RUTHZIL TRATOR COMERCIAL DE PEÇAS LTDA 11 97083-6812 ROLANDO CITRANGULO

PARTS MANUAL

ERP15VT, 16VT, 18VT, 20VT (G807)

ABRIL 2015

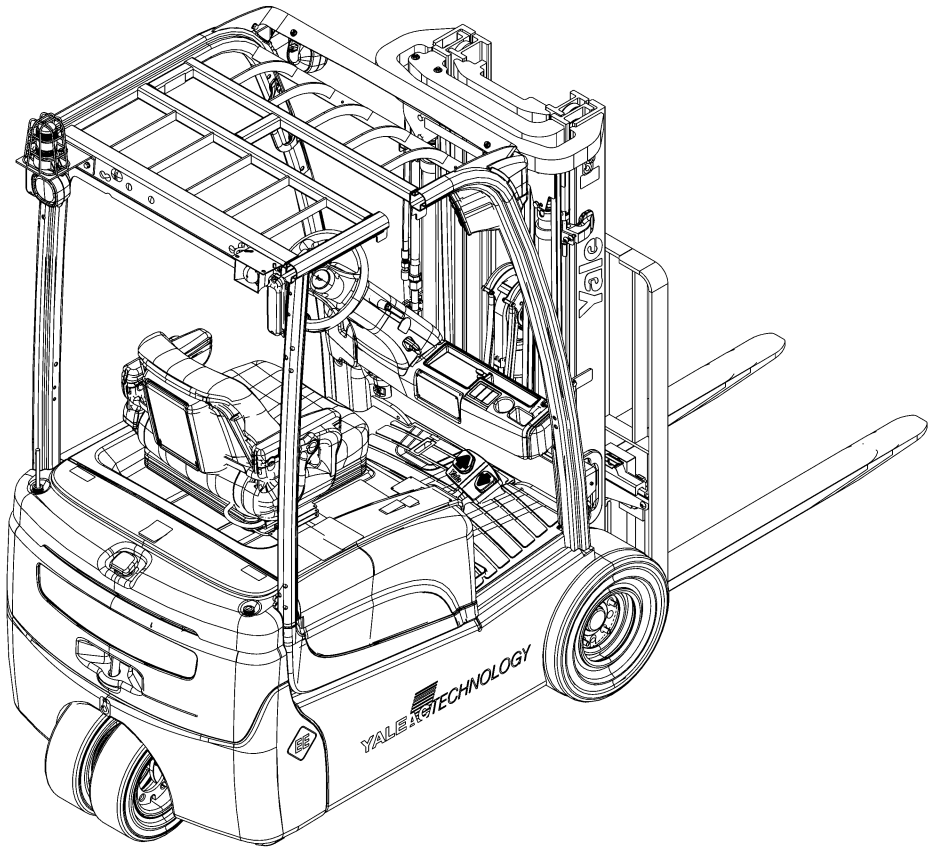

Yale Europe Materials Handling Limited
Centennial House, Building 4.5
Frimley Business Park
Frimley, Surry GU16 7SG, United Kingdom

524308696
©Yale Corp.
04/2015

Yale

SECTIONS

1	GENERAL TRUCK
2	ELECTRICAL SYSTEM
3	DRIVE UNIT
4	STEERING SYSTEM
5	BRAKE SYSTEM
6	HYDRAULIC SYSTEM
7	MAST-TWO STAGE LIMITED FREE-LIFT
8	MAST-THREE STAGE FULL FREE-LIFT
9	MAST-TWO STAGE FULL FREE-LIFT
10	OPTIONS
11	FIELD SERVICE KITS
12	NUMERICAL INDEX
13	USER SUPPORT INFORMATION

This Parts Manual is divided into 13 major sections which are listed above. Quick reference to these sections can be made by placing the right thumb on the tab of the desired section, bending the book back and thumbing the pages to the corresponding tab.

TABLE OF CONTENTS

DESCRIPTION	PAGE
A	
ACCELERATOR PEDAL	
FOOT DIRECTIONAL CONTROL	5-12
STANDARD	5-10
ADD ON OPTIONS	
ADD ON TELEMETRY KITS	11-16
ARMREST SLIDER ASSEMBLY	
→ 9/2010	1-60
9/2010 →	1-62
AUDIBLE ALARM	10-2
AUXILIARY COUNTERWEIGHT	
DROP-IN BATTERY REMOVAL (2/2015 →)	1-103
OPTIONAL - J2.0XNT (1/2015 →)	1-104
SIDE BATTERY REMOVAL (2/2015 →)	1-102
AUXILIARY TUBE EXTENSION KITS	11-3
AUXILIARY TUBE EXTENSIONS	
TWO AND THREE STAGE FULL FREE-LIFT	10-46
TWO-STAGE LIMITED FREE-LIFT	10-44
B	
BATTERY COMPARTMENT DOOR	
SIDE REMOVAL (2/2015 →)	1-92
BATTERY CONNECTOR AND CABLE	
WITH E-STEERING	2-44
WITH RAPID CHARGE OPTION (→ 2/2015)	2-42
WITHOUT RAPID CHARGE OPTION - SIDE BATTERY EXTRACTION (S/N G807B05405L →)	2-36
WITHOUT RAPID CHARGE OPTION - STANDARD AND SIDE BATTERY EXTRACTION (→ S/N G807B05404L)	2-38
WITHOUT RAPID CHARGE OPTION - STANDARD BATTERY EXTRACTION (S/N G807B05405L →)	2-40
BATTERY RETENTION	
→ S/N G807B02919J	1-98
S/N G807B02920J →	1-100
BATTERY TRAY OPTIONS	
DROP-IN (→ 2/2015)	1-80
DROP-IN (2/2015 →)	1-82
SIDE REMOVAL (S/N G807B02920J ↔ 2/2015)	1-86
SIDE REMOVAL (2/2015 →)	1-88
SIDE REMOVAL - WITH REMOVABLE BATTERY TRAY (2/2015 →)	1-90
SIDE-REMOVAL (→ S/N G807B02919J)	1-84
BRAKE PEDAL LINKAGE	5-2
C	
CAB	
FRONT PANEL ASSEMBLY	1-38
FRONT WIPER ASSEMBLY	1-40
HEADLINER ASSEMBLY	1-26
HEATER	1-42
HEATER ASSEMBLY (→ 9/2011)	1-44

©2015 Yale Europe Materials Handling Limited

TABLE OF CONTENTS (continued)

DESCRIPTION	PAGE
HEATER ASSEMBLY (9/2011 →)	1-46
PVC DOORS	1-14
REAR PANEL AND WIPER ATTACHMENT	1-18
REAR PANEL ASSEMBLY	1-20
ROOF FLAP	1-24
STEEL DOOR ASSEMBLY - RIGHT HAND	1-30
STEEL DOOR ASSEMBLY - LEFT HAND	1-32
STEEL DOORS	1-28
TOP PANEL ASSEMBLY	1-22
WINDOW - STEEL DOOR, RIGHT HAND	1-34
WINDOW - STEEL DOOR, LEFT HAND	1-36
CAB ASSEMBLY	
FULL STEEL CAB	1-16
WITH PVC DOORS	1-12
CAB KITS	
CARRIAGE ASSEMBLY	
THREE STAGE FULL FREE LIFT - A271 - STANDARD	8-22
THREE STAGE FULL FREE LIFT - A271 - INTEGRAL SIDE-SHIFT	10-26
THREE STAGE FULL FREE LIFT - C662 - STANDARD	8-48
THREE STAGE FULL FREE LIFT - C662 - INTEGRAL SIDE-SHIFT	10-28
TWO STAGE FULL FREE- LIFT - C663 - INTEGRAL SIDE-SHIFT	10-32
TWO STAGE FULL FREE- LIFT-A272 - INTEGRAL SIDE-SHIFT	10-30
TWO STAGE FULL FREE- LIFT-STANDARD - A272	9-36
TWO STAGE LIMITED FREE LIFT - A270 - STANDARD	7-12
TWO STAGE LIMITED FREE LIFT - A270 - INTEGRAL SIDE-SHIFT	10-22
TWO STAGE LIMITED FREE LIFT - C661 - STANDARD	7-30
TWO STAGE LIMITED FREE LIFT - C661 - INTEGRAL SIDE-SHIFT	10-24
TWO-STAGE FULL FREE-LIFT - STANDARD (C663)	9-16
CONTACTOR	
WITH E-STEERING (2/2015 →)	2-52
WITHOUT E-STEERING (→ 2/2015)	2-50
CONTROL VALVE	
ELECTRO-HYDRAULIC - 3 AND 4 FUNCTION	6-66
CONTROLLER	
HOIST AND FAN ASSEMBLY (→ S/N G807B05963L)	2-26
HOIST AND FAN ASSEMBLY - WITHOUT E-STEERING (S/N G807B05964L →)	2-28
TRACTION AND FAN ASSEMBLY (→ S/N G807B05963L)	2-32
TRACTION AND FAN ASSEMBLY (S/N G807B05964L →)	2-34
CONTROLLER 48/36 VDC	
HOIST 450A WITH E-STEERING (2/2015 →)	2-30
CONTROLLERS	
WITH E-STEERING (2/2015 →)	2-22
WITHOUT E-STEERING (→ 2/2015)	2-18
CONVERSION KIT	11-2
CONVERSION KITS	
COUNTERWEIGHT	
→ 2/2015	1-4
2/2015 →	1-6

©2015 Yale Europe Materials Handling Limited

TABLE OF CONTENTS (continued)

DESCRIPTION	PAGE
COWL MOUNT	
→ S/N G807B02919J	1-105
S/N G807B02920J →	1-106
D	
DASH AND STEERING COLUMN COVERS	
FIXED COLUMN	1-110
TELESCOPIC COLUMN	1-112
DC/DC CONVERTER	
→ S/N G807B06434M	10-4
S/N G807B06435M →	10-6
DISPLAY	2-53
DOME LIGHT	10-14
DRIVE TIRE AND WHEEL ASSEMBLY	3-10
DRIVE UNIT ASSEMBLY	3-2
E	
ELECTRICAL ARRANGEMENT	
→ S/N G807B02104H	2-4
S/N G807B02105H ↔ 10/2013	2-8
WITH E-STEERING (2/2015 →)	2-14
WITHOUT E-STEERING (10/2013 ↔ 2/2015)	2-10
F	
FLOOR PLATES	1-108
FORK POSITIONER ASSEMBLY	10-42
FORKS	
OPTIONAL	1-119
STANDARD	1-118
FRAME HINGE	
2/2015 →	1-96
FREE LIFT ASSEMBLY	
THREE STAGE FULL FREE LIFT - A271 (→ S/N A271B02146H)	8-10
THREE STAGE FULL FREE LIFT - A271 (S/N A271B02147H →)	8-14
THREE STAGE FULL FREE LIFT - C662	8-40
TWO STAGE FULL FREE LIFT - C663	9-8
FREE LIFT CYLINDER ASSEMBLY	
THREE STAGE FULL FREE LIFT - A271	8-20
THREE STAGE FULL FREE LIFT - C662	8-46
TWO STAGE FULL FREE LIFT - C663	9-14
FREE-LIFT ASSEMBLY	
TWO STAGE FULL FREE- LIFT - A272	9-34
FRONT WORK AND MARKER LIGHTS	10-8
FUSE PANEL ASSEMBLY	
WITH E-STEERING (2/2015 →)	2-48
WITHOUT E-STEERING (→ 2/2015)	2-46
H	
HEADER HOSE ASSEMBLY	
THREE STAGE FULL FREE LIFT - A271 (S/N G807B02139H →)	8-28

©2015 Yale Europe Materials Handling Limited

TABLE OF CONTENTS (continued)

DESCRIPTION	PAGE
THREE STAGE FULL FREE LIFT - A271 - 3 RD FUNCTION HOSES (→ S/N G807B02138H)	8-24
THREE STAGE FULL FREE LIFT - A271 - 4 TH FUNCTION HOSES (→ S/N G807B02138H)	8-26
THREE STAGE FULL FREE LIFT - C662 - 3 RD FUNCTION HOSES (→ S/N G807B02138H)	8-50
THREE STAGE FULL FREE LIFT - C662 - 4 TH FUNCTION HOSES (→ S/N G807B02138H)	8-52
THREE STAGE FULL FREE-LIFT - C662 (S/N G807B02139H →) (→ 12/2012)	8-56
THREE STAGE FULL FREE-LIFT - C662 (12/2012 →)	8-60
TWO STAGE FULL FREE- LIFT - A272	9-38
TWO STAGE FULL FREE LIFT - C663 - 3 FUNCTION (→ S/N G807B02138H)	9-18
TWO STAGE FULL FREE LIFT - C663 - 4TH FUNCTION (→ S/N G807B02138H)	9-20
TWO STAGE LIMITED FREE LIFT - A270 (→ S/N A270B01595H)	7-14
TWO STAGE LIMITED FREE LIFT - A270 (S/N A270B01596H →)	7-16
TWO STAGE LMITED FREE-LIFT - C661	7-32
TWO-STAGE FULL FREE-LIFT - C663 (S/N G807B02139H →)	9-22
HEADER HOSE CONVERSION KITS	
HOOD AND COUNTERWEIGHT COVER	
2/2015 →	1-72
LATE PRODUCTION (→ 2/2015)	1-68
WITH RAPID CHARGE OPTION (→ 2/2015)	1-74
HOOD AND COVERS	
EARLY PRODUCTION	1-64
HYDRAULIC CONTROL VALVE	
MANUAL - 3 AND 4 FUNCTION (→ S/N G807B03975K)	6-44
MANUAL - 3 AND 4 FUNCTION (S/N G807B03976K ↔ 2/2015)	6-48
MANUAL - 3 AND 4 FUNCTION (2/2015 →)	6-52
HYDRAULIC CONTROLS	
ELECTRO-HYDRAULIC	6-64
MANUAL	6-36
HYDRAULIC CONVERSION KITS	11-2
HYDRAULIC FILTER HOUSING	6-20
HYDRAULIC HOSE	
MAST	6-34
HYDRAULIC HOSES AND FITTINGS	
AUXILIARY HOSES	6-32
STEERING (→ PENDING PER ECN 15533404) (→ 2/2015)	6-26
STEERING - WITH SYNCRONOUS STEERING (PENDING PER ECN 15533404 →)	6-28
STEERING - WITHOUT SYNCRONOUS STEERING (PENDING PER ECN 15533404 →)	6-30
HYDRAULIC LEVERS - LINKAGE ASSEMBLY (MANUAL)	6-40
HYDRAULIC MOTOR	6-12
HYDRAULIC POWER UNIT INSTALLATION	
→ 2/2015	6-4
ELECTRIC STEERING	6-6
HYDRAULIC PUMP	6-14
HYDRAULIC PUMP AND MOTOR	
ELECTRIC STEERING (2/2015 →)	6-10
HYDRAULIC PUMP AND MOTOR ASSEMBLY	
→ 2/2015	6-8
HYDRAULIC SUPPLY AND RETURN	
→ 2/2015	6-22
WITH ELECTRIC STEERING (2/2015 →)	6-24

©2015 Yale Europe Materials Handling Limited

TABLE OF CONTENTS (continued)

DESCRIPTION	PAGE
HYDRAULIC TANK AND ATTACHING PARTS	
ELECTRIC STEERING (2/2015 →)	6-18
HYDRAULIC TANK ASSEMBLY	
→ 2/2015	6-16
I	
IMPACT SENSOR	
→ 2/2015	10-48
2/2015 →	10-50
INLET SECTION	
ELECTRO-HYDRAULIC CONTROL VALVE	6-68
MANUAL HYDRAULIC CONTROL VALVE	6-56
INTEGRAL SIDE-SHIFT	
FORK POSITIONER - TWO STAGE LIMITED FREE-LIFT	10-34
FORK POSITIONER (907 MM) - 2 AND 3 FFL	10-36
FORK POSITIONER (977 MM) - 2 AND 3 FFL	10-38
INTEGRAL SIDE-SHIFT CYLINDER	10-40
L	
LABELS	
EXTERIOR	1-120
HYDRAULIC CONTROL FUNCTIONS	1-124
INTERIOR	1-122
LIFT CYLINDER ASSEMBLY	
TWO STAGE LIMITED FREE LIFT - A270	7-10
TWO STAGE LIMITED FREE LIFT - C661	7-26
LIFT/TILT SECTION	
ELECTRO-HYDRAULIC CONTROL VALVE	6-70
LIFT/TILT/AUXILIARY SECTION	
MANUAL HYDRAULIC CONTROL VALVE	6-58
LIGHT/ALARM ADD-ON OPTIONS KITS	11-4
LIGHTS	
WITH STANDARD OVERHEAD GUARD	2-62
LOAD BACKREST EXTENSION	1-116
M	
MAIN LIFT ASSEMBLY	
THREE STAGE FULL FREE LIFT - A271	8-6
THREE STAGE FULL FREE LIFT - C662	8-36
TWO STAGE FULL FREE- LIFT - A272	9-28
TWO STAGE FULL FREE LIFT - C663	9-6
MAIN LIFT CYLINDER ASSEMBLY	
THREE STAGE FULL FREE LIFT - A271	8-18
THREE STAGE FULL FREE LIFT - C662	8-42
MAIN LIFT CYLINDER LH	
TWO STAGE FULL FREE LIFT - A272	9-30
TWO STAGE FULL FREE LIFT - C663	9-10
MAIN LIFT CYLINDER RH	
TWO STAGE FULL FREE- LIFT - A272	9-32
TWO STAGE FULL FREE- LIFT - C663	9-12

©2015 Yale Europe Materials Handling Limited

TABLE OF CONTENTS (continued)

DESCRIPTION	PAGE
MAST ASSEMBLY	
THREE STAGE FULL FREE LIFT - A271 - INNER, INTERMEDIATE AND OUTER (→ S/N A271B02146H)	8-2
THREE STAGE FULL FREE LIFT - A271 - INNER, INTERMEDIATE AND OUTER (S/N A271B02147H →)	8-4
THREE STAGE FULL FREE LIFT - C662 - INNER, INTERMEDIATE AND OUTER (→ S/N C662B02349H)	8-32
THREE STAGE FULL FREE LIFT - C662 - INNER, INTERMEDIATE AND OUTER (S/N C662B02350H →)	8-34
TWO STAGE FULL FREE LIFT - C663 (→ S/N C663B01671H)	9-2
TWO STAGE FULL FREE LIFT - C663 (S/N C663B01672H →)	9-4
TWO STAGE FULL FREE- LIFT - A272	9-26
TWO STAGE LIMITED FREE LIFT - A270 (→ S/N A270B01595H)	7-2
TWO STAGE LIMITED FREE LIFT - A270 (S/N A270B01596H →)	7-6
TWO STAGE LIMITED FREE LIFT - C661 (→ S/N C661B01677H)	7-18
TWO STAGE LIMITED FREE LIFT - C661 (S/N C661B01678H →)	7-22
MASTER CYLINDER	5-4
MINI-LEVER CONTROLS	
3 FUNCTION	2-54
4 FUNCTION	2-58
MIRROR	
CONVEX REAR VIEW	10-16
DUAL REAR VIEW	10-18
MISCELLANEOUS ADD-ON OPTION KITS	11-4
O	
OUTLET SECTION	
MANUAL HYDRAULIC CONTROL VALVE	6-60
OVERHEAD GUARD	
→ S/N G807B02919J	1-8
S/N G807B02920J →	1-10
P	
PARKING BRAKE RELEASE	
→ 2/2008	5-6
2/2008 →	5-8
POSITIONER SENSOR	
MANUAL HYDRAULIC CONTROL VALVE	6-62
R	
REAR REFLECTORS AND TAIL LIGHTS	10-10
REVERSE HANDLE	10-20
S	
SEAT	
FULL SUSPENSION - SHEET 1 0F 2	1-48
FULL SUSPENSION - SHEET 2 OF 2	1-52
FULL SUSPENSION, HIGH BACK - SHEET 1 0F 2	1-54
FULL SUSPENSION, HIGH BACK - SHEET 2 OF 2	1-58

©2015 Yale Europe Materials Handling Limited

TABLE OF CONTENTS (continued)

DESCRIPTION	PAGE
SERVICE KITS	
SIDE PANELS	1-78
STATIC STRAP	1-114
STEER AXLE ASSEMBLY	
→ 2/2015	4-4
STEER AXLE MOUNTING	
→ 2/2015	4-2
STEER TIRE AND WHEEL ASSEMBLY	4-15
STEERING ACCUMULATOR	
→ PENDING PER ECN 15533404	4-34
STEERING AXLE	
ELECTRIC STEERING - PAGE 1 OF 4	4-8
ELECTRIC STEERING - PAGE 2 OF 4	4-10
ELECTRIC STEERING - PAGE 3 OF 4	4-12
ELECTRIC STEERING - PAGE 4 OF 4	4-14
STEERING COLUMN ASSEMBLY	
FIXED (→ 10/2013)	4-20
FIXED (10/2013 →)	4-22
FIXED - ELECTRIC STEERING	4-24
TELESCOPIC (→ 10/2013)	4-26
TELESCOPIC (10/2013 →)	4-27
TELESCOPIC WITH TILT MEMORY - ELECTRIC STEERING	4-28
STEERING HAND PUMP ASSEMBLY	
→ PENDING PER ECN 15533404	4-30
PENDING PER ECN 15533404 →	4-32
STEERING WHEEL AND COLUMN	
FIXED	4-16
TELESCOPIC	4-18
STROBE LIGHT ASSEMBLY AND REAR WORK LIGHT	10-12
T	
TIE RODS	
ELECTRO-HYDRAULIC CONTROL VALVE	6-72
MANUAL HYDRAULIC CONTROL VALVE	6-61
TILT CYLINDER AND MAST INSTALLATION	6-74
TILT CYLINDER ASSEMBLY	6-76
TILT SENSOR GROUP	2-56
TRACTION MOTOR ASSEMBLY	3-4
TRACTION SPEED LIMITER	
STANDARD AND INTEGRAL SIDE-SHIFT CARRIAGES	10-52
TRANSMISSION	
COVER AND BRAKE DISCS	3-6
HOUSING	3-8
W	
WIRE HARNESS	
AUXILIARY PLUG	2-165
CAB ACCESSORY	2-152
CAB ACCESSORY - ALTERNATE PART	2-153

©2015 Yale Europe Materials Handling Limited

TABLE OF CONTENTS (continued)

DESCRIPTION	PAGE
DC CONVERTER - 12V OUTLET (→ 9/2013)	2-158
DC CONVERTER - 12V OUTLET (9/2013 →)	2-162
DC/DC CONVERTER	2-164
DC/DC CONVERTER - W/ E-STEERING	2-166
HEATER	2-144
HYDRAULIC FLUID LEVEL AND PRESSURE	2-155
LIGHTS WITH OVERHEAD GUARD (→ 10/2013)	2-156
LIGHTS WITH OVERHEAD GUARD (10/2013 →)	2-160
MAIN WITH ELECTRO-HYDRAULICS - SHEET 1 OF 2 (→ S/N G807B02113H)	2-70
MAIN WITH ELECTRO-HYDRAULICS - SHEET 2 OF 2 (→ S/N G807B02113H)	2-74
MAIN WITH ELECTRO-HYDRAULICS - SHEET 1 OF 2 (S/N G807B02114H →)	2-78
MAIN WITH ELECTRO-HYDRAULICS - SHEET 2 OF 2 (S/N G807B02114H →)	2-82
MAIN WITH ELECTRO-HYDRAULICS AND E-STEERING - SHEET 1 0F 2 (2/2015 →)	2-94
MAIN WITH ELECTRO-HYDRAULICS AND E-STEERING - SHEET 2 OF 2 (2/2015 →)	2-98
MAIN WITH ELECTRO-HYDRAULICS, WITHOUT E-STEER - SHEET 1 OF 2 (S/N G807B06004L →)	2-86
MAIN WITH ELECTRO-HYDRAULICS, WITHOUT E-STEER - SHEET 2 OF 2 (S/N G807B06004L →)	2-90
MAIN WITH MANUAL HYDRAULICS - SHEET 1 OF 2 (→ S/N G807B02104H)	2-102
MAIN WITH MANUAL HYDRAULICS - SHEET 2 OF 2 (→ S/N G807B02104H)	2-106
MAIN WITH MANUAL HYDRAULICS - SHEET 1 OF 2 (S/N G807B02105H →)	2-110
MAIN WITH MANUAL HYDRAULICS - SHEET 2 OF 2 (S/N G807B02105H →)	2-114
MAIN WITH MANUAL HYDRAULICS - SHEET 1 OF 2 (S/N G807B06004L ↔ 11/2014)	2-118
MAIN WITH MANUAL HYDRAULICS - SHEET 2 OF 2 (S/N G807B06004L ↔ 11/2014)	2-122
MAIN WITH MANUAL HYDRAULICS AND E-STEERING - SHEET 1 OF 2 (2/2015 →)	2-134
MAIN WITH MANUAL HYDRAULICS AND E-STEERING - SHEET 2 OF 2 (2/2015 →)	2-138
MAIN WITH MANUAL HYDRAULICS, WITHOUT E-STEER - SHEET 1 OF 2 (11/2014 ↔ 2/2015)	2-126
MAIN WITH MANUAL HYDRAULICS, WITHOUT E-STEER - SHEET 2 OF 2 (11/2014 ↔ 2/2015)	2-130
MANUAL HYDRAULICS	2-145
MANUAL INTERLOCK	2-146
REAR WIPER	2-151
RH LIGHT WITH FREEZER DISPLAY - WITH TURN SIGNAL (→ 10/2013)	2-66
RH LIGHT WITH FREEZER DISPLAY - WITH TURN SIGNAL (10/2013 →)	2-68
RH LIGHT WITH STANDARD DISPLAY - WITHOUT TURN SIGNALS (→ 10/2013)	2-64
RH LIGHT WITH STANDARD DISPLAY - WITHOUT TURN SIGNALS (10/2013 →)	2-65
STEER COLUMN	2-149
STEER UNIT	2-148
STEERING COLUMN WITH ELECTRIC STEERING (2/2015 →)	2-150
SYNCHRONOUS STEERING	2-147
TURN SIGNAL	2-142

©2015 Yale Europe Materials Handling Limited

ABBREVIATIONS QUICK REFERENCE SHEET

Listed below are abbreviations used in parts manuals to denote the following expressions:

TERM	DEFINITION
Amp	Amperes
AR	As Required
BDI	Battery Discharge Indicators
BWI	Brush Wear Indicator
CE	Communicator End
CRE	Corrosive Environment
D/B	Date Break
dbA	Decibel "A" Scale
DE	Drive End
ECH	Empty Container Handler
ECH-3	Empty Container Handler - 3 High Stacking
ECH-4	Empty Container Handler - 4 High Stacking
ECH-5	Empty Container Handler - 5 High Stacking
ECH-6	Empty Container Handler - 6 High Stacking
ECH-7	Empty Container Handler - 7 High Stacking
ECM	Electronic Control Module
ECN	Engineering Change Notice
EEPROM	Electrically Erasable Programmable Read Only Memory
EPA	US Environmental Protection Agency
EPROM	Electrically Programmable Read Only Memory

TERM	DEFINITION
FRE	Freezer Environment
in.	inches
LPG	Liquefied Petroleum Gas
MAP	Manifold Absolute Pressure
mm	millimeters
MSTS	Microprocessor Spark Timing System
NPT	National Pipe Threads
O/S	Oversize
PTO	Power Take Off
RPM	Revolutions per Minute
S/N	Serial Number
TMM	Truck Management Module
UL Type D	Diesel-Powered Safety Rating
UL Type DS	Diesel-Powered Safety Rating
UL Type E	Battery-Powered Safety Rating
UL Type EE	Battery-Powered Safety Rating
UL Type ES	Battery-Powered Safety Rating
UL Type G	Gasoline-Powered Safety Rating
UL Type GS	Gasoline-Powered Safety Rating
UL Type LP	Gas-Powered Safety Rating
UL Type LPS	LP Gas-Powered Safety Rating
U/S	Undersize
UL	Underwriters Laboratory
V	Volts

©2015 Yale Europe Materials Handling Limited

HOW TO USE THE ILLUSTRATED PARTS MANUAL

This parts manual describes and illustrates assemblies, subassemblies, and detail parts needed for service replacement.

The different constructions are indicated by keys and footnotes. The callouts correspond to descriptions found on the next page.

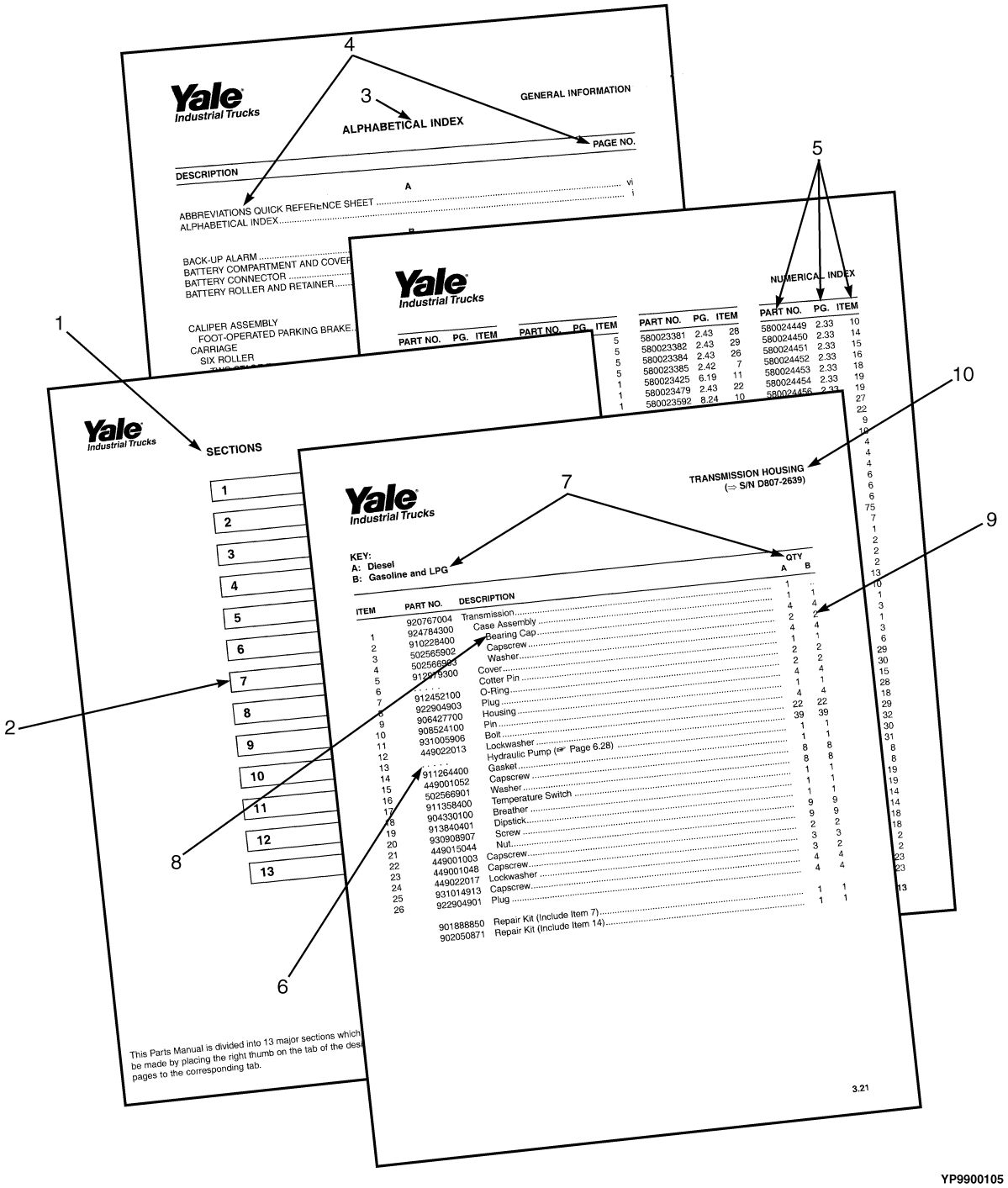

©2015 Yale Europe Materials Handling Limited

HOW TO FIND THE DESIRED PART NUMBER

WHEN THE PART NUMBER AND THE NEXT HIGHER ASSEMBLY IS NOT KNOWN:

1. Determine the function and application of the part required. Turn to the Sections Page. Choose the general area of reference most likely to include the part.
2. Turn to the section you chose. Use the Section Table of Contents to determine the assembly which would normally contain the part required. Then locate the part on the assembly breakdown page.

WHEN THE PART NUMBER IS NOT KNOWN AND THE NEXT HIGHER ASSEMBLY IS KNOWN:

3. Determine the assembly the required part is used on. Turn to the Table of Contents (Page i).
4. Locate the assembly the required part is used on and turn to the page indicated for that assembly. Then locate the part on the assembly breakdown page.

WHEN THE PART NUMBER IS KNOWN:

5. Use the Numerical Index (Page 12-1) to find the part number. Turn to the page listed and locate the part as indicated by the item number.

GENERAL:

The assembly breakdowns include part numbers, descriptions, quantities required, keys and footnotes to help in selecting correct parts.

6. Parts Supersession Information. Part numbers that have this history will be displayed in the parts list in the order that they were superseded (from oldest to newest). The superseded part numbers will be shown with a line through them.

   Five periods in the PART NO. column (. . . . .) indicate that the part is either *Not Serviced Separately* or there is a reference to another figure. A figure reference is denoted by a pointing hand followed by a page number in the DESCRIPTION column (☞Page 3-4)
7. Keys are used to show two or more similar assemblies, RH and LH assembly parts, etc. Select the appropriate key, "A", "B", "C", "D", or "E" and the corresponding quantity column to find the required parts. Two periods in the QTY column (..) indicate that the part is not used for that assembly.
8. Indented descriptions under the DESCRIPTION column are used to indicate assemblies and subparts of assemblies. In the example on the previous page, *BEARING CAP* (Item 2) is a subpart of the major assembly *CASE*.
9. Quantities shown are for one assembly. The quantities of the subpart *BEARING CAP* are indicated as two and two. This means two per *CASE* assembly.
10. Serial number breaks identify the most current parts information and are shown as follows:
    → **S/N A810N2639**
    Indicates last serial number affected.
    S/N A810N2640 →
    Indicates the first serial number affected.
    S/N A810N1553 ↔ S/N A810N3291
    Indicates a range of serial numbers affected.

    ECN numbers for pending serial numbers are shown to allow for the inclusion of the most current parts information and are identified as follows:
    → **S/N Pending Per ECN 63243**
    Indicates a pending serial number for last unit affected.
    S/N Pending Per ECN 63243 →
    Indicates a pending serial number for first unit affected.

    Date breaks are used to indicate when a change occurred but a subsequent serial number break was not recorded. This is an arbitrary date usually based on the ECN release and are identified as follows:
    → **D/B 3/00**
    Indicates that a change occurred sometime within that month for the item affected.
    D/B 3/00 →
    Indicates that a change occurred sometime within that month for the item affected.
    D/B 3/00 ↔ D/B 4/00
    Indicates a range of production dates of the item affected.

    Contact your local dealer for Yale lift trucks for serial number information for items with a ECN or a date break.

ORDERING PARTS:

When ordering replacement parts, give the unit serial number, part number, name of part and quantity required.

For any further information on parts, service, or ordering, consult your local dealer for Yale lift trucks.

©2015 Yale Europe Materials Handling Limited

IDENTIFICATION OF TRUCK SERIAL NUMBERS

X	OOO	X	OOOO	X
(1)	(2)	(3)	(4)	(5)

NOTE: Serial Number breakdown is only for trucks built after 1994.

(1) and (2) The first letter and three numbers indicate the truck unit code.

(3) The second letter indicates the plant of manufacture.

(4) The four or five digit number indicates the production sequence number of the truck.

(5) The final letter indicates the year of manufacture starting with "A" in 1957, 1980, and 2003. The letters "I", "O", and "Q" will not be used.

For pending serial numbers contact your local dealer for Yale lift trucks.

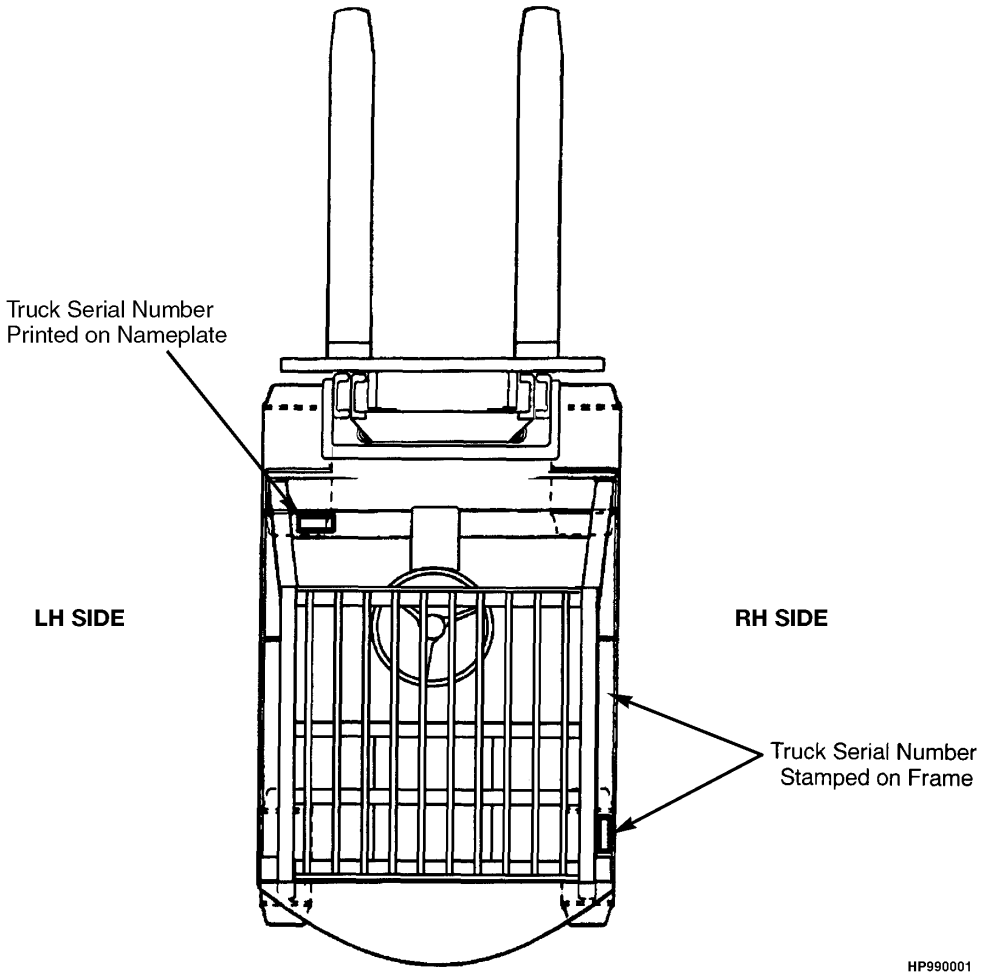

Parts referred to in this book as right or left hand parts are in accordance with the illustration above.

©2015 Yale Europe Materials Handling Limited

IDENTIFICATION OF MAST SERIAL NUMBERS

X OOO X OOOO

(1) (2) (3) (4)

OOOO

(5)

(1) and (2) The first letter and number indicates the mast unit code.

(3) The second letter indicates the plant of manufacture.

(4) The four or five digit number indicates the production sequence number of the mast.

(5) Carriage travel in millimeters stamped just below the serial number.

Mast Group identification consists of mast unit code (1) and (2) plus carriage travel (5).

For pending production sequence numbers contact your local dealer for Yale lift trucks.

LIFT EQUIPMENT IDENTIFICATION

1. Fork part number, capacity rating, plant code letter, and date of manufacture are stamped approximately six inches below the top of most forks.
2. The carriage group number is stamped on the right hand side of the top crossmember (pin type) or on the back of the right hand end of the bottom crossmember (hook type). A date code has two letters in line with or below the carriage group number.
3. The mast identification number has a unit code, a letter indicating the plant of manufacture, and a serial number. Underneath the production sequence number is a four digit number that indicates the carriage travel in millimeters.
4. Tilt and lift cylinder group numbers are stamped on the cylinder shell.

   Always refer to the group, serial, or part number when ordering service parts.

   Modification of masts and carriages by SPED (Special Products Engineering Department) are identified by a model prefix code beginning with the letter "S". contact your dealer for Yale lift trucks for information on these assemblies.

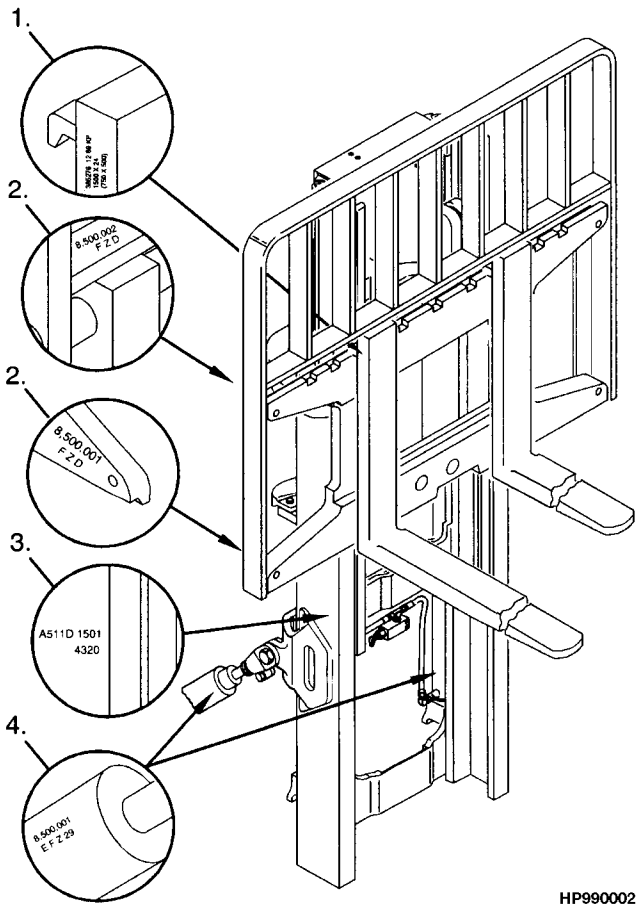

©2015 Yale Europe Materials Handling Limited

IDENTIFICATION OF ATTACHMENT AND SIDE-SHIFT CARRIAGE SERIAL NUMBERS

X OOO X OOOO

(1) (2) (3) (4)

(1) and (2) The first letter and three numbers indicate the attachment unit code.

(3) The second letter indicates the plant of manufacture.

(4) The four or five digit number indicates the production sequence number.

For pending production sequence numbers contact your local dealer for Yale lift trucks.

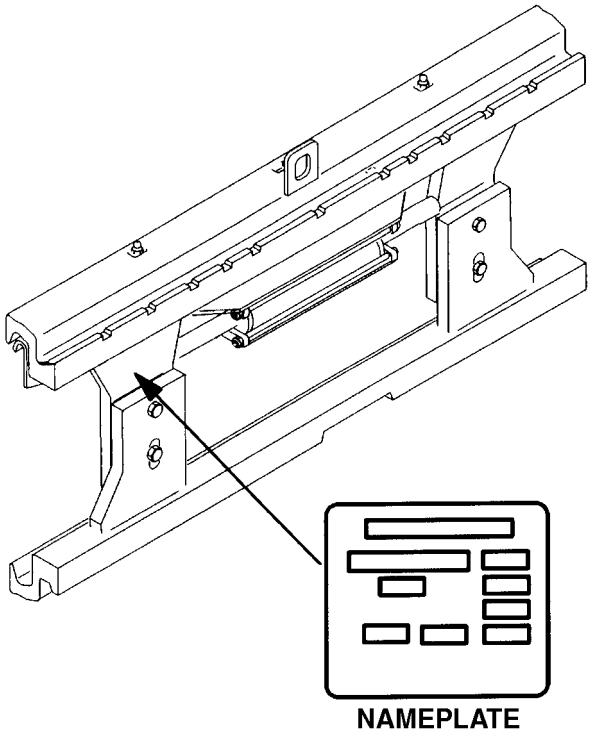

Side-shift carriages and attachments have nameplates. Use the serial number found on the nameplate to identify the attachment.

Always refer to the group, serial, or part number when ordering service parts.

Modifications of attachments and side-shift carriages by SPED (Special Products Engineering Department) are identified by a model prefix code beginning with the letter "S". Contact your dealer for Yale lift trucks for information on these assemblies.

©2015 Yale Europe Materials Handling Limited

PUBLICATIONS

Every new lift truck is provided with an OPERATING MANUAL. This manual has information that the operator must know for inspection and operation of the lift truck.

SERVICE MAINTENANCE MANUALS, which provide service and overhaul procedures, and PARTS MANUALS with complete replacement part identification, are available at a nominal fee from your Yale dealer to assist users in effectively maintaining Yale lift trucks in a safe, useful condition. See the list below for information on ordering specific publications for this model lift truck.

PUBLICATION	YALE PART NUMBER
Operating Manual	524319284
Service Manual (Complete)	524320408
Parts Manual	524308696

©2015 Yale Europe Materials Handling Limited

NOTES

©2015 Yale Europe Materials Handling Limited

1 GENERAL TRUCK

SECTION 1
GENERAL TRUCK

DESCRIPTION	PAGE
ARMREST SLIDER ASSEMBLY	
→ 9/2010	1-60
9/2010 →	1-62
AUXILIARY COUNTERWEIGHT	
DROP-IN BATTERY REMOVAL (2/2015 →)	1-103
OPTIONAL - J2.0XNT (1/2015 →)	1-104
SIDE BATTERY REMOVAL (2/2015 →)	1-102
BATTERY COMPARTMENT DOOR	
SIDE REMOVAL (2/2015 →)	1-92
BATTERY RETENTION	
→ S/N G807B02919J	1-98
S/N G807B02920J →	1-100
BATTERY TRAY OPTIONS	
DROP-IN (→ 2/2015)	1-80
DROP-IN (2/2015 →)	1-82
SIDE REMOVAL (S/N G807B02920J ↔ 2/2015)	1-86
SIDE REMOVAL (2/2015 →)	1-88
SIDE REMOVAL - WITH REMOVABLE BATTERY TRAY (2/2015 →)	1-90
SIDE-REMOVAL (→ S/N G807B02919J)	1-84
CAB	
FRONT PANEL ASSEMBLY	1-38
FRONT WIPER ASSEMBLY	1-40
HEADLINER ASSEMBLY	1-26
HEATER	1-42
HEATER ASSEMBLY (→ 9/2011)	1-44
HEATER ASSEMBLY (9/2011 →)	1-46
PVC DOORS	1-14
REAR PANEL AND WIPER ATTACHMENT	1-18
REAR PANEL ASSEMBLY	1-20
ROOF FLAP	1-24
STEEL DOOR ASSEMBLY - RIGHT HAND	1-30
STEEL DOOR ASSEMBLY - LEFT HAND	1-32
STEEL DOORS	1-28
TOP PANEL ASSEMBLY	1-22
WINDOW - STEEL DOOR, RIGHT HAND	1-34
WINDOW - STEEL DOOR, LEFT HAND	1-36
CAB ASSEMBLY	
FULL STEEL CAB	1-16
WITH PVC DOORS	1-12
COUNTERWEIGHT	
→ 2/2015	1-4
2/2015 →	1-6
COWL MOUNT	
→ S/N G807B02919J	1-105
S/N G807B02920J →	1-106
DASH AND STEERING COLUMN COVERS	
FIXED COLUMN	1-110
TELESCOPIC COLUMN	1-112
FLOOR PLATES	1-108

©2015 Yale Europe Materials Handling Limited

SECTION 1
GENERAL TRUCK

DESCRIPTION	PAGE
FORKS	
OPTIONAL	1-119
STANDARD	1-118
FRAME HINGE	
2/2015 →	1-96
HOOD AND COUNTERWEIGHT COVER	
2/2015 →	1-72
LATE PRODUCTION (→ 2/2015)	1-68
WITH RAPID CHARGE OPTION (→ 2/2015)	1-74
HOOD AND COVERS	
EARLY PRODUCTION	1-64
LABELS	
EXTERIOR	1-120
HYDRAULIC CONTROL FUNCTIONS	1-124
INTERIOR	1-122
LOAD BACKREST EXTENSION	1-116
OVERHEAD GUARD	
→ S/N G807B02919J	1-8
S/N G807B02920J →	1-10
SEAT	
FULL SUSPENSION - SHEET 1 0F 2	1-48
FULL SUSPENSION - SHEET 2 OF 2	1-52
FULL SUSPENSION, HIGH BACK - SHEET 1 0F 2	1-54
FULL SUSPENSION, HIGH BACK - SHEET 2 OF 2	1-58
SIDE PANELS	1-78
STATIC STRAP	1-114

©2015 Yale Europe Materials Handling Limited

NOTES

©2015 Yale Europe Materials Handling Limited

COUNTERWEIGHT (FIGURE 1-1)

(→ 2/2015)

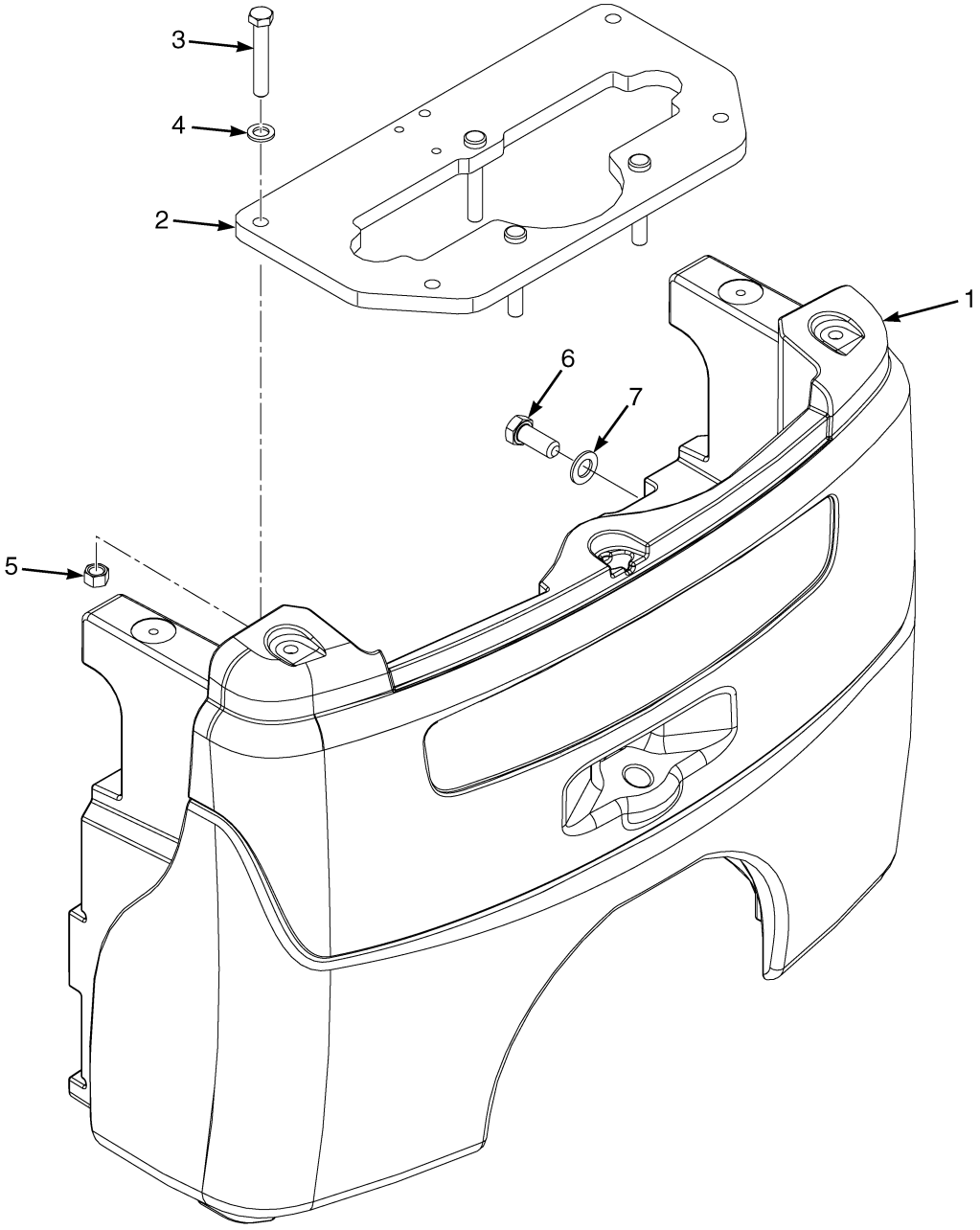

BP120464

©2015 Yale Europe Materials Handling Limited

COUNTERWEIGHT

(→ 2/2015)

ITEM	PART NO.	DESCRIPTION	QTY
1	524289762	Counterweight	1
2	580079963	Steer Plate Assembly	1
2	580079965	Stud	3
3	931017915	Capscrew	4
4	502566903	Washer	8
5	~~580005381~~		
	580080654	Nut	4
6	580087336	Capscew	4
7	940102912	Washer	4
7	**a** 016100800	Shim	4

FOOTNOTES:

a Not Illustrated

©2015 Yale Europe Materials Handling Limited

COUNTERWEIGHT (FIGURE 1-2)
(2/2015 →)

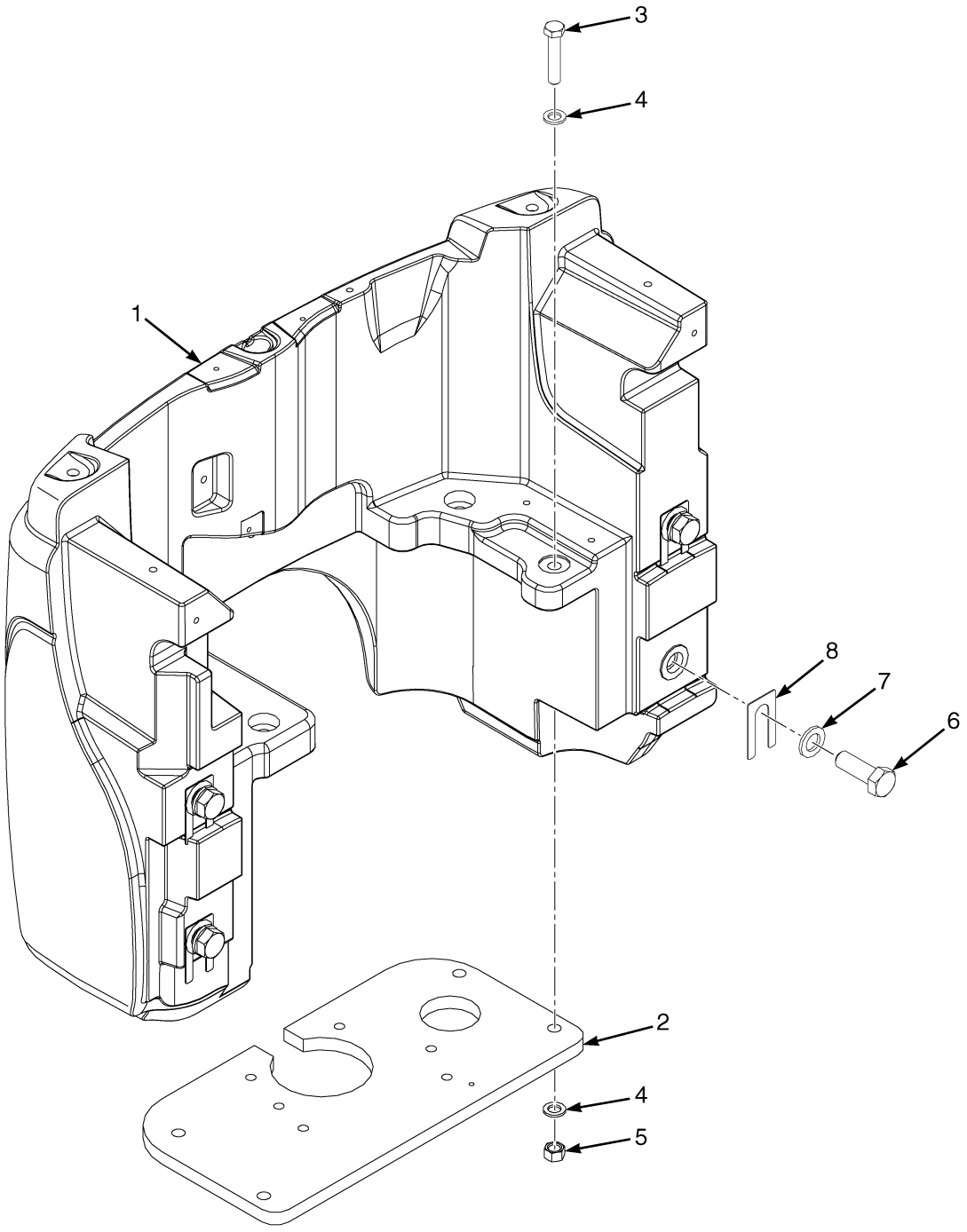

©2015 Yale Europe Materials Handling Limited

COUNTERWEIGHT

(2/2015 →)

ITEM	PART NO.	DESCRIPTION	QTY
1	550053304	Counterweight	1
2	582020433	Mounting Plate	1
3	502565902	Capscrew	4
4	502566903	Washer	8
5	~~580005381~~		
	580080654	Nut	4
6	580087336	Capscew	4
7	940102912	Washer	4
8	016100800	Shim	AR

©2015 Yale Europe Materials Handling Limited

OVERHEAD GUARD (FIGURE 1-3)

(→ S/N G807B02919J)

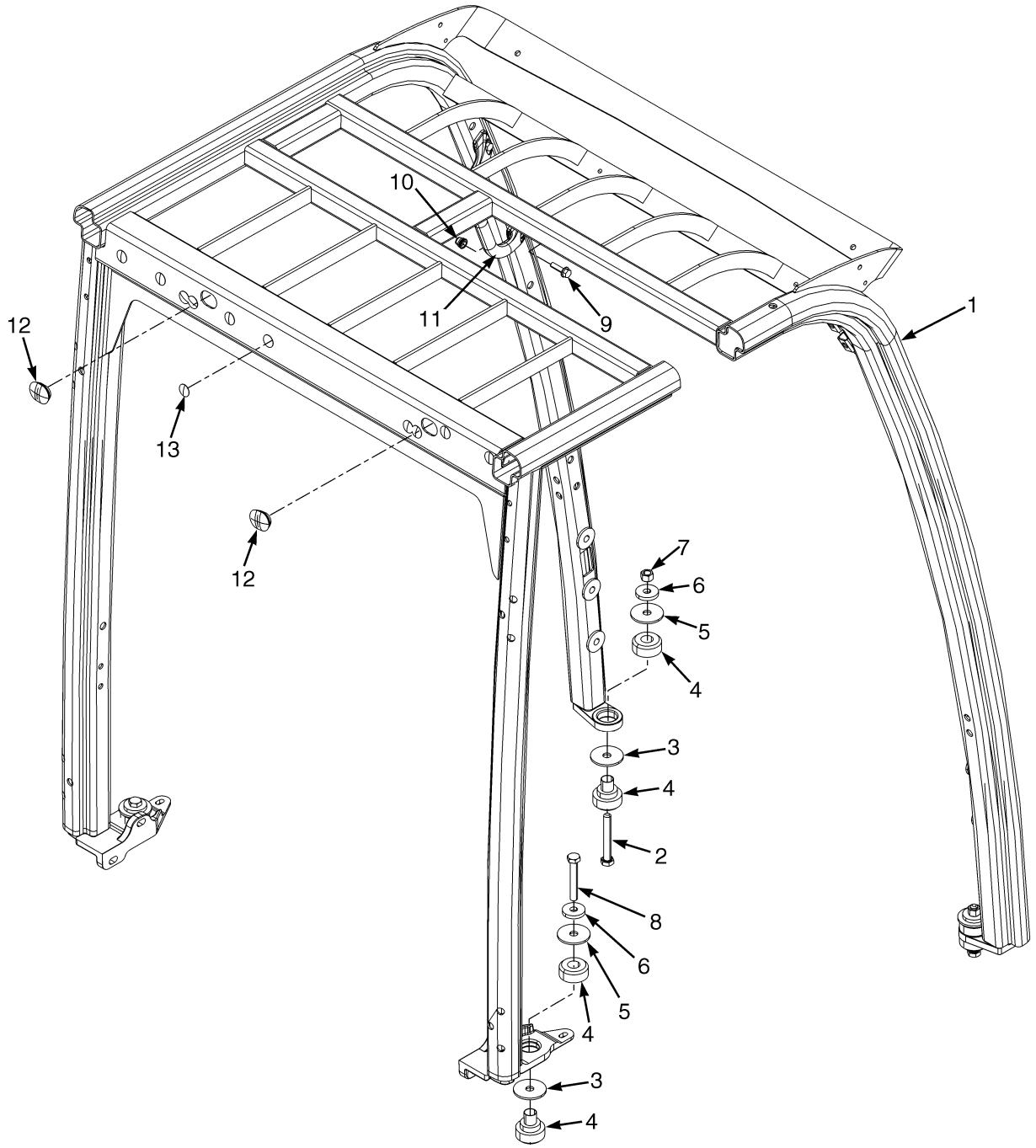

BP120451

©2015 Yale Europe Materials Handling Limited

OVERHEAD GUARD
(→ S/N G807B02919J)

ITEM	PART NO.	DESCRIPTION	QTY
1	524286264	Overhead Guard (Standard) (546 mm Battery Compartment)	1
1	524286265	Overhead Guard (Standard) (642 mm Battery Compartment)	1
1	524286266	Overhead Guard (Standard) (750 mm Battery Compartment)	1
2	449001351	Capscrew	2
3	580086916	Washer	2
4	580004721	Mount	4
5	580004761	Washer	4
6	505970501	Washer	4
7	909882405	Nut	2
8	449001059	Capscrew	2
9	580049229	Capscrew	2
10	580044861	Insert	2
11	580091639	Handle	1
12	524201323	Grommet	4
13	580059493	Plug	12
	a 580010741	Plug	2

FOOTNOTES:

a Not Illustrated

©2015 Yale Europe Materials Handling Limited

OVERHEAD GUARD (FIGURE 1-4)

(S/N G807B02920J →)

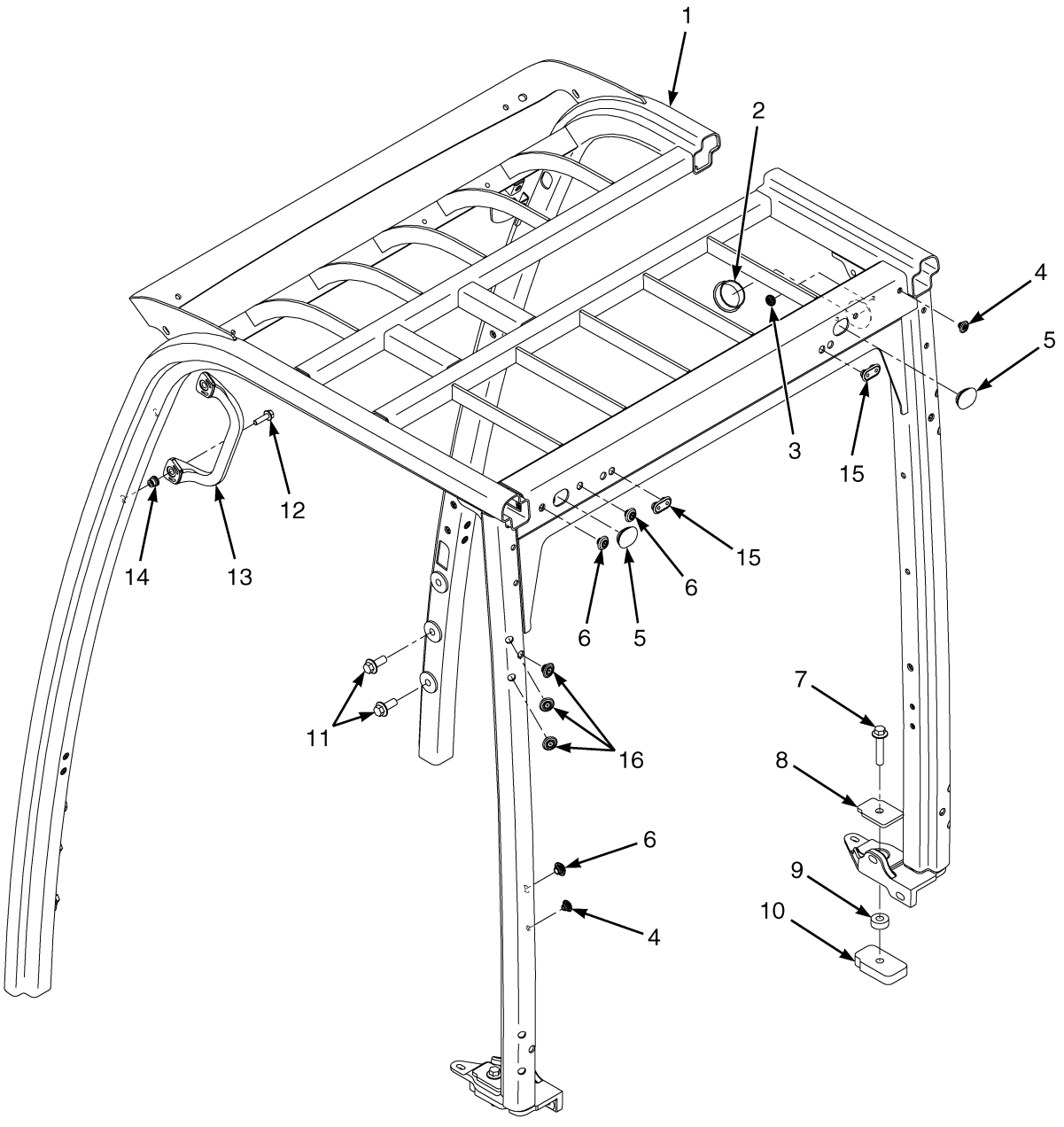

©2015 Yale Europe Materials Handling Limited

OVERHEAD GUARD

(S/N G807B02920J →)

KEY:
A: With Cab
B: Without Cab

ITEM	PART NO.	DESCRIPTION	QTY A	QTY B
1	**b** 550027111	Overhead Guard (Standard) (546 mm Battery Compartment)	1	1
1	**c** 550071204	Overhead Guard (Standard) (546 mm Battery Compartment)	1	1
1	**b** 550027112	Overhead Guard (Standard) (642 mm Battery Compartment)	1	1
1	**c** 550071205	Overhead Guard (Standard) (642 mm Battery Compartment)	1	1
1	**b** 550027113	Overhead Guard (Standard) (750 mm Battery Compartment)	1	1
1	**c** 550071206	Overhead Guard (Standard) (750 mm Battery Compartment)	1	1
2	580010741	Plug	2	2
3	580093985	Plug (Black)	4	4
4	580093986	Plug (10 mm)	2	2
5	524201323	Grommet	3	3
6	580093987	Plug (13.5 mm)	2	15
7	580056886	Capscrew	2	2
8	582013982	Spacer	2	2
9	582012058	Spacer	2	2
10	582013983	Mount	2	2
11	580056527	Capscrew	4	4
12	580049229	Capscrew	2	2
13	580091639	Handle	1	1
14	580044861	Insert	2	2
15	524332271	Plug	..	2
16	580093988	Plug	..	12
	a 582001304	Plug (23.0 mm)	2	2

FOOTNOTES:

a Not Illustrated
b → 2/2015
c 2/2015 →

©2015 Yale Europe Materials Handling Limited

CAB ASSEMBLY (FIGURE 1-5)
WITH PVC DOORS

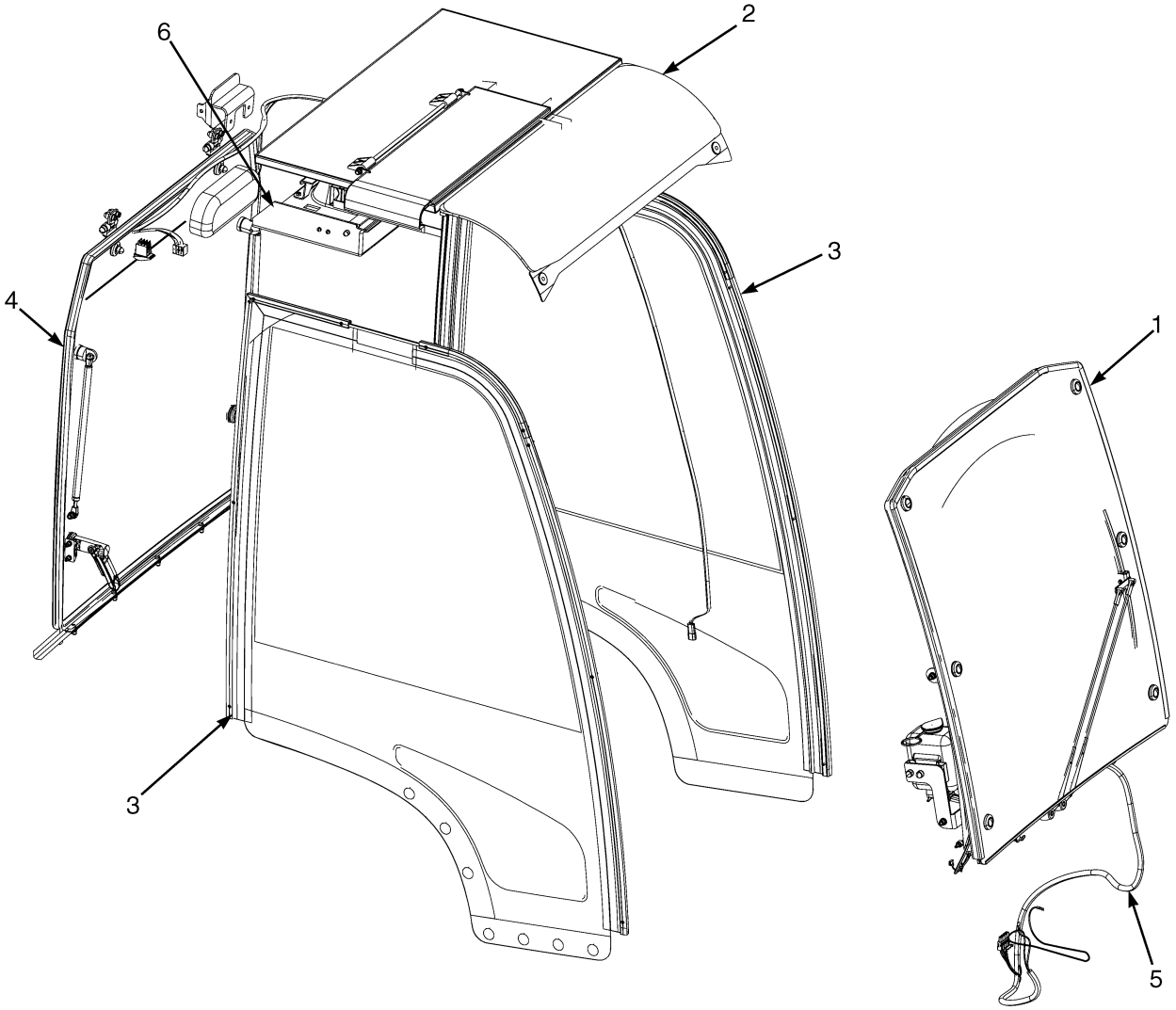

BP120603

©2015 Yale Europe Materials Handling Limited

CAB ASSEMBLY
WITH PVC DOORS

KEY:
A: 546mm Battery Compartment
B: 642mm Battery Compartment
C: 750mm Battery Compartment

ITEM	PART NO.	DESCRIPTION	QTY A	QTY B	QTY C
1	580096324	Kit-Front Screen (☞Page 1-38)	1	1	1
2	580096200	Kit-Top Screen (☞Page 1-22)	1	..	..
2	580096201	Kit-Top Screen (☞Page 1-22)	..	1	..
2	580096202	Kit-Top Screen (☞Page 1-22)	..	..	1
3	580091703	Kit-Door (☞Page 1-14)	1	..	..
3	580091704	Kit-Door (☞Page 1-14)	..	1	..
3	580091705	Kit-Door (☞Page 1-14)	..	..	1
4	580096322	Kit-Rear Screen (Standard Hood) (☞Page 1-20)	1	1	1
4	580096323	Kit-Rear Screen (Low Hood) (☞Page 1-20)	1	1	1
5	580091709	Kit-Window Washer	1	1	1
6	580091706	Headliner (☞Page 1-26)	1	..	..
6	580091707	Headliner (☞Page 1-26)	..	1	..
6	580091708	Headliner (☞Page 1-26)	..	..	1

©2015 Yale Europe Materials Handling Limited

CAB (FIGURE 1-6)
PVC DOORS

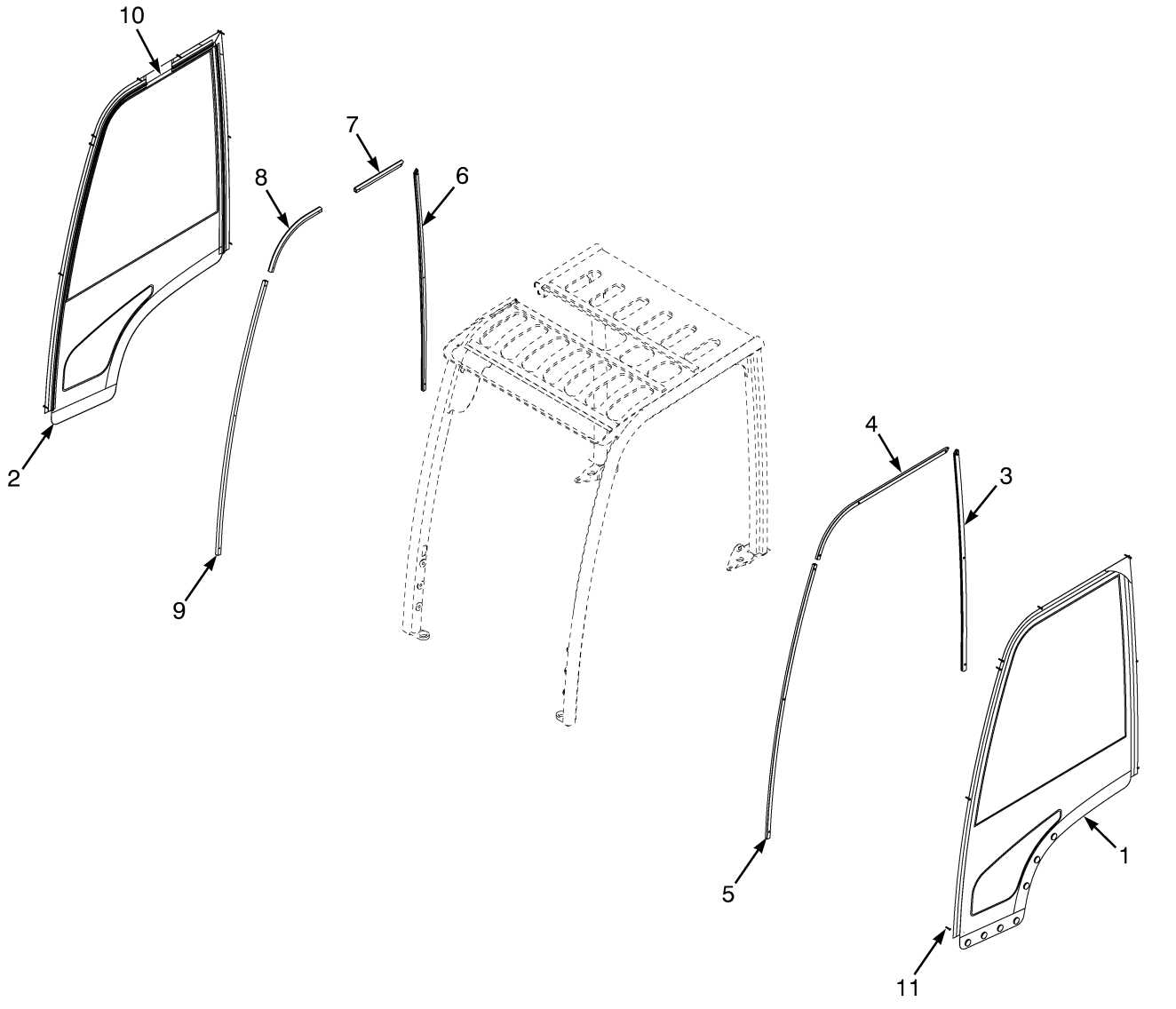

©2015 Yale Europe Materials Handling Limited

CAB
PVC DOORS

KEY:
A: 546mm Battery Compartment
B: 642mm Battery Compartment
C: 750mm Battery Compartment

ITEM	PART NO.	DESCRIPTION	QTY A	QTY B	QTY C
	580091703	Kit-Door	1	..	..
	580091704	Kit-Door	..	1	..
	580091705	Kit-Door	..	..	1
1	582000627	Door Pvc (LH)	1	..	..
1	582000639	Door Pvc (LH)	..	1	..
1	582000644	Door Pvc (LH)	..	..	1
2	582000628	Door Pvc (RH)	1	..	..
2	582000640	Door Pvc (RH)	..	1	..
2	582000651	Door Pvc (RH)	..	..	1
3	582000632	Channel	1	1	1
4	582000631	Channel	1	..	..
4	582000641	Channel	..	1	..
4	582000645	Channel	..	..	1
5	582000630	Channel	1	1	1
6	582000636	Channel	1	1	1
7	582000635	Channel	1	..	..
7	582000643	Channel	..	1	..
7	582000647	Channel	..	..	1
8	582000634	Channel	1	..	..
8	582000642	Channel	..	1	..
8	582000646	Channel	..	..	1
9	582000633	Channel	1	1	1
10	582000629	Plate	1	1	1
11	524329714	Capscrew	19	19	19
	a 582000638	Tape	AR	AR	AR
	550000369	Kit (Door Mounting)	1	1	1

FOOTNOTES:

a Not Illustrated

©2015 Yale Europe Materials Handling Limited

CAB ASSEMBLY (FIGURE 1-7)
FULL STEEL CAB

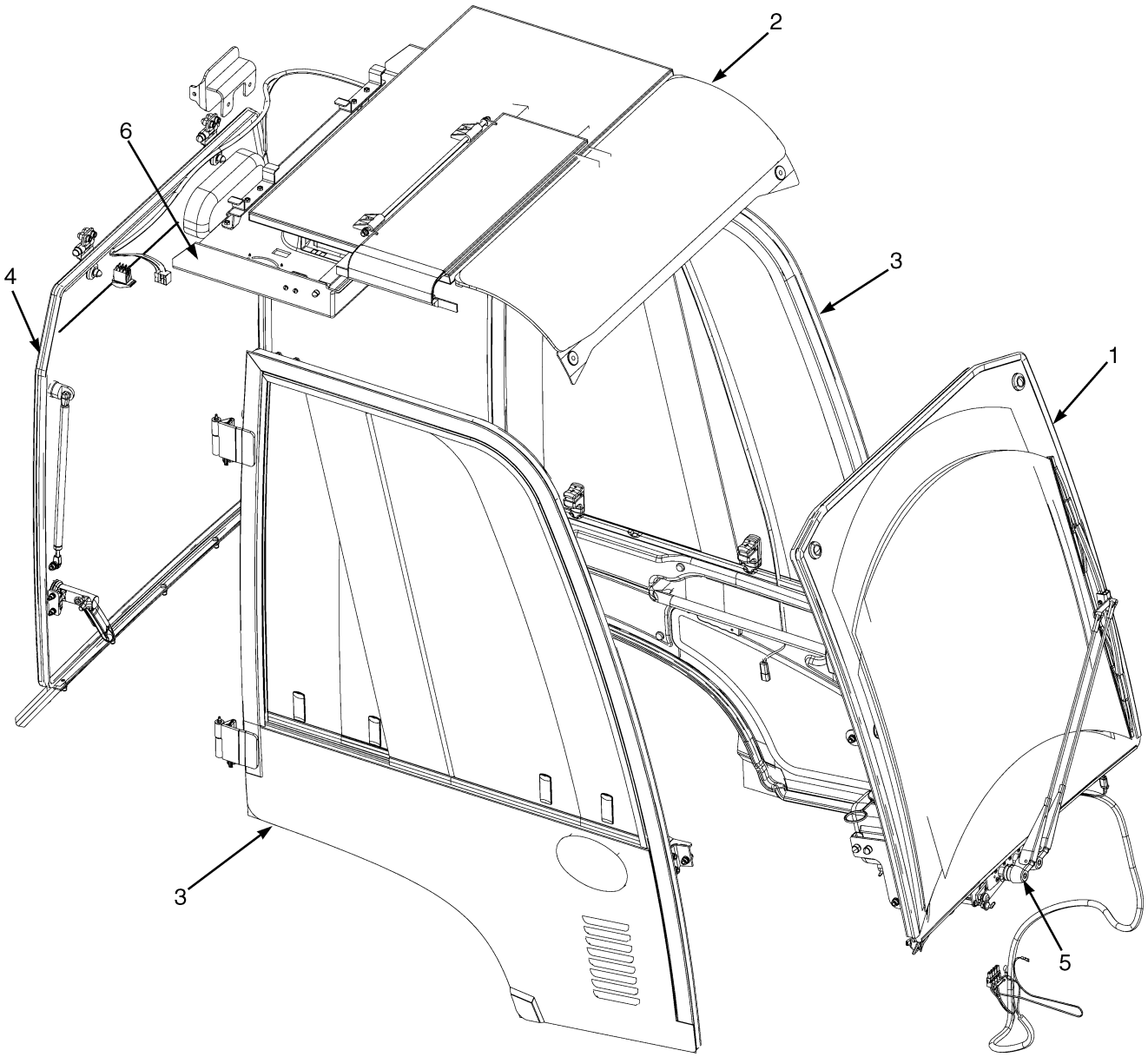

©2015 Yale Europe Materials Handling Limited

CAB ASSEMBLY
FULL STEEL CAB

KEY:
A: 546 mm Battery Compartment
B: 642 mm Battery Compartment
C: 750 mm Battery Compartment

ITEM	PART NO.	DESCRIPTION	QTY A	QTY B	QTY C
1	580096324	Kit-Front Screen (☞Page 1-38)	1	1	1
2	580096200	Kit-Top Screen (☞Page 1-22)	1	..	..
2	580096201	Kit-Top Screen (☞Page 1-22)	..	1	..
2	580096202	Kit-Top Screen (☞Page 1-22)	..	..	1
3	524310923	Door Kit (☞Page 1-28)	1	..	..
3	524310929	Door Kit (☞Page 1-28)	..	1	..
3	524310930	Door Kit (☞Page 1-28)	..	..	1
4	580096322	Kit-Rear Screen (Standard Hood) (☞Page 1-20)	1	1	1
4	580096323	Kit-Rear Screen (Low Hood) (☞Page 1-20)	1	1	1
5	580091709	Kit-Window Washer (☞Page 1-40)	1	1	1
6	580091706	Headliner (☞Page 1-26)	1	..	..
6	580091707	Headliner (☞Page 1-26)	..	1	..
6	580091708	Headliner (☞Page 1-26)	..	..	1

©2015 Yale Europe Materials Handling Limited

CAB (FIGURE 1-8)
REAR PANEL AND WIPER ATTACHMENT

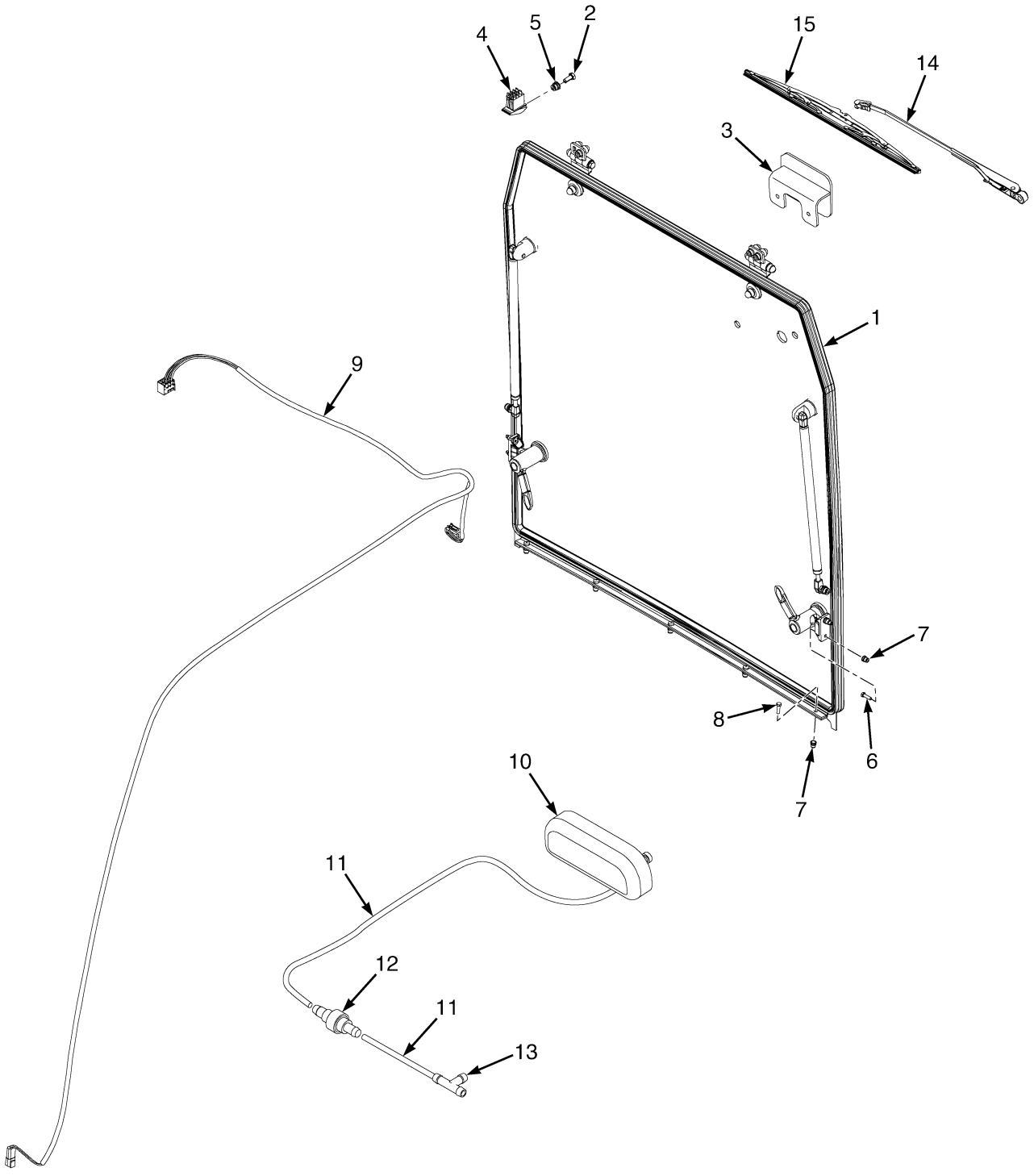

©2015 Yale Europe Materials Handling Limited

CAB

REAR PANEL AND WIPER ATTACHMENT

ITEM	PART NO.	DESCRIPTION	QTY
1	580096322	Kit-Rear Screen (Standard Hood) (☞Page 1-20)	1
1	580096323	Kit-Rear Screen (Low Hood) (☞Page 1-20)	1
2	524329712	Capscrew	4
3	580094205	Bracket	1
4	580094130	Switch	1
5	580044861	Insert	6
6	580000325	Capscrew	4
7	580041704	Insert	9
8	580008949	Screw	5
9	580095962	Wire Harness (☞Page 2-151)	1
10	**a** 582003205	Wiper Motor	1
11	**a** 580014783	Hose	4
12	**a** ~~580014764~~		
	580003835	Check Valve	1
13	**a** 580003814	Fitting	1
14	**a** 580095428	Wiper Arm	1
15	**a** 580014780	Wiper Blade	1
	580096549	Sleeve-Bulk	AR
	550000367	Kit (Rear Screen Mounting)	1

FOOTNOTES:

a Included in Kit 580096322 and 580096323

©2015 Yale Europe Materials Handling Limited

CAB (FIGURE 1-9)
REAR PANEL ASSEMBLY

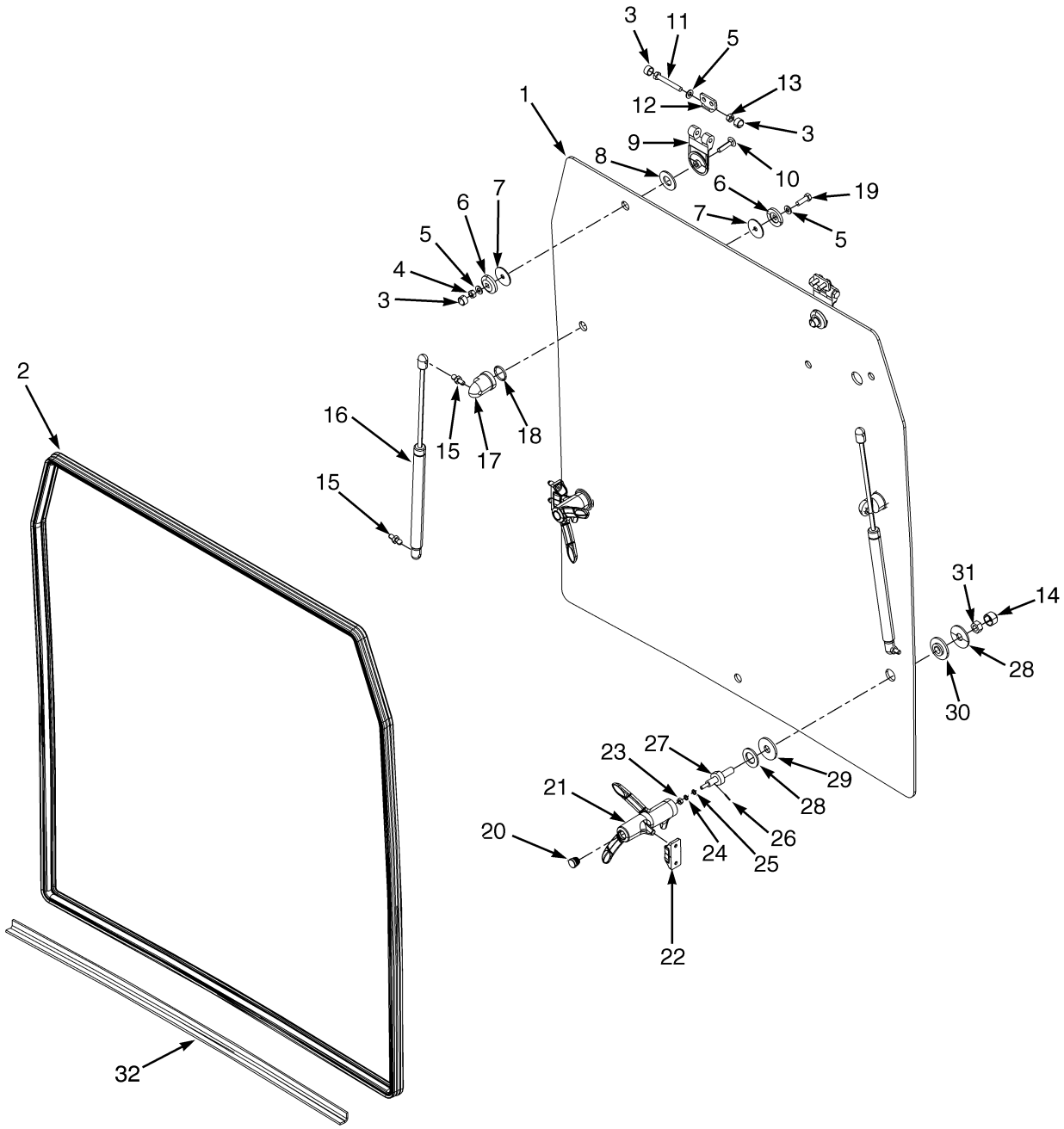

BP120531

©2015 Yale Europe Materials Handling Limited

CAB
REAR PANEL ASSEMBLY

ITEM	PART NO.	DESCRIPTION	QTY
	580096322	Kit-Rear Screen (Standard Hood)	1
	580096323	Kit-Rear Screen (Low Hood)	1
1	582012631	Screen Rear (Standard Hood)	1
1	580095408	Rear Screen (Low Hood)	1
2	580021466	Seal (4 meters)	AR
3	580016589	Cover (Capscrew Head)	4
4	449015014	Nut	2
5	504226242	Washer	8
6	580014767	Washer	4
7	580014766	Washer	4
8	580095410	Washer	2
9	580095409	Hinge	2
10	580014768	Screw	2
11	580095414	Screw	2
12	~~580095413~~		
	582003206	Plate	2
13	504229298	Nut	4
14	580022901	Cover (Capscrew Head)	2
15	580014009	Ball Stud	4
16	580095417	Gas Spring	2
17	580095415	Knob	2
18	580095416	O-Ring	2
19	449001014	Screw	2
20	580095423	Plug	2
21	580095418	Grip	2
22	580095427	Latch	2
22	582003207	Screw	4
23	. . . . .	Nut	1
24	449021003	Washer	2
25	580095422	Washer	2
26	580095429	Plug	1
27	580095419	Connector	2
28	580095421	Washer	4
29	580095420	Washer	2
30	580095424	Washer	2
31	580095426	Nut	2
32	~~580095430~~		
	582012632	Rear Screen	1
	ab 449007018	Screw	5

FOOTNOTES:

a For Edge Protector (Low Hood Option Only)

b Not Illustrated

©2015 Yale Europe Materials Handling Limited

CAB (FIGURE 1-10)
TOP PANEL ASSEMBLY

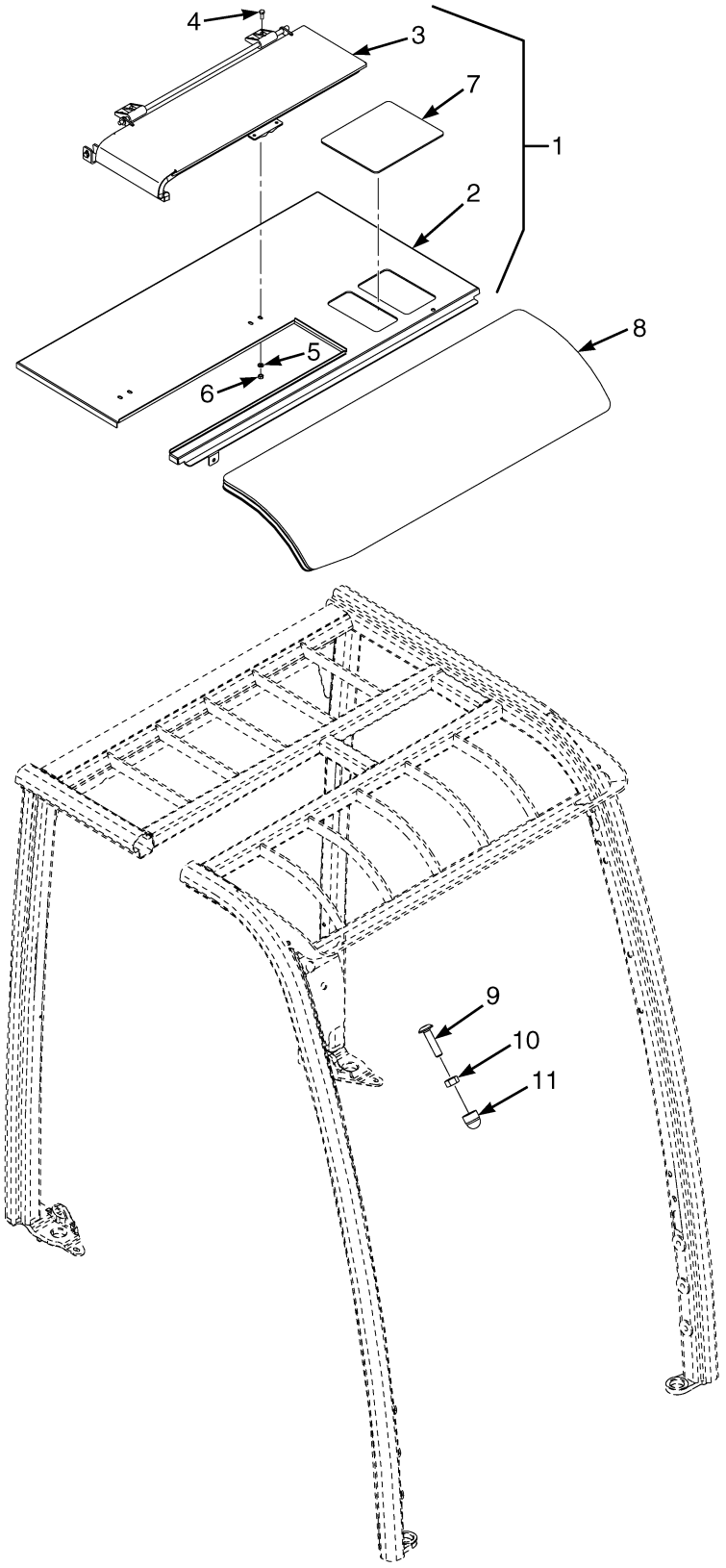

©2015 Yale Europe Materials Handling Limited

CAB
TOP PANEL ASSEMBLY

KEY:
A: 546mm Battery Compartment
B: 642mm Battery Compartment
C: 750mm Battery Compartment

ITEM	PART NO.	DESCRIPTION	QTY A	QTY B	QTY C
	580096200	Kit-Top Screen	1	..	..
	580096201	Kit-Top Screen	..	1	..
	580096202	Kit-Top Screen	..	..	1
1	580096203	Cab (Rear Top Assembly)	1	..	..
1	580096204	Cab (Rear Top Assembly)	..	1	..
1	580096205	Cab (Rear Top Assembly)	..	..	1
2	580097077	Roof Panel	1	1	1
2	580097078	Roof Panel	1	..	1
2	580097075	Roof Panel	1	1	1
3	580097076	Flap Assembly (☞Page 1-24)	1	1	1
4	449001412	Capscrew	4	4	4
5	449021003	Washer	4	4	4
6	449015002	Nut	4	4	4
7	582004287	Screen (Small Glass)	1	1	1
8	580095364	Screen	1	..	..
8	580095366	Screen	..	1	..
8	580095367	Screen	..	..	1
9	550011943	Capscrew	4	4	4
10	~~580004321~~				
	580047919	Nut	4	4	4
11	580094577	Cap	4	4	4
	a 580096546	Adhesive	1	1	1
	a 580096547	Activator	AR	AR	AR
	a 580096548	Primer	AR	AR	AR
	a 580095365	Shim	2	2	2
	550000366	Kit (Top Screen Mounting)	1	1	1
	550000370	Kit (Roof Liner Mounting)	1	1	1

FOOTNOTES:

a Not Illustrated

©2015 Yale Europe Materials Handling Limited

CAB (FIGURE 1-11)
ROOF FLAP

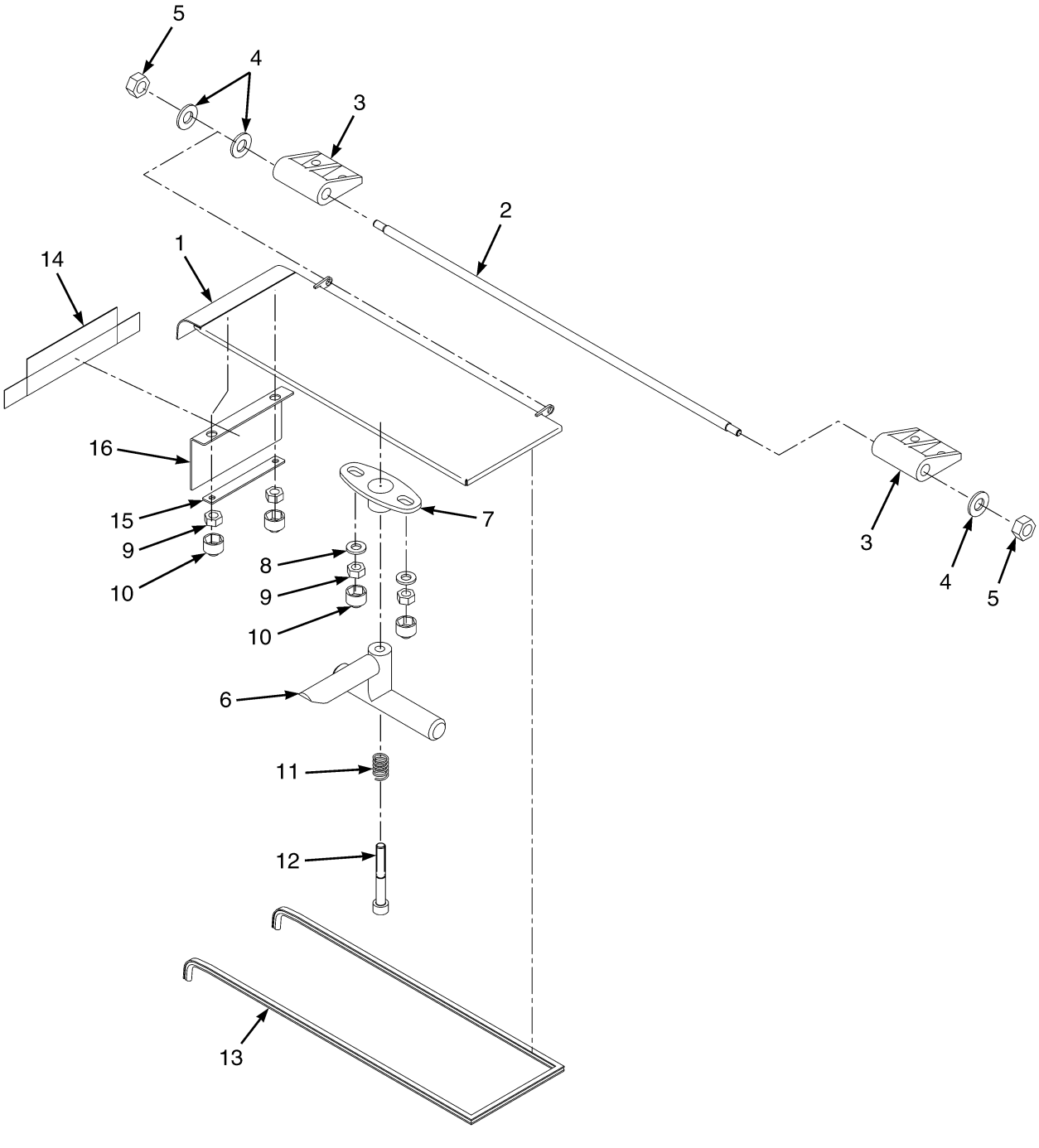

©2015 Yale Europe Materials Handling Limited

CAB
ROOF FLAP

ITEM	PART NO.	DESCRIPTION	QTY
	580097076	Flap Assembly (Roof)	1
1	582041371	Roof Panel	1
2	582041372	Hinge Rod	1
3	582004290	Hinge	2
4	504226242	Washer	3
5	504229298	Nut	2
6	582004291	Grip	1
7	582004292	Grip	1
8	449021003	Washer	2
9	449015002	Nut	4
10	580022847	Cover (Capscrew Head)	4
11	582004293	Spring	1
12	582004294	Screw	1
13	582004295	Seal	1
14	582041373	Roof Panel (PVC)	1
15	582041374	Plate	1
16	582041375	Plate	1

©2015 Yale Europe Materials Handling Limited

CAB (FIGURE 1-12)
HEADLINER ASSEMBLY

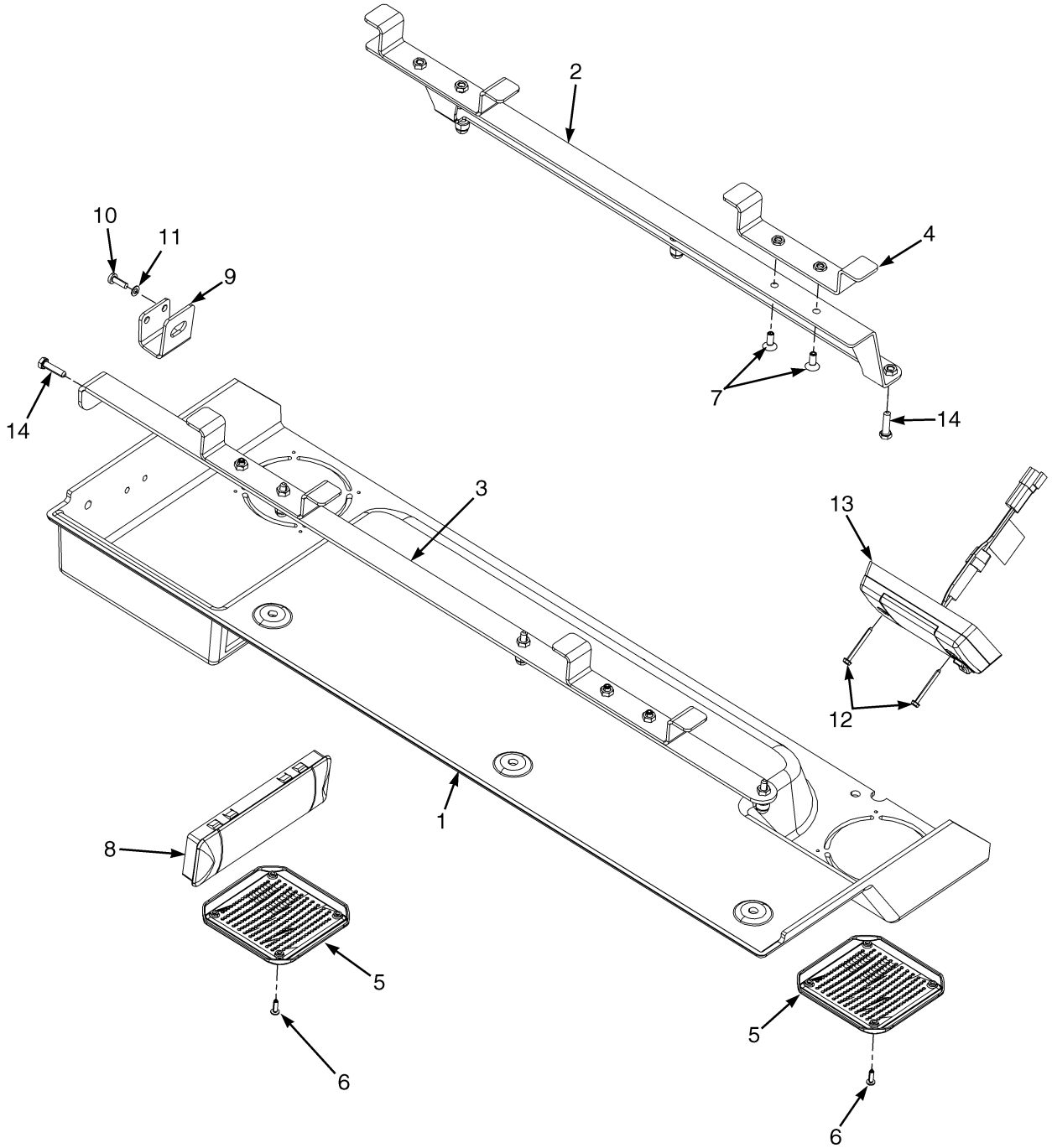

©2015 Yale Europe Materials Handling Limited

CAB

HEADLINER ASSEMBLY

KEY:
A: 546mm Battery Compartment
B: 642mm Battery Compartment
C: 750mm Battery Compartment

ITEM	PART NO.	DESCRIPTION	QTY A	QTY B	QTY C
	580091706	Headliner	1	..	..
	580091707	Headliner	..	1	..
	580091708	Headliner	..	..	1
1	580095402	Headliner	1	..	..
1	580095401	Headliner	..	1	..
1	580095379	Headliner	..	..	1
2	580095380	Bracket	1	1	1
3	580095381	Bracket	1	1	1
4	580095382	Clamp	1	1	1
5	580062048	Cover (Speaker)	2	2	2
6	580095384	Screw	8	8	8
7	580075011	Capscrew	7	7	7
8	580064170	Cover	1	1	1
9	580095392	Bracket	1	1	1
10	580095393	Screw	2	2	2
11	580048529	Washer	2	2	2
12	580093848	Screw	2	2	2
13	580097506	Dome Light	1	1	1
14	550011943	Capscrew	7	7	7
	550000372	Kit (Dome Light)	1	1	1

©2015 Yale Europe Materials Handling Limited

CAB (FIGURE 1-13)
STEEL DOORS

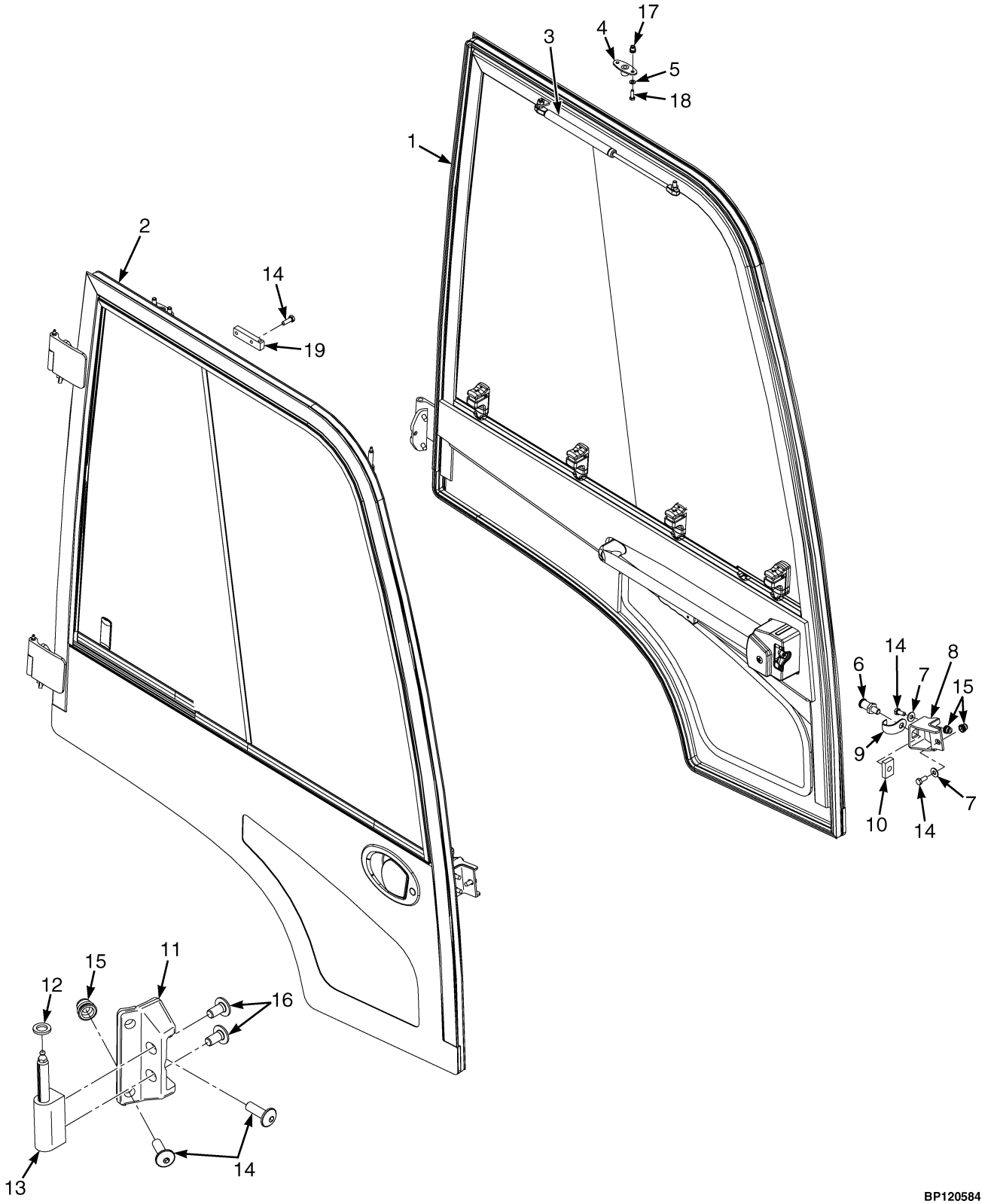

©2015 Yale Europe Materials Handling Limited

CAB
STEEL DOORS

KEY:
A: 546mm Battery Compartment
B: 642mm Battery Compartment
C: 750mm Battery Compartment

ITEM	PART NO.	DESCRIPTION	QTY A	QTY B	QTY C
	524310923	Door Kit	1	..	..
	524310929	Door Kit	..	1	..
	524310930	Door Kit	..	..	1
1	580086545	Door Assembly (LH) (☞Page 1-32)	1	..	..
1	580086547	Door Assembly (LH) (☞Page 1-32)	..	1	..
1	580086549	Door Assembly (LH) (☞Page 1-32)	..	..	1
2	580086546	Door Assembly (RH) (☞Page 1-30)	1	..	..
2	580086548	Door Assembly (RH) (☞Page 1-30)	..	1	..
2	580086550	Door Assembly (RH) (☞Page 1-30)	..	..	1
3	580095371	Gas Spring (LH)	1	1	1
3	580095372	Gas Spring (Without Ball Studs) (RH)	1	1	1
4	580096199	Bracket (Gas Spring)	2	2	2
5	449021003	Washer	4	4	4
6	580028818	Bolt	2	2	2
7	504226242	Washer	6	6	6
8	580096197	Bracket (LH)	1	1	1
8	580096198	Bracket (RH)	1	1	1
9	580028817	Guard	2	2	2
10	580028816	Block (Tapped)	2	2	2
11	580095375	Mounting Plate	4	4	4
12	580016584	Washer	4	4	4
13	580095374	Hinge	4	4	4
14	524329712	Capscrew	20	20	20
15	580044861	Insert	18	18	18
16	524329711	Capscrew	8	8	8
17	580041704	Insert	2	2	2
18	550011943	Capscrew	4	4	4
19	. . . . .	Bracket	1	1	1
	501702902	Loctite	AR	AR	AR
	550000368	Kit (Door Mounting)	1	1	1

©2015 Yale Europe Materials Handling Limited

CAB (FIGURE 1-14)
STEEL DOOR ASSEMBLY — RIGHT HAND

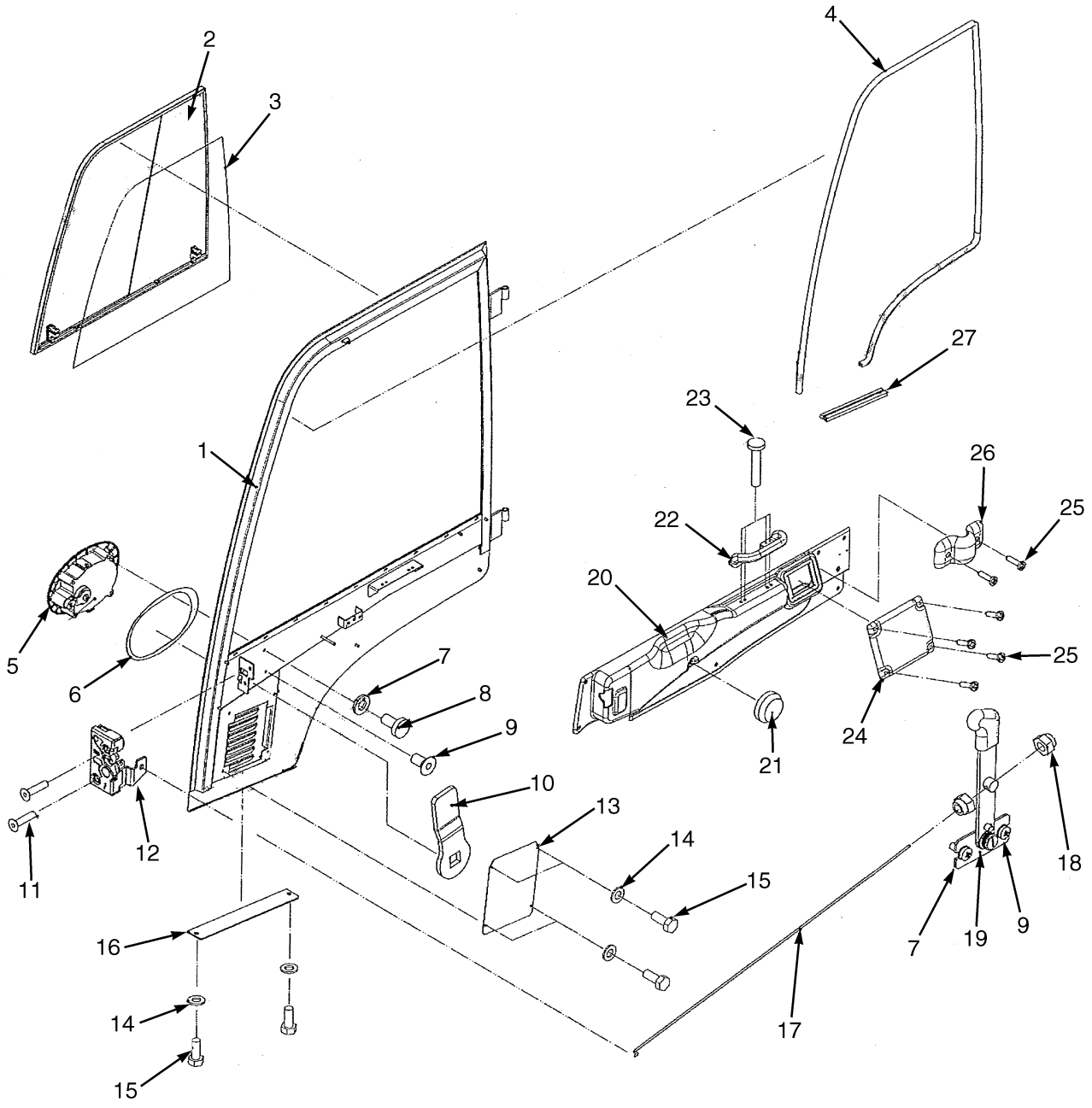

©2015 Yale Europe Materials Handling Limited

CAB

STEEL DOOR ASSEMBLY – RIGHT HAND

KEY:
A: 546mm Battery Compartment
B: 642mm Battery Compartment
C: 750mm Battery Compartment

ITEM	PART NO.	DESCRIPTION	QTY A	QTY B	QTY C
	580086546	Door Assembly	1	..	..
	580086548	Door Assembly	..	1	..
	580086550	Door Assembly	..	..	1
1	524337824	Door	1	..	..
1	524337826	Door	..	1	..
1	524337828	Door	..	..	1
2	580097108	Sliding Window Assembly (☞Page 1-34)	1	..	..
2	580097105	Sliding Window Assembly (☞Page 1-34)	..	1	..
2	580097096	Sliding Window Assembly (☞Page 1-34)	..	..	1
3	580048647	Seal (4 meters)	AR	AR	AR
4	580032669	Seal	AR	AR	AR
5	580092792	Grip	1	1	1
6	582001078	Seal	1	1	1
7	449021003	Washer	3	3	3
8	449007018	Screw	3	3	3
9	580097084	Screw	1	1	1
10	580092794	Plate	1	1	1
11	580092795	Screw	2	2	2
12	580048654	Latch	1	1	1
13	580097103	Plate	1	1	1
14	580048529	Washer	6	6	6
15	449001268	Capscrew	6	6	6
16	580097102	Plate	1	1	1
17	580097098	Lever	1	1	1
18	580022274	Nut	1	1	1
19	580062036	Lever	1	1	1
20	580097109	Door Panel	1	..	..
20	580097106	Enclosure	..	1	..
20	580097097	Cover	..	..	1
21	580062102	Fastener	7	7	7
22	~~580062032~~				
	582029585	Handle	1	1	1
23	580062025	Screw	4	4	4
24	580097100	Cover	1	1	1
25	580014813	Screw	6	6	6
26	580097101	Clamp	1	1	1
27	580097099	Seal	AR	AR	AR
	a 580060136	Key (For Cab Door Grip)	1	1	1

FOOTNOTES:

a Not Illustrated

©2015 Yale Europe Materials Handling Limited

CAB (FIGURE 1-15)
STEEL DOOR ASSEMBLY — LEFT HAND

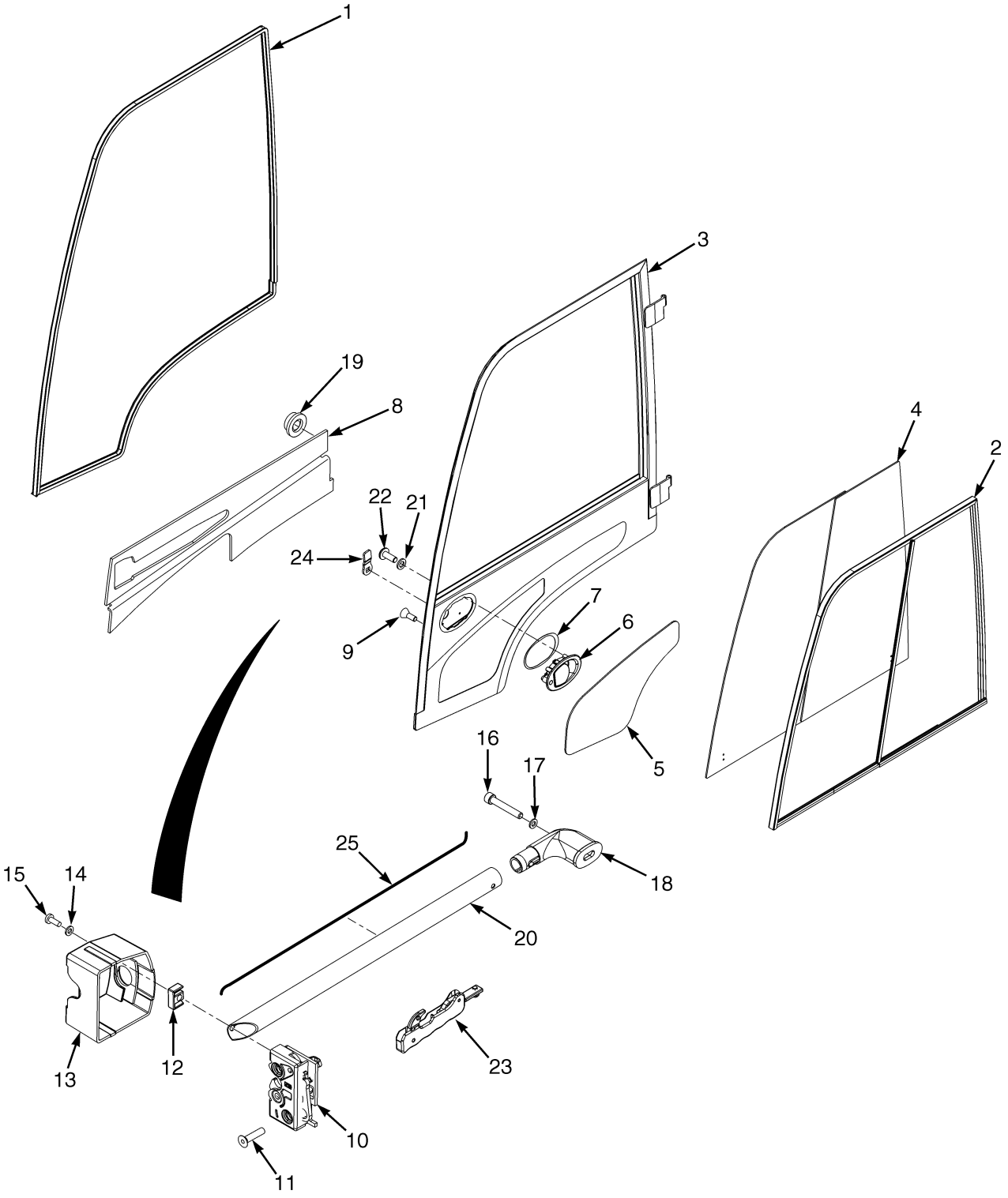

©2015 Yale Europe Materials Handling Limited

CAB

STEEL DOOR ASSEMBLY – LEFT HAND

KEY:
A: 546mm Battery Compartment
B: 642mm Battery Compartment
C: 750mm Battery Compartment

ITEM	PART NO.	DESCRIPTION	QTY A	QTY B	QTY C
	580086545	Door Assembly	1	..	..
	580086547	Door Assembly	..	1	..
	580086549	Door Assembly	..	..	1
1	580032669	Seal	AR	AR	AR
2	580097080	Sliding Window (☞Page 1-36)	..	1	..
2	580097090	Sliding Window (☞Page 1-36)	1	..	..
2	580097086	Sliding Window (☞Page 1-36)	..	..	1
3	524337823	Door	1	..	..
3	524337825	Door	..	1	..
3	524337825	Door	..	..	1
4	580048647	Seal	1	1	1
5	580097081	Screen	1	1	1
6	580092792	Grip	1	1	1
7	582001078	Seal	1	1	1
8	580097091	Cover	1	..	..
8	580097082	Cover	..	1	..
8	580097087	Cover	..	..	1
9	580097084	Screw	1	1	1
10	580048678	Latch	1	1	1
11	580092795	Screw	2	2	2
12	580048655	Plate	1	1	1
13	580092808	Cover	1	1	1
14	580048656	Washer	1	1	1
15	580016583	Screw	1	1	1
16	580092800	Screw	1	1	1
17	580092798	Washer	1	1	1
18	580092797	Door Handle	1	1	1
19	580062102	Fastener	7	7	7
20	580092796	Tube	1	1	1
21	449021003	Washer	3	3	3
22	580029110	Screw	3	3	3
23	580048658	Lock	1	1	1
24	580092794	Plate	1	1	1
25	580092801	Rod	1	1	1
	a 580060136	Key (For Cab Door Grip)	1	1	1

FOOTNOTES:

a Not Illustrated

©2015 Yale Europe Materials Handling Limited

CAB (FIGURE 1-16)
WINDOW — STEEL DOOR, RIGHT HAND

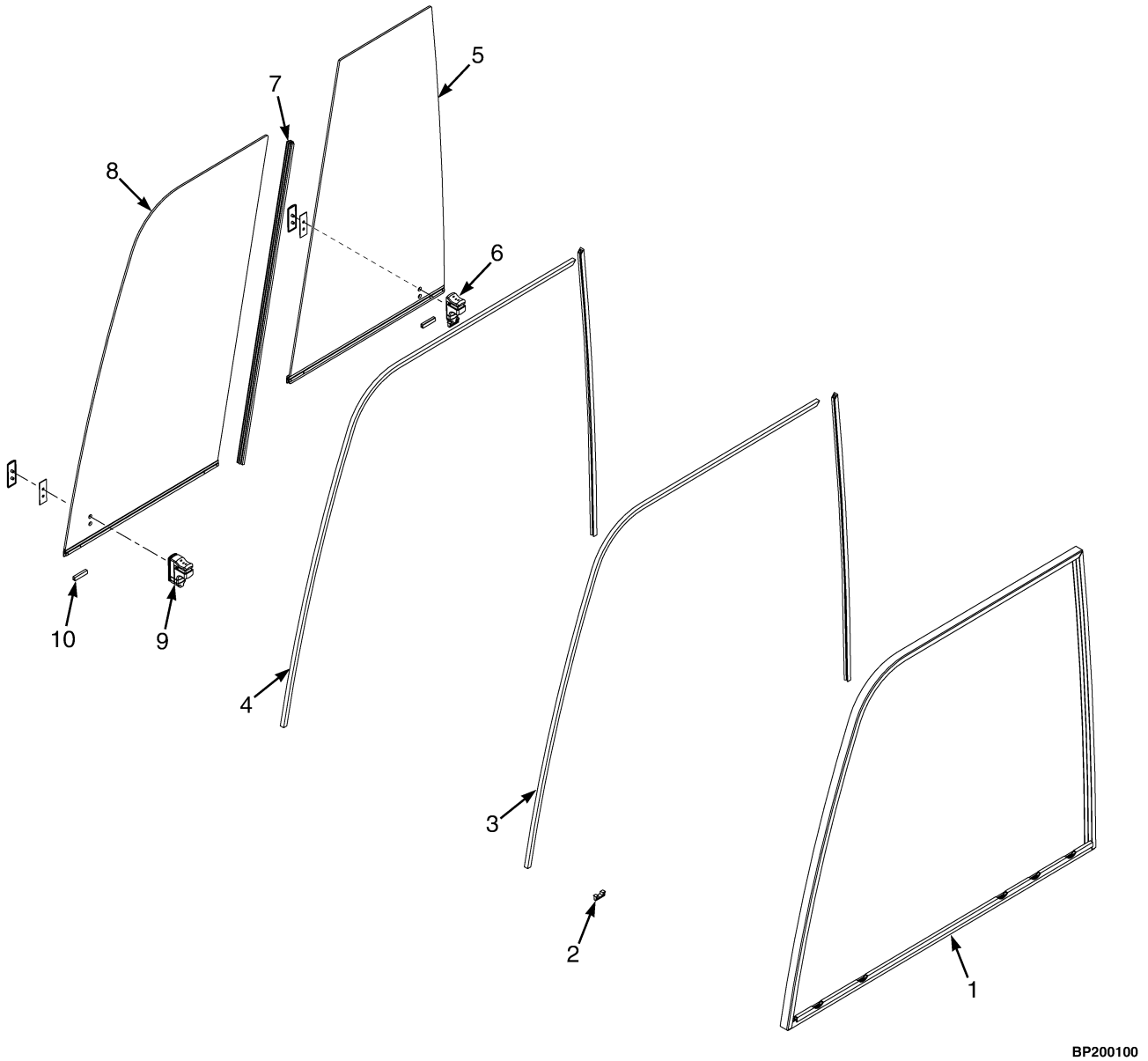

©2015 Yale Europe Materials Handling Limited

CAB

WINDOW – STEEL DOOR, RIGHT HAND

KEY:
A: 546mm Battery Compartment
B: 642mm Battery Compartment
C: 750mm Battery Compartment

ITEM	PART NO.	DESCRIPTION	QTY A	QTY B	QTY C
	580097108	Sliding Window Assembly	1	..	..
	580097105	Sliding Window Assembly	..	1	..
	580097096	Sliding Window Assembly	..	..	1
1	582003422	Window Frame	1	..	..
1	582003415	Window Frame	..	1	..
1	582004485	Window Frame	..	..	1
2	582003538	Clip	6	6	6
3	582003542	Seal	AR	AR	AR
4	580084066	Seal	AR	AR	AR
5	582003424	Sliding Window	1	..	..
5	582004487	Sliding Window	..	1	..
5	582002616	Sliding Window	..	..	1
6	582003539	Latch	1	1	1
7	582003418	Seal	1	1	1
8	582003423	Sliding Window	1	..	..
8	582003416	Sliding Window	..	1	..
8	582004486	Sliding Window	..	..	1
9	~~580079560~~				
	582005270	Latch	1	1	1
10	~~580084063~~				
	582003541	Guide	4	4	4
	a 580025717	Edge Protector	AR	AR	AR
	a 580075139	Strip Seal	AR	AR	AR

FOOTNOTES:

a Not Illustrated

©2015 Yale Europe Materials Handling Limited

CAB (FIGURE 1-17)
WINDOW — STEEL DOOR, LEFT HAND

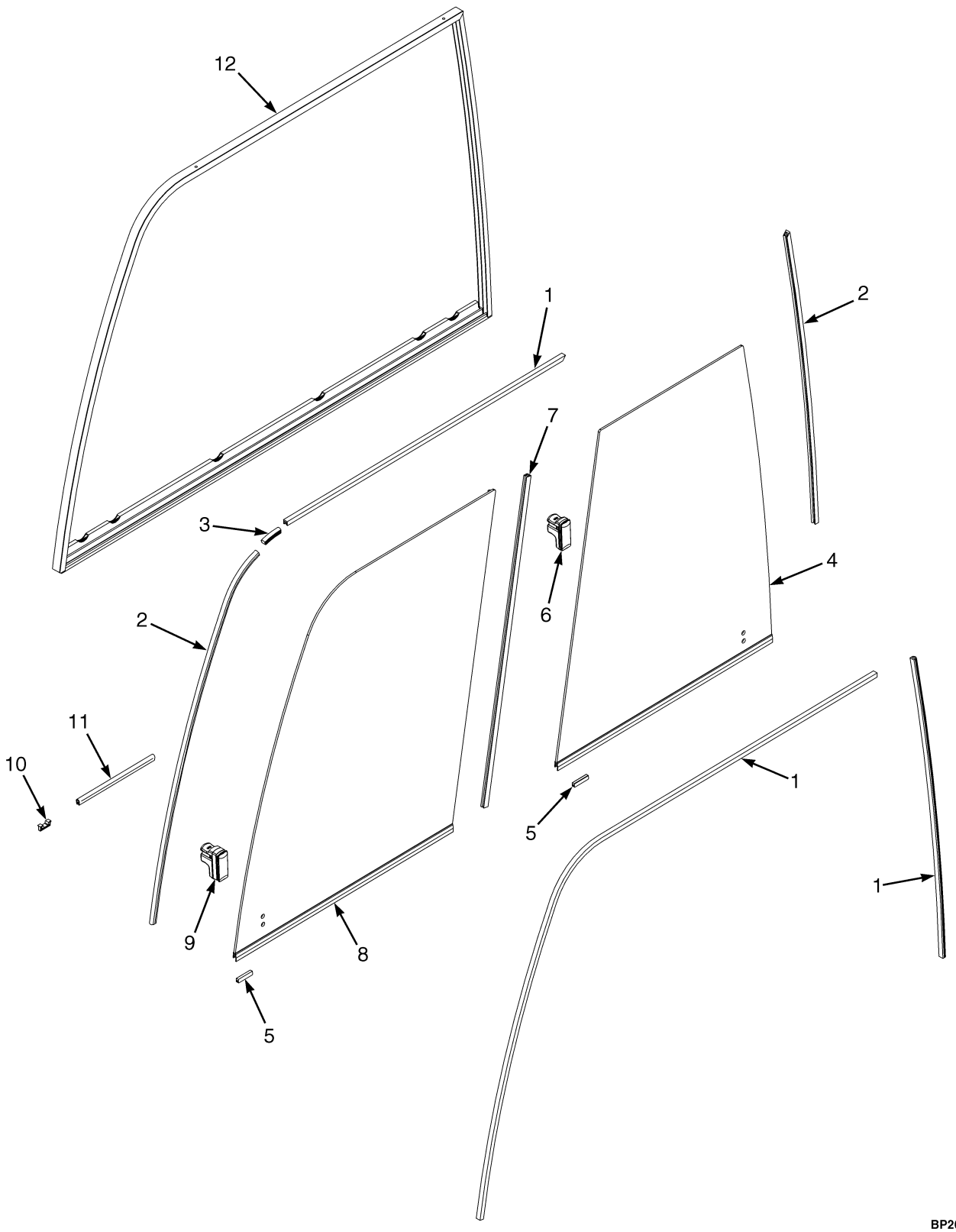

©2015 Yale Europe Materials Handling Limited

CAB

WINDOW – STEEL DOOR, LEFT HAND

KEY:
A: 546mm Battery Compartment
B: 642mm Battery Compartment
C: 750mm Battery Compartment

ITEM	PART NO.	DESCRIPTION	QTY A	QTY B	QTY C
	580097090	Sliding Window (Assembly)	1	..	..
	580097080	Sliding Window (Assembly)	..	1	..
	580097086	Sliding Window (Assembly)	..	..	1
1	580084066	Seal	AR	AR	AR
2	582003542	Seal	AR	AR	AR
3	580075139	Strip Seal	AR	AR	AR
4	582003421	Sliding Window	1	..	..
4	582003427	Sliding Window	..	1	..
4	582004484	Sliding Window	..	..	1
5	~~580084063~~				
	582003541	Guide	4	4	4
6	582003539	Latch	1	1	1
7	582003418	Seal	1	1	1
8	582003420	Sliding Window	1	..	..
8	582003426	Sliding Window	..	1	..
8	582004483	Sliding Window	..	..	1
9	~~580079560~~				
	582005270	Latch	1	1	1
10	582003538	Clip	6	6	6
11	580025717	Edge Protector	AR	AR	AR
12	582003419	Window Frame	1	..	..
12	582003425	Window Frame	..	1	..
12	582004482	Window Frame	..	..	1

©2015 Yale Europe Materials Handling Limited

CAB (FIGURE 1-18)
FRONT PANEL ASSEMBLY

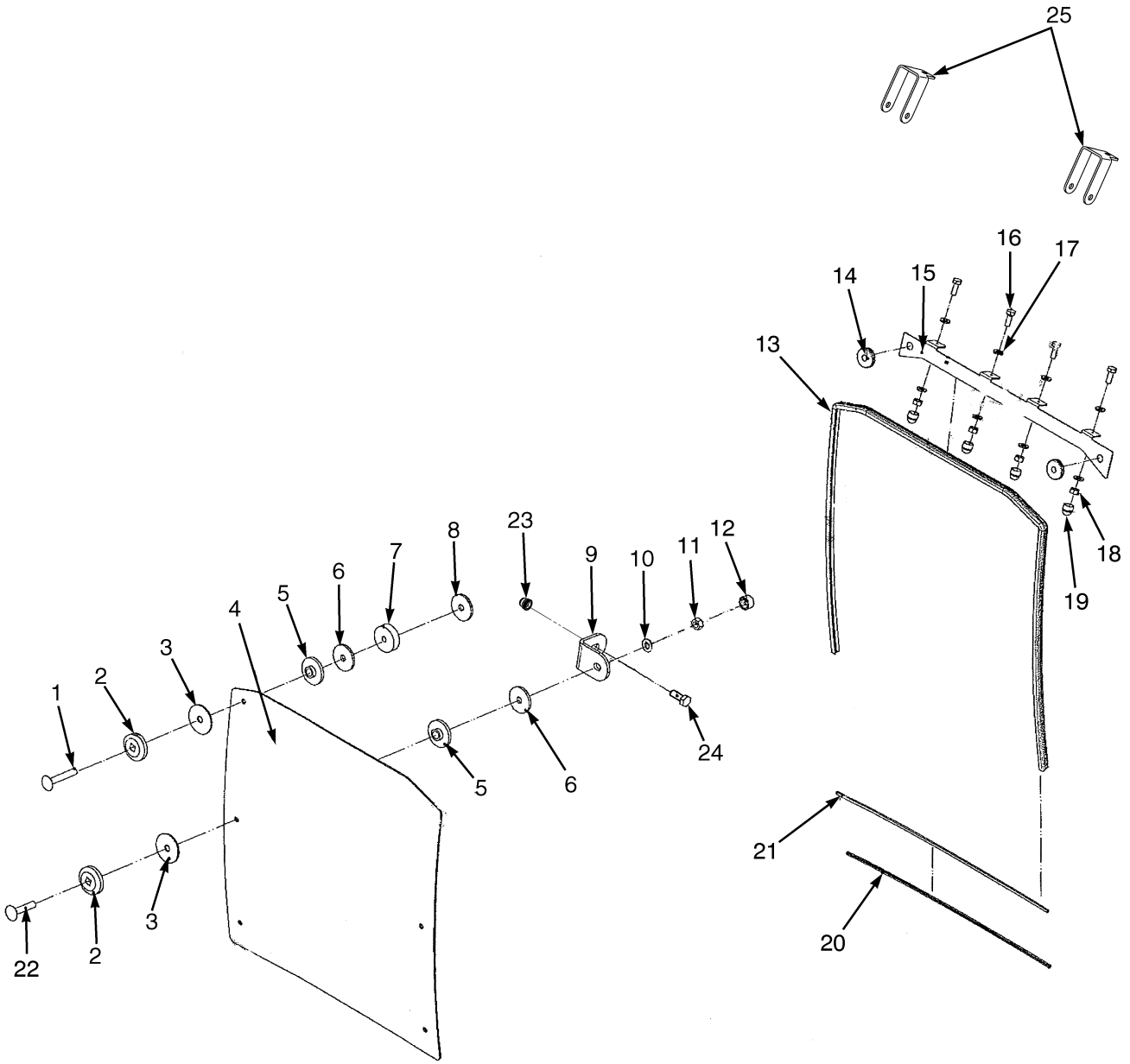

BP120463

©2015 Yale Europe Materials Handling Limited

CAB

FRONT PANEL ASSEMBLY

ITEM	PART NO.	DESCRIPTION	QTY
	580096324	Kit-Front Screen	1
1	580095407	Screw	1
2	580014767	Washer	6
3	580014766	Washer	6
4	580095403	Window	1
5	580014765	Washer	6
6	580061837	Washer	6
7	580095406	Washer	1
8	580015057	Washer	1
9	580061836	Bracket	4
10	504226242	Washer	11
11	449015014	Nut	6
12	580016589	Cover (Capscrew Head)	10
13	580021466	Seal	2
14	580013034	Grommet	2
15	580095404	Clamp	1
16	449001412	Capscrew	4
17	449021003	Washer	8
18	449015002	Nut	4
19	580022847	Cover (Capscrew Head)	4
20	580095405	Edge Protector	AR
21	580086566	Seal	AR
22	580086567	Screw	5
23	580044861	Insert	5
24	524329712	Capscrew	5
25	580093519	Bracket	2
	550000365	Kit (Front Screen Mounting)	1

©2015 Yale Europe Materials Handling Limited

CAB (FIGURE 1-19)
FRONT WIPER ASSEMBLY

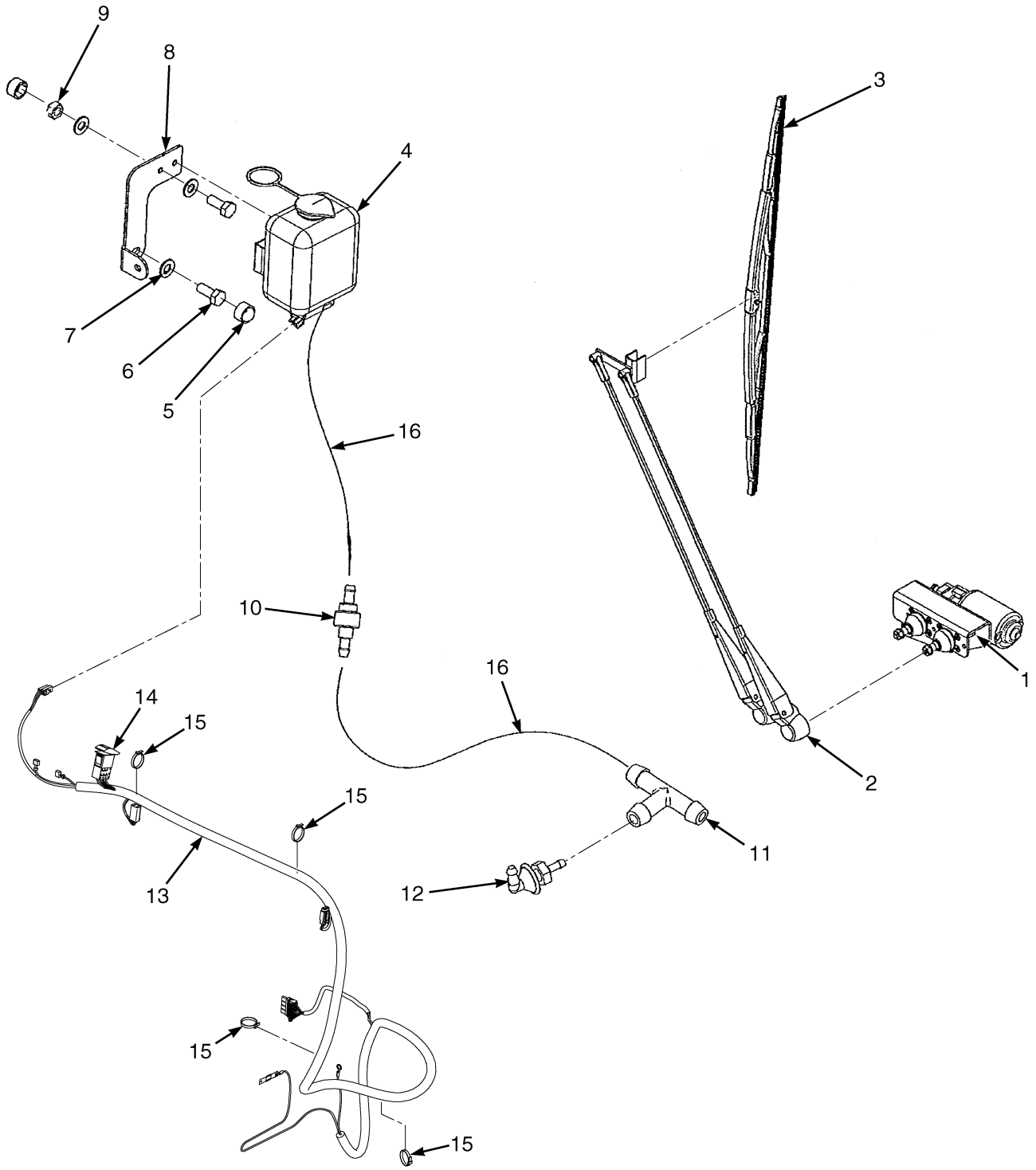

©2015 Yale Europe Materials Handling Limited

CAB

FRONT WIPER ASSEMBLY

ITEM	PART NO.	DESCRIPTION	QTY
1	580095369	Wiper Motor	1
2	580095370	Wiper Arm	1
3	580095376	Wiper Blade	1
4	580079433	Pump (With Reservoir)	1
5	580016589	Cover (Capscrew Head)	3
6	580069801	Capscrew	3
7	504226242	Washer	5
8	580095377	Bracket	1
9	580095378	Nut	2
10	~~580014764~~		
	580003835	Check Valve	2
11	580076856	Connector	1
12	580022804	Connector (Spray Nozzle)	1
13	580092315	Wire Harness (☞Page 2-152)	1
14	580094130	Switch	1
15	312850034	Strap Clamp	4
16	580014783	Hose	1
	550000371	Kit (Front Wiper/Washer Mounting)	1
	582020905	Kit-Wiper Motor	1
	582020912	Kit-Wiper Arm/Blade Front	1
	582020914	Kit-Washer Bottle	1

©2015 Yale Europe Materials Handling Limited

CAB (FIGURE 1-20)
HEATER

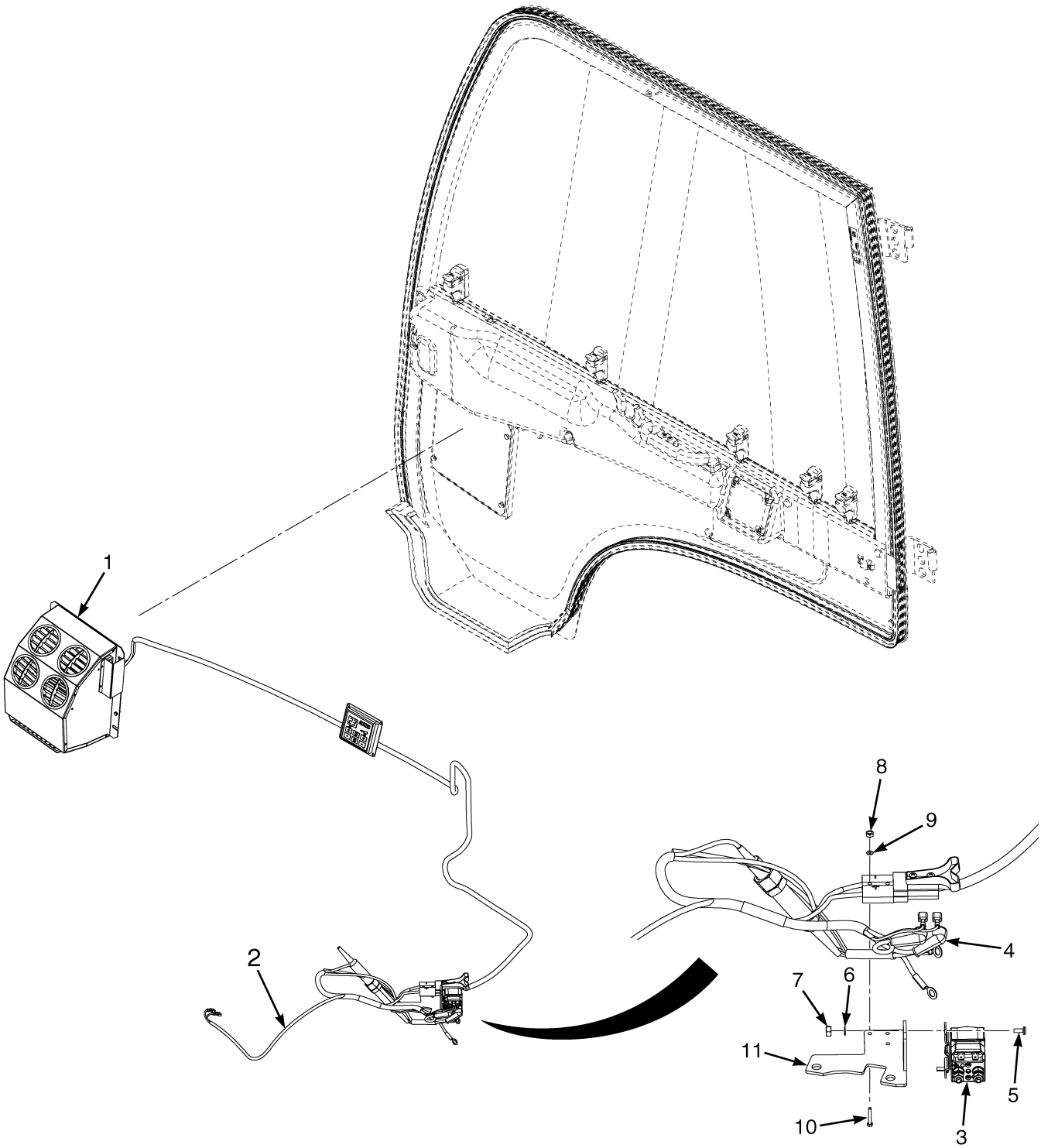

©2015 Yale Europe Materials Handling Limited

CAB
HEATER

ITEM	PART NO.	DESCRIPTION	QTY
1	**b** 580091710	Kit-Cab Heater (☞Page 1-44)	1
1	**c** 582011988	Kit-Cab Heater (☞Page 1-46)	1
2	580095513	Wire Harness (☞Page 2-144)	1
3	580095953	Contactor (48 Volt)	1
4	505970552	Boot	2
5	449007004	Screw	2
6	940004903	Washer	2
7	449015012	Nut	2
8	449015024	Nut	2
9	940004902	Washer	2
10	580049624	Capscrew	2
11	580096409	Plate Wldmt	1
	a 504237286	Clamp	1
	550000349	Kit (Heater Mounting)	1
	a 580094577	Cap	4

FOOTNOTES:

a Not Illustrated
b → 9/2011
c 9/2011 →

©2015 Yale Europe Materials Handling Limited

CAB (FIGURE 1-21)
HEATER ASSEMBLY (→ 9/2011)

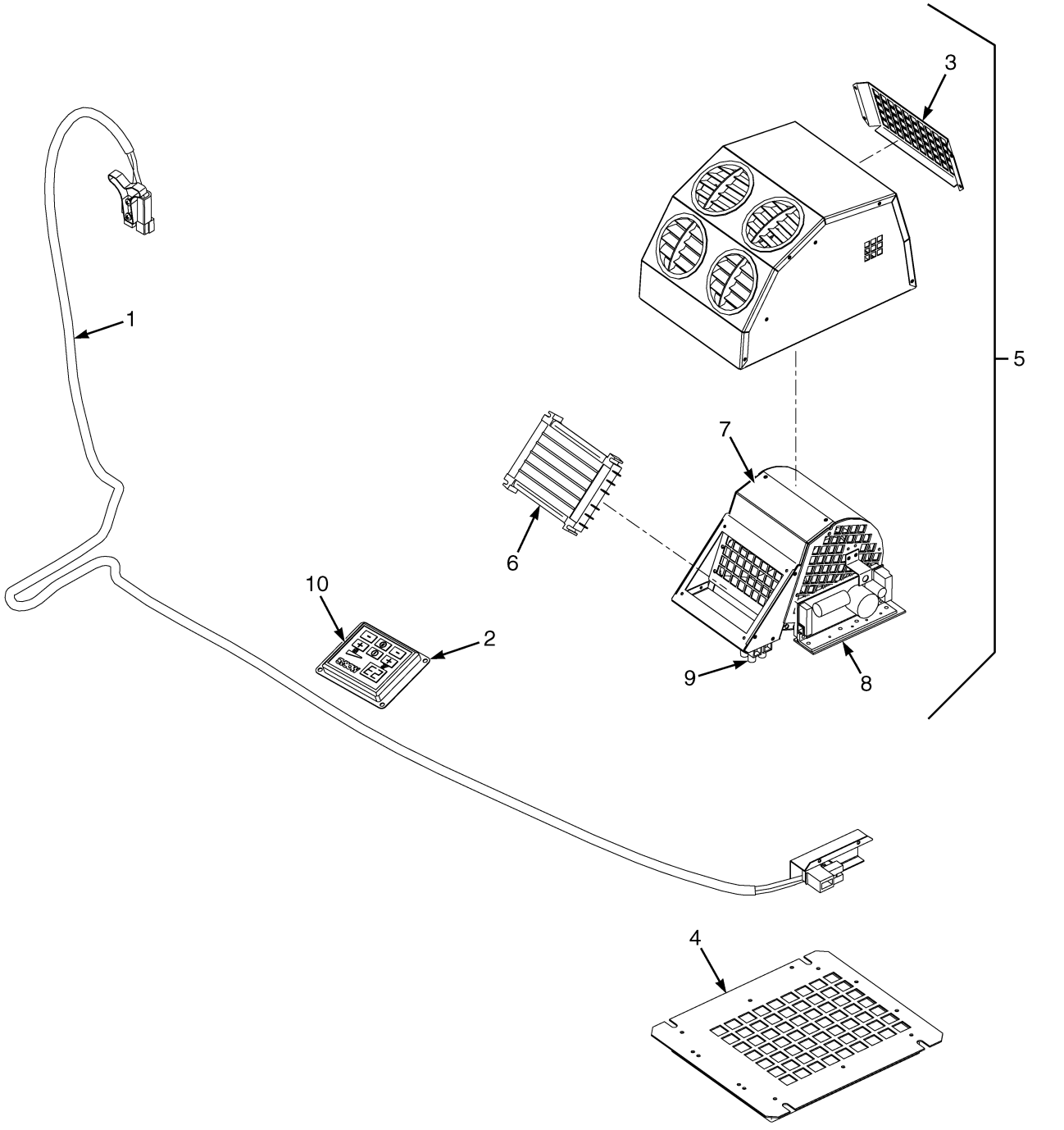

©2015 Yale Europe Materials Handling Limited

CAB

HEATER ASSEMBLY (→ 9/2011)

ITEM	PART NO.	DESCRIPTION	QTY
	580091710	Kit-Cab Heater	1
1	582002106	Power Cable	1
2	582002105	Mounting Plate	1
3	582002108	Filter	1
4	582002107	Air Filter	1
5	582002102	Heater	1
6	582002115	Heater Element	1
7	582002114	Fan	1
8	582002111	Control Panel	1
9	582002117	Valve	1
10	582002104	Control Panel	1
	a 582002103	Cable	1
	a 582002109	Thermistor	1
	a 582002110	Thermistor	1
	a 582002112	Filter (EMC)	4

FOOTNOTES:

a Not Illustrated

©2015 Yale Europe Materials Handling Limited

CAB (FIGURE 1-22)
HEATER ASSEMBLY (9/2011 →)

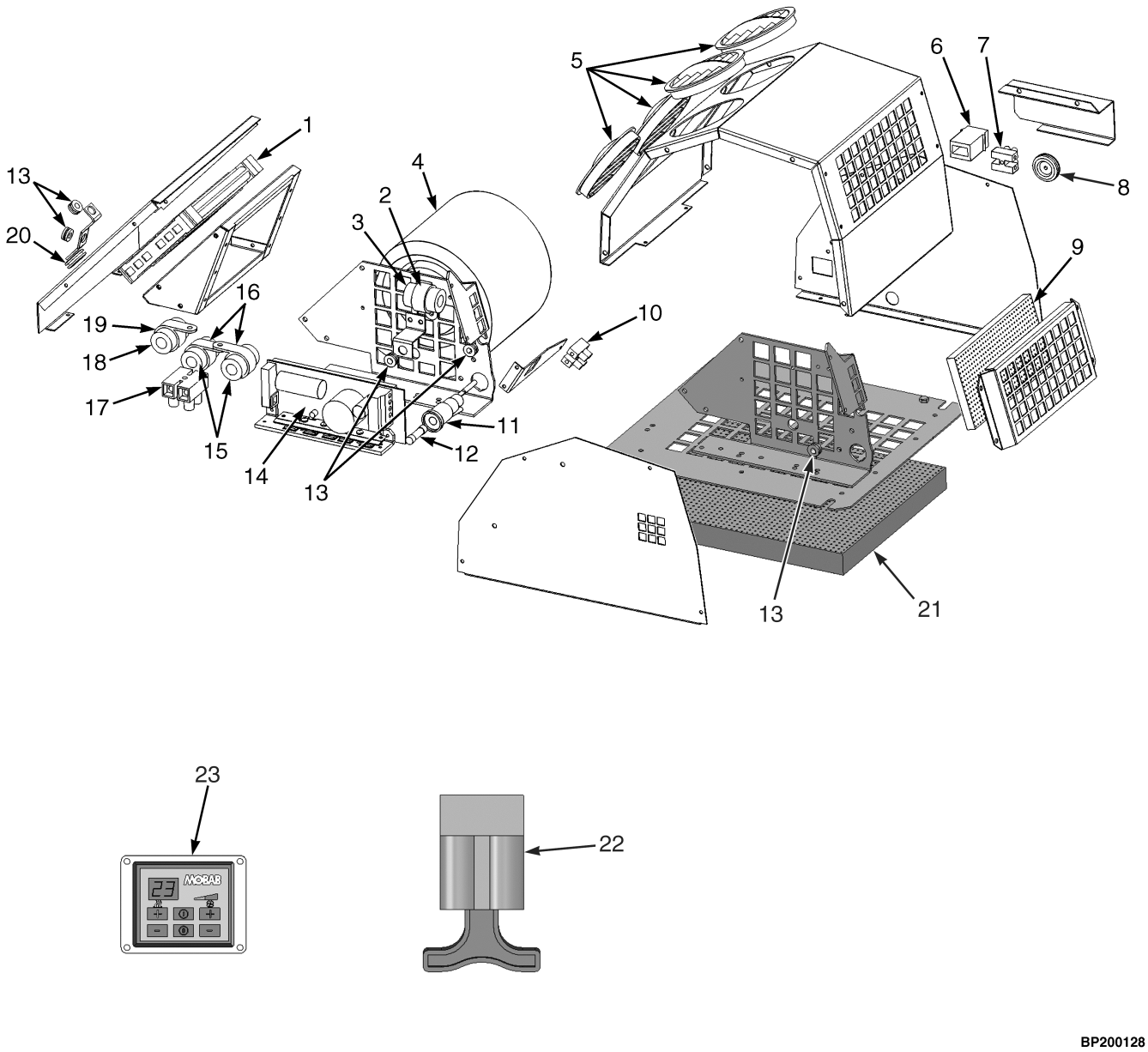

BP200128

©2015 Yale Europe Materials Handling Limited

CAB

HEATER ASSEMBLY (9/2011 →)

ITEM	PART NO.	DESCRIPTION	QTY
	582011988	Kit-Cab Heater	1
1	582002115	Heater Element	1
2	582014467	Clip	1
3	582010040	Filter	1
4	582010037	Fan	1
5	582014464	Air Duct	4
6	582010043	Contact	1
7	582014470	Terminal Block	1
8	582014471	Grommet	1
9	582002108	Filter	1
10	582014469	Terminal Block	1
11	582010042	Fuse Holder	1
12	582010041	Fuse (5 Amp)	1
13	582014472	Grommet	4
14	582014473	Printed Circuit Board	1
15	582010039	Filter	2
16	582014465	Clip	2
17	582014468	Terminal Block	1
18	582002112	Filter (EMC)	1
19	582014466	Clip	1
20	582014474	Grommet	1
21	582002107	Air Filter	1
22	582000773	Connector	1
23	582002104	Control Panel	1

©2015 Yale Europe Materials Handling Limited

SEAT (FIGURE 1-23)
FULL SUSPENSION — SHEET 1 0F 2

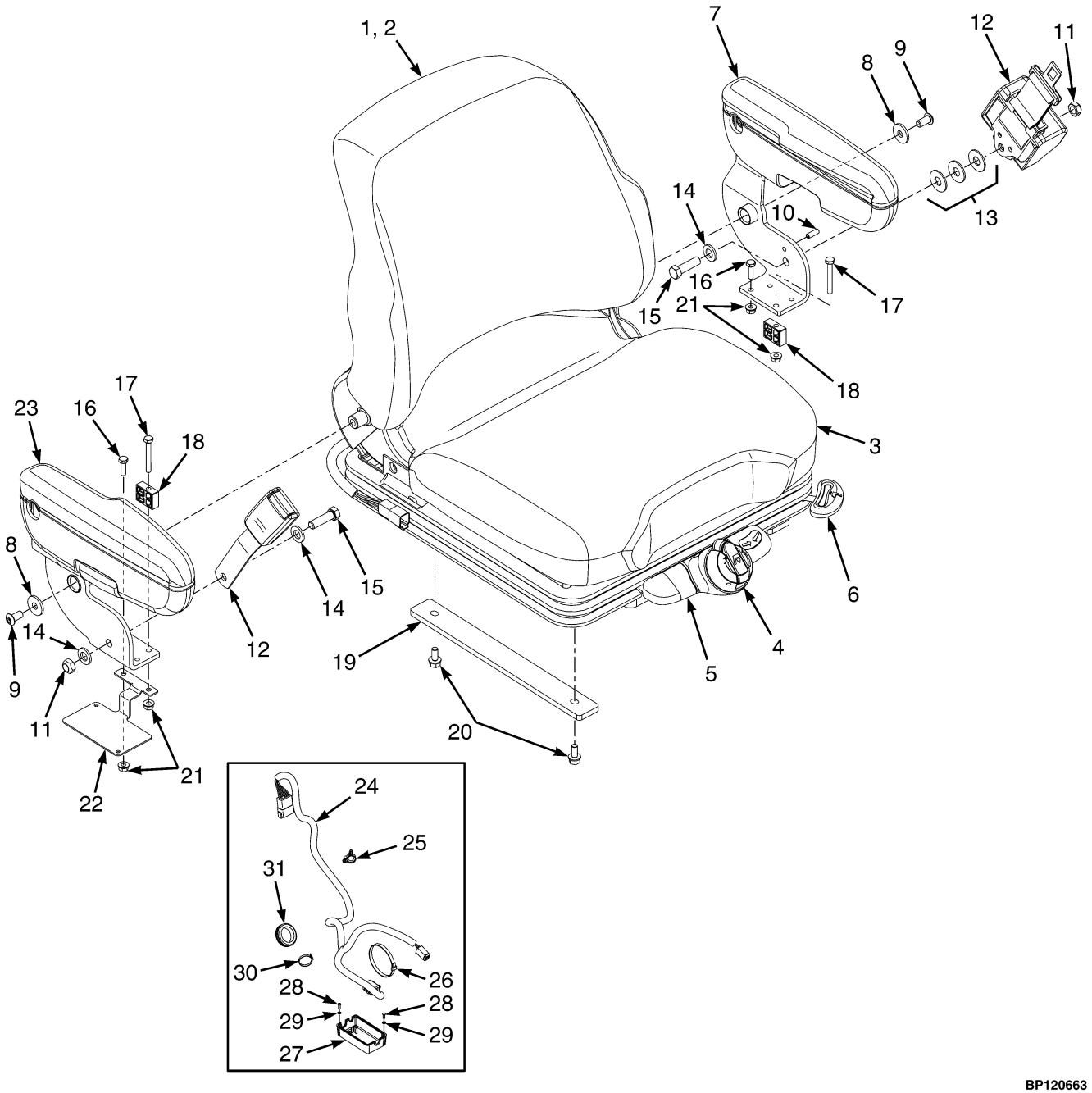

©2015 Yale Europe Materials Handling Limited

SEAT

FULL SUSPENSION – SHEET 1 0F 2

KEY:
A: w/o Electronic Control Arm
B: w/ Electronic Control Arm

ITEM	PART NO.	DESCRIPTION	QTY A	QTY B
	580086313	Seat-Full Suspension (Vinyl-Maximum Travel) (Full Suspension)	1	1
	580086312	Seat-Full Suspension (Cloth-Maximum Travel) (Full Suspension)	1	1
	~~580086311~~			
	582003584	Seat-Full Suspension (Vinyl) (Swivel) (Full Suspension)	1	1
	~~580086310~~			
	582003585	Seat-Full Suspension (Cloth) (Swivel) (Full Suspension)	1	1
1	580095476	Kit-Cushion (Seat and Back, Vinyl)	1	1
1	580095473	Kit-Cushion (Seat and Back, Cloth)	1	1
2	580095474	Kit-Cushion (Back Cushion, Vinyl)	1	1
2	580095471	Kit-Cushion (Back Cushion, Cloth)	1	1
2	. . . . .	Back Cushion	1	1
2	580057271	Screw	2	2
3	580095475	Kit-Seat Cushion (Vinyl)	1	1
3	580095472	Kit-Seat Cushion (Cloth)	1	1
3	. . . . .	Seat Cushion	1	1
3	580073651	Spring	2	2
3	580032260	Cotter Pin (Hair)	2	2
4	580095462	Kit-Weight Adjuster	1	1
4	. . . . .	Knob	1	1
4	. . . . .	Bushing	1	1
4	. . . . .	Washer	1	1
4	. . . . .	Pin	1	1
4	. . . . .	U-Joint	1	1
5	580095464	Kit-Service (Front Panel) (With Swivel)	1	1
5	. . . . .	Front Panel	1	1
5	. . . . .	Knob	1	1
5	. . . . .	Socket Head Capscrew	2	2
5	. . . . .	Roll Pin	1	1
5	580095463	Kit-Service (Front Panel) (Non Swivel)	1	1
5	. . . . .	Front Panel	1	1
5	. . . . .	Socket Head Capscrew	2	2
5	. . . . .	Roll Pin	1	1
6	580095477	Kit-Seat Rail	1	1
6	. . . . .	Locking Rail	1	1
6	. . . . .	Slave Rail	1	1
6	. . . . .	Bolt	4	4
6	580057307	Nut	4	4
7	580084952	Armrest (Left-Hand Side)	1	1
8	580057451	Washer	2	1
9	311207098	Screw	2	1
10	023021000	Roll Pin	1	1
11	502097909	Locknut	2	2
12	580062078	Kit-Seat Belt (Black)	1	1
12	524281279	Kit-Seat Belt (Red High Visibility without Interlock)	1	1
12	582024336	Seat Belt (High Visibility with Interlock)	1	1

©2015 Yale Europe Materials Handling Limited

SEAT

FULL SUSPENSION – SHEET 1 0F 2

KEY:
A: w/o Electronic Control Arm
B: w/ Electronic Control Arm

ITEM	PART NO.	DESCRIPTION	QTY A	QTY B
13	502398907	Washer	3	3
14	580056005	Washer	3	3
15	203081600	Capscrew	2	1
15	203081800	Capscrew	..	1
16	203142800	Capscrew	2	1
17	062151600	Capscrew	2	1
18	580092600	Block	2	1
18	582002535	Spacer (Alternate Part)	2	1
19	582004554	Plate (Maxium Travel Mounting)	2	2
20	580056815	Capscrew (Max Travel Seat Mount)	4	4
21	518803677	Nut	4	2
22	580093020	Bracket	1	..
23	580084954	Armrest (Right-Hand Side)	1	..
24	580089657	Wire Harness (Seat Jumper)	1	..
24	580089658	Wire Harness (MLM Jumper)	..	1
25	580025559	Clip	1	1
26	312850032	Strap Clamp	1	1
27	580092987	Cover (Seat-Side Electrical)	1	1
28	580092732	Capscrew	2	2
29	940400905	Washer	2	2
30	312850034	Strap Clamp	1	1
31	640136901	Grommet	1	1
a	582014270	Kit (Mechanical Lumbar)	1	1
a	580095465	Kit-Service Internal Tether-80 MM Travel (Maxium Travel)	1	1
a	580095466	Kit-Service Internal Tether-56 MM Travel (With Swivel)	1	1
a	580084955	Seat Cover (Right-Hand Side)	1	..
a	580093325	Spacer (Seat Belt)	..	1
a	580049884	Sensor (Operator Presence)	1	1
a	580091801	Wire Harness	1	1
a	580014465	Information Case (Kit)	1	1
	580018616	Plate (Book Box)	1	1
	580018613	Box (Book)	1	1
	580018614	Cover	1	1
	580018567	Screw	4	4
a	582012046	Bracket (Angle Controller)	1	1
ab	312850042	Strap Clamp	1	1
ac	312850034	Strap Clamp	2	2

FOOTNOTES:

a Not Illustrated
b → 10/2013
c 10/2013 →

©2015 Yale Europe Materials Handling Limited

NOTES

©2015 Yale Europe Materials Handling Limited

SEAT (FIGURE 1-24)
FULL SUSPENSION — SHEET 2 OF 2

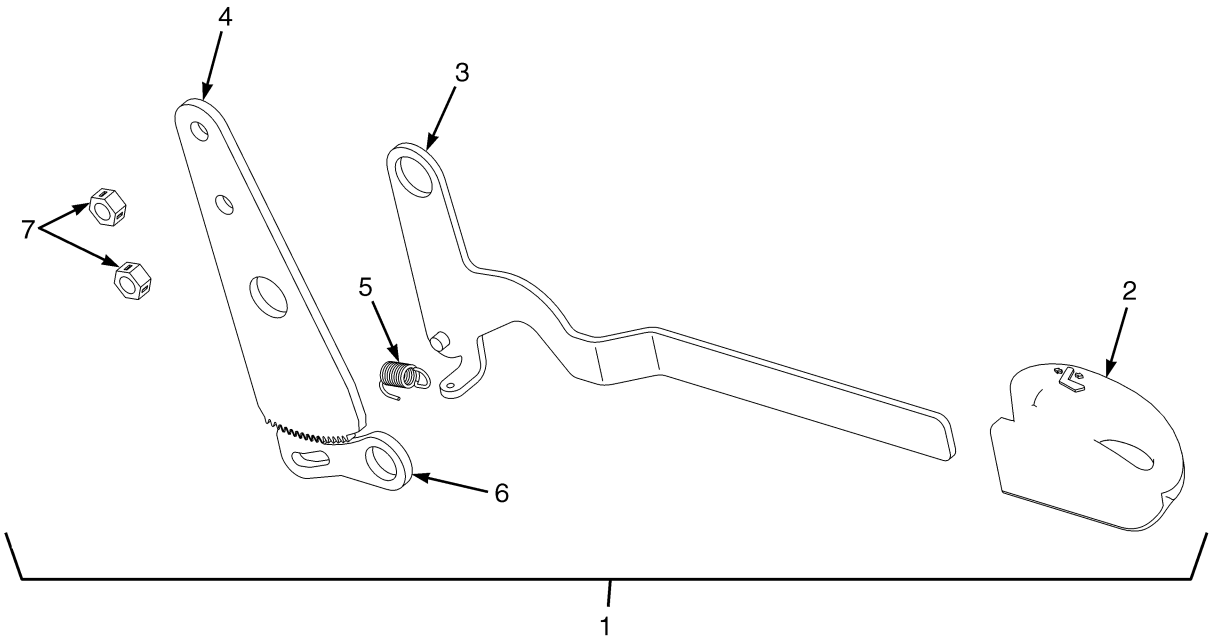

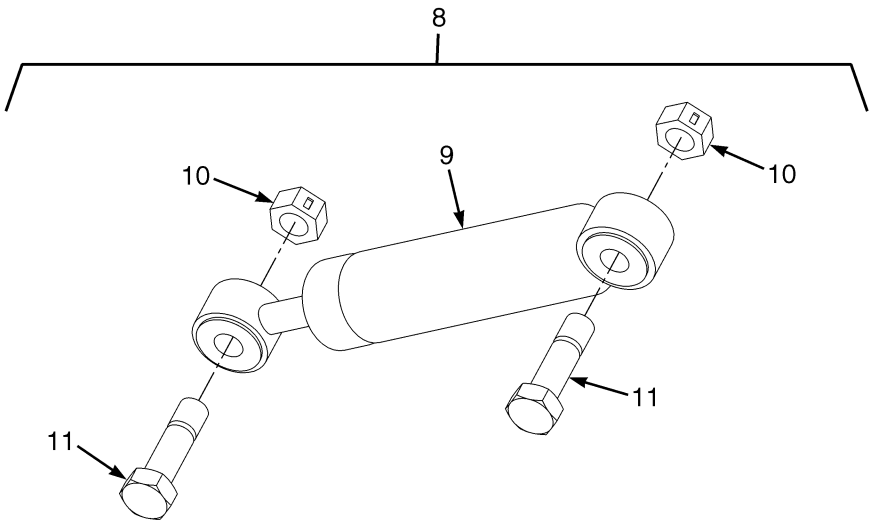

BP120646

©2015 Yale Europe Materials Handling Limited

SEAT

FULL SUSPENSION – SHEET 2 OF 2

ITEM	PART NO.	DESCRIPTION	QTY
1	580095461	Kit-Recliner (Back Seat Adjustment)	1
2	. . . . .	Knob	1
3	. . . . .	Lever	1
4	580018642	Plate	1
5	. . . . .	Spring	1
6	580018643	Latch	1
7	580057307	Nut	2
8	580095460	Kit-Damper Service	1
9	580057260	Damper	1
10	580057307	Nut	2
11	580057266	Bolt	2

©2015 Yale Europe Materials Handling Limited

SEAT (FIGURE 1-25)

FULL SUSPENSION, HIGH BACK — SHEET 1 0F 2

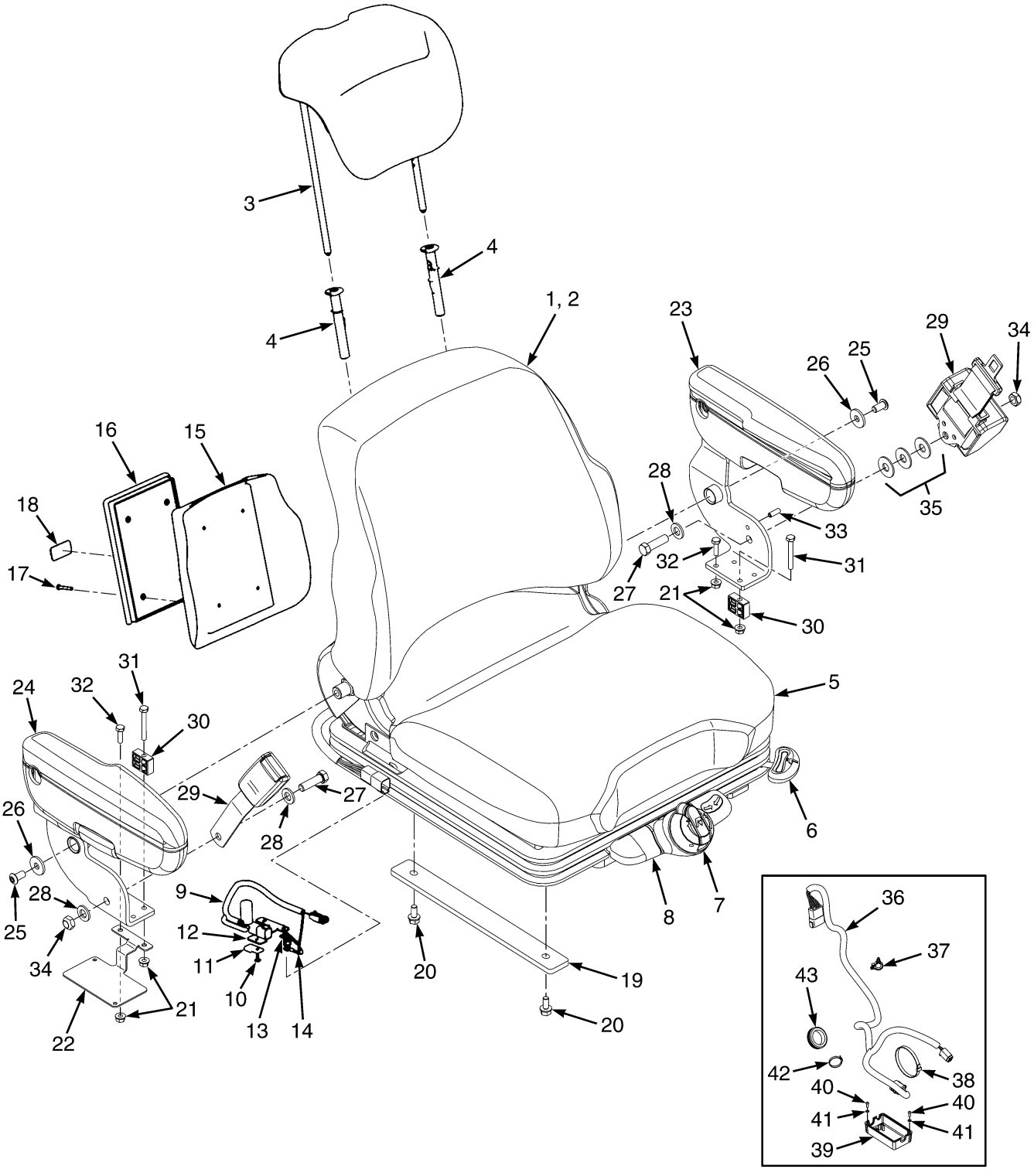

©2015 Yale Europe Materials Handling Limited

SEAT

FULL SUSPENSION, HIGH BACK – SHEET 1 0F 2

ITEM	PART NO.	DESCRIPTION	QTY
	582005762	Seat-Full Suspension (Vinyl) (High Back, Lumbar)	1
	582005761	Seat-Full Suspension (Cloth) (High Back, Lumbar)	1
1	582006632	Kit-Cushion (Seat Back, Vinyl)	1
1	582006634	Kit-Cushion (Seat Back, Cloth)	1
2	. . . . .	Back Cushion	1
2	580057271	Screw	2
3	582039706	Kit Head Rest (Cloth)	1
3	580067351	Kit-Back/Headrest Cushion (Vinyl)	1
4	. . . . .	Guide Assembly (Tubes)	2
5	580095476	Kit-Cushion (Seat and Back, Vinyl)	1
5	580095475	Kit-Seat Cushion (Vinyl)	1
5	580095472	Kit-Seat Cushion (Cloth)	1
5	. . . . .	Seat Cushion	1
5	580073651	Spring	2
5	580032260	Cotter Pin (Hair)	2
6	582018841	Kit-Seat Rail	1
6	. . . . .	Locking Rail	1
6	. . . . .	Slave Rail	1
6	. . . . .	Bolt	4
6	580057307	Nut	4
7	580095462	Kit-Weight Adjuster	1
7	. . . . .	Knob	1
7	. . . . .	Bushing	1
7	. . . . .	Washer	1
7	. . . . .	Pin	1
7	. . . . .	U-Joint	1
8	580095463	Kit-Service (Front Panel) (Non Swivel)	1
8	. . . . .	Front Panel	1
8	. . . . .	Socket Head Capscrew	2
8	. . . . .	Roll Pin	1
9	582005028	Wire Harness	1
10	580018577	Fastener	1
11	. . . . .	Connector Clip	1
12	. . . . .	Retainer Bracket	1
13	580018567	Screw	2
14	580056635	Wire (Ground Wire)	1
15	580018616	Plate (Book Box)	1
16	580010469	Holder (Manual)	1
17	580018567	Screw	4
18	580068237	Label (Serial Number)	1
19	582004554	Plate (Maxium Travel Mounting)	2
20	580056815	Capscrew (Max Travel Seat Mount)	1
21	518803677	Nut	4
22	580093020	Bracket	1
23	580084952	Armrest (Left-Hand Side)	1
23	580049903	Cushion (LH Armrest)	1
24	580084954	Armrest (Right-Hand Side)	1
24	580049904	Cushion (RH Armrest)	1
25	311207098	Screw	2
26	580057451	Washer	2

©2015 Yale Europe Materials Handling Limited

SEAT

FULL SUSPENSION, HIGH BACK – SHEET 1 0F 2

ITEM	PART NO.	DESCRIPTION	QTY
27	203081600	Capscrew	2
28	580056005	Washer	3
29	580062078	Kit-Seat Belt (Black)	1
29	524281279	Kit-Seat Belt (Red High Visibility without Interlock)	1
29	582024336	Seat Belt (High Visibility with Interlock)	1
30	582002535	Spacer	2
31	062151600	Capscrew	2
32	203142800	Capscrew	2
33	023021000	Roll Pin	1
34	502097909	Locknut	2
35	502398907	Washer	3
36	580089657	Wire Harness (Seat Jumper)	1
36	580089658	Wire Harness (MLM Jumper)	1
37	580025559	Clip	1
38	312850032	Strap Clamp	1
39	580092987	Cover (Seat-Side Electrical)	1
40	580092732	Capscrew	2
41	940400905	Washer	2
42	312850034	Strap Clamp	1
43	640136901	Grommet	1
	582014270	Kit (Mechanical Lumbar)	1
	a 582014269	Kit Seat Suspension (Non Swivel Seat)	1
	b 580084955	Seat Cover (Right-Hand Side)	1
	b 580049884	Sensor (Operator Presence)	1
	b 582012046	Bracket (Angle Controller)	1
	b 580095465	Kit-Service Internal Tether-80 MM Travel (Maxium Travel)	1
	bc 312850042	Strap Clamp	1
	bd 312850034	Strap Clamp	2

FOOTNOTES:

a Kit included Tether and Recliner Kit from Sheet 2 of 2 Also
b Not Illustrated
c → 10/2013
d 10/2013 →

©2015 Yale Europe Materials Handling Limited

NOTES

©2015 Yale Europe Materials Handling Limited

SEAT (FIGURE 1-26)
FULL SUSPENSION, HIGH BACK — SHEET 2 OF 2

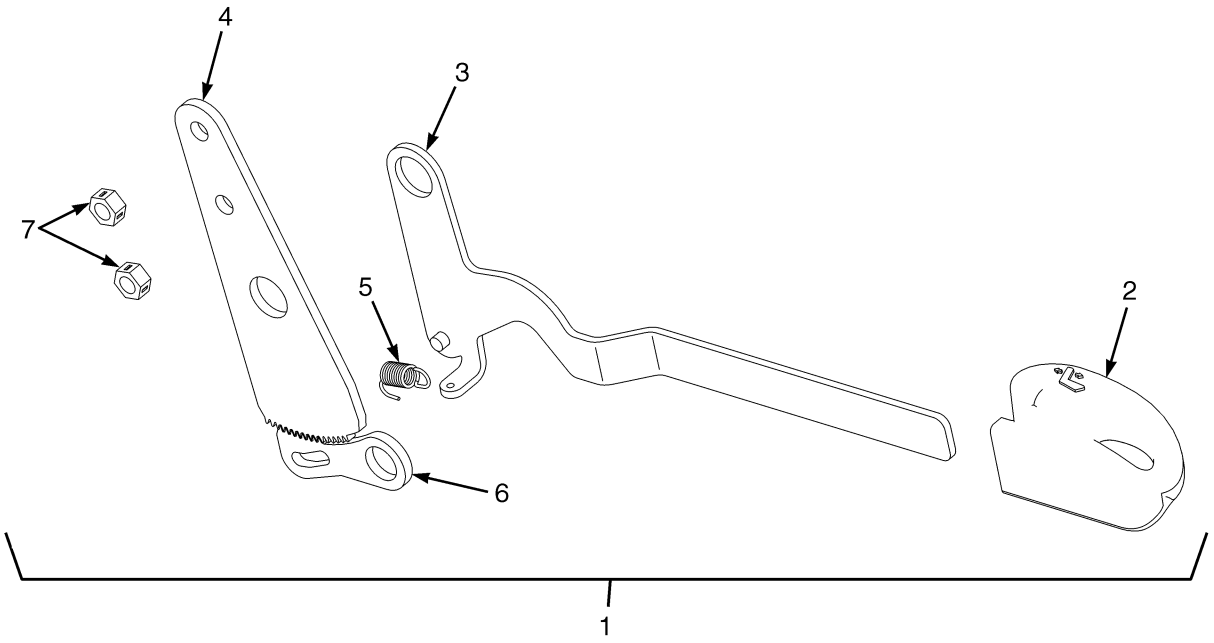

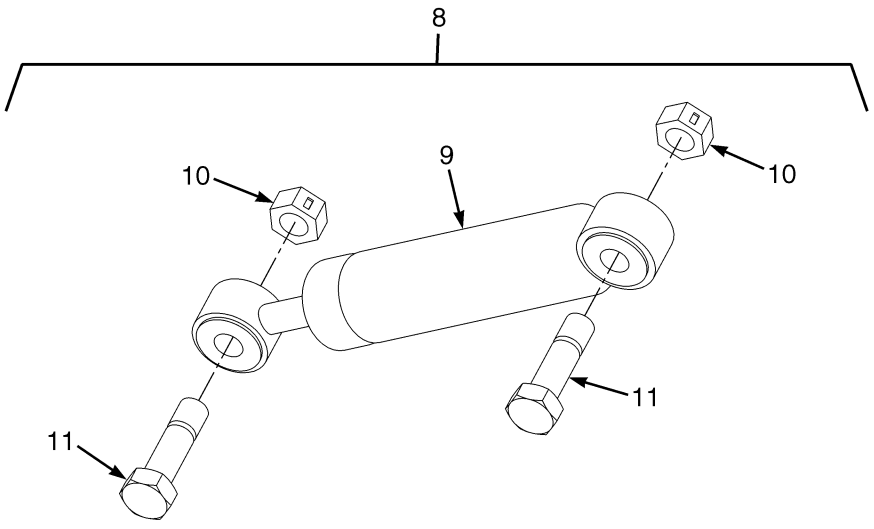

BP120646

©2015 Yale Europe Materials Handling Limited

SEAT

FULL SUSPENSION, HIGH BACK – SHEET 2 OF 2

ITEM	PART NO.	DESCRIPTION	QTY
1	580095461	Kit-Recliner (Back Seat Adjustment)	1
2	. . . . .	Knob	1
3	. . . . .	Lever	1
4	580018642	Plate	1
5	. . . . .	Spring	1
6	580018643	Latch	1
7	580057307	Nut	2
8	580095460	Kit-Damper Service	1
9	580057260	Damper	1
10	580057307	Nut	2
11	580057266	Bolt	2

©2015 Yale Europe Materials Handling Limited

ARMREST SLIDER ASSEMBLY (FIGURE 1-27)

(→ 9/2010)

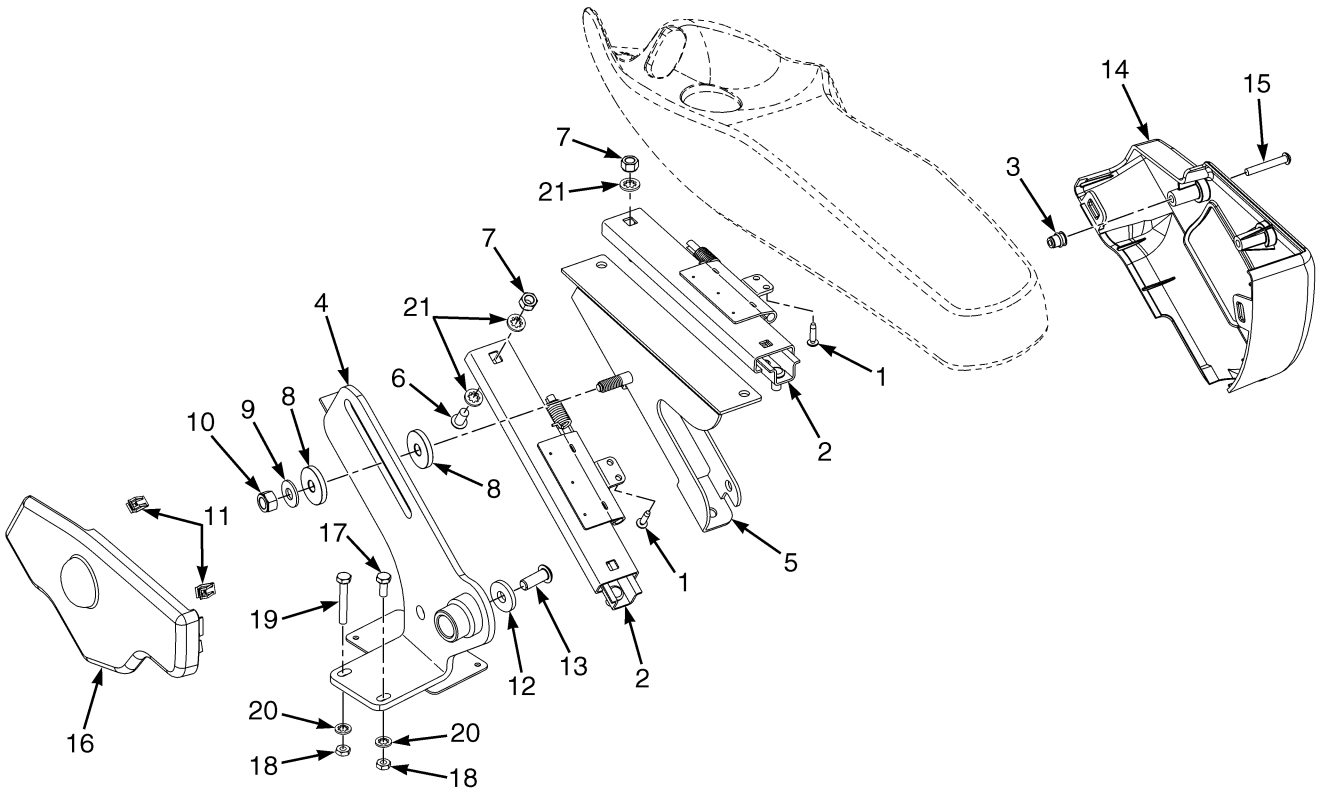

HP121229

©2015 Yale Europe Materials Handling Limited

ARMREST SLIDER ASSEMBLY

(→ 9/2010)

ITEM	PART NO.	DESCRIPTION	QTY
	580096837	Armrest (Right-Hand Side) Assembly	1
	. . . . .	Armrest (Handle Slide Assy-Upper)	1
	. . . . .	Armrest (Handle Slide - Lower)	1
	a 580096260	Handle (Slider)	2
1	580097245	Screw	4
2	580083302	Armrest (Slider)	2
3	580041704	Insert	3
4	580092816	Bracket Wldmt	1
5	580092817	Bracket Wldmt (Slide)	1
5	582002565	Bracket Wldmt (Alternate Part)	1
6	580032377	Capscrew	2
7	504230271	Nut	6
8	580092815	Washer	2
9	504071785	Washer	1
10	909882404	Nut	1
11	580046139	Clip	2
12	580083301	Washer	1
13	580012279	Capscrew	1
14	580083620	Cover	1
14	582003730	Cover (Alternate Part)	1
15	932728910	Capscrew	3
16	580086959	Cover (MLM Inner)	1
16	582003731	Cover (Alternate Part)	1
17	203142800	Capscrew	1
18	518803677	Nut	2
19	062151600	Capscrew	1
	a 940600908	Washer (Star)	1
	a 940400908	Washer (Star)	6
	a 900014292	Capscrew	2
	. . . . .	Mini-Lever Assembly	1

FOOTNOTES:

a Not Illustrated

©2015 Yale Europe Materials Handling Limited

ARMREST SLIDER ASSEMBLY (FIGURE 1-28)

(9/2010 →)

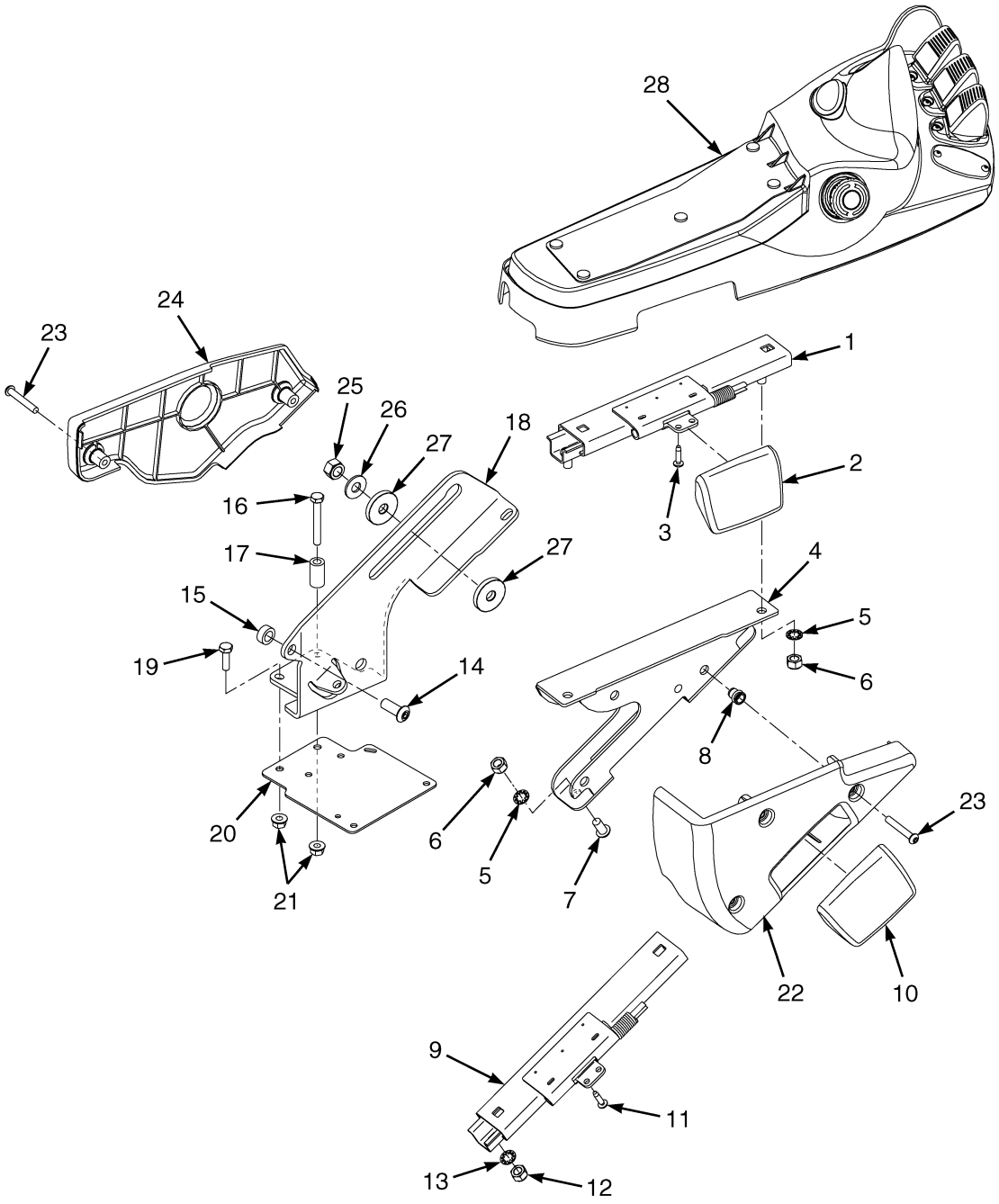

BP120759

©2015 Yale Europe Materials Handling Limited

ARMREST SLIDER ASSEMBLY

(9/2010 →)

ITEM	PART NO.	DESCRIPTION	QTY
	582002564	Armrest (Slider for Mini Lever)	1
1	. . . . .	Armrest (Handle Slide - Upper)	1
1	580083302	Armrest (Slider)	1
2	580096260	Handle (Slider)	1
3	580097245	Screw	2
4	582002565	Bracket Wldmt	1
5	940400908	Washer	4
6	504230271	Nut	4
7	580032377	Capscrew	2
8	580041704	Insert	3
9	. . . . .	Armrest (Handle Slide Assy)	1
9	580083302	Armrest (Slider)	1
10	580096260	Handle (Slider)	1
11	580097245	Screw	2
12	504230271	Nut	2
13	940400908	Washer	2
14	580012279	Capscrew	1
15	582002619	Spacer	1
16	062151600	Capscrew	1
17	582002535	Spacer	1
18	582003682	Bracket	1
19	203142800	Capscrew	1
20	582002534	Cover Plate	1
21	518803677	Nut	2
22	582003730	Cover	1
23	932728910	Capscrew	5
24	582003731	Cover	1
25	909882404	Nut	1
26	504071785	Washer	1
27	580092815	Washer	2
28	. . . . .	Mini-Lever Control Arm	1

©2015 Yale Europe Materials Handling Limited

HOOD AND COVERS (FIGURE 1-29)
EARLY PRODUCTION

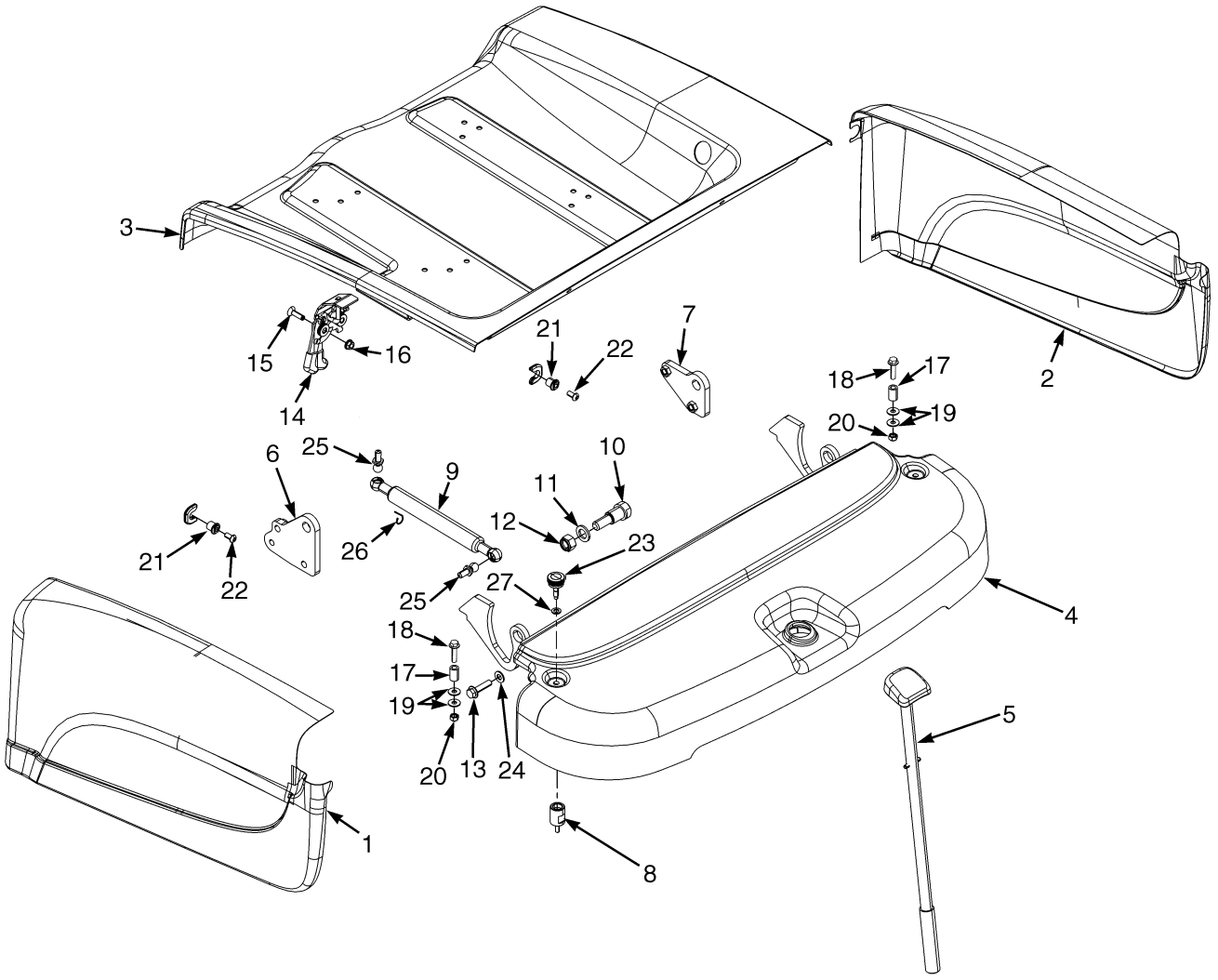

BP120443

©2015 Yale Europe Materials Handling Limited

HOOD AND COVERS
EARLY PRODUCTION

KEY:
A: 546 mm Battery Compartment
B: 642 mm Battery Compartment
C: 750 mm Battery Compartment

ITEM	PART NO.	DESCRIPTION	QTY A	QTY B	QTY C
1	524303230	Side Panel (LH) (WB1)	1	..	..
1	524303231	Side Panel (LH) (WB2)	..	1	..
1	524303232	Side Panel (LH) (WB3)	..	..	1
1	524303227	LH Side Panel (Low Hood WB1)	1	..	..
1	524303228	Side Panel (LH) (Low Hood WB2)	..	1	..
1	524303229	Side Panel (LH) (Low Hood WB3)	..	..	1
2	524303236	Side Panel (RH) (WB1)	1	..	..
2	524303237	Side Panel (RH) (WB2)	..	1	..
2	524303238	Side Panel (RH) (WB3)	..	..	1
2	524303233	SIde Panel (RH) (Low Hood WB1)	1	..	..
2	524303234	Side Panel (RH) (Low Hood WB2)	..	1	..
2	524303235	Side Panel (RH) (Low Hood WB3)	..	..	1
3	**c** 524303418	Hood	1	..	..
3	**a** 524303419	Hood	..	1	..
3	**b** 524303420	Hood	..	..	1
4	524292608	Cover (Standard)	1	1	1
4	524292609	Cover (Low)	1	1	1
5	580090565	Tow Pin (Assembly) (Standard)	1	1	1
5	580090566	Tow Pin (Assembly) (Low)	1	1	1
6	580092200	Bracket Wldmt	1	1	1
6	580092373	Bracket Wldmt (LH) (Low)	1	1	1
7	580092201	Bracket Wldmt (RH) (Standard)	1	1	1
7	580092199	Bracket Wldmt (RH) (Low)	1	1	1
8	580078656	Spacer	2	2	2
9	580093008	Gas Spring	1	..	..
9	580093009	Gas Spring	..	1	..
9	580093010	Gas Spring	..	..	1
10	580090217	Pin	2	2	2
11	502566903	Washer	2	2	2
12	449015107	Locknut	1	1	1
13	580032011	Capscrew	4	4	4
14	580081279	Hood Latch	1	1	1
15	934204901	Capscrew	2	2	2
16	580027573	Nut (Flange)	2	2	2
17	580081502	Tube	2	2	2
18	580048227	Capscrew	2	2	2
19	504226242	Washer	6	6	6
20	449015098	Nut	2	2	2
21	580086081	Pin	2	2	2
22	449001415	Capscrew	2	2	2
23	580082923	Screw	2	2	2
24	449021006	Washer	4	4	4
25	580090208	Ball Stud	2	2	2
26	580090209	Clip	2	2	2

©2015 Yale Europe Materials Handling Limited

HOOD AND COVERS
EARLY PRODUCTION

KEY:
A: 546 mm Battery Compartment
B: 642 mm Battery Compartment
C: 750 mm Battery Compartment

ITEM	PART NO.	DESCRIPTION	QTY A	QTY B	QTY C
27	580060686	Retainer	2	2	2

FOOTNOTES:

a → S/N G807B05629L
b → S/N G807B05656L
c → S/N G807B05663L

©2015 Yale Europe Materials Handling Limited

NOTES

©2015 Yale Europe Materials Handling Limited

HOOD AND COUNTERWEIGHT COVER (FIGURE 1-30)

LATE PRODUCTION (→ 2/2015)

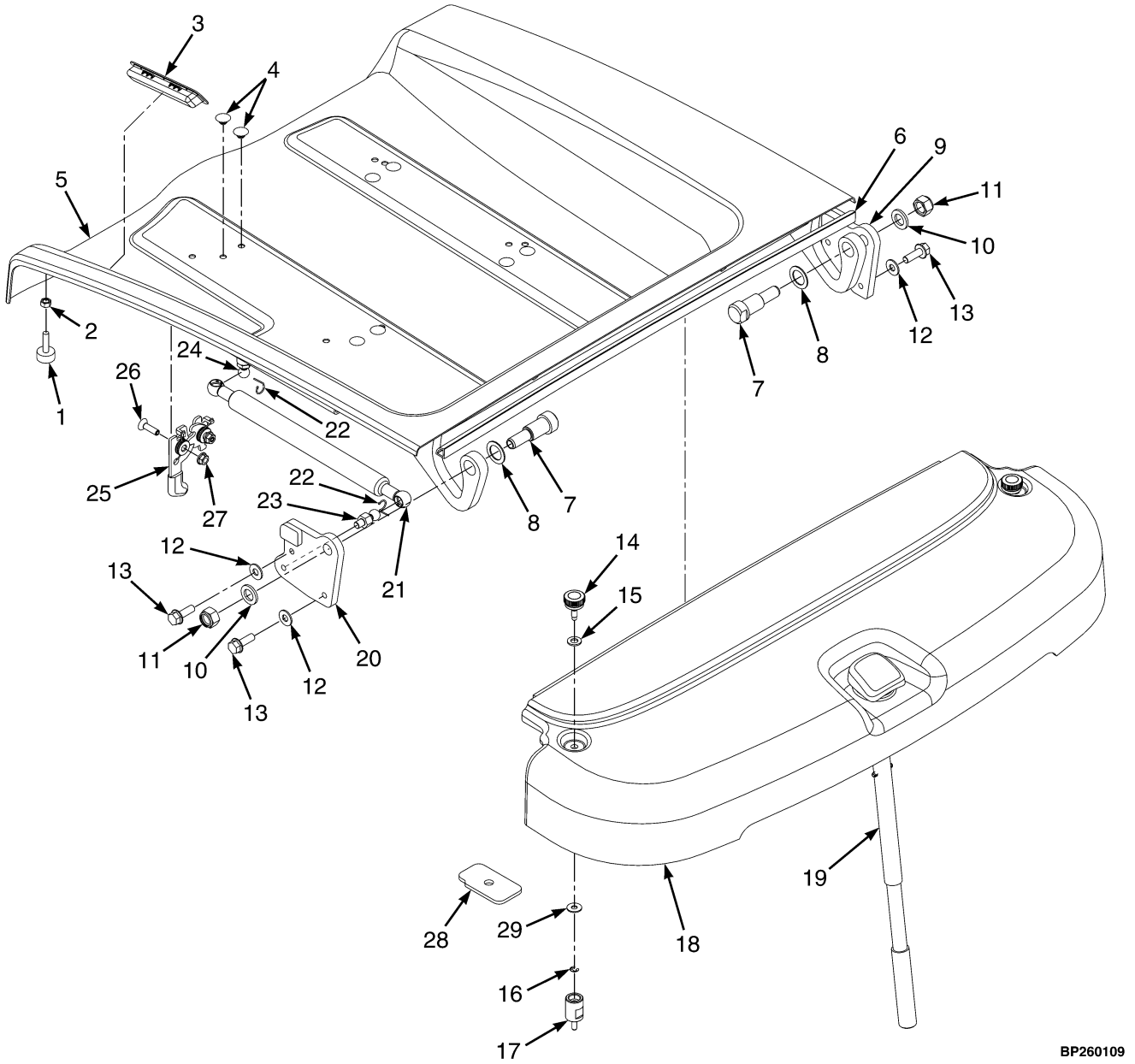

©2015 Yale Europe Materials Handling Limited

HOOD AND COUNTERWEIGHT COVER

LATE PRODUCTION (→ 2/2015)

KEY:
A: 546 mm Battery Compartment
B: 642 mm Battery Compartment
C: 750 mm Battery Compartment

ITEM	PART NO.	DESCRIPTION	QTY A	QTY B	QTY C
1	582001164	Bumper	2	2	2
2	449015014	Nut	2	2	2
3	580090503	Handle (Hood)	1	1	1
4	926887302	Plug	8	8	8
5	**c** 524336793	Hood	1	..	..
5	**a** 524336794	Hood	..	1	..
5	**b** 524336795	Hood	..	..	1
6	. . . . .	Seal	AR	AR	AR
7	580090217	Pin (Shoulder)	2	2	2
8	582013981	Shim	2	2	2
9	~~582001371~~				
	582010888	Bracket Wldmt (RH-Hood Hinge) (Standard Hood)	1	1	1
9	~~582001372~~				
	582010887	Bracket (RH-Hood Hinge) (Low Hood)	1	1	1
10	502566903	Washer	2	2	2
11	449015107	Locknut	2	2	2
12	504071785	Washer	4	4	4
13	580083689	Bolt	4	4	4
14	580082923	Screw (Captive)	2	2	2
15	580095072	Washer	2	2	2
16	580060686	Retainer	2	2	2
17	580078656	Spacer (Counterweight Cover) (Standard Hood)	2	2	2
18	524292608	Cover (Counterweight) (Standard Hood)	1	1	1
18	524292609	Cover (Counterweight) (Low Hood)	1	1	1
19	580090565	Tow Pin (Assembly) (Standard Hood)	1	1	1
19	580090566	Tow Pin (Assembly) (Low Hood)	1	1	1
19	580078475	Handle	1	1	1
19	449034074	Spring Pin	2	2	2
20	~~582001373~~				
	582010890	Bracket Wldmt (LH-Hood Hinge) (Standard Hood)	1	1	1
20	582011603	Bracket (LH-Hood Hinge) (Low Hood)	1	1	1
21	580093008	Gas Spring (With Pop-up Coil)	1	..	..
21	580093009	Gas Spring (With Pop-up Coil)	..	1	..
21	580093010	Gas Spring (With Pop-up Coil)	..	..	1
22	580090209	Clip (Locking)	2	2	2
23	582011620	Ball Stud	1	1	1
24	582011621	Ball Stud	1	1	1
25	580081279	Hood Latch	1	1	1
26	934204901	Capscrew	2	2	2
27	580027573	Nut (Flange)	2	2	2
28	582022928	Mount	2	2	2
29	504226242	Washer	AR	AR	AR
	501702902	Loctite	AR	AR	AR

©2015 Yale Europe Materials Handling Limited

FOOTNOTES:

a S/N G807B05630L →
b S/N G807B05657L →
c S/N G807B05664L →

©2015 Yale Europe Materials Handling Limited

NOTES

©2015 Yale Europe Materials Handling Limited

HOOD AND COUNTERWEIGHT COVER (FIGURE 1-31)

(2/2015 →)

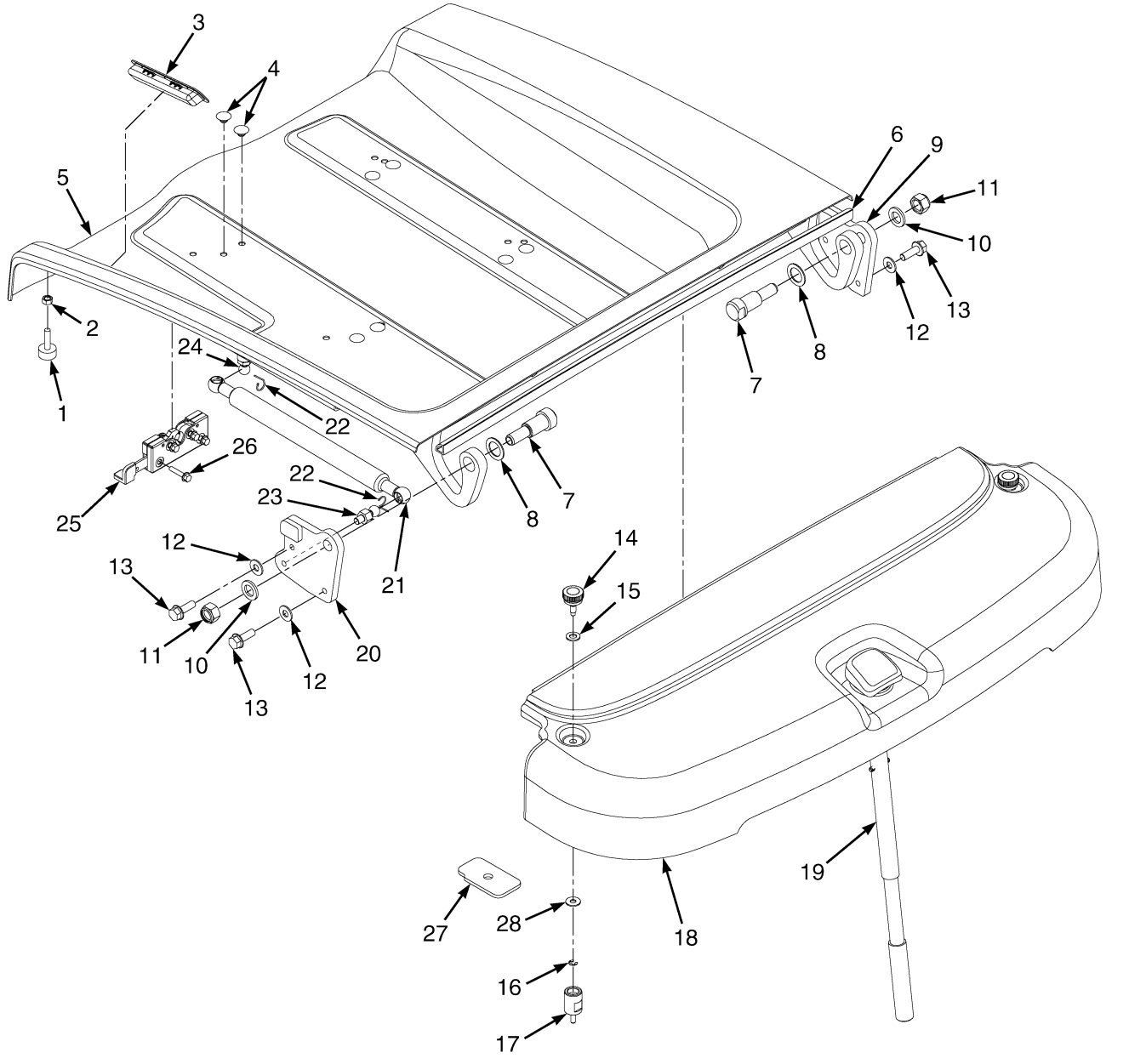

©2015 Yale Europe Materials Handling Limited

HOOD AND COUNTERWEIGHT COVER

(2/2015 →)

KEY:
A: 546 mm Battery Compartment
B: 642 mm Battery Compartment
C: 750 mm Battery Compartment

ITEM	PART NO.	DESCRIPTION	QTY A	QTY B	QTY C
1	582001164	Bumper	2	2	2
2	449015014	Nut	2	2	2
3	580090503	Handle (Hood)	1	1	1
4	926887302	Plug	8	8	8
5	550070561	Hood	1	..	..
5	550070562	Hood	..	1	..
5	550070563	Hood	..	..	1
6	582012023	Seal-Bulk (FT)	AR	AR	AR
7	580090217	Pin (Shoulder)	2	2	2
8	582013981	Shim	2	2	2
9	~~582001371~~				
	582010888	Bracket Wldmt (RH-Hood Hinge) (Standard Hood)	1	1	1
9	~~582001372~~				
	582010887	Bracket (RH-Hood Hinge) (Low Hood)	1	1	1
10	502566903	Washer	2	2	2
11	449015107	Locknut	2	2	2
12	504071785	Washer	4	4	4
13	580083689	Bolt	4	4	4
14	580082923	Screw (Captive)	2	2	2
15	580095072	Washer	2	2	2
16	580060686	Retainer	2	2	2
17	580078656	Spacer (Counterweight Cover) (Standard Hood)	2	2	2
18	524292608	Cover (Counterweight) (Standard Hood)	1	1	1
18	524292609	Cover (Counterweight) (Low Hood)	1	1	1
19	580090565	Tow Pin (Assembly) (Standard Hood)	1	1	1
19	580090566	Tow Pin (Assembly) (Low Hood)	1	1	1
19	580078475	Handle	1	1	1
19	449034074	Spring Pin	2	2	2
20	~~582001373~~				
	582010890	Bracket Wldmt (LH-Hood Hinge) (Standard Hood)	1	1	1
20	582011603	Bracket (LH-Hood Hinge) (Low Hood)	1	1	1
21	580093008	Gas Spring (With Pop-up Coil)	1	..	..
21	580093009	Gas Spring (With Pop-up Coil)	..	1	..
21	580093010	Gas Spring (With Pop-up Coil)	..	..	1
22	580090209	Clip (Locking)	2	2	2
23	582011620	Ball Stud	1	1	1
24	582011621	Ball Stud	1	1	1
25	582001022	Hood Latch	1	1	1
26	580006420	Capscrew	4	4	4
27	582022928	Mount	2	2	2
28	504226242	Washer	AR	AR	AR
	501702902	Loctite	AR	AR	AR

©2015 Yale Europe Materials Handling Limited

HOOD AND COUNTERWEIGHT COVER (FIGURE 1-32)

WITH RAPID CHARGE OPTION (→ 2/2015)

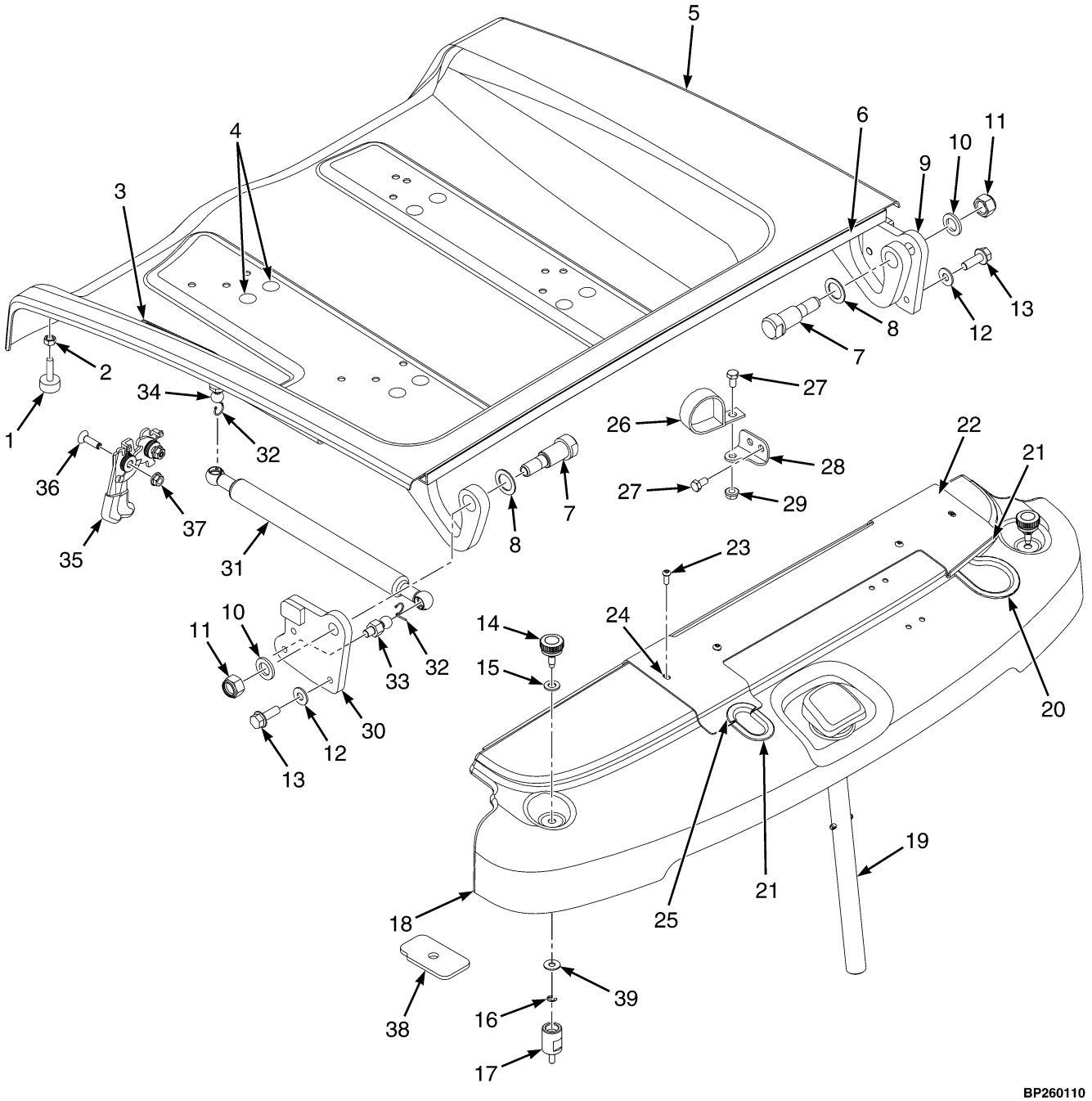

©2015 Yale Europe Materials Handling Limited

HOOD AND COUNTERWEIGHT COVER
WITH RAPID CHARGE OPTION (→ 2/2015)

KEY:
A: 546 mm Battery Compartment
B: 642 mm Battery Compartment
C: 750 mm Battery Compartment

ITEM	PART NO.	DESCRIPTION	QTY A	QTY B	QTY C
1	582001164	Bumper	2	2	2
2	449015014	Nut	2	2	2
3	580090503	Handle (Hood)	1	1	1
4	926887302	Plug	8	8	8
5	524336793	Hood	1	..	..
5	524336794	Hood	..	1	..
5	524336795	Hood	..	..	1
6	. . . . .	Seal	1	1	1
7	580090217	Pin (Shoulder)	2	2	2
8	582013981	Shim	2	2	2
9	~~582001371~~				
	582010888	Bracket Wldmt (Hood Hinge-RH) (Standard Hood)	1	1	1
9	~~582001372~~				
	582010887	Bracket (Hood Hinge-RH) (Low Hood)	1	1	1
10	502566903	Washer	2	2	2
11	449015107	Locknut	2	2	2
12	504071785	Washer	4	4	4
13	580083689	Bolt	4	4	4
14	580082923	Screw (Captive)	2	2	2
15	580095072	Washer	2	2	2
16	580060686	Retainer	2	2	2
17	580078656	Spacer (Counterweight Cover) (Standard Hood)	2	2	2
18	550043718	Cover (Counterweight Rapid Charge (Standard))	1	1	1
18	550044369	Cover (Counterweight Rapid Charge) (Low Hood)	1	1	1
19	580090565	Tow Pin (Assembly) (Standard Hood)	1	1	1
19	580090566	Tow Pin (Assembly) (Low Hood)	1	1	1
19	580078475	Handle	1	1	1
19	449034074	Spring Pin	2	2	2
20	582024069	Trim	1	1	1
21	582011385	Trim	2	2	2
22	550043719	Cover	1	1	1
23	518791613	Capscrew	4	4	4
24	580041704	Insert	4	4	4
25	582024070	Trim	1	1	1
26	580006948	Clamp	1	1	1
27	449001415	Capscrew	3	3	3
28	582023713	Plate	1	1	1
29	580027573	Nut (Flange)	1	1	1
30	~~582001373~~				
	582010890	Bracket Wldmt (Hood Hinge-LH) (Standard Hood)	1	1	..
30	582011603	Bracket (Hood Hinge-LH) (Low Hood)	1	1	1
31	580093008	Gas Spring (With Pop-up Coil)	1	..	..
31	580093009	Gas Spring (With Pop-up Coil)	..	1	..
31	580093010	Gas Spring (With Pop-up Coil)	..	..	1

©2015 Yale Europe Materials Handling Limited

HOOD AND COUNTERWEIGHT COVER
WITH RAPID CHARGE OPTION (→ 2/2015)

KEY:
A: 546 mm Battery Compartment
B: 642 mm Battery Compartment
C: 750 mm Battery Compartment

ITEM	PART NO.	DESCRIPTION	QTY A	QTY B	QTY C
32	580090209	Clip	2	2	2
33	582011620	Ball Stud	1	1	1
34	582011621	Ball Stud	1	1	1
35	580081279	Hood Latch	1	1	1
36	934204901	Capscrew	2	2	2
37	580027573	Nut (Flange)	2	2	2
38	582022928	Mount	2	2	2
39	504226242	Washer	AR	AR	AR
	a 501702902	Loctite	AR	AR	AR

FOOTNOTES:

a Not Illustrated

©2015 Yale Europe Materials Handling Limited

NOTES

©2015 Yale Europe Materials Handling Limited

SIDE PANELS (FIGURE 1-33)

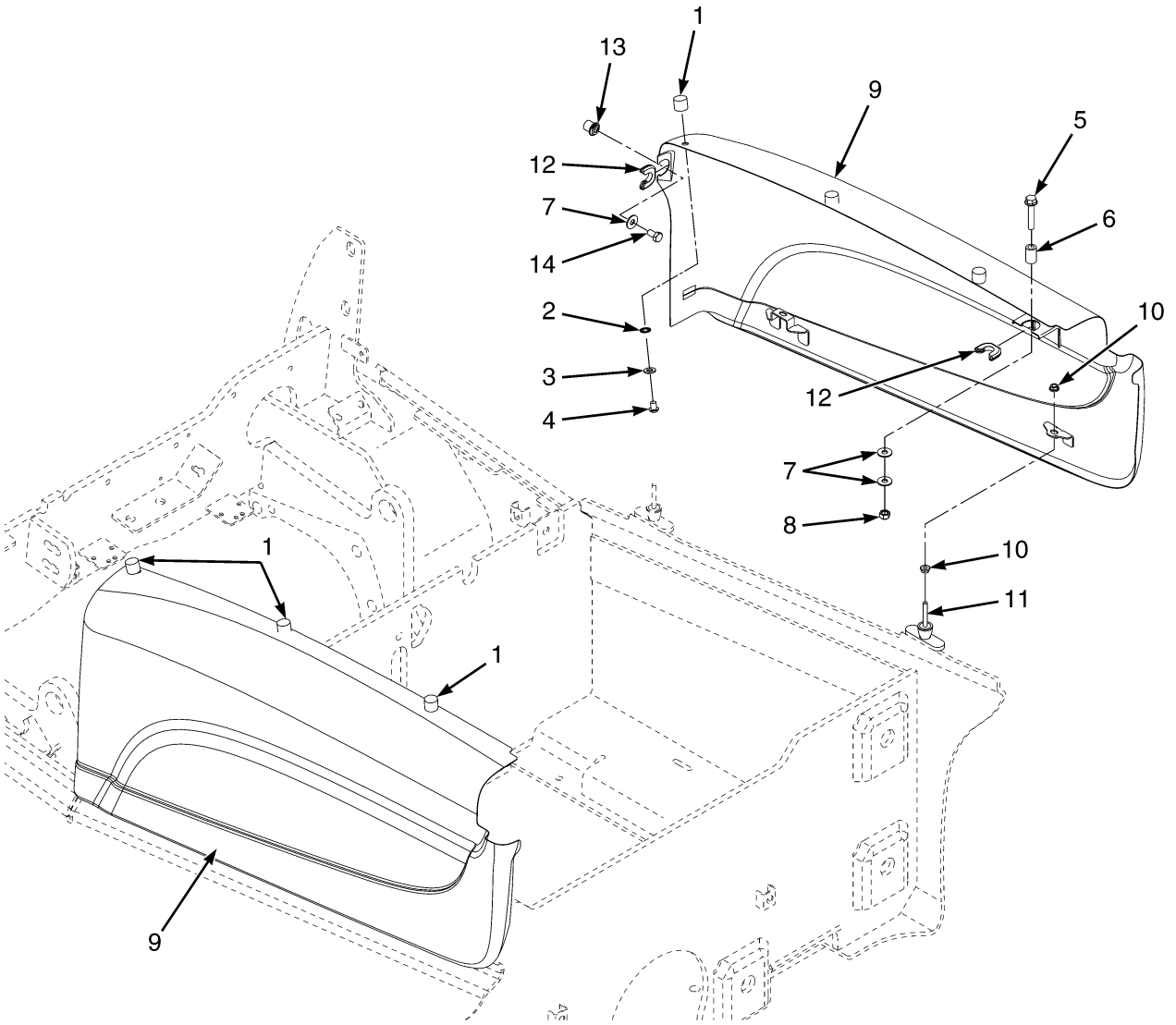

BP120964

©2015 Yale Europe Materials Handling Limited

SIDE PANELS

KEY:
A: 546 mm Battery Compartment
B: 642 mm Battery Compartment
C: 750 mm Battery Compartment

ITEM	PART NO.	DESCRIPTION	QTY A	QTY B	QTY C
1	580094279	Bumper	6	6	6
2	940400908	Washer	6	6	6
3	502566901	Washer	6	6	6
4	580032375	Capscrew	6	6	6
5	580048227	Capscrew	2	2	2
6	580081502	Tube	2	2	2
7	504226242	Washer	6	6	6
8	449015098	Nut	2	2	2
9	**a** 550044441	Side Panel (LH) (High Hood) (Rapid Charge)	1	..	..
9	**a** 550044445	Side Panel (RH) (High Hood) (Rapid Charge)	1	..	..
9	**a** 550044442	Side Panel (LH) (High Hood) (Rapid Charge)	..	1	..
9	**a** 550044446	Side Panel (RH) (High Hood) (Rapid Charge)	..	1	..
9	**a** 550044443	Side Panel (LH) (High Hood) (Rapid Charge)	..	..	1
9	**a** 550044447	Side Panel (RH) (High Hood) (Rapid Charge)	..	..	1
9	**a** 550044448	Side Panel (LH) (Standard Hood) (Rapid Charge)	1	..	..
9	**a** 550044451	Side Panel (RH) (Standard Hood) (Rapid Charge)	1	..	..
9	**a** 550044449	Side Panel (LH) (Standard Hood) (Rapid Charge)	..	1	..
9	**a** 550044452	Side Panel (RH) (Standard Hood) (Rapid Charge)	..	1	..
9	**a** 550044450	Side Panel (LH) (Standard Hood) (Rapid Charge)	..	..	1
9	**a** 550044453	Side Panel (RH) (Standard Hood) (Rapid Charge)	..	..	1
9	524303230	Side Panel (LH) (WB1) (Standard)	1	..	..
9	524303236	Side Panel (RH) (WB1) (Standard)	1	..	..
9	524303231	Side Panel (LH) (WB2) (Standard)	..	1	..
9	524303237	Side Panel (RH) (WB2) (Standard)	..	1	..
9	524303232	Side Panel (LH) (WB3) (Standard)	..	..	1
9	524303238	Side Panel (RH) (WB3) (Standard)	..	..	1
9	524303227	LH Side Panel (Low Hood WB1) (Standard)	1	..	..
9	524303233	SIde Panel (RH) (Low Hood WB1) (Standard)	1	..	..
9	524303228	Side Panel (LH) (Low Hood WB2) (Standard)	..	1	..
9	524303234	Side Panel (RH) (Low Hood WB2) (Standard)	..	1	..
9	524303229	Side Panel (LH) (Low Hood WB3) (Standard)	..	..	1
9	524303235	Side Panel (RH) (Low Hood WB3) (Standard)	..	..	1
10	~~580004321~~				
	580047919	Nut	4	4	4
11	580096550	Isolator	2	2	2
12	580092374	Clip (Side Panel)	2	2	2
13	580086081	Pin	2	2	2
14	449001415	Capscrew	2	2	2

FOOTNOTES:

a → 2/2015

©2015 Yale Europe Materials Handling Limited

BATTERY TRAY OPTIONS (FIGURE 1-34)

DROP-IN (→ 2/2015)

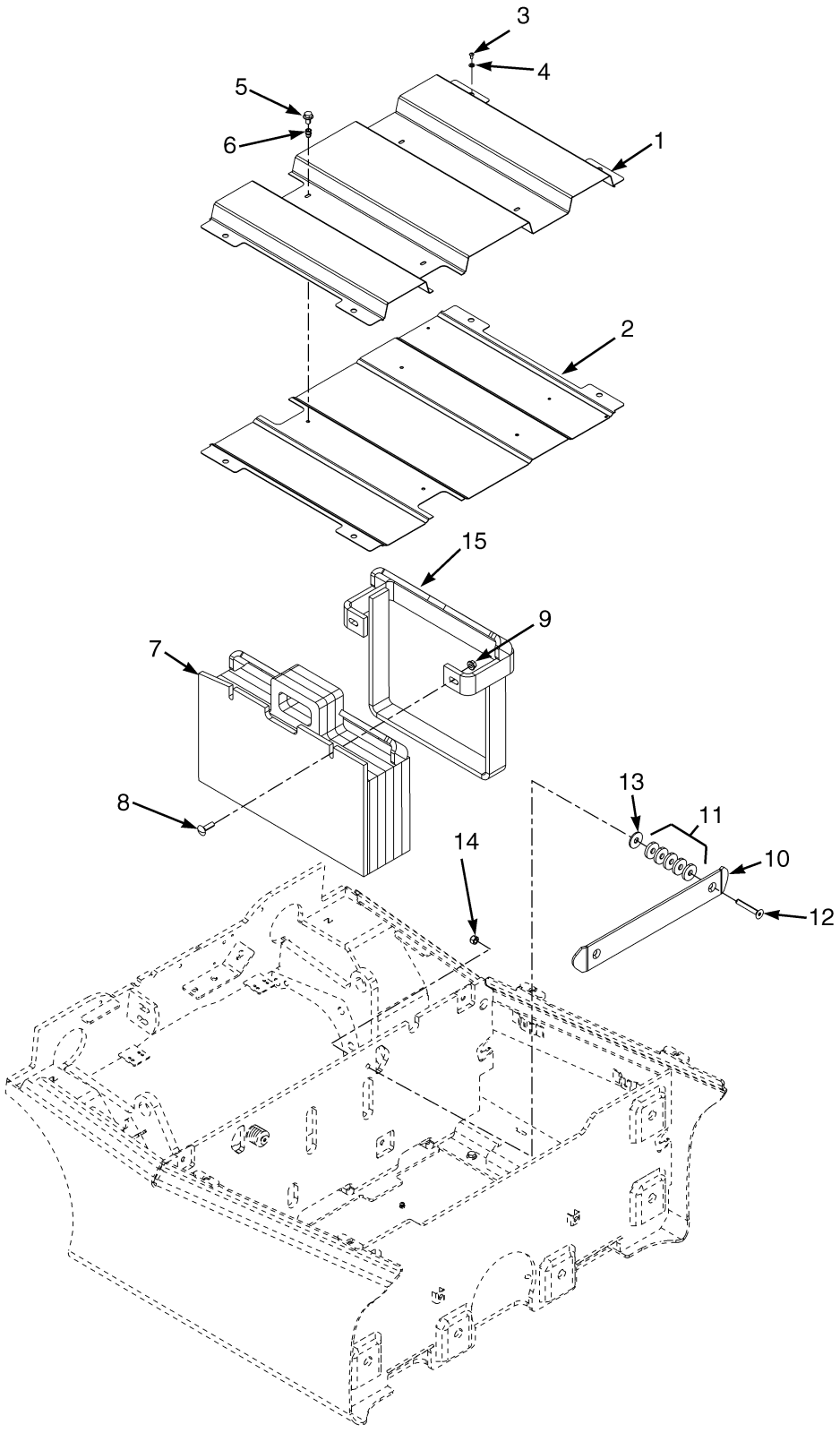

©2015 Yale Europe Materials Handling Limited

BATTERY TRAY OPTIONS

DROP-IN (→ 2/2015)

KEY:
A: 546 mm Battery Compartment
B: 642 mm Battery Compartment
C: 750 mm Battery Compartment

ITEM	PART NO.	DESCRIPTION	QTY A	QTY B	QTY C
1	580092538	Battery Tray (Upper)	1	..	..
1	580092536	Battery Tray (Upper)	..	1	..
1	580092539	Battery Tray (Upper)	..	..	1
2	580092595	Battery Tray (Lower)	1	..	..
2	580092596	Battery Tray (Lower)	..	1	..
2	580092597	Battery Tray (Lower)	..	..	1
3	449001089	Capscrew	4	4	4
4	016103300	Washer	4	4	4
5	580039438	Capscrew	4	4	4
6	580044859	Insert	4	4	4
7	**b** 580090913	Add-On Counterweight	..	1	..
7	**a** 580086460	Add-On Counterweight	1	1	..
8	520041824	Bolt	2	2	2
9	580027572	Nut	2	2	2
10	580090522	Plate	1	1	1
11	580081348	Spacer	10	10	10
12	504231285	Capscrew (M10 x 1.5 x 70)	2	2	2
13	580090523	Spacer	2	2	2
14	909882404	Nut	2	2	2
15	580090912	Spacer Block	..	..	1

FOOTNOTES:

a Model: ERP15VT,16VT,18VT

b Model: ERP20VT

©2015 Yale Europe Materials Handling Limited

BATTERY TRAY OPTIONS (FIGURE 1-35)

DROP-IN (2/2015 →)

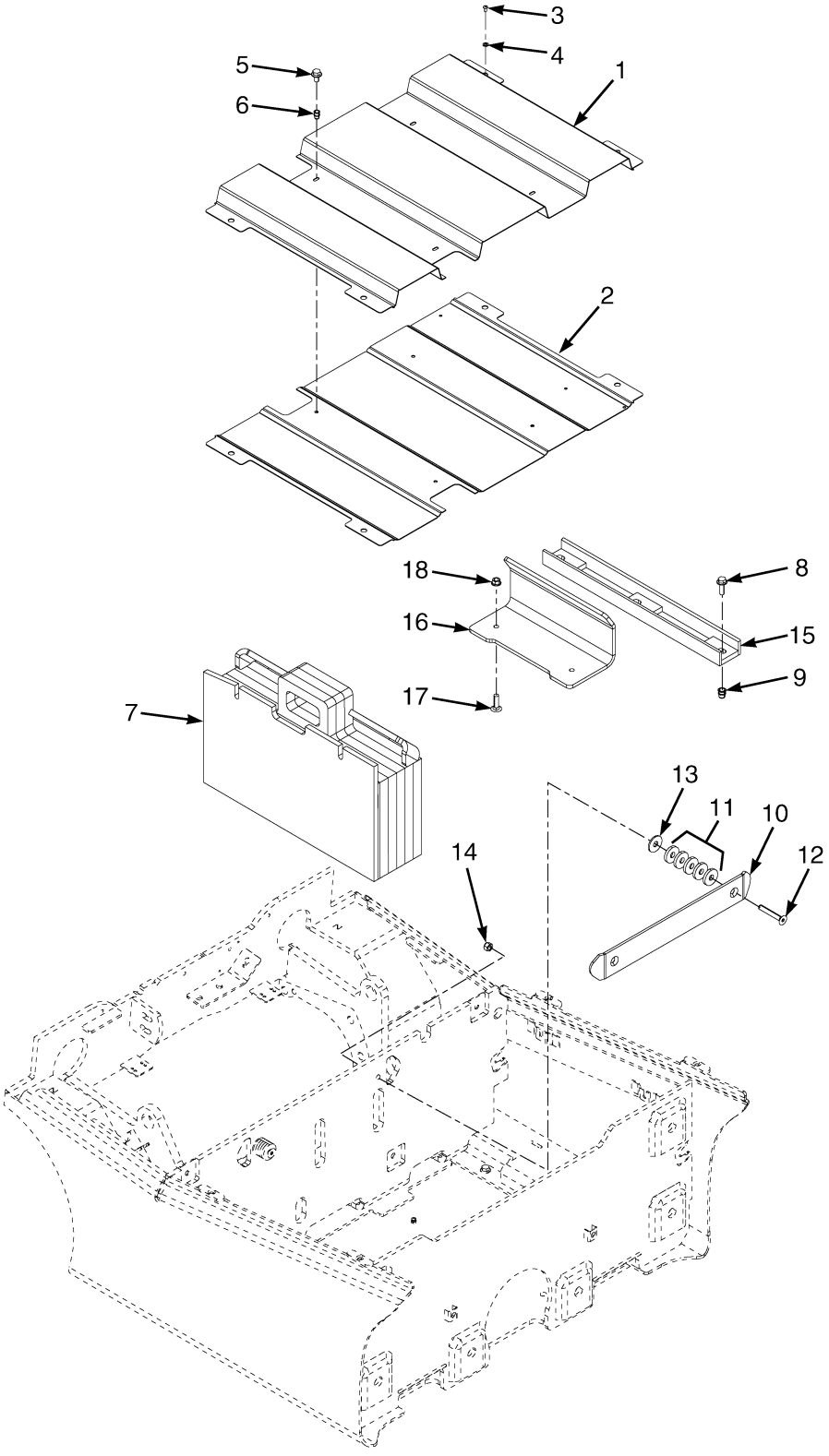

©2015 Yale Europe Materials Handling Limited

BATTERY TRAY OPTIONS

DROP-IN (2/2015 →)

KEY:

A: 546 mm Battery Compartment
B: 642 mm Battery Compartment
C: 750 mm Battery Compartment

ITEM	PART NO.	DESCRIPTION	QTY A	QTY B	QTY C
1	580092538	Battery Tray (Upper)	1	..	..
1	580092536	Battery Tray (Upper)	..	1	..
1	580092539	Battery Tray (Upper)	..	..	1
2	580092595	Battery Tray (Lower)	1	..	..
2	580092596	Battery Tray (Lower)	..	1	..
2	580092597	Battery Tray (Lower)	..	..	1
3	449001089	Capscrew	4	4	4
4	016103300	Washer	4	4	4
5	580039438	Capscrew	4	4	4
6	580044859	Insert	4	4	4
7	**b** 580090913	Add-On Counterweight	..	1	..
7	**a** 580086460	Add-On Counterweight	1	1	..
8	580046451	Capscrew	2	2	2
9	580044862	Insert	2	2	2
10	580090522	Plate	1	1	1
11	580081348	Spacer	10	10	10
12	504231285	Capscrew (M10 x 1.5 x 70)	2	2	2
13	580090523	Spacer	2	2	2
14	909882404	Nut	2	2	2
15	580095137	Support	1	..	..
15	580095140	Support	..	1	..
15	580095141	Support	..	..	1
16	582034616	Spacer	1	1	1
17	520041824	Bolt	2	2	2
18	580027572	Nut	2	2	2

FOOTNOTES:

a Model: ERP15VT,16VT,18VT

b Model: ERP20VT

©2015 Yale Europe Materials Handling Limited

BATTERY TRAY OPTIONS (FIGURE 1-36)

SIDE-REMOVAL (→ S/N G807B02919J)

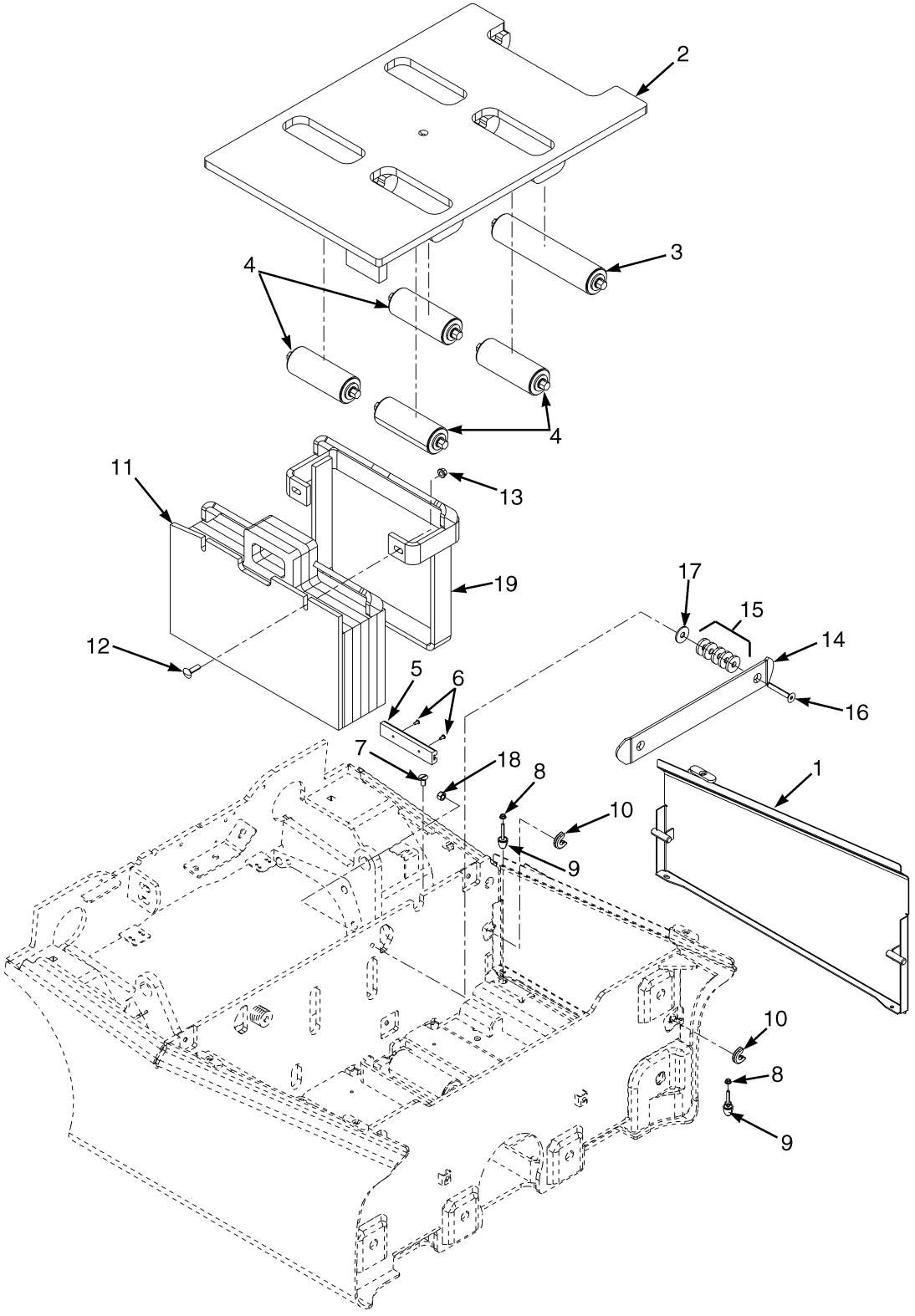

©2015 Yale Europe Materials Handling Limited

BATTERY TRAY OPTIONS

SIDE-REMOVAL (→ S/N G807B02919J)

KEY:
A: 546 mm Battery Compartment
B: 642 mm Battery Compartment
C: 750 mm Battery Compartment

ITEM	PART NO.	DESCRIPTION	QTY A	QTY B	QTY C
1	524307980	Side Panel	1	..	..
1	524307981	Side Panel	..	1	..
1	524307982	Side Panel	..	..	1
2	580087814	Plate Wldmt	1	..	..
2	580087815	Plate Wldmt	..	1	..
2	580087816	Plate Wldmt	..	..	1
3	~~504035206~~				
	582028836	Roller	1	1	1
4	~~580087919~~				
	582020963	Roller	4	4	4
5	580080516	Bumper	1	1	1
6	580038834	Capscrew	2	2	2
7	580093901	Capscrew	1	1	1
8	~~580004321~~				
	580047919	Nut	4	4	4
9	504238222	Buffer	2	2	2
10	580081322	Clip	2	2	2
11	**b** ~~580090911~~				
	582015438	Add-ON Counterweight	..	1	..
11	**a** 580089574	Add-On Counterweight	..	1	..
12	520041824	Bolt	2	2	2
13	580027572	Nut	2	2	2
14	580090522	Plate	1	1	1
15	580081348	Spacer	10	10	10
16	504231285	Capscrew (M10 x 1.5 x 70)	2	2	2
17	580090523	Spacer	2	2	2
18	909882404	Nut	2	2	2
19	580090912	Spacer Block	..	..	1
	c 524328904	Spacer	1	1	1

FOOTNOTES:

a Model: ERP16VT,18VT
b Model: ERP20VT
c Not Illustrated

©2015 Yale Europe Materials Handling Limited

BATTERY TRAY OPTIONS (FIGURE 1-37)

SIDE REMOVAL (S/N G807B02920J ↔ 2/2015)

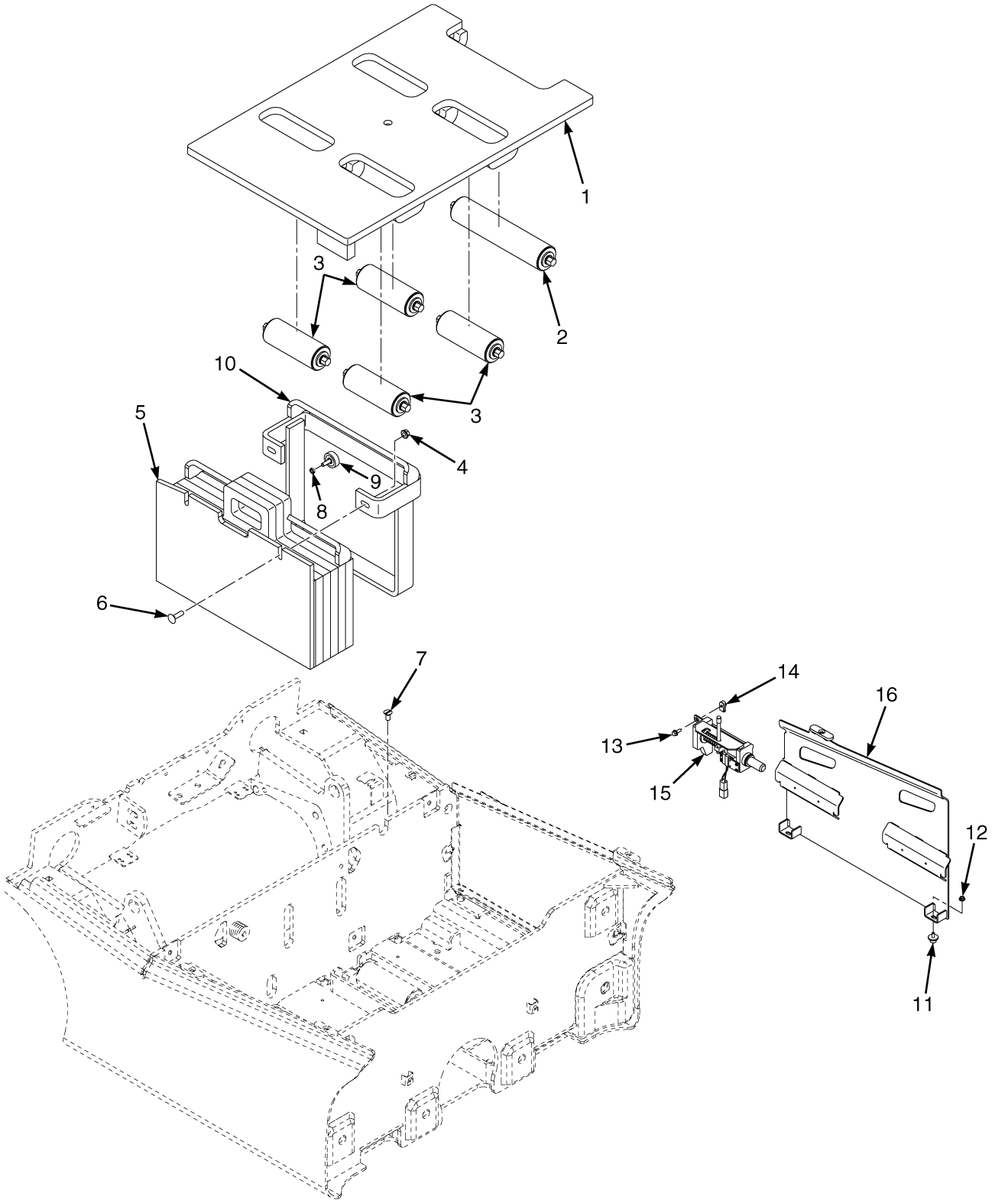

©2015 Yale Europe Materials Handling Limited

BATTERY TRAY OPTIONS

SIDE REMOVAL (S/N G807B02920J ↔ 2/2015)

KEY:
A: 546 mm Battery Compartment
B: 642 mm Battery Compartment
C: 750 mm Battery Compartment

ITEM	PART NO.	DESCRIPTION	QTY A	QTY B	QTY C
1	580087814	Plate Wldmt	1	..	..
1	580087815	Plate Wldmt	..	1	..
1	580087816	Plate Wldmt	..	..	1
2	~~504035206~~				
	582028836	Roller	1	1	1
3	~~580087919~~				
	582020963	Roller	4	4	4
4	580027572	Nut	2	2	2
5	**a** ~~580090911~~				
	582015438	Add-ON Counterweight	..	1	..
5	**b** 580089574	Add-On Counterweight	..	1	..
6	520041824	Bolt	2	2	2
7	580093901	Capscrew	1	1	1
8	580060019	Nut	2	2	2
9	580086939	Rubber Mount	2	2	2
10	580090912	Spacer Block	..	..	1
11	504238222	Buffer	2	2	2
12	~~580004321~~				
	580047919	Nut	2	2	2
13	580049011	Capscrew	2	2	2
14	580051800	Nut (Foldover)	2	2	2
15	582011629	Retainer (☞Page 1-100)	1	1	1
16	550027121	Panel	1	..	..
16	550027122	Panel	..	1	..
16	550027123	Panel	..	..	1

FOOTNOTES:

a Model: ERP16VT,18VT

b Model: ERP20VT

©2015 Yale Europe Materials Handling Limited

BATTERY TRAY OPTIONS (FIGURE 1-38)

SIDE REMOVAL (2/2015 →)

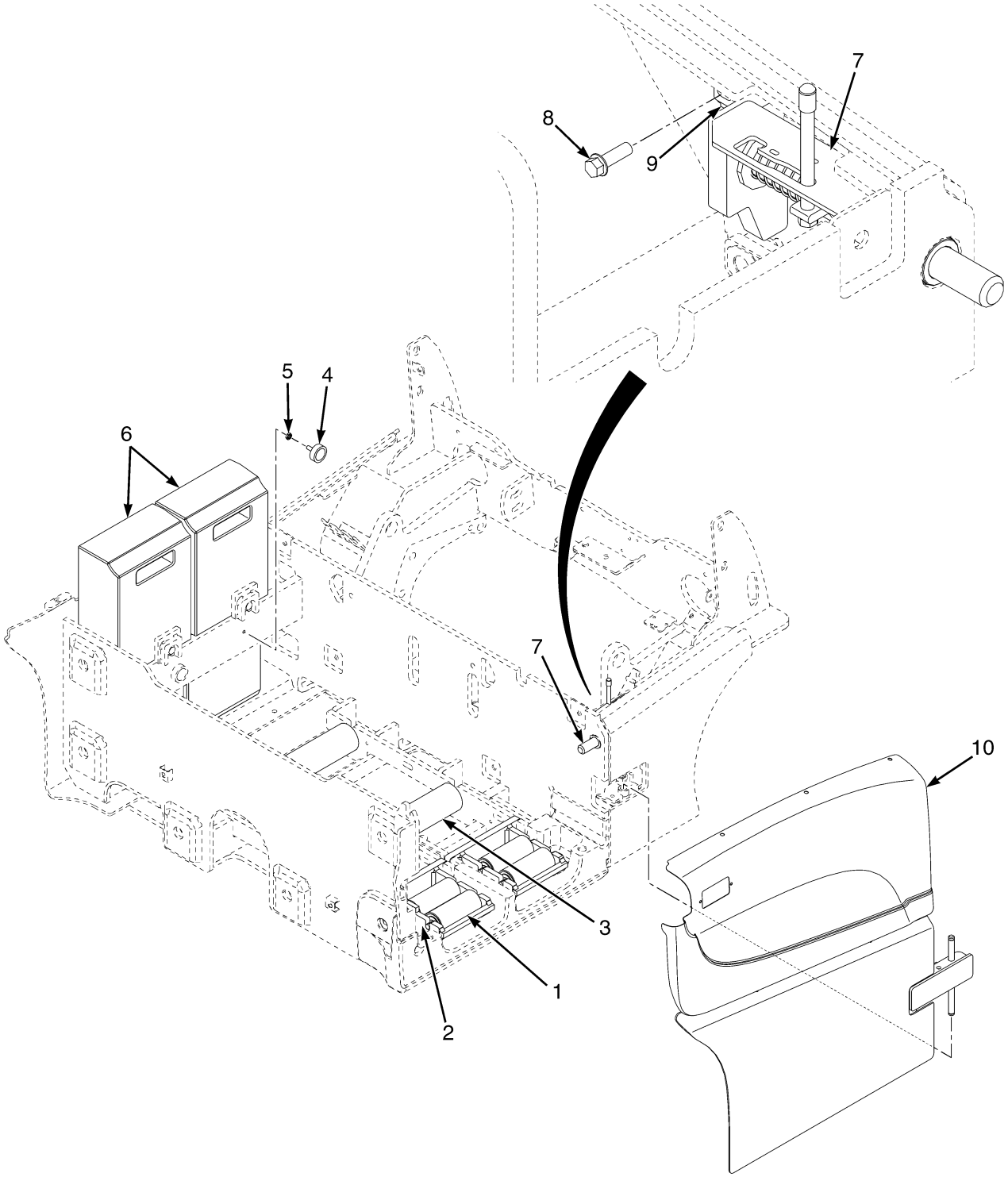

©2015 Yale Europe Materials Handling Limited

BATTERY TRAY OPTIONS

SIDE REMOVAL (2/2015 →)

ITEM	PART NO.	DESCRIPTION	QTY
1	582046125	Roller	4
2	582045703	Bracket	2
3	~~580087919~~		
	582020963	Roller	4
4	580086939	Rubber Mount	2
5	580060019	Nut	2
6	. . . . .	Auxiliary Counterweight (☞Page 1-102, ☞Page 1-104)	..
7	582020007	Retainer (☞Page 1-100)	1
8	580049011	Capscrew	2
9	580051800	Nut (Foldover)	2
10	. . . . .	Battery Compartment Doors	..

©2015 Yale Europe Materials Handling Limited

BATTERY TRAY OPTIONS (FIGURE 1-39)

SIDE REMOVAL — WITH REMOVABLE BATTERY TRAY (2/2015 →)

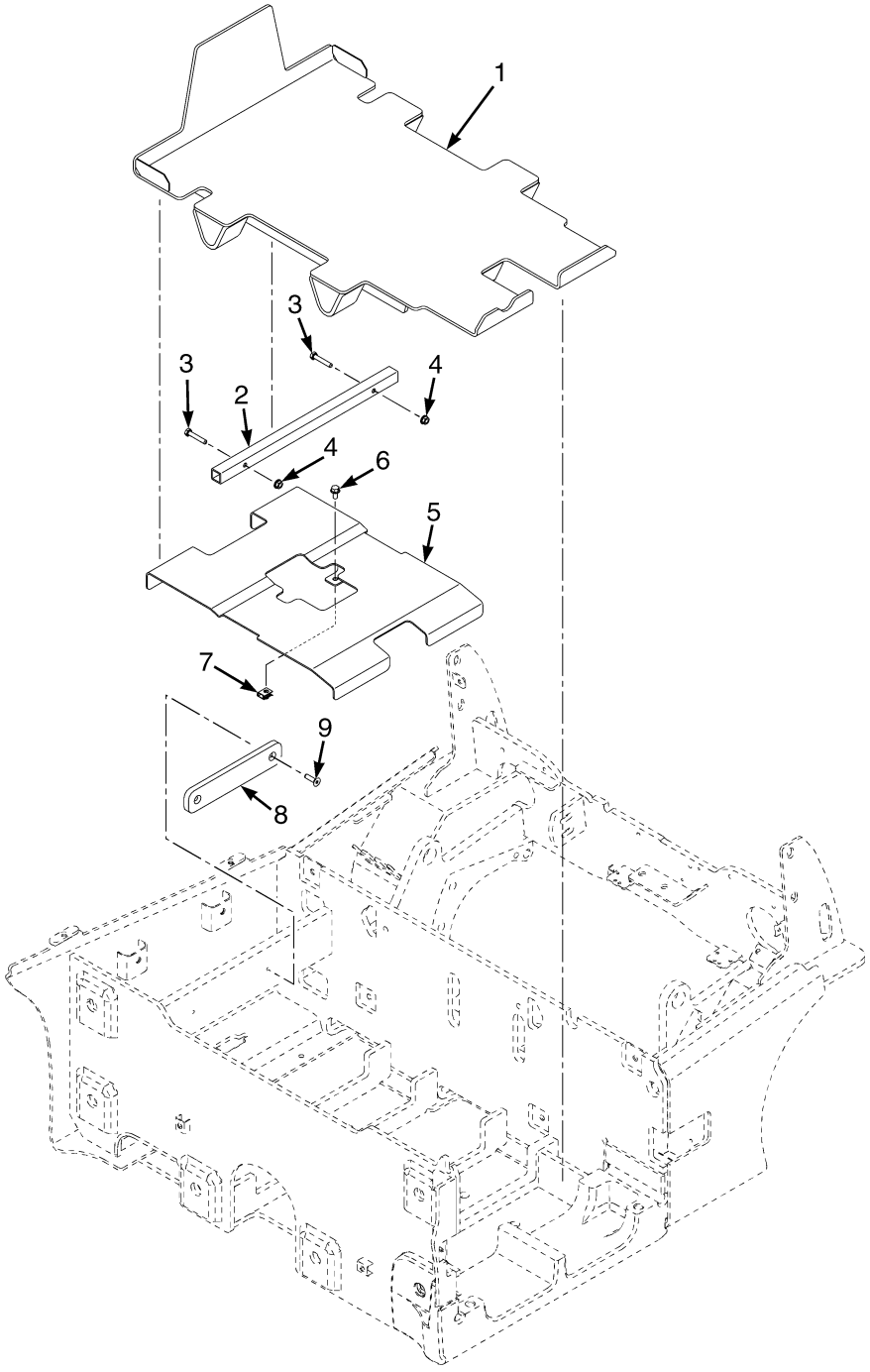

BP121353

©2015 Yale Europe Materials Handling Limited

BATTERY TRAY OPTIONS

SIDE REMOVAL – WITH REMOVABLE BATTERY TRAY (2/2015 →)

KEY:
A: 546 mm Battery Compartment
B: 642 mm Battery Compartment
C: 750 mm Battery Compartment

ITEM	PART NO.	DESCRIPTION	QTY A	QTY B	QTY C
1	582045700	Battery Tray	2	..	..
1	582045701	Battery Tray	..	2	..
1	582045702	Battery Tray	..	..	2
2	. . . . .	Tube	1	1	1
3	449001052	Capscrew	2	2	2
4	580027573	Nut (Flange)	2	2	2
5	582045697	Guard	1	..	..
5	582045698	Guard	..	1	..
5	582045699	Guard	..	..	1
6	~~582041056~~				
	580047714	Capscrew	2	2	2
7	582038389	Nut	2	2	2
8	. . . . .	Spacer Plate	1	1	1
9	934204901	Capscrew	2	2	2

©2015 Yale Europe Materials Handling Limited

BATTERY COMPARTMENT DOOR (FIGURE 1-40)

SIDE REMOVAL (2/2015 →)

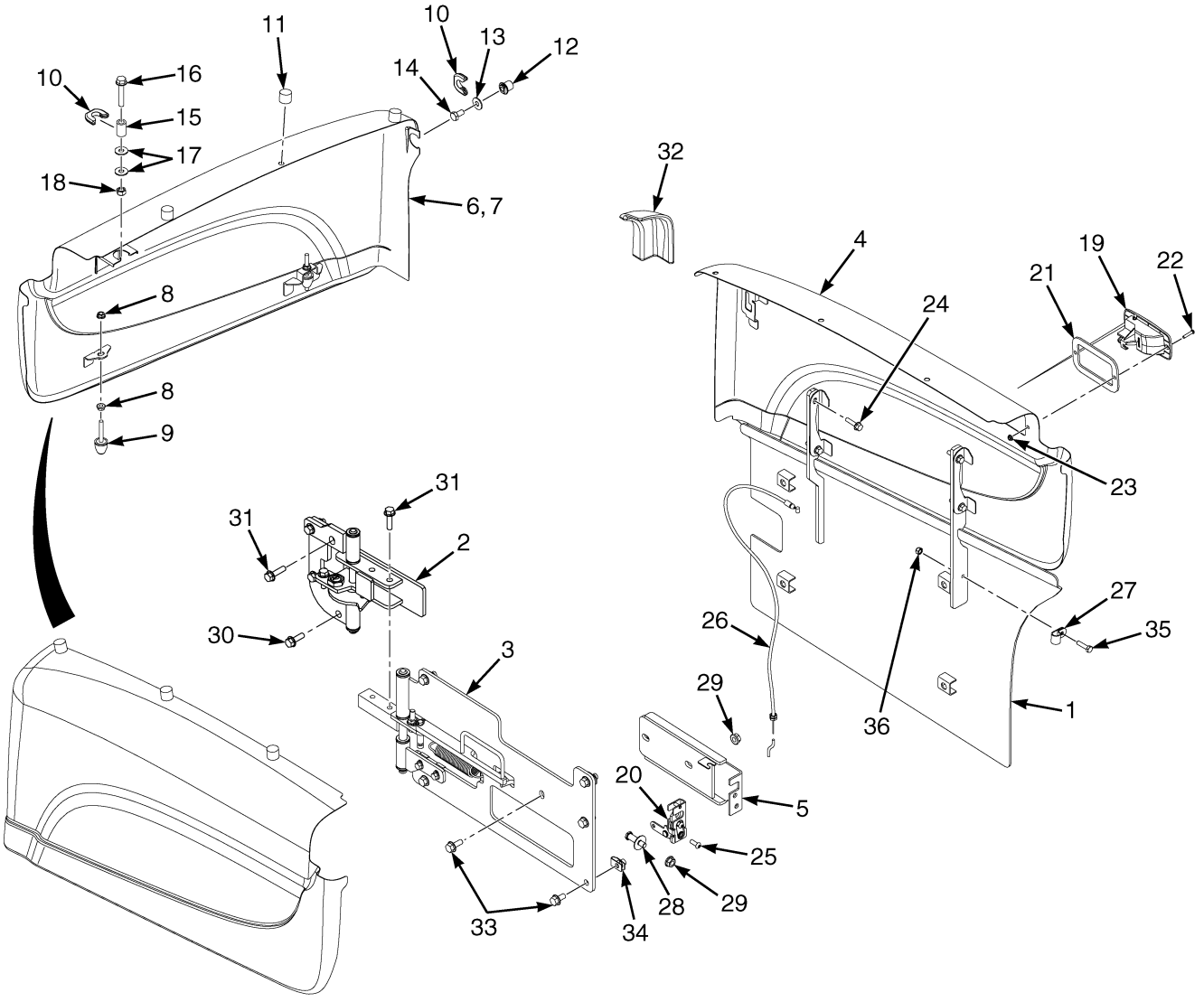

©2015 Yale Europe Materials Handling Limited

BATTERY COMPARTMENT DOOR

SIDE REMOVAL (2/2015 →)

KEY:
A: 546 mm Battery Compartment
B: 642 mm Battery Compartment
C: 750 mm Battery Compartment

ITEM	PART NO.	DESCRIPTION	QTY A	QTY B	QTY C
1	550083618	Door	1	..	..
1	550083619	Door	..	1	..
1	550083620	Door	..	..	1
2	582042496	Hinge (Frame) (☞Page 1-96)	1	1	1
3	582042497	Hinge (Frame)	1	1	1
4	550084140	Cover	1	..	..
4	550084141	Cover	..	1	..
4	550084142	Cover	..	..	1
5	582041794	Plate (Latch Mounting)	1	1	1
6	524303230	Side Panel (LH) (WB1)	1	..	..
6	524303231	Side Panel (LH) (WB2)	..	1	..
6	524303232	Side Panel (LH) (WB3)	..	..	1
7	524303576	Side Panel (LH)	1	..	..
7	524303578	Side Panel (LH)	..	1	..
7	524303580	Side Panel (LH)	..	..	1
8	~~580004321~~				
	580047919	Nut	4	4	4
9	580096550	Isolator	2	2	2
10	580092374	Clip (Side Panel)	2	2	2
11	580094279	Bumper	3	3	3
12	580086081	Pin	1	1	1
13	504226242	Washer	1	1	1
14	449001415	Capscrew	1	1	1
15	580081502	Tube	1	1	1
16	580048227	Capscrew	1	1	1
17	504226242	Washer	2	2	2
18	449015098	Nut	1	1	1
19	582034647	Handle	1	1	1
20	582034645	Latch	1	1	1
21	582034646	Plate	1	1	1
22	582009563	Screw	2	2	2
23	580044946	Nut	2	2	2
24	580049840	Capscrew	4	4	4
25	580030975	Screw (Button Head)	2	2	2
26	582034524	Cable	1	1	1
27	582017798	Clip	1	1	1
28	582034648	Striker	1	1	1
29	580027573	Nut (Flange)	3	3	3
30	580030966	Capscrew	2	2	2
31	580049229	Capscrew	3	3	3
32	582042884	Seal	1	1	1
33	580049231	Capscrew	6	6	6
34	580026621	Nut	4	4	4
35	449001192	Screw	1	1	1

©2015 Yale Europe Materials Handling Limited

BATTERY COMPARTMENT DOOR

SIDE REMOVAL (2/2015 →)

KEY:
A: 546 mm Battery Compartment
B: 642 mm Battery Compartment
C: 750 mm Battery Compartment

ITEM	PART NO.	DESCRIPTION	QTY A	QTY B	QTY C
36	449015112	Locknut	1	1	1

©2015 Yale Europe Materials Handling Limited

NOTES

©2015 Yale Europe Materials Handling Limited

FRAME HINGE (FIGURE 1-41)

(2/2015 →)

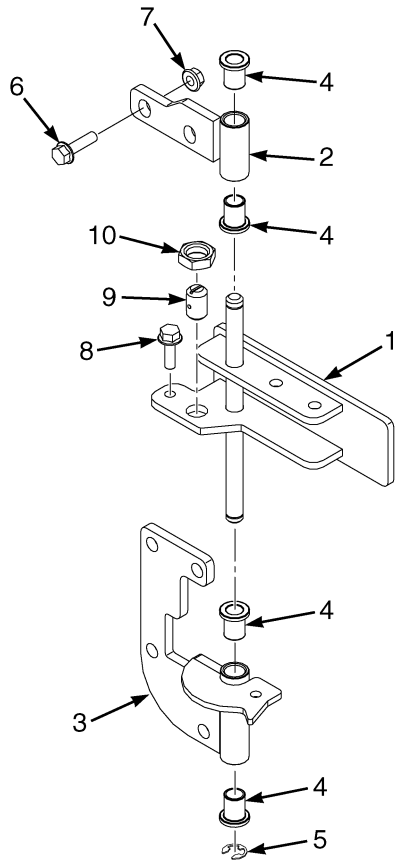

BP121309

©2015 Yale Europe Materials Handling Limited

FRAME HINGE

(2/2015 →)

ITEM	PART NO.	DESCRIPTION	QTY
	582042496	Hinge	1
1	550088446	Hinge	1
2	582041785	Hinge	1
3	582041783	Hinge	1
4	582042489	Bushing	4
5	580038063	E-Ring	1
6	580049229	Capscrew	1
7	580027573	Nut (Flange)	1
8	580030966	Capscrew	1
9	582042488	Spring Guide	1
10	580060022	Nut	1

©2015 Yale Europe Materials Handling Limited

BATTERY RETENTION (FIGURE 1-42)

(→ S/N G807B02919J)

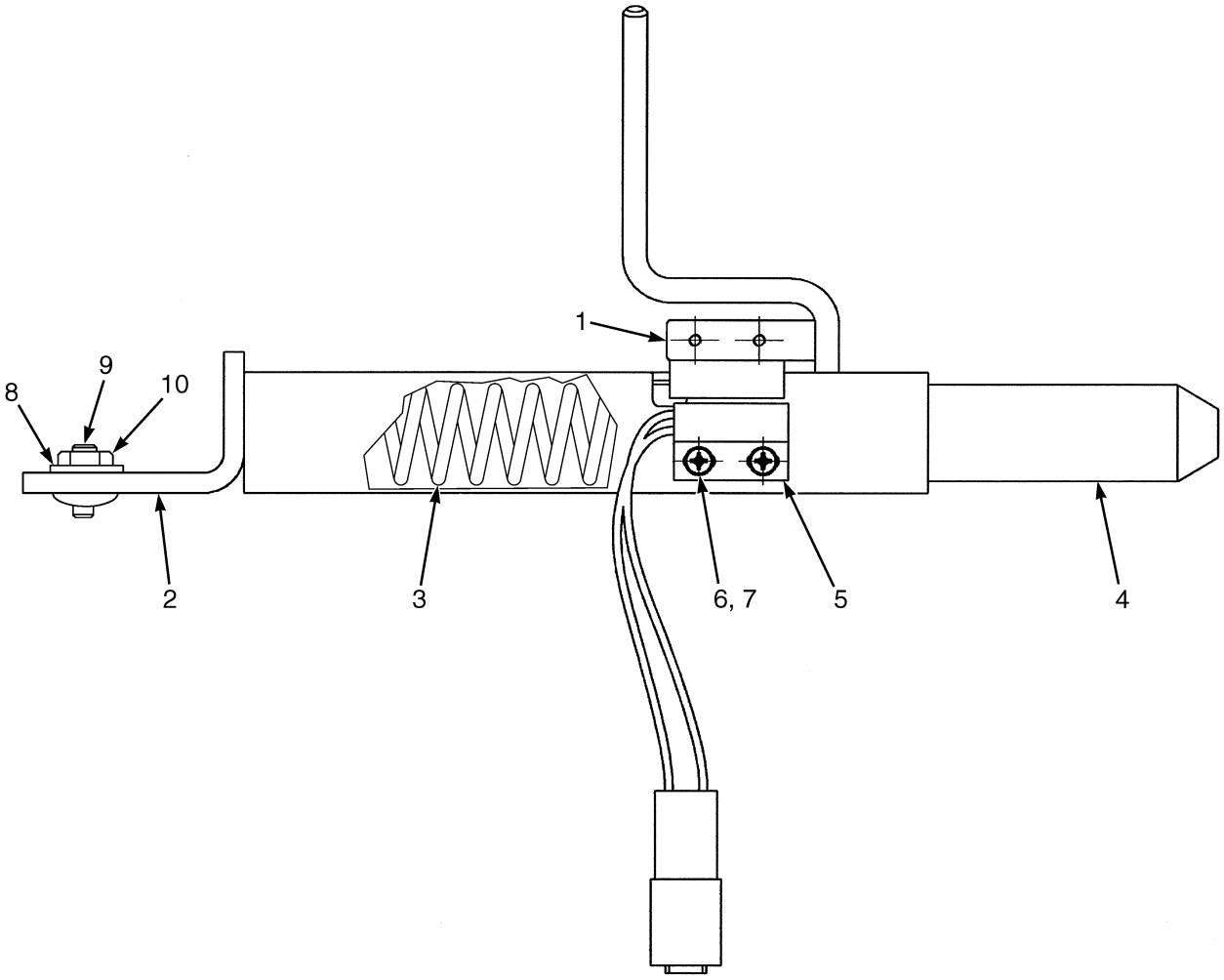

BP120563

©2015 Yale Europe Materials Handling Limited

BATTERY RETENTION

(→ S/N G807B02919J)

ITEM	PART NO.	DESCRIPTION	QTY
	524328789	Retainer (Assembly)	1
1	580051442	Magnet	1
2	524327738	Bracket	1
3	524327744	Spring	1
4	524327741	Pin	1
5	580071587	Switch Assembly	1
6	940004902	Washer	4
7	449007032	Screw	4
8	504226242	Washer	1
9	580023049	Bolt	1
10	580027573	Nut (Flange)	1

©2015 Yale Europe Materials Handling Limited

BATTERY RETENTION (FIGURE 1-43)

(S/N G807B02920J →)

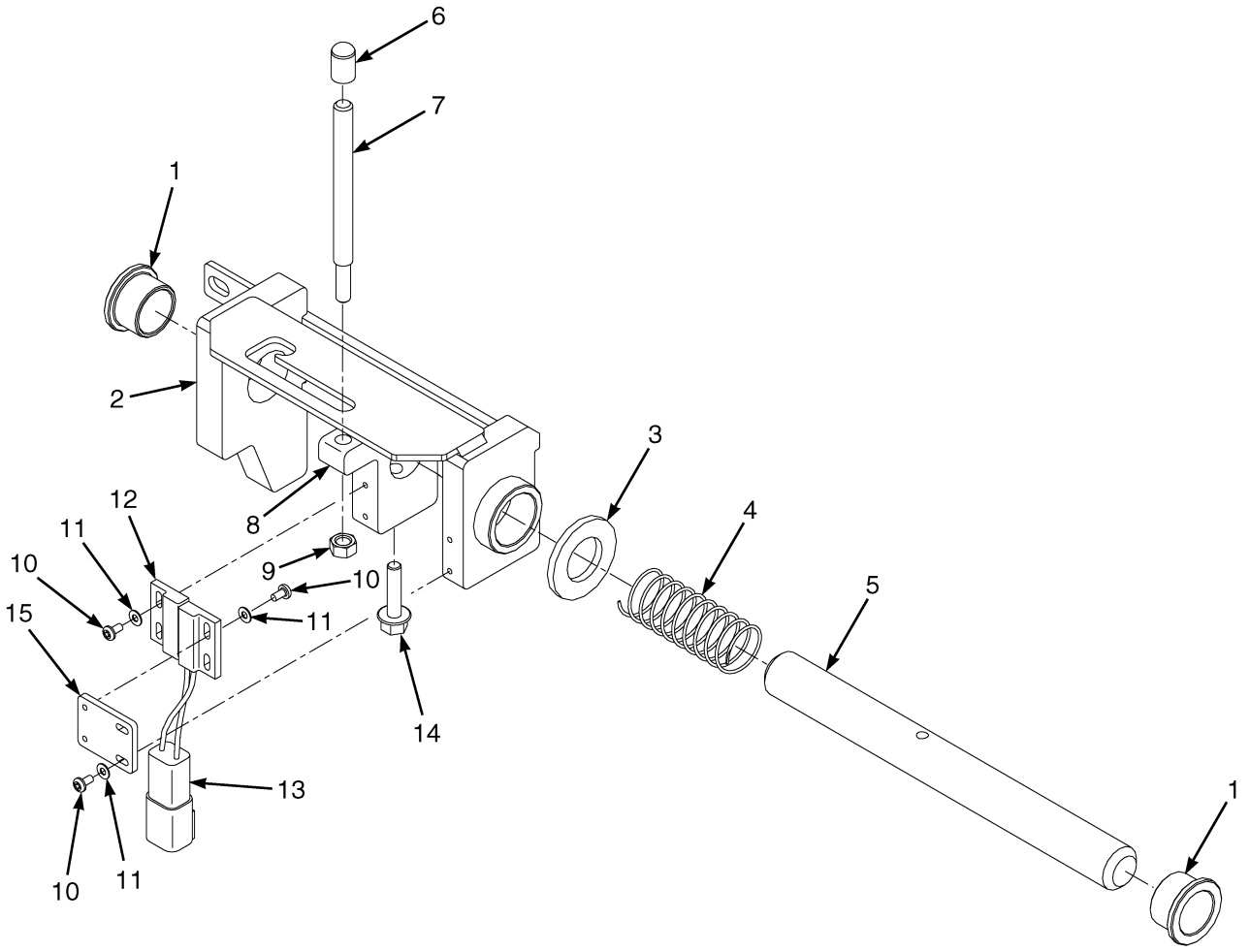

©2015 Yale Europe Materials Handling Limited

BATTERY RETENTION

(S/N G807B02920J →)

ITEM	PART NO.	DESCRIPTION	QTY
	a 582011629	Retainer	1
	b 582020007	Retainer	1
1	582011628	Bushing	2
2	**a** 582011619	Bracket	1
2	**b** 582020006	Bracket	1
3	061278400	Washer	1
4	524327744	Spring	1
5	582011618	Pin	1
6	580041768	Cap	1
7	582012293	Lever	1
8	582011617	Block	1
9	**a** ~~580004321~~		
	580047919	Nut	1
9	**b** 449015002	Nut	1
10	449007032	Screw	6
11	940004902	Washer	6
12	580051442	Magnet	1
13	580071587	Switch Assembly	1
13	580071586	Switch	1
13	505968540	Connector (Secondary Lock)	1
13	505968514	Terminal (Pin)	2
13	580022893	Connector (2 Pin)	1
14	580038355	Capscrew	1
15	. . . . .	Plate	1

FOOTNOTES:

a → 2/2015

b 2/2015 →

©2015 Yale Europe Materials Handling Limited

AUXILIARY COUNTERWEIGHT (FIGURE 1-44)

SIDE BATTERY REMOVAL (2/2015 →)

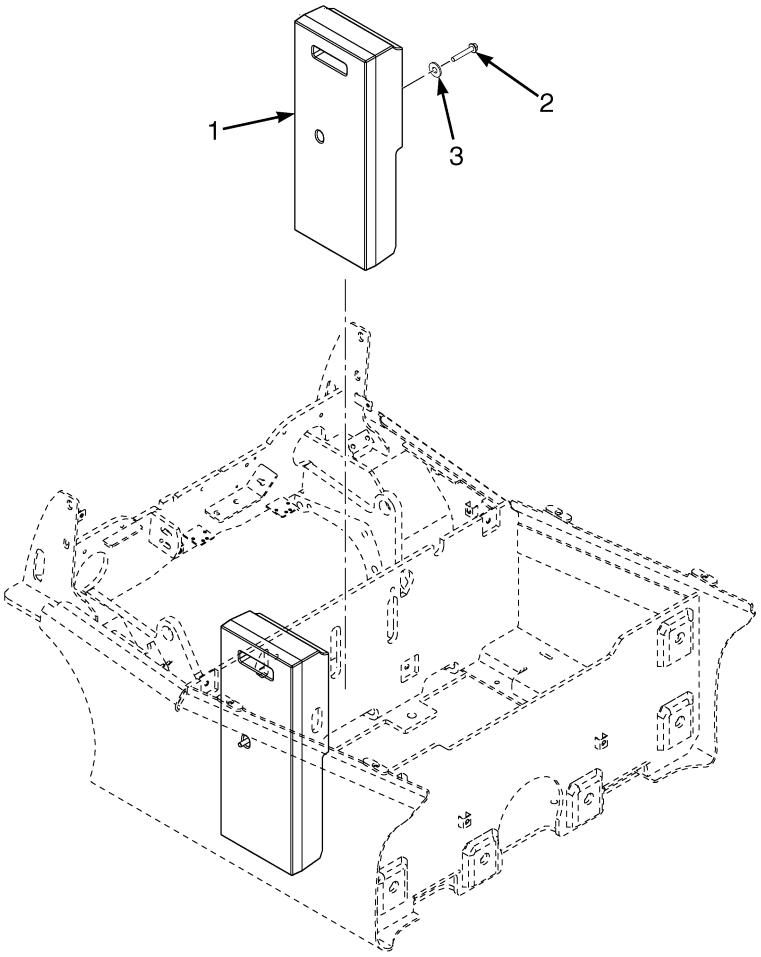

BM121288

ITEM	PART NO.	DESCRIPTION	QTY
1	582031844	Auxiliary Counterweight	1
2	580077405	Capscrew	1
3	504223217	Washer	1
	a 580086939	Rubber Mount	2
	a 580060019	Nut	2

FOOTNOTES:

a Not Illustrated

©2015 Yale Europe Materials Handling Limited

AUXILIARY COUNTERWEIGHT (FIGURE 1-45)

DROP-IN BATTERY REMOVAL (2/2015 →)

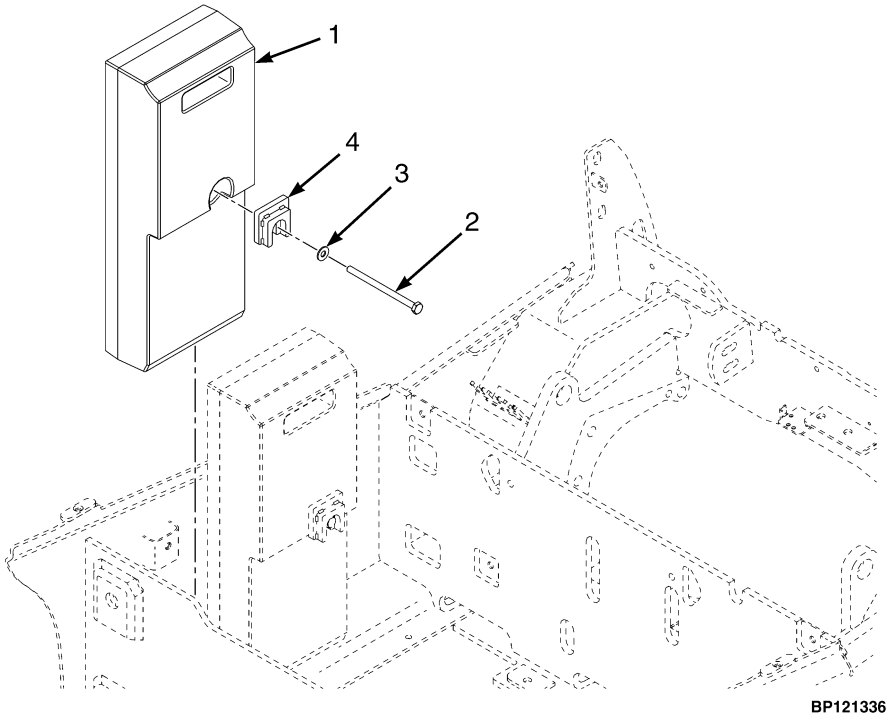

KEY:

A: 546 mm Battery Compartment (J1.5XNT)
B: 546 mm Battery Compartment (J1.6XNT)
C: 642 mm Battery Compartment (J1.8XNT)
D: 750 mm Battery Compartment (J2.0XNT)

ITEM	PART NO.	DESCRIPTION	QTY A	B	C	D
1	582031844	Auxiliary Counterweight	1	2	2	1
2	449001293	Capscrew	1	2	2	1
3	504071785	Washer	1	2	2	1
4	582043822	Spacer	1	2	2	1

©2015 Yale Europe Materials Handling Limited

AUXILIARY COUNTERWEIGHT (FIGURE 1-46)

OPTIONAL — J2.0XNT (1/2015 →)

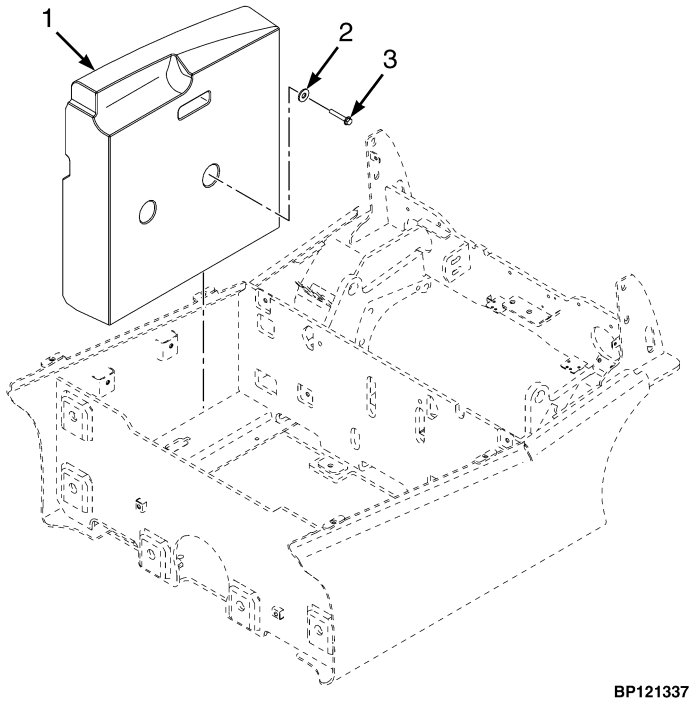

KEY:
A: Side Battery Removal
B: Drop-In Battery Removal

ITEM	PART NO.	DESCRIPTION	QTY A	QTY B
1	582031845	Auxiliary Counterweight (642 mm Battery Compartment)	1	..
1	582031846	Auxiliary Counterweight (642 mm Battery Compartment)	..	1
2	504223217	Washer	2	2
3	580077405	Capscrew	2	2

©2015 Yale Europe Materials Handling Limited

COWL MOUNT (FIGURE 1-47)
(→ S/N G807B02919J)

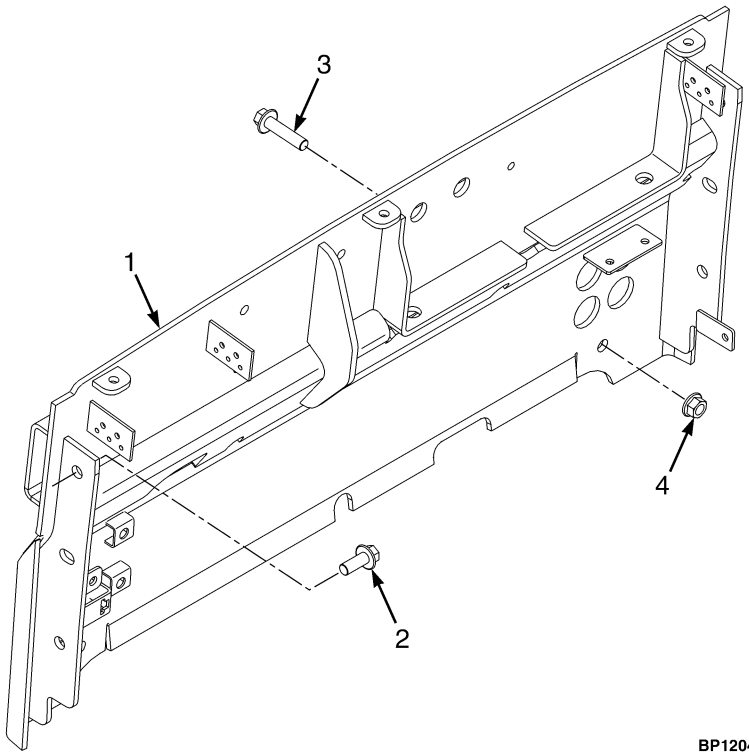

ITEM	PART NO.	DESCRIPTION	QTY
1	550017001	Cowl	1
2	580056527	Capscrew	6
3	580072264	Capscrew	2
4	~~580004218~~		
	580056528	Nut (Shoulder)	2

©2015 Yale Europe Materials Handling Limited

COWL MOUNT (FIGURE 1-48)

(S/N G807B02920J →)

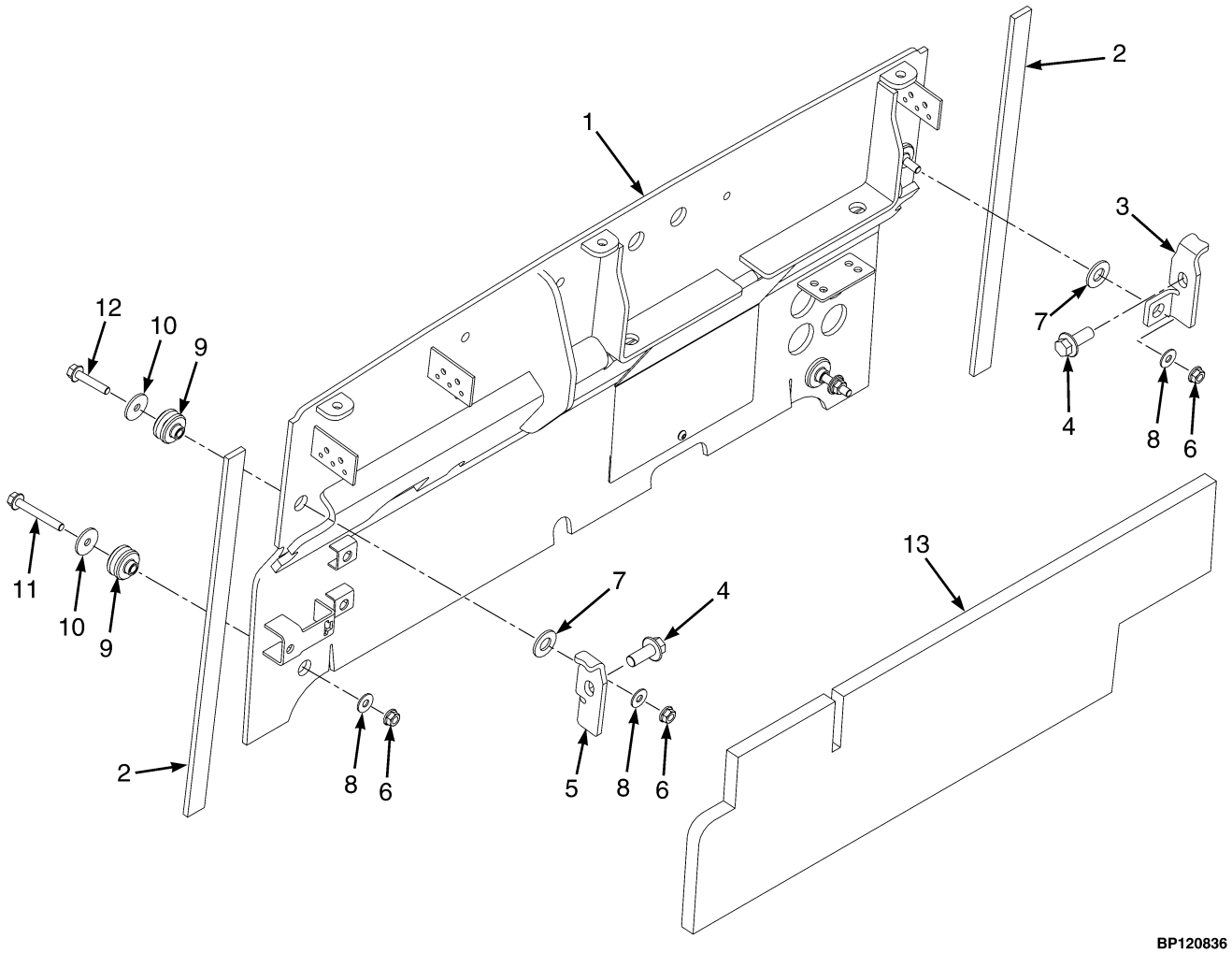

©2015 Yale Europe Materials Handling Limited

COWL MOUNT
(S/N G807B02920J →)

ITEM	PART NO.	DESCRIPTION	QTY
1	550026997	Cowl	1
2	582014213	Seal (Foam)	2
3	582014154	Bracket (RH)	2
4	580056527	Capscrew	2
5	582014155	Bracket (LH)	1
6	580027573	Nut (Flange)	4
7	505975509	Washer	2
8	504226242	Washer	4
9	580044129	Isolator	4
10	580056666	Washer	4
11	580030969	Capscrew	2
12	580030967	Capscrew	2
13	**a** 582012880	Liner	1

FOOTNOTES:

a S/N G807B02301J →

©2015 Yale Europe Materials Handling Limited

FLOOR PLATES (FIGURE 1-49)

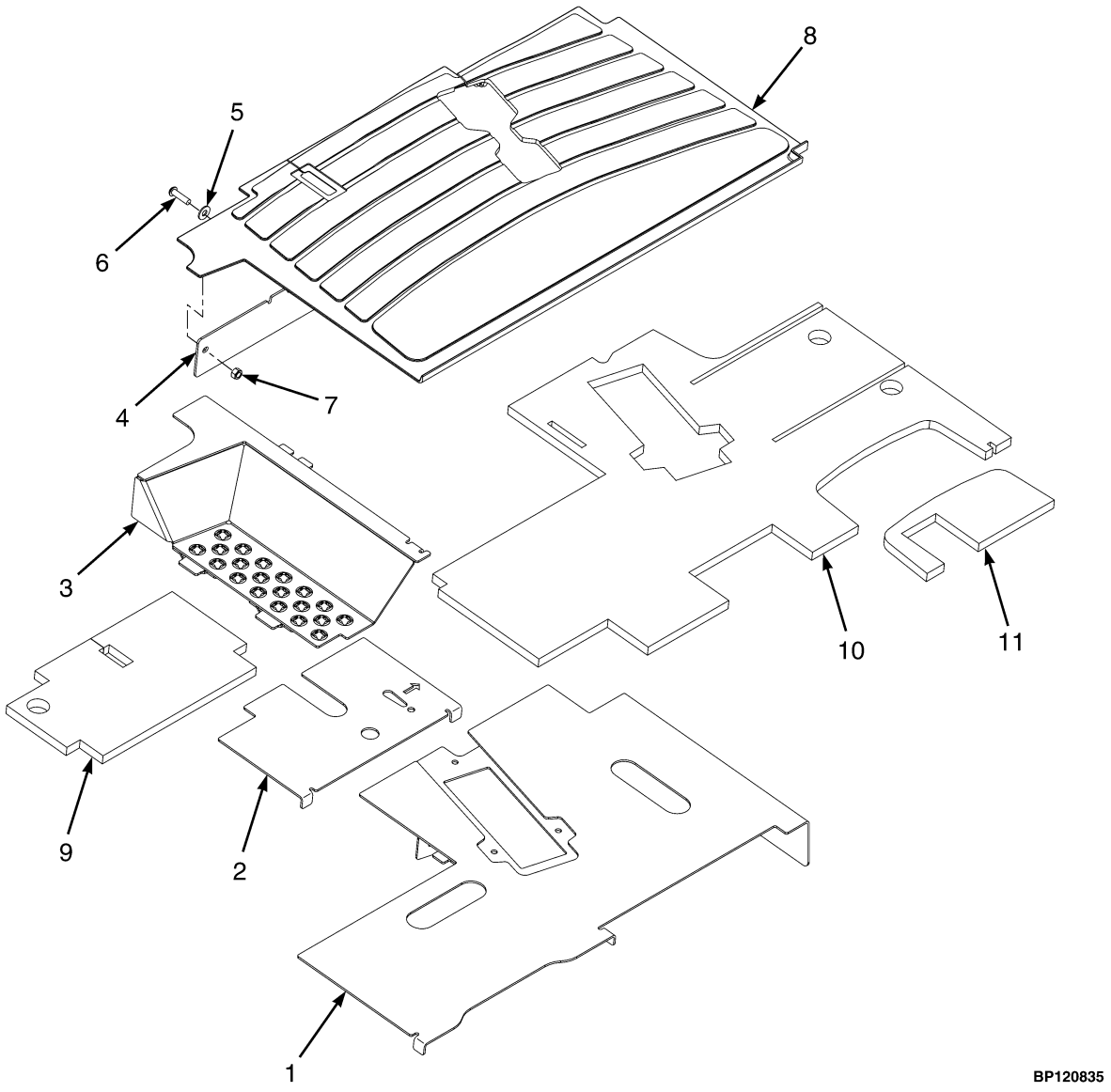

©2015 Yale Europe Materials Handling Limited

FLOOR PLATES

KEY:
A: Manual Hydraulics
B: Electronic Hydraulics

ITEM	PART NO.	DESCRIPTION	QTY A	QTY B
1	**b** 580087967	Floorplate (Standard Height)	1	..
1	**i** 582000409	Floorplate (Standard Height)	1	..
1	**c** 580087968	Floorplate (Standard Height)	..	1
1	**f** 582000410	Floorplate (Standard Height)	..	1
1	**a** 580087969	Floorplate (Low Height)	1	..
1	**i** 582000411	Floorplate (Low Height)	1	..
1	**c** 580087970	Floorplate (Low Height)	..	1
1	**f** 582000412	Floorplate (Low Height)	..	1
2	580087966	Floorplate	1	1
3	582029905	Step (Standard Step)	1	1
3	580087972	Floorplate (Low Step)	1	1
4	580087973	Floorplate (Extension-Standard Height)	1	1
5	580003569	Washer	6	6
6	932729908	Capscrew	3	3
7	504230271	Nut	3	3
8	**b** 580092460	Floormat	1	..
8	**d** 582000407	Floormat	1	..
8	**g** 582006492	Floormat	1	..
8	**c** 580092459	Floormat	..	1
8	**e** 582000408	Floormat	..	1
8	**h** 582006493	Floormat	..	1
9	582001004	Liner	1	1
10	582001006	Liner	1	1
11	582001005	Liner	..	1

FOOTNOTES:

a → S/N G807B02115G
b → S/N G807B02115H
c → S/N G807B02119H
d S/N G807B02116H ↔ S/N G807B02281H
e S/N G807B02120H ↔ S/N G807B02364H
f S/N G807B02120H →
g S/N G807B02282H →
h S/N G807B02365H →
i S/N G807B02116H →

©2015 Yale Europe Materials Handling Limited

DASH AND STEERING COLUMN COVERS (FIGURE 1-50)

FIXED COLUMN

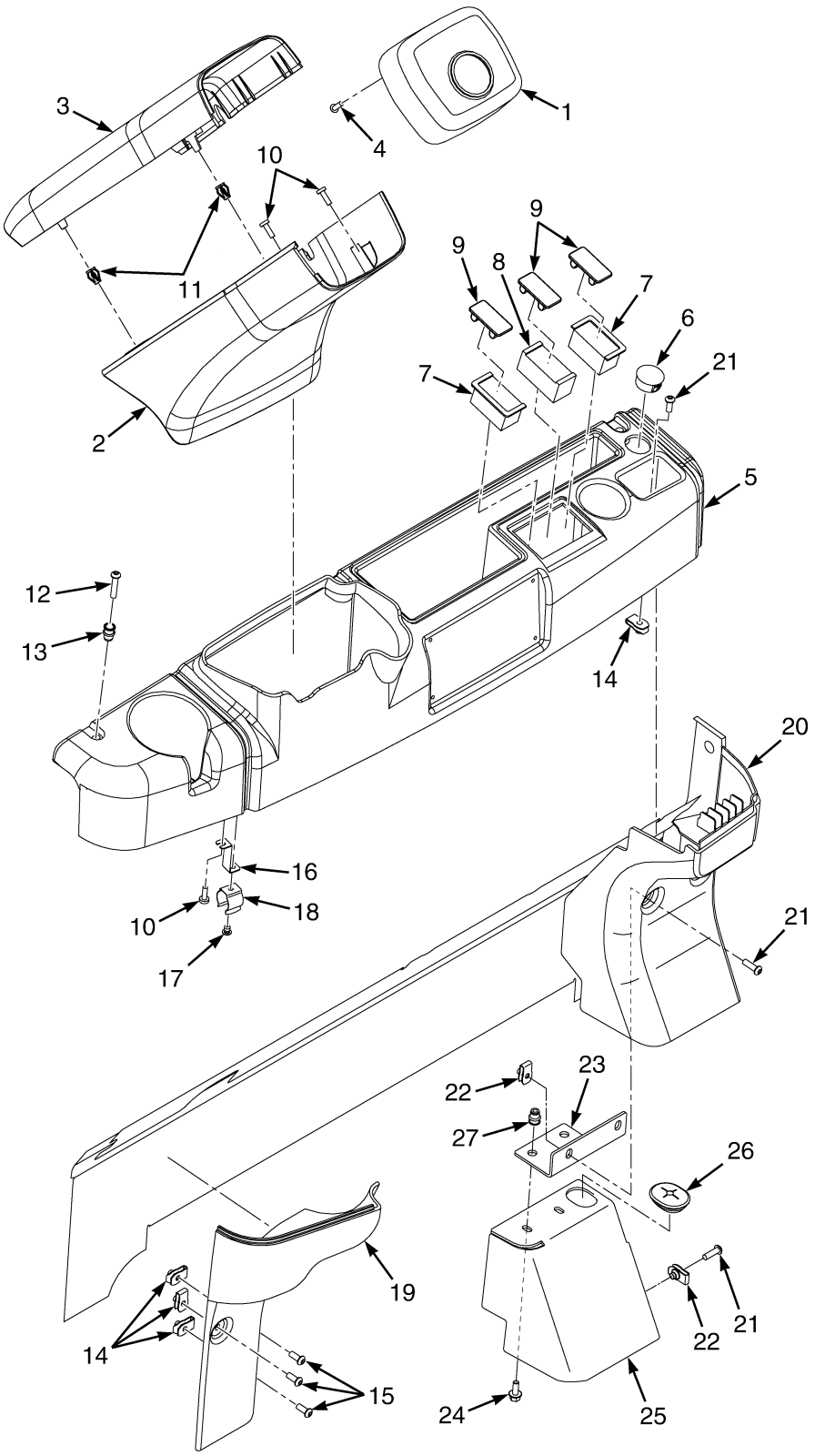

©2015 Yale Europe Materials Handling Limited

DASH AND STEERING COLUMN COVERS
FIXED COLUMN

KEY:
A: With Cab
B: Without Cab

ITEM	PART NO.	DESCRIPTION	QTY A	QTY B
1	580086551	Cover (w/ Turn Signals)	1	1
1	580086579	Cover (w/o Turn Signals)	1	1
2	580086472	Cover (Lower Column)	1	1
3	580086473	Cover (Upper Column)	1	1
4	520038861	Capscrew	4	4
5	580094801	Dash Panel	1	..
5	**a** 580080884	Dash Panel	..	1
5	**b** 582029018	Dash Panel	..	1
6	580093292	Plug	1	1
7	520041817	Panel (End)	2	2
8	520041892	Panel (Center)	1	1
9	520041863	Cover	3	3
10	909904403	Screw	7	7
11	580046139	Clip	2	2
12	932728908	Capscrew	3	3
13	580044859	Insert	3	3
14	504225257	Nut	3	3
15	932728903	Capscrew	4	4
15	932728903	Capscrew (Alternate Part)	3	3
16	580093852	Bracket	3	3
17	580075214	Rivet	3	3
18	580092014	Clip	3	3
19	580093323	Cover	1	1
20	580097533	Cover	..	1
21	505970553	Capscrew	3	2
22	580051800	Nut (Foldover)	3	2
22	504225257	Nut (Alternate Part)	3	3
23	582006755	Bracket	..	1
24	580049011	Capscrew	..	2
25	582006754	Hose Guard	1	..
26	582001247	Grommet	1	..
27	580041704	Insert	2	2

FOOTNOTES:

a → 12/2013

b 12/2013 →

©2015 Yale Europe Materials Handling Limited

DASH AND STEERING COLUMN COVERS (FIGURE 1-51)

TELESCOPIC COLUMN

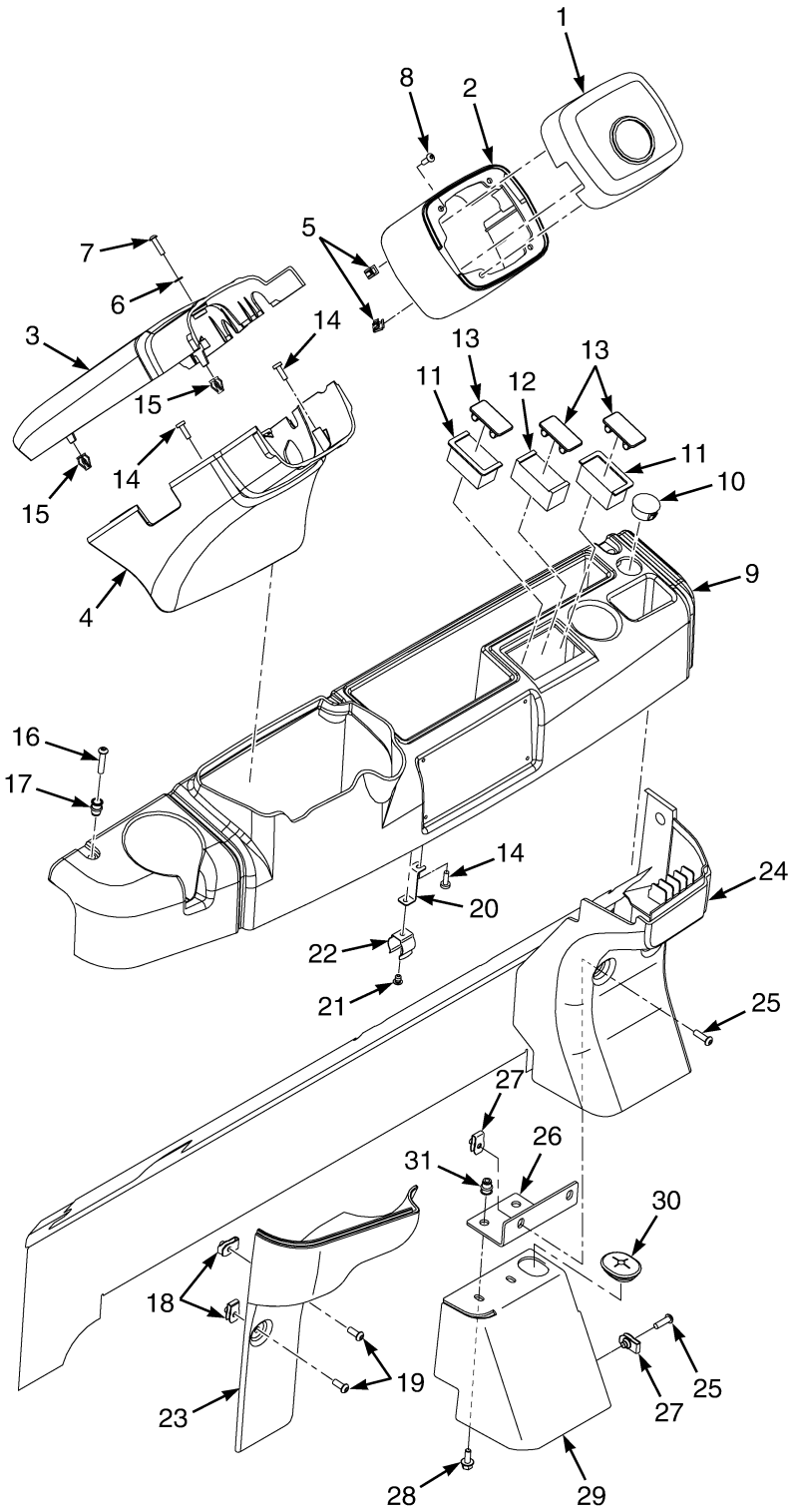

BP120522

©2015 Yale Europe Materials Handling Limited

DASH AND STEERING COLUMN COVERS
TELESCOPIC COLUMN

KEY:
A: With Cab
B: Without Cab

ITEM	PART NO.	DESCRIPTION	QTY A	QTY B
1	580086551	Cover (w/ Turn Signal)	1	1
1	580086579	Cover (w/o Turn Signal)	1	1
2	580086580	Cover (Telescoping)	1	1
3	580086471	Cover (Upper)	1	1
4	580086470	Cover (Lower)	1	1
5	580046139	Clip	2	2
6	449021002	Washer	1	1
7	580029727	Capscrew	1	1
8	520038861	Capscrew	4	4
9	580094801	Dash Panel	1	..
9	**a** 580080884	Dash Panel	..	1
9	**b** 582029018	Dash Panel	..	1
10	580093292	Plug	1	1
11	520041817	Panel (End)	2	2
12	520041892	Panel (Center)	1	1
13	520041863	Cover	3	3
14	909904403	Screw	7	7
15	580046139	Clip	2	2
16	932728908	Capscrew	3	3
17	580044859	Insert	3	3
18	504225257	Nut	3	3
19	932728903	Capscrew	4	4
19	932728903	Capscrew (Alternate Part)	3	3
20	580093852	Bracket	3	3
21	580075214	Rivet	3	3
22	580092014	Clip	3	3
23	580093323	Cover	1	1
24	580097533	Cover	..	1
25	505970553	Capscrew	3	2
26	582006755	Bracket	..	1
27	580051800	Nut (Foldover)	3	2
27	504225257	Nut (Alternate Part)	3	3
28	580049011	Capscrew	..	2
29	582006754	Hose Guard	1	..
30	582001247	Grommet	1	..
31	580041704	Insert	2	2

FOOTNOTES:

a → 12/2013

b 12/2013 →

©2015 Yale Europe Materials Handling Limited

STATIC STRAP (FIGURE 1-52)

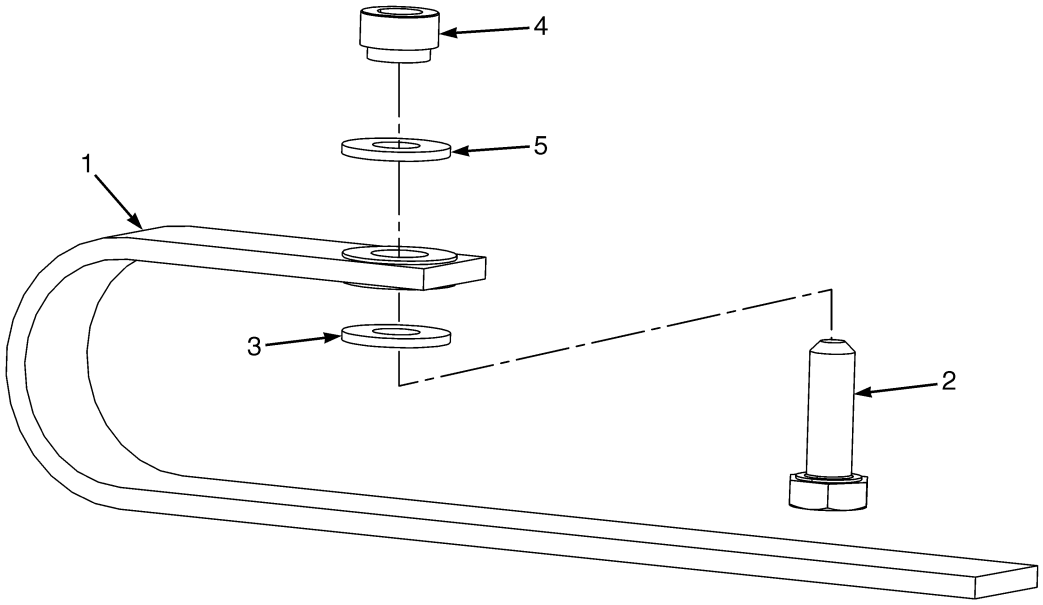

BP120462

ITEM	PART NO.	DESCRIPTION	QTY
1	504232275	Static Strap	1
2	449001015	Capscrew	1
3	504071785	Washer	1
4	580055652	Nut	1
5	940600909	Washer	1

©2015 Yale Europe Materials Handling Limited

NOTES

©2015 Yale Europe Materials Handling Limited

LOAD BACKREST EXTENSION (FIGURE 1-53)

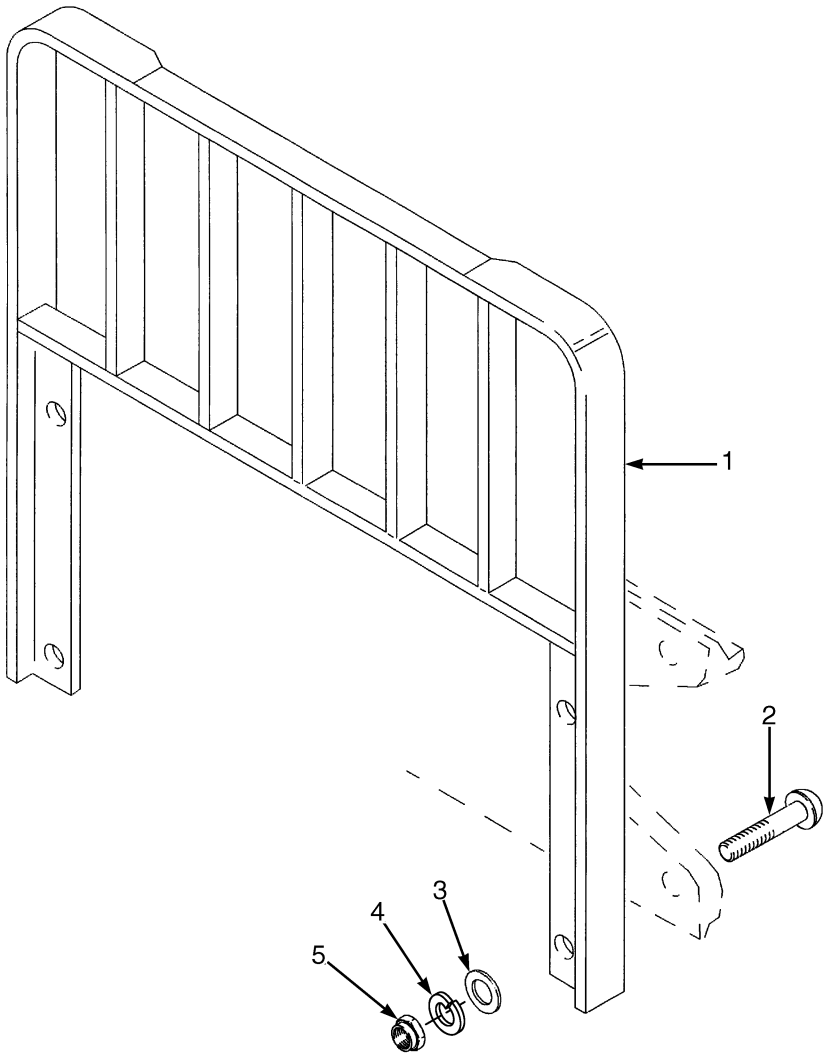

BP120450

©2015 Yale Europe Materials Handling Limited

LOAD BACKREST EXTENSION

KEY:
A: Standard
B: Integral Side Shift

ITEM	PART NO.	DESCRIPTION	QTY A	QTY B
1	524310195	Load Backrest (907 mm)	1	..
1	524310196	Load Backrest (977 mm)	1	..
1	524310195	Load Backrest (907 mm)	..	1
1	524310196	Load Backrest (977 mm)	..	1
2	501749901	Capscrew	4	..
2	501749902	Capscrew	..	4
3	061278200	Washer	4	4
4	504233271	Washer	4	4
5	909882405	Nut	4	4

©2015 Yale Europe Materials Handling Limited

FORKS (FIGURE 1-54)
STANDARD

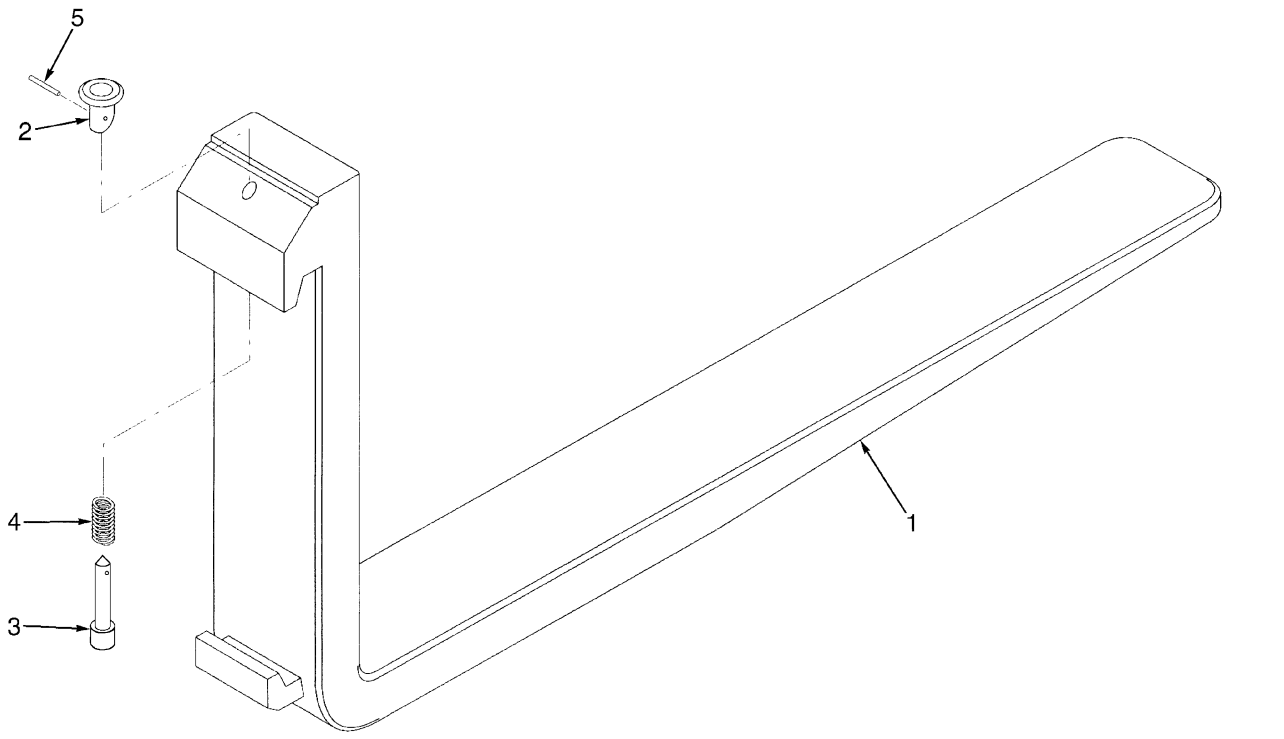

KEY:
A: 80 x 40 mm
B: 100 x 40 mm

ITEM	PART NO.	DESCRIPTION	QTY A	QTY B
1	504242721	Fork (1000 mm)	2	..
1	504242722	Fork (1100 mm)	2	..
1	504242723	Fork (1200 mm)	2	..
1	253937205	Fork (1000 mm)	..	2
1	253937218	Fork (1100 mm)	..	2
1	253937208	Fork (1200 mm)	..	2
2	580034999	Knob	1	1
3	580035000	Pin	1	1
4	580026749	Spring	1	1
5	580035001	Pin	1	1
	580035002	Kit-Latch	1	1

©2015 Yale Europe Materials Handling Limited

FORKS (FIGURE 1-55)
OPTIONAL

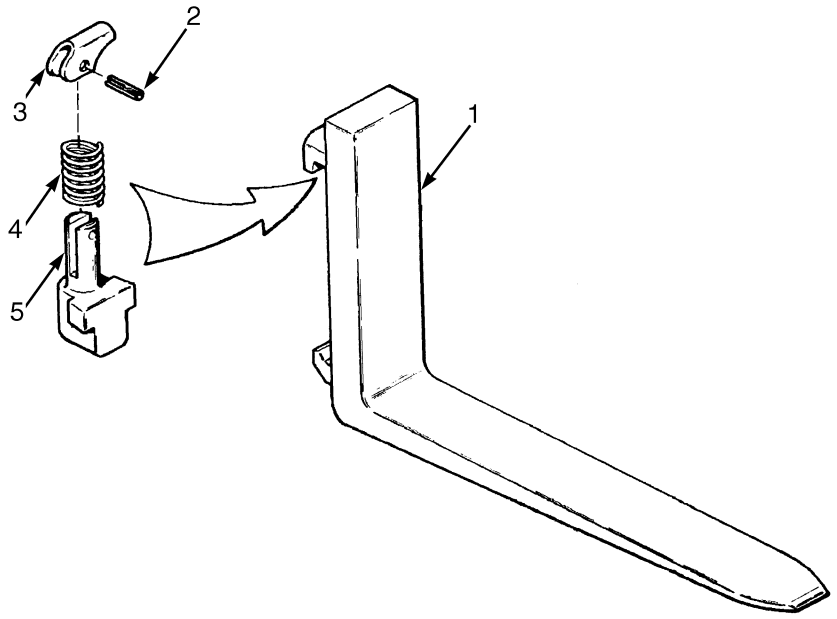

HP120793

KEY:
A: 100 x 40 mm
B: 80 x 40 mm

ITEM	PART NO.	DESCRIPTION	QTY A	QTY B
1	524199308	Fork (1000 mm)	2	..
1	524199309	Fork (1100 mm)	2	..
1	524199311	Fork (1200 mm)	2	..
1	550080327	Fork (1000 mm)	..	2
1	550080328	Fork (1100 mm)	..	2
1	550080240	Fork (1200 mm)	..	2
1	550080327	Fork (1000 mm)	2	..
1	550080328	Fork (1100 mm)	2	..
1	550080329	Fork (1200 mm)	2	..
2	580006844	Roll Pin	1	..
2	. . . . .	Pin	1	1
3	580006843	Latch	1	..
3	. . . . .	Lever	1	1
4	580006842	Spring	1	..
4	. . . . .	Spring	1	1
5	580049861	Pin	1	..
5	. . . . .	Pin	1	1
	580049860	Kit-Latch (Class II)	2	..
	582035685	Kit Fork Latch Mechanism (Class 2A)	2	2

©2015 Yale Europe Materials Handling Limited

LABELS (FIGURE 1-56)
EXTERIOR

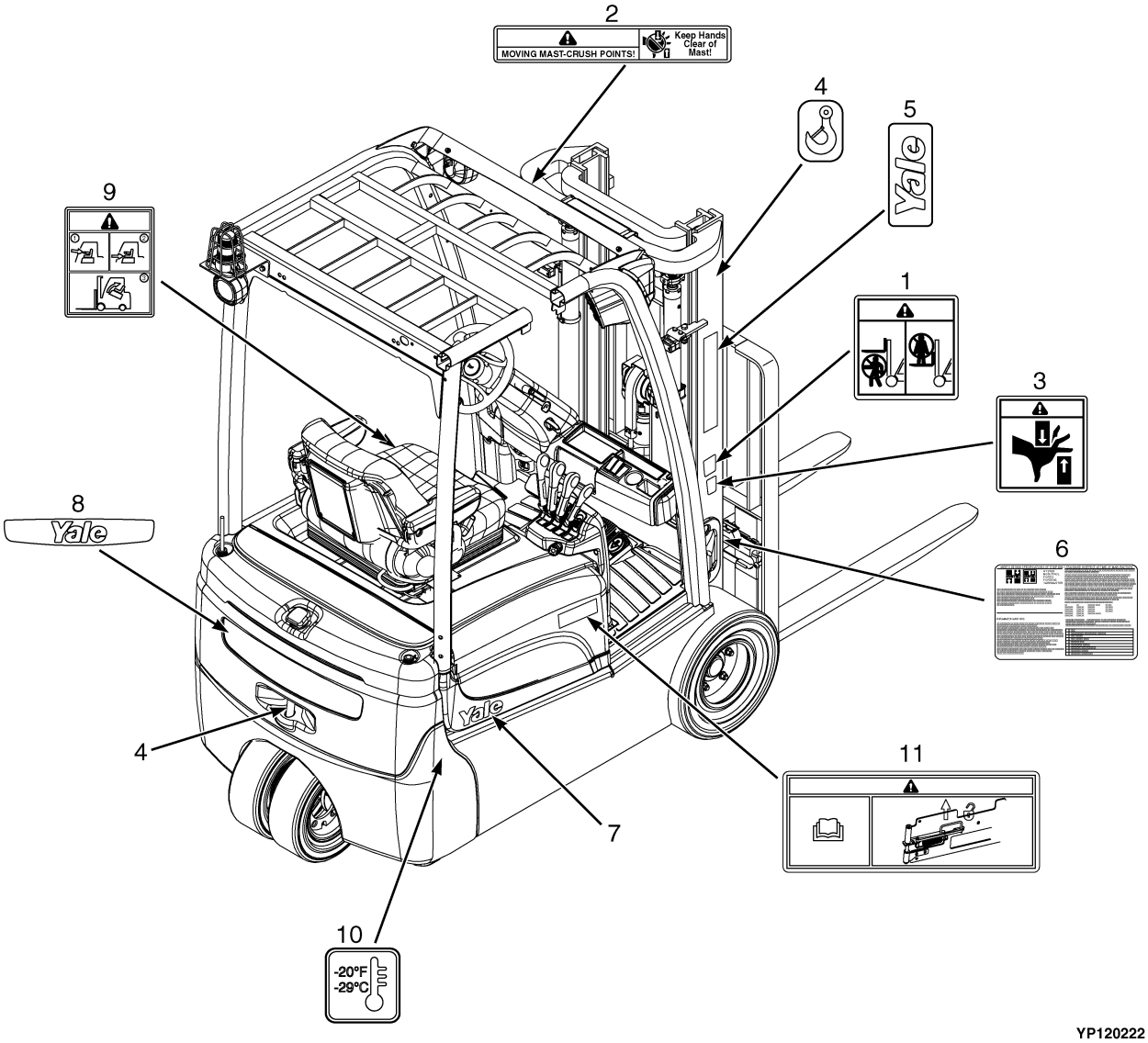

©2015 Yale Europe Materials Handling Limited

LABELS
EXTERIOR

ITEM	PART NO.	DESCRIPTION	QTY
1	505972545	Label (Mast Warning)	2
2	504238219	Label (Mast Warning)	1
3	505974557	Label (Pinch Point)	2
4	580094122	Label (Eye Hook)	4
5	524208881	Label (Yale)	2
6	524162256	Label (Patents and Trademarks)	1
7	524329106	Label (Yale)	2
8	524305613	Label (Counterweight)	1
9	580067649	Warning Label (Electro-Hydraulic)	1
9	582024745	Label (Electronic Hydraulics Caution w/ Rapid Charge)	1
9	582024747	Label (Manual Hydraulics Caution w/ Rapid Charge)	1
10	580084552	Label (Cold Storage)	1
10	580084553	Label (Arctic)	1
11	582042748	Label (Battey Door Caution)	1

©2015 Yale Europe Materials Handling Limited

LABELS (FIGURE 1-57)
INTERIOR

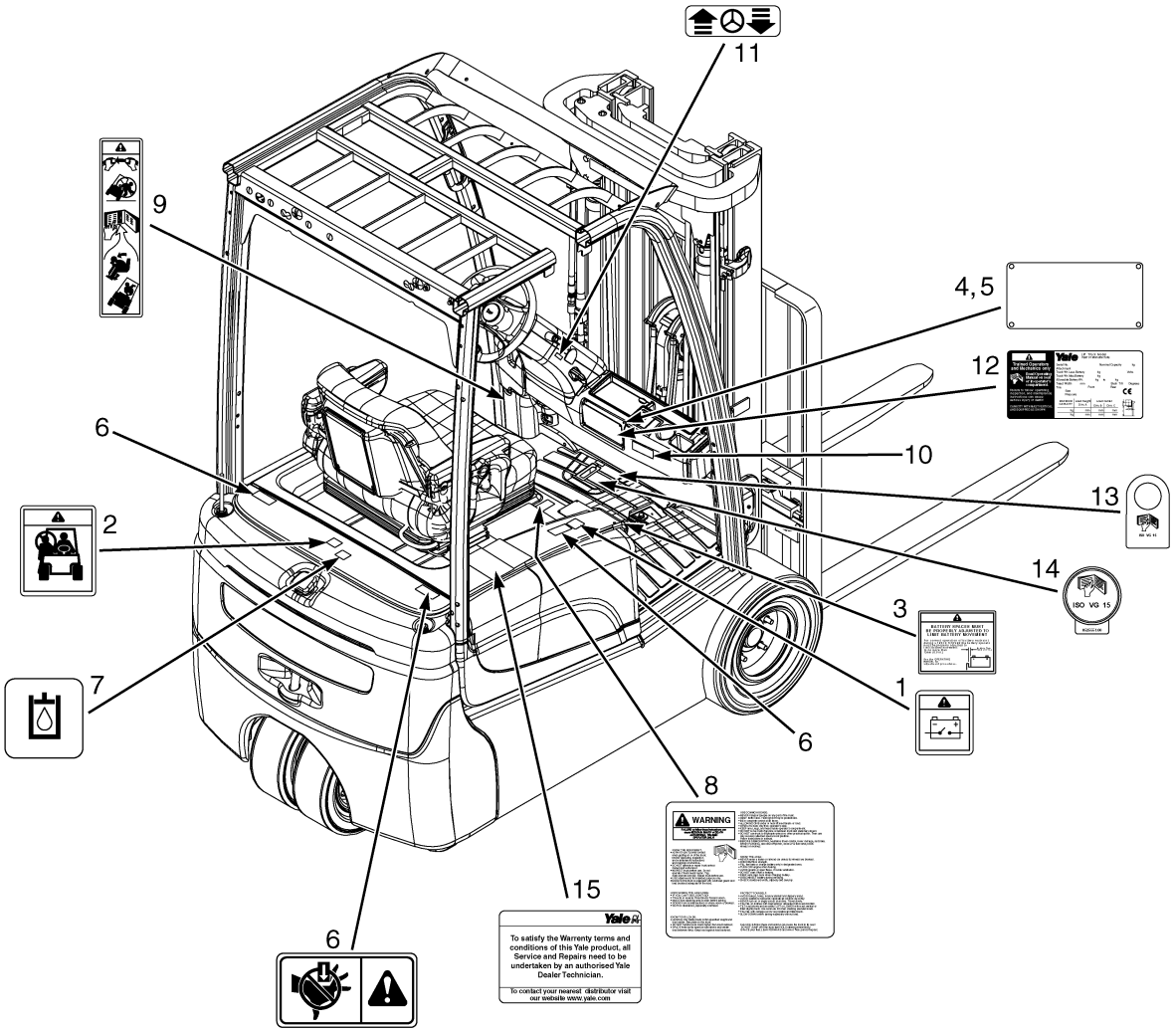

YP120221

©2015 Yale Europe Materials Handling Limited

LABELS
INTERIOR

ITEM	PART NO.	DESCRIPTION	QTY
1	580031629	Label (Battery Disconnect)	1
2	505972566	Label (No Riders)	1
3	518797644	Label (Battery Spacer)	1
4	580008064	Nameplate Cover	1
5	505976530	Rivet	6
6	506395569	Label (Pinch Point)	3
7	520045119	Label (Hydraulic Oil Fill)	1
8	580091217	Label (Operator Warning)	1
9	580094256	Label (Operator Restraint)	2
10	. . . . .	Nameplate Tag	1
11	504955200	Label (Tilt Column)	1
12	. . . . .	Nameplate (Capacity)	1
14	580049770	Label (Brake System Fluid)	1
15	524216189	Label (Warranty)	1

©2015 Yale Europe Materials Handling Limited

LABELS (FIGURE 1-58)
HYDRAULIC CONTROL FUNCTIONS

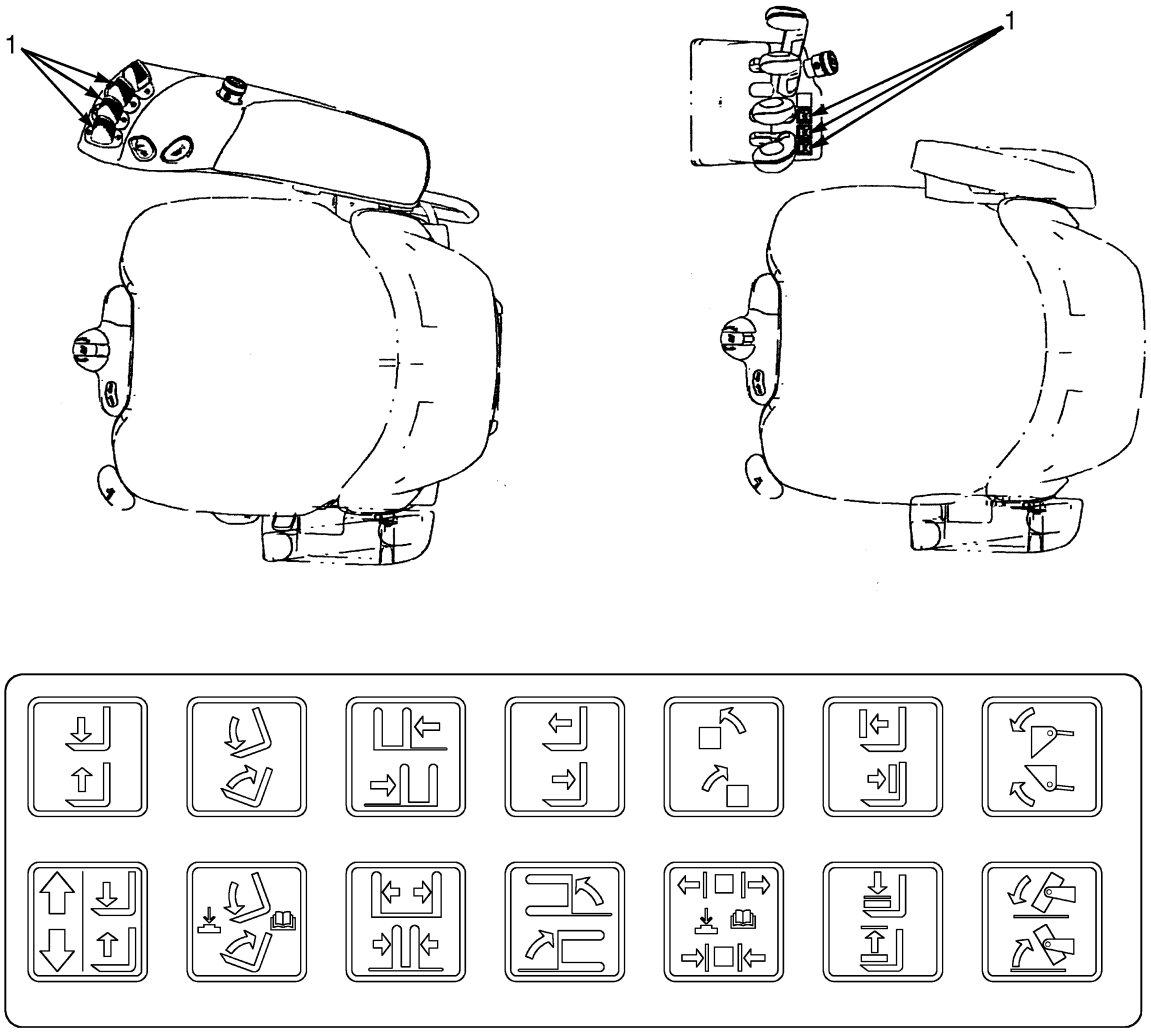

BP120427

©2015 Yale Europe Materials Handling Limited

LABELS

HYDRAULIC CONTROL FUNCTIONS

ITEM	PART NO.	DESCRIPTION	QTY
1	580087338	Label	1

©2015 Yale Europe Materials Handling Limited

NOTES

©2015 Yale Europe Materials Handling Limited

2 ELECTRICAL SYSTEM

SECTION 2
ELECTRICAL SYSTEM

DESCRIPTION	PAGE
BATTERY CONNECTOR AND CABLE	
WITH E-STEERING	2-44
WITH RAPID CHARGE OPTION (→ 2/2015)	2-42
WITHOUT RAPID CHARGE OPTION - SIDE BATTERY EXTRACTION (S/N G807B05405L →)	2-36
WITHOUT RAPID CHARGE OPTION - STANDARD AND SIDE BATTERY EXTRACTION (→ S/N G807B05404L)	2-38
WITHOUT RAPID CHARGE OPTION - STANDARD BATTERY EXTRACTION (S/N G807B05405L →)	2-40
CONTACTOR	
WITH E-STEERING (2/2015 →)	2-52
WITHOUT E-STEERING (→ 2/2015)	2-50
CONTROLLER	
HOIST AND FAN ASSEMBLY (→ S/N G807B05963L)	2-26
HOIST AND FAN ASSEMBLY - WITHOUT E-STEERING (S/N G807B05964L →)	2-28
TRACTION AND FAN ASSEMBLY (→ S/N G807B05963L)	2-32
TRACTION AND FAN ASSEMBLY (S/N G807B05964L →)	2-34
CONTROLLER 48/36 VDC	
HOIST 450A WITH E-STEERING (2/2015 →)	2-30
CONTROLLERS	
WITH E-STEERING (2/2015 →)	2-22
WITHOUT E-STEERING (→ 2/2015)	2-18
DISPLAY	2-53
ELECTRICAL ARRANGEMENT	
→ S/N G807B02104H	2-4
S/N G807B02105H ↔ 10/2013	2-8
WITH E-STEERING (2/2015 →)	2-14
WITHOUT E-STEERING (10/2013 ↔ 2/2015)	2-10
FUSE PANEL ASSEMBLY	
WITH E-STEERING (2/2015 →)	2-48
WITHOUT E-STEERING (→ 2/2015)	2-46
LIGHTS	
WITH STANDARD OVERHEAD GUARD	2-62
MINI-LEVER CONTROLS	
3 FUNCTION	2-54
4 FUNCTION	2-58
TILT SENSOR GROUP	2-56
WIRE HARNESS	
AUXILIARY PLUG	2-165
CAB ACCESSORY	2-152
CAB ACCESSORY - ALTERNATE PART	2-153
DC CONVERTER - 12V OUTLET (→ 9/2013)	2-158
DC CONVERTER - 12V OUTLET (9/2013 →)	2-162
DC/DC CONVERTER	2-164
DC/DC CONVERTER - W/ E-STEERING	2-166
HEATER	2-144
HYDRAULIC FLUID LEVEL AND PRESSURE	2-155
LIGHTS WITH OVERHEAD GUARD (→ 10/2013)	2-156
LIGHTS WITH OVERHEAD GUARD (10/2013 →)	2-160
MAIN WITH ELECTRO-HYDRAULICS - SHEET 1 OF 2 (→ S/N G807B02113H)	2-70

©2015 Yale Europe Materials Handling Limited

SECTION 2
ELECTRICAL SYSTEM

DESCRIPTION	PAGE
MAIN WITH ELECTRO-HYDRAULICS - SHEET 2 OF 2 (→ S/N G807B02113H)	2-74
MAIN WITH ELECTRO-HYDRAULICS - SHEET 1 OF 2 (S/N G807B02114H →)	2-78
MAIN WITH ELECTRO-HYDRAULICS - SHEET 2 OF 2 (S/N G807B02114H →)	2-82
MAIN WITH ELECTRO-HYDRAULICS AND E-STEERING - SHEET 1 0F 2 (2/2015 →)	2-94
MAIN WITH ELECTRO-HYDRAULICS AND E-STEERING - SHEET 2 OF 2 (2/2015 →)	2-98
MAIN WITH ELECTRO-HYDRAULICS, WITHOUT E-STEER - SHEET 1 OF 2 (S/N G807B06004L →)	2-86
MAIN WITH ELECTRO-HYDRAULICS, WITHOUT E-STEER - SHEET 2 OF 2 (S/N G807B06004L →)	2-90
MAIN WITH MANUAL HYDRAULICS - SHEET 1 OF 2 (→ S/N G807B02104H)	2-102
MAIN WITH MANUAL HYDRAULICS - SHEET 2 OF 2 (→ S/N G807B02104H)	2-106
MAIN WITH MANUAL HYDRAULICS - SHEET 1 OF 2 (S/N G807B02105H →)	2-110
MAIN WITH MANUAL HYDRAULICS - SHEET 2 OF 2 (S/N G807B02105H →)	2-114
MAIN WITH MANUAL HYDRAULICS - SHEET 1 OF 2 (S/N G807B06004L ↔ 11/2014)	2-118
MAIN WITH MANUAL HYDRAULICS - SHEET 2 OF 2 (S/N G807B06004L ↔ 11/2014)	2-122
MAIN WITH MANUAL HYDRAULICS AND E-STEERING - SHEET 1 OF 2 (2/2015 →)	2-134
MAIN WITH MANUAL HYDRAULICS AND E-STEERING - SHEET 2 OF 2 (2/2015 →)	2-138
MAIN WITH MANUAL HYDRAULICS, WITHOUT E-STEER - SHEET 1 OF 2 (11/2014 ↔ 2/2015)	2-126
MAIN WITH MANUAL HYDRAULICS, WITHOUT E-STEER - SHEET 2 OF 2 (11/2014 ↔ 2/2015)	2-130
MANUAL HYDRAULICS	2-145
MANUAL INTERLOCK	2-146
REAR WIPER	2-151
RH LIGHT WITH FREEZER DISPLAY - WITH TURN SIGNAL (→ 10/2013)	2-66
RH LIGHT WITH FREEZER DISPLAY - WITH TURN SIGNAL (10/2013 →)	2-68
RH LIGHT WITH STANDARD DISPLAY - WITHOUT TURN SIGNALS (→ 10/2013)	2-64
RH LIGHT WITH STANDARD DISPLAY - WITHOUT TURN SIGNALS (10/2013 →)	2-65
STEER COLUMN	2-149
STEER UNIT	2-148
STEERING COLUMN WITH ELECTRIC STEERING (2/2015 →)	2-150
SYNCHRONOUS STEERING	2-147
TURN SIGNAL	2-142

©2015 Yale Europe Materials Handling Limited

NOTES

©2015 Yale Europe Materials Handling Limited

ELECTRICAL ARRANGEMENT (FIGURE 2-1)

(→ S/N G807B02104H)

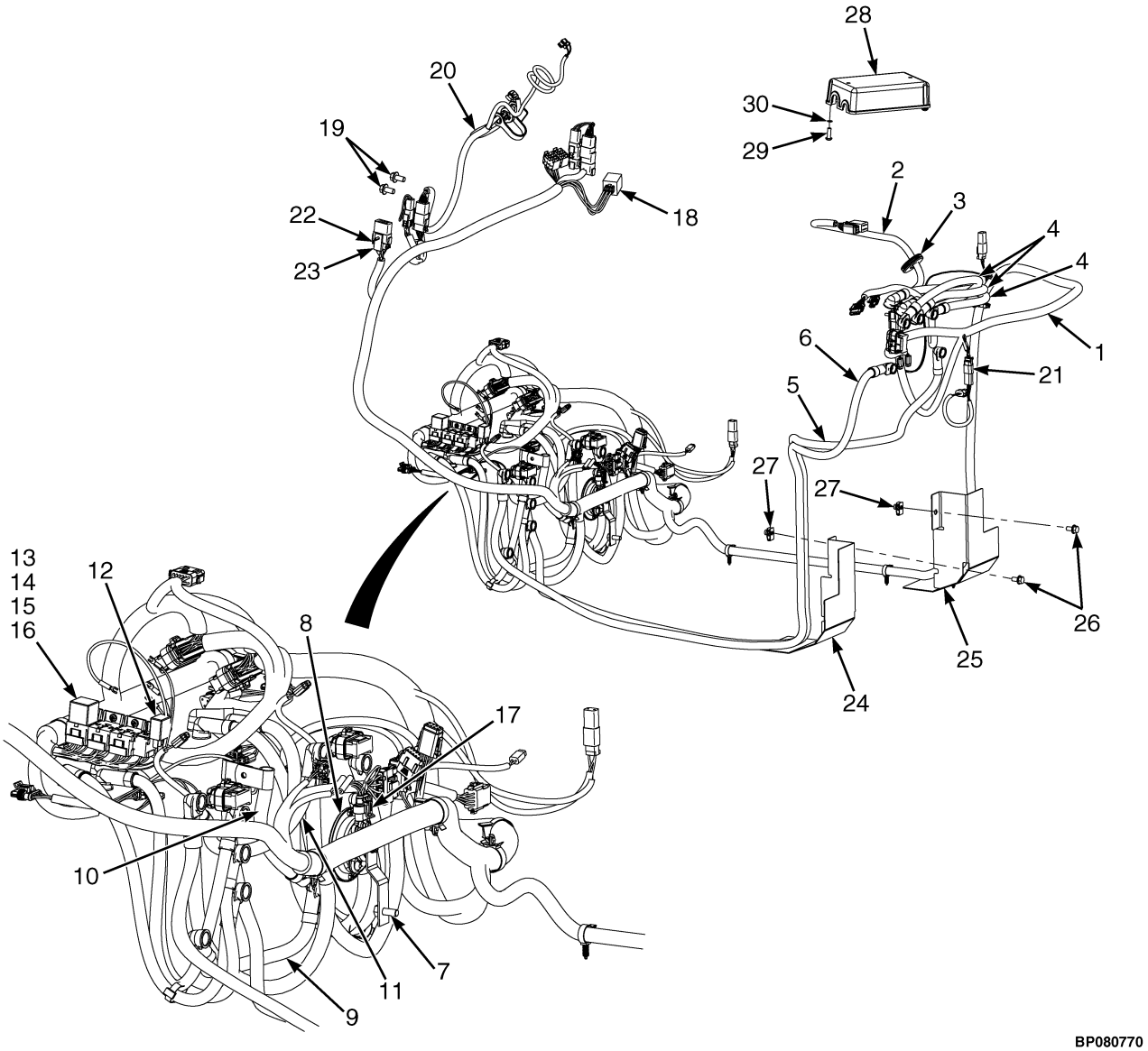

©2015 Yale Europe Materials Handling Limited

ELECTRICAL ARRANGEMENT

(→ S/N G807B02104H)

ITEM	PART NO.	DESCRIPTION	QTY
1	580097300	Wire Harness (Main) (Electro-Hydraulic) (☞Page 2-70, ☞Page 2-74)	1
1	580097301	Wire Harness (Main) (Manual Hydraulic) (☞Page 2-102, ☞Page 2-106)	1
2	**a** 580089658	Wire Harness (MLM Jumper) (Mini-level Module Jumper)	1
2	**b** 580089657	Wire Harness (Seat Jumper) (Seat Jumper)	1
3	580093195	Grommet	1
4	580090545	Power Cable (Hoist Controller/Pump)	3
4	582003697	Boot	2
5	580086514	Power Cable (546 mm Battery Compartment)	1
5	501924912	Fitting	1
5	580044571	E-Ring	1
5	582003697	Boot	1
5	580086516	Power Cable (642 mm Battery Compartment)	1
5	501924912	Fitting	1
5	580044571	E-Ring	1
5	582003697	Boot	1
5	580086518	Power Cable (750 mm Battery Compartment)	1
5	501924912	Fitting	1
5	580044571	E-Ring	1
5	582003697	Boot	1
6	580086513	Power Cable (546 mm Battery Compartment)	1
6	012472200	Terminal	2
6	582003697	Boot	2
6	580086515	Power Cable (642 mm Battery Compartment)	1
6	012472200	Terminal	2
6	582003697	Boot	2
6	580086517	Power Cable (750 mm Battery Compartment)	1
6	012472200	Terminal	2
6	582003697	Boot	2
7	580049231	Capscrew	1
8	580090484	Horn	1
9	580086511	Power Cable Assembly (Traction Motor)	1
9	582003697	Boot	2
9	720249901	Terminal	2
10	580086512	Power Cable Assembly (Traction Motor)	1
10	580044571	E-Ring	1
10	505976537	Boot	1
10	501924912	Fitting	1
11	580086510	Power Cable Assembly (Traction Motor)	1
11	582003697	Boot	1
11	720249901	Terminal	1
12	582003754	Relay (Key Switch) (Mini Power)	2
13	**ac** 580085375	Relay (Mini)	3
13	**bc** 580085375	Relay (Mini)	2
14	449007004	Screw	3
15	937100903	Nut	3
16	940400905	Washer	3
17	580086554	Power Cable Assembly (Traction Motor)	2
17	580086727	Power Cable (U)	1
17	505976537	Boot	2
17	720249901	Terminal	2

©2015 Yale Europe Materials Handling Limited

ELECTRICAL ARRANGEMENT

(→ S/N G807B02104H)

ITEM	PART NO.	DESCRIPTION	QTY
17	580086728	Power Cable (V)	1
17	505976537	Boot	2
17	720249901	Terminal	2
17	580086729	Power Cable (W)	1
17	505976537	Boot	2
17	720249901	Terminal	2
17	312850034	Strap Clamp	1
18	580092485	Flasher	1
19	580026621	Nut	2
20	580092516	Wire Harness (Steer Column) (☞Page 2-149)	1
20	580089956	Wire Harness (Synchronous Steering) (☞Page 2-147)	1
21	580085052	Wire Harness (Steer Unit) (☞Page 2-148)	1
22	580026812	Clip	5
23	580047200	Screw	2
24	580090335	Dust Cover (LH)	1
25	580090336	Dust Cover (RH)	1
26	~~582041056~~		
	580047714	Capscrew	2
28	580056613	Fastener	5
29	580092987	Cover (Seat-Side Electrical)	1
30	940400903	Washer	2
32	580092732	Capscrew	2

FOOTNOTES:

a Electro-Hydraulic
b Manual Hydraulic
c Qty 1 Used With E-Hydraulic Controls, Qty 2 Used With Brake/Tail/And Back-Up Lights.

©2015 Yale Europe Materials Handling Limited

NOTES

©2015 Yale Europe Materials Handling Limited

ELECTRICAL ARRANGEMENT (FIGURE 2-2)

(S/N G807B02105H ↔ 10/2013)

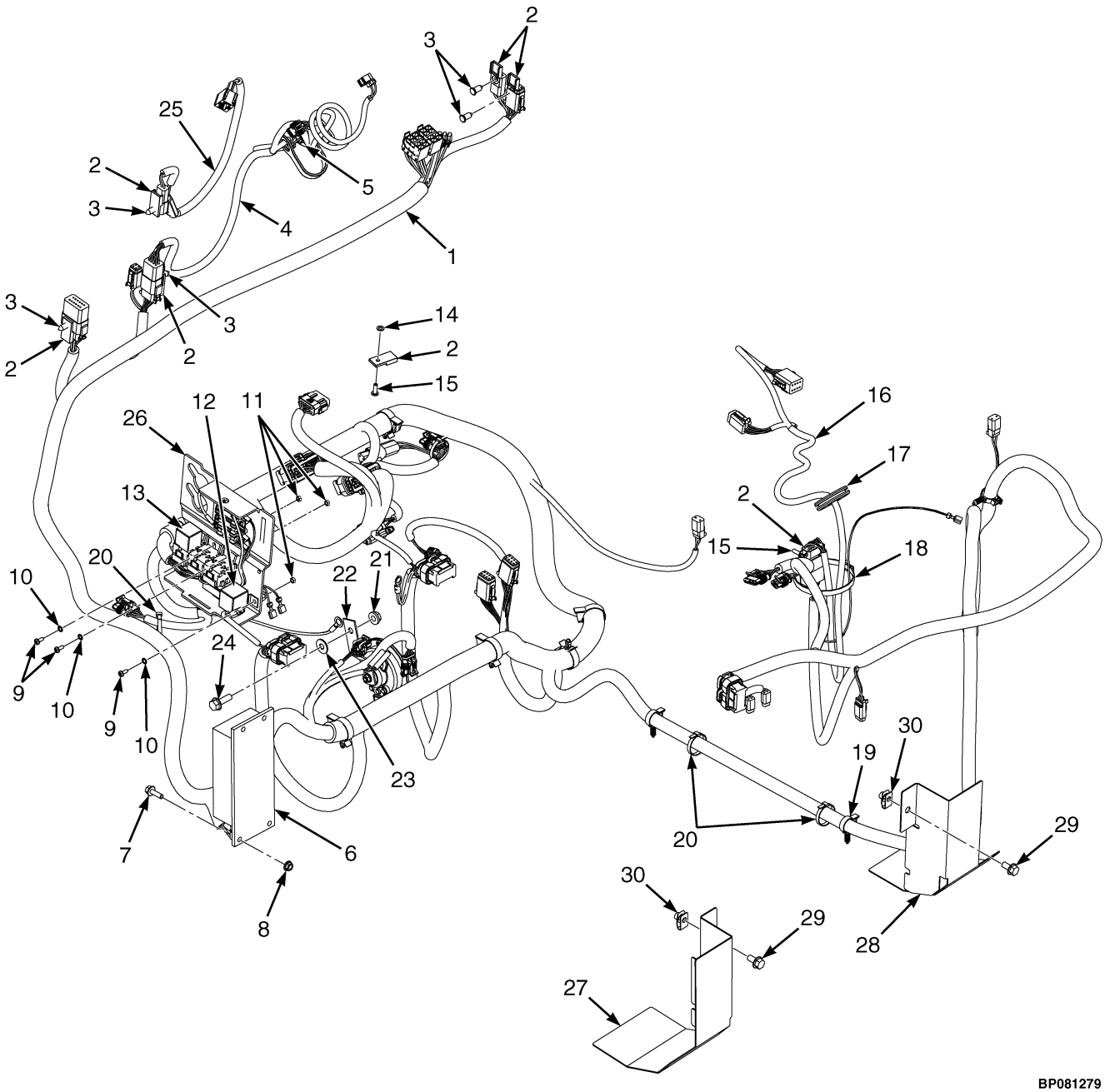

©2015 Yale Europe Materials Handling Limited

ELECTRICAL ARRANGEMENT

(S/N G807B02105H ↔ 10/2013)

KEY:
A: w/ Manual-Hydraulic Option
B: w/ Electro-Hydraulic Option

ITEM	PART NO.	DESCRIPTION	QTY A	QTY B
1	580097301	Wire Harness (Main) (☞Page 2-102, ☞Page 2-106, ☞Page 2-110, ☞Page 2-114)	1	..
1	580097300	Wire Harness (Main) (☞Page 2-70, ☞Page 2-74, ☞Page 2-78, ☞Page 2-82)	..	1
2	580026812	Clip	6	7
3	580056613	Fastener	5	5
4	580092516	Wire Harness (Steer Column) (☞Page 2-149)	1	1
5	580047200	Screw	2	2
6	580047198	Dc-Dc Converter (36V/48V to 12V)	1	1
7	580039438	Capscrew	2	2
8	~~580004321~~ 580047919	Nut	2	2
9	449007004	Screw	3	3
10	940400905	Washer	3	3
11	937100903	Nut	3	3
12	582003754	Relay (Key Switch)	1	1
13	**c** 580085375	Relay (Mini)	2	3
14	449021002	Washer	..	1
15	501904909	Rivet	1	2
16	580089657	Wire Harness (Seat Jumper) (☞Page 2-110, ☞Page 2-114)	1	..
16	580089658	Wire Harness (MLM Jumper) (☞Page 2-78, ☞Page 2-82)	..	1
17	580093195	Grommet	1	1
18	312850032	Strap Clamp	1	1
19	580030878	Clip	1	1
20	312850034	Strap Clamp	6	6
21	580058190	Nut	1	1
22	580090484	Horn (24/48V)	1	1
23	504226242	Washer	1	1
24	580030966	Capscrew	1	1
25	**a** 580089956	Wire Harness (Synchronous Steering) (☞Page 2-147)	1	1
26	. . . . .	Fuse Panel Assembly (☞Page 2-46)	1	1
27	580090335	Dust Cover	1	1
28	580090336	Dust Cover	1	1
29	~~582041056~~ 580047714	Capscrew	2	2
30	580026621	Nut	2	2
	b 582021286	Wire Harness (Jumper)	1	..

FOOTNOTES:

a For use only with synchronous steering option
b Not Illustrated
c Qty 1 Used With E-Hydraulic Controls, Qty 2 Used With Brake/Tail/And Back-Up Lights.

©2015 Yale Europe Materials Handling Limited

ELECTRICAL ARRANGEMENT (FIGURE 2-3)

WITHOUT E-STEERING (10/2013 ↔ 2/2015)

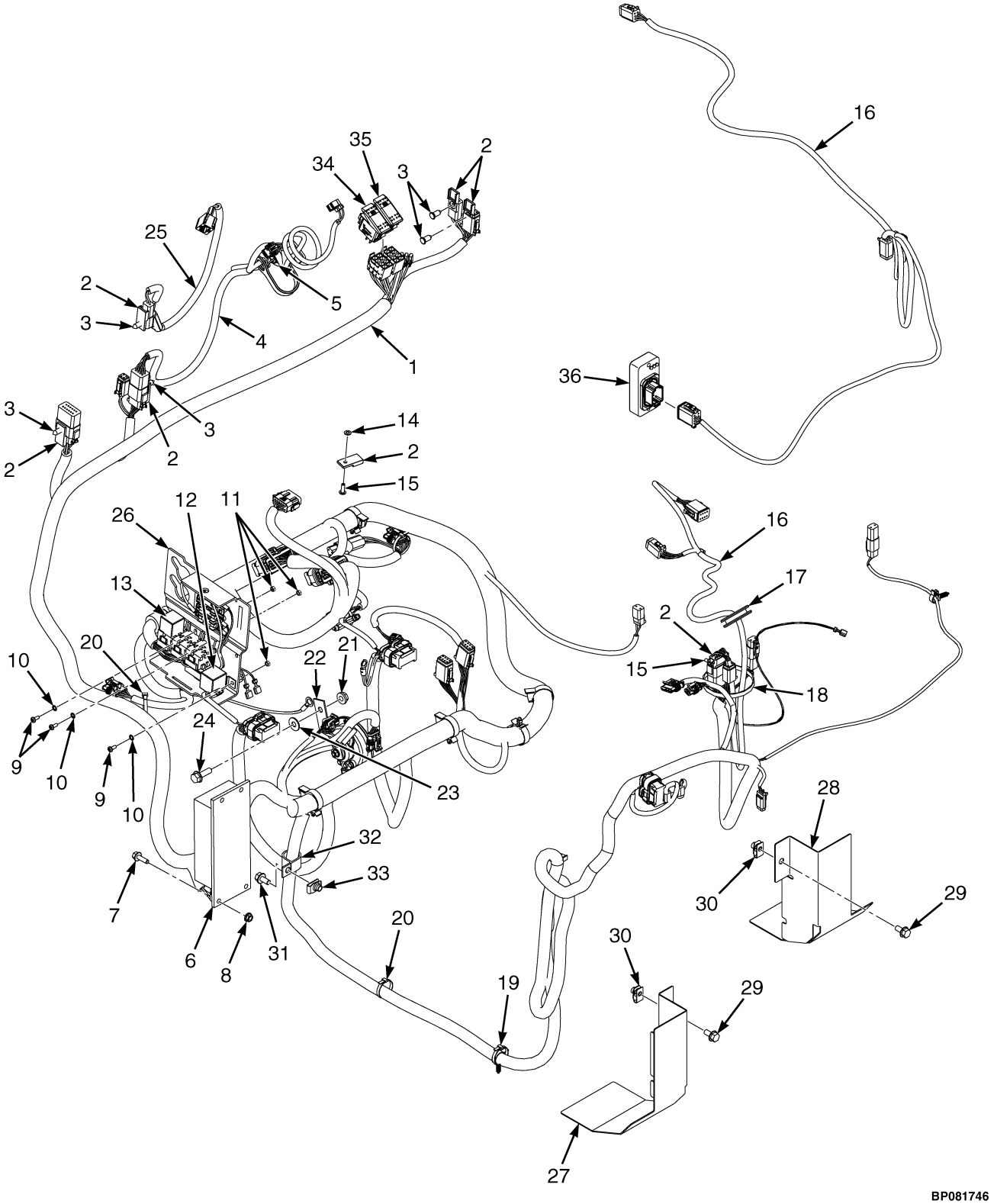

©2015 Yale Europe Materials Handling Limited

ELECTRICAL ARRANGEMENT

WITHOUT E-STEERING (10/2013 ↔ 2/2015)

KEY:
A: w/ Manual-Hydraulic Option
B: w/ Electro-Hydraulic Option

ITEM	PART NO.	DESCRIPTION	QTY A	QTY B
1	**f** 582028372	Wire Harness (Main) (☞Page 2-118, ☞Page 2-122)	1	..
1	**g** 582039726	Wire Harness (Main) (☞Page 2-126, ☞Page 2-130)	1	..
1	582028371	Wire Harness (Main) (☞Page 2-86, ☞Page 2-90)	..	1
2	580026812	Clip	6	7
3	580056613	Fastener	5	5
4	580092516	Wire Harness (Steer Column) (☞Page 2-149)	1	1
5	580047200	Screw	2	2
6	580047198	Dc-Dc Converter (36V/48V to 12V)	1	1
7	580039438	Capscrew	2	2
8	~~580004321~~			
	580047919	Nut	2	2
9	449007004	Screw	3	3
10	940400905	Washer	3	3
11	937100903	Nut	3	3
12	582003754	Relay (Key Switch)	1	1
13	**d** 580085375	Relay (Mini)	2	3
14	449021002	Washer	..	1
15	501904909	Rivet	1	2
16	580089657	Wire Harness (Seat Jumper)	1	..
16	580089658	Wire Harness (MLM Jumper)	..	1
16	**e** 582039042	Wire Harness (Seat Jumper)	1	..
16	**e** 582039043	Wire Harness (MLM Jumper)	..	1
17	580068361	Grommet	1	1
18	312850032	Strap Clamp	1	1
19	580030878	Clip	1	1
20	312850034	Strap Clamp	6	6
21	580058190	Nut	1	1
22	580090484	Horn (24/48V)	1	1
23	504226242	Washer	1	1
24	580030966	Capscrew	1	1
25	**a** 580089956	Wire Harness (Synchronous Steering) (☞Page 2-147)	1	1
26	582006467	Fuse Panel (☞Page 2-46)	1	1
27	580090335	Dust Cover	1	1
28	580090336	Dust Cover	1	1
29	~~582041056~~			
	580047714	Capscrew	2	2
30	580026621	Nut	2	2
31	~~582041056~~			
	580047714	Capscrew	1	1
32	504069724	Clamp	1	1
33	580026621	Nut	1	1
34	520041835	Switch	1	1
35	520041894	Switch (Rear Work Light 12V)	1	1
36	**e** 582038671	Control Module (Seat Belt Sequence)	1	1
36	582038799	Tape	1	1

©2015 Yale Europe Materials Handling Limited

ELECTRICAL ARRANGEMENT

WITHOUT E-STEERING (10/2013 ↔ 2/2015)

KEY:
A: w/ Manual-Hydraulic Option
B: w/ Electro-Hydraulic Option

ITEM	PART NO.	DESCRIPTION	QTY A	QTY B
	bc 582021286	Wire Harness (Jumper)	1	..

FOOTNOTES:

a For use only with synchronous steering option
b Main Harness to Spool Interlock Solenoid
c Not Illustrated
d Qty 1 Used With E-Hydraulic Controls, Qty 2 Used With Brake/Tail/And Back-Up Lights.
e With Seat Belt Sequence Module
f → 11/2014
g 11/2014 →

©2015 Yale Europe Materials Handling Limited

NOTES

©2015 Yale Europe Materials Handling Limited

ELECTRICAL ARRANGEMENT (FIGURE 2-4)

WITH E-STEERING (2/2015 →)

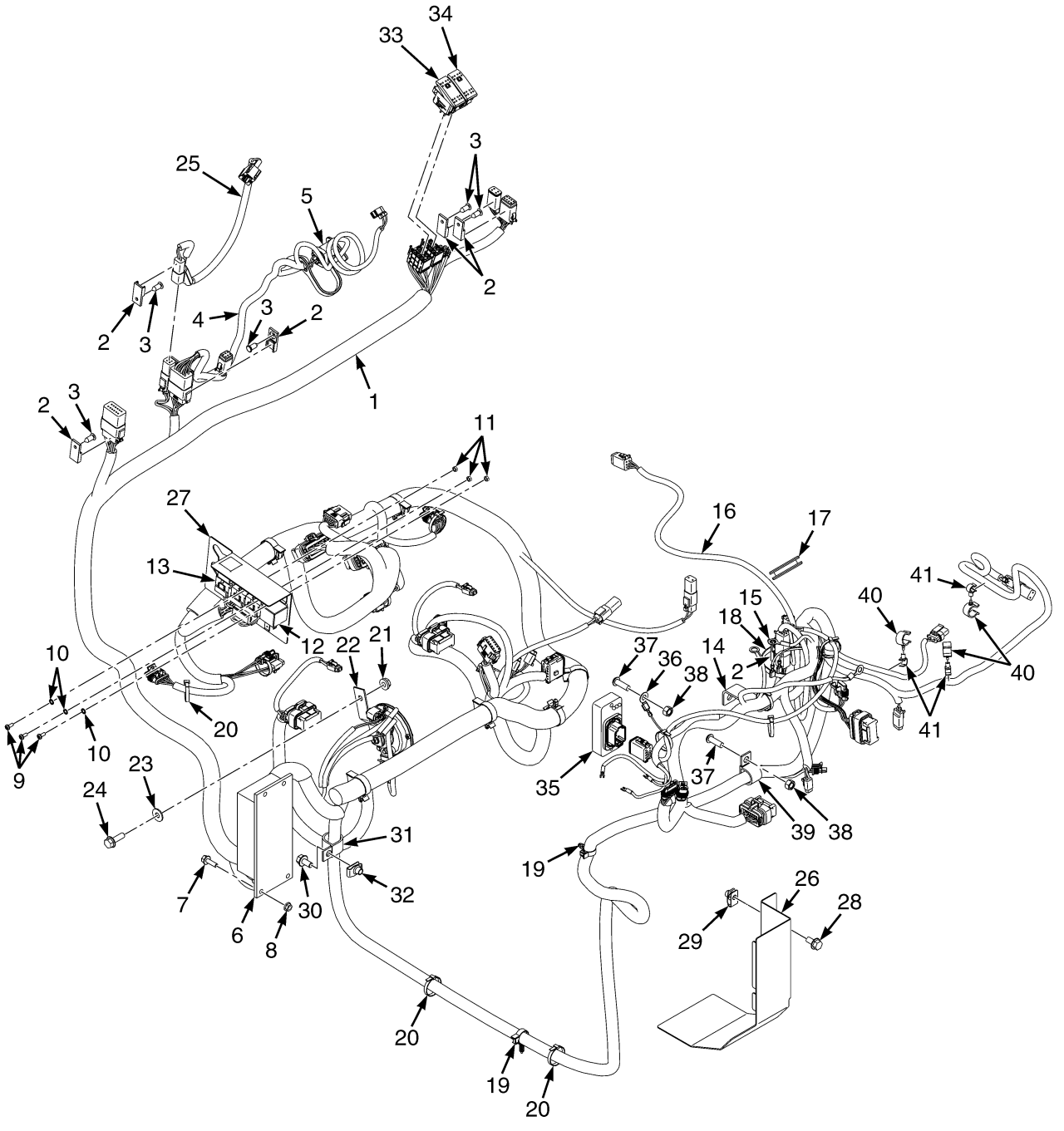

©2015 Yale Europe Materials Handling Limited

ELECTRICAL ARRANGEMENT
WITH E-STEERING (2/2015 →)

KEY:
A: W/ Manual-Hydraulic Option
B: W/ Electro-Hydraulic Option

ITEM	PART NO.	DESCRIPTION	QTY A	QTY B
1	582025076	Wire Harness (Main) (☞Page 2-134, ☞Page 2-138)	1	..
1	582025078	Wire Harness (Main) (☞Page 2-94, ☞Page 2-98)	..	1
2	580026812	Clip	6	7
3	580056613	Fastener	6	5
4	582033575	Wire Harness (Steering Column) (☞Page 2-150)	1	1
5	580047200	Screw	2	2
6	580047198	Dc-Dc Converter (36V/48V to 12V)	1	1
7	580039438	Capscrew	2	2
8	~~580004321~~			
	580047919	Nut	2	2
9	449007004	Screw	3	3
10	940400905	Washer	3	3
11	937100903	Nut	3	3
12	582003754	Relay (Key Switch)	1	1
13	**d** 580085375	Relay (Mini)	2	1
14	582043213	Bracket (Harness Mount)	1	1
15	501904909	Rivet	1	2
16	580089657	Wire Harness (Seat Jumper)	1	..
16	580089658	Wire Harness (MLM Jumper)	..	1
16	**e** 582039042	Wire Harness (Seat Jumper)	1	..
16	**e** 582039043	Wire Harness (MLM Jumper)	..	1
17	580068361	Grommet	1	1
18	312850032	Strap Clamp	1	1
19	580030878	Clip	1	1
20	312850034	Strap Clamp	4	4
21	580058190	Nut	1	1
22	580090484	Horn (24/48V)	1	1
23	504226242	Washer	1	1
24	580030966	Capscrew	1	1
25	**a** 580089956	Wire Harness (Synchronous Steering) (☞Page 2-147)	1	1
26	580090335	Dust Cover	1	1
27	582028143	Bracket (Relay Mounting)	1	1
28	~~582041056~~			
	580047714	Capscrew	1	1
29	580026621	Nut	1	1
30	~~582041056~~			
	580047714	Capscrew	1	1
31	504069724	Clamp	1	1
32	580026621	Nut	1	1
33	520041835	Switch	1	1
34	520041894	Switch (Rear Work Light 12V)	1	1
35	**e** 582038671	Control Module (Seat Belt Sequence)	1	1
35	**e** 582038799	Tape	1	1
36	520044855	Tab	1	1
37	580032373	Capscrew	2	2

©2015 Yale Europe Materials Handling Limited

ELECTRICAL ARRANGEMENT
WITH E-STEERING (2/2015 →)

KEY:
A: W/ Manual-Hydraulic Option
B: W/ Electro-Hydraulic Option

ITEM	PART NO.	DESCRIPTION	QTY A	QTY B
38	580086019	Nut	2	2
39	501921910	Clamp	1	1
40	580042794	Clamp (Swivel)	3	3
41	580049559	Clamp (Swivel)	3	3
	bc 582021286	Wire Harness (Jumper)	1	..

FOOTNOTES:

a For use only with synchronous steering option.
b Main Harness and Spool Interlock Solenoid.
c Not Illustrated
d Qty 1 used with E-Hydraulic Controls, Qty 2 used with Brake/Tail/and Back-Up Lights.
e With Seat Belt Sequence Module

©2015 Yale Europe Materials Handling Limited

NOTES

©2015 Yale Europe Materials Handling Limited

CONTROLLERS (FIGURE 2-5)
WITHOUT E-STEERING (→ 2/2015)

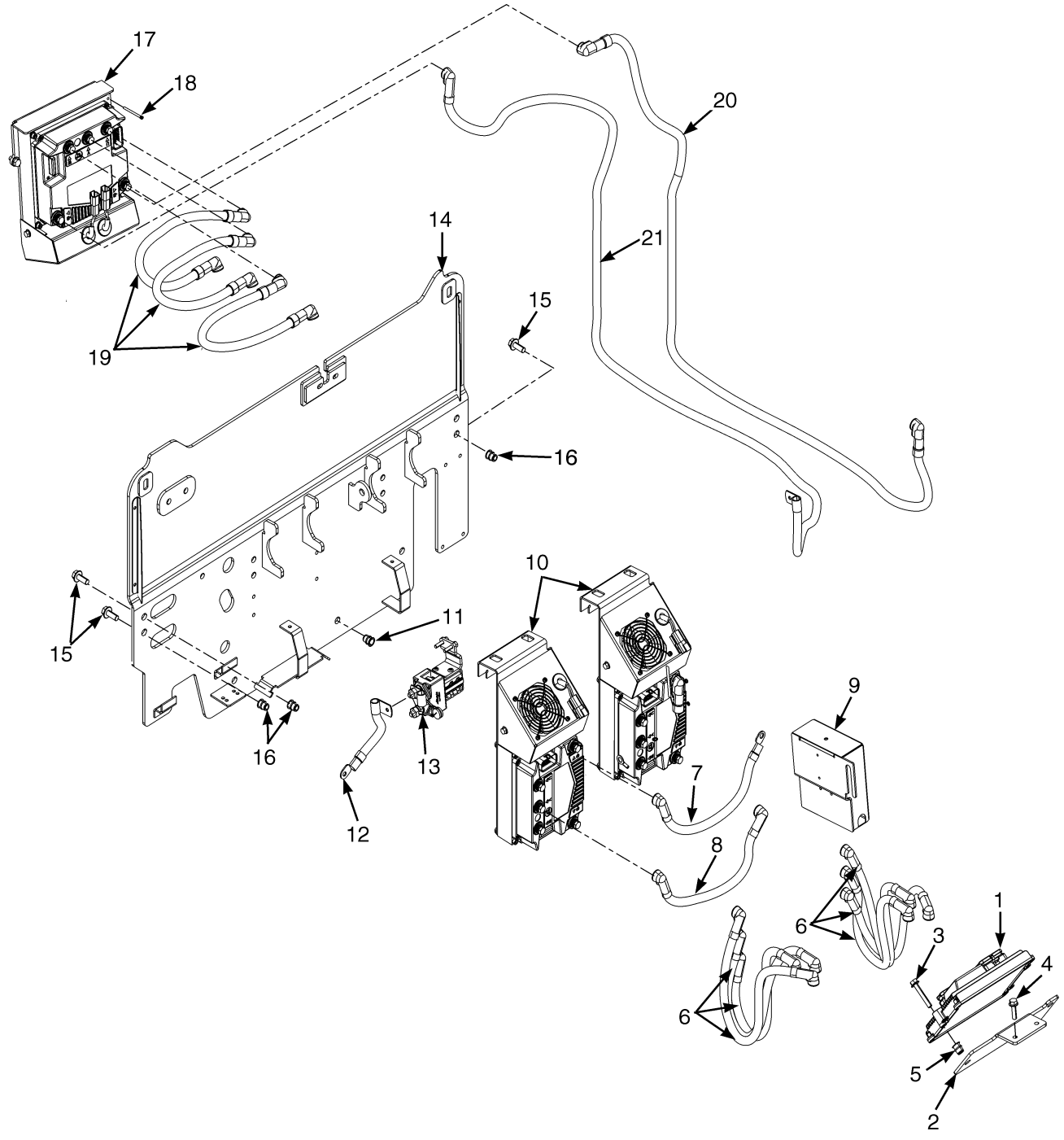

©2015 Yale Europe Materials Handling Limited

CONTROLLERS

WITHOUT E-STEERING (→ 2/2015)

ITEM	PART NO.	DESCRIPTION	QTY
1	**a** 580074868	Master Controller (VSM) (Standard-w/o Electro Hydraulics)	1
1	**a** 580074863	Master Controller (VSM) (Premium-w/ Electro Hydraulics)	1
2	580088319	Bracket	1
3	580030968	Capscrew	3
4	580030966	Capscrew	2
5	580044860	Insert	2
6	580086554	Power Cable Assembly (Traction Controller/Traction Motor)	2
6	580086727	Power Cable (U)	1
6	505976537	Boot	2
6	720249901	Terminal	2
6	580086728	Power Cable (V)	1
6	505976537	Boot	2
6	720249901	Terminal	2
6	580086729	Power Cable (W)	1
6	505976537	Boot	2
6	720249901	Terminal	2
6	312850034	Strap Clamp	1
7	580086510	Power Cable Assembly (Traction Controller/Traction Motor)	1
7	582003697	Boot	1
7	720249901	Terminal	2
8	580086511	Power Cable Assembly (Traction Controller/Traction Motor)	1
8	582003697	Boot	2
8	720249901	Terminal	2
9	582006467	Fuse Panel (☞Page 2-46)	1
10	**b** 580093280	Controller And Fan Assembly (Traction) (☞Page 2-32)	1
10	**e**	Controller And Fan Assembly (Traction) (☞Page 2-34)	1
11	580044860	Insert	1
12	580086512	Power Cable Assembly (Traction Motor)	1
12	580044571	E-Ring	1
12	505976537	Boot	1
12	501924912	Fitting	1
13	580096235	Contactor Assembly (☞Page 2-50)	1
14	**c** 524336812	Mounting Plate	1
14	**d** 550029734	Mounting Plate	1
14	**e** 550082061	Mounting Plate	1
15	580030970	Capscrew	4
16	580044862	Insert	4
17	**b** 580088696	Controller Assembly (Hoist) (☞Page 2-26)	1
17	**e** 582026265	Controller Assembly (Hoist) (☞Page 2-28)	1
18	~~582041056~~		
	580047714	Capscrew	1
19	580090545	Power Cable (Hoist Controller/Pump)	3
19	582003697	Boot	2
20	580086513	Power Cable (546 mm Battery Compartment)	1
20	580086515	Power Cable (642 mm Battery Compartment)	1
20	580086517	Power Cable (750 mm Battery Compartment)	1
20	012472200	Terminal	2
20	582003697	Boot	2
21	580086514	Power Cable (546 mm Battery Compartment)	1
21	580086516	Power Cable (642 mm Battery Compartment)	1

©2015 Yale Europe Materials Handling Limited

CONTROLLERS
WITHOUT E-STEERING (→ 2/2015)

ITEM	PART NO.	DESCRIPTION	QTY
21	580086518	Power Cable (750 mm Battery Compartment)	1
21	582003697	Boot	1
21	580044571	E-Ring	1

FOOTNOTES:

a Vehicle System Manager
b → 10/2013
c → S/N G807B03453J
d S/N G807B03454J ↔ 10/2013
e 10/2013 →

©2015 Yale Europe Materials Handling Limited

NOTES

©2015 Yale Europe Materials Handling Limited

CONTROLLERS (FIGURE 2-6)
WITH E-STEERING (2/2015 →)

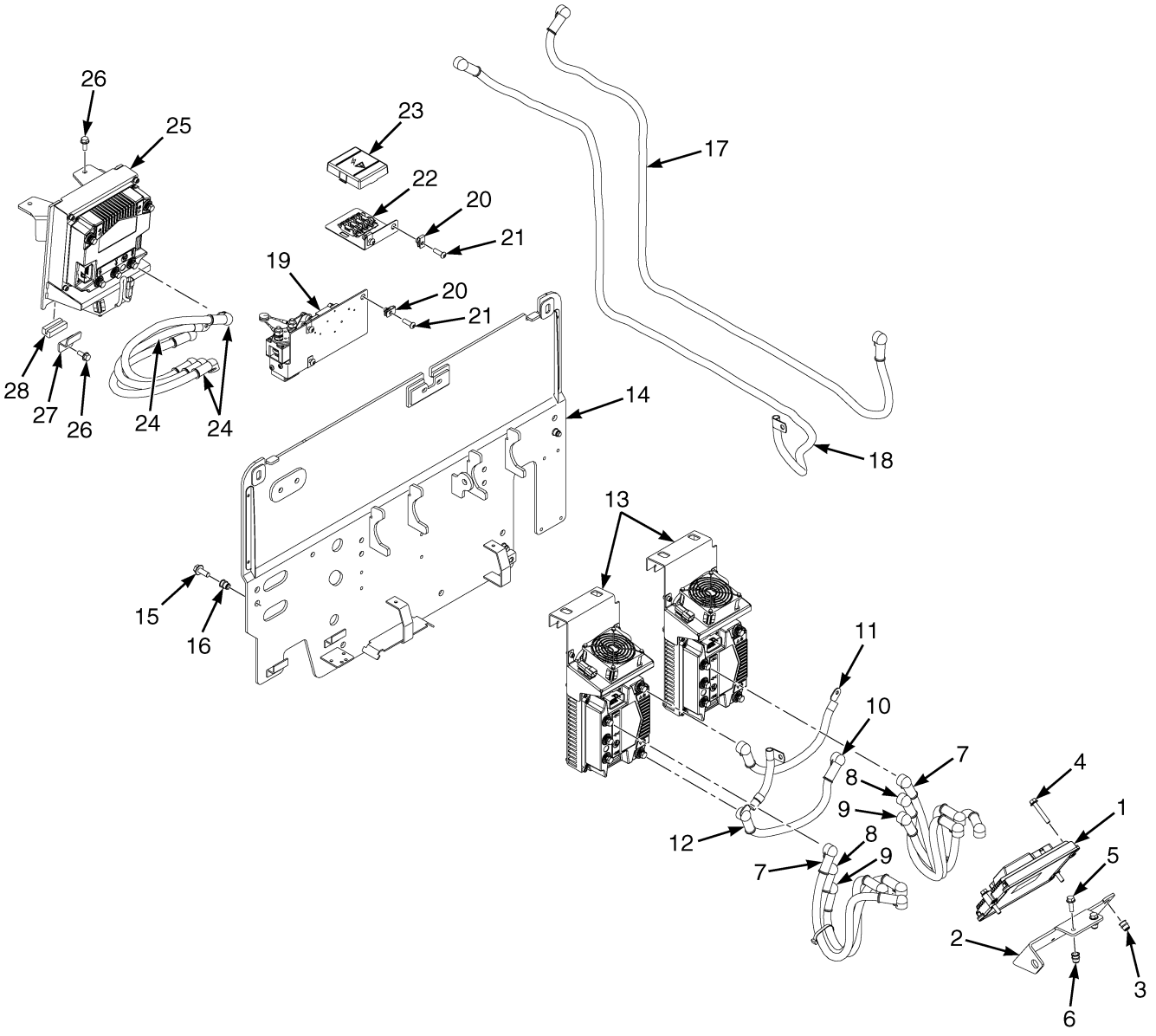

©2015 Yale Europe Materials Handling Limited

CONTROLLERS
WITH E-STEERING (2/2015 →)

ITEM	PART NO.	DESCRIPTION	QTY
1	**a** 580074868	Master Controller (VSM) (Standard w/o Electro Hydraulics)	1
1	**a** 580074863	Master Controller (VSM) (Premium w/ Electro Hydraulics)	1
2	582040022	Bracket	1
2	582040021	Bracket	1
3	580044860	Insert	2
4	580030968	Capscrew	2
5	580093935	Capscrew	2
6	580044860	Insert	2
7	580086554	Power Cable Assembly (Traction Controller / Traction Motor)	2
7	580086727	Power Cable (U)	1
7	582003697	Boot	2
7	518796618	E-Ring	2
7	312850034	Strap Clamp	1
8	580086728	Power Cable (V)	1
8	582003697	Boot	2
8	518796618	E-Ring	2
9	580086729	Power Cable (W)	1
9	582003697	Boot	2
9	518796618	E-Ring	2
10	580086511	Power Cable Assembly (Traction Controller \ Traction Motor)	1
10	582003697	Boot	2
10	720249901	Terminal	2
11	580086510	Power Cable Assembly	1
11	582003697	Boot	2
11	720249901	Terminal	2
12	580086512	Power Cable Assembly (Traction Motor)	1
12	580044571	E-Ring	1
12	505976537	Boot	1
12	501924912	Fitting	1
13	. . . . .	Controller and Fan Assembly (☞Page 2-30)	2
14	550087403	Bulkhead	1
15	580030970	Capscrew	4
16	580044862	Insert	4
17	582026948	Power Cable (546mm Battery Compartment)	1
17	582026953	Power Cable (642mm Battery Compartment)	1
17	582025217	Power Cable (750mm Battery Compartment)	1
17	518796618	E-Ring	2
17	582003697	Boot	2
18	582026949	Power Cable (546mm Battery Compartment)	1
18	582026951	Power Cable (642mm Battery Compartment)	1
18	582026952	Power Cable (750mm Battery Compartment)	1
18	582003697	Boot	1
18	518796618	E-Ring	1
19	582033578	Contactor Assembly (☞Page 2-50)	1
20	580026621	Nut	5
21	580032373	Capscrew	5
22	. . . . .	Fuse Panel Assembly (☞Page 2-48)	1
23	580089953	Cover (Fuse Box)	1
24	582026947	Power Cable	3
24	582003697	Boot	2

©2015 Yale Europe Materials Handling Limited

CONTROLLERS
WITH E-STEERING (2/2015 →)

ITEM	PART NO.	DESCRIPTION	QTY
25	. . . . .	Controller (Hoist) (☞Page 2-30)	1
26	580049231	Capscrew	5
27	582033639	Bracket	1
28	520052866	Strip Seal	1

FOOTNOTES:

a Vehicle System Manager

©2015 Yale Europe Materials Handling Limited

NOTES

©2015 Yale Europe Materials Handling Limited

CONTROLLER (FIGURE 2-7)

HOIST AND FAN ASSEMBLY (→ S/N G807B05963L)

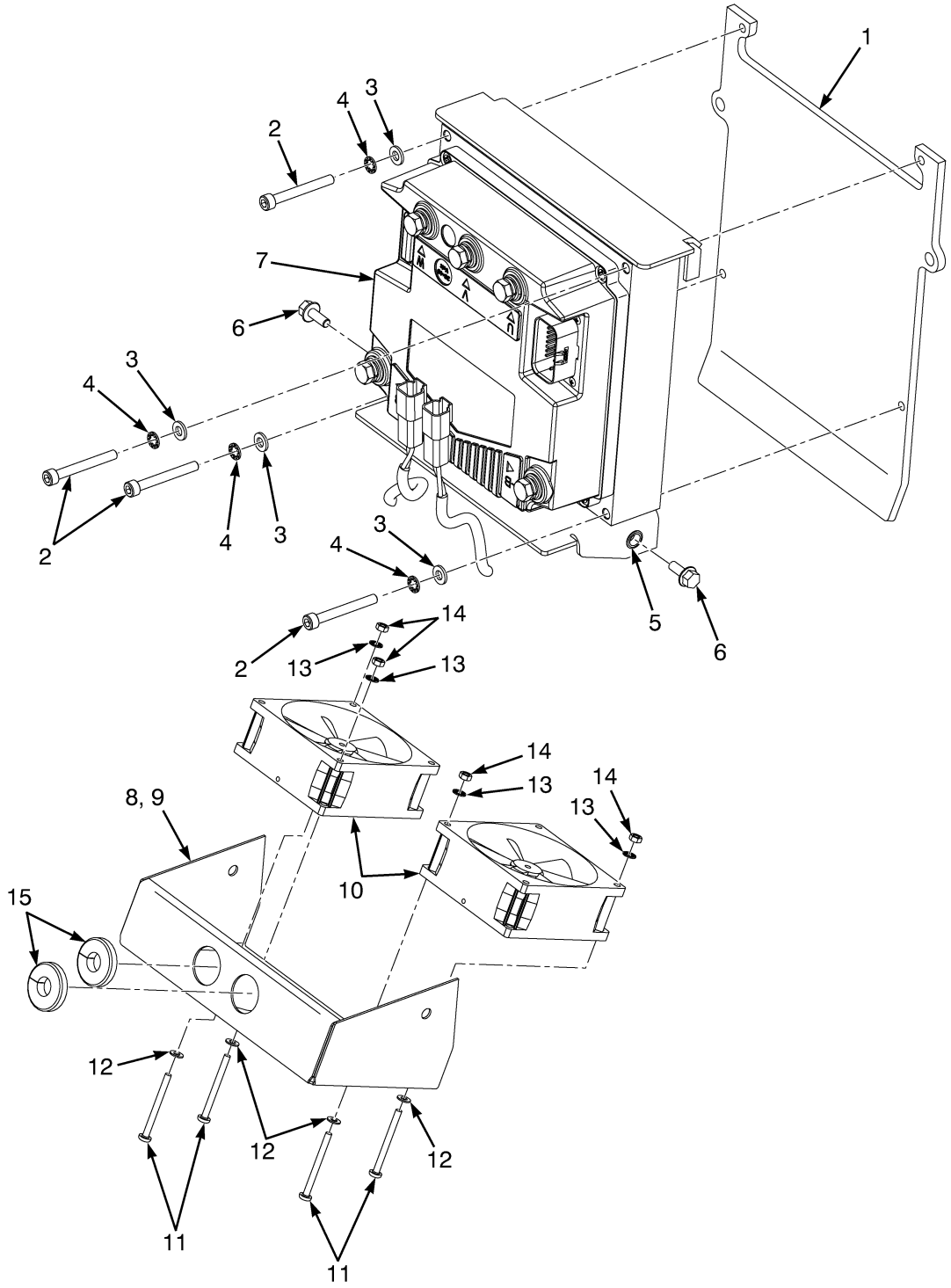

©2015 Yale Europe Materials Handling Limited

CONTROLLER

HOIST AND FAN ASSEMBLY (→ S/N G807B05963L)

ITEM	PART NO.	DESCRIPTION	QTY
	580088696	Controller Assembly	1
1	580088502	Plate Wldmt	1
2	932107911	Capscrew	4
3	449021003	Washer	4
4	940400907	Washer	4
5	580041704	Insert	2
6	580049011	Capscrew	2
7	580078342	Controller	1
8	580093282	Fan Assembly	1
9	580088503	Air Duct	1
10	580092606	Fan	2
11	931109911	Metric Screw	4
12	940004903	Washer	4
13	940400905	Washer	4
14	937100903	Nut	4
15	580039440	Grommet	1

©2015 Yale Europe Materials Handling Limited

CONTROLLER (FIGURE 2-8)

HOIST AND FAN ASSEMBLY — WITHOUT E-STEERING (S/N G807B05964L →)

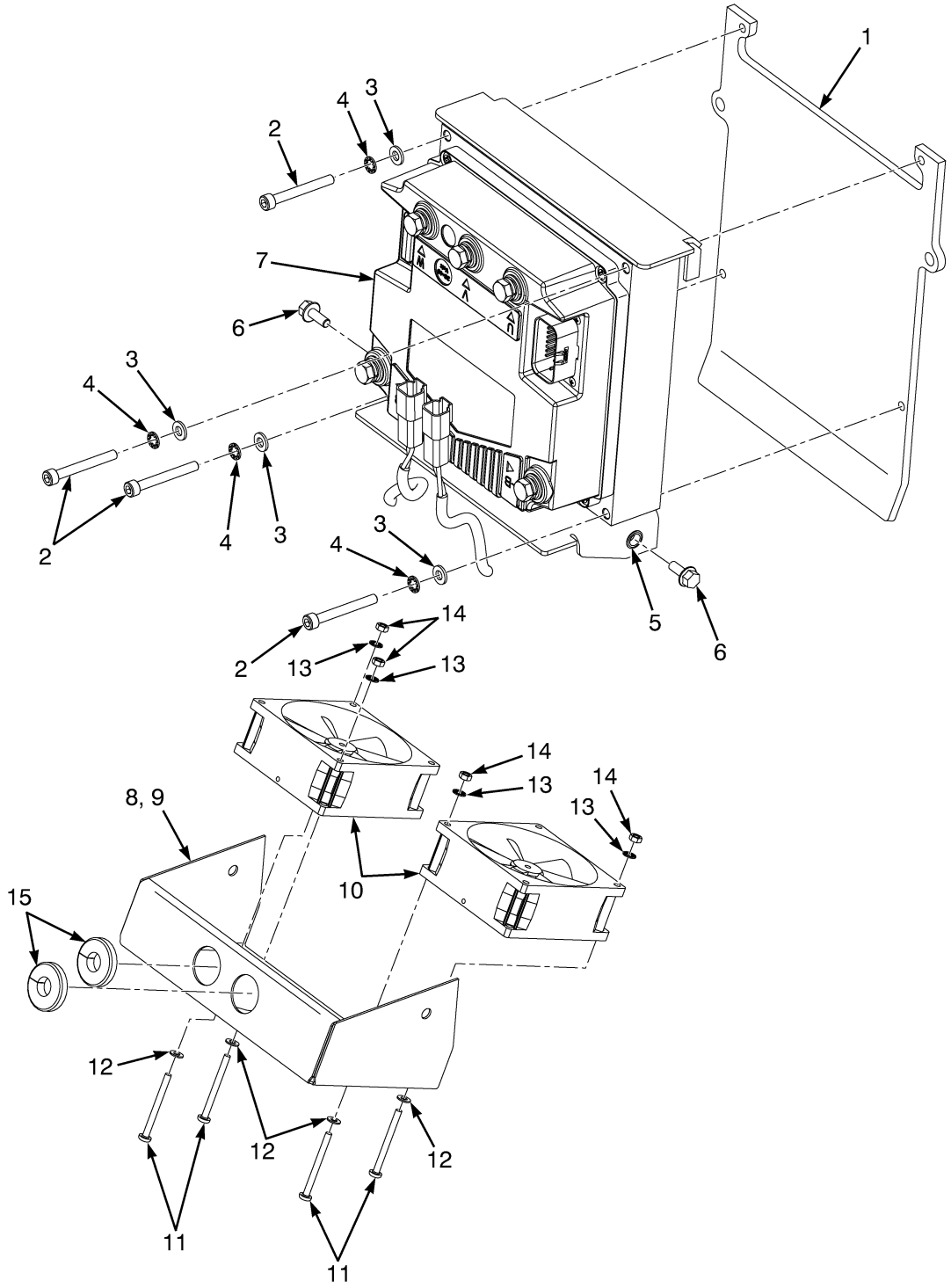

©2015 Yale Europe Materials Handling Limited

CONTROLLER

HOIST AND FAN ASSEMBLY – WITHOUT E-STEERING (S/N G807B05964L →)

ITEM	PART NO.	DESCRIPTION	QTY
	582026265	Controller Assembly (48VDC)	1
1	580088502	Plate Wldmt	1
2	932107911	Capscrew	4
3	449021003	Washer	4
4	940400907	Washer	4
5	580041704	Insert	2
6	580049011	Capscrew	2
7	582026256	Controller	1
8	580093282	Fan Assembly (48VDC)	1
9	580088503	Air Duct	1
10	580092606	Fan (48VDC)	2
11	931109911	Metric Screw	4
12	940004903	Washer	4
13	940400905	Washer	4
14	937100903	Nut	4
15	580039440	Grommet	1

©2015 Yale Europe Materials Handling Limited

CONTROLLER 48/36 VDC (FIGURE 2-9)

HOIST 450A WITH E-STEERING (2/2015 →)

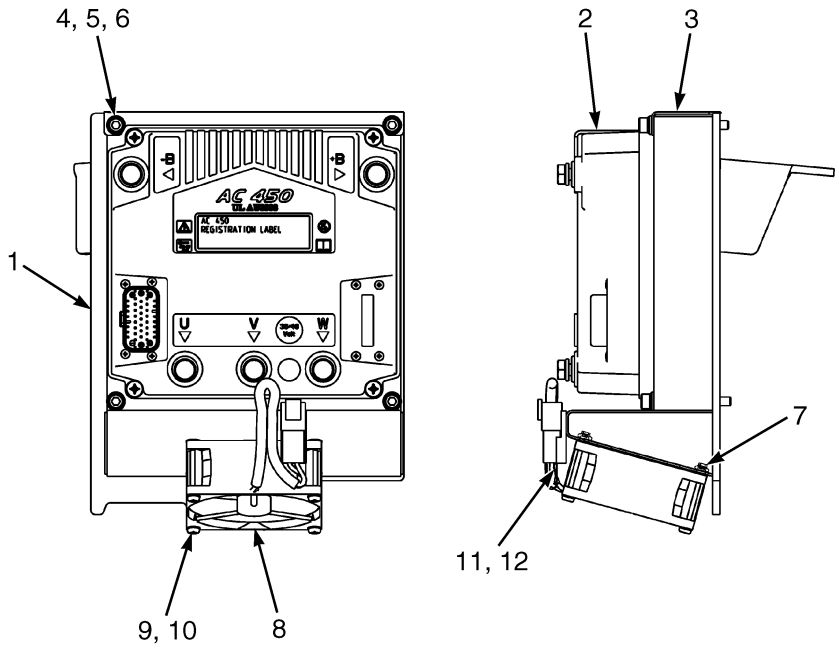

©2015 Yale Europe Materials Handling Limited

CONTROLLER 48/36 VDC

HOIST 450A WITH E-STEERING (2/2015 →)

ITEM	PART NO.	DESCRIPTION	QTY
1	582033599	Bracket Wldmt	1
2	582026256	Controller	1
3	582033397	Cover	1
4	449021003	Washer	4
5	940400907	Washer	4
6	580011872	Capscrew	4
7	580093718	Insert	4
8	582019554	Fan (36/48 VDC)	1
9	940004903	Washer	4
10	931109912	Screw	4
11	580026812	Clip	1
12	580056613	Fastener	1

©2015 Yale Europe Materials Handling Limited

CONTROLLER (FIGURE 2-10)

TRACTION AND FAN ASSEMBLY (→ S/N G807B05963L)

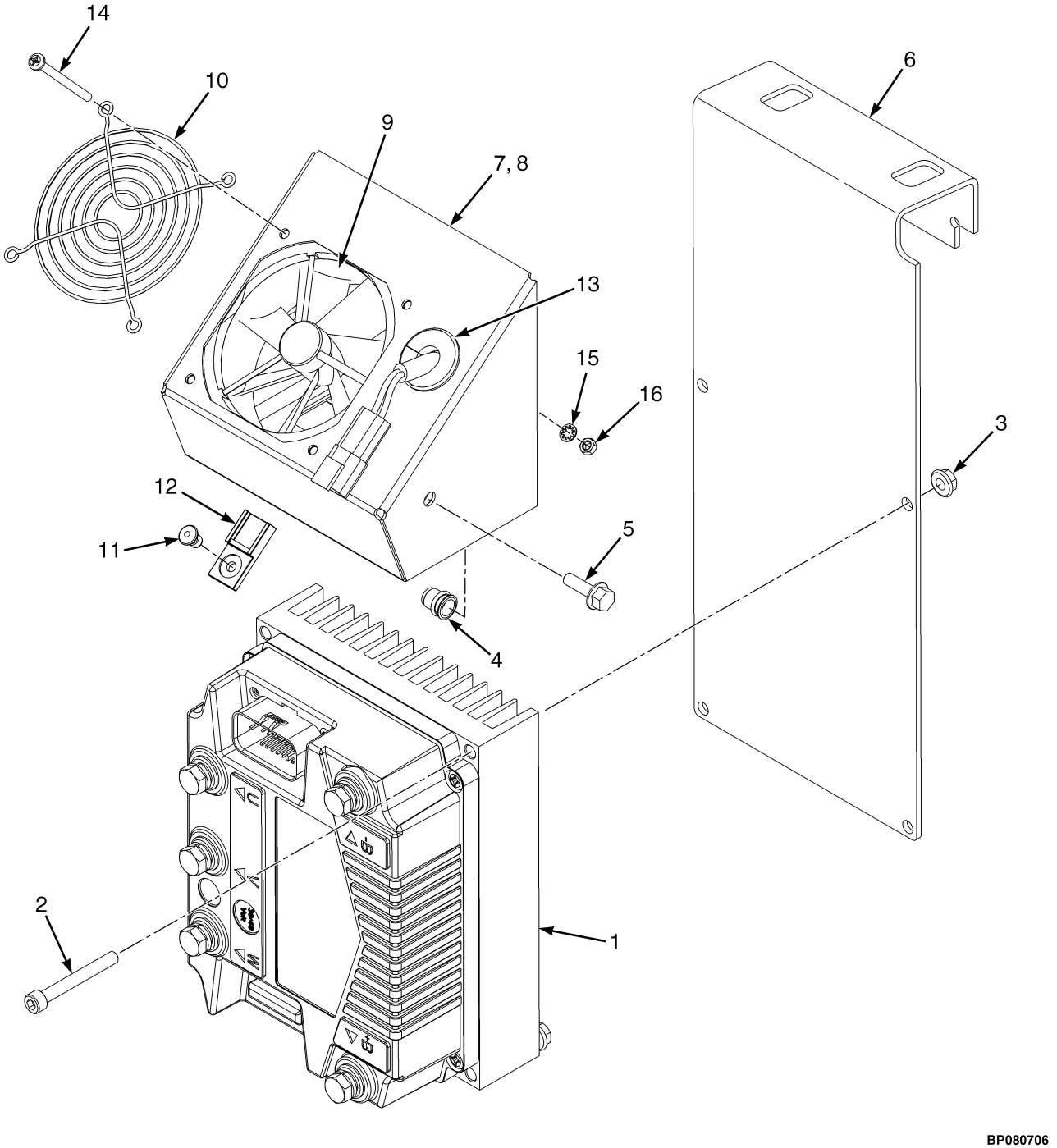

©2015 Yale Europe Materials Handling Limited

CONTROLLER

TRACTION AND FAN ASSEMBLY (→ S/N G807B05963L)

ITEM	PART NO.	DESCRIPTION	QTY
	580093280	Controller And Fan Assembly	1
1	580078341	Controller	1
2	932107911	Capscrew	4
3	~~580004321~~		
	580047919	Nut	4
4	580041704	Insert	2
5	580039438	Capscrew	2
6	580088506	Plate Wldmt	1
7	580093281	Fan Assembly	1
8	580088508	Air Duct	1
9	580092606	Fan	1
10	580051609	Guard	1
11	580056613	Fastener	1
12	580026812	Clip	1
13	580039440	Grommet	1
14	931109912	Screw	4
15	940400905	Washer	4
16	937100903	Nut	4

©2015 Yale Europe Materials Handling Limited

CONTROLLER (FIGURE 2-11)
TRACTION AND FAN ASSEMBLY (S/N G807B05964L →)

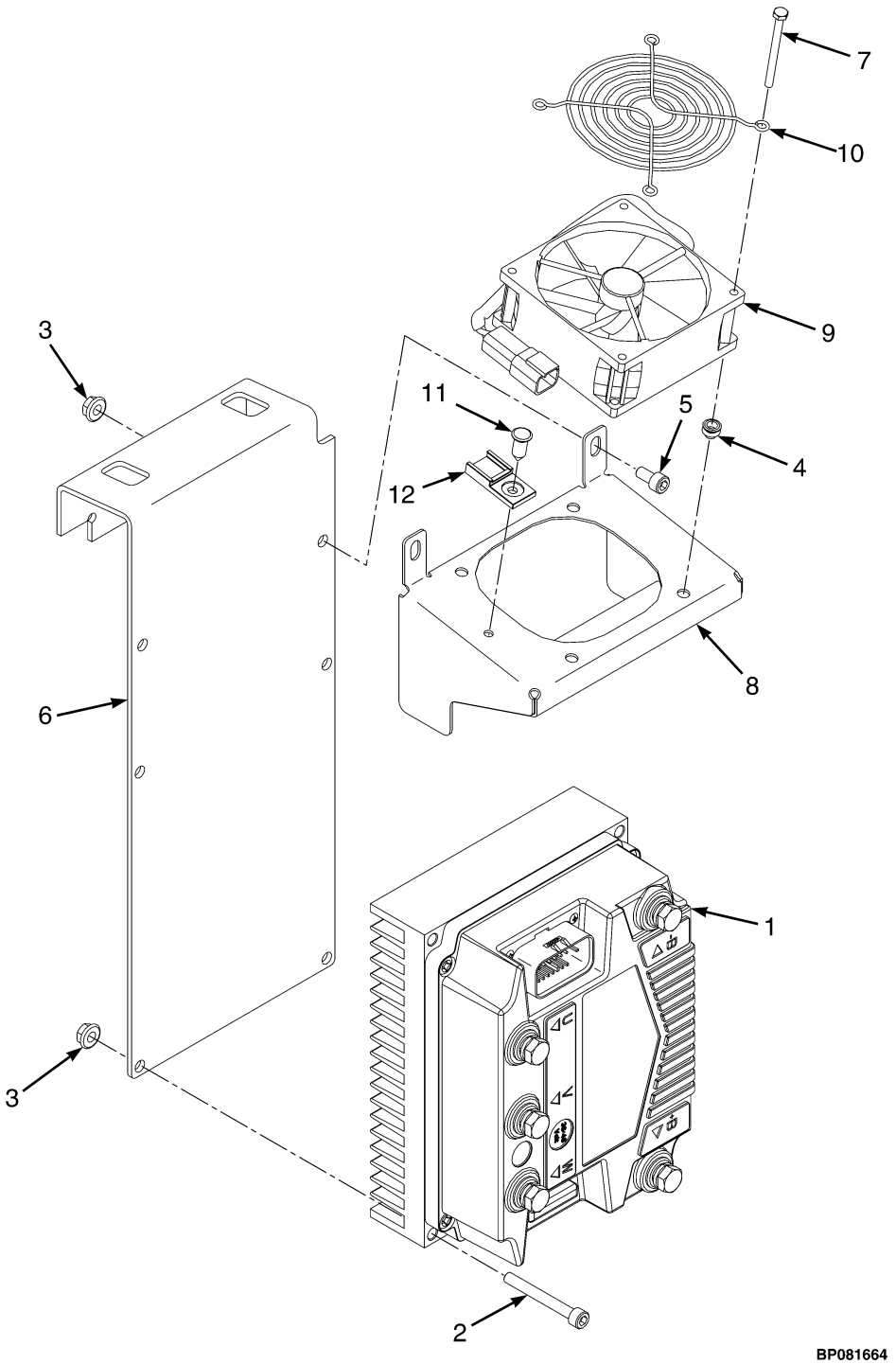

©2015 Yale Europe Materials Handling Limited

CONTROLLER

TRACTION AND FAN ASSEMBLY (S/N G807B05964L →)

ITEM	PART NO.	DESCRIPTION	QTY
1	582025210	Controller	2
2	932107911	Capscrew	4
3	~~580004321~~		
	580047919	Nut	6
4	580093718	Insert	4
5	932200902	Capscrew	2
6	582026255	Plate	1
7	524164714	Screw	4
8	582037647	Air Duct	1
9	580092606	Fan (48 VDC)	1
10	580051609	Guard	1
11	580056613	Fastener	1
12	580026812	Clip	1

©2015 Yale Europe Materials Handling Limited

BATTERY CONNECTOR AND CABLE (FIGURE 2-12)

WITHOUT RAPID CHARGE OPTION — SIDE BATTERY EXTRACTION (S/N G807B05405L →)

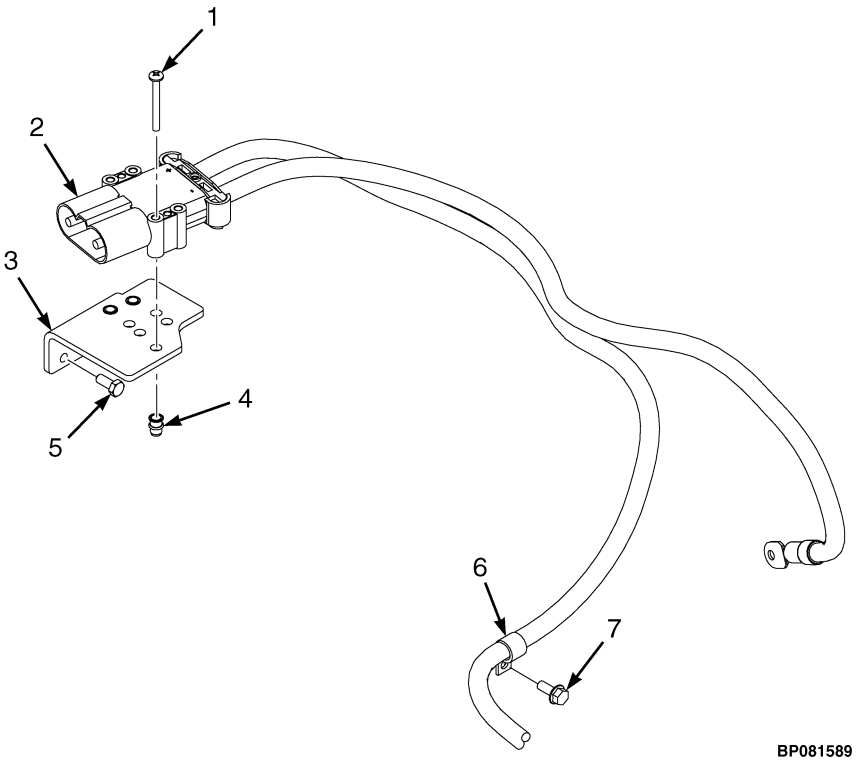

KEY:
A: 546 mm Battery Compartment
B: 642 mm Battery Compartment
C: 750 mm Battery Compartment

ITEM	PART NO.	DESCRIPTION	QTY A	QTY B	QTY C
1	449007053	Cross Recess Screw	3	3	3
2	**a** 580092362	Battery Connector And Cable (48 Volt)	1	..	..
2	**a** 580095315	Battery Connector	1	..	..
2	**a** 012474300	Terminal , Lug	1	..	..
2	**a** 012472200	Terminal	1	..	..
2	580092327	Battery Connector And Cable (48 Volt)	..	1	..
2	580095315	Battery Connector	..	1	..
2	012474300	Terminal , Lug	..	1	..
2	012472200	Terminal	..	1	..
2	580090524	Battery Connector And Cable (48 Volt)	..	..	1
2	580095315	Battery Connector	..	..	1
2	012474300	Terminal , Lug	..	..	1
2	012472200	Terminal	..	..	1
3	580088366	Bracket	1	1	1
4	580044859	Insert	3	3	3
5	449001013	Capscrew	2	2	2
6	580008371	Clamp	1	1	1
7	580049231	Capscrew	1	1	1

©2015 Yale Europe Materials Handling Limited

FOOTNOTES:

a → 2/2015

©2015 Yale Europe Materials Handling Limited

BATTERY CONNECTOR AND CABLE (FIGURE 2-13)

WITHOUT RAPID CHARGE OPTION — STANDARD AND SIDE BATTERY EXTRACTION (→ S/N G807B05404L)

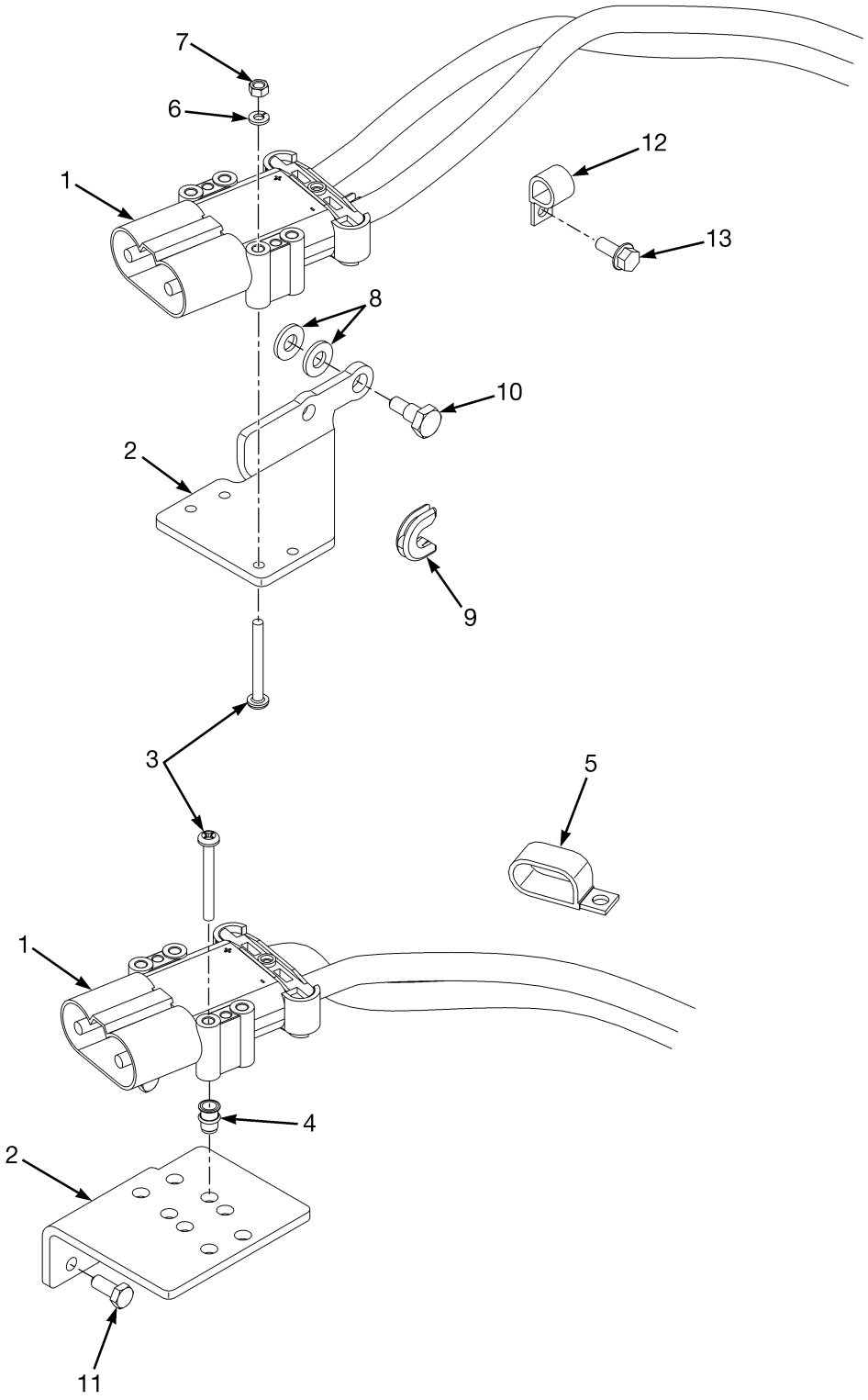

BP120045

©2015 Yale Europe Materials Handling Limited

BATTERY CONNECTOR AND CABLE

WITHOUT RAPID CHARGE OPTION – STANDARD AND SIDE BATTERY EXTRACTION

(→ S/N G807B05404L)

KEY:
A: Standard Battery Extraction
B: Side Battery Extraction

ITEM	PART NO.	DESCRIPTION	QTY A	QTY B
1	580092362	Battery Connector And Cable (546mm Battery Compartment)	1	1
1	580092327	Battery Connector And Cable (642mm Battery Compartment)	1	1
1	580090524	Battery Connector And Cable (750mm Battery Compartment)	1	1
1	580095315	Battery Connector	1	1
1	012474300	Terminal , Lug	1	1
1	012472200	Terminal	1	1
2	580088367	Bracket	1	..
2	580088366	Bracket	..	1
3	449007053	Cross Recess Screw	4	4
4	580044859	Insert	..	4
5	900003206	Clamp	1	1
6	449022018	Washer	4	..
7	449015002	Nut	4	..
8	580087820	Washer	2	..
9	580081322	Clip	1	..
10	580012352	Bolt	1	..
11	449001013	Capscrew	..	2
12	580008371	Clamp	1	1
13	580049231	Capscrew	1	1

©2015 Yale Europe Materials Handling Limited

BATTERY CONNECTOR AND CABLE (FIGURE 2-14)

WITHOUT RAPID CHARGE OPTION — STANDARD BATTERY EXTRACTION (S/N G807B05405L →)

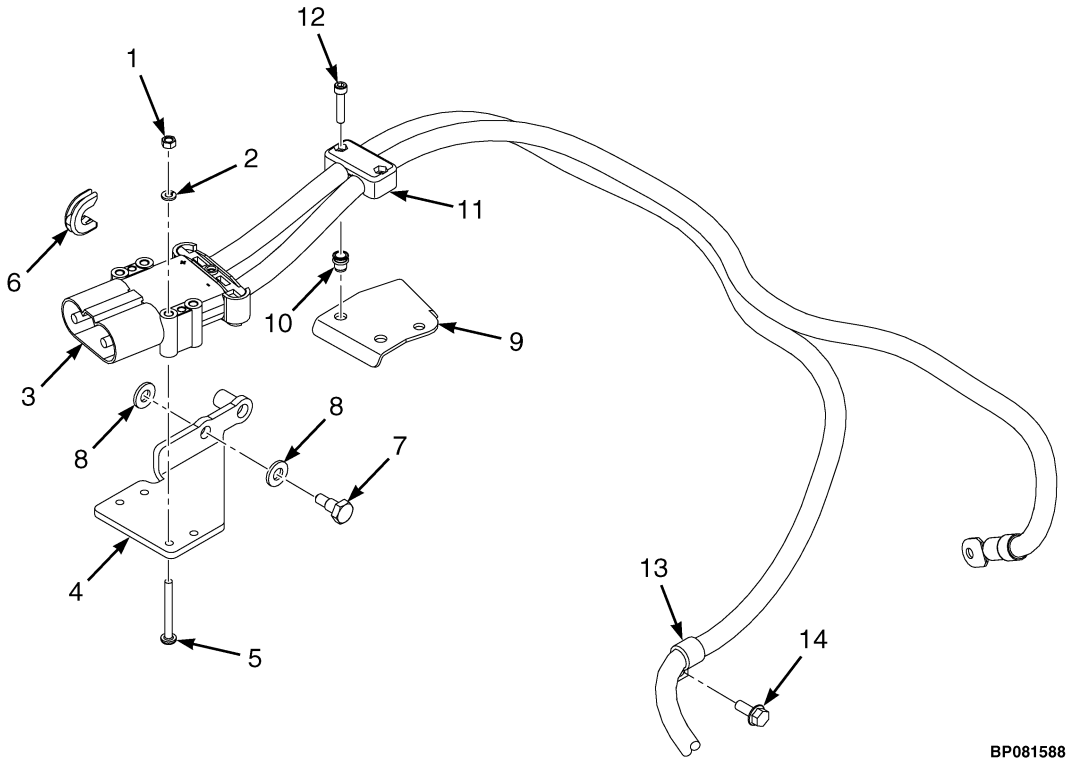

KEY:
A: 546 mm Battery Connector
B: 642 mm Battery Connector
C: 750 mm Battery Connector

ITEM	PART NO.	DESCRIPTION	QTY A	QTY B	QTY C
1	449015002	Nut	4	4	4
2	449022018	Washer	4	4	4
3	**b** 580092362	Battery Connector And Cable (48 Volt)	1	..	..
3	**b** 580095315	Battery Connector	1	..	..
3	**b** 012474300	Terminal , Lug	1	..	..
3	**b** 012472200	Terminal	1	..	..
3	580092327	Battery Connector And Cable (48 Volt)	..	1	..
3	580095315	Battery Connector	..	1	..
3	012474300	Terminal , Lug	..	1	..
3	012472200	Terminal	..	1	..
3	580090524	Battery Connector And Cable (48 Volt)	..	..	1
3	580095315	Battery Connector	..	..	1
3	012474300	Terminal , Lug	..	..	1
3	012472200	Terminal	..	..	1
4	580088367	Bracket	1	1	1
5	449007053	Cross Recess Screw	4	4	4
6	580081322	Clip	1	1	1
7	580012352	Bolt	2	2	2
8	580087820	Washer	2	2	2
9	582033306	Bracket	1	1	1

©2015 Yale Europe Materials Handling Limited

KEY:
A: 546 mm Battery Connector
B: 642 mm Battery Connector
C: 750 mm Battery Connector

ITEM	PART NO.	DESCRIPTION	QTY A	QTY B	QTY C
10	580041704	Insert	2	2	2
11	504068794	Clamp (Double Hose)	1	1	1
12	580055864	Capscrew	2	2	2
13	580008371	Clamp	1	1	1
14	580049231	Capscrew	1	1	1
	a 582033907	Rubber Pad	1	1	1

FOOTNOTES:

a Not illustrated

b → 2/2015

©2015 Yale Europe Materials Handling Limited

BATTERY CONNECTOR AND CABLE (FIGURE 2-15)

WITH RAPID CHARGE OPTION (→ 2/2015)

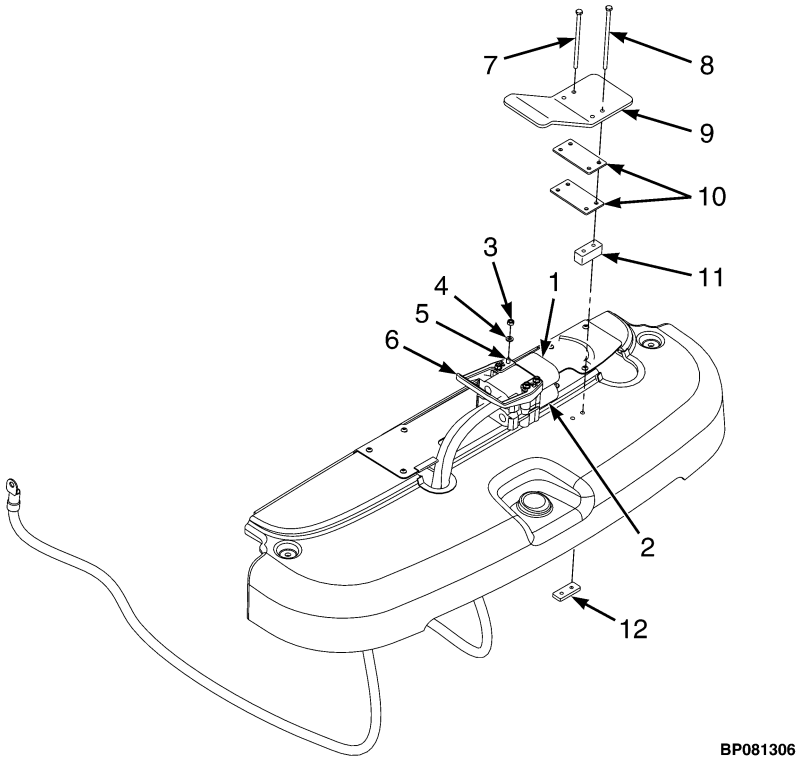

KEY:

A: 546 mm Battery Compartment
B: 642 mm Battery Compartment
C: 750 mm Battery Compartment

ITEM	PART NO.	DESCRIPTION	QTY A	QTY B	QTY C
	582019331	Battery Connector And Cable (Assembly)	1	..	..
	582019332	Battery Connector And Cable (Assembly)	..	1	..
	582019333	Battery Connector And Cable (Assembly)	..	..	1
1	582019334	Battery Connector And Cable (Negative)	1	1	1
1	582000788	Plug	1	1	1
1	012472200	Terminal	1	1	1
1	502164907	Cable	AR	AR	AR
1	520039889	Sealant	AR	AR	AR
2	582019335	Battery Connector And Cable (Positive)	1	..	..
2	582019336	Battery Connector And Cable (Positive)	..	1	..
2	582019337	Battery Connector And Cable (Positive)	..	..	1
2	582000788	Plug	1	1	1
2	012474300	Terminal , Lug	1	1	1
2	520039889	Sealant	AR	AR	AR
3	449015135	Nut	4	4	4
4	449021003	Washer	4	4	4
5	580064872	Metr Hex HD Cpscr HCE1000	4	4	4
6	580093651	Handle	1	1	1
6	580093650	Handle	1	1	1
7	580093671	Capscrew	2	2	2

©2015 Yale Europe Materials Handling Limited

KEY:
A: 546 mm Battery Compartment
B: 642 mm Battery Compartment
C: 750 mm Battery Compartment

ITEM	PART NO.	DESCRIPTION	QTY A	QTY B	QTY C
8	580014821	Capscrew	2	2	2
9	582019426	Plate	1	1	1
10	580096192	Plate (Spacer)	2	2	2
11	582019418	Plate (Spacer)	1	1	1
12	582019419	Plate (Mounting)	1	1	1
	550046840	Kit	1	1	1

©2015 Yale Europe Materials Handling Limited

BATTERY CONNECTOR AND CABLE (FIGURE 2-16)
WITH E-STEERING

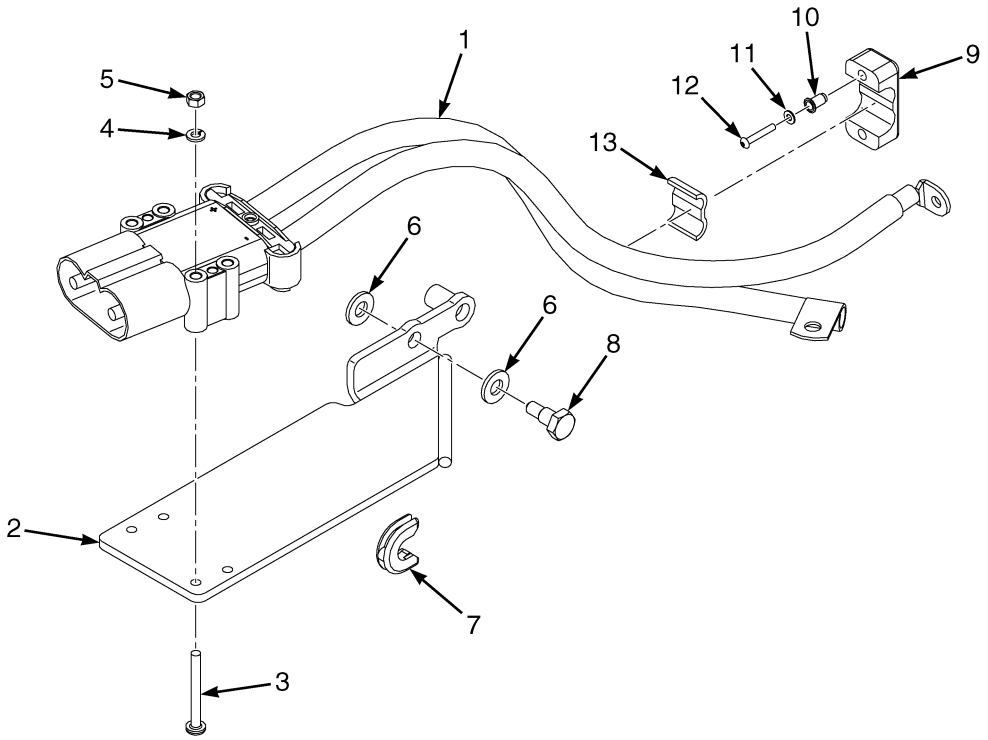

BP081819

ITEM	PART NO.	DESCRIPTION	QTY
1	582026946	Battery Connector And Cable	1
1	580095315	Battery Connector	1
1	580044571	E-Ring	1
1	582040759	Terminal , Power	1
2	582042374	Bracket (Drop In)	1
3	449007053	Cross Recess Screw	4
4	449022018	Washer	4
5	449015002	Nut	4
6	580087820	Washer	2
7	580081322	Clip	1
8	580012352	Bolt	1
9	504068794	Clamp (Double Hose)	1
10	580093718	Insert	2
11	940004903	Washer	2
12	580051168	Screw	2
13	582033907	Rubber Pad	1

©2015 Yale Europe Materials Handling Limited

NOTES

©2015 Yale Europe Materials Handling Limited

FUSE PANEL ASSEMBLY (FIGURE 2-17)
WITHOUT E-STEERING (→ 2/2015)

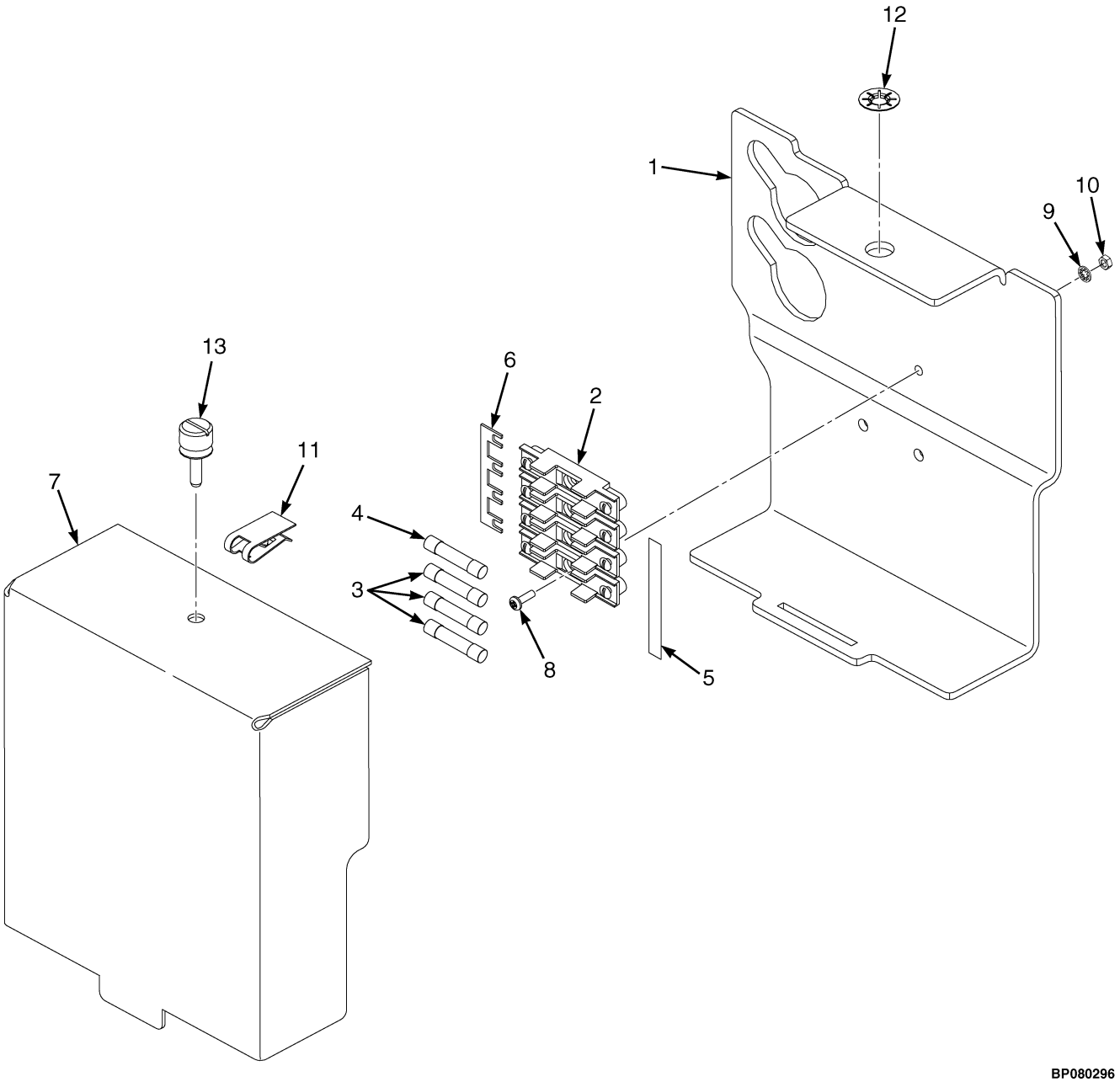

©2015 Yale Europe Materials Handling Limited

FUSE PANEL ASSEMBLY

WITHOUT E-STEERING (→ 2/2015)

ITEM	PART NO.	DESCRIPTION	QTY
	582006467	Fuse Panel	1
1	582006469	Bracket	1
2	503891203	Fuse Block	1
3	580079892	Fuse (10 Amp)	3
4	580062127	Fuse (5 Amp)	1
5	580088267	Label	1
6	580088716	Buss Bar	1
7	582006470	Cover	1
8	449007008	Screw (M3 x .05 x 10)	2
9	940400904	Washer	2
10	937100902	Nut	2
11	580096415	Receptacle	1
12	580096414	Retainer	1
13	580096410	Fastener	1

©2015 Yale Europe Materials Handling Limited

FUSE PANEL ASSEMBLY (FIGURE 2-18)
WITH E-STEERING (2/2015 →)

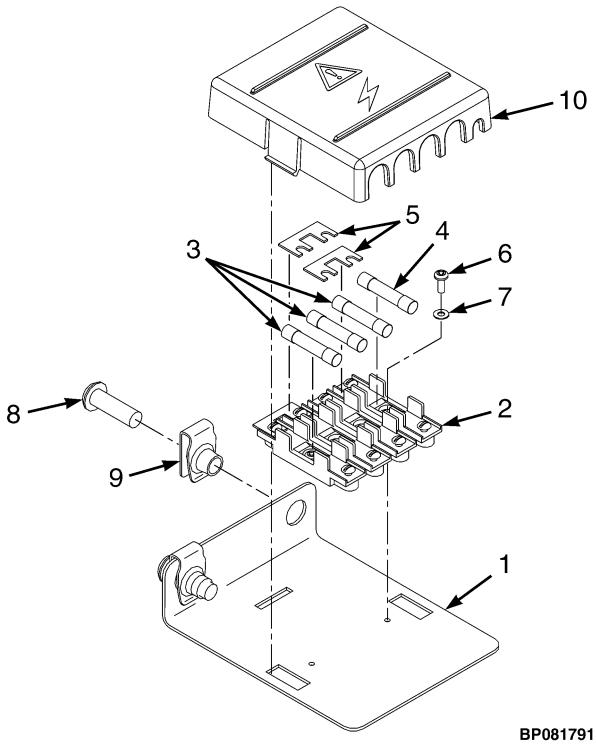

ITEM	PART NO.	DESCRIPTION	QTY
1	582021375	Bracket	1
2	503891203	Fuse Block	1
3	500903103	Fuse (15 Amp)	3
4	580062127	Fuse (5 Amp)	1
5	580046783	Fuse Connector	3
6	449007033	Screw	2
7	940004902	Washer	2
8	580032373	Capscrew	2
9	580026621	Nut	2
10	580089953	Cover (Fuse Box)	1

©2015 Yale Europe Materials Handling Limited

NOTES

©2015 Yale Europe Materials Handling Limited

CONTACTOR (FIGURE 2-19)
WITHOUT E-STEERING (→ 2/2015)

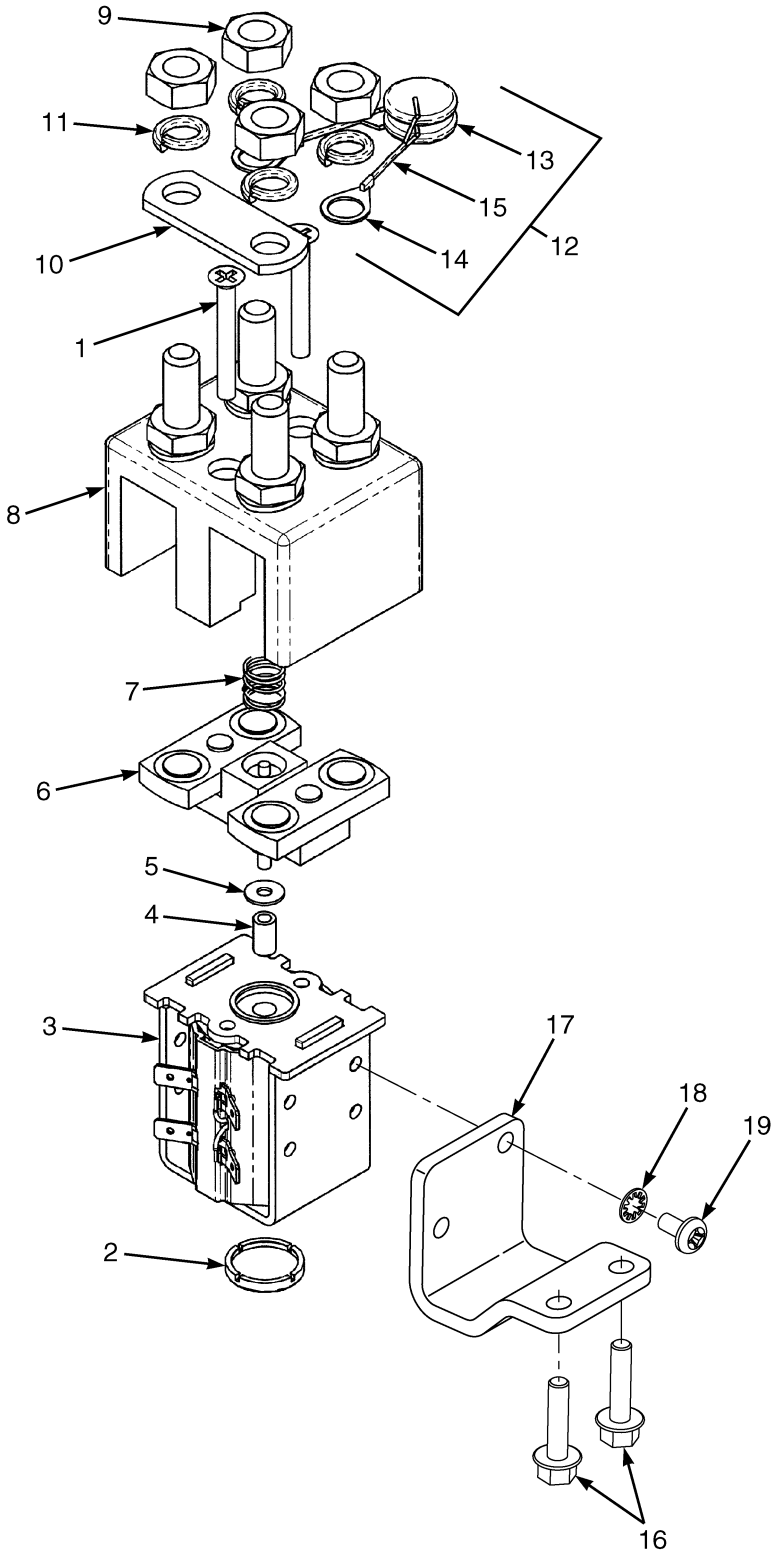

©2015 Yale Europe Materials Handling Limited

CONTACTOR

WITHOUT E-STEERING (→ 2/2015)

ITEM	PART NO.	DESCRIPTION	QTY
	580096235	Contactor Assembly	1
	580096416	Contactor	1
1	296321162	Screw	2
2	580001246	End Cap	1
3	580095963	Coil And Frame	1
4	580095964	Plunger	1
5	580095965	Washer	1
6	580097260	Contact	1
7	580097261	Return Spring	1
8	580097262	Cover (With Fixed Contacts)	1
9	501737903	Nut	4
10	580096417	Buss Bar	1
11	~~504057795~~		
	449022013	Lockwasher	4
12	580035780	Thermistor (Assembly)	1
13	580088826	Thermistor	2
13	582001171	Thermistor (Optional)	2
14	580035779	E-Ring	2
15	580060043	Heat Shrink	2
16	580049840	Capscrew	2
17	580092759	Bracket	1
18	940400906	Washer	2
19	449007041	Screw	2

©2015 Yale Europe Materials Handling Limited

CONTACTOR (FIGURE 2-20)
WITH E-STEERING (2/2015 →)

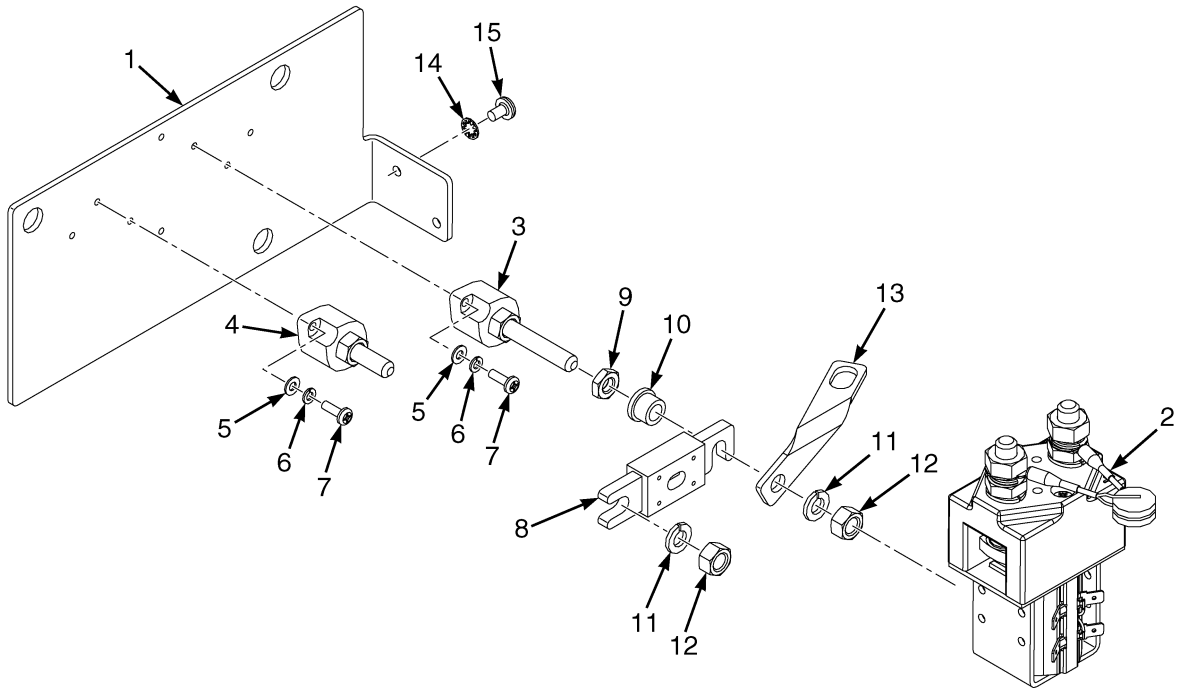

BP081818

ITEM	PART NO.	DESCRIPTION	QTY
	582033578	Contactor Assembly	1
1	582026005	Bracket	1
2	580080967	Contactor Assembly	1
3	582042483	Terminal Post	1
4	582042484	Terminal Post	1
5	940004903	Washer	4
6	449022019	Lockwasher	4
7	449007024	Screw	4
8	580043148	Fuse (700A)	1
9	580004592	Nut	1
10	520357520	Spacer	1
11	449022016	Lockwasher	2
12	580086019	Nut	2
13	582042033	Buss Bar	1
14	940400906	Washer	2
15	449007007	Screw	2

©2015 Yale Europe Materials Handling Limited

DISPLAY (FIGURE 2-21)

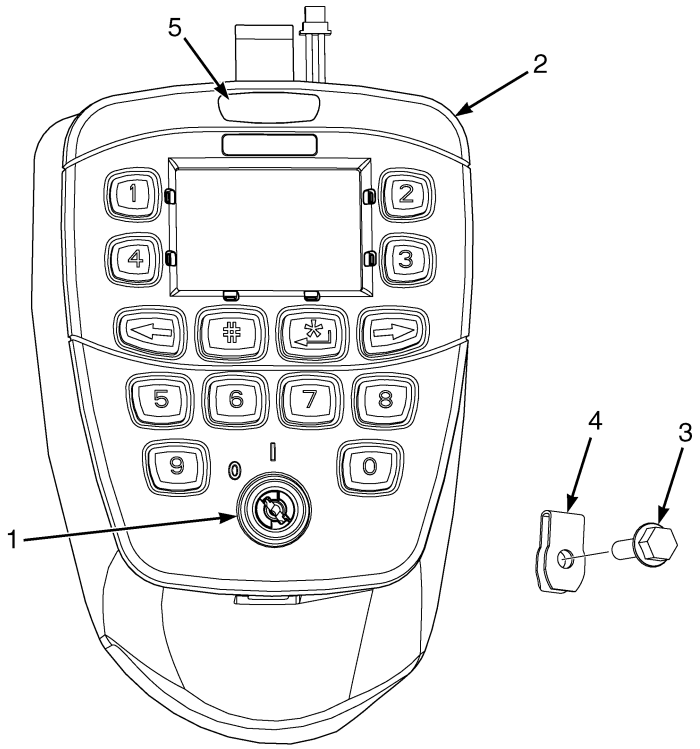

BP080712

ITEM	PART NO.	DESCRIPTION	QTY
	580078476	Display (Standard)	1
	580078477	Display (Freezer)	1
1	580087593	Ignition Switch	1
2	580089437	Cover	1
3	580039438	Capscrew	2
4	580051800	Nut (Foldover)	2
5	524324509	Label	1
6	580089704	Knob (Keyless Start)	1
6	504240712	Key Set	1
	a 580080769	Wire Harness (RH Lights) (Freezer Option) (☞Page 2-66)	1
	c 582034652	Wire Harness (RH Lights) (Freezer Option) (☞Page 2-68)	1
	a 580085297	Wire Harness (RH Lights) (Standard Option) (☞Page 2-64)	1
	b 582028832	Wire Harness (RH Lights) (Standard Display without Turn Signals) (☞Page 2-65)	1
	d 582036589	Wire Harness (RH Lights) (Standard Option) (☞Page 2-65)	1

FOOTNOTES:

a → 10/2013
b 10/2013 ↔ 2/2015
c 10/2013 →
d 2/2015 →

©2015 Yale Europe Materials Handling Limited

MINI-LEVER CONTROLS (FIGURE 2-22)

3 FUNCTION

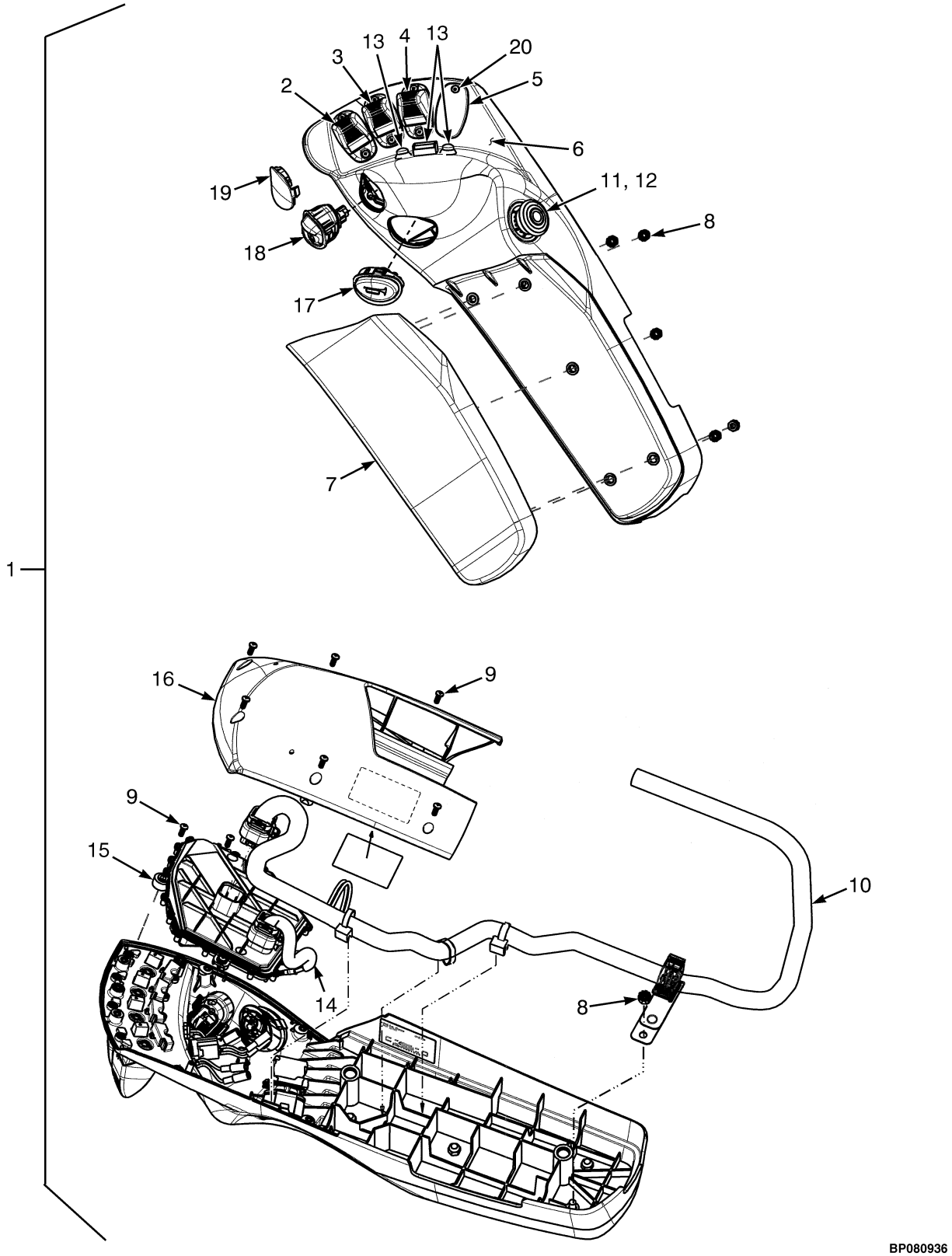

©2015 Yale Europe Materials Handling Limited

MINI-LEVER CONTROLS
3 FUNCTION

KEY:
A: Without Directional Control Switch
B: With Directional Control Switch
C: Without Directional Control Switch, With RTST
D: With Directional Control Switch, With RTST

ITEM	PART NO.	DESCRIPTION	QTY A	B	C	D
1	580093559	Mini-Lever Assembly	1	..	..	..
1	580093562	Mini-Lever Assembly	..	1	..	..
1	580093544	Mini-Lever Assembly	..	..	1	..
1	580093550	Mini-Lever Assembly	..	..	..	1
2	. . . . .	Lever Position 1	1	1	1	1
2	580096227	Lever (Single Function)	1	1	1	1
3	. . . . .	Lever Position 2	1	1	1	1
3	580096227	Lever (Single Function)	1	1	..	..
3	580096229	Lever (With Override)	..	..	1	1
4	. . . . .	Lever Position 3	1	1	1	1
4	580096227	Lever (Single Function)	1	1	1	1
5	. . . . .	Lever Position 4	1	1	1	1
5	580093297	Plug	1	1	1	1
6	580097446	Armrest (Without Push Buttons)	1	1	..	..
6	582003674	Armrest (With Push Buttons)	..	..	1	1
7	580097388	Cushion (Armrest)	1	1	1	1
8	580097432	Nut	5	5	5	5
9	580097386	Screw	9	9	9	9
10	580097448	Wire Harness	1	1	1	1
11	580097387	Switch (E-Stop) (Emergency Switch)	1	1	1	1
12	**a** 580092120	Push Button Switch	1	1	1	1
13	**a** 580095849	Push Button (Position 2)	..	..	1	1
13	**bc** 580096147	Cover (Push Button)	AR	AR	AR	AR
14	580095850	Wire Harness (Forward/Reverse Switch in the MLM)	..	..	1	1
15	~~580097449~~					
	582005940	Printed Circuit Board	1	1	1	1
16	580097447	Cover (Bottom Armrest)	1	1	1	1
17	580097389	Horn Button	1	1	1	1
18	580096412	Switch (Directional Control)	..	1	..	1
19	580096411	Plug (Directional Control Switch)	1	..	1	..
20	580093745	Capscrew	8	8	8	8

FOOTNOTES:

a Not all Lift Trucks may have all the switches and buttons shown.
b Not Illustrated
c Plug for Use Without Push Button

©2015 Yale Europe Materials Handling Limited

TILT SENSOR GROUP (FIGURE 2-23)

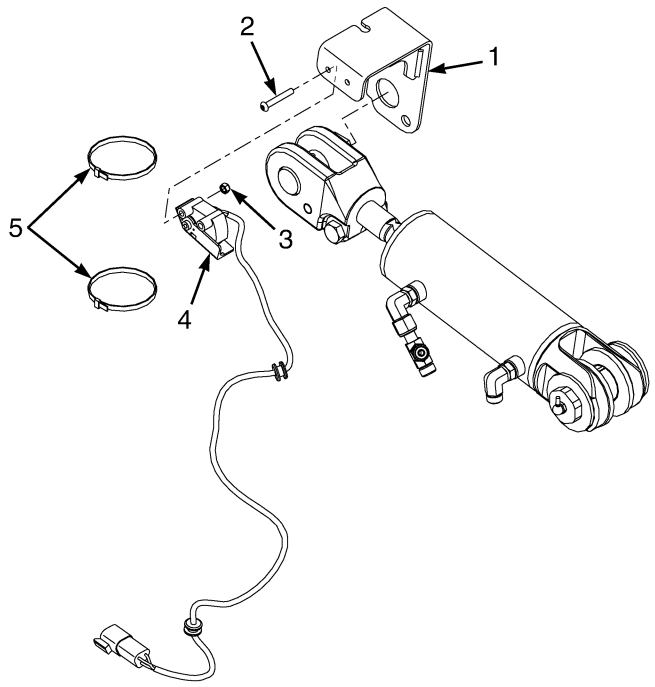

ITEM	PART NO.	DESCRIPTION	QTY
1	582005411	Bracket Wldmt	1
2	580047034	Capscrew	2
3	449015112	Locknut	2
4	580060645	Sensor (Mast Tilt Position)	1
5	504070790	Strap Clamp	2
	a 520039885	Washer	1

FOOTNOTES:

a Not Illustrated

©2015 Yale Europe Materials Handling Limited

NOTES

©2015 Yale Europe Materials Handling Limited

MINI-LEVER CONTROLS (FIGURE 2-24)

4 FUNCTION

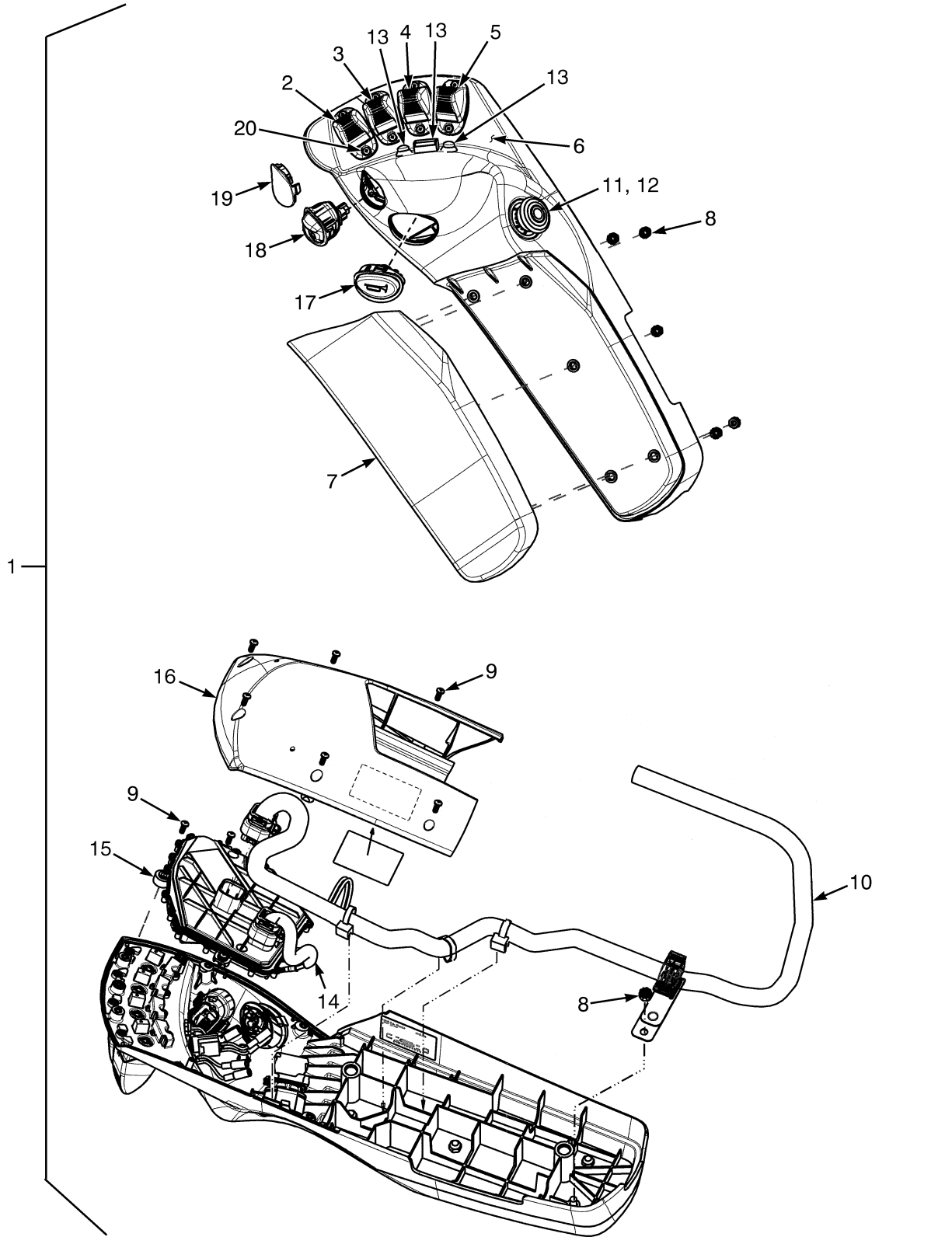

©2015 Yale Europe Materials Handling Limited

MINI-LEVER CONTROLS
4 FUNCTION

KEY:
A: Without Directional Control Switch
B: With Directional Control Switch
C: Without Directional Control Switch, With RTST
D: With Directional Control Switch, With RTST

ITEM	PART NO.	DESCRIPTION	QTY A	B	C	D
1	580093542	Mini-Lever Assembly	1	..	..	..
1	**e** 580093543	Mini-Lever Assembly	1	..	..	..
1	580093547	Mini-Lever Assembly	..	1	..	..
1	**e** 580093549	Mini-Lever Assembly	..	1	..	..
1	580093561	Mini-Lever Assembly	..	..	1	..
1	**e** 580093546	Mini-Lever Assembly	..	..	1	..
1	580093563	Mini-Lever Assembly	..	..	..	1
1	**e** 580093551	Mini-Lever Assembly	..	..	..	1
2	. . . . .	Lever Position 1	1	1	1	1
2	580096227	Lever (Single Function)	1	1	1	1
3	. . . . .	Lever Position 2	1	1	1	1
3	580096227	Lever (Single Function)	1	1	..	..
3	580096229	Lever (With Override)	..	..	1	1
4	. . . . .	Lever Position 3	1	1	1	1
4	580096227	Lever (Single Function)	1	1	1	1
5	. . . . .	Lever Position 4	1	1	1	1
5	580096227	Lever (Single Function)	1	1	..	..
5	580096228	Lever (Clamping)	..	..	1	1
6	**f** 580097446	Armrest (Without Push Buttons)	1	1	..	..
6	582003674	Armrest (With Push Buttons)	1	1	1	1
7	580097388	Cushion (Armrest)	1	1	1	1
8	580097432	Nut	5	5	5	5
9	580097386	Screw	9	9	9	9
10	580097448	Wire Harness	1	1	1	1
11	580097387	Switch (E-Stop) (Emergency Switch)	1	1	1	1
12	**a** 580092120	Push Button Switch	1	1	1	1
13	**ae** 580095849	Push Button (Position 4)	1	1	..	..
13	**a** 580095849	Push Button (Position 2)	..	..	1	1
13	**ae** 580095849	Push Button (Position 2 and 4)	..	..	1	1
13	**bc** 580096147	Cover (Push Button)	AR	AR	AR	AR
14	**d** 580095850	Wire Harness (Forward/Reverse Switch in the MLM)	1	1	1	1
15	~~580097449~~					
	582005940	Printed Circuit Board	1	1	1	1
16	580097447	Cover (Bottom Armrest)	1	1	1	1
17	580097389	Horn Button	1	1	1	1
18	580096412	Switch (Directional Control)	..	1	..	1
19	580096411	Plug (Directional Control Switch)	1	..	1	..
20	580093745	Capscrew	8	8	8	8

©2015 Yale Europe Materials Handling Limited

FOOTNOTES:

a Not all Lift Trucks may have all the switches and buttons shown.
b Not Illustrated
c Plug for Use Without Push Button
d RTST With Clamping
e With Clamping
f Without Clamping

©2015 Yale Europe Materials Handling Limited

NOTES

©2015 Yale Europe Materials Handling Limited

LIGHTS (FIGURE 2-25)
WITH STANDARD OVERHEAD GUARD

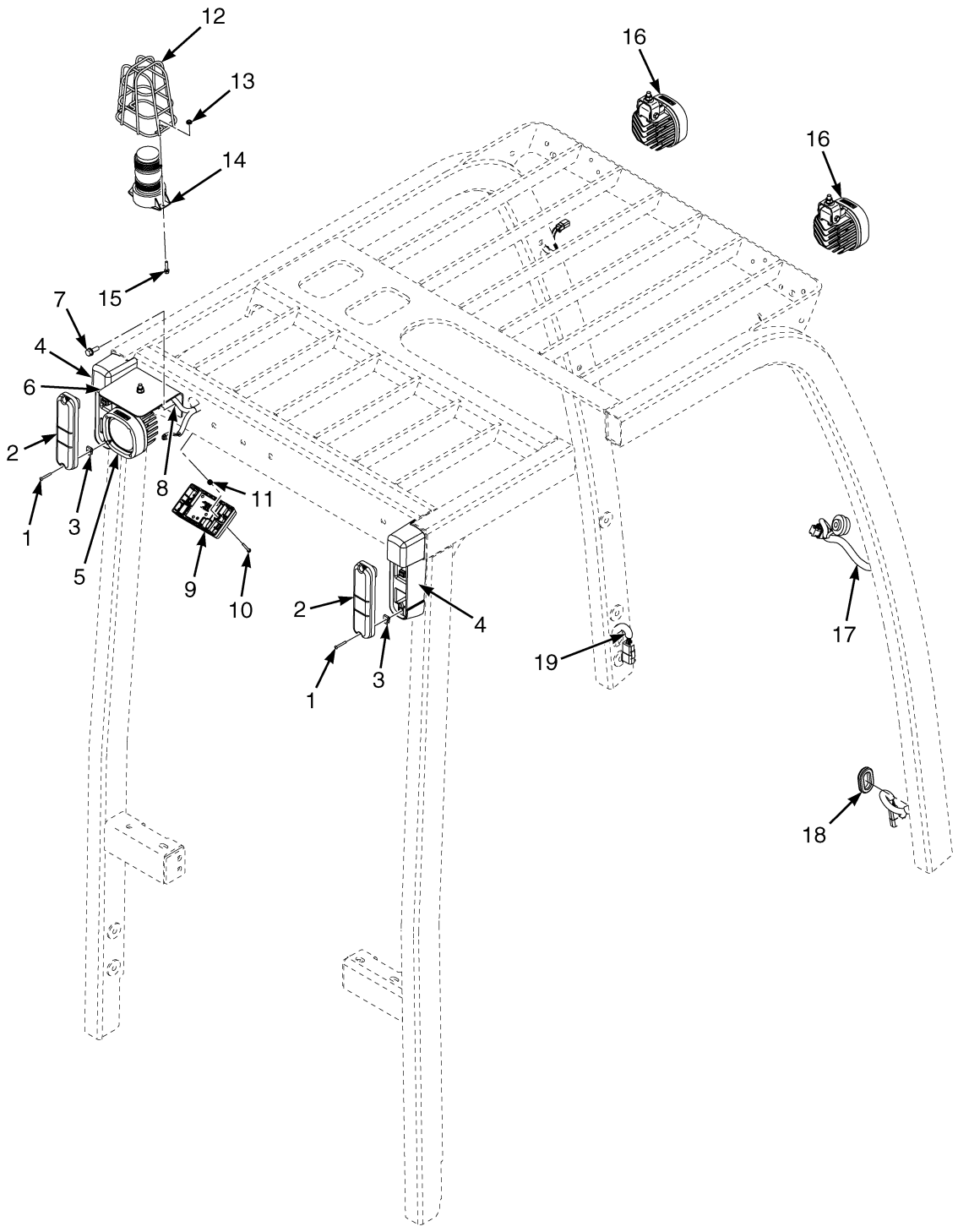

©2015 Yale Europe Materials Handling Limited

LIGHTS
WITH STANDARD OVERHEAD GUARD

ITEM	PART NO.	DESCRIPTION	QTY
1	580095093	Screw	2
2	582001995	Light (Tail) (LED)	2
2	580037209	Reflector (Tail) (Optional)	2
3	580040850	Nut (Clip)	2
4	580085910	Tail Light Base (LH) (☞Page 10-10)	1
4	580085909	Tail Light Base (RH) (☞Page 10-10)	1
5	580092289	Worklight (Rear) (LED) (☞Page 10-12)	1
5	580083835	Worklight (Rear) (Halogen) (☞Page 10-12)	1
6	580093014	Bracket (Standard Mount)	1
6	580093013	Bracket (Low Mount)	1
7	580056815	Capscrew	2
8	580044860	Insert	2
9	580097506	Dome Light (☞Page 10-14)	1
10	580093735	Capscrew	2
11	580093718	Insert	2
12	504232297	Guard (Strobe Light)	1
13	580058188	Nut	2
14	580079615	Strobe Light Assembly (☞Page 10-12)	1
15	580058314	Capscrew	2
16	. . . . .	Front Head/Work Light (☞Page 10-8)	1
17	**b** 580085297	Wire Harness (RH Lights) (Standard Option) (☞Page 2-64)	1
17	**c** 582028832	Wire Harness (RH Lights) (Standard Display without Turn Signals) (☞Page 2-65)	1
17	**e** 582036589	Wire Harness (RH Lights) (Standard Option) (☞Page 2-65)	1
17	**b** 580080769	Wire Harness (RH Lights) (Freezer Option) (☞Page 2-66)	1
17	**d** 582034652	Wire Harness (RH Lights) (Freezer Option) (☞Page 2-68)	1
18	580079741	Grommet	1
19	**b** 580080768	Wire Harness (Lights with Overhead Guard) (☞Page 2-156)	1
19	**d** 582028549	Wire Harness (Lights with Overhead Guard) (☞Page 2-160)	1
	a 580011639	Lubricant	AR

FOOTNOTES:

a Not Illustrated
b → 10/2013
c 10/2013 ↔ 2/2015
d 10/2013 →
e 2/2015 →

©2015 Yale Europe Materials Handling Limited

WIRE HARNESS (FIGURE 2-26)

RH LIGHT WITH STANDARD DISPLAY — WITHOUT TURN SIGNALS (→ 10/2013)

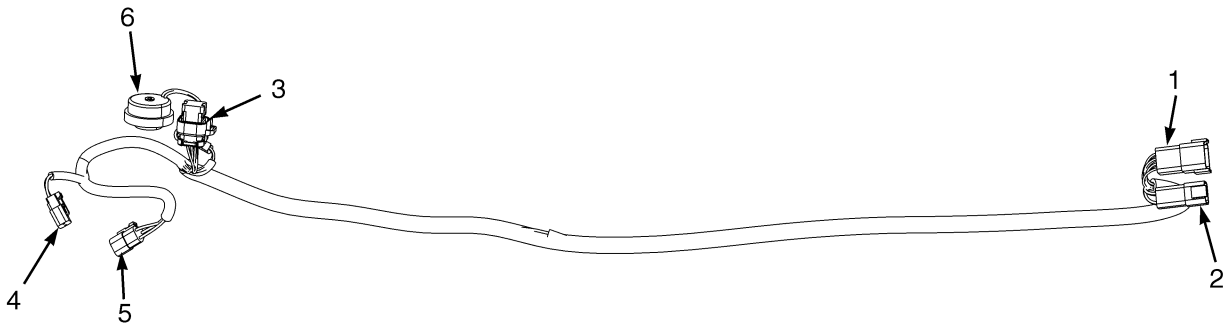

BP080718

ITEM	PART NO.	DESCRIPTION	QTY
	580085297	Wire Harness (RH Lights) (Standard Option) (Standard)	1
1	580042219	Connector (8 Pin) (Main Harness)	1
1	580041195	Terminal Pin	7
1	580019119	Plug	1
1	580042220	Connector	1
2	580020942	Connector (4 Way) (Main Harness)	1
2	505968514	Terminal (Pin)	4
2	518806635	Connector	1
3	520202603	Connector (Plug) (Display)	1
3	520202601	Connector (Socket Female)	7
4	580019101	Connector (Socket) (Right Front Work Light)	1
4	505968568	Terminal (Socket)	2
4	580021088	Connector	1
5	580025868	Connector (Right Front Marker Light)	1
5	505968568	Terminal (Socket)	3
5	580019140	Connector (Secondary Lock)	1
6	580086232	Buzzer	1

©2015 Yale Europe Materials Handling Limited

WIRE HARNESS (FIGURE 2-27)

RH LIGHT WITH STANDARD DISPLAY — WITHOUT TURN SIGNALS (10/2013 →)

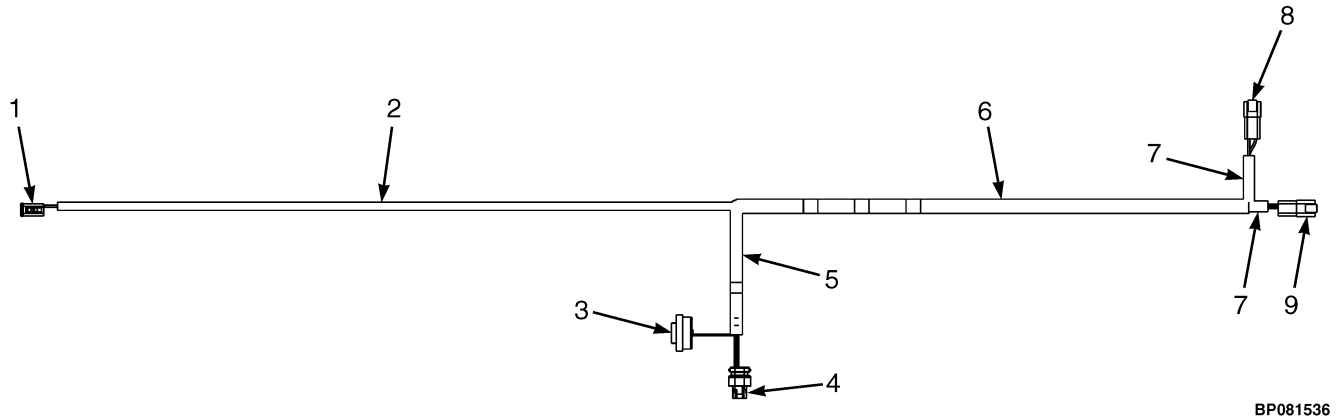

ITEM	PART NO.	DESCRIPTION	QTY
	a 582028832	Wire Harness (RH Lights) (Standard Display without Turn Signals)	1
	b 582036589	Wire Harness (RH Lights) (Standard Option)	1
1	. . . . .	Connector Assembly (Right Hand Front Work Light)	1
1	580021087	Connector (2 Way)	1
1	505968568	Terminal (Socket)	2
1	580021088	Connector	1
2	580044908	Conduit	AR
3	580086232	Buzzer	1
4	. . . . .	Connector Assembly (Display)	1
4	520202603	Connector (Plug)	1
4	520202601	Connector (Socket Female)	7
4	520202604	Plug	1
5	520038855	Conduit	AR
6	910065119	Conduit	AR
7	504232281	Conduit	AR
8	. . . . .	Connector Assembly (Main Lights Harness)	1
8	580020942	Connector (4 Way)	1
8	580019119	Plug	2
8	505968514	Terminal (Pin)	2
8	518806635	Connector	1
9	. . . . .	Connector Assembly (Main Harness)	1
9	580042219	Connector (8 Pin)	1
9	580019353	Terminal (Pin)	7
9	580019119	Plug	1
9	580042220	Connector	1

FOOTNOTES:

a → 2/2015

b 2/2015 →

©2015 Yale Europe Materials Handling Limited

WIRE HARNESS (FIGURE 2-28)

RH LIGHT WITH FREEZER DISPLAY — WITH TURN SIGNAL (→ 10/2013)

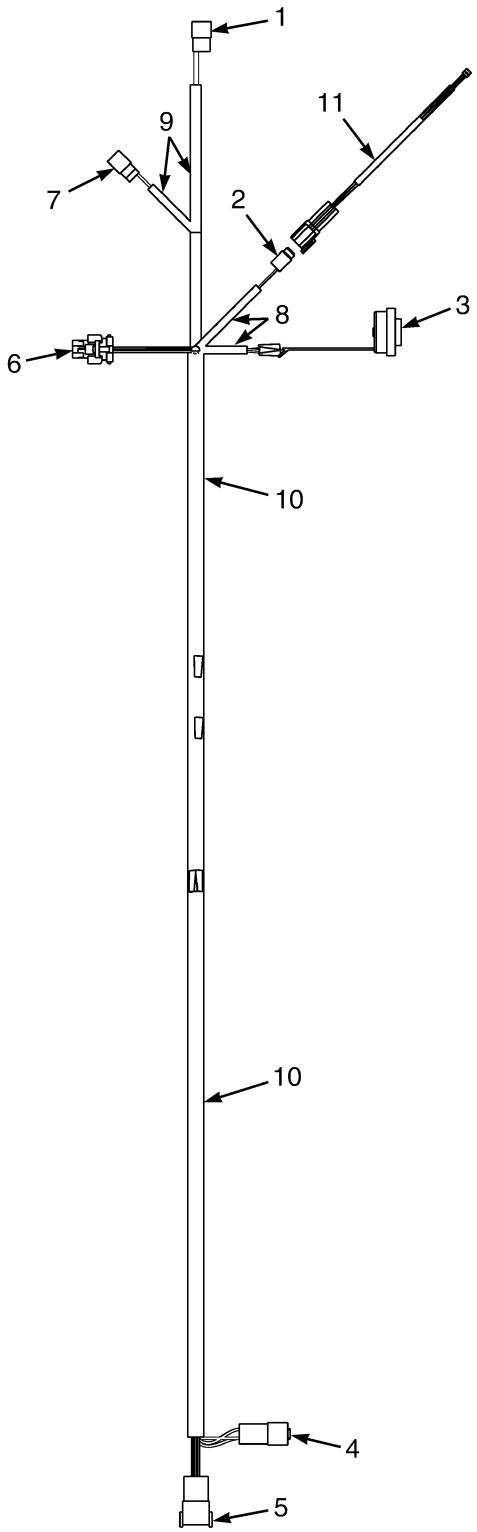

BP081000

©2015 Yale Europe Materials Handling Limited

WIRE HARNESS

RH LIGHT WITH FREEZER DISPLAY – WITH TURN SIGNAL (→ 10/2013)

ITEM	PART NO.	DESCRIPTION	QTY
	580080769	Wire Harness (RH Lights) (Freezer Option) (Premium)	1
1	. . . . .	Connector Assembly (Right Front Marker Light)	1
1	580025868	Connector	1
1	505968568	Terminal (Socket)	3
1	580019140	Connector (Secondary Lock)	1
2	. . . . .	Connector Assembly (Display Temperature Sensor)	1
2	580019245	Connector (2 Socket)	1
2	580019107	Terminal (Socket)	2
2	580019246	Connector (Secondary Lock)	1
3	580086232	Buzzer	1
4	. . . . .	Connector Assembly (Main Harness)	1
4	505968514	Terminal (Pin)	4
4	580020942	Connector (4 Way)	1
4	518806635	Connector	1
5	. . . . .	Connector Assembly (Main Harness)	1
5	580042219	Connector (8 Pin)	1
5	580019353	Terminal (Pin)	7
5	580019119	Plug	1
5	580042220	Connector	1
6	. . . . .	Connector Assembly (Display)	1
6	520202603	Connector (Plug)	1
6	520202601	Connector (Socket Female)	8
7	. . . . .	Connector Assembly (Right Front Work Light)	1
7	505968568	Terminal (Socket)	2
7	580019101	Connector (Socket)	1
7	580021088	Connector	1
8	580089790	Conduit	AR
9	580044908	Conduit	AR
10	520038855	Conduit	AR
11	580093528	Wire Harness (Temperature Sensor)	1
11	580056006	Connector (2 Pin)	1

©2015 Yale Europe Materials Handling Limited

WIRE HARNESS (FIGURE 2-29)

RH LIGHT WITH FREEZER DISPLAY — WITH TURN SIGNAL (10/2013 →)

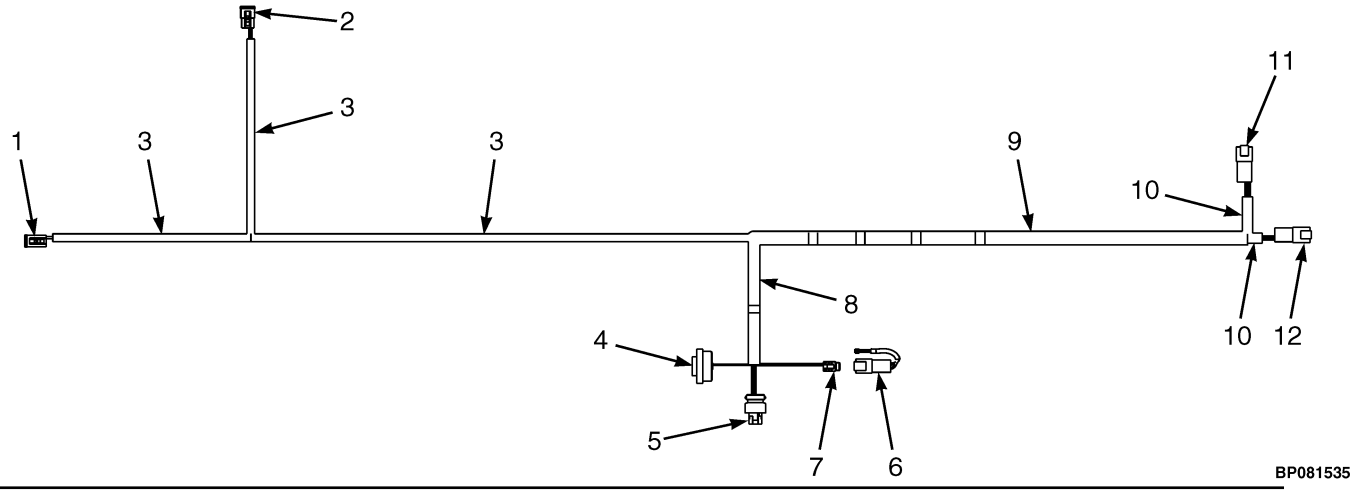

ITEM	PART NO.	DESCRIPTION	QTY
	582034652	Wire Harness (RH Lights) (Freezer Option)	1
1	. . . . .	Connector Assembly (Right Hand Front Work Light)	1
1	580021087	Connector (2 Way)	1
1	505968568	Terminal (Socket)	2
1	580021088	Connector	1
2	. . . . .	Connector Assembly (Right Hand Front Marker)	1
2	580019139	Connector (3-Way)	1
2	505968568	Terminal (Socket)	3
2	580019140	Connector (Secondary Lock)	1
3	580044908	Conduit	AR
4	580086232	Buzzer	1
5	. . . . .	Connector Assembly (Display with Key Switch)	1
5	520202603	Connector (Plug)	1
5	520202601	Connector (Socket Female)	8
6	580093528	Wire Harness (Temperature Sensor)	1
7	. . . . .	Connector Assembly (Wire Harness Temperature Sensor)	1
7	580019245	Connector (2 Socket)	1
7	580019107	Terminal (Socket)	2
7	580019246	Connector (Secondary Lock)	1
8	520038855	Conduit	AR
9	910065119	Conduit	AR
10	504232281	Conduit	AR
11	. . . . .	Connector Assembly (Main Lights Harness)	1
11	580020942	Connector (4 Way)	1
11	505968514	Terminal (Pin)	4
11	518806635	Connector	1
12	. . . . .	Connector Assembly (Main Harness)	1
12	580042219	Connector (8 Pin)	1
12	580019353	Terminal (Pin)	7
12	580019119	Plug	1

©2015 Yale Europe Materials Handling Limited

NOTES

©2015 Yale Europe Materials Handling Limited

WIRE HARNESS (FIGURE 2-30)

MAIN WITH ELECTRO-HYDRAULICS — SHEET 1 OF 2 (→ S/N G807B02113H)

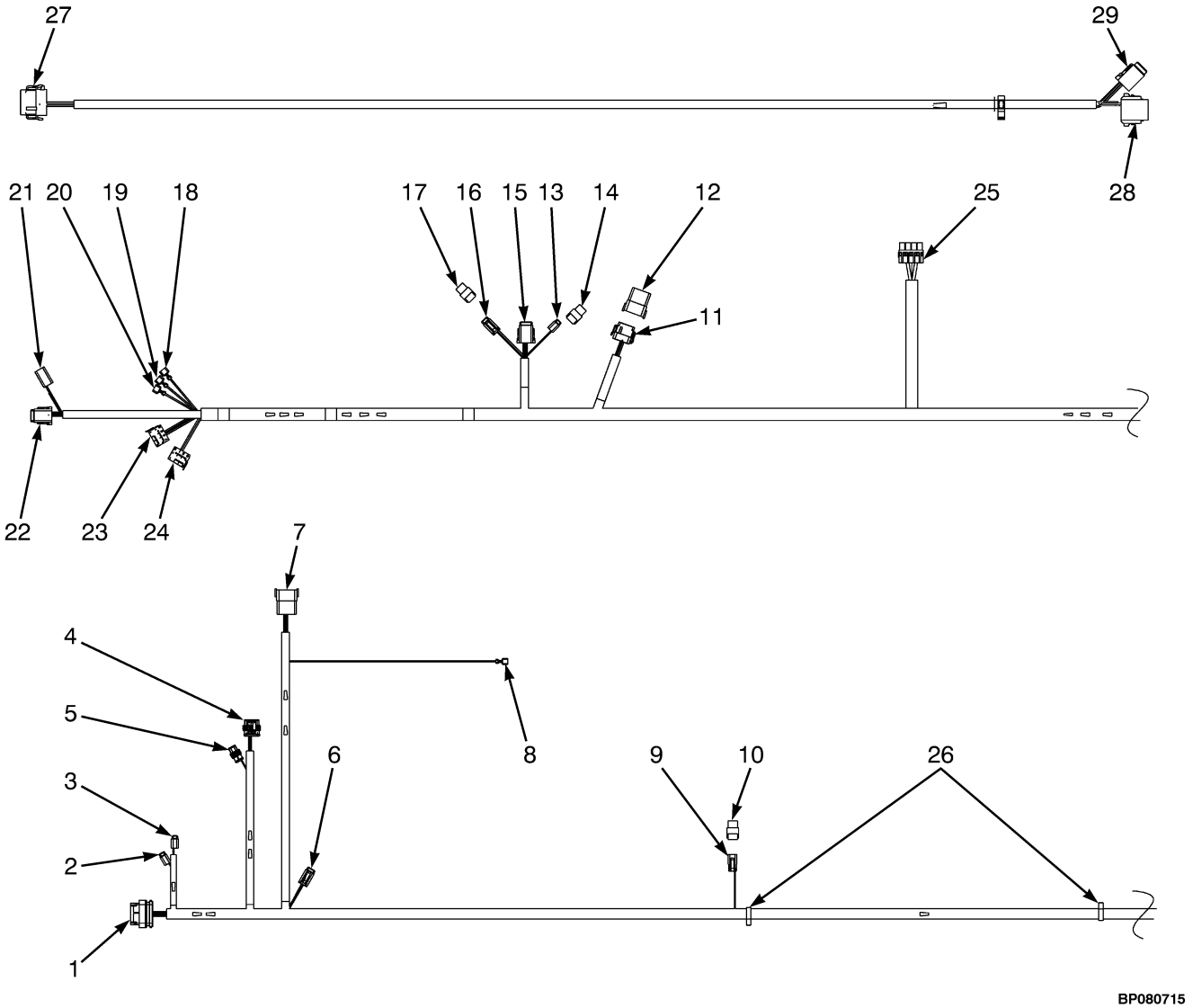

©2015 Yale Europe Materials Handling Limited

WIRE HARNESS

MAIN WITH ELECTRO-HYDRAULICS – SHEET 1 OF 2 (→ S/N G807B02113H)

ITEM	PART NO.	DESCRIPTION	QTY
	580097300	Wire Harness (Main) (Electro - Hydraulic)	1
1	. . . . .	Connector (Pump Controller)	1
1	520202602	Connector	1
1	520202601	Connector (Socket Female)	13
2	. . . . .	Connector (Hydraulic Controller-Cooling Fan)	1
2	580019245	Connector (2 Socket)	1
2	580019107	Terminal (Socket)	2
2	580019246	Connector (Secondary Lock)	1
3	. . . . .	Connector (Hydraulic Controller-Cooling Fan)	1
3	580019245	Connector (2 Socket)	1
3	580019107	Terminal (Socket)	2
3	580019246	Connector (Secondary Lock)	1
4	. . . . .	Connector (Motor Speed Sensor)	1
4	580035032	Connector (4 Way)	1
4	580062119	Receptacle Contact 20-22 AWG (Terminal)	4
4	580040456	Wire Seal (Yellow)	4
5	. . . . .	Connector (Motor Temperature Sensor)	1
5	580035031	Connector (2 Way)	1
5	580062119	Receptacle Contact 20-22 AWG (Terminal)	2
5	580040456	Wire Seal (Yellow)	2
6	. . . . .	Connector (Steer Axle Harness)	1
6	580022891	Connector	1
6	580019107	Terminal (Socket)	3
6	580022892	Connector (Secondary Lock)	1
7	. . . . .	Connector (Seat Harness)	1
7	580069704	Connector	1
7	580041195	Terminal Pin	11
7	580019119	Plug	1
7	580069705	Connector (Secondary Lock)	1
8	504059730	Terminal (ESD Hydraulic Tank)	1
9	. . . . .	Connector (Overhead Guard Horn Switch)	1
9	580021087	Connector (2 Way)	1
9	580062388	Terminal	2
9	580021088	Connector	1
10	. . . . .	Connector	1
10	580022893	Connector (2 Pin)	1
10	505968566	Plug	1
11	. . . . .	Connector (Light Option Harness)	1
11	580036981	Connector	1
11	580019107	Terminal (Socket)	1
11	580019119	Plug	2
11	580039513	Terminal	9
12	. . . . .	Connector	1
12	580069704	Connector	1
12	580019119	Plug	1
13	. . . . .	Connector (Synchronous Steering)	1
13	580019245	Connector (2 Socket)	1
13	580019107	Terminal (Socket)	2
13	580019246	Connector (Secondary Lock)	1
14	. . . . .	Connector	1

©2015 Yale Europe Materials Handling Limited

WIRE HARNESS

MAIN WITH ELECTRO-HYDRAULICS – SHEET 1 OF 2 (→ S/N G807B02113H)

ITEM	PART NO.	DESCRIPTION	QTY
14	580056006	Connector (2 Pin)	1
14	580019119	Plug	1
15	. . . . .	Connector (Steer Harness)	1
15	580042221	Connector	1
15	580019107	Terminal (Socket)	8
15	580042222	Connector (Secondary Lock)	1
16	. . . . .	Connector (Turn Signal Switch)	1
16	580019097	Connector	1
16	580019119	Plug	1
16	580039513	Terminal	3
16	580019098	Secondary Lock	1
17	. . . . .	Connector	1
17	580086209	Connector	1
17	580019119	Plug	4
18	500383916	Terminal Housing (Blue) (Flasher) (Left)	1
19	500383916	Terminal Housing (Blue) (Flasher) (+)	1
20	500383916	Terminal Housing (Blue) (Flasher) (-)	1
21	. . . . .	Connector (Display Light Harness)	1
21	580020943	Connector (4-Way)	1
21	505968568	Terminal (Socket)	4
21	580020944	Connector (Secondary Lock)	1
22	. . . . .	Connector (Display Harness)	1
22	580042221	Connector	1
22	580019107	Terminal (Socket)	7
22	580019119	Plug	1
22	580042222	Connector (Secondary Lock)	1
23	. . . . .	Connector (No Marker Light Switch)	1
23	~~580019248~~		
	520052844	Socket	1
23	580091403	Terminal	2
23	505972527	Terminal	1
24	. . . . .	Connector (Rear Work Light Switch)	1
24	~~580019248~~		
	520052844	Socket	1
24	580091403	Terminal	2
25	. . . . .	Connector (DC-DC Converter)	1
25	580047197	Connector	1
25	580047195	Terminal	1
25	580090639	Terminal	3
26	580030878	Clip	2
	580089658	Wire Harness (MLM Jumper) (MLM Jumper)	1
27	. . . . .	Connector (To Main Harness)	1
27	580036981	Connector	1
27	580019107	Terminal (Socket)	11
27	580019119	Plug	1
27	580036986	Connector (Secondary Lock)	1
28	. . . . .	Connector (Mini-lever Module)	1
28	505968519	Connector (8 Socket)	1
28	580062388	Terminal	7
28	505968566	Plug	1

©2015 Yale Europe Materials Handling Limited

WIRE HARNESS

MAIN WITH ELECTRO-HYDRAULICS – SHEET 1 OF 2 (→ S/N G807B02113H)

ITEM	PART NO.	DESCRIPTION	QTY
28	505968558	Connector (Secondary Lock)	1
29	. . . . .	Connector	1
29	580039499	Connector	1
29	580039513	Terminal	5
29	580019119	Plug	1
29	580039500	Connector (Secondary Lock)	1

©2015 Yale Europe Materials Handling Limited

WIRE HARNESS (FIGURE 2-31)

MAIN WITH ELECTRO-HYDRAULICS — SHEET 2 OF 2 (→ S/N G807B02113H)

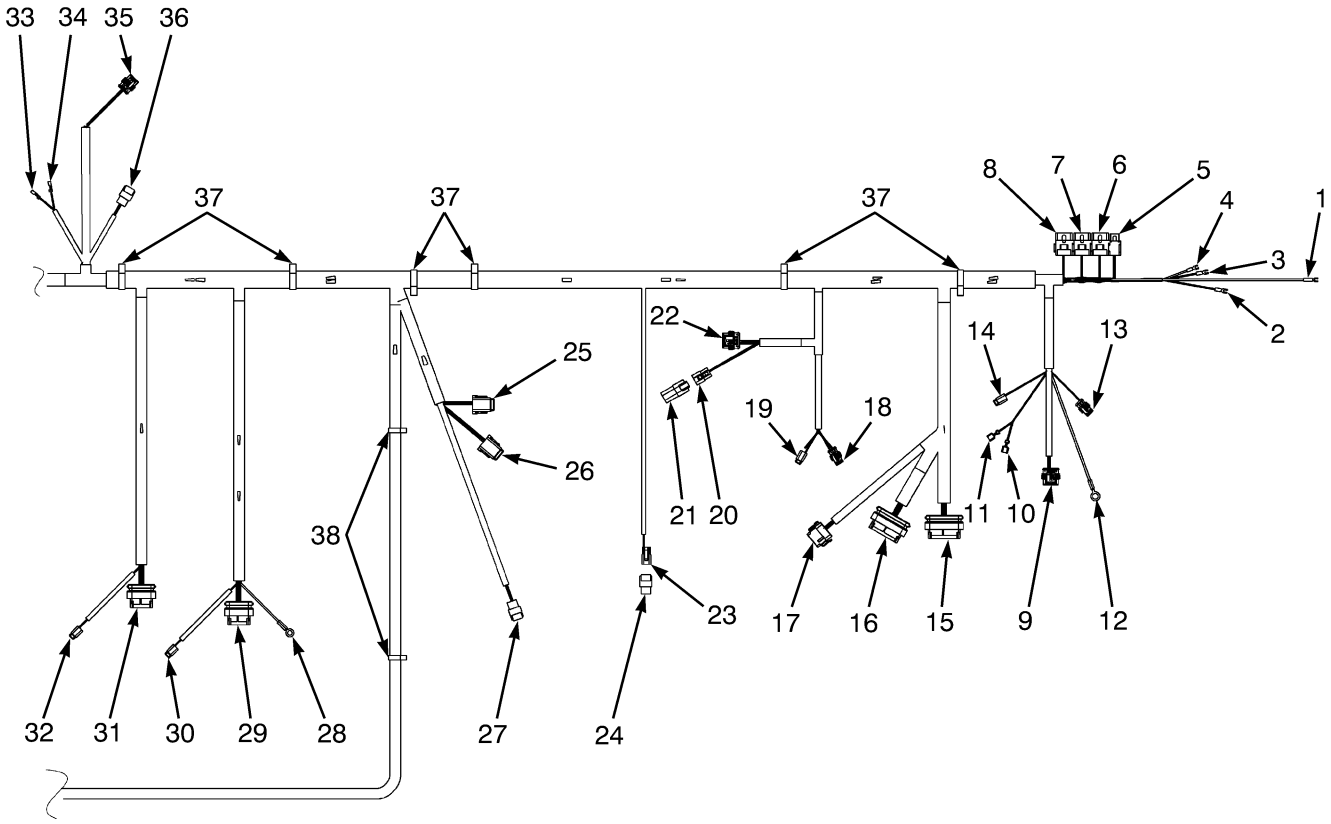

BP080716

©2015 Yale Europe Materials Handling Limited

WIRE HARNESS

MAIN WITH ELECTRO-HYDRAULICS – SHEET 2 OF 2 (→ S/N G807B02113H)

ITEM	PART NO.	DESCRIPTION	QTY
	580097300	Wire Harness (Main) (Electro-Hydraulic)	1
1	580058582	Spring Terminal	1
2	580058583	E-Spade	1
3	580058583	E-Spade	1
4	580058583	E-Spade	1
5	. . . . .	Receptacle (Key Switch Relay)	1
5	580091405	Terminal	4
6	. . . . .	Receptacle (Back-Up Light Relay)	1
6	580085282	Receptacle	1
6	580091405	Terminal	4
7	. . . . .	Receptacle (E. Hydraulic EN Relay)	1
7	580085282	Receptacle	1
7	580091405	Terminal	4
8	. . . . .	Receptacle (Brake Light Relay)	1
8	580085282	Receptacle	1
8	580091403	Terminal	2
8	580091405	Terminal	2
9	. . . . .	Connector (Left Speed Sensor)	1
9	580035032	Connector (4 Way)	1
9	580062119	Receptacle Contact 20-22 AWG (Terminal)	4
9	580040456	Wire Seal (Yellow)	4
10	504059730	Terminal	1
11	504059730	Terminal	1
12	520044861	E-Ring	1
13	. . . . .	Connector (Left Traction Motor Temperature Sensor)	1
13	580035031	Connector (2 Way)	1
13	580062119	Receptacle Contact 20-22 AWG (Terminal)	2
13	580040456	Wire Seal (Yellow)	2
14	. . . . .	Connector (Left Electric Brake)	1
14	580019245	Connector (2 Socket)	1
14	580019107	Terminal (Socket)	2
14	580019246	Connector (Secondary Lock)	1
15	. . . . .	Connector (Vehicle System Manager)	1
15	520202606	Connector (35 Way)	1
15	520202601	Connector (Socket Female)	20
16	. . . . .	Connector (Vehicle System Manager)	1
16	580048272	Connector	1
16	520202601	Connector (Socket Female)	23
17	. . . . .	Connector (Accessory Jumper)	1
17	580036981	Connector	1
17	580019107	Terminal (Socket)	10
17	580019119	Plug	2
17	580036986	Connector (Secondary Lock)	1
18	. . . . .	Connector (Right Traction Motor Temperature Sensor)	1
18	580035031	Connector (2 Way)	1
18	580062119	Receptacle Contact 20-22 AWG	2
18	580040456	Wire Seal (Yellow) (Terminal)	2
19	. . . . .	Connector (Right Electric Brake)	1
19	580019245	Connector (2 Socket)	1
19	580019107	Terminal (Socket)	2

©2015 Yale Europe Materials Handling Limited

WIRE HARNESS

MAIN WITH ELECTRO-HYDRAULICS – SHEET 2 OF 2 (→ S/N G807B02113H)

ITEM	PART NO.	DESCRIPTION	QTY
19	580019246	Connector (Secondary Lock)	1
20	. . . . .	Connector (Tilt Position Sensor)	1
20	580019139	Connector (3-Way)	1
20	580038290	Terminal	3
20	520038872	Connector (Secondary Lock)	1
21	. . . . .	Connector	1
21	580022894	Connector	1
21	505968566	Plug	3
22	. . . . .	Connector (Right Speed Sensor)	1
22	580035032	Connector (4 Way)	1
22	580062119	Receptacle Contact 20-22 AWG (Terminal)	4
22	580040456	Wire Seal (Yellow)	4
23	. . . . .	Connector (Battery Gate Magnetic Switch)	1
23	580021087	Connector (2 Way)	1
23	580062388	Terminal	2
23	580021088	Connector	1
24	. . . . .	Connector	1
24	580022893	Connector (2 Pin)	1
24	505968566	Plug	1
25	. . . . .	Connector (E. Hydraulic Valve Lower Coils)	1
25	580080319	Connector	1
25	580019107	Terminal (Socket)	8
25	580042222	Connector (Secondary Lock)	1
26	. . . . .	Connector (E. Hydraulic Valve Upper Coil)	1
26	580042221	Connector	1
26	580019107	Terminal (Socket)	8
26	580042222	Connector (Secondary Lock)	1
27	. . . . .	Connector (Left Pressure Sensor)	1
27	580037805	Connector	1
27	580037807	Terminal	3
27	580039602	Seal (Green)	3
28	520039880	E-Ring	1
29	. . . . .	Connector (Right Traction Motor Controller)	1
29	520202602	Connector	1
29	520202601	Connector (Socket Female)	12
30	. . . . .	Connector (Right Controller Cooling Fan)	1
30	580019245	Connector (2 Socket)	1
30	580019107	Terminal (Socket)	2
30	580019246	Connector (Secondary Lock)	1
31	. . . . .	Connector (Left Traction Motor Controller)	1
31	520202602	Connector	1
31	520202601	Connector (Socket Female)	12
32	. . . . .	Connector (Left Controller Cooling Fan)	1
32	580019245	Connector (2 Socket)	1
32	580019107	Terminal (Socket)	2
32	580019246	Connector (Secondary Lock)	1
33	952405902	Terminal (Brake Floor Level Sensor)	1
34	952405902	Terminal (Brake Floor Level Sensor)	1
35	. . . . .	Connector (Horn Assembly)	1
35	580062118	Connector (3 Way)	1

©2015 Yale Europe Materials Handling Limited

WIRE HARNESS

MAIN WITH ELECTRO-HYDRAULICS – SHEET 2 OF 2 (→ S/N G807B02113H)

ITEM	PART NO.	DESCRIPTION	QTY
35	580062119	Receptacle Contact 20-22 AWG	3
35	580040456	Wire Seal (Yellow)	3
36	. . . . .	Connector (Service Brake Sensor)	1
36	580037805	Connector	1
36	580037807	Terminal	3
36	580039602	Seal (Green)	3
37	580039764	Clip	6
38	580030878	Clip	2

©2015 Yale Europe Materials Handling Limited

WIRE HARNESS (FIGURE 2-32)

MAIN WITH ELECTRO-HYDRAULICS — SHEET 1 OF 2 (S/N G807B02114H →)

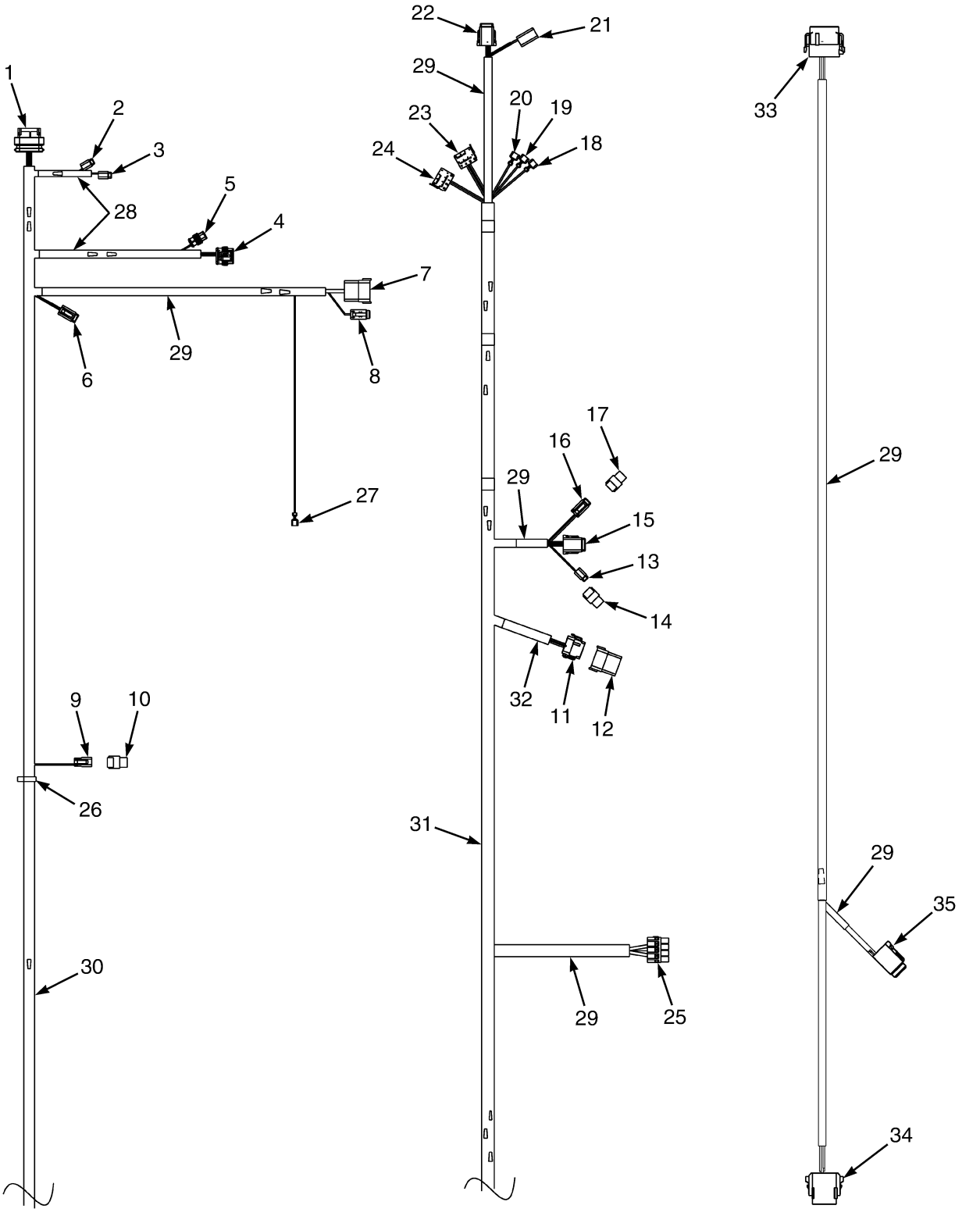

©2015 Yale Europe Materials Handling Limited

WIRE HARNESS

MAIN WITH ELECTRO-HYDRAULICS – SHEET 1 OF 2 (S/N G807B02114H →)

ITEM	PART NO.	DESCRIPTION	QTY
	580097300	Wire Harness (Main) (Electro - Hydraulic)	1
1	. . . . .	Connector Assembly (Pump Controller)	1
1	520202602	Connector	1
1	520202601	Connector (Socket Female)	13
2	. . . . .	Connector Assembly (Hydraulic Controller-Cooling Fan)	1
2	580019245	Connector (2 Socket)	1
2	580019107	Terminal (Socket)	2
2	580019246	Connector (Secondary Lock)	1
3	. . . . .	Connector Assembly (Hydraulic Controller-Cooling Fan)	1
3	580019245	Connector (2 Socket)	1
3	580019107	Terminal (Socket)	2
3	580019246	Connector (Secondary Lock)	1
4	. . . . .	Connector Assembly (Motor Speed Sensor)	1
4	580035032	Connector (4 Way)	1
4	580062119	Receptacle Contact 20-22 AWG (Terminal)	4
4	580040456	Wire Seal (Yellow)	4
5	. . . . .	Connector Assembly (Motor Temperature Sensor)	1
5	580035031	Connector (2 Way)	1
5	580062119	Receptacle Contact 20-22 AWG (Terminal)	2
5	580040456	Wire Seal (Yellow)	2
6	. . . . .	Connector Assembly (Steer Axle Harness)	1
6	580022891	Connector	1
6	580019107	Terminal (Socket)	3
6	580022892	Connector (Secondary Lock)	1
7	. . . . .	Connector Assembly (Seat Harness)	1
7	580069704	Connector	1
7	580019353	Terminal (Pin)	11
7	580019119	Plug	1
7	580069705	Connector (Secondary Lock)	1
8	. . . . .	Connector Assembly (Hydraulic Fluid Level -Pressure)	1
8	580039499	Connector	1
8	580019107	Terminal (Socket)	5
8	580019119	Plug	1
8	580039500	Connector (Secondary Lock)	1
9	. . . . .	Connector Assembly (Overhead Guard Horn Switch)	1
9	580021087	Connector (2 Way)	1
9	580062388	Terminal	2
9	580021088	Connector	1
10	. . . . .	Connector	1
10	580022893	Connector (2 Pin)	1
10	505968566	Plug	1
11	. . . . .	Connector Assembly (Light Option Harness)	1
11	580036981	Connector	1
11	580019107	Terminal (Socket)	1
11	580019119	Plug	1
11	580039513	Terminal	10
11	580036986	Connector (Secondary Lock)	1
12	. . . . .	Connector Assembly	1
12	580069704	Connector	1
12	580019119	Plug	12

©2015 Yale Europe Materials Handling Limited

WIRE HARNESS

MAIN WITH ELECTRO-HYDRAULICS – SHEET 1 OF 2 (S/N G807B02114H →)

ITEM	PART NO.	DESCRIPTION	QTY
13	. . . . .	Connector Assembly (Synchronous Steering)	1
13	580019245	Connector (2 Socket)	1
13	580019107	Terminal (Socket)	2
13	580019246	Connector (Secondary Lock)	1
14	. . . . .	Connector Assembly	1
14	580056006	Connector (2 Pin)	1
14	580019119	Plug	1
15	. . . . .	Connector Assembly (Steer Harness)	1
15	580042221	Connector	1
15	580019107	Terminal (Socket)	7
15	580042222	Connector (Secondary Lock)	1
16	. . . . .	Connector Assembly (Turn Signal Switch)	1
16	580019097	Connector	1
16	580019119	Plug	1
16	580039513	Terminal	3
16	580019098	Secondary Lock (Secondary Lock)	1
17	. . . . .	Connector Assembly	1
17	580086209	Connector	1
17	580019119	Plug	4
18	500383916	Terminal Housing (Blue) (Flasher) (Left)	1
19	500383916	Terminal Housing (Blue) (Flasher) (+)	1
20	500383916	Terminal Housing (Blue) (Flasher) (-)	1
21	. . . . .	Connector Assembly (Display Light Harness)	1
21	580020943	Connector (4-Way)	1
21	505968568	Terminal (Socket)	4
21	580020944	Connector (Secondary Lock)	1
22	. . . . .	Connector Assembly (Display Harness)	1
22	580042221	Connector	1
22	580019107	Terminal (Socket)	7
22	580019119	Plug	1
22	580042222	Connector (Secondary Lock)	1
23	. . . . .	Connector Assembly (No Marker Light Switch)	1
23	~~580019248~~		
	520052844	Socket	1
23	580091403	Terminal	2
23	505972527	Terminal	2
24	. . . . .	Connector Assembly (Rear Work Light Switch)	1
24	~~580019248~~		
	520052844	Socket	1
24	580091403	Terminal	2
25	. . . . .	Connector Assembly (DC-DC Converter)	1
25	580047197	Connector	1
25	580047195	Terminal	2
25	580090639	Terminal	2
26	580030878	Clip	2
27	504059730	Terminal (ESD Hydraulic Tank)	1
28	580044908	Conduit	AR
29	504232281	Conduit	AR
30	910065119	Conduit	AR
31	520045672	Conduit	AR

©2015 Yale Europe Materials Handling Limited

WIRE HARNESS

MAIN WITH ELECTRO-HYDRAULICS – SHEET 1 OF 2 (S/N G807B02114H →)

ITEM	PART NO.	DESCRIPTION	QTY
32	520038855	Conduit	AR
	580089658	Wire Harness (MLM Jumper)	1
33	. . . . .	Connector Assembly (To Main Harness)	1
33	580036981	Connector	1
33	580019107	Terminal (Socket)	11
33	580019119	Plug	1
33	580036986	Connector (Secondary Lock)	1
34	. . . . .	Connector Assembly (Mini-lever Module)	1
34	505968519	Connector (8 Socket)	1
34	580062388	Terminal	7
34	505968566	Plug	1
34	505968558	Connector (Secondary Lock)	1
35	. . . . .	Connector Assembly	1
35	580039499	Connector	1
35	580019107	Terminal (Socket)	5
35	580019119	Plug	1
35	580039500	Connector (Secondary Lock)	1

©2015 Yale Europe Materials Handling Limited

WIRE HARNESS (FIGURE 2-33)

MAIN WITH ELECTRO-HYDRAULICS — SHEET 2 OF 2 (S/N G807B02114H →)

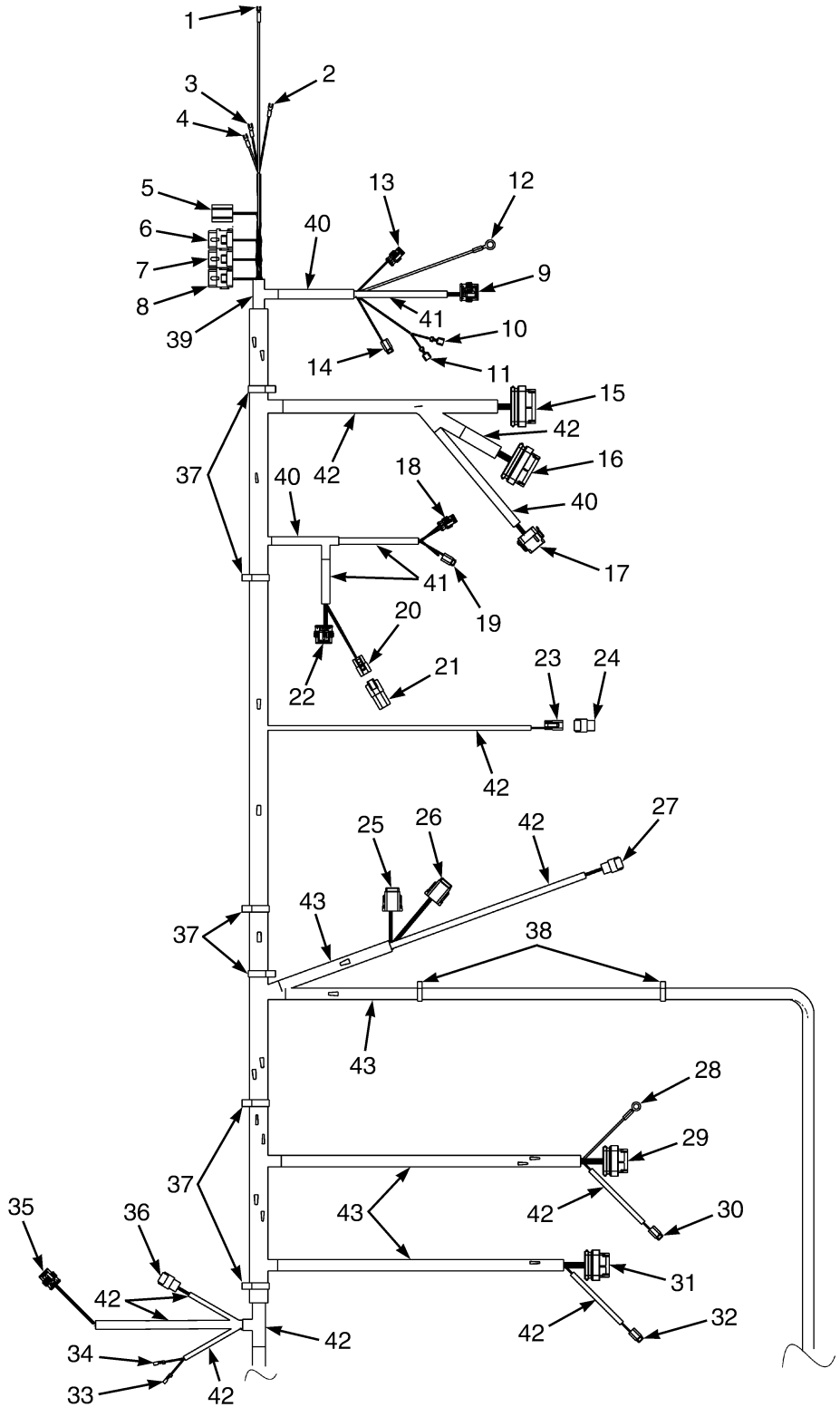

BP081274

©2015 Yale Europe Materials Handling Limited

WIRE HARNESS

MAIN WITH ELECTRO-HYDRAULICS – SHEET 2 OF 2 (S/N G807B02114H →)

ITEM	PART NO.	DESCRIPTION	QTY
	580097300	Wire Harness (Main) (Electro-Hydraulic)	1
1	580058582	Spring Terminal	1
2	580058583	E-Spade	1
3	580058583	E-Spade	1
4	580058583	E-Spade	1
5	. . . . .	Receptacle (Key Switch Relay)	1
5	580009067	Connector	1
5	582000484	Terminal	2
5	582005304	Terminal	2
6	. . . . .	Receptacle (Back-Up Light Relay)	1
6	580085282	Receptacle	1
6	580091403	Terminal	2
6	580091405	Terminal	2
7	. . . . .	Receptacle (E. Hydraulic EN Relay)	1
7	580085282	Receptacle	1
7	580091405	Terminal	4
8	. . . . .	Receptacle (Brake Light Relay)	1
8	580085282	Receptacle	1
8	580091403	Terminal	2
8	580091405	Terminal	2
9	. . . . .	Connector Assembly (Left Speed Sensor)	1
9	580035032	Connector (4 Way)	1
9	580062119	Receptacle Contact 20-22 AWG (Terminal)	4
9	580040456	Wire Seal (Yellow)	4
10	504059730	Terminal	1
11	504059730	Terminal	1
12	520044861	E-Ring	1
13	. . . . .	Connector Assembly (Left Traction Motor Temperature Sensor)	1
13	580035031	Connector (2 Way)	1
13	580062119	Receptacle Contact 20-22 AWG (Terminal)	2
13	580040456	Wire Seal (Yellow)	2
14	. . . . .	Connector Assembly (Left Electric Brake)	1
14	580019245	Connector (2 Socket)	1
14	580019107	Terminal (Socket)	2
14	580019246	Connector (Secondary Lock)	1
15	. . . . .	Connector Assembly (Vehicle System Manager)	1
15	520202606	Connector (35 Way)	1
15	520202601	Connector (Socket Female)	21
16	. . . . .	Connector Assembly (Vehicle System Manager)	1
16	580048272	Connector	1
16	520202601	Connector (Socket Female)	23
17	. . . . .	Connector Assembly (Accessory Jumper)	1
17	580036981	Connector	1
17	580019107	Terminal (Socket)	10
17	580019119	Plug	2
17	580036986	Connector (Secondary Lock)	1
18	. . . . .	Connector Assembly (Right Traction Motor Temperature Sensor)	1
18	580035031	Connector (2 Way)	1
18	580062119	Receptacle Contact 20-22 AWG	2
18	580040456	Wire Seal (Yellow) (Terminal)	2

©2015 Yale Europe Materials Handling Limited

WIRE HARNESS

MAIN WITH ELECTRO-HYDRAULICS – SHEET 2 OF 2 (S/N G807B02114H →)

ITEM	PART NO.	DESCRIPTION	QTY
19	. . . . .	Connector Assembly (Right Electric Brake)	1
19	580019245	Connector (2 Socket)	1
19	580019107	Terminal (Socket)	2
19	580019246	Connector (Secondary Lock)	1
20	. . . . .	Connector Assembly (Tilt Position Sensor)	1
20	580019139	Connector (3-Way)	1
20	580038290	Terminal	3
20	520038872	Connector (Secondary Lock)	1
21	. . . . .	Connector Assembly	1
21	580022894	Connector	1
21	505968566	Plug	3
22	. . . . .	Connector Assembly (Right Speed Sensor)	1
22	580035032	Connector (4 Way)	1
22	580062119	Receptacle Contact 20-22 AWG (Terminal)	4
22	580040456	Wire Seal (Yellow)	4
23	. . . . .	Connector Assembly (Battery Gate Magnetic Switch)	1
23	580021087	Connector (2 Way)	1
23	580062388	Terminal	2
23	580021088	Connector	1
24	. . . . .	Connector Assembly	1
24	580022893	Connector (2 Pin)	1
24	505968566	Plug	2
25	. . . . .	Connector Assembly (E. Hydraulic Valve Lower Coils)	1
25	580080319	Connector	1
25	580019107	Terminal (Socket)	8
25	580042222	Connector (Secondary Lock)	1
26	. . . . .	Connector Assembly (E. Hydraulic Valve Upper Coil)	1
26	580042221	Connector	1
26	580019107	Terminal (Socket)	8
26	580042222	Connector (Secondary Lock)	1
27	. . . . .	Connector Assembly (Left Pressure Sensor)	1
27	580037805	Connector	1
27	580037807	Terminal	3
27	580039602	Seal (Green)	3
28	520039880	E-Ring	1
29	. . . . .	Connector Assembly (Right Traction Motor Controller)	1
29	520202602	Connector	1
29	520202601	Connector (Socket Female)	12
30	. . . . .	Connector Assembly (Right Controller Cooling Fan)	1
30	580019245	Connector (2 Socket)	1
30	580019107	Terminal (Socket)	2
30	580019246	Connector (Secondary Lock)	1
31	. . . . .	Connector Assembly (Left Traction Motor Controller)	1
31	520202602	Connector	1
31	520202601	Connector (Socket Female)	14
32	. . . . .	Connector Assembly (Left Controller Cooling Fan)	1
32	580019245	Connector (2 Socket)	1
32	580019107	Terminal (Socket)	2
32	580019246	Connector (Secondary Lock)	1
33	952405902	Terminal (Brake Floor Level Sensor)	1

©2015 Yale Europe Materials Handling Limited

WIRE HARNESS

MAIN WITH ELECTRO-HYDRAULICS – SHEET 2 OF 2 (S/N G807B02114H →)

ITEM	PART NO.	DESCRIPTION	QTY
34	952405902	Terminal (Brake Floor Level Sensor)	1
35	. . . . .	Connector Assembly (Horn Assembly)	1
35	580062118	Connector (3 Way)	1
35	580062119	Receptacle Contact 20-22 AWG	3
35	580040456	Wire Seal (Yellow)	3
36	. . . . .	Connector Assembly (Service Brake Sensor)	1
36	580037805	Connector	1
36	580037807	Terminal	3
36	580039602	Seal (Green)	3
37	580039764	Clip	6
38	580030878	Clip	2
39	910065119	Conduit	AR
40	504232281	Conduit	AR
41	580044908	Conduit	AR
42	520045672	Conduit	AR
43	580089790	Conduit	AR

©2015 Yale Europe Materials Handling Limited

WIRE HARNESS (FIGURE 2-34)

MAIN WITH ELECTRO-HYDRAULICS, WITHOUT E-STEER — SHEET 1 OF 2 (S/N G807B06004L →)

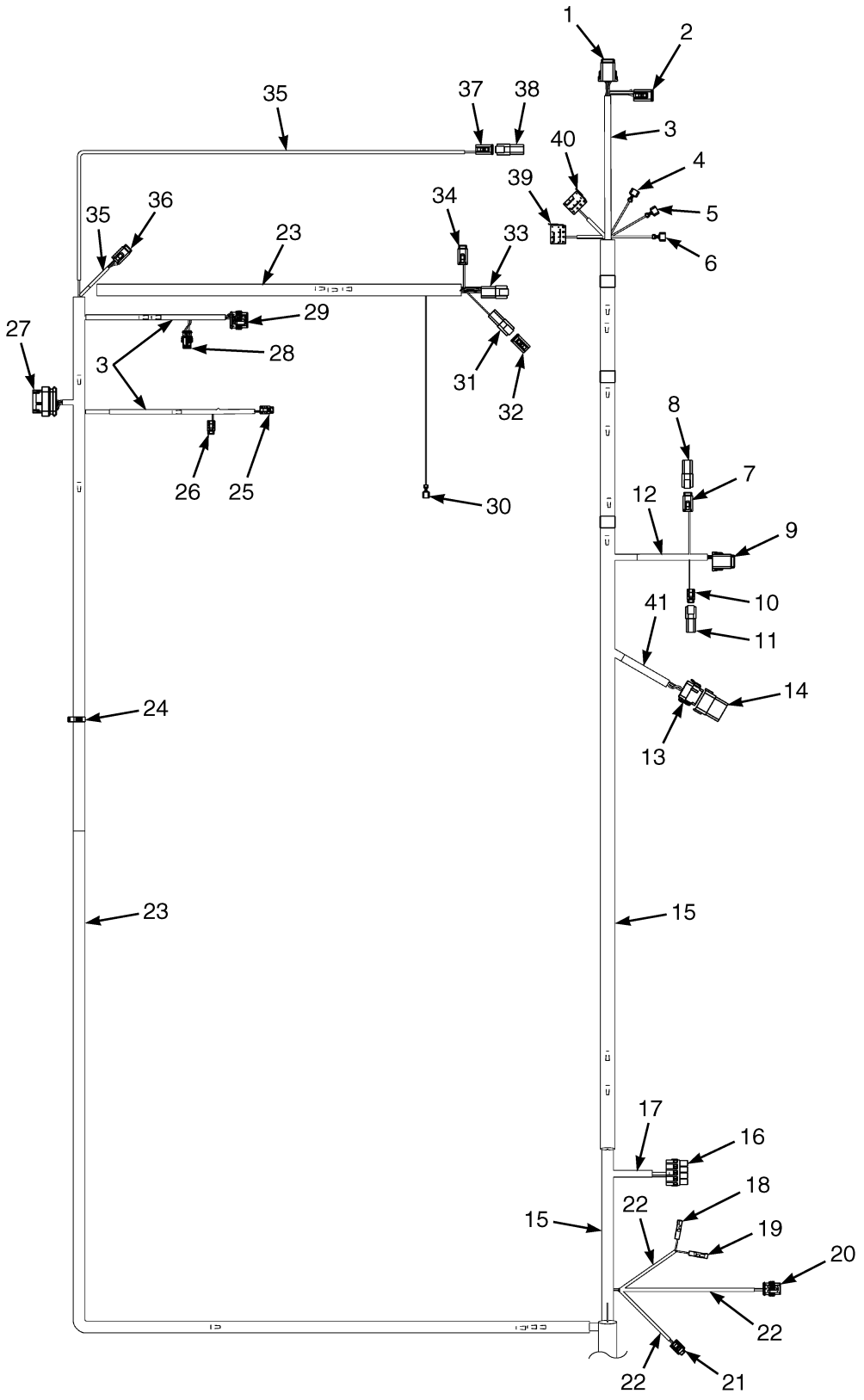

©2015 Yale Europe Materials Handling Limited

WIRE HARNESS

MAIN WITH ELECTRO-HYDRAULICS, WITHOUT E-STEER – SHEET 1 OF 2 (S/N G807B06004L →)

ITEM	PART NO.	DESCRIPTION	QTY
	582028371	Wire Harness (Main)	1
1	. . . . .	Connector Assembly (Display Harness)	1
1	580042221	Connector	1
1	580019107	Terminal (Socket)	6
1	580039513	Terminal	1
1	580019119	Plug	1
1	580042222	Connector (Secondary Lock)	1
2	. . . . .	Connector Assembly (Display Light Harness)	1
2	580020943	Connector (4-Way)	1
2	505968568	Terminal (Socket)	4
2	580020944	Connector (Secondary Lock)	1
3	504232281	Conduit	AR
4	500383916	Terminal Housing (Blue) Flasher (L)	1
5	500383916	Terminal Housing (Blue) Flasher (+)	1
6	500383916	Terminal Housing (Blue) Flasher (-)	1
7	. . . . .	Connector Assembly (Turn Signal Switch)	1
7	580019097	Connector	1
7	580019119	Plug	1
7	580039513	Terminal	3
7	580019098	Secondary Lock	1
8	. . . . .	Connector Assembly (Endcap)	1
8	580086209	Connector	1
8	580019119	Plug	4
9	. . . . .	Connector Assembly (Steer Harness)	1
9	580042221	Connector	1
9	580019107	Terminal (Socket)	6
9	580019119	Plug	1
9	580039513	Terminal	1
9	580042222	Connector (Secondary Lock)	1
10	. . . . .	Connector Assembly (Synchronous Steer)	1
10	580019245	Connector (2 Socket)	1
10	580019107	Terminal (Socket)	2
10	580019246	Connector (Secondary Lock)	1
11	. . . . .	Connector Assembly (Endcap)	1
11	580056006	Connector (2 Pin)	1
11	580019119	Plug	2
12	520038855	Conduit	AR
13	. . . . .	Connector Assembly (Light Option Harness)	1
13	580036981	Connector	1
13	580039513	Terminal	9
13	582022955	Terminal	2
13	580019119	Plug	1
13	580036986	Connector (Secondary Lock)	1
14	. . . . .	Connector Assembly (Endcap)	1
14	580069704	Connector	1
14	580019119	Plug	12
15	580019366	Conduit	AR
16	. . . . .	Connector Assembly (DC-DC Converter)	1
16	580047195	Terminal	2
16	580090639	Terminal	2

©2015 Yale Europe Materials Handling Limited

WIRE HARNESS

MAIN WITH ELECTRO-HYDRAULICS, WITHOUT E-STEER – SHEET 1 OF 2 (S/N G807B06004L →)

ITEM	PART NO.	DESCRIPTION	QTY
16	580047197	Connector	1
17	520045672	Conduit	AR
18	952405902	Terminal (Brake Fluid Level Sensor)	1
19	952405902	Terminal (Brake Fluid Level Sensor)	1
20	. . . . .	Connector Assembly (Horn Assembly)	1
20	580062118	Connector (3 Way)	1
20	580062119	Receptacle Contact 20-22 AWG	2
20	580035034	Terminal (Pin)	1
21	. . . . .	Connector Assembly (Service Brake Sensor)	1
21	580037805	Connector	1
21	580037807	Terminal	3
22	580089790	Conduit	AR
23	505970586	Conduit	AR
24	580040120	Clip	1
25	. . . . .	Connector Assembly (Hydraulic Control Cooling Fan)	1
25	580019245	Connector (2 Socket)	1
25	580039513	Terminal	1
25	580019107	Terminal (Socket)	1
25	580019246	Connector (Secondary Lock)	1
26	. . . . .	Connector Assembly (Hydraulic Control Cooling Fan)	1
26	580019245	Connector (2 Socket)	1
26	580039513	Terminal	1
26	580019107	Terminal (Socket)	1
26	580019246	Connector (Secondary Lock)	1
27	. . . . .	Connector Assembly (Pump Controller)	1
27	520202602	Connector	1
27	520202601	Connector (Socket Female)	13
27	520202604	Plug	10
28	. . . . .	Connector Assembly (Motor Temperature Sensor)	1
28	580035031	Connector (2 Way)	1
28	580062119	Receptacle Contact 20-22 AWG	2
29	. . . . .	Connector Assembly (Motor Speed Sensor)	1
29	580035032	Connector (4 Way)	1
29	580062119	Receptacle Contact 20-22 AWG	4
30	504059730	Terminal (ESD Hydraulic Tank)	1
31	. . . . .	Connector Assembly (Seat Belt Switch Harness)	1
31	580022893	Connector (2 Pin)	1
31	580038290	Terminal	2
31	505968540	Connector (Secondary Lock)	1
32	. . . . .	Connector Assembly (Endcap)	1
32	580021087	Connector (2 Way)	1
32	580021088	Connector	1
32	580019119	Plug	2
33	. . . . .	Connector Assembly (MLM Seat Harness)	1
33	580069704	Connector	1
33	580019353	Terminal (Pin)	10
33	580041195	Terminal Pin	1
33	580019119	Plug	1
33	580069705	Connector (Secondary Lock)	1
34	. . . . .	Connector Assembly (Hydraulic Fluid Level Filter)	1

©2015 Yale Europe Materials Handling Limited

WIRE HARNESS

MAIN WITH ELECTRO-HYDRAULICS, WITHOUT E-STEER – SHEET 1 OF 2 (S/N G807B06004L →)

ITEM	PART NO.	DESCRIPTION	QTY
34	580039499	Connector	1
34	580019107	Terminal (Socket)	5
34	580019119	Plug	1
34	580039500	Connector	1
35	580044908	Conduit	AR
36	. . . . .	Connector Assembly (Steer Axle Harness)	1
36	580022891	Connector	1
36	580019107	Terminal (Socket)	3
36	580022892	Connector (Secondary Lock)	1
37	. . . . .	Connector Assembly (Overhead Guard Horn Switch)	1
37	580021087	Connector (2 Way)	1
37	580062388	Terminal	1
37	505064713	Terminal	1
37	580021088	Connector	1
38	. . . . .	Connector Assembly (Endcap)	1
38	580022893	Connector (2 Pin)	1
38	505968566	Plug	2
39	. . . . .	Connector Assembly (Rear Work Light Switch)	1
39	~~580019248~~		
	520052844	Socket	1
39	582005304	Terminal	2
40	. . . . .	Connector Assembly (Ino Mark Light Switch)	1
40	~~580019248~~		
	520052844	Socket	1
40	582005304	Terminal	3
41	910065119	Conduit	AR

©2015 Yale Europe Materials Handling Limited

WIRE HARNESS (FIGURE 2-35)

MAIN WITH ELECTRO-HYDRAULICS, WITHOUT E-STEER — SHEET 2 OF 2 (S/N G807B06004L →)

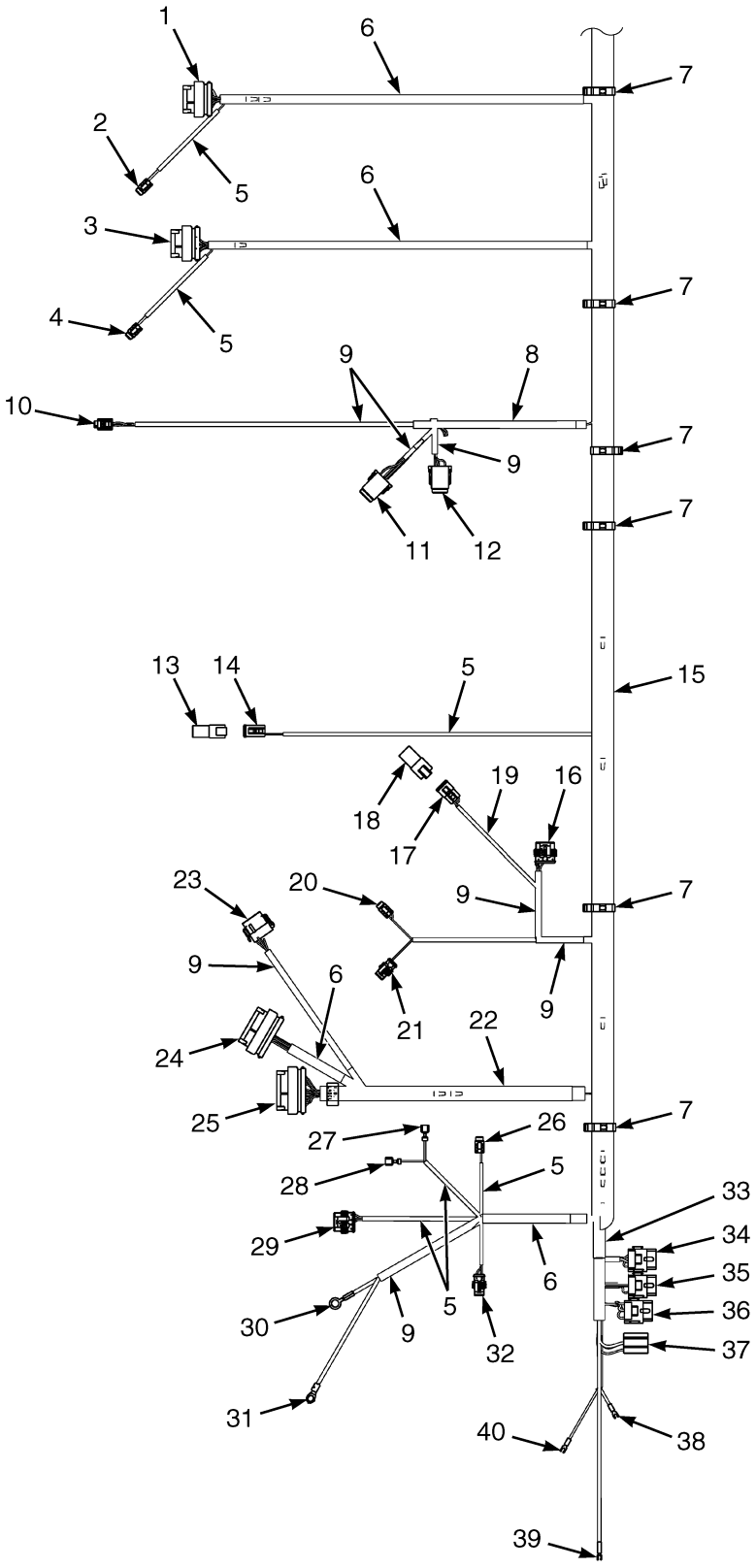

BP081530

©2015 Yale Europe Materials Handling Limited

WIRE HARNESS

MAIN WITH ELECTRO-HYDRAULICS, WITHOUT E-STEER – SHEET 2 OF 2 (S/N G807B06004L →)

ITEM	PART NO.	DESCRIPTION	QTY
	582028371	Wire Harness (Main)	1
1	. . . . .	Connector Assembly (Left Traction Motor Controller)	1
1	520202602	Connector	1
1	520202601	Connector (Socket Female)	13
1	520202604	Plug	10
2	. . . . .	Connector Assembly (Left Controller Cooling Fan)	1
2	580019245	Connector (2 Socket)	1
2	580039513	Terminal	1
2	580019107	Terminal (Socket)	1
2	580019246	Connector (Secondary Lock)	1
3	. . . . .	Connector Assembly (Right Traction Motor Controller)	1
3	520202602	Connector	1
3	520202601	Connector (Socket Female)	13
3	520202604	Plug	10
4	. . . . .	Connector Assembly (Right Controller Cooling Fan)	1
4	580019245	Connector (2 Socket)	1
4	580039513	Terminal	1
4	580019107	Terminal (Socket)	1
4	580019246	Connector (Secondary Lock)	1
5	580044908	Conduit	AR
6	910065119	Conduit	AR
7	580039764	Clip	5
8	520038855	Conduit	AR
9	504232281	Conduit	AR
10	. . . . .	Connector Assembly (Left Pressure Sensor)	1
10	580037805	Connector	1
10	580037807	Terminal	3
11	. . . . .	Connector Assembly (E Hydraulic Valve Upper Coils)	1
11	580042221	Connector	1
11	580019107	Terminal (Socket)	8
11	580042222	Connector (Secondary Lock)	1
12	. . . . .	Connector Assembly (E Hydraulic Valve Lower Coils)	1
12	580080319	Connector	1
12	580019107	Terminal (Socket)	8
12	580042222	Connector (Secondary Lock)	1
13	. . . . .	Connector Assembly (Endcap)	1
13	580022893	Connector (2 Pin)	1
13	505968566	Plug	2
14	. . . . .	Connector Assembly (Battery Gate Magnetic Switch)	1
14	580021087	Connector (2 Way)	1
14	580062388	Terminal	2
14	580021088	Connector	1
15	580041641	Conduit	AR
16	. . . . .	Connector Assembly (Right Speed Sensor)	1
16	580035032	Connector (4 Way)	1
16	580062119	Receptacle Contact 20-22 AWG	4
17	. . . . .	Connector Assembly (Tilt Position Sensor)	1
17	580019139	Connector (3-Way)	1
17	580062388	Terminal	3
17	580019140	Connector (Secondary Lock)	1

©2015 Yale Europe Materials Handling Limited

WIRE HARNESS

MAIN WITH ELECTRO-HYDRAULICS, WITHOUT E-STEER – SHEET 2 OF 2 (S/N G807B06004L →)

ITEM	PART NO.	DESCRIPTION	QTY
18	. . . . .	Connector Assembly (Endcap)	1
18	580022894	Connector	1
18	505968566	Plug	3
19	580089790	Conduit	AR
20	. . . . .	Connector Assembly (Right Electric Brake)	1
20	580019245	Connector (2 Socket)	1
20	580019107	Terminal (Socket)	2
20	580019246	Connector (Secondary Lock)	1
21	. . . . .	Connector Assembly (Right Traction Motor Temperature Sensor)	1
21	580035031	Connector (2 Way)	1
21	580062119	Receptacle Contact 20-22 AWG	2
22	505970586	Conduit	AR
23	. . . . .	Connector Assembly (Accessory Jumper)	1
23	580036981	Connector	1
23	580019107	Terminal (Socket)	10
23	580019119	Plug	2
23	580036986	Connector (Secondary Lock)	1
24	. . . . .	Connector Assembly (Vehicle System Manager)	1
24	580048272	Connector	1
24	520202601	Connector (Socket Female)	21
24	520202604	Plug	14
25	. . . . .	Connector Assembly (Vehicle System Manager)	1
25	520202602	Connector	1
25	520202601	Connector (Socket Female)	21
25	520202604	Plug	14
26	. . . . .	Connector Assembly (Left Electric Brake)	1
26	580019245	Connector (2 Socket)	1
26	580019107	Terminal (Socket)	2
26	580019246	Connector (Secondary Lock)	1
27	504059730	Terminal (Main Controller Coil)	1
28	504059730	Terminal (Main Controller Coil)	1
29	. . . . .	Connector Assembly (Left Speed Sensor)	1
29	580035032	Connector (4 Way)	1
29	580062119	Receptacle Contact 20-22 AWG	4
30	520044861	E-Ring	1
31	582006327	Ring Terminal	1
32	. . . . .	Connector Assembly (Left Traction Motor Temperature Sensor)	1
32	580035031	Connector (2 Way)	1
32	580062119	Receptacle Contact 20-22 AWG	2
33	520045672	Conduit	AR
34	. . . . .	Connector Assembly (Hydraulic Relay)	1
34	580085282	Receptacle	1
34	582024619	Terminal	4
35	. . . . .	Connector Assembly (Brake Light Relay)	1
35	580085282	Receptacle	1
35	582024619	Terminal	2
35	582024620	Terminal	2
36	. . . . .	Connector Assembly (Back-Up Light Relay)	1
36	580085282	Receptacle	1
36	582024619	Terminal	2

©2015 Yale Europe Materials Handling Limited

WIRE HARNESS

MAIN WITH ELECTRO-HYDRAULICS, WITHOUT E-STEER – SHEET 2 OF 2 (S/N G807B06004L →)

ITEM	PART NO.	DESCRIPTION	QTY
36	582024620	Terminal	2
37	. . . . .	Connector Assembly (Key Switch Relay)	1
37	580009067	Connector	1
37	582000484	Terminal	2
37	580091403	Terminal	1
37	582005304	Terminal	1
38	580026299	E-Ring (FU 1 LD)	1
39	580058582	Spring Terminal (FU 4 B+)	1
40	580058583	E-Spade (FU 4 LD)	1

©2015 Yale Europe Materials Handling Limited

WIRE HARNESS (FIGURE 2-36)

MAIN WITH ELECTRO-HYDRAULICS AND E-STEERING — SHEET 1 0F 2 (2/2015 →)

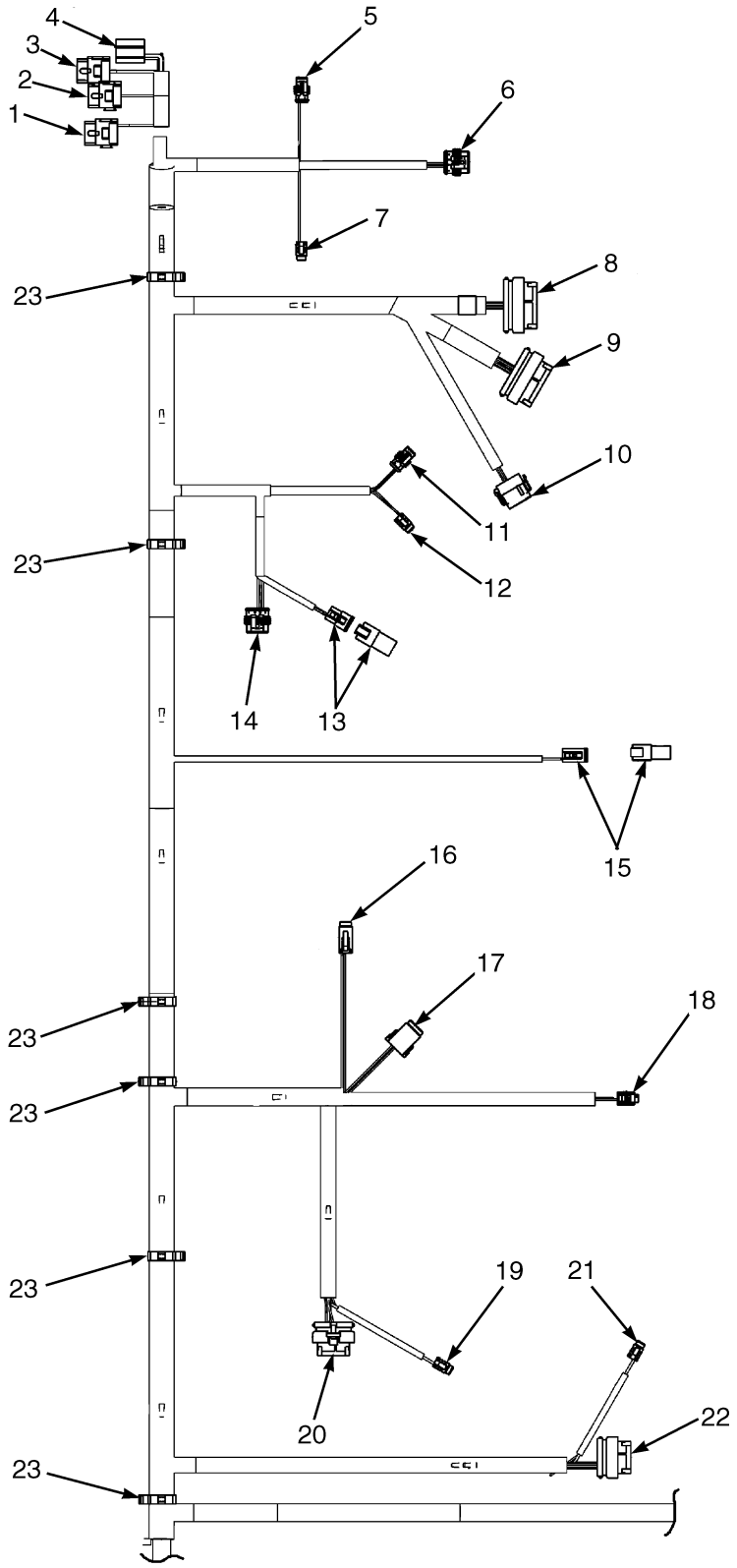

©2015 Yale Europe Materials Handling Limited

WIRE HARNESS

MAIN WITH ELECTRO-HYDRAULICS AND E-STEERING – SHEET 1 0F 2 (2/2015 →)

ITEM	PART NO.	DESCRIPTION	QTY
	582025078	Wire Harness (Main)	1
1	. . . . .	Connector Assembly (CRS209/Hyd En Relay)	1
1	580085282	Receptacle	1
1	582024619	Terminal	4
2	. . . . .	Connector Assembly (CRS110/Brake Light Relay)	1
2	580085282	Receptacle	1
2	582024620	Terminal	2
2	582024619	Terminal	2
3	. . . . .	Connector Assembly (CRS210/Back-Up Light Relay)	1
3	580085282	Receptacle	1
3	582024620	Terminal	2
3	582024619	Terminal	2
4	. . . . .	Connector Assembly (CRS208/Key Switch Relay)	1
4	580009067	Connector	1
4	582000484	Terminal	2
4	580091403	Terminal	1
4	582005304	Terminal	1
5	. . . . .	Connector Assembly (CPS154/LT Traction Motor Temp Sensor)	1
5	580035031	Connector (2 Way)	1
5	580062119	Receptacle Contact 20-22 AWG	2
5	~~580059764~~		
	272479200	Wire Seal	2
6	. . . . .	Connector Assembly (CPS152/LT Speed Sensor)	1
6	580035032	Connector (4 Way)	1
6	580062119	Receptacle Contact 20-22 AWG	4
6	~~580059764~~		
	272479200	Wire Seal	4
7	. . . . .	Connector Assembly (CPS26/LT Elect Bk)	1
7	580019245	Connector (2 Socket)	1
7	580019246	Connector (Secondary Lock) (Lock)	1
7	580019107	Terminal (Socket)	2
8	. . . . .	Connector Assembly (CPS1/VSM)	1
8	520202606	Connector (35 Way)	1
8	520202601	Connector (Socket Female)	21
8	520202604	Plug	14
9	. . . . .	Connector Assembly (CPS2/VSM)	1
9	580048272	Connector	1
9	520202601	Connector (Socket Female)	21
9	520202604	Plug	14
10	. . . . .	Connector Assembly (CPS272/ACC Jumper)	1
10	580036981	Connector	1
10	580036986	Connector (Lock)	1
10	580019107	Terminal (Socket)	10
10	580019119	Plug	2
11	. . . . .	Connector Assembly (CPS155/RT Traction Motor Temp Sensor)	1
11	580035031	Connector (2 Way)	1
11	580062119	Receptacle Contact 20-22 AWG	2
11	~~580059764~~		
	272479200	Wire Seal	2
12	. . . . .	Connector Assembly (CPS24/RT Elect BK)	1

©2015 Yale Europe Materials Handling Limited

WIRE HARNESS

MAIN WITH ELECTRO-HYDRAULICS AND E-STEERING – SHEET 1 0F 2 (2/2015 →)

ITEM	PART NO.	DESCRIPTION	QTY
12	580019245	Connector (2 Socket)	1
12	580019246	Connector (Secondary Lock) (Lock)	1
12	580019107	Terminal (Socket)	2
13	. . . . .	Connector Assembly (CRP8/Tilt Position Sensor)	1
13	580022894	Connector	1
13	505968566	Plug	3
13	580019139	Connector (3-Way)	1
13	580062388	Terminal	3
14	. . . . .	Connector Assembly (CSP153/RT Speed Sensor)	1
14	580035032	Connector (4 Way)	1
14	580062119	Receptacle Contact 20-22 AWG	4
14	~~580059764~~		
	272479200	Wire Seal	4
15	. . . . .	Connector Assembly (CPS102/Battery Gate Magnet Switch)	1
15	580022893	Connector (2 Pin)	1
15	505968566	Plug	2
15	580021087	Connector (2 Way)	1
15	580021088	Connector (Lock)	1
15	580062388	Terminal	2
16	. . . . .	Connector Assembly (CPS75/EHYD Valve Lower Coils)	1
16	580080319	Connector	1
16	580042222	Connector (Lock)	1
16	580019107	Terminal (Socket)	8
17	. . . . .	Connector Assembly (CPS74/EHYD Valve Upper Coils)	1
17	580042221	Connector	1
17	580042222	Connector (Lock)	1
17	580019107	Terminal (Socket)	8
18	. . . . .	Connector Assembly (CPS10/LFT Press Sensor)	1
18	580037805	Connector	1
18	580037807	Terminal	3
18	580039602	Seal (Green)	3
19	. . . . .	Connector Assembly (CPS156/RT Cont Cooling Fan)	1
19	580019245	Connector (2 Socket)	1
19	580019246	Connector (Secondary Lock) (Lock)	1
19	580039513	Terminal	1
19	580019107	Terminal (Socket)	1
20	. . . . .	Connector Assembly (CP3/RT Traction Motor)	1
20	520202602	Connector	1
20	520202601	Connector (Socket Female)	13
20	520202604	Plug	10
21	. . . . .	Connector Assembly (CPS157/LT Cont Cooling Fan)	1
21	580019245	Connector (2 Socket)	1
21	580019246	Connector (Secondary Lock) (Lock)	1
21	580039513	Terminal	1
21	580019107	Terminal (Socket)	1
22	. . . . .	Connector Assembly (CPS4/LT Traction Motor)	1
22	520202602	Connector	1
22	520202601	Connector (Socket Female)	13
22	520202604	Plug	10
23	580039764	Clip	6

©2015 Yale Europe Materials Handling Limited

NOTES

©2015 Yale Europe Materials Handling Limited

WIRE HARNESS (FIGURE 2-37)

MAIN WITH ELECTRO-HYDRAULICS AND E-STEERING — SHEET 2 OF 2 (2/2015 →)

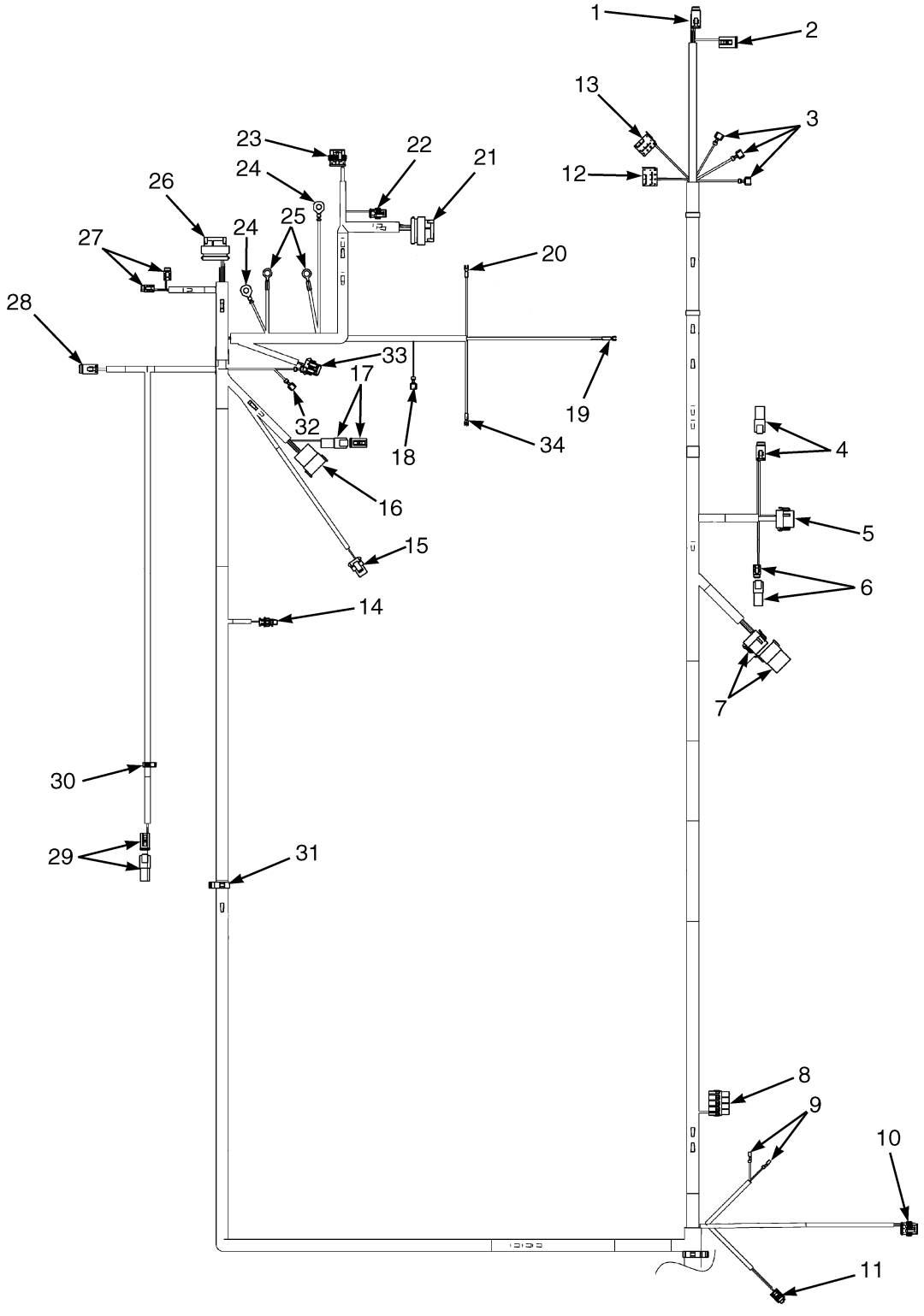

BP081816

©2015 Yale Europe Materials Handling Limited

WIRE HARNESS

MAIN WITH ELECTRO-HYDRAULICS AND E-STEERING – SHEET 2 OF 2 (2/2015 →)

ITEM	PART NO.	DESCRIPTION	QTY
	582025078	Wire Harness (Main)	1
1	. . . . .	Connector Assembly (CPS135/ Display Harness)	1
1	580042221	Connector	1
1	580042222	Connector (Lock)	1
1	580019107	Terminal (Socket)	7
1	580019119	Plug	1
2	. . . . .	Connector Assembly (CPS180/Display LGT Harness)	1
2	580020943	Connector (4-Way)	1
2	580020944	Connector (lock)	1
2	505968568	Terminal (Socket)	4
3	500383916	Terminal Housing (Blue) (Flasher)	3
4	. . . . .	Connector Assembly (CPS134/Turn Signal Switch)	1
4	580019097	Connector	1
4	580019098	Secondary Lock (Lock)	1
4	580019119	Plug	1
4	580039513	Terminal	3
4	580086209	Connector	1
4	580019119	Plug	4
5	. . . . .	Connector Assembly (CPS132/Steer Harness)	1
5	580036981	Connector	1
5	580036986	Connector (lock)	1
5	580039513	Terminal	2
5	580019107	Terminal (Socket)	9
5	580019119	Plug	1
6	. . . . .	Connector Assembly (CPS133/Synch Steering)	1
6	580056006	Connector (2 Pin)	1
6	580019119	Plug	2
6	580019245	Connector (2 Socket)	1
6	580019246	Connector (Secondary Lock) (Lock)	1
6	580019107	Terminal (Socket)	2
7	. . . . .	Connector Assembly (CPS138/LGT OPT Harness)	1
7	580036981	Connector	1
7	580036986	Connector (Lock)	1
7	580039513	Terminal	9
7	582022955	Terminal	2
7	580019119	Plug	1
8	. . . . .	Connector Assembly (CPS90/Dc-DC Converter)	1
8	580047197	Connector	1
8	580047195	Terminal	2
8	580090639	Terminal	2
9	952405902	Terminal (Brake Fluid Level Sensor)	2
9	952408901	Sleeve	2
10	. . . . .	Connector Assembly (Horn Assembly)	1
10	580062118	Connector (3 Way)	1
10	580062119	Receptacle Contact 20-22 AWG	2
10	580035034	Terminal (Pin)	1
10	~~580059764~~		
	272479200	Wire Seal	2
10	580035035	Wire Seal	1
11	. . . . .	Connector Assembly (Service Brake Sensor)	1

©2015 Yale Europe Materials Handling Limited

WIRE HARNESS

MAIN WITH ELECTRO-HYDRAULICS AND E-STEERING – SHEET 2 OF 2 (2/2015 →)

ITEM	PART NO.	DESCRIPTION	QTY
11	580037805	Connector	1
11	580037807	Terminal	3
11	580039602	Seal (Green)	3
12	. . . . .	Connector Assembly (CRP205/Marker Light Switch)	1
12	~~580019248~~		
	520052844	Socket	1
12	582005304	Terminal	3
13	. . . . .	Connector Assembly (CRP206/Rear Work Light Switch)	1
13	~~580019248~~		
	520052844	Socket	1
13	582005304	Terminal	2
14	. . . . .	Connector Assembly (CPS31Hydraulic Temp Sensor)	1
14	580044127	Connector (2 Way)	1
14	580087764	Terminal	2
14	580087649	Seal (Green)	2
15	. . . . .	Connector Assembly (CPS66/Hyd FLT Switch)	1
15	520045074	Plug	1
15	520045069	Terminal (Lock)	1
15	504288730	Seal	2
16	. . . . .	Connector Assembly (CRP52-55/MLM Seat Harness)	1
16	580069704	Connector	1
16	580069705	Connector (Lock)	1
16	580019353	Terminal (Pin)	10
16	580041195	Terminal Pin	1
16	580019119	Plug	1
17	. . . . .	Connector Assembly (CRP57/Seat Belt Switch)	1
17	580021087	Connector (2 Way)	1
17	580021088	Connector (Lock)	1
17	580019119	Plug	2
17	580022893	Connector (2 Pin)	1
17	505968540	Connector (Secondary Lock)	1
17	580038290	Terminal	2
18	504059730	Terminal (Hydraulic Tank)	1
19	580058582	Spring Terminal (Insulated Fork)	1
20	580058583	E-Spade	1
21	. . . . .	Connector Assembly (CPS6/Electric Steer Motor)	1
21	520202602	Connector	8
21	520202601	Connector (Socket Female)	15
22	. . . . .	Connector Assembly (CPS61/Motor Temp Sensor)	1
22	580035031	Connector (2 Way)	1
22	580062119	Receptacle Contact 20-22 AWG	2
22	~~580059764~~		
	272479200	Wire Seal	2
23	. . . . .	Connector Assembly (CPS146/Motor Speed Sensor)	1
23	580035032	Connector (4 Way)	1
23	580062119	Receptacle Contact 20-22 AWG	4
23	~~580059764~~		
	272479200	Wire Seal	4
24	582033354	Terminal	2
25	520044861	E-Ring	2

©2015 Yale Europe Materials Handling Limited

WIRE HARNESS

MAIN WITH ELECTRO-HYDRAULICS AND E-STEERING – SHEET 2 OF 2 (2/2015 →)

ITEM	PART NO.	DESCRIPTION	QTY
26	. . . . .	Connector Assembly (CPS5/Pump)	1
26	520202602	Connector	1
26	520202601	Connector (Socket Female)	13
26	520202604	Plug	10
27	. . . . .	Connector Assembly (CPS95A/B Hydraulic Cooling Fan)	2
27	580019245	Connector (2 Socket)	1
27	580019246	Connector (Secondary Lock) (Lock)	1
27	580039513	Terminal	1
27	580019107	Terminal (Socket)	1
28	. . . . .	Connector Assembly (CPS31A/Steer Axle Harness)	1
28	580022891	Connector	1
28	580022892	Connector (Secondary Lock)	1
28	580019107	Terminal (Socket)	3
29	. . . . .	Connector Assembly (CPS114/OHG Horn Switch)	1
29	580021087	Connector (2 Way)	1
29	580021088	Connector (Lock)	1
29	580062388	Terminal	1
29	505064713	Terminal	1
29	580022893	Connector (2 Pin) (End Cap)	1
29	505968566	Plug	2
30	580030876	Clip	1
31	580039799	Clip	1
32	504059730	Terminal (Red)	2
33	. . . . .	Connector Assembly (CPS70/Hyd Fluid Level Sensor)	1
33	580033516	Connector	1
33	580033537	Connector Lock	1
33	582020053	Terminal	3
33	580026649	Wire Seal (White)	3
34	580026299	E-Ring	1

©2015 Yale Europe Materials Handling Limited

WIRE HARNESS (FIGURE 2-38)

MAIN WITH MANUAL HYDRAULICS — SHEET 1 OF 2 (→ S/N G807B02104H)

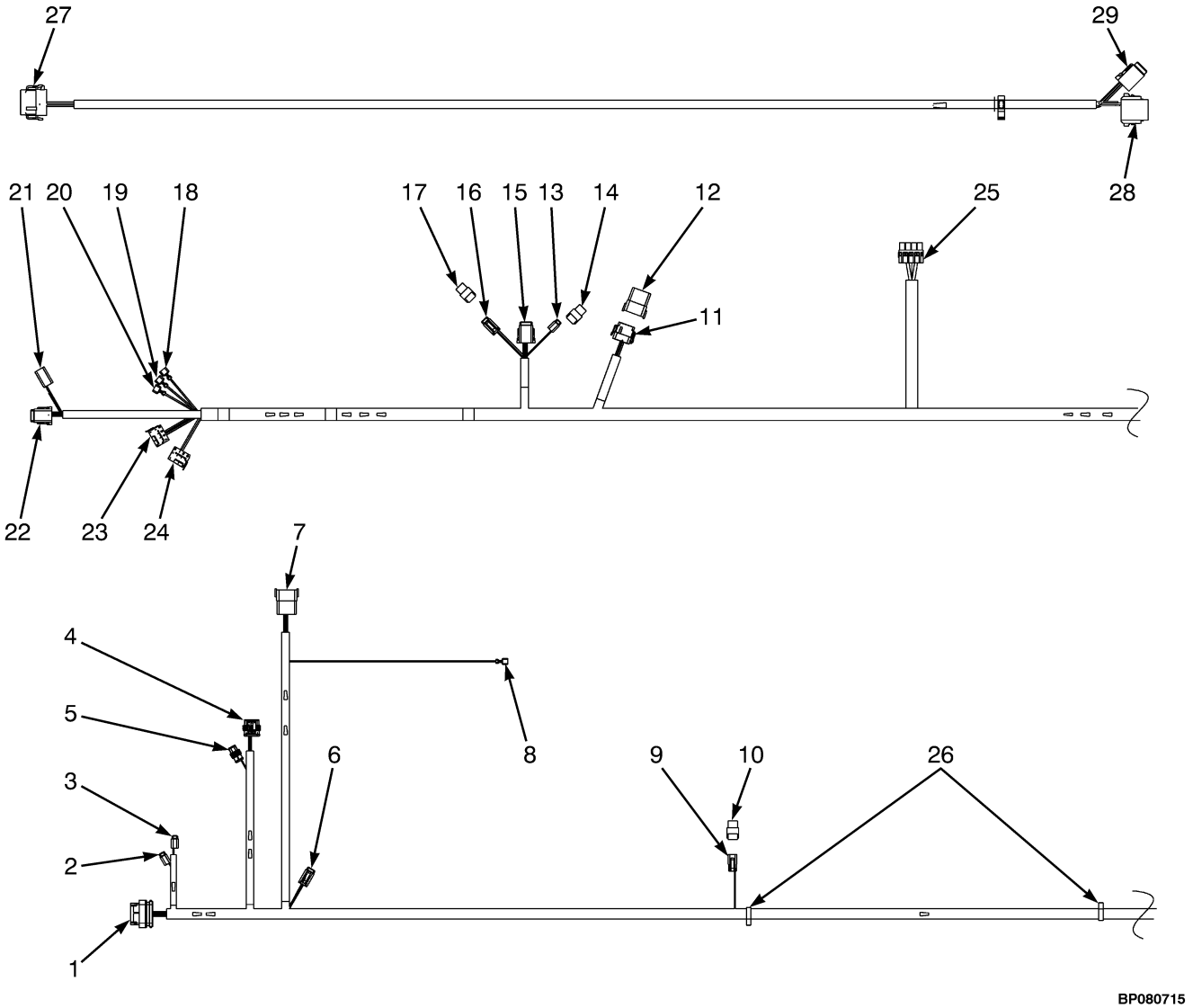

©2015 Yale Europe Materials Handling Limited

WIRE HARNESS

MAIN WITH MANUAL HYDRAULICS – SHEET 1 OF 2 (→ S/N G807B02104H)

ITEM	PART NO.	DESCRIPTION	QTY
	580097301	Wire Harness (Main) (Manual-Hydraulic)	1
1	. . . . .	Connector (Pump Controller)	1
1	520202602	Connector	1
1	520202601	Connector (Socket Female)	13
2	. . . . .	Connector (Hydraulic Cooling Fan)	1
2	580019245	Connector (2 Socket)	1
2	580019107	Terminal (Socket)	2
2	580019246	Connector (Secondary Lock)	1
3	. . . . .	Connector (Hydraulic Controller Cooling Fan)	1
3	580019245	Connector (2 Socket)	1
3	580019107	Terminal (Socket)	2
3	580019246	Connector (Secondary Lock)	1
4	. . . . .	Connector (Motor Speed Sensor)	1
4	580035032	Connector (4 Way)	1
4	580062119	Receptacle Contact 20-22 AWG (Terminal)	4
4	580040456	Wire Seal (Yellow)	4
5	. . . . .	Connector (Motor Temperature Sensor)	1
5	580035031	Connector (2 Way)	1
5	580062119	Receptacle Contact 20-22 AWG (Terminal)	2
5	580040456	Wire Seal (Yellow)	2
6	. . . . .	Connector (Steer Axle Harness)	1
6	580022891	Connector	1
6	580019107	Terminal (Socket)	3
6	580022892	Connector (Secondary Lock)	1
7	. . . . .	Connector (Seat Sensor)	1
7	580019353	Terminal (Pin)	11
7	580039490	Connector	1
7	580019119	Plug	1
7	580019353	Terminal (Pin)	5
7	580039491	Connector (Secondary Lock)	1
8	504059730	Terminal (ESD Hydraulic Tank)	1
9	. . . . .	Connector (Overhead Guard Horn Switch)	1
9	580021087	Connector (2 Way)	1
9	580062388	Terminal	2
9	580021088	Connector	1
10	. . . . .	Connector	1
10	580022893	Connector (2 Pin)	1
10	505968566	Plug	1
11	. . . . .	Connector (Light Option Harness)	1
11	580036981	Connector	1
11	580019107	Terminal (Socket)	1
11	580019119	Plug	1
11	580039513	Terminal	10
11	580036986	Connector (Secondary Lock)	1
12	. . . . .	Connector	1
12	580069704	Connector	1
12	580019119	Plug	12
13	. . . . .	Connector (Turn Signal Switch)	1
13	580019097	Connector	1
13	580019119	Plug	1

©2015 Yale Europe Materials Handling Limited

WIRE HARNESS

MAIN WITH MANUAL HYDRAULICS – SHEET 1 OF 2 (→ S/N G807B02104H)

ITEM	PART NO.	DESCRIPTION	QTY
13	580039513	Terminal	3
13	580019098	Secondary Lock	1
14	. . . . .	Connector	1
14	580086209	Connector	1
14	580019119	Plug	4
15	. . . . .	Connector (Steer Harness)	1
15	580042221	Connector	1
15	580019107	Terminal (Socket)	7
15	580019119	Plug	1
16	. . . . .	Connector (Steer Make-up Valve)	1
16	580019245	Connector (2 Socket)	1
16	580019107	Terminal (Socket)	2
16	580019246	Connector (Secondary Lock)	1
17	. . . . .	Connector	1
17	580056006	Connector (2 Pin)	1
17	580019119	Plug	1
18	500383916	Terminal Housing (Blue) (Flasher) (L)	1
19	500383916	Terminal Housing (Blue) (Flasher) (+)	1
20	500383916	Terminal Housing (Blue) (Flasher) (-)	1
21	. . . . .	Connector (Display Light Harness)	1
21	505968568	Terminal (Socket)	4
21	580020943	Connector (4-Way)	1
21	580020944	Connector (Secondary Lock)	1
22	. . . . .	Connector (Display Harness)	1
22	580042221	Connector	1
22	580019107	Terminal (Socket)	7
22	580019119	Plug	1
22	580042222	Connector (Secondary Lock)	1
23	. . . . .	Connector (No Marker Light Switch)	1
23	~~580019248~~		
	520052844	Socket	1
23	580091403	Terminal	2
24	. . . . .	Connector (Rear Work Light Switch)	1
24	~~580019248~~		
	520052844	Socket	1
24	580091403	Terminal	2
25	. . . . .	Connector DC-DC Converter	1
25	580047197	Connector	1
25	580090639	Terminal	3
25	580047195	Terminal	1
26	580030878	Clip	2
	580089657	Wire Harness (Seat Jumper)	1
27	580039499	Connector (Seat Sensor)	1
27	580039513	Terminal	5
27	580019119	Plug	1
27	580039500	Connector (Secondary Lock)	1
28	. . . . .	Connector	1
29	580039499	Connector (Seat Assembly)	1
29	580039513	Terminal	5
29	580019119	Plug	1

©2015 Yale Europe Materials Handling Limited

WIRE HARNESS

MAIN WITH MANUAL HYDRAULICS – SHEET 1 OF 2 (→ S/N G807B02104H)

ITEM	PART NO.	DESCRIPTION	QTY
29	580039500	Connector (Secondary Lock)	1

©2015 Yale Europe Materials Handling Limited

WIRE HARNESS (FIGURE 2-39)

MAIN WITH MANUAL HYDRAULICS — SHEET 2 OF 2 (→ S/N G807B02104H)

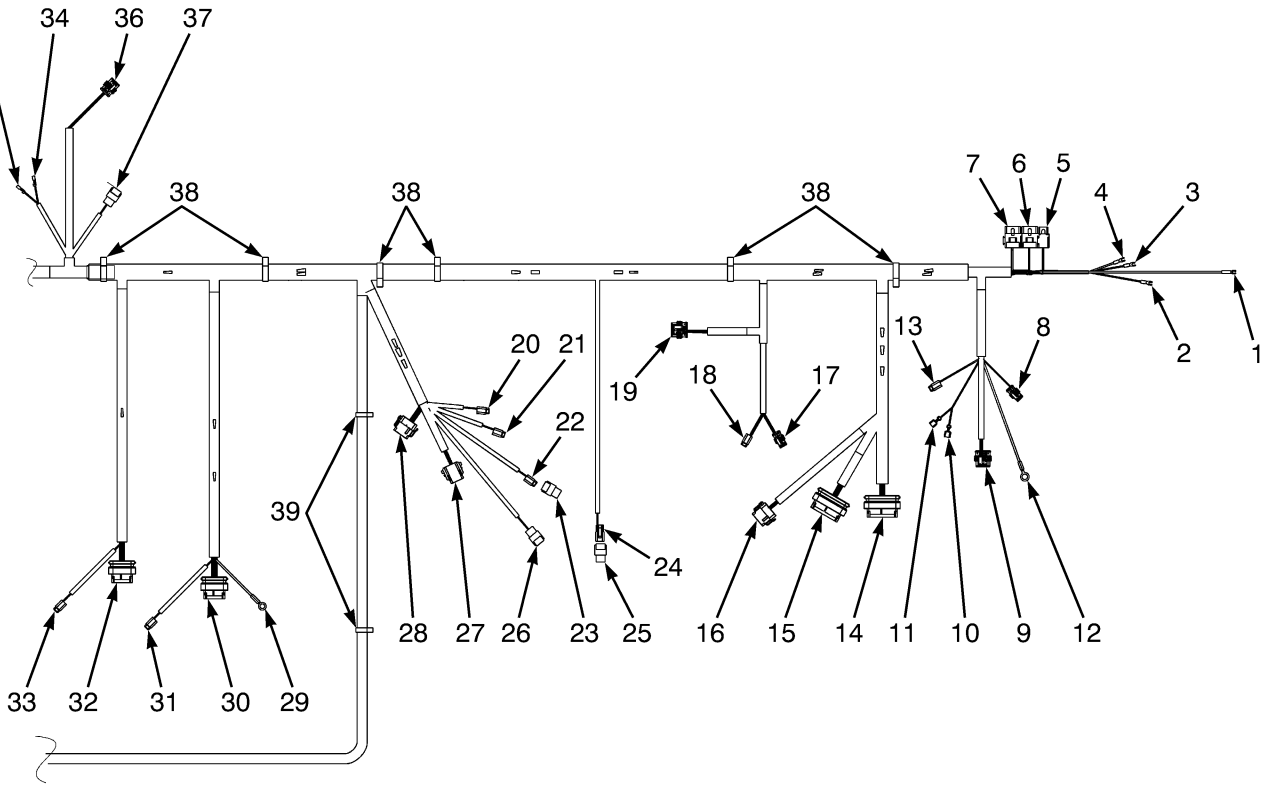

©2015 Yale Europe Materials Handling Limited

WIRE HARNESS

MAIN WITH MANUAL HYDRAULICS – SHEET 2 OF 2 (→ S/N G807B02104H)

ITEM	PART NO.	DESCRIPTION	QTY
	580097301	Wire Harness (Main) (Manual)	1
1	580058582	Spring Terminal	1
2	580058583	E-Spade	1
3	580058583	E-Spade	1
4	580058583	E-Spade	1
5	. . . . .	Connector (Key Switch Relay)	1
5	580009067	Connector	1
5	582005304	Terminal	2
5	582000484	Terminal	2
6	. . . . .	Connector (Back-up Light Relay)	1
6	580085282	Receptacle	1
6	580091405	Terminal	2
6	580091403	Terminal	2
7	. . . . .	Connector (Brake Light Relay)	1
7	580085282	Receptacle	1
7	580091403	Terminal	2
7	580091405	Terminal	2
8	. . . . .	Connector (Left Traction Motor Temperature Sensor)	1
8	580035031	Connector (2 Way)	1
8	580062119	Receptacle Contact 20-22 AWG (Terminal)	2
8	580040456	Wire Seal (Yellow)	2
9	. . . . .	Connector (Left Traction Speed Sensor)	1
9	580035032	Connector (4 Way)	1
9	580062119	Receptacle Contact 20-22 AWG (Terminal)	4
9	580040456	Wire Seal (Yellow)	4
10	504059730	Terminal (Main Controller Coil)	1
11	504059730	Terminal (Main Controller Coil)	1
12	520044861	E-Ring (Main Contactor Battery)	1
13	. . . . .	Connector (Left Electric Brake)	1
13	580019245	Connector (2 Socket)	1
13	580019107	Terminal (Socket)	2
13	580019246	Connector (Secondary Lock)	1
14	. . . . .	Connector (Vehicle System Manager)	1
14	520202606	Connector (35 Way)	1
14	520202601	Connector (Socket Female)	23
15	. . . . .	Connector (Vehicle System Manager)	1
15	580048272	Connector	1
15	520202601	Connector (Socket Female)	13
16	. . . . .	Connector (Accessory Jumper)	1
16	580036981	Connector	1
16	580019107	Terminal (Socket)	10
16	580019119	Plug	2
16	580036986	Connector (Secondary Lock)	1
17	. . . . .	Connector (Right Traction Motor Temperature System)	1
17	580035031	Connector (2 Way)	1
17	580062119	Receptacle Contact 20-22 AWG (Terminal)	2
17	580040456	Wire Seal (Yellow)	2
18	. . . . .	Connector (Right Electric Brake)	1
18	580019245	Connector (2 Socket)	1
18	580019107	Terminal (Socket)	2

©2015 Yale Europe Materials Handling Limited

WIRE HARNESS

MAIN WITH MANUAL HYDRAULICS – SHEET 2 OF 2 (→ S/N G807B02104H)

ITEM	PART NO.	DESCRIPTION	QTY
18	580019246	Connector (Secondary Lock)	1
19	. . . . .	Connector (Right Traction Speed Sensor)	1
19	580035032	Connector (4 Way)	1
19	580062119	Receptacle Contact 20-22 AWG (Terminal)	4
19	580040456	Wire Seal (Yellow)	4
20	. . . . .	Connector (Spool Interlock Solenoid 1)	1
20	580019245	Connector (2 Socket)	1
20	580019107	Terminal (Socket)	2
20	580019246	Connector (Secondary Lock)	1
21	. . . . .	Connector (Spool Interlock Solenoid 2)	1
21	580019245	Connector (2 Socket)	1
21	580019107	Terminal (Socket)	2
21	580019246	Connector (Secondary Lock)	1
22	. . . . .	Connector (Clamp Interlock Coil)	1
22	580019245	Connector (2 Socket)	1
22	580019107	Terminal (Socket)	2
22	580019246	Connector (Secondary Lock)	1
24	580021087	Connector (2 Way) (Battery Gate Magnetic Switch)	1
24	580062388	Terminal	2
24	580021088	Connector	1
25	. . . . .	Connector	1
25	580022893	Connector (2 Pin)	1
25	505968566	Plug	2
26	. . . . .	Connector (Left Pressure Sensor)	1
26	580037805	Connector	1
26	580037807	Terminal	3
26	580039602	Seal (Green)	3
27	. . . . .	Connector (To Manual Hydraulic)	1
27	505968519	Connector (8 Socket)	1
27	580062388	Terminal	8
27	505968558	Connector (Secondary Lock)	1
28	. . . . .	Connector (Manual Hydraulic Spool Position Sensor)	1
28	580036981	Connector	1
28	580019107	Terminal (Socket)	12
28	580036986	Connector (Secondary Lock)	1
29	582006327	Ring Terminal	1
30	. . . . .	Connector (Right Traction Motor Controller)	1
30	520202602	Connector	1
30	520202601	Connector (Socket Female)	12
31	. . . . .	Connector (Right Controller Cooling Fan)	1
31	580019245	Connector (2 Socket)	1
31	580019107	Terminal (Socket)	2
31	580019246	Connector (Secondary Lock)	1
32	. . . . .	Connector (Left Traction Motor Controller)	1
32	520202602	Connector	1
32	520202601	Connector (Socket Female)	14
33	. . . . .	Connector	1
33	580019245	Connector (2 Socket) (Left Controller Cooling Fan)	1
33	580019107	Terminal (Socket)	2
33	580019246	Connector (Secondary Lock)	1

©2015 Yale Europe Materials Handling Limited

WIRE HARNESS

MAIN WITH MANUAL HYDRAULICS – SHEET 2 OF 2 (→ S/N G807B02104H)

ITEM	PART NO.	DESCRIPTION	QTY
34	952405902	Terminal (Brake Floor Level Sensor)	1
35	952405902	Terminal (Brake Floor Level Sensor)	1
36	. . . . .	Connector (Horn Assembly)	1
36	580062118	Connector (3 Way)	1
36	580035034	Terminal (Pin)	3
36	580040456	Wire Seal (Yellow)	3
37	. . . . .	Connector (Service Brake Sensor)	1
37	580037805	Connector	1
37	580037807	Terminal	3
37	580039602	Seal (Green)	3
38	580039764	Clip	6
39	580030878	Clip	2

©2015 Yale Europe Materials Handling Limited

WIRE HARNESS (FIGURE 2-40)

MAIN WITH MANUAL HYDRAULICS — SHEET 1 OF 2 (S/N G807B02105H →)

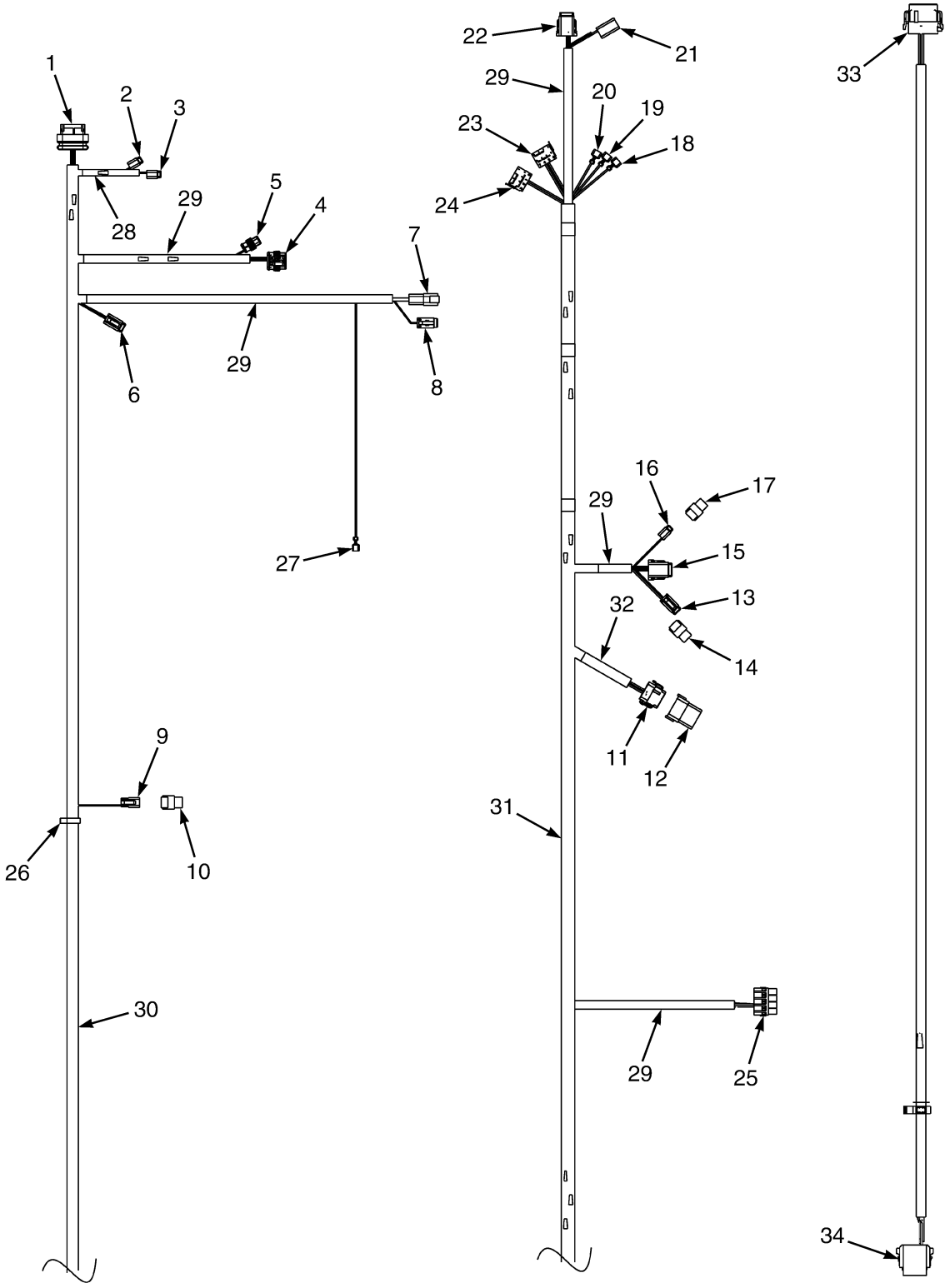

©2015 Yale Europe Materials Handling Limited

WIRE HARNESS

MAIN WITH MANUAL HYDRAULICS – SHEET 1 OF 2 (S/N G807B02105H →)

ITEM	PART NO.	DESCRIPTION	QTY
	580097301	Wire Harness (Main) (Manual-Hydraulic)	1
1	. . . . .	Connector Assembly (Pump Controller)	1
1	520202602	Connector	1
1	520202601	Connector (Socket Female)	13
2	. . . . .	Connector Assembly (Hydraulic Cooling Fan)	1
2	580019245	Connector (2 Socket)	1
2	580019107	Terminal (Socket)	2
2	580019246	Connector (Secondary Lock)	1
3	. . . . .	Connector Assembly (Hydraulic Controller Cooling Fan)	1
3	580019245	Connector (2 Socket)	1
3	580019107	Terminal (Socket)	2
3	580019246	Connector (Secondary Lock)	1
4	. . . . .	Connector Assembly (Motor Speed Sensor)	1
4	580035032	Connector (4 Way)	1
4	580062119	Receptacle Contact 20-22 AWG (Terminal)	4
4	580040456	Wire Seal (Yellow)	4
5	. . . . .	Connector Assembly (Motor Temperature Sensor)	1
5	580035031	Connector (2 Way)	1
5	580062119	Receptacle Contact 20-22 AWG (Terminal)	2
5	580040456	Wire Seal (Yellow)	2
6	. . . . .	Connector Assembly (Steer Axle Harness)	1
6	580022891	Connector	1
6	580019107	Terminal (Socket)	3
6	580022892	Connector (Secondary Lock)	1
7	. . . . .	Connector Assembly (Seat Sensor)	1
7	580039490	Connector	1
7	580019119	Plug	1
7	580019353	Terminal (Pin)	5
7	580039491	Connector (Secondary Lock)	1
8	. . . . .	Connector Assembly (Hydraulic Fluid Level-Pressure)	1
8	580039499	Connector	1
8	580019107	Terminal (Socket)	5
8	580019119	Plug	1
8	580039500	Connector (Secondary Lock)	1
9	. . . . .	Connector Assembly (Overhead Guard Horn Switch)	1
9	580021087	Connector (2 Way)	1
9	580062388	Terminal	2
9	580021088	Connector	1
10	. . . . .	Connector Assembly	1
10	580022893	Connector (2 Pin)	1
10	505968566	Plug	1
11	. . . . .	Connector Assembly (Light Option Harness)	1
11	580036981	Connector	1
11	580019107	Terminal (Socket)	1
11	580019119	Plug	1
11	580039513	Terminal	10
11	580036986	Connector (Secondary Lock)	1
12	. . . . .	Connector	1
12	580069704	Connector	1
12	580019119	Plug	12

©2015 Yale Europe Materials Handling Limited

WIRE HARNESS

MAIN WITH MANUAL HYDRAULICS – SHEET 1 OF 2 (S/N G807B02105H →)

ITEM	PART NO.	DESCRIPTION	QTY
13	. . . . .	Connector (Turn Signal Switch)	1
13	580019097	Connector	1
13	580019119	Plug	1
13	580039513	Terminal	3
13	580019098	Secondary Lock	1
14	. . . . .	Connector	1
14	580086209	Connector	1
14	580019119	Plug	4
15	. . . . .	Connector (Steer Harness)	1
15	580042221	Connector	1
15	580019107	Terminal (Socket)	7
15	580019119	Plug	1
15	580042222	Connector (Secondary Lock)	1
16	. . . . .	Connector (Steer Make-up Valve)	1
16	580019245	Connector (2 Socket)	1
16	580019107	Terminal (Socket)	2
16	580019246	Connector (Secondary Lock)	1
17	. . . . .	Connector	1
17	580056006	Connector (2 Pin)	1
17	580019119	Plug	1
18	500383916	Terminal Housing (Blue) (Flasher) (L)	1
19	500383916	Terminal Housing (Blue) (Flasher) (+)	1
20	500383916	Terminal Housing (Blue) (Flasher) (-)	1
21	. . . . .	Connector (Display Light Harness)	1
21	505968568	Terminal (Socket)	4
21	580020943	Connector (4-Way)	1
21	580020944	Connector (Secondary Lock)	1
22	. . . . .	Connector (Display Harness)	1
22	580042221	Connector	1
22	580019107	Terminal (Socket)	7
22	580019119	Plug	1
22	580042222	Connector (Secondary Lock)	1
23	. . . . .	Connector (No Marker Light Switch)	1
23	~~580019248~~		
	520052844	Socket	1
23	505972527	Terminal	2
23	580091403	Terminal	2
24	. . . . .	Connector (Rear Work Light Switch)	1
24	~~580019248~~		
	520052844	Socket	1
24	580091403	Terminal	2
25	. . . . .	Connector DC-DC Converter	1
25	580047197	Connector	1
25	580090639	Terminal	2
25	580047195	Terminal	2
26	580030878	Clip	2
27	504059730	Terminal (ESD Hydraulic Tank)	1
28	580044908	Conduit	AR
29	504232281	Conduit	AR
30	910065119	Conduit	AR

©2015 Yale Europe Materials Handling Limited

WIRE HARNESS

MAIN WITH MANUAL HYDRAULICS – SHEET 1 OF 2 (S/N G807B02105H →)

ITEM	PART NO.	DESCRIPTION	QTY
31	520045672	Conduit	AR
32	520038855	Conduit	AR
	580089657	Wire Harness (Seat Jumper)	1
33	580039499	Connector (Seat Sensor)	1
33	580039513	Terminal	5
33	580019119	Plug	1
33	580039500	Connector (Secondary Lock)	1
34	. . . . .	Connector (Seat Assembly)	1
34	580039499	Connector	1
34	580039513	Terminal	5
34	580019119	Plug	1
34	580039500	Connector (Secondary Lock)	1

©2015 Yale Europe Materials Handling Limited

WIRE HARNESS (FIGURE 2-41)

MAIN WITH MANUAL HYDRAULICS — SHEET 2 OF 2 (S/N G807B02105H →)

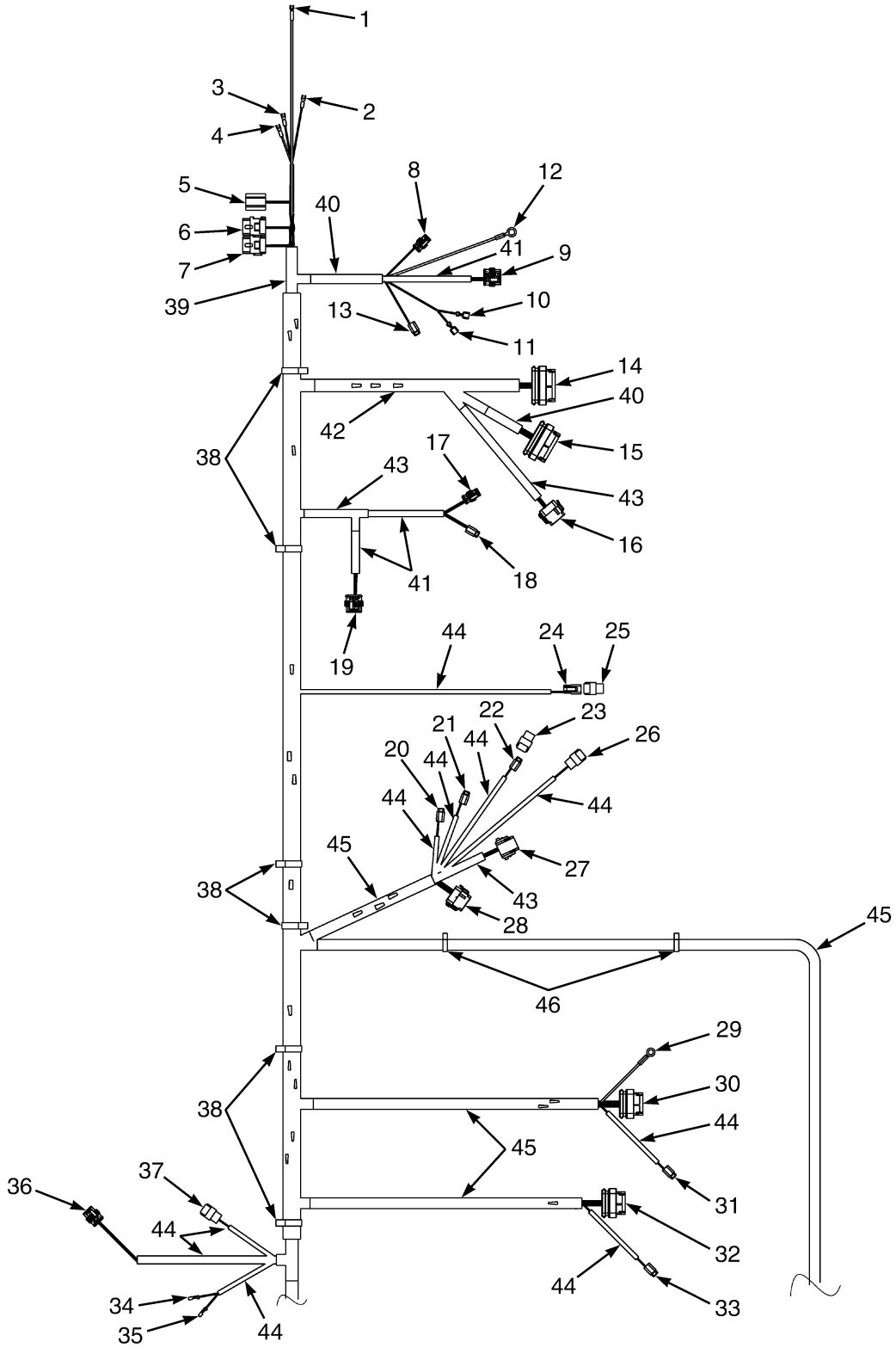

BP081276

©2015 Yale Europe Materials Handling Limited

WIRE HARNESS

MAIN WITH MANUAL HYDRAULICS – SHEET 2 OF 2 (S/N G807B02105H →)

ITEM	PART NO.	DESCRIPTION	QTY
	580097301	Wire Harness (Main) (Manual)	1
1	580058582	Spring Terminal	1
2	580058583	E-Spade	1
3	580058583	E-Spade	1
4	580058583	E-Spade	1
5	. . . . .	Connector Assembly (Key Switch Relay)	1
5	580009067	Connector	1
5	582000484	Terminal	2
5	582005304	Terminal	2
6	. . . . .	Connector Assembly (Back-up Light Relay)	1
6	580085282	Receptacle	1
6	580091405	Terminal	2
6	580091403	Terminal	2
7	. . . . .	Connector Assembly (Brake Light Relay)	1
7	580085282	Receptacle	1
7	580091403	Terminal	2
7	580091405	Terminal	2
8	. . . . .	Connector Assembly (Left Traction Motor Temperature Sensor)	1
8	580035031	Connector (2 Way)	1
8	580062119	Receptacle Contact 20-22 AWG (Terminal)	2
8	580040456	Wire Seal (Yellow)	2
9	. . . . .	Connector Assembly (Left Traction Speed Sensor)	1
9	580035032	Connector (4 Way)	1
9	580062119	Receptacle Contact 20-22 AWG (Terminal)	4
9	580040456	Wire Seal (Yellow)	4
10	504059730	Terminal (Main Controller Coil)	1
11	504059730	Terminal (Main Controller Coil)	1
12	520044861	E-Ring (Main Contactor Battery)	1
13	. . . . .	Connector Assembly (Left Electric Brake)	1
13	580019245	Connector (2 Socket)	1
13	580019107	Terminal (Socket)	2
13	580019246	Connector (Secondary Lock)	1
14	. . . . .	Connector Assembly (Vehicle System Manager)	1
14	520202606	Connector (35 Way)	1
14	520202601	Connector (Socket Female)	23
15	. . . . .	Connector Assembly (Vehicle System Manager)	1
15	580048272	Connector	1
15	520202601	Connector (Socket Female)	13
16	. . . . .	Connector Assembly (Accessory Jumper)	1
16	580036981	Connector	1
16	580019107	Terminal (Socket)	10
16	580019119	Plug	2
16	580036986	Connector (Secondary Lock)	1
17	. . . . .	Connector Assembly (Right Traction Motor Temperature System)	1
17	580035031	Connector (2 Way)	1
17	580062119	Receptacle Contact 20-22 AWG (Terminal)	2
17	580040456	Wire Seal (Yellow)	2
18	. . . . .	Connector Assembly (Right Electric Brake)	1
18	580019245	Connector (2 Socket)	1
18	580019107	Terminal (Socket)	2

©2015 Yale Europe Materials Handling Limited

WIRE HARNESS

MAIN WITH MANUAL HYDRAULICS – SHEET 2 OF 2 (S/N G807B02105H →)

ITEM	PART NO.	DESCRIPTION	QTY
18	580019246	Connector (Secondary Lock)	1
19	. . . . .	Connector Assembly (Right Traction Speed Sensor)	1
19	580035032	Connector (4 Way)	1
19	580062119	Receptacle Contact 20-22 AWG (Terminal)	4
19	580040456	Wire Seal (Yellow)	4
20	. . . . .	Connector Assembly (Spool Interlock Solenoid 1)	1
20	580019245	Connector (2 Socket)	1
20	580019107	Terminal (Socket)	2
20	580019246	Connector (Secondary Lock)	1
21	. . . . .	Connector Assembly (Spool Interlock Solenoid 2)	1
21	580019245	Connector (2 Socket)	1
21	580019107	Terminal (Socket)	2
21	580019246	Connector (Secondary Lock)	1
22	. . . . .	Connector Assembly (Clamp Interlock Coil)	1
22	580019245	Connector (2 Socket)	1
22	580019107	Terminal (Socket)	2
22	580019246	Connector (Secondary Lock)	1
24	580021087	Connector (2 Way) (Battery Gate Magnetic Switch)	1
24	580062388	Terminal	2
24	580021088	Connector	1
25	. . . . .	Connector Assembly	1
25	580022893	Connector (2 Pin)	1
25	505968566	Plug	2
26	. . . . .	Connector Assembly (Left Pressure Sensor)	1
26	580037805	Connector	1
26	580037807	Terminal	3
26	580039602	Seal (Green)	3
27	. . . . .	Connector Assembly (To Manual Hydraulic)	1
27	505968519	Connector (8 Socket)	1
27	580062388	Terminal	8
27	505968558	Connector (Secondary Lock)	1
28	. . . . .	Connector Assembly (Manual Hydraulic Spool Position Sensor)	1
28	580036981	Connector	1
28	580019107	Terminal (Socket)	12
28	580036986	Connector (Secondary Lock)	1
29	520039880	E-Ring	1
30	. . . . .	Connector Assembly (Right Traction Motor Controller)	1
30	520202602	Connector	1
30	520202601	Connector (Socket Female)	12
31	. . . . .	Connector Assembly (Right Controller Cooling Fan)	1
31	580019245	Connector (2 Socket)	1
31	580019107	Terminal (Socket)	2
31	580019246	Connector (Secondary Lock)	1
32	. . . . .	Connector Assembly (Left Traction Motor Controller)	1
32	520202602	Connector	1
32	520202601	Connector (Socket Female)	14
33	. . . . .	Connector Assembly	1
33	580019245	Connector (2 Socket) (Left Controller Cooling Fan)	1
33	580019107	Terminal (Socket)	2
33	580019246	Connector (Secondary Lock)	1

©2015 Yale Europe Materials Handling Limited

WIRE HARNESS

MAIN WITH MANUAL HYDRAULICS – SHEET 2 OF 2 (S/N G807B02105H →)

ITEM	PART NO.	DESCRIPTION	QTY
34	952405902	Terminal (Brake Floor Level Sensor)	1
35	952405902	Terminal (Brake Floor Level Sensor)	1
36	. . . . .	Connector Assembly (Horn Assembly)	1
36	580062118	Connector (3 Way)	1
36	580035034	Terminal (Pin)	3
36	580040456	Wire Seal (Yellow)	3
37	. . . . .	Connector Assembly (Service Brake Sensor)	1
37	580037805	Connector	1
37	580037807	Terminal	3
37	580039602	Seal (Green)	3
38	580039764	Clip	6
39	910065119	Conduit	AR
40	520038855	Conduit	AR
41	580044908	Conduit	AR
42	520045672	Conduit	AR
43	504232281	Conduit	AR
44	580089790	Conduit	AR
45	910065119	Conduit	AR
46	580030878	Clip	2

©2015 Yale Europe Materials Handling Limited

WIRE HARNESS (FIGURE 2-42)

MAIN WITH MANUAL HYDRAULICS — SHEET 1 OF 2 (S/N G807B06004L ↔ 11/2014)

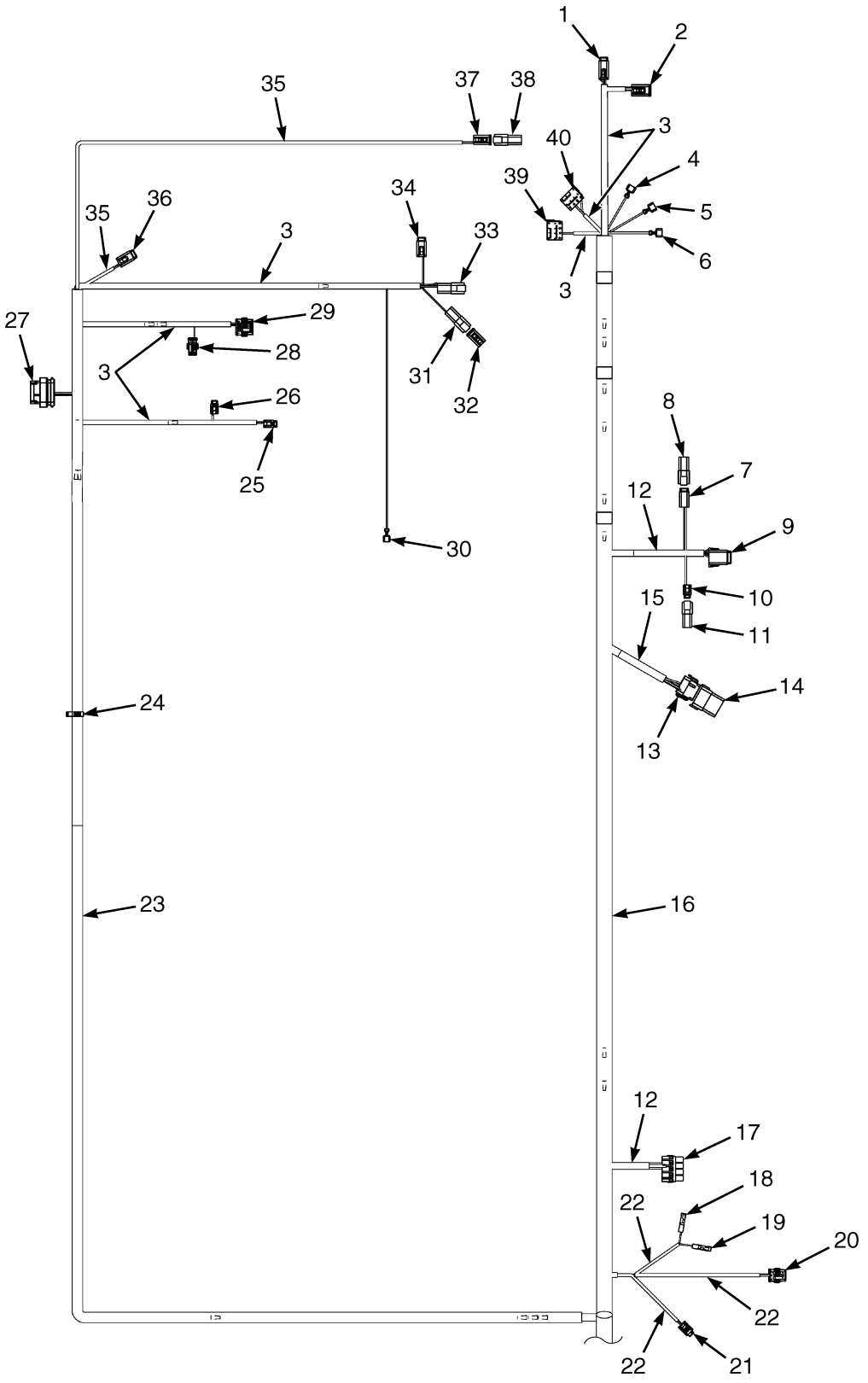

©2015 Yale Europe Materials Handling Limited

WIRE HARNESS

MAIN WITH MANUAL HYDRAULICS – SHEET 1 OF 2 (S/N G807B06004L ↔ 11/2014)

ITEM	PART NO.	DESCRIPTION	QTY
	582028372	Wire Harness (Main)	1
1	. . . . .	Connector Assembly (Display Harness)	1
1	580042221	Connector	1
1	580019107	Terminal (Socket)	6
1	580039513	Terminal	1
1	580019119	Plug	1
1	580042222	Connector (Secondary Lock)	1
2	. . . . .	Connector Assembly (Display Light Harness)	1
2	580020943	Connector (4-Way)	1
2	505968568	Terminal (Socket)	4
2	580020944	Connector (Secondary Lock)	1
3	504232281	Conduit	AR
4	500383916	Terminal Housing (Blue) Flasher (L)	1
5	500383916	Terminal Housing (Blue) Flasher (+)	1
6	500383916	Terminal Housing (Blue) Flasher (-)	1
7	. . . . .	Connector Assembly (Turn Signal Switch)	1
7	580019097	Connector	1
7	580019119	Plug	1
7	580039513	Terminal	3
7	580019098	Secondary Lock	1
8	. . . . .	Connector Assembly (Endcap)	1
8	580086209	Connector	1
8	580019119	Plug	4
9	. . . . .	Connector Assembly (Steer Harness)	1
9	580042221	Connector	1
9	580019107	Terminal (Socket)	6
9	580019119	Plug	1
9	580039513	Terminal	1
9	580042222	Connector (Secondary Lock)	1
10	. . . . .	Connector Assembly (Synchronous Steer)	1
10	580019245	Connector (2 Socket)	1
10	580019107	Terminal (Socket)	1
10	580039513	Terminal	1
10	580019246	Connector (Secondary Lock)	1
11	. . . . .	Connector Assembly (Endcap)	1
11	580056006	Connector (2 Pin)	1
11	580019119	Plug	2
12	520038855	Conduit	AR
13	. . . . .	Connector Assembly (Light Option Harness)	1
13	580036981	Connector	1
13	580039513	Terminal	9
13	582022955	Terminal	2
13	580019119	Plug	1
13	580036986	Connector (Secondary Lock)	1
14	. . . . .	Connector Assembly (Endcap)	1
14	580069704	Connector	1
14	580019119	Plug	12
15	910065119	Conduit	AR
16	580019366	Conduit	AR
17	. . . . .	Connector Assembly (DC-DC Converter)	1

©2015 Yale Europe Materials Handling Limited

WIRE HARNESS

MAIN WITH MANUAL HYDRAULICS – SHEET 1 OF 2 (S/N G807B06004L ↔ 11/2014)

ITEM	PART NO.	DESCRIPTION	QTY
17	580047195	Terminal	2
17	580090639	Terminal	2
17	580047197	Connector	1
18	952405902	Terminal (Brake Fluid Level Sensor)	1
19	952405902	Terminal (Brake Fluid Level Sensor)	1
20	. . . . .	Connector Assembly (Horn Assembly)	1
20	580062118	Connector (3 Way)	1
20	580062119	Receptacle Contact 20-22 AWG	2
20	580035034	Terminal (Pin)	1
21	. . . . .	Connector Assembly (Service Brake Sensor)	1
21	580037805	Connector	1
21	580037807	Terminal	3
22	580089790	Conduit	AR
23	505970586	Conduit	AR
24	580040120	Clip	1
25	. . . . .	Connector Assembly (Hydraulic Control Cooling Fan)	1
25	580019245	Connector (2 Socket)	1
25	580039513	Terminal	1
25	580019107	Terminal (Socket)	1
25	580019246	Connector (Secondary Lock)	1
26	. . . . .	Connector Assembly (Hydraulic Control Cooling Fan)	1
26	580019245	Connector (2 Socket)	1
26	580039513	Terminal	1
26	580019107	Terminal (Socket)	1
26	580019246	Connector (Secondary Lock)	1
27	. . . . .	Connector Assembly (Pump Controller)	1
27	520202602	Connector	1
27	520202601	Connector (Socket Female)	13
27	520202604	Plug	10
28	. . . . .	Connector Assembly (Motor Temperature Sensor)	1
28	580035031	Connector (2 Way)	1
28	580062119	Receptacle Contact 20-22 AWG	2
29	. . . . .	Connector Assembly (Motor Speed Sensor)	1
29	580035032	Connector (4 Way)	1
29	580062119	Receptacle Contact 20-22 AWG	4
30	504059730	Terminal (ESD Hydraulic Tank)	1
31	. . . . .	Connector Assembly (Seat Belt Switch Harness)	1
31	580022893	Connector (2 Pin)	1
31	580038290	Terminal	2
31	505968540	Connector (Secondary Lock)	1
32	. . . . .	Connector Assembly (Endcap)	1
32	580021087	Connector (2 Way)	1
32	580021088	Connector	1
32	580019119	Plug	2
33	. . . . .	Connector Assembly (Seat Sensor)	1
33	580039490	Connector	1
33	580019353	Terminal (Pin)	5
33	580019119	Plug	1
33	580039491	Connector (Secondary Lock)	1
34	. . . . .	Connector Assembly (Hydraulic Fluid Level Filter)	1

©2015 Yale Europe Materials Handling Limited

WIRE HARNESS

MAIN WITH MANUAL HYDRAULICS – SHEET 1 OF 2 (S/N G807B06004L ↔ 11/2014)

ITEM	PART NO.	DESCRIPTION	QTY
34	580039499	Connector	1
34	580019107	Terminal (Socket)	5
34	580019119	Plug	1
34	580039500	Connector	1
35	580044908	Conduit	AR
36	. . . . .	Connector Assembly (Steer Axle Harness)	1
36	580022891	Connector	1
36	580019107	Terminal (Socket)	3
36	580022892	Connector (Secondary Lock)	1
37	. . . . .	Connector Assembly (Overhead Guard Horn Switch)	1
37	580021087	Connector (2 Way)	1
37	580062388	Terminal	1
37	505064713	Terminal	1
37	580021088	Connector	1
38	. . . . .	Connector Assembly (Endcap)	1
38	580022893	Connector (2 Pin)	1
38	505968566	Plug	2
39	. . . . .	Connector Assembly (Rear Work Light Switch)	1
39	~~580019248~~		
	520052844	Socket	1
39	582005304	Terminal	2
40	. . . . .	Connector Assembly (Ino Mark Light Switch)	1
40	~~580019248~~		
	520052844	Socket	1
40	582005304	Terminal	3

©2015 Yale Europe Materials Handling Limited

WIRE HARNESS (FIGURE 2-43)

MAIN WITH MANUAL HYDRAULICS — SHEET 2 OF 2 (S/N G807B06004L ↔ 11/2014)

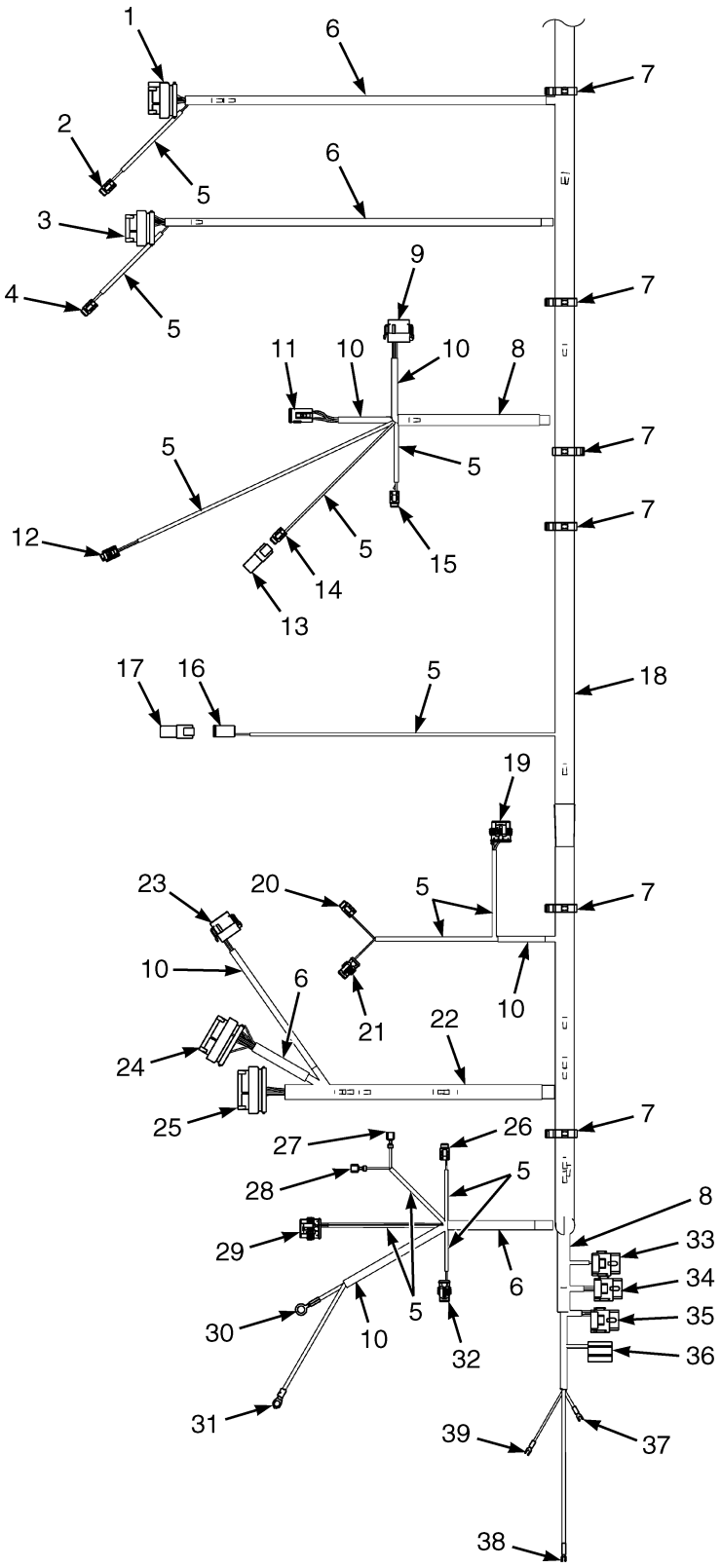

©2015 Yale Europe Materials Handling Limited

WIRE HARNESS

MAIN WITH MANUAL HYDRAULICS – SHEET 2 OF 2 (S/N G807B06004L ↔ 11/2014)

ITEM	PART NO.	DESCRIPTION	QTY
	582028372	Wire Harness (Main)	1
1	. . . . .	Connector Assembly (Left Traction Motor Controller)	1
1	520202602	Connector	1
1	520202601	Connector (Socket Female)	13
1	520202604	Plug	10
2	. . . . .	Connector Assembly (Left Controller Cooling Fan)	1
2	580019245	Connector (2 Socket)	1
2	580039513	Terminal	1
2	580019107	Terminal (Socket)	1
2	580019246	Connector (Secondary Lock)	1
3	. . . . .	Connector Assembly (Right Traction Motor Controller)	1
3	520202602	Connector	1
3	520202601	Connector (Socket Female)	13
3	520202604	Plug	10
4	. . . . .	Connector Assembly (Right Controller Cooling Fan)	1
4	580019245	Connector (2 Socket)	1
4	580039513	Terminal	1
4	580019107	Terminal (Socket)	1
4	580019246	Connector (Secondary Lock)	1
5	580044908	Conduit	AR
6	910065119	Conduit	AR
7	580039764	Clip	5
8	520045672	Conduit	AR
9	. . . . .	Contactor Assembly (Manual Hydraulic Spool Position Sensor)	1
9	580036981	Connector	1
9	580019107	Terminal (Socket)	12
9	580036986	Connector (Secondary Lock)	1
10	504232281	Conduit	AR
11	. . . . .	Connector Assembly (Manual Hydraulic Valve)	1
11	580027206	Connector	1
11	580062388	Terminal	7
11	505064713	Terminal	1
11	580027207	Connector (Secondary Lock)	1
12	. . . . .	Contactor Assembly (Left Pressure Sensor)	1
12	580037805	Connector	1
12	580037807	Terminal	3
13	. . . . .	Connector Assembly (Endcap)	1
13	580056006	Connector (2 Pin)	1
13	580019119	Plug	2
14	. . . . .	Connector Assembly (Clamp Interlock Coil)	1
14	580019245	Connector (2 Socket)	1
14	580039513	Terminal	1
14	580019107	Terminal (Socket)	1
14	580019246	Connector (Secondary Lock)	1
15	. . . . .	Connector Assembly (Spool Interlock)	1
15	580019245	Connector (2 Socket)	1
15	580039513	Terminal	2
15	580019246	Connector (Secondary Lock)	1
16	. . . . .	Connector Assembly (Battery Gate Magnetic Switch)	1
16	580021087	Connector (2 Way)	1

©2015 Yale Europe Materials Handling Limited

WIRE HARNESS

MAIN WITH MANUAL HYDRAULICS – SHEET 2 OF 2 (S/N G807B06004L ↔ 11/2014)

ITEM	PART NO.	DESCRIPTION	QTY
16	580062388	Terminal	2
16	580021088	Connector	1
17	. . . . .	Connector Assembly (Endcap)	1
17	580022894	Connector	1
17	505968566	Plug	3
18	580041641	Conduit	AR
19	. . . . .	Connector Assembly (Right Speed Sensor)	1
19	580035032	Connector (4 Way)	1
19	580062119	Receptacle Contact 20-22 AWG	4
20	. . . . .	Connector Assembly (Right Electric Brake)	1
20	580019245	Connector (2 Socket)	1
20	580019107	Terminal (Socket)	2
20	580019246	Connector (Secondary Lock)	1
21	. . . . .	Connector Assembly (Right Traction Motor Temperature Sensor)	1
21	580035031	Connector (2 Way)	1
21	580062119	Receptacle Contact 20-22 AWG	2
22	580019366	Conduit	AR
23	. . . . .	Connector Assembly (Accessory Jumper)	1
23	580036981	Connector	1
23	580019107	Terminal (Socket)	10
23	580019119	Plug	2
23	580036986	Connector (Secondary Lock)	1
24	. . . . .	Connector Assembly (Vehicle System Manager)	1
24	580048272	Connector	1
24	520202601	Connector (Socket Female)	16
24	520202604	Plug	19
25	. . . . .	Connector Assembly (Vehicle System Manager)	1
25	520202602	Connector	1
25	520202601	Connector (Socket Female)	24
25	520202604	Plug	11
26	. . . . .	Connector Assembly (Left Electric Brake)	1
26	580019245	Connector (2 Socket)	1
26	580019107	Terminal (Socket)	2
26	580019246	Connector (Secondary Lock)	1
27	504059730	Terminal (Main Controller Coil)	1
28	504059730	Terminal (Main Controller Coil)	1
29	. . . . .	Connector Assembly (Left Speed Sensor)	1
29	580035032	Connector (4 Way)	1
29	580062119	Receptacle Contact 20-22 AWG	4
30	520044861	E-Ring	1
31	582006327	Ring Terminal	1
32	. . . . .	Connector Assembly (Left Traction Motor Temperature Sensor)	1
32	580035031	Connector (2 Way)	1
32	580062119	Receptacle Contact 20-22 AWG	2
33	. . . . .	Connector Assembly (Hydraulic Relay)	1
33	580085282	Receptacle	1
33	582024619	Terminal	4
34	. . . . .	Connector Assembly (Brake Light Relay)	1
34	580085282	Receptacle	1
34	582024619	Terminal	2

©2015 Yale Europe Materials Handling Limited

WIRE HARNESS

MAIN WITH MANUAL HYDRAULICS – SHEET 2 OF 2 (S/N G807B06004L ↔ 11/2014)

ITEM	PART NO.	DESCRIPTION	QTY
34	582024620	Terminal	2
35	. . . . .	Connector Assembly (Back-Up Light Relay)	1
35	580085282	Receptacle	1
35	582024619	Terminal	2
35	582024620	Terminal	2
36	. . . . .	Connector Assembly (Key Switch Relay)	1
36	580009067	Connector	1
36	582000484	Terminal	2
36	580091403	Terminal	1
36	582005304	Terminal	1
37	580026299	E-Ring (FU 1 LD)	1
38	580058582	Spring Terminal (FU 4 B+)	1
39	580058583	E-Spade (FU 4 LD)	1

©2015 Yale Europe Materials Handling Limited

WIRE HARNESS (FIGURE 2-44)

MAIN WITH MANUAL HYDRAULICS, WITHOUT E-STEER — SHEET 1 OF 2 (11/2014 ↔ 2/2015)

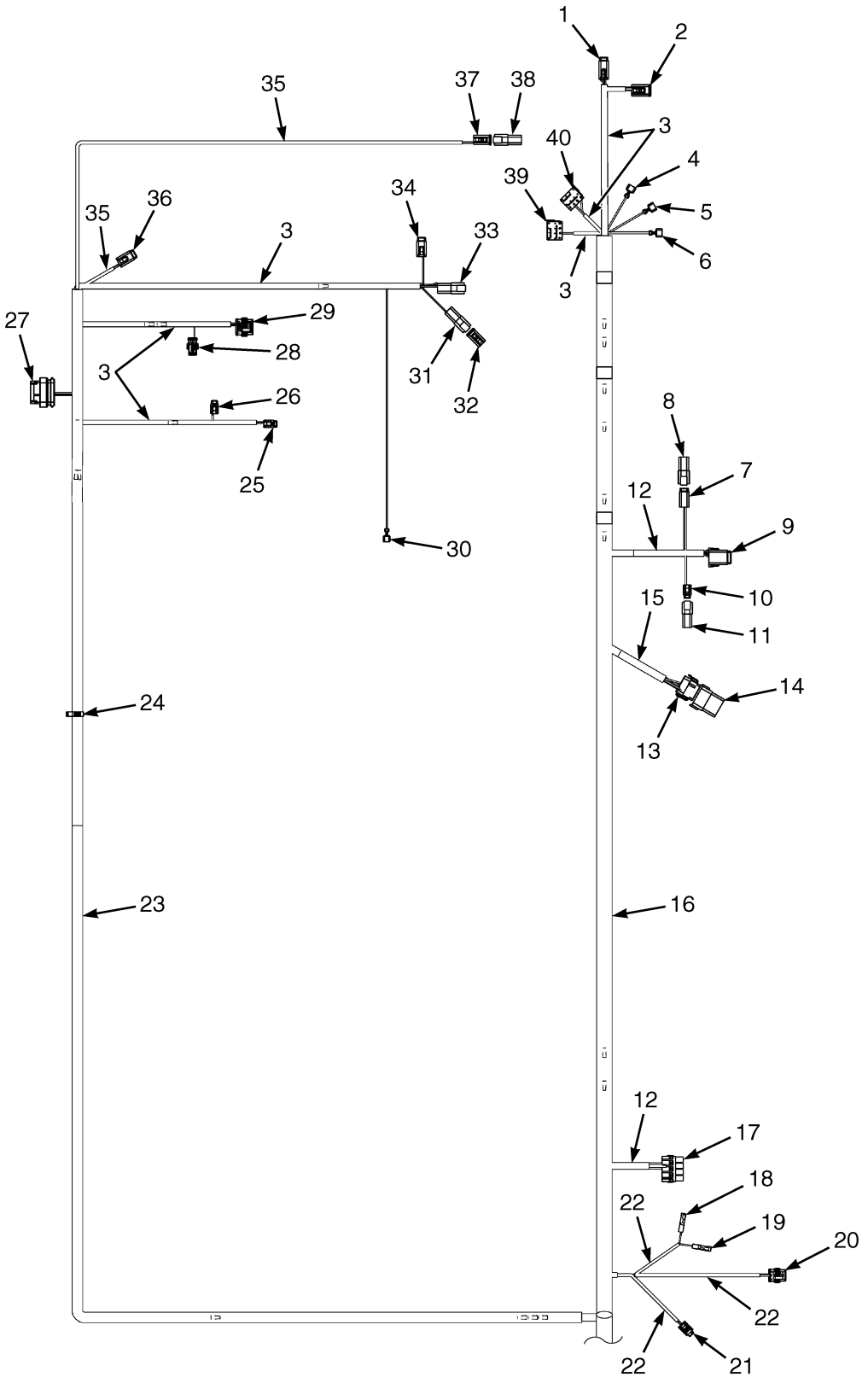

©2015 Yale Europe Materials Handling Limited

WIRE HARNESS

MAIN WITH MANUAL HYDRAULICS, WITHOUT E-STEER – SHEET 1 OF 2 (11/2014 ↔ 2/2015)

ITEM	PART NO.	DESCRIPTION	QTY
	582039726	Wire Harness (Main)	1
1	. . . . .	Connector Assembly (Display Harness)	1
1	580042221	Connector	1
1	580019107	Terminal (Socket)	6
1	580039513	Terminal	1
1	580019119	Plug	1
1	580042222	Connector (Secondary Lock)	1
2	. . . . .	Connector Assembly (Display Light Harness)	1
2	580020943	Connector (4-Way)	1
2	505968568	Terminal (Socket)	4
2	580020944	Connector (Secondary Lock)	1
3	504232281	Conduit	AR
4	500383916	Terminal Housing (Blue) Flasher (L)	1
5	500383916	Terminal Housing (Blue) Flasher (+)	1
6	500383916	Terminal Housing (Blue) Flasher (-)	1
7	. . . . .	Connector Assembly (Turn Signal Switch)	1
7	580019097	Connector	1
7	580019119	Plug	1
7	580039513	Terminal	3
7	580019098	Secondary Lock (Secondary Lock)	1
8	. . . . .	Connector Assembly (Endcap)	1
8	580086209	Connector	1
8	580019119	Plug	4
9	. . . . .	Connector Assembly (Steer Harness)	1
9	580042221	Connector	1
9	580019107	Terminal (Socket)	6
9	580019119	Plug	1
9	580039513	Terminal	1
9	580042222	Connector (Secondary Lock)	1
10	. . . . .	Connector Assembly (Synchronous Steer)	1
10	580019245	Connector (2 Socket)	1
10	580019107	Terminal (Socket)	1
10	580039513	Terminal	1
10	580019246	Connector (Secondary Lock) (Lock)	1
11	. . . . .	Connector Assembly (Endcap)	1
11	580056006	Connector (2 Pin)	1
11	580019119	Plug	2
12	520038855	Conduit	AR
13	. . . . .	Connector Assembly (Light Option Harness)	1
13	580036981	Connector	1
13	580039513	Terminal	9
13	582022955	Terminal	2
13	580019119	Plug	1
13	580036986	Connector (Secondary Lock)	1
14	. . . . .	Connector Assembly (Endcap)	1
14	580069704	Connector	1
14	580019119	Plug	12
15	910065119	Conduit	AR
16	580019366	Conduit	AR
17	. . . . .	Connector Assembly (DC-DC Converter)	1

©2015 Yale Europe Materials Handling Limited

WIRE HARNESS

MAIN WITH MANUAL HYDRAULICS, WITHOUT E-STEER – SHEET 1 OF 2 (11/2014 ↔ 2/2015)

ITEM	PART NO.	DESCRIPTION	QTY
17	580047195	Terminal	2
17	580090639	Terminal	2
17	580047197	Connector	1
18	952405902	Terminal (Brake Fluid Level Sensor)	1
19	952405902	Terminal (Brake Fluid Level Sensor)	1
20	. . . . .	Connector Assembly (Horn Assembly)	1
20	580062118	Connector (3 Way)	1
20	580062119	Receptacle Contact 20-22 AWG	2
20	580035034	Terminal (Pin)	1
21	. . . . .	Connector Assembly (Service Brake Sensor)	1
21	580037805	Connector	1
21	580037807	Terminal	3
22	580089790	Conduit	AR
23	505970586	Conduit	AR
24	580040120	Clip	1
25	. . . . .	Connector Assembly (Hydraulic Control Cooling Fan)	1
25	580019245	Connector (2 Socket)	1
25	580039513	Terminal	1
25	580019107	Terminal (Socket)	1
25	580019246	Connector (Secondary Lock)	1
26	. . . . .	Connector Assembly (Hydraulic Control Cooling Fan)	1
26	580019245	Connector (2 Socket)	1
26	580039513	Terminal	1
26	580019107	Terminal (Socket)	1
26	580019246	Connector (Secondary Lock)	1
27	. . . . .	Connector Assembly (Pump Controller)	1
27	520202602	Connector	1
27	520202601	Connector (Socket Female)	13
27	520202604	Plug	10
28	. . . . .	Connector Assembly (Motor Temperature Sensor)	1
28	580035031	Connector (2 Way)	1
28	580062119	Receptacle Contact 20-22 AWG	2
28	~~580059764~~		
	272479200	Wire Seal	2
29	. . . . .	Connector Assembly (Motor Speed Sensor)	1
29	580035032	Connector (4 Way)	1
29	580062119	Receptacle Contact 20-22 AWG	4
29	~~580059764~~		
	272479200	Wire Seal	4
30	504059730	Terminal (ESD Hydraulic Tank)	1
31	. . . . .	Connector Assembly (Seat Belt Switch Harness)	1
31	580022893	Connector (2 Pin)	1
31	580038290	Terminal	2
31	505968540	Connector (Secondary Lock)	1
32	. . . . .	Connector Assembly (Endcap)	1
32	580021087	Connector (2 Way)	1
32	580021088	Connector	1
32	580019119	Plug	2
33	. . . . .	Connector Assembly (Seat Sensor)	1
33	580039490	Connector	1

©2015 Yale Europe Materials Handling Limited

WIRE HARNESS

MAIN WITH MANUAL HYDRAULICS, WITHOUT E-STEER – SHEET 1 OF 2 (11/2014 ↔ 2/2015)

ITEM	PART NO.	DESCRIPTION	QTY
33	580019353	Terminal (Pin)	5
33	580019119	Plug	1
33	580039491	Connector (Secondary Lock)	1
34	. . . . .	Connector Assembly (Hydraulic Fluid Level Filter)	1
34	580039499	Connector	1
34	580019107	Terminal (Socket)	5
34	580019119	Plug	1
34	580039500	Connector	1
35	580044908	Conduit	AR
36	. . . . .	Connector Assembly (Steer Axle Harness)	1
36	580022891	Connector	1
36	580019107	Terminal (Socket)	3
36	580022892	Connector (Secondary Lock)	1
37	. . . . .	Connector Assembly (Overhead Guard Horn Switch)	1
37	580021087	Connector (2 Way)	1
37	580062388	Terminal	1
37	505064713	Terminal	1
37	580021088	Connector	1
38	. . . . .	Connector Assembly (Endcap)	1
38	580022893	Connector (2 Pin)	1
38	505968566	Plug	2
39	. . . . .	Connector Assembly (Rear Work Light Switch)	1
39	~~580019248~~		
	520052844	Socket	1
39	582005304	Terminal	2
40	. . . . .	Connector Assembly (Ino Mark Light Switch)	1
40	~~580019248~~		
	520052844	Socket	1
40	582005304	Terminal	3

©2015 Yale Europe Materials Handling Limited

WIRE HARNESS (FIGURE 2-45)

MAIN WITH MANUAL HYDRAULICS, WITHOUT E-STEER — SHEET 2 OF 2 (11/2014 ↔ 2/2015)

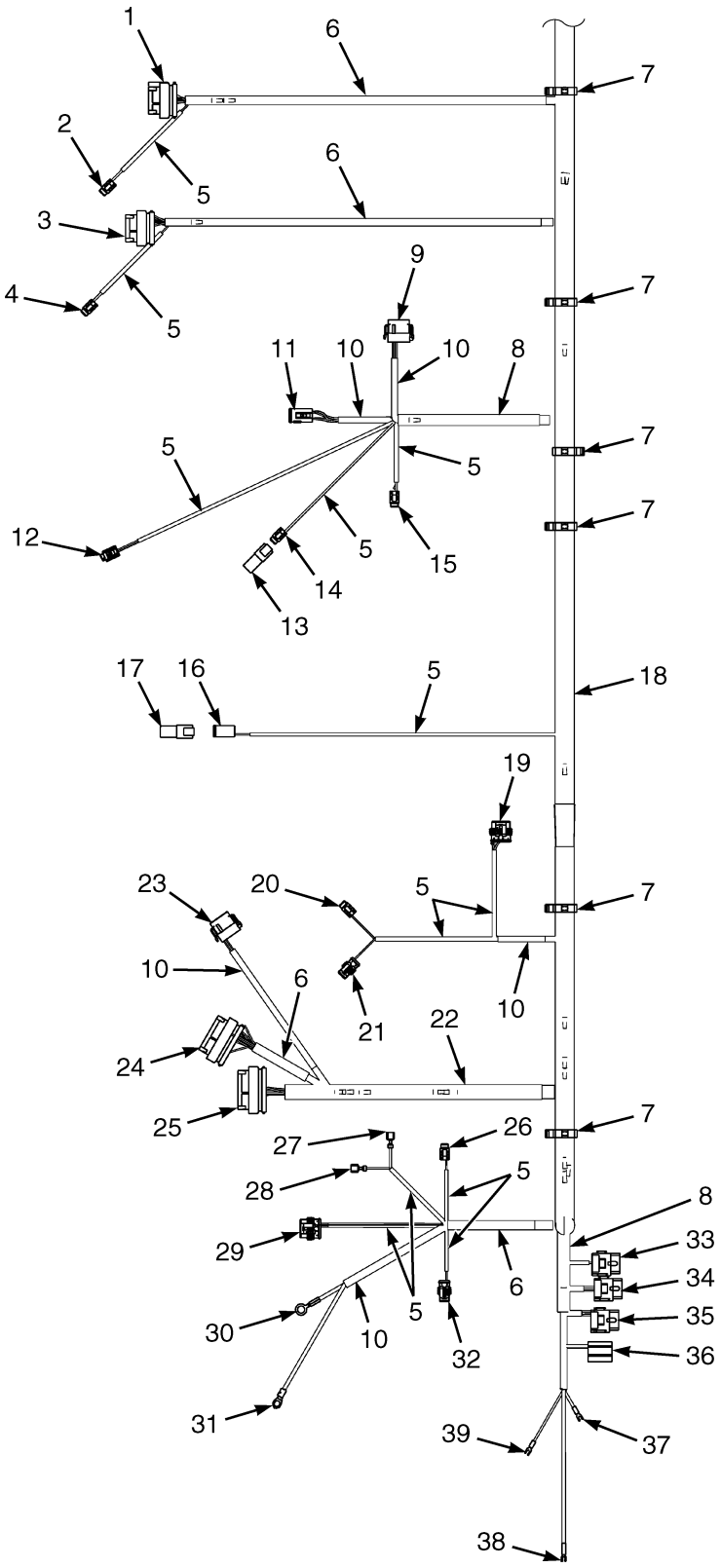

©2015 Yale Europe Materials Handling Limited

WIRE HARNESS

MAIN WITH MANUAL HYDRAULICS, WITHOUT E-STEER – SHEET 2 OF 2 (11/2014 ↔ 2/2015)

ITEM	PART NO.	DESCRIPTION	QTY
	582039726	Wire Harness (Main)	1
1	. . . . .	Connector Assembly (Left Traction Motor Controller)	1
1	520202602	Connector	1
1	520202601	Connector (Socket Female)	13
1	520202604	Plug	10
2	. . . . .	Connector Assembly (Left Controller Cooling Fan)	1
2	580019245	Connector (2 Socket)	1
2	580039513	Terminal	1
2	580019107	Terminal (Socket)	1
2	580019246	Connector (Secondary Lock) (Lock)	1
3	. . . . .	Connector Assembly (Right Traction Motor Controller)	1
3	520202602	Connector	1
3	520202601	Connector (Socket Female)	13
3	520202604	Plug	10
4	. . . . .	Connector Assembly (Right Controller Cooling Fan)	1
4	580019245	Connector (2 Socket)	1
4	580039513	Terminal	1
4	580019107	Terminal (Socket)	1
4	580019246	Connector (Secondary Lock) (Lock)	1
5	580044908	Conduit	AR
6	910065119	Conduit	AR
7	580039764	Clip	5
8	520045672	Conduit	AR
9	. . . . .	Contactor Assembly (Manual Hydraulic Spool Position Sensor)	1
9	580036981	Connector	1
9	580019107	Terminal (Socket)	12
9	580036986	Connector (Secondary Lock)	1
10	504232281	Conduit	AR
11	. . . . .	Connector Assembly (Manual Hydraulic Valve)	1
11	580036940	Connector	1
11	580062388	Terminal	9
11	505064713	Terminal	1
11	580026813	Connector (Secondary Lock)	1
12	. . . . .	Contactor Assembly (Left Pressure Sensor)	1
12	580037805	Connector	1
12	580037807	Terminal	3
13	. . . . .	Connector Assembly (Endcap)	1
13	580056006	Connector (2 Pin)	1
13	580019119	Plug	2
14	. . . . .	Connector Assembly (Clamp Interlock Coil)	1
14	580019245	Connector (2 Socket)	1
14	580039513	Terminal	1
14	580019107	Terminal (Socket)	1
14	580019246	Connector (Secondary Lock)	1
15	. . . . .	Connector Assembly (Spool Interlock)	1
15	580019245	Connector (2 Socket)	1
15	580039513	Terminal	2
15	580019246	Connector (Secondary Lock)	1
16	. . . . .	Connector Assembly (Battery Gate Magnetic Switch)	1
16	580021087	Connector (2 Way)	1

©2015 Yale Europe Materials Handling Limited

WIRE HARNESS

MAIN WITH MANUAL HYDRAULICS, WITHOUT E-STEER – SHEET 2 OF 2 (11/2014 ↔ 2/2015)

ITEM	PART NO.	DESCRIPTION	QTY
16	580062388	Terminal	2
16	580021088	Connector	1
17	. . . . .	Connector Assembly (Endcap)	1
17	580022894	Connector	1
17	505968566	Plug	3
18	580041641	Conduit	AR
19	. . . . .	Connector Assembly (Right Speed Sensor)	1
19	580035032	Connector (4 Way)	1
19	580062119	Receptacle Contact 20-22 AWG	4
20	. . . . .	Connector Assembly (Right Electric Brake)	1
20	580019245	Connector (2 Socket)	1
20	580019107	Terminal (Socket)	2
20	580019246	Connector (Secondary Lock)	1
21	. . . . .	Connector Assembly (Right Traction Motor Temperature Sensor)	1
21	580035031	Connector (2 Way)	1
21	580062119	Receptacle Contact 20-22 AWG	2
22	580019366	Conduit	AR
23	. . . . .	Connector Assembly (Accessory Jumper)	1
23	580036981	Connector	1
23	580019107	Terminal (Socket)	10
23	580019119	Plug	2
23	580036986	Connector (Secondary Lock)	1
24	. . . . .	Connector Assembly (Vehicle System Manager)	1
24	580048272	Connector	1
24	520202601	Connector (Socket Female)	16
24	520202604	Plug	19
25	. . . . .	Connector Assembly (Vehicle System Manager)	1
25	520202606	Connector (35 Way)	1
25	520202601	Connector (Socket Female)	24
25	520202604	Plug	11
26	. . . . .	Connector Assembly (Left Electric Brake)	1
26	580019245	Connector (2 Socket)	1
26	580019107	Terminal (Socket)	2
26	580019246	Connector (Secondary Lock)	1
27	504059730	Terminal (Main Controller Coil)	1
28	504059730	Terminal (Main Controller Coil)	1
29	. . . . .	Connector Assembly (Left Speed Sensor)	1
29	580035032	Connector (4 Way)	1
29	580062119	Receptacle Contact 20-22 AWG	4
30	520044861	E-Ring	1
31	582006327	Ring Terminal	1
32	. . . . .	Connector Assembly (Left Traction Motor Temperature Sensor)	1
32	580035031	Connector (2 Way)	1
32	580062119	Receptacle Contact 20-22 AWG	2
33	. . . . .	Connector Assembly (Hydraulic Relay)	1
33	580085282	Receptacle	1
33	582024619	Terminal	4
34	. . . . .	Connector Assembly (Brake Light Relay)	1
34	580085282	Receptacle	1
34	582024619	Terminal	2

©2015 Yale Europe Materials Handling Limited

WIRE HARNESS

MAIN WITH MANUAL HYDRAULICS, WITHOUT E-STEER – SHEET 2 OF 2 (11/2014 ↔ 2/2015)

ITEM	PART NO.	DESCRIPTION	QTY
34	582024620	Terminal	2
35	. . . . .	Connector Assembly (Back-Up Light Relay)	1
35	580085282	Receptacle	1
35	582024619	Terminal	2
35	582024620	Terminal	2
36	. . . . .	Connector Assembly (Key Switch Relay)	1
36	580009067	Connector	1
36	582000484	Terminal	2
36	580091403	Terminal	1
36	582005304	Terminal	1
37	580026299	E-Ring (FU 1 LD)	1
38	580058582	Spring Terminal (FU 4 B+)	1
39	580058583	E-Spade (FU 4 LD)	1

©2015 Yale Europe Materials Handling Limited

WIRE HARNESS (FIGURE 2-46)

MAIN WITH MANUAL HYDRAULICS AND E-STEERING — SHEET 1 OF 2 (2/2015 →)

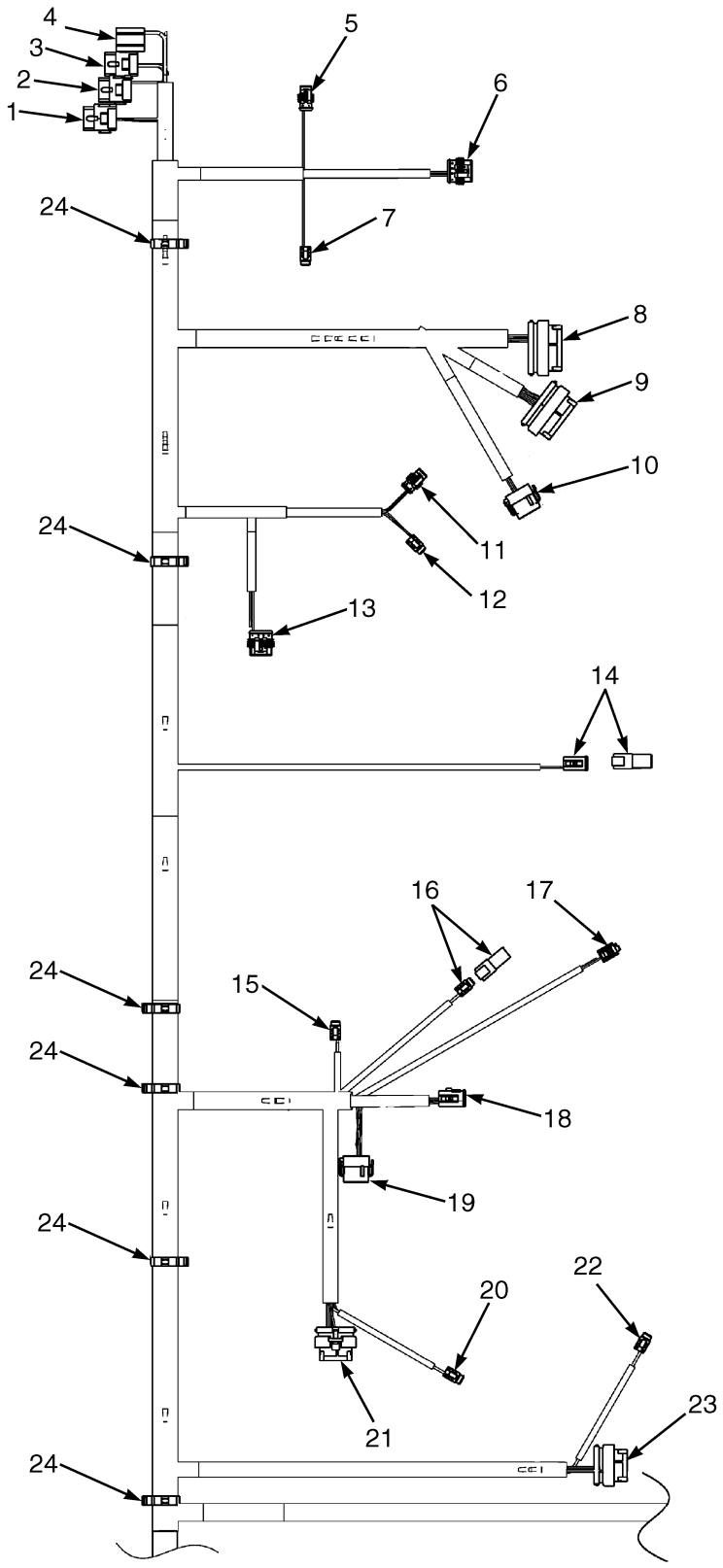

©2015 Yale Europe Materials Handling Limited

WIRE HARNESS

MAIN WITH MANUAL HYDRAULICS AND E-STEERING – SHEET 1 OF 2 (2/2015 →)

ITEM	PART NO.	DESCRIPTION	QTY
	582025076	Wire Harness (Main)	1
1	. . . . .	Connector Assembly (CRS209/Hyd En Relay)	1
1	580085282	Receptacle	1
1	582024619	Terminal	4
2	. . . . .	Connector Assembly (CRS110/Brake Light Relay)	1
2	580085282	Receptacle	1
2	582024620	Terminal	2
2	582024619	Terminal	2
3	. . . . .	Connector Assembly (CRS210/Back-Up Light Relay)	1
3	580085282	Receptacle	1
3	582024620	Terminal	2
3	582024619	Terminal	2
4	. . . . .	Connector Assembly (CRS208/Key Switch Relay)	1
4	580009067	Connector	1
4	582000484	Terminal	2
4	580091403	Terminal	1
4	582005304	Terminal	1
5	. . . . .	Connector Assembly (LT Traction Motor Temp Sensor)	1
5	580035031	Connector (2 Way)	1
5	580062119	Receptacle Contact 20-22 AWG	2
5	~~580059764~~		
	272479200	Wire Seal	2
6	. . . . .	Connector Assembly (CPS152/LT Speed Sensor)	1
6	580035032	Connector (4 Way)	1
6	580062119	Receptacle Contact 20-22 AWG	4
6	~~580059764~~		
	272479200	Wire Seal	4
7	. . . . .	Connector Assembly (CPS26/LT Electric Brake)	1
7	580019245	Connector (2 Socket)	1
7	580019246	Connector (Secondary Lock) (Lock)	1
7	580019107	Terminal (Socket)	2
8	. . . . .	Connector Assembly (CPS1/VSM)	1
8	520202606	Connector (35 Way)	1
8	520202601	Connector (Socket Female)	24
8	520202604	Plug	11
9	. . . . .	Connector Assembly (CPS2/VSM)	1
9	580048272	Connector	1
9	520202601	Connector (Socket Female)	16
9	520202604	Plug	19
10	. . . . .	Connector Assembly (CPS272/ACC Jumper)	1
10	580036981	Connector	1
10	580036986	Connector (Lock)	1
10	580019107	Terminal (Socket)	10
10	580019119	Plug	2
11	. . . . .	Connector Assembly (CPS155/RT Traction Motor Temp Sensor)	1
11	580035031	Connector (2 Way)	1
11	580062119	Receptacle Contact 20-22 AWG	2
11	~~580059764~~		
	272479200	Wire Seal	2
12	. . . . .	Connector Assembly (CPS24/RT Electric Brake)	1

©2015 Yale Europe Materials Handling Limited

WIRE HARNESS

MAIN WITH MANUAL HYDRAULICS AND E-STEERING – SHEET 1 OF 2 (2/2015 →)

ITEM	PART NO.	DESCRIPTION	QTY
12	580019245	Connector (2 Socket)	1
12	580019246	Connector (Secondary Lock) (Lock)	1
12	580019107	Terminal (Socket)	2
13	. . . . .	Connector Assembly (CPS153/RT Speed Sensor)	1
13	580062119	Receptacle Contact 20-22 AWG	4
13	~~580059764~~		
	272479200	Wire Seal	4
14	. . . . .	Connector Assembly (CPS102/Battery Gate Magnet Switch)	1
14	580021087	Connector (2 Way)	1
14	580021088	Connector (Lock)	1
14	580062388	Terminal	2
14	580022893	Connector (2 Pin) (End Plug)	1
14	505968566	Plug	2
15	. . . . .	Connector Assembly (CPS160A/Spool Interlock Solenoid 2)	1
15	580019245	Connector (2 Socket)	1
15	580019246	Connector (Secondary Lock) (Lock)	1
15	580039513	Terminal	2
16	. . . . .	Connector Assembly (CPS190B/Clamp Interlock Coil)	1
16	580019245	Connector (2 Socket)	1
16	580019246	Connector (Secondary Lock) (Lock)	1
16	580039513	Terminal	1
16	580019107	Terminal (Socket)	1
16	580056006	Connector (2 Pin) (End Plug)	1
16	580019119	Plug	2
17	. . . . .	Connector Assembly (CPS10/LH Pressure Switch)	1
17	580037805	Connector	1
17	580037807	Terminal	3
17	580039602	Seal (Green)	3
18	. . . . .	Connector Assembly (CPS192/Manual Hydraulic Harness)	1
18	580036940	Connector	1
18	580026813	Connector (Lock)	1
18	580062388	Terminal	7
18	505064713	Terminal	1
18	580019119	Plug	4
19	. . . . .	Connector Assembly (CPS162/Manual Hyd Spool Position Sensor)	1
19	580036981	Connector	1
19	580036986	Connector (Lock)	1
19	580019107	Terminal (Socket)	12
20	. . . . .	Connector Assembly (CPS156/RH Cooling Fan)	1
20	580019245	Connector (2 Socket)	1
20	580019246	Connector (Secondary Lock) (Lock)	1
20	580039513	Terminal	1
20	580019107	Terminal (Socket)	1
21	. . . . .	Connector Assembly (CPS3/RH Traction Motor)	1
21	520202606	Connector (35 Way)	1
21	520202601	Connector (Socket Female)	13
21	520202604	Plug	10
22	. . . . .	Connector Assembly (CPS157/LH Cooling Fan)	1
22	580019245	Connector (2 Socket)	1
22	580019246	Connector (Secondary Lock) (Lock)	1

©2015 Yale Europe Materials Handling Limited

WIRE HARNESS

MAIN WITH MANUAL HYDRAULICS AND E-STEERING – SHEET 1 OF 2 (2/2015 →)

ITEM	PART NO.	DESCRIPTION	QTY
22	580039513	Terminal	1
22	580019107	Terminal (Socket)	1
23	. . . . .	Connector Assembly (CPS4/LH Traction Motor)	1
23	520202606	Connector (35 Way)	1
23	520202601	Connector (Socket Female)	13
23	520202604	Plug	10
24	580039764	Clip	6

©2015 Yale Europe Materials Handling Limited

WIRE HARNESS (FIGURE 2-47)

MAIN WITH MANUAL HYDRAULICS AND E-STEERING — SHEET 2 OF 2 (2/2015 →)

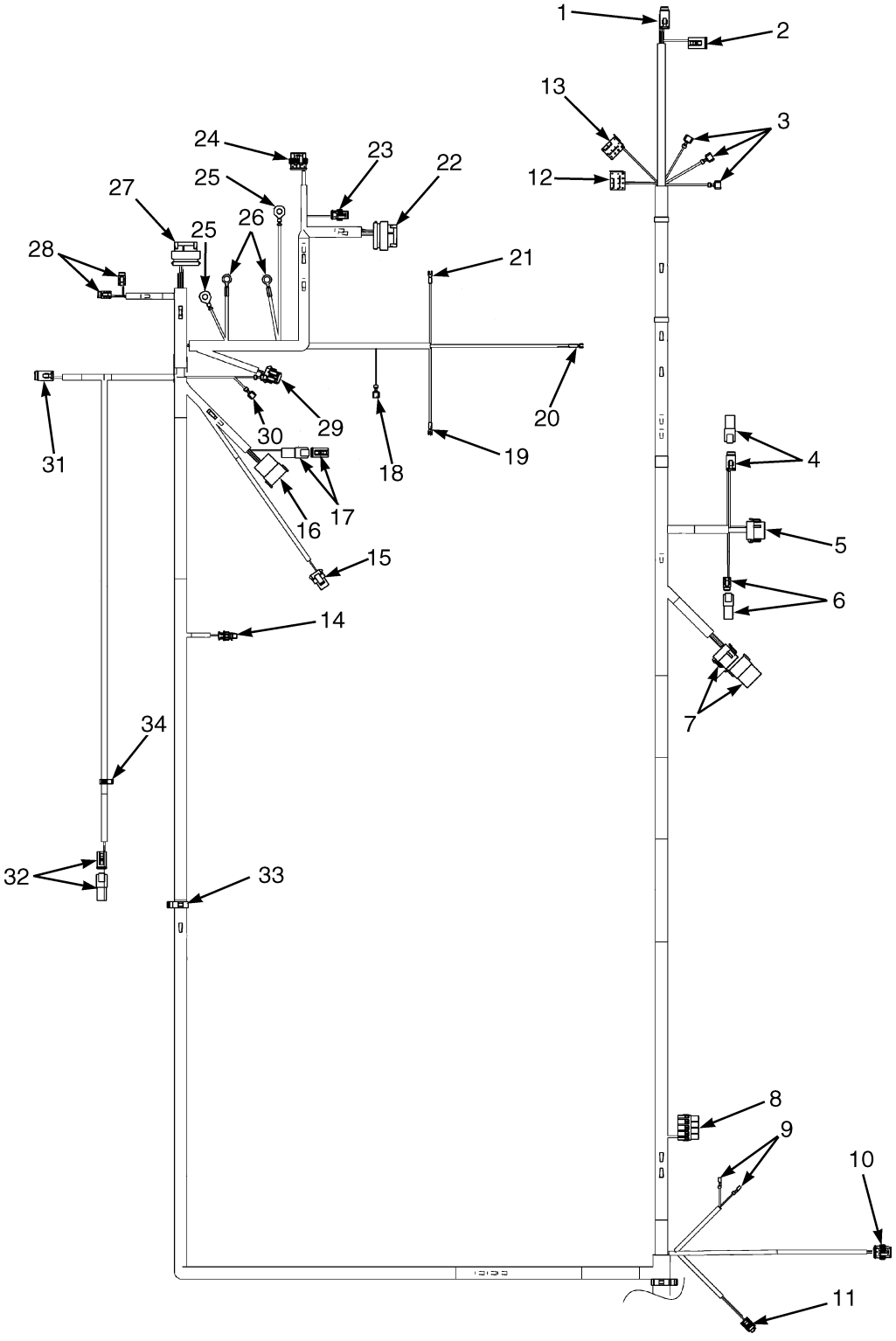

BP081814

©2015 Yale Europe Materials Handling Limited

WIRE HARNESS

MAIN WITH MANUAL HYDRAULICS AND E-STEERING – SHEET 2 OF 2 (2/2015 →)

ITEM	PART NO.	DESCRIPTION	QTY
	582025076	Wire Harness (Main)	1
1	. . . . .	Connector Assembly (CPS135/ Display Harness)	1
1	580042221	Connector	1
1	580042222	Connector (Lock)	1
1	580019107	Terminal (Socket)	7
1	580019119	Plug	1
2	. . . . .	Connector Assembly (CPS180/Display LGT Harness)	1
2	580020943	Connector (4-Way)	1
2	580020944	Connector (lock)	1
2	505968568	Terminal (Socket)	4
3	500383916	Terminal Housing (Blue) (Flasher)	3
4	. . . . .	Connector Assembly (CPS133/Synch Steering)	1
4	580056006	Connector (2 Pin)	1
4	580019119	Plug	2
4	580019245	Connector (2 Socket)	1
4	580019246	Connector (Secondary Lock) (Lock)	1
4	580019107	Terminal (Socket)	2
5	. . . . .	Connector Assembly (CPS132/Steer Harness)	1
5	580036981	Connector	1
5	580036986	Connector (lock)	1
5	580039513	Terminal	2
5	580019107	Terminal (Socket)	9
5	580019119	Plug	1
6	. . . . .	Connector Assembly (CPS134/Turn Signal Switch)	1
6	580019097	Connector	1
6	580019098	Secondary Lock (Lock)	1
6	580019119	Plug	1
6	580039513	Terminal	3
6	580086209	Connector	1
6	580019119	Plug	4
7	. . . . .	Connector Assembly (CPS138/LGT OPT Harness)	1
7	580036981	Connector	1
7	580036986	Connector (Lock)	1
7	580039513	Terminal	9
7	582022955	Terminal	2
7	580019119	Plug	1
8	. . . . .	Connector Assembly (CPS90/Dc-DC Converter)	1
8	580047197	Connector	1
8	580047195	Terminal	2
8	580090639	Terminal	2
9	952405902	Terminal (Brake Fluid Level Sensor)	2
9	952408901	Sleeve	2
10	. . . . .	Connector Assembly (CPS151Horn Assembly)	1
10	580062118	Connector (3 Way)	1
10	580062119	Receptacle Contact 20-22 AWG	2
10	580035034	Terminal (Pin)	1
10	~~580059764~~		
	272479200	Wire Seal	2
10	580035035	Wire Seal	1
11	. . . . .	Connector Assembly (CPS11/Service Brake Sensor)	1

©2015 Yale Europe Materials Handling Limited

WIRE HARNESS

MAIN WITH MANUAL HYDRAULICS AND E-STEERING – SHEET 2 OF 2 (2/2015 →)

ITEM	PART NO.	DESCRIPTION	QTY
11	580037805	Connector	1
11	580037807	Terminal	3
11	580039602	Seal (Green)	3
12	. . . . .	Connector Assembly (CRP205/Marker Light Switch)	1
12	~~580019248~~		
	520052844	Socket	1
12	582005304	Terminal	3
13	. . . . .	Connector Assembly (CRP206/Rear Work Light Switch)	1
13	~~580019248~~		
	520052844	Socket	1
13	582005304	Terminal	2
14	. . . . .	Connector Assembly (CPS31Hydraulic Temp Sensor)	1
14	580044127	Connector (2 Way)	1
14	580087764	Terminal	2
14	580087649	Seal (Green)	2
15	. . . . .	Connector Assembly (CPS66/Hyd FLT Switch)	1
15	520045074	Plug	1
15	520045069	Terminal (Lock)	1
15	504288730	Seal	2
16	. . . . .	Connector Assembly (CRP55/MLM Seat Harness)	1
16	580039490	Connector	1
16	580039491	Connector (Secondary Lock)	1
16	580019353	Terminal (Pin)	5
16	580019119	Plug	1
17	. . . . .	Connector Assembly (CRP57/Seat Belt Switch)	1
17	580021087	Connector (2 Way)	1
17	580021088	Connector (Lock)	1
17	580019119	Plug	2
17	580022893	Connector (2 Pin)	1
17	505968540	Connector (Secondary Lock)	1
17	580038290	Terminal	2
18	504059730	Terminal (Hydraulic Tank)	1
19	580026299	E-Ring	1
20	580058582	Spring Terminal (Red)	2
21	580058583	E-Spade	1
22	. . . . .	Connector Assembly (CPS6/Electric Steer Motor)	1
22	520202602	Connector	8
22	520202601	Connector (Socket Female)	15
23	. . . . .	Connector Assembly (CPS61/Motor Temp Sensor)	1
23	580035031	Connector (2 Way)	1
23	580062119	Receptacle Contact 20-22 AWG	2
23	~~580059764~~		
	272479200	Wire Seal	2
24	. . . . .	Connector Assembly (CPS146/Motor Speed Sensor)	1
24	580035032	Connector (4 Way)	1
24	580062119	Receptacle Contact 20-22 AWG	4
24	~~580059764~~		
	272479200	Wire Seal	4
25	582033354	Terminal	2
26	520044861	E-Ring	2

©2015 Yale Europe Materials Handling Limited

WIRE HARNESS

MAIN WITH MANUAL HYDRAULICS AND E-STEERING – SHEET 2 OF 2 (2/2015 →)

ITEM	PART NO.	DESCRIPTION	QTY
27	. . . . .	Connector Assembly (CPS5/Pump)	1
27	520202602	Connector	1
27	520202601	Connector (Socket Female)	13
27	520202604	Plug	10
28	. . . . .	Connector Assembly (CPS95A/B Hydraulic Cooling Fan)	2
28	580019245	Connector (2 Socket)	1
28	580019246	Connector (Secondary Lock) (Lock)	1
28	580039513	Terminal	1
28	580019107	Terminal (Socket)	1
29	. . . . .	Connector Assembly (CPS70/Hyd Fluid Level Sensor)	1
29	580033516	Connector	1
29	580033537	Connector Lock	1
29	582020053	Terminal	3
29	580026649	Wire Seal (White)	3
31	. . . . .	Connector Assembly (CPS31A/Steer Axle Harness)	1
31	580022891	Connector	1
31	580022892	Connector (Secondary Lock)	1
31	580019107	Terminal (Socket)	3
32	. . . . .	Connector Assembly (CPS114/OHG Horn Switch)	1
32	580021087	Connector (2 Way)	1
32	580021088	Connector (Lock)	1
32	580062388	Terminal	1
32	505064713	Terminal	1
32	580022893	Connector (2 Pin) (End Cap)	1
32	505968566	Plug	2
33	580039799	Clip	1
34	580030876	Clip	1

©2015 Yale Europe Materials Handling Limited

WIRE HARNESS (FIGURE 2-48)
TURN SIGNAL

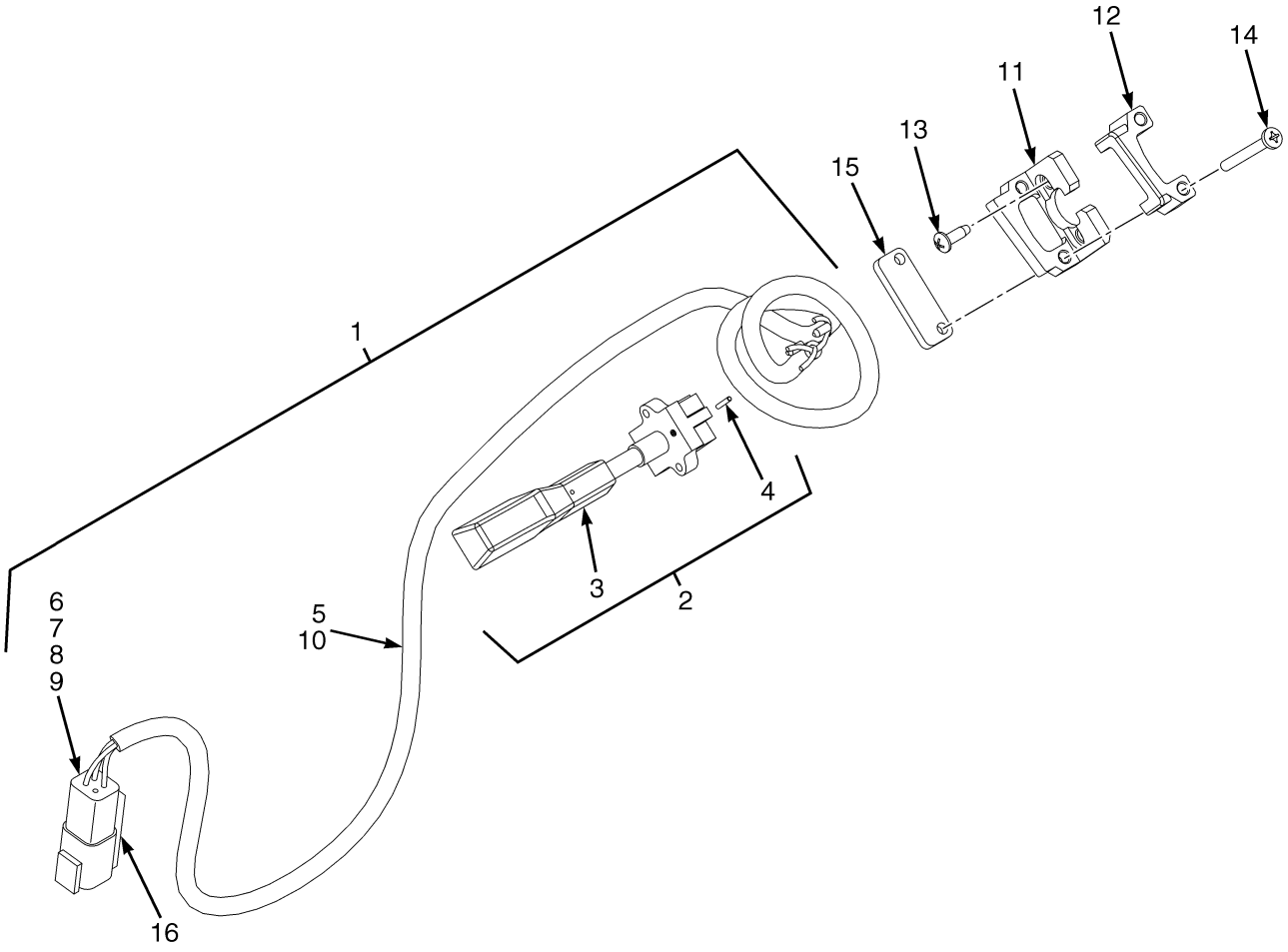

©2015 Yale Europe Materials Handling Limited

WIRE HARNESS
TURN SIGNAL

ITEM	PART NO.	DESCRIPTION	QTY
1	580096675	Switch Assembly (Turn Signal)	1
2	580096712	Switch (Assembly)	1
3	580095888	Switch	1
4	582001501	Roll Pin	1
5	580079372	Wire Harness (Turn Signal)	1
6	580086209	Connector	1
7	~~582020052~~		
	580063957	Secondary Lock	1
8	580041195	Terminal Pin	1
9	580019119	Plug	1
10	580044908	Conduit	1
11	580095116	Bracket (Turn Signal)	1
12	580095115	Bracket (Guide)	1
13	580094284	Self Tapping Screw	2
14	**b** 449007040	Screw	2
14	**c** 931109909	Screw	2
15	**c** 580095117	Spacer (Turn Signal)	1
16	580026812	Clip	1
	a 501904909	Rivet	1

FOOTNOTES:

a Not Illustrated
b With Fixed Column
c With Telescopic Column

©2015 Yale Europe Materials Handling Limited

WIRE HARNESS (FIGURE 2-49)
HEATER

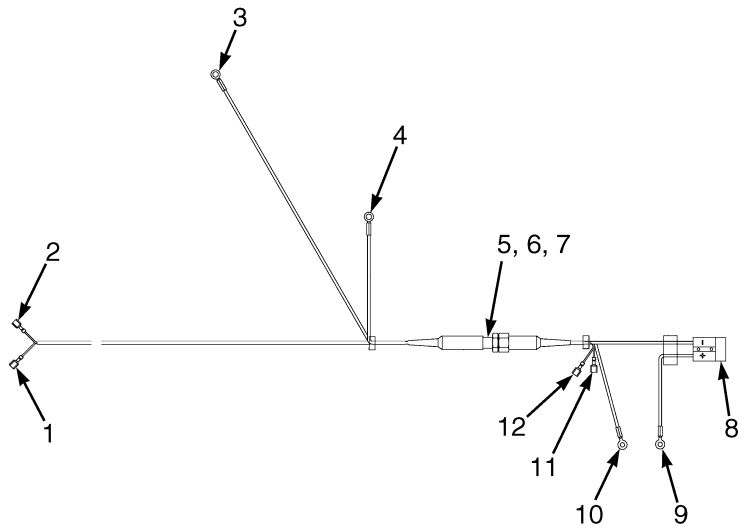

BP080973

ITEM	PART NO.	DESCRIPTION	QTY
	580095513	Wire Harness (Heater)	1
1	580027620	Connector Body (Line Contactor Coil)	1
2	580027620	Connector Body (Line Contactor Coil)	1
3	520039880	E-Ring (B- AC Pump Controller)	1
4	520039880	E-Ring (B+ AC Pump Controller)	1
5	. . . . .	Fuse Holder Assembly	1
5	580002018	Fuse Holder	1
6	580095835	Fuse	1
7	582000772	Insulator	1
8	582000773	Connector	1
9	520045874	E-Ring (Heater Contactor)	1
10	520045874	E-Ring (Heater Contactor)	1
11	580027620	Connector Body (Heater Contactor Coil)	1
12	580027620	Connector Body (Heater Contactor Coil)	1

©2015 Yale Europe Materials Handling Limited

WIRE HARNESS (FIGURE 2-50)
MANUAL HYDRAULICS

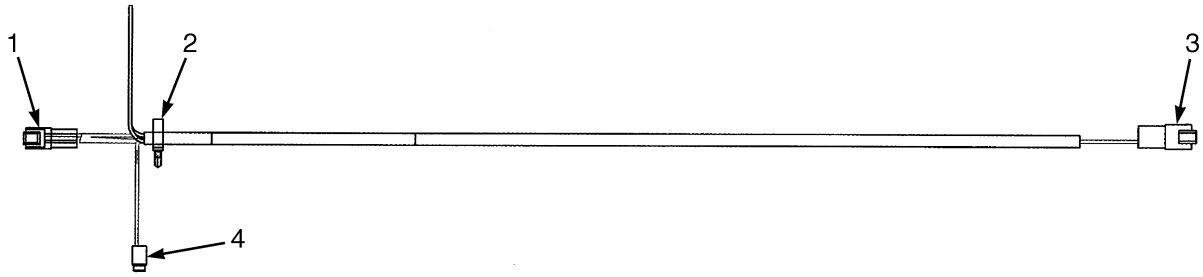

BP080297

ITEM	PART NO.	DESCRIPTION	QTY
	580092519	Wire Harness (Manual Hydraulics)	1
1	. . . . .	Connector Assembly (Forward / Reverse Switch)	1
1	580019353	Terminal (Pin)	4
1	~~582020052~~		
	580063957	Secondary Lock	1
1	580039492	Connector	1
2	580025559	Clip	1
3	. . . . .	Connector Assembly (To Main Harness)	1
3	505972593	Connector (8 Pin)	1
3	505972507	Connector	1
3	580019353	Terminal (Pin)	8
4	. . . . .	Connector Assembly (Clamp Coil Switch)	1
4	580019107	Terminal (Socket)	2
4	580019246	Connector (Secondary Lock)	1
4	580019245	Connector (2 Socket)	1

©2015 Yale Europe Materials Handling Limited

WIRE HARNESS (FIGURE 2-51)
MANUAL INTERLOCK



BP080908

ITEM	PART NO.	DESCRIPTION	QTY
	580085612	Wire Harness (Manual Interlock)	1
1	580085613	Push Button Switch (Included with Manual Interlock Wire Harness)	1
2	. . . . .	Connector Assembly (Main Harness)	1
2	580056006	Connector (2 Pin)	1
2	580056004	Connector (Secondary Lock)	1

©2015 Yale Europe Materials Handling Limited

WIRE HARNESS (FIGURE 2-52)
SYNCHRONOUS STEERING

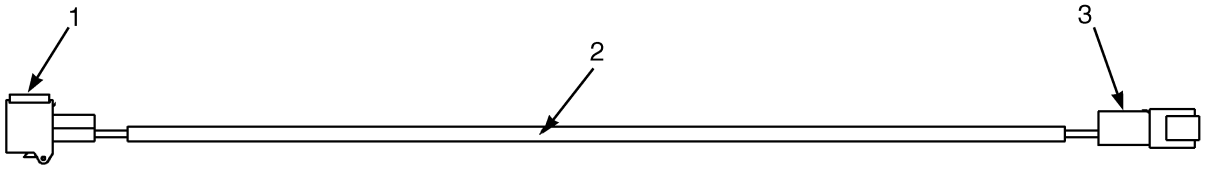

BP080756

ITEM	PART NO.	DESCRIPTION	QTY
	580089956	Wire Harness (Synchronous Steering)	1
1	. . . . .	Connector Assembly (To Steer Make-Up Valve)	1
1	580071585	Connector	1
1	580056004	Connector (Secondary Lock)	1
1	580025558	Terminal	2
1	580049815	Seal	2
2	580089790	Conduit	AR
3	. . . . .	Connector Assembly (To Main Harness)	1
3	580056006	Connector (2 Pin)	1
3	580041195	Terminal Pin	2

©2015 Yale Europe Materials Handling Limited

WIRE HARNESS (FIGURE 2-53)
STEER UNIT

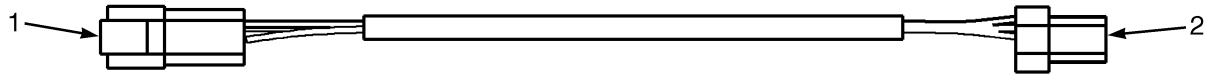

BP080922

ITEM	PART NO.	DESCRIPTION	QTY
	580085052	Wire Harness (Steer Unit)	1
1	. . . . .	Connector Assembly (To Main Harness)	1
1	580080890	Connector	1
1	580041195	Terminal Pin	3
1	580080891	Connector	1
2	. . . . .	Connector Assembly (Steer Axle Sensor)	1
2	580023947	Connector	1
2	504288741	Terminal	3

©2015 Yale Europe Materials Handling Limited

WIRE HARNESS (FIGURE 2-54)
STEER COLUMN

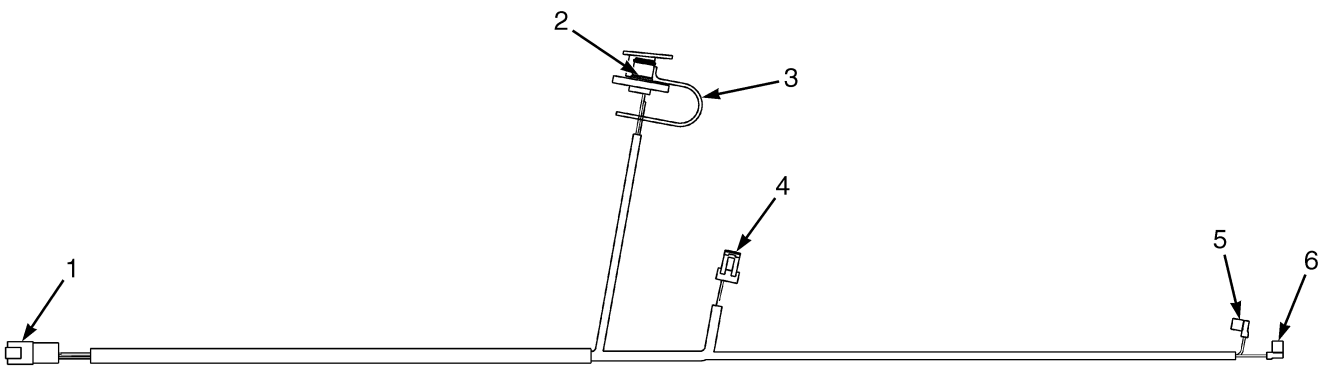

BP080923

ITEM	PART NO.	DESCRIPTION	QTY
	580092516	Wire Harness (Steer Column)	1
1	. . . . .	Connector Assembly (To Main Harness)	1
1	580042219	Connector (8 Pin)	1
1	580042220	Connector	1
1	580019353	Terminal (Pin)	7
2	. . . . .	Connector Assembly (Diagnostic Connection)	1
2	580051703	Connector	1
2	580039194	Connector	1
2	580062388	Terminal	3
3	580051704	Dust Cap (For Diagnostic Cable)	1
3	580011639	Lubricant	AR
4	. . . . .	Connector Assembly (Steer Wheel Position Sensor)	1
4	580087646	Connector	1
4	580087763	Terminal	3
5	. . . . .	Connector Assembly (Horn Switch C)	1
5	580092930	Terminal	1
6	. . . . .	Connector Assembly (Horn Switch NO)	1
6	580092930	Terminal	1

©2015 Yale Europe Materials Handling Limited

WIRE HARNESS (FIGURE 2-55)
STEERING COLUMN WITH ELECTRIC STEERING (2/2015 →)

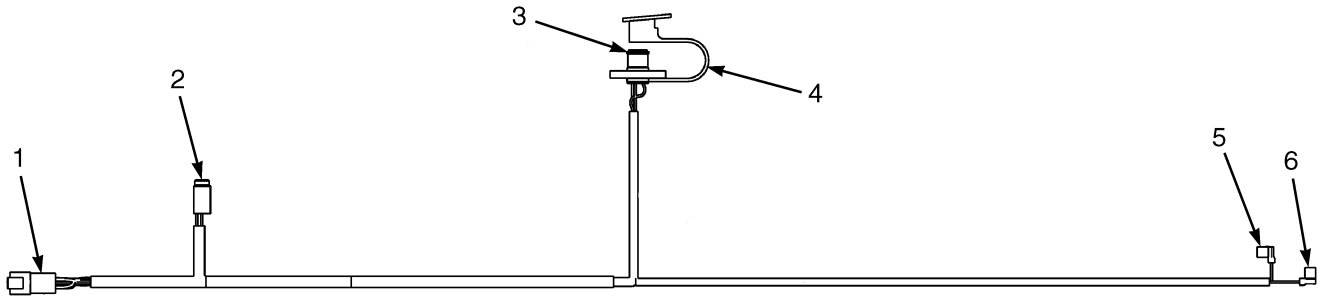

BP081817

ITEM	PART NO.	DESCRIPTION	QTY
	582033575	Wire Harness (Steering Column)	1
1	. . . . .	Connector Assembly (Main Harness)	1
1	580069704	Connector	1
1	580069705	Connector (Lock)	1
1	580019353	Terminal (Pin)	11
1	580019119	Plug	1
2	. . . . .	Connector Assembly (Steer Wheel Position Sensor)	1
2	580039499	Connector	1
2	580039500	Connector (Lock)	1
2	580039513	Terminal	6
3	. . . . .	Connector Assembly (Diagnostic Connection)	1
3	580051703	Connector	1
3	580062388	Terminal	3
4	580051704	Dust Cap (For Diagnostic Cable)	1
5	. . . . .	Connector Assembly (Horn Switch C)	1
5	580092930	Terminal	1
6	. . . . .	Connector Assembly (Horn Switch NO)	1
6	580092930	Terminal	1

©2015 Yale Europe Materials Handling Limited

WIRE HARNESS (FIGURE 2-56)
REAR WIPER

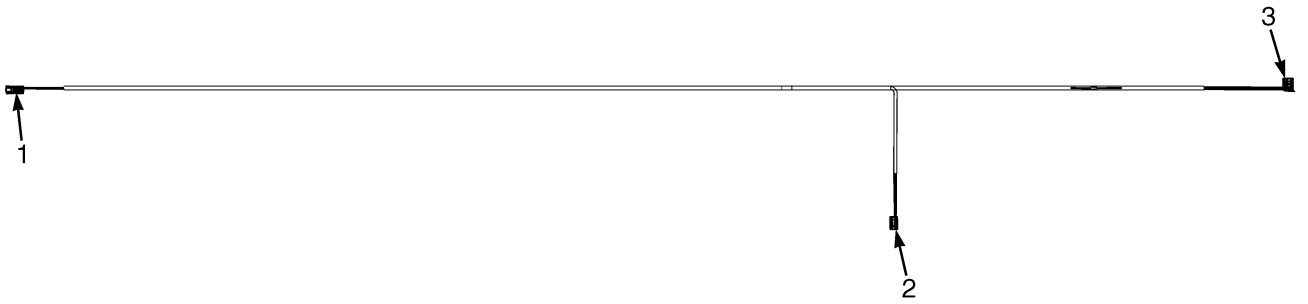

ITEM	PART NO.	DESCRIPTION	QTY
	580095962	Wire Harness	1
1	. . . . .	Connector Assembly (Front Wire Harness)	1
1	580080890	Connector	1
1	580041195	Terminal Pin	3
1	580080891	Connector (Secondary Lock)	1
2	. . . . .	Connector Assembly (Rear Wiper Motor)	1
2	504064701	Connector (4 Soc)	1
2	505064713	Terminal	4
2	580001849	Connector (Secondary Lock)	1
3	. . . . .	Connector Assembly (Rear Wiper Switch)	1
3	~~580019248~~		
	520052844	Socket	1
3	520052846	Terminal	5

©2015 Yale Europe Materials Handling Limited

WIRE HARNESS (FIGURE 2-57)
CAB ACCESSORY

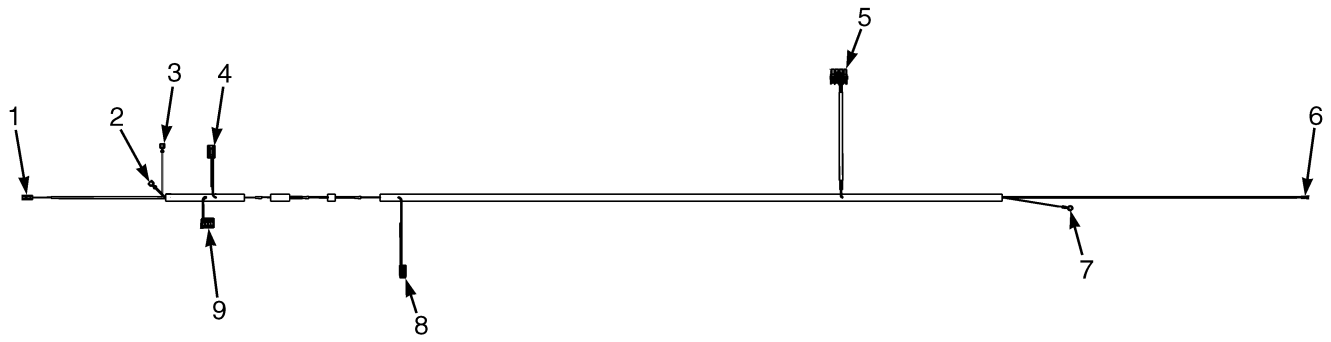

BP080974

ITEM	PART NO.	DESCRIPTION	QTY
	580092315	Wire Harness	1
1	. . . . .	Connector Assembly (Wiper Washer Pump)	1
1	505968511	Connector Body	1
1	505966522	Terminal	2
2	580034540	Connector Body (12V_Access Supply)	1
3	580034540	Connector Body (12V_Access Supply)	1
4	. . . . .	Connector Assembly (Front Wiper Motor)	1
4	504064701	Connector (4 Soc)	1
4	505064713	Terminal	4
4	580001849	Connector (Secondary Lock)	1
5	. . . . .	Connector Assembly (12V DC Convertor)	1
5	580047197	Connector	1
5	580090639	Terminal	4
6	580026299	E-Ring (B+ Terminal Block 10A Fuse)	1
7	504450739	E-Ring (B- LH Traction Controller)	1
8	. . . . .	Connector Assembly (Rear Wire Harness)	1
8	580022891	Connector	1
8	580039513	Terminal	3
8	580022892	Connector (Secondary Lock)	1
9	. . . . .	Connector Assembly (Front Wiper Switch)	1
9	~~580019248~~		
	520052844	Socket	1
9	520052846	Terminal	5

©2015 Yale Europe Materials Handling Limited

WIRE HARNESS (FIGURE 2-58)
CAB ACCESSORY — ALTERNATE PART

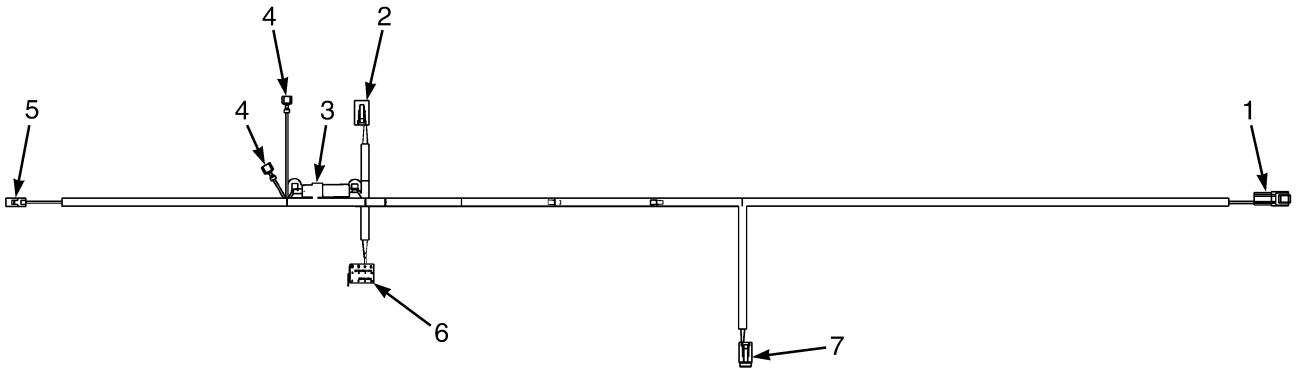

BP081327

ITEM	PART NO.	DESCRIPTION	QTY
	582022522	Wire Harness (Cab Accessories)	1
1	. . . . .	Connector Assembly (DC Converter)	1
1	580022893	Connector (2 Pin)	1
1	505968540	Connector (Secondary Lock)	1
1	505968593	Terminal (Socket)	2
2	. . . . .	Connector Assembly (Front Wiper Motor)	1
2	504064701	Connector (4 Soc)	1
2	580001849	Connector (Secondary Lock)	1
2	505968568	Terminal (Socket)	2
3	582000739	Fuse Holder	1
3	500903103	Fuse (15 Amp)	1
4	580034540	Connector Body	2
5	. . . . .	Connector Assembly (Wiper Washer Pump)	1
5	505968511	Connector Body	1
5	505966522	Terminal	2
6	. . . . .	Connector Assembly (Front Wiper Switch)	1
6	~~580019248~~		
	520052844	Socket	1
6	582004390	Terminal	5
7	. . . . .	Connector Assembly (Rear Wire Harness)	1
7	580022891	Connector	1
7	580022892	Connector (Secondary Lock)	1
7	580039513	Terminal	3
	a 582001181	Label (Fuse Warning-Amp/Volt)	1
	a 582001182	Label (Fuse Warning-Risk of Fire)	1

©2015 Yale Europe Materials Handling Limited

FOOTNOTES:

a Not Illustrated

©2015 Yale Europe Materials Handling Limited

WIRE HARNESS (FIGURE 2-59)
HYDRAULIC FLUID LEVEL AND PRESSURE



BP080975

ITEM	PART NO.	DESCRIPTION	QTY
	580084295	Wire Harness	1
1	. . . . .	Connector Assembly (Main Harness)	1
1	580039490	Connector	1
1	580019107	Terminal (Socket)	5
1	580039491	Connector (Secondary Lock)	1
1	580019119	Plug	1
2	. . . . .	Connector Assembly (Hydraulic Fluid Level Sensor)	1
2	580033516	Connector	1
2	520045804	Terminal	3
2	580033537	Connector Lock	1
2	580026649	Wire Seal (White)	3
3	580093612	Conduit	AR
4	. . . . .	Connector Assembly (Hydraulic Fluid Pressure Switch)	1
4	520045074	Plug	1
4	504288733	Terminal	2
4	580023845	Seal (Purple)	2
4	520045069	Terminal	1

©2015 Yale Europe Materials Handling Limited

WIRE HARNESS (FIGURE 2-60)
LIGHTS WITH OVERHEAD GUARD (→ 10/2013)

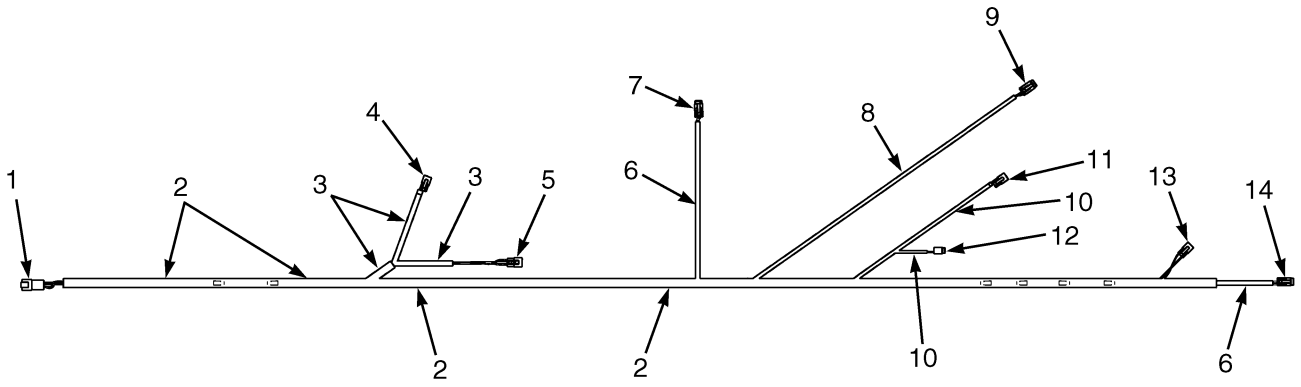

BP081110

ITEM	PART NO.	DESCRIPTION	QTY
	580080768	Wire Harness	1
1	. . . . .	Connector Assembly (To Main Wire Harness)	1
1	580069704	Connector	1
1	580041195	Terminal Pin	10
1	580019353	Terminal (Pin)	1
1	580019119	Plug	1
1	580069705	Connector (Secondary Lock)	1
2	910065119	Conduit	AR
3	580044908	Conduit	AR
4	. . . . .	Connector Assembly (To Left Front Work Light)	1
4	580021087	Connector (2 Way)	1
4	505968568	Terminal (Socket)	2
4	580021088	Connector	1
5	. . . . .	Connector Assembly (To Left Front Marker Light)	1
5	580019139	Connector (3-Way)	1
5	505968568	Terminal (Socket)	3
5	580019140	Connector (Secondary Lock)	1
6	504232281	Conduit	AR
7	. . . . .	Connector Assembly (To Left Rear Light Assembly)	1
7	580039499	Connector	1
7	580019119	Plug	1
7	580039513	Terminal	5
7	580039500	Connector (Secondary Lock)	1
8	580089790	Conduit	AR
9	. . . . .	Connector Assembly (To Dome Light)	1
9	580022891	Connector	1
9	580039513	Terminal	2
9	580019119	Plug	1
9	580022892	Connector (Secondary Lock)	1
10	580044908	Conduit	AR
11	. . . . .	Connector Assembly (To Rear Work Light)	1
11	580021087	Connector (2 Way)	1
11	505968568	Terminal (Socket)	2
11	580021088	Connector	1
12	. . . . .	Connector Assembly (To Rear Strobe Light)	1

©2015 Yale Europe Materials Handling Limited

ITEM	PART NO.	DESCRIPTION	QTY
12	580019245	Connector (2 Socket)	1
12	580019107	Terminal (Socket)	2
12	580019246	Connector (Secondary Lock)	1
13	. . . . .	Connector Assembly (To Back Up Alarm)	1
13	580021087	Connector (2 Way)	1
13	505968568	Terminal (Socket)	2
13	580021088	Connector	1
14	. . . . .	Connector Assembly (To Right Rear Light Assembly)	1
14	580039499	Connector	1
14	580039500	Connector (Secondary Lock)	1
14	580039513	Terminal	5
14	580019119	Plug	1

©2015 Yale Europe Materials Handling Limited

WIRE HARNESS (FIGURE 2-61)

DC CONVERTER — 12V OUTLET (→ 9/2013)

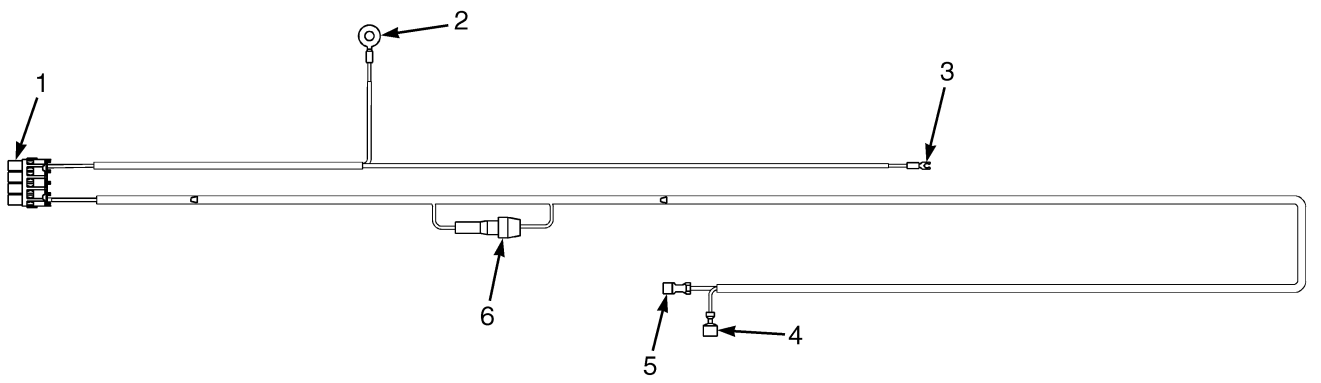

BP080925

ITEM	PART NO.	DESCRIPTION	QTY
	580096577	Wire Harness Assembly (DC Converter)	1
1	. . . . .	Connector Assembly (To DC-DC Converter)	1
1	580047197	Connector	1
1	580047195	Terminal	1
1	580090639	Terminal	3
2	. . . . .	Connector Assembly (B- Cont.)	1
2	580022887	E-Ring	1
3	. . . . .	Connector Assembly (FU3 LD)	1
3	580026299	E-Ring	1
4	. . . . .	Connector Assembly (12v Access)	1
4	580034540	Connector Body	1
5	. . . . .	Connector Assembly (12v Access)	1
5	580085506	Terminal	1
6	. . . . .	Inline Fuse Holder (To Main Branch)	1
6	751194100	Fuse Holder	1
6	500903103	Fuse (15 Amp)	1

©2015 Yale Europe Materials Handling Limited

NOTES

©2015 Yale Europe Materials Handling Limited

WIRE HARNESS (FIGURE 2-62)
LIGHTS WITH OVERHEAD GUARD (10/2013 →)

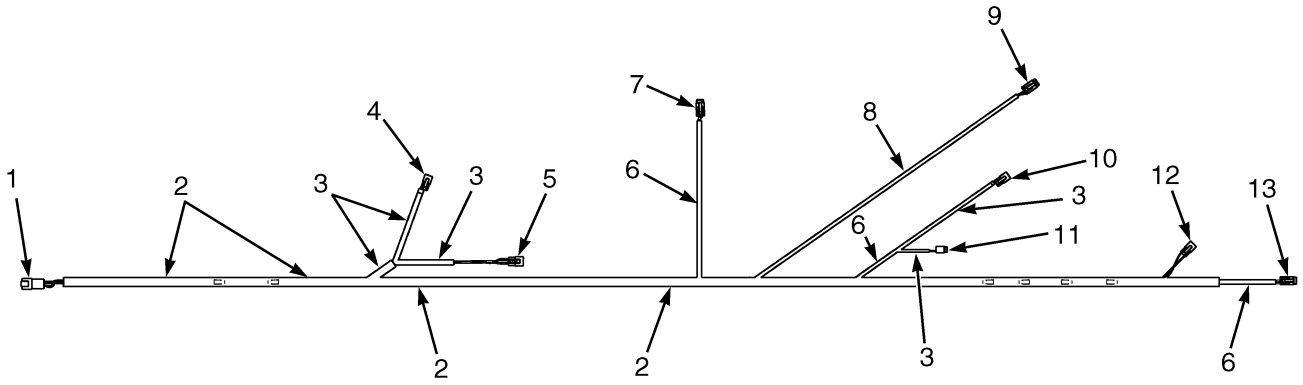

BP081539

©2015 Yale Europe Materials Handling Limited

WIRE HARNESS

LIGHTS WITH OVERHEAD GUARD (10/2013 →)

ITEM	PART NO.	DESCRIPTION	QTY
	582028549	Wire Harness (Lights with Overhead Guard)	1
1	. . . . .	Connector Assembly (To Main Wire Harness)	1
1	580069704	Connector	1
1	580041195	Terminal Pin	10
1	580019353	Terminal (Pin)	1
1	580019119	Plug	1
1	580069705	Connector (Secondary Lock)	1
2	910065119	Conduit	AR
3	580044908	Conduit	AR
4	. . . . .	Connector Assembly (To Left Front Work Light)	1
4	580021087	Connector (2 Way)	1
4	505968568	Terminal (Socket)	2
4	580021088	Connector	1
5	. . . . .	Connector Assembly (To Left Front Marker Light)	1
5	580019139	Connector (3-Way)	1
5	505968568	Terminal (Socket)	3
5	580019140	Connector (Secondary Lock)	1
6	504232281	Conduit	AR
7	. . . . .	Connector Assembly (To Left Rear Light Assembly)	1
7	580039499	Connector	1
7	580019119	Plug	1
7	580039513	Terminal	5
7	580039500	Connector (Secondary Lock)	1
8	580089790	Conduit	AR
9	. . . . .	Connector Assembly (To Dome Light)	1
9	580022891	Connector	1
9	580039513	Terminal	2
9	580019119	Plug	1
9	580022892	Connector (Secondary Lock)	1
10	. . . . .	Connector Assembly (To Rear Work Light)	1
10	580021087	Connector (2 Way)	1
10	505968568	Terminal (Socket)	2
10	580021088	Connector	1
11	. . . . .	Connector Assembly (To Rear Strobe Light)	1
11	580019245	Connector (2 Socket)	1
11	580019107	Terminal (Socket)	2
11	580019246	Connector (Secondary Lock)	1
12	. . . . .	Connector Assembly (To Back Up Alarm)	1
12	580021087	Connector (2 Way)	1
12	505968568	Terminal (Socket)	2
12	580021088	Connector	1
13	. . . . .	Connector Assembly (To Right Rear Light Assembly)	1
13	580039499	Connector	1
13	580039513	Terminal	5
13	580019119	Plug	1
13	580039500	Connector (Secondary Lock)	1

©2015 Yale Europe Materials Handling Limited

WIRE HARNESS (FIGURE 2-63)

DC CONVERTER — 12V OUTLET (9/2013 →)

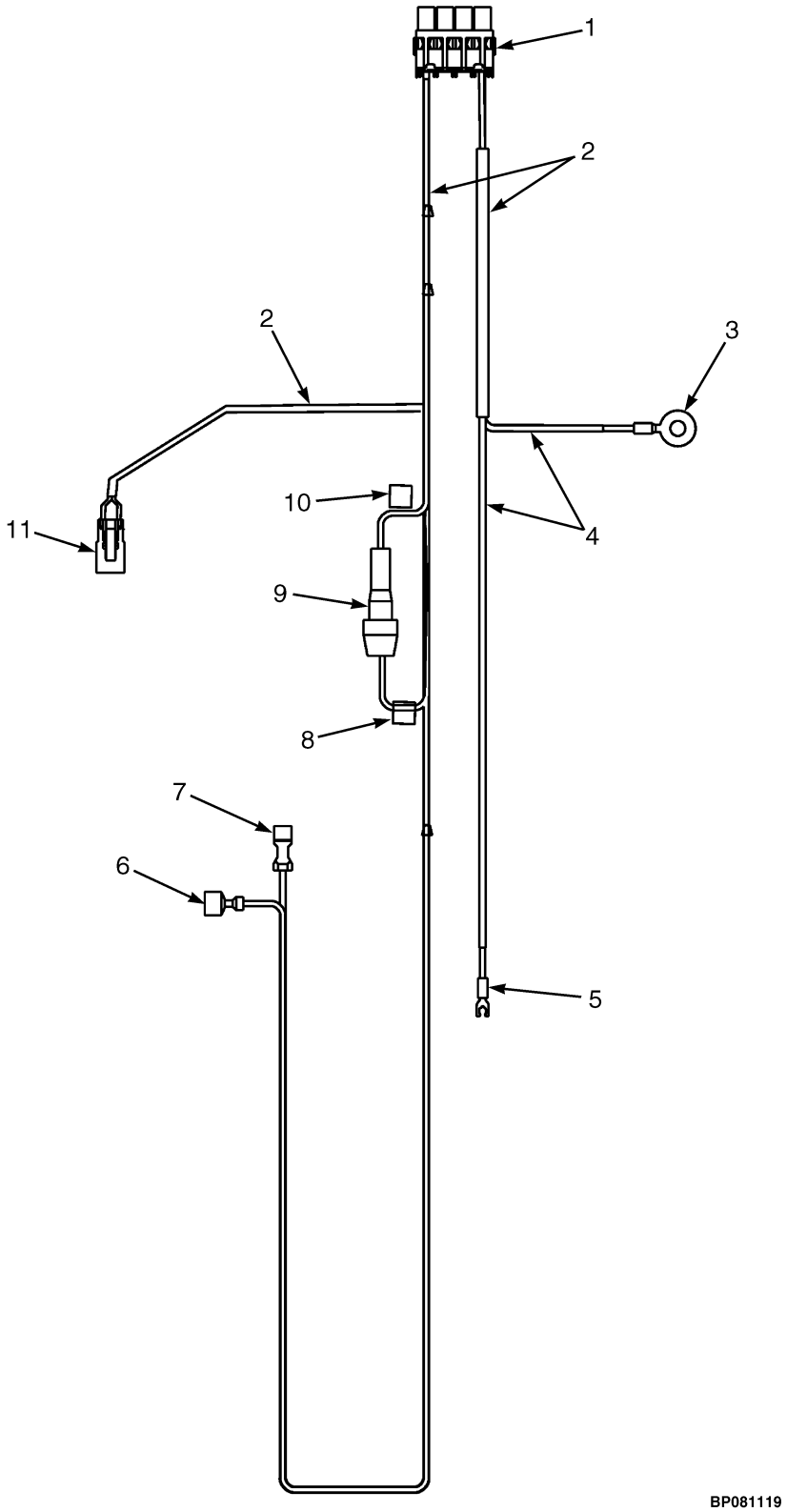

©2015 Yale Europe Materials Handling Limited

WIRE HARNESS

DC CONVERTER – 12V OUTLET (9/2013 →)

ITEM	PART NO.	DESCRIPTION	QTY
	582011889	Wire Harness (12V Outlet)	1
1	. . . . .	Connector Assembly (To DC-DC Converter)	1
1	580047197	Connector	1
1	580047195	Terminal	1
1	580090639	Terminal	3
2	520038855	Conduit	AR
3	. . . . .	Connector Assembly (B- Cont.)	1
3	580022887	E-Ring	1
4	580093612	Conduit	AR
5	. . . . .	Connector Assembly (FU3 LD)	1
5	580026299	E-Ring	1
6	. . . . .	Connector Assembly (12v Access)	1
6	580034540	Connector Body	1
7	. . . . .	Connector Assembly (12v Access)	1
7	580085506	Terminal	1
8	582001182	Label (Fuse Warning-Risk of Fire)	1
9	. . . . .	Inline Fuse Holder (To Main Branch)	1
9	751194100	Fuse Holder	1
9	500903103	Fuse (15 Amp)	1
10	582001181	Label (Fuse Warning-Amp/Volt)	1
11	. . . . .	Connector Assembly (Access Harness)	1
11	505968501	Connector	1
11	505064747	Terminal	2
11	505968535	Connector (Secondary Lock)	1

©2015 Yale Europe Materials Handling Limited

WIRE HARNESS (FIGURE 2-64)
DC/DC CONVERTER

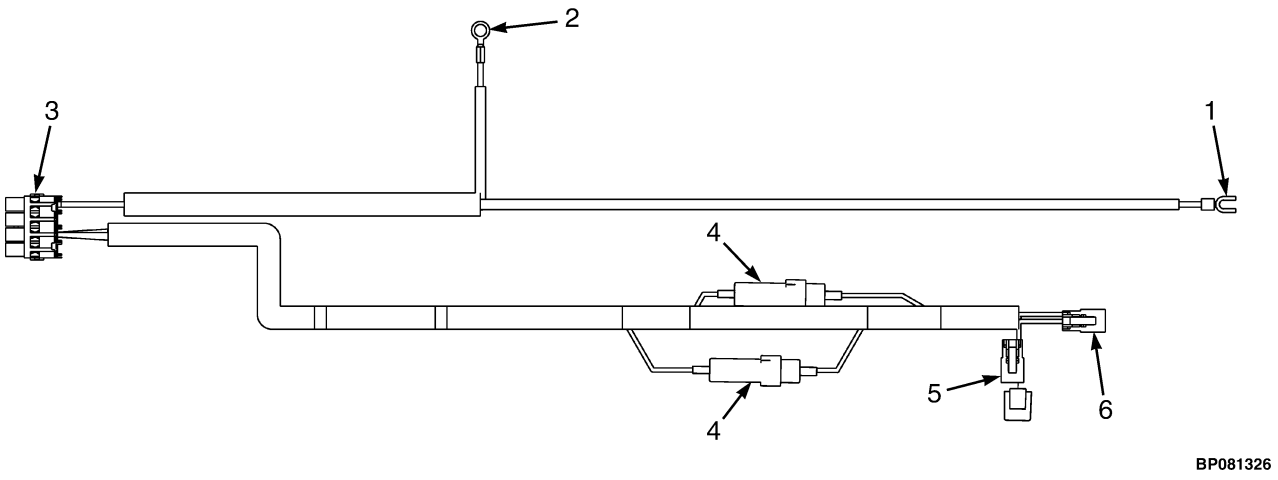

ITEM	PART NO.	DESCRIPTION	QTY
	582023142	Wire Harness (DC/DC Converter)	1
1	518807642	E-Spade	1
2	504450739	E-Ring	1
3	. . . . .	Connector Assembly (DC/DC Converter)	1
3	580090639	Terminal	2
3	580047197	Connector	1
3	580047195	Terminal	2
4	582000739	Fuse Holder	2
4	500903103	Fuse (15 Amp)	2
5	. . . . .	Connector Assembly (ACC)	1
5	505968501	Connector	1
5	580071066	Connector	1
5	505968568	Terminal (Socket)	2
5	505968535	Connector (Secondary Lock)	1
6	. . . . .	Connector Assembly (ACC)	1
6	505968501	Connector	1
6	505968535	Connector (Secondary Lock)	1
6	505968568	Terminal (Socket)	2
	a 582001182	Label (Fuse Warning-Risk of Fire)	2
	a 582001181	Label (Fuse Warning-Amp/Volt)	2

FOOTNOTES:

a Not Illustrated

©2015 Yale Europe Materials Handling Limited

WIRE HARNESS (FIGURE 2-65)
AUXILIARY PLUG

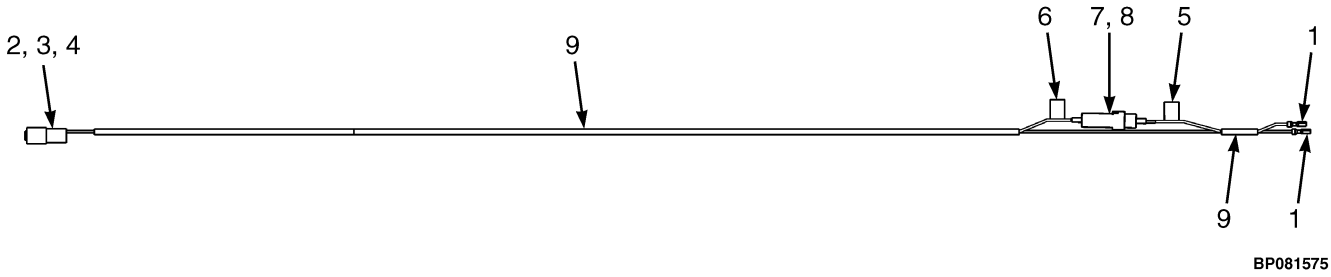

ITEM	PART NO.	DESCRIPTION	QTY
	582000819	Wire Harness (Aux Plug)	1
1	500383916	Terminal Housing (Blue) (Housing)	2
2	505968533	Connector (2 Pin)	1
3	505968514	Terminal (Pin)	2
4	505968540	Connector (Secondary Lock)	1
5	582001181	Label (Fuse Warning-Amp/Volt)	1
6	582001182	Label (Fuse Warning-Risk of Fire)	1
7	582000739	Fuse Holder	1
8	500903103	Fuse (15 Amp)	1
9	. . . . .	Conduit	AR
	a 580072738	Wire-Bulk (M) (White)	AR
	a 580095930	Wire-Bulk (M) (Green)	AR

FOOTNOTES:

a Not Illustrated

©2015 Yale Europe Materials Handling Limited

WIRE HARNESS (FIGURE 2-66)
DC/DC CONVERTER — W/ E-STEERING

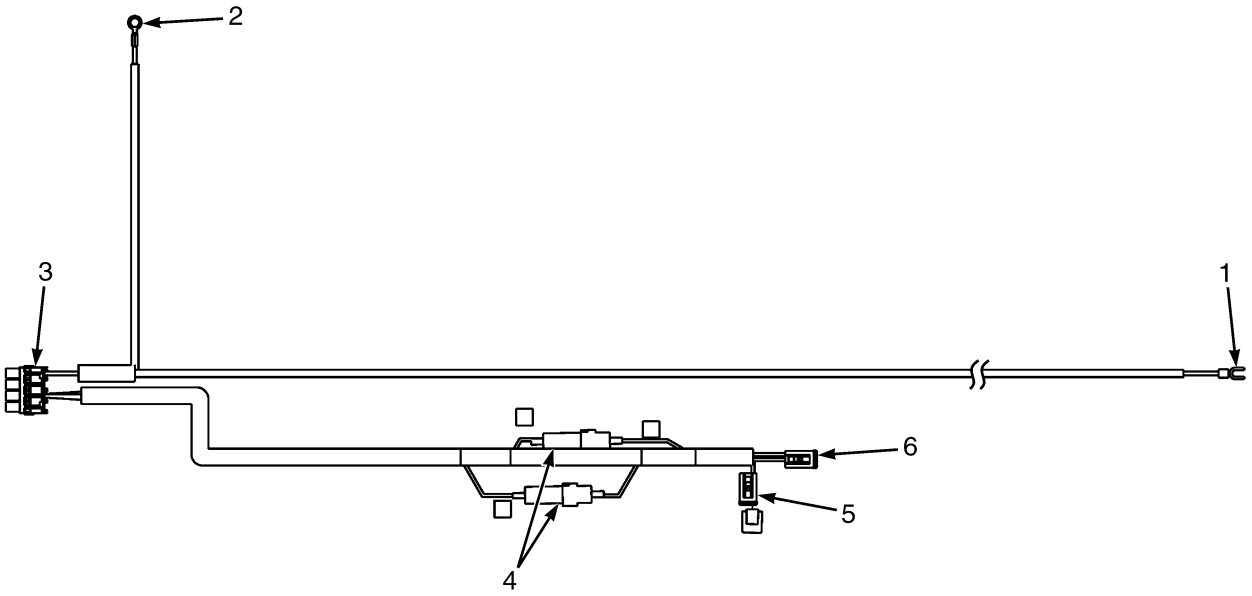

BP000897

©2015 Yale Europe Materials Handling Limited

WIRE HARNESS

DC/DC CONVERTER – W/ E-STEERING

ITEM	PART NO.	DESCRIPTION	QTY
	582042078	Wire Harness (DC/DC Converter) (w/ E-Steer)	1
1	518807642	E-Spade	1
2	504450739	E-Ring	1
3	. . . . .	Connector Assembly (DC/DC Converter)	1
3	580090639	Terminal	1
3	580047197	Connector	1
3	580047195	Terminal	1
4	582000739	Fuse Holder	1
4	500903103	Fuse (15 Amp)	1
5	. . . . .	Connector Assembly (ACC)	1
5	505968501	Connector	1
5	580071066	Connector	1
5	505968568	Terminal (Socket)	1
5	505968535	Connector (Secondary Lock)	1
6	. . . . .	Connector Assembly (ACC)	1
6	505968501	Connector	1
6	505968535	Connector (Secondary Lock)	1
6	505968568	Terminal (Socket)	1
	a 582001182	Label (Fuse Warning-Risk of Fire)	1
	a 582001181	Label (Fuse Warning-Amp/Volt)	1

FOOTNOTES:

a Not illustrated.

©2015 Yale Europe Materials Handling Limited

NOTES

©2015 Yale Europe Materials Handling Limited

3 DRIVE UNIT

SECTION 3
DRIVE UNIT

DESCRIPTION	PAGE
DRIVE TIRE AND WHEEL ASSEMBLY	3-10
DRIVE UNIT ASSEMBLY	3-2
TRACTION MOTOR ASSEMBLY	3-4
TRANSMISSION	
COVER AND BRAKE DISCS	3-6
HOUSING	3-8

©2015 Yale Europe Materials Handling Limited

DRIVE UNIT ASSEMBLY (FIGURE 3-1)

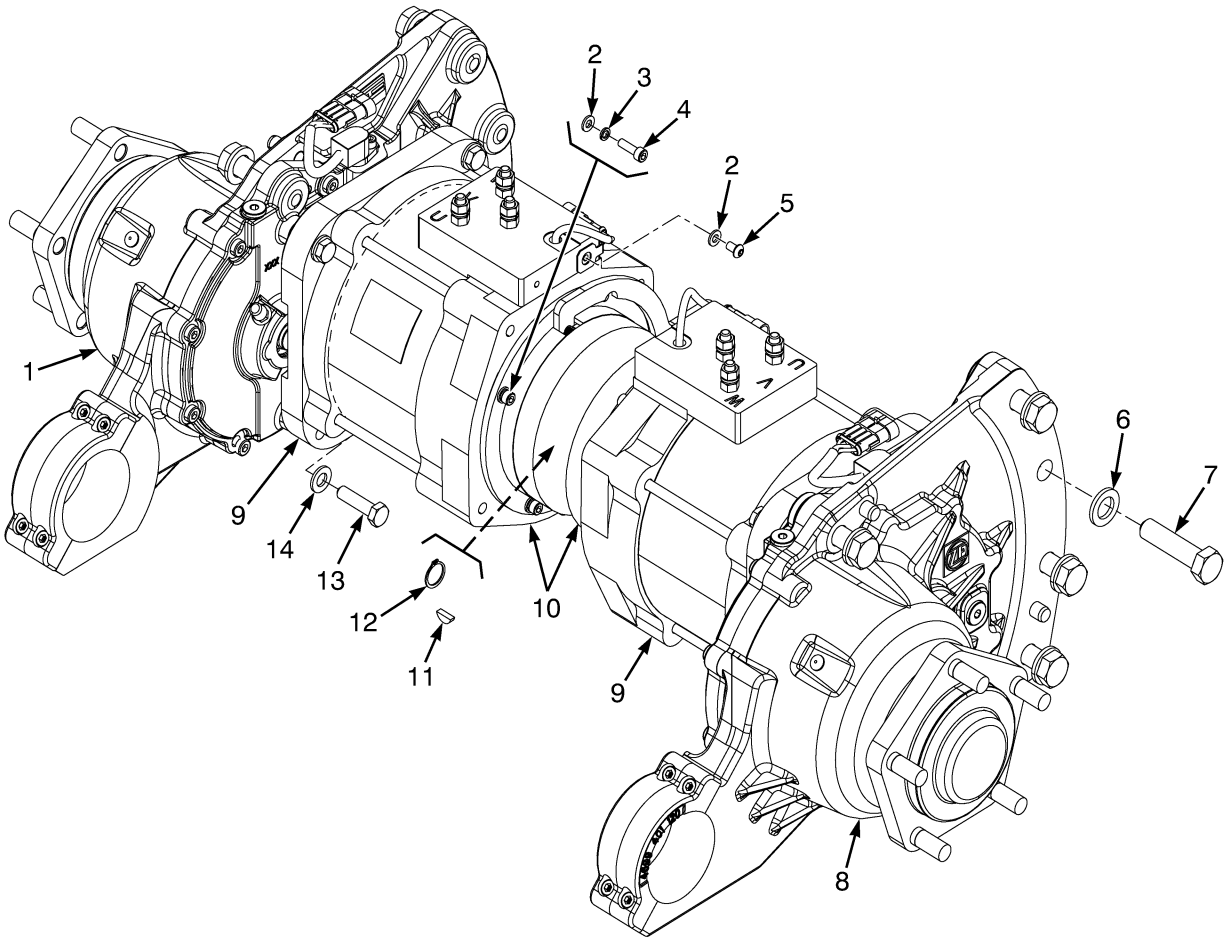

©2015 Yale Europe Materials Handling Limited

DRIVE UNIT ASSEMBLY

ITEM	PART NO.	DESCRIPTION	QTY
1	580084788	Drive Unit Assembly (48 Volt Right Hand) (☞Page 3-6, ☞Page 3-8).....	1
2	449021003	Washer	10
3	~~580027011~~		
	518807647	Lockwasher	8
4	580055989	Capscrew	8
5	580023890	Capscrew	2
6	502566903	Washer	10
7	502565904	Screw	10
8	580084789	Drive Unit Assembly (48 Volt Left Hand) (☞Page 3-6, ☞Page 3-8).....	1
9	~~580076354~~		
	582041194	Traction Motor (48v) (☞Page 3-4).....	1
10	~~580082389~~		
	582014937	Parking Brake (Electric)	2
11	027678700	Woodruff Key	2
12	015914900	Snap Ring	2
13	931014907	Capscrew	8
14	502566904	Washer	8

©2015 Yale Europe Materials Handling Limited

TRACTION MOTOR ASSEMBLY (FIGURE 3-2)

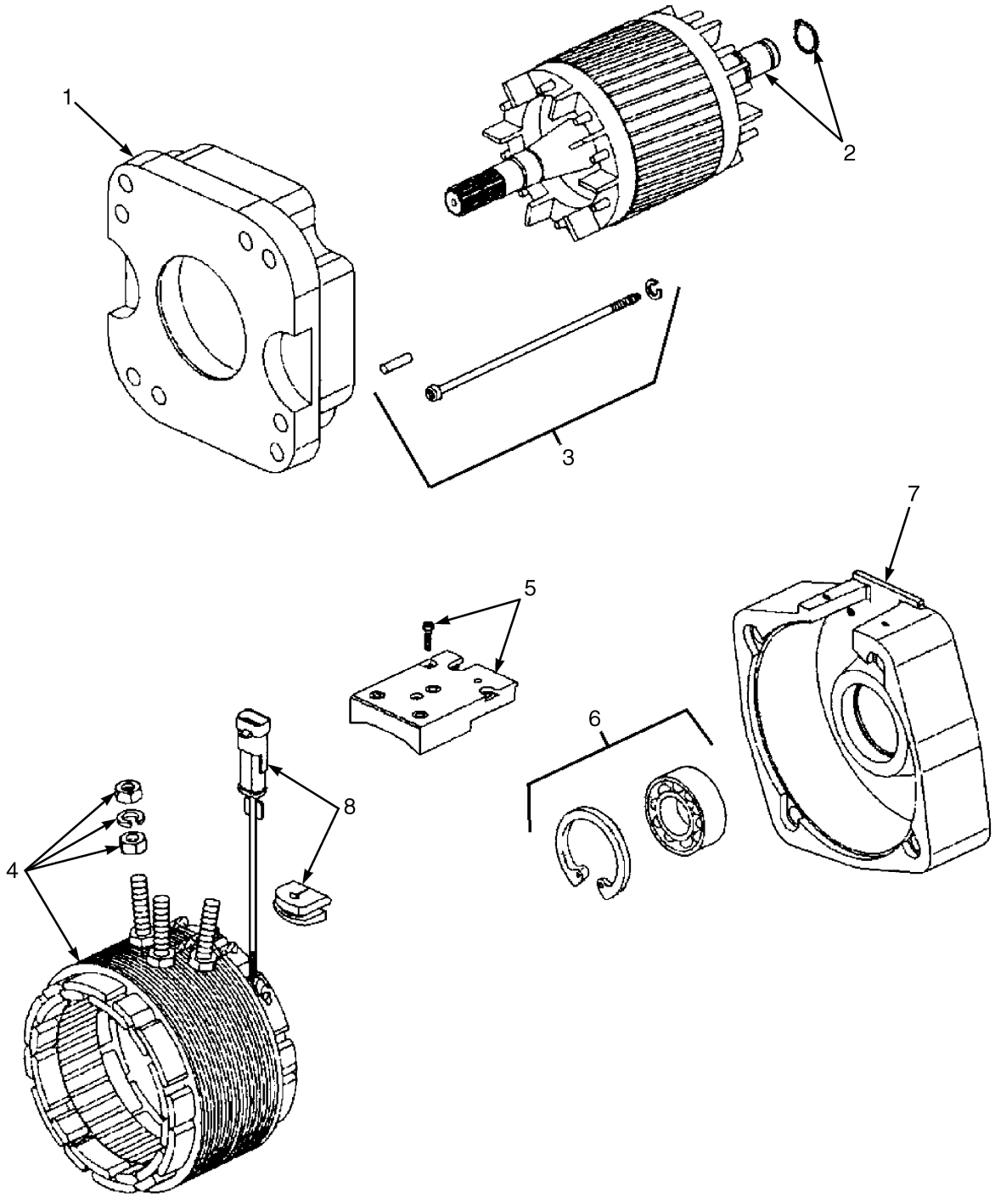

©2015 Yale Europe Materials Handling Limited

TRACTION MOTOR ASSEMBLY

ITEM	PART NO.	DESCRIPTION	QTY
	~~580076354~~		
	582041194	Traction Motor (48v)	1
1	580086736	Bracket	1
2	580086739	Armature	1
3	580086741	Fixing Kit	1
4	580086745	Stator (48v)	1
5	580050715	Plate	1
6	580086749	Bearing (With Snap Ring)	1
7	580086747	End Bracket	1
8	. . . . .	Temperature Sensor	1

©2015 Yale Europe Materials Handling Limited

TRANSMISSION (FIGURE 3-3)
COVER AND BRAKE DISCS

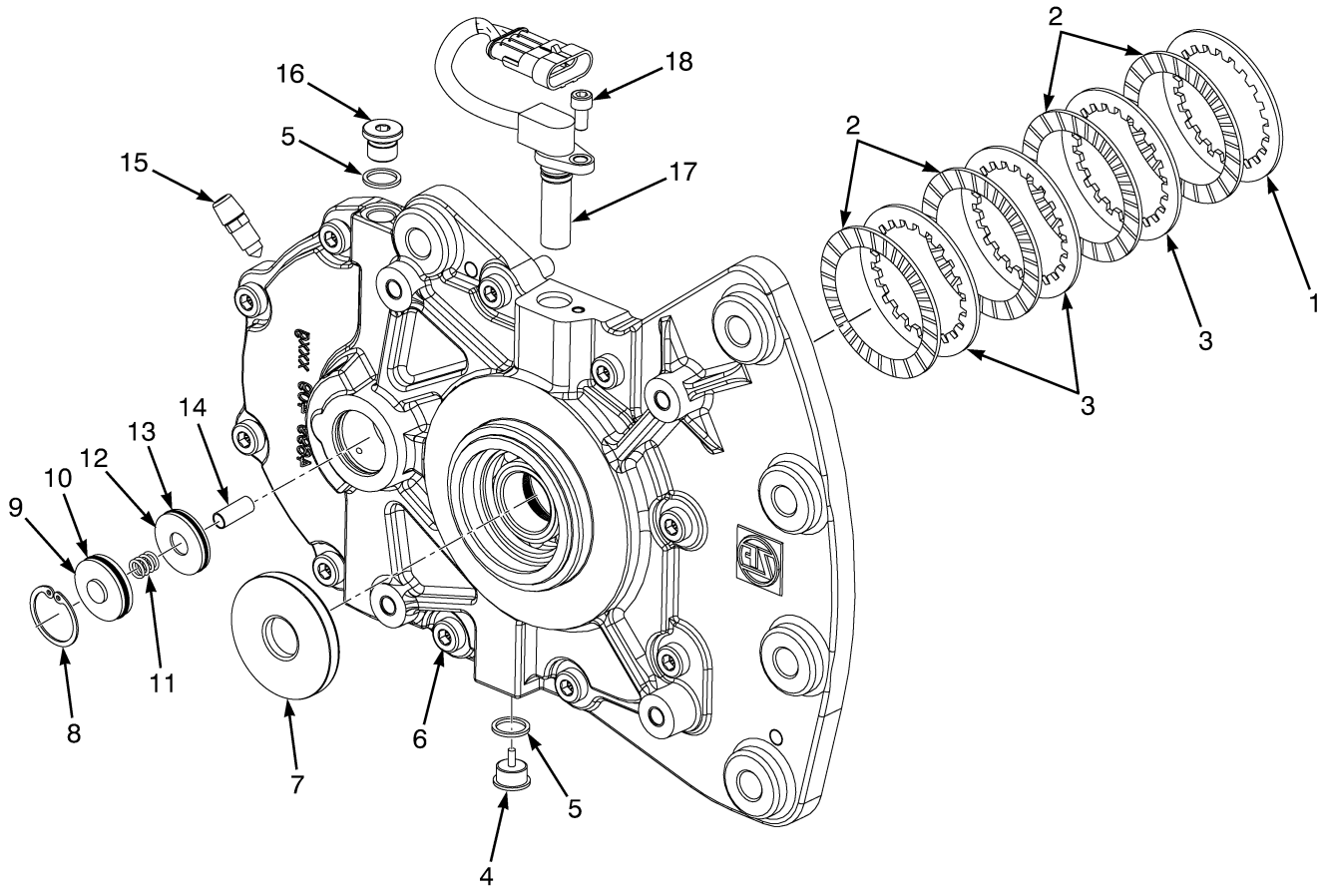

©2015 Yale Europe Materials Handling Limited

TRANSMISSION
COVER AND BRAKE DISCS

ITEM	PART NO.	DESCRIPTION	QTY
	580066715	Transmission (Left Hand)	1
	580066714	Transmission (Right Hand)	1
1	580089416	Disk	1
2	580089413	Clutch Disk (Outer)	4
3	580089414	Clutch Disk (Inner)	3
4	580029621	Plug	1
5	580017695	Sealing Ring	2
6	582017950	Screw	10
7	580089358	Seal	1
8	580089425	Snap Ring	1
9	580089423	Cover	1
10	580089424	O-Ring	1
11	580089422	Spring	1
12	580089420	Piston	1
13	580089421	Ring	1
14	580089419	Pin	1
15	580089427	Fitting Bleed (Bleeder)	1
16	580089531	Plug	1
17	~~582022865~~		
	580082123	Sensor (Speed)	1
18	580089362	Screw	1
	582005800	Kit-Repair (LH)	1
	582005797	Kit-Repair (RH)	1
	582005799	Kit-Repair Brake (LH/RH)	1

©2015 Yale Europe Materials Handling Limited

TRANSMISSION (FIGURE 3-4)
HOUSING

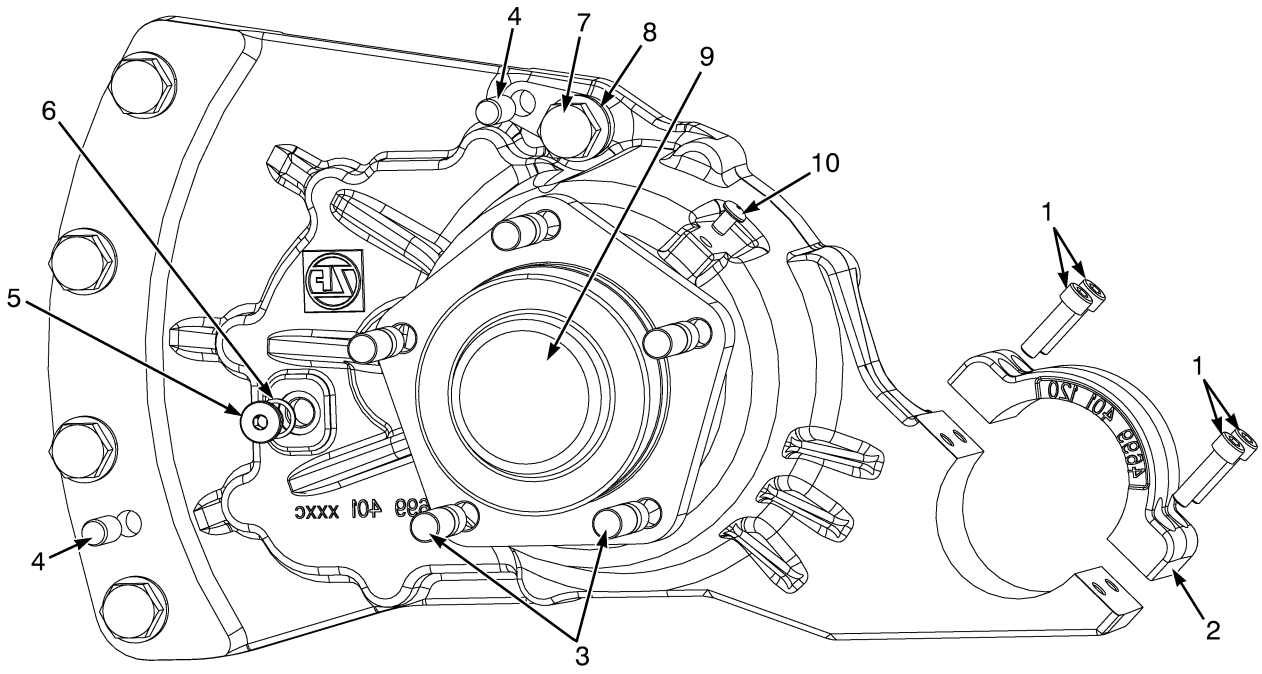

BP070080

©2015 Yale Europe Materials Handling Limited

TRANSMISSION
HOUSING

ITEM	PART NO.	DESCRIPTION	QTY
	580066715	Transmission (Left Hand)	1
	580066714	Transmission (Right Hand)	1
1	580089529	Capscrew	4
2	**a** 580089344	Cap (Trunnion) (☞Page 6-74)	1
3	580029600	Wheel Stud	5
4	580089351	Pin	2
5	580089531	Plug	1
6	580017695	Sealing Ring	1
7	502565904	Screw	5
8	502566903	Washer	5
9	580089405	Cup (Protection)	1
10	~~580064390~~		
	519244834	Breather Valve (Breather)	1

FOOTNOTES:

a Bushings 582002132 and Shims 580052276 are found on figure Tilt Cylinder and Mast Mounting

©2015 Yale Europe Materials Handling Limited

DRIVE TIRE AND WHEEL ASSEMBLY (FIGURE 3-5)

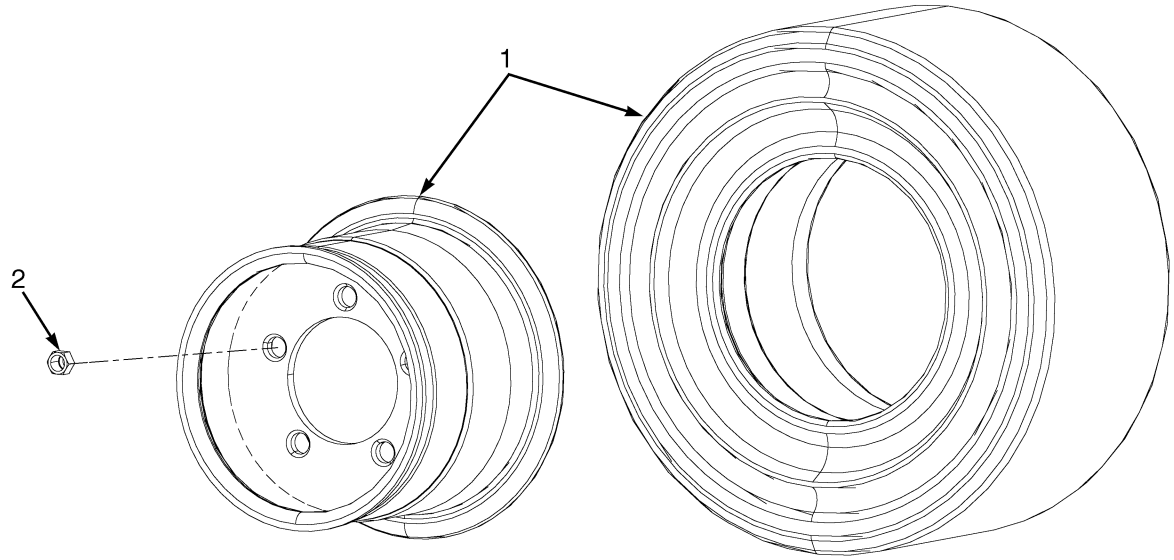

BP070010

KEY:
A: Key A: 18x7-8 (1.5-1.6VT)
B: Key B: 200/50-10 (1.8-2.0VT)

ITEM	PART NO.	DESCRIPTION	QTY A	QTY B
1	524291984	Drive Tire Assembly (Sit Solid)	2	..
1	524292922	Tire Rim	1	..
1	580041532	Pneumatic Shape Solid Tire	1	..
1	524292651	Drive Tire Assembly (Sit Solid)	..	2
1	524292169	Tire Rim	..	1
1	524136932	Solid Pneumatic Tire	..	1
1	524292997	Drive Tire Assembly (Non Marking)	2	..
1	524292922	Tire Rim	1	..
1	580064617	Pneumatic Shape Solid Tire (Non Marking)	1	..
1	524293967	Drive Tire Assembly (Non Marking)	..	2
1	524292169	Tire Rim	..	1
1	580067308	Solid Pneumatic Tire	..	1
2	449077093	Wheel Nut	10	10

©2015 Yale Europe Materials Handling Limited

4 STEERING SYSTEM

SECTION 4
STEERING SYSTEM

DESCRIPTION	PAGE
STEER AXLE ASSEMBLY	
→ 2/2015	4-4
STEER AXLE MOUNTING	
→ 2/2015	4-2
STEER TIRE AND WHEEL ASSEMBLY	4-15
STEERING ACCUMULATOR	
→ PENDING PER ECN 15533404	4-34
STEERING AXLE	
ELECTRIC STEERING - PAGE 1 OF 4	4-8
ELECTRIC STEERING - PAGE 2 OF 4	4-10
ELECTRIC STEERING - PAGE 3 OF 4	4-12
ELECTRIC STEERING - PAGE 4 OF 4	4-14
STEERING COLUMN ASSEMBLY	
FIXED (→ 10/2013)	4-20
FIXED (10/2013 →)	4-22
FIXED - ELECTRIC STEERING	4-24
TELESCOPIC (→ 10/2013)	4-26
TELESCOPIC (10/2013 →)	4-27
TELESCOPIC WITH TILT MEMORY - ELECTRIC STEERING	4-28
STEERING HAND PUMP ASSEMBLY	
→ PENDING PER ECN 15533404	4-30
PENDING PER ECN 15533404 →	4-32
STEERING WHEEL AND COLUMN	
FIXED	4-16
TELESCOPIC	4-18

©2015 Yale Europe Materials Handling Limited

STEER AXLE MOUNTING (FIGURE 4-1)
(→ 2/2015)

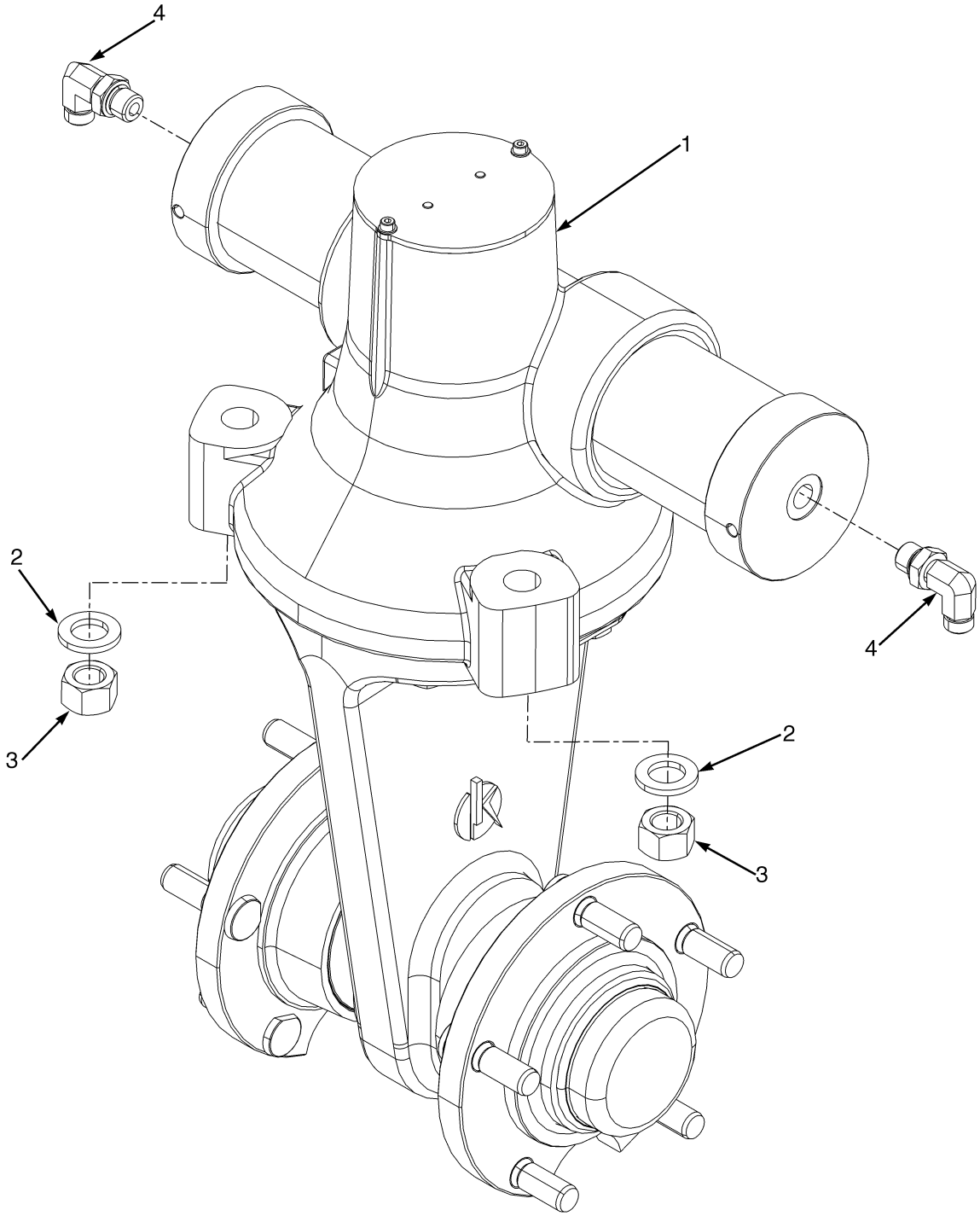

©2015 Yale Europe Materials Handling Limited

STEER AXLE MOUNTING

(→ 2/2015)

ITEM	PART NO.	DESCRIPTION	QTY
1	**b** 580076834	Steer Axle (☞Page 4-4)	1
1	**c** 582017968	Steering Axle (☞Page 4-4)	1
2	502566903	Washer	3
3	580011059	Nut	3
4	580019865	Fitting	2
4	504155200	O-Ring	1
4	052645200	O-Ring	1
	a 501702903	Loctite	1

FOOTNOTES:

a Not Illustrated
b → S/N G807B04225K
c S/N G807B04226K →

©2015 Yale Europe Materials Handling Limited

STEER AXLE ASSEMBLY (FIGURE 4-2)

(→ 2/2015)

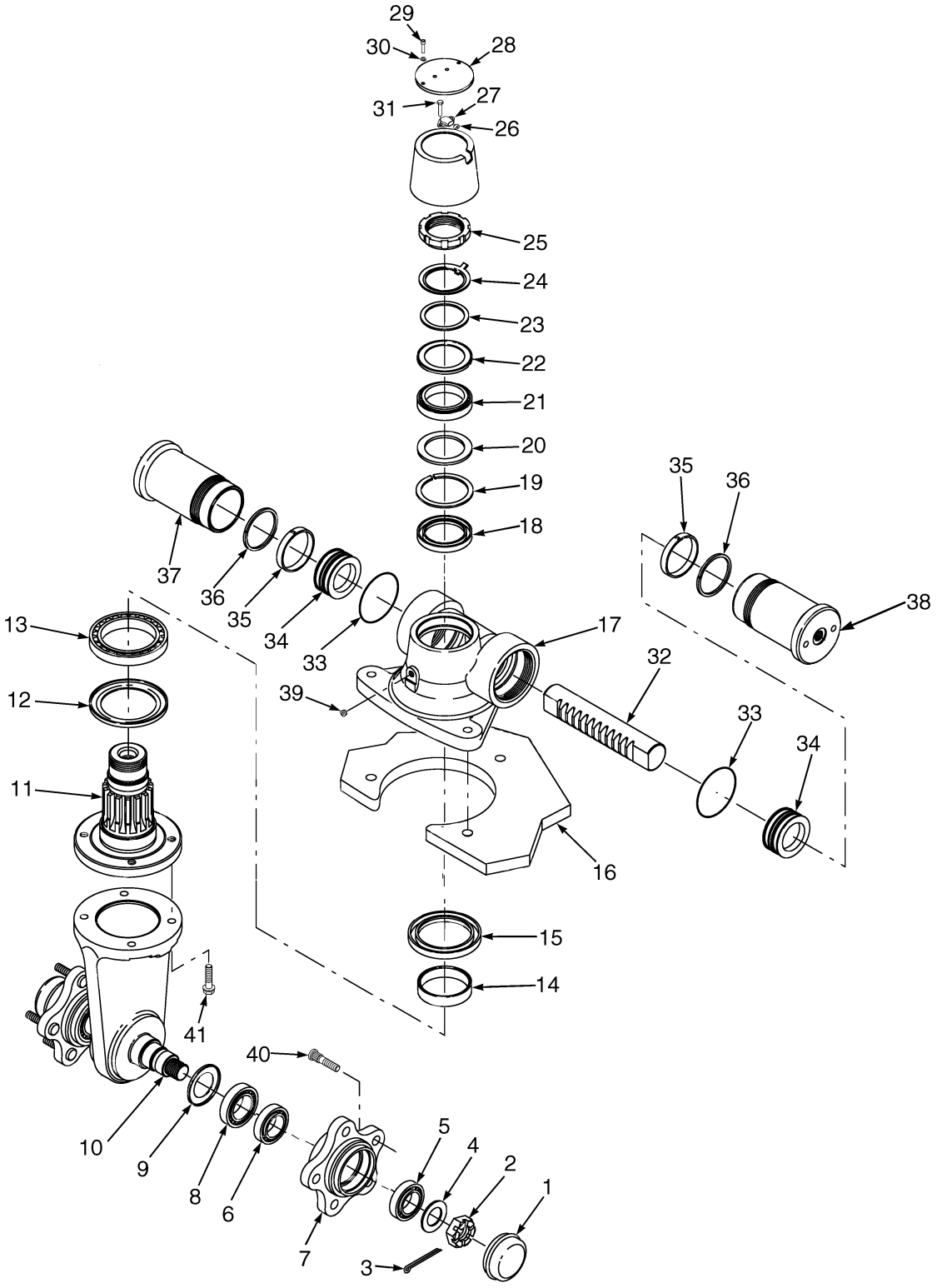

©2015 Yale Europe Materials Handling Limited

STEER AXLE ASSEMBLY

(→ 2/2015)

ITEM	PART NO.	DESCRIPTION	QTY
	b 580076834	Steer Axle	1
	c 582017968	Steering Axle	1
1	580012512	Cap	2
2	580024143	Nut	2
3	580024145	Cotter Pin	2
4	580024144	Washer	2
5	580012515	Bearing Set	2
6	**b** ~~580012516~~		
	580032520	Bearing Set	2
6	**c** 582020325	Bearing	2
7	580024136	Wheel Hub	2
8	580024141	Sealing Ring	2
9	580024138	Ring	2
10	. . . . .	Axle	1
11	580081260	Pinion Shaft	1
12	580012530	Sealing Ring	1
13	580012527	Bearing	1
14	580012511	Wear Ring	1
15	580012535	Sealing Ring	1
16	. . . . .	Axle Support	1
17	580081256	Housing	1
18	580012536	Sealing Ring	1
19	580012531	Ring	1
20	580012533	Shim	1
21	**b** 580012526	Bearing	1
21	**c** 582020326	Bearing	1
22	580012529	Sealing Ring	1
23	580012532	Shim	1
24	580012541	Lockwasher	1
25	580012540	Nut	1
26	580081263	Magnet	1
26	580072682	Magnet (Alternate Part)	1
27	580081262	Sensor	1
27	**b** 580088325	Sensor (Steering) (Alternate Part)	1
27	**c** 580089701	Sensor (Steering)	1
28	**b** ~~580081259~~		
	582015428	Plate	1
28	**c** 582019140	Cover	1
29	580081266	Capscrew	2
30	580081268	Washer	2
31	**b** 580081265	Capscrew	2
31	**c** 580009061	Screw	2
32	580012509	Gear	1
33	580012537	O-Ring	2
34	580012507	Piston	2
35	580012538	Seal	2
36	580012539	Rod Wiper	2
37	580081257	Cylinder	2
38	580081258	Cap	2
38	582015168	O-Ring (Cap)	2

©2015 Yale Europe Materials Handling Limited

STEER AXLE ASSEMBLY

(→ 2/2015)

ITEM	PART NO.	DESCRIPTION	QTY
39	580081267	Plug	2
40	580012510	Wheel Stud	10
41	580014898	Screw	8
	582019141	Cover Assembly (Sensor)	1
	a 580012544	Washer	1
	a 580081271	Plug	1
	a 580012534	Shim	1
	580081273	Seal Kit Piston	2
	580081274	Seal Kit Top	1
	580081275	Seal Kit Bottom	1

FOOTNOTES:

a Not Illustrated
b → S/N G807B04225K
c S/N G807B04226K →

©2015 Yale Europe Materials Handling Limited

NOTES

©2015 Yale Europe Materials Handling Limited

STEERING AXLE (FIGURE 4-3)
ELECTRIC STEERING — PAGE 1 OF 4

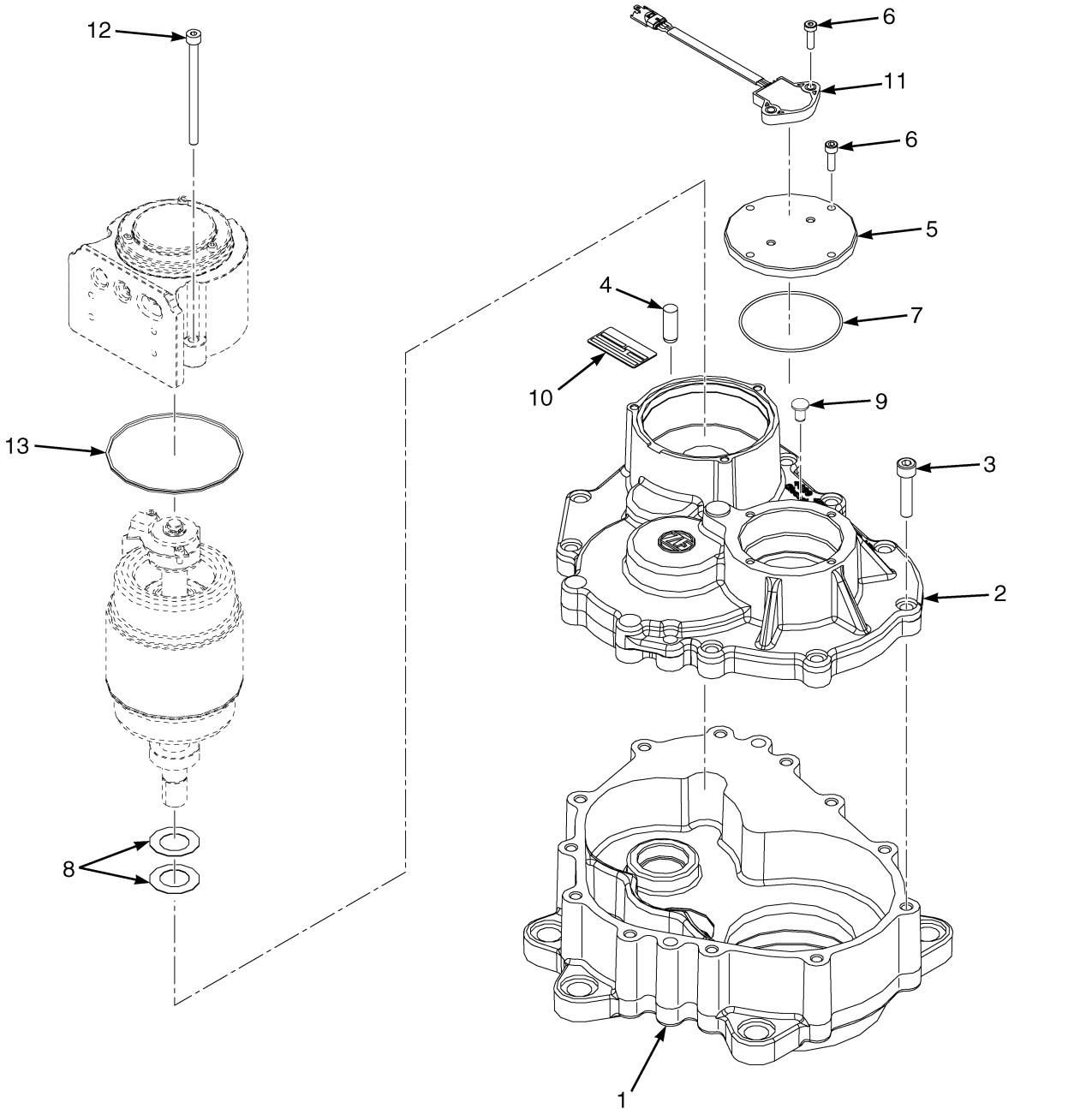

©2015 Yale Europe Materials Handling Limited

STEERING AXLE

ELECTRIC STEERING – PAGE 1 OF 4

ITEM	PART NO.	DESCRIPTION	QTY
	582027234	Steering Axle	1
1	582038970	Housing	1
2	582038971	Cover	1
3	582038972	Capscrew	12
4	582038973	Pin	1
5	582038974	Cover	1
6	582038979	Capscrew	6
7	582038976	O-Ring	1
8	582038977	Spring	2
9	582002924	Filter	1
10	582030281	Plate	1
11	582038978	Sensor	1
12	582042119	Capscrew	3
13	582042120	V-Ring Seal	1

©2015 Yale Europe Materials Handling Limited

STEERING AXLE (FIGURE 4-4)
ELECTRIC STEERING — PAGE 2 OF 4

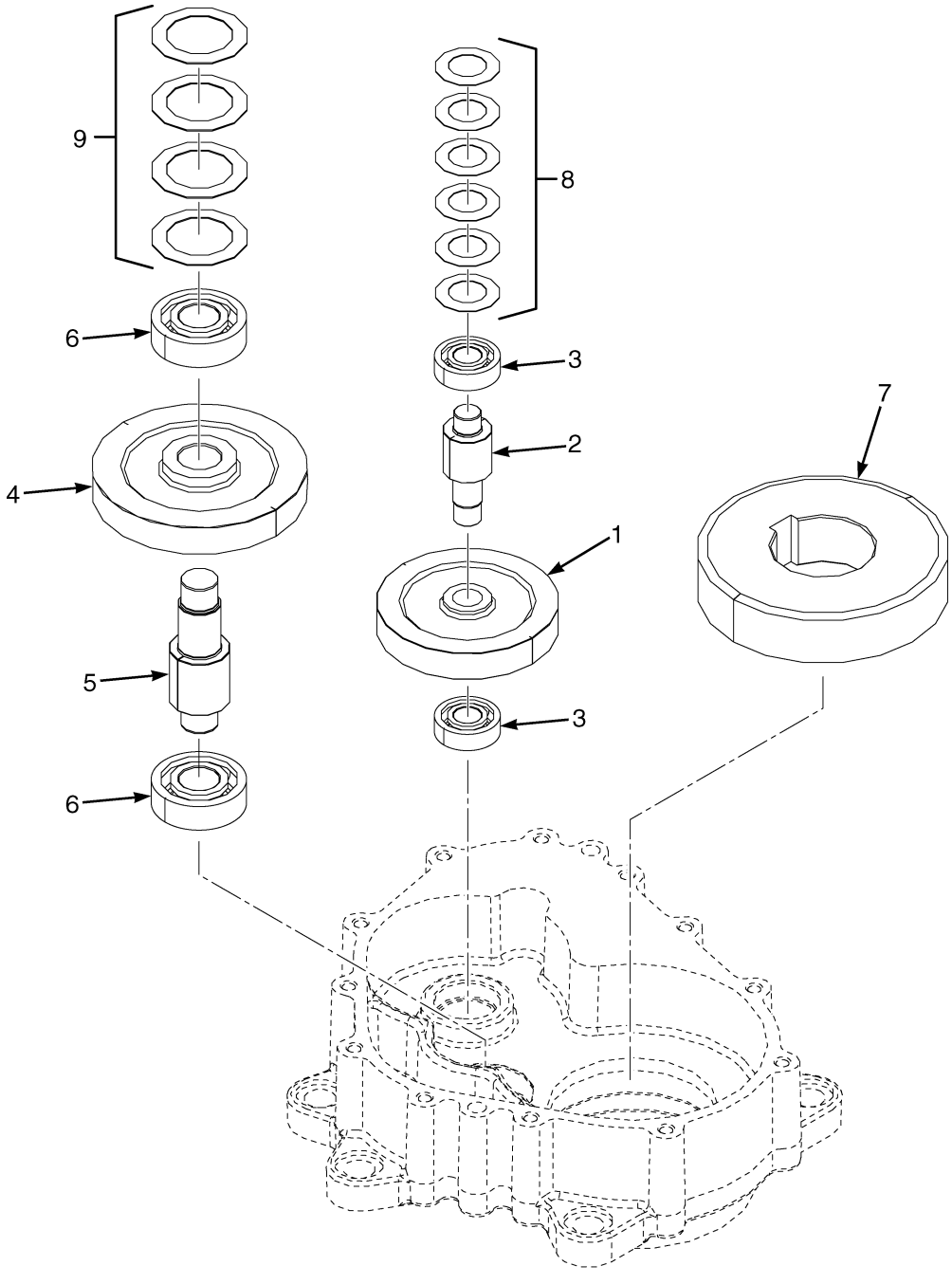

©2015 Yale Europe Materials Handling Limited

STEERING AXLE

ELECTRIC STEERING – PAGE 2 OF 4

ITEM	PART NO.	DESCRIPTION	QTY
	582027234	Steering Axle	1
1	582038980	Gear	1
2	582038981	Shaft	1
3	582038982	Ball Bearing	2
4	582038983	Gear	1
5	582038984	Shaft	1
6	582038985	Ball Bearing	2
7	582038986	Gear	1
8	582038977	Spring	6
9	580026640	Spring	4

©2015 Yale Europe Materials Handling Limited

STEERING AXLE (FIGURE 4-5)
ELECTRIC STEERING — PAGE 3 OF 4

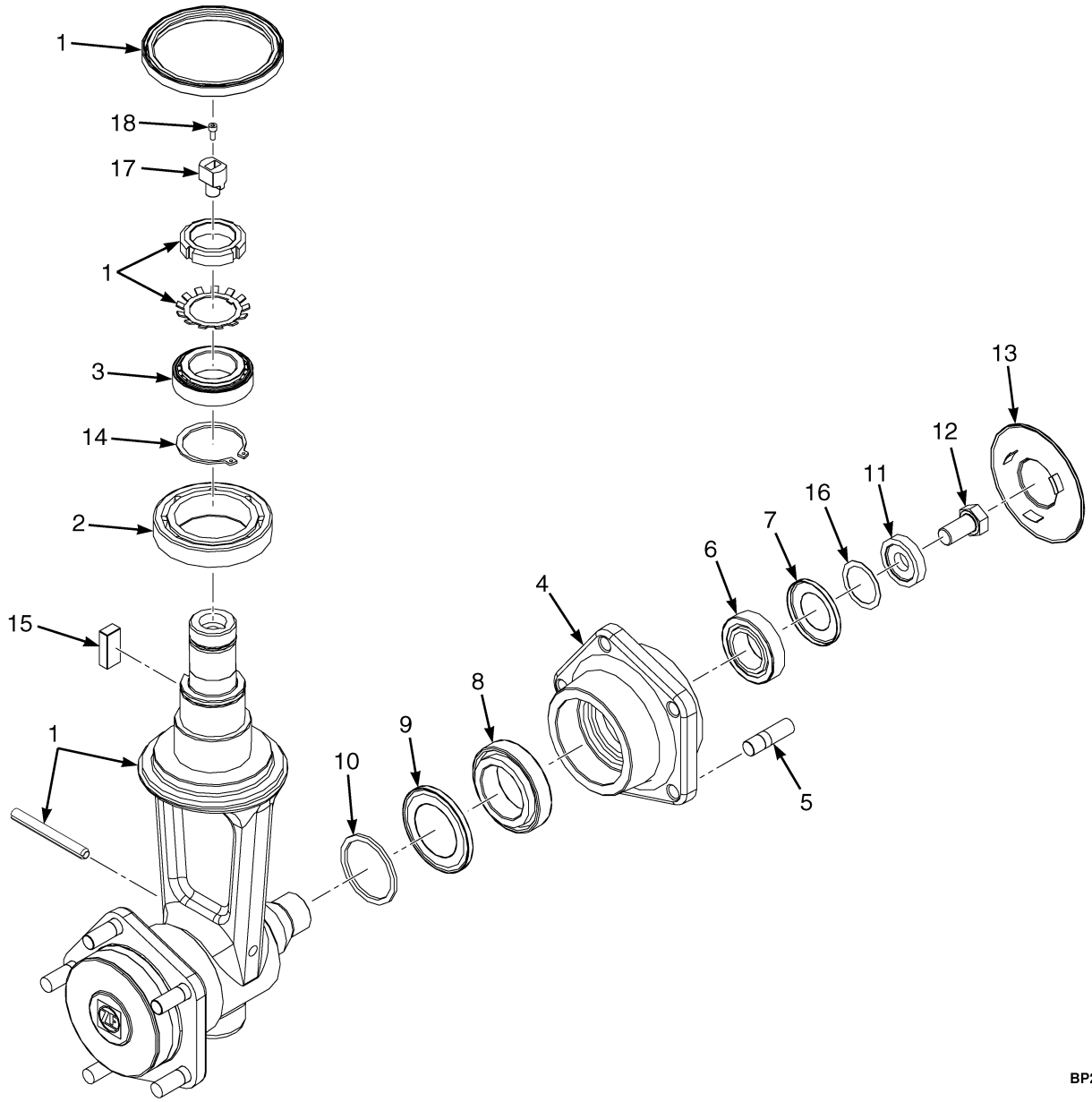

©2015 Yale Europe Materials Handling Limited

STEERING AXLE

ELECTRIC STEERING – PAGE 3 OF 4

ITEM	PART NO.	DESCRIPTION	QTY
	582027234	Steering Axle	1
1	582038987	Frame	1
2	580089376	Bearing	1
3	582038988	Bearing	1
4	582038991	Flange	2
5	582013018	Bolt	10
6	582038992	Bearing	2
7	582038993	Ring	2
8	582038994	Bearing	2
9	582038995	Ring	2
10	582038996	Shim	2
11	582038997	Shim	2
12	582038998	Screw	2
13	. . . . .	Protection Cap	2
14	582010758	Snap Ring	1
15	582039001	Key	1
16	582039021	Shim	AR
16	582039022	Shim	AR
16	582039023	Shim	AR
16	582039024	Shim	AR
16	582039025	Shim	AR
17	582039002	Magnet	1
18	582039003	Capscrew	1

©2015 Yale Europe Materials Handling Limited

STEERING AXLE (FIGURE 4-6)
ELECTRIC STEERING — PAGE 4 OF 4

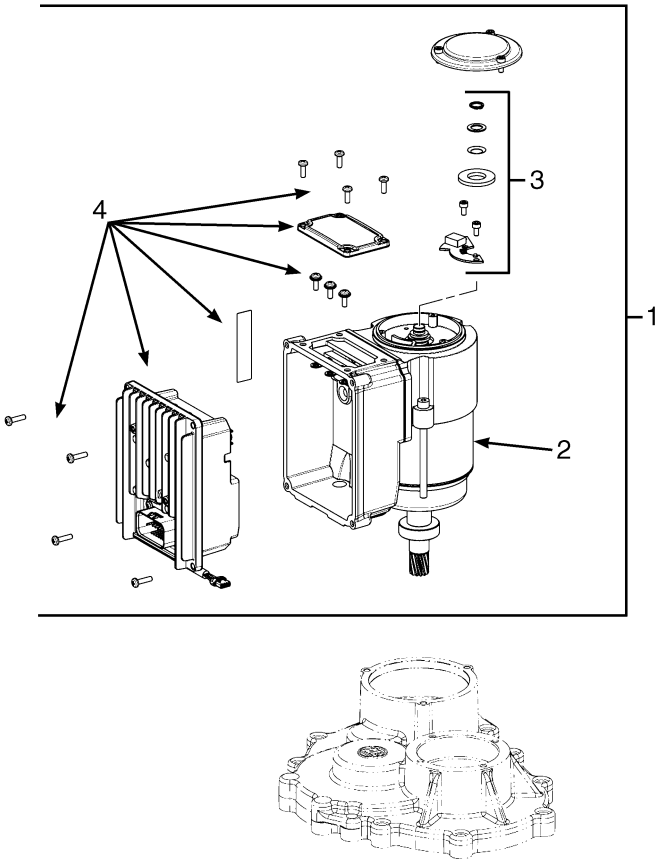

BP220365

ITEM	PART NO.	DESCRIPTION	QTY
1	582039031	Control Unit	1
2	. . . . .	Electric Motor	1
3	582042123	Kit-Repair	1
4	582042122	Kit-Repair	1

©2015 Yale Europe Materials Handling Limited

STEER TIRE AND WHEEL ASSEMBLY (FIGURE 4-7)

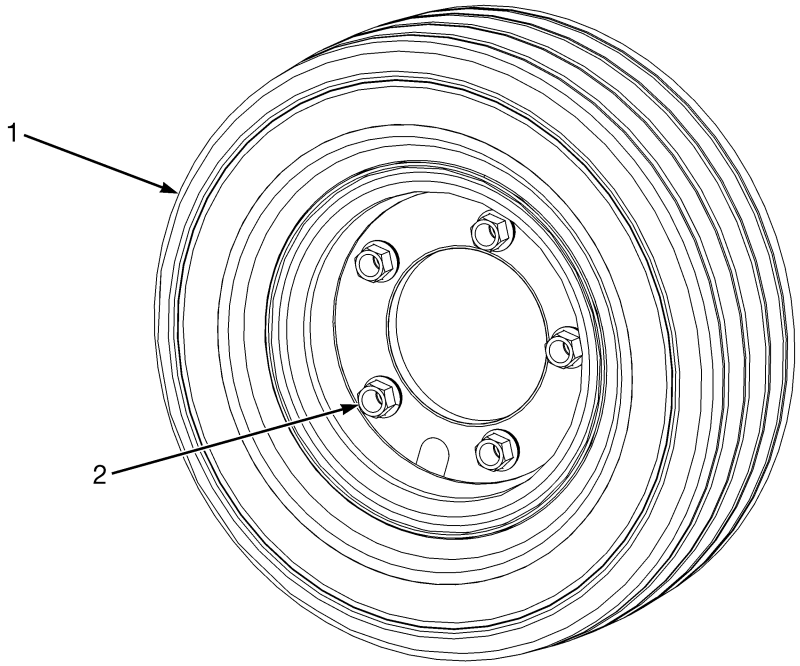

ITEM	PART NO.	DESCRIPTION	QTY
1	524167321	Steer Tire Assy (Sit Solid)	2
1	580010870	Wheel	1
1	524166936	Solid Pneumatic Tire	1
1	524292806	Tire and Wheel Assembly (Sit Solid Non-Marking)	2
1	580010870	Wheel	1
1	580067321	Tire	1
2	449077093	Wheel Nut	10

©2015 Yale Europe Materials Handling Limited

STEERING WHEEL AND COLUMN (FIGURE 4-8)
FIXED

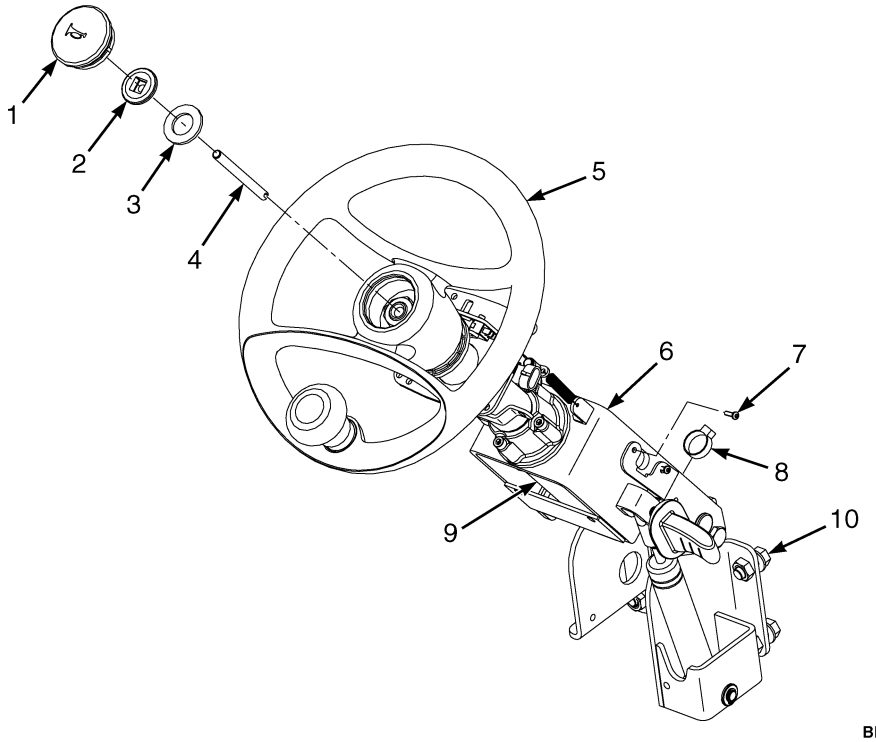

BP220292

ITEM	PART NO.	DESCRIPTION	QTY
1	580092678	Horn Button	1
2	580096538	Nut (Horn Button)	1
3	580062392	Washer	1
4	580092748	Rod	1
5	580046399	Steering Wheel (Without Spinner Knob)	1
5	580045338	Steering Wheel (With Spinner)	1
5	580058078	Knob Assembly	1
5	~~580086876~~		
	580086874	Knob , Spinner	1
5	580086875	Cap	1
5	~~580086876~~		
	580086874	Knob , Spinner	1
6	**a** 580096836	Steering Column (Fixed) (☞Page 4-20)	1
6	**c** 582021826	Steering Column (Fixed) (☞Page 4-22)	1
6	**e** 582026484	Steering Column (Fixed) (With E-Steering) (☞Page 4-24)	1
7	580047200	Screw	2
8	312850040	Strap Clamp	1
9	**b** 580082524	Steering Hand Pump (Without Synchronous Steering) (☞Page 4-30)	1
9	**b** 580082525	Steering Hand Pump (With Synchronous Steering) (☞Page 4-30)	1
9	580013351	Kit-Seal	1
9	580096349	Kit-Solenoid	1
9	**e** 582038673	Steering Control Unit (Without Synchronous Steering) (☞Page 4-32)	1
9	**e** 582038675	Steering Control Unit (With Synchronous Steering) (☞Page 4-32)	1
10	**a** 580030970	Capscrew	4
10	**d** 582019181	Capscrew	4

©2015 Yale Europe Materials Handling Limited

FOOTNOTES:

a → 10/2013
b → 2/2015
c 10/2013 ↔ 2/2015
d 10/2013 →
e 2/2015 →

©2015 Yale Europe Materials Handling Limited

STEERING WHEEL AND COLUMN (FIGURE 4-9)
TELESCOPIC

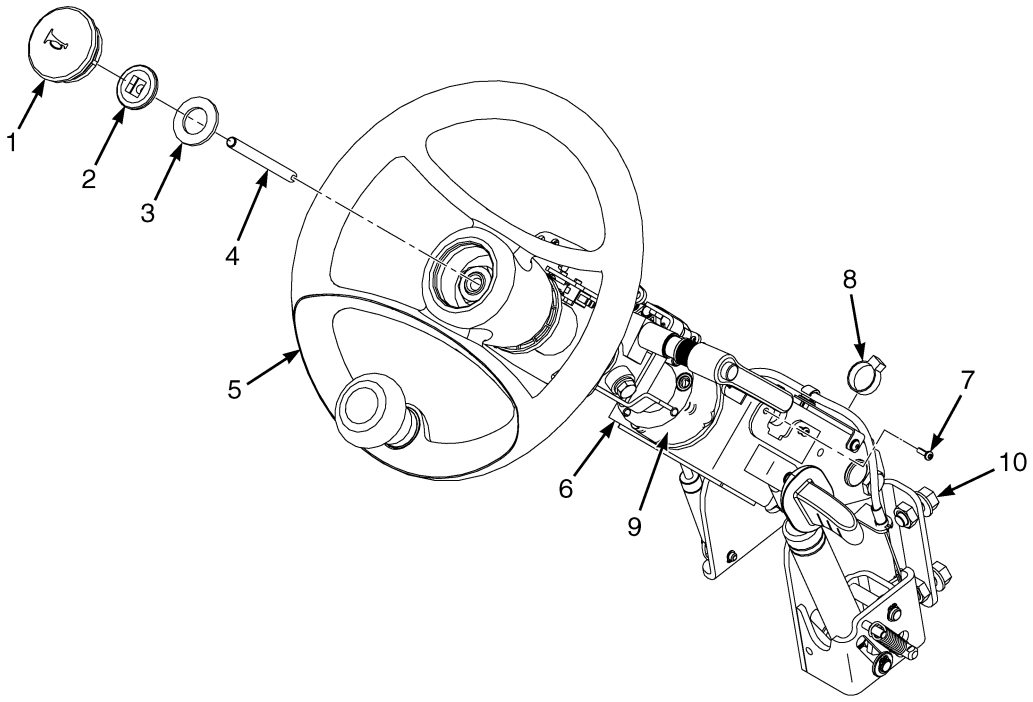

BP220291

ITEM	PART NO.	DESCRIPTION	QTY
1	580092678	Horn Button	1
2	580096538	Nut (Horn Button)	1
3	580062392	Washer	1
4	580092748	Rod	1
5	580046399	Steering Wheel (Without Spinner Knob)	1
5	580045338	Steering Wheel (With Spinner)	1
5	580058078	Knob Assembly	1
5	~~580086876~~		
	580086874	Knob , Spinner	1
5	580086875	Cap	1
5	~~580086876~~		
	580086874	Knob , Spinner	1
6	**a** 580096835	Steering Column (Telescopic) (☞Page 4-26)	1
6	**c** 582021825	Steering Column (Telescopic) (☞Page 4-27)	1
6	**e** 582026483	Steering Column (Telescopic) (With E-Steering) (☞Page 4-28)	1
7	580047200	Screw	2
8	312850040	Strap Clamp	1
9	**b** 580082524	Steering Hand Pump (W/o Synchronous Steering) (☞Page 4-30)	1
9	**b** 580082525	Steering Hand Pump (With Synchronous Steering) (☞Page 4-30)	1
9	580013351	Kit-Seal	1
9	580096349	Kit-Solenoid	1
9	**e** 582038673	Steering Control Unit (☞Page 4-32)	1
9	**e** 582038675	Steering Control Unit (☞Page 4-32)	1
10	**a** 580030970	Capscrew	4
10	**d** 582019181	Capscrew	4

©2015 Yale Europe Materials Handling Limited

FOOTNOTES:

a → 10/2013
b → 2/2015
c 10/2013 ↔ 2/2015
d 10/2013 →
e 2/2015 →

©2015 Yale Europe Materials Handling Limited

STEERING COLUMN ASSEMBLY (FIGURE 4-10)

FIXED (→ 10/2013)

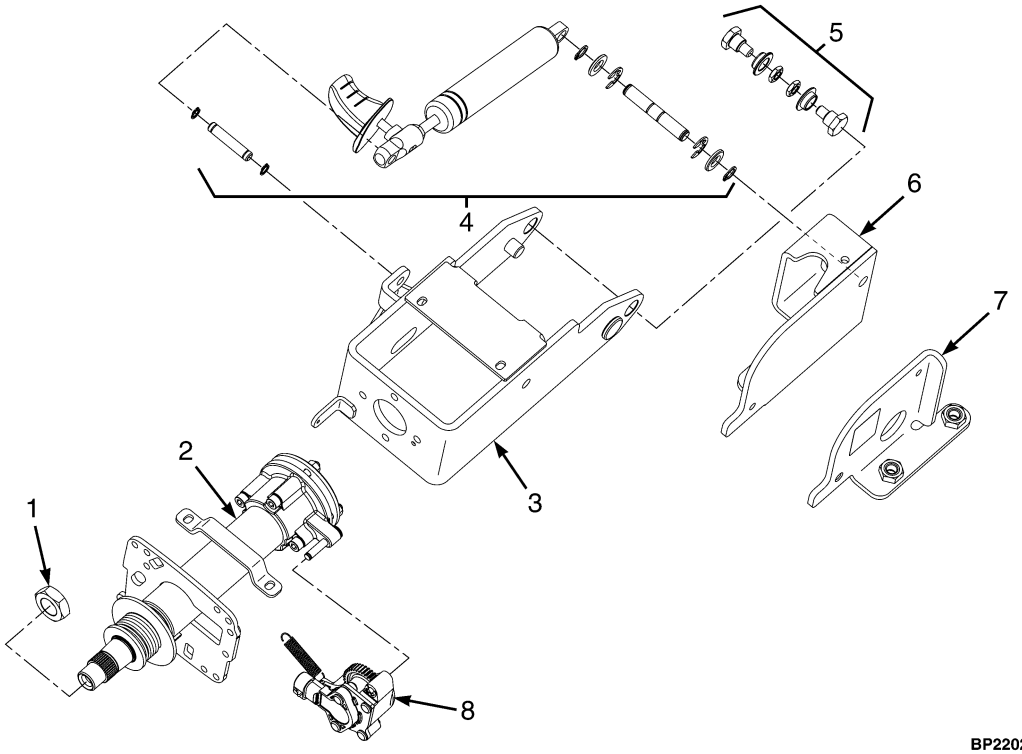

ITEM	PART NO.	DESCRIPTION	QTY
	580096836	Steering Column	1
1	580049810	Kit-Nut	1
2	580096779	Kit-Shaft	1
2	524135278	Switch	1
2	580060918	Plate	1
3	580096780	Kit-Support	1
4	~~580096782~~		
	582034695	Kit-Gas Spring	1
5	580096773	Kit-Pivot	1
6	580096781	Kit-Support	1
7	580096783	Kit-Support	1
8	580096778	Kit-Sensor	1

©2015 Yale Europe Materials Handling Limited

NOTES

©2015 Yale Europe Materials Handling Limited

STEERING COLUMN ASSEMBLY (FIGURE 4-11)

FIXED (10/2013 →)

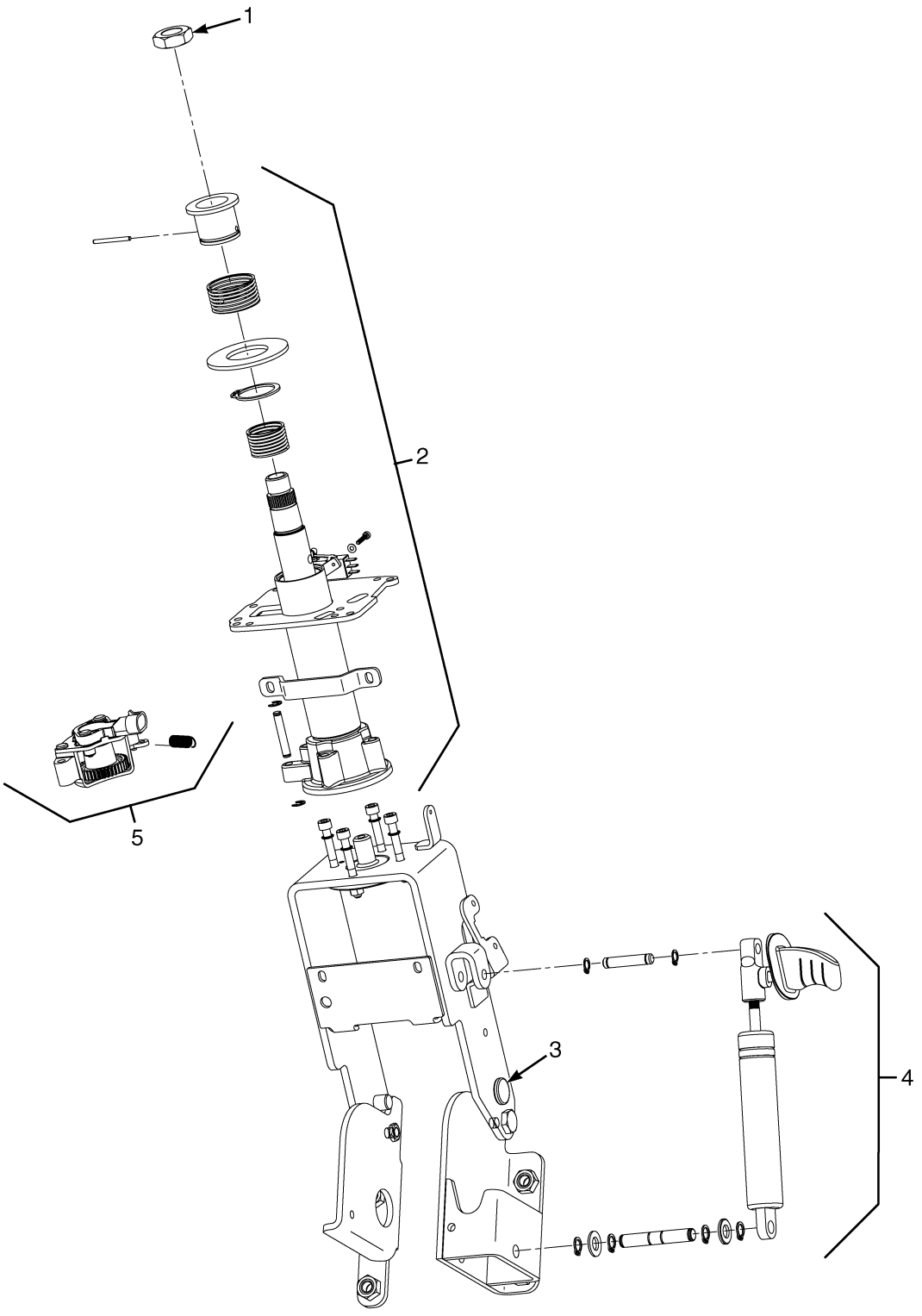

©2015 Yale Europe Materials Handling Limited

STEERING COLUMN ASSEMBLY

FIXED (10/2013 →)

ITEM	PART NO.	DESCRIPTION	QTY
	582021826	Steering Column (Fixed)	1
1	580049810	Kit-Nut	1
2	582029904	Kit (Upper)	1
3	582016330	Kit Pivot (Lower)	1
4	~~582040088~~		
	582037335	Kit-Gas Spring	1
5	580092679	Sensor (Steer Column)	1
5	580092681	Spring	1
5	580060127	E-Ring	2

©2015 Yale Europe Materials Handling Limited

STEERING COLUMN ASSEMBLY (FIGURE 4-12)
FIXED — ELECTRIC STEERING

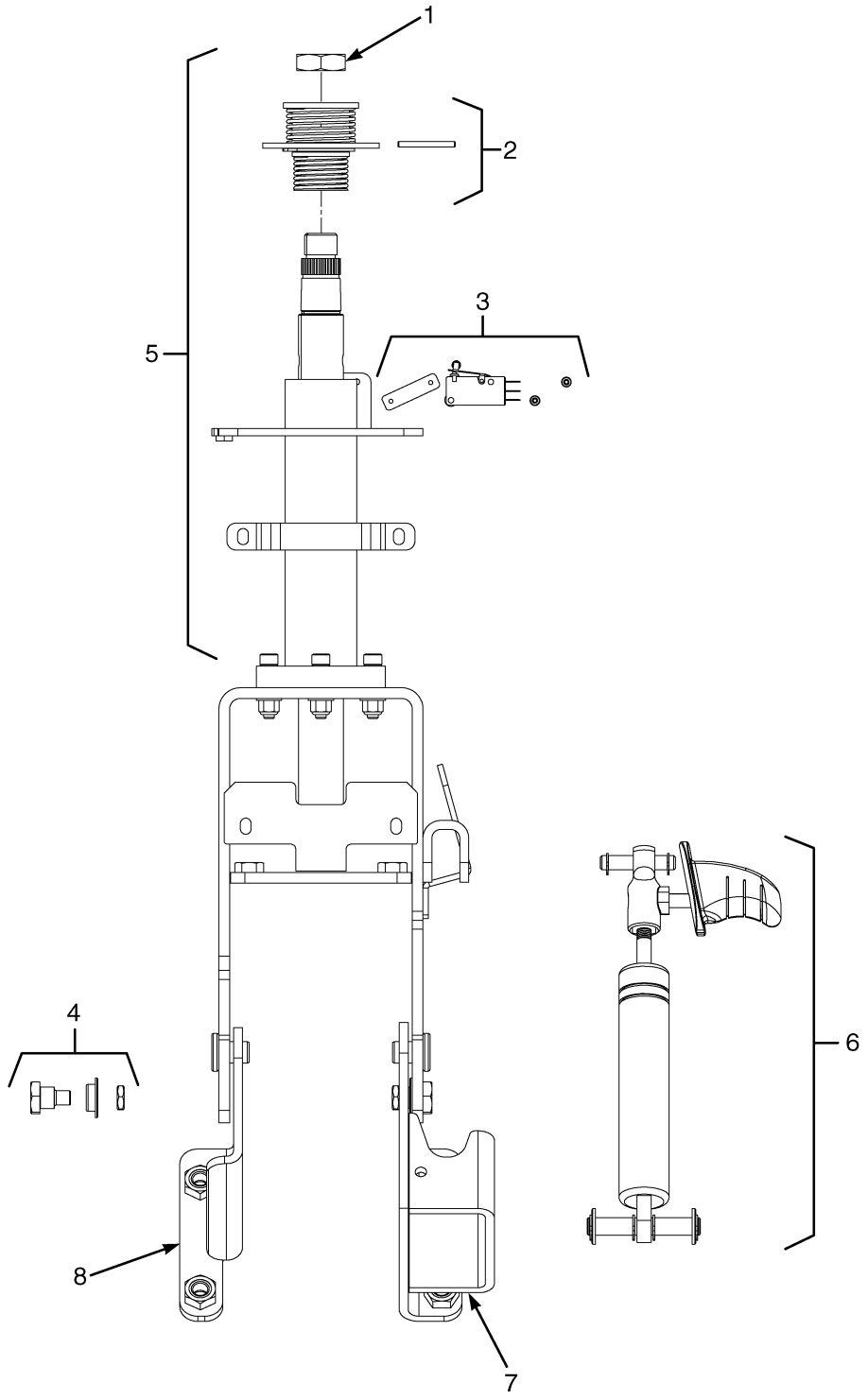

©2015 Yale Europe Materials Handling Limited

STEERING COLUMN ASSEMBLY

FIXED – ELECTRIC STEERING

ITEM	PART NO.	DESCRIPTION	QTY
	582026484	Steering Column (Fixed)	1
1	580049810	Kit-Nut	1
2	582035197	Kit Horn Activator Ring	1
3	582035198	Kit Horn Switch and Mounting Plate	1
3	524135278	Switch (Sealed)	1
4	582016330	Kit Pivot (Lower)	1
5	582035205	Kit Upper Fixed Assembly	1
6	582029886	Kit (Gas Spring-Big)	1
7	582035207	Kit RH Base Plate	1
8	582035206	Kit LH Base Plate	1

©2015 Yale Europe Materials Handling Limited

STEERING COLUMN ASSEMBLY (FIGURE 4-13)

TELESCOPIC (→ 10/2013)

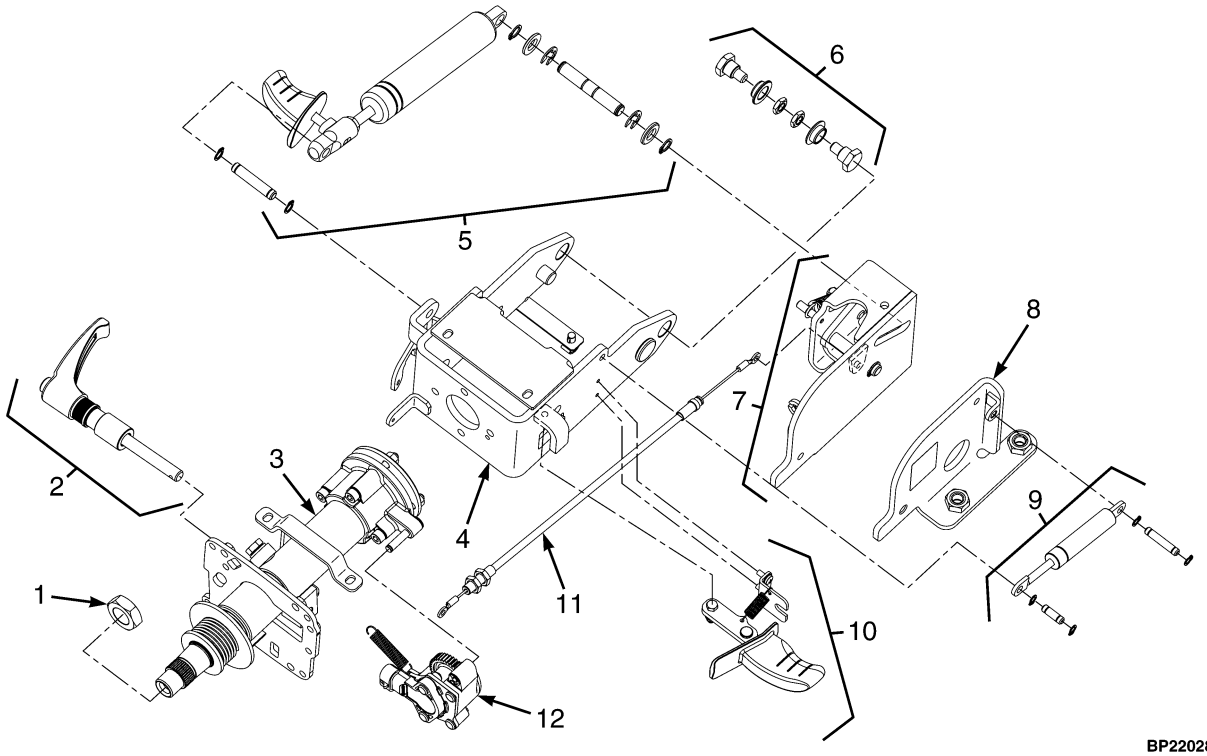

ITEM	PART NO.	DESCRIPTION	QTY
	580096835	Steering Column	1
1	580049810	Kit-Nut	1
2	580096769	Kit-Handle	1
3	580096770	Kit-Steering Support	1
3	524135278	Switch	1
3	580060918	Plate	1
4	580096771	Kit-Support	1
5	~~580096772~~		
	582034696	Kit-Gas Spring	1
6	580096773	Kit-Pivot	1
7	580096774	Kit-Support	1
8	580096775	Kit-Support	1
9	580096776	Kit Lift-O-Mat	1
10	580096777	Kit-Lever	1
11	580091437	Cable Assy	1
12	580096778	Kit-Sensor	1

©2015 Yale Europe Materials Handling Limited

STEERING COLUMN ASSEMBLY (FIGURE 4-14)

TELESCOPIC (10/2013 →)

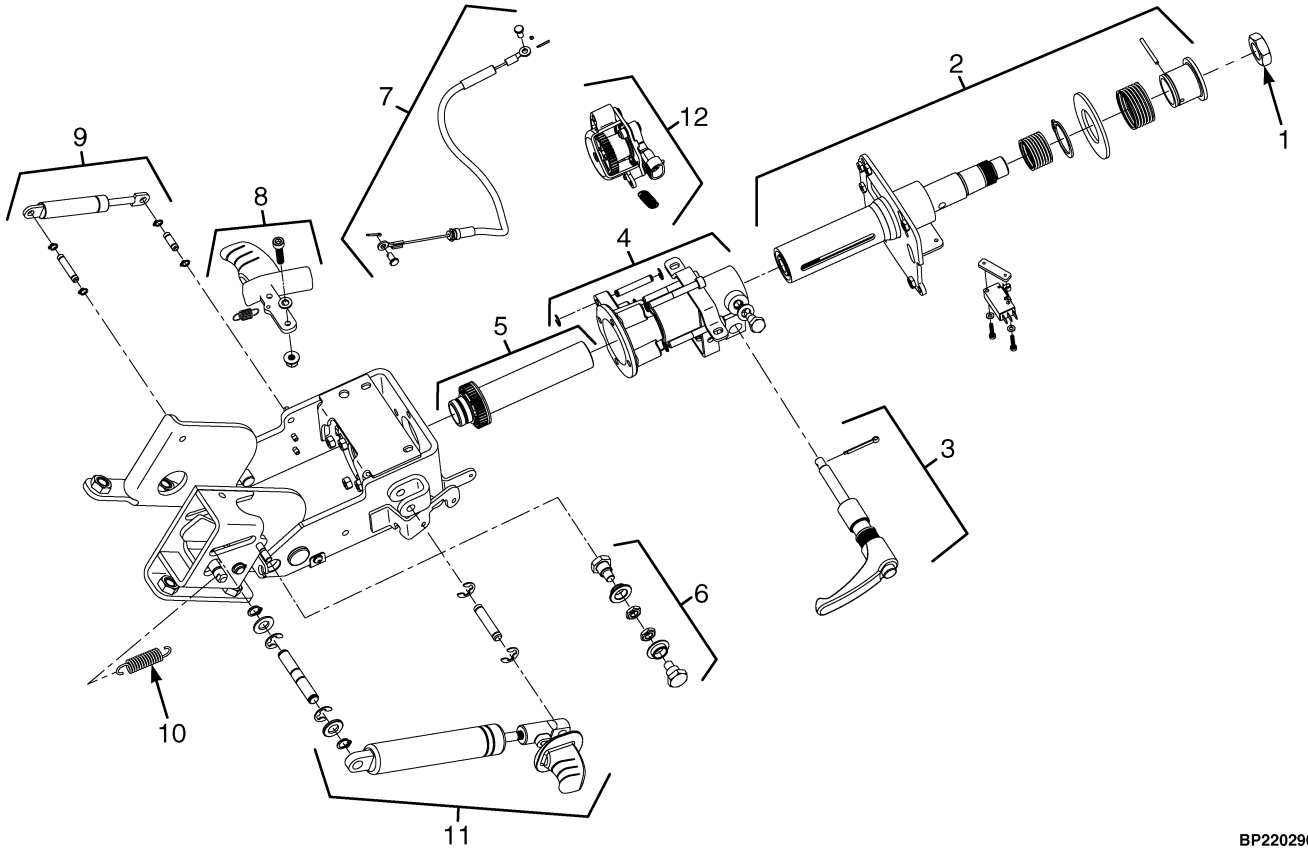

BP220290

ITEM	PART NO.	DESCRIPTION	QTY
	582021825	Steering Column (Telescopic)	1
1	580049810	Kit-Nut	1
2	582029880	Kit (Upper Telescoping)	1
3	582029881	Kit (Clamping Lever)	1
4	582029882	Kit (Lower Telescoping)	1
5	582029883	Kit-Shaft (Shaft)	1
6	582016330	Kit Pivot (Lower)	1
7	582029885	Kit (Tilt Memory Cable)	1
8	582029884	Kit (Tilt Memory Lever)	1
9	582029888	Kit (Gas Spring-Small)	1
10	582029887	Kit (Release Spring)	1
11	582029886	Kit (Gas Spring-Big)	1
12	580092679	Sensor (Steering Column)	1
12	580092681	Spring	1
12	580060127	E-Ring	2

©2015 Yale Europe Materials Handling Limited

STEERING COLUMN ASSEMBLY (FIGURE 4-15)
TELESCOPIC WITH TILT MEMORY — ELECTRIC STEERING

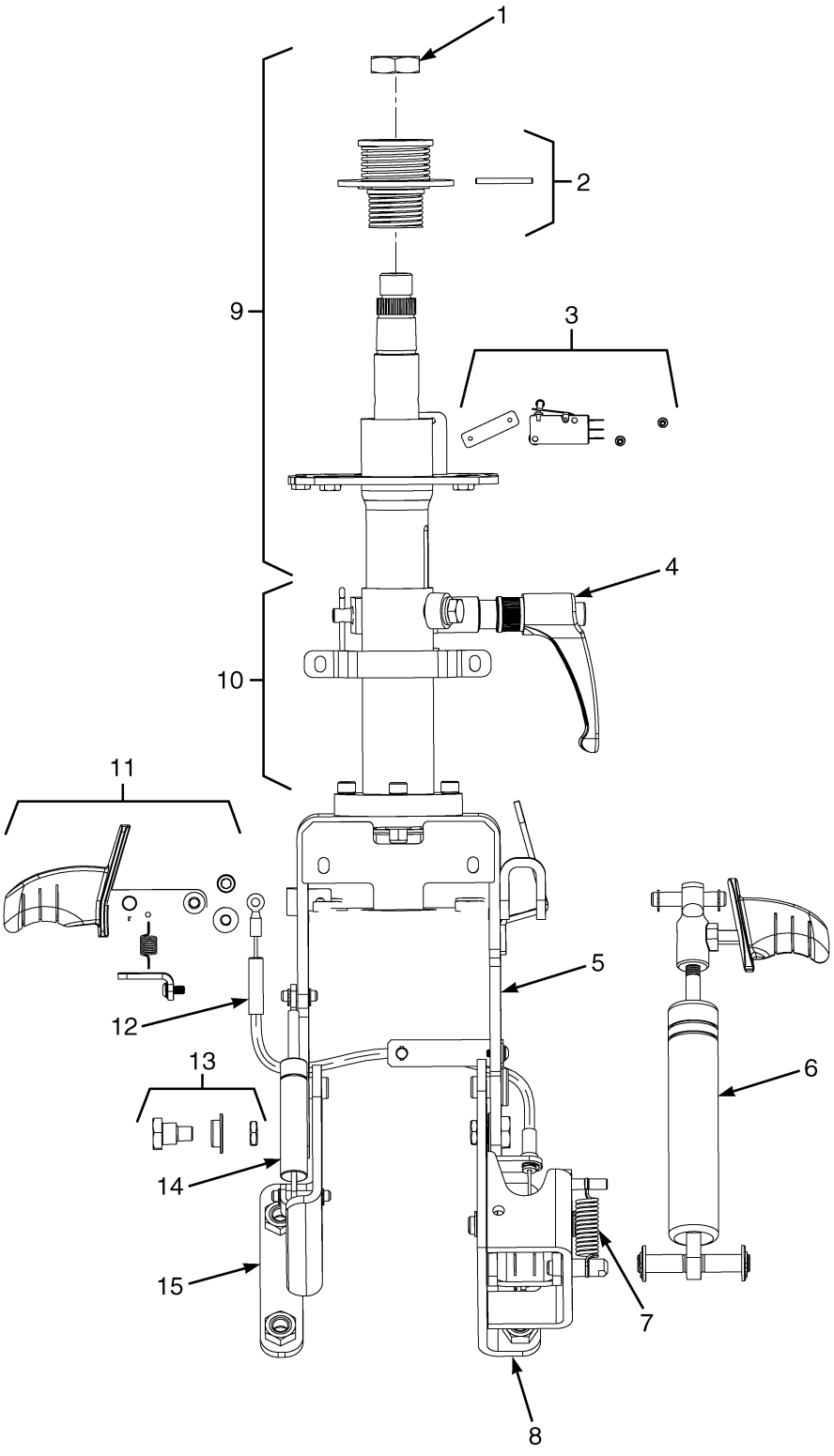

©2015 Yale Europe Materials Handling Limited

STEERING COLUMN ASSEMBLY

TELESCOPIC WITH TILT MEMORY – ELECTRIC STEERING

ITEM	PART NO.	DESCRIPTION	QTY
	582026483	Steering Column (Telescopic)	1
1	580049810	Kit-Nut	1
2	582035197	Kit Horn Activator Ring	1
3	582035198	Kit Horn Switch and Mounting Plate	1
4	582029881	Kit (Clamping Lever)	1
5	582035203	Kit Middle Support	1
6	582029886	Kit (Gas Spring-Big)	1
7	582029887	Kit (Release Spring)	1
8	582035202	Kit RH Base Plate	1
9	582035199	Kit Upper Housing with 2 Shafts	1
10	582035200	Kit Lower Telescoping Housing	1
11	582029884	Kit (Tilt Memory Lever)	1
12	582029885	Kit (Tilt Memory Cable)	1
13	582016330	Kit Pivot (Lower)	1
14	582029888	Kit (Gas Spring-Small)	1
15	582035201	Kit LH Base Plate	1

©2015 Yale Europe Materials Handling Limited

STEERING HAND PUMP ASSEMBLY (FIGURE 4-16)

(→ PENDING PER ECN 15533404)

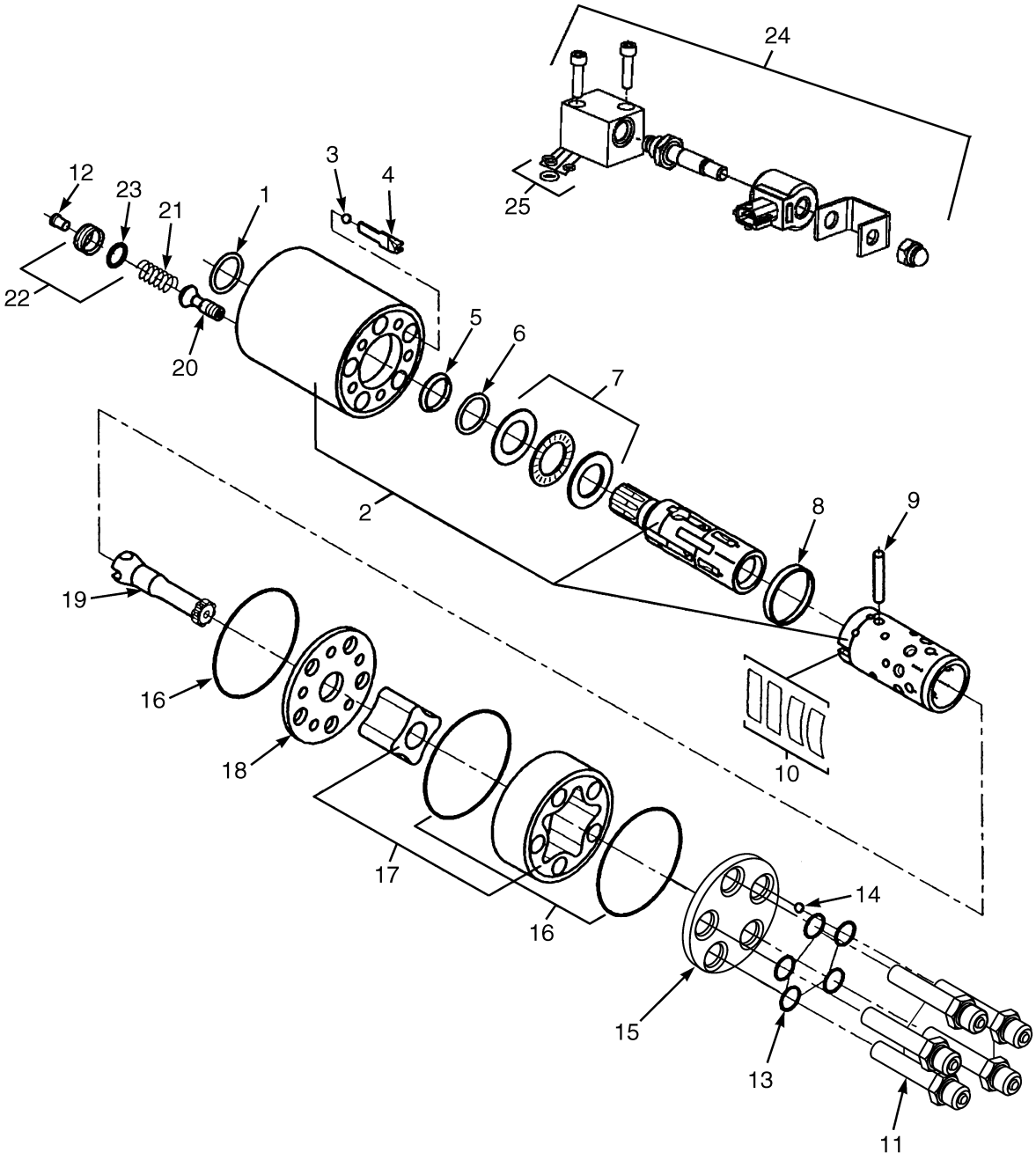

©2015 Yale Europe Materials Handling Limited

STEERING HAND PUMP ASSEMBLY

(→ PENDING PER ECN 15533404)

KEY:
A: Without Sync Steer
B: With Sync Steer

ITEM	PART NO.	DESCRIPTION	QTY A	QTY B
	580082525	Steering Hand Pump	..	1
	580082524	Steering Hand Pump	1	..
1	580013339	Dust Seal	1	1
2	. . . . .	Housing Spool and Sleeve	1	1
3	. . . . .	Ball	1	1
4	. . . . .	Stop	1	1
5	580013347	Seal (Integrated Column)	1	1
6	. . . . .	Shaft Seal	1	1
7	. . . . .	Bearing	1	1
8	. . . . .	Ring	1	1
9	. . . . .	Pin (Cross)	1	1
10	. . . . .	Kit Spring	1	1
11	. . . . .	Screw	5	5
12	. . . . .	Cap	1	1
13	. . . . .	O-Ring	5	5
14	. . . . .	Ball	1	1
15	. . . . .	End Cover	1	1
16	. . . . .	O-Ring	3	3
17	. . . . .	Gear Set	1	1
18	. . . . .	Plate	1	1
19	. . . . .	Shaft	1	1
20	. . . . .	Relief Valve	1	1
21	. . . . .	Spring (Relief Valve)	1	1
22	. . . . .	Adjusting Screw	1	1
23	580013348	O-Ring	1	1
24	. . . . .	Solenoid	..	1
25	. . . . .	Solenoid Rings	..	1
	580013351	Kit-Seal	1	1
	580096349	Kit-Solenoid	..	1

©2015 Yale Europe Materials Handling Limited

STEERING HAND PUMP ASSEMBLY (FIGURE 4-17)

(PENDING PER ECN 15533404 →)

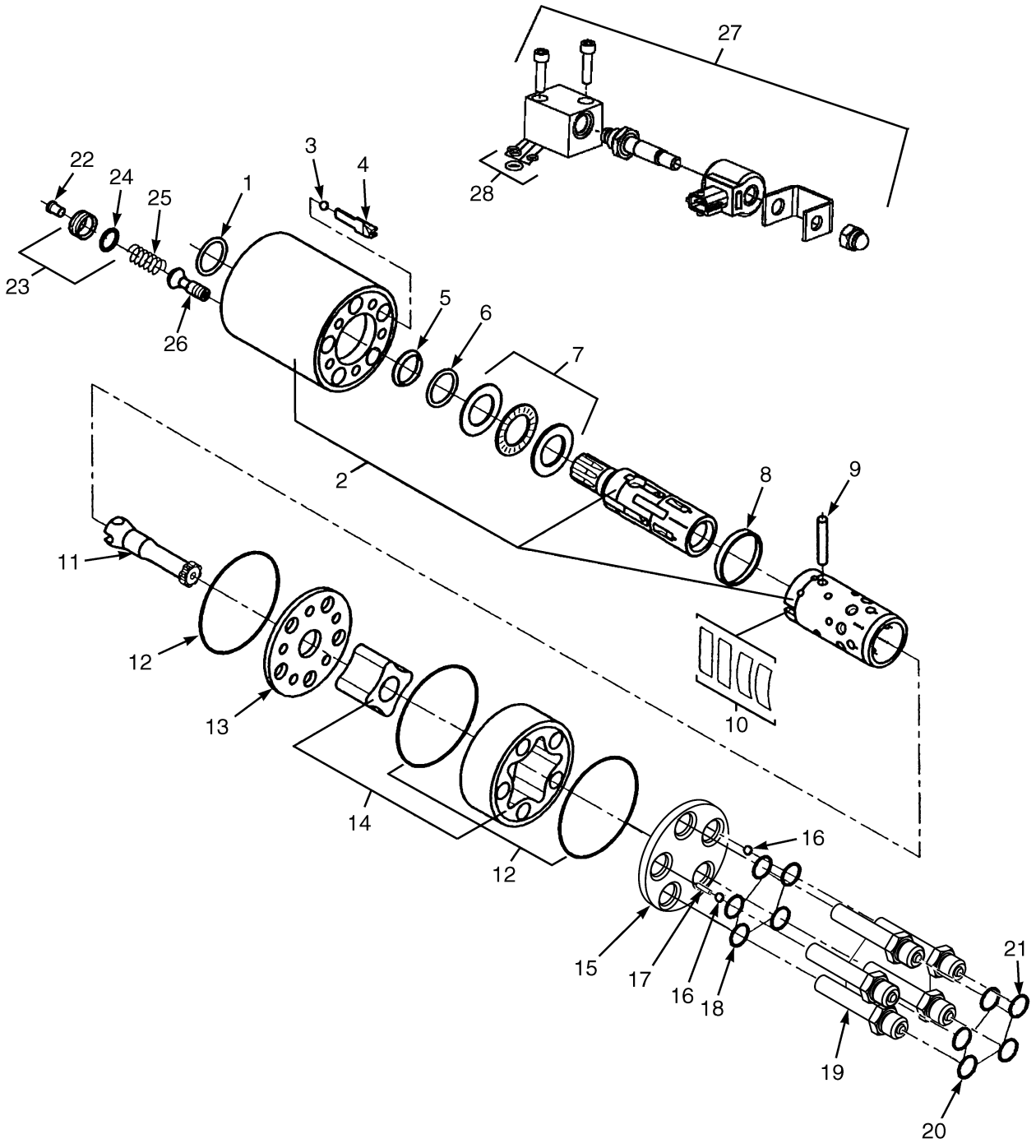

©2015 Yale Europe Materials Handling Limited

STEERING HAND PUMP ASSEMBLY

(PENDING PER ECN 15533404 →)

KEY:
A: Without Synchronous Steering
B: With Synchronous Steering

ITEM	PART NO.	DESCRIPTION	QTY A	QTY B
	582038673	Steering Control Unit	1	..
	582038675	Steering Control Unit	..	1
1	. . . . .	Dust Seal	1	1
2	. . . . .	Housing Spool and Sleeve	1	1
3	. . . . .	Ball	1	1
4	. . . . .	Stop	1	1
5	. . . . .	Seal	1	1
6	. . . . .	Shaft Seal	1	1
7	. . . . .	Bearing	1	1
8	. . . . .	Ring	1	1
9	. . . . .	Pin	1	1
10	. . . . .	Spring	1	1
11	. . . . .	Shaft	1	1
12	. . . . .	O-Ring	3	3
13	. . . . .	Plate	1	1
14	. . . . .	Gear Set	1	1
15	. . . . .	End Cover	1	1
16	. . . . .	Ball	2	2
17	. . . . .	Pin	1	1
18	. . . . .	O-Ring	5	5
19	. . . . .	Screws	5	5
20	. . . . .	O-Ring	4	4
21	. . . . .	O-Ring	1	1
22	. . . . .	Cap	1	1
23	. . . . .	Adjusting Screw	1	1
24	. . . . .	O-Ring	1	1
25	. . . . .	Spring (Relief Valve)	1	1
26	. . . . .	Relief Valve	1	1
27	. . . . .	Solenoid	..	1
28	. . . . .	Solenoid Rings	..	1
	580013351	Kit-Seal	1	1
	582000740	Kit-Seal	1	1

©2015 Yale Europe Materials Handling Limited

STEERING ACCUMULATOR (FIGURE 4-18)

(→ PENDING PER ECN 15533404)

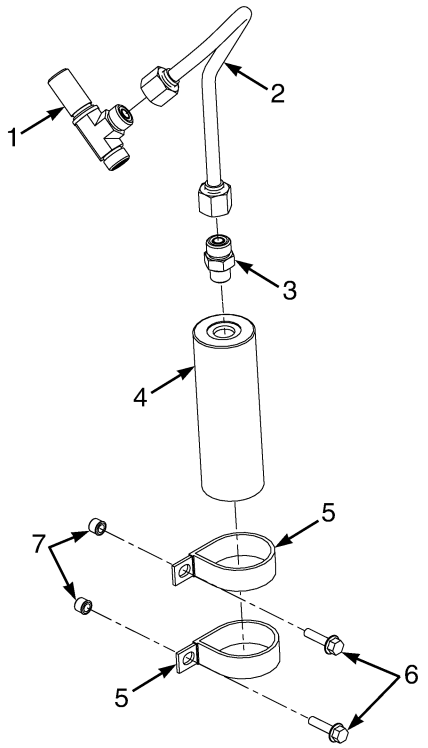

BP220164

ITEM	PART NO.	DESCRIPTION	QTY
1	580096234	T-Fitting	1
2	580095898	Tube Assy	1
3	580019808	Fitting	1
3	504155200	O-Ring	1
3	052645200	O-Ring	1
4	580095679	Accumulator	1
5	580006935	Clamp	2
6	580049840	Capscrew	2
7	580096292	Insert	2
7	~~580004321~~		
	580047919	Nut (Alternate Part)	2

©2015 Yale Europe Materials Handling Limited

5 BRAKE SYSTEM

SECTION 5
BRAKE SYSTEM

DESCRIPTION	PAGE
ACCELERATOR PEDAL	
FOOT DIRECTIONAL CONTROL	5-12
STANDARD	5-10
BRAKE PEDAL LINKAGE	5-2
MASTER CYLINDER	5-4
PARKING BRAKE RELEASE	
→ 2/2008	5-6
2/2008 →	5-8

©2015 Yale Europe Materials Handling Limited

BRAKE PEDAL LINKAGE (FIGURE 5-1)

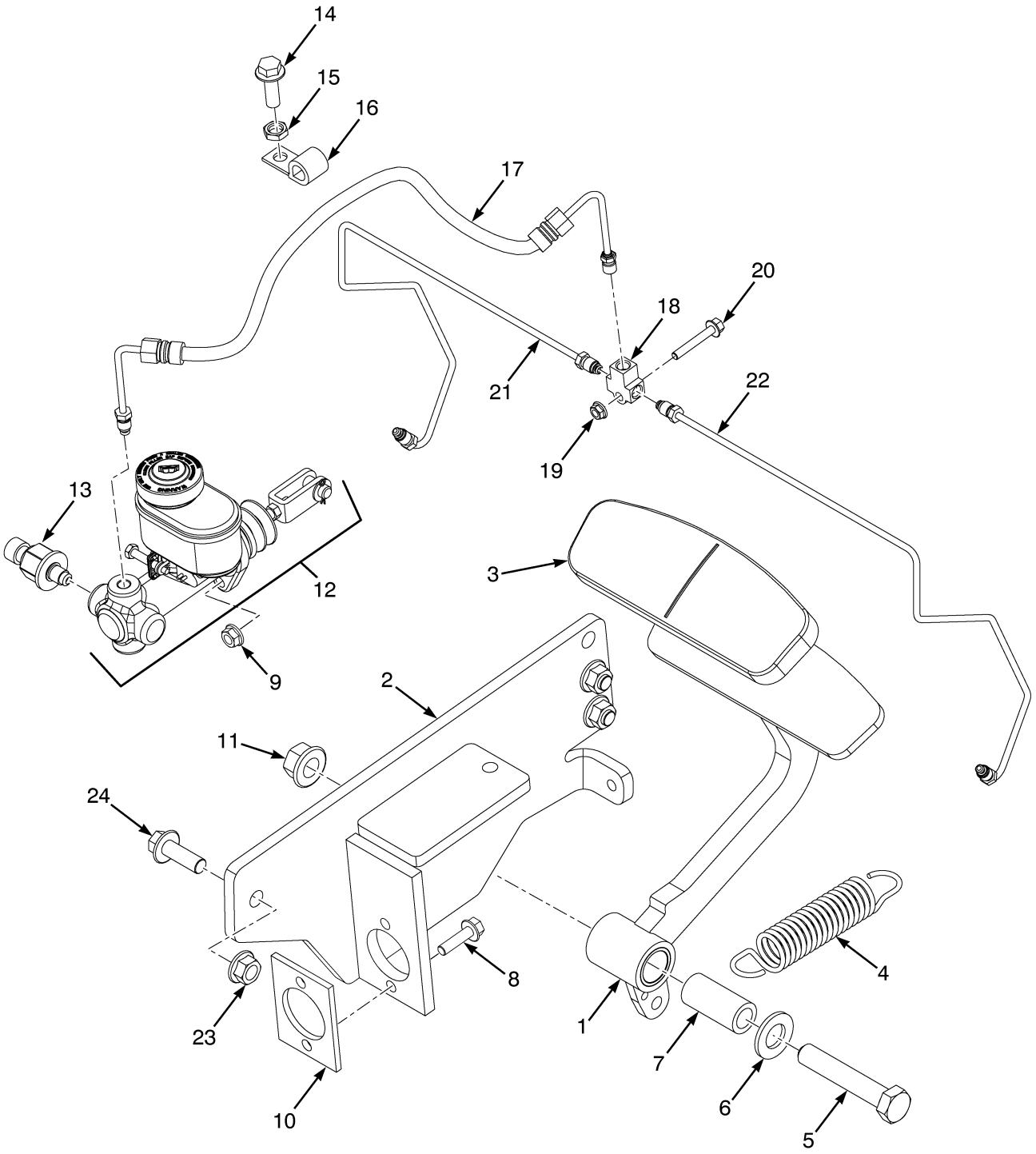

©2015 Yale Europe Materials Handling Limited

BRAKE PEDAL LINKAGE

ITEM	PART NO.	DESCRIPTION	QTY
	582002648	Brake Assy	1
1	580093059	Pedal Assy	1
2	**a** 580093061	Mounting Weldment	1
2	**c** 582039333	Mounting Weldment	1
3	580088377	Pad (Brake Pedal)	1
4	505966598	Spring	1
5	580036662	Capscrew	1
6	580088381	Washer	1
7	580088380	Tube	1
8	**a** 580036662	Capscrew	2
8	**c** 580049229	Capscrew	2
9	580027573	Nut (Flange)	2
10	**b** 580093060	Spacer Block	1
11	580058194	Nut	1
12	580084793	Master Cylinder (☞Page 5-4)	1
13	**d** ~~580096841~~		
	582033506	Pressure Transducer	1
14	580046451	Capscrew	1
15	580060020	Nut	2
16	504236269	Clamp	1
16	580093232	Clamp (Alternate Part)	1
17	580090544	Hose Assy	1
18	580075200	Fitting	1
19	~~580004321~~		
	580047919	Nut	1
19	580051800	Nut (Foldover) (Alternate Part)	1
20	580093196	Capscrew	1
20	580049840	Capscrew (Alternate Part)	1
21	580072267	Tube Assy	1
22	580072266	Tube Assy	1
23	~~580004218~~		
	580056528	Nut (Shoulder)	3
24	580056667	Capscrew	3

FOOTNOTES:

a → 2/2015
b → S/N G807B02201H
c 2/2015 →
d S/N G807B05677L →

©2015 Yale Europe Materials Handling Limited

MASTER CYLINDER (FIGURE 5-2)

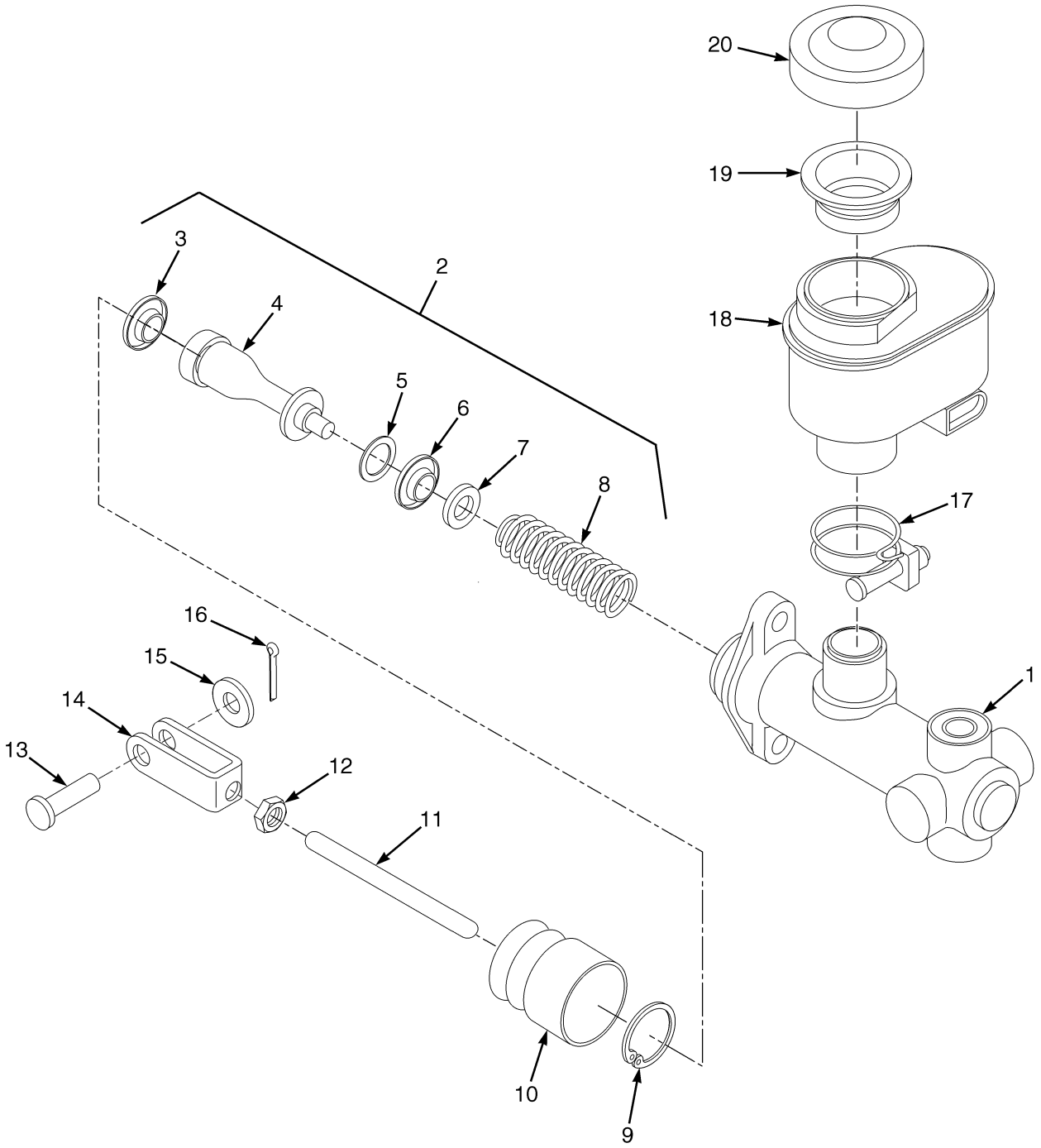

©2015 Yale Europe Materials Handling Limited

MASTER CYLINDER

ITEM	PART NO.	DESCRIPTION	QTY
	580084793	Master Cylinder (Assembly)	1
1	. . . . .	Master Cylinder	1
2	. . . . .	Piston Assembly	1
3	. . . . .	Cup	1
4	. . . . .	Piston	1
5	. . . . .	Spacer	1
6	. . . . .	Cup	1
7	. . . . .	Retainer	1
8	. . . . .	Spring	1
9	. . . . .	Retaining Ring	1
10	580047673	Boot	1
11	580085603	Push Rod	1
12	580085604	Nut	1
13	580085606	Pin	1
14	~~580047597~~		
	912261301	Rod End	1
15	580047600	Washer	1
16	580085607	Split Pin	1
17	580085608	Clamp	1
18	. . . . .	Reservoir	1
19	. . . . .	Gasket	1
20	. . . . .	Cap	1
21	580085610	Repair Kit	1

©2015 Yale Europe Materials Handling Limited

PARKING BRAKE RELEASE (FIGURE 5-3)

(→ 2/2008)

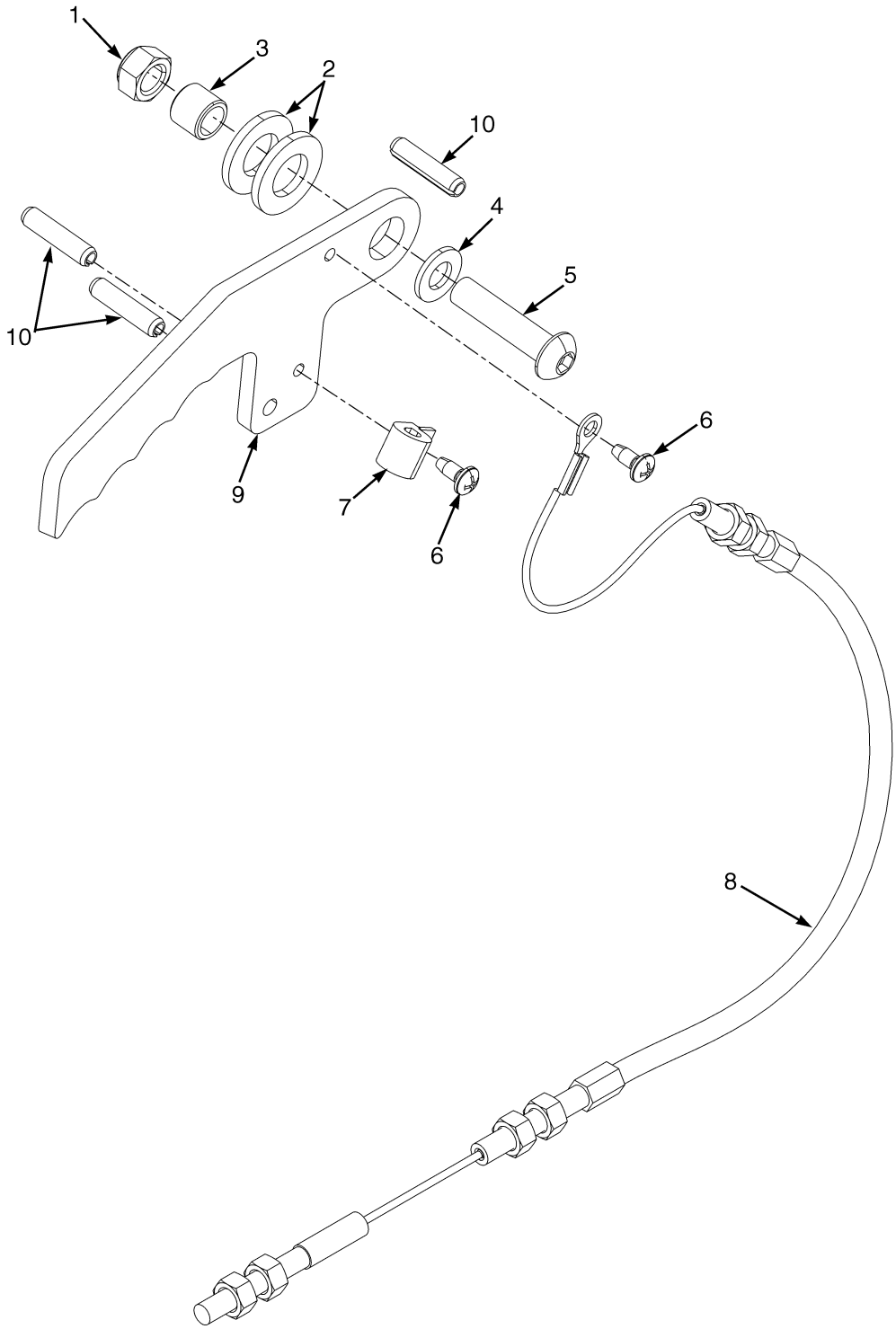

©2015 Yale Europe Materials Handling Limited

PARKING BRAKE RELEASE

(→ 2/2008)

ITEM	PART NO.	DESCRIPTION	QTY
1	449015098	Nut	1
2	449021010	Washer	2
3	580090260	Spacer	1
4	580055631	Washer	1
5	580025509	Capscrew	1
6	580046077	Screw	2
7	580014572	Clamp	1
8	580080801	Cable	1
9	580089162	Handle	1
10	449034052	Pin	3
	a 580094284	Self Tapping Screw	1

FOOTNOTES:

a Not Illustrated

©2015 Yale Europe Materials Handling Limited

PARKING BRAKE RELEASE (FIGURE 5-4)

(2/2008 →)

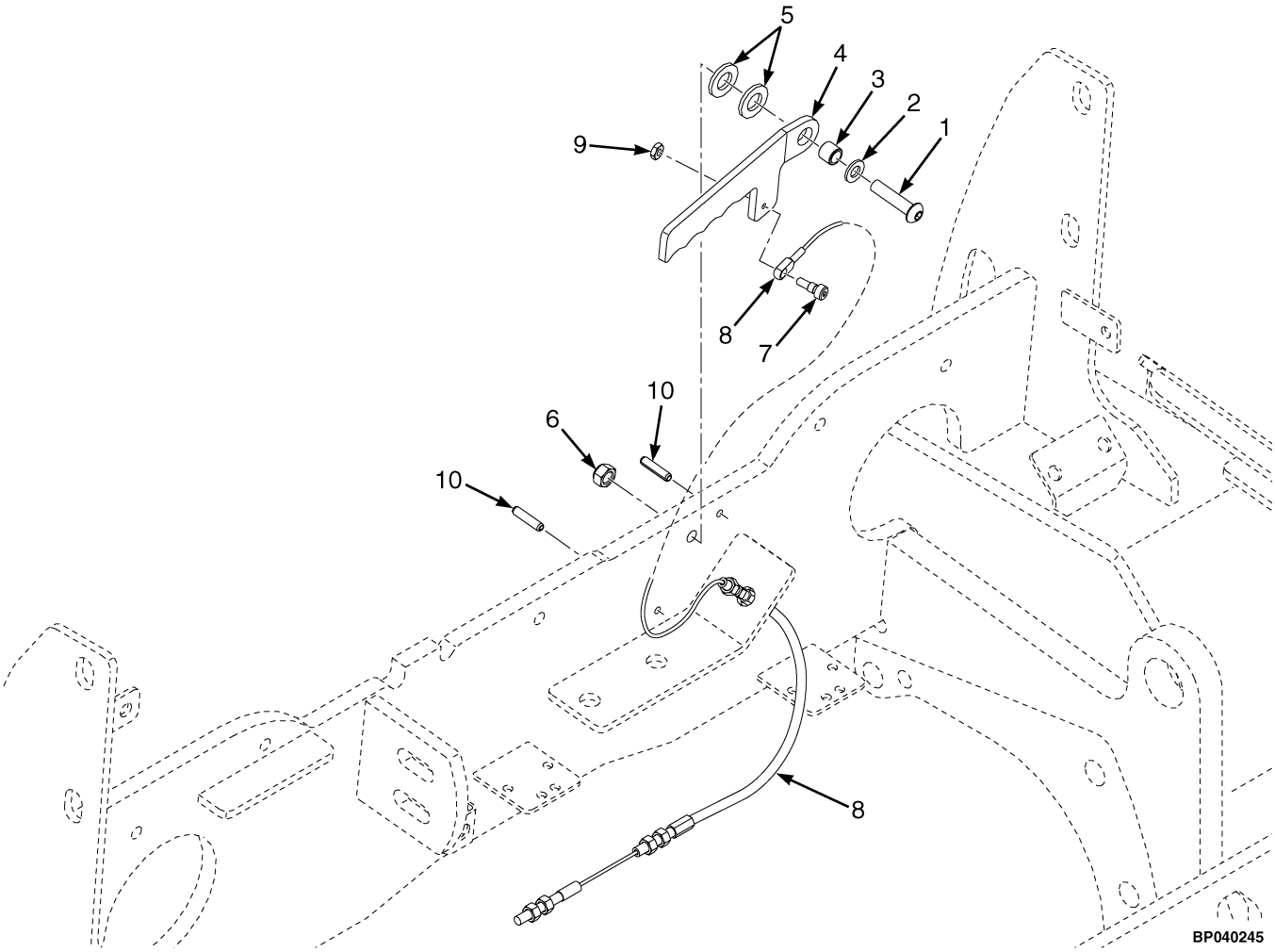

©2015 Yale Europe Materials Handling Limited

PARKING BRAKE RELEASE

(2/2008 →)

ITEM	PART NO.	DESCRIPTION	QTY
1	580025509	Capscrew	1
2	580055631	Washer	1
3	580090260	Spacer	1
4	580089162	Handle	1
5	449021010	Washer	2
6	449015098	Nut	1
7	580009419	Capscrew	1
8	580080801	Cable	1
9	014936200	Nut	1
10	449034052	Pin	2

©2015 Yale Europe Materials Handling Limited

ACCELERATOR PEDAL (FIGURE 5-5)
STANDARD

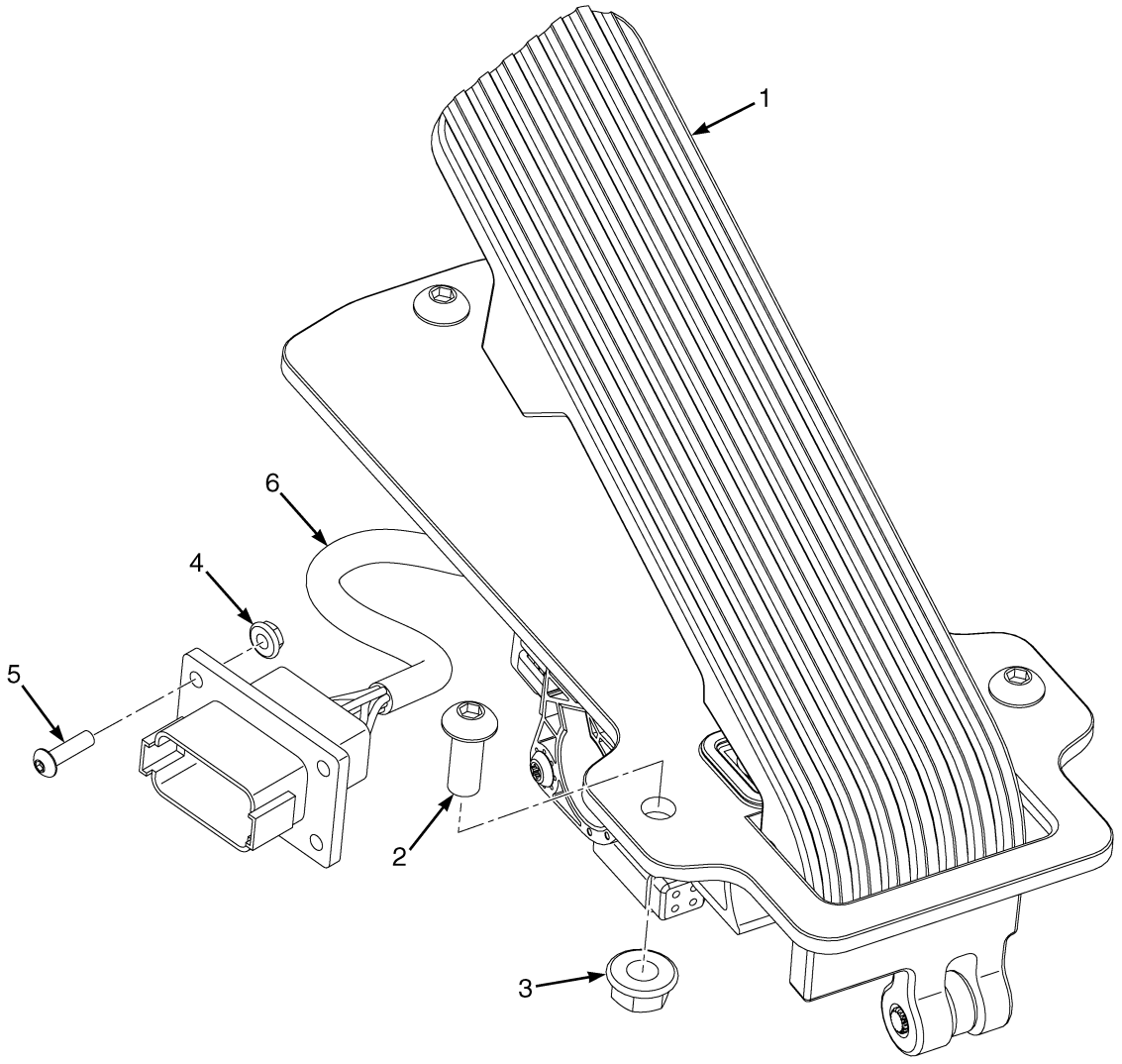

BP040127

©2015 Yale Europe Materials Handling Limited

ACCELERATOR PEDAL
STANDARD

ITEM	PART NO.	DESCRIPTION	QTY
1	**b** 580078742	Accelerator Pedal (Standard)	1
1	**d** 582006585	Accelerator Pedal (Standard w/ Pad)	1
1	**d** 582006587	Accelerator Pedal (Cover)	1
1	582033451	Kit-Sensor	1
2	932729905	Capscrew	3
3	**a** 580027573	Nut (Flange)	3
3	**c** 504230271	Nut (Flange)	3
4	580044946	Nut	2
5	932726904	Capscrew	2
6	580092621	Wire Harness	1

FOOTNOTES:

a → 10/2013
b → S/N G807B02645H
c 10/2013 →
d S/N G807B02646H →

©2015 Yale Europe Materials Handling Limited

ACCELERATOR PEDAL (FIGURE 5-6)
FOOT DIRECTIONAL CONTROL

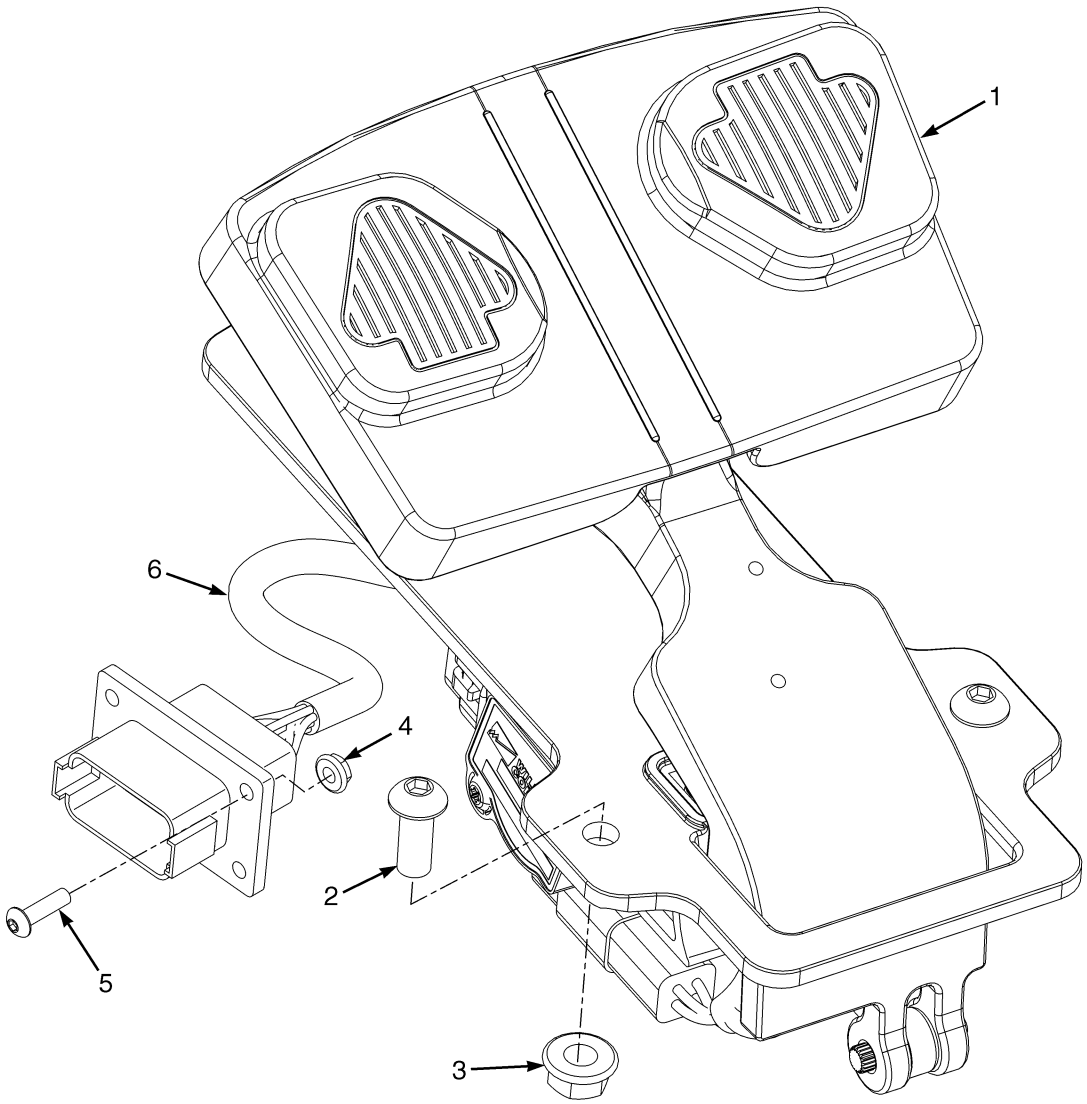

BP040017

©2015 Yale Europe Materials Handling Limited

ACCELERATOR PEDAL
FOOT DIRECTIONAL CONTROL

ITEM	PART NO.	DESCRIPTION	QTY
1	~~524287557~~		
	550051639	Accelerator Pedal	1
2	932729905	Capscrew	3
3	**a** 580027573	Nut (Flange)	3
3	**b** 504230271	Nut (Flange)	3
4	580044946	Nut	2
5	932726904	Capscrew	2
6	580092621	Wire Harness	1

FOOTNOTES:

a → 10/2013

b 10/2013 →

©2015 Yale Europe Materials Handling Limited

NOTES

©2015 Yale Europe Materials Handling Limited

6 HYDRAULIC SYSTEM

SECTION 6
HYDRAULIC SYSTEM

DESCRIPTION	PAGE
CONTROL VALVE	
ELECTRO-HYDRAULIC - 3 AND 4 FUNCTION	6-66
HYDRAULIC CONTROL VALVE	
MANUAL - 3 AND 4 FUNCTION (→ S/N G807B03975K)	6-44
MANUAL - 3 AND 4 FUNCTION (S/N G807B03976K ↔ 2/2015)	6-48
MANUAL - 3 AND 4 FUNCTION (2/2015 →)	6-52
HYDRAULIC CONTROLS	
ELECTRO-HYDRAULIC	6-64
MANUAL	6-36
HYDRAULIC FILTER HOUSING	6-20
HYDRAULIC HOSE	
MAST	6-34
HYDRAULIC HOSES AND FITTINGS	
AUXILIARY HOSES	6-32
STEERING (→ PENDING PER ECN 15533404) (→ 2/2015)	6-26
STEERING - WITH SYNCRONOUS STEERING (PENDING PER ECN 15533404 →)	6-28
STEERING - WITHOUT SYNCRONOUS STEERING (PENDING PER ECN 15533404 →)	6-30
HYDRAULIC LEVERS - LINKAGE ASSEMBLY (MANUAL)	6-40
HYDRAULIC MOTOR	6-12
HYDRAULIC POWER UNIT INSTALLATION	
→ 2/2015	6-4
ELECTRIC STEERING	6-6
HYDRAULIC PUMP	6-14
HYDRAULIC PUMP AND MOTOR	
ELECTRIC STEERING (2/2015 →)	6-10
HYDRAULIC PUMP AND MOTOR ASSEMBLY	
→ 2/2015	6-8
HYDRAULIC SUPPLY AND RETURN	
→ 2/2015	6-22
WITH ELECTRIC STEERING (2/2015 →)	6-24
HYDRAULIC TANK AND ATTACHING PARTS	
ELECTRIC STEERING (2/2015 →)	6-18
HYDRAULIC TANK ASSEMBLY	
→ 2/2015	6-16
INLET SECTION	
ELECTRO-HYDRAULIC CONTROL VALVE	6-68
MANUAL HYDRAULIC CONTROL VALVE	6-56
LIFT/TILT SECTION	
ELECTRO-HYDRAULIC CONTROL VALVE	6-70
LIFT/TILT/AUXILIARY SECTION	
MANUAL HYDRAULIC CONTROL VALVE	6-58
OUTLET SECTION	
MANUAL HYDRAULIC CONTROL VALVE	6-60
POSITIONER SENSOR	
MANUAL HYDRAULIC CONTROL VALVE	6-62
TIE RODS	
ELECTRO-HYDRAULIC CONTROL VALVE	6-72
MANUAL HYDRAULIC CONTROL VALVE	6-61
TILT CYLINDER AND MAST INSTALLATION	6-74

©2015 Yale Europe Materials Handling Limited

SECTION 6
HYDRAULIC SYSTEM

DESCRIPTION	PAGE
TILT CYLINDER ASSEMBLY	6-76

©2015 Yale Europe Materials Handling Limited

NOTES

©2015 Yale Europe Materials Handling Limited

HYDRAULIC POWER UNIT INSTALLATION (FIGURE 6-1)

(→ 2/2015)

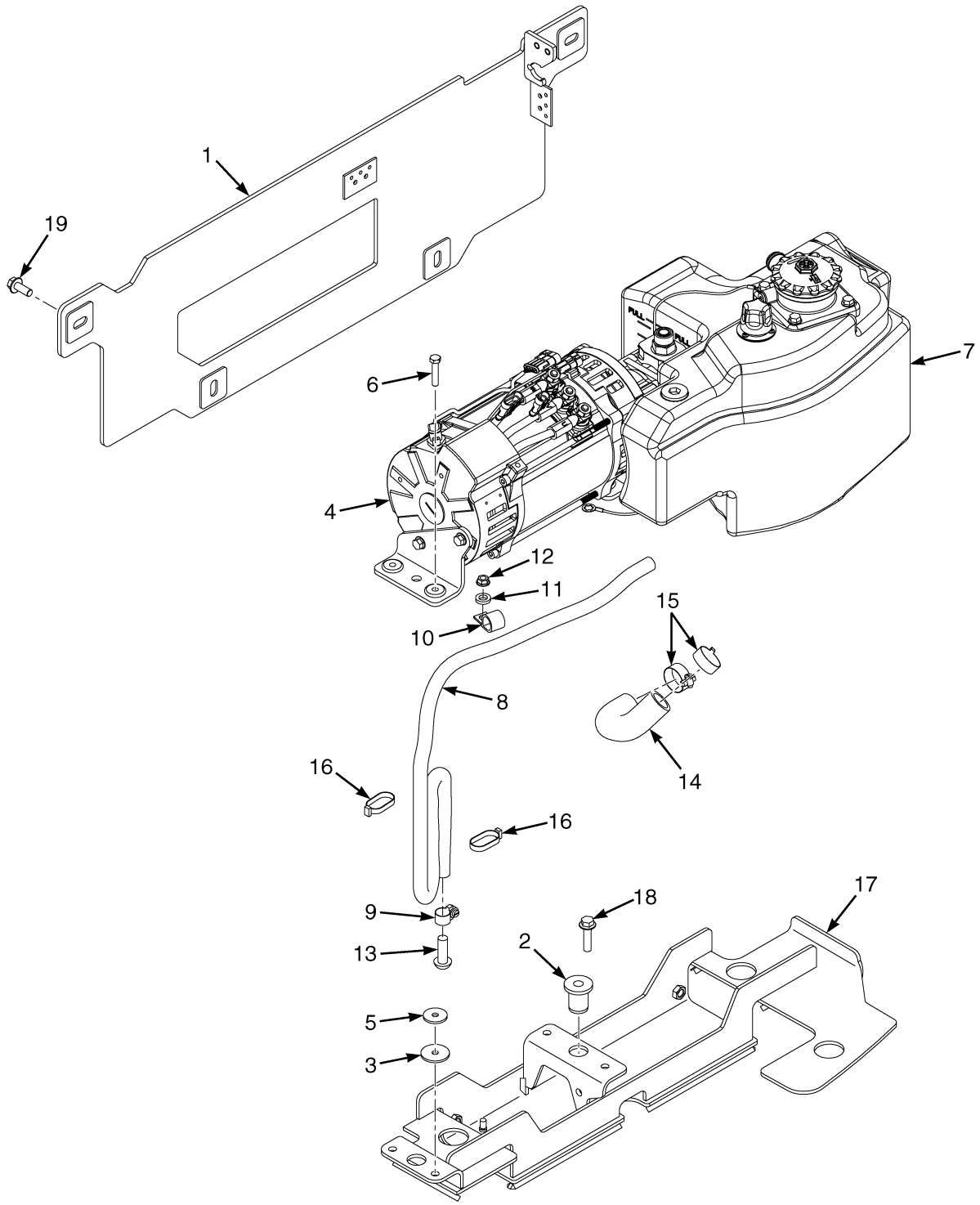

©2015 Yale Europe Materials Handling Limited

HYDRAULIC POWER UNIT INSTALLATION

(→ 2/2015)

ITEM	PART NO.	DESCRIPTION	QTY
	. . . . .	Hydraulic Power Unit	1
1	**a** 580088376	Bulkhead	1
1	**b** 582034185	Bulkhead	1
2	504228297	Grommet	1
3	524335565	Washer	4
4	580081882	Pump And Motor (☞Page 6-8)	1
5	524335567	Washer	4
6	449001028	Capscrew	4
7	. . . . .	Hydraulic Tank (☞Page 6-16)	1
8	580049228	Hose Assy	1
9	502056906	Clamp	2
10	060023600	Clamp	1
11	580096813	Spacer	1
12	580027573	Nut (Flange)	1
13	580044776	Rivet	1
14	580088041	Hose	1
15	502056904	Clamp (Hose)	1
16	312850034	Strap Clamp	2
17	524335575	Bracket Wldmt	1
18	580030970	Capscrew	3
19	900014293	Capscrew	4

FOOTNOTES:

a → 10/2013

b 10/2013 →

©2015 Yale Europe Materials Handling Limited

HYDRAULIC POWER UNIT INSTALLATION (FIGURE 6-2)

ELECTRIC STEERING

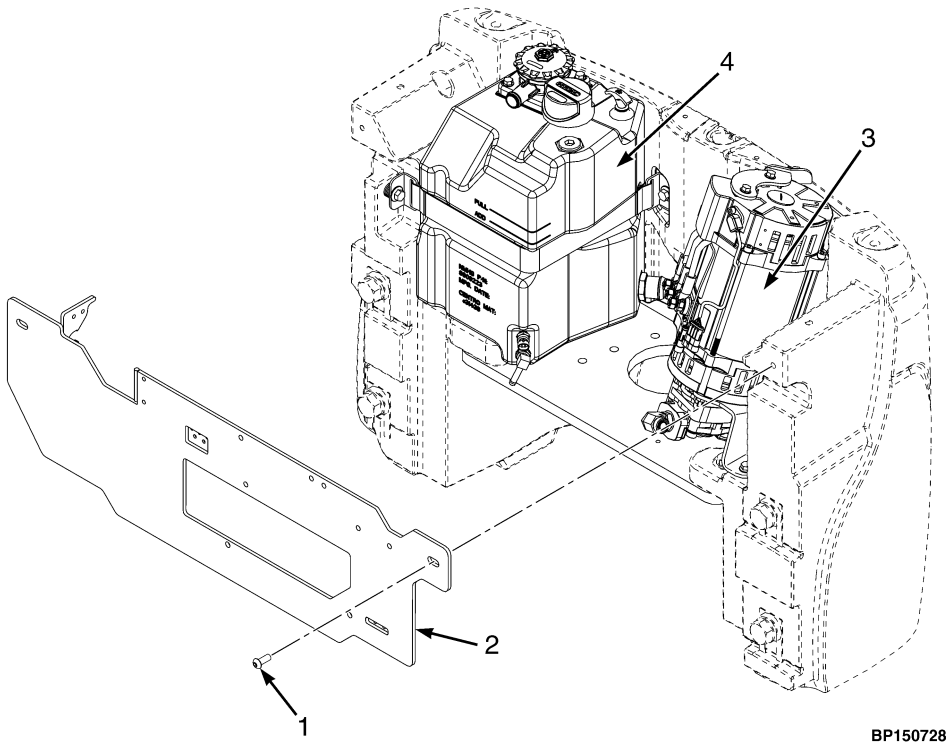

ITEM	PART NO.	DESCRIPTION	QTY
1	900014293	Capscrew	2
2	582021376	Bulkhead Weldment	1
3	. . . . .	Hydraulic Pump and Motor (☞Page 6-10).....	..
4	. . . . .	Hydraulic Tank (☞Page 6-18).....	..

©2015 Yale Europe Materials Handling Limited

NOTES

©2015 Yale Europe Materials Handling Limited

HYDRAULIC PUMP AND MOTOR ASSEMBLY (FIGURE 6-3)

(→ 2/2015)

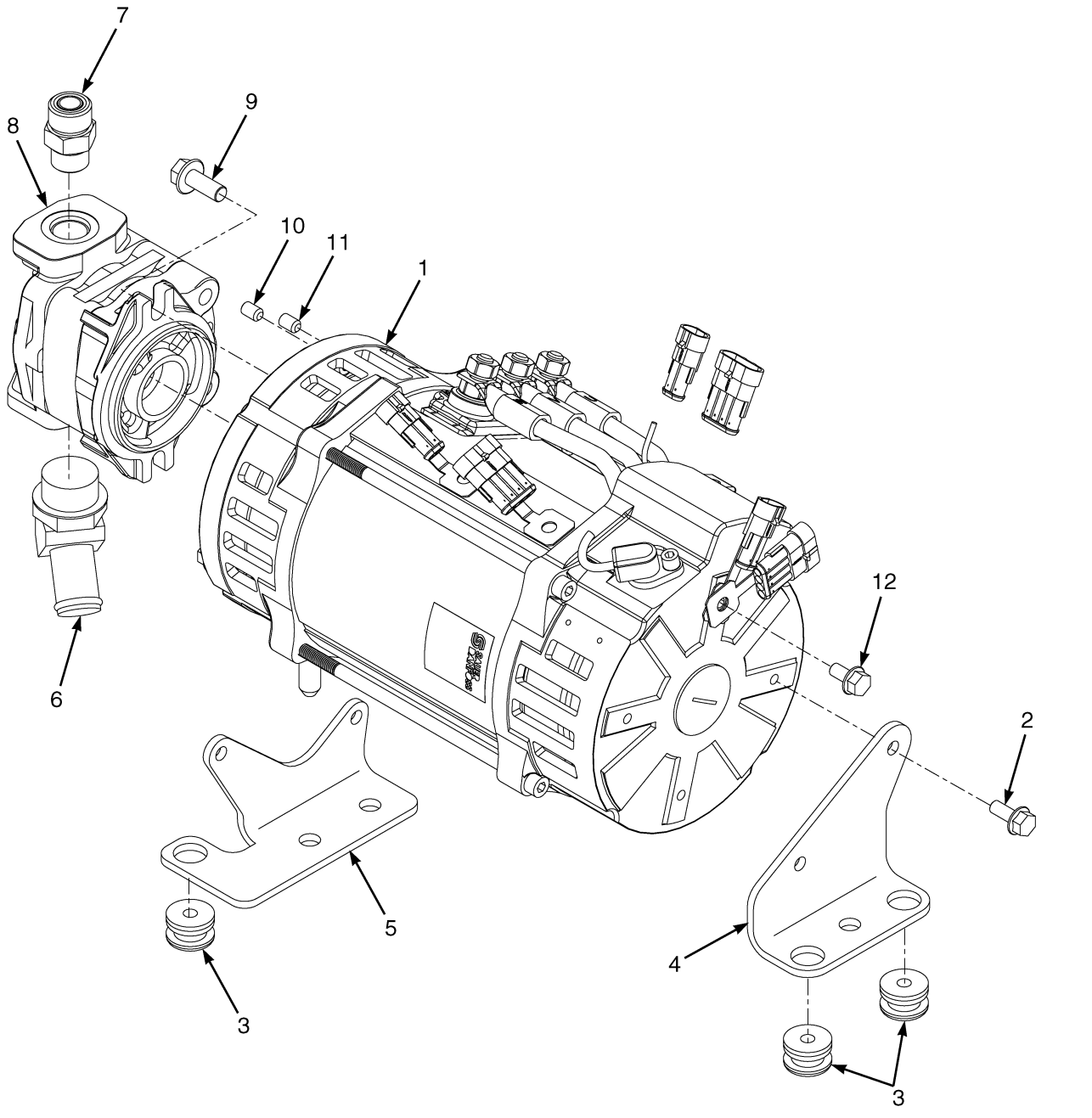

©2015 Yale Europe Materials Handling Limited

HYDRAULIC PUMP AND MOTOR ASSEMBLY

(→ 2/2015)

ITEM	PART NO.	DESCRIPTION	QTY
1	580078524	Motor Hydraulic (☞Page 6-12)	1
2	580049231	Capscrew	4
3	580043044	Mount	3
4	**b** 580088046	Bracket	1
4	**c** 524335572	Bracket Wldmt (Rear Motor Mount)	1
5	**b** 580088045	Bracket	1
5	**c** 524335570	Bracket (Front Motor Mount)	1
6	316445012	Fitting	1
6	052645700	O-Ring	1
7	580019817	Fitting	1
7	580019387	O-Ring	1
7	052645400	O-Ring	1
8	580087788	Hydraulic Pump Assembly (☞Page 6-14)	1
9	580030970	Capscrew	2
10	**a**	Dowel	..
11	**a**	Dowel	..
12	**a**	Capscrew	..

FOOTNOTES:

a Not used on this application
b → S/N G807B01619G
c S/N G807B01620G →

©2015 Yale Europe Materials Handling Limited

HYDRAULIC PUMP AND MOTOR (FIGURE 6-4)
ELECTRIC STEERING (2/2015 →)

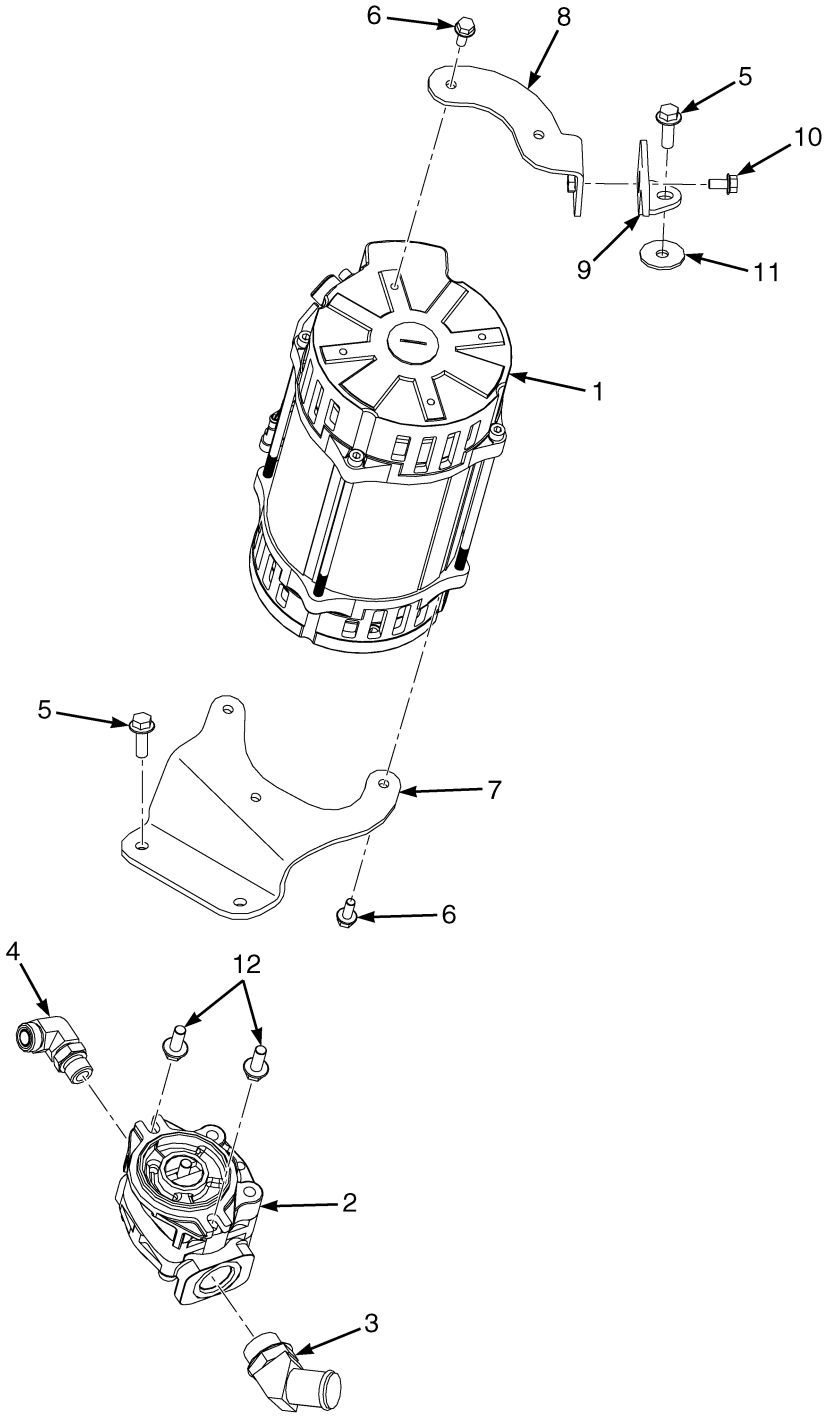

©2015 Yale Europe Materials Handling Limited

HYDRAULIC PUMP AND MOTOR

ELECTRIC STEERING (2/2015 →)

ITEM	PART NO.	DESCRIPTION	QTY
1	580078524	Motor Hydraulic (☞Page 6-12)	1
2	580087788	Hydraulic Pump Assembly (☞Page 6-14)	1
3	580066779	Fitting	1
4	580056465	Fitting	1
5	580046451	Capscrew	3
6	580049231	Capscrew	5
7	582029495	Bracket	1
8	582029497	Bracket Wldmt	1
9	582029496	Bracket Wldmt	1
10	~~582041056~~		
	580047714	Capscrew	1
11	520039885	Washer	1
12	580030970	Capscrew	3

©2015 Yale Europe Materials Handling Limited

HYDRAULIC MOTOR (FIGURE 6-5)

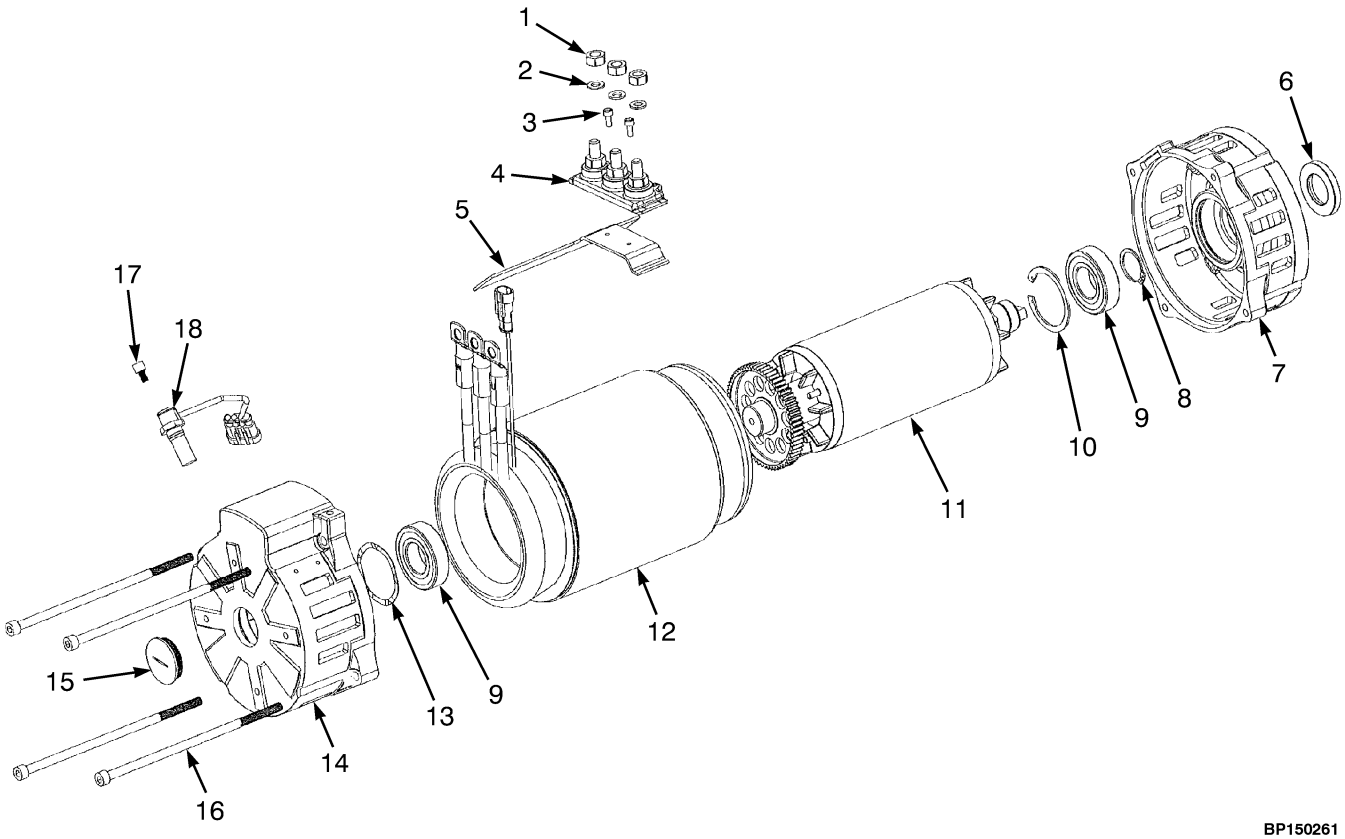

ITEM	PART NO.	DESCRIPTION	QTY
	580078524	Motor Hydraulic	1
1	449015044	Nut	3
2	~~504057795~~		
	449022013	Lockwasher	3
3	580009061	Screw	2
4	580091422	Terminal Post	1
5	580091423	Bracket	1
6	580059753	Ring (Input Shaft Seal)	1
7	~~580093495~~		
	582012597	Shield	1
8	~~580091430~~		
	015915900	Snap Ring	1
9	580027008	Bearing	2
10	~~580027009~~		
	640046913	Snap Ring	1
11	580091420	Armature	1
12	580091421	Housing	1
13	580091425	Spring Washer	1
14	580091427	Shield	1
15	~~580091428~~		
	582012598	Plug	1
16	~~580091426~~		
	582000959	Screw	4

©2015 Yale Europe Materials Handling Limited

ITEM	PART NO.	DESCRIPTION	QTY
17	582012661	Capscrew	1
18	~~580091429~~		
	582014889	Sensor Assembly (Speed) (Speed)	1

©2015 Yale Europe Materials Handling Limited

HYDRAULIC PUMP (FIGURE 6-6)

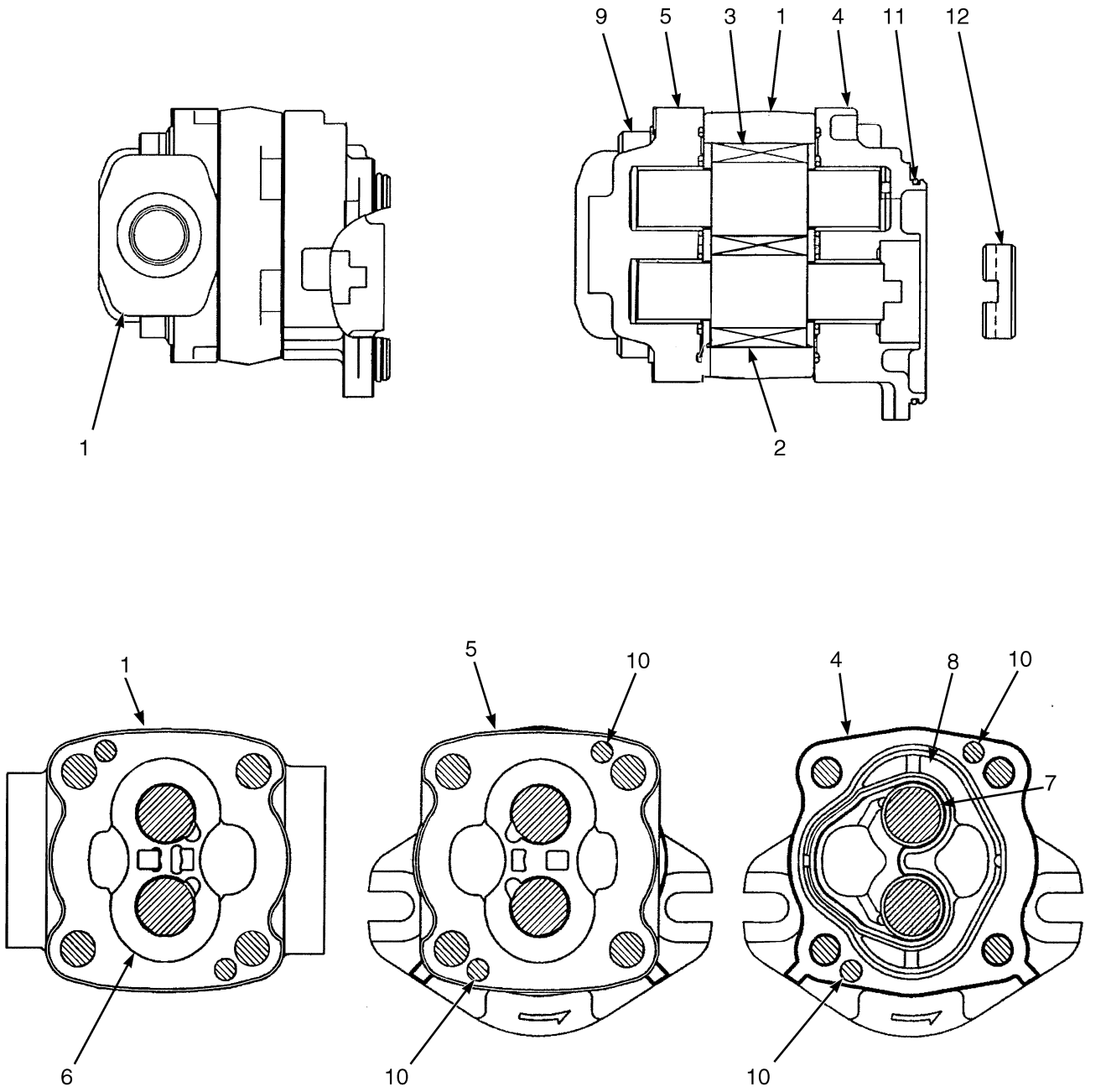

BP150156

©2015 Yale Europe Materials Handling Limited

HYDRAULIC PUMP

ITEM	PART NO.	DESCRIPTION	QTY
	580087788	Hydraulic Pump Assembly	1
1	. . . . .	Housing	1
2	. . . . .	Drive Gear	1
3	. . . . .	Gear	1
4	580086892	Flange	1
5	580086893	Cover Plate	1
6	580069355	Side Plate	2
7	. . . . .	Seal (Plate)	2
8	. . . . .	Back-Up	2
9	580089242	Screw	4
10	580054028	Dowel	4
11	. . . . .	Seal	1
12	580086894	Coupling	1
	580089241	Kit-Gear	1
	a 580086895	Kit-Seal	1

FOOTNOTES:

a Input Shaft Sealing Ring is not included. See Motor for correct part.

©2015 Yale Europe Materials Handling Limited

HYDRAULIC TANK ASSEMBLY (FIGURE 6-7)

(→ 2/2015)

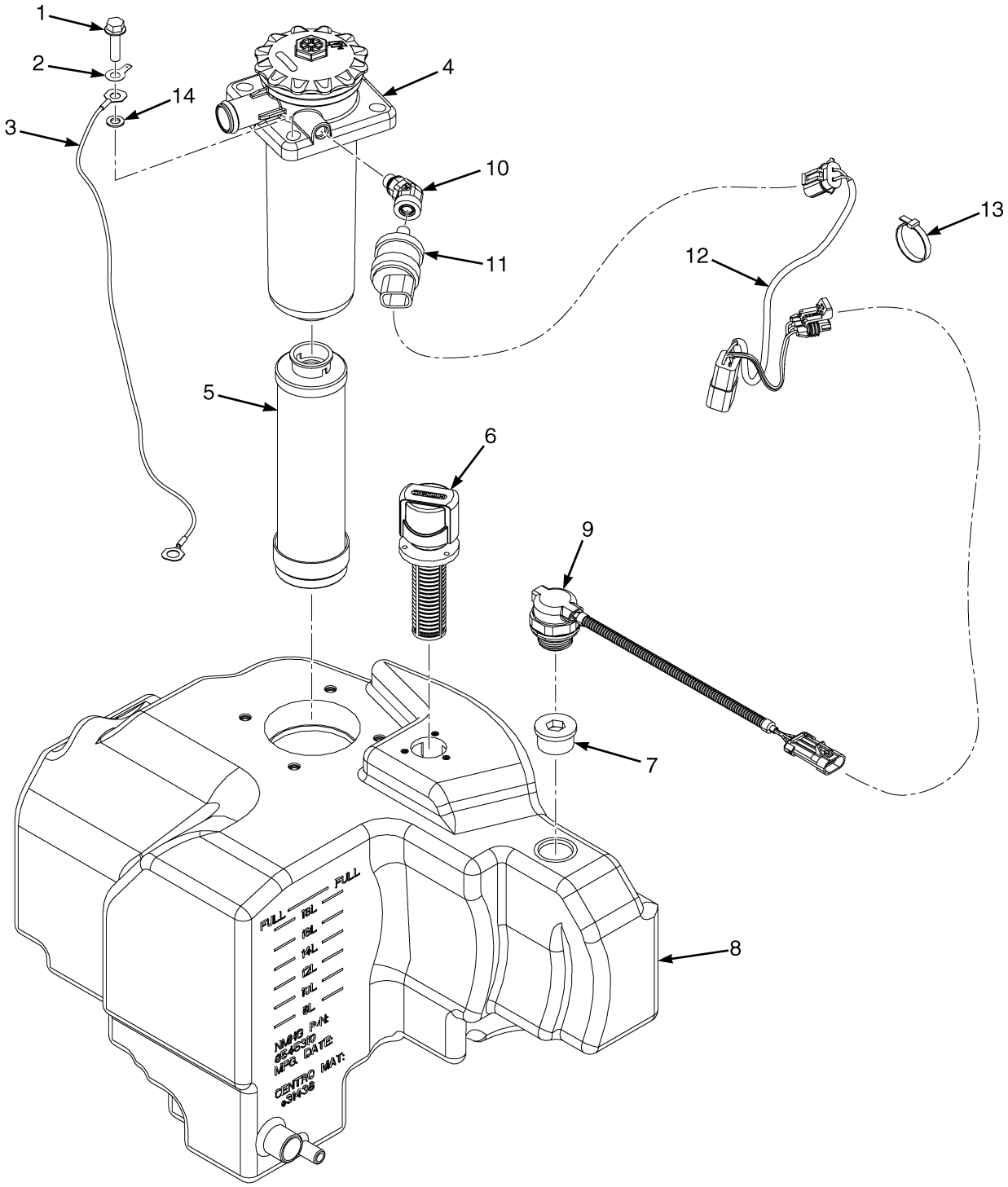

BP150250

©2015 Yale Europe Materials Handling Limited

HYDRAULIC TANK ASSEMBLY

(→ 2/2015)

ITEM	PART NO.	DESCRIPTION	QTY
	. . . . .	Hydraulic Tank	1
1	449001343	Capscrew	4
2	520044855	Tab	1
3	580085376	Wire Harness	1
4	580090334	Hydraulic Filter Housing Assy (☞Page 6-20)	1
5	580084425	Hydraulic Filter (Element)	1
6	582010160	Breather	1
7	505971539	Fitting	1
7	052645600	O-Ring	1
8	580091900	Hydraulic Tank	1
9	580087332	Sensor (Tank Level)	1
10	580093418	Adapter	1
11	580049602	Pressure Switch	1
12	580084295	Wire Harness (☞Page 2-155)	1
13	312850034	Strap Clamp	1
14	449022016	Lockwasher	4

©2015 Yale Europe Materials Handling Limited

HYDRAULIC TANK AND ATTACHING PARTS (FIGURE 6-8)

ELECTRIC STEERING (2/2015 →)

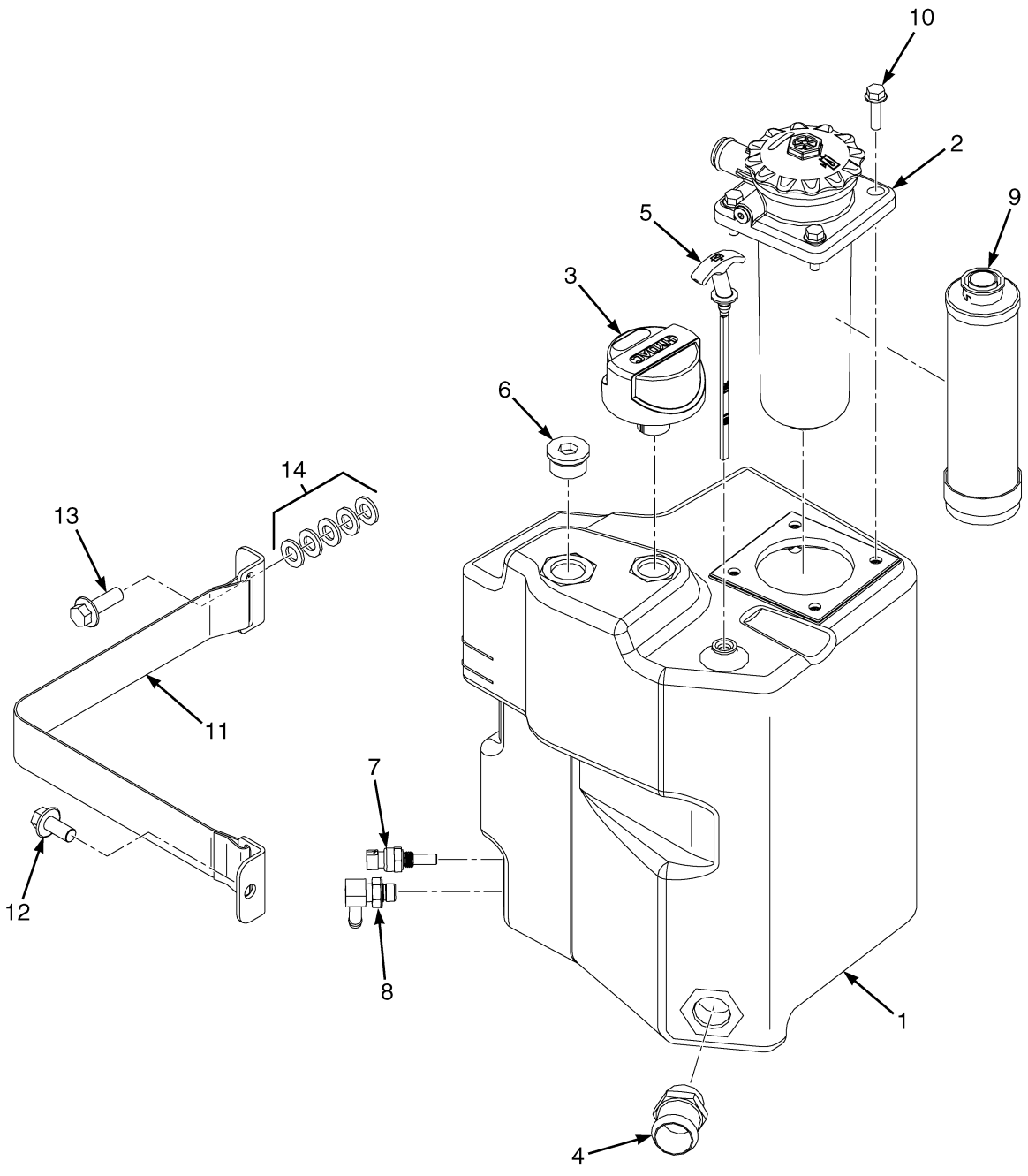

©2015 Yale Europe Materials Handling Limited

HYDRAULIC TANK AND ATTACHING PARTS

ELECTRIC STEERING (2/2015 →)

ITEM	PART NO.	DESCRIPTION	QTY
1	582023935	Hydraulic Tank	1
2	580090334	Hydraulic Filter Housing Assy (☞Page 6-20)	1
3	580056337	Breather	1
4	580052324	Adapter (Suction)	1
5	~~582007121~~		
	582022524	Dipstick	1
6	505971539	Fitting	1
7	580036023	Temperature Sensor	1
8	059726400	Fitting	1
9	580084425	Hydraulic Filter (Element)	1
10	580049229	Capscrew	4
11	582023286	Strap	1
12	580090672	Bolt	1
13	580056667	Capscrew	1
14	449021010	Washer	5

©2015 Yale Europe Materials Handling Limited

HYDRAULIC FILTER HOUSING (FIGURE 6-9)

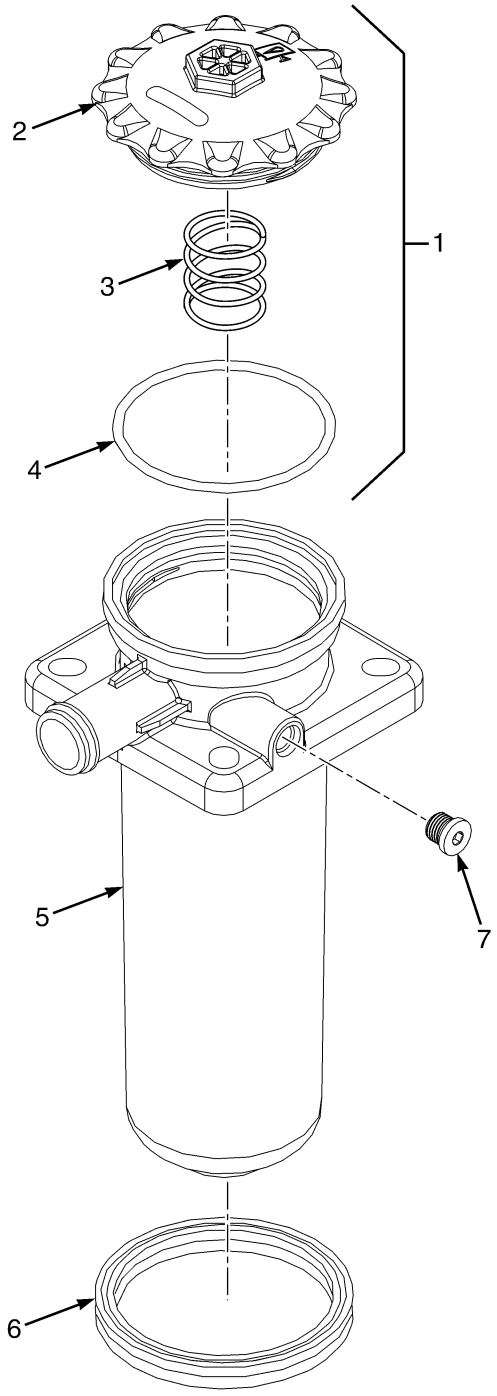

BP140170

©2015 Yale Europe Materials Handling Limited

HYDRAULIC FILTER HOUSING

ITEM	PART NO.	DESCRIPTION	QTY
	580090334	Hydraulic Filter Housing Assy	1
1	580087580	Cover Assembly	1
2	. . . . .	Lid	1
3	. . . . .	Spring	1
4	. . . . .	Seal	1
5	580087586	Cover	1
6	. . . . .	Quad Ring	1
7	315976062	Fitting	1
	580087581	Kit-Seal	1

©2015 Yale Europe Materials Handling Limited

HYDRAULIC SUPPLY AND RETURN (FIGURE 6-10)

(→ 2/2015)

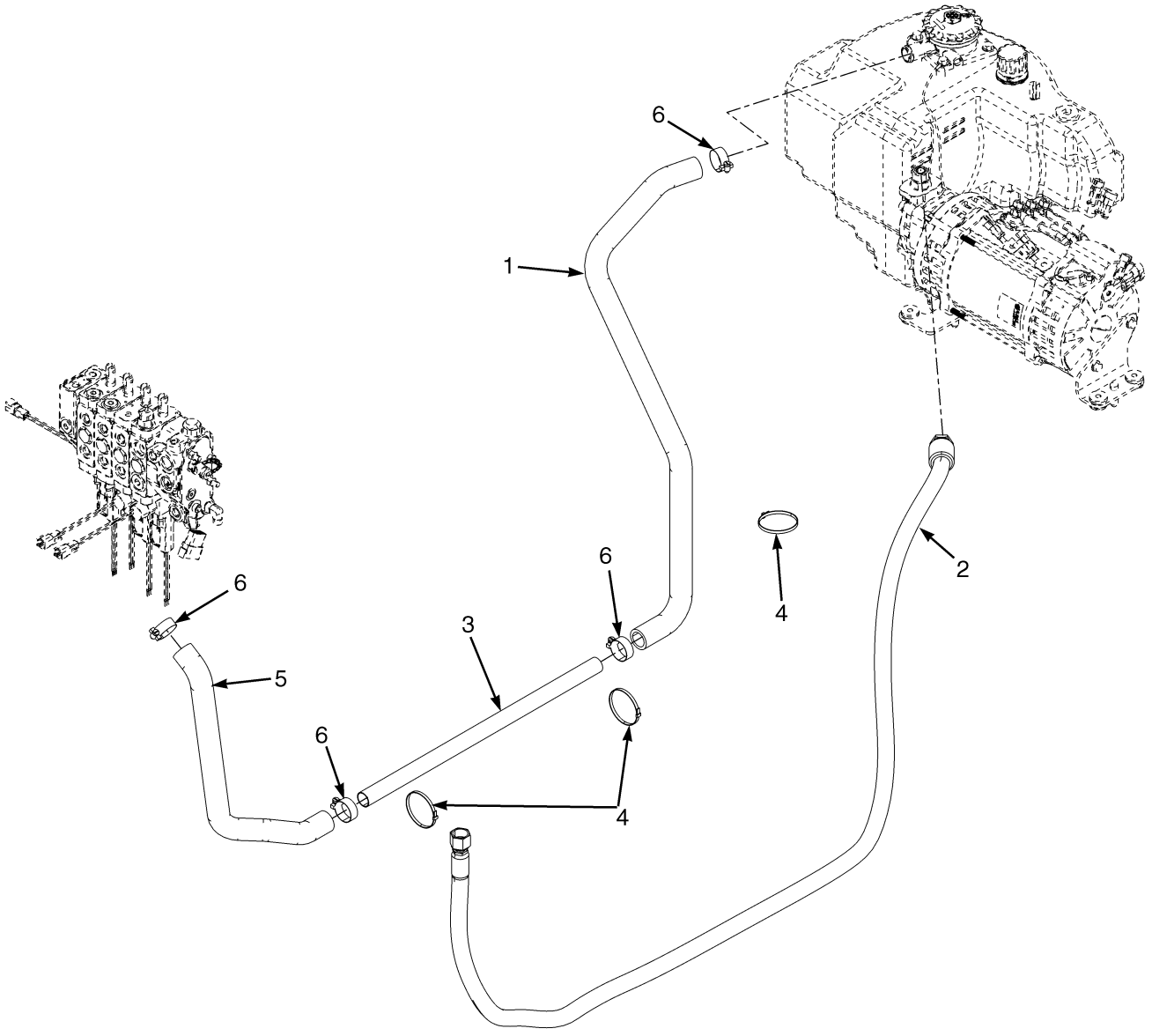

©2015 Yale Europe Materials Handling Limited

HYDRAULIC SUPPLY AND RETURN

(→ 2/2015)

KEY:
A: 546 mm Battery Compartment
B: 642 mm Battery Compartment
C: 750 mm Battery Compartment

ITEM	PART NO.	DESCRIPTION	QTY A	QTY B	QTY C
1	580093289	Hose	1	1	1
2	580081678	Hose Assy (Manual)	1	..	..
2	580081679	Hose Assy (Manual)	..	1	..
2	580081680	Hose Assy (Manual)	..	..	1
2	580086478	Hose Assy (E. Hydraulic)	1	..	..
2	580086479	Hose Assy (E. Hydraulic)	..	1	..
2	580086480	Hose Assy (E. Hydraulic)	..	..	1
3	580081686	Pipe	1	..	..
3	580081687	Pipe	..	1	..
3	580081688	Pipe	..	..	1
4	504070790	Strap Clamp	3	3	3
5	580093290	Hose (Manual)	1	1	1
5	582008645	Hose (Manual) (Alternate Part)	1	1	1
5	580093291	Hose (E. Hydraulic)	1	1	1
5	582008646	Hose (E Hydraulics) (Alternate Part)	1	1	1
6	502056904	Clamp (Hose)	3	3	3

©2015 Yale Europe Materials Handling Limited

HYDRAULIC SUPPLY AND RETURN (FIGURE 6-11)
WITH ELECTRIC STEERING (2/2015 →)

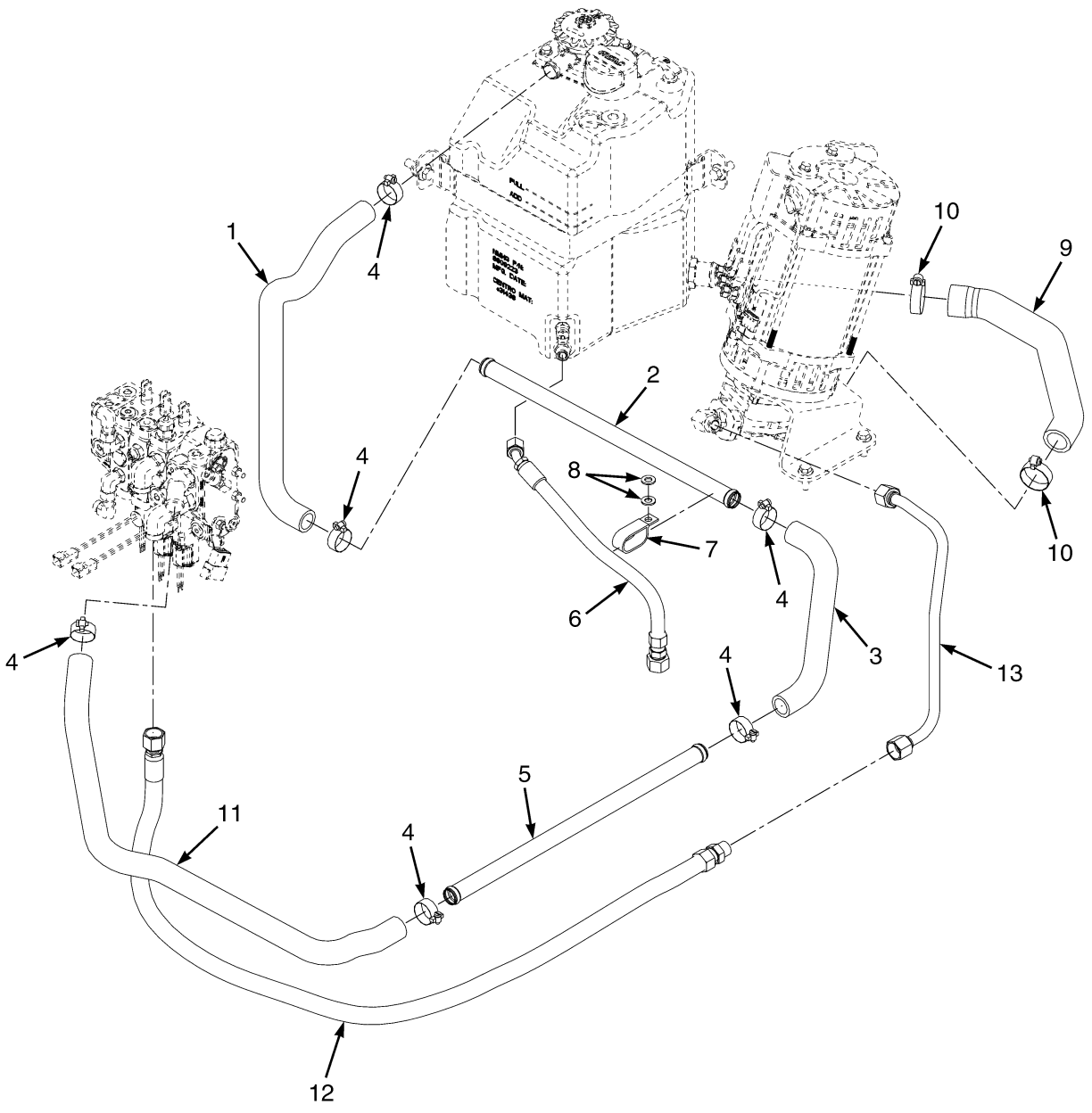

©2015 Yale Europe Materials Handling Limited

HYDRAULIC SUPPLY AND RETURN
WITH ELECTRIC STEERING (2/2015 →)

ITEM	PART NO.	DESCRIPTION	QTY
1	582030307	Hose (Rear Return RH)	1
2	582030309	Pipe	1
3	582030308	Hose (Rear Return LH)	1
4	502056904	Clamp (Hose)	6
5	580081686	Pipe (WB1)	1
5	580081687	Pipe (WB2)	1
5	580081688	Pipe (WB3)	1
6	582041959	Hose Assy (Drain)	1
7	520082886	Clamp	1
8	502566904	Washer	2
9	582024321	Hose (Tank Suction)	1
10	502056903	Clamp	2
11	**f** 582030138	Hose	1
11	**e** 582030137	Hose	1
11	**d** 582030135	Hose	1
11	**c** 582030136	Hose	1
12	**g** 582030507	Hose Assy (Supply)	1
12	**h** 582030506	Hose Assy	1
12	**i** 582030510	Hose Assy	1
12	**a** 582030502	Hose Assy	1
12	**b** 582030511	Hose Assy	1
13	582034026	Tube Assy	1

FOOTNOTES:

a E-Hydraulics WB1
b E-Hydraulics WB3
c Front with E-Hydraulics
d Front with E-Hydraulics Low
e Front with Manual Hydraulic Low
f Front with Manual Hydraulics
g Manual Hydraulics WB1 and E-Hydraulics WB2
h Manual Hydraulics WB2
i Manual Hydraulics WB3

©2015 Yale Europe Materials Handling Limited

HYDRAULIC HOSES AND FITTINGS (FIGURE 6-12)

STEERING (→ PENDING PER ECN 15533404) (→ 2/2015)

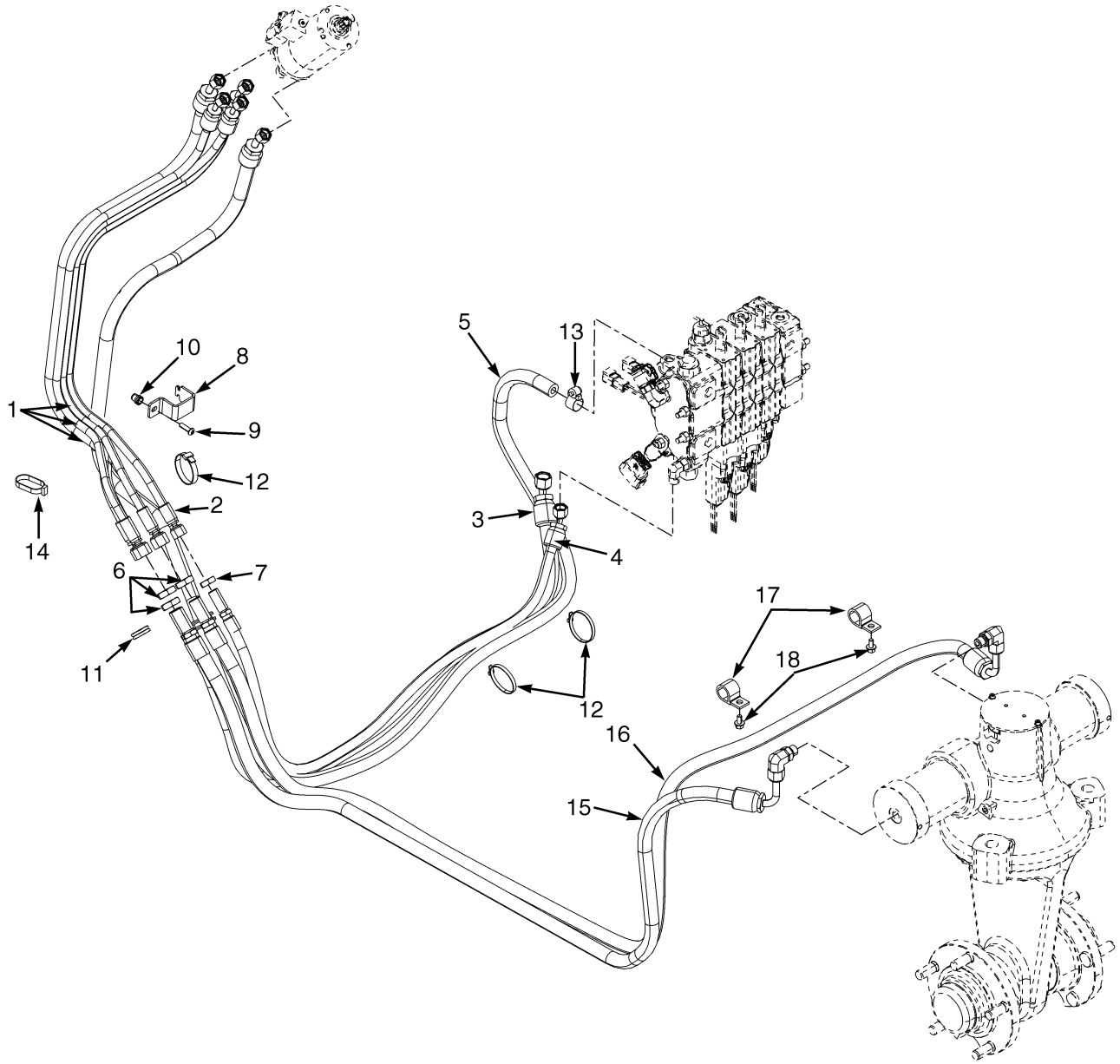

BP150028

©2015 Yale Europe Materials Handling Limited

HYDRAULIC HOSES AND FITTINGS

STEERING (→ PENDING PER ECN 15533404) (→ 2/2015)

KEY:
A: With Syncronous Steering
B: Without Syncronous Steering

ITEM	PART NO.	DESCRIPTION	QTY A	QTY B
1	580092754	Hose Assy (Hand Pump)	3	..
1	580092756	Hose Assy (Hand Pump)	..	3
2	580093399	Hose Assy	1	..
2	580093398	Hose Assy	..	1
3	580093213	Hose Assy (Steer Port)	1	1
4	580092635	Hose Assy (Steer Port)	1	1
5	580092634	Hose Assy (Steer Port)	1	..
5	580092686	Hose Assy (Steer Port)	..	1
6	580067676	Locknut	3	3
7	580092997	Nut	1	1
8	580093117	Clamp	1	1
9	580027677	Capscrew	1	1
10	580041704	Insert	1	1
11	032616700	Grommet	1	1
12	312850034	Strap Clamp	3	3
12	312850034	Strap Clamp (Alternate Part)	1	1
13	502056906	Clamp	1	1
14	312850032	Strap Clamp	2	2
14	312850032	Strap Clamp (Alternate Part)	4	4
15	580090543	Hose Assy (RH Steer) (750 mm Battery Compartment)	1	1
15	580090541	Hose Assy (RH Steer) (642 mm Battery Compartment)	1	1
15	580078986	Hose Assy (RH Steer) (546 mm Battery Compartment)	1	1
16	580090542	Hose Assy (LH Steer) (750 mm Battery Compartment)	1	1
16	580090540	Hose Assy (LH Steer) (642 mm Battery Compartment)	1	1
16	580078985	Hose Assy (LH Steer) (546 mm Battery Compartment)	1	1
17	504075742	Clamp	2	2
18	580039900	Capscrew	2	2

©2015 Yale Europe Materials Handling Limited

HYDRAULIC HOSES AND FITTINGS (FIGURE 6-13)

STEERING — WITH SYNCRONOUS STEERING (PENDING PER ECN 15533404 →)

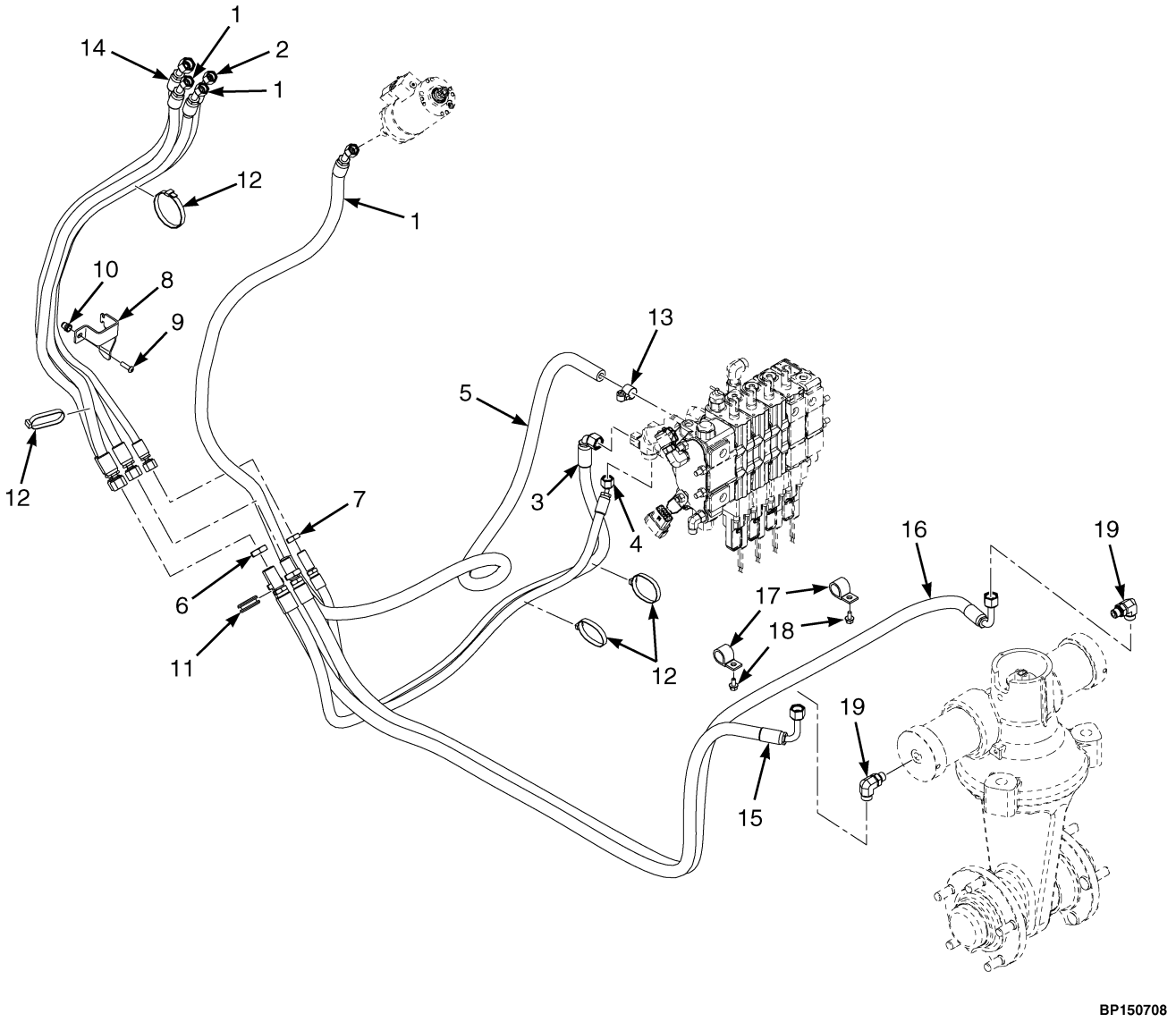

©2015 Yale Europe Materials Handling Limited

HYDRAULIC HOSES AND FITTINGS

STEERING – WITH SYNCRONOUS STEERING (PENDING PER ECN 15533404 →)

ITEM	PART NO.	DESCRIPTION	QTY
1	580092754	Hose Assy (Hand Pump)	2
2	580093399	Hose Assy (Hand Pump)	1
3	582026728	Hose Assy (Control Valve)	1
4	580092635	Hose Assy (Control Valve)	1
5	580092634	Hose Assy (Control Valve / Hand Pump)	1
6	580067676	Locknut	3
7	580092997	Nut	1
8	580093117	Clamp	1
9	580027677	Capscrew	1
10	580041704	Insert	1
11	032616700	Grommet	1
12	312850032	Strap Clamp	5
13	502056906	Clamp	1
14	582026745	Hose Assy	1
15	580078985	Hose Assy (LH Steer) (546 mm Battery Compartment)	1
15	580090540	Hose Assy (LH Steer) (642 mm Battery Compartment)	1
16	580078986	Hose Assy (RH Steer) (546 mm Battery Compartment)	1
16	580090541	Hose Assy (RH Steer) (642 mm Battery Compartment)	1
17	504075742	Clamp	2
18	580039900	Capscrew	2

©2015 Yale Europe Materials Handling Limited

HYDRAULIC HOSES AND FITTINGS (FIGURE 6-14)

STEERING — WITHOUT SYNCRONOUS STEERING (PENDING PER ECN 15533404 →)

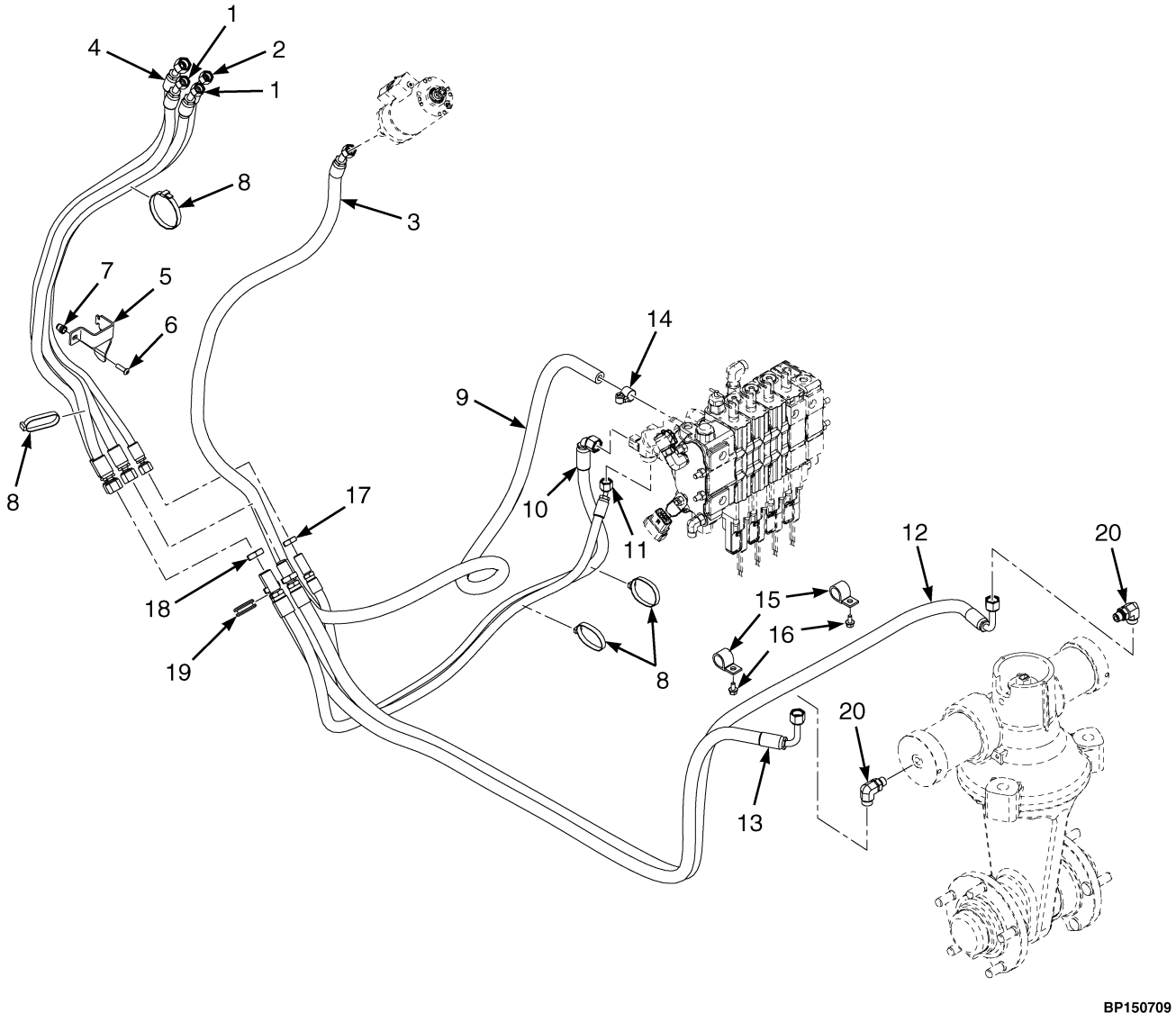

©2015 Yale Europe Materials Handling Limited

HYDRAULIC HOSES AND FITTINGS

STEERING – WITHOUT SYNCRONOUS STEERING (PENDING PER ECN 15533404 →)

ITEM	PART NO.	DESCRIPTION	QTY
1	580092754	Hose Assy	2
2	580093399	Hose Assy	1
3	580092634	Hose Assy	1
4	582026745	Hose Assy	1
5	580093117	Clamp	1
6	580027677	Capscrew	1
7	580041704	Insert	1
8	312850032	Strap Clamp	5
9	580092634	Hose Assy	1
10	582026728	Hose Assy	1
11	580092635	Hose Assy	1
12	580078986	Hose Assy (RH Steer) (546 mm Battery Compartment)	1
12	580090541	Hose Assy (RH Steer) (642 mm Battery Compartment)	1
13	580078985	Hose Assy (LH Steer) (546 mm Battery Compartment)	1
13	580090540	Hose Assy (LH Steer) (642 mm Battery Compartment)	1
14	502056906	Clamp	1
15	504075742	Clamp	2
16	580039900	Capscrew	2
17	580092997	Nut	1
18	580067676	Locknut	3
19	032616700	Grommet	1
20	580019865	Fitting	2

©2015 Yale Europe Materials Handling Limited

HYDRAULIC HOSES AND FITTINGS (FIGURE 6-15)
AUXILIARY HOSES

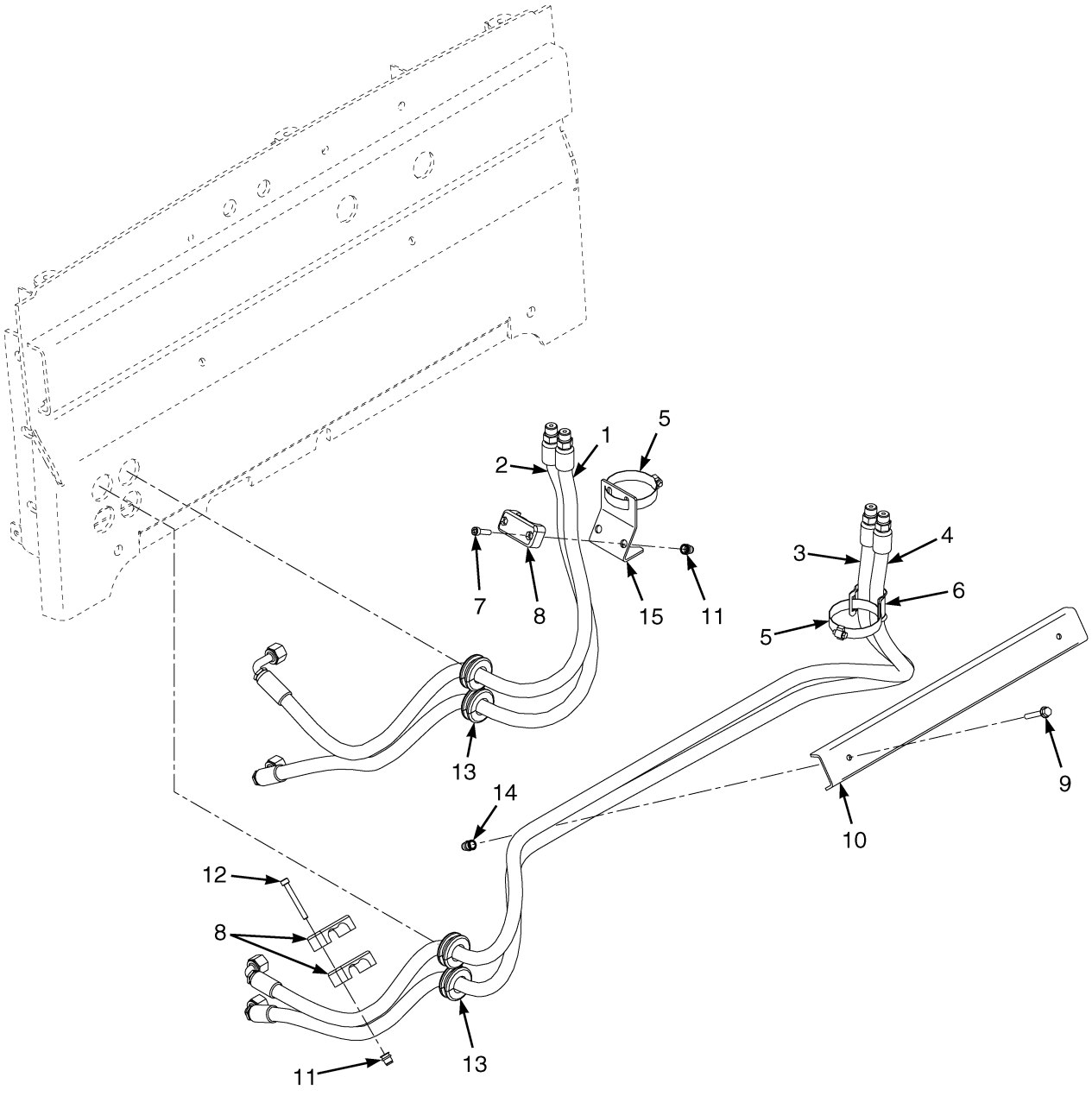

©2015 Yale Europe Materials Handling Limited

HYDRAULIC HOSES AND FITTINGS
AUXILIARY HOSES

KEY:
A: 3 Function
B: 4 Function

ITEM	PART NO.	DESCRIPTION	QTY A	QTY B
1	**b** 580096236	Hose Assy (Control Valve/Header Hoses)	1	1
1	**a** 580096240	Hose Assy (Control Valve/Header Hoses)	1	1
2	**b** 580096237	Hose Assy (Control Valve/Header Hoses)	1	1
2	**a** 580096241	Hose Assy (Control Valve/Header Hoses)	1	1
3	**b** 580096238	Hose Assy (Control Valve/Header Hoses)	..	1
3	**a** 580096242	Hose Assy (Control Valve/Header Hoses)	..	1
4	**b** 580096239	Hose Assy (Control Valve/Header Hoses)	..	1
4	**a** 580096243	Hose Assy (Control Valve/Header Hoses)	..	1
5	580045653	Clamp	1	2
6	524141696	Hose Clamp	1	1
7	580055863	Capscrew	2	4
8	504068794	Clamp (Double Hose)	3	3
9	**e** 580093196	Capscrew	..	2
9	**f** 580055730	Capscrew	..	2
9	**g** 580086330	Capscrew	..	2
10	**d** 580096286	Hose Guide	..	1
10	**g** 582032105	Hose Guide	..	1
11	580041704	Insert	4	4
12	932107911	Capscrew	2	2
13	582001011	Grommet	2	4
14	580066855	Insert	..	2
15	582007208	Bracket	1	2
	c 582006901	Plug	2	..
	c 580086384	Washer	..	2

FOOTNOTES:

a Electro Hydraulic
b Manual Hydraulic
c Not Illustrated
d → 10/2013
e → 9/2013
f 9/2013 ↔ 10/2013
g 10/2013 →

©2015 Yale Europe Materials Handling Limited

HYDRAULIC HOSE (FIGURE 6-16)
MAST

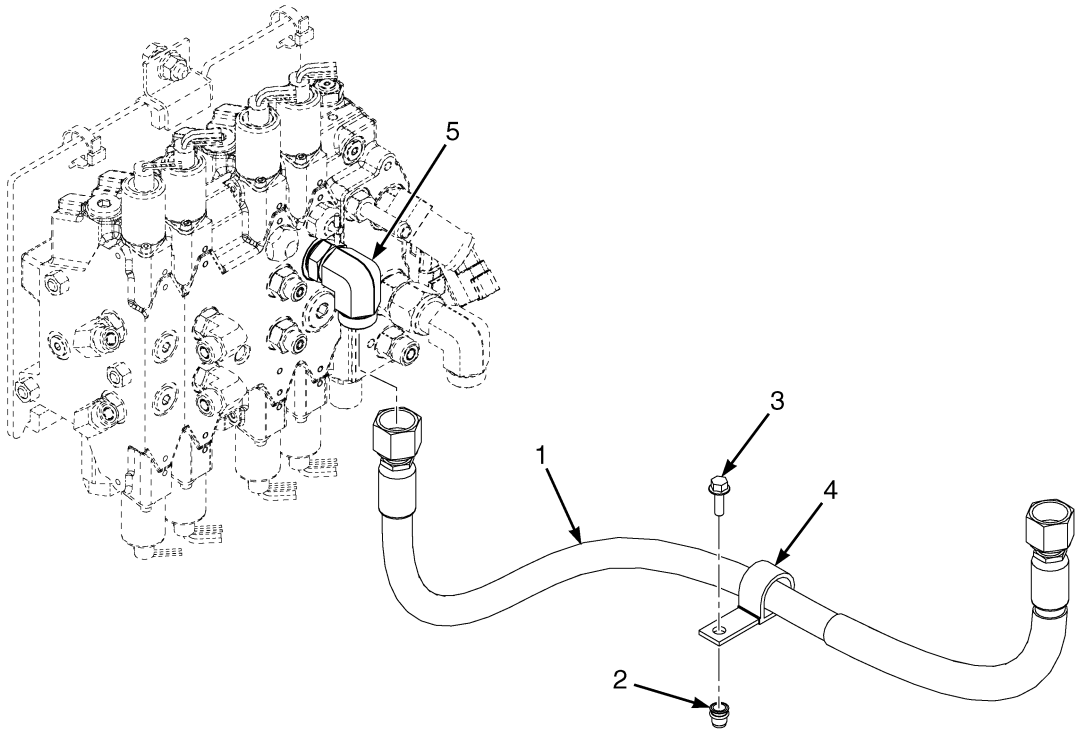

ITEM	PART NO.	DESCRIPTION	QTY
1	580086523	Hose (Two and Three Stage)	1
1	582001152	Hose Assy (Four Stage)	1
2	580041704	Insert	1
3	580039438	Capscrew	1
4	501921906	Hose Clamp	1
5	580056465	Fitting	1

©2015 Yale Europe Materials Handling Limited

NOTES

©2015 Yale Europe Materials Handling Limited

HYDRAULIC CONTROLS (FIGURE 6-17)

MANUAL

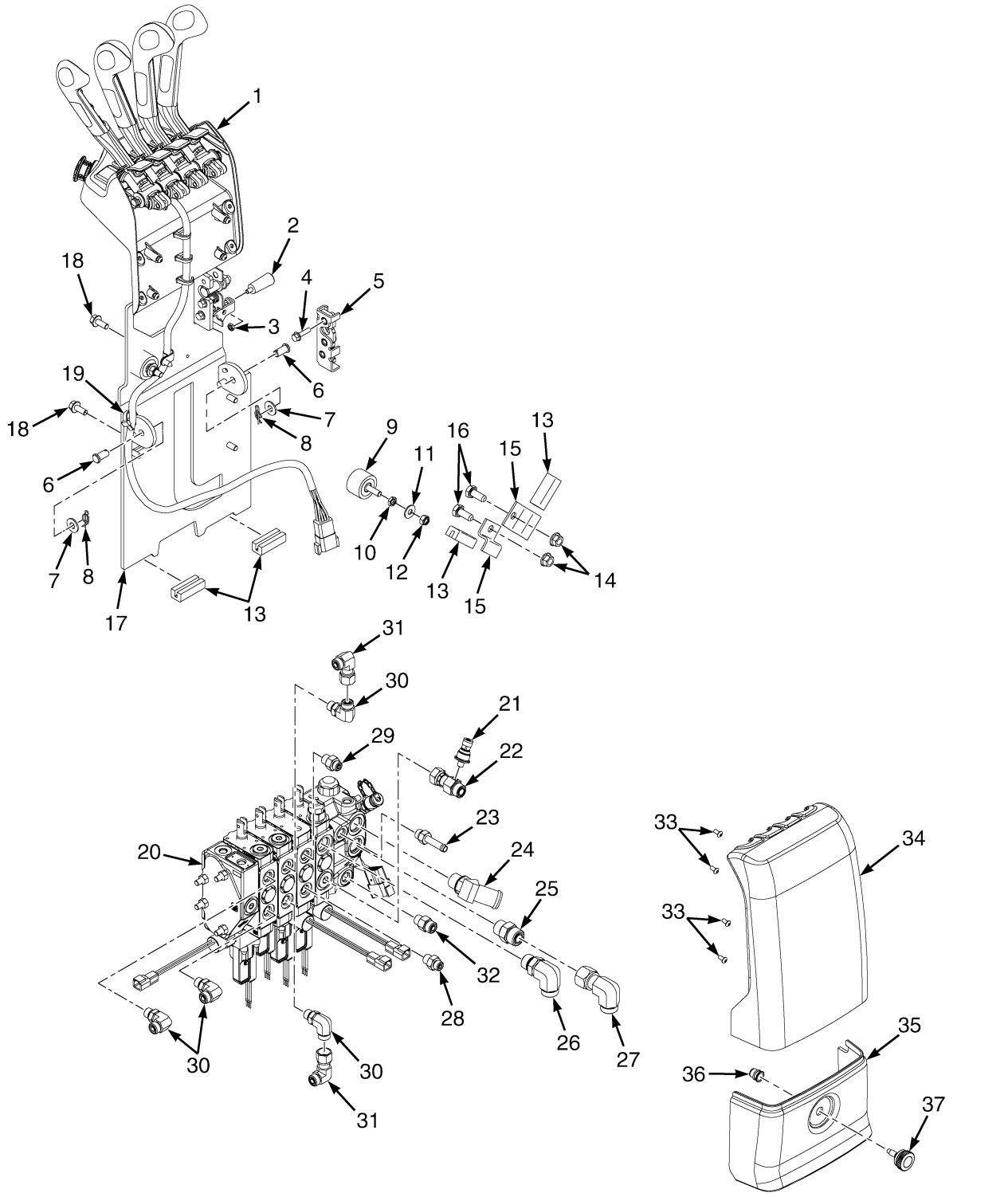

©2015 Yale Europe Materials Handling Limited

HYDRAULIC CONTROLS
MANUAL

KEY:
A: 3 Function
B: 4 Function

ITEM	PART NO.	DESCRIPTION	QTY A	QTY B
1	**b**	Manual Lever Linkage Assembly (☞Page 6-40)	1	1
2	580092632	Handle	1	1
3	. . . . .	Nut	1	1
4	580049840	Capscrew	3	3
5	580092526	Latch	1	1
6	580092620	Pin	2	2
7	580095072	Washer	2	2
8	580000868	Locking Cotter Pin	2	2
9	582005840	Rubber Mount	2	2
10	580060019	Nut	2	2
11	504226242	Washer	2	2
12	449015098	Nut	2	2
13	520052866	Strip Seal	4	4
14	580027572	Nut	2	2
15	504228208	Bracket	2	2
16	449001023	Capscrew	2	2
17	524325742	Bracket Wldmt	1	1
18	580049231	Capscrew	3	3
19	312850032	Strap Clamp	1	1
20	. . . . .	Hydraulic Control Valve Assembly (☞Page 6-44)	1	1
21	580096842	Pressure Transducer	1	1
22	580089702	T-Fitting (Load Sensing)	1	1
23	501704901	Fitting (Steering Return)	1	1
23	052645200	O-Ring	1	1
24	580082583	Fitting	1	1
25	580019817	Fitting	1	1
25	580019387	O-Ring	1	1
25	052645400	O-Ring	1	1
26	580056465	Fitting	1	1
26	580019387	O-Ring	1	1
26	052645400	O-Ring	1	1
27	580019838	Fitting	1	1
27	580019387	O-Ring	2	2
28	580019806	Fitting	2	2
28	580039385	O-Ring	1	1
28	052645200	O-Ring	1	1
29	582002698	Fitting	1	1
30	580019865	Fitting (Steering Supply)	2	4
30	504155200	O-Ring	1	1
30	052645200	O-Ring	1	1
31	580020585	Fitting	2	4
32	**c** 580096080	Check Valve	1	1
32	**d** 580019808	Fitting	1	1
33	580038834	Capscrew	6	6
34	~~580090088~~	Cover	1	1

©2015 Yale Europe Materials Handling Limited

HYDRAULIC CONTROLS
MANUAL

KEY:
A: 3 Function
B: 4 Function

ITEM	PART NO.	DESCRIPTION	QTY A	QTY B
	582001502			
35	~~580090060~~			
	582013786	Cover	1	1
36	580044860	Insert	1	1
37	580082923	Screw	1	1
	a 501702901	Loctite	AR	AR

FOOTNOTES:

a Not Illustrated
b Service with component parts
c → 2/2015
d 2/2015 →

©2015 Yale Europe Materials Handling Limited

NOTES

©2015 Yale Europe Materials Handling Limited

HYDRAULIC LEVERS - LINKAGE ASSEMBLY (MANUAL) (FIGURE 6-18)

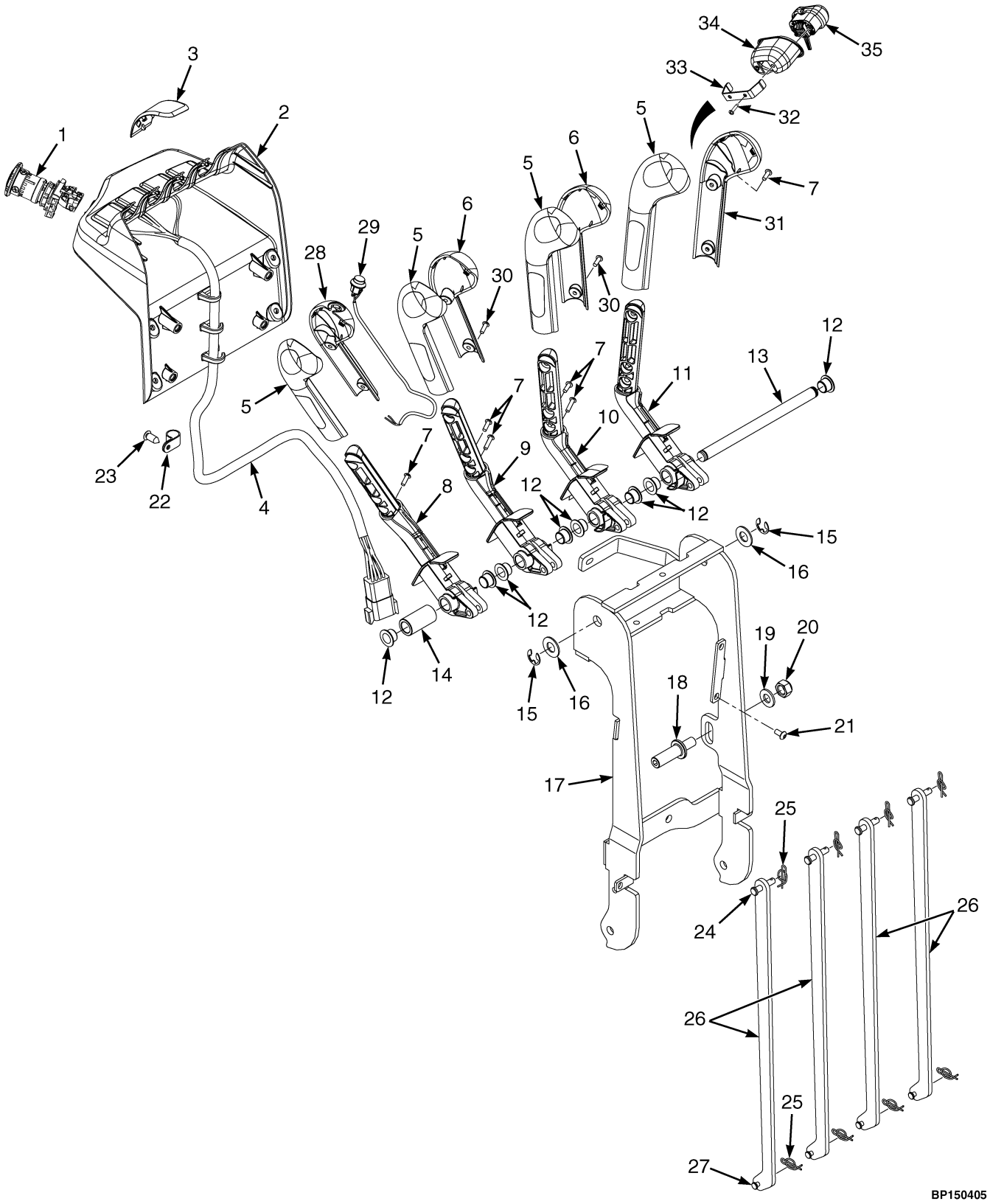

©2015 Yale Europe Materials Handling Limited

HYDRAULIC LEVERS - LINKAGE ASSEMBLY (MANUAL)

KEY:
A: 3 Function
B: 4 Function

ITEM	PART NO.	DESCRIPTION	QTY A	QTY B
	. . . . .	Linkage Assembly	1	1
1	580092120	Push Button Switch	1	1
2	580096665	Cover	1	1
3	~~580090091~~			
	582001835	Cover	1	..
4	580092519	Wire Harness (Manual Hydraulics) (☞Page 2-145)	1	1
5	580088640	Handle (Palm Side Blank Half)	3	4
6	580088641	Handle (Finger Side Blank Half)	1	2
7	580092732	Capscrew	5	8
8	580094905	Lever	1	1
9	580094904	Lever	1	1
10	580094903	Lever	1	1
11	580094902	Lever	..	1
12	580081792	Bushing	6	8
13	580093015	Pin	1	1
14	580093016	Spacer	1	..
15	580038063	E-Ring	2	2
16	580093017	Washer	2	2
17	580092525	Bracket Wldmt	1	1
17	580096106	Bracket Wldmt (Alternate Part)	1	1
18	~~580092527~~			
	582004475	Striker	1	1
19	449021006	Washer	1	1
20	449015036	Locknut	1	1
21	580038834	Capscrew	5	5
22	580092568	Clip	1	1
23	580056613	Fastener	1	1
24	580090635	Pin	3	4
25	580056840	Locking Ring Cotter Pin	6	8
26	**c** 524325743	Link	3	4
26	**d** 582012037	Link	3	4
27	500583902	Pin	3	4
28	**a** 580088643	Handle (Clamp Switch Blank Half)	1	1
28	**b** 580088641	Handle (Finger Side Blank Half)	1	1
29	580085612	Wire Harness (Manual Interlock) (☞Page 2-146)	1	1
30	580092732	Capscrew	5	8
31	**a** 580094141	Handle (Forward / Reverse Switch Half)	1	1
31	**b** 580088641	Handle (Finger Side Blank Half)	1	1
32	**a** 504060717	Screw	2	2
33	**a** 580093212	Retainer	1	1
34	**a** 580094142	Cup	1	1
35	**a** 580086581	Switch	1	1

©2015 Yale Europe Materials Handling Limited

FOOTNOTES:

a With Directional Control/With Clamping
b Without Directional Control/Without Clamping
c → S/N G807B02741J
d S/N G807B02798J →

©2015 Yale Europe Materials Handling Limited

NOTES

©2015 Yale Europe Materials Handling Limited

HYDRAULIC CONTROL VALVE (FIGURE 6-19)

MANUAL — 3 AND 4 FUNCTION (→ S/N G807B03975K)

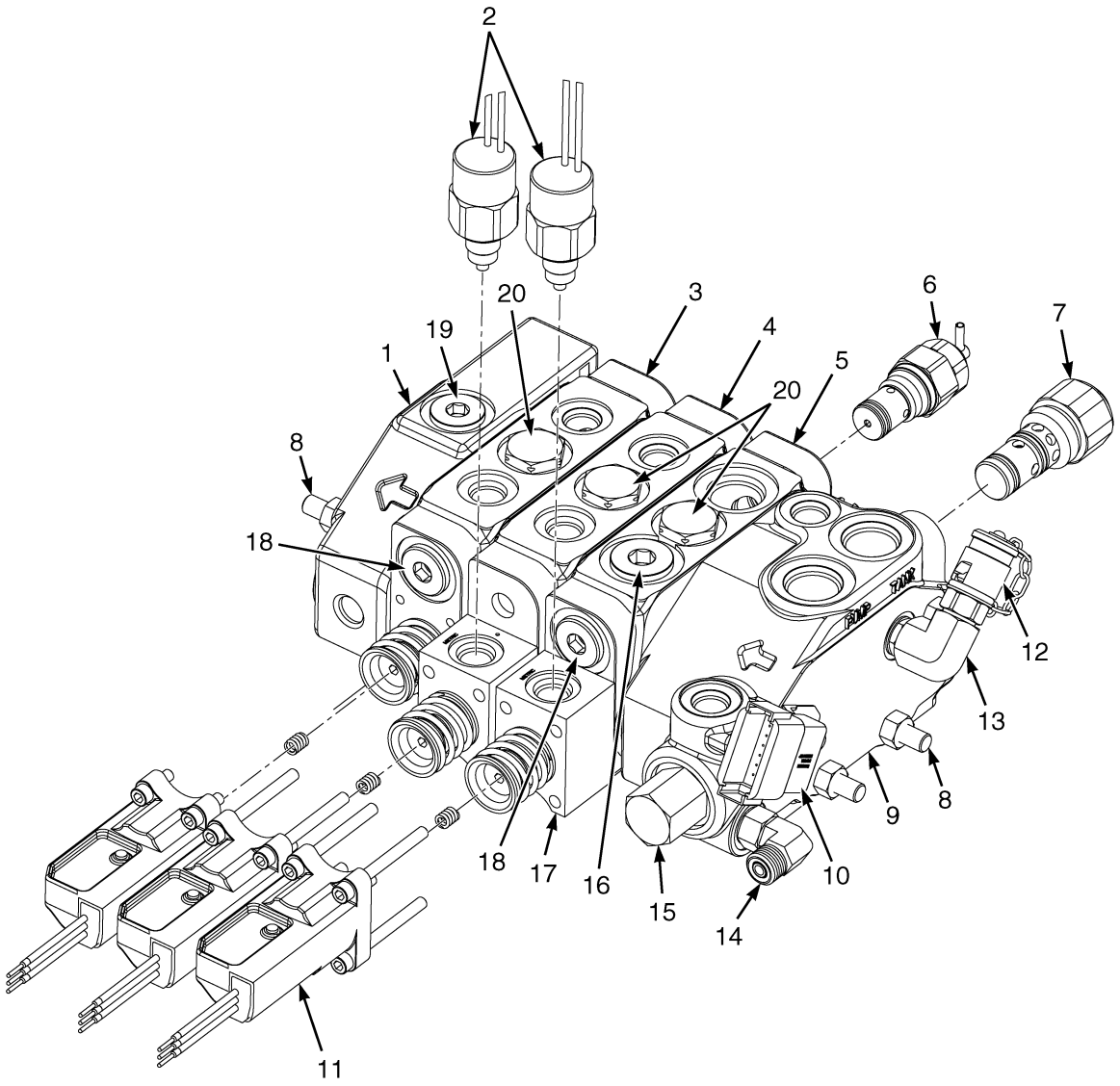

©2015 Yale Europe Materials Handling Limited

HYDRAULIC CONTROL VALVE

MANUAL – 3 AND 4 FUNCTION (→ S/N G807B03975K)

KEY:
A: 3 Function
B: 4 Function

ITEM	PART NO.	DESCRIPTION	QTY A	QTY B
	c 580078598	Hydraulic Control Valve Assembly (w/o Clamping)	1	..
	d 580078599	Hydraulic Control Valve Assembly (w/o Clamping)	..	1
	f 582000658	Hydraulic Control Valve Assembly (w/o Clamping)	1	..
	g 582000659	Hydraulic Control Valve Assembly (w/o Clamping)	..	1
	e 580083535	Hydraulic Control Valve Assembly (w/Clamping)	..	1
	h 582000661	Hydraulic Control Valve Assembly (w/ Clamping)	..	1
1	580096029	Valve Section (Outlet) (☞Page 6-60)	1	1
2	580095977	Spool (Solenoid)	2	2
2	580095700	Kit-Seal Valve	1	1
3	580096027	Valve Section (Aux 1) (☞Page 6-58)	1	2
3	580095700	Kit-Seal Valve	1	1
4	~~582012225~~			
	582009593	Valve Section (Tilt) (☞Page 6-58)	1	1
4	580095700	Kit-Seal Valve	1	1
4	~~582012225~~			
	582009593	Valve Section (Alternate Part)	1	1
5	580096025	Valve Section (Lift) (☞Page 6-58)	1	1
5	580095700	Kit-Seal Valve	1	1
6	580096023	Lowering Control Valve	1	1
7	580096022	Relief Valve	1	1
8	580095686	Kit-Tie Rod (Tie Rod) (☞Page 6-61)	1	..
8	580095689	Kit-Tie Rod (☞Page 6-61)	..	1
9	580096024	Valve Section (Inlet) (☞Page 6-56)	1	1
9	580095691	Kit-Seal Valve	1	1
10	580095976	Kit-Connector	1	1
10	580096019	Connector	1	1
10	580096020	Connector	1	1
10	580095330	Clip	1	1
10	580095331	Plug	1	1
10	580095333	Nut	1	1
11	580095683	Kit-Sensor (Position Sensor)	3	4
11	. . . . .	Sensor	1	1
11	580095327	Capscrew	4	4
11	580032779	Capscrew	4	4
11	580095685	Spring	1	1
12	580041208	Fitting (Diagnostic)	1	1
13	580043644	Fitting	1	1
14	582004452	Fitting	1	1
15	582004451	Plug	1	1
16	580095701	Plug	1	1
17	582004450	Body (Spool Lock)	2	2
18	582004448	Plug	3	5
19	~~580059132~~			
	505967551	Fitting	1	1
20	582004454	Plug	3	4

©2015 Yale Europe Materials Handling Limited

HYDRAULIC CONTROL VALVE

MANUAL – 3 AND 4 FUNCTION (→ S/N G807B03975K)

KEY:
A: 3 Function
B: 4 Function

ITEM	PART NO.	DESCRIPTION	QTY A	QTY B
	b 582004449	Body (Spool Lock)	..	1
	b 582004455	Plug	2	2
	a 580096021	Kit-Seal Valve	1	1
	550004544	Kit-Diode	1	1

FOOTNOTES:

a Contains kits 580095691, 580059700 and 580059707
b Not Illustrated
c → S/N G807B02030H
d → S/N G807B02186H
e → S/N G807B02188H
f S/N G807B02031H ↔ S/N G807B03976K
g S/N G807B02187H ↔ S/N G807B02982K
h S/N G807B02189H ↔ S/N G807B03987K

©2015 Yale Europe Materials Handling Limited

NOTES

©2015 Yale Europe Materials Handling Limited

HYDRAULIC CONTROL VALVE (FIGURE 6-20)
MANUAL — 3 AND 4 FUNCTION (S/N G807B03976K ↔ 2/2015)

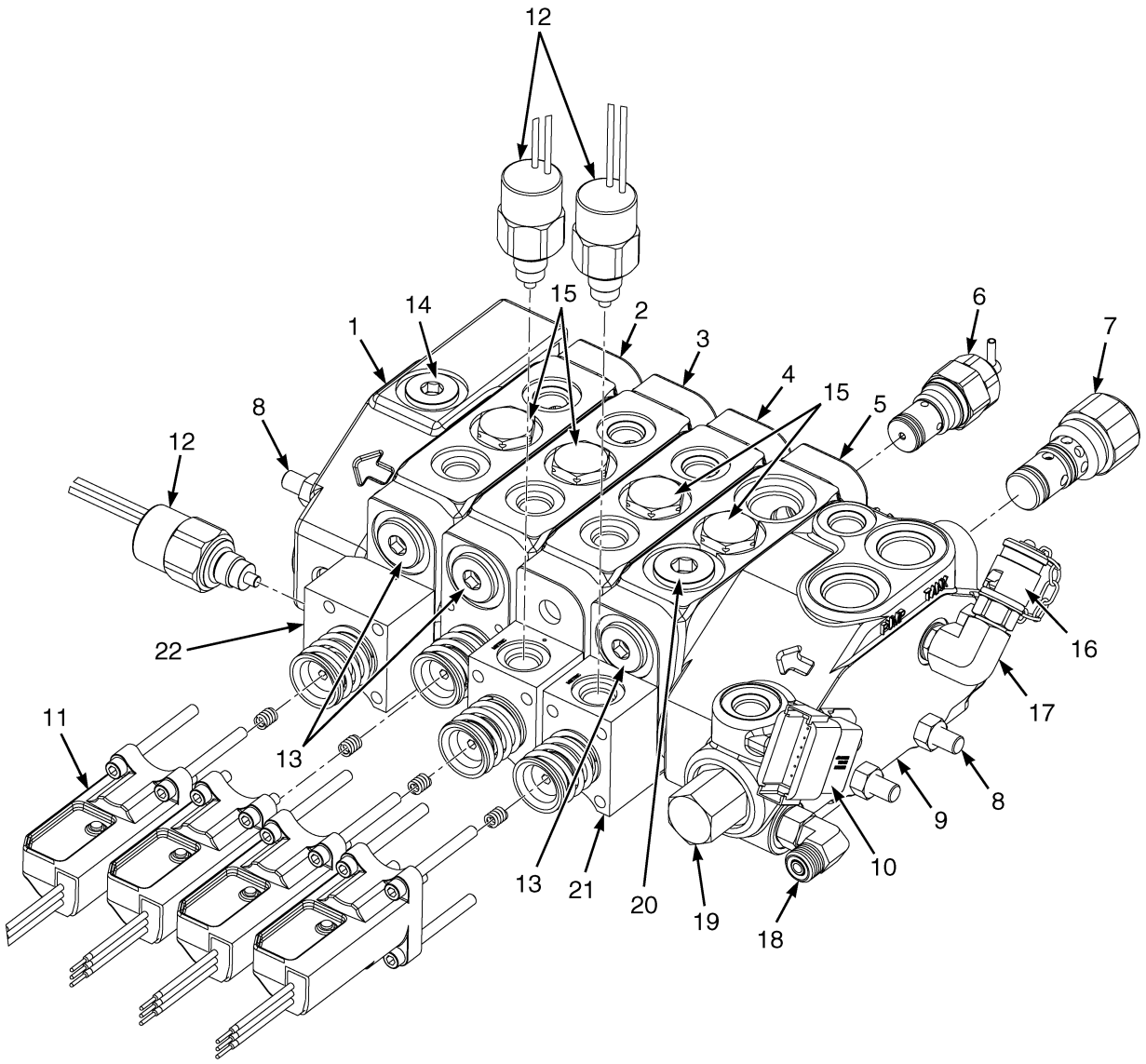

©2015 Yale Europe Materials Handling Limited

HYDRAULIC CONTROL VALVE

MANUAL – 3 AND 4 FUNCTION (S/N G807B03976K ↔ 2/2015)

KEY:
A: 3 Function
B: 4 Function

ITEM	PART NO.	DESCRIPTION	QTY A	QTY B
	582006951	Hydraulic Control Valve (w/o Clamping)	1	..
	c 582006952	Hydraulic Control Valve (w/o Clamping)	..	1
	d 582006953	Hydraulic Control Valve (w/Clamping)	..	1
1	580096029	Valve Section (Outlet) (☞Page 6-60)	1	1
1	~~580059132~~			
	505967551	Fitting	1	1
2	580096027	Valve Section (Aux 2 without Clamping) (☞Page 6-58)	..	1
2	580096028	Valve Section (With Spool Lock for with Clamping) (☞Page 6-58)	..	1
2	580095700	Kit-Seal Valve	..	1
3	580096027	Valve Section (Aux 1) (☞Page 6-58)	1	1
3	580095700	Kit-Seal Valve	1	1
4	~~582012225~~			
	582009593	Valve Section (Tilt) (☞Page 6-58)	1	1
4	580095700	Kit-Seal Valve	1	1
5	580096025	Valve Section (Lift) (☞Page 6-58)	1	1
5	580095700	Kit-Seal Valve	1	1
6	580096023	Lowering Control Valve	1	1
7	580096022	Relief Valve	1	1
8	580095686	Kit-Tie Rod (☞Page 6-61)	1	..
8	580095689	Kit-Tie Rod (☞Page 6-61)	..	1
9	580096024	Valve Section (Inlet) (☞Page 6-56)	1	1
9	580095691	Kit-Seal Valve	1	1
10	580095976	Kit-Connector	1	1
10	580096019	Connector	1	1
10	580096020	Connector	1	1
10	580095330	Clip	1	1
10	580095331	Plug	1	1
10	580095333	Nut	1	1
11	580095683	Kit-Sensor (Position Sensor) (☞Page 6-62)	3	4
12	580095977	Spool (Solenoid)	2	3
12	580095700	Kit-Seal Valve	1	1
13	582004448	Plug	3	5
14	~~580059132~~			
	505967551	Fitting	1	1
15	582004454	Plug	3	4
16	580041208	Fitting (Diagnostic)	1	1
17	580043644	Fitting	1	1
18	582004452	Fitting	1	1
19	582004451	Plug	1	1
20	580095701	Plug	1	1
21	582004450	Body (Spool Lock)	2	2
22	582004449	Body (Spool Lock)	1	1
	ab 580096021	Kit-Seal Valve	1	1
	b 582004455	Plug	1	1

©2015 Yale Europe Materials Handling Limited

FOOTNOTES:

a Contains Kits 580095691, 580095700 and 580095707
b Not Illustrated
c S/N G807B03983K →
d S/N G807B03988K →

©2015 Yale Europe Materials Handling Limited

NOTES

©2015 Yale Europe Materials Handling Limited

HYDRAULIC CONTROL VALVE (FIGURE 6-21)

MANUAL — 3 AND 4 FUNCTION (2/2015 →)

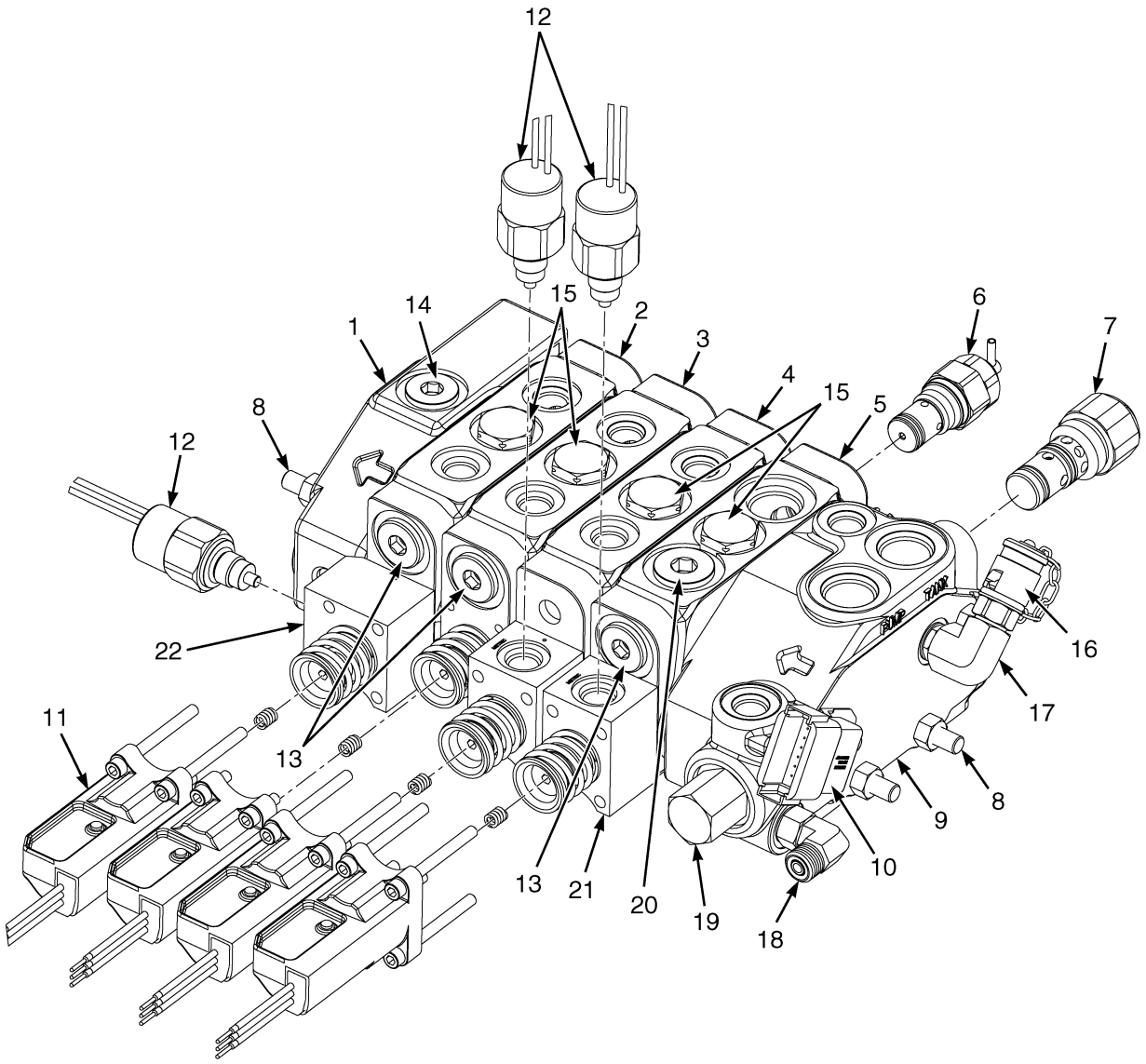

©2015 Yale Europe Materials Handling Limited

HYDRAULIC CONTROL VALVE

MANUAL – 3 AND 4 FUNCTION (2/2015 →)

KEY:
A: 3 Function
B: 4 Function

ITEM	PART NO.	DESCRIPTION	QTY A	QTY B
	582022998	Hyd Control Valve (w/o Clamping)	1	..
	582022999	Hyd Control Valve (w/o Clamping)	..	1
	582023001	Hyd Control Valve (w/Clamping)	..	1
1	580096029	Valve Section (Outlet) (☞Page 6-60)	1	1
1	~~580059132~~			
	505967551	Fitting	1	1
2	580096027	Valve Section (Aux 2 Without Clamping) (☞Page 6-58)	..	1
2	582018661	Valve Section (With Spool Lock for Clamping) (☞Page 6-58)	..	1
2	580095700	Kit-Seal Valve	..	1
3	580096027	Valve Section (Aux 1) (☞Page 6-58)	1	1
3	580095700	Kit-Seal Valve	1	1
4	~~582012225~~			
	582009593	Valve Section (Tilt) (☞Page 6-58)	1	1
4	580095700	Kit-Seal Valve	1	1
5	580096025	Valve Section (Lift) (☞Page 6-58)	1	1
5	580095700	Kit-Seal Valve	1	1
6	582034576	Valve (Lowering Control)	1	1
7	580096022	Relief Valve (Main)	1	1
8	580095686	Kit-Tie Rod (☞Page 6-61)	1	..
8	580095689	Kit-Tie Rod (☞Page 6-61)	..	1
9	582034580	Valve Section (Inlet) (☞Page 6-56)	1	1
9	580095691	Kit-Seal Valve	1	1
10	580095976	Kit-Connector	1	1
10	580096019	Connector	1	1
10	580096020	Connector	1	1
10	580095330	Clip	1	1
10	580095331	Plug	1	1
10	580095333	Nut	1	1
11	580095683	Kit-Sensor (Position Sensor) (☞Page 6-62)	3	4
12	580095977	Spool (Solenoid)	2	3
12	580095700	Kit-Seal Valve	1	1
13	582004448	Plug	3	5
14	~~580059132~~			
	505967551	Fitting	1	1
15	582004454	Plug (Load Check)	3	4
16	582034578	Fitting (Diagnostic)	1	1
17	580049733	Fitting	1	1
18	580095701	Plug	1	1
21	582004450	Body (Spool Lock)	2	2
22	582004449	Body (Spool Lock)	1	1
23	582004455	Plug (Anti-Cavity)	2	2
24	582034579	Plug	2	2
	ab 580096021	Kit-Seal Valve	1	1

©2015 Yale Europe Materials Handling Limited

FOOTNOTES:

a Contains Kits 580095691, 580095700 and 580095707

b Not Illustrated

©2015 Yale Europe Materials Handling Limited

NOTES

©2015 Yale Europe Materials Handling Limited

INLET SECTION (FIGURE 6-22)
MANUAL HYDRAULIC CONTROL VALVE

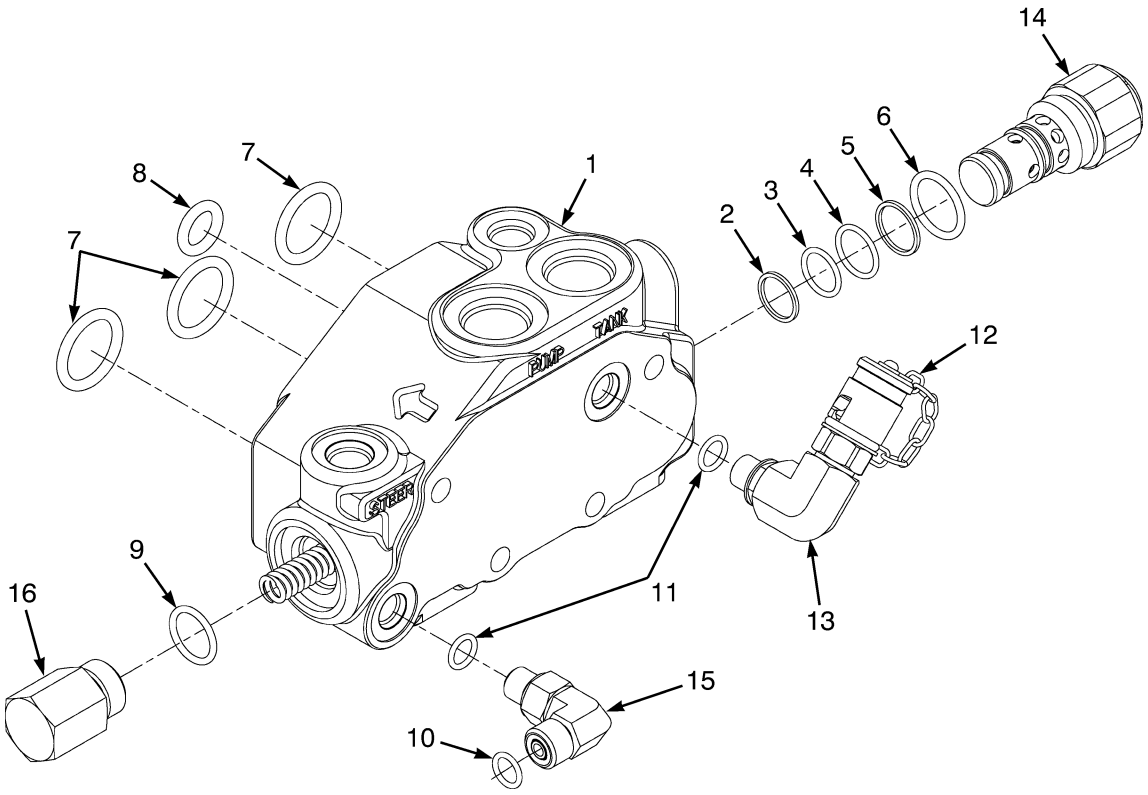

©2015 Yale Europe Materials Handling Limited

INLET SECTION
MANUAL HYDRAULIC CONTROL VALVE

ITEM	PART NO.	DESCRIPTION	QTY
1	**a** 580096024	Valve Section (Inlet Section)	1
1	**b** 582034580	Valve Section (Inlet Section)	1
2	580095699	Back-Up Ring	1
3	580095698	O-Ring	1
4	580095697	O-Ring	1
5	580095696	Back-Up Ring	1
6	580095695	O-Ring	1
7	580095694	O-Ring	3
8	580095693	O-Ring	1
9	580095335	O-Ring	1
10	580095692	O-Ring	2
11	580095329	O-Ring	1
12	**a** 580041208	Fitting (Diagnostic)	1
12	**b** 582034578	Fitting (Diagnostic)	1
13	**a** 580043644	Fitting	1
13	**b** 580049733	Fitting	1
14	580096022	Relief Valve	1
15	. . . . .	Fitting	1
16	. . . . .	Plug	1
	580095691	Kit-Seal Valve	1

FOOTNOTES:

a → 2/2015

b 2/2015 →

©2015 Yale Europe Materials Handling Limited

LIFT/TILT/AUXILIARY SECTION (FIGURE 6-23)
MANUAL HYDRAULIC CONTROL VALVE

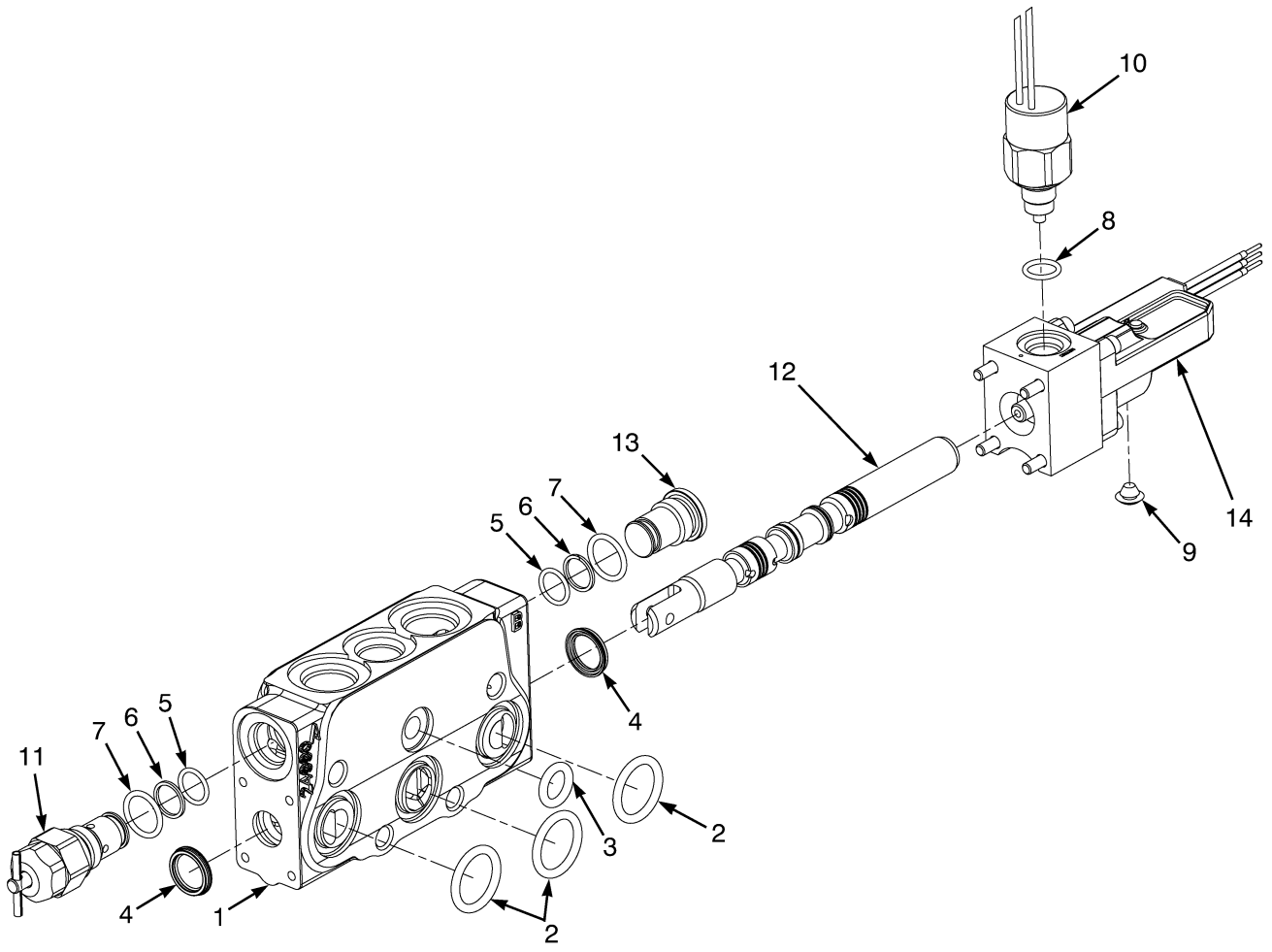

BP140140

©2015 Yale Europe Materials Handling Limited

LIFT/TILT/AUXILIARY SECTION
MANUAL HYDRAULIC CONTROL VALVE

ITEM	PART NO.	DESCRIPTION	QTY
1	580096025	Valve Section (Lift Section)	1
1	~~582012225~~		
	582009593	Valve Section (Tilt Section)	1
1	580096027	Valve Section (Aux.1 , Aux 2 Section)	1
1	**c** 580096028	Valve Section (With Spool Lock for with Clamping))	1
1	**d** 582018661	Valve Section (Aux 2 Section)	1
2	580095694	O-Ring	3
3	580095693	O-Ring	1
4	580095706	Seal	2
5	580095705	O-Ring	2
6	580095704	Back-Up Ring	2
7	580095703	O-Ring	3
8	580095702	O-Ring	1
9	580095864	Plug	1
10	580095977	Spool (Solenoid)	1
11	580096023	Lowering Control Valve	1
12	. . . . .	Spool	1
13	**b**	Plug	1
13	**c** 582004448	Plug	1
14	580095683	Kit-Sensor	1
	ac 580095701	Plug	1
	ad 582034579	Plug	1
	a 580095328	O-Ring	1
	580095700	Kit-Seal Valve	1

FOOTNOTES:

a Not Illustrated
b → 11/2014
c → 2/2015
d 2/2015 →

©2015 Yale Europe Materials Handling Limited

OUTLET SECTION (FIGURE 6-24)
MANUAL HYDRAULIC CONTROL VALVE

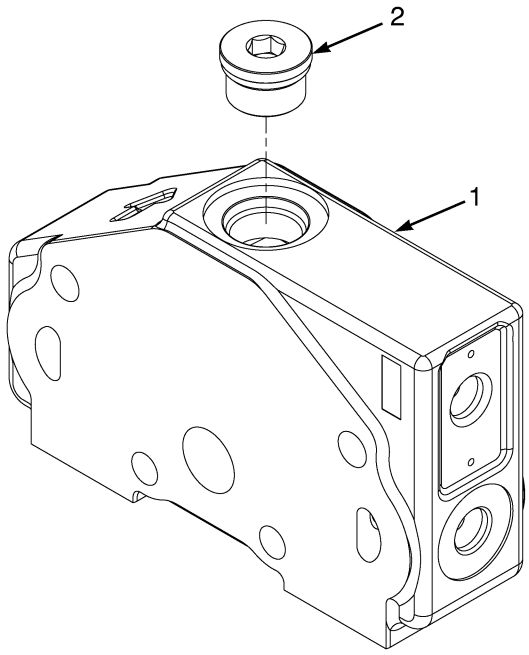

BP140138

ITEM	PART NO.	DESCRIPTION	QTY
1	580096029	Valve Section (Outlet Section)	1
2	~~580059132~~		
	505967551	Fitting	1
2	052645300	O-Ring	1
	~~580059132~~		
	505967551	Fitting	1

©2015 Yale Europe Materials Handling Limited

TIE RODS (FIGURE 6-25)
MANUAL HYDRAULIC CONTROL VALVE

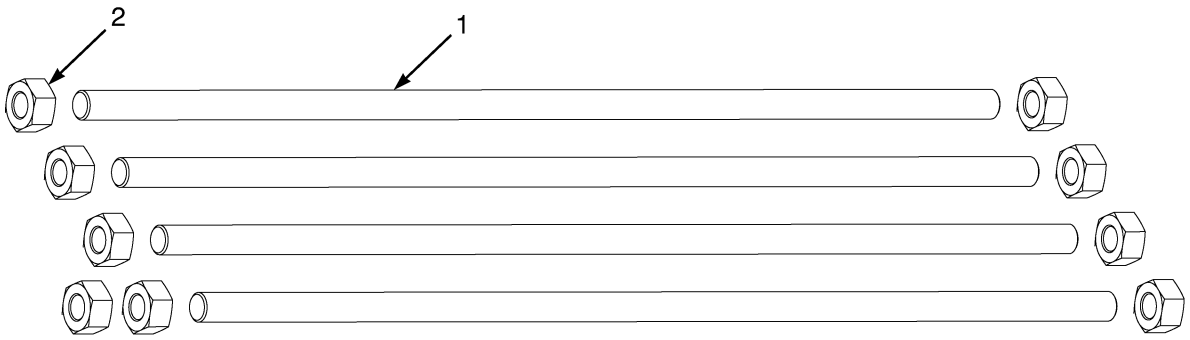

BP140063

KEY:
A: 3 Function (258 mm)
B: 4 Function (298 mm)

ITEM	PART NO.	DESCRIPTION	QTY A	QTY B
	580095686	Kit-Tie Rod	1	..
	580095689	Kit-Tie Rod	..	1
1	580095687	Stud	4	..
1	580095690	Stud	..	4
2	580095688	Nut	9	9

©2015 Yale Europe Materials Handling Limited

POSITIONER SENSOR (FIGURE 6-26)
MANUAL HYDRAULIC CONTROL VALVE

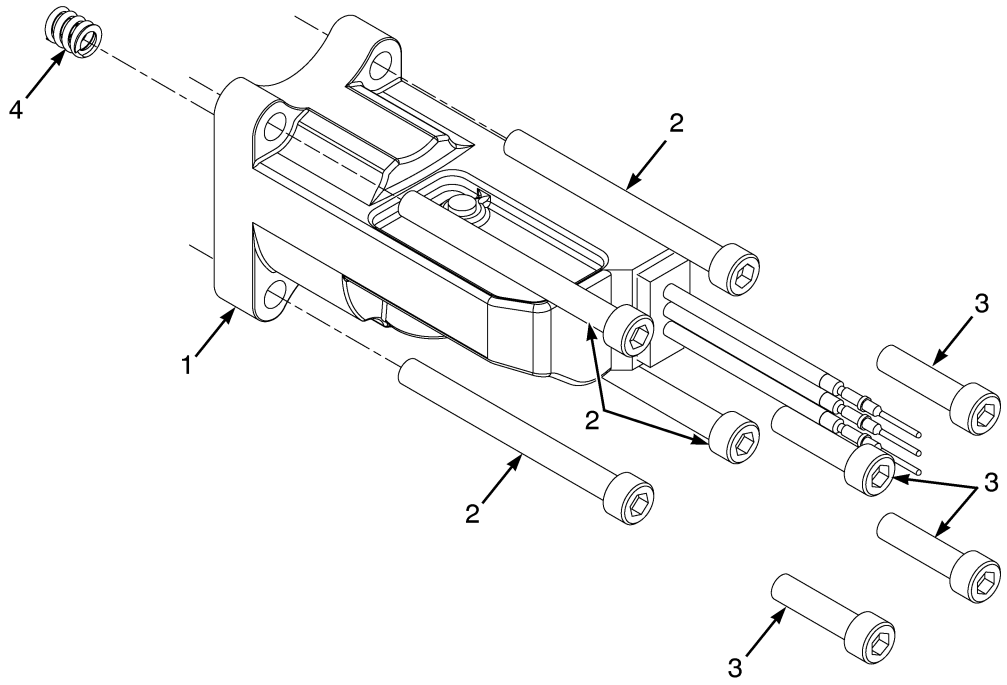

BP140139

ITEM	PART NO.	DESCRIPTION	QTY
1	. . . . .	Sensor	1
2	580095327	Capscrew	4
3	580032779	Capscrew	4
4	580095685	Spring	1
	580095683	Kit-Sensor	1

©2015 Yale Europe Materials Handling Limited

NOTES

©2015 Yale Europe Materials Handling Limited

HYDRAULIC CONTROLS (FIGURE 6-27)
ELECTRO-HYDRAULIC

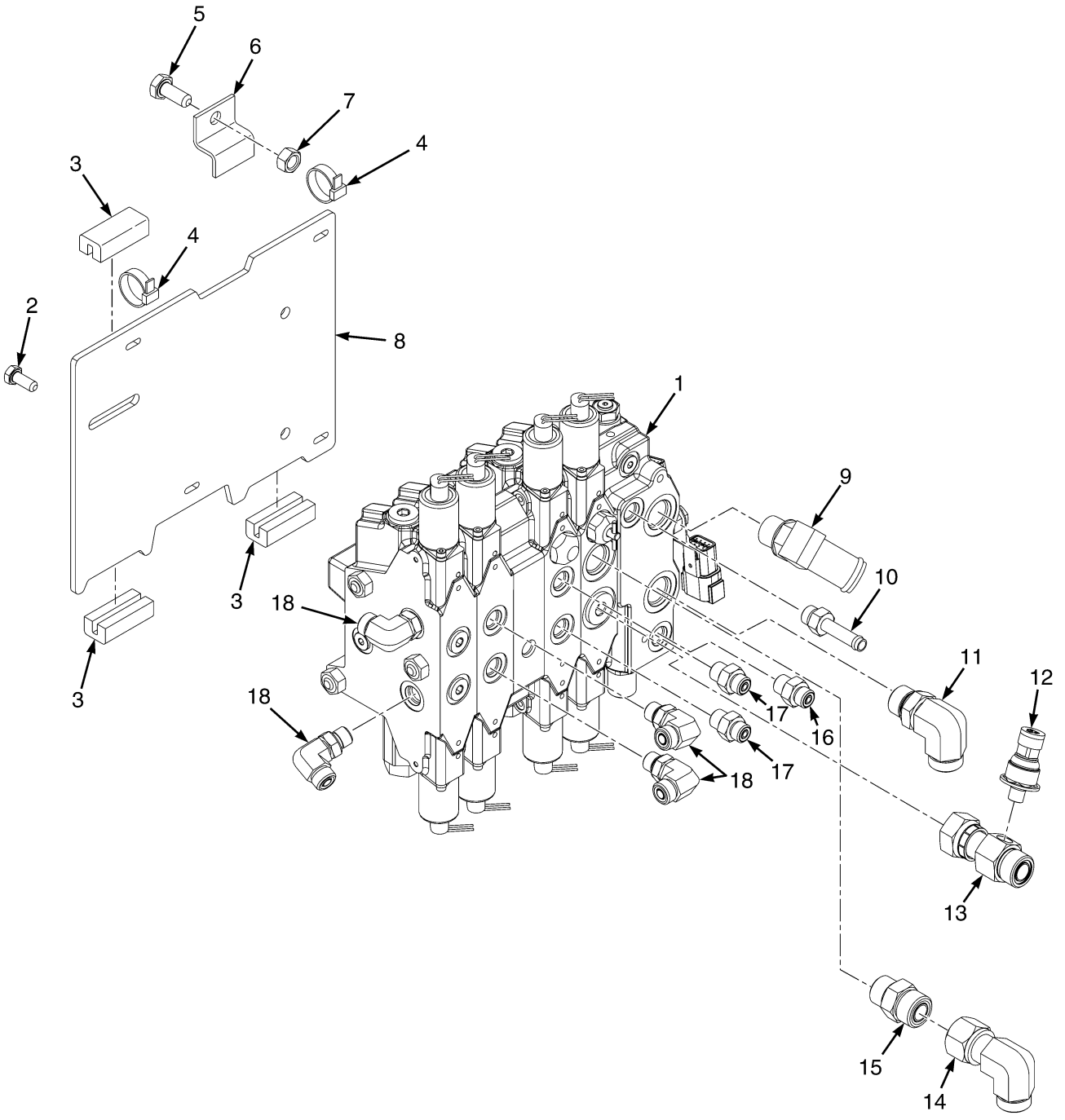

©2015 Yale Europe Materials Handling Limited

HYDRAULIC CONTROLS
ELECTRO-HYDRAULIC

KEY:
A: 3 Function
B: 4 Function

ITEM	PART NO.	DESCRIPTION	QTY A	QTY B
1	**a** 580087767	Hydraulic Control Valve (☞Page 6-66)	1	..
1	**a** 580087772	Hydraulic Control Valve (☞Page 6-66)	..	1
1	**c** 582022996	Hyd Control Valve (☞Page 6-66)	1	..
1	582022997	Hyd Control Valve (☞Page 6-66)	..	1
2	580049231	Capscrew	3	3
3	520052866	Strip Seal	3	3
4	312850032	Strap Clamp	4	4
5	449001023	Capscrew	1	1
6	504228208	Bracket	1	1
7	580027572	Nut	1	1
8	580092985	Plate	1	1
9	580082583	Fitting	1	1
9	052645400	O-Ring	1	1
10	501704901	Fitting (Steering Return)	1	1
10	052645200	O-Ring	1	1
11	580056465	Fitting	1	1
11	580019387	O-Ring	1	1
11	052645400	O-Ring	1	1
12	**b** 580096842	Pressure Transducer	1	1
13	**b** 580089702	T-Fitting (Load Sensing)	1	1
14	580019838	Fitting	1	1
14	580019387	O-Ring	2	2
15	580019817	Fitting	1	1
15	580019387	O-Ring	1	1
15	052645400	O-Ring	1	1
16	**a** 580096080	Check Valve	1	1
16	**c** 580019808	Fitting	1	1
16	504155200	O-Ring	1	1
17	580019806	Fitting	2	2
17	580039385	O-Ring	1	1
17	052645200	O-Ring	1	1
18	580019865	Fitting (Steering Supply)	2	4
18	504155200	O-Ring	1	1
18	052645200	O-Ring	1	1

FOOTNOTES:

a → 2/2015
b 11/2008 →
c 2/2015 →

©2015 Yale Europe Materials Handling Limited

CONTROL VALVE (FIGURE 6-28)
ELECTRO-HYDRAULIC — 3 AND 4 FUNCTION

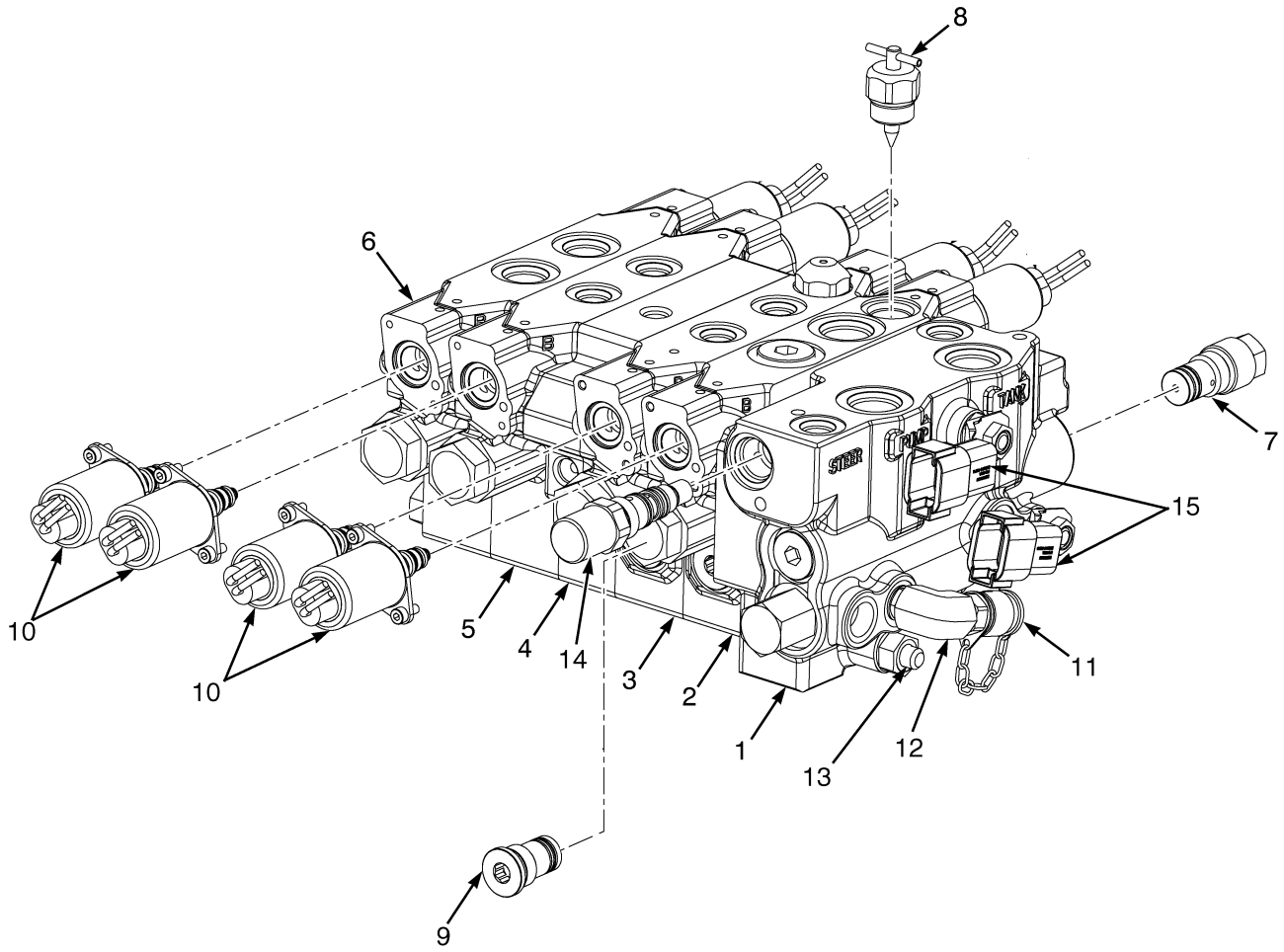

©2015 Yale Europe Materials Handling Limited

CONTROL VALVE
ELECTRO-HYDRAULIC – 3 AND 4 FUNCTION

ITEM	PART NO.	DESCRIPTION	QTY
	ae 580087767	Hydraulic Control Valve	1
	be 580087772	Hydraulic Control Valve	1
	af 582022996	Hyd Control Valve	1
	bf 582022997	Hyd Control Valve	1
1	**e** 580095231	Valve Section (Inlet) (☞Page 6-64)	1
1	**f** 582034598	Valve Section (Inlet) (☞Page 6-68)	1
2	580095232	Valve Section (Lift) (☞Page 6-70)	1
3	580095233	Valve Section (Tilt) (☞Page 6-70)	1
4	580095234	Valve Section (Spacer) (☞Page 6-70)	1
4	580095273	Kit-Seal (Order one for each valve section)	1
5	**be** 580095268	Valve Section (Dual Aux)	1
5	580095273	Kit-Seal (Order one for each valve section)	1
5	**b** 582029429	Valve Section (Dual Aux)	1
6	**d** 580095235	Valve Section (End Aux)	1
6	580095273	Kit-Seal (Order one for each valve section)	1
6	**f** 582029424	Valve Section (End Aux)	1
7	**e** 580095226	Relief Valve	1
7	**f** 582029423	Relief Valve	1
8	580095227	Lowering Control Valve	1
9	580095230	Plug (Compensator)	1
10	**a** 580095229	Solenoid Valve	6
10	**b** 580095229	Solenoid Valve	8
11	580041208	Fitting (Diagnostic)	1
12	580043644	Fitting	1
13	**a** 580095236	Tie Rod (Assembly) (☞Page 6-72)	1
13	**b** 580095269	Tie Rod (Assembly) (☞Page 6-72)	1
14	~~580095238~~		
	582029425	Pilot Valve	1
15	580095228	Kit-Service (Connector Assembly)	1
15	580095330	Clip	2
15	580095331	Plug	4
15	580095563	Connector	1
15	580095564	Connector	1
15	580095565	Connector	2
15	580095333	Nut	2
	c 580095237	Kit-Seal Complete Valve	1

FOOTNOTES:

a 3 Function
b 4 Function
c Contains 1 kit of 580095272 and 5 kits of 580095273
d → 11/2014
e → 2/2015
f 2/2015 →

©2015 Yale Europe Materials Handling Limited

INLET SECTION (FIGURE 6-29)
ELECTRO-HYDRAULIC CONTROL VALVE

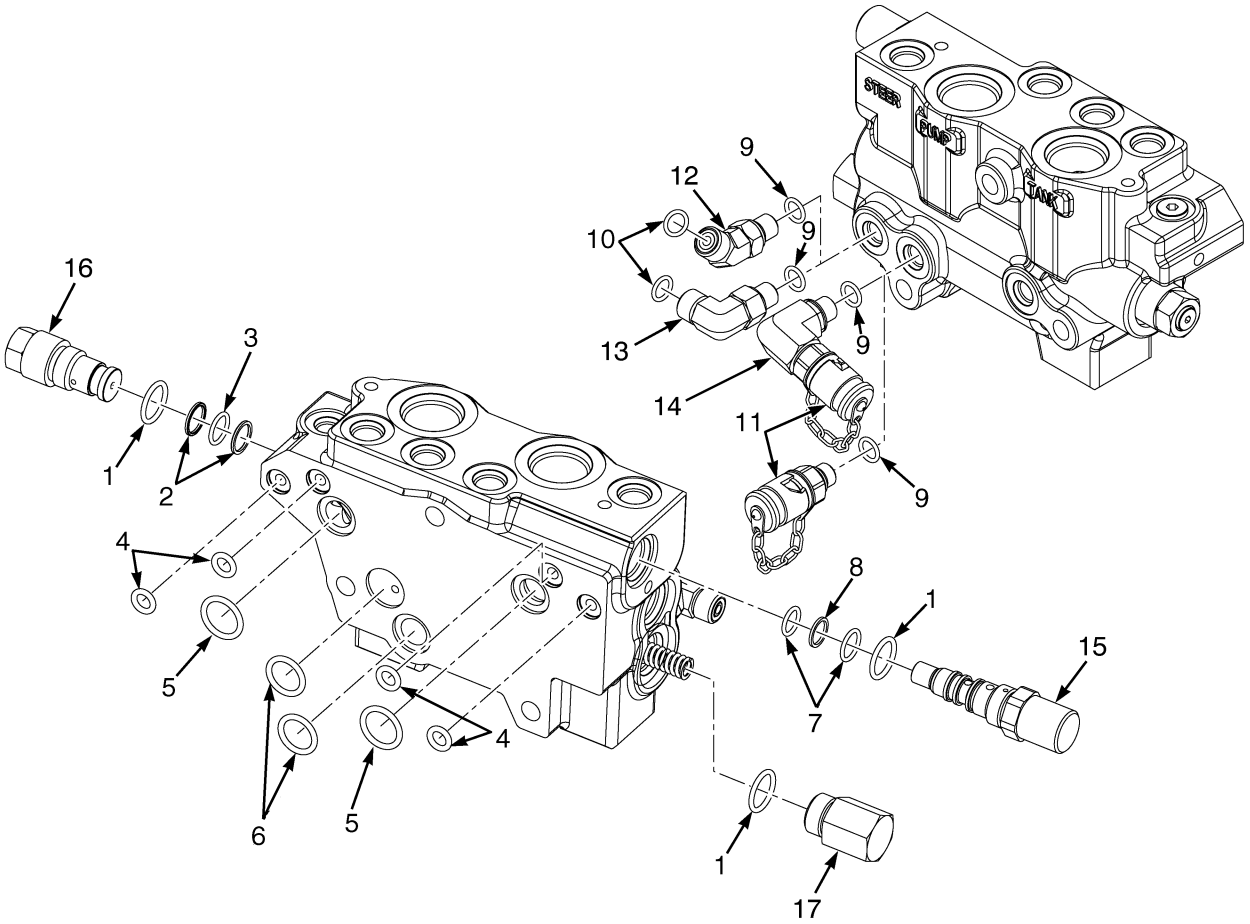

BP140025

©2015 Yale Europe Materials Handling Limited

INLET SECTION
ELECTRO-HYDRAULIC CONTROL VALVE

ITEM	PART NO.	DESCRIPTION	QTY
	b 580095231	Valve Section (Inlet Section)	1
	c 582034598	Valve Section (Inlet)	1
1	580095335	O-Ring	3
2	580095549	Back-Up Ring	2
3	580095550	O-Ring	1
4	580095562	O-Ring	4
5	580095557	O-Ring	2
6	580095558	O-Ring	2
7	580095559	O-Ring	2
8	580095560	Back-Up Ring	1
9	580095561	O-Ring	3
10	580095329	O-Ring	1
11	580041208	Fitting (Diagnostic)	2
12	315976062	Fitting	2
12	580004501	Plug	1
12	056363300	O-Ring	1
13	315976070	Fitting	1
13	052645200	O-Ring	1
14	~~580059132~~		
	505967551	Fitting	1
14	052645300	O-Ring	1
15	~~580095238~~		
	582029425	Pilot Valve	1
16	**a** 580095226	Relief Valve	1
16	**c** 582029423	Relief Valve	1
17	. . . . .	Plug	1
	580095272	Kit-Seal	1

FOOTNOTES:

a → 11/2014
b → 2/2015
c 2/2015 →

©2015 Yale Europe Materials Handling Limited

LIFT/TILT SECTION (FIGURE 6-30)
ELECTRO-HYDRAULIC CONTROL VALVE

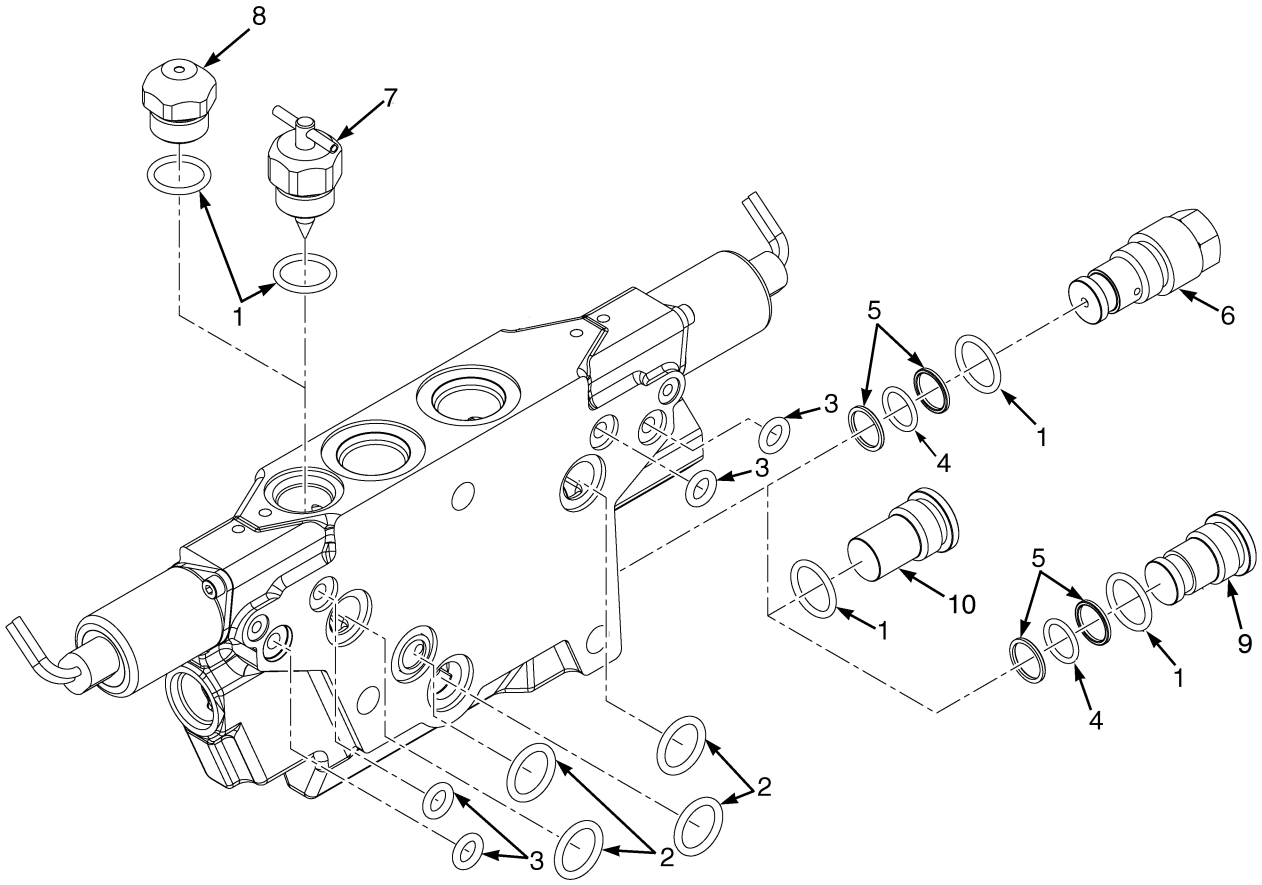

BP140051

©2015 Yale Europe Materials Handling Limited

LIFT/TILT SECTION
ELECTRO-HYDRAULIC CONTROL VALVE

ITEM	PART NO.	DESCRIPTION	QTY
	580095232	Valve Section (Lift Section Assembly)	1
	580095233	Valve Section (Tilt Section Assembly)	1
	580095234	Valve Section (Spacer Section Assembly)	1
1	580095335	O-Ring	2
2	580095558	O-Ring	4
3	580095562	O-Ring	4
4	580095550	O-Ring	1
5	580095549	Back-Up Ring	2
6	580095226	Relief Valve (Tilt)	1
7	580095227	Lowering Control Valve (Lift)	1
8	. . . . .	Plug (Port Option) (Tilt)	1
9	. . . . .	Fitting (Tilt)	1
10	. . . . .	Fitting (Lift)	1
	580095273	Kit-Seal (Order one for each valve section)	1

©2015 Yale Europe Materials Handling Limited

TIE RODS (FIGURE 6-31)
ELECTRO-HYDRAULIC CONTROL VALVE

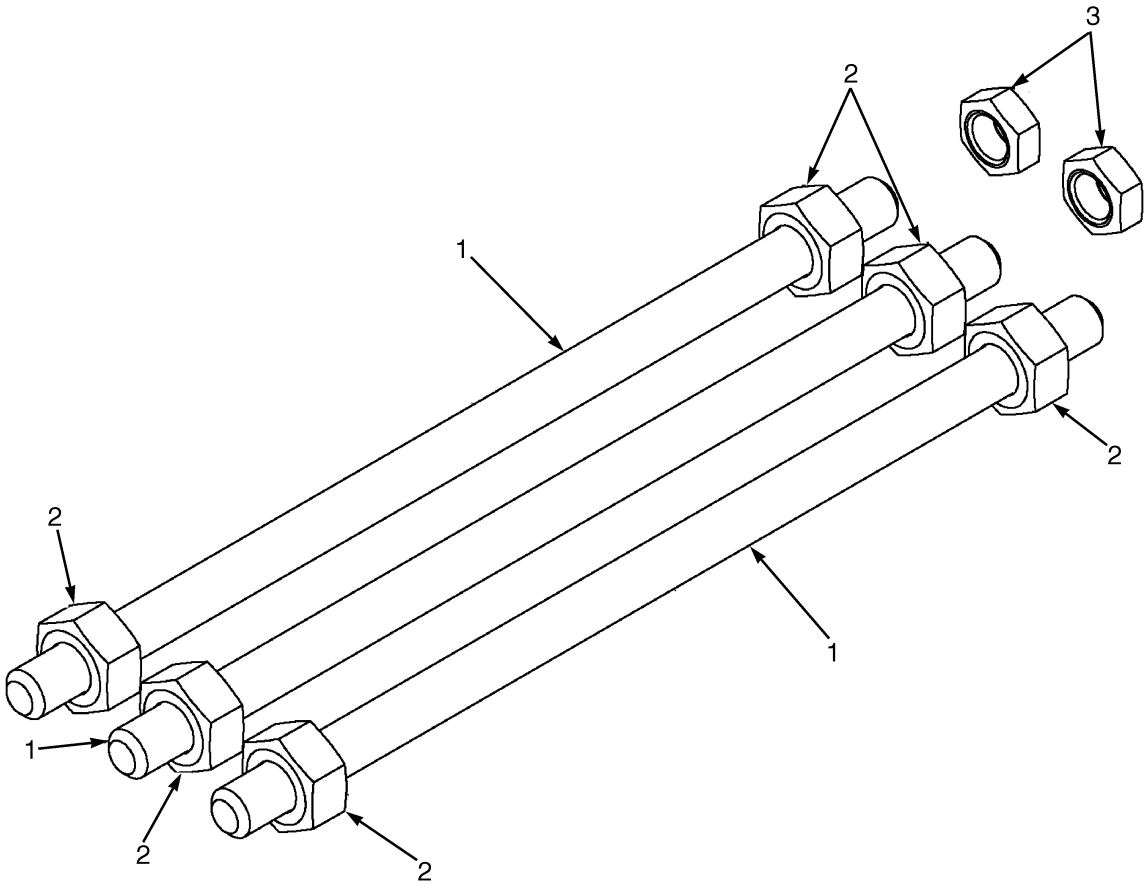

BP140019

©2015 Yale Europe Materials Handling Limited

TIE RODS

ELECTRO-HYDRAULIC CONTROL VALVE

KEY:
A: 3 Function
B: 4 Function

ITEM	PART NO.	DESCRIPTION	QTY A	QTY B
	580095236	Tie Rod (Kit)	1	..
	580095269	Tie Rod (Kit)	..	1
1	580095547	Tie Rod	3	..
1	580095544	Bolt	..	3
2	580095545	Nut	6	6
3	580095546	Nut	2	2

©2015 Yale Europe Materials Handling Limited

TILT CYLINDER AND MAST INSTALLATION (FIGURE 6-32)

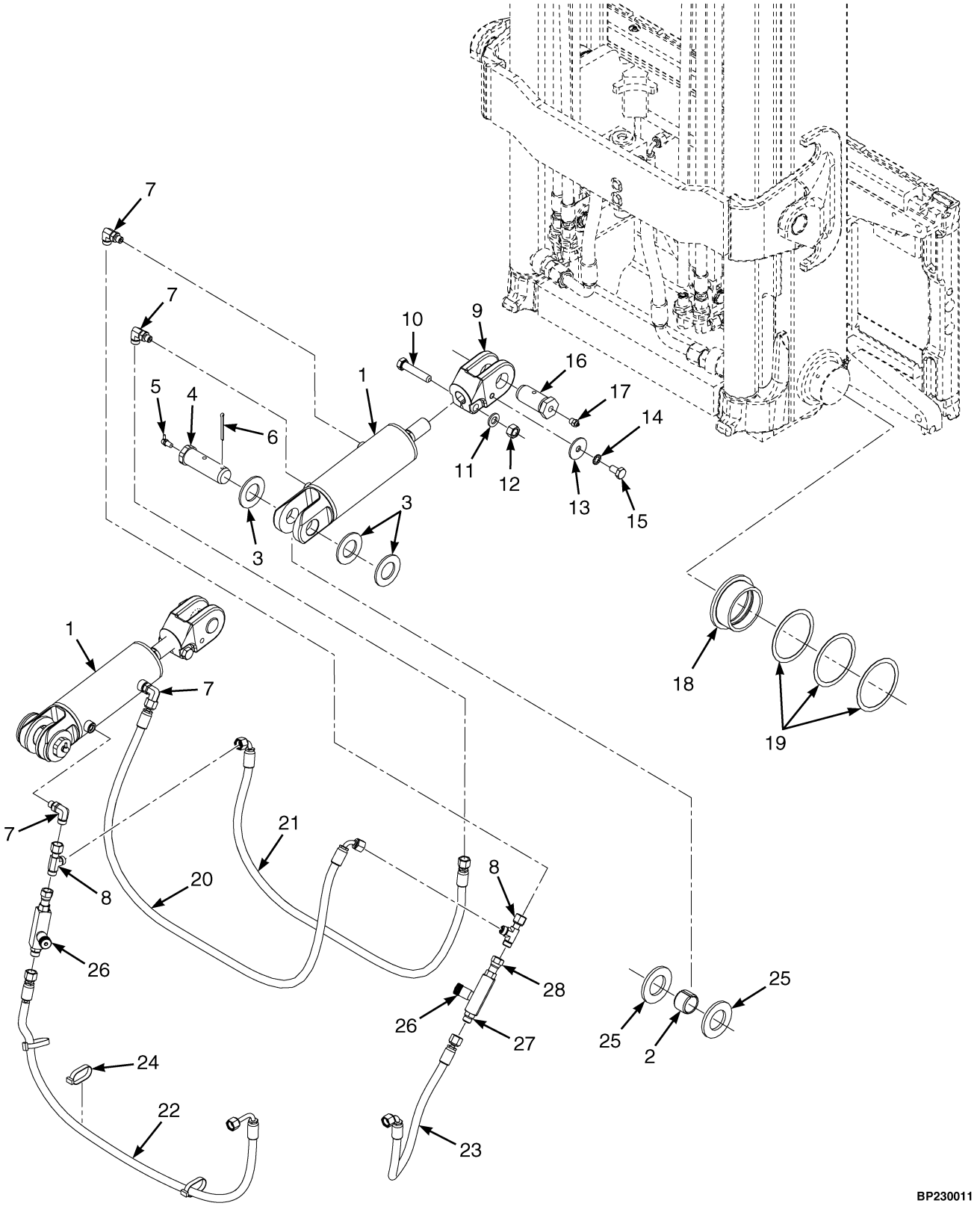

©2015 Yale Europe Materials Handling Limited

TILT CYLINDER AND MAST INSTALLATION

ITEM	PART NO.	DESCRIPTION	QTY
1	580077160	Tilt Cylinder (5 degrees Forward, 5 Degrees Backward) (☞Page 6-76).....	2
1	580077161	Tilt Cylinder (10 degrees Forward, 5 Degrees Backward) (☞Page 6-76).....	2
1	580083122	Tilt Cylinder (5 degrees Forward, 4 Degrees Backward) (☞Page 6-76).....	2
2	504229225	Bushing	1
3	504574267	Washer	6
4	518801677	Pin	2
5	502139901	Grease Fitting	2
6	449025047	Cotter Pin	2
7	580019860	Fitting	4
7	580039385	O-Ring	1
7	056363300	O-Ring	1
8	580019894	Fitting	2
8	580039385	O-Ring	2
9	900003275	Rod End	2
10	580061352	Capscrew	2
11	580056005	Washer	2
12	580056000	Nut	2
13	520039885	Washer	2
14	940600909	Washer	2
15	449001016	Capscrew	2
16	900005215	Pin	2
17	015627900	Grease Fitting	2
18	~~580052277~~		
	582002132	Bushing (Mast Mounting)	2
19	580052276	Shim	6
20	580082260	Hose Assy	1
21	580095846	Hose Assy	1
22	580082265	Hose Assy	1
23	580082261	Hose Assy	1
24	312850034	Strap Clamp	4
25	940004914	Washer	4
26	**a** 582018663	Valve (Flow Control)	2
26	**b** 582022774	Valve (Flow Control)	2
27	**a** 580049119	Fitting	2
27	**b** 580019805	Fitting	2
28	**a** 582018668	Fitting	2
28	**b** 582021639	Fitting	2

FOOTNOTES:

a S/N G807B04140K ↔ S/N G807B05139L

b S/N G807B05140L →

©2015 Yale Europe Materials Handling Limited

TILT CYLINDER ASSEMBLY (FIGURE 6-33)

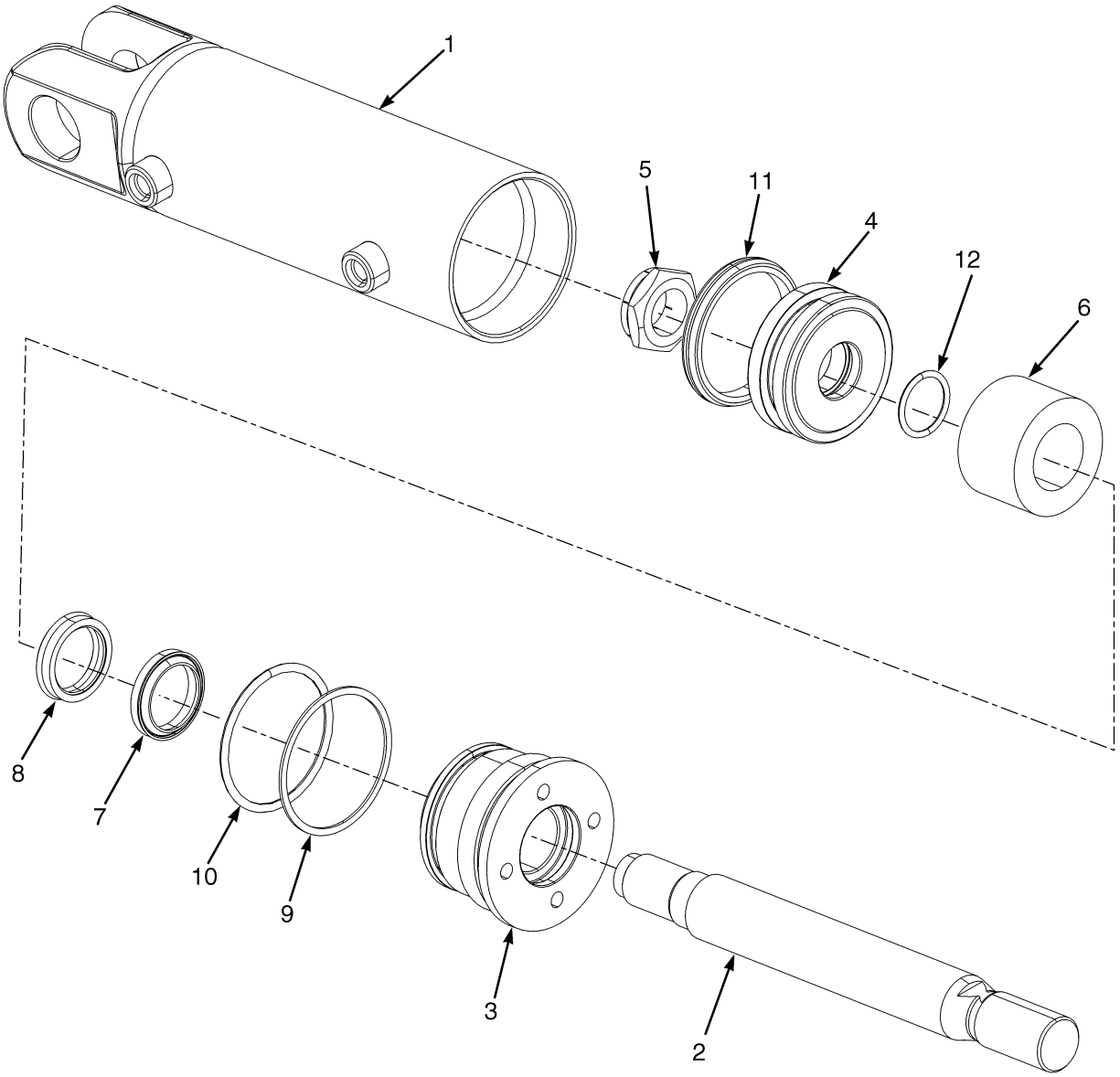

©2015 Yale Europe Materials Handling Limited

TILT CYLINDER ASSEMBLY

KEY:
A: 5 degrees forward / 5 degrees backward
B: 10 degrees forward / 5 degrees backward
C: 5 degrees forward / 4 degrees backward

ITEM	PART NO.	DESCRIPTION	QTY A	QTY B	QTY C
	580077160	Tilt Cylinder	2	..	..
	580077161	Tilt Cylinder	..	2	..
	580083122	Tilt Cylinder	..	..	2
1	520041613	Tube	1	1	1
2	519517618	Rod	1	..	..
2	519517619	Rod	..	..	1
3	504143500	Gland	1	1	1
4	519477600	Piston	1	1	1
5	502637902	Locknut	1	1	1
6	500653509	Spacer	1	..	1
7	580022507	Rod Wiper	1	1	1
8	580022501	Rod Seal	1	1	1
9	502011911	Back-Up Ring	1	1	1
10	012823300	O-Ring	1	1	1
11	504305711	Piston Seal	1	1	1
12	501802906	O-Ring	1	1	1
	580023425	Kit-Seal	1	1	1

©2015 Yale Europe Materials Handling Limited

NOTES

©2015 Yale Europe Materials Handling Limited

7 MAST-TWO STAGE LIMITED FREE-LIFT

SECTION 7
MAST-TWO STAGE LIMITED FREE-LIFT

DESCRIPTION	PAGE
CARRIAGE ASSEMBLY	
TWO STAGE LIMITED FREE LIFT - A270 - STANDARD	7-12
TWO STAGE LIMITED FREE LIFT - C661 - STANDARD	7-30
HEADER HOSE ASSEMBLY	
TWO STAGE LIMITED FREE LIFT - A270 (→ S/N A270B01595H)	7-14
TWO STAGE LIMITED FREE LIFT - A270 (S/N A270B01596H →)	7-16
TWO STAGE LMITED FREE-LIFT - C661	7-32
LIFT CYLINDER ASSEMBLY	
TWO STAGE LIMITED FREE LIFT - A270	7-10
TWO STAGE LIMITED FREE LIFT - C661	7-26
MAST ASSEMBLY	
TWO STAGE LIMITED FREE LIFT - A270 (→ S/N A270B01595H)	7-2
TWO STAGE LIMITED FREE LIFT - A270 (S/N A270B01596H →)	7-6
TWO STAGE LIMITED FREE LIFT - C661 (→ S/N C661B01677H)	7-18
TWO STAGE LIMITED FREE LIFT - C661 (S/N C661B01678H →)	7-22

©2015 Yale Europe Materials Handling Limited

MAST ASSEMBLY (FIGURE 7-1)

TWO STAGE LIMITED FREE LIFT - A270 (→ S/N A270B01595H)

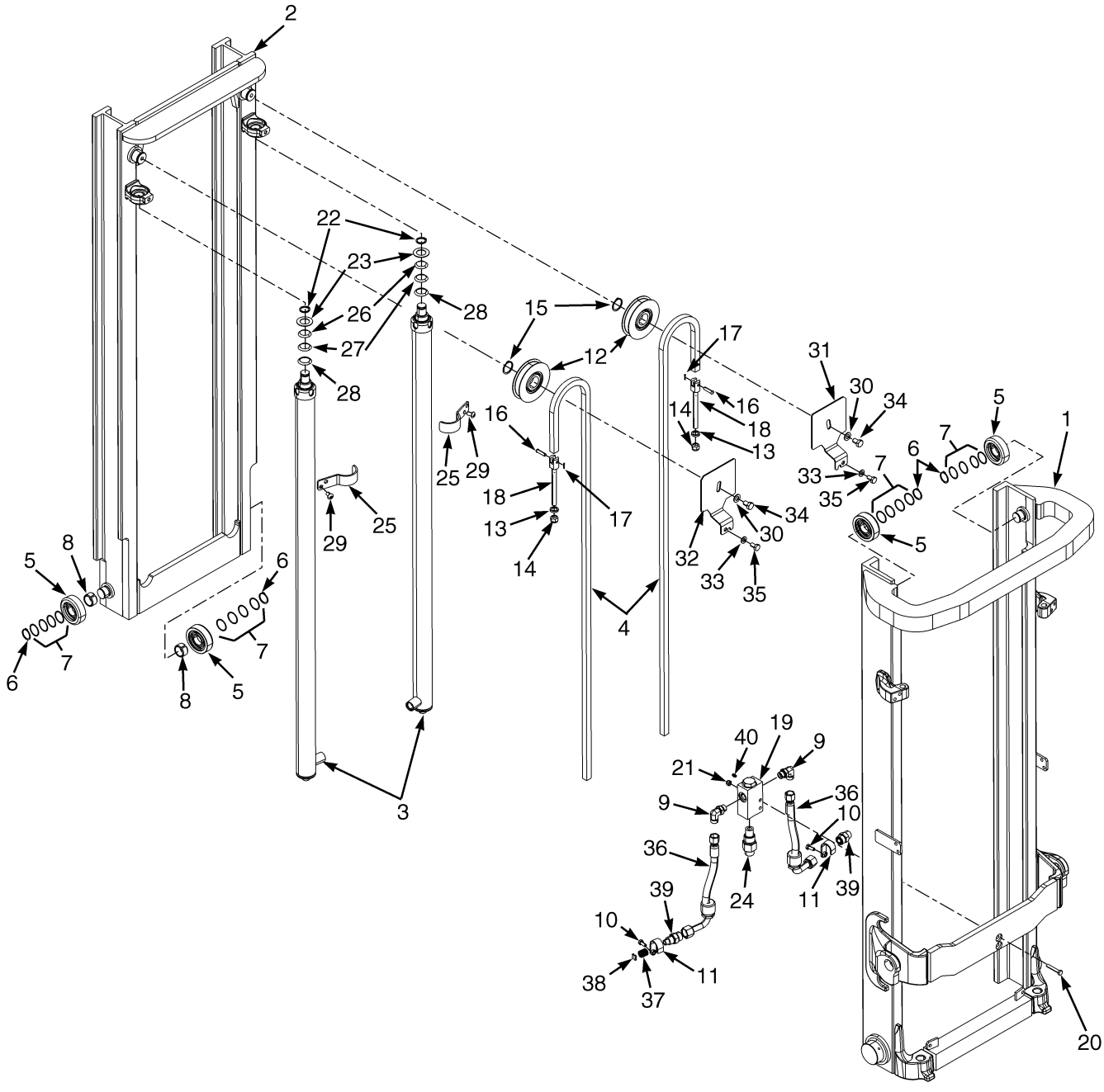

BP170355

©2015 Yale Europe Materials Handling Limited

MAST ASSEMBLY

TWO STAGE LIMITED FREE LIFT - A270 (→ S/N A270B01595H)

A270

ITEM	DESCRIPTION 1 2 3 4	LIFT HEIGHT TO BOTTOM OF FORKS			
		3320 mm (130.7 in.)	3820 mm (150.4 in.)	4320 mm (170.1 in.)	4820 mm (189.8 in.)
	Mast Group Number	A270 3320	A270 3820	A270 4320	A270 4820
	Mast Assy	580084918	580084924	580084929	580085347
1	Outer Mast	524198371	524198377	524198382	580085361
2	Inner Mast	524198411	524198417	524198422	524198523
4	Chain	580089878	580089882	580089886	580089891

ITEM	PART NO.	DESCRIPTION	QTY
	b	Mast Assy	1
1	**b**	Outer Mast	1
2	**b**	Inner Mast	1
3	. . . . .	Cylinder (☞Page 7-10)	2
4	**b**	Chain	2
5	580081128	Load Roller	4
6	~~580091430~~		
	015915900	Snap Ring	4
7	580093128	Shim	AR
8	900003277	Bushing	2
9	580020576	Fitting	2
10	580055733	Capscrew	2
11	524198557	Clamp	2
12	580088047	Chain Sheave	2
13	504240200	Ring	2
14	504240239	Nut	2
15	015916300	Snap Ring	2
16	580087831	Pin	2
17	015415900	Cotter Pin	2
18	524198558	Chain Anchor	2
19	580007839	Housing	1
20	580055983	Capscrew	2
21	580055651	Nut	2
22	500227907	Snap Ring	2
23	504064767	Washer (1.500 mm)	2
24	524141846	Lowering Control Valve	1
25	580095196	Bracket	2
26	504064769	Washer (0.254 mm)	AR
27	504069791	Washer (0.762 mm)	AR
28	504069702	Washer (1.524 mm)	AR
29	580055738	Capscrew	4
30	580055632	Washer	2
31	580087613	Cover Plate	1
32	580087614	Cover Plate	1
33	580055634	Washer	2
34	580055742	Capscrew	2

©2015 Yale Europe Materials Handling Limited

MAST ASSEMBLY

TWO STAGE LIMITED FREE LIFT - A270 (→ S/N A270B01595H)

ITEM	PART NO.	DESCRIPTION	QTY
35	580055738	Capscrew	3
36	580084999	Hose Assy	2
37	504075776	Spring	1
38	504236253	Washer	1
39	580064145	Fitting	2
40	061655900	Lube Ftg	2
	a 500390901	Fitting	1
	a 582000921	Foam Tape	2

FOOTNOTES:

a Not Illustrated

b Refer to Table

©2015 Yale Europe Materials Handling Limited

NOTES

©2015 Yale Europe Materials Handling Limited

MAST ASSEMBLY (FIGURE 7-2)

TWO STAGE LIMITED FREE LIFT - A270 (S/N A270B01596H →)

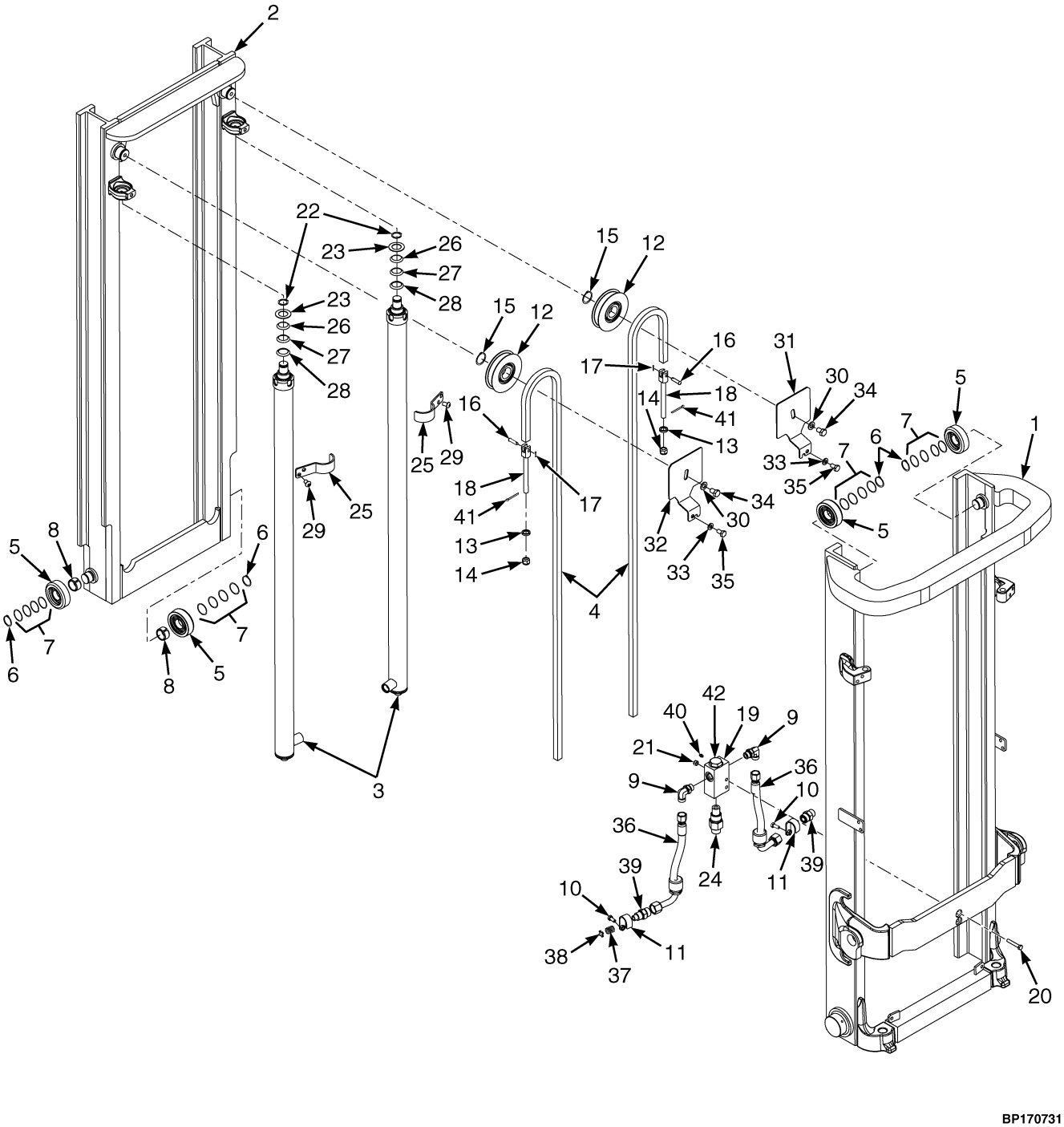

BP170731

©2015 Yale Europe Materials Handling Limited

MAST ASSEMBLY

TWO STAGE LIMITED FREE LIFT - A270 (S/N A270B01596H →)

A270

ITEM	DESCRIPTION 1 2 3 4	LIFT HEIGHT TO BOTTOM OF FORKS			
		3320 mm (130.7 in.)	3820 mm (150.4 in.)	4320 mm (170.1 in.)	4820 mm (189.8 in.)
	Mast Group Number	A270 3320	A270 3820	A270 4320	A270 4820
	Mast Assy	580084918	580084924	580084929	580085347
1	Outer Mast	582000566	582000571	582000576	582000581
2	Inner Mast	524198411	524198417	524198422	524198523
4	Chain	580089877	580089881	580089885	580093639

ITEM	PART NO.	DESCRIPTION	QTY
	b	Mast Assy	1
1	**b**	Outer Mast	1
2	**b**	Inner Mast	1
3	. . . . .	Cylinder (☞Page 7-10)	2
4	**b**	Chain	2
5	580081128	Load Roller	4
6	~~580091430~~		
	015915900	Snap Ring	4
7	580093128	Shim	AR
8	900003277	Bushing	2
9	580020576	Fitting	2
10	580055733	Capscrew	2
11	524198557	Clamp	2
12	580088047	Chain Sheave	2
13	504240200	Ring	2
14	504240239	Nut	2
15	015916300	Snap Ring	2
16	580087831	Pin	2
17	015415900	Cotter Pin	2
18	524198558	Chain Anchor	2
19	580007839	Housing	1
20	580055983	Capscrew	2
21	580055651	Nut	2
22	500227907	Snap Ring	2
23	504064767	Washer (1.500 mm)	2
24	524141846	Lowering Control Valve	1
25	580095196	Bracket	2
26	504064769	Washer (0.254 mm)	AR
27	504069791	Washer (0.762 mm)	AR
28	504069702	Washer (1.524 mm)	AR
29	580055738	Capscrew	4
30	580055632	Washer	2
31	580087613	Cover Plate	1
32	580087614	Cover Plate	1
33	580055634	Washer	2
34	580055742	Capscrew	2

©2015 Yale Europe Materials Handling Limited

MAST ASSEMBLY

TWO STAGE LIMITED FREE LIFT - A270 (S/N A270B01596H →)

ITEM	PART NO.	DESCRIPTION	QTY
35	580055738	Capscrew	2
36	580084999	Hose Assy	2
37	504075776	Spring	1
38	504236253	Washer	1
39	580064145	Fitting	1
40	061655900	Lube Ftg	2
41	449025042	Cotter Pin	2
42	500390901	Fitting	1
	a 582000921	Foam Tape	2

FOOTNOTES:

a Not Illustrated

b Refer to Table

©2015 Yale Europe Materials Handling Limited

NOTES

©2015 Yale Europe Materials Handling Limited

LIFT CYLINDER ASSEMBLY (FIGURE 7-3)
TWO STAGE LIMITED FREE LIFT - A270

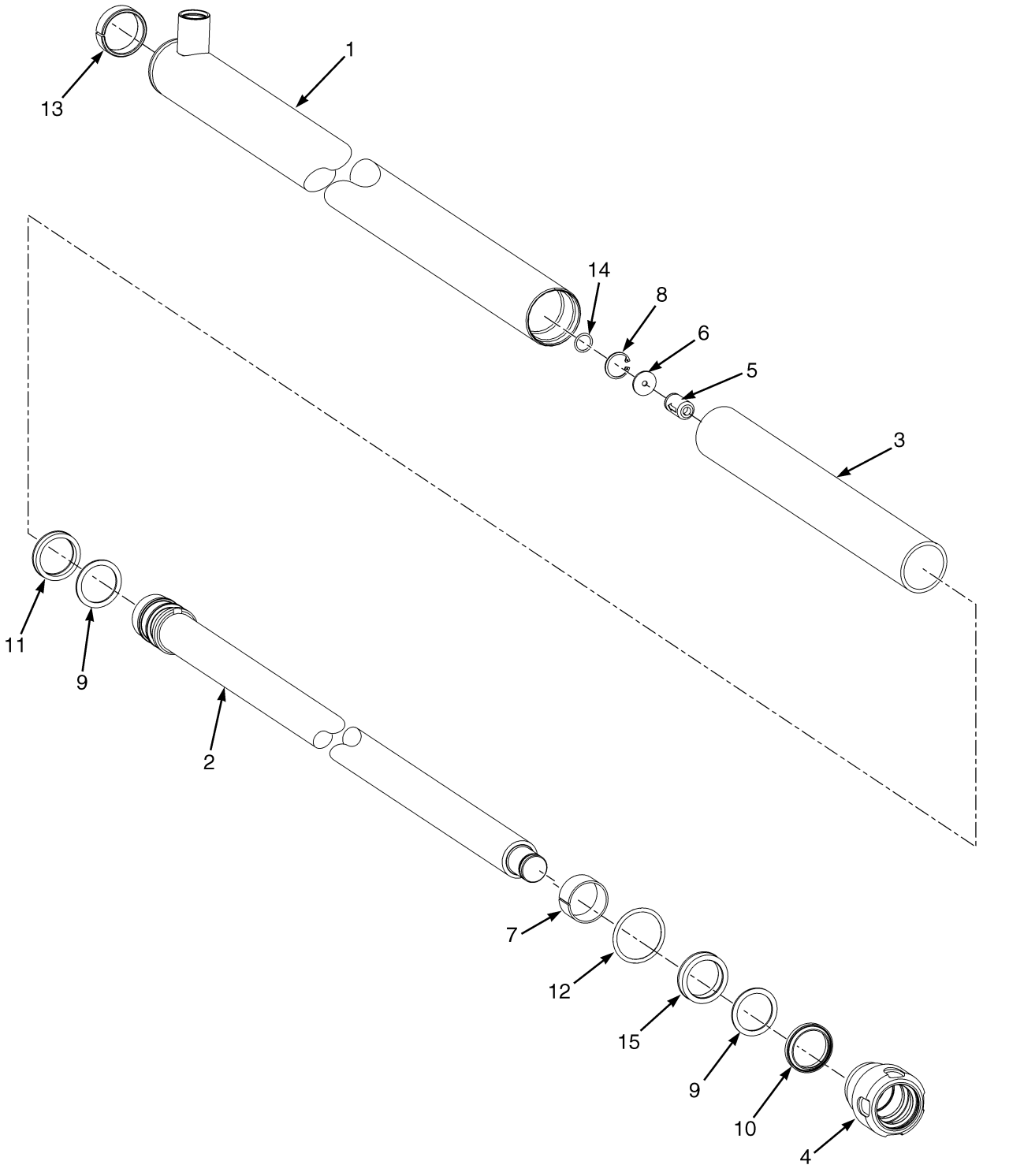

©2015 Yale Europe Materials Handling Limited

LIFT CYLINDER ASSEMBLY
TWO STAGE LIMITED FREE LIFT - A270

A270

ITEM	DESCRIPTION 1 2 3 4	LIFT HEIGHT TO BOTTOM OF FORKS			
		3320 mm (130.7 in.)	3820 mm (150.4 in.)	4320 mm (170.1 in.)	4820 mm (189.8 in.)
	Mast Group Number	**A270 3320**	**A270 3820**	**A270 4320**	**A270 4820**
	Cylinder Group Number	**8537811**	**8537817**	**8537822**	**8537829**
	Cylinder Assy	580078941	580083295	580083300	524198548
1	Tube Assy	524284711	524284717	524284722	524284729
2	Rod Assy	519521699	519521704	519521709	519521716
3	Spacer	----	505657521	505657521	505657528

ITEM	PART NO.	DESCRIPTION	QTY
	b	Cylinder Assy	1
1	**b**	Tube Assy	1
2	**b**	Rod Assy	1
3	**b**	Spacer	1
4	580090681	Gland	1
5	504235239	Check Valve	1
6	504148200	Washer	1
7	518794659	Wear Ring	1
8	501850904	Snap Ring	1
9	504154200	Back-Up Ring	2
10	580022508	Rod Wiper	1
11	504153200	Rod Seal	1
12	012825700	O-Ring	1
13	504024201	Wear Ring	1
14	580011167	O-Ring	1
15	502787901	Rod Seal	1
	a 504234269	Lubricant	AR
	580090680	Kit-Seal	1

FOOTNOTES:

a Not Illustrated

b Refer to Table

©2015 Yale Europe Materials Handling Limited

CARRIAGE ASSEMBLY (FIGURE 7-4)
TWO STAGE LIMITED FREE LIFT - A270 — STANDARD

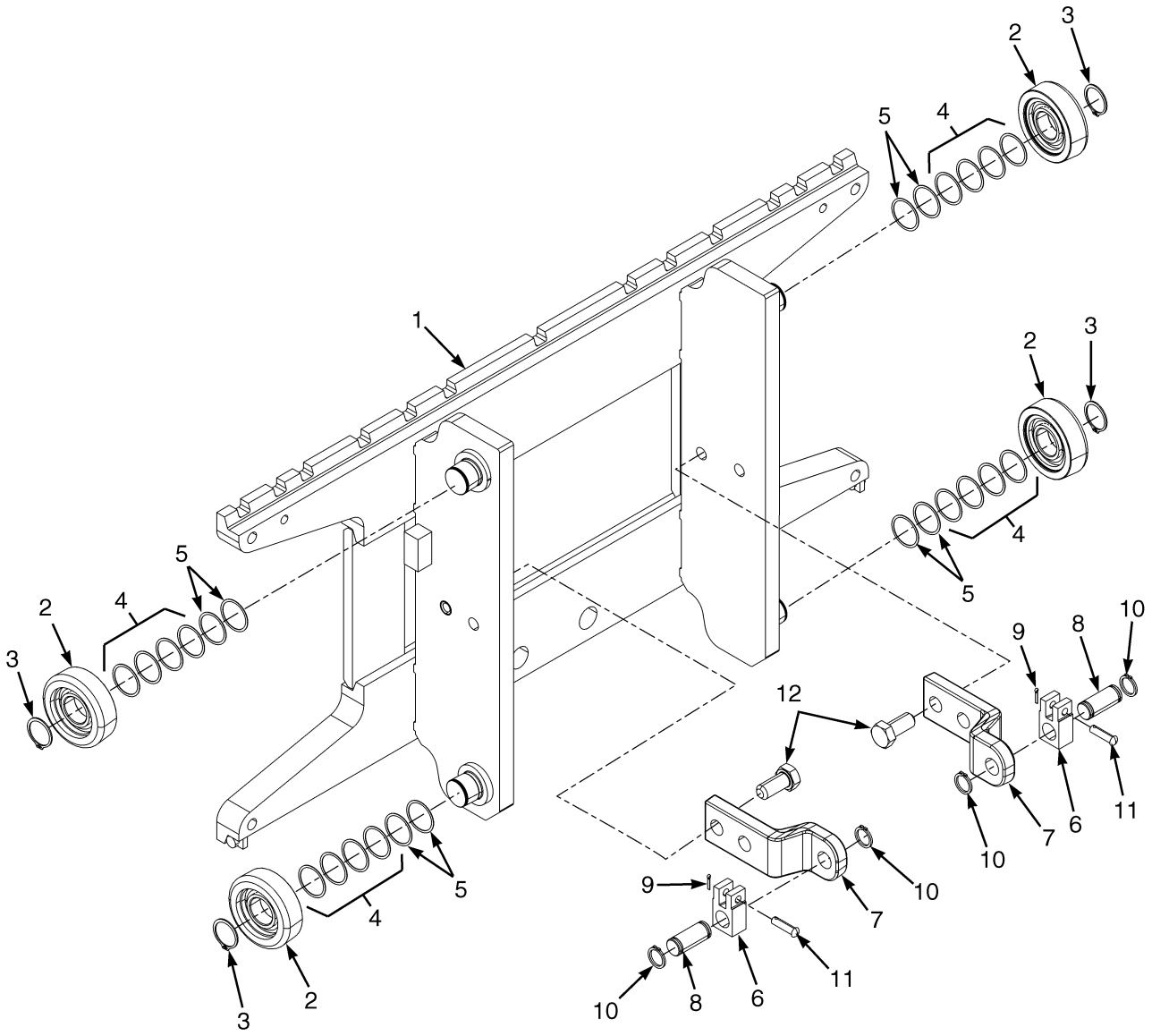

©2015 Yale Europe Materials Handling Limited

CARRIAGE ASSEMBLY

TWO STAGE LIMITED FREE LIFT - A270 – STANDARD

ITEM	PART NO.	DESCRIPTION	QTY
	580083431	Carriage Assembly	1
1	580083427	Carriage	1
2	580081128	Load Roller	4
3	~~580091430~~		
	015915900	Snap Ring	4
4	580093128	Shim	20
5	504240294	Shim (0,762 mm)	16
6	524198472	Chain Anchor	2
7	524198473	Chain Anchor	2
8	580087831	Pin	2
9	015415900	Cotter Pin	2
10	500227904	Snap Ring	4
11	524198471	Pin	2
12	580055980	Capscrew	4

©2015 Yale Europe Materials Handling Limited

HEADER HOSE ASSEMBLY (FIGURE 7-5)

TWO STAGE LIMITED FREE LIFT - A270 (→ S/N A270B01595H)

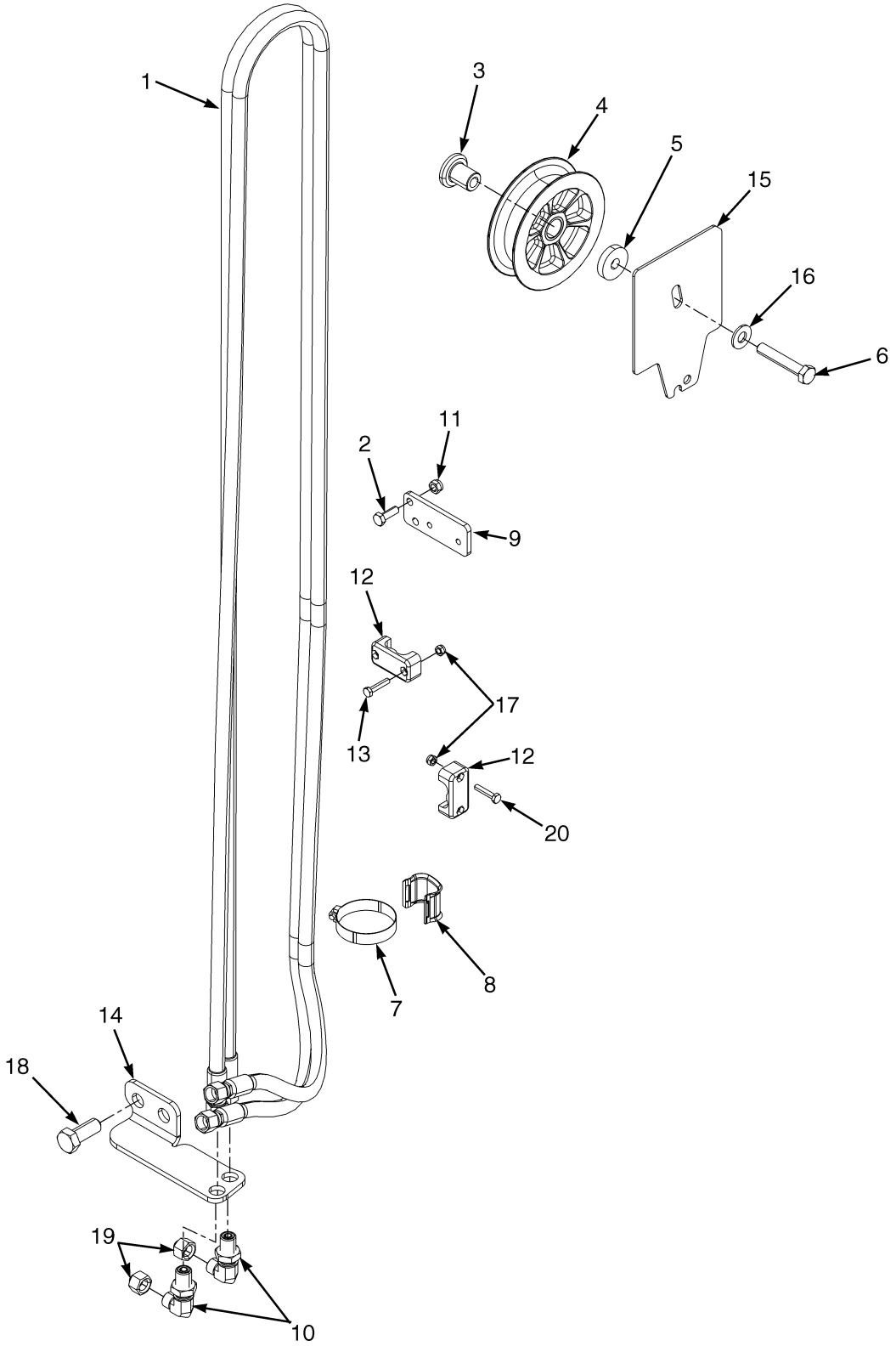

©2015 Yale Europe Materials Handling Limited

HEADER HOSE ASSEMBLY

TWO STAGE LIMITED FREE LIFT - A270 (→ S/N A270B01595H)

A270

ITEM	DESCRIPTION 1 2 3 4	LIFT HEIGHT TO BOTTOM OF FORKS			
		3320 mm (130.7 in.)	3820 mm (150.4 in.)	4320 mm (170.1 in.)	4820 mm (189.8 in.)
	Mast Group Number	A270 3320	A270 3820	A270 4320	A270 4820
1	Hose Assy	580085481	580085486	580085491	580085496

KEY:
A: 3 Function
B: 4 Function

ITEM	PART NO.	DESCRIPTION	QTY A	QTY B
1	**a**	Hose Assy	1	2
2	580055734	Capscrew	2	4
3	524198916	Stubshaft	1	2
4	580087467	Hose Sheave	1	2
5	524198559	Washer	1	2
6	580055977	Capscrew	1	2
7	580045653	Clamp	1	2
8	524141696	Hose Clamp	1	2
9	580087869	Plate	1	2
10	580039401	Fitting	2	4
11	580055651	Nut	2	4
12	504068794	Clamp (Double Hose)	2	4
13	580055981	Capscrew	2	4
14	524198486	Bracket	1	1
14	524198485	Bracket	..	1
15	580087618	Cover Plate	1	2
16	580061870	Washer	1	2
17	580055650	Nut	2	4
18	580085207	Capscrew	2	4
19	580039424	Cap	2	4
20	580055863	Capscrew	2	4

FOOTNOTES:

a Refer to Table

©2015 Yale Europe Materials Handling Limited

HEADER HOSE ASSEMBLY (FIGURE 7-6)

TWO STAGE LIMITED FREE LIFT - A270 (S/N A270B01596H →)

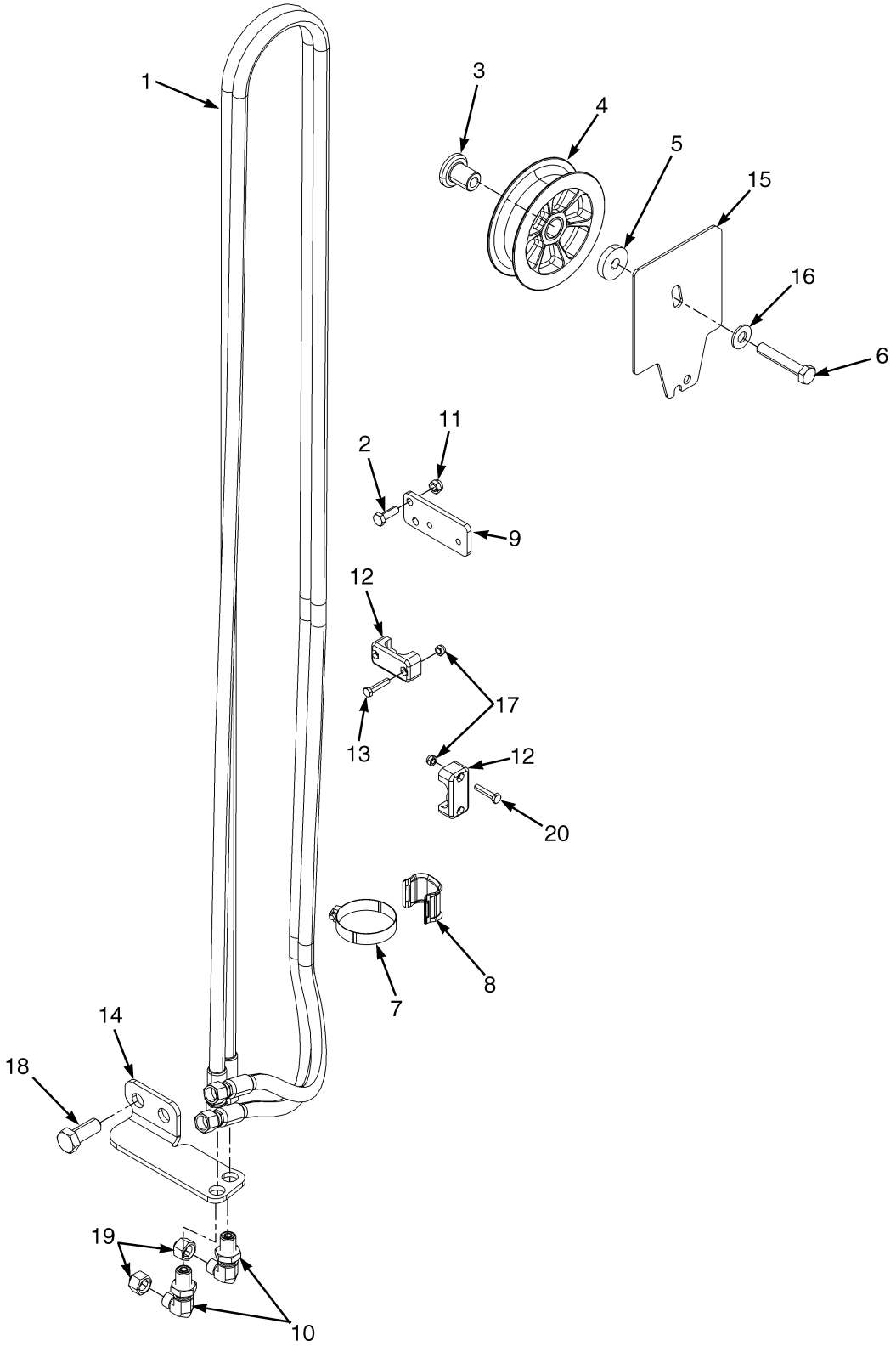

©2015 Yale Europe Materials Handling Limited

HEADER HOSE ASSEMBLY

TWO STAGE LIMITED FREE LIFT - A270 (S/N A270B01596H →)

A270

ITEM	DESCRIPTION 1 2 3 4	LIFT HEIGHT TO BOTTOM OF FORKS			
		3320 mm (130.7 in.)	3820 mm (150.4 in.)	4320 mm (170.1 in.)	4820 mm (189.8 in.)
	Mast Group Number	A270 3320	A270 3820	A270 4320	A270 4820
1	Hose Assy	580085478	580085485	580085488	580085495

KEY:
A: 3 Function
B: 4 Function

ITEM	PART NO.	DESCRIPTION	QTY A	QTY B
1	**a**	Hose Assy	2	4
2	580055734	Capscrew	2	4
3	524198916	Stubshaft	1	2
4	580087467	Hose Sheave	1	2
5	524198559	Washer	1	2
6	580055977	Capscrew	1	2
7	580045653	Clamp	1	2
8	524141696	Hose Clamp	..	..
9	580087869	Plate	1	2
10	580039401	Fitting	2	4
11	580055651	Nut	2	4
12	504068794	Clamp (Double Hose)	2	4
13	580055981	Capscrew	2	4
14	524198486	Bracket	1	1
14	524198485	Bracket	..	1
15	580087618	Cover Plate	1	2
16	580061870	Washer	1	2
17	580055650	Nut	2	4
18	580085207	Capscrew	2	4
19	580039424	Cap	2	4
20	580055863	Capscrew	2	4

FOOTNOTES:

a Refer to Table

©2015 Yale Europe Materials Handling Limited

MAST ASSEMBLY (FIGURE 7-7)

TWO STAGE LIMITED FREE LIFT - C661 (→ S/N C661B01677H)

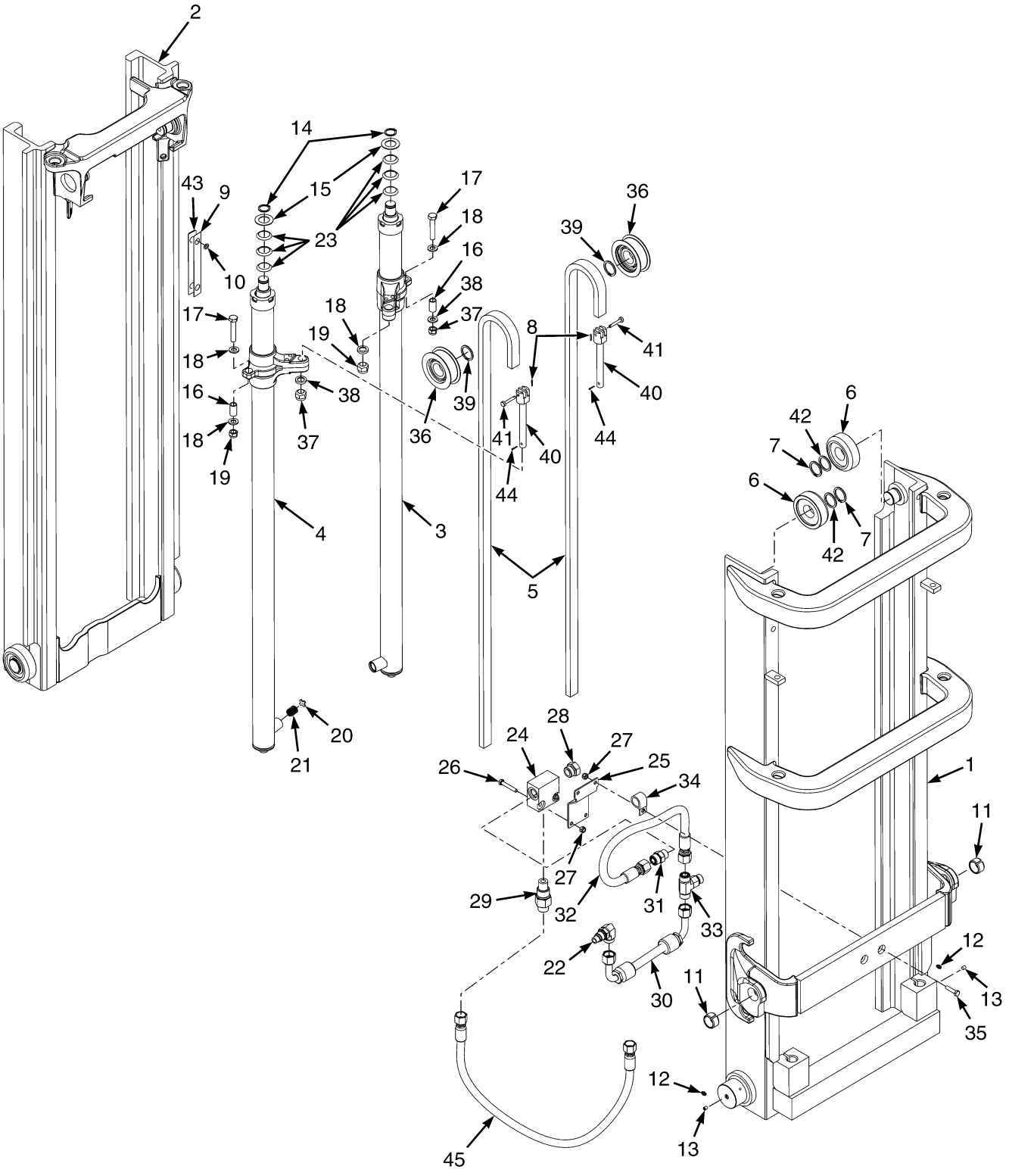

©2015 Yale Europe Materials Handling Limited

MAST ASSEMBLY

TWO STAGE LIMITED FREE LIFT - C661 (→ S/N C661B01677H)

C661

ITEM	DESCRIPTION 1 2 3 4	LIFT HEIGHT TO BOTTOM OF FORKS			
		3392 mm (133.5 in.)	3892 mm (153.2 in.)	4392 mm (172.9 in.)	4892 mm (192.6 in.)
	Mast Group Number	C661 3392	C661 3892	C661 4392	C661 4892
	Mast Assy	580075584	580075589	580075594	580075599
1	Outer Mast	**b**580075642	**b**580075647	**b**580075652	**b**580075657
2	Inner Mast	504067756	504067716	504067741	504067753
5	Chain	900002264	900002268	504075780	900002254

ITEM	PART NO.	DESCRIPTION	QTY
	a	Mast Assy	1
1	**a**	Outer Mast	1
2	**a**	Inner Mast	1
3	. . . . .	Cylinder Assembly (RH) (☞Page 7-26)	1
4	. . . . .	Cylinder Assembly (LH) (☞Page 7-26)	1
5	**a**	Chain	2
6	520036852	Load Roller ("B") (92.18 mm/91.92 mm)	4
7	449029011	Snap Ring	4
8	015415900	Cotter Pin	2
9	504075764	Wear Strip	2
10	012824300	O-Ring	4
11	900003277	Bushing	2
12	015628700	Grease Fitting	2
13	150127005	Fitting	2
14	500227907	Snap Ring	2
15	504064767	Washer (1.500 mm)	2
16	504064739	Spacer	2
17	580055976	Capscrew	2
18	580056005	Washer	4
19	580056001	Nut	2
20	504236253	Washer	1
21	504075776	Spring	1
22	524141842	Fitting	1
23	504064769	Washer (0.254 mm)	1
23	504069791	Washer (0.762 mm)	1
23	504069702	Washer (1.524 mm)	1
24	580087522	Housing	1
25	580087523	Bracket	1
26	580055983	Capscrew	2
27	580055651	Nut	4
28	080437000	Plug	1
29	524141846	Lowering Control Valve	1
29	580019387	O-Ring	1
29	052645600	O-Ring	1
30	580086121	Hose Assy	1
31	580019817	Fitting	1

©2015 Yale Europe Materials Handling Limited

MAST ASSEMBLY

TWO STAGE LIMITED FREE LIFT - C661 (→ S/N C661B01677H)

ITEM	PART NO.	DESCRIPTION	QTY
31	580019387	O-Ring	1
31	052645400	O-Ring	1
32	580087524	Hose Assy	1
33	580039183	Fitting	1
33	580019387	O-Ring	1
33	052645400	O-Ring	1
34	900015238	Clamp	1
35	580067790	Capscrew	2
36	504281794	Chain Sheave (Assembly)	2
37	504234266	Nut	2
38	504064758	Ring	2
39	500227910	Snap Ring	2
40	518801644	Chain Anchor	2
41	580033718	Pin	2
42	504233232	Shim (0.508 mm)	AR
43	504234265	Shim (0.508 mm)	4
44	449025042	Cotter Pin	2
45	582001152	Hose Assy	1

FOOTNOTES:

a Refer to Table

b → S/N G807B02138H

©2015 Yale Europe Materials Handling Limited

NOTES

©2015 Yale Europe Materials Handling Limited

MAST ASSEMBLY (FIGURE 7-8)

TWO STAGE LIMITED FREE LIFT - C661 (S/N C661B01678H →)

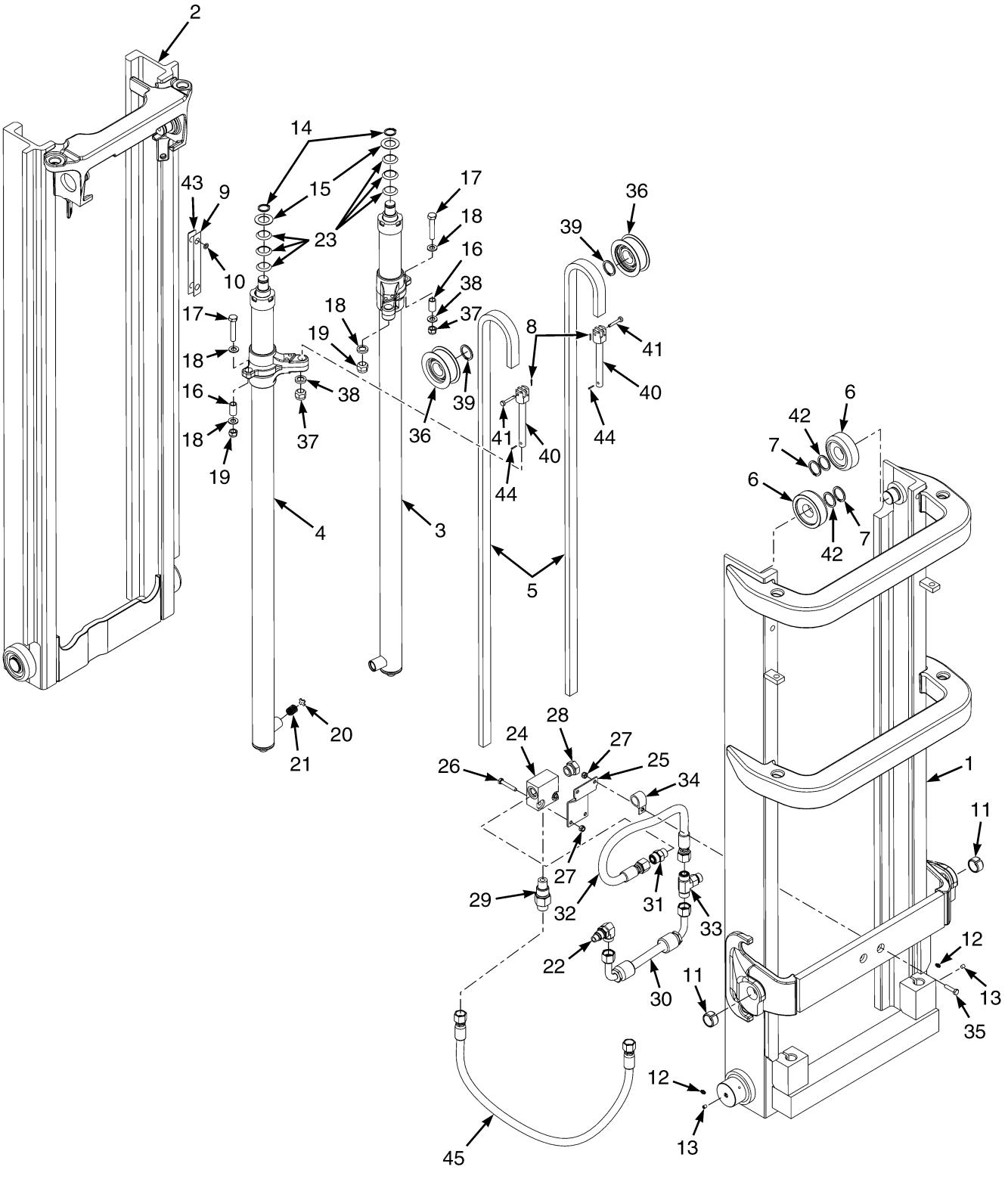

©2015 Yale Europe Materials Handling Limited

MAST ASSEMBLY

TWO STAGE LIMITED FREE LIFT - C661 (S/N C661B01678H →)

C661

ITEM	DESCRIPTION 1 2 3 4	LIFT HEIGHT TO BOTTOM OF FORKS			
		3392 mm (133.5 in.)	3892 mm (153.2 in.)	4392 mm (172.9 in.)	4892 mm (192.6 in.)
	Mast Group Number	C661 3392	C661 3892	C661 4392	C661 4892
	Mast Assy	580075584	580075589	580075594	580075599
1	Outer Mast	**b**582000863	**b**582000869	**b**582000874	**b**582000881
2	Inner Mast	504067756	504067716	504067741	504067753
5	Chain	900002264	900002268	504075780	900002254

ITEM	PART NO.	DESCRIPTION	QTY
	a	Mast Assy	1
1	**a**	Outer Mast	1
2	**a**	Inner Mast	1
3	. . . . .	Cylinder Assembly (RH) (☞Page 7-26)	1
4	. . . . .	Cylinder Assembly (LH) (☞Page 7-26)	1
5	**a**	Chain	2
6	520036852	Load Roller ("B") (92.18 mm/91.92 mm)	4
7	449029011	Snap Ring	4
8	015415900	Cotter Pin	2
9	504075764	Wear Strip	2
10	012824300	O-Ring	4
11	900003277	Bushing	2
12	015628700	Grease Fitting	2
13	150127005	Fitting	2
14	500227907	Snap Ring	2
15	504064767	Washer (1.500 mm)	2
16	504064739	Spacer	2
17	580055976	Capscrew	2
18	580056005	Washer	4
19	580056001	Nut	2
20	504236253	Washer	1
21	504075776	Spring	1
22	524141842	Fitting	1
23	504064769	Washer (0.254 mm)	1
23	504069791	Washer (0.762 mm)	1
23	504069702	Washer (1.524 mm)	1
24	580087522	Housing	1
25	580087523	Bracket	1
26	580055983	Capscrew	2
27	580055651	Nut	4
28	080437000	Plug	1
29	524141846	Lowering Control Valve	1
29	580019387	O-Ring	1
29	052645600	O-Ring	1
30	580086121	Hose Assy	1
31	580019817	Fitting	1

©2015 Yale Europe Materials Handling Limited

MAST ASSEMBLY

TWO STAGE LIMITED FREE LIFT - C661 (S/N C661B01678H →)

ITEM	PART NO.	DESCRIPTION	QTY
31	580019387	O-Ring	1
31	052645400	O-Ring	1
32	580087524	Hose Assy	1
33	580039183	Fitting	1
33	580019387	O-Ring	1
33	052645400	O-Ring	1
34	900015238	Clamp	1
35	580067790	Capscrew	2
36	504281794	Chain Sheave (Assembly)	2
37	504234266	Nut	2
38	504064758	Ring	2
39	500227910	Snap Ring	2
40	518801644	Chain Anchor	2
41	580033718	Pin	2
42	504233232	Shim (0.508 mm)	AR
43	504234265	Shim (0.508 mm)	4
44	449025042	Cotter Pin	2
45	582001152	Hose Assy	1

FOOTNOTES:

a Refer to Table

b S/N G807B02139H →

©2015 Yale Europe Materials Handling Limited

NOTES

©2015 Yale Europe Materials Handling Limited

LIFT CYLINDER ASSEMBLY (FIGURE 7-9)
TWO STAGE LIMITED FREE LIFT - C661

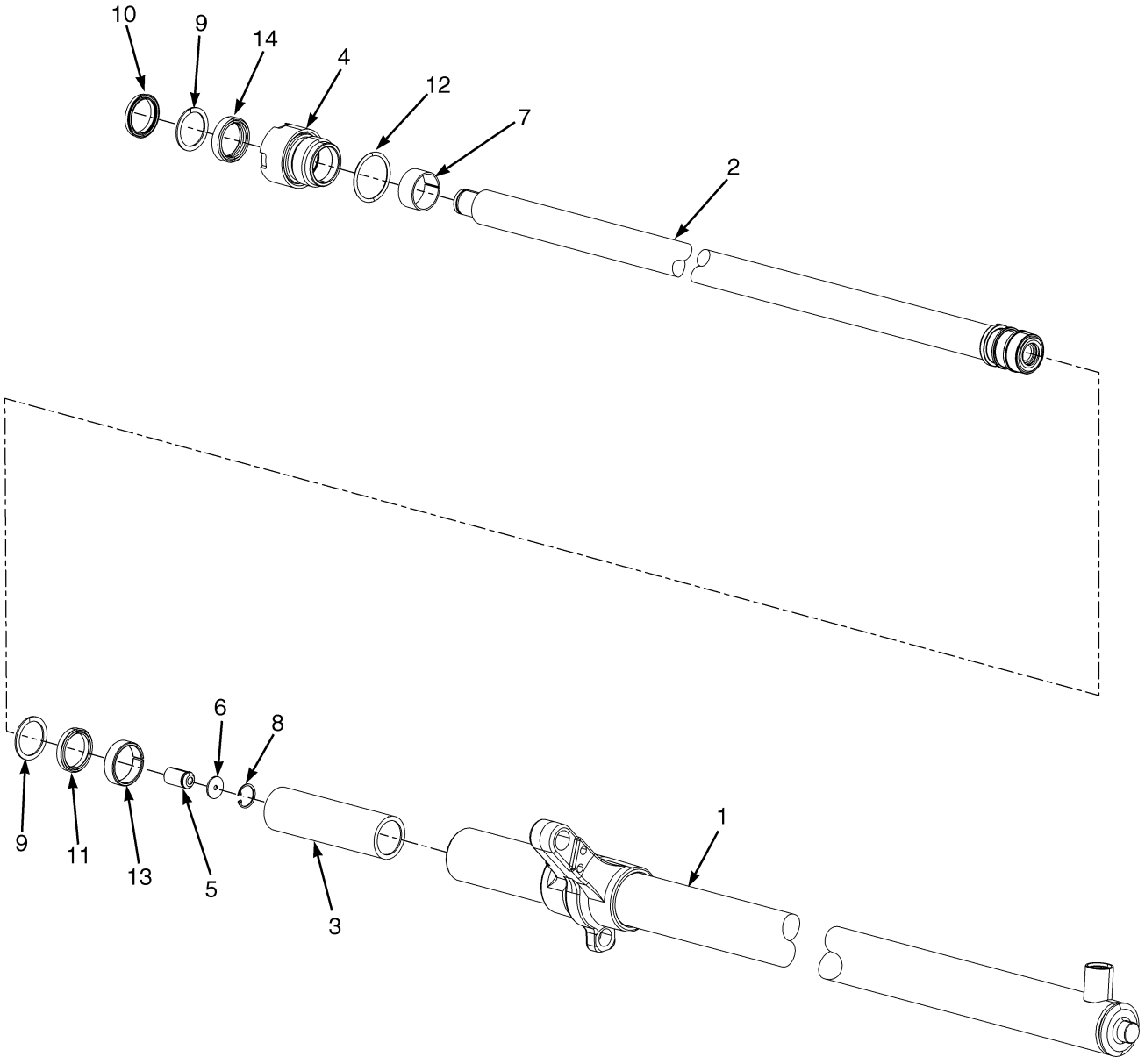

BP170360

©2015 Yale Europe Materials Handling Limited

LIFT CYLINDER ASSEMBLY

TWO STAGE LIMITED FREE LIFT - C661

LEFT HAND

ITEM	DESCRIPTION 1 2 3 4	LIFT HEIGHT TO BOTTOM OF FORKS			
		3392 mm (133.5 in.)	3892 mm (153.2 in.)	4392 mm (172.9 in.)	4892 mm (192.6 in.)
	Mast Group Number	**C661 3392**	**C661 3892**	**C661 4392**	**C661 4892**
	Cylinder Group Number	**8601610**	**8601615**	**8601620**	**8601625**
	Cylinder Assy	519524610	519524615	519524620	519524625
1	Tube Wldmt-Cylinder	519523610	519523615	519523620	519523625
2	Cylinder Rod	519521610	519521615	519521620	519521625
3	Spacer	----	505657521	505657521	505657528

RIGHT HAND

ITEM	DESCRIPTION 1 2 3 4	LIFT HEIGHT TO BOTTOM OF FORKS			
		3392 mm (133.5 in.)	3892 mm (153.2 in.)	4392 mm (172.9 in.)	4892 mm (192.6 in.)
	Mast Group Number	**C661 3392**	**C661 3892**	**C661 4392**	**C661 4892**
	Cylinder Group Number	**8601660**	**8601665**	**8601670**	**8601675**
	Cylinder Assy	519524660	519524665	519524670	519524675
1	Tube Wldmt-Cylinder	519523660	519523665	519523670	519523675
2	Cylinder Rod	519521610	519521615	519521620	519521625
3	Spacer	----	505657521	505657521	505657528

ITEM	PART NO.	DESCRIPTION	QTY
	b	Cylinder Assy	1
1	**b**	Tube Wldmt-Cylinder	1
2	**b**	Cylinder Rod	1
3	**b**	Spacer	1
4	506845500	Gland	1
5	504235239	Check Valve	1
6	504148200	Washer	1
7	518794659	Wear Ring	1
8	501850904	Snap Ring	1
9	504154200	Back-Up Ring	2
10	504163200	Rod Wiper	1
11	504153200	Rod Seal	1
12	012825700	O-Ring	1
13	504024201	Wear Ring	1
14	580022502	Rod Seal	1

©2015 Yale Europe Materials Handling Limited

LIFT CYLINDER ASSEMBLY
TWO STAGE LIMITED FREE LIFT - C661

ITEM	PART NO.	DESCRIPTION	QTY
	a 504232230	O-Ring	1
	504234269	Lubricant	1
	505136043	Kit-Seal	1

FOOTNOTES:

a Not Illustrated

b Refer to Table

©2015 Yale Europe Materials Handling Limited

NOTES

©2015 Yale Europe Materials Handling Limited

CARRIAGE ASSEMBLY (FIGURE 7-10)
TWO STAGE LIMITED FREE LIFT - C661 — STANDARD

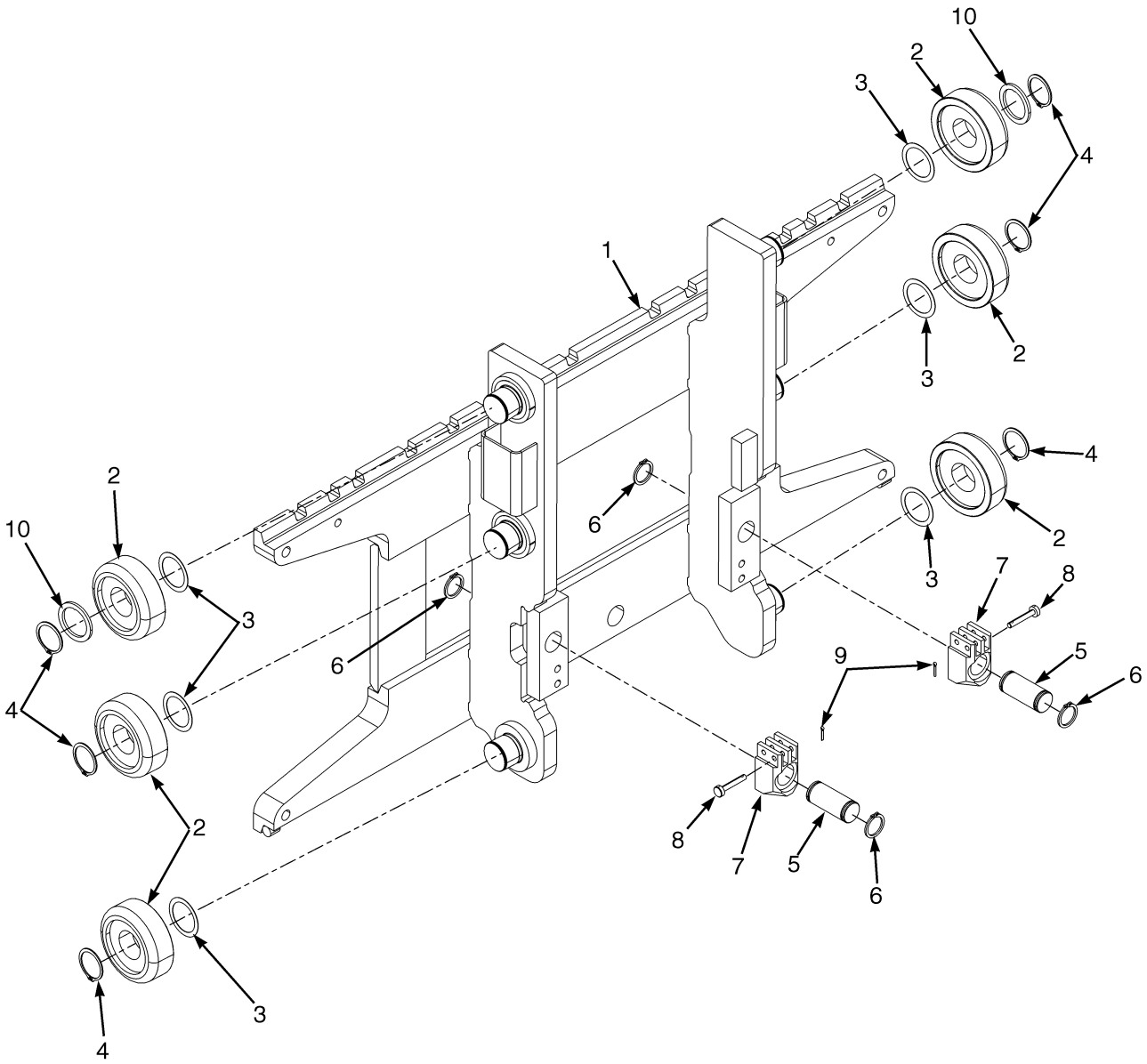

BP170386

©2015 Yale Europe Materials Handling Limited

CARRIAGE ASSEMBLY

TWO STAGE LIMITED FREE LIFT - C661 – STANDARD

ITEM	PART NO.	DESCRIPTION	QTY
	580035910	Carriage Assembly	1
1	580035916	Carriage Wldmt (Frame)	1
2	520036852	Load Roller ("B") (92.18 mm/91.92 mm)	6
2	**a** 580001430	Load Roller ("A") (91.80 mm/91.54 mm)	6
3	504233232	Shim (0.508 mm)	AR
4	015916300	Snap Ring	6
4	**a** 449029011	Snap Ring	6
5	504075781	Pin	2
6	500227907	Snap Ring	4
7	580027878	Chain Anchor (Single Hole)	2
7	**a** 505978544	Chain Anchor (Dual Hole)	2
8	580033718	Pin	2
9	015415900	Cotter Pin	2
10	504235278	Spacer	2

FOOTNOTES:

a Optional

©2015 Yale Europe Materials Handling Limited

HEADER HOSE ASSEMBLY (FIGURE 7-11)
TWO STAGE LMITED FREE-LIFT — C661

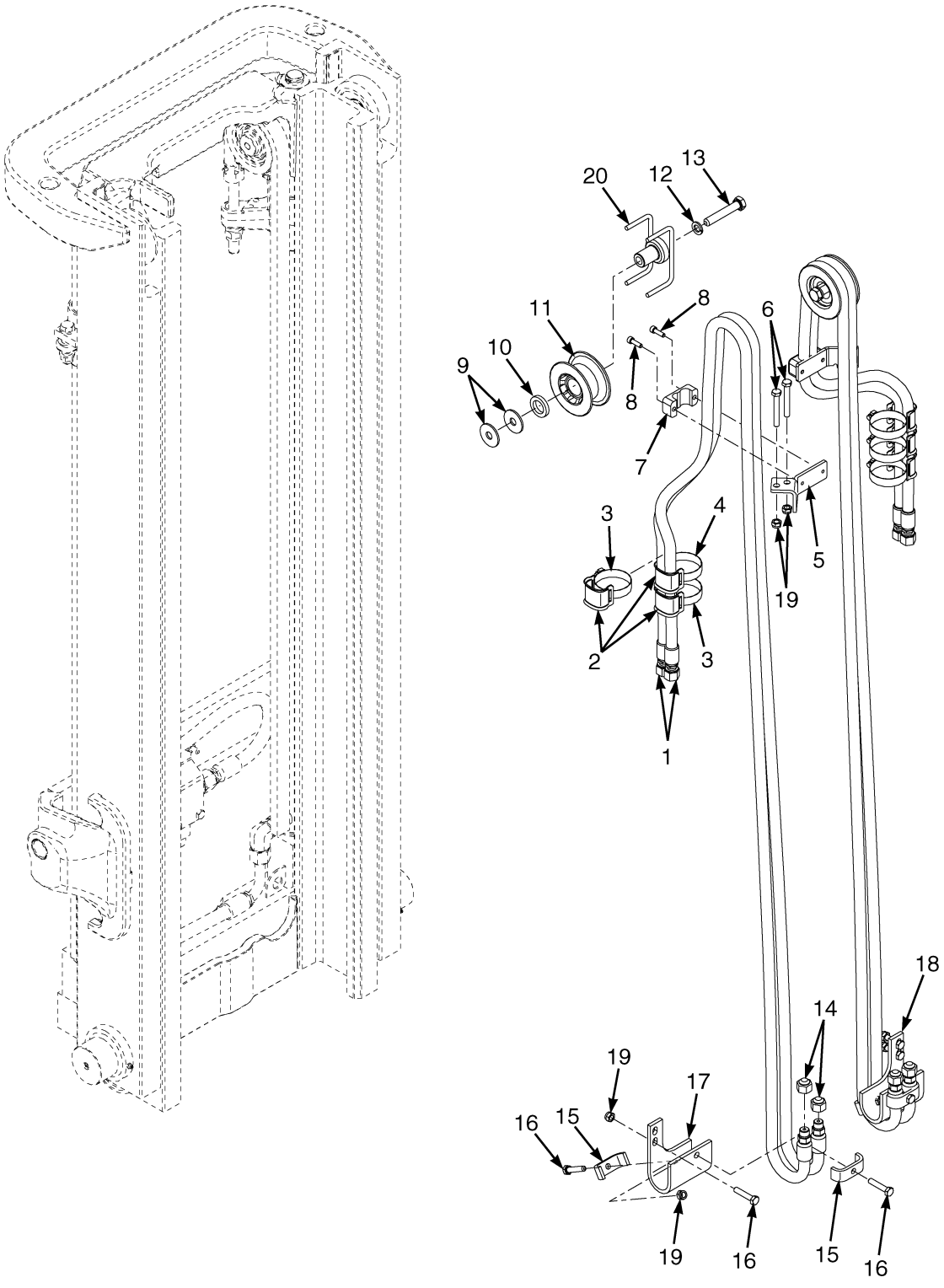

©2015 Yale Europe Materials Handling Limited

HEADER HOSE ASSEMBLY
TWO STAGE LMITED FREE-LIFT – C661

C661

ITEM	DESCRIPTION 1 2 3 4	LIFT HEIGHT TO BOTTOM OF FORKS			
		3392 mm (133.5 in.)	3892 mm (153.2 in.)	4392 mm (172.9 in.)	4892 mm (192.6 in.)
	Mast Group Number	C661 3392	C661 3892	C661 4392	C661 4892
1	Hose Assy	580081863	580081871	580081874	580081907

KEY:
A: 3 Function
B: 4 Function

ITEM	PART NO.	DESCRIPTION	QTY A	QTY B
1	**a**	Hose Assy	2	4
2	524141696	Hose Clamp (2992 mm)	2	4
2	524141696	Hose Clamp (3192 mm)	3	6
3	580045653	Clamp	2	4
4	580068221	Clamp (3192 mm)	1	2
5	580066000	Bracket	1	2
5	582009973	Bracket (Alternate Part)	1	1
6	580055983	Capscrew	2	4
7	504068794	Clamp (Double Hose)	1	2
8	580055989	Capscrew	2	4
9	504070716	Washer	2	4
10	**b** 505962533	Spacer	1	2
10	**c** 580055636	Washer	3	6
11	**b** 580023124	Hose Sheave	1	2
11	**c** 582021968	Hose Sheave	1	2
12	**b** 580055649	Lockwasher	1	2
13	580055977	Capscrew	1	2
14	580039424	Cap	2	4
15	505962578	Clamp	2	4
16	580055735	Capscrew	4	8
17	504069707	Bracket	1	..
18	504069711	Bracket	..	1
19	580055651	Nut	6	12
20	**b** 505961568	Stubshaft	1	2
20	**c** 582022515	Stubshaft	1	2

FOOTNOTES:

a Refer to Table
b → S/N C661B02515K
c S/N C661B02516K →

©2015 Yale Europe Materials Handling Limited

NOTES

©2015 Yale Europe Materials Handling Limited

8 MAST-THREE STAGE FULL FREE-LIFT

SECTION 8
MAST-THREE STAGE FULL FREE-LIFT

DESCRIPTION	PAGE
CARRIAGE ASSEMBLY	
THREE STAGE FULL FREE LIFT - A271 - STANDARD	8-22
THREE STAGE FULL FREE LIFT - C662 - STANDARD	8-48
FREE LIFT ASSEMBLY	
THREE STAGE FULL FREE LIFT - A271 (→ S/N A271B02146H)	8-10
THREE STAGE FULL FREE LIFT - A271 (S/N A271B02147H →)	8-14
THREE STAGE FULL FREE LIFT - C662	8-40
FREE LIFT CYLINDER ASSEMBLY	
THREE STAGE FULL FREE LIFT - A271	8-20
THREE STAGE FULL FREE LIFT - C662	8-46
HEADER HOSE ASSEMBLY	
THREE STAGE FULL FREE LIFT - A271 (S/N G807B02139H →)	8-28
THREE STAGE FULL FREE LIFT - A271 - 3 RD FUNCTION HOSES (→ S/N G807B02138H)	8-24
THREE STAGE FULL FREE LIFT - A271 - 4 TH FUNCTION HOSES (→ S/N G807B02138H)	8-26
THREE STAGE FULL FREE LIFT - C662 - 3 RD FUNCTION HOSES (→ S/N G807B02138H)	8-50
THREE STAGE FULL FREE LIFT - C662 - 4 TH FUNCTION HOSES (→ S/N G807B02138H)	8-52
THREE STAGE FULL FREE-LIFT - C662 (S/N G807B02139H →) (→ 12/2012)	8-56
THREE STAGE FULL FREE-LIFT - C662 (12/2012 →)	8-60
MAIN LIFT ASSEMBLY	
THREE STAGE FULL FREE LIFT - A271	8-6
THREE STAGE FULL FREE LIFT - C662	8-36
MAIN LIFT CYLINDER ASSEMBLY	
THREE STAGE FULL FREE LIFT - A271	8-18
THREE STAGE FULL FREE LIFT - C662	8-42
MAST ASSEMBLY	
THREE STAGE FULL FREE LIFT - A271 - INNER, INTERMEDIATE AND OUTER (→ S/N A271B02146H)	8-2
THREE STAGE FULL FREE LIFT - A271 - INNER, INTERMEDIATE AND OUTER (S/N A271B02147H →)	8-4
THREE STAGE FULL FREE LIFT - C662 - INNER, INTERMEDIATE AND OUTER (→ S/N C662B02349H)	8-32
THREE STAGE FULL FREE LIFT - C662 - INNER, INTERMEDIATE AND OUTER (S/N C662B02350H →)	8-34

©2015 Yale Europe Materials Handling Limited

MAST ASSEMBLY (FIGURE 8-1)

THREE STAGE FULL FREE LIFT - A271 — INNER, INTERMEDIATE AND OUTER (→ S/N A271B02146H)

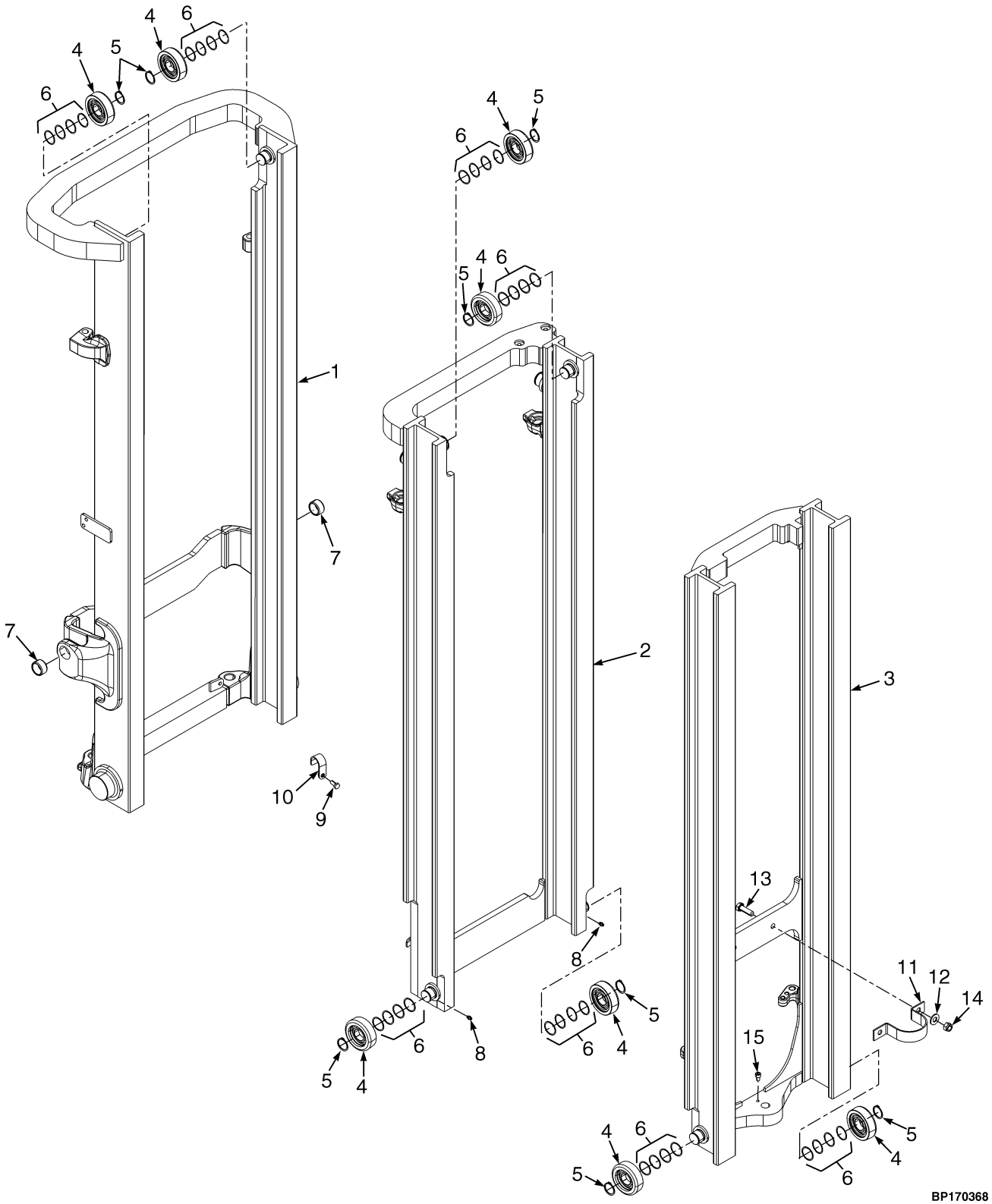

©2015 Yale Europe Materials Handling Limited

MAST ASSEMBLY

THREE STAGE FULL FREE LIFT - A271 – INNER, INTERMEDIATE AND OUTER (→ S/N A271B02146H)

A271

ITEM	DESCRIPTION 1 2 3 4	LIFT HEIGHT TO BOTTOM OF FORKS				
		4260 mm (167.7 in.)	4560 mm (179.5 in.)	4860 mm (191.3 in.)	5160 mm (203.1 in.)	5460 mm (215.0 in.)
	Mast Group Number	A271 4260	A271 4560	A271 4860	A271 5160	A271 5460
	Mast Assy	580084935	580084937	580084941	580084944	580084946
1	Outer Mast	524198366	524198368	524198370	524198373	524198375
2	Intermediate Mast	524198386	524198388	524198390	524198393	524198395
3	Inner Mast	524198436	524198438	524198440	524198443	524198445

ITEM	PART NO.	DESCRIPTION	QTY
	b	Mast Assy	1
1	**b**	Outer Mast	1
2	**b**	Intermediate Mast	1
3	**b**	Inner Mast	1
4	580081128	Load Roller	8
5	~~580091430~~		
	015915900	Snap Ring	8
6	580093128	Shim	AR
7	900003277	Bushing	2
8	061655900	Lube Ftg	2
9	580055733	Capscrew	4
10	524198557	Clamp	2
11	524198470	Bracket	1
12	580056005	Washer	4
13	580055979	Capscrew	2
14	580056001	Nut	2
15	580084113	Capscrew	1
	a 580055738	Capscrew	4
	ac 582000921	Foam Tape	2

FOOTNOTES:

a Not Illustrated
b Refer to Table
c S/N G807B02139H →

©2015 Yale Europe Materials Handling Limited

MAST ASSEMBLY (FIGURE 8-2)

THREE STAGE FULL FREE LIFT - A271 — INNER, INTERMEDIATE AND OUTER (S/N A271B02147H →)

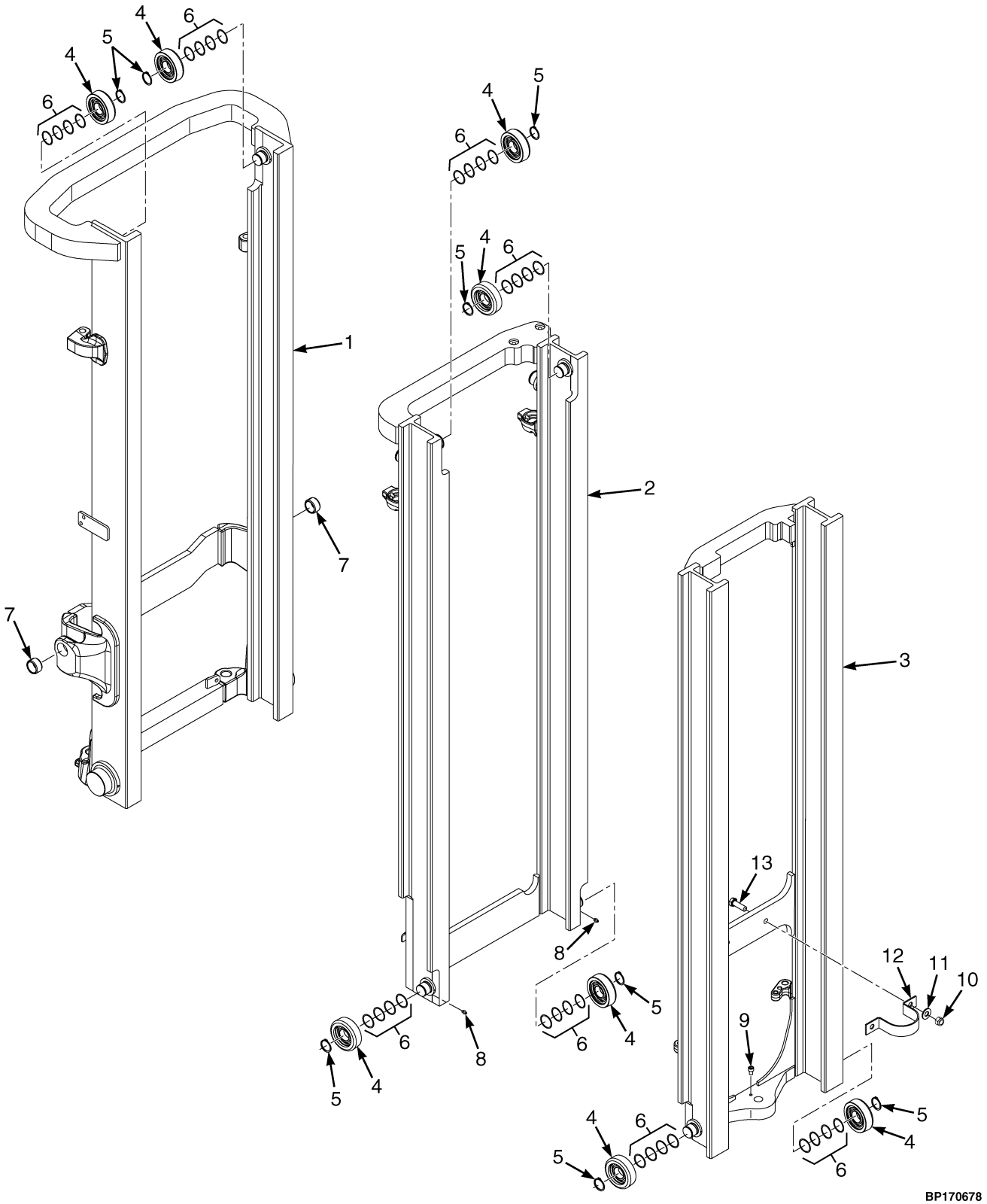

©2015 Yale Europe Materials Handling Limited

MAST ASSEMBLY

THREE STAGE FULL FREE LIFT - A271 – INNER, INTERMEDIATE AND OUTER (S/N A271B02147H →)

A271

ITEM	DESCRIPTION 1 2 3 4	LIFT HEIGHT TO BOTTOM OF FORKS				
		4260 mm (167.7 in.)	4560 mm (179.5 in.)	4860 mm (191.3 in.)	5160 mm (203.1 in.)	5460 mm (215.0 in.)
	Mast Group Number	A271 4260	A271 4560	A271 4860	A271 5160	A271 5460
	Mast Assy	580084935	580084937	580084941	580084944	580084946
1	Outer Mast	582000561	582000563	582000565	582000568	582000570
2	Intermediate Mast	524198386	524198388	524198390	524198393	524198395
3	Inner Mast	524198436	524198438	524198440	524198443	524198445

ITEM	PART NO.	DESCRIPTION	QTY
	a	Mast Assy	1
1	**a**	Outer Mast	1
1	504066700	Stubshaft	2
2	**a**	Intermediate Mast	1
3	**a**	Inner Mast	1
4	580081128	Load Roller	8
5	~~580091430~~		
	015915900	Snap Ring	8
6	580093128	Shim	AR
7	900003277	Bushing	2
8	061655900	Lube Ftg	2
9	580022963	Capscrew	1
10	580056001	Nut	2
11	580056005	Washer	4
12	524198470	Bracket	1
13	580055979	Capscrew	2

FOOTNOTES:

a Refer to Table

©2015 Yale Europe Materials Handling Limited

MAIN LIFT ASSEMBLY (FIGURE 8-3)
THREE STAGE FULL FREE LIFT - A271

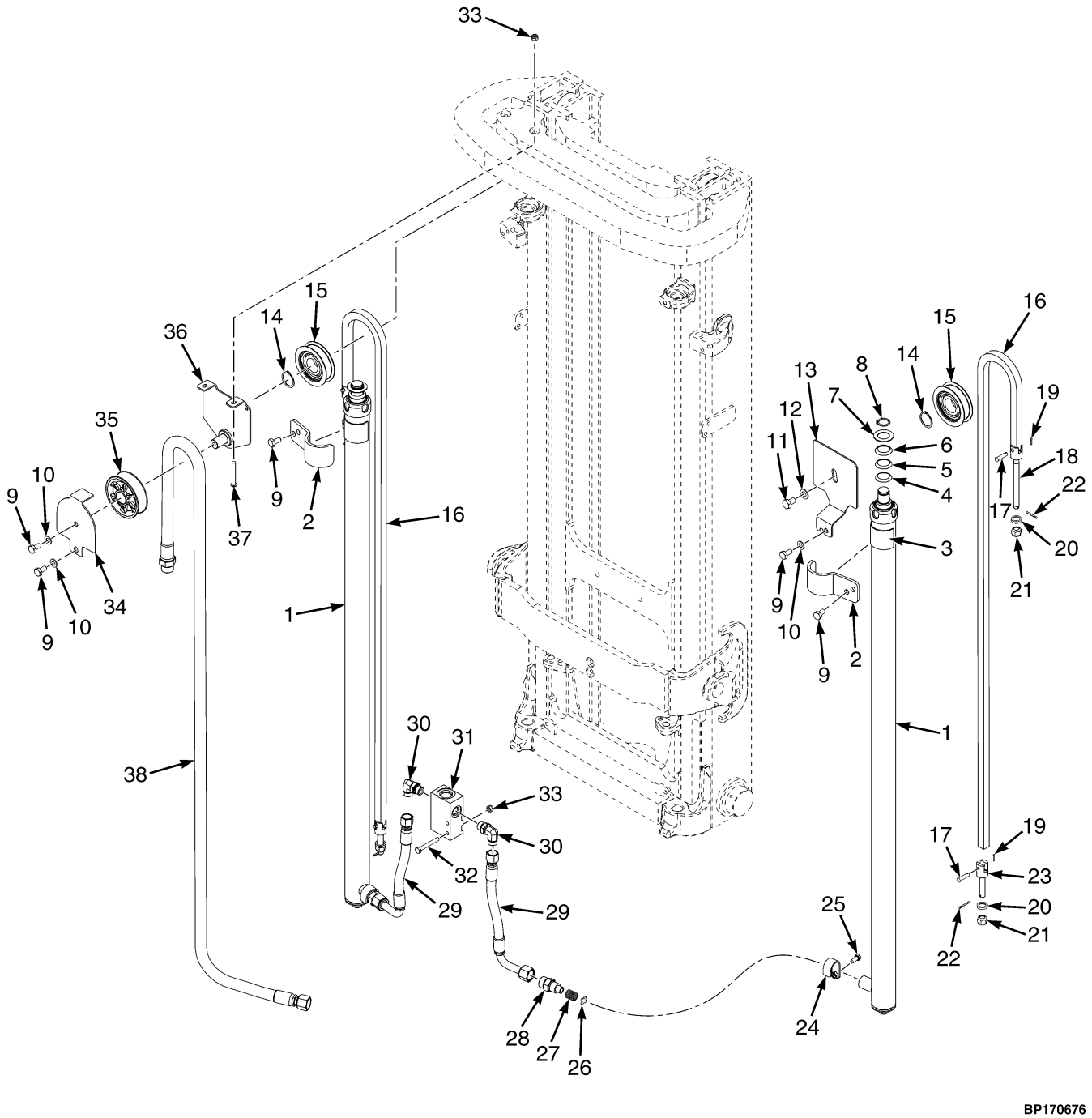

©2015 Yale Europe Materials Handling Limited

MAIN LIFT ASSEMBLY
THREE STAGE FULL FREE LIFT - A271

A271

ITEM	DESCRIPTION 1 2 3 4	LIFT HEIGHT TO BOTTOM OF FORKS				
		4260 mm (167.7 in.)	4560 mm (179.5 in.)	4860 mm (191.3 in.)	5160 mm (203.1 in.)	5460 mm (215.0 in.)
	Mast Group Number	A271 4260	A271 4560	A271 4860	A271 5160	A271 5460
	Mast Assy	580084935	580084937	580084941	580084944	580084946
16	Chain	505961587	504240276	580089895	504240220	580089880

ITEM	PART NO.	DESCRIPTION	QTY
	a	Mast Assy	1
1	. . . . .	Cylinder Assembly (☞Page 8-18)	2
2	580095196	Bracket	2
3	582000921	Foam Tape	2
4	504064769	Washer (0.254 mm)	AR
5	504069791	Washer (0.762 mm)	AR
6	504069702	Washer (1.524 mm)	AR
7	504064767	Washer (1.500 mm)	2
8	500227907	Snap Ring	2
9	580055738	Capscrew	7
10	580055632	Washer	3
11	580055742	Capscrew	1
12	580055634	Washer	1
13	580087614	Cover Plate	1
14	015916300	Snap Ring	2
15	524198474	Chain Sheave	2
16	**a**	Chain	2
17	580087831	Pin	4
18	524198558	Chain Anchor	2
19	015415900	Cotter Pin	4
20	504240200	Ring	4
21	504240239	Nut	4
22	449025042	Cotter Pin	4
23	504242253	Chain Anchor	2
24	524198557	Clamp	2
25	580067790	Capscrew	2
26	504236253	Washer	2
27	504075776	Spring	2
28	580064145	Fitting	2
29	580084999	Hose Assy	2
30	580020576	Fitting	2
31	580007839	Housing	1
32	580055983	Capscrew	2
33	580055651	Nut	4
34	524198479	Cover Plate	1
35	504064782	Hose Sheave	1
36	524198477	Bracket Wldmt	1
37	580087737	Bolt	2

©2015 Yale Europe Materials Handling Limited

MAIN LIFT ASSEMBLY
THREE STAGE FULL FREE LIFT - A271

ITEM	PART NO.	DESCRIPTION	QTY
38	. . . . .	Free-Lift Hose	1

FOOTNOTES:

a Refer to Table

©2015 Yale Europe Materials Handling Limited

NOTES

©2015 Yale Europe Materials Handling Limited

FREE LIFT ASSEMBLY (FIGURE 8-4)

THREE STAGE FULL FREE LIFT - A271 (→ S/N A271B02146H)

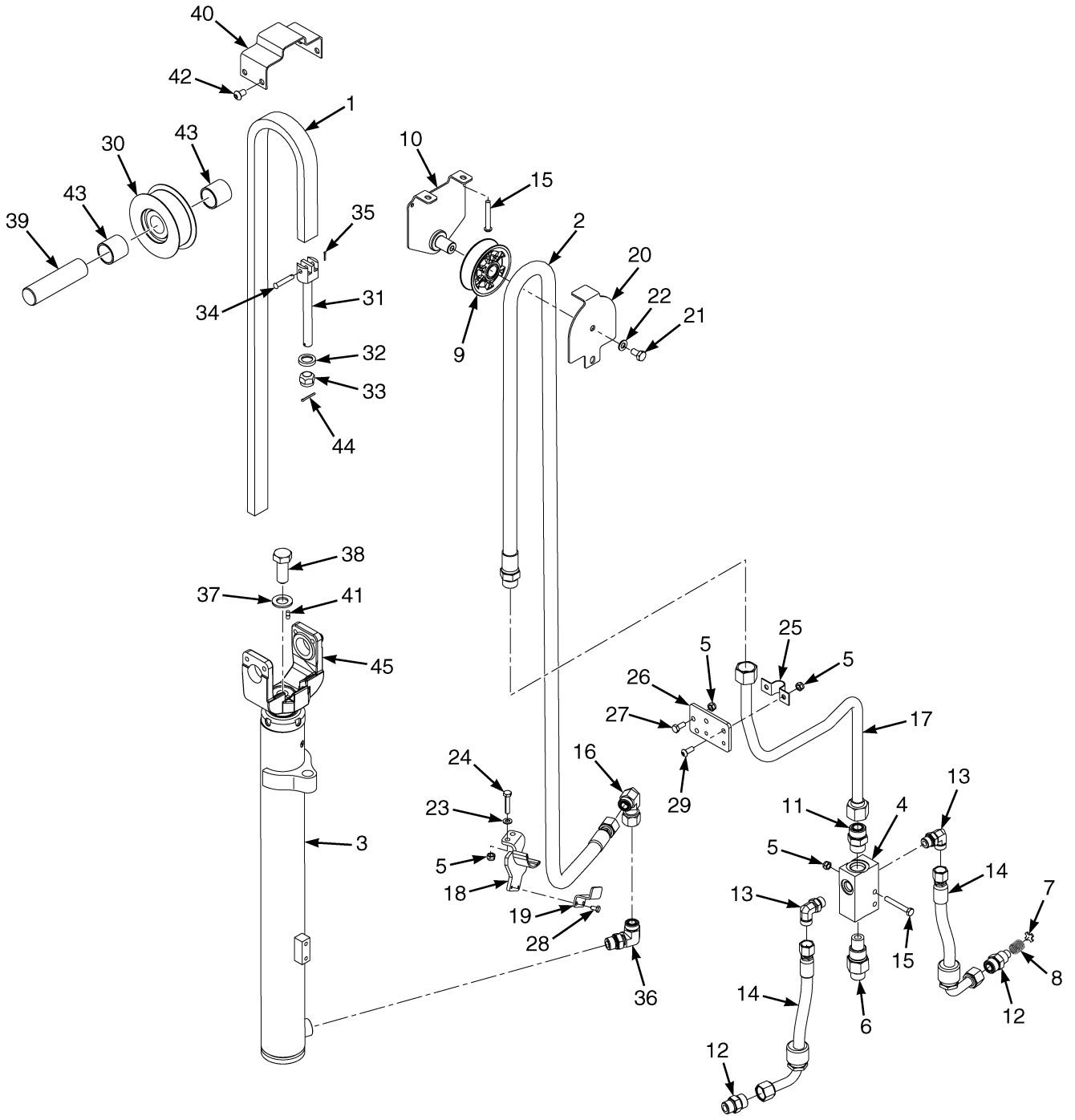

©2015 Yale Europe Materials Handling Limited

FREE LIFT ASSEMBLY

THREE STAGE FULL FREE LIFT - A271 (→ S/N A271B02146H)

A271

ITEM	DESCRIPTION 1 2 3 4	LIFT HEIGHT TO BOTTOM OF FORKS				
		4260 mm (167.7 in.)	4560 mm (179.5 in.)	4860 mm (191.3 in.)	5160 mm (203.1 in.)	5460 mm (215.0 in.)
	Mast Group Number	A271 4260	A271 4560	A271 4860	A271 5160	A271 5460
	Mast Assy	580084935	580084937	580084941	580084944	580084946
1	Chain	580095217	580093638	580095218	580095219	580095220
2	Hose Assy	580084973	580084975	580084977	580084979	580084981

ITEM	PART NO.	DESCRIPTION	QTY
	a	Mast Assy	1
1	**a**	Chain	2
2	**a**	Hose Assy	1
3	. . . . .	Cylinder Assembly (☞Page 8-20)	1
4	580007839	Housing	1
5	580055651	Nut	2
6	524141846	Lowering Control Valve	1
7	504236253	Washer	2
8	504075776	Spring	2
9	504064782	Hose Sheave	1
10	524198477	Bracket Wldmt	1
11	580020576	Fitting	1
12	580064145	Fitting	2
13	580020576	Fitting	1
14	580084999	Hose Assy	2
15	580087737	Bolt	2
16	580019838	Fitting	1
17	580084617	Tube Assy	1
18	524198488	Bracket Wldmt	1
19	524198476	Bracket	1
20	524198479	Cover Plate	1
21	580055738	Capscrew	2
22	580055632	Washer	3
23	580055631	Washer	2
24	580055735	Capscrew	2
25	900003213	Clamp	1
26	580087845	Plate	1
27	580055733	Capscrew	4
28	580086220	Capscrew	2
29	580081111	Capscrew	2
30	524198475	Chain Sheave	1
31	580087844	Chain Anchor	1
32	504234216	Ring	1
33	504234266	Nut	1
34	580095399	Chain Anchor Pin	1
35	015415900	Cotter Pin	1
36	524141844	Valve (Flow)	1

©2015 Yale Europe Materials Handling Limited

FREE LIFT ASSEMBLY

THREE STAGE FULL FREE LIFT - A271 (→ S/N A271B02146H)

ITEM	PART NO.	DESCRIPTION	QTY
37	580071052	Washer	1
38	580062390	Capscrew	1
39	524198507	Pin	1
40	580095674	Bracket	1
41	518804610	Pin	1
42	580082105	Capscrew	4
43	580084586	Bushing	2
44	449025042	Cotter Pin	3
45	580076133	Crosshead	1

FOOTNOTES:

a Refer to Table

©2015 Yale Europe Materials Handling Limited

NOTES

©2015 Yale Europe Materials Handling Limited

FREE LIFT ASSEMBLY (FIGURE 8-5)

THREE STAGE FULL FREE LIFT - A271 (S/N A271B02147H →)

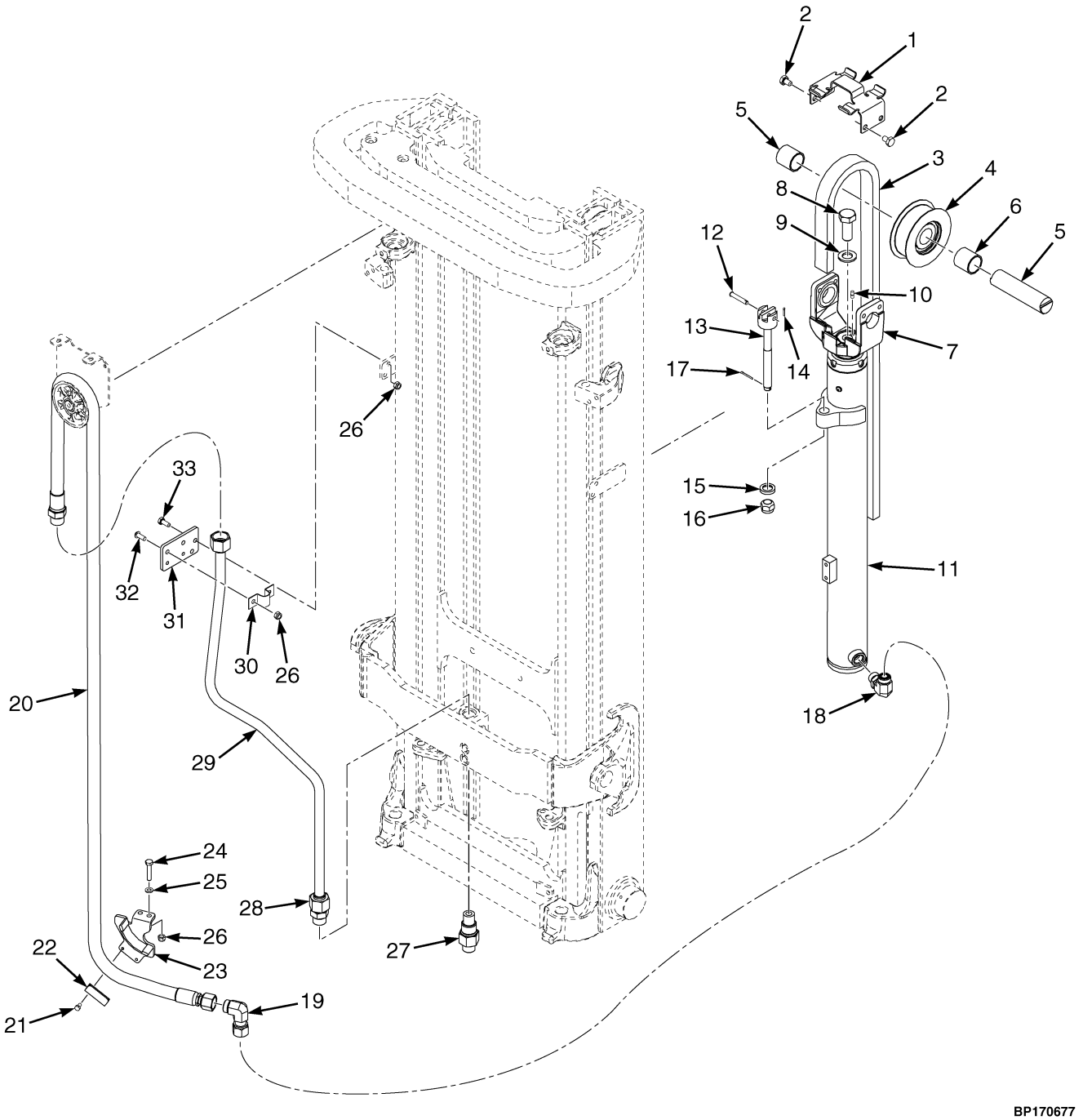

©2015 Yale Europe Materials Handling Limited

FREE LIFT ASSEMBLY

THREE STAGE FULL FREE LIFT - A271 (S/N A271B02147H →)

A271

ITEM	DESCRIPTION 1 2 3 4	LIFT HEIGHT TO BOTTOM OF FORKS				
		4260 mm (167.7 in.)	4560 mm (179.5 in.)	4860 mm (191.3 in.)	5160 mm (203.1 in.)	5460 mm (215.0 in.)
	Mast Group Number	A271 4260	A271 4560	A271 4860	A271 5160	A271 5460
	Mast Assy	580084935	580084937	580084941	580084944	580084946
3	Chain	580095217	580093638	580095218	580095219	580095220
20	Hose Assy	580084970	580084972	580084974	580084977	580084978

ITEM	PART NO.	DESCRIPTION	QTY
	a	Mast Assy	1
1	580095674	Bracket	1
2	580082105	Capscrew	4
3	**a**	Chain	1
4	524198475	Chain Sheave	1
5	580084586	Bushing	2
6	524198507	Pin	1
7	580076133	Crosshead	1
8	580062390	Capscrew	1
9	580071052	Washer	1
10	518804610	Pin	1
11	. . . . .	Cylinder Assembly (☞Page 8-20)	1
12	580095399	Chain Anchor Pin	1
13	580087844	Chain Anchor	1
14	015415900	Cotter Pin	1
15	504234216	Ring	1
16	504234266	Nut	1
17	449025042	Cotter Pin	1
18	524141844	Valve (Flow)	1
19	580019838	Fitting	1
20	**a**	Hose Assy	1
21	580086220	Capscrew	2
22	524198476	Bracket	1
23	524198488	Bracket Wldmt	1
24	580055735	Capscrew	2
25	580055631	Washer	2
26	580055651	Nut	6
27	524141846	Lowering Control Valve	1
28	580020431	Fitting	1
29	~~580096562~~ 582023319	Tube Assy	1
30	900003213	Clamp	1
31	580087845	Plate	1
32	580081111	Capscrew	2
33	580055733	Capscrew	2

©2015 Yale Europe Materials Handling Limited

FOOTNOTES:

a Refer to Table

©2015 Yale Europe Materials Handling Limited

NOTES

©2015 Yale Europe Materials Handling Limited

MAIN LIFT CYLINDER ASSEMBLY (FIGURE 8-6)
THREE STAGE FULL FREE LIFT - A271

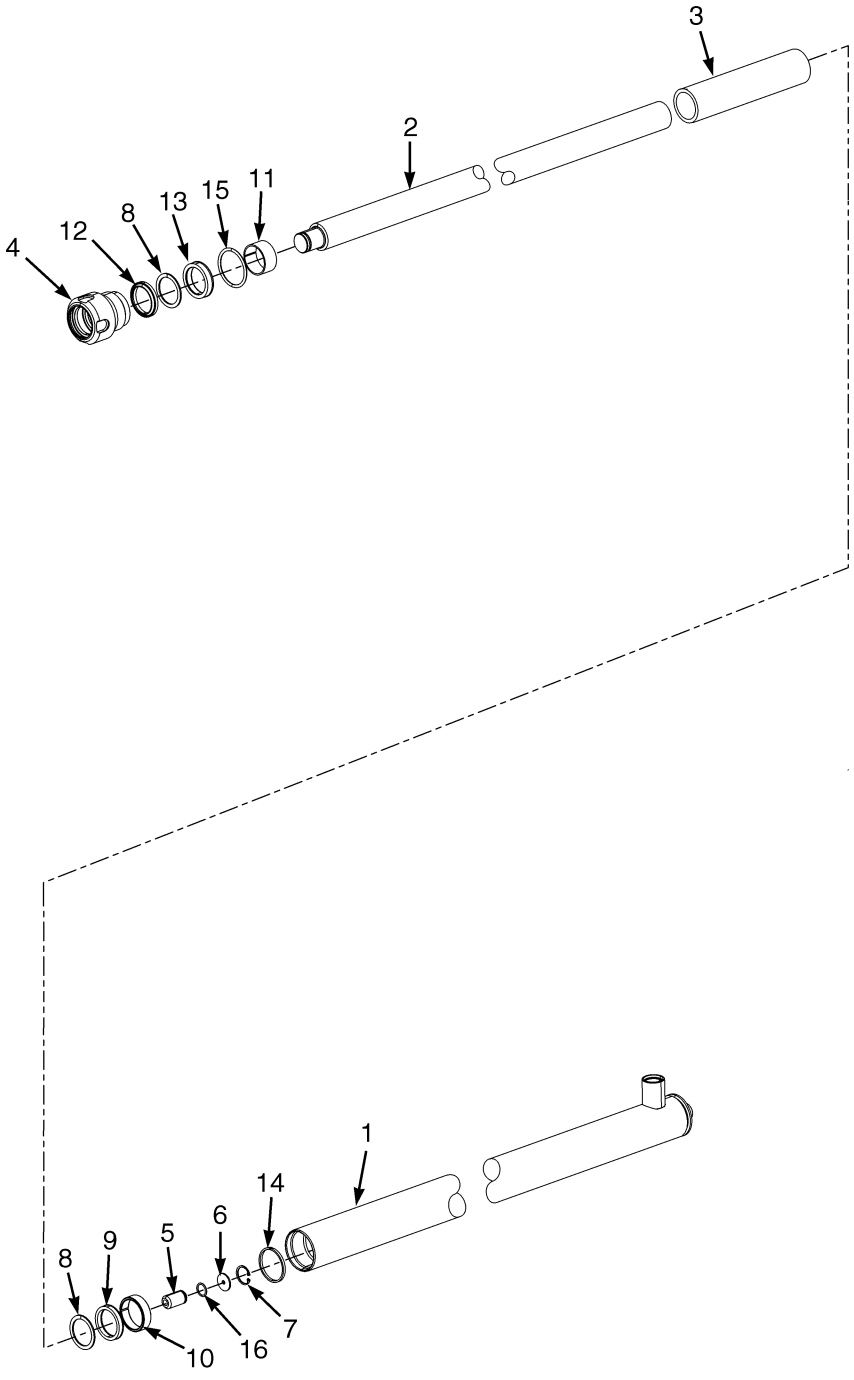

BP170139

©2015 Yale Europe Materials Handling Limited

MAIN LIFT CYLINDER ASSEMBLY
THREE STAGE FULL FREE LIFT - A271

A271

ITEM	DESCRIPTION 1 2 3 4	LIFT HEIGHT TO BOTTOM OF FORKS				
		4260 mm (167.7 in.)	4560 mm (179.5 in.)	4860 mm (191.3 in.)	5160 mm (203.1 in.)	5460 mm (215.0 in.)
	Mast Group Number	A271 4260	A271 4560	A271 4860	A271 5160	A271 5460
	Cylinder Group Number	8537906	8537908	8537910	8537912	8537914
	Cylinder Assy	580081230	580081232	580081234	580081236	580081238
1	Tube Wldmt-Cylinder	524286205	524286207	524286209	524286211	524286213
2	Rod Assy	519528655	519528657	519528659	519528661	519528663
3	Spacer	----	----	----	505657522	505657522

ITEM	PART NO.	DESCRIPTION	QTY
	b	Cylinder Assy	1
1	**b**	Tube Wldmt-Cylinder	1
2	**b**	Rod Assy	1
3	**b**	Spacer	1
4	580090681	Gland	1
5	504235239	Check Valve	1
6	504148200	Washer	1
7	501850904	Snap Ring	1
8	504154200	Back-Up Ring	2
9	504153200	Rod Seal	1
10	504024201	Wear Ring	1
11	518794659	Wear Ring	1
12	580022508	Rod Wiper	1
13	502787901	Rod Seal	1
14	502895202	Piston Ring	1
15	012825700	O-Ring	1
16	580011167	O-Ring	1
	a 504234269	Lubricant	AR
	580090680	Kit-Seal	1

FOOTNOTES:

a Not Illustrated

b Refer to Table

©2015 Yale Europe Materials Handling Limited

FREE LIFT CYLINDER ASSEMBLY (FIGURE 8-7)
THREE STAGE FULL FREE LIFT - A271

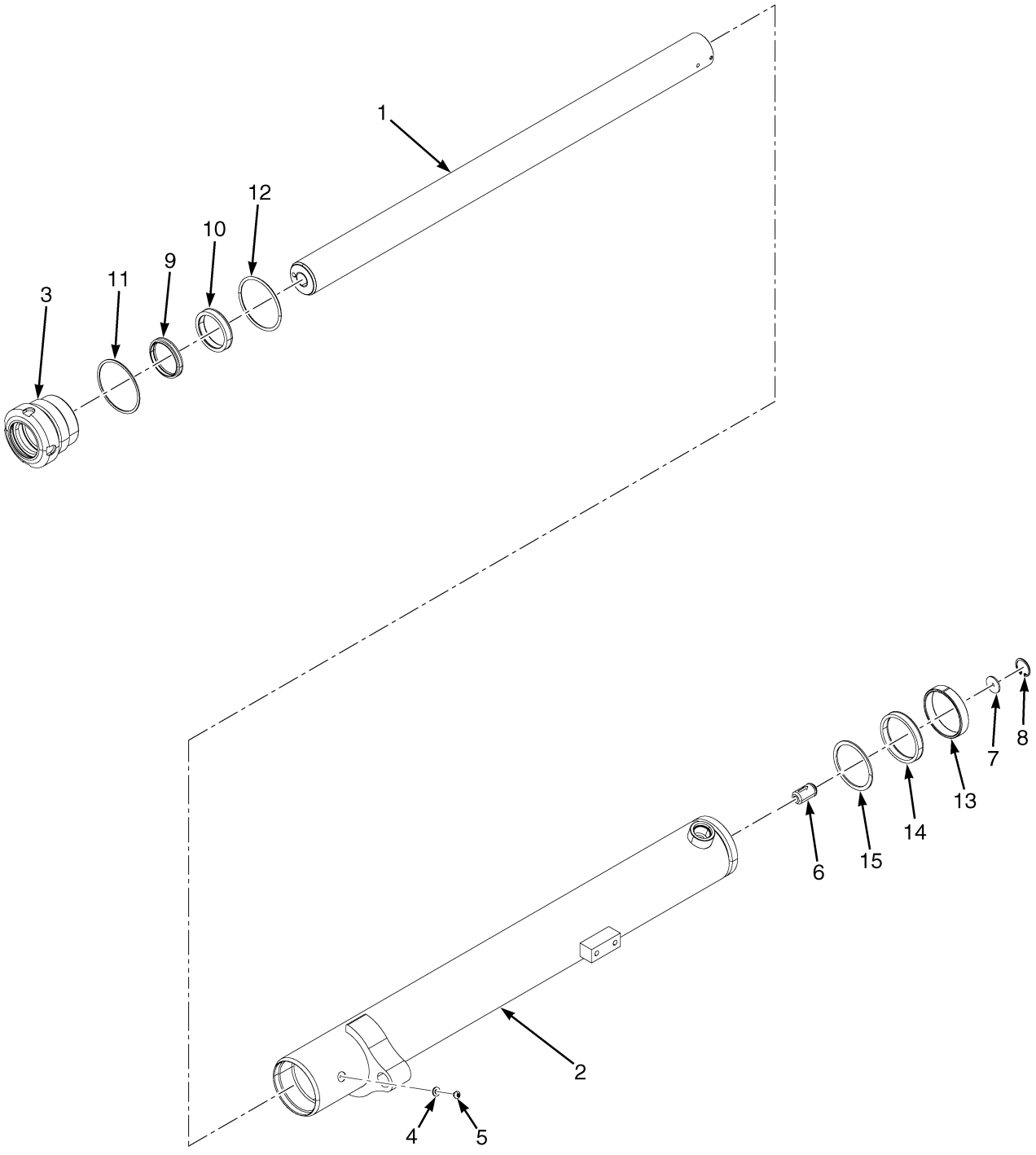

BP170141

©2015 Yale Europe Materials Handling Limited

FREE LIFT CYLINDER ASSEMBLY

THREE STAGE FULL FREE LIFT - A271

A271

ITEM	DESCRIPTION 1 2 3 4	LIFT HEIGHT TO BOTTOM OF FORKS				
		4260 mm (167.7 in.)	4560 mm (179.5 in.)	4860 mm (191.3 in.)	5160 mm (203.1 in.)	5460 mm (215.0 in.)
	Mast Group Number	A271 4260	A271 4560	A271 4860	A271 5160	A271 5460
	Cylinder Group Number	8537706	8537708	8537710	8537713	8537715
	Cylinder Assy	580078419	580078421	580078423	580078426	580082447
1	Tube Wldmt-Cylinder	524283355	524283357	524283359	524283362	524283364
2	Rod Assy	524283330	524283332	524283334	524283337	524283339

ITEM	PART NO.	DESCRIPTION	QTY
	b	Cylinder Assy	1
1	**b**	Tube Wldmt-Cylinder	1
2	**b**	Rod Assy	1
3	580077563	Gland	1
4	502687901	Sealing Ring	1
5	501753914	Screw	1
6	504235239	Check Valve	1
6	580067209	Check Valve (Alternate Part)	1
7	504148200	Washer	1
8	501850904	Snap Ring	1
9	580077907	Rod Wiper	1
10	502787903	Rod Seal	1
10	582006661	Rod Seal (Alternate Part)	1
11	502011914	Back-Up Ring	1
12	066417000	O-Ring	1
13	504024212	Wear Ring	1
14	520045268	Rod Seal	1
15	520045216	Back-Up Ring	1
	a 580011167	O-Ring	1
	a 504234269	Lubricant	1
	524283305	Kit-Seal	1

FOOTNOTES:

a Not Illustrated

b Refer to Table

©2015 Yale Europe Materials Handling Limited

CARRIAGE ASSEMBLY (FIGURE 8-8)
THREE STAGE FULL FREE LIFT - A271 — STANDARD

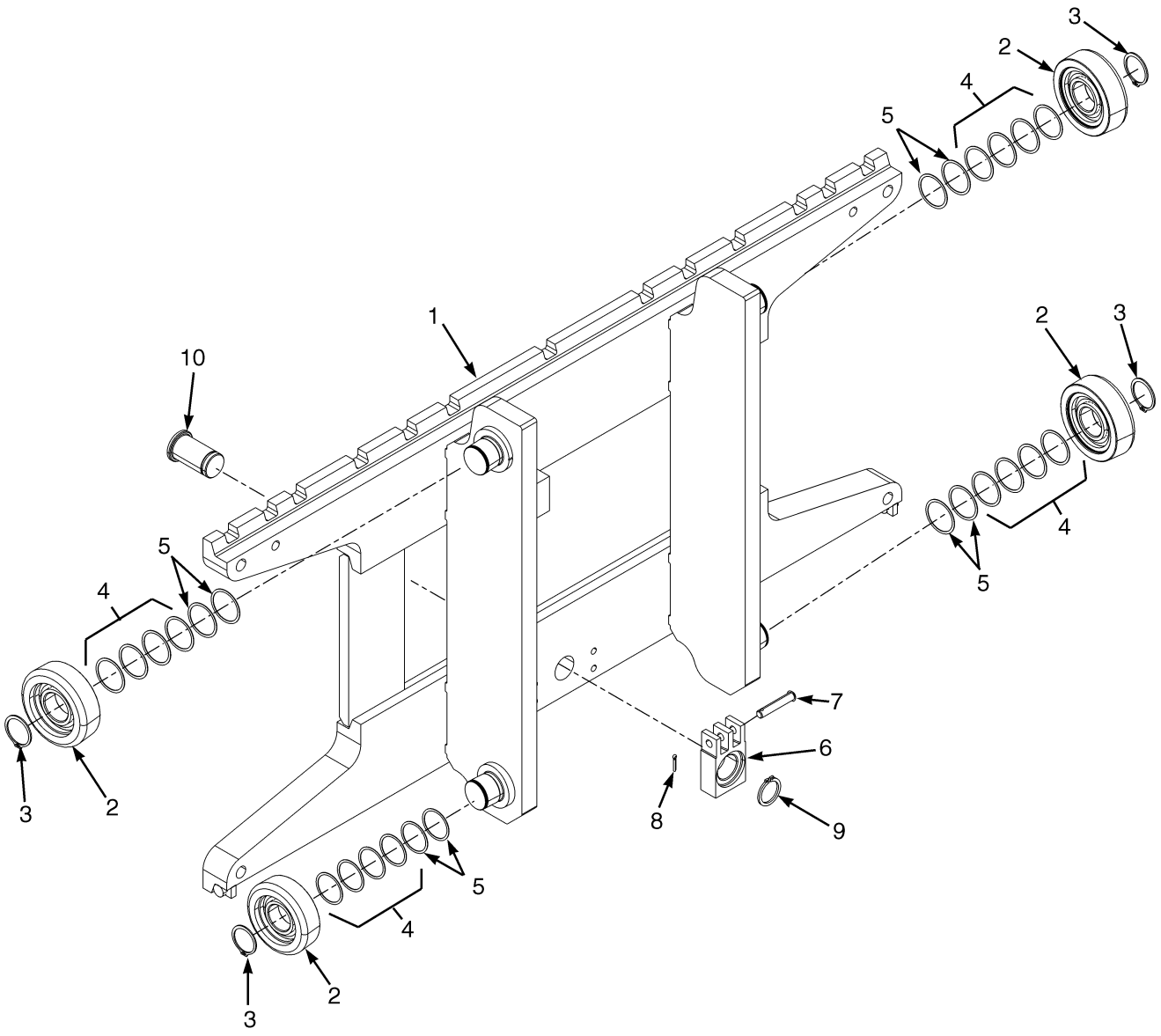

©2015 Yale Europe Materials Handling Limited

CARRIAGE ASSEMBLY

THREE STAGE FULL FREE LIFT - A271 – STANDARD

ITEM	PART NO.	DESCRIPTION	QTY
	580083432	Carriage Assembly	1
1	580083426	Carriage	1
2	580081128	Load Roller	4
3	~~580091430~~		
	015915900	Snap Ring	4
4	580093128	Shim	20
5	504240294	Shim (0,762 mm)	16
6	580090605	Anchor	1
7	580095399	Chain Anchor Pin	1
8	015415900	Cotter Pin	1
9	500227907	Snap Ring	1
10	580061378	Pin	1

©2015 Yale Europe Materials Handling Limited

HEADER HOSE ASSEMBLY (FIGURE 8-9)

THREE STAGE FULL FREE LIFT - A271 — 3 RD FUNCTION HOSES (→ S/N G807B02138H)

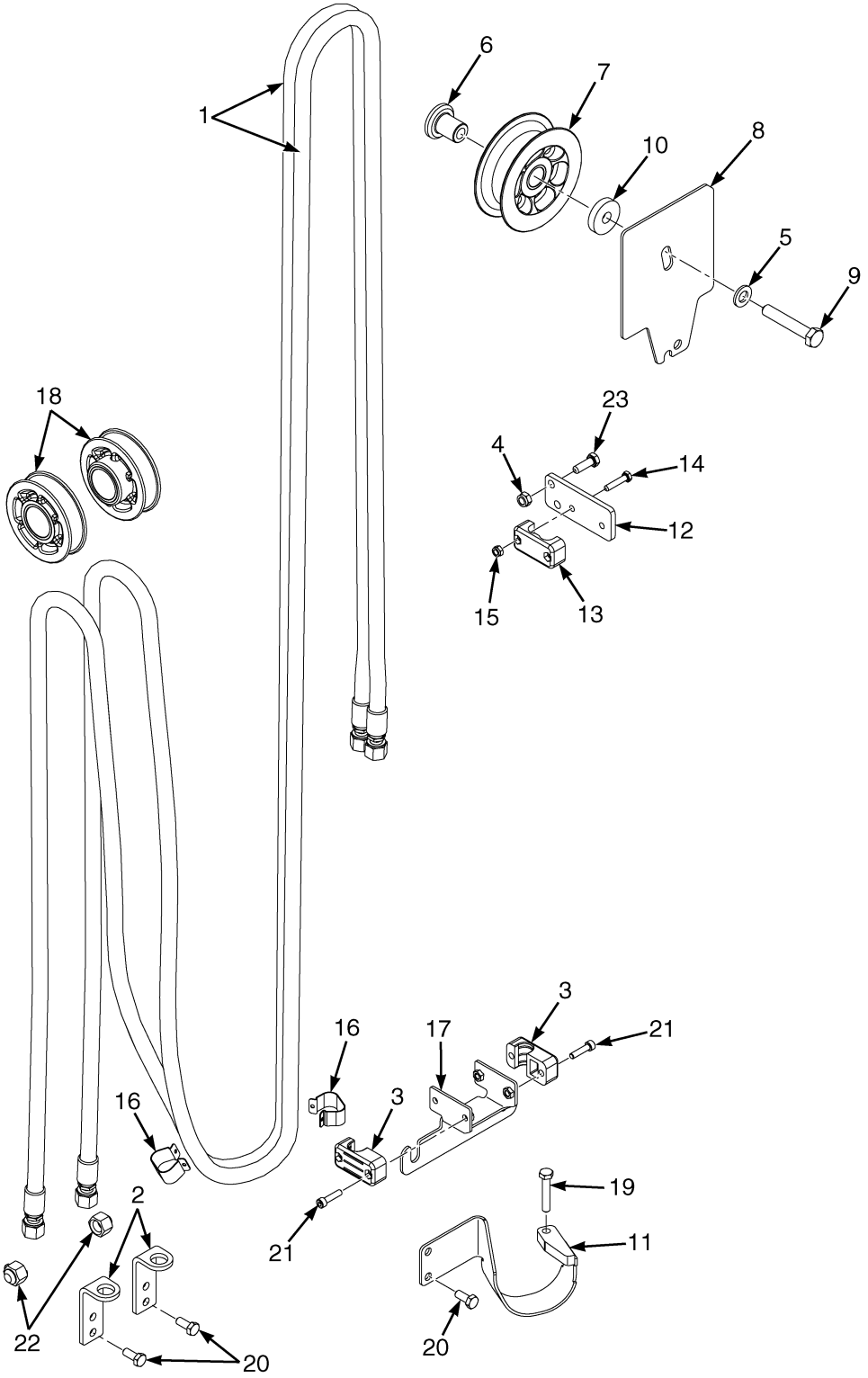

©2015 Yale Europe Materials Handling Limited

HEADER HOSE ASSEMBLY

THREE STAGE FULL FREE LIFT - A271 – 3 RD FUNCTION HOSES (→ S/N G807B02138H)

A271

ITEM	DESCRIPTION 1 2 3 4	LIFT HEIGHT TO BOTTOM OF FORKS				
		4260 mm (167.7 in.)	4560 mm (179.5 in.)	4860 mm (191.3 in.)	5160 mm (203.1 in.)	5460 mm (215.0 in.)
	Mast Group Number	A271 4260	A271 4560	A271 4860	A271 5160	A271 5460
1	Hose Assy	580085423	580085425	580085429	580085433	580085437
2	Bracket	524198700	524198700	524198700	524198700	524198700
3	Clamp (Single Hose)	580087631	580087631	580087631	580087631	580087631

ITEM	PART NO.	DESCRIPTION	QTY
1	**a**	Hose Assy	2
2	**a**	Bracket	2
3	**a**	Clamp (Single Hose)	2
4	580055651	Nut	3
5	580056005	Washer	1
6	524198916	Stubshaft	1
7	580084584	Hose Sheave	1
8	580087618	Cover Plate	1
9	580055977	Capscrew	1
10	524198559	Washer	1
11	580092479	Bracket Wldmt	1
12	580087869	Plate	1
13	504068794	Clamp (Double Hose)	1
14	580055981	Capscrew	2
15	580055650	Nut	2
16	524198496	Clip	2
17	580087685	Bracket Wldmt	1
18	580084590	Hose Sheave	2
19	580055982	Capscrew	1
20	580055733	Capscrew	6
21	580055734	Capscrew	4
22	580039424	Cap	2
23	580055734	Capscrew	2

FOOTNOTES:

a Refer to Table

©2015 Yale Europe Materials Handling Limited

HEADER HOSE ASSEMBLY (FIGURE 8-10)

THREE STAGE FULL FREE LIFT - A271 — 4 TH FUNCTION HOSES (→ S/N G807B02138H)

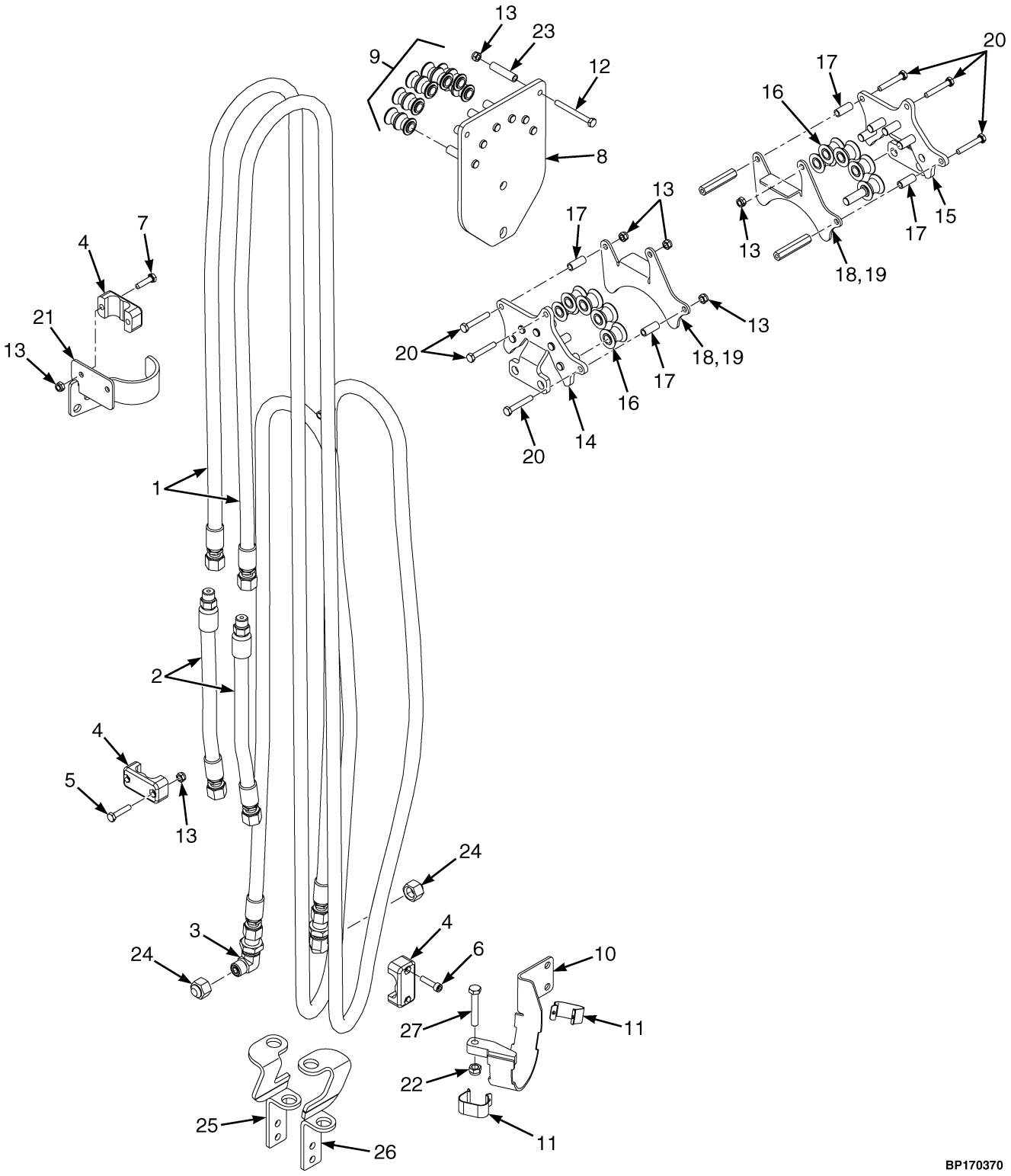

©2015 Yale Europe Materials Handling Limited

HEADER HOSE ASSEMBLY

THREE STAGE FULL FREE LIFT - A271 – 4 TH FUNCTION HOSES (→ S/N G807B02138H)

A271

ITEM	DESCRIPTION 1 2 3 4	LIFT HEIGHT TO BOTTOM OF FORKS				
		4260 mm (167.7 in.)	4560 mm (179.5 in.)	4860 mm (191.3 in.)	5160 mm (203.1 in.)	5460 mm (215.0 in.)
	Mast Group Number	A271 4260	A271 4560	A271 4860	A271 5160	A271 5460
1	Hose Assy	524198588	524198590	524198588	580085433	580085437
2	Hose Assy	524198680	524198680	524198681	524198681	524198681

ITEM	PART NO.	DESCRIPTION	QTY
1	**a**	Hose Assy	2
2	**a**	Hose Assy	2
3	580039401	Fitting	2
4	504068794	Clamp (Double Hose)	4
5	580055981	Capscrew	1
6	580055863	Capscrew	2
7	580086330	Capscrew	2
8	524198504	Mounting Weldment	1
9	580084609	Hose Sheave	1
10	524198502	Bracket Wldmt	1
11	524198496	Clip	2
12	580061563	Capscrew	2
13	580055650	Nut	10
14	524198505	Bracket Wldmt	1
15	524198506	Bracket Wldmt	1
16	580088061	Hose Sheave (Tanget Roller)	10
17	524198501	Spacer	4
18	524198493	Hose Guard	1
20	580055731	Capscrew	64
21	580090832	Bracket Wldmt	1
22	580055651	Nut	1
23	524198499	Spacer	2
24	580039424	Cap	2
25	580096843	Bracket	1
26	580096844	Bracket	1
27	580055736	Capscrew	1

FOOTNOTES:

a Refer to Table

©2015 Yale Europe Materials Handling Limited

HEADER HOSE ASSEMBLY (FIGURE 8-11)

THREE STAGE FULL FREE LIFT — A271 (S/N G807B02139H →)

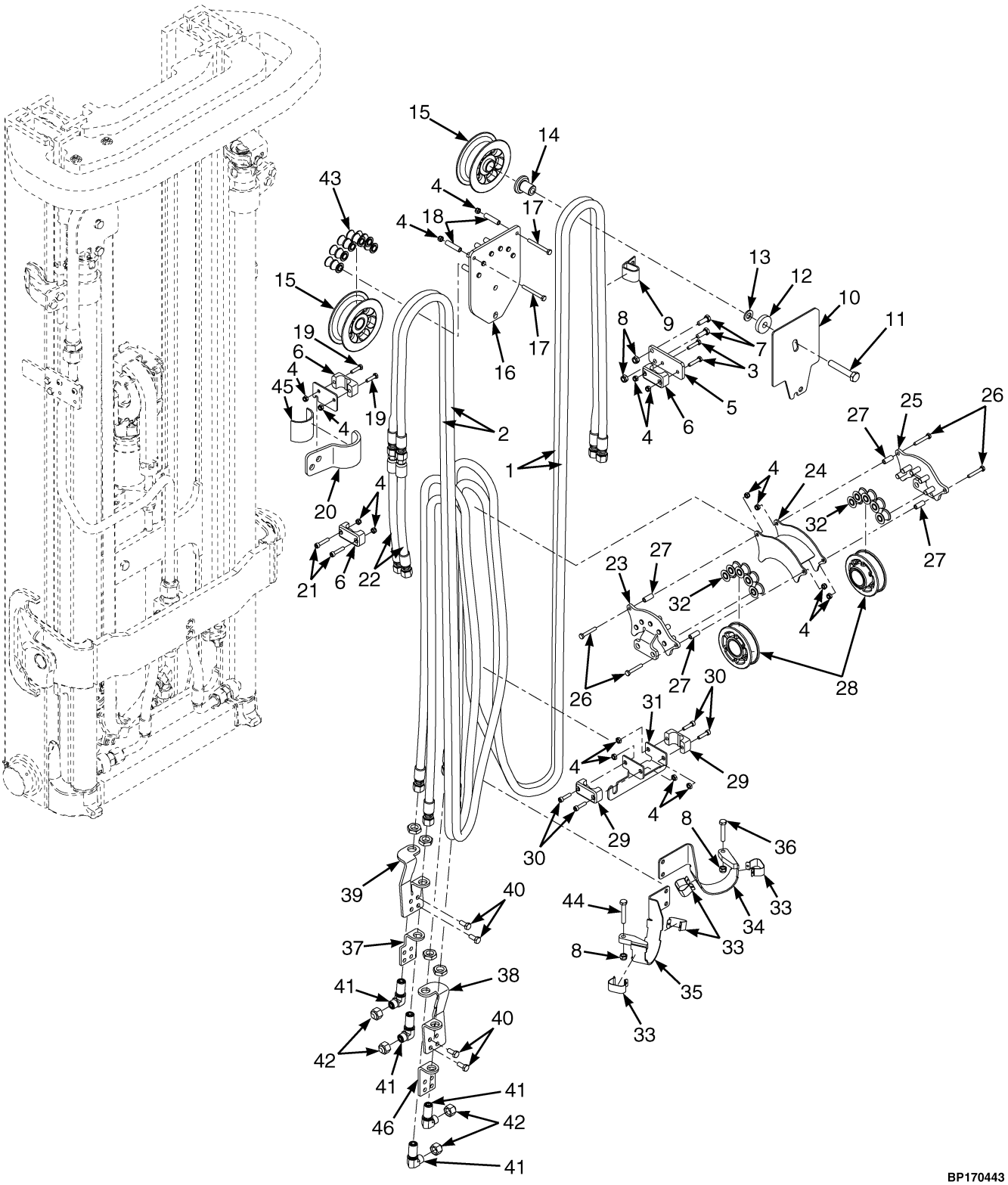

©2015 Yale Europe Materials Handling Limited

HEADER HOSE ASSEMBLY

THREE STAGE FULL FREE LIFT – A271 (S/N G807B02139H →)

A271

ITEM	DESCRIPTION 1 2 3 4	LIFT HEIGHT TO BOTTOM OF FORKS				
		4260 mm (167.7 in.)	4560 mm (179.5 in.)	4860 mm (191.3 in.)	5160 mm (203.1 in.)	5460 mm (215.0 in.)
	Mast Group Number	A271 4260	A271 4560	A271 4860	A271 5160	A271 5460
1	Hose Assy	580085421	580085423	580085425	582000489	580085433
2	Hose Assy	524198680	524198680	524198681	524198681	524198681
22	Hose Assy	----	524198588	----	524198589	524198600

KEY:
A: 3 Function
B: 4 Function

ITEM	PART NO.	DESCRIPTION	QTY A	QTY B
1	**a**	Hose Assy	2	2
2	**a**	Hose Assy	..	2
3	580055981	Capscrew	2	2
4	580055650	Nut	2	12
5	580087869	Plate	1	1
6	504068794	Clamp (Double Hose)	1	6
7	580055734	Capscrew	2	2
8	580055651	Nut	3	4
9	580034850	Clamp	1	1
10	580087618	Cover Plate	1	1
11	580055977	Capscrew	1	1
12	524198559	Washer	1	1
13	580056005	Washer	1	1
14	524198916	Stubshaft	1	1
15	580084584	Hose Sheave	1	1
16	524198504	Mounting Weldment	..	1
17	580061563	Capscrew	..	2
18	524198499	Spacer	..	2
19	580086330	Capscrew	..	2
20	580095198	Bracket Wldmt	..	1
21	580055864	Capscrew	..	2
22	**a**	Hose Assy	2	2
23	524198505	Bracket Wldmt	..	1
24	580093429	Bracket Wldmt	..	1
25	524198506	Bracket Wldmt	..	1
26	580055731	Capscrew	..	4
27	524198501	Spacer	..	4
28	580084590	Hose Sheave	2	2
29	580087631	Clamp (Single Hose)	2	2
30	580055863	Capscrew	4	4
31	580087685	Bracket Wldmt	1	1
32	580088061	Hose Sheave (Tanget Roller)	..	10
33	524198496	Clip	2	4

©2015 Yale Europe Materials Handling Limited

HEADER HOSE ASSEMBLY

THREE STAGE FULL FREE LIFT – A271 (S/N G807B02139H →)

KEY:
A: 3 Function
B: 4 Function

ITEM	PART NO.	DESCRIPTION	QTY A	QTY B
34	580092479	Bracket Wldmt	1	1
35	524198502	Bracket Wldmt	..	1
36	580055982	Capscrew	1	1
37	582009888	Bracket	1	1
38	580096843	Bracket	..	1
39	580096844	Bracket	..	1
40	580055733	Capscrew	6	6
41	580039401	Fitting	2	4
42	580039424	Cap	..	2
43	580084609	Hose Sheave	..	6
44	580056007	Washer	..	1
45	582000921	Foam Tape	..	1
46	582009889	Bracket	1	1

FOOTNOTES:

a Refer to Table

©2015 Yale Europe Materials Handling Limited

NOTES

©2015 Yale Europe Materials Handling Limited

MAST ASSEMBLY (FIGURE 8-12)

THREE STAGE FULL FREE LIFT - C662 — INNER, INTERMEDIATE AND OUTER (→ S/N C662B02349H)

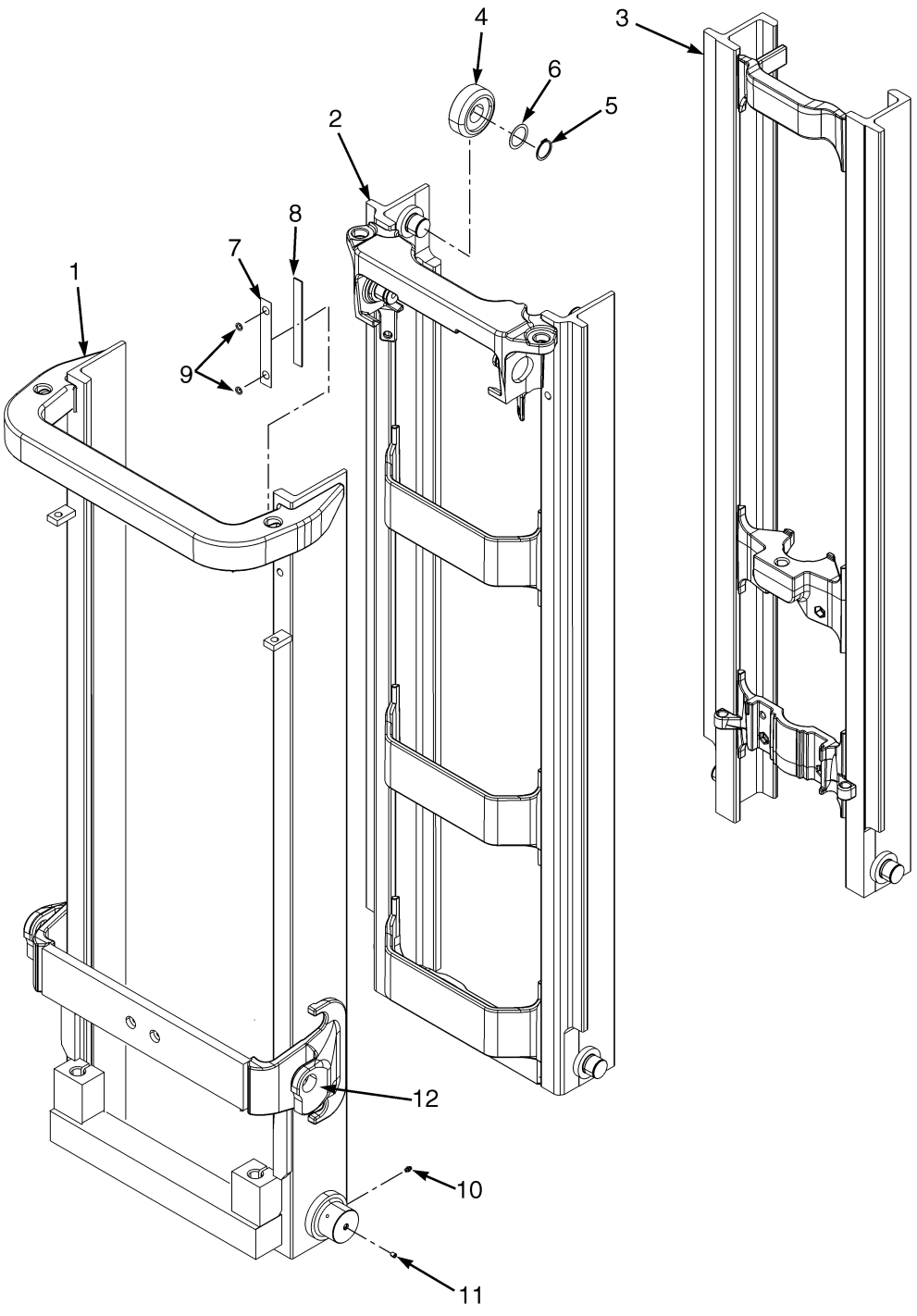

©2015 Yale Europe Materials Handling Limited

MAST ASSEMBLY

THREE STAGE FULL FREE LIFT - C662 – INNER, INTERMEDIATE AND OUTER (→ S/N C662B02349H)

C662

ITEM	DESCRIPTION 1 2 3 4	LIFT HEIGHT TO BOTTOM OF FORKS				
		4260 mm (167.7 in.)	4560 mm (179.5 in.)	4860 mm (191.3 in.)	5160 mm (203.1 in.)	5460 mm (215.0 in.)
	Mast Group Number	C662 4260	C662 4560	C662 4860	C662 5160	C662 5460
	Mast Assy	580075972	580075974	580075976	580075978	580075980
1	Outer Mast	580075637	580075639	580075641	580075644	580075646
2	Intermediate Mast	504074779	504074796	504074744	504074777	504074730
3	Inner Mast	524142185	524142187	524142189	524142191	524142193

ITEM	PART NO.	DESCRIPTION	QTY
	b	Mast Assy	1
1	**b**	Outer Mast	1
2	**b**	Intermediate Mast	1
3	**b**	Inner Mast	1
4	520036852	Load Roller ("B") (92.18 mm/91.92 mm)	8
4	**a** 580001430	Load Roller ("A") (91.80 mm/91.54 mm)	8
5	449029011	Snap Ring	8
5	**a** 015916300	Snap Ring	8
6	504233232	Shim (0.508 mm)	AR
7	**a** 504234265	Shim (0.508 mm)	AR
7	520037804	Shim (0.178 mm)	8
8	504075764	Wear Strip	4
9	012824300	O-Ring	8
10	015628700	Grease Fitting	2
11	150127005	Fitting	2
12	900003277	Bushing	2

FOOTNOTES:

a Optional

b Refer to Table

©2015 Yale Europe Materials Handling Limited

MAST ASSEMBLY (FIGURE 8-13)

THREE STAGE FULL FREE LIFT - C662 — INNER, INTERMEDIATE AND OUTER (S/N C662B02350H →)

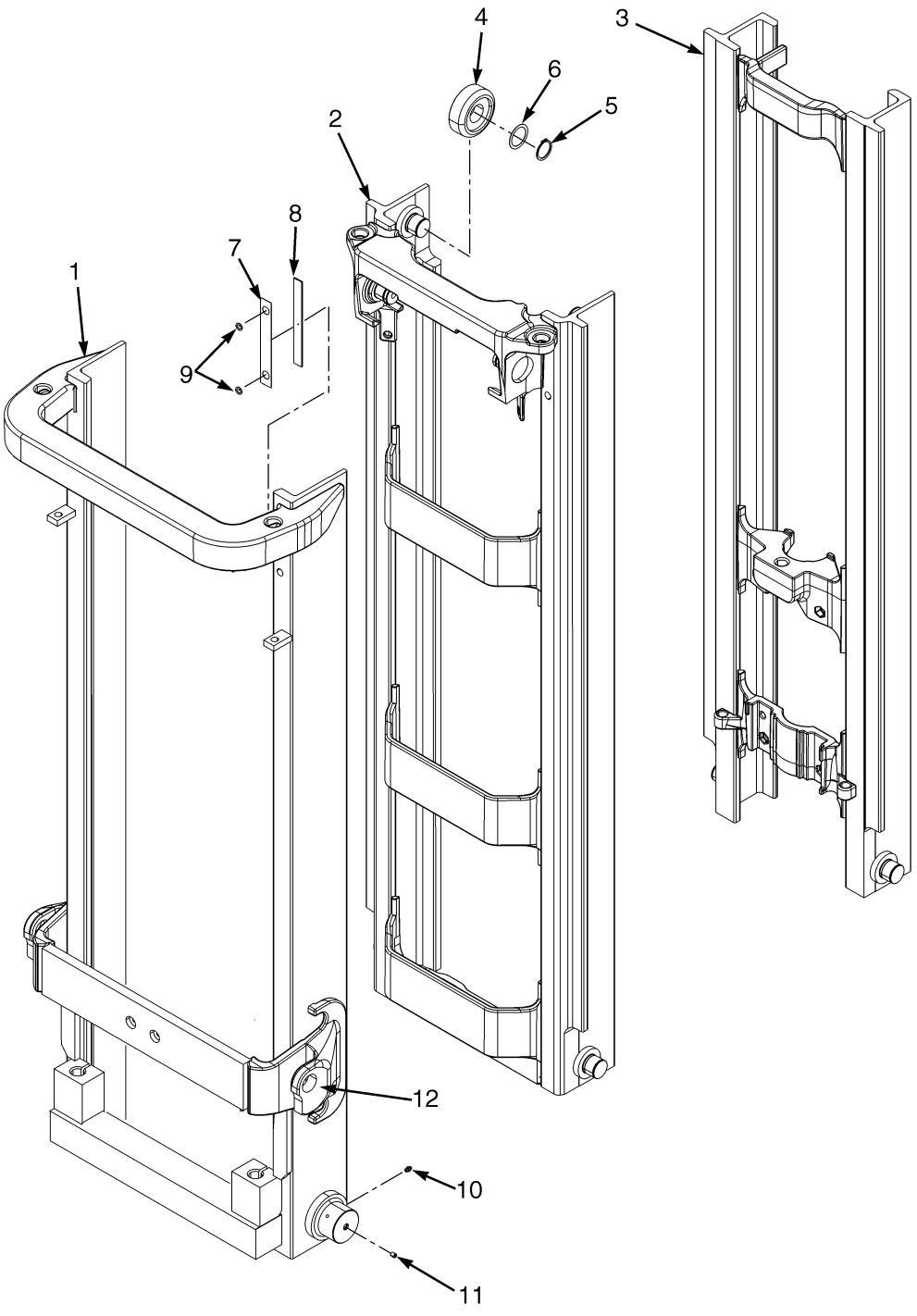

©2015 Yale Europe Materials Handling Limited

MAST ASSEMBLY

THREE STAGE FULL FREE LIFT - C662 – INNER, INTERMEDIATE AND OUTER (S/N C662B02350H →)

C662

ITEM	DESCRIPTION 1 2 3 4	LIFT HEIGHT TO BOTTOM OF FORKS				
		4260 mm (167.7 in.)	4560 mm (179.5 in.)	4860 mm (191.3 in.)	5160 mm (203.1 in.)	5460 mm (215.0 in.)
	Mast Group Number	C662 4260	C662 4560	C662 4860	C662 5160	C662 5460
	Mast Assy	580075972	580075974	580075976	580075978	580075980
1	Outer Mast	582000858	582000860	582000862	582000865	582000867
2	Intermediate Mast	504074779	504074796	504074744	504074777	504074730
3	Inner Mast	524142185	524142187	524142189	524142191	524142193

ITEM	PART NO.	DESCRIPTION	QTY
	b	Mast Assy	1
1	**b**	Outer Mast	1
2	**b**	Intermediate Mast	1
3	**b**	Inner Mast	1
4	520036852	Load Roller ("B") (92.18 mm/91.92 mm)	8
4	**a** 580001430	Load Roller ("A") (91.80 mm/91.54 mm)	8
5	449029011	Snap Ring	8
5	**a** 015916300	Snap Ring	8
6	504233232	Shim (0.508 mm)	AR
7	**a** 504234265	Shim (0.508 mm)	AR
7	520037804	Shim (0.178 mm)	AR
8	504075764	Wear Strip	4
9	012824300	O-Ring	8
10	015628700	Grease Fitting	2
11	150127005	Fitting	2
12	900003277	Bushing	2

FOOTNOTES:

a Optional

b Refer to Table

©2015 Yale Europe Materials Handling Limited

MAIN LIFT ASSEMBLY (FIGURE 8-14)

THREE STAGE FULL FREE LIFT - C662

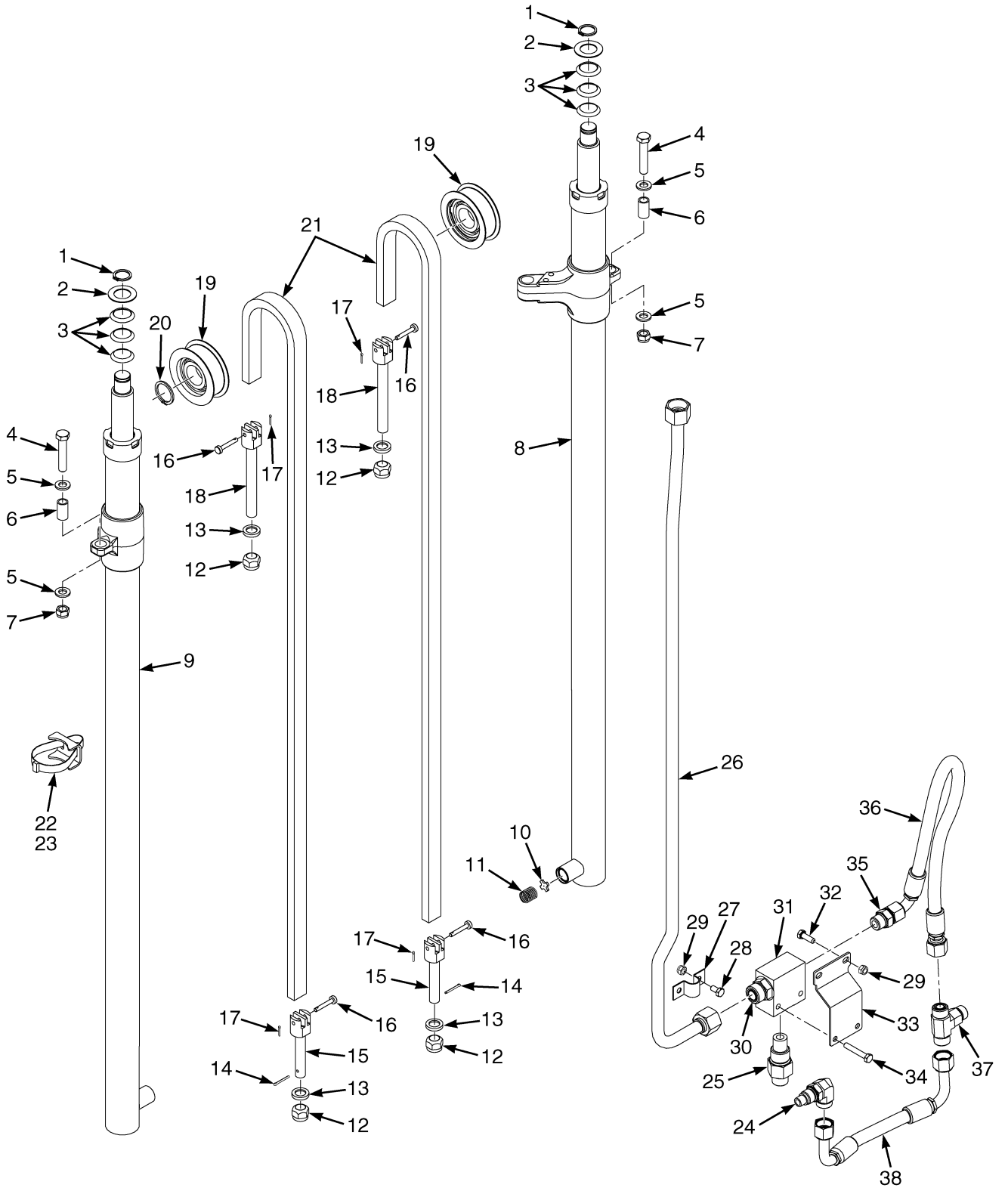

©2015 Yale Europe Materials Handling Limited

MAIN LIFT ASSEMBLY
THREE STAGE FULL FREE LIFT - C662

C662

ITEM	DESCRIPTION 1 2 3 4	LIFT HEIGHT TO BOTTOM OF FORKS				
		4260 mm (167.7 in.)	4560 mm (179.5 in.)	4860 mm (191.3 in.)	5160 mm (203.1 in.)	5460 mm (215.0 in.)
	Mast Group Number	C662 4260	C662 4560	C662 4860	C662 5160	C662 5460
	Mast Assy	580075972	580075974	580075976	580075978	580075980
21	Chain	504233265	504075738	504064703	518791631	504065747
26	Tube Assy	580096671	580096672	580096672	580096672	580096672

ITEM	PART NO.	DESCRIPTION	QTY
	b	Mast Assy	1
1	500227907	Snap Ring	2
2	504064767	Washer (1.500 mm)	2
3	504064769	Washer (0.254 mm)	AR
3	504069791	Washer (0.762 mm)	AR
3	504069702	Washer (1.524 mm)	AR
4	580055976	Capscrew	2
5	580056005	Washer	4
6	504064739	Spacer	2
7	580056001	Nut	2
8	. . . . .	Cylinder Assembly (LH) (☞Page 8-42)	1
9	. . . . .	Cylinder Assembly (RH) (☞Page 8-42)	1
10	504236253	Washer	1
11	504075776	Spring	1
12	504234266	Nut	4
13	504064758	Ring	4
14	449025042	Cotter Pin	2
15	504075767	Chain Anchor	2
16	580033718	Pin	4
17	015415900	Cotter Pin	4
18	518801644	Chain Anchor	2
19	504281794	Chain Sheave (Assembly)	2
20	500227910	Snap Ring	2
21	**b**	Chain	2
22	580068222	Clamp	2
23	582005465	Clamp	2
24	524141842	Fitting	1
25	524141846	Lowering Control Valve	1
25	052645600	O-Ring	1
25	580019387	O-Ring	1
26	**b**	Tube Assy	1
27	900003213	Clamp	2
28	580055733	Capscrew	3
29	580055651	Nut	7
30	580020431	Fitting	1
31	580087522	Housing	1
32	580055734	Capscrew	3

©2015 Yale Europe Materials Handling Limited

MAIN LIFT ASSEMBLY
THREE STAGE FULL FREE LIFT - C662

ITEM	PART NO.	DESCRIPTION	QTY
33	580087523	Bracket	1
34	580055736	Capscrew	2
35	580019817	Fitting	1
36	582008442	Hose Assy	1
37	580039183	Fitting	1
38	580086121	Hose Assy	1
	a 900015238	Clamp	1

FOOTNOTES:

a Not Illustrated

b Refer to Table

©2015 Yale Europe Materials Handling Limited

NOTES

©2015 Yale Europe Materials Handling Limited

FREE LIFT ASSEMBLY (FIGURE 8-15)
THREE STAGE FULL FREE LIFT - C662

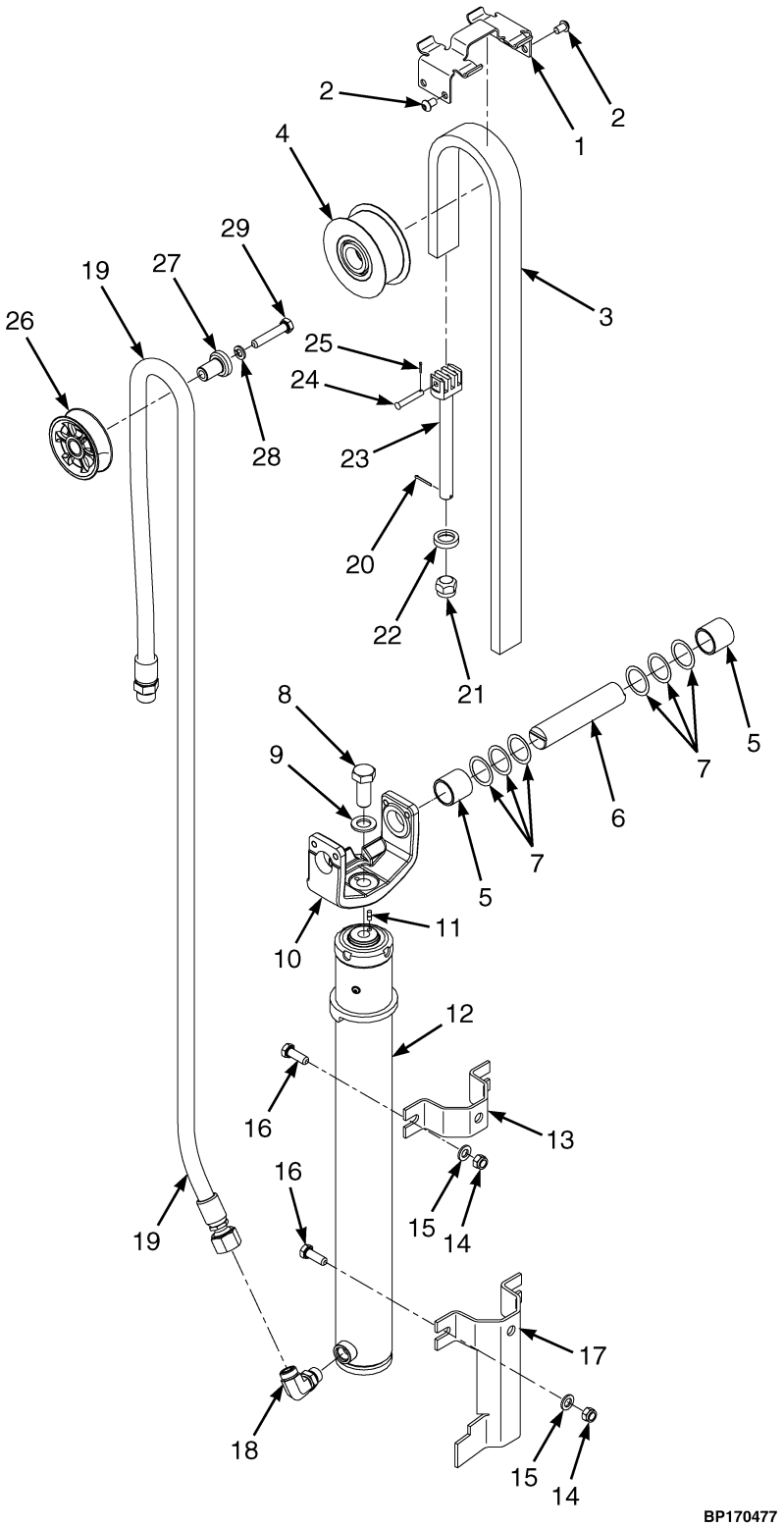

©2015 Yale Europe Materials Handling Limited

FREE LIFT ASSEMBLY
THREE STAGE FULL FREE LIFT - C662

C662

ITEM	DESCRIPTION 1 2 3 4	LIFT HEIGHT TO BOTTOM OF FORKS				
		4260 mm (167.7 in.)	4560 mm (179.5 in.)	4860 mm (191.3 in.)	5160 mm (203.1 in.)	5460 mm (215.0 in.)
	Mast Group Number	C662 4260	C662 4560	C662 4860	C662 5160	C662 5460
	Mast Assy	580075972	580075974	580075976	580075978	580075980
3	Chain	524146997	524146999	524147121	524147124	524147147
19	Hose Assy	580068541	580087802	580068539	580068542	580068544

ITEM	PART NO.	DESCRIPTION	QTY
	a	Mast Assy	1
1	580095678	Bracket	1
2	580087732	Capscrew	4
3	**a**	Chain	1
4	580061290	Chain Sheave	1
5	580087792	Spacer	2
6	580087791	Pin	1
7	504233232	Shim (0.508 mm)	4
8	580062390	Capscrew	1
9	580071052	Washer	1
10	580086907	Crosshead	1
11	518804610	Pin	1
12	. . . . .	Cylinder Assembly (☞Page 8-46)	1
13	580024920	Bracket	1
14	580056001	Nut	4
15	580056005	Washer	2
16	580090840	Capscrew	4
17	580053612	Guard	1
18	524141844	Valve (Flow)	1
18	052645400	O-Ring	1
18	580019387	O-Ring	1
19	**a**	Hose Assy	1
20	449025042	Cotter Pin	1
21	504234286	Nut	1
22	504236213	Ring	1
23	580064348	Chain Anchor	1
24	518792697	Pin	1
25	015415900	Cotter Pin	1
26	504064782	Hose Sheave	1
27	504070732	Stubshaft	1
28	580055649	Lockwasher	1
29	580055976	Capscrew	1

FOOTNOTES:

a Refer to Table

©2015 Yale Europe Materials Handling Limited

MAIN LIFT CYLINDER ASSEMBLY (FIGURE 8-16)
THREE STAGE FULL FREE LIFT - C662

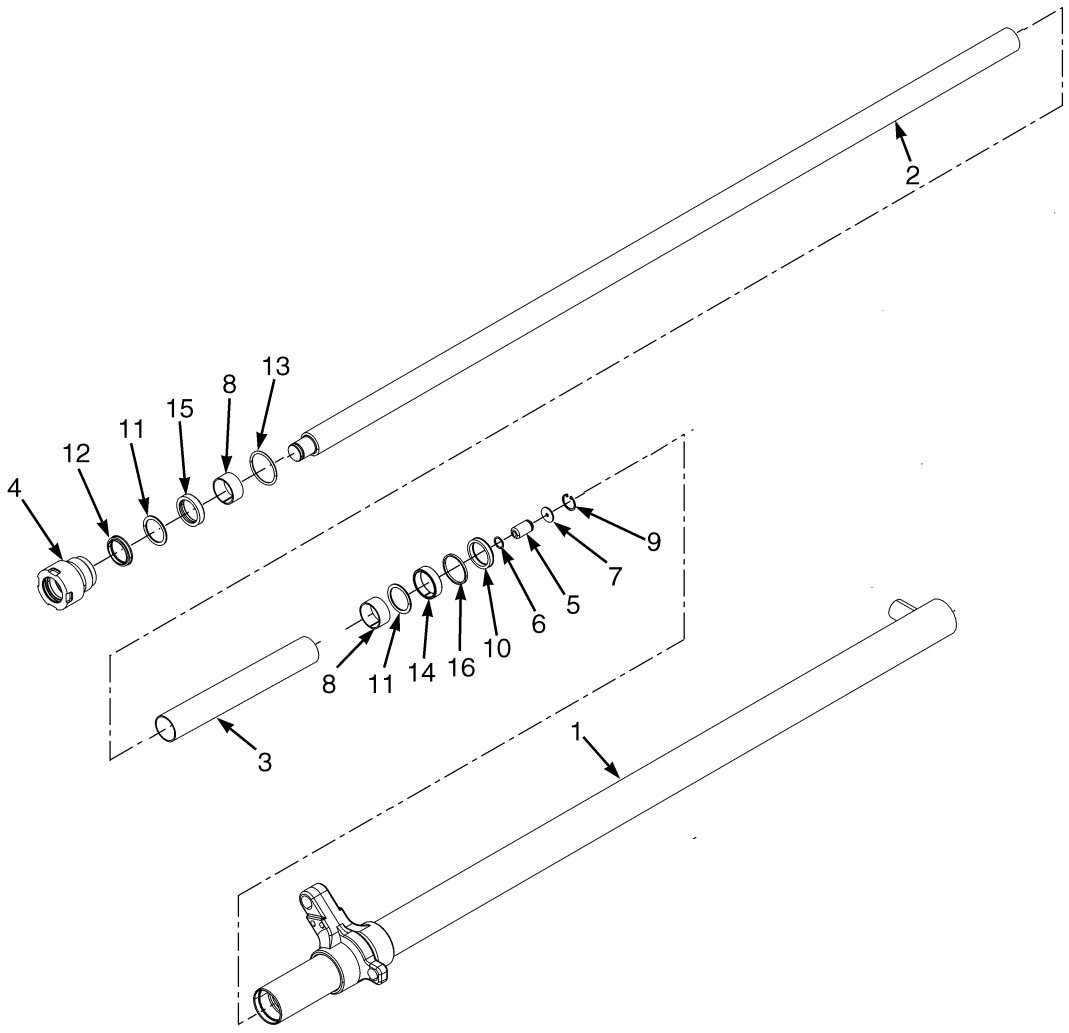

BP170151

©2015 Yale Europe Materials Handling Limited

MAIN LIFT CYLINDER ASSEMBLY

THREE STAGE FULL FREE LIFT - C662

LEFT HAND

ITEM	DESCRIPTION 1 2 3 4	LIFT HEIGHT TO BOTTOM OF FORKS				
		4260 mm (167.7 in.)	4560 mm (179.5 in.)	4860 mm (191.3 in.)	5160 mm (203.1 in.)	5460 mm (215.0 in.)
	Mast Group Number	**C662 4260**	**C662 4560**	**C662 4860**	**C662 5160**	**C662 5460**
	Cylinder Group Number	**8601705**	**8601707**	**8601709**	**8601711**	**8601713**
	Cylinder Assy	519530605	519530607	519530609	519530611	519530613
1	Tube Wldmt-Cylinder	519529605	519529607	519529609	519529611	519529613
2	Cylinder Rod	519528605	519528607	519528609	519528611	519528613
3	Spacer	----	----	----	505657522	505657522

RIGHT HAND

ITEM	DESCRIPTION 1 2 3 4	LIFT HEIGHT TO BOTTOM OF FORKS				
		4260 mm (167.7 in.)	4560 mm (179.5 in.)	4860 mm (191.3 in.)	5160 mm (203.1 in.)	5460 mm (215.0 in.)
	Mast Group Number	**C662 4260**	**C662 4560**	**C662 4860**	**C662 5160**	**C662 5460**
	Cylinder Group Number	**8601755**	**8601757**	**8601759**	**8601761**	**8601763**
	Cylinder Assy	519530655	519530657	519530659	519530661	519530663
1	Tube Wldmt-Cylinder	519529655	519529657	519529659	519529661	519529663
2	Cylinder Rod	519528605	519528607	519528609	519528611	519528613
3	Spacer	----	----	----	505657522	505657522

ITEM	PART NO.	DESCRIPTION	QTY
	b	Cylinder Assy	1
1	**b**	Tube Wldmt-Cylinder	1
2	**b**	Cylinder Rod	1
3	**b**	Spacer	1
4	506845500	Gland	1
5	504235239	Check Valve	1
6	580011167	O-Ring	1
7	504148200	Washer	1
8	518794659	Wear Ring	1
9	501850904	Snap Ring	1
10	504153200	Rod Seal	1
11	504154200	Back-Up Ring	2
12	504163200	Rod Wiper	1
13	012825700	O-Ring	1
14	504024201	Wear Ring	1

©2015 Yale Europe Materials Handling Limited

MAIN LIFT CYLINDER ASSEMBLY
THREE STAGE FULL FREE LIFT - C662

ITEM	PART NO.	DESCRIPTION	QTY
15	580022502	Rod Seal	1
16	502895202	Piston Ring	1
	a 504234269	Lubricant	1
	505136042	Kit-Seal	1

FOOTNOTES:

a Not Illustrated

b Refer to Table

©2015 Yale Europe Materials Handling Limited

NOTES

©2015 Yale Europe Materials Handling Limited

FREE LIFT CYLINDER ASSEMBLY (FIGURE 8-17)
THREE STAGE FULL FREE LIFT - C662

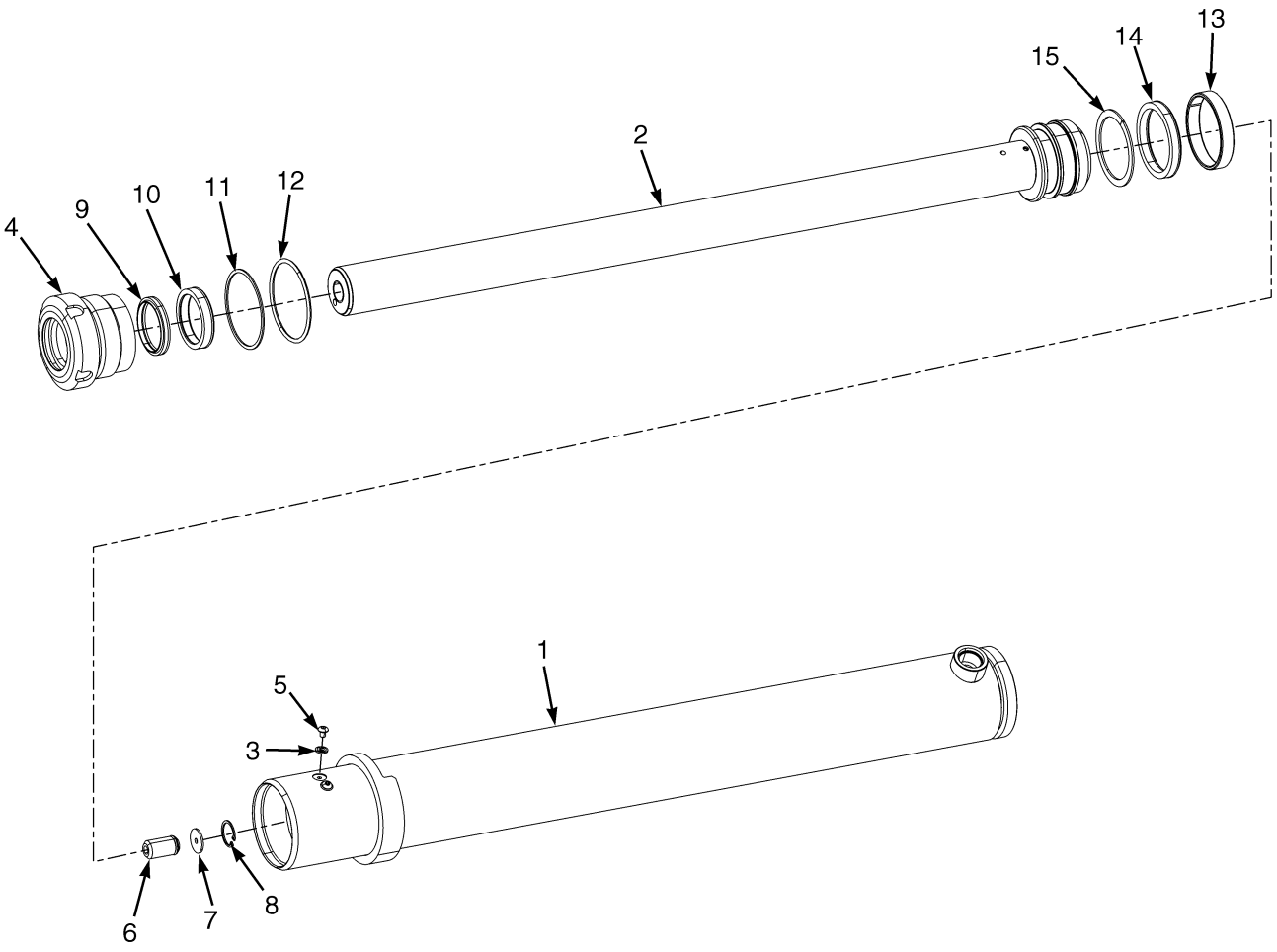

BP170170

©2015 Yale Europe Materials Handling Limited

FREE LIFT CYLINDER ASSEMBLY
THREE STAGE FULL FREE LIFT - C662

C662

ITEM	DESCRIPTION 1 2 3 4	LIFT HEIGHT TO BOTTOM OF FORKS				
		4260 mm (167.7 in.)	4560 mm (179.5 in.)	4860 mm (191.3 in.)	5160 mm (203.1 in.)	5460 mm (215.0 in.)
	Mast Group Number	C662 4260	C662 4560	C662 4860	C662 5160	C662 5460
	Cylinder Group Number	8537305	8537307	8537309	8537312	8537314
	Cylinder Assy	580087032	580087034	580087036	580087039	580087041
1	Tube Wldmt-Cylinder	519541604	519541606	519541608	519541611	519541613
2	Cylinder Rod	520021634	520021636	520021638	520021641	520021643

ITEM	PART NO.	DESCRIPTION	QTY
	b	Cylinder Assy	1
1	**b**	Tube Wldmt-Cylinder	1
2	**b**	Cylinder Rod	1
3	502687901	Sealing Ring	1
4	519537600	Gland	1
5	501753904	Screw	1
6	504235239	Check Valve	1
6	580067209	Check Valve (Alternate Part)	1
7	504148200	Washer	1
8	501850904	Snap Ring	1
9	504450758	Rod Wiper	1
9	580077907	Rod Wiper (Alternate Part)	1
10	502787903	Rod Seal	1
10	582006661	Rod Seal (Alternate Part)	1
11	900004269	Back-Up Ring	1
12	015493200	O-Ring	1
13	504024207	Wear Ring	1
14	504232205	Rod Seal	1
15	504232277	Back-Up Ring	1
	a 504234269	Lubricant	1
	505136049	Kit-Seal	1

FOOTNOTES:

a Not Illustrated

b Refer to Table

©2015 Yale Europe Materials Handling Limited

CARRIAGE ASSEMBLY (FIGURE 8-18)
THREE STAGE FULL FREE LIFT - C662 — STANDARD

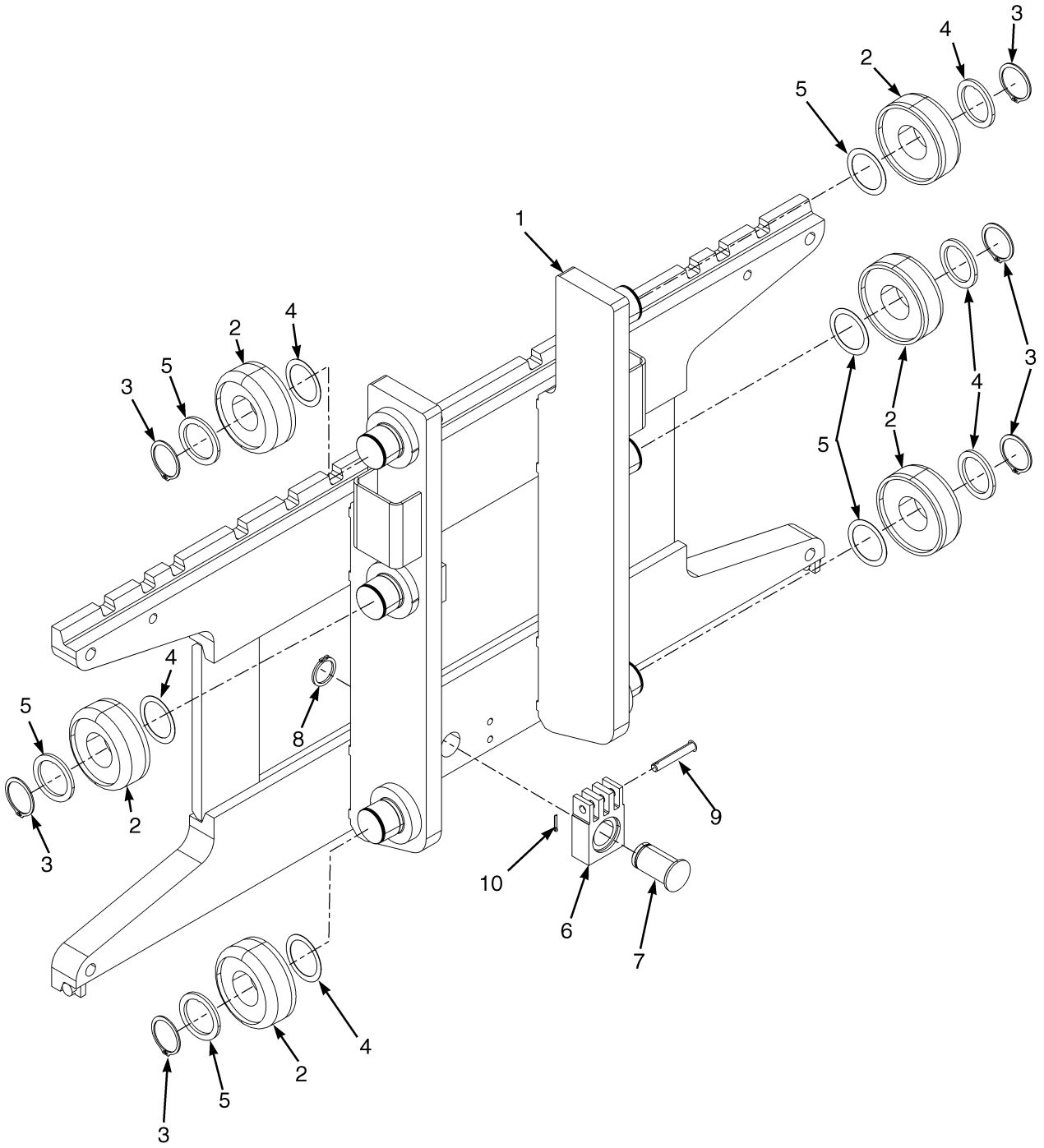

©2015 Yale Europe Materials Handling Limited

CARRIAGE ASSEMBLY

THREE STAGE FULL FREE LIFT - C662 – STANDARD

ITEM	PART NO.	DESCRIPTION	QTY
	580093067	Carriage (Assembly)	1
1	580091006	Carriage	1
2	518797634	Load Roller ("B") (82.18 mm)	6
3	015916300	Snap Ring	6
3	449029011	Snap Ring	6
4	504233232	Shim (0.508 mm)	AR
5	504235278	Spacer	6
6	524197448	Chain Anchor	1
7	580061378	Pin	1
8	500227907	Snap Ring	2
9	518792697	Pin	1
10	015415900	Cotter Pin	1

©2015 Yale Europe Materials Handling Limited

HEADER HOSE ASSEMBLY (FIGURE 8-19)

THREE STAGE FULL FREE LIFT - C662 — 3 RD FUNCTION HOSES (→ S/N G807B02138H)

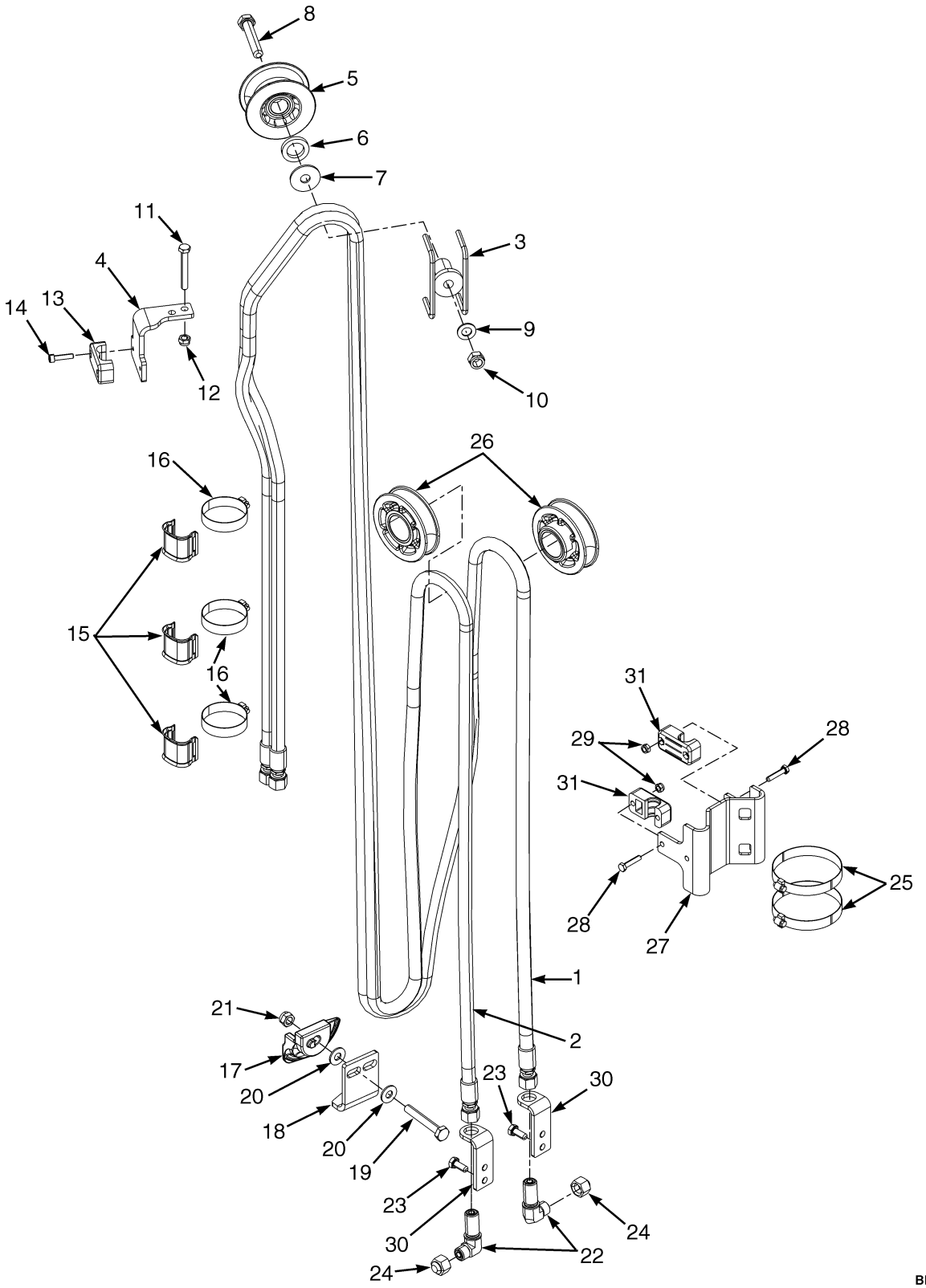

©2015 Yale Europe Materials Handling Limited

HEADER HOSE ASSEMBLY

THREE STAGE FULL FREE LIFT - C662 – 3 RD FUNCTION HOSES (→ S/N G807B02138H)

C662

ITEM	DESCRIPTION 1 2 3 4	LIFT HEIGHT TO BOTTOM OF FORKS				
		4260 mm (167.7 in.)	4560 mm (179.5 in.)	4860 mm (191.3 in.)	5160 mm (203.1 in.)	5460 mm (215.0 in.)
	Mast Group Number	C662 4260	C662 4560	C662 4860	C662 5160	C662 5460
1	Hose Assy	580082021	580082023	580082026	580082028	580082030
2	Hose Assy	580081945	580081948	580081950	580081952	580081977

ITEM	PART NO.	DESCRIPTION	QTY
1	**a**	Hose Assy	1
2	**a**	Hose Assy	1
3	505961568	Stubshaft	1
4	524198510	Bracket	1
5	580023124	Hose Sheave	1
6	505962533	Spacer	1
7	504070716	Washer	1
8	580055977	Capscrew	1
9	580055634	Washer	1
10	580056001	Nut	1
11	580055983	Capscrew	2
12	580055651	Nut	2
13	504068794	Clamp (Double Hose)	1
14	580055863	Capscrew	2
15	524141696	Hose Clamp	3
16	580068221	Clamp	3
17	520039872	Hose Guide	1
18	505962507	Bracket	1
19	580061401	Capscrew	1
20	580055633	Washer	2
21	580055652	Nut	1
22	580039401	Fitting	2
22	504155200	O-Ring	2
23	580055733	Capscrew	4
24	580039424	Cap	2
25	505965586	Clamp	2
26	580084590	Hose Sheave	2
27	580088014	Bracket	1
28	580055981	Capscrew	4
29	580055650	Nut	4
30	524198700	Bracket	2
31	580087631	Clamp (Single Hose)	2

FOOTNOTES:

a Refer to Table

©2015 Yale Europe Materials Handling Limited

HEADER HOSE ASSEMBLY (FIGURE 8-20)

THREE STAGE FULL FREE LIFT - C662 — 4 TH FUNCTION HOSES (→ S/N G807B02138H)

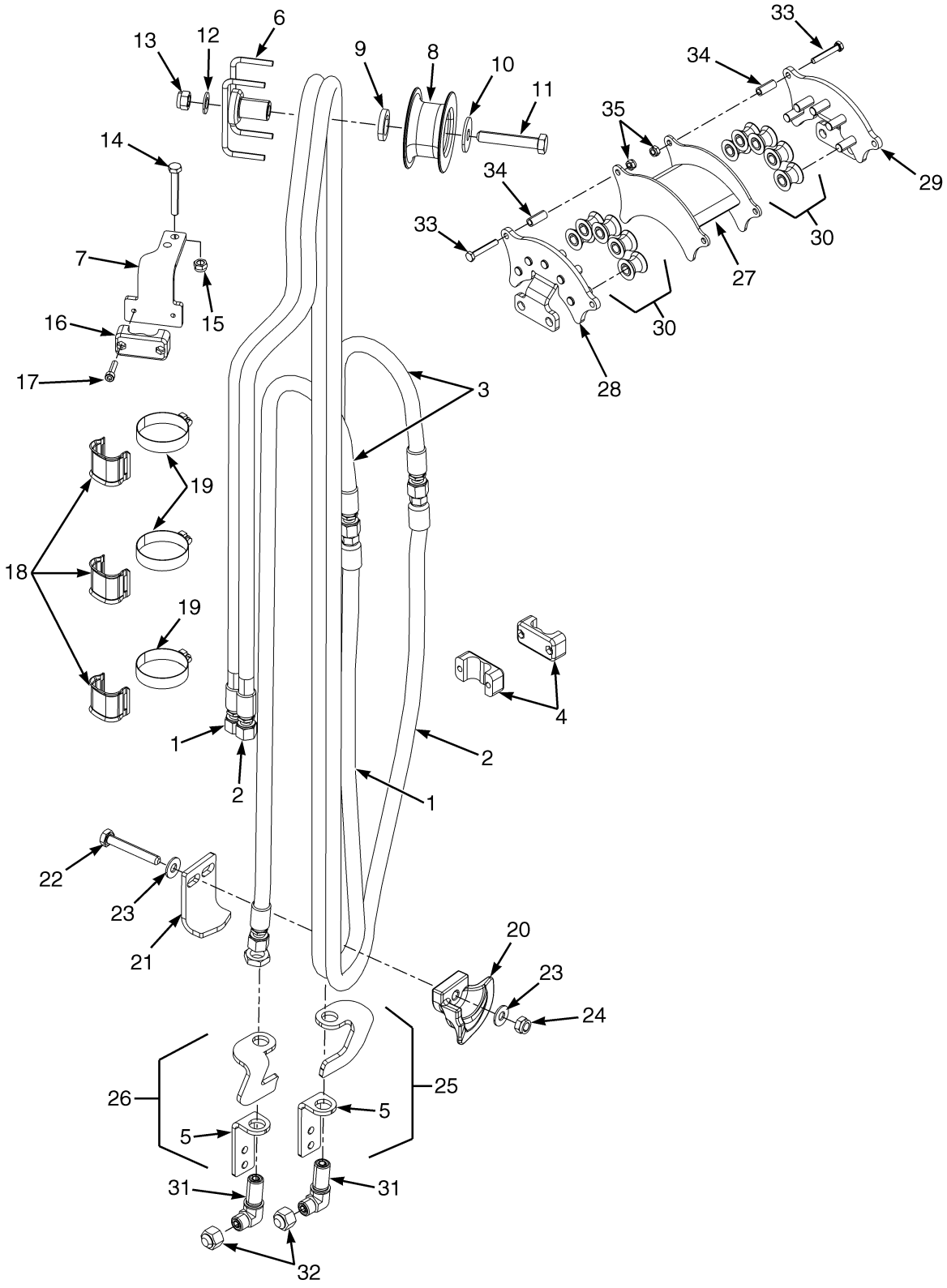

©2015 Yale Europe Materials Handling Limited

HEADER HOSE ASSEMBLY

THREE STAGE FULL FREE LIFT - C662 – 4 TH FUNCTION HOSES (→ S/N G807B02138H)

C662

ITEM	DESCRIPTION 1 2 3 4	LIFT HEIGHT TO BOTTOM OF FORKS				
		4260 mm (167.7 in.)	4560 mm (179.5 in.)	4860 mm (191.3 in.)	5160 mm (203.1 in.)	5460 mm (215.0 in.)
	Mast Group Number	C662 4260	C662 4560	C662 4860	C662 5160	C662 5460
1	Hose Assy	580088111	580088113	580088115	580088117	580088119
2	Hose Assy	580088071	580088073	580088075	580088081	580088083
3	Hose Assy	580096628	580096629	580096629	580096630	580096630

ITEM	PART NO.	DESCRIPTION	QTY
1	**a**	Hose Assy	1
2	**a**	Hose Assy	1
3	**a**	Hose Assy	2
4	580087631	Clamp (Single Hose)	2
5	524198700	Bracket	2
6	505961568	Stubshaft	1
7	524198509	Bracket	1
8	580023124	Hose Sheave	1
9	505962533	Spacer	1
10	504070716	Washer	1
11	580055977	Capscrew	1
12	580055634	Washer	1
13	580056001	Nut	1
14	580055983	Capscrew	2
15	580055651	Nut	2
16	504068794	Clamp (Double Hose)	3
17	580055863	Capscrew	2
18	524141696	Hose Clamp	3
19	580068221	Clamp	3
20	520039810	Hose Guide	1
21	505962507	Bracket	1
22	580061401	Capscrew	1
23	580055633	Washer	2
24	580055652	Nut	1
25	580096843	Bracket	1
26	580096844	Bracket	1
27	580093430	Bracket Wldmt	1
28	524198505	Bracket Wldmt	1
29	524198506	Bracket Wldmt	1
30	580088061	Hose Sheave (Tanget Roller)	10
31	580039401	Fitting	2
31	504155200	O-Ring	2
32	580039424	Cap	2
33	580055731	Capscrew	4
34	524198501	Spacer	4
35	580055650	Nut	4

©2015 Yale Europe Materials Handling Limited

FOOTNOTES:

a Refer to Table

©2015 Yale Europe Materials Handling Limited

NOTES

©2015 Yale Europe Materials Handling Limited

HEADER HOSE ASSEMBLY (FIGURE 8-21)

THREE STAGE FULL FREE-LIFT — C662 (S/N G807B02139H →) (→ 12/2012)

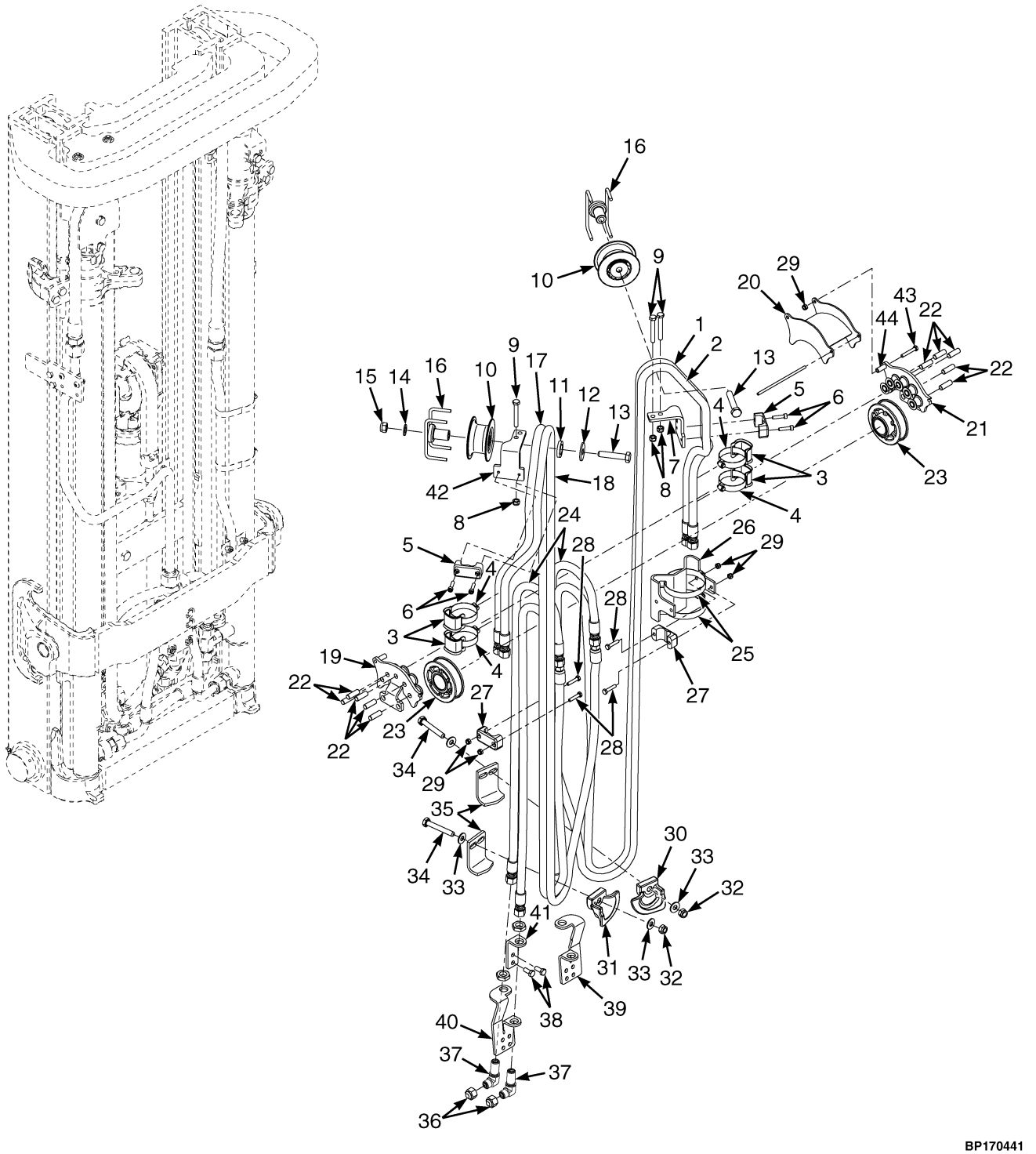

©2015 Yale Europe Materials Handling Limited

HEADER HOSE ASSEMBLY

THREE STAGE FULL FREE-LIFT – C662 (S/N G807B02139H →) (→ 12/2012)

C662

ITEM	DESCRIPTION 1 2 3 4	LIFT HEIGHT TO BOTTOM OF FORKS				
		4260 mm (167.7 in.)	4560 mm (179.5 in.)	4860 mm (191.3 in.)	5160 mm (203.1 in.)	5460 mm (215.0 in.)
	Mast Group Number	C662 4260	C662 4560	C662 4860	C662 5160	C662 5460
1	Hose Assy	580082019	580082021	580082023	582000510	580082028
2	Hose Assy	580081942	580081945	580081948	582000502	580081952
17	Hose Assy	582000520	582000550	580088073	582000803	580088081
18	Hose Assy	582000549	582000521	580088113	582000523	580088117
24	Hose Assy	580096628	580096629	580096629	580096630	580096630

KEY:
A: 3 Function
B: 4 Function

ITEM	PART NO.	DESCRIPTION	QTY A	QTY B
1	**b**	Hose Assy	1	1
2	**b**	Hose Assy	1	1
3	524141696	Hose Clamp	2	4
4	580045653	Clamp	2	4
5	504068794	Clamp (Double Hose)	1	3
6	580055863	Capscrew	2	4
7	524198510	Bracket	1	1
8	580055651	Nut	2	4
9	580055983	Capscrew	2	4
10	580023124	Hose Sheave	1	2
11	505962533	Spacer	1	2
12	504070716	Washer	1	2
13	580055977	Capscrew	1	2
14	580055634	Washer	1	2
15	580056001	Nut	1	2
16	505961568	Stubshaft	1	2
17	**b**	Hose Assy	..	1
18	**b**	Hose Assy	..	1
19	524198505	Bracket Wldmt	..	1
19	582012209	Bracket Wldmt (RH) (Alternate Part)	..	1
20	580093430	Bracket Wldmt	..	1
20	582012211	Bracket Wldmt (Roller Guard) (Alternate Part)	..	1
21	524198506	Bracket Wldmt	..	1
21	582012200	Bracket Wldmt (LH) (Alternate Part)	..	1
22	580088061	Hose Sheave (Tanget Roller)	..	10
23	580084590	Hose Sheave	2	2
24	**b**	Hose Assy	..	2
25	**c** 505965586	Clamp	2	2
26	**c** 580088014	Bracket	1	1
27	580087631	Clamp (Single Hose)	2	2

©2015 Yale Europe Materials Handling Limited

HEADER HOSE ASSEMBLY

THREE STAGE FULL FREE-LIFT – C662 (S/N G807B02139H →) (→ 12/2012)

KEY:
A: 3 Function
B: 4 Function

ITEM	PART NO.	DESCRIPTION	QTY A	QTY B
28	580055981	Capscrew	4	4
29	580055650	Nut	4	8
30	520039872	Hose Guide	1	..
31	520039810	Hose Guide	..	1
32	580055652	Nut	1	2
33	580055633	Washer	2	4
34	580061401	Capscrew	1	2
35	505962507	Bracket	1	2
36	580039424	Cap	2	4
37	580039401	Fitting	2	4
37	504155200	O-Ring	2	2
38	580055733	Capscrew	4	4
39	580096843	Bracket	..	1
40	580096844	Bracket	..	1
41	524198700	Bracket	2	..
42	524198509	Bracket	..	1
43	580055731	Capscrew	..	4
44	524198501	Spacer	..	4
a	524141696	Hose Clamp	1	2
a	580068221	Clamp	1	2

FOOTNOTES:

a Not Illustrated
b Refer to Table
c → 10/2012

©2015 Yale Europe Materials Handling Limited

NOTES

©2015 Yale Europe Materials Handling Limited

HEADER HOSE ASSEMBLY (FIGURE 8-22)

THREE STAGE FULL FREE-LIFT — C662 (12/2012 →)

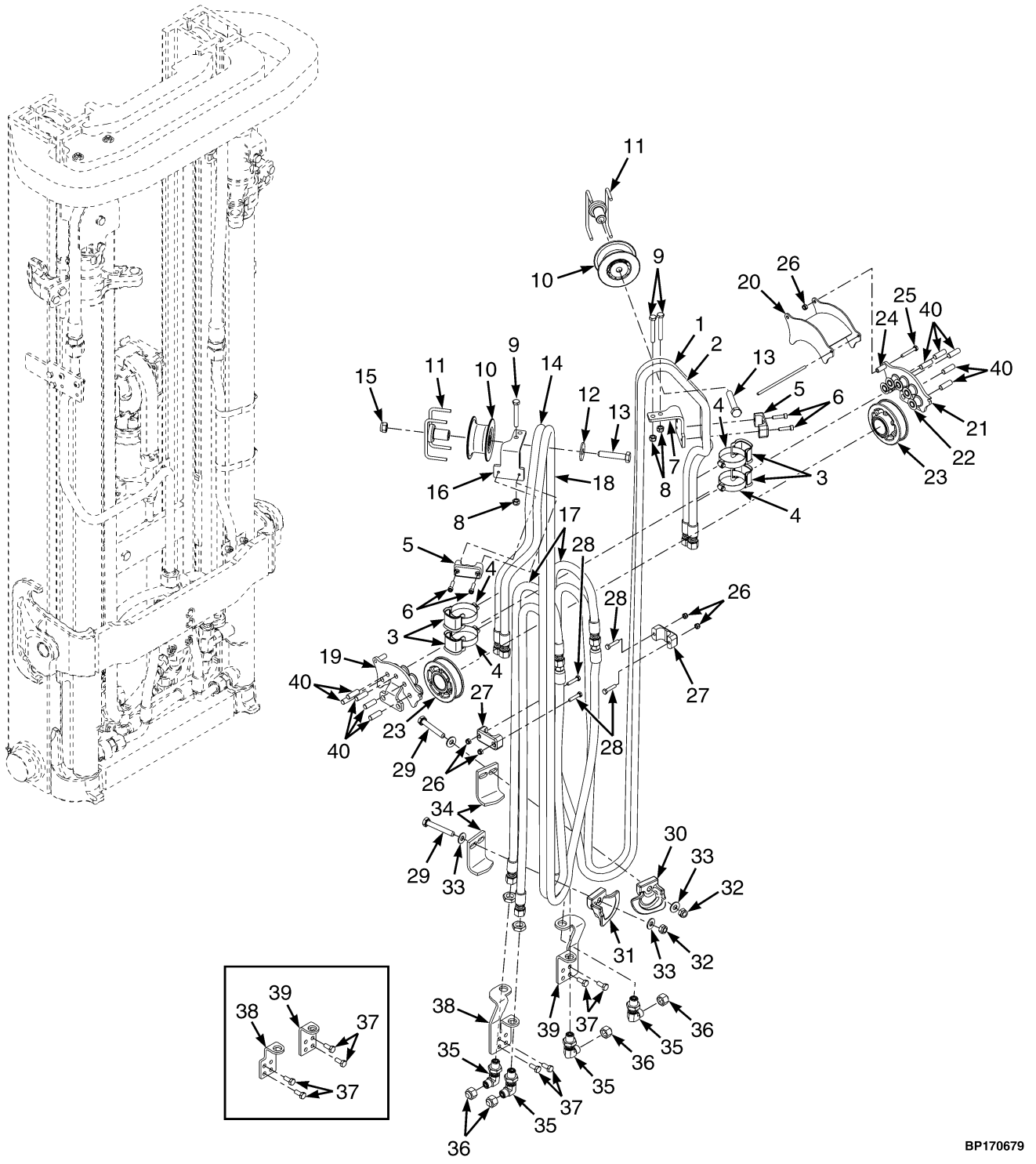

©2015 Yale Europe Materials Handling Limited

HEADER HOSE ASSEMBLY

THREE STAGE FULL FREE-LIFT – C662 (12/2012 →)

C662

ITEM	DESCRIPTION 1 2 3 4	LIFT HEIGHT TO BOTTOM OF FORKS				
		4260 mm (167.7 in.)	4560 mm (179.5 in.)	4860 mm (191.3 in.)	5160 mm (203.1 in.)	5460 mm (215.0 in.)
	Mast Group Number	C662 4260	C662 4560	C662 4860	C662 5160	C662 5460
1	Hose Assy	580082019	580082021	580082023	582000510	580082028
2	Hose Assy	580081942	580081945	580081948	582000502	580081952
14	Hose Assy	582000520	582000550	580088073	582000803	580088081
17	Hose Assy	580096628	580096629	580096629	580096630	580096630
18	Hose Assy	582000549	582000521	580088113	582000523	580088117

KEY:
A: 3 Function
B: 4 Function

ITEM	PART NO.	DESCRIPTION	QTY A	QTY B
1	**a**	Hose Assy	1	1
2	**a**	Hose Assy	1	1
3	524141696	Hose Clamp	3	6
4	580045653	Clamp	3	6
5	504068794	Clamp (Double Hose)	1	3
6	580055863	Capscrew	2	4
7	524198510	Bracket	1	1
8	580055651	Nut	2	4
9	580055983	Capscrew	2	4
10	580023124	Hose Sheave	1	2
11	505961568	Stubshaft	1	2
11	582024931	Stubshaft (Alternate Part)	1	2
12	504070716	Washer	1	2
12	580061870	Washer (Alternate Part)	1	2
13	580055977	Capscrew	1	2
13	580055976	Capscrew (Alternate Part)	1	2
14	**a**	Hose Assy	..	1
15	580056001	Nut	1	2
16	524198509	Bracket	..	1
17	**a**	Hose Assy	..	2
18	**a**	Hose Assy	..	1
19	524198505	Bracket Wldmt	..	1
19	582012209	Bracket Wldmt (RH) (Alternate Part)	..	1
20	580093430	Bracket Wldmt	..	1
20	582012211	Bracket Wldmt (Roller Guard) (Alternate Part)	..	1
21	524198506	Bracket Wldmt	..	1
21	582012200	Bracket Wldmt (LH) (Alternate Part)	..	1
22	580088061	Hose Sheave (Tanget Roller)	..	10
23	580084590	Hose Sheave	2	2
24	524198501	Spacer	..	4

©2015 Yale Europe Materials Handling Limited

HEADER HOSE ASSEMBLY

THREE STAGE FULL FREE-LIFT – C662 (12/2012 →)

KEY:
A: 3 Function
B: 4 Function

ITEM	PART NO.	DESCRIPTION	QTY A	QTY B
25	580055731	Capscrew	..	4
26	580055650	Nut	4	8
27	580087631	Clamp (Single Hose)	2	2
28	580055981	Capscrew	4	4
28	580055864	Capscrew (Alternate Part)	4	4
29	580061401	Capscrew	1	2
30	520039872	Hose Guide	1	1
31	520039810	Hose Guide	..	1
32	580055652	Nut	1	2
33	580055633	Washer	2	4
34	505962507	Bracket	1	2
35	580039401	Fitting	2	4
35	504155200	O-Ring	2	2
36	580039424	Cap	2	4
37	580055733	Capscrew	4	4
38	582009888	Bracket (One Hose)	1	..
38	580096844	Bracket (Two Hose)	..	1
39	582009889	Bracket (One Hose)	1	..
39	580096843	Bracket (Two Hose)	..	1
40	580084591	Pin	..	10

FOOTNOTES:

a Refer to Table

©2015 Yale Europe Materials Handling Limited

9 MAST-TWO STAGE FULL FREE-LIFT

SECTION 9
MAST-TWO STAGE FULL FREE-LIFT

DESCRIPTION	PAGE
CARRIAGE ASSEMBLY	
TWO STAGE FULL FREE- LIFT-STANDARD - A272	9-36
TWO-STAGE FULL FREE-LIFT - STANDARD (C663)	9-16
FREE LIFT ASSEMBLY	
TWO STAGE FULL FREE LIFT - C663	9-8
FREE LIFT CYLINDER ASSEMBLY	
TWO STAGE FULL FREE LIFT - C663	9-14
FREE-LIFT ASSEMBLY	
TWO STAGE FULL FREE- LIFT - A272	9-34
HEADER HOSE ASSEMBLY	
TWO STAGE FULL FREE- LIFT - A272	9-38
TWO STAGE FULL FREE LIFT - C663 - 3 FUNCTION (→ S/N G807B02138H)	9-18
TWO STAGE FULL FREE LIFT - C663 - 4TH FUNCTION (→ S/N G807B02138H)	9-20
TWO-STAGE FULL FREE-LIFT - C663 (S/N G807B02139H →)	9-22
MAIN LIFT ASSEMBLY	
TWO STAGE FULL FREE- LIFT - A272	9-28
TWO STAGE FULL FREE LIFT - C663	9-6
MAIN LIFT CYLINDER LH	
TWO STAGE FULL FREE LIFT - A272	9-30
TWO STAGE FULL FREE LIFT - C663	9-10
MAIN LIFT CYLINDER RH	
TWO STAGE FULL FREE- LIFT - A272	9-32
TWO STAGE FULL FREE- LIFT - C663	9-12
MAST ASSEMBLY	
TWO STAGE FULL FREE LIFT - C663 (→ S/N C663B01671H)	9-2
TWO STAGE FULL FREE LIFT - C663 (S/N C663B01672H →)	9-4
TWO STAGE FULL FREE- LIFT - A272	9-26

©2015 Yale Europe Materials Handling Limited

MAST ASSEMBLY (FIGURE 9-1)

TWO STAGE FULL FREE LIFT — C663 (→ S/N C663B01671H)

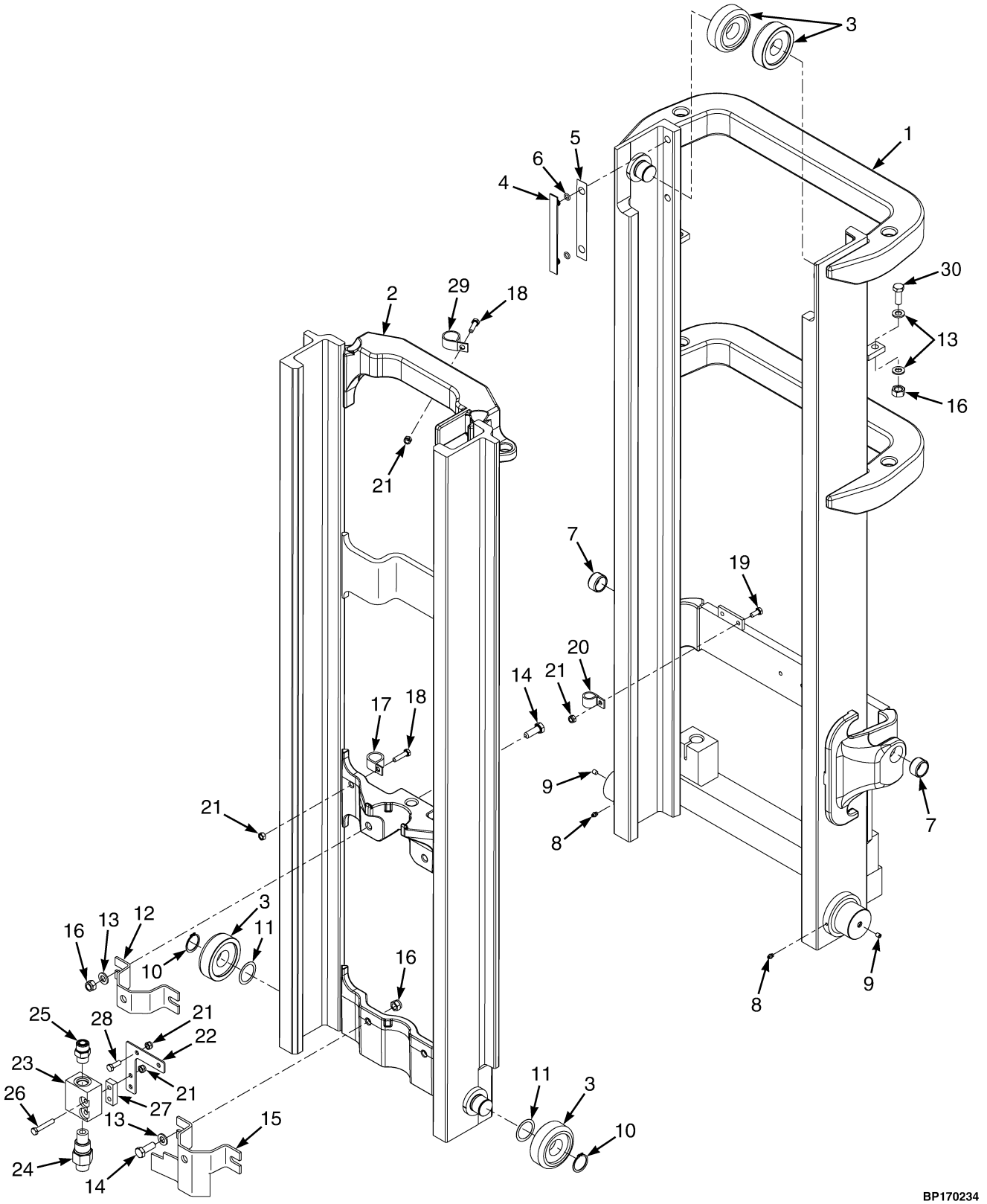

©2015 Yale Europe Materials Handling Limited

MAST ASSEMBLY

TWO STAGE FULL FREE LIFT – C663 (→ S/N C663B01671H)

C663

ITEM	DESCRIPTION 1 2 3 4	LIFT HEIGHT TO BOTTOM OF FORKS		
		3178 mm (125.1 in.)	3678 mm (144.8 in.)	4298 mm (169.2 in.)
	Mast Group Number	C663 3178	C663 3678	C663 4298
	Mast Assy	580075813	580075818	580075823
1	Outer Mast	580075640	580075645	580075650
2	Inner Mast	524142297	524142344	524142349

ITEM	PART NO.	DESCRIPTION	QTY
	a	Mast Assy	1
1	**a**	Outer Mast	1
2	**a**	Inner Mast	1
3	520036852	Load Roller ("B") (92.18 mm/91.92 mm)	4
4	504234265	Shim (0.508 mm)	AR
5	504075764	Wear Strip	2
6	012824300	O-Ring	4
7	900003277	Bushing	2
8	015628700	Grease Fitting	2
9	150127005	Fitting	2
10	449029011	Snap Ring	4
11	504233232	Shim (0.508 mm)	AR
12	580024920	Bracket	1
13	580056005	Washer	4
14	580090840	Capscrew	1
15	580053611	Bracket	1
16	580056001	Nut	4
17	504069724	Clamp	1
18	580093219	Capscrew	2
19	580055733	Capscrew	1
20	504075742	Clamp	1
21	580055651	Nut	7
22	580087519	Bracket	1
23	580087520	Housing	1
24	524141846	Lowering Control Valve	1
25	580019817	Fitting	1
25	580019387	O-Ring	1
25	052645400	O-Ring	1
26	580055983	Capscrew	2
27	580093713	Plate	1
28	580055734	Capscrew	2
29	060023700	Clamp	1
30	580055976	Capscrew	2

FOOTNOTES:

a Refer to Table

©2015 Yale Europe Materials Handling Limited

MAST ASSEMBLY (FIGURE 9-2)

TWO STAGE FULL FREE LIFT — C663 (S/N C663B01672H →)

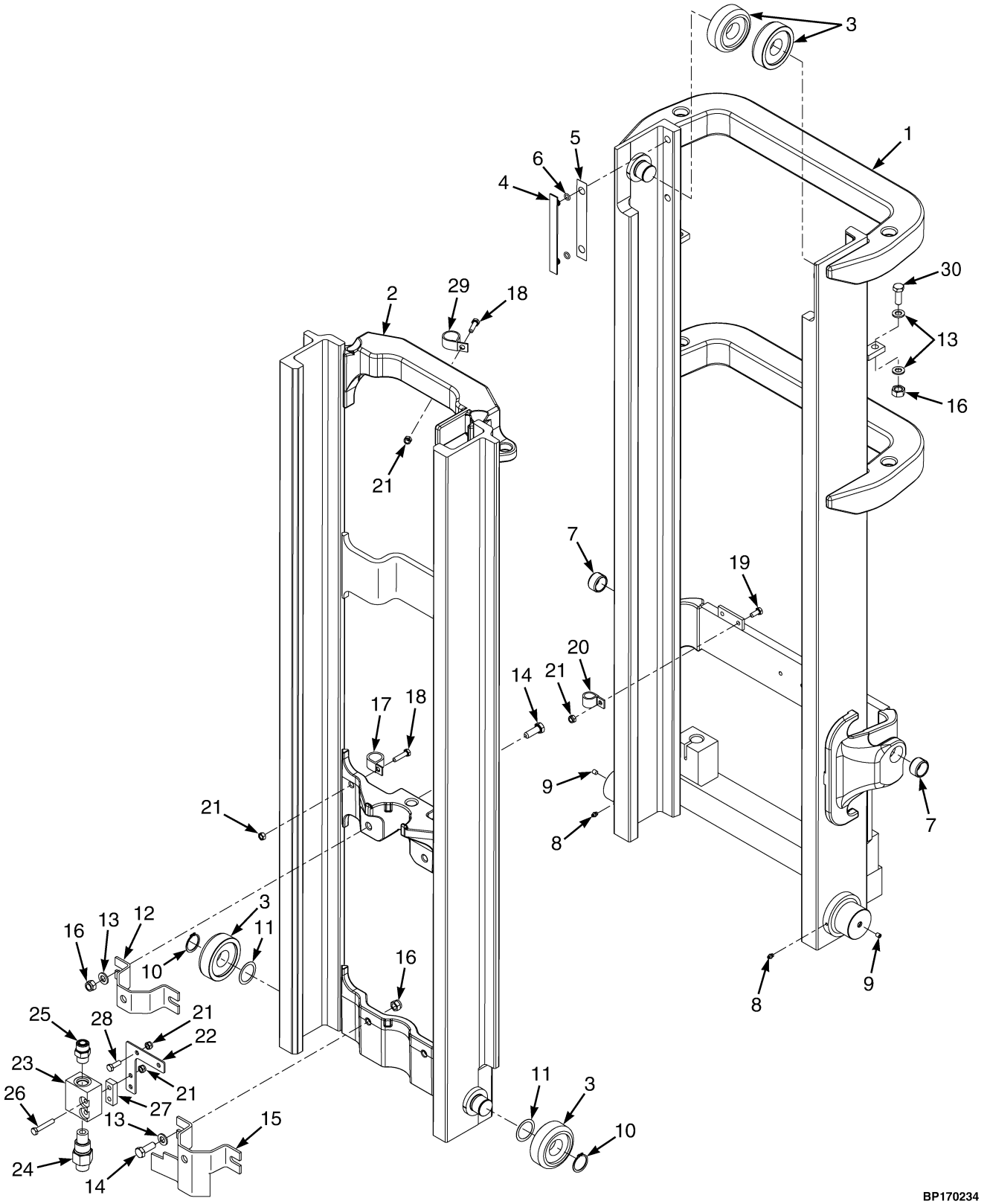

©2015 Yale Europe Materials Handling Limited

MAST ASSEMBLY

TWO STAGE FULL FREE LIFT – C663 (S/N C663B01672H →)

C663

ITEM	DESCRIPTION 1 2 3 4	LIFT HEIGHT TO BOTTOM OF FORKS		
		3178 mm (125.1 in.)	3678 mm (144.8 in.)	4298 mm (169.2 in.)
	Mast Group Number	C663 3178	C663 3678	C663 4298
	Mast Assy	580075813	580075818	580075823
1	Outer Mast	582000861	582000866	582000872
2	Inner Mast	524142297	524142344	524142349

ITEM	PART NO.	DESCRIPTION	QTY
	a	Mast Assy	1
1	**a**	Outer Mast	1
2	**a**	Inner Mast	1
3	520036852	Load Roller ("B") (92.18 mm/91.92 mm)	4
4	504234265	Shim (0.508 mm)	AR
5	504075764	Wear Strip	2
6	012824300	O-Ring	4
7	900003277	Bushing	2
8	015628700	Grease Fitting	2
9	150127005	Fitting	2
10	449029011	Snap Ring	4
11	504233232	Shim (0.508 mm)	AR
12	580024920	Bracket	1
13	580056005	Washer	4
14	580090840	Capscrew	1
15	580053611	Bracket	1
16	580056001	Nut	4
17	504069724	Clamp	1
18	580093219	Capscrew	2
19	580055733	Capscrew	1
20	504075742	Clamp	1
21	580055651	Nut	7
22	580087519	Bracket	1
23	580087520	Housing	1
24	524141846	Lowering Control Valve	1
25	580019817	Fitting	1
25	580019387	O-Ring	1
25	052645400	O-Ring	1
26	580055983	Capscrew	2
27	580093713	Plate	1
28	580055734	Capscrew	2
29	060023700	Clamp	1
30	580055976	Capscrew	2

FOOTNOTES:

a Refer to Table

©2015 Yale Europe Materials Handling Limited

MAIN LIFT ASSEMBLY (FIGURE 9-3)
TWO STAGE FULL FREE LIFT - C663

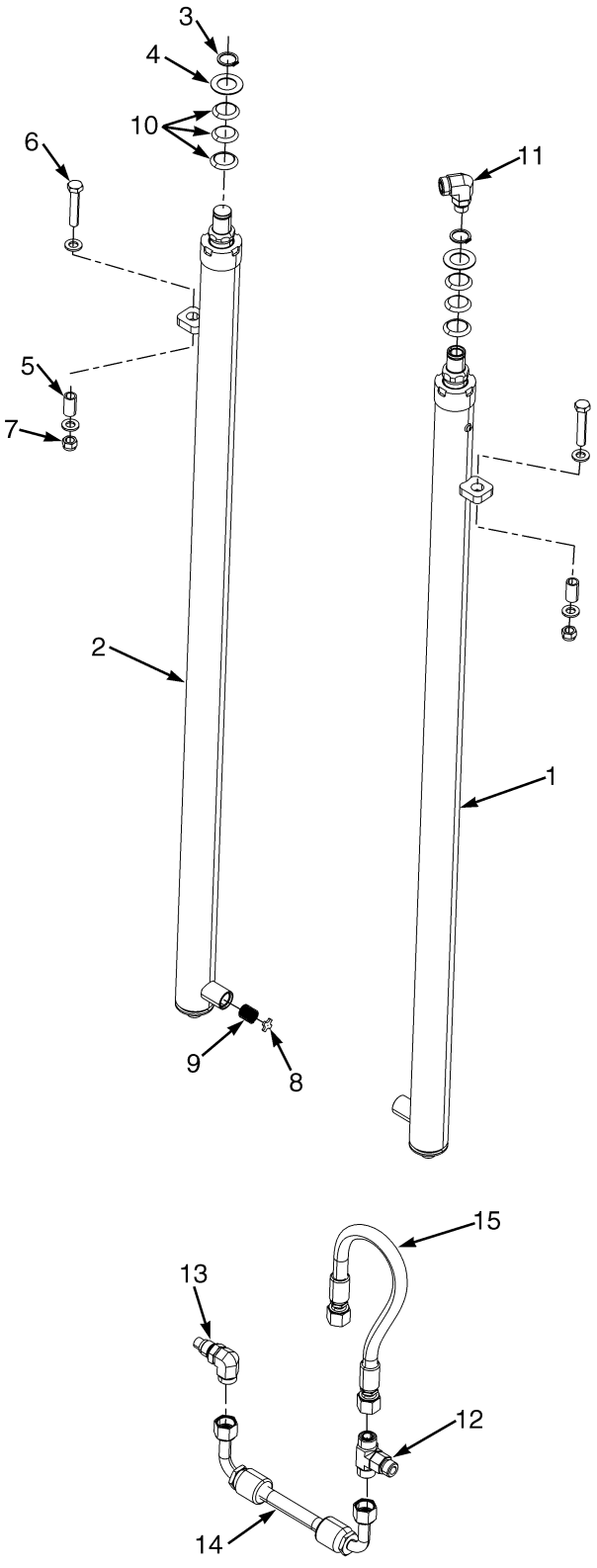

BP170365

©2015 Yale Europe Materials Handling Limited

MAIN LIFT ASSEMBLY
TWO STAGE FULL FREE LIFT - C663

ITEM	PART NO.	DESCRIPTION	QTY
1	. . . . .	Cylinder Assembly (RH) (☞Page 9-12)	1
2	. . . . .	Cylinder Assembly (LH) (☞Page 9-10)	1
3	500227907	Snap Ring	2
4	504064767	Washer (1.500 mm)	2
5	504064739	Spacer	2
6	580055976	Capscrew	2
7	580056001	Nut	4
8	504236253	Washer	1
9	504075776	Spring	1
10	504064769	Washer (0.254 mm)	AR
10	504069791	Washer (0.762 mm)	AR
10	504069702	Washer (1.524 mm)	AR
11	524141842	Fitting	1
12	580039183	Fitting	1
12	580019387	O-Ring	2
12	052645400	O-Ring	1
13	524141842	Fitting	1
14	580086121	Hose Assy	1
15	580087521	Hose Assy	1

©2015 Yale Europe Materials Handling Limited

FREE LIFT ASSEMBLY (FIGURE 9-4)
TWO STAGE FULL FREE LIFT - C663

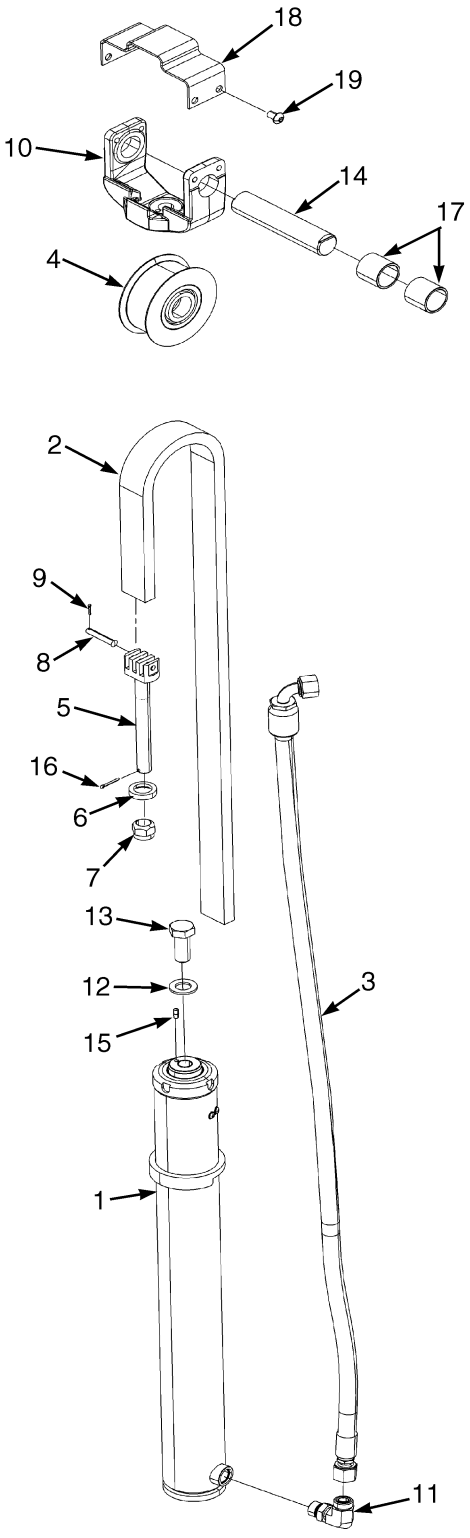

©2015 Yale Europe Materials Handling Limited

FREE LIFT ASSEMBLY
TWO STAGE FULL FREE LIFT - C663

C663

ITEM	DESCRIPTION 1 2 3 4	LIFT HEIGHT TO BOTTOM OF FORKS		
		3178 mm (125.1 in.)	3678 mm (144.8 in.)	4298 mm (169.2 in.)
	Mast Group Number	C663 3178	C663 3678	C663 4298
	Mast Assy	580075813	580075818	580075823
2	Chain	524147120	524147146	524147199
3	Hose Assy	580068520	580068525	580074783

ITEM	PART NO.	DESCRIPTION	QTY
	a	Mast Assy	1
1	. . . . .	Cylinder Assembly (☞Page 9-14)	1
2	**a**	Chain	1
3	**a**	Hose Assy	1
4	580061290	Chain Sheave	1
5	580064348	Chain Anchor	1
6	504236213	Ring	1
7	504234286	Nut	1
8	518792697	Pin	1
9	015415900	Cotter Pin	1
10	580086907	Crosshead	1
11	524141844	Valve (Flow)	1
11	052645400	O-Ring	1
11	580019387	O-Ring	1
12	580071052	Washer	1
13	580090840	Capscrew	1
14	580087791	Pin	1
15	518804610	Pin	1
16	449025042	Cotter Pin	1
17	580087792	Spacer	2
18	580095678	Bracket	2
19	580082105	Capscrew	4

FOOTNOTES:

a Refer to Table

©2015 Yale Europe Materials Handling Limited

MAIN LIFT CYLINDER LH (FIGURE 9-5)
TWO STAGE FULL FREE LIFT - C663

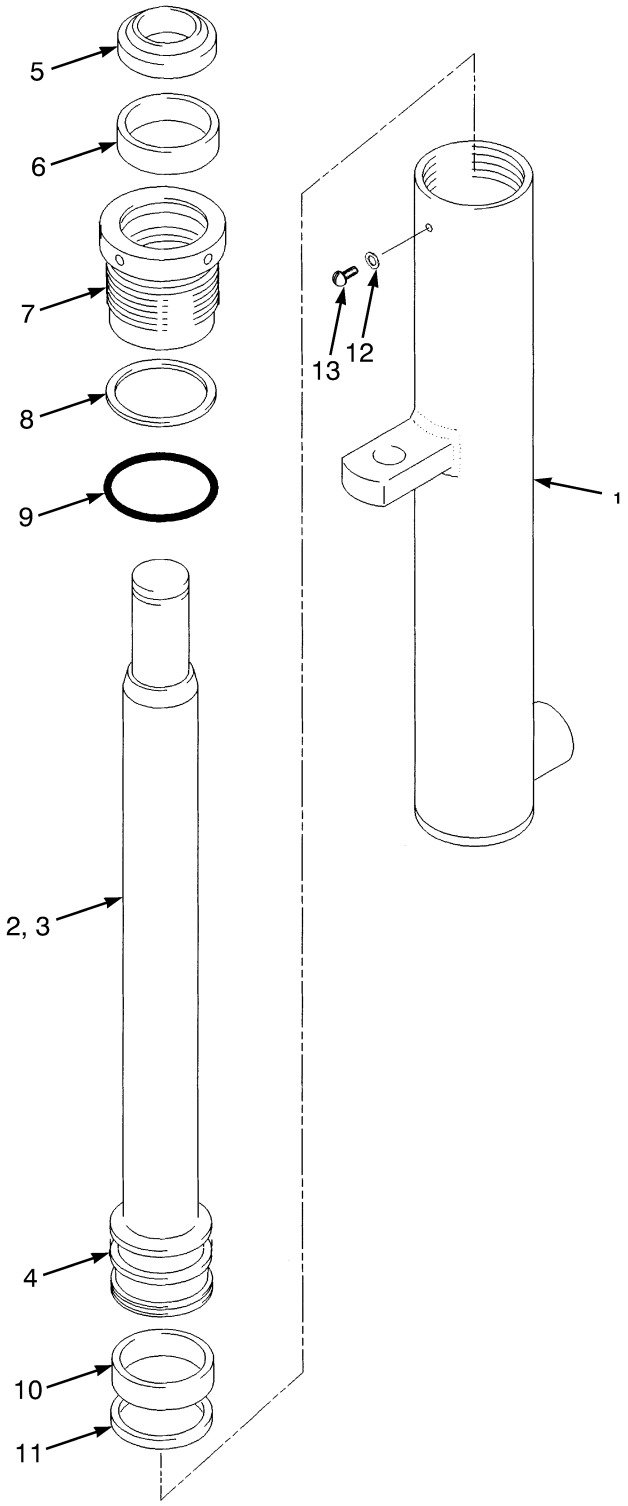

BP170396

©2015 Yale Europe Materials Handling Limited

MAIN LIFT CYLINDER LH
TWO STAGE FULL FREE LIFT - C663

C663

ITEM	DESCRIPTION 1 2 3 4	LIFT HEIGHT TO BOTTOM OF FORKS		
		3178 mm (125.1 in.)	3678 mm (144.8 in.)	4298 mm (169.2 in.)
	Mast Group Number	**C663 3178**	**C663 3678**	**C663 4298**
	Cylinder Group Number	**8501908**	**8501913**	**8501918**
	Cylinder Assy	580050753	580050758	580050763
1	Tube Wldmt-Cylinder	519639708	519639713	519639718
2	Cylinder Rod (Assembly)	519638658	519638663	519638668

ITEM	PART NO.	DESCRIPTION	QTY
	b	Cylinder Assy	1
1	**b**	Tube Wldmt-Cylinder	1
2	**b**	Cylinder Rod (Assembly)	1
3	519652608	Cylinder Rod (3178 mm Lift Height)	1
3	519652613	Cylinder Rod (3678 mm Lift Height)	1
3	519652618	Cylinder Rod (4258 mm Lift Height)	1
4	520102600	Piston	1
5	504158200	Rod Wiper	1
6	580022505	Rod Seal	1
7	580050041	Gland	1
8	502011927	Back-Up Ring	1
9	012825700	O-Ring	1
10	504017204	Wear Ring	1
11	502895202	Piston Ring	1
12	502687901	Sealing Ring	1
13	501753914	Screw	1
	a 504234269	Lubricant	1
	580025602	Kit-Seal	1

FOOTNOTES:

a Not Illustrated

b Refer to Table

©2015 Yale Europe Materials Handling Limited

MAIN LIFT CYLINDER RH (FIGURE 9-6)
TWO STAGE FULL FREE- LIFT - C663

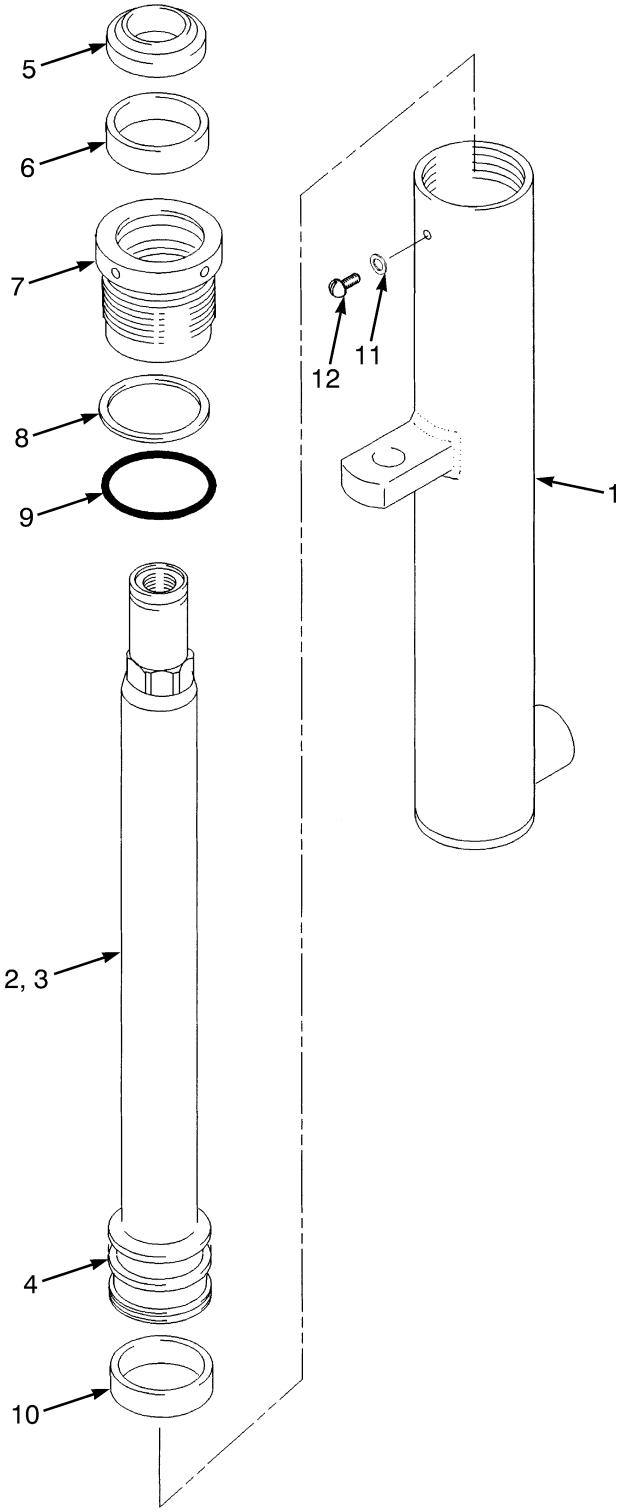

BP170395

©2015 Yale Europe Materials Handling Limited

MAIN LIFT CYLINDER RH
TWO STAGE FULL FREE- LIFT - C663

C663

ITEM	DESCRIPTION 1 2 3 4	LIFT HEIGHT TO BOTTOM OF FORKS		
		3178 mm (125.1 in.)	3678 mm (144.8 in.)	4298 mm (169.2 in.)
	Mast Group Number	**C663 3178**	**C663 3678**	**C663 4298**
	Cylinder Group Number	**8501808**	**8501813**	**8501818**
	Cylinder Assy	580050725	580050730	580050735
1	Tube Wldmt-Cylinder	519639708	519639713	519639718
2	Cylinder Rod (Assembly)	519638608	519638613	519638618

ITEM	PART NO.	DESCRIPTION	QTY
	a	Cylinder Assy	1
1	**a**	Tube Wldmt-Cylinder	1
2	**a**	Cylinder Rod (Assembly)	1
3	519637608	Cylinder Rod (3178 mm Lift Height)	1
3	519637613	Cylinder Rod (3678 mm Lift Height)	1
3	519637618	Cylinder Rod (4298 mm Lift Height)	1
4	520162600	Piston	1
5	504158200	Rod Wiper	1
6	580022505	Rod Seal	1
7	580050041	Gland	1
8	502011927	Back-Up Ring	1
9	012825700	O-Ring	1
10	504017204	Wear Ring	1
11	502687901	Sealing Ring	1
12	501753914	Screw	1
	580025602	Kit-Seal	1

FOOTNOTES:

a Refer to Table

©2015 Yale Europe Materials Handling Limited

FREE LIFT CYLINDER ASSEMBLY (FIGURE 9-7)
TWO STAGE FULL FREE LIFT - C663

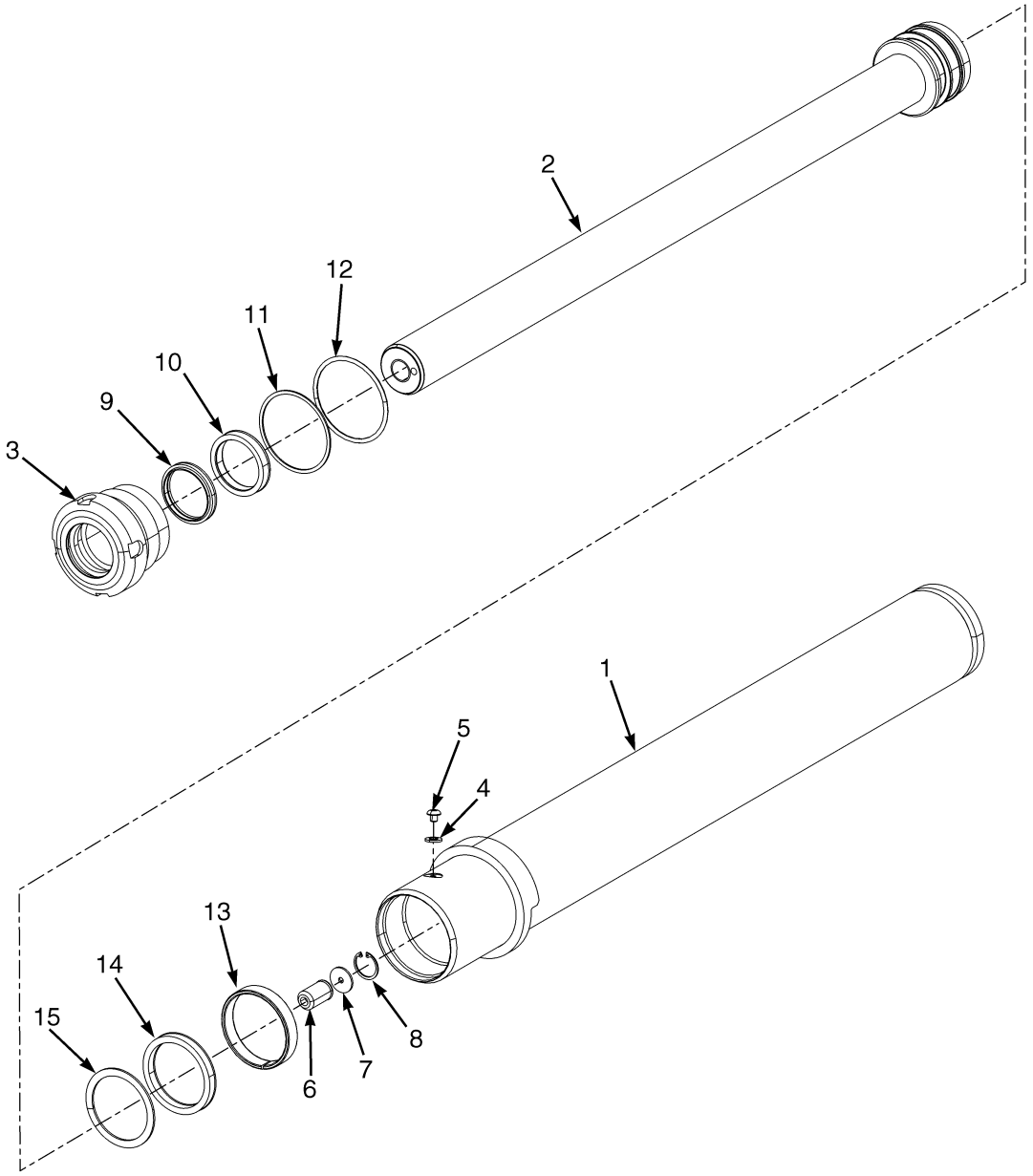

BP170212

©2015 Yale Europe Materials Handling Limited

FREE LIFT CYLINDER ASSEMBLY
TWO STAGE FULL FREE LIFT - C663

C663

ITEM	DESCRIPTION 1 2 3 4	LIFT HEIGHT TO BOTTOM OF FORKS		
		3178 mm (125.1 in.)	3678 mm (144.8 in.)	4298 mm (169.2 in.)
	Mast Group Number	C663 3178	C663 3678	C663 4298
	Cylinder Group Number	8537308	8537313	8537319
	Cylinder Assy	580087035	580087040	580087046
1	Tube Wldmt-Cylinder	519541607	519541612	519541618
2	Cylinder Rod	520021637	520021642	520021648

ITEM	PART NO.	DESCRIPTION	QTY
	b	Cylinder Assy	1
1	**b**	Tube Wldmt-Cylinder	1
2	**b**	Cylinder Rod	1
3	519537600	Gland	1
4	502687901	Sealing Ring	1
5	501753904	Screw	1
6	504235239	Check Valve	1
6	580067209	Check Valve (Alternate Part)	1
7	504148200	Washer	1
8	501850904	Snap Ring	1
9	504450758	Rod Wiper	1
9	580077907	Rod Wiper (Alternate Part)	1
10	502787903	Rod Seal	1
10	582006661	Rod Seal (Alternate Part)	1
11	900004269	Back-Up Ring	1
12	015493200	O-Ring	1
13	504024207	Wear Ring	1
14	504232205	Rod Seal	1
15	504232277	Back-Up Ring	1
	a 504234269	Lubricant	1
	505136049	Kit-Seal	1

FOOTNOTES:

a Not Illustrated

b Refer to Table

©2015 Yale Europe Materials Handling Limited

CARRIAGE ASSEMBLY (FIGURE 9-8)
TWO-STAGE FULL FREE-LIFT — STANDARD (C663)

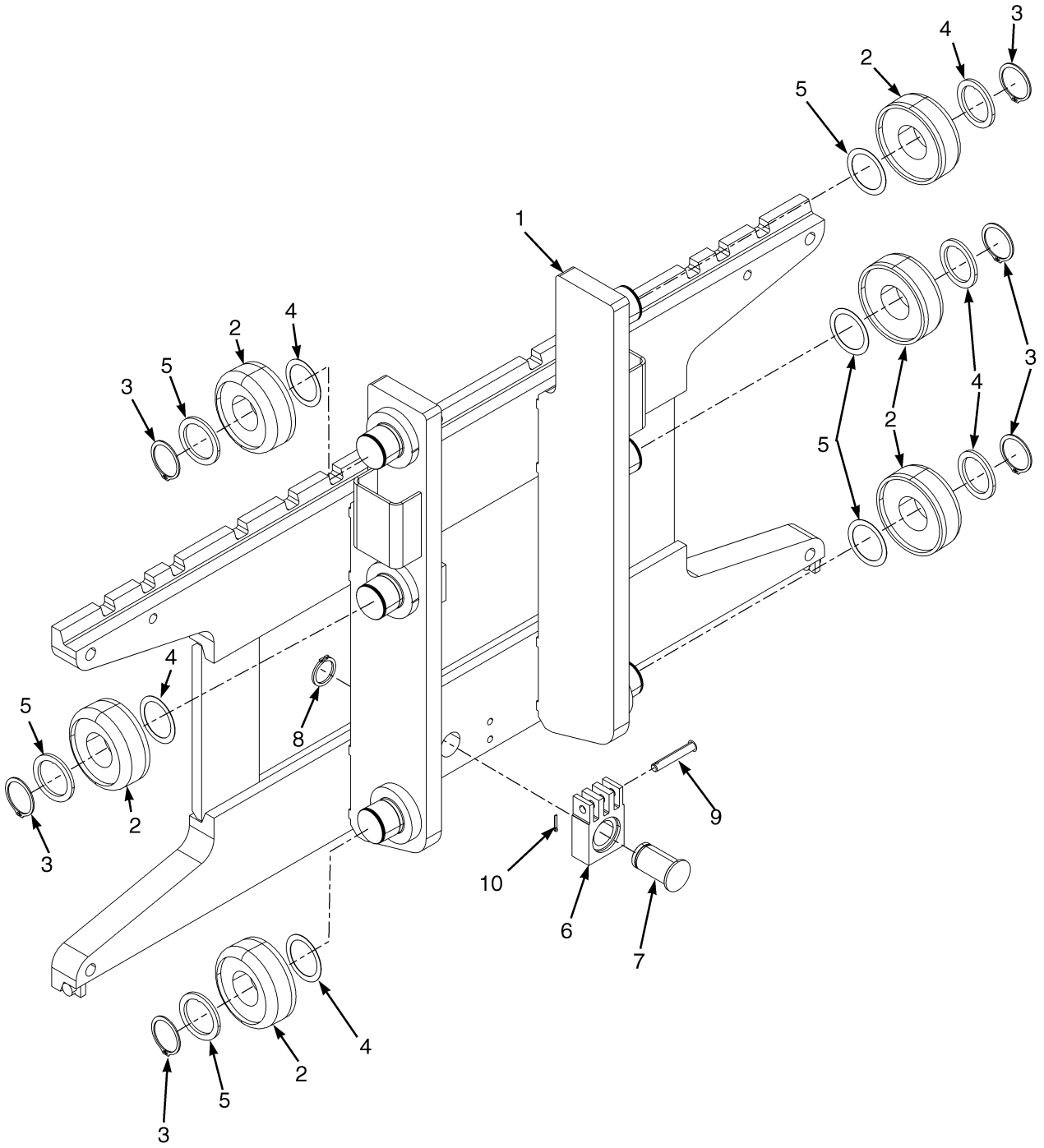

©2015 Yale Europe Materials Handling Limited

CARRIAGE ASSEMBLY

TWO-STAGE FULL FREE-LIFT – STANDARD (C663)

ITEM	PART NO.	DESCRIPTION	QTY
	580093068	Carriage (Assembly)	1
1	580091008	Carriage	1
2	520036852	Load Roller ("B") (92.18 mm/91.92 mm)	6
2	580001430	Load Roller ("A") (91.80 mm/91.54 mm)	6
3	015916300	Snap Ring	6
3	449029011	Snap Ring	6
4	504233232	Shim (0.508 mm)	AR
5	504235278	Spacer	6
6	524197448	Chain Anchor	1
7	580061378	Pin	1
8	500227907	Snap Ring	2
9	518792697	Pin	1
10	015415900	Cotter Pin	1

©2015 Yale Europe Materials Handling Limited

HEADER HOSE ASSEMBLY (FIGURE 9-9)

TWO STAGE FULL FREE LIFT - C663 — 3 FUNCTION (→ S/N G807B02138H)

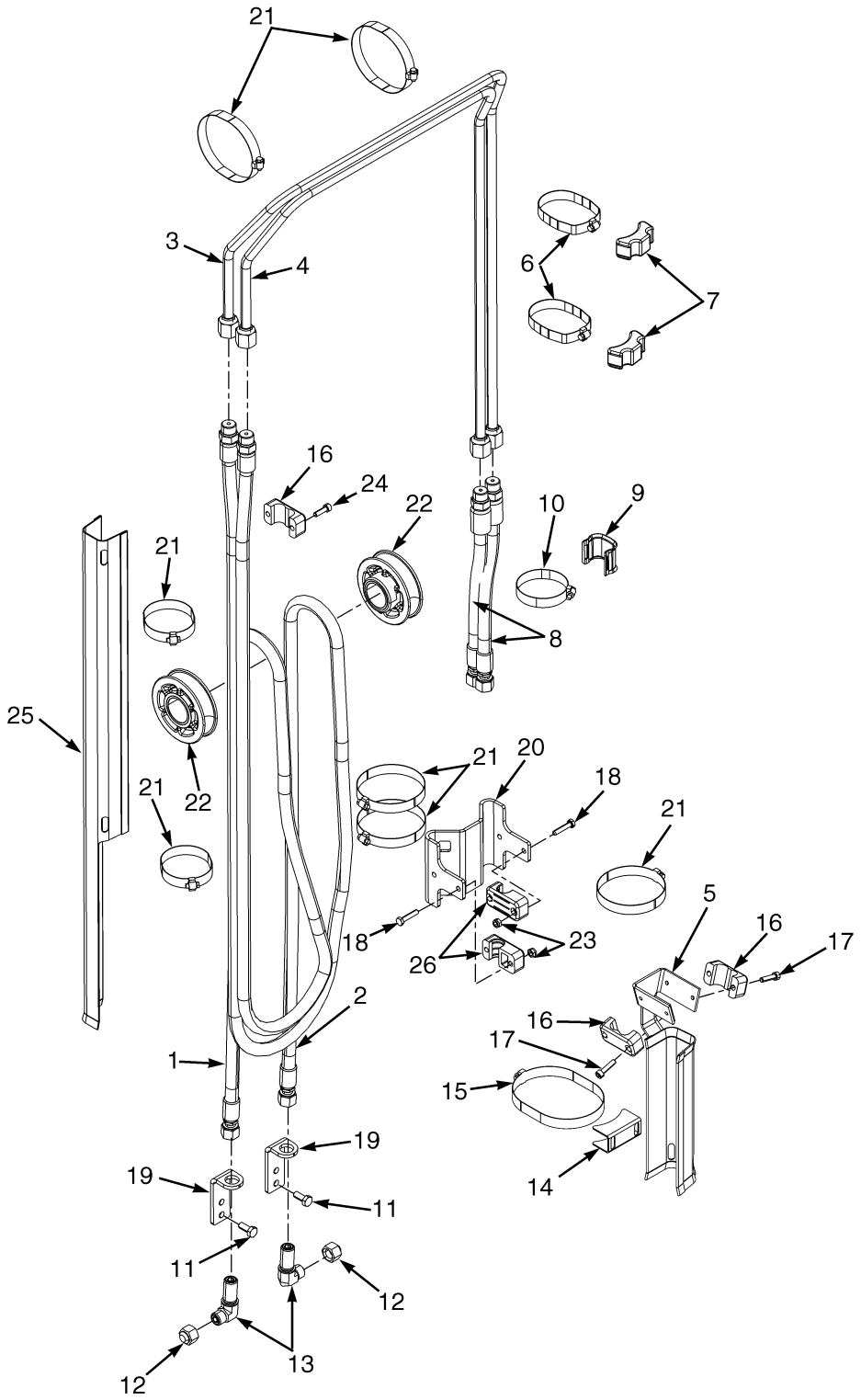

©2015 Yale Europe Materials Handling Limited

HEADER HOSE ASSEMBLY

TWO STAGE FULL FREE LIFT - C663 – 3 FUNCTION (→ S/N G807B02138H)

C663

ITEM	DESCRIPTION 1 2 3 4	LIFT HEIGHT TO BOTTOM OF FORKS		
		3178 mm (125.1 in.)	3678 mm (144.8 in.)	4298 mm (169.2 in.)
	Mast Group Number	C663 3178	C663 3678	C663 4298
1	Hose Assy	580088911	580088916	580088921
2	Hose Assy	580088940	580088945	580088950
3	Hydraulic Tube	524147968	524147973	524147978
4	Hydraulic Tube	524147998	524148003	524148008
5	Hose Guide	580064349	580064349	580064349

ITEM	PART NO.	DESCRIPTION	QTY
1	**a**	Hose Assy	1
2	**a**	Hose Assy	1
3	**a**	Hydraulic Tube	1
4	**a**	Hydraulic Tube	1
5	**a**	Hose Guide	1
6	580068222	Clamp	2
7	580065475	Spacer	2
8	580081310	Hose Assy	2
9	524141696	Hose Clamp	1
10	580068221	Clamp	1
11	580055733	Capscrew	4
12	580039424	Cap	2
13	580039401	Fitting	2
13	504155200	O-Ring	2
14	505959500	Clamp	1
15	505965599	Clamp	1
16	504068794	Clamp (Double Hose)	3
17	580055863	Capscrew	4
18	580055981	Capscrew	4
19	524198700	Bracket	2
20	580088014	Bracket	1
21	505965586	Clamp	7
22	580084590	Hose Sheave	2
23	580055650	Nut	4
24	580055989	Capscrew	2
25	580069228	Hose Guide	1
26	580087631	Clamp (Single Hose)	2

FOOTNOTES:

a Refer to Table

©2015 Yale Europe Materials Handling Limited

HEADER HOSE ASSEMBLY (FIGURE 9-10)

TWO STAGE FULL FREE LIFT - C663 — 4TH FUNCTION (→ S/N G807B02138H)

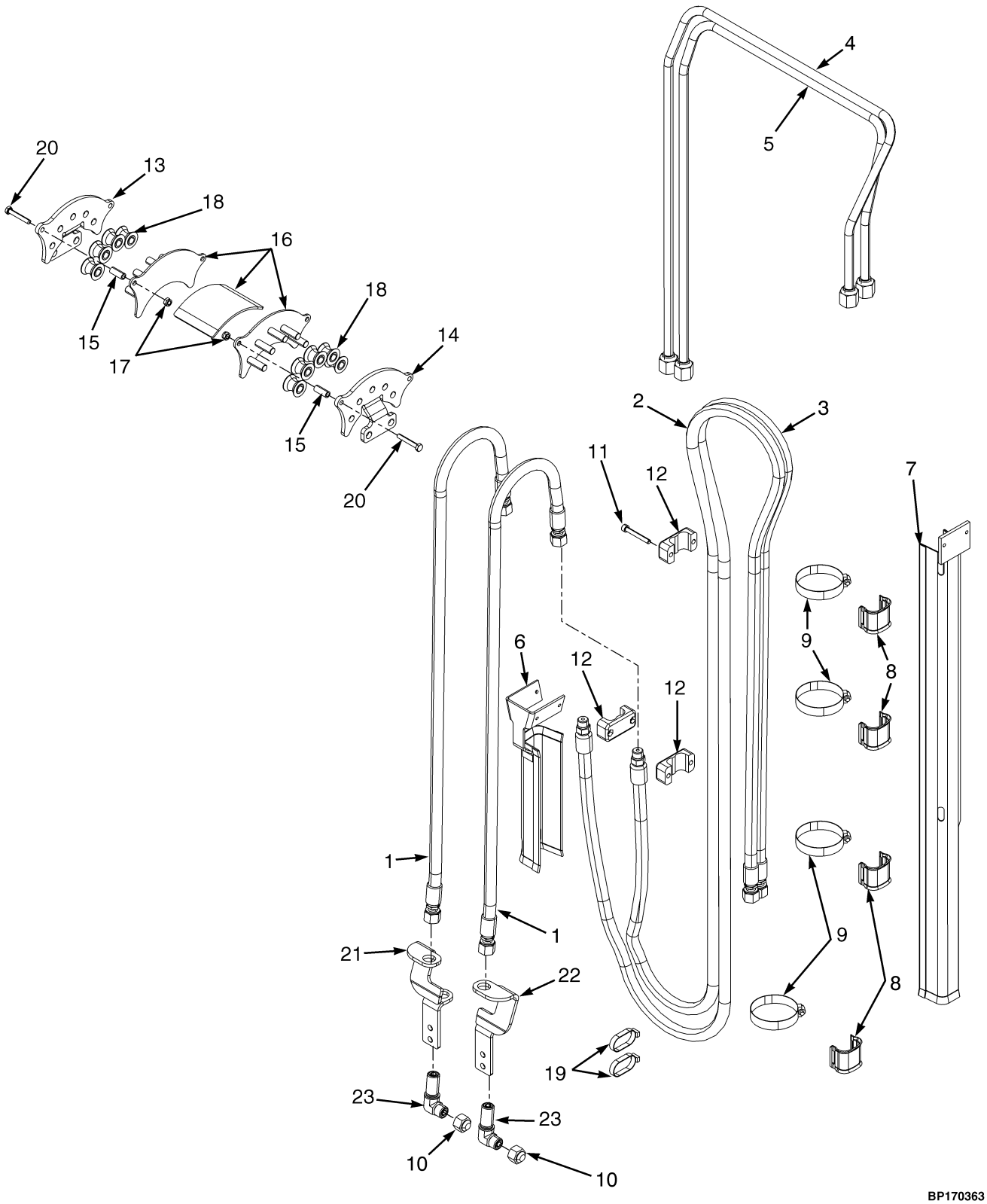

©2015 Yale Europe Materials Handling Limited

HEADER HOSE ASSEMBLY

TWO STAGE FULL FREE LIFT - C663 – 4TH FUNCTION (→ S/N G807B02138H)

C663

ITEM	DESCRIPTION 1 2 3 4	LIFT HEIGHT TO BOTTOM OF FORKS		
		3178 mm (125.1 in.)	3678 mm (144.8 in.)	4298 mm (169.2 in.)
	Mast Group Number	C663 3178	C663 3678	C663 4298
1	Hose Assy	580096629	580096630	580096631
2	Hose Assy	580089069	580089072	580082008
3	Hose Assy	580089076	580081930	580089089
4	Hydraulic Tube	524147998	524148003	524148008
5	Hydraulic Tube	524147968	524147973	524147978
6	Hose Guide	580064349	580064349	580064349
7	Hose Guard	505976557	505976586	518790624
8	Hose Clamp	----	----	524141696
9	Clamp	----	----	580068221

ITEM	PART NO.	DESCRIPTION	QTY
1	**a**	Hose Assy	1
2	**a**	Hose Assy	1
3	**a**	Hose Assy	1
4	**a**	Hydraulic Tube	1
5	**a**	Hydraulic Tube	1
6	**a**	Hose Guide	1
7	**a**	Hose Guard	1
8	**a**	Hose Clamp	1
9	**a**	Clamp	1
10	580039424	Cap	2
11	580055990	Capscrew	2
12	504068794	Clamp (Double Hose)	3
13	524198506	Bracket Wldmt	1
14	524198505	Bracket Wldmt	1
15	524198501	Spacer	6
16	524198493	Hose Guard	1
17	524198489	Hose Guard	1
18	580088061	Hose Sheave (Tanget Roller)	10
19	312850034	Strap Clamp	2
20	580055731	Capscrew	6
21	580055650	Nut	6
22	580089008	Hose Clamp	1
23	580039401	Fitting	2
23	504155200	O-Ring	2

FOOTNOTES:

a Refer to Table

©2015 Yale Europe Materials Handling Limited

HEADER HOSE ASSEMBLY (FIGURE 9-11)

TWO-STAGE FULL FREE-LIFT — C663 (S/N G807B02139H →)

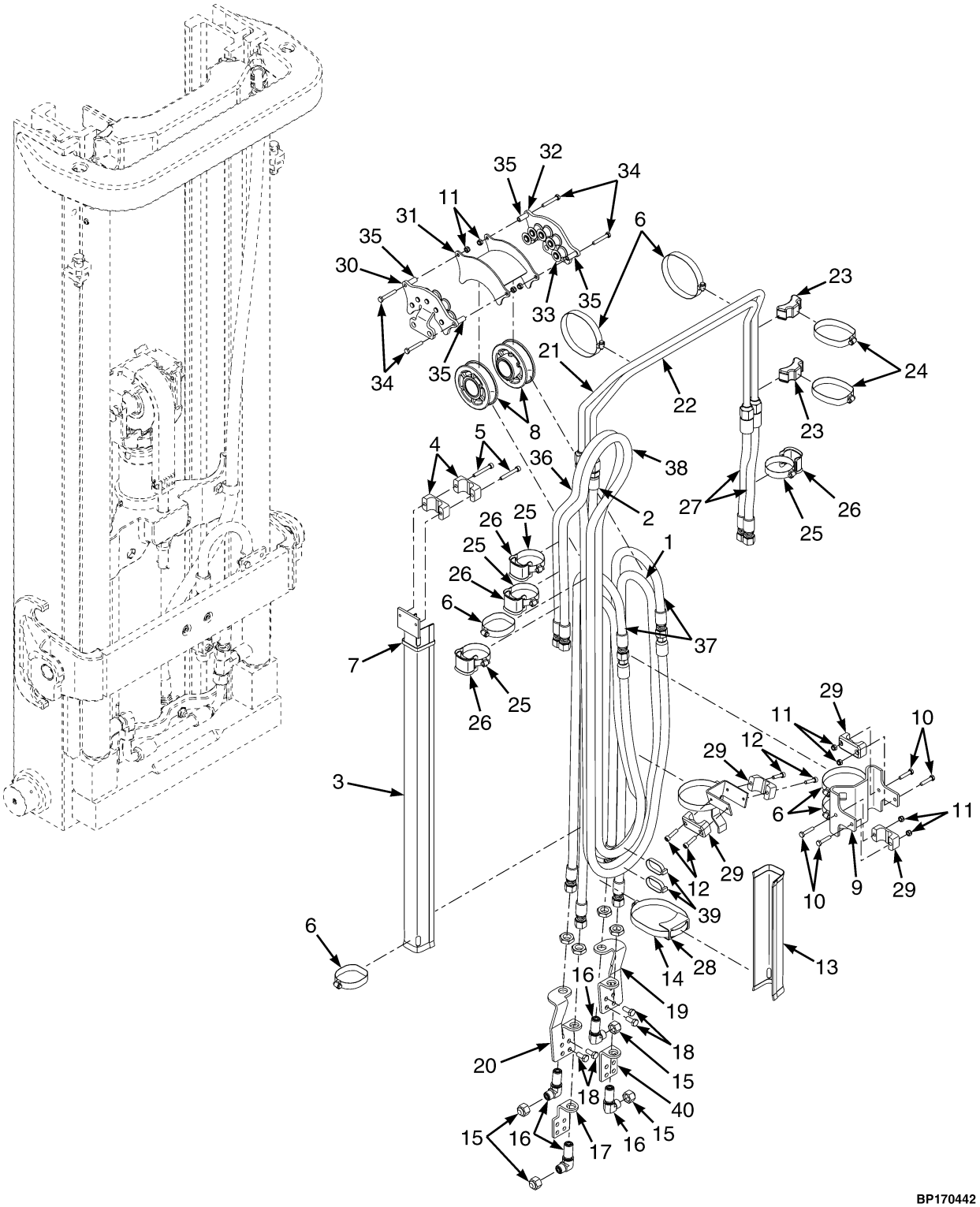

©2015 Yale Europe Materials Handling Limited

HEADER HOSE ASSEMBLY

TWO-STAGE FULL FREE-LIFT – C663 (S/N G807B02139H →)

C663

ITEM	DESCRIPTION 1 2 3 4	LIFT HEIGHT TO BOTTOM OF FORKS		
		3178 mm (125.1 in.)	3678 mm (144.8 in.)	4298 mm (169.2 in.)
	Mast Group Number	C663 3178	C663 3678	C663 4298
1	Hose Assy	580088911	580088916	580088921
2	Hose Assy	580088940	580088945	580088950
3	Hose Guard	505976557	505976586	518790624
13	Channel	582004137	582004137	582004137
27	Hose Assy	524198857	524198862	524198867
36	Hose Assy	580081927	580081928	580081933
37	Hose Assy	580096629	580096630	580096631
38	Hose Assy	580089068	580089070	580082006

KEY:
A: 3 Function
B: 4 Function

ITEM	PART NO.	DESCRIPTION	QTY A	QTY B
1	**a**	Hose Assy	1	1
2	**a**	Hose Assy	1	1
3	**a**	Hose Guard	1	1
4	504068794	Clamp (Double Hose)	5	6
5	580055989	Capscrew	2	..
5	580055990	Capscrew	..	2
6	505965586	Clamp	7	7
7	312850032	Strap Clamp	1	1
8	580084590	Hose Sheave	2	2
9	580088014	Bracket	1	1
10	580055981	Capscrew	4	4
11	580055650	Nut	4	8
12	580055863	Capscrew	4	4
13	**a**	Channel	1	1
14	505965599	Clamp	1	1
15	580039424	Cap	2	4
16	580039401	Fitting	2	4
16	504155200	O-Ring	2	2
17	582009888	Bracket	1	1
18	580055733	Capscrew	4	4
19	580096843	Bracket	..	1
20	580096844	Bracket	..	1
21	582000151	Tube Assy	1	1
22	582000150	Tube Assy	1	1
23	580065475	Spacer	1	2
24	580068222	Clamp	1	2

©2015 Yale Europe Materials Handling Limited

HEADER HOSE ASSEMBLY

TWO-STAGE FULL FREE-LIFT – C663 (S/N G807B02139H →)

KEY:
A: 3 Function
B: 4 Function

ITEM	PART NO.	DESCRIPTION	QTY A	QTY B
25	580068221	Clamp	2	3
26	524141696	Hose Clamp	2	3
27	**a**	Hose Assy	2	2
28	505959500	Clamp	1	1
29	580087631	Clamp (Single Hose)	2	..
29	504068794	Clamp (Double Hose)	..	2
30	524198505	Bracket Wldmt	..	1
31	580093430	Bracket Wldmt	..	1
32	524198506	Bracket Wldmt	..	1
33	580088061	Hose Sheave (Tanget Roller)	..	10
34	580055731	Capscrew	..	2
35	524198501	Spacer	..	2
36	**a**	Hose Assy	..	1
37	**a**	Hose Assy	..	1
38	**a**	Hose Assy	..	1
39	312850034	Strap Clamp	..	2
40	582009889	Bracket	1	1

FOOTNOTES:

a Refer to Table

©2015 Yale Europe Materials Handling Limited

NOTES

©2015 Yale Europe Materials Handling Limited

MAST ASSEMBLY (FIGURE 9-12)
TWO STAGE FULL FREE- LIFT — A272

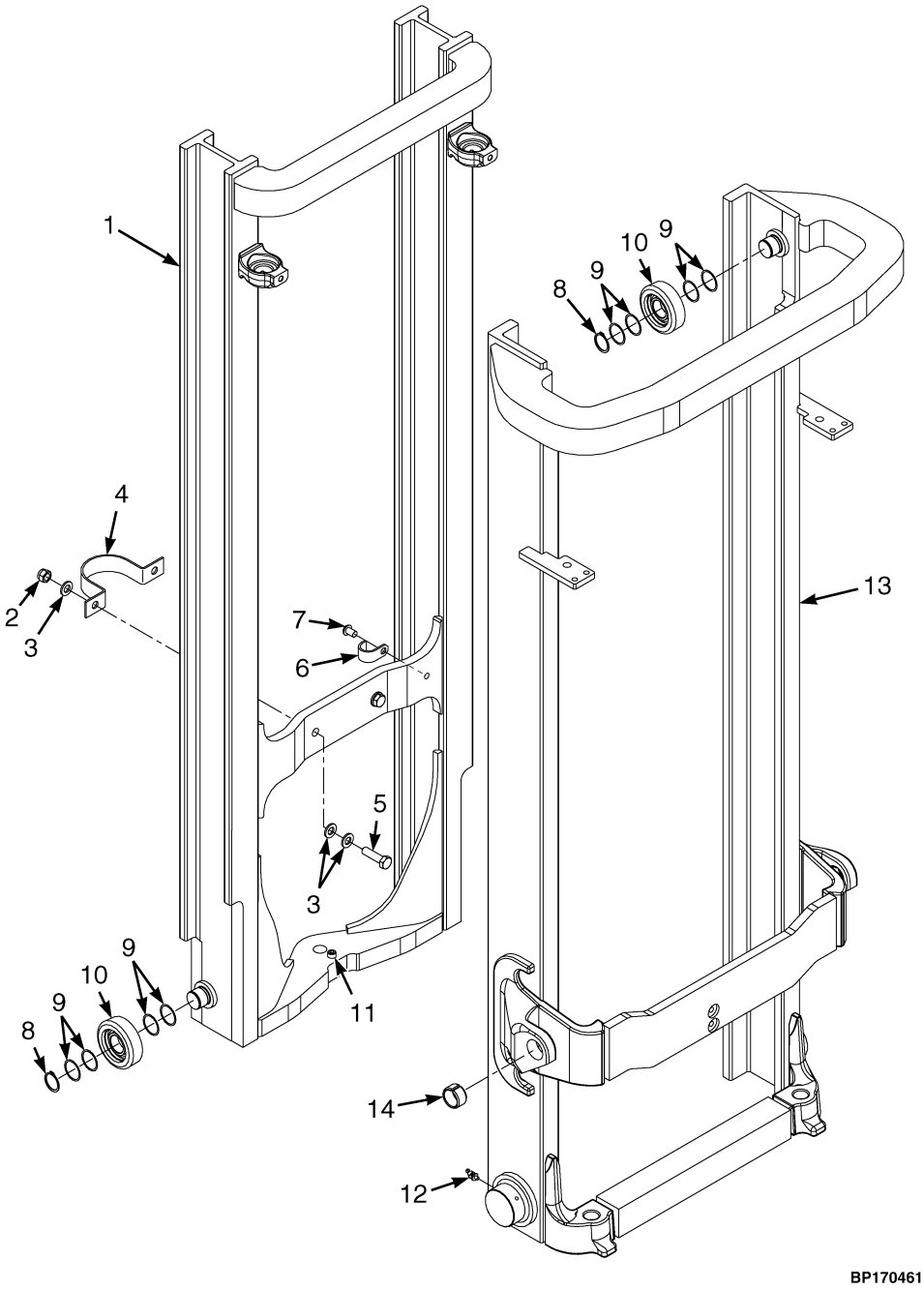

©2015 Yale Europe Materials Handling Limited

MAST ASSEMBLY
TWO STAGE FULL FREE- LIFT – A272

A272

ITEM	DESCRIPTION 1 2 3 4	LIFT HEIGHT TO BOTTOM OF FORKS		
		3178 mm (125.1 in.)	3678 mm (144.8 in.)	4298 mm (169.2 in.)
	Mast Group Number	A272 3178	A272 3678	A272 4298
	Mast Assy	580088601	524198593	524198599
1	Inner Mast	524198458	524198463	580088633
13	Outer Mast	580088620	580088625	580088630

ITEM	PART NO.	DESCRIPTION	QTY
	a	Mast Assy	1
1	**a**	Inner Mast	1
2	580056001	Nut	4
3	580056005	Washer	4
4	524198470	Bracket	1
5	580055979	Capscrew	2
6	580088667	Clamp	1
6	504069724	Clamp (Alternate Part)	1
7	580087732	Capscrew	1
8	~~580091430~~		
	015915900	Snap Ring	4
9	580093128	Shim	AR
10	580081128	Load Roller	4
11	580084113	Capscrew	1
12	061655900	Lube Ftg	2
13	**a**	Outer Mast	1
14	900003277	Bushing	1

FOOTNOTES:

a Refer to Table

©2015 Yale Europe Materials Handling Limited

MAIN LIFT ASSEMBLY (FIGURE 9-13)
TWO STAGE FULL FREE- LIFT — A272

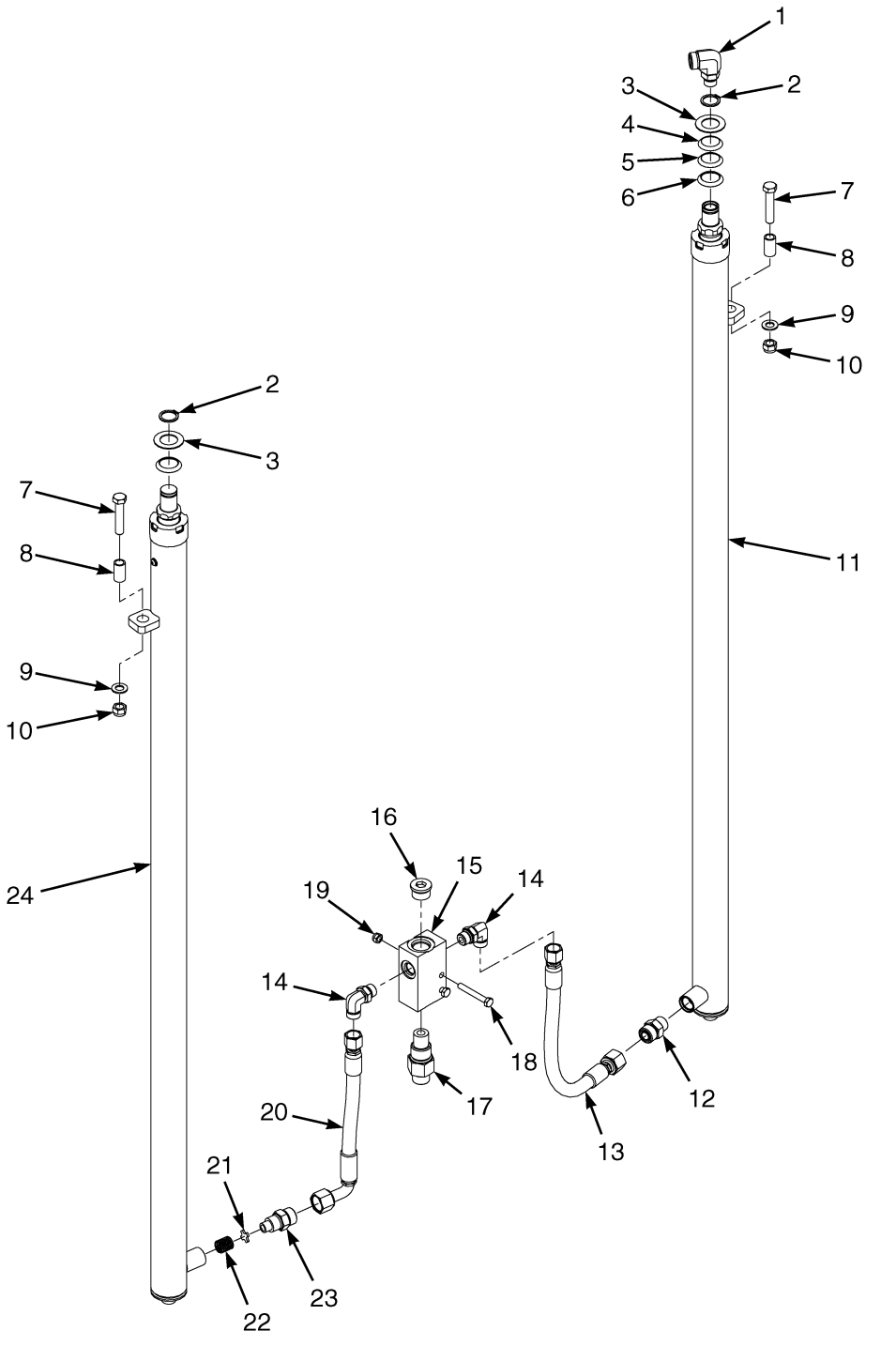

©2015 Yale Europe Materials Handling Limited

MAIN LIFT ASSEMBLY
TWO STAGE FULL FREE- LIFT – A272

ITEM	PART NO.	DESCRIPTION	QTY
1	524141843	Fitting	1
2	500227907	Snap Ring	1
3	504064767	Washer (1.500 mm)	1
4	504069702	Washer (1.524 mm)	AR
5	504069791	Washer (0.762 mm)	AR
6	504064769	Washer (0.254 mm)	AR
7	580061352	Capscrew	2
8	504064739	Spacer	2
9	580055634	Washer	2
10	580056001	Nut	4
11	. . . . .	Cylinder Assembly (RH) (☞Page 9-32)	1
12	580019817	Fitting	1
13	580084999	Hose Assy	1
14	580020576	Fitting	2
15	580007839	Housing	1
16	500390901	Fitting	1
17	524141846	Lowering Control Valve	1
18	580055983	Capscrew	2
19	580055651	Nut	2
20	580084998	Hose Assy	1
21	504236253	Washer	1
22	504075776	Spring	1
23	580064145	Fitting	1
24	. . . . .	Cylinder Assembly (LH) (☞Page 9-30)	1

©2015 Yale Europe Materials Handling Limited

MAIN LIFT CYLINDER LH (FIGURE 9-14)
TWO STAGE FULL FREE LIFT — A272

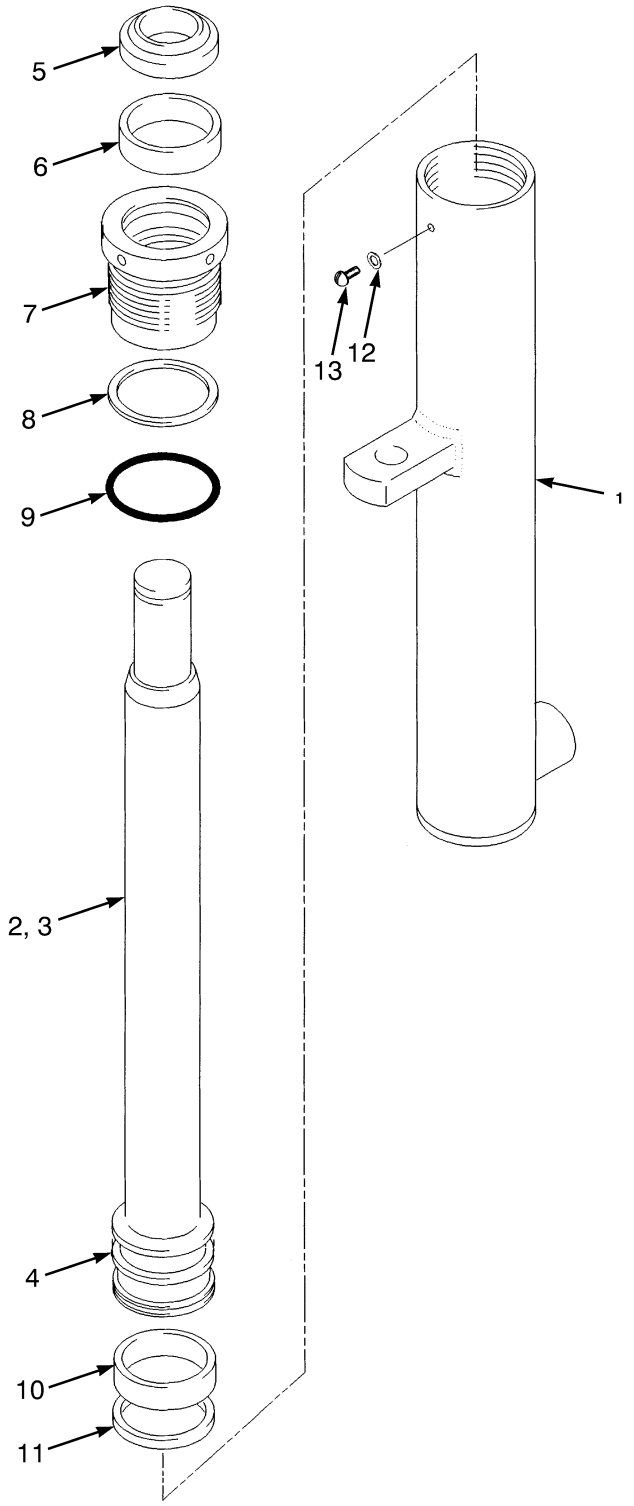

BP170396

©2015 Yale Europe Materials Handling Limited

MAIN LIFT CYLINDER LH
TWO STAGE FULL FREE LIFT – A272

A272

ITEM	DESCRIPTION 1 2 3 4	LIFT HEIGHT TO BOTTOM OF FORKS		
		3178 mm (125.1 in.)	3678 mm (144.8 in.)	4298 mm (169.2 in.)
	Mast Group Number	A272 3178	A272 3678	A272 4298
	Cylinder Group Number	8501908	8501913	8501918
	Cylinder Assy	580050753	580050758	580050763
1	Tube Wldmt-Cylinder	519639708	519639713	519639718
2	Cylinder Rod (Assembly)	519638658	519638663	519638668

ITEM	PART NO.	DESCRIPTION	QTY
	b	Cylinder Assy	1
1	**b**	Tube Wldmt-Cylinder	1
2	**b**	Cylinder Rod (Assembly)	1
3	519652608	Cylinder Rod (3178 mm Lift Height)	1
3	519652613	Cylinder Rod (3678 mm Lift Height)	1
3	519652618	Cylinder Rod (4258 mm Lift Height)	1
4	520102600	Piston	1
5	504158200	Rod Wiper	1
6	580022505	Rod Seal	1
7	580050041	Gland	1
8	502011927	Back-Up Ring	1
9	012825700	O-Ring	1
10	504017204	Wear Ring	1
11	502895202	Piston Ring	1
12	502687901	Sealing Ring	1
13	501753914	Screw	1
	a 504234269	Lubricant	1
	580025602	Kit-Seal	1

FOOTNOTES:

a Not Illustrated

b Refer to Table

©2015 Yale Europe Materials Handling Limited

MAIN LIFT CYLINDER RH (FIGURE 9-15)
TWO STAGE FULL FREE- LIFT — A272

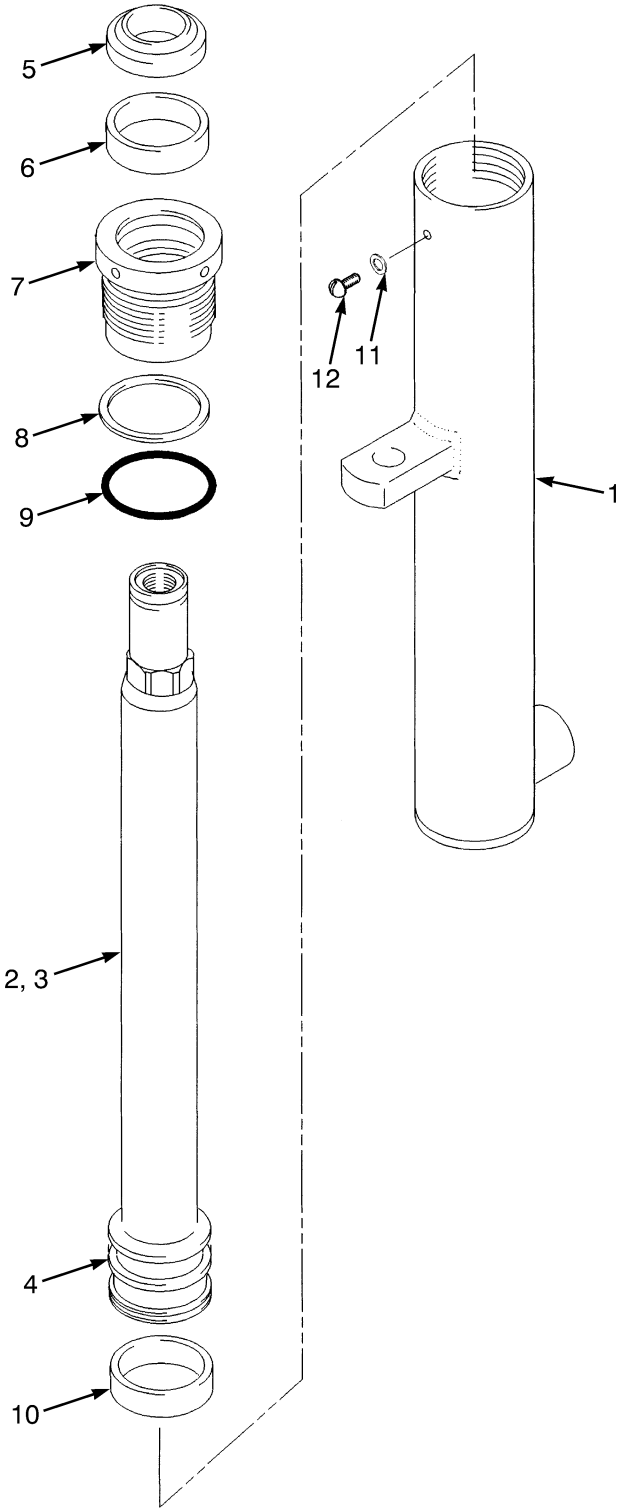

BP170395

©2015 Yale Europe Materials Handling Limited

MAIN LIFT CYLINDER RH
TWO STAGE FULL FREE- LIFT – A272

A272

ITEM	DESCRIPTION 1 2 3 4	LIFT HEIGHT TO BOTTOM OF FORKS		
		3178 mm (125.1 in.)	3678 mm (144.8 in.)	4298 mm (169.2 in.)
	Mast Group Number	**A272 3178**	**A272 3678**	**A272 4298**
	Cylinder Group Number	**8501808**	**8501813**	**8501818**
	Cylinder Assy	580050725	580050730	580050735
1	Tube Wldmt-Cylinder	519639708	519639713	519639718
2	Cylinder Rod (Assembly)	519638608	519638613	519638618
13	Spacer (Not Illustrated)	----	----	506547507

ITEM	PART NO.	DESCRIPTION	QTY
	a	Cylinder Assy	1
1	**a**	Tube Wldmt-Cylinder	1
2	**a**	Cylinder Rod (Assembly)	1
3	519637608	Cylinder Rod (3178 mm Lift Height)	1
3	519637613	Cylinder Rod (3678 mm Lift Height)	1
3	519637618	Cylinder Rod (4298 mm Lift Height)	1
4	520162600	Piston	1
5	504158200	Rod Wiper	1
6	580022505	Rod Seal	1
7	580050041	Gland	1
8	502011927	Back-Up Ring	1
9	012825700	O-Ring	1
10	504017204	Wear Ring	1
11	502687901	Sealing Ring	1
12	501753914	Screw	1
13	**a**	Spacer (Not Illustrated)	1
	580025602	Kit-Seal	1

FOOTNOTES:

a Refer to Table

©2015 Yale Europe Materials Handling Limited

FREE-LIFT ASSEMBLY (FIGURE 9-16)
TWO STAGE FULL FREE- LIFT — A272

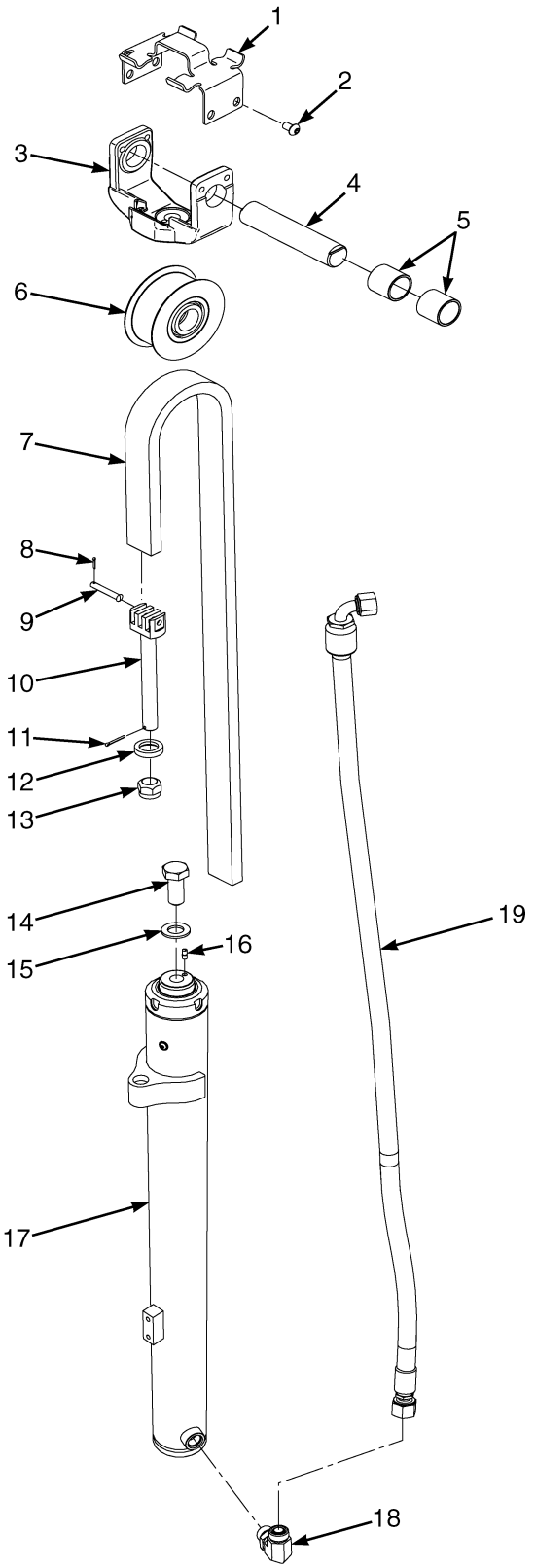

©2015 Yale Europe Materials Handling Limited

FREE-LIFT ASSEMBLY
TWO STAGE FULL FREE- LIFT – A272

A272

ITEM	DESCRIPTION 1 2 3 4	LIFT HEIGHT TO BOTTOM OF FORKS		
		3178 mm (125.1 in.)	3678 mm (144.8 in.)	4298 mm (169.2 in.)
	Mast Group Number	A272 3178	A272 3678	A272 4298
	Mast Assy	580088601	524198593	524198599
7	Chain	505961553	580095219	580089325
19	Hose Assy	524198577	524198582	524198587

ITEM	PART NO.	DESCRIPTION	QTY
	a	Mast Assy	1
1	580095674	Bracket	2
2	580082105	Capscrew	4
3	580076133	Crosshead	1
4	524198507	Pin	1
5	580084586	Bushing	2
6	524198475	Chain Sheave	1
7	**a**	Chain	1
8	015415900	Cotter Pin	1
9	580095399	Chain Anchor Pin	1
10	580087844	Chain Anchor	1
11	449025042	Cotter Pin	1
12	504234216	Ring	1
13	504234266	Nut	1
14	580062390	Capscrew	1
15	580071052	Washer	1
16	518804610	Pin	1
17	. . . . .	Cylinder Assembly	1
18	524141844	Valve (Flow)	1
18	052645400	O-Ring	1
18	580019387	O-Ring	1
19	**a**	Hose Assy	1

FOOTNOTES:

a Refer to Table

©2015 Yale Europe Materials Handling Limited

CARRIAGE ASSEMBLY (FIGURE 9-17)
TWO STAGE FULL FREE- LIFT-STANDARD — A272

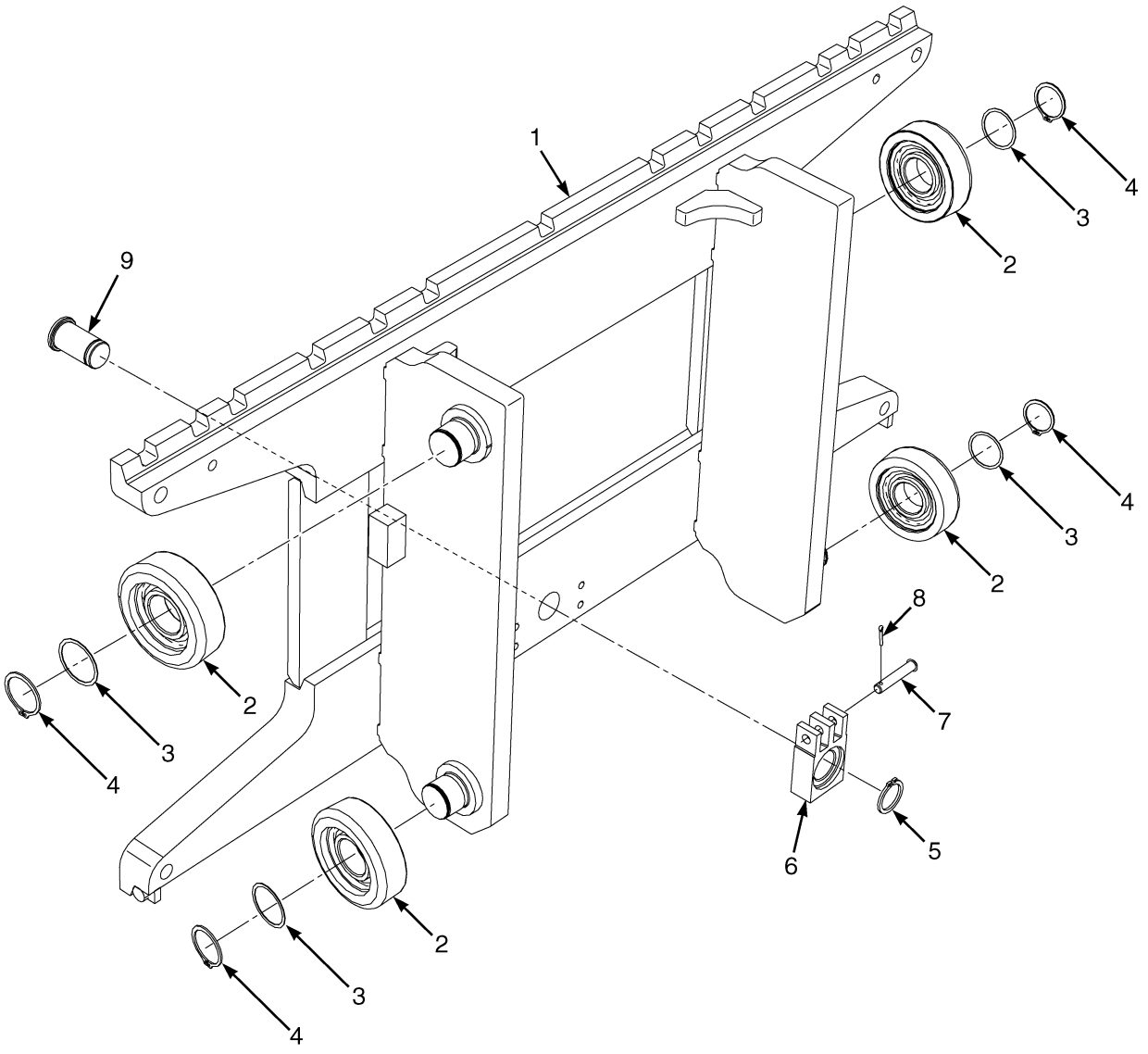

©2015 Yale Europe Materials Handling Limited

CARRIAGE ASSEMBLY

TWO STAGE FULL FREE- LIFT-STANDARD – A272

ITEM	PART NO.	DESCRIPTION	QTY
	580083433	Carriage	1
1	580083425	Carriage Wldmt	1
2	580081128	Load Roller	4
3	580093128	Shim	20
3	504240294	Shim (0,762 mm) (Optional)	16
4	~~580091430~~		
	015915900	Snap Ring	4
5	500227907	Snap Ring	1
6	580090605	Anchor	1
7	504242207	Pin	1
8	015415900	Cotter Pin	1
9	580061378	Pin	1

©2015 Yale Europe Materials Handling Limited

HEADER HOSE ASSEMBLY (FIGURE 9-18)

TWO STAGE FULL FREE- LIFT — A272

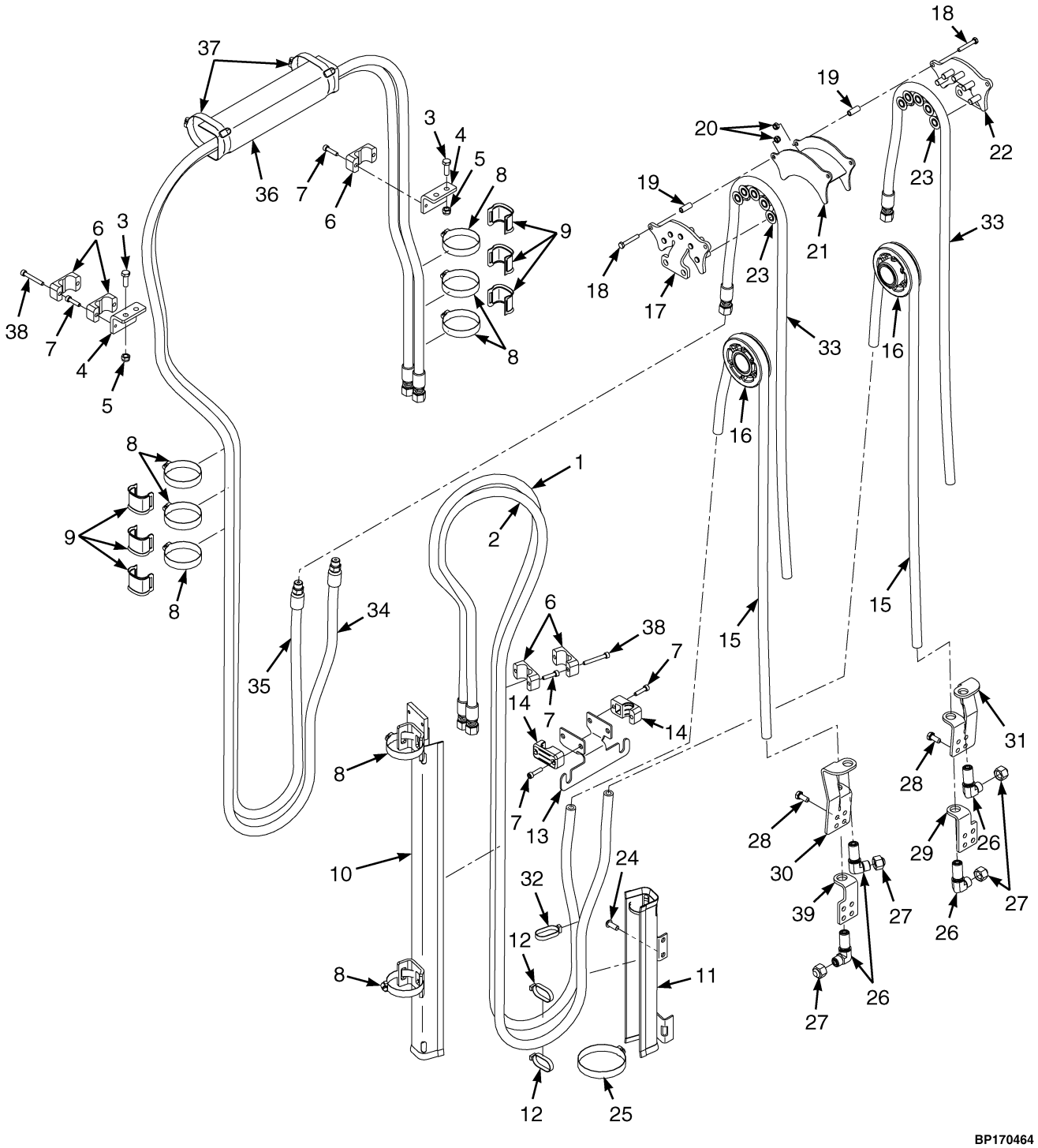

©2015 Yale Europe Materials Handling Limited

HEADER HOSE ASSEMBLY
TWO STAGE FULL FREE- LIFT – A272

A272

ITEM	DESCRIPTION 1 2 3 4	LIFT HEIGHT TO BOTTOM OF FORKS		
		3178 mm (125.1 in.)	3678 mm (144.8 in.)	4298 mm (169.2 in.)
	Mast Group Number	A272 3178	A272 3678	A272 4298
1	Hose Assy	524198627	524198632	524198637
2	Hose Assy	524198607	524198612	524198617
8	Clamp	580045653	580045653	580045653
9	Hose Clamp	524141696	524141696	524141696
10	Channel	524198563	524198564	582010407
11	Channel	524198560	524198569	524198569
15	Hose Assy	582002377	582002379	582002387
33	Hose Assy	524198695	524198695	524198696
34	Hose Assy	524198667	524198672	524198677
35	Hose Assy	524198647	524198652	524198657

KEY:
A: 3 Function
B: 4 Function

ITEM	PART NO.	DESCRIPTION	QTY A	QTY B
1	**a**	Hose Assy	1	1
2	**a**	Hose Assy	1	1
3	580055734	Capscrew	2	4
4	524198567	Bracket	1	2
5	580055651	Nut	2	4
6	504068794	Clamp (Double Hose)	2	7
7	580055863	Capscrew	8	10
8	**a**	Clamp	6	12
9	**a**	Hose Clamp	2	4
10	**a**	Channel	1	1
11	**a**	Channel	1	1
12	312850034	Strap Clamp	1	7
13	580087685	Bracket Wldmt	1	1
14	580087631	Clamp (Single Hose)	2	..
14	504068794	Clamp (Double Hose)	..	2
15	**a**	Hose Assy	2	2
16	580084590	Hose Sheave	2	4
17	524198506	Bracket Wldmt	..	1
18	580055731	Capscrew	..	4
19	524198501	Spacer	..	4
20	580055650	Nut	..	4
21	580093429	Bracket Wldmt	..	1
22	524198505	Bracket Wldmt	..	1

©2015 Yale Europe Materials Handling Limited

HEADER HOSE ASSEMBLY
TWO STAGE FULL FREE- LIFT – A272

KEY:
A: 3 Function
B: 4 Function

ITEM	PART NO.	DESCRIPTION	QTY A	QTY B
23	580088061	Hose Sheave (Tanget Roller)	..	10
24	580081111	Capscrew	2	4
25	580068222	Clamp	1	2
26	580039401	Fitting	2	6
27	580039424	Cap	2	6
28	580055733	Capscrew	4	8
29	582009888	Bracket (LH)	1	..
30	580096843	Bracket	..	1
31	580096844	Bracket	..	1
32	312850032	Strap Clamp	1	2
33	**a**	Hose Assy	2	2
34	**a**	Hose Assy	1	1
35	**a**	Hose Assy	1	1
36	524198568	Hose Guide	..	1
37	505965586	Clamp	..	2
38	580055863	Capscrew	..	4
38	580055990	Capscrew	..	4
39	582009889	Bracket (RH)	1	..

FOOTNOTES:

a Refer to Table

©2015 Yale Europe Materials Handling Limited

10 OPTIONS

SECTION 10
OPTIONS

DESCRIPTION	PAGE
AUDIBLE ALARM	10-2
AUXILIARY TUBE EXTENSIONS	
TWO AND THREE STAGE FULL FREE-LIFT	10-46
TWO-STAGE LIMITED FREE-LIFT	10-44
CARRIAGE ASSEMBLY	
THREE STAGE FULL FREE LIFT - A271 - INTEGRAL SIDE-SHIFT	10-26
THREE STAGE FULL FREE LIFT - C662 - INTEGRAL SIDE-SHIFT	10-28
TWO STAGE FULL FREE- LIFT - C663 - INTEGRAL SIDE-SHIFT	10-32
TWO STAGE FULL FREE- LIFT-A272 - INTEGRAL SIDE-SHIFT	10-30
TWO STAGE LIMITED FREE LIFT - A270 - INTEGRAL SIDE-SHIFT	10-22
TWO STAGE LIMITED FREE LIFT - C661 - INTEGRAL SIDE-SHIFT	10-24
DC/DC CONVERTER	
→ S/N G807B06434M	10-4
S/N G807B06435M →	10-6
DOME LIGHT	10-14
FORK POSITIONER ASSEMBLY	10-42
FRONT WORK AND MARKER LIGHTS	10-8
IMPACT SENSOR	
→ 2/2015	10-48
2/2015 →	10-50
INTEGRAL SIDE-SHIFT	
FORK POSITIONER - TWO STAGE LIMITED FREE-LIFT	10-34
FORK POSITIONER (907 MM) - 2 AND 3 FFL	10-36
FORK POSITIONER (977 MM) - 2 AND 3 FFL	10-38
INTEGRAL SIDE-SHIFT CYLINDER	10-40
MIRROR	
CONVEX REAR VIEW	10-16
DUAL REAR VIEW	10-18
REAR REFLECTORS AND TAIL LIGHTS	10-10
REVERSE HANDLE	10-20
STROBE LIGHT ASSEMBLY AND REAR WORK LIGHT	10-12
TRACTION SPEED LIMITER	
STANDARD AND INTEGRAL SIDE-SHIFT CARRIAGES	10-52

©2015 Yale Europe Materials Handling Limited

AUDIBLE ALARM (FIGURE 10-1)

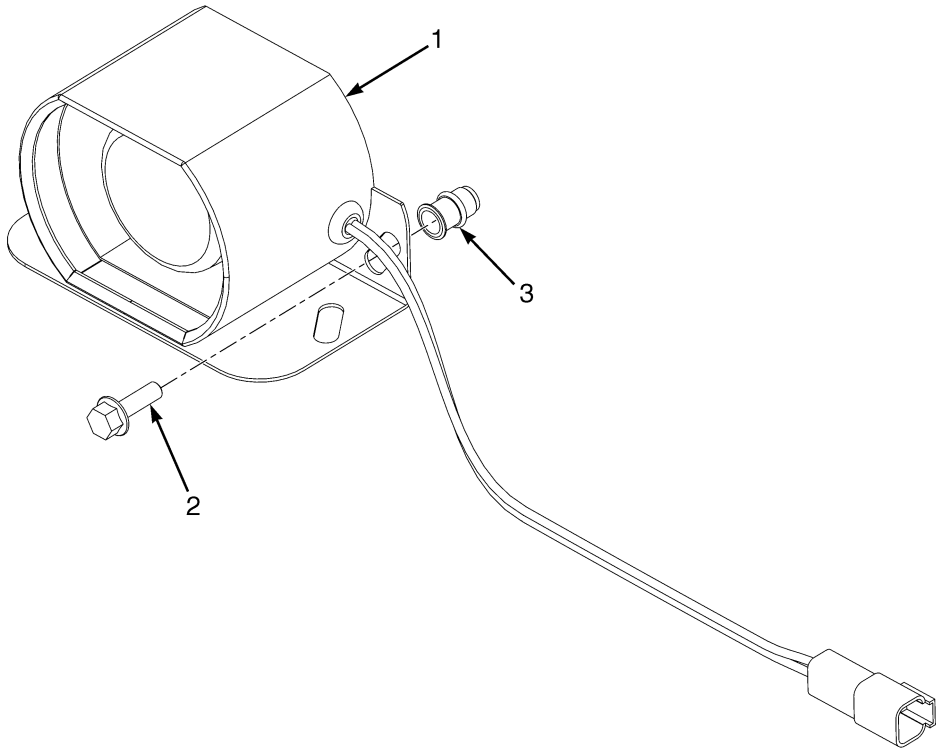

BP000319

ITEM	PART NO.	DESCRIPTION	QTY
1	580093011	Back-Up Alarm Assembly	1
1	580092746	Back-Up Alarm	1
1	580022893	Connector (2 Pin)	1
1	505968540	Connector (Secondary Lock)	1
1	505972554	Terminal	2
2	580044859	Insert	2
3	580086910	Capscrew	2
	a 580048154	Jumper	1

FOOTNOTES:

a Not Illustrated

©2015 Yale Europe Materials Handling Limited

NOTES

©2015 Yale Europe Materials Handling Limited

DC/DC CONVERTER (FIGURE 10-2)
(→ S/N G807B06434M)

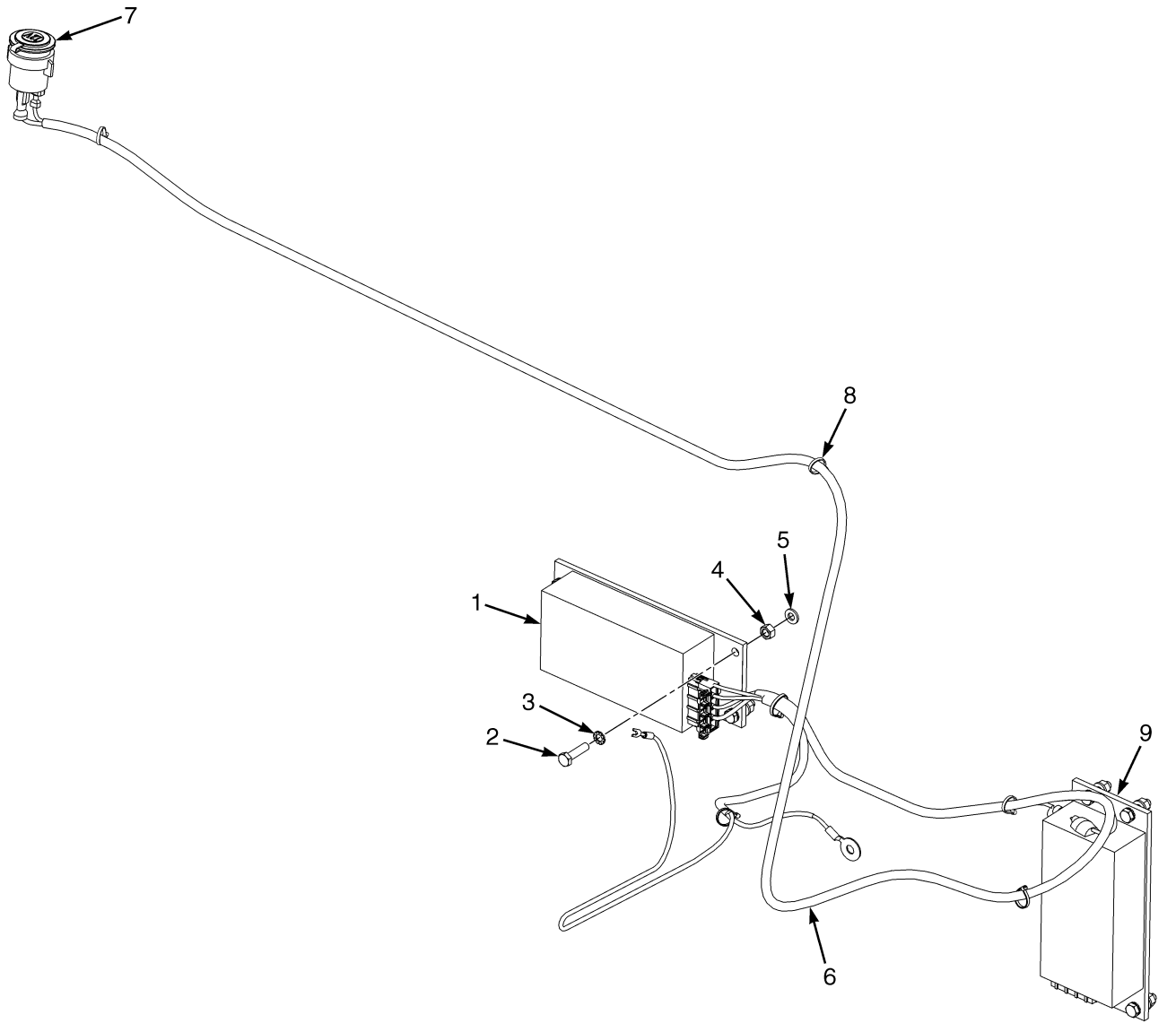

©2015 Yale Europe Materials Handling Limited

DC/DC CONVERTER
(→ S/N G807B06434M)

ITEM	PART NO.	DESCRIPTION	QTY
1	580047198	Dc-Dc Converter (36V/48V to 12V) (Auxiliary)	1
2	580001471	Capscrew	4
2	580039438	Capscrew (Alternate Part)	2
3	940600907	Washer	4
4	504574259	Nut	4
4	~~580004321~~		
	580047919	Nut (Alternate Part)	2
5	449021003	Washer	4
6	**a** 580096577	Wire Harness Assembly (☞Page 2-158)	1
6	**b** 582011889	Wire Harness (☞Page 2-162)	1
7	580058844	Receptacle , 12V	1
8	500403906	Strap	6
9	524332204	Kit-DC/DC Convertor (Primary)	1

FOOTNOTES:

a → 9/2013

b 9/2013 →

©2015 Yale Europe Materials Handling Limited

DC/DC CONVERTER (FIGURE 10-3)
(S/N G807B06435M →)

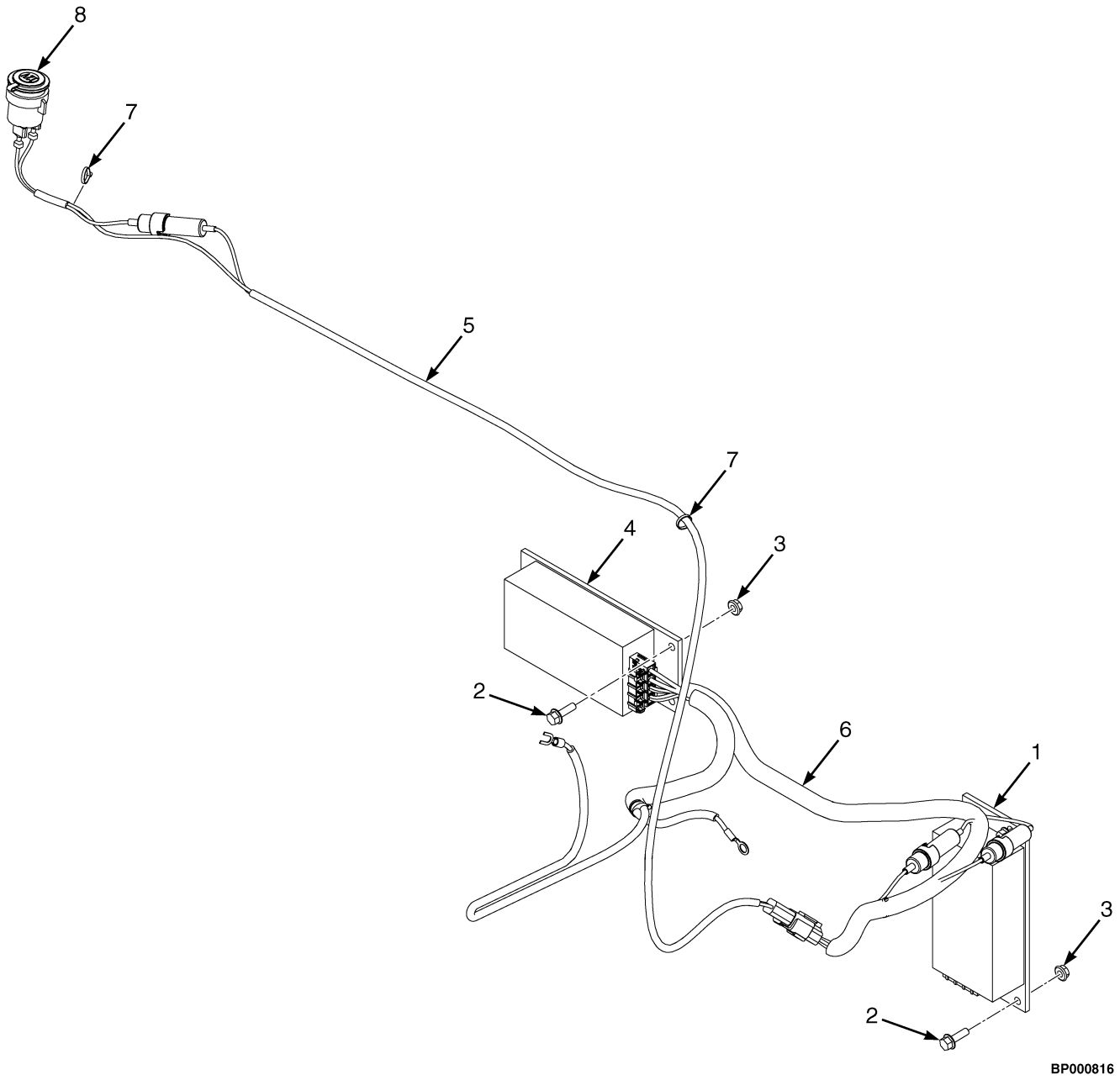

©2015 Yale Europe Materials Handling Limited

DC/DC CONVERTER

(S/N G807B06435M →)

ITEM	PART NO.	DESCRIPTION	QTY
1	580047198	Dc-Dc Converter (36V/48V to 12V) (Primary)	1
2	580039438	Capscrew	4
3	~~580004321~~		
	580047919	Nut	4
4	580047198	Dc-Dc Converter (36V/48V to 12V) (Auxiliary)	1
5	582000819	Wire Harness (Aux Plug) (☞Page 2-165)	1
6	582023142	Wire Harness (DC/DC Converter) (☞Page 2-164)	1
7	500403906	Strap	6
8	580058844	Receptacle , 12V	1

©2015 Yale Europe Materials Handling Limited

FRONT WORK AND MARKER LIGHTS (FIGURE 10-4)

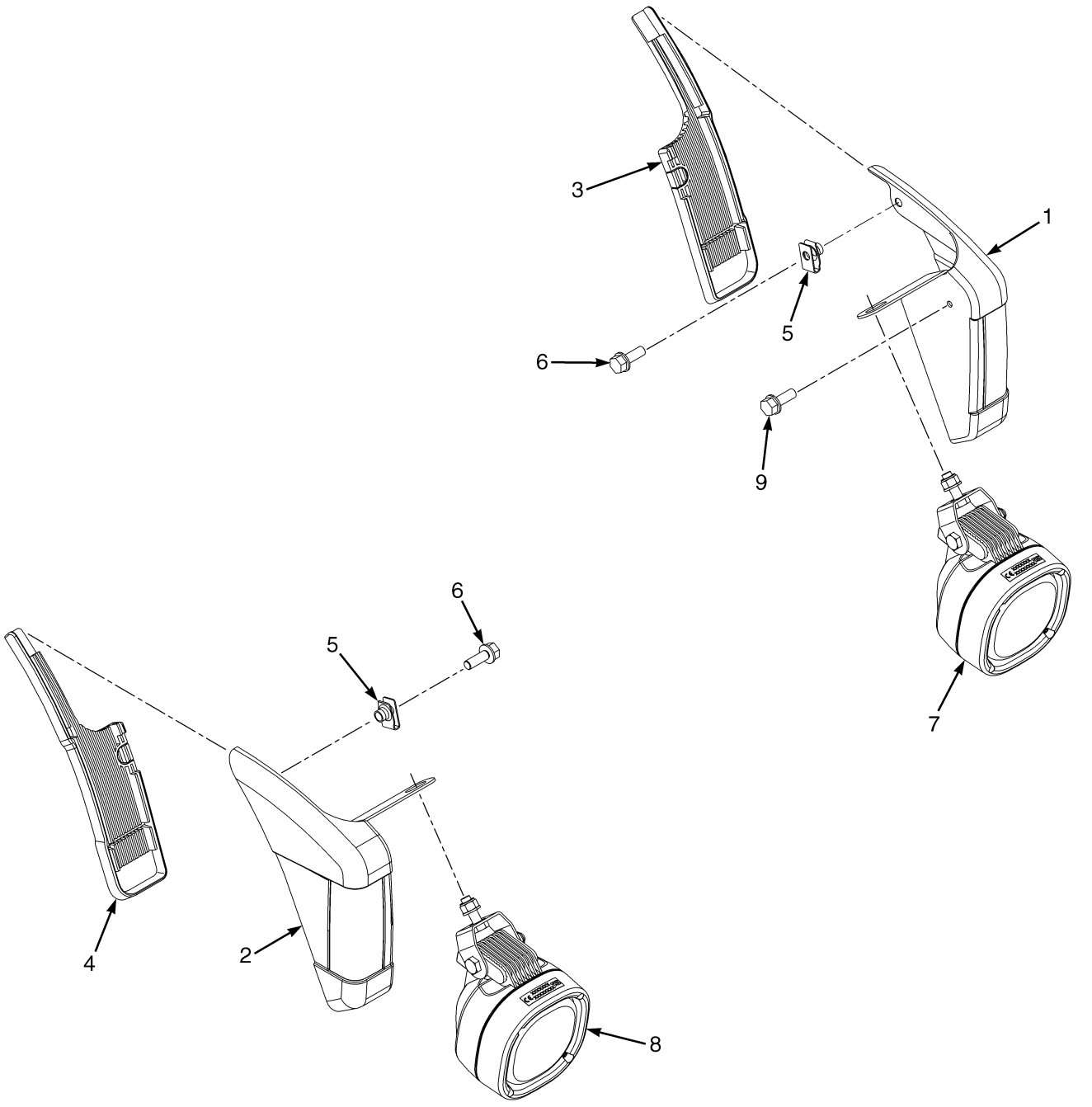

©2015 Yale Europe Materials Handling Limited

FRONT WORK AND MARKER LIGHTS

ITEM	PART NO.	DESCRIPTION	QTY
1	~~580076560~~		
	582001307	Light (LH Front Marker/Turn Signal)	1
2	~~580076559~~		
	582001306	Light (RH Front Marker/Turn Signal)	1
3	580092988	Trim (LH)	1
4	~~580092989~~		
	582000926	Trim (RH)	1
5	580026621	Nut	2
6	580056815	Capscrew	2
7	580083837	Worklight (LH Front) (Glass Lens) (Halogen)	1
7	580083421	Bulb (Clear) (55 W 1450 lm)	1
7	580092291	Worklight (LH Front) (LED)	1
8	580083836	Worklight (RH Front) (Glass Lens) (Halogen)	1
8	580083421	Bulb (Clear) (55 W 1450 lm)	1
8	580092290	Worklight (RH Front) (LED)	1
9	580093324	Capscrew	2
9	580086910	Capscrew (Alternate Part)	2
	a 520041835	Switch	2
	a 580092485	Flasher (☞Page 2-4)	1

FOOTNOTES:

a Not Illustrated

©2015 Yale Europe Materials Handling Limited

REAR REFLECTORS AND TAIL LIGHTS (FIGURE 10-5)

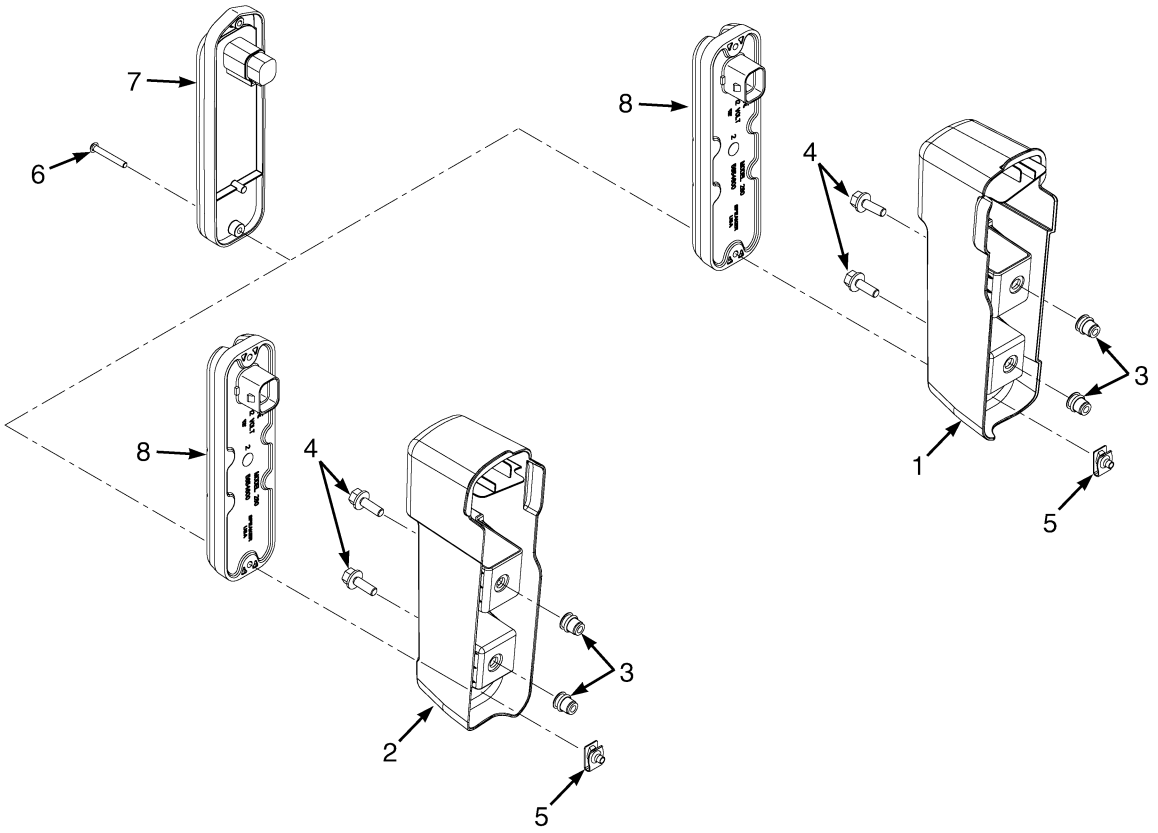

BP000130

©2015 Yale Europe Materials Handling Limited

REAR REFLECTORS AND TAIL LIGHTS

ITEM	PART NO.	DESCRIPTION	QTY
1	580079252	Tail Light Base (LH)	1
2	580079483	Tail Light Base (RH)	1
3	580041704	Insert	4
4	580086910	Capscrew	4
5	580040850	Nut (Clip)	4
6	580095093	Screw	4
7	580037209	Reflector (Tail)	2
8	580079484	Tail Light (LED)	2
8	582001995	Light (Tail) (LED) (Alternate Part)	2

©2015 Yale Europe Materials Handling Limited

STROBE LIGHT ASSEMBLY AND REAR WORK LIGHT (FIGURE 10-6)

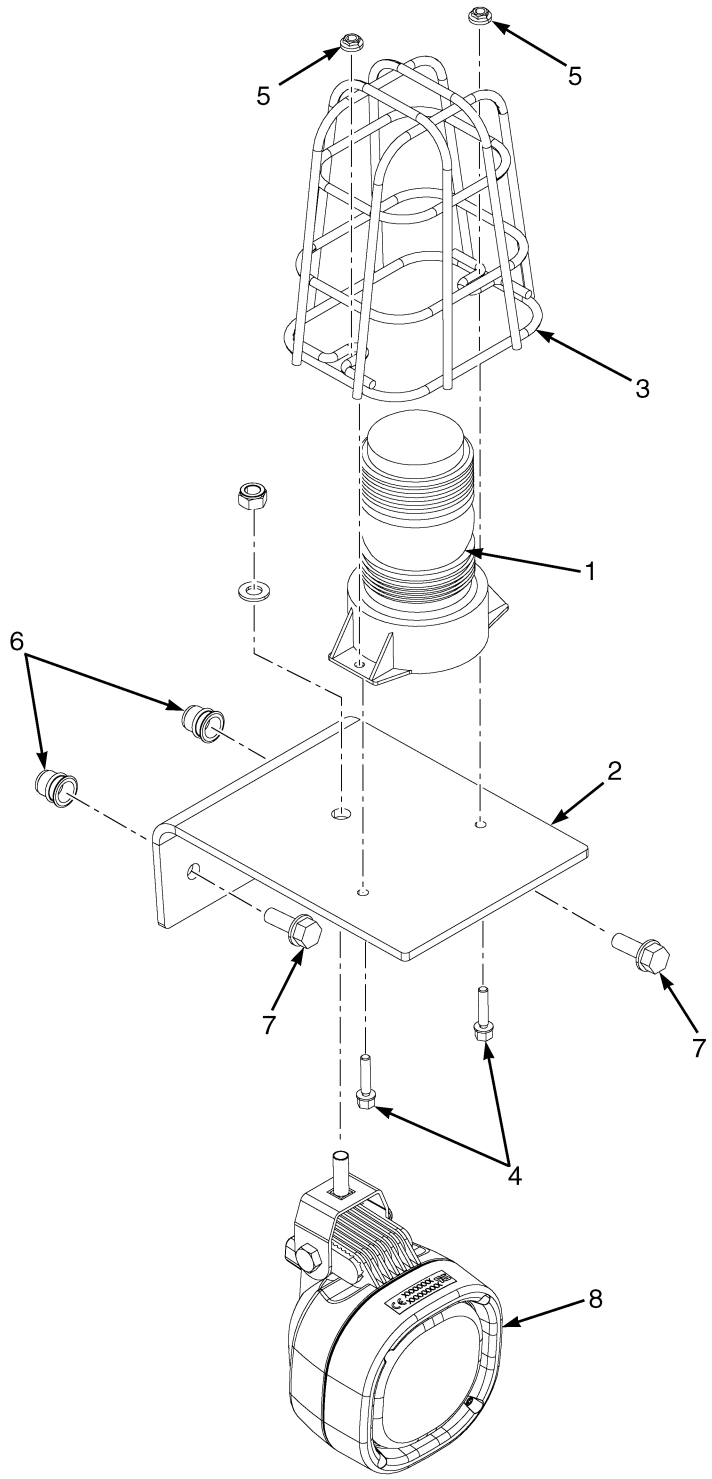

©2015 Yale Europe Materials Handling Limited

STROBE LIGHT ASSEMBLY AND REAR WORK LIGHT

ITEM	PART NO.	DESCRIPTION	QTY
1	**b** 580093198	Strobe Light Assembly	1
1	**c** 580079615	Strobe Light Assembly	1
1	580078920	Strobe Light (Amber LED)	1
1	580056006	Connector (2 Pin)	1
1	580056004	Connector (Secondary Lock)	1
1	580041195	Terminal Pin	1
2	580093014	Bracket (Standard Mount)	1
2	**a** 580093013	Bracket (Low Mount)	1
3	504232297	Guard (Strobe Light)	1
4	580058314	Capscrew	2
5	580058188	Nut	2
6	580044860	Insert	2
7	580056815	Capscrew	2
8	580083835	Worklight (Rear) (Halogen)	1
8	580083421	Bulb (Clear) (55 W 1450 lm)	1
8	580092289	Worklight (Rear) (LED)	1
	a 520041894	Switch (Rear Work Light 12V) (Rear Light)	1

FOOTNOTES:

a Not Illustrated
b → 10/2013
c 10/2013 →

©2015 Yale Europe Materials Handling Limited

DOME LIGHT (FIGURE 10-7)

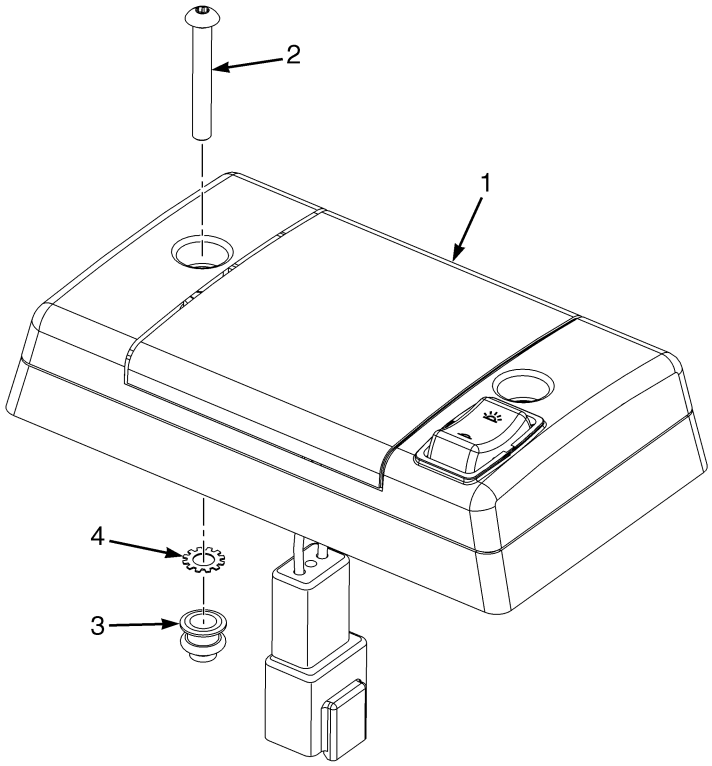

BP000492

ITEM	PART NO.	DESCRIPTION	QTY
1	580097506	Dome Light	1
2	580093735	Capscrew	2
3	580093718	Insert	2
4	940600905	Washer	2

©2015 Yale Europe Materials Handling Limited

NOTES

©2015 Yale Europe Materials Handling Limited

MIRROR (FIGURE 10-8)
CONVEX REAR VIEW

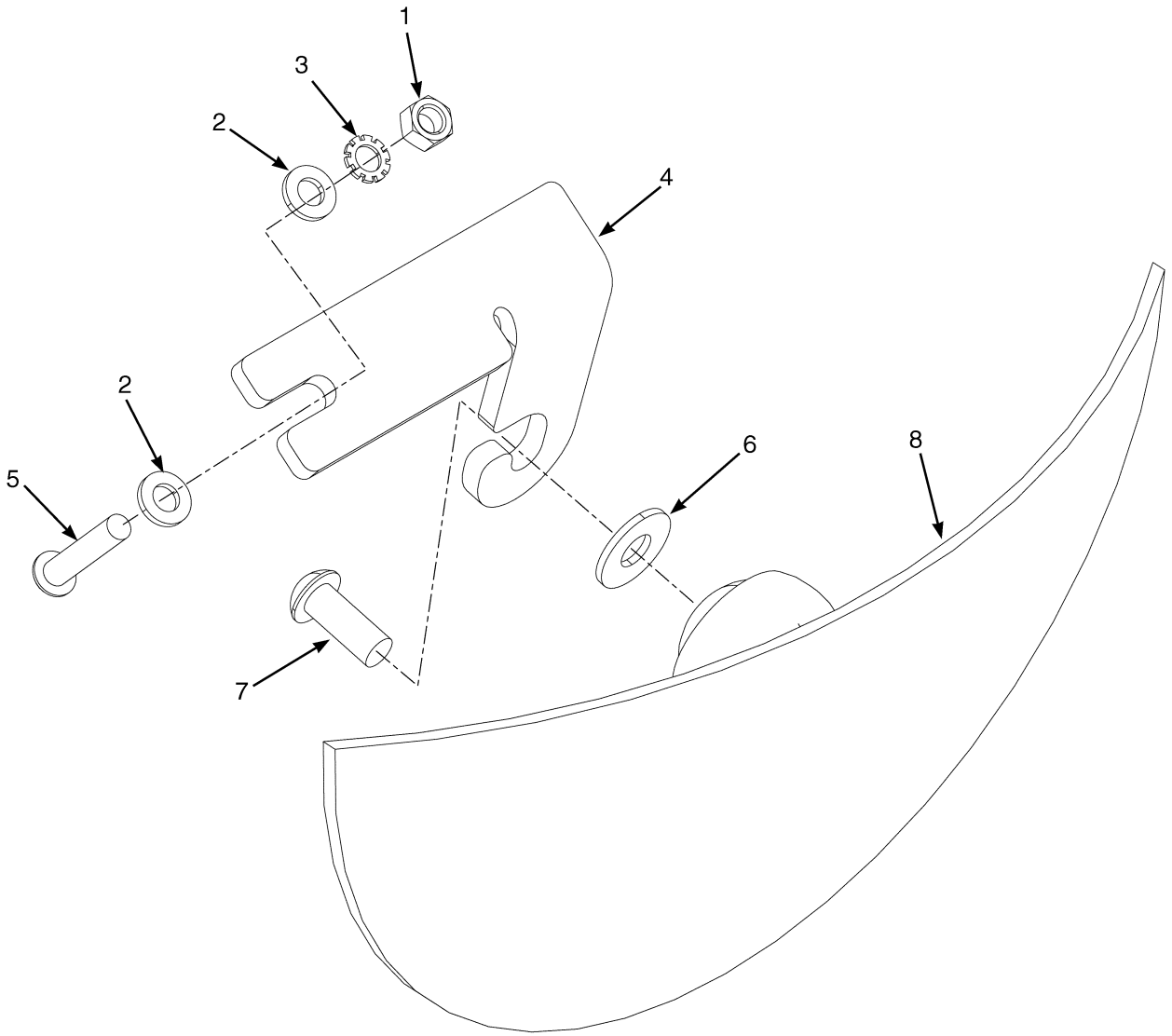

BP000204

©2015 Yale Europe Materials Handling Limited

MIRROR

CONVEX REAR VIEW

ITEM	PART NO.	DESCRIPTION	QTY
1	449015002	Nut	2
2	580029990	Washer	2
3	940600907	Washer	2
4	580094848	Bracket	1
5	932728908	Capscrew	2
6	580003569	Washer	1
7	932729905	Capscrew	1
8	580095052	Mirror	1

©2015 Yale Europe Materials Handling Limited

MIRROR (FIGURE 10-9)
DUAL REAR VIEW

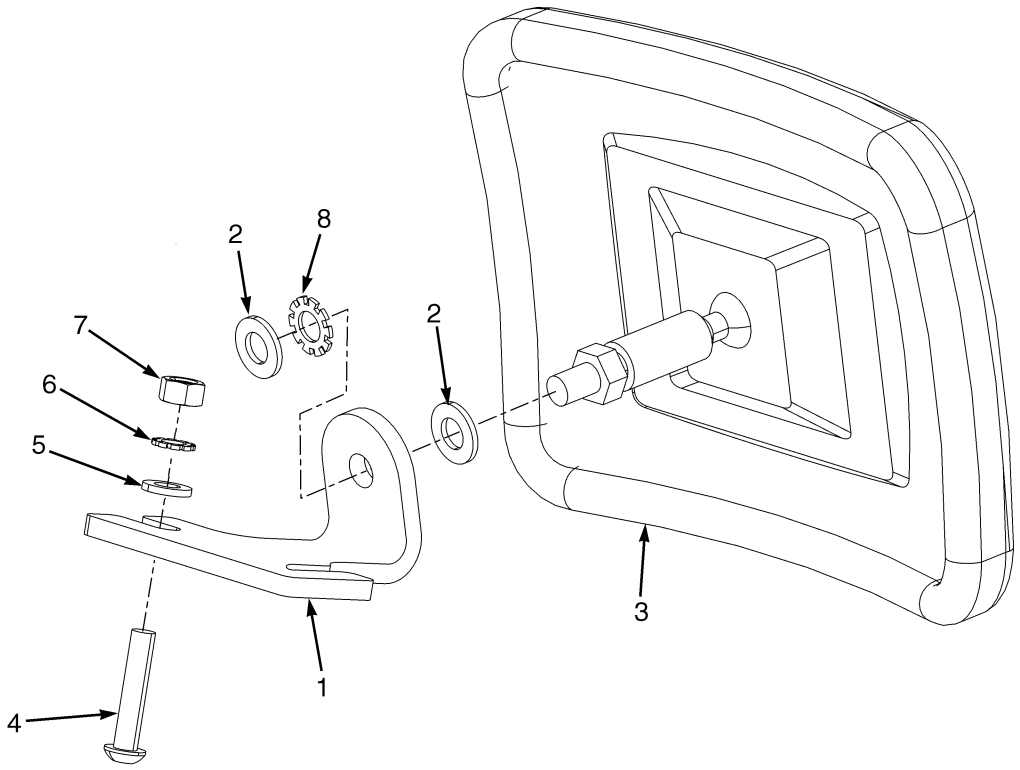

BP000446

©2015 Yale Europe Materials Handling Limited

MIRROR
DUAL REAR VIEW

ITEM	PART NO.	DESCRIPTION	QTY
1	580094602	Bracket	2
2	580055631	Washer	4
3	505975539	Mirror	2
4	932728908	Capscrew	4
5	580029990	Washer	4
6	940600907	Washer	4
7	504574259	Nut	4
8	940600908	Washer	2

©2015 Yale Europe Materials Handling Limited

REVERSE HANDLE (FIGURE 10-10)

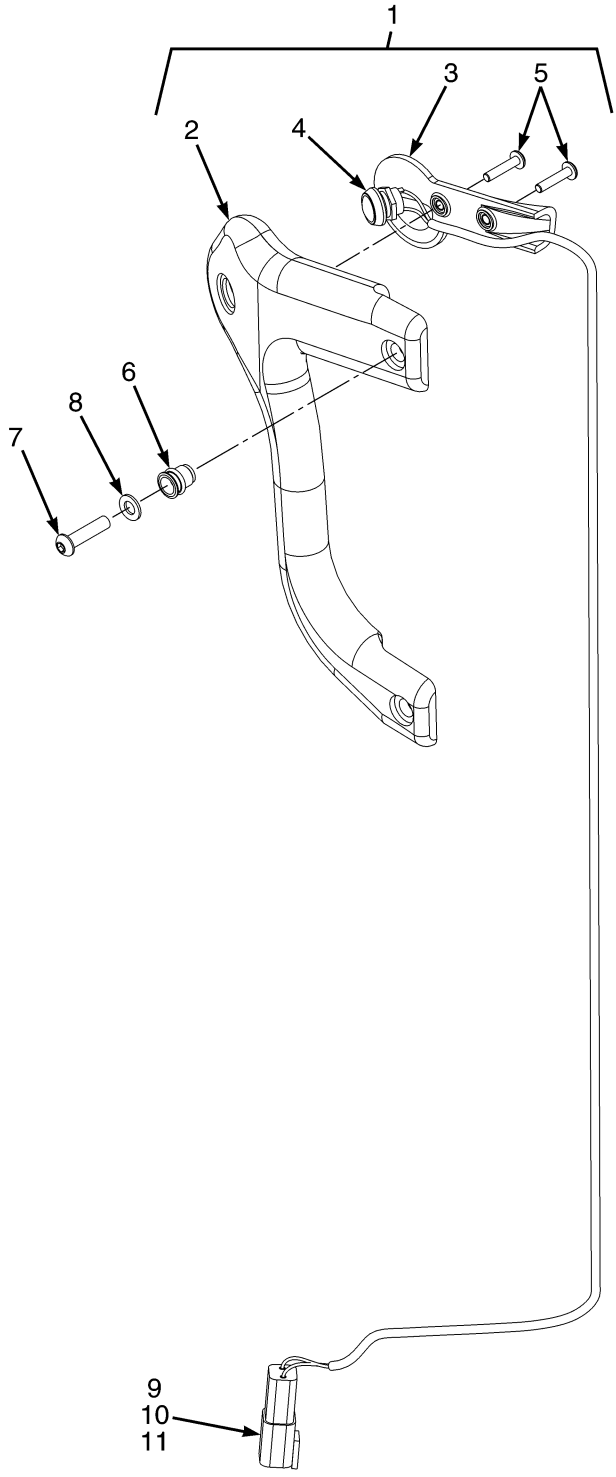

BP000281

©2015 Yale Europe Materials Handling Limited

REVERSE HANDLE

ITEM	PART NO.	DESCRIPTION	QTY
1	580093110	Handle (Assembly)	1
2	580093098	Handle	1
3	580092934	Handle (Bottom)	1
4	580058447	Push Button Switch	1
5	582000744	Screw	2
6	580041704	Insert	2
7	580049840	Capscrew	2
8	580029990	Washer	2
9	. . . . .	Connector Assembly	1
9	580022893	Connector (2 Pin)	1
10	580038290	Terminal	2
11	505968540	Connector (Secondary Lock)	1

©2015 Yale Europe Materials Handling Limited

CARRIAGE ASSEMBLY (FIGURE 10-11)

TWO STAGE LIMITED FREE LIFT - A270 — INTEGRAL SIDE-SHIFT

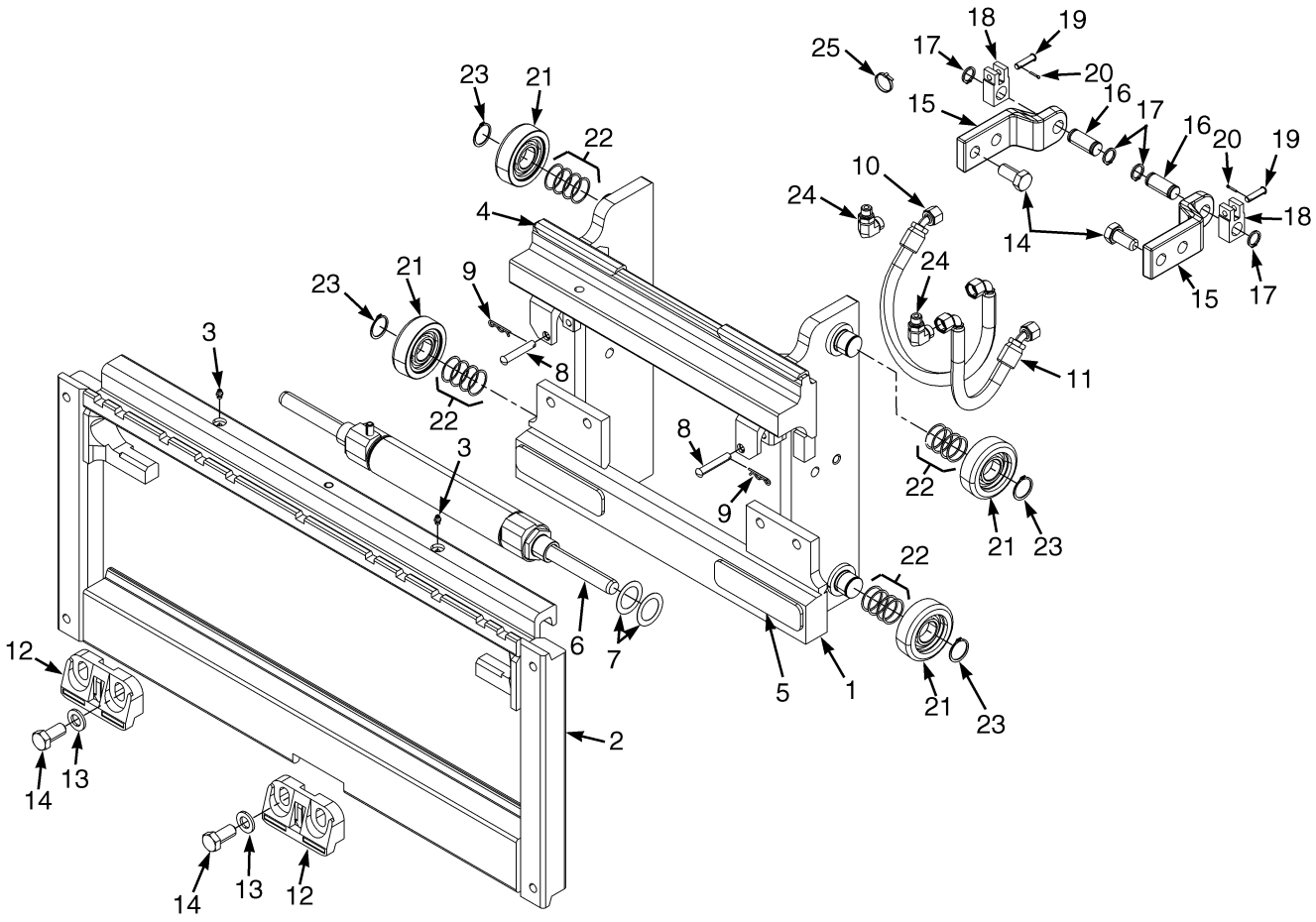

BP170383

©2015 Yale Europe Materials Handling Limited

CARRIAGE ASSEMBLY

TWO STAGE LIMITED FREE LIFT - A270 – INTEGRAL SIDE-SHIFT

ITEM	PART NO.	DESCRIPTION	QTY
	580084684	Side-Shift Carriage Assembly	1
1	580084673	Carriage Wldmt (Inner)	1
1	580090682	Stubshaft	4
2	~~580023798~~		
	582014957	Frame	1
3	015628700	Grease Fitting	1
4	580020724	Bearing Strip (Upper)	2
5	580020726	Bearing Strip (Lower)	2
6	580020708	Sideshift Cylinder Assembly (☞Page 10-40)	1
7	580026720	Shim	AR
8	580026721	Pin	2
9	580026723	Cotter Pin	2
10	580084687	Hose Assy	1
10	**c** 582013580	Hose Assy	1
11	580087941	Hose Assy	1
11	**c** 582013581	Hose Assy	1
12	~~580020723~~		
	582012213	Hook	1
13	580056008	Washer	4
14	580055980	Capscrew	8
15	524198473	Chain Anchor	2
16	524198471	Pin	2
17	500227904	Snap Ring	4
18	524198472	Chain Anchor	2
19	580087831	Pin	2
20	015415900	Cotter Pin	2
21	580081128	Load Roller	4
21	**b** 580081129	Load Roller	4
22	580093128	Shim	AR
23	~~580091430~~		
	015915900	Snap Ring	4
24	580019865	Fitting	2
24	504155200	O-Ring	1
24	052645200	O-Ring	1
24	**c** 580019861	Fitting	2
24	580039385	O-Ring	1
24	052645200	O-Ring	1
25	312850042	Strap Clamp	1
	a 582012635	Carriage (Fork Positioner) (907 mm) (Fork Positioner)	1

FOOTNOTES:

a Not Illustrated
b Optional
c With Fork Positioner

©2015 Yale Europe Materials Handling Limited

CARRIAGE ASSEMBLY (FIGURE 10-12)

TWO STAGE LIMITED FREE LIFT - C661 — INTEGRAL SIDE-SHIFT

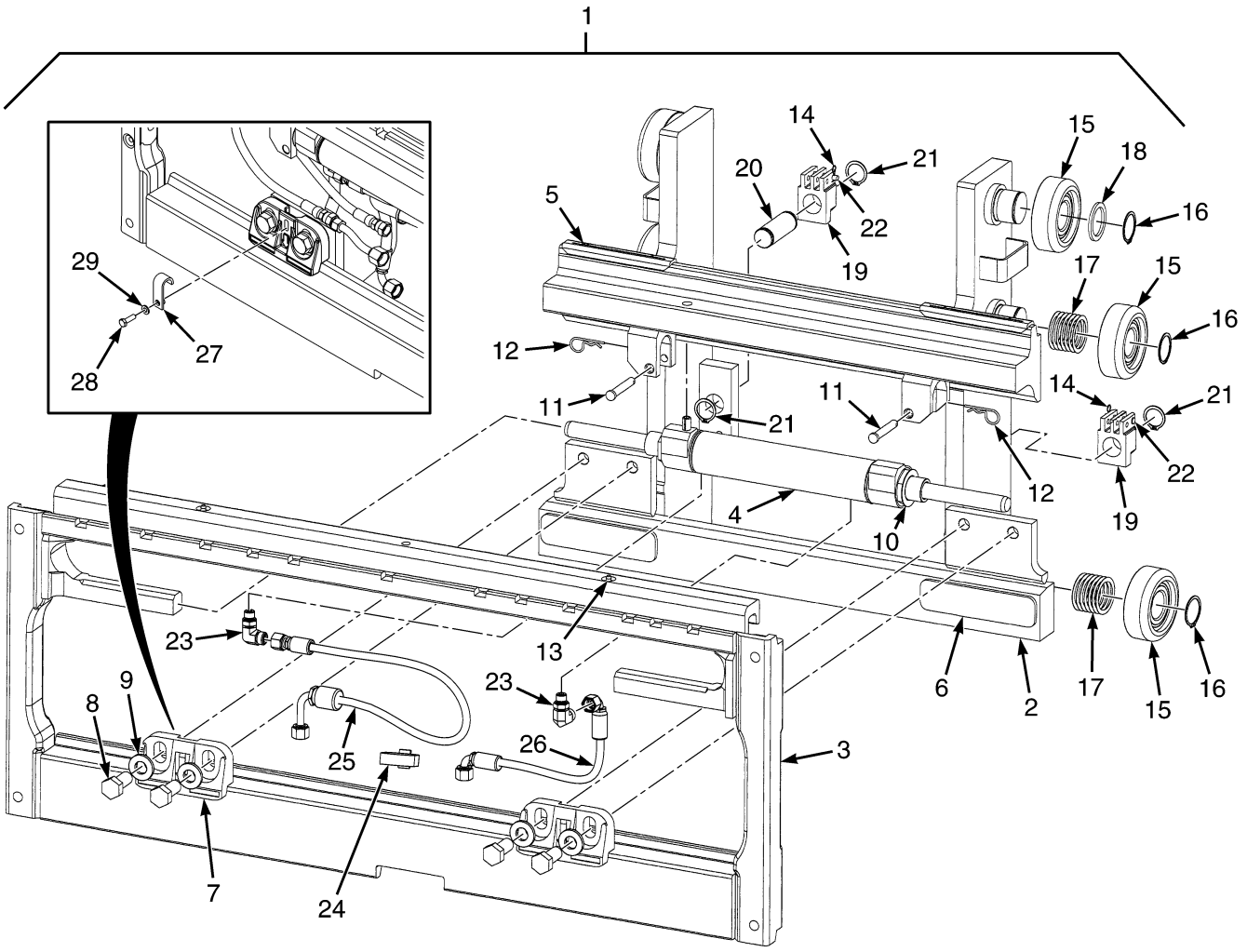

BP170388

©2015 Yale Europe Materials Handling Limited

CARRIAGE ASSEMBLY

TWO STAGE LIMITED FREE LIFT - C661 – INTEGRAL SIDE-SHIFT

ITEM	PART NO.	DESCRIPTION	QTY
1	580037260	Side-Shift Carriage (Assembly)	1
2	580037254	Carriage Wldmt (Inner)	1
2	504066700	Stubshaft	6
3	~~580023799~~		
	582014958	Frame (Outer) (977 mm)	1
4	580020708	Sideshift Cylinder Assembly (☞Page 10-40)	1
5	580020724	Bearing Strip (Upper)	2
6	580020726	Bearing Strip (Lower)	2
7	~~580020723~~		
	582012213	Hook	2
8	580055980	Capscrew	4
9	580056008	Washer	4
10	580026720	Shim	AR
11	580026721	Pin	2
12	580026723	Cotter Pin	2
13	015628700	Grease Fitting	2
14	015415900	Cotter Pin	2
15	520036852	Load Roller ("B") (92.18 mm/91.92 mm)	6
16	015916300	Snap Ring	6
17	504233232	Shim (0.508 mm)	28
18	504235278	Spacer	2
19	505978544	Chain Anchor (Dual Hole)	2
20	504075781	Pin	2
21	500227907	Snap Ring	4
22	580033718	Pin	2
23	580019865	Fitting	2
23	504155200	O-Ring	1
23	052645200	O-Ring	1
23	**b** 580019861	Fitting	2
23	580039385	O-Ring	1
23	052645200	O-Ring	1
24	312850042	Strap Clamp	1
25	580046145	Hose Assy	1
25	**b** ~~582013561~~		
	582019731	Hose Assy	1
26	580049064	Hose Assy	1
26	**b** 582013562	Hose Assy	1
27	582012185	Bracket Wldmt	2
27	582020983	Bracket Wldmt (Alternate)	2
28	580084947	Capscrew	2
29	580086384	Washer	2
	a 582012634	Carriage (977 mm) (Fork Positioner)	1

FOOTNOTES:

a Not Illustrated

b With Fork Positioner

©2015 Yale Europe Materials Handling Limited

CARRIAGE ASSEMBLY (FIGURE 10-13)

THREE STAGE FULL FREE LIFT - A271 — INTEGRAL SIDE-SHIFT

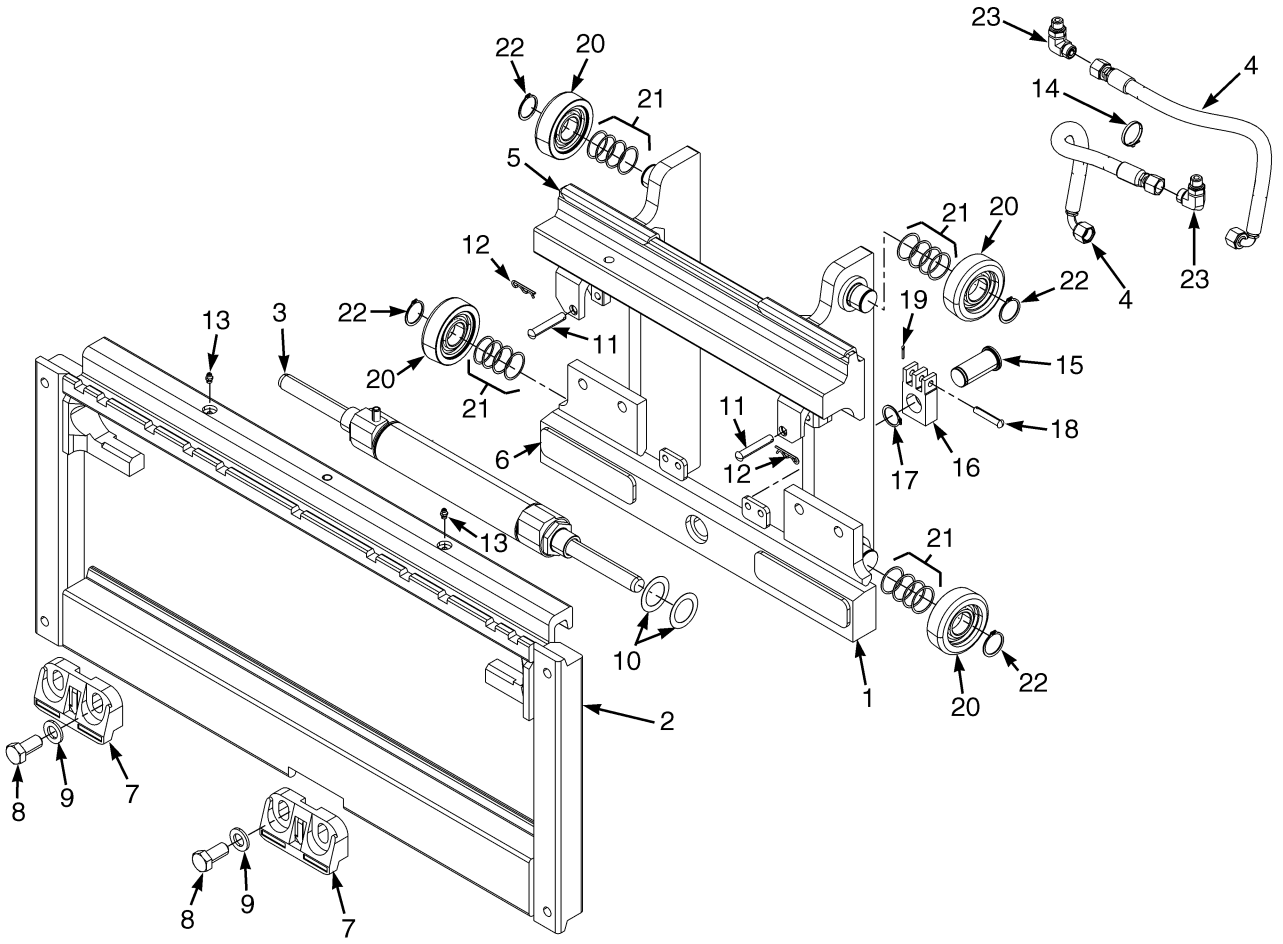

BP170384

©2015 Yale Europe Materials Handling Limited

CARRIAGE ASSEMBLY

THREE STAGE FULL FREE LIFT - A271 – INTEGRAL SIDE-SHIFT

ITEM	PART NO.	DESCRIPTION	QTY
	580084685	Side-Shift Carriage	1
1	580084678	Carriage Wldmt (Inner)	1
1	580090682	Stubshaft	4
2	~~580023798~~		
	582014957	Frame	1
3	580020708	Sideshift Cylinder Assembly (☞Page 10-40)	1
4	580093526	Hose Assy	2
4	**c** 582013275	Hose Assy	2
5	580020724	Bearing Strip (Upper)	2
6	580020726	Bearing Strip (Lower)	2
7	~~580020723~~		
	582012213	Hook	2
8	580055980	Capscrew	4
9	580056008	Washer	4
10	580026720	Shim	AR
11	580026721	Pin	2
12	580026723	Cotter Pin	2
13	015628700	Grease Fitting	2
14	312850042	Strap Clamp	1
15	582020268	Pin	1
16	580090605	Anchor	1
17	500227907	Snap Ring	1
18	580095399	Chain Anchor Pin	1
19	015415900	Cotter Pin	2
20	580081128	Load Roller	4
20	**b** 580081129	Load Roller	4
21	580093128	Shim	AR
22	~~580091430~~		
	015915900	Snap Ring	4
23	**c** 580019861	Fitting	2
23	580039385	O-Ring	1
23	052645200	O-Ring	1
23	580019865	Fitting	2
23	504155200	O-Ring	1
23	052645200	O-Ring	1
24	**a**	Grease	1
	a 582012635	Carriage (Fork Positioner) (907 mm)	1

FOOTNOTES:

a Not Illustrated
b Optional
c With Fork Positioner

©2015 Yale Europe Materials Handling Limited

CARRIAGE ASSEMBLY (FIGURE 10-14)

THREE STAGE FULL FREE LIFT - C662 — INTEGRAL SIDE-SHIFT

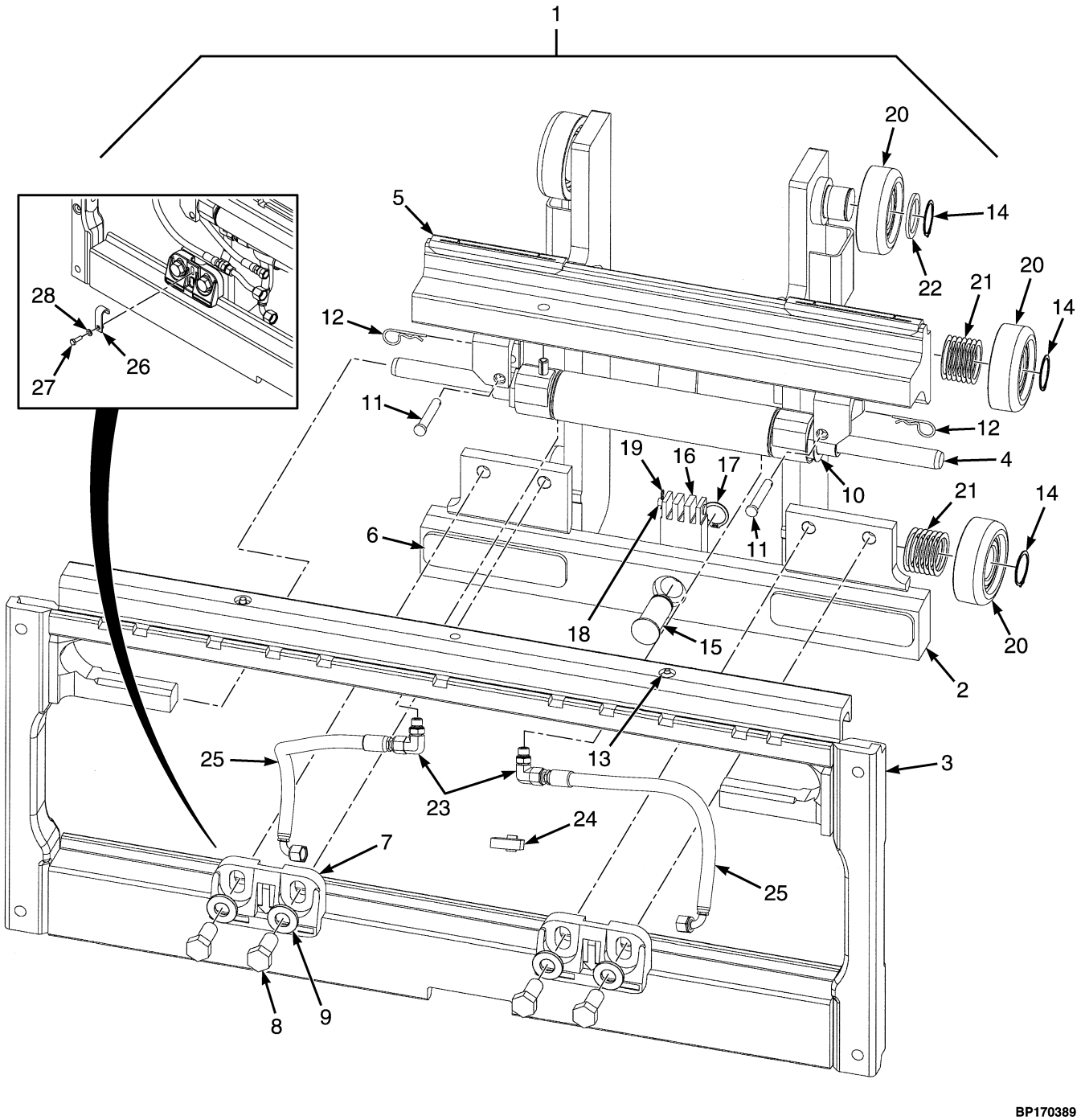

BP170389

©2015 Yale Europe Materials Handling Limited

CARRIAGE ASSEMBLY

THREE STAGE FULL FREE LIFT - C662 – INTEGRAL SIDE-SHIFT

ITEM	PART NO.	DESCRIPTION	QTY
1	580088569	Side-Shift Carriage (Assembly)	1
2	580091007	Carriage Wldmt (Inner)	1
2	504066700	Stubshaft	6
3	~~580023799~~		
	582014958	Frame (Outer) (977 mm)	1
4	580020708	Sideshift Cylinder Assembly (☞Page 10-40)	1
5	580020724	Bearing Strip (Upper)	2
6	580020726	Bearing Strip (Lower)	2
7	~~580020723~~		
	582012213	Hook	2
8	580055980	Capscrew	4
9	580056008	Washer	4
10	580026720	Shim	AR
11	580026721	Pin	2
12	580026723	Cotter Pin	2
13	015628700	Grease Fitting	2
14	015916300	Snap Ring	6
14	**b** 449029011	Snap Ring	6
15	524147388	Pin	1
16	524197448	Chain Anchor	1
17	500227907	Snap Ring	1
18	518792697	Pin	1
19	015415900	Cotter Pin	1
20	518797634	Load Roller ("B") (82.18 mm)	6
20	520053821	Load Roller ("B") (82.18 mm) (Alternate)	6
20	580001437	Load Roller ("A") (82.00 mm) (Alternate)	6
20	580001435	Load Roller ("A") (81.80 mm) (Alternate)	6
21	504233232	Shim (0.508 mm)	28
22	504235278	Spacer	2
23	**c** 580019861	Fitting	2
23	580039385	O-Ring	1
23	052645200	O-Ring	1
23	580019865	Fitting	2
23	052645200	O-Ring	1
23	504155200	O-Ring	1
24	312850042	Strap Clamp	1
25	580093526	Hose Assy	2
25	**c** 582013275	Hose Assy	2
26	582012185	Bracket Wldmt	2
26	582020983	Bracket Wldmt (Alternate)	2
27	580084947	Capscrew	2
28	580086384	Washer	2
	a 582012634	Carriage (977 mm) (Fork Positioner)	1

FOOTNOTES:

a Not Illustrated
b Optional
c With Fork Positioner

©2015 Yale Europe Materials Handling Limited

CARRIAGE ASSEMBLY (FIGURE 10-15)

TWO STAGE FULL FREE- LIFT-A272 — INTEGRAL SIDE-SHIFT

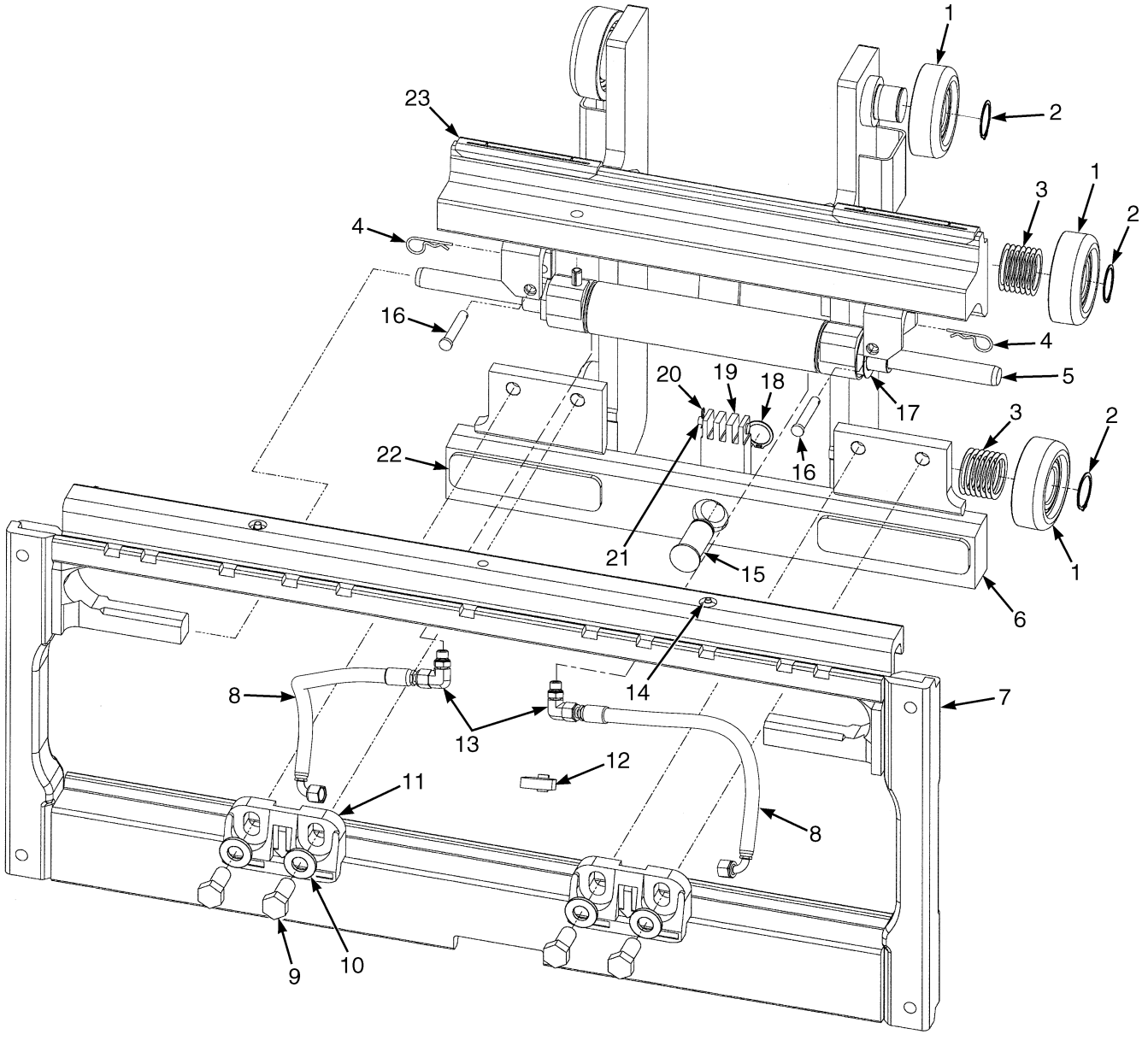

BP170466

©2015 Yale Europe Materials Handling Limited

CARRIAGE ASSEMBLY

TWO STAGE FULL FREE- LIFT-A272 – INTEGRAL SIDE-SHIFT

ITEM	PART NO.	DESCRIPTION	QTY
	580084686	Side-Shift Carriage	1
1	580081128	Load Roller	4
1	580081129	Load Roller	4
2	~~580091430~~		
	015915900	Snap Ring	4
3	580093128	Shim	24
4	580026723	Cotter Pin	2
5	580020708	Sideshift Cylinder Assembly	1
6	580084683	Carriage Wldmt	1
6	580090682	Stubshaft	4
7	~~580023798~~		
	582014957	Frame	1
8	580093526	Hose Assy	2
8	**b** 582013275	Hose Assy	2
9	580055980	Capscrew	4
10	580056008	Washer	4
11	~~580020723~~		
	582012213	Hook	2
12	312850042	Strap Clamp	1
13	**b** 580019861	Fitting	2
13	580039385	O-Ring	1
13	052645200	O-Ring	1
13	580019865	Fitting	2
13	504155200	O-Ring	1
13	052645200	O-Ring	1
13	580039385	O-Ring	1
13	052645200	O-Ring	1
13	580019865	Fitting	2
13	504155200	O-Ring	1
13	052645200	O-Ring	1
14	015628700	Grease Fitting	2
15	582020268	Pin	1
16	580026721	Pin	2
17	580026720	Shim	3
18	500227907	Snap Ring	1
19	580090605	Anchor	1
20	580095399	Chain Anchor Pin	1
21	015415900	Cotter Pin	2
22	580020726	Bearing Strip (Lower)	2
23	580020724	Bearing Strip (Upper)	2
	a 582012635	Carriage (Fork Positioner) (907 mm)	1

FOOTNOTES:

a Not Illustrated

b With Fork Positioner

©2015 Yale Europe Materials Handling Limited

CARRIAGE ASSEMBLY (FIGURE 10-16)

TWO STAGE FULL FREE- LIFT - C663 — INTEGRAL SIDE-SHIFT

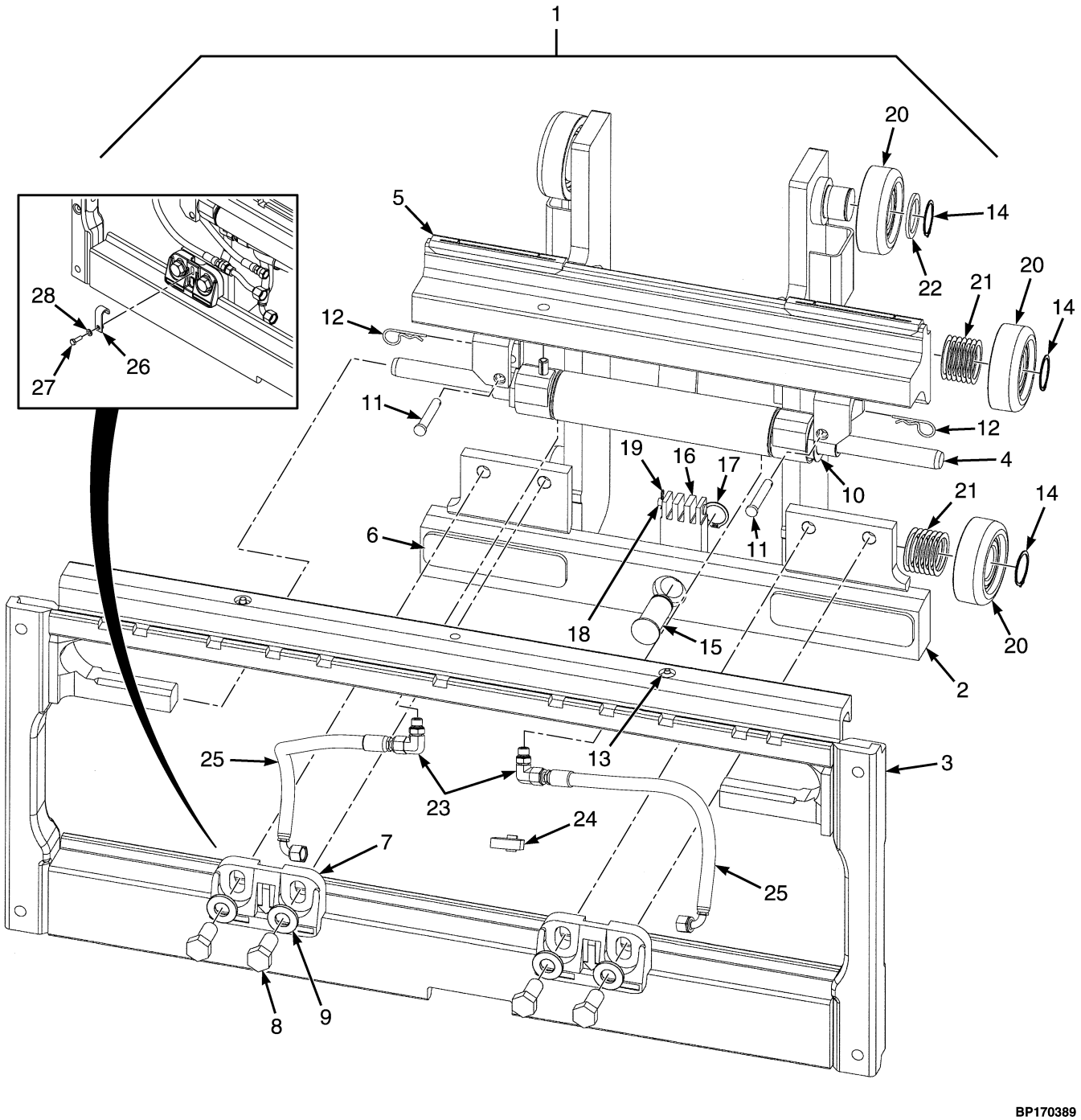

BP170389

©2015 Yale Europe Materials Handling Limited

CARRIAGE ASSEMBLY

TWO STAGE FULL FREE- LIFT - C663 – INTEGRAL SIDE-SHIFT

ITEM	PART NO.	DESCRIPTION	QTY
1	580088570	Side-Shift Carriage (Assembly)	1
2	580091009	Carriage Wldmt (Inner)	1
2	504066700	Stubshaft	6
3	~~580023799~~		
	582014958	Frame (Outer) (977 mm)	1
4	580020708	Sideshift Cylinder Assembly (☞Page 10-40)	1
5	580020724	Bearing Strip (Upper)	2
6	580020726	Bearing Strip (Lower)	2
7	~~580020723~~		
	582012213	Hook	2
8	580055980	Capscrew	4
9	580056008	Washer	4
10	580026720	Shim	AR
11	580026721	Pin	2
12	580026723	Cotter Pin	2
13	015628700	Grease Fitting	2
14	015916300	Snap Ring	6
14	**b** 449029011	Snap Ring	6
15	524147388	Pin	1
16	524197448	Chain Anchor	1
17	500227907	Snap Ring	1
18	518792697	Pin	1
19	015415900	Cotter Pin	1
20	520036852	Load Roller ("B") (92.18 mm/91.92 mm)	6
20	580001430	Load Roller ("A") (91.80 mm/91.54 mm) (Alternate)	6
20	520052899	Load Roller ("B") (92.18 mm/91.92 mm) (Alternate)	6
20	580001436	Load Roller ("A") (93.32 mm/93.06 mm) (Alternate)	6
21	504233232	Shim (0.508 mm)	28
22	504235278	Spacer	2
23	**c** 580019861	Fitting	2
23	580039385	O-Ring	1
23	052645200	O-Ring	1
23	580019865	Fitting	2
23	504155200	O-Ring	1
23	052645200	O-Ring	1
24	312850042	Strap Clamp	1
25	580093526	Hose Assy	2
25	**c** 582013275	Hose Assy	2
26	582012185	Bracket Wldmt	2
26	582020983	Bracket Wldmt (Alternate)	2
27	580084947	Capscrew	2
28	580086384	Washer	2
	a 582012634	Carriage (977 mm) (Fork Positioner)	1

FOOTNOTES:

a Not Illustrated
b Optional
c With Fork Positioner

©2015 Yale Europe Materials Handling Limited

INTEGRAL SIDE-SHIFT (FIGURE 10-17)
FORK POSITIONER — TWO STAGE LIMITED FREE-LIFT

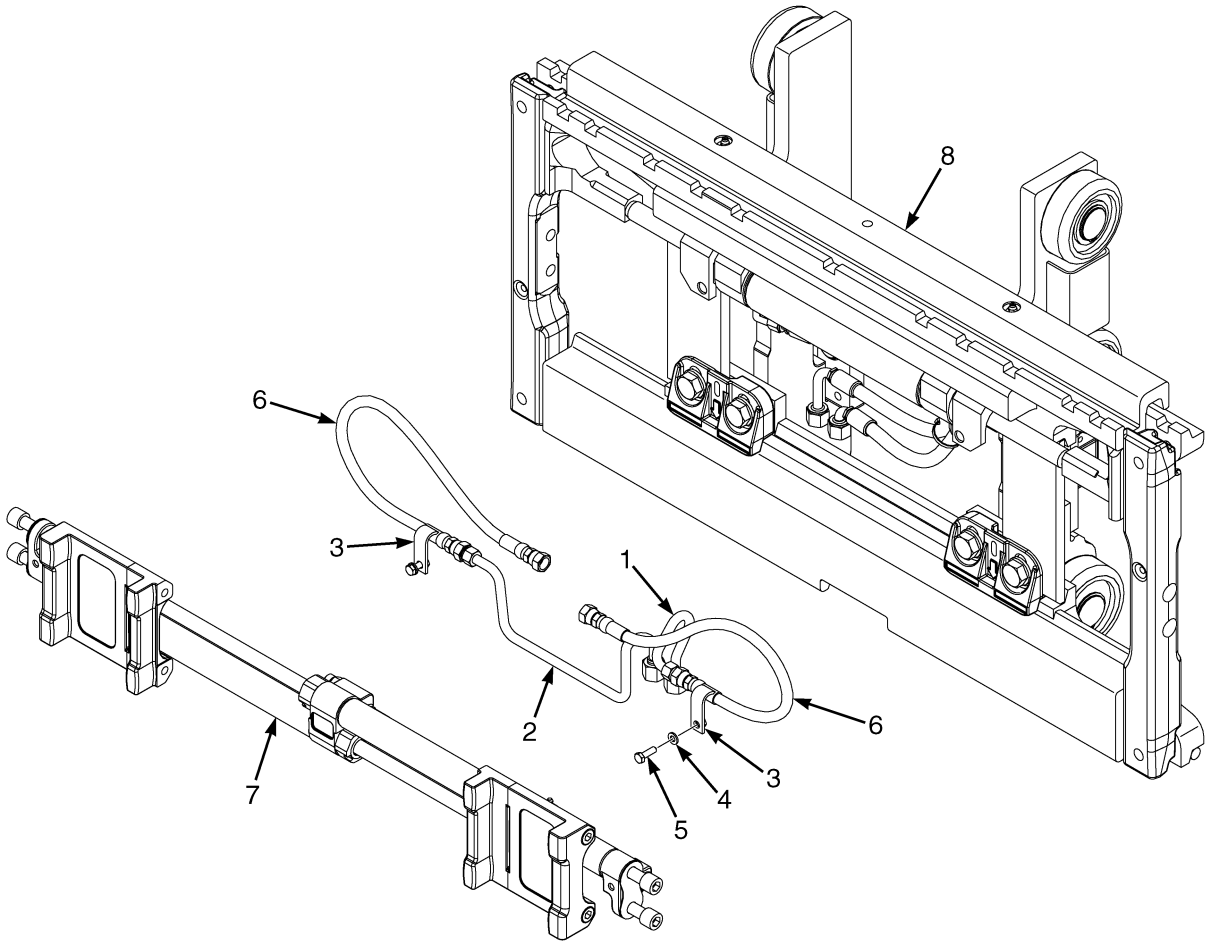

BP020033

©2015 Yale Europe Materials Handling Limited

INTEGRAL SIDE-SHIFT
FORK POSITIONER – TWO STAGE LIMITED FREE-LIFT

ITEM	PART NO.	DESCRIPTION	QTY
1	**a** 582013476	Tube Assy	1
1	**b** 582013472	Tube Assy	1
2	**a** 582013475	Tube Assy	1
2	**b** 582013471	Tube Assy	1
3	582012185	Bracket Wldmt	2
4	580086384	Washer	2
5	580084947	Capscrew	2
6	582011382	Hose Assy	2
7	**a** 582012635	Carriage (Fork Positioner) (907 mm)	1
7	**b** 582012634	Carriage (977 mm) (Fork Positioner)	1
8	. . . . .	Carriage Assembly (☞Page 10-22, ☞Page 10-24)	1

FOOTNOTES:

a A270 Mast

b C661 Mast

©2015 Yale Europe Materials Handling Limited

INTEGRAL SIDE-SHIFT (FIGURE 10-18)
FORK POSITIONER (907 MM) — 2 AND 3 FFL

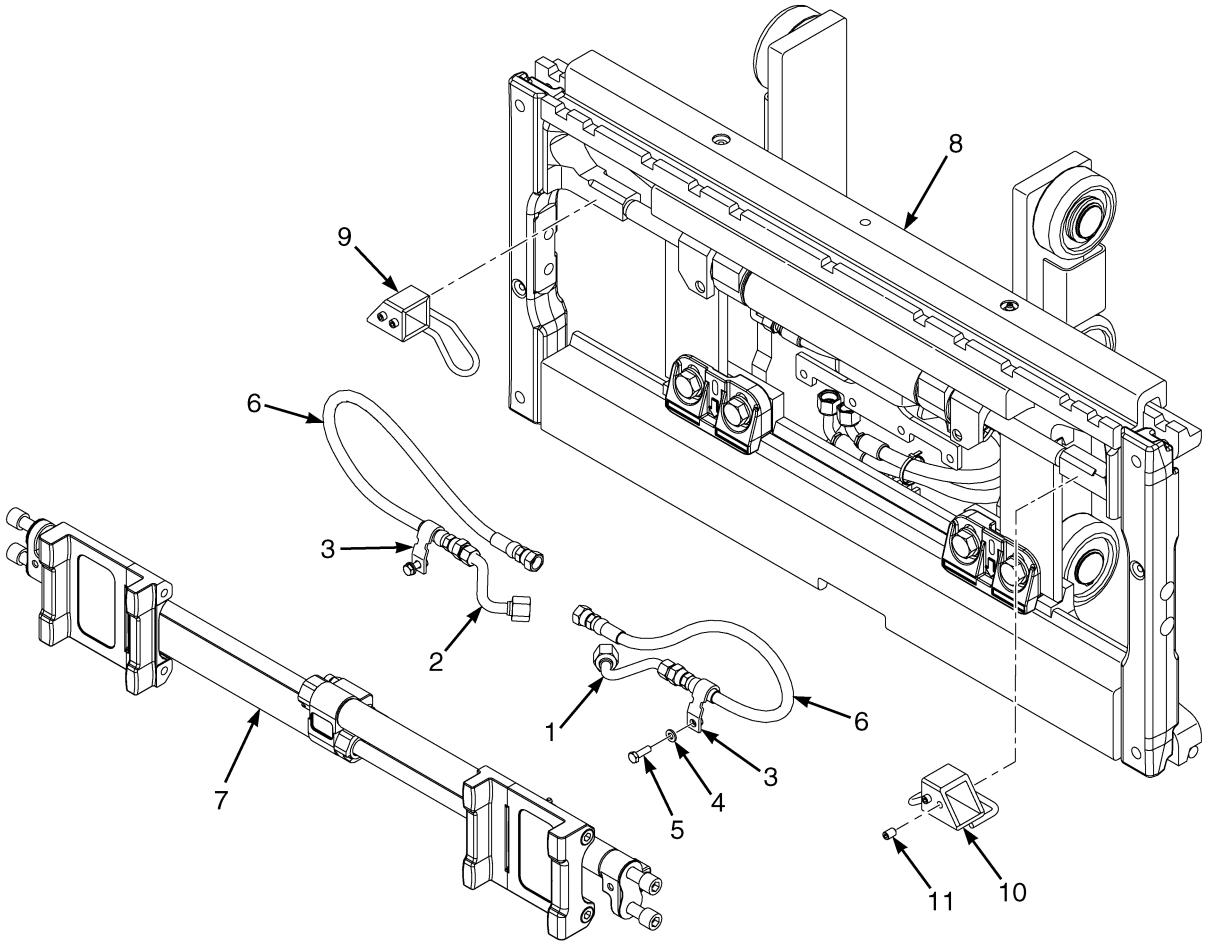

BP020050

©2015 Yale Europe Materials Handling Limited

INTEGRAL SIDE-SHIFT
FORK POSITIONER (907 MM) – 2 AND 3 FFL

ITEM	PART NO.	DESCRIPTION	QTY
1	582027471	Tube Assy	1
2	582027470	Tube Assy	1
3	582012185	Bracket Wldmt	2
4	580086384	Washer	2
5	580084947	Capscrew	2
6	~~582021069~~		
	582012663	Hose Assy	2
7	582012635	Carriage (Fork Positioner) (907 mm)	1
8	. . . . .	Carriage Assembly (☞Page 10-26, ☞Page 10-30)	1
9	582026741	Guide (Hose) (RH)	1
10	582026740	Guide (Hose) (LH)	1
11	582024514	Setscrew	4

©2015 Yale Europe Materials Handling Limited

INTEGRAL SIDE-SHIFT (FIGURE 10-19)
FORK POSITIONER (977 MM) — 2 AND 3 FFL

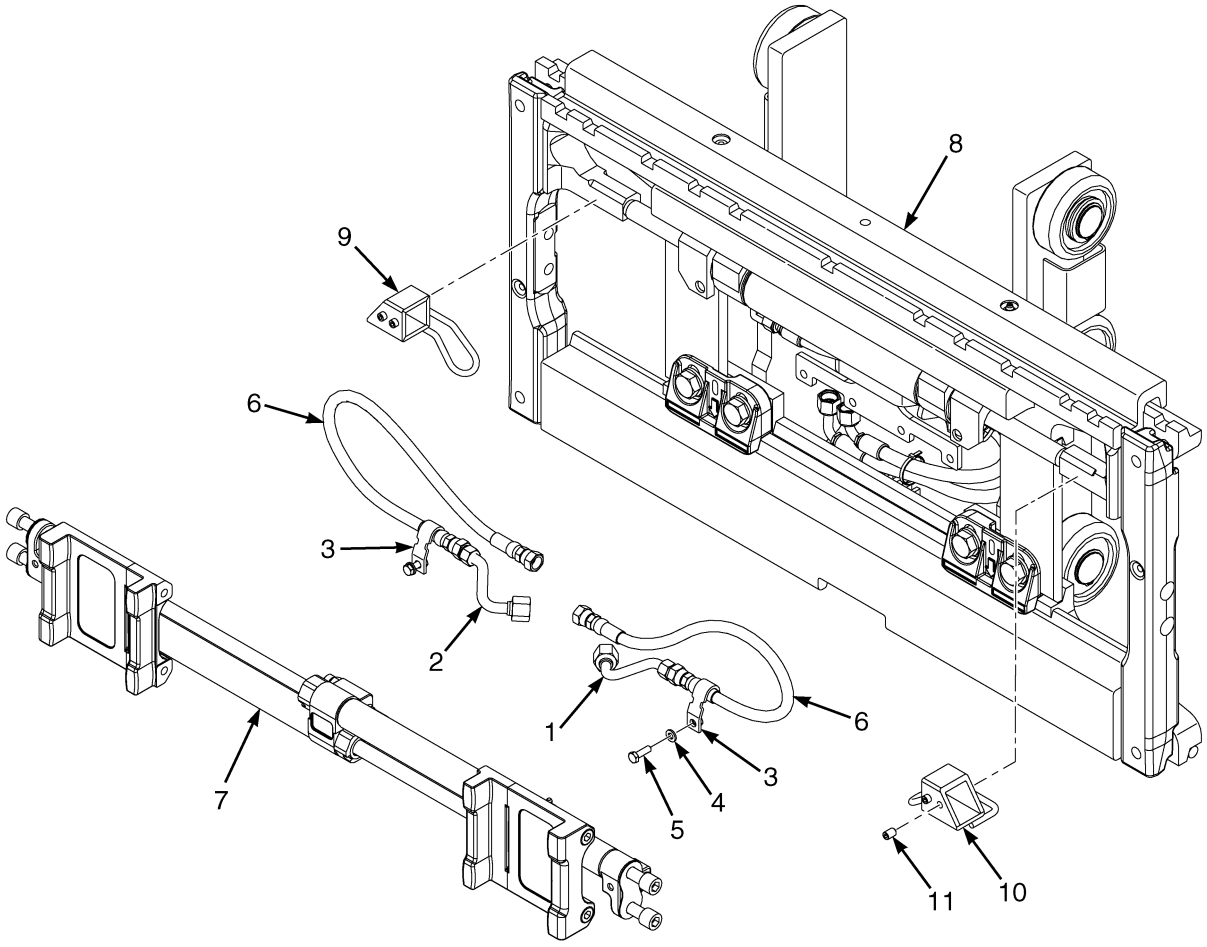

BP020050

©2015 Yale Europe Materials Handling Limited

INTEGRAL SIDE-SHIFT
FORK POSITIONER (977 MM) – 2 AND 3 FFL

ITEM	PART NO.	DESCRIPTION	QTY
1	**b** 582027471	Tube Assy	1
1	**a** 582022448	Tube Assy	1
2	**b** 582027470	Tube Assy	1
2	**a** 582022447	Tube Assy	1
3	**b** 582012185	Bracket Wldmt	2
3	**a** 582022554	Bracket Wldmt	2
4	580086384	Washer	2
5	580084947	Capscrew	2
6	**b** ~~582021069~~ 582012663	Hose Assy	2
6	**a** 582026734	Hose Assy	2
7	582012634	Carriage (977 mm) (Fork Positioner)	1
8	. . . . .	Carriage Assembly (☞Page 10-28, ☞Page 10-32)	1
9	582026741	Guide (Hose) (RH)	1
10	582026740	Guide (Hose) (LH)	1
11	582024514	Setscrew	4

FOOTNOTES:

a Three Stage FFL

b Two Stage FFL

©2015 Yale Europe Materials Handling Limited

INTEGRAL SIDE-SHIFT CYLINDER (FIGURE 10-20)

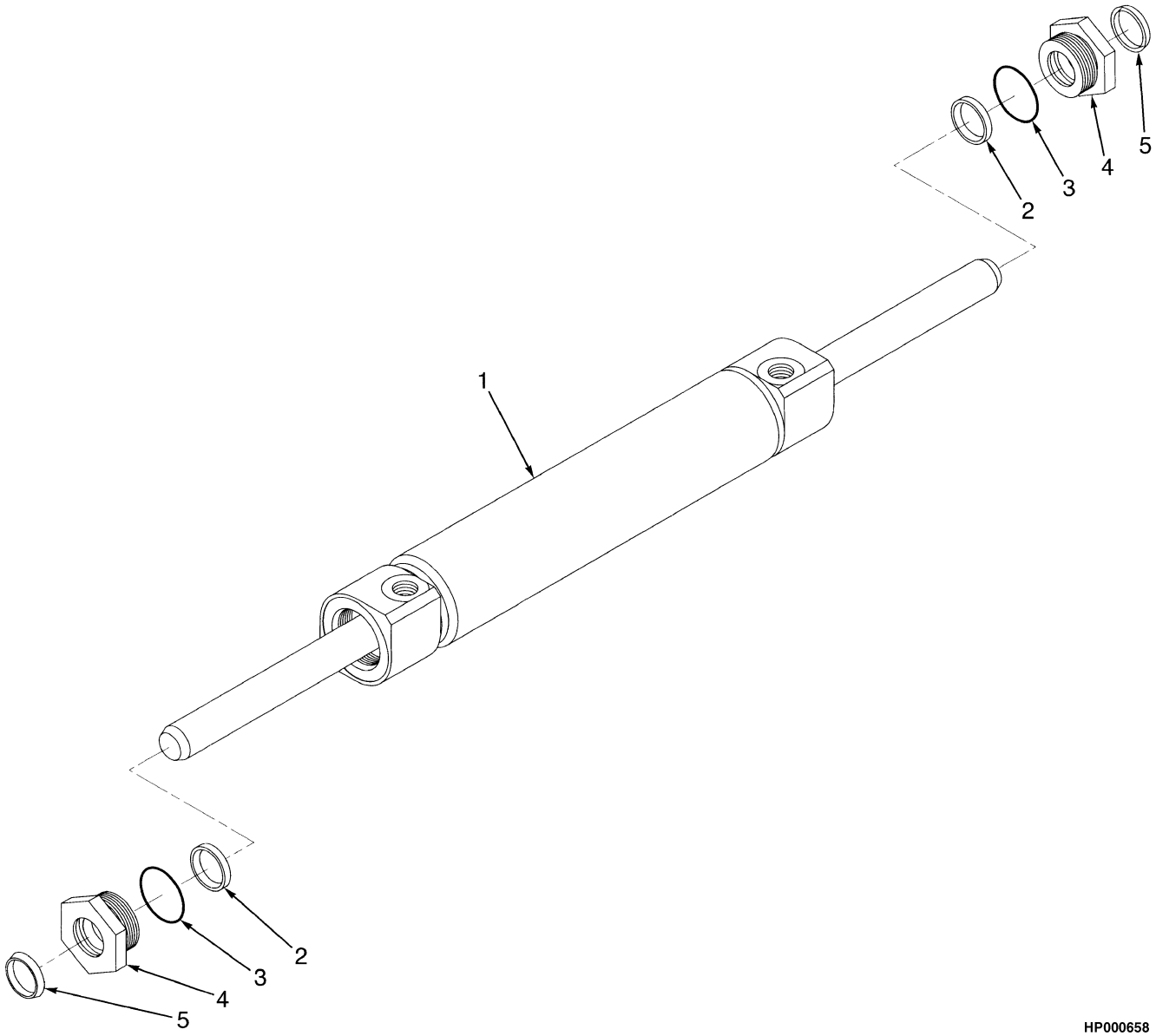

HP000658

ITEM	PART NO.	DESCRIPTION	QTY
	580020708	Sideshift Cylinder Assembly	1
1	580020710	Sideshift Cylinder	1
2	580020721	Rod Seal	2
3	580020719	O-Ring	2
4	580026724	Retainer	2
5	580020741	Rod Wiper	2
6	580027520	Kit-Seal	1

©2015 Yale Europe Materials Handling Limited

NOTES

©2015 Yale Europe Materials Handling Limited

FORK POSITIONER ASSEMBLY (FIGURE 10-21)

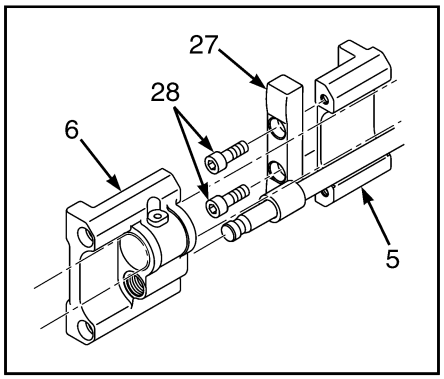

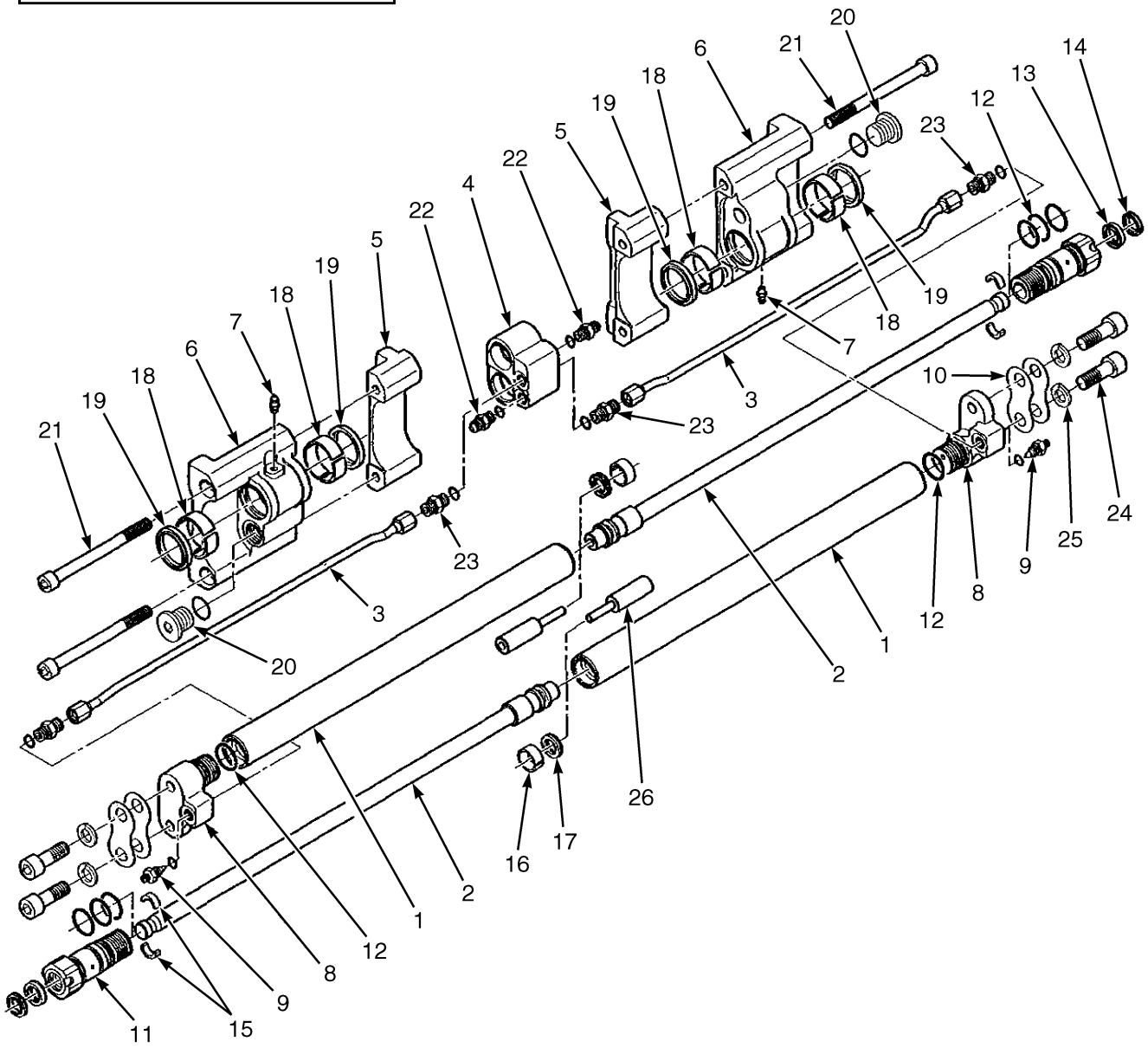

©2015 Yale Europe Materials Handling Limited

FORK POSITIONER ASSEMBLY

ITEM	PART NO.	DESCRIPTION	QTY
	582012635	Carriage (Fork Positioner) (907 mm)	1
	582012634	Carriage (977 mm) (Fork Positioner)	1
1	. . . . .	Cylinder Shell	2
2	. . . . .	Cylinder Rod	2
3	582033811	Tube (907 mm)	2
3	582033813	Tube (977 mm.)	2
4	. . . . .	Mainfold	1
5	. . . . .	Inner Carrier	2
6	. . . . .	Outer Carrier	2
7	582027313	Grease Fitting	1
8	. . . . .	Cylinder Head End	2
9	582049413	Restrictor Fitting	2
10	582033812	Shim	8
11	. . . . .	Retainer	2
12	. . . . .	O-Ring	8
13	. . . . .	Rod Seal	2
14	. . . . .	Rod Wiper	2
15	. . . . .	Keeper	4
16	. . . . .	Piston Wear Ring	2
17	. . . . .	Piston Seal	2
18	. . . . .	Composite Bearing	4
19	. . . . .	Wiper	4
20	. . . . .	Plug	2
21	. . . . .	Capscrew	4
22	582027328	Fitting	4
23	582027327	Fitting	4
24	. . . . .	Capscrew	4
25	. . . . .	Lockwasher	4
26	. . . . .	Piston Spacer	2
27	**a** 582033662	Spacer Bar	2
28	**a** 582033136	Capscrew	4
	582015139	Kit-Service Cylinder	1
	582015140	Kit-Bearing	1

FOOTNOTES:

a With 100mm width Forks

©2015 Yale Europe Materials Handling Limited

AUXILIARY TUBE EXTENSIONS (FIGURE 10-22)

TWO-STAGE LIMITED FREE-LIFT

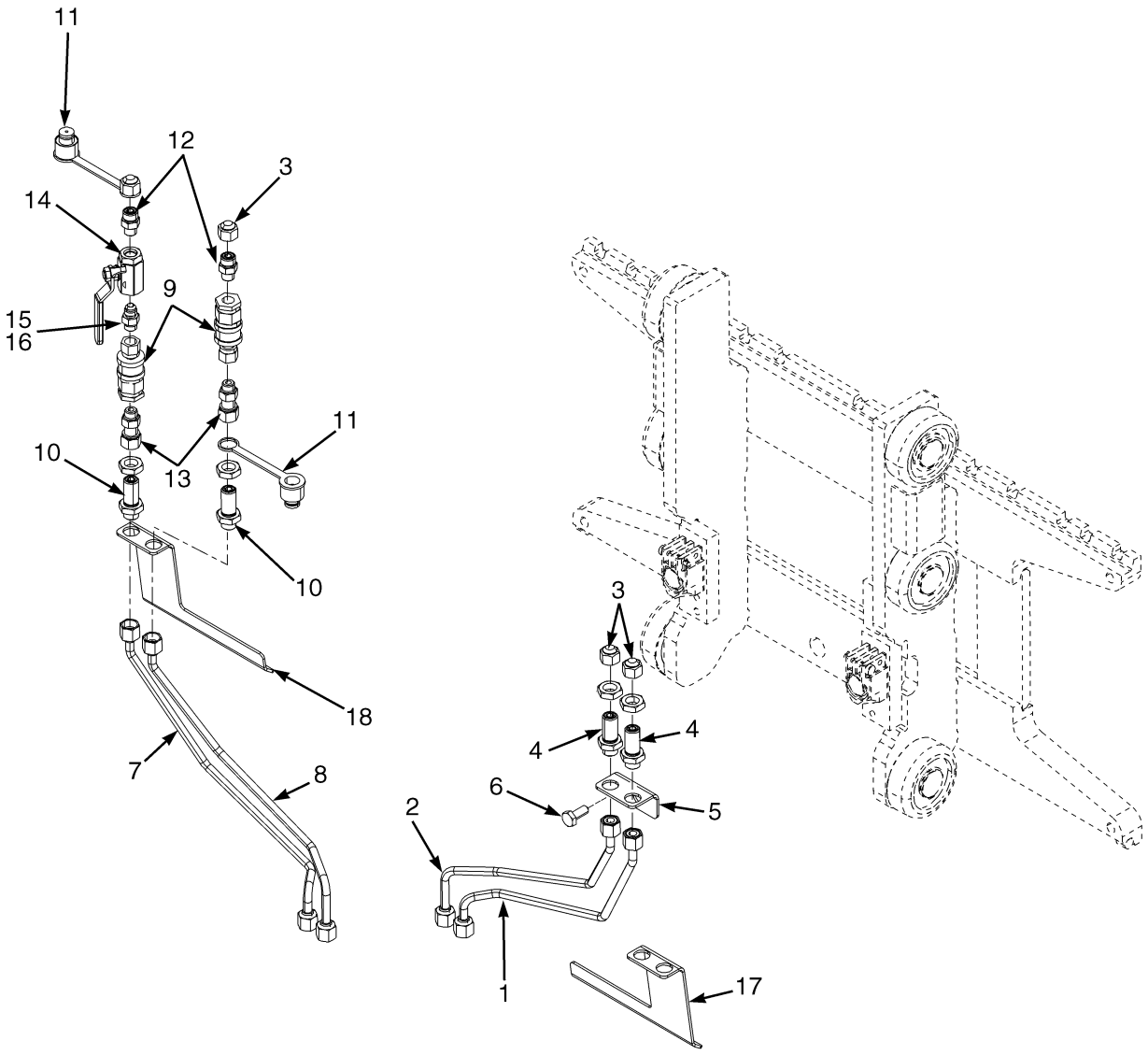

BP000447

©2015 Yale Europe Materials Handling Limited

AUXILIARY TUBE EXTENSIONS
TWO-STAGE LIMITED FREE-LIFT

KEY:
A: 3 Function, without Quick Disconnect
B: 4 Function, without Quick Disconnect
C: 3 Function, with Quick Disconnect
D: 4 Function, with Quick Disconnect

ITEM	PART NO.	DESCRIPTION	QTY A	QTY B	QTY C	QTY D
1	**a** 580089576	Tube Assy	1	1	1	1
1	**b** 580063982	Tube Assy	1	1	1	1
2	**a** 580089577	Tube Assy	1	1	1	1
2	**b** 580063986	Tube Assy	1	1	1	1
3	580039424	Cap	2	2	2	2
4	580039394	Fitting	2	2	2	2
4	504155200	O-Ring	2	2	2	2
5	**d** 580097128	Bracket	1	1	1	1
5	580056588	Bracket (Alternate Part)	1	1	1	1
6	931014902	Capscrew	1	1	1	1
6	580082105	Capscrew (Alternate Part)	1	1	1	1
7	**a** 580089578	Tube Assy	..	1	..	1
7	**b** 580063984	Tube Assy	..	1	..	1
8	**a** 580089579	Tube Assy	..	1	..	1
8	**b** 580063983	Tube Assy	..	1	..	1
9	580018834	Quick Disconnect Fitting	..	2	..	2
10	580018835	Fitting	..	2	..	2
11	580018833	Dust Cap	..	2	..	2
12	580019808	Fitting	..	2	..	2
12	504155200	O-Ring	..	1	..	1
12	052645200	O-Ring	..	1	..	1
13	524147486	Fitting	..	2	..	2
13	504155200	O-Ring	..	1	..	1
13	052645200	O-Ring	..	1	..	1
14	580066043	Drain Valve	..	1	..	1
15	052643200	Connector	..	1	..	1
16	052645200	O-Ring	..	1	..	1
17	**c** 580056741	Bracket	1	1	1	1
18	**c** 580056586	Bracket	1	1	1	1

FOOTNOTES:

a Used on A270 mast
b Used on C661 mast
c With ISS carriage
d With standard carriage

©2015 Yale Europe Materials Handling Limited

AUXILIARY TUBE EXTENSIONS (FIGURE 10-23)

TWO AND THREE STAGE FULL FREE-LIFT

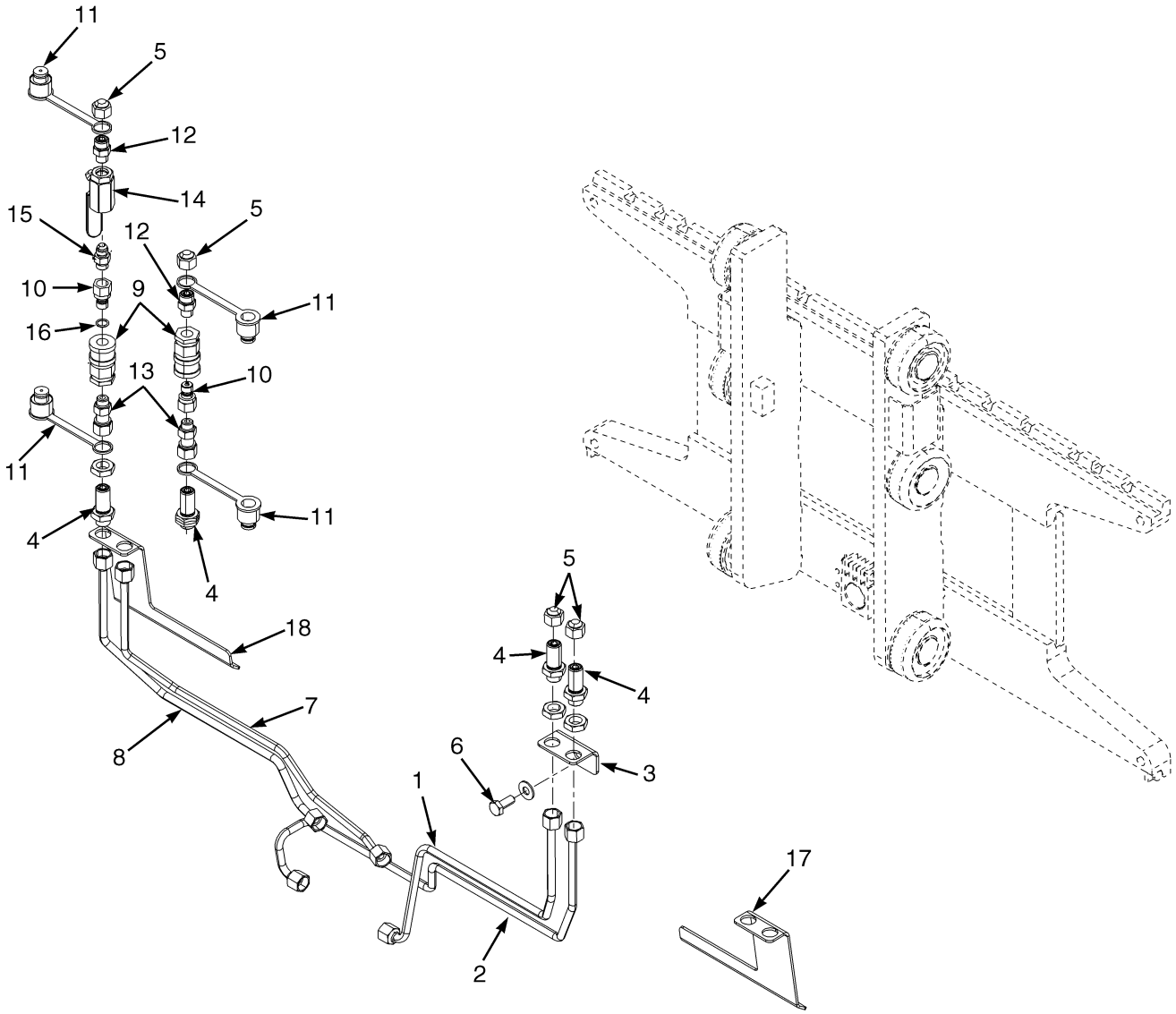

BP000448

©2015 Yale Europe Materials Handling Limited

AUXILIARY TUBE EXTENSIONS
TWO AND THREE STAGE FULL FREE-LIFT

KEY:
A: 3 Function, without Quick Disconnect
B: 4 Function, without Quick Disconnect
C: 3 Function, with Quick Disconnect
D: 4 Function, with Quick Disconnect

ITEM	PART NO.	DESCRIPTION	QTY A	B	C	D
1	**a** 580089633	Tube Assy	1	1	1	1
1	**b** 580089564	Tube Assy	1	1	1	1
1	504155200	O-Ring	1	1	1	1
2	**a** 580089634	Tube Assy	1	1	1	1
2	**b** 580089565	Tube Assy	1	1	1	1
2	504155200	O-Ring	1	1	1	1
3	**d** 580097128	Bracket	1	1	1	1
3	580056588	Bracket (Alternate Part)	1	1	1	1
4	580039394	Fitting	2	2	2	2
4	504155200	O-Ring	2	2	2	2
5	580039424	Cap	2	2	2	2
6	931014902	Capscrew	1	1	1	1
6	580082105	Capscrew (Alternate Part)	1	1	1	1
7	**a** 580089635	Tube Assy	..	1	..	1
7	**b** 580089566	Tube Assy	..	1	..	1
7	504155200	O-Ring	..	1	..	1
8	**a** 580089636	Tube Assy	..	1	..	1
8	**b** 580089567	Tube Assy	..	1	..	1
8	504155200	O-Ring	..	1	..	1
9	580018834	Quick Disconnect Fitting	..	..	2	2
10	580018835	Fitting	..	..	2	2
11	580018833	Dust Cap	..	..	4	4
12	580019808	Fitting	..	..	2	2
12	504155200	O-Ring	..	..	1	1
12	052645200	O-Ring	..	..	1	1
13	524147486	Fitting	..	..	2	2
13	504155200	O-Ring	..	..	1	1
13	052645200	O-Ring	..	..	1	1
14	580066043	Drain Valve	..	..	1	1
15	052643200	Connector	..	..	1	1
16	052645200	O-Ring	..	..	1	1
17	**c** 580056741	Bracket	1	1	1	1
18	**c** 580056586	Bracket	1	1	1	1

FOOTNOTES:

a Used with A271 and A272 masts
b Used with C662 mast
c With ISS carriage
d With standard carriage

©2015 Yale Europe Materials Handling Limited

IMPACT SENSOR (FIGURE 10-24)

(→ 2/2015)

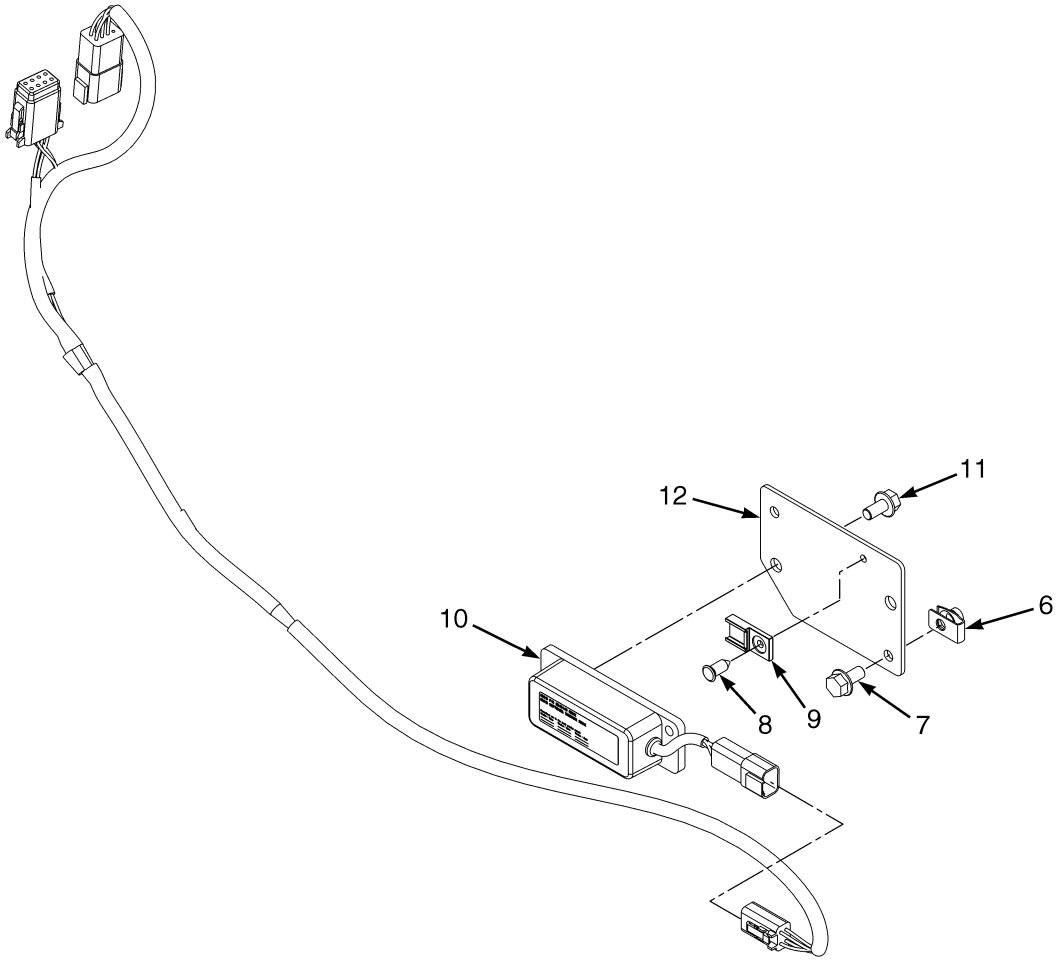

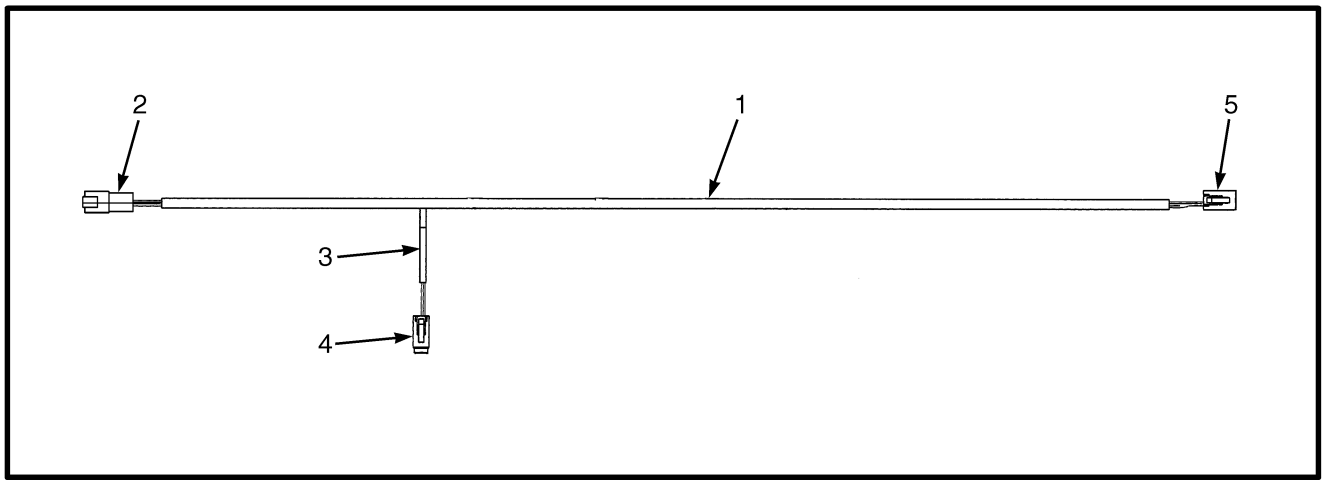

BP000490

©2015 Yale Europe Materials Handling Limited

IMPACT SENSOR

(→ 2/2015)

ITEM	PART NO.	DESCRIPTION	QTY
1	580093386	Wire Harness	1
2	. . . . .	Main Harness Connector	1
2	580042219	Connector (8 Pin)	1
2	580042220	Connector	1
2	580019353	Terminal (Pin)	7
2	580019119	Plug	1
3	504232281	Conduit	AR
4	. . . . .	Display Harness Connector	1
4	580019119	Plug	1
4	580019107	Terminal (Socket)	7
4	580042222	Connector	1
4	580042221	Connector	1
5	. . . . .	Impact Sensor	1
5	505064713	Terminal	4
5	580020944	Connector	1
5	580020943	Connector (4-Way)	1
6	580051800	Nut (Foldover)	2
7	580049011	Capscrew	2
8	580056613	Fastener	1
9	580026812	Clip	1
10	582001764	Sensor (Impact)	1
11	~~582041056~~		
	580047714	Capscrew	2
12	582003479	Bracket	1

©2015 Yale Europe Materials Handling Limited

IMPACT SENSOR (FIGURE 10-25)

(2/2015 →)

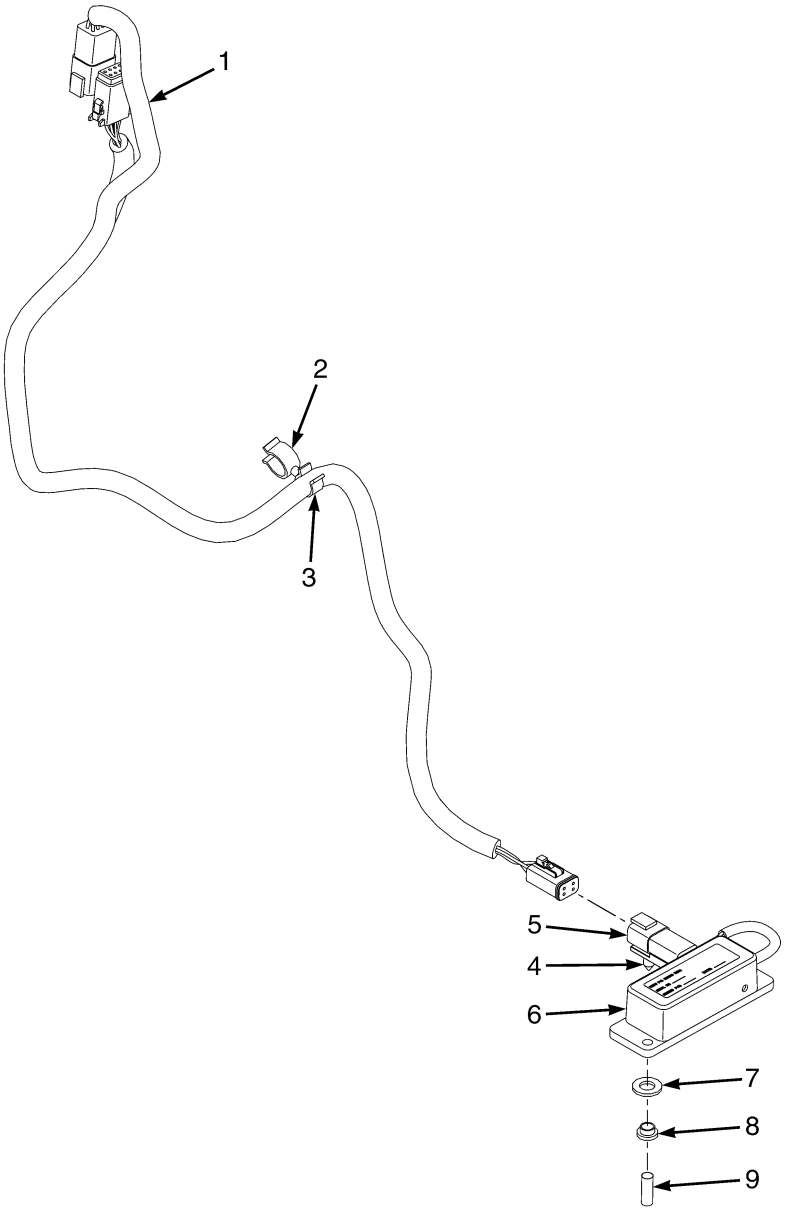

BP000899

©2015 Yale Europe Materials Handling Limited

IMPACT SENSOR

(2/2015 →)

ITEM	PART NO.	DESCRIPTION	QTY
1	582039646	Wire Harness	1
2	580041384	Clamp (Swivel)	1
3	580041371	Clamp (Swivel)	1
4	580056613	Fastener	1
5	580026812	Clip	1
6	582001764	Sensor (Impact)	1
7	580095072	Washer	2
8	582024461	Bushing	2
9	~~582041056~~		
	580047714	Capscrew	2

©2015 Yale Europe Materials Handling Limited

TRACTION SPEED LIMITER (FIGURE 10-26)
STANDARD AND INTEGRAL SIDE-SHIFT CARRIAGES

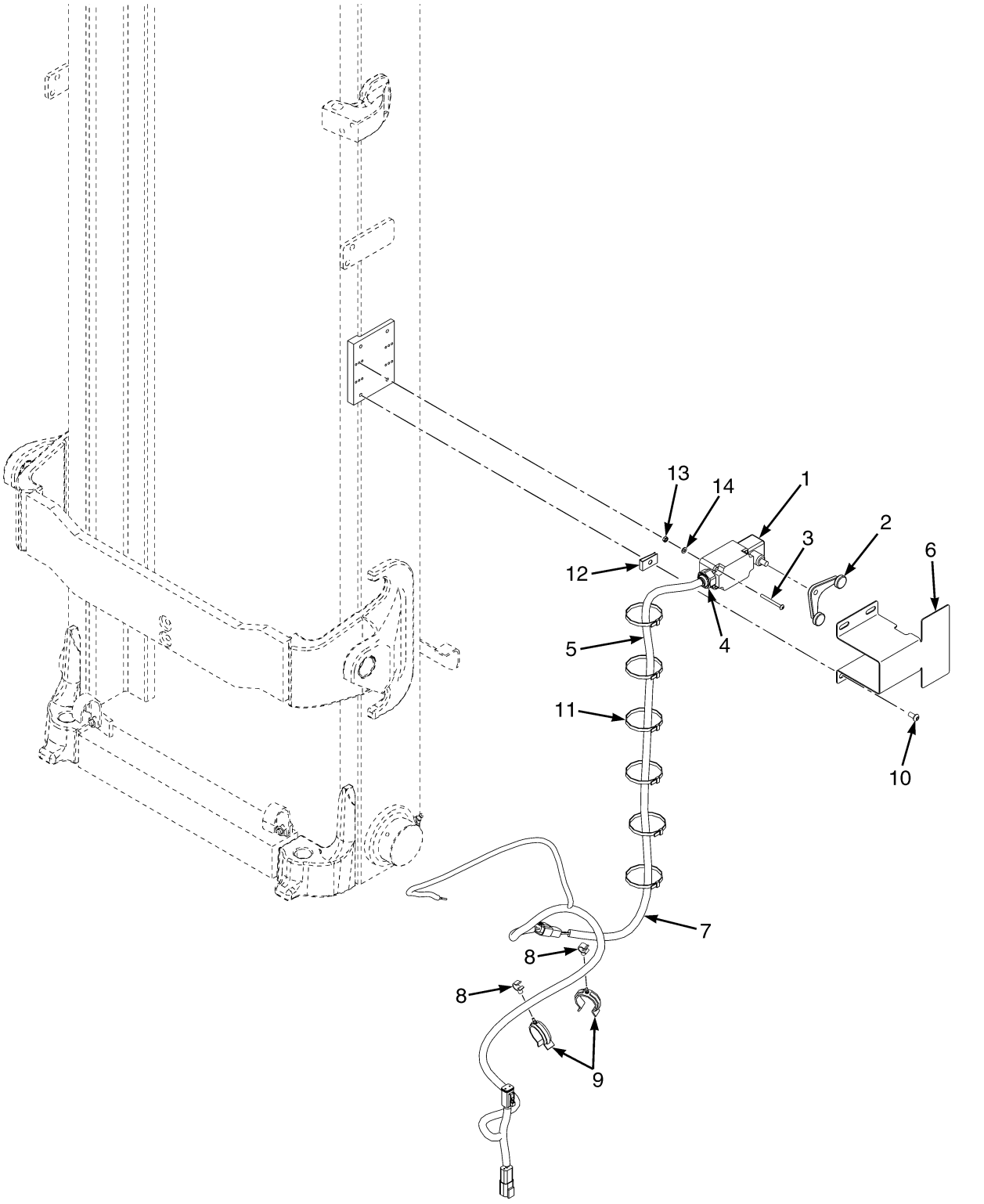

©2015 Yale Europe Materials Handling Limited

TRACTION SPEED LIMITER

STANDARD AND INTEGRAL SIDE-SHIFT CARRIAGES

ITEM	PART NO.	DESCRIPTION	QTY
1	582039204	Switch -Limit	1
2	582039205	Lever	1
3	580093735	Capscrew	4
4	582039208	Gland	1
5	582039210	Wire Harness (Switch)	1
6	582039206	Cover	1
7	582039209	Wire Harness (Traction Speed)	1
8	580049559	Clamp (Swivel)	2
9	580049555	Clamp (Swivel)	2
10	518791613	Capscrew	4
11	504070790	Strap Clamp	6
12	504225257	Nut	4
13	449015012	Nut	4
14	940004903	Washer	4

©2015 Yale Europe Materials Handling Limited

NOTES

©2015 Yale Europe Materials Handling Limited

11 FIELD SERVICE KITS

SECTION 11
FIELD SERVICE KITS

DESCRIPTION	PAGE
ADD ON OPTIONS	
FORK POSITIONER	11-17
ADD ON TELEMETRY KITS	11-16
AUXILIARY TUBE EXTENSION KITS	11-3
CAB KITS	
WHEN SELECTING ANY CAB KIT THE APPROPRIATE INSTALLATION KIT SHOULD ALSO BE SELECTED	11-5
CONVERSION KIT	11-2
DIRECTIONAL CONTROL	11-2
CONVERSION KITS	
BATTERY TRAY EXTRACTION	11-3
HEADER HOSE CONVERSION KITS	
THREE STAGE FULL FREE LIFT - A271 (→ S/N G807B02138H)	11-11
THREE STAGE FULL FREE LIFT - A271 (S/N G807B02139H →)	11-12
THREE STAGE FULL FREE LIFT - C662 (→ S/N G807B02138H)	11-13
THREE STAGE FULL FREE LIFT - C662 (S/N G807B02139H →)	11-14
TWO STAGE FULL FREE- LIFT - C663 (→ S/N G807B02138H)	11-15
TWO STAGE FULL FREE- LIFT - C663 (S/N G807B02139H →)	11-16
TWO STAGE LIMITED FREE LIFT - A270 (→ S/N G807B02138H)	11-7
TWO STAGE LIMITED FREE LIFT - A270 (S/N G807B02139H →)	11-8
TWO STAGE LIMITED FREE LIFT - C661 (→ S/N G807B02138H)	11-9
TWO STAGE LIMITED FREE LIFT - C661 (S/N G807B02139H →)	11-10
HYDRAULIC CONVERSION KITS	11-2
LIGHT/ALARM ADD-ON OPTIONS KITS	11-4
MISCELLANEOUS ADD-ON OPTION KITS	11-4
SERVICE KITS	
WIDE HOSE SHEAVE	11-16

©2015 Yale Europe Materials Handling Limited

CONVERSION KIT

DESCRIPTION	PART NUMBER
Kit-Tilt 5 Forward/4 Back	524332184
Kit-Tilt 5 Forward/5 Back	524332185
Kit-Tilt 10 Forward/5 Back	524332186
Kit-Tilt Common Parts	524332604
Kit-Conversion Lowered Hydraulic Oil	550014701
Kit-Gas Spring (WB1)	550031132
Kit-Gas Spring (WB2)	550031133
Kit-Gas Spring (WB3)	550031134
Kit Synchronous Steering	**a**550036937
Kit-Cooling Traction Motor	550039099

FOOTNOTES:

a Kit requires software that must be Dealer installed. Dealer to obtain new configuration data file from Axcess Online

CONVERSION KIT
DIRECTIONAL CONTROL

DESCRIPTION	PART NUMBER
Kit Std Pedal to FDC with Manual Controls	524333632
Kit FDC to Std Pedal with Manual Control FWD/REV Switch	524333818
Kit Standard Pedal to FDC with Removal of Forward/Reverse Switch from Mini Lever.	524333687
Kit FDC to Standard Pedal with FWD/REV Mini Lever Switch	524333764
Kit Accelerator Extension	550023711

HYDRAULIC CONVERSION KITS

DESCRIPTION	PART NUMBER
Kit-Mini Lever Conv 3 Way (w/lockout to w/o lockout)	**a**524332187
Kit-Mini Lever Conv 3 Way (w/o Lockout to w/lockout)	**a**524332188
Kit-Mini Lever Conv 4 Way (w/lockout to w/o lockout)	**a**524332189
Kit-Mini Lever Conv 4 Way (w/o Lockout to w/lockout)	**a**524332190
Kit-Hyd Valve 3 to 4 Way (Non Clamping to Clamping, E-Hyd Valve)	**a**524332191
Kit-Manual Lever Conversion 3 Way (Non Clamping to Clamping)	**a**524332192
Kit-Hyd Valve 3 to 4 Way (Manual Valve to 4 Function w/o Clamping)	**b**524337165
Kit-Hyd Valve 3 to 4 Way (Manual Valve to 4 Function with Clamping)	**a**524337166
Kit-Hyd Valve 3 TO 4 Way (MLM Single Function)	**b**550000039
Kit -Conversion Add 3 Function Hoses, Manual Valve	550004130
Kit -Conversion Add 4 Function Hoses, Manual Valve	550004131
Kit -Conversion Add 3 and 4 Function Auxiliary Hoses, Manual Valve	550004132

©2015 Yale Europe Materials Handling Limited

HYDRAULIC CONVERSION KITS (CONTINUED)

DESCRIPTION	PART NUMBER
Kit -Conversion Add 3 Function Hoses, E-Hyd Valve	550004133
Kit -Conversion Add 4 Function Hoses, E-Hyd Valve	550004134
Kit -Conversion Add 3 and 4 Function Auxiliary Hoses, E-Hyd Valve	550004135

FOOTNOTES:

a Kit requires software that must be Dealer installed. Dealer to obtain new configuration data file from Axcess Online.

b Software can be activated via the display.

CONVERSION KITS
BATTERY TRAY EXTRACTION

DESCRIPTION	PART NUMBER
Kit Battery Tray Extract with Stacker (BC546)	550114859
Kit Battery Tray Extract with Forks (BC546)	550114861
Kit Battery Tray Extract with Stacker (BC642)	550114863
Kit Battery Tray Extract with Forks (BC642)	550114865
Kit Battery Tray Extract with Stacker (BC750)	550114867
Kit Battery Tray Extract with Forks (BC750)	550114869

AUXILIARY TUBE EXTENSION KITS

DESCRIPTION	PART NUMBER
Kit-Quick Disconnect Fitting (Manual Hydraulic)	524147488
Kit-Aux Tube Extension (3 Func. Class II-Standard Carriage)	**c**524242851
Kit-Aux Tube Extension (4 Func. Class II-Standard Carriage)	**c**524242852
Kit-Aux Tube Extension (3 Func. Class II-Integral Side-Shift)	**c**524242853
Kit-Aux Tube Extension (4 Func. Class II-Integral Side-Shift)	**c**524242854
Kit-Aux Tube Extension (Third Function Standard Carriage)	**d**524333732
Kit-Aux Tube Extension (Fourth Function Standard Carriage)	**d**524333733
Kit-Aux Tube Extension (Third Function Integral Side-Shift)	**d**524333735
Kit-Aux Tube Extension (Fourth Function Integral Side-Shift)	**d**524333736
Kit-Aux Tube Extension (Third Function Standard Carriage)	**a**524333772
Kit-Aux Tube Extension (Fourth Function Standard Carriage)	**a**524333773
Kit-Aux Tube Extension (Third Function Integral Side-Shift)	**a**524333775
Kit-Aux Tube Extension (Fourth Function Integral Side-Shift)	**a**524333776
Kit-Aux Tube Extension (Third Function Standard Carriage)	**b**524333778
Kit-Aux Tube Extension (Fourth Function Standard Carriage)	**b**524333779
Kit-Aux Tube Extension (Third Function Integral Side-Shift)	**b**524333781
Kit-Aux Tube Extension (Fourth Function Integral Side-Shift)	**b**524333782

©2015 Yale Europe Materials Handling Limited

FOOTNOTES:
a A270 (2 LFL)
b A271 and A272 (2/3 FFL)
c C661 (2 LFL)
d C662 and C663 (2/3 FFL)

MISCELLANEOUS ADD-ON OPTION KITS

DESCRIPTION	PART NUMBER
Kit-DC/DC Convertor	524332204
Kit-Conversion (Keyless Start with Aux Key Switch)	**a**524332205
Kit-Conversion (Keyless Start without Aux Key Switch)	**a**524337400
Kit-Handle (Reverse)	524337311
Kit-Adapter (12 Volt)	524337313
Kit-Mirror (Dual Mirrors) (Rear)	524337315
Kit-Mirror (Panoramic Mirror)	524337316
Kit-Load Weight ON Display	**a**524337307
Kit-Sensor (Return To set Tilt)	**a**550013614
Kit (Lifting Eye)(Battery)	550005007
Kit (Retainer Battery)	550019158
Kit-Impact Monitoring	**a**550010752

FOOTNOTES:
a Kit requires software that must be Dealer installed. Dealer to obtain new configuration data file from Axcess Online.

LIGHT/ALARM ADD-ON OPTIONS KITS

DESCRIPTION	PART NUMBER
Kit-Worklight (One Rear)(Halogen)	524332199
Kit-Worklight (Two Front (Halogen)	524332200
Kit-Headlight (Two Front Marker)	524332201
Kit-Led Brake/Back-UP Light	524332202
Kit-Worklight (One Rear)(LED)	524332203
Kit-Worklight (Two Front)(LED)	524337899
Kit-Strobe Light Assembly	524337900
Kit-Strobe Light Mounting (Standard Mounting Bracket)	524337901
Kit-Strobe Light Mounting (Low Mounting Bracket)	524337902
Kit-Light (Turn Signal Switch)	524337903
Kit-Back-UP Alarm	**a**524337904
Kit-Dome Light	**a**524337905
Kit-Light (Overhead Guard Harness and Switch)	524337906
Kit-Worklight (LED Mast)	**c**550030984

©2015 Yale Europe Materials Handling Limited

LIGHT/ALARM ADD-ON OPTIONS KITS (CONTINUED)

DESCRIPTION	PART NUMBER
Kit-Worklight (LED Mast w/OHG)	**c**550030985
Kit-DC/DC Convertor	**b**524332204

FOOTNOTES:
a Dome light and Audible Alarm are not available by themselves and must be ordered with other light kits.
b If truck is not already equipped with DC-DC Converter, one must be ordered with Light Kits.
c Includes Mast Light Harness

CAB KITS

WHEN SELECTING ANY CAB KIT THE APPROPRIATE INSTALLATION KIT SHOULD ALSO BE SELECTED

DESCRIPTION	PART NUMBER
Kit-Front Screen	**ac**580096324
Kit-Top Screen (546MM BC)	580096200
Kit-Top Screen (642MM BC)	580096201
Kit-Top Screen (750MM BC)	580096202
Kit-Rear Screen (Standard Hood)	**b**580096322
Kit-Rear Screen (Low Hood)	**b**580096323
Door Kit (Steel 546MM BC)	524310923
Door Kit (Steel 642MM BC)	524310929
Door Kit (Steel 750MM BC)	524310930
Kit-Door (PVC 546 mm BC)	580091703
Kit-Door (PVC 642 mm BC)	580091704
Kit-Door (PVC 750 mm BC)	580091705
Kit (Mounting Front Screen)	550000365
Kit (Mounting Top Screen)	550000366
Kit (Mounting Rear Screen)	550000367
Kit (Mounting Steel Doors)	550000368
Kit (Mounting PVC Doors)	550000369
Kit (Mounting Roof Liner)	550000370
Kit (Mounting Front Wiper/Washer)	550000371
Kit (Mounting Heater)	550000349
Kit (Rear wiper switch mounting without head liner)	550004387
Kit (Dome Light Cab Only)	550000372
Headliner (546 mm BC)	580091706
Headliner (642 mm BC)	580091707
Headliner (750 mm BC)	580091708
Kit-Wiper Motor (Front)	582020905
Kit-Wiper Arm/Blade Front (Front)	582020912
Kit-Washer Bottle	582020914

©2015 Yale Europe Materials Handling Limited

CAB KITS

WHEN SELECTING ANY CAB KIT THE APPROPRIATE INSTALLATION KIT SHOULD ALSO BE SELECTED (CONTINUED)

DESCRIPTION	PART NUMBER
Kit-Cab Heater	582011988

FOOTNOTES:

a Front Screen Option only available in combination with backward tilt of 4 degrees or less.

b Includes Wiper and Motor

c When ordering Front Screen Kit a Window Wiper and Washer Kit is required

©2015 Yale Europe Materials Handling Limited

HEADER HOSE CONVERSION KITS

TWO STAGE LIMITED FREE LIFT - A270 (→ S/N G807B02138H)

THREE TO FOUR FUNCTION

DESCRIPTION	LIFT HEIGHT TO BOTTOM OF FORKS			
	3320 mm (130.7 in.)	3820 mm (150.4 in.)	4320 mm (170.1 in.)	4820 mm (189.8 in.)
Mast Group Number	**A270 3320**	**A270 3820**	**A270 4320**	**A270 4820**
Kit-Hose Group 3 to 4 Way	524331889	524331892	524331895	524331898

TWO TO FOUR FUNCTION

DESCRIPTION	LIFT HEIGHT TO BOTTOM OF FORKS			
	3320 mm (130.7 in.)	3820 mm (150.4 in.)	4320 mm (170.1 in.)	4820 mm (189.8 in.)
Mast Group Number	**A270 3320**	**A270 3820**	**A270 4320**	**A270 4820**
Kit-Hose Group 2 to 4 Way	524331890	524331893	524331896	524331899

TWO TO THREE FUNCTION

DESCRIPTION	LIFT HEIGHT TO BOTTOM OF FORKS			
	3320 mm (130.7 in.)	3820 mm (150.4 in.)	4320 mm (170.1 in.)	4820 mm (189.8 in.)
Mast Group Number	**A270 3320**	**A270 3820**	**A270 4320**	**A270 4820**
Kit-Hose Group 2 to 3 Way	524331888	524331891	524331894	524331897

©2015 Yale Europe Materials Handling Limited

HEADER HOSE CONVERSION KITS

TWO STAGE LIMITED FREE LIFT - A270 (S/N G807B02139H →)

THREE TO FOUR FUNCTION

DESCRIPTION	LIFT HEIGHT TO BOTTOM OF FORKS			
	3320 mm (130.7 in.)	3820 mm (150.4 in.)	4320 mm (170.1 in.)	4820 mm (189.8 in.)
Mast Group Number	**A270 3320**	**A270 3820**	**A270 4320**	**A270 4820**
Kit-Hose Group 3 to 4 Way	550004069	550004072	550004075	550004078

TWO TO FOUR FUNCTION

DESCRIPTION	LIFT HEIGHT TO BOTTOM OF FORKS			
	3320 mm (130.7 in.)	3820 mm (150.4 in.)	4320 mm (170.1 in.)	4820 mm (189.8 in.)
Mast Group Number	**A270 3320**	**A270 3820**	**A270 4320**	**A270 4820**
Kit-Hose Group 2 to 4 Way	550004070	550004073	550004076	550004079

TWO TO THREE FUNCTION

DESCRIPTION	LIFT HEIGHT TO BOTTOM OF FORKS			
	3320 mm (130.7 in.)	3820 mm (150.4 in.)	4320 mm (170.1 in.)	4820 mm (189.8 in.)
Mast Group Number	**A270 3320**	**A270 3820**	**A270 4320**	**A270 4820**
Kit-Hose Group 2 to 3 Way	550004068	550004071	550004074	550004077

©2015 Yale Europe Materials Handling Limited

HEADER HOSE CONVERSION KITS

TWO STAGE LIMITED FREE LIFT - C661 (→ S/N G807B02138H)

THREE TO FOUR FUNCTION

DESCRIPTION	LIFT HEIGHT TO BOTTOM OF FORKS			
	3392 mm (133.5 in.)	3892 mm (153.2 in.)	4392 mm (172.9 in.)	4892 mm (192.6 in.)
Mast Group Number	**C661 3392**	**C661 3892**	**C661 4392**	**C661 4892**
Kit-Hose Group 3 to 4 Way	524330362	524330365	524330368	524330371

TWO TO FOUR FUNCTION

DESCRIPTION	LIFT HEIGHT TO BOTTOM OF FORKS			
	3392 mm (133.5 in.)	3892 mm (153.2 in.)	4392 mm (172.9 in.)	4892 mm (192.6 in.)
Mast Group Number	**C661 3392**	**C661 3892**	**C661 4392**	**C661 4892**
Kit-Hose Group 2 to 4 Way	524330363	524330366	524330369	524330372

TWO TO THREE FUNCTION

DESCRIPTION	LIFT HEIGHT TO BOTTOM OF FORKS			
	3392 mm (133.5 in.)	3892 mm (153.2 in.)	4392 mm (172.9 in.)	4892 mm (192.6 in.)
Mast Group Number	**C661 3392**	**C661 3892**	**C661 4392**	**C661 4892**
Kit-Hose Group 2 to 3 Way	524330361	524330364	524330367	524330370

©2015 Yale Europe Materials Handling Limited

HEADER HOSE CONVERSION KITS

TWO STAGE LIMITED FREE LIFT - C661 (S/N G807B02139H →)

THREE TO FOUR FUNCTION

DESCRIPTION	LIFT HEIGHT TO BOTTOM OF FORKS			
	3392 mm (133.5 in.)	3892 mm (153.2 in.)	4392 mm (172.9 in.)	4892 mm (192.6 in.)
Mast Group Number	**C661 3392**	**C661 3892**	**C661 4392**	**C661 4892**
Kit-Hose Group 3 to 4 Way	550003093	550003096	550003099	550003102

TWO TO FOUR FUNCTION

DESCRIPTION	LIFT HEIGHT TO BOTTOM OF FORKS			
	3392 mm (133.5 in.)	3892 mm (153.2 in.)	4392 mm (172.9 in.)	4892 mm (192.6 in.)
Mast Group Number	**C661 3392**	**C661 3892**	**C661 4392**	**C661 4892**
Kit-Hose Group 2 to 4 Way	550003094	550003097	550003100	550003103

TWO TO THREE FUNCTION

DESCRIPTION	LIFT HEIGHT TO BOTTOM OF FORKS			
	3392 mm (133.5 in.)	3892 mm (153.2 in.)	4392 mm (172.9 in.)	4892 mm (192.6 in.)
Mast Group Number	**C661 3392**	**C661 3892**	**C661 4392**	**C661 4892**
Kit-Hose Group 2 to 3 Way	550003092	550003095	550003098	550003101

©2015 Yale Europe Materials Handling Limited

HEADER HOSE CONVERSION KITS

THREE STAGE FULL FREE LIFT - A271 (→ S/N G807B02138H)

THREE TO FOUR FUNCTION

DESCRIPTION	LIFT HEIGHT TO BOTTOM OF FORKS				
	4260 mm (167.7 in.)	4560 mm (179.5 in.)	4860 mm (191.3 in.)	5160 mm (203.1 in.)	5460 mm (215.0 in.)
Mast Group Number	**A271 4260**	**A271 4560**	**A271 4860**	**A271 5160**	**A271 5460**
Kit-Hose Group 3 to 4 Way	524331902	524331905	524331908	524331911	524331914

TWO TO FOUR FUNCTION

DESCRIPTION	LIFT HEIGHT TO BOTTOM OF FORKS				
	4260 mm (167.7 in.)	4560 mm (179.5 in.)	4860 mm (191.3 in.)	5160 mm (203.1 in.)	5460 mm (215.0 in.)
Mast Group Number	**A271 4260**	**A271 4560**	**A271 4860**	**A271 5160**	**A271 5460**
Kit-Hose Group 2 to 4 Way	524331903	524331906	524331909	524331912	524331915

TWO TO THREE FUNCTION

DESCRIPTION	LIFT HEIGHT TO BOTTOM OF FORKS				
	4260 mm (167.7 in.)	4560 mm (179.5 in.)	4860 mm (191.3 in.)	5160 mm (203.1 in.)	5460 mm (215.0 in.)
Mast Group Number	**A271 4260**	**A271 4560**	**A271 4860**	**A271 5160**	**A271 5460**
Kit-Hose Group 2 to 3 Way	524331901	524331904	524331907	524331910	524331913

©2015 Yale Europe Materials Handling Limited

HEADER HOSE CONVERSION KITS

THREE STAGE FULL FREE LIFT - A271 (S/N G807B02139H →)

THREE TO FOUR FUNCTION

DESCRIPTION	LIFT HEIGHT TO BOTTOM OF FORKS			
	4260 mm (167.7 in.)	4560 mm (179.5 in.)	4860 mm (191.3 in.)	5160 mm (203.1 in.)
Mast Group Number	**A271 4260**	**A271 4560**	**A271 4860**	**A271 5160**
Kit-Hose Group 3 TO 4 Way	550004084	550004087	550004090	550004093

TWO TO FOUR FUNCTION

DESCRIPTION	LIFT HEIGHT TO BOTTOM OF FORKS				
	4260 mm (167.7 in.)	4560 mm (179.5 in.)	4860 mm (191.3 in.)	5160 mm (203.1 in.)	5460 mm (215.0 in.)
Mast Group Number	**A271 4260**	**A271 4560**	**A271 4860**	**A271 5160**	**A271 5460**
Kit-Hose Group 2 TO 4 Way	550004085	550004088	550004091	550004094	550004097

TWO TO THREE FUNCTION

DESCRIPTION	LIFT HEIGHT TO BOTTOM OF FORKS				
	4260 mm (167.7 in.)	4560 mm (179.5 in.)	4860 mm (191.3 in.)	5160 mm (203.1 in.)	5460 mm (215.0 in.)
Mast Group Number	**A271 4260**	**A271 4560**	**A271 4860**	**A271 5160**	**A271 5460**
Kit-Hose Group 2 TO 3 Way	550004083	550004086	550004089	550004092	550004095

©2015 Yale Europe Materials Handling Limited

HEADER HOSE CONVERSION KITS

THREE STAGE FULL FREE LIFT - C662 (→ S/N G807B02138H)

THREE TO FOUR FUNCTION

DESCRIPTION	LIFT HEIGHT TO BOTTOM OF FORKS				
	4260 mm (167.7 in.)	4560 mm (179.5 in.)	4860 mm (191.3 in.)	5160 mm (203.1 in.)	5460 mm (215.0 in.)
Mast Group Number	**C662 4260**	**C662 4560**	**C662 4860**	**C662 5160**	**C662 5460**
Kit-Hose Group 3 to 4 Way	524330375	524330378	524330381	524330384	524330387

TWO TO FOUR FUNCTION

DESCRIPTION	LIFT HEIGHT TO BOTTOM OF FORKS				
	4260 mm (167.7 in.)	4560 mm (179.5 in.)	4860 mm (191.3 in.)	5160 mm (203.1 in.)	5460 mm (215.0 in.)
Mast Group Number	**C662 4260**	**C662 4560**	**C662 4860**	**C662 5160**	**C662 5460**
Kit-Hose Group 2 to 4 Way	524330376	524330379	524330382	524330385	524330388

TWO TO THREE FUNCTION

DESCRIPTION	LIFT HEIGHT TO BOTTOM OF FORKS				
	4260 mm (167.7 in.)	4560 mm (179.5 in.)	4860 mm (191.3 in.)	5160 mm (203.1 in.)	5460 mm (215.0 in.)
Mast Group Number	**C662 4260**	**C662 4560**	**C662 4860**	**C662 5160**	**C662 5460**
Kit-Hose Group 2 to 3 Way	524330374	524330377	524330380	524330383	524330386

©2015 Yale Europe Materials Handling Limited

HEADER HOSE CONVERSION KITS

THREE STAGE FULL FREE LIFT - C662 (S/N G807B02139H →)

THREE TO FOUR FUNCTION

DESCRIPTION	LIFT HEIGHT TO BOTTOM OF FORKS				
	4260 mm (167.7 in.)	4560 mm (179.5 in.)	4860 mm (191.3 in.)	5160 mm (203.1 in.)	5460 mm (215.0 in.)
Mast Group Number	**C662 4260**	**C662 4560**	**C662 4860**	**C662 5160**	**C662 5460**
Kit-Hose Group 3 to 4 Way	550003070	550003073	550003076	550003079	550003082

TWO TO FOUR FUNCTION

DESCRIPTION	LIFT HEIGHT TO BOTTOM OF FORKS				
	4260 mm (167.7 in.)	4560 mm (179.5 in.)	4860 mm (191.3 in.)	5160 mm (203.1 in.)	5460 mm (215.0 in.)
Mast Group Number	**C662 4260**	**C662 4560**	**C662 4860**	**C662 5160**	**C662 5460**
Kit-Hose Group 2 to 4 Way	550003071	550003074	550003077	550003080	550003083

TWO TO THREE FUNCTION

DESCRIPTION	LIFT HEIGHT TO BOTTOM OF FORKS				
	4260 mm (167.7 in.)	4560 mm (179.5 in.)	4860 mm (191.3 in.)	5160 mm (203.1 in.)	5460 mm (215.0 in.)
Mast Group Number	**C662 4260**	**C662 4560**	**C662 4860**	**C662 5160**	**C662 5460**
Kit-Hose Group 2 to 3 Way	550003069	550003072	550003075	550003078	550003081

©2015 Yale Europe Materials Handling Limited

HEADER HOSE CONVERSION KITS

TWO STAGE FULL FREE- LIFT - C663 (→ S/N G807B02138H)

THREE TO FOUR FUNCTION

DESCRIPTION	LIFT HEIGHT TO BOTTOM OF FORKS			
	3178 mm (125.1 in.)	3678 mm (144.8 in.)	3778 mm (148.7 in.)	4298 mm (169.2 in.)
Mast Group Number	**C663 3178**	**C663 3678**	**C663 3778**	**C663 4298**
Kit-Hose Group 3 to 4 Way	524198914	524330391	524330394	524330397

TWO TO FOUR FUNCTION

DESCRIPTION	LIFT HEIGHT TO BOTTOM OF FORKS			
	3178 mm (125.1 in.)	3678 mm (144.8 in.)	3778 mm (148.7 in.)	4298 mm (169.2 in.)
Mast Group Number	**C663 3178**	**C663 3678**	**C663 3778**	**C663 4298**
Kit-Hose Group 2 to 4 Way	524198915	524330392	524330395	524330398

TWO TO THREE FUNCTION

DESCRIPTION	LIFT HEIGHT TO BOTTOM OF FORKS			
	3178 mm (125.1 in.)	3678 mm (144.8 in.)	3778 mm (148.7 in.)	4298 mm (169.2 in.)
Mast Group Number	**C663 3178**	**C663 3678**	**C663 3778**	**C663 4298**
Kit-Hose Group 2 to 3 Way	524198913	524330390	524330393	524330396

©2015 Yale Europe Materials Handling Limited

HEADER HOSE CONVERSION KITS

TWO STAGE FULL FREE- LIFT - C663 (S/N G807B02139H →)

THREE TO FOUR FUNCTION

DESCRIPTION	LIFT HEIGHT TO BOTTOM OF FORKS		
	3178 mm (125.1 in.)	3678 mm (144.8 in.)	4298 mm (169.2 in.)
Mast Group Number	**C663 3178**	**C663 3678**	**C663 4298**
Kit-Hose Group 3 to 4 Way	550003193	550003196	550003199

TWO TO FOUR FUNCTION

DESCRIPTION	LIFT HEIGHT TO BOTTOM OF FORKS		
	3178 mm (125.1 in.)	3678 mm (144.8 in.)	4298 mm (169.2 in.)
Mast Group Number	**C663 3178**	**C663 3678**	**C663 4298**
Kit-Hose Group 2 to 4 Way	550003194	550003197	550003200

TWO TO THREE FUNCTION

DESCRIPTION	LIFT HEIGHT TO BOTTOM OF FORKS		
	3178 mm (125.1 in.)	3678 mm (144.8 in.)	4298 mm (169.2 in.)
Mast Group Number	**C663 3178**	**C663 3678**	**C663 4298**
Kit-Hose Group 2 to 3 Way	550003192	550003195	550003198

SERVICE KITS

WIDE HOSE SHEAVE

DESCRIPTION	PART NUMBER
Kit Wide Sheave 3 Fun 2 LFL	550055213
Kit Wide Sheave 4 Fun 2 LFL	550055214

ADD ON TELEMETRY KITS

DESCRIPTION	PART NUMBER
Telemetry Kit (FM1 W/GSM Cellular)	550073691
Telemetry Kit (FM1 W/WIFI)	550073692
Telemetry Kit (ER Interlock)	550073721
Telemetry Kit (ISO-Prox Card Reader)	550073824

©2015 Yale Europe Materials Handling Limited

ADD ON TELEMETRY KITS (CONTINUED)

DESCRIPTION	PART NUMBER
Telemetry Kit (HID Standard Prox Card Reader)	550073825
Telemetry Kit (IClass/MIFARE Prox Card Reader)	550073826
Telemetry Kit (Yale Check List)	550064624

ADD ON OPTIONS
FORK POSITIONER

DESCRIPTION	PART NUMBER
Kit-Fork Positioner (3FFL 1.8-2.0T Class II)	550065484
Kit-Fork Positioner (3 FFL 1.5-1.6 Class II)	550088500

©2015 Yale Europe Materials Handling Limited

NOTES

©2015 Yale Europe Materials Handling Limited

12 NUMERICAL INDEX

SECTION 12
NUMERICAL INDEX

PART NO.	PAGE	ITEM
012472200	2-5	6
	2-5	6
	2-5	6
	2-19	20
	2-36	2
	2-36	2
	2-36	2
	2-39	1
	2-40	3
	2-40	3
	2-40	3
	2-42	1
012474300	2-36	2
	2-36	2
	2-36	2
	2-39	1
	2-40	3
	2-40	3
	2-40	3
	2-42	2
012823300	6-77	10
012824300	7-19	10
	7-23	10
	8-33	9
	8-35	9
	9-3	6
	9-5	6
012825700	7-11	12
	7-27	12
	8-19	15
	8-43	13
	9-11	9
	9-13	9
	9-31	9
	9-33	9
014936200	5-9	9
015415900	7-3	17
	7-7	17
	7-13	9
	7-19	8
	7-23	8
	7-31	9
	8-7	19
	8-11	35
	8-15	14
	8-23	8
	8-37	17
	8-41	25
	8-49	10
	9-9	9
	9-17	10
	9-35	8
	9-37	8
	10-23	20
	10-25	14
	10-27	19
	10-29	19
	10-31	21
	10-33	19
015493200	8-47	12
	9-15	12
015627900	6-75	17
015628700	7-19	12
	7-23	12
	8-33	10
	8-35	10
	9-3	8
	9-5	8
	10-23	3
	10-25	13
	10-27	13
	10-29	13
	10-31	14
	10-33	13
015914900	3-3	12
015915900	6-12	8
	7-3	6
	7-7	6
	7-13	3
	8-3	5
	8-5	5
	8-23	3
	9-27	8
	9-37	4
	10-23	23
	10-27	22
	10-31	2
015916300	7-3	15
	7-7	15
	7-31	4
	8-7	14
	8-33	5
	8-35	5
	8-49	3
	9-17	3
	10-25	16
	10-29	14
	10-33	14
016100800	1-5	7
	1-7	8
016103300	1-81	4
	1-83	4
023021000	1-49	10
	1-56	33
027678700	3-3	11
032616700	6-27	11
	6-29	11
	6-31	19
052643200	10-45	15
	10-47	15
052645200	4-3	4
	4-34	3
	6-37	23
	6-37	28
	6-37	30
	6-65	10
	6-65	17
	6-65	18
	6-69	13
	10-23	24
	10-23	24
	10-25	23
	10-25	23
	10-27	23
	10-27	23
	10-29	23
	10-29	23
	10-31	13
	10-31	13
	10-31	13
	10-31	13
	10-33	23
	10-33	23
	10-45	12
	10-45	13
	10-45	16
	10-47	12
	10-47	13
	10-47	16
052645300	6-60	2
	6-69	14
052645400	6-9	7
	6-37	25
	6-37	26
	6-65	9
	6-65	11
	6-65	15
	7-20	31
	7-20	33
	7-24	31
	7-24	33
	8-41	18
	9-3	25
	9-5	25
	9-7	12
	9-9	11
	9-35	18
052645600	6-17	7
	7-19	29
	7-23	29
	8-37	25
052645700	6-9	6
056363300	6-69	12
	6-75	7
059726400	6-19	8
060023600	6-5	10
060023700	9-3	29
	9-5	29
061278200	1-117	3
061278400	1-101	3
061655900	7-4	40
	7-8	40
	8-3	8
	8-5	8
	9-27	12
062151600	1-50	17
	1-56	31
	1-61	19
	1-63	16
066417000	8-21	12
080437000	7-19	28
	7-23	28
150127005	7-19	13
	7-23	13
	8-33	11
	8-35	11
	9-3	9
	9-5	9
203081600	1-50	15
	1-56	27
203081800	1-50	15
203142800	1-50	16
	1-56	32
	1-61	17
	1-63	19
253937205	1-118	1

©2015 Yale Europe Materials Handling Limited

NUMERICAL INDEX (continued)

PART NO.	PAGE	ITEM
253937208	1-118	1
253937218	1-118	1
272479200	2-95	5
	2-95	6
	2-95	11
	2-96	14
	2-99	10
	2-100	22
	2-100	23
	2-128	28
	2-128	29
	2-135	5
	2-135	6
	2-135	11
	2-136	13
	2-139	10
	2-140	23
	2-140	24
296321162	2-51	1
311207098	1-49	9
	1-55	25
312850032	1-50	26
	1-56	38
	2-9	18
	2-11	18
	2-15	18
	6-27	14
	6-27	14
	6-29	12
	6-31	8
	6-37	19
	6-65	4
	9-23	7
	9-40	32
312850034	1-41	15
	1-50	30
	1-50	
	1-56	42
	1-56	
	2-6	17
	2-9	20
	2-11	20
	2-15	20
	2-19	6
	2-23	7
	6-5	16
	6-17	13
	6-27	12
	6-27	12
	6-75	24
	9-21	19
	9-24	39
	9-39	12
312850040	4-16	8
	4-18	8
312850042	1-50	
	1-56	
	10-23	25
	10-25	24
	10-27	14
	10-29	24
	10-31	12
	10-33	24
315976062	6-21	7
	6-69	12
315976070	6-69	13
316445012	6-9	6
449001013	2-36	5
	2-39	11
449001014	1-21	19
449001015	1-114	2
449001016	6-75	15
449001023	6-37	16
	6-65	5
449001028	6-5	6
449001052	1-91	3
449001059	1-9	8
449001089	1-81	3
	1-83	3
449001192	1-93	35
449001268	1-31	15
449001293	1-103	2
449001343	6-17	1
449001351	1-9	2
449001412	1-23	4
	1-39	16
449001415	1-65	22
	1-75	27
	1-79	14
	1-93	14
449007004	1-43	5
	2-5	14
	2-9	9
	2-11	9
	2-15	9
449007007	2-52	15
449007008	2-47	8
449007018	1-21	
	1-31	8
449007024	2-52	7
449007032	1-99	7
	1-101	10
449007033	2-48	6
449007040	2-143	14
449007041	2-51	19
449007053	2-36	1
	2-39	3
	2-40	5
	2-44	3
449015002	1-23	6
	1-25	9
	1-39	18
	1-101	9
	2-39	7
	2-40	1
	2-44	5
	10-17	1
449015012	1-43	7
	10-53	13
449015014	1-21	4
	1-39	11
	1-69	2
	1-73	2
	1-75	2
449015024	1-43	8
449015036	6-41	20
449015044	6-12	1
449015098	1-65	20
	1-79	8
	1-93	18
	5-7	1
	5-9	6
	6-37	12
449015107	1-65	12
	1-69	11
	1-73	11
	1-75	11
449015112	1-94	36
	2-56	3
449015135	2-42	3
449021002	1-113	6
	2-9	14
	2-11	14
449021003	1-21	24
	1-23	5
	1-25	8
	1-29	5
	1-31	7
	1-33	21
	1-39	17
	2-27	3
	2-29	3
	2-31	4
	2-42	4
	3-3	2
	10-5	5
449021006	1-65	24
	6-41	19
449021010	5-7	2
	5-9	5
	6-19	14
449022013	2-51	11
	6-12	2
449022016	2-52	11
	6-17	14
449022018	2-39	6
	2-40	2
	2-44	4
449022019	2-52	6
449025042	7-8	41
	7-20	44
	7-24	44
	8-7	22
	8-12	44
	8-15	17
	8-37	14
	8-41	20
	9-9	16
	9-35	11
449025047	6-75	6
449029011	7-19	7
	7-23	7
	7-31	4
	8-33	5
	8-35	5
	8-49	3
	9-3	10
	9-5	10
	9-17	3
	10-29	14
	10-33	14
449034052	5-7	10
	5-9	10
449034074	1-69	19
	1-73	19
	1-75	19
449077093	3-10	2
	4-15	2
500227904	7-13	10
	10-23	17
500227907	7-3	22
	7-7	22
	7-19	14
	7-23	14

©2015 Yale Europe Materials Handling Limited

NUMERICAL INDEX (continued)

PART NO.	PAGE	ITEM
	7-31	6
	8-7	8
	8-23	9
	8-37	1
	8-49	8
	9-7	3
	9-17	8
	9-29	2
	9-37	5
	10-25	21
	10-27	17
	10-29	17
	10-31	18
	10-33	17
500227910	7-20	39
	7-24	39
	8-37	20
500383916	2-72	18
	2-72	19
	2-72	20
	2-80	18
	2-80	19
	2-80	20
	2-87	4
	2-87	5
	2-87	6
	2-99	3
	2-104	18
	2-104	19
	2-104	20
	2-112	18
	2-112	19
	2-112	20
	2-119	4
	2-119	5
	2-119	6
	2-127	4
	2-127	5
	2-127	6
	2-139	3
	2-165	1
500390901	7-4	
	7-8	42
	9-29	16
500403906	10-5	8
	10-7	7
500583902	6-41	27
500653509	6-77	6
500903103	2-48	3
	2-153	3
	2-158	6
	2-163	9
	2-164	4
	2-165	8
	2-167	4
501702901	6-38	
501702902	1-29	
	1-69	
	1-73	
	1-76	
501702903	4-3	
501704901	6-37	23
	6-65	10
501737903	2-51	9
501749901	1-117	2
501749902	1-117	2
501753904	8-47	5
	9-15	5
501753914	8-21	5
	9-11	13
	9-13	12
	9-31	13
	9-33	12
501802906	6-77	12
501850904	7-11	8
	7-27	8
	8-19	7
	8-21	8
	8-43	9
	8-47	8
	9-15	8
501904909	2-9	15
	2-11	15
	2-15	15
	2-143	
501921906	6-34	4
501921910	2-16	39
501924912	2-5	5
	2-5	5
	2-5	5
	2-5	10
	2-19	12
	2-23	12
502011911	6-77	9
502011914	8-21	11
502011927	9-11	8
	9-13	8
	9-31	8
	9-33	8
502056903	6-25	10
502056904	6-5	15
	6-23	6
	6-25	4
502056906	6-5	9
	6-27	13
	6-29	13
	6-31	14
502097909	1-49	11
	1-56	34
502139901	6-75	5
502164907	2-42	1
502398907	1-50	13
	1-56	35
502565902	1-7	3
502565904	3-3	7
	3-9	7
502566901	1-79	3
502566903	1-5	4
	1-7	4
	1-65	11
	1-69	10
	1-73	10
	1-75	10
	3-3	6
	3-9	8
	4-3	2
502566904	3-3	14
	6-25	8
502637902	6-77	5
502687901	8-21	4
	8-47	3
	9-11	12
	9-13	11
	9-15	4
	9-31	12
	9-33	11
502787901	7-11	15
	8-19	13
502787903	8-21	10
	8-47	10
	9-15	10
502895202	8-19	14
	8-44	16
	9-11	11
	9-31	11
503891203	2-47	2
	2-48	2
504017204	9-11	10
	9-13	10
	9-31	10
	9-33	10
504024201	7-11	13
	7-27	13
	8-19	10
	8-43	14
504024207	8-47	13
	9-15	13
504024212	8-21	13
504059730	2-71	8
	2-75	10
	2-75	11
	2-80	27
	2-83	10
	2-83	11
	2-88	30
	2-92	27
	2-92	28
	2-100	18
	2-101	32
	2-103	8
	2-107	10
	2-107	11
	2-112	27
	2-115	10
	2-115	11
	2-120	30
	2-124	27
	2-124	28
	2-128	30
	2-132	27
	2-132	28
	2-140	18
504060717	6-41	32
504064701	2-151	2
	2-152	4
	2-153	2
504064703	8-37	21
504064739	7-19	16
	7-23	16
	8-37	6
	9-7	5
	9-29	8
504064758	7-20	38
	7-24	38
	8-37	13
504064767	7-3	23
	7-7	23
	7-19	15
	7-23	15
	8-7	7
	8-37	2
	9-7	4
	9-29	3
504064769	7-3	26

©2015 Yale Europe Materials Handling Limited

NUMERICAL INDEX (continued)

PART NO.	PAGE	ITEM
	7-7	26
	7-19	23
	7-23	23
	8-7	4
	8-37	3
	9-7	10
	9-29	6
504064782	8-7	35
	8-11	9
	8-41	26
504065747	8-37	21
504066700	8-5	1
	10-25	2
	10-29	2
	10-33	2
504067716	7-19	2
	7-23	2
504067741	7-19	2
	7-23	2
504067753	7-19	2
	7-23	2
504067756	7-19	2
	7-23	2
504068794	2-41	11
	2-44	9
	6-33	8
	7-15	12
	7-17	12
	7-33	7
	8-25	13
	8-27	4
	8-29	6
	8-51	13
	8-53	16
	8-57	5
	8-61	5
	9-19	16
	9-21	12
	9-23	4
	9-24	29
	9-39	6
	9-39	14
504069702	7-3	28
	7-7	28
	7-19	23
	7-23	23
	8-7	6
	8-37	3
	9-7	10
	9-29	4
504069707	7-33	17
504069711	7-33	18
504069724	2-11	32
	2-15	31
	9-3	17
	9-5	17
	9-27	6
504069791	7-3	27
	7-7	27
	7-19	23
	7-23	23
	8-7	5
	8-37	3
	9-7	10
	9-29	5
504070716	7-33	9
	8-51	7
	8-53	10
	8-57	12
	8-61	12
504070732	8-41	27
504070790	2-56	5
	6-23	4
	10-53	11
504071785	1-61	9
	1-63	26
	1-69	12
	1-73	12
	1-75	12
	1-103	3
	1-114	3
504074730	8-33	2
	8-35	2
504074744	8-33	2
	8-35	2
504074777	8-33	2
	8-35	2
504074779	8-33	2
	8-35	2
504074796	8-33	2
	8-35	2
504075738	8-37	21
504075742	6-27	17
	6-29	17
	6-31	15
	9-3	20
	9-5	20
504075764	7-19	9
	7-23	9
	8-33	8
	8-35	8
	9-3	5
	9-5	5
504075767	8-37	15
504075776	7-4	37
	7-8	37
	7-19	21
	7-23	21
	8-7	27
	8-11	8
	8-37	11
	9-7	9
	9-29	22
504075780	7-19	5
	7-23	5
504075781	7-31	5
	10-25	20
504143500	6-77	3
504148200	7-11	6
	7-27	6
	8-19	6
	8-21	7
	8-43	7
	8-47	7
	9-15	7
504153200	7-11	11
	7-27	11
	8-19	9
	8-43	10
504154200	7-11	9
	7-27	9
	8-19	8
	8-43	11
504155200	4-3	4
	4-34	3
	6-37	30
	6-65	16
	6-65	18
	8-51	22
	8-53	31
	8-58	37
	8-62	35
	9-19	13
	9-21	23
	9-23	16
	10-23	24
	10-25	23
	10-27	23
	10-29	23
	10-31	13
	10-31	13
	10-33	23
	10-45	4
	10-45	12
	10-45	13
	10-47	1
	10-47	2
	10-47	4
	10-47	7
	10-47	8
	10-47	12
	10-47	13
504158200	9-11	5
	9-13	5
	9-31	5
	9-33	5
504163200	7-27	10
	8-43	12
504223217	1-102	3
	1-104	2
504225257	1-111	14
	1-111	22
	1-113	18
	1-113	27
	10-53	12
504226242	1-21	5
	1-25	4
	1-29	7
	1-39	10
	1-41	7
	1-65	19
	1-69	29
	1-73	28
	1-76	39
	1-79	7
	1-93	13
	1-93	17
	1-99	8
	1-107	8
	2-9	23
	2-11	23
	2-15	23
	6-37	11
504228208	6-37	15
	6-65	6
504228297	6-5	2
504229225	6-75	2
504229298	1-21	13
	1-25	5
504230271	1-61	7
	1-63	6
	1-63	12
	1-109	7
	5-11	3

©2015 Yale Europe Materials Handling Limited

NUMERICAL INDEX (continued)

PART NO.	PAGE	ITEM
	5-13	3
504231285	1-81	12
	1-83	12
	1-85	16
504232205	8-47	14
	9-15	14
504232230	7-28	
504232275	1-114	1
504232277	8-47	15
	9-15	15
504232281	2-65	7
	2-68	10
	2-80	29
	2-85	40
	2-87	3
	2-91	9
	2-112	29
	2-117	43
	2-119	3
	2-123	10
	2-127	3
	2-131	10
	2-156	6
	2-161	6
	10-49	3
504232297	2-63	12
	10-13	3
504233232	7-20	42
	7-24	42
	7-31	3
	8-33	6
	8-35	6
	8-41	7
	8-49	4
	9-3	11
	9-5	11
	9-17	4
	10-25	17
	10-29	21
	10-33	21
504233265	8-37	21
504233271	1-117	4
504234216	8-11	32
	8-15	15
	9-35	12
504234265	7-20	43
	7-24	43
	8-33	7
	8-35	7
	9-3	4
	9-5	4
504234266	7-20	37
	7-24	37
	8-11	33
	8-15	16
	8-37	12
	9-35	13
504234269	7-11	
	7-28	
	8-19	
	8-21	
	8-44	
	8-47	
	9-11	
	9-15	
	9-31	
504234286	8-41	21
	9-9	7
504235239	7-11	5
	7-27	5
	8-19	5
	8-21	6
	8-43	5
	8-47	6
	9-15	6
504235278	7-31	10
	8-49	5
	9-17	5
	10-25	18
	10-29	22
	10-33	22
504236213	8-41	22
	9-9	6
504236253	7-4	38
	7-8	38
	7-19	20
	7-23	20
	8-7	26
	8-11	7
	8-37	10
	9-7	8
	9-29	21
504236269	5-3	16
504237286	1-43	
504238219	1-121	2
504238222	1-85	9
	1-87	11
504240200	7-3	13
	7-7	13
	8-7	20
504240220	8-7	16
504240239	7-3	14
	7-7	14
	8-7	21
504240276	8-7	16
504240294	7-13	5
	8-23	5
	9-37	3
504240712	2-53	6
504242207	9-37	7
504242253	8-7	23
504242721	1-118	1
504242722	1-118	1
504242723	1-118	1
504281794	7-20	36
	7-24	36
	8-37	19
504288730	2-100	15
	2-140	15
504288733	2-155	4
504288741	2-148	2
504305711	6-77	11
504450739	2-152	7
	2-164	2
	2-167	2
504450758	8-47	9
	9-15	9
504574259	10-5	4
	10-19	7
504574267	6-75	3
504955200	1-123	11
505064713	2-89	37
	2-101	29
	2-121	37
	2-123	11
	2-129	37
	2-131	11
	2-136	18
	2-141	32
	2-151	2
	2-152	4
	10-49	5
505064747	2-163	11
505136042	8-44	
505136043	7-28	
505136049	8-47	
	9-15	
505657521	7-11	3
	7-11	3
	7-27	3
	7-27	3
	7-27	3
	7-27	3
505657522	8-19	3
	8-19	3
	8-43	3
	8-43	3
	8-43	3
	8-43	3
505657528	7-11	3
	7-27	3
	7-27	3
505959500	9-19	14
	9-24	28
505961553	9-35	7
505961568	7-33	20
	8-51	3
	8-53	6
	8-57	16
	8-61	11
505961587	8-7	16
505962507	8-51	18
	8-53	21
	8-58	35
	8-62	34
505962533	7-33	10
	8-51	6
	8-53	9
	8-57	11
505962578	7-33	15
505965586	8-51	25
	8-57	25
	9-19	21
	9-23	6
	9-40	37
505965599	9-19	15
	9-23	14
505966522	2-152	1
	2-153	5
505966598	5-3	4
505967551	6-45	19
	6-49	1
	6-49	14
	6-53	1
	6-53	14
	6-60	2
	6-60	
	6-69	14
505968501	2-163	11
	2-164	5
	2-164	6
	2-167	5
	2-167	6
505968511	2-152	1

©2015 Yale Europe Materials Handling Limited

NUMERICAL INDEX (continued)

PART NO.	PAGE	ITEM
	2-153	5
505968514	1-101	13
	2-64	2
	2-65	8
	2-67	4
	2-68	11
	2-165	3
505968519	2-72	28
	2-81	34
	2-108	27
	2-116	27
505968533	2-165	2
505968535	2-163	11
	2-164	5
	2-164	6
	2-167	5
	2-167	6
505968540	1-101	13
	2-88	31
	2-100	17
	2-120	31
	2-128	31
	2-140	17
	2-153	1
	2-165	4
	10-2	1
	10-21	11
505968558	2-73	28
	2-81	34
	2-108	27
	2-116	27
505968566	2-71	10
	2-72	28
	2-76	21
	2-76	24
	2-79	10
	2-81	34
	2-84	21
	2-84	24
	2-89	38
	2-91	13
	2-92	18
	2-96	13
	2-96	15
	2-101	29
	2-103	10
	2-108	25
	2-111	10
	2-116	25
	2-121	38
	2-124	17
	2-129	38
	2-132	17
	2-136	14
	2-141	32
505968568	2-64	4
	2-64	5
	2-65	1
	2-67	1
	2-67	7
	2-68	1
	2-68	2
	2-72	21
	2-80	21
	2-87	2
	2-99	2
	2-104	21
	2-112	21
	2-119	2
	2-127	2
	2-139	2
	2-153	2
	2-156	4
	2-156	5
	2-156	11
	2-157	13
	2-161	4
	2-161	5
	2-161	10
	2-161	12
	2-164	5
	2-164	6
	2-167	5
	2-167	6
505968593	2-153	1
505970501	1-9	6
505970552	1-43	4
505970553	1-111	21
	1-113	25
505970586	2-88	23
	2-92	22
	2-120	23
	2-128	23
505971539	6-17	7
	6-19	6
505972507	2-145	3
505972527	2-72	23
	2-80	23
	2-112	23
505972545	1-121	1
505972554	10-2	1
505972566	1-123	2
505972593	2-145	3
505974557	1-121	3
505975509	1-107	7
505975539	10-19	3
505976530	1-123	5
505976537	2-5	10
	2-5	17
	2-6	17
	2-6	17
	2-19	6
	2-19	6
	2-19	6
	2-19	12
	2-23	12
505976557	9-21	7
	9-23	3
505976586	9-21	7
	9-23	3
505978544	7-31	7
	10-25	19
506395569	1-123	6
506547507	9-33	13
506845500	7-27	4
	8-43	4
518790624	9-21	7
	9-23	3
518791613	1-75	23
	10-53	10
518791631	8-37	21
518792697	8-41	24
	8-49	9
	9-9	8
	9-17	9
	10-29	18
	10-33	18
518794659	7-11	7
	7-27	7
	8-19	11
	8-43	8
518796618	2-23	7
	2-23	8
	2-23	9
	2-23	17
	2-23	18
518797634	8-49	2
	10-29	20
518797644	1-123	3
518801644	7-20	40
	7-24	40
	8-37	18
518801677	6-75	4
518803677	1-50	21
	1-55	21
	1-61	18
	1-63	21
518804610	8-12	41
	8-15	10
	8-41	11
	9-9	15
	9-35	16
518806635	2-64	2
	2-65	8
	2-67	4
	2-68	11
518807642	2-164	1
	2-167	1
518807647	3-3	3
519244834	3-9	10
519477600	6-77	4
519517618	6-77	2
519517619	6-77	2
519521610	7-27	2
	7-27	2
519521615	7-27	2
	7-27	2
519521620	7-27	2
	7-27	2
519521625	7-27	2
	7-27	2
519521699	7-11	2
519521704	7-11	2
519521709	7-11	2
519521716	7-11	2
519523610	7-27	1
519523615	7-27	1
519523620	7-27	1
519523625	7-27	1
519523660	7-27	1
519523665	7-27	1
519523670	7-27	1
519523675	7-27	1
519524610	7-27	
519524615	7-27	
519524620	7-27	
519524625	7-27	
519524660	7-27	
519524665	7-27	
519524670	7-27	
519524675	7-27	
519528605	8-43	2
	8-43	2
519528607	8-43	2

©2015 Yale Europe Materials Handling Limited

NUMERICAL INDEX (continued)

PART NO.	PAGE	ITEM
	8-43	2
519528609	8-43	2
	8-43	2
519528611	8-43	2
	8-43	2
519528613	8-43	2
	8-43	2
519528655	8-19	2
519528657	8-19	2
519528659	8-19	2
519528661	8-19	2
519528663	8-19	2
519529605	8-43	1
519529607	8-43	1
519529609	8-43	1
519529611	8-43	1
519529613	8-43	1
519529655	8-43	1
519529657	8-43	1
519529659	8-43	1
519529661	8-43	1
519529663	8-43	1
519530605	8-43	
519530607	8-43	
519530609	8-43	
519530611	8-43	
519530613	8-43	
519530655	8-43	
519530657	8-43	
519530659	8-43	
519530661	8-43	
519530663	8-43	
519537600	8-47	4
	9-15	3
519541604	8-47	1
519541606	8-47	1
519541607	9-15	1
519541608	8-47	1
519541611	8-47	1
519541612	9-15	1
519541613	8-47	1
519541618	9-15	1
519637608	9-13	3
	9-33	3
519637613	9-13	3
	9-33	3
519637618	9-13	3
	9-33	3
519638608	9-13	2
	9-33	2
519638613	9-13	2
	9-33	2
519638618	9-13	2
	9-33	2
519638658	9-11	2
	9-31	2
519638663	9-11	2
	9-31	2
519638668	9-11	2
	9-31	2
519639708	9-11	1
	9-13	1
	9-31	1
	9-33	1
519639713	9-11	1
	9-13	1
	9-31	1
	9-33	1
519639718	9-11	1
	9-13	1
	9-31	1
	9-33	1
519652608	9-11	3
	9-31	3
519652613	9-11	3
	9-31	3
519652618	9-11	3
	9-31	3
520021634	8-47	2
520021636	8-47	2
520021637	9-15	2
520021638	8-47	2
520021641	8-47	2
520021642	9-15	2
520021643	8-47	2
520021648	9-15	2
520036852	7-19	6
	7-23	6
	7-31	2
	8-33	4
	8-35	4
	9-3	3
	9-5	3
	9-17	2
	10-25	15
	10-33	20
520037804	8-33	7
	8-35	7
520038855	2-65	5
	2-67	10
	2-68	8
	2-81	32
	2-87	12
	2-91	8
	2-113	32
	2-117	40
	2-119	12
	2-127	12
	2-163	2
520038861	1-111	4
	1-113	8
520038872	2-76	20
	2-84	20
520039810	8-53	20
	8-58	31
	8-62	31
520039872	8-51	17
	8-58	30
	8-62	30
520039880	2-76	28
	2-84	28
	2-116	29
	2-144	3
	2-144	4
520039885	2-56	
	6-11	11
	6-75	13
520039889	2-42	1
	2-42	2
520041613	6-77	1
520041817	1-111	7
	1-113	11
520041824	1-81	8
	1-83	17
	1-85	12
	1-87	6
520041835	2-11	34
	2-15	33
	10-9	
520041863	1-111	9
	1-113	13
520041892	1-111	8
	1-113	12
520041894	2-11	35
	2-15	34
	10-13	
520044855	2-15	36
	6-17	2
520044861	2-75	12
	2-83	12
	2-92	30
	2-100	25
	2-107	12
	2-115	12
	2-124	30
	2-132	30
	2-140	26
520045069	2-100	15
	2-140	15
	2-155	4
520045074	2-100	15
	2-140	15
	2-155	4
520045119	1-123	7
520045216	8-21	15
520045268	8-21	14
520045672	2-80	31
	2-85	42
	2-88	17
	2-92	33
	2-113	31
	2-117	42
	2-123	8
	2-131	8
520045804	2-155	2
520045874	2-144	9
	2-144	10
520052844	2-72	23
	2-72	24
	2-80	23
	2-80	24
	2-89	39
	2-89	40
	2-100	12
	2-100	13
	2-104	23
	2-104	24
	2-112	23
	2-112	24
	2-121	39
	2-121	40
	2-129	39
	2-129	40
	2-140	12
	2-140	13
	2-151	3
	2-152	9
	2-153	6
520052846	2-151	3
	2-152	9
520052866	2-24	28
	6-37	13
	6-65	3
520052899	10-33	20

©2015 Yale Europe Materials Handling Limited

NUMERICAL INDEX (continued)

PART NO.	PAGE	ITEM
520053821	10-29	20
520082886	6-25	7
520102600	9-11	4
	9-31	4
520162600	9-13	4
	9-33	4
520202601	2-64	3
	2-65	4
	2-67	6
	2-68	5
	2-71	1
	2-75	15
	2-75	16
	2-76	29
	2-76	31
	2-79	1
	2-83	15
	2-83	16
	2-84	29
	2-84	31
	2-88	27
	2-91	1
	2-91	3
	2-92	24
	2-92	25
	2-95	8
	2-95	9
	2-96	20
	2-96	22
	2-100	21
	2-101	26
	2-103	1
	2-107	14
	2-107	15
	2-108	30
	2-108	32
	2-111	1
	2-115	14
	2-115	15
	2-116	30
	2-116	32
	2-120	27
	2-123	1
	2-123	3
	2-124	24
	2-124	25
	2-128	27
	2-131	1
	2-131	3
	2-132	24
	2-132	25

PART NO.	PAGE	ITEM
	2-135	8
	2-135	9
	2-136	21
	2-137	23
	2-140	22
	2-141	27
520202602	2-71	1
	2-76	29
	2-76	31
	2-79	1
	2-84	29
	2-84	31
	2-88	27
	2-91	1
	2-91	3
	2-92	25
	2-96	20
	2-96	22
	2-100	21
	2-101	26
	2-103	1
	2-108	30
	2-108	32
	2-111	1
	2-116	30
	2-116	32
	2-120	27
	2-123	1
	2-123	3
	2-140	22
	2-141	27
520202603	2-64	3
	2-65	4
	2-67	6
	2-68	5
520202604	2-65	4
	2-88	27
	2-91	1
	2-91	3
	2-92	24
	2-92	25
	2-95	8
	2-95	9
	2-96	20
	2-96	22
	2-101	26
	2-120	27

PART NO.	PAGE	ITEM
	2-123	1
	2-123	3
	2-124	24
	2-124	25
	2-128	27
	2-131	1
	2-131	3
	2-132	24
	2-132	25
	2-135	8
	2-135	9
	2-136	21
	2-137	23
	2-141	27
520202606	2-75	15
	2-83	15
	2-95	8
	2-107	14
	2-115	14
	2-132	25
	2-135	8
	2-136	21
	2-137	23
520357520	2-52	10
524135278	4-20	2
	4-25	3
	4-26	3
524136932	3-10	1
524141696	6-33	6
	7-15	8
	7-17	8
	7-33	2
	7-33	2
	8-51	15
	8-53	18
	8-57	3
	8-58	
	8-61	3
	9-19	9
	9-21	8
	9-24	26
	9-39	9
	9-39	9
	9-39	9
524141842	7-19	22
	7-23	22
	8-37	24
	9-7	11
	9-7	13
524141843	9-29	1
524141844	8-11	36

PART NO.	PAGE	ITEM
	8-15	18
	8-41	18
	9-9	11
	9-35	18
524141846	7-3	24
	7-7	24
	7-19	29
	7-23	29
	8-11	6
	8-15	27
	8-37	25
	9-3	24
	9-5	24
	9-29	17
524142185	8-33	3
	8-35	3
524142187	8-33	3
	8-35	3
524142189	8-33	3
	8-35	3
524142191	8-33	3
	8-35	3
524142193	8-33	3
	8-35	3
524142297	9-3	2
	9-5	2
524142344	9-3	2
	9-5	2
524142349	9-3	2
	9-5	2
524146997	8-41	3
524146999	8-41	3
524147120	9-9	2
524147121	8-41	3
524147124	8-41	3
524147146	9-9	2
524147147	8-41	3
524147199	9-9	2
524147388	10-29	15
	10-33	15
524147486	10-45	13
	10-47	13
524147968	9-19	3
	9-21	5
524147973	9-19	3
	9-21	5
524147978	9-19	3
	9-21	5
524147998	9-19	4
	9-21	4
524148003	9-19	4

©2015 Yale Europe Materials Handling Limited

NUMERICAL INDEX (continued)

PART NO.	PAGE	ITEM
	9-21	4
524148008	9-19	4
	9-21	4
524162256	1-121	6
524164714	2-35	7
524166936	4-15	1
524167321	4-15	1
524197448	8-49	6
	9-17	6
	10-29	16
	10-33	16
524198366	8-3	1
524198368	8-3	1
524198370	8-3	1
524198371	7-3	1
524198373	8-3	1
524198375	8-3	1
524198377	7-3	1
524198382	7-3	1
524198386	8-3	2
	8-5	2
524198388	8-3	2
	8-5	2
524198390	8-3	2
	8-5	2
524198393	8-3	2
	8-5	2
524198395	8-3	2
	8-5	2
524198411	7-3	2
	7-7	2
524198417	7-3	2
	7-7	2
524198422	7-3	2
	7-7	2
524198436	8-3	3
	8-5	3
524198438	8-3	3
	8-5	3
524198440	8-3	3
	8-5	3
524198443	8-3	3
	8-5	3
524198445	8-3	3
	8-5	3
524198458	9-27	1
524198463	9-27	1
524198470	8-3	11
	8-5	12
	9-27	4
524198471	7-13	11
	10-23	16
524198472	7-13	6
	10-23	18
524198473	7-13	7
	10-23	15
524198474	8-7	15
524198475	8-11	30
	8-15	4
	9-35	6
524198476	8-11	19
	8-15	22
524198477	8-7	36
	8-11	10
524198479	8-7	34
	8-11	20
524198485	7-15	14
	7-17	14
524198486	7-15	14
	7-17	14
524198488	8-11	18
	8-15	23
524198489	9-21	17
524198493	8-27	18
	9-21	16
524198496	8-25	16
	8-27	11
	8-29	33
524198499	8-27	23
	8-29	18
524198501	8-27	17
	8-29	27
	8-53	34
	8-58	44
	8-61	24
	9-21	15
	9-24	35
	9-39	19
524198502	8-27	10
	8-30	35
524198504	8-27	8
	8-29	16
524198505	8-27	14
	8-29	23
	8-53	28
	8-57	19
	8-61	19
	9-21	14
	9-24	30
	9-39	22
524198506	8-27	15
	8-29	25
	8-53	29
	8-57	21
	8-61	21
	9-21	13
	9-24	32
	9-39	17
524198507	8-12	39
	8-15	6
	9-35	4
524198509	8-53	7
	8-58	42
	8-61	16
524198510	8-51	4
	8-57	7
	8-61	7
524198523	7-3	2
	7-7	2
524198548	7-11	
524198557	7-3	11
	7-7	11
	8-3	10
	8-7	24
524198558	7-3	18
	7-7	18
	8-7	18
524198559	7-15	5
	7-17	5
	8-25	10
	8-29	12
524198560	9-39	11
524198563	9-39	10
524198564	9-39	10
524198567	9-39	4
524198568	9-40	36
524198569	9-39	11
	9-39	11
524198577	9-35	19
524198582	9-35	19
524198587	9-35	19
524198588	8-27	1
	8-29	22
524198589	8-29	22
524198590	8-27	1
524198593	9-27	
	9-35	
524198599	9-27	
	9-35	
524198600	8-29	22
524198607	9-39	2
524198612	9-39	2
524198617	9-39	2
524198627	9-39	1
524198632	9-39	1
524198637	9-39	1
524198647	9-40	35
524198652	9-40	35
524198657	9-40	35
524198667	9-40	34
524198672	9-40	34
524198677	9-40	34
524198680	8-27	2
	8-27	2
	8-29	2
	8-29	2
524198681	8-27	2
	8-27	2
	8-27	2
	8-29	2
	8-29	2
	8-29	2
524198695	9-40	33
	9-40	33
524198696	9-40	33
524198700	8-25	2
	8-25	2
	8-25	2
	8-25	2
	8-25	2
	8-51	30
	8-53	5
	8-58	41
	9-19	19
524198857	9-24	27
524198862	9-24	27
524198867	9-24	27
524198913		
524198914		
524198915		
524198916	7-15	3
	7-17	3
	8-25	6
	8-29	14
524199308	1-119	1
524199309	1-119	1
524199311	1-119	1
524201323	1-9	12
	1-11	5
524208881	1-121	5
524216189	1-123	15
524281279	1-49	12
	1-56	29
524283305	8-21	

©2015 Yale Europe Materials Handling Limited

NUMERICAL INDEX (continued)

PART NO.	PAGE	ITEM
524283330	8-21	2
524283332	8-21	2
524283334	8-21	2
524283337	8-21	2
524283339	8-21	2
524283355	8-21	1
524283357	8-21	1
524283359	8-21	1
524283362	8-21	1
524283364	8-21	1
524284711	7-11	1
524284717	7-11	1
524284722	7-11	1
524284729	7-11	1
524286205	8-19	1
524286207	8-19	1
524286209	8-19	1
524286211	8-19	1
524286213	8-19	1
524286264	1-9	1
524286265	1-9	1
524286266	1-9	1
524289762	1-5	1
524291984	3-10	1
524292169	3-10	1
	3-10	1
524292608	1-65	4
	1-69	18
	1-73	18
524292609	1-65	4
	1-69	18
	1-73	18
524292651	3-10	1
524292806	4-15	1
524292922	3-10	1
	3-10	1
524292997	3-10	1
524293967	3-10	1
524303227	1-65	1
	1-79	9
524303228	1-65	1
	1-79	9
524303229	1-65	1
	1-79	9
524303230	1-65	1
	1-79	9
	1-93	6
524303231	1-65	1
	1-79	9
	1-93	6
524303232	1-65	1
	1-79	9
	1-93	6
524303233	1-65	2
	1-79	9
524303234	1-65	2
	1-79	9
524303235	1-65	2
	1-79	9
524303236	1-65	2
	1-79	9
524303237	1-65	2
	1-79	9
524303238	1-65	2
	1-79	9
524303418	1-65	3
524303419	1-65	3
524303420	1-65	3
524303576	1-93	7
524303578	1-93	7
524303580	1-93	7
524305613	1-121	8
524307980	1-85	1
524307981	1-85	1
524307982	1-85	1
524310195	1-117	1
	1-117	1
524310196	1-117	1
	1-117	1
524310923	1-17	3
	1-29	
524310929	1-17	3
	1-29	
524310930	1-17	3
	1-29	
524324509	2-53	5
524325742	6-37	17
524325743	6-41	26
524327738	1-99	2
524327741	1-99	4
524327744	1-99	3
	1-101	4
524328789	1-99	
524328904	1-85	
524329106	1-121	7
524329711	1-29	16
524329712	1-19	2
	1-29	14
	1-39	24
524329714	1-15	11
524330361		
524330362		
524330363		
524330364		
524330365		
524330366		
524330367		
524330368		
524330369		
524330370		
524330371		
524330372		
524330374		
524330375		
524330376		
524330377		
524330378		
524330379		
524330380		
524330381		
524330382		
524330383		
524330384		
524330385		
524330386		
524330387		
524330388		
524330390		
524330391		
524330392		
524330393		
524330394		
524330395		
524330396		
524330397		
524330398		
524331888		
524331889		
524331890		
524331891		
524331892		
524331893		
524331894		
524331895		
524331896		
524331897		
524331898		
524331899		
524331901		
524331902		
524331903		
524331904		
524331905		
524331906		
524331907		
524331908		
524331909		
524331910		
524331911		
524331912		
524331913		
524331914		
524331915		
524332204	10-5	9
524332271	1-11	15
524335565	6-5	3
524335567	6-5	5
524335570	6-9	5
524335572	6-9	4
524335575	6-5	17
524336793	1-69	5
	1-75	5
524336794	1-69	5
	1-75	5
524336795	1-69	5
	1-75	5
524336812	2-19	14
524337823	1-33	3
524337824	1-31	1
524337825	1-33	3
	1-33	3
524337826	1-31	1
524337828	1-31	1
550000349	1-43	
550000365	1-39	
550000366	1-23	
550000367	1-19	
550000368	1-29	
550000369	1-15	
550000370	1-23	
550000371	1-41	
550000372	1-27	
550003069		
550003070		
550003071		
550003072		
550003073		
550003074		
550003075		
550003076		
550003077		
550003078		
550003079		
550003080		

©2015 Yale Europe Materials Handling Limited

NUMERICAL INDEX (continued)

PART NO.	PAGE	ITEM
550003081		
550003082		
550003083		
550003092		
550003093		
550003094		
550003095		
550003096		
550003097		
550003098		
550003099		
550003100		
550003101		
550003102		
550003103		
550003192		
550003193		
550003194		
550003195		
550003196		
550003197		
550003198		
550003199		
550003200		
550004068		
550004069		
550004070		
550004071		
550004072		
550004073		
550004074		
550004075		
550004076		
550004077		
550004078		
550004079		
550004083		
550004084		
550004085		
550004086		
550004087		
550004088		
550004089		
550004090		
550004091		
550004092		
550004093		
550004094		
550004095		
550004097		
550004544	6-46	
550011943	1-23	9
	1-27	14
	1-29	18
550017001	1-105	1
550026997	1-107	1
550027111	1-11	1
550027112	1-11	1
550027113	1-11	1
550027121	1-87	16
550027122	1-87	16
550027123	1-87	16
550029734	2-19	14
550043718	1-75	18
550043719	1-75	22
550044369	1-75	18
550044441	1-79	9
550044442	1-79	9
550044443	1-79	9
550044445	1-79	9
550044446	1-79	9
550044447	1-79	9
550044448	1-79	9
550044449	1-79	9
550044450	1-79	9
550044451	1-79	9
550044452	1-79	9
550044453	1-79	9
550046840	2-43	
550051639	5-13	1
550053304	1-7	1
550070561	1-73	5
550070562	1-73	5
550070563	1-73	5
550071204	1-11	1
550071205	1-11	1
550071206	1-11	1
550080240	1-119	1
550080327	1-119	1
	1-119	1
550080328	1-119	1
	1-119	1
550080329	1-119	1
550082061	2-19	14
550083618	1-93	1
550083619	1-93	1
550083620	1-93	1
550084140	1-93	4
550084141	1-93	4
550084142	1-93	4
550087403	2-23	14
550088446	1-97	1
580000325	1-19	6
580000868	6-37	8
580001246	2-51	2
580001430	7-31	2
	8-33	4
	8-35	4
	9-17	2
	10-33	20
580001435	10-29	20
580001436	10-33	20
580001437	10-29	20
580001471	10-5	2
580001849	2-151	2
	2-152	4
	2-153	2
580002018	2-144	5
580003569	1-109	5
	10-17	6
580003814	1-19	13
580003835	1-19	12
	1-41	10
580004501	6-69	12
580004592	2-52	9
580004721	1-9	4
580004761	1-9	5
580006420	1-73	26
580006842	1-119	4
580006843	1-119	3
580006844	1-119	2
580006935	4-34	5
580006948	1-75	26
580007839	7-3	19
	7-7	19
	8-7	31
	8-11	4
	9-29	15
580008064	1-123	4
580008371	2-36	6
	2-39	12
	2-41	13
580008949	1-19	8
580009061	4-5	31
	6-12	3
580009067	2-83	5
	2-93	37
	2-95	4
	2-107	5
	2-115	5
	2-125	36
	2-133	36
	2-135	4
580009419	5-9	7
580010469	1-55	16
580010741	1-9	
	1-11	2
580010870	4-15	1
	4-15	1
580011059	4-3	3
580011167	7-11	14
	8-19	16
	8-21	
	8-43	6
580011639	2-63	
	2-149	3
580011872	2-31	6
580012279	1-61	13
	1-63	14
580012352	2-39	10
	2-40	7
	2-44	8
580012507	4-5	34
580012509	4-5	32
580012510	4-6	40
580012511	4-5	14
580012512	4-5	1
580012515	4-5	5
580012526	4-5	21
580012527	4-5	13
580012529	4-5	22
580012530	4-5	12
580012531	4-5	19
580012532	4-5	23
580012533	4-5	20
580012534	4-6	
580012535	4-5	15
580012536	4-5	18
580012537	4-5	33
580012538	4-5	35
580012539	4-5	36
580012540	4-5	25
580012541	4-5	24
580012544	4-6	
580013034	1-39	14
580013339	4-31	1
580013347	4-31	5
580013348	4-31	23
580013351	4-16	9
	4-18	9
	4-31	
	4-33	
580014009	1-21	15
580014465	1-50	

©2015 Yale Europe Materials Handling Limited

NUMERICAL INDEX (continued)

PART NO.	PAGE	ITEM
580014572	5-7	7
580014765	1-39	5
580014766	1-21	7
	1-39	3
580014767	1-21	6
	1-39	2
580014768	1-21	10
580014780	1-19	15
580014783	1-19	11
	1-41	16
580014813	1-31	25
580014821	2-43	8
580014898	4-6	41
580015057	1-39	8
580016583	1-33	15
580016584	1-29	12
580016589	1-21	3
	1-39	12
	1-41	5
580017695	3-7	5
	3-9	6
580018567	1-50	
	1-55	13
	1-55	17
580018577	1-55	10
580018613	1-50	
580018614	1-50	
580018616	1-50	
	1-55	15
580018642	1-53	4
	1-59	4
580018643	1-53	6
	1-59	6
580018833	10-45	11
	10-47	11
580018834	10-45	9
	10-47	9
580018835	10-45	10
	10-47	10
580019097	2-72	16
	2-80	16
	2-87	7
	2-99	4
	2-103	13
	2-112	13
	2-119	7
	2-127	7
	2-139	6
580019098	2-72	16
	2-80	16
	2-87	7
	2-99	4
	2-104	13
	2-112	13
	2-119	7
	2-127	7
	2-139	6
580019101	2-64	4
	2-67	7
580019107	2-67	2
	2-68	7
	2-71	2
	2-71	3
	2-71	6
	2-71	11
	2-71	13
	2-72	15
	2-72	22
	2-72	27
	2-75	14
	2-75	17
	2-75	19
	2-76	25
	2-76	26
	2-76	30
	2-76	32
	2-79	2
	2-79	3
	2-79	6
	2-79	8
	2-79	11
	2-80	13
	2-80	15
	2-80	22
	2-81	33
	2-81	35
	2-83	14
	2-83	17
	2-84	19
	2-84	25
	2-84	26
	2-84	30
	2-84	32
	2-87	1
	2-87	9
	2-87	10
	2-88	25
	2-88	26
	2-89	34
	2-89	36
	2-91	2
	2-91	4
	2-91	11
	2-91	12
	2-92	20
	2-92	23
	2-92	26
	2-95	7
	2-95	10
	2-96	12
	2-96	16
	2-96	17
	2-96	19
	2-96	21
	2-99	1
	2-99	5
	2-99	6
	2-101	27
	2-101	28
	2-103	2
	2-103	3
	2-103	6
	2-103	11
	2-104	15
	2-104	16
	2-104	22
	2-107	13
	2-107	16
	2-107	18
	2-108	20
	2-108	21
	2-108	22
	2-108	28
	2-108	31
	2-108	33
	2-111	2
	2-111	3
	2-111	6
	2-111	8
	2-111	11
	2-112	15
	2-112	16
	2-112	22
	2-115	13
	2-115	16
	2-115	18
	2-116	20
	2-116	21
	2-116	22
	2-116	28
	2-116	31
	2-116	33
	2-119	1
	2-119	9
	2-119	10
	2-120	25
	2-120	26
	2-121	34
	2-121	36
	2-123	2
	2-123	4
	2-123	9
	2-123	14
	2-124	20
	2-124	23
	2-124	26
	2-127	1
	2-127	9
	2-127	10
	2-128	25
	2-128	26
	2-129	34
	2-129	36
	2-131	2
	2-131	4
	2-131	9
	2-131	14
	2-132	20
	2-132	23
	2-132	26
	2-135	7
	2-135	10
	2-136	12
	2-136	16
	2-136	19
	2-136	20
	2-137	22
	2-139	1
	2-139	4
	2-139	5
	2-141	28
	2-141	31
	2-145	4
	2-155	1
	2-157	12
	2-161	11
	10-49	4
580019119	2-64	1
	2-65	8
	2-65	9
	2-67	5
	2-68	12
	2-71	7
	2-71	11

©2015 Yale Europe Materials Handling Limited

NUMERICAL INDEX (continued)

PART NO.	PAGE	ITEM
	2-71	12
	2-72	14
	2-72	16
	2-72	17
	2-72	22
	2-72	27
	2-73	29
	2-75	17
	2-79	7
	2-79	8
	2-79	11
	2-79	12
	2-80	14
	2-80	16
	2-80	17
	2-80	22
	2-81	33
	2-81	35
	2-83	17
	2-87	1
	2-87	7
	2-87	8
	2-87	9
	2-87	11
	2-87	13
	2-87	14
	2-88	32
	2-88	33
	2-89	34
	2-92	23
	2-95	10
	2-99	1
	2-99	4
	2-99	4
	2-99	5
	2-99	6
	2-99	7
	2-100	16
	2-100	17
	2-103	7
	2-103	11
	2-103	12
	2-103	13
	2-104	14
	2-104	15
	2-104	17
	2-104	22
	2-104	27
	2-104	29
	2-107	16
	2-111	7

PART NO.	PAGE	ITEM
	2-111	8
	2-111	11
	2-111	12
	2-112	13
	2-112	14
	2-112	15
	2-112	17
	2-112	22
	2-113	33
	2-113	34
	2-115	16
	2-119	1
	2-119	7
	2-119	8
	2-119	9
	2-119	11
	2-119	13
	2-119	14
	2-120	32
	2-120	33
	2-121	34
	2-123	13
	2-124	23
	2-127	1
	2-127	7
	2-127	8
	2-127	9
	2-127	11
	2-127	13
	2-127	14
	2-128	32
	2-129	33
	2-129	34
	2-131	13
	2-132	23
	2-135	10
	2-136	16
	2-136	18
	2-139	1
	2-139	4
	2-139	5
	2-139	6
	2-139	6
	2-139	7
	2-140	16
	2-140	17
	2-143	9
	2-150	1
	2-155	1
	2-156	1
	2-156	7

PART NO.	PAGE	ITEM
	2-156	9
	2-157	14
	2-161	1
	2-161	7
	2-161	9
	2-161	13
	10-49	2
	10-49	4
580019139	2-68	2
	2-76	20
	2-84	20
	2-91	17
	2-96	13
	2-156	5
	2-161	5
580019140	2-64	5
	2-67	1
	2-68	2
	2-91	17
	2-156	5
	2-161	5
580019245	2-67	2
	2-68	7
	2-71	2
	2-71	3
	2-71	13
	2-75	14
	2-75	19
	2-76	30
	2-76	32
	2-79	2
	2-79	3
	2-80	13
	2-83	14
	2-84	19
	2-84	30
	2-84	32
	2-87	10
	2-88	25
	2-88	26
	2-91	2
	2-91	4
	2-92	20
	2-92	26
	2-95	7
	2-96	12
	2-96	19
	2-96	21
	2-99	6
	2-101	27
	2-103	2

PART NO.	PAGE	ITEM
	2-103	3
	2-104	16
	2-107	13
	2-107	18
	2-108	20
	2-108	21
	2-108	22
	2-108	31
	2-108	33
	2-111	2
	2-111	3
	2-112	16
	2-115	13
	2-115	18
	2-116	20
	2-116	21
	2-116	22
	2-116	31
	2-116	33
	2-119	10
	2-120	25
	2-120	26
	2-123	2
	2-123	4
	2-123	14
	2-123	15
	2-124	20
	2-124	26
	2-127	10
	2-128	25
	2-128	26
	2-131	2
	2-131	4
	2-131	14
	2-131	15
	2-132	20
	2-132	26
	2-135	7
	2-136	12
	2-136	15
	2-136	16
	2-136	20
	2-136	22
	2-139	4
	2-141	28
	2-145	4
	2-157	12
	2-161	11
580019246	2-67	2
	2-68	7
	2-71	2

©2015 Yale Europe Materials Handling Limited

NUMERICAL INDEX (continued)

PART NO.	PAGE	ITEM
	2-71	3
	2-71	13
	2-75	14
	2-76	19
	2-76	30
	2-76	32
	2-79	2
	2-79	3
	2-80	13
	2-83	14
	2-84	19
	2-84	30
	2-84	32
	2-87	10
	2-88	25
	2-88	26
	2-91	2
	2-91	4
	2-92	20
	2-92	26
	2-95	7
	2-96	12
	2-96	19
	2-96	21
	2-99	6
	2-101	27
	2-103	2
	2-103	3
	2-104	16
	2-107	13
	2-108	18
	2-108	20
	2-108	21
	2-108	22
	2-108	31
	2-108	33
	2-111	2
	2-111	3
	2-112	16
	2-115	13
	2-116	18
	2-116	20
	2-116	21
	2-116	22
	2-116	31
	2-116	33
	2-119	10
	2-120	25
	2-120	26
	2-123	2
	2-123	4
	2-123	14
	2-123	15
	2-124	20
	2-124	26
	2-127	10
	2-128	25
	2-128	26
	2-131	2
	2-131	4
	2-131	14
	2-131	15
	2-132	20
	2-132	26
	2-135	7
	2-136	12
	2-136	15
	2-136	16
	2-136	20
	2-136	22
	2-139	4
	2-141	28
	2-145	4
	2-157	12
	2-161	11
580019353	2-65	9
	2-67	5
	2-68	12
	2-79	7
	2-88	33
	2-100	16
	2-103	7
	2-103	7
	2-111	7
	2-120	33
	2-129	33
	2-140	16
	2-145	1
	2-145	3
	2-149	1
	2-150	1
	2-156	1
	2-161	1
	10-49	2
580019366	2-87	15
	2-119	16
	2-124	22
	2-127	16
	2-132	22
580019387	6-9	7
	6-37	25
	6-37	26
	6-37	27
	6-65	11
	6-65	14
	6-65	15
	7-19	29
	7-20	31
	7-20	33
	7-23	29
	7-24	31
	7-24	33
	8-37	25
	8-41	18
	9-3	25
	9-5	25
	9-7	12
	9-9	11
	9-35	18
580019805	6-75	27
580019806	6-37	28
	6-65	17
580019808	4-34	3
	6-37	32
	6-65	16
	10-45	12
	10-47	12
580019817	6-9	7
	6-37	25
	6-65	15
	7-19	31
	7-23	31
	8-38	35
	9-3	25
	9-5	25
	9-29	12
580019838	6-37	27
	6-65	14
	8-11	16
	8-15	19
580019860	6-75	7
580019861	10-23	24
	10-25	23
	10-27	23
	10-29	23
	10-31	13
	10-33	23
580019865	4-3	4
	6-31	20
	6-37	30
	6-65	18
	10-23	24
	10-25	23
	10-27	23
	10-29	23
	10-31	13
	10-31	13
	10-33	23
580019894	6-75	8
580020431	8-15	28
	8-37	30
580020576	7-3	9
	7-7	9
	8-7	30
	8-11	11
	8-11	13
	9-29	14
580020585	6-37	31
580020708	10-23	6
	10-25	4
	10-27	3
	10-29	4
	10-31	5
	10-33	4
	10-40	
580020710	10-40	1
580020719	10-40	3
580020721	10-40	2
580020724	10-23	4
	10-25	5
	10-27	5
	10-29	5
	10-31	23
	10-33	5
580020726	10-23	5
	10-25	6
	10-27	6
	10-29	6
	10-31	22
	10-33	6
580020741	10-40	5
580020942	2-64	2
	2-65	8
	2-67	4
	2-68	11
580020943	2-72	21
	2-80	21
	2-87	2
	2-99	2
	2-104	21
	2-112	21
	2-119	2
	2-127	2
	2-139	2

©2015 Yale Europe Materials Handling Limited

NUMERICAL INDEX (continued)

PART NO.	PAGE	ITEM
	10-49	5
580020944	2-72	21
	2-80	21
	2-87	2
	2-99	2
	2-104	21
	2-112	21
	2-119	2
	2-127	2
	2-139	2
	10-49	5
580021087	2-65	1
	2-68	1
	2-71	9
	2-76	23
	2-79	9
	2-84	23
	2-88	32
	2-89	37
	2-91	14
	2-96	15
	2-100	17
	2-101	29
	2-103	9
	2-108	24
	2-111	9
	2-116	24
	2-120	32
	2-121	37
	2-123	16
	2-128	32
	2-129	37
	2-131	16
	2-136	14
	2-140	17
	2-141	32
	2-156	4
	2-156	11
	2-157	13
	2-161	4
	2-161	10
	2-161	12
580021088	2-64	4
	2-65	1
	2-67	7
	2-68	1
	2-71	9
	2-76	23
	2-79	9
	2-84	23
	2-88	32
	2-89	37
	2-91	14
	2-96	15
	2-100	17
	2-101	29
	2-103	9
	2-108	24
	2-111	9
	2-116	24
	2-120	32
	2-121	37
	2-124	16
	2-128	32
	2-129	37
	2-132	16
	2-136	14
	2-140	17
	2-141	32
	2-156	4
	2-156	11
	2-157	13
	2-161	4
	2-161	10
	2-161	12
580021466	1-21	2
	1-39	13
580022274	1-31	18
580022501	6-77	8
580022502	7-27	14
	8-44	15
580022505	9-11	6
	9-13	6
	9-31	6
	9-33	6
580022507	6-77	7
580022508	7-11	10
	8-19	12
580022804	1-41	12
580022847	1-25	10
	1-39	19
580022887	2-158	2
	2-163	3
580022891	2-71	6
	2-79	6
	2-89	36
	2-101	28
	2-103	6
	2-111	6
	2-121	36
	2-129	36
	2-141	31
	2-152	8
	2-153	7
	2-156	9
	2-161	9
580022892	2-71	6
	2-79	6
	2-89	36
	2-101	28
	2-103	6
	2-111	6
	2-121	36
	2-129	36
	2-141	31
	2-152	8
	2-153	7
	2-156	9
	2-161	9
580022893	1-101	13
	2-71	10
	2-76	24
	2-79	10
	2-84	24
	2-88	31
	2-89	38
	2-91	13
	2-96	15
	2-100	17
	2-101	29
	2-103	10
	2-108	25
	2-111	10
	2-116	25
	2-120	31
	2-121	38
	2-128	31
	2-129	38
	2-136	14
	2-140	17
	2-141	32
	2-153	1
	10-2	1
	10-21	9
580022894	2-76	21
	2-84	21
	2-92	18
	2-96	13
	2-124	17
	2-132	17
580022901	1-21	14
580022963	8-5	9
580023049	1-99	9
580023124	7-33	11
	8-51	5
	8-53	8
	8-57	10
	8-61	10
580023425	6-77	
580023845	2-155	4
580023890	3-3	5
580023947	2-148	2
580024136	4-5	7
580024138	4-5	9
580024141	4-5	8
580024143	4-5	2
580024144	4-5	4
580024145	4-5	3
580024920	8-41	13
	9-3	12
	9-5	12
580025509	5-7	5
	5-9	1
580025558	2-147	1
580025559	1-50	25
	1-56	37
	2-145	2
580025602	9-11	
	9-13	
	9-31	
	9-33	
580025717	1-35	
	1-37	11
580025868	2-64	5
	2-67	1
580026299	2-93	38
	2-101	34
	2-125	37
	2-133	37
	2-140	19
	2-152	6
	2-158	3
	2-163	5
580026621	1-93	34
	2-6	19
	2-9	30
	2-11	30
	2-11	33
	2-15	29
	2-15	32
	2-23	20
	2-48	9
	10-9	5
580026640	4-11	9

©2015 Yale Europe Materials Handling Limited

NUMERICAL INDEX (continued)

PART NO.	PAGE	ITEM
580026649	2-101	33
	2-141	29
	2-155	2
580026720	10-23	7
	10-25	10
	10-27	10
	10-29	10
	10-31	17
	10-33	10
580026721	10-23	8
	10-25	11
	10-27	11
	10-29	11
	10-31	16
	10-33	11
580026723	10-23	9
	10-25	12
	10-27	12
	10-29	12
	10-31	4
	10-33	12
580026724	10-40	4
580026749	1-118	4
580026812	2-6	22
	2-9	2
	2-11	2
	2-15	2
	2-31	11
	2-33	12
	2-35	12
	2-143	16
	10-49	9
	10-51	5
580026813	2-131	11
	2-136	18
580027008	6-12	9
580027206	2-123	11
580027207	2-123	11
580027520	10-40	6
580027572	1-81	9
	1-83	18
	1-85	13
	1-87	4
	6-37	14
	6-65	7
580027573	1-65	16
	1-69	27
	1-75	29
	1-76	37
	1-91	4
	1-93	29
	1-97	7
	1-99	10
	1-107	6
	5-3	9
	5-11	3
	5-13	3
	6-5	12
580027620	2-144	1
	2-144	2
	2-144	11
	2-144	12
580027677	6-27	9
	6-29	9
	6-31	6
580027878	7-31	7
580028816	1-29	10
580028817	1-29	9
580028818	1-29	6
580029110	1-33	22
580029600	3-9	3
580029621	3-7	4
580029727	1-113	7
580029990	10-17	2
	10-19	5
	10-21	8
580030876	2-101	30
	2-141	34
580030878	2-9	19
	2-11	19
	2-15	19
	2-72	26
	2-77	38
	2-80	26
	2-85	38
	2-104	26
	2-109	39
	2-112	26
	2-117	46
580030966	1-93	30
	1-97	8
	2-9	24
	2-11	24
	2-15	24
	2-19	4
580030967	1-107	12
580030968	2-19	3
	2-23	4
580030969	1-107	11
580030970	2-19	15
	2-23	15
	4-16	10
	4-18	10
	6-5	18
	6-9	9
	6-11	12
580030975	1-93	25
580031629	1-123	1
580032011	1-65	13
580032260	1-49	3
	1-55	5
580032373	2-15	37
	2-23	21
	2-48	8
580032375	1-79	4
580032377	1-61	6
	1-63	7
580032520	4-5	6
580032669	1-31	4
	1-33	1
580032779	6-45	11
	6-62	3
580033516	2-101	33
	2-141	29
	2-155	2
580033537	2-101	33
	2-141	29
	2-155	2
580033718	7-20	41
	7-24	41
	7-31	8
	8-37	16
	10-25	22
580034540	2-152	2
	2-152	3
	2-153	4
	2-158	4
	2-163	6
580034850	8-29	9
580034999	1-118	2
580035000	1-118	3
580035001	1-118	5
580035002	1-118	
580035031	2-71	5
	2-75	13
	2-75	18
	2-79	5
	2-83	13
	2-83	18
	2-88	28
	2-92	21
	2-92	32
	2-95	5
	2-95	11
	2-100	22
	2-103	5
	2-107	8
	2-107	17
	2-111	5
	2-115	8
	2-115	17
	2-120	28
	2-124	21
	2-124	32
	2-128	28
	2-132	21
	2-132	32
	2-135	5
	2-135	11
	2-140	23
580035032	2-71	4
	2-75	9
	2-76	22
	2-79	4
	2-83	9
	2-84	22
	2-88	29
	2-91	16
	2-92	29
	2-95	6
	2-96	14
	2-100	23
	2-103	4
	2-107	9
	2-108	19
	2-111	4
	2-115	9
	2-116	19
	2-120	29
	2-124	19
	2-124	29
	2-128	29
	2-132	19
	2-132	29
	2-135	6
	2-140	24
580035034	2-88	20
	2-99	10
	2-109	36
	2-117	36
	2-120	20
	2-128	20
	2-139	10
580035035	2-99	10

©2015 Yale Europe Materials Handling Limited

NUMERICAL INDEX (continued)

PART NO.	PAGE	ITEM
	2-139	10
580035779	2-51	14
580035780	2-51	12
580035910	7-31	
580035916	7-31	1
580036023	6-19	7
580036662	5-3	5
	5-3	8
580036940	2-131	11
	2-136	18
580036981	2-71	11
	2-72	27
	2-75	17
	2-79	11
	2-81	33
	2-83	17
	2-87	13
	2-92	23
	2-95	10
	2-99	5
	2-99	7
	2-103	11
	2-107	16
	2-108	28
	2-111	11
	2-115	16
	2-116	28
	2-119	13
	2-123	9
	2-124	23
	2-127	13
	2-131	9
	2-132	23
	2-135	10
	2-136	19
	2-139	5
	2-139	7
580036986	2-72	27
	2-75	17
	2-79	11
	2-81	33
	2-83	17
	2-87	13
	2-92	23
	2-95	10
	2-99	5
	2-99	7
	2-103	11
	2-107	16
	2-108	28
	2-111	11

PART NO.	PAGE	ITEM
	2-115	16
	2-116	28
	2-119	13
	2-123	9
	2-124	23
	2-127	13
	2-131	9
	2-132	23
	2-135	10
	2-136	19
	2-139	5
	2-139	7
580037209	2-63	2
	10-11	7
580037254	10-25	2
580037260	10-25	1
580037805	2-76	27
	2-77	36
	2-84	27
	2-85	36
	2-88	21
	2-91	10
	2-96	18
	2-100	11
	2-108	26
	2-109	37
	2-116	26
	2-117	37
	2-120	21
	2-123	12
	2-128	21
	2-131	12
	2-136	17
	2-140	11
580037807	2-76	27
	2-77	36
	2-84	27
	2-85	36
	2-88	21
	2-91	10
	2-96	18
	2-100	11
	2-108	26
	2-109	37
	2-116	26
	2-117	37
	2-120	21
	2-123	12
	2-128	21
	2-131	12
	2-136	17

PART NO.	PAGE	ITEM
	2-140	11
580038063	1-97	5
	6-41	15
580038290	2-76	20
	2-84	20
	2-88	31
	2-100	17
	2-120	31
	2-128	31
	2-140	17
	10-21	10
580038355	1-101	14
580038834	1-85	6
	6-37	33
	6-41	21
580039183	7-20	33
	7-24	33
	8-38	37
	9-7	12
580039194	2-149	2
580039385	6-37	28
	6-65	17
	6-75	7
	6-75	8
	10-23	24
	10-25	23
	10-27	23
	10-29	23
	10-31	13
	10-31	13
	10-33	23
580039394	10-45	4
	10-47	4
580039401	7-15	10
	7-17	10
	8-27	3
	8-30	41
	8-51	22
	8-53	31
	8-58	37
	8-62	35
	9-19	13
	9-21	23
	9-23	16
	9-40	26
580039424	7-15	19
	7-17	19
	7-33	14
	8-25	22
	8-27	24
	8-30	42

PART NO.	PAGE	ITEM
	8-51	24
	8-53	32
	8-58	36
	8-62	36
	9-19	12
	9-21	10
	9-23	15
	9-40	27
	10-45	3
	10-47	5
580039438	1-81	5
	1-83	5
	2-9	7
	2-11	7
	2-15	7
	2-33	5
	2-53	3
	6-34	3
	10-5	2
	10-7	2
580039440	2-27	15
	2-29	15
	2-33	13
580039490	2-103	7
	2-111	7
	2-120	33
	2-128	33
	2-140	16
	2-155	1
580039491	2-103	7
	2-111	7
	2-120	33
	2-129	33
	2-140	16
	2-155	1
580039492	2-145	1
580039499	2-73	29
	2-79	8
	2-81	35
	2-89	34
	2-104	27
	2-104	29
	2-111	8
	2-113	33
	2-113	34
	2-121	34
	2-129	34
	2-150	2
	2-156	7
	2-157	14
	2-161	7

©2015 Yale Europe Materials Handling Limited

NUMERICAL INDEX (continued)

PART NO.	PAGE	ITEM
	2-161	13
580039500	2-73	29
	2-79	8
	2-81	35
	2-89	34
	2-104	27
	2-105	29
	2-111	8
	2-113	33
	2-113	34
	2-121	34
	2-129	34
	2-150	2
	2-156	7
	2-157	14
	2-161	7
	2-161	13
580039513	2-71	11
	2-72	16
	2-73	29
	2-79	11
	2-80	16
	2-87	1
	2-87	7
	2-87	9
	2-87	13
	2-88	25
	2-88	26
	2-91	2
	2-91	4
	2-96	19
	2-96	21
	2-99	4
	2-99	5
	2-99	7
	2-101	27
	2-103	11
	2-104	13
	2-104	27
	2-104	29
	2-111	11
	2-112	13
	2-113	33
	2-113	34
	2-119	1
	2-119	7
	2-119	9
	2-119	10
	2-119	13
	2-120	25
	2-120	26
	2-123	2
	2-123	4
	2-123	14
	2-123	15
	2-127	1
	2-127	7
	2-127	9
	2-127	10
	2-127	13
	2-128	25
	2-128	26
	2-131	2
	2-131	4
	2-131	14
	2-131	15
	2-136	15
	2-136	16
	2-136	20
	2-137	22
	2-139	5
	2-139	6
	2-139	7
	2-141	28
	2-150	2
	2-152	8
	2-153	7
	2-156	7
	2-156	9
	2-157	14
	2-161	7
	2-161	9
	2-161	13
580039602	2-76	27
	2-77	36
	2-84	27
	2-85	36
	2-96	18
	2-100	11
	2-108	26
	2-109	37
	2-116	26
	2-117	37
	2-136	17
	2-140	11
580039764	2-77	37
	2-85	37
	2-91	7
	2-96	23
	2-109	38
	2-117	38
	2-123	7
	2-131	7
	2-137	24
580039799	2-101	31
	2-141	33
580039900	6-27	18
	6-29	18
	6-31	16
580040120	2-88	24
	2-120	24
	2-128	24
580040456	2-71	4
	2-71	5
	2-75	9
	2-75	13
	2-75	18
	2-76	22
	2-77	35
	2-79	4
	2-79	5
	2-83	9
	2-83	13
	2-83	18
	2-84	22
	2-85	35
	2-103	4
	2-103	5
	2-107	8
	2-107	9
	2-107	17
	2-108	19
	2-109	36
	2-111	4
	2-111	5
	2-115	8
	2-115	9
	2-115	17
	2-116	19
	2-117	36
580040850	2-63	3
	10-11	5
580041195	2-64	1
	2-71	7
	2-88	33
	2-100	16
	2-143	8
	2-147	3
	2-148	1
	2-151	1
	2-156	1
	2-161	1
	10-13	1
580041208	6-45	12
	6-49	16
	6-57	12
	6-67	11
	6-69	11
580041371	10-51	3
580041384	10-51	2
580041532	3-10	1
580041641	2-91	15
	2-124	18
	2-132	18
580041704	1-19	7
	1-29	17
	1-61	3
	1-63	8
	1-75	24
	1-111	27
	1-113	31
	2-27	5
	2-29	5
	2-33	4
	2-41	10
	6-27	10
	6-29	10
	6-31	7
	6-33	11
	6-34	2
	10-11	3
	10-21	6
580041768	1-101	6
580042219	2-64	1
	2-65	9
	2-67	5
	2-68	12
	2-149	1
	10-49	2
580042220	2-64	1
	2-65	9
	2-67	5
	2-149	1
	10-49	2
580042221	2-72	15
	2-72	22
	2-76	26
	2-80	15
	2-80	22
	2-84	26
	2-87	1
	2-87	9
	2-91	11
	2-96	17

©2015 Yale Europe Materials Handling Limited

NUMERICAL INDEX (continued)

PART NO.	PAGE	ITEM
	2-99	1
	2-104	15
	2-104	22
	2-112	15
	2-112	22
	2-119	1
	2-119	9
	2-127	1
	2-127	9
	2-139	1
	10-49	4
580042222	2-72	15
	2-72	22
	2-76	25
	2-76	26
	2-80	15
	2-80	22
	2-84	25
	2-84	26
	2-87	1
	2-87	9
	2-91	11
	2-91	12
	2-96	16
	2-96	17
	2-99	1
	2-104	22
	2-112	15
	2-112	22
	2-119	1
	2-119	9
	2-127	1
	2-127	9
	2-139	1
	10-49	4
580042794	2-16	40
580043044	6-9	3
580043148	2-52	8
580043644	6-45	13
	6-49	17
	6-57	13
	6-67	12
580044127	2-100	14
	2-140	14
580044129	1-107	9
580044571	2-5	5
	2-5	5
	2-5	5
	2-5	10
	2-19	12
	2-20	21
	2-23	12
	2-44	1
580044776	6-5	13
580044859	1-81	6
	1-83	6
	1-111	13
	1-113	17
	2-36	4
	2-39	4
	10-2	2
580044860	2-19	5
	2-19	11
	2-23	3
	2-23	6
	2-63	8
	6-38	36
	10-13	6
580044861	1-9	10
	1-11	14
	1-19	5
	1-29	15
	1-39	23
580044862	1-83	9
	2-19	16
	2-23	16
580044908	2-65	2
	2-67	9
	2-68	3
	2-80	28
	2-85	41
	2-89	35
	2-91	5
	2-112	28
	2-117	41
	2-121	35
	2-123	5
	2-129	35
	2-131	5
	2-143	10
	2-156	3
	2-156	10
	2-161	3
580044946	1-93	23
	5-11	4
	5-13	4
580045338	4-16	5
	4-18	5
580045653	6-33	5
	7-15	7
	7-17	7
	7-33	3
	8-57	4
	8-61	4
	9-39	8
	9-39	8
	9-39	8
580046077	5-7	6
580046139	1-61	11
	1-111	11
	1-113	5
	1-113	15
580046145	10-25	25
580046399	4-16	5
	4-18	5
580046451	1-83	8
	5-3	14
	6-11	5
580046783	2-48	5
580047034	2-56	2
580047195	2-72	25
	2-80	25
	2-87	16
	2-99	8
	2-104	25
	2-112	25
	2-120	17
	2-128	17
	2-139	8
	2-158	1
	2-163	1
	2-164	3
	2-167	3
580047197	2-72	25
	2-80	25
	2-88	16
	2-99	8
	2-104	25
	2-112	25
	2-120	17
	2-128	17
	2-139	8
	2-152	5
	2-158	1
	2-163	1
	2-164	3
	2-167	3
580047198	2-9	6
	2-11	6
	2-15	6
	10-5	1
	10-7	1
	10-7	4
580047200	2-6	23
	2-9	5
	2-11	5
	2-15	5
	4-16	7
	4-18	7
580047600	5-5	15
580047673	5-5	10
580047714	1-91	6
	2-6	26
	2-9	29
	2-11	29
	2-11	31
	2-15	28
	2-15	30
	2-19	18
	6-11	10
	10-49	11
	10-51	9
580047919	1-23	10
	1-79	10
	1-85	8
	1-87	12
	1-93	8
	1-101	9
	2-9	8
	2-11	8
	2-15	8
	2-33	3
	2-35	3
	4-34	7
	5-3	19
	10-5	4
	10-7	3
580048154	10-2	
580048227	1-65	18
	1-79	5
	1-93	16
580048272	2-75	16
	2-83	16
	2-92	24
	2-95	9
	2-107	15
	2-115	15
	2-124	24
	2-132	24
	2-135	9
580048529	1-27	11
	1-31	14
580048647	1-31	3
	1-33	4

©2015 Yale Europe Materials Handling Limited

NUMERICAL INDEX (continued)

PART NO.	PAGE	ITEM
580048654	1-31	12
580048655	1-33	12
580048656	1-33	14
580048658	1-33	23
580048678	1-33	10
580049011	1-87	13
	1-89	8
	1-111	24
	1-113	28
	2-27	6
	2-29	6
	10-49	7
580049064	10-25	26
580049119	6-75	27
580049228	6-5	8
580049229	1-9	9
	1-11	12
	1-93	31
	1-97	6
	5-3	8
	6-19	10
580049231	1-93	33
	2-5	7
	2-24	26
	2-36	7
	2-39	13
	2-41	14
	6-9	2
	6-11	6
	6-37	18
	6-65	2
580049555	10-53	9
580049559	2-16	41
	10-53	8
580049602	6-17	11
580049624	1-43	10
580049733	6-53	17
	6-57	13
580049770	1-123	14
580049810	4-20	1
	4-23	1
	4-25	1
	4-26	1
	4-27	1
	4-29	1
580049815	2-147	1
580049840	1-93	24
	2-51	16
	4-34	6
	5-3	20
	6-37	4
	10-21	7
580049860	1-119	
580049861	1-119	5
580049884	1-50	
	1-56	
580049903	1-55	23
580049904	1-55	24
580050041	9-11	7
	9-13	7
	9-31	7
	9-33	7
580050715	3-5	5
580050725	9-13	
	9-33	
580050730	9-13	
	9-33	
580050735	9-13	
	9-33	
580050753	9-11	
	9-31	
580050758	9-11	
	9-31	
580050763	9-11	
	9-31	
580051168	2-44	12
580051442	1-99	1
	1-101	12
580051609	2-33	10
	2-35	10
580051703	2-149	2
	2-150	3
580051704	2-149	3
	2-150	4
580051800	1-87	14
	1-89	9
	1-111	22
	1-113	27
	2-53	4
	5-3	19
	10-49	6
580052276	6-75	19
580052324	6-19	4
580053611	9-3	15
	9-5	15
580053612	8-41	17
580054028	6-15	10
580055631	5-7	4
	5-9	2
	8-11	23
	8-15	25
	10-19	2
580055632	7-3	30
	7-7	30
	8-7	10
	8-11	22
580055633	8-51	20
	8-53	23
	8-58	33
	8-62	33
580055634	7-3	33
	7-7	33
	8-7	12
	8-51	9
	8-53	12
	8-57	14
	9-29	9
580055636	7-33	10
580055649	7-33	12
	8-41	28
580055650	7-15	17
	7-17	17
	8-25	15
	8-27	13
	8-29	4
	8-51	29
	8-53	35
	8-58	29
	8-62	26
	9-19	23
	9-21	21
	9-23	11
	9-39	20
580055651	7-3	21
	7-7	21
	7-15	11
	7-17	11
	7-19	27
	7-23	27
	7-33	19
	8-7	33
	8-11	5
	8-15	26
	8-25	4
	8-27	22
	8-29	8
	8-37	29
	8-51	12
	8-53	15
	8-57	8
	8-61	8
	9-3	21
	9-5	21
	9-29	19
	9-39	5
580055652	1-114	4
	8-51	21
	8-53	24
	8-58	32
	8-62	32
580055730	6-33	9
580055731	8-27	20
	8-29	26
	8-53	33
	8-58	43
	8-62	25
	9-21	20
	9-24	34
	9-39	18
580055733	7-3	10
	7-7	10
	8-3	9
	8-11	27
	8-15	33
	8-25	20
	8-30	40
	8-37	28
	8-51	23
	8-58	38
	8-62	37
	9-3	19
	9-5	19
	9-19	11
	9-23	18
	9-40	28
580055734	7-15	2
	7-17	2
	8-25	21
	8-25	23
	8-29	7
	8-37	32
	9-3	28
	9-5	28
	9-39	3
580055735	7-33	16
	8-11	24
	8-15	24
580055736	8-27	27
	8-38	34
580055738	7-3	29
	7-4	35
	7-7	29
	7-8	35
	8-3	

©2015 Yale Europe Materials Handling Limited

NUMERICAL INDEX (continued)

PART NO.	PAGE	ITEM
	8-7	9
	8-11	21
580055742	7-3	34
	7-7	34
	8-7	11
580055863	6-33	7
	7-15	20
	7-17	20
	8-27	6
	8-29	30
	8-51	14
	8-53	17
	8-57	6
	8-61	6
	9-19	17
	9-23	12
	9-39	7
	9-40	38
580055864	2-41	12
	8-29	21
	8-62	28
580055976	7-19	17
	7-23	17
	8-37	4
	8-41	29
	8-61	13
	9-3	30
	9-5	30
	9-7	6
580055977	7-15	6
	7-17	6
	7-33	13
	8-25	9
	8-29	11
	8-51	8
	8-53	11
	8-57	13
	8-61	13
580055979	8-3	13
	8-5	13
	9-27	5
580055980	7-13	12
	10-23	14
	10-25	8
	10-27	8
	10-29	8
	10-31	9
	10-33	8
580055981	7-15	13
	7-17	13
	8-25	14
	8-27	5
	8-29	3
	8-51	28
	8-58	28
	8-62	28
	9-19	18
	9-23	10
580055982	8-25	19
	8-30	36
580055983	7-3	20
	7-7	20
	7-19	26
	7-23	26
	7-33	6
	8-7	32
	8-51	11
	8-53	14
	8-57	9
	8-61	9
	9-3	26
	9-5	26
	9-29	18
580055989	3-3	4
	7-33	8
	9-19	24
	9-23	5
580055990	9-21	11
	9-23	5
	9-40	38
580056000	6-75	12
580056001	7-19	19
	7-23	19
	8-3	14
	8-5	10
	8-37	7
	8-41	14
	8-51	10
	8-53	13
	8-57	15
	8-61	15
	9-3	16
	9-5	16
	9-7	7
	9-27	2
	9-29	10
580056004	2-146	2
	2-147	1
	10-13	1
580056005	1-50	14
	1-56	28
	6-75	11
	7-19	18
	7-23	18
	8-3	12
	8-5	11
	8-25	5
	8-29	13
	8-37	5
	8-41	15
	9-3	13
	9-5	13
	9-27	3
580056006	2-67	11
	2-72	14
	2-80	14
	2-87	11
	2-99	6
	2-104	17
	2-112	17
	2-119	11
	2-123	13
	2-127	11
	2-131	13
	2-136	16
	2-139	4
	2-146	2
	2-147	3
	10-13	1
580056007	8-30	44
580056008	10-23	13
	10-25	9
	10-27	9
	10-29	9
	10-31	10
	10-33	9
580056337	6-19	3
580056465	6-11	4
	6-34	5
	6-37	26
	6-65	11
580056527	1-11	11
	1-105	2
	1-107	4
580056528	1-105	4
	5-3	23
580056586	10-45	18
	10-47	18
580056588	10-45	5
	10-47	3
580056613	2-6	28
	2-9	3
	2-11	3
	2-15	3
	2-31	12
	2-33	11
	2-35	11
	6-41	23
	10-49	8
	10-51	4
580056635	1-55	14
580056666	1-107	10
580056667	5-3	24
	6-19	13
580056741	10-45	17
	10-47	17
580056815	1-50	20
	1-55	20
	2-63	7
	10-9	6
	10-13	7
580056840	6-41	25
580056886	1-11	7
580057260	1-53	9
	1-59	9
580057266	1-53	11
	1-59	11
580057271	1-49	2
	1-55	2
580057307	1-49	6
	1-53	7
	1-53	10
	1-55	6
	1-59	7
	1-59	10
580057451	1-49	8
	1-55	26
580058078	4-16	5
	4-18	5
580058188	2-63	13
	10-13	5
580058190	2-9	21
	2-11	21
	2-15	21
580058194	5-3	11
580058314	2-63	15
	10-13	4
580058447	10-21	4
580058582	2-75	1
	2-83	1
	2-93	39
	2-100	19
	2-107	1
	2-115	1

©2015 Yale Europe Materials Handling Limited

NUMERICAL INDEX (continued)

PART NO.	PAGE	ITEM
	2-125	38
	2-133	38
	2-140	20
580058583	2-75	2
	2-75	3
	2-75	4
	2-83	2
	2-83	3
	2-83	4
	2-93	40
	2-100	20
	2-107	2
	2-107	3
	2-107	4
	2-115	2
	2-115	3
	2-115	4
	2-125	39
	2-133	39
	2-140	21
580058844	10-5	7
	10-7	8
580059493	1-9	13
580059753	6-12	6
580060019	1-87	8
	1-89	5
	1-102	
	6-37	10
580060020	5-3	15
580060022	1-97	10
580060043	2-51	15
580060127	4-23	5
	4-27	12
580060136	1-31	
	1-33	
580060645	2-56	4
580060686	1-66	27
	1-69	16
	1-73	16
	1-75	16
580060918	4-20	2
	4-26	3
580061290	8-41	4
	9-9	4
580061352	6-75	10
	9-29	7
580061378	8-23	10
	8-49	7
	9-17	7
	9-37	9
580061401	8-51	19
	8-53	22
	8-58	34
	8-62	29
580061563	8-27	12
	8-29	17
580061836	1-39	9
580061837	1-39	6
580061870	7-15	16
	7-17	16
	8-61	12
580062025	1-31	23
580062036	1-31	19
580062048	1-27	5
580062078	1-49	12
	1-56	29
580062102	1-31	21
	1-33	19
580062118	2-76	35
	2-85	35
	2-88	20
	2-99	10
	2-109	36
	2-117	36
	2-120	20
	2-128	20
	2-139	10
580062119	2-71	4
	2-71	5
	2-75	9
	2-75	13
	2-75	18
	2-76	22
	2-77	35
	2-79	4
	2-79	5
	2-83	9
	2-83	13
	2-83	18
	2-84	22
	2-85	35
	2-88	20
	2-88	28
	2-88	29
	2-91	16
	2-92	21
	2-92	29
	2-92	32
	2-95	5
	2-95	6
	2-95	11
	2-96	14
	2-99	10
	2-100	22
	2-100	23
	2-103	4
	2-103	5
	2-107	8
	2-107	9
	2-107	17
	2-108	19
	2-111	4
	2-111	5
	2-115	8
	2-115	9
	2-115	17
	2-116	19
	2-120	20
	2-120	28
	2-120	29
	2-124	19
	2-124	21
	2-124	29
	2-124	32
	2-128	20
	2-128	28
	2-128	29
	2-132	19
	2-132	21
	2-132	29
	2-132	32
	2-135	5
	2-135	6
	2-135	11
	2-136	13
	2-139	10
	2-140	23
	2-140	24
580062127	2-47	4
	2-48	4
580062388	2-71	9
	2-72	28
	2-76	23
	2-79	9
	2-81	34
	2-84	23
	2-89	37
	2-91	14
	2-91	17
	2-96	13
	2-96	15
	2-101	29
	2-103	9
	2-108	24
	2-108	27
	2-111	9
	2-116	24
	2-116	27
	2-121	37
	2-123	11
	2-124	16
	2-129	37
	2-131	11
	2-132	16
	2-136	14
	2-136	18
	2-141	32
	2-149	2
	2-150	3
580062390	8-12	38
	8-15	8
	8-41	8
	9-35	14
580062392	4-16	3
	4-18	3
580063957	2-143	7
	2-145	1
580063982	10-45	1
580063983	10-45	8
580063984	10-45	7
580063986	10-45	2
580064145	7-4	39
	7-8	39
	8-7	28
	8-11	12
	9-29	23
580064170	1-27	8
580064348	8-41	23
	9-9	5
580064349	9-19	5
	9-19	5
	9-19	5
	9-21	6
	9-21	6
	9-21	6
580064617	3-10	1
580064872	2-42	5
580065475	9-19	7
	9-23	23
580066000	7-33	5
580066043	10-45	14
	10-47	14
580066714	3-7	
	3-9	

©2015 Yale Europe Materials Handling Limited

NUMERICAL INDEX (continued)

PART NO.	PAGE	ITEM
580066715	3-7	
	3-9	
580066779	6-11	3
580066855	6-33	14
580067209	8-21	6
	8-47	6
	9-15	6
580067308	3-10	1
580067321	4-15	1
580067351	1-55	3
580067649	1-121	9
580067676	6-27	6
	6-29	6
	6-31	18
580067790	7-20	35
	7-24	35
	8-7	25
580068221	7-33	4
	8-51	16
	8-53	19
	8-58	
	9-19	10
	9-21	9
	9-24	25
580068222	8-37	22
	9-19	6
	9-23	24
	9-40	25
580068237	1-55	18
580068361	2-11	17
	2-15	17
580068520	9-9	3
580068525	9-9	3
580068539	8-41	19
580068541	8-41	19
580068542	8-41	19
580068544	8-41	19
580069228	9-19	25
580069355	6-15	6
580069704	2-71	7
	2-71	12
	2-79	7
	2-79	12
	2-87	14
	2-88	33
	2-100	16
	2-103	12
	2-111	12
	2-119	14
	2-127	14
	2-150	1
	2-156	1
	2-161	1
580069705	2-71	7
	2-79	7
	2-88	33
	2-100	16
	2-150	1
	2-156	1
	2-161	1
580069801	1-41	6
580071052	8-12	37
	8-15	9
	8-41	9
	9-9	12
	9-35	15
580071066	2-164	5
	2-167	5
580071585	2-147	1
580071586	1-101	13
580071587	1-99	5
	1-101	13
580072264	1-105	3
580072266	5-3	22
580072267	5-3	21
580072682	4-5	26
580072738	2-165	
580073651	1-49	3
	1-55	5
580074783	9-9	3
580074863	2-19	1
	2-23	1
580074868	2-19	1
	2-23	1
580075011	1-27	7
580075139	1-35	
	1-37	3
580075200	5-3	18
580075214	1-111	17
	1-113	21
580075584	7-19	
	7-23	
580075589	7-19	
	7-23	
580075594	7-19	
	7-23	
580075599	7-19	
	7-23	
580075637	8-33	1
580075639	8-33	1
580075640	9-3	1
580075641	8-33	1
580075642	7-19	1
580075644	8-33	1
580075645	9-3	1
580075646	8-33	1
580075647	7-19	1
580075650	9-3	1
580075652	7-19	1
580075657	7-19	1
580075813	9-3	
	9-5	
	9-9	
580075818	9-3	
	9-5	
	9-9	
580075823	9-3	
	9-5	
	9-9	
580075972	8-33	
	8-35	
	8-37	
	8-41	
580075974	8-33	
	8-35	
	8-37	
	8-41	
580075976	8-33	
	8-35	
	8-37	
	8-41	
580075978	8-33	
	8-35	
	8-37	
	8-41	
580075980	8-33	
	8-35	
	8-37	
	8-41	
580076133	8-12	45
	8-15	7
	9-35	3
580076834	4-3	1
	4-5	
580076856	1-41	11
580077160	6-77	
	6-75	1
580077161	6-77	
	6-75	1
580077405	1-102	2
	1-104	3
580077563	8-21	3
580077907	8-21	9
	8-47	9
	9-15	9
580078341	2-33	1
580078342	2-27	7
580078419	8-21	
580078421	8-21	
580078423	8-21	
580078426	8-21	
580078475	1-69	19
	1-73	19
	1-75	19
580078476	2-53	
580078477	2-53	
580078524	6-9	1
	6-11	1
	6-12	
580078598	6-45	
580078599	6-45	
580078656	1-65	8
	1-69	17
	1-73	17
	1-75	17
580078742	5-11	1
580078920	10-13	1
580078941	7-11	
580078985	6-27	16
	6-29	15
	6-31	13
580078986	6-27	15
	6-29	16
	6-31	12
580079252	10-11	1
580079372	2-143	5
580079433	1-41	4
580079483	10-11	2
580079484	10-11	8
580079615	2-63	14
	10-13	1
580079741	2-63	18
580079892	2-47	3
580079963	1-5	2
580079965	1-5	2
580080319	2-76	25
	2-84	25
	2-91	12
	2-96	16
580080516	1-85	5
580080654	1-5	5
	1-7	5
580080768	2-63	19
	2-156	

©2015 Yale Europe Materials Handling Limited

NUMERICAL INDEX (continued)

PART NO.	PAGE	ITEM
580080769	2-53	
	2-63	17
	2-67	
580080801	5-7	8
	5-9	8
580080884	1-111	5
	1-113	9
580080890	2-148	1
	2-151	1
580080891	2-148	1
	2-151	1
580080967	2-52	2
580081111	8-11	29
	8-15	32
	9-40	24
580081128	7-3	5
	7-7	5
	7-13	2
	8-3	4
	8-5	4
	8-23	2
	9-27	10
	9-37	2
	10-23	21
	10-27	20
	10-31	1
580081129	10-23	21
	10-27	20
	10-31	1
580081230	8-19	
580081232	8-19	
580081234	8-19	
580081236	8-19	
580081238	8-19	
580081256	4-5	17
580081257	4-5	37
580081258	4-5	38
580081260	4-5	11
580081262	4-5	27
580081263	4-5	26
580081265	4-5	31
580081266	4-5	29
580081267	4-6	39
580081268	4-5	30
580081271	4-6	
580081273	4-6	
580081274	4-6	
580081275	4-6	
580081279	1-65	14
	1-69	25
	1-76	35
580081310	9-19	8
580081322	1-85	10
	2-39	9
	2-40	6
	2-44	7
580081348	1-81	11
	1-83	11
	1-85	15
580081502	1-65	17
	1-79	6
	1-93	15
580081678	6-23	2
580081679	6-23	2
580081680	6-23	2
580081686	6-23	3
	6-25	5
580081687	6-23	3
	6-25	5
580081688	6-23	3
	6-25	5
580081792	6-41	12
580081863	7-33	1
580081871	7-33	1
580081874	7-33	1
580081882	6-5	4
580081907	7-33	1
580081927	9-24	36
580081928	9-24	36
580081930	9-21	3
580081933	9-24	36
580081942	8-57	2
	8-61	2
580081945	8-51	2
	8-57	2
	8-61	2
580081948	8-51	2
	8-57	2
	8-61	2
580081950	8-51	2
580081952	8-51	2
	8-57	2
	8-61	2
580081977	8-51	2
580082006	9-24	38
580082008	9-21	2
580082019	8-57	1
	8-61	1
580082021	8-51	1
	8-57	1
	8-61	1
580082023	8-51	1
	8-57	1
	8-61	1
580082026	8-51	1
580082028	8-51	1
	8-57	1
	8-61	1
580082030	8-51	1
580082105	8-12	42
	8-15	2
	9-9	19
	9-35	2
	10-45	6
	10-47	6
580082123	3-7	17
580082260	6-75	20
580082261	6-75	23
580082265	6-75	22
580082447	8-21	
580082524	4-16	9
	4-18	9
	4-31	
580082525	4-16	9
	4-18	9
	4-31	
580082583	6-37	24
	6-65	9
580082923	1-65	23
	1-69	14
	1-73	14
	1-75	14
	6-38	37
580083122	6-77	
	6-75	1
580083295	7-11	
580083300	7-11	
580083301	1-61	12
580083302	1-61	2
	1-63	1
	1-63	9
580083421	10-9	7
	10-9	8
	10-13	8
580083425	9-37	1
580083426	8-23	1
580083427	7-13	1
580083431	7-13	
580083432	8-23	
580083433	9-37	
580083535	6-45	
580083620	1-61	14
580083689	1-69	13
	1-73	13
	1-75	13
580083835	2-63	5
	10-13	8
580083836	10-9	8
580083837	10-9	7
580084066	1-35	4
	1-37	1
580084113	8-3	15
	9-27	11
580084295	2-155	
	6-17	12
580084425	6-17	5
	6-19	9
580084552	1-121	10
580084553	1-121	10
580084584	8-25	7
	8-29	15
580084586	8-12	43
	8-15	5
	9-35	5
580084590	8-25	18
	8-29	28
	8-51	26
	8-57	23
	8-61	23
	9-19	22
	9-23	8
	9-39	16
580084591	8-62	40
580084609	8-27	9
	8-30	43
580084617	8-11	17
580084673	10-23	1
580084678	10-27	1
580084683	10-31	6
580084684	10-23	
580084685	10-27	
580084686	10-31	
580084687	10-23	10
580084788	3-3	1
580084789	3-3	8
580084793	5-3	12
	5-5	
580084918	7-3	
	7-7	
580084924	7-3	
	7-7	
580084929	7-3	
	7-7	
580084935	8-3	

©2015 Yale Europe Materials Handling Limited

NUMERICAL INDEX (continued)

PART NO.	PAGE	ITEM
	8-5	
	8-7	
	8-11	
	8-15	
580084937	8-3	
	8-5	
	8-7	
	8-11	
	8-15	
580084941	8-3	
	8-5	
	8-7	
	8-11	
	8-15	
580084944	8-3	
	8-5	
	8-7	
	8-11	
	8-15	
580084946	8-3	
	8-5	
	8-7	
	8-11	
	8-15	
580084947	10-25	28
	10-29	27
	10-33	27
	10-35	5
	10-37	5
	10-39	5
580084952	1-49	7
	1-55	23
580084954	1-50	23
	1-55	24
580084955	1-50	
	1-56	
580084970	8-15	20
580084972	8-15	20
580084973	8-11	2
580084974	8-15	20
580084975	8-11	2
580084977	8-11	2
	8-15	20
580084978	8-15	20
580084979	8-11	2
580084981	8-11	2
580084998	9-29	20
580084999	7-4	36
	7-8	36
	8-7	29
	8-11	14
	9-29	13
580085052	2-6	21
	2-148	
580085207	7-15	18
	7-17	18
580085282	2-75	6
	2-75	7
	2-75	8
	2-83	6
	2-83	7
	2-83	8
	2-92	34
	2-92	35
	2-92	36
	2-95	1
	2-95	2
	2-95	3
	2-107	6
	2-107	7
	2-115	6
	2-115	7
	2-124	33
	2-124	34
	2-125	35
	2-132	33
	2-132	34
	2-133	35
	2-135	1
	2-135	2
	2-135	3
580085297	2-53	
	2-63	17
	2-64	
580085347	7-3	
	7-7	
580085361	7-3	1
580085375	2-5	13
	2-5	13
	2-9	13
	2-11	13
	2-15	13
580085376	6-17	3
580085421	8-29	1
580085423	8-25	1
	8-29	1
580085425	8-25	1
	8-29	1
580085429	8-25	1
580085433	8-25	1
	8-27	1
	8-29	1
580085437	8-25	1
	8-27	1
580085478	7-17	1
580085481	7-15	1
580085485	7-17	1
580085486	7-15	1
580085488	7-17	1
580085491	7-15	1
580085495	7-17	1
580085496	7-15	1
580085506	2-158	5
	2-163	7
580085603	5-5	11
580085604	5-5	12
580085606	5-5	13
580085607	5-5	16
580085608	5-5	17
580085610	5-5	21
580085612	2-146	
	6-41	29
580085613	2-146	1
580085909	2-63	4
580085910	2-63	4
580086019	2-16	38
	2-52	12
580086081	1-65	21
	1-79	13
	1-93	12
580086121	7-19	30
	7-23	30
	8-38	38
	9-7	14
580086209	2-72	17
	2-80	17
	2-87	8
	2-99	4
	2-104	14
	2-112	14
	2-119	8
	2-127	8
	2-139	6
	2-143	6
580086220	8-11	28
	8-15	21
580086232	2-64	6
	2-65	3
	2-67	3
	2-68	4
580086312	1-49	
580086313	1-49	
580086330	6-33	9
	8-27	7
	8-29	19
580086384	6-33	
	10-25	29
	10-29	28
	10-33	28
	10-35	4
	10-37	4
	10-39	4
580086460	1-81	7
	1-83	7
580086470	1-113	4
580086471	1-113	3
580086472	1-111	2
580086473	1-111	3
580086478	6-23	2
580086479	6-23	2
580086480	6-23	2
580086510	2-5	11
	2-19	7
	2-23	11
580086511	2-5	9
	2-19	8
	2-23	10
580086512	2-5	10
	2-19	12
	2-23	12
580086513	2-5	6
	2-19	20
580086514	2-5	5
	2-19	21
580086515	2-5	6
	2-19	20
580086516	2-5	5
	2-19	21
580086517	2-5	6
	2-19	20
580086518	2-5	5
	2-20	21
580086523	6-34	1
580086545	1-29	1
	1-33	
580086546	1-29	2
	1-31	
580086547	1-29	1
	1-33	
580086548	1-29	2
	1-31	
580086549	1-29	1
	1-33	
580086550	1-29	2

©2015 Yale Europe Materials Handling Limited

NUMERICAL INDEX (continued)

PART NO.	PAGE	ITEM
	1-31	
580086551	1-111	1
	1-113	1
580086554	2-5	17
	2-19	6
	2-23	7
580086566	1-39	21
580086567	1-39	22
580086579	1-111	1
	1-113	1
580086580	1-113	2
580086581	6-41	35
580086727	2-5	17
	2-19	6
	2-23	7
580086728	2-6	17
	2-19	6
	2-23	8
580086729	2-6	17
	2-19	6
	2-23	9
580086736	3-5	1
580086739	3-5	2
580086741	3-5	3
580086745	3-5	4
580086747	3-5	7
580086749	3-5	6
580086874	4-16	5
	4-16	5
	4-18	5
	4-18	5
580086875	4-16	5
	4-18	5
580086892	6-15	4
580086893	6-15	5
580086894	6-15	12
580086895	6-15	
580086907	8-41	10
	9-9	10
580086910	10-2	3
	10-9	9
	10-11	4
580086916	1-9	3
580086939	1-87	9
	1-89	4
	1-102	
580086959	1-61	16
580087032	8-47	
580087034	8-47	
580087035	9-15	
580087036	8-47	
580087039	8-47	
580087040	9-15	
580087041	8-47	
580087046	9-15	
580087332	6-17	9
580087336	1-5	6
	1-7	6
580087338	1-125	1
580087467	7-15	4
	7-17	4
580087519	9-3	22
	9-5	22
580087520	9-3	23
	9-5	23
580087521	9-7	15
580087522	7-19	24
	7-23	24
	8-37	31
580087523	7-19	25
	7-23	25
	8-38	33
580087524	7-20	32
	7-24	32
580087580	6-21	1
580087581	6-21	
580087586	6-21	5
580087593	2-53	1
580087613	7-3	31
	7-7	31
580087614	7-3	32
	7-7	32
	8-7	13
580087618	7-15	15
	7-17	15
	8-25	8
	8-29	10
580087631	8-25	3
	8-25	3
	8-25	3
	8-25	3
	8-29	29
	8-51	31
	8-53	4
	8-57	27
	8-62	27
	9-19	26
	9-24	29
	9-39	14
580087646	2-149	4
580087649	2-100	14
	2-140	14
580087685	8-25	17
	8-29	31
	9-39	13
580087732	8-41	2
	9-27	7
580087737	8-7	37
	8-11	15
580087763	2-149	4
580087764	2-100	14
	2-140	14
580087767	6-65	1
	6-67	
580087772	6-65	1
	6-67	
580087788	6-9	8
	6-11	2
	6-15	
580087791	8-41	6
	9-9	14
580087792	8-41	5
	9-9	17
580087802	8-41	19
580087814	1-85	2
	1-87	1
580087815	1-85	2
	1-87	1
580087816	1-85	2
	1-87	1
580087820	2-39	8
	2-40	8
	2-44	6
580087831	7-3	16
	7-7	16
	7-13	8
	8-7	17
	10-23	19
580087844	8-11	31
	8-15	13
	9-35	10
580087845	8-11	26
	8-15	31
580087869	7-15	9
	7-17	9
	8-25	12
	8-29	5
580087941	10-23	11
580087966	1-109	2
580087967	1-109	1
580087968	1-109	1
580087969	1-109	1
580087970	1-109	1
580087972	1-109	3
580087973	1-109	4
580088014	8-51	27
	8-57	26
	9-19	20
	9-23	9
580088041	6-5	14
580088045	6-9	5
580088046	6-9	4
580088047	7-3	12
	7-7	12
580088061	8-27	16
	8-29	32
	8-53	30
	8-57	22
	8-61	22
	9-21	18
	9-24	33
	9-40	23
580088071	8-53	2
580088073	8-53	2
	8-57	17
	8-61	14
580088075	8-53	2
580088081	8-53	2
	8-57	17
	8-61	14
580088083	8-53	2
580088111	8-53	1
580088113	8-53	1
	8-57	18
	8-61	18
580088115	8-53	1
580088117	8-53	1
	8-57	18
	8-61	18
580088119	8-53	1
580088267	2-47	5
580088319	2-19	2
580088325	4-5	27
580088366	2-36	3
	2-39	2
580088367	2-39	2
	2-40	4
580088376	6-5	1
580088377	5-3	3
580088380	5-3	7
580088381	5-3	6
580088502	2-27	1
	2-29	1

©2015 Yale Europe Materials Handling Limited

NUMERICAL INDEX (continued)

PART NO.	PAGE	ITEM
580088503	2-27	9
	2-29	9
580088506	2-33	6
580088508	2-33	8
580088569	10-29	1
580088570	10-33	1
580088601	9-27	
	9-35	
580088620	9-27	13
580088625	9-27	13
580088630	9-27	13
580088633	9-27	1
580088640	6-41	5
580088641	6-41	6
	6-41	28
	6-41	31
580088643	6-41	28
580088667	9-27	6
580088696	2-19	17
	2-27	
580088716	2-47	6
580088826	2-51	13
580088911	9-19	1
	9-23	1
580088916	9-19	1
	9-23	1
580088921	9-19	1
	9-23	1
580088940	9-19	2
	9-23	2
580088945	9-19	2
	9-23	2
580088950	9-19	2
	9-23	2
580089008	9-21	22
580089068	9-24	38
580089069	9-21	2
580089070	9-24	38
580089072	9-21	2
580089076	9-21	3
580089089	9-21	3
580089162	5-7	9
	5-9	4
580089241	6-15	
580089242	6-15	9
580089325	9-35	7
580089344	3-9	2
580089351	3-9	4
580089358	3-7	7
580089362	3-7	18
580089376	4-13	2
580089405	3-9	9
580089413	3-7	2
580089414	3-7	3
580089416	3-7	1
580089419	3-7	14
580089420	3-7	12
580089421	3-7	13
580089422	3-7	11
580089423	3-7	9
580089424	3-7	10
580089425	3-7	8
580089427	3-7	15
580089437	2-53	2
580089529	3-9	1
580089531	3-7	16
	3-9	5
580089564	10-47	1
580089565	10-47	2
580089566	10-47	7
580089567	10-47	8
580089574	1-85	11
	1-87	5
580089576	10-45	1
580089577	10-45	2
580089578	10-45	7
580089579	10-45	8
580089633	10-47	1
580089634	10-47	2
580089635	10-47	7
580089636	10-47	8
580089657	1-50	24
	1-56	36
	2-5	2
	2-9	16
	2-11	16
	2-15	16
	2-104	
	2-113	
580089658	1-50	24
	1-56	36
	2-5	2
	2-9	16
	2-11	16
	2-15	16
	2-72	
	2-81	
580089701	4-5	27
580089702	6-37	22
	6-65	13
580089704	2-53	6
580089790	2-67	8
	2-85	43
	2-88	22
	2-92	19
	2-117	44
	2-120	22
	2-128	22
	2-147	2
	2-156	8
	2-161	8
580089877	7-7	4
580089878	7-3	4
580089880	8-7	16
580089881	7-7	4
580089882	7-3	4
580089885	7-7	4
580089886	7-3	4
580089891	7-3	4
580089895	8-7	16
580089953	2-23	23
	2-48	10
580089956	2-6	20
	2-9	25
	2-11	25
	2-15	25
	2-147	
580090208	1-65	25
580090209	1-65	26
	1-69	22
	1-73	22
	1-76	32
580090217	1-65	10
	1-69	7
	1-73	7
	1-75	7
580090260	5-7	3
	5-9	3
580090334	6-17	4
	6-19	2
	6-21	
580090335	2-6	24
	2-9	27
	2-11	27
	2-15	26
580090336	2-6	25
	2-9	28
	2-11	28
580090484	2-5	8
	2-9	22
	2-11	22
	2-15	22
580090503	1-69	3
	1-73	3
	1-75	3
580090522	1-81	10
	1-83	10
	1-85	14
580090523	1-81	13
	1-83	13
	1-85	17
580090524	2-36	2
	2-39	1
	2-40	3
580090540	6-27	16
	6-29	15
	6-31	13
580090541	6-27	15
	6-29	16
	6-31	12
580090542	6-27	16
580090543	6-27	15
580090544	5-3	17
580090545	2-5	4
	2-19	19
580090565	1-65	5
	1-69	19
	1-73	19
	1-75	19
580090566	1-65	5
	1-69	19
	1-73	19
	1-75	19
580090605	8-23	6
	9-37	6
	10-27	16
	10-31	19
580090635	6-41	24
580090639	2-72	25
	2-80	25
	2-87	16
	2-99	8
	2-104	25
	2-112	25
	2-120	17
	2-128	17
	2-139	8
	2-152	5
	2-158	1
	2-163	1
	2-164	3
	2-167	3
580090672	6-19	12
580090680	7-11	

©2015 Yale Europe Materials Handling Limited

NUMERICAL INDEX (continued)

PART NO.	PAGE	ITEM
	8-19	
580090681	7-11	4
	8-19	4
580090682	10-23	1
	10-27	1
	10-31	6
580090832	8-27	21
580090840	8-41	16
	9-3	14
	9-5	14
	9-9	13
580090912	1-81	15
	1-85	19
	1-87	10
580090913	1-81	7
	1-83	7
580091006	8-49	1
580091007	10-29	2
580091008	9-17	1
580091009	10-33	2
580091217	1-123	8
580091403	2-72	23
	2-72	24
	2-75	8
	2-80	23
	2-80	24
	2-83	6
	2-83	8
	2-93	37
	2-95	4
	2-104	23
	2-104	24
	2-107	6
	2-107	7
	2-112	23
	2-112	24
	2-115	6
	2-115	7
	2-125	36
	2-133	36
	2-135	4
580091405	2-75	5
	2-75	6
	2-75	7
	2-75	8
	2-83	6
	2-83	7
	2-83	8
	2-107	6
	2-107	7
	2-115	6
	2-115	7
580091420	6-12	11
580091421	6-12	12
580091422	6-12	4
580091423	6-12	5
580091425	6-12	13
580091427	6-12	14
580091437	4-26	11
580091639	1-9	11
	1-11	13
580091703	1-13	3
	1-15	
580091704	1-13	3
	1-15	
580091705	1-13	3
	1-15	
580091706	1-13	6
	1-17	6
	1-27	
580091707	1-13	6
	1-17	6
	1-27	
580091708	1-13	6
	1-17	6
	1-27	
580091709	1-13	5
	1-17	5
580091710	1-43	1
	1-45	
580091801	1-50	
580091900	6-17	8
580092014	1-111	18
	1-113	22
580092120	2-55	12
	2-59	12
	6-41	1
580092199	1-65	7
580092200	1-65	6
580092201	1-65	7
580092289	2-63	5
	10-13	8
580092290	10-9	8
580092291	10-9	7
580092315	1-41	13
	2-152	
580092327	2-36	2
	2-39	1
	2-40	3
580092362	2-36	2
	2-39	1
	2-40	3
580092373	1-65	6
580092374	1-79	12
	1-93	10
580092459	1-109	8
580092460	1-109	8
580092479	8-25	11
	8-30	34
580092485	2-6	18
	10-9	
580092516	2-6	20
	2-9	4
	2-11	4
	2-149	
580092519	2-145	
	6-41	4
580092525	6-41	17
580092526	6-37	5
580092536	1-81	1
	1-83	1
580092538	1-81	1
	1-83	1
580092539	1-81	1
	1-83	1
580092568	6-41	22
580092595	1-81	2
	1-83	2
580092596	1-81	2
	1-83	2
580092597	1-81	2
	1-83	2
580092600	1-50	18
580092606	2-27	10
	2-29	10
	2-33	9
	2-35	9
580092620	6-37	6
580092621	5-11	6
	5-13	6
580092632	6-37	2
580092634	6-27	5
	6-29	5
	6-31	3
	6-31	9
580092635	6-27	4
	6-29	4
	6-31	11
580092678	4-16	1
	4-18	1
580092679	4-23	5
	4-27	12
580092681	4-23	5
	4-27	12
580092686	6-27	5
580092732	1-50	28
	1-56	40
	2-6	32
	6-41	7
	6-41	30
580092746	10-2	1
580092748	4-16	4
	4-18	4
580092754	6-27	1
	6-29	1
	6-31	1
580092756	6-27	1
580092759	2-51	17
580092792	1-31	5
	1-33	6
580092794	1-31	10
	1-33	24
580092795	1-31	11
	1-33	11
580092796	1-33	20
580092797	1-33	18
580092798	1-33	17
580092800	1-33	16
580092801	1-33	25
580092808	1-33	13
580092815	1-61	8
	1-63	27
580092816	1-61	4
580092817	1-61	5
580092930	2-149	5
	2-149	6
	2-150	5
	2-150	6
580092934	10-21	3
580092985	6-65	8
580092987	1-50	27
	1-56	39
	2-6	29
580092988	10-9	3
580092997	6-27	7
	6-29	7
	6-31	17
580093008	1-65	9
	1-69	21
	1-73	21
	1-75	31
580093009	1-65	9
	1-69	21
	1-73	21

©2015 Yale Europe Materials Handling Limited

NUMERICAL INDEX (continued)

PART NO.	PAGE	ITEM
	1-75	31
580093010	1-65	9
	1-69	21
	1-73	21
	1-75	31
580093011	10-2	1
580093013	2-63	6
	10-13	2
580093014	2-63	6
	10-13	2
580093015	6-41	13
580093016	6-41	14
580093017	6-41	16
580093020	1-50	22
	1-55	22
580093059	5-3	1
580093060	5-3	10
580093061	5-3	2
580093067	8-49	
580093068	9-17	
580093098	10-21	2
580093110	10-21	1
580093117	6-27	8
	6-29	8
	6-31	5
580093128	7-3	7
	7-7	7
	7-13	4
	8-3	6
	8-5	6
	8-23	4
	9-27	9
	9-37	3
	10-23	22
	10-27	21
	10-31	3
580093195	2-5	3
	2-9	17
580093196	5-3	20
	6-33	9
580093198	10-13	1
580093212	6-41	33
580093213	6-27	3
580093219	9-3	18
	9-5	18
580093232	5-3	16
580093280	2-19	10
	2-33	
580093281	2-33	7
580093282	2-27	8
	2-29	8
580093289	6-23	1
580093290	6-23	5
580093291	6-23	5
580093292	1-111	6
	1-113	10
580093297	2-55	5
580093323	1-111	19
	1-113	23
580093324	10-9	9
580093325	1-50	
580093386	10-49	1
580093398	6-27	2
580093399	6-27	2
	6-29	2
	6-31	2
580093418	6-17	10
580093429	8-29	24
	9-39	21
580093430	8-53	27
	8-57	20
	8-61	20
	9-24	31
580093519	1-39	25
580093526	10-27	4
	10-29	25
	10-31	8
	10-33	25
580093528	2-67	11
	2-68	6
580093542	2-59	1
580093543	2-59	1
580093544	2-55	1
580093546	2-59	1
580093547	2-59	1
580093549	2-59	1
580093550	2-55	1
580093551	2-59	1
580093559	2-55	1
580093561	2-59	1
580093562	2-55	1
580093563	2-59	1
580093612	2-155	3
	2-163	4
580093638	8-11	1
	8-15	3
580093639	7-7	4
580093650	2-42	6
580093651	2-42	6
580093671	2-42	7
580093713	9-3	27
	9-5	27
580093718	2-31	7
	2-35	4
	2-44	10
	2-63	11
	10-14	3
580093735	2-63	10
	10-14	2
	10-53	3
580093745	2-55	20
	2-59	20
580093848	1-27	12
580093852	1-111	16
	1-113	20
580093901	1-85	7
	1-87	7
580093935	2-23	5
580093985	1-11	3
580093986	1-11	4
580093987	1-11	6
580093988	1-11	16
580094122	1-121	4
580094130	1-19	4
	1-41	14
580094141	6-41	31
580094142	6-41	34
580094205	1-19	3
580094256	1-123	9
580094279	1-79	1
	1-93	11
580094284	2-143	13
	5-7	
580094577	1-23	11
	1-43	
580094602	10-19	1
580094801	1-111	5
	1-113	9
580094848	10-17	4
580094902	6-41	11
580094903	6-41	10
580094904	6-41	9
580094905	6-41	8
580095052	10-17	8
580095072	1-69	15
	1-73	15
	1-75	15
	6-37	7
	10-51	7
580095093	2-63	1
	10-11	6
580095115	2-143	12
580095116	2-143	11
580095117	2-143	15
580095137	1-83	15
580095140	1-83	15
580095141	1-83	15
580095196	7-3	25
	7-7	25
	8-7	2
580095198	8-29	20
580095217	8-11	1
	8-15	3
580095218	8-11	1
	8-15	3
580095219	8-11	1
	8-15	3
	9-35	7
580095220	8-11	1
	8-15	3
580095226	6-67	7
	6-69	16
	6-71	6
580095227	6-67	8
	6-71	7
580095228	6-67	15
580095229	6-67	10
	6-67	10
580095230	6-67	9
580095231	6-67	1
	6-69	
580095232	6-67	2
	6-71	
580095233	6-67	3
	6-71	
580095234	6-67	4
	6-71	
580095235	6-67	6
580095236	6-67	13
	6-73	
580095237	6-67	
580095268	6-67	5
580095269	6-67	13
	6-73	
580095272	6-69	
580095273	6-67	4
	6-67	5
	6-67	6
	6-71	
580095315	2-36	2
	2-36	2
	2-36	2
	2-39	1
	2-40	3

©2015 Yale Europe Materials Handling Limited

NUMERICAL INDEX (continued)

PART NO.	PAGE	ITEM
	2-40	3
	2-40	3
	2-44	1
580095327	6-45	11
	6-62	2
580095328	6-59	
580095329	6-57	11
	6-69	10
580095330	6-45	10
	6-49	10
	6-53	10
	6-67	15
580095331	6-45	10
	6-49	10
	6-53	10
	6-67	15
580095333	6-45	10
	6-49	10
	6-53	10
	6-67	15
580095335	6-57	9
	6-69	1
	6-71	1
580095364	1-23	8
580095365	1-23	
580095366	1-23	8
580095367	1-23	8
580095369	1-41	1
580095370	1-41	2
580095371	1-29	3
580095372	1-29	3
580095374	1-29	13
580095375	1-29	11
580095376	1-41	3
580095377	1-41	8
580095378	1-41	9
580095379	1-27	1
580095380	1-27	2
580095381	1-27	3
580095382	1-27	4
580095384	1-27	6
580095392	1-27	9
580095393	1-27	10
580095399	8-11	34
	8-15	12
	8-23	7
	9-35	9
	10-27	18
	10-31	20
580095401	1-27	1
580095402	1-27	1
580095403	1-39	4
580095404	1-39	15
580095405	1-39	20
580095406	1-39	7
580095407	1-39	1
580095408	1-21	1
580095409	1-21	9
580095410	1-21	8
580095414	1-21	11
580095415	1-21	17
580095416	1-21	18
580095417	1-21	16
580095418	1-21	21
580095419	1-21	27
580095420	1-21	29
580095421	1-21	28
580095422	1-21	25
580095423	1-21	20
580095424	1-21	30
580095426	1-21	31
580095427	1-21	22
580095428	1-19	14
580095429	1-21	26
580095430	1-21	32
580095460	1-53	8
	1-59	8
580095461	1-53	1
	1-59	1
580095462	1-49	4
	1-55	7
580095463	1-49	5
	1-55	8
580095464	1-49	5
580095465	1-50	
	1-56	
580095466	1-50	
580095471	1-49	2
580095472	1-49	3
	1-55	5
580095473	1-49	1
580095474	1-49	2
580095475	1-49	3
	1-55	5
580095476	1-49	1
	1-55	5
580095477	1-49	6
580095513	1-43	2
	2-144	
580095544	6-73	1
580095545	6-73	2
580095546	6-73	3
580095547	6-73	1
580095549	6-69	2
	6-71	5
580095550	6-69	3
	6-71	4
580095557	6-69	5
580095558	6-69	6
	6-71	2
580095559	6-69	7
580095560	6-69	8
580095561	6-69	9
580095562	6-69	4
	6-71	3
580095563	6-67	15
580095564	6-67	15
580095565	6-67	15
580095674	8-12	40
	8-15	1
	9-35	1
580095678	8-41	1
	9-9	18
580095679	4-34	4
580095683	6-45	11
	6-49	11
	6-53	11
	6-59	14
	6-62	
580095685	6-45	11
	6-62	4
580095686	6-45	8
	6-49	8
	6-53	8
	6-61	
580095687	6-61	1
580095688	6-61	2
580095689	6-45	8
	6-49	8
	6-53	8
	6-61	
580095690	6-61	1
580095691	6-45	9
	6-49	9
	6-53	9
	6-57	
580095692	6-57	10
580095693	6-57	8
	6-59	3
580095694	6-57	7
	6-59	2
580095695	6-57	6
580095696	6-57	5
580095697	6-57	4
580095698	6-57	3
580095699	6-57	2
580095700	6-45	2
	6-45	3
	6-45	4
	6-45	5
	6-49	2
	6-49	3
	6-49	4
	6-49	5
	6-49	12
	6-53	2
	6-53	3
	6-53	4
	6-53	5
	6-53	12
	6-59	
580095701	6-45	16
	6-49	20
	6-53	18
	6-59	
580095702	6-59	8
580095703	6-59	7
580095704	6-59	6
580095705	6-59	5
580095706	6-59	4
580095835	2-144	6
580095846	6-75	21
580095849	2-55	13
	2-59	13
	2-59	13
	2-59	13
580095850	2-55	14
	2-59	14
580095864	6-59	9
580095888	2-143	3
580095898	4-34	2
580095930	2-165	
580095953	1-43	3
580095962	1-19	9
	2-151	
580095963	2-51	3
580095964	2-51	4
580095965	2-51	5
580095976	6-45	10
	6-49	10
	6-53	10
580095977	6-45	2
	6-49	12
	6-53	12

©2015 Yale Europe Materials Handling Limited

NUMERICAL INDEX (continued)

PART NO.	PAGE	ITEM
	6-59	10
580096019	6-45	10
	6-49	10
	6-53	10
580096020	6-45	10
	6-49	10
	6-53	10
580096021	6-46	
	6-49	
	6-53	
580096022	6-45	7
	6-49	7
	6-53	7
	6-57	14
580096023	6-45	6
	6-49	6
	6-59	11
580096024	6-45	9
	6-49	9
	6-57	1
580096025	6-45	5
	6-49	5
	6-53	5
	6-59	1
580096027	6-45	3
	6-49	2
	6-49	3
	6-53	2
	6-53	3
	6-59	1
580096028	6-49	2
	6-59	1
580096029	6-45	1
	6-49	1
	6-53	1
	6-60	1
580096080	6-37	32
	6-65	16
580096106	6-41	17
580096147	2-55	13
	2-59	13
580096192	2-43	10
580096197	1-29	8
580096198	1-29	8
580096199	1-29	4
580096200	1-13	2
	1-17	2
	1-23	
580096201	1-13	2
	1-17	2
	1-23	
580096202	1-13	2
	1-17	2
	1-23	
580096203	1-23	1
580096204	1-23	1
580096205	1-23	1
580096227	2-55	2
	2-55	3
	2-55	4
	2-59	2
	2-59	3
	2-59	4
	2-59	5
580096228	2-59	5
580096229	2-55	3
	2-59	3
580096234	4-34	1
580096235	2-19	13
	2-51	
580096236	6-33	1
580096237	6-33	2
580096238	6-33	3
580096239	6-33	4
580096240	6-33	1
580096241	6-33	2
580096242	6-33	3
580096243	6-33	4
580096260	1-61	
	1-63	2
	1-63	10
580096286	6-33	10
580096292	4-34	7
580096322	1-13	4
	1-17	4
	1-19	1
	1-21	
580096323	1-13	4
	1-17	4
	1-19	1
	1-21	
580096324	1-13	1
	1-17	1
	1-39	
580096349	4-16	9
	4-18	9
	4-31	
580096409	1-43	11
580096410	2-47	13
580096411	2-55	19
	2-59	19
580096412	2-55	18
	2-59	18
580096414	2-47	12
580096415	2-47	11
580096416	2-51	
580096417	2-51	10
580096538	4-16	2
	4-18	2
580096546	1-23	
580096547	1-23	
580096548	1-23	
580096549	1-19	
580096550	1-79	11
	1-93	9
580096577	2-158	
	10-5	6
580096628	8-53	3
	8-57	24
	8-61	17
580096629	8-53	3
	8-53	3
	8-57	24
	8-57	24
	8-61	17
	8-61	17
	9-21	1
	9-24	37
580096630	8-53	3
	8-53	3
	8-57	24
	8-57	24
	8-61	17
	8-61	17
	9-21	1
	9-24	37
580096631	9-21	1
	9-24	37
580096665	6-41	2
580096671	8-37	26
580096672	8-37	26
	8-37	26
	8-37	26
	8-37	26
580096675	2-143	1
580096712	2-143	2
580096769	4-26	2
580096770	4-26	3
580096771	4-26	4
580096773	4-20	5
	4-26	6
580096774	4-26	7
580096775	4-26	8
580096776	4-26	9
580096777	4-26	10
580096778	4-20	8
	4-26	12
580096779	4-20	2
580096780	4-20	3
580096781	4-20	6
580096783	4-20	7
580096813	6-5	11
580096835	4-18	6
	4-26	
580096836	4-16	6
	4-20	
580096837	1-61	
580096842	6-37	21
	6-65	12
580096843	8-27	25
	8-30	38
	8-53	25
	8-58	39
	8-62	39
	9-23	19
	9-40	30
580096844	8-27	26
	8-30	39
	8-53	26
	8-58	40
	8-62	38
	9-23	20
	9-40	31
580097075	1-23	2
580097076	1-23	3
	1-25	
580097077	1-23	2
580097078	1-23	2
580097080	1-33	2
	1-37	
580097081	1-33	5
580097082	1-33	8
580097084	1-31	9
	1-33	9
580097086	1-33	2
	1-37	
580097087	1-33	8
580097090	1-33	2
	1-37	
580097091	1-33	8
580097096	1-31	2
	1-35	
580097097	1-31	20
580097098	1-31	17

©2015 Yale Europe Materials Handling Limited

NUMERICAL INDEX (continued)

PART NO.	PAGE	ITEM
580097099	1-31	27
580097100	1-31	24
580097101	1-31	26
580097102	1-31	16
580097103	1-31	13
580097105	1-31	2
	1-35	
580097106	1-31	20
580097108	1-31	2
	1-35	
580097109	1-31	20
580097128	10-45	5
	10-47	3
580097245	1-61	1
	1-63	3
	1-63	11
580097260	2-51	6
580097261	2-51	7
580097262	2-51	8
580097300	2-5	1
	2-9	1
	2-71	
	2-75	
	2-79	
	2-83	
580097301	2-5	1
	2-9	1
	2-103	
	2-107	
	2-111	
	2-115	
580097386	2-55	9
	2-59	9
580097387	2-55	11
	2-59	11
580097388	2-55	7
	2-59	7
580097389	2-55	17
	2-59	17
580097432	2-55	8
	2-59	8
580097446	2-55	6
	2-59	6
580097447	2-55	16
	2-59	16
580097448	2-55	10
	2-59	10
580097506	1-27	13
	2-63	9
	10-14	1
580097533	1-111	20
	1-113	24
582000150	9-23	22
582000151	9-23	21
582000407	1-109	8
582000408	1-109	8
582000409	1-109	1
582000410	1-109	1
582000411	1-109	1
582000412	1-109	1
582000484	2-83	5
	2-93	37
	2-95	4
	2-107	5
	2-115	5
	2-125	36
	2-133	36
	2-135	4
582000489	8-29	1
582000502	8-57	2
	8-61	2
582000510	8-57	1
	8-61	1
582000520	8-57	17
	8-61	14
582000521	8-57	18
	8-61	18
582000523	8-57	18
	8-61	18
582000549	8-57	18
	8-61	18
582000550	8-57	17
	8-61	14
582000561	8-5	1
582000563	8-5	1
582000565	8-5	1
582000566	7-7	1
582000568	8-5	1
582000570	8-5	1
582000571	7-7	1
582000576	7-7	1
582000581	7-7	1
582000627	1-15	1
582000628	1-15	2
582000629	1-15	10
582000630	1-15	5
582000631	1-15	4
582000632	1-15	3
582000633	1-15	9
582000634	1-15	8
582000635	1-15	7
582000636	1-15	6
582000638	1-15	
582000639	1-15	1
582000640	1-15	2
582000641	1-15	4
582000642	1-15	8
582000643	1-15	7
582000644	1-15	1
582000645	1-15	4
582000646	1-15	8
582000647	1-15	7
582000651	1-15	2
582000658	6-45	
582000659	6-45	
582000661	6-45	
582000739	2-153	3
	2-164	4
	2-165	7
	2-167	4
582000740	4-33	
582000744	10-21	5
582000772	2-144	7
582000773	1-47	22
	2-144	8
582000788	2-42	1
	2-42	2
582000803	8-57	17
	8-61	14
582000819	2-165	
	10-7	5
582000858	8-35	1
582000860	8-35	1
582000861	9-5	1
582000862	8-35	1
582000863	7-23	1
582000865	8-35	1
582000866	9-5	1
582000867	8-35	1
582000869	7-23	1
582000872	9-5	1
582000874	7-23	1
582000881	7-23	1
582000921	7-4	
	7-8	
	8-3	
	8-7	3
	8-30	45
582000926	10-9	4
582000959	6-12	16
582001004	1-109	9
582001005	1-109	11
582001006	1-109	10
582001011	6-33	13
582001022	1-73	25
582001078	1-31	6
	1-33	7
582001152	6-34	1
	7-20	45
	7-24	45
582001164	1-69	1
	1-73	1
	1-75	1
582001171	2-51	13
582001181	2-153	
	2-163	10
	2-165	5
	2-164	
	2-167	
582001182	2-153	
	2-163	8
	2-165	6
	2-164	
	2-167	
582001247	1-111	26
	1-113	30
582001304	1-11	
582001306	10-9	2
582001307	10-9	1
582001501	2-143	4
582001502	6-37	34
582001764	10-49	10
	10-51	6
582001835	6-41	3
582001995	2-63	2
	10-11	8
582002102	1-45	5
582002103	1-45	
582002104	1-45	10
	1-47	23
582002105	1-45	2
582002106	1-45	1
582002107	1-45	4
	1-47	21
582002108	1-45	3
	1-47	9
582002109	1-45	
582002110	1-45	
582002111	1-45	8
582002112	1-45	
	1-47	18
582002114	1-45	7
582002115	1-45	6
	1-47	1

©2015 Yale Europe Materials Handling Limited

NUMERICAL INDEX (continued)

PART NO.	PAGE	ITEM
582002117	1-45	9
582002132	6-75	18
582002377	9-39	15
582002379	9-39	15
582002387	9-39	15
582002534	1-63	20
582002535	1-50	18
	1-56	30
	1-63	17
582002564	1-63	
582002565	1-61	5
	1-63	4
582002616	1-35	5
582002619	1-63	15
582002648	5-3	
582002698	6-37	29
582002924	4-9	9
582003205	1-19	10
582003206	1-21	12
582003207	1-21	22
582003415	1-35	1
582003416	1-35	8
582003418	1-35	7
	1-37	7
582003419	1-37	12
582003420	1-37	8
582003421	1-37	4
582003422	1-35	1
582003423	1-35	8
582003424	1-35	5
582003425	1-37	12
582003426	1-37	8
582003427	1-37	4
582003479	10-49	12
582003538	1-35	2
	1-37	10
582003539	1-35	6
	1-37	6
582003541	1-35	10
	1-37	5
582003542	1-35	3
	1-37	2
582003584	1-49	
582003585	1-49	
582003674	2-55	6
	2-59	6
582003682	1-63	18
582003697	2-5	4
	2-5	5
	2-5	5
	2-5	5
	2-5	6
	2-5	6
	2-5	6
	2-5	9
	2-5	11
	2-19	7
	2-19	8
	2-19	19
	2-19	20
	2-20	21
	2-23	7
	2-23	8
	2-23	9
	2-23	10
	2-23	11
	2-23	17
	2-23	18
	2-23	24
582003730	1-61	14
	1-63	22
582003731	1-61	16
	1-63	24
582003754	2-5	12
	2-9	12
	2-11	12
	2-15	12
582004137	9-23	13
	9-23	13
	9-23	13
582004287	1-23	7
582004290	1-25	3
582004291	1-25	6
582004292	1-25	7
582004293	1-25	11
582004294	1-25	12
582004295	1-25	13
582004390	2-153	6
582004448	6-45	18
	6-49	13
	6-53	13
	6-59	13
582004449	6-46	
	6-49	22
	6-53	22
582004450	6-45	17
	6-49	21
	6-53	21
582004451	6-45	15
	6-49	19
582004452	6-45	14
	6-49	18
582004454	6-45	20
	6-49	15
	6-53	15
582004455	6-46	
	6-49	
	6-53	23
582004475	6-41	18
582004482	1-37	12
582004483	1-37	8
582004484	1-37	4
582004485	1-35	1
582004486	1-35	8
582004487	1-35	5
582004554	1-50	19
	1-55	19
582005028	1-55	9
582005270	1-35	9
	1-37	9
582005304	2-83	5
	2-89	39
	2-89	40
	2-93	37
	2-95	4
	2-100	12
	2-100	13
	2-107	5
	2-115	5
	2-121	39
	2-121	40
	2-125	36
	2-129	39
	2-129	40
	2-133	36
	2-135	4
	2-140	12
	2-140	13
582005411	2-56	1
582005465	8-37	23
582005761	1-55	
582005762	1-55	
582005797	3-7	
582005799	3-7	
582005800	3-7	
582005840	6-37	9
582005940	2-55	15
	2-59	15
582006327	2-92	31
	2-108	29
	2-124	31
	2-132	31
582006467	2-11	26
	2-19	9
	2-47	
582006469	2-47	1
582006470	2-47	7
582006492	1-109	8
582006493	1-109	8
582006585	5-11	1
582006587	5-11	1
582006632	1-55	1
582006634	1-55	1
582006661	8-21	10
	8-47	10
	9-15	10
582006754	1-111	25
	1-113	29
582006755	1-111	23
	1-113	26
582006901	6-33	
582006951	6-49	
582006952	6-49	
582006953	6-49	
582007208	6-33	15
582008442	8-38	36
582008645	6-23	5
582008646	6-23	5
582009563	1-93	22
582009593	6-45	4
	6-45	4
	6-49	4
	6-53	4
	6-59	1
582009888	8-30	37
	8-62	38
	9-23	17
	9-40	29
582009889	8-30	46
	8-62	39
	9-24	40
	9-40	39
582009973	7-33	5
582010037	1-47	4
582010039	1-47	15
582010040	1-47	3
582010041	1-47	12
582010042	1-47	11
582010043	1-47	6
582010160	6-17	6
582010407	9-39	10
582010758	4-13	14
582010887	1-69	9
	1-73	9

©2015 Yale Europe Materials Handling Limited

NUMERICAL INDEX (continued)

PART NO.	PAGE	ITEM
	1-75	9
582010888	1-69	9
	1-73	9
	1-75	9
582010890	1-69	20
	1-73	20
	1-75	30
582011382	10-35	6
582011385	1-75	21
582011603	1-69	20
	1-73	20
	1-75	30
582011617	1-101	8
582011618	1-101	5
582011619	1-101	2
582011620	1-69	23
	1-73	23
	1-76	33
582011621	1-69	24
	1-73	24
	1-76	34
582011628	1-101	1
582011629	1-87	15
	1-101	
582011889	2-163	
	10-5	6
582011988	1-43	1
	1-47	
582012023	1-73	6
582012037	6-41	26
582012046	1-50	
	1-56	
582012058	1-11	9
582012185	10-25	27
	10-29	26
	10-33	26
	10-35	3
	10-37	3
	10-39	3
582012200	8-57	21
	8-61	21
582012209	8-57	19
	8-61	19
582012211	8-57	20
	8-61	20
582012213	10-23	12
	10-25	7
	10-27	7
	10-29	7
	10-31	11
	10-33	7
582012293	1-101	7
582012597	6-12	7
582012598	6-12	15
582012631	1-21	1
582012634	10-25	
	10-29	
	10-33	
	10-35	7
	10-39	7
	10-43	
582012635	10-23	
	10-27	
	10-31	
	10-35	7
	10-37	7
	10-43	
582012661	6-13	17
582012663	10-37	6
	10-39	6
582012880	1-107	13
582013018	4-13	5
582013275	10-27	4
	10-29	25
	10-31	8
	10-33	25
582013471	10-35	2
582013472	10-35	1
582013475	10-35	2
582013476	10-35	1
582013562	10-25	26
582013580	10-23	10
582013581	10-23	11
582013786	6-38	35
582013981	1-69	8
	1-73	8
	1-75	8
582013982	1-11	8
582013983	1-11	10
582014154	1-107	3
582014155	1-107	5
582014213	1-107	2
582014269	1-56	
582014270	1-50	
	1-56	
582014464	1-47	5
582014465	1-47	16
582014466	1-47	19
582014467	1-47	2
582014468	1-47	17
582014469	1-47	10
582014470	1-47	7
582014471	1-47	8
582014472	1-47	13
582014473	1-47	14
582014474	1-47	20
582014889	6-13	18
582014937	3-3	10
582014957	10-23	2
	10-27	2
	10-31	7
582014958	10-25	3
	10-29	3
	10-33	3
582015139	10-43	
582015140	10-43	
582015168	4-5	38
582015428	4-5	28
582015438	1-85	11
	1-87	5
582016330	4-23	3
	4-25	4
	4-27	6
	4-29	13
582017798	1-93	27
582017950	3-7	6
582017968	4-3	1
	4-5	
582018661	6-53	2
	6-59	1
582018663	6-75	26
582018668	6-75	28
582018841	1-55	6
582019140	4-5	28
582019141	4-6	
582019181	4-16	10
	4-18	10
582019331	2-42	
582019332	2-42	
582019333	2-42	
582019334	2-42	1
582019335	2-42	2
582019336	2-42	2
582019337	2-42	2
582019418	2-43	11
582019419	2-43	12
582019426	2-43	9
582019554	2-31	8
582019731	10-25	25
582020006	1-101	2
582020007	1-89	7
	1-101	
582020053	2-101	33
	2-141	29
582020268	10-27	15
	10-31	15
582020325	4-5	6
582020326	4-5	21
582020433	1-7	2
582020905	1-41	
582020912	1-41	
582020914	1-41	
582020963	1-85	4
	1-87	3
	1-89	3
582020983	10-25	27
	10-29	26
	10-33	26
582021286	2-9	
	2-12	
	2-16	
582021375	2-48	1
582021376	6-6	2
582021639	6-75	28
582021825	4-18	6
	4-27	
582021826	4-16	6
	4-23	
582021968	7-33	11
582022447	10-39	2
582022448	10-39	1
582022515	7-33	20
582022522	2-153	
582022524	6-19	5
582022554	10-39	3
582022774	6-75	26
582022928	1-69	28
	1-73	27
	1-76	38
582022955	2-87	13
	2-99	7
	2-119	13
	2-127	13
	2-139	7
582022996	6-65	1
	6-67	
582022997	6-65	1
	6-67	
582022998	6-53	
582022999	6-53	
582023001	6-53	
582023142	2-164	
	10-7	6
582023286	6-19	11

©2015 Yale Europe Materials Handling Limited

NUMERICAL INDEX (continued)

PART NO.	PAGE	ITEM
582023319	8-15	29
582023713	1-75	28
582023935	6-19	1
582024069	1-75	20
582024070	1-75	25
582024321	6-25	9
582024336	1-49	12
	1-56	29
582024461	10-51	8
582024514	10-37	11
	10-39	11
582024619	2-92	34
	2-92	35
	2-92	36
	2-95	1
	2-95	2
	2-95	3
	2-124	33
	2-124	34
	2-125	35
	2-132	33
	2-132	34
	2-133	35
	2-135	1
	2-135	2
	2-135	3
582024620	2-92	35
	2-93	36
	2-95	2
	2-95	3
	2-125	34
	2-125	35
	2-133	34
	2-133	35
	2-135	2
	2-135	3
582024745	1-121	9
582024747	1-121	9
582024931	8-61	11
582025076	2-15	1
	2-135	
	2-139	
582025078	2-15	1
	2-95	
	2-99	
582025210	2-35	1
582025217	2-23	17
582026005	2-52	1
582026255	2-35	6
582026256	2-29	7
	2-31	2
582026265	2-19	17
	2-29	
582026483	4-18	6
	4-29	
582026484	4-16	6
	4-25	
582026728	6-29	3
	6-31	10
582026734	10-39	6
582026740	10-37	10
	10-39	10
582026741	10-37	9
	10-39	9
582026745	6-29	14
	6-31	4
582026946	2-44	1
582026947	2-23	24
582026948	2-23	17
582026949	2-23	18
582026951	2-23	18
582026952	2-23	18
582026953	2-23	17
582027234	4-9	
	4-11	
	4-13	
582027313	10-43	7
582027327	10-43	23
582027328	10-43	22
582027470	10-37	2
	10-39	2
582027471	10-37	1
	10-39	1
582028143	2-15	27
582028371	2-11	1
	2-87	
	2-91	
582028372	2-11	1
	2-119	
	2-123	
582028549	2-63	19
	2-161	
582028832	2-53	
	2-63	17
	2-65	
582028836	1-85	3
	1-87	2
582029018	1-111	5
	1-113	9
582029423	6-67	7
	6-69	16
582029424	6-67	6
582029425	6-67	14
	6-69	15
582029429	6-67	5
582029495	6-11	7
582029496	6-11	9
582029497	6-11	8
582029585	1-31	22
582029880	4-27	2
582029881	4-27	3
	4-29	4
582029882	4-27	4
582029883	4-27	5
582029884	4-27	8
	4-29	11
582029885	4-27	7
	4-29	12
582029886	4-25	6
	4-27	11
	4-29	6
582029887	4-27	10
	4-29	7
582029888	4-27	9
	4-29	14
582029904	4-23	2
582029905	1-109	3
582030135	6-25	11
582030136	6-25	11
582030137	6-25	11
582030138	6-25	11
582030281	4-9	10
582030307	6-25	1
582030308	6-25	3
582030309	6-25	2
582030502	6-25	12
582030506	6-25	12
582030507	6-25	12
582030510	6-25	12
582030511	6-25	12
582031844	1-102	1
	1-103	1
582031845	1-104	1
582031846	1-104	1
582032105	6-33	10
582033136	10-43	28
582033306	2-40	9
582033354	2-100	24
	2-140	25
582033397	2-31	3
582033451	5-11	1
582033506	5-3	13
582033575	2-15	4
	2-150	
582033578	2-23	19
	2-52	
582033599	2-31	1
582033639	2-24	27
582033662	10-43	27
582033811	10-43	3
582033812	10-43	10
582033813	10-43	3
582033907	2-41	
	2-44	13
582034026	6-25	13
582034185	6-5	1
582034524	1-93	26
582034576	6-53	6
582034578	6-53	16
	6-57	12
582034579	6-53	24
	6-59	
582034580	6-53	9
	6-57	1
582034598	6-67	1
	6-69	
582034616	1-83	16
582034645	1-93	20
582034646	1-93	21
582034647	1-93	19
582034648	1-93	28
582034652	2-53	
	2-63	17
	2-68	
582034695	4-20	4
582034696	4-26	5
582035197	4-25	2
	4-29	2
582035198	4-25	3
	4-29	3
582035199	4-29	9
582035200	4-29	10
582035201	4-29	15
582035202	4-29	8
582035203	4-29	5
582035205	4-25	5
582035206	4-25	8
582035207	4-25	7
582035685	1-119	
582036589	2-53	
	2-63	17
	2-65	
582037335	4-23	4
582037647	2-35	8

©2015 Yale Europe Materials Handling Limited

NUMERICAL INDEX (continued)

PART NO.	PAGE	ITEM
582038389	1-91	7
582038671	2-11	36
	2-15	35
582038673	4-16	9
	4-18	9
	4-33	
582038675	4-16	9
	4-18	9
	4-33	
582038799	2-11	36
	2-15	35
582038970	4-9	1
582038971	4-9	2
582038972	4-9	3
582038973	4-9	4
582038974	4-9	5
582038976	4-9	7
582038977	4-9	8
	4-11	8
582038978	4-9	11
582038979	4-9	6
582038980	4-11	1
582038981	4-11	2
582038982	4-11	3
582038983	4-11	4
582038984	4-11	5
582038985	4-11	6
582038986	4-11	7
582038987	4-13	1
582038988	4-13	3
582038991	4-13	4
582038992	4-13	6
582038993	4-13	7
582038994	4-13	8
582038995	4-13	9
582038996	4-13	10
582038997	4-13	11
582038998	4-13	12
582039001	4-13	15
582039002	4-13	17
582039003	4-13	18
582039021	4-13	16
582039022	4-13	16
582039023	4-13	16
582039024	4-13	16
582039025	4-13	16
582039031	4-14	1
582039042	2-11	16
	2-15	16
582039043	2-11	16
	2-15	16
582039204	10-53	1
582039205	10-53	2
582039206	10-53	6
582039208	10-53	4
582039209	10-53	7
582039210	10-53	5
582039333	5-3	2
582039646	10-51	1
582039706	1-55	3
582039726	2-11	1
	2-127	
	2-131	
582040021	2-23	2
582040022	2-23	2
582040759	2-44	1
582041194	3-3	9
	3-5	
582041371	1-25	1
582041372	1-25	2
582041373	1-25	14
582041374	1-25	15
582041375	1-25	16
582041783	1-97	3
582041785	1-97	2
582041794	1-93	5
582041959	6-25	6
582042033	2-52	13
582042078	2-167	
582042119	4-9	12
582042120	4-9	13
582042122	4-14	4
582042123	4-14	3
582042374	2-44	2
582042483	2-52	3
582042484	2-52	4
582042488	1-97	9
582042489	1-97	4
582042496	1-93	2
	1-97	
582042497	1-93	3
582042748	1-121	11
582042884	1-93	32
582043213	2-15	14
582043822	1-103	4
582045697	1-91	5
582045698	1-91	5
582045699	1-91	5
582045700	1-91	1
582045701	1-91	1
582045702	1-91	1
582045703	1-89	2
582046125	1-89	1
582049413	10-43	9
640046913	6-12	10
640136901	1-50	31
	1-56	43
720249901	2-5	9
	2-5	11
	2-5	17
	2-6	17
	2-6	17
	2-19	6
	2-19	6
	2-19	6
	2-19	6
	2-19	7
	2-19	8
	2-23	10
	2-23	11
751194100	2-158	6
	2-163	9
900002254	7-19	5
	7-23	5
900002264	7-19	5
	7-23	5
900002268	7-19	5
	7-23	5
900003206	2-39	5
900003213	8-11	25
	8-15	30
	8-37	27
900003275	6-75	9
900003277	7-3	8
	7-7	8
	7-19	11
	7-23	11
	8-3	7
	8-5	7
	8-33	12
	8-35	12
	9-3	7
	9-5	7
	9-27	14
900004269	8-47	11
	9-15	11
900005215	6-75	16
900014292	1-61	
900014293	6-5	19
	6-6	1
900015238	7-20	34
	7-24	34
	8-38	
909882404	1-61	10
	1-63	25
	1-81	14
	1-83	14
	1-85	18
909882405	1-9	7
	1-117	5
909904403	1-111	10
	1-113	14
910065119	2-65	6
	2-68	9
	2-80	30
	2-85	39
	2-89	41
	2-91	6
	2-112	30
	2-117	39
	2-117	45
	2-119	15
	2-123	6
	2-127	15
	2-131	6
	2-156	2
	2-161	2
912261301	5-5	14
926887302	1-69	4
	1-73	4
	1-75	4
931014902	10-45	6
	10-47	6
931014907	3-3	13
931017915	1-5	3
931109909	2-143	14
931109911	2-27	11
	2-29	11
931109912	2-31	10
	2-33	14
932107911	2-27	2
	2-29	2
	2-33	2
	2-35	2
	6-33	12
932200902	2-35	5
932726904	5-11	5
	5-13	5
932728903	1-111	15
	1-111	15
	1-113	19
	1-113	19
932728908	1-111	12
	1-113	16
	10-17	5

©2015 Yale Europe Materials Handling Limited

NUMERICAL INDEX (continued)

PART NO.	PAGE	ITEM
	10-19	4
932728910	1-61	15
	1-63	23
932729905	5-11	2
	5-13	2
	10-17	7
932729908	1-109	6
934204901	1-65	15
	1-69	26
	1-76	36
	1-91	9
937100902	2-47	10
937100903	2-5	15
	2-9	11
	2-11	11
	2-15	11
	2-27	14
	2-29	14
	2-33	16
940004902	1-43	9
	1-99	6
	1-101	11
	2-48	7
940004903	1-43	6
	2-27	12
	2-29	12
	2-31	9
	2-44	11
	2-52	5
	10-53	14
940004914	6-75	25
940102912	1-5	7
	1-7	7
940400903	2-6	30
940400904	2-47	9
940400905	1-50	29
	1-56	41
	2-5	16
	2-9	10
	2-11	10
	2-15	10
	2-27	13
	2-29	13
	2-33	15
940400906	2-51	18
	2-52	14
940400907	2-27	4
	2-29	4
	2-31	5
940400908	1-61	
	1-63	5
	1-63	13
	1-79	2
940600905	10-14	4
940600907	10-5	3
	10-17	3
	10-19	6
940600908	1-61	
	10-19	8
940600909	1-114	5
	6-75	14
952405902	2-76	33
	2-76	34
	2-84	33
	2-85	34
	2-88	18
	2-88	19
	2-99	9
	2-109	34
	2-109	35
	2-117	34
	2-117	35
	2-120	18
	2-120	19
	2-128	18
	2-128	19
	2-139	9
952408901	2-99	9
	2-139	9

©2015 Yale Europe Materials Handling Limited

NUMERICAL INDEX (continued)

NOTES

©2015 Yale Europe Materials Handling Limited

13 USER SUPPORT INFORMATION

SECTION 13
USER SUPPORT INFORMATION

DESCRIPTION	PAGE
SERVICE PARTS ORDERING INSTRUCTIONS	13-2
TECHNICAL SERVICE PUBLICATIONS	13-2

©2015 Yale Europe Materials Handling Limited

Your investment in a Yale Industrial Truck is important to you and to your Yale Dealer. You measure the return on that investment through the performance of these trucks and the drivers who operate and the mechanics who service them safely and efficiency. The following information is intended to help you to achieve your investments objectives:

SERVICE PARTS ORDERING INSTRUCTIONS

HOW TO ORDER SERVICE PARTS

In order to prevent delay, too much communication and to have your orders filled correctly, quickly, and at the least possible cost, the following is the correct procedure to use to order replacement parts.

WHEN ORDERING PARTS

Contact your authorized Yale Industrial Truck Dealer giving them the following information:

1. Your Purchase order number.
2. Complete addresses for sending the invoice and parts.
3. Tell us how you want your parts sent. If we do not get this information, we will send the parts using the lowest priced method.
4. Correct part number(s) and description(s). Use your parts manual as a reference.
5. Model and serial number of the truck.

TECHNICAL SERVICE PUBLICATIONS

Technical literature, with detailed information, is available at a nominal fee to assist users to effectively maintain Yale Industrial Trucks in a safe, useful condition. Part Manuals with complete replacement parts identification, Service Maintenance Manuals which provide service and overhaul procedures and additional copies of the Operating Manual can be obtained from your Yale Industrial Truck Dealer.

To provide instructions for safely operating and servicing Yale Industrial Trucks, each truck is equipped with an operators manual. It describes various operating techniques and safety warnings to the operator. It contains a guide to safe maintenance practices and recommended schedules for maintenance. if the operators manual is missing from any Yale Industrial Truck, it should be replaced. Replacement copies are available for a nominal fee from your Yale Dealer.

For additional information or assistance in obtaining these user support publications see your Yale Industrial Truck Dealer or contact:

Yale Materials Handling Corporation
Yale Europe Materials Handling Limited
Flagship House, Reading Road North
Fleet, Hampshire GU138 HR United Kingdom

©2015 Yale Europe Materials Handling Limited

Yale Europe Materials Handling Limited
Centennial House, Building 4.5
Frimley Business Park
Frimley, Surry GU16 7SG, United Kingdom

524308696
©Yale Corp.
04/2015