classicmachinery.net
https://truckmanualshub.com/

Hitachi EX120-1

BUCKET

BUCKET PINS

BUCKET LINKAGES

BUCKET LINKAGES

DIPPER STICK

BOOM

BUCKET CYLINDER

DIPPER STICK CYLINDER

BOOM LIFT CYLINDER

CAB

SEAT

INSTRUMENT PANEL

RELAYS

COMPUTER

WIRING LOOM

HAND SERVO CONTROLS

HEATER A/C

BONNET

DOORS

FUEL TANK

HYDRAULIC TANK

BELLY PLATES

DIESEL ENGINE

RADIATOR

HYDRAULIC OIL COOLER

HYDRAULIC PUMPS

HYD PUMP DRIVE GEARBOX

SLEW MOTOR

SLEW MOTOR GEARBOX

CONTROL VALVE

CENTRE JOINT

SLEW BEARING

TRACK CHAINS & GROUSERS

classicmachinery.net

https://truckmanualshub.com/

TOP ROLLERS

FRONT IDLERS

RECOIL SPRINGS

TRACK ADJUSTERS

BOTTOM ROLLERS

TRACK MOTORS

FINAL DRIVES

DRIVE SPROCKETS

BATTERIES

HOSES

Other Parts Books

classicmachinery.net

https://truckmanualshub.com/

Bucket

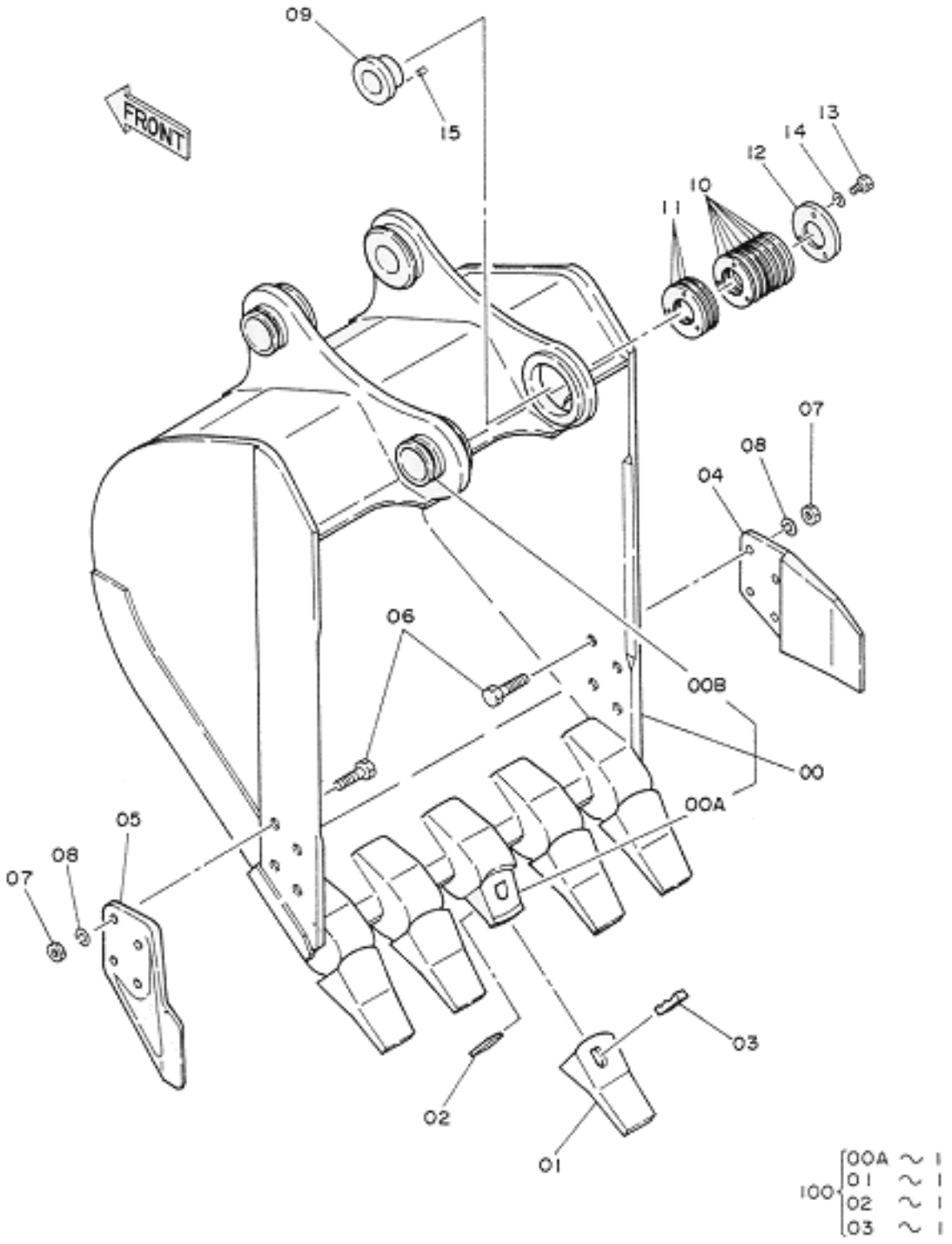

ITEM	PART NO.	PART NAME

classicmachinery.net
https://truckmanualshub.com/

	>9071463	BUCKETASS'Y
00	8038183	BUCKET
00A	4188013	ADAPTOR; TOOTH
00B	4197033	STOPPER
01	963228	POINT; TOOTH
02	963229	PIN; LOCK
03	963227	RUBBER; LOCK
04	2015428	CUTTER; SIDE
05	2015429	CUTTER; SIDE
06	J932050	BOLT
07	J951020	NUT
08	A590920	WASHER; SPRING
09	3028363	BUSHING
10	4143635	SHIM 1.0
11	4143636	SHIM 0.5
12	4143634	PLATE
13	J901440	BOLT
14	A590914	WASHER; SPRING
15	4179109	PIN; KNOCK
100	9075345	KIT; POINT

Home Page

classicmachinery.net

Bucket Pins

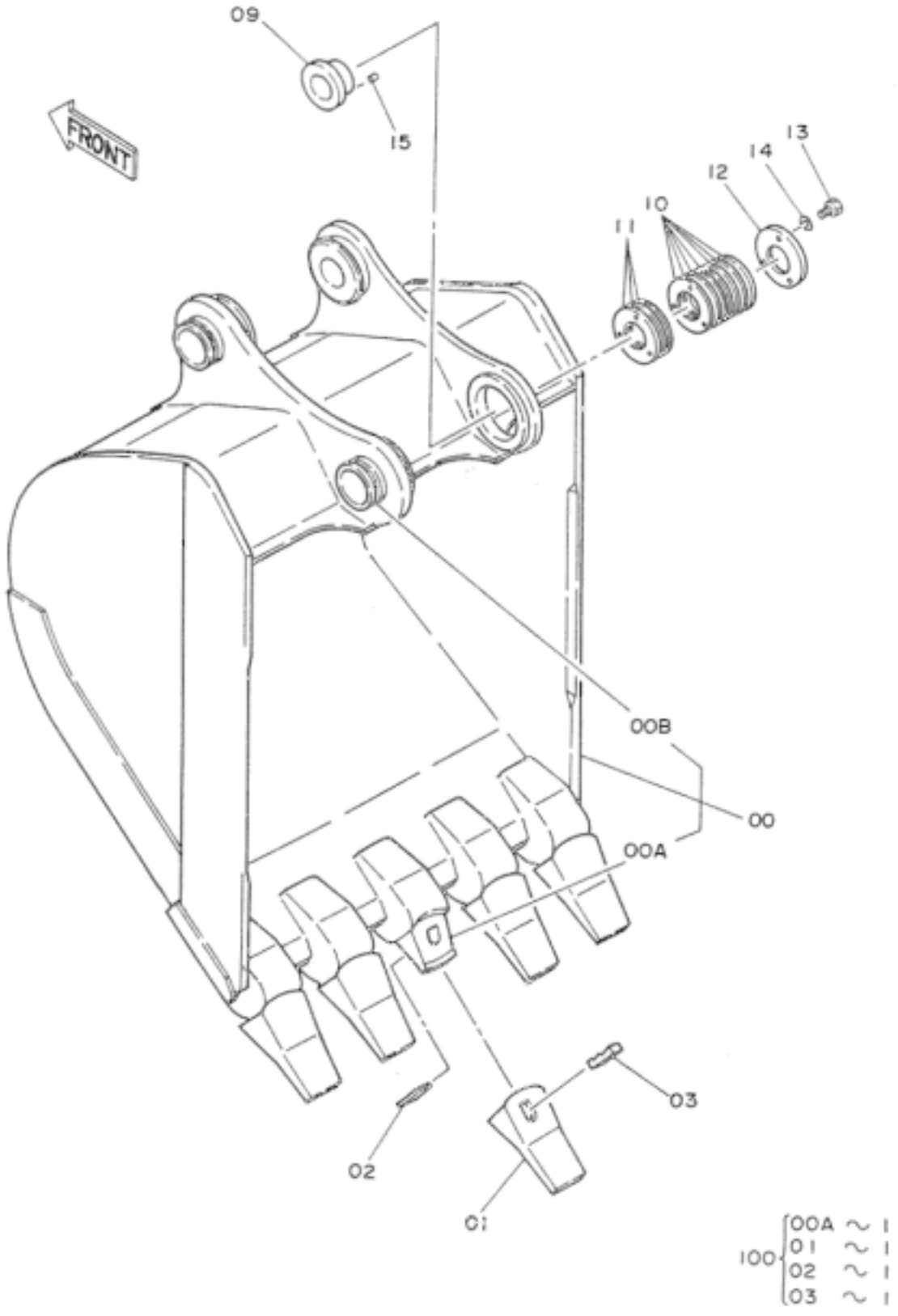

ITEM	PART NO.	PART NAME

classicmachinery.net
https://truckmanualshub.com/

	9073649	BUCKET ASS'Y
00	8038697	BUCKET
00A	4188013	ADAPTOR; TOOTH
00B	4197033	STOPPER
01	963228	POINT; TOOTH
02	963229	PIN; LOCK
03	963227	RUBBER; LOCK
09	3028363	BUSHING
10	4143635	SHIM 1.0
11	4143636	SHIM 0.5
12	4143634	PLATE
13	J901440	BOLT
14	A590914	WASHER; SPRING
15	4179109	PIN; KNOCK
100	9075345	KIT; POINT

Home Page

classicmachinery.net

https://truckmanualshub.com/

Bucket Linkages

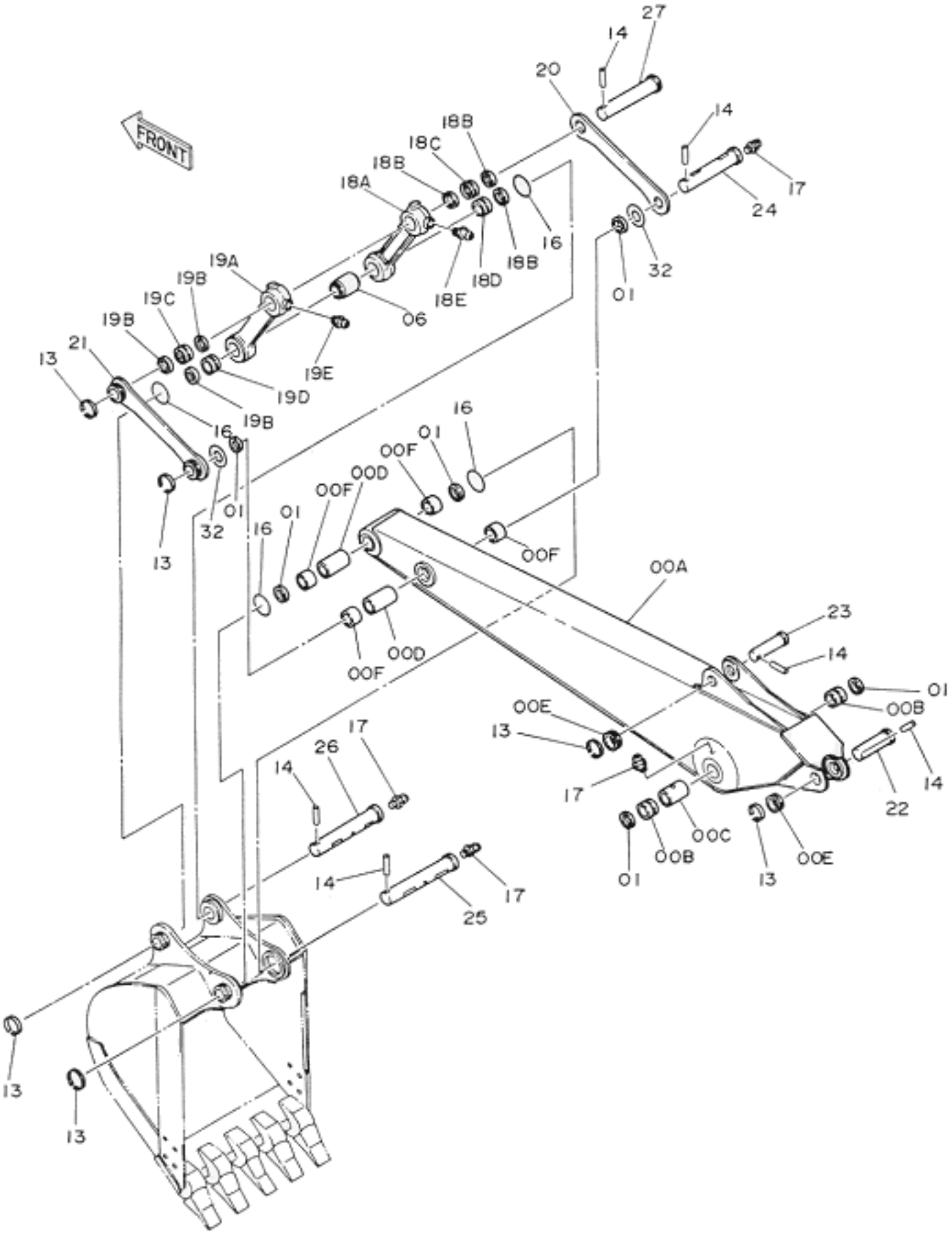

classicmachinery.net

https://truckmanualshub.com/

>

ITEM	PART NO	PART NAME
00A-F	8035674	ARM ASS'Y
00A	6007772	ARM
00B	4188796	BUSHING
00C	4128972	PIPE
00D	4124575	PIPE
00E	4197033	STOPPER
00F	4196558	BUSHING
01	4065687	SEAL;DUST
06	4065885	SPACER
13	4065688	RING
14	4065689	PIN
16	4152726	O-RING
17	J75481	FITTING
18A-E	8038215	LINK ASS'Y (R)
18A	2023691	LINK
18B	4065687	SEAL;DUST
18C	4176557	BUSHING
18D	4196558	BUSHING
18E	J75481	FITTING
19A-E	8038216	LINK ASS'Y (L)
19A	2023704	LINK
19B	4065687	SEAL;DUST
19C	4196557	BUSHING
19D	4196558	BUSHING
19E	J75481	FITTING
20	4188797	LINK (R)
21	9725289	LINK (L)
22	3037077	PIN
23	3037078	PIN
24	3037079	PIN
25	3037080	PIN
26	3037081	PIN
27	3037082	PIN
32	4075357	WASHER

classicmachinery.net

https://truckmanualshub.com/

Home Page

classicmachinery.net

https://truckmanualshub.com/

Dipper Stick

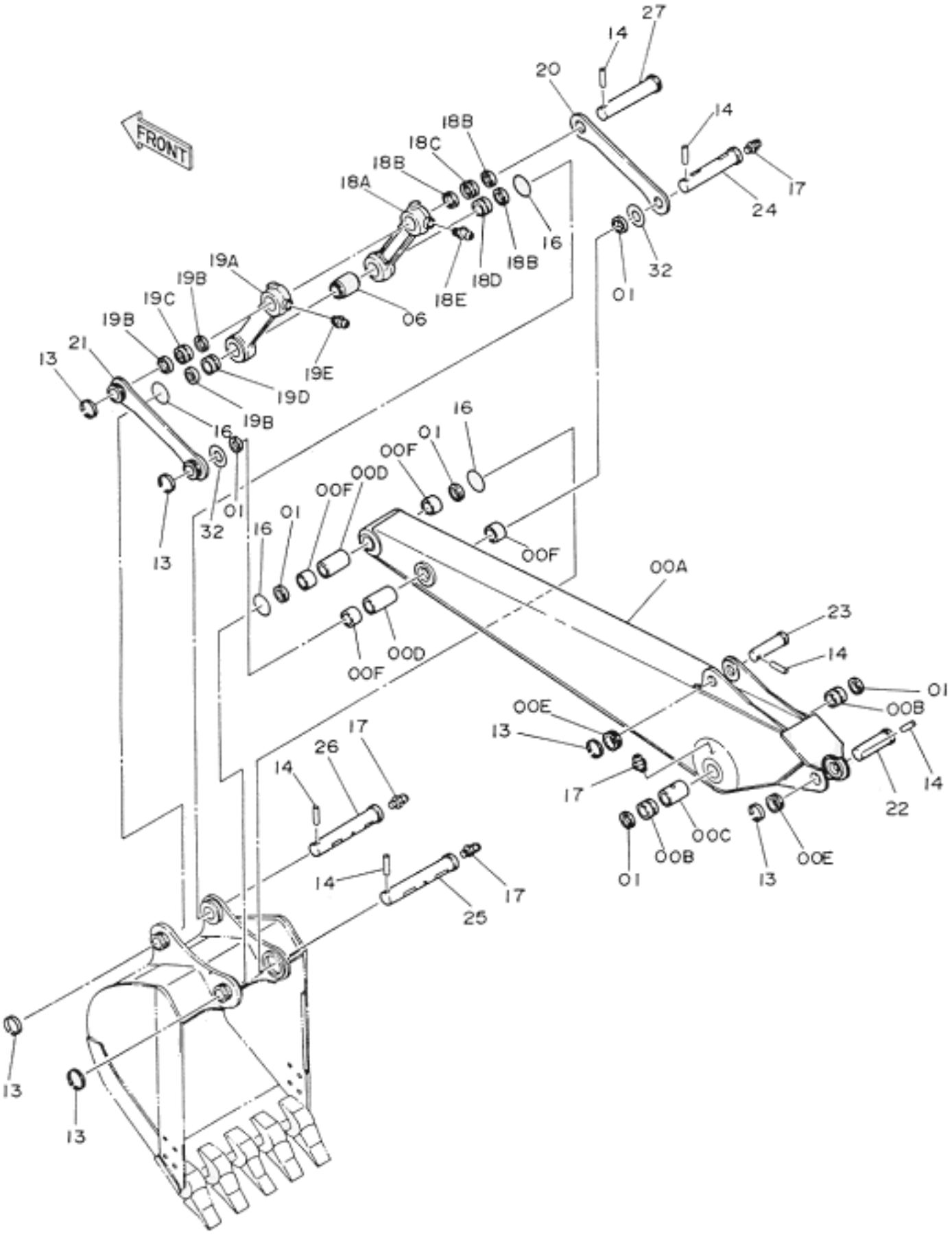

classicmachinery.net

https://truckmanualshub.com/

ITEM	PART NO	PART NAME
00A-F	8035674	ARM ASS'Y
00A	6007772	ARM
00B	4188796	BUSHING
00C	4128972	PIPE
00D	4124575	PIPE
00E	4197033	STOPPER
00F	4196558	BUSHING
01	4065687	SEAL;DUST
06	4065885	SPACER
13	4065688	RING
14	4065689	PIN
16	4152726	O-RING
17	J75481	FITTING
18A-E	8038215	LINK ASS'Y (R)
18A	2023691	LINK
18B	4065687	SEAL;DUST
18C	4176557	BUSHING
18D	4196558	BUSHING
18E	J75481	FITTING
19A-E	8038216	LINK ASS'Y (L)
19A	2023704	LINK
19B	4065687	SEAL;DUST
19C	4196557	BUSHING
19D	4196558	BUSHING
19E	J75481	FITTING
20	4188797	LINK (R)
21	9725289	LINK (L)
22	3037077	PIN
23	3037078	PIN
24	3037079	PIN
25	3037080	PIN
26	3037081	PIN
27	3037082	PIN
32	4075357	WASHER

classicmachinery.net

https://truckmanualshub.com/

Home Page

classicmachinery.net

Boom

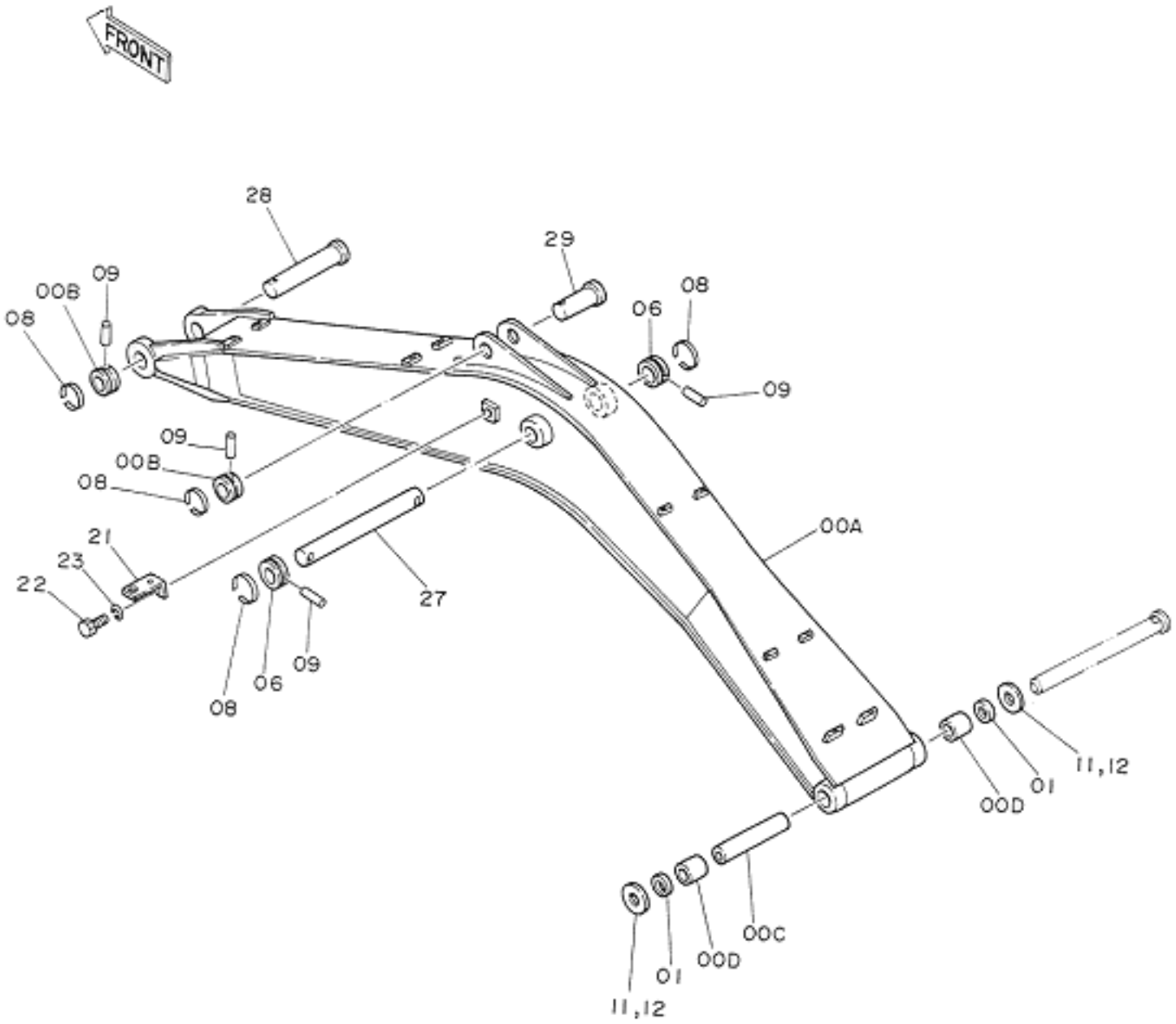

ITEM	PART NO	PART NAME
00A-D	8035673	BOOM ASS’Y
00A	5001862	BOOM
00B	4197033	STOPPER
00C	4196559	PIPE
00D	4196556	BUSHING
01	4065687	SEAL;DUST
06	4197033	STOPPER

classicmachinery.net

08	4065688	RING
09	4065689	PIN
11	4075359	WASHER 1.0
12	4075360	WASHER 2.0
21	4224631	BRACKET
22	J901425	BOLT
23	A590914	WASHER;SPRING
27	3037073	PIN
27	3042411	PIN
28	3037075	PIN
29	3037077	PIN

Home Page

classicmachinery.net

https://truckmanualshub.com/

Bucket Cylinder

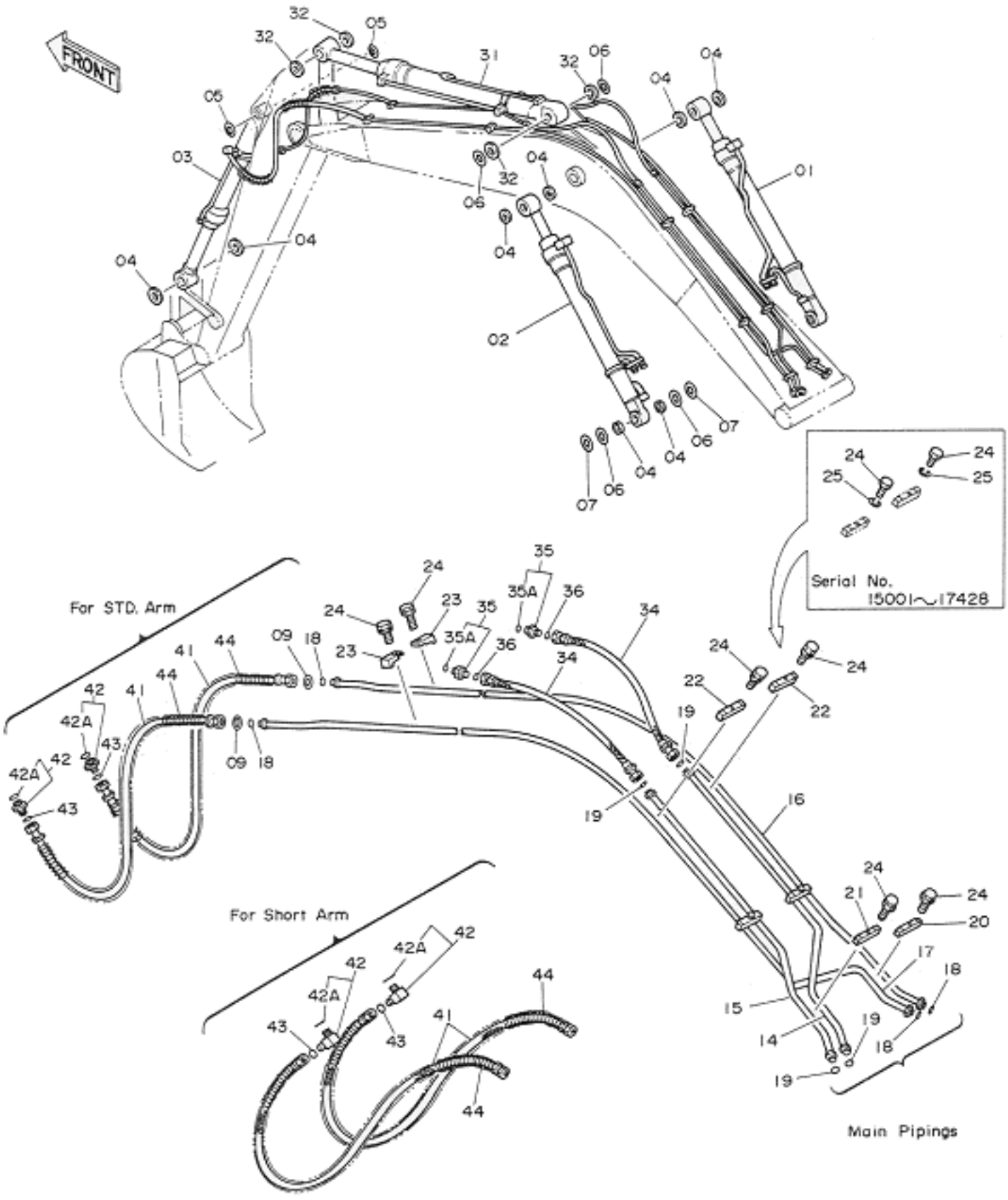

classicmachinery.net
https://truckmanualshub.com/

ITEM	PART NO	PART NAME
01	4187910	CYL.;BOOM (R)
02	4187911	CYL.;BOOM (L)
03	4187913	CYL.;BUCKET
04	4065687	SEAL;DUST
05	4094086	SEAL;DUST
06	4075357	WASHER 1.0
07	4075358	WASHER 2.0
09	4073051	WASHER 1.6
14	8035605	PIPE
15	8035606	PIPE
16	8035607	PIPE
17	8035608	PIPE
18	4138938	O-RING
19	4187308	O-RING
20	4189858	CLAMP;PIPE
21	4189859	CLAMP;PIPE
22	4141806	CLAMP;PIPE
23	4190125	CLAMP;PIPE
24	J901250	BOLT
24	J011250	BOLT;SEMS
25	A590912	WASHER;SPRING
31	4187912	CYL;ARM
32	4065687	SEAL;DUST
34	4188905	HOSE
35	4189619	ADAPTER;S
35A	4506424	*O-RING
38	4187308	O-RING
41	4187388	HOSE (*1)
42	4189602	ADAPTER;S (STD. ARM)
42	4200580	ELBOW;S (SHORT ARM)
42A	4506418	*O-RING
43	4138938	O-RING (*1)
44	4053606	PROTECTOR (*1)

Home Page

classicmachinery.net

classicmachinery.net

https://truckmanualshub.com/

Dipper Stick Cylinder

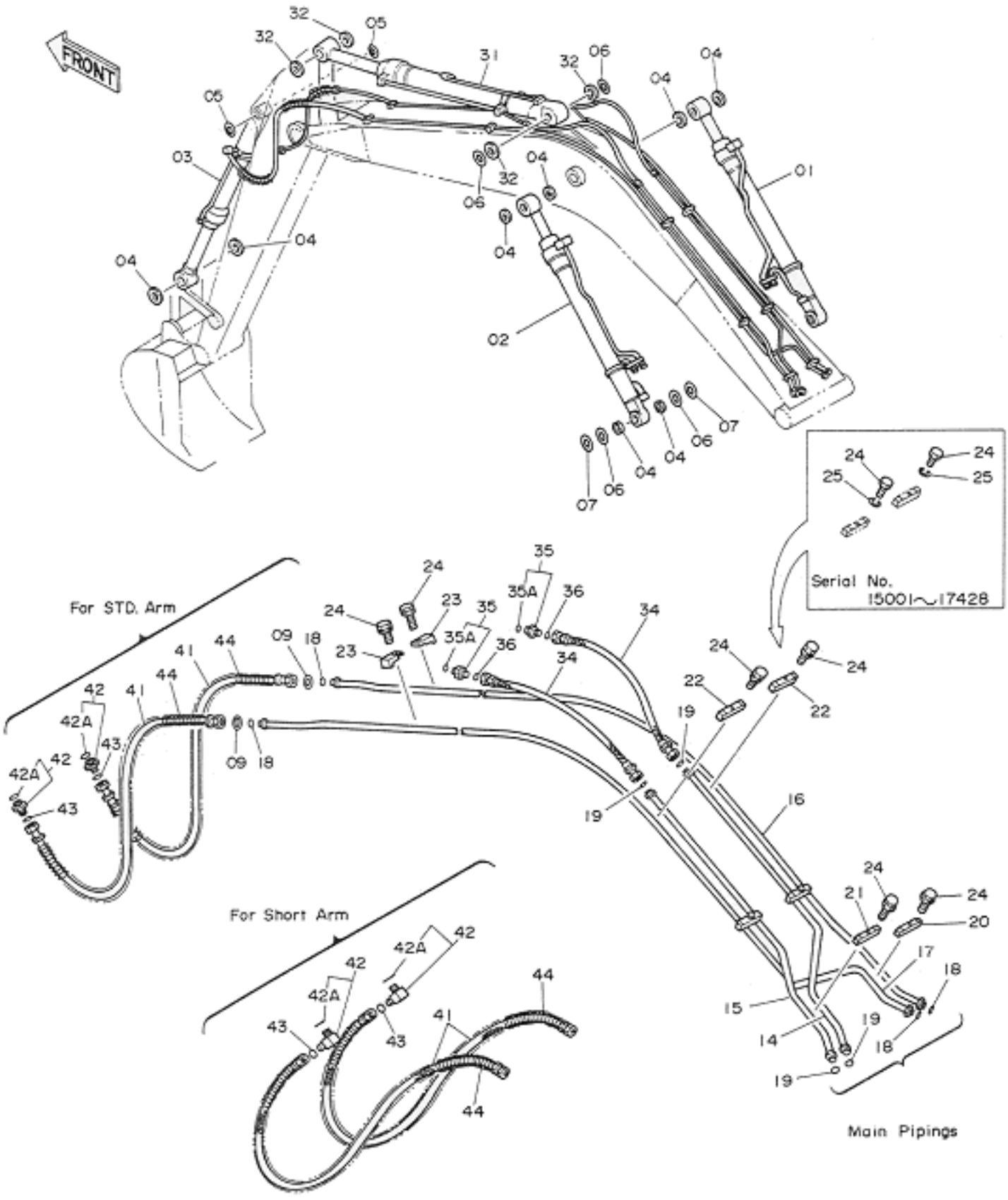

classicmachinery.net
https://truckmanualshub.com/

ITEM	PART NO	PART NAME
01	4187910	CYL.;BOOM (R)
02	4187911	CYL.;BOOM (L)
03	4187913	CYL.;BUCKET
04	4065687	SEAL;DUST
05	4094086	SEAL;DUST
06	4075357	WASHER 1.0
07	4075358	WASHER 2.0
09	4073051	WASHER 1.6
14	8035605	PIPE
15	8035606	PIPE
16	8035607	PIPE
17	8035608	PIPE
18	4138938	O-RING
19	4187308	O-RING
20	4189858	CLAMP;PIPE
21	4189859	CLAMP;PIPE
22	4141806	CLAMP;PIPE
23	4190125	CLAMP;PIPE
24	J901250	BOLT
24	J011250	BOLT;SEMS
25	A590912	WASHER;SPRING
31	4187912	CYL;ARM
32	4065687	SEAL;DUST
34	4188905	HOSE
35	4189619	ADAPTER;S
35A	4506424	*O-RING
38	4187308	O-RING
41	4187388	HOSE (*1)
42	4189602	ADAPTER;S (STD. ARM)
42	4200580	ELBOW;S (SHORT ARM)
42A	4506418	*O-RING
43	4138938	O-RING (*1)
44	4053606	PROTECTOR (*1)

Home Page

classicmachinery.net

classicmachinery.net

https://truckmanualshub.com/

Boom Lift Cylinder

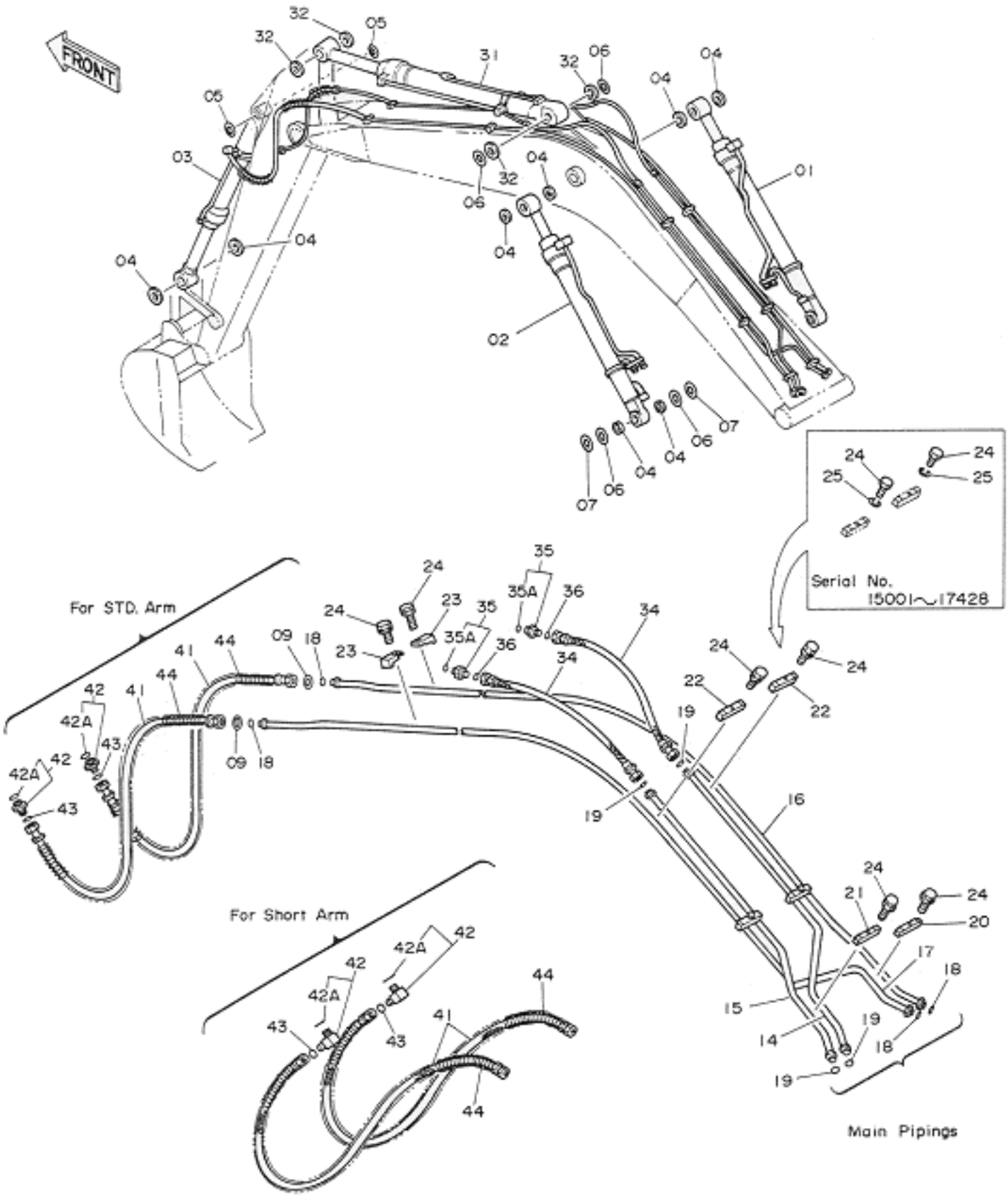

classicmachinery.net
https://truckmanualshub.com/

ITEM	PART NO	PART NAME
01	4187910	CYL.;BOOM (R)
02	4187911	CYL.;BOOM (L)
03	4187913	CYL.;BUCKET
04	4065687	SEAL;DUST
05	4094086	SEAL;DUST
06	4075357	WASHER 1.0
07	4075358	WASHER 2.0
09	4073051	WASHER 1.6
14	8035605	PIPE
15	8035606	PIPE
16	8035607	PIPE
17	8035608	PIPE
18	4138938	O-RING
19	4187308	O-RING
20	4189858	CLAMP;PIPE
21	4189859	CLAMP;PIPE
22	4141806	CLAMP;PIPE
23	4190125	CLAMP;PIPE
24	J901250	BOLT
24	J011250	BOLT;SEMS
25	A590912	WASHER;SPRING
31	4187912	CYL;ARM
32	4065687	SEAL;DUST
34	4188905	HOSE
35	4189619	ADAPTER;S
35A	4506424	*O-RING
38	4187308	O-RING
41	4187388	HOSE (*1)
42	4189602	ADAPTER;S (STD. ARM)
42	4200580	ELBOW;S (SHORT ARM)
42A	4506418	*O-RING
43	4138938	O-RING (*1)
44	4053606	PROTECTOR (*1)

Home Page

classicmachinery.net

classicmachinery.net

https://truckmanualshub.com/

EX120 Cab

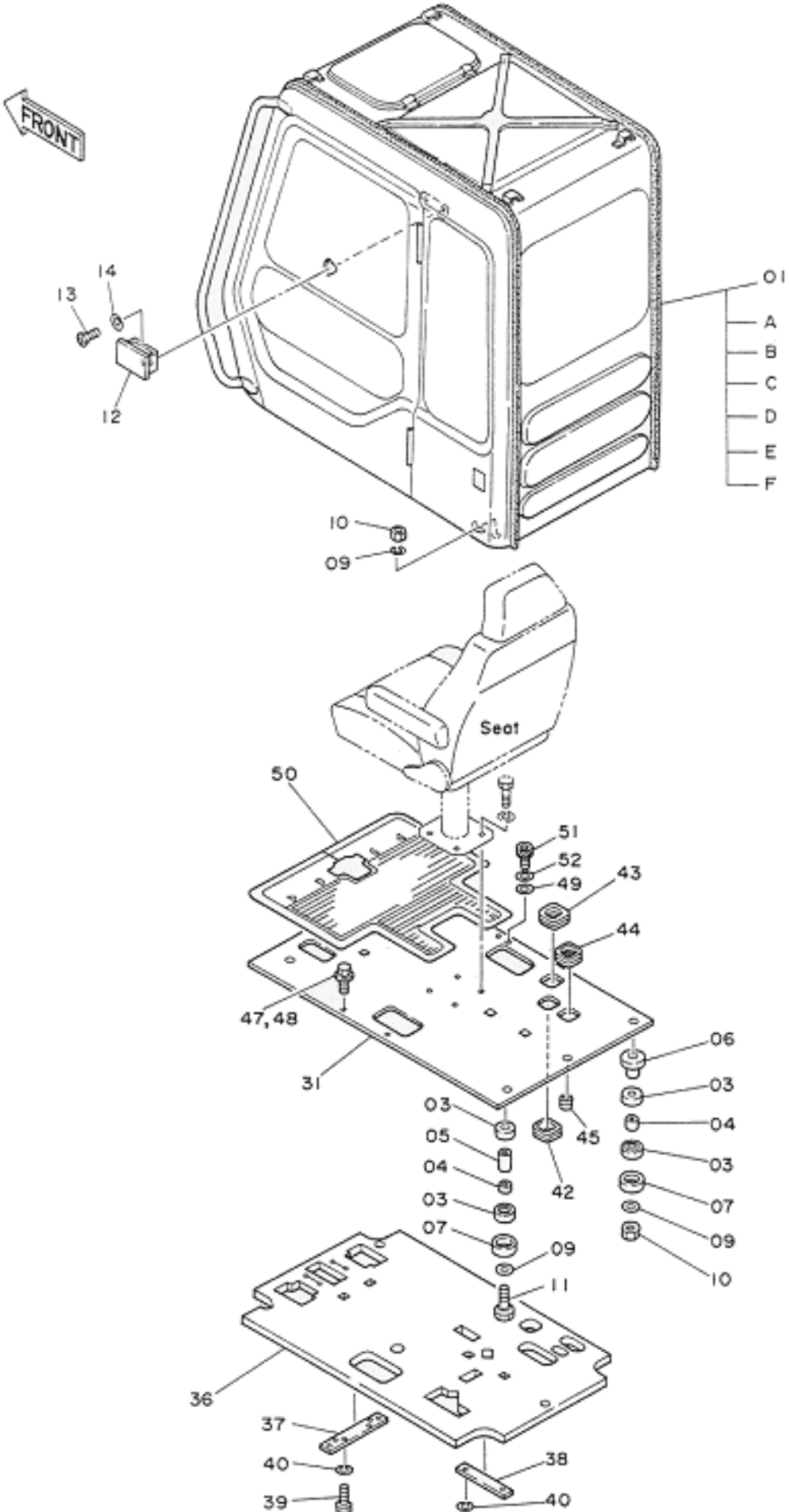

classicmachinery.net

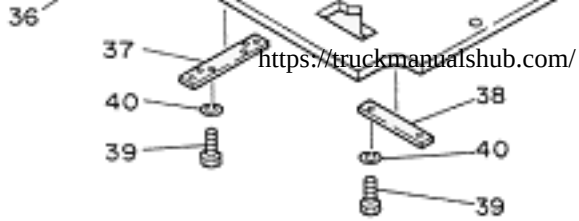

https://truckmanualshub.com/

ITEM	PART NO.	PART NAME
01	4186740	CAB ASS'Y (SDX)
03	4200084	RUBBER
04	4200085	RUBBER
05	4200086	SPACER
06	9727615	STOPPER
07	4185675	STOPPER
09	4114405	WASHER
10	M660016	NUT; U
11	4203189	BOLT
12	4146719	ASHTRAY
13	M430510	SCREW
14	A590105	WASHER
31	6008562	PLATE
36	2024676	GLASS WOOL
37	4205043	PLATE
38	4204646	PLATE
39	J901025	BOLT
39	J901020	BOLT
40	A590910	WASHER; SPRING
42	4205080	BUSHING; RUBBER
43	4205081	BUSHING; RUBBER
44	4205082	BUSHING; RUBBER
45	4205084	BUSHING; RUBBER
47	J901030	BOLT
47	J011030	BOLT; SEMS
48	A590910	WASHER; SPRING
49	4114402	WASHER
50	1011396	MAT; FLOOR
51	4208498	BOLT; SOCKET
52	A590910	WASER; SPRING

classicmachinery.net

https://truckmanualshub.com/
Home Page

classicmachinery.net

https://truckmanualshub.com/

Seat

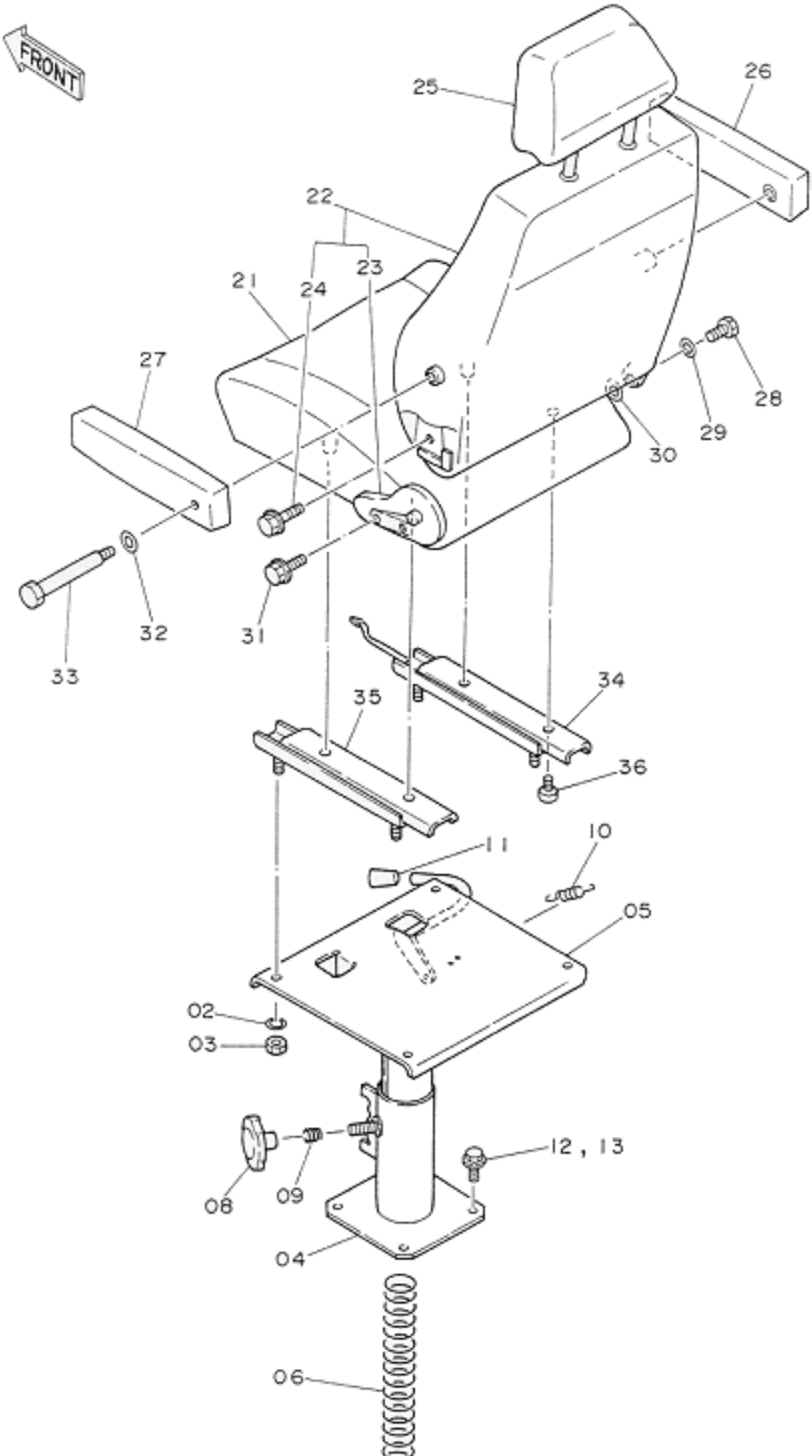

classicmachinery.net

https://truckmanualshub.com/

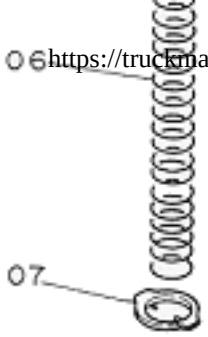

ITEM	PART NO.	PART NAME
02	A590908	WASHER;SPRING
03	M500807	NUT
04-11	4178550	STAND ASS'Y
04	+++++++	STAND
05	+++++++	SUPPORT
06	4206087	SPRING
07	3039222	PLATE
08	3039223	KNOB
09	3039221	SPRING
10	3030268	SPRING
11	3030267	GRIP
12	J901025	BOLT
12	J011025	BOLT;SEMS
13	A590910	WASHER;SPRING
21-36	4186742	SEAT ASS'Y
21-36	4230833	SEAT ASS'Y
21	0340801	CUSHION;SEAT
21	0368101	CUSHION;SEAT
22	0340802	SEAT;BACK
22	0368102	SEAT;BACK
23	0340803	ADJUSTER
24	0262708	BOLT
25	0340804	HEAD-REST
25	0368103	HEAD-REST
26	0340805	ARM-REST (R)
26	0368104	ARM-REST (R)
27	0340806	ARM-REST (L)
27	0368105	ARM-REST(L)
28	0262709	BOLT;HINGE

classicmachinery.net

29	0262710	WASHER
30	0262711	WASHER;SPRING
31	0262708	BOLT
32	0262707	WASHER
32	0262710	WASHER
33	0340807	BOLT
34	0304002	ADJUSTER;SEAT(R)
34	03688106	ADJUSTER;SEAT(R)
35	0304003	ADJUSTER;SEAT(L)
36	0340808	SCREW

Home Page

classicmachinery.net

https://truckmanualshub.com/

Instrument Panel

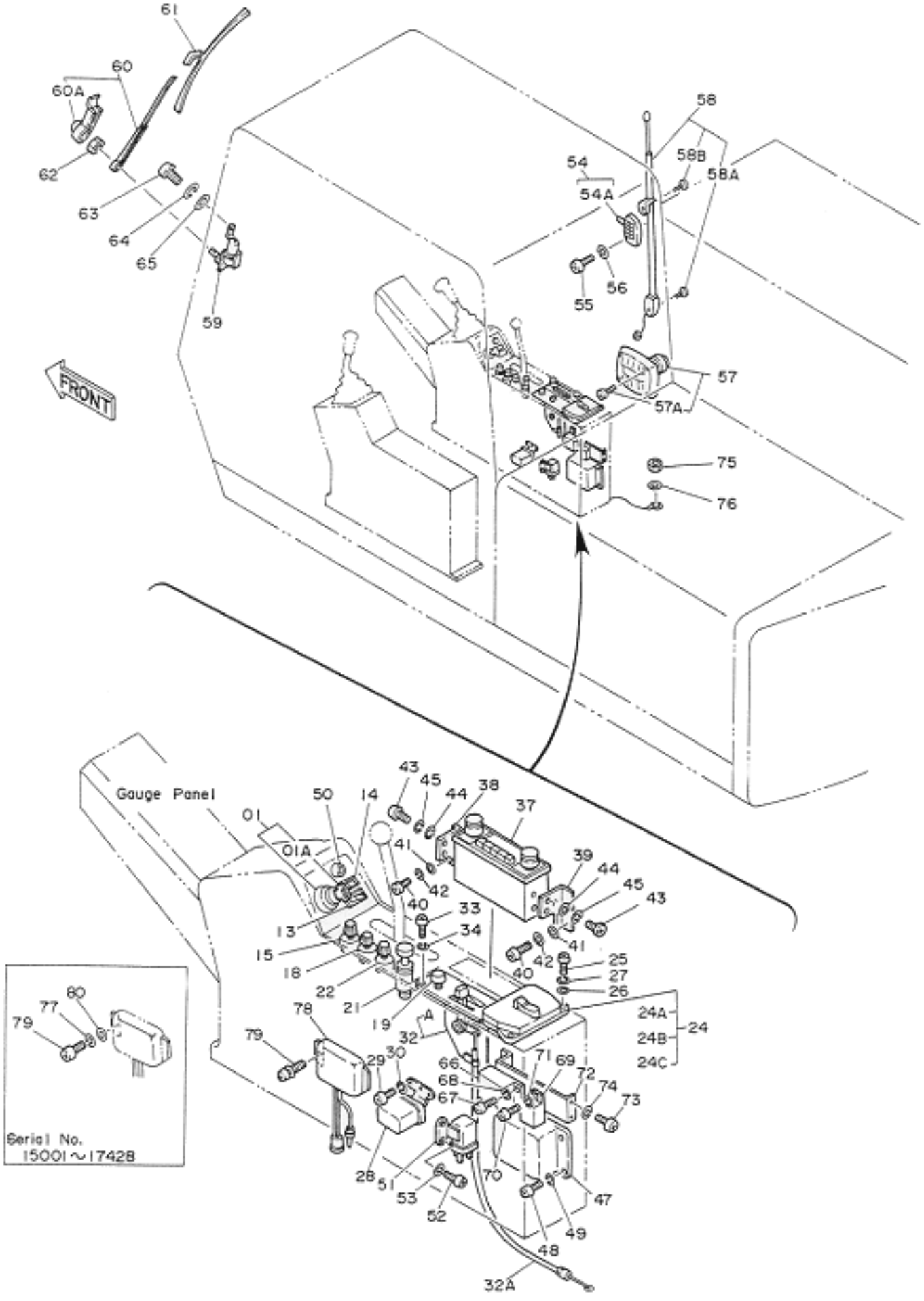

classicmachinery.net

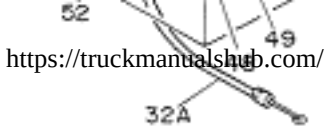

https://truckmanualshub.com/

ITEM	PART NO.	PART NAME
01	4186745	SWITCH; START (WITH KEY)
01	4186743	SWITCH; START (WITH H-MARK KEY)
01A	4187759	KEY; START (NO. H800) (1=2 PIECES)
01A	4187757	KEY; START (NO. H800) (H-MARK KEY:1=2 PIECES)
13	4187088	SWITCH (TRAVEL SPEED)
14	4187089	SWITCH (AUTOMATIC FUEL CONTROL)
15	4201802	SWITCH (CHANGE OF MODE)
18	4184396	SWITCH (LIGHT)
19	4184397	SWITCH (BLOWER)
21	4184395	LIGHTER
22	4184398	SWITCH (WIPER)
24	4184394	BOX; FUSE
24A	4208246	FUSE (1A)
24B	4195610	FUSE (10A)
24C	4127781	FUSE (15A)
25	J850625	SCREW
26	J250006	WASHER; PLANE
27	J251006	WASHER; SPRING
28	4505392	RELAY; HORN
29	M430610	SCREW
30	A590906	WASHER; SPRING
32	4189169	CONTROLLER
32A	4248908	CABLE
33	J850410	SCREW
34	J251004	WASHER; SPRING
37	4043976	RADIO
38	4198945	BRACKET
39	4198946	BRACKET
40	M430610	SCREW

classicmachinery.net
https://truckmanualshub.com/

41	A590106	WASHER; PLANE
42	A590906	WASHER; SPRING
43	M430508	SCREW
44	A590105	WASHER
45	A590905	WASHER; SPRING
47	9067007	UNIT; CONTROL
48	M430610	SCREW
49	A590906	WASHER; SPRING
50	4146754	RUBBER
51	4152940	RELAY; HOURMETER
52	M430513	SCREW
53	A590905	WASHER; SPRING

Home Page

classicmachinery.net

Wiring Loom

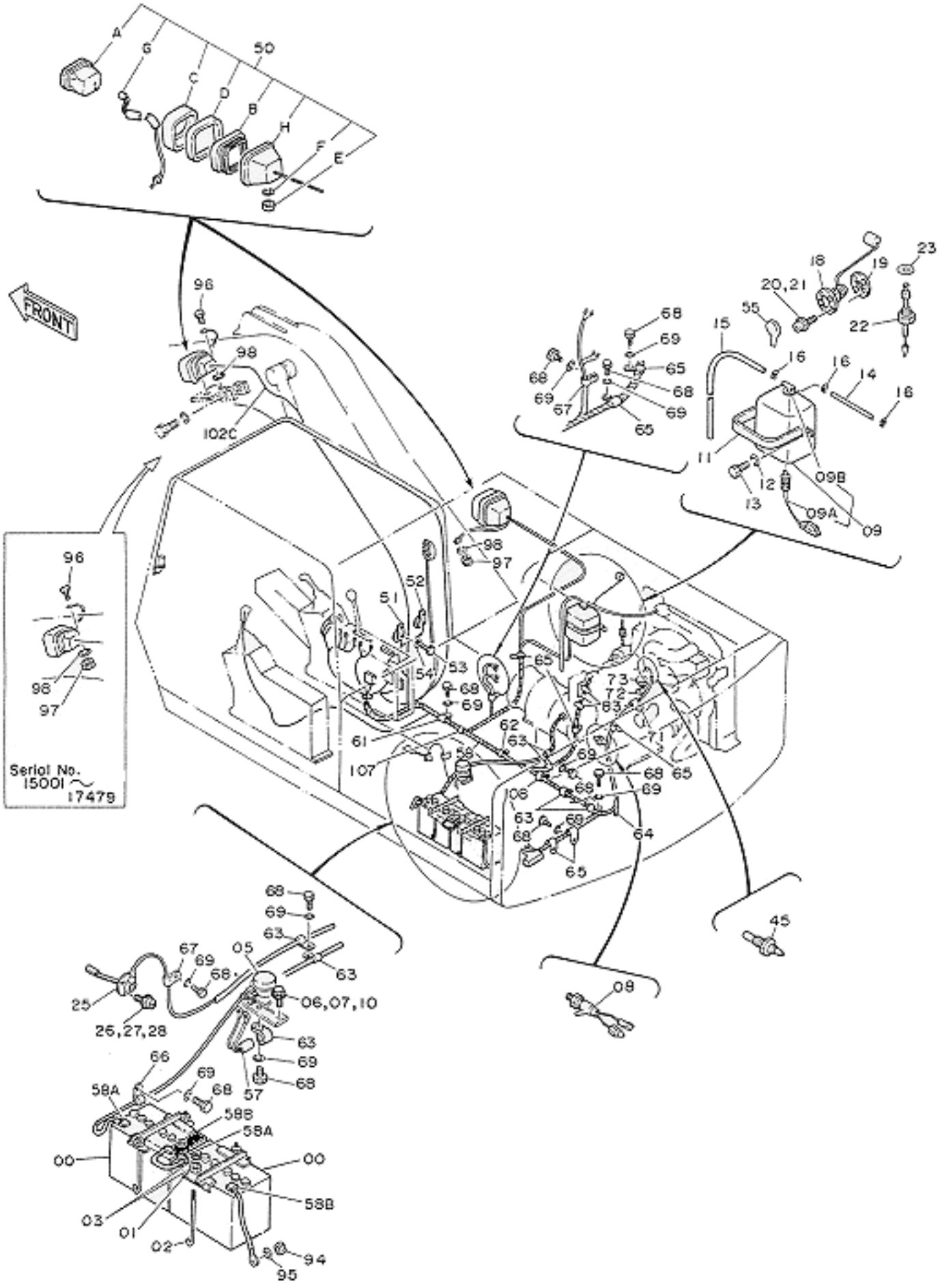

classicmachinery.net



https://truckmanualshub.com/

ITEM	PART NO.	PART NAME
57	4191038	FUSIBLE-LINK
58	4211235	HARNESS;WIRE
58A	4256240	*CAP
58B	4256241	*CAP
58C	4257312	*HARNESS;WIRE (BOOM LIGHT)
61	4190263	CLIP
62	4190277	CLIP
63	4190262	CLIP
64	4190253	CLIP
65	4190275	CLIP
66	4190272	CLIP
67	4190275	CLIP
68	4101014	BOLT
69	A590910	WASHER SPRING
70	A590906	WASHER;SPRING
71	4000855	CLIP;PIPE
72	J900610	BOLT
83	4055312	CLIP
94	J950010	NUT
95	A590110	WASHER
96	J900616	BOLT
97	M500605	NUT
97	M500605	NUT
98	A590106	WASHER
107	4190263	CLIP
107	4192035	CLIP
108	4190262	CLIP
108	4190277	CLIP

Home Page

classicmachinery.net

https://truckmanualshub.com/

Hand Servo Controls

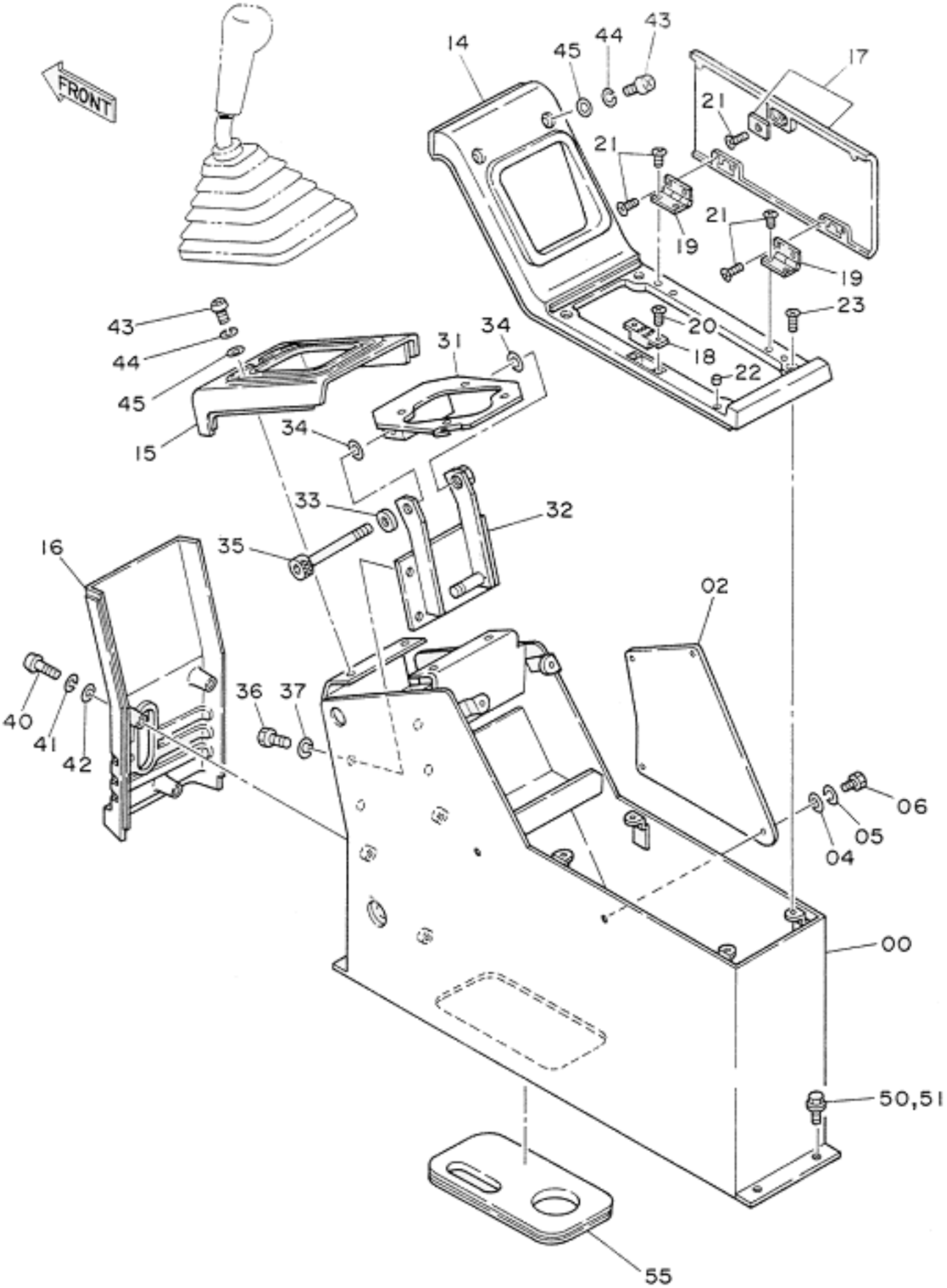

classicmachinery.net

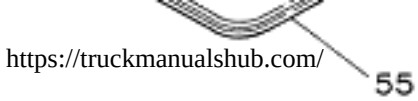

https://truckmanualshub.com/

ITEM	PART NO	PART NAME
00	6008363	STAND
02	4200807	COVER
04	A590106	WASHER; PLANE
05	A590906	WASHER;SPRING
06	J900614	BOLT
14	5002029	COVER
15	1010967	COVER
16	1010900	COVER
17	7017989	COVER
18	4199403	MAGNET
19	4199401	HINGE
20	M470310	SCREW
21	4197781	SCREW
22	4208354	RUBBER
23	J660614	SCREW
31-35	9076593	BRACKET ASS’Y
31	++++++	BRACKET
31	8038104	BRACKET
32	++++++	BRACKET
32	8038101	BRACKET
33	A590112	WASHER
34	4191947	SHIM
35	M341200	BOLT; SPROCKET
36	J901020	BOLT
37	A590910	WASHER; SPRING
40	J850640	SCREW
41	J251006	WASHER; SPRING
42	J250006	WASHER; PLANE
43	J850620	SCREW
44	J251006	WASHER; SPRING
45	J250006	WASHER; PLANE
50	J901025	BOLT
50	J011025	BOLT; SEMS
51	A590910	WASHER; SPRING

classicmachinery.net

55	4200658	BUSHING;RUBBER

Home Page

classicmachinery.net

https://truckmanualshub.com/

Heater A/C

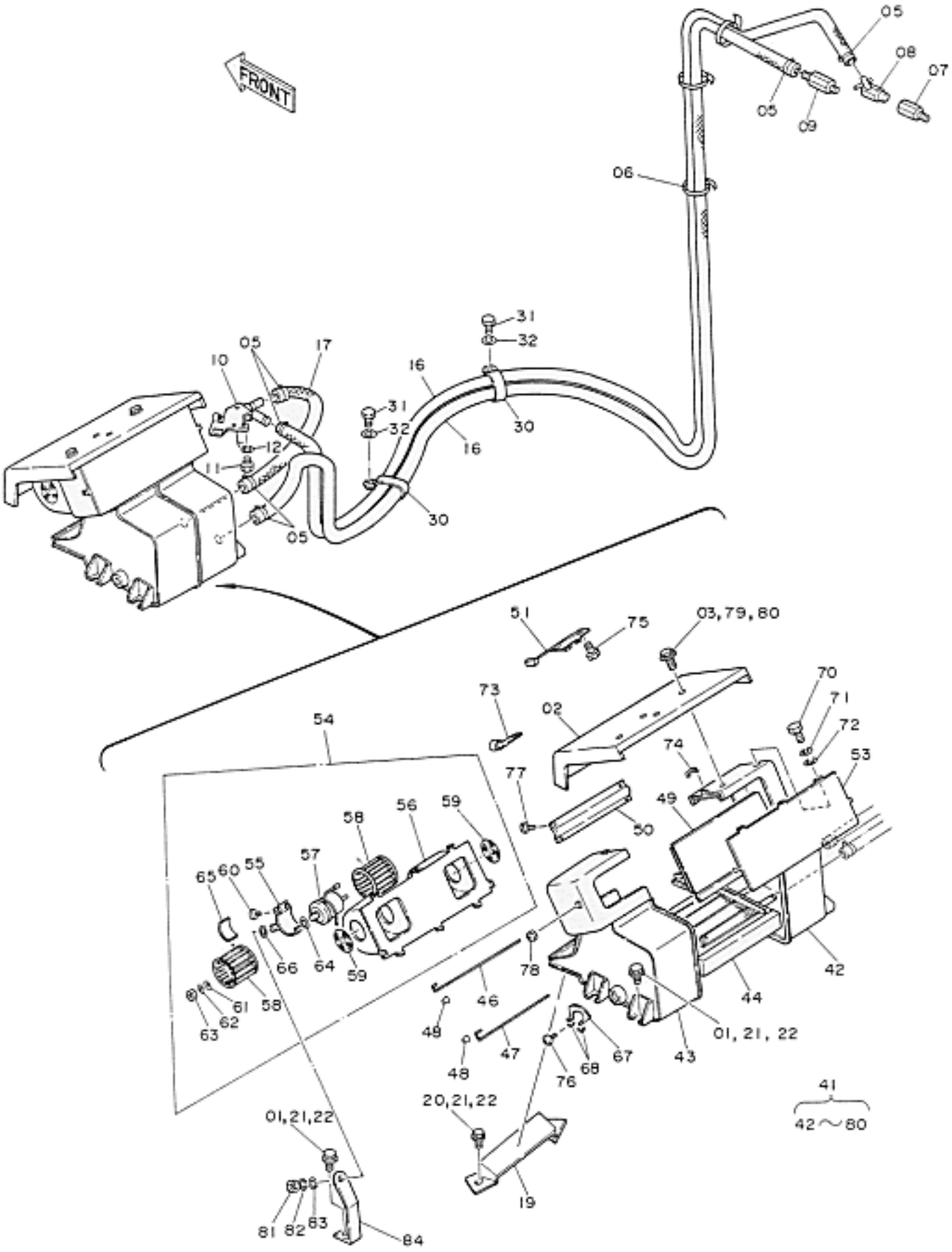



classicmachinery.net

https://truckmanualshub.com/

ITEM	PART NO	PART NAME	
01	J901025	BOLT	
01	J021025	BOLT-SEMS	
02	7009413	COVER	
03	J900625	BOLT	
03	J020625	BOLT;SEMS	
05	4507228	CLAMP;HOSE	
06	4055312	CLIP	
07	4051445	ADAPTER	
08	4508050	COCK	
09	4201862	ADAPTER	
10	4195823	COCK	
11	M430416	SCREW	
12	A590904	WASHER;SPRING	
16	4106495	HOSE;RUBBER	
17	4203228	HOSE;RUBBER	
19	2016220	BRACKET	
20	J901025	BOLT	
20	J021025	BOLT;SEMS	
21	A590910	WASHER;SPRING	
22	A590110	WASHER	7
30	4190266	CLIP	
31	J901016	BOLT	
32	A590910	WASHER;SPRING	
41-84	4193703	HEATER ASS'Y	
41	0228301	UNIT;HEATER	
41	0311513	UNIT;HEATER	
42	+++++++	CASE (A)	
43	+++++++	CASE (B)	
44	0228108	CORE;HEATER	
44	0311514	CORE;HEATER	
46	0228109	SHAFT (H-C)	
47	0228110	SHAFT (H-D)	
48	0228111	KNOB	
49	0228112	DAMPER (H-C)	

classicmachinery.net
https://truckmanualshub.com/

50	0228113	DAMPER (H-D)
51	0228114	RESISTOR
53	0228116	COVER;CASE
54	0228117	CASE ASS'Y
55	0228118	BAND;MOTOR
56	0228119	COVER;MOTOR
57	0228120	MOTOR;BLOWER
58	0228121	FAN
59	0228122	BELL-MOUTH
60	0311501	SCREW
61	0311502	WASHER;RUBBER

Home Page

classicmachinery.net

Cover

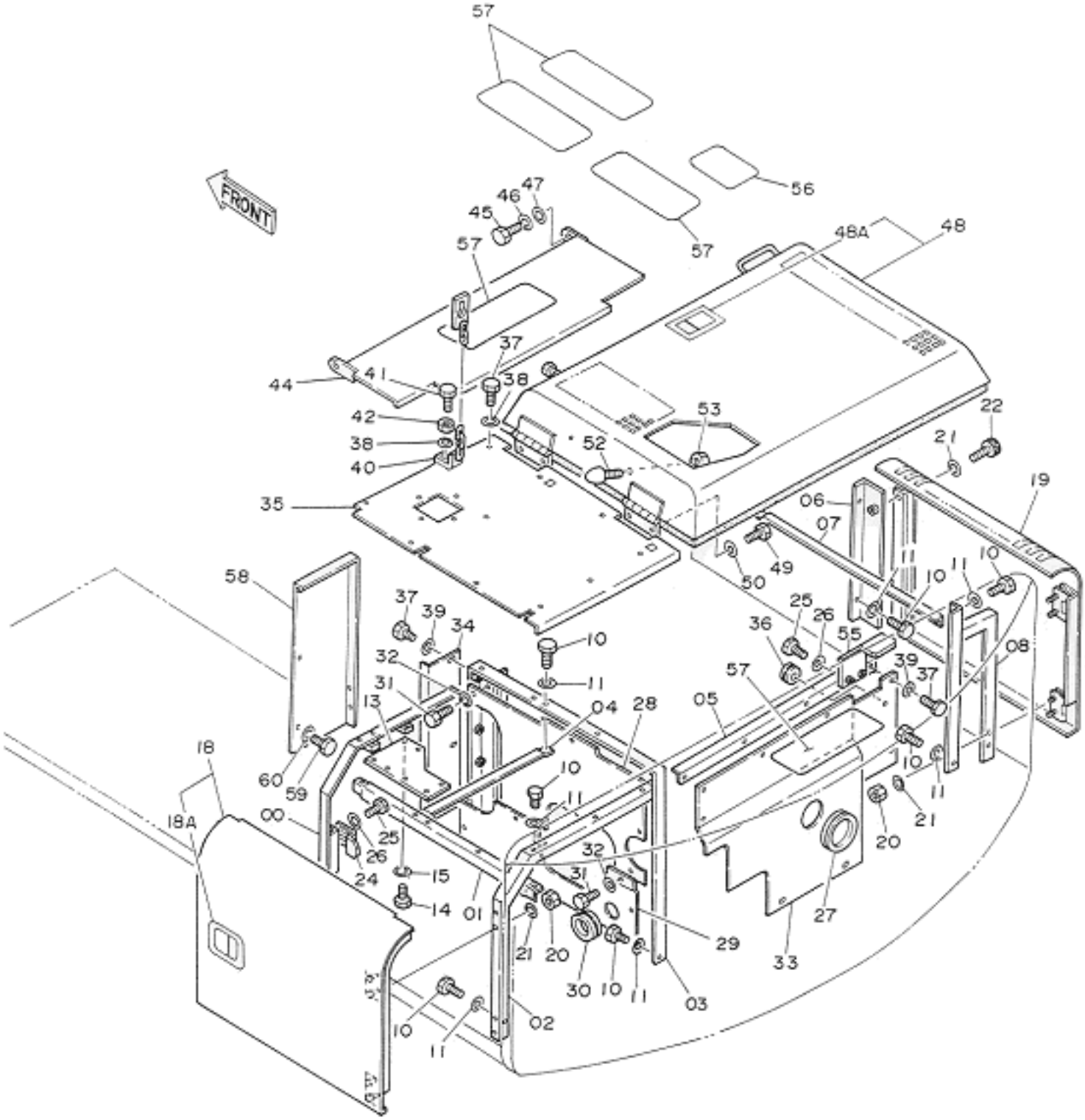

ITEM	PART NO	PART NAME
39	449490	WASHER
40	9725452	LOCK

classicmachinery.net
https://truckmanualshub.com/

41	J901245	BOLT
42	J950012	NUT
44	8037160	COVER
45	J901020	BOLT
46	A590910	WASHER; SPRING
47	J217083	WASHER
48	6008145	COVER; ENGINE
48A	7017862	LOCK ASS'Y
49	J901225	BOLT
50	A590112	WASHER
52	487195	STOPPER
53	J952010	NUT
55	9725453	STOPPER
56	4121128	TAPE
57	4073519	TAPE
57	4073519	TAPE
58	4204023	COVER
59	J901225	BOLT
60	449490	WASHER

Home Page

classicmachinery.net

https://truckmanualshub.com/

Fuel Tank

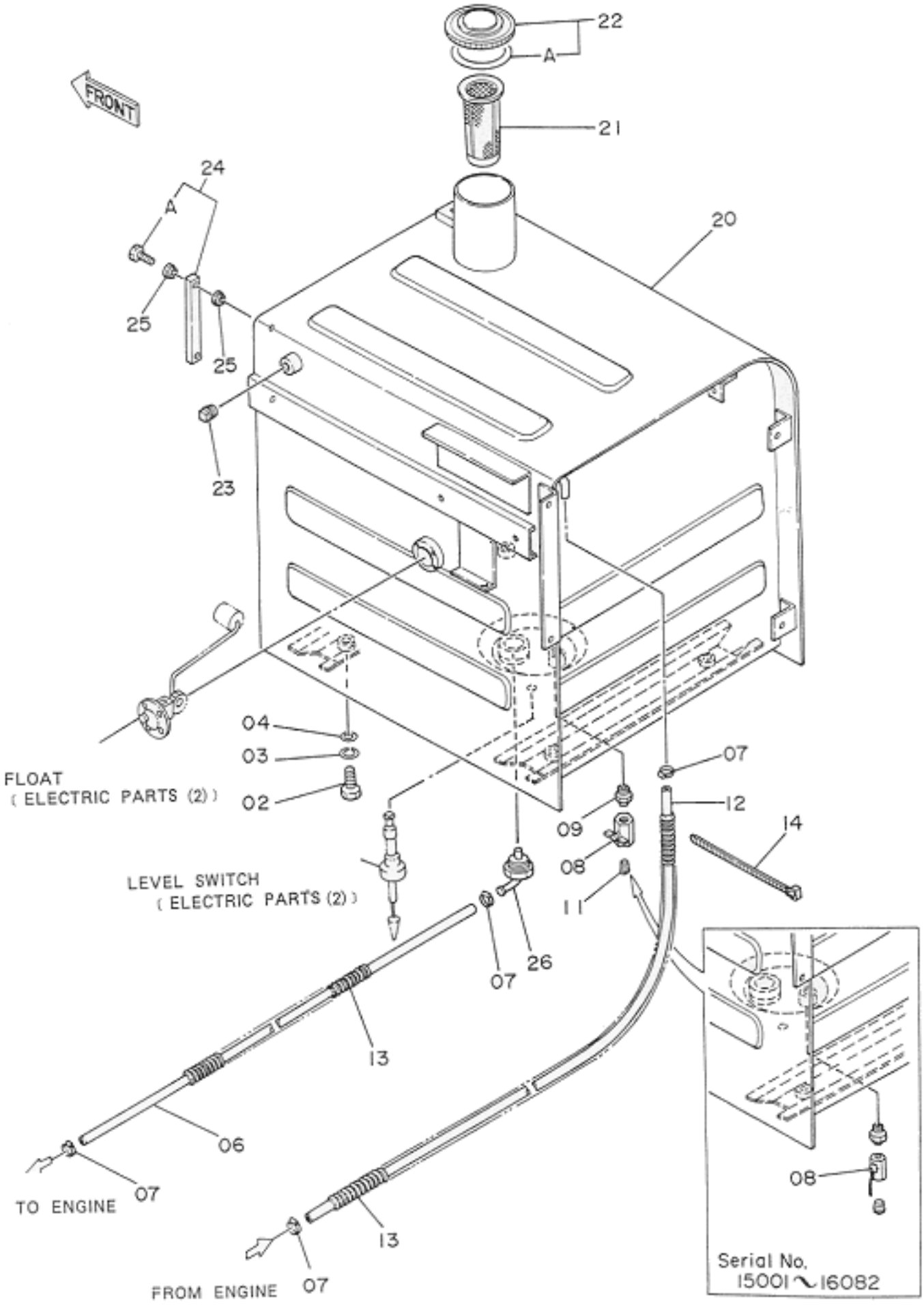

classicmachinery.net

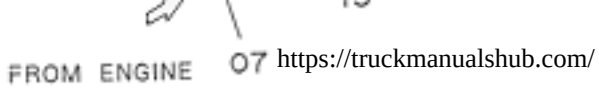

https://truckmanualshub.com/

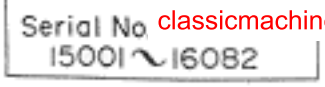

ITEM	PART NO	PART NAME
02	J901640	BOLT
03	A590916	WASHER;SPRING
04	4114405	WASHER
06	4075190	HOSE;FUEL
07	4514700	CLIP;HOSE
08	94-4026	COCK
08	4216448	VALVE;BALL
09	J70782	ADAPTER
11	94-2022	PLUG
12	4201770	HOSE;FUEL
13	4188524	TUBE
14	4055312	CLIP
20	6007799	TANK;FUEL
21	4121496	FILTER
22	4188409	CAP
22A	4168820	PACKING;RUBBER
23	94-2024	PLUG
24	8033923	GAUGE;LEVEL
24A	4100967	BOLT
25	449558	WASHER;SEAL
26	9726772	PIPE

Home Page

classicmachinery.net

https://truckmanualshub.com/

Hydraulic Tank

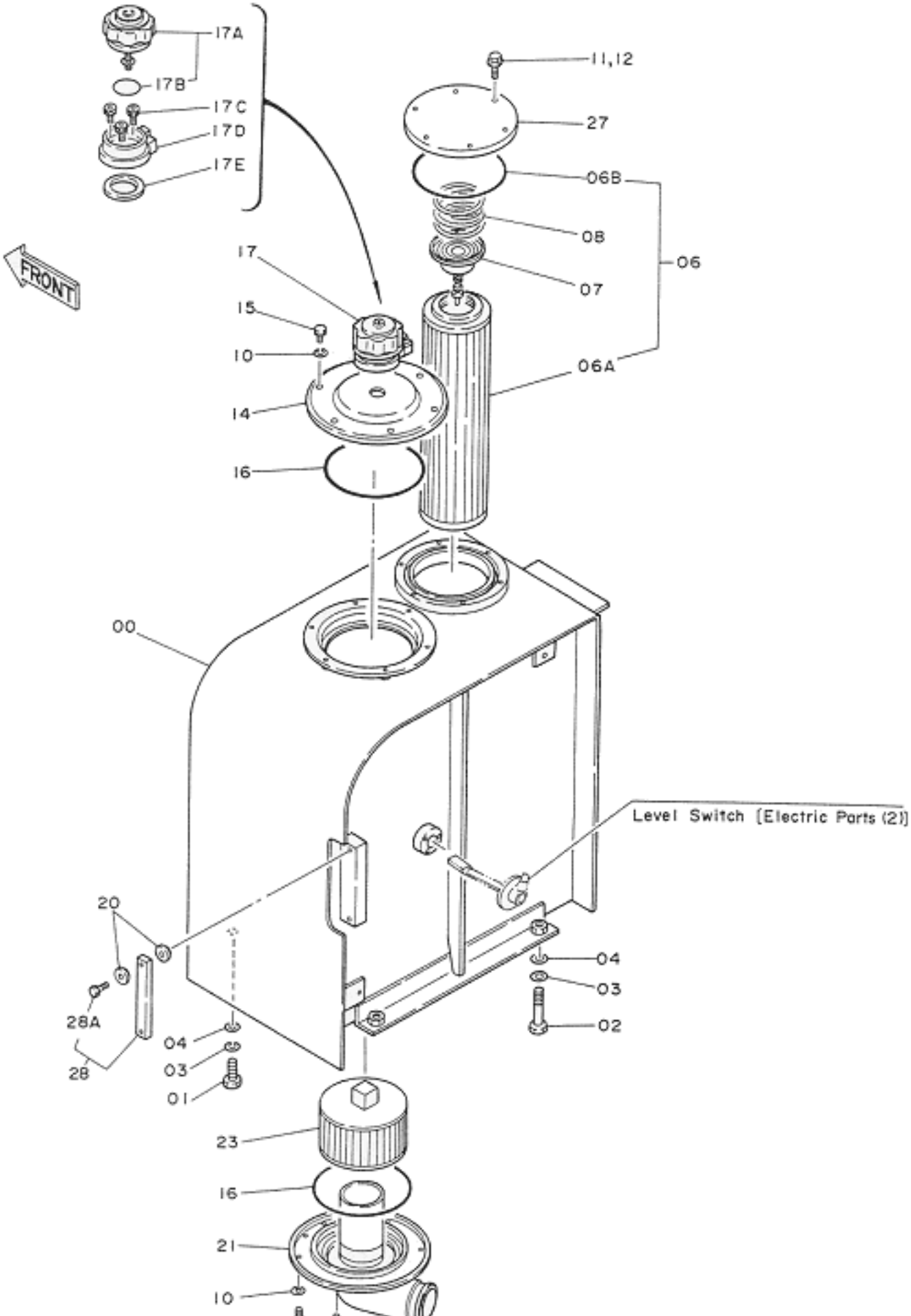

classicmachinery.net

https://truckmanualshub.com/

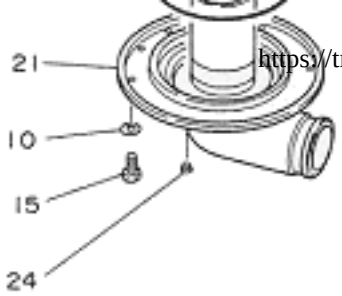

ITEM	PART NO	PART NAME
00	6007798	TANK; OIL
01	J901640	BOLT
02	J901680	BOLT
03	A590916	WASHER; SPRING
04	4114405	WASHER
06	4156753	ELEMENT;FILTER
06	4227353	ELEMENT; FILTER
06A	4132686	ELEMENT FILTER
06B	A810145	O-RING
07	4065280	VALVE
08	4109393	SPRING
10	A590910	WASHER; SPRING
11	J901020	BOLT
11	J011020	BOLT; SEMS
12	A590910	WASHER; SPRING
14	8033464	COVER
15	M111022	BOLT
16	A810160	O-RING
17	4178684	BREATHER; AIR
17A	4222874	FILTER
17B	953612	O-RING
17C	M340516	BOLT; SOCKET
17D	4222875	CASE
17E	4222876	PACKING
20	449558	WASHER; SEAL
21	7017641	PIPE; SUCTION
23	4125320	FILTER; SUCTION
24	94-2011	PLUG
27	4202009	COVER
28	8038196	GAUGE; LEVEL

classicmachinery.net
https://truckmanualshub.com/

28A	4100967	BOLT

Home Page

classicmachinery.net

Diesel Engine



classicmachinery.net
https://truckmanualshub.com/

ITEM	PART NO	PART NAME
00	4176895	ENGINE
00	4236387	ENGINE
00A	4179863	BELT;V
00B	4183853	FILTER;OIL
00C	4206130	FILTER;FUEL
00D	4223445	SWITCH;LEVEL (OIL LEVEL SENSOR)
00E	4223446	SWITCH;PRESSURE (OIL FILTER WARNING)
00F	4223444	SWITCH;THERMOMETER (OVERHEAT WARNING)
01	8021976	BRACKET
02	8021977	BRACKET
03	A590910	WASHER;SPRING
04	M111025	BOLT
05	M511008	NUT
07	2016999	RUBBER;CUSHION
08	4086894	WASHER
09	A590914	WASHER;SPRING
10	J950014	NUT
11	4177883	RUBBER
12	4169423	STOPPER
13	4185675	STOPPER
14	4114405	WASHER
15	J931613	BOLT
16	4176282	BOLT
17	J951016	NUT
26	2021730	HOSE;WATER
27	3033315	HOSE;WATER
28	4504198	CLAMP;HOSE
29	4504199	CLAMP;HOSE
31	4191187	MUFFLER
32	7017125	BRACKET
33	4181672	BOLT;U
34	M501008	NUT

classicmachinery.net
https://truckmanualshub.com/

35	4188758	PACKING
36	8035871	PIPE;EXHAUST
37	M520807	NUT
37	4252898	NUT;U
38	4188756	CLAMP
38	4213017	CLAMP
39	J901035	BOLT
39	J901240	BOLT
40	A590910	WASHER;SPRING
40	A590912	WASHER;SPRING
41	M520010	NUT
41	M520012	NUT
43	J901020	BOLT
45	4171509	HOSE; VINYL

Home Page

classicmachinery.net

https://truckmanualshub.com/

Radiator

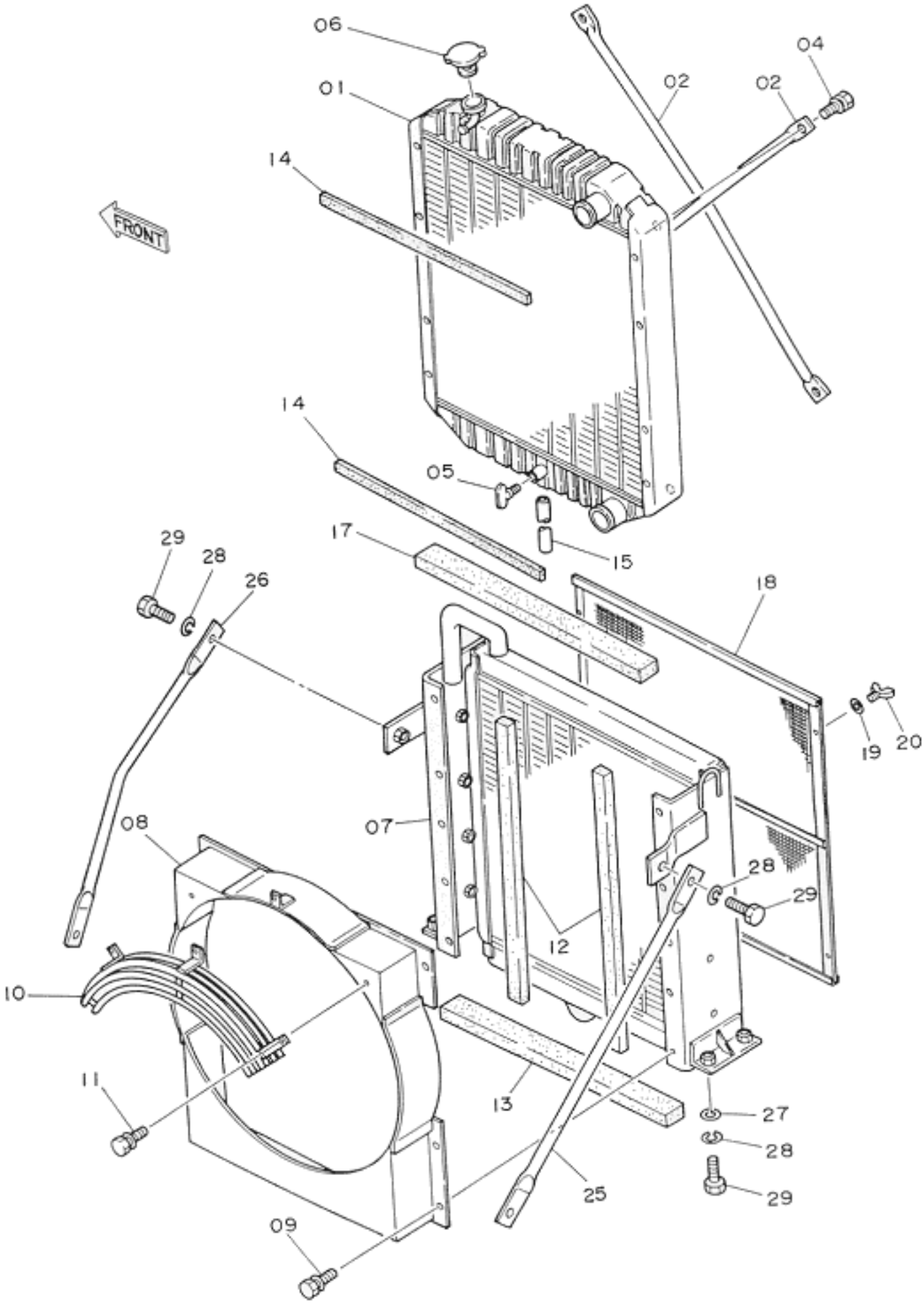

classicmachinery.net

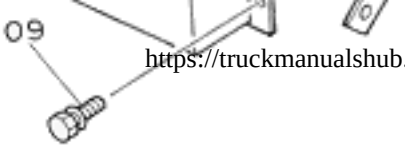

https://truckmanualshub.com/

ITEM	PART NO	PART NAME
01-20	4176902	RADIATOR ASS'Y
01	4206094	CORE; RADIATOR
02	4206676	ROD
04	4206679	BOLT
05	4148705	PLUG; DRAIN
06	4206093	CAP
06	4228160	CAP
07	4206096	COOLER; OIL
08	4206674	GUIDE;FAN
08	4228295	GUIDE; FAN
09	4206678	BOLT
10	4204469	GUARD; FAN
11	4206128	BOLT
12	4206672	PACKING
13	4200220	PACKING
14	4200221	PACKING
15	4148706	HOSE
17	4206671	PACKING
18	4196945	NET
19	4206931	WASHER
20	4206930	BOLT; WING
25	4178601	STAY
26	4188115	STAY
27	4114405	WASHER
28	A590916	WASHER; SPRING
29	J901635	BOLT

Home Page

classicmachinery.net

Pump Device (SDX)

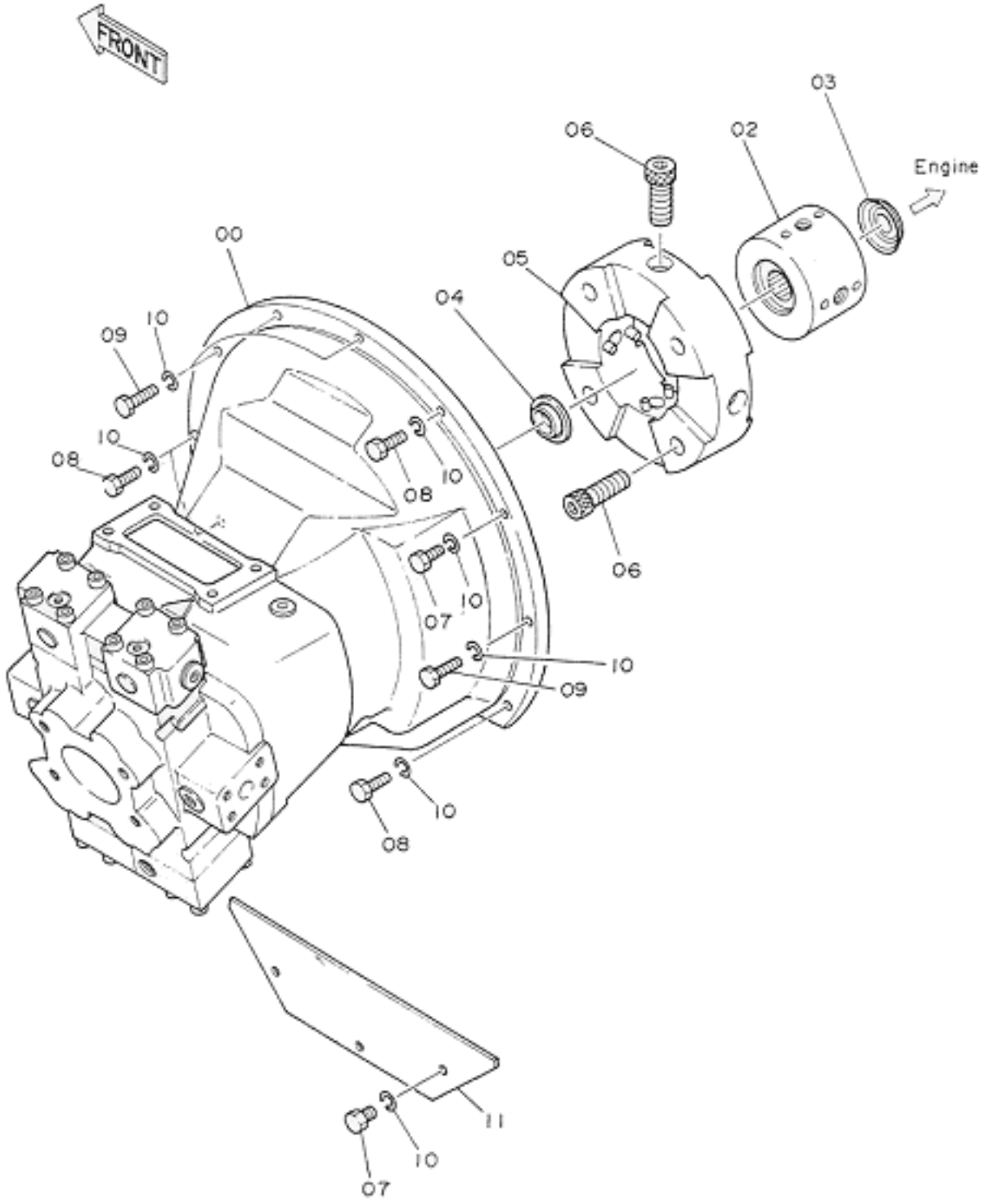

<

ITEM	PART NO.	PART NAME
00	4176903	PUMP;PISTON
02	3023434	SLEEVE

classicmachinery.net
https://truckmanualshub.com/

03	A882050	PLUG
04	4063616	SEAL; OIL
05	4091497	COUPLING
06	4095325	BOLT; SOCKET
07	J901018	BOLT
08	J901030	BOLT
09	J901035	BOLT
10	A590910	WASHER; SPRING
11	4178568	COVER

Pump Device (DX)

ITEM	PART NO.	PART NAME
00	4176903	PUMP;PISTON
02	3023434	SLEEVE
03	A882050	PLUG
04	4063616	SEAL;OIL
05	4091497	COUPLING
06	4095325	BOLT;SPROCKET
07	J901018	BOLT
08	J901030	BOLT
09	J901035	BOLT
10	A590910	WASHER;SPRING
11	4175868	COVER
12	J901014	BOLT
13	J901030	BOLT

Home Page

classicmachinery.net

https://truckmanualshub.com/

Slew Motor

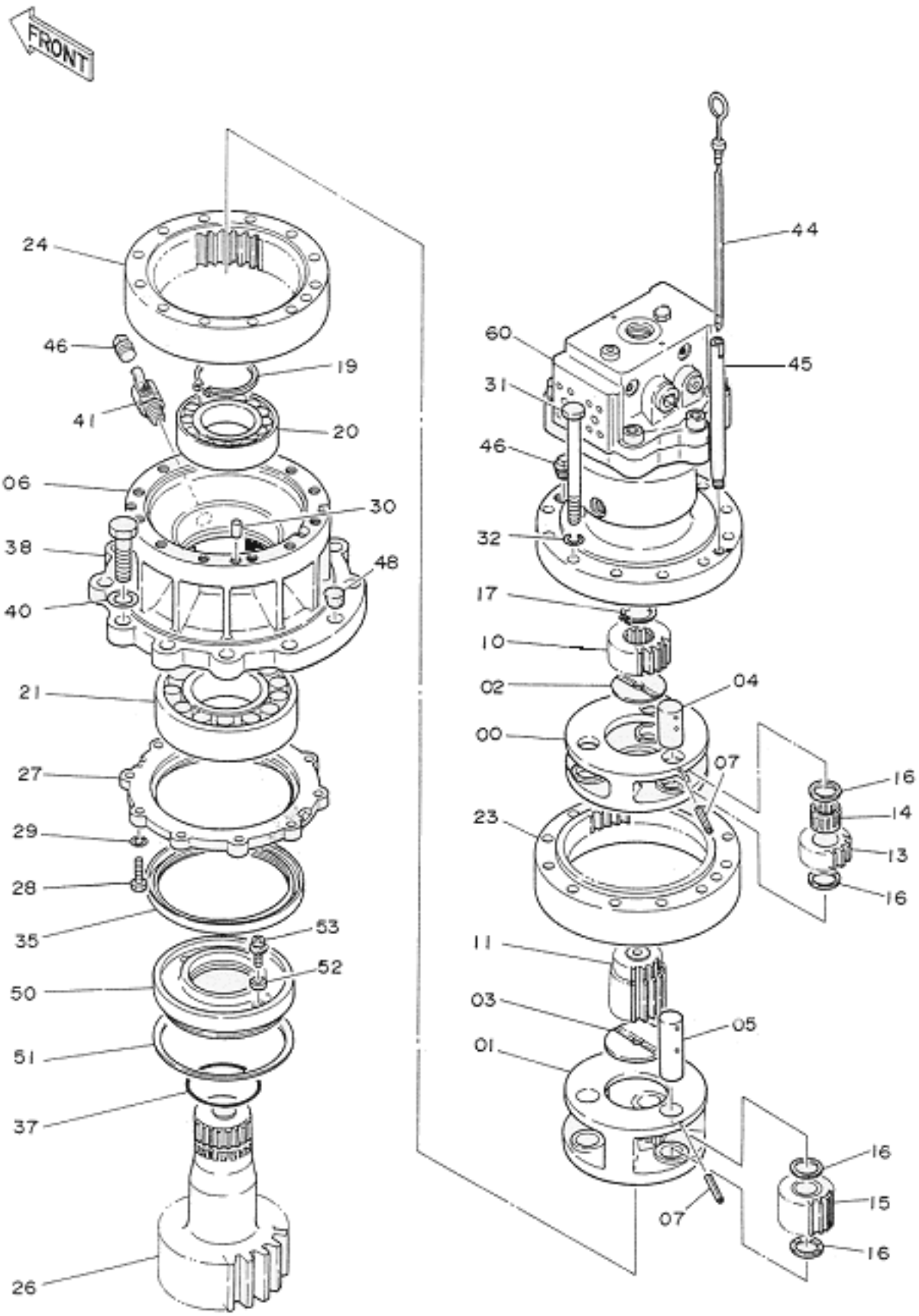

classicmachinery.net
https://truckmanualshub.com/

ITEM	PART NO.	PART NAME
00	2023962	CARRIER
01	2023965	CARRIER
01	2024894	CARRIER
02	4176070	PLATE;THRUST
03	4195372	PLATE;THRUST
04	4186262	PIN
05	4177855	PIN
05	4207801	PIN
06	1010887	HOUSING
07	4063351	PIN;SPRING
10	3037606	GEAR;SUN
11	3037607	GEAR;SUN
11	30384862	GEAR;SUN
13	3037605	GEAR;PLANETARY
14	4184840	BRG;NEEDLE
15	9727159	GEAR;PLANETARY
16	4176071	PLATE;THRUST
17	991342	RING;RETAINING
19	991350	RING;RETAINING
20	969154	BRG.;SPH.ROL.
21	4001398	BRG.;SPH.ROL.
23	2023964	GEAR;INTERNAL
23	2024895	GEAR;INTERNAL
24	2023961	GEAR;INTERNAL
26	2023963	SHAFT;PROP
27	3037604	COVER
28	J901032	BOLT
29	A590910	WASHER;SPRING
30	J401232	PIN;KNOCK
31	J901412	BOLT
32	A590914	WASHER;SPRING
35	4198921	SEAL;OIL
37	A811095	O-RING
38	J932065	BOLT
40	4018545	WASHER
41	4194712	COCK

classicmachinery.net

44	3035979	GAUGE;LEVEL
44	3043290	GAUGE;LEVEL
45	4191881	PIPE
45	4228687	PIPE
46	94-2024	PLUG
48	456336	CORK
50	3038685	SLEEVE
51	4204074	RING;RETAINING
52	4204644	MAGNET
53	4204645	SCREW
60	4199025	MOTOR;OIL
60	4224976	MOTOR;OIL

Home Page

classicmachinery.net

Control Valve

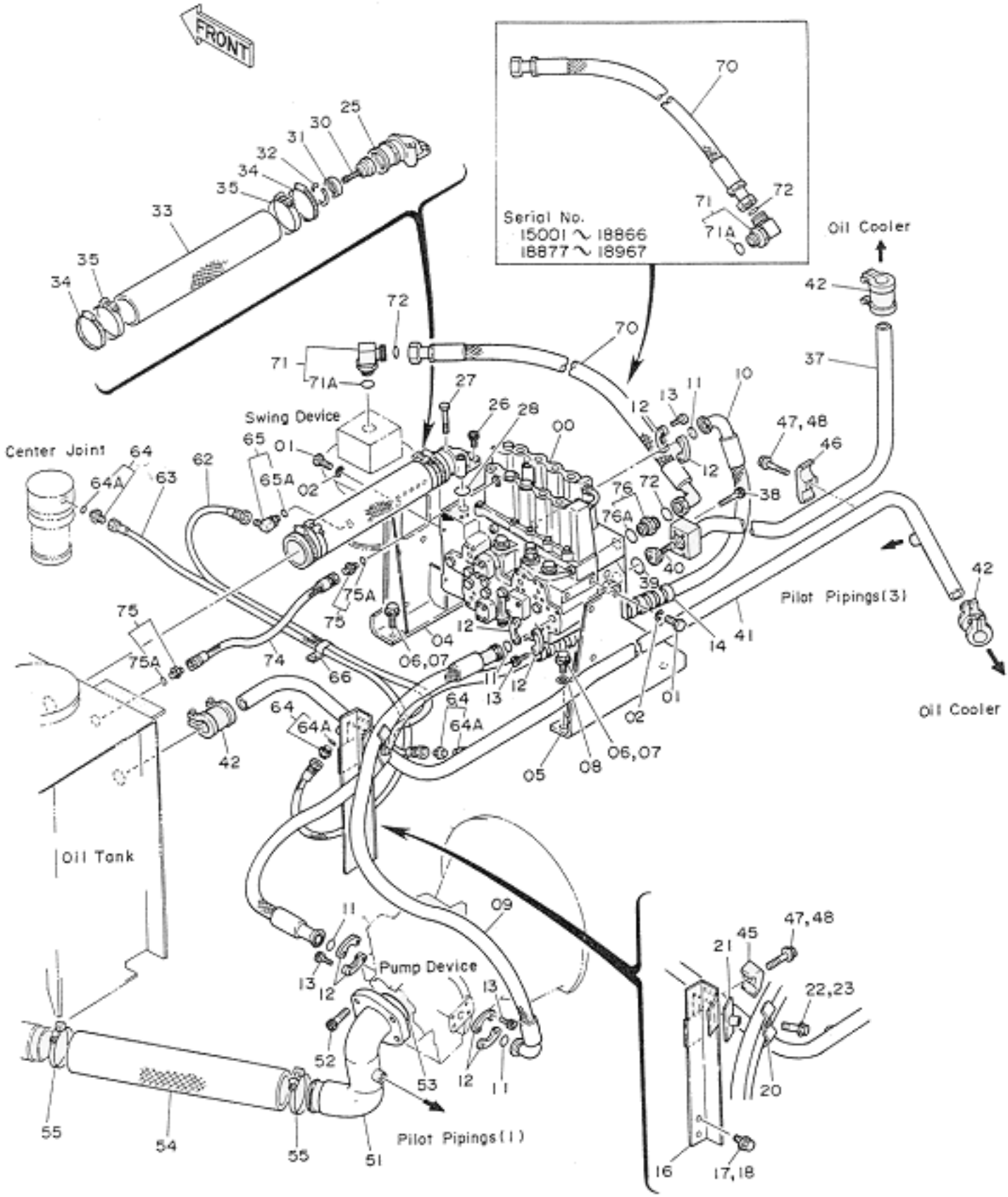

ITEM	PART NO.	PART NAME
00	4176905	VALVE;CONTROL

classicmachinery.net
https://truckmanualshub.com/

00	4224897	VALVE;CONTROL
01	J901430	BOLT
02	A590914	WASHER;SPRING
04	8037416	BRACKET
05	8037415	BRACKET
06	J901235	BOLT
06	J011235	BOLT;SEMS
07	A590912	WASHER;SPRINGS
08	4086891	WASHER
09	4200439	HOSE
10	4200440	HOSE
11	971489	O-RING
12	986910	FLANGE;SPLIT
13	M341030	BOLT;SOCKET
14	4044420	PROTECTOR
16	9728910	SUPPORT
17	J901235	BOLT
17	J011235	BOLT;SEMS
18	A590912	WASHER;SPRING
20	4202103	CLAMP
21	9727633	CLAMP
22	J901250	BOLT
22	J901255	BOLT
22	J011255	BOLT;SEMS
23	A590912	WASHER;SPRING
25	2021613	MANIFOLD
26	M341022	BOLT;SOCKET
27	M341065	BOLT;SOCKET
28	A811035	O-RING
30	4188627	VALVE
31	4188628	RING
32	991721	RING;RETAINING
33	4098558	HOSE;RUBBER
34	4504491	CLAMP;HOSE
35	4156850	CLAMP;HOSE
37	9725244	PIPE;RETURN
38	M341056	BOLT;SOCKET

classicmachinery.net
https://truckmanualshub.com/

39	4203137	O-RING
40	4202625	VALVE
41	8035500	PIPE;RETURN
42	4071213	COUPLING
45	4190127	CLAMP;PIPE
46	4189860	CLAMP;PIPE
47	J901265	BOLT
47	J011265	BOLT;SEMS

Home Page

classicmachinery.net

Centre Joint

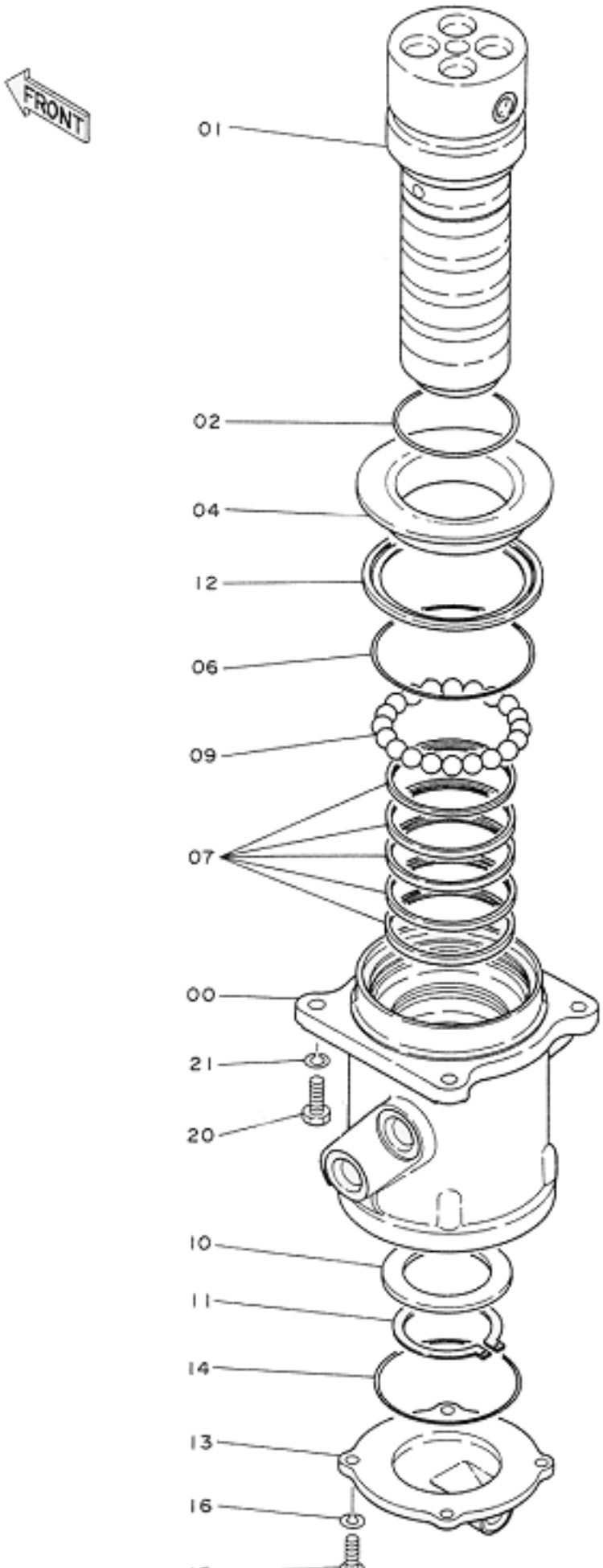

classicmachinery.net

https://truckmanualshub.com/

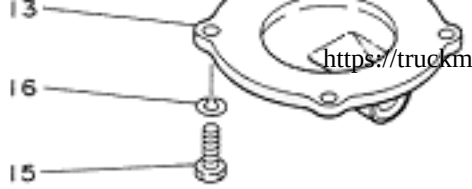

ITEM	PART NO.	PART NAME
00-16	9062438	CENTRE JOINT ASS'Y
00	1009275	BODY
01	1009276	SPINDLE
02	A810095	O-RING
04	4187060	COVER
06	4176479	O-RING
07	4176480	SEAL; OIL
09	972658	BALL
10	4176429	RING
11	991349	RING; RETAINING
12	4195898	SEAL; DUST
13	2024181	COVER
14	A810110	O-RING
15	J901030	BOLT
16	A590910	WASHER; SPRING
20	J901230	BOLT
21	A590912	WASHER; SPRING

Home Page

classicmachinery.net

Slew Bearings

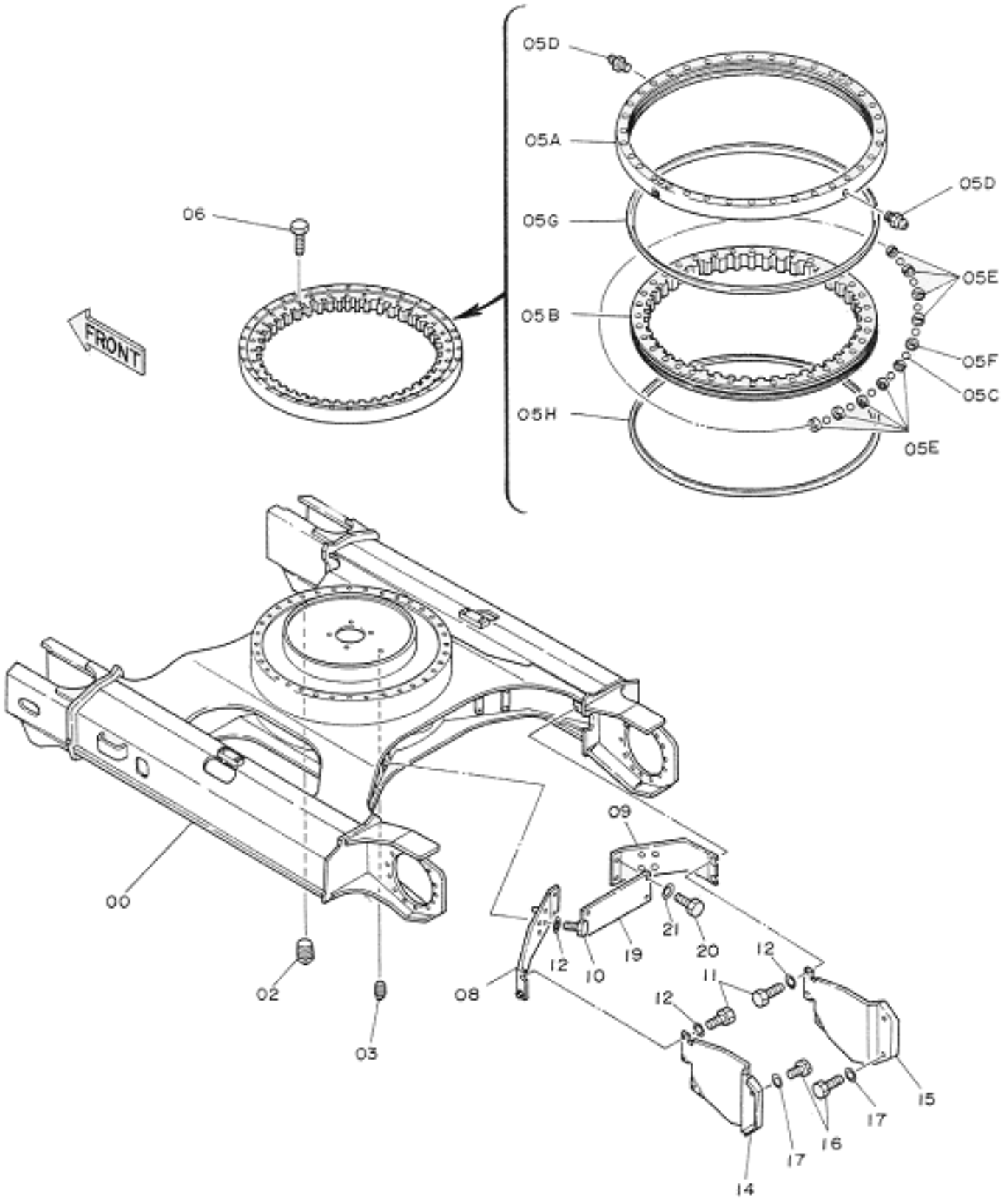

ITEM	PART NO.	PART NAME
00	6007757	FRAME;TRACK

classicmachinery.net
https://truckmanualshub.com/

02	J75214	PLUG
03	94-2024	PLUG
05A~H	6008417	BRG.;SWINGCIRCL ASS'Y
05A	+++++++	RACE;OUTER
05B	+++++++	RACE;INNER
05C	4127741	BALL (1=109 PIECES)
05D	J75481	FITTING
05E	4127708	SUPPORT
05F	4127707	SUPPORT
05G	4188127	SEAL
05H	4188128	SEAL
06	J931600	BOLT
08	8038007	COVER
09	8038006	COVER
10	J901255	BOLT
11	J901225	BOLT
12	449490	WASHER
14	2022900	COVER
15	2022901	COVER
16	J901225	BOLT
17	449490	WASHER
19	4200038	COVER
20	J901225	BOLT
21	449490	WASHER

Home Page

classicmachinery.net

https://truckmanualshub.com/

Track Chains and Grousers

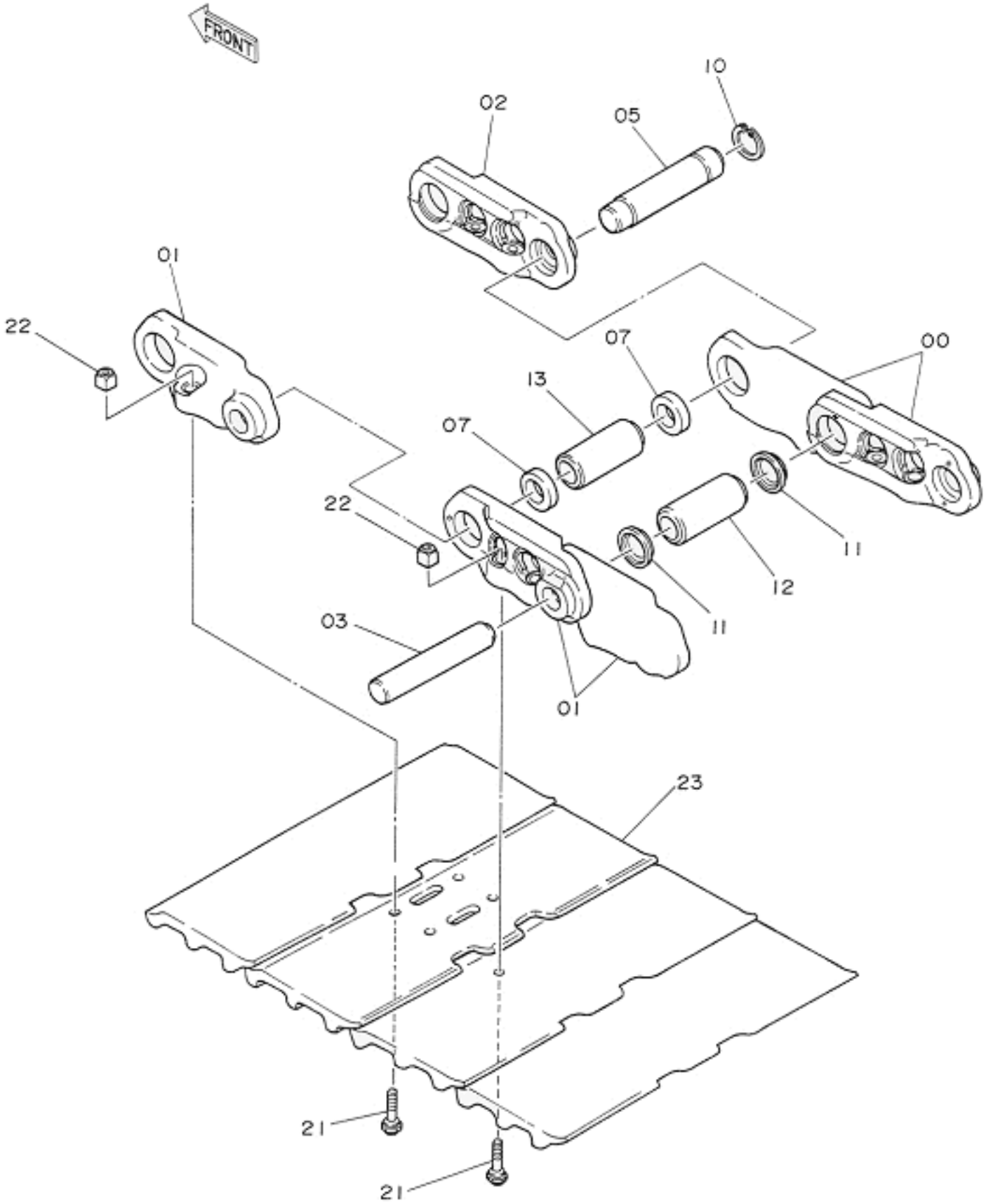

classicmachinery.net
https://truckmanualshub.com/

ITEM	PART NO.	PART NAME
	9067033	TRACK-LINK ASS'Y
00-13	9067034	TRACK-LINK ASS'Y
00	1010119	TRACK-LINK;B
01	1010120	TRACK-LINK;B
02	4187522	TRACK-LINK;M
03	4145301	PIN
05	4187523	PIN;MASTER
07	4187553	COLLAR
10	4192665	RING
11	4192571	SEAL
12	4158239	BUSHING
13	4158240	BUSHING;MASTER
21	4157879	BOLT:SHOE
22	4122664	NUT
23	2019235	SHOE;GROUSER

Home Page

classicmachinery.net

https://truckmanualshub.com/

Upper Roller

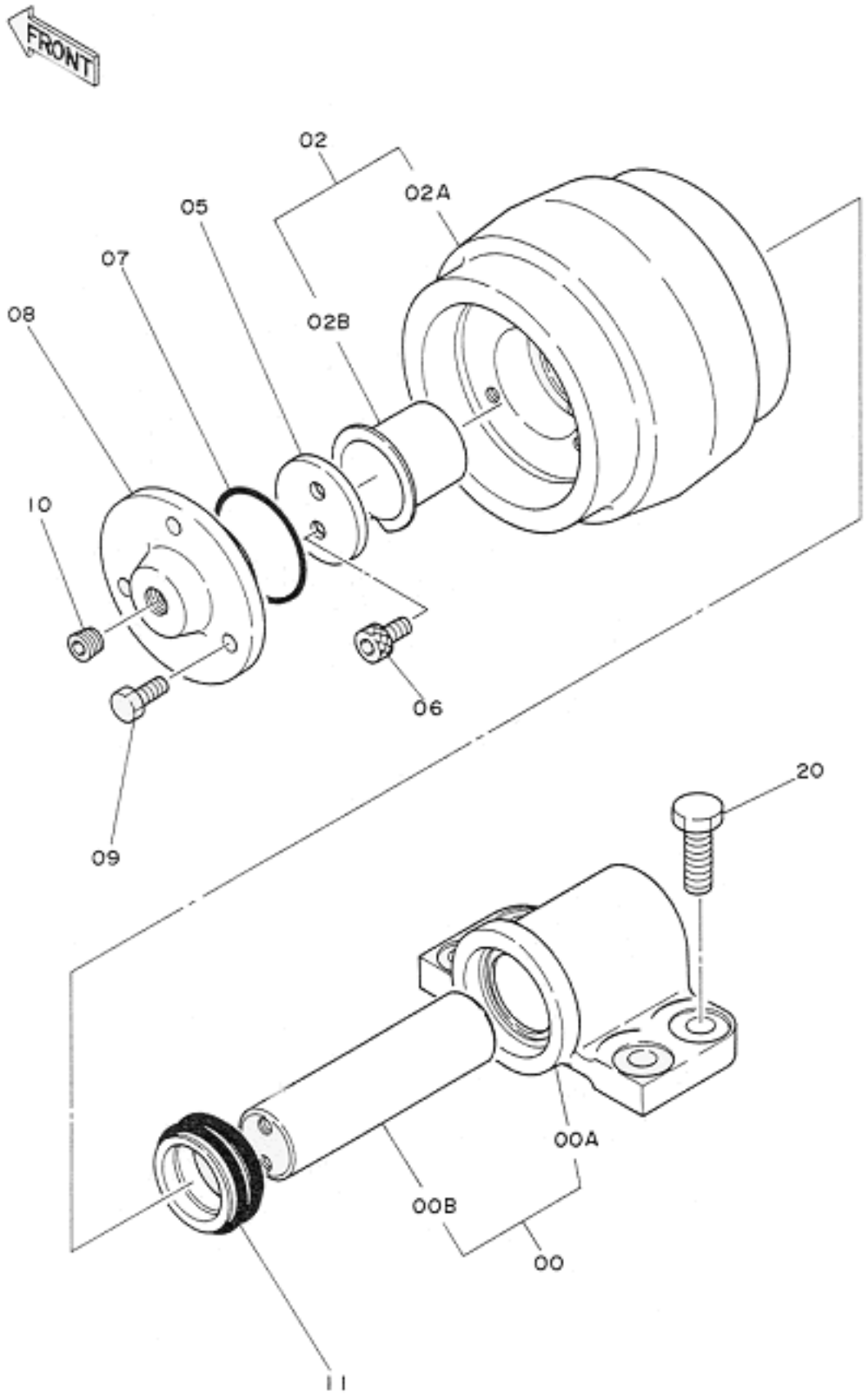

ITEM	PART NO.	PART NAME

classicmachinery.net

00-11	9061288	ROLLER: UPPER ASS'Y
00	9074472	BRACKET ASS'Y
00A	+++++++	BRACKET
00B	+++++++	SHAFT
02	9074430	ROLLER(WITH BUSHING)
02A	3032326	ROLLER
02B	4173904	BUSHING
05	4173905	WASHER
06	M340814	BOLT; SOCKET
07	A810050	O-RING
08	4173903	COVER
09	M220818	BOLT
10	94-2011	PLUG
11	4122070	SEAL; GROUP
20	J901235	BOLT

Home Page

classicmachinery.net

https://truckmanualshub.com/

Front Idlers

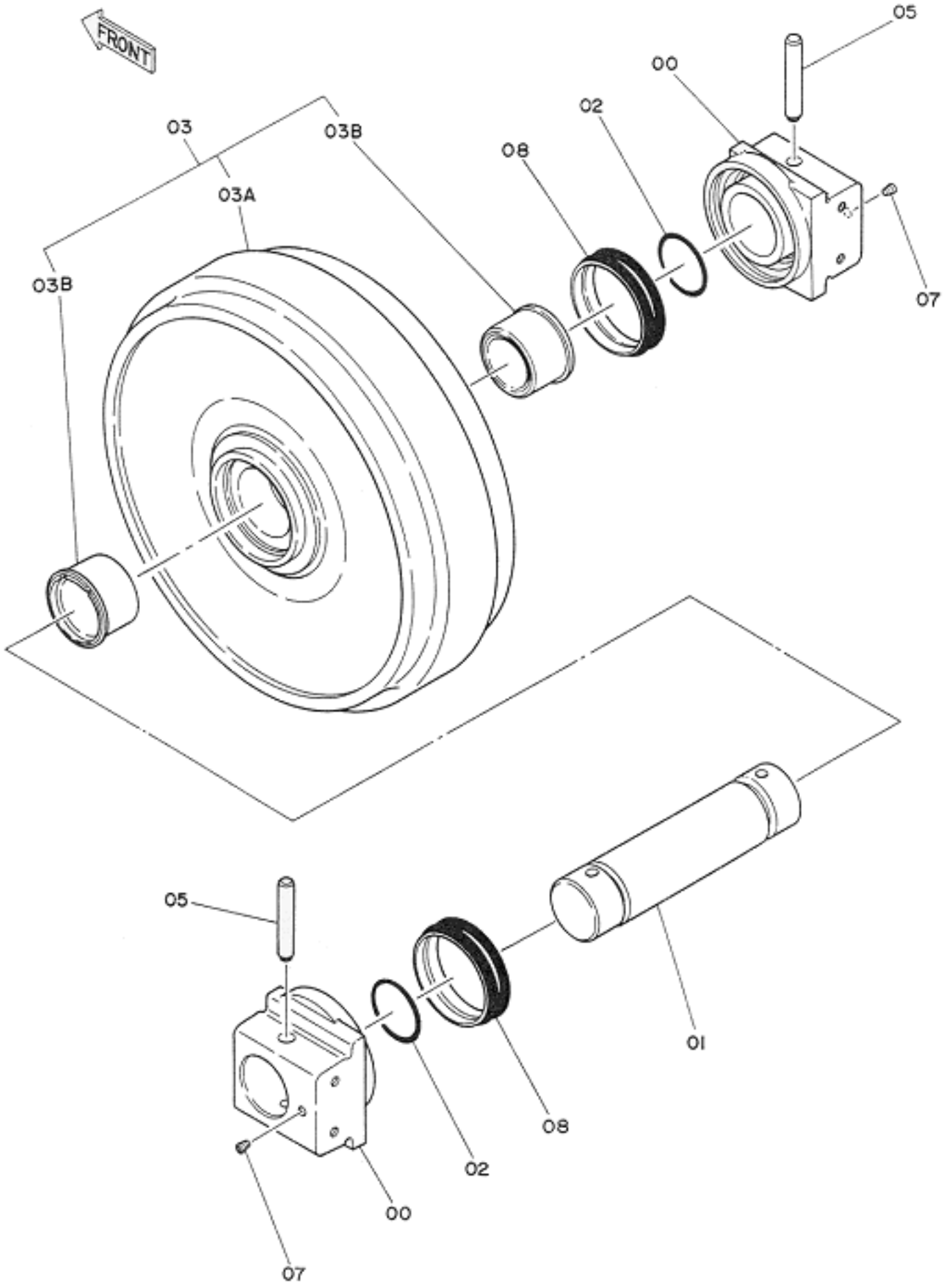

classicmachinery.net



https://truckmanualshub.com/

ITEM	PART NO.	PART NAME
	9068144	IDLER ASS'Y
00	2022827	BRG.
01	3035618	AXLE
02	A810060	O-RING
03	9074364	IDLER(WITH BUSHING)
03A	7017054	IDLER
03B	3035617	BUSHING
05	4126209	PIN
07	94-2011	PLUG
08	4153468	SEAL; GROUP

Home Page

classicmachinery.net

https://truckmanualshub.com/

Recoil Spring

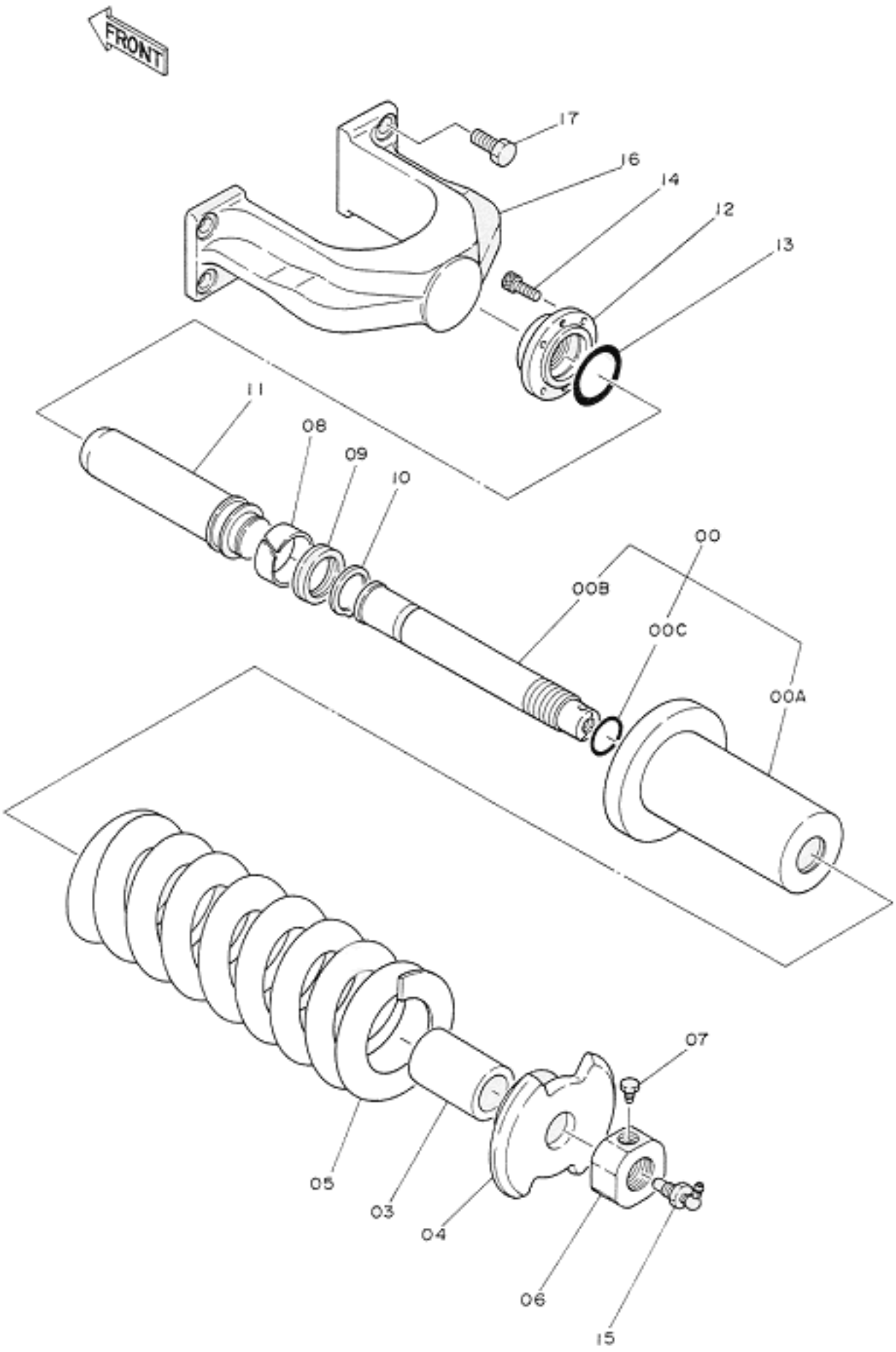

classicmachinery.net
https://truckmanualshub.com/

>
>

ITEM	PART NO.	PART NAME
	9066616	ADJUSTER ASS'Y
00	9074447	CYL. ASS'Y
00A	3034933	CYL.
00B	3034939	ROD
00C	992444	O-RING
03	4186446	SPACER
04	4186443	WASHER
05	3034938	SPRING
06	4186445	NUT
07	4186691	BOLT
08	4182361	RING; WEAR
09	4179303	PACKING; U-RING
10	959499	RING; RETAINING
11	3034935	ROD; PISTON
12	3034936	FLANGE
13	A811055	O-RING
14	M340820	BOLT
15	9061173	VALVE
16	1010168	YOKE
17	J901635	BOLT

Home Page

classicmachinery.net

https://truckmanualshub.com/

Track Adjusters

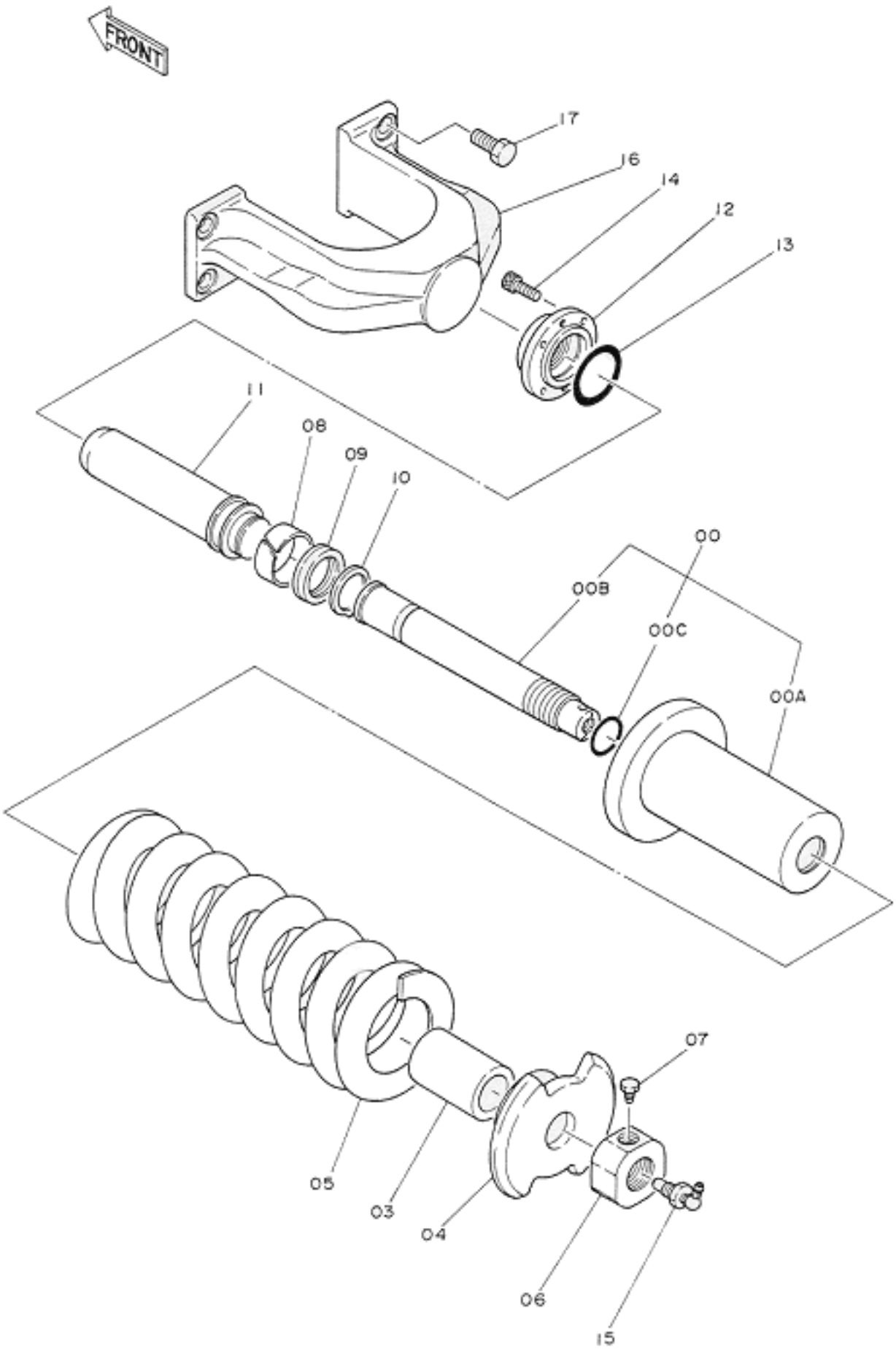

classicmachinery.net

https://truckmanualshub.com/

ITEM	PART NO.	PART NAME
	9066616	ADJUSTER ASS'Y
00	9074447	CYL. ASS'Y
00A	3034933	CYL.
00B	3034939	ROD
00C	992444	O-RING
03	4186446	SPACER
04	4186443	WASHER
05	3034938	SPRING
06	4186445	NUT
07	4186691	BOLT
08	4182361	RING; WEAR
09	4179303	PACKING; U-RING
10	959499	RING; RETAINING
11	3034935	ROD; PISTON
12	3034936	FLANGE
13	A811055	O-RING
14	M340820	BOLT
15	9061173	VALVE
16	1010168	YOKE
17	J901635	BOLT

Home Page

classicmachinery.net

Bottom Rollers

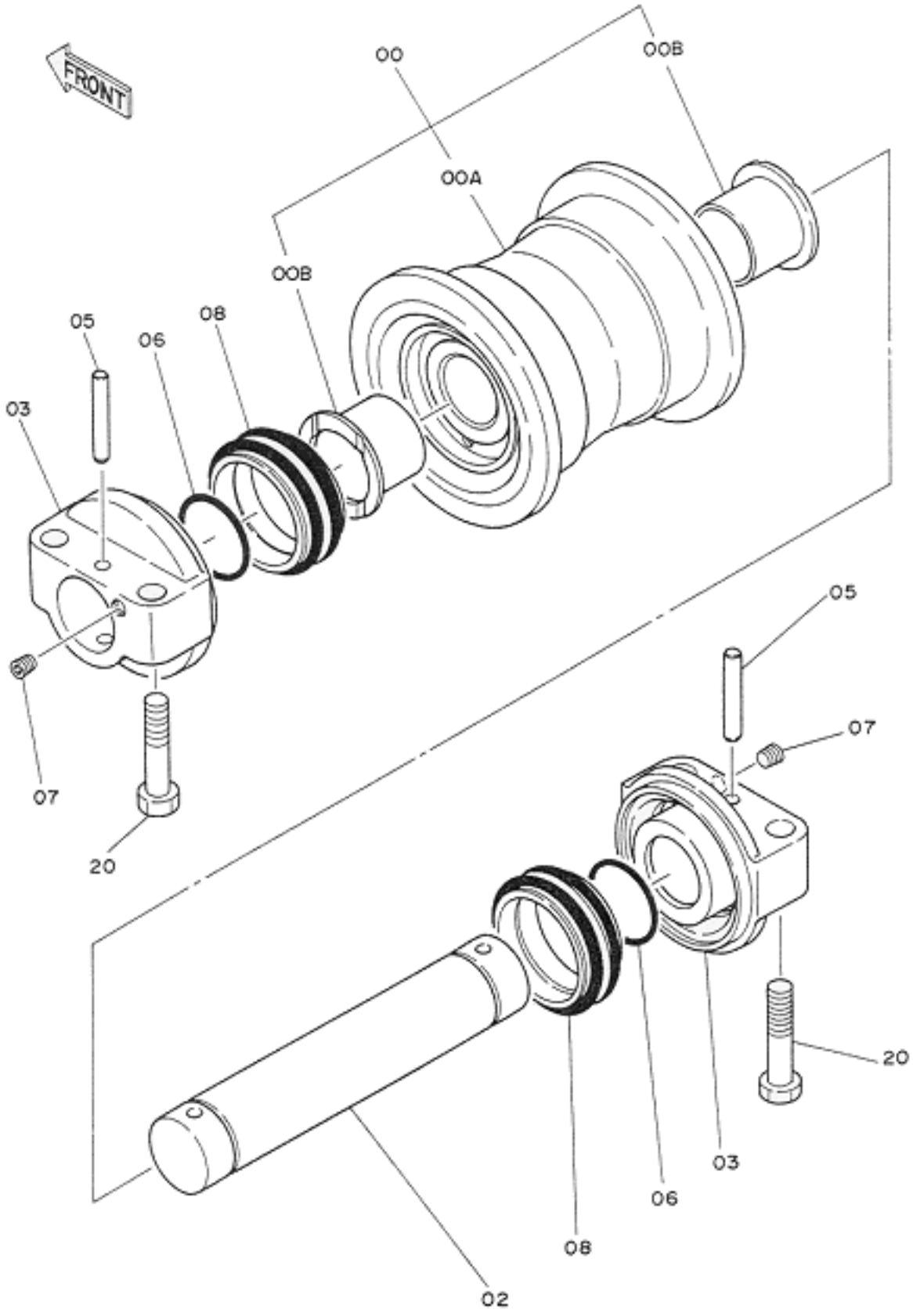

ITEM	PART NO	PART NAME

classicmachinery.net
https://truckmanualshub.com/

00-08	9066508	ROLLER; LOWER ASS'Y
00	9074436	ROLLER (WITH BUSHING)
00A	8034918	ROLLER
00B	3033926	BUSHING
02	3022832	AXLE
03	2022367	COLLAR
05	4134874	PIN
06	A810045	O-RING
07	94-2011	PLUG
08	4060225	SEAL;GROUP
08	4176824	SEAL;GROUP
20	J931670	BOLT
20	4227029	BOLT

Home Page

classicmachinery.net

Track Motors

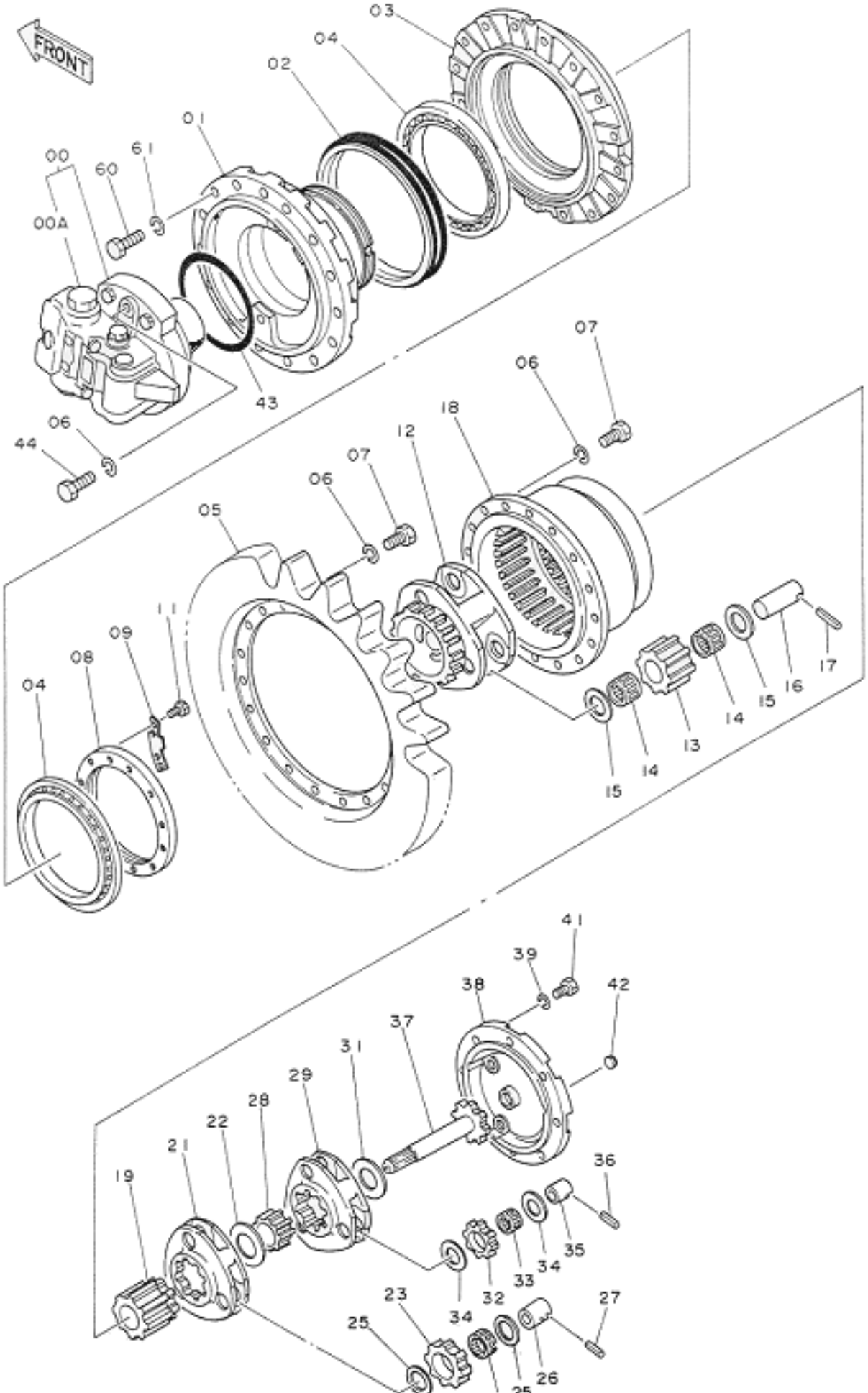

classicmachinery.net

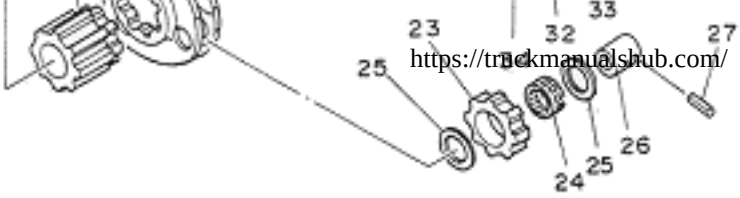

https://truckmanualshub.com/

>

ITEM	PART NO	PART NAME
00-44	9065935	TRAVEL DEVICE ASS'Y
00-44	9080069	TRAVEL DEVICE ASS'Y
00	9065907	MOTOR; OIL
00	9080113	MOTOR; OIL
00A	9065906	VALVE; BRAKE
00A	9080511	VALVE; BRAKE
01	1009905	HOUSING
02	4179741	SEAL; GROUP
03	1009401	FLANGE
04	4178201	BRG.; ROL.
05	1010325	SPROCKET
06	A590916	WASHER; SPRING
07	J931640	BOLT
08	3033234	NUT
09	4178862	PLATE; LOCK
11	J901020	BOLT
12	1009808	CARRIER
13	3034195	GEAR; PLANETARY
14	4183108	BRG.; NEEDLE
15	4196487	PLATE; THRUST
16	4183107	PIN
17	4144020	PIN; SPRING
18	1010014	GEAR; RING
19	3033236	GEAR; SUN
21	2021634	CARRIER
22	4187683	SPACER
23	3033238	GEAR; PLANETARY
24	4113606	BRG.; NEEDLE
25	4196489	PLATE; THRUST
26	4178203	PIN
27	4173093	PIN; SPRING

classicmachinery.net
https://truckmanualshub.com/

28	3033235	GEAR; SUN
29	2021633	CARRIER
29	2022129	CARRIER
31	4178208	SPACER
32	3033237	GEAR; PLANETARY
32	3034194	GEAR; PLANETARY
33	4177007	BRG.; NEEDLE
34	4192910	PLATE; THRUST
35	4178202	PIN
36	4169566	PIN; SPRING
37	2022131	SHAFT; PROP.
37	2022128	SHAFT; PROP.
38	2022682	COVER
38	2025960	COVER
39	A590912	WASHER; SPRING
41	M221228	BOLT
42	94-2013	PLUG
42	94-2013	PLUG
43	4092970	O-RING
44	J931670	BOLT
60	J931670	BOLT
61	A590916	WASHER;SPRING

Home Page

classicmachinery.net

https://truckmanualshub.com/

Final Drives

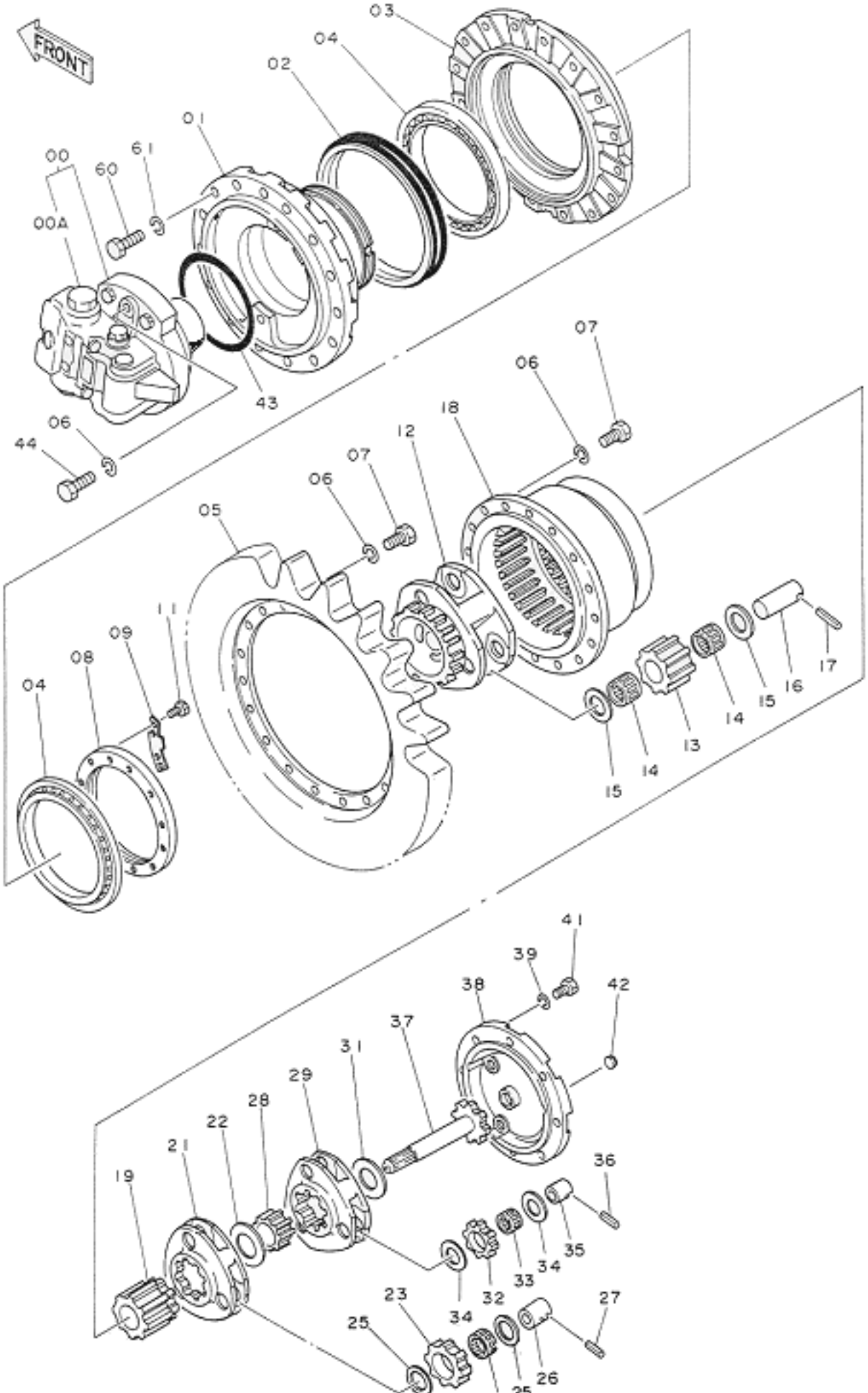

classicmachinery.net

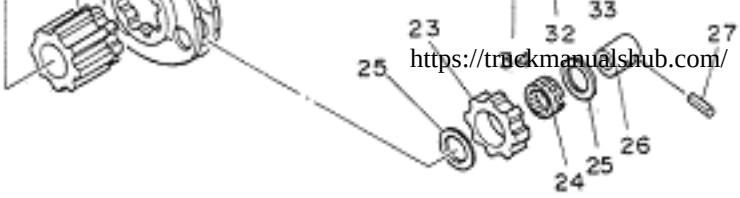

https://truckmanualshub.com/

ITEM	PART NO	PART NAME
00-44	9065935	TRAVEL DEVICE ASS'Y
00-44	9080069	TRAVEL DEVICE ASS'Y
00	9065907	MOTOR; OIL
00	9080113	MOTOR; OIL
00A	9065906	VALVE; BRAKE
00A	9080511	VALVE; BRAKE
01	1009905	HOUSING
02	4179741	SEAL; GROUP
03	1009401	FLANGE
04	4178201	BRG.; ROL.
05	1010325	SPROCKET
06	A590916	WASHER; SPRING
07	J931640	BOLT
08	3033234	NUT
09	4178862	PLATE; LOCK
11	J901020	BOLT
12	1009808	CARRIER
13	3034195	GEAR; PLANETARY
14	4183108	BRG.; NEEDLE
15	4196487	PLATE; THRUST
16	4183107	PIN
17	4144020	PIN; SPRING
18	1010014	GEAR; RING
19	3033236	GEAR; SUN
21	2021634	CARRIER
22	4187683	SPACER
23	3033238	GEAR; PLANETARY
24	4113606	BRG.; NEEDLE
25	4196489	PLATE; THRUST
26	4178203	PIN
27	4173093	PIN; SPRING
28	3033235	GEAR; SUN

classicmachinery.net
https://truckmanualshub.com/

29	2021633	CARRIER
29	2022129	CARRIER
31	4178208	SPACER
32	3033237	GEAR; PLANETARY
32	3034194	GEAR; PLANETARY
33	4177007	BRG.; NEEDLE
34	4192910	PLATE; THRUST
35	4178202	PIN
36	4169566	PIN; SPRING
37	2022131	SHAFT; PROP.
37	2022128	SHAFT; PROP.
38	2022682	COVER
38	2025960	COVER
39	A590912	WASHER; SPRING
41	M221228	BOLT
42	94-2013	PLUG
42	94-2013	PLUG
43	4092970	O-RING
44	J931670	BOLT
60	J931670	BOLT
61	A590916	WASHER;SPRING

Home Page