RUTHZIL TRATOR COMERCIAL DE PEÇAS LTDA 11 97083-6812 ROLANDO CITRANGULO

FB80.3 FB100.3

Catálogo de peças de reposição - Catalogo de piezas de repuesto

ATENÇÃO Leia atentamente o Manual de Operação e Manutenção antes de colocar a máquina em funcionamento, ou efetuar qualquer tipo de intervenção na máquina.

ATENCION Lea atentamete el manual de empleo y cuidado antes de poner manos a las operaciones de puesta en marcha, manejo, mantenimiento, repostado de conbustible y otras que fuere.

É proibida a reprodução gráfica e eletrônica do texto e das figuras.
Se prohibe la imitación del o copia del texto y de los grabados.

FIATALLIS LATINO AMERICANA LTDA - “TECNOLOGIA GANHANDO TERRENO” - PUBLICAÇÕES TÉCNICAS
Av. Gal. David Sarnoff, 2237 - 32.210-900 - Contagem - Minas Gerais - BR
Depto. de Peças de Reposição – Tel.: 0055 31 329 3380 - Fax: 0055 31 329 3386

1st issue - 1ª Edizione - 1ere Edition - 1e Ausgabe - 1ª Edicion - 1ª Edição - VI / 2001 FA 75314102

GENERAL CONTEST

INSTRUCTIONS FOR ORDERING SPARE PARTS ..... PAGE 3

ORDERING RULES ..... PAGE 4

IDENTIFICATIONS PLATES ..... PAGE 5

NOTES FOR CONSULTING ..... PAGE 6-7

MAIN SECTIONS ..... PAGE 16

SECTION LIST ..... PAGE 17-28

MAINTENANCE PARTS ..... PAGE 29

GROUP “ASSEMBLY” ..... PAGE 30

OPTIONAL EQUIPMENT ..... PAGE 31

The parts from page 32 are inserted at the end of the Catalogue.

NUMBER INDEX ..... PAGE 1-34

INDICE GENERALE

ISTRUZIONI PER ORDINARE I RICAMBI ..... PAG. 3

NORME PER LE ORDINAZIONI ..... PAG. 4

TARGHETTE DI IDENTIFICAZIONE ..... PAG. 5

AVVERTENZE PER LA CONSUL TAZIONE ..... PAG. 8-9

SEZIONI PRINCIPALI ..... PAG. 16

ELENCO SEZIONI ..... PAG. 17-28

PARTICOLARI PER LA MANUTENZIONE ..... PAG. 29

COMPLESSIVO GRUPPI ..... PAG. 30

ELENCO DELLE VARIANTI ..... PAG. 31

Le parti da pag. 32 sono inserite al fondo del Catalogo.

INDICE NUMERICO ..... PAG. 1-34

INDEX GENERAL

INSTRUCTIONS POUR LA COMMANDE DES P.D.R. ..... PAGE. 3

NORMAS POUR LES COMMANDES ..... PAGE 4

PLAQUES D’IDENTIFICATION ..... PAGE 5

REGLES POUR LA CONSULTATION ..... PAGE 10-11

SECTIONS PRINCIPALES ..... PAGE 16

LISTE DES SECTIONS ..... PAGE 17-28

PIECES POUR L’ENTRETIEN ..... PAGE 29

ENSEMBLE DES GROUPES ..... PAGE 30

LISTE DES VARIANTES ..... PAGE 31

Les parties de la page 32 se trouvent au fond du catalogue.

INDEX NUMERIQUE ..... PAGE 1-34

ALLGEMEINVERZEICHNIS

ANWEISUNGEN ZUR BESTELLUNG DER ERSATZTEILE ..... SEITE 3

BESTELLNORMEN ..... SEITE 4

KENNZEICHENSCHILD ..... SEITE 5

ANMERKUNGEN NASCHLAGEN ..... SEITE 12-13

HAUPTABSCHNITTE ..... SEITE 16

AUFLISTUNG DER HAUPTABSCHNITTE ..... SEITE 17-28

ERSATZTEILEN FUER DER WARTUNG ..... SEITE 29

SATZZUSAZEMMENSTELLUNG ..... SEITE 30

LISTE DER VARIANTEN ..... SEITE 31

Abschnitte von Seite Nr 32 am Katalogende

ZAHLENVERZEICHNIS ..... SEITE 1-34

INDICE GENERAL

COMO SE ENCARGAN LOS RECAMBIOS ..... PÁG. 3

NORMAS PARA ENCARGAR LAS PIEZAS ..... PÁG. 4A

PLAQUAS DE IDENTIFICACIÓN ..... PÁG. 5

ADVERTENCIAS PARAS LA CONSULTACIÓN ..... PÁG. 14-15

SECCIONES PRINCIPALES ..... PÁG. 16

LISTA DE LAS SECCIONES ..... PÁG. 17-28

REPUESTOS POR MANUTENCION ..... PÁG. 29

GRUPO DE LOS CONJUNTO ..... PÁG. 30

LISTA DE VARIANTES ..... PÁG. 31

Las piezas a partir de pág. 32 se colocan al final del Catálogo.

ÍNDICE NUMÉRICO ..... PÁG. 1-34

ÍNDICE GERAL

INSTRUÇÕES PARA O PEDIDO DE PEÇAS SOBRESSALENTES ..... PÁG. 3

NORMAS PARA O PEDIDO ..... PÁG. 4A

CHAPAS DE IDENTIFICAÇÃO ..... PÁG. 5

REGRAS PARA A CONSULTA ..... PÁG. 15A-15B

SECÇÕES PRINCIPAIS ..... PÁG. 16

LISTA DAS SECÇÕES ..... PÁG. 17-28

PEÇAS PARA A MANUTENÇÃO ..... PÁG. 29

CONJUNTO DOS GRUPOS ..... PÁG. 30

LISTA DAS VARIANTES ..... PÁG. 31

As secções a partir da pág. 32 estão colocadas no final do Catálogo.

ÍNDICE NUMÉRICO ..... PÁG. 1-34

ALGEMENE INHOUND

INSTRUKTIES VOOR HET BESTELTEN VAN ONDERDELEN ..... PAGE 3

BESTELNORMEN ..... PAGE 4A

IDENTIFICATIEPLAAT ..... PAGE 5

GEBRUIKSAANWIJZINGEN .. PAGES 15C TO 15D

INDELING VAN HOOFDSECTIES ..... PAGE 16

SECTIELIJST ..... PAGES 17 TO 28

AANBEVOLEN WISSELSTUKKEN ..... PAGE 29

GROEPSAMENSTELLING ..... PAGE 30

SPECIALE UITRUSTINGEN ..... PAGE 31

Página 32 en verder staan achteraan in het boek, na de respectievelijke groepen.

NUMMERISCHE INDEX VAN DE ONDERDELEN ..... PAGE 1-34

GENEREL INDHOLDSFORTEGNELSE

INSTRUKTIONER FOR BESTILLING AF RESERVEDELE ..... SIDE 3

BESTILLIGSREGLER ..... SIDE 4A

KENDNGSPLADER ..... SIDE 5

OPSAGSREGLER ..... SIDE 15E-15F

HOVEDAFSNIT ..... SIDE 16

LISTE OVER HOVEDAFSNIT ..... SIDE 17-28

RESERVEDELE FOR VEDLIGEHOLDELSE SIDE29

SAMLING AF AGGREGATER ..... SIDE 30

LISTE OVER VARIANTER ..... SIDE 31

Afsnittene fra side 32 findes bagest i kataloget.

NUMMERFORTEGNELSE ..... SIDE 1-34

INSTRUCTIONS FOR ORDERING SPARE PARTS

The order numbers indicated in this catalogue are updated to the date of publication. The models in production are continuously improved and it can therefone happen that the order numbers and illustrations of this catalogue are obsolete.
When ordering parts, check the order numbers in your Dealer's updated microfiches and in the general spare parts list.

ISTRUZIONI PER ORDINARE I RICAMBI

I numeri di ordinazione riportali su questo catalogo sono aggiomati alla data di uscita della pubblicazione. I modelli in produzione sono migliorati costantemente, quindi numeri di ordinazione e le illustrazioni di questo catalogo possono non essere piú attuali.
Al momento di ordinare i ricambi, verificare i numeri di ordinazione presso il Vostro Concessionario, che dispone dele microfiches aggiornate a dell'elenco generale dei ricambi.

INSTRUCTIONS POUR LA COMMANDE DES PEICES DE RECHANGE

Les références des pièces indiqués sur ce catalogue sont mis à jour à la date de sortie de la publication. Les modéles en production sont constamment ameliorés, par conséquent, les références des pièces et les illustrations de ce catalogue peuvent ne plus être à jour.
Au moment de passer la commande des pièces de rechange, contrôles les références des pièces auprès de votre Concessionaire, qui dispose des microfiches a jour et de la liste générale des piéces de rechange.

ANWEISUNGEN ZUR BESTELLUNG DER ERSATZTEILE

Die Bestellnummer in diesem Katalog werden bei jeder Herausgabe auf den laudenden Stand gebracht. Da die Maschinen ständig verbessert werden, könnten die Bestellnummber und die Abbildungen dieses Katalogs nicht mehr effektiv sein.
Bei der Bestellung von Ersatzteilen bitte überprüfen Sie die entsprechenden Bestellnummer mit Ihrem Händler, der über die gültigen Mikrokarten und die allgemeine Ersatzteilliste verfügt.

COMO SE ENCARGAN LOS RECAMBIOS

Los números para encargar las piezas reflejados en el presente catálogo están actualizados a la fecha de salida de la publicación. Los modelos en producción se mejoran de forma constante y, por lo tanto, los números para encargar las peizas y las ilustraciones del presente catálogo puede que ya no sean actuales.
En el momento de encargar los recambios, comprueben pues los números para encargar las piezas donde su Concesionario, el cual dispone de las microfichas acualizadas y la lista general de recambios.

INSTRUÇÕES PARA O PEDIDO DE PEÇAS SOBRESSALENTES

Os números de pedido indicados neste catálogo estão actualizados até a data de impressão desta publicação. Os modelos produzidos passam por um melhoramento constante; portanto, os números de pedido e as ilustrações deste catálogo podem não ser mais actuais.
No momento de pedir as peças sobressalentes, verifique os números de pedido com o seu Concessionário, o qual dispõe das microfiches actualizados e da lista geral das peças sobresssalentes.

INSTRUCTIES VOOR HET BESTELLEN VAN WISSELSTUKKEN

De onderdelennummers van deze uitgave zijn herzien en aangepast op datum van uitgave. De modellen in productie worden continu verbeted daarom kan het gebeuren dat sommige stuknummers gewijzigd of vervangen zijn.
Bij het bestellen van onderderdelen kontroleer uw nummers met de update microfiche van uw agent en met de algemene onderdelenlijst.

INSTRUKTIONER FOR BESTILLING AF RESERVEDELE

Bestillingsnumrene angivet i denne katalog er opdateret til udgivelsesdatoen. Da modellerne i produktion konstant forbedres, kan det ske, at bestillingsnumrene og billederne i denne katalog ikke længere er gældende.
Når De bestiller reservedele, er det derfor nødvendigt at check bestillingsnumrene hos Deres forthandler, som eribesiddelse af opdaterede mikrokort og af en generel oversigt over reservedele.

ORDERING RULES

THIS CATALOGUE IS DIVIDED INTO 12 MAIN SECTIONS WHICH CORRESPOND TO THE SPECIFIC TRACTOR ZONES.
EACH OF THESE SECTIONS IS REPRESENTED BY DETAILED ILLUSTRATIONS TO ENABLE THE IDENTIFICATION OF THE “SUBASSEMBLY”.
THE PARTS SUPPLIED AS SPARE PARTS ATE INDICATED INSIDE THE “SUBASSEMBLIES”.
HENCE: FOR THE CORRECT IDENTIFICATION OF THE SPARE PART, WE RECOMMEND TO:

- CONSULT THE ILLUSTRATION ON PAGE 16 TO IDENTIFY THE SECTION IN QUESTION;
- CONSULT THE SECTION IN QUESTION FROM PAGE 17 TO PAG 28 TO FIND THE SUBASSEMBLY TO WHICH THE SPARE PART REQUESTED BELONGS;
- CONSULT THE NUMBER INDEX ON PAGE 32 ON WHICH ALL SPARE PARTS ARE INDICATED;
- CONSULT THE IDENTIFICATION MARK, PAGE 36, TO IDENTIFY THE SUPPLIER OF PARTICULAR INTERNAL ASSEMBLIES (ONLY FOR CERTAIN PRODUCTS).

NORME PER LE ORDINAZIONI

QUESTO CATALOGO E’SUDDIVISO IN 12 SEZIONI PRINCIPAL, CHE CORRISPONDONDO A SPECIFICHE ZONE DEL TRATTORE. OGNUNA DI QUESTE SEZIONI E’RAPPRESENTAT A CON ILLUSTRAZIONI DETTAGLIATE CHE CONSENTONO L’IDENTIFICAZIONE DEL “SOTTOGRUPPO”. ALL’INTERNO DEL “SOTTOGRUPPI” SONO INDICATI I PARTICOLARI FORNITI COME RICAMBIO.
QUINDI: PER UNA CORRETTA RICERCA DELLE PARTI DI RICAMBIO SI CONSIGLIA DI:

- CONSULTARE L’ILLUSTRAZIONE A PAG. 16 PER INDIVIDUARE LA SEZIONE INTERESSATA.
- CONSULTARE LA SEZIONE INDICATA, DA PAG. 17 A PAG. 28 PER INDIVIDUARE IL SOTTOGRUPPO DI APPARTENENZA DEL RICAMBIO RICHIESTO.
- CONSULTARE L’INDICE NUMERICO, PAG. 32 IN CUI SONO ELENCATE TUTTLE LE PARTI DI RICAMBIO.
- CONSULTARE LA STAMPIGLIATURA DEL CODIGE DI IDENTIFICAZIONE, PAG. 36 PER INDIVIDUARE IL FORNITORE DI ALCUNI GRUPPI INTERNI. (Solo per alcune produzioni)

NORMES POUR LES COMMANDES

CE CATALOGUE EST DIVISÉ EN 12 SECTIONS PRINCIPALES QUI CORRESPONDENT À DES PARTIES SPÉCIFIQUES DU TRACTEUR, CHACUNE DE CES SECTIONS EST REPRÉSENTÉE PAR DES ILLUSTRATIONS DÉTAILLÉES QUI PERMETTENT L’IDENTIFICATION DU “SOUS-GROUPE”. DANS LES “SOUS-GROUPE” SONT INDIQUÉES LES PIÈCES FOURNIES COMME PIÉCES DE RECHANGE.
DONC: POUR UNE RECHERCHE CORRECTE DES PIÈCES DE RECHANGE, IL EST CONSEILLÉ DE:

- CONSULTER L’ILLUSTRATION PAGE 16 POUR TROUVER LA SECTION INTÉRESSÉE.
- CONSULTER LA SECTION INDIQUÉE DE LA PAGE 17 À LA PAGE 28 POUR TROUVER LE SOUS-GROUPE AUQUEL LA PIÈCE DE RECHANGE DEMANDÉE APPARTIENT.
- CONSULTER L’INDEX NUMÉRIQUE PAGE 32 AVEC LA LISTE DE TOUTES LES PIÈCES DE RECHANGE.
- CONSULTER L’ESTAMPILLAGE DU CODE D’IDENTIFICATION PAGE 36 POUR TROUVER LE FOURNISSEUR DE QUELQUES GROUPES INTÉRIEURS (SEULEMENT POUR CERTAINES PRODUCTIONS).

BESTELLNORMEN

DAS KATALOG HAT 12 HAUPT ABSCHNITTE, DIE GEWISSE SCHLEPPERTEILE ENTSPRECHEN. ALLE ABSCHNITTE SIND MIT DETAILLIERTEN ABBILDUNGEN AUSGESTATTET, DIE DIE IDENTIFIZIERUNG DER UNTERGRUPPERN ERMÖGLICHEN. BEI JEDER UNTERGRUPPE WERDEN DIE TEILE ANGEGEBEN, DIE ALS ERSATZTEIL AUSGELIEFERT WERDEN.
ZUR GENAUEN AUSWAHL DER ERSATZTEILE WIRD FOLGENDES EMPFOHLEN:

- IN DER ABBILDUNG AUF SEITE NR 16 ZUR BESTIMMUNG DES ENTSPRECHENDEN ABSCHNITTS NACHSCHLAGEN.
- ZUR BESTIMMUNG DER UNTERGRUPPE VOM VERLANGTEN ERSATZTEIL IM ANGEGEBENEN ABSCHNITT VON SEITE 17 AUF SEITE 28 NACHSCHLAGEN.
- IM ZAHLENVERZEICHNIS SEITE NR. 32 NACHSCHLAGEN, IN DEM ALLE ERSATZTEILE AUFGELISTET SIND.
- DAS IDENTIFIZIERUNGSCODE NACHSCHAUEN SEITE NR 36 ZUR FESTSTELLUNG DES LIEFERANTEN VON EINIGEN INNENAGGREGATEN (BETRIFFT AUSSCHLIESSLICH EINIGE VERSIONEN).

NORMAS PARA ENCARGAR LAS PIEZAS

ESTE CATÁLOGO SE DIVIDE EN 12 SECCIONES PRINCIPALES, LA CUALES CORRESPONDEN A ZONAS ESPECÍFICAS DEL TRACTOR. CADA UNA DE ESTAS SECCIONES SE REFLEJA CON ILUSTRACIONES DETALLADAS QUE PERMITEN LA INDIVIDUACIÓN DEL “SUB-GRUPO”. EN EL INTERIOR DE LOS “SUB-GRUPOS” SE INDICAN LOS DETALLES QUE SE SUMINISTRAN COMO RECAMBIOS.

POR LO TANTO: PARA UNA BÚSQUEDA CORRECTA DE LAS PIEZAS DE RECAMBIO SE ACONSEJA QUE:

– CONSULTEN LA ILUSTRACIÓN DE PÁG. 16 PARA INDIVIDUAR LA SECCIÓN INTERESADA;
– CONSULTEN LA SECCIÓN INDICADA, DE PÁG. 17 A PÁG. 28, PARA INDIVIDUAR EL SUBGRUPO AL QUE PERTENCE EL RECAMBO NECESARIO;
– CONSULTEN EL ÍNDICE NUMÉRICO, PÁG. 32, EN QUE SE DETALLAN TODAS LAS PIEZAS DE RECAMBIO;
– CONSULTEN LA MARCA DEL CÓDIGO DE IDENTIFICATIÓN, PÁG. 36 PARA INDIVIDUAR EL, PROVEEDOR DE ALGUNOS GRUPOS INTERIORES. (SÓLO PARA ALGUNOS PRODUCTOS).

NORMAS PARA O PEDIDO

ESTE CATÁLOGO ESTÁ SUBDIVIDIDO EM 12 SECÇÕES PRINCIPAIS, QUE CORRESPONDEM A ZONAS ESPEPECÍFICAS DO TRACTOR. CADA UMA DESTAS SECÇÕES É REPRESENTADA POR ILUSTRAÇÕES PORMENORIZADAS QUE PERMITEM A IDENTIFICAÇÃO DO “SUBGRUPO”. DENTRO DOS “SUBGRUPOS”, ESTÃO INDICADAS AS PEÇAS FORNECIDAS COMO SOBRESSALENTES.

LOGO, PARA IDENTIFICAR CORRECTAMENTE AS PEÇAS SOBRESSALENTES, ACONSELHA-SE A:

– CONSULTAR A ILUSTRAÇÃO NA PÁG. 16 PARA IDENTIFICAR A SECÇÃO INTERESSADA.
– CONSULTAR A SECÇÃO INDICADA, DA PÁG. 17 À PÁG. 28, PARA IDENTIFICAR O SUBGRUPO AO QUAL A PEÇA INTERESSADA PERTENCE.
– CONSULTAR O ÍNDICE NUMÉRICO, NA PÁG. 32, NO QUAL ESTÃO RELACIONADAS TODAS AS PEÇAS SOBRESSALENTES.
– CONSULTAR A GRAVAÇÃO DO CÓDIGO DE IDENTIFICAÇÃO, NA PÁG. 36, PARA IDENTIFICAR O FORNECEDOR DE ALGUNS GRUPOS INTERIORES (APENAS PARA ALGUNS PRODUTOS).

BESTELREGELS

DIT ONDERDELENBOEK IS VERDEELD IN 12 HOOFDSECTIES WELKE CORRESPONDEREN MET DE SPECIFIEKE TRAKTORZONES.
IEDERE SECTIE IS AANGEDUID IN GEDETAILEERDE ILLUSTRATIE DIE DE ONDERLIGGENEDE GROEPEN VERMELD.
DE ONDERLIGGENDE GROEPEN GEVEN DE WISSELSTUKKEN AAN.
DAAROM: VOOR DE CORRECTIE IDENTIFICATIE VAN EEN ONDERDEEL GA ALS VOLGT TE WERK;

– RAADPLEEG DE ILLUSTRATIE OP PAGINA 16.
– RAADPLEEG DE GEDETAILEERDE SECTIE TEKENINGEN VAN PAGINA 17 TOT 28 VAN DE SECTIE VAN UW KEUZE EN GA NAAR DE GEWENSTE GROEP VOOR HET VINDEN VAN UW ONDERDEEL.
– INDIEN NODIG RAADPLEEG DE NUMERISCHE INDEX, PAGINA 32, VOOR HET OPZOEKEN VAN EEN GEKENID STUKNUMMER.
– RAADPLEEG DE MERK IDENTIFICATIE, PAGINA 36, OM DE LEVERANCIER TE KENNEN VAN EVENTUEEL PARTIKULIERE SAMENGESTELDE ONDERDELEN. (ENKEL VOOR SPECIFIEKE GROEPEN).

BESTILLINGSREGLER

DENNE KATALOG ER OPDELT I 12 HOVEDAFSNIT, SOM SVARER TIL SPECIFIKKE ZONER PÅ TRAKTOREN. HVER AF DISSE AFSNIT ER FORSYNET MED DETALJEREDE BILLEDER, DER GØR DET MULIGT AT FIND DET PÅÆLDENDE “UNDERAGGREGAT”. INDENFOR HVERT “UNDERAGGREAT” ANGIVES DE DELE, DER LEVERS SOM RESERVEDELE.
FOR KORREKT IDENTIFICERING AF RESERVEDELE ANBEFALES DERFOR FØLGENDE:

– VED HJÆLP AF BILLEDER PÅ SIDE 16 FINDER MAN DEN PÅGÆLDENDE ZONE.
– MAN KONSUL TERER DER ANGIVNE HOVEDAFSNIT FRA SIDE 17 TIL SIDE 28 FOR AT FINDE DET UNDERAGGREGAT, DEN ØNSKEDE RESERVEDEL HØRER TIL.
– MAN SLÅR OP I NUMMERFORTEGNELSEN PÅ SIDE 32, I HVILKEN ALLE RESERVEDELE ER OPFØRT.
– VED HJÆLP AF KENDINGSKODEN PÅ SIDE 36 FINDER MAN NAVNET PÅ LEVERANDØREN AF VISSE INDRE AGGREGATER (KUN FOR VISSE PRODUKTIONER).

IDENTIFICATION PLATES

PLAQUES D'IDENTIFICATION

PLAQUAS DE IDENTIFICACION

IDENTIFICATIEPLATEN

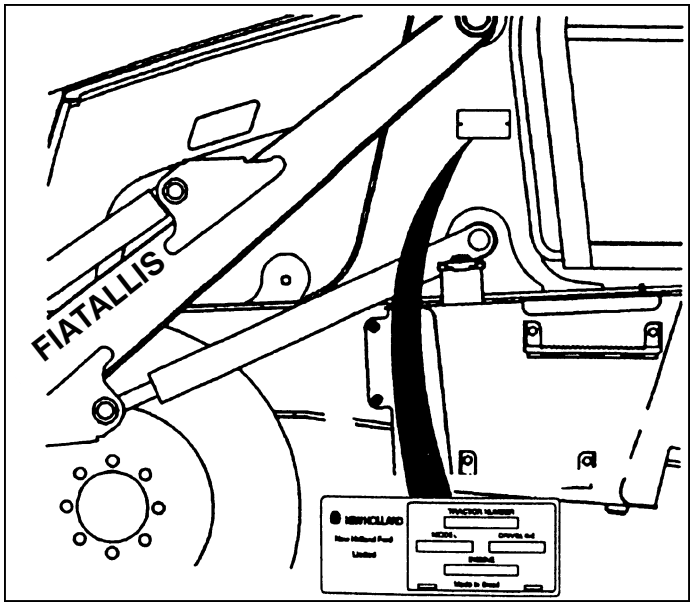

VEHICLE IDENTIFICATION
IDENTIFICAZIONE MODELLO
IDENTIFICATION MODELE
KENNZEICHEN MODELLS
IDENTIFICACION MODELO
IDENTIFICAÇÃO DO MODELO
MODELIDENTIFICATIE
MODELKENDINGSPLADE

TARGHETTE DI IDENTIFICAZIONE

KENNZEICHENSCHILD

CHAPAS DE IDENTIFICAÇÃO

DATAPLADER

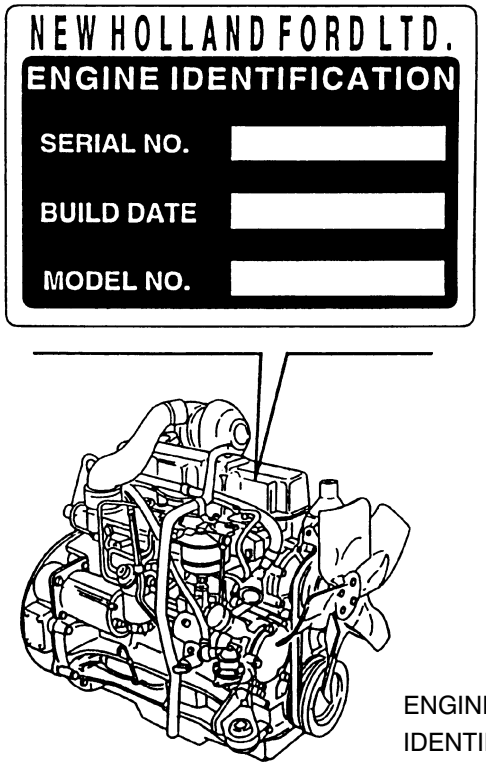

ENGINE IDENTIFICATION
IDENTIFICAZIONE MOTORE
IDENTIFICATION MOTEUR
KENNZEICHEN MOTOR
IDENTIFICACION MOTOR
IDENTIFICAÇÃO DO MOTOR
MOTORIDENTIFICATIE
MOTORKENDINGSPLADE

REGRAS PARA A CONSULTA

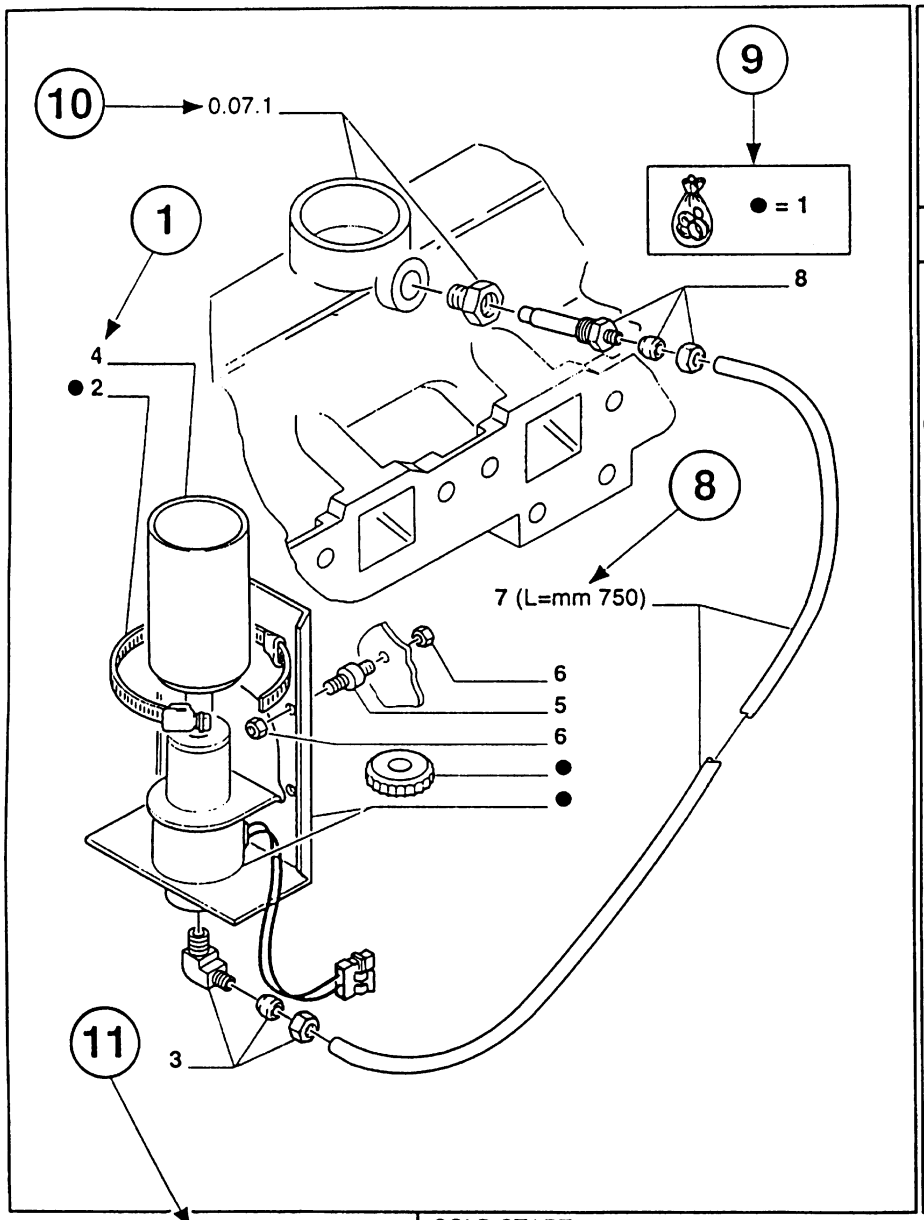

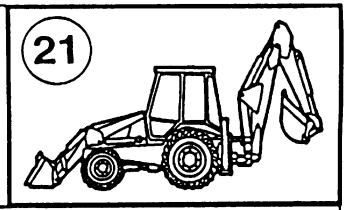

22

MOD	R	P/N. Imola	P/N. Brazil	Q	Descricão Denominacion	Description Descrizione	L.C.
	1	**5161189**		1	KIT JUEGO	KIT KIT	002K
	2	**4778118**		1	COLAR COLLAR	COLLAR COLLARE	180C
	3	**5146123**		1	CONEXÃO RACOR	FITTING RACCORDO	020R
C4010	4	**5151823**		1	RECIPIENTE CONTENEDOR	CONTAINER CONTENITORE	254C
D4010	4	**5159136**	**75201024**	1	RECIPIENTE CONTENEDOR	CONTAINER CONTENITORE	254C

5 1 2 3 4 17 19 17 17 18 12

2

P.L. : PROCURE LOCALLY

20

5 6 7 14 16

D4010 Chassis 701248	5151823 = 5159136 + (2) 5159139

MOD.

COLD START
AVVIAMENTO A FREDDO
DEMARRAGE A FROID
KALSTART
ARRANQUE ENFRJO

13

15

1.19.8

1/2 | 03/94

1 **R** - **Código de referência** do **Número de Pedido.**

2 **P/N. Imola - Número de Pedido da peça**. Corresponde ao mesmo número da peça utilizada nas máquinas fabricadas em Imola - Itália.

3 **P/N Brazil - Número de Pedido da peça**. Corresponde ao mesmo número da peça utilizada nas máquinas fabricadas no Brasil. Quando ambos os números forem indicados na mesma linha significa que são intercambiáveis, qualquer das duas peças poderá ser montadas.

4 **Q.** - **Quantidade** de total da peça, referida à página.
A quantidade pode ser substituída pelas indicações.
M = fornecido em metros. **AR** = quantidade necessária.

5 **MOD.** - Indicação de **Modificação**.
C 4010 = Peça valida **ATÉ** a modificação **4010.**
D 4010 = Peça valida **A PARTIR** da modificação **4010**.

6 **Actuação de modificação**. Número de motor ou de chassi a partir do qual a modificação tem início. Os números estão relacionados na chapa de identificação do modelo (ver pág. 5).
Por exemplo: **D 4010 Chassis 701248**; significa que a peça foi montada "**A PARTIR**" do número de chassi **701248**. Por conseguinte, as peças marcadas pela indicação **C 4010** foram aplicadas **ATÉ** o chassi de número **701247**.

7 Quando previsto, e indicada a **"Norma de Substituição"**.
Por exemplo: **5151823 = 5159136 + (2) 5159139**; significa que quando o stock da peça **5151823** esgotar, será fornecida a peça **5159136**, juntamente com **2** unidades da peça **5159139**.
Se ao lado da actuação não forem indicadas as "**Normas de Substituição**", significa que a peça **"antes de modificação" C4010** será sempre fornecida como peça subressalente, não sendo intercambiável com peça **"após a modificação" D 4010.**

8 Característica técnica referente à peça indicada.

9 Peça sobressalente fornecida juntamente com a máquina.

10 Peça representada na **Página** ou no **Grupo** indicado. Ou referência a **Variante** ou **Pormenores.**

11 **Sigla** comercial do modelo.

12 **Código** da **"Secção"**.

13 **Denominação** do **"Grupo"**.

14 **Código** do **"Grupo"** ou código da "**Vuriante**".

15 **Número de páginas** que compõem o "**Subgrupo**".

16 **Data** de impressão ou de actualização da página (mês - ano).

17 **Denominação** da peça.

18 **L.C.** - **Código do Léxico**, para a busca da denominação em **Alemão** e **Espanhol**. (ver pág. 33)

19 **Descrição adicional** da peça. Parc além das indicações específicas da peça, tais como dimensões ou emprego, podem ser utilizadas descrições comuns. (ver pág. 34)

20 **Notas** específicas referidas às ilustrações ou ao texto.

21 **Posição** do **"Grupo"** na máquina.

22 **Sentido de marcha** do tractor (ver pág. 34).

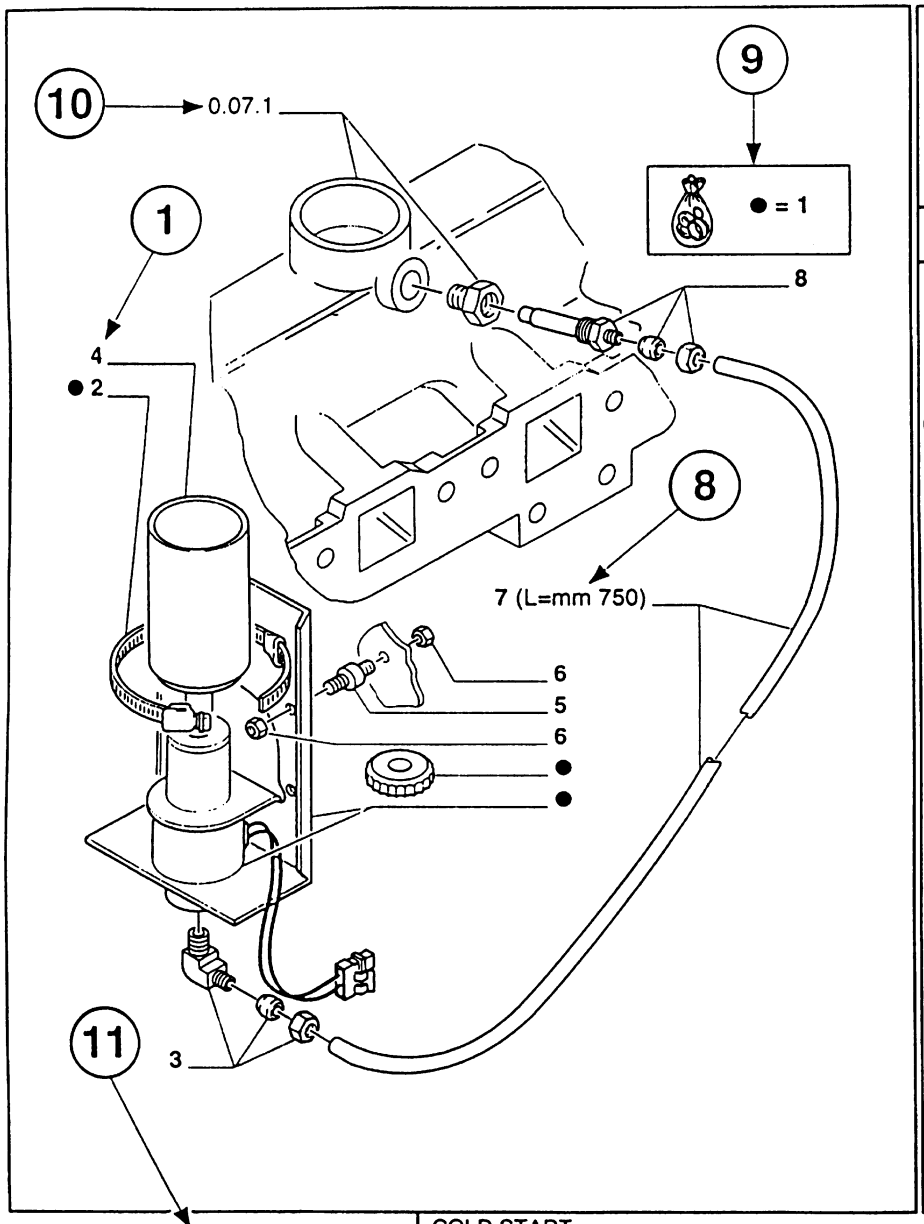

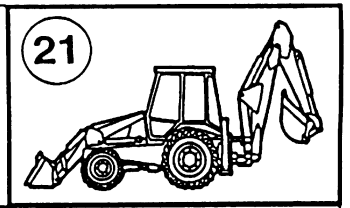

22

MOD	R	P/N. Imola	P/N. Brazil	Q	Descricão Denominacion	Description Descrizione	L.C.
	1	**5161189**		1	KIT JUEGO	KIT KIT	002K
	2	**4778118**		1	COLAR COLLAR	COLLAR COLLARE	180C
	3	**5146123**		1	CONEXÃO RACOR	FITTING RACCORDO	020R
C4010	4	**5151823**		1	RECIPIENTE CONTENEDOR	CONTAINER CONTENITORE	254C
D4010	4	**5159136**	**75201024**	1	RECIPIENTE CONTENEDOR	CONTAINER CONTENITORE	254C

5 1 2 3 4 17 19 17 17 18 12

2

P.L. : PROCURE LOCALLY

20

5 6 7 14 16

D4010 Chassis 701248	5151823 = 5159136 + (2) 5159139

MOD.

COLD START
AVVIAMENTO A FREDDO
DEMARRAGE A FROID
KALSTART
ARRANQUE ENFRJO

13

15

1.19.8

1/2 | 03/94

1 **R** - **Código** de **identificación** de la **pieza.**.

2 **P/N. Imola** - **Numero de pedido de la pieza.** Corresponde al mismo numero de la pieza utilizada en las máquinas fabricadas en Imola – Italia

3 **P/N Brazil - Numero de pedido de la pieza.** Corresponde al mismo numero de la pieza utilizada en las máquinas fabricadas en Brasil. Cuando los dos numeros sean indicados en la misma linea significa que son intercanbiables, qualquier de las dos piezas podera ser montada.

4 **Q.** - **Cantidad** global del detalle, referida a la página.
La cantidad puede estar substituída por las indicadores:
M = se suministra por metros. **A R** = cantidad a pedido.

5 **MOD**. - Indica **Modificación**.
C 4010 = Pieza válida **HASTA** la modificación **4010.**
D 4010 = Pieza válida **DESDE** la modificación **4010**.

6 **Actuación de modificación**. Número del motor o del chasis desde el cual se há iniciado la modificación. Los números están indicados en la placa de identificación del modelo. (Véase pág. 5)
Ej.: **D 4010 Chassis 701248**; significa que la pieza de há montado "**DESDE**" el número de chasis **701248**. Por consiguiente, las piezas marcadas con **C 4010,** se han aplicado **HASTA** el número del chasis **701247**.

7 Cuando oportuno, se indica la "**Norma de Repuesto**".
Ej.: **5151823 = 5159136 + (2) 5159139**; significa que cuando se agoten las existencias de la piezas **5151823** se suminisrtarán la **5159136**, junto a **2** piezas de la **5159139**.
Si al lado de **actuación** no se incluyen las "**Normas de Repuesto**", significa que la pieza **"premodificación" C4010,** se suministra siempre de repuesto, y que no puede intercambiarse con la pieza **"postmodificación" D 4010.**

8 Caracteristica técnica relativa a la pieza indicada..

9 Repuesto suministrado en **kit.**

10 Pieza representada en la **Página** o en el **Grupo** indicado. O bien, referencia a **Variantes** o **Piezas.**

11 **Sigla** comercial del modelo.

12 **Código** del la "**Seccion**".

13 **Denominación** del "**Grupo**".

14 **Código** del "**Grupo**" o **código** "**Variante**".

15 **Número** de **páginas** que componen el "Subgrupo".

16 **Fecha** de impresión o actualización de la página (mes - año).

17 Denominación de la pieza.

18 **L.C.** - **Código do Léxico**, para a busca la denominación en **Alemán** y en **Español**. (Véase pág. 33)

19 **Descripción adicional** de la pieza. Además de las indicaciones especificas de la pieza, como sus dimensiones o empleo, se pueden utilizar descripciones comunes. (Véase pág.34)

20 **Notas** especificas referidas a las ilustraciones o al texto.

21 **Posición** del **"Grupo"** en la máquina.

22 **Sentido de marcha** del tractor (Véase pág. 34).

NOTES FOR CATALOG CONSULTING

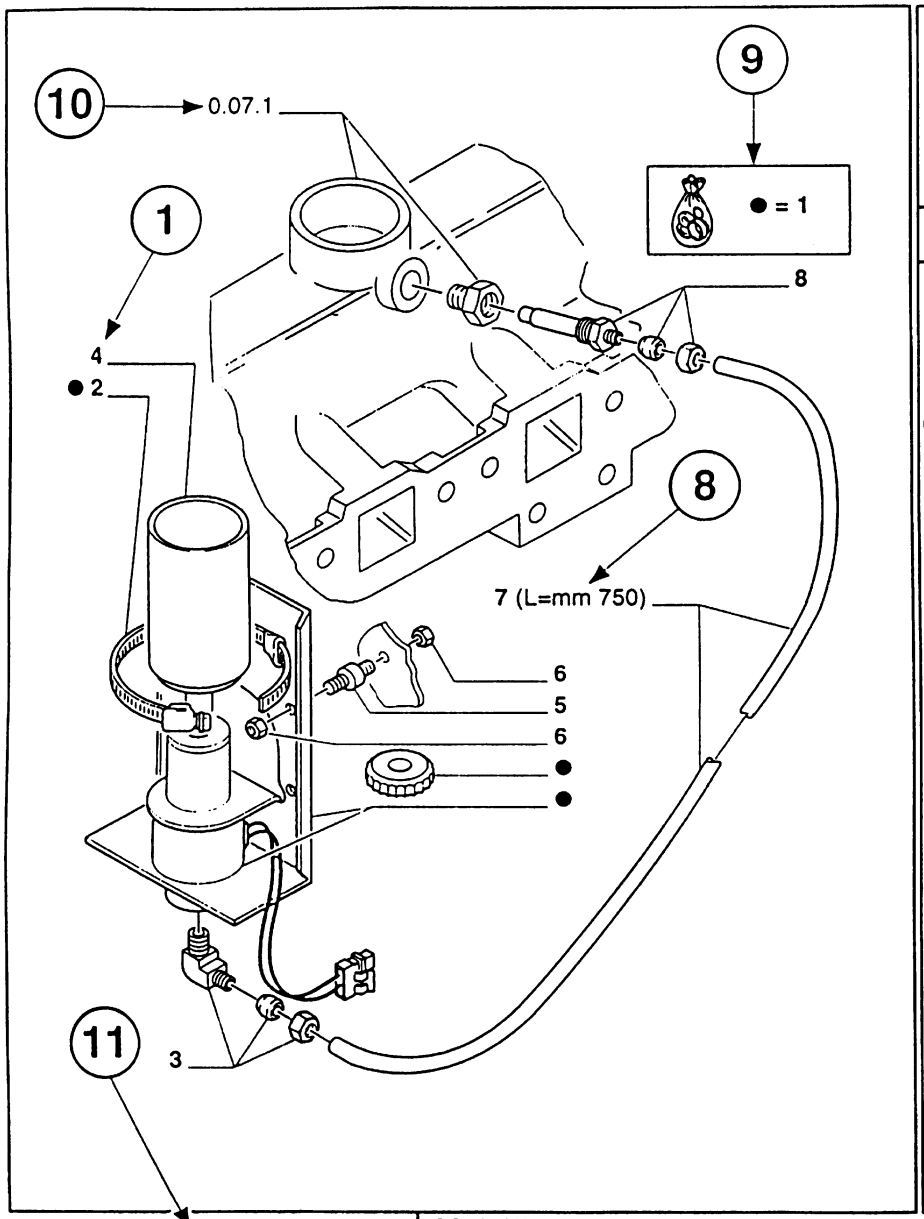

22

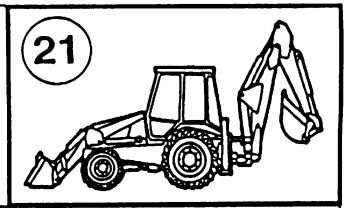

MOD	R	P/N. Imola	P/N. Brazil	Q	Descricão Denominacion	Description Descrizione	L.C.
	1	**5161189**		1	KIT JUEGO	KIT KIT	002K
	2	**4778118**		1	COLAR COLLAR	COLLAR COLLARE	180C
	3	**5146123**		1	CONEXÃO RACOR	FITTING RACCORDO	020R
C4010	4	**5151823**		1	RECIPIENTE CONTENEDOR	CONTAINER CONTENITORE	254C
D4010	4	**5159136**	**75201024**	1	RECIPIENTE CONTENEDOR	CONTAINER CONTENITORE	254C

5 1 2 3 4 17 19 17 17 18 12

2

P.L. : PROCURE LOCALLY

20

5 6 7 14 16

D4010 Chassis 701248	5151823 = 5159136 + (2) 5159139

MOD.

COLD START
AVVIAMENTO A FREDDO
DEMARRAGE A FROID
KALSTART
ARRANQUE ENFRJO

13

15

1.19.8

1/2 | 03/94

1 **R** - **Reference** - Code of **Part Number.**

2 **P/N. Imola - Part Number**. Correspond to the same part number of the part used on the machines made in Imola – Italy.

3 **P/N Brazil - Part Number.** Correspond to the same part number of the part used on the machines made in Brazil. When both numbers appears on the same line it means that they are interchangeable, any one may be mounted.

4 **Q.** - Total **Quantity** of the Part referred to in the page.
The quantily can be replaced by the following indications:
M = supplied in metres. **A R** = quantity as requested.

5 **MOD**. - **Modification**.
C 4010 = Part valid **UNTIL 4010** change**.**
D 4010 = Part valid **FROM 4010** change.

6 **Implementation of change**. Engine or chassis number from which the change starts. The numbers are indicated on the identification plate of the model (see page 5).
E.g.: **D 4010 Chassis 701248**; means that the part has been installed **"FROM"** chassis number **701248**. Consequently, the parts marked by **C 4010,** were installed **UP TO** classis number **701247**.

7 When requested. **"Substitution Rules"** is indicated.
E.g.: **5151823 = 5159136 + (2) 5159139**: means that when the stock of part **5151823** has been used up, **5159136** will be supplied together with **2 pcs** of part **5159139**.
If **"Substitution rule"** is not indicated beside the **Implementation of the change**, this means that the "premodification" part **C 4010** is always supplied as spare part, because it cannot be changed by "postmodifiation" part **D 4010.**

8 Technical specifications relating to the Part indicated.

9 Spare part supplied with the kit.

10 Part illustrated in the **Page** or in the **Assembly** indicated, or calls for **Variations** or **Details.**

11 Model **Trademark**.

12 **"Section" Code.**

13 **"Assembly" name**.

14 **"Assembly" code** or **"Accessory" code.**

15 **Number of pages** making up the "Subassembly".

16 **Date** of printing or updating of page (month-year).

17 Part **Description**.

18 **L.C.** - **Lexicon cole** for the identification of Part names in **German** and **Spanish** (see page 33)

19 **Further description** of the Part. Besides the specific indications of the Part such as size and use, common descriptions can be utilized (see page 34)

20 Specific **Notes** to the illustrations or to the text.

21 **Position** of the **"Assembly**" on the machine.

22 Tractor **running direction** (see page 34)

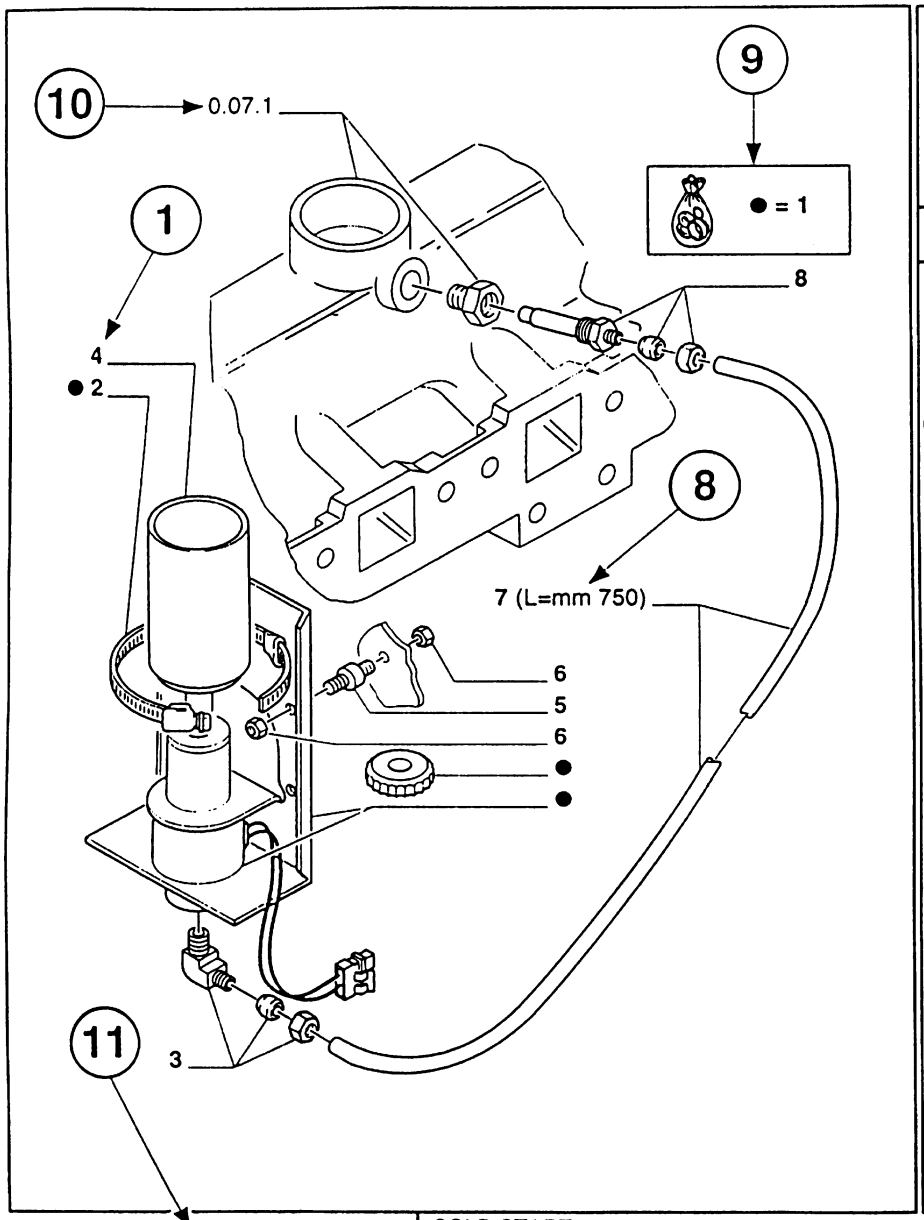

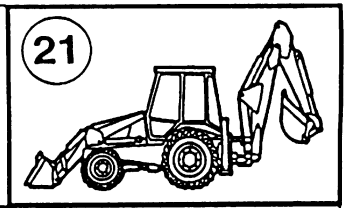

22

MOD	R	P/N. Imola	P/N. Brazil	Q	Descricão Denominacion	Description Descrizione	L.C.
	1	**5161189**		1	KIT JUEGO	KIT KIT	002K
	2	**4778118**		1	COLAR COLLAR	COLLAR COLLARE	180C
	3	**5146123**		1	CONEXÃO RACOR	FITTING RACCORDO	020R
C4010	4	**5151823**		1	RECIPIENTE CONTENEDOR	CONTAINER CONTENITORE	254C
D4010	4	**5159136**	**75201024**	1	RECIPIENTE CONTENEDOR	CONTAINER CONTENITORE	254C

5 1 2 3 4 17 19 17 17 18 12

2

P.L. : PROCURE LOCALLY

20

5 6 7 14 16

D4010 Chassis 701248	5151823 = 5159136 + (2) 5159139

MOD.

COLD START
AVVIAMENTO A FREDDO
DEMARRAGE A FROID
KALSTART
ARRANQUE ENFRJO

13

15

1.19.8

1/2 03/94

1 **R** - **Codice di riferimento** del **Numero di Ordinazione**.

2 **P/N. Imola - Numero di ordinazione del particolare.** Corrisponde al stesso numero del particolare usado nelle machine fatte in Imola - Italia.

3 **P/N Brazil - Numero di ordinazione del particolare.** Corrisponde al stesso numero del particolare usato nelle machine fatte in Brasile. Quando ambedue sono nella stessa linea significa che sono intercambiabile, qualcune delle due possono essere montale.

4 **Q.** - **Quantità** complessiva del particolare, riferita alta pagina.
La quantità può essere sostituita dalle indicazioni:
M = fornito a metri. **A R** = quantità a richiesta.

5 **MOD**. - Indicazione di **Modifica**..
C 4010 = Particolare valido **FINO** alta modifica **4010.**
D 4010 = Particolare valido **DALLA** modifica **4010**.

6 **Attuazione di modifica**. Numero di motore o di telaio da cui ha inizio la modifica. I numeri sono indicati sulla targhetta di identificazione del modelo (ved. pag. 5)
Es: **D 4010 Chassis 701248**; significa che il particolare è stato montado **"DAL"** numero di telaio **701248**. Di conseguenza i particolari contrassegnati con **C 4010,** sono stati applicati **FINO** al telaio numero **701247**.

7 Quando prevista, viene indicada la **"Norma di Ricambio".**
Es: **5151823 = 5159136 + (2) 5159139**; significa che ad esaurimento scorte del particolare **5151823** si fornirà il **5159136**, unitamente al **5159139** in quantità di **2**.
Se a lato dell'**attuazione**, non vengono riportate **"Norma di Ricambio"**, significa che il particolare **"premodifica" C 4010**, viene sempre fornito di ricambio, non essendo intercambiabile con quello **"postmodifica" D 4010**.

8 Caratteristica tecnica relativa al particolare indicato.

9 Ricambio fornito in **Corredo**.

10 Particolare raffigurato nella **Pagina** o nel **Gruppo** indicado. Oppure richiami di **Varianti** o di **Dettagli**.

11 **Sigla** commerciale del modelo.

12 **Codice** della **"Sezione".**

13 **Denominazione** del "**Gruppo**".

14 **Codice** del **"Gruppo"** o codice **"Variante**".

15 **Numero** di **pagine** componenti il "Sottogruppo".

16 **Data** di stampa o aggiornamento della pagina. (mese-anno).

17 **Denominazione** del particolare.

18 **L.C.** - **Codice Lessico**, per la ricerca della denominazione in **Tedesco** e **Spagnolo**. (ved. pag. 33)

19 **Descrizione aggiuntiva** del particolare. Oltre ad indicazioni specifiche del pezzo, quali dimensioni od impiego, possono essere utilizzate descrizioni comuni. (ved. pag. 34)

20 **Note** specifiche riferite alle illustrazioni od al testo.

21 **Posizione** del "**Gruppo**" nella macchina.

22 **Senso di marcia** del trattore. (ved. pag. 34)

MAINTENANCE PARTS	PARTICOLARI PER LA MANUTENZIONE	FILTRES	FILTRI
PIECES POUR L'ENTRETIEN	ERSATZTEILEN FUER DER WARTUNG	FILTRES	FILTREN
REPUESTOS POUR MANUTENCION	PEÇAS PARA A MANUTENÇÃO	FILTROS	FILTROS
ONDERDELEN DIE AAN ONDERHOUD ONDERHEVIG ZIJN	RESERVEDELE FOR VEDLIGEHOLDELSE	FILTERS	FILTRE

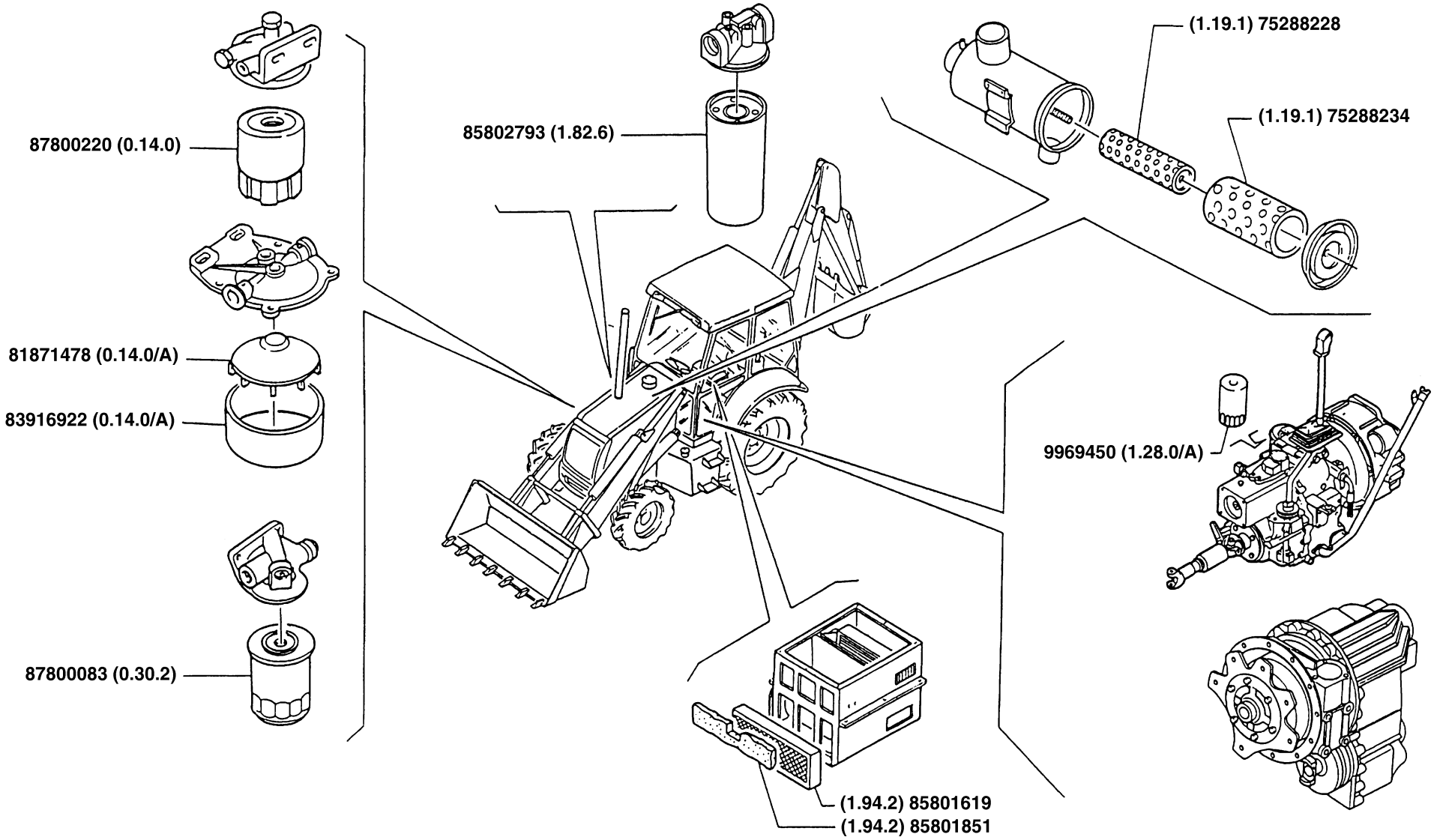

IDENTIFICATION PLATE AND SERIEL NUMBER
PLAQUETTE D'IDENTIFICATION ET NUMÉRO DE SÉRIE
PLACAS DE IDENTIFICATIÓN Y NÚMERO DE SERIE
IDENTIFICATIEPLATEN EN SERIENUMMER

TARGHETTE DI IDENTIFICAZIONE E NUMERO DI SERIE
TYPENSCHILD UND SERIENNUMMER
PLACAS DE IDENTIFICAÇÃO E NÚMERO DE SÉRIE
DATAPLADER OG SERIENNUMMER

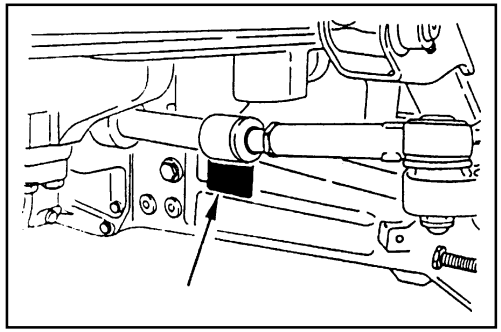

Front axle 4WD
Assale anteriore 4WD
Axe avant 4WD
Vorderachse 4WD
Eje delantero 4WD
Eixo dianteiro 4WD
Vooras 4WD
Foraksel 4WD

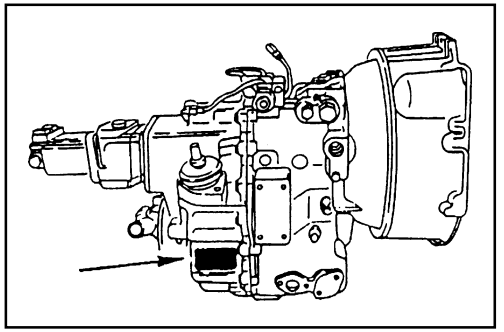

"Power shuttle" transmission
Trasmissione "Power shuttle"
Transmission "Power shuttle"
"Power shuttle" - antrieb
Transmision "Power shuttle"
Transmissão "Power shuttle"
"Power shuttle" Transmissie
"Power schuttle" Transmission

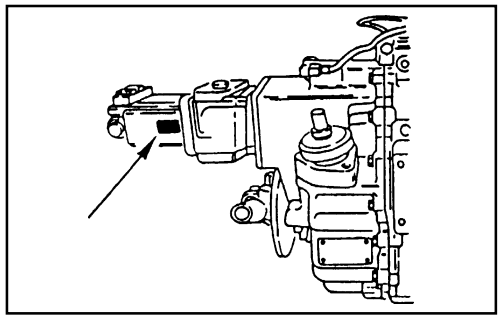

Hydraulic pump
Pompa idraulica
Pompe hydraulique
Hydraulische pumpe
Bomba hidráulica
Bomba hidráulica
Hydraulische pump
Hydraulikpumpe

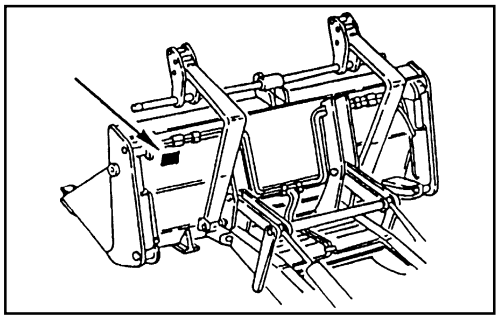

Buchet 4x1 and 6x1
Benna 4x1 e 6x1
Benne 4x1 et 6x1
Schaufel 4x1 und 6x1
Cucharon 4x1 y 6x1
Balde 4x1 e 6x1
Bak 4x1 en 6x1
Spand 4x1 og 6x1

MAIN SECTION

SECCIONES PRINCIPALES

SEZIONI PRINCIPALI

SECÇÕES PRINCIPAIS

SECTIONS PRINCIPALES

HOOFDSECTIES

HAUPTABSCHNITTE

HOVEDSEKTIONER

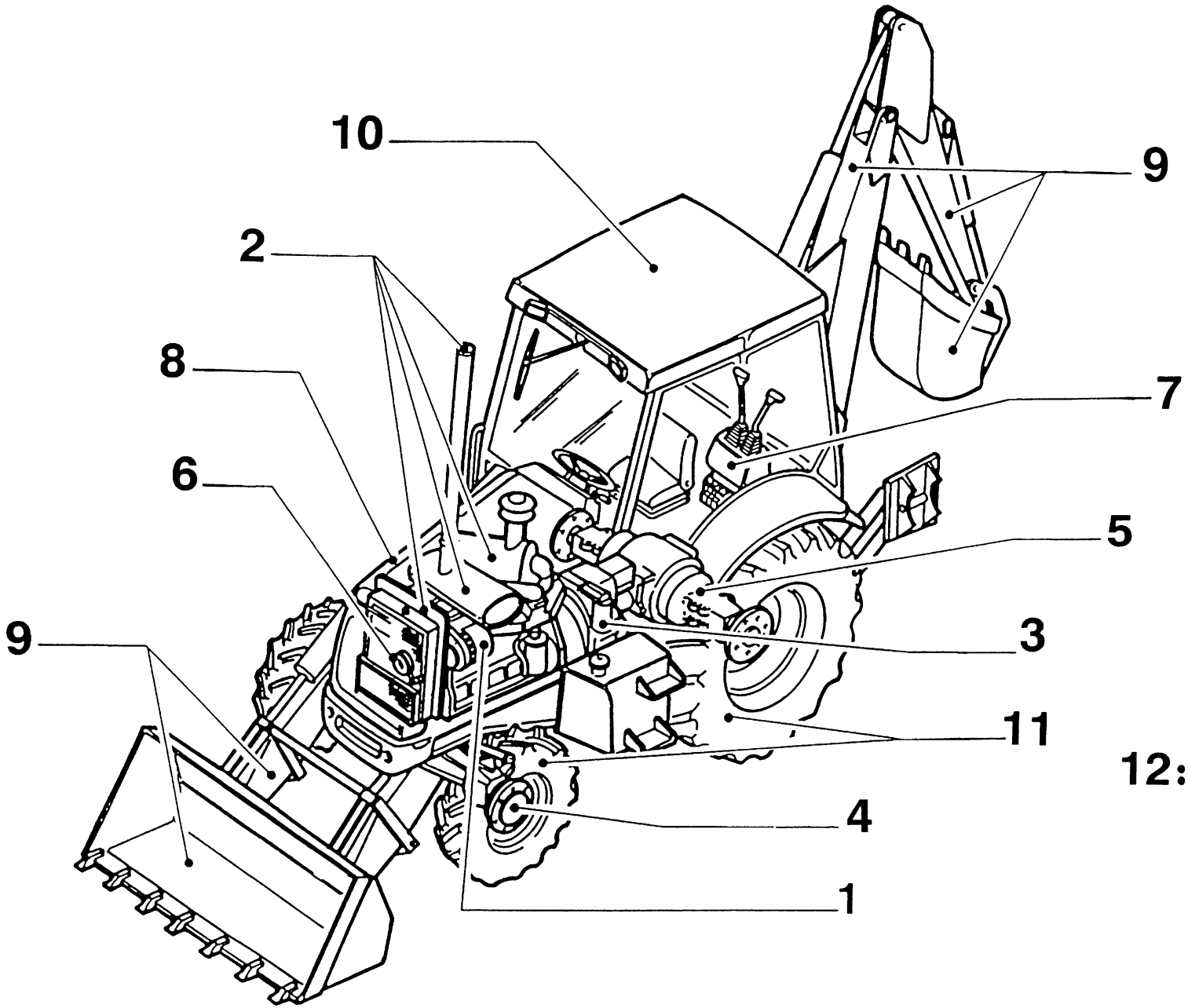

12: **VARIATION**
VARIANTI
VARIANTES
VARIANTEN
VARIANTES
VARIANTES
UITRUSTINGEN
VARIANTER

ENGINE

MOTOR

MOTORE

MOTOR

MOTEUR

MOTOR

MOTOR

MOTOR

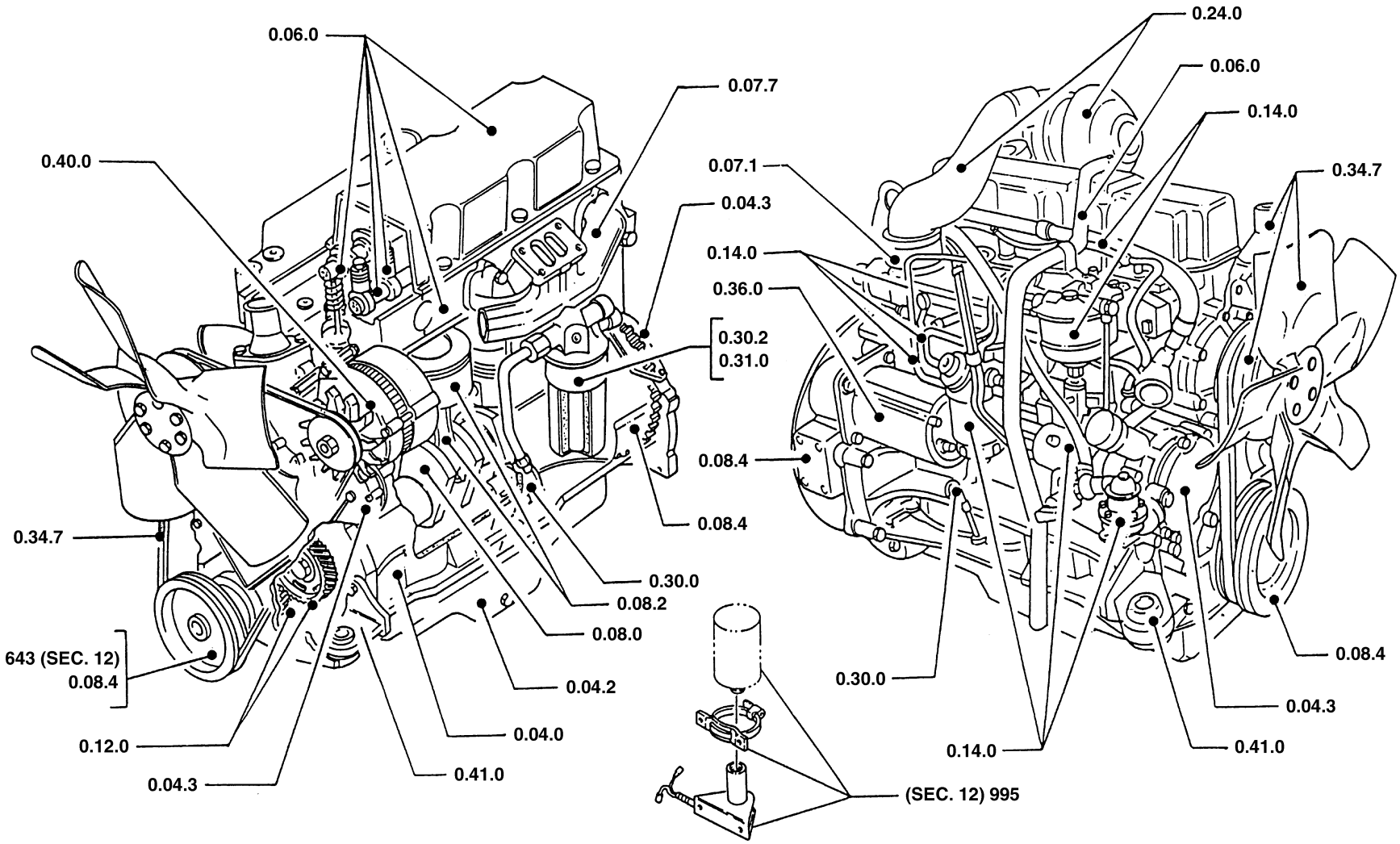

FUEL TANK - SILENCER
RADIATOR - AIR CLEANER

SERBATOIO COMBUST. - SILENZIATORE
RADIATORE - FILTRO ARIA

RESERVOIR A COMBUSTIBLE - SILENCIEUX
RADIATEUR - FILTRE A AIR

KRAFTSTOFFTANK - AUSPUFFTOPF
KUEHLER - LUFTFILTER

TANQUE COMBUSTIBLE - SILENCIADOR
RADIATOR - FILTRO DE AIRE

DEPÒSITO DE COMBUSTÍVEL - SEILENCIADOR
RADIADOR - FILTRO DE AR

BRANDSTOFTANK - GELUIDDEMPER
RADIATOR - LUCHTREINIGER

BRÆNDSTOFBEHOLDER - LIDDÆMPER
RADIATOR - LUFTFILTER

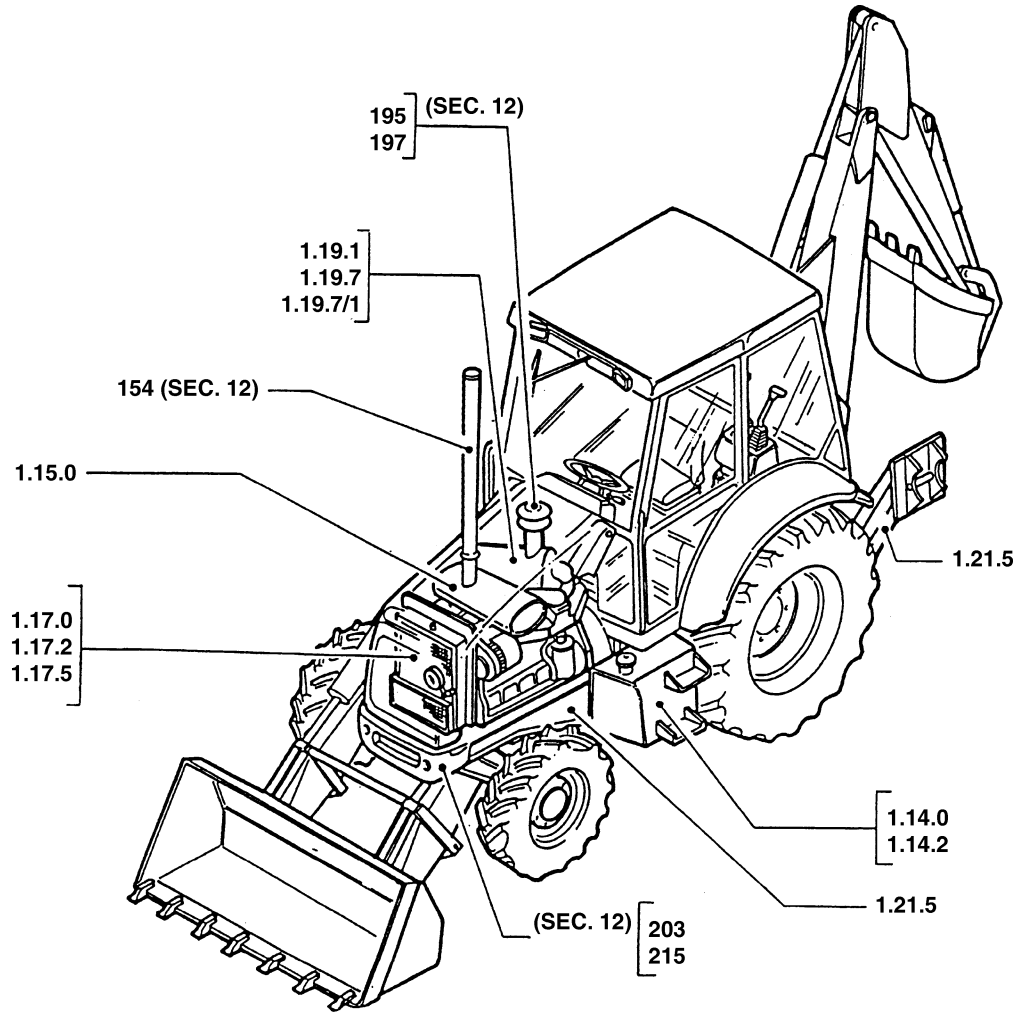

TRANSMISSION | CAMBIO DI VELOCITÀ | BOITE DE VITESSES | WECHSELGETRIEBE

CAMBIO DE VELOCIDADES | CAIXA DE VELOCIDADES | TRANSMISSIE | GEARKASSE

Powershuttle transmission

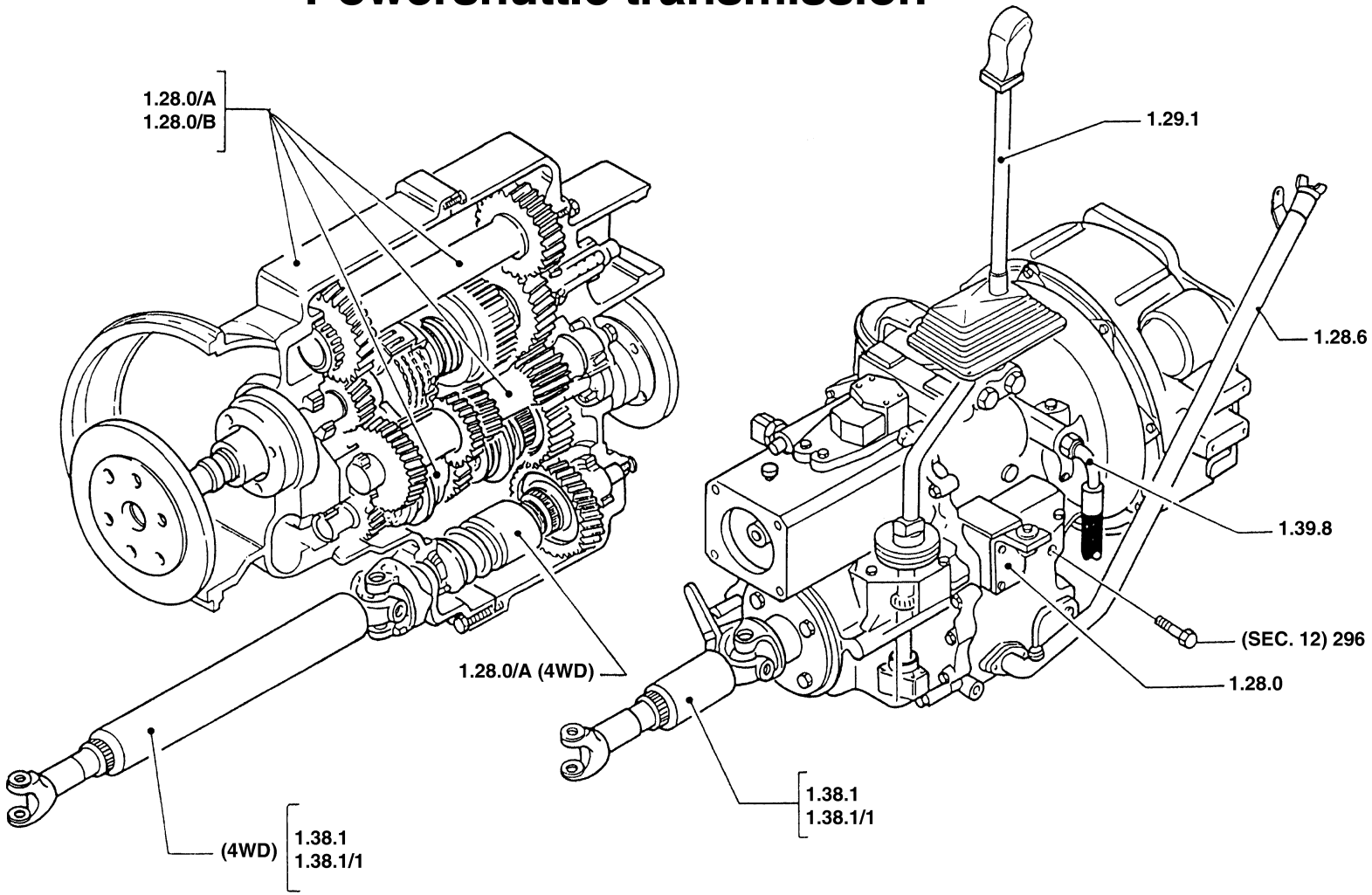

FRONT AXLE (2WD/4WD)

PUENTA ANTERIOR (2WD/4WD)

ASSALE ANTERIORE (2WD/4WD)

EIXO DIANTEIRO (2WD/4WD)

ESSIEU AVANT (2WD/4WD)

VOORWIELAANDRIJVING (2WD/4WD)

VORDERACHSE (2WD/4WD)

FORAKSEL (2/4-HJULS TRÆK)

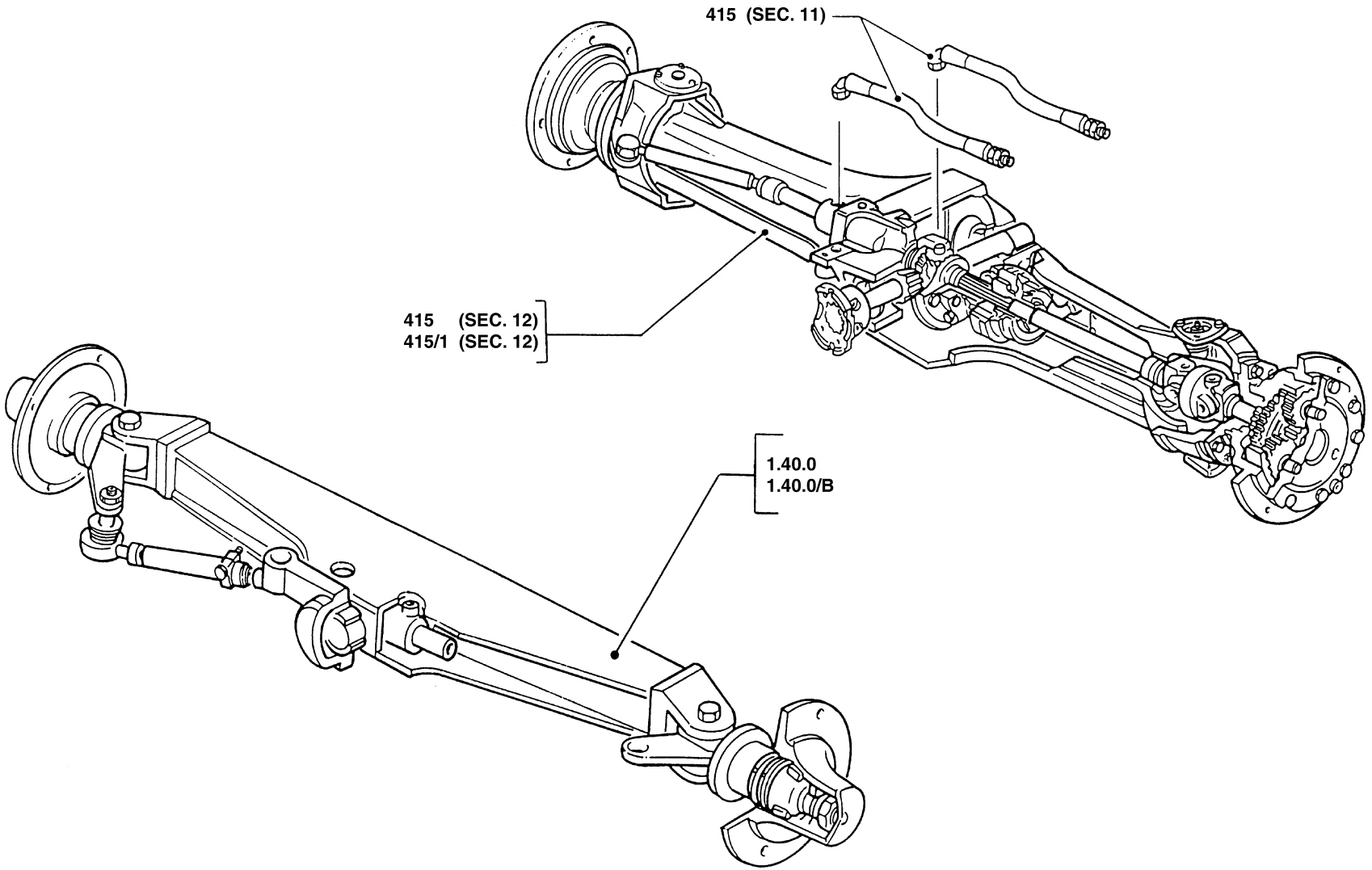

SEC. 5

SIDE REDUCTION

REDUCTOR LATERAL

RIDUTTORI LATERALI

REDUTORES LATERAIS

REDUCTEUR LATERAL

EINDREDUKTIE

ENDANTRIEBE

SIDEREDUKTIONSGEAR

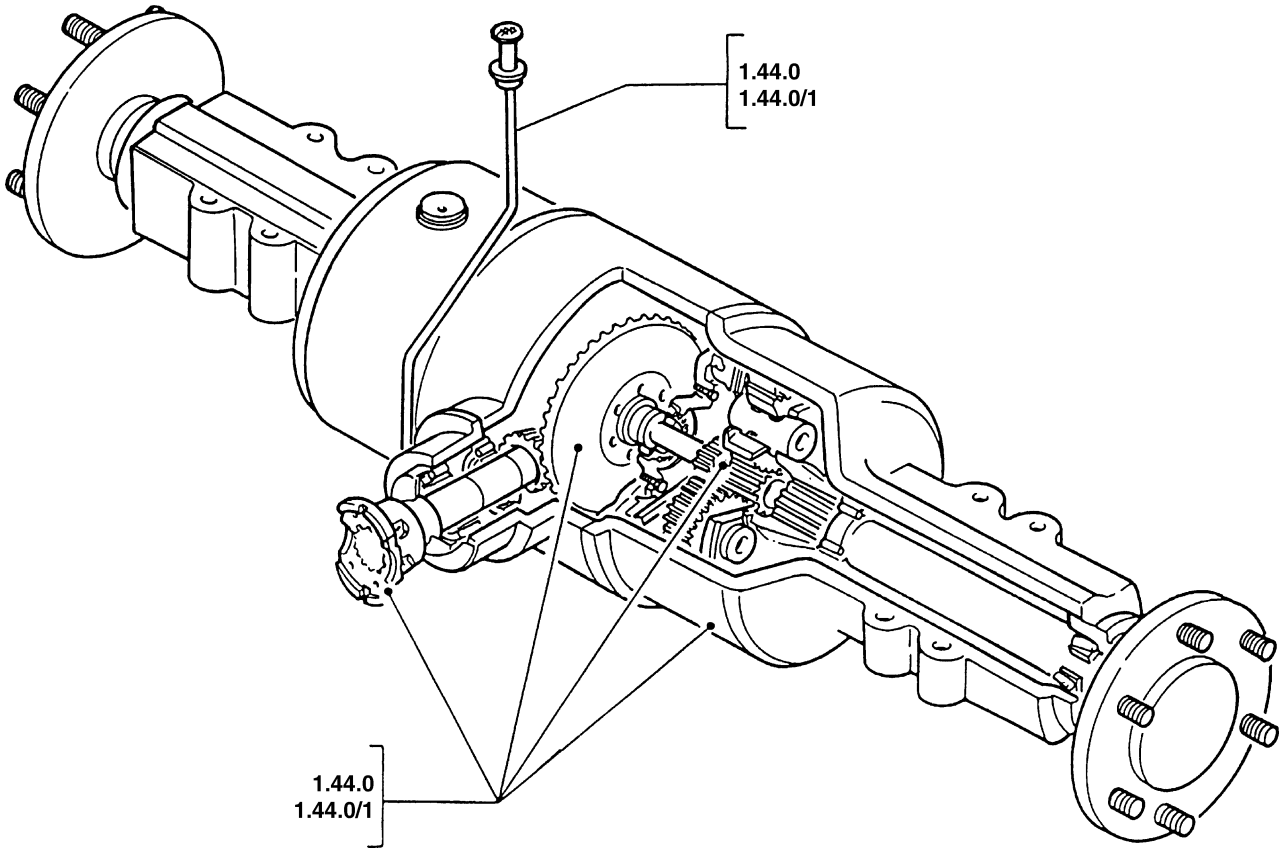

ELECTRICAL EQUIPMENT

IMPIANTO ELETTRICO

INSTALLATION ELECTRIQUE

ELEKTRISCHE ANLAGE

SISTEMA ELECTRICO

SISTEMA ELÉCTRICO

ELECTRISCHE UITRUSTING

ELSYSTEM

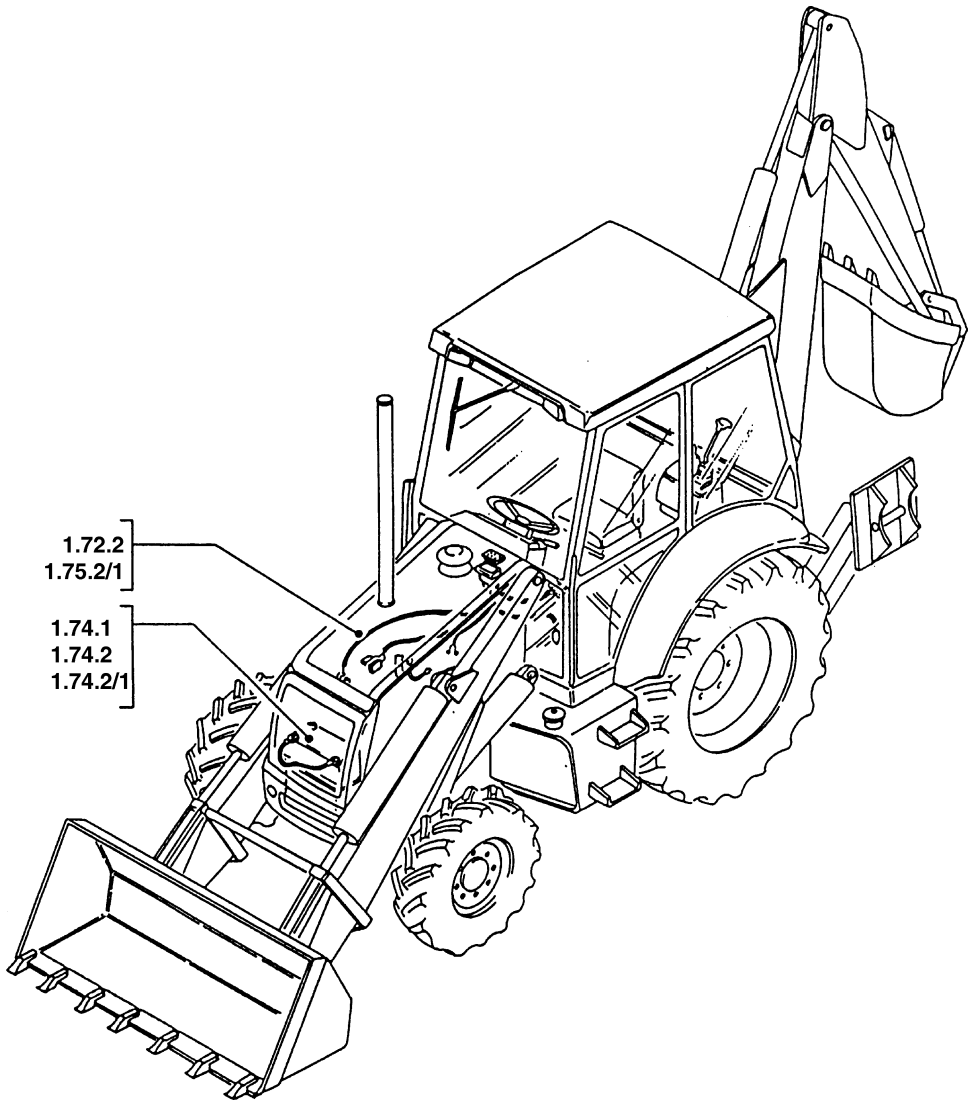

SEC. 7

SLIDE VALVES | **DISTRIBUTORI** | **DISTRIBUTEURS** | **VERTEILERN**

CORREDERAS | **DISTRIBUDORES** | **VERDEELKLEPPEN** | **FORDELERE**

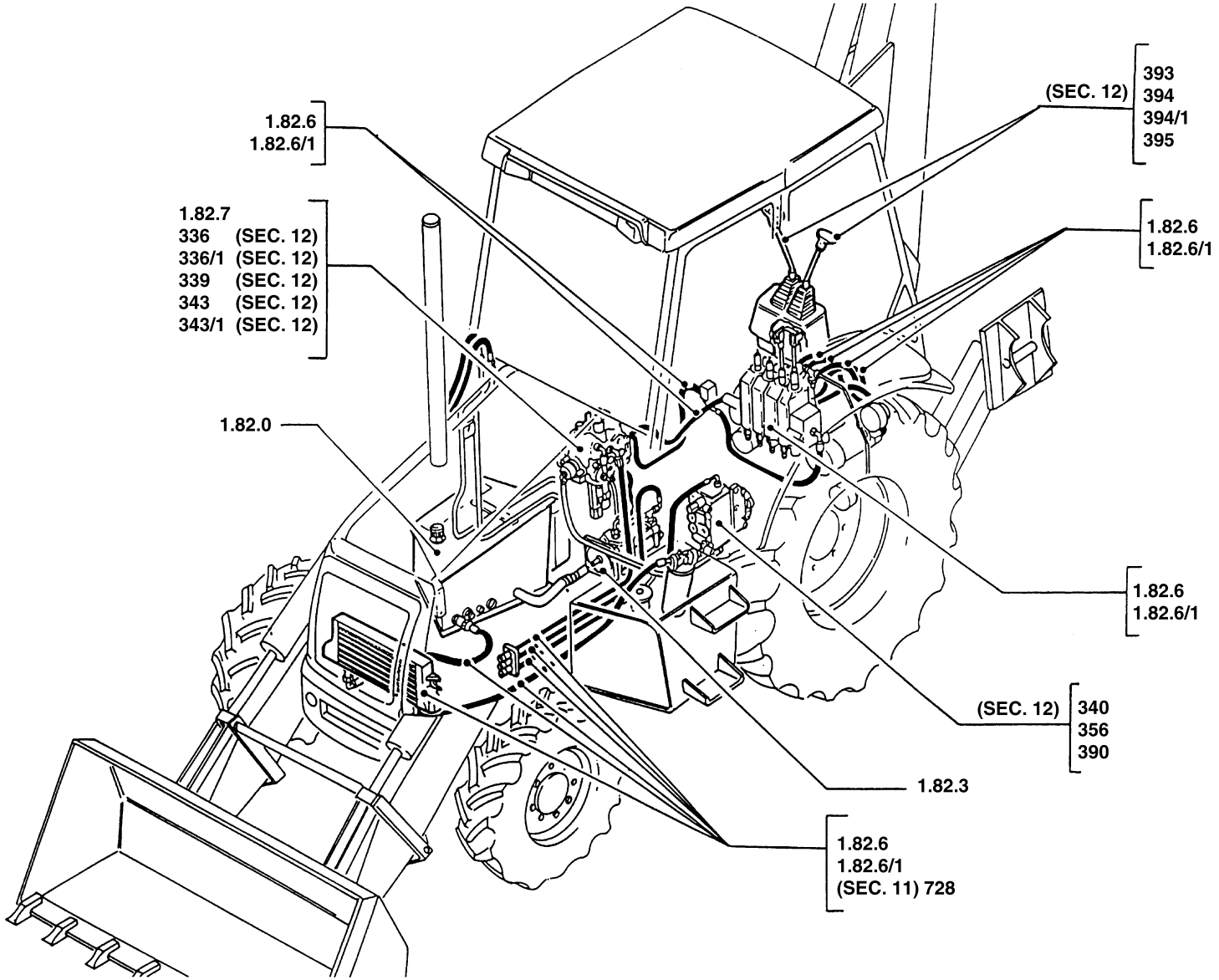

BODY, HOOD

CAPOT

COFANI

CAPUZES

AUVENT

MOTOR DEKSELS

MOTORHAUBE UND VERKLEIDUNG

DAKSLER

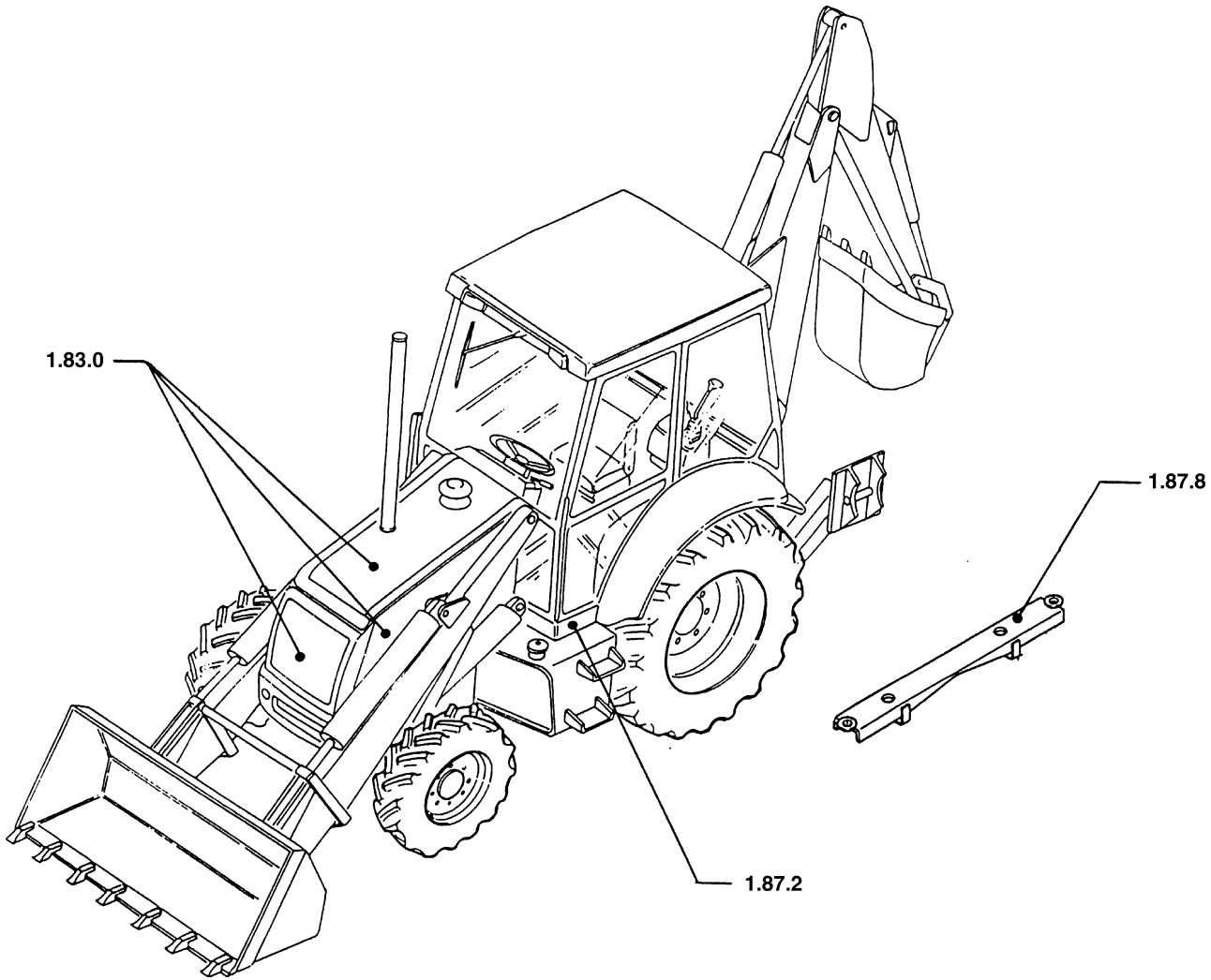

SEC. 9

BACKHOE

RETROEXCAVADOR

RETROESCAVATORE

RETRO-ESCAVADORA

TRACTO-PEILE

RETROGRAAFMACHINE

HECKBAGGER

EKSKAVATOR MED BAGSKOVL

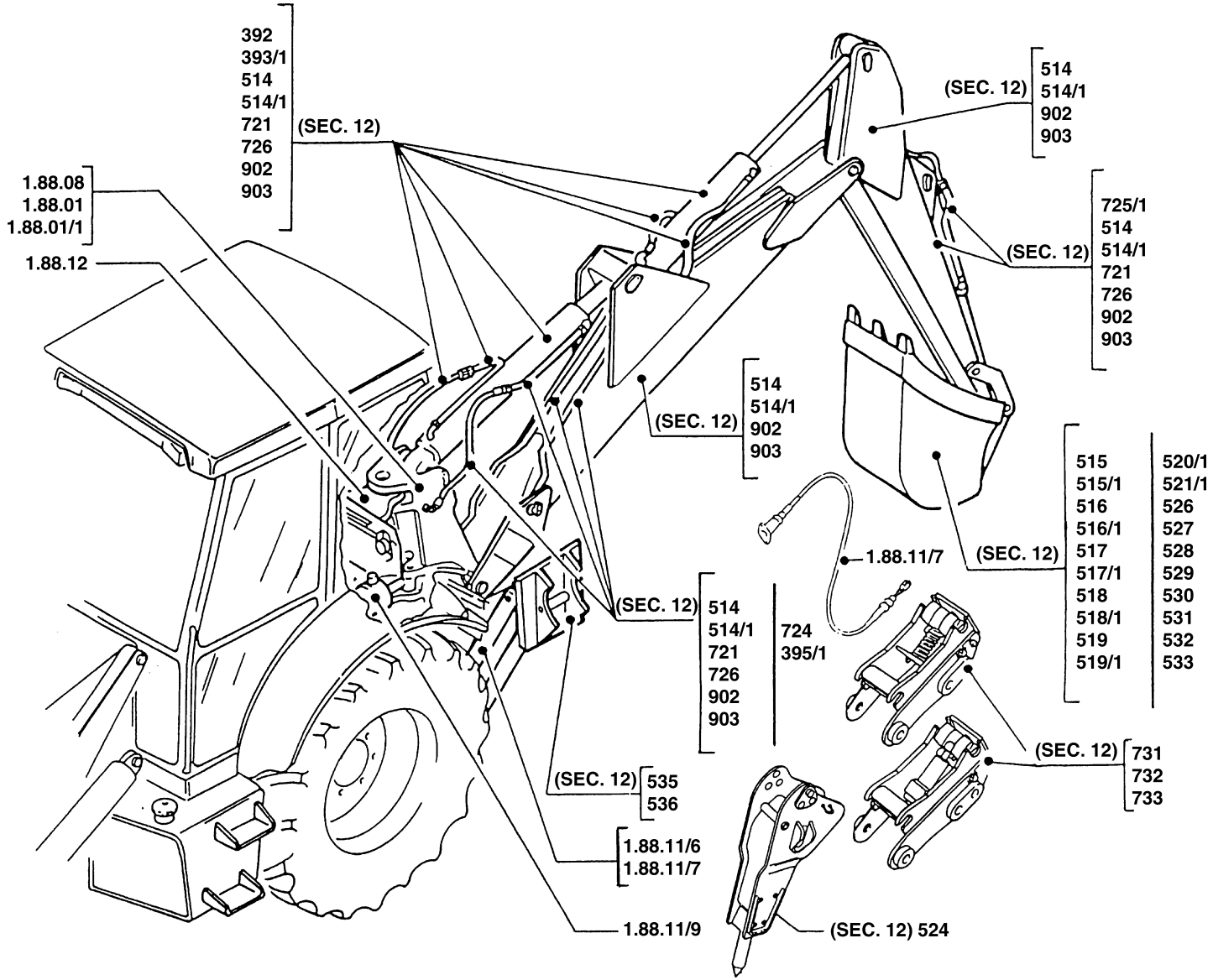

* Continued on Sec. 9

LOADER | **PALA** | **CHARGEUR** | **AUFLADER**

CARGADOR | **PÁ** | **LAADSCHOP** | **GRAVEMASCKINE**

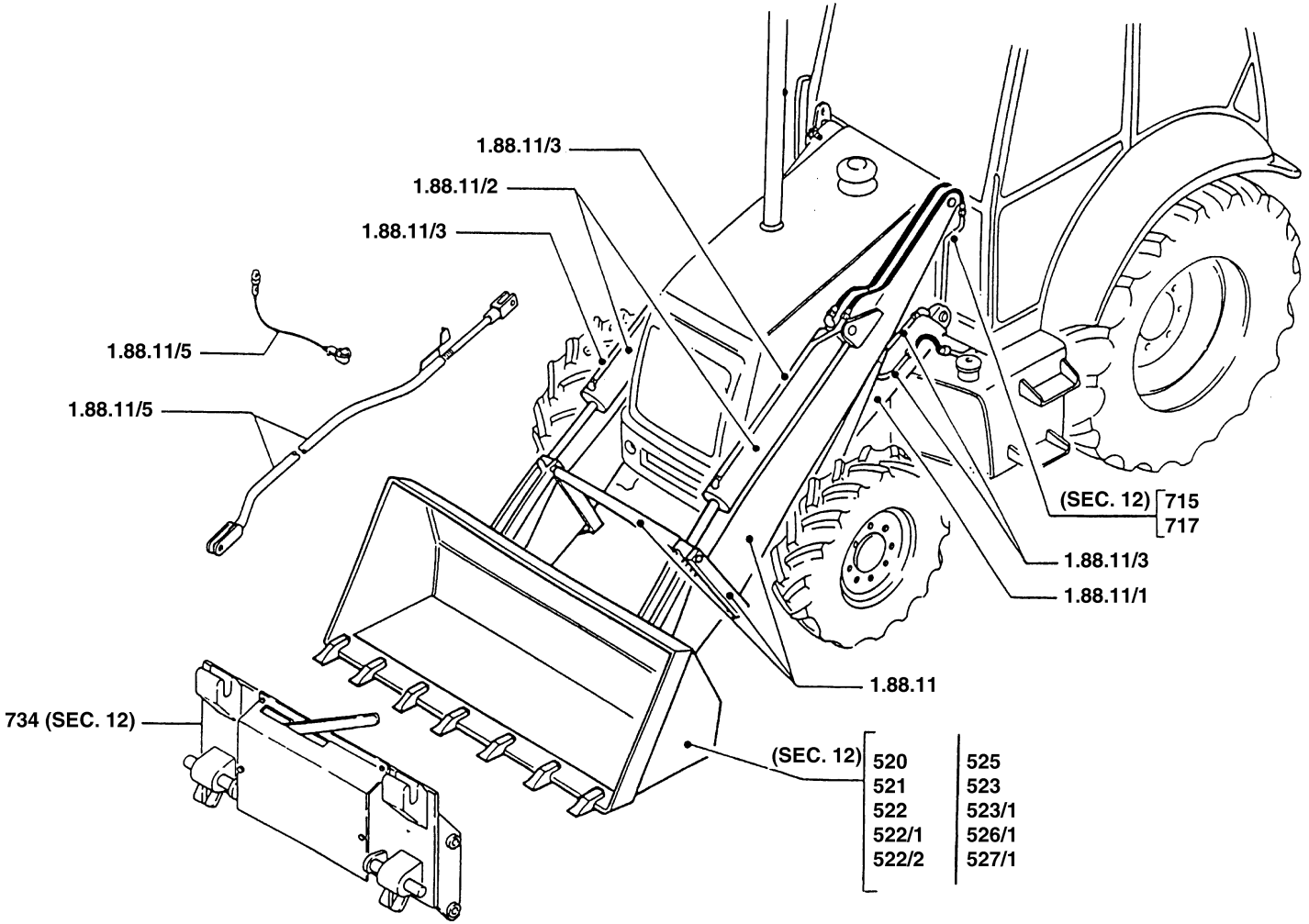

SEC. 10

BODY, HOOD
***DRIVER'S POST**

CAPOT
***PUESTO DE CONDUCCION**

COFANI
***POSTO GUIDA**

CAPUZES
***POSTO DE CONDUÇÃO**

AUVENT
***POSTE DE CONDUITE**

MOTOR DEKSELS
***KABINE**

MOTORHAUBE UND VERKLEIDUNG
***FUEHRERSTAND**

DÆKSLER
***FØRERSÆDE**

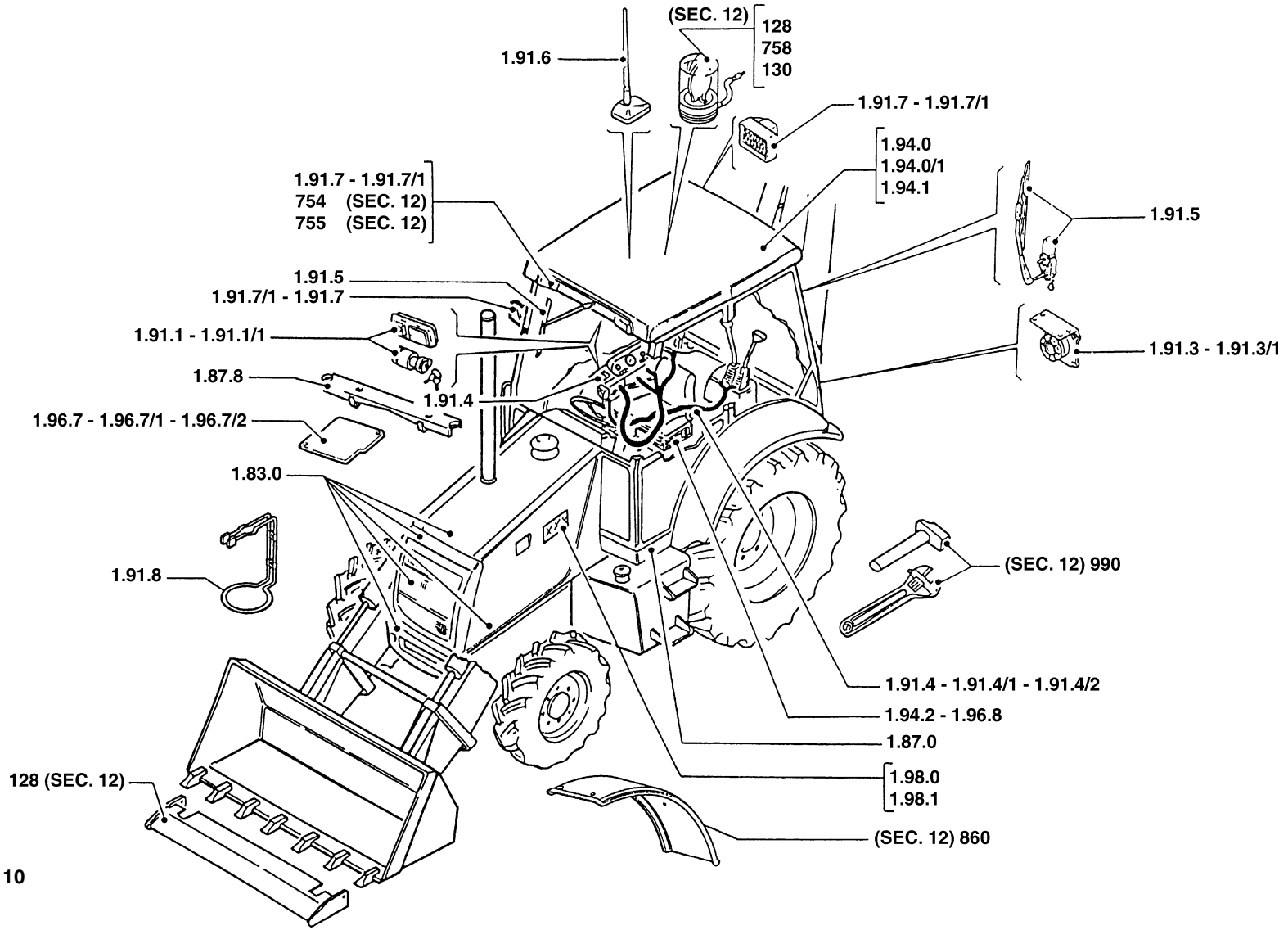

* Continued on Sec. 10

BODY, HOOD
*DRIVER'S POST

CAPOT
*PUESTO DE CONDUCCION

COFANI
*POSTO GUIDA

CAPUZES
*POSTO DE CONDUÇÃO

AUVENT
*POSTE DE CONDUITE

MOTOR DEKSELS
*KABINE

MOTORHAUBE UND VERKLEIDUNG
*FUEHRERSTAND

DÆKSLER
*FØRERSÆDE

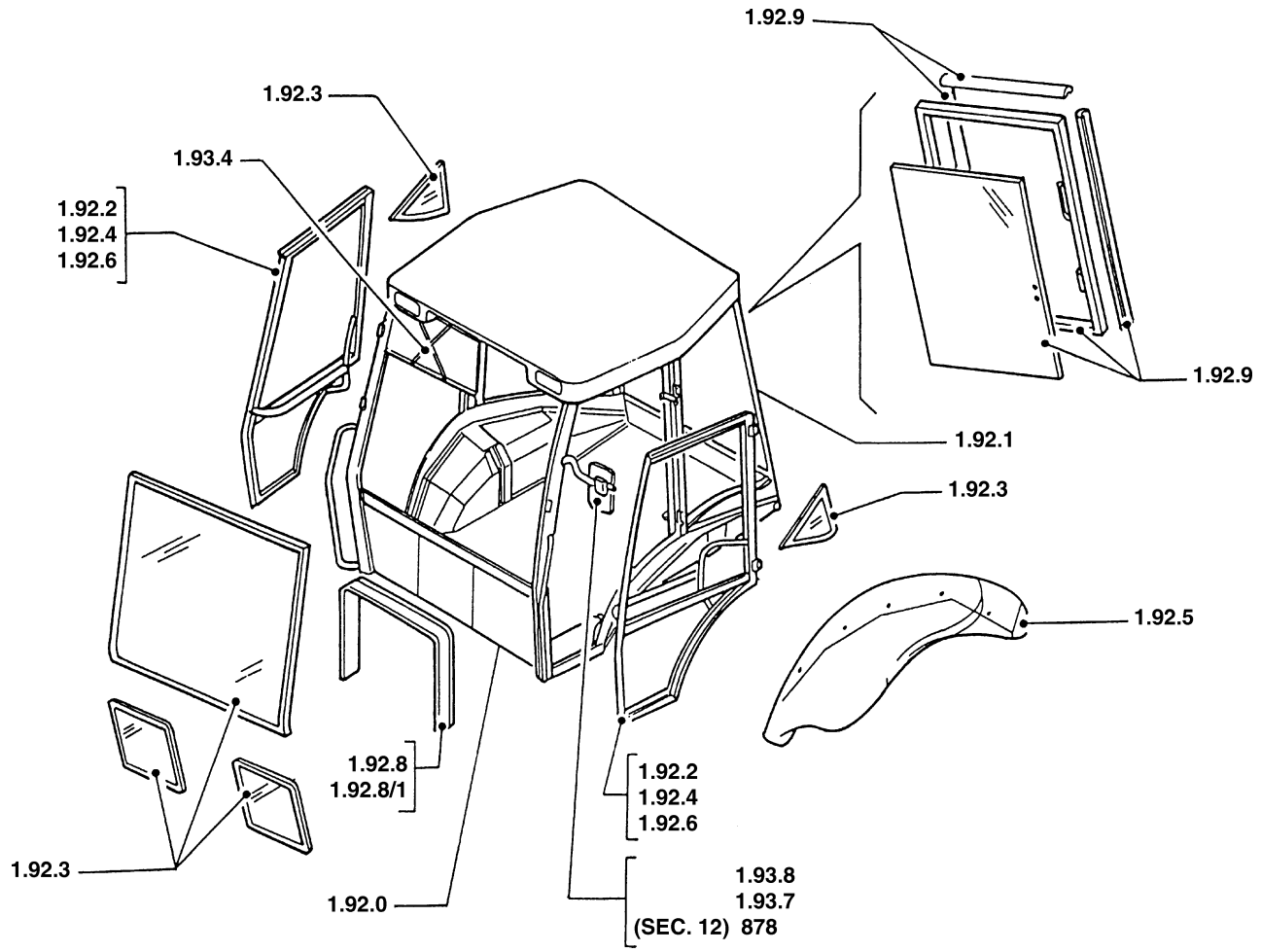

SEC. 10

BODY, HOOD
***DRIVER'S POST**

CAPOT
***PUESTO DE CONDUCCION**

COFANI
***POSTO GUIDA**

CAPUZES
***POSTO DE CONDUÇÃO**

AUVENT
***POSTE DE CONDUITE**

MOTOR DEKSELS
***KABINE**

MOTORHAUBE UND VERKLEIDUNG
***FUEHRERSTAND**

DÆKSLER
***FØRERSÆDE**

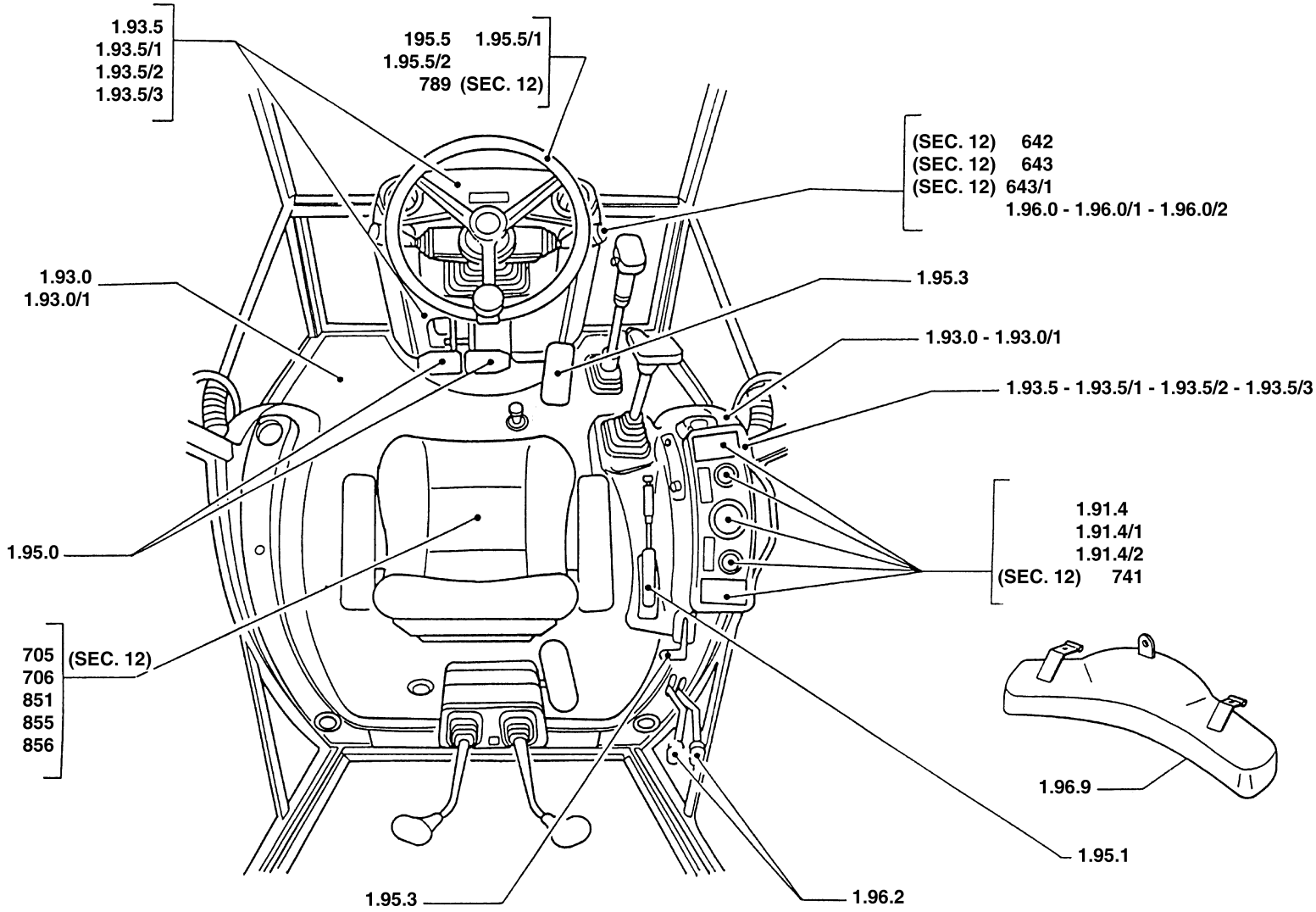

WHEELS | **RUOTE** | **ROUES** | **RÄDER**

RUEDAS | **RODAS** | **WIELEN** | **HJUL**

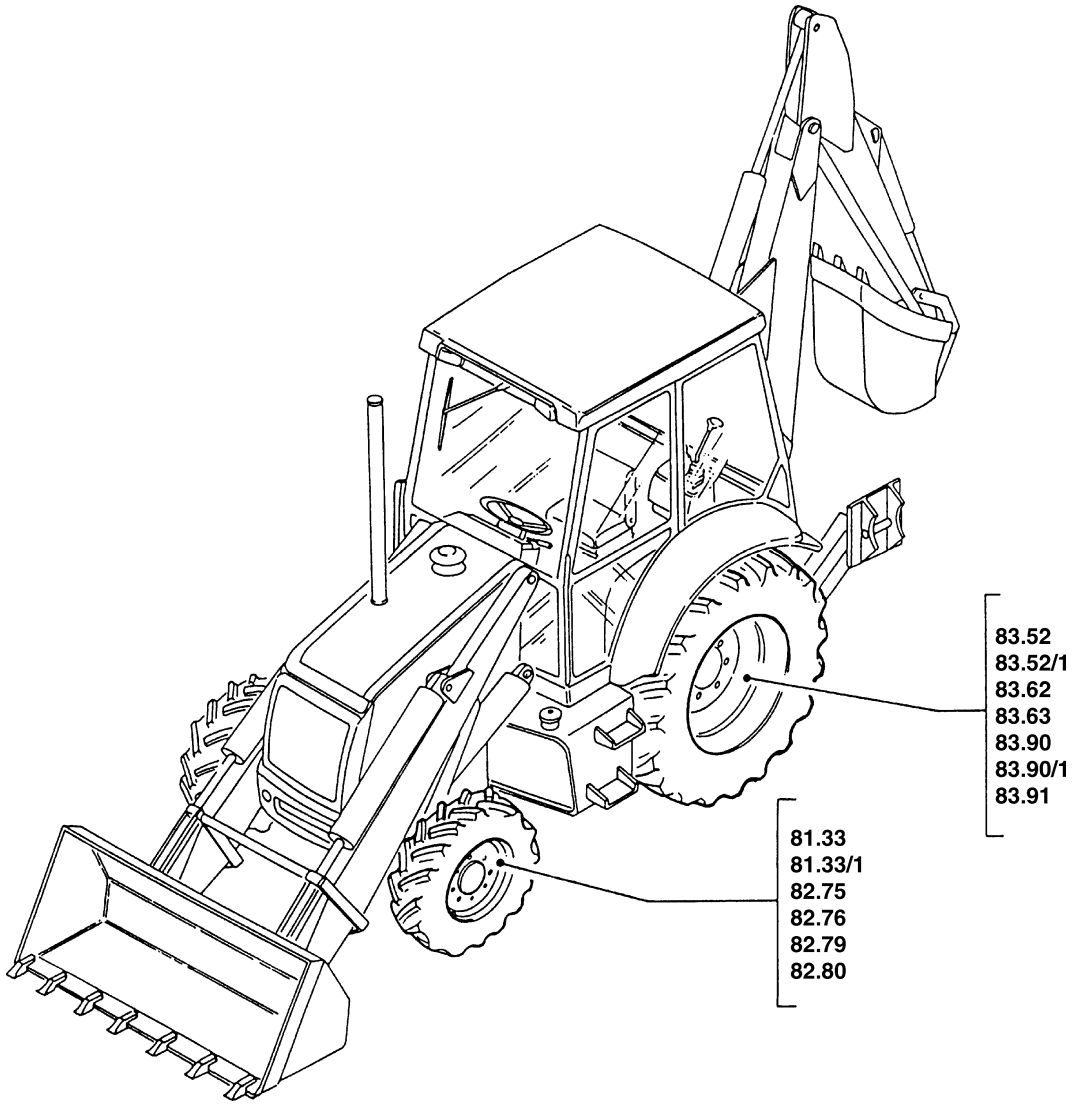

SEC. 12

VARIATION

VARIANTES

VARIANTI

VARIANTES

VARIANTES

UITRUSTINGEN

VARIANTEN

VARIANTER

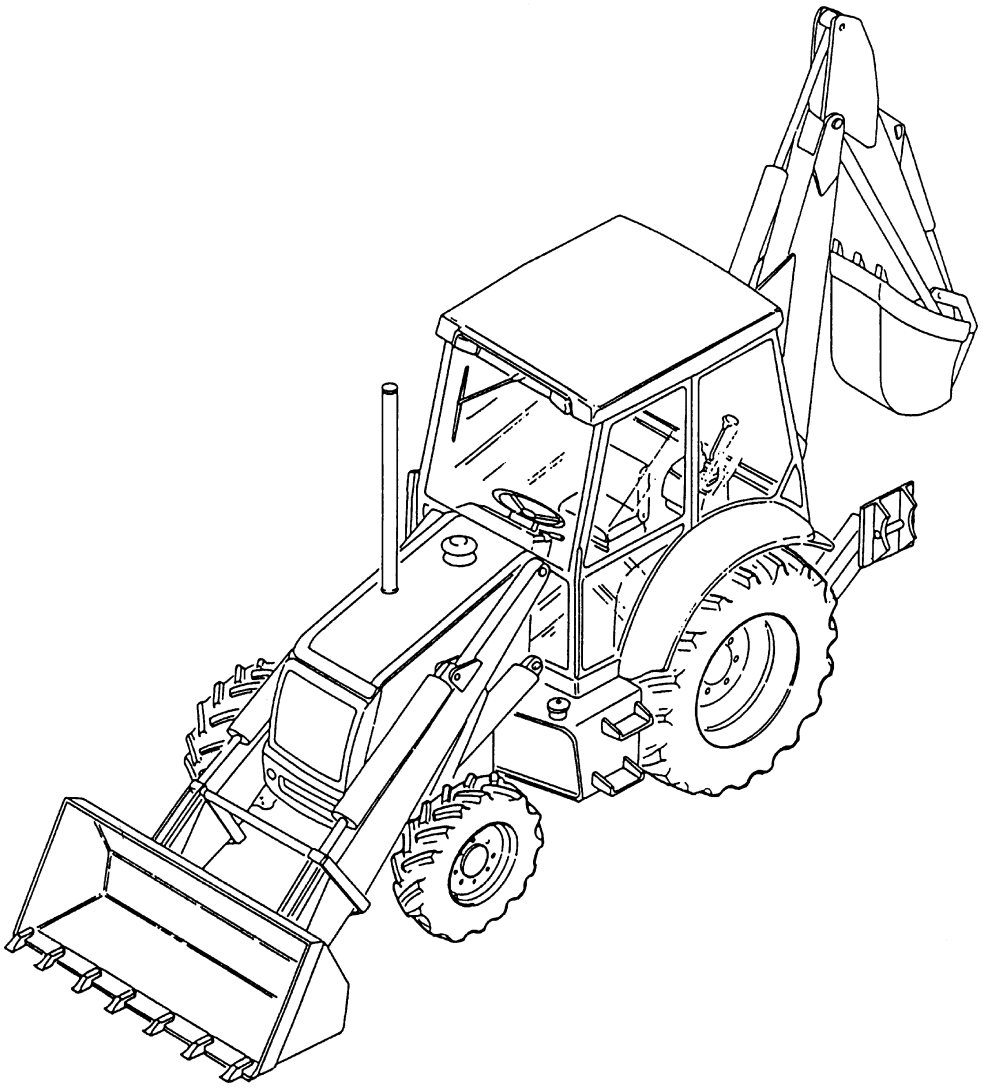

ENGINE **MOTORE** **MOTEUR** **MOTOR**

MOTOR **MOTOR** **MOTOR** **MOTOR**

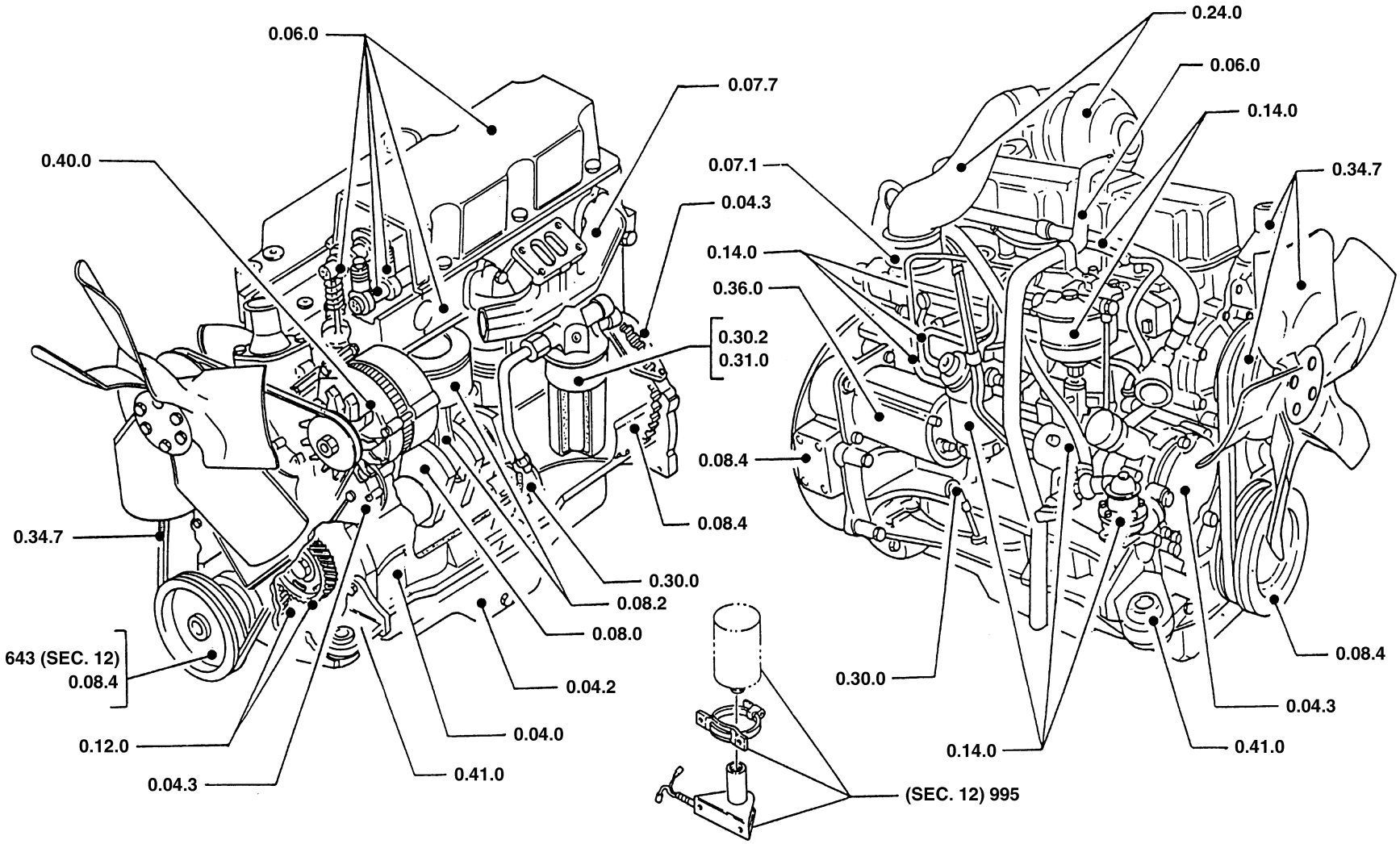

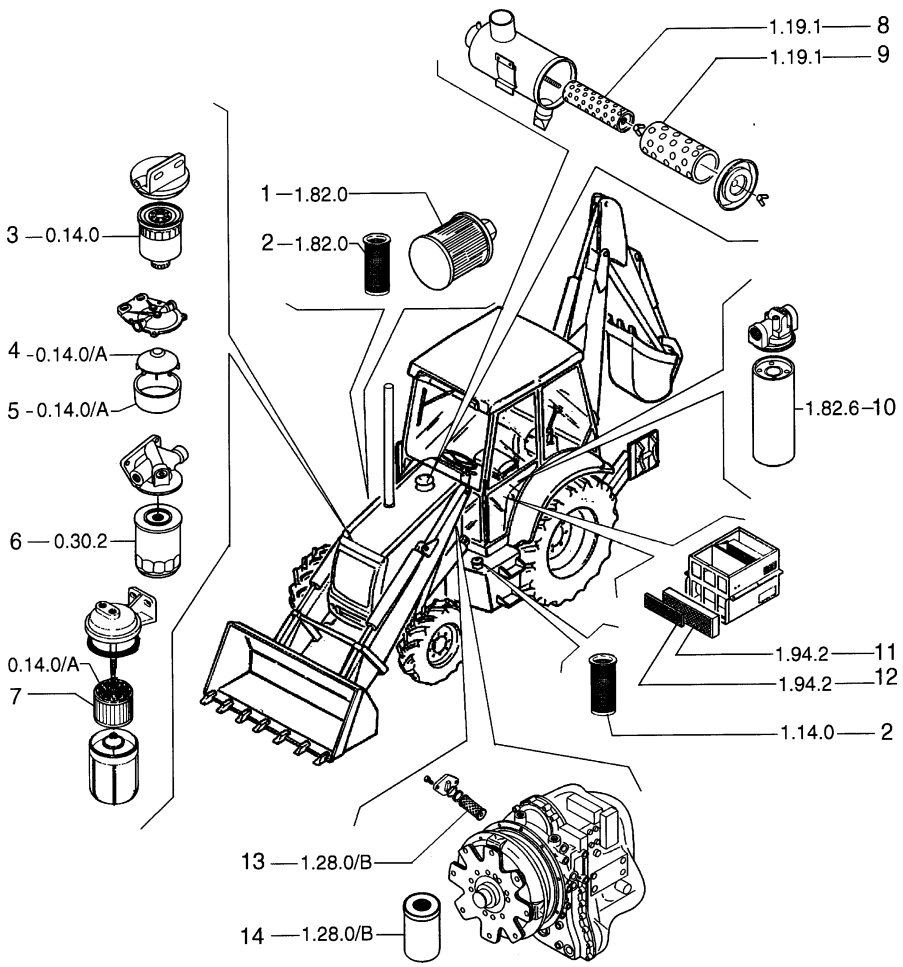

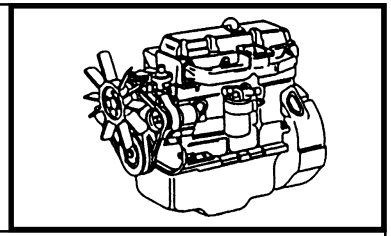

MOD	R	P/N. Imola	P/N. Brazil	Q	Descrição Denominacion	Description Descrizione	L.C.
	1	**73124631**		1	ELEM. FILTRANTE FILTRO	FILTERING ELEM. ELEM. FILTRANTE	020E
	2		**75241002**	1	ELEM. FILTRANTE FILTRO	FILTERING ELEM. ELEM. FILTRANTE	020E
	3	**87800220**		1	FILTRO COMBUST. FILTRO COMBUST.	FUEL FILTER FILTRO COMBUST.	064F
	4	**81871478**		1	ELEM. FILTRANTE FILTRO	FILTERING ELEM. ELEM. FILTRANTE	020E
	5	**83916922**		1	ELEM. FILTRANTE FILTRO	FILTERING ELEM. ELEM. FILTRANTE	020E
	6	**87800083**		1	FILTRO FILTRO	FILTER FILTRO	065F
	7		**75288845**	1	FILTRO FILTRO	FILTER FILTRO	065F
	8	**85807304**		1	ELEM. FILTRANTE FILTRO	FILTERING ELEM. ELEM. FILTRANTE	020E
	9		**75288234**	1	ELEM. FILTRANTE FILTRO	FILTERING ELEM. ELEM. FILTRANTE	020E
	10	**85802793**		1	ELEM. FILTRANTE CARTUCHO FILTRO	FILTERING ELEM. CARTUCCIA FILTR	084C
	11	**85801619**		1	FILTRO DE AR FILTRO DE AIRE	AIR CLEANER FILTRO ARIA	066F
	12	**85802326**		1	FILTRO DE AR FILTRO DE AIRE	AIR CLEANER FILTRO ARIA	066F
	13	**9968359**		1	FILTRO FILTRO	FILTER FILTRO	065F
	14	**85817004**		1	FILTRO DE ÓLEO FILTRO ACEITE	OIL FILTER FILTRO OLIO	067F

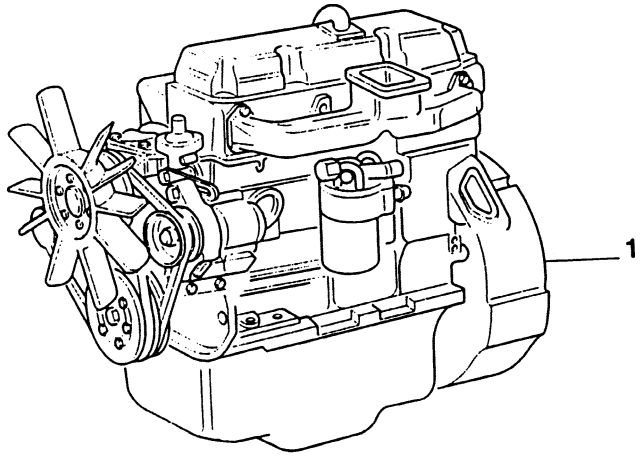

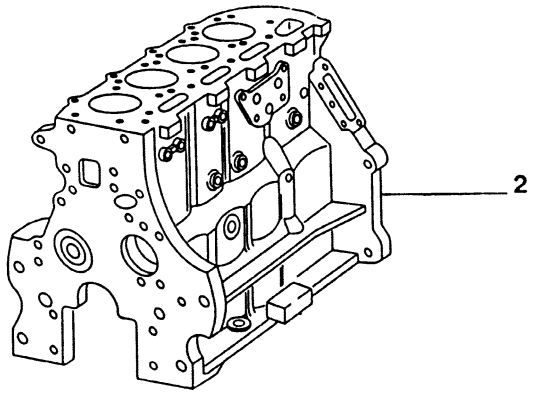

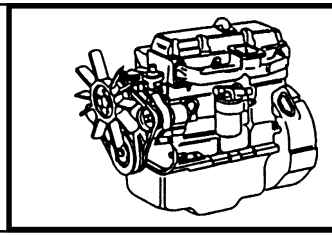

MOD	R	P/N. Imola	P/N. Brazil	Q	Descrição Denominacion	Description Descrizione	L.C.
	1	**87800270**	**75245702**	1	MOTOR ASPIRADO MOTOR	ENGINE MOTORE TERMICO	130M
	2	**83999186**		1	MOTOR PARCIAL MOTOR ALIGERADO	SHORT ENGINE MOTORE ALLEGGERITO	139M

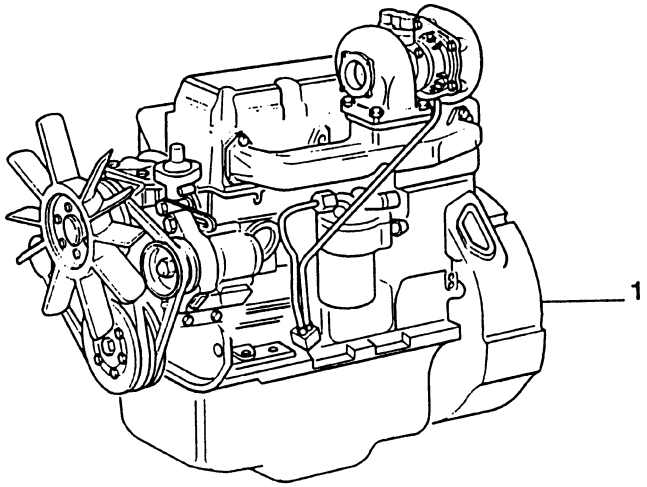

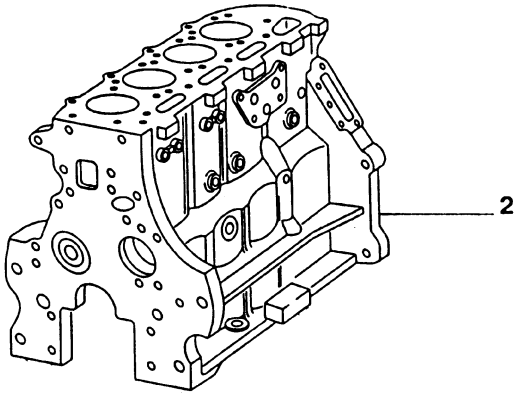

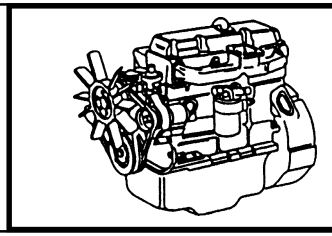

MOD	R	P/N. Imola	P/N. Brazil	Q	Descrição Denominacion	Description Descrizione	L.C.
	1	**87800799**	**87801309**	1	MOTOR TURBO MOTOR	TURBOCHARG.ENG. MOTORE SOVRAL.	0001
	2	**83999187**		1	MOTOR PARCIAL MOTOR ALIGERADO	SHORT ENGINE MOTORE ALLEGGERITO	139M

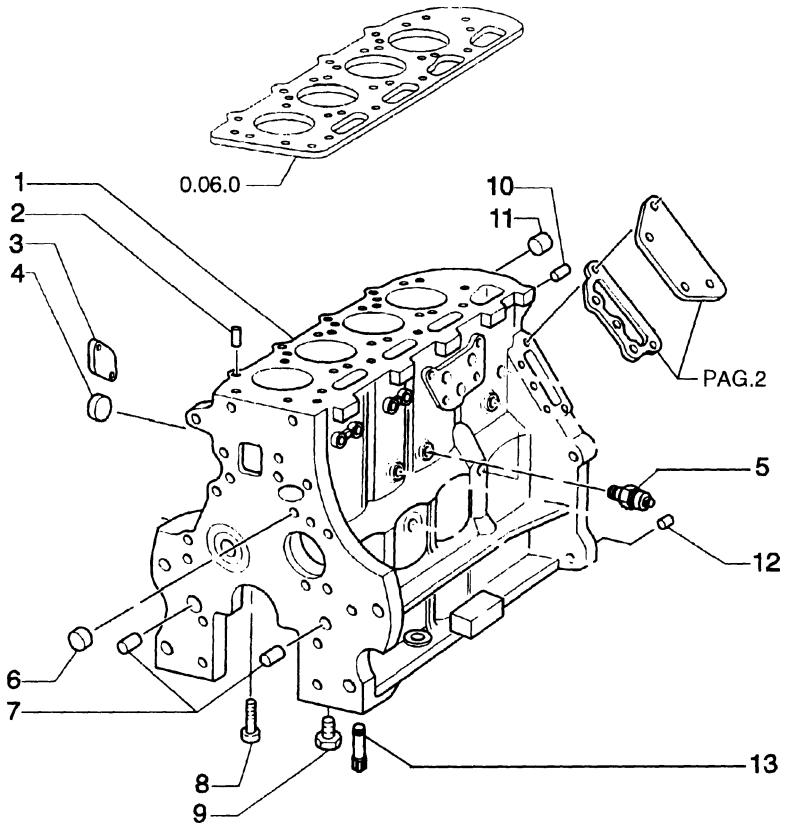

ASPIR Usado en el motor aspirado
TURB Usado en el motor turbinado

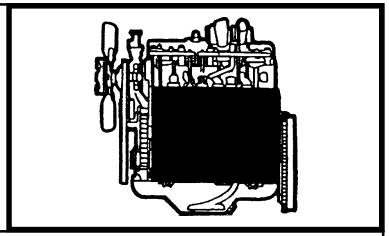

MOD	R	P/N. Imola	P/N. Brazil	Q	Descrição Denominacion	Description Descrizione	L.C.
	1	**87840861**		1	BLOCO DO MOTOR BLOQUE CILINDR.	CRANKCASE BASAMENTO MOTOR	020B
	2	**83960218**		2	PINO CENTRAGEM TETON	DOWEL GRANO	090G
	3	**83957023**		2	TAMPA TAPA	COVER COPERCHIO	265C
	4	**83957022**		AR	BUJÃO TAPON	PLUG TAPPO	050T
	5	**82950128**		1	SENSOR SENSOR	SENSOR SENSORE	133S
	6	**83956679**		1	BUJÃO TAPON	PLUG TAPPO	050T
	7	**81808472**		2	PINO BULON	PIN PERNO	080P
	8	**81876966**		4	PARAFUSO TORNILLO	SCREW VITE	040V
	9	**82001688**		10	PARAFUSO TORNILLO	SCREW VITE	040V
ASPIR	10	**82851789**		1	BUJÃO TAPON	PLUG TAPPO	050T
TURB	10	**82851790**		1	BUJÃO TAPON	PLUG TAPPO	050T
	11	**83957026**		AR	BUJÃO TAPON	PLUG TAPPO	050T
	12	**86505157**		2	PINO CENTRAGEM TETON	DOWEL GRANO	090G
	13	**81876966**		4	PULVERIZADOR PULVERIZADOR	NOZZLE POLVERIZZATORE	148P

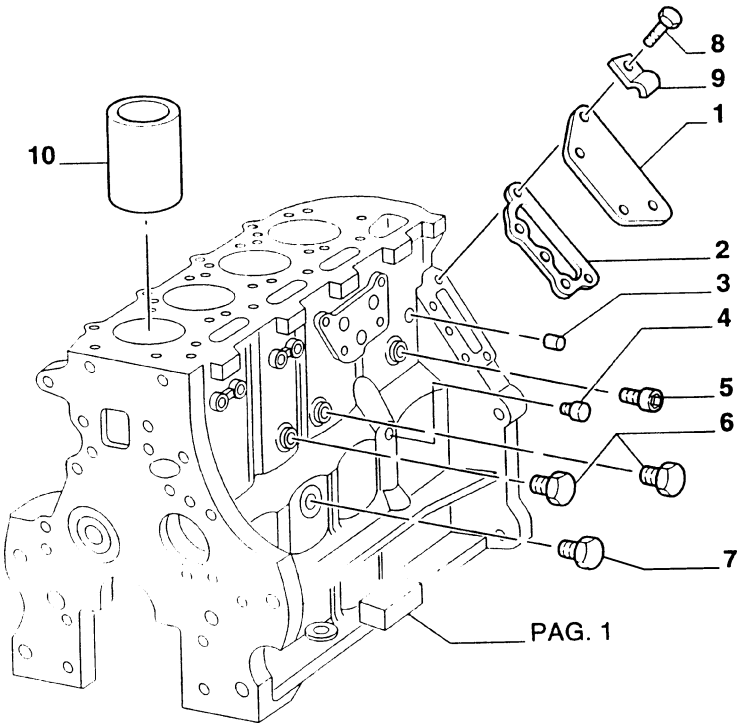

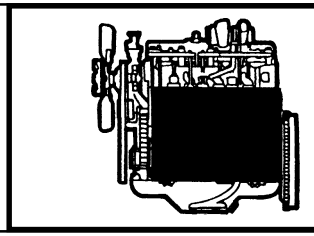

MOD	R	P/N. Imola	P/N. Brazil	Q	Descrição Denominacion	Description Descrizione	L.C.
	1	**87840555**		1	TAMPA TAPA	COVER COPERCHIO	265C
	2	**81822547**		1	JUNTA JUNTA PLANA	GASKET GUARNIZ. PIANA	120G
	3	**82851791**		1	BUJÃO TAPON	PLUG TAPPO	050T
	4	**82851792**		1	BUJÃO TAPON	PLUG TAPPO	050T
	5	**81868410**		1	BUJÃO TAPON	PLUG TAPPO	050T
	6	**81868411**		3	BUJÃO TAPON	PLUG TAPPO	050T
	7	**82851787**		1	BUJÃO TAPON	PLUG TAPPO	050T
	8	**83925618**		4	PARAFUSO TORNILLO	SCREW VITE	040V
	9	**83976853**		1	PRESILHA ABRESADERA	CLIP FERMAGLIO	045F
	10	**83998292**		4	CAMISA CILINDRO CAMISA CILINDRO	CYLINDER LINER CAMICIA CILINDR	035C

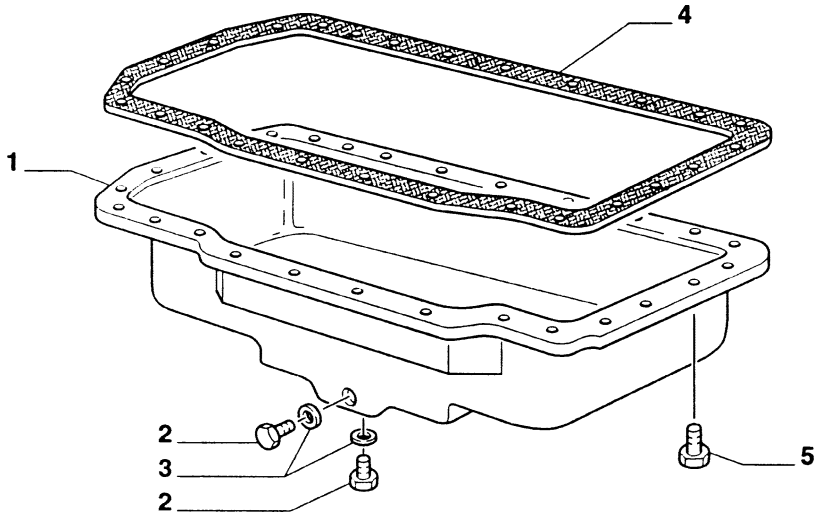

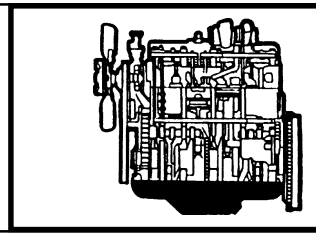

MOD	R	P/N. Imola	P/N. Brazil	Q	Descrição Denominacion	Description Descrizione	L.C.
	1	**87840431**		1	CARTER DE ÓLEO CARTER DE ACEITE	OIL PAN COPPA OLIO	274C
	2	**82854702**		2	BUJÃO TAPON	PLUG TAPPO	050T
	3	**82853724**		2	ANEL DE VEDAÇÃO JUNTA HERMETICA	SEAL RING ANELLO TENUTA	055A
	4	**89832923**		1	JUNTA JUNTA PLANA	GASKET GUARNIZ. PIANA	120G
	5	**81876943**		26	PARAFUSO TORNILLO	SCREW VITE	040V

FB80.3 - FB100.3

CARTER DE ÓLEO
CARTER DE ACEITE
OIL SUMP
COPPA OLIO

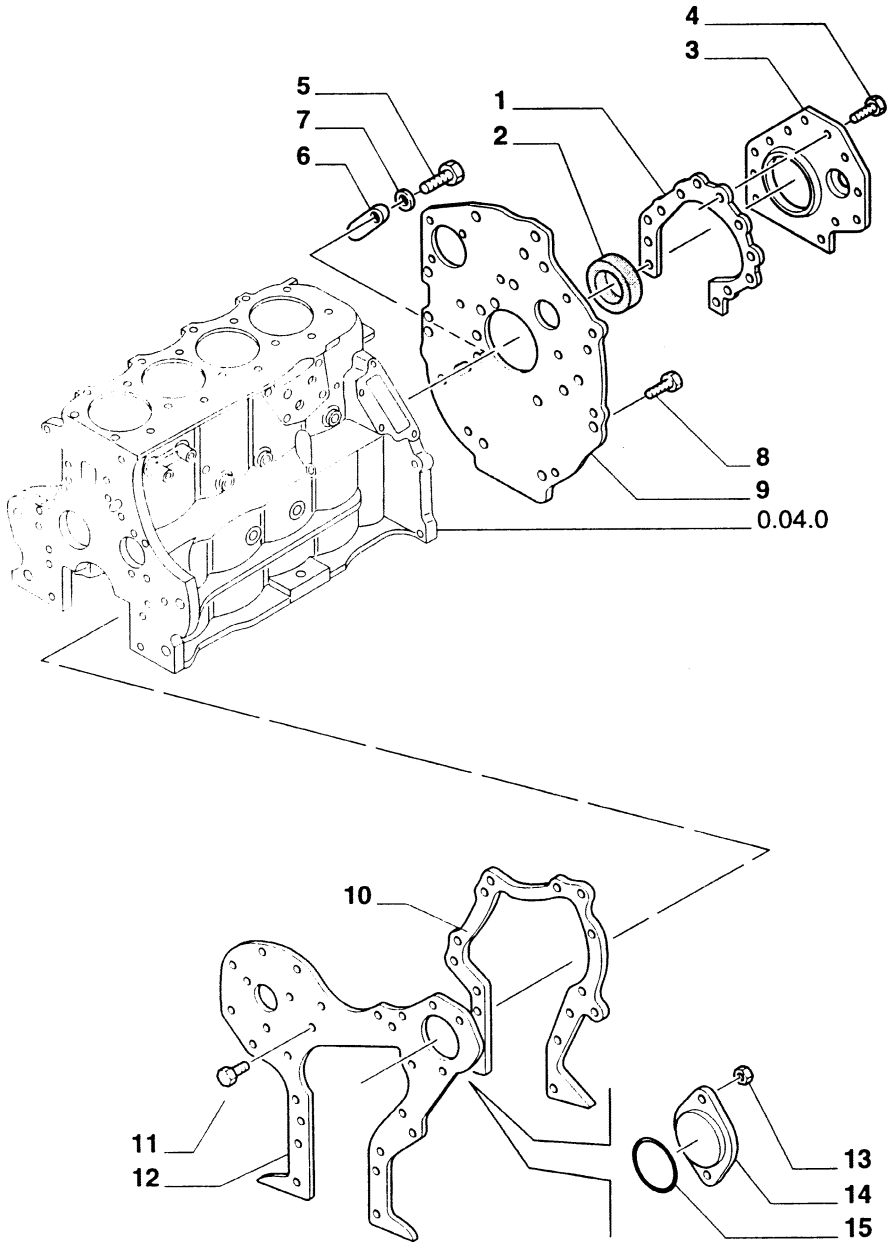

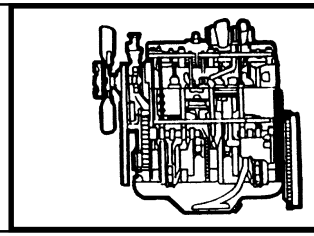

MOD	R	P/N. Imola	P/N. Brazil	Q	Descrição Denominacion	Description Descrizione	L.C.
	1	**87800887**		1	JUNTA JUNTA PLANA	GASKET GUARNIZ. PIANA	120G
	2	**83955247**		1	RETENTOR EMPAQUETADURA	SEAL ASSY GUARNIZIONE	123G
	3	**81876599**		1	CHAPA PLACA	PLATE PIASTRA	105P
	4	**81876604**		12	PARAFUSO TORNILLO	SCREW VITE	040V
	5	**81821507**		1	PARAFUSO TORNILLO	SCREW VITE	040V
	6	**81804217**		1	TAMPA TAPA	COVER COPERCHIO	265C
	7	**80080681**		1	ARRUELA ARANDELA	WASHER ROSETTA	131R
	8	**81876945**		1	PARAFUSO TORNILLO	SCREW VITE	040V
	9	**87800621**		1	CHAPA PLACA	PLATE PIASTRA	105P
	10	**83959396**		1	JUNTA JUNTA PLANA	GASKET GUARNIZ. PIANA	120G
	11	**83958244**		4	PARAFUSO TORNILLO	SCREW VITE	040V
	12	**83956700**		1	PLACA PLACA	PLATE PIASTRINA	110P
	13	**81862931**		2	PORCA TUERCA	NUT DADO	010D
	14	**81803219**		1	TAMPA TAPA	COVER COPERCHIO	265C
	15	**80510137**		1	ANEL DE VEDAÇÃO JUNTA HERMETICA	SEAL RING ANELLO TENUTA	055A

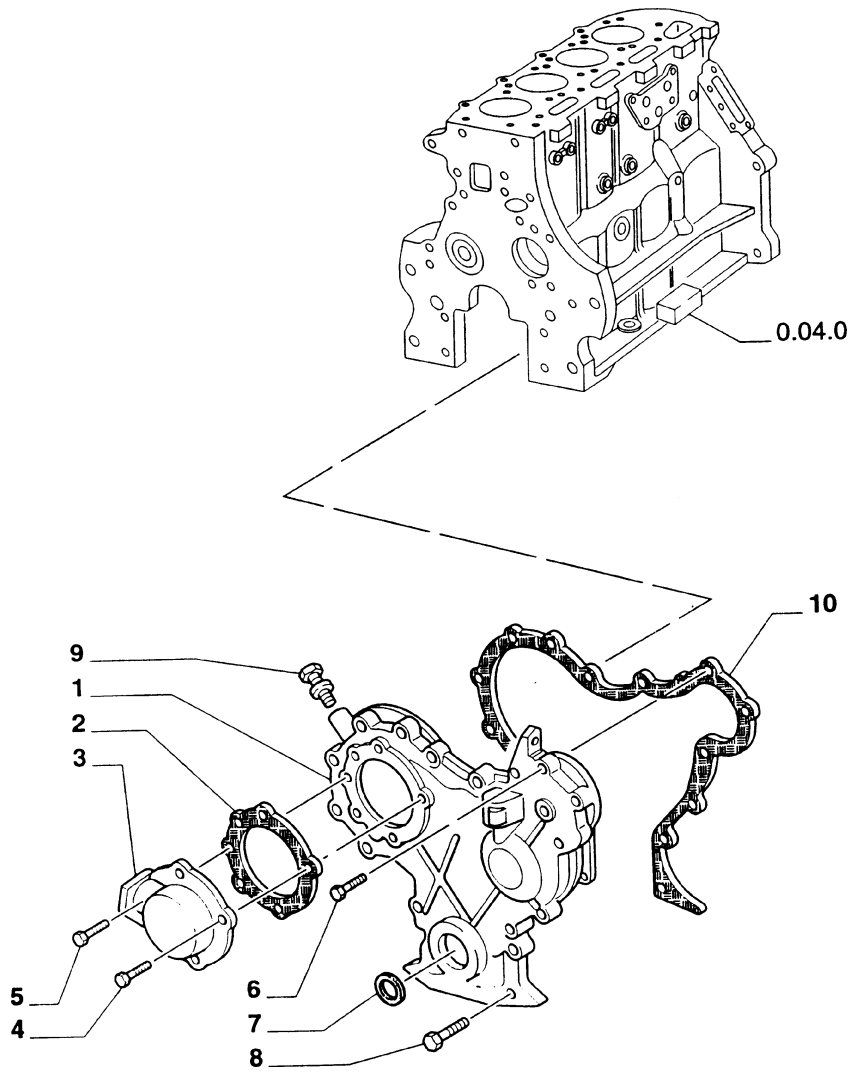

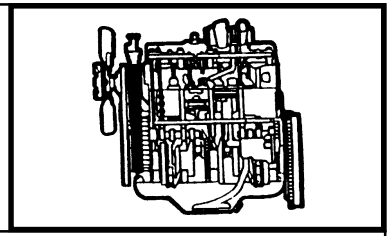

MOD	R	P/N. Imola	P/N. Brazil	Q	Descrição Denominacion	Description Descrizione	L.C.
	1	**87800077**		1	TAMPA TAPA	COVER COPERCHIO	265C
	2	**83959395**		1	JUNTA JUNTA PLANA	GASKET GUARNIZ. PIANA	120G
	3	**87800681**		1	TAMPA TAPA	COVER COPERCHIO	265C
	4	**82851915**		4	PARAFUSO TORNILLO	SCREW VITE	040V
	5	**87800191**		1	PARAFUSO TORNILLO	SCREW VITE	040V
	6	**80050020**		2	PARAFUSO TORNILLO	SCREW VITE	040V
	7	**87800696**		1	RETENTOR EMPAQUETADURA	SEAL ASSY GUARNIZIONE	123G
	8	**81867931**		4	PARAFUSO TORNILLO	SCREW VITE	040V
	8	**81867943**		2	PARAFUSO TORNILLO	SCREW VITE	040V
	8	**81876948**		8	PARAFUSO TORNILLO	SCREW VITE	040V
	8	**83958605**		1	PARAFUSO TORNILLO	SCREW VITE	040V
	9	**83907851**		1	BUJÃO TAPON	PLUG TAPPO	050T
	10	**83959876**		1	JUNTA JUNTA PLANA	GASKET GUARNIZ. PIANA	120G

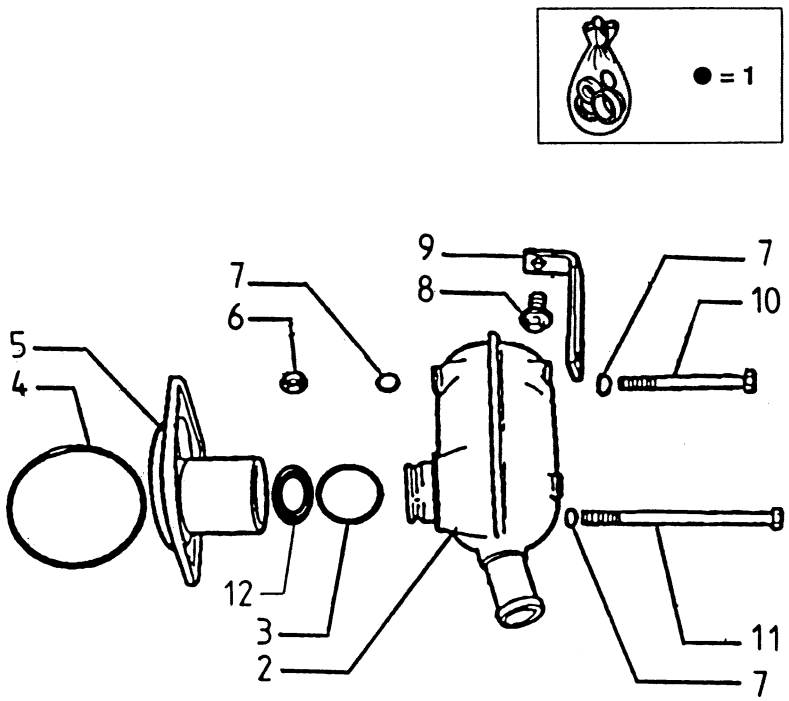

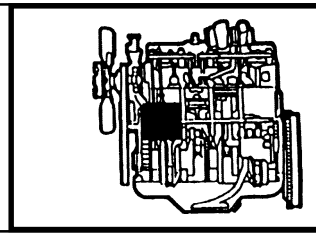

MOD	R	P/N. Imola	P/N. Brazil	Q	Descrição Denominacion	Description Descrizione	L.C.
	1	**85807856**	**87801635**	1	KIT JUEGO	KIT KIT	002K
	2	**4624515**		1	RESPIRO RESPIRADERO	BREATHER SFIATATOIO	145S
	3	**4600893**		1	ARRUELA ARANDELA	WASHER ROSETTA	131R
	4	**80510137**	**83416207**	1	ANEL DE VEDAÇÃO JUNTA HERMETICA	SEAL RING ANELLO TENUTA	055A
	5	**85806249**		1	TAMPA TAPA	COVER COPERCHIO	265C
	6	**82936390**		1	PORCA TUERCA	NUT DADO	010D
	7	**4716734**		3	ARRUELA ARANDELA	WASHER ROSETTA	131R
	8	**83935490**		1	PARAFUSO TORNILLO	SCREW VITE	040V
	9	**85807800**		1	SUPORTE SOPORTE	SUPPORT SUPPORTO	300S
	10	**81823235**		1	PARAFUSO TORNILLO	SCREW VITE	040V
	11	**85807859**		1	PARAFUSO TORNILLO	SCREW VITE	040V
	12	**70926538**		1	O'RING JUNTA TORICA	O'RING GUARNIZIONE O-R	158G

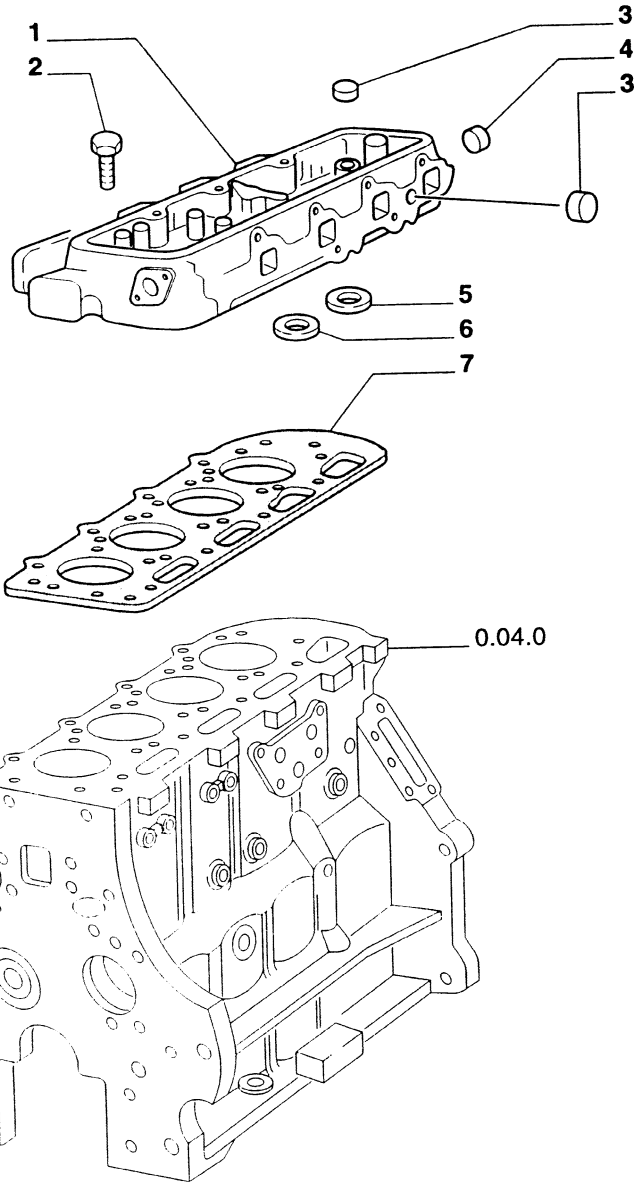

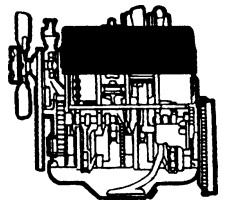

MOD	R	P/N. Imola	P/N. Brazil	Q	Descrição Denominacion	Description Descrizione	L.C.
	1	**81876753**		1	CABEÇOTE DO CILINDRO CULATA	CYLINDER HEAD TESTA CILINDRI	113T
	2	**83948300**		13	PARAFUSO TORNILLO	SCREW VITE	040V
	3	**83957021**		7	BUJÃO TAPON	PLUG TAPPO	050T
	4	**83957025**		AR	BUJÃO TAPON	PLUG TAPPO	050T
	5	**81876756**		4	SEDE VALV ADMIS STD ASIENTO DE VALVULA	VALVE SEAT SEDE VALVOLA	74S1
	5	**81876763**		AR	SEDE VALV ADMIS 0,010 ASIENTO DE VALVULA	VALVE SEAT SEDE VALVOLA	74S2
	5	**81876768**		AR	SEDE VALV ADMIS 0,020 ASIENTO DE VALVULA	VALVE SEAT SEDE VALVOLA	74S3
	6	**81865194**		4	SEDE VALV ESCAP STD ASIENTO DE VALVULA	VALVE SEAT SEDE VALVOLA	74S4
	6	**81865195**		AR	SEDE VALV ESCAP 0,010 ASIENTO DE VALVULA	VALVE SEAT SEDE VALVOLA	74S5
	6	**81865196**		AR	SEDE VALV ESCAP 0,020 ASIENTO DE VALVULA	VALVE SEAT SEDE VALVOLA	74S6
	7	**87800517**		1	JUNTA DE CABEÇOTE JUNTA DA CULATA	GASKET, CYLINDER HEAD GUARNIZIONE TESTA CILIN	129G

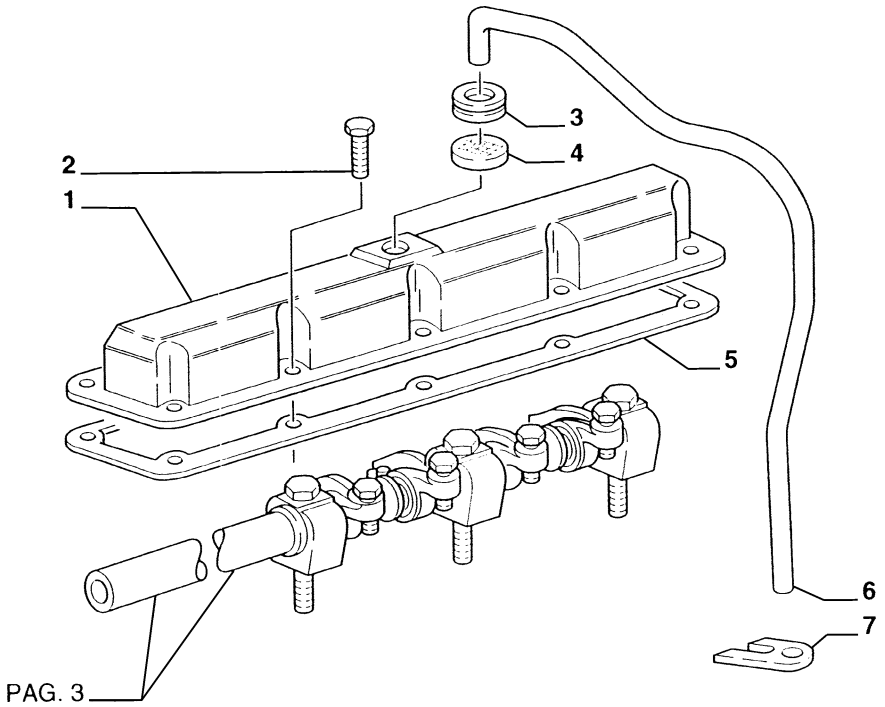

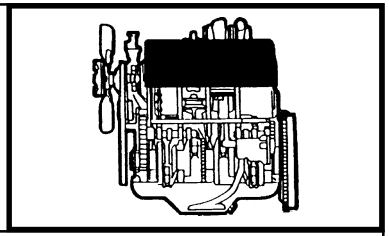

MOD	R	P/N. Imola	P/N. Brazil	Q	Descrição Denominacion	Description Descrizione	L.C.
	1	**87800919**		1	TAMPA TAPA	COVER COPERCHIO	265C
	2	**83949109**		10	PARAFUSO TORNILLO	SCREW VITE	040V
	3	**83958239**		1	ANEL DE VEDAÇÃO JUNTA HERMETICA	SEAL RING ANELLO TENUTA	055A
	4	**87800918**		1	FILTRO FILTRO	FILTER FILTRO	065F
	5	**83976375**		1	JUNTA JUNTA PLANA	GASKET GUARNIZ. PIANA	120G
	6	**87801109**		1	TUBO TUBO	TUBE TUBO RIGIDO	193T
	7	**83991667**		1	GUIA GUIA	GUIDE GUIDA	145G

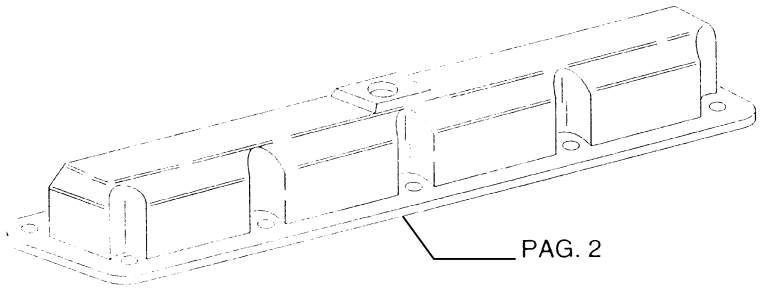

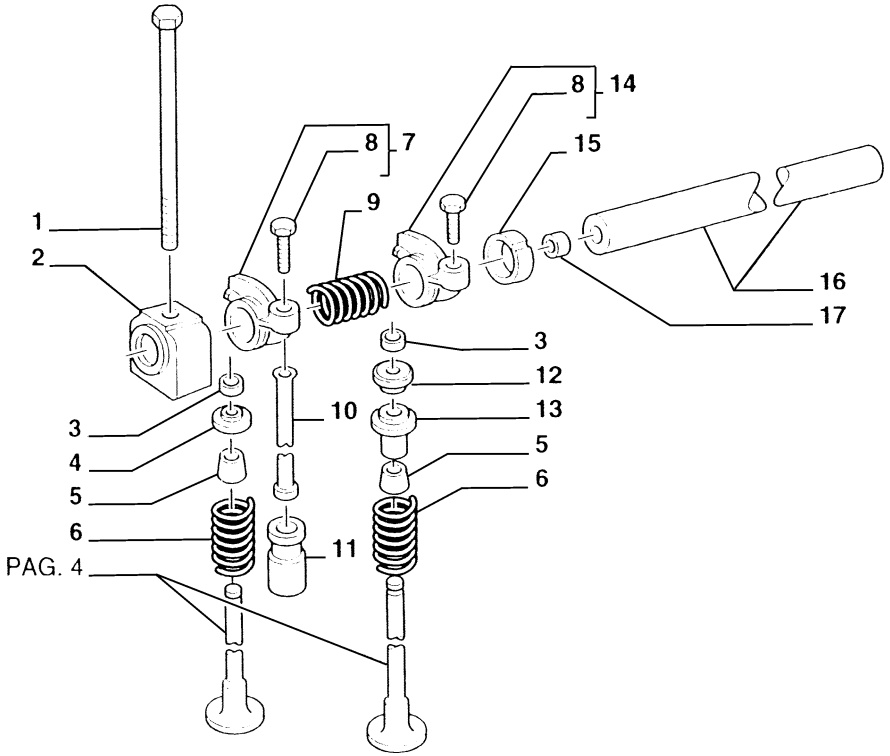

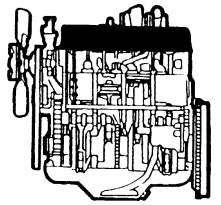

MOD	R	P/N. Imola	P/N. Brazil	Q	Descrição Denominacion	Description Descrizione	L.C.
	1	**83948451**		5	PARAFUSO TORNILLO	SCREW VITE	040V
	2	**83903589**		5	SUPORTE SOPORTE	SUPPORT SUPPORTO	300S
	3	**81876796**		16	SEMI-CONE SEMI-CONE	LOCK CONE SEMICONO	100S
	4	**83958102**		4	PRATO PLATILLO	PLATE PIATTELLO	120P
	5	**87840154**		8	PRATO ARANDELA	CUP SCODELLINO	060S
	6	**83999742**		8	MOLA MUELLE	SPRING MOLLA	100M
	7	**81804316**		4	BALANCIM BALANCIN	ROCKER BILANCIERE	055B
	8	**87801302**		1	PARAFUSO TORNILLO	SCREW VITE	040V
	9	**81804341**		4	MOLA MUELLE	SPRING MOLLA	100M
	10	**81877890**		8	HASTE VARILLA	ROD ASTA	090A
	11	**83946434**		8	PINO ARTICULADO EMPUJADOR	TAPPET PUNTERIA	240P
	12	**83952337**		4	PRATO PLATILLO	PLATE PIATTELLO	120P
	13	**83952336**		4	SEDE ASIENTO	SEAT SEDE	069S
	14	**83956710**		4	BALANCIM BALANCIN	ROCKER BILANCIERE	055B
	15	**81818731**		4	ESPAÇADOR SEPARADOR	SPACER DISTANZIALE	075D
	16	**83960174**		1	EIXO ARBOL	SHAFT ALBERO	016A
	17	**83417040**		2	BUJÃO TAPON	PLUG TAPPO	050T

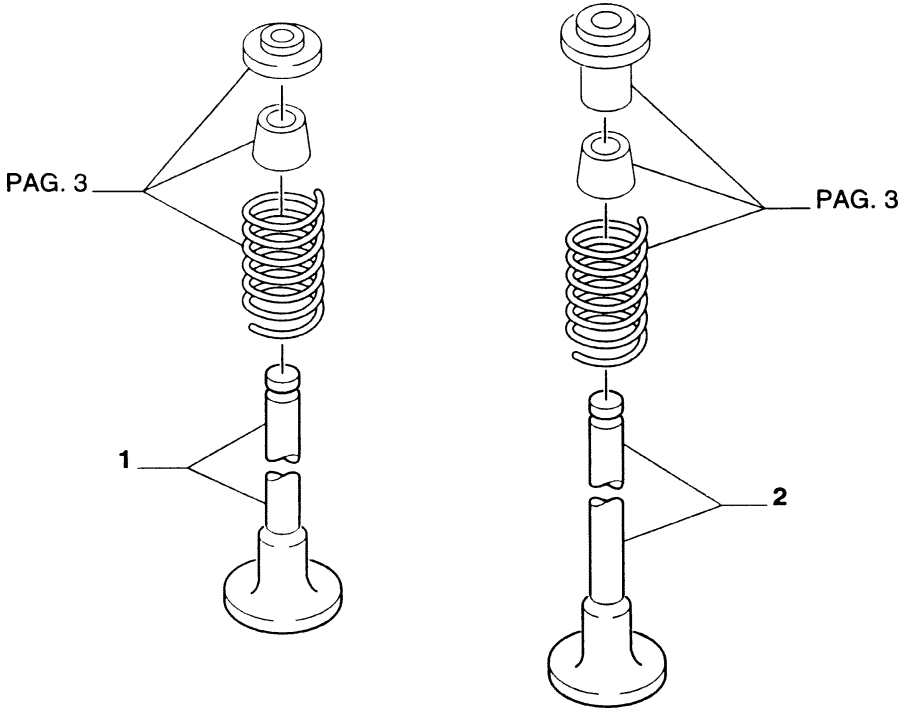

ASPIR Usado en el motor aspirado
TURB Usado en el motor turbinado

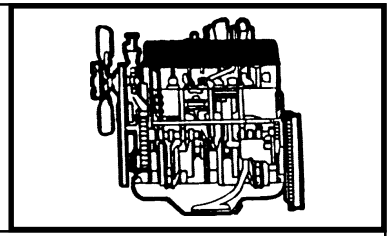

MOD	R	P/N. Imola	P/N. Brazil	Q	Descrição Denominacion	Description Descrizione	L.C.
ASPIR	1	**81865092**		4	VÁLVULA ADMISS STD VALVULA ADMISION	INTAKE VALVE VALVOLA ASPIRAZ	1111
ASPIR	1	**81865093**		AR	VÁLVULA ADMISS 0,015 VALVULA ADMISION	INTAKE VALVE VALVOLA ASPIRAZ	1112
TURB	1	**82850528**		AR	VÁLVULA ADMISS 0,015 VALVULA ADMISION	INTAKE VALVE VALVOLA ASPIRAZ	1112
TURB	1	**82850530**		4	VÁLVULA ADMISS STD VALVULA ADMISION	INTAKE VALVE VALVOLA ASPIRAZ	1111
ASPIR	2	**81865085**		4	VÁLVULA ESCAPE STD VALVULA DE ESCAPE	EXHAUST VALVE VALVOLA SCARICO	1121
ASPIR	2	**81865086**		AR	VÁLVULA ESCAPE 0,015 VALVULA DE ESCAPE	EXHAUST VALVE VALVOLA SCARICO	1122
TURB	2	**82850521**		AR	VÁLVULA ESCAPE 0,015 VALVULA DE ESCAPE	EXHAUST VALVE VALVOLA SCARICO	1122
TURB	2	**82850523**		4	VÁLVULA ESCAPE STD VALVULA DE ESCAPE	EXHAUST VALVE VALVOLA SCARICO	1121

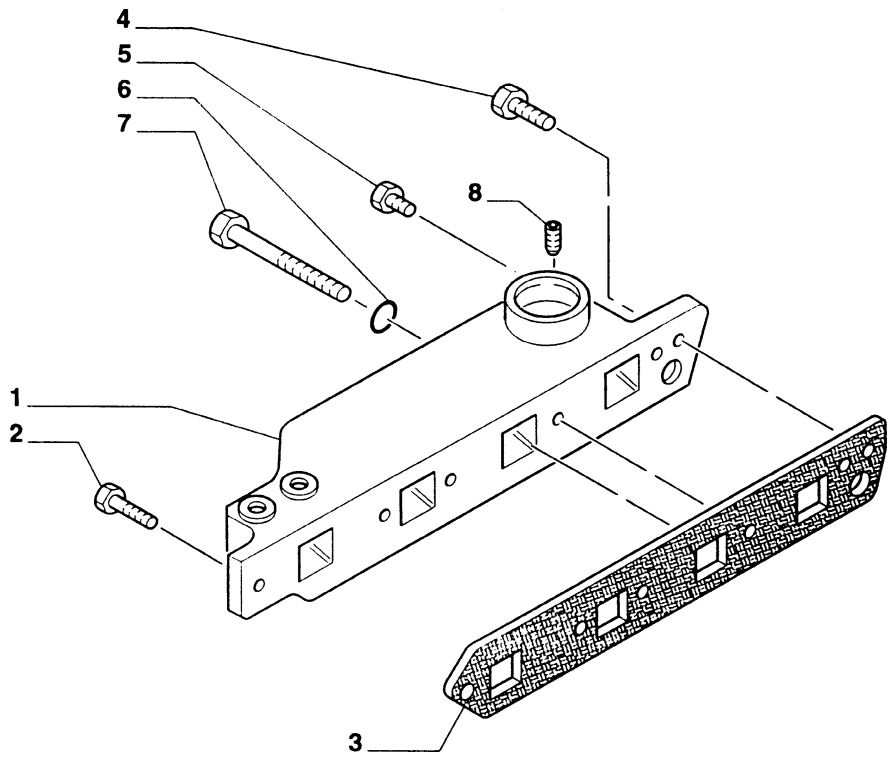

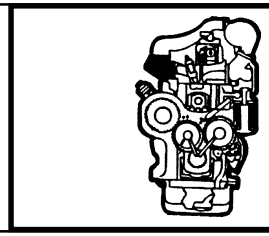

MOD	R	P/N. Imola	P/N. Brazil	Q	Descrição Denominacion	Description Descrizione	L.C.
	1	**87800237**		1	COLETOR ADMIS. COLECTOR ADMIS.	INTAKE MANIFOLD COLLETTORE ASP.	225C
	2	**83958605**		1	PARAFUSO TORNILLO	SCREW VITE	040V
	3	**83999300**		1	JUNTA JUNTA PLANA	GASKET GUARNIZ. PIANA	120G
	4	**81868740**		2	PARAFUSO TORNILLO	SCREW VITE	040V
	5	**83984176**		1	BUJÃO TAPON	PLUG TAPPO	050T
	6	**81868473**		3	O'RING JUNTA TORICA	O'RING GUARNIZIONE O-R	158G
	7	**81868474**		3	PARAFUSO TORNILLO	SCREW VITE	040V
	8	**83933675**		1	SENSOR SENSOR	SENSOR SENSORE	133S

FB80.3 - FB100.3

COLETOR DE ADMISSÃO
COLECTOR DE ADMISION
INTAKE MANIFOLD
CONDOTTO DI ASPIRAZIONE

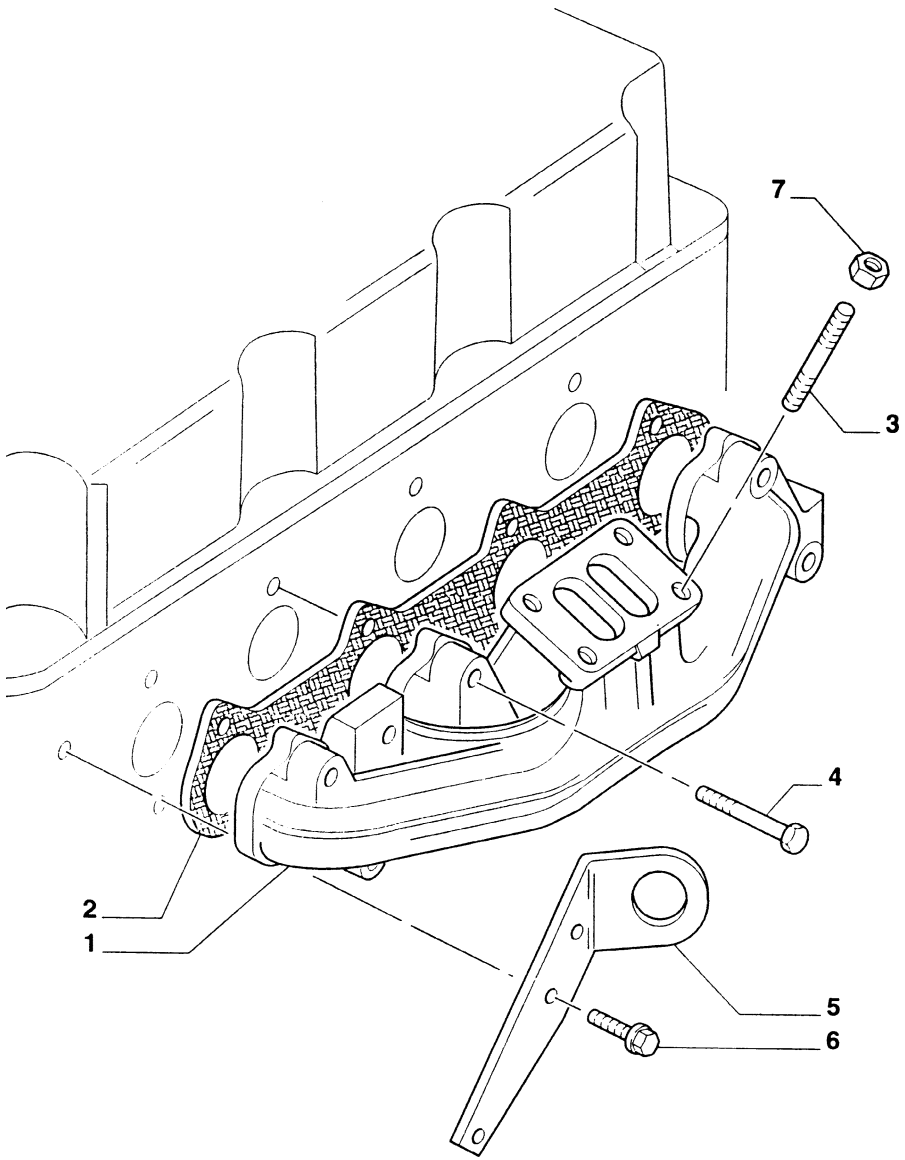

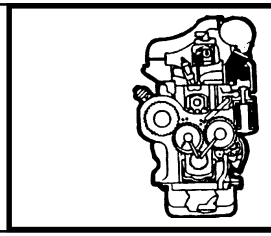

MOD	R	P/N. Imola	P/N. Brazil	Q	Descrição Denominacion	Description Descrizione	L.C.
	1	**87800661**		1	COLETOR ESCAPE COLECTOR ESCAPE	EXHAUST MANIF. COLLETTORE SCAR	230C
	2	**83999221**		1	JUNTA JUNTA PLANA	GASKET GUARNIZ. PIANA	120G
	3	**87801551**		4	PRISIONEIRO ESPARRAGO	STUD PRIGIONIERO	210P
	4	**80050020**		8	PARAFUSO TORNILLO	SCREW VITE	040V
	5	**82852825**		1	SUPORTE SOPORTE	SUPPORT SUPPORTO	300S
	6	**81876801**		2	PARAFUSO TORNILLO	SCREW VITE	040V
	7	**83993005**		4	PORCA TUERCA	NUT DADO	010D

FB80.3 - FB100.3

COLETOR DE ESCAPE
COLECTOR DE ESCAPE
EXHAUST MANIFOLD
CONDOTTO DI SCARICO

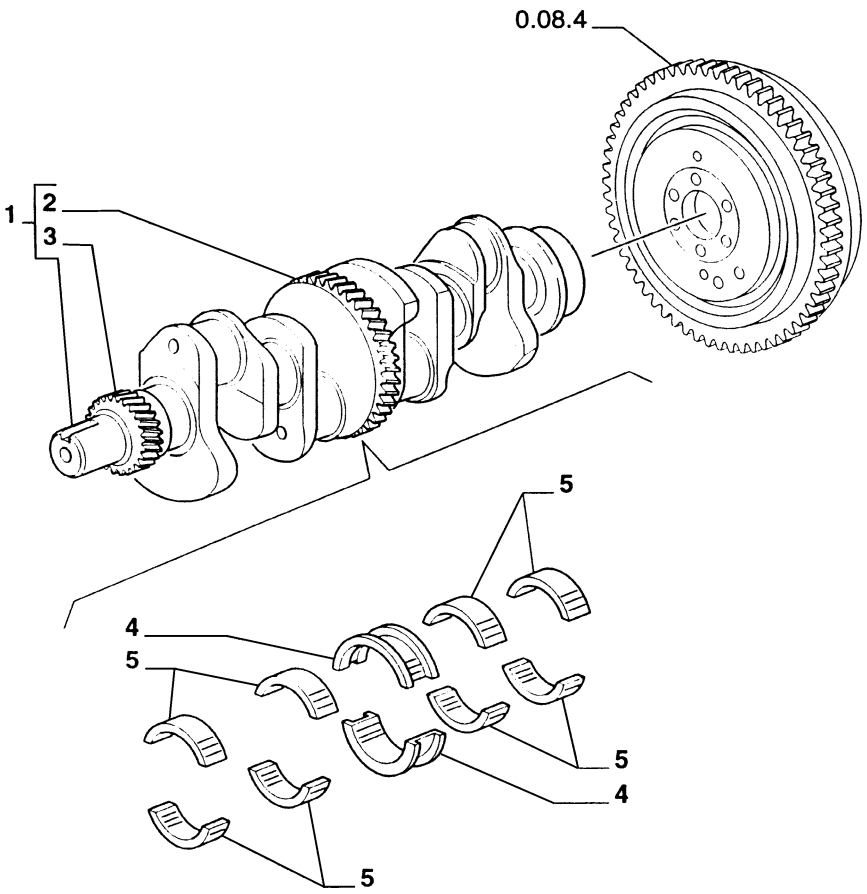

ASPIR Usado en el motor aspirado
TURB Usado en el motor turbinado

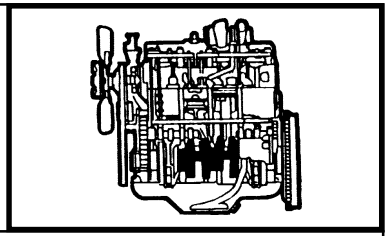

MOD	R	P/N. Imola	P/N. Brazil	Q	Descrição Denominacion	Description Descrizione	L.C.
ASPIR	1	**81869023**		1	VIRABREQUIM CIGUENAL	CRANKSHAFT ALBERO MOTORE	018A
TURB	1	**87800523**		1	VIRABREQUIM CIGUENAL	CRANKSHAFT ALBERO MOTORE	018A
	2	**81872682**		1	ENGRENAGEM CORONA	GEAR INGRANAGGIO	050I
	3	**83998053**		1	ENGRENAGEM CORONA	GEAR INGRANAGGIO	050I
	4	**81877667**		1	BRONZINA STD CASQUILLO	SHELL ENG BLOCK SEMICUSCINETO	330S
	4	**87790267**		1	BRONZINA 0,002 CASQUILLO	SHELL ENG BLOCK SEMICUSCINETO	331S
	4	**87790268**		1	BRONZINA 0,010 CASQUILLO	SHELL ENG BLOCK SEMICUSCINETO	332S
	4	**87790269**		1	BRONZINA 0,020 CASQUILLO	SHELL ENG BLOCK SEMICUSCINETO	333S
	4	**87790270**		1	BRONZINA 0,030 CASQUILLO	SHELL ENG BLOCK SEMICUSCINETO	334S
	4	**87790271**		1	BRONZINA 0,040 CASQUILLO	SHELL ENG BLOCK SEMICUSCINETO	335S
	5	**81877668**		4	BRONZINA STD CASQUILLO	SHELL ENG BLOCK SEMICUSCINETO	330S
	5	**87790261**		4	BRONZINA 0,002 CASQUILLO	SHELL ENG BLOCK SEMICUSCINETO	331S
	5	**87790262**		4	BRONZINA 0,010 CASQUILLO	SHELL ENG BLOCK SEMICUSCINETO	332S
	5	**87790263**		4	BRONZINA 0,020 CASQUILLO	SHELL ENG BLOCK SEMICUSCINETO	333S
	5	**87790264**		4	BRONZINA 0,030 CASQUILLO	SHELL ENG BLOCK SEMICUSCINETO	334S
	5	**87790265**		4	BRONZINA 0,040 CASQUILLO	SHELL ENG BLOCK SEMICUSCINETO	335S

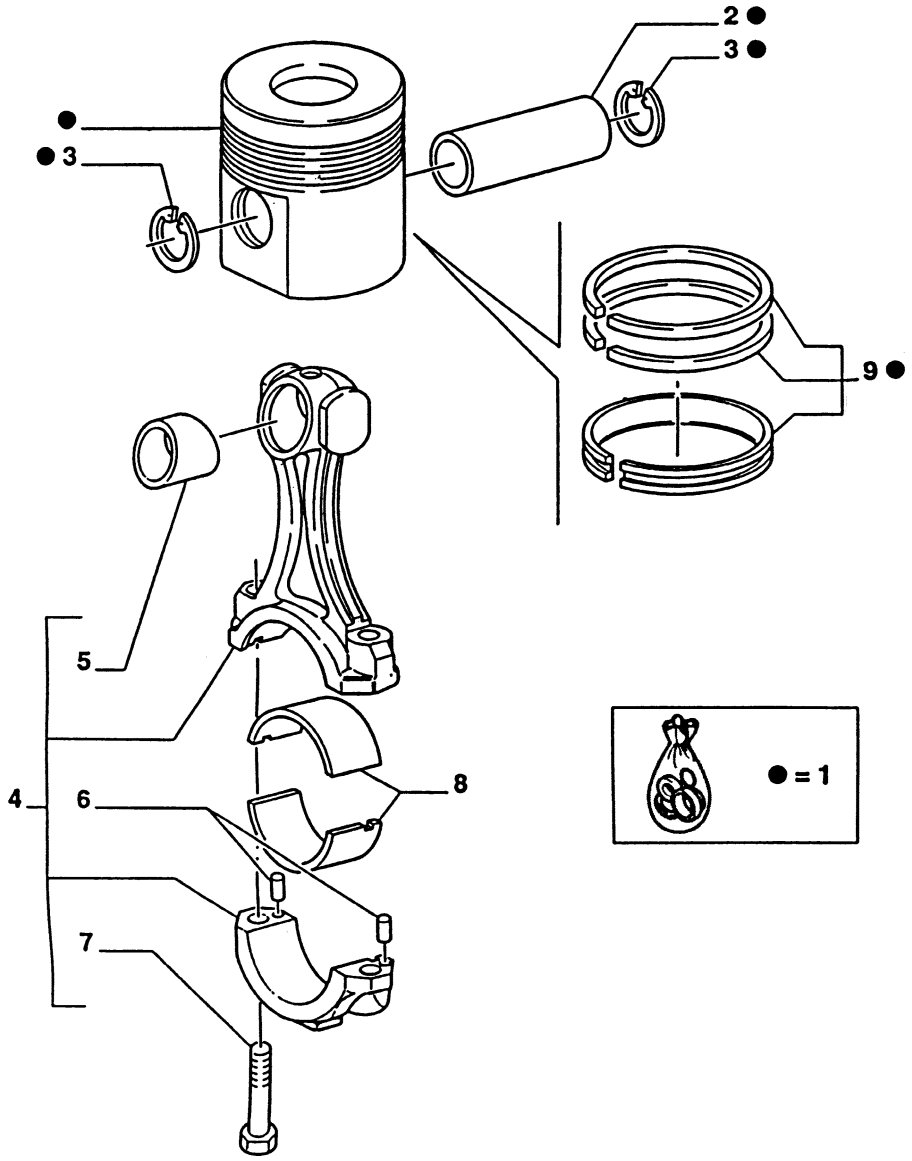

ASPIR Usado en el motor aspirado

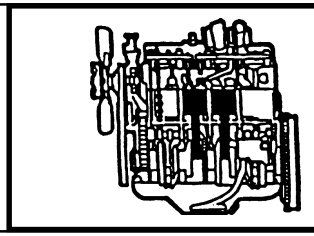

MOD	R	P/N. Imola	P/N. Brazil	Q	Descrição Denominacion	Description Descrizione	L.C.
ASPIR	1	**81873450**		4	KIT PISTÃO C/ANEIS 0,004 PISTON COMPL	KIT PISTON & RINGS SERIE STANTUFFI E	3131
ASPIR	1	**81873452**		4	KIT PISTÃO C/ANEIS 0,020 PISTON COMPL	KIT PISTON & RINGS SERIE STANTUFFI E	3132
ASPIR	1	**81873453**		4	KIT PISTÃO C/ANEIS 0,030 PISTON COMPL	KIT PISTON & RINGS SERIE STANTUFFI E	3133
ASPIR	1	**87801071**		4	KIT PISTÃO C/ANEIS STD PISTON COMPL	KIT PISTON & RINGS SERIE STANTUFFI E	313S
ASPIR	2	**83958629**		4	PINO BULON	PIN PERNO	080P
ASPIR	3	**81823836**		8	ANEL ELÅSTICO ANILLO ELASTICO	SNAP RING ANELLO ELASTICO	187A
ASPIR	4	**81875622**		4	BIELA DO MOTOR BIELA	CONNECTING ROD BIELLA MOTORE	051B
ASPIR	5	**87840995**		4	BUCHA BUJE	BUSHING BOCCOLA	095B
	6	**83991680**		8	PINO BULON	PIN PERNO	080P
	7	**83991682**		8	PARAFUSO TORNILLO	SCREW VITE	040V
	8	**87790304**		4	BRONZINA STD CASQUILLO	SHELL ENG BLOCK SEMICUSCINETO	330S
	8	**87790305**		4	BRONZINA 0,002 CASQUILLO	SHELL ENG BLOCK SEMICUSCINETO	331S
	8	**87790306**		4	BRONZINA 0,010 CASQUILLO	SHELL ENG BLOCK SEMICUSCINETO	332S
	8	**87790307**		4	BRONZINA 0,020 CASQUILLO	SHELL ENG BLOCK SEMICUSCINETO	333S
	8	**87790308**		4	BRONZINA 0,030 CASQUILLO	SHELL ENG BLOCK SEMICUSCINETO	334S
	8	**87790309**		4	BRONZINA 0,040 CASQUILLO	SHELL ENG BLOCK SEMICUSCINETO	335S
ASPIR	9	**87801095**		4	ANEIS SEGMENTO STD AROS DE EMBOLO	PISTONS RINGS ANELLI STANTUFF	A062
ASPIR	9	**87801096**		4	ANEIS SEGMENTO 0,020 AROS DE EMBOLO	PISTONS RINGS ANELLI STANTUFF	A063
ASPIR	9	**87801097**		4	ANEIS SEGMENTO 0,030 AROS DE EMBOLO	PISTONS RINGS ANELLI STANTUFF	A064
ASPIR	9	**87801098**		4	ANEIS SEGMENTO 0,040 AROS DE EMBOLO	PISTONS RINGS ANELLI STANTUFF	A065

FB80.3

PISTÃO E BIELA
PISTON Y BIELA
PISTON AND CONECTING ROD
PISTONE E BIELLA

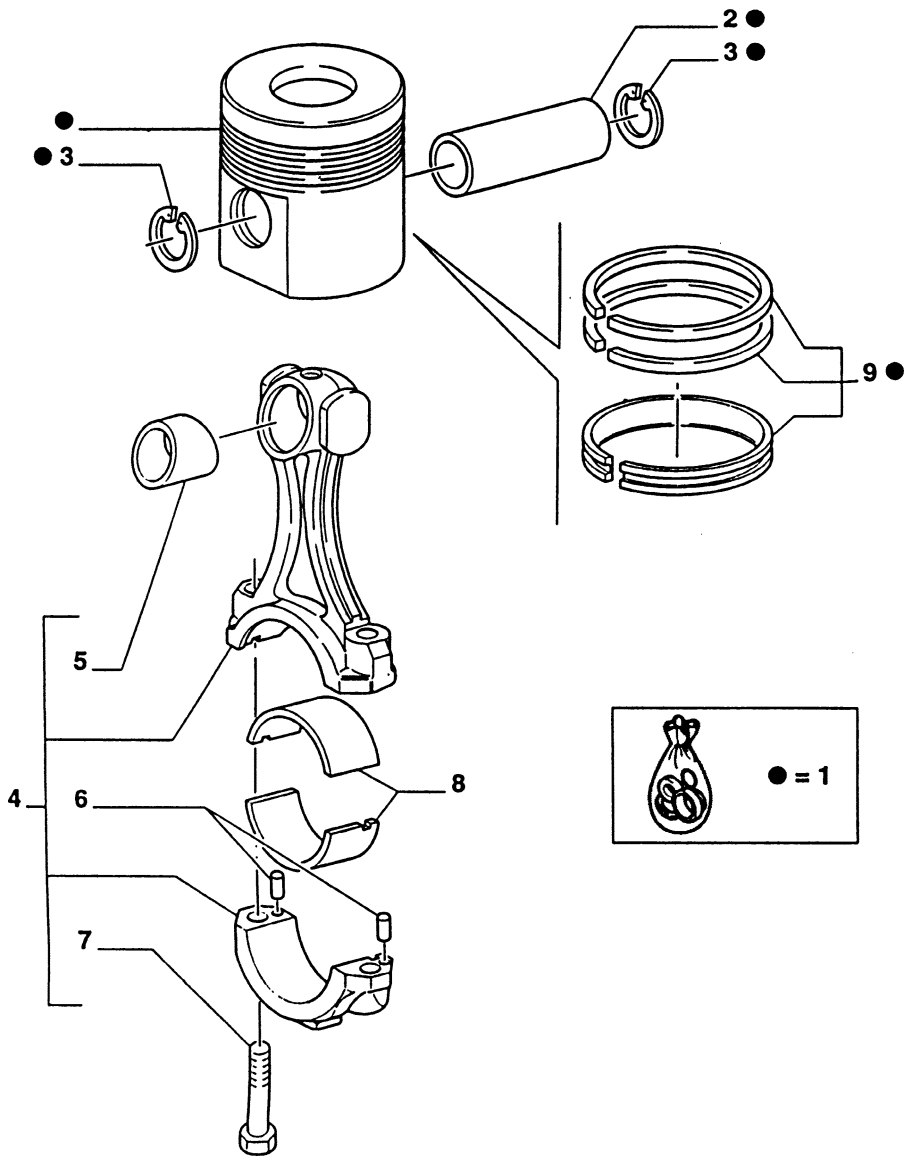

TURB Usado en el motor turbinado

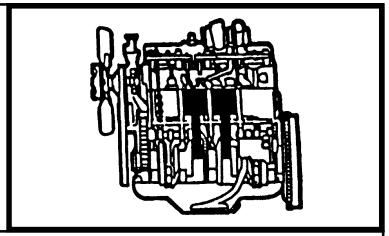

MOD	R	P/N. Imola	P/N. Brazil	Q	Descrição Denominacion	Description Descrizione	L.C.
TURB	1	**81873457**		4	KIT PISTÃO C/ANEIS 0,004 PISTON COMPL	KIT PISTON & RINGS SERIE STANTUFFI E	3131
TURB	1	**81873458**		4	KIT PISTÃO C/ANEIS 0,020 PISTON COMPL	KIT PISTON & RINGS SERIE STANTUFFI E	3132
TURB	1	**81873460**		4	KIT PISTÃO C/ANEIS 0,030 PISTON COMPL	KIT PISTON & RINGS SERIE STANTUFFI E	3133
TURB	1	**87800537**		4	KIT PISTÃO C/ANEIS STD PISTON COMPL	KIT PISTON & RINGS SERIE STANTUFFI E	313S
TURB	2	**83962729**		4	PINO BULON	PIN PERNO	080P
TURB	3	**81821513**		8	ANEL ELÁSTICO ANILLO ELASTICO	SNAP RING ANELLO ELASTICO	187A
TURB	4	**87801219**		4	BIELA DO MOTOR BIELA	CONNECTING ROD BIELLA MOTORE	051B
TURB	5	**87840994**		4	BUCHA BUJE	BUSHING BOCCOLA	095B
	6	**83991680**		8	PINO BULON	PIN PERNO	080P
	7	**83991682**		8	PARAFUSO TORNILLO	SCREW VITE	040V
	8	**87790304**		4	BRONZINA STD CASQUILLO	SHELL ENG BLOCK SEMICUSCINETO	330S
	8	**87790305**		4	BRONZINA 0,002 CASQUILLO	SHELL ENG BLOCK SEMICUSCINETO	331S
	8	**87790306**		4	BRONZINA 0,010 CASQUILLO	SHELL ENG BLOCK SEMICUSCINETO	332S
	8	**87790307**		4	BRONZINA 0,020 CASQUILLO	SHELL ENG BLOCK SEMICUSCINETO	333S
	8	**87790308**		4	BRONZINA 0,030 CASQUILLO	SHELL ENG BLOCK SEMICUSCINETO	334S
	8	**87790309**		4	BRONZINA 0,040 CASQUILLO	SHELL ENG BLOCK SEMICUSCINETO	335S
TURB	9	**87801086**		4	ANEIS SEGMENTO STD AROS DE EMBOLO	PISTONS RINGS ANELLI STANTUFF	A062
TURB	9	**87801087**		4	ANEIS SEGMENTO 0,020 AROS DE EMBOLO	PISTONS RINGS ANELLI STANTUFF	A063
TURB	9	**87801088**		4	ANEIS SEGMENTO 0,030 AROS DE EMBOLO	PISTONS RINGS ANELLI STANTUFF	A064
TURB	9	**87801089**		4	ANEIS SEGMENTO 0,040 AROS DE EMBOLO	PISTONS RINGS ANELLI STANTUFF	A065

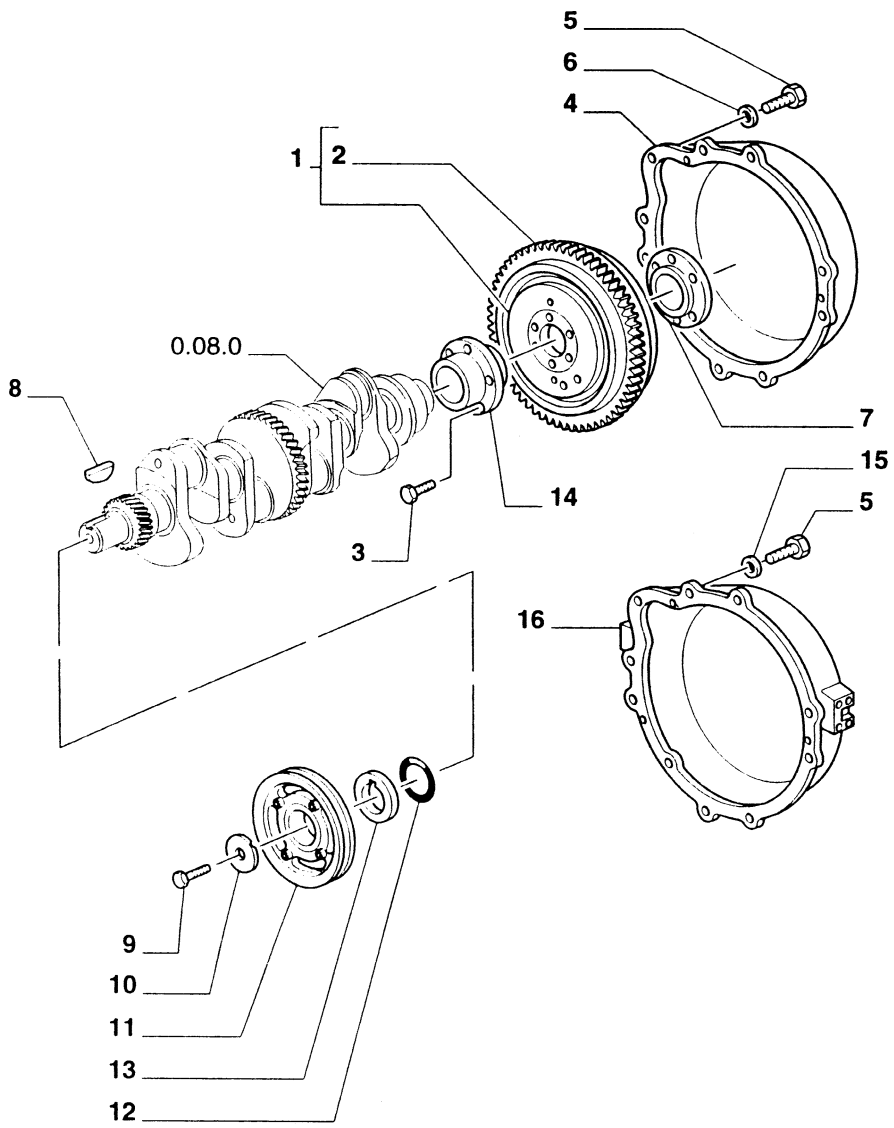

ASPIR Usado en el motor aspirado
TURB Usado en el motor turbinado

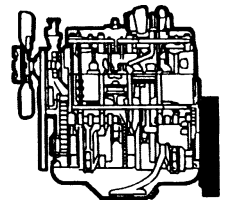

MOD	R	P/N. Imola	P/N. Brazil	Q	Descrição Denominacion	Description Descrizione	L.C.
	1	**83963740**		1	VOLANTE DO MOTOR VOLANTE	FLYWHEEL VOLANO	048V
	2	**83949153**		1	CREMALHEIRA CREMALLERA	RACK CREMAGLIERA	312C
	3	**83909957**		6	PARAFUSO TORNILLO	SCREW VITE	040V
TURB	4	**87800419**		1	CARCAÇA CAJA	CASE SCATOLA	035S
	5	**80088556**		4	PARAFUSO TORNILLO	SCREW VITE	040V
	5	**81844835**		2	PARAFUSO TORNILLO	SCREW VITE	040V
TURB	6	**80087340**		4	ARRUELA ARANDELA	WASHER ROSETTA	131R
	7	**87800709**		1	AMORTEC.VIBRAÇÃO AMORTIGUADOR	DAMPER AMMORTIZZATORE	036A
	8	**83956433**		1	CHAVETA CHAVETA	KEY LINGUETTA	060L
	9	**82895561**		1	PARAFUSO TORNILLO	SCREW VITE	040V
	10	**83990589**		1	ARRUELA ARANDELA	WASHER ROSETTA	131R
	11	**83957692**		1	POLIA POLEA	PULLEY PULEGIA	230P
	12	**83948687**		1	O'RING JUNTA TORICA	O'RING GUARNIZIONE O-R	158G
	13	**87800706**		1	ESPAÇADOR SEPARADOR	SPACER DISTANZIALE	075D
	14	**87800710**		1	ACOPLAMENTO ACOPLAMIENTO	COUPLING INNESTO	25GA
ASPIR	15	**80084057**		4	ARRUELA ARANDELA	WASHER ROSETTA	131R
ASPIR	16	**83963839**		1	CARCAÇA CAJA	CASE SCATOLA	035S

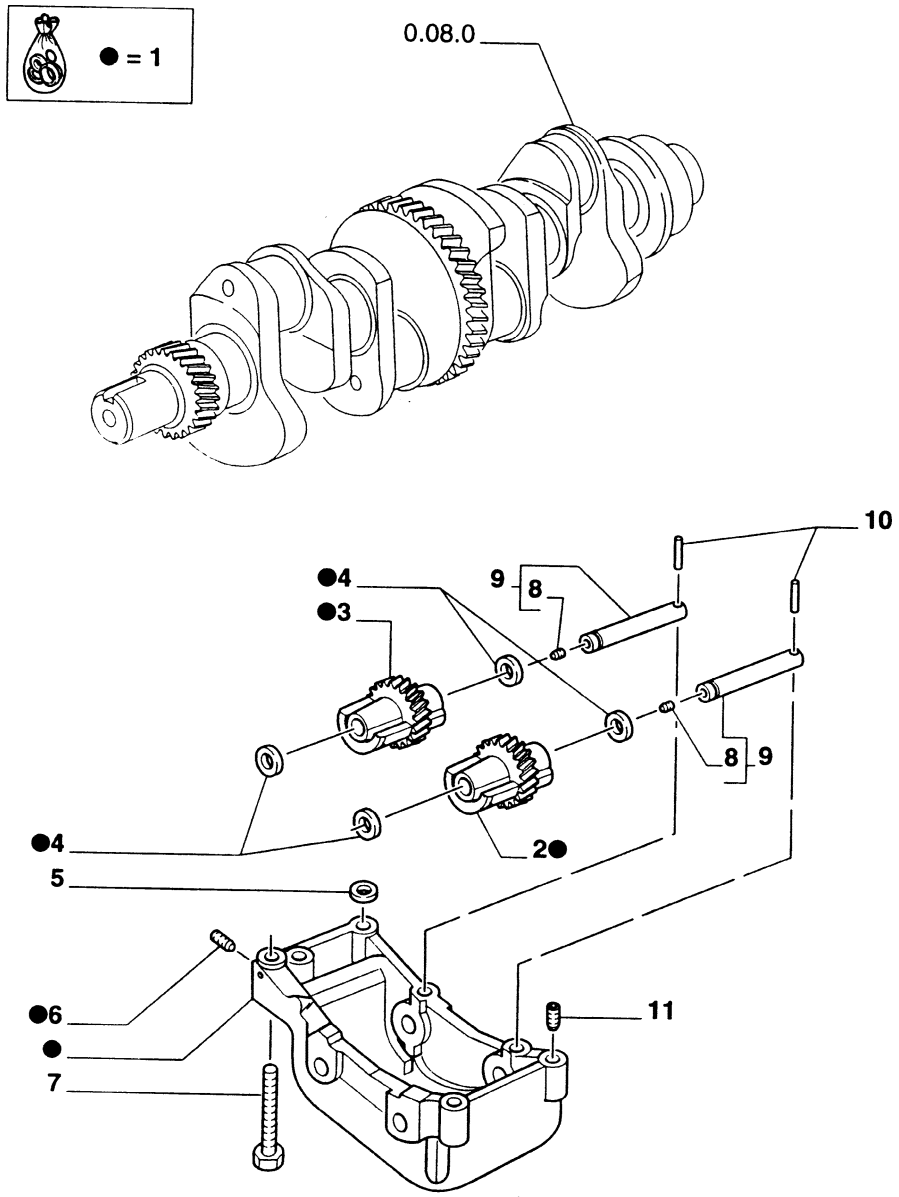

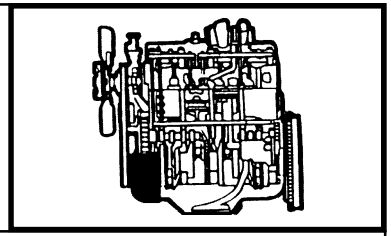

MOD	R	P/N. Imola	P/N. Brazil	Q	Descrição Denominacion	Description Descrizione	L.C.
	1	**81868467**		1	CARCAÇA CAJA	CASE SCATOLA	035S
	2	**81868470**		1	CONTRAPESO CONTRAPESO	COUNTERWEIGHT CONTRAPPESO	061C
	3	**81868468**		1	CONTRAPESO CONTRAPESO	COUNTERWEIGHT CONTRAPPESO	061C
	4	**81804059**		4	ARRUELA ARANDELA	WASHER ROSETTA	131R
	5	**83417161**		1	ANEL DE VEDAÇÃO JUNTA HERMETICA	SEAL RING ANELLO TENUTA	055A
	6	**83998890**		1	BUJÃO TAPON	PLUG TAPPO	050T
	7	**83946431**		4	PARAFUSO TORNILLO	SCREW VITE	040V
	8	**81825520**		1	BUJÃO TAPON	PLUG TAPPO	050T
	9	**81867918**		2	EIXO ARBOL	SHAFT ALBERO	016A
	10	**83998857**		2	PINO BULON	PIN PERNO	080P
	11	**83960218**		2	PINO CENTRAGEM TETON	DOWEL GRANO	090G

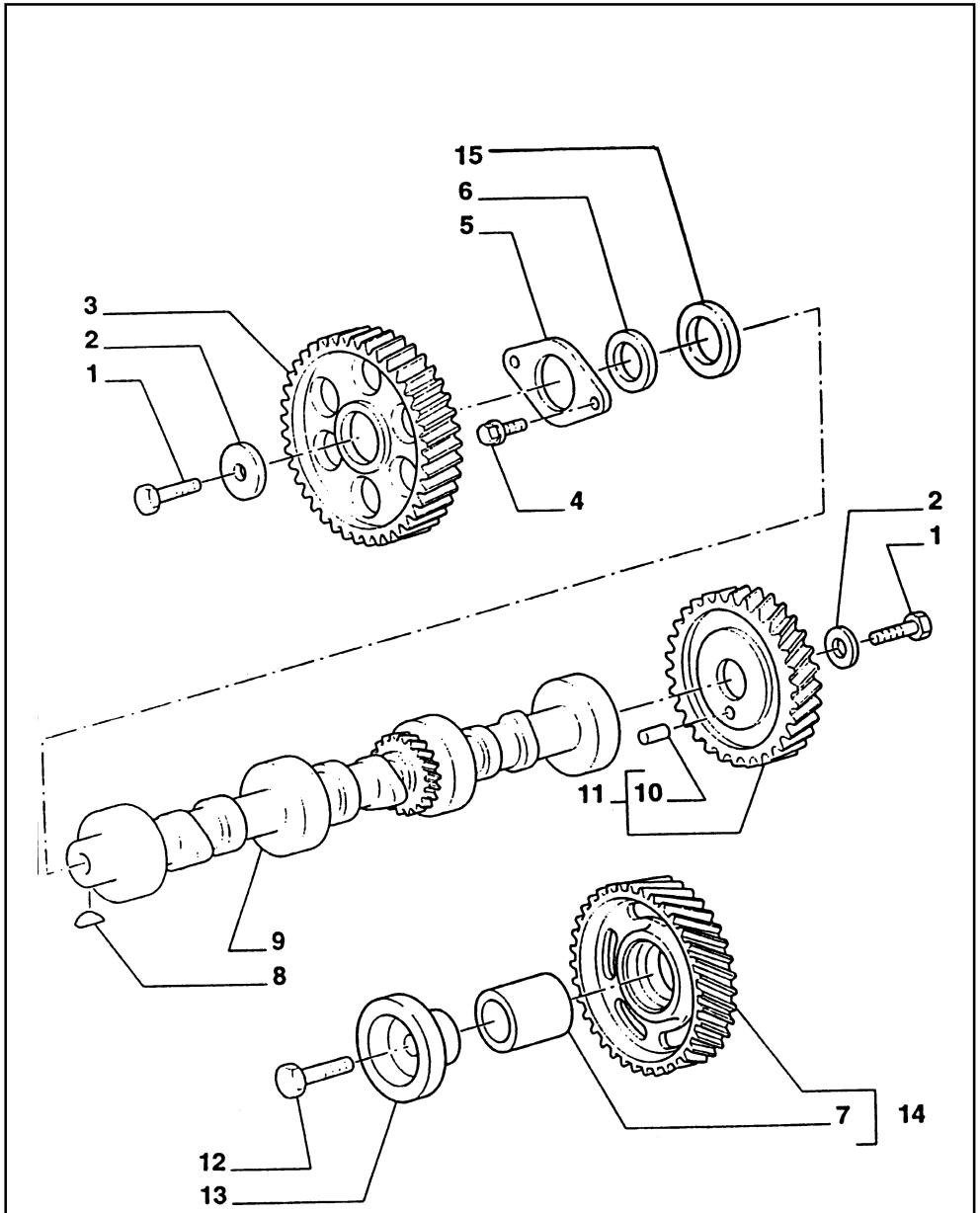

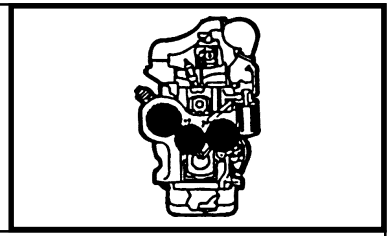

MOD	R	P/N. Imola	P/N. Brazil	Q	Descrição Denominacion	Description Descrizione	L.C.
	1	**83909101**		2	PARAFUSO TORNILLO	SCREW VITE	040V
	2	**81804024**		2	ARRUELA ARANDELA	WASHER ROSETTA	131R
	3	**83963173**		1	ENGRENAGEM CORONA	GEAR INGRANAGGIO	050I
	4	**83956692**		2	PARAFUSO TORNILLO	SCREW VITE	040V
	5	**83957730**		1	PLACA PLACA	PLATE PIASTRINA	110P
	6	**81804020**		1	ANEL ARO	RING ANELLO	045A
	7	**83923678**		1	ESPAÇADOR SEPARADOR	SPACER DISTANZIALE	075D
	8	**83416019**		1	CHAVETA CHAVETA	KEY LINGUETTA	060L
	9	**83999236**		1	EIXO COMANDO VÁLVULA ARBOL DE LEVAS	CAMSHAFT ALBERO ECCENTR.	017A
	10	**81877662**		1	PINO CENTRAGEM TETON	DOWEL GRANO	090G
	11	**83937074**		1	ENGRENAGEM CORONA	GEAR INGRANAGGIO	050I
	12	**82852337**		1	PARAFUSO TORNILLO	SCREW VITE	040V
	13	**87840571**		1	BLOCO CALCE	BLOCK BLOCCHETTO	074B
	14	**83963174**		1	ENGRENAGEM CORONA	GEAR INGRANAGGIO	050I
	15	**81810777**		4	BUCHA BUJE	BUSHING BOCCOLA	095B

FB80.3 - FB100.3

COMANDO DE VÁLVULAS
ENGRAN. DE MANDO EMPUJAD. Y VARILLAS
DRIVE-GEARING TAPPETS AND PUSHRODS
RUOTISMI DI COMANDO ASTE E PUNTERIE

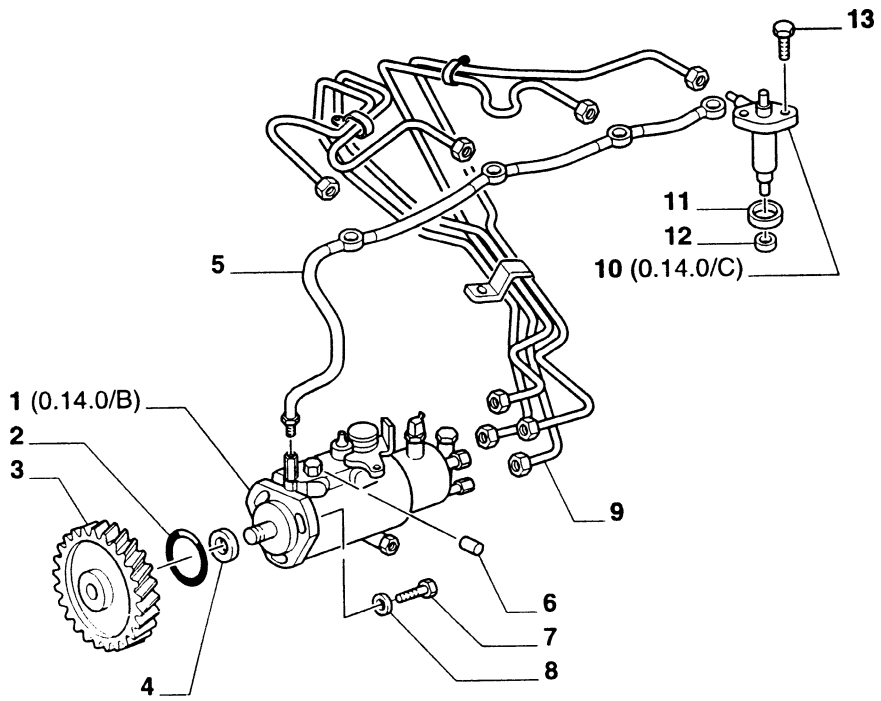

ASPIR Usado en el motor aspirado
TURB Usado en el motor turbinado

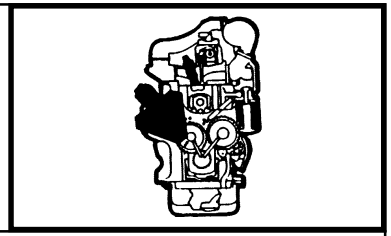

MOD	R	P/N. Imola	P/N. Brazil	Q	Descrição Denominacion	Description Descrizione	L.C.
ASPIR	1	**87840745**		1	BOMBA INJETORA BOMBA INYECCION	INJECTION PUMP POMPA INIEZIONE	158P
TURB	1	**87840747**		1	BOMBA INJETORA BOMBA INYECCION	INJECTION PUMP POMPA INIEZIONE	158P
	2	**80510185**		1	O'RING JUNTA TORICA	O'RING GUARNIZIONE O-R	158G
	3	**83991490**		1	ENGRENAGEM CORONA	GEAR INGRANAGGIO	050I
	4	**81877117**		1	ANEL DE VEDAÇÃO JUNTA HERMETICA	SEAL RING ANELLO TENUTA	055A
	5	**82850875**		1	MANGUEIRA MANGA C/RACORDE	HOSE ASSY TUBO FLESSIBILE	192T
	6	**83982674**		1	ESPAÇADOR SEPARADOR	SPACER DISTANZIALE	075D
	7	**82855493**		3	PARAFUSO TORNILLO	SCREW VITE	040V
	8	**83925582**		3	ARRUELA ARANDELA	WASHER ROSETTA	131R
	9	**82853807**		1	TUBULAÇÃO TUBERIA	PIPING TUBAZIONI	82GD
ASPIR	10	**81868877**		4	INJETOR COMPLETO INYECTOR	INJECTOR ASSY INIETTORE	089I
TURB	10	**81868878**		4	INJETOR COMPLETO INYECTOR	INJECTOR ASSY INIETTORE	089I
	11	**81806277**		4	ANEL DE VEDAÇÃO JUNTA HERMETICA	SEAL RING ANELLO TENUTA	055A
	12	**81873921**		4	ARRUELA ARANDELA	WASHER ROSETTA	131R
	13	**87840522**		8	PARAFUSO TORNILLO	SCREW VITE	040V

FB80.3 - FB100.3

BOMBA DE INJEÇÃO DE COMBUSTÍVEL
ENS. SISTEMA DE CIRCULACION CON BOMBA DE COMBUSTIBILE DE INYECCION
FUEL SYSTEM INJECTION PUMP
SISTEMA DI ALIMENTAZIONE CON POMPA DI INIEZIONE

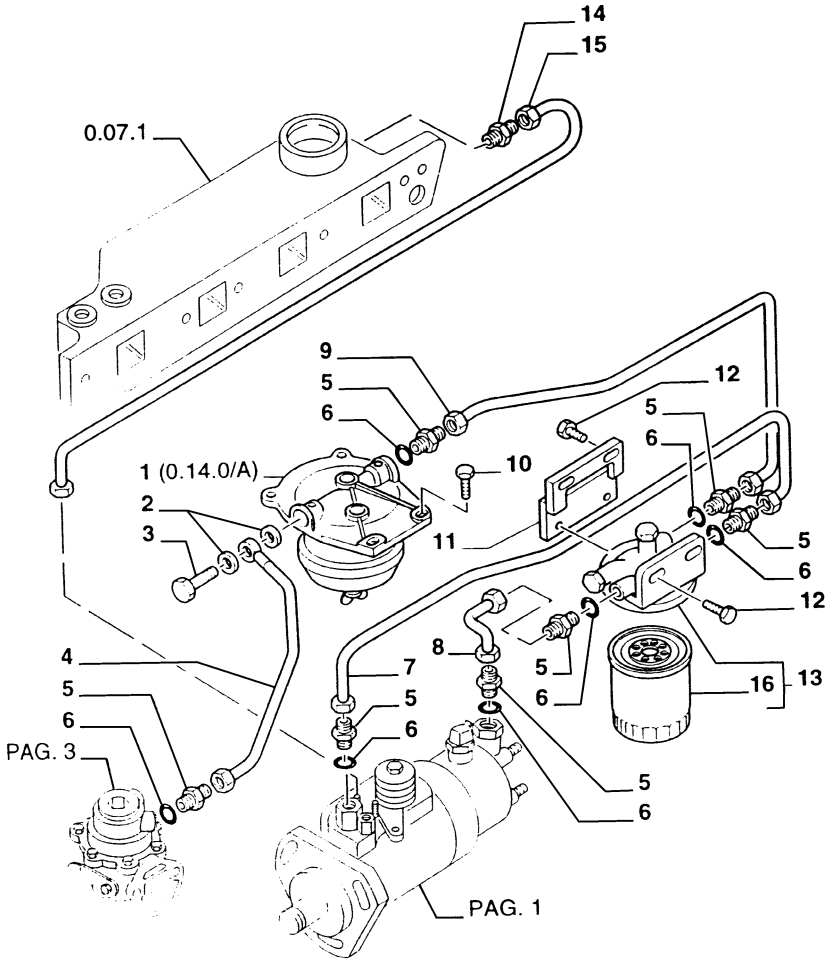

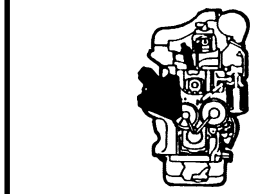

MOD	R	P/N. Imola	P/N. Brazil	Q	Descrição Denominacion	Description Descrizione	L.C.
	1	**81871476**		1	FILTRO FILTRO	FILTER FILTRO	065F
	2	**81868477**		2	ARRUELA ARANDELA	WASHER ROSETTA	131R
	3	**81868478**		1	PARAFUSO TORNILLO	SCREW VITE	040V
	4	**87800243**		1	TUBO TUBO	TUBE TUBO RIGIDO	193T
	5	**83947824**		7	CONEXÃO RACOR	FITTING RACCORDO	020R
	6	**80033323**		7	O'RING JUNTA TORICA	O'RING GUARNIZIONE O-R	158G
	7	**87800609**		1	TUBO TUBO	TUBE TUBO RIGIDO	193T
	8	**87800187**		1	TUBO TUBO	TUBE TUBO RIGIDO	193T
	9	**81869613**		1	TUBO TUBO	TUBE TUBO RIGIDO	193T
	10	**81868740**		1	PARAFUSO TORNILLO	SCREW VITE	040V
	10	**83958605**		1	PARAFUSO TORNILLO	SCREW VITE	040V
	11	**87800188**		1	SUPORTE SOPORTE	SUPPORT SUPPORTO	300S
	12	**83995273**		4	PARAFUSO TORNILLO	SCREW VITE	040V
	13	**87800677**		1	FILTRO FILTRO	FILTER FILTRO	065F
	14	**83976351**		1	CONEXÃO RACOR	FITTING RACCORDO	020R
	15	**83999194**		1	TUBO TUBO	TUBE TUBO RIGIDO	193T
	16	**87800220**		1	FILTRO COMBUST. FILTRO COMBUST.	FUEL FILTER FILTRO COMBUST.	064F

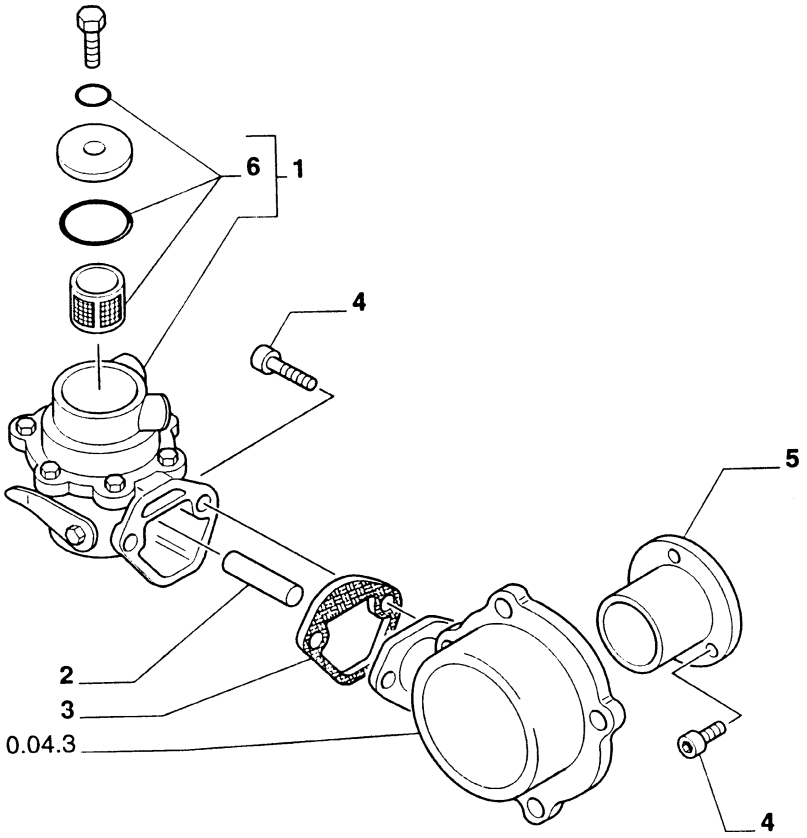

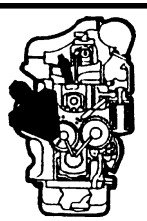

MOD	R	P/N. Imola	P/N. Brazil	Q	Descrição Denominacion	Description Descrizione	L.C.
	1	**87800194**		1	BOMBA ALIMENT. BOMBA ALIMENT.	FUEL PUMP POMPA ALIMENT.	154P
	2	**87800193**		1	HASTE VARILLA	ROD ASTA	090A
	3	**87800195**		1	JUNTA JUNTA PLANA	GASKET GUARNIZ. PIANA	120G
	4	**87800410**		5	PARAFUSO TORNILLO	SCREW VITE	040V
	5	**87800192**		1	CUBO CUBO,BUJE	HUB MOZZO	135M
	6	**9969212**		1	KIT JUEGO	KIT KIT	002K

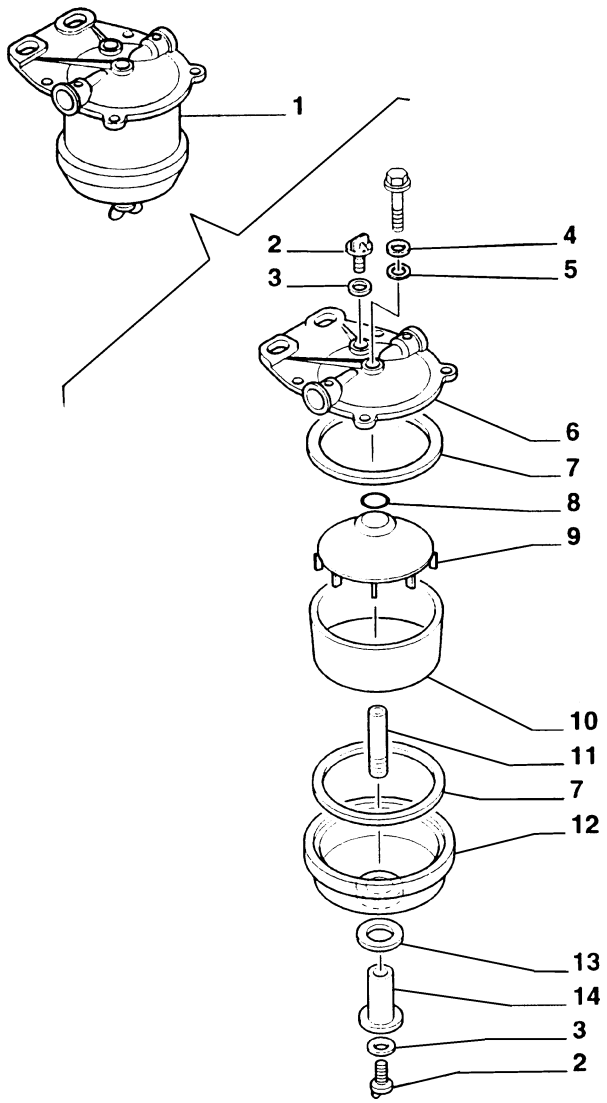

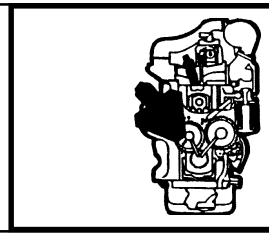

MOD	R	P/N. Imola	P/N. Brazil	Q	Descrição Denominacion	Description Descrizione	L.C.
	1	**81871476**		1	FILTRO FILTRO	FILTER FILTRO	065F
	2	**81825360**		2	BUJÃO TAPON	PLUG TAPPO	050T
	3	**81825363**		2	ARRUELA ARANDELA	WASHER ROSETTA	131R
	4	**81833781**		1	ARRUELA ARANDELA	WASHER ROSETTA	131R
	5	**81811884**		1	ANEL DE VEDAÇÃO JUNTA HERMETICA	SEAL RING ANELLO TENUTA	055A
	6	**81871477**		1	TAMPA TAPA	COVER COPERCHIO	265C
	7	**83914036**		2	RETENTOR EMPAQUETADURA	SEAL ASSY GUARNIZIONE	123G
	8	**80229317**		1	ANEL DE VEDAÇÃO JUNTA HERMETICA	SEAL RING ANELLO TENUTA	055A
	9	**81871478**		1	ELEM. FILTRANTE FILTRO	FILTERING ELEM. ELEM. FILTRANTE	020E
	10	**83916922**		1	ELEM. FILTRANTE FILTRO	FILTERING ELEM. ELEM. FILTRANTE	020E
	11	**81871481**		1	PARAFUSO TORNILLO	SCREW VITE	040V
	12	**81871479**		1	CARCAÇA CAJA	CASE SCATOLA	035S
	13	**81871480**		1	ARRUELA ARANDELA	WASHER ROSETTA	131R
	14	**81871482**		1	PINO BULON	PIN PERNO	080P

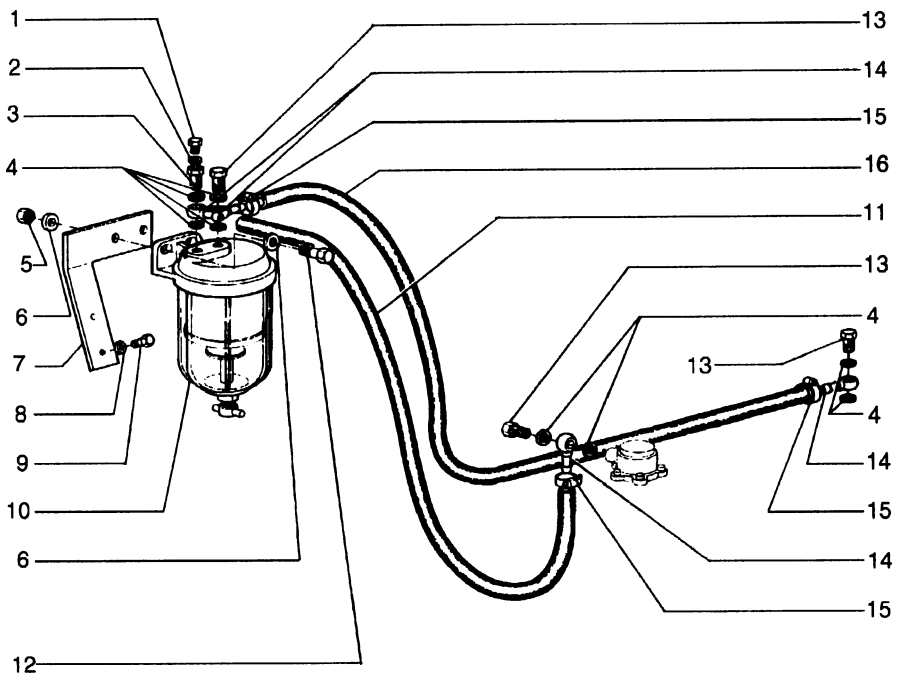

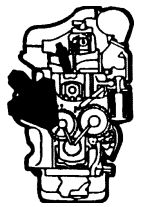

MOD	R	P/N. Imola	P/N. Brazil	Q	Descrição Denominacion	Description Descrizione	L.C.
	1		**75288852**	1	BUJÃO TAPON	PLUG TAPPO	050T
	2		**10279985**	1	ARRUELA ARANDELA	WASHER ROSETTA	131R
	3		**75288850**	1	CONEXÃO RACOR	FITTING RACCORDO	020R
	4		**10279985**	8	ARRUELA ARANDELA	WASHER ROSETTA	131R
	5		**16104121**	2	PORCA TUERCA	NUT DADO	010D
	6		**70930370**	3	ARRUELA ARANDELA	WASHER ROSETTA	131R
	7		**85807296**	1	SUPORTE SOPORTE	SUPPORT SUPPORTO	300S
	8		**12644421**	2	ARRUELA ARANDELA	WASHER ROSETTA	131R
	9		**70928182**	2	PARAFUSO TORNILLO	SCREW VITE	040V
	10		**75250573**	1	FILTRO COMBUST. FILTRO COMBUST.	FUEL FILTER FILTRO COMBUST.	064F
	11		**75310522**	1	MANGUEIRA TUBO FLEXIBLE	HOSE TUBO FLESSIBILE	285T
	12		**16043831**	2	PARAFUSO TORNILLO	SCREW VITE	040V
	13		**75252397**	3	CONEXÃO RACOR	FITTING RACCORDO	020R
	14		**79010217**	4	CONEXÃO RACOR	FITTING RACCORDO	020R
	15		**70929402**	3	ABRAÇADEIRA ABRAZADERA	CLAMP FASCETTA	031F
	16		**75310523**	1	MANGUEIRA TUBO FLEXIBLE	HOSE TUBO FLESSIBILE	285T

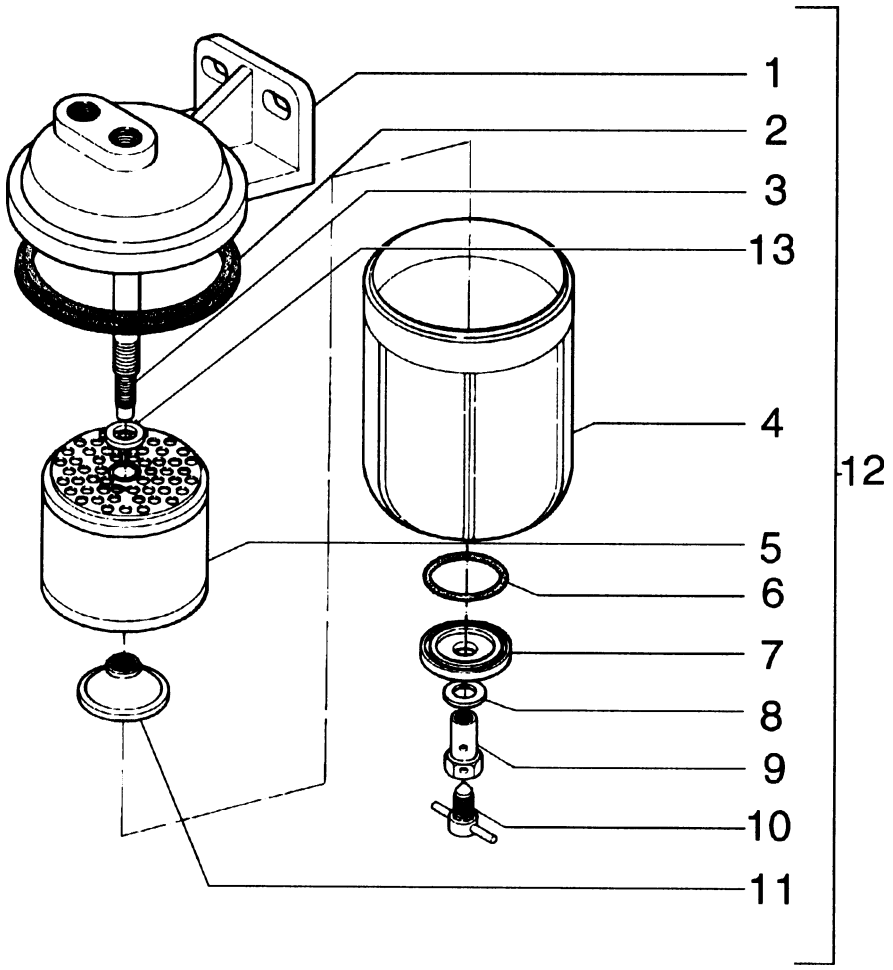

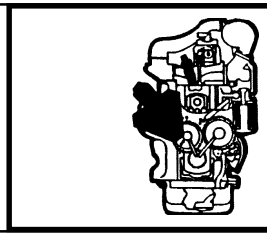

MOD	R	P/N. Imola	P/N. Brazil	Q	Descrição Denominacion	Description Descrizione	L.C.
	1		**75288849**	1	SUPORTE SOPORTE	SUPPORT SUPPORTO	300S
	2		**75288848**	1	RETENTOR JUNTA	SEAL GUARNIZIONE	122G
	3		**75288846**	1	TIRANTE TIRANTE	TIEROD TIRANTE	142T
	4		**75288844**	1	SUPORTE SOPORTE	SUPPORT SUPPORTO	300S
	5		**75288845**	1	FILTRO FILTRO	FILTER FILTRO	065F
	6		**75288841**	1	O'RING JUNTA TORICA	O'RING GUARNIZIONE O-R	158G
	7		**75288842**	1	SEDE ASIENTO	SEAT SEDE	069S
	8		**75288840**	1	ARRUELA ARANDELA	WASHER ROSETTA	131R
	9		**75288839**	1	CONEXÃO RACOR	FITTING RACCORDO	020R
	10		**75288838**	1	TORNEIRA GRIFO	DRAINCOCK RUBINETTO	150R
	11		**75288843**	1	PORCA TUERCA	NUT DADO	010D
	12		**75250573**	1	FILTRO COMBUST. FILTRO COMBUST.	FUEL FILTER FILTRO COMBUST.	064F
	13		**75288847**	1	ARRUELA ARANDELA	WASHER ROSETTA	131R

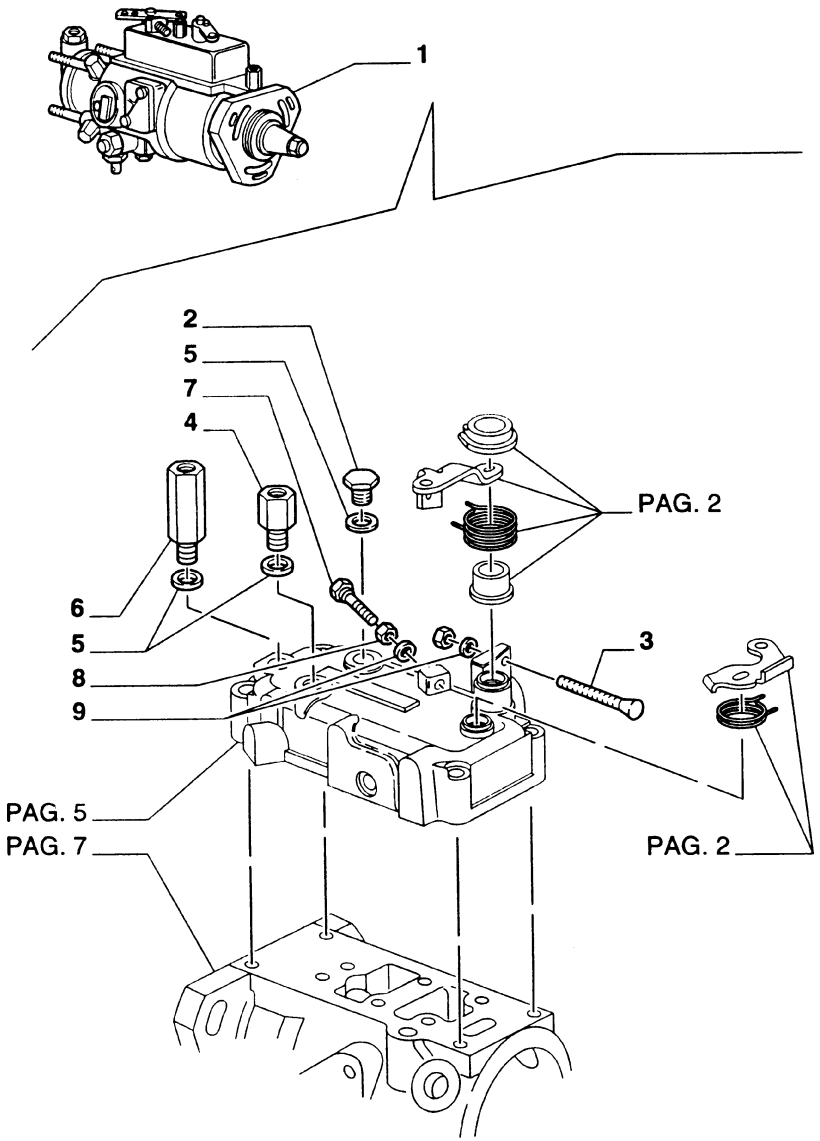

ASPIR Usado en el motor aspirado
TURB Usado en el motor turbinado

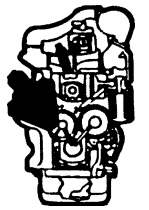

MOD	R	P/N. Imola	P/N. Brazil	Q	Descrição Denominacion	Description Descrizione	L.C.
ASPIR	1	**87840745**		1	BOMBA INJETORA BOMBA INYECCION	INJECTION PUMP POMPA INIEZIONE	158P
TURB	1	**87840747**		1	BOMBA INJETORA BOMBA INYECCION	INJECTION PUMP POMPA INIEZIONE	158P
	2	**83982563**		1	PARAFUSO TORNILLO	SCREW VITE	040V
	3	**81873250**		1	PARAFUSO TORNILLO	SCREW VITE	040V
	4	**83981019**		1	CONEXÃO RACOR	FITTING RACCORDO	020R
	5	**81820799**		3	ARRUELA ARANDELA	WASHER ROSETTA	131R
	6	**83981018**		1	VÁLVULA VALVULA	VALVE VALVOLA	010V
	7	**81873249**		1	PARAFUSO TORNILLO	SCREW VITE	040V
	8	**89706755**		2	PORCA TUERCA	NUT DADO	010D
	9	**80300614**		2	ARRUELA PRESSÃO ARANDELA ELAST.	LOCKWASHER ROSETTA ELAST.	170R

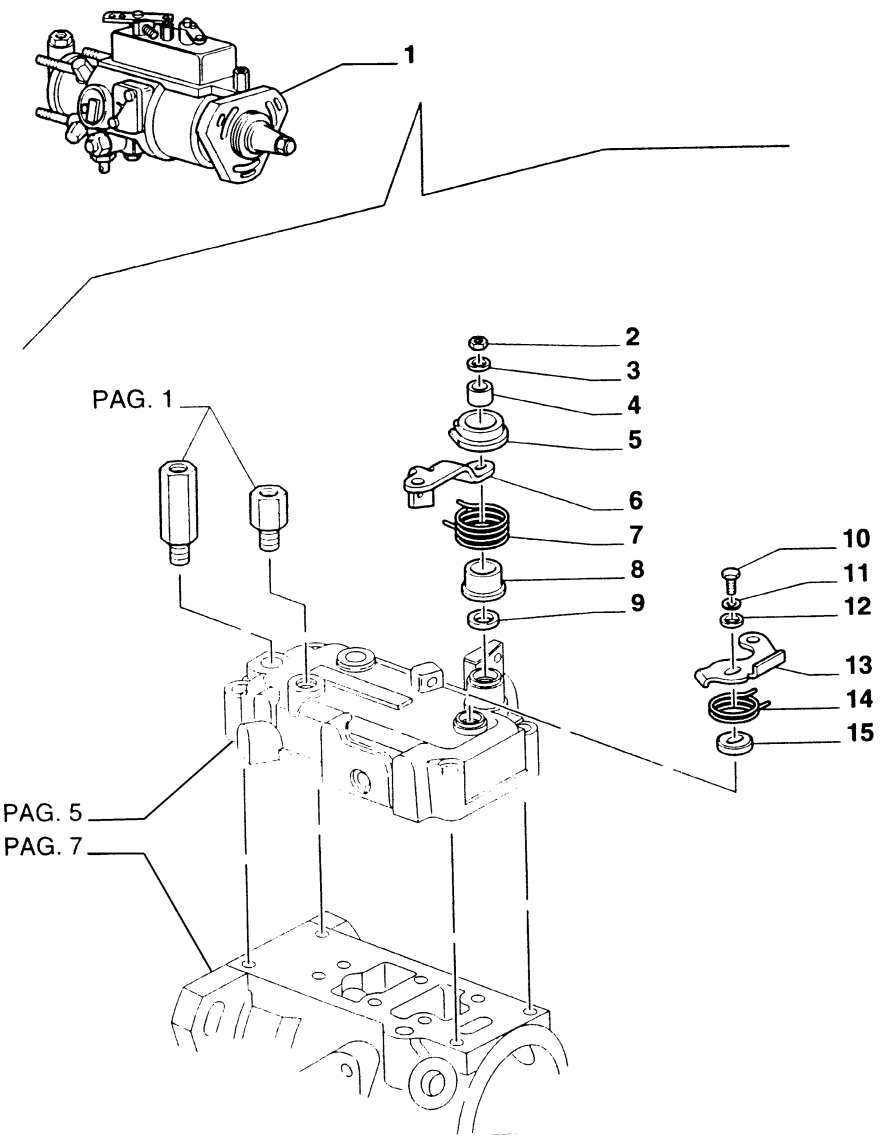

ASPIR Usado en el motor aspirado
TURB Usado en el motor turbinado

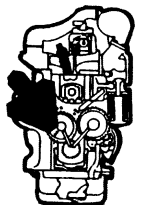

MOD	R	P/N. Imola	P/N. Brazil	Q	Descrição Denominacion	Description Descrizione	L.C.
ASPIR	1	**87840745**		1	BOMBA INJETORA BOMBA INYECCION	INJECTION PUMP POMPA INIEZIONE	158P
TURB	1	**87840747**		1	BOMBA INJETORA BOMBA INYECCION	INJECTION PUMP POMPA INIEZIONE	158P
	2	**81873317**		1	PORCA TUERCA	NUT DADO	010D
	3	**81873248**		1	ARRUELA ARANDELA	WASHER ROSETTA	131R
	4	**81873468**		1	ANEL ARO	RING ANELLO	045A
	5	**81873469**		1	ANEL ARO	RING ANELLO	045A
	6	**82851777**		1	ALAVANCA PALANCA	LEVER LEVA	045L
	7	**82851776**		1	MOLA MUELLE	SPRING MOLLA	100M
	8	**81873205**		1	GUIA GUIA	GUIDE GUIDA	145G
	9	**81811013**		1	ANEL ARO	RING ANELLO	045A
	10	**83982752**		1	PARAFUSO TORNILLO	SCREW VITE	040V
	11	**80280734**		1	ARRUELA PRESSÃO ARANDELA ELAST.	LOCKWASHER ROSETTA ELAST.	170R
	12	**81873258**		1	ARRUELA ARANDELA	WASHER ROSETTA	131R
	13	**83982726**		1	ALAVANCA PALANCA	LEVER LEVA	045L
	14	**83982754**		1	MOLA MUELLE	SPRING MOLLA	100M

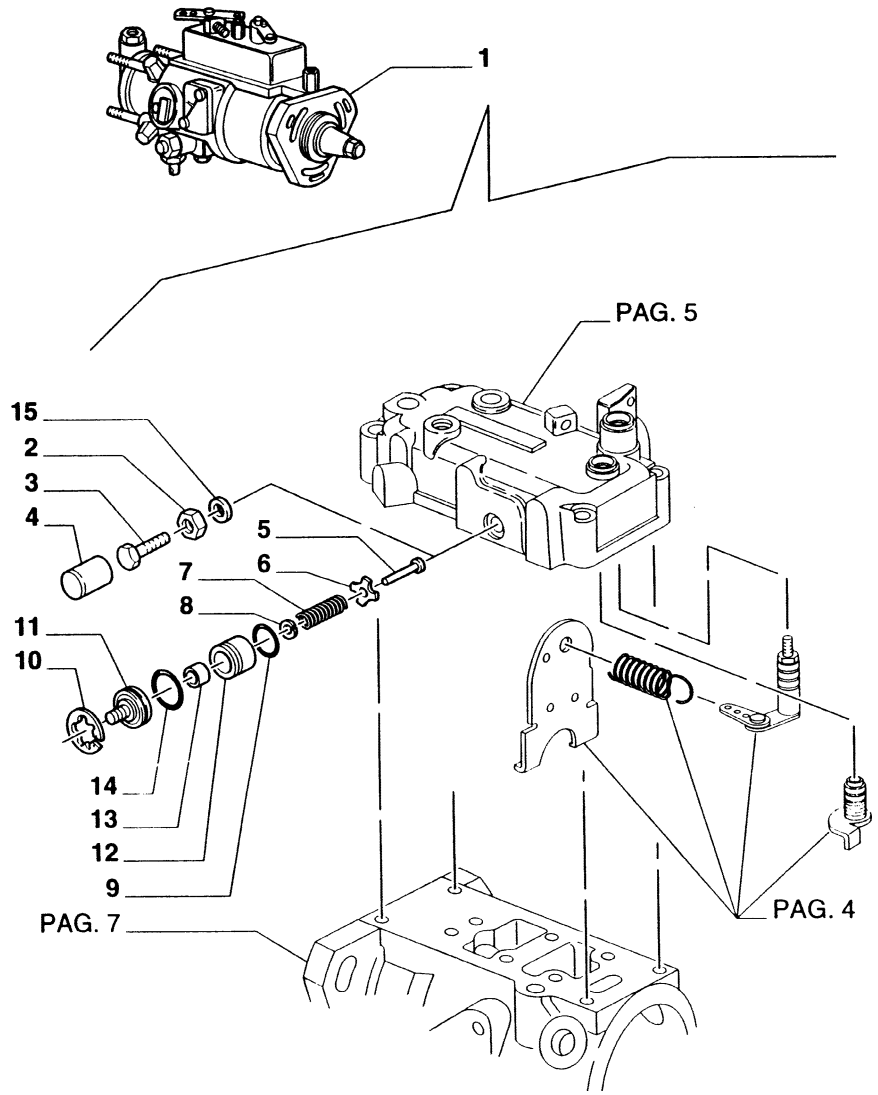

ASPIR Usado en el motor aspirado
TURB Usado en el motor turbinado

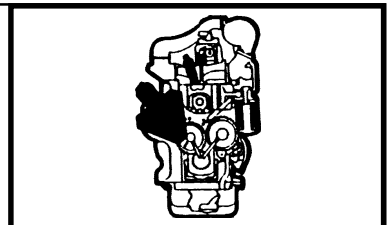

MOD	R	P/N. Imola	P/N. Brazil	Q	Descrição Denominacion	Description Descrizione	L.C.
ASPIR	1	**87840745**		1	BOMBA INJETORA BOMBA INYECCION	INJECTION PUMP POMPA INIEZIONE	158P
TURB	1	**87840747**		1	BOMBA INJETORA BOMBA INYECCION	INJECTION PUMP POMPA INIEZIONE	158P
	2	**81872155**		1	BATENTE DISPOSITIVO DE TOPE	STOP ARRESTO	080A
	3	**81873187**		1	EIXO ARBOL	SHAFT ALBERO	016A
	4	**83982674**		1	LUVA MANGUITO	SLEEVE MANICOTTO	030M
	5	**83982667**		1	EIXO ARBOL	SHAFT ALBERO	016A
	6	**83982665**		1	GUIA GUIA	GUIDE GUIDA	145G
	7	**83982652**		1	MOLA MUELLE	SPRING MOLLA	100M
	8	**81873186**		1	ANEL ARO	RING ANELLO	045A
	9	**80122056**		1	ANEL DE VEDAÇÃO JUNTA HERMETICA	SEAL RING ANELLO TENUTA	055A
	10	**81873185**		1	ANEL ARO	RING ANELLO	045A
	11	**83982651**		1	CHAPA PLACA	PLATE PIASTRA	105P
	12	**83987148**		1	ANEL ARO	RING ANELLO	045A
	13	**83982657**		1	ÊMBOLO EMBOLO	PISTON STANTUFFO	235S
	14	**83416168**		1	ANEL DE VEDAÇÃO JUNTA HERMETICA	SEAL RING ANELLO TENUTA	055A
	15	**83982672**		1	ARRUELA ARANDELA	WASHER ROSETTA	131R

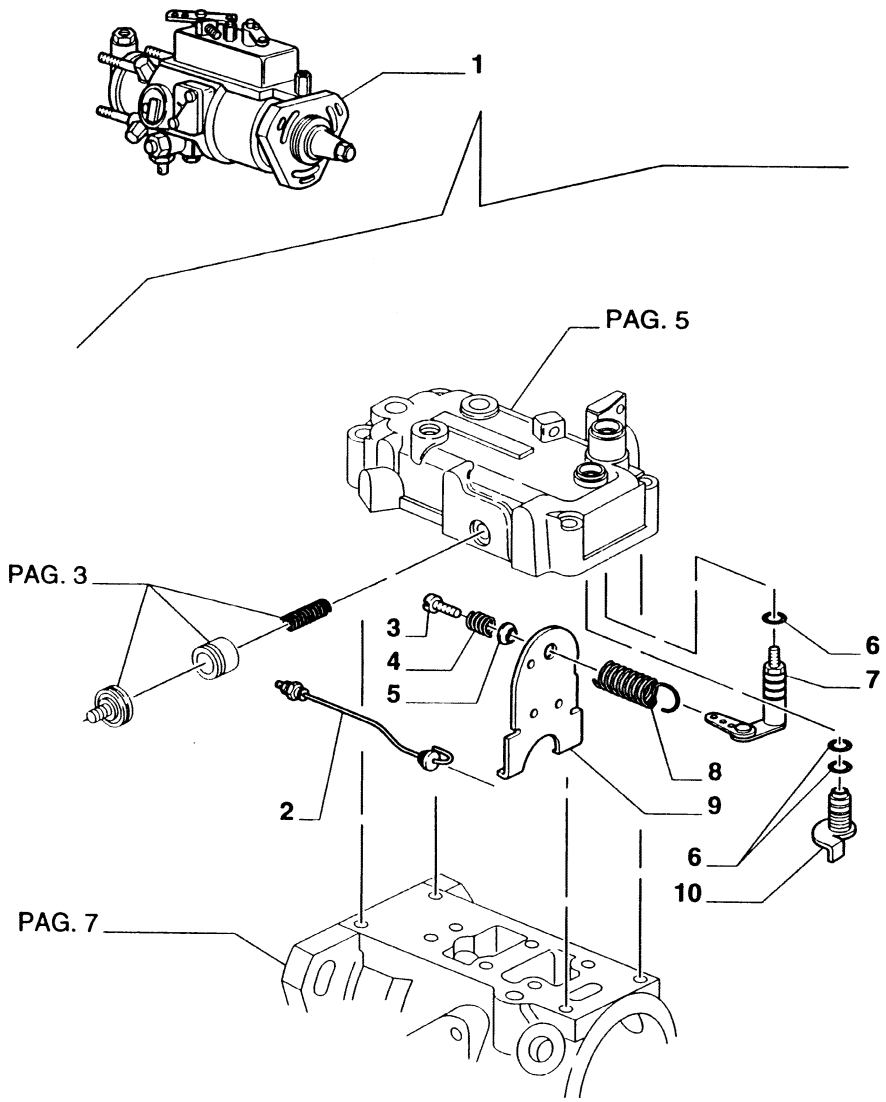

ASPIR Usado en el motor aspirado
TURB Usado en el motor turbinado

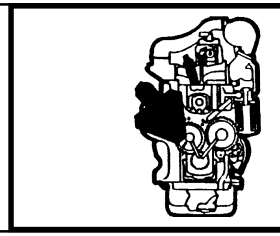

MOD	R	P/N. Imola	P/N. Brazil	Q	Descrição Denominacion	Description Descrizione	L.C.
ASPIR	1	**87840745**		1	BOMBA INJETORA BOMBA INYECCION	INJECTION PUMP POMPA INIEZIONE	158P
TURB	1	**87840747**		1	BOMBA INJETORA BOMBA INYECCION	INJECTION PUMP POMPA INIEZIONE	158P
	2	**81873252**		1	TUBO TUBO	TUBE TUBO RIGIDO	193T
	3	**83982702**		1	GUIA GUIA	GUIDE GUIDA	145G
	4	**81873251**		1	MOLA MUELLE	SPRING MOLLA	100M
	5	**83982706**		1	ESFERA BOLA	BALL SFERA	140S
	6	**83416156**		3	ANEL ARO	RING ANELLO	045A
	7	**81873204**		1	ALAVANCA PALANCA	LEVER LEVA	045L
TURB	8	**81873266**		1	MOLA MUELLE	SPRING MOLLA	100M
ASPIR	8	**83917424**		1	MOLA MUELLE	SPRING MOLLA	100M
	9	**83981441**		1	BRAÇO BRAZO	ARM BRACCIO	130B
	10	**83982729**		1	BATENTE DISPOSITIVO DE TOPE	STOP ARRESTO	080A

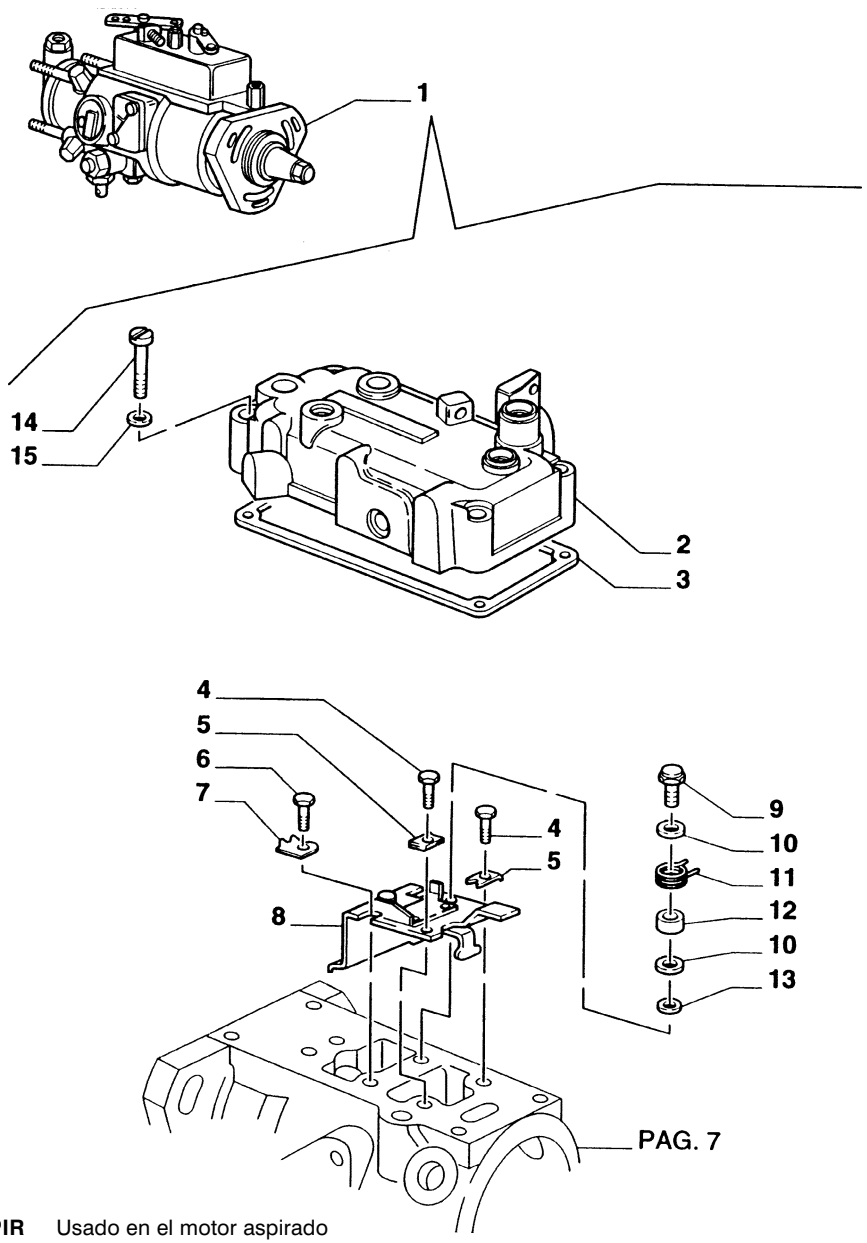

ASPIR Usado en el motor aspirado
TURB Usado en el motor turbinado

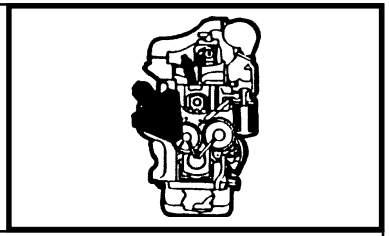

MOD	R	P/N. Imola	P/N. Brazil	Q	Descrição Denominacion	Description Descrizione	L.C.
ASPIR	1	**87840745**		1	BOMBA INJETORA BOMBA INYECCION	INJECTION PUMP POMPA INIEZIONE	158P
TURB	1	**87840747**		1	BOMBA INJETORA BOMBA INYECCION	INJECTION PUMP POMPA INIEZIONE	158P
	2	**81873182**		1	TAMPA TAPA	COVER COPERCHIO	265C
	3	**83982546**		1	RETENTOR EMPAQUETADURA	SEAL ASSY GUARNIZIONE	123G
	4	**83981638**		2	PARAFUSO TORNILLO	SCREW VITE	040V
	5	**83981720**		2	ARRUELA ARANDELA	WASHER ROSETTA	131R
	6	**83981444**		1	PARAFUSO TORNILLO	SCREW VITE	040V
	7	**83981728**		1	ARRUELA ARANDELA	WASHER ROSETTA	131R
	8	**83981442**		1	ESTRIBO ESTRIBO	BRACKET STAFFA	225S
	9	**81867417**		1	PARAFUSO TORNILLO	SCREW VITE	040V
	10	**81872616**		2	ARRUELA ARANDELA	WASHER ROSETTA	131R
	11	**83981443**		1	MOLA MUELLE	SPRING MOLLA	100M
	12	**83981490**		1	ANEL ARO	RING ANELLO	045A
	13	**81872617**		1	ARRUELA ARANDELA	WASHER ROSETTA	131R
	14	**81873173**		4	PARAFUSO TORNILLO	SCREW VITE	040V
	15	**81873174**		4	ARRUELA ARANDELA	WASHER ROSETTA	131R

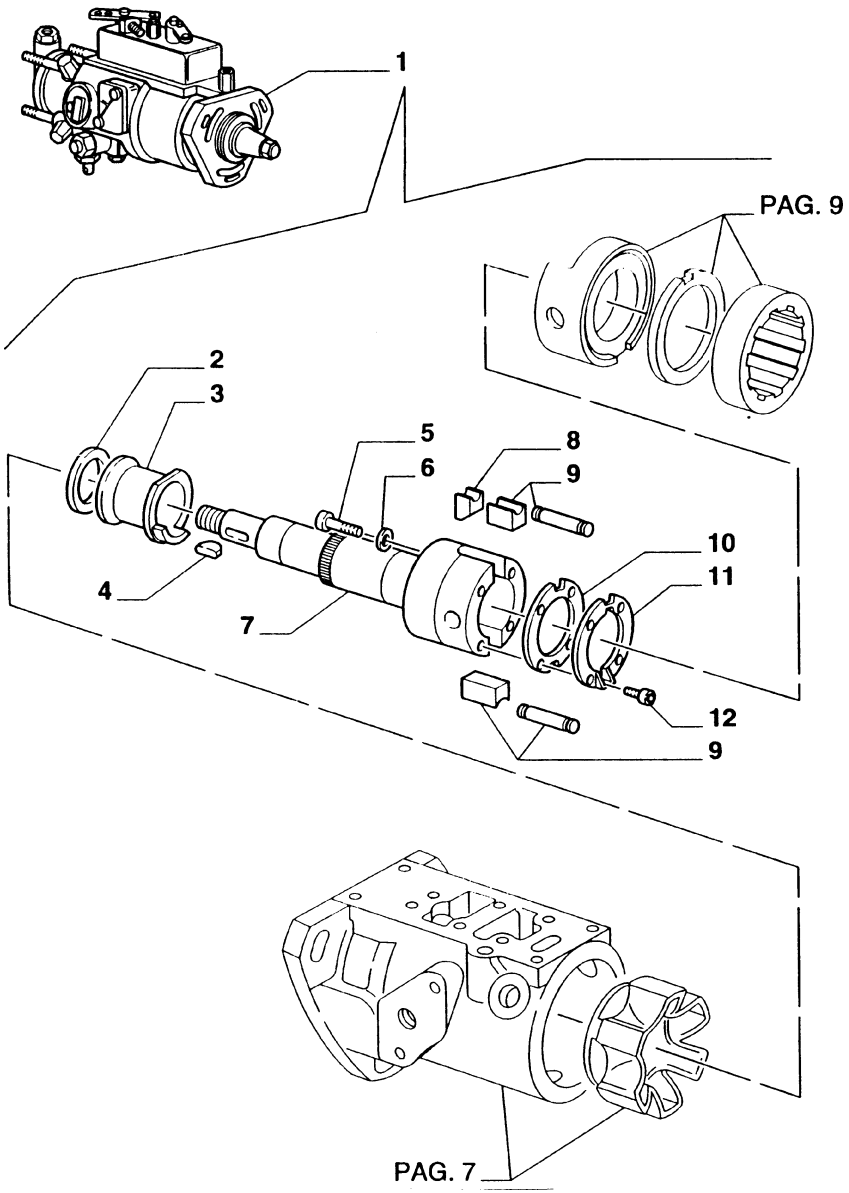

ASPIR Usado en el motor aspirado
TURB Usado en el motor turbinado

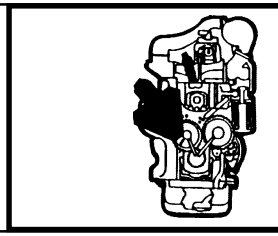

MOD	R	P/N. Imola	P/N. Brazil	Q	Descrição Denominacion	Description Descrizione	L.C.
ASPIR	1	**81840745**		1	BOMBA INJETORA BOMBA INYECCION	INJECTION PUMP POMPA INIEZIONE	158P
TURB	1	**81840747**		1	BOMBA INJETORA BOMBA INYECCION	INJECTION PUMP POMPA INIEZIONE	158P
	2	**83903032**		1	ARRUELA ARANDELA	WASHER ROSETTA	131R
	3	**83917428**		1	BUCHA BUJE	BUSHING BOCCOLA	095B
	4	**81412030**		1	CHAVETA CHAVETA	KEY LINGUETTA	060L
	5	**81872604**		3	PARAFUSO TORNILLO	SCREW VITE	040V
	6	**81872606**		3	ARRUELA ARANDELA	WASHER ROSETTA	131R
	7	**81872599**		1	EIXO ARBOL	SHAFT ALBERO	016A
	8	**81872602**		3	GUIA GUIA	GUIDE GUIDA	145G
	9	**81872613**		1	KIT JUEGO	KIT KIT	002K
	10	**81873389**		1	JUNTA JUNTA PLANA	GASKET GUARNIZ. PIANA	120G
	11	**81873387**		1	JUNTA JUNTA PLANA	GASKET GUARNIZ. PIANA	120G
	12	**81872608**		4	PARAFUSO TORNILLO	SCREW VITE	040V

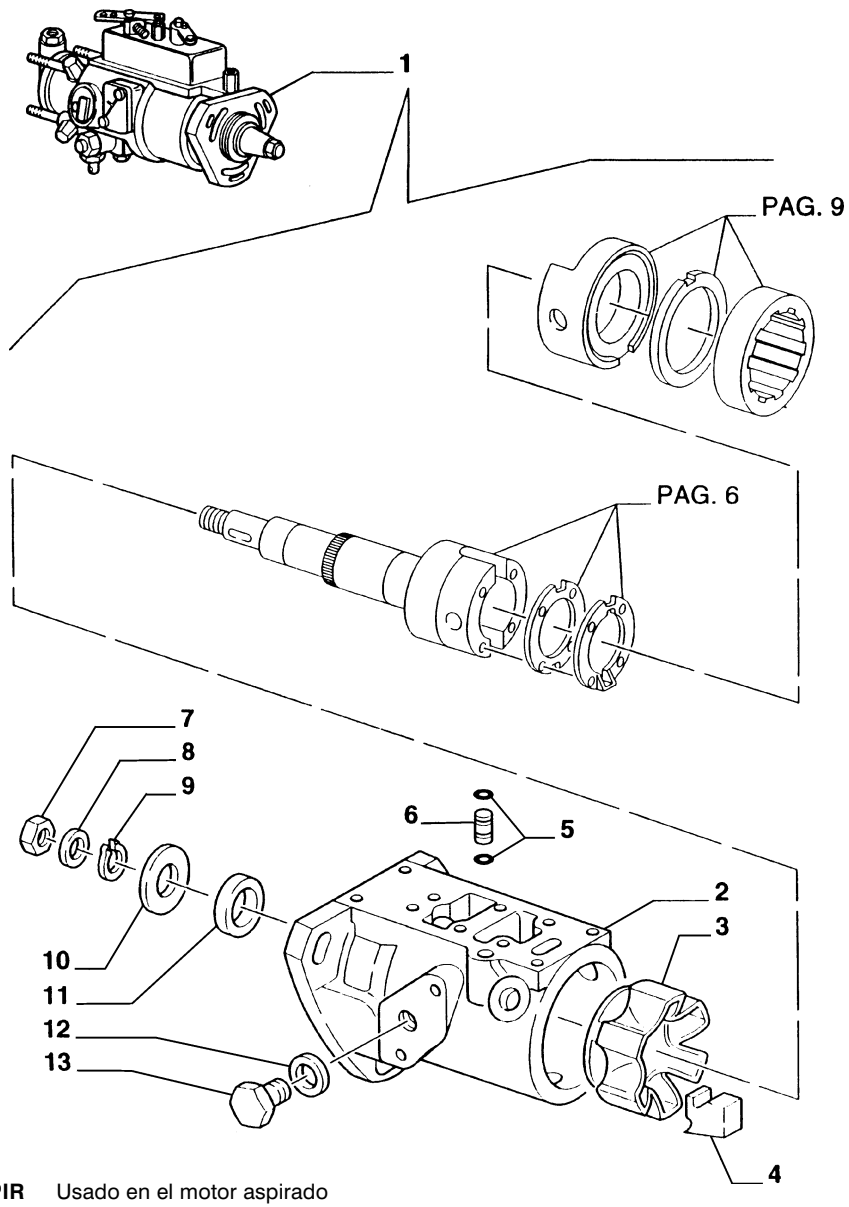

ASPIR Usado en el motor aspirado
TURB Usado en el motor turbinado

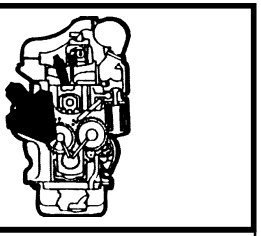

MOD	R	P/N. Imola	P/N. Brazil	Q	Descrição Denominacion	Description Descrizione	L.C.
ASPIR	1	**87840745**		1	BOMBA INJETORA BOMBA INYECCION	INJECTION PUMP POMPA INIEZIONE	158P
TURB	1	**87840747**		1	BOMBA INJETORA BOMBA INYECCION	INJECTION PUMP POMPA INIEZIONE	158P
	2	**83981427**		1	CARCAÇA CAJA	CASE SCATOLA	035S
	3	**83981126**		1	ROTOR ROTOR	ROTOR ROTORE	145R
	4	**83928174**		4	CONTRA PESO CONTRA PESO	COUNTERWEIGHT A ZAVORRA E GANCI	0222
	5	**86500548**		2	O'RING JUNTA TORICA	O'RING GUARNIZIONE O-R	158G
	6	**83982555**		1	PINO PASADOR	PIN SPINA	200S
	7	**83918492**		1	PORCA TUERCA	NUT DADO	010D
	8	**83918488**		1	MOLA MUELLE	SPRING MOLLA	100M
	9	**81873281**		1	ANEL ELÅSTICO ANILLO ELASTICO	SNAP RING ANELLO ELASTICO	187A
	10	**83981428**		1	ARRUELA ARANDELA	WASHER ROSETTA	131R
	11	**83981431**		2	BUCHA BUJE	BUSHING BOCCOLA	095B
	12	**81872611**		1	ARRUELA ARANDELA	WASHER ROSETTA	131R
	13	**83981426**		1	BUJÃO TAPON	PLUG TAPPO	050T

FB80.3 - FB100.3

BOMBA DE INJEÇÃO DE COMBUSTÍVEL
BOMBA DE INYECCIÓN DE COMBUSTIBILE
FUEL SYSTEM - INJECTION PUMP
POMPA DI INIEZIONE

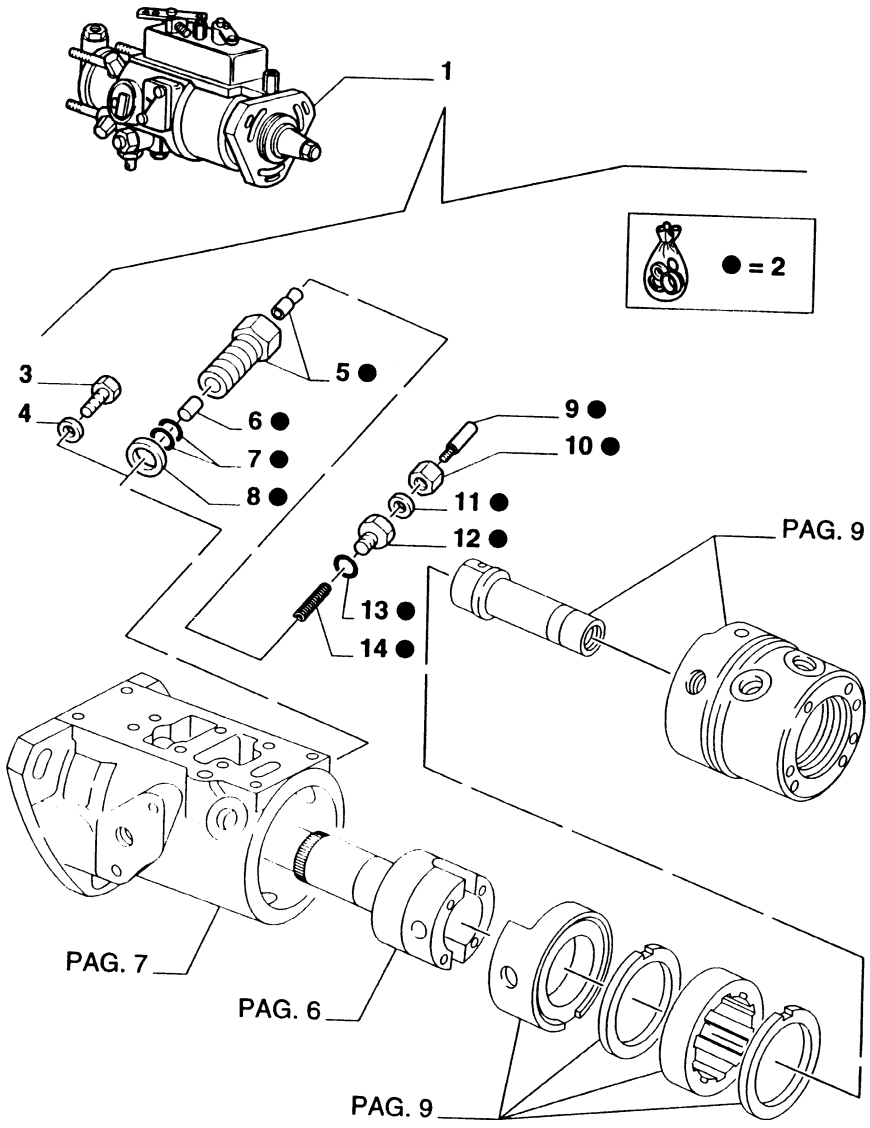

ASPIR Usado en el motor aspirado
TURB Usado en el motor turbinado

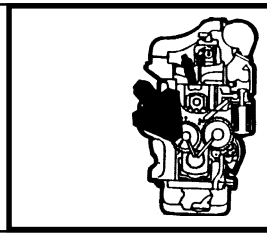

MOD	R	P/N. Imola	P/N. Brazil	Q	Descrição Denominacion	Description Descrizione	L.C.
ASPIR	1	**87840745**		1	BOMBA INJETORA BOMBA INYECCION	INJECTION PUMP POMPA INIEZIONE	158P
TURB	1	**87840747**		1	BOMBA INJETORA BOMBA INYECCION	INJECTION PUMP POMPA INIEZIONE	158P
	2	**81873150**		1	VÁLVULA VALVULA	VALVE VALVOLA	010V
	3	**81811687**		1	PARAFUSO TORNILLO	SCREW VITE	040V
	4	**81811703**		1	ARRUELA ARANDELA	WASHER ROSETTA	131R
	5	**81873151**		1	CORPO CUERPO	BODY CORPO	300C
	6	**81873157**		1	FILTRO FILTRO	FILTER FILTRO	065F
	7	**83982119**		2	O'RING JUNTA TORICA	O'RING GUARNIZIONE O-R	158G
	8	**81872612**		1	ARRUELA ARANDELA	WASHER ROSETTA	131R
	9	**81873156**		1	PARAFUSO TORNILLO	SCREW VITE	040V
	10	**81873155**		1	PORCA TUERCA	NUT DADO	010D
	11	**81873154**		1	ARRUELA ARANDELA	WASHER ROSETTA	131R
	12	**81873153**		1	BUJÃO TAPON	PLUG TAPPO	050T
	13	**83416158**		1	O'RING JUNTA TORICA	O'RING GUARNIZIONE O-R	158G
	14	**81873152**		1	MOLA MUELLE	SPRING MOLLA	100M

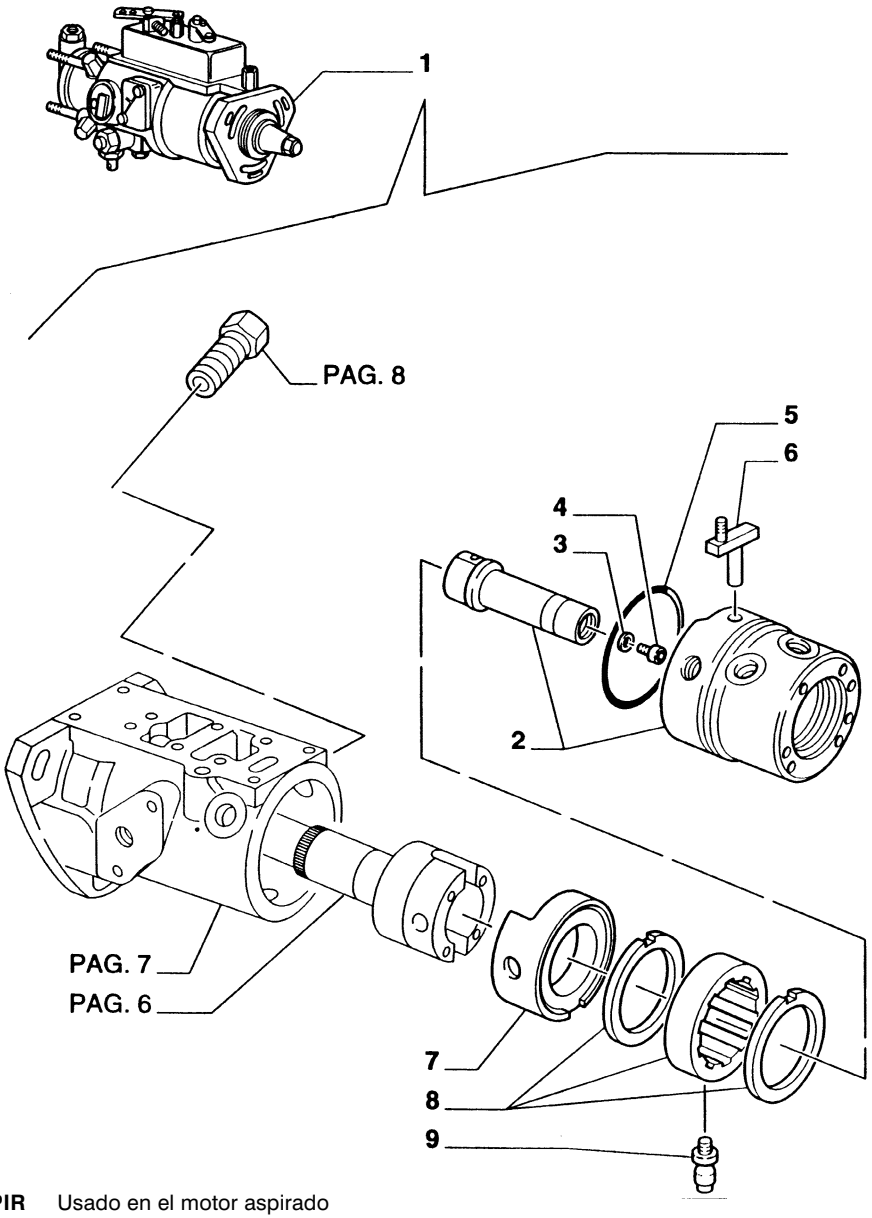

ASPIR Usado en el motor aspirado
TURB Usado en el motor turbinado

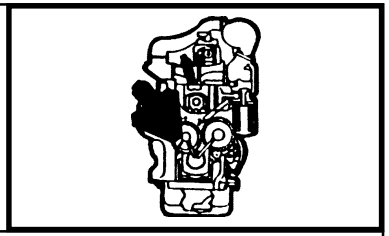

MOD	R	P/N. Imola	P/N. Brazil	Q	Descrição Denominacion	Description Descrizione	L.C.
ASPIR	1	**87840745**		1	BOMBA INJETORA BOMBA INYECCION	INJECTION PUMP POMPA INIEZIONE	158P
TURB	1	**87840747**		1	BOMBA INJETORA BOMBA INYECCION	INJECTION PUMP POMPA INIEZIONE	158P
	2	**83981439**		1	CARCAÇA CAJA	CASE SCATOLA	035S
	3	**81872614**		1	ARRUELA ARANDELA	WASHER ROSETTA	131R
	4	**81872615**		1	PARAFUSO TORNILLO	SCREW VITE	040V
	5	**83981964**		1	O'RING JUNTA TORICA	O'RING GUARNIZIONE O-R	158G
	6	**81872636**		1	VÁLVULA VALVULA	VALVE VALVOLA	010V
	7	**83981432**		1	SUPORTE SOPORTE	SUPPORT SUPPORTO	300S
TURB	8	**81872629**		1	KIT JUEGO	KIT KIT	002K
ASPIR	8	**81872633**		1	KIT JUEGO	KIT KIT	002K
	9	**81810977**		1	PARAFUSO TORNILLO	SCREW VITE	040V

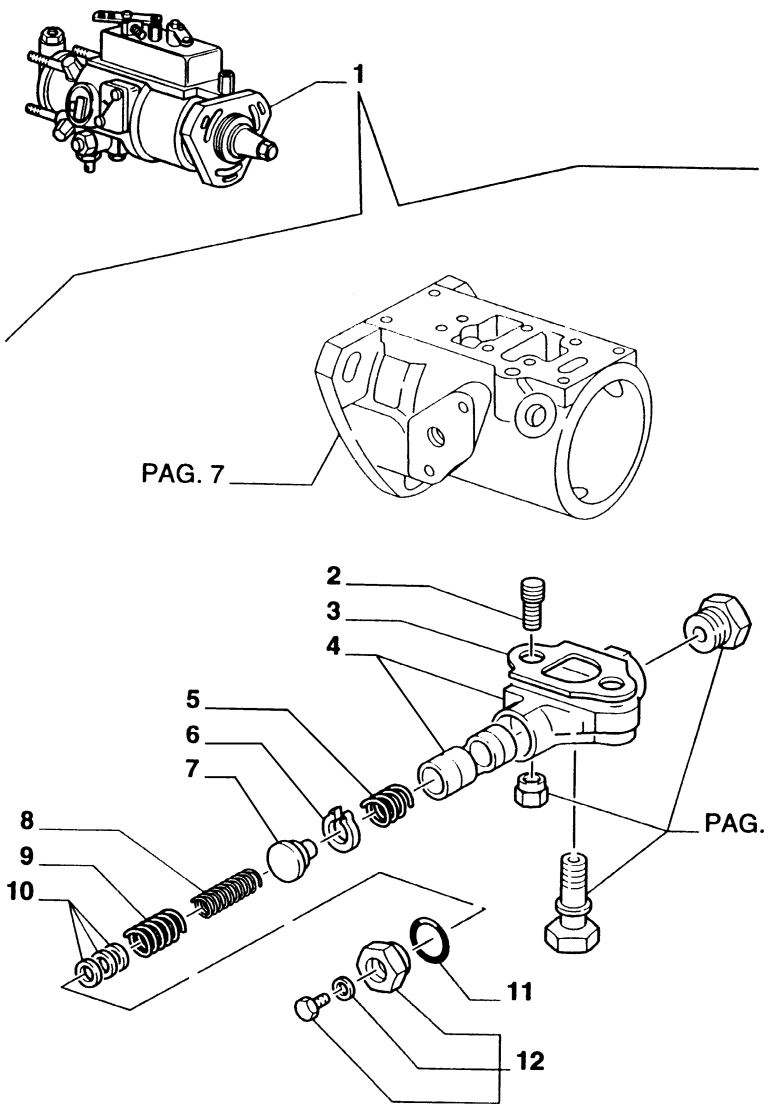

ASPIR Usado en el motor aspirado
TURB Usado en el motor turbinado

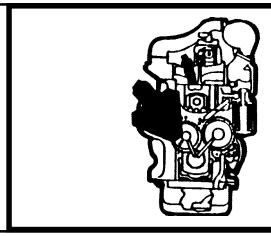

MOD	R	P/N. Imola	P/N. Brazil	Q	Descrição Denominacion	Description Descrizione	L.C.
ASPIR	1	**87840745**		1	BOMBA INJETORA BOMBA INYECCION	INJECTION PUMP POMPA INIEZIONE	158P
TURB	1	**87840747**		1	BOMBA INJETORA BOMBA INYECCION	INJECTION PUMP POMPA INIEZIONE	158P
	2	**83982421**		1	PRISIONEIRO ESPARRAGO	STUD PRIGIONIERO	210P
	3	**81810932**		1	JUNTA JUNTA PLANA	GASKET GUARNIZ. PIANA	120G
	4	**81873163**		1	CARTER CARTER ACEITE	SUMP COPPA	275C
	5	**83982443**		1	MOLA MUELLE	SPRING MOLLA	100M
	6	**83982545**		1	ANEL ARO	RING ANELLO	045A
ASPIR	7	**81873263**		1	PLACA PLACA	PLATE PIASTRINA	110P
TURB	7	**81873264**		1	PLACA PLACA	PLATE PIASTRINA	110P
	8	**83982486**		1	MOLA MUELLE	SPRING MOLLA	100M
	9	**83982482**		1	MOLA MUELLE	SPRING MOLLA	100M
	10	**81873172**		1	CALÇO CALCE	SHIM SPESSORE	198S
	10	**83903045**		1	CALÇO CALCE	SHIM SPESSORE	198S
	10	**83903046**		1	CALÇO CALCE	SHIM SPESSORE	198S
	10	**83903047**		1	CALÇO CALCE	SHIM SPESSORE	198S
	11	**81812972**		1	O'RING JUNTA TORICA	O'RING GUARNIZIONE O-R	158G
	12	**81833911**		1	KIT JUEGO	KIT KIT	002K

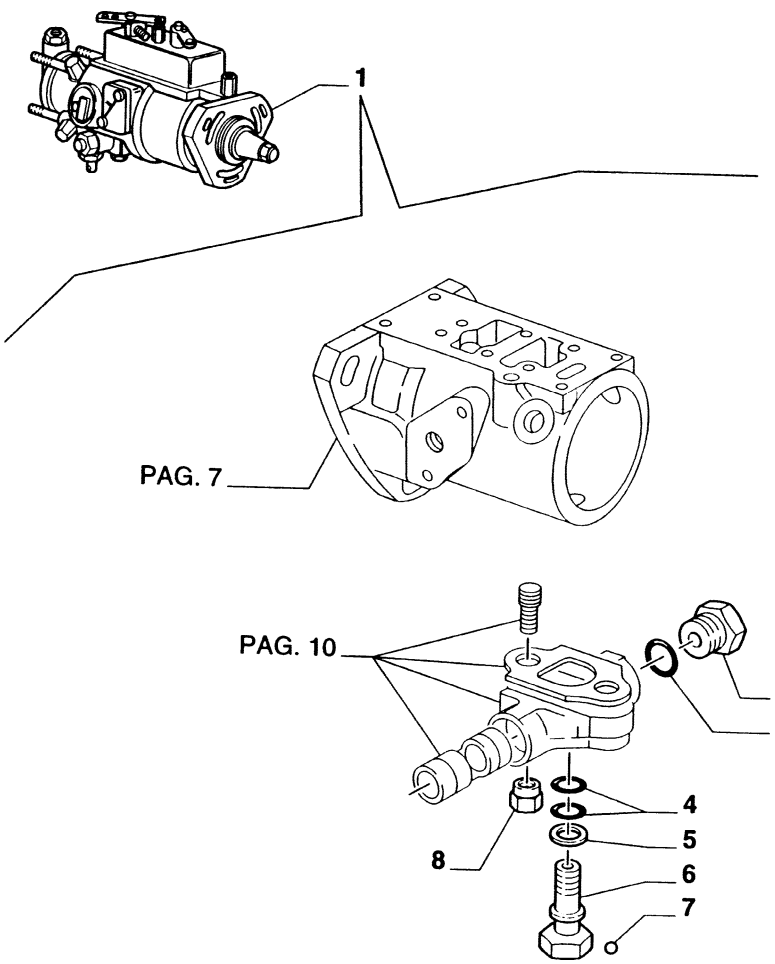

ASPIR Usado en el motor aspirado
TURB Usado en el motor turbinado

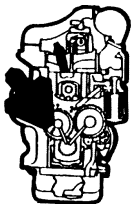

MOD	R	P/N. Imola	P/N. Brazil	Q	Descrição Denominacion	Description Descrizione	L.C.
ASPIR	1	**87840745**		1	BOMBA INJETORA BOMBA INYECCION	INJECTION PUMP POMPA INIEZIONE	158P
TURB	1	**87840747**		1	BOMBA INJETORA BOMBA INYECCION	INJECTION PUMP POMPA INIEZIONE	158P
TURB	2	**81873166**		1	BUJÃO TAPON	PLUG TAPPO	050T
ASPIR	2	**81874575**		1	BUJÃO TAPON	PLUG TAPPO	050T
	3	**81812975**		1	O'RING JUNTA TORICA	O'RING GUARNIZIONE O-R	158G
	4	**81813686**		2	O'RING JUNTA TORICA	O'RING GUARNIZIONE O-R	158G
	5	**83982437**		1	ANEL ARO	RING ANELLO	045A
	6	**83982122**		1	CONEXÃO RACOR	FITTING RACCORDO	020R
	7	**83982120**		1	ESFERA BOLA	BALL SFERA	140S
	8	**81811694**		1	PORCA TUERCA	NUT DADO	010D

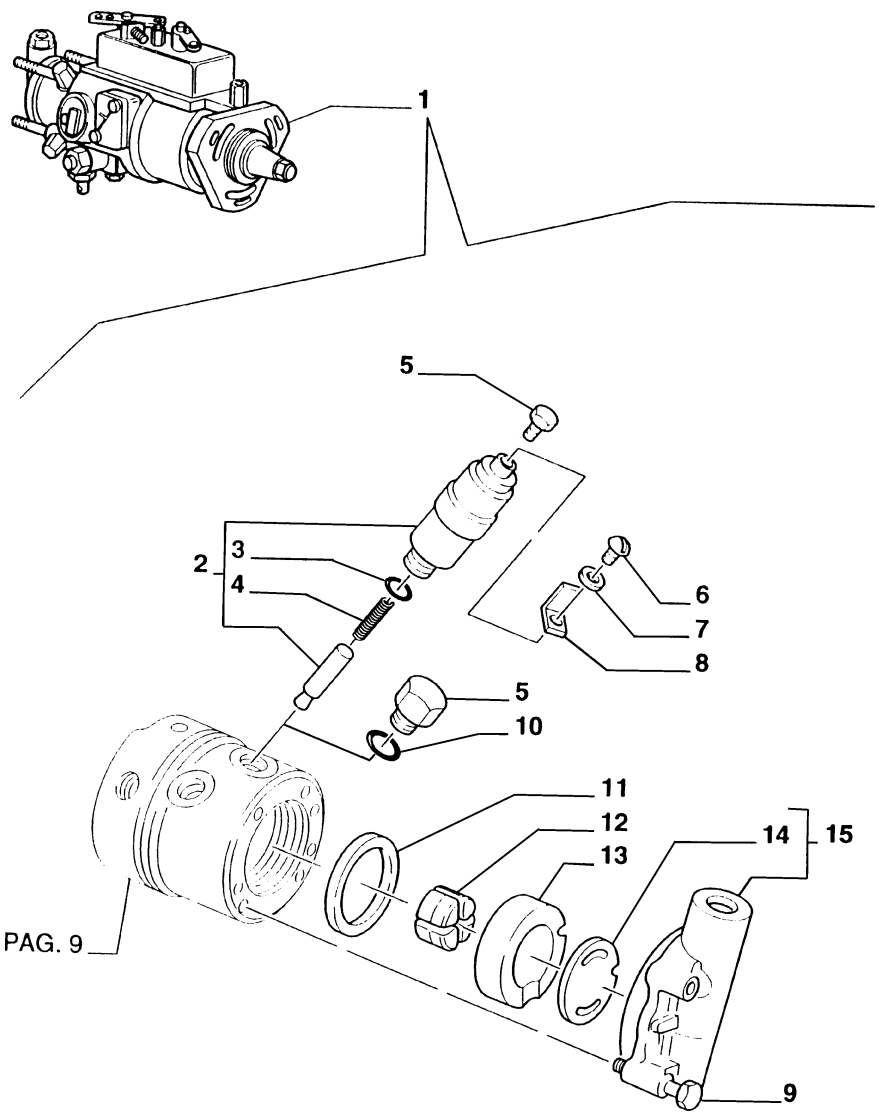

ASPIR Usado en el motor aspirado
TURB Usado en el motor turbinado

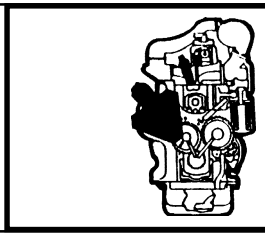

MOD	R	P/N. Imola	P/N. Brazil	Q	Descrição Denominacion	Description Descrizione	L.C.
ASPIR	1	**87840745**		1	BOMBA INJETORA BOMBA INYECCION	INJECTION PUMP POMPA INIEZIONE	158P
TURB	1	**87840747**		1	BOMBA INJETORA BOMBA INYECCION	INJECTION PUMP POMPA INIEZIONE	158P
	2	**83981012**		1	SOLENÓIDE SOLENOIDE	SOLENOID ELETTROMAGNETE	030E
	3	**80050458**		1	O'RING JUNTA TORICA	O'RING GUARNIZIONE O-R	158G
	4	**81872638**		1	MOLA MUELLE	SPRING MOLLA	100M
	5	**83982575**		1	BUJÃO TAPON	PLUG TAPPO	050T
	6	**81872639**		1	PARAFUSO TORNILLO	SCREW VITE	040V
	7	**81872640**		1	ARRUELA ARANDELA	WASHER ROSETTA	131R
	8	**83981830**		1	TERMINAL DO FIO TERMINAL	WIRE TERMINAL CAPOCORDA	060C
	9	**83982572**		4	PARAFUSO TORNILLO	SCREW VITE	040V
	10	**81813686**		1	O'RING JUNTA TORICA	O'RING GUARNIZIONE O-R	158G
	11	**83982598**		1	ANEL ARO	RING ANELLO	045A
	12	**83982619**		1	ROTOR ROTOR	ROTOR ROTORE	145R
	13	**83982623**		1	EXCENTRICO LEVA	CAM CAMMA	040C
	14	**83982609**		1	CHAPA PLACA	PLATE PIASTRA	105P
	15	**81873175**		1	TAMPA TAPA	COVER COPERCHIO	265C

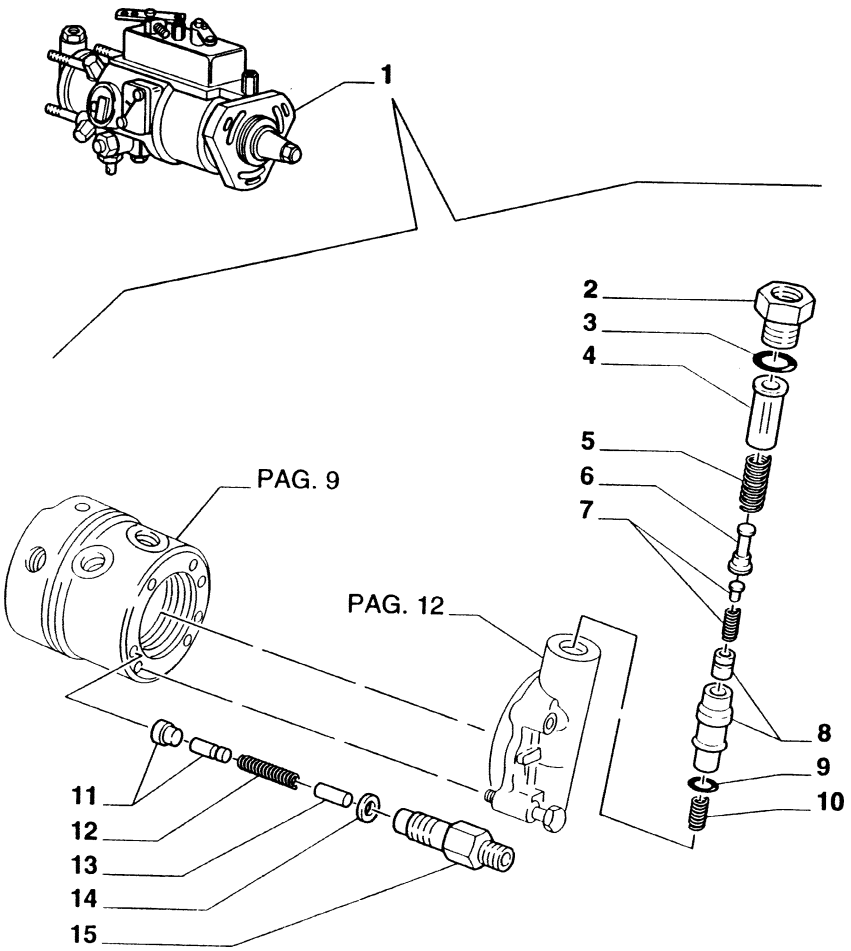

ASPIR Usado en el motor aspirado
TURB Usado en el motor turbinado

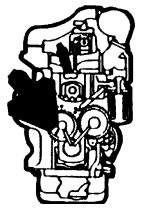

MOD	R	P/N. Imola	P/N. Brazil	Q	Descrição Denominacion	Description Descrizione	L.C.
ASPIR	1	**87840745**		1	BOMBA INJETORA BOMBA INYECCION	INJECTION PUMP POMPA INIEZIONE	158P
TURB	1	**87840747**		1	BOMBA INJETORA BOMBA INYECCION	INJECTION PUMP POMPA INIEZIONE	158P
	2	**83982610**		1	CONEXÃO RACOR	FITTING RACCORDO	020R
	3	**89827059**		1	O'RING JUNTA TORICA	O'RING GUARNIZIONE O-R	158G
	4	**81811019**		1	FILTRO FILTRO	FILTER FILTRO	065F
	5	**81810928**		1	MOLA MUELLE	SPRING MOLLA	100M
	6	**83982580**		1	REGULADOR REGULADOR	REGULATOR REGOLATORE	169R
	7	**81873177**		1	EIXO ARBOL	SHAFT ALBERO	016A
	8	**81873176**		1	KIT JUEGO	KIT KIT	002K
	9	**81812929**		1	ANEL DE VEDAÇÃO JUNTA HERMETICA	SEAL RING ANELLO TENUTA	055A
	10	**81811018**		1	MOLA MUELLE	SPRING MOLLA	100M
	11	**81872699**		4	VÁLVULA VALVULA	VALVE VALVOLA	010V
	12	**81872697**		4	MOLA MUELLE	SPRING MOLLA	100M
	13	**81872698**		4	GUIA GUIA	GUIDE GUIDA	145G
	14	**81872696**		4	ARRUELA ARANDELA	WASHER ROSETTA	131R
	15	**81872695**		4	CONEXÃO RACOR	FITTING RACCORDO	020R

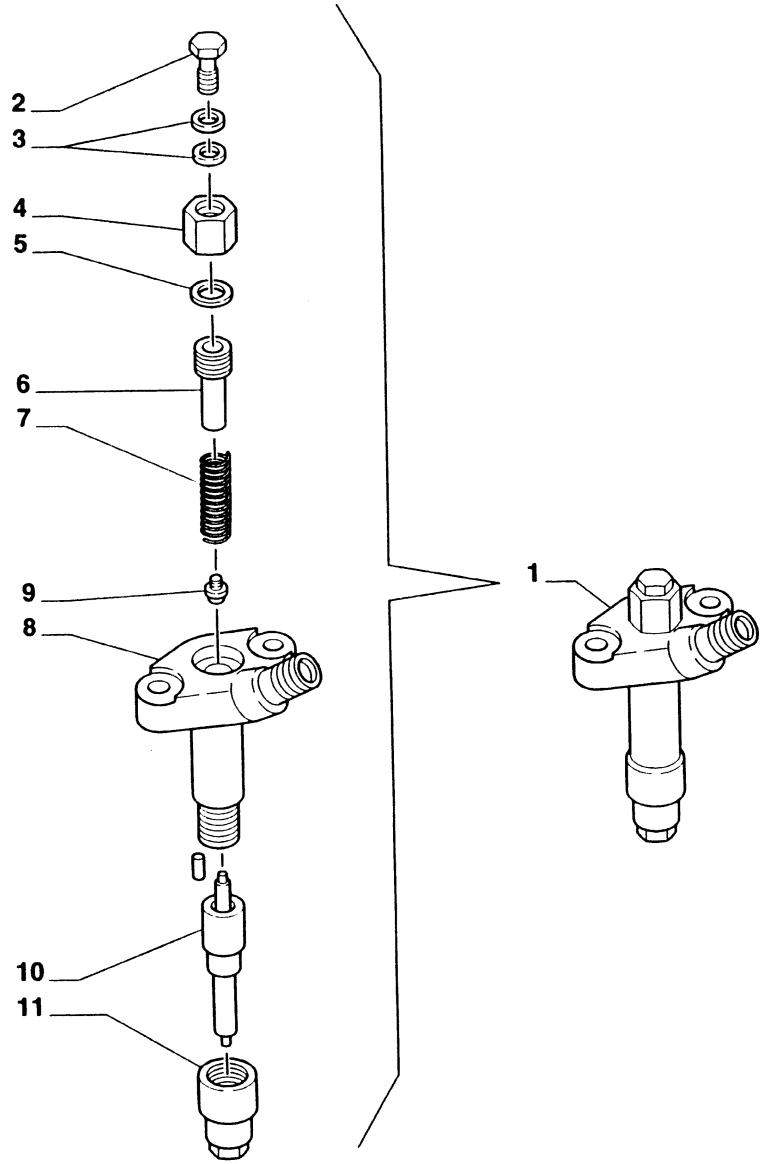

ASPIR Usado en el motor aspirado
TURB Usado en el motor turbinado

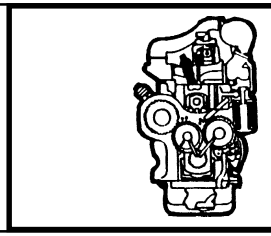

MOD	R	P/N. Imola	P/N. Brazil	Q	Descrição Denominacion	Description Descrizione	L.C.
ASPIR	1	**81868877**			INJETOR COMPLETO INYECTOR	INJECTOR ASSY INIETTORE	089I
TURB	1	**81868878**			INJETOR COMPLETO INYECTOR	INJECTOR ASSY INIETTORE	089I
	2	**83917421**			PARAFUSO TORNILLO	SCREW VITE	040V
	3	**81867564**			ANEL DE VEDAÇÃO JUNTA HERMETICA	SEAL RING ANELLO TENUTA	055A
	4	**81867534**			PORCA TUERCA	NUT DADO	010D
	5	**83959938**			DISCO DISCO	DISC DISCO	060D
	6	**81867533**			PARAFUSO TORNILLO	SCREW VITE	040V
	7	**81867532**			MOLA MUELLE	SPRING MOLLA	100M
	8	**81867530**			CARCAÇA CAJA	CASE SCATOLA	035S
	9	**81867531**			CONEXÃO RACOR	FITTING RACCORDO	020R
ASPIR	10	**81867537**			INJETOR INYECTOR	JET UGELLO	020U
TURB	10	**81867538**			INJETOR INYECTOR	JET UGELLO	020U
	11	**81867527**			TAMPA TAPA	COVER COPERCHIO	265C

FB80.3 - FB100.3

INJETOR DE COMBUSTÍVEL
ENS. SISTEMA DE CIRCULACION - INYECTOR
FUEL SYSTEM - INJECTOR
INIETORE

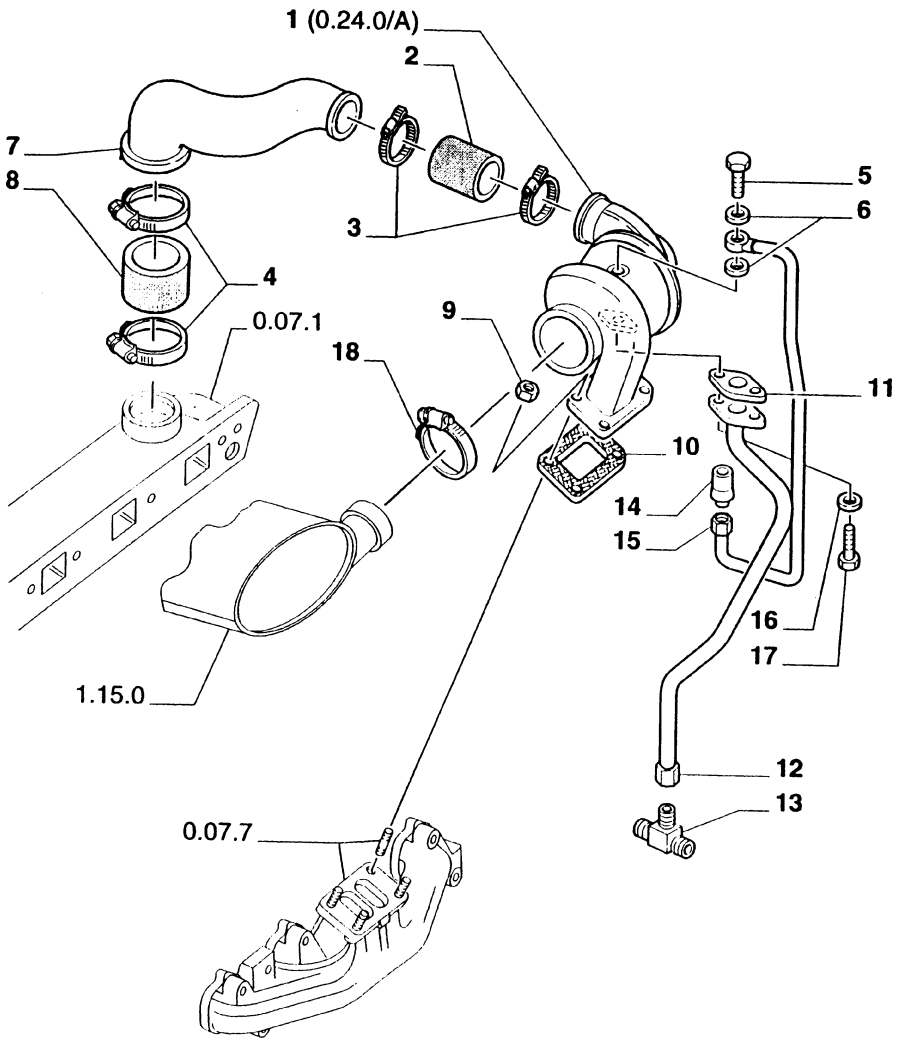

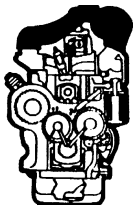

MOD	R	P/N. Imola	P/N. Brazil	Q	Descrição Denominacion	Description Descrizione	L.C.
	1	**83999247**		1	TURBOCOMPRESSOR TURBOCOMPRESSOR	TURBOCHARGER TURBOCOMPRESSOR	210T
	2	**81868456**		1	LUVA MANGUITO	SLEEVE MANICOTTO	030M
	3	**81871498**		2	ABRAÇADEIRA ABRAZADERA	CLAMP FASCETTA	031F
	4	**81871496**		2	BORNE BORNE	TERMINAL CONNEC MORSETTO ELETT.	120M
	5	**81868478**		1	BOCAL ENCHIM. BOCA DE CARGA	FILLER PLUG BOCCHET.INTROD.	090B
	6	**81868477**		2	ARRUELA ARANDELA	WASHER ROSETTA	131R
	7	**81868455**		1	LUVA MANGUITO	SLEEVE MANICOTTO	030M
	8	**81862808**		1	LUVA MANGUITO	SLEEVE MANICOTTO	030M
	9	**83993005**		4	PORCA TUERCA	NUT DADO	010D
	10	**83911642**		1	RETENTOR EMPAQUETADURA	SEAL ASSY GUARNIZIONE	123G
	11	**81862805**		1	RETENTOR EMPAQUETADURA	SEAL ASSY GUARNIZIONE	123G
	12	**87800859**		1	TUBO TUBO	TUBE TUBO RIGIDO	193T
	13	**81869032**		1	CONEXÃO RACOR	FITTING RACCORDO	020R
	14	**81865543**		1	TUBO TUBO	TUBE TUBO RIGIDO	193T
	15	**81868534**		1	TUBO TUBO	TUBE TUBO RIGIDO	193T
	16	**85700656**		2	ARRUELA DE VEDAÇÃO JUNTA HERMETICA	WASHER, SEALING ROSETTA DI TENUTA	133R
	17	**82880843**		2	PARAFUSO TORNILLO	SCREW VITE	040V
	18	**89711034**		1	BORNE BORNE	TERMINAL CONNEC MORSETTO ELETT.	120M

FB80.3 - FB100.3

TURBOCOMPRESSOR
TURBOCOMPRESOR
TURBOCHARGING
SOVRALIMENTAZIONE

0.24.0

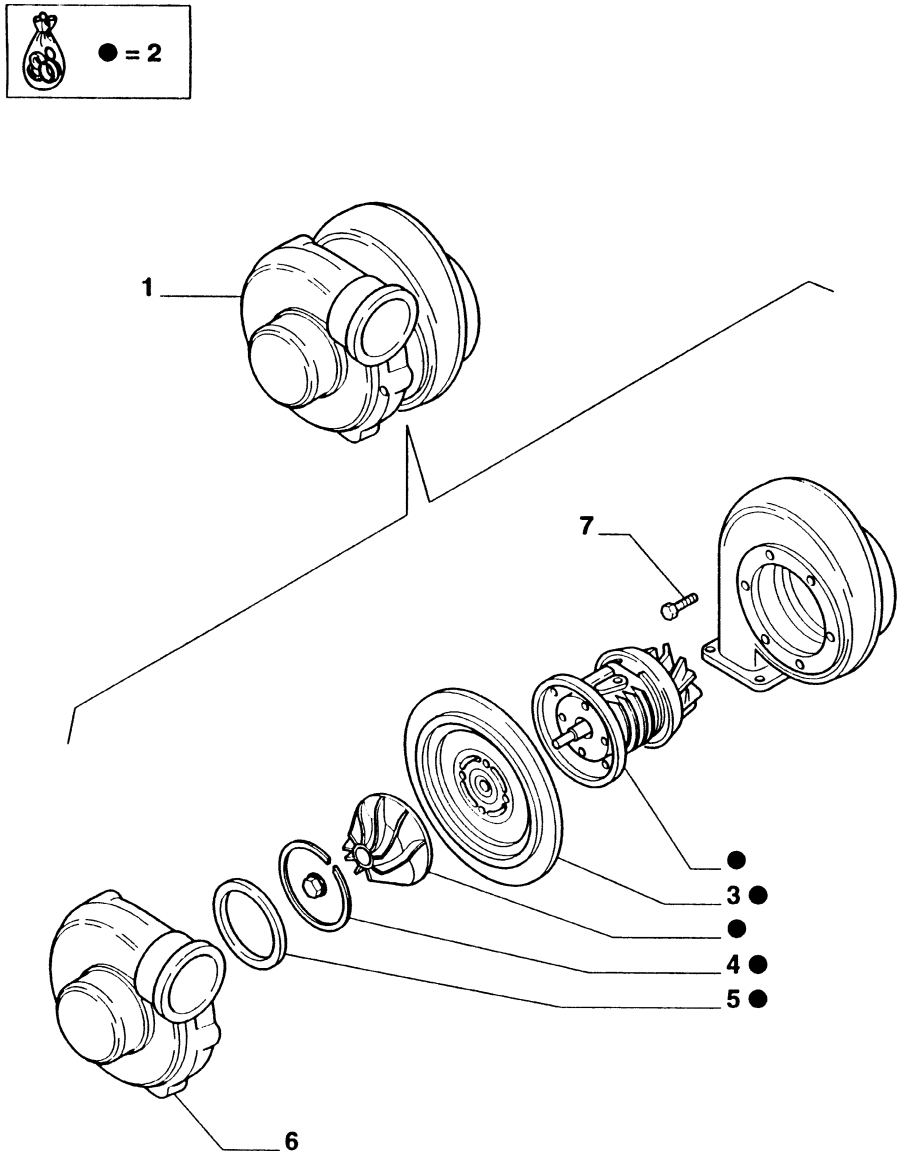

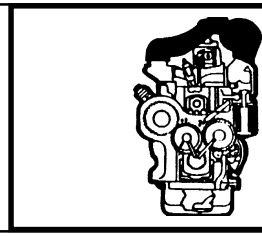

MOD	R	P/N. Imola	P/N. Brazil	Q	Descrição Denominacion	Description Descrizione	L.C.
	1	**83999247**		1	TURBOCOMPRESSOR TURBOCOMPRESSOR	TURBOCHARGER TURBOCOMPRESSOR	210T
	2	**81867227**		1	NÚCLEO NUCLEO	CORE NUCLEO	060N
	3	**81867218**		1	CHAPA PLACA	PLATE PIASTRA	105P
	4	**83977909**		1	CONEXÃO RACOR	FITTING RACCORDO	020R
	5	**81867220**		1	RETENTOR EMPAQUETADURA	SEAL ASSY GUARNIZIONE	123G
	6	**81867226**		1	TAMPA TAPA	COVER COPERCHIO	265C
	7	**81867216**		4	PARAFUSO TORNILLO	SCREW VITE	040V

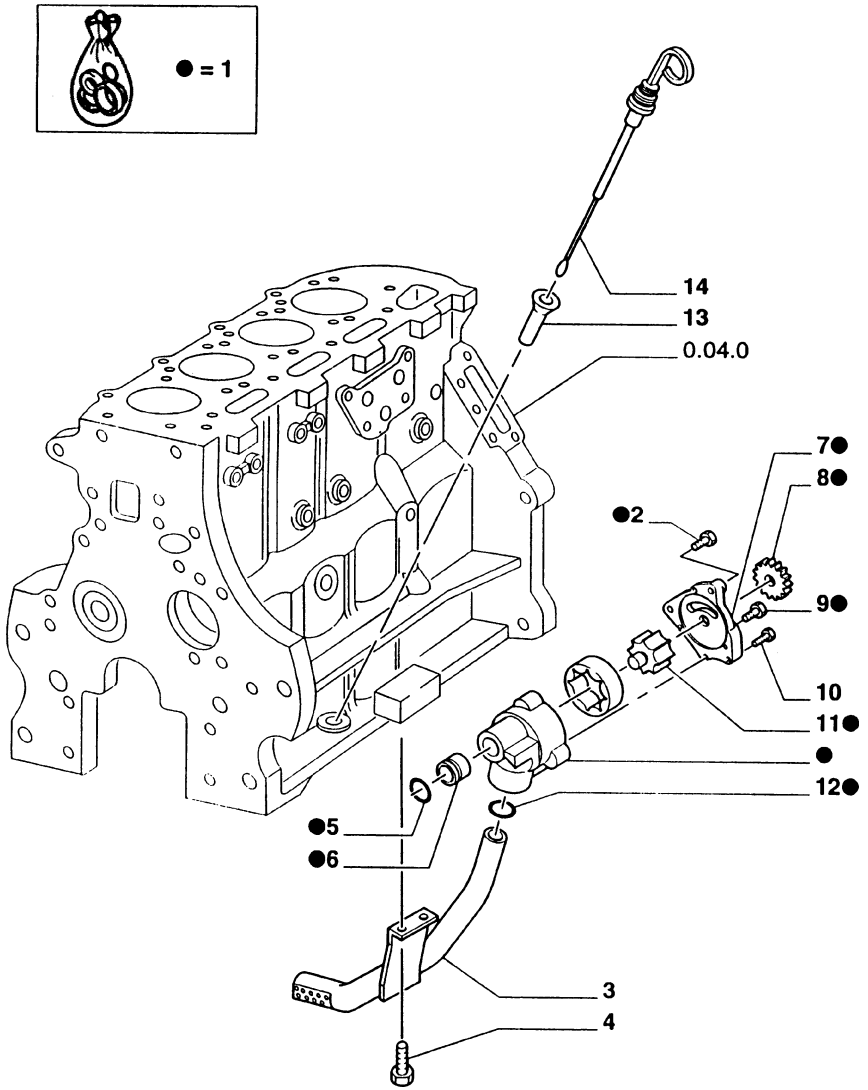

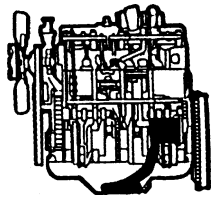

MOD	R	P/N. Imola	P/N. Brazil	Q	Descrição Denominacion	Description Descrizione	L.C.
	1	**81868537**		1	BOMBA BOMBA	PUMP POMPA	155P
	2	**81868721**		1	PARAFUSO TORNILLO	SCREW VITE	040V
	3	**83980619**		1	TUBO TUBO	TUBE TUBO RIGIDO	193T
	4	**81876945**		2	PARAFUSO TORNILLO	SCREW VITE	040V
	5	**14463081**		1	RETENTOR EMPAQUETADURA	SEAL ASSY GUARNIZIONE	123G
	6	**83999696**		1	POLIA POLEA	PULLEY PULEGIA	230P
	7	**83999691**		1	TAMPA TAPA	COVER COPERCHIO	265C
	8	**83999693**		1	ENGRENAGEM CORONA	GEAR INGRANAGGIO	050I
	9	**81868718**		1	PARAFUSO TORNILLO	SCREW VITE	040V
	10	**80087657**		3	PARAFUSO TORNILLO	SCREW VITE	040V
	11	**83999692**		1	EIXO ARBOL	SHAFT ALBERO	016A
	12	**81874127**		1	ANEL DE VEDAÇÃO JUNTA HERMETICA	SEAL RING ANELLO TENUTA	055A
	13	**83943981**		1	PORTA OBJETOS ESTUCHE	CASING ASTUCCIO	101A
	14	**87801534**		1	HASTE DE NIVEL VARILLA NIVEL	DIPSTICK ASTA LIVELLO	091A

FB80.3 - FB100.3

BOMBA DE ÓLEO
BOMBA DE ACEITE
OIL PUMP
POMPA OLIO

0.30.0

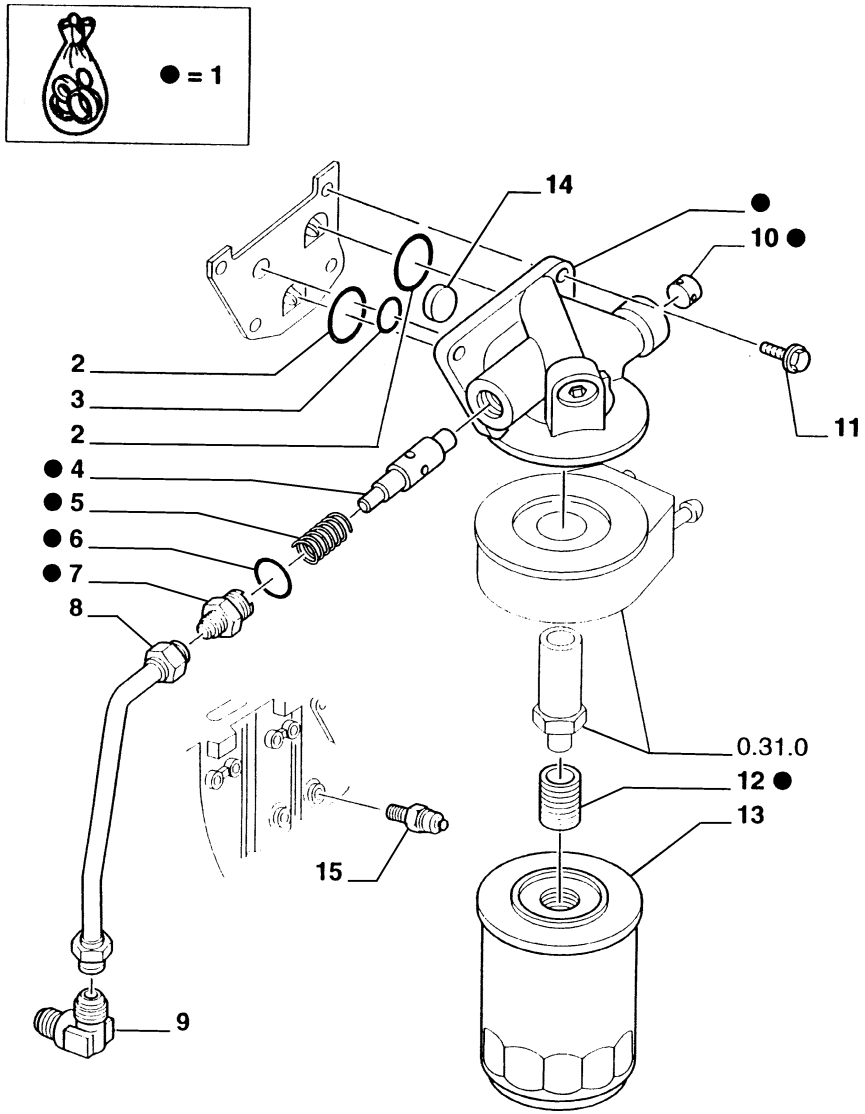

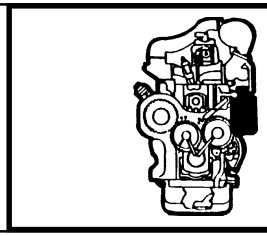

MOD	R	P/N. Imola	P/N. Brazil	Q	Descrição Denominacion	Description Descrizione	L.C.
	1	**87800547**		1	CHAPA PLACA	PLATE PIASTRA	105P
	2	**14463881**		2	RETENTOR EMPAQUETADURA	SEAL ASSY GUARNIZIONE	123G
	3	**83958249**		1	ANEL DE VEDAÇÃO JUNTA HERMETICA	SEAL RING ANELLO TENUTA	055A
	4	**83999649**		1	VÁLV. SOBREPRES VALV. SOBREPRES	OVERPRES. VALVE VALVOLA SOVRAPR	007V
	5	**81868595**		1	MOLA MUELLE	SPRING MOLLA	100M
	6	**80167266**		1	ANEL DE VEDAÇÃO JUNTA HERMETICA	SEAL RING ANELLO TENUTA	055A
	7	**81869029**		1	CONEXÃO RACOR	FITTING RACCORDO	020R
	8	**81869030**		1	TUBO TUBO	TUBE TUBO RIGIDO	193T
	8	**81869035**		1	TUBO TUBO	TUBE TUBO RIGIDO	193T
	9	**80182977**		1	COTOVELO CODO	ELBOW GOMITO	085G
	9	**81862801**		1	CONEXÃO RACOR	FITTING RACCORDO	020R
	10	**82926938**		3	BUJÃO TAPON	PLUG TAPPO	050T
	11	**83949104**		4	PARAFUSO TORNILLO	SCREW VITE	040V
	12	**82860069**		1	CONEXÃO RACOR	FITTING RACCORDO	020R
	13	**87800083**		1	FILTRO FILTRO	FILTER FILTRO	065F
	14	**81869031**		1	DISCO DISCO	DISC DISCO	060D
	15	**81873524**		1	INTERRUPTOR INTERRUPTOR	SWITCH INTERRUTTORE	075I

FB80.3 - FB100.3

FILTRO DE ÓLEO
FILTRO DE ACEITE
OIL FILTER
FILTRO OLIO

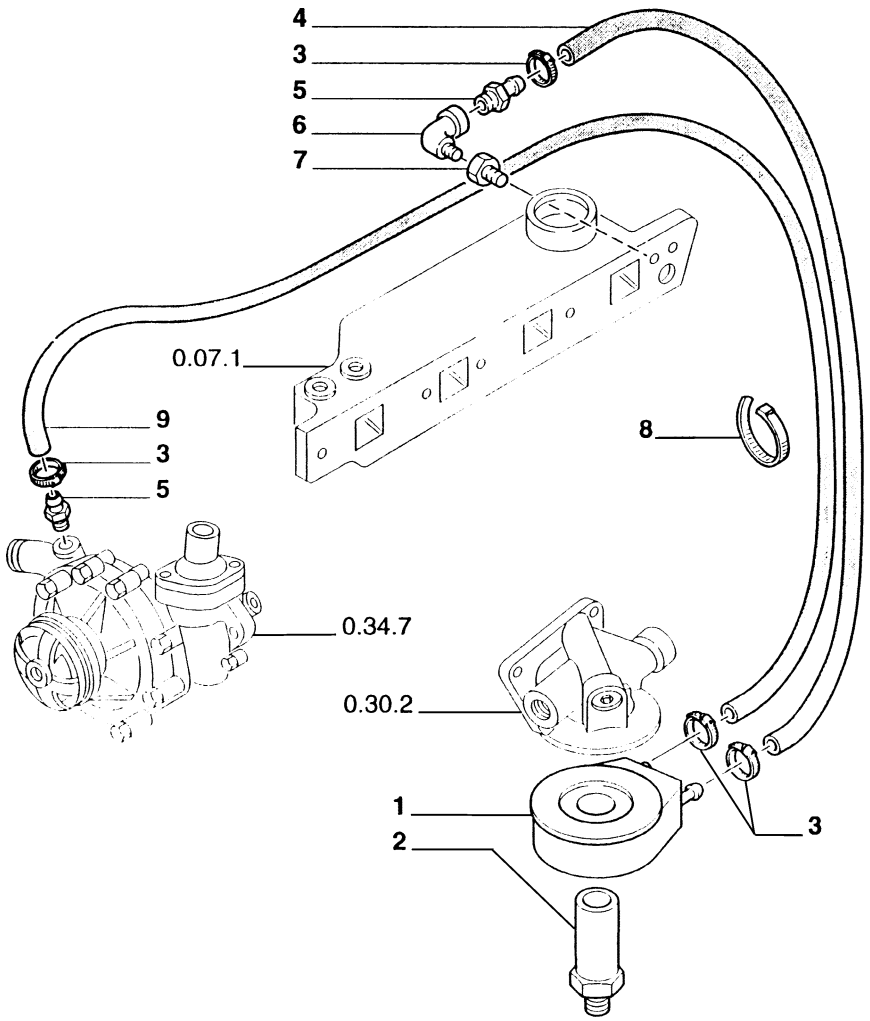

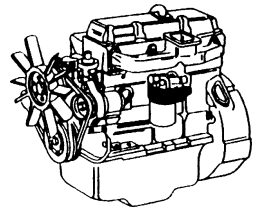

MOD	R	P/N. Imola	P/N. Brazil	Q	Descrição Denominacion	Description Descrizione	L.C.
	1	**83960219**		1	TROCADOR CALOR CAMBIADOR CALOR	HEAT EXCHANGER SCAMBIAT.CALORE	025S
	2	**83960222**		1	CONEXÃO RACOR	FITTING RACCORDO	020R
	3	**83417056**		4	ABRAÇADEIRA ABRAZADERA	CLAMP FASCETTA	031F
	4	**87800722**		1	MANGUEIRA TUBO FLEXIBLE	HOSE TUBO FLESSIBILE	285T
	5	**82894853**		2	CONEXÃO RACOR	FITTING RACCORDO	020R
	6	**83961127**		1	CONEXÃO RACOR	FITTING RACCORDO	020R
	7	**87800411**		1	CONEXÃO RACOR	FITTING RACCORDO	020R
	8	**80529070**		3	COLAR COLLAR	COLLAR COLLARE	180C
	9	**87800723**		1	MANGUEIRA TUBO FLEXIBLE	HOSE TUBO FLESSIBILE	285T

FB80.3 - FB100.3

TROCADOR DE CALOR
CAMBIADOR DE CALOR
OIL COOLER
SCAMBIATORE DI CALORE

0.31.0

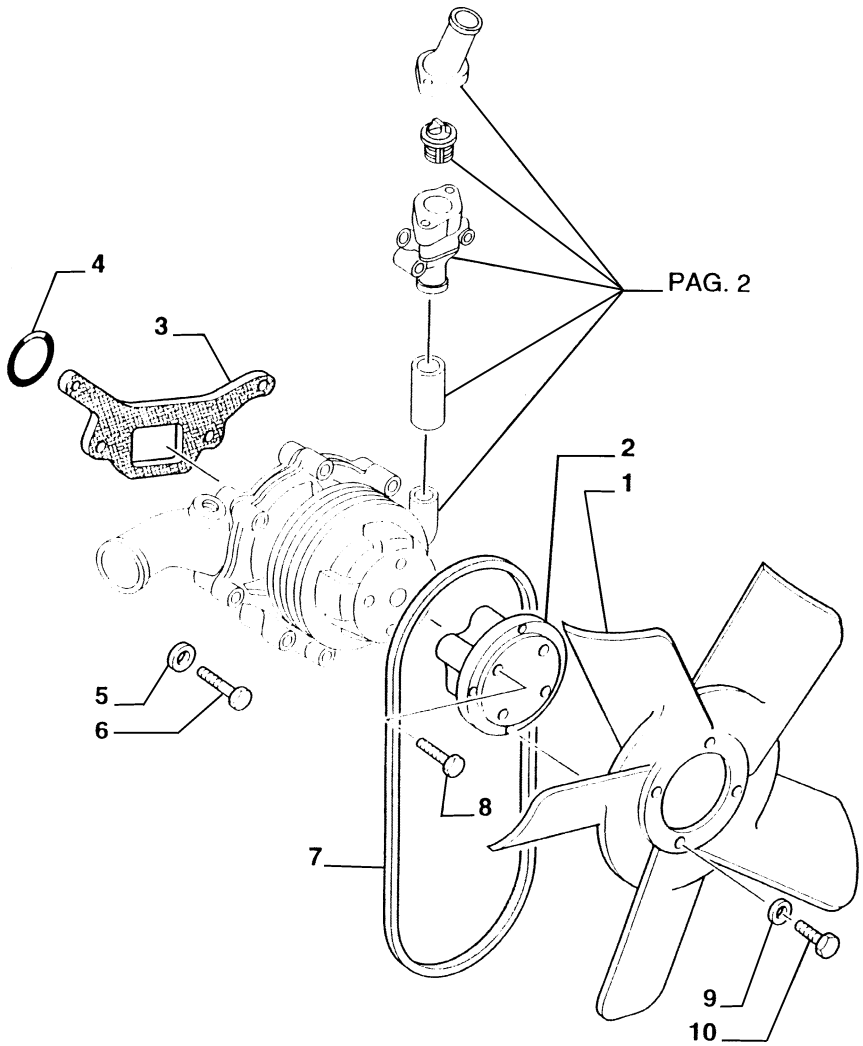

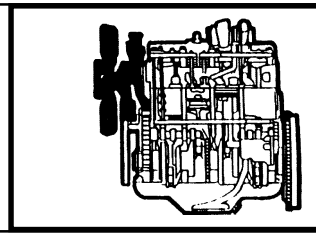

MOD	R	P/N. Imola	P/N. Brazil	Q	Descrição Denominacion	Description Descrizione	L.C.
	1	**81868398**		1	VENTILADOR VENTILADOR	FAN VENTILATORE	030V
	2	**87800147**		1	ANEL ARO	RING ANELLO	045A
	3	**82853374**		1	RETENTOR EMPAQUETADURA	SEAL ASSY GUARNIZIONE	123G
	4	**83913202**		1	ANEL DE VEDAÇÃO JUNTA HERMETICA	SEAL RING ANELLO TENUTA	055A
	5	**83980546**		4	ARRUELA ARANDELA	WASHER ROSETTA	131R
	6	**80012934**		4	PARAFUSO TORNILLO	SCREW VITE	040V
	6	**81821380**		2	PARAFUSO TORNILLO	SCREW VITE	040V
	6	**81868095**		2	PARAFUSO TORNILLO	SCREW VITE	040V
	7		**75242369**	1	CORREIA CORREA	BELT CINGHIA	173C
	8	**81867931**		4	PARAFUSO TORNILLO	SCREW VITE	040V
	9	**80140160**		4	ARRUELA PRESSÃO ARANDELA ELAST.	LOCKWASHER ROSETTA ELAST.	170R
	10	**85700121**		4	PARAFUSO TORNILLO	SCREW VITE	040V

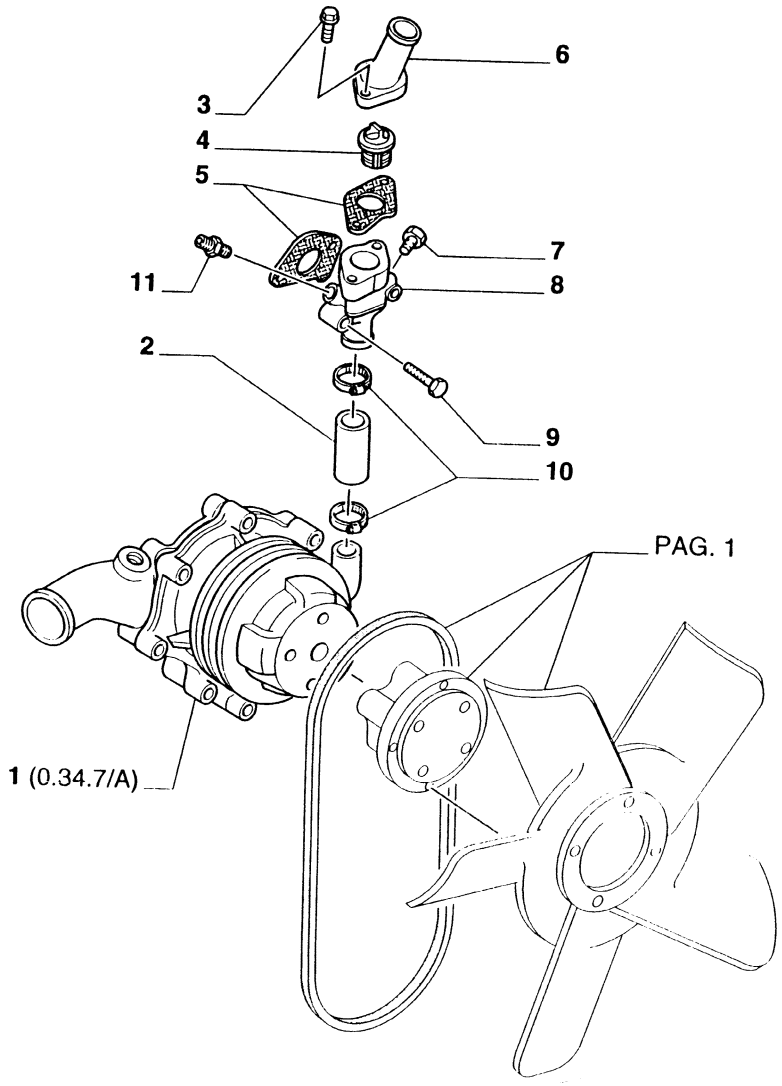

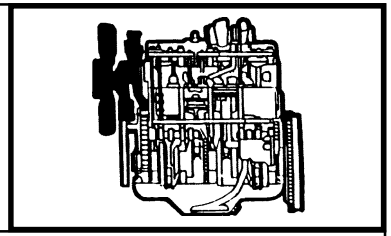

MOD	R	P/N. Imola	P/N. Brazil	Q	Descrição Denominacion	Description Descrizione	L.C.
	1	**87800118**		1	BOMBA INJETORA BOMBA INYECCION	INJECTION PUMP POMPA INIEZIONE	158P
	2	**83946457**		1	MANGUEIRA TUBO FLEXIBLE	HOSE TUBO FLESSIBILE	285T
	3	**81879213**		2	PARAFUSO TORNILLO	SCREW VITE	040V
	4	**87800842**		1	TERMOSTATO	THERMOSTAT TERMOSTATO	096T
	5	**81805624**		2	RETENTOR EMPAQUETADURA	SEAL ASSY GUARNIZIONE	123G
	6	**83959426**		1	CONEXÃO RACOR	FITTING RACCORDO	020R
	7	**83984176**		2	BUJÃO TAPON	PLUG TAPPO	050T
	8	**82866720**		1	CARCAÇA CAJA	CASE SCATOLA	035S
	9	**83946468**		2	PARAFUSO TORNILLO	SCREW VITE	040V
	10	**81811886**		2	ABRAÇADEIRA ABRAZADERA	CLAMP FASCETTA	031F
	11	**89712608**		1	MANÔMETRO ÁGUA MANOMETRO AGUA	WATER PRESSURE MANOMETRO ACQUA	040M

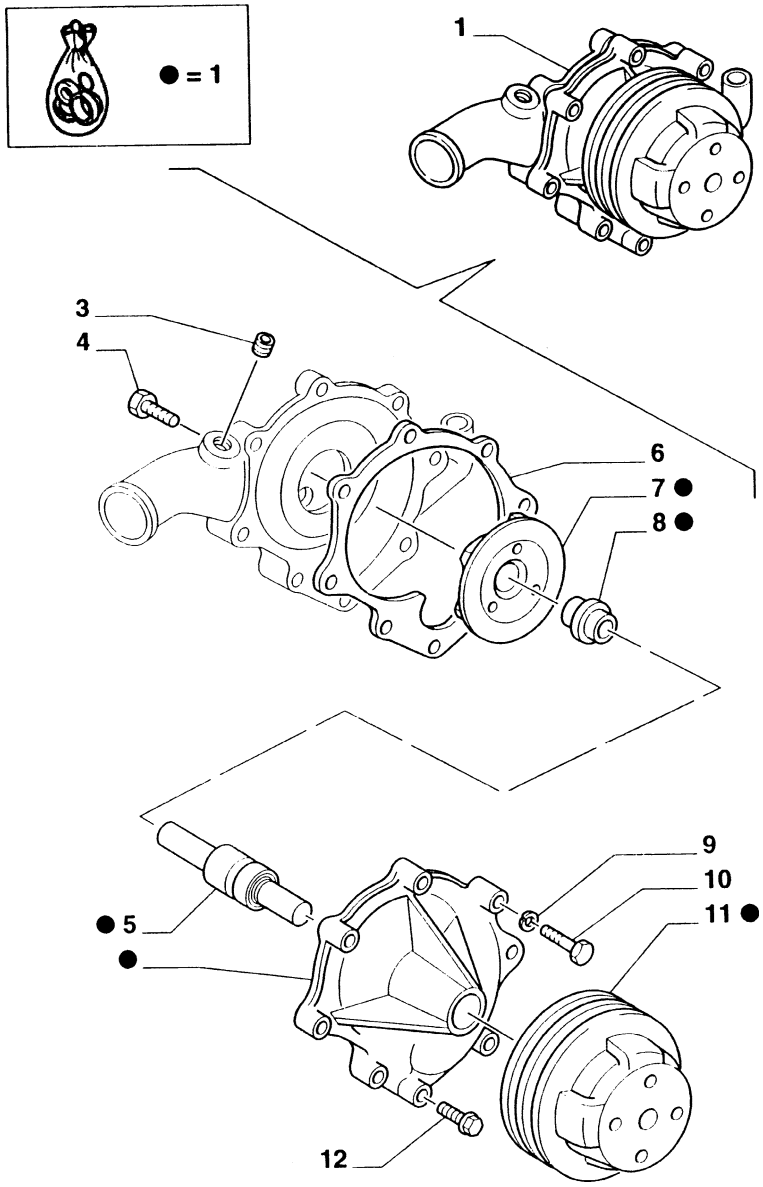

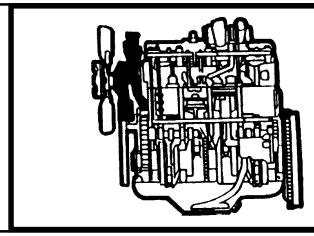

MOD	R	P/N. Imola	P/N. Brazil	Q	Descrição Denominacion	Description Descrizione	L.C.
	1	**87800118**		1	BOMBA D'ÁGUA BOMBA DE AGUA	WATER PUMP POMPA ACQUA	P152
	2	**87800109**		1	KIT JUEGO	KIT KIT	002K
	3	**83984176**		1	BUJÃO TAPON	PLUG TAPPO	050T
	4	**81863681**		1	PARAFUSO TORNILLO	SCREW VITE	040V
	5	**83943917**		1	ROLAMENTO RODAMIENTO	BEARING CUSCINETTO	341C
	6	**83959398**		1	RETENTOR EMPAQUETADURA	SEAL ASSY GUARNIZIONE	123G
	7	**83926005**		1	ROTOR IMPULSOR	IMPELLER GIRANTE	060G
	8	**81870468**		1	RETENTOR EMPAQUETADURA	SEAL ASSY GUARNIZIONE	123G
	9	**80080681**		4	ARRUELA PRESSÃO ARANDELA ELAST.	LOCKWASHER ROSETTA ELAST.	170R
	10	**81821262**		4	PARAFUSO TORNILLO	SCREW VITE	040V
	11	**83903421**		1	POLIA POLEA	PULLEY PULEGIA	230P
	12	**82934397**		4	PARAFUSO TORNILLO	SCREW VITE	040V

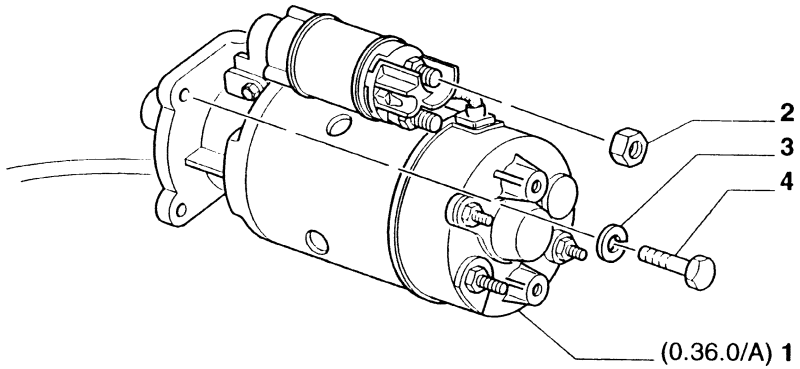

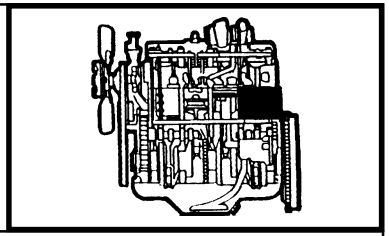

MOD	R	P/N. Imola	P/N. Brazil	Q	Descrição Denominacion	Description Descrizione	L.C.
	1	**75242367**		1	MOTOR ARRANQUE MOTOR ARRANQUE	STARTER MOTOR MOTORINO AVVIAM	133M
	2	**70910324**		1	PORCA TUERCA	NUT DADO	010D
	3	**10615779**		3	ARRUELA ARANDELA	WASHER ROSETTA	131R
	4	**70922287**		1	PARAFUSO TORNILLO	SCREW VITE	040V
	4	**70921076**		2	PARAFUSO TORNILLO	SCREW VITE	040V

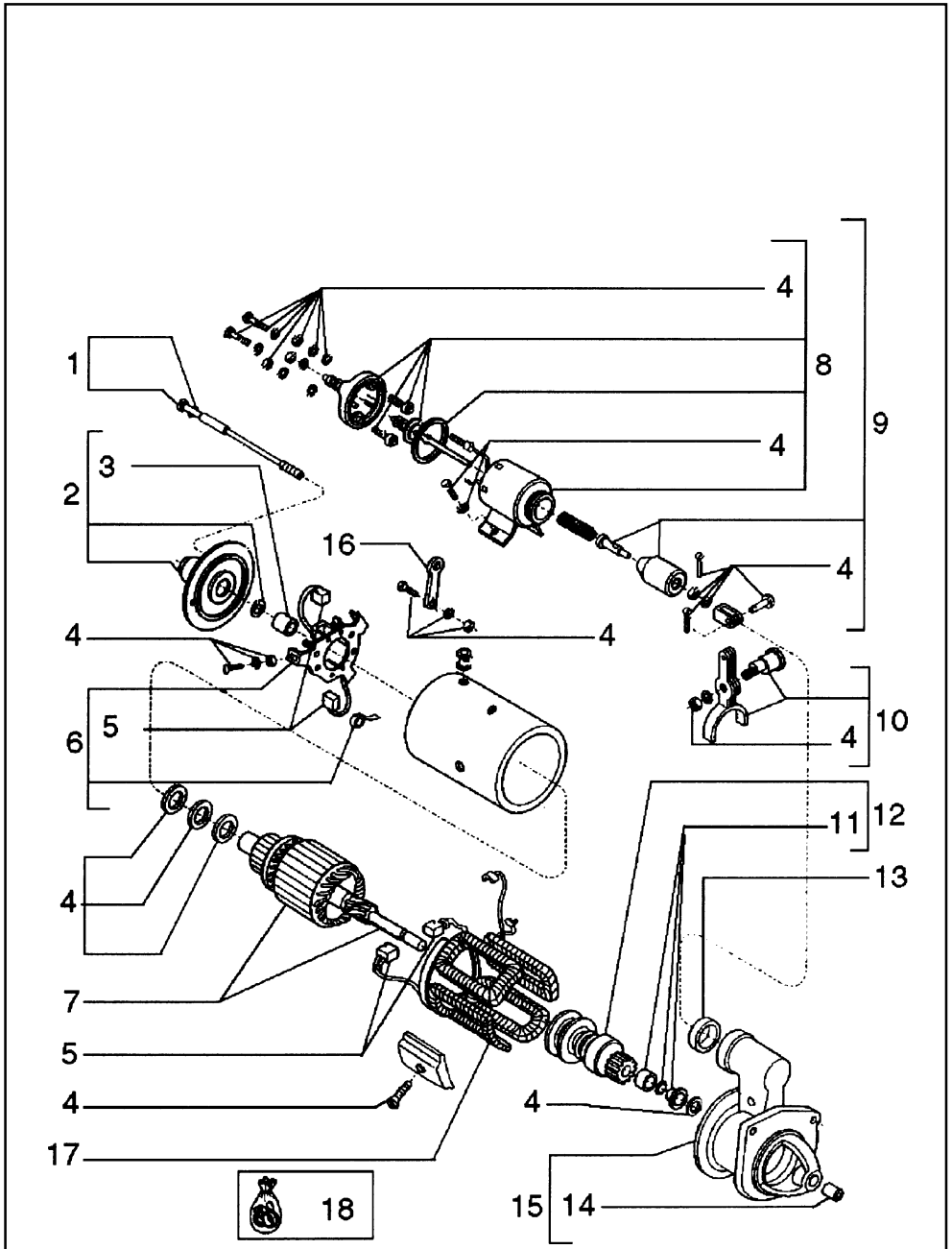

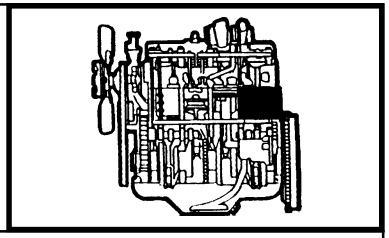

MOD	R	P/N. Imola	P/N. Brazil	Q	Descrição Denominacion	Description Descrizione	L.C.
	1		**75311278**	1	TIRANTE TIRANTE	TIEROD TIRANTE	142T
	2		**75311279**	1	TAMPA TAPA	COVER COPERCHIO	265C
	3		**75311276**	1	BUCHA BUJE	BUSHING BOCCOLA	095B
	4		**75311280**	1	KIT JUEGO	KIT KIT	002K
	5		**75311274**	1	ESCOVA ESCOBILLA	BRUSH SPAZZOLA	177S
	6		**75311269**	1	SUPORTE SOPORTE	SUPPORT SUPPORTO	300S
	7		**75311270**	1	INDUZIDO INDUCIDO	ARMATURE INDOTTO	046I
	8		**75311285**	1	MAGNETO MAGNETO	MAGNETO MAGNETE	012M
	9		**75310665**	1	MAGNETO MAGNETO	MAGNETO MAGNETE	012M
	10		**75311282**	1	ALAVANCA PALANCA	LEVER LEVA	045L
	11		**75311273**	1	KIT JUEGO	KIT KIT	002K
	12		**75311271**	1	PINHAO PINON	PINION PIGNONE	122K
	13		**75311284**	1	BUCHA BUJE	BUSHING BOCCOLA	095B
	14		**75311277**	1	BUCHA BUJE	BUSHING BOCCOLA	095B
	15		**75311281**	1	CARCAÇA CAJA	CASE SCATOLA	035S
	16		**75311283**	1	ALAVANCA PALANCA	LEVER LEVA	045L
	17		**75311272**	1	BOBINA BOBINA	COIL BOBINA	083B
	18		**75311275**	1	KIT JUEGO	KIT KIT	002K

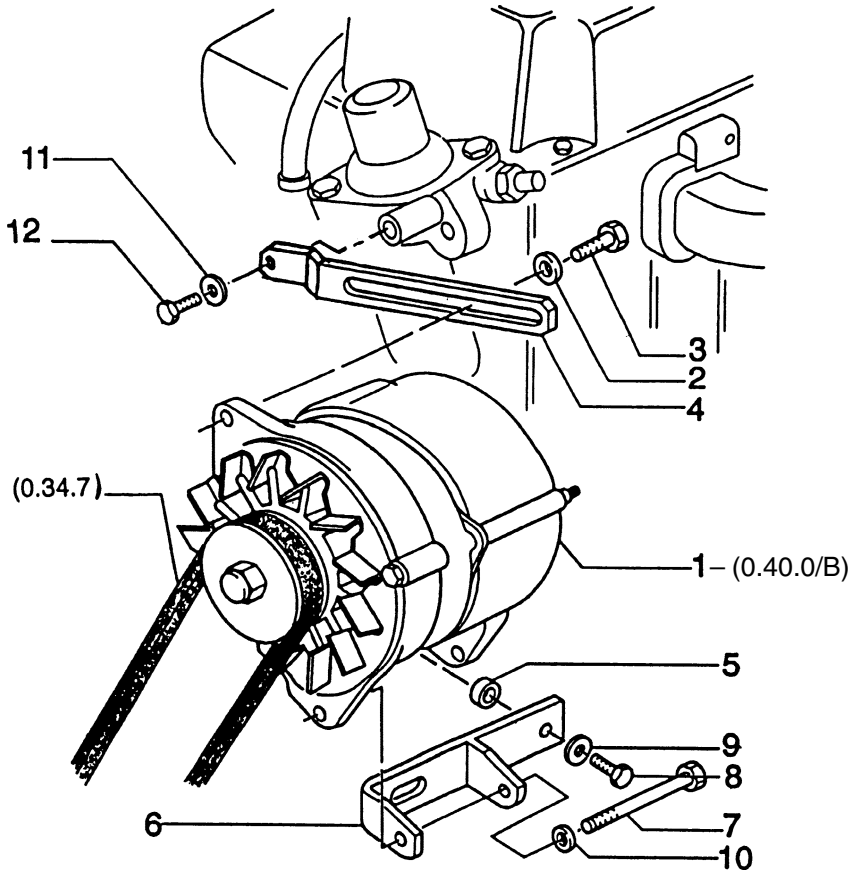

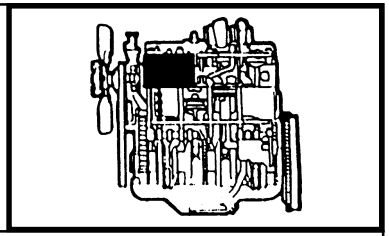

MOD	R	P/N. Imola	P/N. Brazil	Q	Descrição Denominacion	Description Descrizione	L.C.
	1		**84990890**	1	ALTERNADOR ALTERNADOR	ALTERNATOR ALTERNATORE	025A
	2	**86511315**	**70929292**	1	ARRUELA ARANDELA	WASHER ROSETTA	131R
	3	**82880843**	**70922925**	1	PARAFUSO TORNILLO	SCREW VITE	040V
	4		**84990893**	1	ESTICADOR TENSOR CORREA	BELT STRETCHER TENDICINGHIA	087T
	5	**87800196**		1	BUCHA BUJE	BUSHING BOCCOLA	095B
	6		**84990888**	1	SUPORTE SOPORTE	SUPPORT SUPPORTO	300S
	7		**70927218**	1	PARAFUSO TORNILLO	SCREW VITE	040V
	8	**83933065**	**70922262**	2	PARAFUSO TORNILLO	SCREW VITE	040V
	9	**82935806**	**70929156**	2	ARRUELA ARANDELA	WASHER ROSETTA	131R
	10		**70927328**	1	ARRUELA ARANDELA	WASHER ROSETTA	131R
	11	**83946521**	**10519601**	1	ARRUELA ARANDELA	WASHER ROSETTA	131R
	12	**80087872**		1	PARAFUSO TORNILLO	SCREW VITE	040V

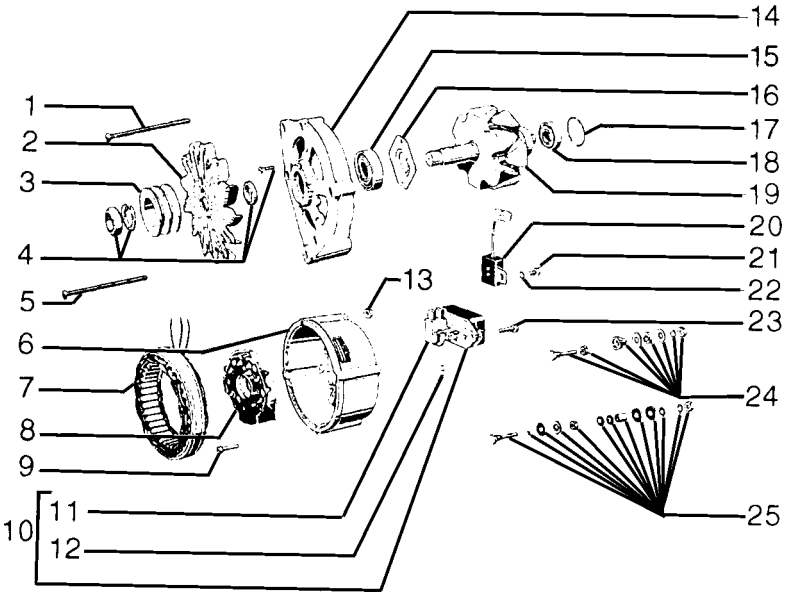

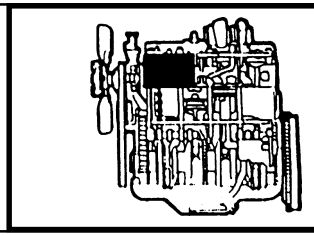

MOD	R	P/N. Imola	P/N. Brazil	Q	Descrição Denominacion	Description Descrizione	L.C.
	1	**85805728**		2	PARAFUSO TORNILLO	SCREW VITE	040V
	2	**85805731**		1	VENTILADOR VENTILADOR	FAN VENTILATORE	030V
	3	**85805732**		1	POLIA POLEA	PULLEY PULEGIA	230P
	4	**85805737**		1	KIT JUEGO	KIT KIT	002K
	5	**85805730**		2	PARAFUSO TORNILLO	SCREW VITE	040V
	6	**85805720**		1	SUPORTE SOPORTE	SUPPORT SUPPORTO	300S
	7	**85805727**		1	ESTATOR ESTATOR	STATOR STATORE	271S
	8	**85805721**		1	DIODO DIODO	DIODE DIODO	053D
	9	**85805723**		3	PARAFUSO TORNILLO	SCREW VITE	040V
	10	**85805724**		1	REGULADOR REGULADOR	REGULATOR REGOLATORE	169R
	11	**85805726**		1	ESCOVA ESCOBILLA	BRUSH SPAZZOLA	177S
	12	**85805725**		2	MOLA MUELLE	SPRING MOLLA	100M
	13	**85805733**		2	PORCA TUERCA	NUT DADO	010D
	14	**85805715**		2	SUPORTE SOPORTE	SUPPORT SUPPORTO	300S
	15	**85805716**		1	ROLAMENTO RODAMIENTO	BEARING CUSCINETTO	341C
	16	**85805717**		1	PLACA PLACA	PLATE PIASTRINA	110P
	17	**85805722**		1	O'RING JUNTA TORICA	O'RING GUARNIZIONE O-R	158G
	18	**85805719**		1	ROLAMENTO RODAMIENTO	BEARING CUSCINETTO	341C
	19	**85805718**		1	ROTOR ROTOR	ROTOR ROTORE	145R
	20	**85805734**		1	CONDENSADOR CONDENSADOR	CONDENSER CONDENSATORE	220C

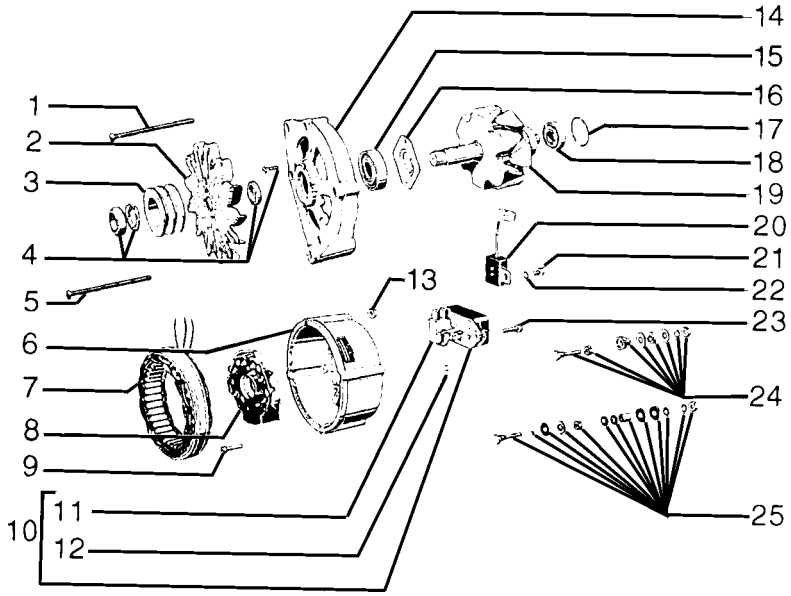

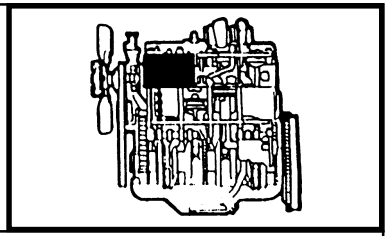

MOD	R	P/N. Imola	P/N. Brazil	Q	Descrição Denominacion	Description Descrizione	L.C.
	21	**85805735**		1	PARAFUSO TORNILLO	SCREW VITE	040V
	22	**85805736**		1	ARRUELA PRESSÃO ARANDELA ELAST.	LOCKWASHER ROSETTA ELAST.	170R
	23	**85805729**		2	PARAFUSO TORNILLO	SCREW VITE	040V
	24	**85805738**		1	KIT JUEGO	KIT KIT	002K
	25	**85805739**		1	KIT JUEGO	KIT KIT	002K

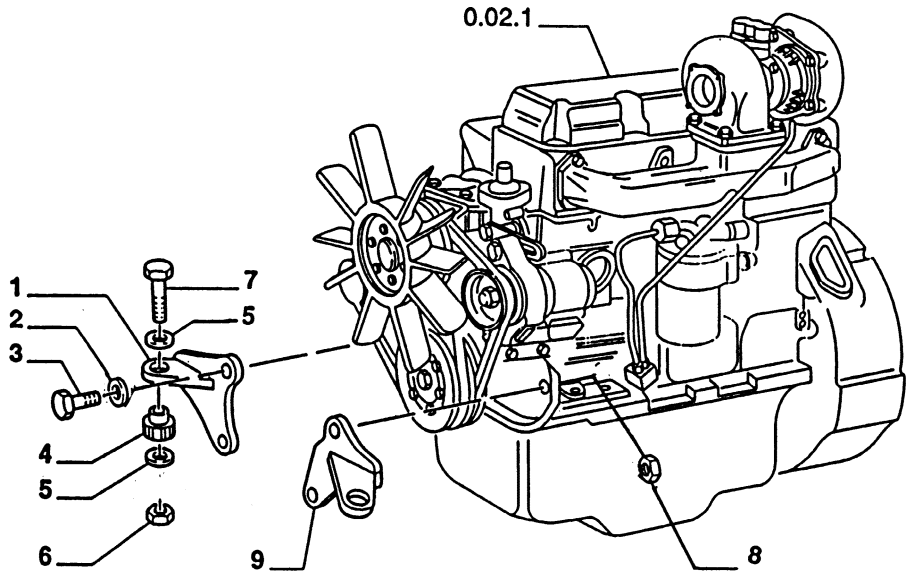

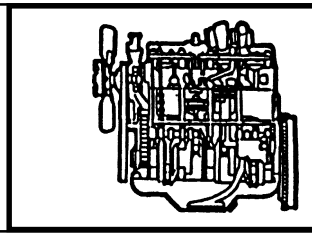

MOD	R	P/N. Imola	P/N. Brazil	Q	Descrição Denominacion	Description Descrizione	L.C.
	1		**75245698**	1	SUPORTE DIREITO SOPORTE	SUPPORT RH SUPPORTO	109D
	2		**70928358**	4	ARRUELA ARANDELA	WASHER ROSETTA	131R
	3		**70925483**	4	PARAFUSO TORNILLO	SCREW VITE	040V
	4		**76022229**	2	COXIM COJIN	CUSHION CUSCINO	345C
	5		**70927328**	2	ARRUELA ARANDELA	WASHER ROSETTA	131R
	6		**12574921**	2	PORCA TUERCA	NUT DADO	010D
	7		**15981531**	2	PARAFUSO TORNILLO	SCREW VITE	040V
	8		**70916170**	4	PORCA TUERCA	NUT DADO	010D
	9		**75245697**	1	SUPORTE ESQUERDO SOPORTE	SUPPORT LH SUPPORTO	109E

FUEL TANK - SILENCER
RADIATOR - AIR CLEANER

SERBATOIO COMBUST. - SILENZIATORE
RADIATORE - FILTRO ARIA

RESERVOIR A COMBUSTIBLE - SILENCIEUX
RADIATEUR - FILTRE A AIR

KRAFTSTOFFTANK - AUSPUFFTOPF
KUEHLER - LUFTFILTER

TANQUE COMBUSTIBLE - SILENCIADOR
RADIATOR - FILTRO DE AIRE

DEPÒSITO DE COMBUSTÍVEL - SEILENCIADOR
RADIADOR - FILTRO DE AR

BRANDSTOFTANK - GELUIDDEMPER
RADIATOR - LUCHTREINIGER

BRÆNDSTOFBEHOLDER - LIDDÆMPER
RADIATOR - LUFTFILTER

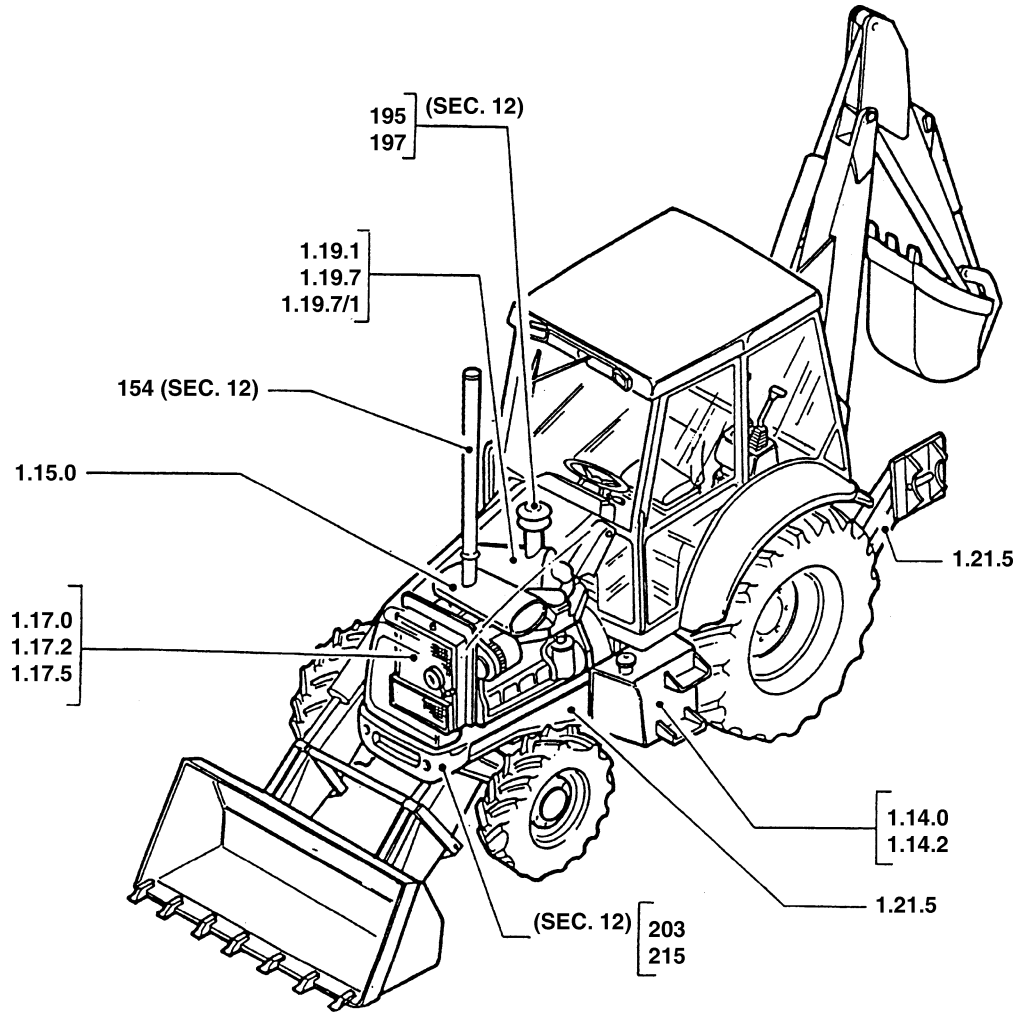

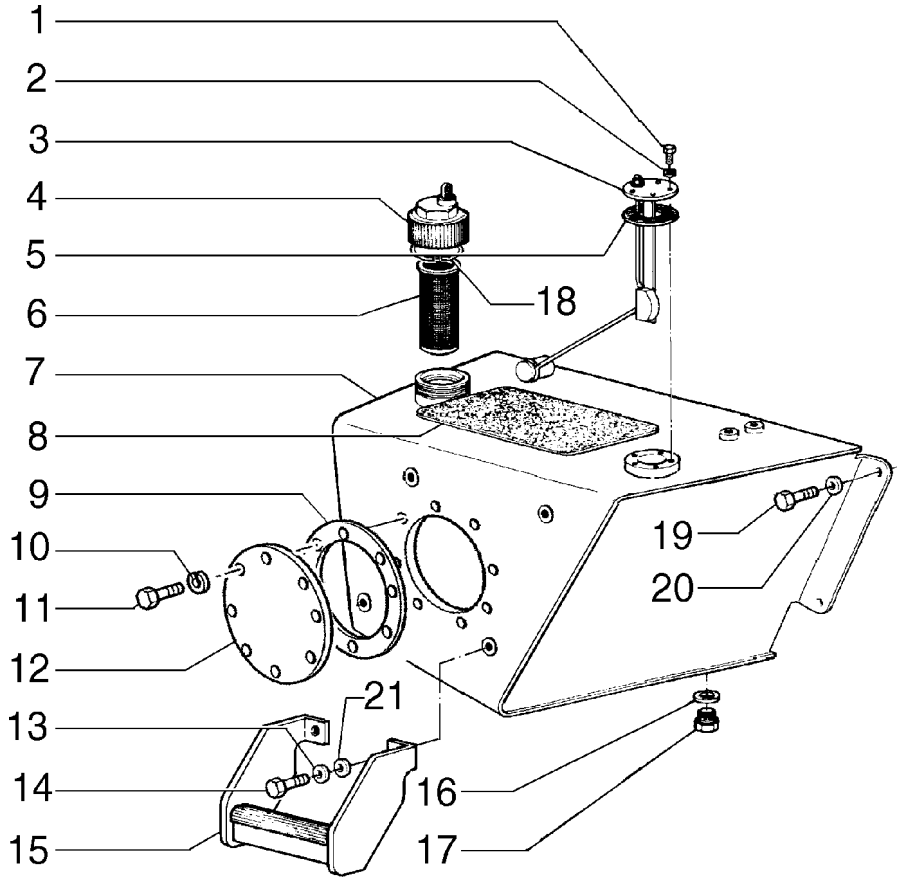

CAB Usado em máquinas com cabine
TOLD Usado em máquinas com toldo

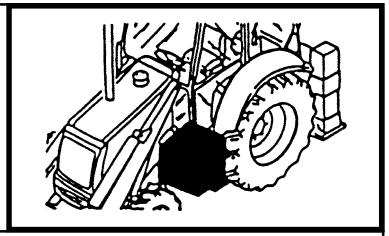

MOD	R	P/N. Imola	P/N. Brazil	Q	Descrição Denominacion	Description Descrizione	L.C.
	1	**13272214**	**13272111**	5	PARAFUSO TORNILLO	SCREW VITE	040V
	2	**10519211**	**10519201**	5	ARRUELA ARANDELA	WASHER ROSETTA	131R
TOLD	3		**75240702**	1	BOIA FLOTADOR	FLOAT GALLEGGIANTE	020G
CAB	3	**85803063**		1	BOIA FLOTADOR	FLOAT GALLEGGIANTE	020G
	4		**79104494**	1	TAMPA TAPA	COVER COPERCHIO	265C
	5		**70241522**	1	JUNTA JUNTA PLANA	GASKET GUARNIZ. PIANA	120G
	6		**75241002**	1	FILTRO COMBUST. FILTRO COMBUST.	FUEL FILTER FILTRO COMBUST.	064F
	7	**85801220**	**75257619**	1	RESERVATORIO DEPOSITO	TANK SERBATOIO	115S
	8	**85802808**	**75210383**	1	FAIXA BANDA	BAND FASCIA	029F
	9	**85801215**		1	JUNTA JUNTA PLANA	GASKET GUARNIZ. PIANA	120G
	10	**11194779**	**12644421**	8	ARRUELA PRESSÃO ARANDELA ELAST.	LOCKWASHER ROSETTA ELAST.	170R
	11	**10902424**	**10902431**	8	PARAFUSO TORNILLO	SCREW VITE	040V
	12	**85801216**		1	TAMPA TAPA	COVER COPERCHIO	265C
	13		**10517071**	4	ARRUELA PRESSÃO ARANDELA ELAST.	LOCKWASHER ROSETTA ELAST.	170R
	14	**15570321**	**15540631**	4	PARAFUSO TORNILLO	SCREW VITE	040V
	15	**85801218**	**75247636**	2	ESCADA ESCALERILLA	LADDER SCALETTA	022S
	16		**10296260**	1	JUNTA JUNTA PLANA	GASKET GUARNIZ. PIANA	120G
	17		**75201058**	1	BUJÃO TAPON	PLUG TAPPO	050T
	18		**4971843**	1	ANEL ELÁSTICO ANILLO ELASTICO	SNAP RING ANELLO ELASTICO	187A
	19	**11190774**	**12646921**	4	ARRUELA ARANDELA	WASHER ROSETTA	131R

FB80.3 - FB100.3

RESERVATÓRIO DE COMBUSTÍVEL
DEPOSITO DE COMBUSTIBILE
FUEL TANK
SERBATOIO COMBUSTIBILE

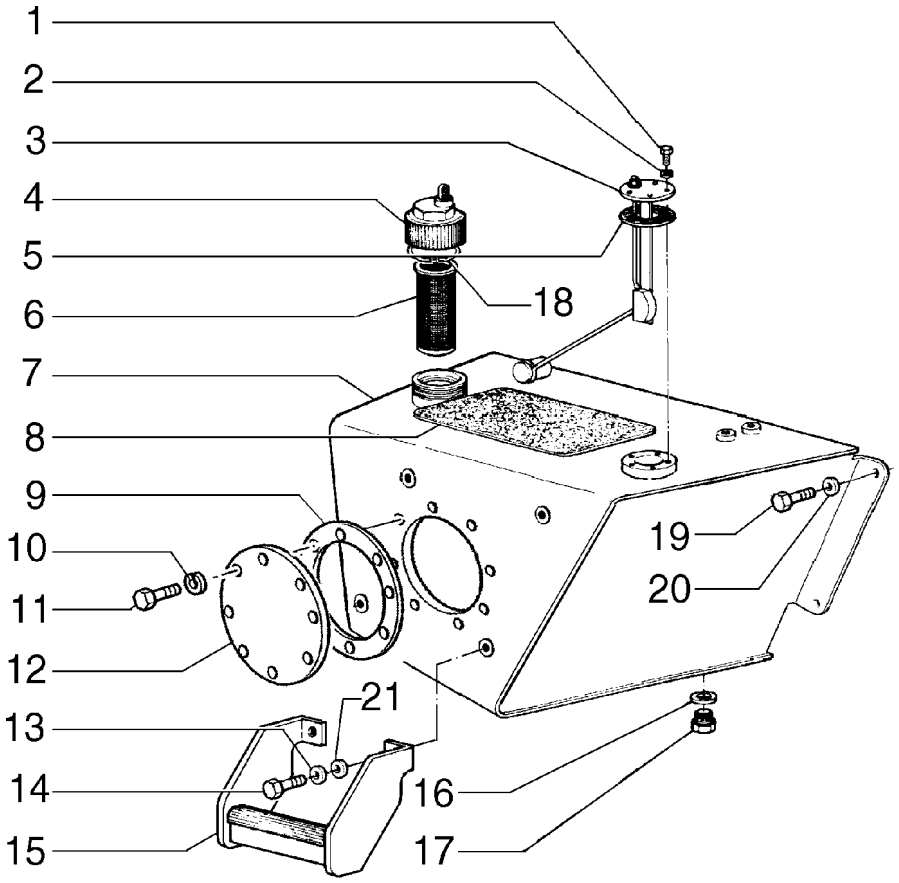

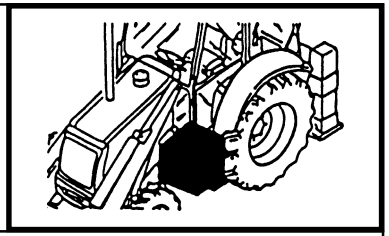

MOD	R	P/N. Imola	P/N. Brazil	Q	Descrição Denominacion	Description Descrizione	L.C.
	20	**15540321**	**15540331**	4	PARAFUSO TORNILLO	SCREW VITE	040V
	21	**11190774**	**14496821**	4	ARRUELA ARANDELA	WASHER ROSETTA	131R

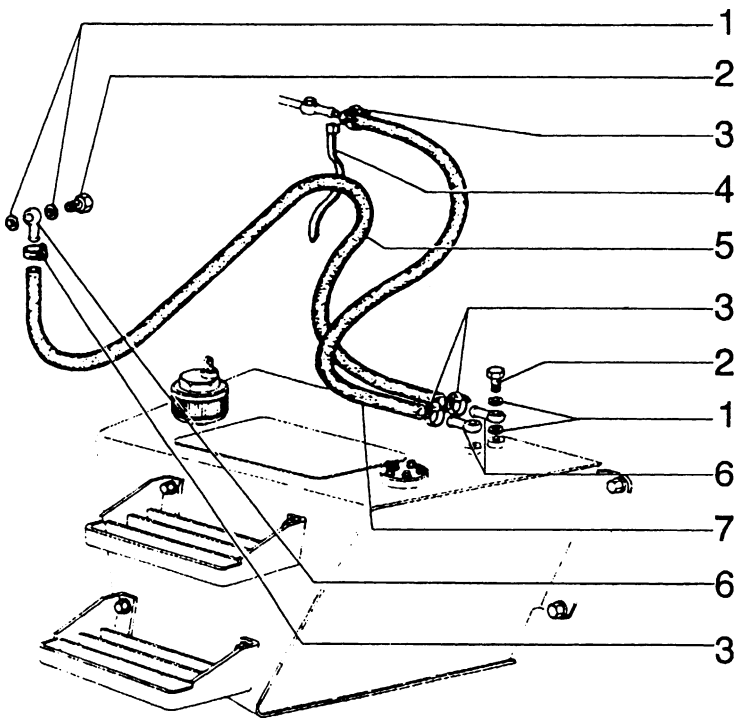

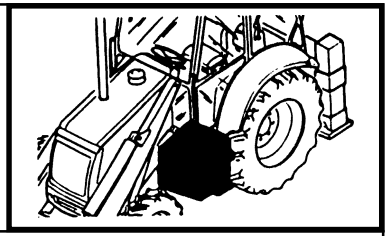

MOD	R	P/N. Imola	P/N. Brazil	Q	Descrição Denominacion	Description Descrizione	L.C.
	1		**10298460**	6	RETENTOR JUNTA	SEAL GUARNIZIONE	122G
	2		**10181711**	3	CONECTOR PLOT DE EMPALME	CONNECTOR BLOCC. CONNESS.	075B
	3	**85803013**	**70929402**	4	ABRAÇADEIRA ABRAZADERA	CLAMP FASCETTA	031F
	4	**13000190**	**75201642**	4	ABRAÇADEIRA ABRAZADERA	CLAMP FASCETTA	031F
	5	**85802626**	**75246763**	1	MANGUEIRA MANGA C/RACORDE	HOSE ASSY TUBO FLESSIBILE	192T
	6		**75246764**	3	CONEXÃO RACOR	FITTING RACCORDO	020R
	7	**85803245**	**75246762**	1	MANGUEIRA MANGA C/RACORDE	HOSE ASSY TUBO FLESSIBILE	192T

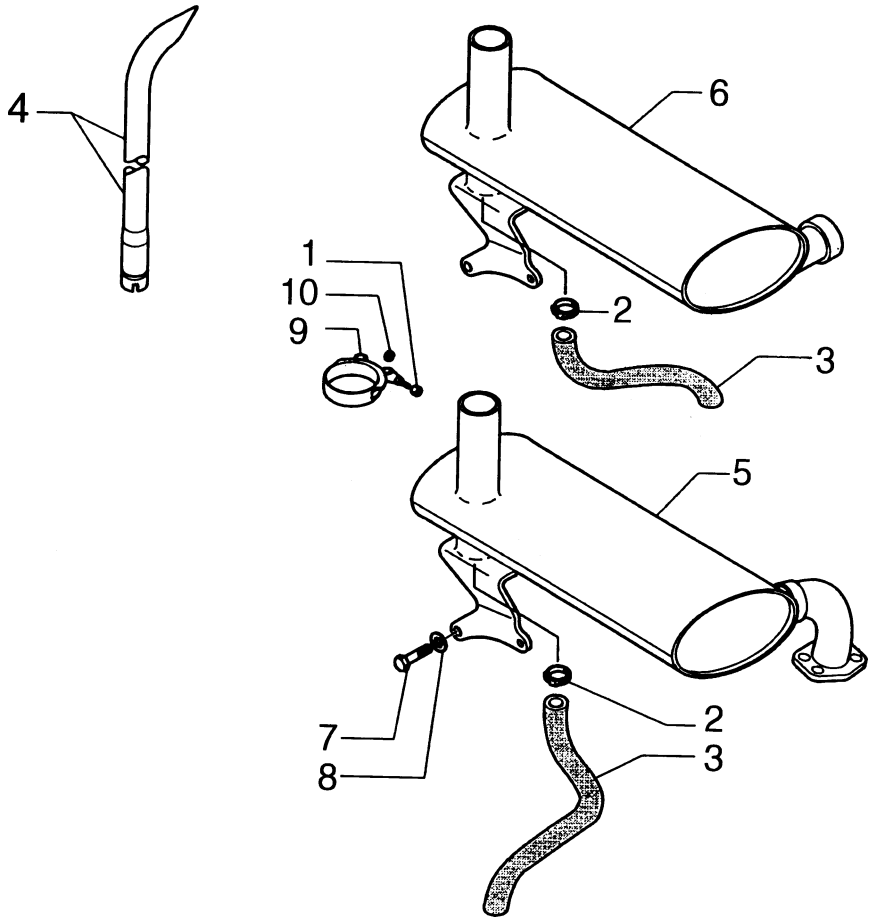

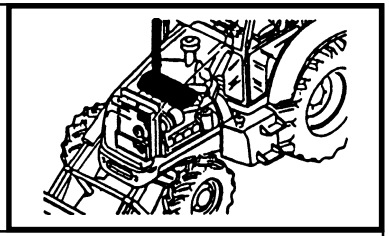

MOD	R	P/N. Imola	P/N. Brazil	Q	Descrição Denominacion	Description Descrizione	L.C.
	1	**16100811**		1	PORCA TUERCA	NUT DADO	010D
	2	**13000190**		1	TUBO TUBO	TUBE TUBO RIGIDO	193T
	3	**85802293**		1	ABRAÇADEIRA ABRAZADERA	CLAMP FASCETTA	031F
	4	**85813076**		1	TUBO TUBO	TUBE TUBO RIGIDO	193T
ASPIR	5	**85813074**		1	SILENCIOSO SILENCIADOR	MUFFLER SILENZIATORE	160S
TURB	6	**85813075**		1	PARAFUSO TORNILLO	SCREW VITE	040V
	7	**81821207**		4	ARRUELA ARANDELA	WASHER ROSETTA	131R
	8	**12648521**		2	PORCA TUERCA	NUT DADO	010D
	9	**85804694**		1	SUPORTE SOPORTE	SUPPORT SUPPORTO	300S
	10	**85805786**		1	ESPAÇADOR SEPARADOR	SPACER DISTANZIALE	075D

Opcional – ar condicionado

ASPIR Usado em motor aspirado
TURB Usado em motor turbinado

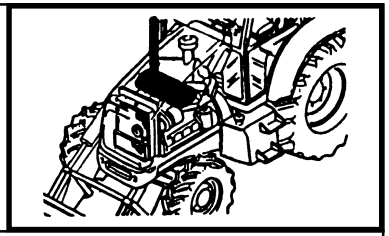

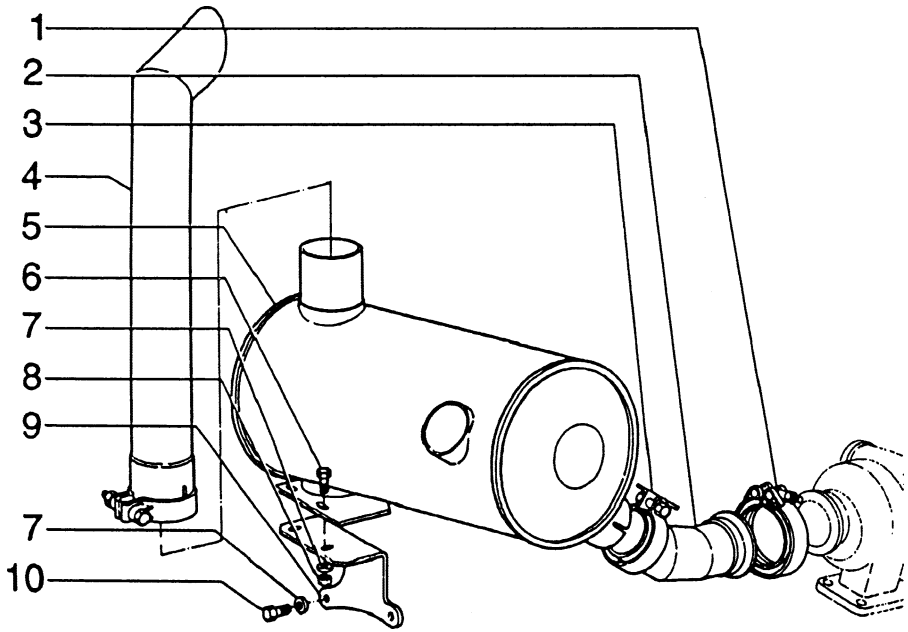

MOD	R	P/N. Imola	P/N. Brazil	Q	Descrição Denominacion	Description Descrizione	L.C.
TURB	1	**83919776**		1	ABRAÇADEIRA ABRAZADERA	CLAMP FASCETTA	031F
TURB	2		**75280144**	1	TUBO TUBO	TUBE TUBO RIGIDO	193T
	3		**75237996**	1	ABRAÇADEIRA ABRAZADERA	CLAMP FASCETTA	031F
	4		**75246352**	1	TUBO TUBO	TUBE TUBO RIGIDO	193T
	5		**75247358**	1	SILENCIOSO SILENCIADOR	MUFFLER SILENZIATORE	160S
	6		**11106431**	2	PARAFUSO TORNILLO	SCREW VITE	040V
	7	**80280244**	**70926180**	4	ARRUELA ARANDELA	WASHER ROSETTA	131R
	8		**12577221**	2	PORCA TUERCA	NUT DADO	010D
	9		**75247374**	1	SUPORTE SOPORTE	SUPPORT SUPPORTO	300S
	10	**80280244**	**70926108**	2	PARAFUSO TORNILLO	SCREW VITE	040V

TURB Usado em motor turbo

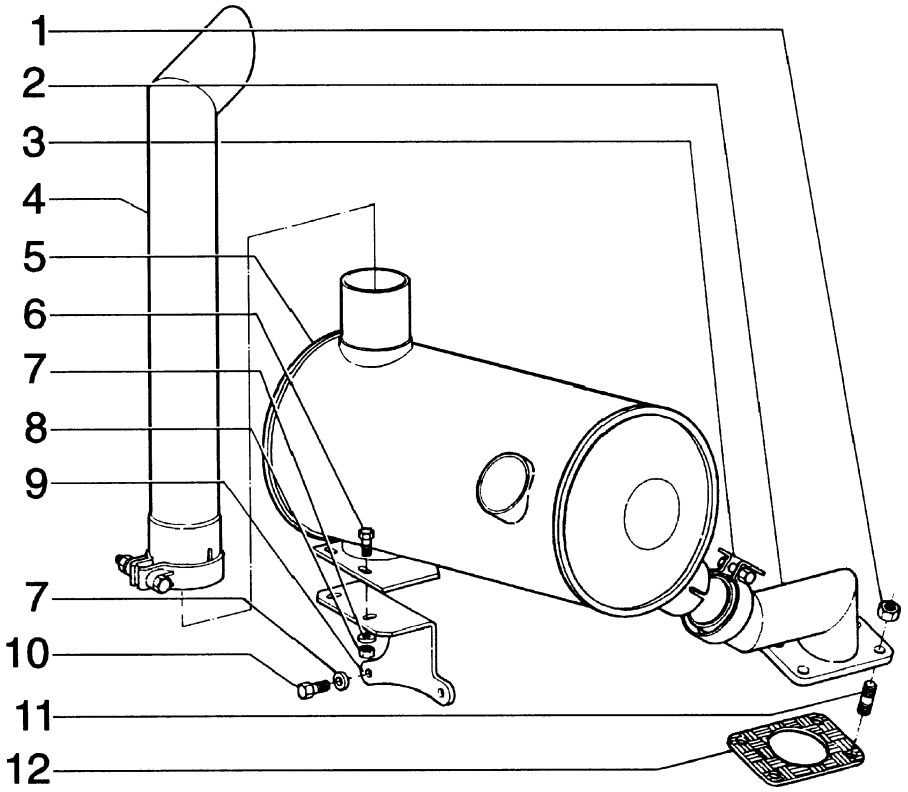

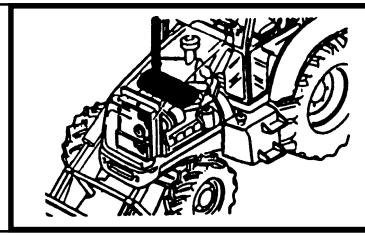

MOD	R	P/N. Imola	P/N. Brazil	Q	Descrição Denominacion	Description Descrizione	L.C.
ASPIR	1	**83993005**		4	PORCA TUERCA	NUT DADO	010D
ASPIR	2		**75247284**	1	TUBO TUBO	TUBE TUBO RIGIDO	193T
	3		**75237796**	1	ABRAÇADEIRA ABRAZADERA	CLAMP FASCETTA	031F
	4		**75246352**	1	TUBO TUBO	TUBE TUBO RIGIDO	193T
	5		**75247358**	1	SILENCIOSO SILENCIADOR	MUFFLER SILENZIATORE	160S
	6		**11106431**	2	PARAFUSO TORNILLO	SCREW VITE	040V
	7	**80280244**	**70926180**	4	ARRUELA ARANDELA	WASHER ROSETTA	131R
	8		**12577221**	2	PORCA TUERCA	NUT DADO	010D
	9		**75247374**	1	SUPORTE SOPORTE	SUPPORT SUPPORTO	300S
	10	**80280244**	**70926108**	1	PARAFUSO TORNILLO	SCREW VITE	040V
ASPIR	11	**83935845**		4	PRISIONEIRO ESPARRAGO	STUD PRIGIONIERO	210P
ASPIR	12	**83911642**		1	JUNTA JUNTA PLANA	GASKET GUARNIZ. PIANA	120G

ASPIR Usado em motor aspirado

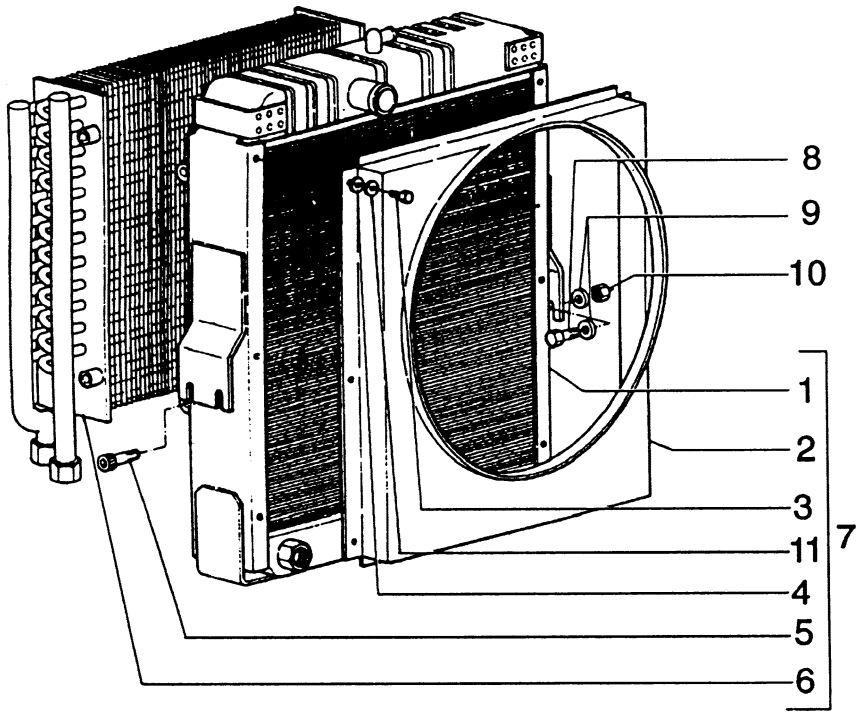

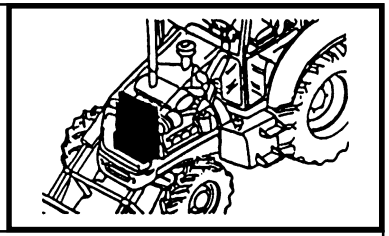

MOD	R	P/N. Imola	P/N. Brazil	Q	Descrição Denominacion	Description Descrizione	L.C.
	1		**75255097**	1	RADIADOR D'ÁGUA RADIAFOR AGUA	WATER RADIATOR RADIATORE ACQUA	167R
	1		**75245751**	1	RADIADOR D'ÁGUA RADIAFOR AGUA	WATER RADIATOR RADIATORE ACQUA	167R
	2		**75255098**	1	DEFLETOR CANALIZADOR	SHROUD CONVOGLIATORE	260C
	2		**75245752**	1	DEFLETOR CANALIZADOR	SHROUD CONVOGLIATORE	260C
	3	**16043124**	**16043131**	6	PARAFUSO TORNILLO	SCREW VITE	040V
	4		**70919326**	6	ARRUELA ARANDELA	WASHER ROSETTA	131R
	5		**14420431**	4	PARAFUSO TORNILLO	SCREW VITE	040V
	6		**75255037**	1	TROCADOR CALOR CAMBIADOR CALOR	HEAT EXCHANGER SCAMBIAT.CALORE	025S
	6		**75245753**	1	TROCADOR CALOR CAMBIADOR CALOR	HEAT EXCHANGER SCAMBIAT.CALORE	025S
	7		**75255036**	1	RADIADOR D'ÁGUA RADIAFOR AGUA	WATER RADIATOR RADIATORE ACQUA	167R
	7		**75245750**	1	RADIADOR D'ÁGUA RADIAFOR AGUA	WATER RADIATOR RADIATORE ACQUA	167R
	8		**15540531**	4	PARAFUSO TORNILLO	SCREW VITE	040V
	9	**11190774**	**12646921**	8	ARRUELA ARANDELA	WASHER ROSETTA	131R
	10	**16105021**	**16105011**	4	PORCA TUERCA	NUT DADO	010D
	11	**10516674**	**10516671**	6	ARRUELA PRESSÃO ARANDELA ELAST.	LOCKWASHER ROSETTA ELAST.	170R

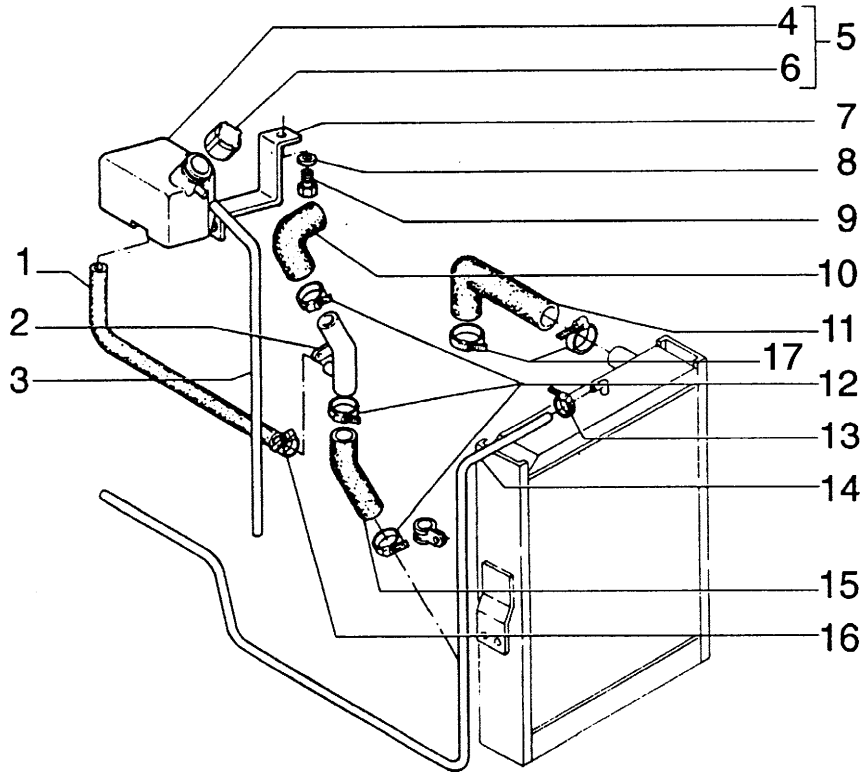

Usado em motor aspirado

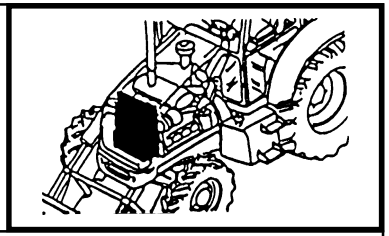

MOD	R	P/N. Imola	P/N. Brazil	Q	Descrição Denominacion	Description Descrizione	L.C.
	1	**85802877**	**75245456**	1	MANGUEIRA MANGA C/RACORDE	HOSE ASSY TUBO FLESSIBILE	192T
	2		**75246961**	1	TUBO TUBO	TUBE TUBO RIGIDO	193T
	3		**19032781**	1	MANGUEIRA MANGA C/RACORDE	HOSE ASSY TUBO FLESSIBILE	192T
	4	**85803018**		1	RESERVATORIO DEPOSITO	TANK SERBATOIO	115S
	5	**85802804**		1	RESERVATORIO DEPOSITO	TANK SERBATOIO	115S
	6	**85803019**		1	TAMPA TAPA	COVER COPERCHIO	265C
	7	**85803407**	**75246969**	1	SUPORTE SOPORTE	SUPPORT SUPPORTO	300S
	8	**11197874**	**70929292**	2	ARRUELA ARANDELA	WASHER ROSETTA	131R
	9	**16043834**	**16043231**	2	PARAFUSO TORNILLO	SCREW VITE	040V
	10	**85802672**		1	MANGUEIRA MANGA C/RACORDE	HOSE ASSY TUBO FLESSIBILE	192T
	11		**75246965**	1	MANGUEIRA MANGA C/RACORDE	HOSE ASSY TUBO FLESSIBILE	192T
	12	**85803012**	**12174790**	4	ABRAÇADEIRA ABRAZADERA	CLAMP FASCETTA	031F
	13	**85803013**	**12179190**	2	ABRAÇADEIRA ABRAZADERA	CLAMP FASCETTA	031F
	14	**85802876**		1	MANGUEIRA MANGA C/RACORDE	HOSE ASSY TUBO FLESSIBILE	192T
	15		**75246966**	1	MANGUEIRA MANGA C/RACORDE	HOSE ASSY TUBO FLESSIBILE	192T
	16	**85803012**	**12173890**	2	ABRAÇADEIRA ABRAZADERA	CLAMP FASCETTA	031F
	17	**79083845**		2	ABRAÇADEIRA ABRAZADERA	CLAMP FASCETTA	031F

FB80.3 - FB100.3

TUBULAÇÃO DE ARREFECIMENTO DO MOTOR
TUBERIAS DE REFRIGERACION DEL MOTOR
ENGINE COOLING PIPES
TUBAZIONI RAFFREDDAMENTO MOTORE

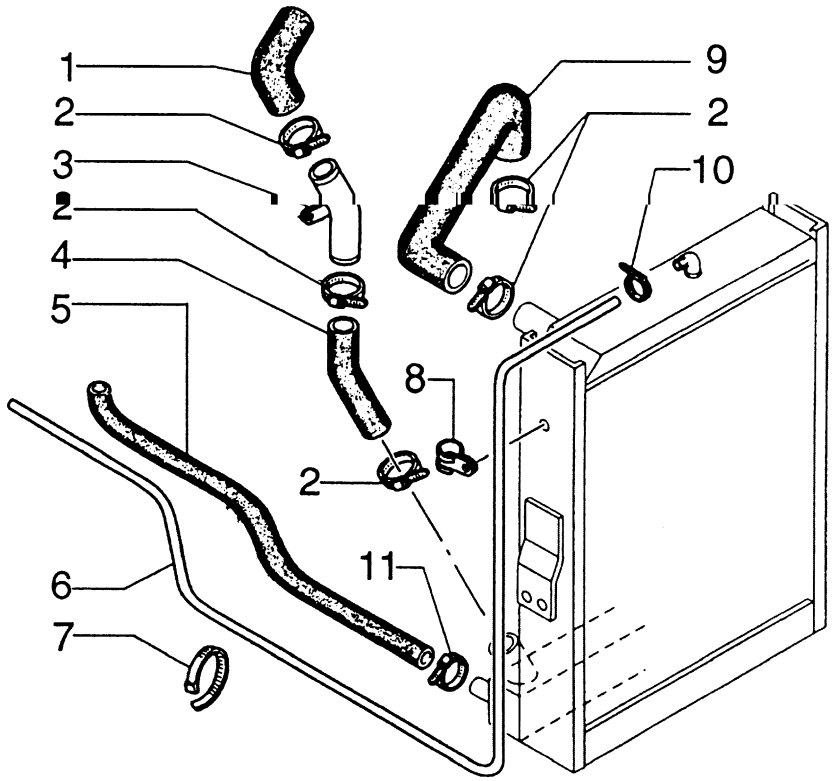

Usado em motor turbo

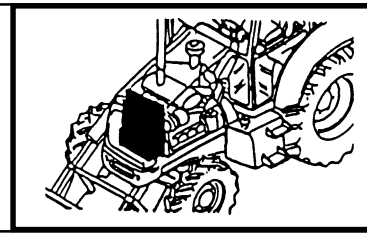

MOD	R	P/N. Imola	P/N. Brazil	Q	Descrição Denominacion	Description Descrizione	L.C.
	1	**85802672**		1	MANGUEIRA MANGA C/RACORDE	HOSE ASSY TUBO FLESSIBILE	192T
	2	**85803012**	**12174190**	6	ABRAÇADEIRA ABRAZADERA	CLAMP FASCETTA	031F
	3	**85802673**		1	TUBO TUBO	TUBE TUBO RIGIDO	193T
	4	**85803452**		1	MANGUEIRA MANGA C/RACORDE	HOSE ASSY TUBO FLESSIBILE	192T
	5	**85802877**	**75245456**	1	MANGUEIRA MANGA C/RACORDE	HOSE ASSY TUBO FLESSIBILE	192T
	6	**85802876**	**19032781**	1	MANGUEIRA MANGA C/RACORDE	HOSE ASSY TUBO FLESSIBILE	192T
	7		**14560187**	4	ABRAÇADEIRA ABRAZADERA	CLAMP FASCETTA	031F
	8		**13000290**	3	ABRAÇADEIRA ABRAZADERA	CLAMP FASCETTA	031F
	9	**85802670**		1	MANGUEIRA MANGA C/RACORDE	HOSE ASSY TUBO FLESSIBILE	192T
	10	**85803013**	**12179190**	2	ABRAÇADEIRA ABRAZADERA	CLAMP FASCETTA	031F
	11	**85803012**	**12173890**	2	ABRAÇADEIRA ABRAZADERA	CLAMP FASCETTA	031F

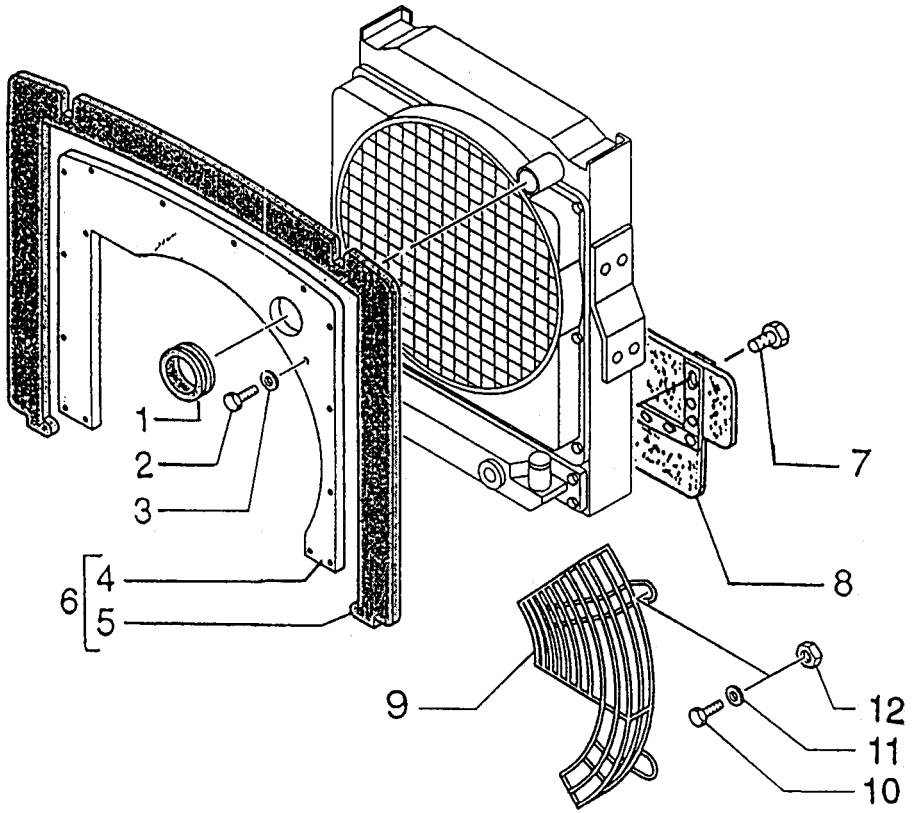

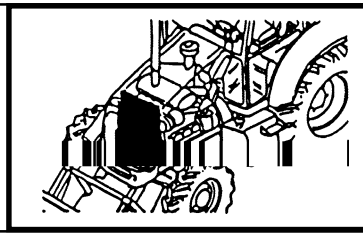

MOD	R	P/N. Imola	P/N. Brazil	Q	Descrição Denominacion	Description Descrizione	L.C.
	1	**85803453**		1	ELEM.VEDAÇ. AR CIERRE DEL AIRE	AIR-TIGHT ELEM. ELEM.TENUT.ARIA	17G5
	2	**10902224**		4	PARAFUSO TORNILLO	SCREW VITE	040V
	3	**12647601**		4	ARRUELA ARANDELA	WASHER ROSETTA	131R
	4		**75280418**	1	SUPORTE SOPORTE	SUPPORT SUPPORTO	300S
	5	**85803026**		1	ELEM.VEDAÇ. AR CIERRE DEL AIRE	AIR-TIGHT ELEM. ELEM.TENUT.ARIA	17G5
	6		**75280417**	1	ELEM.VEDAÇ. AR CIERRE DEL AIRE	AIR-TIGHT ELEM. ELEM.TENUT.ARIA	17G5
	7	**16043834**	**16043231**	2	PARAFUSO TORNILLO	SCREW VITE	040V
	8		**75280261**	1	ELEM.VEDAÇ. AR CIERRE DEL AIRE	AIR-TIGHT ELEM. ELEM.TENUT.ARIA	17G5
	9	**85803820**		1	GRADE REJILLA	GRID GRIGLIA	101G
	10	**10902424**	**10902431**	2	PARAFUSO TORNILLO	SCREW VITE	040V
	11	**12640604**	**70928190**	2	ARRUELA ARANDELA	WASHER ROSETTA	131R
	12	**12574211**	**12575421**	1	PORCA TUERCA	NUT DADO	010D

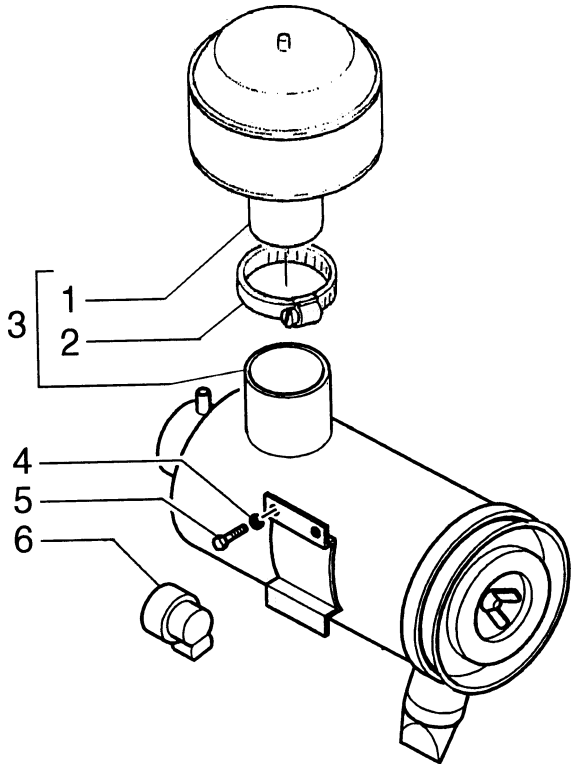

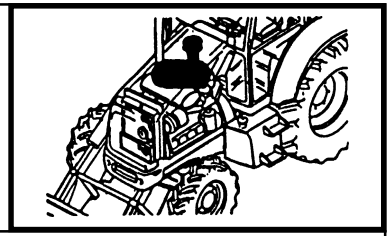

MOD	R	P/N. Imola	P/N. Brazil	Q	Descrição Denominacion	Description Descrizione	L.C.
	1	**85807300**		1	PRÉ-FILTRO PREFILTRO	PRECLEANER PREFILTRO	201P
	2	**85802743**	**70922200**	1	ABRAÇADEIRA ABRAZADERA	CLAMP FASCETTA	031F
	3	**85807299**		1	FILTRO DE AR FILTRO DE AIRE	AIR CLEANER FILTRO ARIA	066F
	4	**11193871**		4	ARRUELA ARANDELA	WASHER ROSETTA	131R
	5	**16043421**		4	PARAFUSO TORNILLO	SCREW VITE	040V
	6	**85803082**		1	INDICADOR INDICADOR	INDICATOR INDICATORE	035I

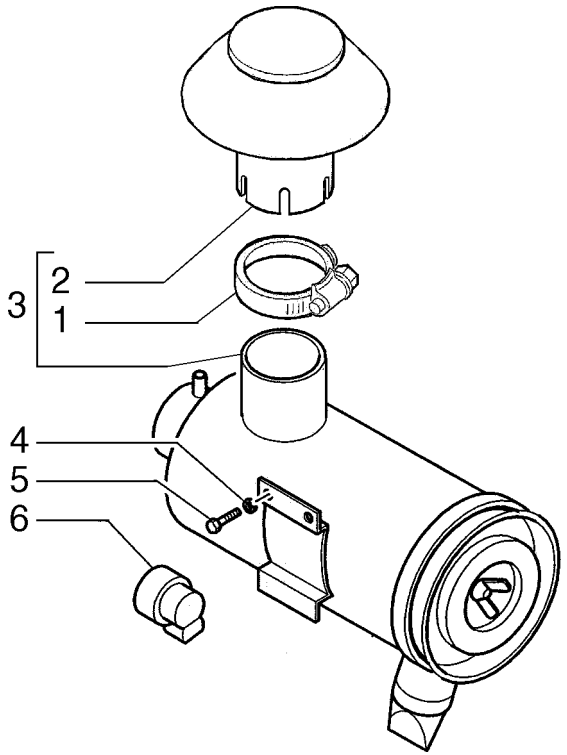

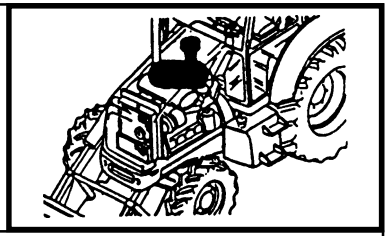

MOD	R	P/N. Imola	P/N. Brazil	Q	Descrição Denominacion	Description Descrizione	L.C.
	1	**85802743**	**70922200**	2	ABRAÇADEIRA ABRAZADERA	CLAMP FASCETTA	031F
	2	**85807301**		1	PRÉ-FILTRO PREFILTRO	PRECLEANER PREFILTRO	201P
	3	**85807298**		1	FILTRO DE AR FILTRO DE AIRE	AIR CLEANER FILTRO ARIA	066F
	4	**11193871**		4	ARRUELA ARANDELA	WASHER ROSETTA	131R
	5	**16043421**		4	PARAFUSO TORNILLO	SCREW VITE	040V
	6	**85803082**		1	INDICADOR INDICADOR	INDICATOR INDICATORE	035I

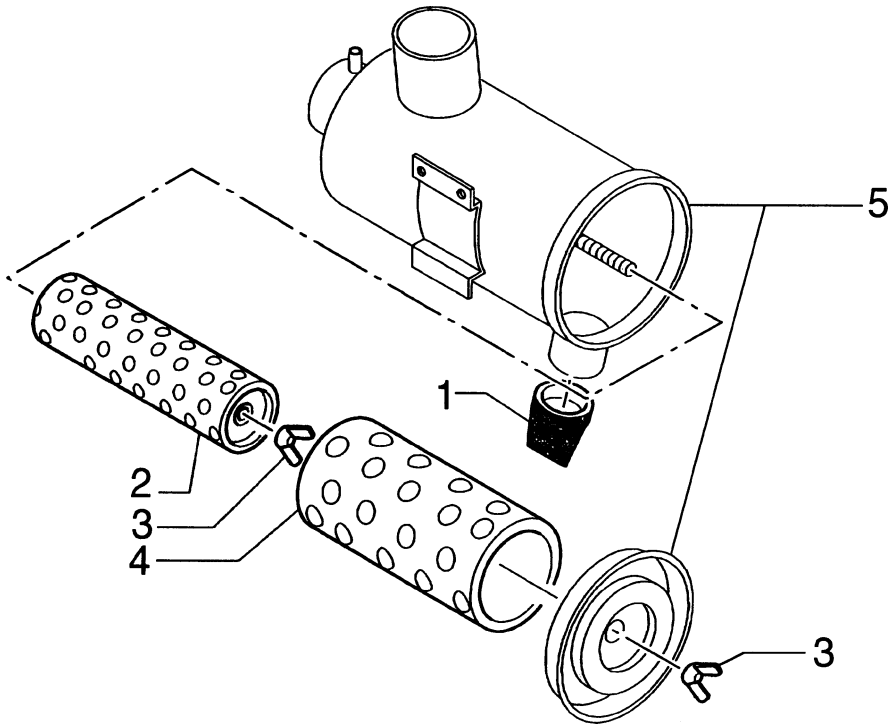

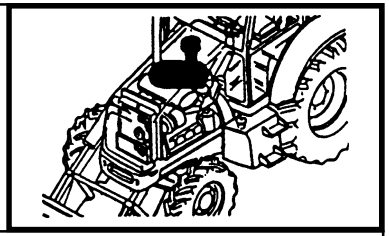

MOD	R	P/N. Imola	P/N. Brazil	Q	Descrição Denominacion	Description Descrizione	L.C.
	1	**85803087**		1	VÁLVULA VALVULA	VALVE VALVOLA	010V
	2	**85807304**	**1909964**	1	ELEM. FILTRANTE FILTRO	FILTERING. ELEM. ELEM. FILTRANTE	020E
	3	**85803086**		2	PORCA TUERCA	NUT DADO	010D
	4	**85807303**	**1930765**	1	ELEM. FILTRANTE FILTRO	FILTERING ELEM. ELEM. FILTRANTE	020E
	5	**85807302**		1	CARCAÇA CAJA	CASE SCATOLA	035S

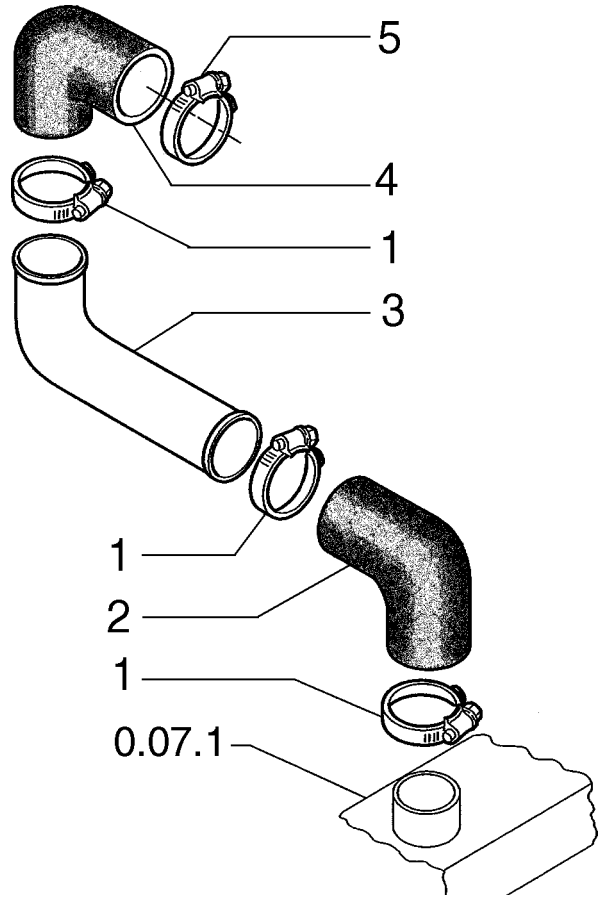

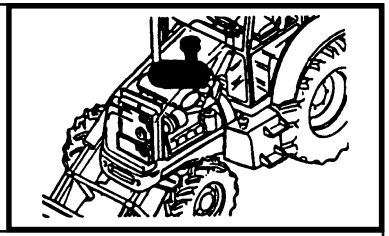

MOD	R	P/N. Imola	P/N. Brazil	Q	Descrição Denominacion	Description Descrizione	L.C.
	1	**85803010**		3	ABRAÇADEIRA ABRAZADERA	CLAMP FASCETTA	031F
	2	**85802844**		1	MANGUEIRA TUBO FLEXIBLE	HOSE TUBO FLESSIBILE	285T
	3	**85802784**	**75247076**	1	TUBO TUBO	TUBE TUBO RIGIDO	193T
	4	**85802770**		1	MANGUEIRA TUBO FLEXIBLE	HOSE TUBO FLESSIBILE	285T
	5	**85802743**	**70922200**	1	ABRAÇADEIRA ABRAZADERA	CLAMP FASCETTA	031F

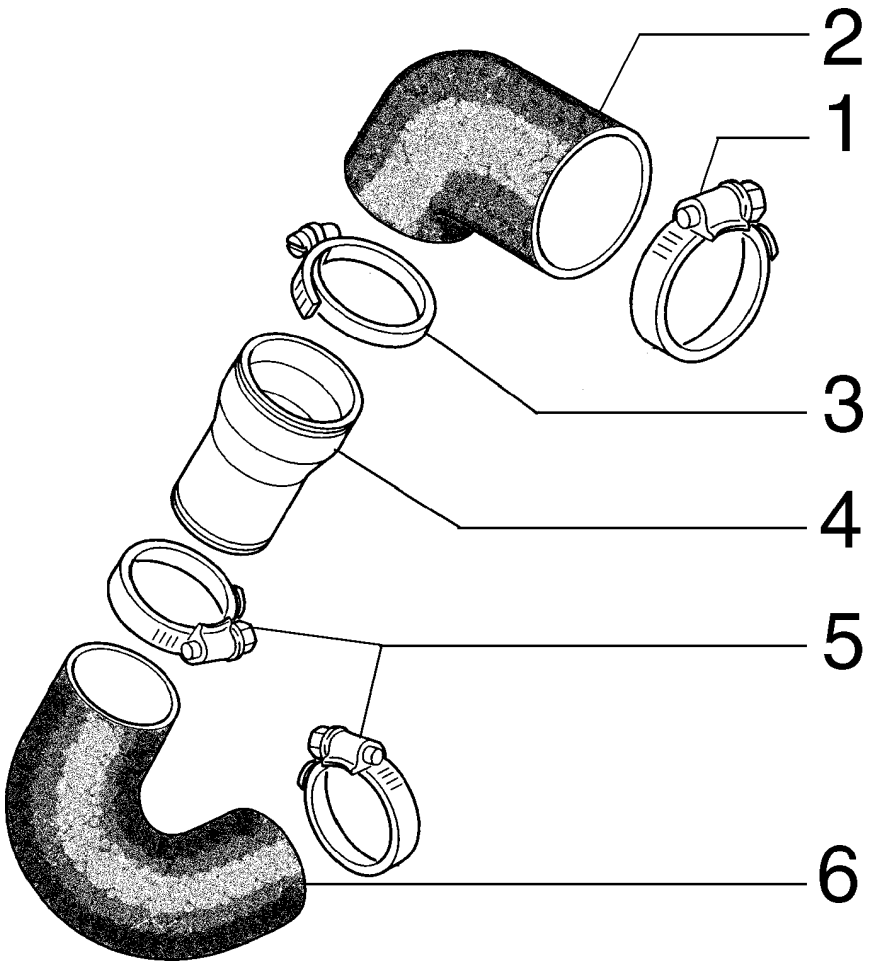

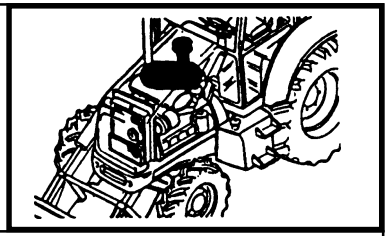

MOD	R	P/N. Imola	P/N. Brazil	Q	Descrição Denominacion	Description Descrizione	L.C.
	1	**85802743**	**70922200**	1	ABRAÇADEIRA ABRAZADERA	CLAMP FASCETTA	031F
	2	**85802770**		1	MANGUEIRA TUBO FLEXIBLE	HOSE TUBO FLESSIBILE	285T
	3	**85803010**	**12174990**	3	ABRAÇADEIRA ABRAZADERA	CLAMP FASCETTA	031F
	4	**85802769**		1	TUBO TUBO	TUBE TUBO RIGIDO	193T
	5	**85803094**	**12174890**	2	ABRAÇADEIRA ABRAZADERA	CLAMP FASCETTA	031F
	6	**85802768**		1	MANGUEIRA TUBO FLEXIBLE	HOSE TUBO FLESSIBILE	285T

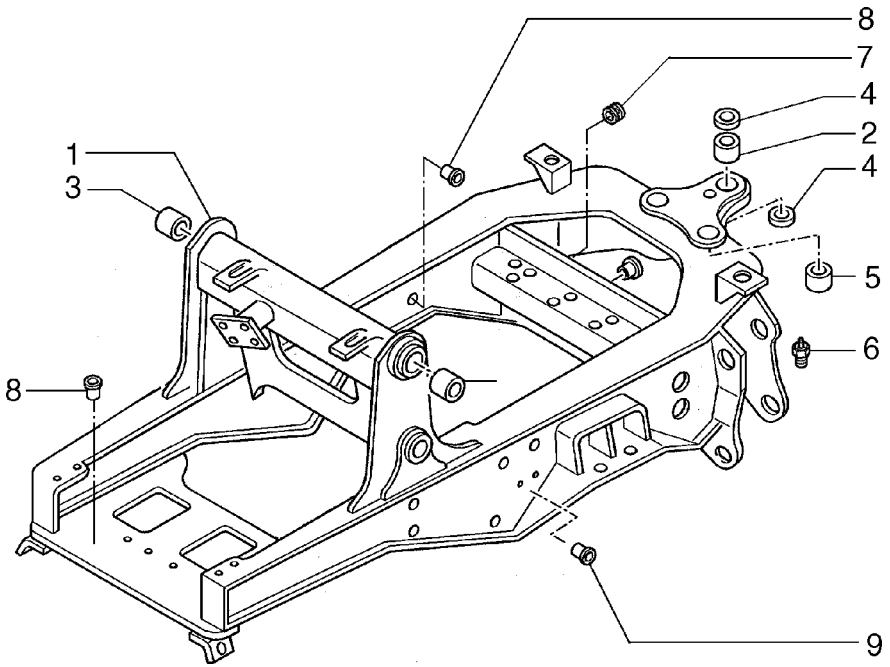

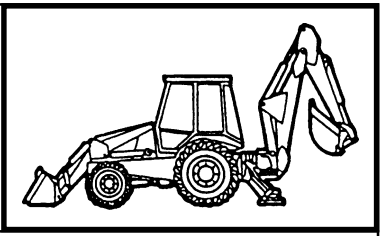

MOD	R	P/N. Imola	P/N. Brazil	Q	Descrição Denominacion	Description Descrizione	L.C.
	1	**85801115**		1	CHASSI PRINCIP. BASTIDOR	MAIN FRAME TELAIO TRATTORE	077T
	2	**85700728**		2	BUCHA BUJE	BUSHING BOCCOLA	095B
	3	**85801110**		2	BUCHA BUJE	BUSHING BOCCOLA	095B
	4	**81875248**		4	RETENTOR JUNTA	SEAL GUARNIZIONE	122G
	5	**83910645**		2	BUCHA BUJE	BUSHING BOCCOLA	095B
	6	**80080710**	**70914465**	3	PINO GRAXEIRO ENGRASADOR	GREASE FITTING INGRASSATORE	060I
	7		**71415445**	2	ISOLANTE AISLANTE	INSULATOR ISOLANTE	085I
	8		**75254118**	AR	ROSCA POSTIÇA ROSCA POSTIZA	INSERT INSERTO FILETT.	054I
	9		**75254117**	AR	ROSCA POSTIÇA ROSCA POSTIZA	INSERT INSERTO FILETT.	054I

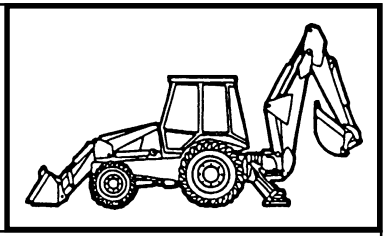

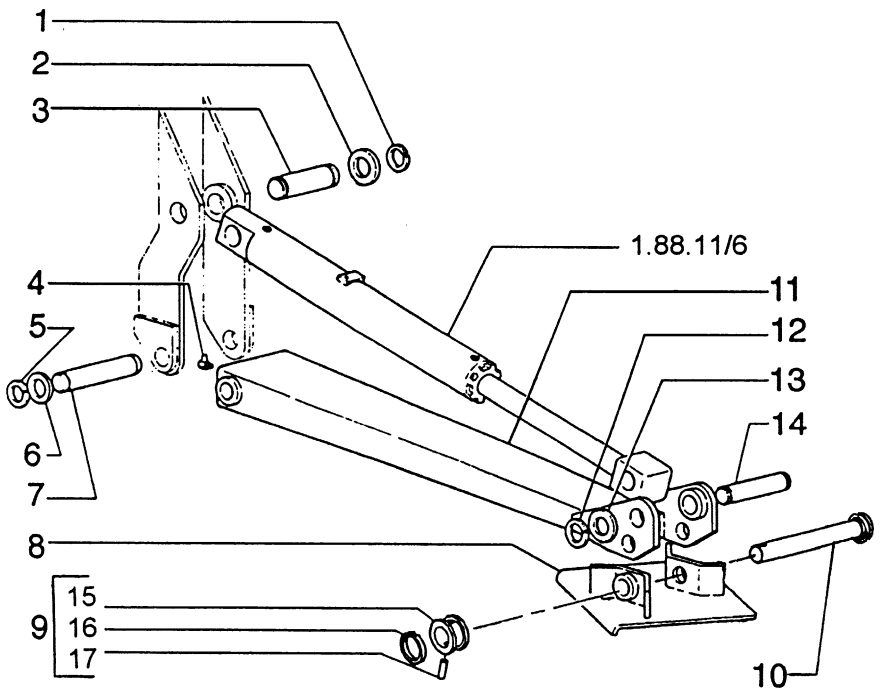

D DIREITO - RIGHT
E ESQUERDO - LEFT

MOD	R	P/N. Imola	P/N. Brazil	Q	Descrição Denominacion	Description Descrizione	L.C.
	1	**83911019**	**75246056**	4	ANEL ELÁSTICO ANILLO ELASTICO	SNAP RING ANELLO ELASTICO	187A
	2	**83910977**		4	ARRUELA ARANDELA	WASHER ROSETTA	131R
	3	**85801262**		2	PINO BULON	PIN PERNO	080P
	4	**80080710**	**70914465**	2	PINO GRAXEIRO ENGRASADOR	GREASE FITTING INGRASSATORE	060I
	5	**83911020**		4	ANEL ELÁSTICO ANILLO ELASTICO	SNAP RING ANELLO ELASTICO	187A
	6	**81901837**		4	ARRUELA ARANDELA	WASHER ROSETTA	131R
	7		**75245455**	2	PINO BULON	PIN PERNO	080P
E	8		**75248224**	1	ESTABILIZADOR ESTABILIZADOR	STABILIZER STABILIZZATORE	220S
D	8		**75248225**	1	ESTABILIZADOR ESTABILIZADOR	STABILIZER STABILIZZATORE	220S
	9	**85803139**		2	PINO BULON	PIN PERNO	080P
	10		**85803141**	2	PINO BULON	PIN PERNO	080P
D	11		**75244437**	1	BRAÇO BRAZO	ARM BRACCIO	130B
E	11		**75244438**	1	BRAÇO BRAZO	ARM BRACCIO	130B
	12	**83910630**		4	ANEL ELÁSTICO ANILLO ELASTICO	SNAP RING ANELLO ELASTICO	187A
	13	**83910629**		2	ARRUELA ARANDELA	WASHER ROSETTA	131R
	14	**83999466**		2	PINO BULON	PIN PERNO	080P
	15	**85803140**		2	ESPAÇADOR SEPARADOR	SPACER DISTANZIALE	075D
	16	**85802992**		2	ANEL ARO	RING ANELLO	045A
	17	**85802993**		2	PINO BULON	PIN PERNO	080P

TRANSMISSION | CAMBIO DI VELOCITÀ | BOITE DE VITESSES | WECHSELGETRIEBE

CAMBIO DE VELOCIDADES | CAIXA DE VELOCIDADES | TRANSMISSIE | GEARKASSE

Powershuttle transmission

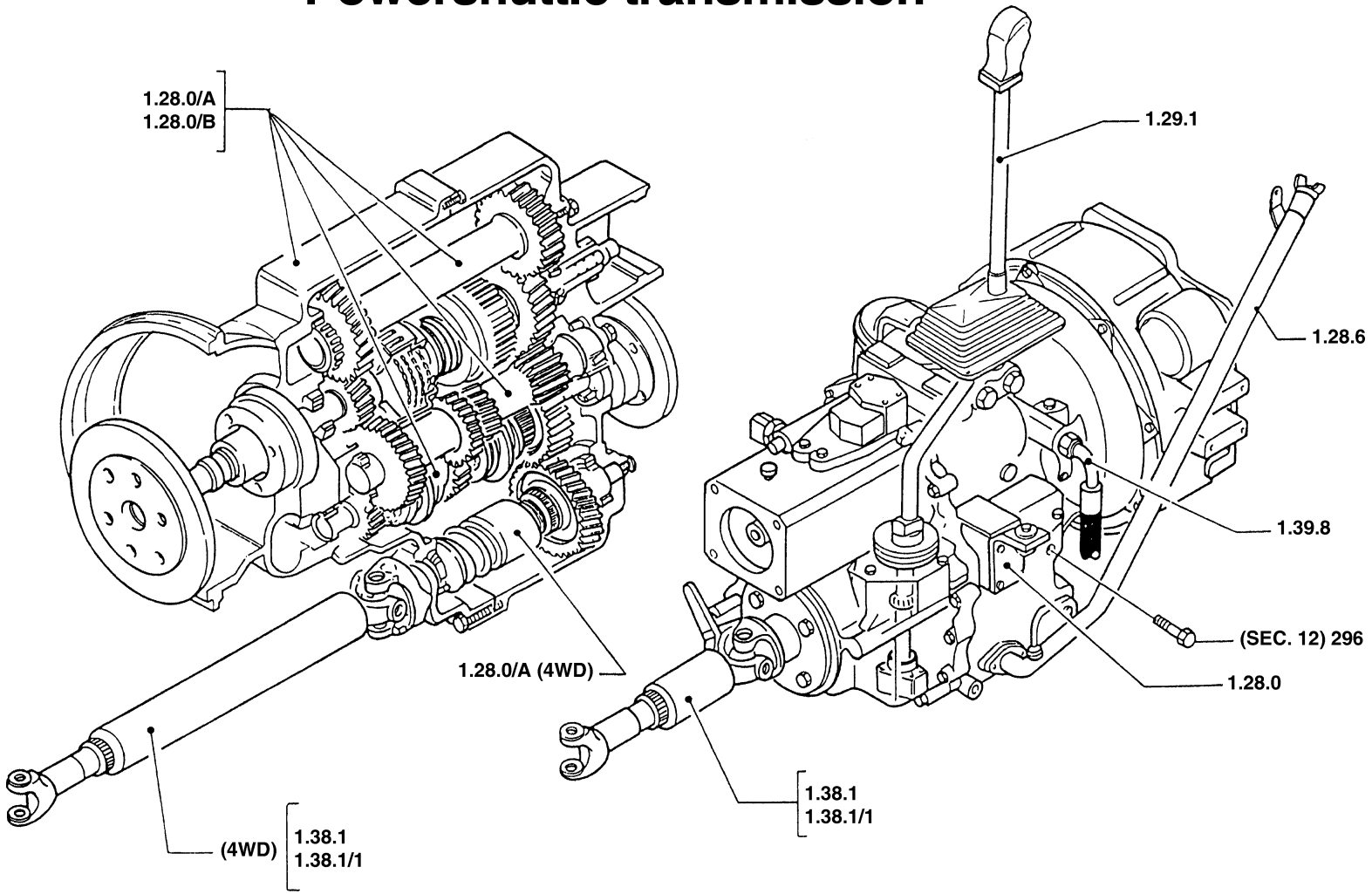

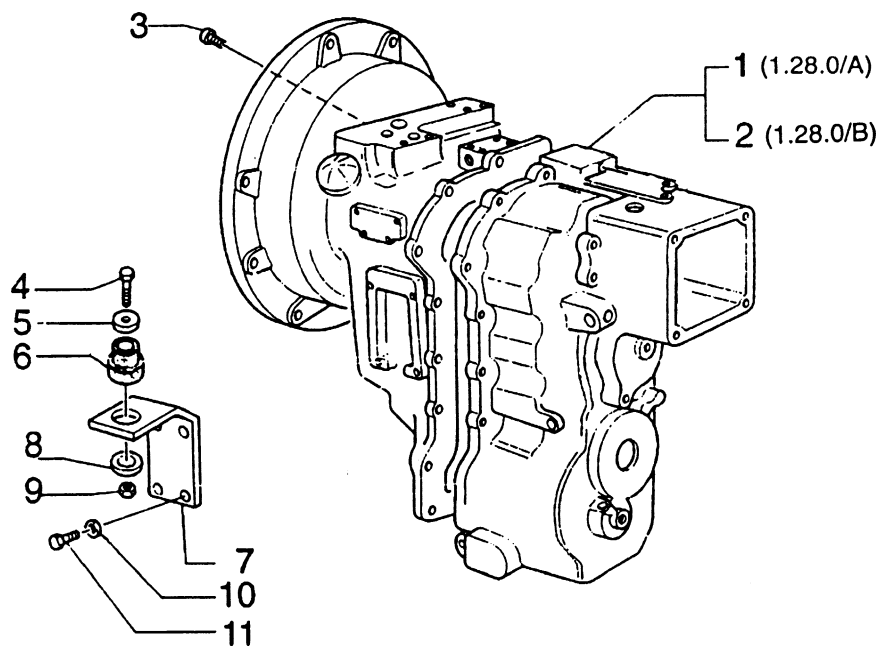

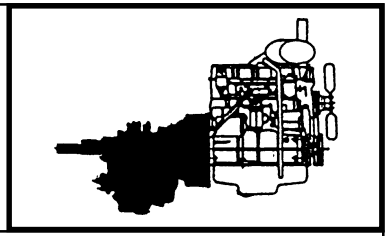

MOD	R	P/N. Imola	P/N. Brazil	Q	Descrição Denominacion	Description Descrizione	L.C.
	1	**85815587**		1	TRANSMISSÃO 4X4 CAMBIO DE VELOCIDADES	TRANSMISSION CAMBIO VELOCITA	32G4
	2	**85815586**		1	TRANSMISSÃO 4X2 CAMBIO DE VELOCIDADES	TRANSMISSION CAMBIO VELOCITA	32G2
	3		**70927174**	8	PARAFUSO TORNILLO	SCREW VITE	040V
	4		**15981531**	2	PARAFUSO TORNILLO	SCREW VITE	040V
	5		**73146386**	2	ARRUELA ARANDELA	WASHER ROSETTA	131R
	6		**76022229**	2	COXIM COJIN	CUSHION CUSCINO	345C
	7		**75245921**	2	SUPORTE SOPORTE	SUPPORT SUPPORTO	300S
	8		**70927328**	2	ARRUELA ARANDELA	WASHER ROSETTA	131R
	9		**12574921**	2	PORCA TUERCA	NUT DADO	010D
	10	**11190774**	**70928178**	8	ARRUELA ARANDELA	WASHER ROSETTA	131R
	11		**11112631**	8	PARAFUSO TORNILLO	SCREW VITE	040V

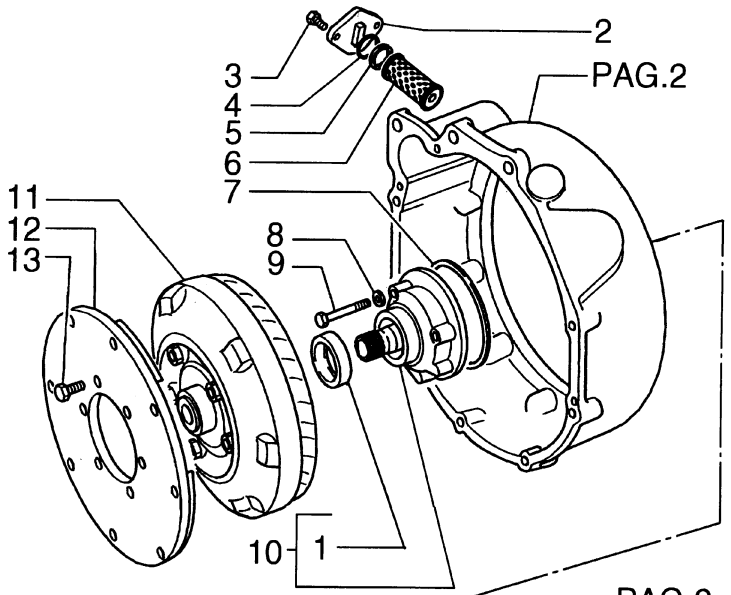

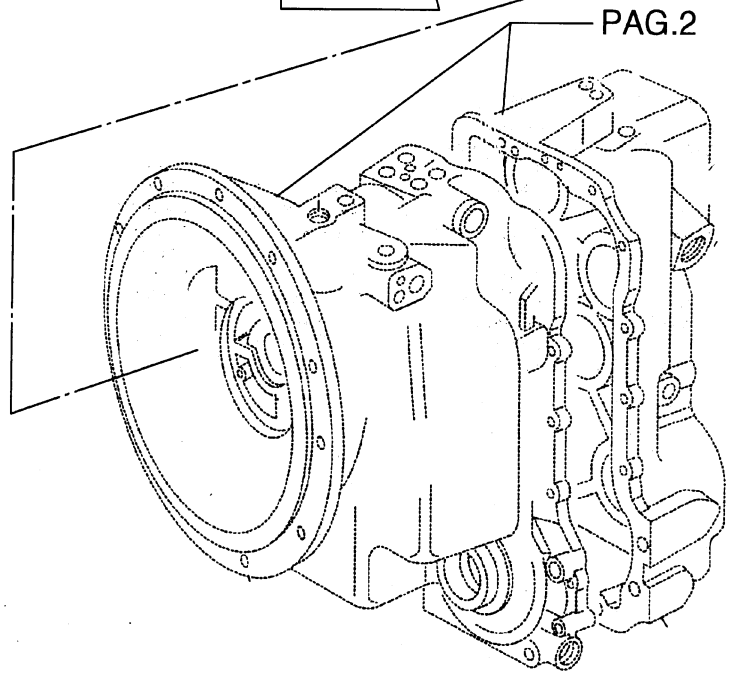

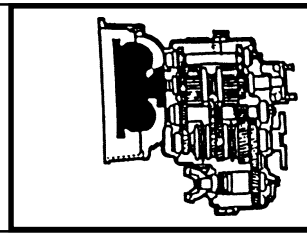

MOD	R	P/N. Imola	P/N. Brazil	Q	Descrição Denominacion	Description Descrizione	L.C.
	1	**9968312**		1	RETENTOR EMPAQUETADURA	SEAL ASSY GUARNIZIONE	123G
	2	**9968362**		1	TAMPA TAPA	COVER COPERCHIO	265C
	3	**85817169**		2	PARAFUSO TORNILLO	SCREW VITE	040V
	4	**9968360**		1	O'RING JUNTA TORICA	O'RING GUARNIZIONE O-R	158G
	5	**9968361**		1	ANEL ARO	RING ANELLO	045A
	6	**9968359**		1	FILTRO FILTRO	FILTER FILTRO	065F
	7	**9968313**		1	JUNTA JUNTA PLANA	GASKET GUARNIZ. PIANA	120G
	8	**85817001**		4	ARRUELA ARANDELA	WASHER ROSETTA	131R
	9	**85817163**		4	PARAFUSO TORNILLO	SCREW VITE	040V
	10	**9968311**		1	BOMBA DE ÖLEO BOMBA DE ACEITE	OIL PUMP POMPA OLIO	P153
	11	**85817620**		1	CONVERSOR TORQUE CONVERTIDOR PAR	TORQUE CONVERT. CONVERTITORE	259C
	12	**9968241**		1	DISCO DISCO	DISC DISCO	060D
	13	**9968380**		6	PARAFUSO TORNILLO	SCREW VITE	040V

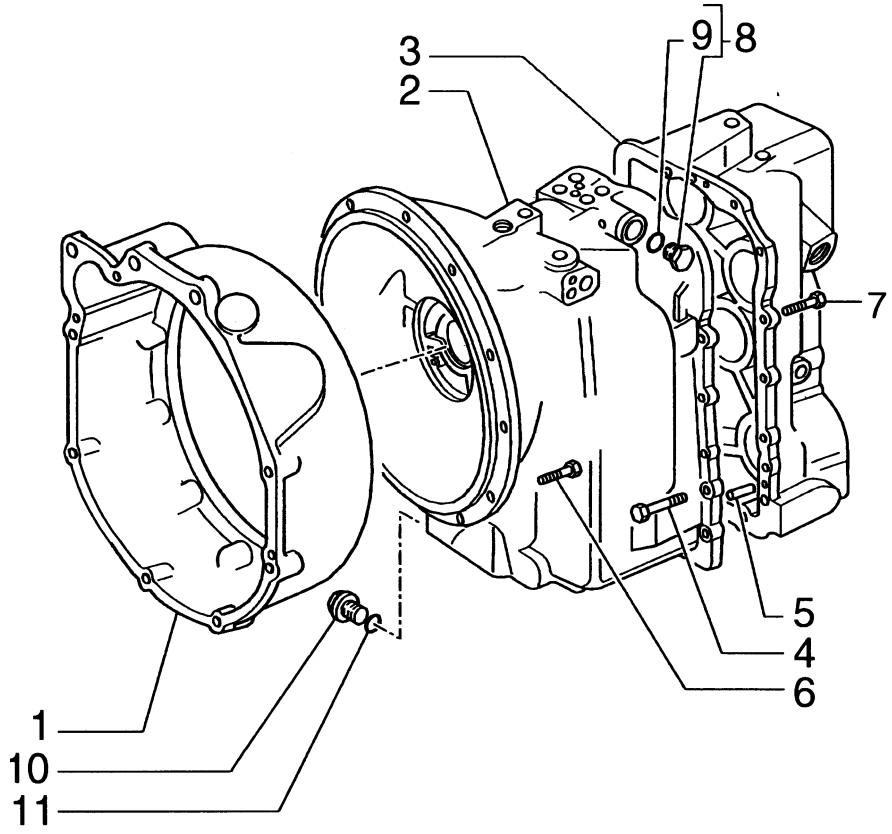

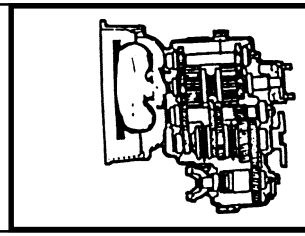

MOD	R	P/N. Imola	P/N. Brazil	Q	Descrição Denominacion	Description Descrizione	L.C.
	1	**9968237**		1	CARCAÇA CAJA	CASE SCATOLA	035S
	2	**9968216**		1	CARCAÇA CAJA	CASE SCATOLA	035S
	3	**9968217**		1	CARCAÇA CAJA	CASE SCATOLA	035S
	4	**85817164**		14	PARAFUSO TORNILLO	SCREW VITE	040V
	5	**9968356**		2	PINO CENTRAGEM TETON	DOWEL GRANO	090G
	6	**85812083**		12	PARAFUSO TORNILLO	SCREW VITE	040V
	7	**85817164**		14	PARAFUSO TORNILLO	SCREW VITE	040V
	8	**9968219**		1	BUJÃO TAPON	PLUG TAPPO	050T
	9	**9968218**		1	O'RING JUNTA TORICA	O'RING GUARNIZIONE O-R	158G
	10	**9969444**		1	BUJÃO TAPON	PLUG TAPPO	050T
	11	**9968365**		1	O'RING JUNTA TORICA	O'RING GUARNIZIONE O-R	158G

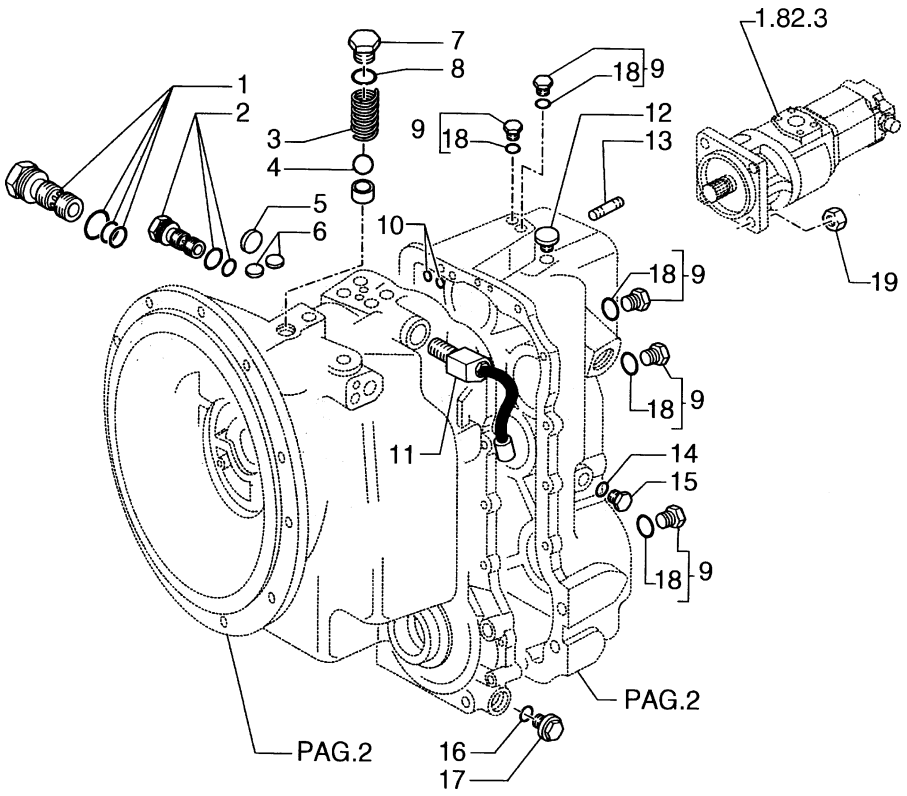

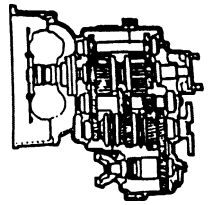

MOD	R	P/N. Imola	P/N. Brazil	Q	Descrição Denominacion	Description Descrizione	L.C.
	1	**9968350**		1	VÁLVULA VALVULA	VALVE VALVOLA	010V
	2	**9968334**		1	VÁLVULA VALVULA	VALVE VALVOLA	010V
	3	**9968378**		1	MOLA MUELLE	SPRING MOLLA	100M
	4	**9968379**		1	ESFERA BOLA	BALL SFERA	140S
	5	**9968371**		1	BUJÃO TAPON	PLUG TAPPO	050T
	6	**9968333**		2	BUJÃO TAPON	PLUG TAPPO	050T
	7	**85807003**		1	SEDE ASIENTO	SEAT SEDE	069S
	8	**9968377**		1	O'RING JUNTA TORICA	O'RING GUARNIZIONE O-R	158G
	9	**9968219**		AR	BUJÃO TAPON	PLUG TAPPO	050T
	10	**9968368**		4	O'RING JUNTA TORICA	O'RING GUARNIZIONE O-R	158G
	11	**9968351**		1	VÁLVULA VALVULA	VALVE VALVOLA	010V
	12	**9968364**		1	RESPIRO RESPIRADERO	BREATHER SFIATATOIO	145S
	13	**85802683**		4	PRISIONEIRO ESPARRAGO	STUD PRIGIONIERO	210P
	14	**9968383**		1	O'RING JUNTA TORICA	O'RING GUARNIZIONE O-R	158G
	15	**9968382**		1	BUJÃO TAPON	PLUG TAPPO	050T
	16	**9968365**		1	O'RING JUNTA TORICA	O'RING GUARNIZIONE O-R	158G
	17	**9969444**		1	BUJÃO TAPON	PLUG TAPPO	050T
	18	**9968218**		AR	O'RING JUNTA TORICA	O'RING GUARNIZIONE O-R	158G
	19	**85802684**		AR	PORCA TUERCA	NUT DADO	010D

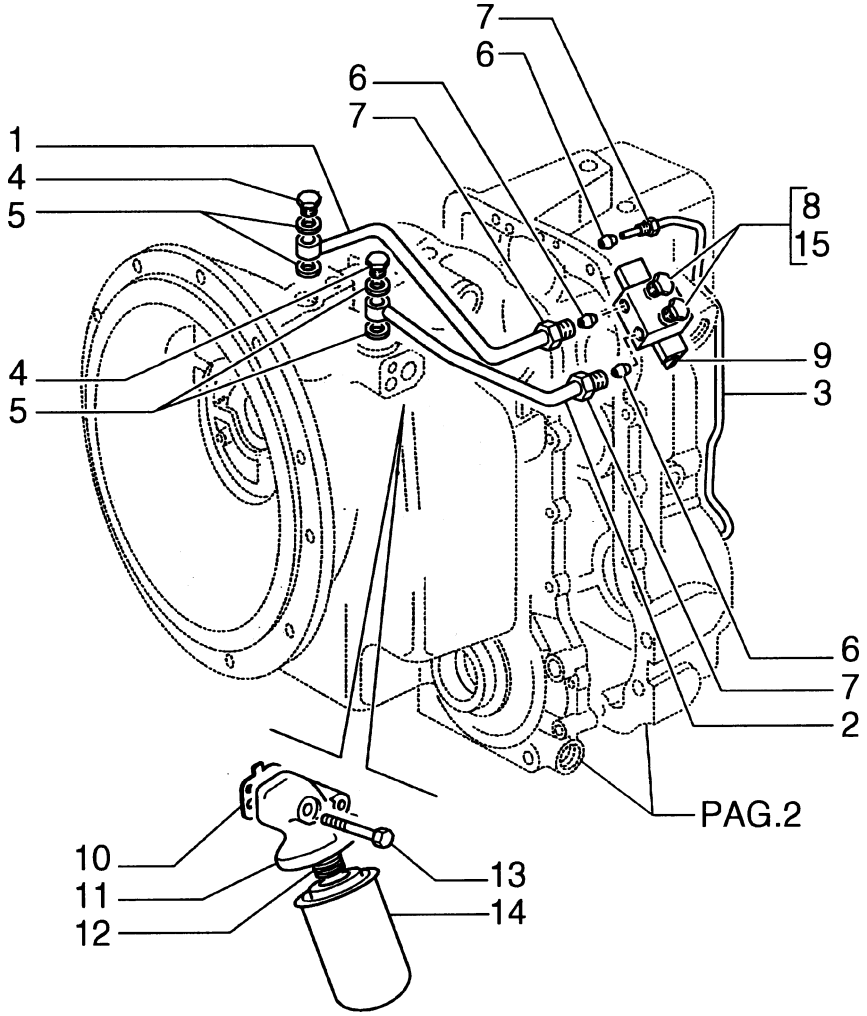

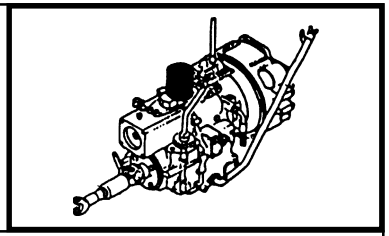

MOD	R	P/N. Imola	P/N. Brazil	Q	Descrição Denominacion	Description Descrizione	L.C.
	1	**85812086**		1	TUBO TUBO	TUBE TUBO RIGIDO	193T
	2	**85812087**		1	TUBO TUBO	TUBE TUBO RIGIDO	193T
	3	**9968337**		1	TUBO TUBO	TUBE TUBO RIGIDO	193T
	4	**9968676**		2	CONEXÃO RACOR	FITTING RACCORDO	020R
	5	**85817002**		4	ANEL DE VEDAÇÃO JUNTA HERMETICA	SEAL RING ANELLO TENUTA	055A
	6	**9968340**		AR	CONEXÃO RACOR	FITTING RACCORDO	020R
	7	**9968336**		AR	PORCA TUERCA	NUT DADO	010D
	8	**9968219**		2	BUJÃO TAPON	PLUG TAPPO	050T
	9	**85812085**		1	CONEXÃO RACOR	FITTING RACCORDO	020R
	10	**9968375**		1	JUNTA JUNTA PLANA	GASKET GUARNIZ. PIANA	120G
	11	**9968374**		1	CARCAÇA FILTRO CUERPO FILTRO	FILTER SHELL CONTENIT.FILTRO	255C
	12	**9968354**		1	ADAPTADOR ADAPTADOR	ADAPTER ADATTATORE	001A
	13	**85817165**		2	PARAFUSO TORNILLO	SCREW VITE	040V
	14	**85817004**		1	FILTRO DE ÓLEO FILTRO ACEITE	OIL FILTER FILTRO OLIO	067F
	15	**9968218**		AR	O'RING JUNTA TORICA	O'RING GUARNIZIONE O-R	158G

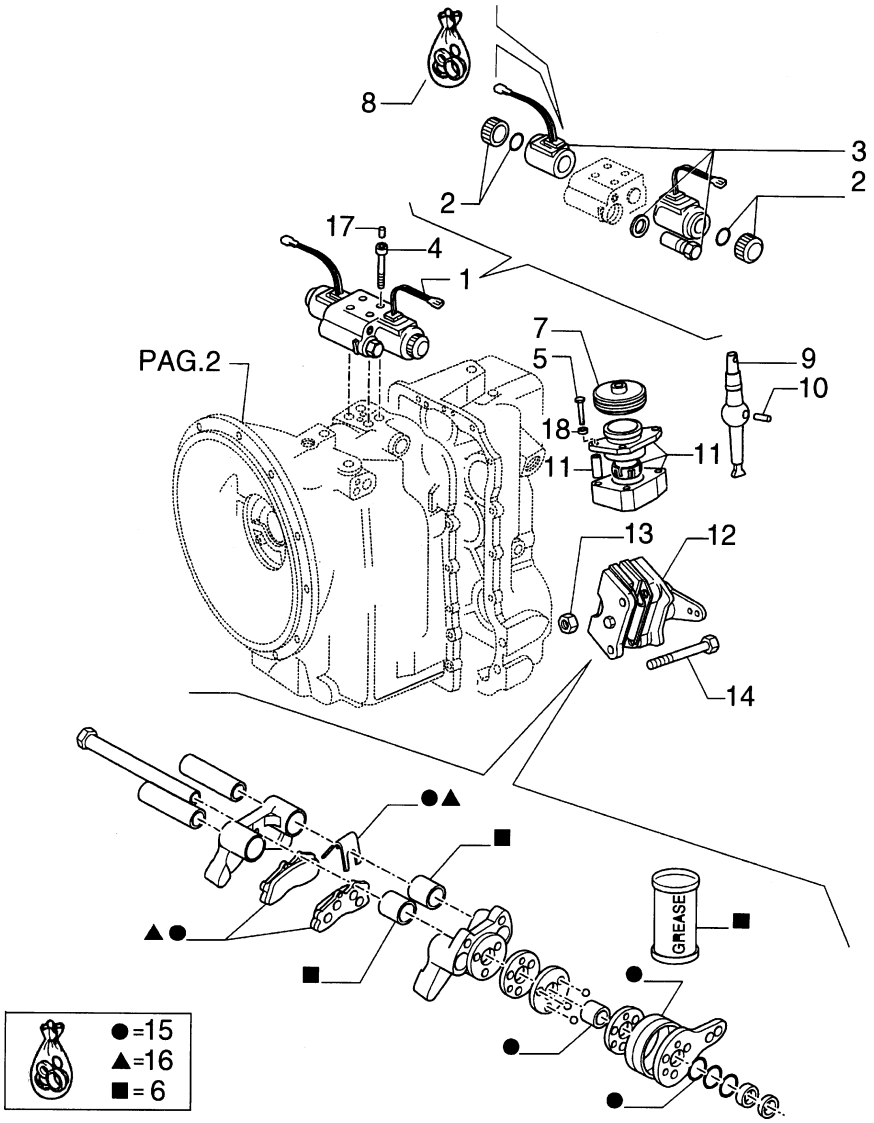

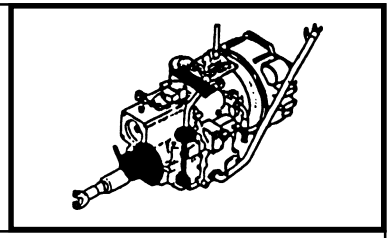

MOD	R	P/N. Imola	P/N. Brazil	Q	Descrição Denominacion	Description Descrizione	L.C.
	1	**85805815**		1	VÁLVULA VALVULA	VALVE VALVOLA	010V
	2	**9969344**		2	KIT JUEGO	KIT KIT	002K
	3	**85813304**		2	SOLENÓIDE SOLENOIDE	SOLENOID ELETTROMAGNETE	030E
	4	**9969445**		4	PARAFUSO TORNILLO	SCREW VITE	040V
	5	**85817163**		3	PARAFUSO TORNILLO	SCREW VITE	040V
	6	**85813318**		1	KIT JUEGO	KIT KIT	002K
	7	**9968328**		1	COIFA PARA PÓ CAPUCHA	DUST BOOT CUFFIA PARAPOLV	334C
	8	**85813338**		1	KIT JUEGO	KIT KIT	002K
	9	**9968324**		1	ALAVANCA PALANCA	LEVER LEVA	045L
	10	**9968327**		1	PINO BULON	PIN PERNO	080P
	11	**9968326**		1	SUPORTE SOPORTE	SUPPORT SUPPORTO	300S
	12	**85813300**		1	FREIO FRENO	BRAKE FRENO	093F
	13	**9969281**		2	PORCA TUERCA	NUT DADO	010D
	14	**9968299**		2	PARAFUSO TORNILLO	SCREW VITE	040V
	15	**9968926**		1	KIT JUEGO	KIT KIT	002K
	16	**9968927**		1	KIT JUEGO	KIT KIT	002K
	17	**9968678**		1	PINO BULON	PIN PERNO	080P
	18	**85812092**		2	ARRUELA ARANDELA	WASHER ROSETTA	131R

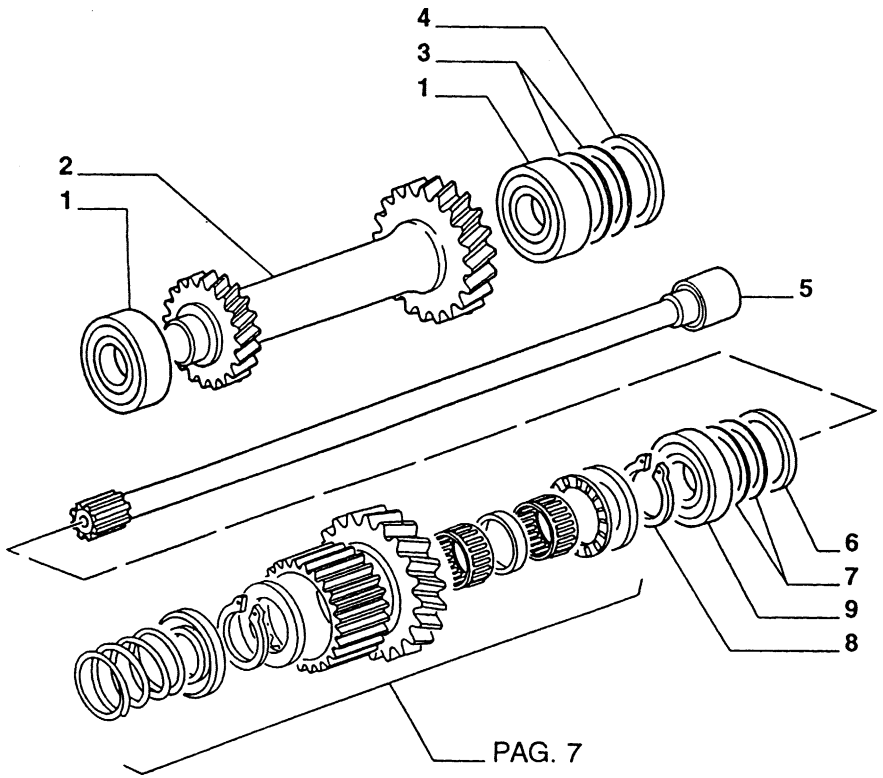

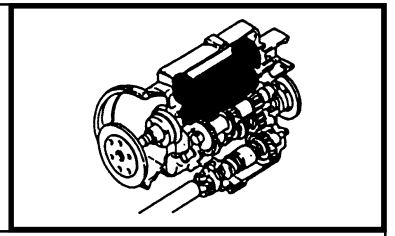

MOD	R	P/N. Imola	P/N. Brazil	Q	Descrição Denominacion	Description Descrizione	L.C.
	1	**9968268**		2	ROLAMENTO RODAMIENTO	BEARING CUSCINETTO	341C
	2	**9968281**		1	ENGRENAGEM CORONA	GEAR INGRANAGGIO	050I
	3	**9968262**		AR	CALÇO 0,002 mm CALCE	SHIM SPESSORE	198S
	3	**9968263**		AR	CALÇO 0,003 mm CALCE	SHIM SPESSORE	198S
	3	**9968264**		AR	CALÇO 0,003 mm CALCE	SHIM SPESSORE	198S
	3	**9968265**		AR	CALÇO 0,007 mm CALCE	SHIM SPESSORE	198S
	3	**9968266**		AR	CALÇO 0,015 mm CALCE	SHIM SPESSORE	198S
	3	**9968267**		AR	CALÇO 0,020 mm CALCE	SHIM SPESSORE	198S
	4	**9968261**		1	ESPAÇADOR SEPARADOR	SPACER DISTANZIALE	075D
	5	**9968347**		1	EIXO ARBOL	SHAFT ALBERO	016A
	6	**9968341**		1	CALÇO CALCE	SHIM SPESSORE	198S
	7	**9968342**		AR	CALÇO CALCE	SHIM SPESSORE	198S
	7	**9968343**		AR	CALÇO CALCE	SHIM SPESSORE	198S
	7	**9968344**		AR	CALÇO CALCE	SHIM SPESSORE	198S
	7	**9968345**		AR	CALÇO CALCE	SHIM SPESSORE	198S
	8	**9968291**		1	ANEL ELÁSTICO ANILLO ELASTICO	SNAP RING ANELLO ELASTICO	187A
	9	**9968305**		1	ROLAMENTO RODAMIENTO	BEARING CUSCINETTO	341C

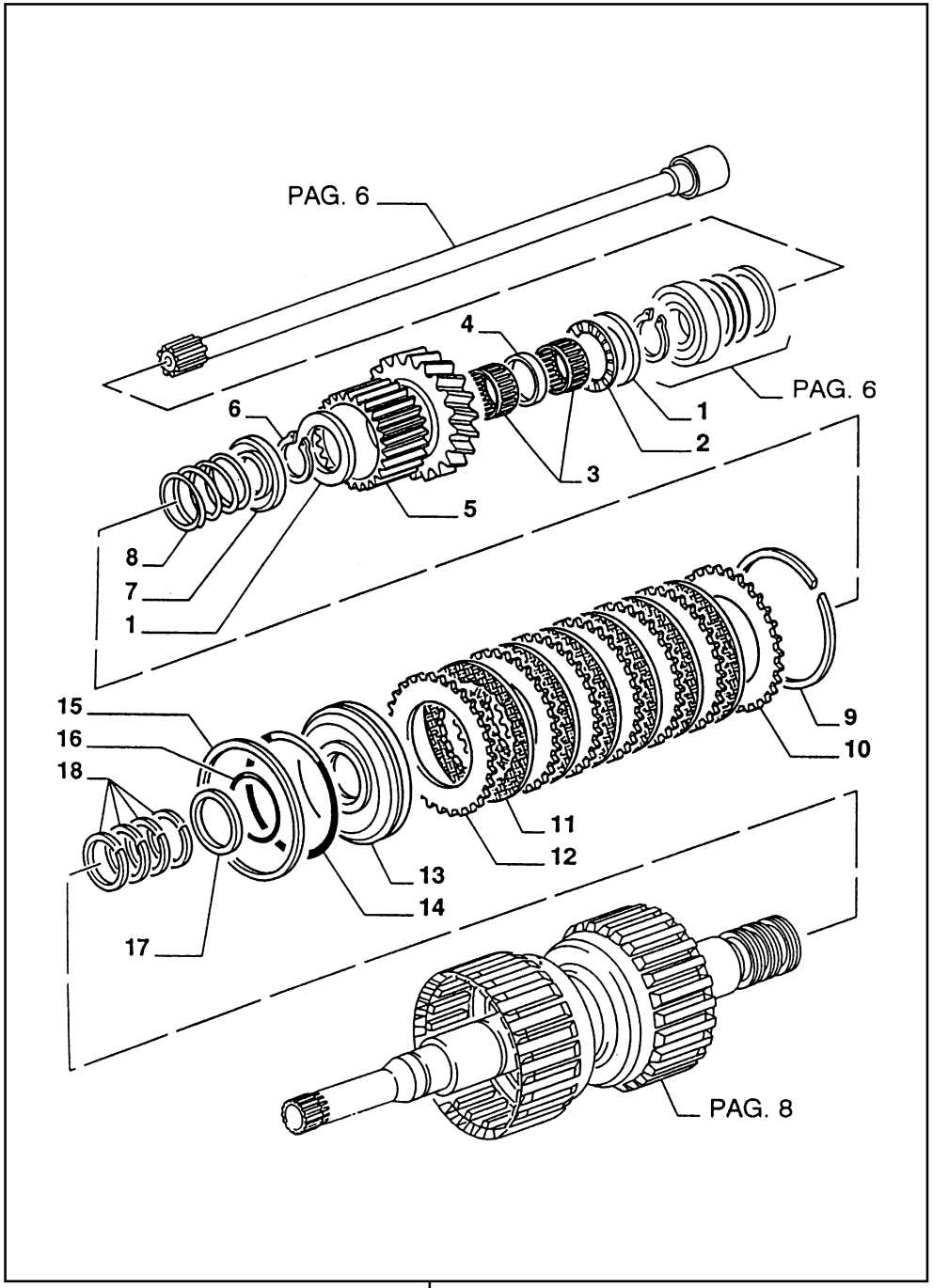

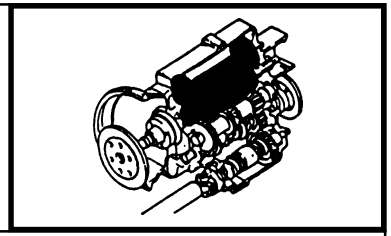

MOD	R	P/N. Imola	P/N. Brazil	Q	Descrição Denominacion	Description Descrizione	L.C.
	1	**9968279**		2	ARRUELA ARANDELA	WASHER ROSETTA	131R
	2	**9968228**		1	ROLAMENTO RODAMIENTO	BEARING CUSCINETTO	341C
	3	**9968304**		2	ROLAMENTO RODAMIENTO	BEARING CUSCINETTO	341C
	4	**9968302**		1	ESPAÇADOR SEPARADOR	SPACER DISTANZIALE	075D
	5	**9968286**		1	ENGRENAGEM CORONA	GEAR INGRANAGGIO	050I
	6	**9968291**		1	ANEL ELÅSTICO ANILLO ELASTICO	SNAP RING ANELLO ELASTICO	187A
	7	**9968292**		1	ANEL ARO	RING ANELLO	045A
	8	**9968293**		1	MOLA MUELLE	SPRING MOLLA	100M
	9	**9968287**		1	ANEL ARO	RING ANELLO	045A
	10	**9968288**		1	DISCO DISCO	DISC DISCO	060D
	11	**9968290**		6	DISCO DISCO	DISC DISCO	060D
	12	**9968289**		6	DISCO DISCO	DISC DISCO	060D
	13	**9968294**		1	ÊMBOLO EMBOLO	PISTON STANTUFFO	235S
	14	**9968296**		1	O'RING JUNTA TORICA	O'RING GUARNIZIONE O-R	158G
	15	**9968295**		1	ANEL ARO	RING ANELLO	045A
	16	**9968298**		1	O'RING JUNTA TORICA	O'RING GUARNIZIONE O-R	158G
	17	**9968297**		1	ANEL DE VEDAÇÃO JUNTA HERMETICA	SEAL RING ANELLO TENUTA	055A
	18	**9968226**		4	ANEL DE VEDAÇÃO JUNTA HERMETICA	SEAL RING ANELLO TENUTA	055A

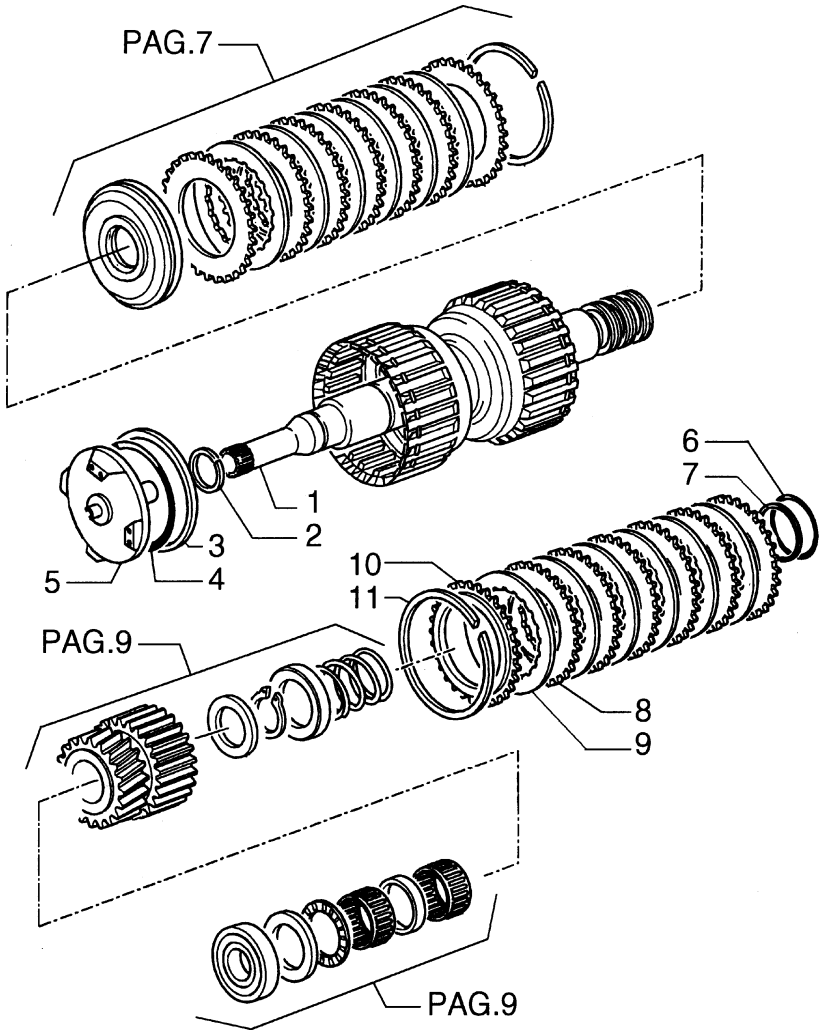

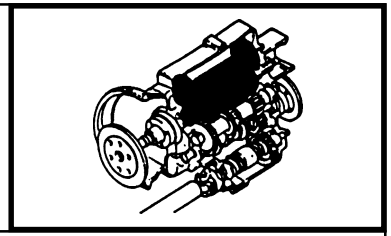

MOD	R	P/N. Imola	P/N. Brazil	Q	Descrição Denominacion	Description Descrizione	L.C.
	1	**9968282**		1	EIXO ARBOL	SHAFT ALBERO	016A
	2	**9968314**		1	ANEL DE VEDAÇÃO JUNTA HERMETICA	SEAL RING ANELLO TENUTA	055A
	3	**9968295**		1	ANEL DE VEDAÇÃO JUNTA HERMETICA	SEAL RING ANELLO TENUTA	055A
	4	**9968296**		1	O'RING JUNTA TORICA	O'RING GUARNIZIONE O-R	158G
	5	**9968294**		1	ÊMBOLO EMBOLO	PISTON STANTUFFO	235S
	6	**9968298**		1	O'RING JUNTA TORICA	O'RING GUARNIZIONE O-R	158G
	7	**9968297**		1	ANEL DE VEDAÇÃO JUNTA HERMETICA	SEAL RING ANELLO TENUTA	055A
	8	**9968289**		6	DISCO DISCO	DISC DISCO	060D
	9	**9968290**		6	DISCO DISCO	DISC DISCO	060D
	10	**9968288**		1	DISCO DISCO	DISC DISCO	060D
	11	**9968287**		1	ANEL DE VEDAÇÃO JUNTA HERMETICA	SEAL RING ANELLO TENUTA	055A

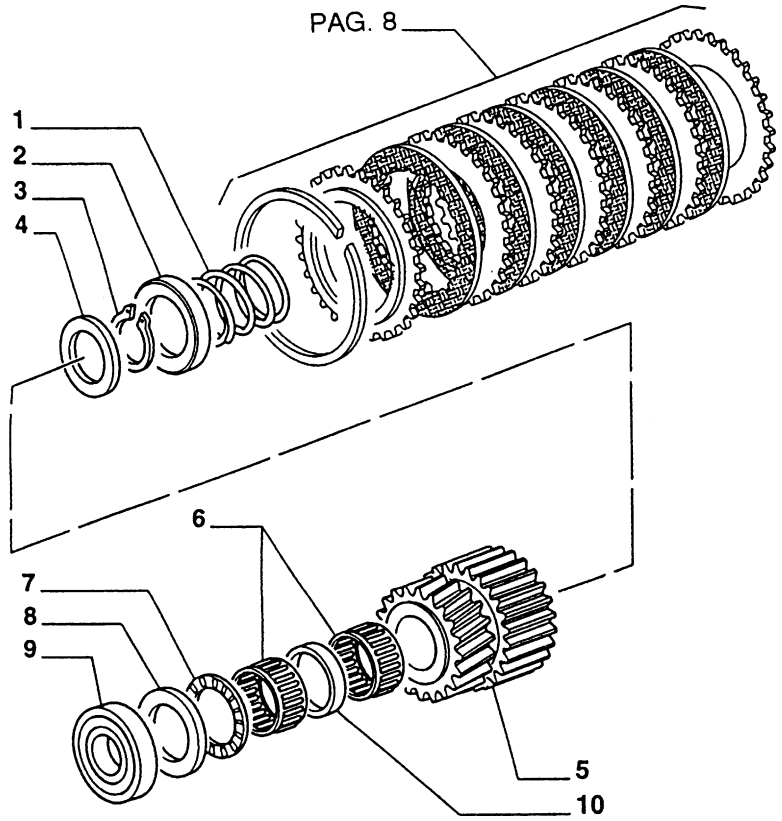

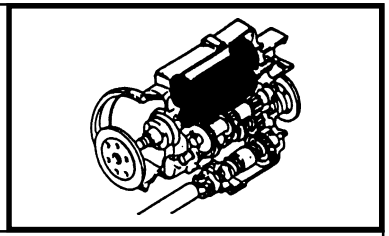

MOD	R	P/N. Imola	P/N. Brazil	Q	Descrição Denominacion	Description Descrizione	L.C.
	1	**9968293**		1	MOLA MUELLE	SPRING MOLLA	100M
	2	**9968292**		1	ANEL ARO	RING ANELLO	045A
	3	**9968291**		1	ANEL ELÁSTICO ANILLO ELASTICO	SNAP RING ANELLO ELASTICO	187A
	4	**9968279**		1	ARRUELA ARANDELA	WASHER ROSETTA	131R
	5	**9968285**		1	ENGRENAGEM CORONA	GEAR INGRANAGGIO	050I
	6	**9968304**		2	ROLAMENTO RODAMIENTO	BEARING CUSCINETTO	341C
	7	**9968228**		1	ROLAMENTO RODAMIENTO	BEARING CUSCINETTO	341C
	8	**9968230**		1	ARRUELA ARANDELA	WASHER ROSETTA	131R
	9	**9968276**		1	ROLAMENTO RODAMIENTO	BEARING CUSCINETTO	341C
	10	**9968302**		1	ESPAÇADOR SEPARADOR	SPACER DISTANZIALE	075D

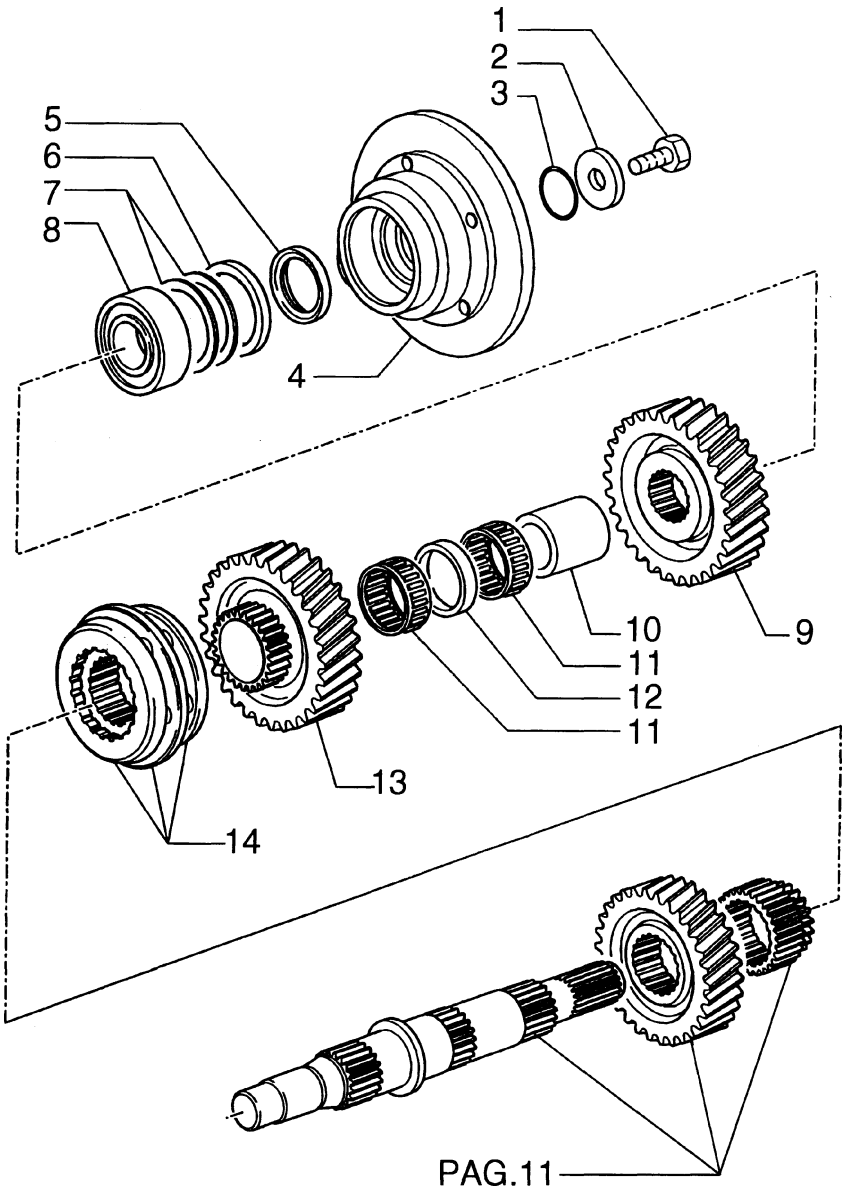

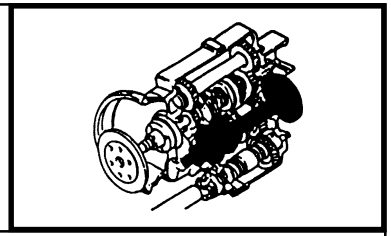

MOD	R	P/N. Imola	P/N. Brazil	Q	Descrição Denominacion	Description Descrizione	L.C.
	1	**9968308**		1	PARAFUSO TORNILLO	SCREW VITE	040V
	2	**9968306**		1	ARRUELA ARANDELA	WASHER ROSETTA	131R
	3	**9968309**		1	O'RING JUNTA TORICA	O'RING GUARNIZIONE O-R	158G
	4	**9968310**		1	DISCO DE FREIO DISCO DE FRENO	BRAKE DISC DISCO FRENO	064D
	5	**9968357**		1	ANEL DE VEDAÇÃO JUNTA HERMETICA	SEAL RING ANELLO TENUTA	055A
	6	**9968271**		1	ESPAÇADOR SEPARADOR	SPACER DISTANZIALE	075D
	7	**9968272**		AR	CALÇO CALCE	SHIM SPESSORE	198S
	7	**9968273**		AR	CALÇO CALCE	SHIM SPESSORE	198S
	7	**9968274**		AR	CALÇO CALCE	SHIM SPESSORE	198S
	7	**9968275**		AR	CALÇO CALCE	SHIM SPESSORE	198S
	8	**9968270**		1	ROLAMENTO RODAMIENTO	BEARING CUSCINETTO	341C
	9	**9968249**		1	ENGRENAGEM CORONA	GEAR INGRANAGGIO	050I
	10	**9968252**		1	LUVA MANGUITO	SLEEVE MANICOTTO	030M
	11	**9968250**		2	ROLAMENTO RODAMIENTO	BEARING CUSCINETTO	341C
	12	**9968251**		1	ESPAÇADOR SEPARADOR	SPACER DISTANZIALE	075D
	13	**9968248**		1	ENGRENAGEM CORONA	GEAR INGRANAGGIO	050I
	14	**9968307**		1	SINCRONIZADOR SINCRONIZADOR	SYCRONIZER SINCRONIZZATT.	161S

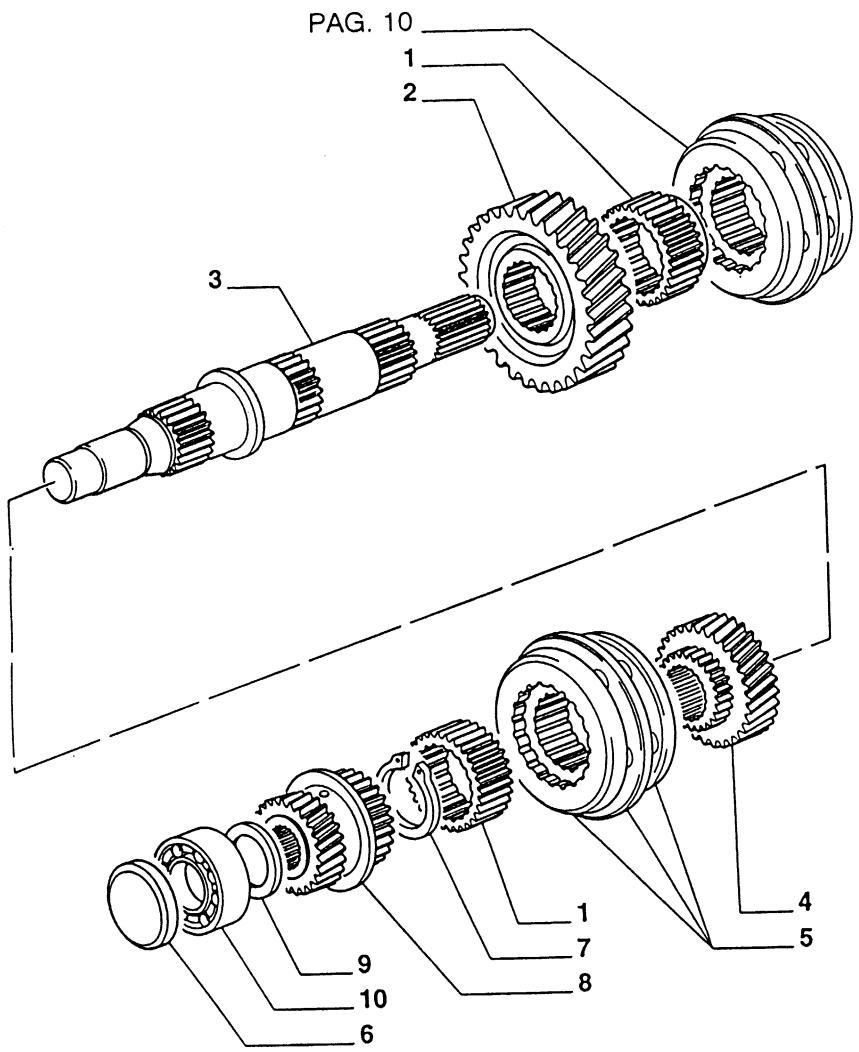

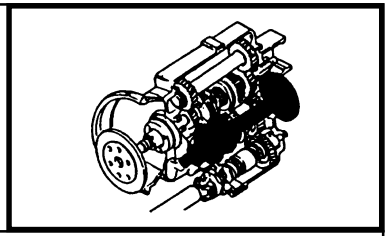

MOD	R	P/N. Imola	P/N. Brazil	Q	Descrição Denominacion	Description Descrizione	L.C.
	1	**9968223**		2	ENGRENAGEM CORONA	GEAR INGRANAGGIO	050I
	2	**9968247**		1	ENGRENAGEM CORONA	GEAR INGRANAGGIO	050I
	3	**9968269**		1	EIXO ARBOL	SHAFT ALBERO	016A
	4	**9968246**		1	ENGRENAGEM CORONA	GEAR INGRANAGGIO	050I
	5	**9968307**		1	SINCRONIZADOR SINCRONIZADOR	SYCRONIZER SINCRONIZZATT.	161S
	6	**9968358**		1	ANEL ARO	RING ANELLO	045A
	7	**9968253**		1	ANEL ELÁSTICO ANILLO ELASTICO	SNAP RING ANELLO ELASTICO	187A
	8	**9968245**		1	ENGRENAGEM CORONA	GEAR INGRANAGGIO	050I
	9	**9968260**		1	ARRUELA ARANDELA	WASHER ROSETTA	131R
	10	**9968278**		1	ROLAMENTO RODAMIENTO	BEARING CUSCINETTO	341C

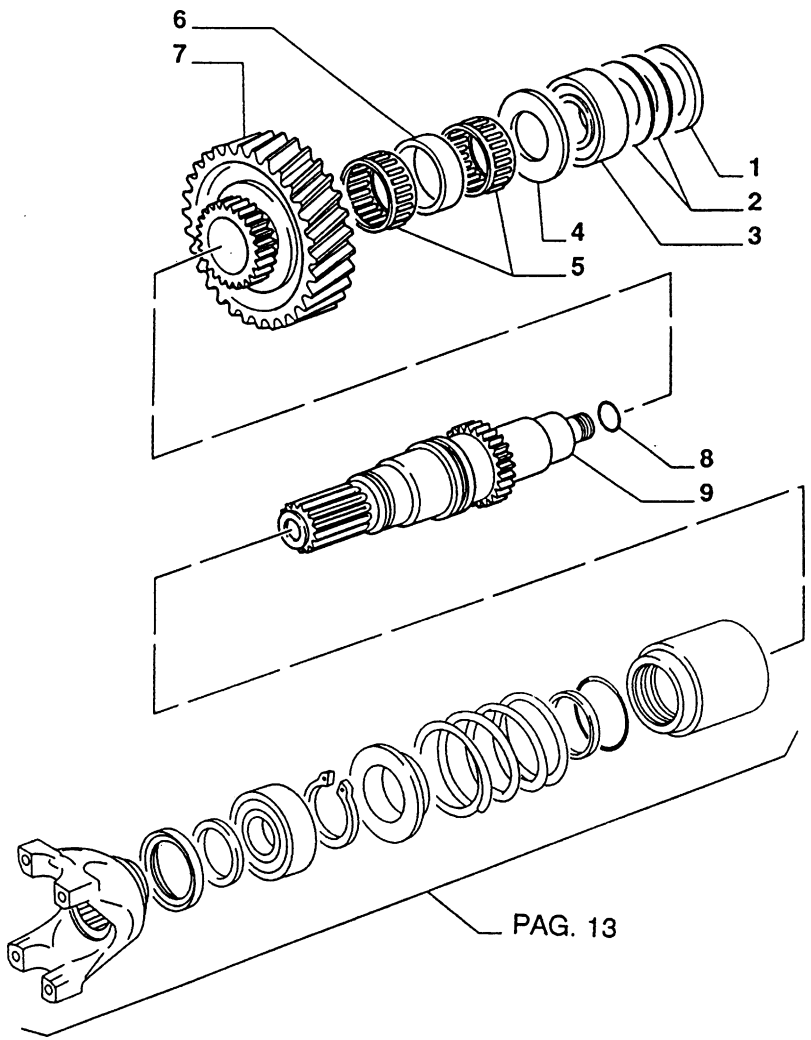

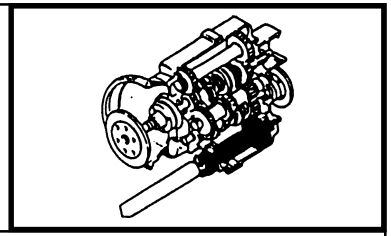

MOD	R	P/N. Imola	P/N. Brazil	Q	Descrição Denominacion	Description Descrizione	L.C.
	1	**9968255**		1	ESPAÇADOR SEPARADOR	SPACER DISTANZIALE	075D
	2	**9968256**		AR	CALÇO CALCE	SHIM SPESSORE	198S
	2	**9968257**		AR	CALÇO CALCE	SHIM SPESSORE	198S
	2	**9968258**		AR	CALÇO CALCE	SHIM SPESSORE	198S
	2	**9968259**		AR	CALÇO CALCE	SHIM SPESSORE	198S
	3	**9968276**		1	ROLAMENTO RODAMIENTO	BEARING CUSCINETTO	341C
	4	**9968244**		1	ARRUELA ARANDELA	WASHER ROSETTA	131R
	5	**9968392**		1	ROLAMENTO RODAMIENTO	BEARING CUSCINETTO	341C
	6	**9968393**		1	ESPAÇADOR SEPARADOR	SPACER DISTANZIALE	075D
	7	**9968240**		1	ENGRENAGEM CORONA	GEAR INGRANAGGIO	050I
	8	**9968254**		1	ANEL DE VEDAÇÃO JUNTA HERMETICA	SEAL RING ANELLO TENUTA	055A
	9	**9968239**		1	EIXO ARBOL	SHAFT ALBERO	016A

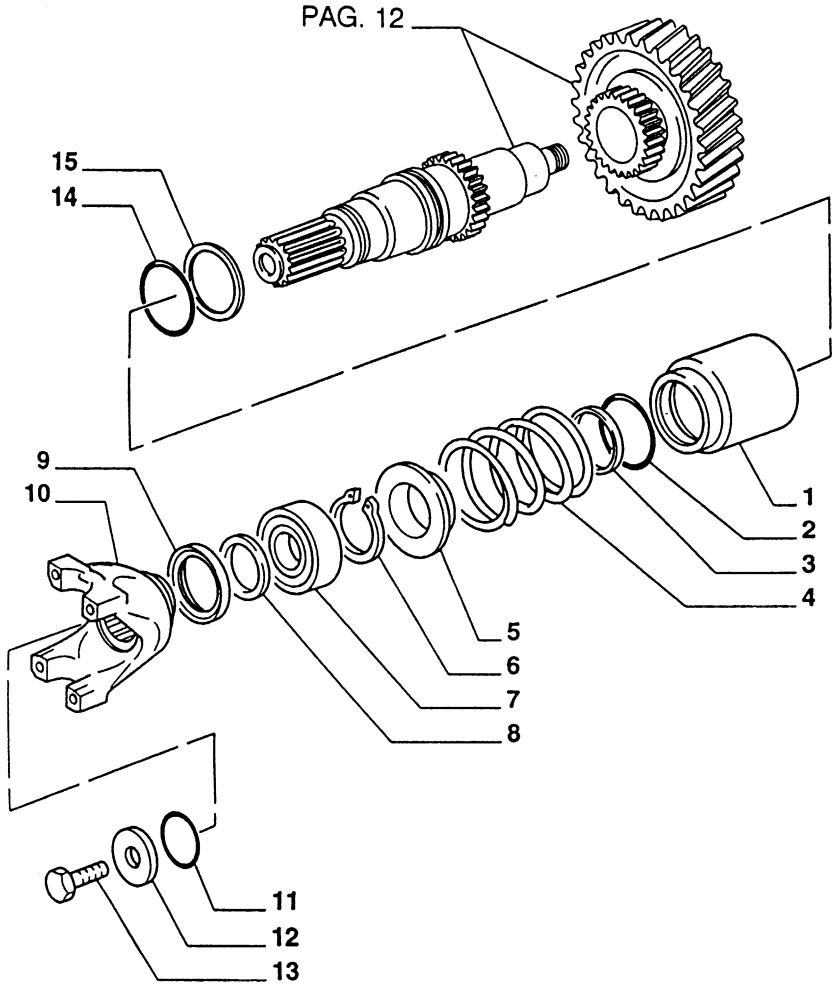

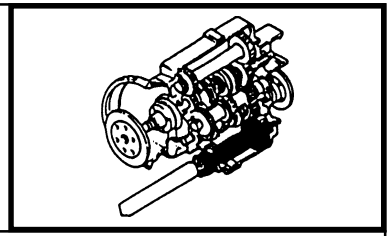

MOD	R	P/N. Imola	P/N. Brazil	Q	Descrição Denominacion	Description Descrizione	L.C.
	1	**9968234**		1	EMBREAGEM EMBRAGUE	CLUTCH FRIZIONE	095F
	2	**9968298**		1	O'RING JUNTA TORICA	O'RING GUARNIZIONE O-R	158G
	3	**9968297**		1	ANEL DE VEDAÇÃO JUNTA HERMETICA	SEAL RING ANELLO TENUTA	055A
	4	**9968235**		1	MOLA MUELLE	SPRING MOLLA	100M
	5	**9968236**		1	SUPORTE SOPORTE	SUPPORT SUPPORTO	300S
	6	**9968233**		1	ANEL ELÁSTICO ANILLO ELASTICO	SNAP RING ANELLO ELASTICO	187A
	7	**9968276**		1	ROLAMENTO RODAMIENTO	BEARING CUSCINETTO	341C
	8	**9968301**		1	ESPAÇADOR SEPARADOR	SPACER DISTANZIALE	075D
	9	**9968357**		1	ANEL DE VEDAÇÃO JUNTA HERMETICA	SEAL RING ANELLO TENUTA	055A
	10	**9968300**		1	FLANGE BRIDA	FLANGE FLANGIA	070F
	11	**9968309**		1	O'RING JUNTA TORICA	O'RING GUARNIZIONE O-R	158G
	12	**9968306**		1	ARRUELA ARANDELA	WASHER ROSETTA	131R
	13	**9968308**		1	PARAFUSO TORNILLO	SCREW VITE	040V
	14	**9968232**		1	O'RING JUNTA TORICA	O'RING GUARNIZIONE O-R	158G
	15	**9968229**		1	ANEL DE VEDAÇÃO JUNTA HERMETICA	SEAL RING ANELLO TENUTA	055A

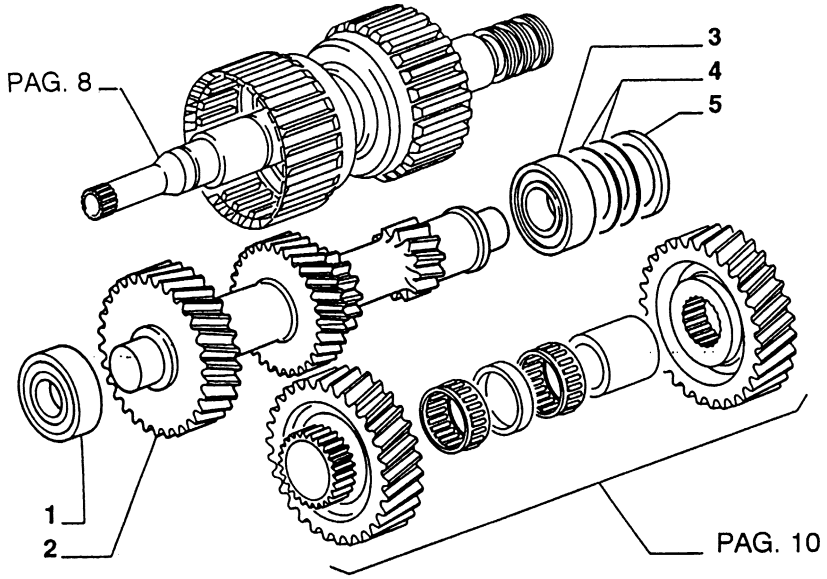

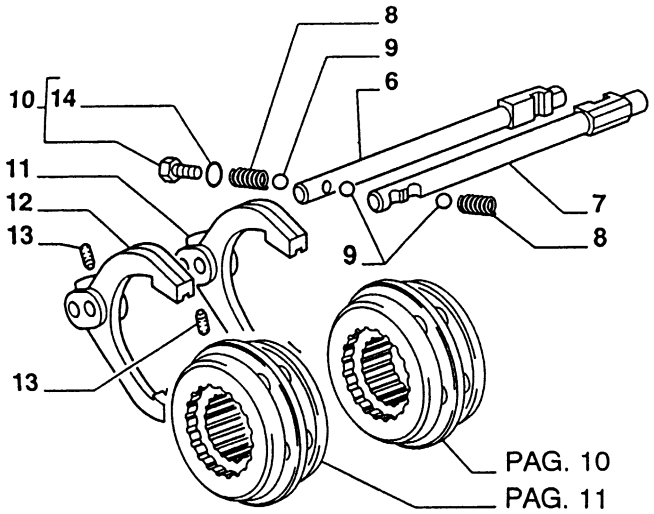

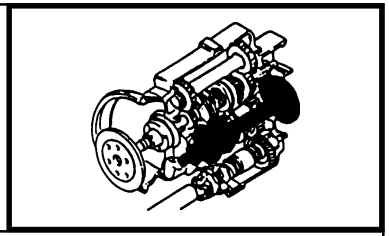

MOD	R	P/N. Imola	P/N. Brazil	Q	Descrição Denominacion	Description Descrizione	L.C.
	1	**9968277**		1	ROLAMENTO RODAMIENTO	BEARING CUSCINETTO	341C
	2	**9968280**		1	EIXO ARBOL	SHAFT ALBERO	016A
	3	**9968270**		1	ROLAMENTO RODAMIENTO	BEARING CUSCINETTO	341C
	4	**9968272**		AR	CALÇO CALCE	SHIM SPESSORE	198S
	4	**9968273**		AR	CALÇO CALCE	SHIM SPESSORE	198S
	4	**9968274**		AR	CALÇO CALCE	SHIM SPESSORE	198S
	4	**9968275**		AR	CALÇO CALCE	SHIM SPESSORE	198S
	5	**9968271**		1	ESPAÇADOR SEPARADOR	SPACER DISTANZIALE	075D
	6	**9968319**		1	HASTE VARILLA	ROD ASTA	090A
	7	**9968322**		1	HASTE VARILLA	ROD ASTA	090A
	8	**9968316**		2	MOLA MUELLE	SPRING MOLLA	100M
	9	**9968315**		3	ESFERA BOLA	BALL SFERA	140S
	10	**9968219**		AR	BUJÃO TAPON	PLUG TAPPO	050T
	11	**9968317**		1	FORQUILHA 1ª, 2ª HORQUILLA	YOKE FORCELLA	085F
	12	**9968318**		1	FORQUILHA 3ª, 4ª HORQUILLA	YOKE FORCELLA	085F
	13	**9968323**		2	PARAFUSO TORNILLO	SCREW VITE	040V
	14	**9968218**		AR	O'RING JUNTA TORICA	O'RING GUARNIZIONE O-R	158G

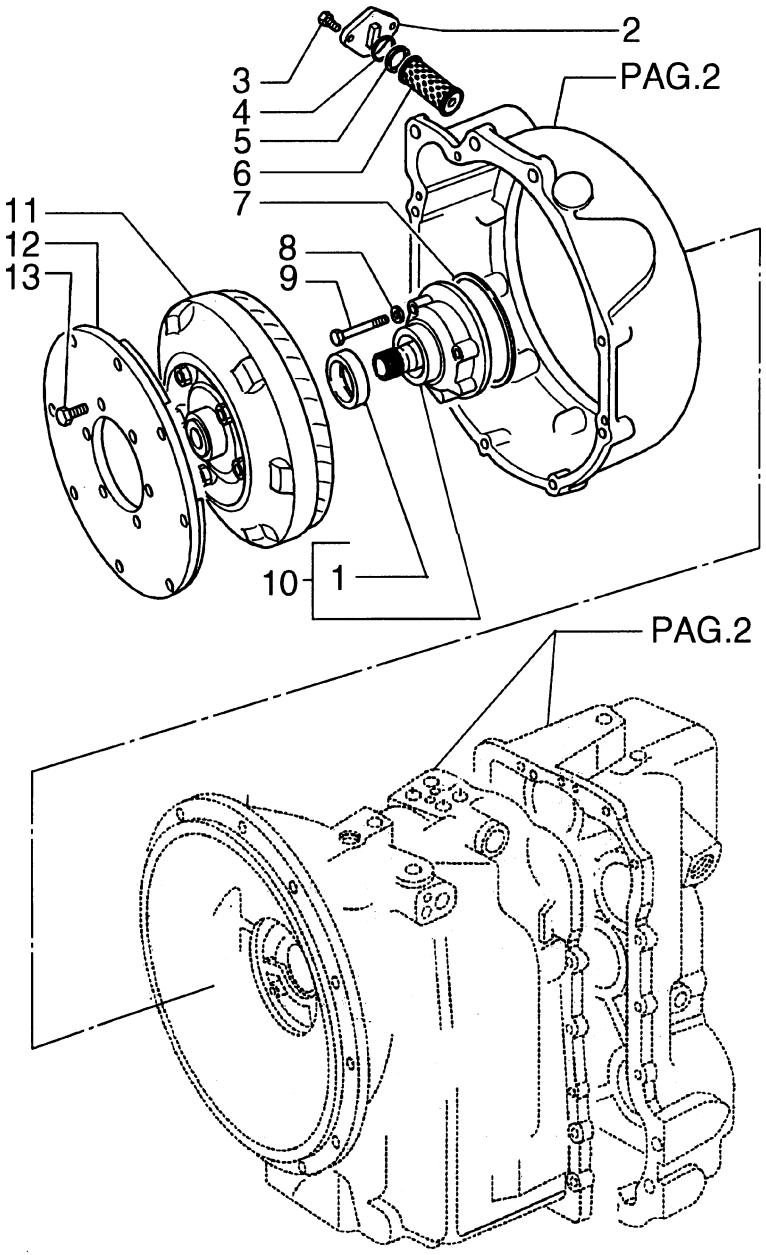

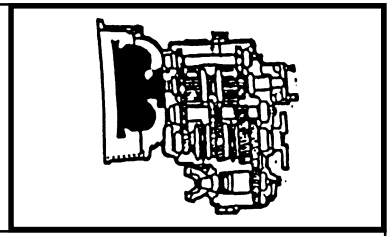

MOD	R	P/N. Imola	P/N. Brazil	Q	Descrição Denominacion	Description Descrizione	L.C.
	1	**9968312**		1	RETENTOR EMPAQUETADURA	SEAL ASSY GUARNIZIONE	123G
	2	**9968362**		1	TAMPA TAPA	COVER COPERCHIO	265C
	3	**85817169**		2	PARAFUSO TORNILLO	SCREW VITE	040V
	4	**9968360**		1	O'RING JUNTA TORICA	O'RING GUARNIZIONE O-R	158G
	5	**9968361**		1	ANEL ARO	RING ANELLO	045A
	6	**9968359**		1	FILTRO FILTRO	FILTER FILTRO	065F
	7	**9968313**		1	JUNTA JUNTA PLANA	GASKET GUARNIZ. PIANA	120G
	8	**85817001**		4	ARRUELA ARANDELA	WASHER ROSETTA	131R
	9	**85817163**		4	PARAFUSO TORNILLO	SCREW VITE	040V
	10	**9968311**		1	BOMBA DE ÓLEO BOMBA DE ACEITE	OIL PUMP POMPA OLIO	P153
	11	**85817620**		1	CONVERSOR TORQUE CONVERTIDOR PAR	TORQUE CONVERT. CONVERTITORE	259C
	12	**9968241**		1	DISCO DISCO	DISC DISCO	060D
	13	**9968380**		6	PARAFUSO TORNILLO	SCREW VITE	040V

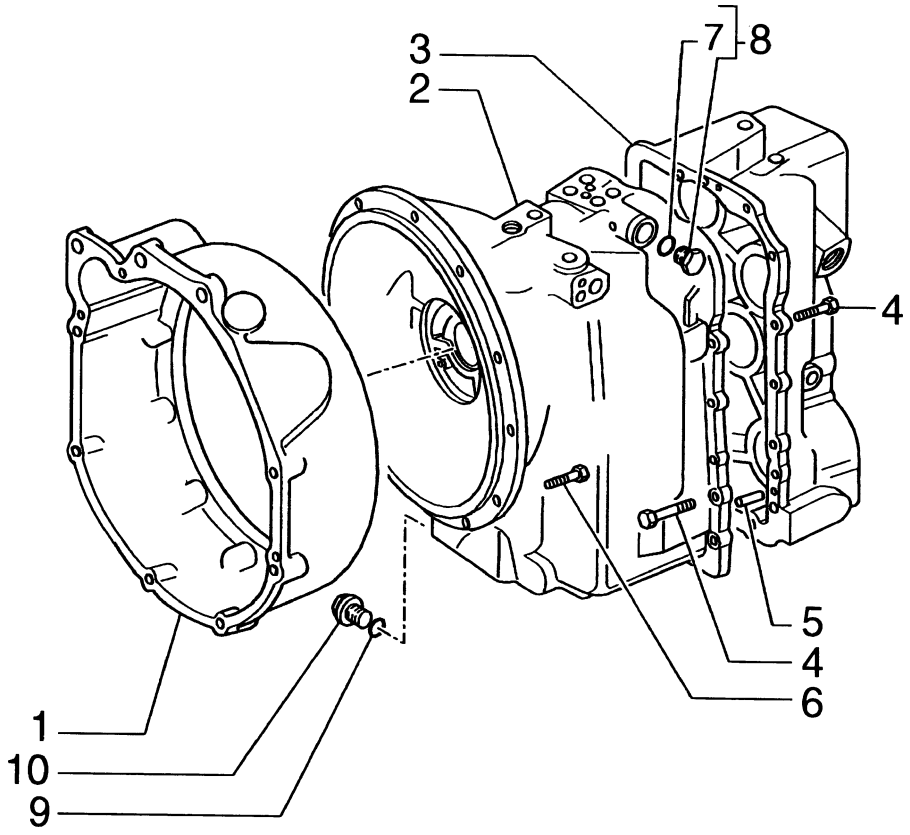

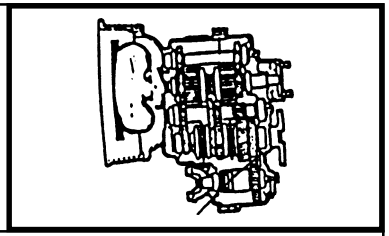

MOD	R	P/N. Imola	P/N. Brazil	Q	Descrição Denominacion	Description Descrizione	L.C.
	1	**9968237**		1	CARCAÇA CAJA	CASE SCATOLA	035S
	2	**9968394**		1	CARCAÇA CAJA	CASE SCATOLA	035S
	3	**9968395**		1	CARCAÇA CAJA	CASE SCATOLA	035S
	4	**85817164**		14	PARAFUSO TORNILLO	SCREW VITE	040V
	5	**9968356**		2	PINO CENTRAGEM TETON	DOWEL GRANO	090G
	6	**85812083**		12	PARAFUSO TORNILLO	SCREW VITE	040V
	7	**9968218**		1	O'RING JUNTA TORICA	O'RING GUARNIZIONE O-R	158G
	8	**9968219**		1	BUJÃO TAPON	PLUG TAPPO	050T
	9	**9968365**		1	O'RING JUNTA TORICA	O'RING GUARNIZIONE O-R	158G
	10	**9969444**		1	BUJÃO TAPON	PLUG TAPPO	050T

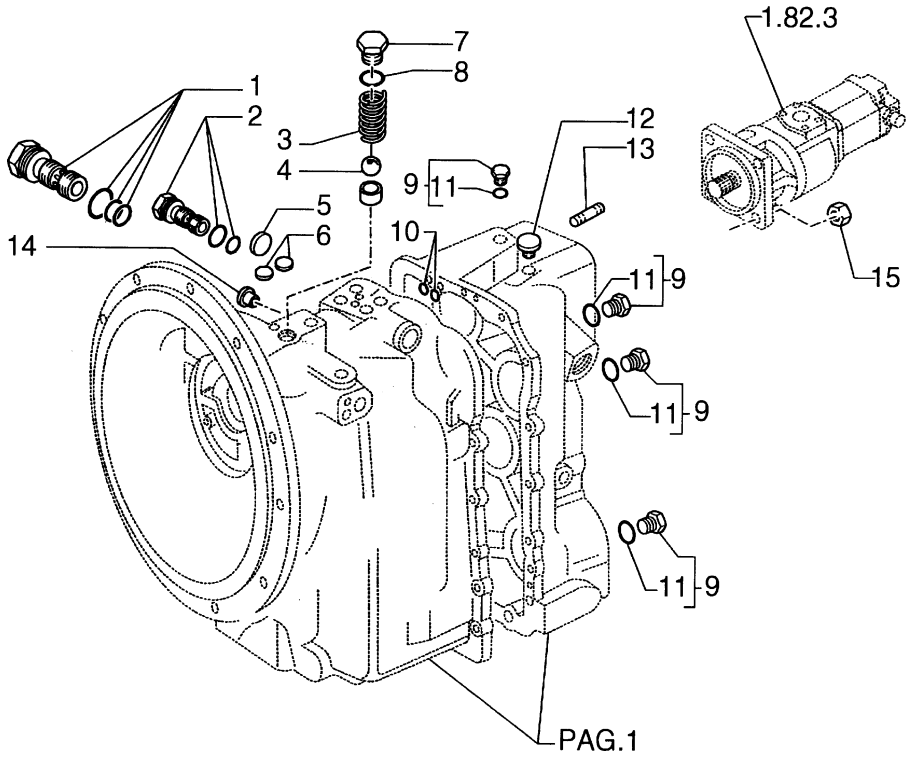

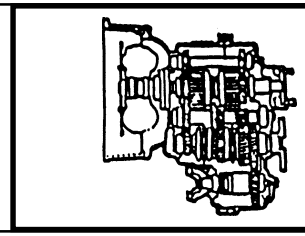

MOD	R	P/N. Imola	P/N. Brazil	Q	Descrição Denominacion	Description Descrizione	L.C.
	1	**9968350**		1	VÁLVULA VALVULA	VALVE VALVOLA	010V
	2	**9968334**		1	VÁLVULA VALVULA	VALVE VALVOLA	010V
	3	**9968378**		1	MOLA MUELLE	SPRING MOLLA	100M
	4	**9968379**		1	ESFERA BOLA	BALL SFERA	140S
	5	**9968371**		1	BUJÃO TAPON	PLUG TAPPO	050T
	6	**9968333**		2	BUJÃO TAPON	PLUG TAPPO	050T
	7	**85807003**		1	SEDE ASIENTO	SEAT SEDE	069S
	8	**9968377**		1	O'RING JUNTA TORICA	O'RING GUARNIZIONE O-R	158G
	9	**9968219**		AR	BUJÃO TAPON	PLUG TAPPO	050T
	10	**9968368**		4	O'RING JUNTA TORICA	O'RING GUARNIZIONE O-R	158G
	11	**9968218**		AR	O'RING JUNTA TORICA	O'RING GUARNIZIONE O-R	158G
	12	**9968364**		1	RESPIRO RESPIRADERO	BREATHER SFIATATOIO	145S
	13	**85802683**		4	PRISIONEIRO ESPARRAGO	STUD PRIGIONIERO	210P
	14	**9968383**		1	O'RING JUNTA TORICA	O'RING GUARNIZIONE O-R	158G
	15	**9968382**		1	BUJÃO TAPON	PLUG TAPPO	050T
	16	**9968365**		1	O'RING JUNTA TORICA	O'RING GUARNIZIONE O-R	158G
	17	**9969444**		1	BUJÃO TAPON	PLUG TAPPO	050T

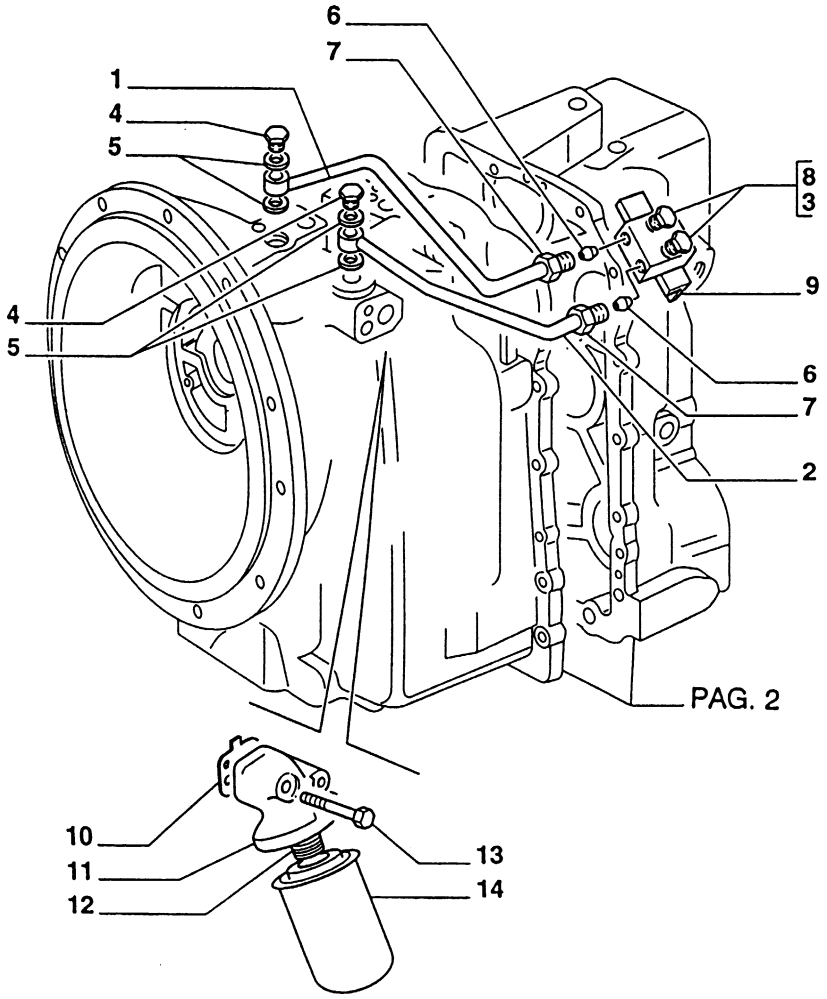

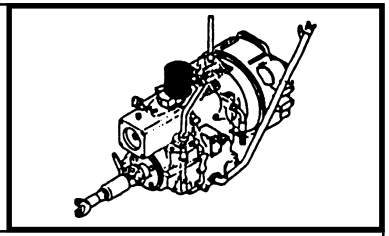

MOD	R	P/N. Imola	P/N. Brazil	Q	Descrição Denominacion	Description Descrizione	L.C.
	1	**85812087**		1	TUBO TUBO	TUBE TUBO RIGIDO	193T
	2	**85812086**		1	TUBO TUBO	TUBE TUBO RIGIDO	193T
	3	**9968218**		AR	O'RING JUNTA TORICA	O'RING GUARNIZIONE O-R	158G
	4	**9968676**		2	BUJÃO TAPON	PLUG TAPPO	050T
	5	**85817002**		4	ANEL DE VEDAÇÃO JUNTA HERMETICA	SEAL RING ANELLO TENUTA	055A
	6	**9969449**		AR	CONEXÃO RACOR	FITTING RACCORDO	020R
	7	**9968336**		AR	PORCA TUERCA	NUT DADO	010D
	8	**9968219**		2	BUJÃO TAPON	PLUG TAPPO	050T
	9	**85812085**		1	CONEXÃO RACOR	FITTING RACCORDO	020R
	10	**9968375**		1	JUNTA JUNTA PLANA	GASKET GUARNIZ. PIANA	120G
	11	**9968374**		1	CARCAÇA FILTRO CUERPO FILTRO	FILTER SHELL CONTENIT.FILTRO	255C
	12	**9968354**		1	ADAPTADOR ADAPTADOR	ADAPTER ADATTATORE	001A
	13	**85817165**		2	PARAFUSO TORNILLO	SCREW VITE	040V
	14	**85817004**		1	FILTRO DE ÓLEO FILTRO ACEITE	OIL FILTER FILTRO OLIO	067F

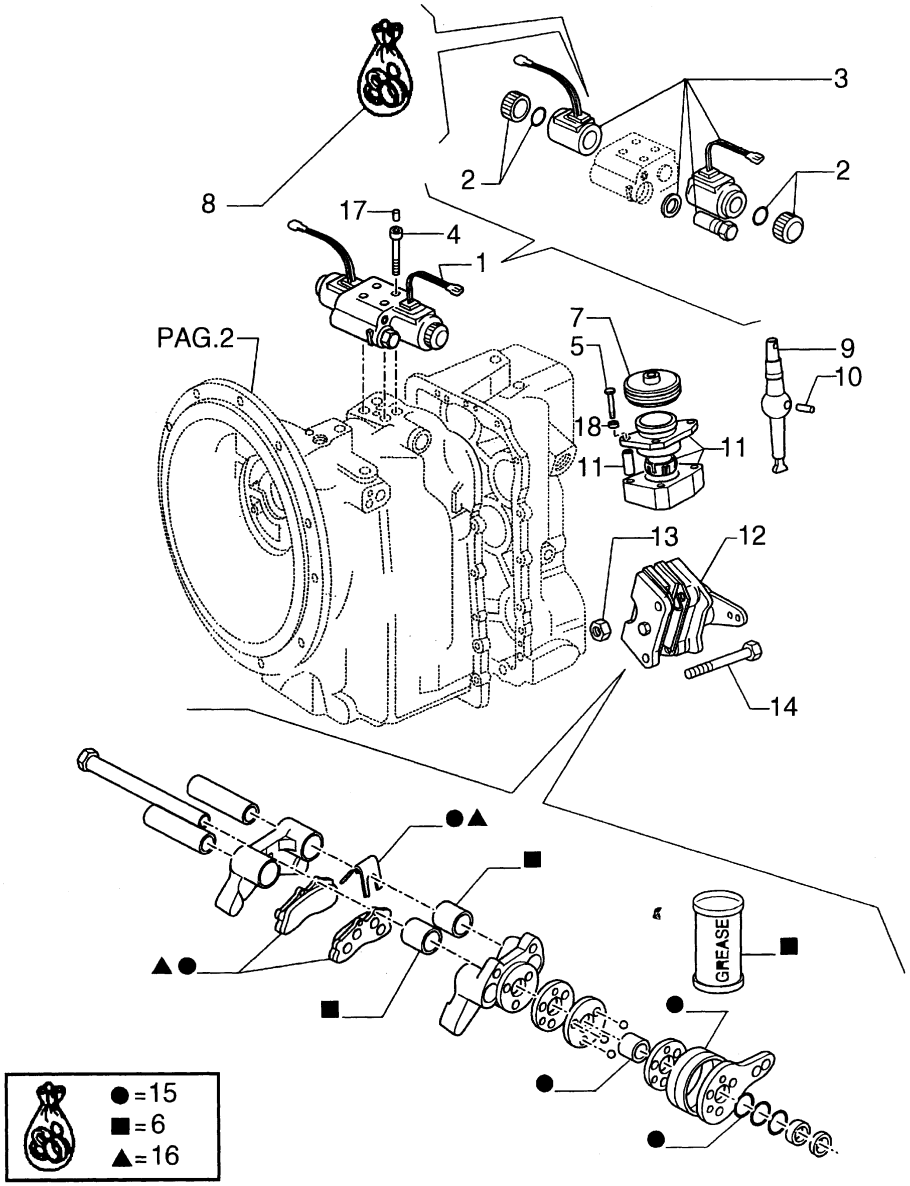

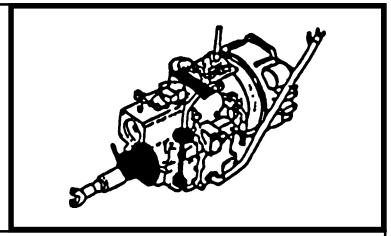

MOD	R	P/N. Imola	P/N. Brazil	Q	Descrição Denominacion	Description Descrizione	L.C.
	1	**85805818**		1	VÁLVULA VALVULA	VALVE VALVOLA	010V
	2	**9969344**		2	KIT JUEGO	KIT KIT	002K
	3	**85813304**		1	SOLENÓIDE SOLENOIDE	SOLENOID ELETTROMAGNETE	030E
	4	**9969445**		4	PARAFUSO TORNILLO	SCREW VITE	040V
	5	**85817163**		3	PARAFUSO TORNILLO	SCREW VITE	040V
	6	**85813318**		1	KIT JUEGO	KIT KIT	002K
	7	**9968328**		1	COIFA PARA PÓ CAPUCHA	DUST BOOT CUFFIA PARAPOLV	334C
	8	**85813338**		1	KIT JUEGO	KIT KIT	002K
	9	**9968324**		1	ALAVANCA PALANCA	LEVER LEVA	045L
	10	**9968327**		1	PINO BULON	PIN PERNO	080P
	11	**9968326**		1	SUPORTE SOPORTE	SUPPORT SUPPORTO	300S
	12	**9968238**		1	FREIO FRENO	BRAKE FRENO	093F
	13	**9969281**		2	PORCA TUERCA	NUT DADO	010D
	14	**9968299**		2	PARAFUSO TORNILLO	SCREW VITE	040V
	15	**9968926**		1	KIT JUEGO	KIT KIT	002K
	16	**9968927**		1	KIT JUEGO	KIT KIT	002K
	17	**9968678**		2	BUJÃO TAPON	PLUG TAPPO	050T
	18	**85812092**		2	ARRUELA ARANDELA	WASHER ROSETTA	131R

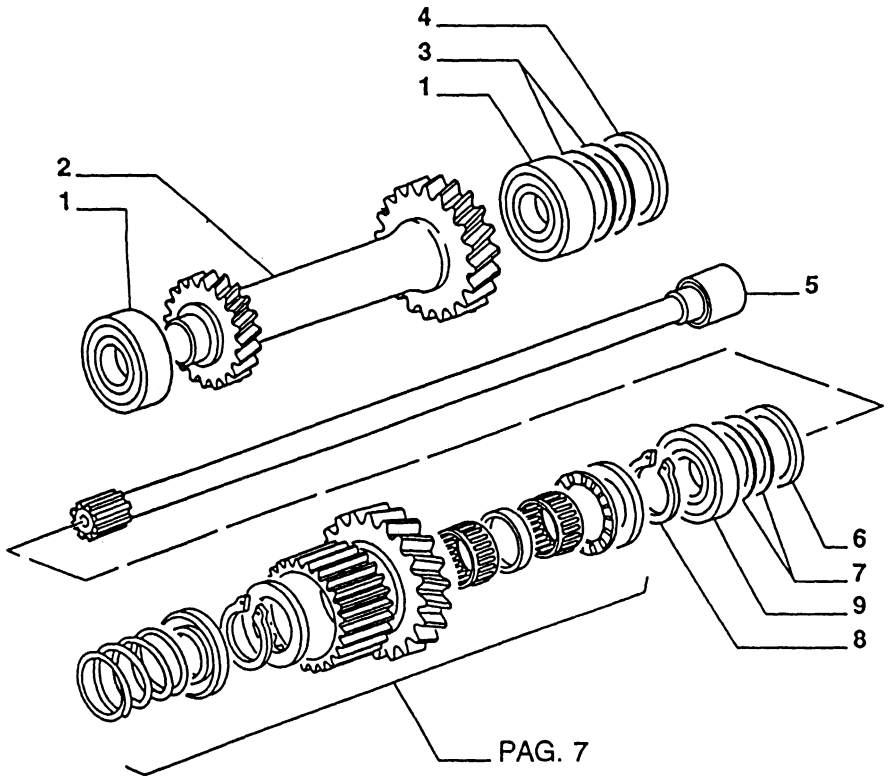

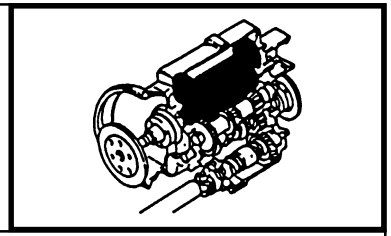

MOD	R	P/N. Imola	P/N. Brazil	Q	Descrição Denominacion	Description Descrizione	L.C.
	1	**9968268**		2	ROLAMENTO RODAMIENTO	BEARING CUSCINETTO	341C
	2	**9968281**		1	ENGRENAGEM CORONA	GEAR INGRANAGGIO	050I
	3	**9968262**		AR	CALÇO 0,002 mm CALCE	SHIM SPESSORE	198S
	3	**9968263**		AR	CALÇO 0,003 mm CALCE	SHIM SPESSORE	198S
	3	**9968264**		AR	CALÇO 0,003 mm CALCE	SHIM SPESSORE	198S
	3	**9968265**		AR	CALÇO 0,007 mm CALCE	SHIM SPESSORE	198S
	3	**9968266**		AR	CALÇO 0,015 mm CALCE	SHIM SPESSORE	198S
	3	**9968267**		AR	CALÇO 0,020 mm CALCE	SHIM SPESSORE	198S
	4	**9968261**		1	ESPAÇADOR SEPARADOR	SPACER DISTANZIALE	075D
	5	**9968347**		1	EIXO ARBOL	SHAFT ALBERO	016A
	6	**9968341**		1	CALÇO CALCE	SHIM SPESSORE	198S
	7	**9968342**		AR	CALÇO CALCE	SHIM SPESSORE	198S
	7	**9968343**		AR	CALÇO CALCE	SHIM SPESSORE	198S
	7	**9968344**		AR	CALÇO CALCE	SHIM SPESSORE	198S
	7	**9968345**		AR	CALÇO CALCE	SHIM SPESSORE	198S
	8	**9968291**		1	ANEL ELÁSTICO ANILLO ELASTICO	SNAP RING ANELLO ELASTICO	187A
	9	**9968305**		1	ROLAMENTO RODAMIENTO	BEARING CUSCINETTO	341C

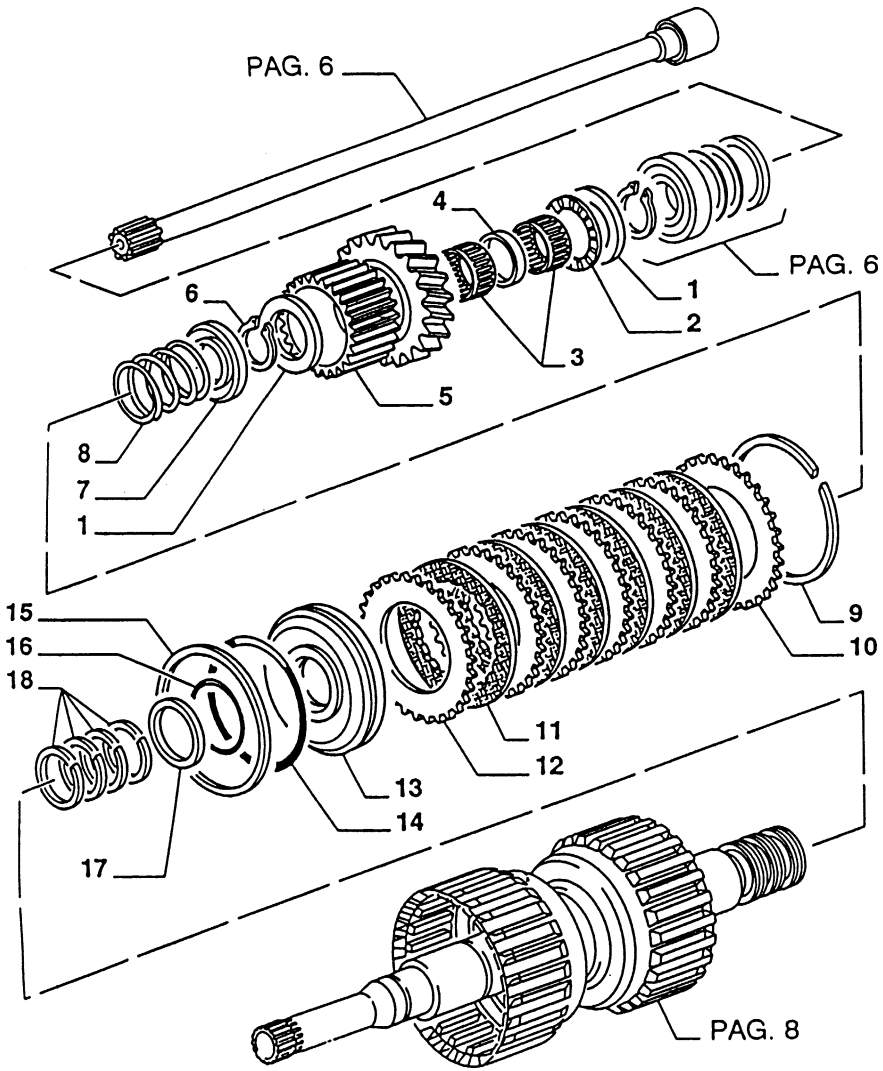

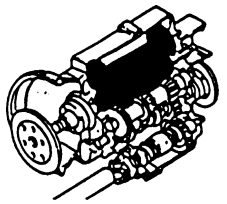

MOD	R	P/N. Imola	P/N. Brazil	Q	Descrição Denominacion	Description Descrizione	L.C.
	1	**9968279**		2	ARRUELA ARANDELA	WASHER ROSETTA	131R
	2	**9968228**		1	ROLAMENTO RODAMIENTO	BEARING CUSCINETTO	341C
	3	**9968304**		2	ROLAMENTO RODAMIENTO	BEARING CUSCINETTO	341C
	4	**9968302**		1	ESPAÇADOR SEPARADOR	SPACER DISTANZIALE	075D
	5	**9968286**		1	ENGRENAGEM CORONA	GEAR INGRANAGGIO	050I
	6	**9968291**		1	ANEL ELÁSTICO ANILLO ELASTICO	SNAP RING ANELLO ELASTICO	187A
	7	**9968292**		1	ANEL ARO	RING ANELLO	045A
	8	**9968293**		1	MOLA MUELLE	SPRING MOLLA	100M
	9	**9968287**		1	ANEL ARO	RING ANELLO	045A
	10	**9968288**		1	DISCO DISCO	DISC DISCO	060D
	11	**9968290**		6	DISCO DISCO	DISC DISCO	060D
	12	**9968289**		6	DISCO DISCO	DISC DISCO	060D
	13	**9968294**		1	ÊMBOLO EMBOLO	PISTON STANTUFFO	235S
	14	**9968296**		1	O'RING JUNTA TORICA	O'RING GUARNIZIONE O-R	158G
	15	**9968295**		1	ANEL ARO	RING ANELLO	045A
	16	**9968298**		1	O'RING JUNTA TORICA	O'RING GUARNIZIONE O-R	158G
	17	**9968297**		1	ANEL DE VEDAÇÃO JUNTA HERMETICA	SEAL RING ANELLO TENUTA	055A
	18	**9968226**		4	ANEL DE VEDAÇÃO JUNTA HERMETICA	SEAL RING ANELLO TENUTA	055A

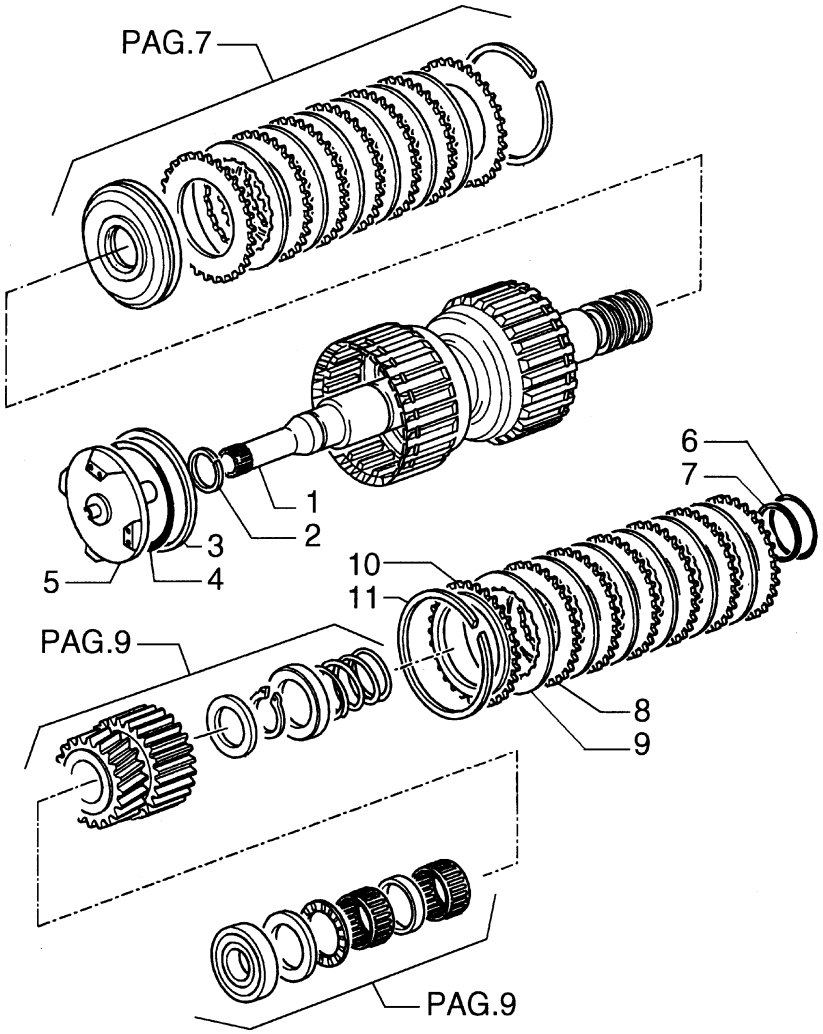

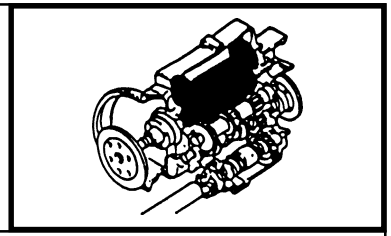

MOD	R	P/N. Imola	P/N. Brazil	Q	Descrição Denominacion	Description Descrizione	L.C.
	1	**9968282**		1	EIXO ARBOL	SHAFT ALBERO	016A
	2	**9968314**		1	ANEL DE VEDAÇÃO JUNTA HERMETICA	SEAL RING ANELLO TENUTA	055A
	3	**9968295**		1	ANEL DE VEDAÇÃO JUNTA HERMETICA	SEAL RING ANELLO TENUTA	055A
	4	**9968296**		1	O'RING JUNTA TORICA	O'RING GUARNIZIONE O-R	158G
	5	**9968294**		1	ÊMBOLO EMBOLO	PISTON STANTUFFO	235S
	6	**9968298**		1	O'RING JUNTA TORICA	O'RING GUARNIZIONE O-R	158G
	7	**9968297**		1	ANEL DE VEDAÇÃO JUNTA HERMETICA	SEAL RING ANELLO TENUTA	055A
	8	**9968289**		6	DISCO DISCO	DISC DISCO	060D
	9	**9968290**		6	DISCO DISCO	DISC DISCO	060D
	10	**9968288**		1	DISCO DISCO	DISC DISCO	060D
	11	**9968287**		1	ANEL DE VEDAÇÃO JUNTA HERMETICA	SEAL RING ANELLO TENUTA	055A

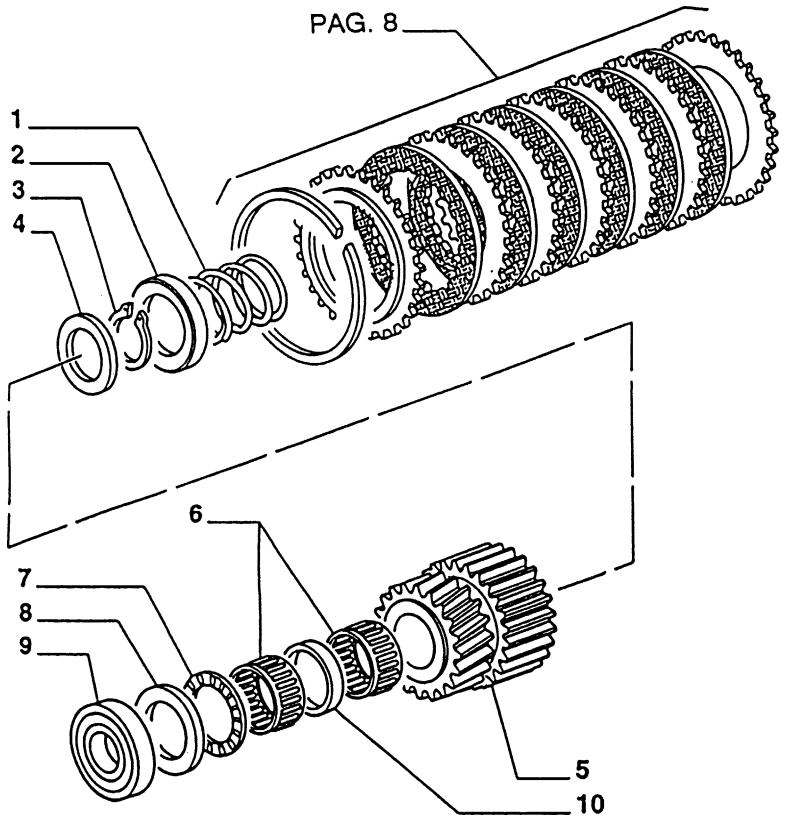

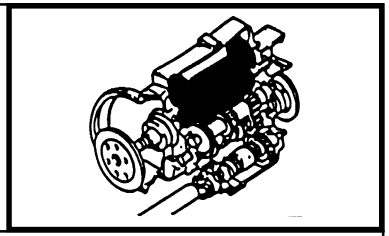

MOD	R	P/N. Imola	P/N. Brazil	Q	Descrição Denominacion	Description Descrizione	L.C.
	1	**9968293**		1	MOLA MUELLE	SPRING MOLLA	100M
	2	**9968292**		1	ANEL ARO	RING ANELLO	045A
	3	**9968291**		1	ANEL ELÁSTICO ANILLO ELASTICO	SNAP RING ANELLO ELASTICO	187A
	4	**9968279**		1	ARRUELA ARANDELA	WASHER ROSETTA	131R
	5	**9968285**		1	ENGRENAGEM CORONA	GEAR INGRANAGGIO	050I
	6	**9968304**		2	ROLAMENTO RODAMIENTO	BEARING CUSCINETTO	341C
	7	**9968228**		1	ROLAMENTO RODAMIENTO	BEARING CUSCINETTO	341C
	8	**9968230**		1	ARRUELA ARANDELA	WASHER ROSETTA	131R
	9	**9968276**		1	ROLAMENTO RODAMIENTO	BEARING CUSCINETTO	341C
	10	**9968302**		1	ESPAÇADOR SEPARADOR	SPACER DISTANZIALE	075D

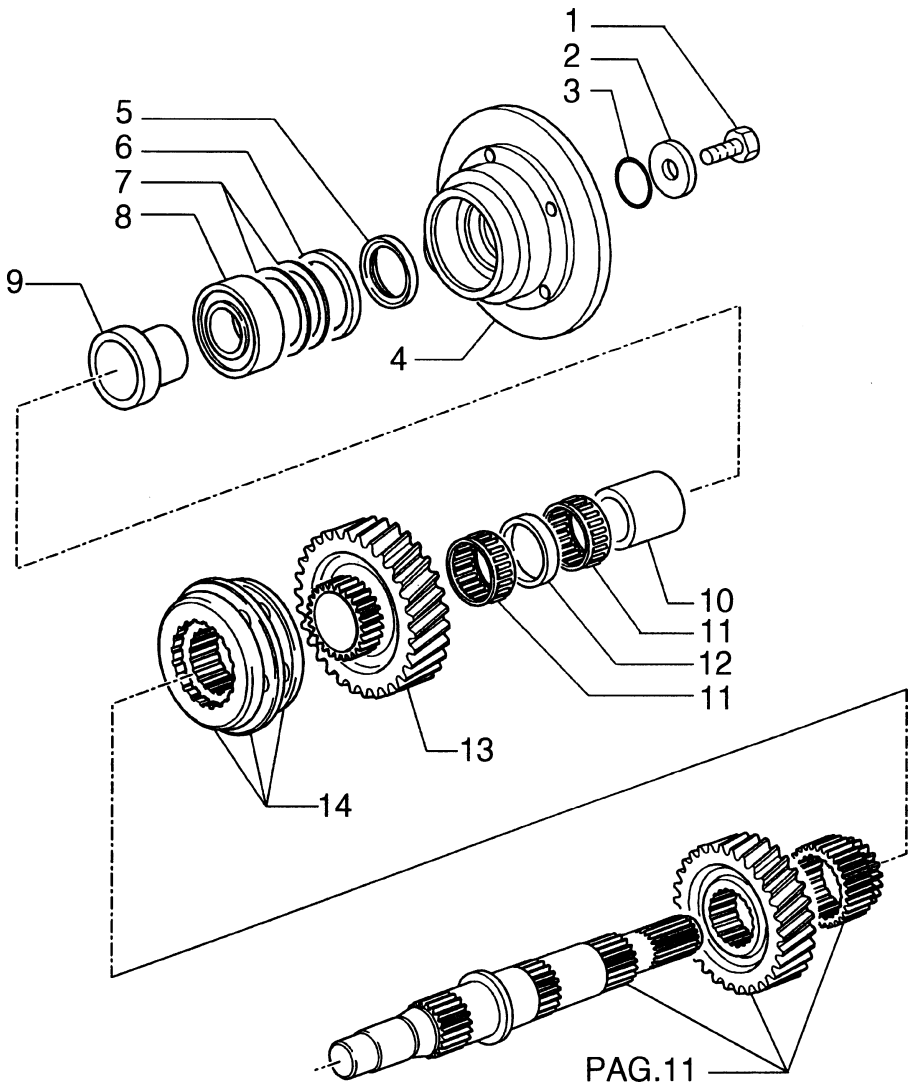

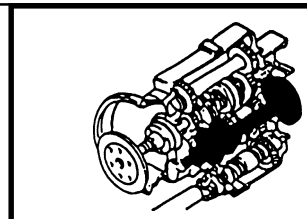

MOD	R	P/N. Imola	P/N. Brazil	Q	Descrição Denominacion	Description Descrizione	L.C.
	1	**9968308**		1	PARAFUSO TORNILLO	SCREW VITE	040V
	2	**9968306**		1	ARRUELA ARANDELA	WASHER ROSETTA	131R
	3	**9968309**		1	O'RING JUNTA TORICA	O'RING GUARNIZIONE O-R	158G
	4	**9968310**		1	DISCO DE FREIO DISCO DE FRENO	BRAKE DISC DISCO FRENO	064D
	5	**9968357**		1	ANEL DE VEDAÇÃO JUNTA HERMETICA	SEAL RING ANELLO TENUTA	055A
	6	**9968271**		1	ESPAÇADOR SEPARADOR	SPACER DISTANZIALE	075D
	7	**9968272**		AR	CALÇO CALCE	SHIM SPESSORE	198S
	7	**9968273**		AR	CALÇO CALCE	SHIM SPESSORE	198S
	7	**9968274**		AR	CALÇO CALCE	SHIM SPESSORE	198S
	7	**9968275**		AR	CALÇO CALCE	SHIM SPESSORE	198S
	8	**9968270**		1	ROLAMENTO RODAMIENTO	BEARING CUSCINETTO	341C
	9	**9968396**		1	ESPAÇADOR SEPARADOR	SPACER DISTANZIALE	075D
	10	**9968252**		1	LUVA MANGUITO	SLEEVE MANICOTTO	030M
	11	**9968250**		2	ROLAMENTO RODAMIENTO	BEARING CUSCINETTO	341C
	12	**9968251**		1	ESPAÇADOR SEPARADOR	SPACER DISTANZIALE	075D
	13	**9968248**		1	ENGRENAGEM CORONA	GEAR INGRANAGGIO	050I
	14	**9968307**		1	SINCRONIZADOR SINCRONIZADOR	SYCRONIZER SINCRONIZZATT.	161S

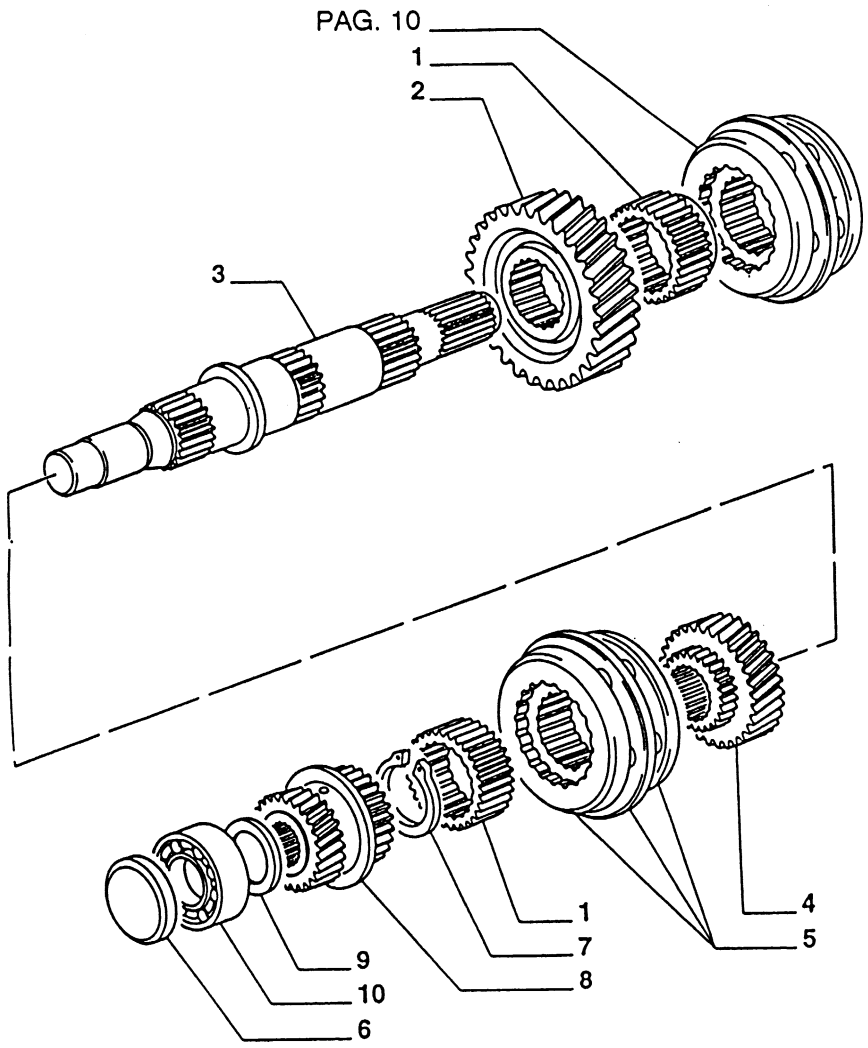

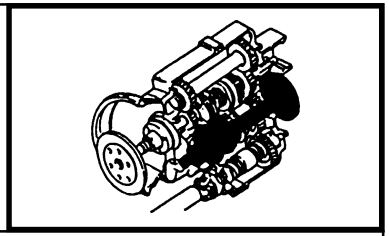

MOD	R	P/N. Imola	P/N. Brazil	Q	Descrição Denominacion	Description Descrizione	L.C.
	1	**9968223**		2	ENGRENAGEM CORONA	GEAR INGRANAGGIO	050I
	2	**9968247**		1	ENGRENAGEM CORONA	GEAR INGRANAGGIO	050I
	3	**9968269**		1	EIXO ARBOL	SHAFT ALBERO	016A
	4	**9968246**		1	ENGRENAGEM CORONA	GEAR INGRANAGGIO	050I
	5	**9968307**		1	SINCRONIZADOR SINCRONIZADOR	SYCRONIZER SINCRONIZZATT.	161S
	6	**9968358**		1	ANEL ARO	RING ANELLO	045A
	7	**9968253**		1	ANEL ELÁSTICO ANILLO ELASTICO	SNAP RING ANELLO ELASTICO	187A
	8	**9968245**		1	ENGRENAGEM CORONA	GEAR INGRANAGGIO	050I
	9	**9968260**		1	ARRUELA ARANDELA	WASHER ROSETTA	131R
	10	**9968278**		1	ROLAMENTO RODAMIENTO	BEARING CUSCINETTO	341C

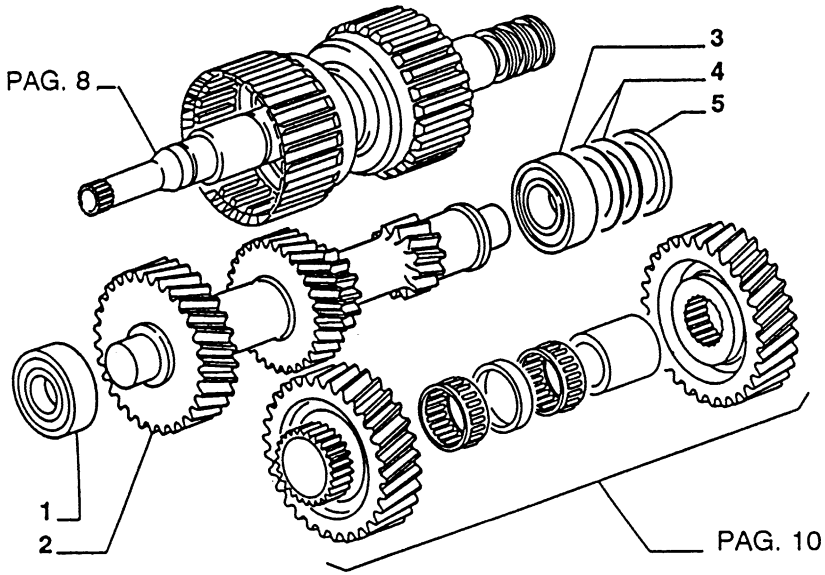

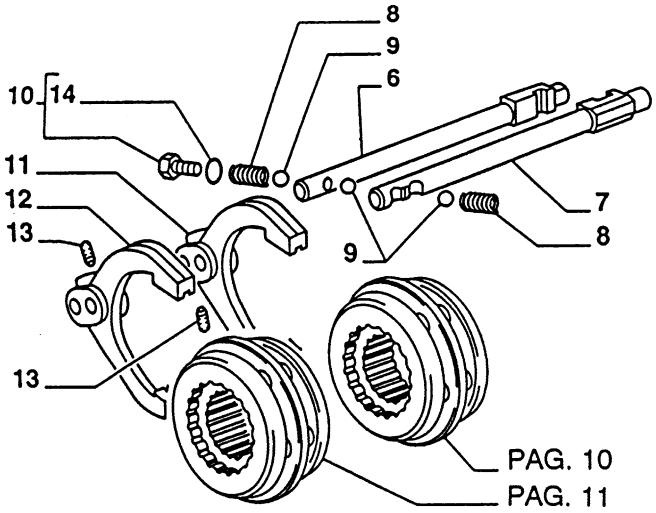

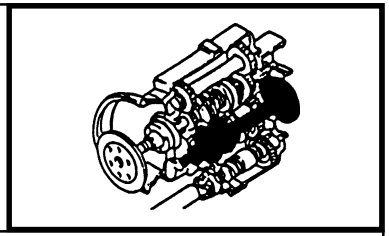

MOD	R	P/N. Imola	P/N. Brazil	Q	Descrição Denominacion	Description Descrizione	L.C.
	1	**9968277**		1	ROLAMENTO RODAMIENTO	BEARING CUSCINETTO	341C
	2	**9968280**		1	EIXO ARBOL	SHAFT ALBERO	016A
	3	**9968270**		1	ROLAMENTO RODAMIENTO	BEARING CUSCINETTO	341C
	4	**9968272**		AR	CALÇO CALCE	SHIM SPESSORE	198S
	4	**9968273**		AR	CALÇO CALCE	SHIM SPESSORE	198S
	4	**9968274**		AR	CALÇO CALCE	SHIM SPESSORE	198S
	4	**9968275**		AR	CALÇO CALCE	SHIM SPESSORE	198S
	5	**9968271**		1	ESPAÇADOR SEPARADOR	SPACER DISTANZIALE	075D
	6	**9968319**		1	HASTE VARILLA	ROD ASTA	090A
	7	**9968322**		1	HASTE VARILLA	ROD ASTA	090A
	8	**9968316**		2	MOLA MUELLE	SPRING MOLLA	100M
	9	**9968315**		3	ESFERA BOLA	BALL SFERA	140S
	10	**9968219**		AR	BUJÃO TAPON	PLUG TAPPO	050T
	11	**9968317**		1	FORQUILHA 1ª e 2ª HORQUILLA	YOKE FORCELLA	085F
	12	**9968318**		1	FORQUILHA 3ª e 4ª HORQUILLA	YOKE FORCELLA	085F
	13	**9968323**		2	PARAFUSO TORNILLO	SCREW VITE	040V
	14	**9968218**		AR	O'RING JUNTA TORICA	O'RING GUARNIZIONE O-R	158G

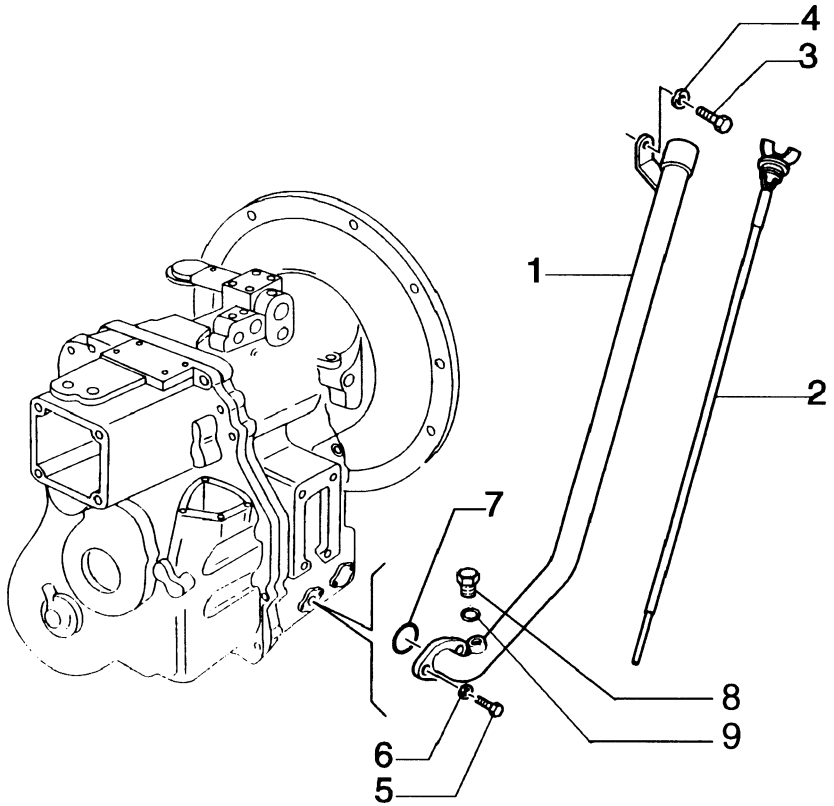

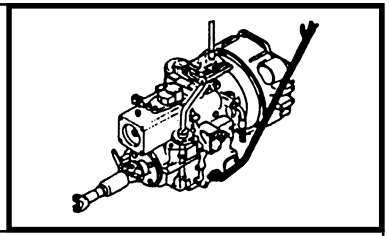

MOD	R	P/N. Imola	P/N. Brazil	Q	Descrição Denominacion	Description Descrizione	L.C.
	1	**85802675**	**75245908**	1	TUBO TUBO	TUBE TUBO RIGIDO	193T
	2	**85802674**	**75247406**	1	HASTE DE NIVEL VARILLA NIVEL	DIPSTICK ASTA LIVELLO	091A
	3	**16043131**	**16043231**	1	PARAFUSO TORNILLO	SCREW VITE	040V
	4	**11193974**	**12645031**	1	ARRUELA ARANDELA	WASHER ROSETTA	131R
	5	**11112221**	**11112231**	2	PARAFUSO TORNILLO	SCREW VITE	040V
	6	**11190774**	**70928460**	2	ARRUELA ARANDELA	WASHER ROSETTA	131R
	7	**14463580**	**14463580**	1	O'RING JUNTA TORICA	O'RING GUARNIZIONE O-R	158G
	8	**85802805**		1	BUJÃO TAPON	PLUG TAPPO	050T
	9	**89825770**		1	O'RING JUNTA TORICA	O'RING GUARNIZIONE O-R	158G

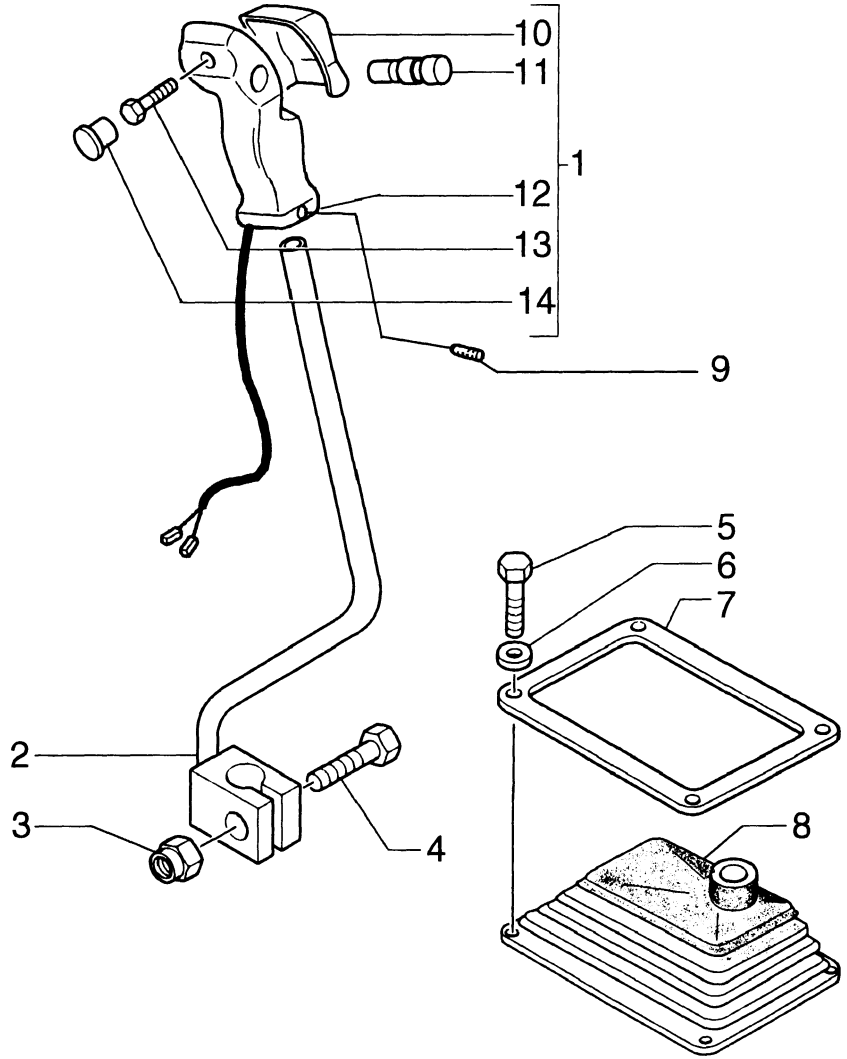

A Use tuerca Ímola con el tornillo Ímola
B Use tuerca Brazil con el tornillo Brazil

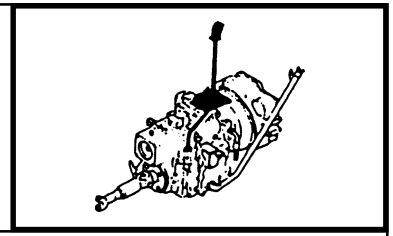

MOD	R	P/N. Imola	P/N. Brazil	Q	Descrição Denominacion	Description Descrizione	L.C.
	1	**85802947**		1	EMPUNHADURA EMPUNADURA	HANDGRIP IMPUGNATURA	025I
	2	**85802679**	**75245906**	1	ALAVANCA PALANCA	LEVER LEVA	045L
B	3		**16105011**	1	PORCA TUERCA	NUT DADO	010D
A	3	**16105021**		1	PORCA TUERCA	NUT DADO	010D
B	4		**15540831**	1	PARAFUSO TORNILLO	SCREW VITE	040V
A	4	**15540824**		1	PARAFUSO TORNILLO	SCREW VITE	040V
	5	**10903024**	**10902821**	4	PARAFUSO TORNILLO	SCREW VITE	040V
	6	**11197774**	**70928190**	4	ARRUELA ARANDELA	WASHER ROSETTA	131R
	7	**85700681**		1	JUNTA JUNTA PLANA	GASKET GUARNIZ. PIANA	120G
	8	**85802847**		1	COIFA PARA PÓ CAPUCHA	DUST BOOT CUFFIA PARAPOLV	334C
	9	**13736611**	**13796921**	1	PINO BULON	PIN PERNO	080P
	10	**85803238**		1	TAMPA TAPA	COVER COPERCHIO	265C
	11	**85803239**		1	PINO BULON	PIN PERNO	080P
	12	**85802949**		1	EMPUNHADURA EMPUNADURA	HANDGRIP IMPUGNATURA	025I
	13	**15915101**		1	PARAFUSO TORNILLO	SCREW VITE	040V
	14	**85803240**		1	PROTEÇÃO PROTECCION	GUARD RIPARO	070R

FB80.3 - FB100.3

ALAVANCA DE COMANDO DA TRANSMISSÃO
MANDOS EXTERIORES DEL CAMBIO
TRANSMISSION EXTERNAL SHIFTING CONTROLS
COMANDI ESTERNI CAMBIO

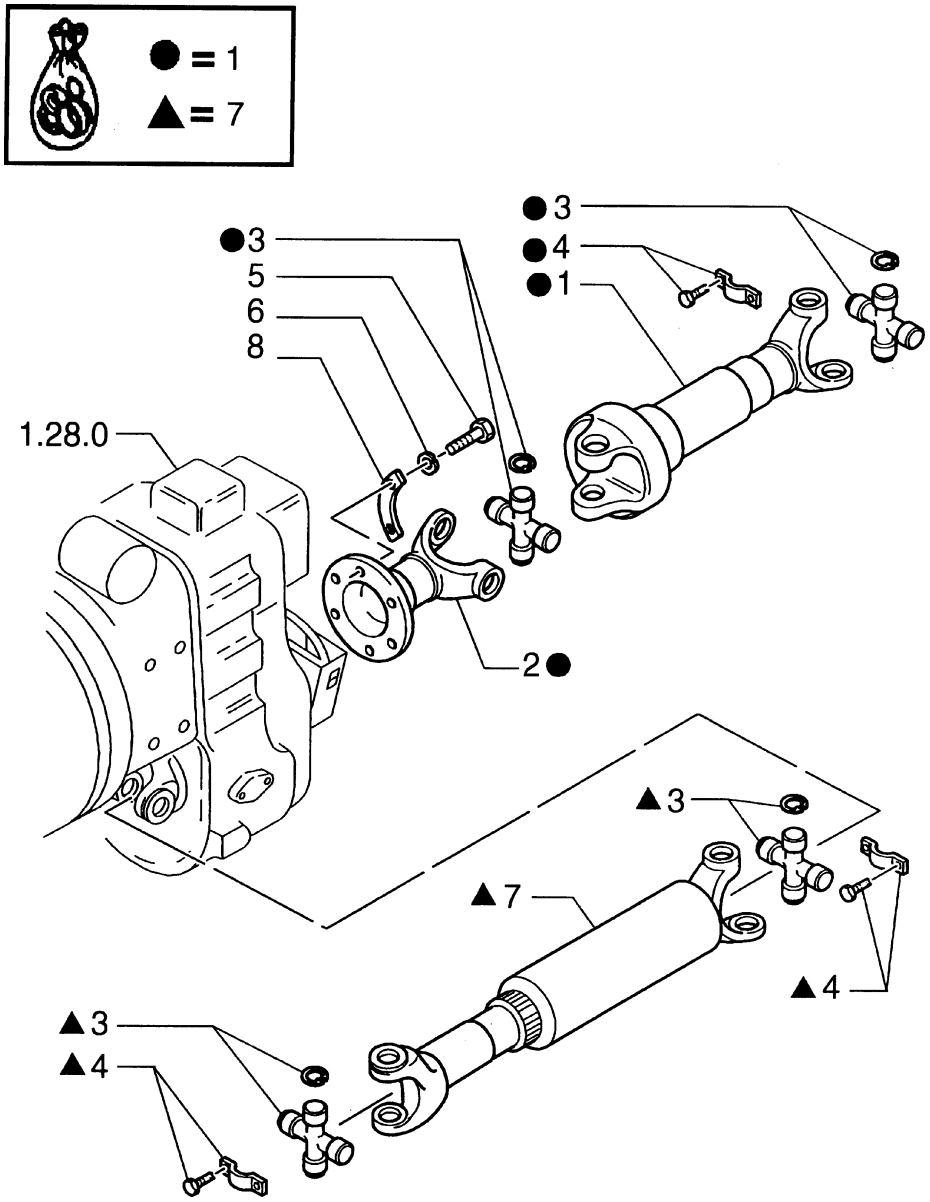

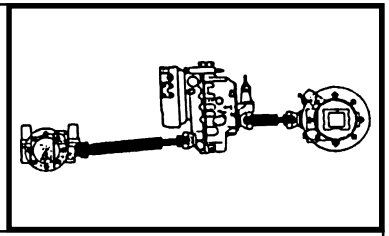

MOD	R	P/N. Imola	P/N. Brazil	Q	Descrição Denominacion	Description Descrizione	L.C.
	1	**85801003**		1	EIXO CARDAN TRASEIRO ARBOL DE TRANSM	PROPELLER SHAFT ALBERI DI TRASM	A192
	2	**9968409**		1	FLANGE BRIDA	FLANGE FLANGIA	070F
	3	**9968410**		4	CRUZETA CRUCETA	SPIDER CROCIERA	320C
	4	**85801573**		AR	KIT JUEGO	KIT KIT	002K
	5	**85804571**		6	PARAFUSO TORNILLO	SCREW VITE	040V
	6	**11197874**		6	ARRUELA ARANDELA	WASHER ROSETTA	131R
	7	**85801002**		1	EIXO CARDAN DIANTEIRO ARBOL DE TRANSM	PROPELLER SHAFT ALBERI DI TRASM	A193
	8	**85803545**		3	PLACA PLACA	PLATE PIASTRINA	110P

FB80.3 - FB100.3

ÁRVORE DE TRANSMISSÃO
ARBOL DE LA TRANSMISSION
PROPELLER SHAFT
ALBERO TRANSMISSIONE

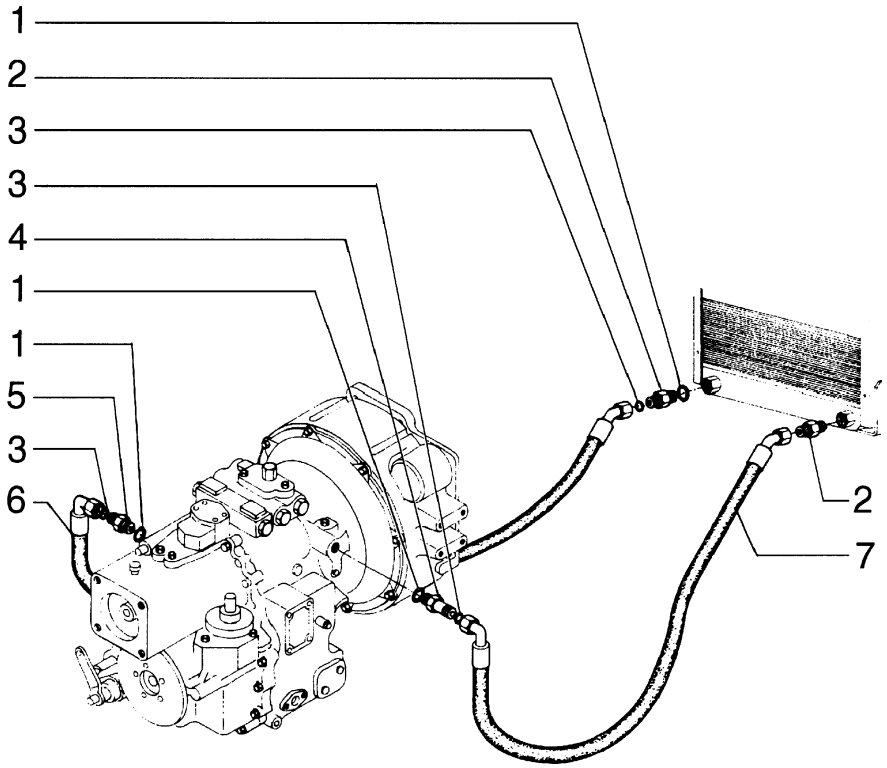

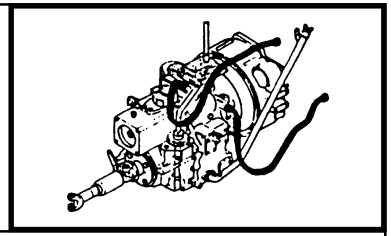

MOD	R	P/N. Imola	P/N. Brazil	Q	Descrição Denominacion	Description Descrizione	L.C.
	1	**80167268**	**70926538**	4	O'RING JUNTA TORICA	O'RING GUARNIZIONE O-R	158G
	2	**85802760**		2	CONEXÃO RACOR	FITTING RACCORDO	020R
	3	**89824050**	**70931640**	4	O'RING JUNTA TORICA	O'RING GUARNIZIONE O-R	158G
	4	**83963375**	**76021723**	2	CONEXÃO RACOR	FITTING RACCORDO	020R
	5	**85803451**	**76022818**	1	CONEXÃO RACOR	FITTING RACCORDO	020R
	6		**75246888**	1	MANGUEIRA MANGA C/RACORDE	HOSE ASSY TUBO FLESSIBILE	192T
	7		**75246887**	1	MANGUEIRA MANGA C/RACORDE	HOSE ASSY TUBO FLESSIBILE	192T

FB80.3 - FB100.3

TUBULAÇÃO DE ARREFECIMENTO DA TRANSMISSÃO
TUBOS DE REFRIGERACION ACEITE TRANSMISSION
TRANSMISSION OIL COOLING PIPES
TUBAZIONI REFFREDDAMENTO OLIO TRASMISSIONE

FRONT AXLE (2WD/4WD)

PUENTA ANTERIOR (2WD/4WD)

ASSALE ANTERIORE (2WD/4WD)

EIXO DIANTEIRO (2WD/4WD)

ESSIEU AVANT (2WD/4WD)

VOORWIELAANDRIJVING (2WD/4WD)

VORDERACHSE (2WD/4WD)

FORAKSEL (2/4-HJULS TRÆK)

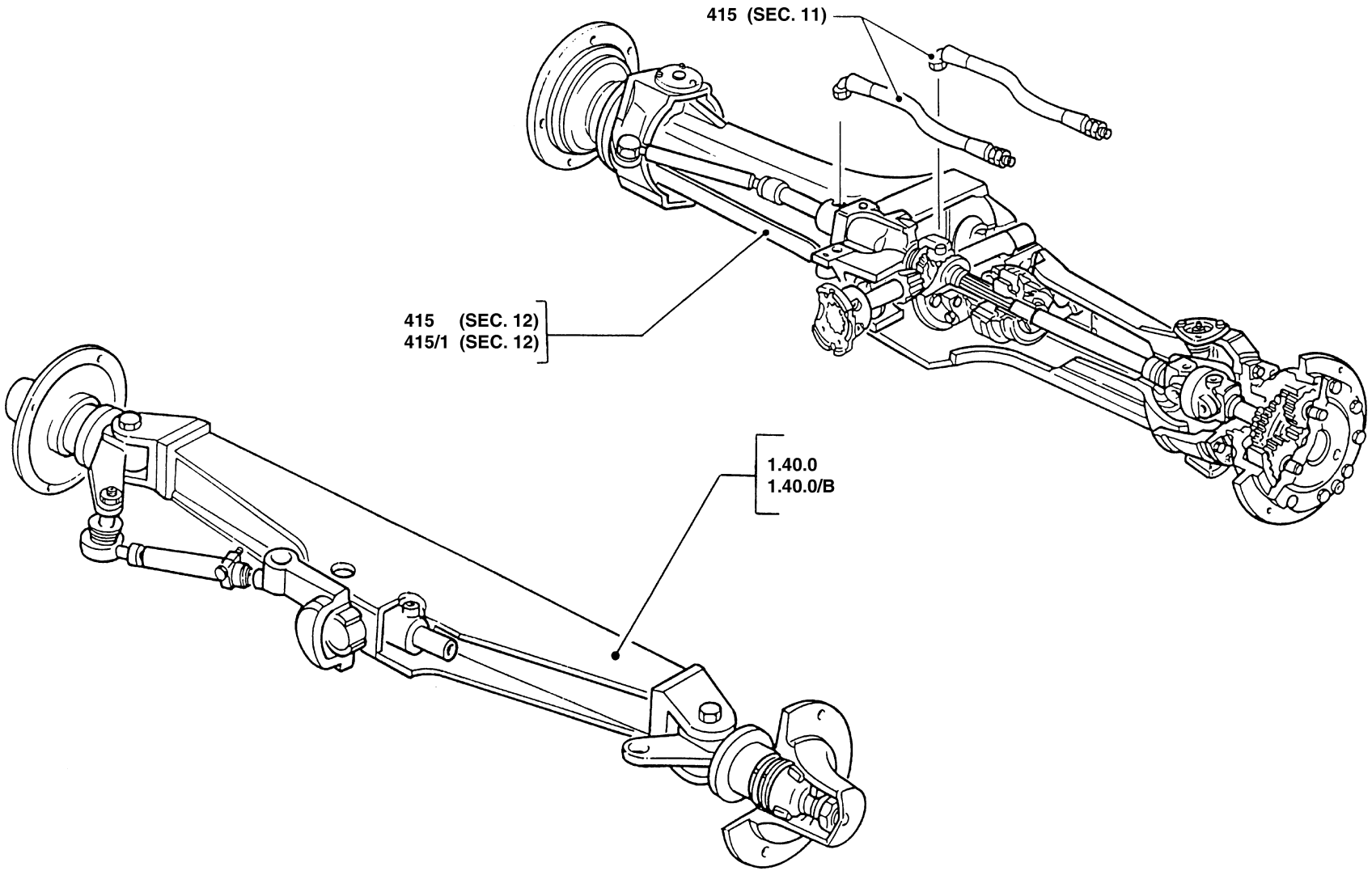

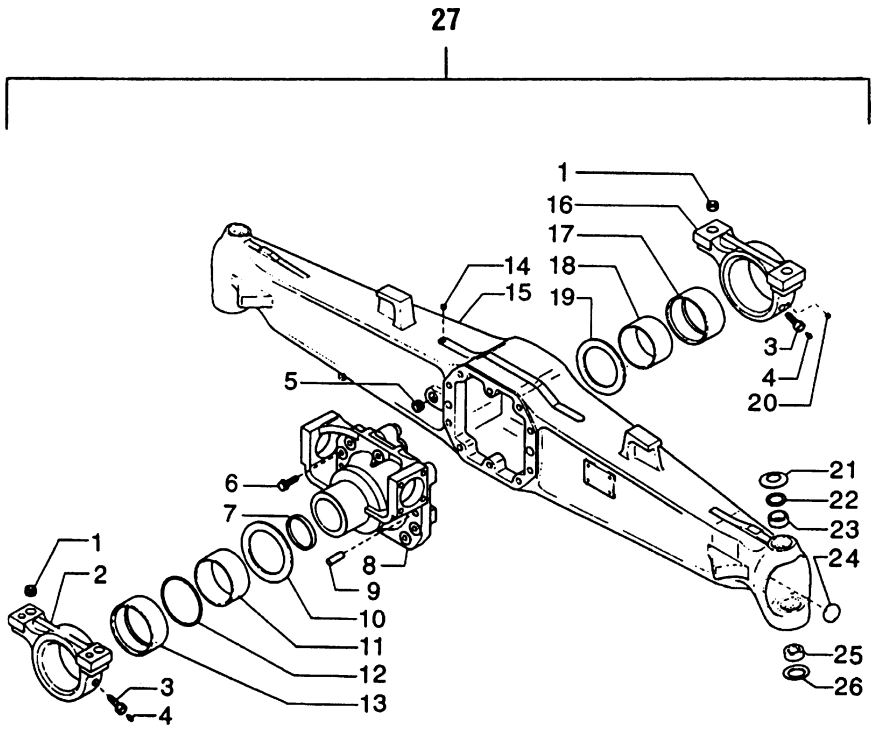

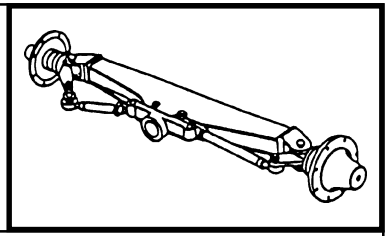

MOD	R	P/N. Imola	P/N. Brazil	Q	Descrição Denominacion	Description Descrizione	L.C.
	1	**9967990**		4	ARRUELA ARANDELA	WASHER ROSETTA	131R
	2	**9968009**		1	SUPORTE SOPORTE	SUPPORT SUPPORTO	300S
	3	**9967995**		2	CONEXÃO RACOR	FITTING RACCORDO	020R
	4	**9967996**		2	BUJÃO TAPON	PLUG TAPPO	050T
	5	**85805707**		1	BUJÃO TAPON	PLUG TAPPO	050T
	6	**9967769**		10	PARAFUSO TORNILLO	SCREW VITE	040V
	7	**85805706**		1	TAMPA TAPA	COVER COPERCHIO	265C
	8	**85805705**		1	SUPORTE SOPORTE	SUPPORT SUPPORTO	300S
	9	**9967683**		2	PINO BULON	PIN PERNO	080P
	10	**9968006**		1	RETENTOR JUNTA	SEAL GUARNIZIONE	122G
	11	**9968010**		1	ESPAÇADOR SEPARADOR	SPACER DISTANZIALE	075D
	12	**9968008**		1	O'RING JUNTA TORICA	O'RING GUARNIZIONE O-R	158G
	13	**9968007**		1	LUVA MANGUITO	SLEEVE MANICOTTO	030M
	14	**85805703**		1	BUJÃO TAPON	PLUG TAPPO	050T
	15	**85805965**		1	CARCAÇA CAJA	CASE SCATOLA	035S
	16	**9967991**		1	SUPORTE SOPORTE	SUPPORT SUPPORTO	300S
	17	**9967992**		1	LUVA MANGUITO	SLEEVE MANICOTTO	030M
	18	**9967993**		1	ESPAÇADOR SEPARADOR	SPACER DISTANZIALE	075D
	19	**9967994**		1	RETENTOR JUNTA	SEAL GUARNIZIONE	122G
	20	**85805973**		1	BUJÃO TAPON	PLUG TAPPO	050T

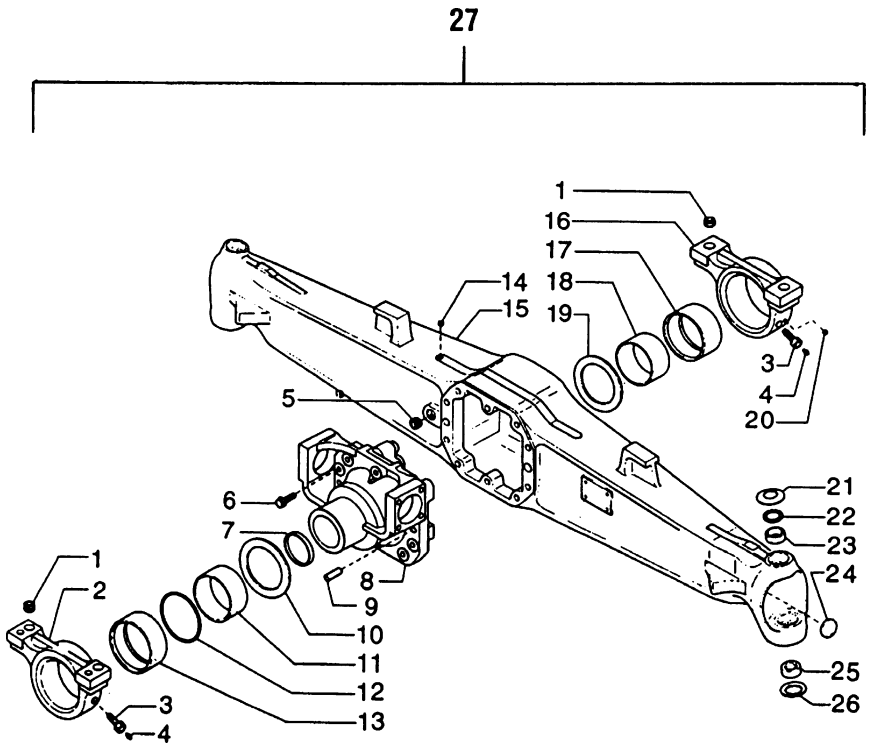

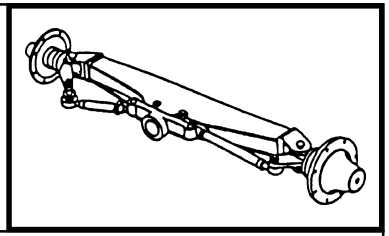

MOD	R	P/N. Imola	P/N. Brazil	Q	Descrição Denominacion	Description Descrizione	L.C.
	21	**9967673**		1	ANEL ARO	RING ANELLO	045A
	22	**9967684**		2	ESPAÇADOR SEPARADOR	SPACER DISTANZIALE	075D
	23	**9967674**		2	BUCHA BUJE	BUSHING BOCCOLA	095B
	24	**85805704**		2	TAMPA TAPA	COVER COPERCHIO	265C
	25	**9967678**		2	BUCHA BUJE	BUSHING BOCCOLA	095B
	26	**9967679**		2	ANEL ARO	RING ANELLO	045A
	27	**85805700**		1	EIXO EJE	AXLE ASSALE	085A

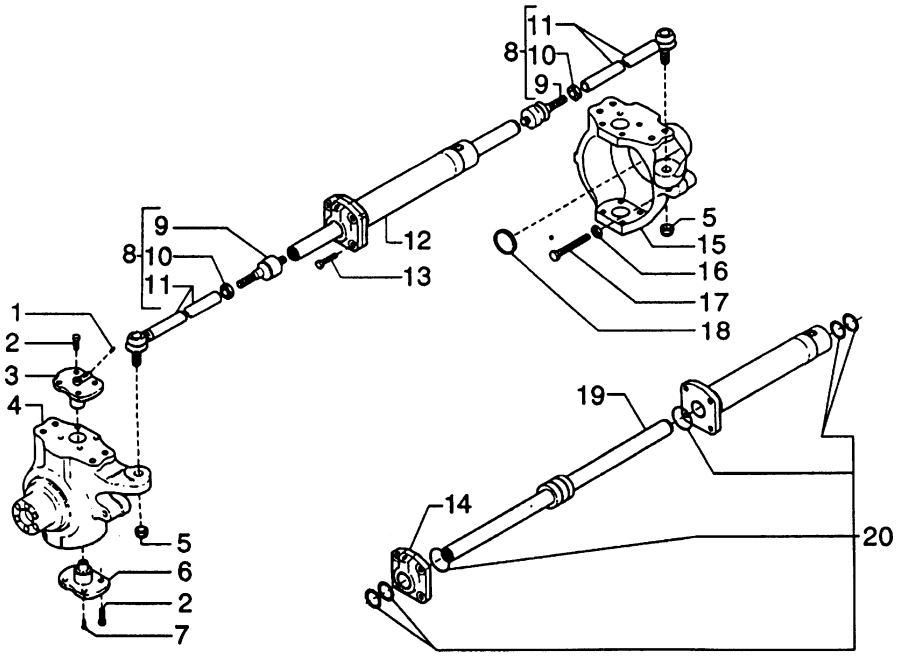

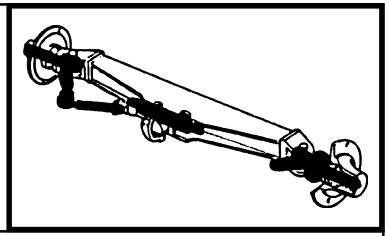

MOD	R	P/N. Imola	P/N. Brazil	Q	Descrição Denominacion	Description Descrizione	L.C.
	1	**9968021**		2	BUJÃO TAPON	PLUG TAPPO	050T
	2	**85805979**		16	PARAFUSO TORNILLO	SCREW VITE	040V
	3	**85805980**		2	FLANGE BRIDA	FLANGE FLANGIA	070F
	4	**85805981**		1	CUBO CUBO,BUJE	HUB MOZZO	135M
	5	**85805982**		2	PORCA TUERCA	NUT DADO	010D
	6	**85805983**		2	FLANGE BRIDA	FLANGE FLANGIA	070F
	7	**85805984**		2	PINO GRAXEIRO ENGRASADOR	GREASE FITTING INGRASSATORE	060I
	8	**85805974**		2	PIVO MANGUETA	STEERING KNUCKL FUSO A SNODO	112F
	9	**85805975**		2	TIRANTE TIRANTE	TIEROD TIRANTE	142T
	10	**85805976**		2	PORCA TUERCA	NUT DADO	010D
	11	**85805977**		2	PIVO MANGUETA	STEERING KNUCKL FUSO A SNODO	112F
	12	**85805978**		1	TIRANTE TIRANTE	TIEROD TIRANTE	142T
	13	**9968028**		4	PARAFUSO TORNILLO	SCREW VITE	040V
	14	**85805989**		1	FLANGE BRIDA	FLANGE FLANGIA	070F
	15	**85805985**		1	CUBO CUBO,BUJE	HUB MOZZO	135M
	16	**85805986**		2	PORCA TUERCA	NUT DADO	010D
	17	**85805987**		2	PARAFUSO TORNILLO	SCREW VITE	040V
	18	**85805708**		2	TAMPA TAPA	COVER COPERCHIO	265C
	19	**85805992**		1	HASTE VASTAGO	ROD STELO	274S
	20	**85805990**		1	KIT JUEGO	KIT KIT	002K

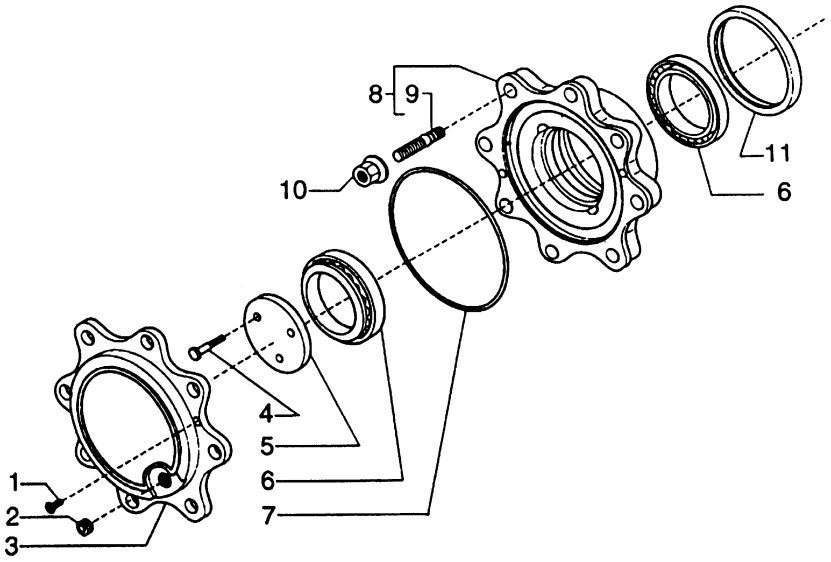

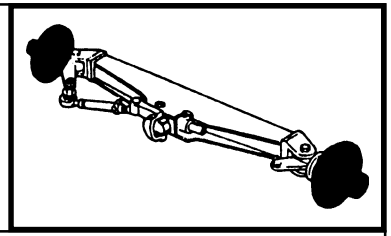

MOD	R	P/N. Imola	P/N. Brazil	Q	Descrição Denominacion	Description Descrizione	L.C.
	1	**85806013**		4	PARAFUSO TORNILLO	SCREW VITE	040V
	2	**85805707**		2	BUJÃO TAPON	PLUG TAPPO	050T
	3	**85805710**		2	CUBO CUBO,BUJE	HUB MOZZO	135M
	4	**85806010**		6	PARAFUSO TORNILLO	SCREW VITE	040V
	5	**85813054**		2	ARRUELA ARANDELA	WASHER ROSETTA	131R
	6	**5136951**		4	ROLAMENTO RODAMIENTO	BEARING CUSCINETTO	341C
	7	**85805711**		2	O'RING JUNTA TORICA	O'RING GUARNIZIONE O-R	158G
	8	**85806003**		2	CUBO CUBO,BUJE	HUB MOZZO	135M
	9	**9968070**		16	PRISIONEIRO ESPARRAGO	STUD PRIGIONIERO	210P
	10	**9968071**		16	PORCA TUERCA	NUT DADO	010D
	11	**85806001**		2	RETENTOR JUNTA	SEAL GUARNIZIONE	122G

SIDE REDUCTION

RIDUTTORI LATERALI

REDUCTEUR LATERAL

ENDANTRIEBE

REDUCTOR LATERAL

REDUTORES LATERAIS

EINDREDUKTIE

SIDEREDUKTIONSGEAR

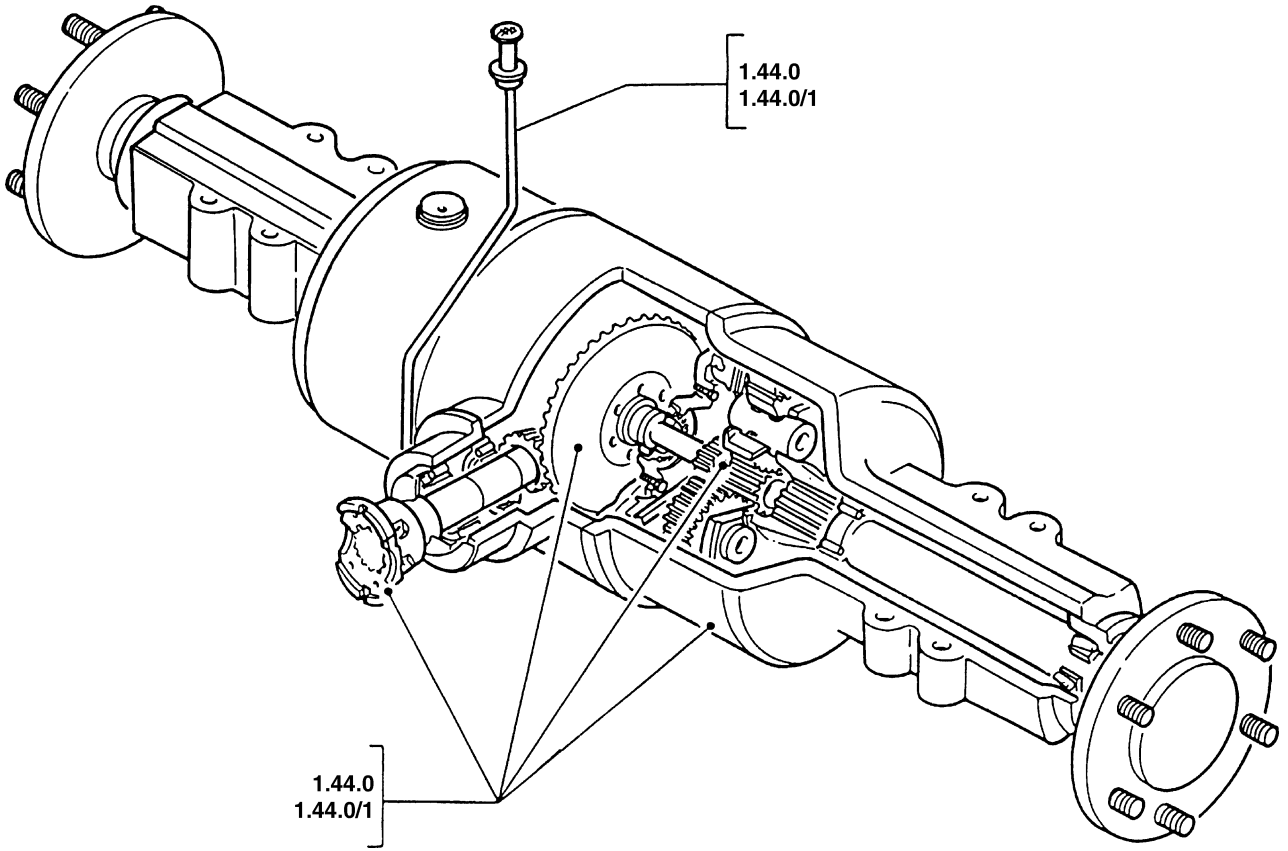

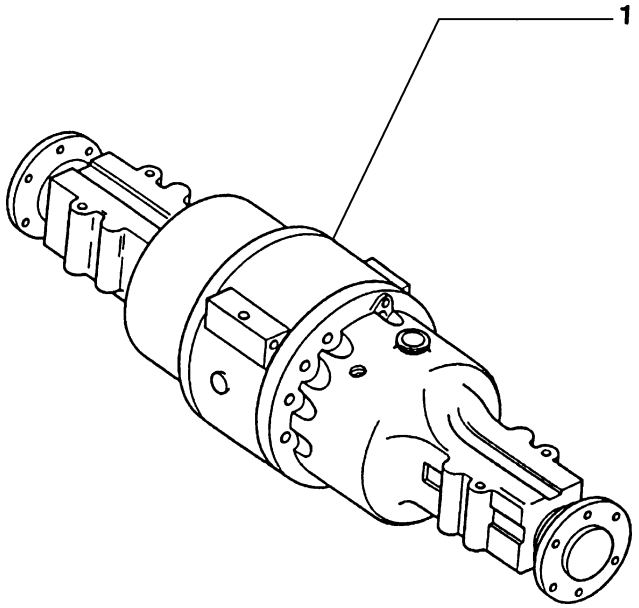

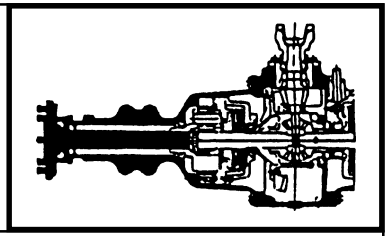

MOD	R	P/N. Imola	P/N. Brazil	Q	Descrição Denominacion	Description Descrizione	L.C.
	1	**85805790**		1	EIXO TRASEIRO PUENTE POSTER.	REAR AXLE MOTOASSALE POST	M150

5

FB80.3 - FB100.3

EIXO TRASEIRO
EJE TRASERO
REAR AXLE
ASSALE POSTERIORE

1.44.0

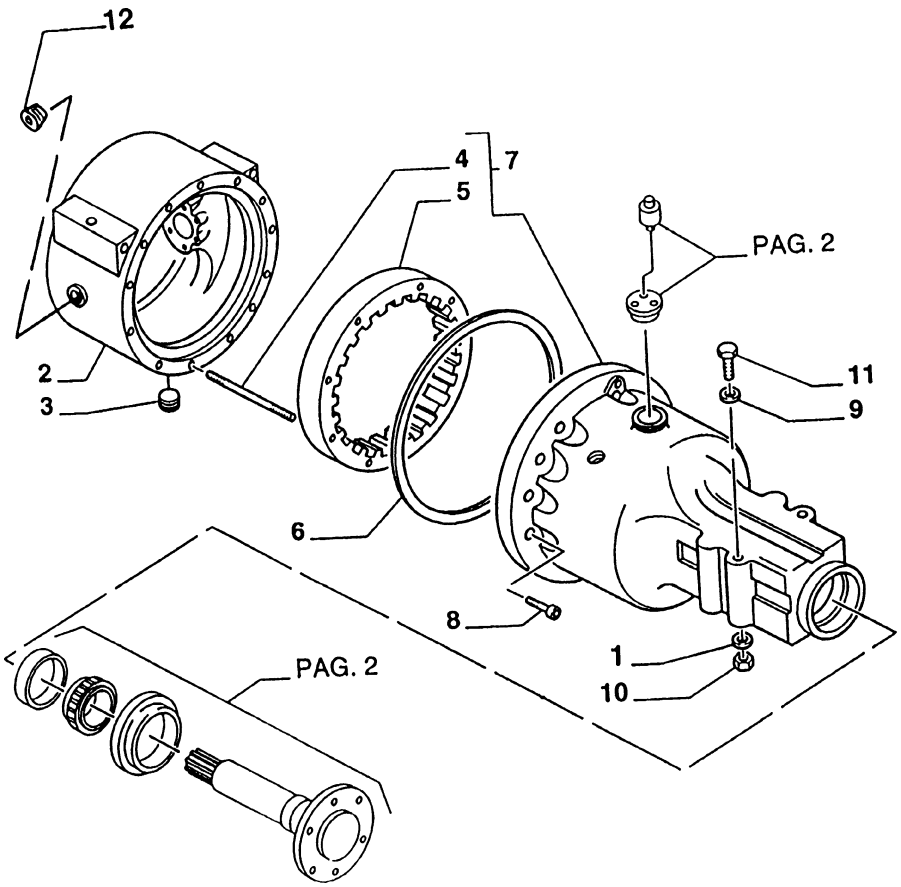

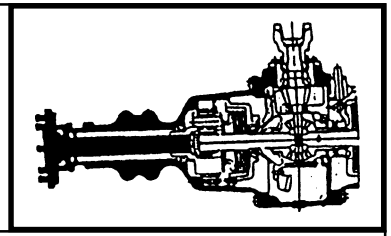

MOD	R	P/N. Imola	P/N. Brazil	Q	Descrição Denominacion	Description Descrizione	L.C.
	1	**11200679**		4	ARRUELA ARANDELA	WASHER ROSETTA	131R
	2	**83955462**		1	SUPORTE SOPORTE	SUPPORT SUPPORTO	300S
	3	**80263136**		1	BUJÃO TAPON	PLUG TAPPO	050T
	4	**86536748**		4	PRISIONEIRO ESPARRAGO	STUD PRIGIONIERO	210P
	5	**86536749**		2	PLANETÅRIO PINON PLANET.	SUN GEAR PLANETARIO	145P
	6	**83417133**		2	ANEL DE VEDAÇÃO JUNTA HERMETICA	SEAL RING ANELLO TENUTA	055A
	7	**86552793**		1	CORPO ESQUERDO CUERPO	BODY CORPO	300E
	7	**86552794**		1	CORPO DIREITO CUERPO	BODY CORPO	300D
	8	**81809406**		1	PARAFUSO TORNILLO	SCREW VITE	040V
	8	**86505999**		25	PARAFUSO TORNILLO	SCREW VITE	040V
	9	**14497331**		4	ARRUELA ARANDELA	WASHER ROSETTA	131R
	10	**12575321**		4	PORCA TUERCA	NUT DADO	010D
	11	**15999431**		4	PARAFUSO TORNILLO	SCREW VITE	040V
	12	**83909107**		1	BUJÃO TAPON	PLUG TAPPO	050T

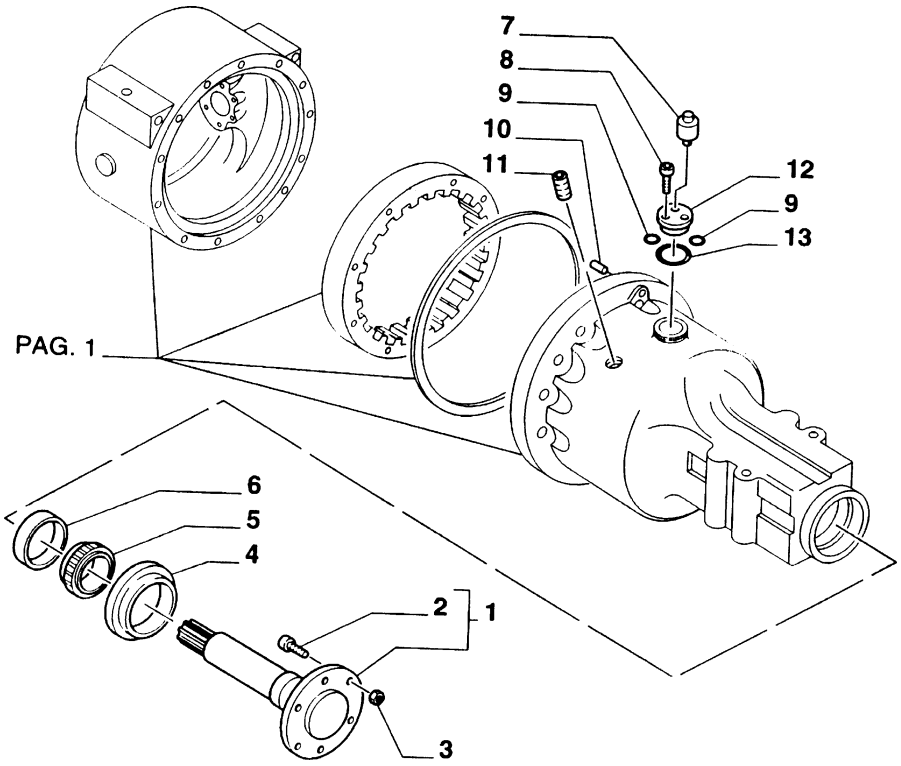

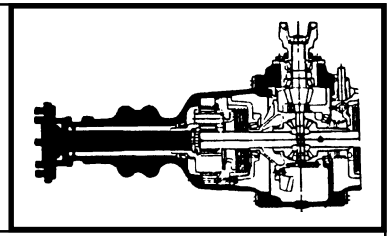

MOD	R	P/N. Imola	P/N. Brazil	Q	Descrição Denominacion	Description Descrizione	L.C.
	1	**86511646**		2	EIXO ARBOL	SHAFT ALBERO	016A
	2	**83955490**		16	PRISIONEIRO ESPARRAGO	STUD PRIGIONIERO	210P
	3	**85802758**		16	PORCA TUERCA	NUT DADO	010D
	4	**81866390**		2	ANEL DE VEDAÇÃO JUNTA HERMETICA	SEAL RING ANELLO TENUTA	055A
	5	**81818397**		2	CONE DE ROLAMENTO CONE	BEARING CONE CONO	237C
	6	**80163044**		2	CAPA DE ROLAMENTO TAZA RODAMIENTO	BEARING CUP SCODELLINO CUSCINETTO	237P
	7	**81820047**		2	RESPIRO RESPIRADERO	BREATHER SFIATATOIO	145S
	8	**83952702**		4	PARAFUSO TORNILLO	SCREW VITE	040V
	9	**80236535**		4	O'RING JUNTA TORICA	O'RING GUARNIZIONE O-R	158G
	10	**81802548**		2	PINO BULON	PIN PERNO	080P
	11	**80678966**		2	BUJÃO TAPON	PLUG TAPPO	050T
	12	**81878514**		2	COLETOR COLECTOR	MANIFOLD COLLETTORE	198C
	13	**80271233**		2	JUNTA JUNTA PLANA	GASKET GUARNIZ. PIANA	120G

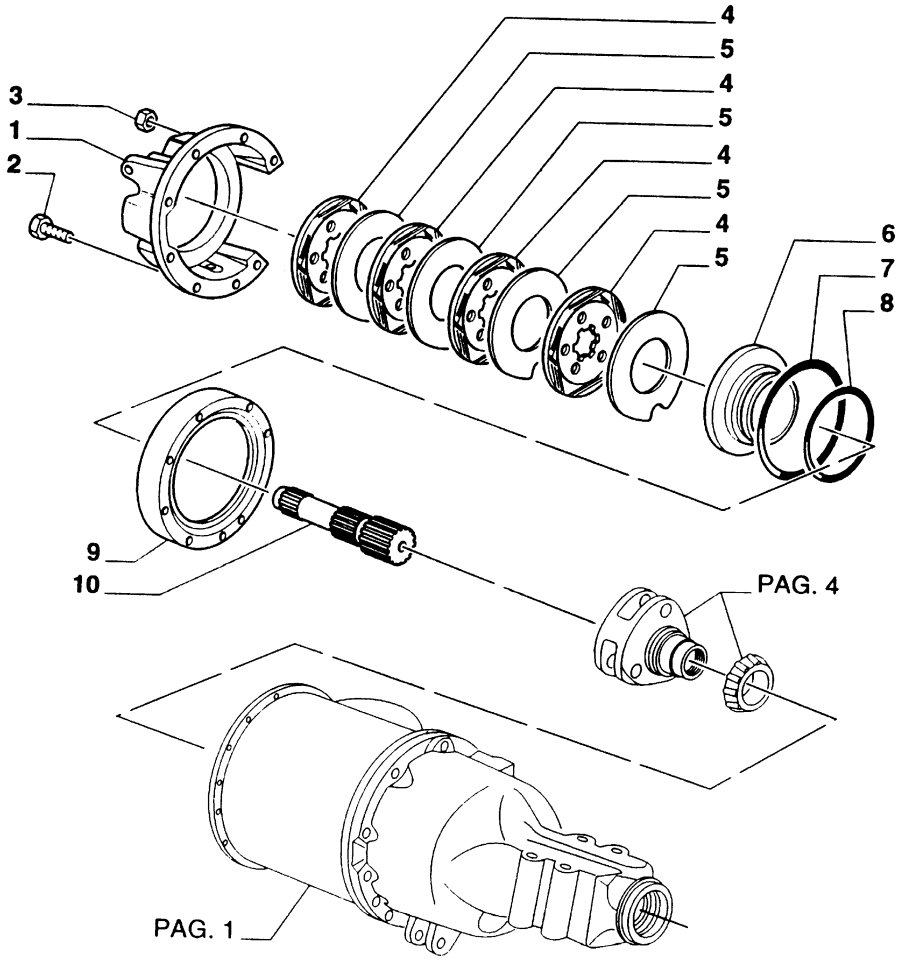

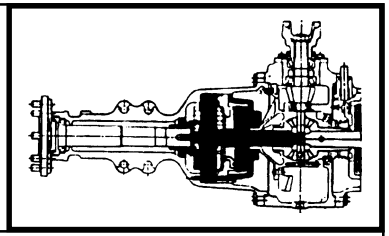

MOD	R	P/N. Imola	P/N. Brazil	Q	Descrição Denominacion	Description Descrizione	L.C.
	1	**86536752**		1	CARCAÇA DIREITA CAJA	CASE SCATOLA	35SD
	1	**86536753**		1	CARCAÇA ESQUERDA CAJA	CASE SCATOLA	35SE
	2	**86539458**		12	PARAFUSO TORNILLO	SCREW VITE	040V
	3	**86539263**		4	PORCA TUERCA	NUT DADO	010D
	4	**86529646**		8	DISCO DISCO	DISC DISCO	060D
	5	**81874478**		8	DISCO DISCO	DISC DISCO	060D
	6	**81874462**		2	ÊMBOLO EMBOLO	PISTON STANTUFFO	235S
	7	**81875252**		2	ANEL DE VEDAÇÃO JUNTA HERMETICA	SEAL RING ANELLO TENUTA	055A
	8	**81875253**		2	ANEL DE VEDAÇÃO JUNTA HERMETICA	SEAL RING ANELLO TENUTA	055A
	9	**86536750**		1	ESPAÇADOR DIREITO SEPARADOR	SPACER DISTANZIALE	75DD
	9	**86536751**		1	ESPAÇADOR ESQUERDO SEPARADOR	SPACER DISTANZIALE	75DE
	10	**81803334**		2	EIXO ARBOL	SHAFT ALBERO	016A

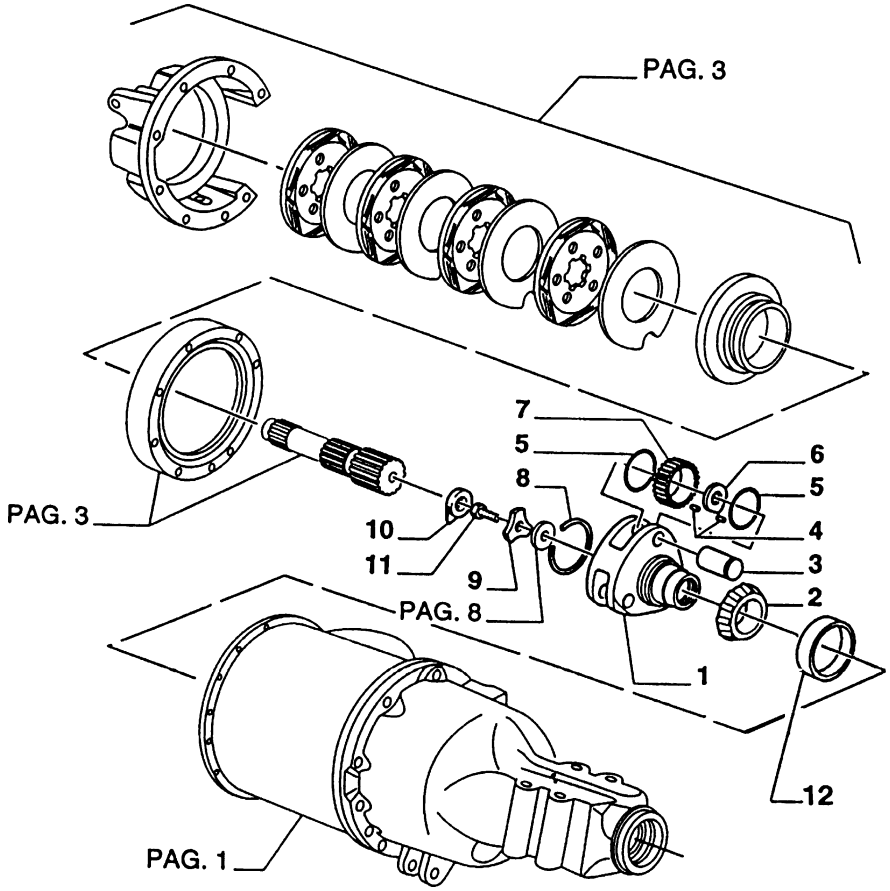

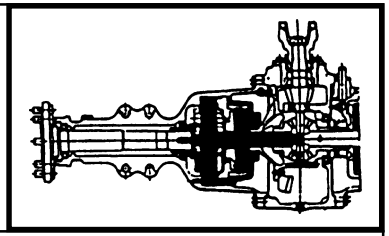

MOD	R	P/N. Imola	P/N. Brazil	Q	Descrição Denominacion	Description Descrizione	L.C.
	1	**86546391**		2	CARCAÇA CAJA	CASE SCATOLA	035S
	2	**81854753**		2	CONE DE ROLAMENTO CONE	BEARING CONE CONO	237C
	3	**81820849**		6	EIXO ARBOL	SHAFT ALBERO	016A
	4	**81823610**		96	AGULHA(P/ROLAM) AGUJA	NEEDLE ROLLER RULLINO	155R
	5	**81803273**		12	ANEL ARO	RING ANELLO	045A
	6	**81803275**		6	ESPAÇADOR SEPARADOR	SPACER DISTANZIALE	075D
	7	**86546392**		6	ENGRENAGEM CORONA	GEAR INGRANAGGIO	050I
	8	**81820846**		2	ANEL ARO	RING ANELLO	045A
	9	**81803450**		2	ARRUELA ARANDELA	WASHER ROSETTA	131R
	10	**83949811**		2	CHAPA PLACA	PLATE PIASTRA	105P
	11	**81846884**		2	PARAFUSO TORNILLO	SCREW VITE	040V
	12	**81825865**		2	CAPA DE ROLAMENTO TAZA RODAMIENTO	BEARING CUP SCODELLINO CUSCINETTO	237P

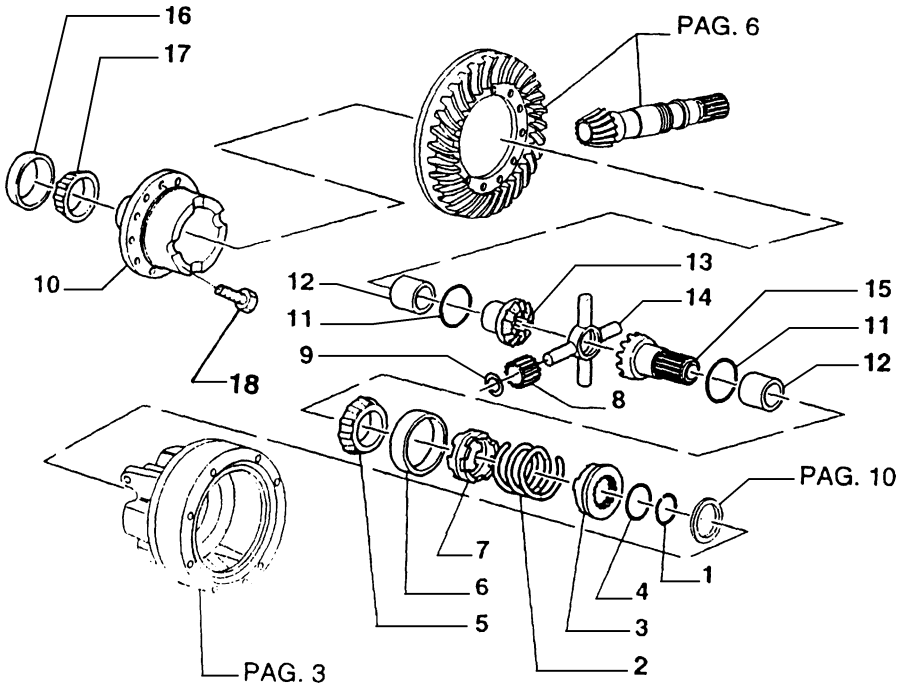

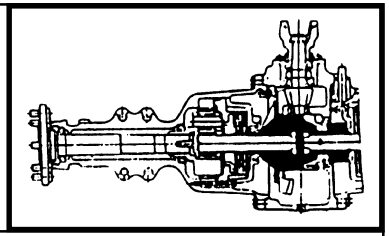

MOD	R	P/N. Imola	P/N. Brazil	Q	Descrição Denominacion	Description Descrizione	L.C.
	1	**81803474**		1	ANEL ARO	RING ANELLO	045A
	2	**81800474**		1	MOLA MUELLE	SPRING MOLLA	100M
	3	**81812261**		1	CONEXÃO RACOR	FITTING RACCORDO	020R
	4	**81800475**		1	DISCO DISCO	DISC DISCO	060D
	5	**81803413**		1	CONE DE ROLAMENTO CONE	BEARING CONE CONO	237C
	6	**81803420**		1	CAPA DE ROLAMENTO TAZA RODAMIENTO	BEARING CUP SCODELLINO CUSCINETTO	237P
	7	**81800472**		1	ADAPTADOR ADAPTADOR	ADAPTER ADATTATORE	001A
	8	**81728114**		4	PINHAO PINON	PINION PIGNONE	122P
	9	**83989915**		4	ARRUELA ARANDELA	WASHER ROSETTA	131R
	10	**81816246**		1	CARCAÇA CAJA	CASE SCATOLA	035S
	11	**81803424**		2	ARRUELA ARANDELA	WASHER ROSETTA	131R
	12	**81800471**		2	BUCHA BUJE	BUSHING BOCCOLA	095B
	13	**81803445**		1	ENGRENAGEM CORONA	GEAR INGRANAGGIO	050I
	14	**81876885**		1	CRUZETA CRUCETA	SPIDER CROCIERA	320C
	15	**81803451**		1	ENGRENAGEM CORONA	GEAR INGRANAGGIO	050I
	16	**80510892**		1	CAPA DE ROLAMENTO TAZA RODAMIENTO	BEARING CUP SCODELLINO CUSCINETTO	237P
	17	**80510884**		1	CONE DE ROLAMENTO CONE	BEARING CONE CONO	237C
	18	**83994579**		8	PARAFUSO TORNILLO	SCREW VITE	040V

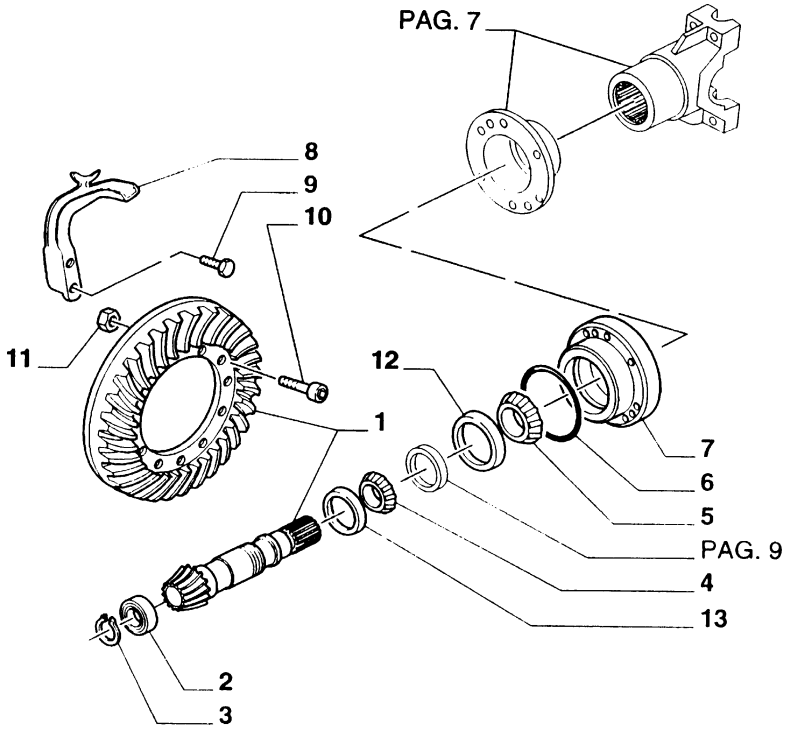

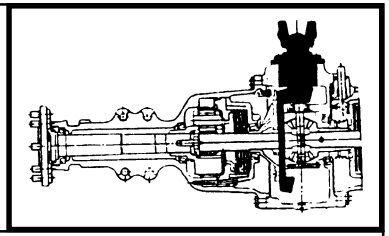

MOD	R	P/N. Imola	P/N. Brazil	Q	Descrição Denominacion	Description Descrizione	L.C.
	1	**83958890**		1	COROA E PINHÃO PAR CONICO	BEVEL GEAR SET COPPIA CONICA	285C
	2	**81824478**		1	ROLAMENTO RODAMIENTO	BEARING CUSCINETTO	341C
	3	**81803542**		1	ANEL ELÅSTICO ANILLO ELASTICO	SNAP RING ANELLO ELASTICO	187A
	4	**82958961**		1	CONE DE ROLAMENTO CONE	BEARING CONE CONO	237C
	5	**81845711**		1	CONE DE ROLAMENTO CONE	BEARING CONE CONO	237C
	6	**81827354**		1	O'RING JUNTA TORICA	O'RING GUARNIZIONE O-R	158G
	7	**81847146**		1	FLANGE BRIDA	FLANGE FLANGIA	070F
	8	**81803369**		1	ALAVANCA PALANCA	LEVER LEVA	045L
	9	**89706729**		2	PARAFUSO TORNILLO	SCREW VITE	040V
	10	**83957533**		12	PARAFUSO TORNILLO	SCREW VITE	040V
	11	**83417169**		12	PORCA TUERCA	NUT DADO	010D
	12	**80052491**		1	CAPA DE ROLAMENTO TAZA RODAMIENTO	BEARING CUP SCODELLINO CUSCINETTO	237P
	13	**83912252**		1	CAPA DE ROLAMENTO TAZA RODAMIENTO	BEARING CUP SCODELLINO CUSCINETTO	237P

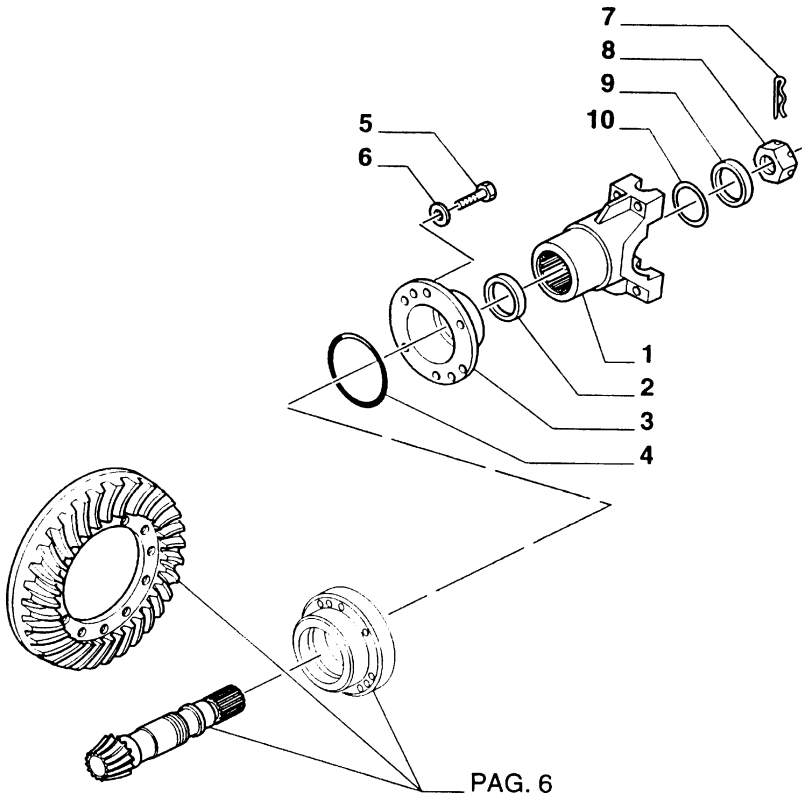

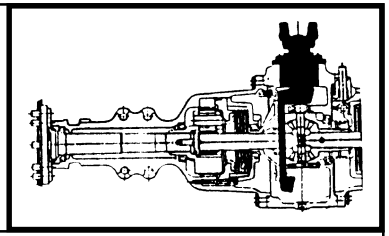

MOD	R	P/N. Imola	P/N. Brazil	Q	Descrição Denominacion	Description Descrizione	L.C.
	1	**83949810**		1	FLANGE BRIDA	FLANGE FLANGIA	070F
	2	**81834073**		1	ANEL DE VEDAÇÃO JUNTA HERMETICA	SEAL RING ANELLO TENUTA	055A
	3	**83912246**		1	CUBO CUBO,BUJE	HUB MOZZO	135M
	4	**81845713**		1	O'RING JUNTA TORICA	O'RING GUARNIZIONE O-R	158G
	5	**80088702**		6	PARAFUSO TORNILLO	SCREW VITE	040V
	6	**80280248**		6	ARRUELA ARANDELA	WASHER ROSETTA	131R
	7	**83947107**		1	PINO BULON	PIN PERNO	080P
	8	**83949812**		1	PORCA TUERCA	NUT DADO	010D
	9	**81834042**		1	ARRUELA ARANDELA	WASHER ROSETTA	131R
	10	**81845714**		1	ANEL DE VEDAÇÃO JUNTA HERMETICA	SEAL RING ANELLO TENUTA	055A

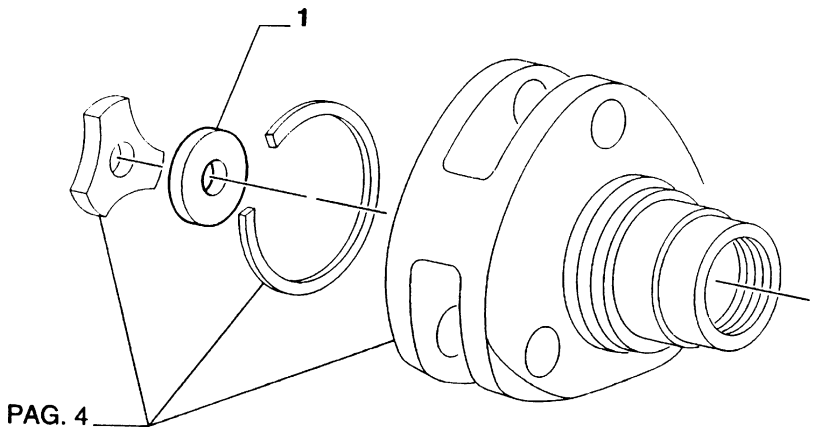

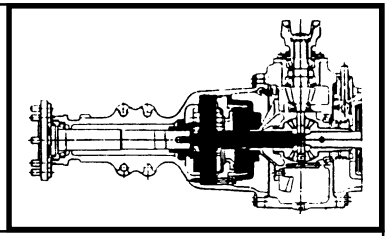

MOD	R	P/N. Imola	P/N. Brazil	Q	Descrição Denominacion	Description Descrizione	L.C.
	1	**81803502**		AR	ESPAÇADOR 1,346/1,372 SEPARADOR	SPACER DISTANZIALE	075D
	1	**81803503**		AR	ESPAÇADOR 1,448/1,473 SEPARADOR	SPACER DISTANZIALE	075D
	1	**81803504**		AR	ESPAÇADOR 1,549/1,575 SEPARADOR	SPACER DISTANZIALE	075D
	1	**81803505**		AR	ESPAÇADOR 1,651/1,676 SEPARADOR	SPACER DISTANZIALE	075D
	1	**81803506**		AR	ESPAÇADOR 1,753/1,778 SEPARADOR	SPACER DISTANZIALE	075D
	1	**81803507**		AR	ESPAÇADOR 1,854/1,880 SEPARADOR	SPACER DISTANZIALE	075D
	1	**81803508**		AR	ESPAÇADOR 1,956/1,981 SEPARADOR	SPACER DISTANZIALE	075D
	1	**81803509**		AR	ESPAÇADOR 2,057/2,083 SEPARADOR	SPACER DISTANZIALE	075D
	1	**81803510**		AR	ESPAÇADOR 2,159/2,184 SEPARADOR	SPACER DISTANZIALE	075D
	1	**81803511**		AR	ESPAÇADOR 2,261/2,286 SEPARADOR	SPACER DISTANZIALE	075D

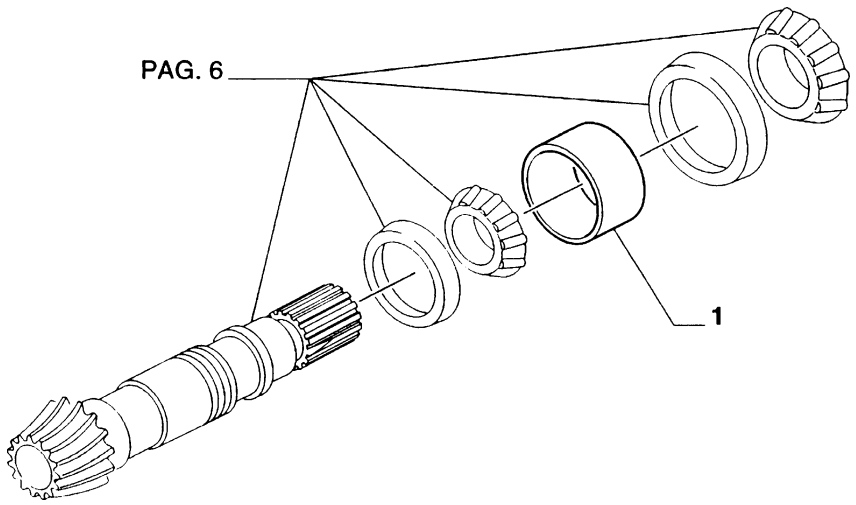

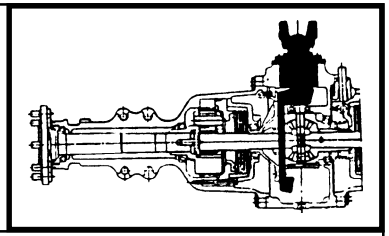

MOD	R	P/N. Imola	P/N. Brazil	Q	Descrição Denominacion	Description Descrizione	L.C.
	1	**81847148**		AR	ESPAÇADOR SEPARADOR	SPACER DISTANZIALE	075D
	1	**81847149**		AR	ESPAÇADOR SEPARADOR	SPACER DISTANZIALE	075D
	1	**81847150**		AR	ESPAÇADOR SEPARADOR	SPACER DISTANZIALE	075D
	1	**81847151**		AR	ESPAÇADOR SEPARADOR	SPACER DISTANZIALE	075D
	1	**81847152**		AR	ESPAÇADOR SEPARADOR	SPACER DISTANZIALE	075D
	1	**81847153**		AR	ESPAÇADOR SEPARADOR	SPACER DISTANZIALE	075D
	1	**81847154**		AR	ESPAÇADOR SEPARADOR	SPACER DISTANZIALE	075D
	1	**81847155**		AR	ESPAÇADOR SEPARADOR	SPACER DISTANZIALE	075D
	1	**81847156**		AR	ESPAÇADOR SEPARADOR	SPACER DISTANZIALE	075D
	1	**81847157**		AR	ESPAÇADOR SEPARADOR	SPACER DISTANZIALE	075D
	1	**81847158**		AR	ESPAÇADOR SEPARADOR	SPACER DISTANZIALE	075D
	1	**81847159**		AR	ESPAÇADOR SEPARADOR	SPACER DISTANZIALE	075D
	1	**81847160**		AR	ESPAÇADOR SEPARADOR	SPACER DISTANZIALE	075D
	1	**81847161**		AR	ESPAÇADOR SEPARADOR	SPACER DISTANZIALE	075D
	1	**81847162**		AR	ESPAÇADOR SEPARADOR	SPACER DISTANZIALE	075D

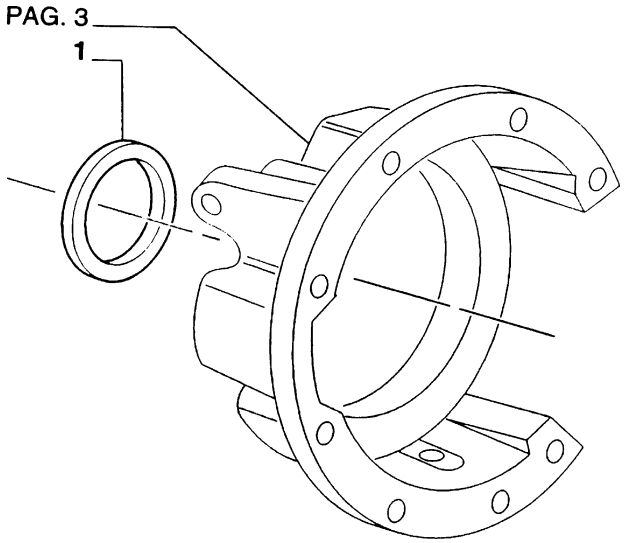

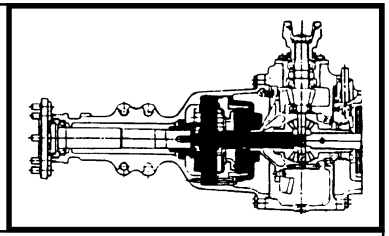

MOD	R	P/N. Imola	P/N. Brazil	Q	Descrição Denominacion	Description Descrizione	L.C.
	1	**81803515**		AR	CALÇO CALCE	SHIM SPESSORE	198S
	1	**81803516**		AR	CALÇO CALCE	SHIM SPESSORE	198S
	1	**81803517**		AR	CALÇO CALCE	SHIM SPESSORE	198S
	1	**81803518**		AR	CALÇO CALCE	SHIM SPESSORE	198S
	1	**81803519**		AR	CALÇO CALCE	SHIM SPESSORE	198S
	1	**81803520**		AR	CALÇO CALCE	SHIM SPESSORE	198S
	1	**81803521**		AR	CALÇO CALCE	SHIM SPESSORE	198S
	1	**81803522**		AR	CALÇO CALCE	SHIM SPESSORE	198S

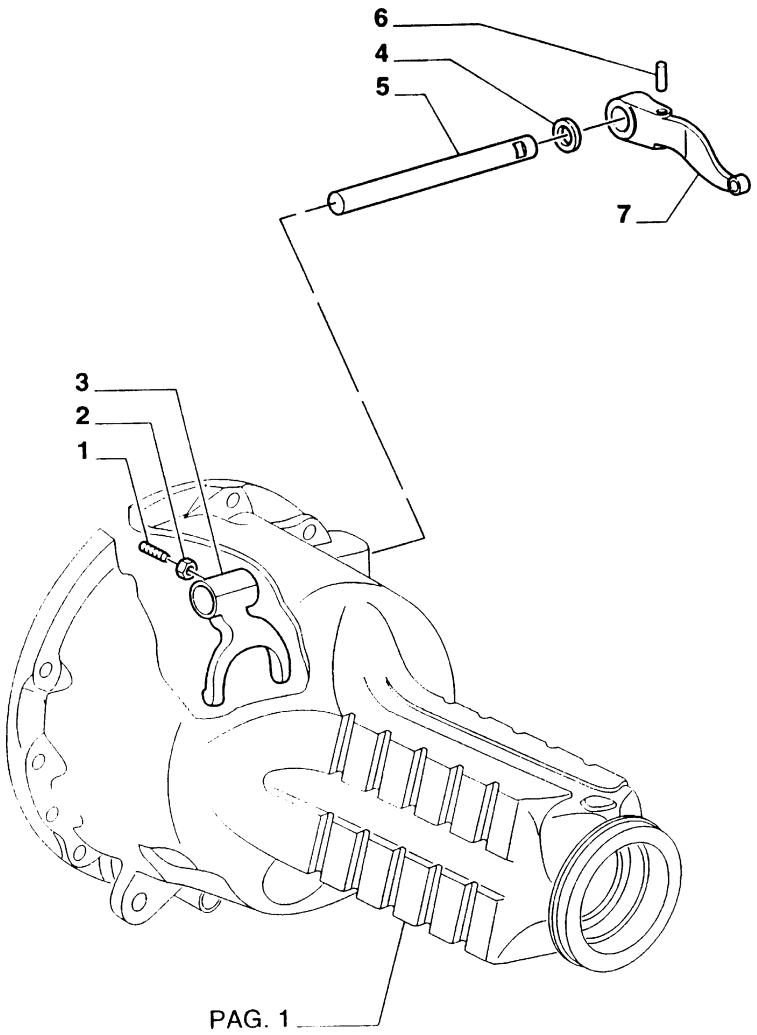

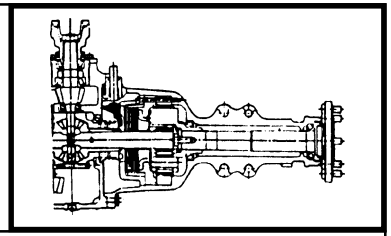

MOD	R	P/N. Imola	P/N. Brazil	Q	Descrição Denominacion	Description Descrizione	L.C.
	1	**81804978**		1	PARAFUSO TORNILLO	SCREW VITE	040V
	2	**80084264**		1	PORCA TUERCA	NUT DADO	010D
	3	**81803336**		1	FORQUILHA HORQUILLA	YOKE FORCELLA	085F
	4	**81800480**		1	ANEL DE VEDAÇÃO JUNTA HERMETICA	SEAL RING ANELLO TENUTA	055A
	5	**81803345**		1	EIXO ARBOL	SHAFT ALBERO	016A
	6	**82958118**		1	PINO PASADOR	PIN SPINA	200S
	7	**81802560**		1	ALAVANCA PALANCA	LEVER LEVA	045L

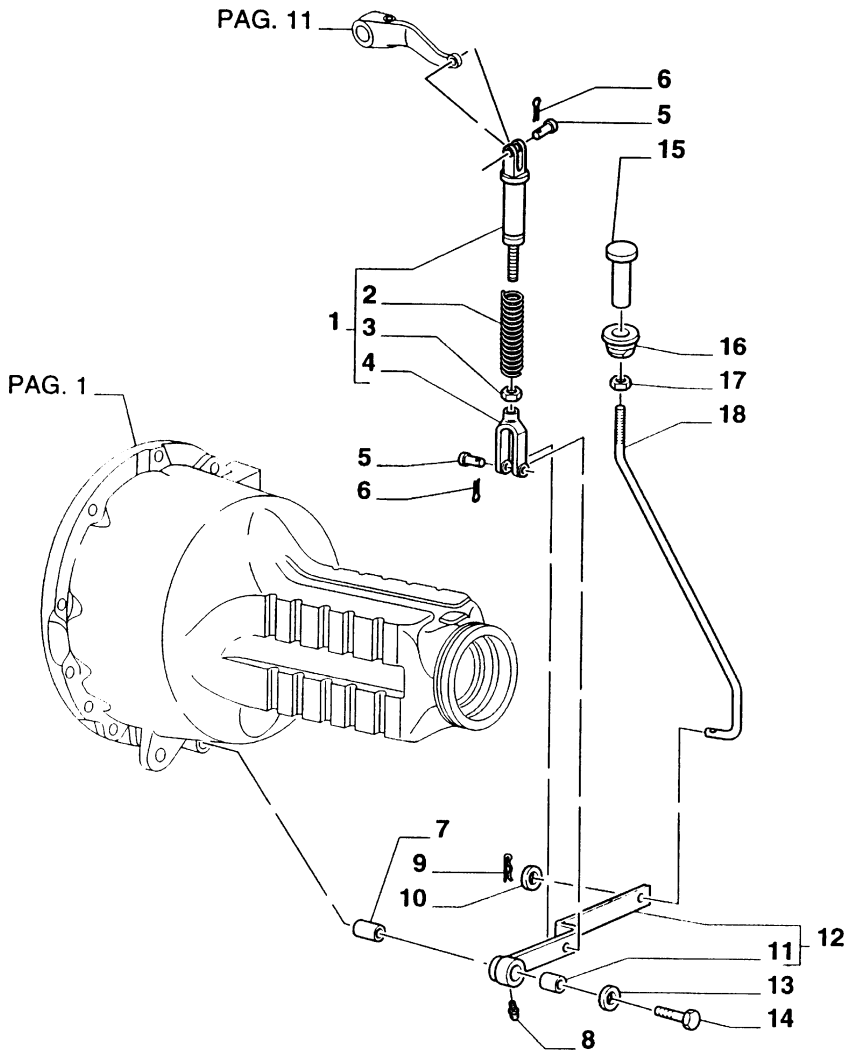

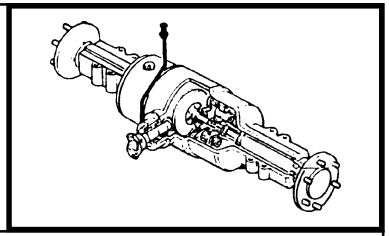

MOD	R	P/N. Imola	P/N. Brazil	Q	Descrição Denominacion	Description Descrizione	L.C.
	1	**83949838**	**75246312**	1	TIRANTE TIRANTE	TIEROD TIRANTE	142T
	2	**81800486**	**75247480**	1	MOLA MUELLE	SPRING MOLLA	100M
	3	**80087307**		1	PORCA TUERCA	NUT DADO	010D
	4	**83952932**	**75247476**	1	FORQUILHA HORQUILLA	YOKE FORCELLA	085F
	5	**83948308**	**75246324**	2	PINO BULON	PIN PERNO	080P
	6	**10802801**	**70900805**	2	CONTRA PINO CHAVETA PARTIDA	COTTER PIN COPIGLIA	270C
	7	**81800488**	**75246623**	1	BUCHA BUJE	BUSHING BOCCOLA	095B
	8	**13406911**		1	PINO GRAXEIRO ENGRASADOR	GREASE FITTING INGRASSATORE	060I
	9	**10766901**	**10733601**	1	CONTRA PINO CHAVETA PARTIDA	COTTER PIN COPIGLIA	270C
	10	**12644921**		1	ARRUELA ARANDELA	WASHER ROSETTA	131R
	11	**81805231**	**73125303**	1	BUCHA BUJE	BUSHING BOCCOLA	095B
	12	**85802513**		1	SUPORTE SOPORTE	SUPPORT SUPPORTO	300S
	13	**14497121**	**14497131**	1	ARRUELA ARANDELA	WASHER ROSETTA	131R
	14	**83911686**	**70922544**	1	PARAFUSO TORNILLO	SCREW VITE	040V
	15	**83971567**	**75246316**	1	PINO BULON	PIN PERNO	080P
	16	**83904750**	**75246319**	1	ANEL ARO	RING ANELLO	045A
	17	**81822462**	**70913177**	1	PORCA TUERCA	NUT DADO	010D
	18	**85802515**		1	TIRANTE TIRANTE	TIEROD TIRANTE	142T

ELECTRICAL EQUIPMENT

SISTEMA ELECTRICO

IMPIANTO ELETTRICO

SISTEMA ELÉCTRICO

INSTALLATION ELECTRIQUE

ELECTRISCHE UITRUSTING

ELEKTRISCHE ANLAGE

ELSYSTEM

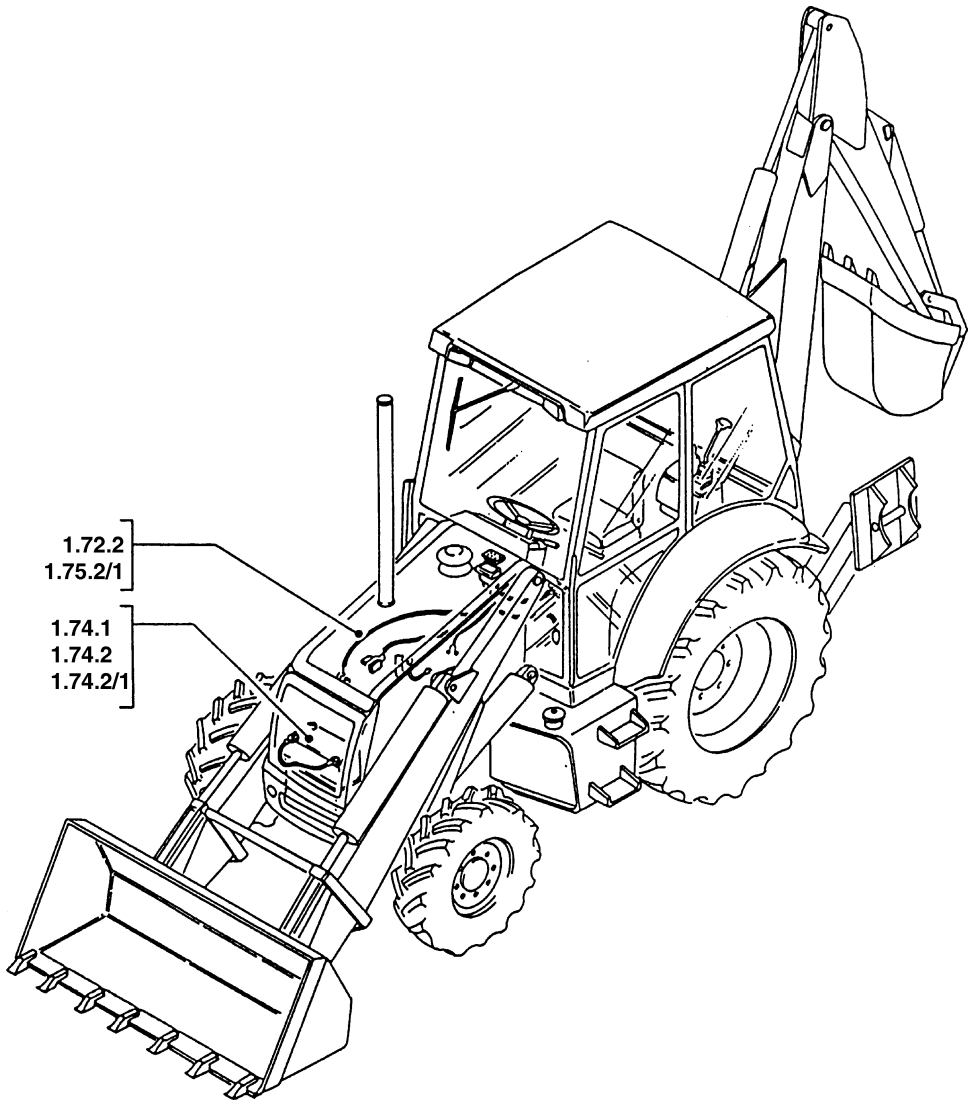

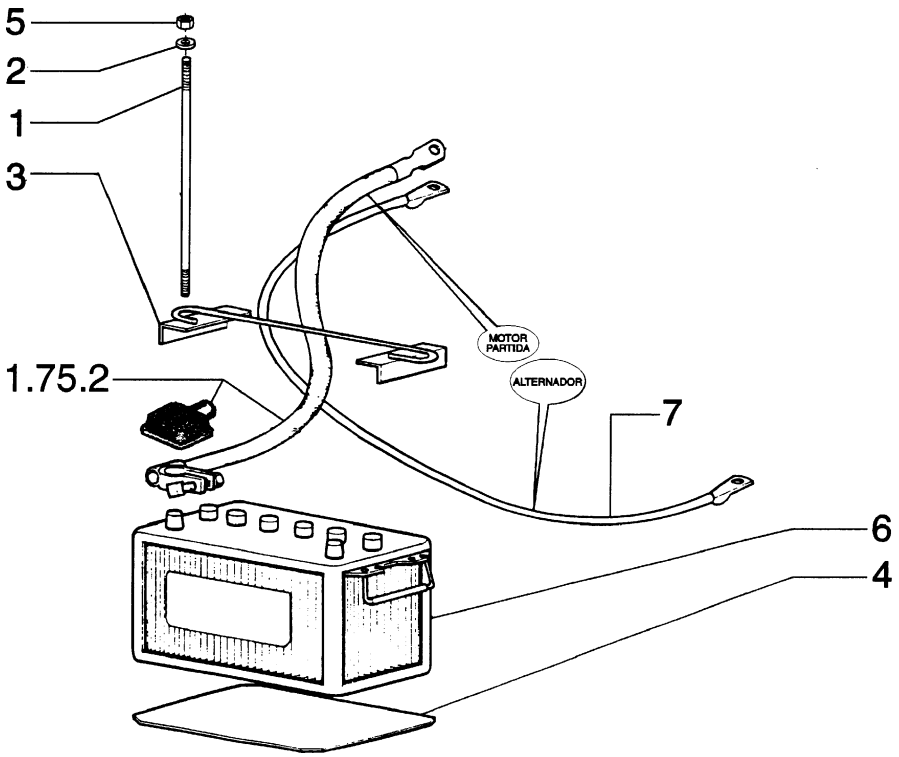

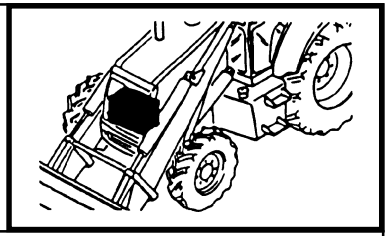

MOD	R	P/N. Imola	P/N. Brazil	Q	Descrição Denominacion	Description Descrizione	L.C.
	1		**75248827**	2	TIRANTE TIRANTE	STRUT PUNTONE	244P
	2		**12646721**	2	ARRUELA ARANDELA	WASHER ROSETTA	131R
	3		**75247748**	1	SUPORTE SOPORTE	SUPPORT SUPPORTO	300S
	4		**75240035**	1	CHAPA PLACA	PLATE PIASTRA	105P
	5		**16100821**	2	PORCA TUERCA	NUT DADO	010D
	6		**75247128**	1	BATERIA BATERIA	BATTERY BATTERIA	025B
	7		**75257199**	1	CABO ELÉTRICO CABLE	CABLE CAVO	111C

FB80.3 - FB100.3

FIXAÇÃO DA BATERIA
FISAJE BATERIA
BATTERY MOUNTING
FISSAGIO BATTERIA

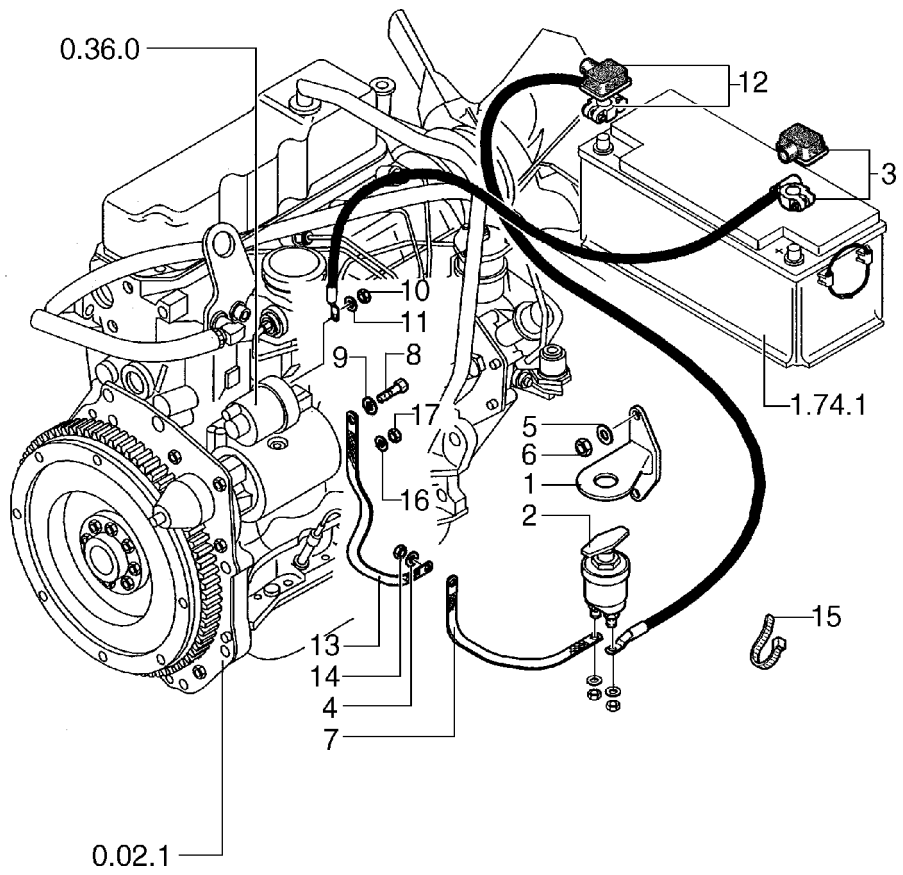

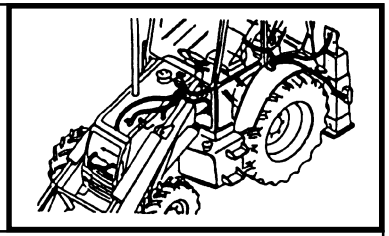

MOD	R	P/N. Imola	P/N. Brazil	Q	Descrição Denominacion	Description Descrizione	L.C.
	1	**85804367**		1	SUPORTE SOPORTE	SUPPORT SUPPORTO	300S
	2	**4822229**		1	INTERRUPTOR INTERRUPTOR	SWITCH INTERRUTTORE	075I
	3	**85804370**		1	CABO ELETRICO CABLE	CABLE CAVO	111C
	4	**12646721**		2	ARRUELA ARANDELA	WASHER ROSETTA	131R
	5	**11193879**		3	ARRUELA PRESSÃO ARANDELA ELAST.	LOCKWASHER ROSETTA ELAST.	170R
	6	**85804150**		2	PORCA TUERCA	NUT DADO	010D
	7	**85803882**		1	CABO ELETRICO CABLE	CABLE CAVO	111C
	8	**10902124**		1	PARAFUSO TORNILLO	SCREW VITE	040V
	9	**14496404**		1	ARRUELA ARANDELA	WASHER ROSETTA	131R
	10	**16102321**		1	PORCA TUERCA	NUT DADO	010D
	11	**12638511**		1	ARRUELA ARANDELA	WASHER ROSETTA	131R
	12	**85803885**		1	CABO ELETRICO CABLE	CABLE CAVO	111C
	13	**85806214**		1	CABO ELETRICO CABLE	CABLE CAVO	111C
	14	**14048211**		2	PORCA TUERCA	NUT DADO	010D
	15	**85805686**		4	ABRAÇADEIRA ABRAZADERA	CLAMP FASCETTA	031F
	16	**12637811**		1	ARRUELA ARANDELA	WASHER ROSETTA	131R
	17	**10788811**		1	PORCA TUERCA	NUT DADO	010D

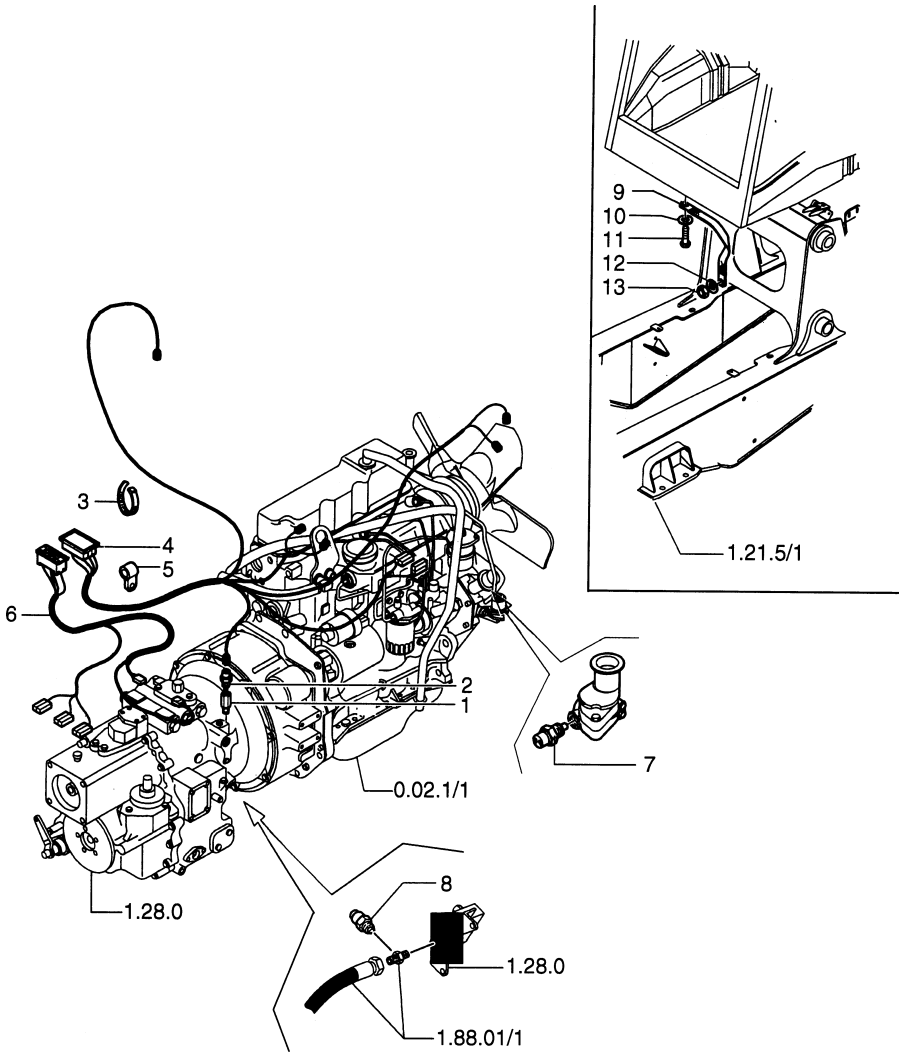

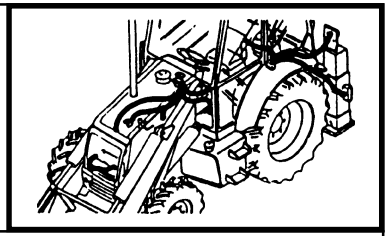

MOD	R	P/N. Imola	P/N. Brazil	Q	Descrição Denominacion	Description Descrizione	L.C.
	1	**85803524**		1	CONEXÃO RACOR	FITTING RACCORDO	020R
	2	**85803879**		1	SENSOR SENSOR	SENSOR SENSORE	133S
	3	**14560187**		55	ABRAÇADEIRA ABRAZADERA	CLAMP FASCETTA	031F
	4	**85819218**		1	CABO ELETRICO CABLE	CABLE CAVO	111C
	5	**85802889**		1	ABRAÇADEIRA ABRAZADERA	CLAMP FASCETTA	031F
	6	**85818892**		1	CABO ELETRICO CABLE	CABLE CAVO	111C
	7	**85803881**		1	SENSOR SENSOR	SENSOR SENSORE	133S
	8	**85817672**		1	SENSOR SENSOR	SENSOR SENSORE	133S
	9	**85803884**		1	CABO ELETRICO CABLE	CABLE CAVO	111C
	10	**11193879**		1	ARRUELA ARANDELA	WASHER ROSETTA	131R
	11	**16043021**		1	PARAFUSO TORNILLO	SCREW VITE	040V
	12	**12637811**		1	ARRUELA ARANDELA	WASHER ROSETTA	131R
	13	**10788811**		1	PORCA TUERCA	NUT DADO	010D

SLIDE VALVES | **DISTRIBUTORI** | **DISTRIBUTEURS** | **VERTEILERN**

CORREDERAS | **DISTRIBUDORES** | **VERDEELKLEPPEN** | **FORDELERE**

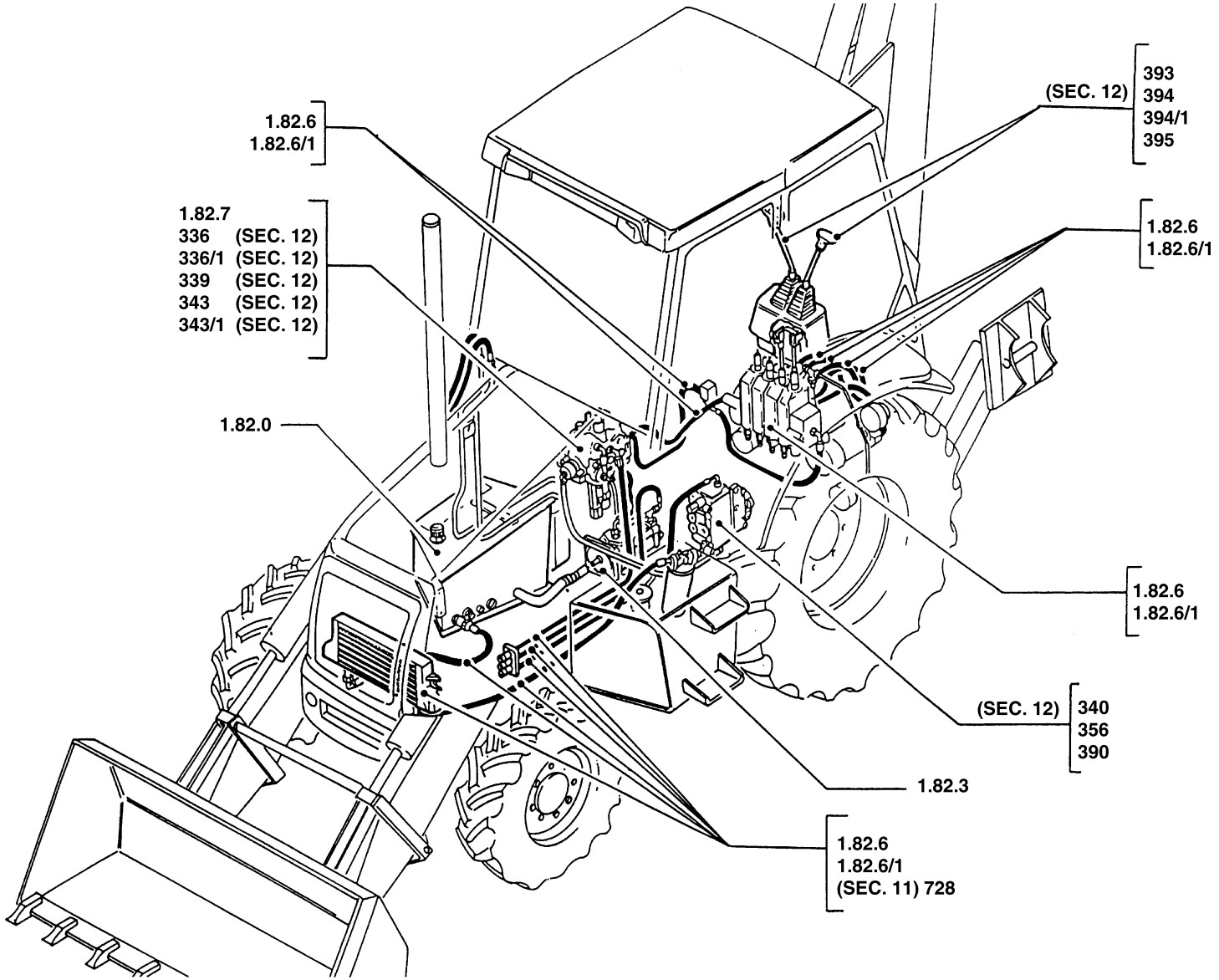

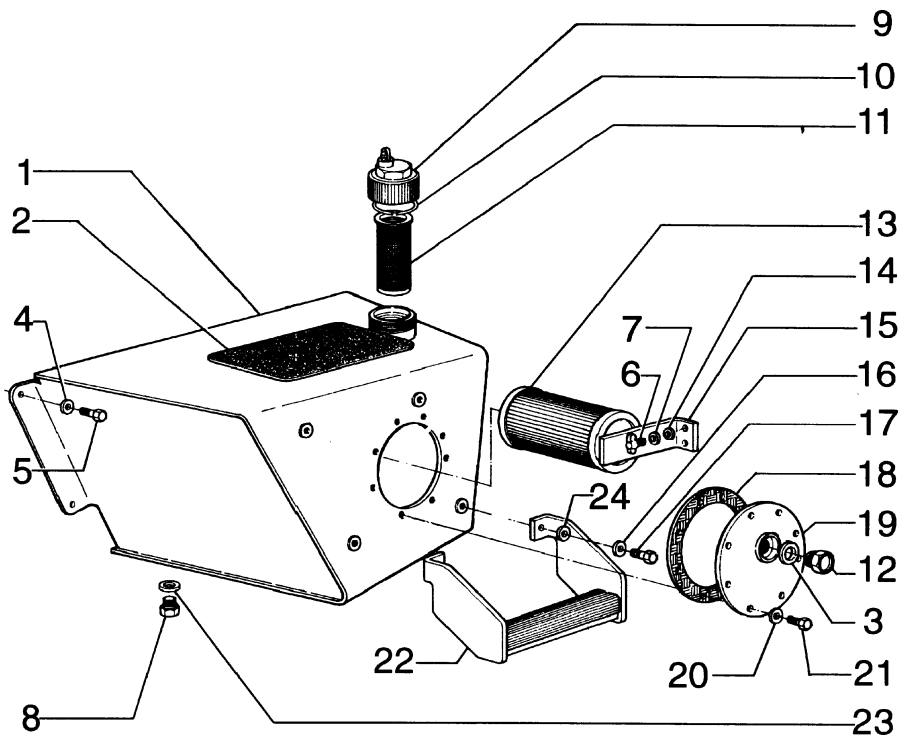

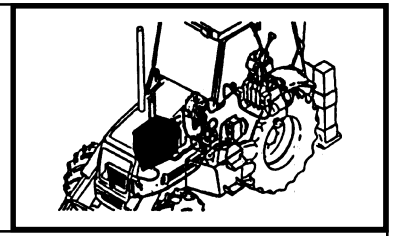

MOD	R	P/N. Imola	P/N. Brazil	Q	Descrição Denominacion	Description Descrizione	L.C.
	1		**75257596**	1	RESERV.OLEO HID DEP.ACEITE HIDR	HYDRAULIC TANK SERBATOIO OLIO	410S
	2	**85802808**	**75210383**	1	FAIXA BANDA	BAND FASCIA	029F
	3		**10295485**	1	ANEL DE VEDAÇÃO JUNTA HERMETICA	SEAL RING ANELLO TENUTA	055A
	4		**12646921**	4	ARRUELA ARANDELA	WASHER ROSETTA	131R
	5	**15540321**	**15540431**	4	PARAFUSO TORNILLO	SCREW VITE	040V
	6		**73111466**	2	PARAFUSO TORNILLO	SCREW VITE	040V
	7		**10615479**	2	ARRUELA ARANDELA	WASHER ROSETTA	131R
	8		**75201058**	1	BUJÃO TAPON	PLUG TAPPO	050T
	9		**79104494**	1	TAMPA TAPA	COVER COPERCHIO	265C
	10		**4971843**	1	ANEL ELÁSTICO ANILLO ELASTICO	SNAP RING ANELLO ELASTICO	187A
	11		**75241002**	1	ELEM. FILTRANTE FILTRO	FILTERING ELEM. ELEM. FILTRANTE	020E
	12		**75214200**	1	INDICADOR NIVEL VARILLA NIVEL	OIL LEVER INDIC INDIC.LIVELLO	I091
	13		**73124631**	1	ELEM. FILTRANTE FILTRO	FILTERING ELEM. ELEM. FILTRANTE	020E
	14	**12644421**		2	ARRUELA ARANDELA	WASHER ROSETTA	131R
	15		**75248366**	1	SUPORTE SOPORTE	SUPPORT SUPPORTO	300S
	16		**10517071**	4	ARRUELA PRESSÃO ARANDELA ELAST.	LOCKWASHER ROSETTA ELAST.	170R
	17		**15540331**	4	PARAFUSO TORNILLO	SCREW VITE	040V
	18		**75258401**	1	JUNTA JUNTA PLANA	GASKET GUARNIZ. PIANA	120G
	19		**75257656**	1	TAMPA TAPA	COVER COPERCHIO	265C
	20		**12644421**	8	ARRUELA ARANDELA	WASHER ROSETTA	131R

FB80.3 - FB100.3

RESERVATÓRIO ÓLEO HIDRÁULICO
DEPOSITO DE ACEITE INSTALACION HIDRAULICA
HYDRAULIC SYSTEM OIL RESERVOIR
SERBATOIO OLIO IMPIANTO IDRAULICO

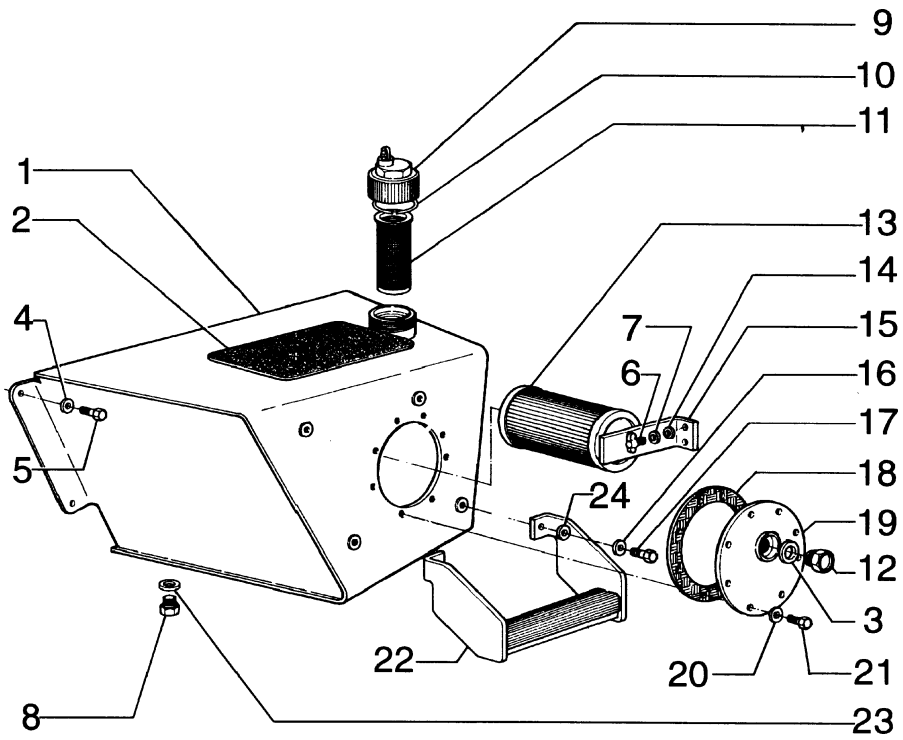

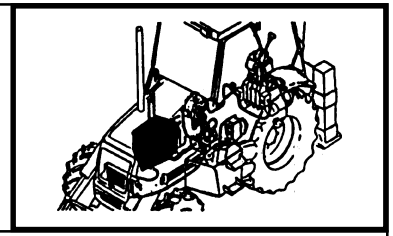

MOD	R	P/N. Imola	P/N. Brazil	Q	Descrição Denominacion	Description Descrizione	L.C.
	21		**10902431**	8	PARAFUSO TORNILLO	SCREW VITE	040V
	22	**85801218**	**75247363**	2	ESCADA ESCALERILLA	LADDER SCALETTA	022S
	23		**10296260**	1	ANEL DE VEDAÇÃO JUNTA HERMETICA	SEAL RING ANELLO TENUTA	055A
	24		**14496821**	4	ARRUELA ARANDELA	WASHER ROSETTA	131R

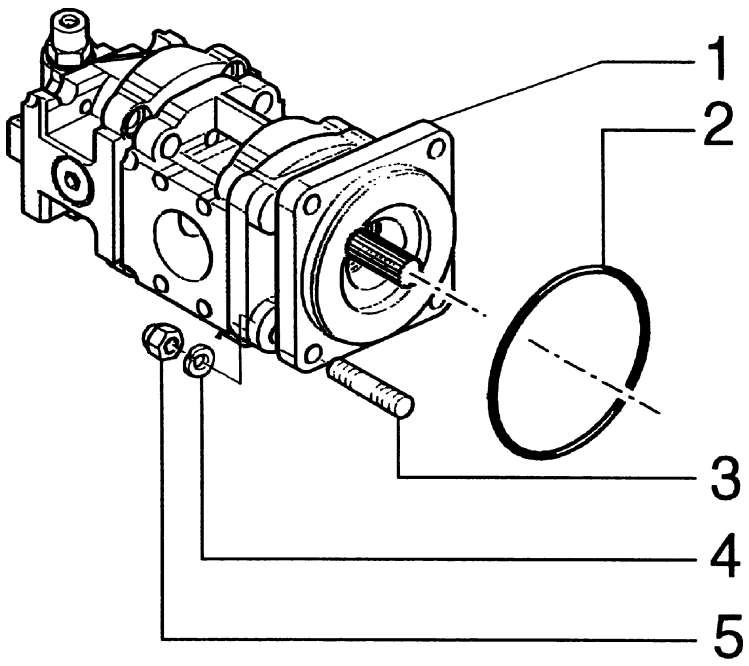

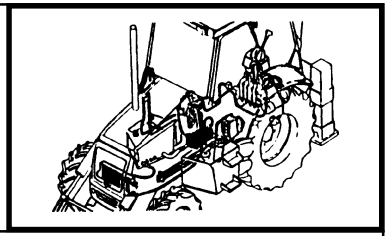

MOD	R	P/N. Imola	P/N. Brazil	Q	Descrição Denominacion	Description Descrizione	L.C.
	1	**85818997**		1	BOMBA BOMBA	PUMP POMPA	155P
	2	**14466880**		1	O'RING JUNTA TORICA	O'RING GUARNIZIONE O-R	158G
	3	**85802683**		4	PRISIONEIRO ESPARRAGO	STUD PRIGIONIERO	210P
	4	**11190774**		4	ARRUELA ARANDELA	WASHER ROSETTA	131R
	5	**85802684**		1	PORCA TUERCA	NUT DADO	010D

7

FB80.3 - FB100.3

BOMBA HIDRÁULICA
BOMBA HIDRAULICA
IMPLEMENT HYDRAULIC PUMP
POMPA IDRAULICA ATTREZZO

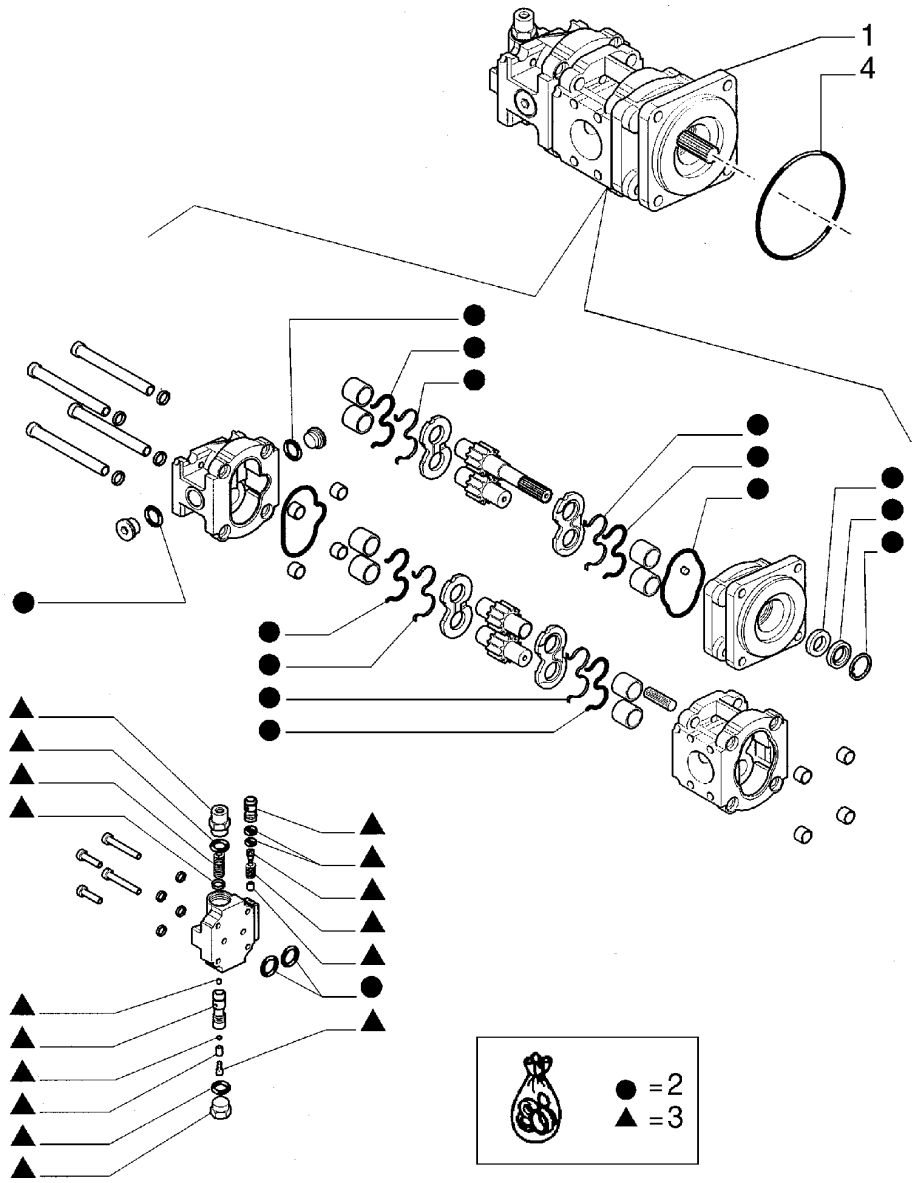

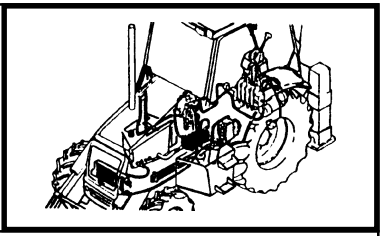

MOD	R	P/N. Imola	P/N. Brazil	Q	Descrição Denominacion	Description Descrizione	L.C.
	1	**85818997**		1	BOMBA BOMBA	PUMP POMPA	155P
	2	**85813244**		1	JOGO DE ANÉIS CONUNTO DE JUNTAS	KIT OF SEALS SERIE GUARNIZIONI	630S
	3	**85819096**		1	VÁLVULA VALVULA	VALVE VALVOLA	010V
	4	**14466880**		1	O'RING JUNTA TORICA	O'RING GUARNIZIONE O-R	158G

FB80.3 - FB100.3

BOMBA HIDRÁULICA
BOMBA HIDRAULICA
IMPLEMENT HYDRAULIC PUMP
POMPA IDRAULICA ATTREZZO

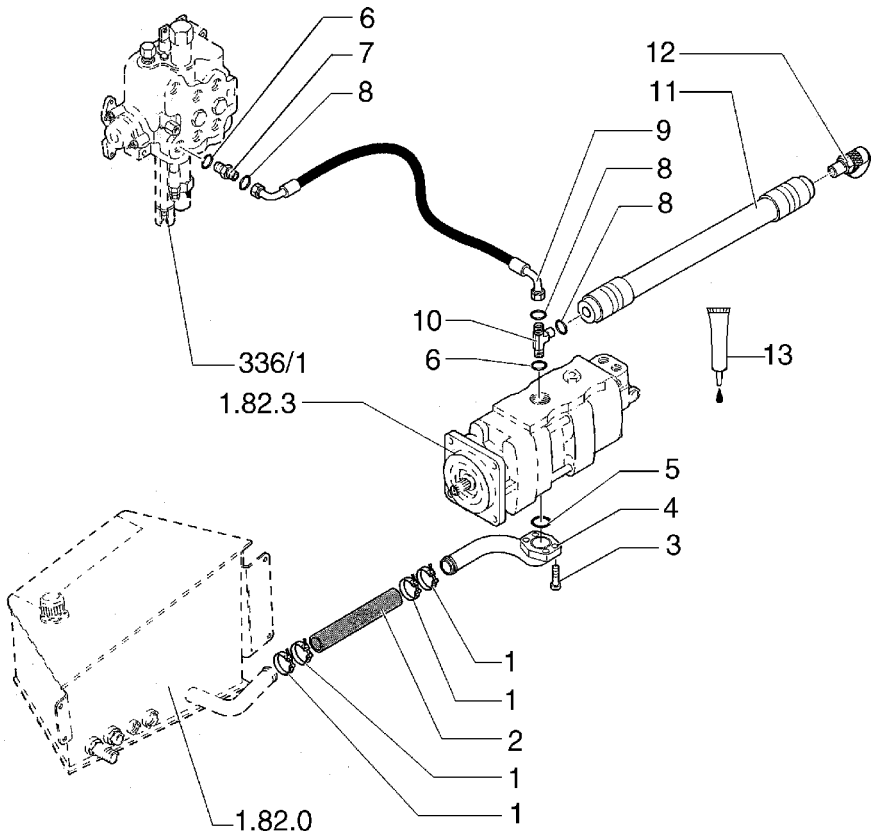

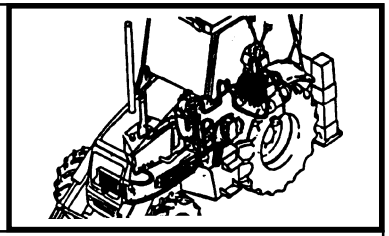

MOD	R	P/N. Imola	P/N. Brazil	Q	Descrição Denominacion	Description Descrizione	L.C.
	1	**85803012**		4	ABRAÇADEIRA ABRAZADERA	CLAMP FASCETTA	031F
	2	**85811870**		1	MANGUEIRA MANGA C/RACORDE	HOSE ASSY TUBO FLESSIBILE	192T
	3	**14422021**		3	PARAFUSO TORNILLO	SCREW VITE	040V
	4	**85815588**		1	TUBO TUBO	TUBE TUBO RIGIDO	193T
	5	**14464681**		1	O'RING JUNTA TORICA	O'RING GUARNIZIONE O-R	158G
	6	**80167266**		2	O'RING JUNTA TORICA	O'RING GUARNIZIONE O-R	158G
	7	**83962538**		1	CONEXÃO RACOR	FITTING RACCORDO	020R
	8	**89991976**		3	O'RING JUNTA TORICA	O'RING GUARNIZIONE O-R	158G
	9	**85815569**		1	MANGUEIRA MANGA C/RACORDE	HOSE ASSY TUBO FLESSIBILE	192T
	10	**85815581**		1	CONEXÃO RACOR	FITTING RACCORDO	020R
	11	**85815568**		1	MANGUEIRA MANGA C/RACORDE	HOSE ASSY TUBO FLESSIBILE	192T
	12	**85817596**		1	CONEXÃO RACOR	FITTING RACCORDO	020R
	13	**75209270**		1	SELANTE SELADOR	SEALANT SIGILLANTE	405S

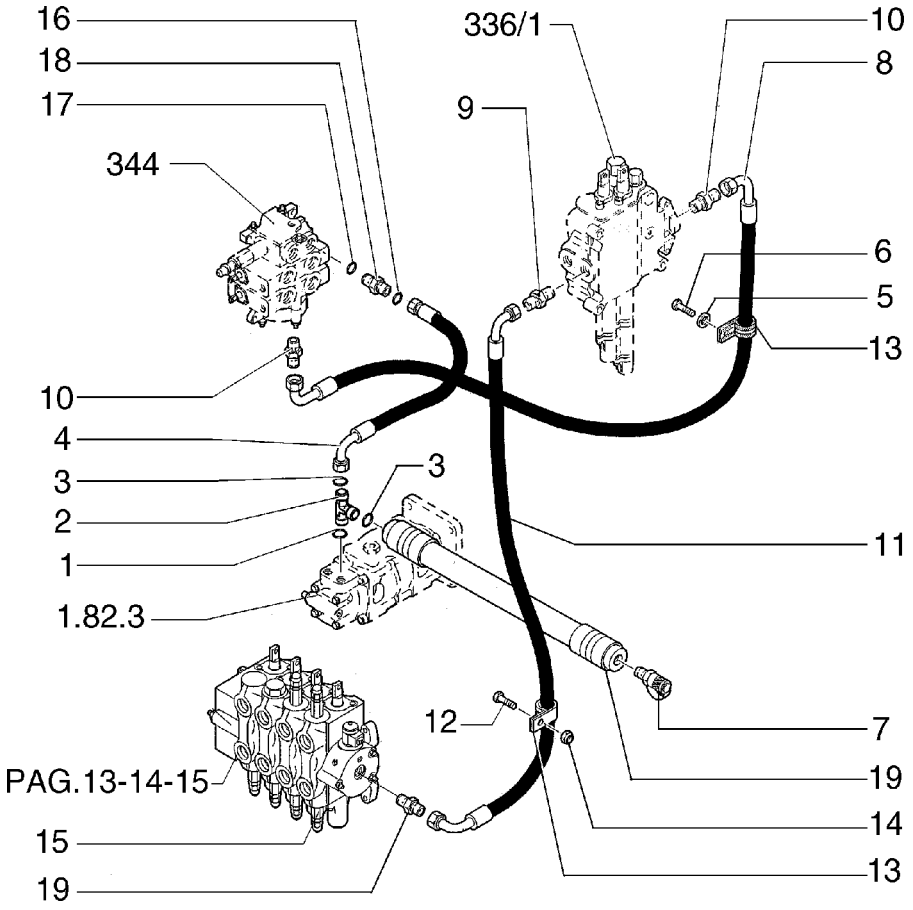

JG Manga Ímola con el conector Ímola

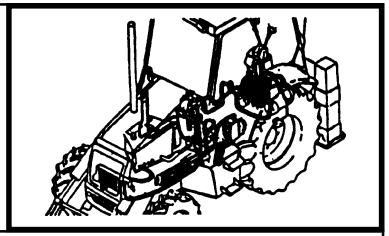

MOD	R	P/N. Imola	P/N. Brazil	Q	Descrição Denominacion	Description Descrizione	L.C.
	1	**83901443**	**70930357**	4	O'RING JUNTA TORICA	O'RING GUARNIZIONE O-R	158G
	2	**83963000**	**76022766**	1	CONEXÃO RACOR	FITTING RACCORDO	020R
JG	3	**89626929**	**70923843**	3	O'RING JUNTA TORICA	O'RING GUARNIZIONE O-R	158G
	4	**85802841**	**75247129**	1	MANGUEIRA MANGA C/RACORDE	HOSE ASSY TUBO FLESSIBILE	192T
	5	**11190574**		1	ARRUELA ARANDELA	WASHER ROSETTA	131R
	6	**81825117**	**70923843**	2	O'RING JUNTA TORICA	O'RING GUARNIZIONE O-R	158G
	7	**81827365**	**70928486**	2	O'RING JUNTA TORICA	O'RING GUARNIZIONE O-R	158G
	8	**85802840**	**75247127**	1	MANGUEIRA MANGA C/RACORDE	HOSE ASSY TUBO FLESSIBILE	192T
JG	9	**85802958**	**75280421**	2	CONEXÃO RACOR	FITTING RACCORDO	020R
	10	**85802642**	**83962178**	2	CONEXÃO RACOR	FITTING RACCORDO	020R
JG	11	**85802776**	**75247119**	1	MANGUEIRA MANGA C/RACORDE	HOSE ASSY TUBO FLESSIBILE	192T
	12	**15970724**	**15970731**	2	PARAFUSO TORNILLO	SCREW VITE	040V
	13	**11190774**	**70928178**	3	ARRUELA ARANDELA	WASHER ROSETTA	131R
	14	**15540831**		4	PARAFUSO TORNILLO	SCREW VITE	040V
	15	**85802890**		2	ABRAÇADEIRA ABRAZADERA	CLAMP FASCETTA	031F
	16	**12574521**		1	PORCA TUERCA	NUT DADO	010D
	17		**85805701**	1	DISTRIBUIDOR DISTRIBUIDOR	CONTROL VALVE DISTRIBUTORE	083D

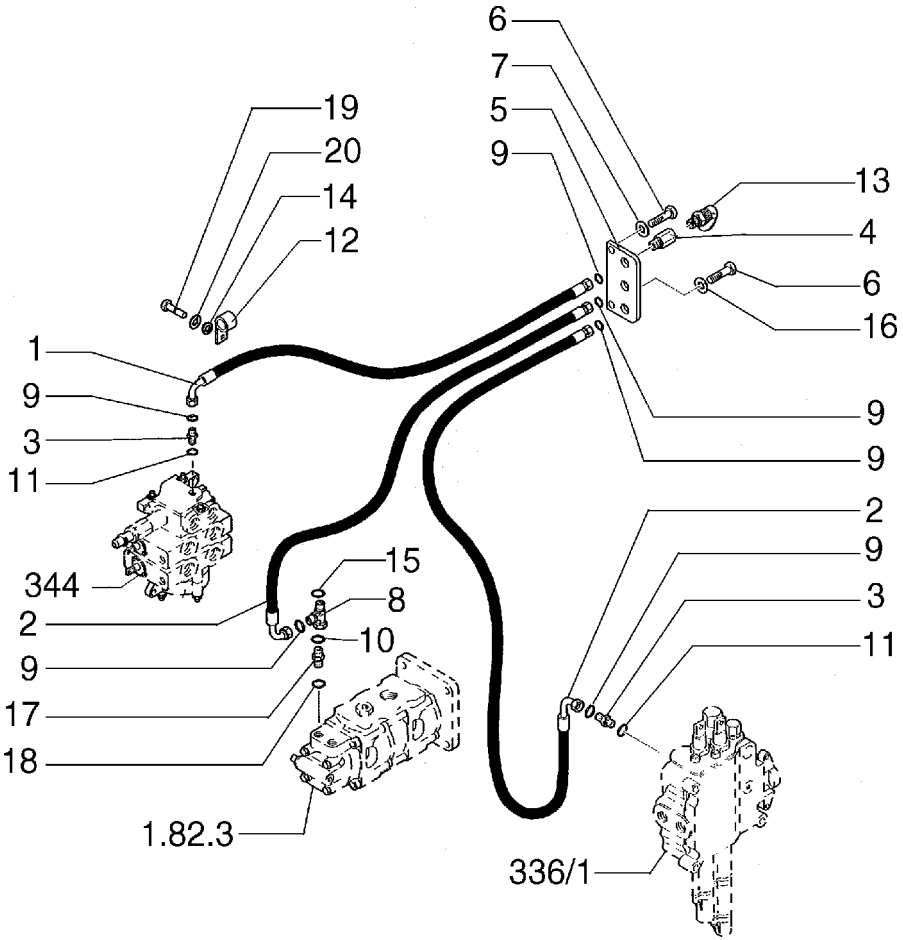

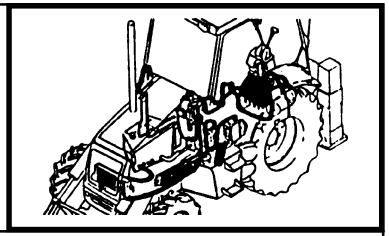

MOD	R	P/N. Imola	P/N. Brazil	Q	Descrição Denominacion	Description Descrizione	L.C.
	1	**85812170**		1	MANGUEIRA MANGA C/RACORDE	HOSE ASSY TUBO FLESSIBILE	192T
	2	**85812171**		2	MANGUEIRA MANGA C/RACORDE	HOSE ASSY TUBO FLESSIBILE	192T
	3	**89993143**		1	CONEXÃO RACOR	FITTING RACCORDO	020R
	4	**85817226**		3	CONEXÃO RACOR	FITTING RACCORDO	020R
	5	**85802846**		1	PLACA PLACA	PLATE PIASTRA	105P
	7	**16043224**		2	PARAFUSO TORNILLO	SCREW VITE	040V
	8	**11193874**		2	ARRUELA ARANDELA	WASHER ROSETTA	131R
	9	**85815582**		1	CONEXÃO RACOR	FITTING RACCORDO	020R
	10	**81844851**		3	O'RING JUNTA TORICA	O'RING GUARNIZIONE O-R	158G
	11	**89992298**		1	O'RING JUNTA TORICA	O'RING GUARNIZIONE O-R	158G
	12	**89617873**		2	O'RING JUNTA TORICA	O'RING GUARNIZIONE O-R	158G
	13	**85802890**		1	ABRAÇADEIRA ABRAZADERA	CLAMP FASCETTA	031F
	15	**89992298**		1	O'RING JUNTA TORICA	O'RING GUARNIZIONE O-R	158G
	16	**12647121**		1	ARRUELA ARANDELA	WASHER ROSETTA	131R
	17	**83963374**		1	CONEXÃO RACOR	FITTING RACCORDO	020R
	18	**80128825**		1	O'RING JUNTA TORICA	O'RING GUARNIZIONE O-R	158G
	19	**15540824**		1	PARAFUSO TORNILLO	SCREW VITE	040V
	20	**12646924**		1	ARRUELA ARANDELA	WASHER ROSETTA	131R

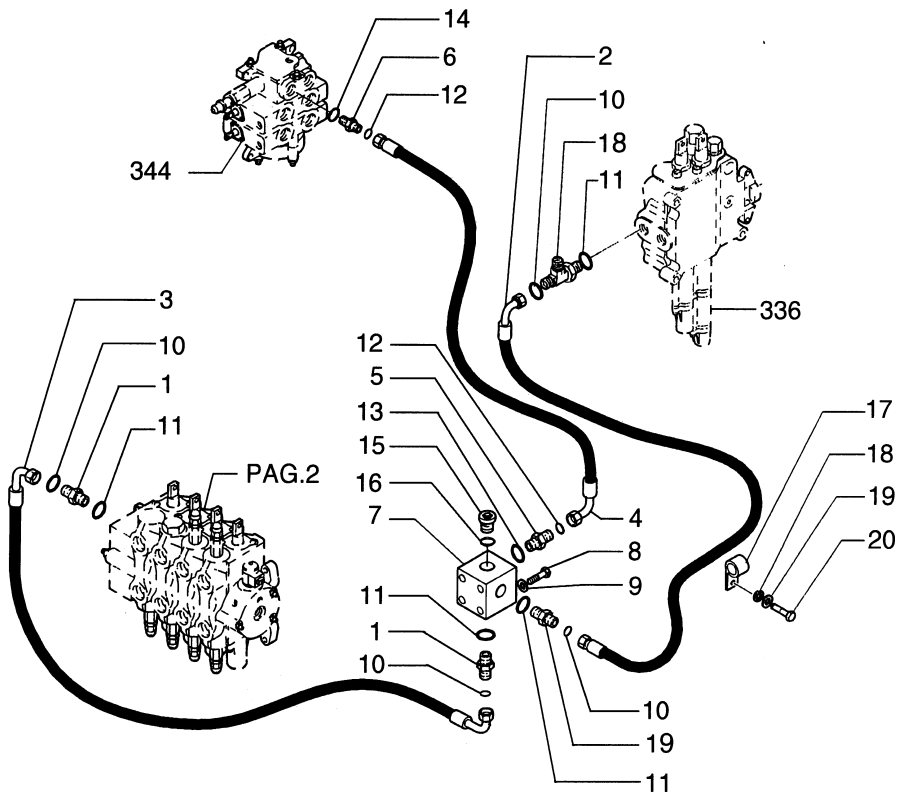

JG Manga Ímola con el conector Ímola

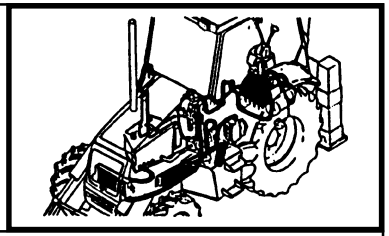

MOD	R	P/N. Imola	P/N. Brazil	Q	Descrição Denominacion	Description Descrizione	L.C.
	1	**89824055**	**76021723**	4	CONEXÃO RACOR	FITTING RACCORDO	020R
	2	**85802777**	**75247120**	1	MANGUEIRA MANGA C/RACORDE	HOSE ASSY TUBO FLESSIBILE	192T
	3	**85802839**	**75247124**	1	MANGUEIRA MANGA C/RACORDE	HOSE ASSY TUBO FLESSIBILE	192T
JG	4	**85802838**	**75247188**	1	MANGUEIRA MANGA C/RACORDE	HOSE ASSY TUBO FLESSIBILE	192T
JG	5	**83962538**	**75236793**	1	CONEXÃO RACOR	FITTING RACCORDO	020R
JG	6	**85802642**	**76022766**	1	CONEXÃO RACOR	FITTING RACCORDO	020R
	7	**85802799**		1	BLOCO CALCE	BLOCK BLOCCHETTO	074B
	8	**15541631**	**15541531**	2	PARAFUSO TORNILLO	SCREW VITE	040V
	9	**11190774**	**70928460**	2	ARRUELA ARANDELA	WASHER ROSETTA	131R
	10	**89824050**	**70931640**	4	O'RING JUNTA TORICA	O'RING GUARNIZIONE O-R	158G
	11	**80167268**	**70926538**	4	O'RING JUNTA TORICA	O'RING GUARNIZIONE O-R	158G
JG	12	**81825117**	**70923843**	2	O'RING JUNTA TORICA	O'RING GUARNIZIONE O-R	158G
JG	13	**80167266**	**70935175**	1	O'RING JUNTA TORICA	O'RING GUARNIZIONE O-R	158G
JG	14	**81827365**	**70928486**	1	O'RING JUNTA TORICA	O'RING GUARNIZIONE O-R	158G
	15	**85802955**	**76021240**	1	BUJÃO TAPON	PLUG TAPPO	050T
	16	**80128825**	**70935176**	1	ANEL DE VEDAÇÃO JUNTA HERMETICA	SEAL RING ANELLO TENUTA	055A
	17	**85802890**		1	ABRAÇADEIRA ABRAZADERA	CLAMP FASCETTA	031F
	18	**85817531**		1	CONEXÃO RACOR	FITTING RACCORDO	020R
	19	**76021723**		1	CONEXÃO RACOR	FITTING RACCORDO	020R

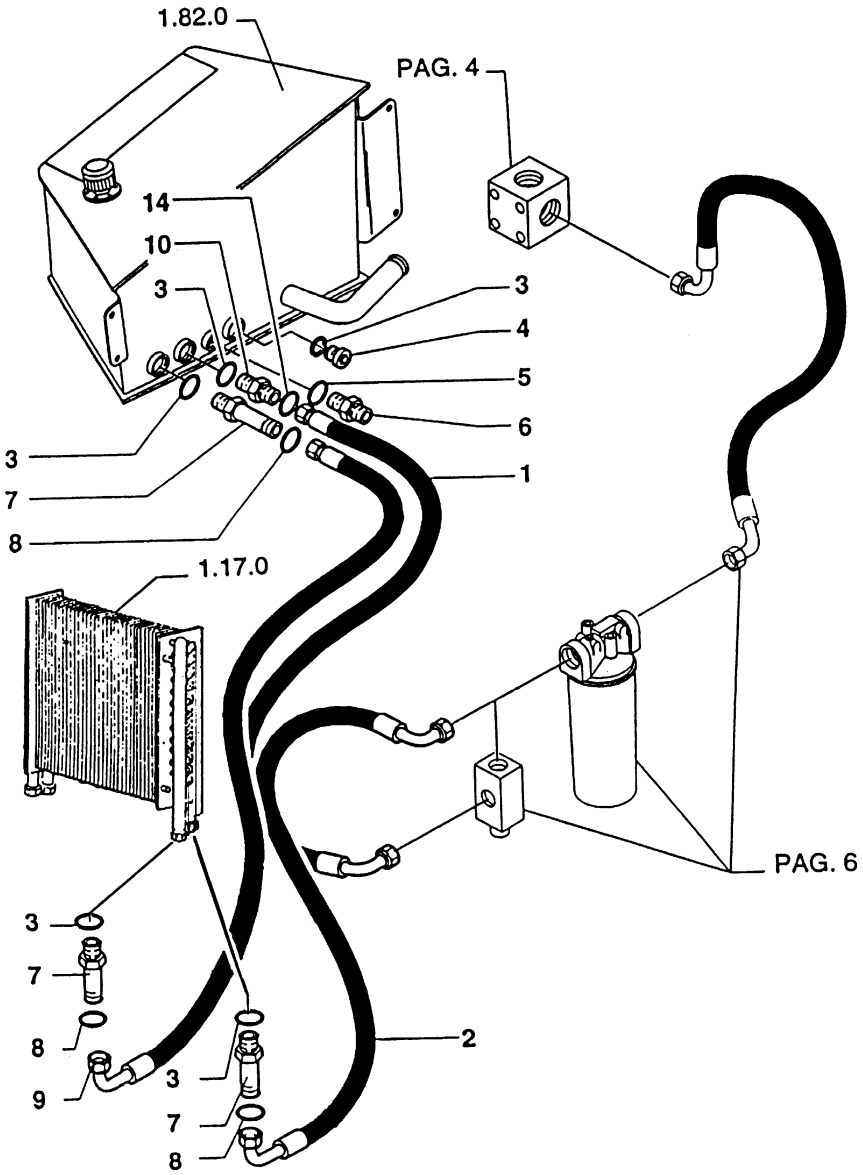

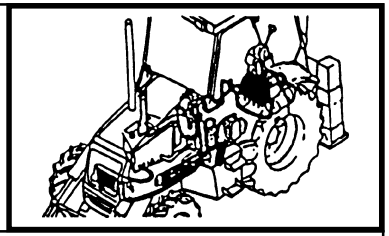

MOD	R	P/N. Imola	P/N. Brazil	Q	Descrição Denominacion	Description Descrizione	L.C.
	1	**85802833**	**75247123**	1	MANGUEIRA MANGA C/RACORDE	HOSE ASSY TUBO FLESSIBILE	192T
	2		**75246614**	1	MANGUEIRA MANGA C/RACORDE	HOSE ASSY TUBO FLESSIBILE	192T
	3	**80167268**	**70926538**	5	O'RING JUNTA TORICA	O'RING GUARNIZIONE O-R	158G
	4	**85802800**	**70921216**	1	BUJÃO TAPON	PLUG TAPPO	050T
	5	**81827365**	**70928486**	1	O'RING JUNTA TORICA	O'RING GUARNIZIONE O-R	158G
	6		**7523793**	1	CONEXÃO RACOR	FITTING RACCORDO	020R
	7	**85802760**		2	CONEXÃO RACOR	FITTING RACCORDO	020R
	8	**89824050**	**70931640**	3	O'RING JUNTA TORICA	O'RING GUARNIZIONE O-R	158G
	9	**85803481**		1	MANGUEIRA MANGA C/RACORDE	HOSE ASSY TUBO FLESSIBILE	192T
	9	**85803481**		1	MANGUEIRA MANGA C/RACORDE	HOSE ASSY TUBO FLESSIBILE	192T
	10	**85802801**		2	CONEXÃO RACOR	FITTING RACCORDO	020R

7

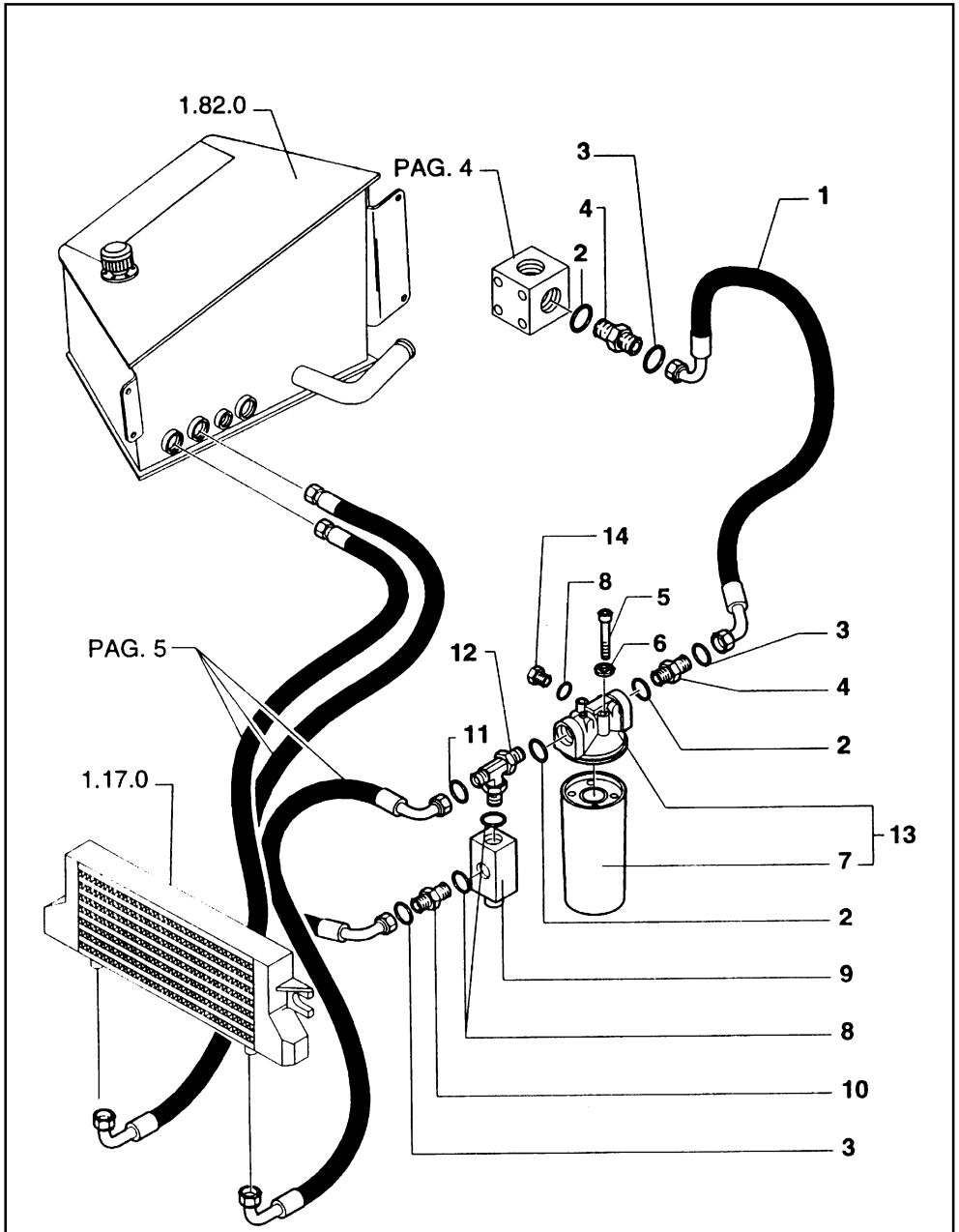

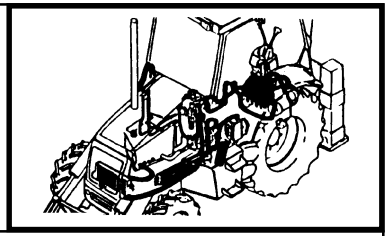

MOD	R	P/N. Imola	P/N. Brazil	Q	Descrição Denominacion	Description Descrizione	L.C.
	1		**75247017**	1	MANGUEIRA MANGA C/RACORDE	HOSE ASSY TUBO FLESSIBILE	192T
	1	**85802837**		1	MANGUEIRA MANGA C/RACORDE	HOSE ASSY TUBO FLESSIBILE	192T
	2	**80570186**	**70921235**	3	O'RING JUNTA TORICA	O'RING GUARNIZIONE O-R	158G
	3	**89824050**	**70931640**	3	O'RING JUNTA TORICA	O'RING GUARNIZIONE O-R	158G
	3	**89824051**		3	O'RING JUNTA TORICA	O'RING GUARNIZIONE O-R	158G
	4	**85802960**		2	CONEXÃO RACOR	FITTING RACCORDO	020R
	5	**11106231**		2	PARAFUSO TORNILLO	SCREW VITE	040V
	6	**11190679**	**70930370**	4	ARRUELA ARANDELA	WASHER ROSETTA	131R
	7	**85802793**		1	ELEM. FILTRANTE CARTUCHO FILTRO	FILTER ELEMENT CARTUCCIA FILTR	084C
	8	**80167268**	**70926538**	3	O'RING JUNTA TORICA	O'RING GUARNIZIONE O-R	158G
	9	**85801509**		1	VÁLVULA VALVULA	VALVE VALVOLA	010V
	10	**85802801**		1	CONEXÃO RACOR	FITTING RACCORDO	020R
	11	**89824050**	**70931640**	1	O'RING JUNTA TORICA	O'RING GUARNIZIONE O-R	158G
	12	**85802962**		1	CONEXÃO RACOR	FITTING RACCORDO	020R
	13	**85802791**		1	FILTRO FILTRO	FILTER FILTRO	065F
	14	**85802800**	**70921216**	1	BUJÃO TAPON	PLUG TAPPO	050T

FB80.3 - FB100.3

TUBULAÇÃO DO SISTEMA HIDRÁULICO
TUBOS DEL CIRCUITO HIDRAULICO
HYDRAULIC SYSTEM PIPING
TUBAZIONI IMPIANTO IDRAULICO

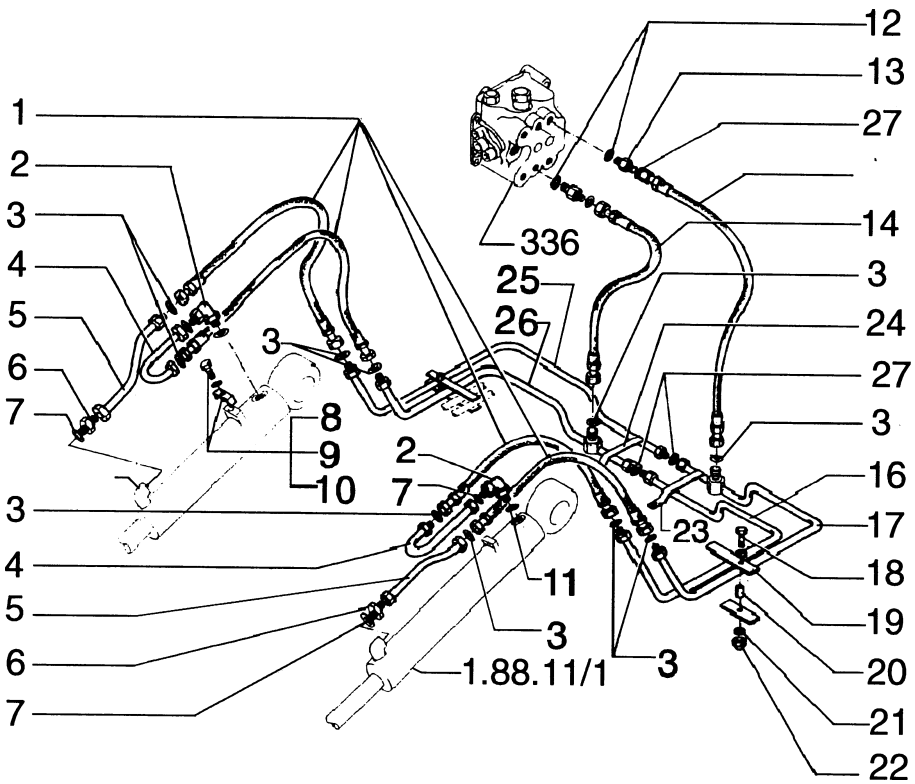

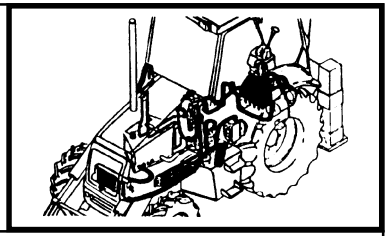

MOD	R	P/N. Imola	P/N. Brazil	Q	Descrição Denominacion	Description Descrizione	L.C.
	1		**75246171**	4	MANGUEIRA MANGA C/RACORDE	HOSE ASSY TUBO FLESSIBILE	192T
	2	**83971549**	**76022816**	2	COTOVELO CODO	ELBOW GOMITO	085G
	3	**81845038**	**70923841**	10	O'RING JUNTA TORICA	O'RING GUARNIZIONE O-R	158G
	4		**75246291**	2	TUBO TUBO	TUBE TUBO RIGIDO	193T
	5		**75246293**	2	TUBO TUBO	TUBE TUBO RIGIDO	193T
	6	**83963376**	**75236793**	2	CONEXÃO RACOR	FITTING RACCORDO	020R
	7	**81827365**	**70928486**	4	O'RING JUNTA TORICA	O'RING GUARNIZIONE O-R	158G
	8		**70923355**	2	ABRAÇADEIRA ABRAZADERA	CLAMP FASCETTA	031F
	9		**11106431**	2	PARAFUSO TORNILLO	SCREW VITE	040V
	10	**10516674**	**10516871**	2	ARRUELA PRESSÃO ARANDELA ELAST.	LOCKWASHER ROSETTA ELAST.	170R
	11	**80128825**	**70935176**	2	O'RING JUNTA TORICA	O'RING GUARNIZIONE O-R	158G
	12	**81827365**	**70928486**	2	O'RING JUNTA TORICA	O'RING GUARNIZIONE O-R	158G
	13	**83963000**	**76022766**	2	CONEXÃO RACOR	FITTING RACCORDO	020R
	14		**75247122**	1	MANGUEIRA MANGA C/RACORDE	HOSE ASSY TUBO FLESSIBILE	192T
	15	**85812185**		1	MANGUEIRA MANGA C/RACORDE	HOSE ASSY TUBO FLESSIBILE	192T
	16		**75246232**	1	TUBO TUBO	TUBE TUBO RIGIDO	193T
	17		**75246230**	1	TUBO TUBO	TUBE TUBO RIGIDO	193T
	18		**16044031**	2	PARAFUSO TORNILLO	SCREW VITE	040V
	19	**85802939**		2	ABRAÇADEIRA ABRAZADERA	CLAMP FASCETTA	031F
	20		**75246283**	2	ESPAÇADOR SEPARADOR	SPACER DISTANZIALE	075D

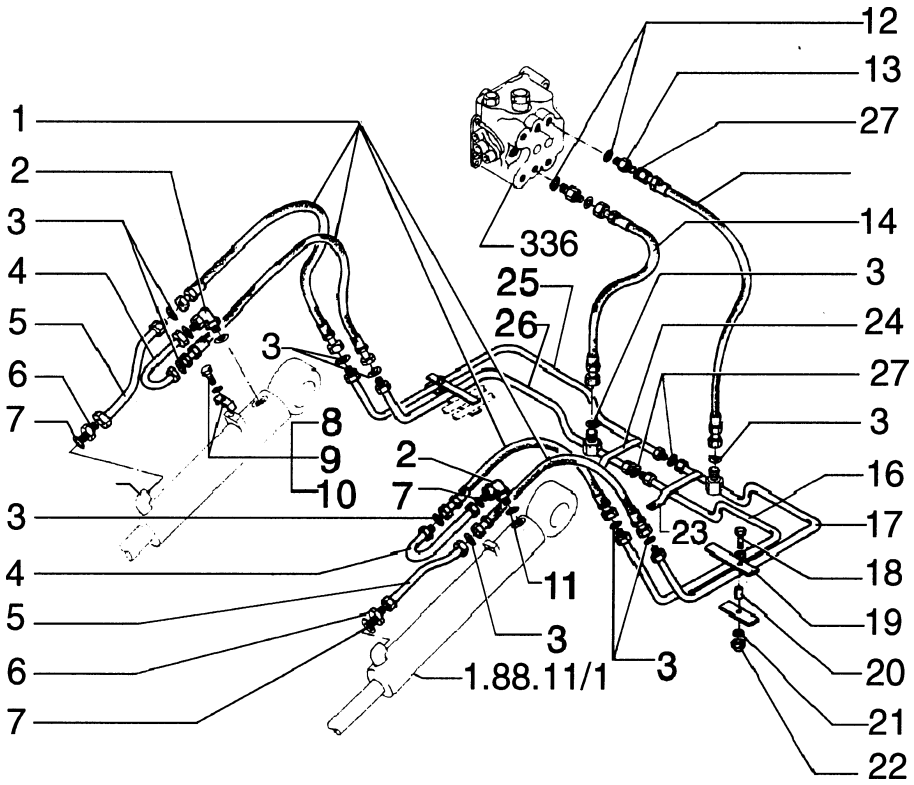

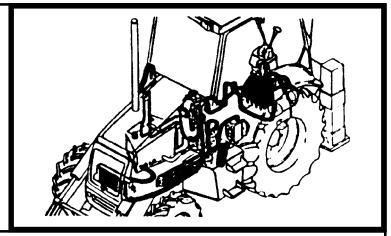

MOD	R	P/N. Imola	P/N. Brazil	Q	Descrição Denominacion	Description Descrizione	L.C.
	21		**70929292**	2	ARRUELA ARANDELA	WASHER ROSETTA	131R
	22	**16104111**	**16104121**	2	PORCA TUERCA	NUT DADO	010D
	23	**85802941**		1	ABRAÇADEIRA ABRAZADERA	CLAMP FASCETTA	031F
	24	**85802940**		1	ABRAÇADEIRA ABRAZADERA	CLAMP FASCETTA	031F
	25		**75246231**	1	TUBO TUBO	TUBE TUBO RIGIDO	193T
	26		**75246233**	1	TUBO TUBO	TUBE TUBO RIGIDO	193T
	27	**83901443**	**70930357**	4	O'RING JUNTA TORICA	O'RING GUARNIZIONE O-R	158G

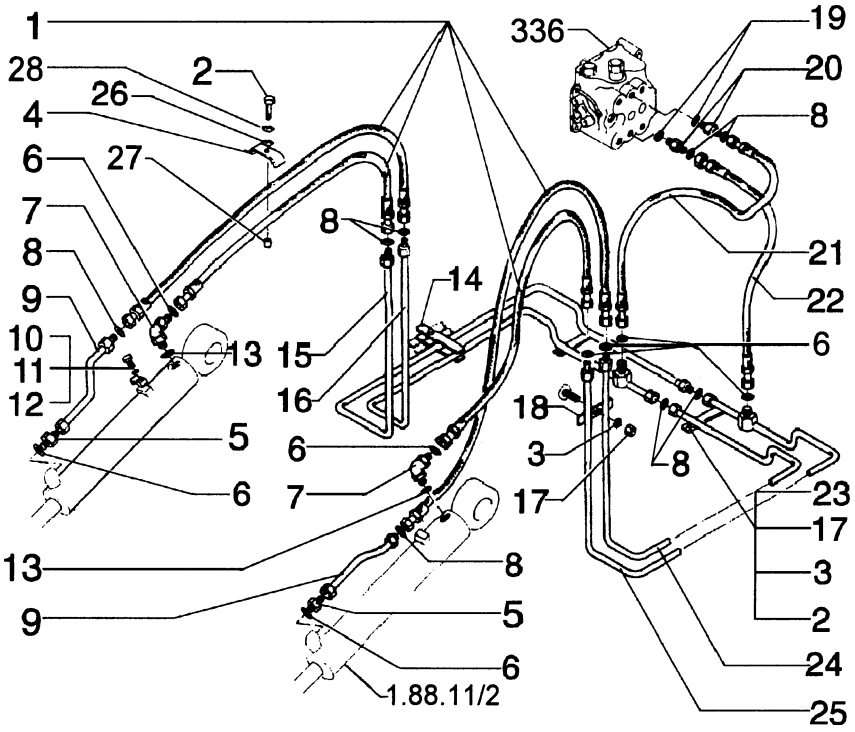

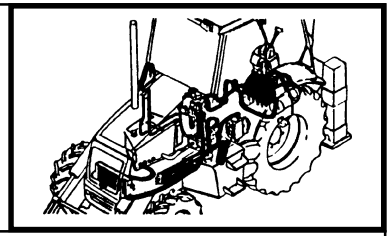

MOD	R	P/N. Imola	P/N. Brazil	Q	Descrição Denominacion	Description Descrizione	L.C.
	1		**75246170**	4	MANGUEIRA MANGA C/RACORDE	HOSE ASSY TUBO FLESSIBILE	192T
	2		**16043831**	2	PARAFUSO TORNILLO	SCREW VITE	040V
	3		**11197879**	6	ARRUELA ARANDELA	WASHER ROSETTA	131R
	4	**85700327**		4	ABRAÇADEIRA ABRAZADERA	CLAMP FASCETTA	031F
	5	**83963376**	**75236793**	2	CONEXÃO RACOR	FITTING RACCORDO	020R
	6	**81845038**	**70923841**	10	O'RING JUNTA TORICA	O'RING GUARNIZIONE O-R	158G
	7		**75246915**	2	CONEXÃO RACOR	FITTING RACCORDO	020R
	8	**83901443**	**70930357**	4	O'RING JUNTA TORICA	O'RING GUARNIZIONE O-R	158G
	9		**75246295**	2	TUBO TUBO	TUBE TUBO RIGIDO	193T
	10		**71415883**	2	ABRAÇADEIRA ABRAZADERA	CLAMP FASCETTA	031F
	11		**11106431**	2	PARAFUSO TORNILLO	SCREW VITE	040V
	12	**10516674**	**10516871**	2	ARRUELA PRESSÃO ARANDELA ELAST.	LOCKWASHER ROSETTA ELAST.	170R
	13	**80167268**	**70926538**	2	O'RING JUNTA TORICA	O'RING GUARNIZIONE O-R	158G
	14	**85802926**		2	ABRAÇADEIRA ABRAZADERA	CLAMP FASCETTA	031F
	15		**75246227**	1	TUBO TUBO	TUBE TUBO RIGIDO	193T
	16		**75246229**	1	TUBO TUBO	TUBE TUBO RIGIDO	193T
	17	**16104111**	**16104121**	5	PORCA TUERCA	NUT DADO	010D
	18	**85802925**		2	ABRAÇADEIRA ABRAZADERA	CLAMP FASCETTA	031F
	19	**81827365**	**70928486**	4	O'RING JUNTA TORICA	O'RING GUARNIZIONE O-R	158G

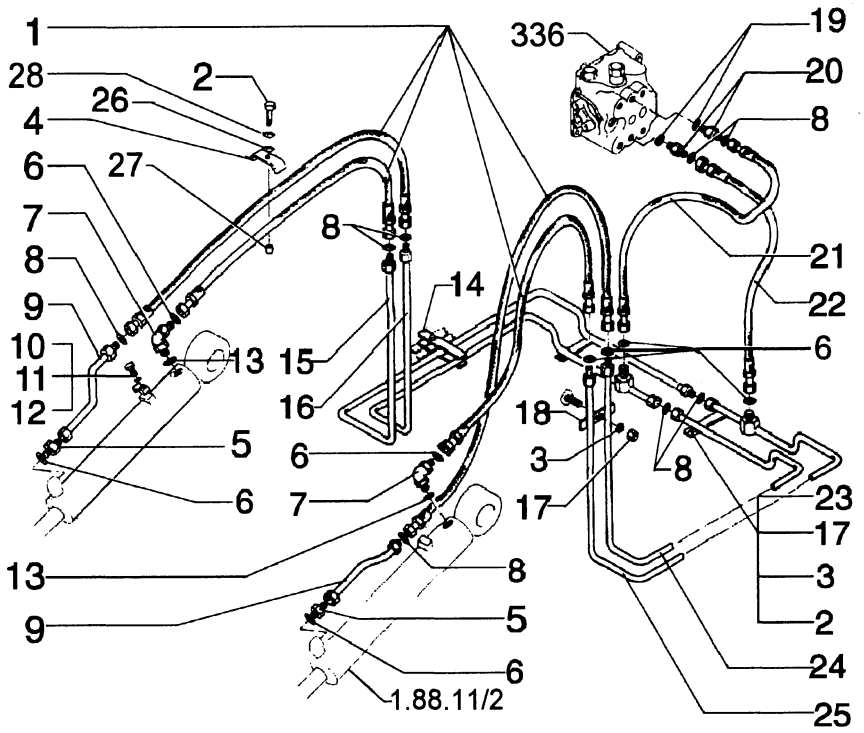

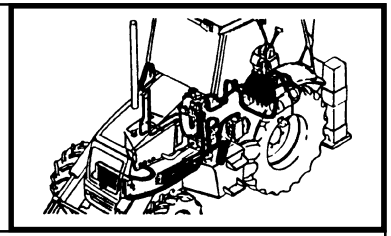

MOD	R	P/N. Imola	P/N. Brazil	Q	Descrição Denominacion	Description Descrizione	L.C.
	20	**83963000**	**76022766**	2	CONEXÃO RACOR	FITTING RACCORDO	020R
	21		**75247122**	1	MANGUEIRA MANGA C/RACORDE	HOSE ASSY TUBO FLESSIBILE	192T
	22	**85812185**		1	MANGUEIRA MANGA C/RACORDE	HOSE ASSY TUBO FLESSIBILE	192T
	23	**85802927**		2	ABRAÇADEIRA ABRAZADERA	CLAMP FASCETTA	031F
	24		**75246228**	1	TUBO TUBO	TUBE TUBO RIGIDO	193T
	25		**75246221**	1	TUBO TUBO	TUBE TUBO RIGIDO	193T
	26		**12647121**	2	ARRUELA ARANDELA	WASHER ROSETTA	131R
	27	**83971589**		2	ESPAÇADOR SEPARADOR	SPACER DISTANZIALE	075D
	28		**11193979**	2	ARRUELA ARANDELA	WASHER ROSETTA	131R

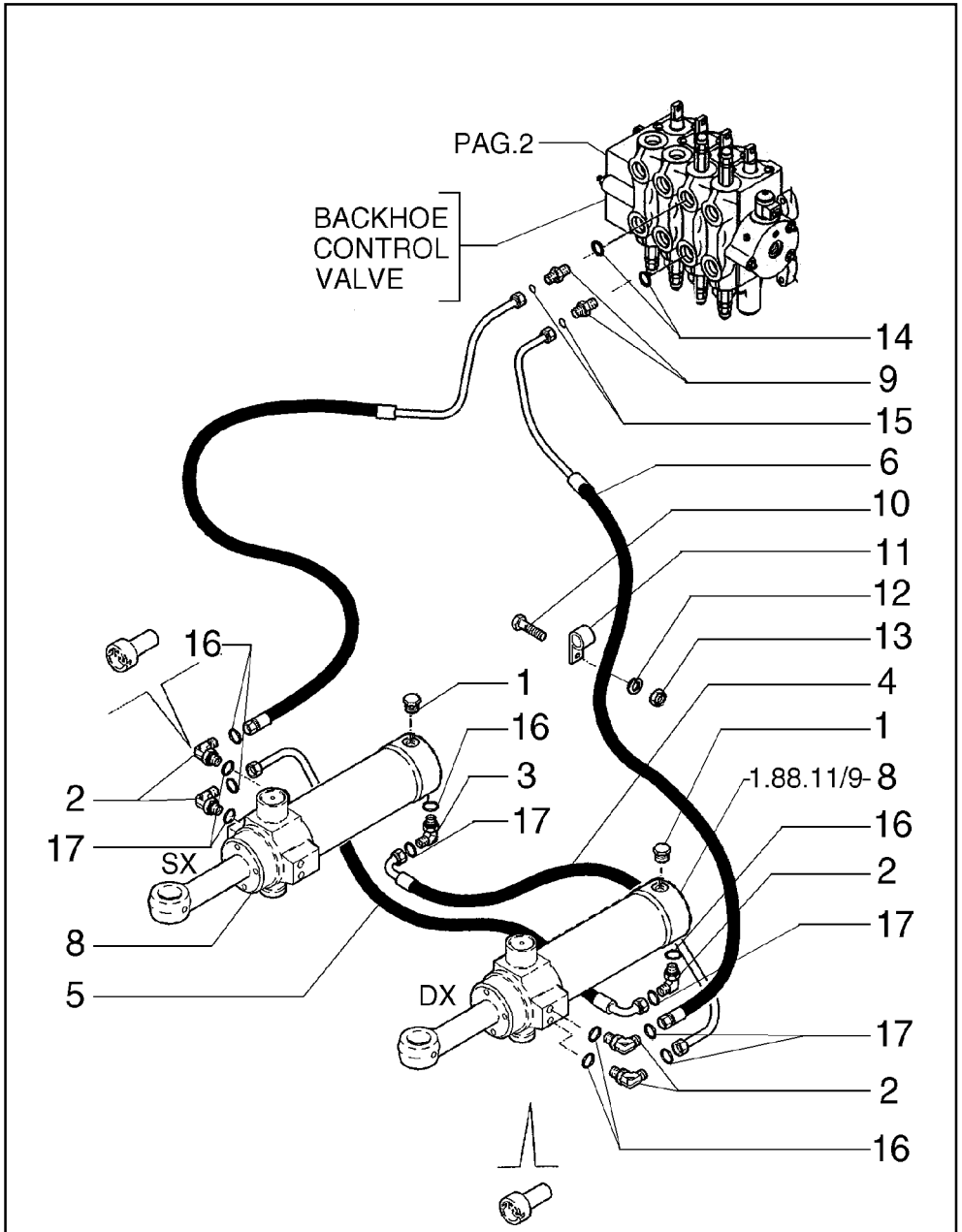

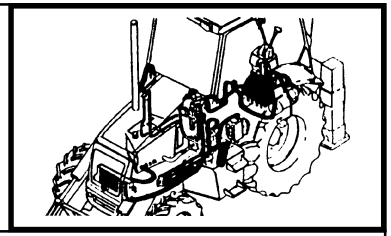

MOD	R	P/N. Imola	P/N. Brazil	Q	Descrição Denominacion	Description Descrizione	L.C.
	1	**85802955**		2	BUJÃO TAPON	PLUG TAPPO	050T
	2	**83971549**	**76022816**	5	CONEXÃO RACOR	FITTING RACCORDO	020R
	3	**83963374**	**76021263**	1	CONEXÃO RACOR	FITTING RACCORDO	020R
	4	**85819727**		1	MANGUEIRA MANGA C/RACORDE	HOSE ASSY TUBO FLESSIBILE	192T
	5	**85819729**		1	MANGUEIRA MANGA C/RACORDE	HOSE ASSY TUBO FLESSIBILE	192T
	6	**85819730**		1	MANGUEIRA MANGA C/RACORDE	HOSE ASSY TUBO FLESSIBILE	192T
	7	**85819728**		1	MANGUEIRA MANGA C/RACORDE	HOSE ASSY TUBO FLESSIBILE	192T
	8	**85800355**		2	CILINDRO CILINDRO	CYLINDER CILINDRO	164C
	9	**83963376**		2	CONEXÃO RACOR	FITTING RACCORDO	020R
	10	**10902224**	**10902221**	1	PARAFUSO TORNILLO	SCREW VITE	040V
	11	**85802954**		1	ABRAÇADEIRA ABRAZADERA	CLAMP FASCETTA	031F
	12	**14496404**		2	ARRUELA ARANDELA	WASHER ROSETTA	131R
	13	**12574221**		1	PORCA TUERCA	NUT DADO	010D
	14	**81827365**	**70928486**	2	O'RING JUNTA TORICA	O'RING GUARNIZIONE O-R	158G
	15	**81845038**	**70923841**	2	O'RING JUNTA TORICA	O'RING GUARNIZIONE O-R	158G
	16	**80128825**		6	O'RING JUNTA TORICA	O'RING GUARNIZIONE O-R	158G
	17	**89992298**		6	O'RING JUNTA TORICA	O'RING GUARNIZIONE O-R	158G

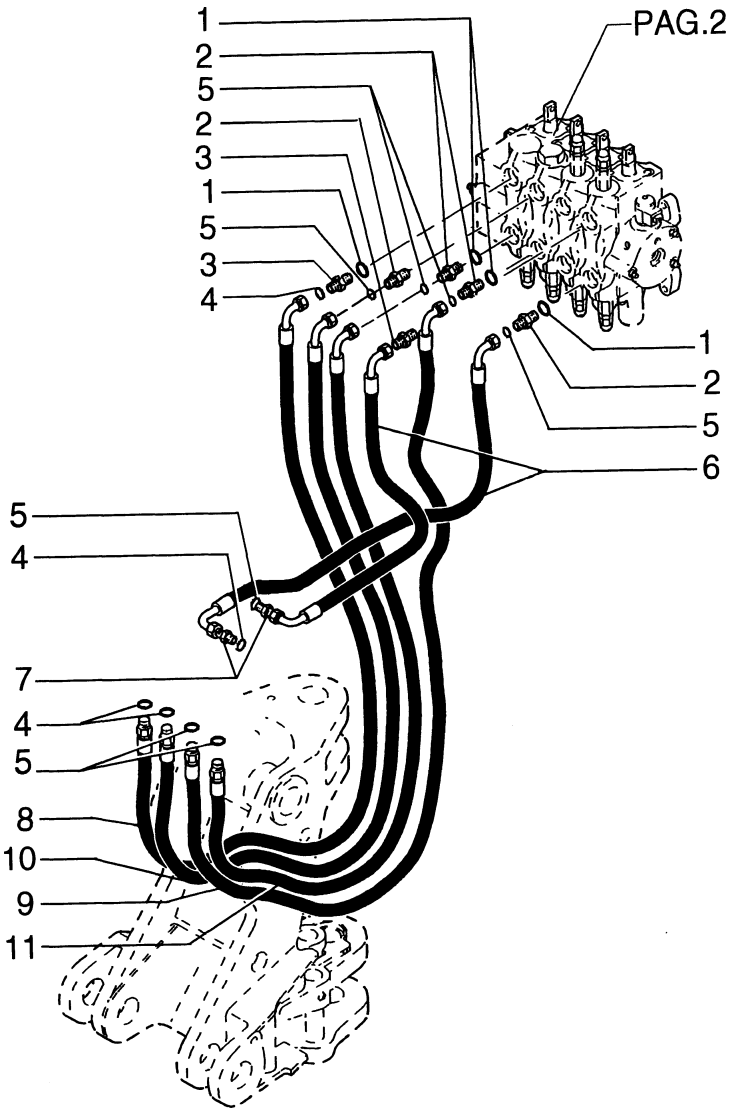

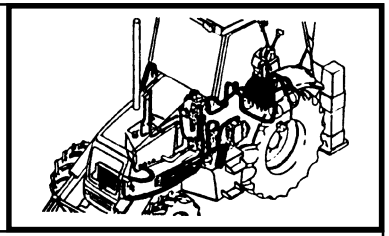

MOD	R	P/N. Imola	P/N. Brazil	Q	Descrição Denominacion	Description Descrizione	L.C.
	1	**81827365**	**70928486**	6	O'RING JUNTA TORICA	O'RING GUARNIZIONE O-R	158G
	2		**76022766**	4	CONEXÃO RACOR	FITTING RACCORDO	020R
	3		**75236793**	2	CONEXÃO RACOR	FITTING RACCORDO	020R
	4	**81845038**	**70935175**	5	O'RING JUNTA TORICA	O'RING GUARNIZIONE O-R	158G
	5	**83901443**	**70930357**	7	O'RING JUNTA TORICA	O'RING GUARNIZIONE O-R	158G
	6		**75245967**	2	MANGUEIRA MANGA C/RACORDE	HOSE ASSY TUBO FLESSIBILE	192T
	7		**75245971**	2	CONEXÃO RACOR	FITTING RACCORDO	020R
	8		**75247190**	1	MANGUEIRA MANGA C/RACORDE	HOSE ASSY TUBO FLESSIBILE	192T
	9		**75245898**	1	MANGUEIRA MANGA C/RACORDE	HOSE ASSY TUBO FLESSIBILE	192T
	10		**75280842**	1	MANGUEIRA MANGA C/RACORDE	HOSE ASSY TUBO FLESSIBILE	192T
	11		**75280841**	1	MANGUEIRA MANGA C/RACORDE	HOSE ASSY TUBO FLESSIBILE	192T

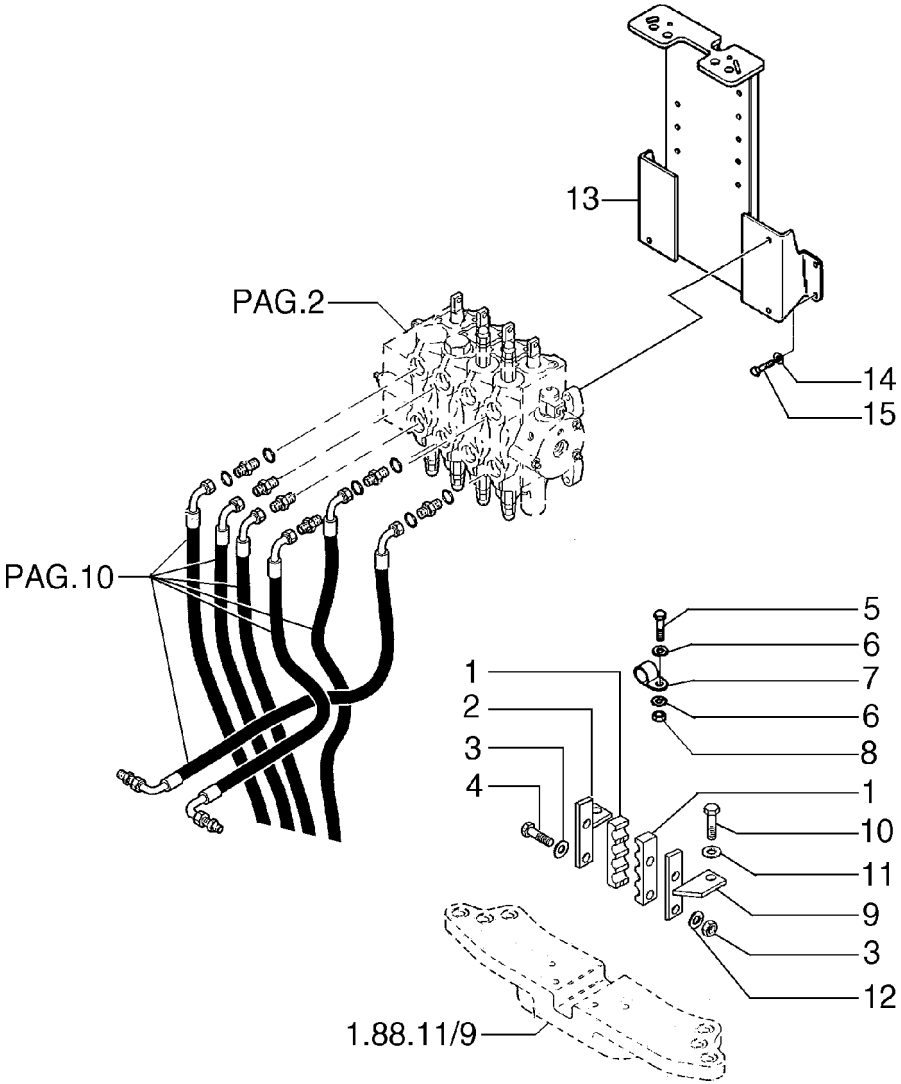

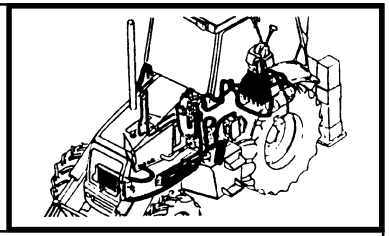

MOD	R	P/N. Imola	P/N. Brazil	Q	Descrição Denominacion	Description Descrizione	L.C.
	1	**85802731**		1	ESTRIBO ESTRIBO	BRACKET STAFFA	225S
	2	**85804573**	**75249444**	1	SUPORTE SOPORTE	SUPPORT SUPPORTO	300S
	3	**12647121**	**70929292**	4	ARRUELA ARANDELA	WASHER ROSETTA	131R
	4	**16044424**	**16044531**	2	PARAFUSO TORNILLO	SCREW VITE	040V
	5	**10902224**	**10902221**	1	PARAFUSO TORNILLO	SCREW VITE	040V
	6	**14496404**	**10730101**	2	ARRUELA PRESSÃO ARANDELA ELAST.	LOCKWASHER ROSETTA ELAST.	170R
	7	**85803131**		1	ABRAÇADEIRA ABRAZADERA	CLAMP FASCETTA	031F
	8	**12574221**		1	PORCA TUERCA	NUT DADO	010D
	9	**85804574**	**75249446**	1	SUPORTE SOPORTE	SUPPORT SUPPORTO	300S
	10	**11106231**		2	PARAFUSO TORNILLO	SCREW VITE	040V
	11	**11190574**	**14496621**	2	ARRUELA ARANDELA	WASHER ROSETTA	131R
	12	**16104121**		2	PORCA TUERCA	NUT DADO	010D
	13	**85801480**	**75246956**	1	SUPORTE SOPORTE	SUPPORT SUPPORTO	300S
	14	**11190774**	**70928178**	4	ARRUELA PRESSÃO ARANDELA ELAST.	LOCKWASHER ROSETTA ELAST.	170R
	15	**11112821**	**11112431**	4	PARAFUSO TORNILLO	SCREW VITE	040V

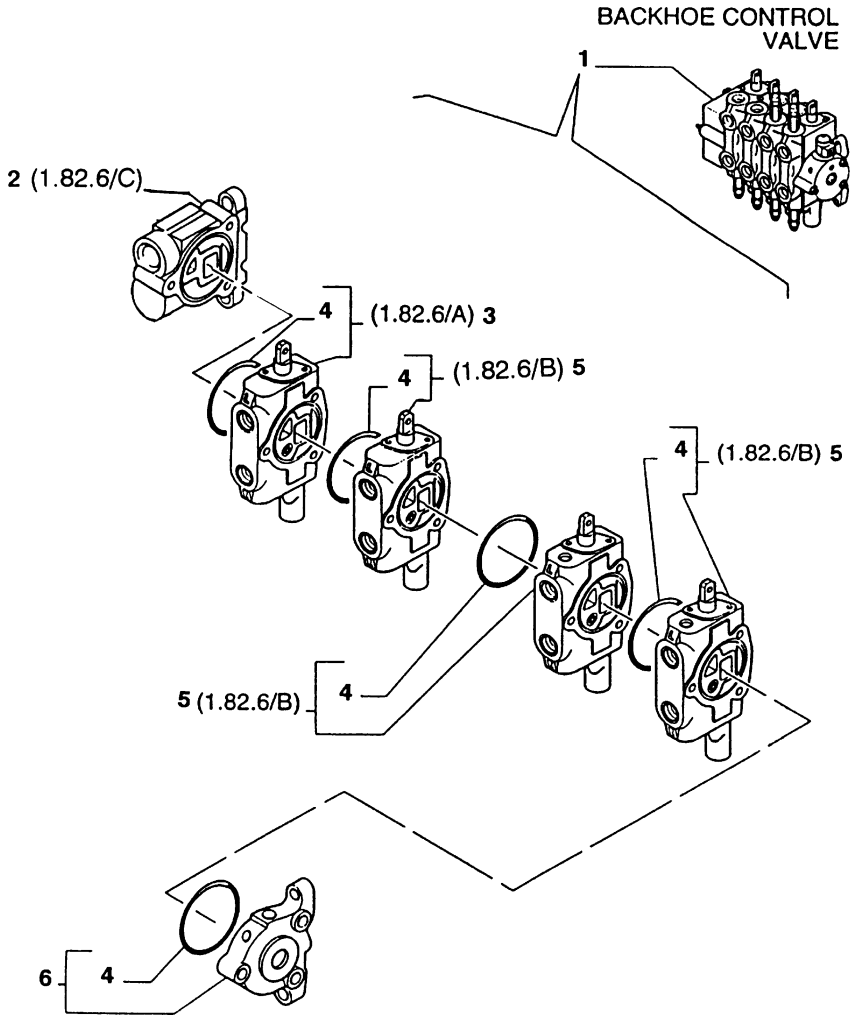

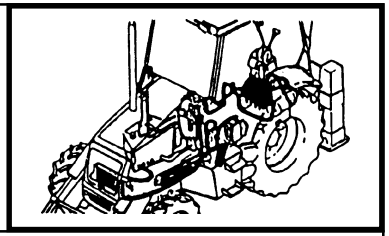

MOD	R	P/N. Imola	P/N. Brazil	Q	Descrição Denominacion	Description Descrizione	L.C.
	1	**85805701**		1	DISTRIBUIDOR DISTRIBUIDOR	CONTROL VALVE DISTRIBUTORE	083D
	2	**9968496**		1	VÁLVULA VALVULA	VALVE VALVOLA	010V
	3	**9968492**		1	VÁLVULA VALVULA	VALVE VALVOLA	010V
	4	**9968495**		5	VÁLVULA VALVULA	VALVE VALVOLA	010V
	5	**9968493**		3	O'RING JUNTA TORICA	O'RING GUARNIZIONE O-R	158G
	6	**9968494**		1	VÁLVULA VALVULA	VALVE VALVOLA	010V

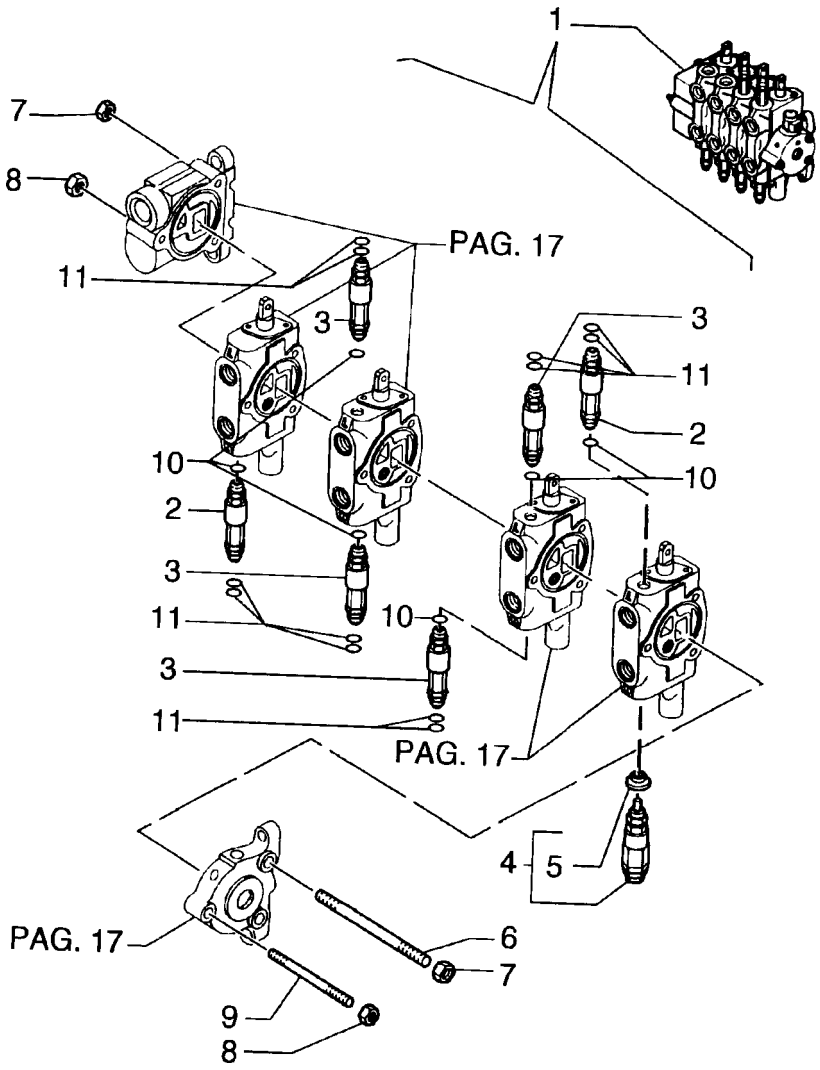

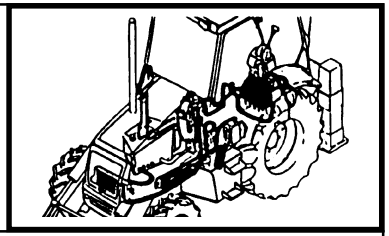

MOD	R	P/N. Imola	P/N. Brazil	Q	Descrição Denominacion	Description Descrizione	L.C.
	1	**85805701**		1	DISTRIBUIDOR DISTRIBUIDOR	CONTROL VALVE DISTRIBUTORE	083D
	2	**9968595**		2	VÁLVULA VALVULA	VALVE VALVOLA	010V
	3	**9968596**		4	VÁLVULA VALVULA	VALVE VALVOLA	010V
	4	**9968508**		1	VÁLVULA VALVULA	VALVE VALVOLA	010V
	5	**9968509**		1	RETENTOR EMPAQUETADURA	SEAL ASSY GUARNIZIONE	123G
	6	**9968505**		2	PRISIONEIRO ESPARRAGO	STUD PRIGIONIERO	210P
	7	**9968504**		4	PORCA TUERCA	NUT DADO	010D
	8	**9968507**		2	PORCA TUERCA	NUT DADO	010D
	9	**9968506**		1	PRISIONEIRO ESPARRAGO	STUD PRIGIONIERO	210P
	10	**14457481**		6	O'RING JUNTA TORICA	O'RING GUARNIZIONE O-R	158G
	11	**14453081**		12	O'RING JUNTA TORICA	O'RING GUARNIZIONE O-R	158G

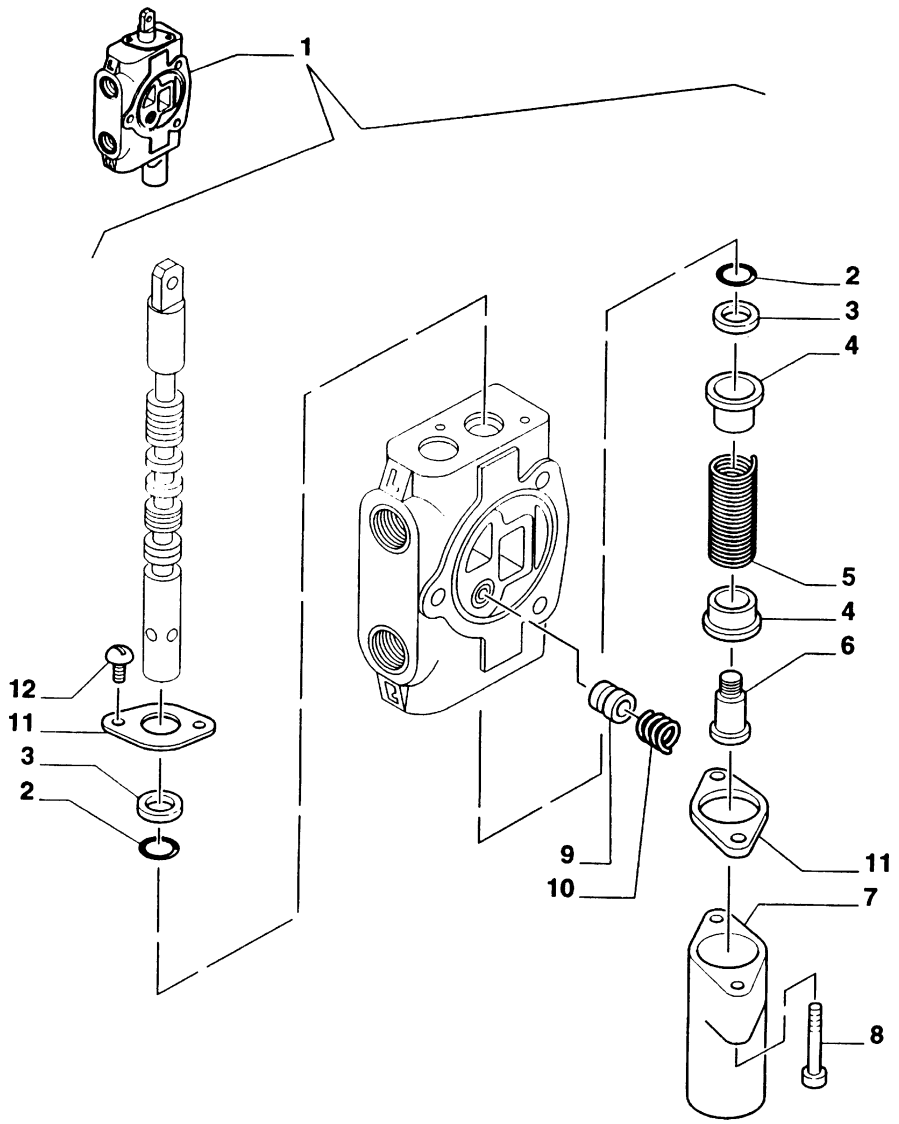

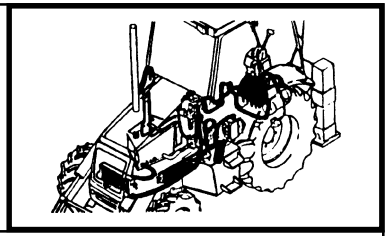

MOD	R	P/N. Imola	P/N. Brazil	Q	Descrição Denominacion	Description Descrizione	L.C.
	1	**9968492**		1	VÁLVULA VALVULA	VALVE VALVOLA	010V
	2	**85999136**		2	O'RING JUNTA TORICA	O'RING GUARNIZIONE O-R	158G
	3	**85999138**		2	ANEL RASPADOR ANEL RASCADOR	OILSCRAPER RING ANELLO RASCHIAOLIO	050A
	4	**9968512**		2	SEDE ASIENTO	SEAT SEDE	069S
	5	**9968514**		1	MOLA MUELLE	SPRING MOLLA	100M
	6	**9968515**		1	PARAFUSO TORNILLO	SCREW VITE	040V
	7	**9968513**		1	TAMPA TAPA	COVER COPERCHIO	265C
	8	**9968516**		2	PARAFUSO TORNILLO	SCREW VITE	040V
	9	**9968510**		1	PISTAO EMBOLO	PLUNGER PISTONCINO	130P
	10	**9968511**		1	MOLA MUELLE	SPRING MOLLA	100M
	11	**9968458**		2	PLACA PLACA	PLATE PIASTRINA	110P
	12	**9968460**		2	PARAFUSO TORNILLO	SCREW VITE	040V

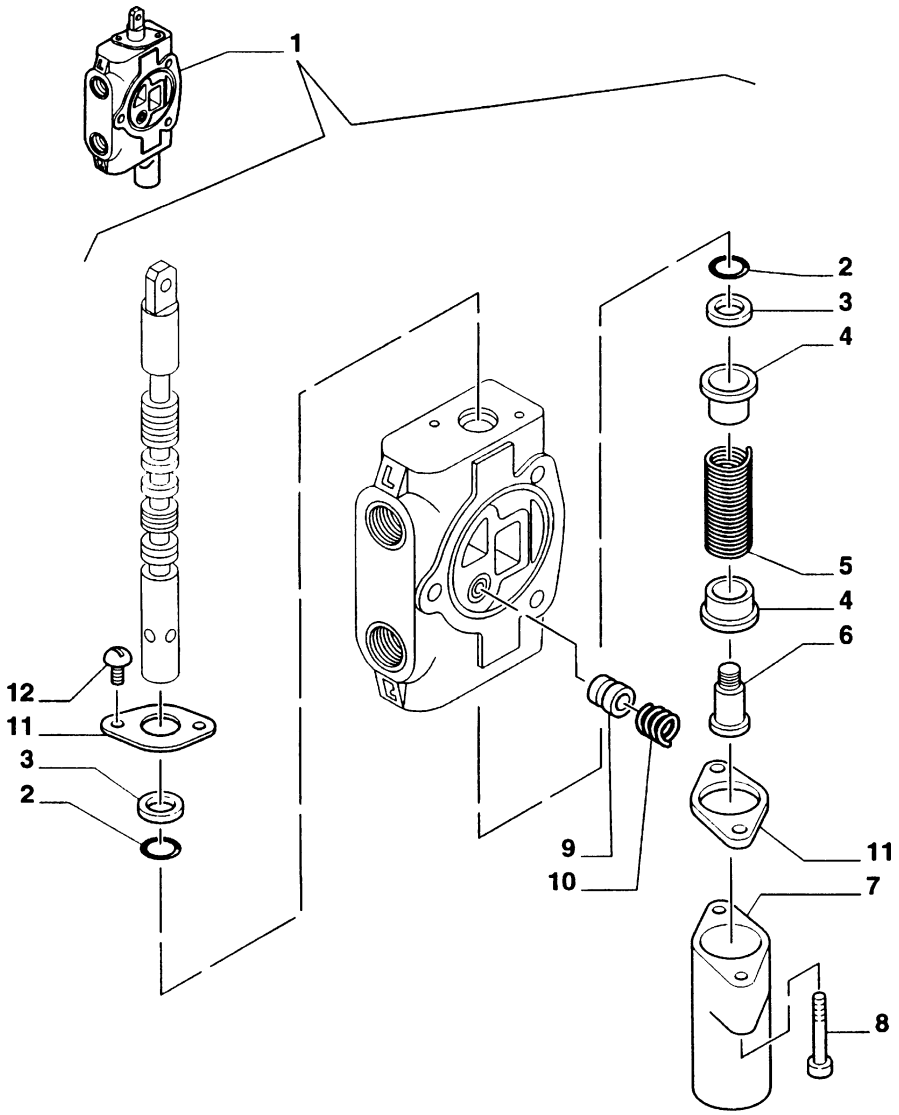

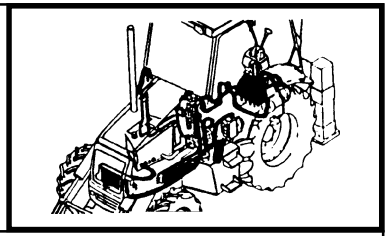

MOD	R	P/N. Imola	P/N. Brazil	Q	Descrição Denominacion	Description Descrizione	L.C.
	1	**9968493**		1	VÁLVULA VALVULA	VALVE VALVOLA	010V
	2	**85999136**		2	O'RING JUNTA TORICA	O'RING GUARNIZIONE O-R	158G
	3	**85999138**		2	ANEL RASPADOR ANEL RASCADOR	OILSCRAPER RING ANELLO RASCHIAOLIO	050A
	4	**9968512**		2	SEDE ASIENTO	SEAT SEDE	069S
	5	**9968514**		1	MOLA MUELLE	SPRING MOLLA	100M
	6	**9968515**		1	PARAFUSO TORNILLO	SCREW VITE	040V
	7	**9968513**		1	TAMPA TAPA	COVER COPERCHIO	265C
	8	**9968516**		2	PARAFUSO TORNILLO	SCREW VITE	040V
	9	**9968510**		1	PISTAO EMBOLO	PLUNGER PISTONCINO	130P
	10	**9968511**		1	MOLA MUELLE	SPRING MOLLA	100M
	11	**9968458**		2	PLACA PLACA	PLATE PIASTRINA	110P
	12	**9968460**		2	PARAFUSO TORNILLO	SCREW VITE	040V

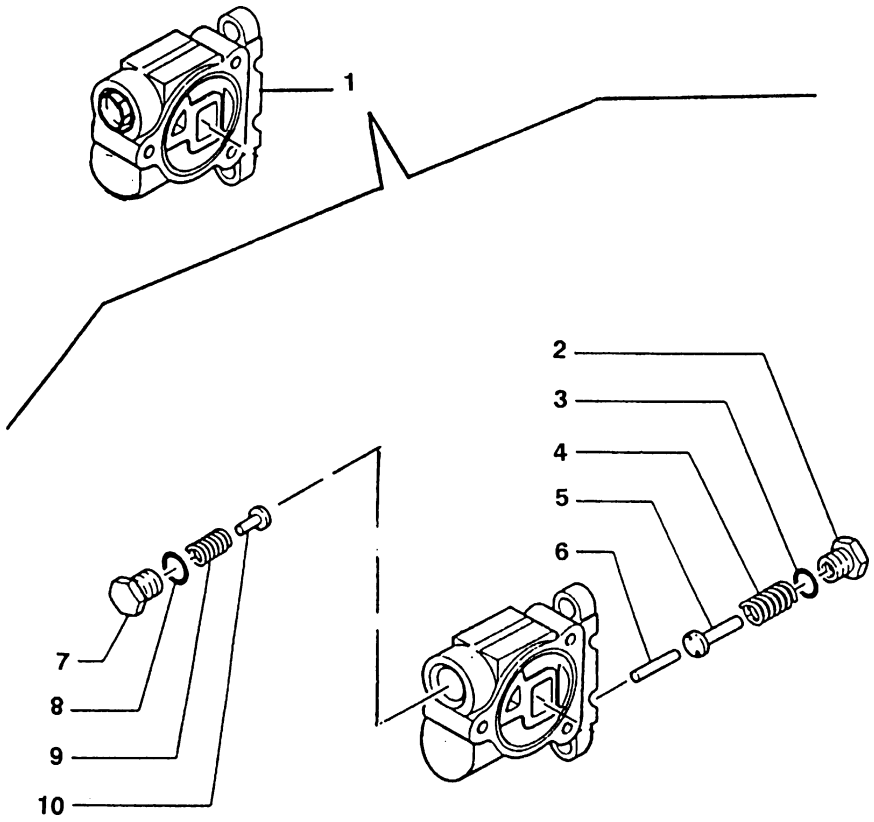

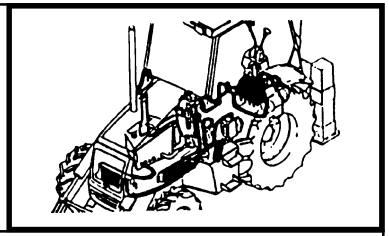

MOD	R	P/N. Imola	P/N. Brazil	Q	Descrição Denominacion	Description Descrizione	L.C.
	1	**9968496**		1	VÁLVULA VALVULA	VALVE VALVOLA	010V
	2	**9968501**		1	BUJÃO TAPON	PLUG TAPPO	050T
	3	**9968502**		1	O'RING JUNTA TORICA	O'RING GUARNIZIONE O-R	158G
	4	**9968500**		1	MOLA MUELLE	SPRING MOLLA	100M
	5	**9968503**		1	GUIA PATIN	PAD PATTINO	045P
	6	**9968497**		1	PINO PASADOR	PIN SPINA	200S
	7	**9968498**		1	BUJÃO TAPON	PLUG TAPPO	050T
	8	**9968468**		1	O'RING JUNTA TORICA	O'RING GUARNIZIONE O-R	158G
	9	**9968448**		1	MOLA MUELLE	SPRING MOLLA	100M
	10	**9968499**		1	GUIA PATIN	PAD PATTINO	045P

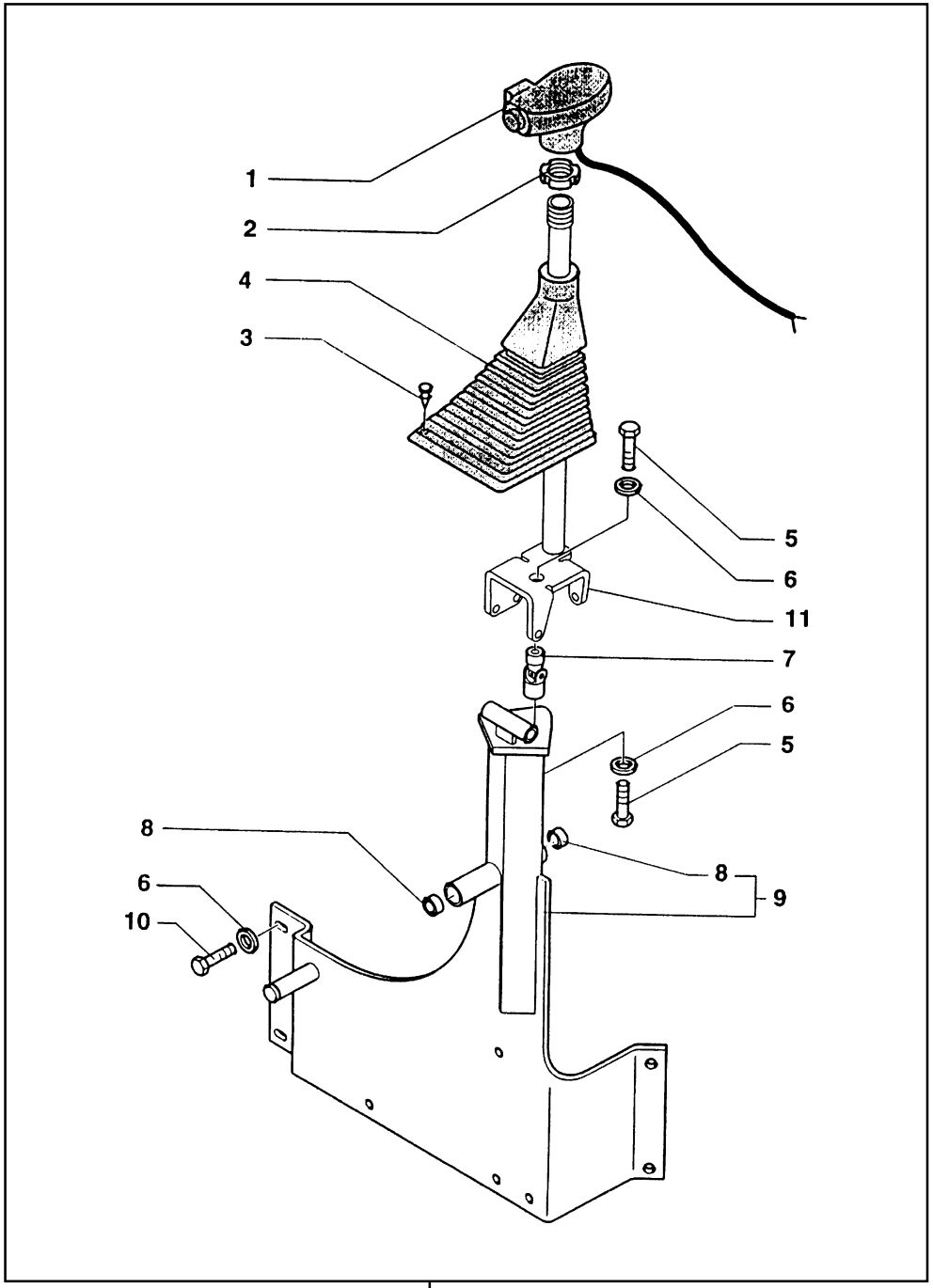

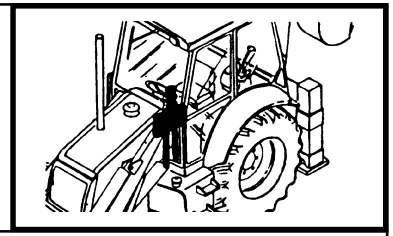

MOD	R	P/N. Imola	P/N. Brazil	Q	Descrição Denominacion	Description Descrizione	L.C.
	1	**85803055**		1	EMPUNHADURA EMPUNADURA	HANDGRIP IMPUGNATURA	025I
	2	**83977174**		1	PORCA TUERCA	NUT DADO	010D
	3	**14568887**	**14590887**	4	BOTAO BOTON	BUTTON BOTTONE	120B
	4	**85802842**		1	COIFA PARA PO CAPUCHA	DUST BOOT CUFFIA PARAPOLV	334C
	5	**15540321**	**15540331**	2	PARAFUSO TORNILLO	SCREW VITE	040V
	6	**11190774**	**70926191**	6	ARRUELA ARANDELA	WASHER ROSETTA	131R
	7	**85801518**	**75247612**	1	JUNTA ESFÉRICA ARTIC.ESFERICA	BALL JOINT GIUNTO SFERICO	070G
	8	**85802494**	**83962857**	2	BUCHA BUJE	BUSHING BOCCOLA	095B
	9	**85801582**	**75246123**	1	SUPORTE SOPORTE	SUPPORT SUPPORTO	300S
	10	**11112821**	**11112431**	4	PARAFUSO TORNILLO	SCREW VITE	040V
	11	**85802617**		1	SUPORTE SOPORTE	SUPPORT SUPPORTO	300S

FB80.3 - FB100.3

ALAVANCA DE COMANDO DA CARREGADEIRA E SUPORTE DO DISTRIBUIDOR
SOPORTE DEL DISTRIBUIDOR ANTERIOR Y REENVIOS
FRONT CONTROL VALVE SUPPORT AND TRANSMISSIONS
SUPPORTO DISTRIBUTORE ANTERIORE E RINVII

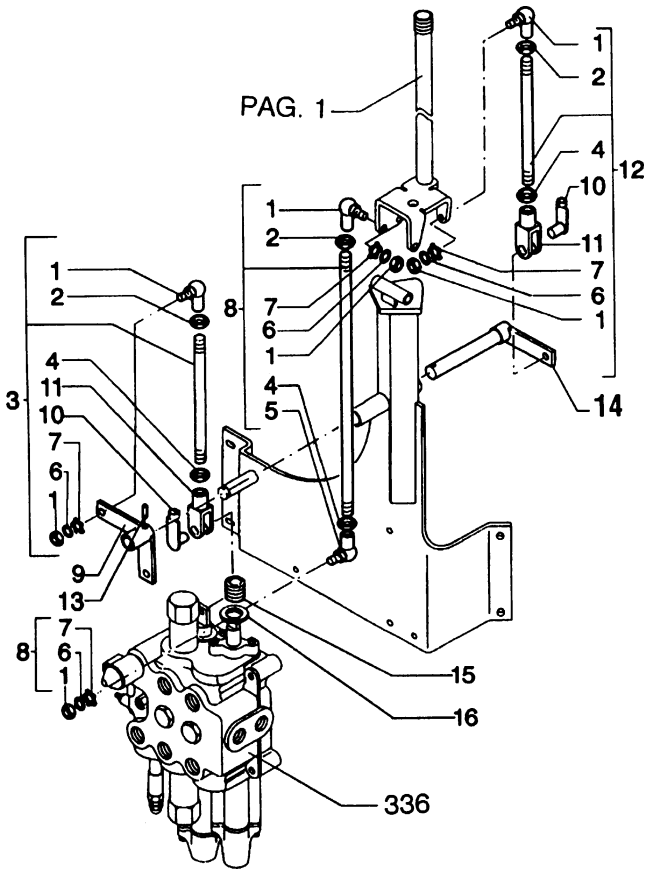

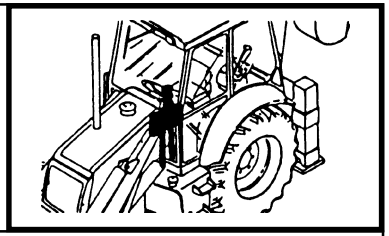

MOD	R	P/N. Imola	P/N. Brazil	Q	Descrição Denominacion	Description Descrizione	L.C.
	1	**85801517**		3	JUNTA ESFÉRICA ARTIC.ESFERICA	BALL JOINT GIUNTO SFERICO	070G
	2	**16102311**		3	PORCA TUERCA	NUT DADO	010D
	3	**85801564**		1	TIRANTE TIRANTE	TIEROD TIRANTE	142T
	4	**16102911**		3	PORCA TUERCA	NUT DADO	010D
	5	**85801544**		1	JUNTA ESFÉRICA ARTIC.ESFERICA	BALL JOINT GIUNTO SFERICO	070G
	6	**12601370**		4	ARRUELA ARANDELA	WASHER ROSETTA	131R
	7	**12598370**		4	ARRUELA ARANDELA	WASHER ROSETTA	131R
	8	**85801566**		1	TIRANTE TIRANTE	TIEROD TIRANTE	142T
	9	**85805690**	**75249272**	1	ALAVANCA PALANCA	LEVER LEVA	045L
	10	**85802738**		2	PINO BULON	PIN PERNO	080P
	11	**11991971**		2	GARFO HORCA	FORK FORCA	125F
	12	**85801562**		1	TIRANTE TIRANTE	TIEROD TIRANTE	142T
	13		**75242314**	1	PINO ELÁSTICO PASADOR ELAST.	SPRING PIN SPINA ELASTICA	202S
	14	**85805692**	**75249274**	1	ALAVANCA PALANCA	LEVER LEVA	045L
	15		**73160778**	2	PROTEÇÃO PROTECCION	GUARD RIPARO	070R
	16	**10520121**		2	ARRUELA ARANDELA	WASHER ROSETTA	131R

BODY, HOOD

CAPOT

COFANI

CAPUZES

AUVENT

MOTOR DEKSELS

MOTORHAUBE UND VERKLEIDUNG

DAKSLER

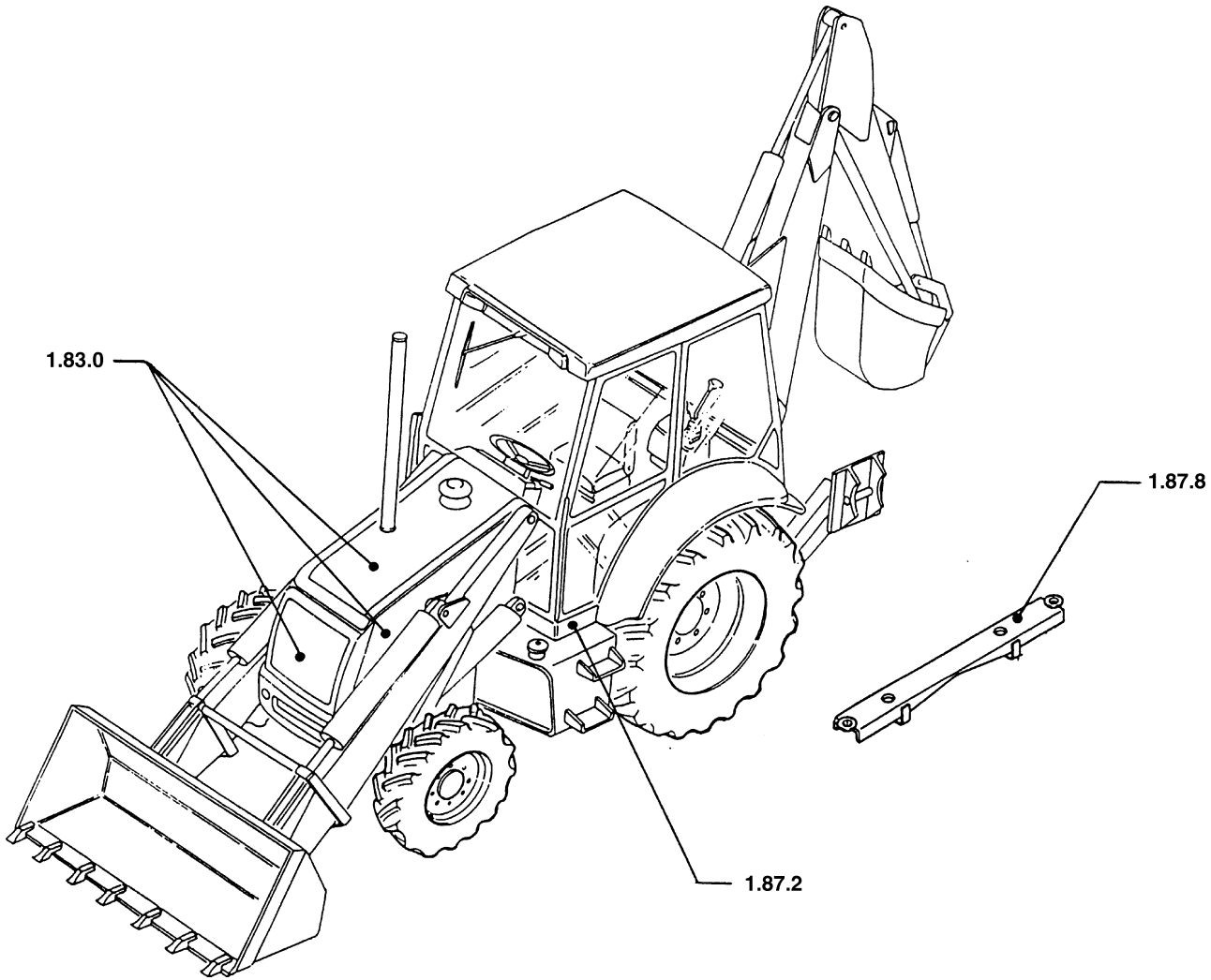

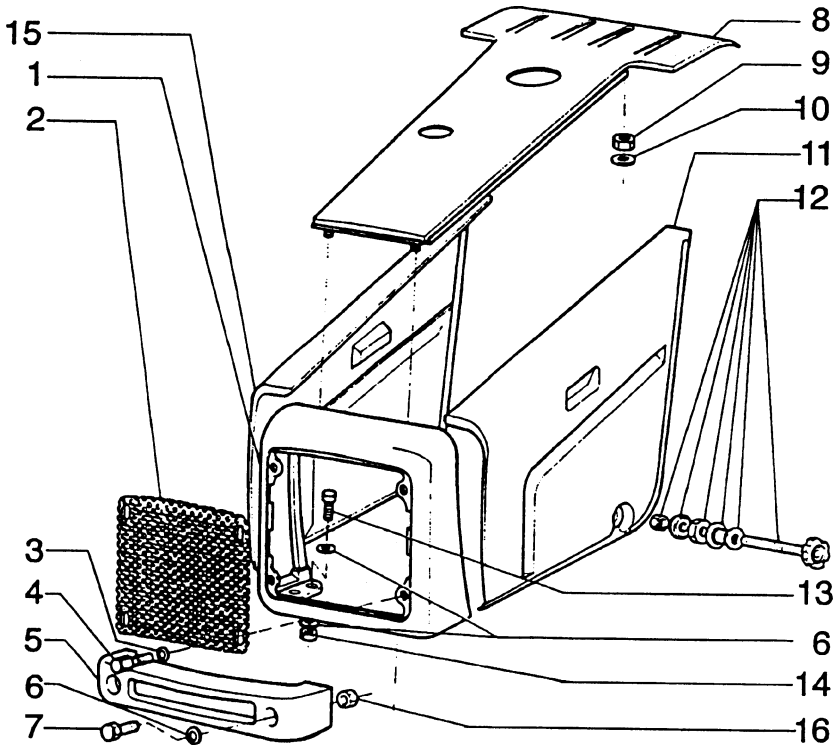

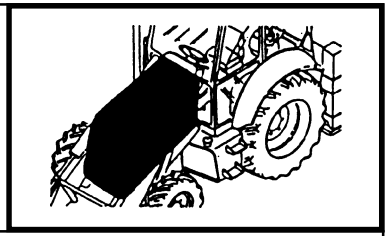

MOD	R	P/N. Imola	P/N. Brazil	Q	Descrição Denominacion	Description Descrizione	L.C.
	1		**75245582**	1	TAMPA TAPA	COVER COPERCHIO	265C
	2		**75246335**	1	GRADE REJILLA	GRID GRIGLIA	101G
	3	**11193874**	**10519601**	4	ARRUELA ARANDELA	WASHER ROSETTA	131R
	4	**16043124**	**16043131**	4	PARAFUSO TORNILLO	SCREW VITE	040V
	5	**85801356**		1	SUPORTE SOPORTE	SUPPORT SUPPORTO	300S
	6		**70927328**	10	ARRUELA ARANDELA	WASHER ROSETTA	131R
	7		**15981231**	2	PARAFUSO TORNILLO	SCREW VITE	040V
	8		**85801493**	1	CAPO CAPOT	HOOD COFANO	176C
	9		**16101521**	4	PORCA TUERCA	NUT DADO	010D
	10	**11190774**	**70926191**	4	ARRUELA ARANDELA	WASHER ROSETTA	131R
	11	**85815533**		1	PAINEL LATERAL COSTADO	SIDE PANEL FIANCHETTO	052F
	12	**85802951**	**75246363**	1	MANOPLA EMPUNADURA	KNOB POMELLO	150P
	13		**15981231**	4	PARAFUSO TORNILLO	SCREW VITE	040V
	14		**12164121**	4	PORCA TUERCA	NUT DADO	010D
	15	**85804830**		1	PAINEL LATERAL COSTADO	SIDE PANEL FIANCHETTO	052F
	16		**12574921**	2	PORCA TUERCA	NUT DADO	010D

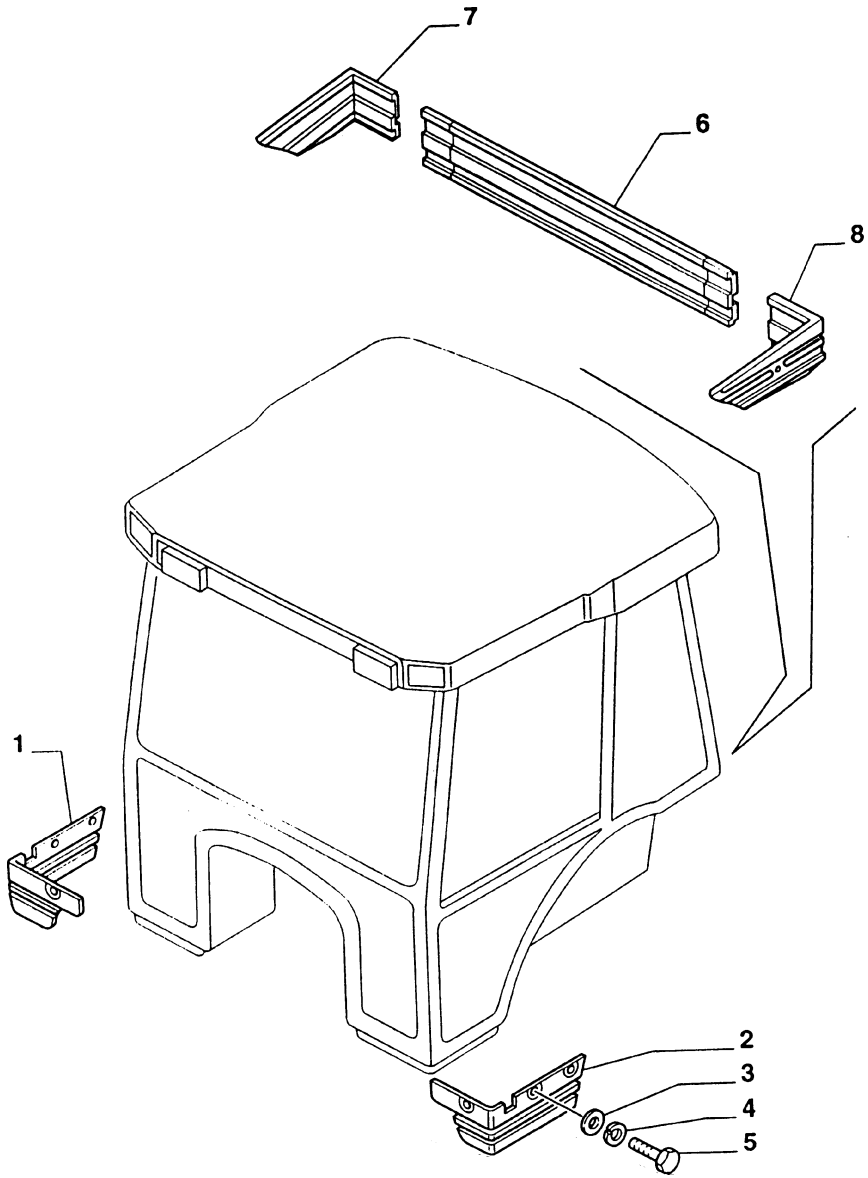

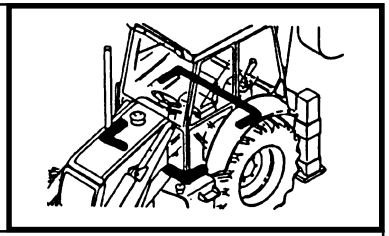

MOD	R	P/N. Imola	P/N. Brazil	Q	Descrição Denominacion	Description Descrizione	L.C.
	1	**85802952**		1	PROTEÇÃO PROTECCION	GUARD RIPARO	070R
	2	**85802953**		1	PROTEÇÃO PROTECCION	GUARD RIPARO	070R
	3	**12643721**	**12644421**	11	ARRUELA ARANDELA	WASHER ROSETTA	131R
	4	**11194674**	**10516671**	11	ARRUELA ARANDELA	WASHER ROSETTA	131R
	5	**10902724**	**10902421**	11	PARAFUSO TORNILLO	SCREW VITE	040V
	6	**85803576**		1	PROTEÇÃO PROTECCION	GUARD RIPARO	070R
	7	**85803577**		1	PROTEÇÃO PROTECCION	GUARD RIPARO	070R
	8	**85803578**		1	PROTEÇÃO PROTECCION	GUARD RIPARO	070R

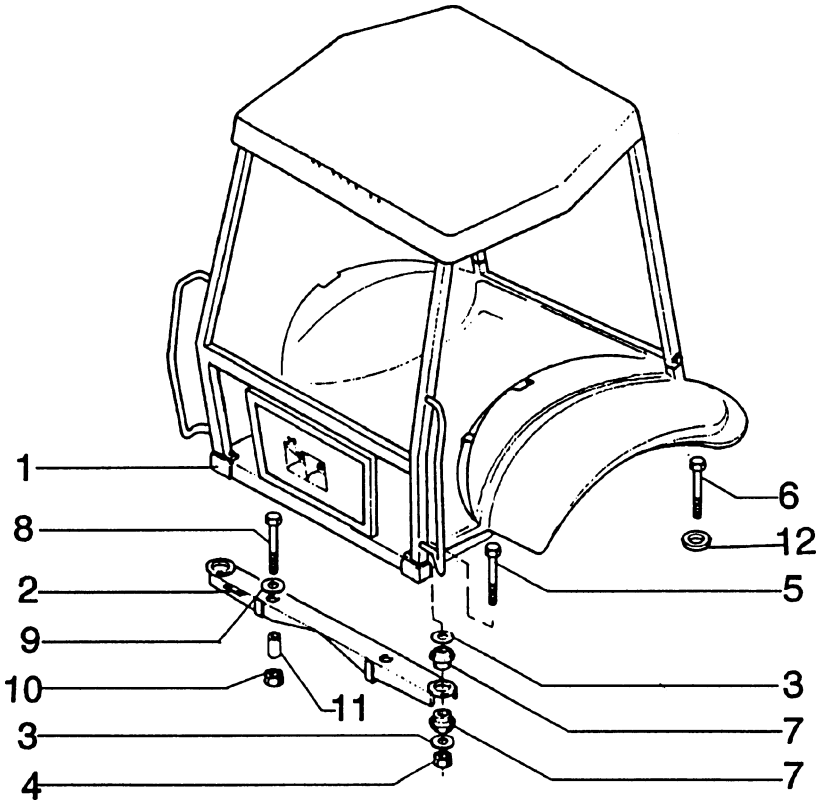

A C/Aquecimento
B C/Ar condicionado

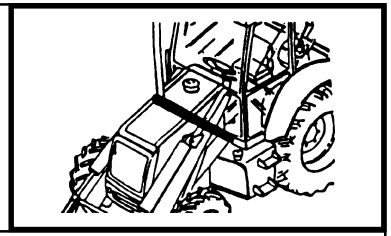

MOD	R	P/N. Imola	P/N. Brazil	Q	Descrição Denominacion	Description Descrizione	L.C.
A	1		**75257110**	1	CABINA CABINA	CAB CABINA	008C
B	1		**75257724**	1	CABINA CABINA	CAB CABINA	008C
	2		**75245575**	1	SUPORTE SUPORTE	SUPPORT SUPPORTO	300S
	3		**75235714**	6	ARRUELA ARANDELA	WASHER ROSETTA	131R
	4		**12574921**	4	PORCA TUERCA	NUT DADO	010D
	5		**15982531**	2	PARAFUSO TORNILLO	SCREW VITE	040V
	6		**15982131**	2	PARAFUSO TORNILLO	SCREW VITE	040V
	7		**75235715**	8	COXIM COJIN	CUSHION CUSCINO	345C
	8		**15989531**	2	PARAFUSO TORNILLO	SCREW VITE	040V
	9	**10520431**	**10520421**	2	ARRUELA ARANDELA	WASHER ROSETTA	131R
	10	**12575121**	**12575127**	2	PORCA TUERCA	NUT DADO	010D
	11		**75246790**	2	ESPAÇADOR SEPARADOR	SPACER DISTANZIALE	075D
	12		**75237610**	2	ARRUELA ARANDELA	WASHER ROSETTA	131R

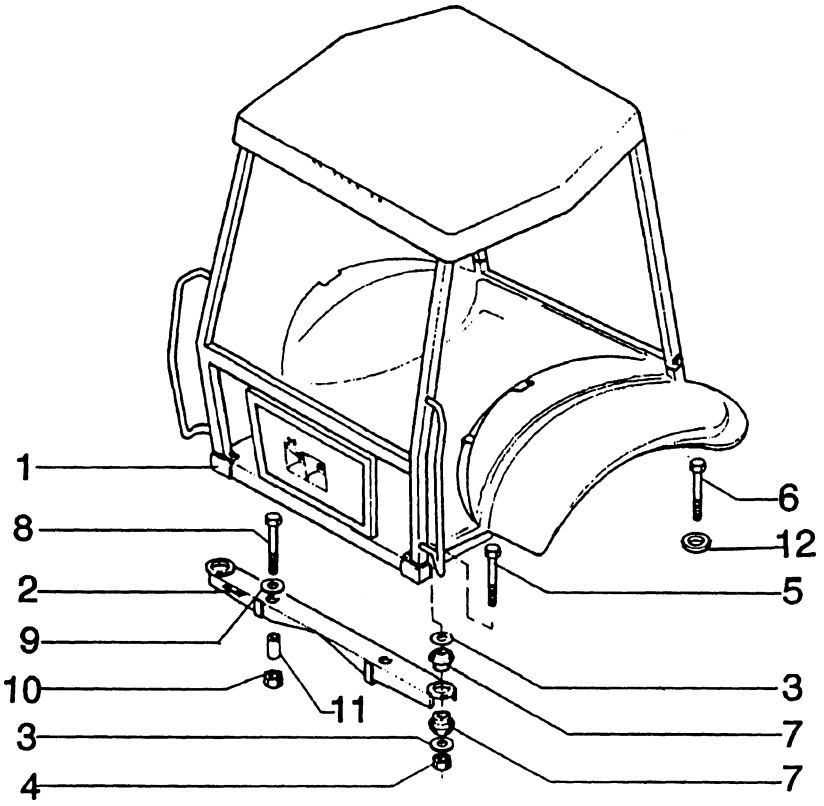

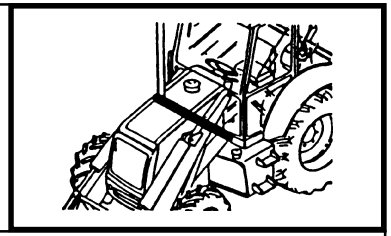

MOD	R	P/N. Imola	P/N. Brazil	Q	Descrição Denominacion	Description Descrizione	L.C.
	1		**75258467**	1	TOLDO R.O.P.S TOLDO R.O.P.S.	ROPS CANOPY STRUTTURA PROTE	408S
	2		**75245575**	1	SUPORTE SOPORTE	SUPPORT SUPPORTO	300S
	3		**75235714**	8	ARRUELA ARANDELA	WASHER ROSETTA	131R
	4		**12574921**	4	PORCA TUERCA	NUT DADO	010D
	5		**15982531**	2	PARAFUSO TORNILLO	SCREW VITE	040V
	6		**15982131**	2	PARAFUSO TORNILLO	SCREW VITE	040V
	7		**75235715**	8	COXIM COJIN	CUSHION CUSCINO	345C
	8		**15989531**	2	PARAFUSO TORNILLO	SCREW VITE	040V
	9	**10520431**	**10520421**	2	ARRUELA ARANDELA	WASHER ROSETTA	131R
	10	**12575121**	**12575127**	2	PORCA TUERCA	NUT DADO	010D
	11		**75246790**	2	ESPAÇADOR SEPARADOR	SPACER DISTANZIALE	075D
	12		**75237610**	2	ARRUELA ARANDELA	WASHER ROSETTA	131R

BACKHOE

RETROEXCAVADOR

RETROESCAVATORE

RETRO-ESCAVADORA

TRACTO-PEILE

RETROGRAAFMACHINE

HECKBAGGER

EKSKAVATOR MED BAGSKOVL

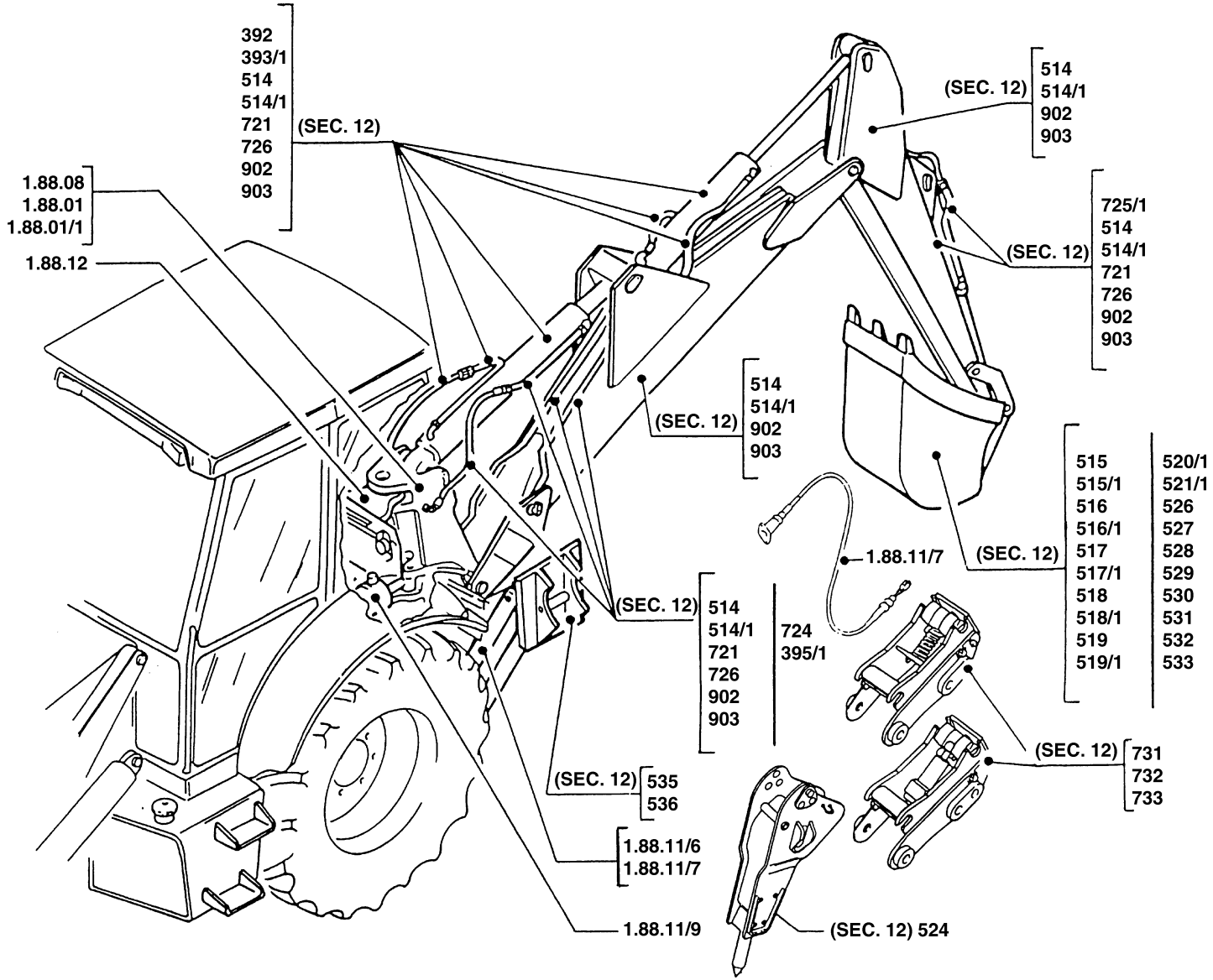

* Continued on Sec. 9

SEC. 9

LOADER | **PALA** | **CHARGEUR** | **AUFLADER**

CARGADOR | **PÁ** | **LAADSCHOP** | **GRAVEMASCKINE**

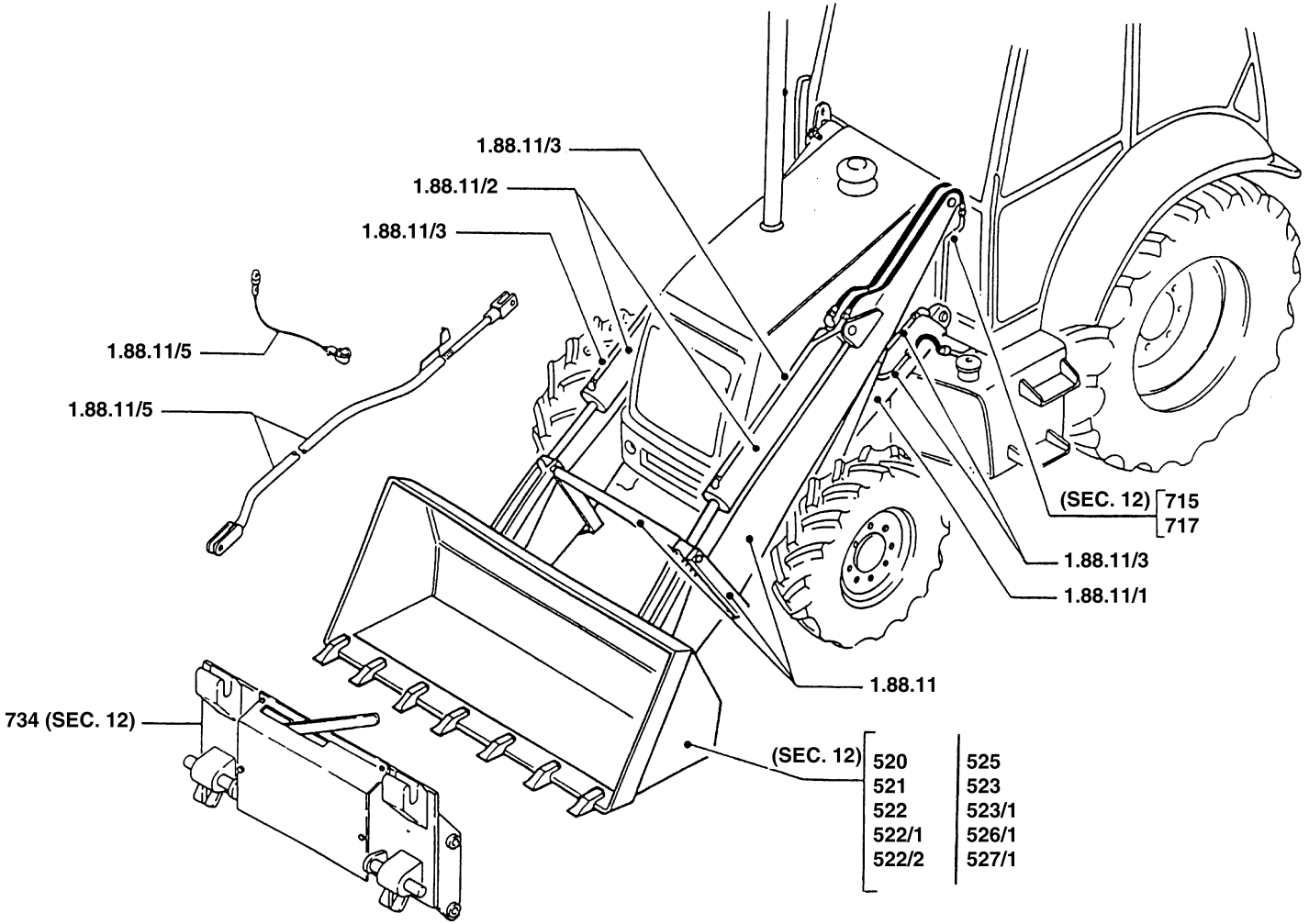

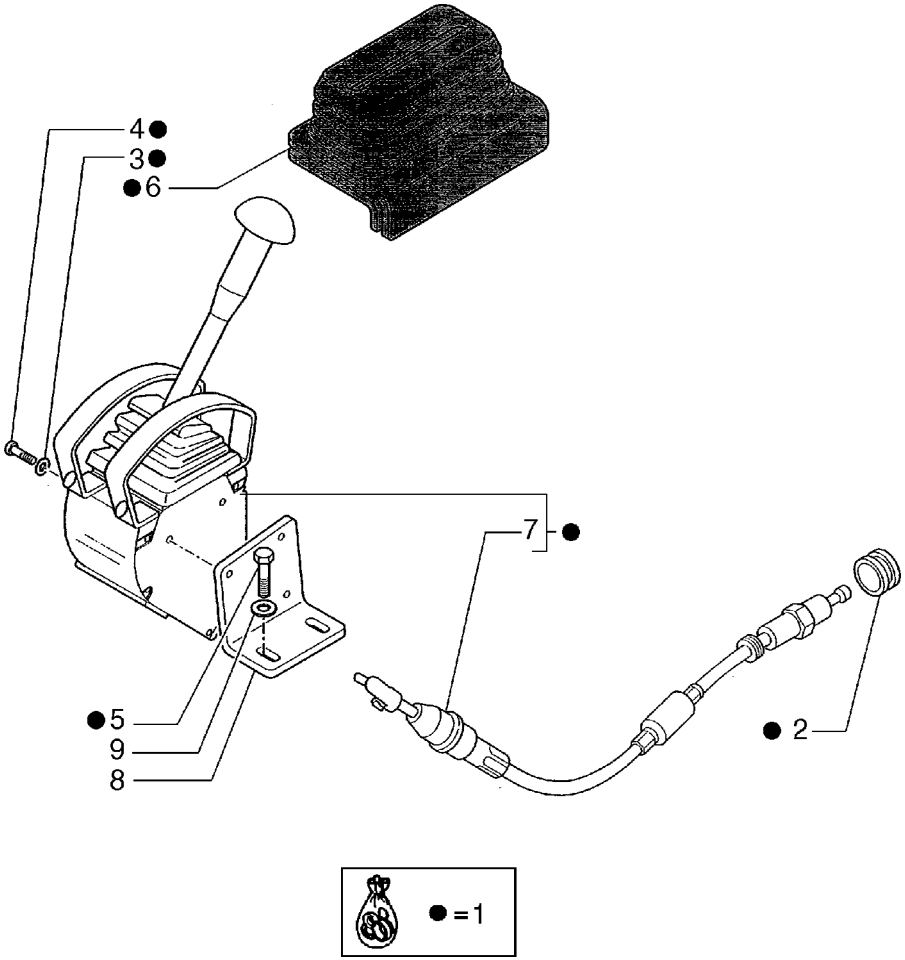

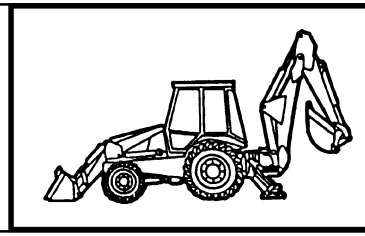

MOD	R	P/N. Imola	P/N. Brazil	Q	Descrição Denominacion	Description Descrizione	L.C.
	1	**85819751**		1	ALAVANCA PALANCA	LEVER LEVA	045L
	2	**10398680**		1	ANEL ARO	RING ANELLO	045A
	3	**11193274**		3	ARRUELA ARANDELA	WASHER ROSETTA	131R
	4	**15212921**		3	PARAFUSO TORNILLO	SCREW VITE	040V
	5	**85808419**		1	SUPORTE SOPORTE	SUPPORT SUPPORTO	300S
	6	**85813132**		1	COIFA PARA PÓ CAPUCHA	DUST BOOT CUFFIA PARAPOLV	334C
	7	**10791411**		1	PORCA TUERCA	NUT DADO	010D
	8	**11193874**		2	ARRUELA ARANDELA	WASHER ROSETTA	131R
	9	**16043624**		2	PARAFUSO TORNILLO	SCREW VITE	040V

FB80.3 - FB100.3

SISTEMA DE BLOQUEIO DA RETRO PARA TRANSPORTE
CIRCUITO HIDRAULICO BLOQUEIO PARTE TRASERA
HYDRAULIC SYSTEM FOR “TRANSPORT LOCK” REAR LOCKING
IMPIANTO IDRAULICO BLOCCAGGIO RETRO “TRANSPORT LOCK”

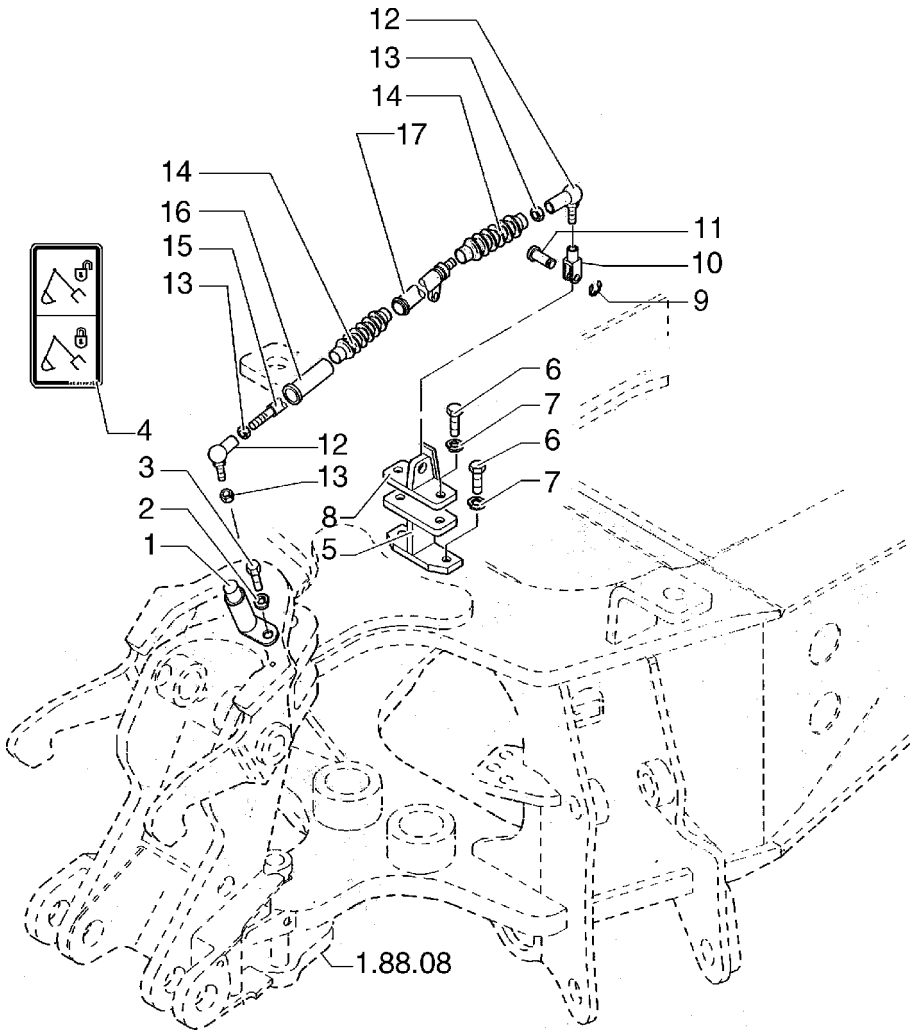

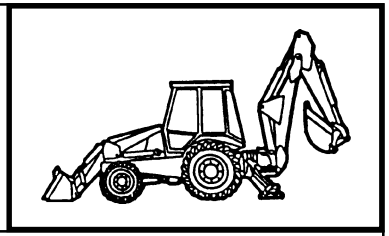

MOD	R	P/N. Imola	P/N. Brazil	Q	Descrição Denominacion	Description Descrizione	L.C.
	1	**85819483**		1	AMORTEC. VIBRAÇÃO AMORTIGUADOR	DAMPER AMMORTIZZATORE	036A
	2	**11193874**		1	ARRUELA ARANDELA	WASHER ROSETTA	131R
	3	**16043624**		1	PARAFUSO TORNILLO	SCREW VITE	040V
	4	**85812278**		1	ADESIVO CALCOMANIA	DECAL TARGA	065T
	5	**85819488**		1	SUPORTE SOPORTE	SUPPORT SUPPORTO	300S
	6	**11106221**		4	PARAFUSO TORNILLO	SCREW VITE	040V
	7	**11190574**		4	ARRUELA ARANDELA	WASHER ROSETTA	131R
	8	**85819485**		1	SUPORTE SOPORTE	SUPPORT SUPPORTO	300S
	9	**85813407**		1	ANEL ARO	RING ANELLO	045A
	10	**85819468**		1	FORQUILHA HORQUILLA	YOKE FORCELLA	085F
	11	**85819472**		1	PINO BULON	PIN PERNO	080P
	12	**85819477**		2	ARTICULAÇÃO	ARTICULATION SNODO	165S
	13	**85819478**		3	PORCA TUERCA	NUT DADO	010D
	14	**85819479**		2	SANFONA CAPUCHON	BOOT CAPPUCCIO	065C
	15	**85819481**		1	HASTE VARILLA	ROD ASTA	090A
	16	**85819482**		1	BUCHA BUJE	BUSHING BOCCOLA	095B
	17	**85819480**		1	TUBO TUBO	TUBE TUBO RIGIDO	193T

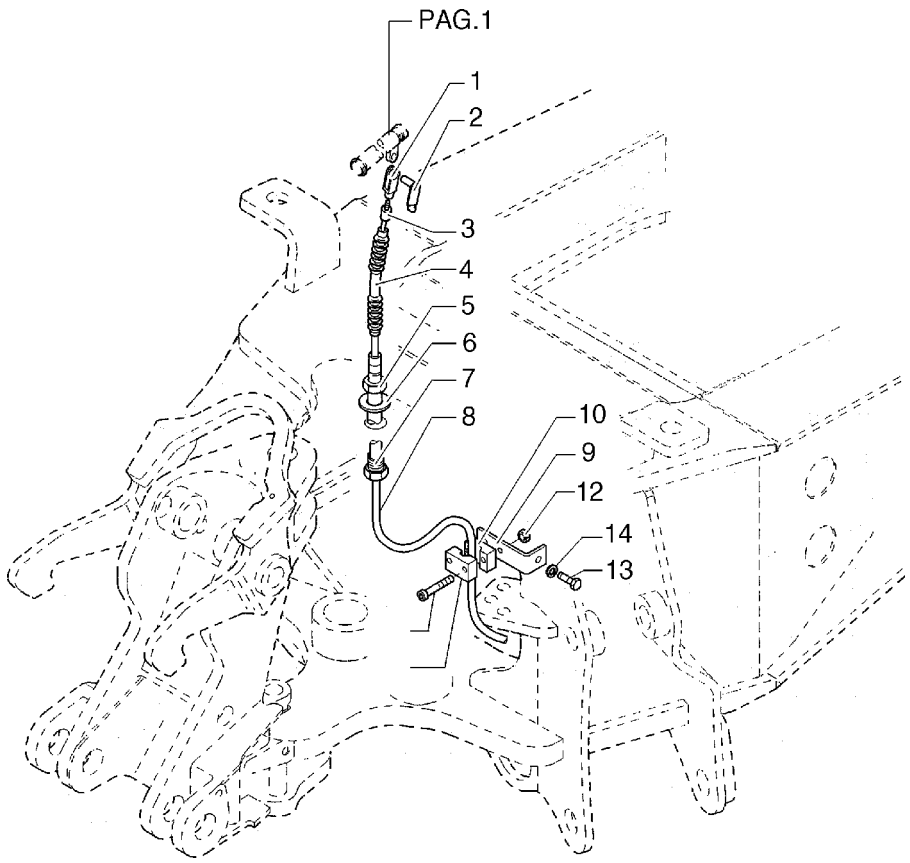

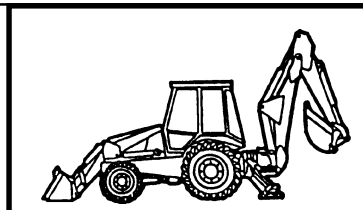

MOD	R	P/N. Imola	P/N. Brazil	Q	Descrição Denominacion	Description Descrizione	L.C.
	1	**85819467**		1	FORQUILHA HORQUILLA	YOKE FORCELLA	085F
	2	**85819469**		1	ABRAÇADEIRA ABRAZADERA	CLAMP FASCETTA	031F
	3	**85819471**		1	ANEL ARO	RING ANELLO	045A
	4	**85819473**		1	COIFA PARA PÓ CAPUCHA	DUST BOOT CUFFIA PARAPOLV	334C
	5	**85819475**		1	PORCA TUERCA	NUT DADO	010D
	6	**85818474**		1	ARRUELA ARANDELA	WASHER ROSETTA	131R
	7	**85819486**		1	PORCA TUERCA	NUT DADO	010D
	8	**85819487**		1	CABO CABLE	ROPE FUNE	105F
	9	**85819604**		1	ABRAÇADEIRA ABRAZADERA	CLAMP FASCETTA	031F
	10	**85813401**		2	TARUGO TACO	BLOCK TASSELLO	060T
	11	**85813400**		2	PARAFUSO TORNILLO	SCREW VITE	040V
	12	**85813188**		2	PORCA TUERCA	NUT DADO	010D
	13	**16043124**		1	PARAFUSO TORNILLO	SCREW VITE	040V
	14	**11193874**		1	ARRUELA ARANDELA	WASHER ROSETTA	131R

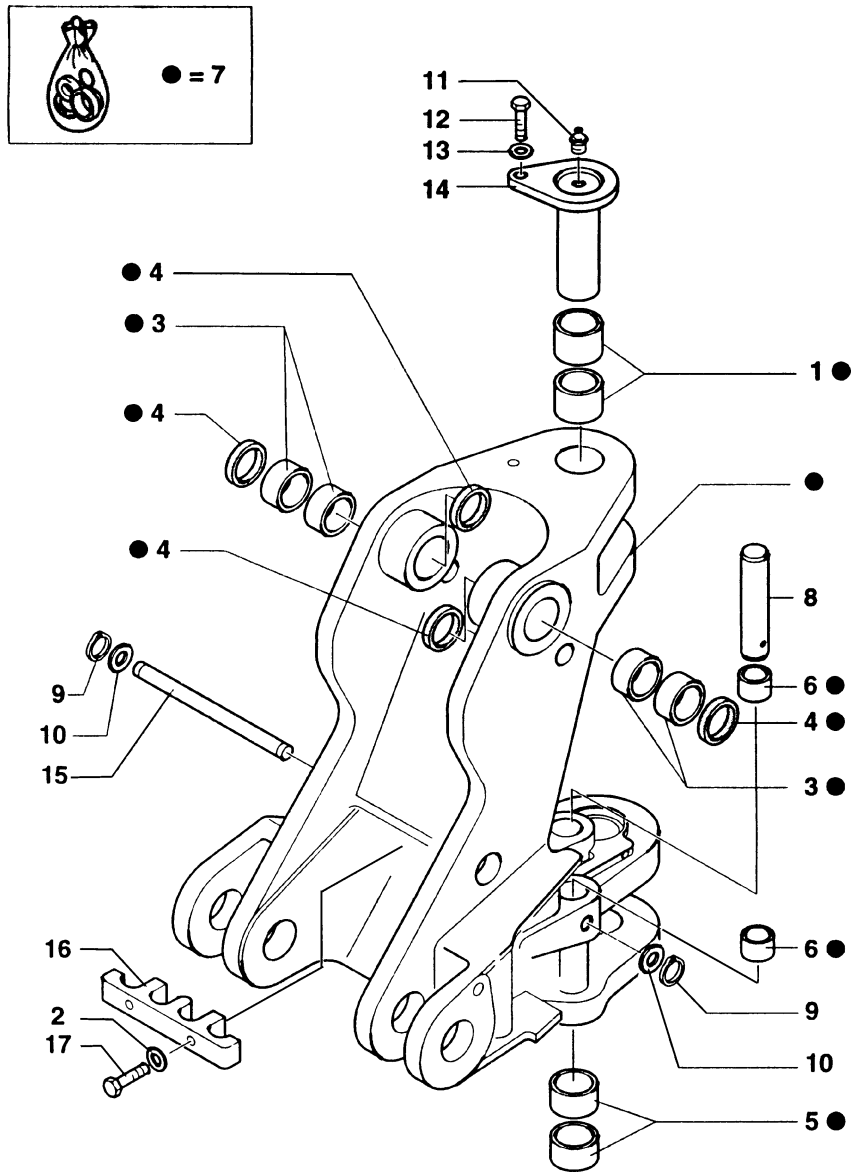

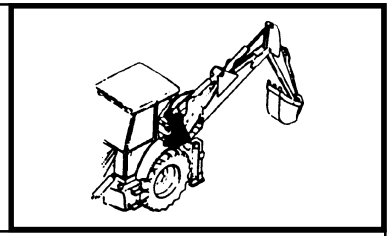

MOD	R	P/N. Imola	P/N. Brazil	Q	Descrição Denominacion	Description Descrizione	L.C.
	1	**85803196**		2	BUCHA BUJE	BUSHING BOCCOLA	095B
	2	**70930370**		2	ARRUELA ARANDELA	WASHER ROSETTA	131R
	3	**85801029**		4	BUCHA BUJE	BUSHING BOCCOLA	095B
	4	**85801025**		4	RETENTOR JUNTA	SEAL GUARNIZIONE	122G
	5	**85803197**		2	BUCHA BUJE	BUSHING BOCCOLA	095B
	6	**85803193**		4	BUCHA BUJE	BUSHING BOCCOLA	095B
	7	**85801028**		1	SUPORTE SOPORTE	SUPPORT SUPPORTO	300S
	8	**85803192**		2	PINO BULON	PIN PERNO	080P
	9	**85803195**	**11066276**	2	ANEL ELÁSTICO ANILLO ELASTICO	SNAP RING ANELLO ELASTICO	187A
	10	**70928844**	**10520121**	2	ARRUELA ARANDELA	WASHER ROSETTA	131R
	11	**80080710**	**70914465**	1	PINO GRAXEIRO ENGRASADOR	GREASE FITTING INGRASSATORE	060I
	12	**85802397**		1	PARAFUSO TORNILLO	SCREW VITE	040V
	13	**85802396**	**70677010**	1	ARRUELA ARANDELA	WASHER ROSETTA	131R
	14	**85801076**		1	PINO BULON	PIN PERNO	080P
	15	**85803194**		1	PINO BULON	PIN PERNO	080P
	16	**85803638**		1	BORNE BORNE	TERMINAL CONNEC MORSETTO ELETT.	120M
	17	**11107331**		2	PARAFUSO TORNILLO	SCREW VITE	040V

FB80.3 - FB100.3

SUPORTE DA RETRO
SOPORTE DE LA PARTE TRASERA
REAR SUPPORT
SUPPORTO RETRO

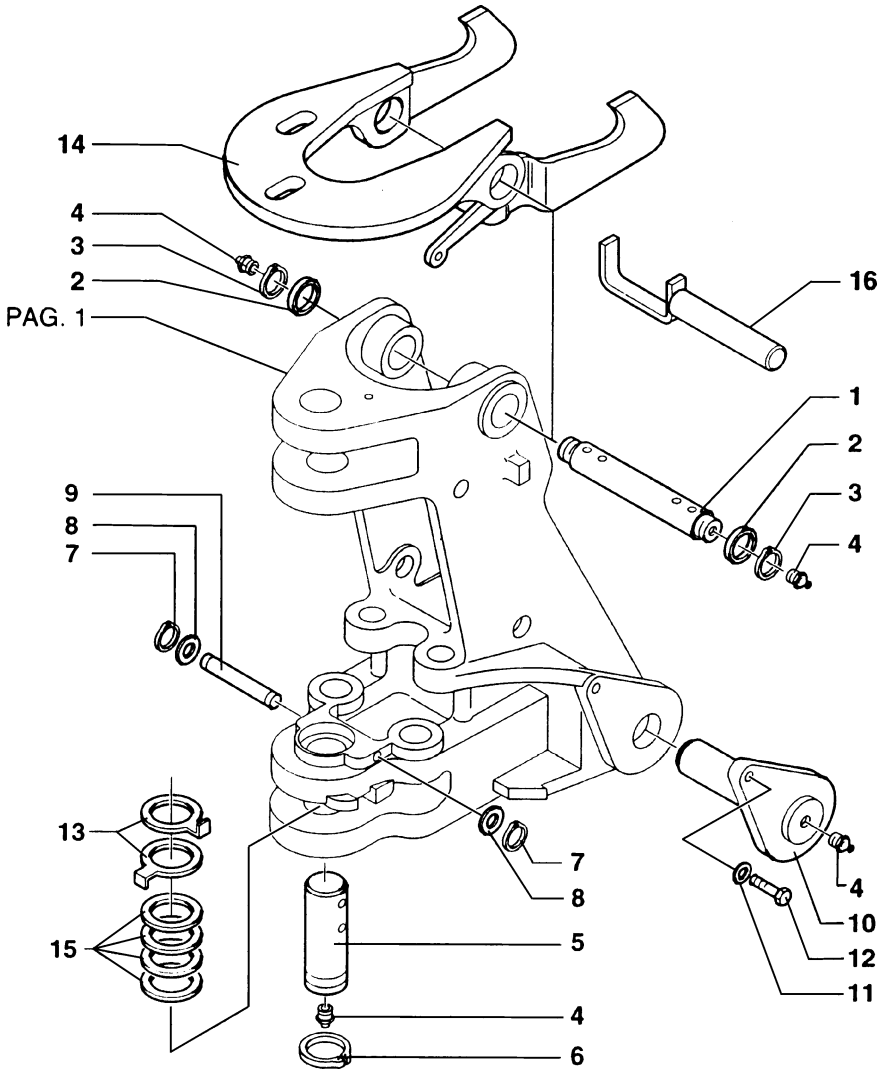

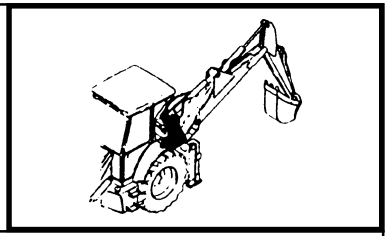

MOD	R	P/N. Imola	P/N. Brazil	Q	Descrição Denominacion	Description Descrizione	L.C.
	1	**85801026**		1	EIXO ARBOL	SHAFT ALBERO	016A
	2	**83910977**		2	ANEL ARO	RING ANELLO	045A
	3	**83911019**		2	ANEL ELÁSTICO ANILLO ELASTICO	SNAP RING ANELLO ELASTICO	187A
	4	**80080710**	**70914465**	2	PINO GRAXEIRO ENGRASADOR	GREASE FITTING INGRASSATORE	060I
	5	**85801079**		1	PINO BULON	PIN PERNO	080P
	6	**85803198**		1	ANEL ELÁSTICO ANILLO ELASTICO	SNAP RING ANELLO ELASTICO	187A
	7	**85803195**		2	ANEL ELÁSTICO ANILLO ELASTICO	SNAP RING ANELLO ELASTICO	187A
	8	**10523211**	**10520121**	2	ARRUELA ARANDELA	WASHER ROSETTA	131R
	9	**85803246**		1	PINO BULON	PIN PERNO	080P
	10	**85802872**		2	PINO BULON	PIN PERNO	080P
	11	**85802396**	**70677010**	1	ARRUELA ARANDELA	WASHER ROSETTA	131R
	12	**85802397**		1	PARAFUSO TORNILLO	SCREW VITE	040V
	13	**85801191**		2	ANEL ARO	RING ANELLO	045A
	14	**85819494**		1	GANCHO GANCHO	HOOK GANCIO	030G
	15	**8274447**		4	CALÇO CALCE	SHIM SPESSORE	198S
	16	**85803797**		1	PINO BULON	PIN PERNO	080P

FB80.3 - FB100.3

SUPORTE DA RETRO
SOPORTE DE LA PARTE TRASERA
REAR SUPPORT
SUPPORTO RETRO

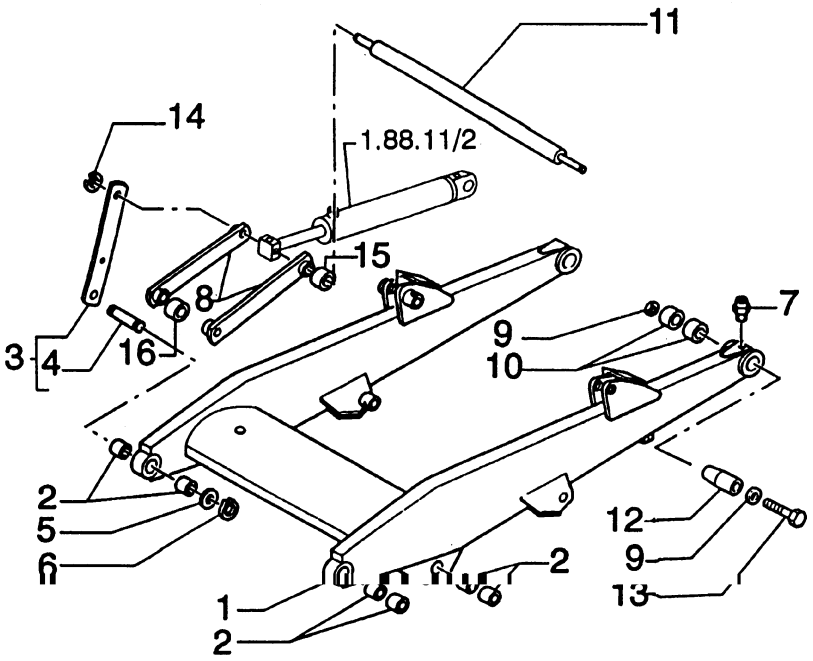

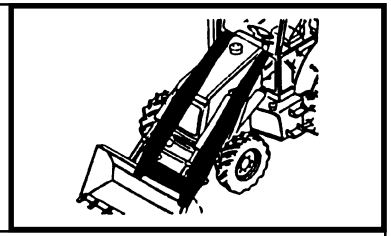

MOD	R	P/N. Imola	P/N. Brazil	Q	Descrição Denominacion	Description Descrizione	L.C.
	1	**85801012**		1	BRAÇO BRAZO	ARM BRACCIO	130B
	2	**81901809**		8	BUCHA BUJE	BUSHING BOCCOLA	095B
	3	**85801052**	**75244354**	1	BIELA DIREITA BIELA	LINK R.H. BIELLA	50BD
	3	**85801053**	**75244355**	1	BIELA ESQUERDA BIELA	LINK R.L. BIELLA	50BE
	4	**85801056**		2	PINO BULON	PIN PERNO	080P
	5	**81900328**		4	ARRUELA ARANDELA	WASHER ROSETTA	131R
	6	**81902463**	**75245692**	4	ANEL ELÁSTICO ANILLO ELASTICO	SNAP RING ANELLO ELASTICO	187A
	7	**80080710**	**70914465**	4	PINO GRAXEIRO ENGRASADOR	GREASE FITTING INGRASSATORE	060I
	8	**85801057**	**75247391**	4	BIELA BIELA	LINK BIELLA	050B
	9	**85700130**		2	ARRUELA ARANDELA	WASHER ROSETTA	131R
	10	**81901896**		4	BUCHA BUJE	BUSHING BOCCOLA	095B
	11	**85801088**		1	PINO BULON	PIN PERNO	080P
	12	**85801087**		1	PINO BULON	PIN PERNO	080P
	13	**11383631**		1	PARAFUSO TORNILLO	SCREW VITE	040V
	13	**15988737**		1	PARAFUSO TORNILLO	SCREW VITE	040V
	14	**81902463**	**75245692**	2	ANEL ELÁSTICO ANILLO ELASTICO	SNAP RING ANELLO ELASTICO	187A
	15	**83902710**		4	BUCHA BUJE	BUSHING BOCCOLA	095B
	16		**75248202**	4	BUCHA BUJE	BUSHING BOCCOLA	095B

FB80.3 - FB100.3

BRAÇO DA CARREGADEIRA E ARTICULAÇÕES
BRAZOS Y ARTICULACIONES
ARMS AND JOINTS
BRACCI E ARTICOLAZIONI

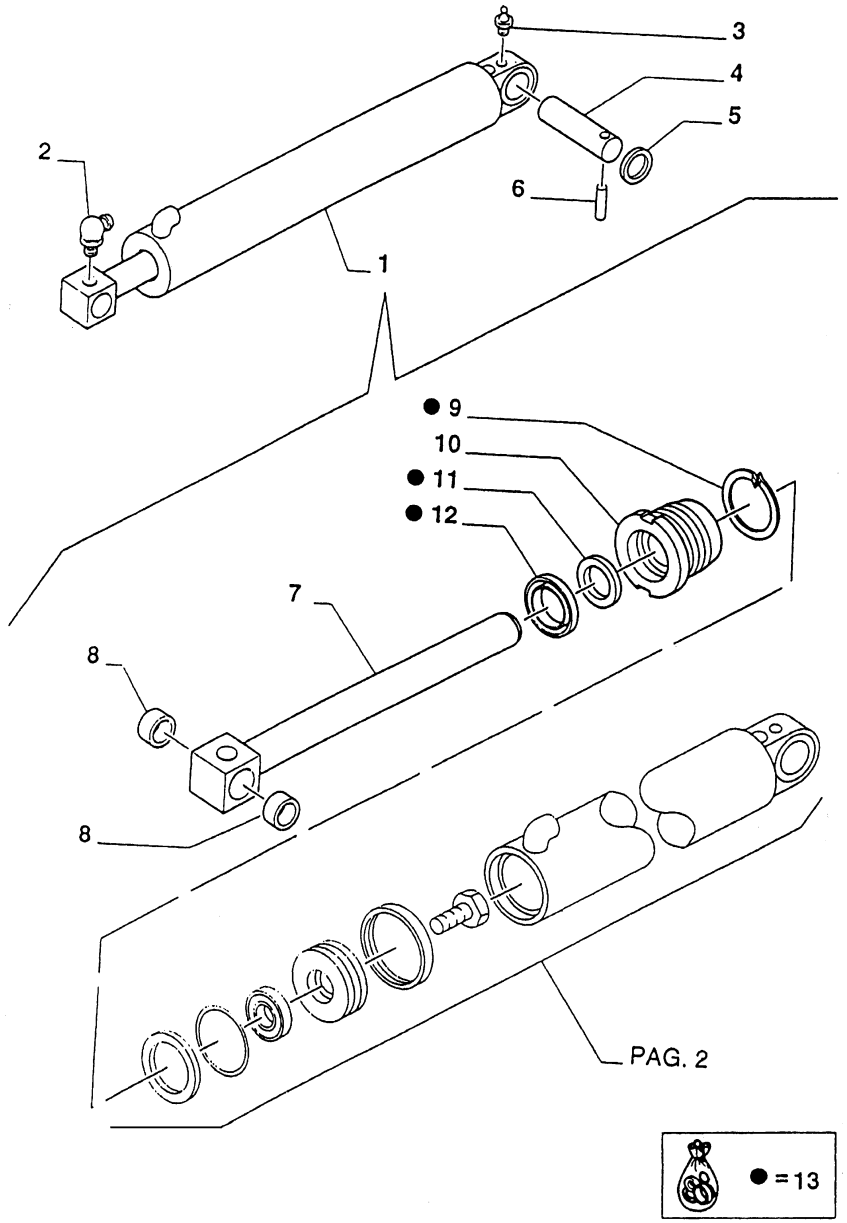

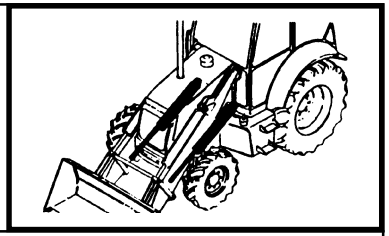

MOD	R	P/N. Imola	P/N. Brazil	Q	Descrição Denominacion	Description Descrizione	L.C.
	1	**85800550**		2	CILINDRO BASCULAM CILINDRO VUELCO	POSIT. CYLINDER CILINDR. ROVESC.	C409
	2	**81818824**		2	PINO GRAXIEIRO ENGRASADOR	GREASE FITTING INGRASSATORE	060I
	3	**80080710**		4	PINO GRAXEIRO ENGRASADOR	GREASE FITTING INGRASSATORE	060I
	4	**85801049**		2	PINO BULON	PIN PERNO	080P
	5	**81900328**		2	ARRUELA ARANDELA	WASHER ROSETTA	131R
	6	**85802993**		2	PINO BULON	PIN PERNO	080P
	7	**83962811**		2	HASTE VARILLA	ROD ASTA	274S
	8	**81902174**		4	BUCHA BUJE	BUSHING BOCCOLA	095B
	9	**83937315**		2	ANEL ELÁSTICO ANILLO ELASTICO	SNAP RING ANELLO ELASTICO	187A
	10	**85800978**		2	FUNDO DIANTEIRO TAPA ANTERIOR	HEAD FONDELLO ANT.	132F
	11	**85800085**		2	RETENTOR JUNTA	SEAL GUARNIZIONE	122G
	12	**85800081**		2	RETENTOR JUNTA	SEAL GUARNIZIONE	122G
	13	**85819355**		AR	KIT JUEGO	KIT KIT	002K

9

FB80.3 - FB100.3

CILINDRO BASCULAMENTO CAÇAMBA CARREGADEIRA
CILINDRO DE MANDO DEL CUCHARON
LOADER BUCKET CONTROL CYLINDER
COLINDRO COMANDO BENNA

1.88.11/1

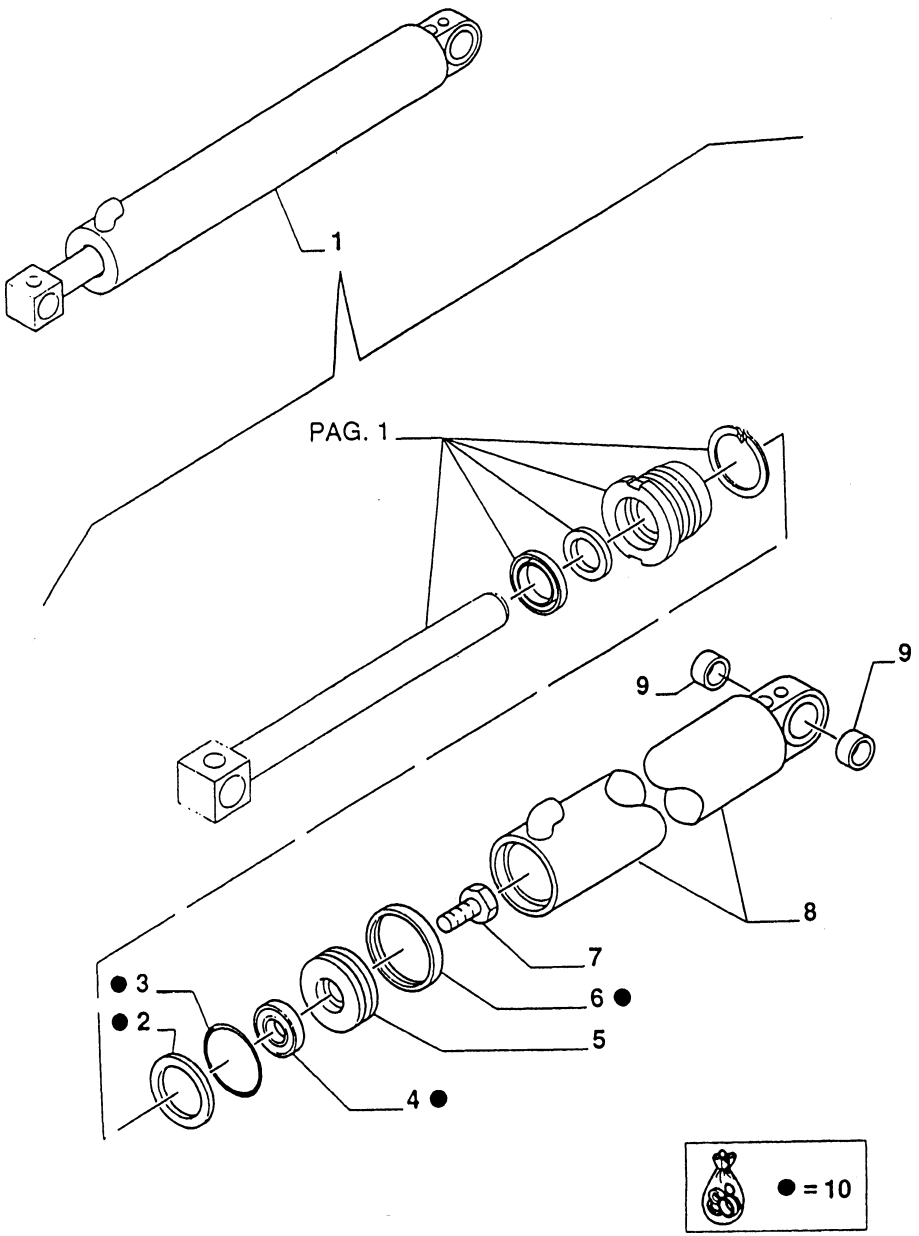

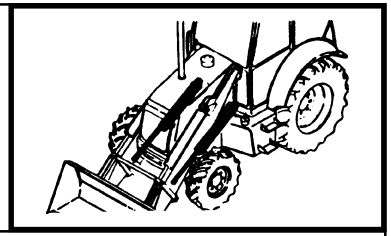

MOD	R	P/N. Imola	P/N. Brazil	Q	Descrição Denominacion	Description Descrizione	L.C.
	1	**858000550**		2	CILINDRO BASCULAM CILINDRO VUELCO	POSIT. CYLINDER CILINDR. ROVESC.	C409
	2	**85800002**		2	DISCO DISCO	DISC DISCO	060D
	3	**83911409**		2	O'RING JUNTA TORICA	O'RING GUARNIZIONE O-R	158G
	4	**85800089**		2	RETENTOR JUNTA	SEAL GUARNIZIONE	122G
	5	**83962807**		2	ÊMBOLO EMBOLO	PISTON STANTUFFO	235S
	6	**83912413**		2	ANEL DE VEDAÇÃO JUNTA HERMETICA	SEAL RING ANELLO TENUTA	055A
	7	**82866949**		2	PARAFUSO TORNILLO	SCREW VITE	040V
	8	**85800504**		2	CAMISA CILINDRO CAMISA CILINDRO	CYLINDER LINER CAMICIA CILINDR	035C
	9	**83902710**		2	BUCHA BUJE	BUSHING BOCCOLA	095B
	10	**85819355**		AR	KIT JUEGO	KIT KIT	002K

FB80.3 - FB100.3

CILINDRO BASCULAMENTO CAÇAMBA CARREGADEIRA
CILINDRO DE MANDO DEL CUCHARON
LOADER BUCKET CONTROL CYLINDER
COLINDRO COMANDO BENNA

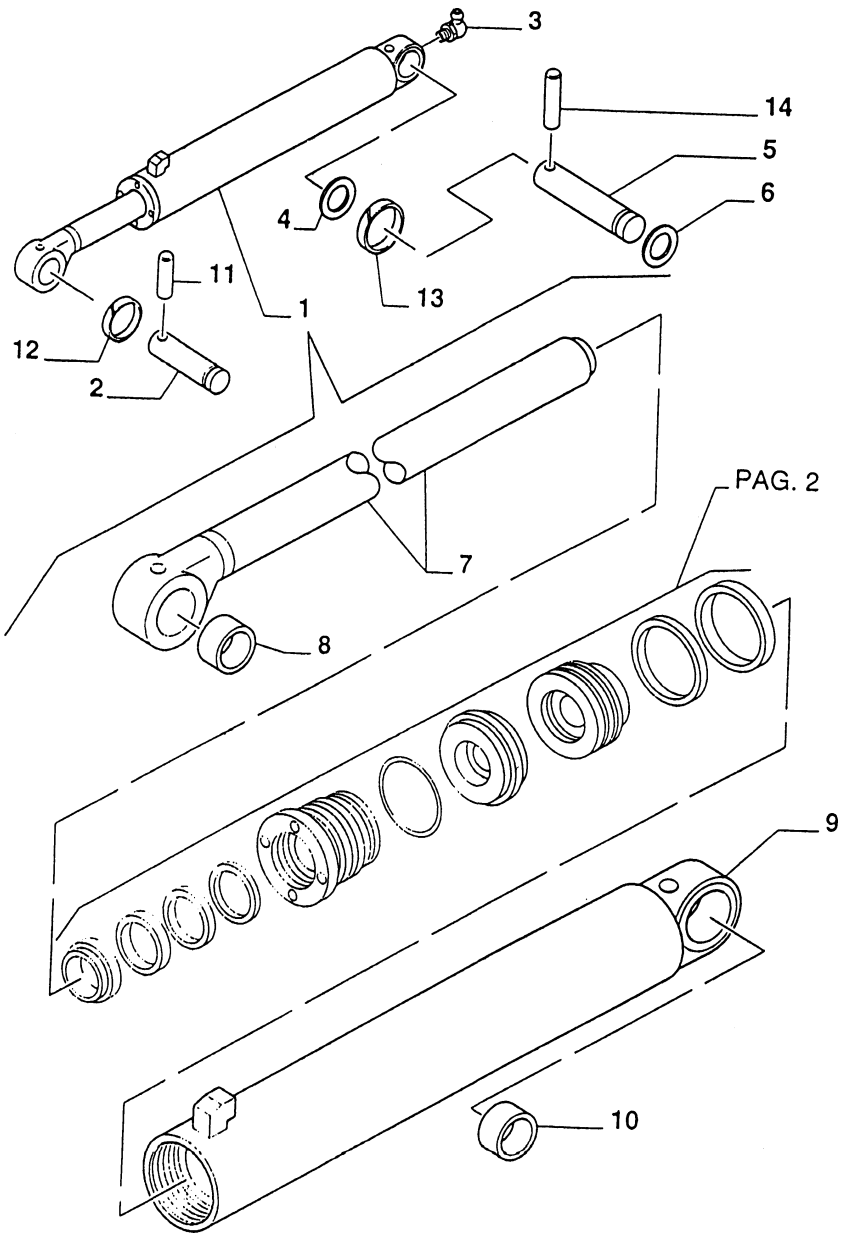

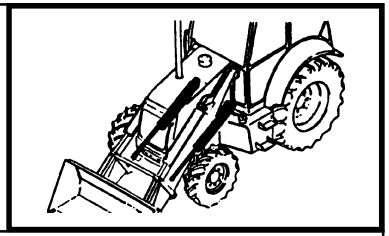

MOD	R	P/N. Imola	P/N. Brazil	Q	Descrição Denominacion	Description Descrizione	L.C.
	1		**85800150**	2	CILINDRO ELEVAÇÃO CAMISA CILINDRO	LIFT CYLINDER CAMICIA CILINDR	11G1
	2	**85801050**		1	PINO BULON	PIN PERNO	080P
	3	**81818824**		4	PINO GRAXEIRO ENGRASADOR	GREASE FITTING INGRASSATORE	060I
	4	**81901837**		2	ARRUELA ARANDELA	WASHER ROSETTA	131R
	5	**85801086**		2	PINO BULON	PIN PERNO	080P
	6	**83911020**		2	ARRUELA ARANDELA	WASHER ROSETTA	131R
	7	**85800103**		2	HASTE VARILLA	ROD ASTA	090A
	8	**81902174**		2	BUCHA BUJE	BUSHING BOCCOLA	095B
	9	**85800105**		2	CAMISA CILINDRO CAMISA CILINDRO	CYLINDER LINER CAMICIA CILINDR	035C
	10	**81901897**		2	BUCHA BUJE	BUSHING BOCCOLA	095B
	11	**85802993**		2	PINO BULON	PIN PERNO	080P
	12	**85802992**		2	ANEL ARO	RING ANELLO	045A
	13	**85802991**		2	ANEL ARO	RING ANELLO	045A
	14	**85802994**		2	PINO BULON	PIN PERNO	080P

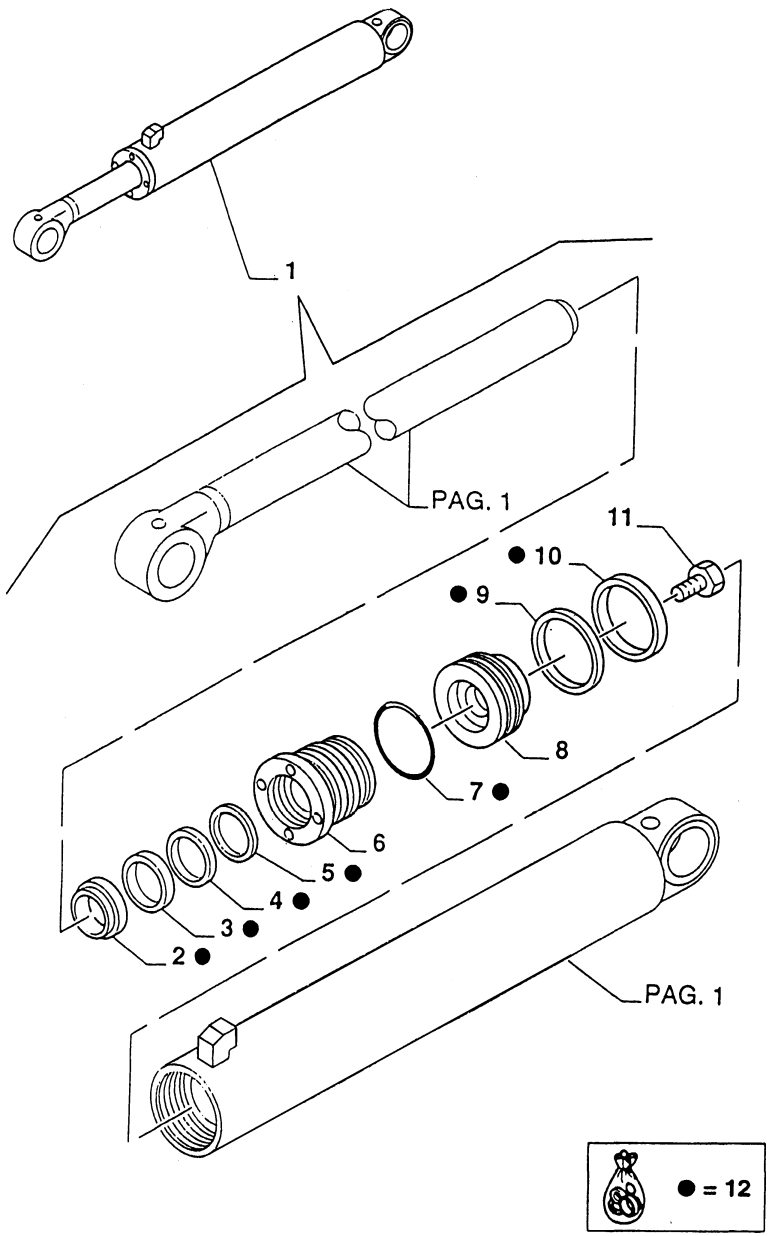

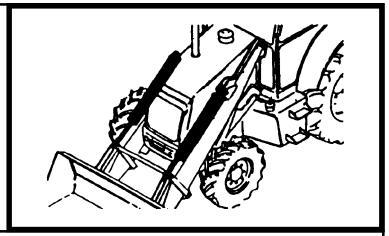

MOD	R	P/N. Imola	P/N. Brazil	Q	Descrição Denominacion	Description Descrizione	L.C.
	1	**85800150**		2	CILINDRO ELEVAÇÃO GATO ELEVACION	LIFT CYLINDERS CIL. SOLLEVAM.	11G1
	2	**85800082**		2	RETENTOR JUNTA	SEAL GUARNIZIONE	122G
	3	**85800086**		2	RETENTOR JUNTA	SEAL GUARNIZIONE	122G
	4	**85800090**		2	RETENTOR JUNTA	SEAL GUARNIZIONE	122G
	5	**85800093**		2	ANEL DE VEDAÇÃO JUNTA HERMÉTICA	SEAL RING ANELLO TENUTA	055A
	6	**85800973**		2	FUNDO DIANTEIRO TAPA ANTERIOR	HEAD FONDELLO ANT.	132F
	7	**83911410**		2	O'RING JUNTA TORICA	O'RING GUARNIZIONE O-R	158G
	8	**85800981**		2	ÊMBOLO ÊMBOLO	PISTON STANTUFFO	235S
	9	**85800960**		2	ANEL DE VEDAÇÃO JUNTA HERMÉTICA	SEAL RING ANELLO TENUTA	055A
	10	**83931400**		2	ANEL DE VEDAÇÃO JUNTA HERMÉTICA	SEAL RING ANELLO TENUTA	055A
	11	**82866949**		2	PARAFUSO TORNILLO	SCREW VITE	040V
	12	**85819352**		AR	KIT JUEGO	KIT KIT	002K

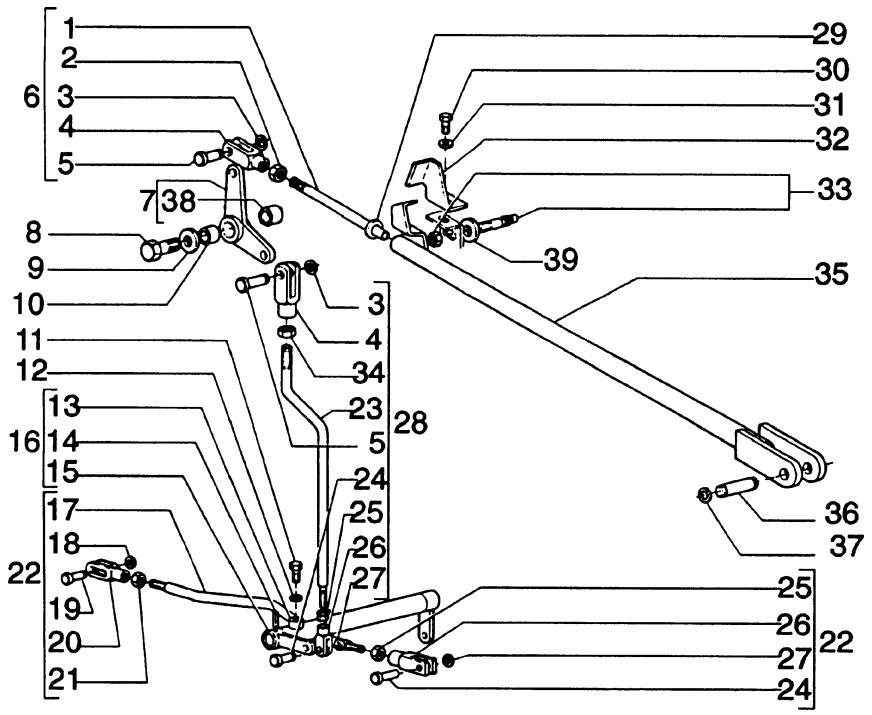

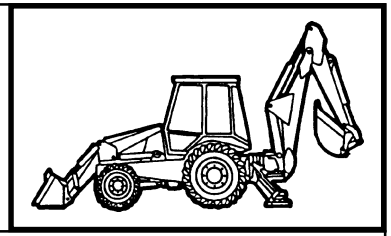

MOD	R	P/N. Imola	P/N. Brazil	Q	Descrição Denominacion	Description Descrizione	L.C.
	1	**82974967**		1	TIRANTE TIRANTE	TIEROD TIRANTE	142T
	2	**11702921**		1	PORCA TUERCA	NUT DADO	010D
	3	**11088170**		2	ANEL ELÁSTICO ANILLO ELASTICO	SNAP RING ANELLO ELASTICO	187A
	4	**83962659**		2	GARFO HORCA	FORK FORCA	125F
	5	**83962658**		2	PINO BULON	PIN PERNO	080P
	6	**83963433**	**75245375**	1	TIRANTE TIRANTE	TIEROD TIRANTE	142T
	7	**85803215**	**75247137**	1	ALAVANCA PALANCA	LEVER LEVA	045L
	8	**15988737**		1	PARAFUSO TORNILLO	SCREW VITE	040V
	9		**70918433**	1	ARRUELA ARANDELA	WASHER ROSETTA	131R
	10	**83963422**		1	ESPAÇADOR SEPARADOR	SPACER DISTANZIALE	075D
	11	**15970531**		2	PARAFUSO TORNILLO	SCREW VITE	040V
	12	**11190679**		2	ARRUELA ARANDELA	WASHER ROSETTA	131R
	13	**85802724**		1	ALAVANCA PALANCA	LEVER LEVA	045L
	14	**13907470**	**75242314**	1	PINO ELÁSTICO PASADOR ELAST.	SPRING PIN SPINA ELASTICA	202S
	15	**85802695**		1	ALAVANCA PALANCA	LEVER LEVA	045L
	16	**85801591**	**75249319**	1	ALAVANCA PALANCA	LEVER LEVA	045L
	17	**85802736**		1	TIRANTE TIRANTE	TIEROD TIRANTE	142T
	18	**11087876**	**11087970**	1	ANEL ELÁSTICO ANILLO ELASTICO	SNAP RING ANELLO ELASTICO	187A
	19	**85802737**	**75246544**	1	PINO BULON	PIN PERNO	080P
	20	**85802735**	**75246545**	1	GARFO HORCA	FORK FORCA	125F

FB80.3 - FB100.3

POSICIONADOR DA CAÇAMBA
DISPOSITIVOS DE LA HERRAMIENTA
IMPLEMENT DEVICES
DISPOSITIVI ATTREZZO

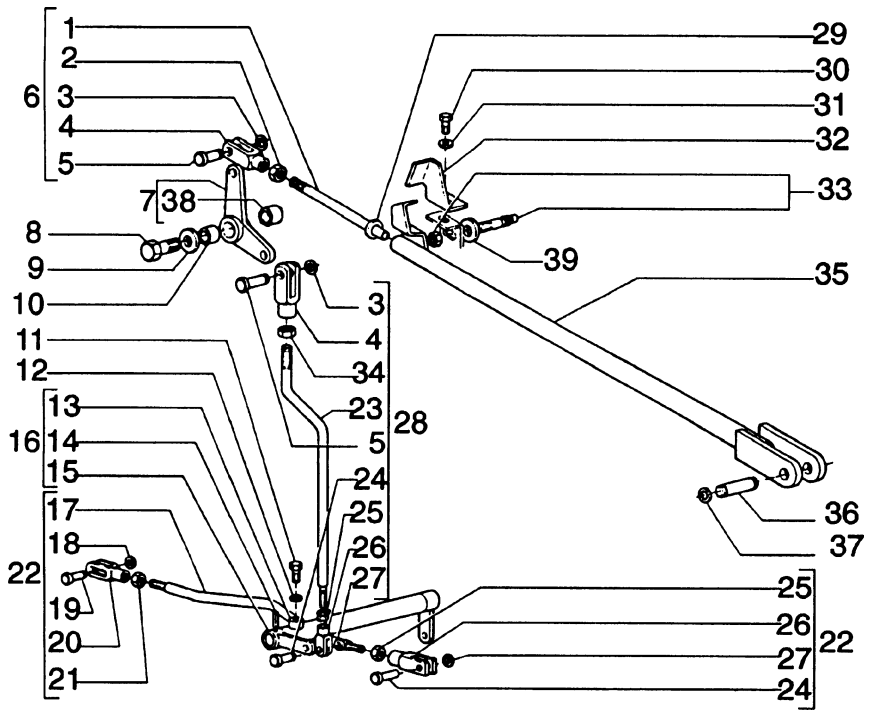

CAB Solamente es usado em equipos con cabina cerrada
TOLD Solamente es usado em equipos con toldo solar

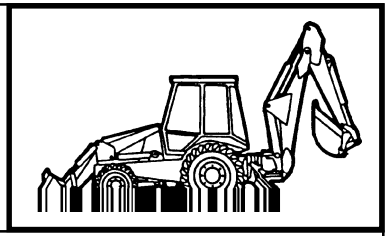

MOD	R	P/N. Imola	P/N. Brazil	Q	Descrição Denominacion	Description Descrizione	L.C.
	21	**16102311**		1	PORCA TUERCA	NUT DADO	010D
	22	**85802734**	**75246543**	1	TIRANTE TIRANTE	TIEROD TIRANTE	142T
	23	**85802742**		1	TIRANTE TIRANTE	TIEROD TIRANTE	142T
	24	**85802738**	**75245693**	2	PINO BULON	PIN PERNO	080P
	25	**16102911**		2	PORCA TUERCA	NUT DADO	010D
	26	**11991971**		2	GARFO HORCA	FORK FORCA	125F
	27	**11087876**	**11087970**	2	ANEL ELÁSTICO ANILLO ELASTICO	SNAP RING ANELLO ELASTICO	187A
	28	**85802741**		1	TIRANTE TIRANTE	TIEROD TIRANTE	142T
	29	**82879400**	**14496631**	2	ARRUELA ARANDELA	WASHER ROSETTA	131R
	30	**10902124**	**10902131**	1	PARAFUSO TORNILLO	SCREW VITE	040V
	31	**11193279**	**70928190**	1	ARRUELA ARANDELA	WASHER ROSETTA	131R
	32	**85803277**		1	SUPORTE SOPORTE	SUPPORT SUPPORTO	300S
TOLD	33		**79113969**	1	SENSOR SENSOR	SENSOR SENSORE	133S
CAB	33	**85802950**		1	SENSOR SENSOR	SENSOR SENSORE	133S
	34		**10717311**	1	PORCA TUERCA	NUT DADO	010D
	35	**85803279**		1	TIRANTE TIRANTE	TIEROD TIRANTE	142T
	36		**75280675**	1	PINO BULON	PIN PERNO	080P
	37		**11087371**	2	ANEL ELÁSTICO ANILLO ELASTICO	SNAP RING ANELLO ELASTICO	187A
	38	**81855916**	**75247140**	1	BUCHA BUJE	BUSHING BOCCOLA	095B
	39		**79076055**	2	ESPAÇADOR SEPARADOR	SPACER DISTANZIALE	075D

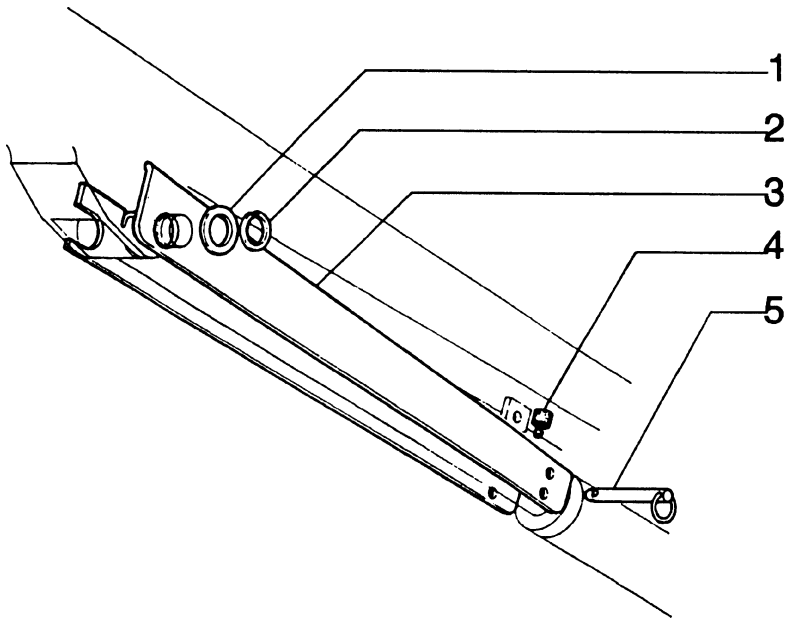

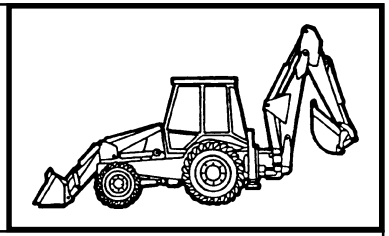

MOD	R	P/N. Imola	P/N. Brazil	Q	Descrição Denominacion	Description Descrizione	L.C.
	1	**81900328**		1	ARRUELA ARANDELA	WASHER ROSETTA	131R
	2	**81902463**	**75245692**	1	ANEL ELÁSTICO ANILLO ELASTICO	SNAP RING ANELLO ELASTICO	187A
	3	**85801048**		1	TRAVA SEGURO	PAWL NOTTOLINO	050N
	4	**85802403**		1	COXIM COJIN	CUSHION CUSCINO	345C
	5	**86507337**		1	PINO BULON	PIN PERNO	080P

9

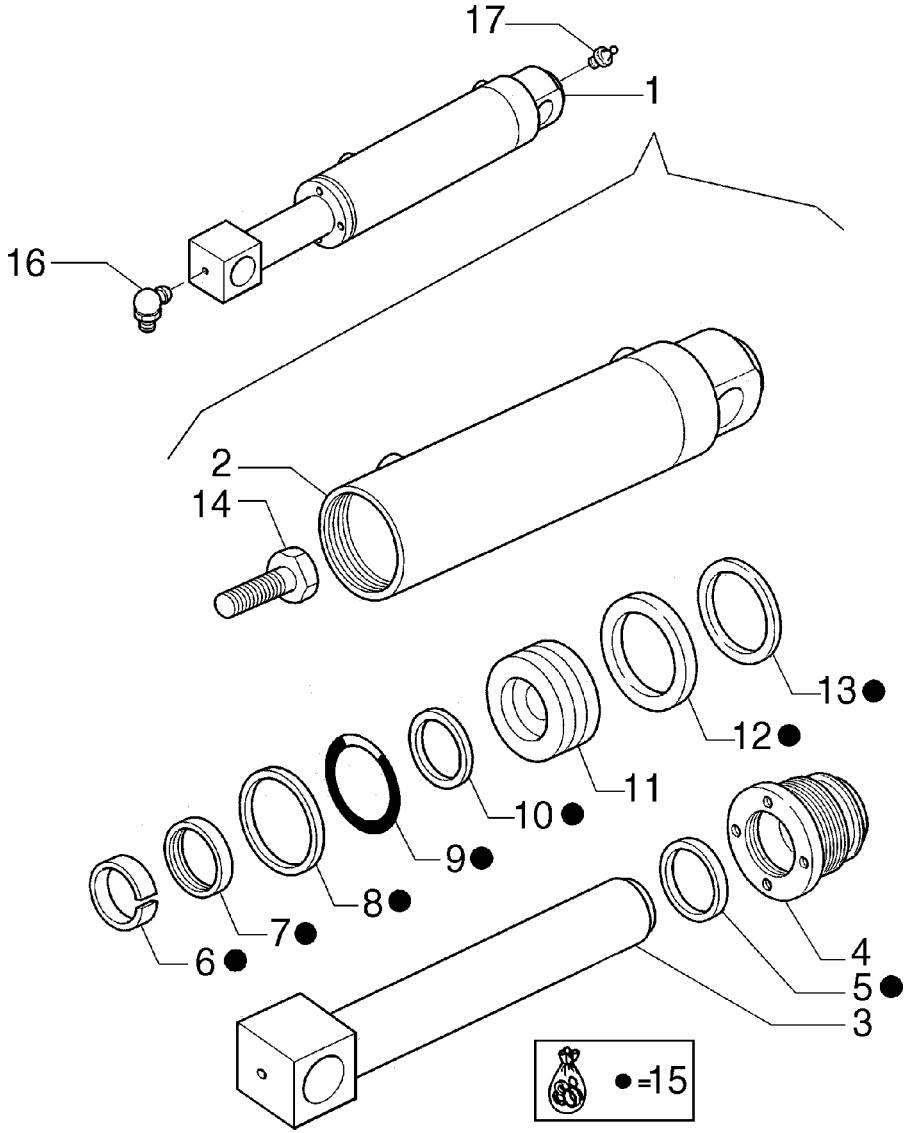

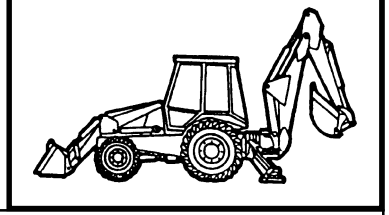

MOD	R	P/N. Imola	P/N. Brazil	Q	Descrição Denominacion	Description Descrizione	L.C.
	1	**85800600**	**85800650**	2	CILINDRO CILINDRO	CYLINDER CILINDRO	164C
	2	**85800604**		1	CAMISA CILINDRO CAMISA CILINDRO	TUBE CANNA CILINDRO	053C
	3	**85800603**		1	HASTE VASTAGO	ROD STELO	274S
	4	**85800979**		1	FUNDO FONDO	BOTTON PLATE FONDELLO	080F
	5	**85800083**		1	ANEL DE VEDAÇÃO JUNTA HERMETICA	SEAL RING ANELLO TENUTA	055A
	6	**85800094**		1	ANEL ARO	RING ANELLO	045A
	7	**85800087**		1	RETENTOR JUNTA	SEAL GUARNIZIONE	122G
	8	**85800004**		1	ANEL ARO	RING ANELLO	045A
	9	**83963231**		1	O'RING JUNTA TORICA	O'RING GUARNIZIONE O-R	158G
	10	**85800091**		1	RETENTOR JUNTA	SEAL GUARNIZIONE	122G
	11	**85800982**		1	ÊMBOLO EMBOLO	PISTON STANTUFFO	235S
	12	**83937326**		1	ANEL DE VEDAÇÃO JUNTA HERMETICA	SEAL RING ANELLO TENUTA	055A
	13	**85800961**		1	ANEL ARO	RING ANELLO	045A
	14	**82866947**		1	PARAFUSO TORNILLO	SCREW VITE	040V
	15	**85819356**		1	KIT JUEGO	KIT KIT	002K
	16	**81818824**		1	PINO GRAXEIRO ENGRASADOR	GREASE FITTING INGRASSATORE	060I
	17	**80080710**		1	PINO GRAXEIRO ENGRASADOR	GREASE FITTING INGRASSATORE	060I

FB80.3 - FB100.3

CILINDROS ESTABILIZADORES
CILINDROS ESTABILIZADORES
STABILIZER CYLINDERS
CILINDRI STABILIZZATORI

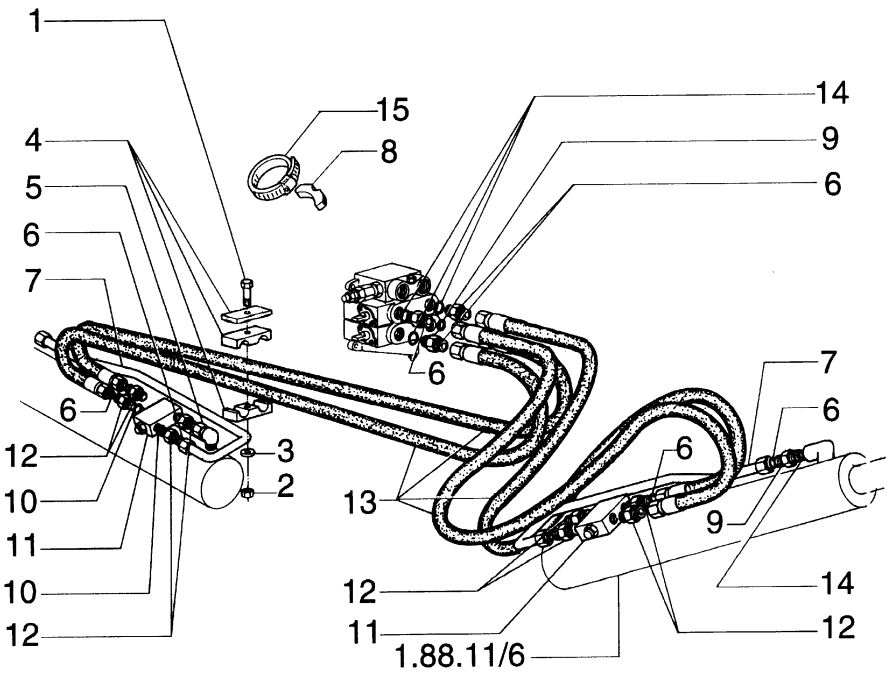

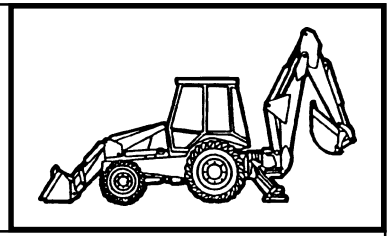

MOD	R	P/N. Imola	P/N. Brazil	Q	Descrição Denominacion	Description Descrizione	L.C.
	1	**11194779**	**70934150**	2	PARAFUSO TORNILLO	SCREW VITE	040V
	2		**70920329**	2	PORCA TUERCA	NUT DADO	010D
	3	**11194779**	**70928190**	4	ARRUELA ARANDELA	WASHER ROSETTA	131R
	4		**75246144**	2	ABRAÇADEIRA ABRAZADERA	CLAMP FASCETTA	031F
	5	**85802965**		2	COTOVELO CODO	ELBOW GOMITO	085G
	6	**81845038**	**70923841**	14	O'RING JUNTA TORICA	O'RING GUARNIZIONE O-R	158G
	7	**85802620**		2	TUBO TUBO	TUBE TUBO RIGIDO	193T
	8	**83911131**		2	SUPORTE SOPORTE	SUPPORT SUPPORTO	300S
	9	**83963374**	**76021263**	6	CONEXÃO RACOR	FITTING RACCORDO	020R
	10	**89617873**	**76021244**	8	O'RING JUNTA TORICA	O'RING GUARNIZIONE O-R	158G
	11	**85802820**		2	VÁLVULA VALVULA	VALVE VALVOLA	010V
	12	**83985067**	**76021264**	4	CONEXÃO RACOR	FITTING RACCORDO	020R
	13	**85802836**	**75247179**	4	MANGUEIRA MANGA C/RACORDE	HOSE ASSY TUBO FLESSIBILE	192T
	14	**80128825**	**70935176**	6	O'RING JUNTA TORICA	O'RING GUARNIZIONE O-R	158G
	15	**85803008**		2	ABRAÇADEIRA ABRAZADERA	CLAMP FASCETTA	031F

FB80.3 - FB100.3

TUBULAÇÃO DOS CILINDROS ESTABILIZADORES
TUBOS PARA CILINDROS ESTABILIZADORES
PIPES FOR STABILIZER CYLINDERS
TUBAZIONI CILINDRI STABILIZZATORI

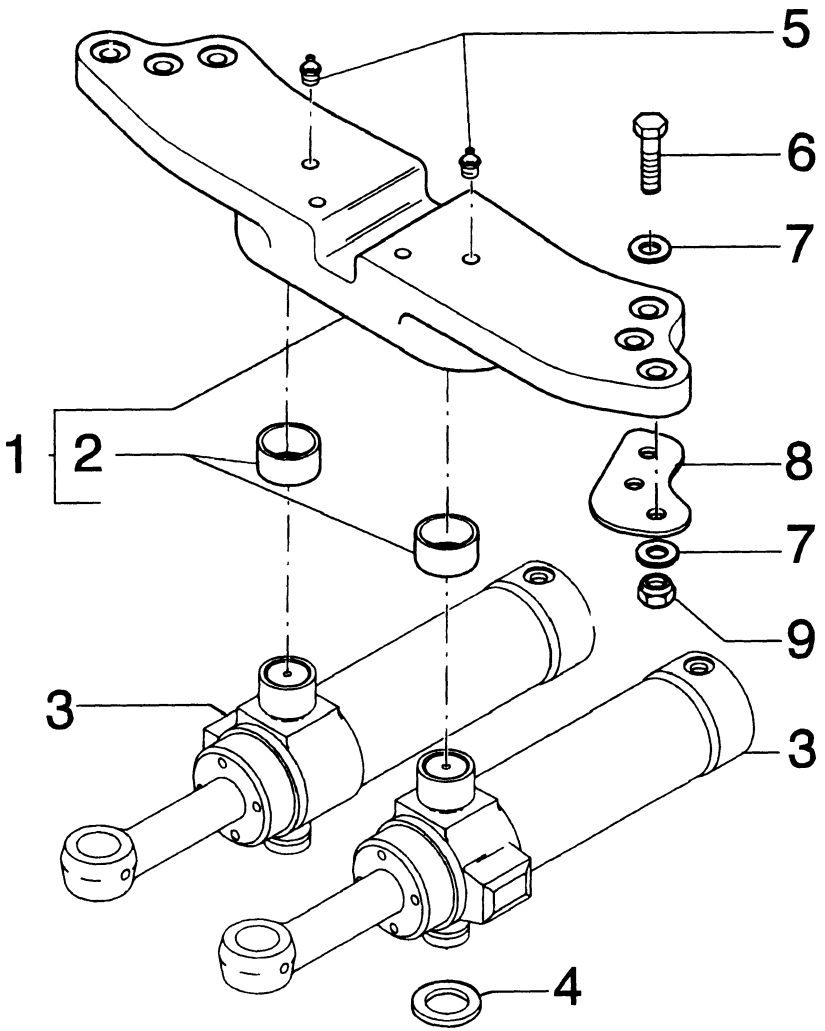

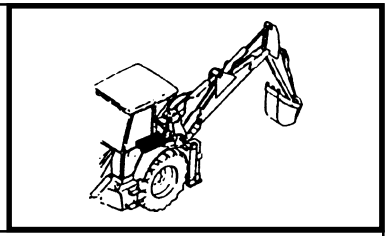

MOD	R	P/N. Imola	P/N. Brazil	Q	Descrição Denominacion	Description Descrizione	L.C.
	1	**85803616**	**75246821**	1	SUPORTE SOPORTE	SUPPORT SUPPORTO	300S
	2	**83910645**		2	BUCHA BUJE	BUSHING BOCCOLA	095B
	3	**85800355**		2	CILINDRO CILINDRO	CYLINDER CILINDRO	164C
	4		**75249428**	1	ARRUELA ARANDELA	WASHER ROSETTA	131R
	5	**80080710**	**70914465**	2	PINO GRAXEIRO ENGRASADOR	GREASE FITTING INGRASSATORE	060I
	6	**15988931**	**15989131**	6	PARAFUSO TORNILLO	SCREW VITE	040V
	7	**10520431**	**10520421**	6	ARRUELA ARANDELA	WASHER ROSETTA	131R
	8	**85801153**		4	ESPAÇADOR SEPARADOR	SPACER DISTANZIALE	075D
	8	**85803039**		2	ESPAÇADOR SEPARADOR	SPACER DISTANZIALE	075D
	9	**12575121**	**12575127**	6	PORCA TUERCA	NUT DADO	010D

FB80.3 - FB100.3

CILINDROS DE ROTAÇÃO DA RETRO E CHAPA DE APOIO
CILINDROS Y PLACA ROTACION
CYLINDERS AND ROTATION PLATE
CILINDRI E PIASTRA ROTAZIONI

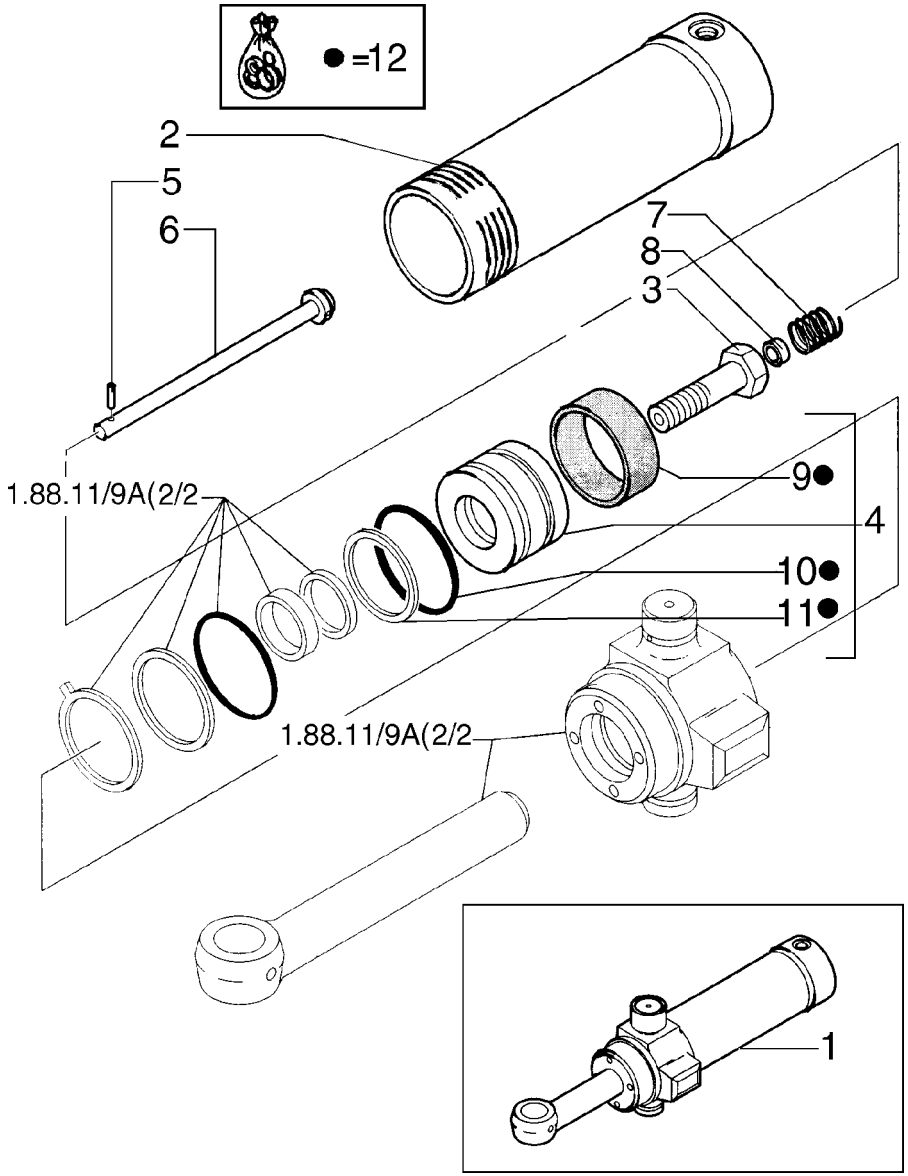

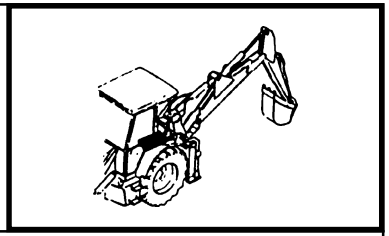

MOD	R	P/N. Imola	P/N. Brazil	Q	Descrição Denominacion	Description Descrizione	L.C.
	1	**85800355**		1	CILINDRO CILINDRO	CYLINDER CILINDRO	164C
	2	**85800342**		1	CAMISA CILINDRO CAMISA CILINDRO	CYLINDER LINER CAMICIA CILINDR	035C
	3	**82866945**		1	PARAFUSO TORNILLO	SCREW VITE	040V
	4	**81875232**		1	ÊMBOLO EMBOLO	PISTON STANTUFFO	235S
	5	**83910599**		1	PINO BULON	PIN PERNO	080P
	6	**85800990**		1	EIXO ARBOL	SHAFT ALBERO	016A
	7	**83931313**		1	MOLA MUELLE	SPRING MOLLA	100M
	8	**83998909**		1	BUCHA BUJE	BUSHING BOCCOLA	095B
	9	**81875256**		1	RETENTOR JUNTA	SEAL GUARNIZIONE	122G
	10	**83904858**		1	ANEL ARO	RING ANELLO	045A
	11	**82853846**		1	JUNTA JUNTA PLANA	GASKET GUARNIZ. PIANA	120G
	12	**85819353**		1	KIT JUEGO	KIT KIT	002K

FB80.3 - FB100.3

CILINDROS DE ROTAÇÃO DA RETRO E CHAPA DE APOIO
CILINDROS Y PLACA ROTACION
CYLINDERS AND ROTATION PLATE
CILINDRI E PIASTRA ROTAZIONI

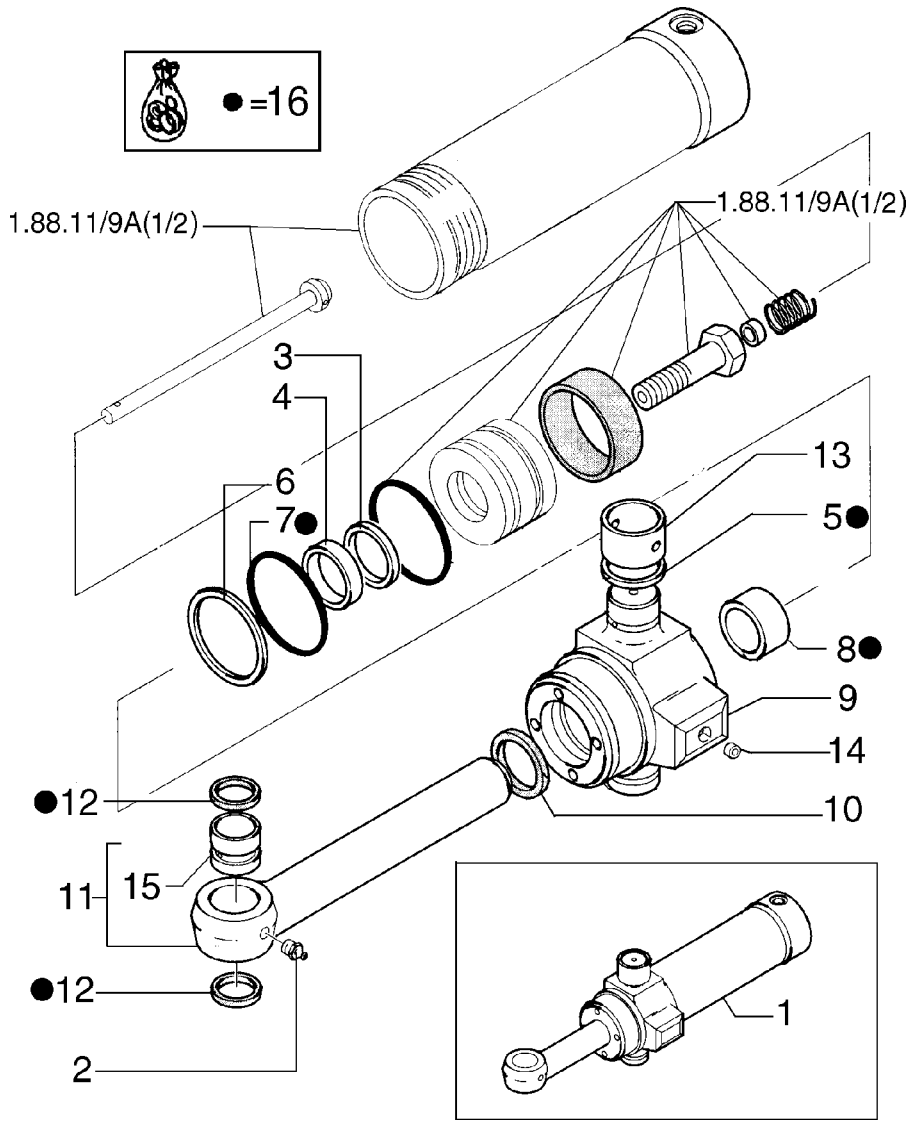

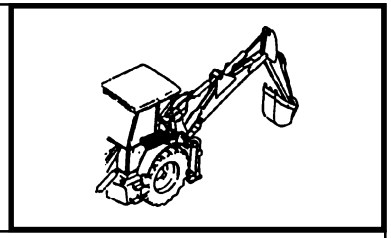

MOD	R	P/N. Imola	P/N. Brazil	Q	Descrição Denominacion	Description Descrizione	L.C.
	1	**85800355**		1	CILINDRO CILINDRO	CYLINDER CILINDRO	164C
	2	**80080710**		1	PINO GRAXEIRO ENGRASSATORE	GREASE FITTING INGRASSATORE	060I
	3	**85800086**		1	RETENTOR JUNTA	SEAL GUARNIZIONE	122G
	4	**85800082**		1	RETENTOR JUNTA	SEAL GUARNIZIONE	122G
	5	**83910601**		2	RETENTOR JUNTA	SEAL GUARNIZIONE	122G
	6	**85800007**		1	ANEL ARO	RING ANELLO	045A
	7	**85800018**		1	O'RING JUNTA TORICA	O'RING GUARNIZIONE O-R	158G
	8	**85800093**		1	RETENTOR JUNTA	SEAL GUARNIZIONE	122G
	8	**70929276**		1	ARRUELA ARANDELA	WASHER ROSETTA	131R
	9	**85800966**		1	TAMPA JUNTA TORICA	COVER COPERCHIO	265C
	10	**85800090**		1	RETENTOR JUNTA	SEAL GUARNIZIONE	122G
	11	**85800307**		1	HASTE VASTAGO	ROD STELO	274S
	12	**83931289**		2	RETENTOR JUNTA	SEAL GUARNIZIONE	122G
	13	**83912378**		2	BUCHA BUJE	BUSHING BOCCOLA	095B
	14	**85800965**		1	CONEXÃO RACOR	FITTING RACCORDO	020R
	15	**85800303**		1	BUCHA BUJE	BUSHING BOCCOLA	095B
	16	**85819353**		1	KIT JUEGO	KIT KIT	002K

BODY, HOOD
*DRIVER'S POST

CAPOT
*PUESTO DE CONDUCCION

COFANI
*POSTO GUIDA

CAPUZES
*POSTO DE CONDUÇÃO

AUVENT
*POSTE DE CONDUITE

MOTOR DEKSELS
*KABINE

MOTORHAUBE UND VERKLEIDUNG
*FUEHRERSTAND

DÆKSLER
*FØRERSÆDE

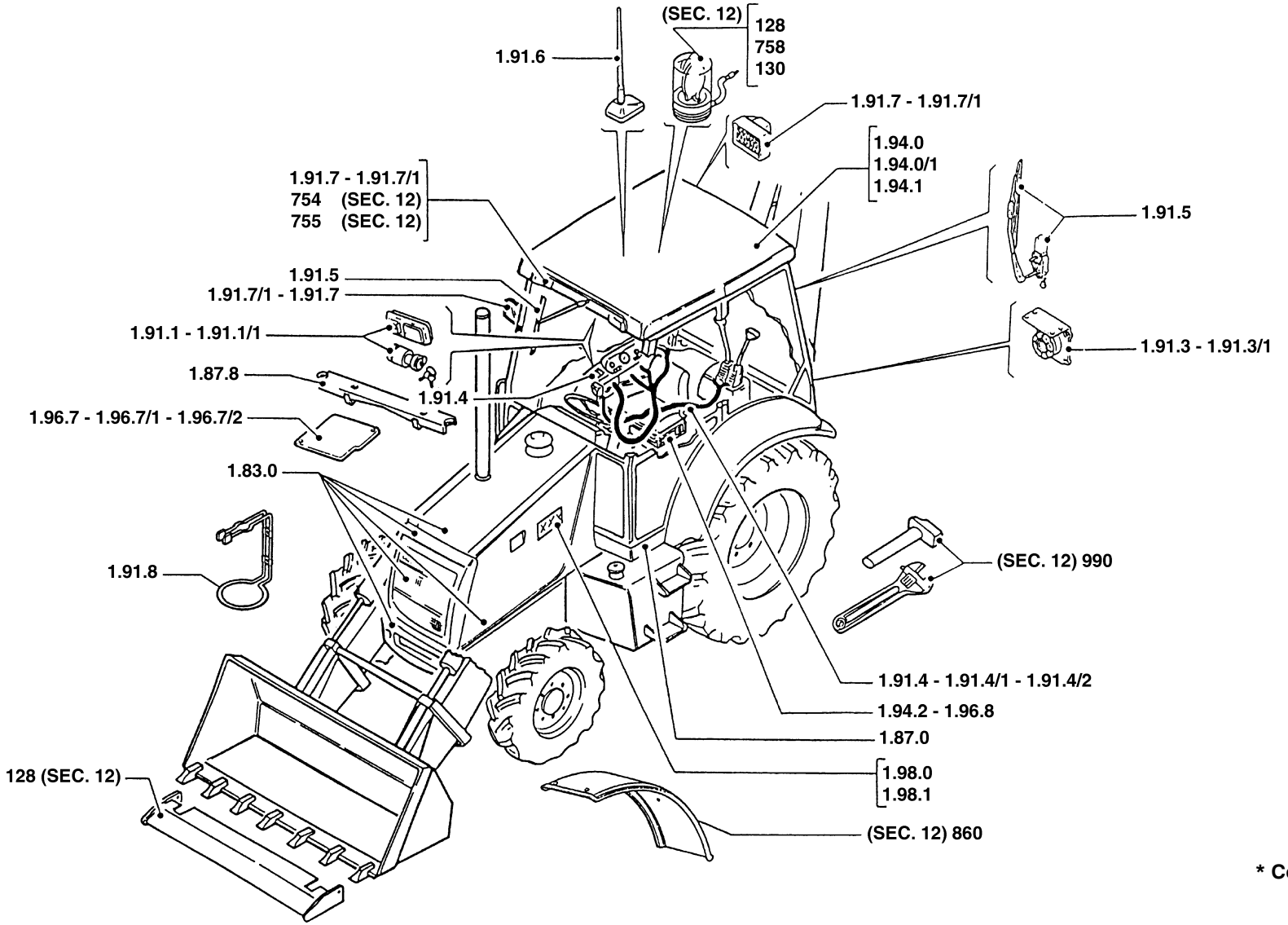

* Continued on Sec. 10

SEC. 10

BODY, HOOD
***DRIVER'S POST**

CAPOT
***PUESTO DE CONDUCCION**

COFANI
***POSTO GUIDA**

CAPUZES
***POSTO DE CONDUÇÃO**

AUVENT
***POSTE DE CONDUITE**

MOTOR DEKSELS
***KABINE**

MOTORHAUBE UND VERKLEIDUNG
***FUEHRERSTAND**

DÆKSLER
***FØRERSÆDE**

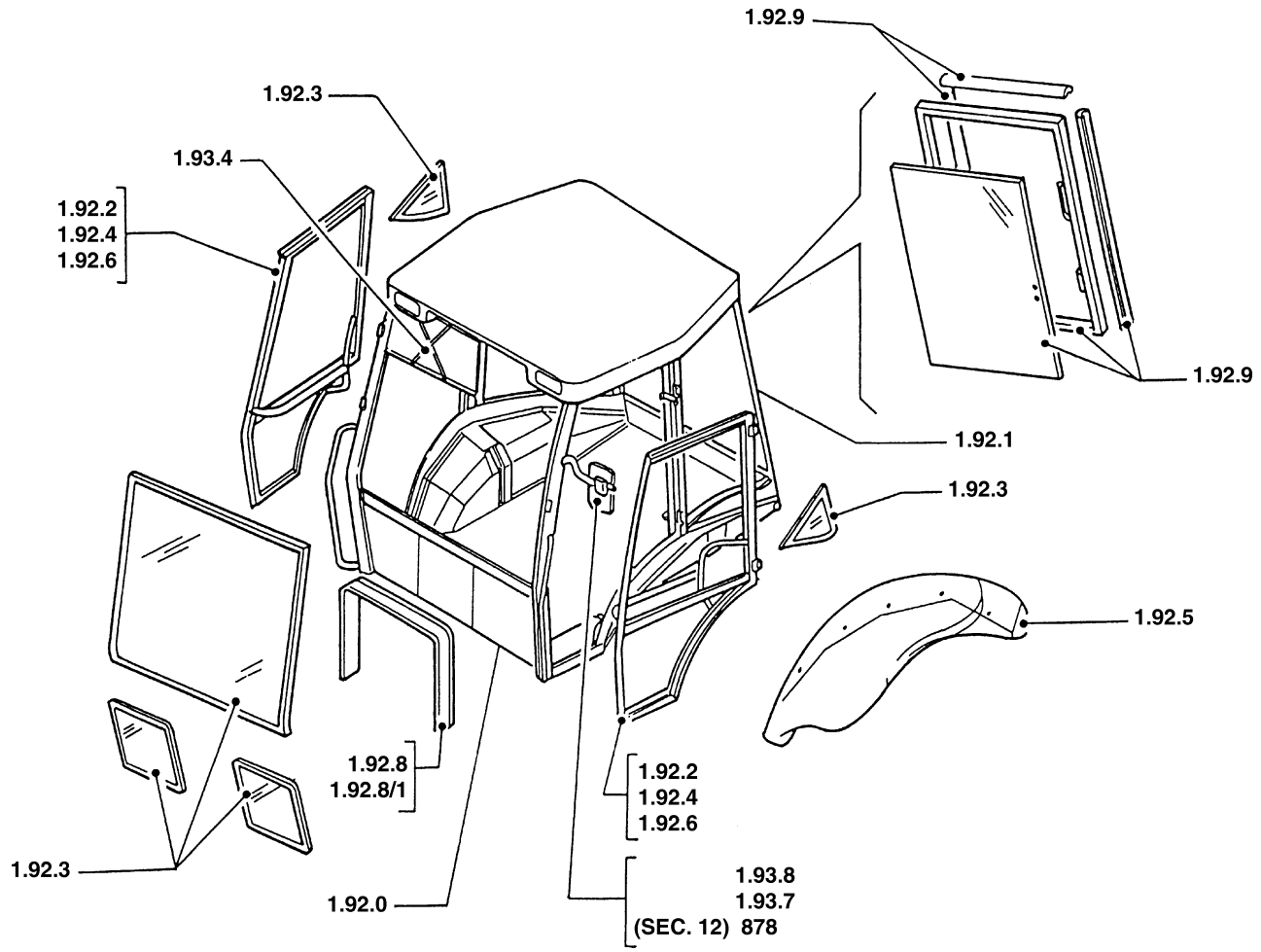

BODY, HOOD
***DRIVER'S POST**

CAPOT
***PUESTO DE CONDUCCION**

COFANI
***POSTO GUIDA**

CAPUZES
***POSTO DE CONDUÇÃO**

AUVENT
***POSTE DE CONDUITE**

MOTOR DEKSELS
***KABINE**

MOTORHAUBE UND VERKLEIDUNG
***FUEHRERSTAND**

DÆKSLER
***FØRERSÆDE**

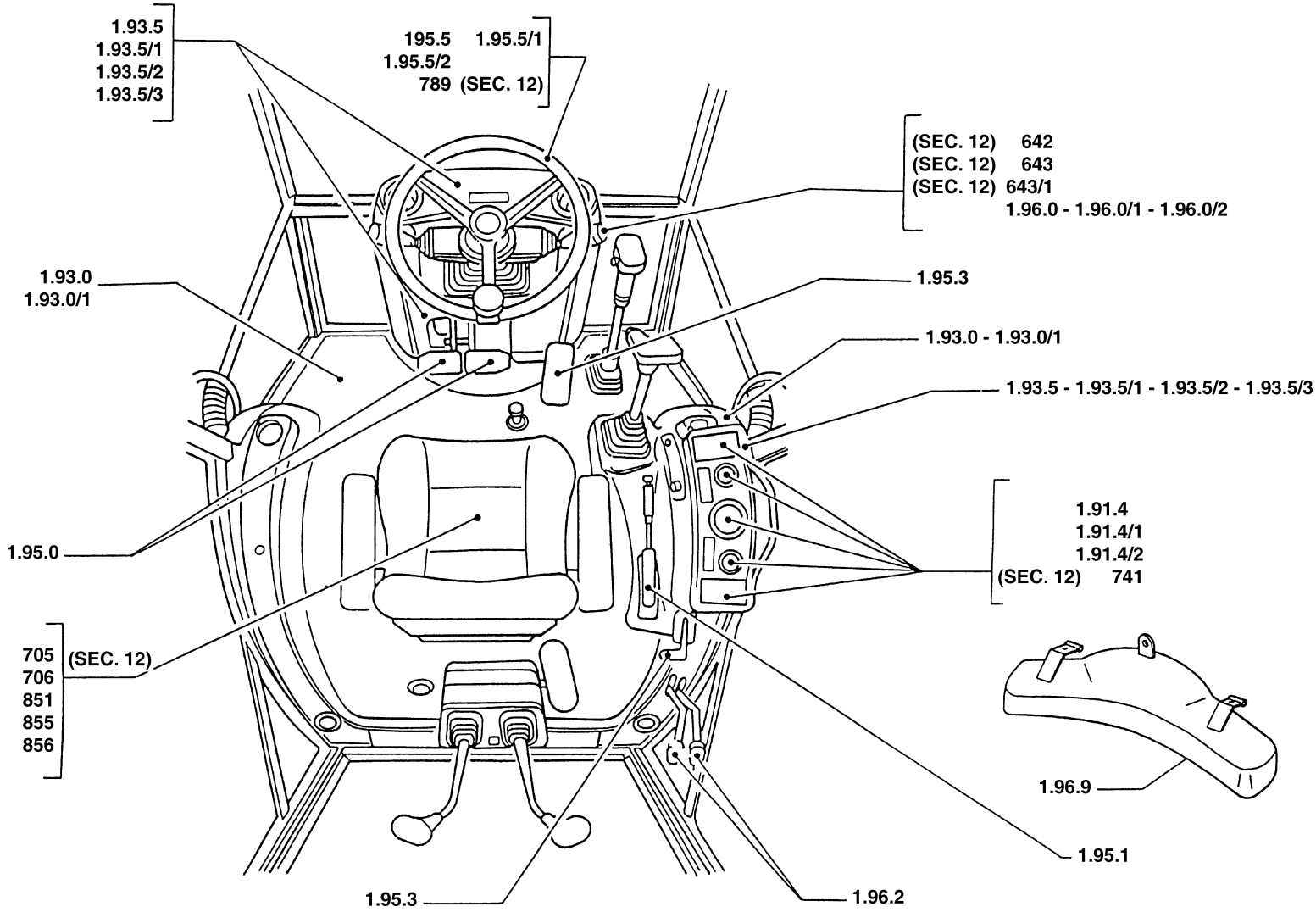

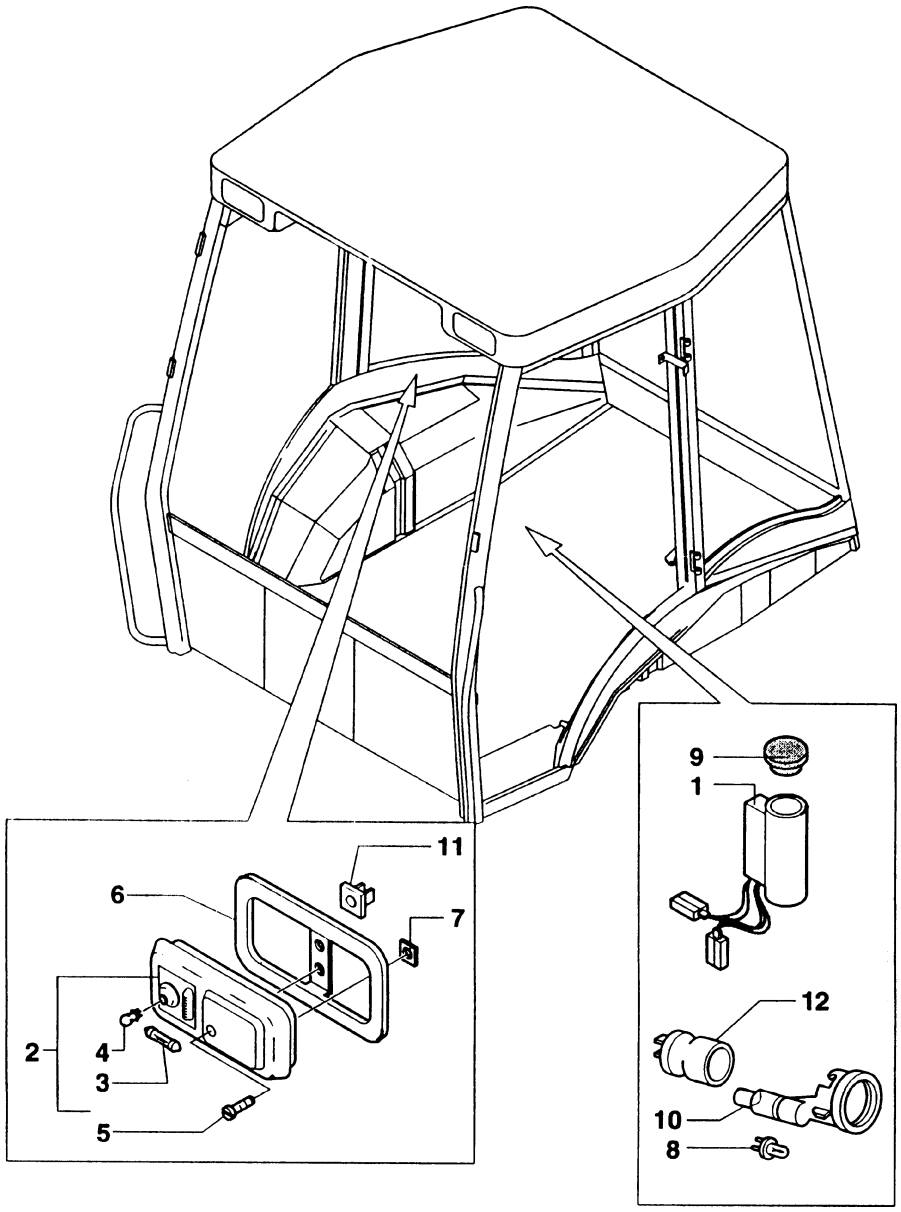

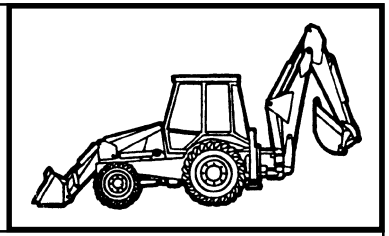

MOD	R	P/N. Imola	P/N. Brazil	Q	Descrição Denominacion	Description Descrizione	L.C.
	1	**71403846**		1	TOMADA TONA CORRIENTE	RECEPTACLE PRESA CORRENTE	205P
	2	**5141635**		1	LÂMPADA DO TETO PANTALLA	CEILING LIGHT PLAFONIERA	135P
	3	**10863090**		1	LÂMPADA LAMPARA	LAMP LAMPADA	030L
	4	**14144190**		1	LÂMPADA LAMPARA	LAMP LAMPADA	030L
	5	**15902604**		2	PARAFUSO TORNILLO	SCREW VITE	040V
	6	**85802204**		1	MOLDURA MARCO	BEZEL CORNICE	295C
	7	**14183471**		4	PLACA PLACA	PLATE PIASTRINA	110P
	8	**14143790**		1	LÂMPADA LAMPARA	LAMP LAMPADA	030L
	9	**79111978**		1	BUJÃO TAPON	PLUG TAPPO	050T
	10	**5148132**		1	PORTA-LÂMPADA SOPORTE LAMPARA	BULB HOLDER PORTALAMPADA	193P
	11	**14215480**		2	BLOCO CALCE	BLOCK BLOCCHETTO	074B
	12	**5148131**		1	SEDE ASIENTO	SEAT SEDE	069S

10

FB80.3 - FB100.3

CABINE / EQUIPAMENTOS ELÉTRICOS
CABINA / APARATOS DE LA INSTALACION ELECTRICA
CAB / ELECTRIC EQUIPMENT
CABINA / APPARECCHI IMPIANTO ELETTRICO

1.91.1

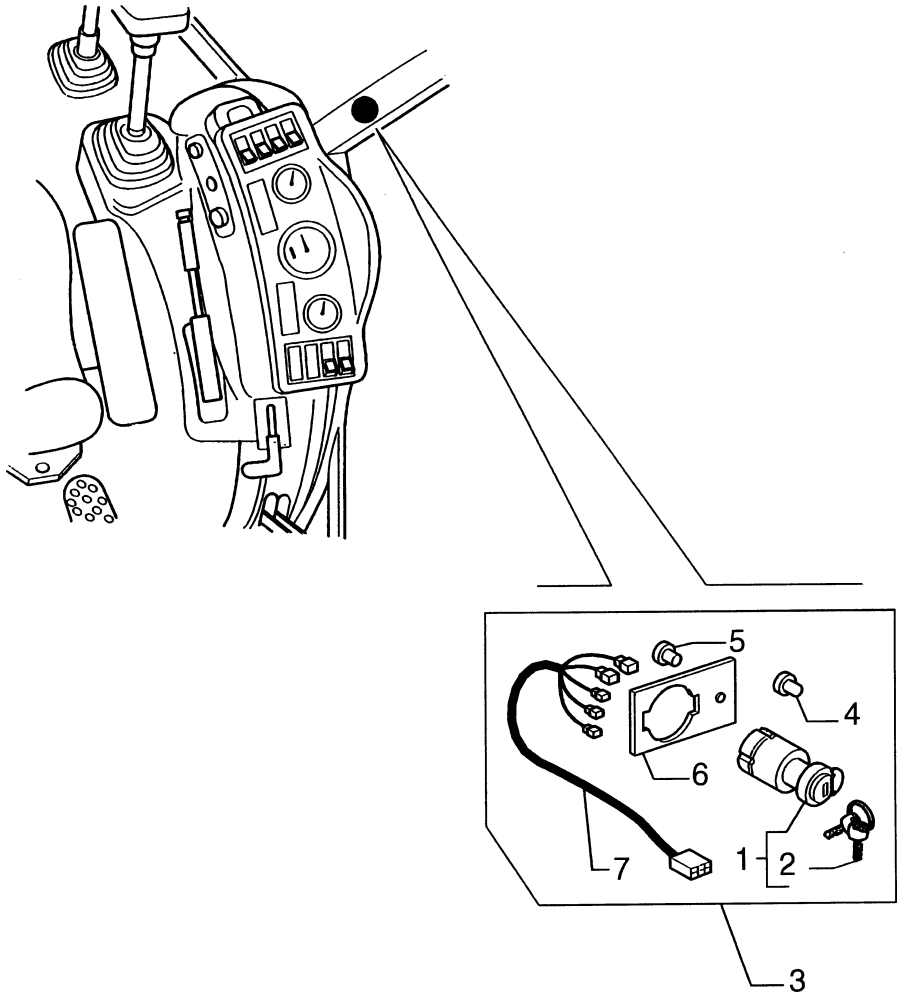

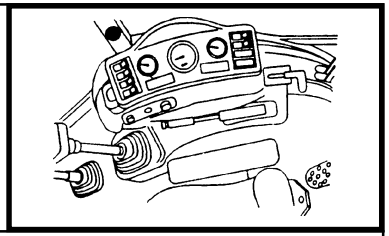

MOD	R	P/N. Imola	P/N. Brazil	Q	Descrição Denominacion	Description Descrizione	L.C.
	1	**85804674**		1	INTERRUPTOR INTERRUPTOR	SWITCH INTERRUTTORE	075I
	2	**85804675**		2	CHAVE LLAVE	KEY CHIAVE	150C
	3	**85807866**		1	KIT JUEGO	KIT KIT	002K
	4	**80784122**		1	BUJÃO TAPON	PLUG TAPPO	050T
	5	**10427200**		1	REBITE REMACHE	RIVET RIBATTINO	055R
	6	**85805888**		1	CHAPA PLACA	PLATE PIASTRA	105P
	7	**85807855**		1	CABO ELÉTRICO CABLE	CABLE CAVO	111C

10

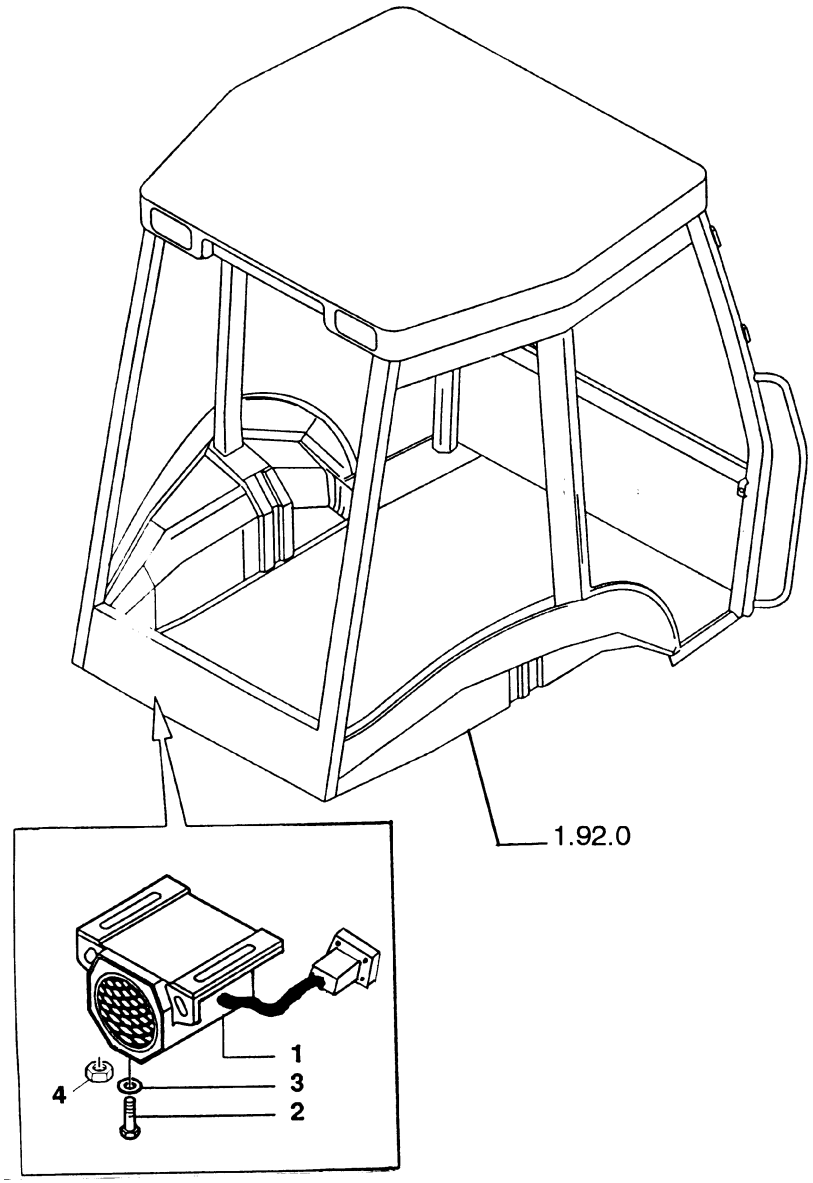

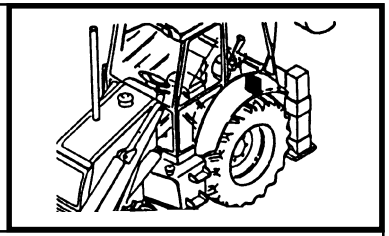

MOD	R	P/N. Imola	P/N. Brazil	Q	Descrição Denominacion	Description Descrizione	L.C.
	1	**85804568**		1	ALARME DE RÉ AVISADOR ALARMA	BACK UP ALARM AVVIS.ACUST.R.M	0760
	2	**13276414**		2	PARAFUSO TORNILLO	SCREW VITE	040V
	3	**11193274**		2	ARRUELA ARANDELA	WASHER ROSETTA	131R
	4	**12574111**		2	PORCA TUERCA	NUT DADO	010D

10

FB80.3 - FB100.3

CABINE / ALARME DE RÉ
CABINA / ALARMA PARA MARCHA ATRAS
CAB / REVERSE GEAR ALARM
CABINA / ALLARME PER RETROMARCIA

1.91.3

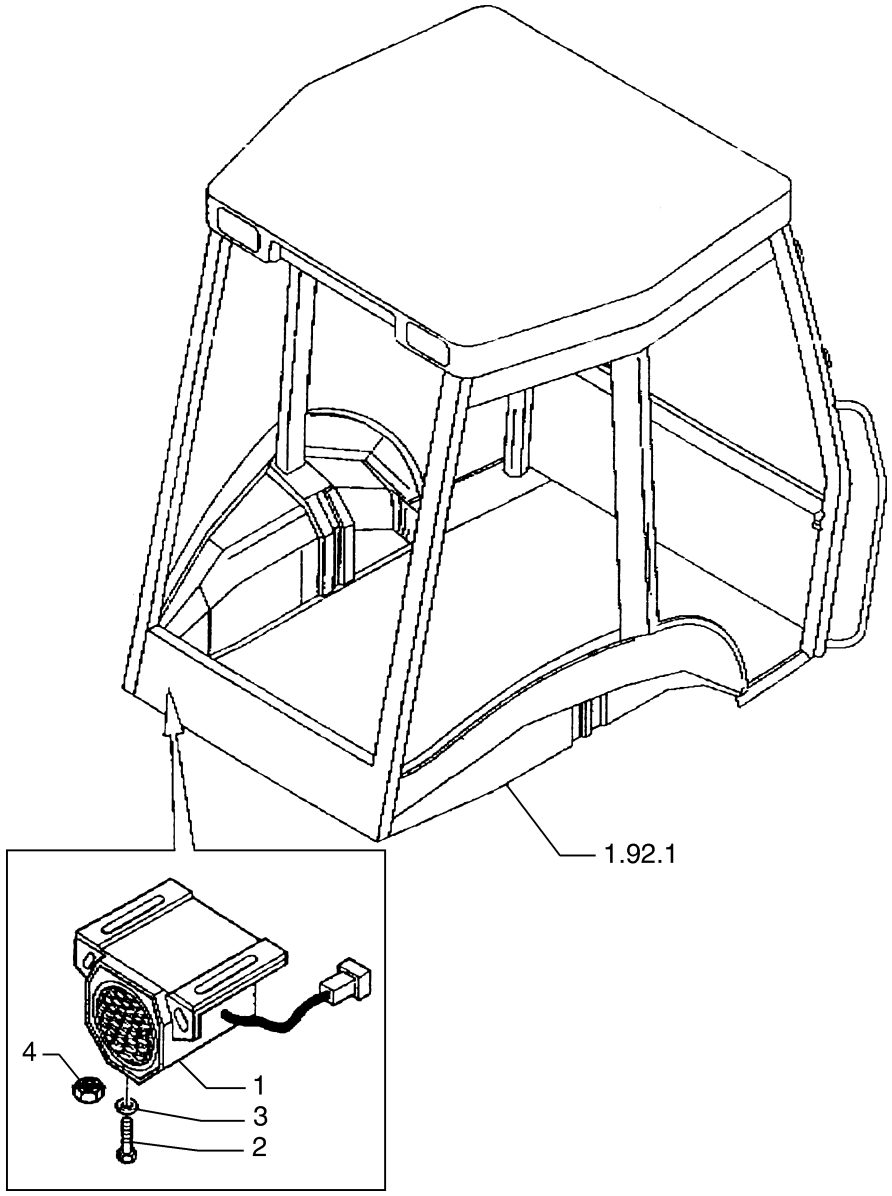

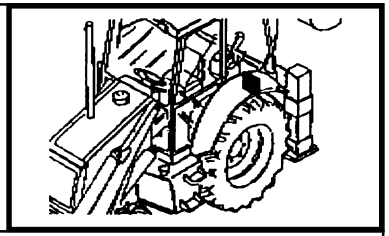

MOD	R	P/N. Imola	P/N. Brazil	Q	Descrição Denominacion	Description Descrizione	L.C.
	1	**85804568**		1	ALARME DE RÉ AVISADOR ALARMA	BACK UP ALARM AVVIS.ACUST.R.M	0760
	2	**13274411**		2	PARAFUSO TORNILLO	SCREW VITE	040V
	3	**11197774**		2	ARRUELA ARANDELA	WASHER ROSETTA	131R
	4	**12574111**		2	PORCA TUERCA	NUT DADO	010D

10

FB80.3 - FB100.3

TOLDO / ALARME DE RÉ
TOLDO / ALARMA PARA MARCHA ATRAS
SAFETY FRAME / REVERSE GEAR ALARM
TELAIO DI SICUREZZA / ALLARME PER RETROMARCIA

1.91.3/1

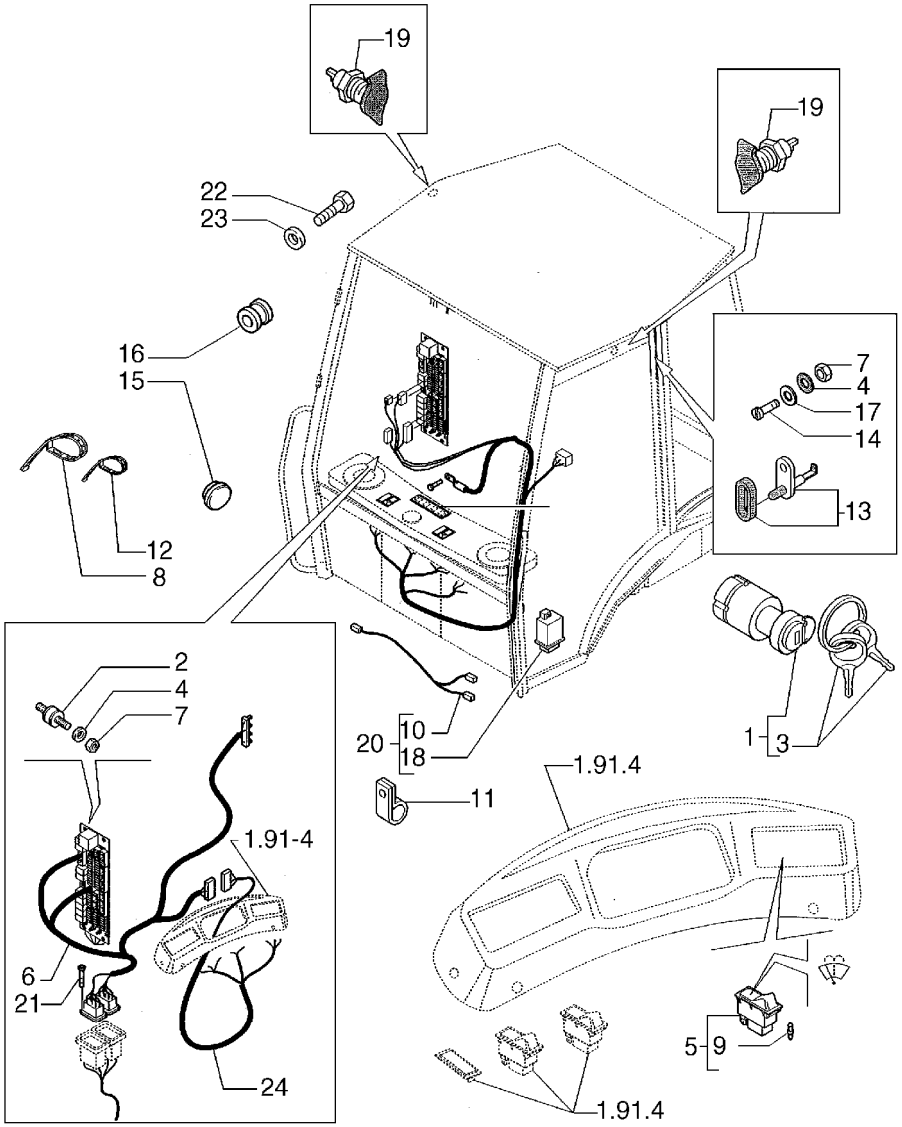

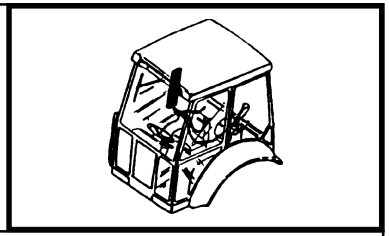

MOD	R	P/N. Imola	P/N. Brazil	Q	Descrição Denominacion	Description Descrizione	L.C.
	1	**85804674**		1	INTERRUPTOR INTERRUPTOR	SWITCH INTERRUPTORE	075I
	2	**85802478**		4	BLOCO CALCE	BLOCK BLOCCHETTO	074B
	3	**85804675**		2	CHAVE LLAVE	KEY CHIAVE	150C
	4	**10615274**		6	ARRUELA ARANDELA	WASHER ROSETTA	131R
	5	**85818823**		1	INTERRUPTOR INTERRUPTOR	SWITCH INTERRUPTORE	075I
	6	**85819201**		1	CABO ELÉTRICO CABLE	CABLE CAVO	111C
	7	**12574011**		6	PORCA TUERCA	NUT DADO	010D
	8	**85805383**		30	ABRAÇADEIRA ABRAZADERA	CLAMP FASCETTA	031F
	9	**14143790**		AR	LÂMPADA LAMPARA	LAMP LAMPADA	030L
	10	**85802045**		1	CABO ELÉTRICO CABLE	CABLE CAVO	111C
	11	**10450090**		1	ABRAÇADEIRA ABRAZADERA	CLAMP FASCETTA	031F
	12	**5112712**		5	ABRAÇADEIRA ABRAZADERA	CLAMP FASCETTA	031F
	13	**83961521**		2	INTERRUPTOR INTERRUPTOR	SWITCH INTERRUPTORE	075I
	14	**13309417**		2	PARAFUSO TORNILLO	SCREW VITE	040V
	15	**85808460**		1	BUJÃO TAPON	PLUG TAPPO	050T
	16	**10398980**		1	ANEL ARO	RING ANELLO	045A
	17	**10519201**		2	ARRUELA ARANDELA	WASHER ROSETTA	131R
	18	**85806132**		1	UNIDADE COMANDO CENTRALILLA	CONTROL UNIT CENTRALINA	130C
	19	**82002966**		2	TOMADA TONA CORRIENTE	RECEPTACLE PRESA CORRENTE	205P
	20	**85806131**		1	KIT JUEGO	KIT KIT	002K

FB80.3 - FB100.3

CABINE / CABOS ELÉTRICOS VÁRIOS
CABINA / CABLES ELECTRICOS VARIOS
CAB / MISCELLANEUS ELECTRIC WIRES
CABINA / CAVI ELETTRICI VARI

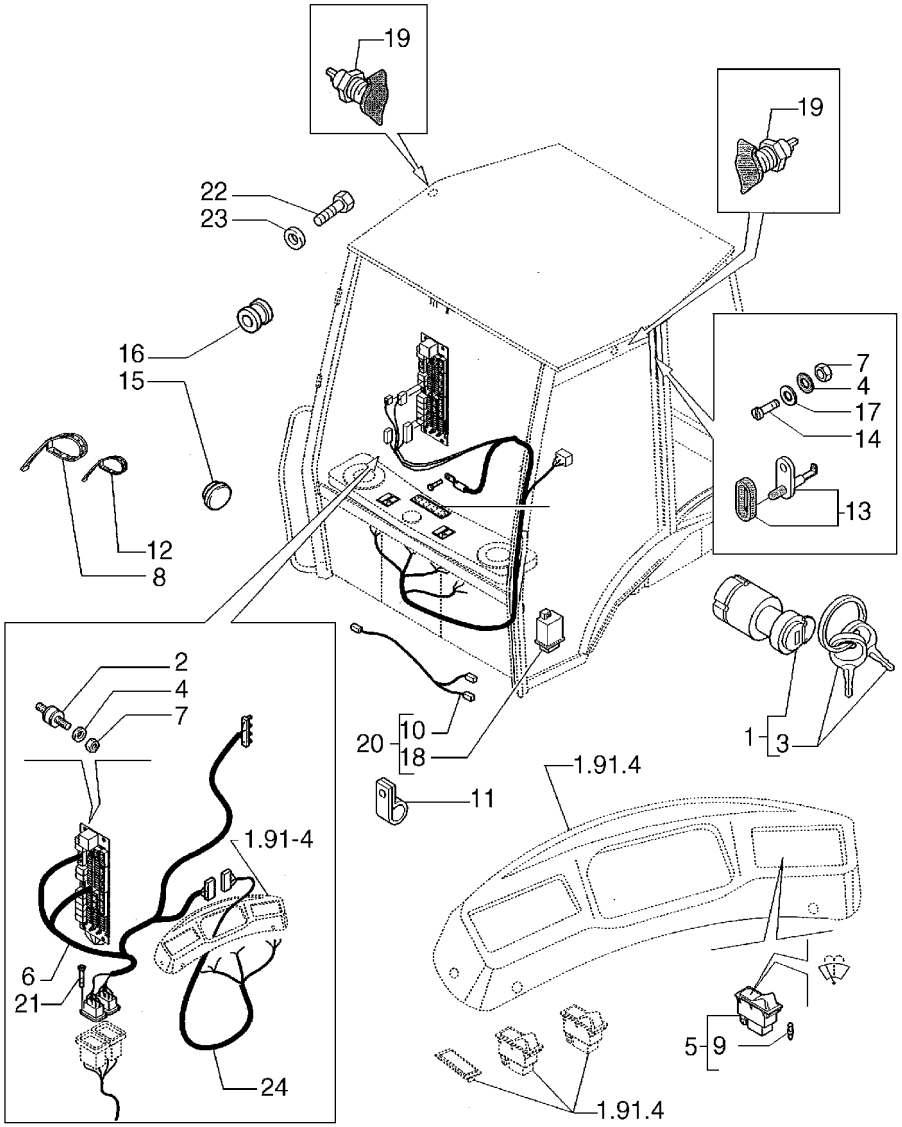

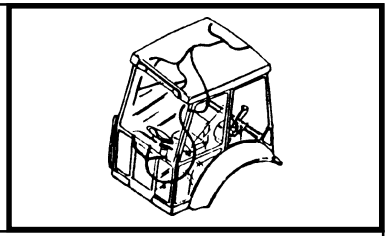

MOD	R	P/N. Imola	P/N. Brazil	Q	Descrição Denominacion	Description Descrizione	L.C.
	21	**13272214**		2	RARAFUSO TORNILLO	SCREW VITE	040V
	22	**10902624**		1	PARAFUSO TORNILLO	SCREW VITE	040V
	23	**11193274**		1	ARRUELA ARANDELA	WASHER ROSETTA	131R
	24	**85819214**		1	CABO ELETRICO CABLE	CABLE CAVO	111C

10

FB80.3 - FB100.3

CABINE / CABOS ELÉTRICOS VÁRIOS
CABINA / CABLES ELECTRICOS VARIOS
CAB / MISCELLANEUS ELECTRIC WIRES
CABINA / CAVI ELETTRICI VARI

1.91.4

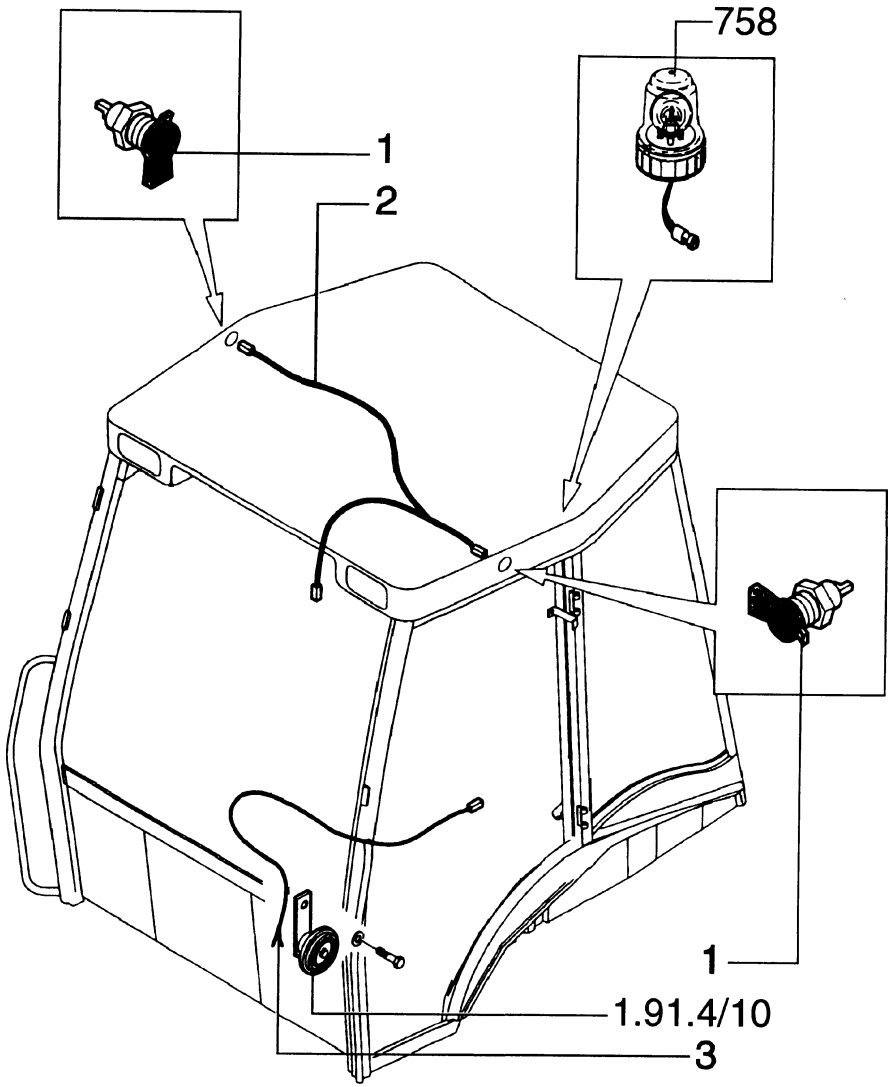

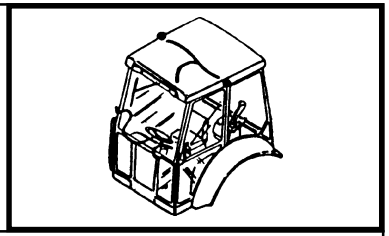

MOD	R	P/N. Imola	P/N. Brazil	Q	Descrição Denominacion	Description Descrizione	L.C.
	1	**82002966**		2	TOMADA TONA CORRIENTE	RECEPTACLE PRESA CORRENTE	205P
	2	**85803957**		1	CABO ELETRICO CABLE	CABLE CAVO	111C
	3		**75250381**	1	CABO ELETRICO CABLE	CABLE CAVO	111C

10

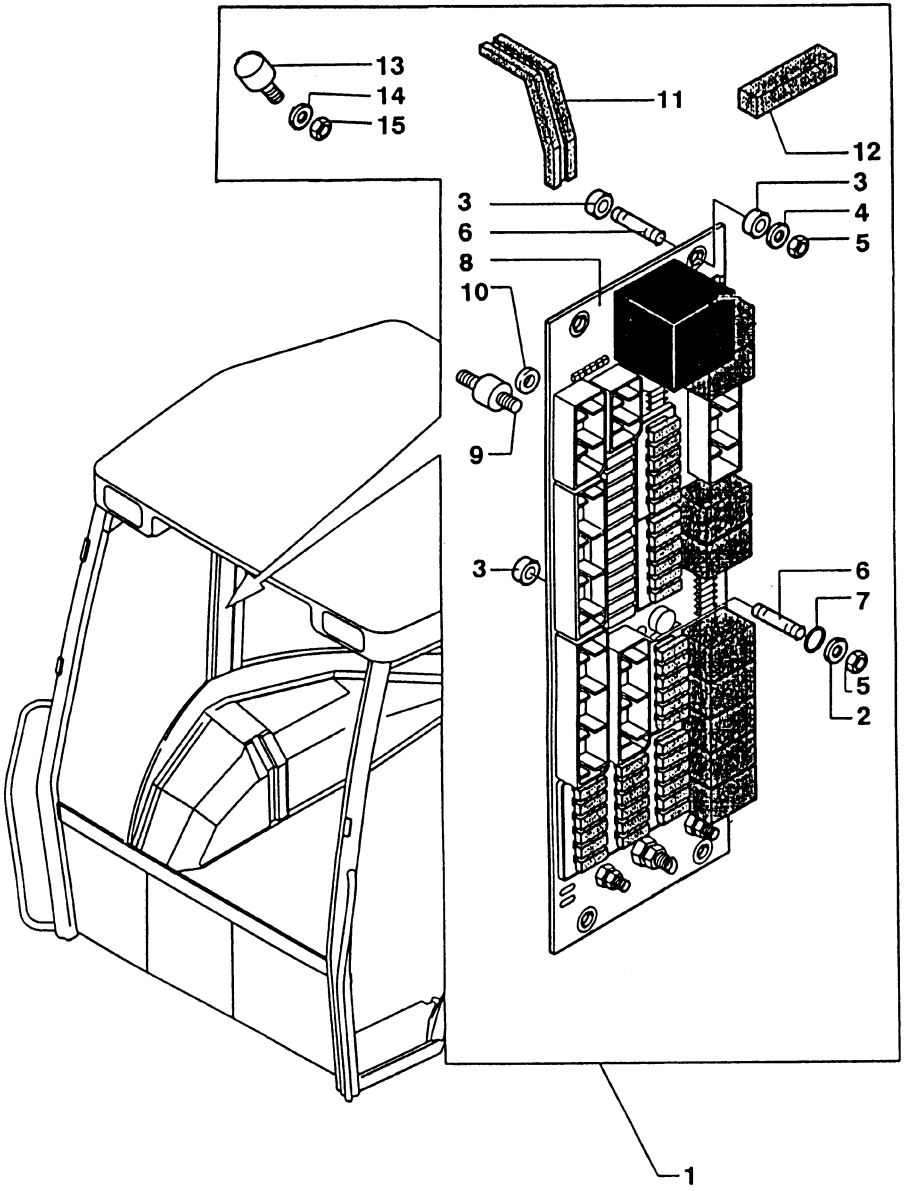

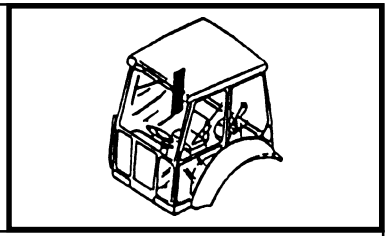

MOD	R	P/N. Imola	P/N. Brazil	Q	Descrição Denominacion	Description Descrizione	L.C.
	1	**85805105**		1	CENTRALINA ELETRONICA UNIDADE CONTR	ELECTRONIC CONT UNIT CENTRALINA	655C
	2	**10519260**		1	ARRUELA ARANDELA	WASHER ROSETTA	131R
	3	**79046227**		9	ESPAÇADOR SEPARADOR	SPACER DISTANZIALE	075D
	4	**13577604**		4	ARRUELA ARANDELA	WASHER ROSETTA	131R
	5	**12574011**		4	PORCA TUERCA	NUT DADO	010D
	6	**85802373**		5	PRISIONEIRO ESPARRAGO	STUD PRIGIONIERO	210P
	7	**14452581**		1	ANEL DE VEDAÇÃO JUNTA HERMETICA	SEAL RING ANELLO TENUTA	055A
	8	**85805104**		1	CORPO CUERPO	BODY CORPO	300C
	9	**85802478**		4	PRISIONEIRO ESPARRAGO	STUD PRIGIONIERO	210P
	10	**10615274**		4	ARRUELA ARANDELA	WASHER ROSETTA	131R
	11	**85801093**		1	JUNTA ADESIVA TIRCA	STRIP-GASKET GUARNIZIONE ADESIVA	124G
	12	**85805173**		1	JUNTA ADESIVA TIRCA	STRIP-GASKET GUARNIZIONE ADESIVA	124G
	13	**85806135**		1	PARAFUSO TORNILLO	SCREW VITE	040V
	14	**10519201**		1	ARRUELA ARANDELA	WASHER ROSETTA	131R
	15	**12574011**		1	PORCA TUERCA	NUT DADO	010D

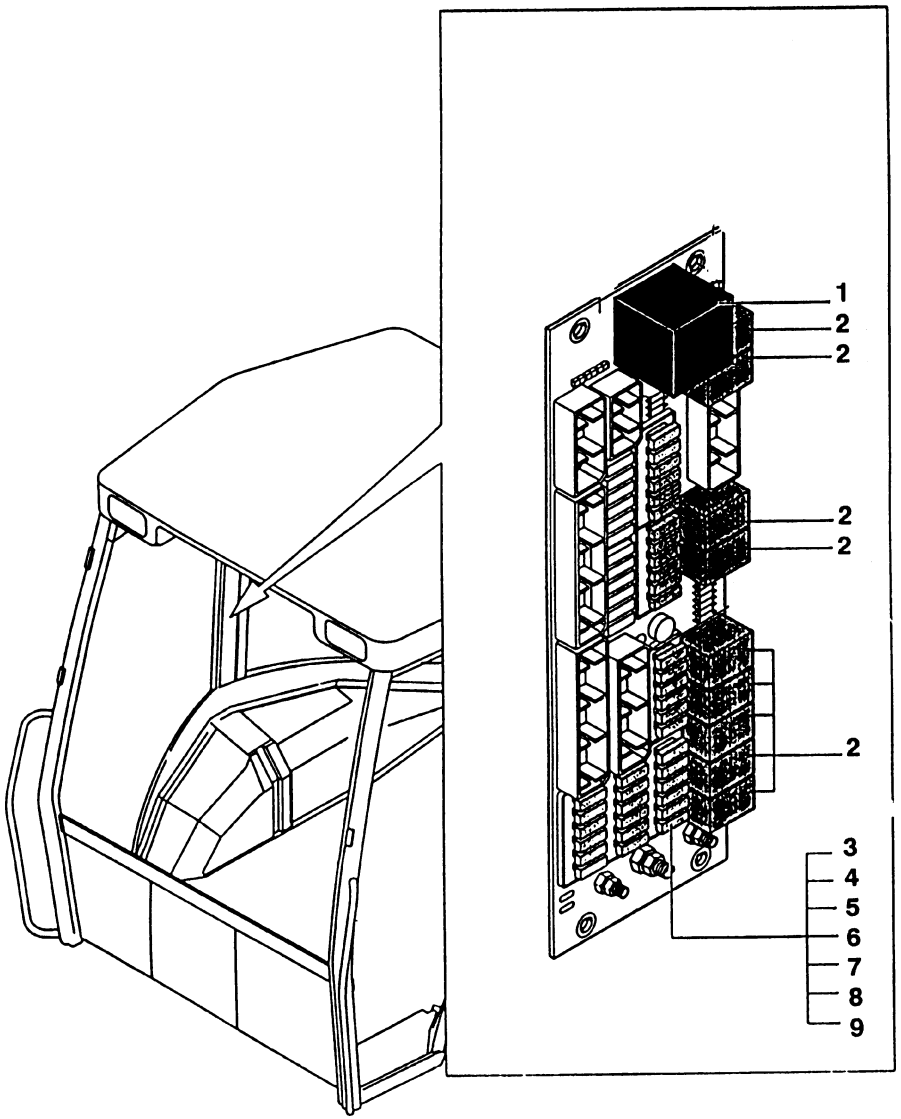

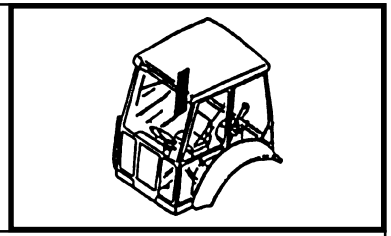

MOD	R	P/N. Imola	P/N. Brazil	Q	Descrição Denominacion	Description Descrizione	L.C.
	1	**85803986**		1	INTERRUPTOR INTERRUPTOR	INTERMITTENT SWITCH INTERMETTITORE	076I
	2	**85805144**		9	RELE TELERUPTOR	RELAY TELERUTTORE	085T
	3	**11054990**		8	FUSIVEL FUSIBLE	FUSE FUSIBILE	110F
	4	**11055190**		1	FUSIVEL FUSIBLE	FUSE FUSIBILE	110F
	5	**11055090**		8	FUSIVEL FUSIBLE	FUSE FUSIBILE	110F
	6	**85806134**		2	FUSIVEL FUSIBLE	FUSE FUSIBILE	110F
	7	**11054790**		1	FUSIVEL FUSIBLE	FUSE FUSIBILE	110F
	8	**11054590**		2	FUSIVEL FUSIBLE	FUSE FUSIBILE	110F
	9	**11054890**		4	FUSIVEL FUSIBLE	FUSE FUSIBILE	110F

10

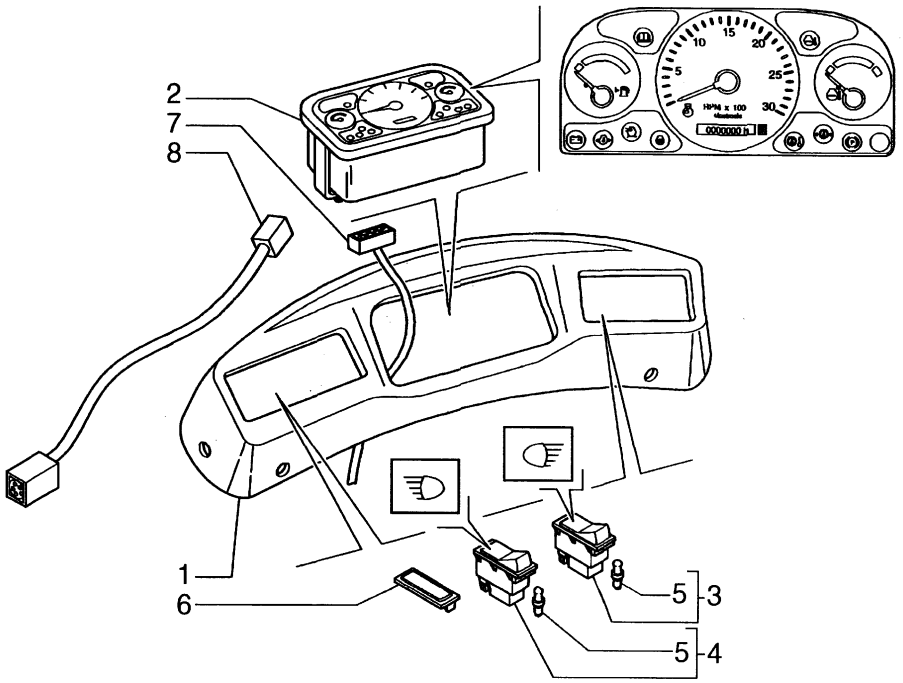

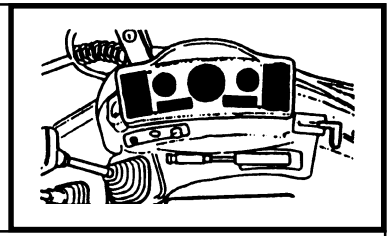

MOD	R	P/N. Imola	P/N. Brazil	Q	Descrição Denominacion	Description Descrizione	L.C.
	1	**85818817**		1	PAINEL PANEL	PANEL PANNELLO	025P
	2		**75258446**	1	PAINEL PANEL	PANEL PANNELLO	025P
	3	**85818819**		1	INTERRUPTOR INTERRUPTOR	SWITCH INTERRUTTORE	075I
	4	**85818818**		1	INTERRUPTOR INTERRUPTOR	SWITCH INTERRUTTORE	075I
	5	**14143790**		1	LÂMPADA LAMPARA	LAMP LAMPADA	030L
	6	**5151033**		7	BUJÃO TAPON	PLUG TAPPO	050T
	7	**85819214**		1	CABO ELÉTRICO CABLE	CABLE CAVO	111C
	8	**85819213**		1	CABO ELÉTRICO CABLE	CABLE CAVO	111C

10

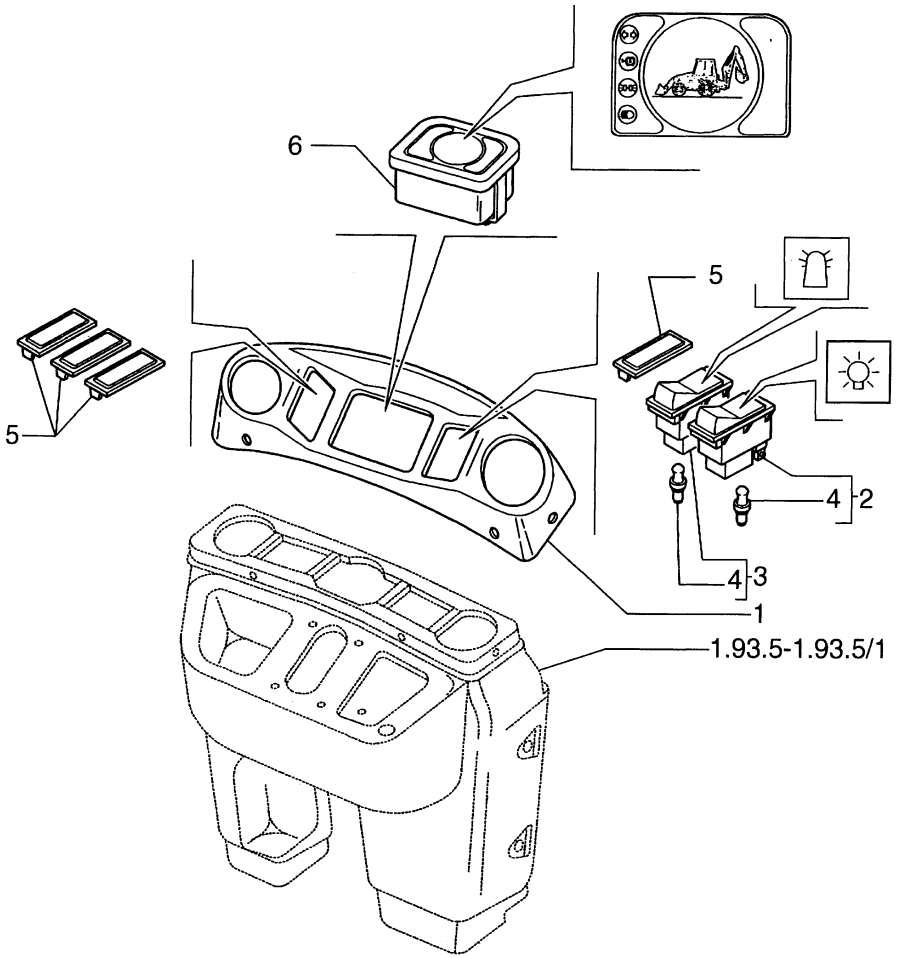

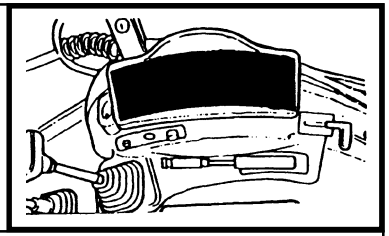

MOD	R	P/N. Imola	P/N. Brazil	Q	Descrição Denominacion	Description Descrizione	L.C.
	1	**85818826**		1	PAINEL PANEL	PANEL PANNELLO	025P
	2	**85818828**		1	INTERRUPTOR INTERRUPTOR	SWITCH INTERRUTTORE	075I
	3	**85818827**		1	INTERRUPTOR INTERRUPTOR	SWITCH INTERRUTTORE	075I
	4	**14143790**		1	LÂMPADA LAMPARA	LAMP LAMPADA	030L
	5	**5151033**		1	BUJÃO TAPON	PLUG TAPPO	05OT
	6	**85817586**		1	PAINEL PANEL	PANEL PANNELLO	025P

10

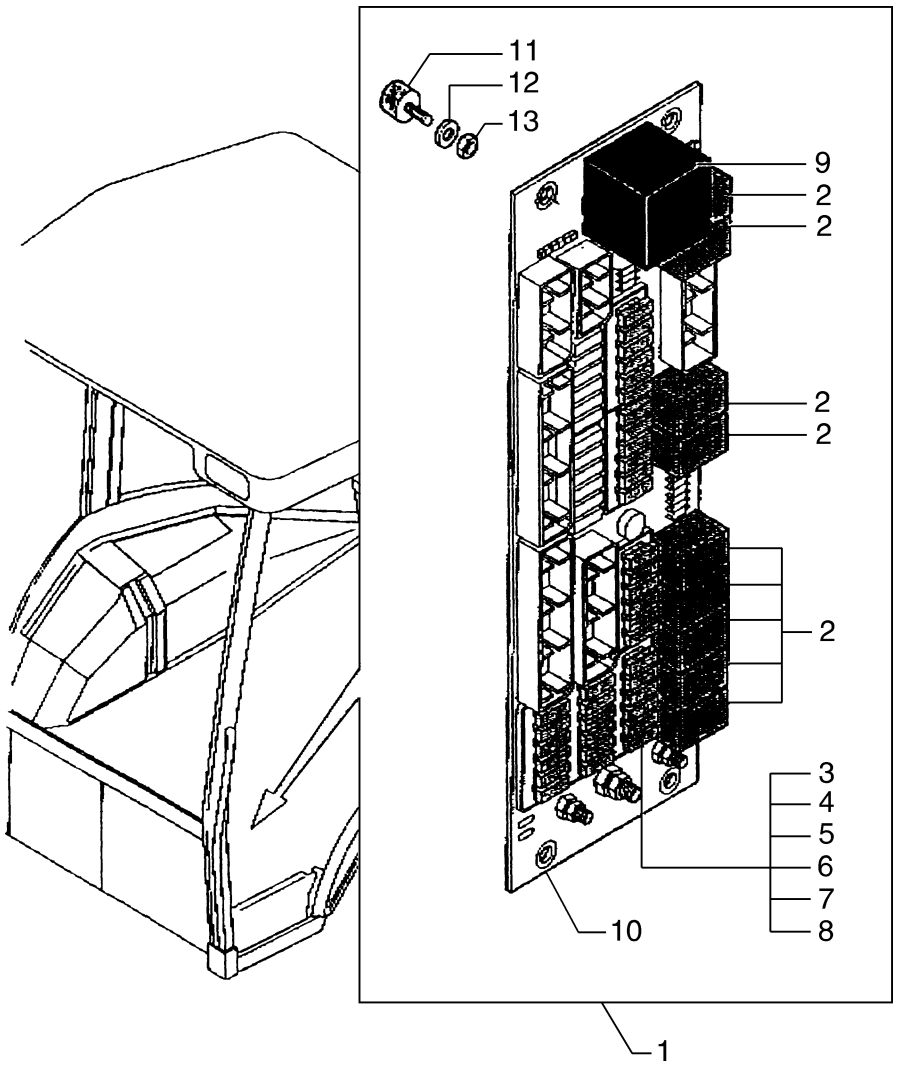

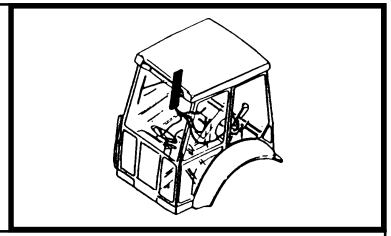

MOD	R	P/N. Imola	P/N. Brazil	Q	Descrição Denominacion	Description Descrizione	L.C.
	1	**85805106**		1	KIT JUEGO	KIT KIT	002K
	2	**85805144**		11	RELE TELERUPTOR	RELAY TELERUTTORE	085T
	3	**11054990**		6	FUSIVEL FUSIBLE	FUSE FUSIBILE	110F
	4	**11055190**		1	FUSIVEL FUSIBLE	FUSE FUSIBILE	110F
	5	**11055090**		6	FUSIVEL FUSIBLE	FUSE FUSIBILE	110F
	6	**11054590**		2	FUSIVEL FUSIBLE	FUSE FUSIBILE	110F
	7	**11054790**		1	FUSIVEL FUSIBLE	FUSE FUSIBILE	110F
	8	**11054890**		4	FUSIVEL FUSIBLE	FUSE FUSIBILE	110F
	9	**85803986**		1	INTERRUPTOR INTERRUPTOR	SWITCH INTERRUTTORE	075I
	10	**85805104**		1	CENTRALINA ELETRONICA UNIDADE CONTR	ELECTRONIC CONT UNIT CENTRALINA	655C
	11	**85805135**		1	PRISIONEIRO ESPARRAGO	STUD PRIGIONIERO	210P
	12	**10519201**		1	ARRUELA ARANDELA	WASHER ROSETTA	131R
	13	**12574011**		1	PORCA TUERCA	NUT DADO	010D

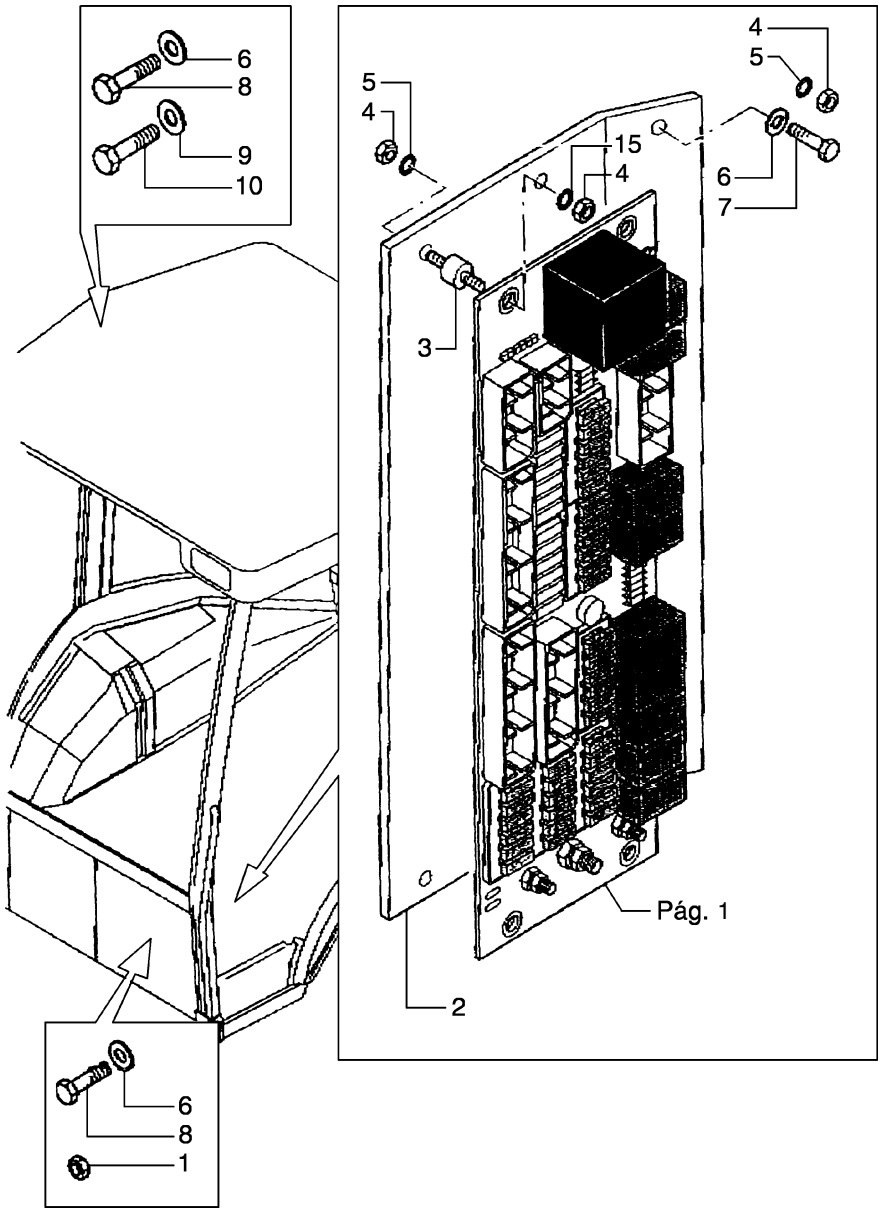

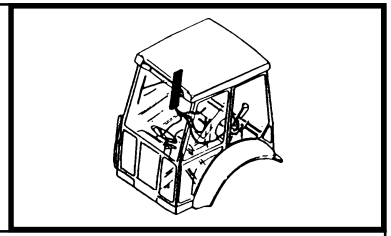

MOD	R	P/N. Imola	P/N. Brazil	Q	Descrição Denominacion	Description Descrizione	L.C.
	1	**16104121**		1	PORCA TUERCA	NUT DADO	010D
	2	**85802440**		1	SUPORTE SOPORTE	SUPPORT SUPPORTO	300S
	3	**85802478**		4	PRISIONEIRO ESPARRAGO	STUD PRIGIONIERO	210P
	4	**10794014**		8	PORCA TUERCA	NUT DADO	010D
	5	**10615274**		8	ARRUELA ARANDELA	WASHER ROSETTA	131R
	6	**10519624**		2	ARRUELA ARANDELA	WASHER ROSETTA	131R
	7	**16043324**		2	PARAFUSO TORNILLO	SCREW VITE	040V
	8	**16043124**		2	PARAFUSO TORNILLO	SCREW VITE	040V
	9	**11193274**		1	ARRUELA ARANDELA	WASHER ROSETTA	131R
	10	**10902131**		1	PARAFUSO TORNILLO	SCREW VITE	040V

10

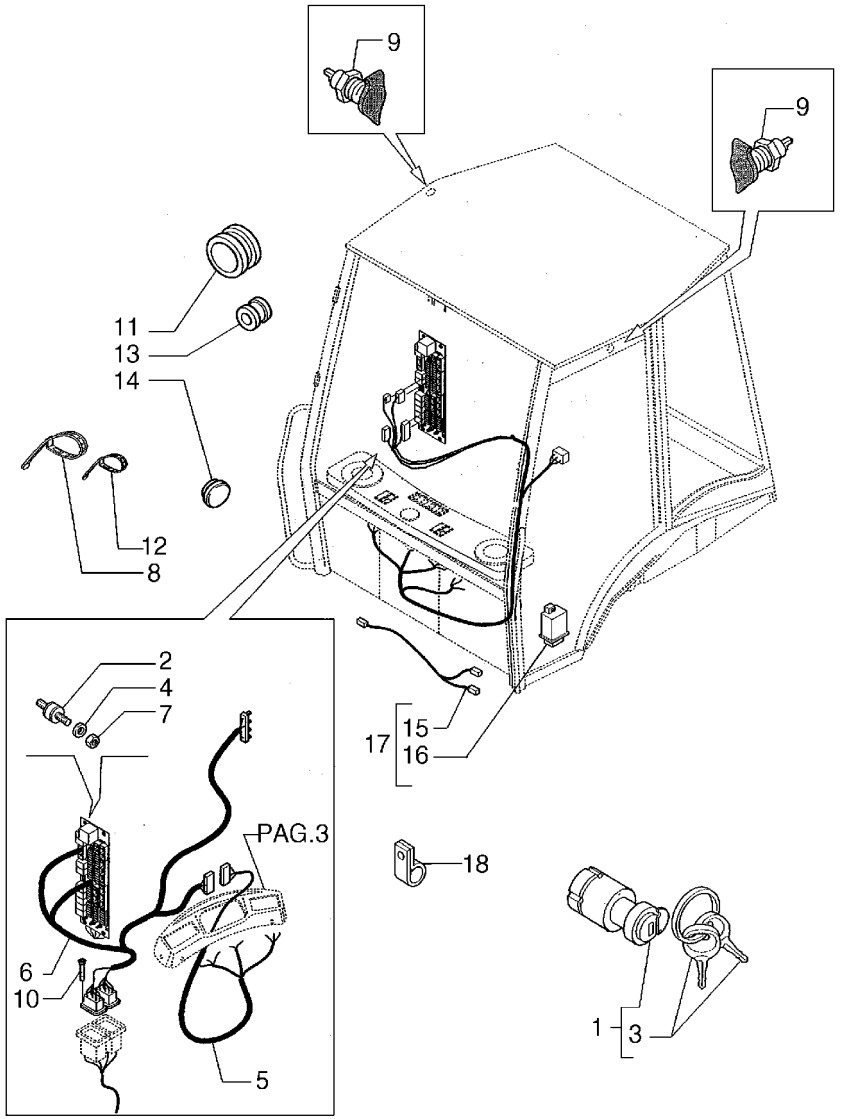

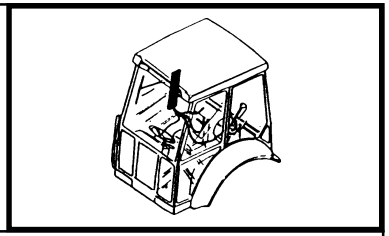

MOD	R	P/N. Imola	P/N. Brazil	Q	Descrição Denominacion	Description Descrizione	L.C.
	1	**85804674**		1	INTERRUPTOR INTERRUPTOR	SWITCH INTERRUTTORE	075I
	2	**85802478**		4	BLOCO CALCE	BLOCK BLOCCHETTO	074B
	3	**85804675**		2	CHAVE LLAVE	KEY CHIAVE	150C
	4	**10615274**		4	ARRUELA ARANDELA	WASHER ROSETTA	131R
	5	**85818821**		1	CABO ELÉTRICO CABLE	CABLE CAVO	111C
	6	**85819460**		1	CABO ELÉTRICO CABLE	CABLE CAVO	111C
	7	**12574011**		4	PORCA TUERCA	NUT DADO	010D
	8	**85805383**		22	ABRAÇADEIRA ABRAZADERA	CLAMP FASCETTA	031F
	9	**82002966**		2	INTERRUPTOR INTERRUPTOR	SWITCH INTERRUTTORE	075I
	10	**13272214**		2	PARAFUSO TORNILLO	SCREW VITE	040V
	11	**10398680**		5	ANEL ARO	RING ANELLO	045A
	12	**5112712**		5	ABRAÇADEIRA ABRAZADERA	CLAMP FASCETTA	031F
	13	**10398990**		2	ANEL ARO	RING ANELLO	045A
	14	**85808460**		1	BUJÃO TAPON	PLUG TAPPO	050T
	15	**85802045**		1	CABO ELÉTRICO CABLE	CABLE CAVO	111C
	16	**85806132**		1	UNIDADE COMANDO CENTRALILLA	CONTROL UNIT CENTRALINA	130C
	17	**85806132**		1	KIT JUEGO	KIT KIT	002K
	18	**10450090**		1	ABRAÇADEIRA ABRAZADERA	CLAMP FASCETTA	031F

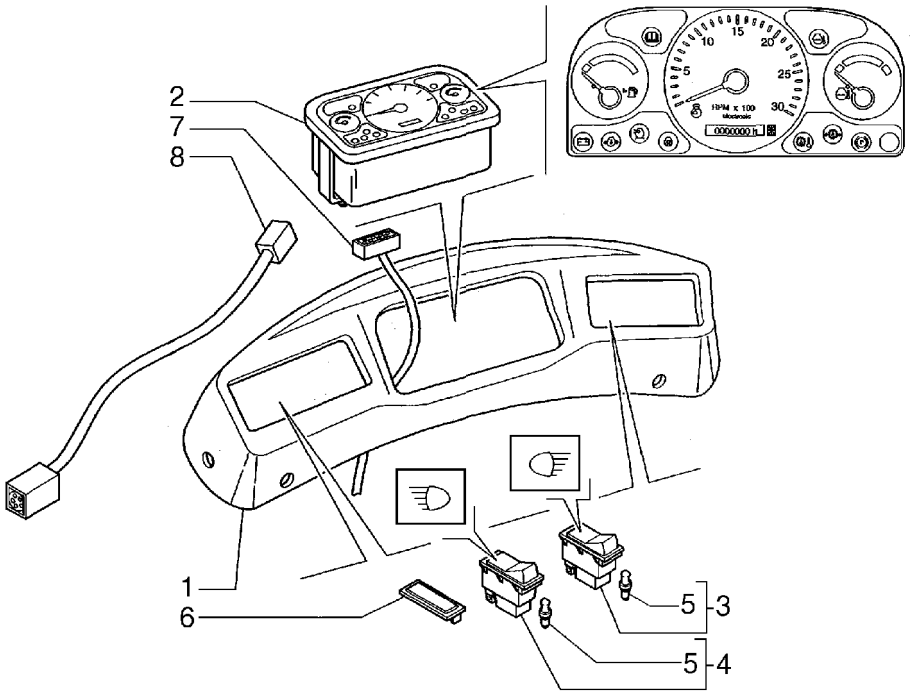

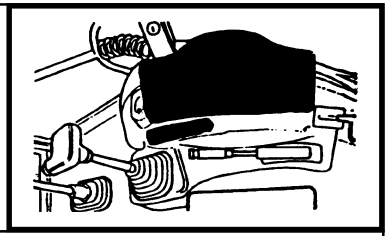

MOD	R	P/N. Imola	P/N. Brazil	Q	Descrição Denominacion	Description Descrizione	L.C.
	1	**85818817**		1	PAINEL PANEL	PANEL PANNELLO	025P
	2		**75258446**	1	PAINEL PANEL	PANEL PANNELLO	025P
	3	**85818819**		1	INTERRUPTOR INTERRUPTOR	SWITCH INTERRUTTORE	075I
	4	**85818818**		1	INTERRUPTOR INTERRUPTOR	SWITCH INTERRUTTORE	075I
	5	**14143790**		1	LÂMPADA LAMPARA	LAMP LAMPADA	030L
	6	**5151033**		7	BUJÃO TAPON	PLUG TAPPO	050T
	7	**85819214**		1	CABO ELÉTRICO CABLE	CABLE CAVO	111C
	8	**85819213**		1	CABO ELÉTRICO CABLE	CABLE CAVO	111C

10

FB80.3 - FB100.3

TOLDO / CABOS ELÉTRICOS VÁRIOS
TOLDO / CABLES ELECTRICOS VARIOS
SAFETY FRAME / MISCELLANEUS ELECTRIC WIRES
TELAIO DI SICUREZZA / CAVI ELETTRICI VARI

1.91.4/2

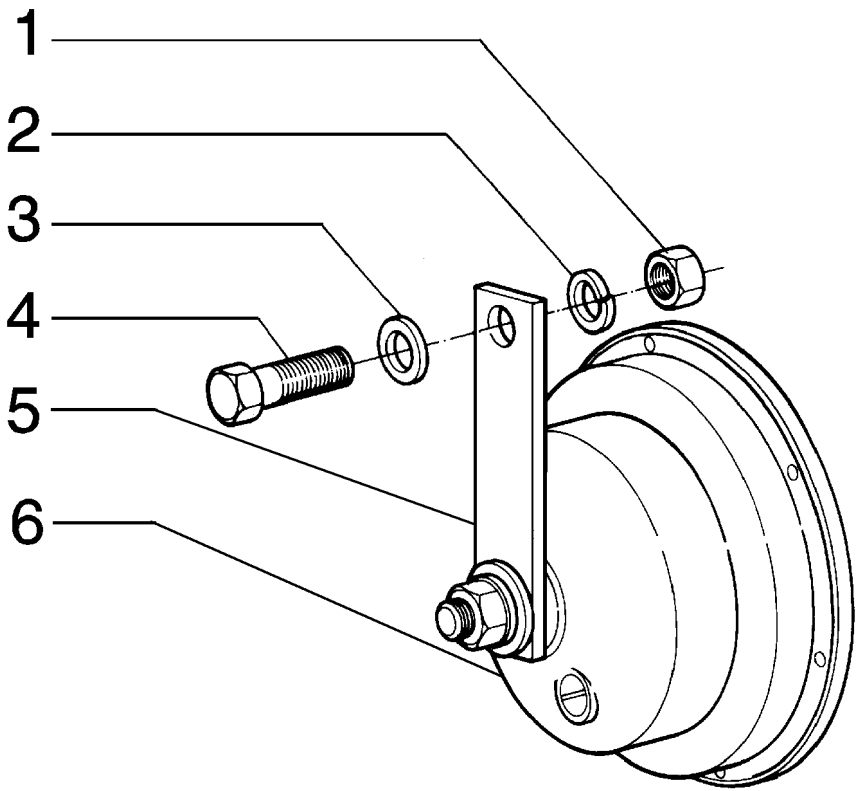

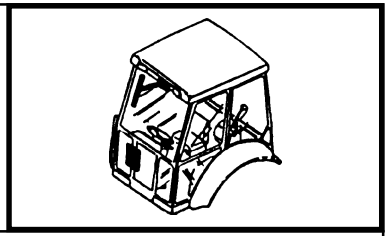

MOD	R	P/N. Imola	P/N. Brazil	Q	Descrição Denominacion	Description Descrizione	L.C.
	1		**70911025**	1	PORCA TUERCA	NUT DADO	010D
	2	**10516674**	**10516671**	1	ARRUELA PRESSÃO ARANDELA ELAST.	LOCKWASHER ROSETTA ELAST.	170R
	3		**12646721**	1	ARRUELA ARANDELA	WASHER ROSETTA	131R
	4	**82880843**	**70922925**	1	PARAFUSO TORNILLO	SCREW VITE	040V
	5		**75237919**	1	SUPORTE SOPORTE	SUPPORT SUPPORTO	300S
	6		**75216315**	1	BUZINA BOCINA	HORN AVVISAT ACUST.	105A

FB80.3 - FB100.3

TOLDO / CABO PAINEL DE INSTRUMENTOS
TOLDO / CABLE TABLERO BORDO
SAFETY FRAME / CABLE INSTRUM. PANEL
TELAIO DI SICUREZZA / CAVO PLANCIA

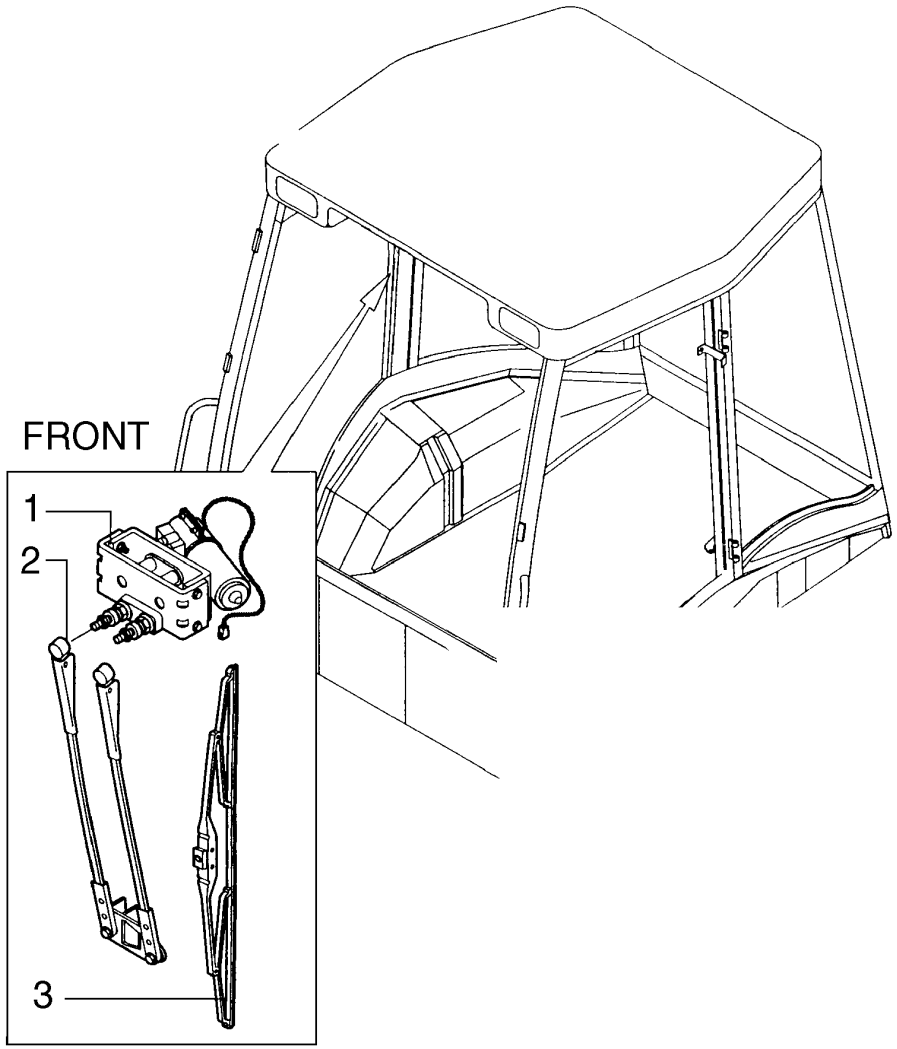

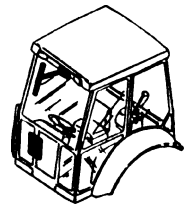

MOD	R	P/N. Imola	P/N. Brazil	Q	Descrição Denominacion	Description Descrizione	L.C.
	1	**85806184**		1	MOTOR ELETRICO MOTOR ELECTRICO	ELECTRIC MOTOR MOTORINO ELETTR	137M
	2	**85806185**		1	BRAÇO BRAZO	ARM BRACCIO	130B
	3	**85819826**		1	PALHETA ALABE	BLADE PALETTA	499P

10

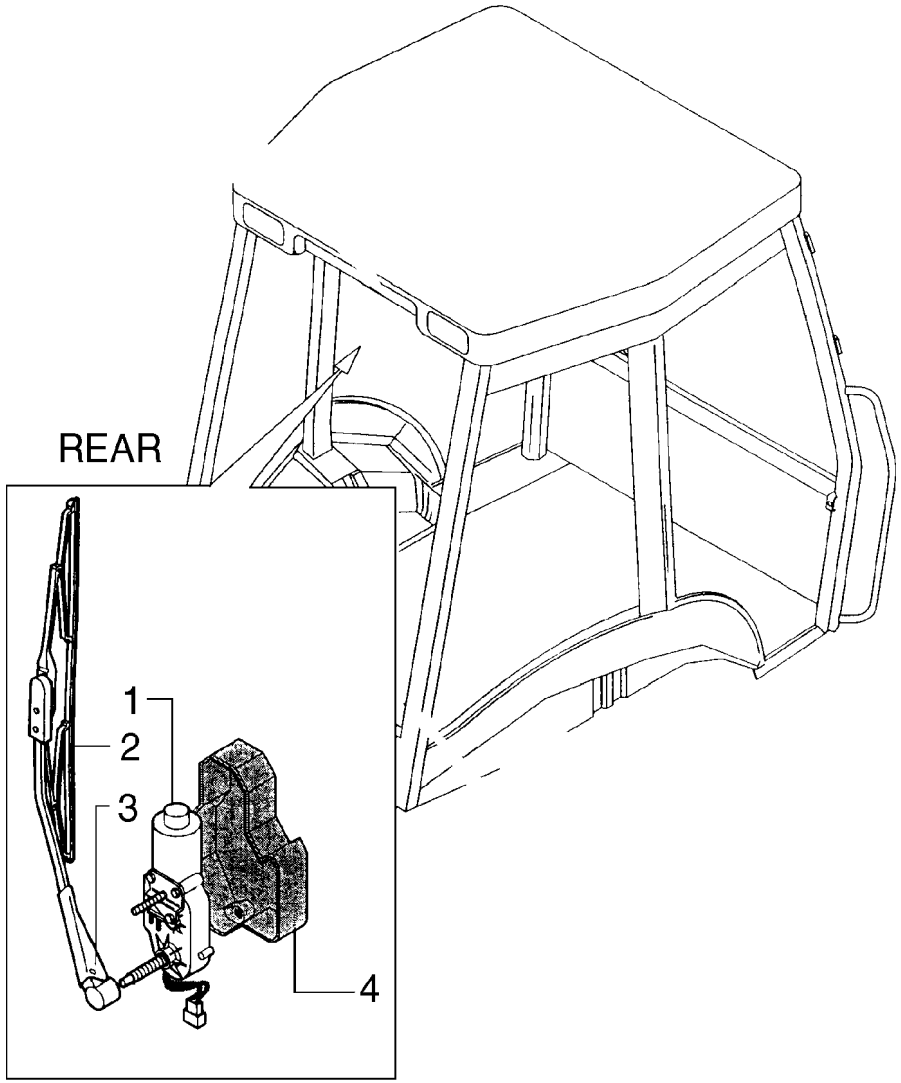

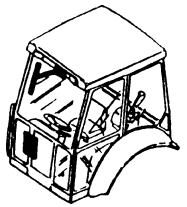

MOD	R	P/N. Imola	P/N. Brazil	Q	Descrição Denominacion	Description Descrizione	L.C.
	1	**85806097**		1	MOTOR ELETRICO MOTOR ELECTRICO	ELECTRIC MOTOR MOTORINO ELETTR	137M
	2	**85819827**		1	PALHETA ALABE	BLADE PALETTA	499P
	3	**85806098**		1	BRAÇO BRAZO	ARM BRACCIO	130B
	4	**85806095**		1	TAMPA TAPA	COVER COPERCHIO	265C

10

FB80.3 - FB100.3

LIMPADOR DO PARA-BRISA
LIMPIA-PARABRISAS
WINDSHIELD WIPER
TERGICRISTALLO

1.91.5

2/3 | **06/01**

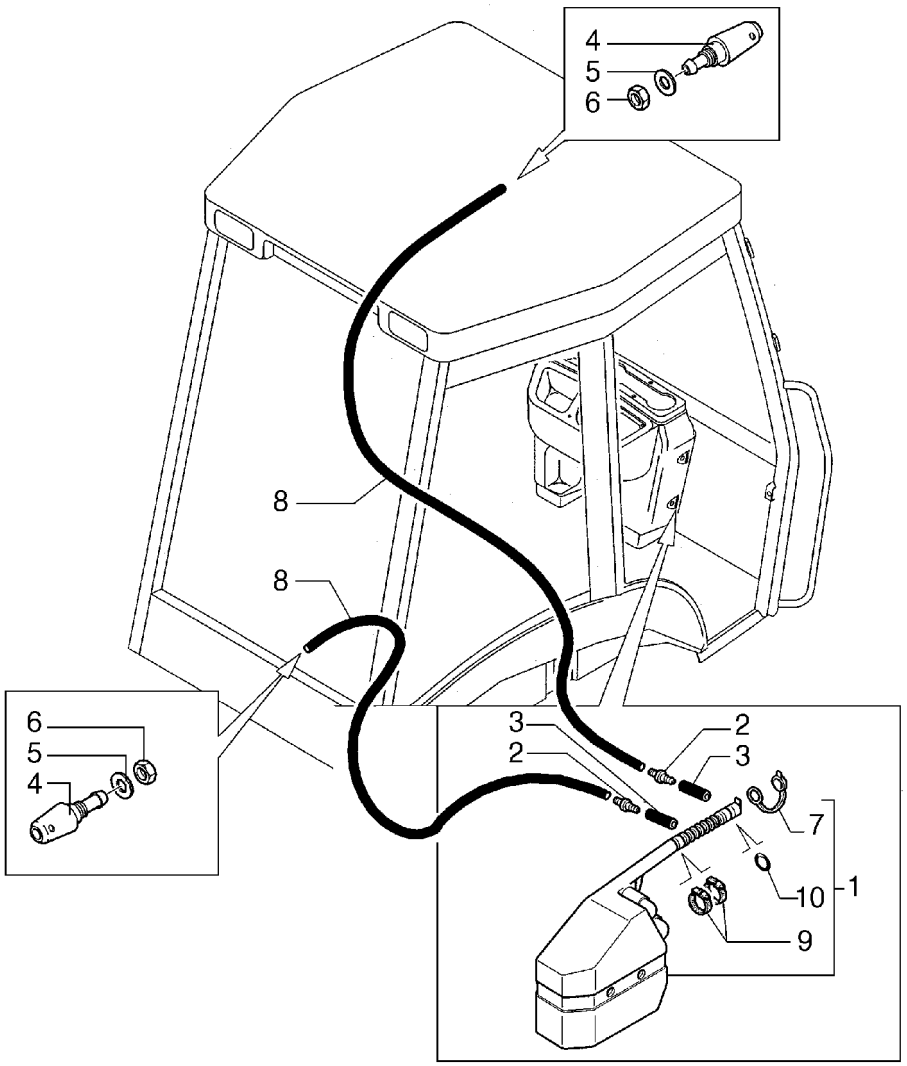

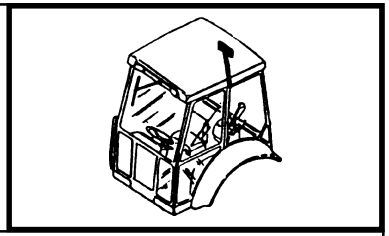

MOD	R	P/N. Imola	P/N. Brazil	Q	Descrição Denominacion	Description Descrizione	L.C.
	1	**85819373**		1	RESERVATORIO DEPOSITO	FUEL TANK SERBATOIO	114S
	2	**5136113**		2	VÁLVULA VALVULA	VALVE VALVOLA	010V
	3	**85812339**		2	MANGUEIRA MANGA C/RACORDE	HOSE ASSY TUBO FLESSIBILE	192T
	4	**85802398**		2	NEBULIZADOR	NOZZLE SPRUZZATORE	406S
	5	**12646704**		2	ARRUELA ARANDELA	WASHER ROSETTA	131R
	6	**16102411**		2	PORCA TUERCA	NUT DADO	010D
	7	**5175736**		1	BUJÃO TAPON	PLUG TAPPO	050T
	8	**85805446**		2	MANGUEIRA MANGA C/RACORDE	HOSE ASSY TUBO FLESSIBILE	192T
	9	**85811993**		2	ABRAÇADEIRA ABRAZADERA	CLAMP FASCETTA	031F
	10	**14463580**		1	JUNTA JUNTA PLANA	GASKET GUARNIZ. PIANA	120G

10

FB80.3 - FB100.3

LIMPADOR DO PARA-BRISA
LIMPIA-PARABRISAS
WINDSHIELD WIPER
TERGICRISTALLO

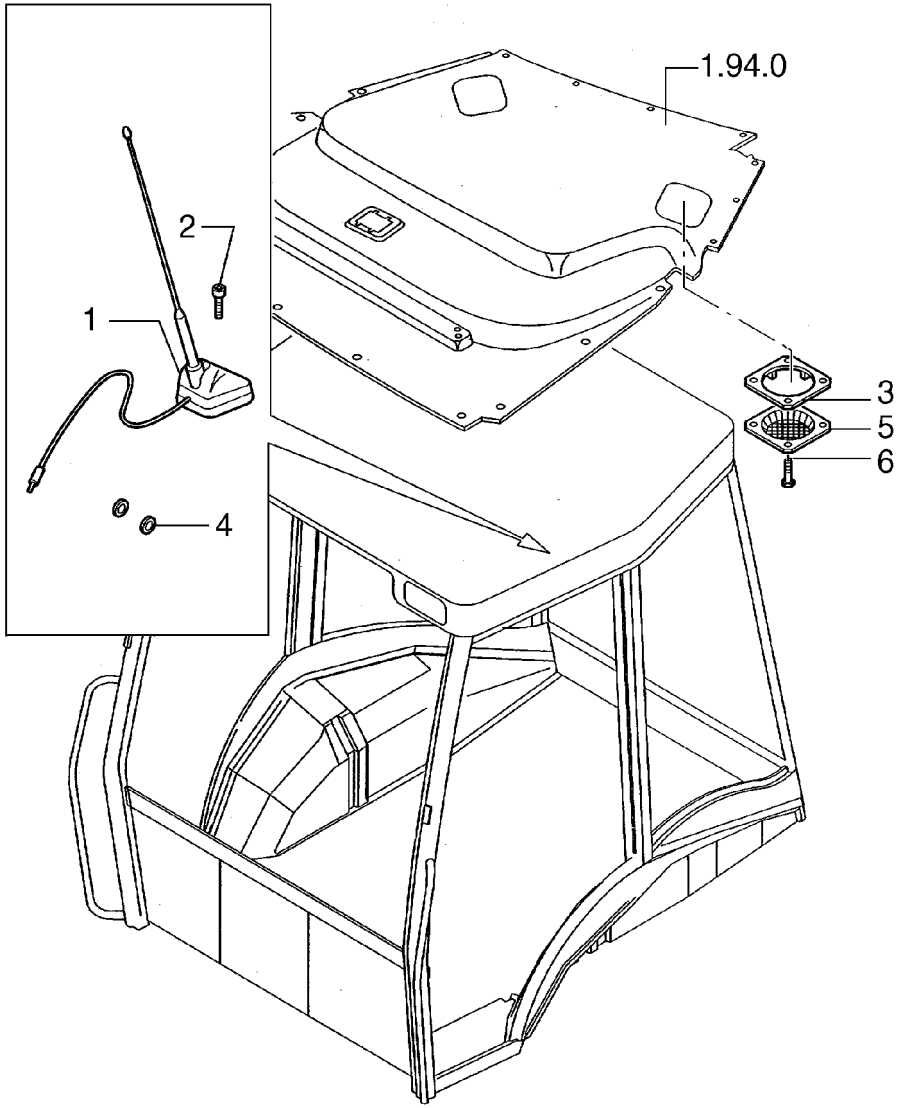

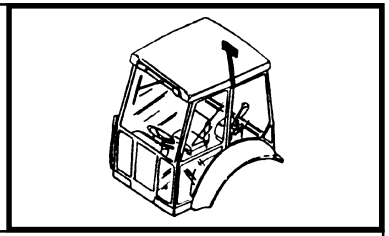

MOD	R	P/N. Imola	P/N. Brazil	Q	Descrição Denominacion	Description Descrizione	L.C.
	1	**85805163**		1	HASTE VARILLA	ROD ASTA	090A
	2	**13311817**		1	PARAFUSO TORNILLO	SCREW VITE	040V
	3	**85802107**		2	CHAPA PLACA	PLATE PIASTRA	105P
	4	**10399580**		1	ANEL ARO	RING ANELLO	045A
	5	**85804362**		2	GRADE REJILLA	GRID GRIGLIA	101G
	6	**13297842**		8	PARAFUSO TORNILLO	SCREW VITAE	040V

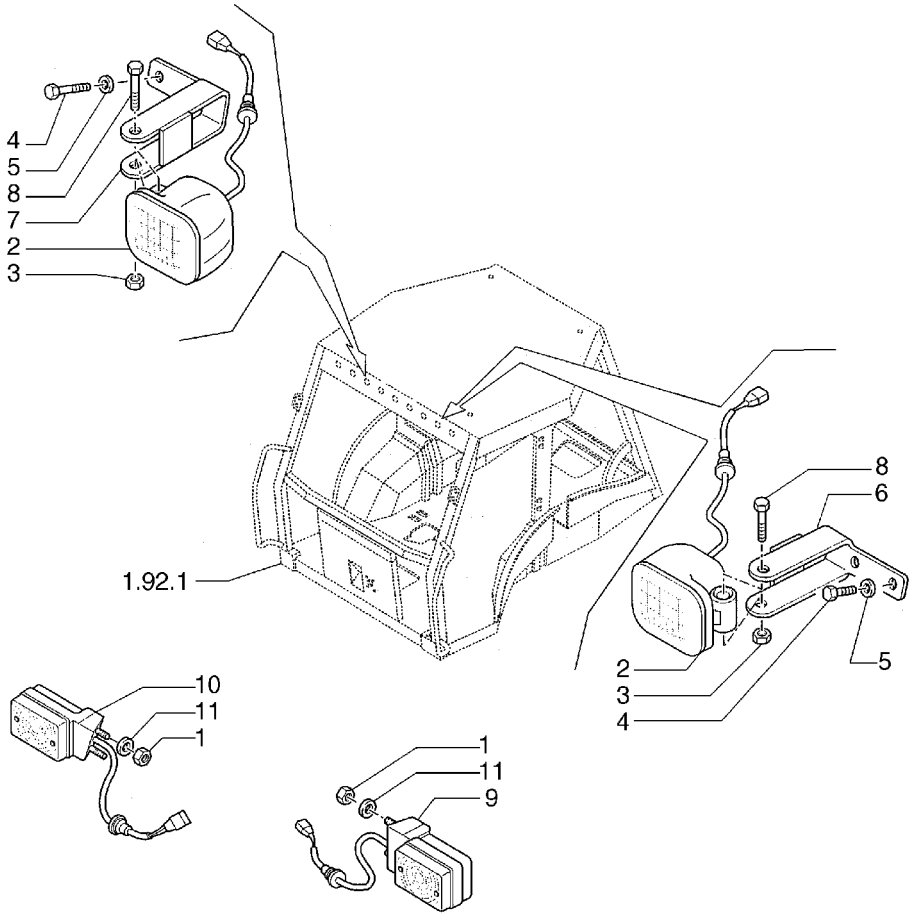

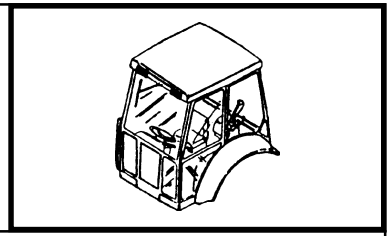

MOD	R	P/N. Imola	P/N. Brazil	Q	Descrição Denominacion	Description Descrizione	L.C.
	1	**12574111**		4	PORCA TUERCA	NUT DADO	010D
	2	**85819200**		4	FAROL PROYECTOR	FLOODLIGHT PROIETTORE	220P
	3	**16104111**		4	PORCA TUERCA	NUT DADO	010D
	4	**10902131**		8	PARAFUSO TORNILLO	SCREW VITE	040V
	5	**10615479**		8	ARRUELA ARANDELA	WASHER ROSETTA	131R
	6	**85819191**		1	SUPORTE SOPORTE	SUPPORT SUPPORTO	300S
	7	**85819190**		1	SUPORTE SOPORTE	SUPPORT SUPPORTO	300S
	8	**16044321**		4	PARAFUSO TORNILLO	SCREW VITE	040V
	9	**85819197**		1	INDICADOR DE DIRE INDICADOR DE DIRE	TURN-SIGNAL INDICA INDICATORE DI DIRE	029I
	10	**85819196**		1	INDICADOR DE DIRE INDICADOR DE DIRE	TURN-SIGNAL INDICATOR INDICATORE DI DIRE	029I
	11	**12637804**		4	ARRUELA ARANDELA	WASHER ROSETTA	131R

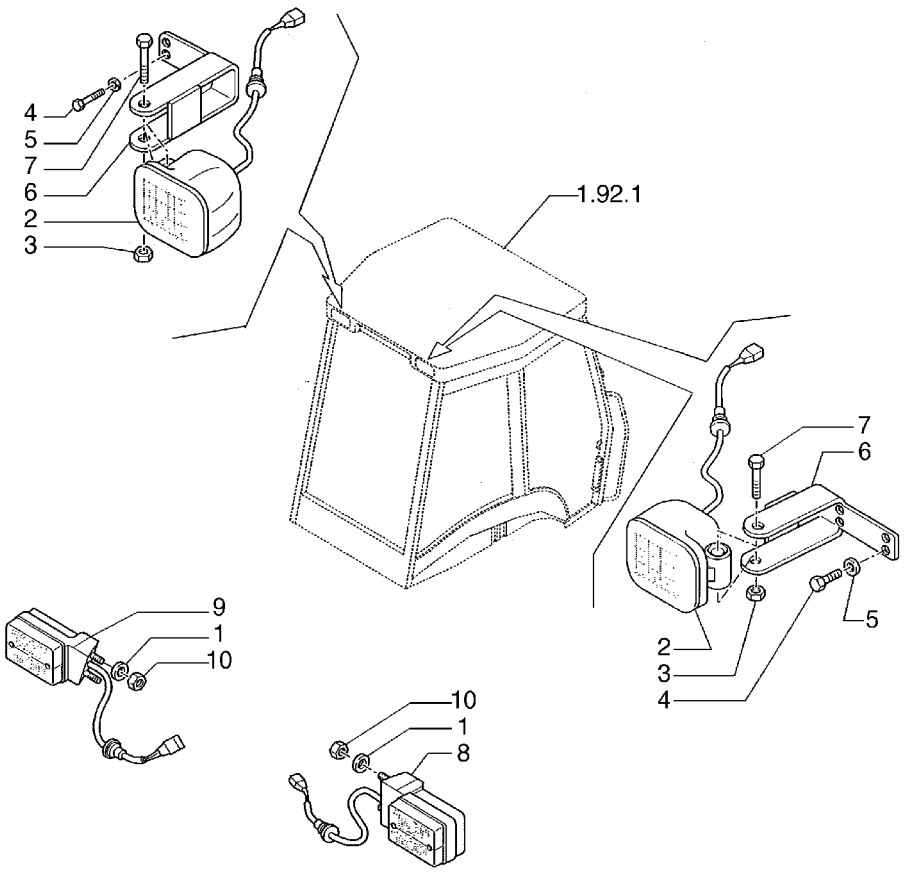

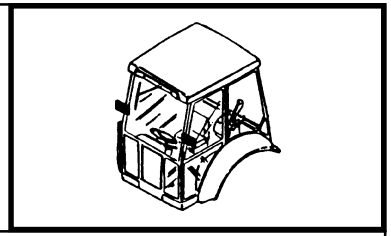

MOD	R	P/N. Imola	P/N. Brazil	Q	Descrição Denominacion	Description Descrizione	L.C.
	1	**12637804**		4	ARRUELA ARANDELA	WASHER ROSETTA	131R
	2	**85819200**		2	FAROL PROYECTOR	FLOODLIGHT PROIETTORE	220P
	3	**16104111**		2	PORCA TUERCA	NUT DADO	010D
	4	**10902131**		4	PARAFUSO TORNILLO	SCREW VITE	040V
	5	**10615479**		4	ARRUELA ARANDELA	WASHER ROSETTA	131R
	6	**85819194**		2	SUPORTE SOPORTE	SUPPPORT SUPPORTO	300S
	7	**16044321**		2	PARAFUSO TORNILLO	SCREW VITE	040V
	8	**85819198**		1	LUZ POSTERIOR LUZ POSTERIOR	TAIL LAMP ASSY REA FANALE POSTERIOR	013F
	9	**85819199**		1	LUZ POSTERIOR LUZ POSTERIOR	TAIL LAMP ASSY REA FANALE POSTERIOR	013F
	10	**12574111**		4	PORCA TUERCA	WASHER DADO	010D

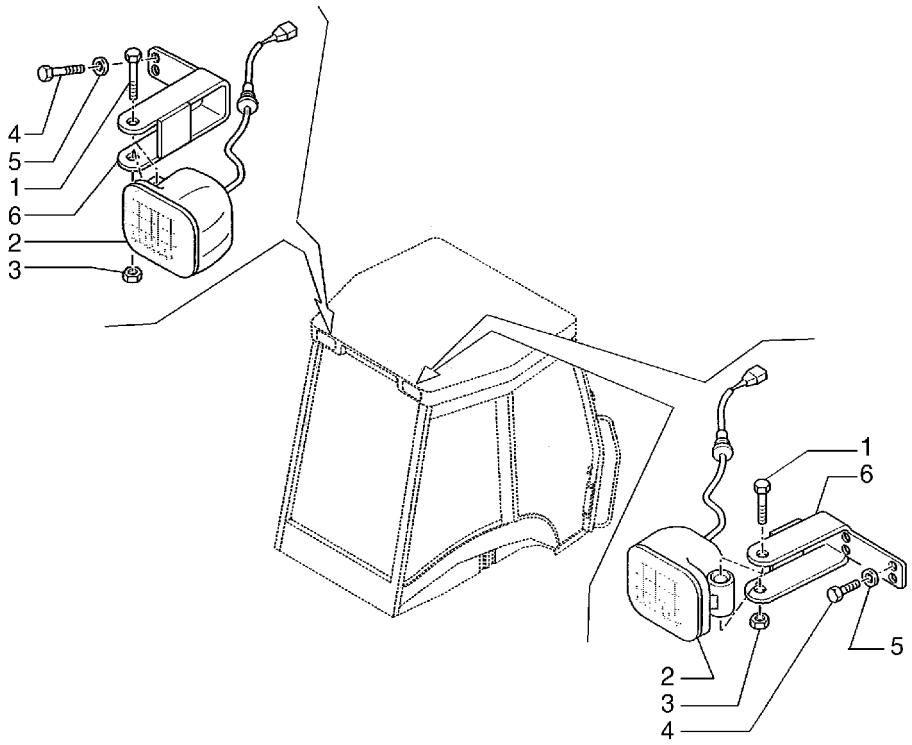

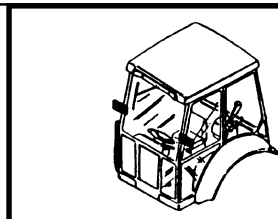

MOD	R	P/N. Imola	P/N. Brazil	Q	Descrição Denominacion	Description Descrizione	L.C.
	1	**16044321**		2	PARAFUSO TORNILLO	SCREW VITE	040V
	2	**85819200**		2	FAROL PROYECTOR	FLOODLIGHT PROIETTORE	200P
	3	**16104111**		2	PORCA TUERCA	NUT DADO	010D
	4	**10902131**		4	PARAFUSO TORNILLO	SCREW VITE	040V
	5	**11197774**		4	ARRUELA ARANDELA	WASHER ROSETTA	131R
	6	**85819194**		2	SUPORTE SOPORTE	SUPPORT SUPPORTO	300S

10

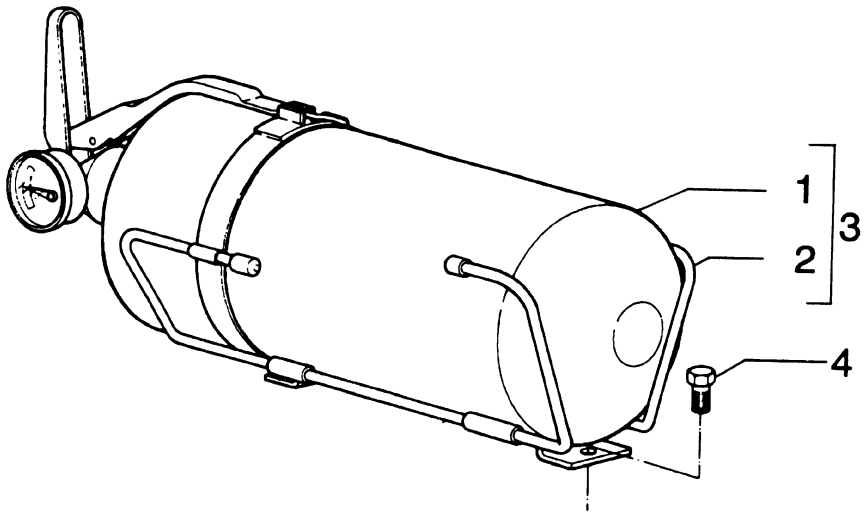

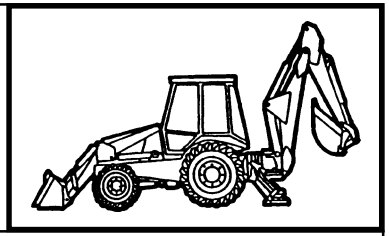

MOD	R	P/N. Imola	P/N. Brazil	Q	Descrição Denominacion	Description Descrizione	L.C.
	1		**75245052**	1	EXTINTOR EXTINTOR	FIRE EXTINGUISH ESTINTORE	055E
	2		**75245053**	1	SUPORTE SOPORTE	SUPPORT SUPPORTO	300S
	3		**75211345**	1	EXTINTOR EXTINTOR	FIRE EXTINGUISH ESTINTORE	055E
	4		**70929562**	2	PARAFUSO TORNILLO	SCREW VITE	040V

10

FB80.3 - FB100.3

TOLDO - CABINE / EXTINTOR
TOLDO - CABINA / EXTINTOR
CAB - SAFETY FRAME / EXTINGUISHER
CABINA - TELAIO DI SICUREZZA / ESTINTORE

1.91.8

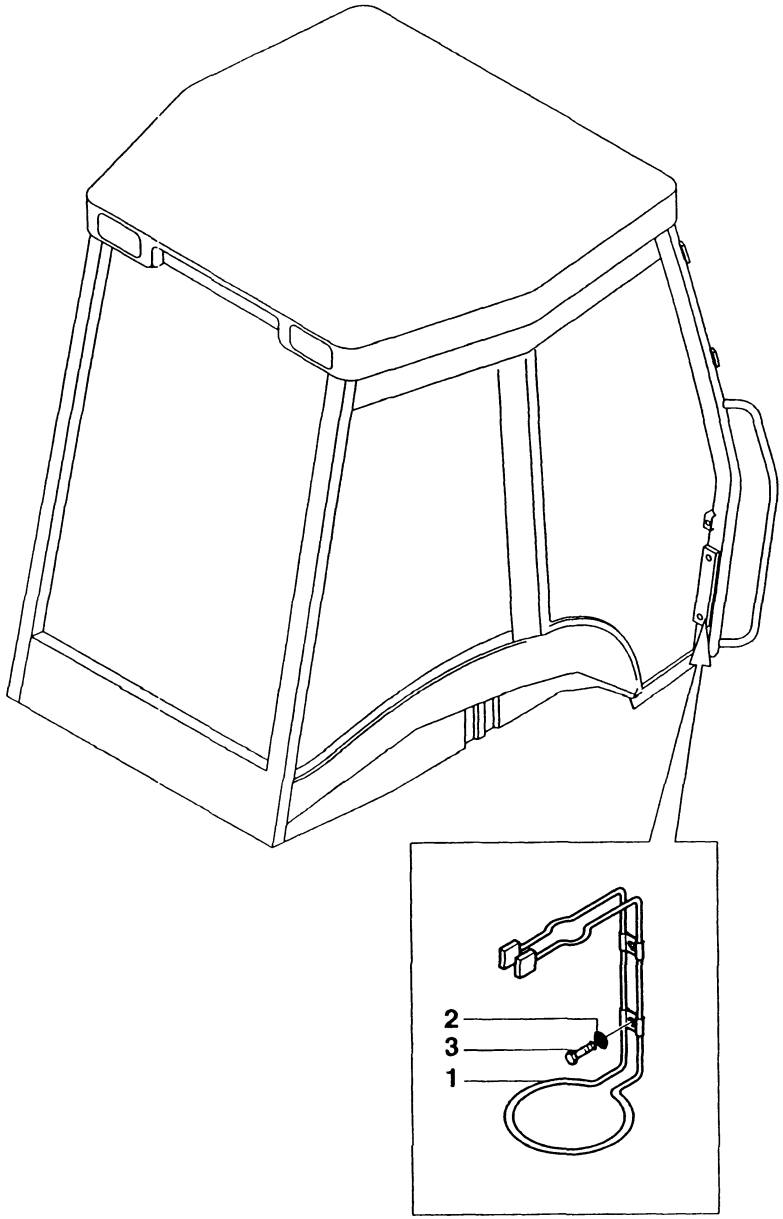

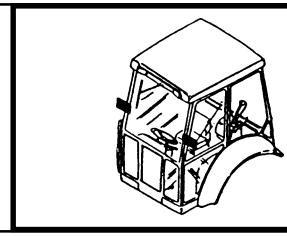

MOD	R	P/N. Imola	P/N. Brazil	Q	Descrição Denominacion	Description Descrizione	L.C.
	1	**85802276**		1	SUPORTE SOPORTE	SUPPORT SUPPORTO	300S
	2	**11193274**		2	ARRUELA ARANDELA	WASHER ROSETTA	131R
	3	**13275917**		2	PARAFUSO TORNILLO	SCREW VITE	040V

10

FB80.3 - FB100.3

TOLDO ROPS/SUPORTE DO EXTINTOR
ESTRUTURA DE PROTECCION/SOPORTE EXTINTOR
ROPS CANOPY/EXTINGUISHER SUPPORT
STRUTTURA PROTEZIONE/SUPPORTO ESTINTORE

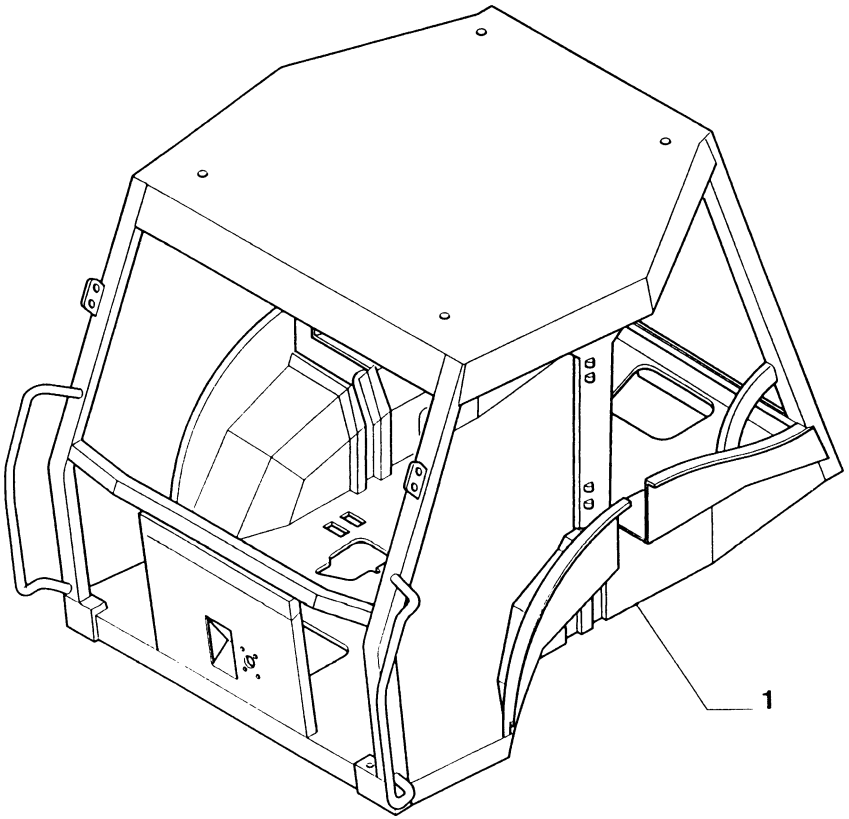

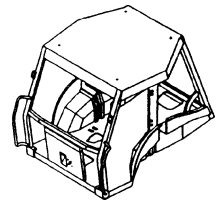

MOD	R	P/N. Imola	P/N. Brazil	Q	Descrição Denominacion	Description Descrizione	L.C.
	1	**85804618**		1	PLATAFORMA PLATAFORMA	FLATCAR PIANALE	102P

10

FB80.3 - FB100.3

ESTRUTURA DO TOLDO
ESTRUTURA DE PROTECCION - ESTRUTURA
ROPS CANOPY FRAME
TELAIO DI SICUREZZA / TELAIO - PIATTAFORMA

1.92.0

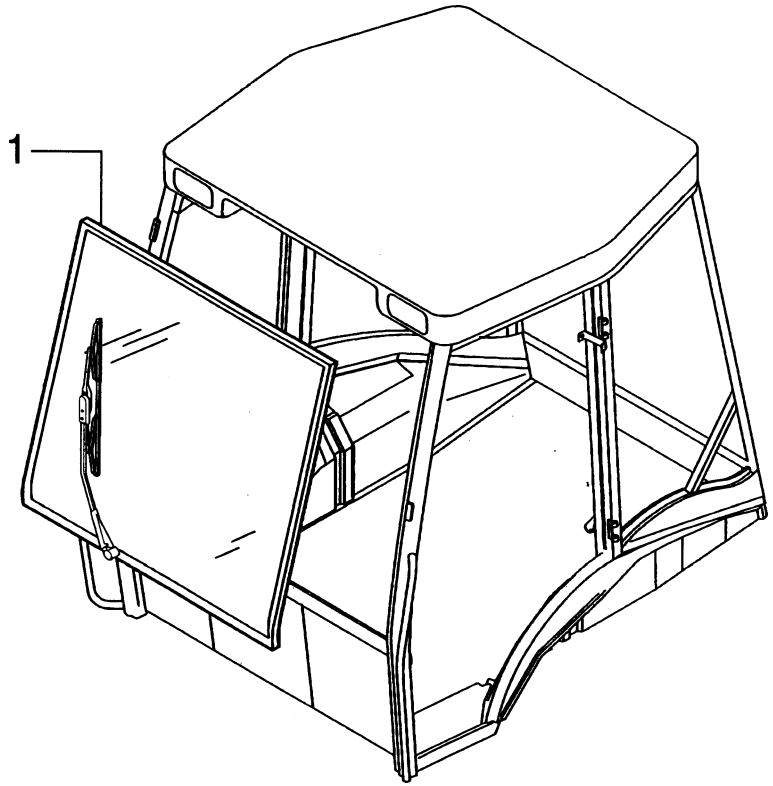

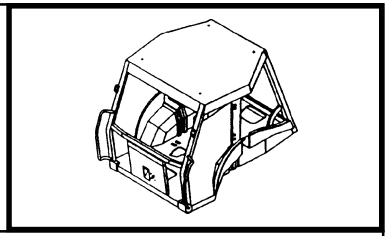

MOD	R	P/N. Imola	P/N. Brazil	Q	Descrição Denominacion	Description Descrizione	L.C.
	1		**75258468**	1	VIDRO CRISTAL	PANEL OF GLASS VETRO	038V

10

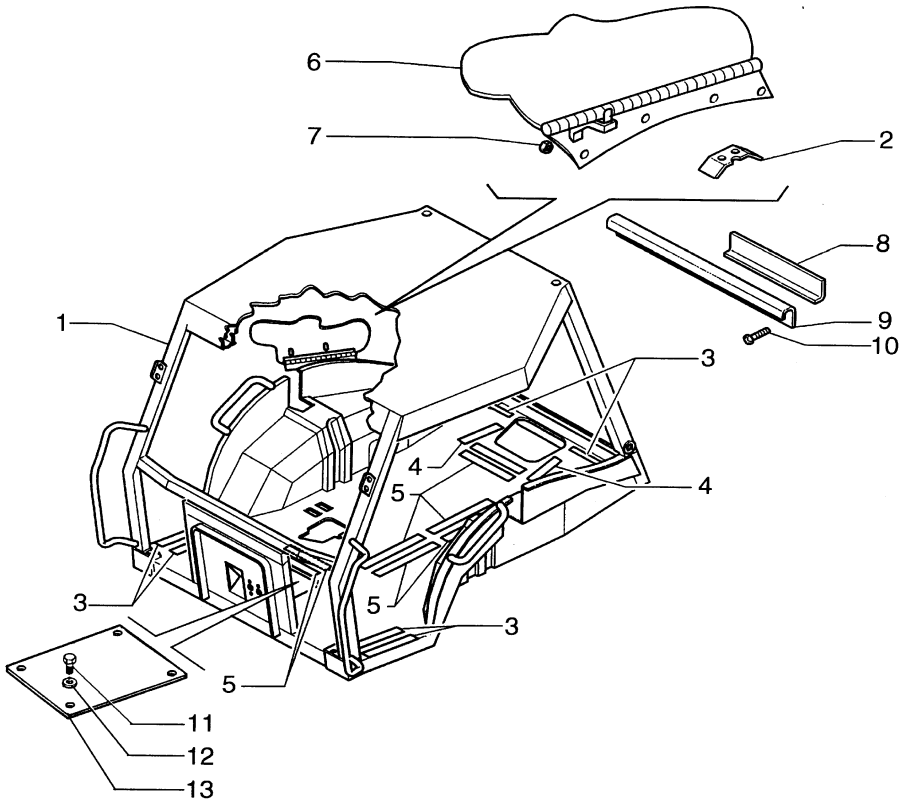

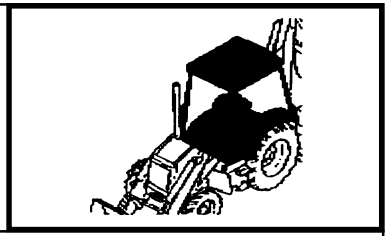

MOD	R	P/N. Imola	P/N. Brazil	Q	Descrição Denominacion	Description Descrizione	L.C.
	1	**85819080**		1	PLATAFORMA PLATAFORMA	FLATCAR PIANALE	102P
	2	**85801863**		1	PROTEÇÃO PROTECCION	GUARD RIPARO	070R
	3	**85804840**		6	FAIXA ANTI-DERR	ANTI-SKID STRISCIA ANTISD	407S
	4	**85804841**		2	FAIXA ANTI-DERR	ANTI-SKID STRISCIA ANTISD	407S
	5	**85804842**		8	FAIXA ANTI-DERR	ANTI-SKID STRISCIA ANTISD	407S
	6	**85806187**		1	PROTEÇÃO PROTECCION	GUARD RIPARO	070R
	7	**17152621**		4	PORCA TUERCA	NUT DADO	010D
	8	**85807880**		1	CHAPA PLACA	PLATE PIASTRA	105P
	9	**85805067**		1	TAMPA TAPA	COVER COPERCHIO	265C
	10	**13271814**		3	PARAFUSO TORNILLO	SCREW VITE	040V
	11	**16043631**		4	PARAFUSO TORNILLO	SCREW VITE	040V
	12	**14496531**		4	ARRUELA ARANDELA	WASHER ROSETTA	131R
	13		**75280066**	1	TAMPA TAPA	COVER COPERCHIO	265C

FB80.3 - FB100.3

TOLDO / ESTRUTURA DA PLATAFORMA
TOLDO / BASTIDOR-PLATAFORMA
SAFETY FRAME / FRAME-PLATAFORM
TELAIO DI SICUREZZA / TELAIO-PIATTAFORMA

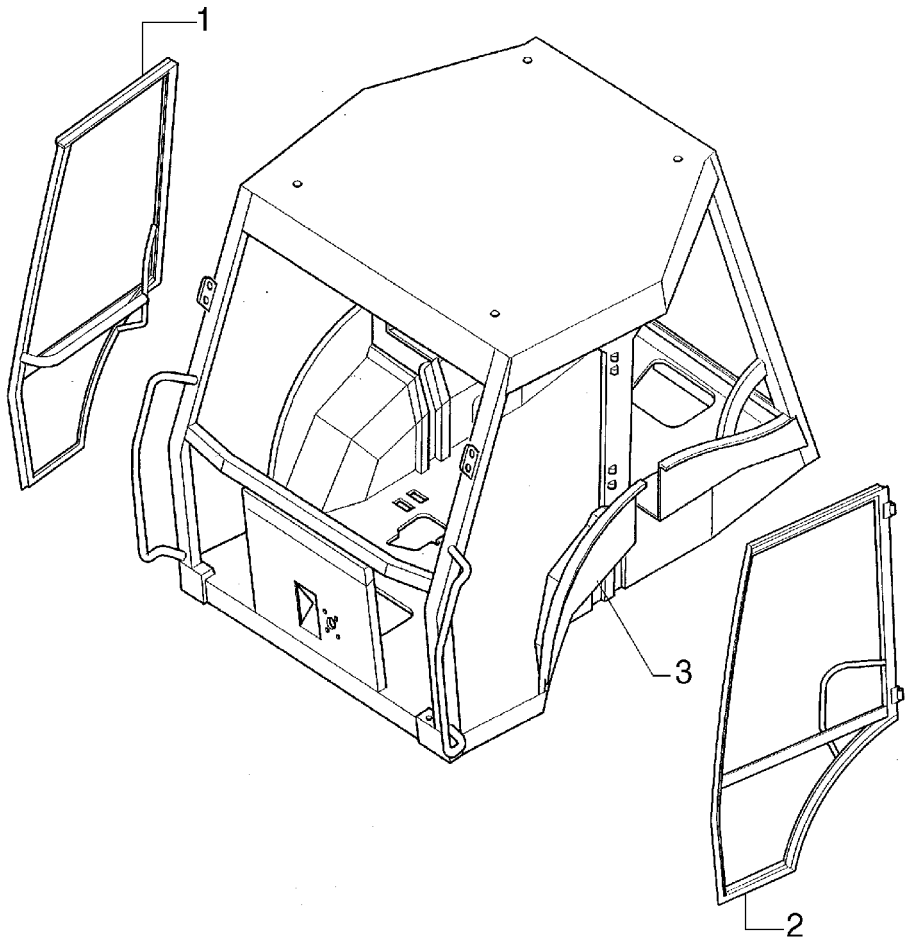

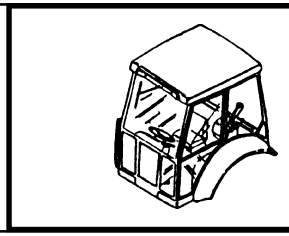

MOD	R	P/N. Imola	P/N. Brazil	Q	Descrição Denominacion	Description Descrizione	L.C.
	1	**85801654**		1	ESTRUTURA ESTRUCTURA	STRUCTURE OSSATURA	0280
	2	**85801655**		1	ESTRUTURA ESTRUCTURA	STRUCTURE OSSATURA	0280
	3	**85819043**		1	ESTRUTURA ESTRUCTURA	STRUCTURE OSSATURA	0280

10

FB80.3 - FB100.3

ESTRUTURA DA PORTA
BASTIDOR DE LAS PUERTAS
DOOR FRAME
TELAIO PORTE

1.92.2

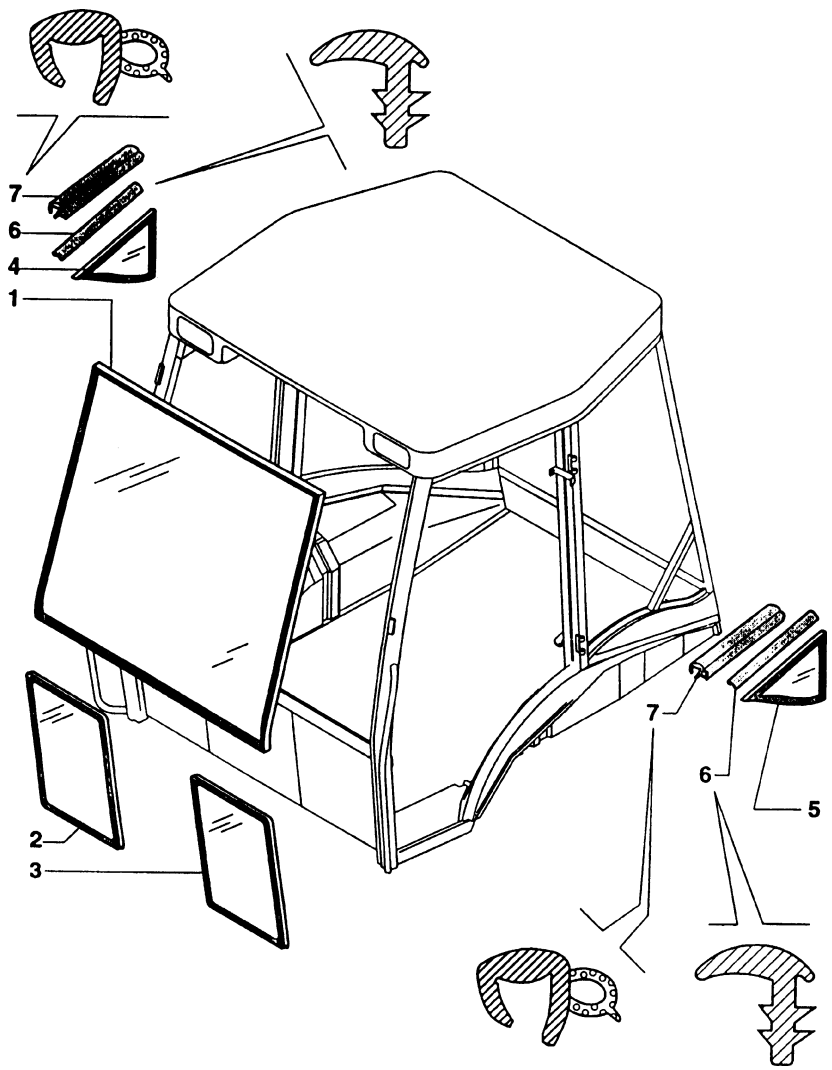

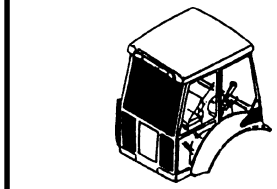

MOD	R	P/N. Imola	P/N. Brazil	Q	Descrição Denominacion	Description Descrizione	L.C.
	1	**85801621**		1	VIDRO CRISTAL	GLASS CRISTALLO	315C
	2	**85801622**		1	VIDRO CRISTAL	GLASS CRISTALLO	315C
	3	**85801623**		1	VIDRO CRISTAL	GLASS CRISTALLO	315C
	4	**85801630**		1	VIDRO CRISTAL	GLASS CRISTALLO	315C
	5	**85801631**		1	VIDRO CRISTAL	GLASS CRISTALLO	315C
	6	**85802334**		M	JUNTA JUNTA PLANA	GASKET GUARNIZ. PIANA	120G
	7	**85805065**		2	JUNTA JUNTA PLANA	GASKET GUARNIZ. PIANA	120G

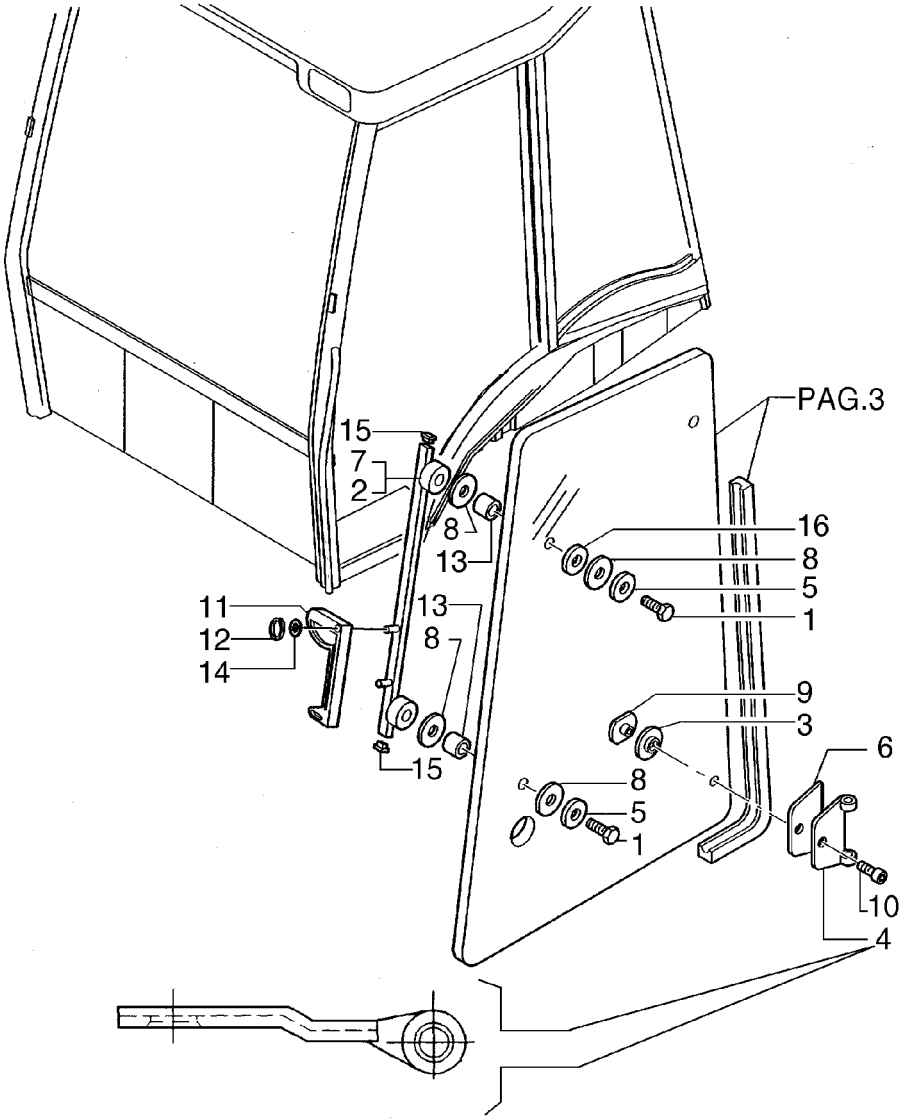

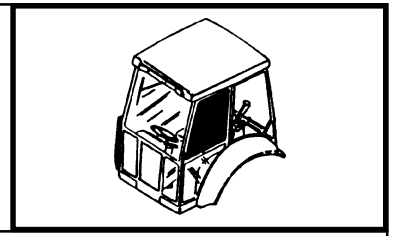

MOD	R	P/N. Imola	P/N. Brazil	Q	Descrição Denominacion	Description Descrizione	L.C.
	1	**82859922**		4	PARAFUSO TORNILLO	SCREW VITE	040V
	2	**85802063**		1	SUPORTE DIREITO SOPORTE	SUPPORT RH SUPPORTO	109D
	3	**83961985**		4	ANEL ARO	RING ANELLO	045A
	4	**85804869**		4	DOBRADIÇA BISAGRA, CHARNE	HINGE CERNIERA	140C
	5	**83931482**		4	ARRUELA ARANDELA	WASHER ROSETTA	131R
	6	**81872036**		4	JUNTA JUNTA PLANA	GASKET GUARNIZ. PIANA	120G
	7	**85802062**		1	SUPORTE ESQUERDO SOPORTE	SUPPORT LH SUPPORTO	109E
	8	**83962050**		8	ANEL ARO	RING ANELLO	045A
	9	**85805448**		4	PORCA RETENÇÃO VIROLA	RING NUT GHIERA	050G
	10	**81871864**		4	PARAFUSO TORNILLO	SCREW VITE	040V
	11	**85801804**		4	ALÇA MANIJA	HANDLE MANIGLIA	020M
	12	**11087876**		4	ANEL ELÁSTICO ANILLO ELASTICO	SNAP RING ANELLO ELASTICO	187A
	13	**83961987**		4	ANEL ARO	RING ANELLO	045A
	14	**10519404**		2	ARRUELA ARANDELA	WASHER ROSETTA	131R
	15	**81871439**		4	BUJÃO TAPON	PLUG TAPPO	050T
	16	**12638501**		4	ARRUELA ARANDELA	WASHER ROSETTA	131R

FB80.3 - FB100.3

VIDROS MÓVEIS
CRISTALES CON POSSIBILIDAD DE ABERTURA
OPENING GLAZING
CRISTALLI APRIBILI

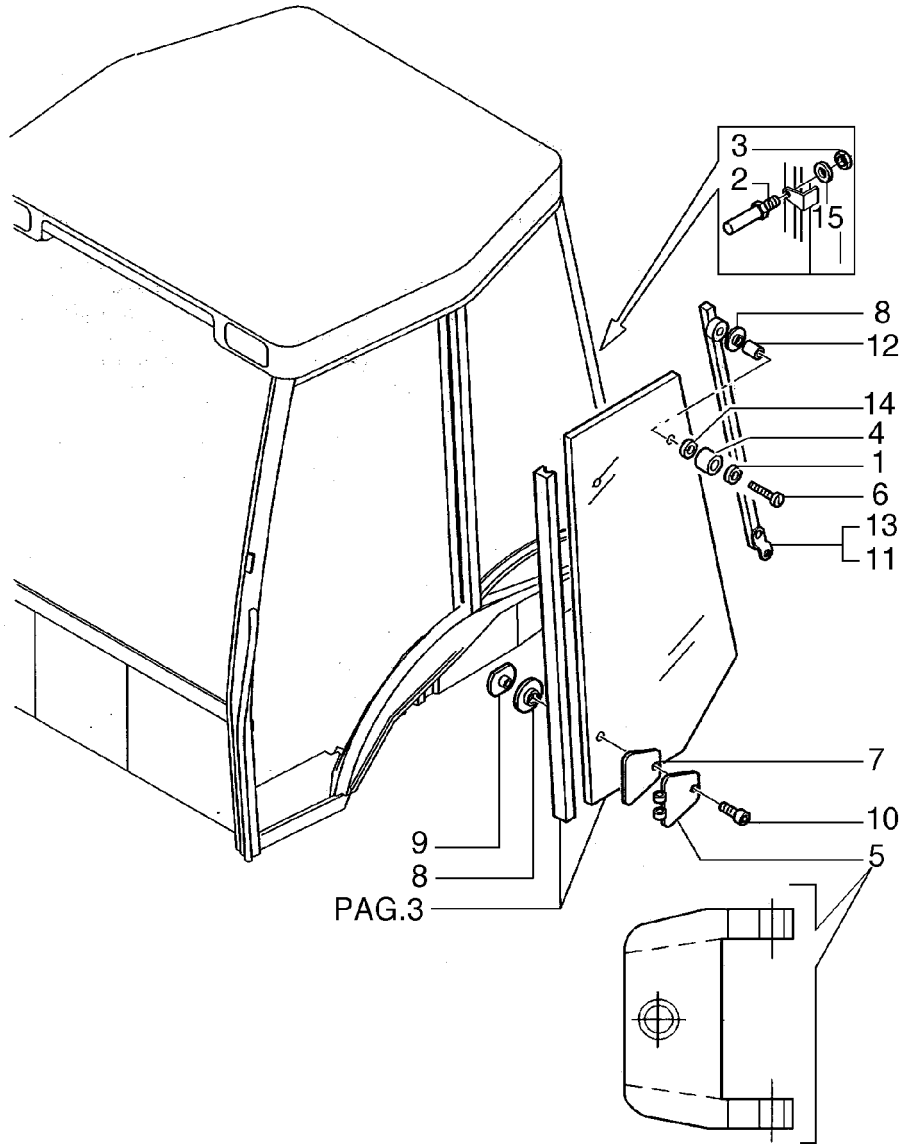

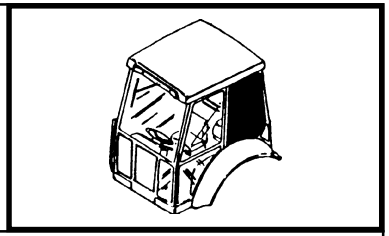

MOD	R	P/N. Imola	P/N. Brazil	Q	Descrição Denominacion	Description Descrizione	L.C.
	1	**10519404**		2	ARRUELA ARANDELA	WASHER ROSETTA	131R
	2	**85801806**		4	BLOCO CALCE	BLOCK BLOCCHETTO	074B
	3	**12574211**		4	PORCA TUERCA	NUT DADO	010D
	4	**83976357**		2	PÅRA-CHOQUES PARACHOQUES	BUMPER PARAURTI	036P
	5	**85804870**		4	DOBRADIÇA BISAGRA, CHARNE	HINGE CERNIERA	140C
	6	**10903221**		2	PARAFUSO TORNILLO	SCREW VITE	040V
	7	**81872028**		4	ANEL ARO	RING ANELLO	045A
	8	**83961985**		8	ANEL ARO	RING ANELLO	045A
	9	**85805448**		4	PORCA RETENÇÃO VIROLA	RING NUT GHIERA	050G
	10	**81871864**		4	PARAFUSO TORNILLO	SCREW VITE	040V
	11	**85801883**		1	SUPORTE DIREITO SOPORTE	SUPPORT RH SUPPORTO	109D
	12	**83961987**		2	ANEL ARO	RING ANELLO	045A
	13	**85801884**		1	SUPORTE ESQUERDO SOPORTE	SUPPORT LH SUPPORTO	109E
	14	**12638501**		2	ARRUELA ARANDELA	WASHER ROSETTA	131R
	15	**12643704**		8	ARRUELA ARANDELA	WASHER ROSETTA	131R

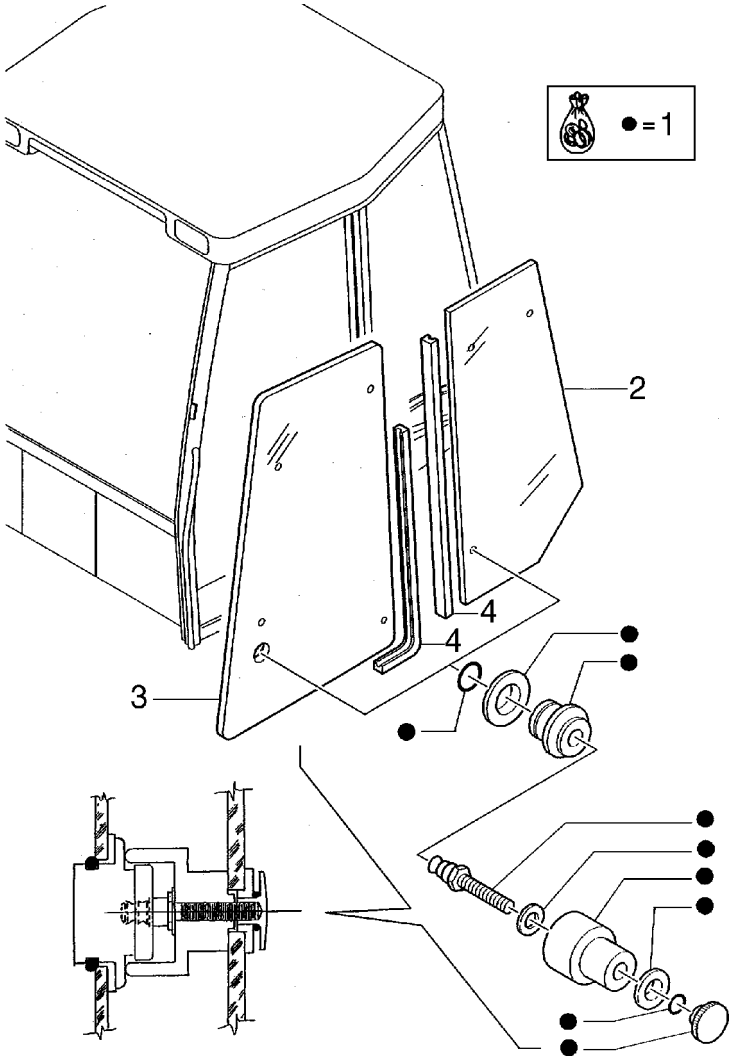

L1 L=3150MM
L2 L=3315MM

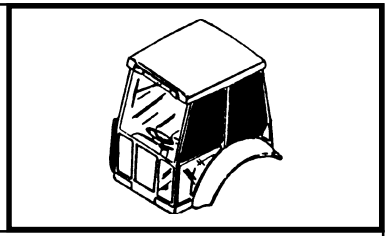

MOD	R	P/N. Imola	P/N. Brazil	Q	Descrição Denominacion	Description Descrizione	L.C.
	1	**85804617**		2	TRAVA SEGURO	PAWL NOTTOLINO	050N
	2	**85801628**		2	VIDRO CRISTAL	GLASS CRISTALLO	315C
	3	**85801626**		2	VIDRO CRISTAL	GLASS CRISTALLO	315C
L1	4	**83997693**		2	JUNTA JUNTA PLANA	GASKET GUARNIZ. PIANA	120G
L2	4	**83812255**		2	JUNTA JUNTA PLANA	GASKET GUARNIZ. PIANA	120G

10

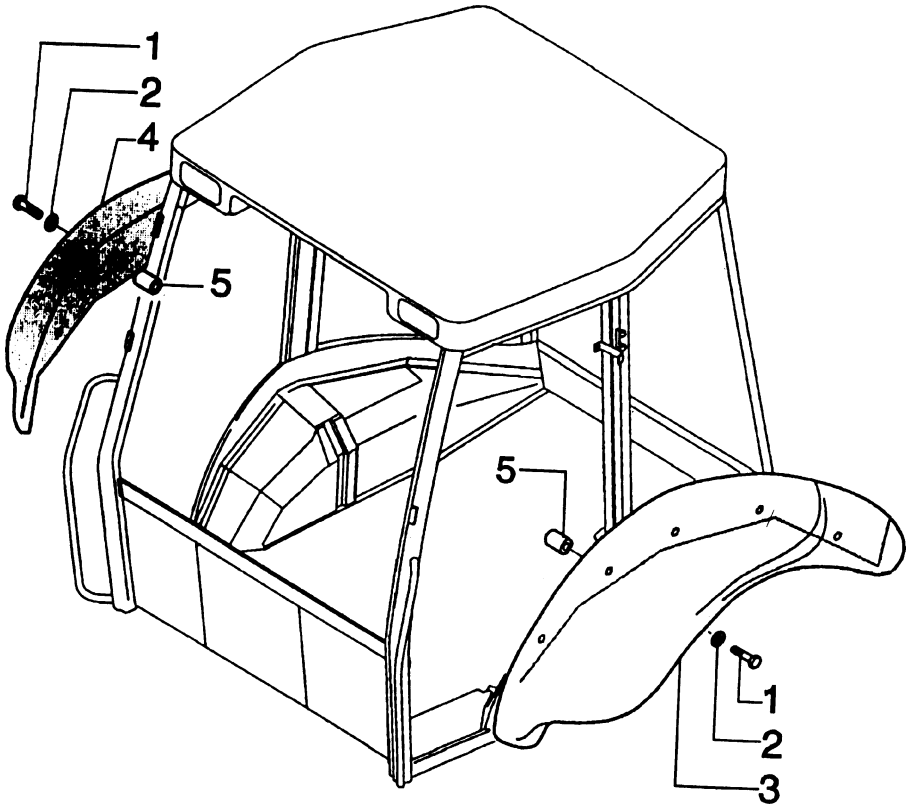

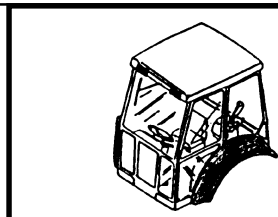

MOD	R	P/N. Imola	P/N. Brazil	Q	Descrição Denominacion	Description Descrizione	L.C.
	1	**16044031**		10	PARAFUSO TORNILLO	SCREW VITE	040V
	2	**70925927**		10	ARRUELA ARANDELA	WASHER ROSETTA	131R
	3	**85802076**		1	PÁRA-LAMA GUARDABARROS	FENDER PARAFANGO	031P
	4	**85802075**		1	PÁRA-LAMA GUARDABARROS	FENDER PARAFANGO	031P
	5	**85801954**		10	ESPAÇADOR SEPARADOR	SPACER DISTANZIALE	075D

FB80.3 - FB100.3

CABINE - TOLDO / PARALAMAS
TOLDO - CABINA / GUARDABARROS
CAB - SAFETY FRAME / MUDGUARDS
CABINA - TELAIO DI SICUREZZA / PARAFANGHI

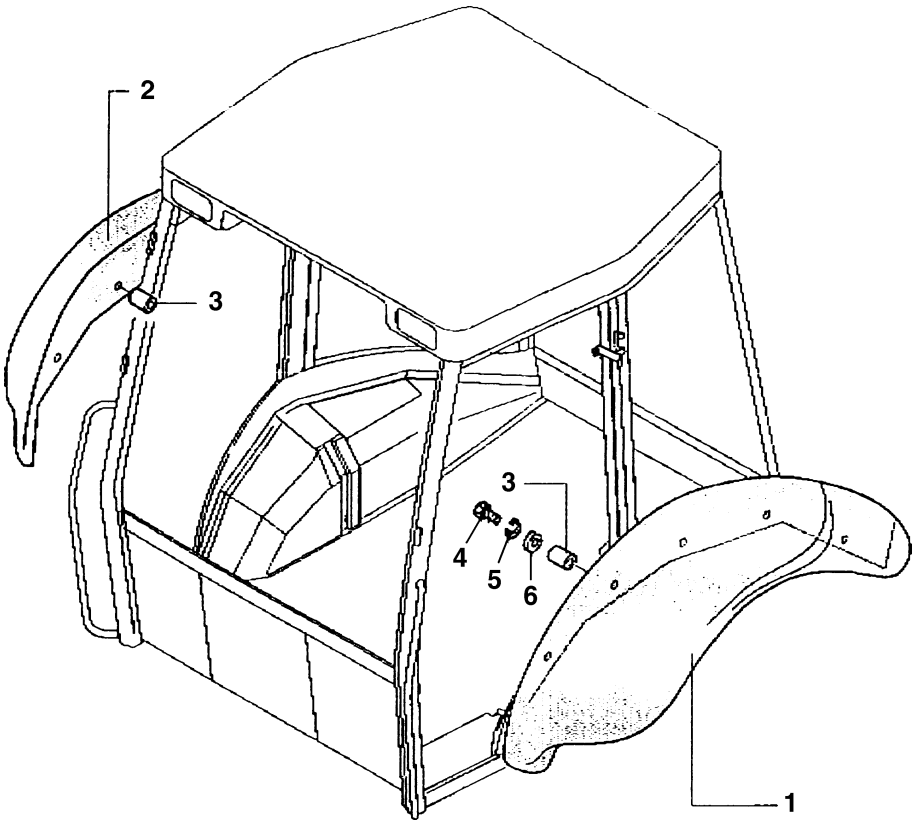

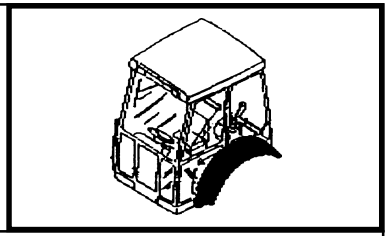

MOD	R	P/N. Imola	P/N. Brazil	Q	Descrição Denominacion	Description Descrizione	L.C.
	1	**85802075**		1	PÁRA-LAMA DIREITO GUARDABARROS	FENDER RIGHT PARAFANGO	031P
	2	**85802076**		1	PÁRA-LAMA ESQUERDO GUARDABARROS	FENDER LEFT PARAFANGO	031P
	3	**85812338**		10	BUCHA BUJE	BUSHING BOCCOLA	095B
	4	**16044124**		10	PARAFUSO TORNILLO	SCREW VITE	040V
	5	**11193874**		10	ARRUELA ARANDELA	WASHER ROSETTA	131R
	6	**12646204**		10	ARRUELA ARANDELA	WASHER ROSETTA	131R

10

FB80.3 - FB100.3

CABINE - TOLDO / PARALAMAS
TOLDO - CABINA / GUARDABARROS
CAB - SAFETY FRAME / MUDGUARDS
CABINA - TELAIO DI SICUREZZA / PARAFANGHI

1.92.5/1

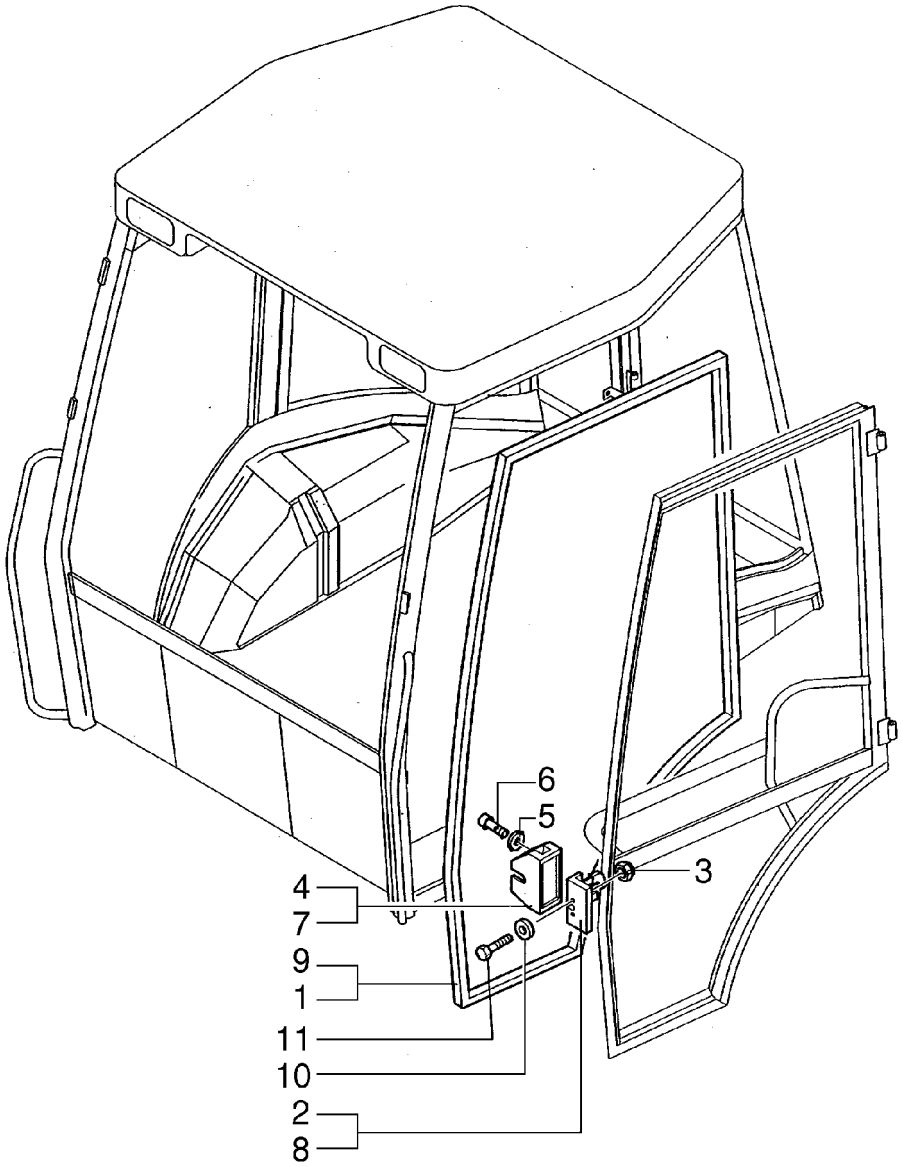

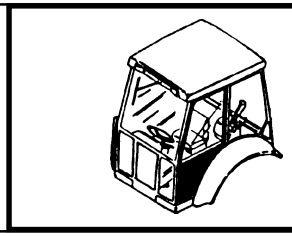

MOD	R	P/N. Imola	P/N. Brazil	Q	Descrição Denominacion	Description Descrizione	L.C.
	1	**85812252**		1	GUARNIÇÃO DIREITA JUNTA	GASKET RH GUARNIZIONE	D123
	2	**44910052**		1	TAMBOR FECHAD. CILINDR CERRAD.	LOCK CYLINDER BLOCC.SERRATURA	082B
	3	**14048221**		4	PORCA TUERCA	NUT DADO	010D
	4	**85805771**		1	TAMPA TAPA	COVER COPERCHIO	265C
	5	**12643704**		2	ARRUELA ARANDELA	WASHER ROSETTA	131R
	6	**13273911**		2	PARAFUSO TORNILLO	SCREW VITE	040V
	7	**85805770**		1	TAMPA TAPA	COVER COPERCHIO	265C
	8	**44910053**		1	TAMBOR FECHAD. CILINDR CERRAD.	LOCK CYLINDER BLOCC.SERRATURA	082B
	9	**85812253**		1	GUARNIÇÃO ESQUERDA JUNTA	GASKET LF GUARNIZIONE	E123
	10	**10519604**		4	ARRUELA ARANDELA	WASHER ROSETTA	131R
	11	**14442427**		4	PARAFUSO TORNILLO	SCREW VITE	040V

FB80.3 - FB100.3

COMPONENTES DA PORTA
COMPONENTES DE LAS PUERTAS
DOOR COMPONENTS
COMPONENTI DEFINIZIONE PORTE

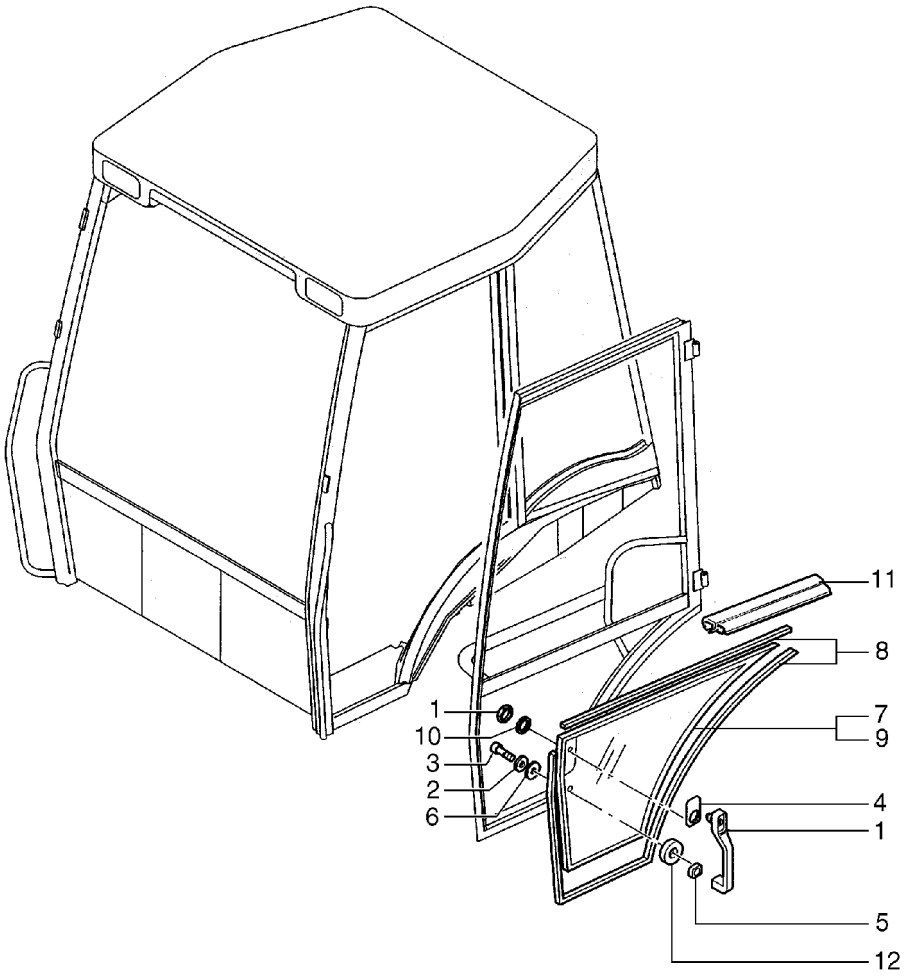

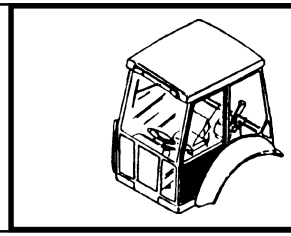

MOD	R	P/N. Imola	P/N. Brazil	Q	Descrição Denominacion	Description Descrizione	L.C.
	1	**85805659**		2	ALÇA MANIJA	HANDLE MANIGLIA	020M
	2	**12640604**		2	ARRUELA ARANDELA	WASHER ROSETTA	131R
	3	**13276611**		2	PARAFUSO TORNILLO	SCREW VITE	040V
	4	**85801799**		2	JUNTA JUNTA PLANA	GASKET GUARNIZ. PIANA	120G
	5	**85801800**		2	JUNTA JUNTA PLANA	GASKET GUARNIZ. PIANA	120G
	6	**83961987**		2	ANEL ARO	RING ANELLO	045A
	7	**85801624**		1	VIDRO CRISTAL	GLASS CRISTALLO	315C
	8	**85802334**		M	JUNTA JUNTA PLANA	GASKET GUARNIZ. PIANA	120G
	9	**85801625**		1	VIDRO CRISTAL	GLASS CRISTALLO	315C
	10	**85802307**		2	JUNTA JUNTA PLANA	GASKET GUARNIZ. PIANA	120G
	11	**85805065**		2	JUNTA JUNTA PLANA	GASKET GUARNIZ. PIANA	120G
	12	**85801801**		2	JUNTA JUNTA PLANA	GASKET GUARNIZ. PIANA	120G

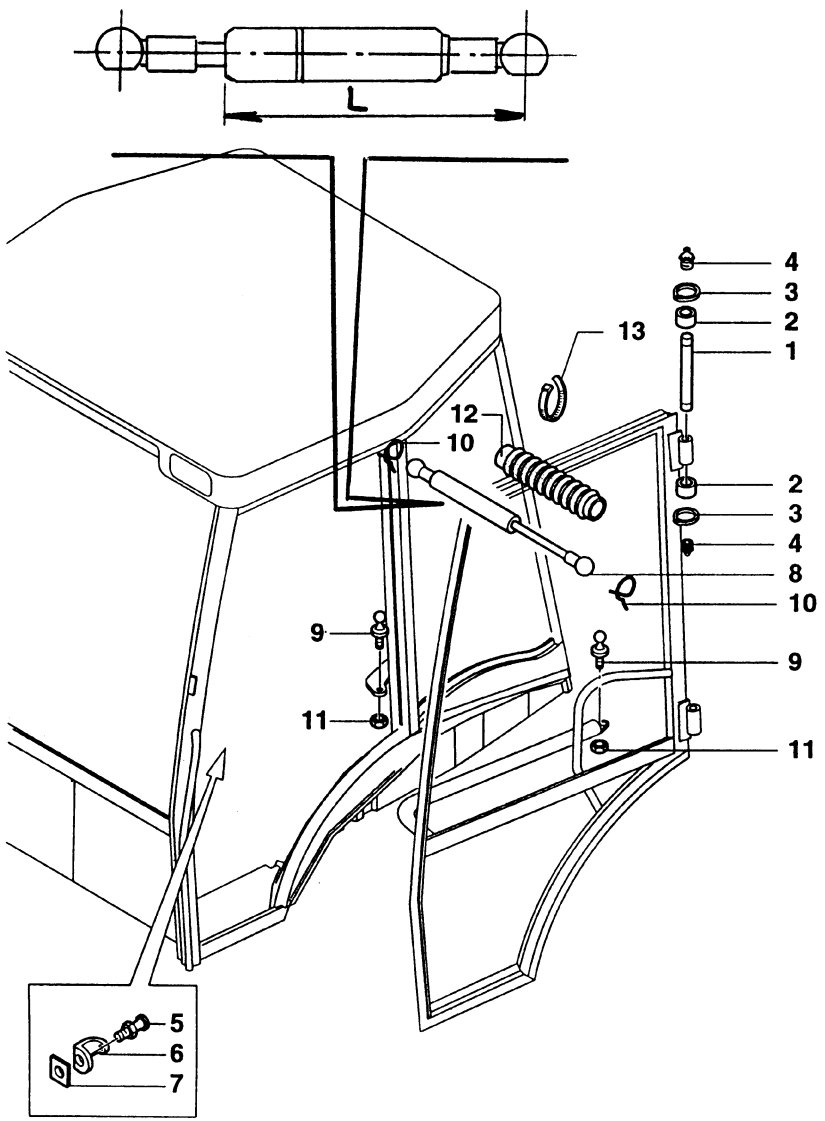

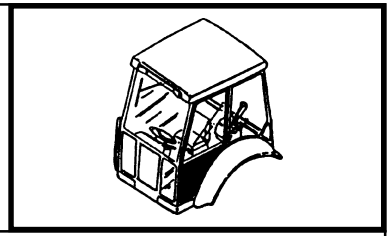

MOD	R	P/N. Imola	P/N. Brazil	Q	Descrição Denominacion	Description Descrizione	L.C.
	1	**85801798**		4	PINO BULON	PIN PERNO	080P
	2	**83964146**		8	DISCO DISCO	DISC DISCO	060D
	3	**11065976**		8	ANEL ELÁSTICO ANILLO ELASTICO	SNAP RING ANELLO ELASTICO	187A
	4	**13406911**		4	PINO GRAXEIRO ENGRASADOR	GREASE FITTING INGRASSATORE	060I
	5	**83994395**		2	ESFERA BOLA	BALL SFERA	140S
	6	**83994372**		2	PROTEÇÃO PROTECCION	GUARD RIPARO	070R
	7	**83994378**		2	PLACA PLACA	PLATE PIASTRINA	110P
	8	**5183854**		2	REGULADOR REGULADOR	REGULATOR REGOLATORE	169R
	9	**82000409**		4	PRISIONEIRO ESPARRAGO	STUD PRIGIONIERO	210P
	10	**81869714**		4	CONEXÃO RACOR	FITTING RACCORDO	020R
	11	**14048221**		4	PORCA TUERCA	NUT DADO	010D
	12	**81867742**		2	COIFA PARA PÓ CAPUCHA	DUST BOOT CUFFIA PARAPOLV	334C
	13	**5112712**		4	ABRAÇADEIRA ABRAZADERA	CLAMP FASCETTA	031F

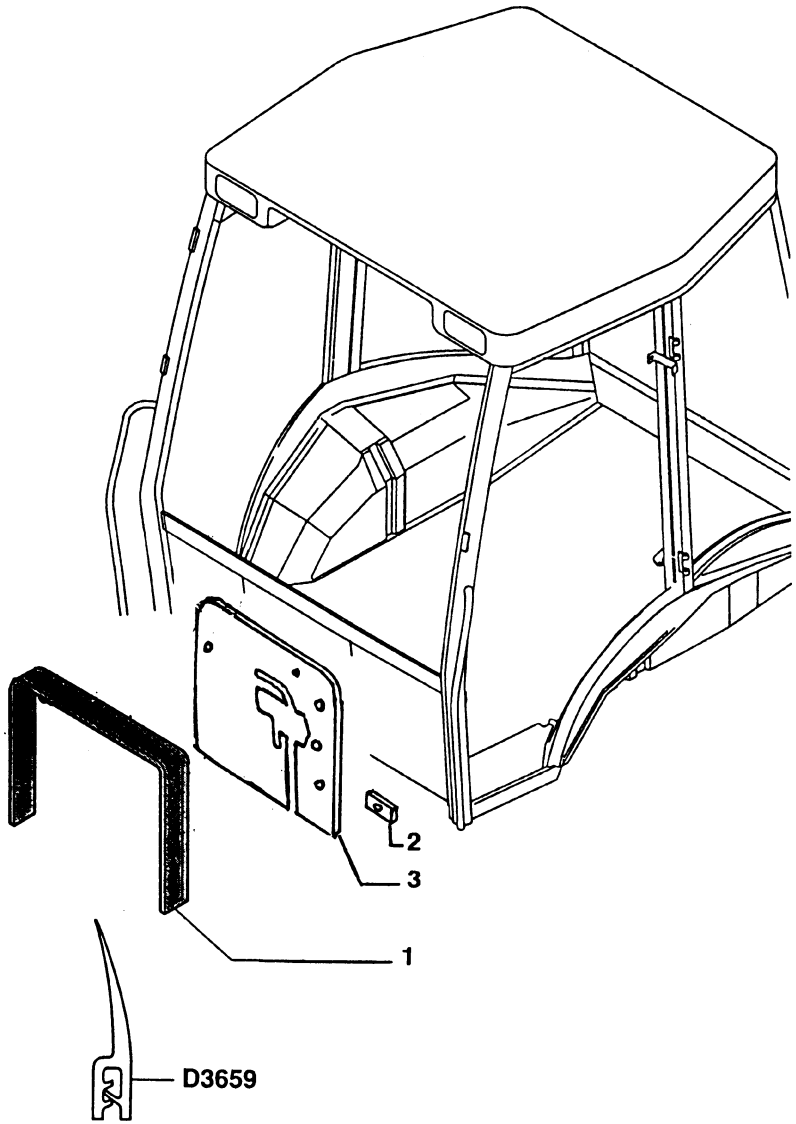

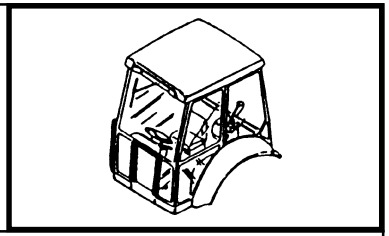

MOD	R	P/N. Imola	P/N. Brazil	Q	Descrição Denominacion	Description Descrizione	L.C.
	1	**85805571**		1	JUNTA JUNTA PLANA	GASKET GUARNIZ. PIANA	120G
	2	**83904591**		4	ARRUELA ARANDELA	WASHER ROSETTA	131R
	3	**85805911**		1	PLACA PLACA	PLATE PIASTRINA	110P

10

FB80.3 - FB100.3

CABINE / PROTEÇÕES
CABINA - PROTECCIONES
CAB - GUARDS
CABINA / RIPARI

1.92.8

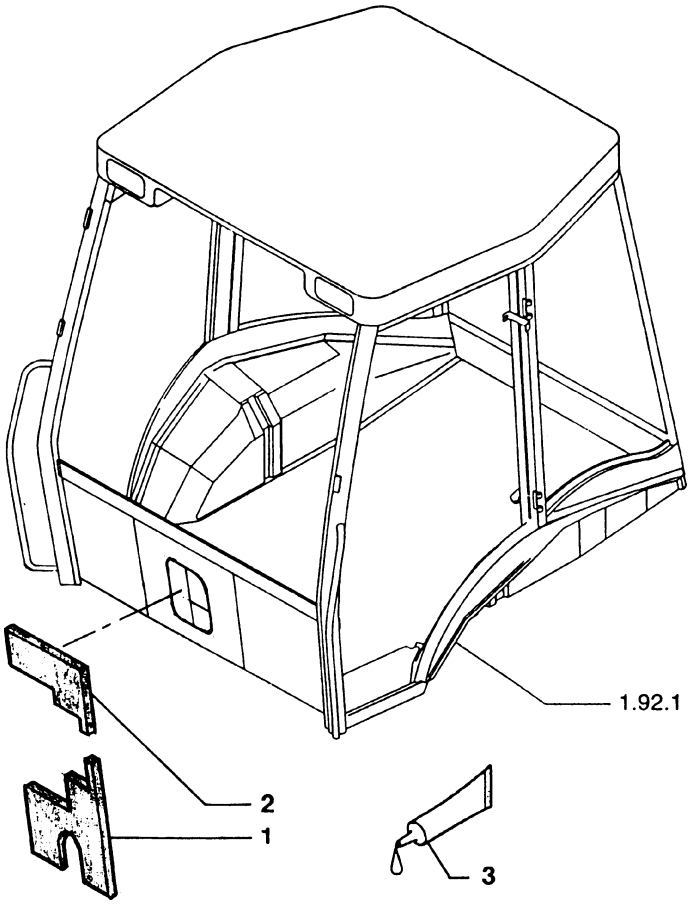

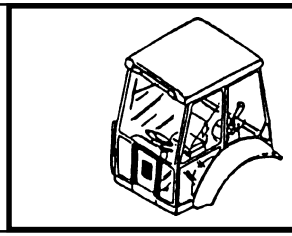

MOD	R	P/N. Imola	P/N. Brazil	Q	Descrição Denominacion	Description Descrizione	L.C.
	1		**75280671**	1	ELEM.VEDAÇ. AR CIERRE DEL AIRE	AIR-TIGHT ELEM. ELEM.TENUT.ARIA	17G5
	2		**75280674**	1	ELEM.VEDAÇ. AR CIERRE DEL AIRE	AIR-TIGHT ELEM. ELEM.TENUT.ARIA	17G5
	3		**73077381**	AR	RETENTOR LIQU. SELLADOR	LIQUID GASKET GUARNIZ.LIQUIDA	159G

10

FB80.3 - FB100.3

TOLDO / PROTEÇÕES
TOLDO - PROTECCIONES
SAFETY FRAME - GUARDS
TELAIO DI SICUREZZA / RIPARI

1.92.8/1

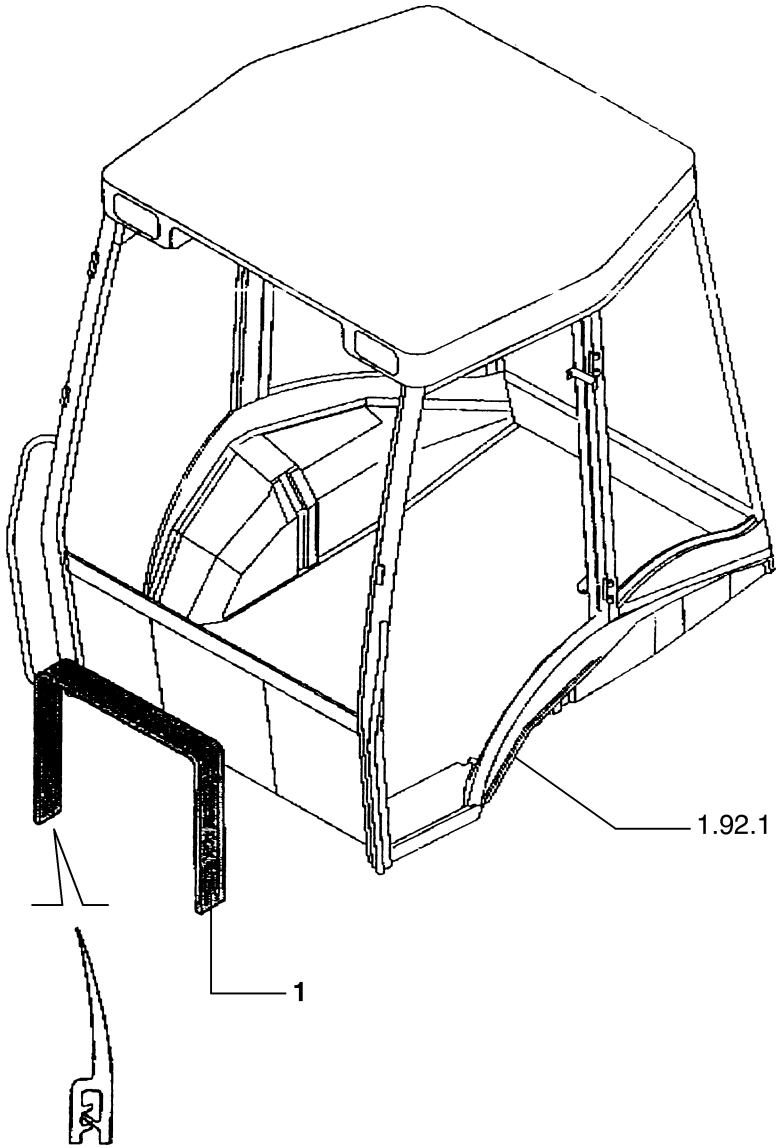

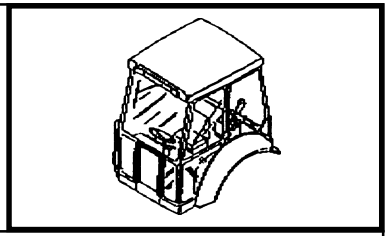

MOD	R	P/N. Imola	P/N. Brazil	Q	Descrição Denominacion	Description Descrizione	L.C.
	1	**85805571**		1	JUNTA JUNTA PLANA	GASKET GUARNIZ. PIANA	120G

10

FB80.3 - FB100.3

CABINE - PROTEÇÕES
CABINA - PROTECCIONES
CAB - GUARDS
CABINA / RIPARI

1.92.8/2

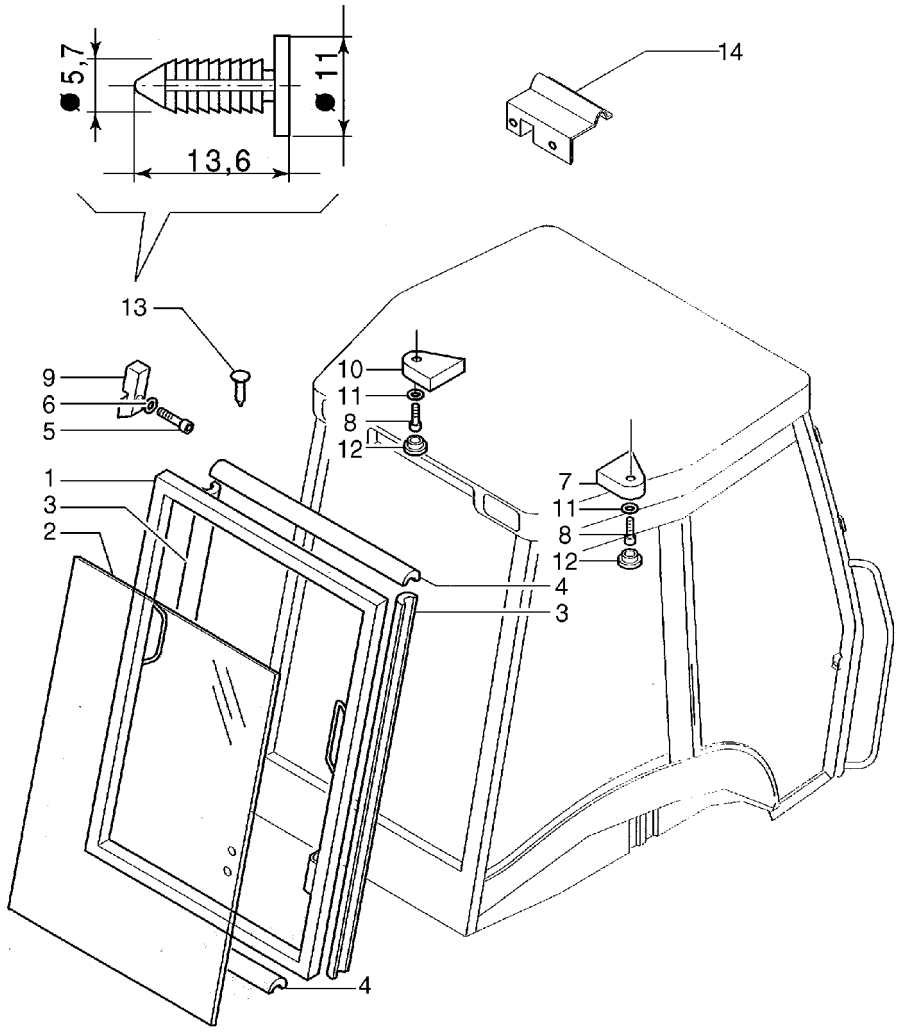

L1 L=1010MM
L2 L=965MM

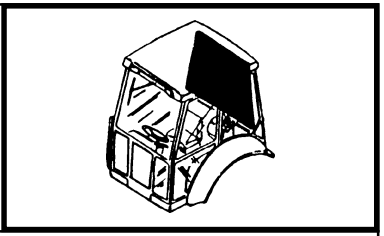

MOD	R	P/N. Imola	P/N. Brazil	Q	Descrição Denominacion	Description Descrizione	L.C.
	1	**85801739**		1	ESTRUTURA ESTRUCTURA	STRUCTURE OSSATURA	0280
	2	**85801632**		1	VIDRO CRISTAL	GLASS CRISTALLO	315C
	3	**85801811**		2	PERFILADO PERFIL	CHANNEL PROFILATO	215P
L1	4	**85819017**		1	JUNTA JUNTA PLANA	GASKET GUARNIZ. PIANA	120G
L2	4	**85819018**		1	JUNTA JUNTA PLANA	GASKET GUARNIZ. PIANA	120G
	5	**16043324**		6	PARAFUSO TORNILLO	SCREW VITE	040V
	6	**12646704**		6	ARRUELA ARANDELA	WASHER ROSETTA	131R
	7	**85801828**		1	ESPAÇADOR SEPARADOR	SPACER DISTANZIALE	075D
	8	**13313417**		2	PARAFUSO TORNILLO	SCREW VITE	040V
	9	**85801826**		2	BLOCO CALCE	BLOCK BLOCCHETTO	074B
	10	**85801829**		1	ESPAÇADOR SEPARADOR	SPACER DISTANZIALE	075D
	11	**85801991**		2	ARRUELA ARANDELA	WASHER ROSETTA	131R
	12	**79111978**		2	BUJÃO TAPON	PLUG TAPPO	050T
	13	**83994150**		2	PARAFUSO TORNILLO	SCREW VITE	040V
	14	**85812365**		1	CHAPA PLACA	PLATE PIASTRA	105P

FB80.3 - FB100.3

PORTA TRASEIRA
PORTEZUELA TRASERA
REAR DOOR
SPORTELLO POSTERIORE

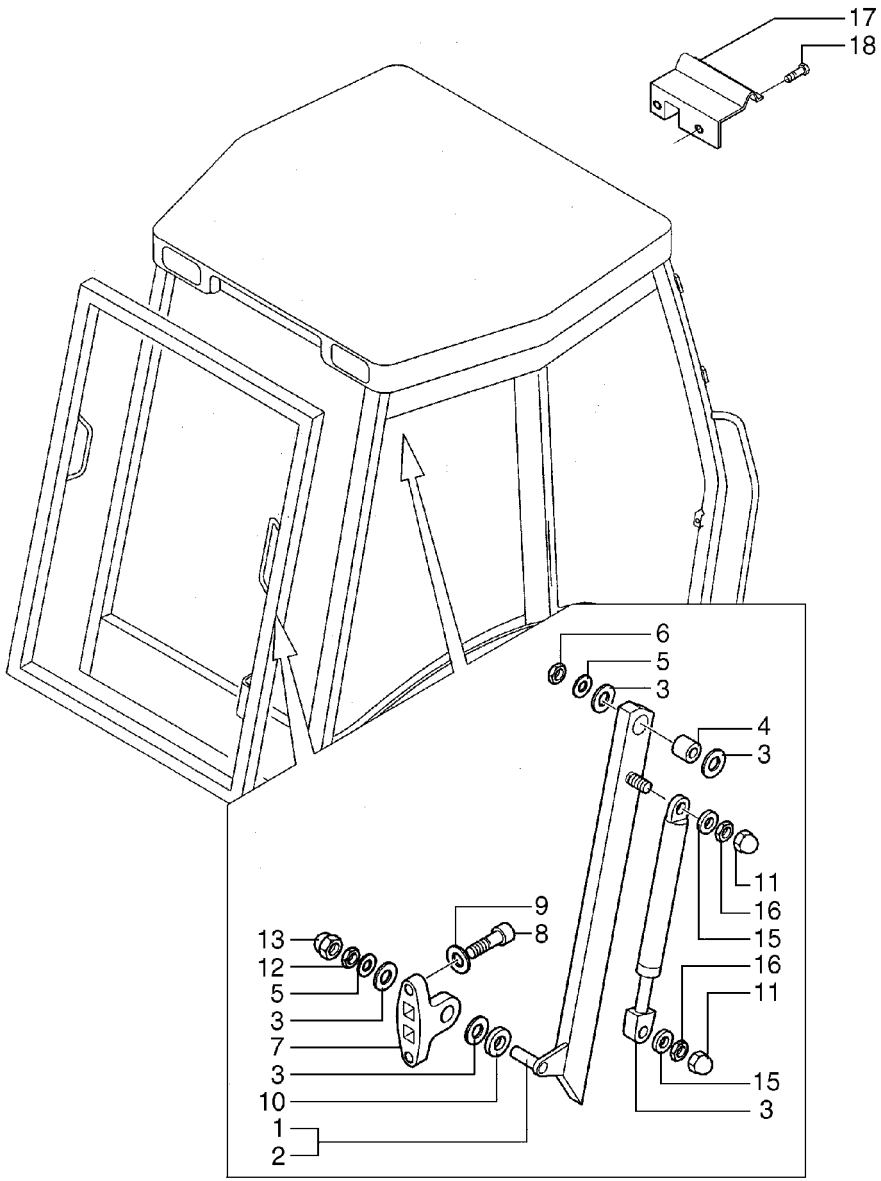

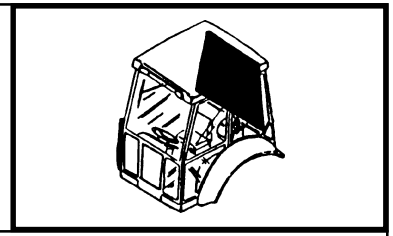

MOD	R	P/N. Imola	P/N. Brazil	Q	Descrição Denominacion	Description Descrizione	L.C.
	1	**85801812**		1	TIRANTE TIRANTE	TIEROD TIRANTE	142T
	2	**85801813**		1	TIRANTE TIRANTE	TIEROD TIRANTE	142T
	3	**85801814**		12	ESPAÇADOR SEPARADOR	SPACER DISTANZIALE	075D
	4	**85801815**		2	BUCHA BUJE	BUSHING BOCCOLA	095B
	5	**12646904**		4	ARRUELA ARANDELA	WASHER ROSETTA	131R
	6	**16105111**		2	PORCA TUERCA	NUT DADO	010D
	7	**85801816**		2	SUPORTE SOPORTE	SUPPORT SUPPORTO	300S
	8	**12638501**		4	ARRUELA ARANDELA	WASHER ROSETTA	131R
	9	**14306424**		4	PARAFUSO TORNILLO	SCREW VITE	040V
	10	**12647004**		2	ARRUELA ARANDELA	WASHER ROSETTA	131R
	11	**15811387**		4	SANFONA CAPUCHON	BOOT CAPPUCCIO	065C
	12	**16104111**		2	PORCA TUERCA	NUT DADO	010D
	13	**5132136**		2	PROTEÇÃO PROTECCION	GUARD RIPARO	070R
	14	**85801827**		2	AMORTEC.VIBRAÇÃO AMORTIGUADOR	DAMPER AMMORTIZZATORE	036A
	15	**14496429**		4	ARRUELA ARANDELA	WASHER ROSETTA	131R
	16	**12574211**		4	PORCA TUERCA	NUT DADO	010D
	17	**85812364**		1	CHAPA PLACA	PLATE PIASTRA	005P
	18	**13276217**		2	PARAFUSO TORNILLO	SCREW VITE	040V

FB80.3 - FB100.3

PORTA TRASEIRA
PORTEZUELA TRASERA
REAR DOOR
SPORTELLO POSTERIORE

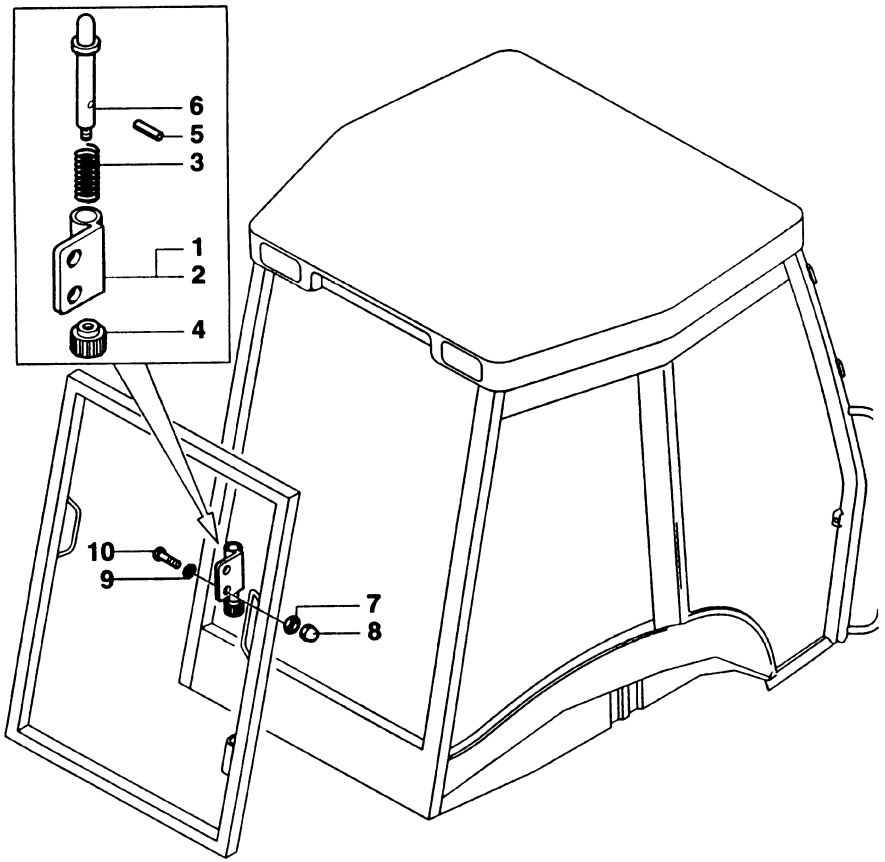

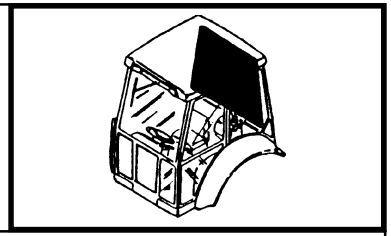

MOD	R	P/N. Imola	P/N. Brazil	Q	Descrição Denominacion	Description Descrizione	L.C.
	1	**85801831**		1	BLOCO CALCE	BLOCK BLOCCHETTO	074B
	2	**85801830**		1	BLOCO CALCE	BLOCK BLOCCHETTO	074B
	3	**85801832**		2	MOLA MUELLE	SPRING MOLLA	100M
	4	**85801833**		2	MANOPLA EMPUNADURA	KNOB POMELLO	150P
	5	**14161771**		2	PINO PASADOR	PIN SPINA	200S
	6	**85801834**		2	PINO BULON	PIN PERNO	080P
	7	**16105111**		4	PORCA TUERCA	NUT DADO	010D
	8	**5132136**		4	PROTEÇÃO PROTECCION	GUARD RIPARO	070R
	9	**12638501**		4	ARRUELA ARANDELA	WASHER ROSETTA	131R
	10	**16043624**		4	PARAFUSO TORNILLO	SCREW VITE	040V

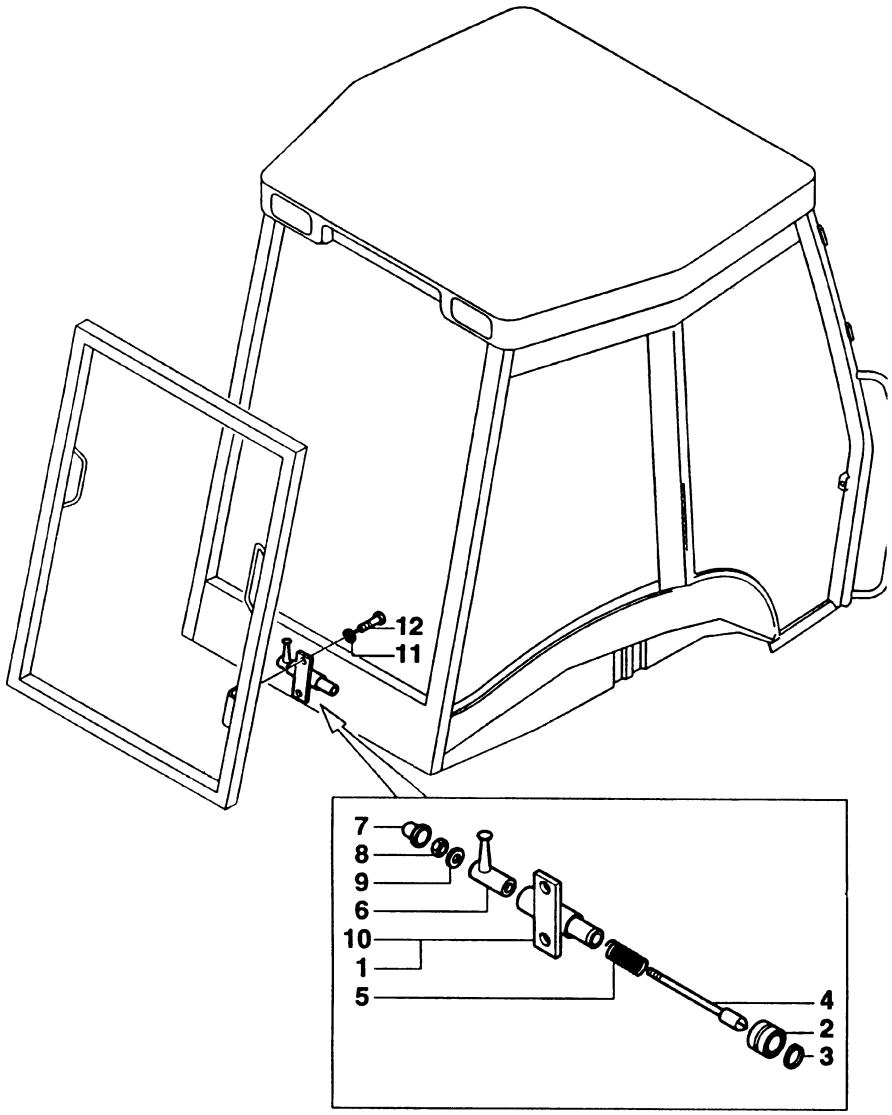

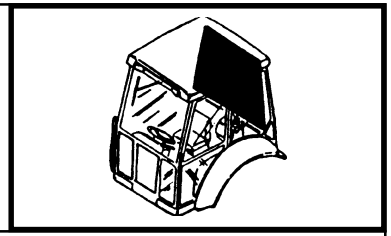

MOD	R	P/N. Imola	P/N. Brazil	Q	Descrição Denominacion	Description Descrizione	L.C.
	1	**85801820**		1	PINO BULON	PIN PERNO	080P
	2	**85802018**		2	ANEL ARO	RING ANELLO	045A
	3	**85802351**		2	ANEL ELÁSTICO ANILLO ELASTICO	SNAP RING ANELLO ELASTICO	187A
	4	**85801823**		2	PINO BULON	PIN PERNO	080P
	5	**85801824**		2	MOLA MUELLE	SPRING MOLLA	100M
	6	**85801825**		2	BRAÇO BRAZO	ARM BRACCIO	130B
	7	**15811387**		2	SANFONA CAPUCHON	BOOT CAPPUCCIO	065C
	8	**12574111**		4	PORCA TUERCA	NUT DADO	010D
	9	**12637821**		4	ARRUELA ARANDELA	WASHER ROSETTA	131R
	10	**85801821**		1	PINO BULON	PIN PERNO	080P
	11	**11198071**		4	ARRUELA ARANDELA	WASHER ROSETTA	131R
	12	**14306424**		4	PARAFUSO TORNILLO	SCREW VITE	040V

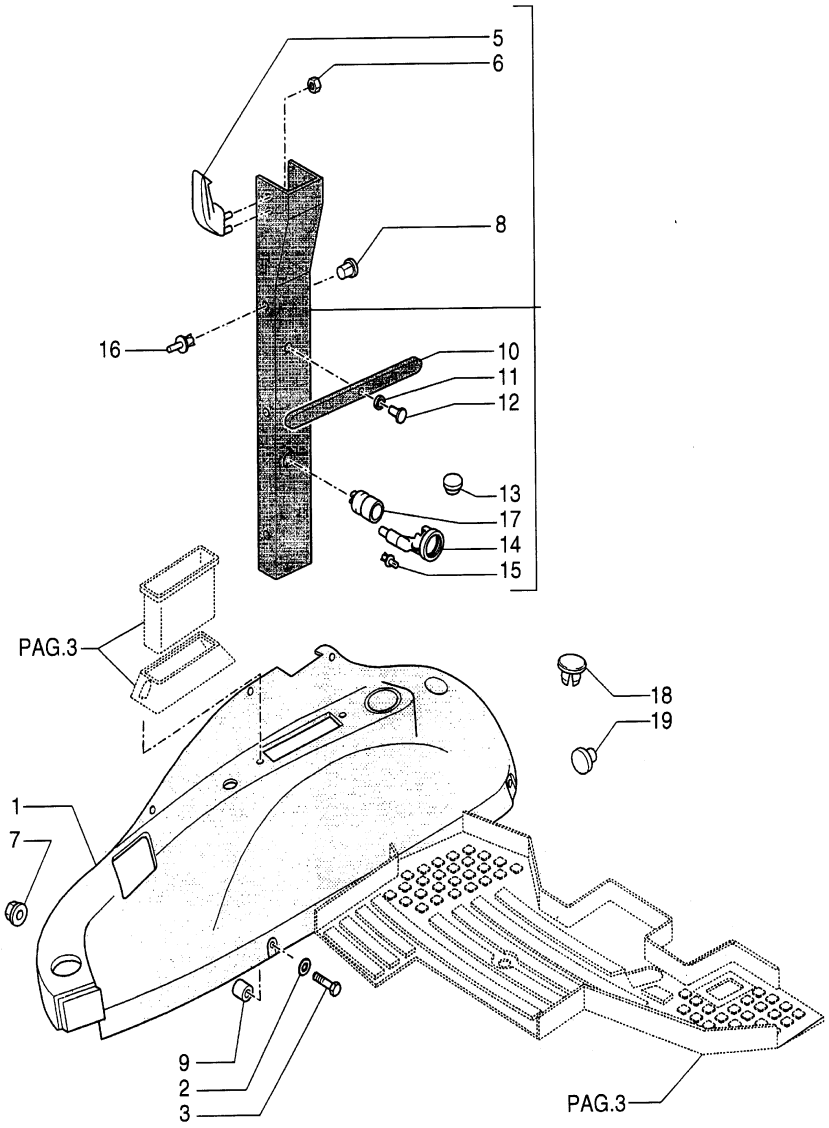

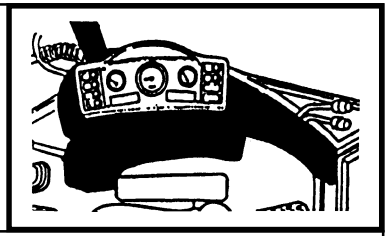

MOD	R	P/N. Imola	P/N. Brazil	Q	Descrição Denominacion	Description Descrizione	L.C.
	1	**85819277**		1	REVESTIMENTO REVESTIMIENTO	COVERING RIVESTIMENTO	116R
	2	**79089592**		6	ARRUELA ARANDELA	WASHER ROSETTA	131R
	3	**79105220**		6	PARAFUSO TORNILLO	SCREW VITE	040V
	4	**85819283**		1	REVESTIMENTO REVESTIMIENTO	COVERING RIVESTIMENTO	116R
	5	**5178468**		1	TRAVA SEGURO	PAWL NOTTOLINO	050N
	6	**14084011**		1	PORCA TUERCA	NUT DADO	010D
	7	**14084814**		4	PORCA TUERCA	NUT DADO	010D
	8	**85819591**		6	BUCHA BUJE	BUSHING BOCCOLA	095B
	9	**15627011**		12	REBITE REMACHE	RIVET RIBATTINO	055R
	10	**83961823**		1	CHAPA PLACA	PLATE PIASTRA	105P
	11	**12638104**		1	ARRUELA ARANDELA	WASHER ROSETTA	131R
	12	**85806154**		1	REBITE REMACHE	RIVET RIBATTINO	055R
	13	**79111978**		1	BUJÃO TAPON	PLUG TAPPO	050T
	14	**5148132**		1	PORTA-LÂMPADA SOPORTE LAMPARA	BULB HOLDER PORTALAMPADA	193P
	15	**14143790**		1	LÂMPADA LAMPARA	LAMP LAMPADA	030L
	16	**81870039**		6	PRISIONEIRO ESPARRAGO	STUD PRIGIONIERO	210P
	17	**5148131**		1	BUCHA BUJE	BUSHING BOCCOLA	095B
	18	**79111978**		1	BUJÃO TAPON	PLUG TAPPO	050T
	19	**85808460**		1	BUJÃO TAPON	PLUG TAPPO	050T

FB80.3 - FB100.3

CABINE / REVESTIMENTOS
CABINA / REVESTIMIENTOS
CAB / COVER
CABINA / RIVESTIMENTI

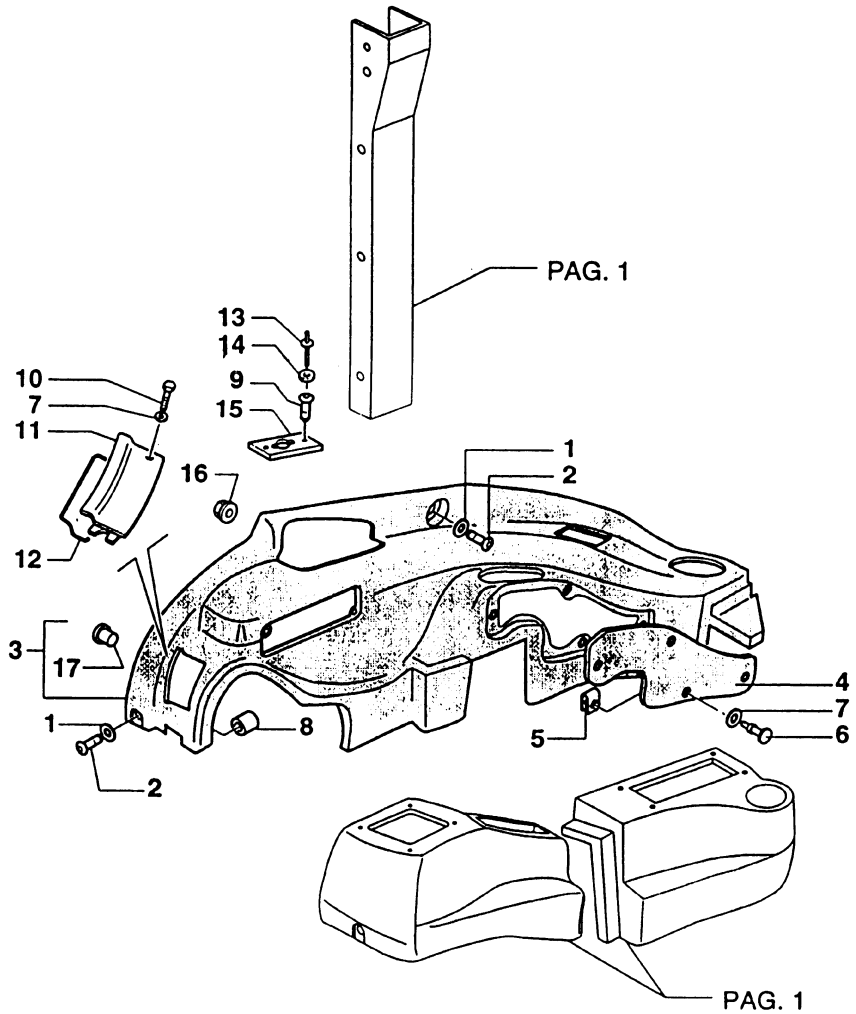

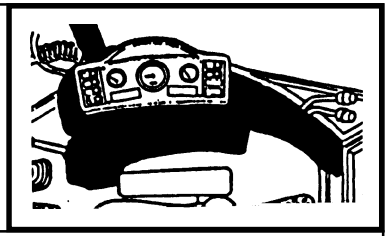

MOD	R	P/N. Imola	P/N. Brazil	Q	Descrição Denominacion	Description Descrizione	L.C.
	1	**79089592**		AR	ARRUELA ARANDELA	WASHER ROSETTA	131R
	2	**79105220**		AR	PARAFUSO TORNILLO	SCREW VITE	040V
	3	**85801639**		1	REVESTIMENTO REVESTIMIENTO	COVERING RIVESTIMENTO	116R
	3	**85806056**		1	REVESTIMENTO REVESTIMIENTO	COVERING RIVESTIMENTO	116R
	4	**85801649**		1	REVESTIMENTO REVESTIMIENTO	COVERING RIVESTIMENTO	116R
	5	**5154844**		5	ABRAÇADEIRA ABRAZADERA	CLAMP FASCETTA	031F
	6	**13311217**		5	PARAFUSO TORNILLO	SCREW VITE	040V
	6	**15693507**		5	PARAFUSO TORNILLO	SCREW VITE	040V
	7	**85801991**		AR	ARRUELA ARANDELA	WASHER ROSETTA	131R
	8	**85801953**		3	REBITE REMACHE	RIVET RIBATTINO	055R
	9	**10427200**		1	REBITE REMACHE	RIVET RIBATTINO	055R
	10	**13311017**		4	PARAFUSO TORNILLO	SCREW VITE	040V
	11	**85806057**		1	TAMPA TAPA	COVER COPERCHIO	265C
	12	**85805065**		1	JUNTA JUNTA PLANA	GASKET GUARNIZ. PIANA	120G
	13	**14644190**		2	REBITE REMACHE	RIVET RIBATTINO	055R
	13	**14644190**		2	REBITE REMACHE	RIVET RIBATTINO	055R
	14	**14496204**		2	ARRUELA ARANDELA	WASHER ROSETTA	131R
	15	**85805888**		1	SUPORTE SOPORTE	SUPPORT SUPPORTO	300S
	16	**14084814**		5	PORCA TUERCA	NUT DADO	010D
	17	**85804750**		6	PORCA TUERCA	NUT DADO	010D

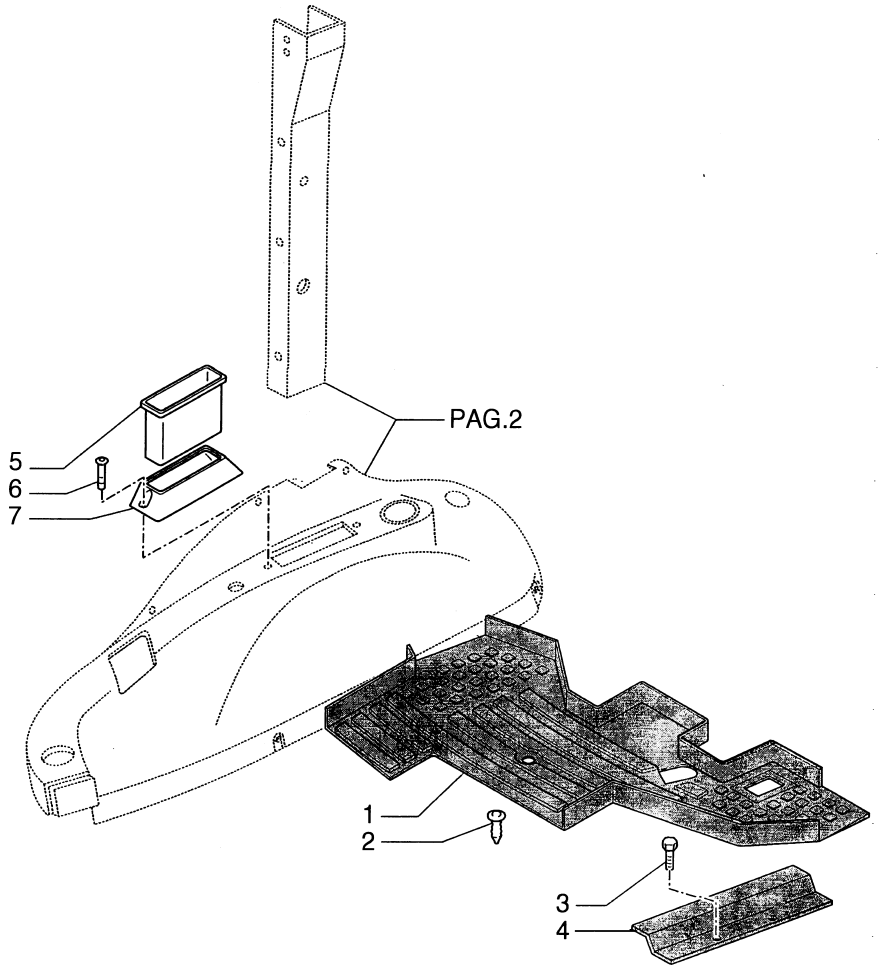

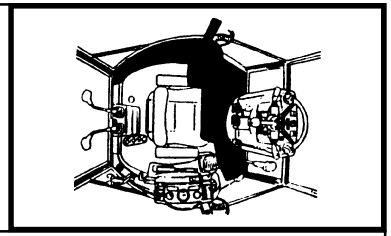

MOD	R	P/N. Imola	P/N. Brazil	Q	Descrição Denominacion	Description Descrizione	L.C.
	1	**85804865**		1	TAPETE ALFOMBRA	MAT TAPPETO	030T
	2	**14568887**		2	BUJÃO TAPON	PLUG TAPPO	050T
	3	**14441521**		4	PARAFUSO TORNILLO	SCREW VITE	040V
	4	**85801651**		1	ALOJAMENTO CAVIDAD	HOUSING ALLOGGIAMENTO	014V
	4	**85805591**		2	PROTEÇÃO PROTECCION	GUARD RIPARO	070R
	5	**85801979**		1	RECIPIENTE CONTENEDOR	CONTAINER CONTENITORE	254C
	6	**13276617**		2	PARAFUSO TORNILLO	SCREW VITE	040V
	7	**85801651**		1	ALOJAMENTO CAVIDAD	HOUSING ALLOGGIAMENTO	014V

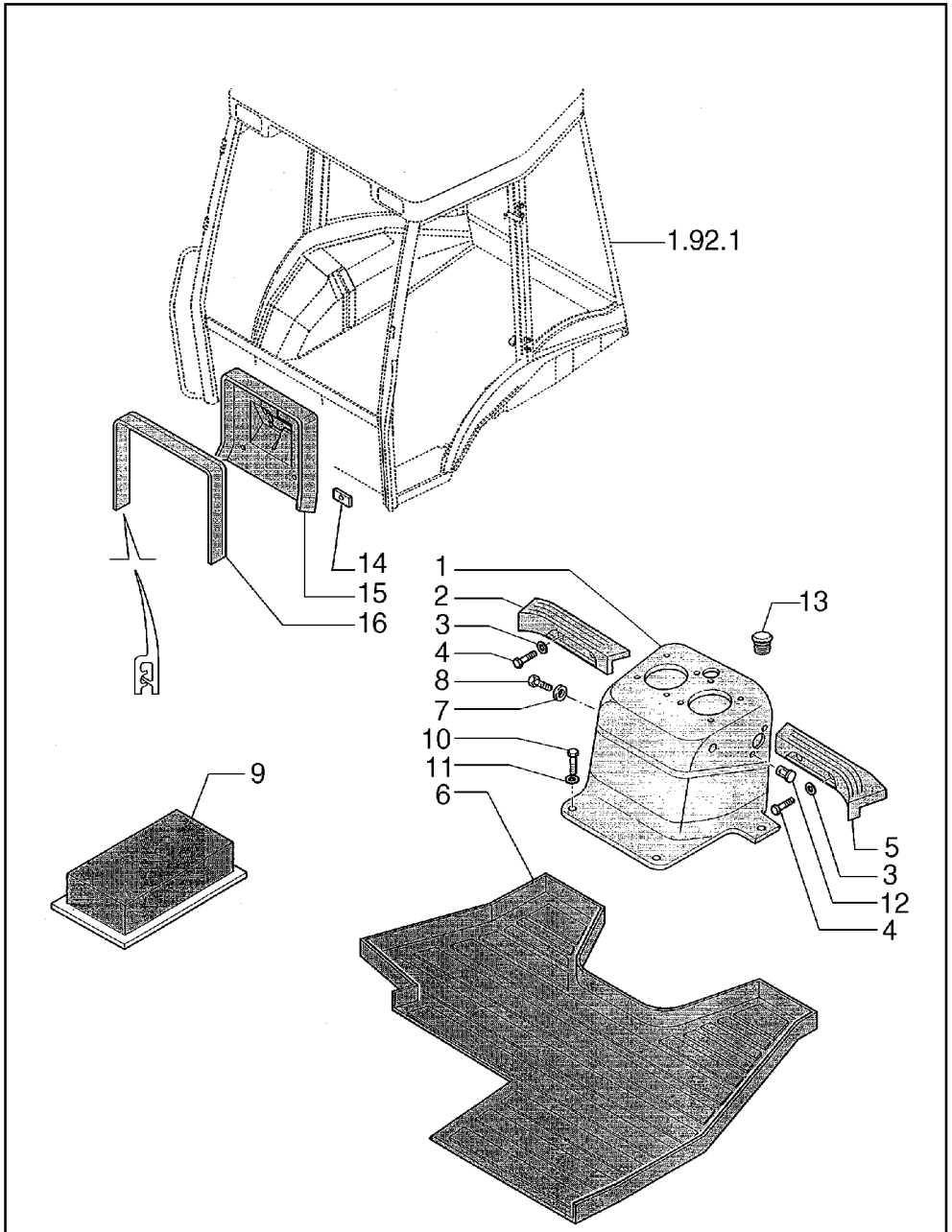

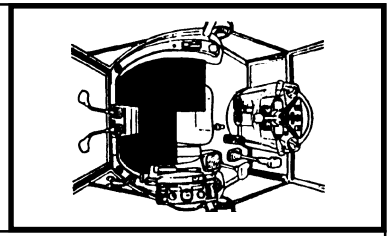

MOD	R	P/N. Imola	P/N. Brazil	Q	Descrição Denominacion	Description Descrizione	L.C.
	1	**85816762**		1	CONSOLE MENZULA	BRACKET MENSOLA	080M
	2	**85804863**		1	PROTEÇÃO PROTECCION	GUARD RIPARO	070R
	3	**10519604**		4	ARRUELA ARANDELA	WASHER ROSETTA	131R
	4	**16043824**		4	PARAFUSO TORNILLO	SCREW VITE	040V
	5	**85804864**		1	PROTEÇÃO PROTECCION	GUARD RIPARO	070R
	6	**85804866**		1	TAPETE ALFOMBRA	MAT TAPPETO	030T
	7	**79089592**		1	ARRUELA ARANDELA	WASHER ROSETTA	131R
	8	**79105220**		1	PARAFUSO TORNILLO	SCREW VITE	040V
	9	**4999021**		1	JUNTA JUNTA PLANA	GASKET GUARNIZ. PIANA	120G
	10	**10902621**		4	PARAFUSO TORNILLO	SCREW VITE	040V
	11	**12640604**		4	ARRUELA ARANDELA	WASHER ROSETTA	131R
	12	**85802259**		2	BUCHA BUJE	BUSHING BOCCOLA	095B
	13	**85802227**		1	BUJÃO TAPON	PLUG TAPPO	050T
	14	**85812080**		4	PORCA TUERCA	NUT DADO	010D
	15	**85805911**		1	PAINEL PANEL	PANEL PANNELLO	025P
	16	**85805571**		1	JUNTA JUNTA PLANA	GASKET GUARNIZ. PIANA	120G

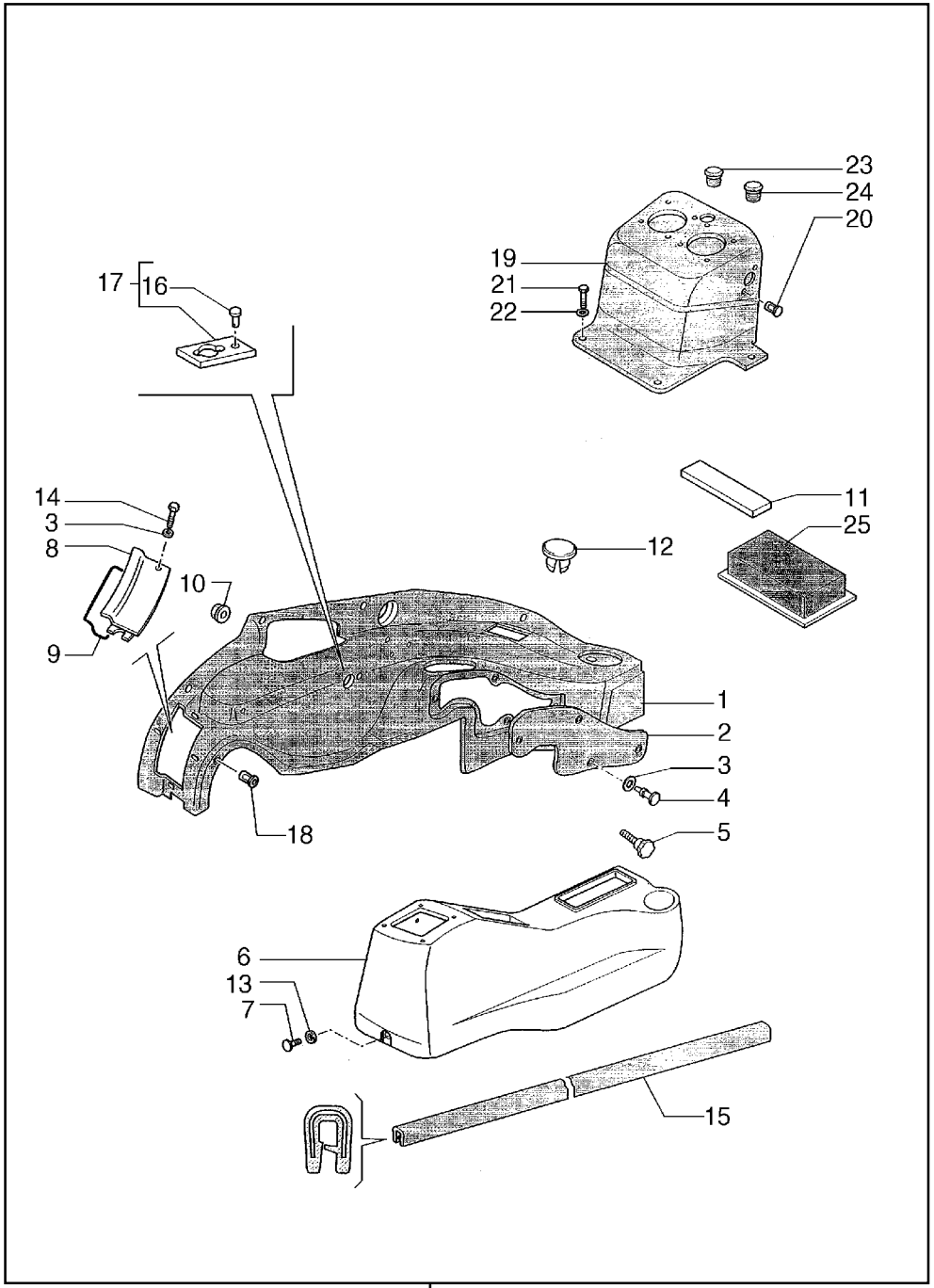

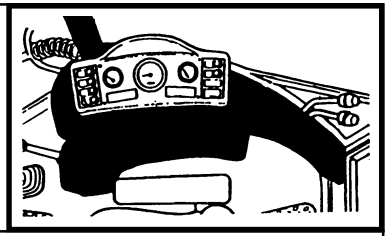

MOD	R	P/N. Imola	P/N. Brazil	Q	Descrição Denominacion	Description Descrizione	L.C.
	1	**85819365**		1	REVESTIMENTO REVESTIMIENTO	COVERING RIVESTIMENTO	116R
	2	**85801649**		1	REVESTIMENTO REVESTIMIENTO	COVERING RIVESTIMENTO	116R
	3	**85801991**		AR	ARRUELA ARANDELA	WASHER ROSETTA	131R
	4	**13311217**		5	PARAFUSO TORNILLO	SCREW VITE	040V
	5	**85805328**		1	PARAFUSO TORNILLO	SCREW VITE	040V
	6	**85805803**		1	PORTA OBJETOS ESTUCHE	CASING ASTUCCIO	101A
	7	**79105220**		2	PARAFUSO TORNILLO	SCREW VITE	040V
	8	**85806057**		1	TAMPA TAPA	COVER COPERCHIO	265C
	9	**85805065**		1	JUNTA JUNTA PLANA	GASKET GUARNIZ. PIANA	120G
	10	**14084814**		5	PORCA TUERCA	NUT DADO	010D
	11	**85805308**		1	JUNTA JUNTA PLANA	GASKET GUARNIZ. PIANA	120G
	12	**79111815**		1	BUJÃO TAPON	PLUG TAPPO	050T
	13	**79089592**		2	ARRUELA ARANDELA	WASHER ROSETTA	131R
	14	**13311017**		4	PARAFUSO TORNILLO	SCREW VITE	040V
	15	**85812081**		1	JUNTA JUNTA PLANA	GASKET GUARNIZ. PIANA	120G
	16	**10427200**		1	REBITE REMACHE	RIVET RIBATTINO	055R
	17	**85805888**		1	SUPORTE SOPORTE	SUPPORT SUPPORTO	300S
	18	**85804750**		6	BUCHA BUJE	BUSHING BOCCOLA	095B
	19	**85816763**		1	REVESTIMENTO REVESTIMIENTO	COVERING RIVESTIMENTO	116R
	20	**85802259**		2	BUCHA BUJE	BUSHING BOCCOLA	095B

FB80.3 - FB100.3

TOLDO/REVESTIMENTO
ESTRUTURA DE PROTECCION/REVESTIMIENTO
ROPS CANOPY/COVERING
STRUTTURA PROTEZIONE/REVESTIMENTI

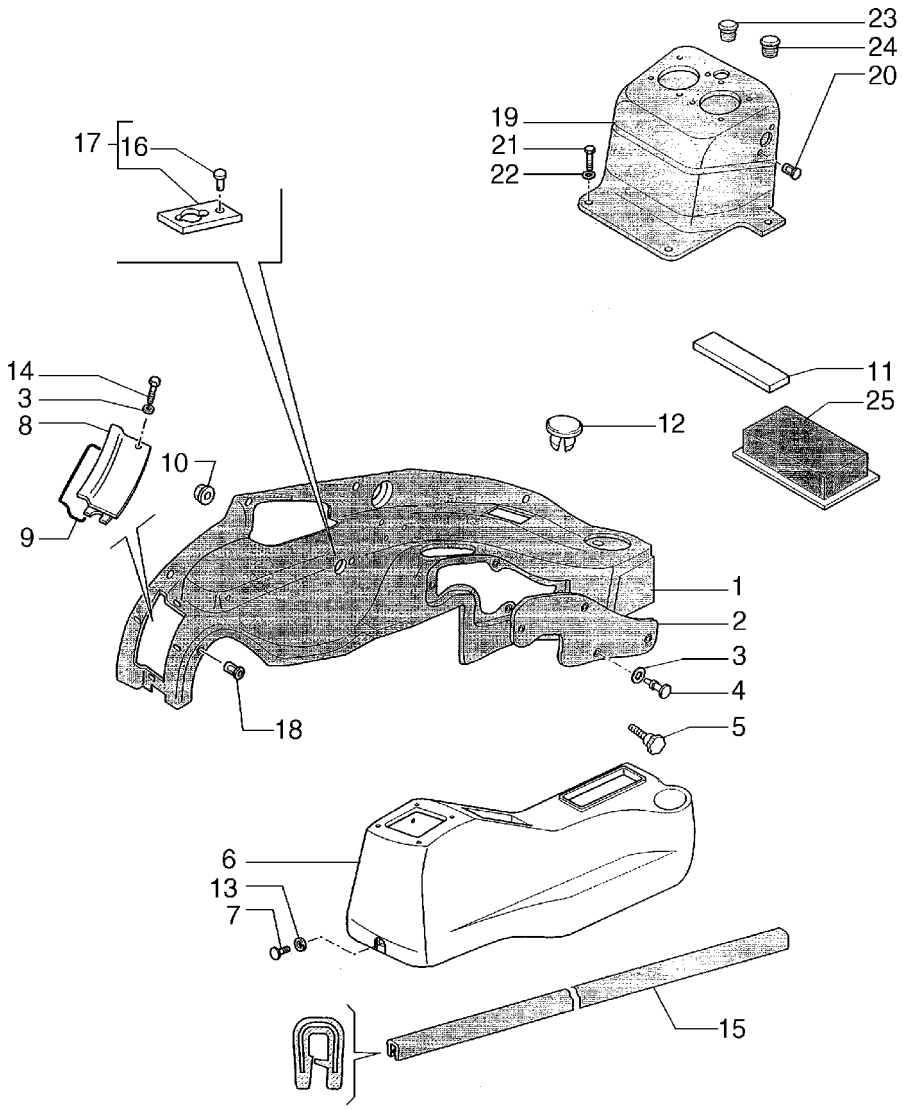

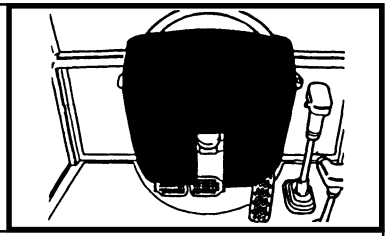

MOD	R	P/N. Imola	P/N. Brazil	Q	Descrição Denominacion	Description Descrizione	L.C.
	21	**16043424**		4	PARAFUSO TORNILLO	SCREW VITE	040V
	22	**11193979**		1	ARRUELA ARANDELA	WASHER ROSETTA	131R
	23	**79111978**		1	BUJÃO TAPON	PLUG TAPPO	050T
	24	**85802227**		1	BUJÃO TAPON	PLUG TAPPO	050T
	25	**4999021**		1	JUNTA JUNTA PLANA	GASKET GUARNIZ. PIANA	120G

10

FB80.3 - FB100.3

TOLDO/REVESTIMENTO
ESTRUTURA DE PROTECCION/REVESTIMIENTO
ROPS CANOPY/COVERING
STRUTTURA PROTEZIONE/REVESTIMENTI

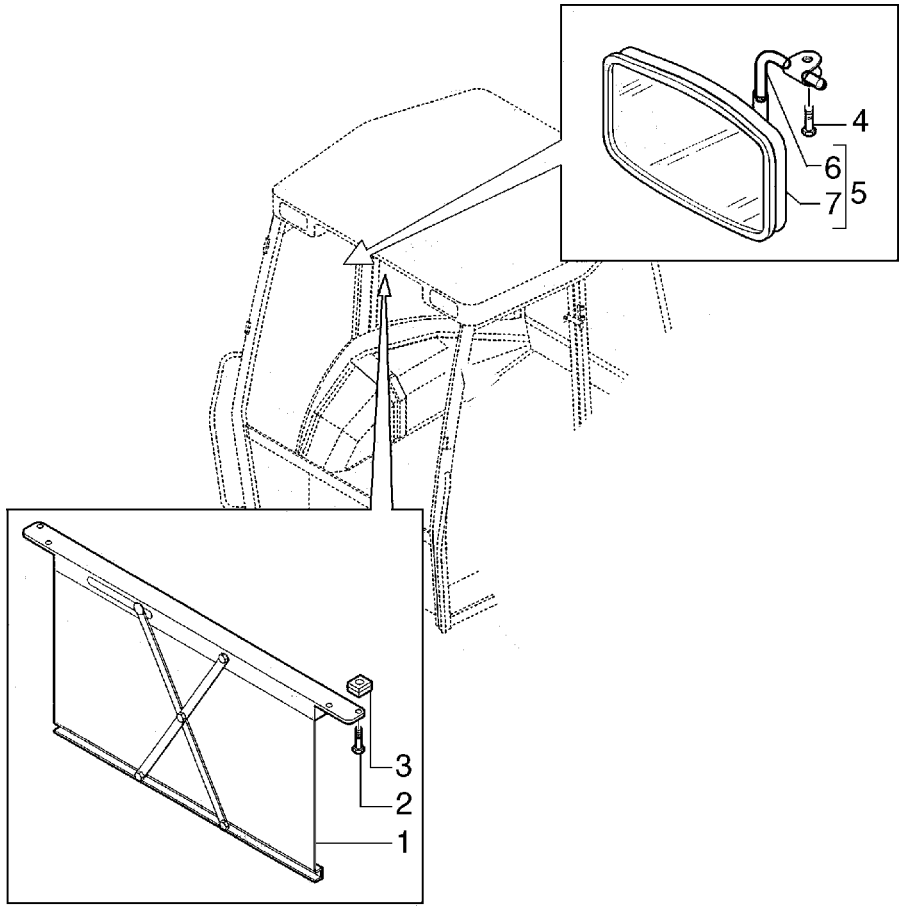

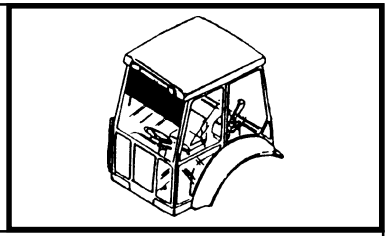

MOD	R	P/N. Imola	P/N. Brazil	Q	Descrição Denominacion	Description Descrizione	L.C.
	1	**5176441**		1	QUEBRA SOL CORTINA PARASOL	SUN CURTAIN TENDINA RIPARO SOLE	089T
	2	**13272477**		4	PARAFUSO TORNILLO	SCREW VITE	040V
	3	**14197790**		4	PORCA TUERCA	NUT DADO	010D
	4	**10902424**		2	PARAFUSO TORNILLO	SCREW VITE	040V
	5	**85817685**		1	RETROVISOR ESPEJO RETROV.	REAR VIEW MIRR. SPECCHIO RETROV.	185S
	6	**85817687**		1	SUPORTE SOPORTE	SUPPORT SUPPORTO	300S
	7	**85817686**		1	RETROVISOR ESPEJO RETROV.	REAR VIEW MIRR. SPECCHIO RETROV.	185S

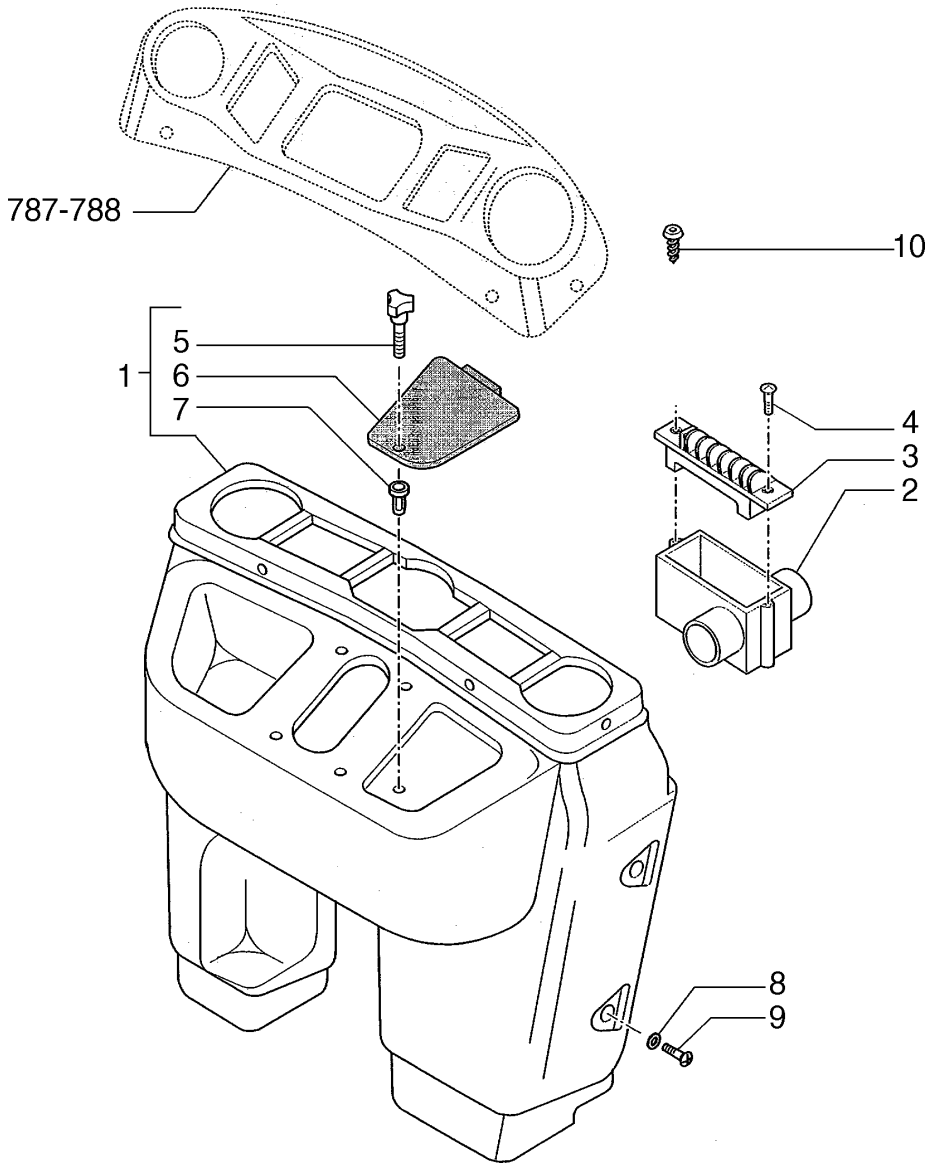

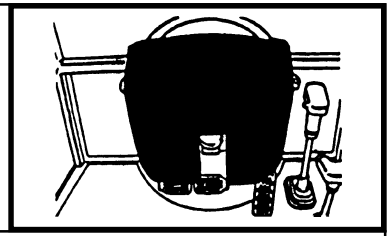

MOD	R	P/N. Imola	P/N. Brazil	Q	Descrição Denominacion	Description Descrizione	L.C.
	1	**85819407**		1	PAINEL TABLERO DE ABOR	DASHBOARD CRUSCOTTO	325C
	2	**85819567**		2	DEFLETOR CANALIZADOR	SHROUD CONVOGLIATORE	260C
	3	**85819454**		2	DIFUSOR DIFUSOR	DIFFUSER DIFFUSORE	045D
	4	**14440327**		4	PARAFUSO TORNILLO	SCREW VITE	040V
	5	**85805323**		1	MANOPLA EMPUNADURA	KNOB POMELLO	150P
	6	**85806089**		1	TAMPA TAPA	COVER COPERCHIO	265C
	7	**85804750**		5	BUCHA BUJE	BUSHING BOCCOLA	095B
	8	**79089592**		AR	ARRUELA ARANDELA	WASHER ROSETTA	131R
	9	**79105220**		AR	PARAFUSO TORNILLO	SCREW VITE	040V
	10	**14568887**		4	BOTAO BOTON	BUTTON BOTTONE	120B
	11	**85801973**		1	BUJÃO TAPON	PLUG TAPPO	050T

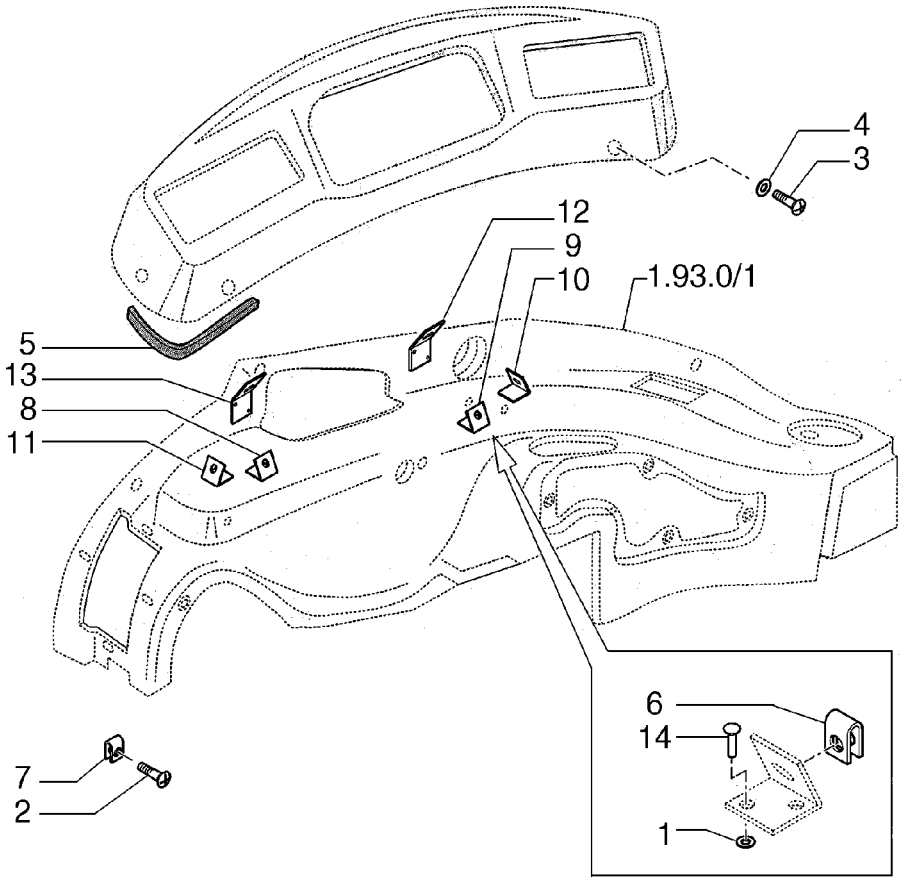

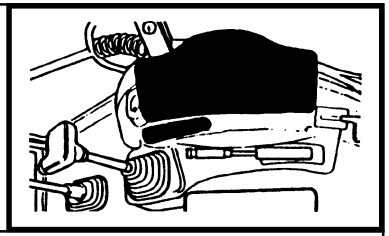

MOD	R	P/N. Imola	P/N. Brazil	Q	Descrição Denominacion	Description Descrizione	L.C.
	1	**12642804**		1	ARRUELA ARANDELA	WASHER ROSETTA	131R
	2	**15693301**		2	PARAFUSO TORNILLO	SCREW VITE	040V
	3	**15693507**		6	PARAFUSO TORNILLO	SCREW VITE	040V
	4	**85801991**		10	ARRUELA ARANDELA	WASHER ROSETTA	131R
	5	**85802294**		1	ABRAÇADEIRA ABRAZADERA	CLAMP FASCETTA	031F
	6	**14189176**		6	ABRAÇADEIRA ABRAZADERA	CLAMP FASCETTA	031F
	7	**14372671**		2	PORCA TUERCA	NUT DADO	010D
	8	**85802141**		1	ABRAÇADEIRA ABRAZADERA	CLAMP FASCETTA	031F
	9	**85802142**		1	ABRAÇADEIRA ABRAZADERA	CLAMP FASCETTA	031F
	10	**85802143**		1	ABRAÇADEIRA ABRAZADERA	CLAMP FASCETTA	031F
	11	**85802144**		1	ABRAÇADEIRA ABRAZADERA	CLAMP FASCETTA	031F
	12	**85802145**		1	ABRAÇADEIRA ABRAZADERA	CLAMP FASCETTA	031F
	13	**85802146**		1	ABRAÇADEIRA ABRAZADERA	CLAMP FASCETTA	031F
	14	**14642192**		12	REBITE REMACHE	RIVET RIBATTINO	055R

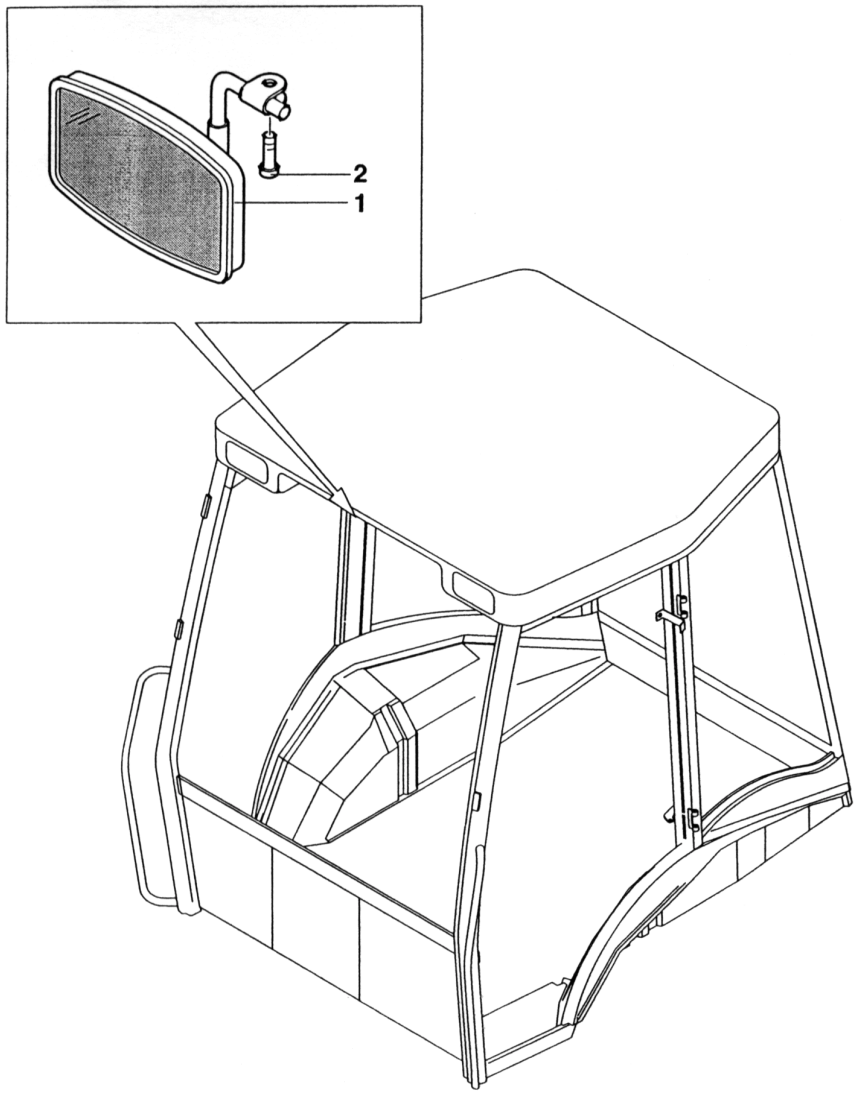

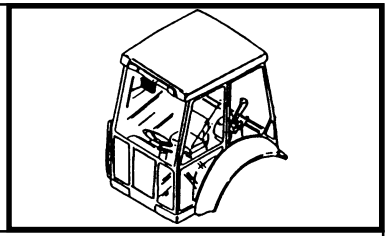

MOD	R	P/N. Imola	P/N. Brazil	Q	Descrição Denominacion	Description Descrizione	L.C.
	1	**83995298**		1	RETROVISOR ESPEJO RETROV.	REAR VIEW MIRR. SPECCHIO RETROV	185S
	2	**13301717**		1	PARAFUSO TORNILLO	SCREW VITE	040V

10

FB80.3 - FB100.3

CABINE-TOLDO - RETROVISOR INTERNO
TOLDO-ESTRUTURA DE PROTECCION - ESPEJO RETROVISOR INTERIOR
CAB-ROPS CANOPY - INTERIOR REAR-VIEW MIRROR
CABINA -STRUTTURA PROTEZIONE- SPECCHIO RETROVISORE INTERNO

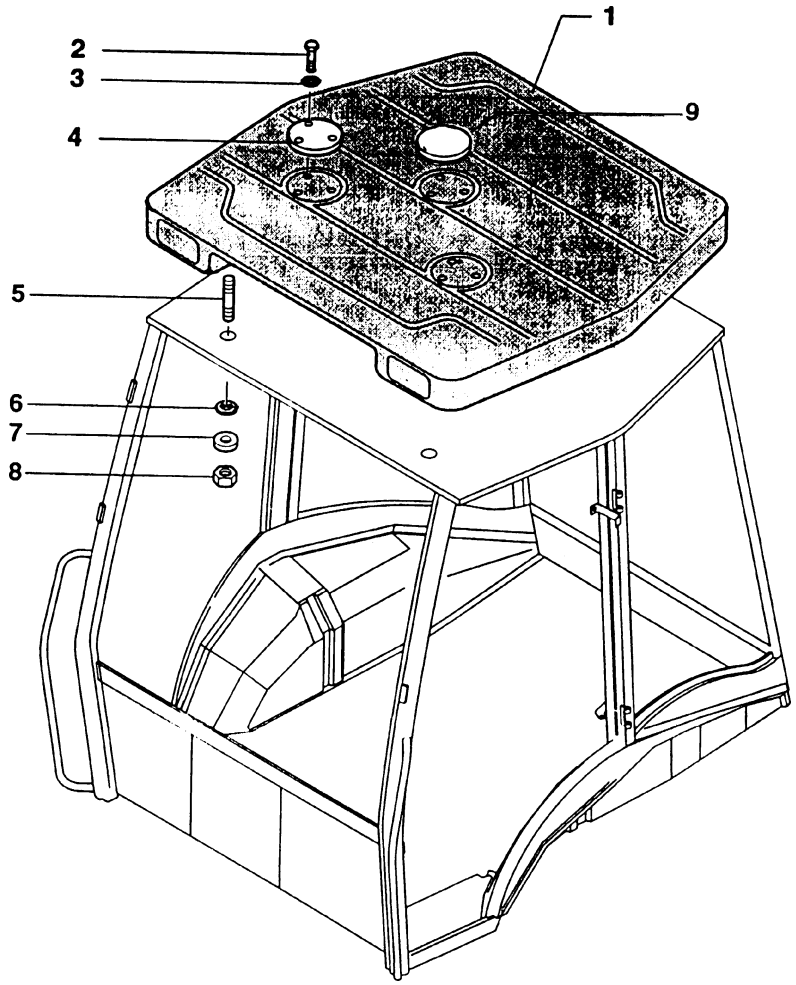

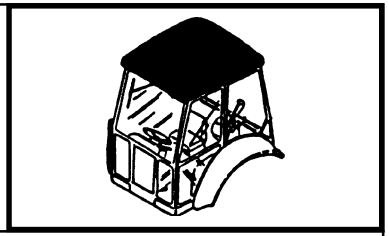

MOD	R	P/N. Imola	P/N. Brazil	Q	Descrição Denominacion	Description Descrizione	L.C.
	1		**75248637**	1	TETO DA CABINA TECHO	ROOF PANEL PADIGLIONE	020P
	2	**13276017**		6	PARAFUSO TORNILLO	SCREW VITE	040V
	3	**10519404**		6	ARRUELA ARANDELA	WASHER ROSETTA	131R
	4	**85802113**		2	TAMPA TAPA	COVER COPERCHIO	265C
	5	**13517020**		8	PRISIONEIRO ESPARRAGO	STUD PRIGIONIERO	210P
	6	**85801801**		8	JUNTA JUNTA PLANA	GASKET GUARNIZ. PIANA	120G
	7	**12646904**		8	ARRUELA ARANDELA	WASHER ROSETTA	131R
	8	**14048221**		8	PORCA TUERCA	NUT DADO	010D
	9	**85807835**		2	TAMPA TAPA	COVER COPERCHIO	265C

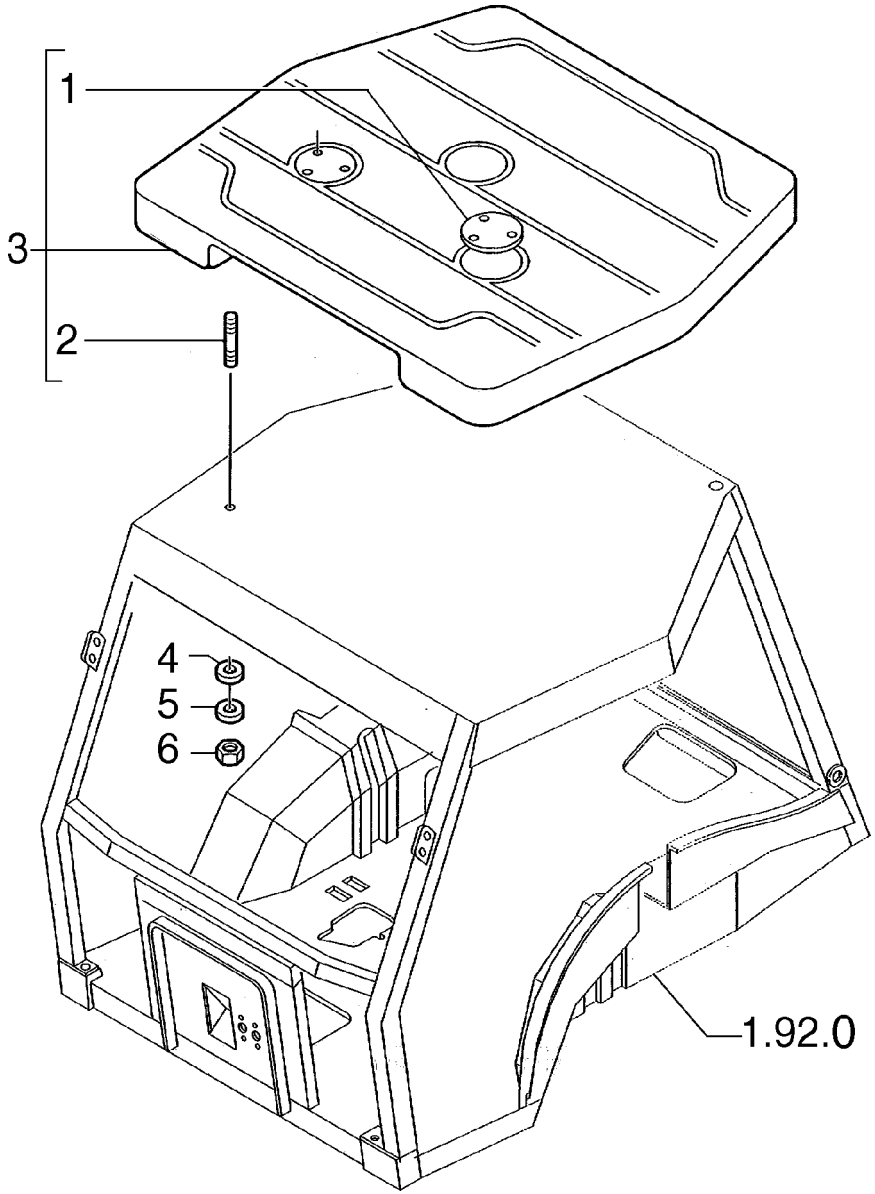

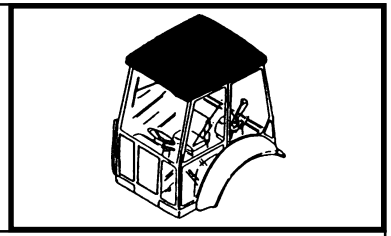

MOD	R	P/N. Imola	P/N. Brazil	Q	Descrição Denominacion	Description Descrizione	L.C.
	1	**85807835**		2	TAMPA TAPA	COVER COPERCHIO	265C
	2	**13517021**		8	PRISIONEIRO ESPARRAGO	STUD PRIGIONIERO	210P
	4	**85801801**		8	ARRUELA ARANDELA	WASHER ROSETTA	131R
	5	**12644321**		8	ARRUELA ARANDELA	WASHER ROSETTA	131R
	6	**16104121**		8	PORCA TUERCA	NUT DADO	010D

10

FB80.3 - FB100.3

TOLDO / TETO
TOLDO / TECHO EXTERIOR
SAFETY FRAME / EXTERIOR ROOF
TELAIO DI SICUREZZA / TETTO ESTERNO

1.94.0/1

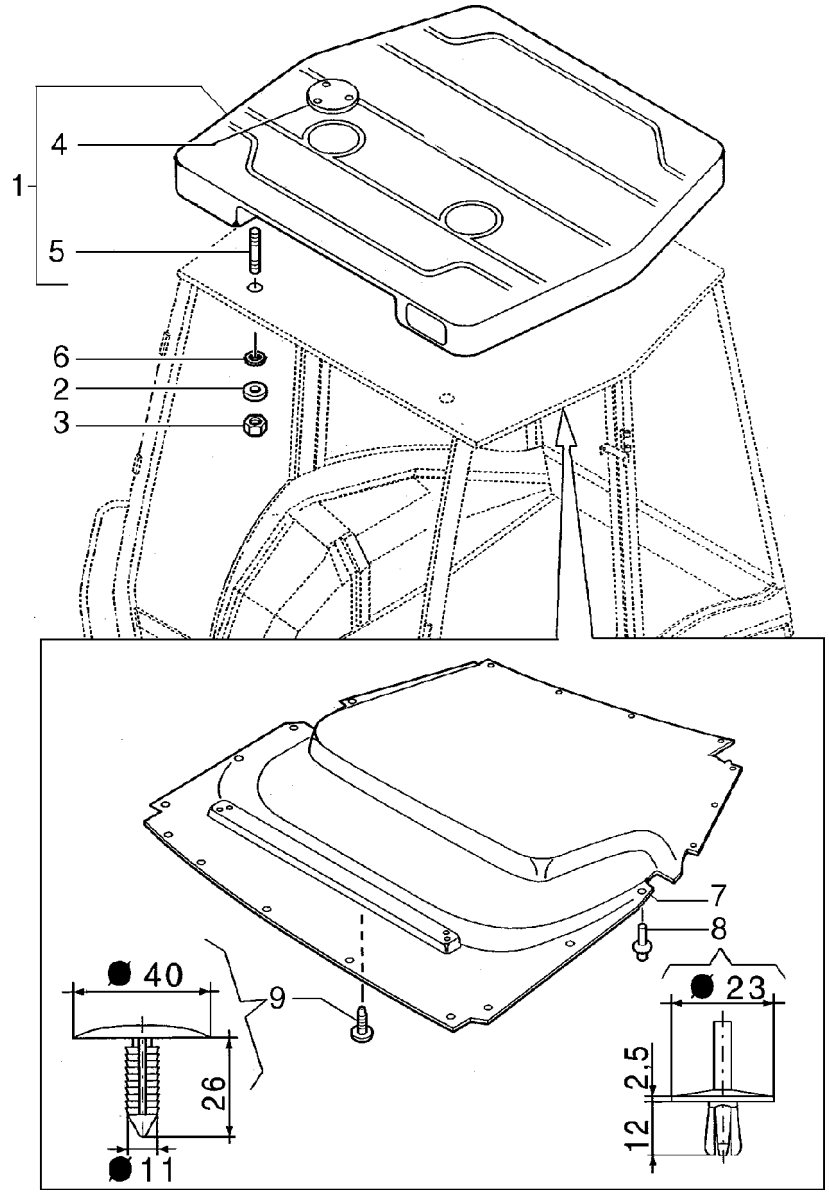

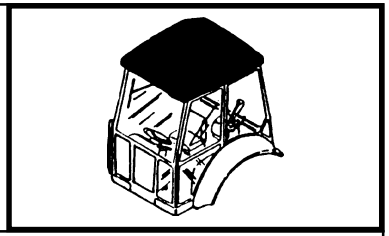

MOD	R	P/N. Imola	P/N. Brazil	Q	Descrição Denominacion	Description Descrizione	L.C.
	1		**75257712**	1	TETO DA CABINA TECHO	ROOF PANEL PADIGLIONE	020P
	2	**12646924**		8	ARRUELA ARANDELA	WASHER ROSETTA	131R
	3	**14048221**		8	PORCA TUERCA	NUT DADO	010D
	4	**85807835**		4	TAMPA TAPA	COVER COPERCHIO	265C
	5	**13517021**		8	PRISIONEIRO ESPARRAGO	STUD PRIGIONIERO	210P
	6	**85801801**		8	RETENTOR JUNTA	SEAL GUARNIZIONE	122G
	7	**85801844**		1	PAINEL PANEL	PANEL PANNELLO	025P
	8	**5162852**		21	BOTAO BOTON	BUTTON BOTTONE	120B
	9	**85805777**		1	BUJÃO TAPON	PLUG TAPPO	050T

FB80.3 - FB100.3

REVESTIMENTO INTERNO TETO
TECHO INTERIOR
INTERIOR ROOF
TETTO INTERNO

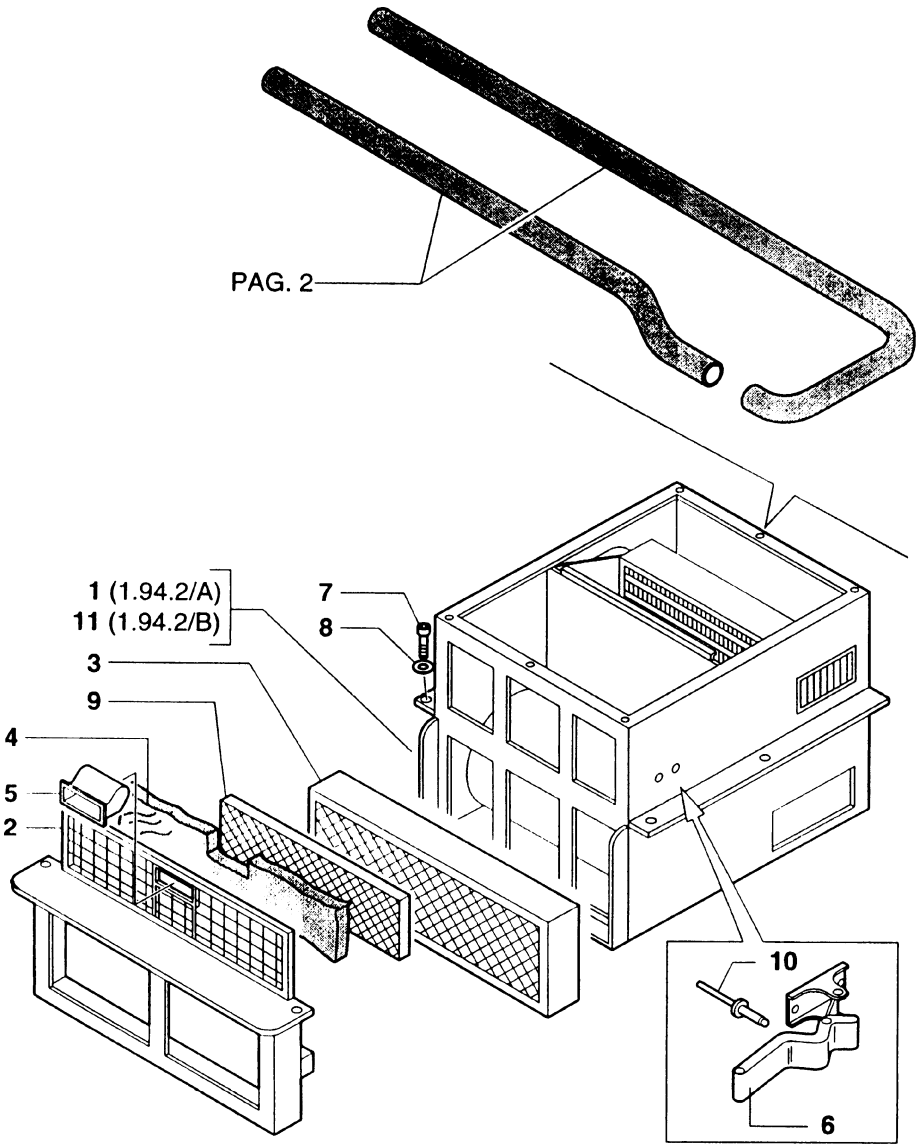

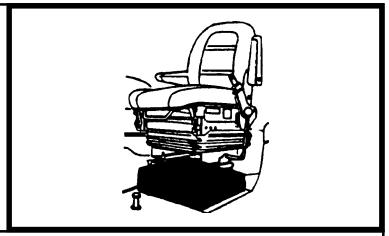

MOD	R	P/N. Imola	P/N. Brazil	Q	Descrição Denominacion	Description Descrizione	L.C.
	1	**85801605**		1	AQUECEDOR CALORIFERO	HEATER RISCALDATORE	105R
	2	**85801659**		1	RECIPIENTE CONTENEDOR	CONTAINER CONTENITORE	254C
	3	**85801619**		1	FILTRO DE AR FILTRO DE AIRE	AIR CLEANER FILTRO ARIA	066F
	4	**85801851**		1	FILTRO DE AR FILTRO DE AIRE	AIR CLEANER FILTRO ARIA	066F
	5	**85801852**		1	ALÇA MANIJA	HANDLE MANIGLIA	020M
	6	**85801853**		2	ALÇA MANIJA	HANDLE MANIGLIA	020M
	7	**16043424**		6	PARAFUSO TORNILLO	SCREW VITE	040V
	8	**11193874**		6	ARRUELA ARANDELA	WASHER ROSETTA	131R
	9	**85802326**		1	TELA REDE	MESH RETE	680R
	10	**14642192**		4	REBITE REMACHE	RIVET RIBATTINO	055R
	11	**85805134**		1	AQUECEDOR CALORIFERO	HEATER RISCALDATORE	105R

10

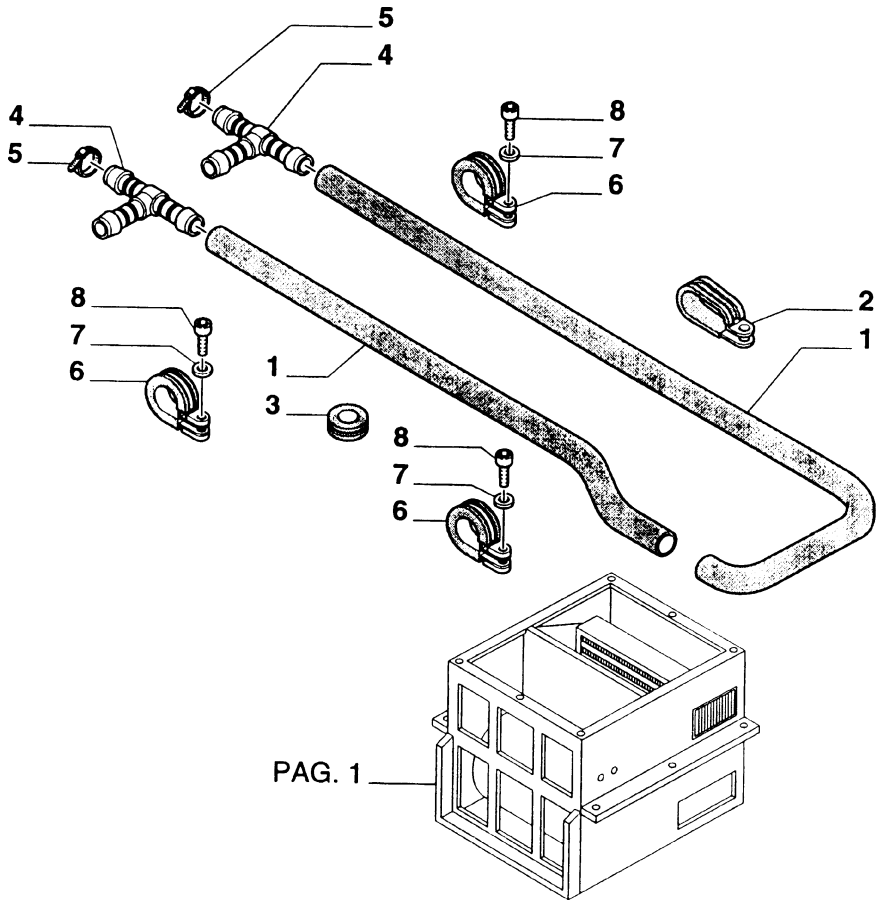

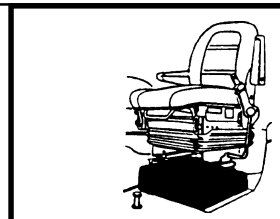

MOD	R	P/N. Imola	P/N. Brazil	Q	Descrição Denominacion	Description Descrizione	L.C.
	1	**85802320**		1	MANGUEIRA MANGA C/RACORDE	HOSE ASSY TUBO FLESSIBILE	192T
	1	**85802321**		1	MANGUEIRA MANGA C/RACORDE	HOSE ASSY TUBO FLESSIBILE	192T
	2	**85803344**		1	ESTRIBO ESTRIBO	BRACKET STAFFA	225S
	3	**10399280**		1	ANEL ISOLANTE ANILLO AISLADOR	INSULATING RING ANELLO ISOLANTE	049A
	4	**85803057**		2	CONEXÃO RACOR	FITTING RACCORDO	020R
	5	**85803079**		6	ABRAÇADEIRA ABRAZADERA	CLAMP FASCETTA	031F
	6	**85804046**		4	ABRAÇADEIRA ABRAZADERA	CLAMP FASCETTA	031F
	7	**11193274**		4	ARRUELA ARANDELA	WASHER ROSETTA	131R
	8	**14305724**		4	PARAFUSO TORNILLO	SCREW VITE	040V

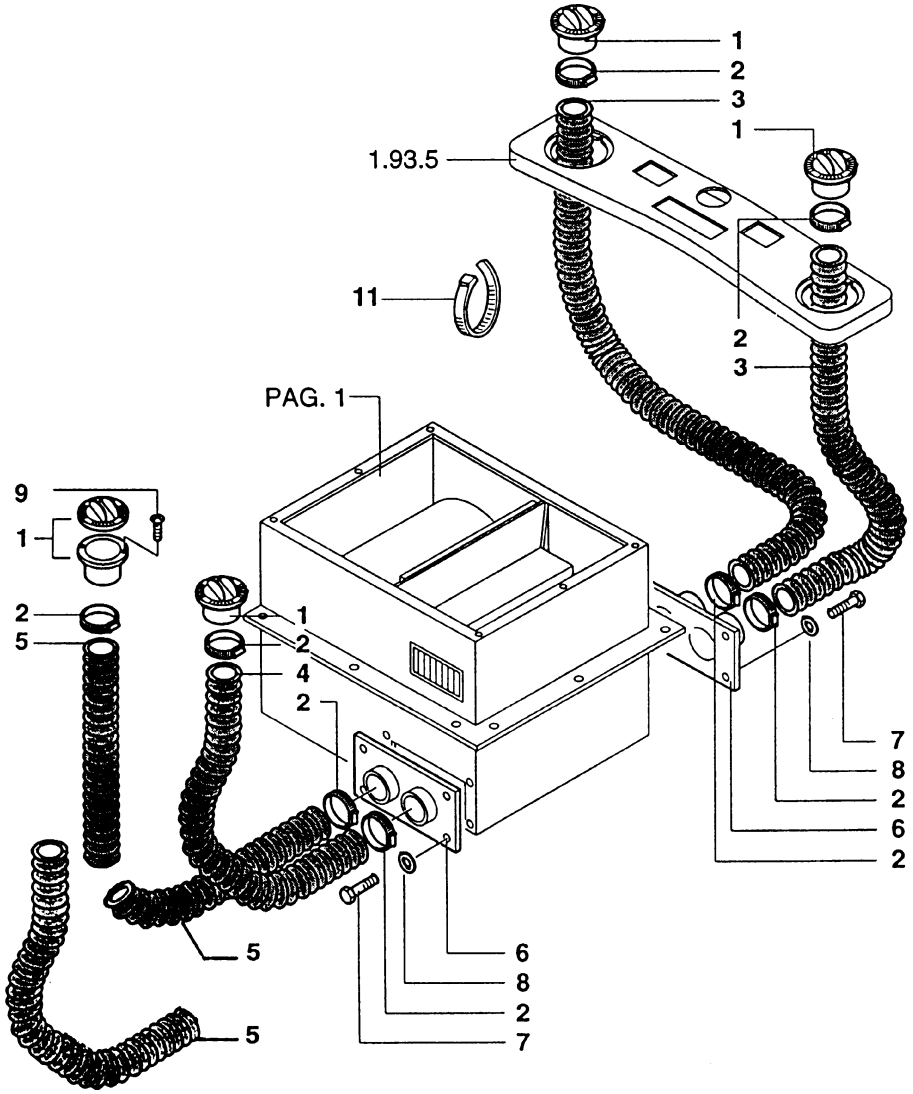

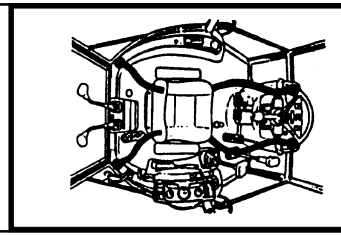

MOD	R	P/N. Imola	P/N. Brazil	Q	Descrição Denominacion	Description Descrizione	L.C.
	1	**70741298**		4	DIFUSOR DIFUSOR	DIFFUSER DIFFUSORE	045D
	2	**13000990**		8	COLAR COLLAR	COLLAR COLLARE	180C
	3	**85804873**		1	MANGUEIRA MANGA C/RACORDE	HOSE ASSY TUBO FLESSIBILE	192T
	4	**85804876**		1	MANGUEIRA MANGA C/RACORDE	HOSE ASSY TUBO FLESSIBILE	192T
	5	**85805637**		1	MANGUEIRA MANGA C/RACORDE	HOSE ASSY TUBO FLESSIBILE	192T
	6	**85805136**		2	FLANGE BRIDA	FLANGE FLANGIA	070F
	7	**10902124**		8	PARAFUSO TORNILLO	SCREW VITE	040V
	8	**11193274**		8	ARRUELA ARANDELA	WASHER ROSETTA	131R
	9	**15916901**		8	PARAFUSO TORNILLO	SCREW VITE	040V
	10	**85804874**		1	MANGUEIRA MANGA C/RACORDE	HOSE ASSY TUBO FLESSIBILE	192T
	11	**5112712**		10	ABRAÇADEIRA ABRAZADERA	CLAMP FASCETTA	031F

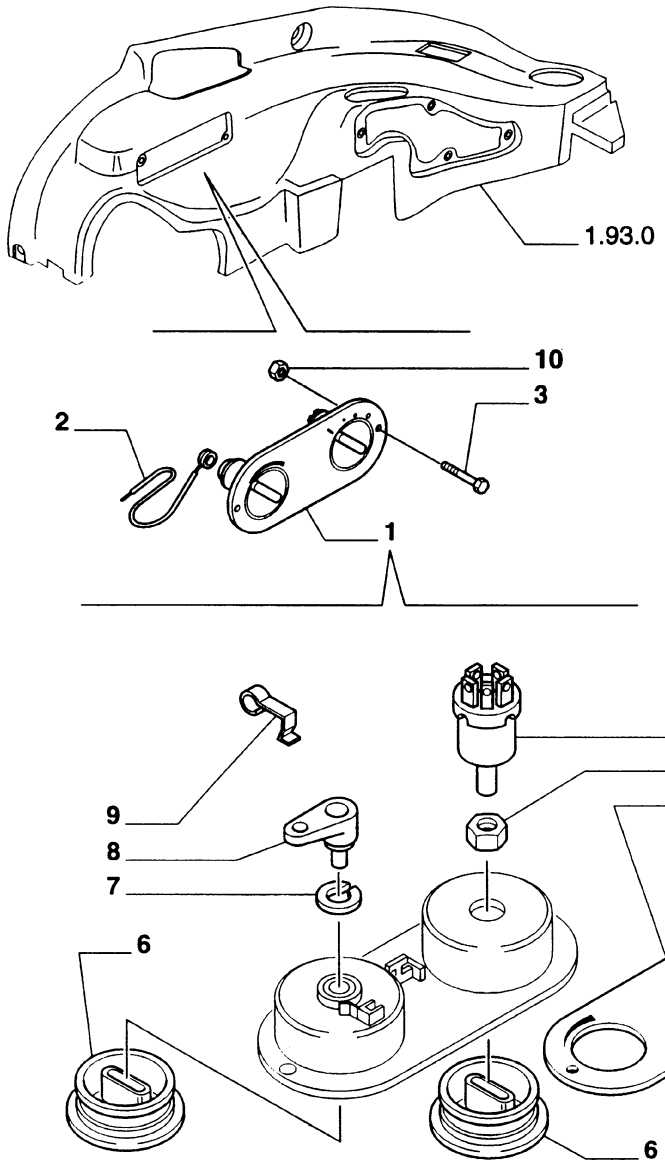

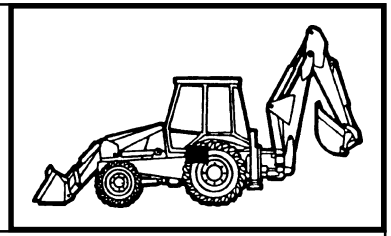

MOD	R	P/N. Imola	P/N. Brazil	Q	Descrição Denominacion	Description Descrizione	L.C.
	1	**85805146**		1	PAINEL PANEL	PANEL PANNELLO	025P
	2	**85805161**		1	CABO FLEXIVEL CABLE FLEXIBLE	FLEXIBLE SHAFT TRASMISSIONE FL	165T
	3	**15910606**		2	PARAFUSO TORNILLO	SCREW VITE	040V
	4	**9966238**		1	CHAVE COMUTADOR CONMUTADOR	SWITCH COMMUTATORE	210C
	5	**9966239**		1	PORCA TUERCA	NUT DADO	010D
	6	**82002775**		2	MANOPLA EMPUNADURA	KNOB POMELLO	150P
	7	**9966241**		1	ARRUELA ARANDELA	WASHER ROSETTA	131R
	8	**82002777**		1	ALAVANCA PALANCA	LEVER LEVA	045L
	9	**9961956**		1	MOLA MUELLE	SPRING MOLLA	100M
	10	**14372671**		2	PORCA TUERCA	NUT DADO	010D
	11	**9970494**		1	DECALCOMANIA CALCOMANIA	DECAL DECALCOMANIA	008D

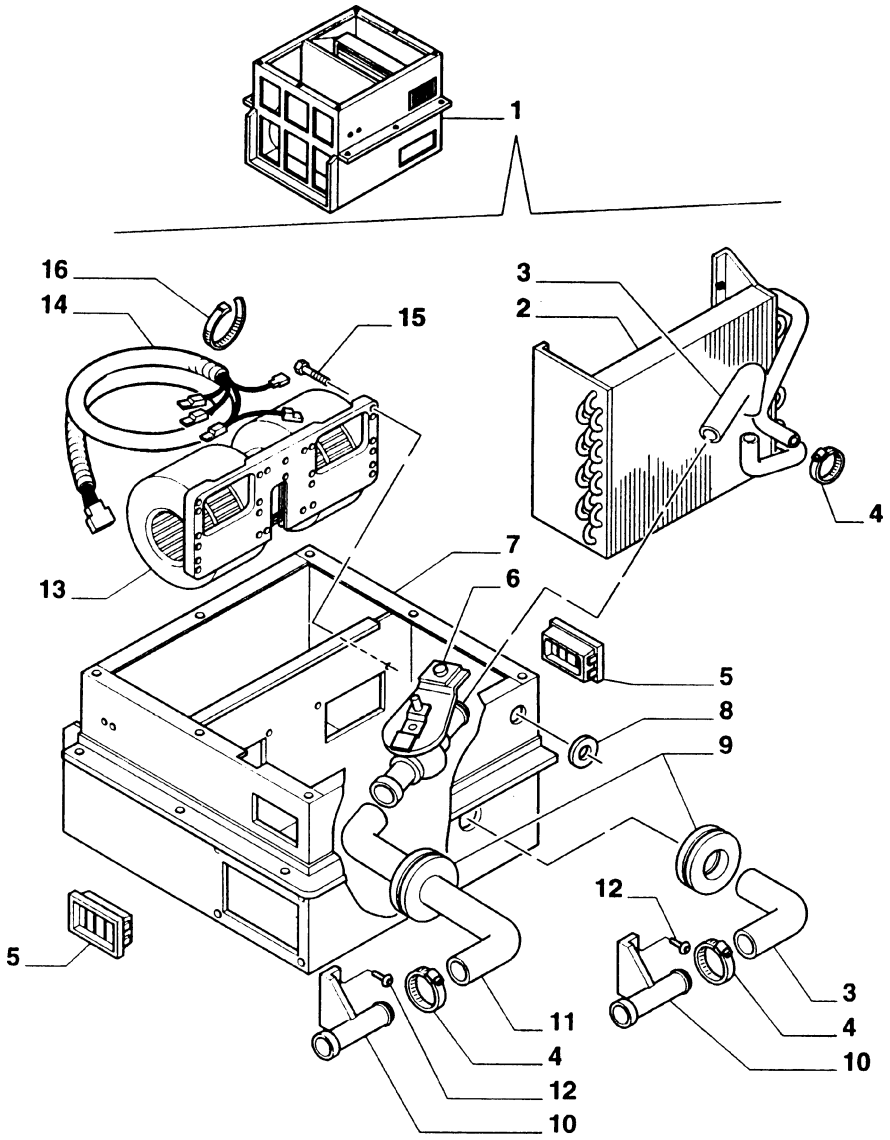

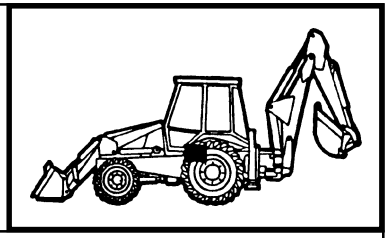

MOD	R	P/N. Imola	P/N. Brazil	Q	Descrição Denominacion	Description Descrizione	L.C.
	1	**85805134**		1	AQUECEDOR CALORIFERO	HEATER RISCALDATORE	105R
	2	**9969441**		1	TROCADOR CALOR CAMBIADOR CALOR	HEAT EXCHANGER SCAMBIAT.CALORE	025S
	3	**9968965**		2	LUVA MANGUITO	SLEEVE MANICOTTO	030M
	4	**13000490**		6	COLAR COLLAR	COLLAR COLLARE	180C
	5	**9968966**		2	DEFLETOR DEFLECTOR	DEFLECTOR DEFLETTORE	020D
	6	**9969439**		1	TORNEIRA GRIFO	DRAINCOCK RUBINETTO	150R
	7	**9969440**		1	CARCAÇA CAJA	CASE SCATOLA	035S
	8	**9969438**		1	ANEL DE VEDAÇÃO JUNTA HERMETICA	SEAL RING ANELLO TENUTA	055A
	9	**9968964**		2	ANEL DE VEDAÇÃO JUNTA HERMETICA	SEAL RING ANELLO TENUTA	055A
	10	**9968962**		2	CONEXÃO RACOR	FITTING RACCORDO	020R
	11	**9969437**		1	MANGUEIRA MANGA C/RACORDE	HOSE ASSY TUBO FLESSIBILE	192T
	12	**9968960**		4	PARAFUSO TORNILLO	SCREW VITE	040V
	13	**9968969**		1	VENTILADOR VENTILADOR	ELECTRIC FAN VENTILATORE	033E
	14	**9968970**		1	CABO ELETRICO CABLE	CABLE CAVO	111C
	15	**9968961**		10	PARAFUSO TORNILLO	SCREW VITE	040V
	16	**14560187**		2	ABRAÇADEIRA ABRAZADERA	CLAMP FASCETTA	031F

FB80.3 - FB100.3

AQUECEDOR
CALEFACCION
HEATING SYSTEM
RISCALDAMENTO

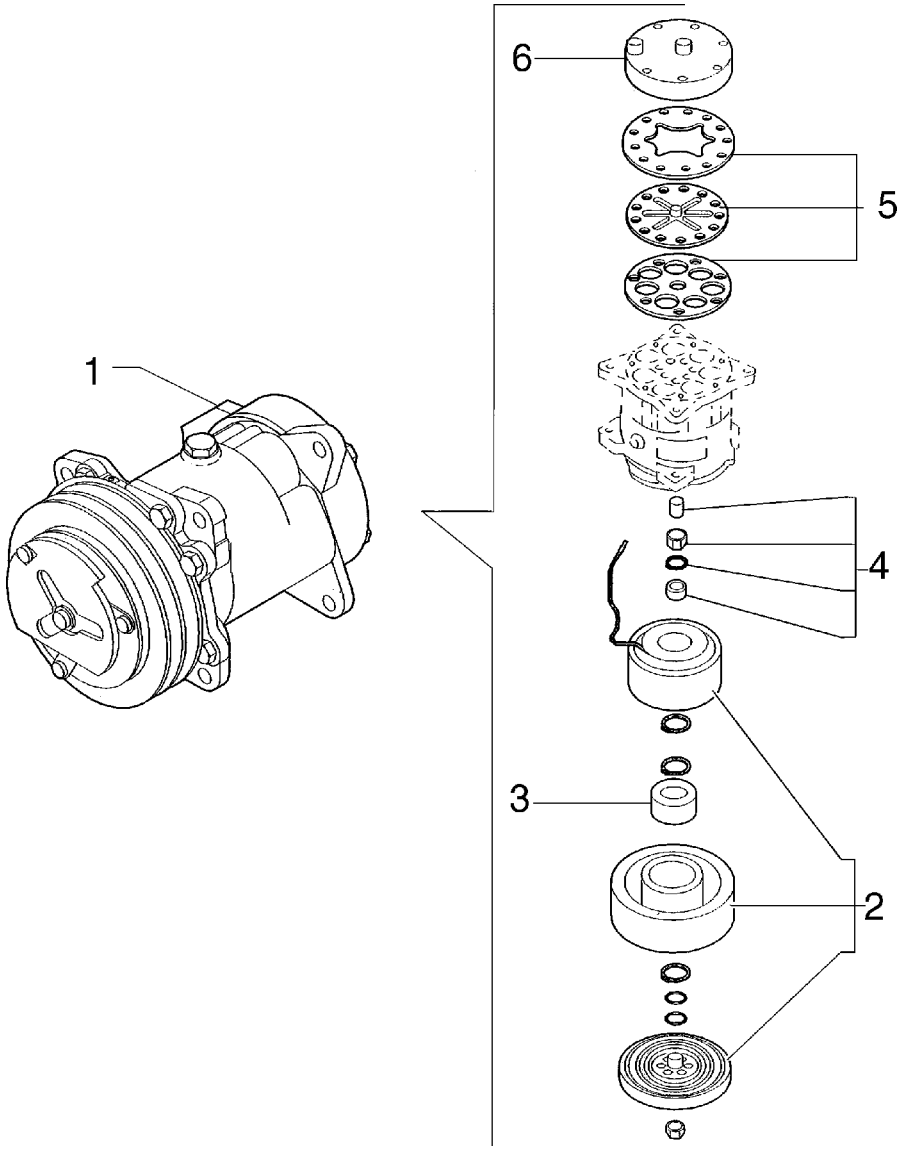

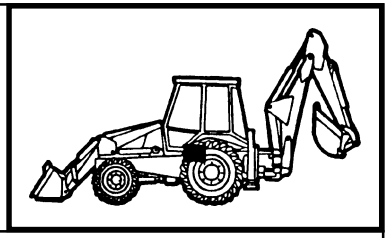

MOD	R	P/N. Imola	P/N. Brazil	Q	Descrição Denominacion	Description Descrizione	L.C.
	1	**85812045**		1	COMPRESSOR COMPRESOR	AIR COMPRESSOR COMPRESSORE	216C
	2	**85817171**		1	KIT JUEGO	KIT KIT	002K
	3	**85817172**		1	ROLAMENTO RODAMIENTO	BEARING CUSCINETTO	341C
	4	**85817173**		1	KIT JUEGO	KIT KIT	002K
	5	**85817174**		1	KIT JUEGO	KIT KIT	002K
	6	**85817175**		1	KIT JUEGO	KIT KIT	002K

10

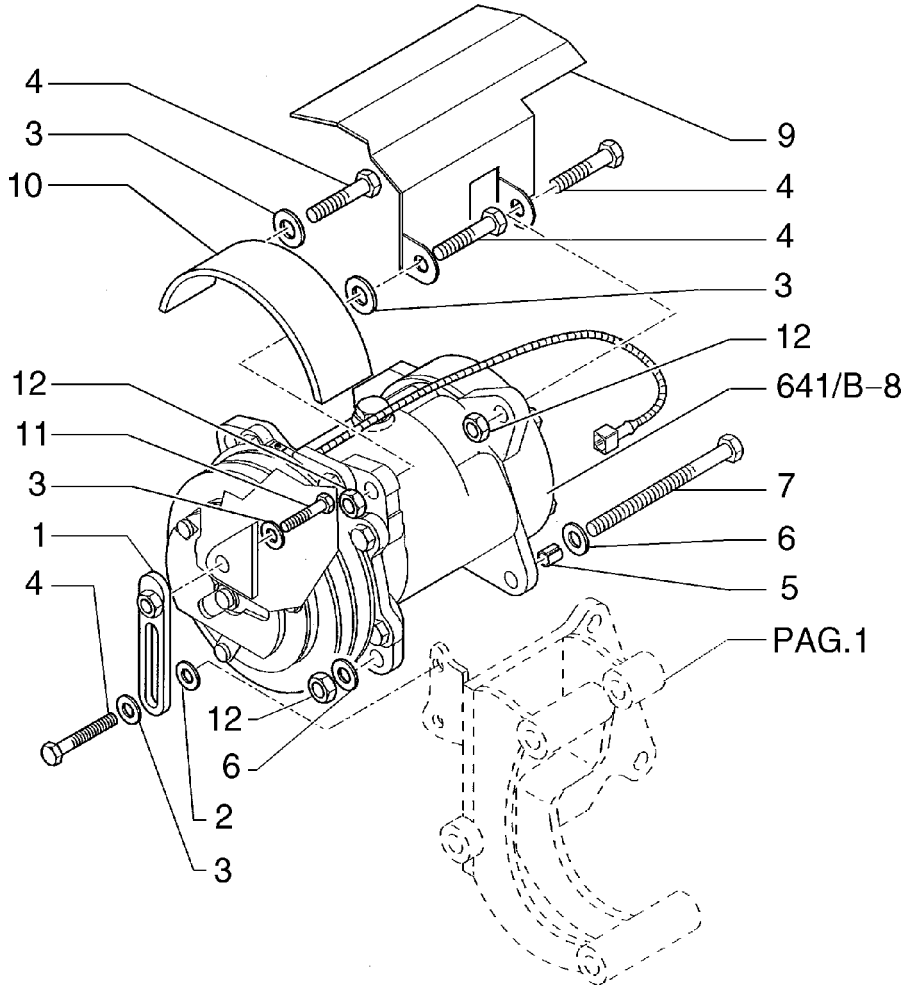

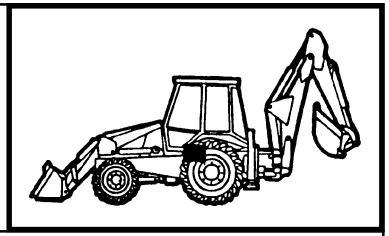

MOD	R	P/N. Imola	P/N. Brazil	Q	Descrição Denominacion	Description Descrizione	L.C.
	1	**85812063**		1	SUPORTE SOPORTE	SUPPORT SUPPORTO	300S
	2	**85812065**		1	ESPAÇADOR SEPARADOR	SPACER DISTANZIALE	075D
	3	**11190574**		6	ARRUELA ARANDELA	WASHER ROSETTA	131R
	4	**11106424**		5	PARAFUSO TORNILLO	SCREW VITE	040V
	5	**85812051**		1	ESPAÇADOR SEPARADOR	SPACER DISTANZIALE	075D
	6	**12601474**		3	ARRUELA ARANDELA	WASHER ROSETTA	131R
	7	**11133524**		1	PARAFUSO TORNILLO	SCREW VITE	040V
	8	**85812045**		1	COMPRESSOR COMPRESOR	AIR COMPRESSOR COMPRESSORE	216C
	9	**85812046**		1	PROTEÇÃO PROTECCION	GUARD RIPARO	070R
	10	**85812046**		1	PROTEÇÃO PROTECCION	GUARD RIPARO	070R
	11	**16040821**		1	PARAFUSO TORNILLO	SCREW VITE	040V
	12	**12577211**		2	PORCA TUERCA	NUT DADO	010D

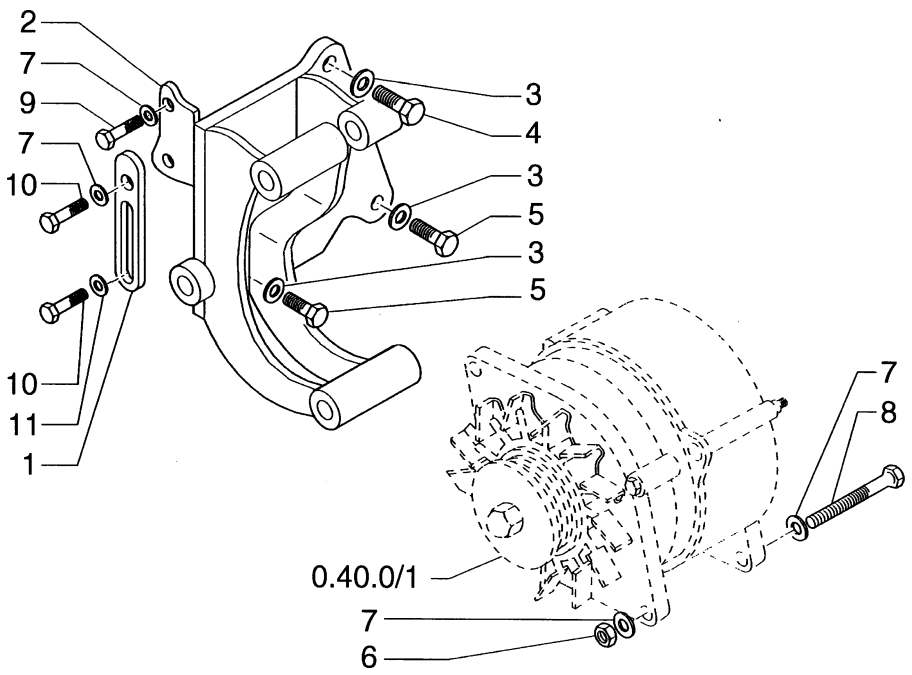

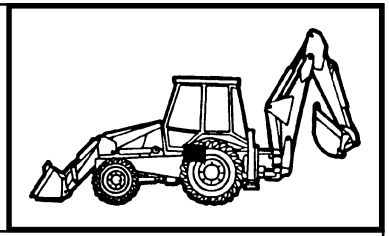

MOD	R	P/N. Imola	P/N. Brazil	Q	Descrição Denominacion	Description Descrizione	L.C.
	1	**85812062**		1	SUPORTE SOPORTE	SUPPORT SUPPORTO	300S
	2	**85812061**		1	SUPORTE SOPORTE	SUPPORT SUPPORTO	300S
	3	**11190574**		3	ARRUELA ARANDELA	WASHER ROSETTA	131R
	4	**85804424**		1	PARAFUSO TORNILLO	SCREW VITE	040V
	5	**80088011**		1	PARAFUSO TORNILLO	SCREW VITE	040V
	6	**16104111**		1	PORCA TUERCA	NUT DADO	010D
	7	**11193874**		4	ARRUELA ARANDELA	WASHER ROSETTA	131R
	8	**16045824**		1	PARAFUSO TORNILLO	SCREW VITE	040V
	9	**80087657**		1	PARAFUSO TORNILLO	SCREW VITE	040V
	10	**16043424**		2	PARAFUSO TORNILLO	SCREW VITE	040V
	11	**11198174**		1	ARRUELA ARANDELA	WASHER ROSETTA	131R

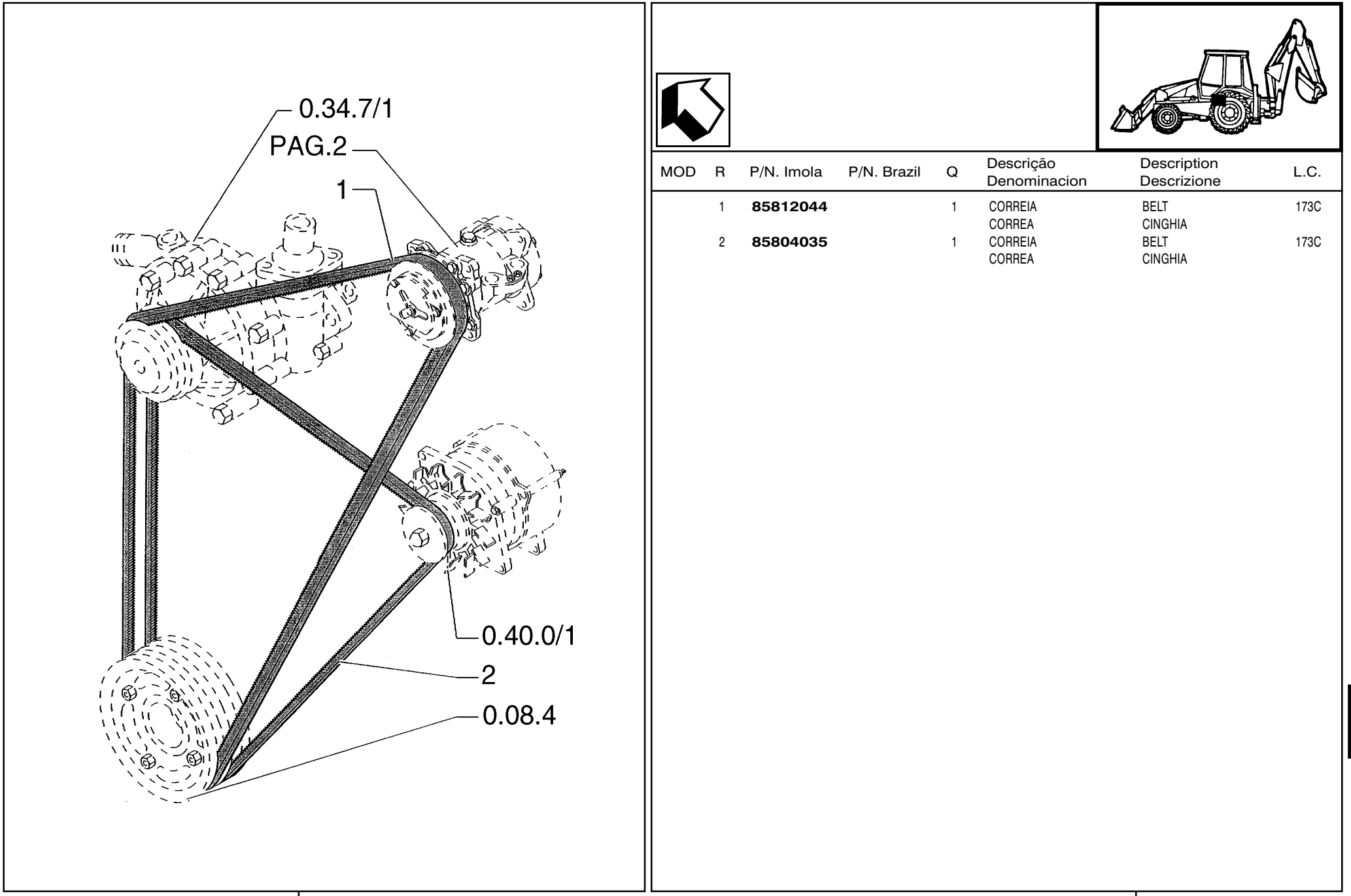

MOD	R	P/N. Imola	P/N. Brazil	Q	Descrição Denominacion	Description Descrizione	L.C.
	1	**85812044**		1	CORREIA CORREA	BELT CINGHIA	173C
	2	**85804035**		1	CORREIA CORREA	BELT CINGHIA	173C

10

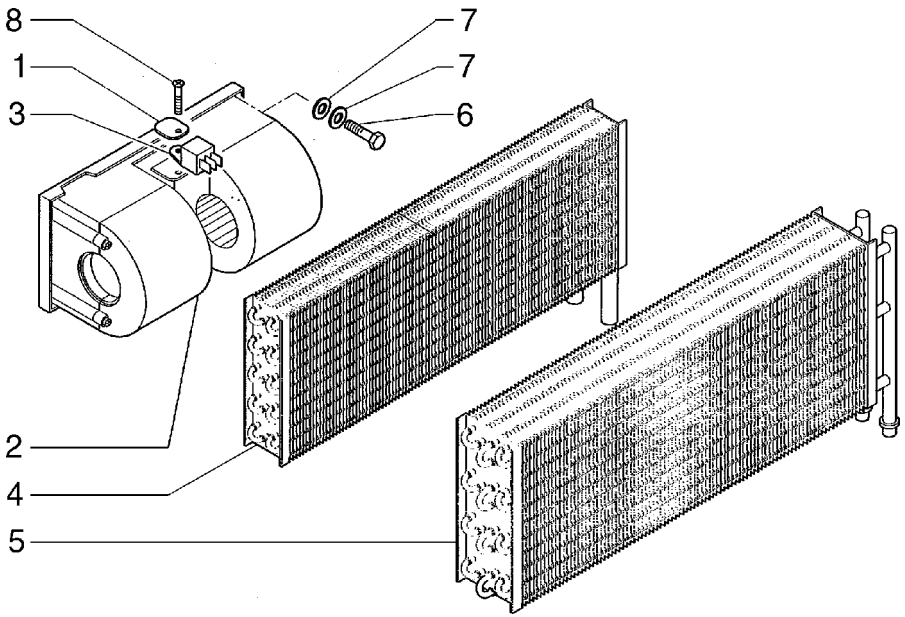

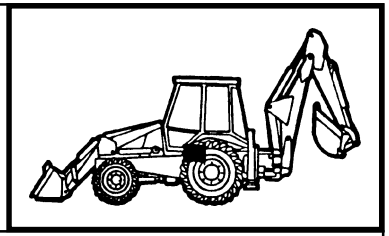

MOD	R	P/N. Imola	P/N. Brazil	Q	Descrição Denominacion	Description Descrizione	L.C.
	1	**85817289**		1	ABRAÇADEIRA ABRAZADERA	CLAMP FASCETTA	031F
	2	**85813079**		1	MOTOR ELETRICO MOTOR ELECTRICO	ELECTRIC MOTOR MOTORINO ELETTR	137M
	3	**85804041**		1	RESISTOR RESISTOR	RESISTOR RESISTORE	039R
	4	**85819636**		1	RADIADOR RADIADOR	RADIATOR RADIATORE	025R
	5	**85819635**		1	EVAPORADOR EVAPORADOR	EVAPORATOR EVAPORATORE	064E
	6	**10902424**		2	PARAFUSO TORNILLO	SCREW VITE	040V
	7	**11193274**		4	ARRUELA ARANDELA	WASHER ROSETTA	131R
	8	**85817189**		1	PARAFUSO TORNILLO	SCREW VITE	040V

10

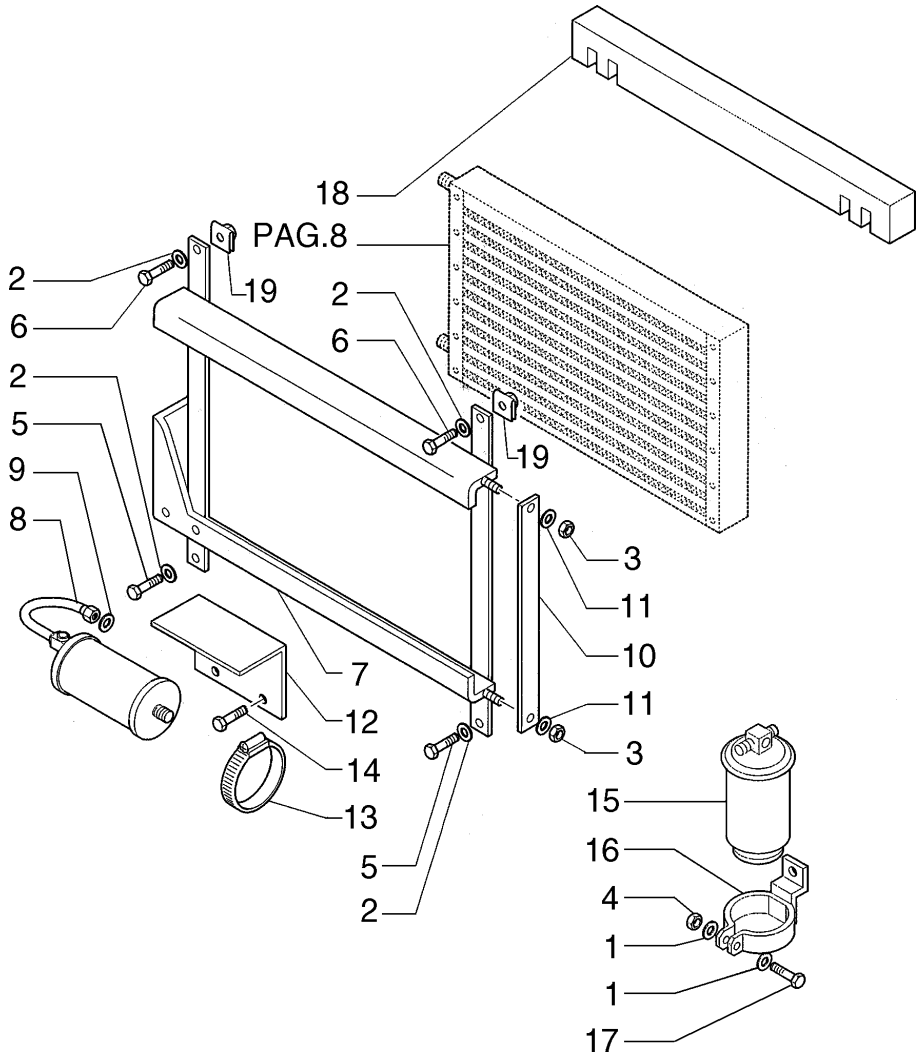

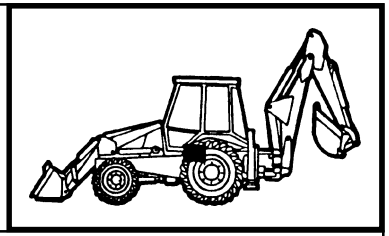

MOD	R	P/N. Imola	P/N. Brazil	Q	Descrição Denominacion	Description Descrizione	L.C.
	1	**14496404**		2	ARRUELA ARANDELA	WASHER ROSETTA	131R
	2	**11193874**		4	ARRUELA ARANDELA	WASHER ROSETTA	131R
	3	**12574211**		2	PORCA TUERCA	NUT DADO	010D
	4	**15896211**		1	PORCA TUERCA	NUT DADO	010D
	5	**16043224**		2	PARAFUSO TORNILLO	SCREW VITE	040V
	6	**16043424**		2	PARAFUSO TORNILLO	SCREW VITE	040V
	7	**85812054**		1	ESTRUTURA ESTRUCTURA	STRUCTURE OSSATURA	0280
	8	**85812053**		1	ACUMULADOR ACUMULADOR	ACCUMULATOR ACCUMULATORE	037A
	9	**85805013**		1	O'RING JUNTA TORICA	O'RING GUARNIZIONE O-R	158G
	10	**85817308**		1	TAMPA TAPA	COVER COPERCHIO	265C
	11	**11193274**		2	ARRUELA ARANDELA	WASHER ROSETTA	131R
	12	**85815575**		1	ABRAÇADEIRA ABRAZADERA	CLAMP FASCETTA	031F
	13	**85815576**		1	ABRAÇADEIRA ABRAZADERA	CLAMP FASCETTA	031F
	14	**85817189**		3	PARAFUSO TORNILLO	SCREW VITE	040V
	15	**85812095**		1	FILTRO FILTRO	FILTER FILTRO	065F
	16	**85812049**		1	SUPORTE SOPORTE	SUPPORT SUPPORTO	300S
	17	**10902624**		1	PARAFUSO TORNILLO	SCREW VITE	040V
	18	**85817287**		1	PROTEÇÃO PROTECCION	GUARD RIPARO	070R
	19	**85804416**		2	MOLA MUELLE	SPRING MOLLA	100M

FB80.3 - FB100.3

AR CONDICIONADO
CLIMATIZADOR
AIR CONDITIONER
CONDIZIONATORE

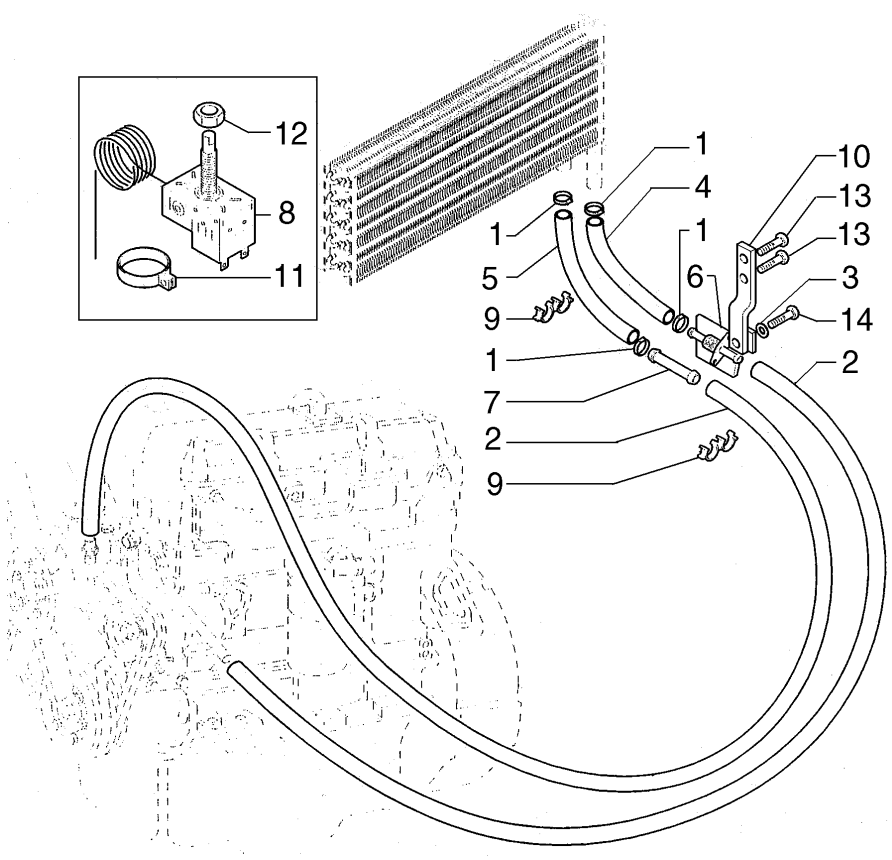

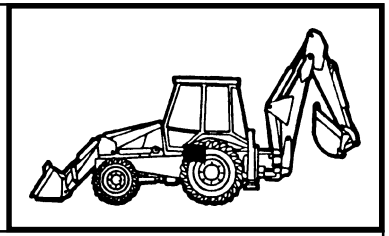

MOD	R	P/N. Imola	P/N. Brazil	Q	Descrição Denominacion	Description Descrizione	L.C.
	1	**85803079**		4	ABRAÇADEIRA ABRAZADERA	CLAMP FASCETTA	031F
	2	**85804974**		2	MANGUEIRA TUBO FLEXIBLE	HOSE TUBO FLESSIBILE	285T
	3	**11193274**		1	ARRUELA ARANDELA	WASHER ROSETTA	131R
	4	**85817303**		1	MANGUEIRA TUBO FLEXIBLE	HOSE TUBO FLESSIBILE	285T
	5	**85817299**		1	MANGUEIRA TUBO FLEXIBLE	HOSE TUBO FLESSIBILE	285T
	6	**85804980**		1	CONEXÃO RACOR	FITTING RACCORDO	020R
	7	**85804051**		1	TUBO TUBO	TUBE TUBO RIGIDO	193T
	8	**85817294**		1	TERMOSTATO	THERMOSTAT TERMOSTATO	096T
	9	**85804975**		2	ABRAÇADEIRA ABRAZADERA	CLAMP FASCETTA	031F
	10	**85804989**		1	SUPORTE SOPORTE	SUPPORT SUPPORTO	300S
	11	**85812217**		1	MOLA MUELLE	SPRING MOLLA	100M
	12	**85817295**		1	PORCA TUERCA	NUT DADO	010D
	13	**10902424**		2	PARAFUSO TORNILLO	SCREW VITE	040V
	14	**10902224**		1	PARAFUSO TORNILLO	SCREW VITE	040V

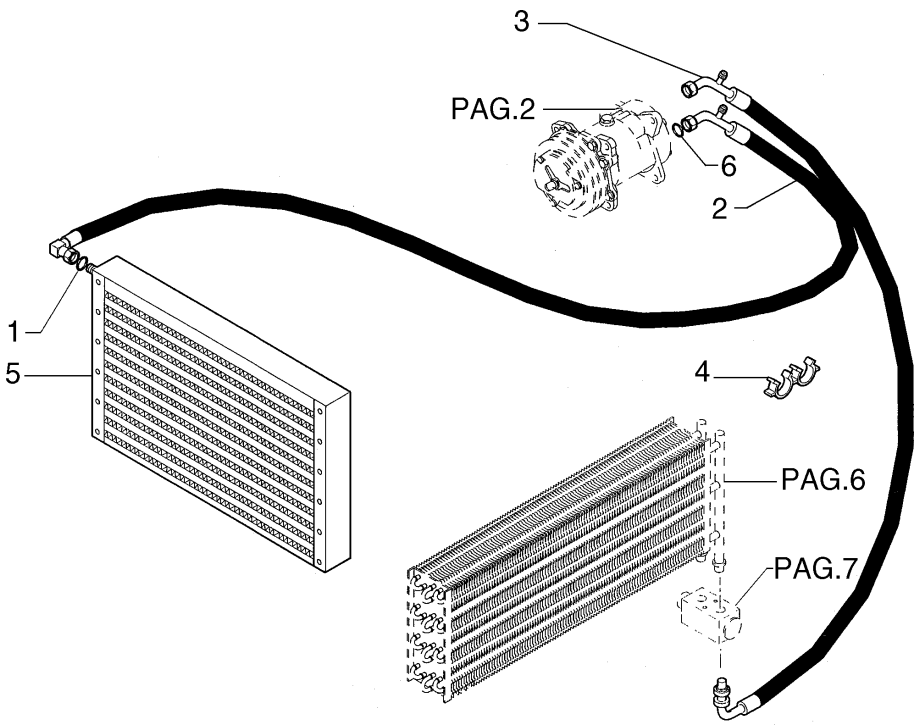

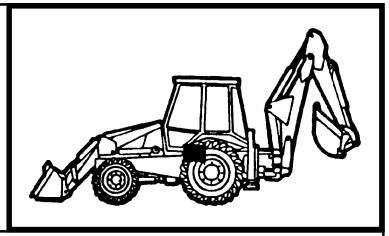

MOD	R	P/N. Imola	P/N. Brazil	Q	Descrição Denominacion	Description Descrizione	L.C.
	1	**85805006**		1	O'RING JUNTA TORICA	O'RING GUARNIZIONE O-R	158G
	2	**85817292**		1	MANGUEIRA TUBO FLEXIBLE	HOSE TUBO FLESSIBILE	285T
	3	**85812057**		1	MANGUEIRA TUBO FLEXIBLE	HOSE TUBO FLESSIBILE	285T
	4	**85804975**		2	ABRAÇADEIRA ABRAZADERA	CLAMP FASCETTA	031F
	5	**85812052**		1	CONDENSADOR CONDENSADOR	CONDENSER CONDENSATORE	220C
	6	**85817186**		1	O'RING JUNTA TORICA	O'RING GUARNIZIONE O-R	158G

10

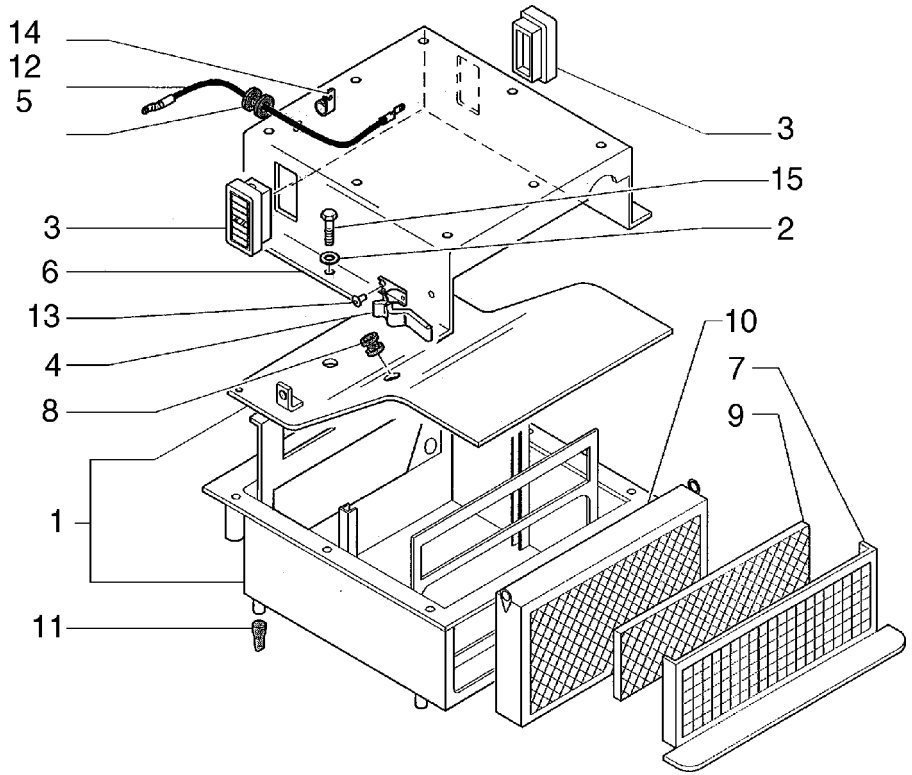

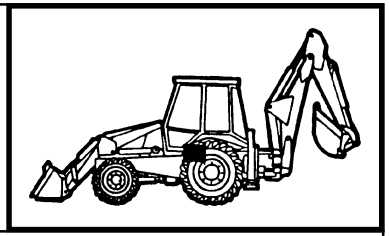

MOD	R	P/N. Imola	P/N. Brazil	Q	Descrição Denominacion	Description Descrizione	L.C.
	1	**85819574**		1	CARCAÇA CAJA	CASE SCATOLA	035S
	2	**11193874**		6	ARRUELA ARANDELA	WASHER ROSETTA	131R
	3	**85804044**		2	DEFLETOR DEFLECTOR	DEFLECTOR DEFLETTORE	020D
	4	**85812043**		2	TAMPA TAPA	COVER COPERCHIO	265C
	5	**85804412**		1	ANEL DE VEDAÇÃO JUNTA HERMÉTICA	SEAL RING ANELLO TENUTA	055A
	6	**85819637**		1	TAMPA TAPA	COVER COPERCHIO	265C
	7	**85811969**		1	SUPORTE SOPORTE	SUPPORT SUPPORTO	300S
	8	**10398980**		1	ANEL ARO	RING ANELLO	045A
	9	**85811970**		1	FILTRO FILTRO	FILTER FILTRO	065F
	10	**85804072**		1	FILTRO FILTRO	FILTER FILTRO	065F
	11	**85804043**		4	GOTEJADOR GOTERA	CHANNEL GOCCIOLATOIO	080G
	12	**85817293**		1	CABO ELÉTRICO CABLE	CABLE CAVO	111C
	13	**85811972**		4	REBITE REMACHE	RIVET RIBATTINO	055R
	14	**85817187**		1	ABRAÇADEIRA ABRAZADERA	CLAMP FASCETTA	031F
	15	**16043624**		6	PARAFUSO TORNILLO	SCREW VITE	040V

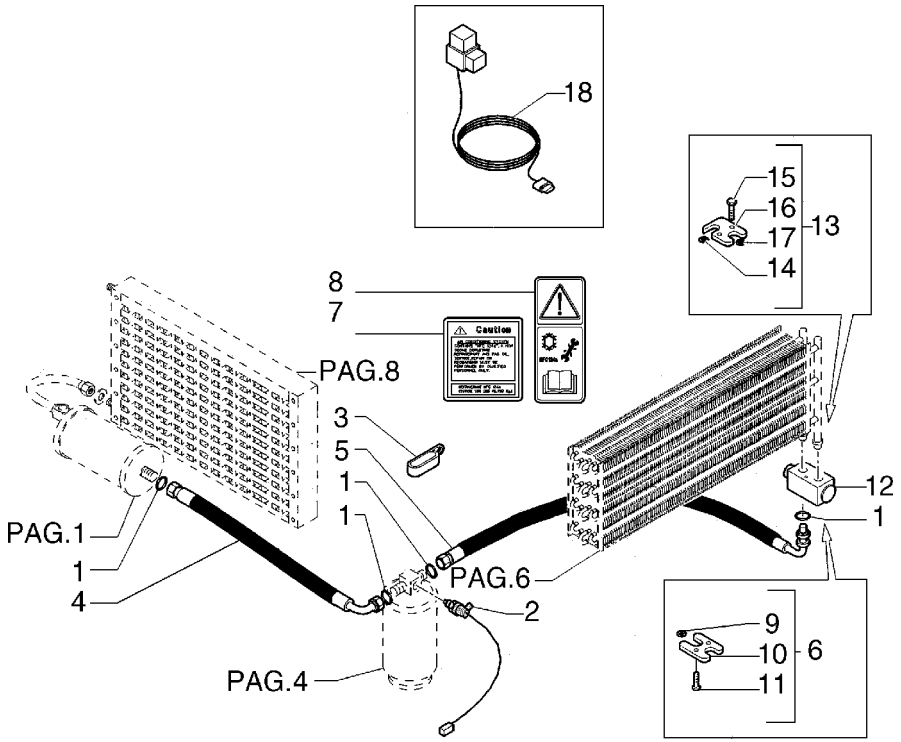

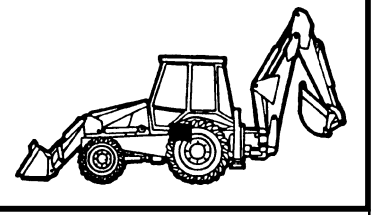

MOD	R	P/N. Imola	P/N. Brazil	Q	Descrição Denominacion	Description Descrizione	L.C.
	1	**85805013**		4	O'RING JUNTA TORICA	O'RING GUARNIZIONE O-R	158G
	2	**85804065**		1	INTERRUPTOR INTERRUPTOR	SWITCH INTERRUTTORE	075I
	3	**85817288**		1	ABRAÇADEIRA ABRAZADERA	CLAMP FASCETTA	031F
	4	**85817291**		1	MANGUEIRA MANGA C/RACORDE	HOSE ASSY TUBO FLESSIBILE	192T
	5	**85817188**		1	MANGUEIRA MANGA C/RACORDE	HOSE ASSY TUBO FLESSIBILE	192T
	6	**85804039**		1	FLANGE BRIDA	FLANGE FLANGIA	070F
	7	**85812064**		1	ADESIVO CALCOMANIA	DECAL TARGA	065T
	8	**85804441**		1	ADESIVO CALCOMANIA	DECAL TARGA	065T
	9	**85805007**		1	ARRUELA ARANDELA	WASHER ROSETTA	131R
	10	**85805008**		1	FLANGE BRIDA	FLANGE FLANGIA	070F
	11	**85805009**		1	PARAFUSO TORNILLO	SCREW VITE	040V
	12	**85804037**		1	VÁLVULA VALVULA	VALVE VALVOLA	010V
	13	**85804038**		1	FLANGE BRIDA	FLANGE FLANGIA	070F
	14	**85805003**		1	O'RING JUNTA TORICA	O'RING GUARNIZIONE O-R	158G
	15	**85805004**		2	PARAFUSO TORNILLO	SCREW VITE	040V
	16	**85805005**		1	FLANGE BRIDA	FLANGE FLANGIA	070F
	17	**85805006**		1	O'RING JUNTA TORICA	O'RING GUARNIZIONE O-R	158G
	18	**85812055**		1	CABO ELÉTRICO CABLE	CABLE CAVO	111C

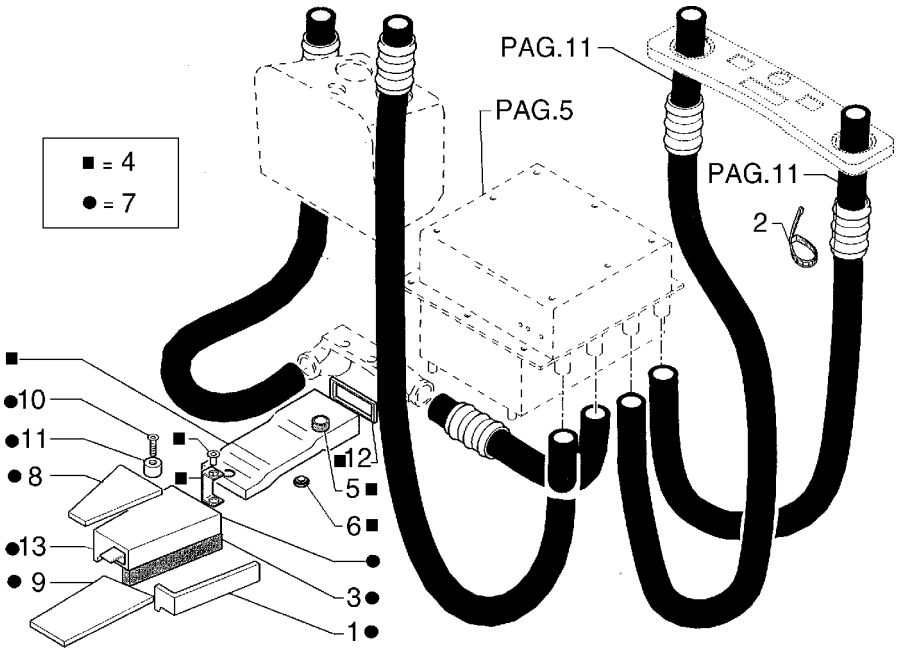

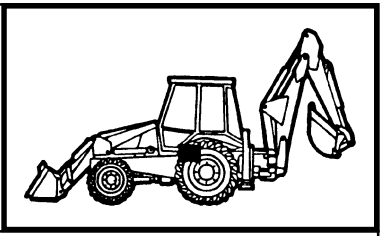

MOD	R	P/N. Imola	P/N. Brazil	Q	Descrição Denominacion	Description Descrizione	L.C.
	1	**85811965**		1	PAINEL PANEL	PANEL PANNELLO	025P
	2	**85808307**		10	ABRAÇADEIRA ABRAZADERA	CLAMP FASCETTA	031F
	3	**5112712**		10	ABRAÇADEIRA ABRAZADERA	CLAMP FASCETTA	031F
	4	**85806023**		1	JUNTA JUNTA PLANA	GASKET GUARNIZ. PIANA	120G
	5	**85817658**		1	DEFLETOR DEFLECTOR	DEFLECTOR DEFLETTORE	020D
	6	**85806023**		2	JUNTA JUNTA PLANA	GASKET GUARNIZ. PIANA	120G
	7	**85806210**		1	BUJÃO TAPON	PLUG TAPPO	050T
	8	**85805200**		1	DEFLETOR DEFLECTOR	DEFLECTOR DEFLETTORE	020D
	9	**85811963**		1	PAINEL PANEL	PANEL PANNELLO	025P
	10	**85811964**		1	PAINEL PANEL	PANEL PANNELLO	025P
	11	**14644190**		2	REBITE REMACHE	RIVET RIBATTINO	055R
	12	**85805347**		2	BUCHA BUJE	BUSHING BOCCOLA	095B
	13	**85812021**		1	JUNTA JUNTA PLANA	GASKET GUARNIZ. PIANA	120G
	14	**85805509**		1	SUPORTE SOPORTE	SUPPORT SUPPORTO	300S

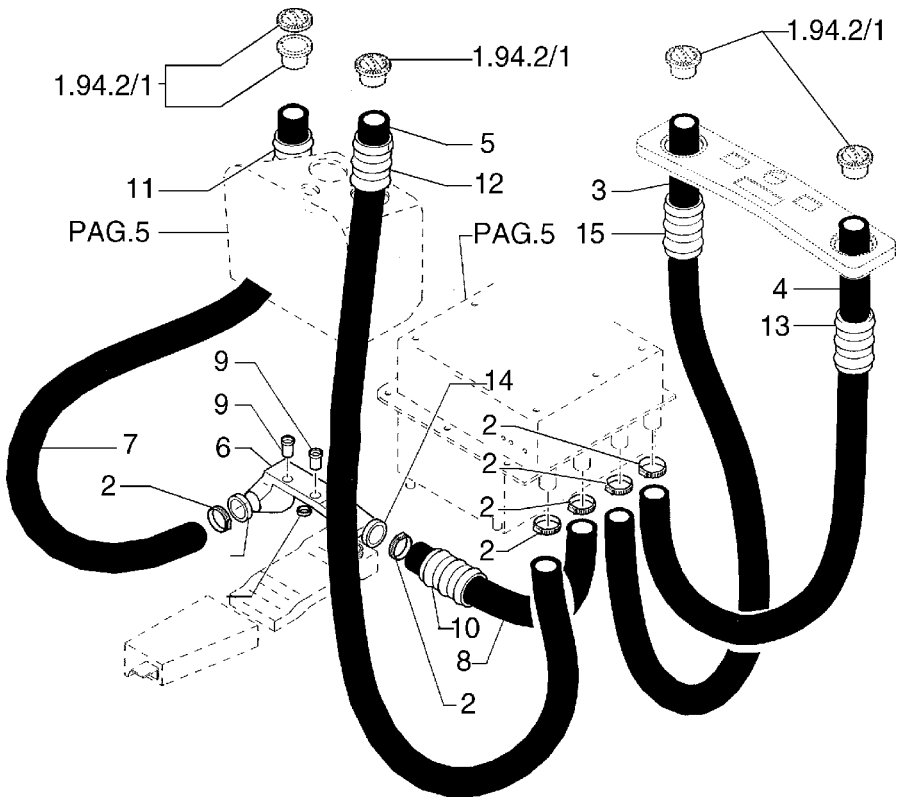

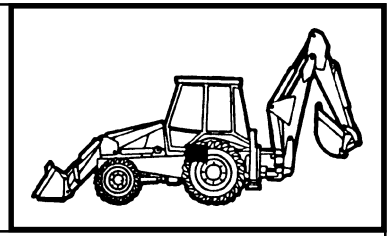

MOD	R	P/N. Imola	P/N. Brazil	Q	Descrição Denominacion	Description Descrizione	L.C.
	1	**85817664**		1	JUNTA JUNTA PLANA	GASKET GUARNIZ. PIANA	120G
	2	**13000990**		AR	ABRAÇADEIRA ABRAZADERA	CLAMP FASCETTA	031F
	3	**85804984**		1	MANGUEIRA TUBO FLEXIBLE	HOSE TUBO FLESSIBILE	285T
	4	**85804983**		1	MANGUEIRA TUBO FLEXIBLE	HOSE TUBO FLESSIBILE	285T
	5	**85804981**		1	MANGUEIRA TUBO FLEXIBLE	HOSE TUBO FLESSIBILE	285T
	6	**85817662**		1	COLETOR COLECTOR	MANIFOLD COLLETTORE	188C
	7	**85805884**		1	MANGUEIRA TUBO FLEXIBLE	HOSE TUBO FLESSIBILE	285T
	8	**85805885**		1	MANGUEIRA TUBO FLEXIBLE	HOSE TUBO FLESSIBILE	285T
	9	**85805347**		2	BUCHA BUJE	BUSHING BOCCOLA	095B
	10	**85805886**		1	MANGUEIRA TUBO FLEXIBLE	HOSE TUBO FLESSIBILE	285T
	11	**85805887**		1	MANGUEIRA TUBO FLEXIBLE	HOSE TUBO FLESSIBILE	285T
	12	**85804985**		1	MANGUEIRA TUBO FLEXIBLE	HOSE TUBO FLESSIBILE	285T
	13	**85804988**		1	MANGUEIRA TUBO FLEXIBLE	HOSE TUBO FLESSIBILE	285T
	14	**85806048**		2	CONEXÃO RACOR	FITTING RACCORDO	020R
	15	**85804987**		1	MANGUEIRA TUBO FLEXIBLE	HOSE TUBO FLESSIBILE	285T

10

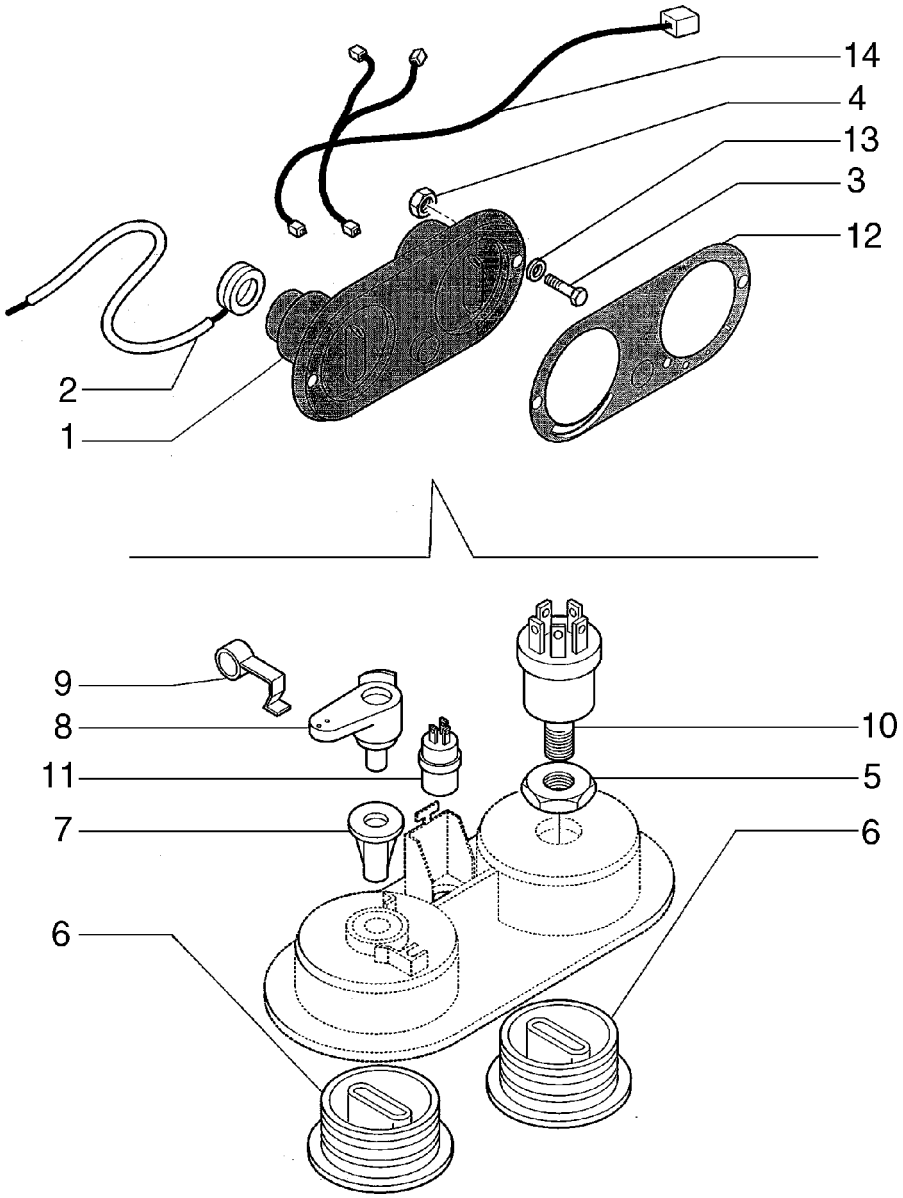

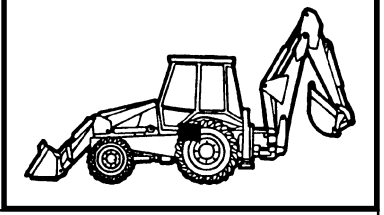

MOD	R	P/N. Imola	P/N. Brazil	Q	Descrição Denominacion	Description Descrizione	L.C.
	1	**5178595**		1	INTERRUPTOR INTERRUPTOR	SWITCH INTERRUTTORE	075I
	2	**85805160**		1	CABO ELÉTRICO CABLE	CABLE CAVO	111C
	3	**10902224**		2	PARAFUSO TORNILLO	SCREW VITE	040V
	4	**15896221**		2	PORCA TUERCA	NUT DADO	010D
	5	**9966239**		1	PORCA TUERCA	NUT DADO	010D
	6	**5178596**		2	MANOPLA EMPUNADURA	KNOB POMELLO	150P
	7	**9966241**		1	ARRUELA ARANDELA	WASHER ROSETTA	131R
	8	**82002777**		1	ALAVANCA PALANCA	LEVER LEVA	045L
	9	**5192097**		1	MOLA MUELLE	SPRING MOLLA	100M
	10	**9966238**		1	INTERRUPTOR INTERRUPTOR	SWITCH INTERRUTTORE	075I
	11	**5189486**		1	INTERRUPTOR INTERRUPTOR	SWITCH INTERRUTTORE	075I
	12	**85811976**		1	ADESIVO CALCOMANIA	DECAL TARGA	065T
	13	**11193274**		2	ARRUELA ARANDELA	WASHER ROSETTA	131R
	14	**85819638**		1	INTERRUPTOR INTERRUPTOR	SWITCH INTERRUTTORE	075I

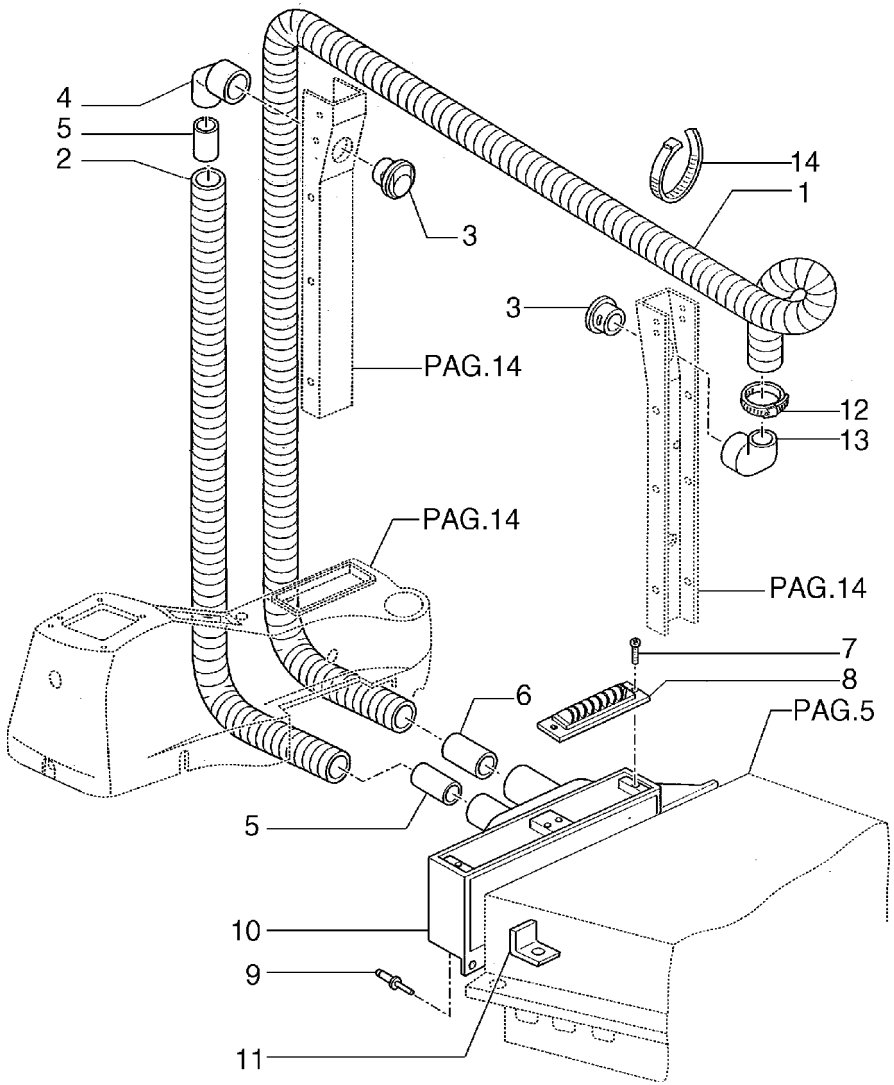

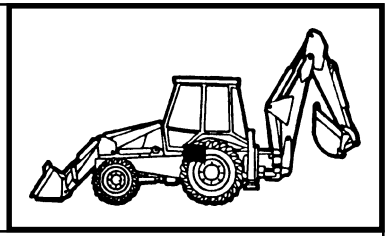

MOD	R	P/N. Imola	P/N. Brazil	Q	Descrição Denominacion	Description Descrizione	L.C.
	1	**85819576**		1	MANGUEIRA TUBO FLEXIBLE	HOSE TUBO FLESSIBILE	285T
	2	**85819578**		1	MANGUEIRA TUBO FLEXIBLE	HOSE TUBO FLESSIBILE	285T
	3	**85816544**		2	DIFUSOR DIFUSOR	DIFFUSER DIFFUSORE	045D
	4	**85819453**		1	COTOVELO CODO	ELBOW GOMITO	085G
	5	**85819451**		2	TUBO TUBO	TUBE TUBO RIGIDO	193T
	6	**85819452**		1	TUBO TUBO	TUBE TUBO RIGIDO	193T
	7	**85819581**		4	PARAFUSO TORNILLO	SCREW VITE	040V
	8	**85819454**		2	COTOVELO CODO	ELBOW GOMITO	085G
	9	**85811972**		4	PRISIONEIRO ESPARRAGO	STUD PRIGIONIERO	210P
	10	**85819575**		1	CARCAÇA CAJA	CASE SCATOLA	035S
	11	**85819577**		1	CHAPA PLACA	PLATE PIASTRA	105P
	12	**85813324**		1	ABRAÇADEIRA ABRAZADERA	CLAMP FASCETTA	031F
	13	**85818891**		1	DIFUSOR DIFUSOR	DIFFUSER DIFFUSORE	045D
	14	**5112712**		10	ABRAÇADEIRA ABRAZADERA	CLAMP FASCETTA	031F

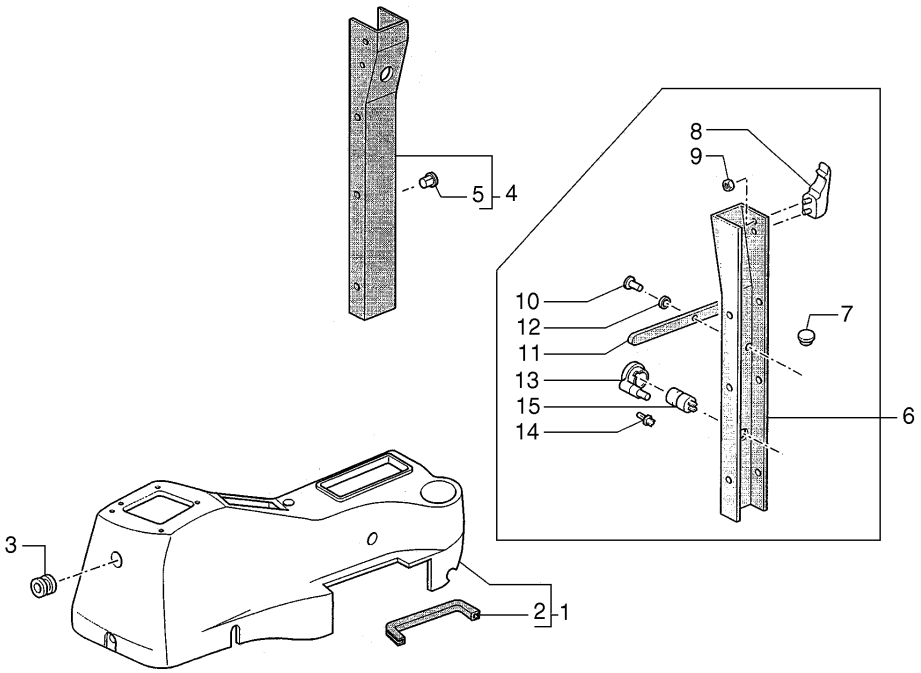

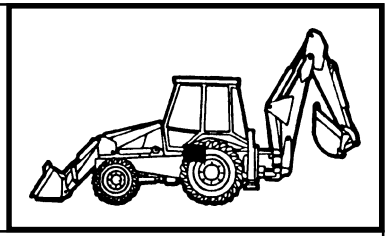

MOD	R	P/N. Imola	P/N. Brazil	Q	Descrição Denominacion	Description Descrizione	L.C.
	1	**85819276**		1	REVESTIMENTO REVESTIMIENTO	COVERING RIVESTIMENTO	116R
	2	**85819675**		1	JUNTA JUNTA PLANA	GASKET GUARNIZ. PIANA	120G
	3	**10398980**		1	ANEL ARO	RING ANELLO	045A
	4	**85819285**		1	REVESTIMENTO REVESTIMIENTO	COVERING RIVESTIMENTO	116R
	5	**85819591**		6	BUCHA BUJE	BUSHING BOCCOLA	095B
	6	**85819287**		1	REVESTIMENTO REVESTIMIENTO	COVERING RIVESTIMENTO	116R
	7	**79111978**		1	BUJÃO TAPON	PLUG TAPPO	050T
	8	**5178468**		1	MANOPLA EMPUNADURA	KNOB POMELLO	150P
	9	**14084011**		1	PORCA TUERCA	NUT DADO	010D
	10	**85806154**		1	REBITE REMACHE	RIVET RIBATTINO	055R
	11	**83961823**		1	CHAPA PLACA	PLATE PIASTRA	105P
	12	**12638104**		1	ARRUELA ARANDELA	WASHER ROSETTA	131R
	13	**5148132**		1	CONECTOR PLOT DE EMPALME	CONNECTOR BLOCC. CONNESS.	075B
	14	**14143790**		1	LÂMPADA LAMPARA	LAMP LAMPADA	030L
	15	**5148131**		1	TAMPÃO SOMBRERETE	CAP CAPPELLO	064C

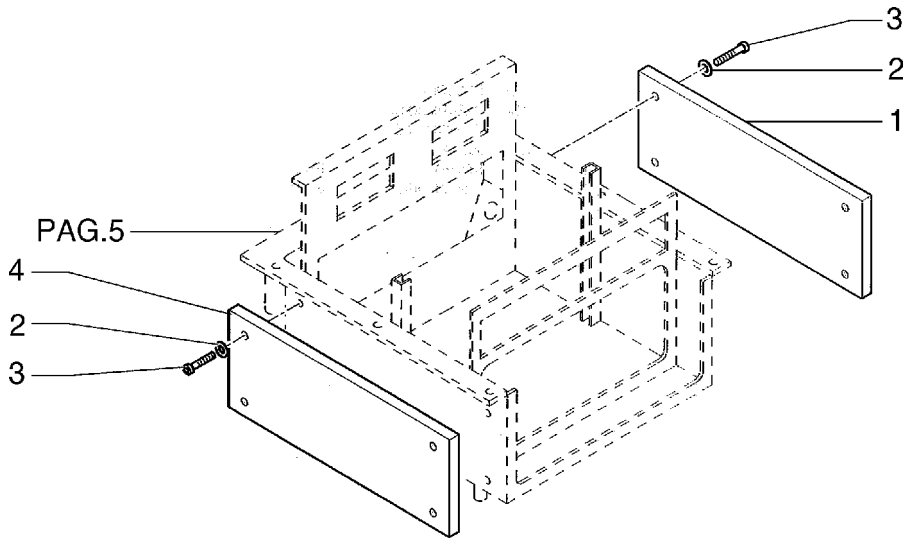

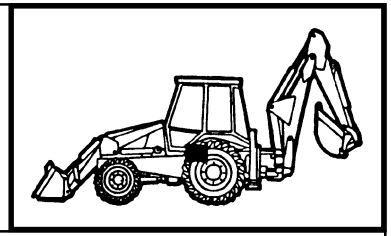

MOD	R	P/N. Imola	P/N. Brazil	Q	Descrição Denominacion	Description Descrizione	L.C.
	1	**85817298**		1	PAINEL PANEL	PANEL PANNELLO	025P
	2	**11193274**		6	ARRUELA ARANDELA	WASHER ROSETTA	131R
	3	**14305221**		6	PARAFUSO TORNILLO	SCREW VITE	040V
	4	**85817297**		1	PAINEL PANEL	PANEL PANNELLO	025P

10

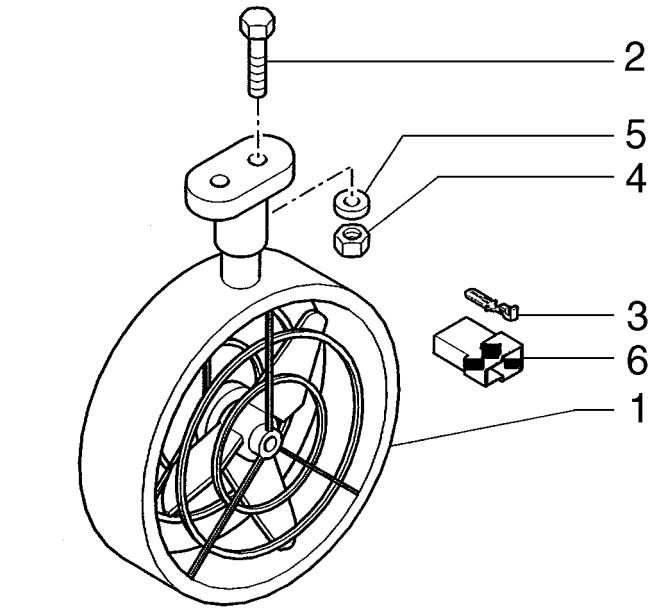

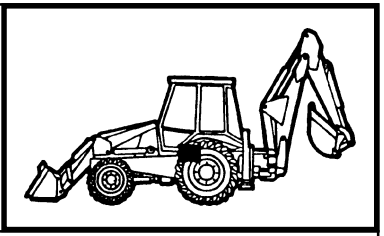

MOD	R	P/N. Imola	P/N. Brazil	Q	Descrição Denominacion	Description Descrizione	L.C.
	1	**85804323**		1	VENTILADOR VENTILADOR	FAN VENTILATORE	030V
	2	**14303324**		2	PARAFUSO TORNILLO	SCREW VITE	040V
	3	**10250640**		2	TERMINAL DO FIO TERMINAL	WIRE TERMINAL CAPOCORDA	060C
	4	**12574011**		2	PORCA TUERCA	NUT DADO	010D
	5	**12642804**		2	ARRUELA ARANDELA	WASHER ROSETTA	131R
	6	**12059980**		1	CONEXÃO RACOR	FITTING RACCORDO	020R

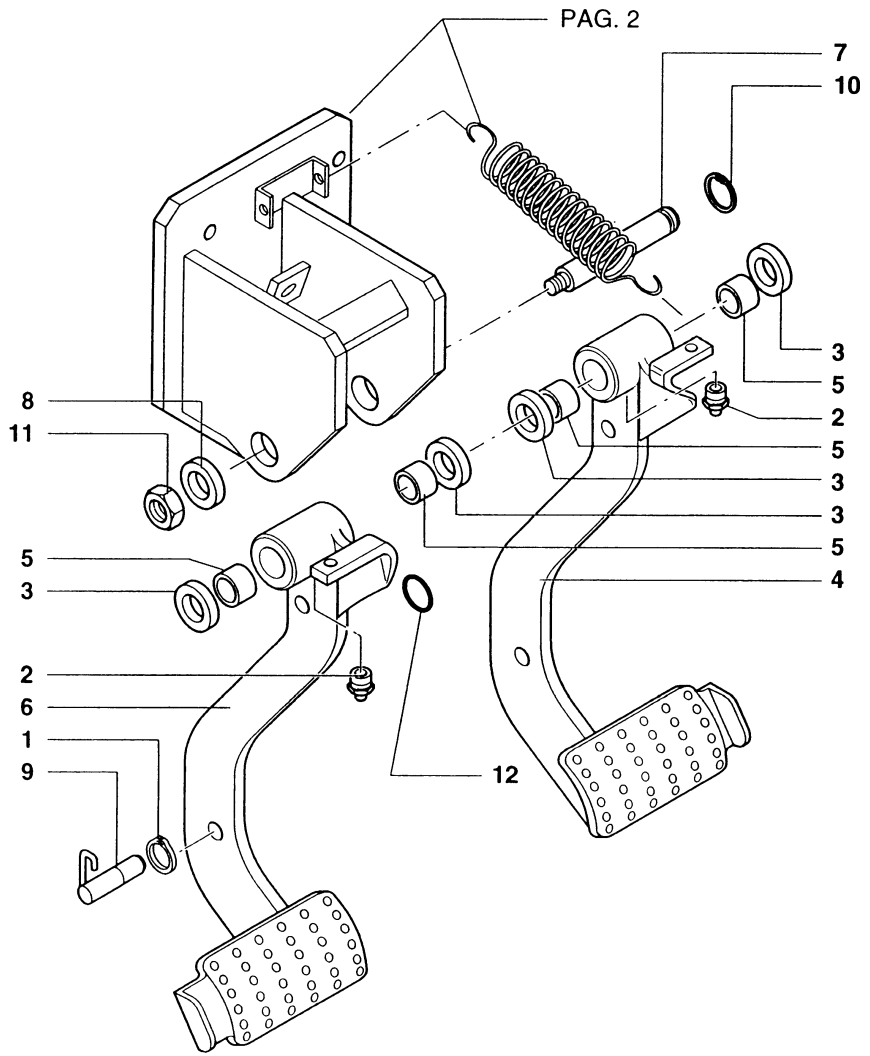

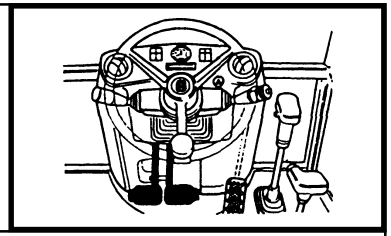

MOD	R	P/N. Imola	P/N. Brazil	Q	Descrição Denominacion	Description Descrizione	L.C.
	1	**11088176**		1	ANEL ELÁSTICO ANILLO ELASTICO	SNAP RING ANELLO ELASTICO	187A
	2	**70914465**		2	PINO GRAXEIRO ENGRASADOR	GREASE FITTING INGRASSATORE	060I
	3	**5148062**		4	ARRUELA ARANDELA	WASHER ROSETTA	131R
	4	**85805285**		1	PEDAL PEDAL	PEDAL PEDALE	060P
	5	**4983992**		4	ROLAMENTO RODAMIENTO	BEARING CUSCINETTO	341C
	6	**85805283**		1	PEDAL PEDAL	PEDAL PEDALE	060P
	7	**85801860**		1	PINO BULON	PIN PERNO	080P
	8	**10517271**		1	ARRUELA ARANDELA	WASHER ROSETTA	131R
	9	**5142152**		1	PINO BULON	PIN PERNO	080P
	10	**11067376**		1	ANEL ELÁSTICO ANILLO ELASTICO	SNAP RING ANELLO ELASTICO	187A
	11	**12164121**		1	PORCA TUERCA	NUT DADO	010D
	12	**14458980**		2	JUNTA JUNTA PLANA	GASKET GUARNIZ. PIANA	120G

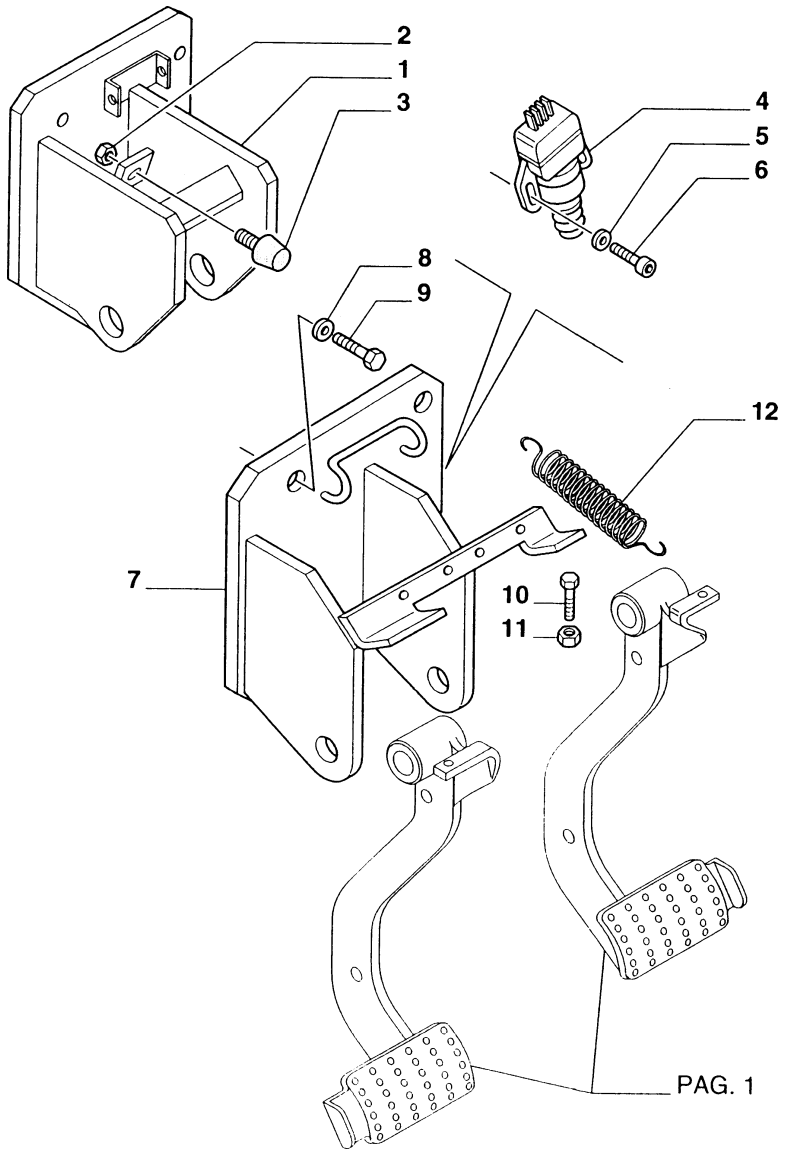

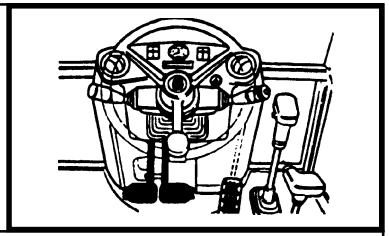

MOD	R	P/N. Imola	P/N. Brazil	Q	Descrição Denominacion	Description Descrizione	L.C.
	1	**85801857**		1	SUPORTE SOPORTE	SUPPORT SUPPORTO	300S
	2	**11701721**		2	PORCA TUERCA	NUT DADO	010D
	3	**71416437**		2	BLOCO CALCE	BLOCK BLOCCHETTO	074B
	4	**83961542**		2	INTERRUPTOR INTERRUPTOR	SWITCH INTERRUTTORE	075I
	5	**12642821**		4	ARRUELA ARANDELA	WASHER ROSETTA	131R
	6	**13272477**		4	PARAFUSO TORNILLO	SCREW VITE	040V
	7	**85805277**		1	SUPORTE SOPORTE	SUPPORT SUPPORTO	300S
	8	**11190574**		4	ARRUELA ARANDELA	WASHER ROSETTA	131R
	9	**15970524**		4	PARAFUSO TORNILLO	SCREW VITE	040V
	10	**16043924**		2	PARAFUSO TORNILLO	SCREW VITE	040V
	11	**11701621**		2	PORCA TUERCA	NUT DADO	010D
	12	**5153180**		1	MOLA MUELLE	SPRING MOLLA	100M

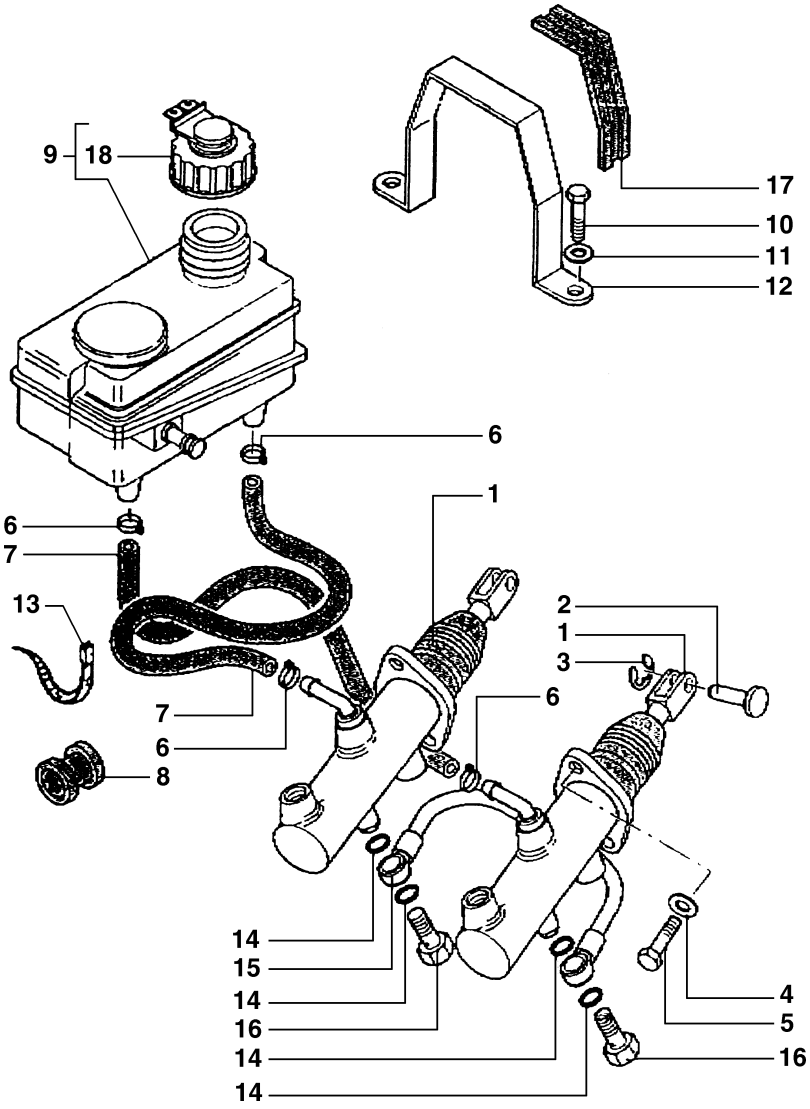

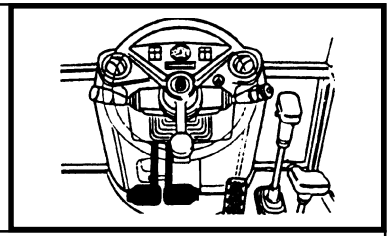

MOD	R	P/N. Imola	P/N. Brazil	Q	Descrição Denominacion	Description Descrizione	L.C.
	1	**85805257**		2	CILINDRO MESTRE CILINDRO MAESTR	MASTER CYLINDER CILINDRO MAESTR	170C
	2	**5155381**		2	PINO BULON	PIN PERNO	080P
	3	**11064176**		2	PRESILHA ABRESADERA	CLIP FERMAGLIO	045F
	4	**10569374**		4	ARRUELA ARANDELA	WASHER ROSETTA	131R
	5	**14306424**		4	PARAFUSO TORNILLO	SCREW VITE	040V
	5	**16043424**		1	PARAFUSO TORNILLO	SCREW VITE	040V
	6	**13423271**		4	COLAR COLLAR	COLLAR COLLARE	180C
	7	**85803255**		2	MANGUEIRA MANGA C/RACORDE	HOSE ASSY TUBO FLESSIBILE	192T
	8	**85801941**		2	ANEL DE VEDAÇÃO JUNTA HERMETICA	SEAL RING ANELLO TENUTA	055A
	9	**82003369**		1	RESERVATORIO DEPOSITO	TANK SERBATOIO	115S
	10	**10902621**		2	PARAFUSO TORNILLO	SCREW VITE	040V
	11	**11193274**		2	ARRUELA ARANDELA	WASHER ROSETTA	131R
	12	**85801092**		1	ABRAÇADEIRA ABRAZADERA	CLAMP FASCETTA	031F
	13	**14560187**		1	ABRAÇADEIRA ABRAZADERA	CLAMP FASCETTA	031F
	14	**4858607**		4	JUNTA JUNTA PLANA	GASKET GUARNIZ. PIANA	120G
	15	**5155701**		1	TUBO TUBO	TUBE TUBO RIGIDO	193T
	16	**5155703**		2	CONEXÃO RACOR	FITTING RACCORDO	020R
	17	**85801093**		1	JUNTA ADESIVA TIRCA	STRIP-GASKET GUARNIZIONE ADESIVA	124G
	18	**85806176**		1	TAMPA TAPA	COVER COPERCHIO	265C

W/SAFETY FRAME NEW VERSION

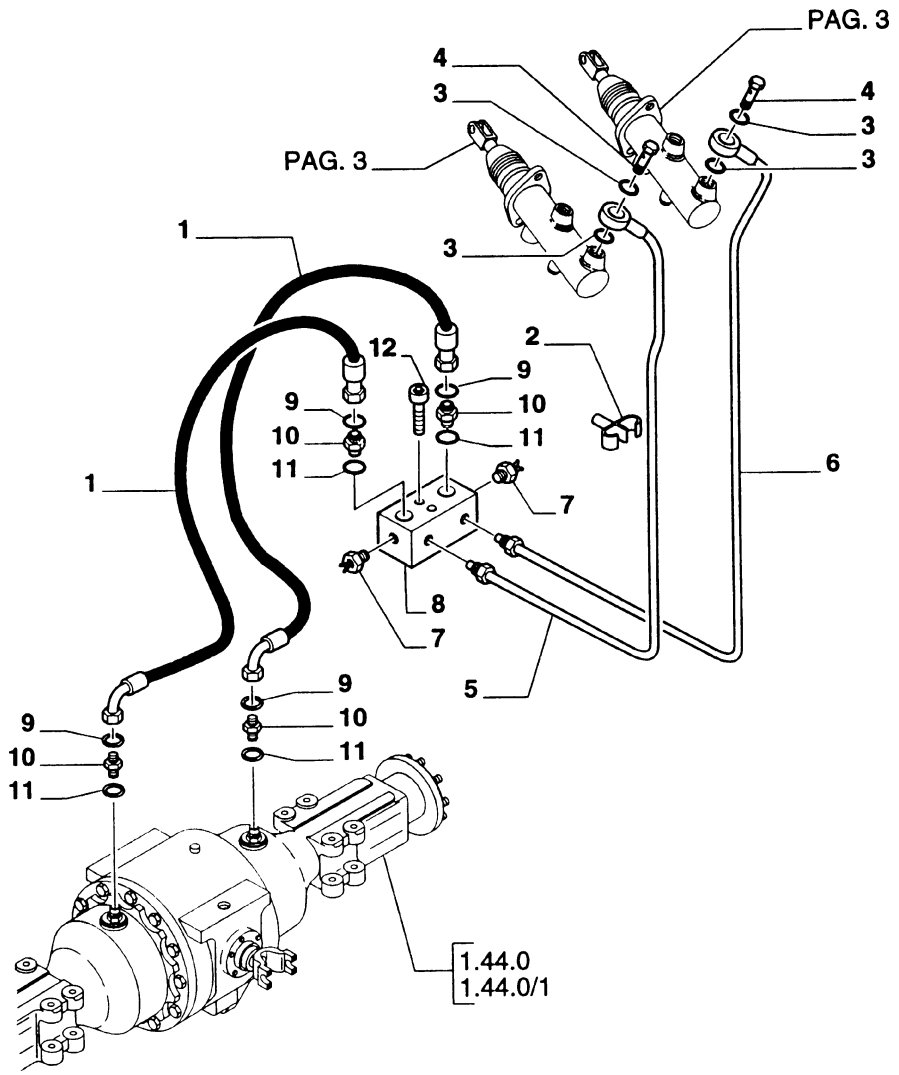

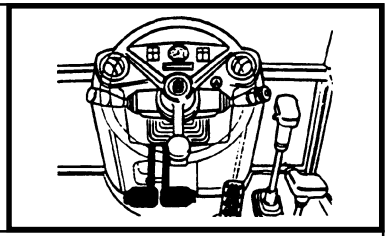

MOD	R	P/N. Imola	P/N. Brazil	Q	Descrição Denominacion	Description Descrizione	L.C.
	1	**85804640**		2	MANGUEIRA MANGA C/RACORDE	HOSE ASSY TUBO FLESSIBILE	192T
	2	**14575380**		3	GRAMPO ELÁSTICO SUJEITADOR	SPRING FASTENER MOLLETTA	105M
	3	**4858607**		4	JUNTA JUNTA PLANA	GASKET GUARNIZ. PIANA	120G
	4	**5155703**		2	CONEXÃO RACOR	FITTING RACCORDO	020R
	5	**85804638**		1	TUBO TUBO	TUBE TUBO RIGIDO	193T
	6	**85804639**		1	TUBO TUBO	TUBE TUBO RIGIDO	193T
	7	**5108180**		2	SENSOR SENSOR	SENSOR SENSORE	133S
	8	**85804637**		1	BLOCO CALCE	BLOCK BLOCCHETTO	074B
	9	**89825770**		4	O'RING JUNTA TORICA	O'RING GUARNIZIONE O-R	158G
	10	**85802803**		4	CONEXÃO RACOR	FITTING RACCORDO	020R
	11	**80165202**		4	O'RING JUNTA TORICA	O'RING GUARNIZIONE O-R	158G
	12	**14305921**		2	PARAFUSO TORNILLO	SCREW VITE	040V

10

W/CAB OR W/SAFETY FRAME NEW VERSION

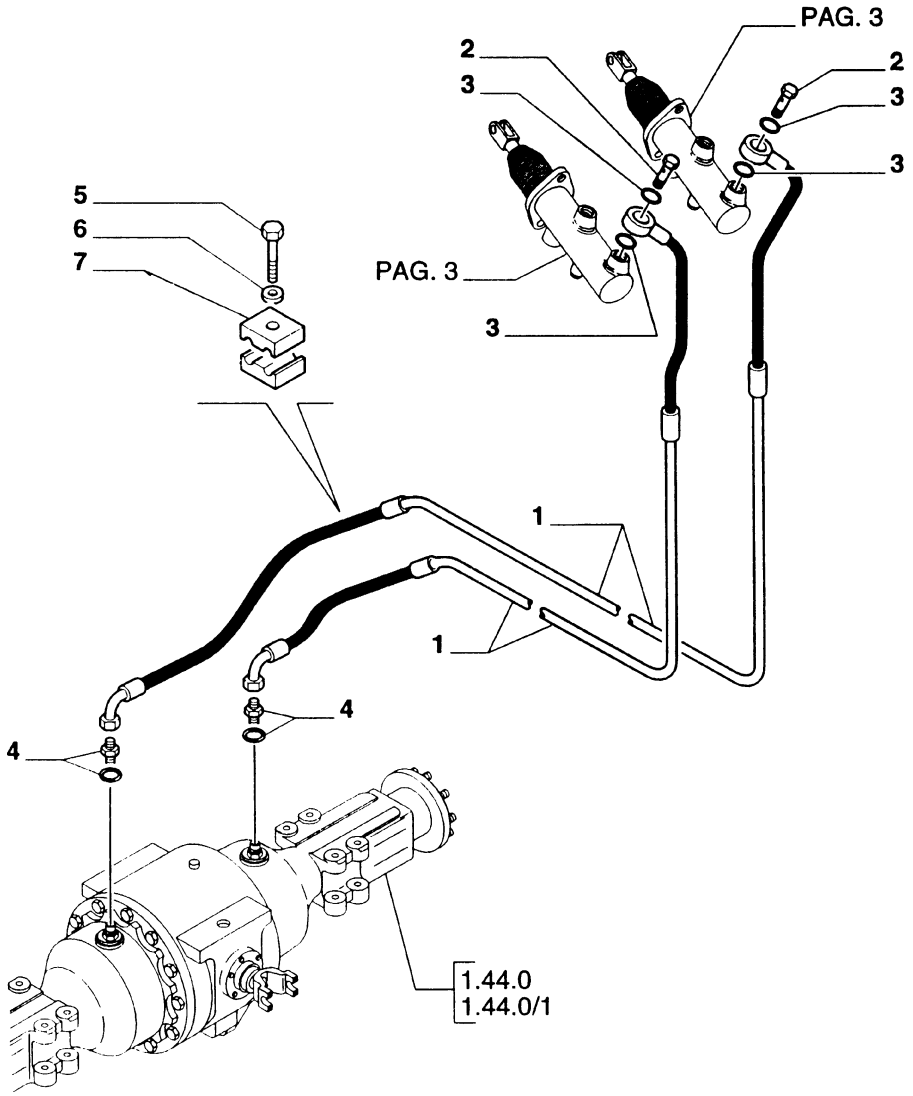

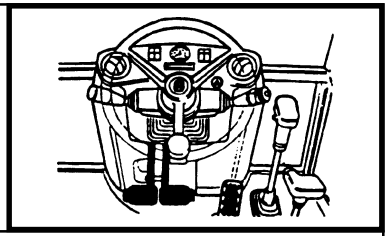

MOD	R	P/N. Imola	P/N. Brazil	Q	Descrição Denominacion	Description Descrizione	L.C.
	1	**85805447**		2	MANGUEIRA MANGA C/RACORDE	HOSE ASSY TUBO FLESSIBILE	192T
	2	**5155703**		2	CONEXÃO RACOR	FITTING RACCORDO	020R
	3	**4858607**		4	JUNTA JUNTA PLANA	GASKET GUARNIZ. PIANA	120G
	4	**85803312**		2	CONEXÃO RACOR	FITTING RACCORDO	020R
	5	**15212721**		2	PARAFUSO TORNILLO	SCREW VITE	040V
	6	**14447021**		2	ARRUELA ARANDELA	WASHER ROSETTA	131R
	7	**85805548**		4	PRESILHA ABRESADERA	CLIP FERMAGLIO	045F

10

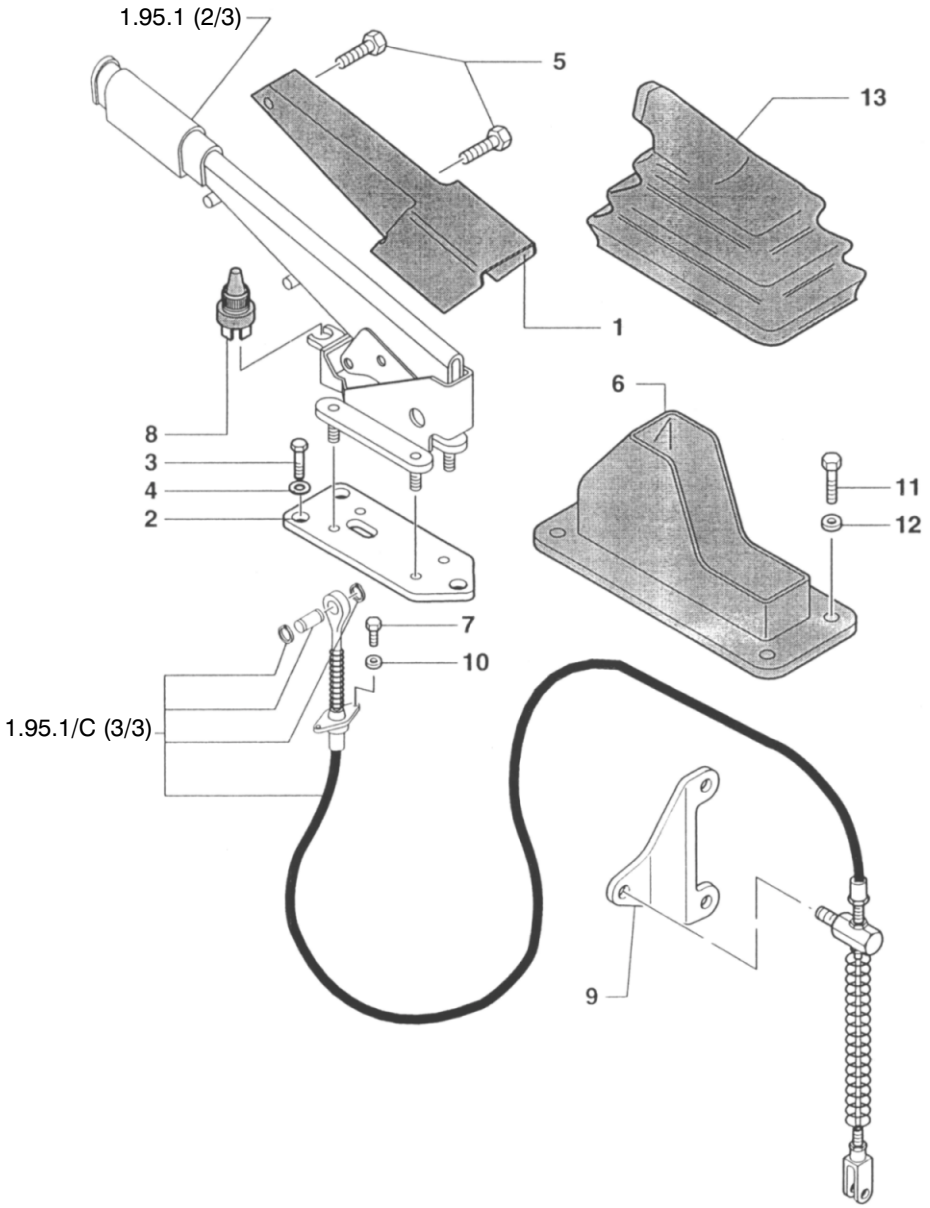

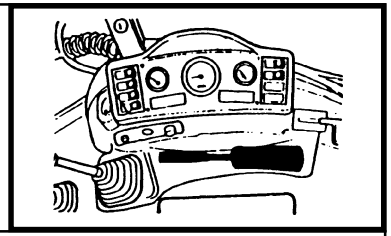

MOD	R	P/N. Imola	P/N. Brazil	Q	Descrição Denominacion	Description Descrizione	L.C.
	1	**85803384**		1	COIFA PARA PÓ CAPUCHA	DUST BOOT CUFFIA PARAPOLV	334C
	2	**85801959**		1	SUPORTE SOPORTE	SUPPORT SUPPORTO	300S
	3	**16043424**	**14590887**	3	PARAFUSO TORNILLO	SCREW VITE	040V
	4	**11193874**		3	ARRUELA ARANDELA	WASHER ROSETTA	131R
	5	**14440027**	**14303031**	4	PARAFUSO TORNILLO	SCREW VITE	040V
	6	**85803383**		1	COIFA PARA PÓ CAPUCHA	DUST BOOT CUFFIA PARAPOLV	334C
	7	**10978024**	**10902431**	2	PARAFUSO TORNILLO	SCREW VITE	040V
	8	**5131017**	**73160099**	1	INTERRUPTOR INTERRUPTOR	SWITCH INTERRUTTORE	075I
	9	**85804723**		1	SUPORTE SOPORTE	SUPPORT SUPPORTO	300S
	10	**10615371**	**70928190**	2	ARRUELA ARANDELA	WASHER ROSETTA	131R
	11	**15693507**	**14568887**	4	BOTAO BOTON	BUTTON BOTTONE	120B
	12	**85801991**		4	ARRUELA ARANDELA	WASHER ROSETTA	131R
	13	**5106733**		1	COIFA PARA PÓ CAPUCHA	DUST BOOT CUFFIA PARAPOLV	334C

FB80.3 - FB100.3

TOLDO / FREIO DE MÃO
TOLDO / MANDO DEL FRENO MANO
SAFETY FRAME / HAND BRAKE CONTROL LEVER
TELAIO DI SICUREZZA / COMANDO FRENO A MANO

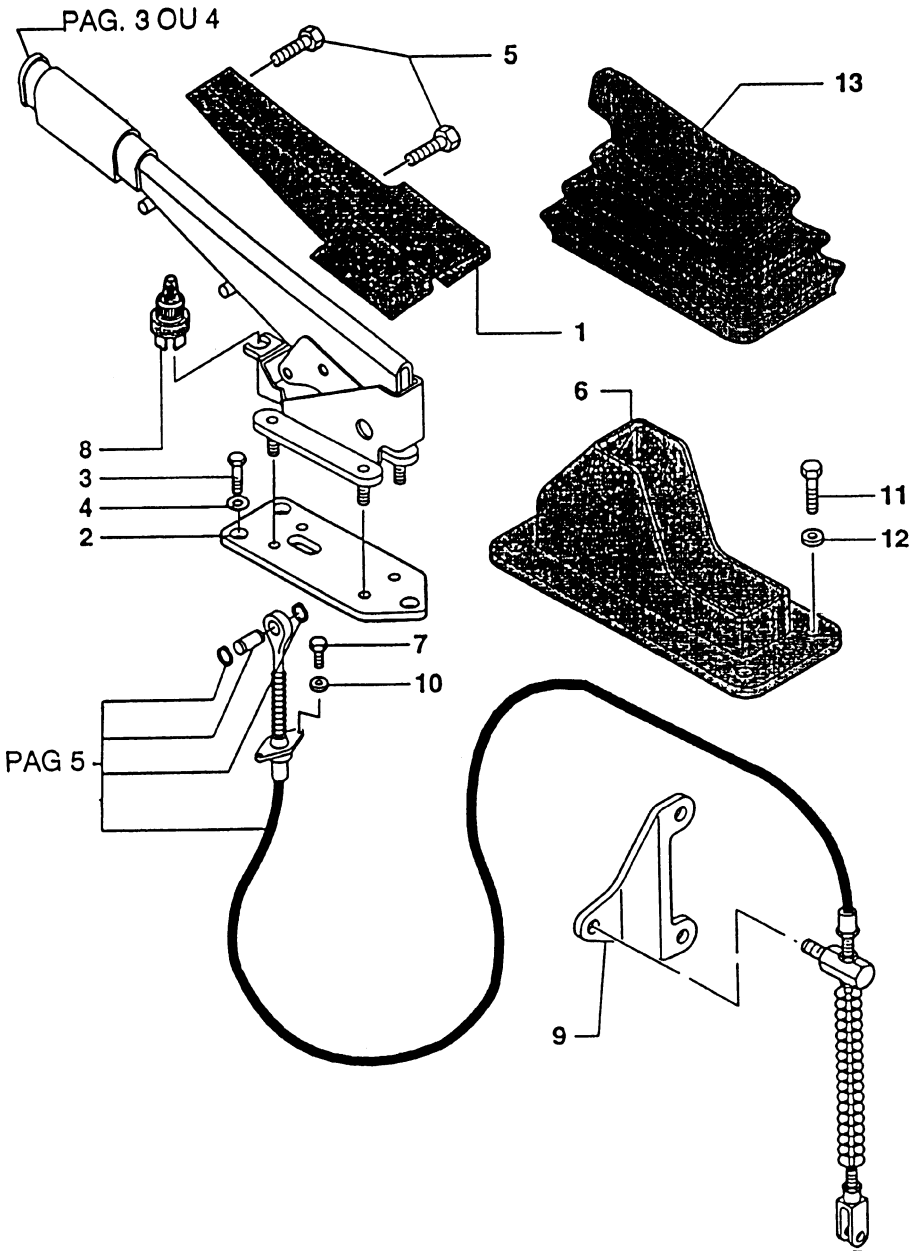

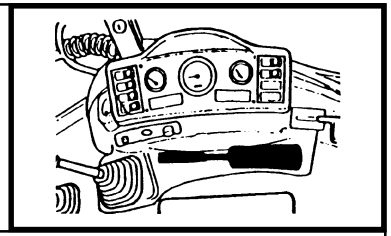

MOD	R	P/N. Imola	P/N. Brazil	Q	Descrição Denominacion	Description Descrizione	L.C.
	1	**85803384**		1	COIFA PARA PÓ CAPUCHA	DUST BOOT CUFFIA PARAPOLV	334C
	2	**85801959**		1	SUPORTE SOPORTE	SUPPORT SUPPORTO	300S
	3	**16043424**		3	PARAFUSO TORNILLO	SCREW VITE	040V
	4	**11193874**	**14303031**	3	ARRUELA ARANDELA	WASHER ROSETTA	131R
	5	**14440027**		4	PARAFUSO TORNILLO	SCREW VITE	040V
	6	**85803383**		1	COIFA PARA PÓ CAPUCHA	DUST BOOT CUFFIA PARAPOLV	334C
	7	**10978024**		2	PARAFUSO TORNILLO	SCREW VITE	040V
	8	**5131017**	**73160099**	1	INTERRUPTOR INTERRUPTOR	SWITCH INTERRUTTORE	075I
	9	**85804723**		1	SUPORTE SOPORTE	SUPPORT SUPPORTO	300S
	10	**10615371**		2	ARRUELA ARANDELA	WASHER ROSETTA	131R
	11	**15693507**		4	PARAFUSO TORNILLO	SCREW VITE	040V
	12	**85801991**		4	ARRUELA ARANDELA	WASHER ROSETTA	131R
	13	**5106733**		1	COIFA PARA PÓ CAPUCHA	DUST BOOT CUFFIA PARAPOLV	334C

10

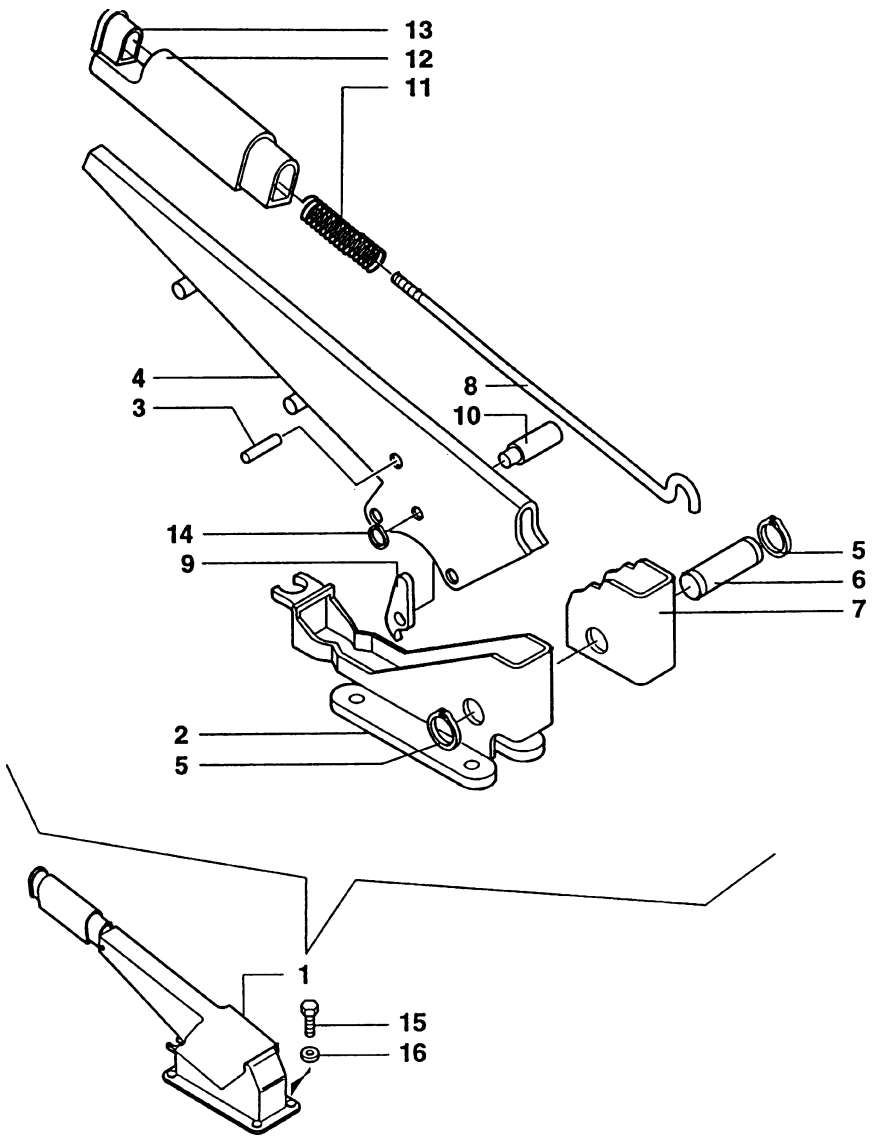

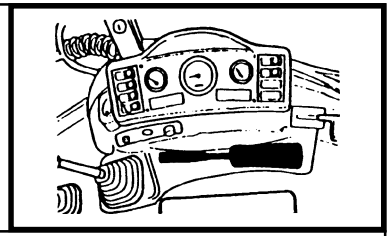

MOD	R	P/N. Imola	P/N. Brazil	Q	Descrição Denominacion	Description Descrizione	L.C.
	1	**85805438**		1	ALAVANCA PALANCA	LEVER LEVA	045L
	2	**85805441**		1	SUPORTE SOPORTE	SUPPORT SUPPORTO	300S
	3	**4985127**		1	REBITE REMACHE	RIVET RIBATTINO	055R
	4	**85805440**		1	ALAVANCA PALANCA	LEVER LEVA	045L
	5	**13400773**		2	ANEL ELÁSTICO ANILLO ELASTICO	SNAP RING ANELLO ELASTICO	187A
	6	**5131437**		1	PINO BULON	PIN PERNO	080P
	7	**5110153**		1	SETOR DENTADO SECTOR DENTADO	TOOTHED SECTOR SETTORE DENTATO	135S
	8	**5128712**		1	TIRANTE TIRANTE	TIEROD TIRANTE	142T
	9	**5110155**		1	TRAVA SEGURO	PAWL NOTTOLINO	050N
	10	**4988275**		1	PINO BULON	PIN PERNO	080P
	11	**5105729**		1	MOLA MUELLE	SPRING MOLLA	100M
	12	**5128431**		1	MANOPLA EMPUNADURA	KNOB POMELLO	150P
	13	**5174275**		1	INTERRUPTOR PULSADOR	PUSH BUTTON PULSANTE	236P
	14	**86507012**		1	ANEL ELÁSTICO ANILLO ELASTICO	SNAP RING ANELLO ELASTICO	187A
	15	**14306920**		4	PARAFUSO TORNILLO	SCREW VITE	040V
	16	**11197874**		4	ARRUELA ARANDELA	WASHER ROSETTA	131R

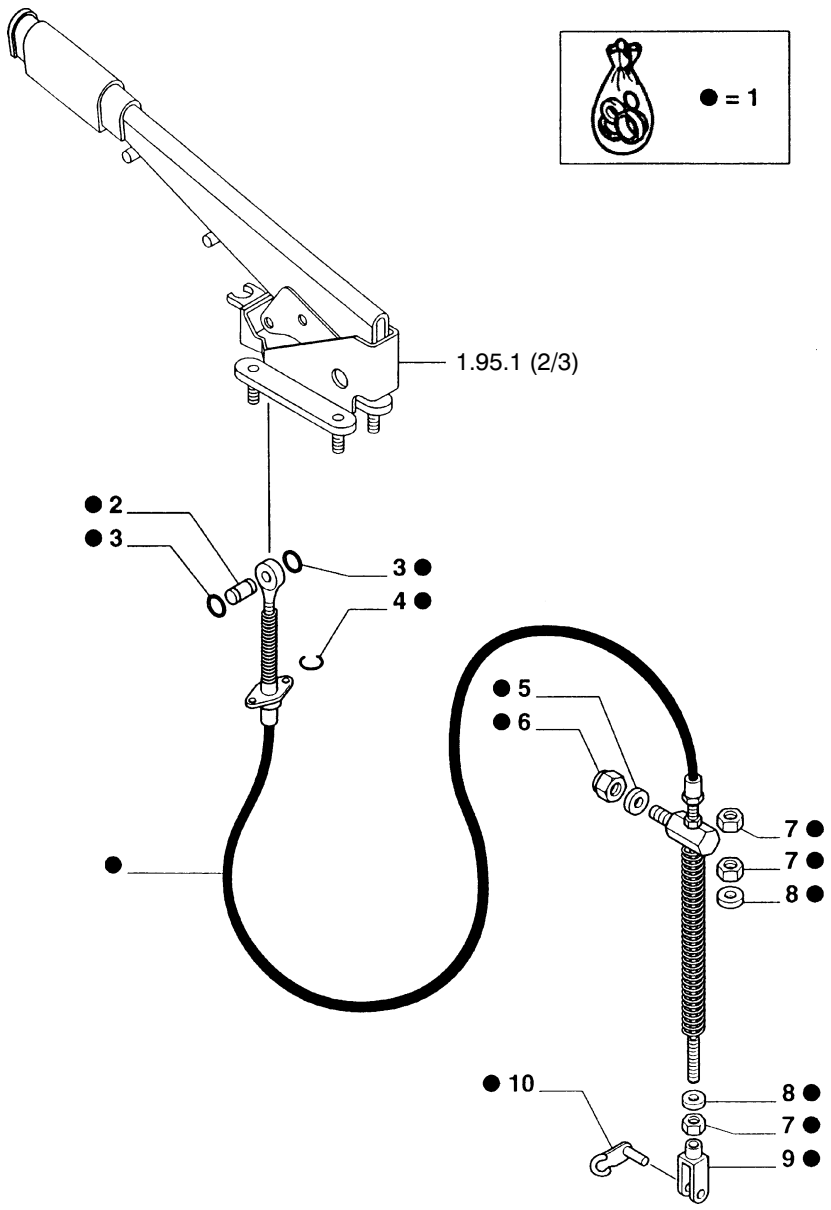

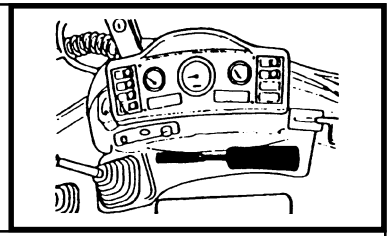

MOD	R	P/N. Imola	P/N. Brazil	Q	Descrição Denominacion	Description Descrizione	L.C.
	1	**85804646**		1	CABO FLEXIVEL CABLE FLEXIBLE	FLEXIBLE SHAFT TRASMISSIONE FL	165T
	2	**9969207**		1	PINO BULON	PIN PERNO	080P
	3	**11087976**		2	ANEL ELÁSTICO ANILLO ELASTICO	SNAP RING ANELLO ELASTICO	187A
	4	**11088071**		1	ANEL ELÁSTICO ANILLO ELASTICO	SNAP RING ANELLO ELASTICO	187A
	5	**12646921**		1	ARRUELA ARANDELA	WASHER ROSETTA	131R
	6	**16105011**		1	PORCA TUERCA	NUT DADO	010D
	7	**10791021**		3	PORCA TUERCA	NUT DADO	010D
	8	**12642521**		2	ARRUELA ARANDELA	WASHER ROSETTA	131R
	9	**9969205**		1	FORQUILHA HORQUILLA	YOKE FORCELLA	085F
	10	**9969206**		1	PINO BULON	PIN PERNO	080P

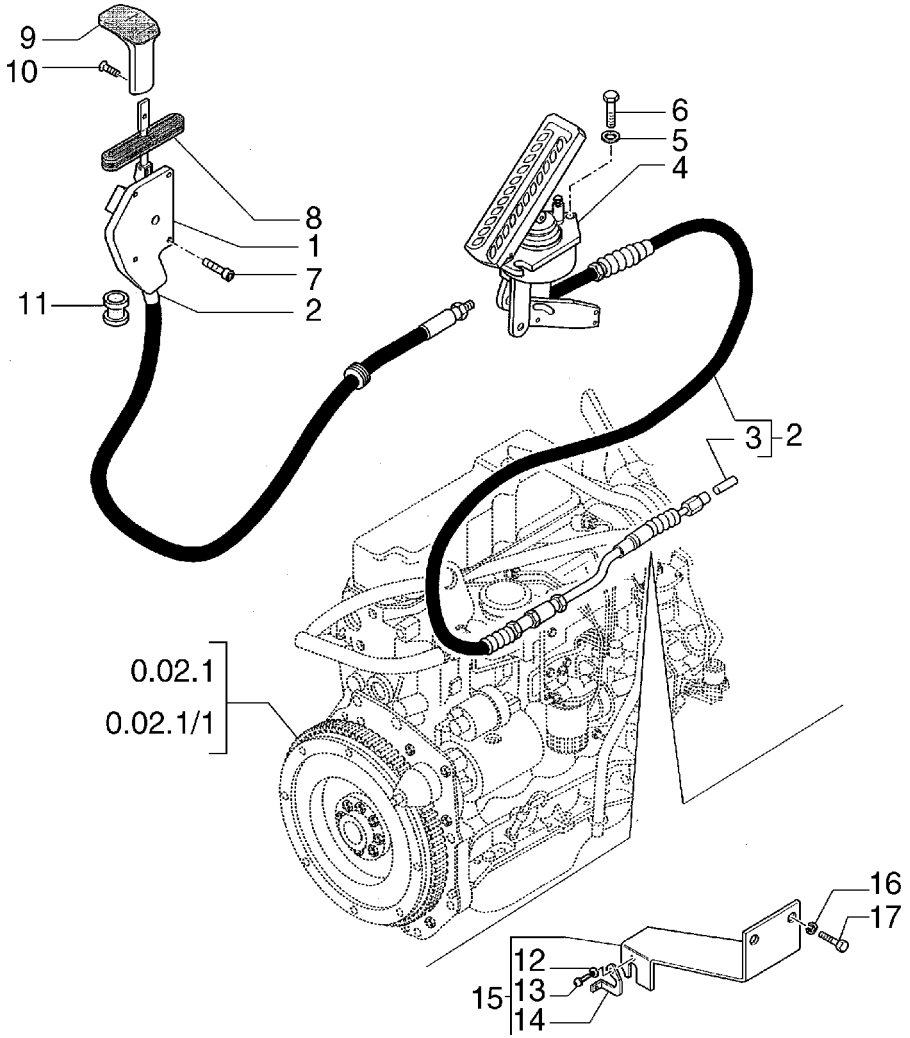

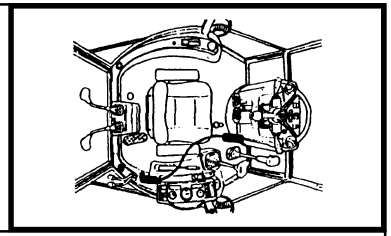

MOD	R	P/N. Imola	P/N. Brazil	Q	Descrição Denominacion	Description Descrizione	L.C.
	1	**85813097**		1	ALAVANCA PALANCA	LEVER LEVA	045L
	2	**85813099**		1	CABO FLEXÍVEL CABLE FLEXIBLE	FLEXIBLE SHAFT TRASMISSIONE FL	165T
	3	**85813140**		1	PINO PASADOR	PIN SPINA	080P
	4	**85819096**		1	VÁLVULA VALVULA	VALVE VALVOLA	010V
	5	**11193274**		3	ARRUELA ARANDELA	WASHER ROSETTA	131R
	6	**10902424**		3	PARAFUSO TORNILLO	SCREW VITE	040V
	7	**13311617**		4	PARAFUSO TORNILLO	SCREW VITE	040V
	8	**85803380**		1	COIFA PARA PÓ CAPUCHA	DUST BOOT CUFFIA PARAPOLV	334C
	9	**82002692**		1	MANOPLA EMPUNADURA	KNOB POMELLO	150P
	10	**13311617**		4	PARAFUSO TORNILLO	SCREW VITE	040V
	11	**10398280**		1	ANEL DE BORRACHA GUARNICION DE CAU	RUBBER RING ANELLO DI GOMMA	048A
	12	**12604171**		1	ARRUELA ARANDELA	WASHER ROSETTA	131R
	13	**13769401**		1	REBITE REMACHE	RIVET RIBATTINO	055R
	14	**85803040**		1	CHAVETA CHAVETA	KEY LINGUETTA	060L
	15	**85806130**		1	SUPORTE SOPORTE	SUPPORT SUPPORTO	300S
	16	**11193974**		2	ARRUELA ARANDELA	WASHER ROSETTA	131R
	17	**16043424**		2	PARAFUSO TORNILLO	SCREW VITE	040V

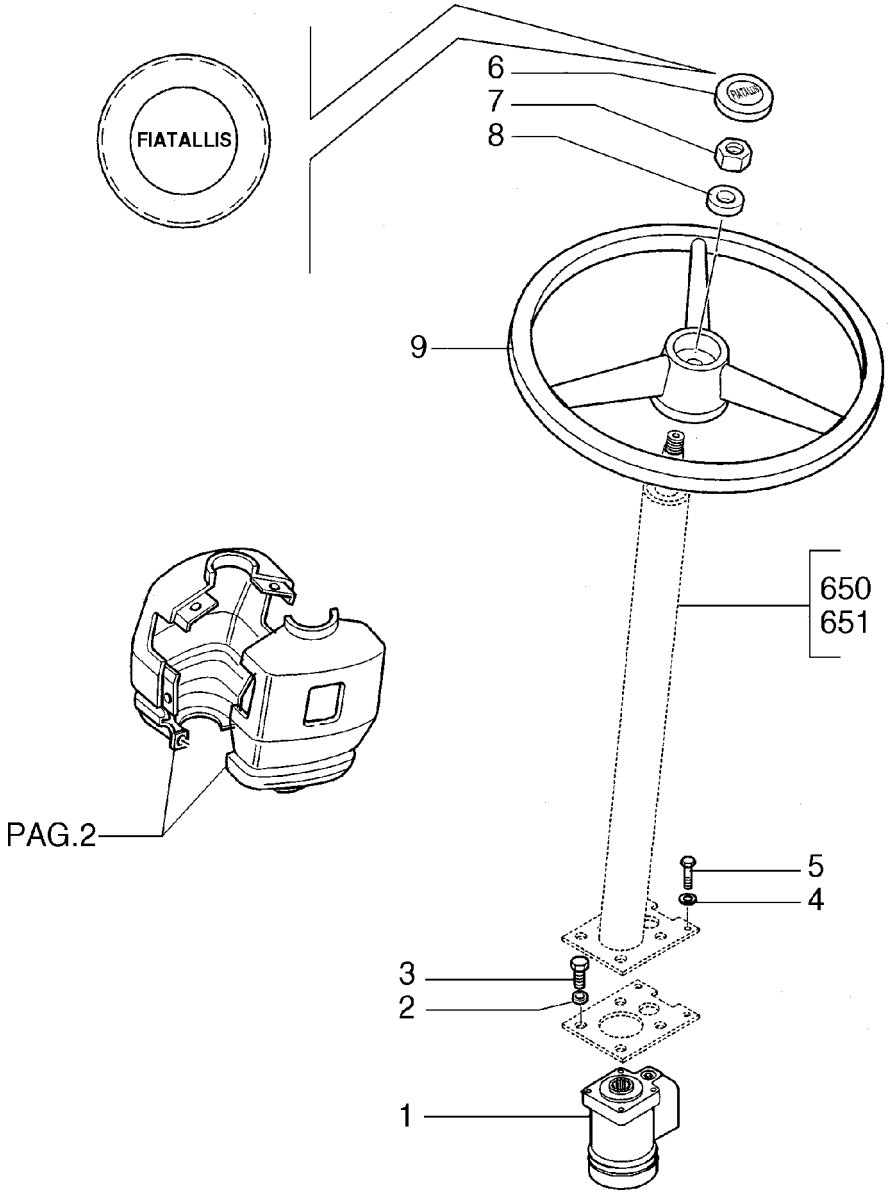

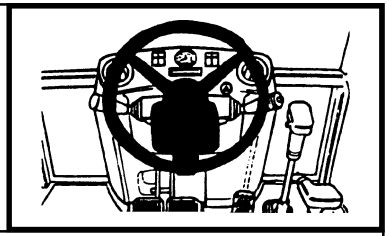

MOD	R	P/N. Imola	P/N. Brazil	Q	Descrição Denominacion	Description Descrizione	L.C.
	1	**85805624**		1	DIREÇÃO HIDR. DIRECCION HIDR.	HYDRAULIC DRIVE IDROGUIDA	010I
	2	**12638624**		4	ARRUELA ARANDELA	WASHER ROSETTA	131R
	3	**85804705**		4	PARAFUSO TORNILLO	SCREW VITE	040V
	4	**11190574**		4	ARRUELA ARANDELA	WASHER ROSETTA	131R
	5	**15970725**		4	PARAFUSO TORNILLO	SCREW VITE	040V
	6	**85802230**		1	TAMPA TAPA	COVER COPERCHIO	265C
	7	**10791421**		1	PORCA TUERCA	NUT DADO	010D
	8	**4998760**		1	ARRUELA ARANDELA	WASHER ROSETTA	131R
	9	**5148946**		1	VOLANTE VOLANTE	STEERING WHEEL VOLANTE	050V

FB80.3 - FB100.3

CABINE / VOLANTE, COLUNA DE DIREÇÃO, VÁLVULA
CABINA / VOLANTE, COLUMNA DE LA DIRECCION, HIDROGUIA
CAB / STEERING WHEEL, STEERING COLUMN, POWER STEERING
CABINA / VOLANTE, PIANTONE STERZO, IDROGUIDA

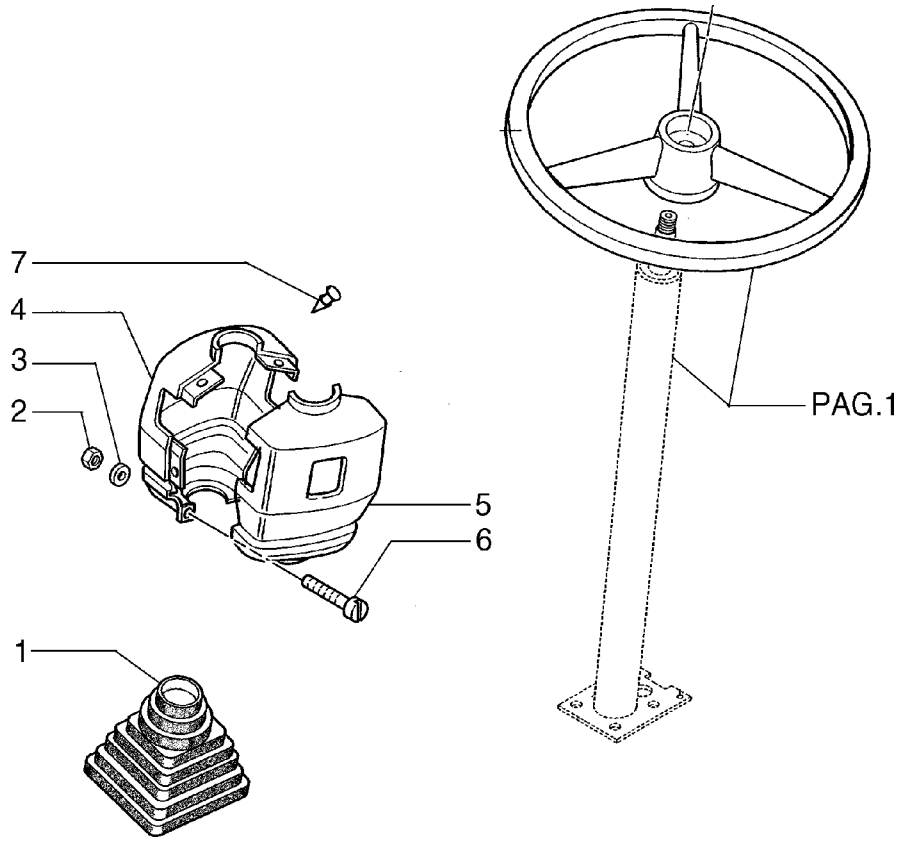

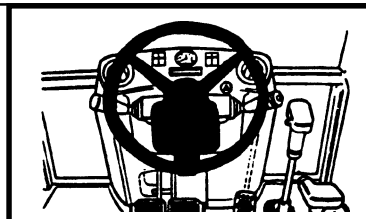

MOD	R	P/N. Imola	P/N. Brazil	Q	Descrição Denominacion	Description Descrizione	L.C.
	1	**85801976**		1	COIFA PARA PÓ CAPUCHA	DUST BOOT CUFFIA PARAPOLV	334C
	2	**12575421**		2	PORCA TUERCA	NUT DADO	010D
	3	**14496401**		2	ARRUELA ARANDELA	WASHER ROSETTA	131R
	4	**85805772**		1	REVESTIMENTO REVESTIMIENTO	COVERING RIVESTIMENTO	116R
	5	**85805775**		1	REVESTIMENTO REVESTIMIENTO	COVERING RIVESTIMENTO	116R
	6	**15930316**		2	PARAFUSO TORNILLO	SCREW VITE	040V
	7	**85805772**		4	BOTÃO BOTON	BUTTON BOTTONE	120B

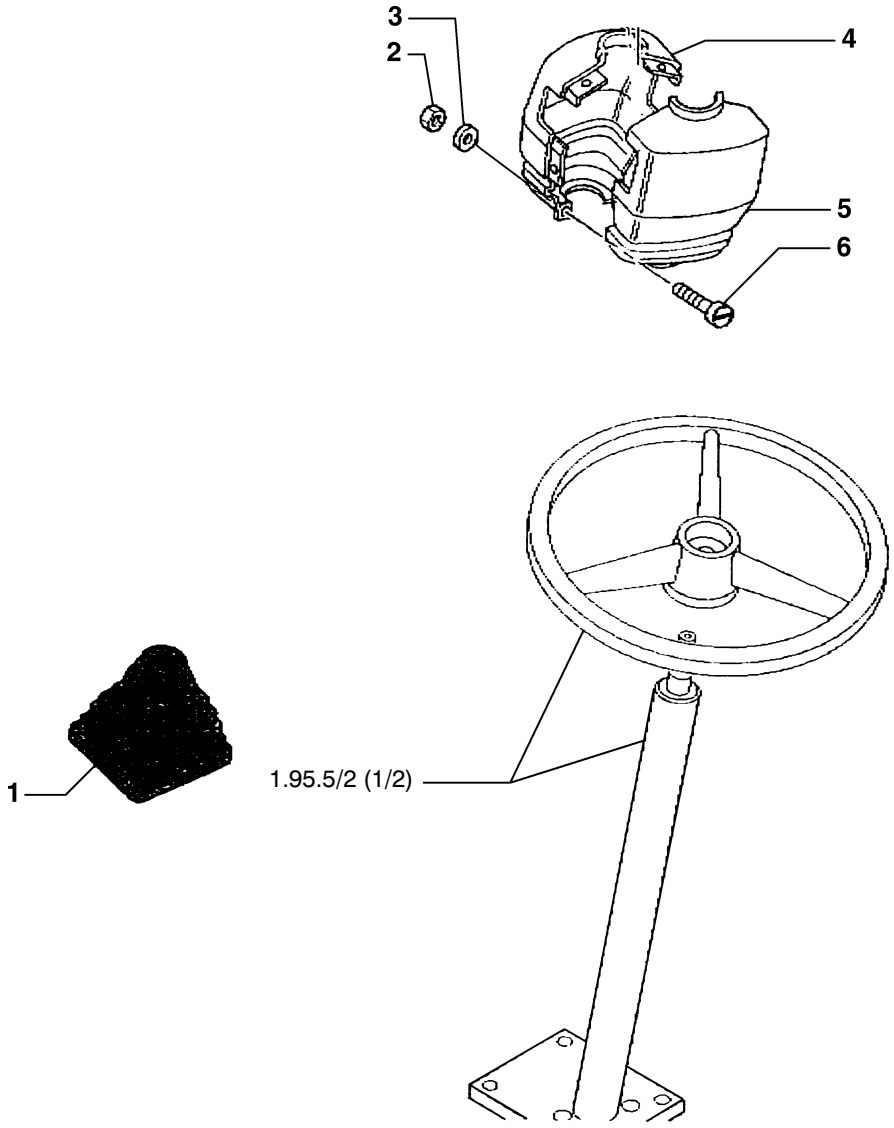

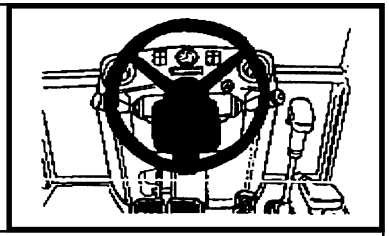

MOD	R	P/N. Imola	P/N. Brazil	Q	Descrição Denominacion	Description Descrizione	L.C.
	1	**85801976**		1	COIFA PARA PÓ CAPUCHA	DUST BOOT CUFFIA PARAPOLV	334C
	2	**12575411**		2	PORCA TUERCA	NUT DADO	010D
	3	**14496404**		2	ARRUELA ARANDELA	WASHER ROSETTA	131R
	4	**85805775**		1	TAMPA TAPA	COVER COPERCHIO	265C
	5	**85805772**		1	TAMPA TAPA	COVER COPERCHIO	265C
	6	**15930316**		4	PARAFUSO TORNILLO	SCREW VITE	040V

10

FB80.3 - FB100.3

TOLDO/VOLANTE,COLUNA DE DIREÇÃO,VÁLVULA
TOLDO/VOLANTE,COLUMNA DE LA DIRECCION,HIDROGUIA
ROPS CANOPY/STEERING WHEEL,STEERING COLUMN,POWER STEERING
TELAIODI SSSICUREZZA/VOLANTE,PIANTONE STERZO,IDROGUIA

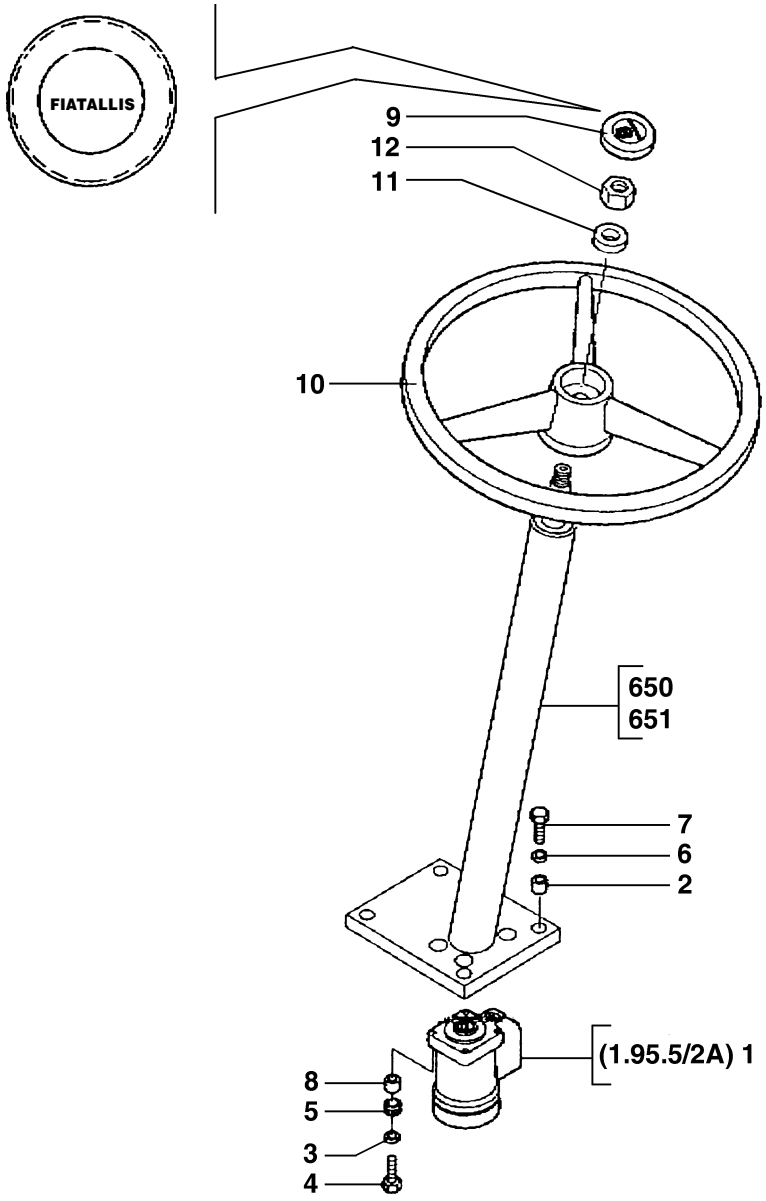

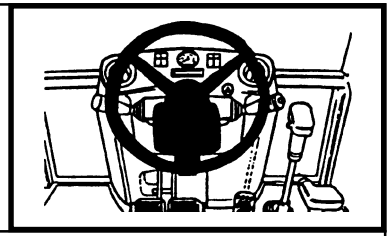

MOD	R	P/N. Imola	P/N. Brazil	Q	Descrição Denominacion	Description Descrizione	L.C.
	1	**85805624**		1	DIREÇÃO HIDR. DIRECCION HIDR.	HYDRAULIC DRIVE IDROGUIDA	010I
	2	**85801942**		4	ESPAÇADOR SEPARADOR	SPACER DISTANZIALE	075D
	4	**85804705**		4	PARAFUSO TORNILLO	SCREW VITE	040V
	5	**85801941**		4	ANEL ARO	RING ANELLO	045A
	6	**11190574**		4	ARRUELA ARANDELA	WASHER ROSETTA	131R
	7	**15970724**		4	PARAFUSO TORNILLO	SCREW VITE	040V
	8	**85801942**		4	ESPAÇADOR SEPARADOR	SPACER DISTANZIALE	075D
	9	**85802230**		1	TAMPA TAPA	COVER COPERCHIO	265C
	10	**5148946**		1	VOLANTE VOLANTE	STEERING WHEEL VOLANTE	050V
	11	**4998760**		1	ARRUELA ARANDELA	WASHER ROSETTA	131R
	12	**10791411**		1	PORCA TUERCA	NUT DADO	010D

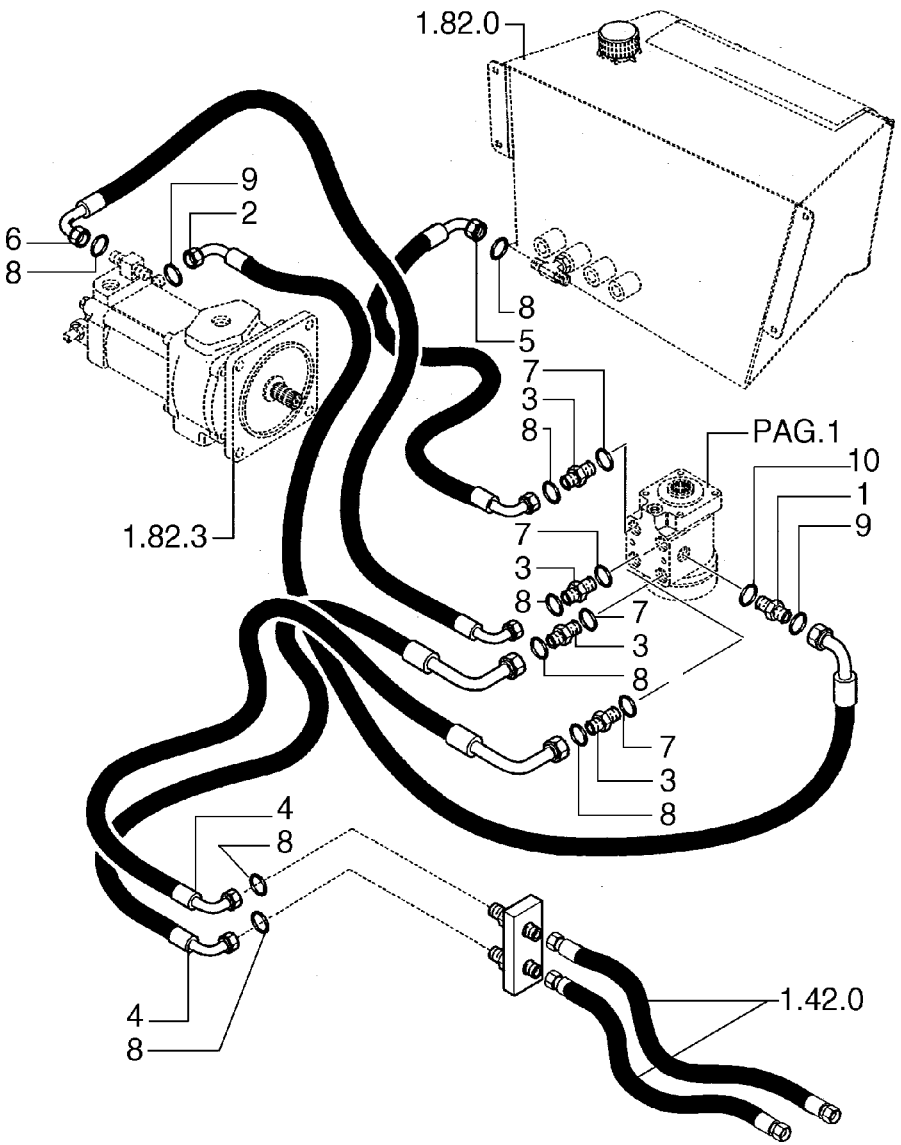

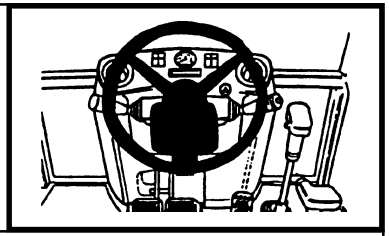

MOD	R	P/N. Imola	P/N. Brazil	Q	Descrição Denominacion	Description Descrizione	L.C.
	1	**85802640**		1	CONEXÃO RACOR	FITTING RACCORDO	020R
	2	**85806100**		1	TUBO TUBO	TUBE TUBO RIGIDO	193T
	3	**83963374**		4	CONEXÃO RACOR	FITTING RACCORDO	020R
	4	**85802639**		2	MANGUEIRA MANGA C/RACORDE	HOSE ASSY TUBO FLESSIBILE	192T
	5	**85802761**		1	MANGUEIRA MANGA C/RACORDE	HOSE ASSY TUBO FLESSIBILE	192T
	6	**85802638**		1	MANGUEIRA MANGA C/RACORDE	HOSE ASSY TUBO FLESSIBILE	192T
	7	**80128825**		4	O'RING JUNTA TORICA	O'RING GUARNIZIONE O-R	158G
	8	**81845038**		8	RETENTOR JUNTA	SEAL GUARNIZIONE	122G
	9	**81844851**		2	O'RING JUNTA TORICA	O'RING GUARNIZIONE O-R	158G
	10	**80165202**		1	O'RING JUNTA TORICA	O'RING GUARNIZIONE O-R	158G

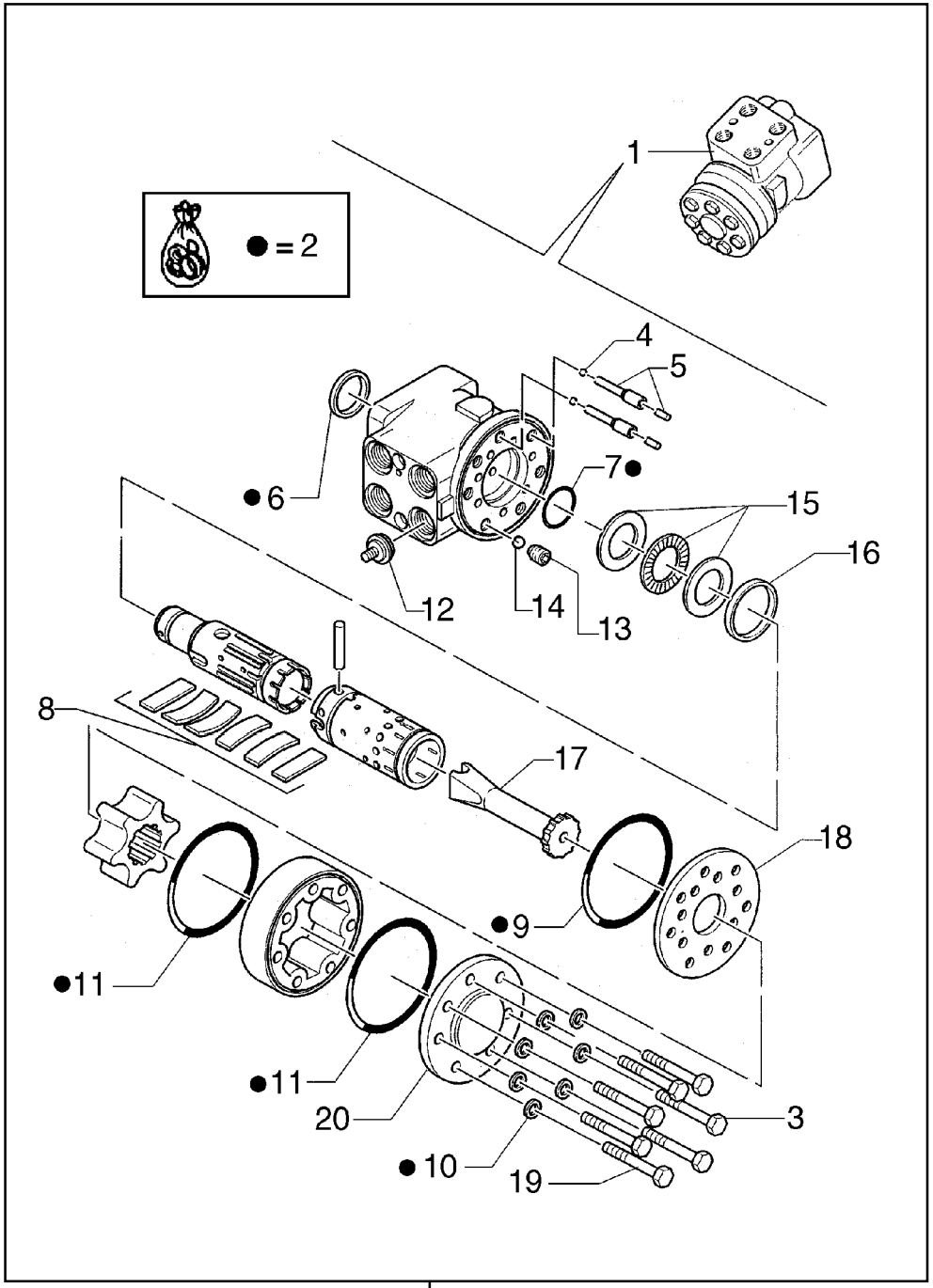

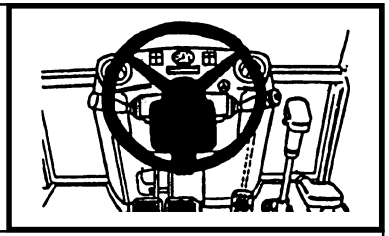

MOD	R	P/N. Imola	P/N. Brazil	Q	Descrição Denominacion	Description Descrizione	L.C.
	1	**85805624**		1	DIREÇÃO HIDR. DIRECCION HIDR.	HYDRAULIC DRIVE IDROGUIDA	010I
	2	**85808390**		1	KIT JUEGO	KIT KIT	002K
	3	**85812135**		6	PARAFUSO TORNILLO	SCREW VITE	040V
	4	**85808385**		2	ESFERA BOLA	BALL SFERA	140S
	5	**9961829**		2	PINO BULON	PIN PERNO	080P
	6	**85812109**		1	O'RING JUNTA TORICA	O'RING GUARNIZIONE O-R	158G
	7	**85808380**		1	O'RING JUNTA TORICA	O'RING GUARNIZIONE O-R	158G
	8	**9960181**		1	KIT JUEGO	KIT KIT	002K
	9	**85812110**		1	O'RING JUNTA TORICA	O'RING GUARNIZIONE O-R	158G
	10	**85812112**		7	ARRUELA ARANDELA	WASHER ROSETTA	131R
	11	**85812111**		2	O'RING JUNTA TORICA	O'RING GUARNIZIONE O-R	158G
	12	**85808386**		1	VÁLVULA VALVULA	VALVE VALVOLA	010V
	13	**85812132**		1	BOCAL ENCHIM. BOCA DE CARGA	FILLER PLUG BOCCHET. INTROD.	090B
	14	**85812131**		1	ESFERA BOLA	BALL SFERA	140S
	15	**71314915**		1	KIT JUEGO	KIT KIT	002K
	16	**85812133**		1	ANEL ARO	RING ANELLO	045A
	17	**85808381**		1	EIXO ARBOL	SHAFT ALBERO	016A
	18	**85808382**		1	CHAPA PLACA	PLATE PIASTRA	105P
	19	**85808383**		1	PARAFUSO TORNILLO	SCREW VITE	040V
	20	**85812134**		1	TAMPA TAPA	COVER COPERCHIO	265C

FB80.3 - FB100.3

TOLDO / VOLANTE, REPARO DA VÁLVULA DE DIREÇÃO
TOLDO / REPARO DE LA VALVULA DE DIRECIÓN
SAFETY FRAME / POWER STEERING
TELAIO DI SICUREZZA / IDROGUIDA

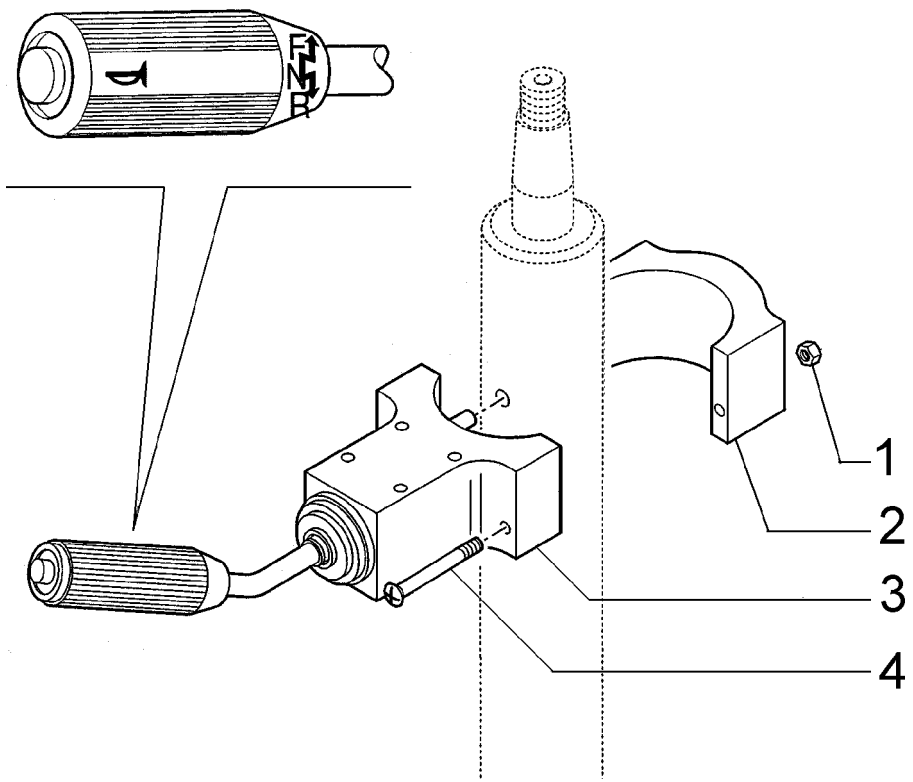

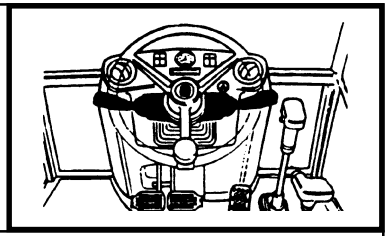

MOD	R	P/N. Imola	P/N. Brazil	Q	Descrição Denominacion	Description Descrizione	L.C.
	1	**12574111**		2	PORCA TUERCA	NUT DADO	010D
	2	**85804676**		1	SUPORTE SOPORTE	SUPPORT SUPPORTO	300S
	3	**85801938**		1	INVERSOR INVERSOR	REVERSER INVERSORE	078I
	4	**14301521**		1	PARAFUSO TORNILLO	SCREW VITE	040V

10

FB80.3 - FB100.3

CABINE / ALAVANCAS INVERSOR
CABINA / MANDO INVERSOR
CAB / REVERSER CONTROLS
CABINA / COMANDO INVERSORE

1.96.0

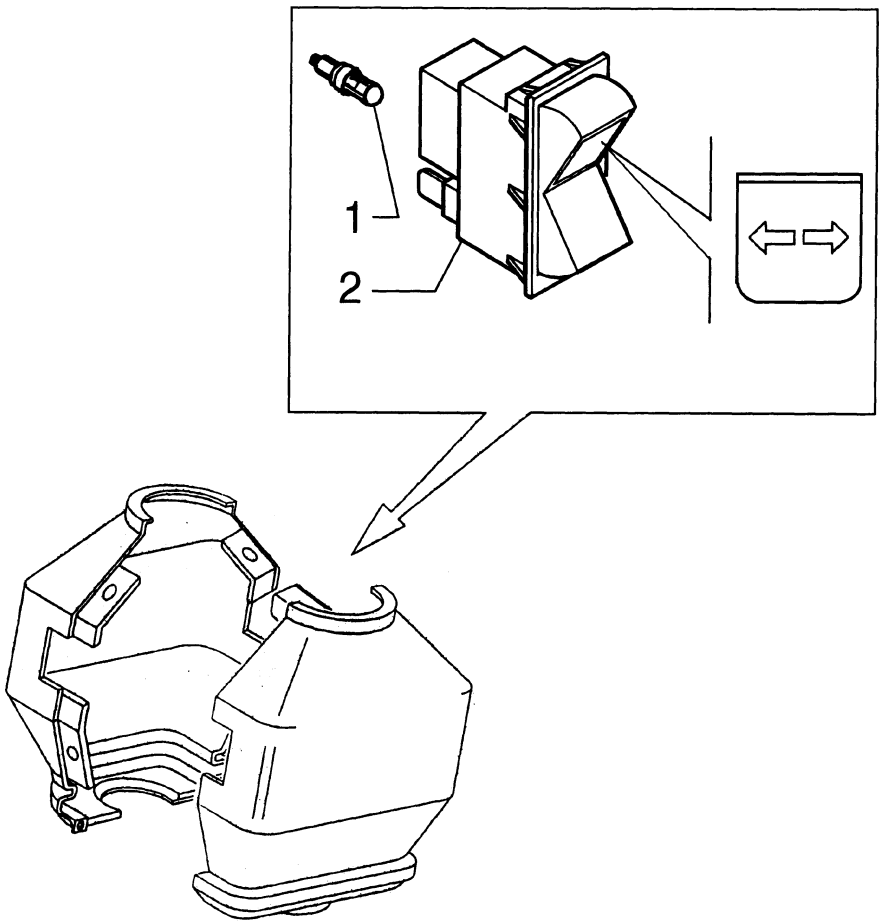

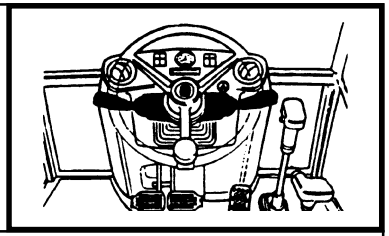

MOD	R	P/N. Imola	P/N. Brazil	Q	Descrição Denominacion	Description Descrizione	L.C.
	1	**14143790**		1	LÂMPADA LAMPARA	LAMP LAMPADA	030L
	2	**85819144**		1	INTERRUPTOR INTERRUPTOR	SWITCH INTERRUTTORE	075I

10

FB80.3 - FB100.3

CABINE / TOLDO / INTERRUPTOR DE SETA
CABINA / ARMADURA DE SEGURIDAD / DESVIO GUIA
CAB / SAFETY FRAME / STEERING LEVER
CABINA / TELAIO DI SICUREZZA / DEVIO GUIDA

1.96.0/A

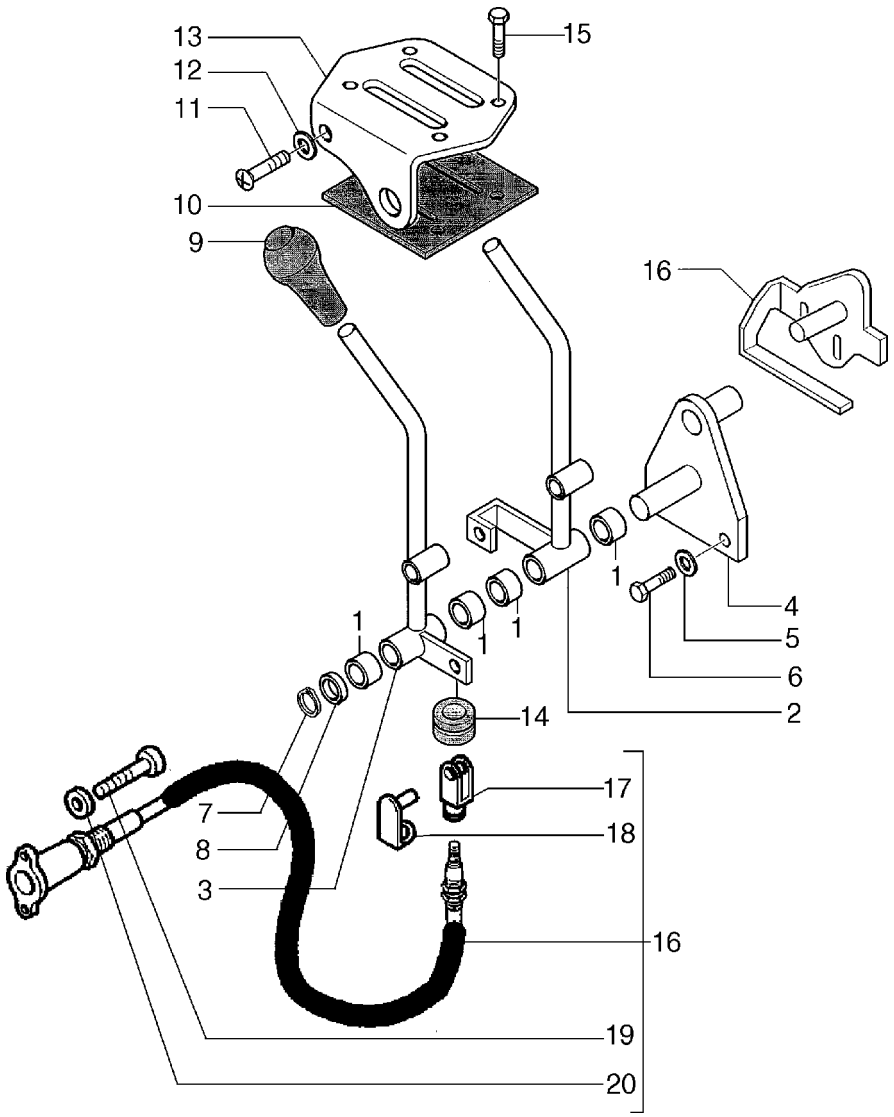

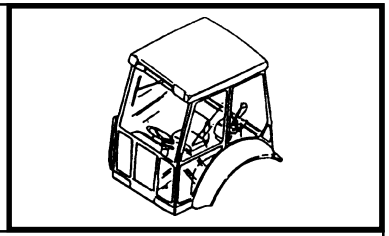

MOD	R	P/N. Imola	P/N. Brazil	Q	Descrição Denominacion	Description Descrizione	L.C.
	1	**85813136**		4	BUCHA BUJE	BUSHING BOCCOLA	095B
	2	**85813134**		1	ALAVANCA PALANCA	LEVER LEVA	045L
	3	**85813135**		1	ALAVANCA PALANCA	LEVER LEVA	045L
	4	**85813133**		1	SUPORTE SOPORTE	SUPPORT SUPPORTO	300S
	5	**11193874**		2	ARRUELA ARANDELA	WASHER ROSETTA	131R
	6	**16043624**		2	PARAFUSO TORNILLO	SCREW VITE	040V
	7	**85813138**		1	ABRAÇADEIRA ABRAZADERA	CLAMP FASCETTA	031F
	8	**85813137**		1	ARRUELA ARANDELA	WASHER ROSETTA	131R
	9	**85802763**		2	MANOPLA EMPUNADURA	KNOB POMELLO	150P
	10	**85803381**		1	REVESTIMENTO REVESTIMIENTO	COVERING RIVESTIMENTO	116R
	11	**13272477**		4	PARAFUSO TORNILLO	SCREW VITE	040V
	12	**10519211**		4	ARRUELA ARANDELA	WASHER ROSETTA	131R
	13	**85804200**		1	CHAPA PLACA	PLATE PIASTRA	105P
	14	**10398680**		1	ANEL ARO	RING ANELLO	045A
	15	**15688101**		4	PARAFUSO TORNILLO	SCREW VITE	040V
	16	**85813104**		2	CABO CABLE	ROPE FUNE	105F
	17	**85813187**		2	GARFO HORCA	FORK FORCA	125F
	18	**85813186**		2	PLACA PLACA	PLATE PIASTRINA	110P
	19	**85813200**		4	PARAFUSO TORNILLO	SCREW VITE	040V
	20	**85813201**		4	ARRUELA ARANDELA	WASHER ROSETTA	131R

FB80.3 - FB100.3

CABINE - TOLDO / CONTROLES DO ESTABILIZADOR
CABINA - TOLDO / MANDOS ESTABILIZADORES
CAB - SAFETY FRAME / STABILIZER CONTROL
CABINA - TELAIO DI SICUREZZA / COMANDO STABILIZZATORI

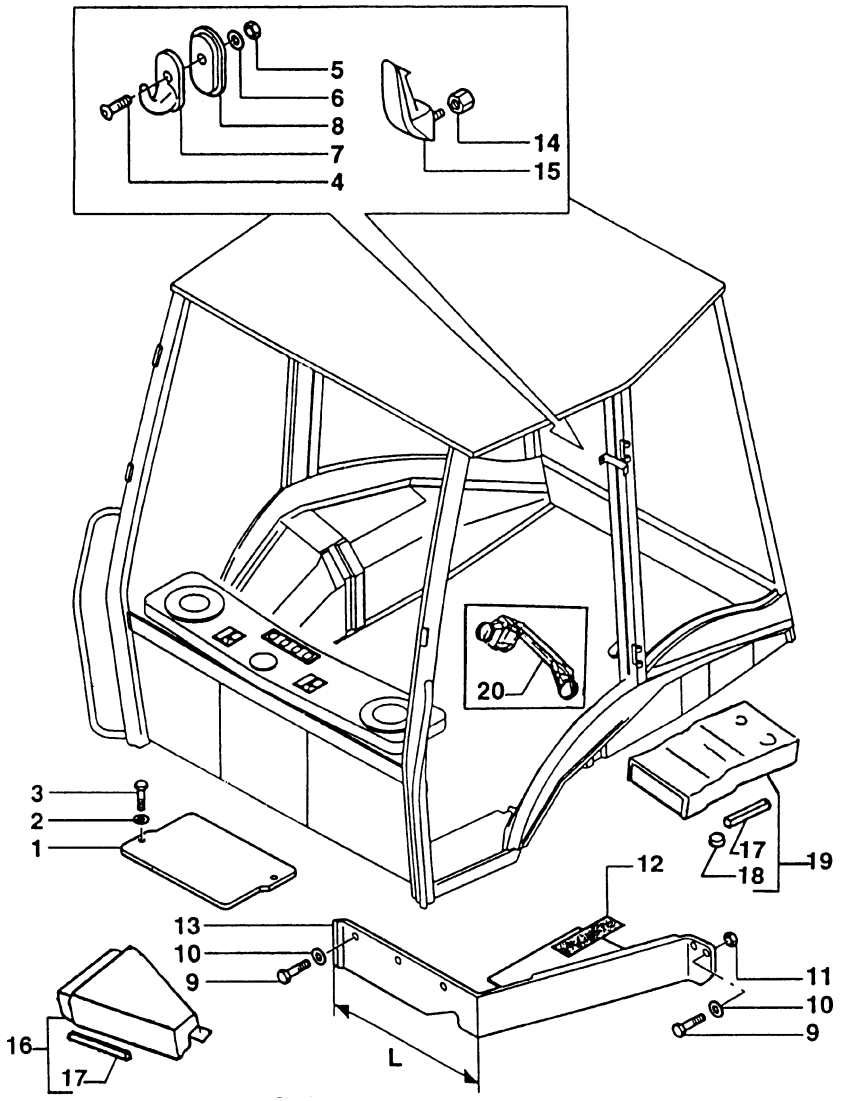

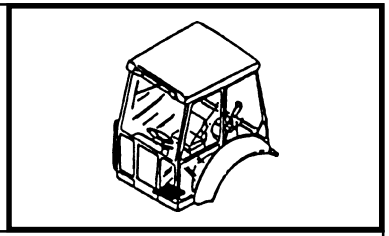

MOD	R	P/N. Imola	P/N. Brazil	Q	Descrição Denominacion	Description Descrizione	L.C.
	1	**85801968**		1	CHAPA PLACA	PLATE PIASTRA	105P
	2	**11198071**		2	ARRUELA ARANDELA	WASHER ROSETTA	131R
	3	**16043424**		2	PARAFUSO TORNILLO	SCREW VITE	040V
	4	**13272214**		1	PARAFUSO TORNILLO	SCREW VITE	040V
	5	**12574011**		1	PORCA TUERCA	NUT DADO	010D
	6	**10519260**		1	ARRUELA ARANDELA	WASHER ROSETTA	131R
	7	**82872313**		1	GANCHO GANCHO	HOOK GANCIO	030G
	8	**83904461**		1	COXIM COJIN	CUSHION CUSCINO	345C
	9	**10902224**		7	PARAFUSO TORNILLO	SCREW VITE	040V
	10	**11193274**		7	ARRUELA ARANDELA	WASHER ROSETTA	131R
	11	**12574211**		2	PORCA TUERCA	NUT DADO	010D
	12	**85802284**		1	JUNTA JUNTA PLANA	GASKET GUARNIZ. PIANA	120G
	13	**85805437**		1	SUPORTE SOPORTE	SUPPORT SUPPORTO	300S
	14	**14084011**		1	PORCA TUERCA	NUT DADO	010D
	15	**5178468**		1	MANOPLA EMPUNADURA	KNOB POMELLO	150P
	16	**85805200**		1	DIFUSOR DIFUSOR	DIFFUSER DIFFUSORE	045D
	17	**85806023**		M	RETENTOR JUNTA	SEAL GUARNIZIONE	122G
	18	**85806210**		1	TAMPÃO TOPE DE GOMA	BLOCK TAMPONE	026T

FB80.3 - FB100.3

CABINE / TAMPAS VÁRIAS
CABINA / TAPONES VARIOS
CAB / MISCELANEUS CAPS
CABINA / TAPPI VARI

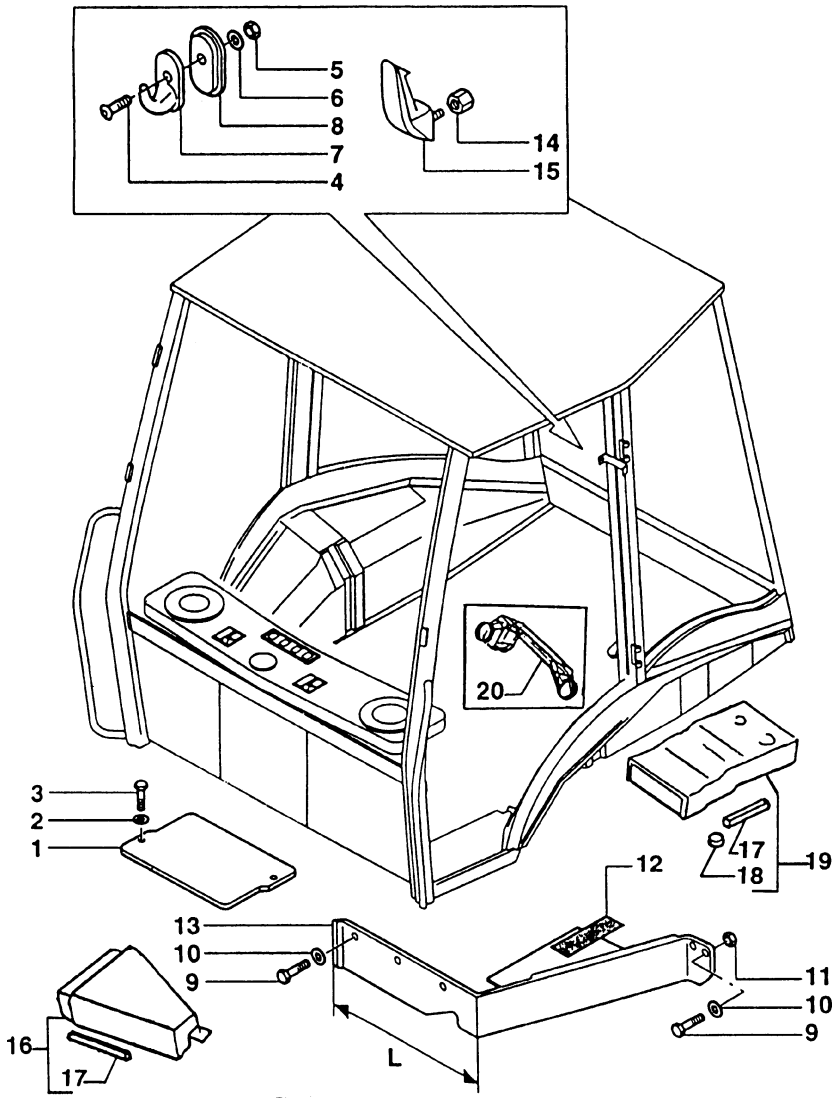

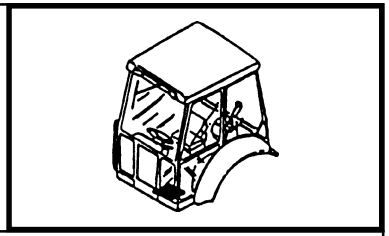

MOD	R	P/N. Imola	P/N. Brazil	Q	Descrição Denominacion	Description Descrizione	L.C.
	19	**85805201**		1	DIFUSOR DIFUSOR	DIFFUSER DIFFUSORE	045D
	20	**85805202**		1	COLETOR COLECTOR	MANIFOLD COLLETTORE	188C

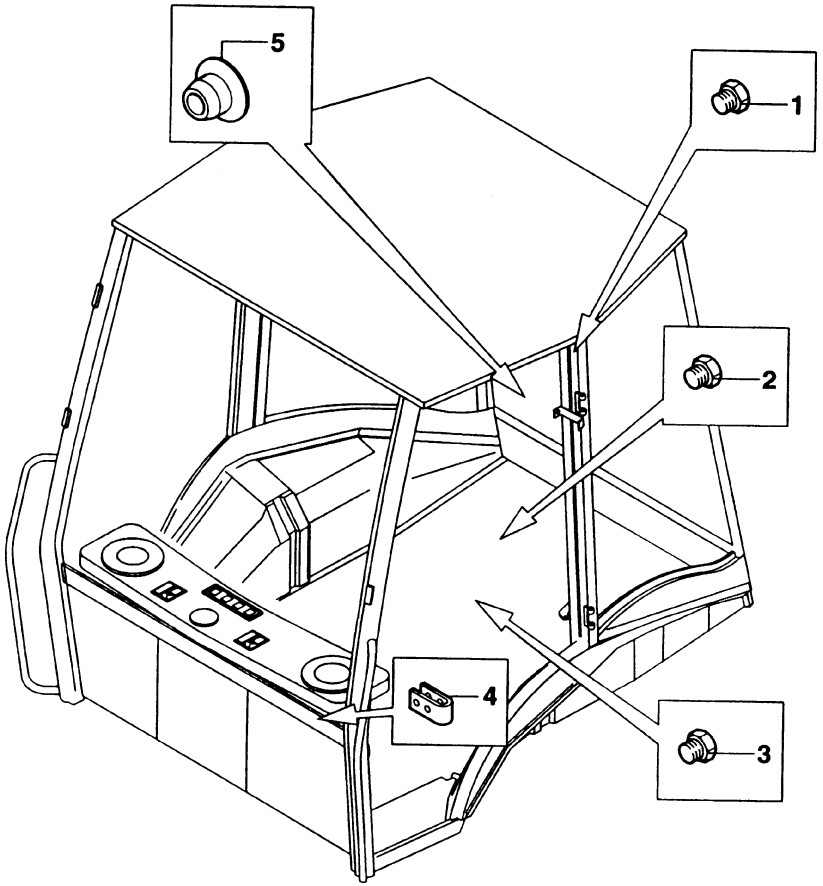

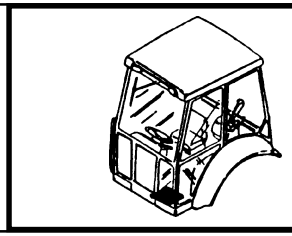

MOD	R	P/N. Imola	P/N. Brazil	Q	Descrição Denominacion	Description Descrizione	L.C.
	1	**83994150**		2	BUJÃO TAPON	PLUG TAPPO	050T
	2	**79111978**		5	BUJÃO TAPON	PLUG TAPPO	050T
	3	**85802309**		2	BUJÃO TAPON	PLUG TAPPO	050T
	4	**5154844**		4	ABRAÇADEIRA ABRAZADERA	CLAMP FASCETTA	031F
	5	**82003283**		2	BUJÃO TAPON	PLUG TAPPO	050T

10

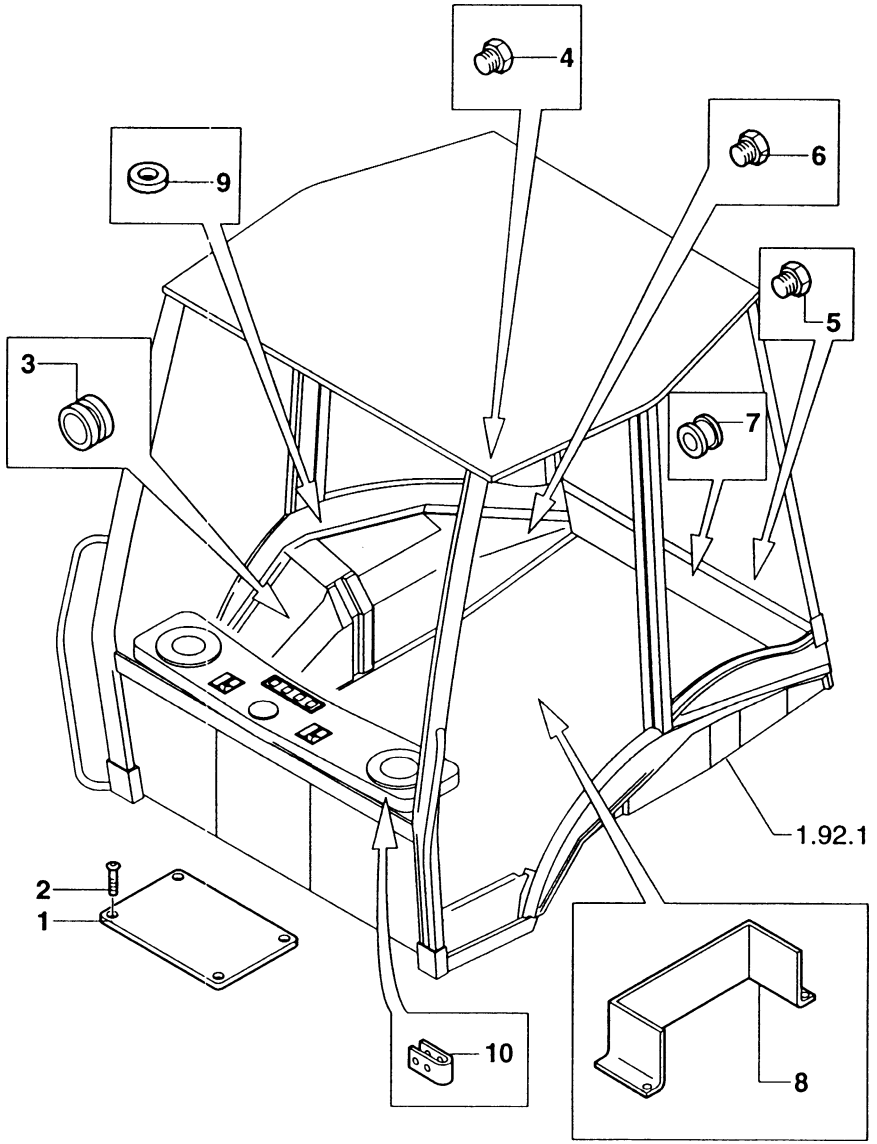

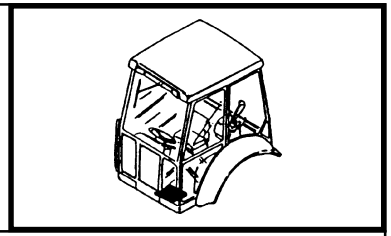

MOD	R	P/N. Imola	P/N. Brazil	Q	Descrição Denominacion	Description Descrizione	L.C.
	1	**85804688**		1	TAMPA TAPA	COVER COPERCHIO	265C
	2	**13313417**		4	PARAFUSO TORNILLO	SCREW VITE	040V
	3	**85801941**		3	ANEL ARO	RING ANELLO	045A
	4	**79111978**		1	BUJÃO TAPON	PLUG TAPPO	050T
	5	**85802309**		2	BUJÃO TAPON	PLUG TAPPO	050T
	6	**83994150**		2	BUJÃO TAPON	PLUG TAPPO	050T
	7	**10398580**		2	ANEL ARO	RING ANELLO	045A
	8	**85804691**		1	MANGUEIRA MANGA C/RACORDE	HOSE ASSY TUBO FLESSIBILE	192T
	10	**5154844**		4	ABRAÇADEIRA ABRAZADERA	CLAMP FASCETTA	031F

FB80.3 - FB100.3

TOLDO ROPS/TAMPAS VÁRIAS
ESTRUTURA DE PROTECCION/TAPONES VARIOS
ROPS CANOPY/MISCELANEUS CAPS
STRUTTURA PROTEZINE/TAPPI VARI

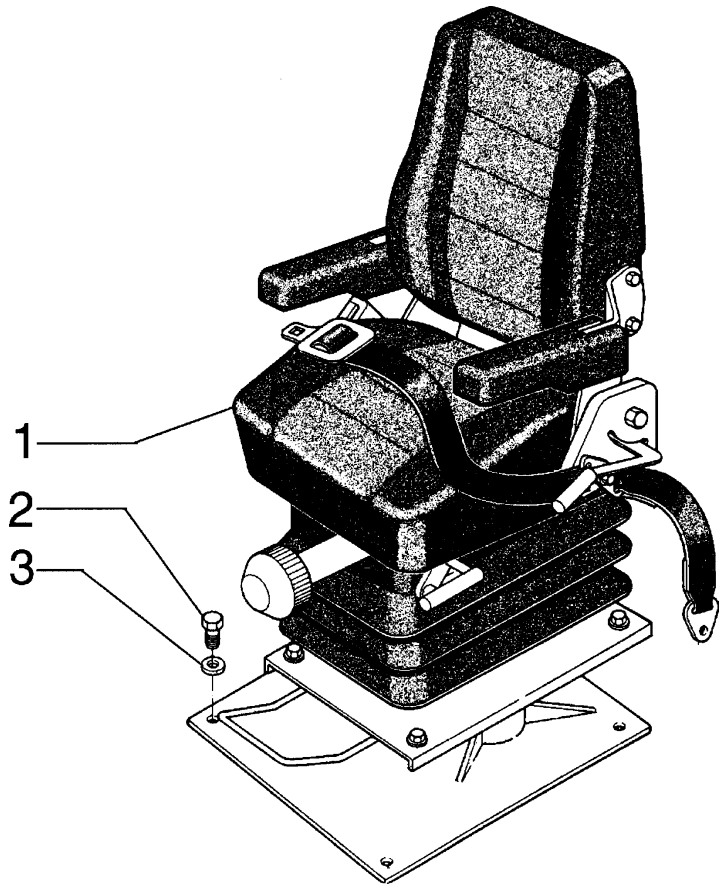

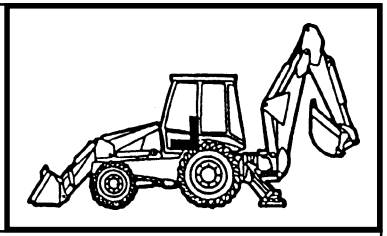

MOD	R	P/N. Imola	P/N. Brazil	Q	Descrição Denominacion	Description Descrizione	L.C.
	1	**75258205**		1	ASSENTO ASIENTO	SEAT SEDILE	080S
	2	**16043431**		8	PARAFUSO TORNILLO	SCREW VITE	040V
	3	**11193871**		8	ARRUELA ARANDELA	WASHER ROSETTA	131R

10

FB80.3 - FB100.3

TOLDO / SUPORTE DO ASSENTO
TOLDO / SOPORTE DEL ASIENTO
SAFETY FRAME / SEAT SUPPORT
TELAIO DI SICUREZZA / SUPPORTO SEDILE

1.96.8

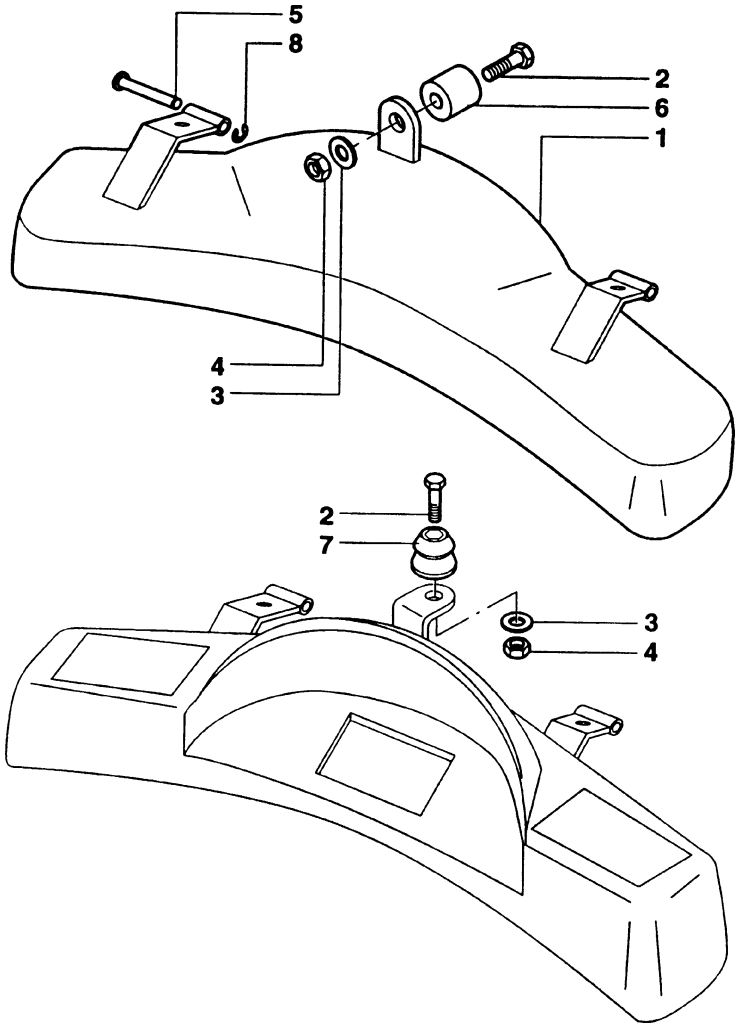

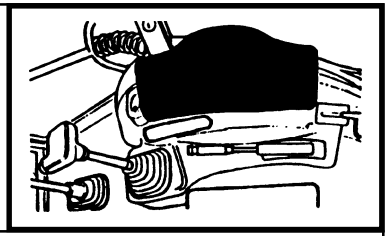

MOD	R	P/N. Imola	P/N. Brazil	Q	Descrição Denominacion	Description Descrizione	L.C.
	1	**85802166**		1	TAMPA TAPA	COVER COPERCHIO	265C
	2	**10902824**	**10902831**	2	PARAFUSO TORNILLO	SCREW VITE	040V
	3	**12647601**	**10730101**	2	ARRUELA ARANDELA	WASHER ROSETTA	131R
	4	**15896221**		2	PORCA TUERCA	NUT DADO	010D
	5	**85802180**		1	PINO BULON	PIN PERNO	080P
	6	**85802179**		1	BUCHA BUJE	BUSHING BOCCOLA	095B
	7	**85802090**		2	PINO BULON	PIN PERNO	080P
	8	**11088076**		2	ANEL ELÅSTICO ANILLO ELASTICO	SNAP RING ANELLO ELASTICO	187A

10

FB80.3 - FB100.3

TOLDO / PROTEÇÃO ANTI-VANDALISMO
TOLDO / PROTECCION ANTI-MANIPULACIONES
SAFETY FRAME / TAMPERING GUARD
TELAIO DI SICUREZZA / ANTIVANDALO

1.96.9

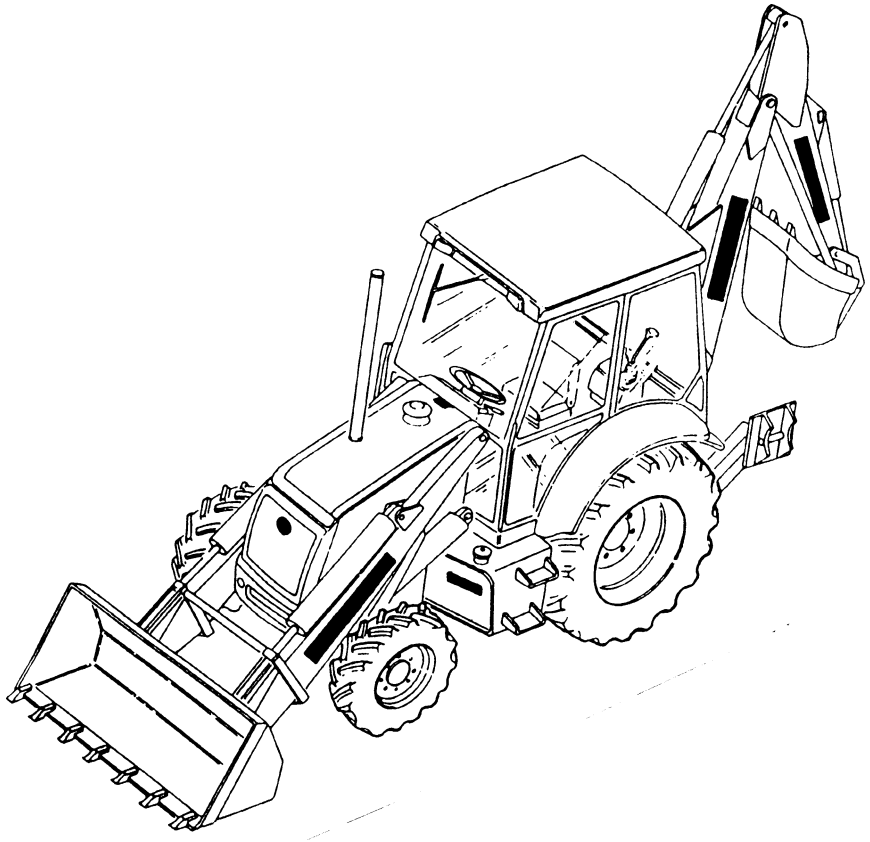

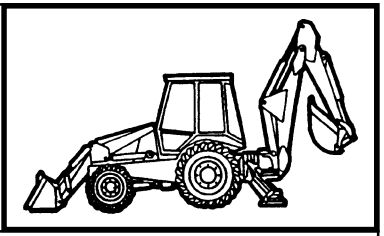

MOD	R	P/N. Imola	P/N. Brazil	Q	Descrição Denominacion	Description Descrizione	L.C.
	1		**75312617**	1	KIT JUEGO	KIT KIT	002K

10

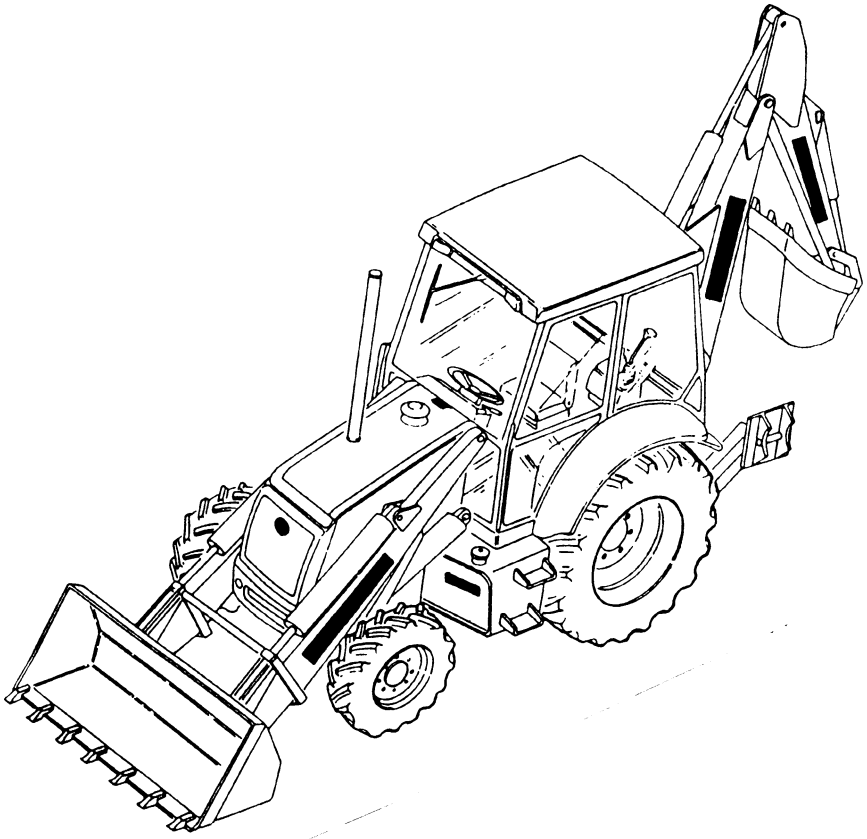

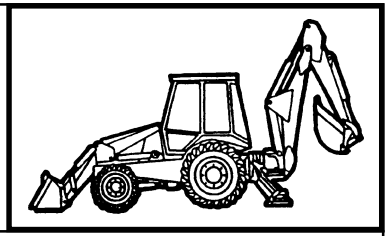

MOD	R	P/N. Imola	P/N. Brazil	Q	Descrição Denominacion	Description Descrizione	L.C.
	1		**753126187**	1	KIT JUEGO	KIT KIT	002K

10

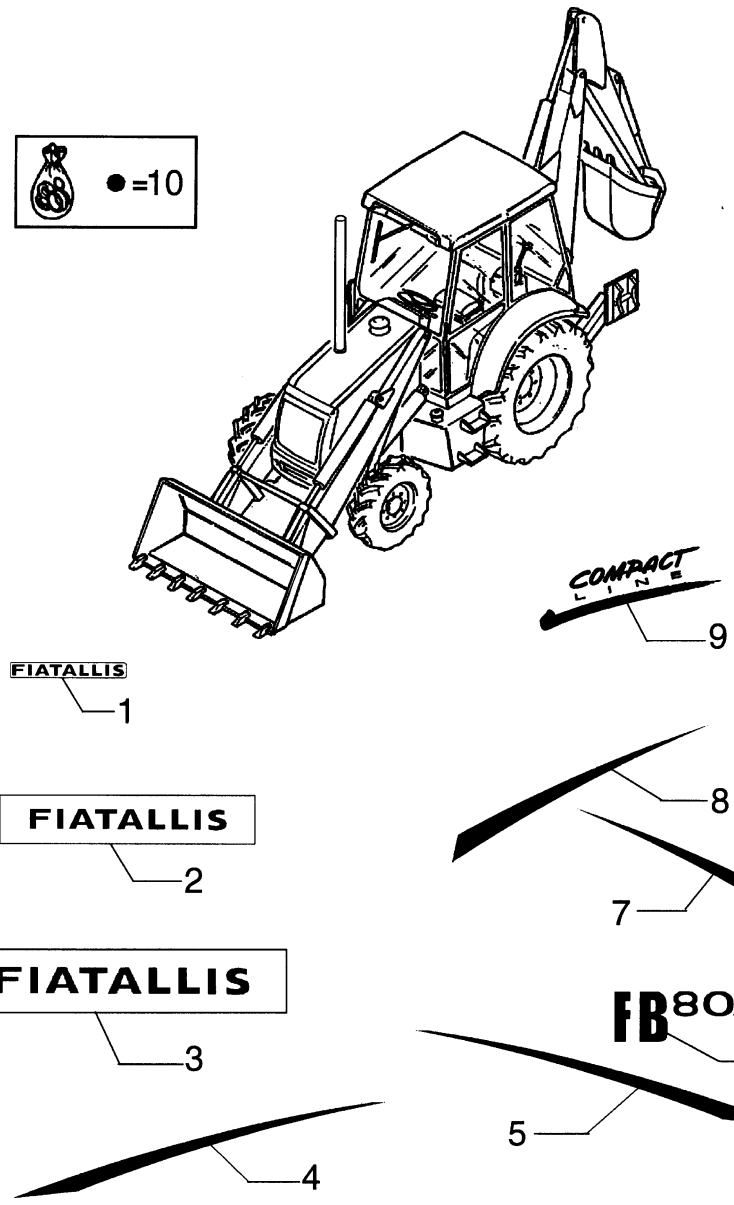

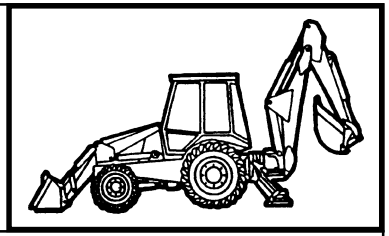

MOD	R	P/N. Imola	P/N. Brazil	Q	Descrição Denominacion	Description Descrizione	L.C.
	1		**75280378**	1	ADESIVO CALCOMANIA	DECAL TARGA	065T
	2		**75280312**	1	ADESIVO CALCOMANIA	DECAL TARGA	065T
	3		**75280297**	2	ADESIVO CALCOMANIA	DECAL TARGA	065T
	4		**75258098**	1	ADESIVO CALCOMANIA	DECAL TARGA	065T
	5		**75258099**	1	ADESIVO CALCOMANIA	DECAL TARGA	065T
	6		**75258145**	2	ADESIVO CALCOMANIA	DECAL TARGA	065T
	7		**75258101**	1	ADESIVO CALCOMANIA	DECAL TARGA	065T
	8		**75258100**	1	ADESIVO CALCOMANIA	DECAL TARGA	065T
	9		**75258192**	2	ADESIVO CALCOMANIA	DECAL TARGA	065T
	10		**75258091**	1	KIT JUEGO	KIT KIT	002K

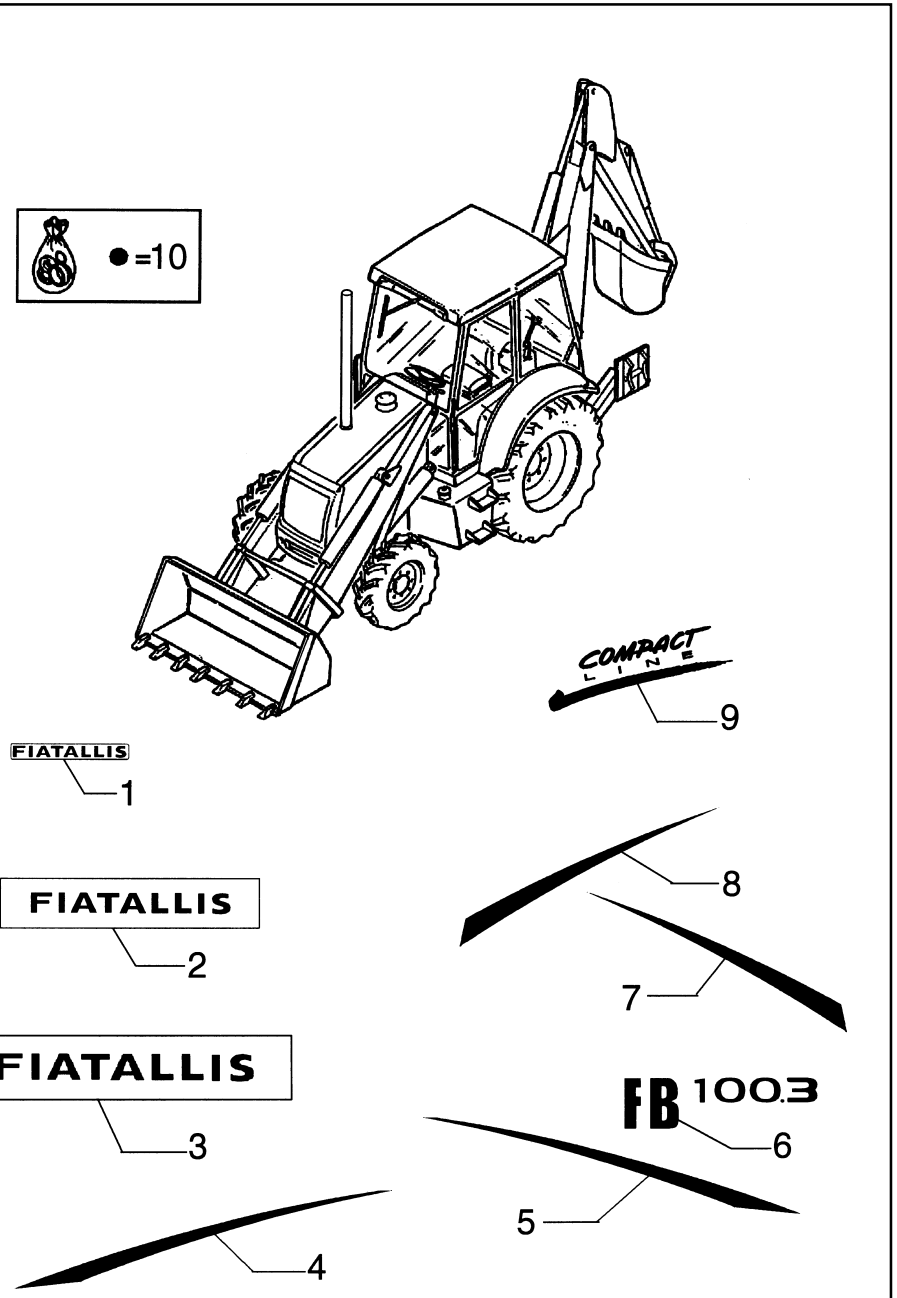

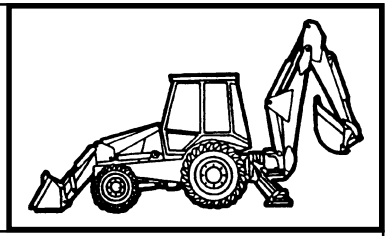

MOD	R	P/N. Imola	P/N. Brazil	Q	Descrição Denominacion	Description Descrizione	L.C.
	1		**75280378**	1	ADESIVO CALCOMANIA	DECAL TARGA	065T
	2		**75280312**	1	ADESIVO CALCOMANIA	DECAL TARGA	065T
	3		**75280297**	2	ADESIVO CALCOMANIA	DECAL TARGA	065T
	4		**75258098**	1	ADESIVO CALCOMANIA	DECAL TARGA	065T
	5		**75258099**	1	ADESIVO CALCOMANIA	DECAL TARGA	065T
	6		**75258146**	1	ADESIVO CALCOMANIA	DECAL TARGA	065T
	7		**75258101**	1	ADESIVO CALCOMANIA	DECAL TARGA	065T
	8		**75258100**	1	ADESIVO CALCOMANIA	DECAL TARGA	065T
	9		**75258192**	2	ADESIVO CALCOMANIA	DECAL TARGA	065T
	10		**75258150**	1	KIT JUEGO	KIT KIT	002K

10

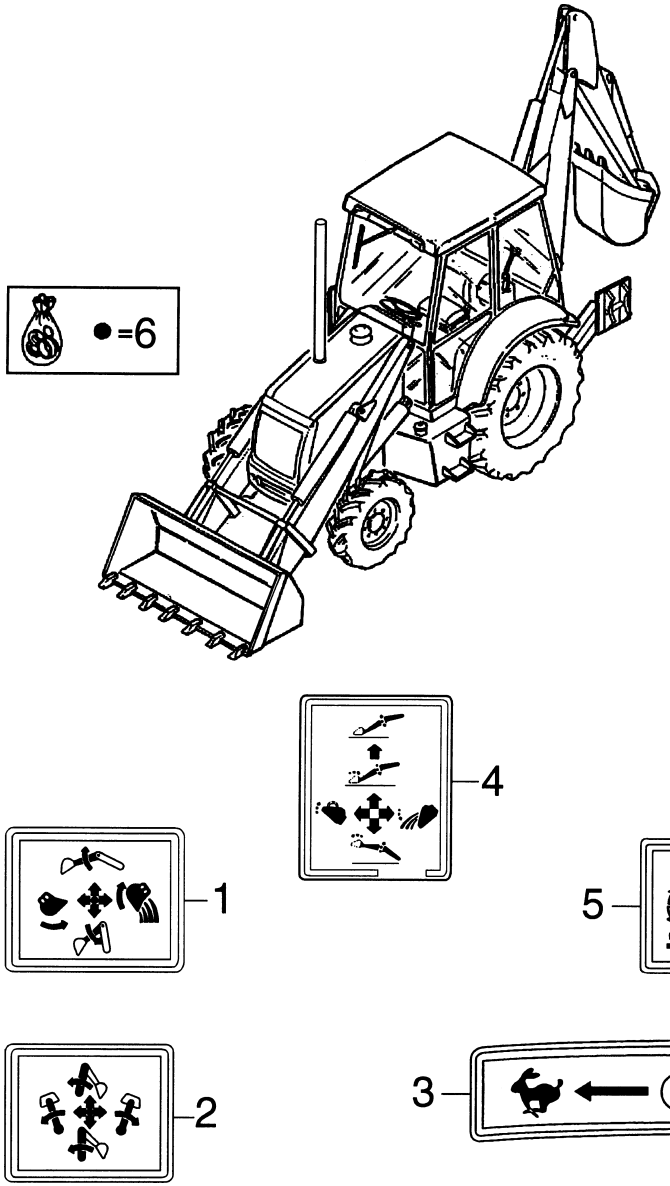

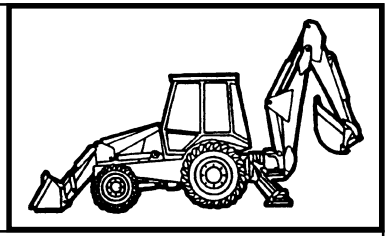

MOD	R	P/N. Imola	P/N. Brazil	Q	Descrição Denominacion	Description Descrizione	L.C.
	1	**85804344**		1	ADESIVO CALCOMANIA	DECAL TARGA	065T
	2	**85804345**		1	ADESIVO CALCOMANIA	DECAL TARGA	065T
	3	**85803789**		1	ADESIVO CALCOMANIA	DECAL TARGA	065T
	4	**85804346**		1	ADESIVO CALCOMANIA	DECAL TARGA	065T
	5	**85803788**		1	ADESIVO CALCOMANIA	DECAL TARGA	065T
	6	**75312622**		1	KIT JUEGO	KIT KIT	002K

WHEELS **RUOTE** **ROUES** **RÄDER**

RUEDAS **RODAS** **WIELEN** **HJUL**

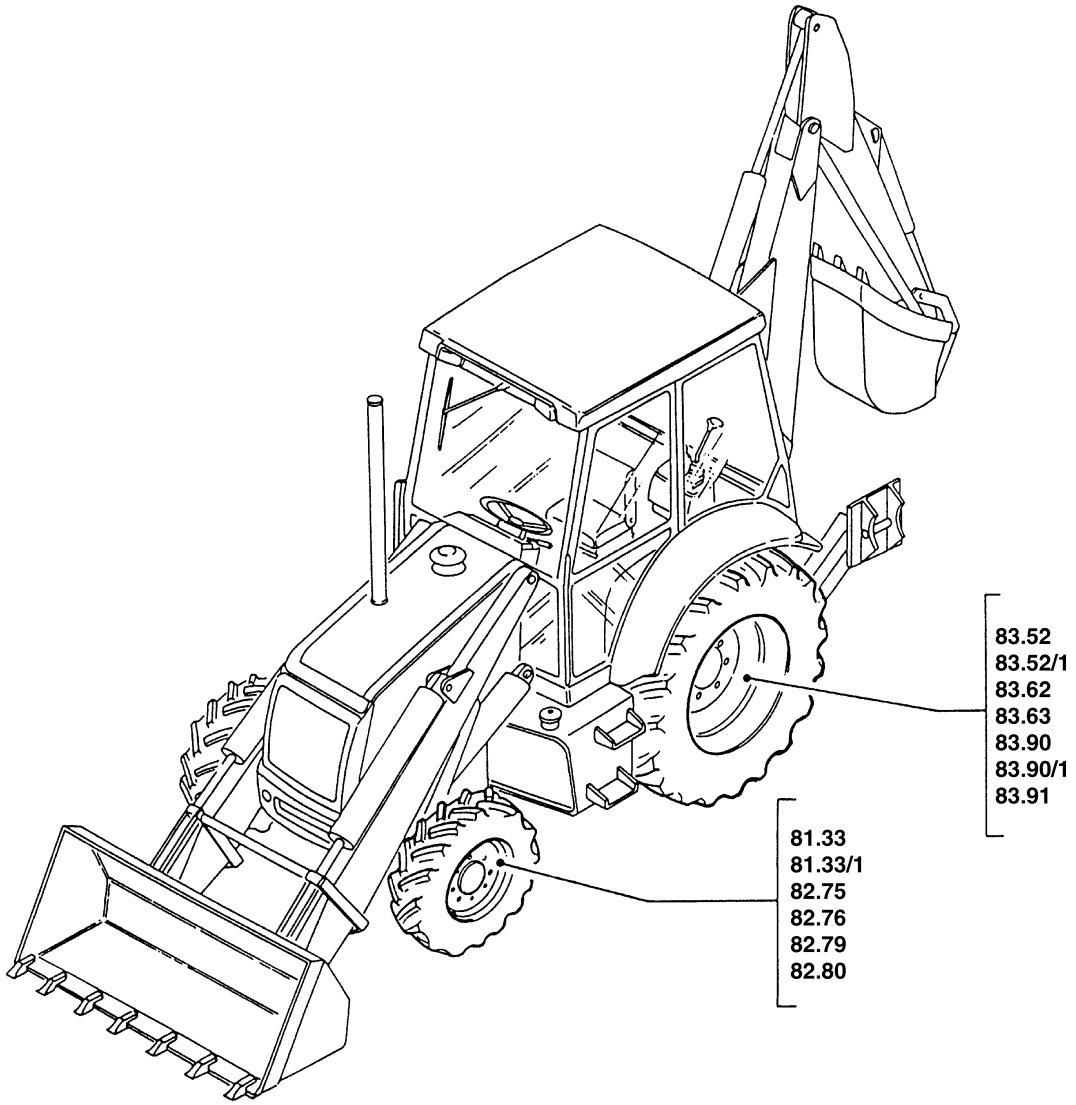

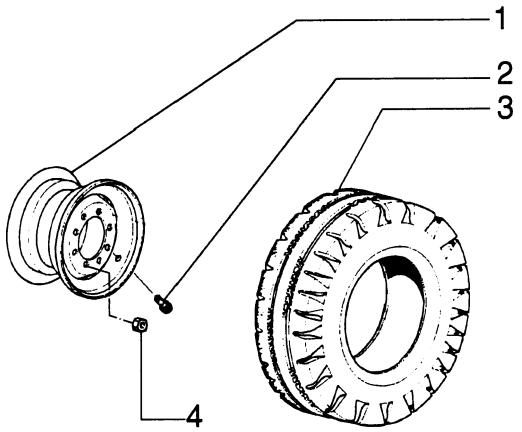

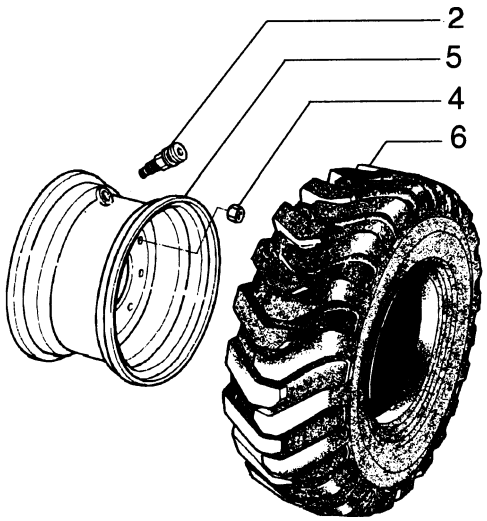

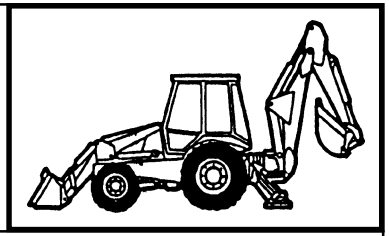

MOD	R	P/N. Imola	P/N. Brazil	Q	Descrição Denominacion	Description Descrizione	L.C.
	1		**75250274**	2	ARO LLANTA DE RUEDA	RIM CERCHIO RUOTA	135C
	2		**70096481**	2	VÁLVULA VALVULA	VALVE VALVOLA	010V
	3		**75248059**	2	PNEU NEUMATICO	TIRE PNEUMATICO	147P
	4		**75245676**	16	PORCA TUERCA	NUT DADO	010D
	5		**75245675**	2	ARO LLANTA DE RUEDA	RIM CERCHIO RUOTA	135C
	6		**70097578**	2	PNEU NEUMATICO	TIRE PNEUMATICO	147P

11

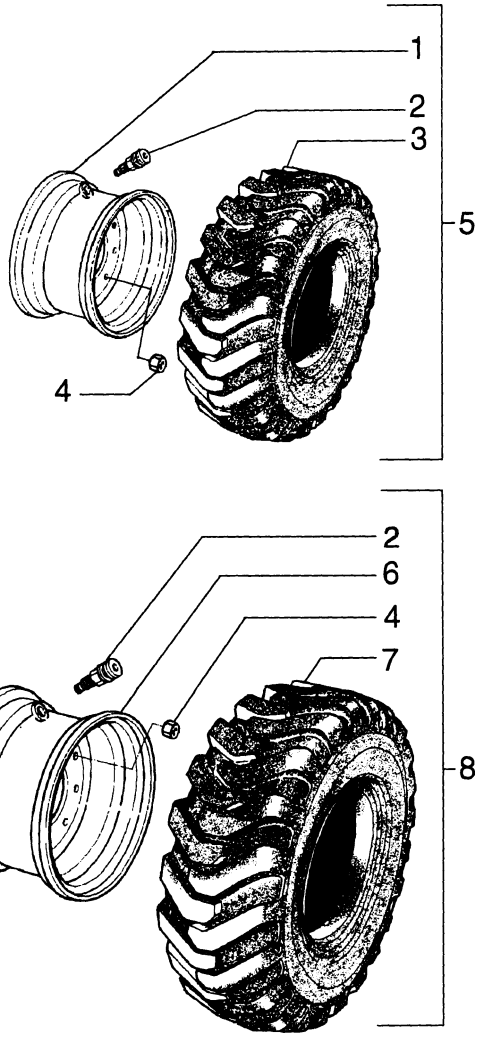

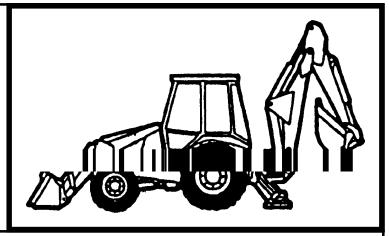

MOD	R	P/N. Imola	P/N. Brazil	Q	Descrição Denominacion	Description Descrizione	L.C.
	1		**85801204**	2	ARO LLANTA DE RUEDA	RIM CERCHIO RUOTA	135C
	2		**70096481**	4	VÁLVULA VALVULA	VALVE VALVOLA	010V
	3		**85700204**	2	PNEU NEUMATICO	TIRE PNEUMATICO	147P
	4		**75245616**	32	PORCA TUERCA	NUT DADO	010D
	5		**75249765**	1	CJ ARO/PNEU ESQUERDO JUEGO	KIT WHEEL/TIRE L.H. KIT RUOTA/PNEUMATICO	E135
	5		**75249766**	1	CJ ARO/PNEU DIREITO JUEGO	KIT WHEEL/TIRE R.H. KIT RUOTA/PNEUMATICO	D135
	6		**75250288**	2	ARO LLANTA DE RUEDA	RIM CERCHIO RUOTA	135C
	7		**85801444**	2	PNEU NEUMATICO	TIRE PNEUMATICO	147P
	8		**75249769**	1	CJ ARO/PNEU ESQUERDO JUEGO	KIT WHEEL/TIRE L.H. KIT RUOTA/PNEUMATICO	E135
	8		**75249770**	1	CJ ARO/PNEU DIREITO JUEGO	KIT WHEEL/TIRE R.H. KIT RUOTA/PNEUMATICO	D135

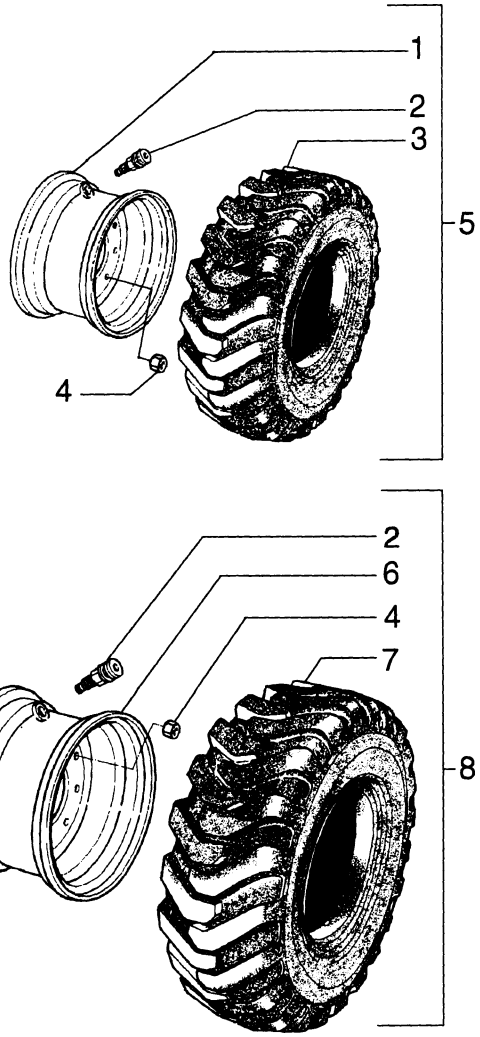

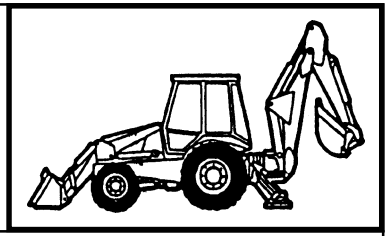

MOD	R	P/N. Imola	P/N. Brazil	Q	Descrição Denominacion	Description Descrizione	L.C.
	1		**75250278**	2	ARO LLANTA DE RUEDA	RIM CERCHIO RUOTA	135C
	2		**70096481**	2	VÁLVULA VALVULA	VALVE VALVOLA	010V
	3		**75245676**	16	PORCA TUERCA	NUT DADO	010D
	4		**75246117**	2	PNEU NEUMATICO	TIRE PNEUMATICO	147P
	5		**75250280**	2	ARO LLANTA DE RUEDA	RIM CERCHIO RUOTA	135C
	6		**85804889**	2	PNEU NEUMATICO	TIRE PNEUMATICO	147P

11

FB80.3 - FB100.3

AROS E PNEUS - OPCIONAL
LLANTAS Y NEUMATICOS - OPCIONAL
WHEELS AND TIRES - SPECIAL
RUOTES E PNEUMATICOS - VARIANTE

VARIATION

VARIANTES

VARIANTI

VARIANTES

VARIANTES

UITRUSTINGEN

VARIANTEN

VARIANTER

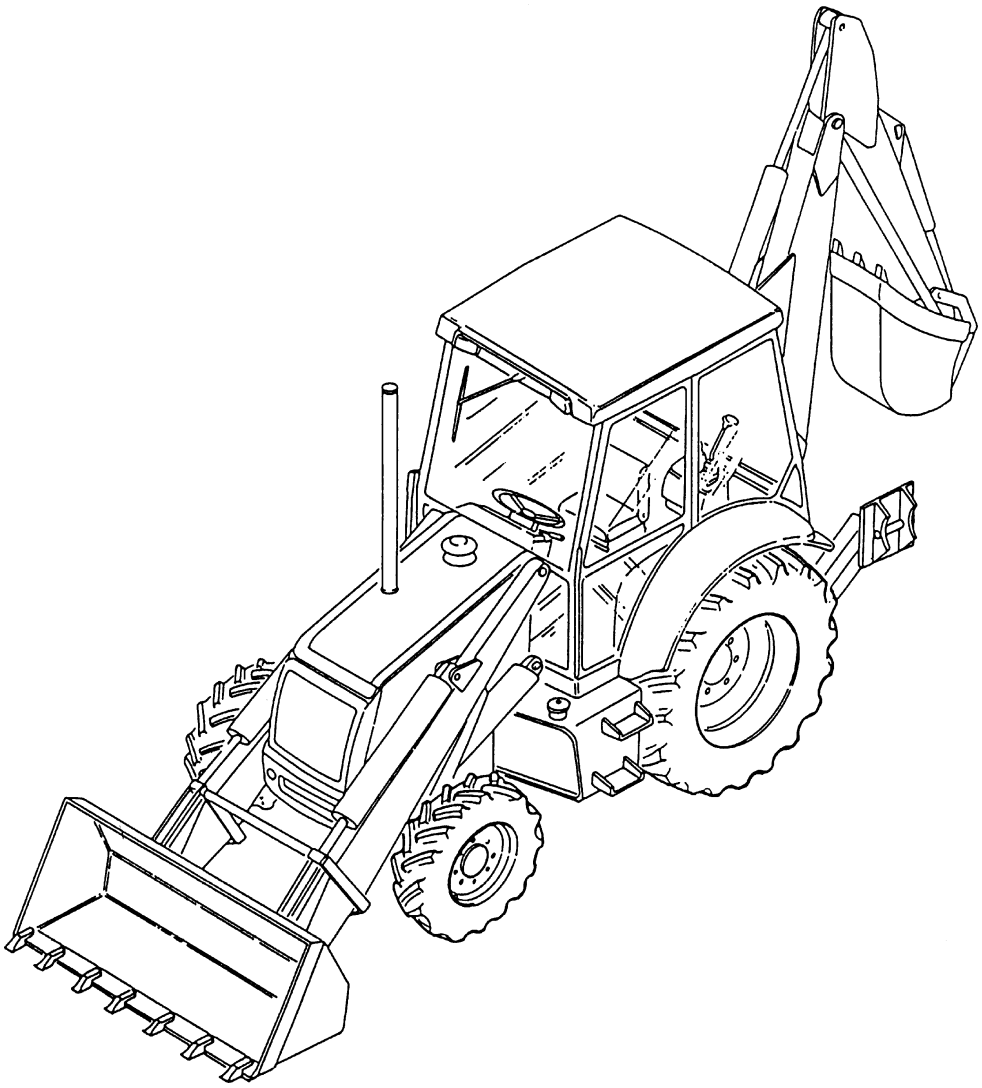

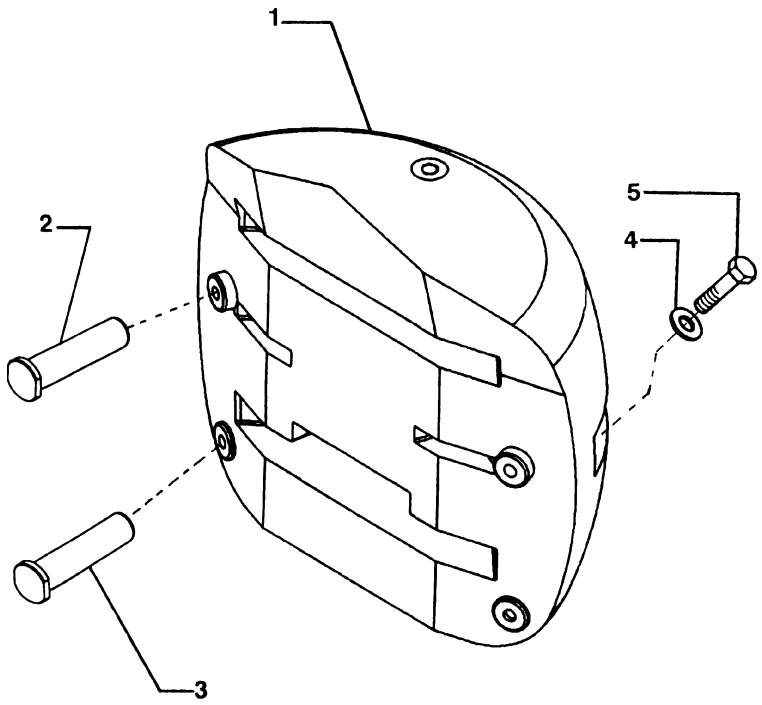



MOD	R	P/N. Imola	P/N. Brazil	Q	Descrição Denominacion	Description Descrizione	L.C.
	1	**85807933**	**75251457**	1	CONTRAPESO TRASEIRO CONTRAPESO POSTERIOR	REAR COUNTERWEI ZAVORRA POSTERI	0221
	2	**85807934**	**75280845**	2	PINO BULON	PIN PERNO	080P
	3	**85807935**	**75280846**	2	PINO BULON	PIN PERNO	080P
	4	**15998737**	**15998731**	4	PARAFUSO TORNILLO	SCREW VITE	040V
	5	**85807951**	**79005245**	4	ARRUELA ARANDELA	WASHER ROSETTA	131R

FB100.3

CONTRAPESO TRASEIRO
CONTRAPESO POSTERIOR
REAR WEIGHT
ZAVORRA POSTERIORE

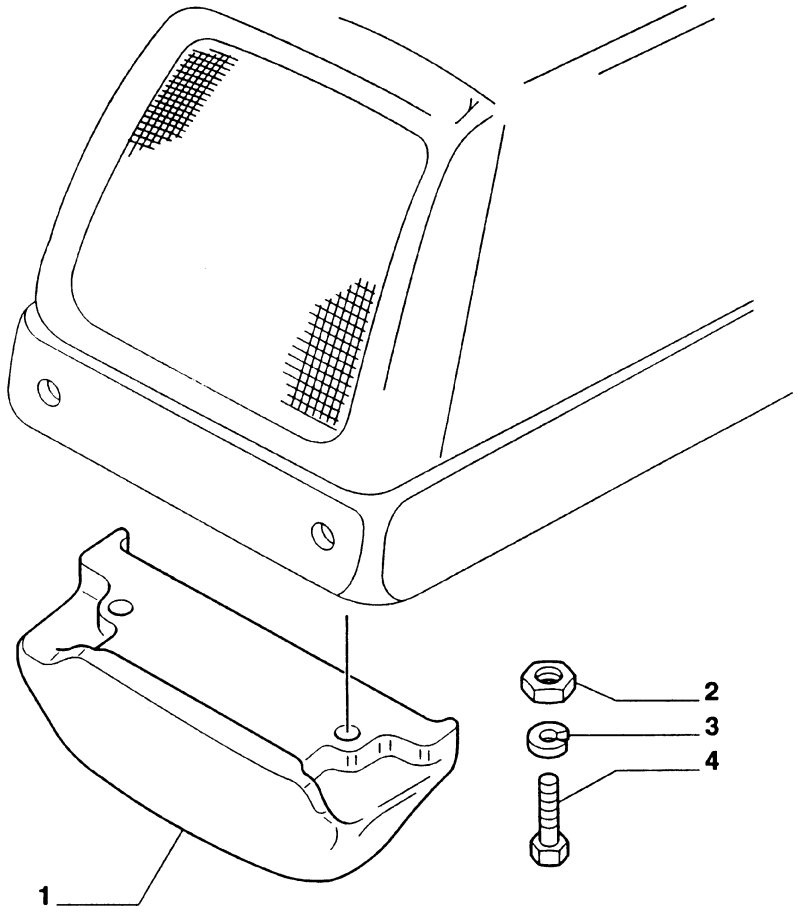

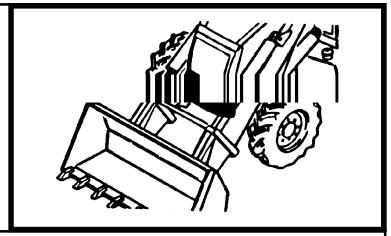

MOD	R	P/N. Imola	P/N. Brazil	Q	Descrição Denominacion	Description Descrizione	L.C.
	1	**85804838**	**85801469**	1	CONTRAPESO LASTRE	COUNTERWEIGHT ZAVORRA	010Z
	2	**12575121**		2	PORCA TUERCA	NUT DADO	010D
	3	**76021649**		4	ARRUELA ARANDELA	WASHER ROSETTA	131R
	4	**15991131**		2	PARAFUSO TORNILLO	SCREW VITE	040V

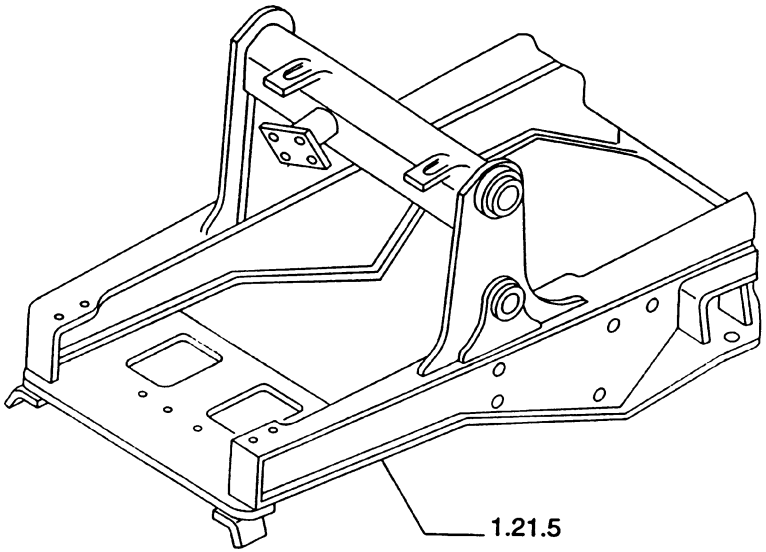

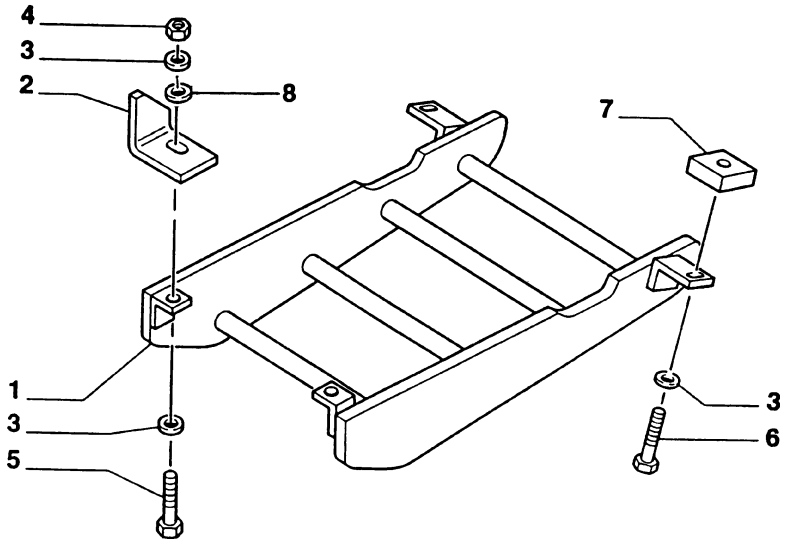

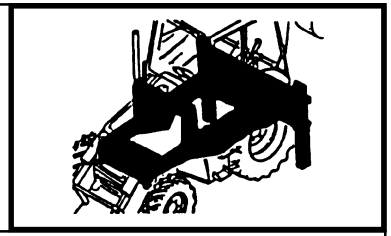

MOD	R	P/N. Imola	P/N. Brazil	Q	Descrição Denominacion	Description Descrizione	L.C.
	1	**85806071**	**75280445**	1	PROTEÇÃO MOTOR PROTECCION MOT.	ENGINE PROTECT. PROTEZIONE MOT.	9007
	2	**85806068**	**75249083**	1	SUPORTE DIREITO SOPORTE	SUPPORT RH SUPPORTO	109D
	2	**85806069**	**75249084**	1	SUPORTE ESQUERDO SOPORTE	SUPPORT LH SUPPORTO	109E
	3	**14496921**	**14496931**	4	ARRUELA ARANDELA	WASHER ROSETTA	131R
	4	**12574921**		2	PORCA TUERCA	NUT DADO	010D
	5	**11391534**	**11390531**	2	PARAFUSO TORNILLO	SCREW VITE	040V
	6		**15981031**	2	PARAFUSO TORNILLO	SCREW VITE	040V
	7	**85806070**	**76006491**	2	CHAPA PLACA	PLATE PIASTRA	105P
	8		**10517271**	2	ARRUELA ARANDELA	WASHER ROSETTA	131R

FB80.3 - FB100.3

PROTETOR EIXO CARDAN DIANTEIRO - 4X4
DEFENSA ARBOL DE TRANSMISSION - 4X4
PROPELLER SHAFT SHIELD - 4X4
PROTEZIONE ALBERO DI TRASMISSIONE - 4X4

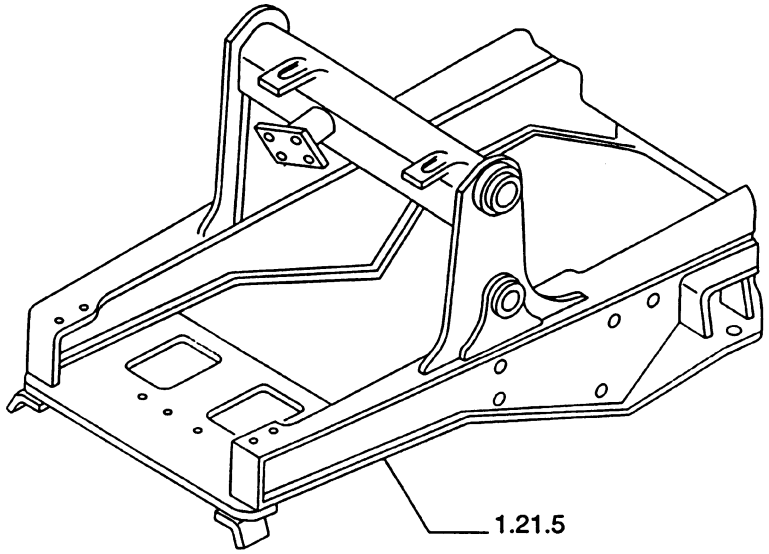

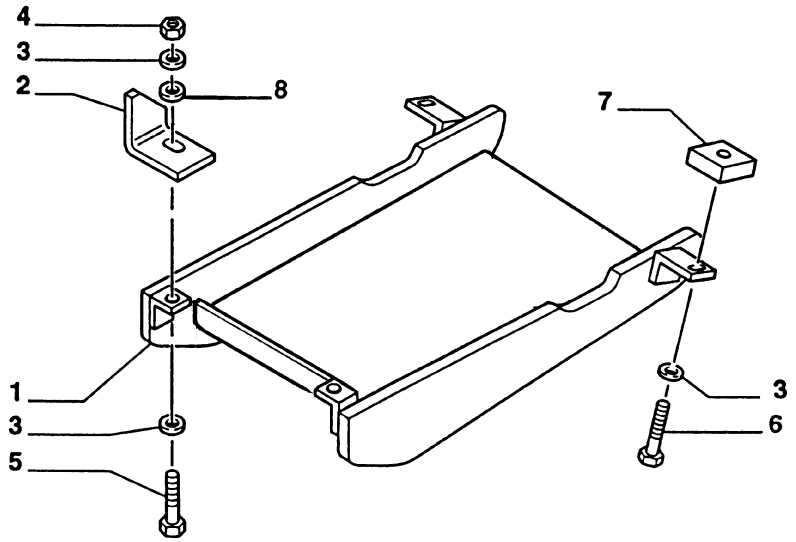

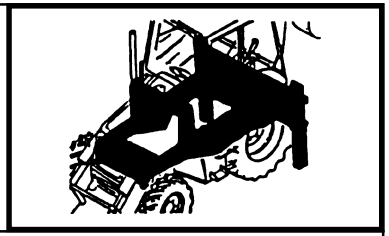

MOD	R	P/N. Imola	P/N. Brazil	Q	Descrição Denominacion	Description Descrizione	L.C.
	1		**75249025**	1	PROTEÇÃO MOTOR PROTECCION MOT.	ENGINE PROTECT. PROTEZIONE MOT.	9007
	2		**75249084**	1	SUPORTE ESQUERDO SOPORTE	SUPPORT LH SUPPORTO	109E
	2		**75249083**	1	SUPORTE DIREITO SOPORTE	SUPPORT RH SUPPORTO	109D
	3	**14496921**	**14496931**	6	ARRUELA ARANDELA	WASHER ROSETTA	131R
	4	**12574921**		2	PORCA TUERCA	NUT DADO	010D
	5	**11391534**	**11390531**	2	PARAFUSO TORNILLO	SCREW VITE	040V
	6		**15981031**	2	PARAFUSO TORNILLO	SCREW VITE	040V
	7	**85806070**	**76006491**	2	CHAPA PLACA	PLATE PIASTRA	105P
	8		**10517271**	2	ARRUELA ARANDELA	WASHER ROSETTA	131R

FB80.3 - FB100.3

PROTETOR DO CARTER DE OLEO - 4X2
DEFENSA CARTER DE ACEITE - 4X2
OIL SUMP PROTECTION - 4X2
PROTEZIONE COPPA OLIO - 4X2

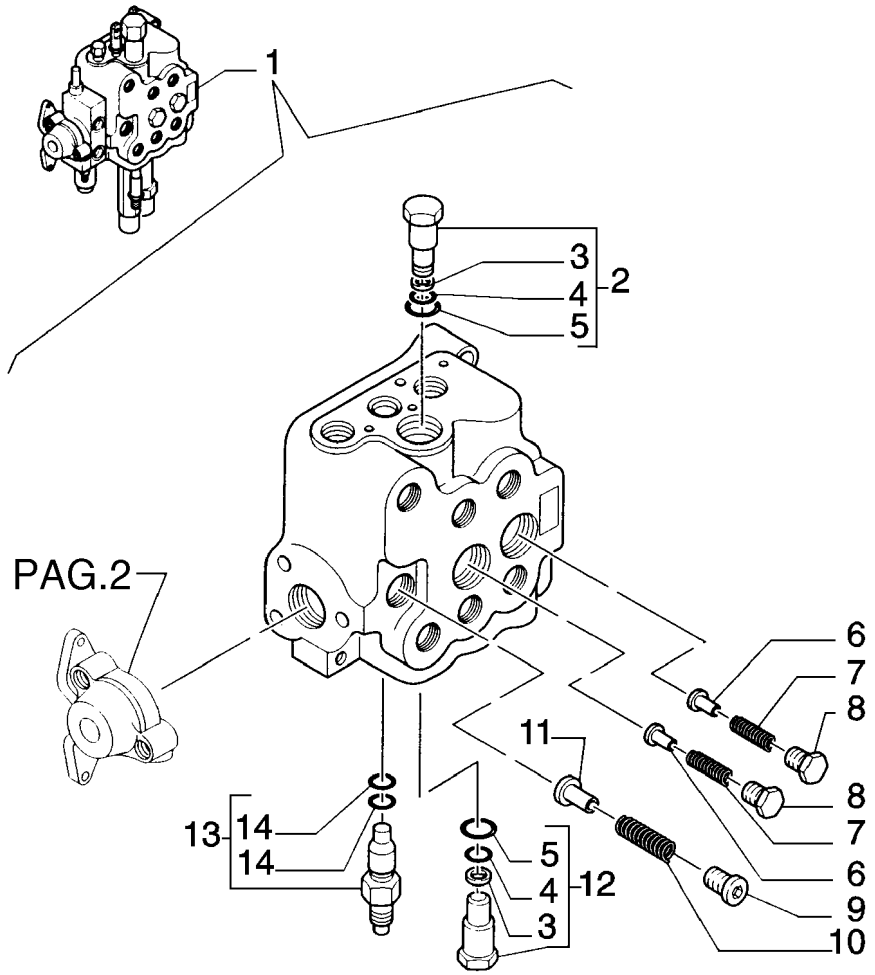

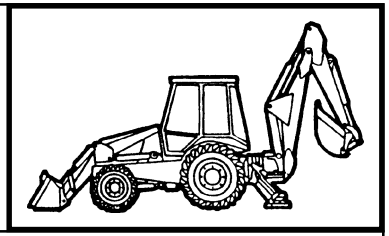

MOD	R	P/N. Imola	P/N. Brazil	Q	Descrição Denominacion	Description Descrizione	L.C.
	1	**85819649**		1	DISTRIBUIDOR DISTRIBUIDOR	CONTROL VALVE DISTRIBUTORE	083D
	2	**9968473**		1	VÁLVULA VALVULA	VALVE VALVOLA	010V
	3	**9968472**		2	ANEL ARO	RING ANELLO	045A
	4	**9968471**		2	O'RING JUNTA TORICA	O'RING GUARNIZIONE O-R	158G
	5	**9968470**		2	O'RING JUNTA TORICA	O'RING GUARNIZIONE O-R	158G
	6	**9968444**		2	PISTÃO EMBOLO	PLUNGER PINSTONCINO	130P
	7	**9968445**		2	MOLA MUELLE	SPRING MOLLA	100M
	8	**9968446**		2	BUJÃO TAPON	PLUG TAPPO	050T
	9	**9968449**		1	BUJÃO TAPON	PLUG TAPPO	050T
	10	**9968448**		1	MOLA MUELLE	SPRING MOLLA	100M
	11	**9968447**		1	PISTÃO EMBOLO	PLUNGER PISTONCINO	130P
	12	**9968469**		1	VÁLVULA VALVULA	VALVE VALVOLA	010V
	13	**85819722**		1	VÁLVULA VALVULA	VALVE VALVOLA	010V
	14	**85819945**		1	ANEL ARO	RING ANELLO	045A

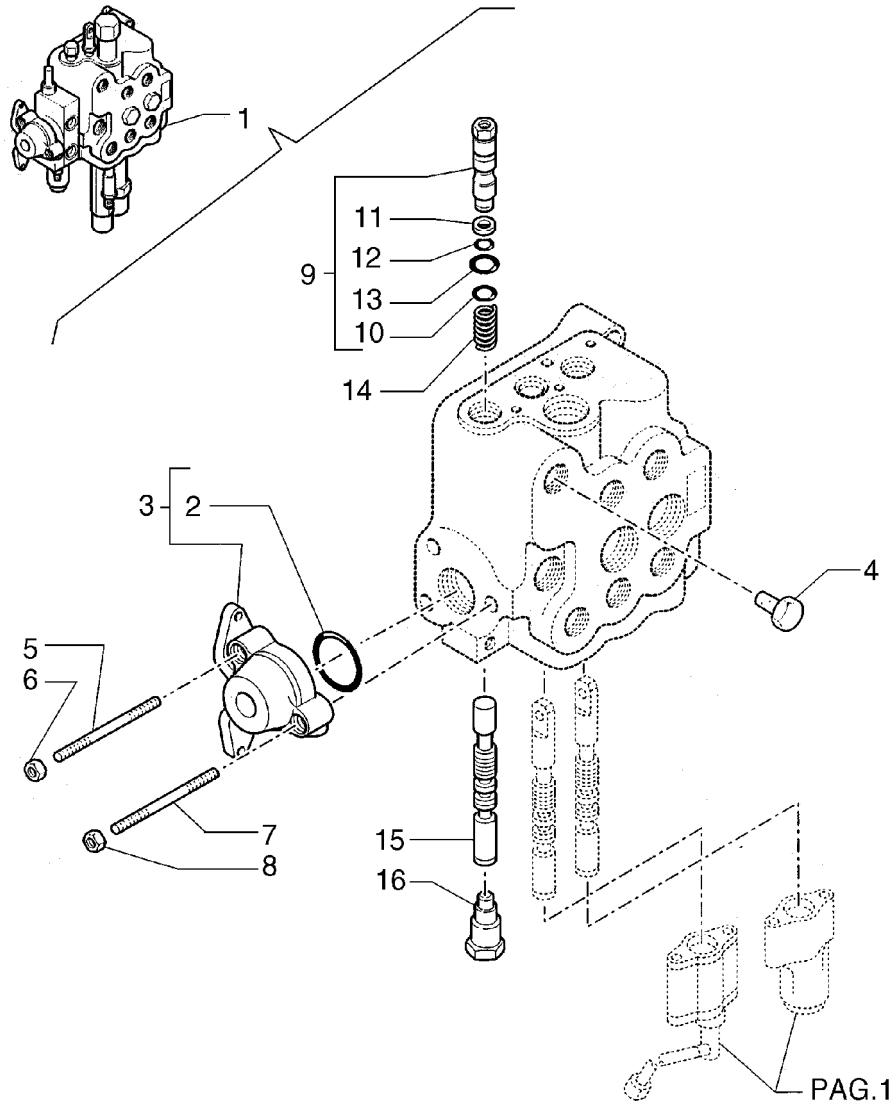

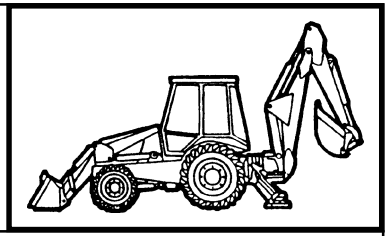

MOD	R	P/N. Imola	P/N. Brazil	Q	Descrição Denominacion	Description Descrizione	L.C.
	1	**85819649**		1	DISTRIBUIDOR DISTRIBUIDOR	CONTROL VALVE DISTRIBUTORE	083D
	2	**9968476**		1	O'RING JUNTA TORICA	O'RING GUARNIZIONE O-R	158G
	3	**9968443**		1	VÁLVULA VALVULA	VALVE VALVOLA	010V
	4	**85807857**		1	BUJÃO TAPON	PLUG TAPPO	050T
	5	**9968521**		2	PRISIONEIRO ESPARRAGO	STUD PRIGIONIERO	210P
	6	**9968441**		2	PORCA TUERCA	NUT DADO	010D
	7	**9968520**		1	PRISIONEIRO ESPARRAGO	STUD PRIGIONIERO	210P
	8	**9968440**		1	PORCA TUERCA	NUT DADO	010D
	9	**85815667**		1	VÁLVULA VALVULA	VALVE VALVOLA	010V
	10	**85815668**		1	ANEL ARO	RING ANELLO	045A
	11	**9968467**		1	ANEL ARO	RING ANELLO	045A
	12	**9968466**		1	O'RING JUNTA TORICA	O'RING GUARNIZIONE O-R	158G
	13	**9968468**		1	O'RING JUNTA TORICA	O'RING GUARNIZIONE O-R	158G
	14	**9968488**		1	MOLA MUELLE	SPRING MOLLA	100M
	15	**85807858**		1	HASTE VARILLA	ROD ASTA	090A
	16	**9968464**		1	BUJÃO TAPON	PLUG TAPPO	050T

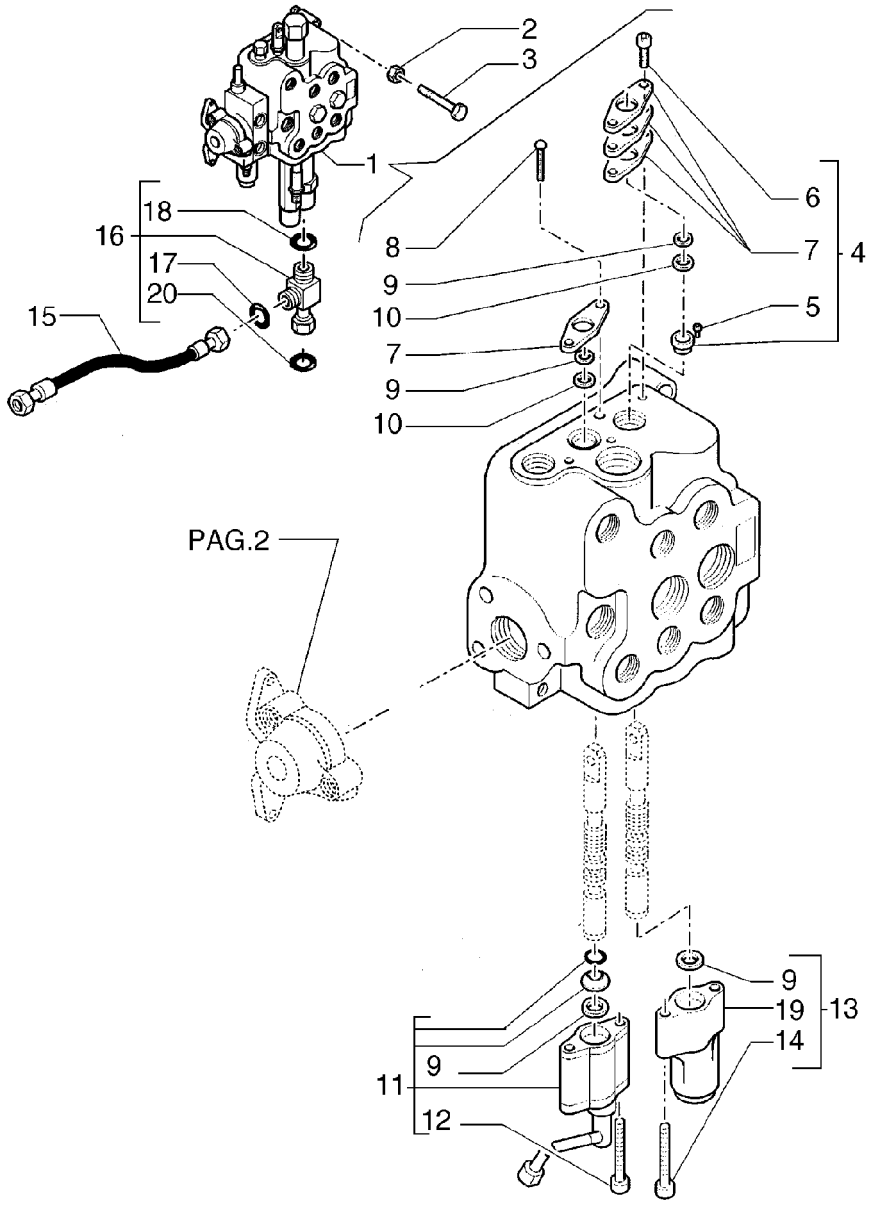

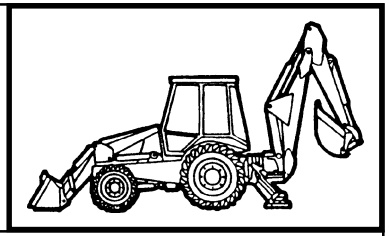

MOD	R	P/N. Imola	P/N. Brazil	Q	Descrição Denominacion	Description Descrizione	L.C.
	1	**85819649**		1	DISTRIBUIDOR DISTRIBUIDOR	CONTROL VALVE DISTRIBUTORE	083D
	2	**11190574**		3	ARRUELA ARANDELA	WASHER ROSETTA	131R
	3	**14308221**		3	PARAFUSO TORNILLO	SCREW VITE	040V
	4	**9968455**		1	SUPORTE SUPORTE	SUPPORT SUPPORTO	300S
	5	**9968457**		1	ESPAÇADOR SEPARADOR	SPACER DISTANZIALE	075D
	6	**9968456**		2	PARAFUSO TORNILLO	SCREW VITE	040V
	7	**9968458**		3	CHAPA PLACA	PLATE PIASTRA	105P
	8	**9968460**		2	PARAFUSO TORNILLO	SCREW VITE	040V
	9	**85999136**		4	O'RING JUNTA TORICA	O'RING GUARNIZIONE O-R	158G
	10	**85999138**		2	O'RING JUNTA TORICA	O'RING GUARNIZIONE O-R	158G
	11	**85808403**		1	ESPAÇADOR SEPARADOR	SPACER DISTANZIALE	075D
	12	**9968451**		2	PARAFUSO TORNILLO	SCREW VITE	040V
	13	**85817025**		1	VÁLVULA VALVULA	VALVE VALVOLA	010V
	14	**9968454**		2	PARAFUSO TORNILLO	SCREW VITE	040V
	15	**85816804**		1	MANGUEIRA MANGA C/RACORDE	HOSE ASSY TUBO FLESSIBLE	192T
	16	**85817531**		1	CONEXÃO RACOR	FITTING RACCORDO	020R
	17	**89825770**		1	O'RING JUNTA TORICA	O'RING GUARNIZIONE O-R	158G
	18	**89824050**		1	O'RING JUNTA TORICA	O'RING GUARNIZIONE O-R	158G
	19	**9968513**		1	TAMPA TAPA	COVER COPERCHIO	265C
	20	**89626929**		1	O'RING JUNTA TORICA	O'RING GUARNIZIONE O-R	158G

FB80.3 - FB100.3

DISTRIBUIDOR DA PÁ DE DUAS SEÇÕES
DISTRIBUIDOR DE LA PALA DE DOS SECCIONES
TWO-SECTION CONTRO VALVE FOR LOADER
DISTRIBUIZIONE PALA A DUE SEZIONI

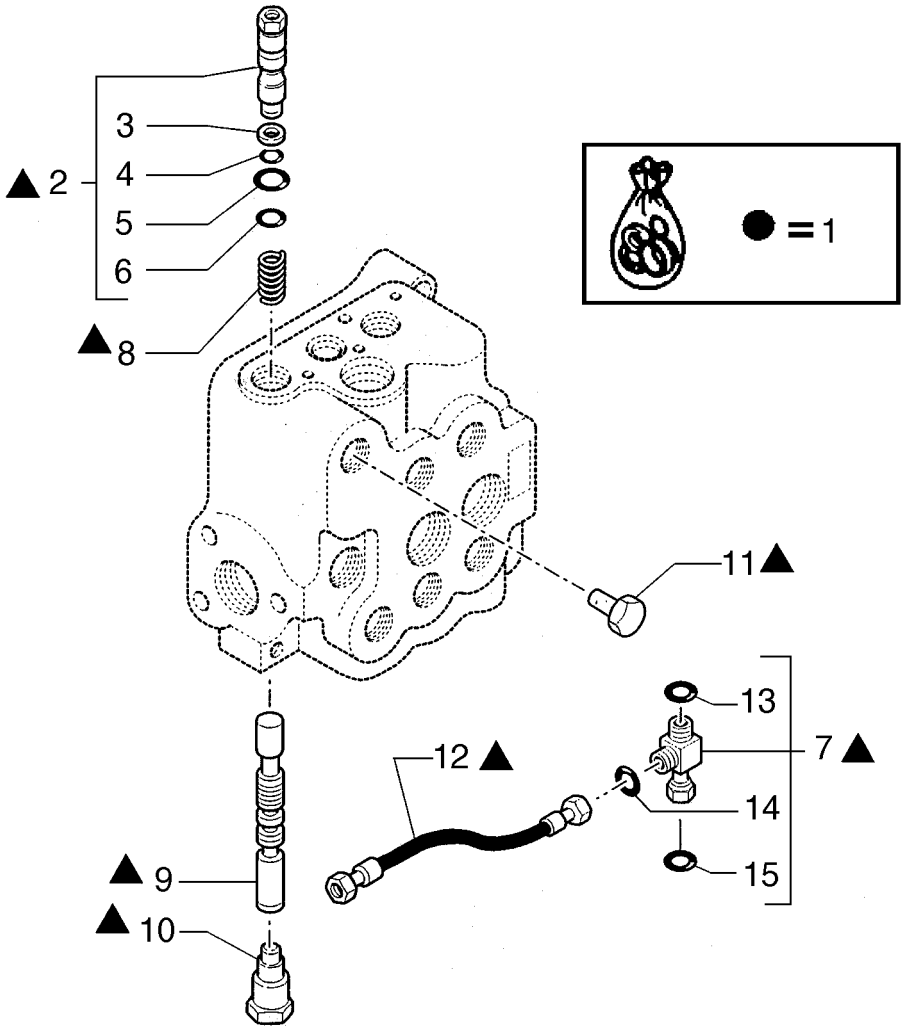

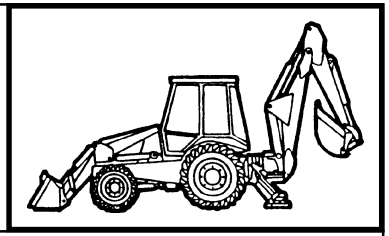

MOD	R	P/N. Imola	P/N. Brazil	Q	Descrição Denominacion	Description Descrizione	L.C.
	1	**85816793**		1	KIT JUEGO	KIT KIT	002K
	2	**85815667**		1	VÁLVULA VALVULA	VALVE VALVOLA	010V
	3	**9968467**		1	ANEL ARO	RING ANELLO	045A
	4	**9968466**		1	O'RING JUNTA TORICA	O'RING GUARNIZIONE O-R	158G
	5	**9968468**		1	O'RING JUNTA TORICA	O'RING GUARNIZIONE O-R	158G
	6	**85815668**		1	ANEL ARO	RING ANELLO	045A
	7	**85817531**		1	CONEXÃO RACOR	FITTING RACCORDO	020R
	8	**9968488**		1	MOLA MUELLE	SPRING MOLLA	100M
	9	**85807858**		1	HASTE VARILLA	ROD ASTA	090A
	10	**9968464**		1	BUJÃO TAPON	PLUG TAPPO	050T
	11	**85807857**		1	BUJÃO TAPON	PLUG TAPPO	050T
	12	**85816804**		1	MANGUEIRA MANGA C/RACORDE	HOSE ASSY TUBO FLESSIBILE	192T
	13	**89824050**		1	O'RING JUNTA TORICA	O'RING GUARNIZIONE O-R	158G
	14	**89825770**		1	O'RING JUNTA TORICA	O'RING GUARNIZIONE O-R	158G
	15	**89626929**		1	O'RING JUNTA TORICA	O'RING GUARNIZIONE O-R	158G

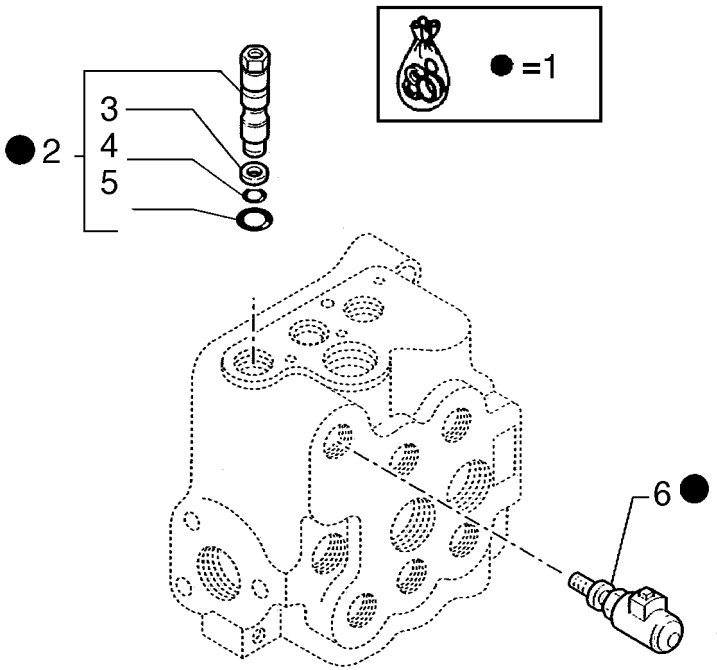

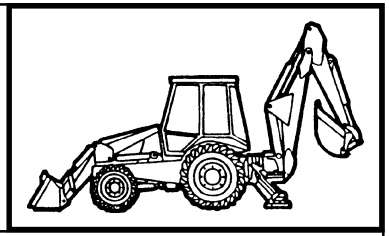

MOD	R	P/N. Imola	P/N. Brazil	Q	Descrição Denominacion	Description Descrizione	L.C.
	1	**85817201**		1	KIT JUEGO	KIT KIT	002K
	2	**9968465**		1	VÁLVULA VALVULA	VALVE VALVOLA	010V
	3	**9968467**		1	ANEL ARO	RING ANELLO	045A
	4	**9968466**		1	O'RING JUNTA TORICA	O'RING GUARNIZIONE O-R	158G
	5	**9968468**		1	O'RING JUNTA TORICA	O'RING GUARNIZIONE O-R	158G
	6	**9968461**		1	INTERRUPTOR INTERRUPTOR	SWITCH INTERRUTTORE	075I

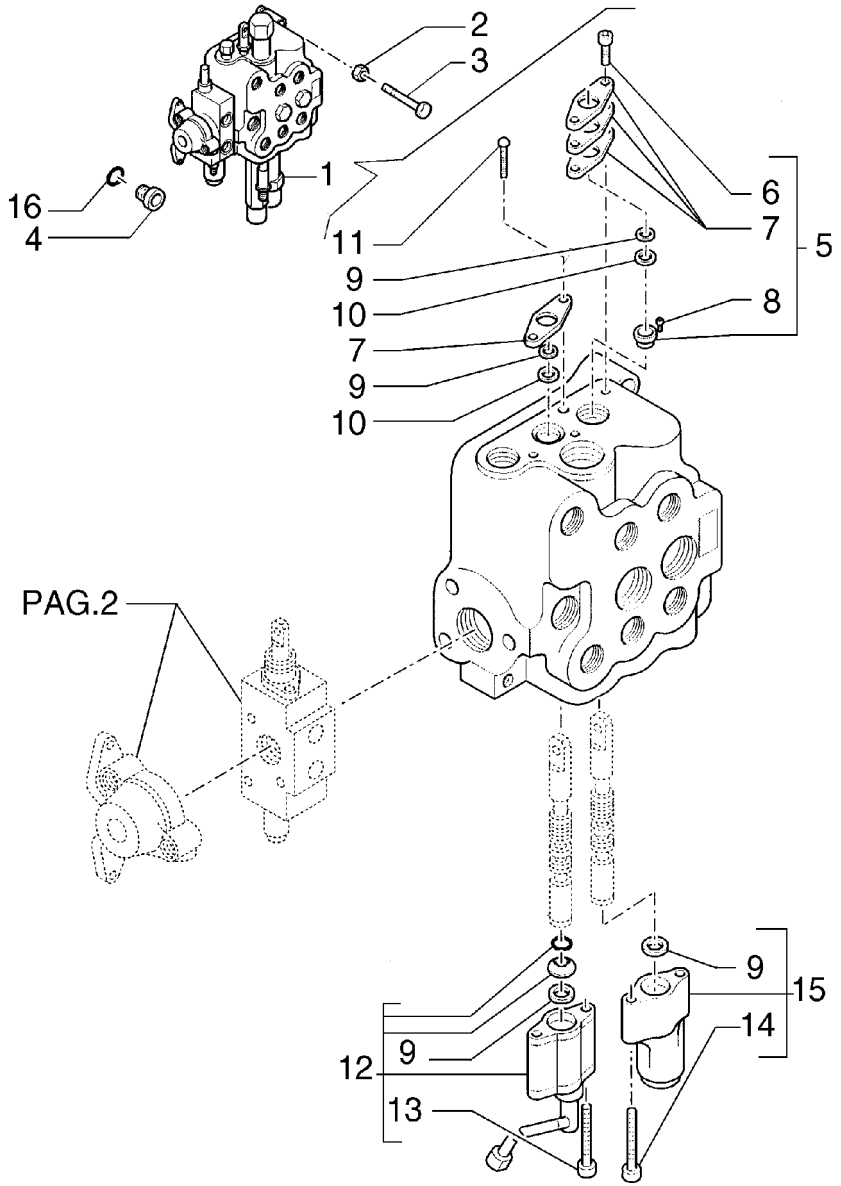

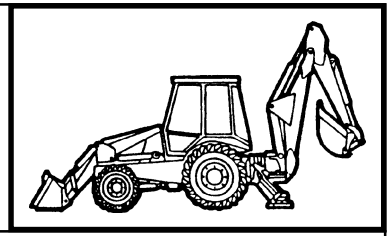

MOD	R	P/N. Imola	P/N. Brazil	Q	Descrição Denominacion	Description Descrizione	L.C.
	1	**85819650**		1	DISTRIBUIDOR DISTRIBUIDOR	CONTROL VALVE DISTRIBUTORE	083D
	2	**11190574**		3	ARRUELA ARANDELA	WASHER ROSETTA	131R
	3	**14308221**		3	PARAFUSO TORNILLO	SCREW VITE	040V
	4	**86508737**		2	BUJÃO TAPON	PLUG TAPPO	050T
	5	**9968455**		1	SUPORTE SOPORTE	SUPPORT SUPPORTO	300S
	6	**9968456**		2	PARAFUSO TORNILLO	SCREW VITE	040V
	7	**9968458**		3	PLACA PLACA	PLATE PIASTRINA	110P
	8	**9968457**		2	ESPAÇADOR SEPARADOR	SPACER DISTANZIALE	075D
	9	**85999136**		4	O'RING JUNTA TORICA	O'RING GUARNIZIONE O-R	158G
	10	**85999138**		2	ANEL RASPADOR ANEL RASCADOR	OILSCRAPER RING ANELLO RASCHIAOLIO	050A
	11	**9968460**		2	PARAFUSO TORNILLO	SCREW VITE	040V
	12	**85808403**		1	BATENTE DISPOSITIVO DE TOPE	STOP ARRESTO	080A
	13	**9968451**		2	PARAFUSO TORNILLO	SCREW VITE	040V
	14	**9968454**		2	PARAFUSO TORNILLO	SCREW VITE	040V
	15	**85817025**		1	VÁLVULA VALVULA	VALVE VALVOLA	010V
	16	**80167269**		2	O'RING JUNTA TORICA	O'RING GUARNIZIONE O-R	158G

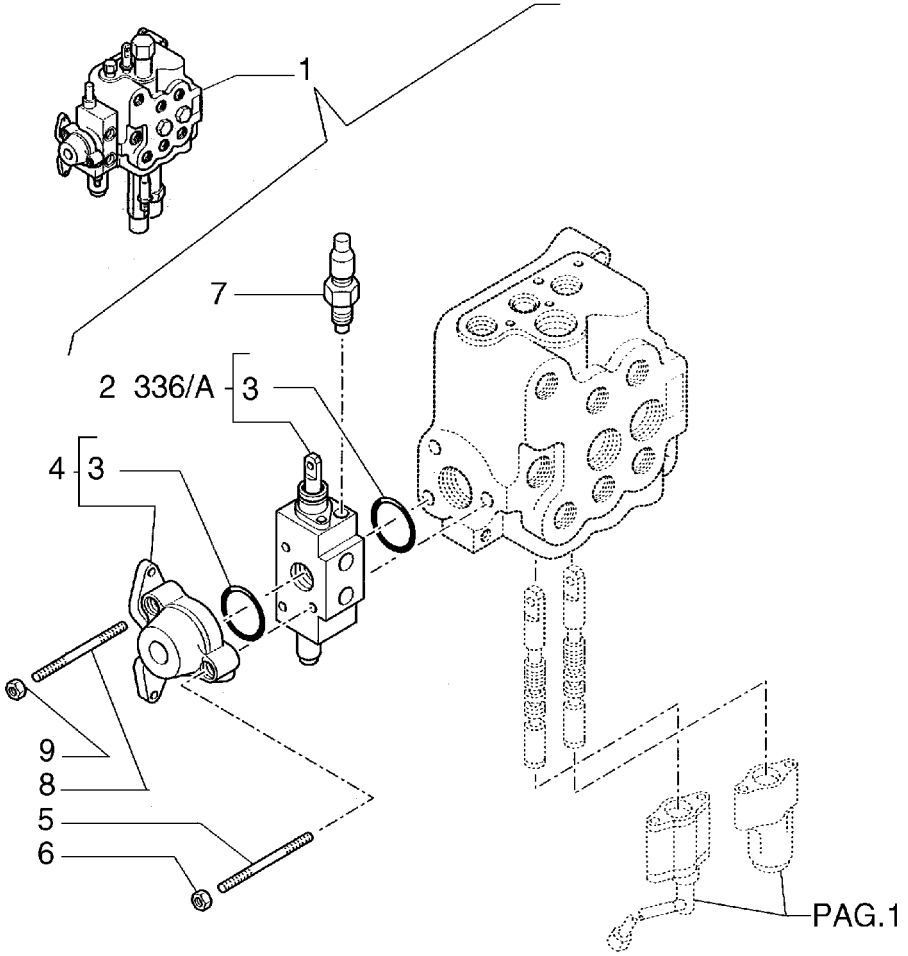

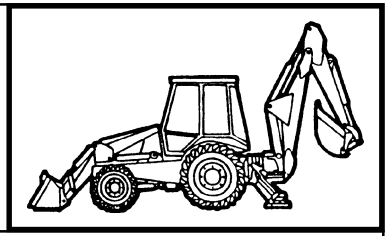

MOD	R	P/N. Imola	P/N. Brazil	Q	Descrição Denominacion	Description Descrizione	L.C.
	1	**85819650**		1	DISTRIBUIDOR DISTRIBUIDOR	CONTROL VALVE DISTRIBUTORE	083D
	2	**85808402**		1	VÁLVULA VALVULA	VALVE VALVOLA	010V
	3	**9968476**		2	O'RING JUNTA TORICA	O'RING GUARNIZIONE O-R	158G
	4	**9968443**		1	TAMPA TAPA	COVER COPERCHIO	265C
	5	**9968438**		1	PRISIONEIRO ESPARRAGO	STUD PRIGIONIERO	210P
	6	**9968440**		1	PORCA TUERCA	NUT DADO	010D
	7	**9968441**		2	VÁLVULA VALVULA	VALVE VALVOLA	010V
	8	**9968439**		2	PRISIONEIRO ESPARRAGO	STUD PRIGIONIERO	210P
	9	**9968441**		2	PORCA TUERCA	NUT DADO	010D

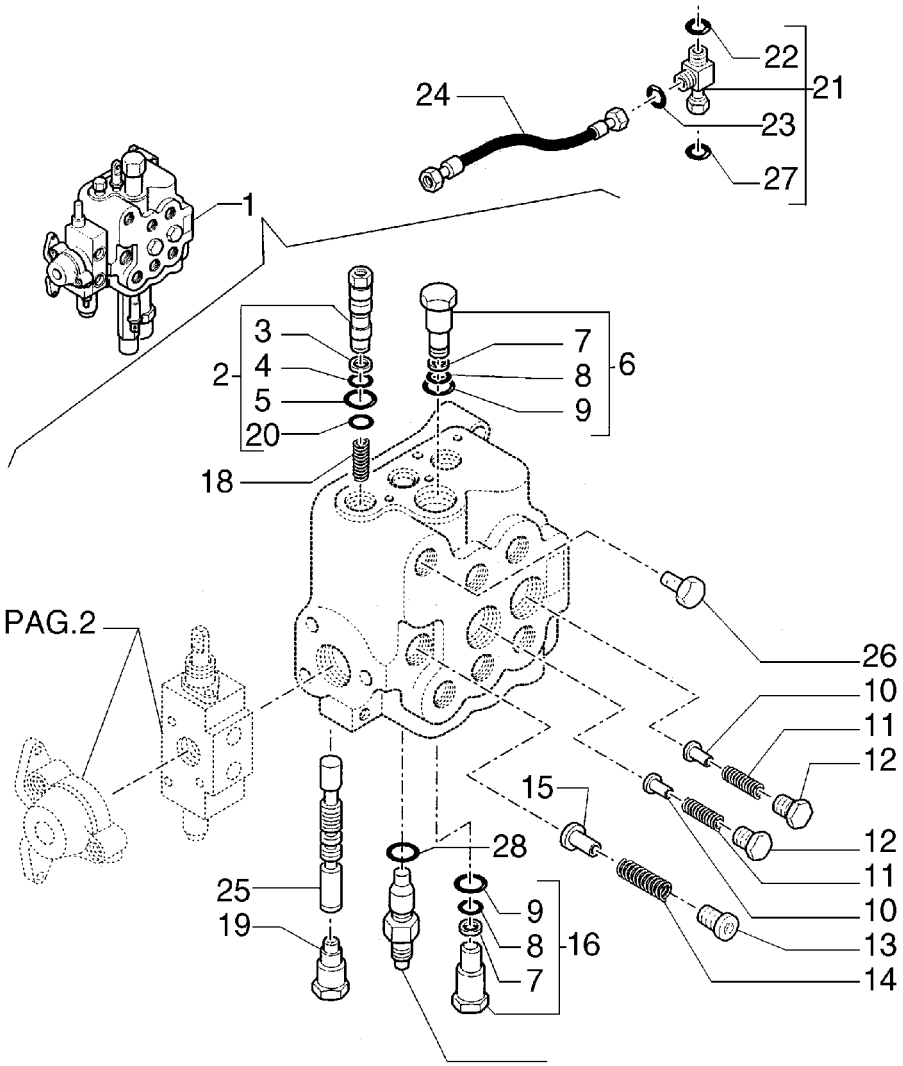

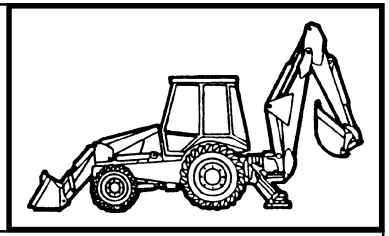

MOD	R	P/N. Imola	P/N. Brazil	Q	Descrição Denominacion	Description Descrizione	L.C.
	1	**85819650**		1	DISTRIBUIDOR DISTRIBUIDOR	CONTROL VALVE DISTRIBUTORE	083D
	2	**85815667**		1	VÁLVULA VALVULA	VALVE VALVOLA	010V
	3	**9968467**		1	ANEL ARO	RING ANELLO	045A
	4	**9968486**		1	O'RING JUNTA TORICA	O'RING GUARNIZIONE O-R	158G
	5	**9968468**		1	O'RING JUNTA TORICA	O'RING GUARNIZIONE O-R	158G
	6	**9968473**		1	VÁLVULA VALVULA	VALVE VALVOLA	010V
	7	**9968472**		2	ANEL ARO	RING ANELLO	045A
	8	**9968471**		2	O'RING JUNTA TORICA	O'RING GUARNIZIONE O-R	158G
	9	**9968470**		2	O'RING JUNTA TORICA	O'RING GUARNIZIONE O-R	158G
	10	**9968444**		2	PISTAO EMBOLO	PLUNGER PISTONCINO	130P
	11	**9968445**		2	MOLA MUELLE	SPRING MOLLA	100M
	12	**9968446**		2	BUJÃO TAPON	PLUG TAPPO	050T
	13	**9968598**		1	BUJÃO TAPON	PLUG TAPPO	050T
	14	**9968448**		1	MOLA MUELLE	SPRING MOLLA	100M
	15	**9968447**		1	PISTAO EMBOLO	PLUNGER PISTONCINO	130P
	16	**9968469**		1	VÁLVULA VALVULA	VALVE VALVOLA	010V
	17	**85819722**		1	VÁLVULA VALVULA	VALVE VALVOLA	010V
	18	**9968488**		1	MOLA MUELLE	SPRING MOLLA	100M
	19	**9968464**		1	BUJÃO TAPON	PLUG TAPPO	050T
	20	**85815668**		1	ANEL ARO	RING ANELLO	045A

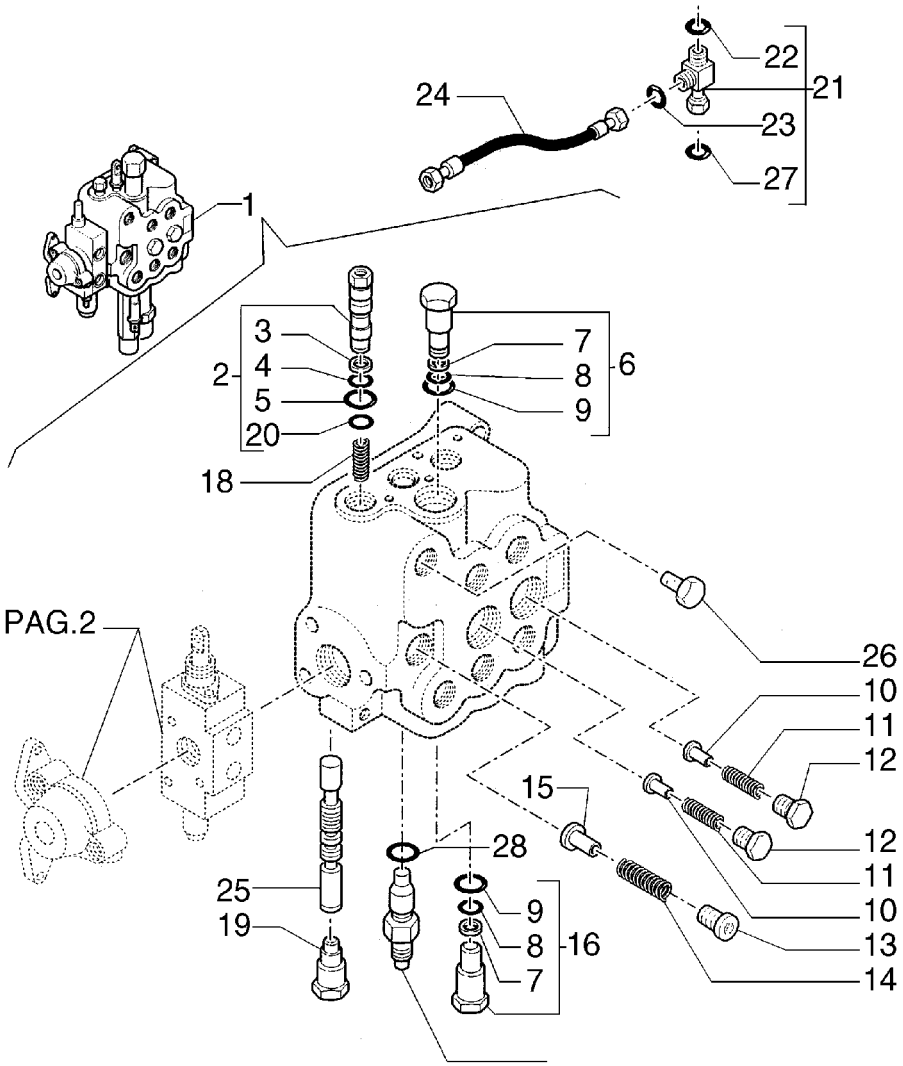

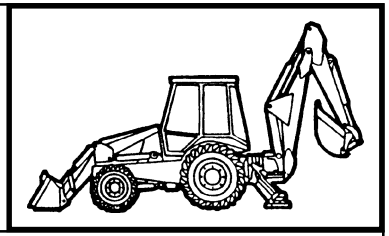

MOD	R	P/N. Imola	P/N. Brazil	Q	Descrição Denominacion	Description Descrizione	L.C.
	21	**85817531**		1	CONEXÃO RACOR	FITTING RACCORDO	020R
	22	**89824050**		1	O'RING JUNTA TORICA	O'RING GUARNIZIONE O-R	158G
	23	**89825770**		1	O'RING JUNTA TORICA	O'RING GUARNIZIONE O-R	158G
	24	**85816804**		1	MANGUEIRA MANGA C/RACORDE	HOSE ASSY TUBO FLESSIBILE	192T
	25	**85807858**		1	HASTE VARILLA	ROD ASTA	090A
	26	**85807857**		1	BUJÃO TAPON	PLUG TAPPO	05OT
	27	**89626929**		1	O'RING JUNTA TORICA	O'RING GUARNIZIONE O-R	158G
	28	**85819945**		1	ANEL ARO	RING ANELLO	045A

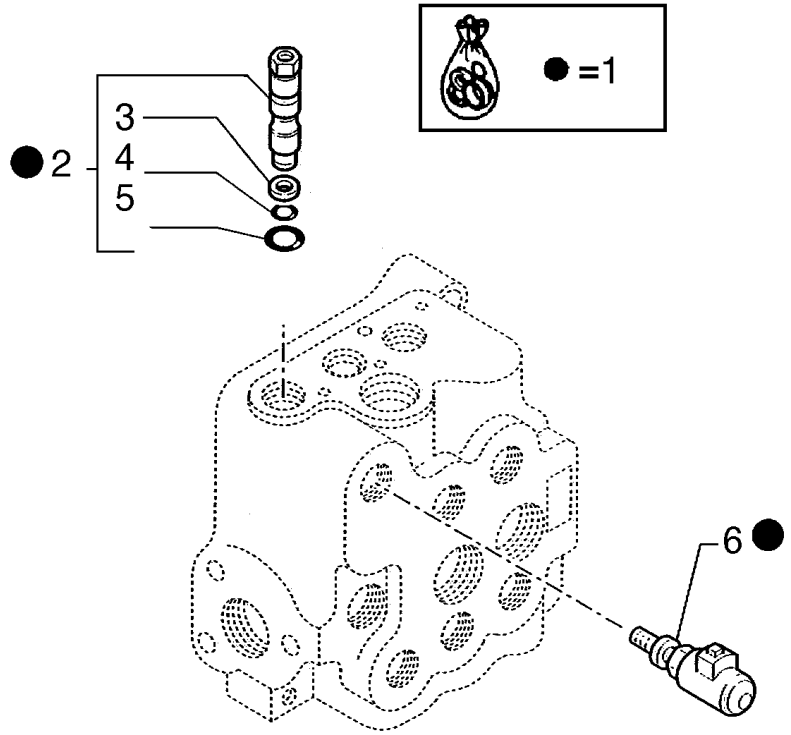

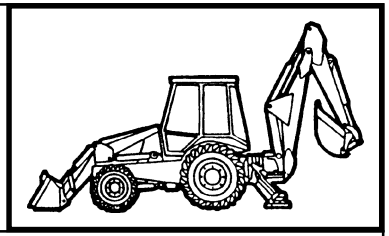

MOD	R	P/N. Imola	P/N. Brazil	Q	Descrição Denominacion	Description Descrizione	L.C.
	1	**85817201**		1	KIT JUEGO	KIT KIT	002K
	2	**9968465**		1	VÁLVULA VALVULA	VALVE VALVOLA	010V
	3	**9968467**		1	ANEL DE VEDAÇÃO JUNTA HERMÉTICA	SEAL RING ANELLO TENUTA	055A
	4	**9968466**		1	O'RING JUNTA TORICA	O'RING GUARNIZIONE O-R	158G
	5	**9968468**		1	O'RING JUNTA TORICA	O'RING GUARNIZIONE O-R	158G
	6	**9968461**		1	SENSOR SENSOR	SENSOR SENSORE	133S

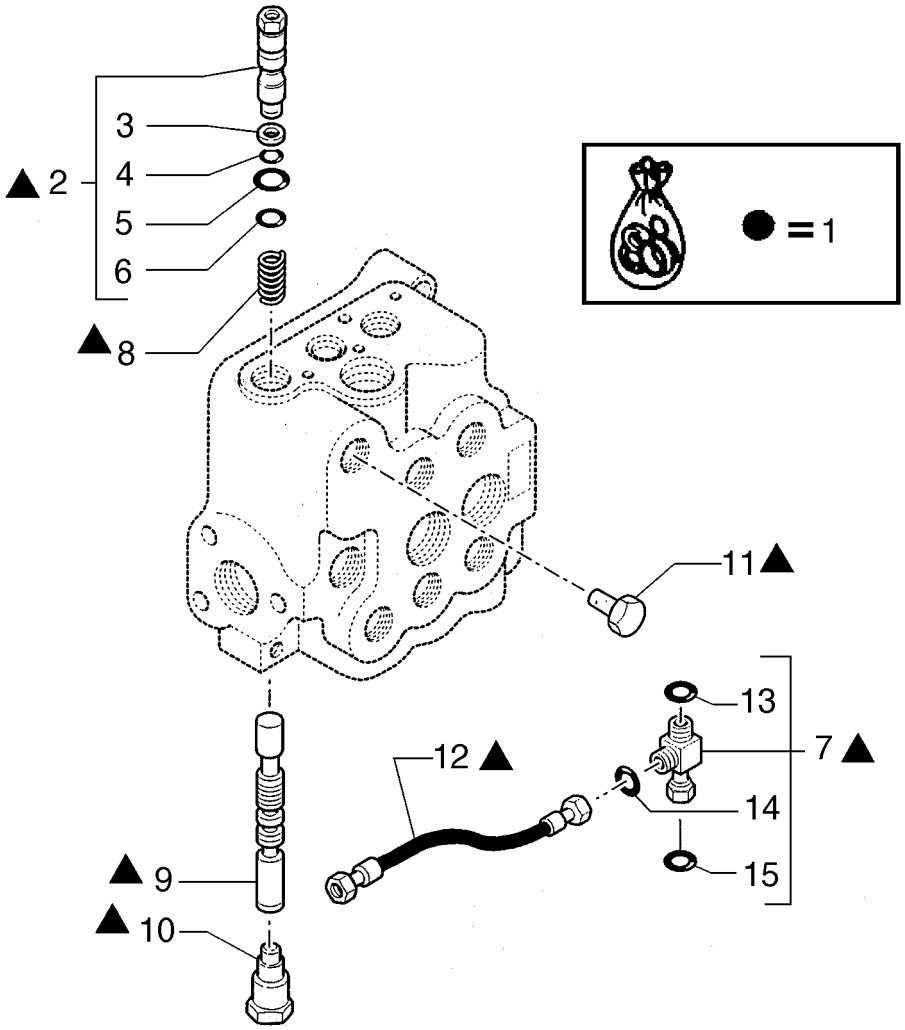

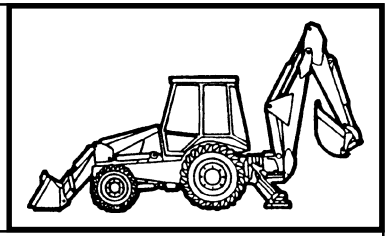

MOD	R	P/N. Imola	P/N. Brazil	Q	Descrição Denominacion	Description Descrizione	L.C.
	1	**85816793**		1	KIT JUEGO	KIT KIT	002K
	2	**85815667**		1	VÁLVULA VALVULA	VALVE VALVOLA	010V
	3	**9968467**		1	ANEL DE VEDAÇÃO JUNTA HERMÉTICA	SEAL RING ANELLO TENUTA	055A
	4	**9968466**		1	O'RING JUNTA TORICA	O'RING GUARNIZIONE O-R	158G
	5	**9968468**		1	O'RING JUNTA TORICA	O'RING GUARNIZIONE O-R	158G
	6	**85815668**		1	ANEL DE VEDAÇÃO JUNTA HERMÉTICA	SEAL RING ANELLO TENUTA	055A
	7	**85817531**		1	CONEXÃO RACOR	FITTING RACCORDO	020R
	8	**9968488**		1	MOLA MUELLE	SPRING MOLLA	100M
	9	**85807858**		1	HASTE VARILLA	ROD ASTA	090A
	10	**9968464**		1	BUJÃO TAPON	PLUG TAPPO	05OT
	11	**85807857**		1	BUJÃO TAPON	PLUG TAPPO	05OT
	12	**85816804**		1	MANGUEIRA MANGA C/RACORDE	HOSE ASSY TUBO FLESSIBILE	192T
	13	**89824050**		1	O'RING JUNTA TORICA	O'RING GUARNIZIONE O-R	158G
	14	**89825770**		1	O'RING JUNTA TORICA	O'RING GUARNIZIONE O-R	158G
	15	**89626929**		1	O'RING JUNTA TORICA	O'RING GUARNIZIONE O-R	158G

FB80.3 - FB100.3

DISTRIBUIDOR DA PÁ DE TRES SEÇÕES
DISTRIBUIDOR DE LA PALA DE TRES SECCIONES
THREE-SECTION CONTROL VALVE FOR LOADER
DISTRIBUIZIONE PALA A TRE SEZIONI

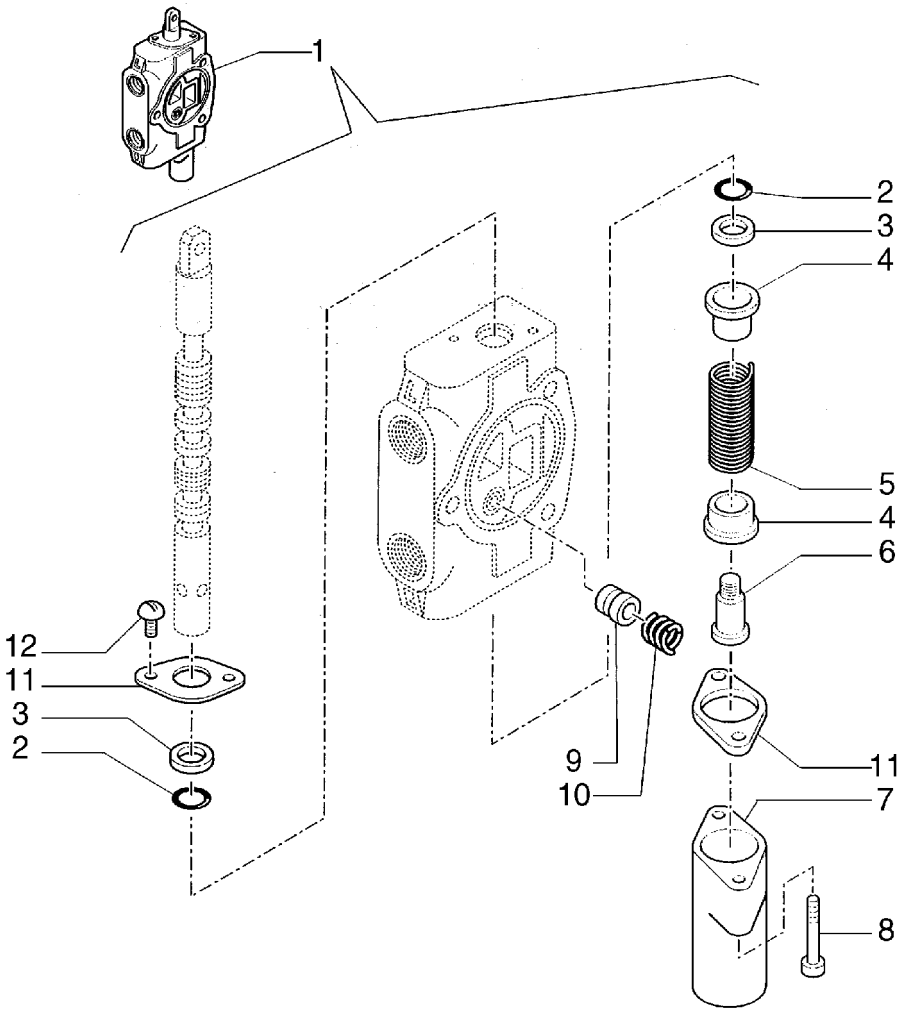

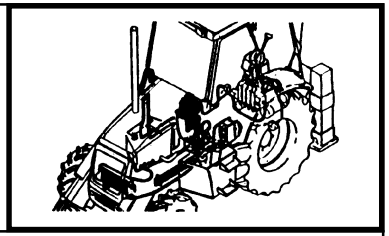

MOD	R	P/N. Imola	P/N. Brazil	Q	Descrição Denominacion	Description Descrizione	L.C.
	1	**85808402**		1	CORPO CUERPO	BODY CORPO	300C
	2	**85813418**		2	O'RING JUNTA TORICA	O'RING GUARNIZIONE O-R	158G
	3	**85813419**		2	ANEL RASPADOR ANEL RASCADOR	OILSCRAPER RING ANELLO RASCHIAOLIO	050A
	4	**9968481**		2	SEDE ASIENTO	SEAT SEDE	069S
	5	**85808401**		1	MOLA MUELLE	SPRING MOLLA	100M
	6	**9968483**		1	PARAFUSO TORNILLO	SCREW VITE	040V
	7	**9968484**		1	TAMPA TAPA	COVER COPERCHIO	265C
	8	**9968486**		2	PARAFUSO TORNILLO	SCREW VITE	040V
	9	**9968477**		1	PISTAO EMBOLO	PLUNGER PISTONCINO	130P
	10	**9968478**		1	MOLA MUELLE	SPRING MOLLA	100M
	11	**9968480**		2	PLACA PLACA	PLATE PIASTRINA	110P
	12	**9968460**		2	PARAFUSO TORNILLO	SCREW VITE	040V

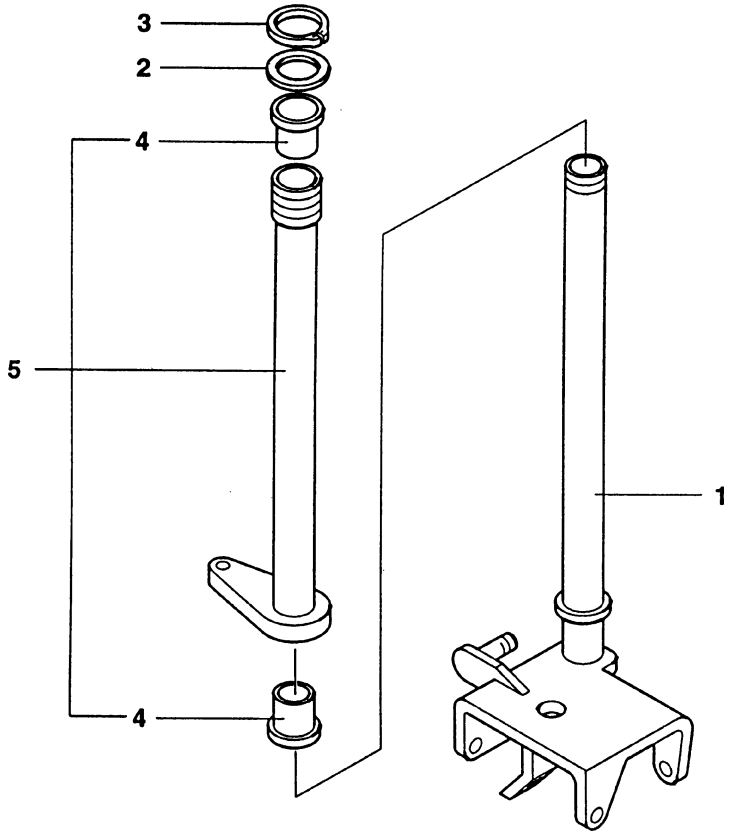

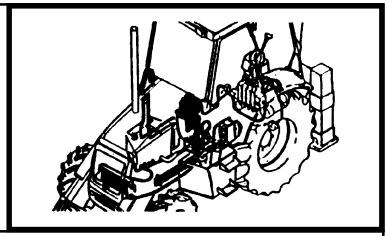

MOD	R	P/N. Imola	P/N. Brazil	Q	Descrição Denominacion	Description Descrizione	L.C.
	1	**85802601**		1	ALAVANCA PALANCA	LEVER LEVA	045L
	2	**83962203**		1	ARRUELA ARANDELA	WASHER ROSETTA	131R
	3	**83962223**		1	ANEL ELÁSTICO ANILLO ELASTICO	SNAP RING ANELLO ELASTICO	187A
	4	**83962208**		2	BUCHA BUJE	BUSHING BOCCOLA	095B
	5	**85802615**		1	ALAVANCA PALANCA	LEVER LEVA	045L

FB80.3 - FB100.3

ALAVANCA DE COMANDO DISTRIBUIDOR DE 3 SEÇÕES
PALANCA DE MANDO DISTRIBUIDOR DE 3 SECCIONES
THREE-SECTION CONTROL VALVE CONTROL LEVER
LEVA COMANDO DISTRIBUITORE A 3 SEZIONI

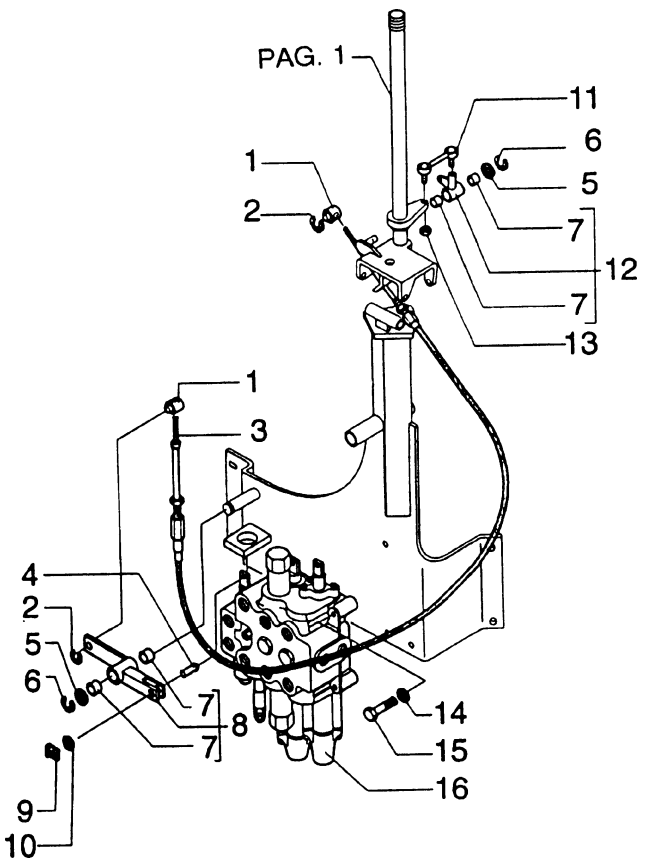

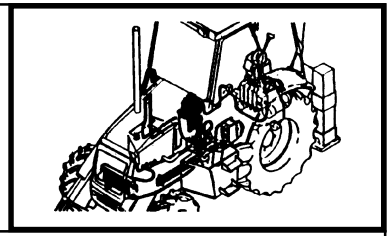

MOD	R	P/N. Imola	P/N. Brazil	Q	Descrição Denominacion	Description Descrizione	L.C.
	1	**83962205**		2	PINO BULON	PIN PERNO	080P
	2	**83947277**		2	ANEL ELÁSTICO ANILLO ELASTICO	SNAP RING ANELLO ELASTICO	187A
	3	**85802745**		1	CABO CABLE	ROPE FUNE	105F
	4	**85801561**		1	PINO BULON	PIN PERNO	080P
	5	**14496921**	**14496931**	2	ARRUELA ARANDELA	WASHER ROSETTA	131R
	6	**83911366**		2	ANEL ELÁSTICO ANILLO ELASTICO	SNAP RING ANELLO ELASTICO	187A
	7	**85802494**	**83962857**	4	BUCHA BUJE	BUSHING BOCCOLA	095B
	8	**85802816**		1	ALAVANCA PALANCA	LEVER LEVA	045L
	9	**11063971**		1	PRESILHA ABRESADERA	CLIP FERMAGLIO	045F
	10	**14496404**	**10519404**	1	ARRUELA ARANDELA	WASHER ROSETTA	131R
	11	**83962218**		1	BIELA BIELA	LINK BIELLA	050B
	12	**85802587**	**83962204**	1	FORQUILHA HORQUILLA	YOKE FORCELLA	085F
	13	**15896221**	**15896211**	1	PORCA TUERCA	NUT DADO	010D
	14	**11190579**	**11190579**	3	ARRUELA ARANDELA	WASHER ROSETTA	131R
	15		**14308221**	3	PARAFUSO TORNILLO	SCREW VITE	040V
	16	**85819650**		1	DISTRIBUIDOR DISTRIBUIDOR	CONTROL VALVE DISTRIBUTORE	083D

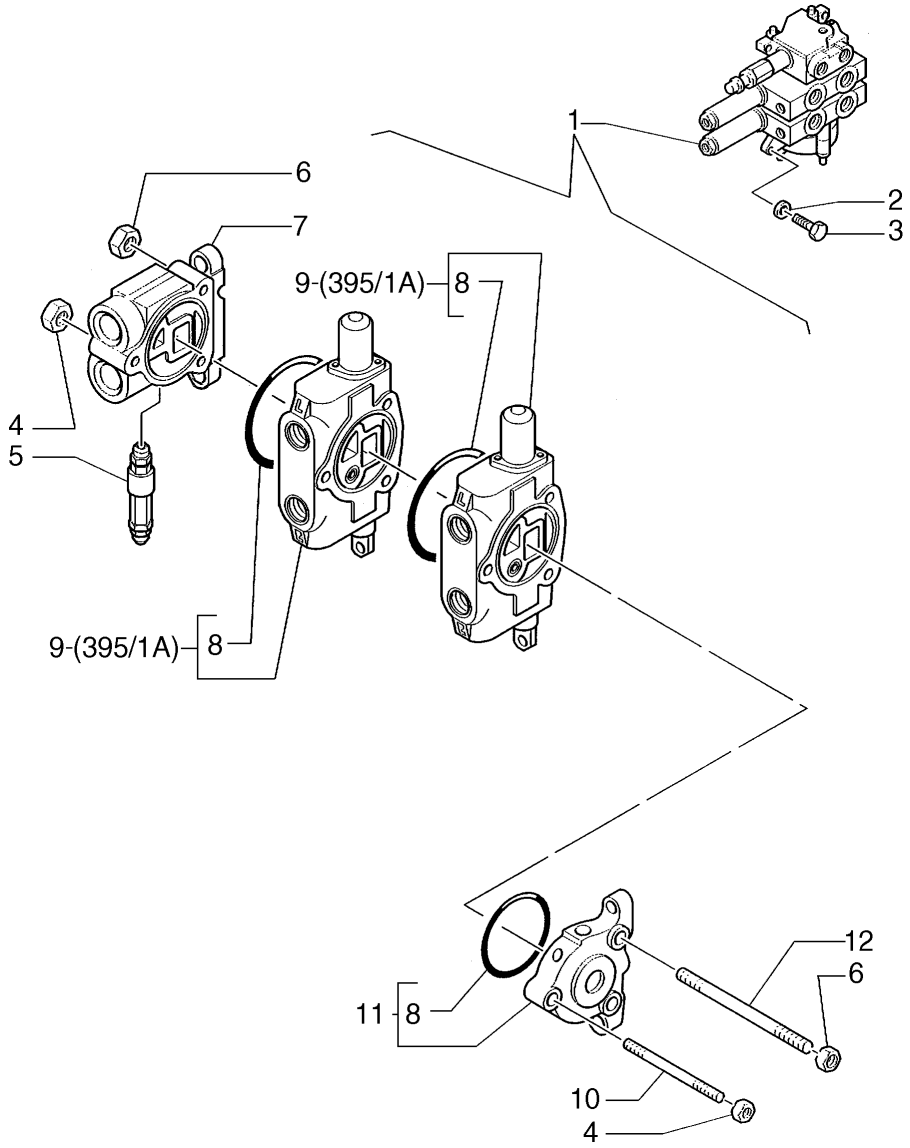

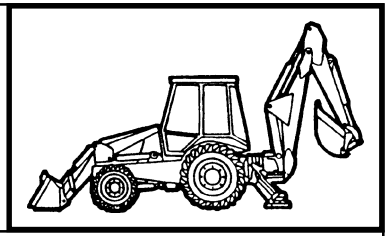

MOD	R	P/N. Imola	P/N. Brazil	Q	Descrição Denominacion	Description Descrizione	L.C.
	1	**85811966**		1	DISTRIBUIDOR DISTRIBUIDOR	CONTROL VALVE DISTRIBUTORE	083D
	2	**11193874**	**70929662**	3	ARRUELA ARANDELA	WASHER ROSETTA	131R
	3	**16043931**		3	PARAFUSO TORNILLO	SCREW VITE	040V
	4	**9968440**		2	KIT JUEGO	KIT KIT	002K
	5	**85812078**		1	VÁLVULA VALVULA	VALVE VALVOLA	010V
	6	**9968441**		4	PORCA TUERCA	NUT DADO	010D
	7	**9968524**		1	CORPO CUERPO	BODY CORPO	300C
	8	**9968476**		3	O'RING JUNTA TORICA	O'RING GUARNIZIONE O-R	158G
	9	**9970107**		2	CORPO CUERPO	BODY CORPO	300C
	10	**9968533**		1	PRISIONEIRO ESPARRAGO	STUD PRIGIONIERO	210P
	11	**9968527**		1	TAMPA TAPA	COVER COPERCHIO	265C
	12	**9968532**		2	PRISIONEIRO ESPARRAGO	STUD PRIGIONIERO	210P

FB80.3 - FB100.3

DISTRIBUIDOR DE DUAS SEÇÕES DO ESTABILIZADOR
DISTRIBUIDOR DE LOS PIES ESTABILIZADORES DE DOS SECCIONES
TWO-SECTION CONTROL VALVE FOR STABILIZER FEET
DISTRIBUTORE PIEDI STABILIZZATORI A DUE SEZIONI

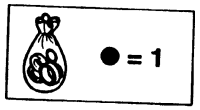

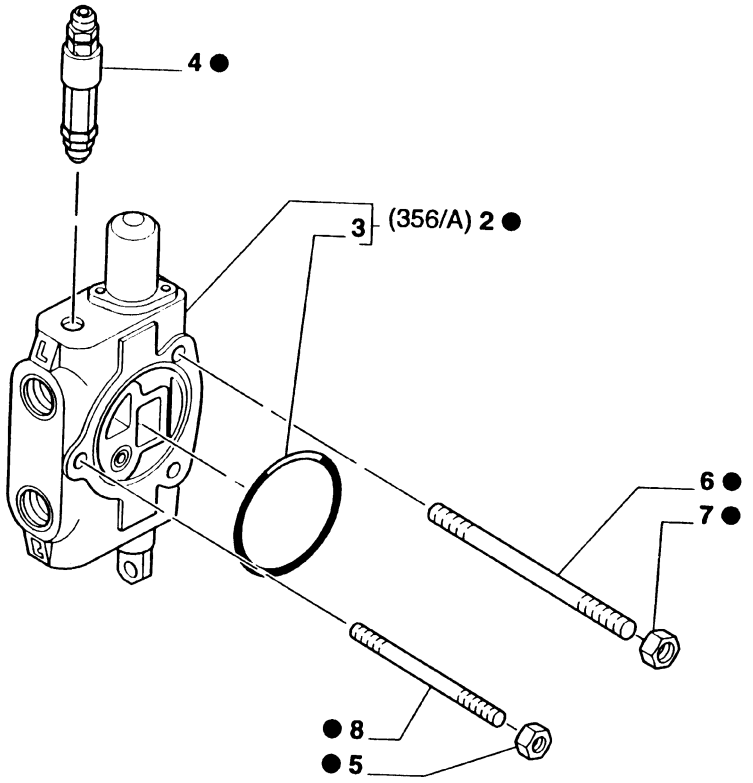

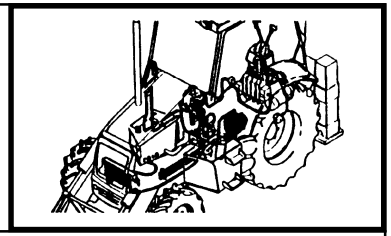

MOD	R	P/N. Imola	P/N. Brazil	Q	Descrição Denominacion	Description Descrizione	L.C.
	1	**85803121**		1	KIT JUEGO	KIT KIT	002K
	2	**9968526**		1	CORPO CUERPO	BODY CORPO	300C
	3	**9968476**		1	O'RING JUNTA TORICA	O'RING GUARNIZIONE O-R	158G
	4	**9968594**		1	VÁLVULA VALVULA	VALVE VALVOLA	010V
	5	**9968440**		1	PORCA TUERCA	NUT DADO	010D
	6	**9968529**		2	PRISIONEIRO ESPARRAGO	STUD PRIGIONIERO	210P
	7	**9968441**		2	PORCA TUERCA	NUT DADO	010D
	8	**9968528**		1	PRISIONEIRO ESPARRAGO	STUD PRIGIONIERO	210P

FB80.3 - FB100.3

TRANSFORMAÇÃO DO DISTRIBUIDOR DE 2 SEÇÕES PARA 3 SEÇÕES
TRANSFORMACION DISTRIBUIDOR DE DOS SECCIONES A TRES SECCIONES
TRANSFORMATION OF CONTROL VALVE FROM TWO SECTIONS TO THREE SECTIONS
TRASFORMAZIONE DISTRIBUTORE DA 2 SEZIONI A 3 SEZIONI

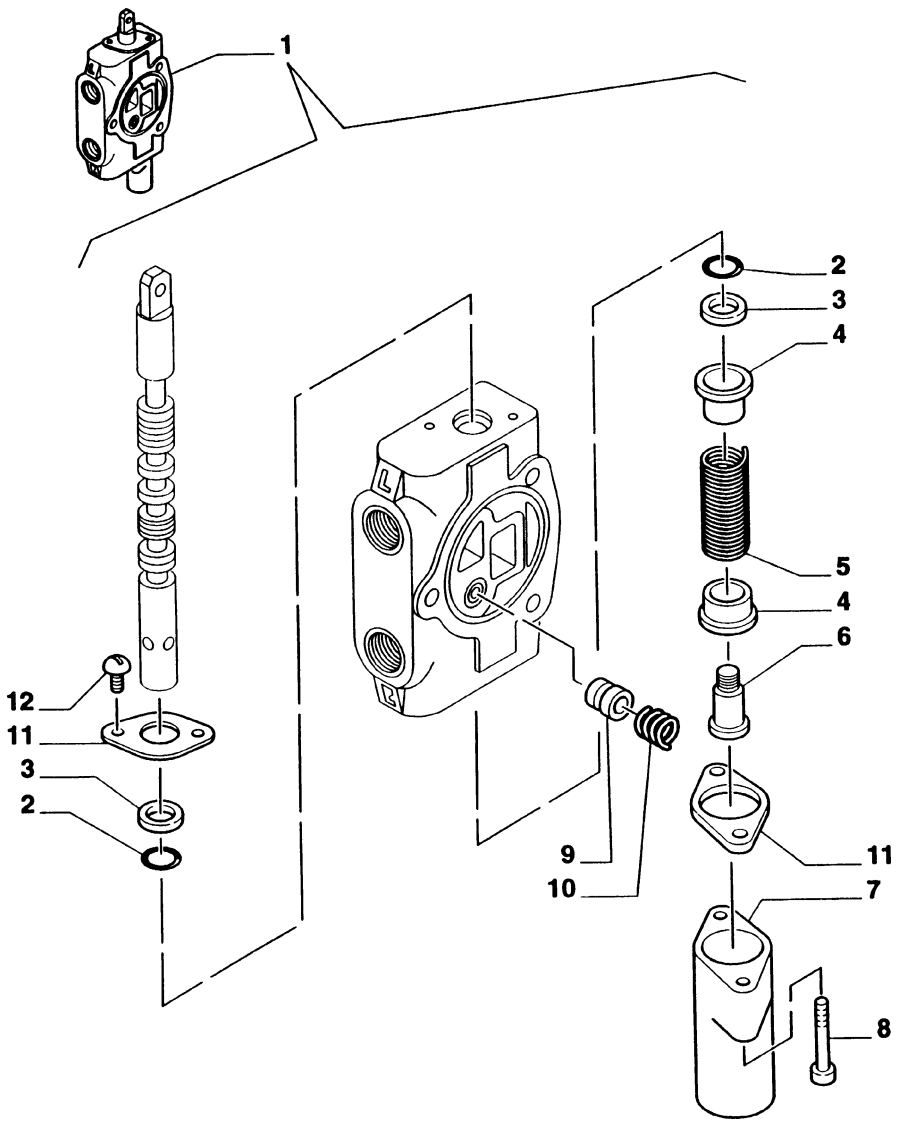

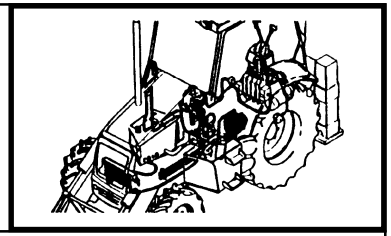

MOD	R	P/N. Imola	P/N. Brazil	Q	Descrição Denominacion	Description Descrizione	L.C.
	1	**9968526**		1	CORPO CUERPO	BODY CORPO	300C
	2	**85813418**		2	O'RING JUNTA TORICA	O'RING GUARNIZIONE O-R	158G
	3	**85813419**		2	ANEL RASPADOR ANEL RASCADOR	OILSCRAPER RING ANELLO RASCHIAOLIO	050A
	4	**9968481**		2	SEDE ASIENTO	SEAT SEDE	069S
	5	**9968531**		1	MOLA MUELLE	SPRING MOLLA	100M
	6	**9968483**		1	PARAFUSO TORNILLO	SCREW VITE	040V
	7	**9968484**		1	TAMPA TAPA	COVER COPERCHIO	265C
	8	**9968486**		2	PARAFUSO TORNILLO	SCREW VITE	040V
	9	**9968477**		1	PISTAO EMBOLO	PLUNGER PISTONCINO	130P
	10	**9968478**		1	MOLA MUELLE	SPRING MOLLA	100M
	11	**9968480**		2	PLACA PLACA	PLATE PIASTRINA	110P
	12	**9968460**		2	PARAFUSO TORNILLO	SCREW VITE	040V

FB80.3 - FB100.3

TRANSFORMAÇÃO DO DISTRIBUIDOR DE 2 SEÇÕES PARA 3 SEÇÕES
TRANSFORMACION DISTRIBUIDOR DE DOS SECCIONES A TRES SECCIONES
TRANSFORMATION OF CONTROL VALVE FROM TWO SECTIONS TO THREE SECTIONS
TRASFORMAZIONE DISTRIBUTORE DA 2 SEZIONI A 3 SEZIONI

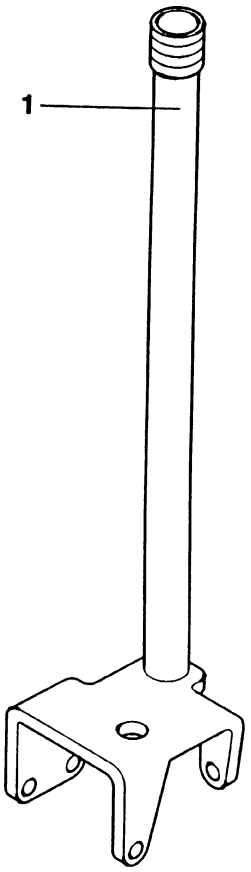

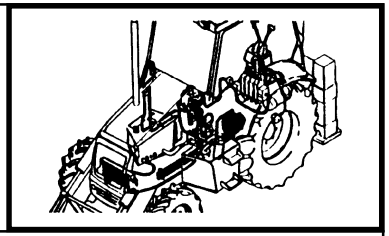

MOD	R	P/N. Imola	P/N. Brazil	Q	Descrição Denominacion	Description Descrizione	L.C.
	1	**85802617**		1	ALAVANCA PALANCA	LEVER LEVA	045L

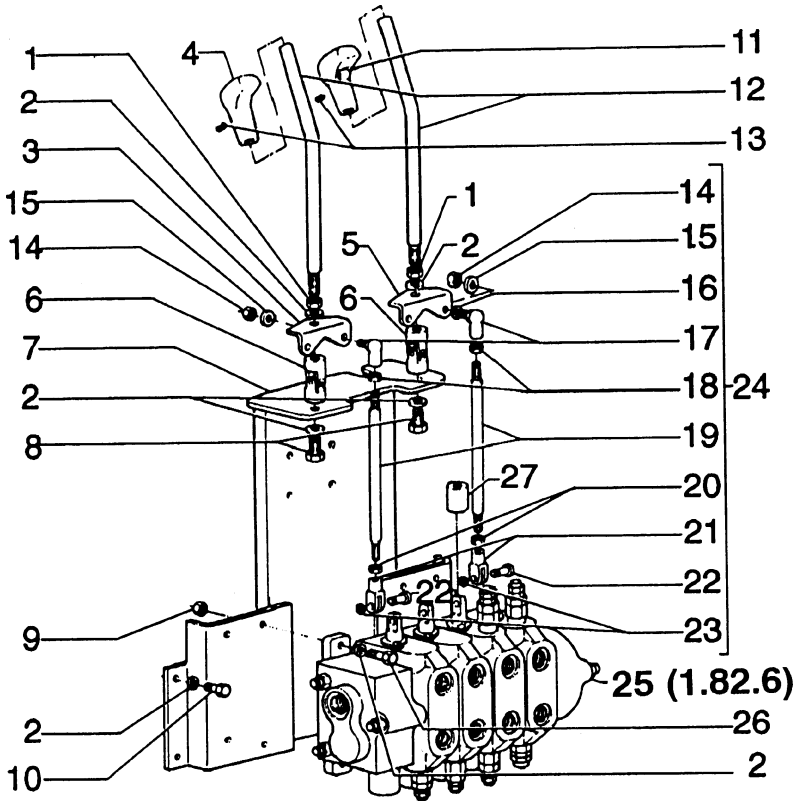

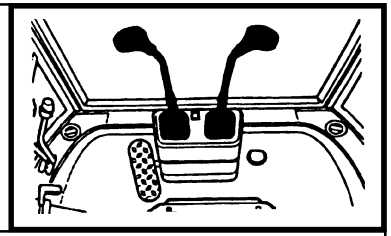

MOD	R	P/N. Imola	P/N. Brazil	Q	Descrição Denominacion	Description Descrizione	L.C.
	1		**16101521**	2	PORCA TUERCA	NUT DADO	010D
	2		**70928178**	12	ARRUELA ARANDELA	WASHER ROSETTA	131R
	3	**85803124**		1	BIELA BIELA	LINK BIELLA	050B
	4	**85801502**		1	MANOPLA EMPUNADURA	KNOB POMELLO	150P
	5	**85803124**		1	BIELA BIELA	LINK BIELLA	050B
	6	**85801518**	**75247612**	2	JUNTA ESFÉRICA ARTIC.ESFERICA	BALL JOINT GIUNTO SFERICO	070G
	7		**75246956**	1	SUPORTE SOPORTE	SUPPORT SUPPORTO	300S
	8		**15540331**	2	PARAFUSO TORNILLO	SCREW VITE	040V
	9		**16101521**	4	PORCA TUERCA	NUT DADO	010D
	10		**11112431**	4	PARAFUSO TORNILLO	SCREW VITE	040V
	11	**85802682**		1	MANOPLA EMPUNADURA	KNOB POMELLO	150P
	12	**85801488**		2	ALAVANCA PALANCA	LEVER LEVA	045L
	13		**13796621**	2	PARAFUSO TORNILLO	SCREW VITE	040V
	14		**16104121**	4	PORCA TUERCA	NUT DADO	010D
	15		**12601370**	4	ARRUELA ARANDELA	WASHER ROSETTA	131R
	16		**12598370**	4	ARRUELA ARANDELA	WASHER ROSETTA	131R
	17	**85801517**		4	JUNTA ESFÉRICA ARTIC.ESFERICA	BALL JOINT GIUNTO SFERICO	070G
	18		**16102311**	4	PORCA TUERCA	NUT DADO	010D
	19	**85801515**		4	TIRANTE TIRANTE	TIEROD TIRANTE	142T
	20		**16102911**	4	PORCA TUERCA	NUT DADO	010D

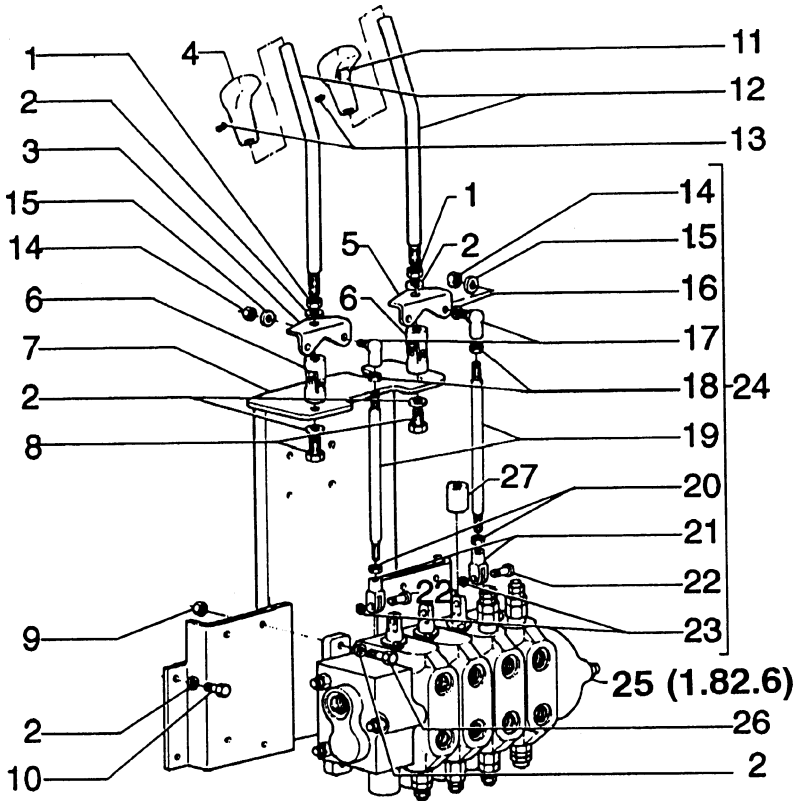

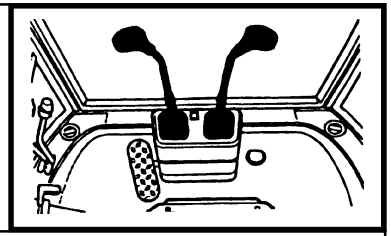

MOD	R	P/N. Imola	P/N. Brazil	Q	Descrição Denominacion	Description Descrizione	L.C.
	22		**75245693**	4	PINO BULON	PIN PERNO	080P
	23		**11087970**	4	ANEL ELÅSTICO ANILLO ELASTICO	SNAP RING ANELLO ELASTICO	187A
	24	**85801514**		4	TIRANTE TIRANTE	TIEROD TIRANTE	142T
	25	**85805701**		1	DISTRIBUIDOR DISTRIBUIDOR	CONTROL VALVE DISTRIBUTORE	083D
	26		**11113231**	4	PARAFUSO TORNILLO	SCREW VITE	040V
	27		**73160978**	6	PROTEÇÃO PROTECCION	GUARD RIPARO	070R

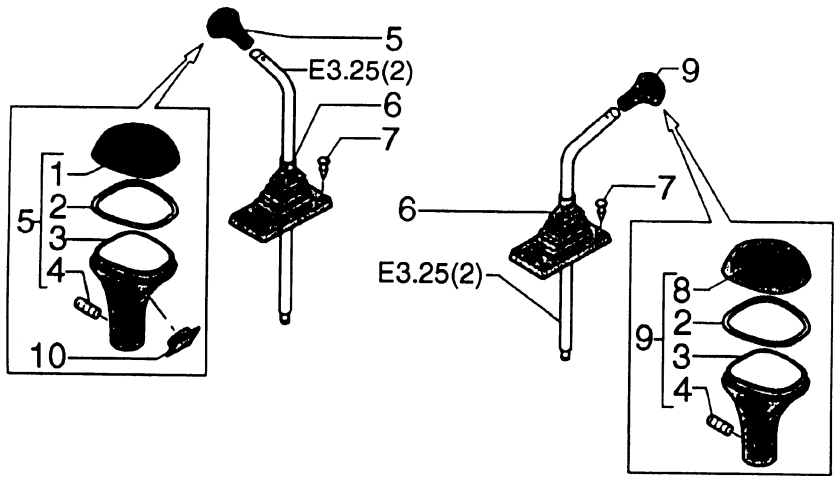

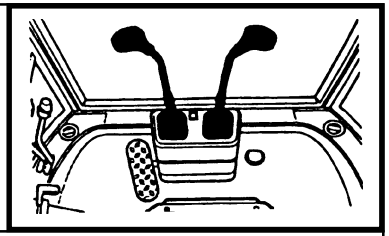

MOD	R	P/N. Imola	P/N. Brazil	Q	Descrição Denominacion	Description Descrizione	L.C.
	1	**85801503**		1	TAMPA TAPA	COVER COPERCHIO	265C
	2	**85801504**		2	ANEL ARO	RING ANELLO	045A
	3	**85801506**		2	CORPO CUERPO	BODY CORPO	300C
	4	**13796621**		2	PARAFUSO TORNILLO	SCREW VITE	040V
	5	**85801502**		1	MANOPLA EMPUNADURA	KNOB POMELLO	150P
	6	**85802843**		2	COIFA PARA PO CAPUCHA	DUST BOOT CUFFIA PARAPOLV	334C
	7	**14568887**		8	PARAFUSO TORNILLO	SCREW VITE	040V
	8	**85802828**		1	TAMPA TAPA	COVER COPERCHIO	265C
	9	**85802682**		1	MANOPLA EMPUNADURA	KNOB POMELLO	150P
	10	**85801505**		1	TAMPA TAPA	COVER COPERCHIO	265C

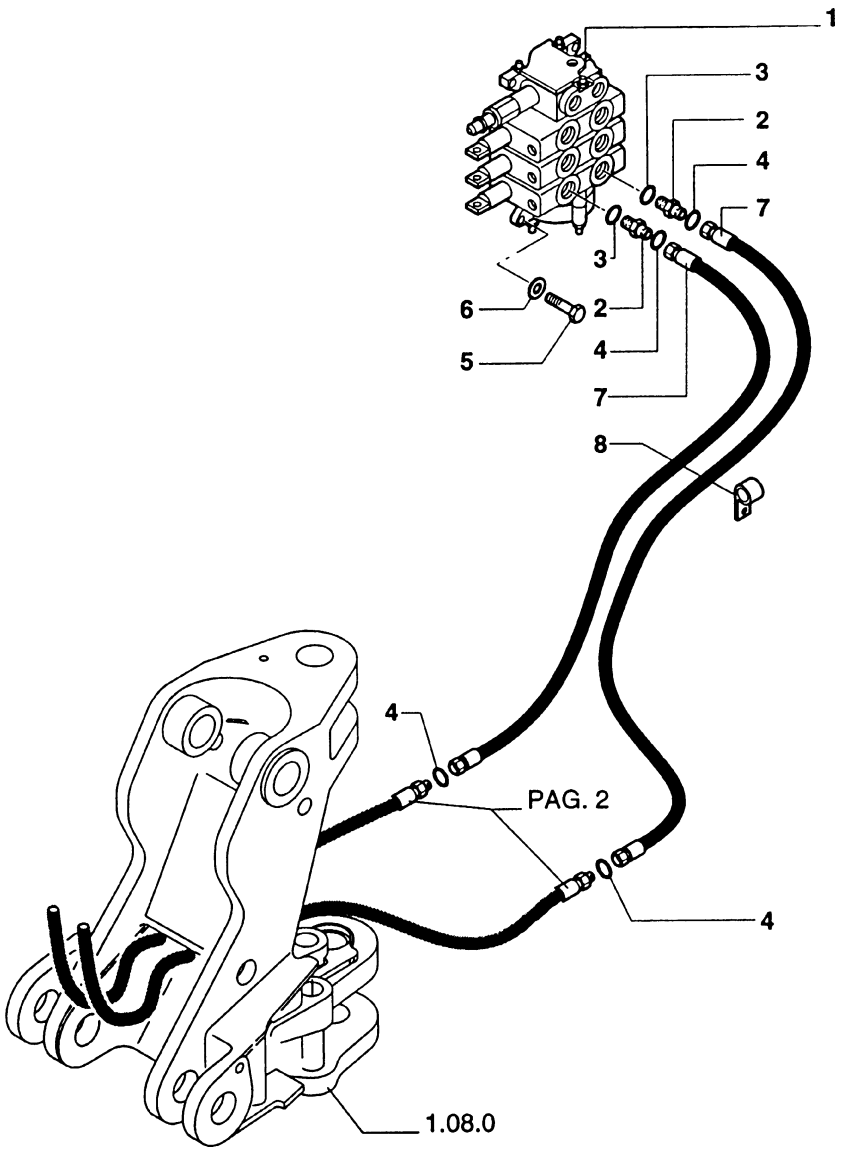

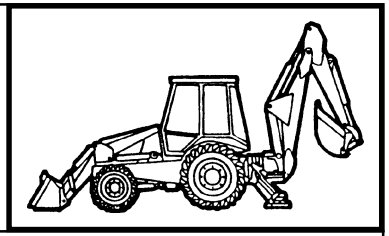

MOD	R	P/N. Imola	P/N. Brazil	Q	Descrição Denominacion	Description Descrizione	L.C.
	1	**85819685**		1	DISTRIBUIDOR DISTRIBUIDOR	CONTROL VALVE DISTRIBUTORE	083D
	2	**83963374**		2	CONEXÃO RACOR	FITTING RACCORDO	020R
	3	**81832258**		2	O'RING JUNTA TORICA	O'RING GUARNIZIONE O-R	158G
	4	**81845038**		4	O'RING JUNTA TORICA	O'RING GUARNIZIONE O-R	158G
	5	**16043924**		3	PARAFUSO TORNILLO	SCREW VITE	040V
	6	**11198179**		3	ARRUELA ARANDELA	WASHER ROSETTA	131R
	7	**85803355**		2	MANGUEIRA MANGA C/RACORDE	HOSE ASSY TUBO FLESSIBILE	192T
	8	**10450590**		4	ABRAÇADEIRA ABRAZADERA	CLAMP FASCETTA	031F

FB80.3 - FB100.3

CIRCUITO HIDRÁULICO DO PEDAL DE COMANDO DO BRAÇO TELESCÓPICO
CIRCUITO HIDR. DEL BRAZO TELESCOPICO MANDO A PEDAL
PEDAL-OPERATED TELESCOPIC ARM HYDRAULIC SYSTEM
IMPIANTO IDR. BRACCIO TELESCOPICO COMANDO PEDALE

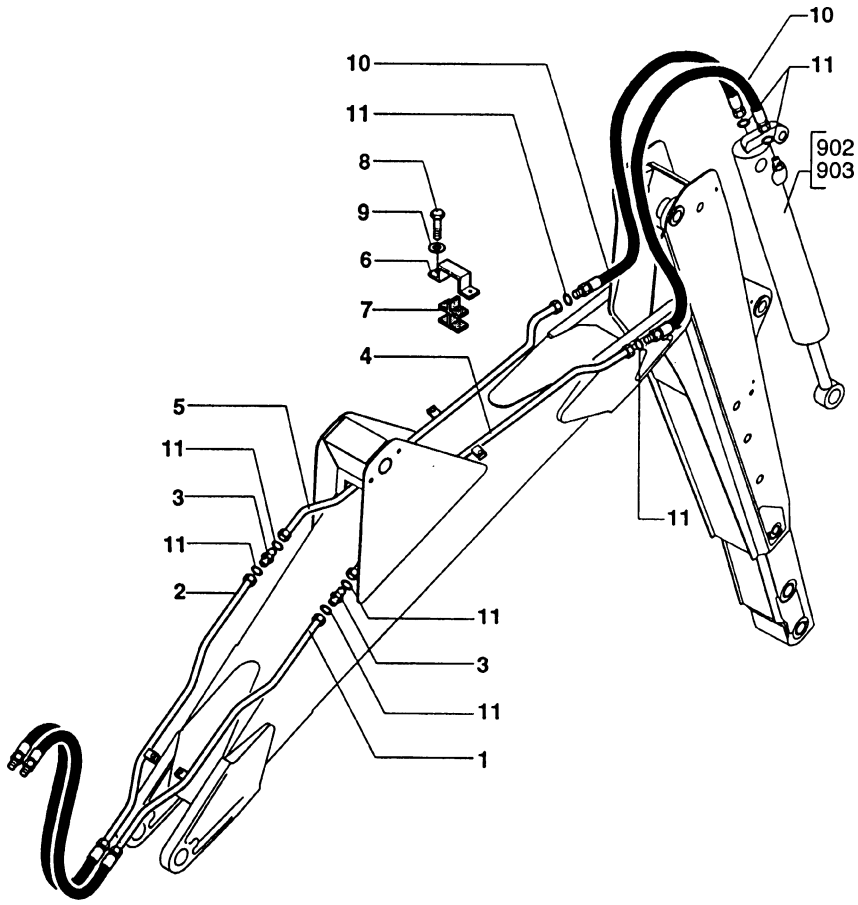

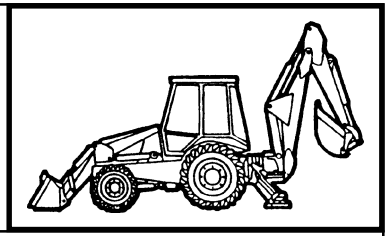

MOD	R	P/N. Imola	P/N. Brazil	Q	Descrição Denominacion	Description Descrizione	L.C.
	1	**85803109**		1	MANGUEIRA MANGA C/RACORDE	HOSE ASSY TUBO FLESSIBILE	192T
	2	**85803108**		1	MANGUEIRA MANGA C/RACORDE	HOSE ASSY TUBO FLESSIBILE	192T
	3	**85803386**		2	CONEXÃO RACOR	FITTING RACCORDO	020R
	4	**85803203**		1	TUBO TUBO	TUBE TUBO RIGIDO	193T
	5	**85803202**		1	TUBO TUBO	TUBE TUBO RIGIDO	193T
	6	**85803402**		1	ABRAÇADEIRA ABRAZADERA	CLAMP FASCETTA	031F
	7	**85803401**		1	BORNE BORNE	TERMINAL CONNEC MORSETTO ELETT.	120M
	8	**16043624**		2	PARAFUSO TORNILLO	SCREW VITE	040V
	9	**11193874**		2	ARRUELA ARANDELA	WASHER ROSETTA	131R
	10	**85801526**		2	MANGUEIRA MANGA C/RACORDE	HOSE ASSY TUBO FLESSIBILE	192T
	11	**81845038**		8	O'RING JUNTA TORICA	O'RING GUARNIZIONE O-R	158G

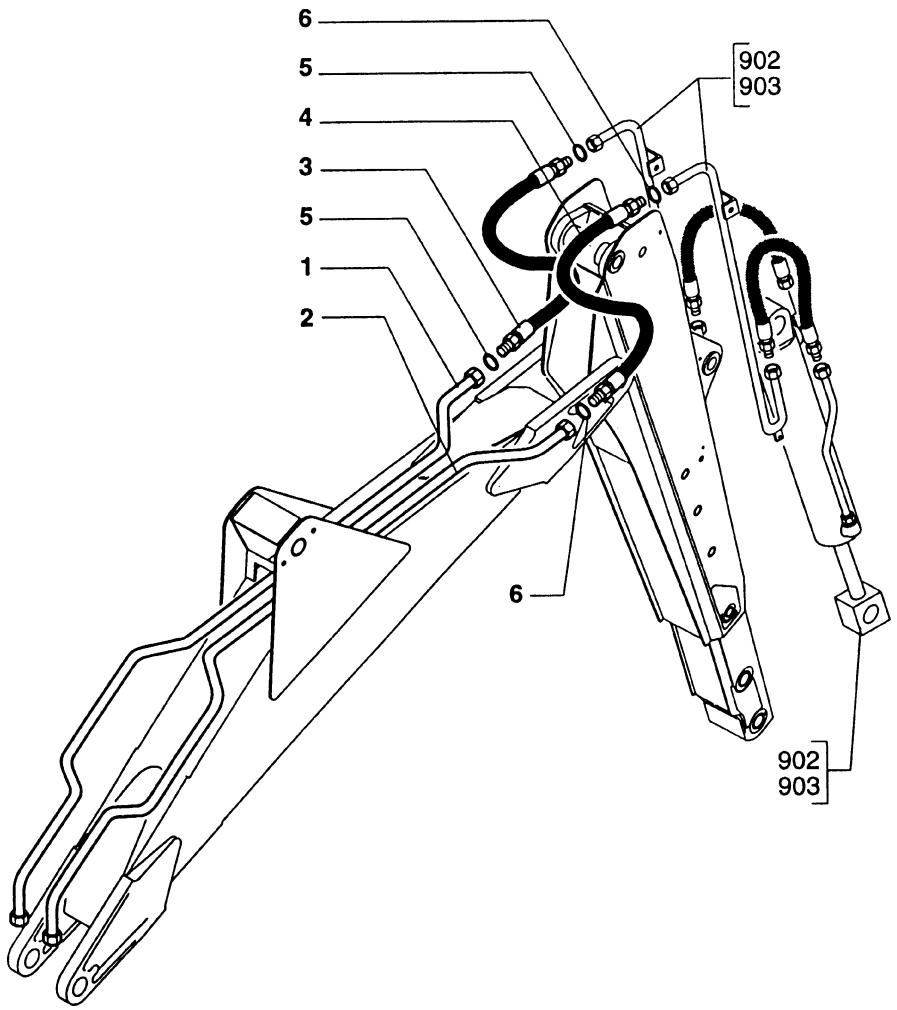

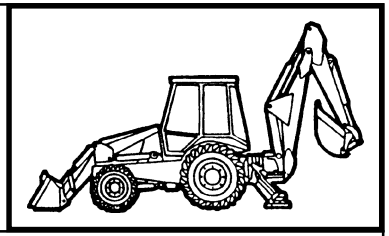

MOD	R	P/N. Imola	P/N. Brazil	Q	Descrição Denominacion	Description Descrizione	L.C.
	1	**85803110**		1	TUBO TUBO	TUBE TUBO RIGIDO	193T
	2	**85803111**		1	TUBO TUBO	TUBE TUBO RIGIDO	193T
	3	**85803357**		1	MANGUEIRA MANGA C/RACORDE	HOSE ASSY TUBO FLESSIBILE	192T
	4	**85801525**		1	MANGUEIRA MANGA C/RACORDE	HOSE ASSY TUBO FLESSIBILE	192T
	5	**83901443**		2	O'RING JUNTA TORICA	O'RING GUARNIZIONE O-R	158G
	6	**81825117**		2	O'RING JUNTA TORICA	O'RING GUARNIZIONE O-R	158G

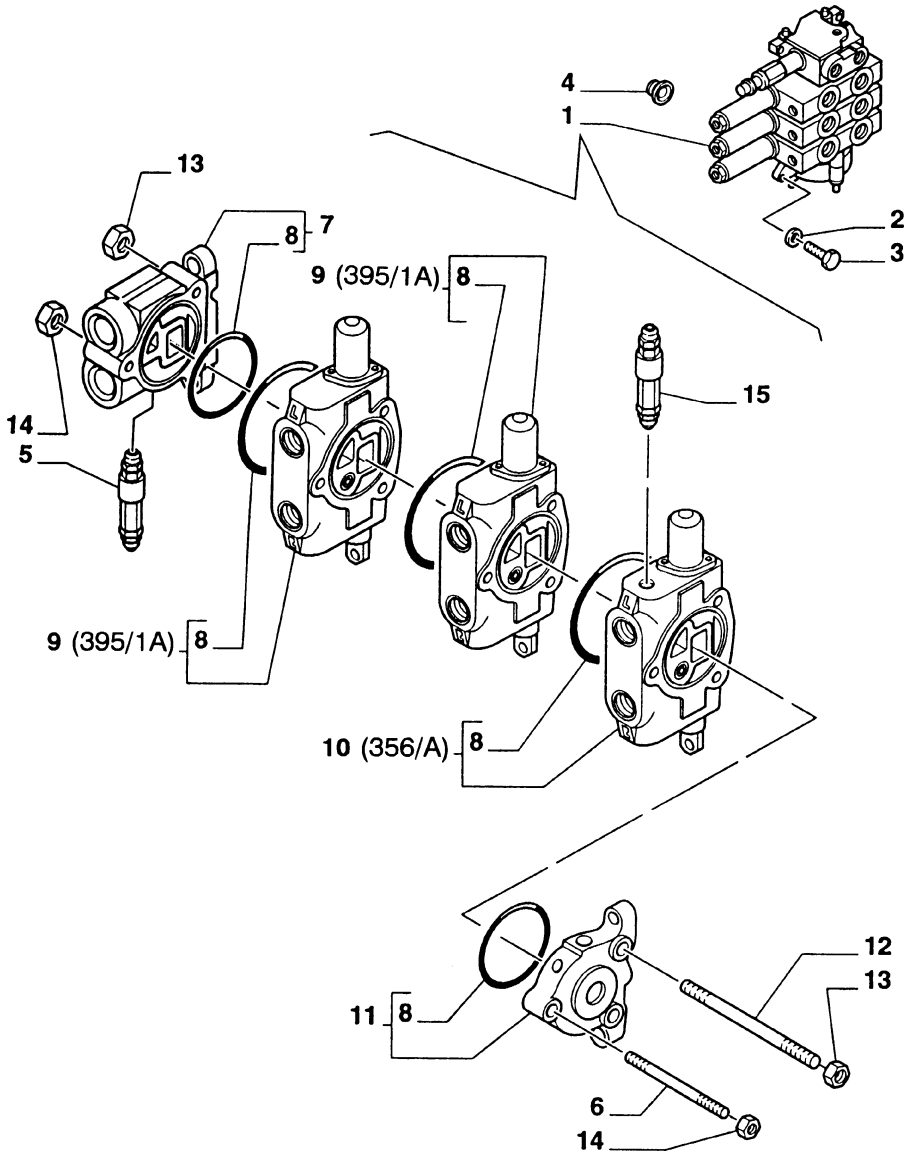

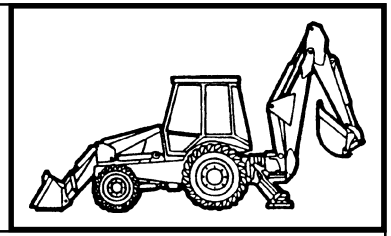

MOD	R	P/N. Imola	P/N. Brazil	Q	Descrição Denominacion	Description Descrizione	L.C.
	1	**85819685**		1	DISTRIBUIDOR DISTRIBUIDOR	CONTROL VALVE DISTRIBUTORE	083D
	2	**11193874**		3	ARRUELA ARANDELA	WASHER ROSETTA	131R
	3	**16043924**		3	PARAFUSO TORNILLO	SCREW VITE	040V
	4	**85803121**		2	BUJÃO TAPON	PLUG TAPPO	050T
	5	**85819721**		1	VÁLVULA VALVULA	VALVE VALVOLA	010V
	6	**9968528**		1	PRISIONEIRO ESPARRAGO	STUD PRIGIONIERO	210P
	7	**9968524**		1	TAMPA TAPA	COVER COPERCHIO	265C
	8	**9968476**		5	O'RING JUNTA TORICA	O'RING GUARNIZIONE O-R	158G
	9	**9970107**		2	CORPO CUERPO	BODY CORPO	300C
	10	**9968526**		1	CORPO CUERPO	BODY CORPO	300C
	11	**9968527**		1	TAMPA TAPA	COVER COPERCHIO	265C
	12	**9968529**		2	PRISIONEIRO ESPARRAGO	STUD PRIGIONIERO	210P
	13	**9968441**		4	PORCA TUERCA	NUT DADO	010D
	14	**9968440**		2	PORCA TUERCA	NUT DADO	010D
	15	**9968594**		1	VÁLVULA VALVULA	VALVE VALVOLA	010V

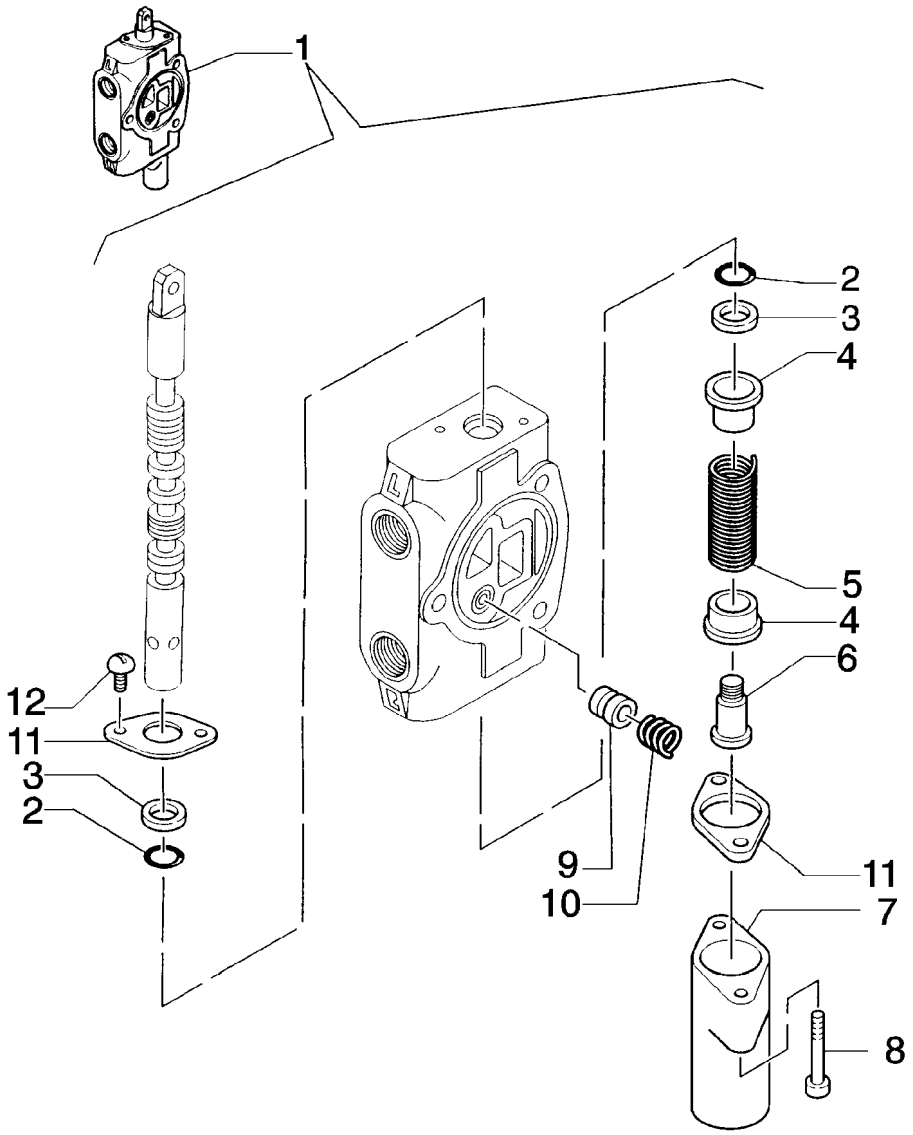

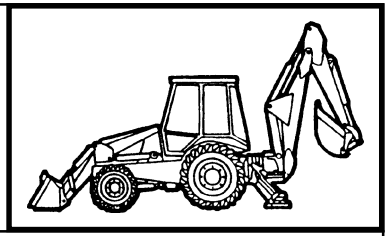

MOD	R	P/N. Imola	P/N. Brazil	Q	Descrição Denominacion	Description Descrizione	L.C.
	1	**9970107**		1	VÁLVULA VALVULA	VALVE VALVOLA	010V
	2	**85813418**		2	JUNTA JUNTA PLANA	GASKET GUARNIZ. PIANA	120G
	3	**85813419**		2	ANEL RASPADOR ANEL RASCADOR	OILSCRAPER RING ANELLO RASCHIAOLIO	050A
	4	**9968481**		2	SEDE ASIENTO	SEAT SEDE	069S
	5	**9968531**		1	MOLA MUELLE	SPRING MOLLA	100M
	6	**9968483**		1	PARAFUSO TORNILLO	SCREW VITE	040V
	7	**9968484**		1	TAMPA TAPA	COVER COPERCHIO	265C
	8	**9968486**		2	PARAFUSO TORNILLO	SCREW VITE	040V
	9	**9968477**		1	PISTÃO EMBOLO	PLUNGER PISTONCINO	130P
	10	**9968478**		2	MOLA MUELLE	SPRING MOLLA	100M
	11	**9968480**		2	PLACA PLACA	PLATE PIASTRINA	110P
	12	**9968460**		2	PARAFUSO TORNILLO	SCREW VITE	040V

FB80.3 - FB100.3

DISTRIBUIDOR DO PEDAL DO ESTABILIZADOR DE TRES SEÇÕES
DISTRIBUIDOR DE LOS PIES ESTABILIZADORES DE TRES SECCIONES
THREE-SECTION CONTROL VALVE FOR STABILIZER FEET
DISTRIBUTORE PIEDI STABILIZZATORI A TRE SEZIONI

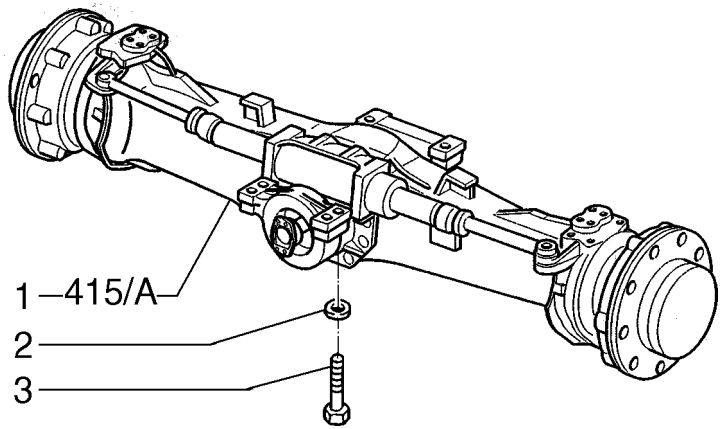

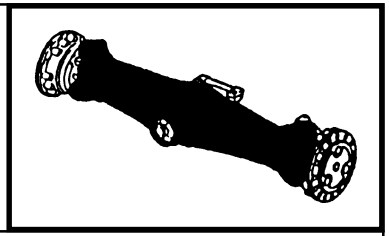

MOD	R	P/N. Imola	P/N. Brazil	Q	Descrição Denominacion	Description Descrizione	L.C.
	1	**85804955**		1	EIXO EJE	AXLE ASSALE	085A
	2	**10520431**	**70928358**	6	ARRUELA ARANDELA	WASHER ROSETTA	131R
	3	**15989137**	**15989131**	6	PARAFUSO TORNILLO	SCREW VITE	040V

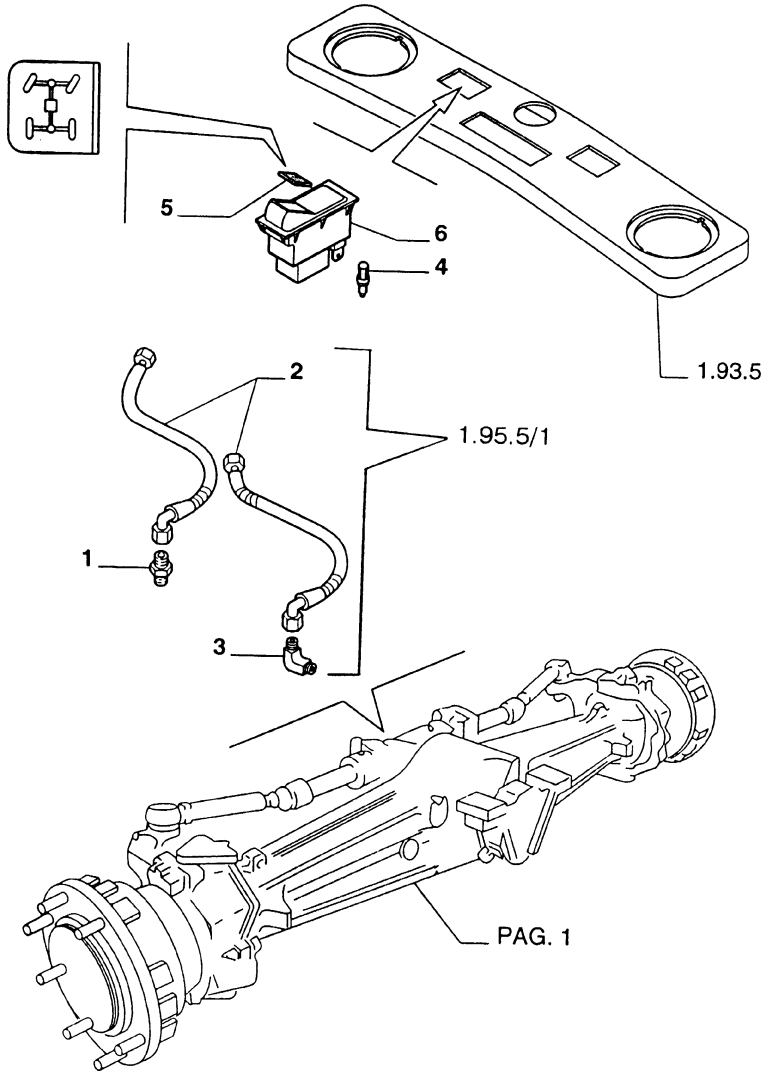

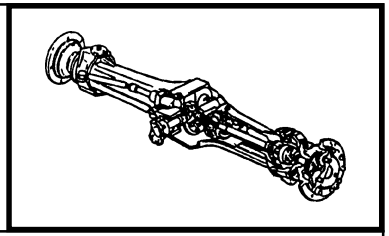

MOD	R	P/N. Imola	P/N. Brazil	Q	Descrição Denominacion	Description Descrizione	L.C.
	1		**79112049**	1	CONEXÃO RACOR	FITTING RACCORDO	020R
	2	**85812212**	**75247179**	2	MANGUEIRA MANGA C/RACORDE	HOSE ASSY TUBO FLESSIBILE	192T
	3		**76022306**	1	CONEXÃO RACOR	FITTING RACCORDO	020R
	4	**14143790**		1	LÂMPADA LAMPARA	LAMP LAMPADA	030L
	5	**85803989**		1	PLACA PLACA	PLATE PIASTRINA	110P
	6	**85805385**		1	CHAVE COMUTADOR CONMUTADOR	SWITCH COMMUTATORE	210C

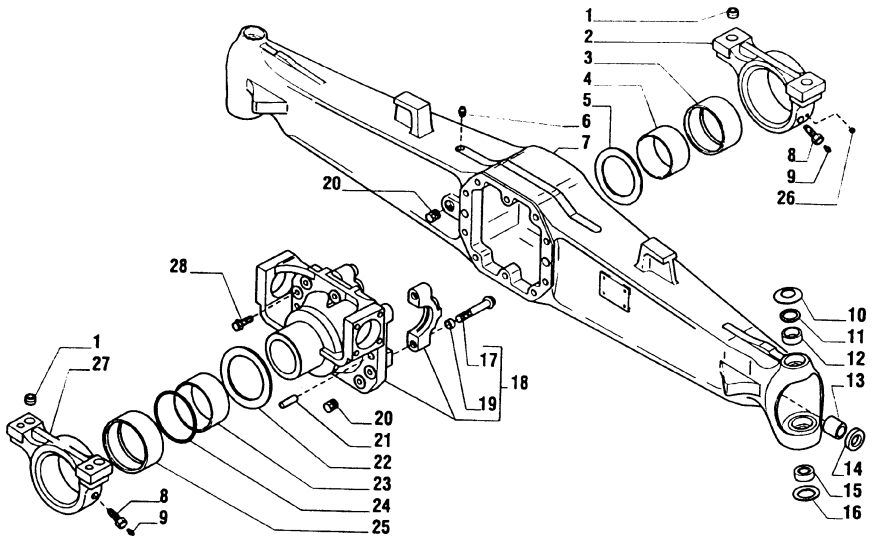

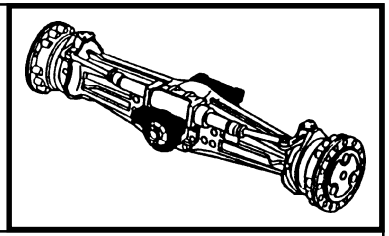

MOD	R	P/N. Imola	P/N. Brazil	Q	Descrição Denominacion	Description Descrizione	L.C.
	1	**9967990**		4	BUCHA BUJE	BUSHING BOCCOLA	095B
	2	**9967991**		1	SUPORTE SOPORTE	SUPPORT SUPPORTO	300S
	3	**9967992**		1	BUCHA BUJE	BUSHING BOCCOLA	095B
	4	**9967993**		1	BUCHA BUJE	BUSHING BOCCOLA	095B
	5	**9967994**		1	ARRUELA ARANDELA	WASHER ROSETTA	131R
	6	**9967672**		1	BUJÃO TAPON	PLUG TAPPO	050T
	7	**85805965**		1	CARCAÇA CAJA	CASE SCATOLA	035S
	8	**9967995**		2	PARAFUSO TORNILLO	SCREW VITE	040V
	9	**9967996**		2	PINO GRAXEIRO ENGRASADOR	GREASE FITTING INGRASSATORE	060I
	10	**85805967**		2	MOLA MUELLE	SPRING MOLLA	100M
	11	**85805966**		2	ESPAÇADOR SEPARADOR	SPACER DISTANZIALE	075D
	12	**85805968**		2	BUCHA BUJE	BUSHING BOCCOLA	095B
	13	**85805969**		2	BUCHA BUJE	BUSHING BOCCOLA	095B
	14	**85805970**		2	RETENTOR EMPAQUETADURA	SEAL ASSY GUARNIZIONE	123G
	15	**85805971**		2	JUNTA ESFÉRICA ARTIC.ESFERICA	BALL JOINT GIUNTO SFERICO	070G
	16	**85805972**		2	MOLA MUELLE	SPRING MOLLA	100M
	17	**9967681**		4	PARAFUSO TORNILLO	SCREW VITE	040V
	18	**9968004**		1	SUPORTE SOPORTE	SUPPORT SUPPORTO	300S
	19	**9967682**		4	BUCHA BUJE	BUSHING BOCCOLA	095B
	20	**9968005**		2	BUJÃO TAPON	PLUG TAPPO	050T

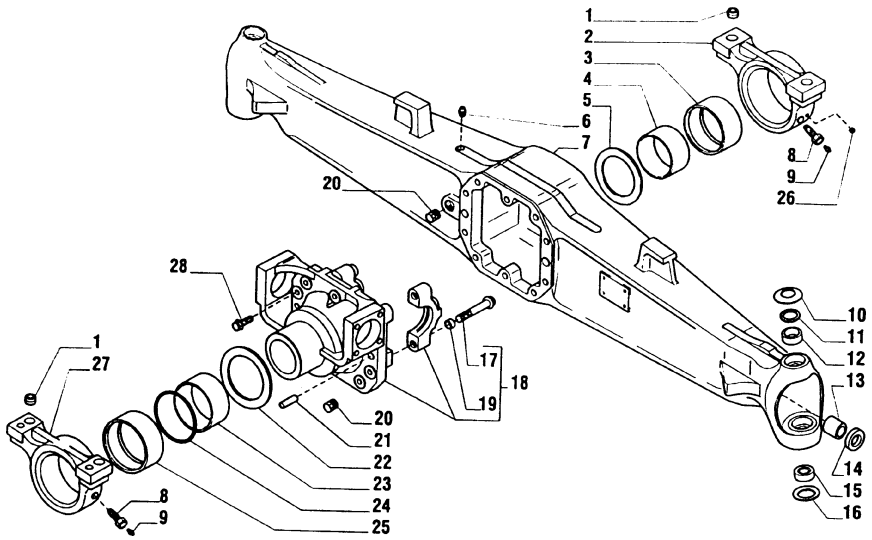

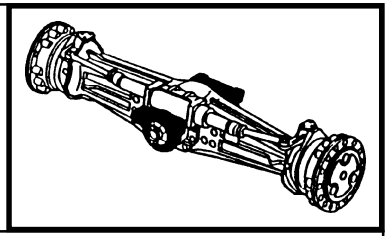

MOD	R	P/N. Imola	P/N. Brazil	Q	Descrição Denominacion	Description Descrizione	L.C.
	21	**9967683**		2	PINO PASADOR	PIN SPINA	200S
	22	**9968006**		1	ARRUELA ARANDELA	WASHER ROSETTA	131R
	23	**9968010**		1	BUCHA BUJE	BUSHING BOCCOLA	095B
	24	**9968008**		1	O'RING JUNTA TORICA	O'RING GUARNIZIONE O-R	158G
	25	**9968007**		1	BUCHA BUJE	BUSHING BOCCOLA	095B
	26	**85805973**		1	BUJÃO TAPON	PLUG TAPPO	050T
	27	**9968009**		1	SUPORTE SOPORTE	SUPPORT SUPPORTO	300S
	28	**9967769**		10	PARAFUSO TORNILLO	SCREW VITE	040V

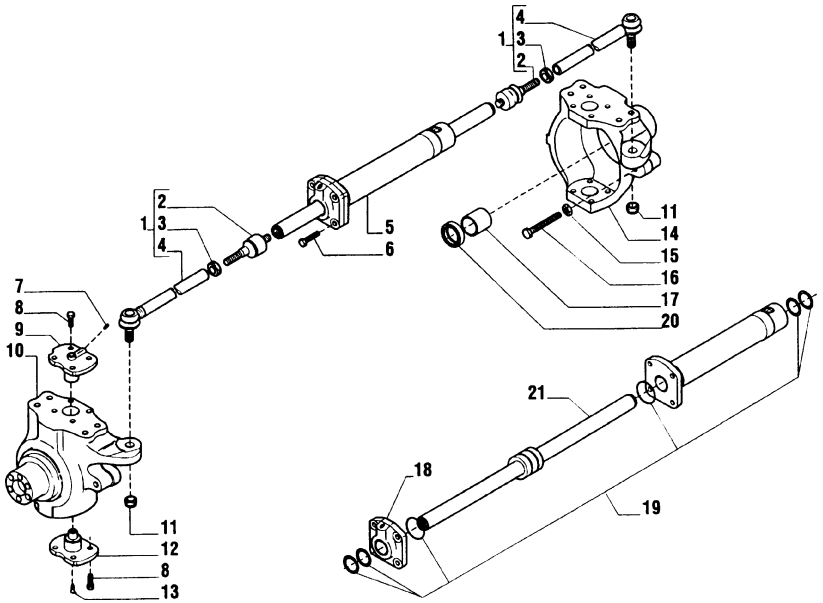

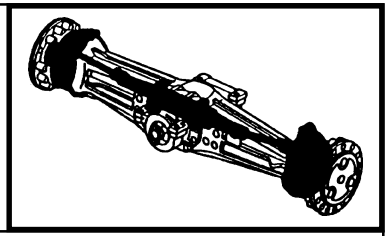

MOD	R	P/N. Imola	P/N. Brazil	Q	Descrição Denominacion	Description Descrizione	L.C.
	1	**85805974**		2	PONTEIRA DE DIREÇÃO BARRA DE ACOPLAMENTO	TRACK ROD TIRANTE STERZO	143T
	2	**85805975**		2	JUNTA ESFÉRICA ARTIC.ESFERICA	BALL JOINT GIUNTO SFERICO	070G
	3	**85805976**		2	PORCA TUERCA	NUT DADO	010D
	4	**85805977**		2	PONTEIRA DE DIREÇÃO BARRA DE ACOPLAMENTO	TRACK ROD TIRANTE STERZO	143T
	5	**85805978**		1	CILINDRO DIREÇÃO CILINDRO DIREC.	STEER'G CYLIND. CILINDRO STERZO	403C
	6	**9968028**		4	PARAFUSO TORNILLO	SCREW VITE	040V
	7	**9968021**		2	PINO GRAXEIRO ENGRASADOR	GREASE FITTING INGRASSATORE	060I
	8	**85805979**		16	PARAFUSO TORNILLO	SCREW VITE	040V
	9	**85805980**		2	TAMPA TAPA	COVER COPERCHIO	265C
	10	**85805981**		1	CUBO DA RODA DISCO DE RUEDA	WHEEL DISC DISCO RUOTA	091D
	11	**85805982**		2	PORCA TUERCA	NUT DADO	010D
	12	**85805983**		2	TAMPA TAPA	COVER COPERCHIO	265C
	13	**85805984**		2	PINO GRAXEIRO ENGRASADOR	GREASE FITTING INGRASSATORE	060I
	14	**85805985**		1	CUBO DA RODA DISCO DE RUEDA	WHEEL DISC DISCO RUOTA	091D
	15	**85805986**		2	PORCA TUERCA	NUT DADO	010D
	16	**85805987**		2	PARAFUSO TORNILLO	SCREW VITE	040V
	17	**85805988**		2	BUCHA BUJE	BUSHING BOCCOLA	095B
	18	**85805989**		1	CABEÇOTE DO CILINDRO CULATA	CYLINDER HEAD TESTA CILINDRI	113T
	19	**85805990**		1	KIT JUEGO	KIT KIT	002K
	20	**85805991**		2	RETENTOR EMPAQUETADURA	SEAL ASSY GUARNIZIONE	123G

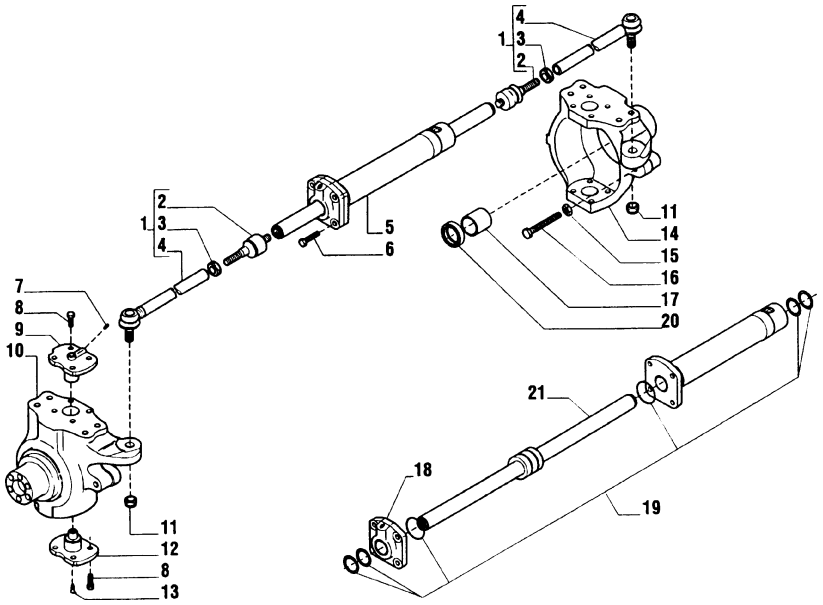

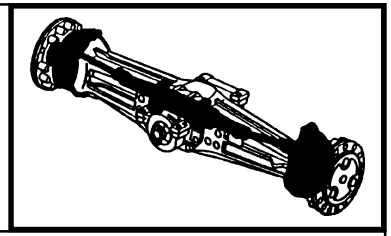

MOD	R	P/N. Imola	P/N. Brazil	Q	Descrição Denominacion	Description Descrizione	L.C.
	21	**85805992**		1	HASTE VASTAGO	ROD STELO	274S

FB80.3 - FB100.3

EIXO DIANTEIRO - 4X4
EJE DELANTERO - 4X4
FRONT AXLE - 4WD
PONTE ANTERIORE - 4X4

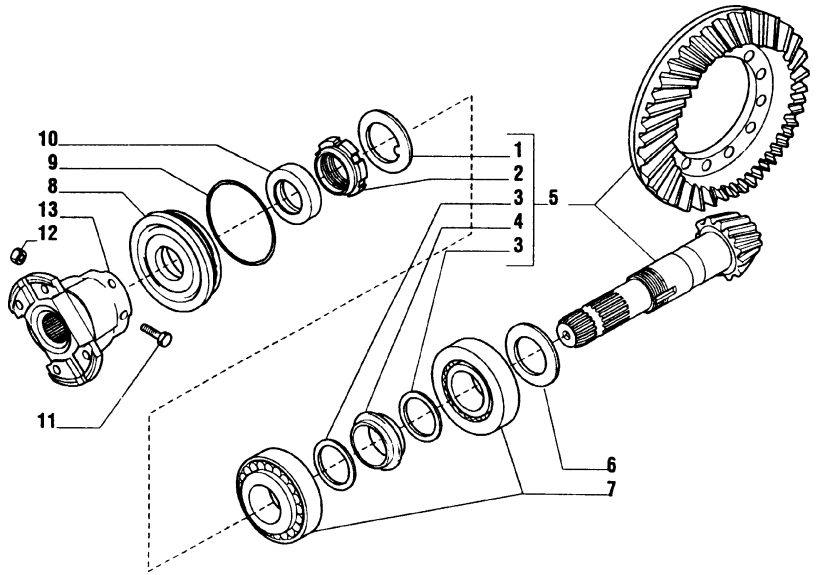

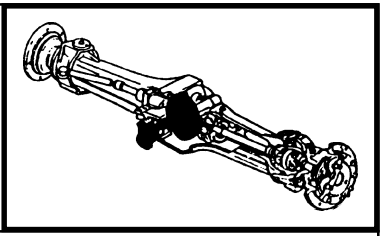

MOD	R	P/N. Imola	P/N. Brazil	Q	Descrição Denominacion	Description Descrizione	L.C.
	1	**9968031**		1	ARRUELA ARANDELA	WASHER ROSETTA	131R
	2	**9968032**		1	PORCA TUERCA	NUT DADO	010D
	3	**9968033**		2	ARRUELA ARANDELA	WASHER ROSETTA	131R
	4	**9968034**		1	DISTANCIADOR ESPARRAGO	STUD COLONNETTA	184C
	5	**9968036**		1	COROA E PINHÃO PAR CONICO	BEVEL GEAR SET COPPIA CONICA	285C
	6	**9968037**		AR	CALÇO CALCE	SHIM SPESSORE	198S
	6	**9968038**		AR	CALÇO CALCE	SHIM SPESSORE	198S
	6	**9968039**		AR	CALÇO CALCE	SHIM SPESSORE	198S
	6	**9968040**		AR	CALÇO CALCE	SHIM SPESSORE	198S
	6	**9968041**		AR	CALÇO CALCE	SHIM SPESSORE	198S
	6	**9968042**		AR	CALÇO CALCE	SHIM SPESSORE	198S
	6	**9968043**		AR	CALÇO CALCE	SHIM SPESSORE	198S
	6	**9968044**		AR	CALÇO CALCE	SHIM SPESSORE	198S
	6	**9968045**		AR	CALÇO CALCE	SHIM SPESSORE	198S
	6	**9968046**		AR	CALÇO CALCE	SHIM SPESSORE	198S
	7	**9968047**		2	ROLAMENTO RODAMIENTO	BEARING CUSCINETTO	341C
	8	**9968051**		1	TAMPA TAPA	COVER COPERCHIO	265C
	9	**9968052**		1	O'RING JUNTA TORICA	O'RING GUARNIZIONE O-R	158G
	10	**9968020**		1	RETENTOR EMPAQUETADURA	SEAL ASSY GUARNIZIONE	123G
	11	**9968048**		2	PARAFUSO TORNILLO	SCREW VITE	040V

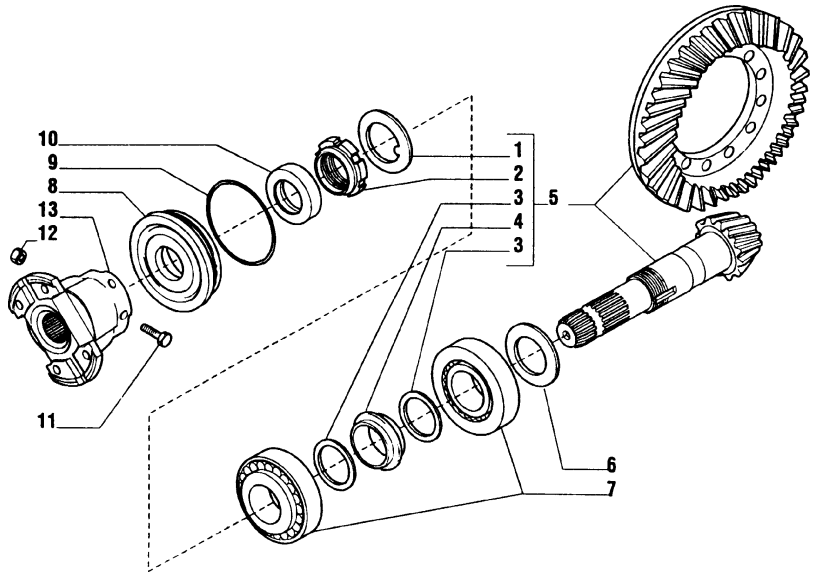

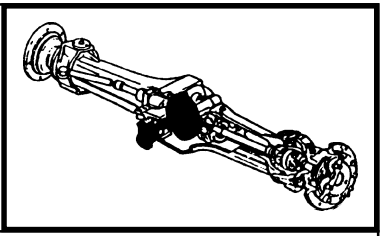

MOD	R	P/N. Imola	P/N. Brazil	Q	Descrição Denominacion	Description Descrizione	L.C.
	12	**9968050**		1	PORCA TUERCA	NUT DADO	010D
	13	**9968049**		1	FLANGE BRIDA	FLANGE FLANGIA	070F

FB80.3 - FB100.3

EIXO DIANTEIRO - 4X4
EJE DELANTERO - 4X4
FRONT AXLE - 4WD
PONTE ANTERIORE - 4X4

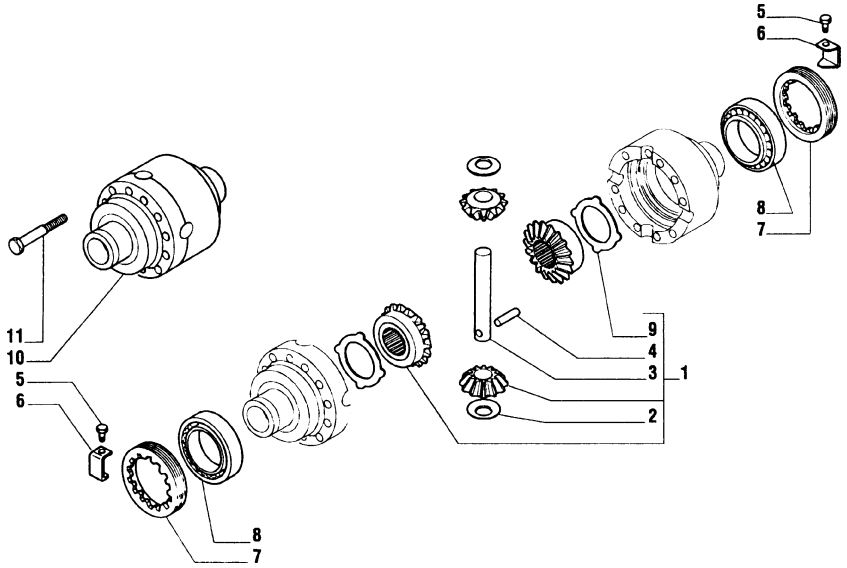

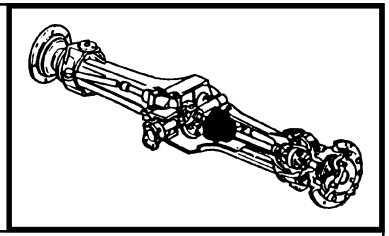

MOD	R	P/N. Imola	P/N. Brazil	Q	Descrição Denominacion	Description Descrizione	L.C.
	1	**85806004**		1	KIT JUEGO	KIT KIT	002K
	2	**9966352**		2	ARRUELA ARANDELA	WASHER ROSETTA	131R
	3	**9966354**		1	PINO BULON	PIN PERNO	080P
	4	**9966356**		1	PINO PASADOR	PIN SPINA	200S
	5	**9967739**		2	PARAFUSO TORNILLO	SCREW VITE	040V
	6	**9967740**		2	ABRAÇADEIRA ABRAZADERA	CLAMP FASCETTA	031F
	7	**9967741**		2	PORCA TUERCA	NUT DADO	010D
	8	**9968054**		2	ROLAMENTO RODAMIENTO	BEARING CUSCINETTO	341C
	9	**9967734**		2	ARRUELA ARANDELA	WASHER ROSETTA	131R
	10	**9968055**		1	DIFERENCIAL DEFERENCIAL	DIFFERENTIAL DIFFERENZIALE	040D
	11	**9967736**		12	PARAFUSO TORNILLO	SCREW VITE	040V

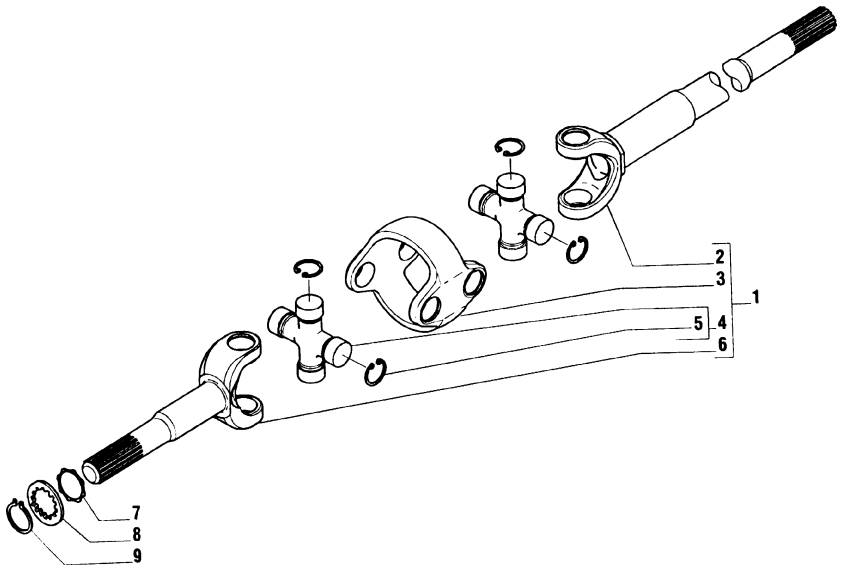

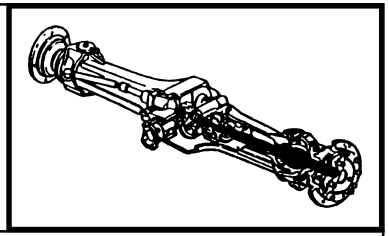

MOD	R	P/N. Imola	P/N. Brazil	Q	Descrição Denominacion	Description Descrizione	L.C.
	1	**85805993**		2	JUNTA CARDAN JUNTA CARDAN	UNIVERSAL JOINT GIUNTO CARDAN.	065G
	2	**85805994**		2	FORQUILHA HORQUILLA	YOKE FORCELLA	085F
	3	**85805995**		2	CORPO CUERPO	BODY CORPO	300C
	4	**9968059**		4	CRUZETA CRUCETA	SPIDER CROCIERA	320C
	5	**9968060**		16	ANEL ELÁSTICO ANILLO ELASTICO	SNAP RING ANELLO ELASTICO	187A
	6	**85805997**		2	FORQUILHA HORQUILLA	YOKE FORCELLA	085F
	7	**85805998**		2	ARRUELA ARANDELA	WASHER ROSETTA	131R
	8	**85805999**		2	ARRUELA ARANDELA	WASHER ROSETTA	131R
	9	**85806000**		2	ANEL ELÁSTICO ANILLO ELASTICO	SNAP RING ANELLO ELASTICO	187A

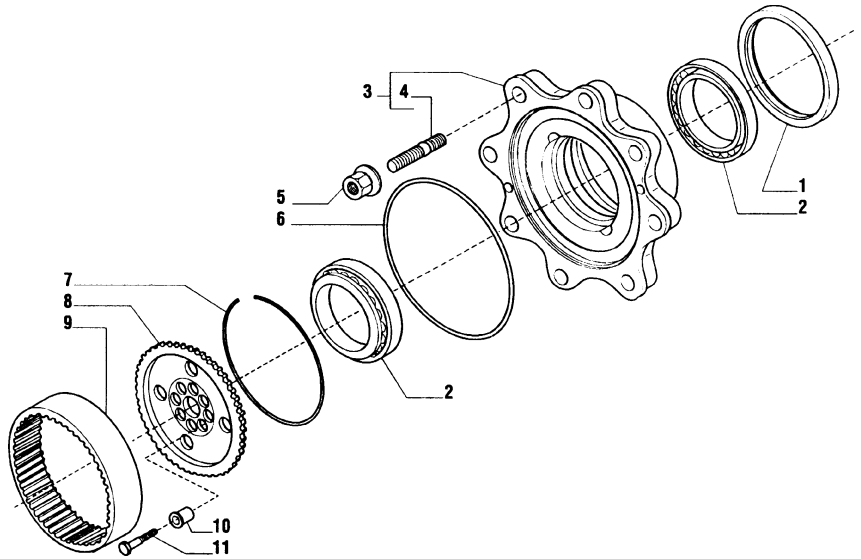

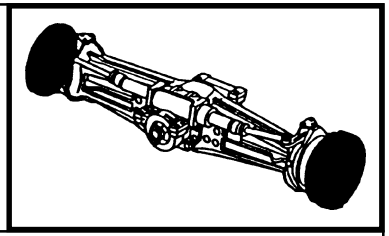

MOD	R	P/N. Imola	P/N. Brazil	Q	Descrição Denominacion	Description Descrizione	L.C.
	1	**85806001**		2	RETENTOR EMPAQUETADURA	SEAL ASSY GUARNIZIONE	123G
	2	**85806002**		4	ROLAMENTO RODAMIENTO	BEARING CUSCINETTO	341C
	3	**85806003**		2	CUBO DA RODA DISCO DE RUEDA	WHEEL DISC DISCO RUOTA	091D
	4	**9968070**		16	PRISIONEIRO ESPARRAGO	STUD PRIGIONIERO	210P
	5	**9968071**		16	PORCA TUERCA	NUT DADO	010D
	6	**85805711**		2	O'RING JUNTA TORICA	O'RING GUARNIZIONE O-R	158G
	7	**85806006**		2	ANEL ARO	RING ANELLO	045A
	8	**85806007**		2	ENGRENAGEM CORONA	GEAR INGRANAGGIO	050I
	9	**85806008**		2	COROA CORONA DENTADA	RING GEAR CORONA DENTATA	297C
	10	**85806009**		12	BUCHA BUJE	BUSHING BOCCOLA	095B
	11	**85806010**		12	PARAFUSO TORNILLO	SCREW VITE	040V

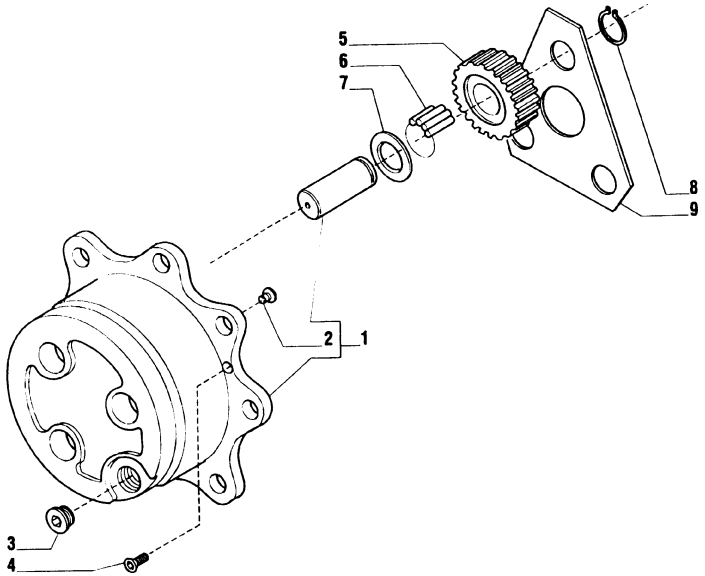

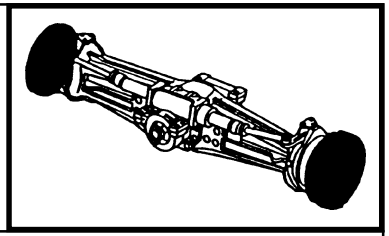

MOD	R	P/N. Imola	P/N. Brazil	Q	Descrição Denominacion	Description Descrizione	L.C.
	1	**85806011**		2	PORTA-SATÉLITE CAJA SATELITES	PLANET. CARRIER PORTASATELLITI	196P
	2	**9968074**		2	GUIA PATIN	PAD PATTINO	045P
	3	**85806012**		2	BUJÃO TAPON	PLUG TAPPO	050T
	4	**85805709**		4	PARAFUSO TORNILLO	SCREW VITE	040V
	5	**85806014**		6	ENGRENAGEM CORONA	GEAR INGRANAGGIO	050I
	6	**85806015**		18	AGULHA(P/ROLAM) AGUJA	NEEDLE ROLLER RULLINO	155R
	7	**9968084**		6	ARRUELA ARANDELA	WASHER ROSETTA	131R
	8	**9968083**		6	ANEL ELÁSTICO ANILLO ELASTICO	SNAP RING ANELLO ELASTICO	187A
	9	**85806016**		2	PLACA PLACA	PLATE PIASTRINA	110P

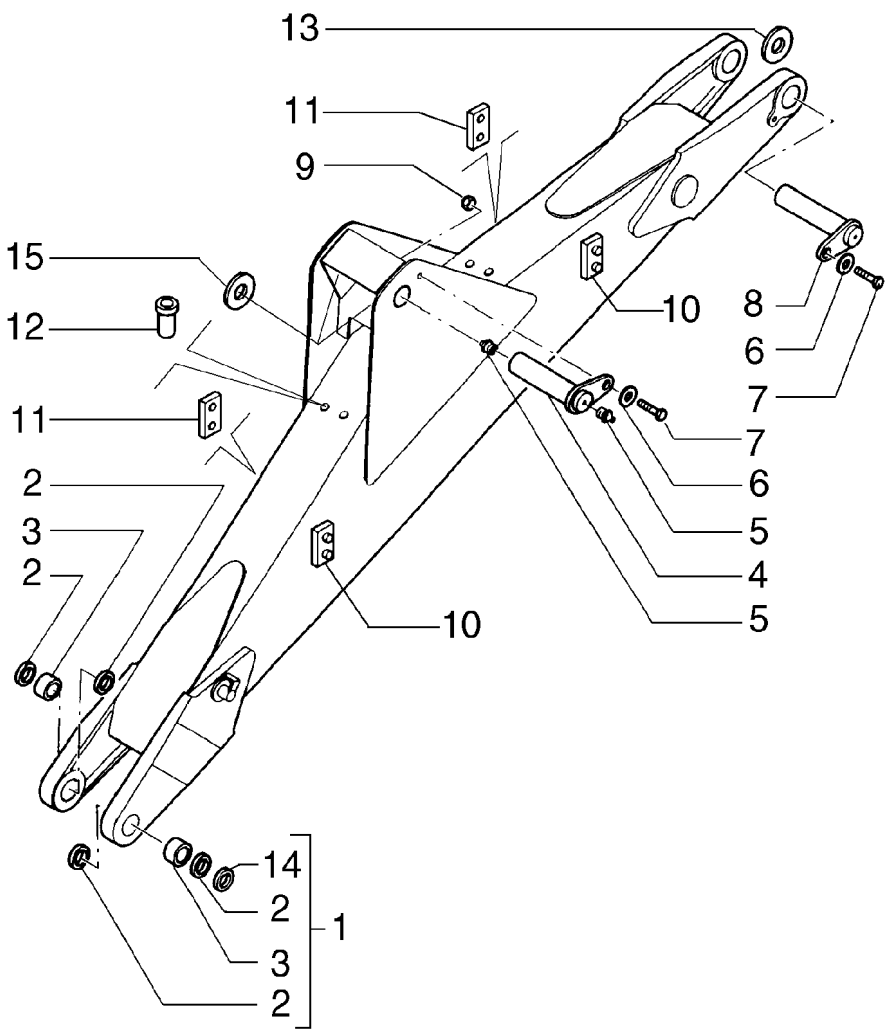

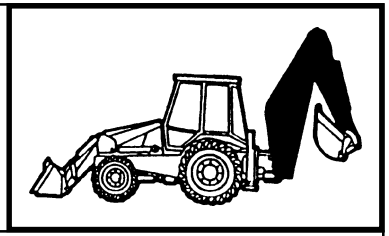

MOD	R	P/N. Imola	P/N. Brazil	Q	Descrição Denominacion	Description Descrizione	L.C.
	1	**85816800**		1	LANÇA LEVANTAM. BRAZO ELEVACION	LIFT BOOM BRACCIO SOLLEV.	133B
	2	**83931281**		4	RETENTOR JUNTA	SEAL GUARNIZIONE	122G
	3	**83910557**		2	BUCHA BUJE	BUSHING BOCCOLA	095B
	4	**85815696**		1	PINO BULON	PIN PERNO	080P
	5	**80080710**	**70914465**	2	PINO GRAXEIRO ENGRASADOR	GREASE FITTING INGRASSATORE	060I
	6	**10520221**	**11200279**	1	ARRUELA ARANDELA	WASHER ROSETTA	131R
	7	**85802397**	**11118537**	2	PARAFUSO TORNILLO	SCREW VITE	040V
	8	**85815607**		1	PINO BULON	PIN PERNO	080P
	9	**12163321**		1	PORCA TUERCA	NUT DADO	010D
	10	**85815627**		2	PLACA PLACA	PLATE PIASTRINA	110P
	11	**85815628**		2	PLACA PLACA	PLATE PIASTRINA	110P
	12	**85801492**		AR	ROSCA POSTIÇA ROSCA POSTIZA	INSERT INSERTO FILETT.	054I
	13	**79043231**		AR	CALÇO CALCE	SHIM SPESSORE	198S
	13	**79043234**		AR	CALÇO CALCE	SHIM SPESSORE	198S
	13	**85818916**		A	CALÇO CALCE	SHIM SPESSORE	198S
	14		**76022686**	2	ARRUELA ARANDELA	WASHER ROSETTA	131R
	15		**76022744**	AR	ARRUELA ARANDELA	WASHER ROSETTA	131R
	16		**70677010**	1	ARRUELA ARANDELA	WASHER ROSETTA	131R

FB80.3 - FB100.3

BRAÇOS DE EXCAVAÇÃO E ELEVAÇÃO
BRAZOS DE EXCAVACION E ELEVACION
EXCAVATOR AND LIFTING ARMS
BRACCIOS SCAVO - SOLLEVAMENTO

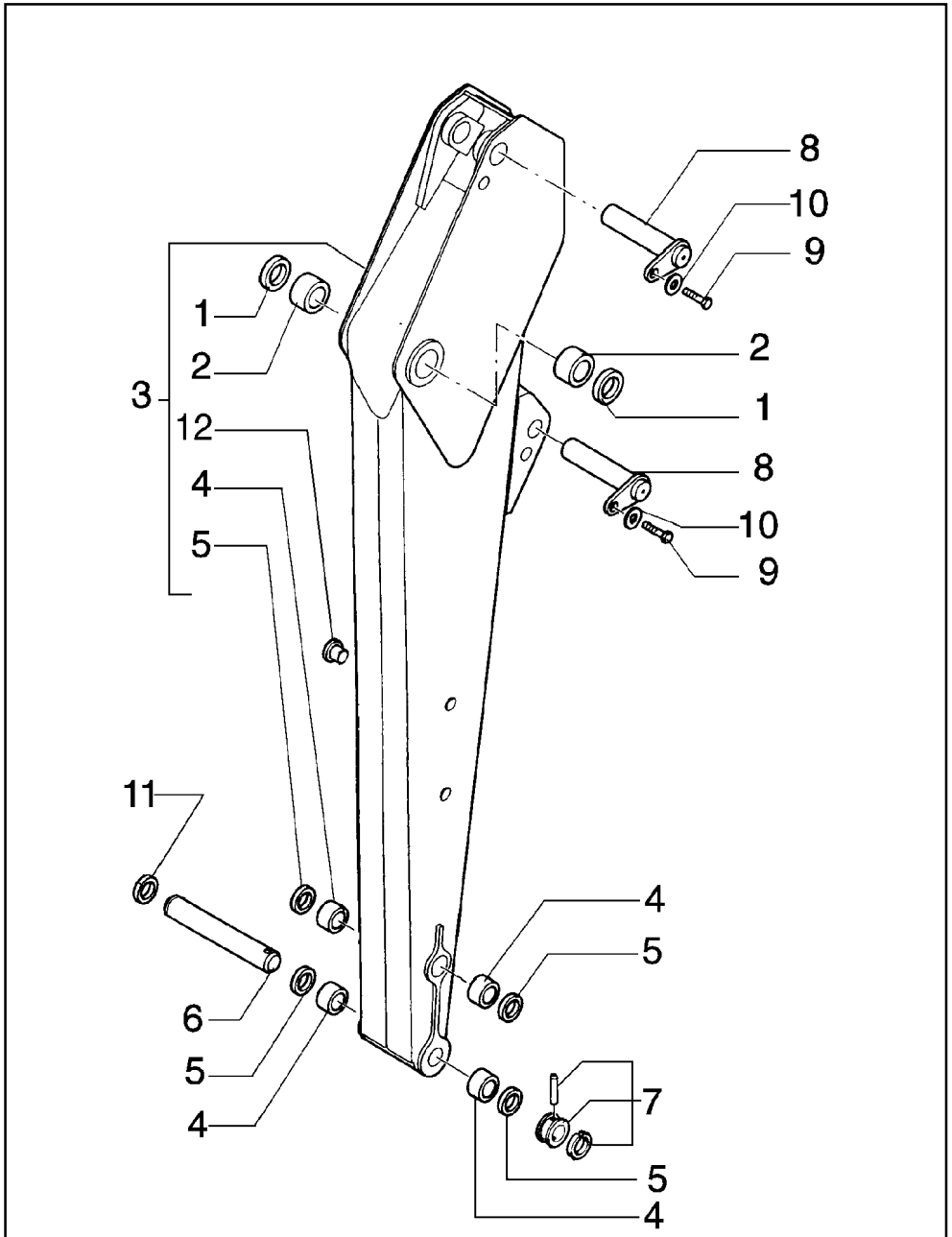

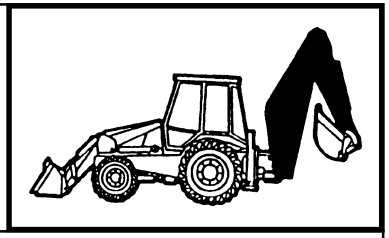

MOD	R	P/N. Imola	P/N. Brazil	Q	Descrição Denominacion	Description Descrizione	L.C.
	1	**89824067**	**83931281**	2	RETENTOR JUNTA	SEAL GUARNIZIONE	122G
	2	**83910546**		2	BUCHA BUJE	BUSHING BOCCOLA	095B
	3	**85817038**		1	BRAÇO BRAZO	ARM BRACCIO	130B
	3	**85817047**		1	BRAÇO BRAZO	ARM BRACCIO	130B
	4	**83910548**		4	BUCHA BUJE	BUSHING BOCCOLA	095B
	5	**83931289**		4	RETENTOR JUNTA	SEAL GUARNIZIONE	122G
	6	**85803005**	**83931373**	1	PINO BULON	PIN PERNO	080P
	7	**85802975**		1	PINO BULON	PIN PERNO	080P
	8	**85803002**	**83931372**	2	PINO BULON	PIN PERNO	080P
	9	**85802397**	**11599521**	2	PARAFUSO TORNILLO	SCREW VITE	040V
	10	**85802396**	**12646921**	2	ARRUELA ARANDELA	WASHER ROSETTA	131R
	11		**75246056**	1	ANEL ELÁSTICO ANILLO ELASTICO	SNAP RING ANELLO ELASTICO	187A
	12	**85804447**		4	BUJÃO TAPON	PLUG TAPPO	050T

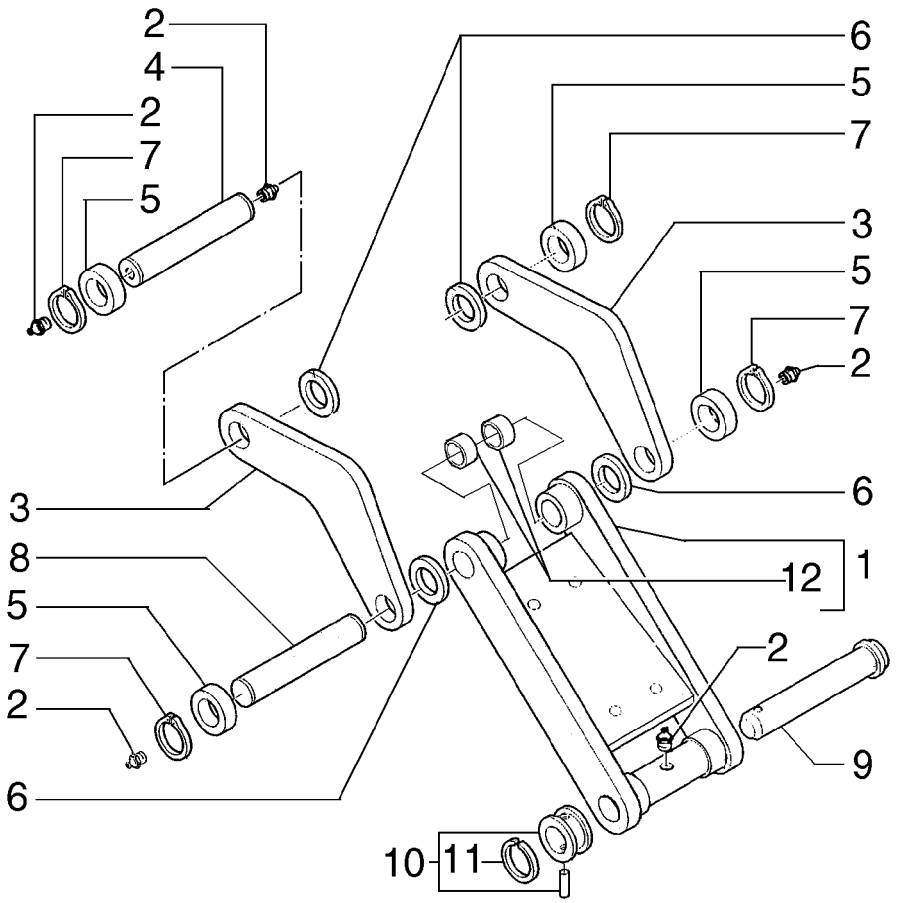

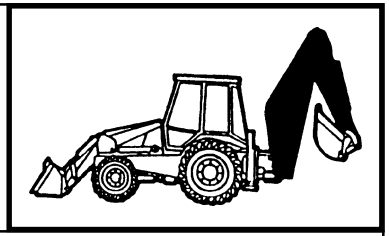

MOD	R	P/N. Imola	P/N. Brazil	Q	Descrição Denominacion	Description Descrizione	L.C.
	1		**75257546**	1	BIELA BIELA	LINK BIELLA	050B
	2		**70914465**	5	PINO GRAXEIRO ENGRASADOR	GREASE FITTING INGRASSATORE	060I
	3	**85817134**		2	BIELA BIELA	LINK BIELLA	050B
	4	**85815517**		1	PINO BULON	PIN PERNO	080P
	5	**83910977**		4	ESPAÇADOR SEPARADOR	SPACER DISTANZIALE	075D
	6	**85818916**		AR	ARRUELA ARANDELA	WASHER ROSETTA	131R
	7	**11069071**		4	ANEL ARO	RING ANELLO	045A
	8	**85813469**		1	PINO BULON	PIN PERNO	080P
	9	**85803005**	**83931373**	1	PINO BULON	PIN PERNO	080P
	10	**85802975**		1	PINO BULON	PIN PERNO	080P
	11	**85802974**		1	ANEL ELÅSTICO ANILLO ELASTICO	SNAP RING ANELLO ELASTICO	187A
	12	**76021466**		4	BUCHA BUJE	BUSHING BOCCOLA	095B

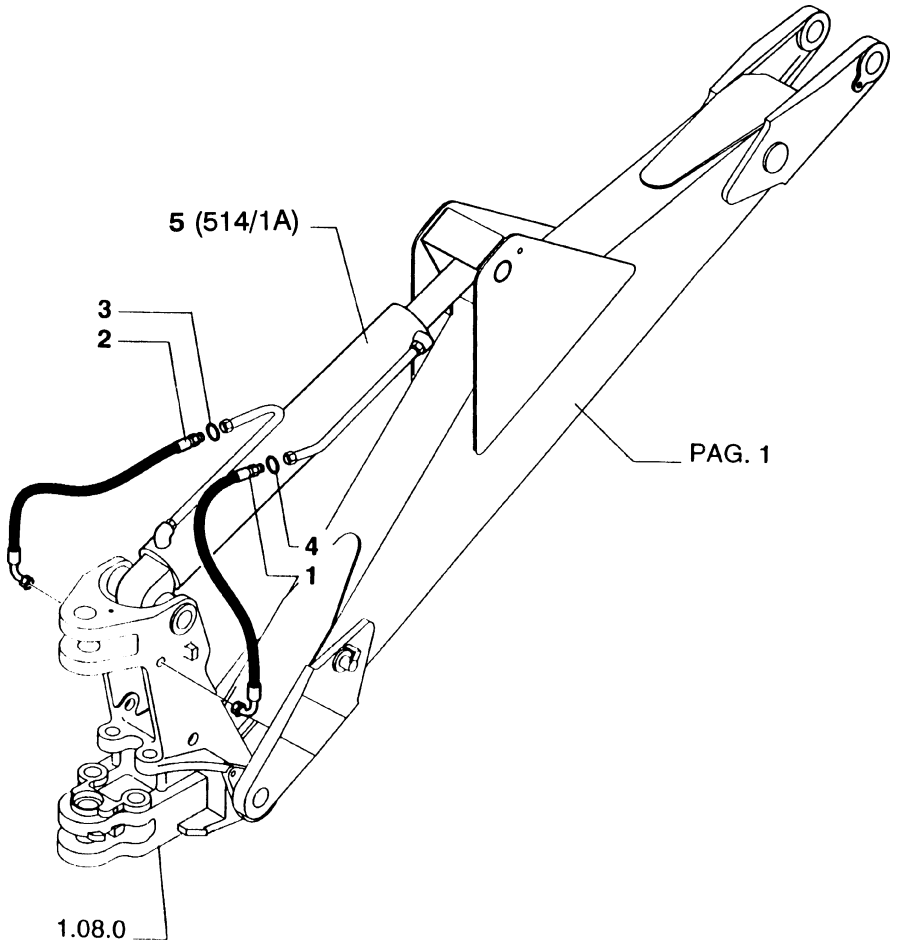

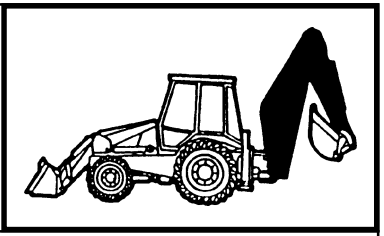

MOD	R	P/N. Imola	P/N. Brazil	Q	Descrição Denominacion	Description Descrizione	L.C.
	1		**75245290**	1	MANGUEIRA MANGA C/RACORDE	HOSE ASSY TUBO FLESSIBILE	192T
	2		**75245975**	1	MANGUEIRA MANGA C/RACORDE	HOSE ASSY TUBO FLESSIBILE	192T
	3	**81804038**	**70923841**	1	O'RING JUNTA TORICA	O'RING GUARNIZIONE O-R	158G
	4	**83901443**	**70930357**	1	O'RING JUNTA TORICA	O'RING GUARNIZIONE O-R	158G
SHORT	5	**85800270**		1	CILINDRO ELEVAÇÃO GATO ELEVACION	LIFT CYLINDERS CIL. SOLLEVAM.	11G1
LONG	5	**85800840**		1	CILINDRO ELEVAÇÃO GATO ELEVACION	LIFT CYLINDERS CIL. SOLLEVAM.	11G1

LONG USADO EN EL BRAZO DE ELEVACION LARGO
SHORT USADO EN EL BRAZO DE ELEVACION CORTO

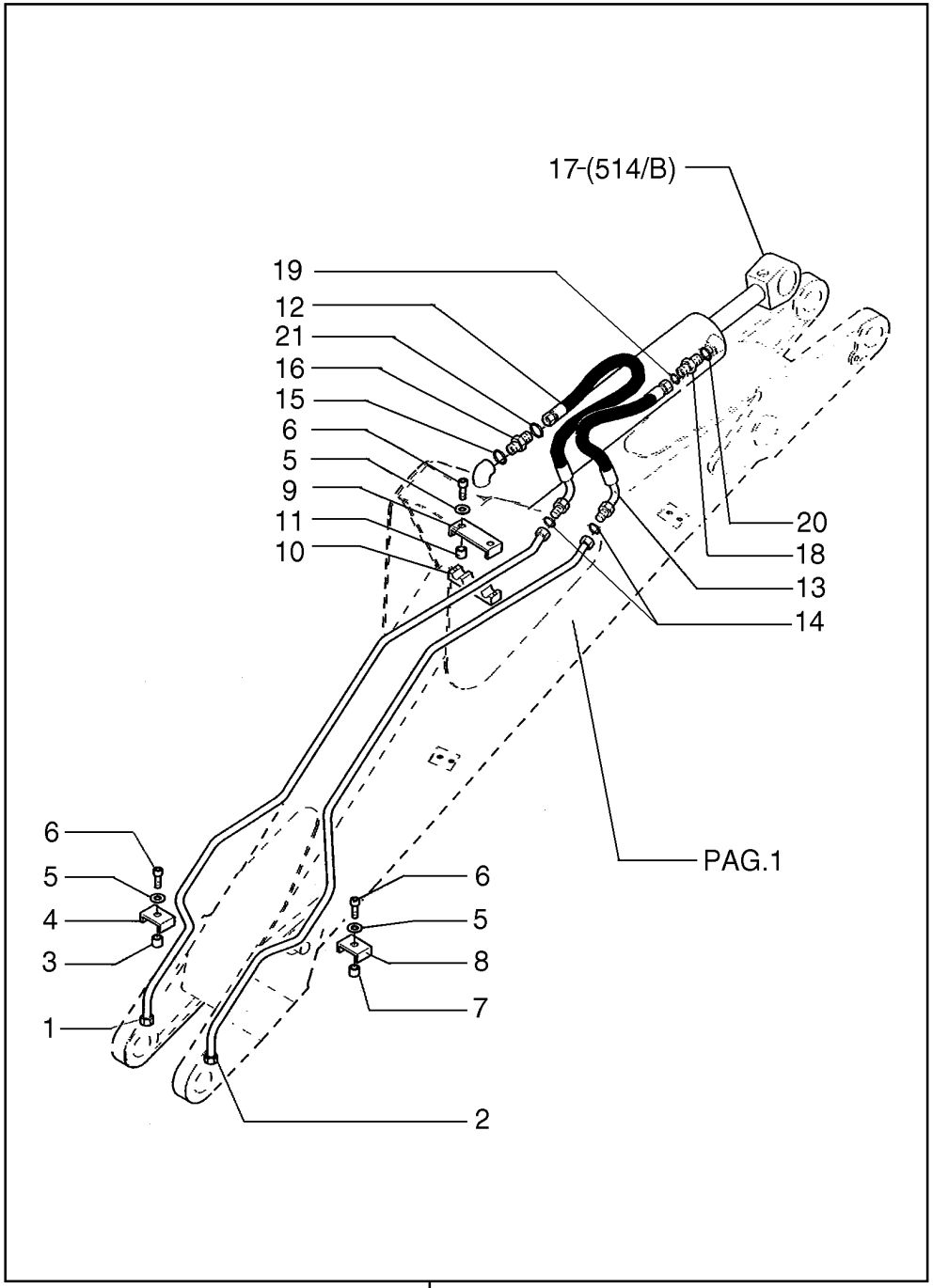

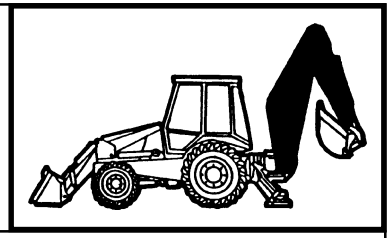

MOD	R	P/N. Imola	P/N. Brazil	Q	Descrição Denominacion	Description Descrizione	L.C.
	1		**75257375**	1	TUBO TUBO	TUBE TUBO RIGIDO	193T
	2		**75257373**	1	TUBO TUBO	TUBE TUBO RIGIDO	193T
	3	**85802901**	**75245952**	1	ESPAÇADOR SEPARADOR	SPACER DISTANZIALE	075D
	4	**85802899**	**76003599**	1	ENCOSTO RETENEDOR	RETAINER CAVALLOTTO	100C
	5	**11198179**	**12642701**	2	ARRUELA ARANDELA	WASHER ROSETTA	131R
	6	**16044224**	**16044131**	2	PARAFUSO TORNILLO	SCREW VITE	040V
	7	**85802902**	**75245951**	1	ESPAÇADOR SEPARADOR	SPACER DISTANZIALE	075D
	8	**85802900**	**76003599**	1	ENCOSTO RETENEDOR	RETAINER CAVALLOTTO	100C
	9	**85802894**		1	ABRAÇADEIRA ABRAZADERA	CLAMP FASCETTA	031F
	10	**85802895**		1	ABRAÇADEIRA ABRAZADERA	CLAMP FASCETTA	031F
	11	**85802893**		2	ESPAÇADOR SEPARADOR	SPACER DISTANZIALE	075D
	12	**85812154**	**75246290**	1	MANGUEIRA MANGA C/RACORDE	HOSE ASSY TUBO FLESSIBILE	192T
	13	**85812178**	**75245975**	1	MANGUEIRA MANGA C/RACORDE	HOSE ASSY TUBO FLESSIBILE	192T
	14	**81845038**	**70923841**	2	O'RING JUNTA TORICA	O'RING GUARNIZIONE O-R	158G
	15	**80167266**		2	O'RING JUNTA TORICA	O'RING GUARNIZIONE O-R	158G
	16	**83962538**	**75236507**	2	CONEXÃO RACOR	FITTING RACCORDO	020R
	17	**85800950**	**85800901**	1	CILINDRO PENETRAÇÃO CILINDRO PENETR	DIPPER CYLINDER CILINDRO PENETR	3G44
	18	**83962538**		1	CONEXÃO RACOR	FITTING RACCORDO	020R
	19	**83901443**		1	O'RING JUNTA TORICA	O'RING GUARNIZIONE O-R	158G
	20		**70930357**	1	O'RING JUNTA TORICA	O'RING GUARNIZIONE O-R	158G

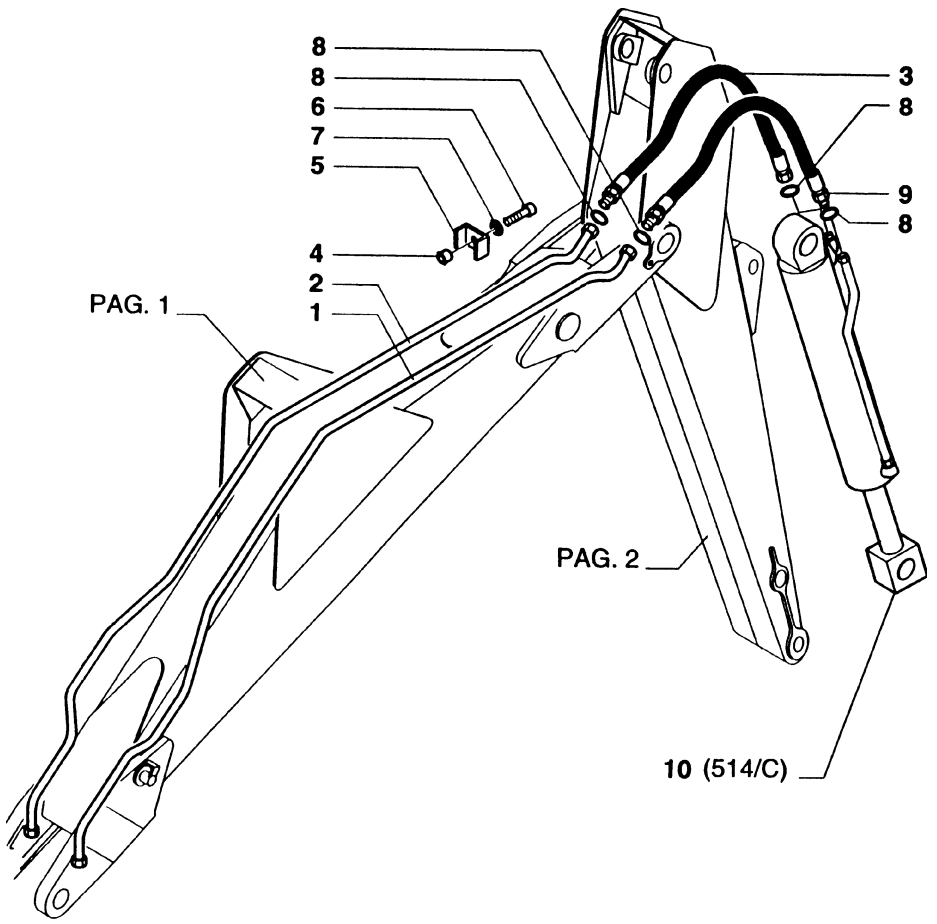

LONG USADO EN EL BRAZO DE EXCAVACION LARGO
SHORT USADO EN EL BRAZO DE ESCAVACION CORTO

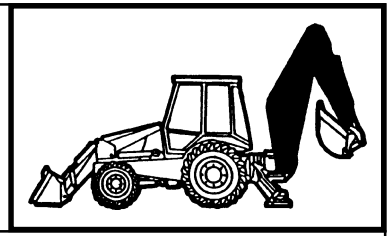

MOD	R	P/N. Imola	P/N. Brazil	Q	Descrição Denominacion	Description Descrizione	L.C.
	1		**75257382**	1	TUBO TUBO	TUBE TUBO RIGIDO	193T
	2		**75257380**	1	TUBO TUBO	TUBE TUBO RIGIDO	193T
LONG	3		**75249263**	1	MANGUEIRA MANGA C/RACORDE	HOSE ASSY TUBO FLESSIBILE	192T
SHORT	3		**75247178**	1	MANGUEIRA MANGA C/RACORDE	HOSE ASSY TUBO FLESSIBILE	192T
	4	**85802901**	**75245953**	1	ESPAÇADOR SEPARADOR	SPACER DISTANZIALE	075D
	5	**85802909**	**75222518**	1	ABRAÇADEIRA ABRAZADERA	CLAMP FASCETTA	031F
	6	**16044224**	**16044131**	1	PARAFUSO TORNILLO	SCREW VITE	040V
	7	**11198179**	**12642701**	1	ARRUELA ARANDELA	WASHER ROSETTA	131R
	8		**70930357**	4	O'RING JUNTA TORICA	O'RING GUARNIZIONE O-R	158G
LONG	9		**75247999**	1	MANGUEIRA MANGA C/RACORDE	HOSE ASSY TUBO FLESSIBILE	192T
	10	**85800913**		1	CILINDRO CILINDRO VUELCO	POSIT.CYLINDER CILINDR.ROVESC.	C409

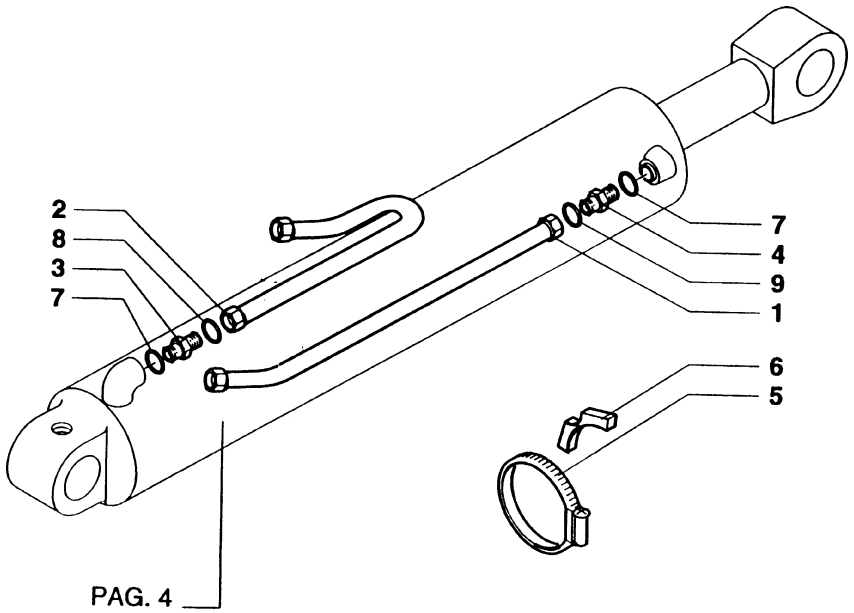

* CILINDRO HIDRAULICO DE ELEVACION

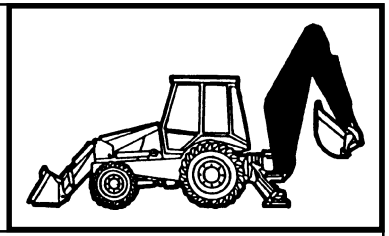

MOD	R	P/N. Imola	P/N. Brazil	Q	Descrição Denominacion	Description Descrizione	L.C.
	1		**75257371**	1	TUBO TUBO	TUBE TUBO RIGIDO	193T
	2		**75257367**	1	TUBO TUBO	TUBE TUBO RIGIDO	193T
	3		**76021725**	1	CONEXÃO RACOR	FITTING RACCORDO	020R
	4		**75236507**	1	CONEXÃO RACOR	FITTING RACCORDO	020R
	5	**85802744**		1	ABRAÇADEIRA ABRAZADERA	CLAMP FASCETTA	031F
	6	**83911131**		2	ENCOSTO RETENEDOR	RETAINER CAVALLOTTO	100C
	7	**80167266**	**70935175**	2	O'RING JUNTA TORICA	O'RING GUARNIZIONE O-R	158G
	8	**81845038**	**70923841**	1	O'RING JUNTA TORICA	O'RING GUARNIZIONE O-R	158G
	9	**83901443**	**70930357**	1	O'RING JUNTA TORICA	O'RING GUARNIZIONE O-R	158G

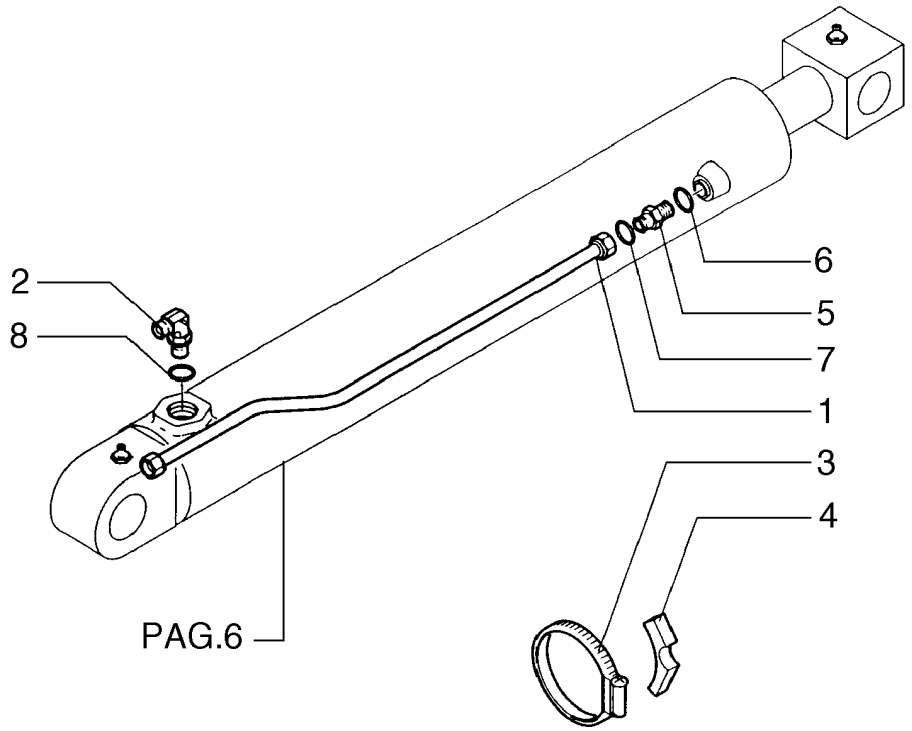

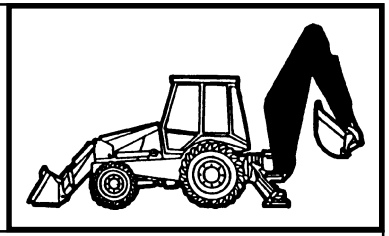

MOD	R	P/N. Imola	P/N. Brazil	Q	Descrição Denominacion	Description Descrizione	L.C.
	1		**75257428**	1	TUBO TUBO	TUBE TUBO RIGIDO	193T
	2	**85802957**	**75236506**	1	CONEXÃO RACOR	FITTING RACCORDO	020R
	3	**85803008**		1	COLAR COLLAR	COLLAR COLLARE	180C
	4	**83901828**		1	ENCOSTO RETENEDOR	RETAINER CAVALLOTTO	100C
	5	**83963415**	**75236507**	1	CONEXÃO RACOR	FITTING RACCORDO	020R
	6	**80167266**	**70935175**	1	O'RING JUNTA TORICA	O'RING GUARNIZIONE O-R	158G
	7	**83901443**	**70930357**	1	O'RING JUNTA TORICA	O'RING GUARNIZIONE O-R	158G
	8		**70930357**	1	O'RING JUNTA TORICA	O'RING GUARNIZIONE O-R	158G

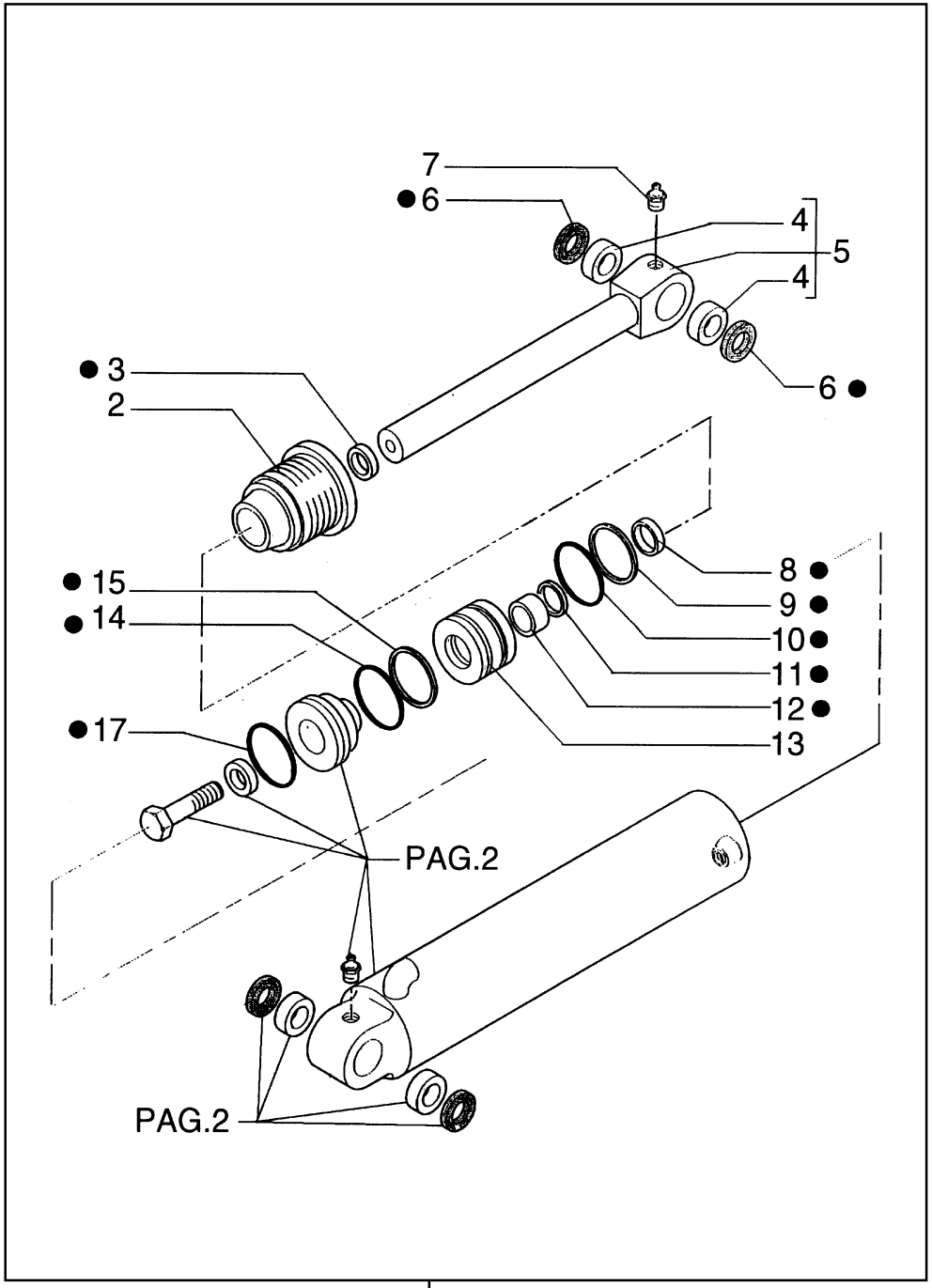

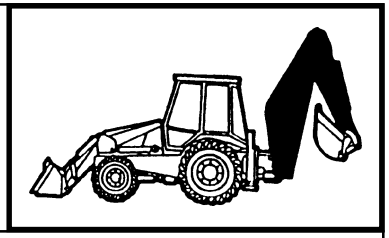

MOD	R	P/N. Imola	P/N. Brazil	Q	Descrição Denominacion	Description Descrizione	L.C.
	1	**85800250**		1	CILINDRO CILINDRO	CYLINDER CILINDRO	164C
	2	**85800975**		1	CABEÇA CABEZA	HEAD TESTA	119T
	3	**85800084**		1	RETENTOR JUNTA	SEAL GUARNIZIONE	122G
	4	**83910551**		2	BUCHA BUJE	BUSHING BOCCOLA	095B
	5	**83962145**		1	HASTE VARILLA	ROD ASTA	090A
	6	**89824067**		2	RETENTOR JUNTA	SEAL GUARNIZIONE	122G
	7	**80080710**		1	PINO GRAXEIRO ENGRASADOR	GREASE FITTING INGRASSATORE	060I
	8	**85800095**		1	BUCHA BUJE	BUSHING BOCCOLA	095B
	9	**85800007**		1	DISCO DISCO	DISC DISCO	060D
	10	**85800212**		1	ANEL ARO	RING ANELLO	045A
	11	**85800088**		1	RETENTOR JUNTA	SEAL GUARNIZIONE	122G
	12	**85800092**		1	RETENTOR JUNTA	SEAL GUARNIZIONE	122G
	13	**85800205**		1	ÊMBOLO EMBOLO	PISTON STANTUFFO	235S
	14	**85800207**		1	ANEL ARO	RING ANELLO	045A
	15	**85800206**		1	ANEL ARO	RING ANELLO	045A
	16	**85819299**		1	KIT JUEGO	KIT KIT	002K
	17	**85800211**		1	ANEL ARO	RING ANELLO	045A

FB80.3 - FB100.3

BRAÇO DE EXCAVAÇÃO LONGO - CILINDRO HIDRÁULICO DE ELEVAÇAO
BRAZO DE EXCAVACION LARGO - CILINDRO HIDRAULICO DE ELEVACION
LONG EXCAVATOR ARM - HYDRAULIC LIFTING CYLINDER
BRACCIO SCAVO LUNGO - CILINDRO IDRAULICO SOLLEVAMENTO

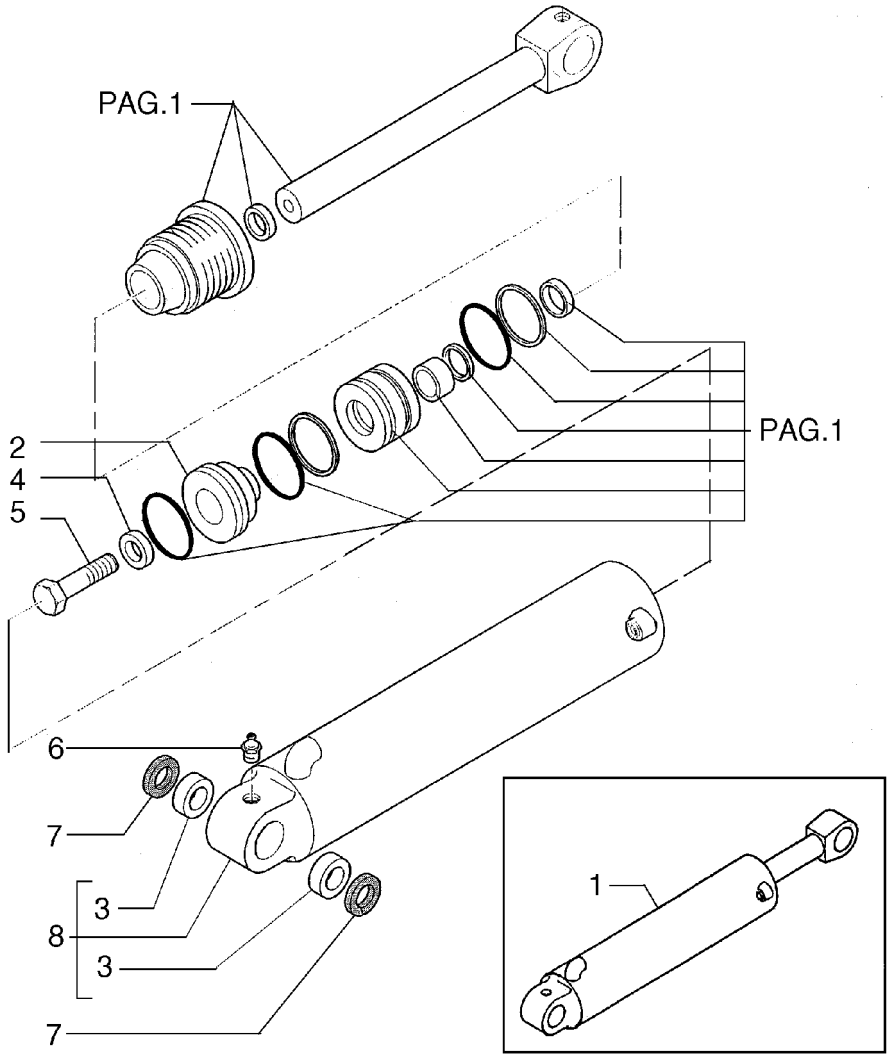

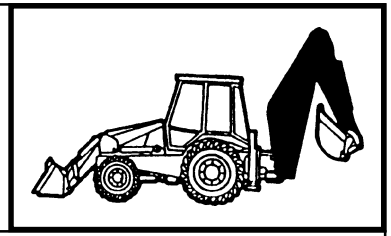

MOD	R	P/N. Imola	P/N. Brazil	Q	Descrição Denominacion	Description Descrizione	L.C.
	1	**85800250**		1	CILINDRO CILINDRO	CYLINDER CILINDRO	164C
	2	**85800203**		1	ÊMBOLO EMBOLO	PISTON STANTUFFO	235S
	3	**85800202**		2	ANEL ARO	RING ANELLO	045A
	4	**83964188**		1	ARRUELA ARANDELA	WASHER ROSETTA	131R
	5	**81871346**		1	PARAFUSO TORNILLO	SCREW VITE	040V
	6	**80080710**		1	PINO GRAXEIRO ENGRASADOR	GREASE FITTING INGRASSATORE	060I
	7	**85801025**		2	RETENTOR JUNTA	SEAL GUARNIZIONE	122G
	8	**85800210**		1	CAMISA CILINDRO CAMISA CILINDRO	CYLINDER LINER CAMICIA CILINDR	035C

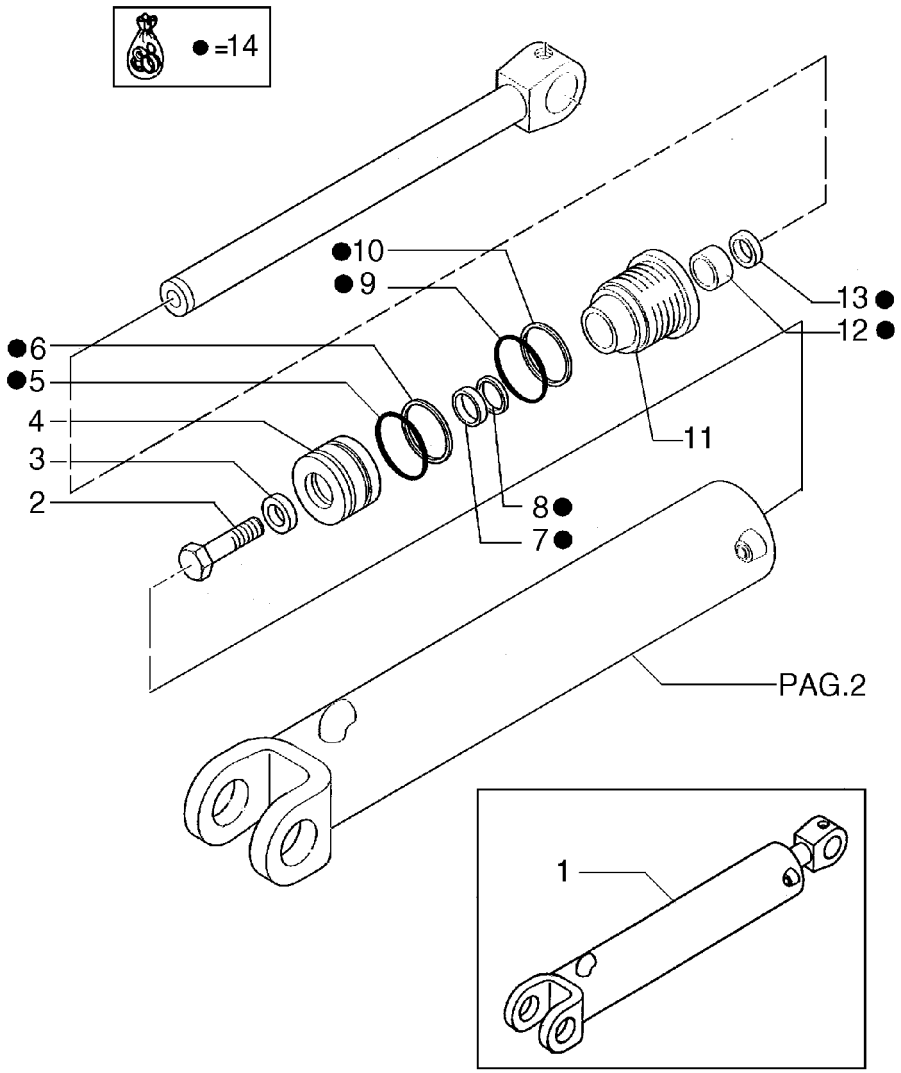

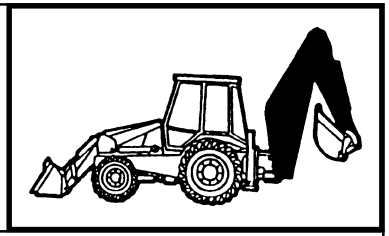

MOD	R	P/N. Imola	P/N. Brazil	Q	Descrição Denominacion	Description Descrizione	L.C.
	1	**85800901**		1	CILINDRO PENETRAÇÃO CILINDRO PENETR	DIPPER CYLINDER CILINDRO PENETR	3G44
	2	**81871346**		1	PARAFUSO TORNILLO	SCREW VITE	040V
	3	**83964188**		1	ARRUELA ARANDELA	WASHER ROSETTA	131R
	4	**85800983**		1	ÊMBOLO EMBOLO	PISTON STANTUFFO	235S
	5	**83800968**		1	ANEL ARO	RING ANELLO	045A
	6	**85800967**		1	ANEL ARO	RING ANELLO	045A
	7	**85800092**		1	RETENTOR JUNTA	SEAL GUARNIZIONE	122G
	8	**85800088**		1	RETENTOR JUNTA	SEAL GUARNIZIONE	122G
	9	**83931389**		1	O'RING JUNTA TORICA	O'RING GUARNIZIONE O-R	158G
	10	**85800005**		1	ANEL DE VEDAÇÃO JUNTA HERMÉTICA	SEAL RING ANELLO TENUTA	055A
	11	**85800991**		1	CABEÇA CABEZA	HEAD TESTA	119T
	12	**85800095**		1	BUCHA BUJE	BUSHING BOCCOLA	095B
	13	**85800084**		1	RETENTOR JUNTA	SEAL GUARNIZIONE	122G
	14	**85819350**		1	KIT JUEGO	KIT KIT	002K

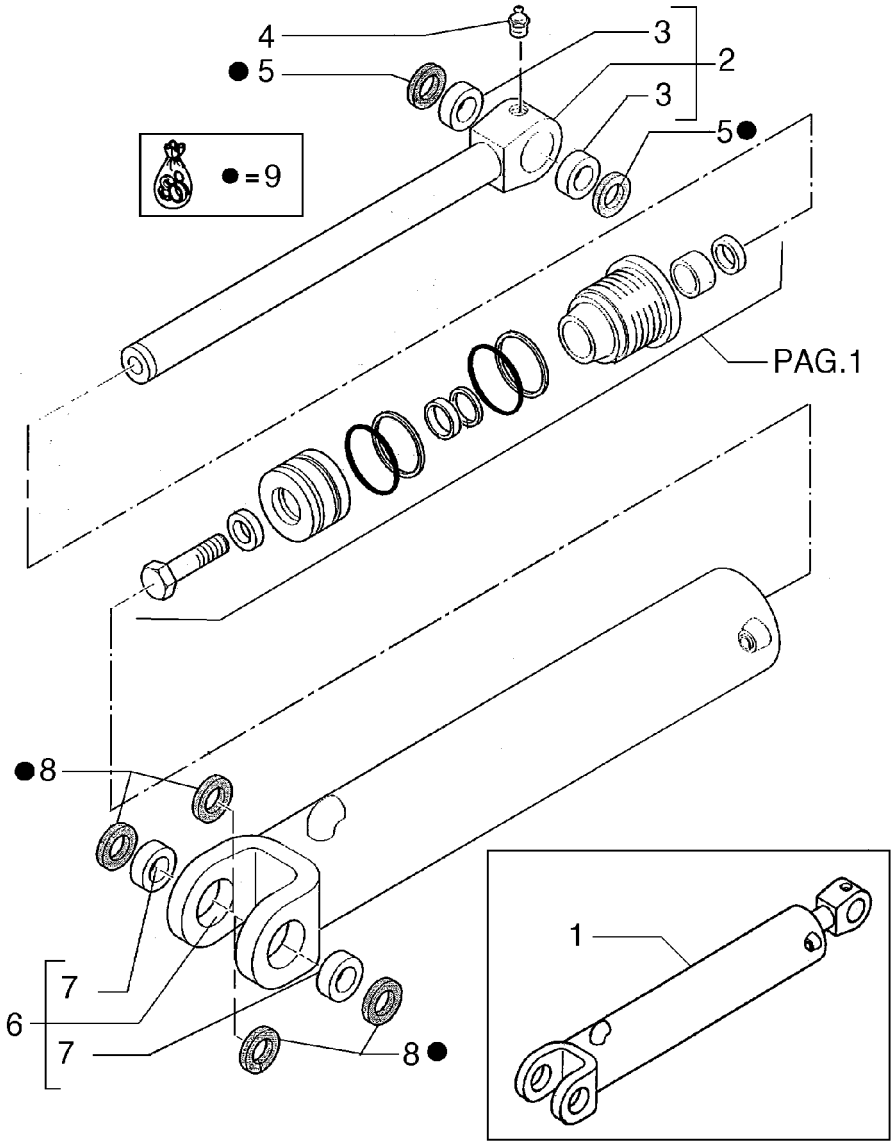

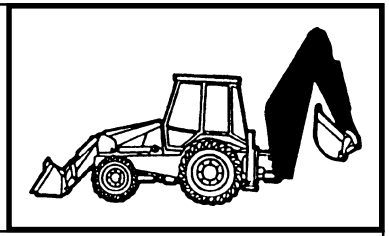

MOD	R	P/N. Imola	P/N. Brazil	Q	Descrição Denominacion	Description Descrizione	L.C.
	1	**85800901**		1	CILINDRO PENETRAÇÃO CILINDRO PENETR	DIPPER CYLINDER CILINDRO PENETR	3G44
	2	**85800971**		1	HASTE VARILLA	ROD ASTA	090A
	3	**83910547**		2	BUCHA BUJE	BUSHING BOCCOLA	095B
	4	**83416242**		1	PINO GRAXEIRO ENGRASADOR	GREASE FITTING INGRASSATORE	060I
	5	**83931289**		2	RETENTOR JUNTA	SEAL GUARNIZIONE	122G
	6	**81873459**		1	CAMISA CILINDRO CAMISA CILINDRO	CYLINDER LINER CAMICIA CILINDR	035C
	7	**83910558**		2	ANEL ARO	RING ANELLO	045A
	8	**89824067**		4	RETENTOR JUNTA	SEAL GUARNIZIONE	122G
	9	**85819350**		1	KIT JUEGO	KIT KIT	002K

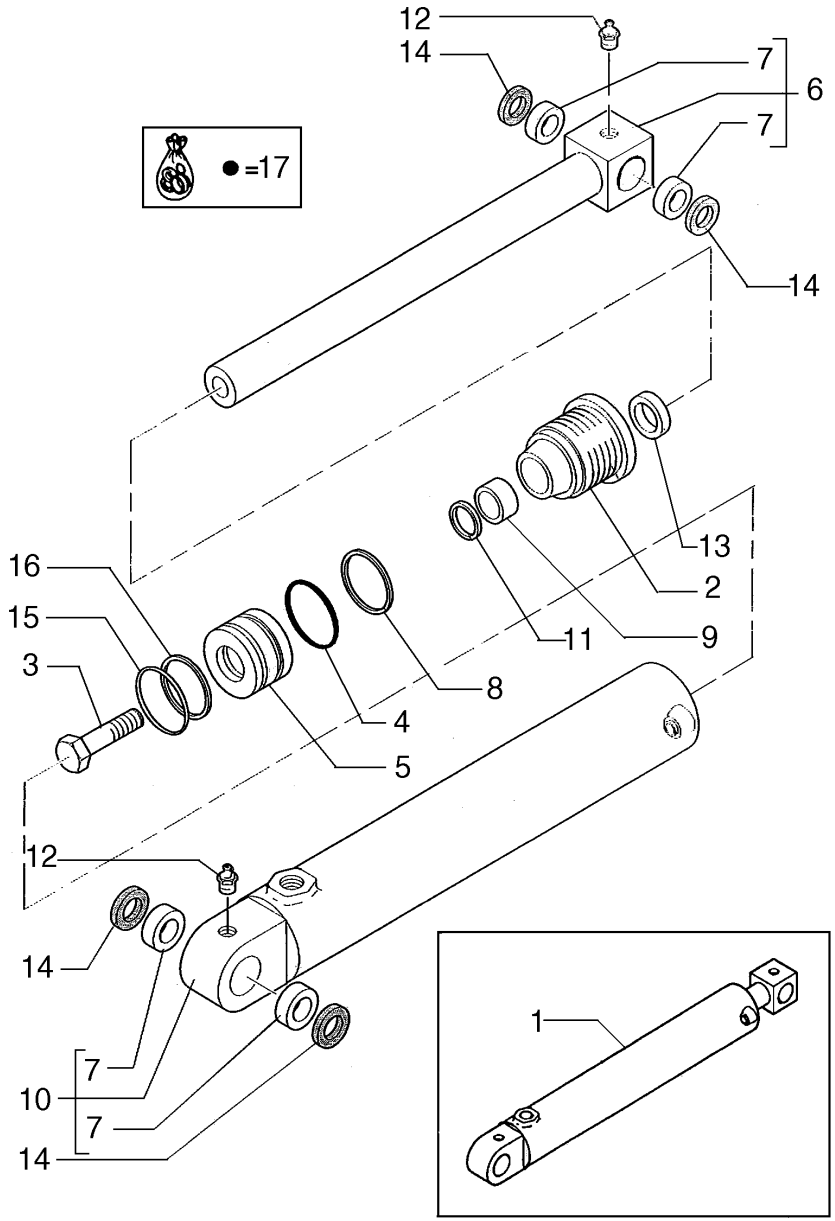

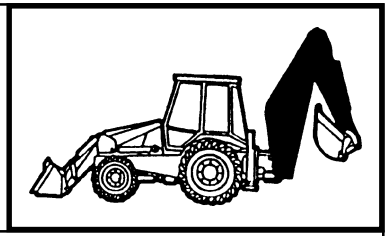

MOD	R	P/N. Imola	P/N. Brazil	Q	Descrição Denominacion	Description Descrizione	L.C.
	1	**85800911**		1	CILINDRO BASCULAM CILINDRO VUELCO	POSIT.CYLINDER CILINDR.ROVESC.	C409
	2	**85800992**		1	ÊMBOLO EMBOLO	PISTON STANTUFFO	235S
	3	**82866944**		1	PARAFUSO TORNILLO	SCREW VITE	040V
	4	**83911410**		1	O'RING JUNTA TORICA	O'RING GUARNIZIONE O-R	158G
	5	**83931398**		1	PISTAO EMBOLO	PLUNGER PISTONCINO	130P
	6	**83963252**		1	HASTE VARILLA	ROD ASTA	090A
	7	**83910547**		4	BUCHA BUJE	BUSHING BOCCOLA	095B
	8	**83963263**		1	ANEL ARO	RING ANELLO	045A
	9	**83963271**		1	BUCHA BUJE	BUSHING BOCCOLA	095B
	10	**83963280**		1	CAMISA CILINDRO CAMISA CILINDRO	CYLINDER LINER CAMICIA CILINDR	035C
	11	**85999325**		1	ANEL ARO	RING ANELLO	045A
	12	**80080710**		2	PINO GRAXEIRO ENGRASADOR	GREASE FITTING INGRASSATORE	060I
	13	**83910528**		1	ANEL ARO	RING ANELLO	045A
	14	**83931289**		4	RETENTOR JUNTA	SEAL GUARNIZIONE	122G
	15	**83931399**		1	ANEL ARO	RING ANELLO	045A
	16	**83931400**		1	ANEL ARO	RING ANELLO	045A
	17	**85819358**		1	KIT JUEGO	KIT KIT	002K

12

FB80.3 - FB100.3

CILINDRO HIDRÁULICO DE BASCULAMENTO
CILINDRO HIDRAULICO DEL CUCHARON
HYDRAULIC BUCKET CYLINDER
CILINDRO IDRAULICO BENNA

514/C

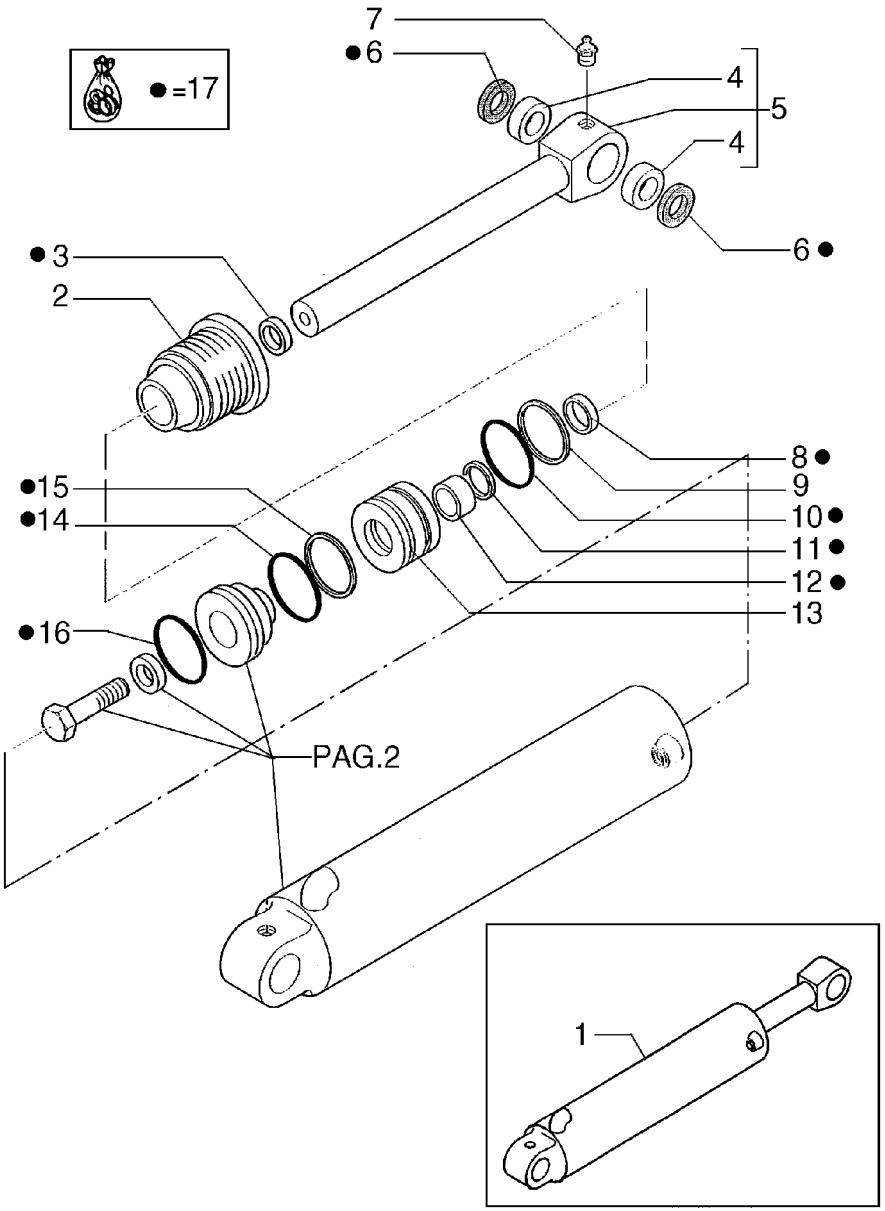

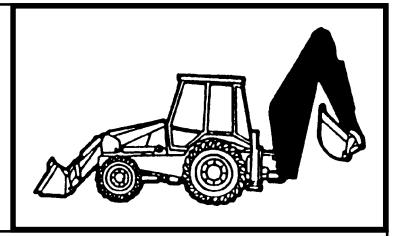

MOD	R	P/N. Imola	P/N. Brazil	Q	Descrição Denominacion	Description Descrizione	L.C.
	1	**85800450**		1	CILINDRO ELEVAÇÃO GATO ELEVACION	LIFT CYLINDERS CIL. SOLLEVAM.	11G1
	2	**85800977**		1	FUNDO DIANTEIRO TAPA ANTERIOR	HEAD FONDELLO ANT.	132F
	3	**85800084**		1	RETENTOR JUNTA	SEAL GUARNIZIONE	122G
	4	**83910551**		2	BUCHA BUJE	BUSHING BOCCOLA	095B
	5	**83962145**		1	HASTE VARILLA	ROD ASTA	090A
	6	**89824067**		2	RETENTOR JUNTA	SEAL GUARNIZIONE	122G
	7	**80080710**		1	PINO GRAXEIRO ENGRASADOR	GREASE FITTING INGRASSATORE	060I
	8	**85800095**		1	BUCHA BUJE	BUSHING BOCCOLA	095B
	9	**83963264**		1	ANEL ARO	RING ANELLO	045A
	10	**85800017**		1	O'RING JUNTA TORICA	O'RING GUARNIZIONE O-R	158G
	11	**85999325**		1	ANEL ARO	RING ANELLO	045A
	12	**85800092**		1	RETENTOR JUNTA	SEAL GUARNIZIONE	122G
	13	**83984698**		1	ÊMBOLO EMBOLO	PISTON STANTUFFO	235S
	14	**83944110**		1	ANEL ARO	RING ANELLO	045A
	15	**83931388**		1	ANEL ARO	RING ANELLO	045A
	16	**81870404**		1	ANEL ARO	RING ANELLO	045A
	17	**85819354**		1	KIT JUEGO	KIT KIT	002K

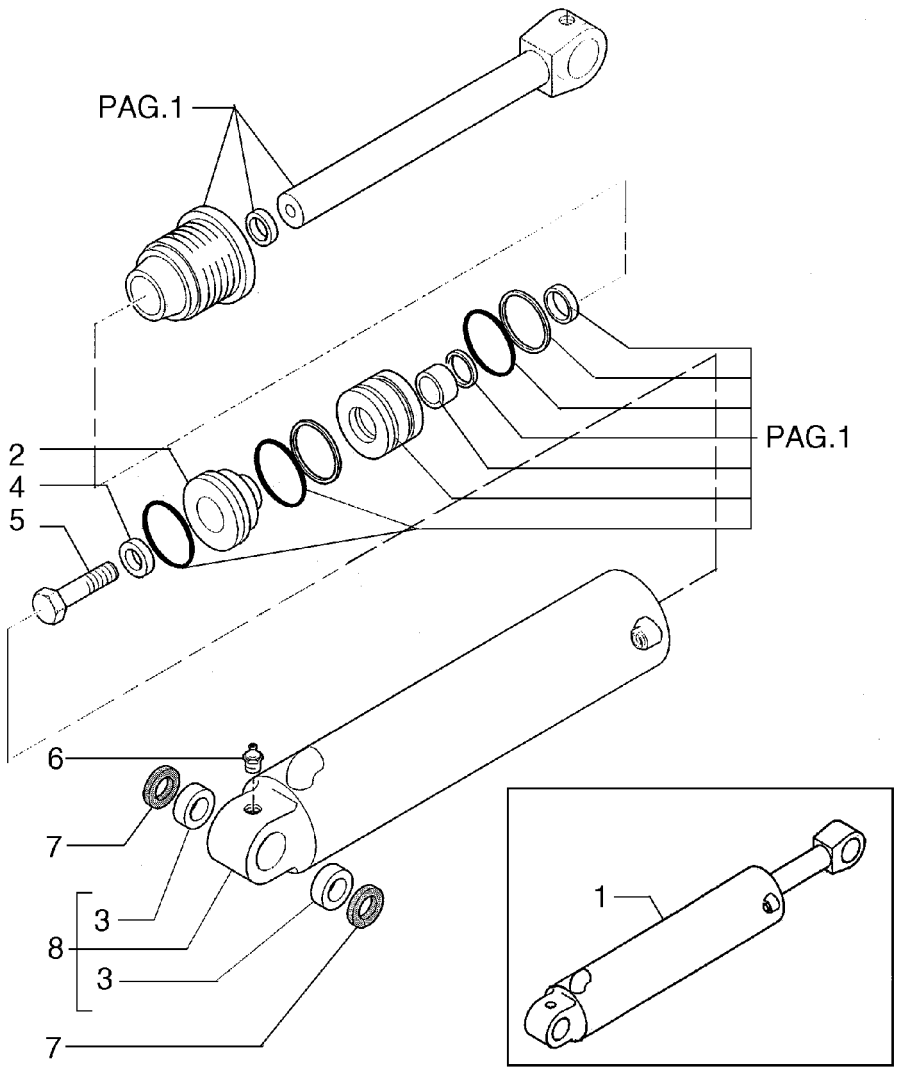

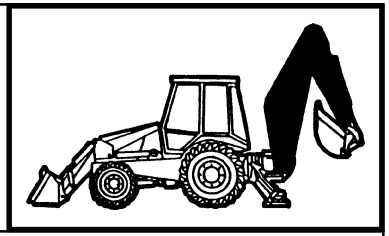

MOD	R	P/N. Imola	P/N. Brazil	Q	Descrição Denominacion	Description Descrizione	L.C.
	1	**85800450**		1	CILINDRO ELEVAÇÃO GATO ELEVACION	LIFT CYLINDERS CIL. SOLLEVAM.	11G1
	2	**81870402**		1	PISTAO EMBOLO	PLUNGER PISTONCINO	130P
	3	**85800202**		2	ANEL ARO	RING ANELLO	045A
	4	**83964188**		1	ARRUELA ARANDELA	WASHER ROSETTA	131R
	5	**81871346**		1	PARAFUSO TORNILLO	SCREW VITE	040V
	6	**80080710**		1	PINO GRAXEIRO ENGRASADOR	GREASE FITTING INGRASSATORE	060I
	7	**85801025**		2	RETENTOR JUNTA	SEAL GUARNIZIONE	122G
	8	**85800402**		1	CAMISA CILINDRO CAMISA CILINDRO	CYLINDER LINER CAMICIA CILINDR	035C

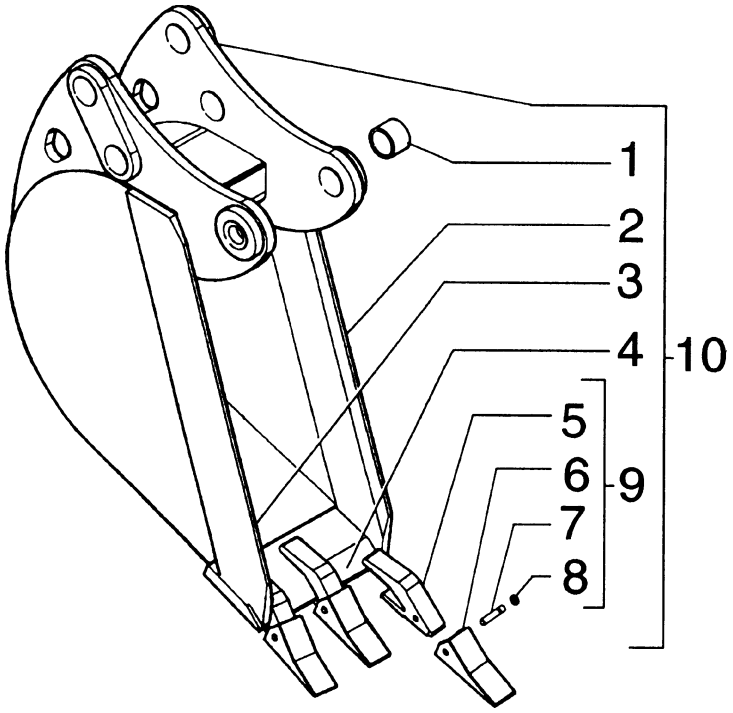

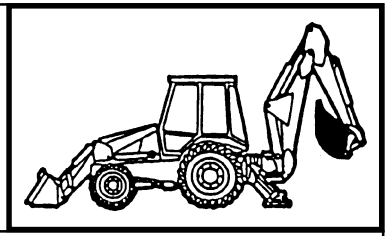

MOD	R	P/N. Imola	P/N. Brazil	Q	Descrição Denominacion	Description Descrizione	L.C.
	1	**83910634**		6	BUCHA BUJE	BUSHING BOCCOLA	095B
	2		**76021430**	1	FACA LATERAL CUCHILLA LAT.	END BIT TAGLIENTE LAT.	019T
	3		**76021431**	1	FACA LATERAL CUCHILLA LAT.	END BIT TAGLIENTE LAT.	019T
	4		**75238098**	1	FACA DA CAÇAMBA CUCHILLA LAT.	BUCKET CUTTING TAGLIENTE BENNA	0071
	5	**85801095**	**75280707**	3	PORTA DENTE CUERPO DIENTE	TOOTH SHANK CORPO DENTE	0092
	6	**85801096**	**75280715**	3	PONTA DO DENTE PUNTA DIENTE	TOOTH TIP PUNTA DENTE	492P
	7	**85801097**		3	PINO BULON	PIN PERNO	080P
	8	**85801098**		3	ANEL ELÁSTICO ANILLO ELASTICO	SNAP RING ANELLO ELASTICO	187A
	9	**85801099**	**75280720**	3	DENTE CAÇAMBA DIENTE CUCHARA	BUCKET TOOTH DENTE BENNA	089D
	10	**85801192**	**75280778**	1	CAÇAMBA CUCHARA	BUCKET BENNA	035B

FB80.3 - FB100.3

CAÇAMBA DA RETRO - LARGURA 12"
CUCHARA DE LA RETRO - ANCHURA 12"
BUCKET, REAR - WIDTH 12"
BENNA RETRO - LARGHEZZA 12"

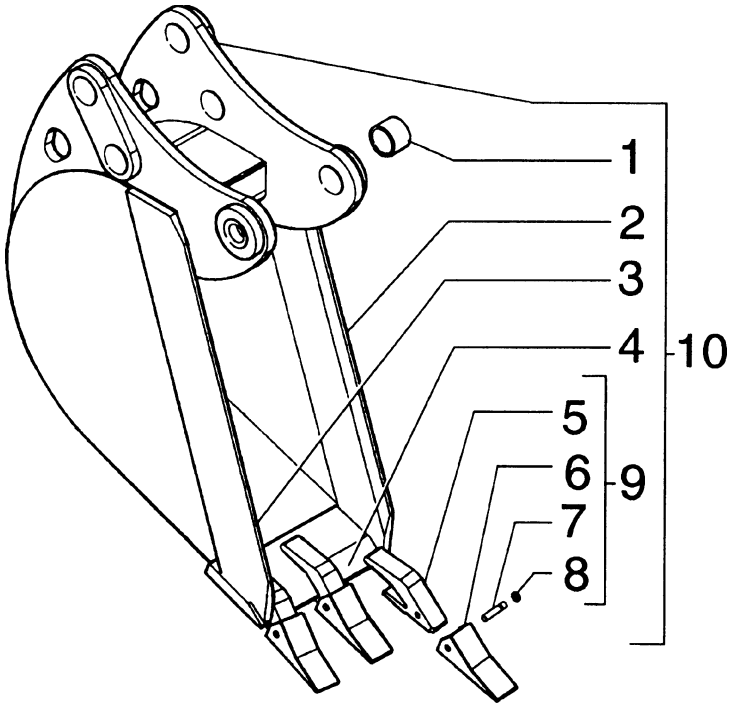

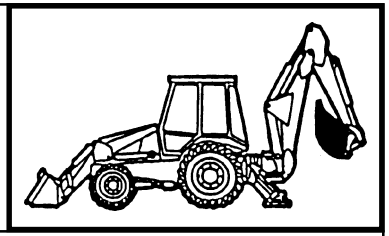

MOD	R	P/N. Imola	P/N. Brazil	Q	Descrição Denominacion	Description Descrizione	L.C.
	1	**83910634**		6	BUCHA BUJE	BUSHING BOCCOLA	095B
	2		**76021430**	1	FACA LATERAL CUCHILLA LAT.	END BIT TAGLIENTE LAT.	019T
	3		**76021431**	1	FACA LATERAL CUCHILLA LAT.	END BIT TAGLIENTE LAT.	019T
	4		**75237932**	1	FACA DA CAÇAMBA CUCHILLA LAT.	BUCKET CUTTING TAGLIENTE BENNA	0071
	5	**85801095**	**75280707**	3	PORTA DENTE CUERPO DIENTE	TOOTH SHANK CORPO DENTE	0092
	6	**85801096**	**75280715**	3	PONTA DO DENTE PUNTA DIENTE	TOOTH TIP PUNTA DENTE	492P
	7	**85801097**		3	PINO BULON	PIN PERNO	080P
	8	**85801098**		3	ANEL ELÁSTICO ANILLO ELASTICO	SNAP RING ANELLO ELASTICO	187A
	9	**85801099**	**75280720**	3	DENTE CAÇAMBA DIENTE CUCHARA	BUCKET TOOTH DENTE BENNA	089D
	10	**85801193**	**75280771**	1	CAÇAMBA CUCHARA	BUCKET BENNA	035B

FB80.3 - FB100.3

CAÇAMBA DA RETRO - LARGURA 18"
CUCHARA DE LA RETRO - ANCHURA 18"
BUCKET, REAR - WIDTH 18"
BENNA RETRO - LARGHEZZA 18"

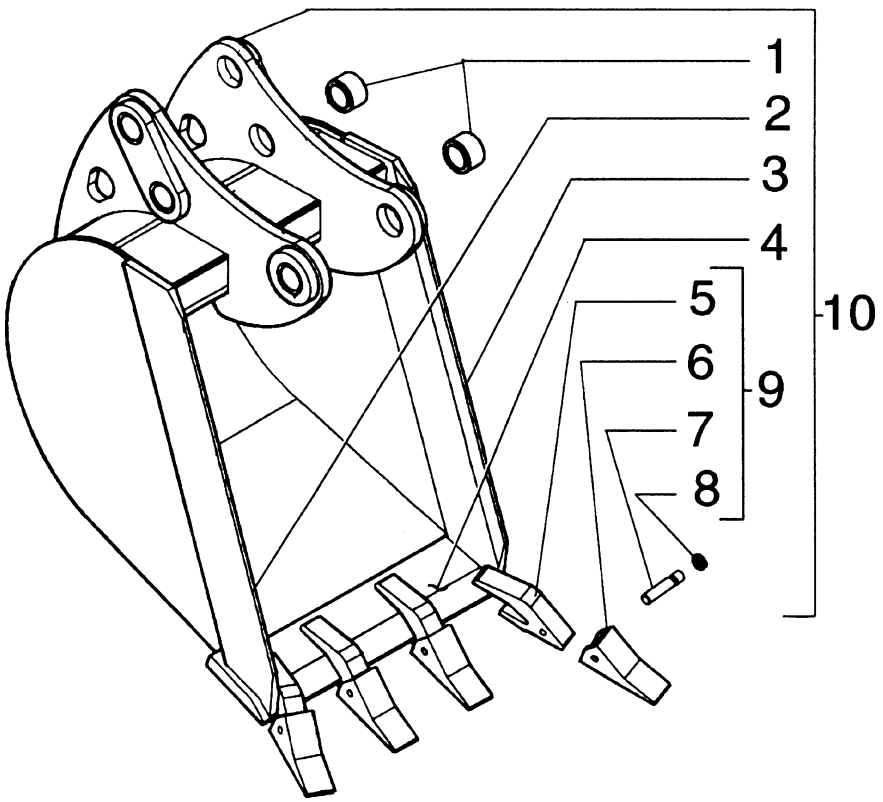

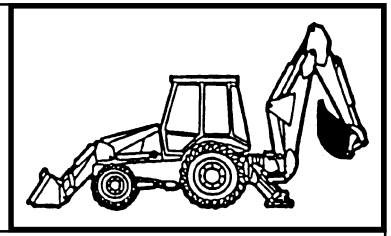

MOD	R	P/N. Imola	P/N. Brazil	Q	Descrição Denominacion	Description Descrizione	L.C.
	1	**83910634**		6	BUCHA BUJE	BUSHING BOCCOLA	095B
	2		**76021430**	1	FACA LATERAL CUCHILLA LAT.	END BIT TAGLIENTE LAT.	019T
	3		**76021431**	1	FACA LATERAL CUCHILLA LAT.	END BIT TAGLIENTE LAT.	019T
	4		**75235259**	1	FACA DA CAÇAMBA CUCHILLA LAT.	BUCKET CUTTING TAGLIENTE BENNA	0071
	5	**85801095**	**75280707**	4	PORTA DENTE CUERPO DIENTE	TOOTH SHANK CORPO DENTE	0092
	6	**85801096**	**75280715**	4	PONTA DO DENTE PUNTA DIENTE	TOOTH TIP PUNTA DENTE	492P
	7	**85801097**		4	PINO BULON	PIN PERNO	080P
	8	**85801098**		4	ANEL ELÁSTICO ANILLO ELASTICO	SNAP RING ANELLO ELASTICO	187A
	9	**85801099**	**75280720**	4	DENTE CAÇAMBA DIENTE CUCHARA	BUCKET TOOTH DENTE BENNA	089D
	10	**85801325**	**75280657**	1	CAÇAMBA CUCHARA	BUCKET BENNA	035B

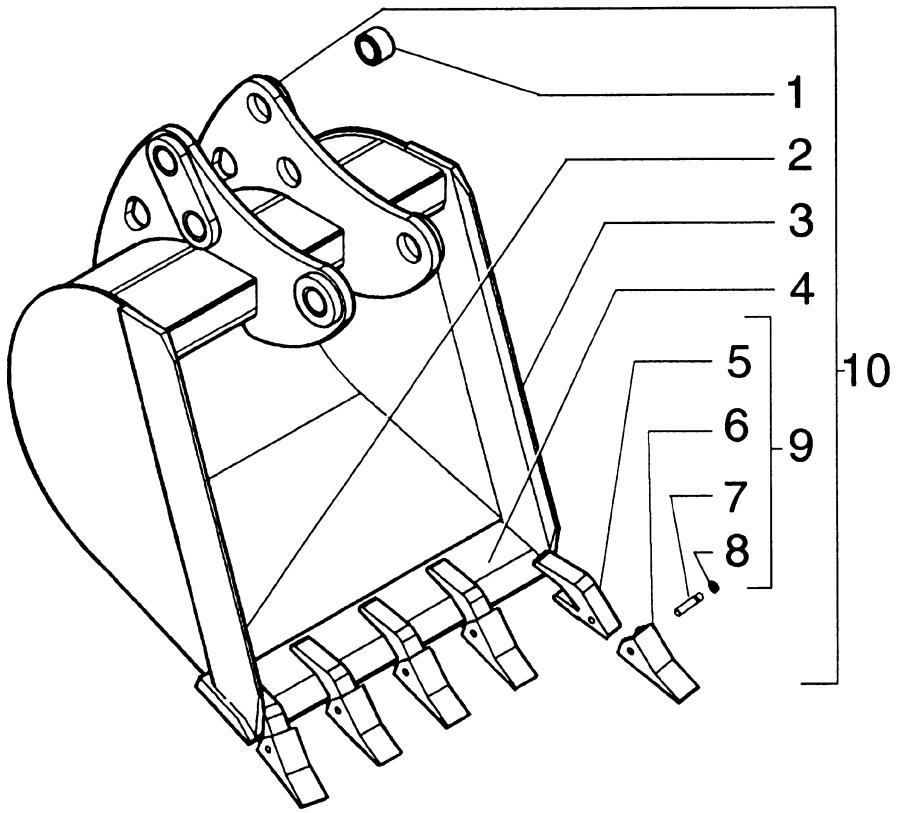

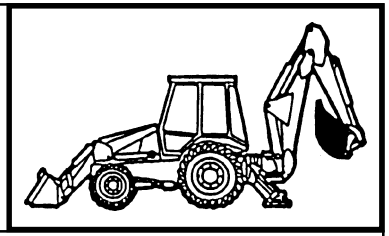

MOD	R	P/N. Imola	P/N. Brazil	Q	Descrição Denominacion	Description Descrizione	L.C.
	1	**83910634**		6	BUCHA BUJE	BUSHING BOCCOLA	095B
	2		**76021430**	1	FACA LATERAL CUCHILLA LAT.	END BIT TAGLIENTE LAT.	019T
	3		**76021431**	1	FACA LATERAL CUCHILLA LAT.	END BIT TAGLIENTE LAT.	019T
	4		**75235262**	1	FACA DA CAÇAMBA CUCHILLA LAT.	BUCKET CUTTING TAGLIENTE BENNA	0071
	5	**85801095**	**75280707**	5	PORTA DENTE CUERPO DIENTE	TOOTH SHANK CORPO DENTE	0092
	6	**85801096**	**75280715**	5	PONTA DO DENTE PUNTA DIENTE	TOOTH TIP PUNTA DENTE	492P
	7	**85801097**		5	PINO BULON	PIN PERNO	080P
	8	**85801098**		5	ANEL ELÁSTICO ANILLO ELASTICO	SNAP RING ANELLO ELASTICO	187A
	9	**85801099**	**75280720**	5	DENTE CAÇAMBA DIENTE CUCHARA	BUCKET TOOTH DENTE BENNA	089D
	10	**85801231**	**75280651**	1	CAÇAMBA CUCHARA	BUCKET BENNA	035B

FB80.3 - FB100.3

CAÇAMBA DA RETRO - LARGURA 30"
CUCHARA DE LA RETRO - ANCHURA 30"
BUCKET, REAR - WIDTH 30"
BENNA RETRO - LARGHEZZA 30"

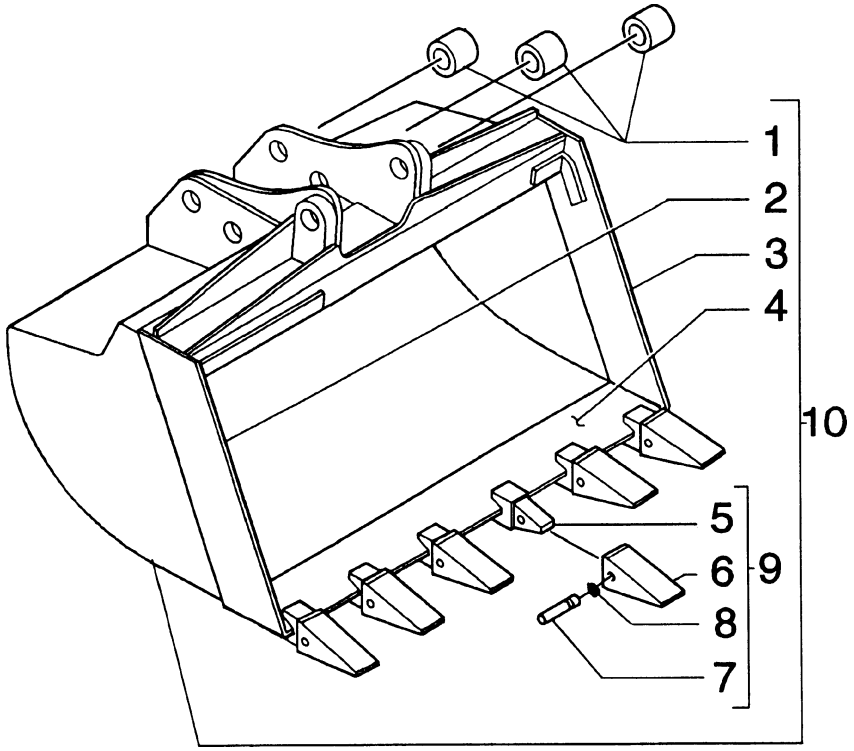

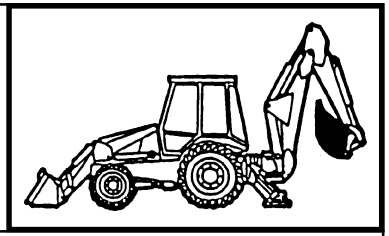

MOD	R	P/N. Imola	P/N. Brazil	Q	Descrição Denominacion	Description Descrizione	L.C.
	1	**83910634**		6	BUCHA BUJE	BUSHING BOCCOLA	095B
	2		**76021398**	1	FACA LATERAL CUCHILLA LAT.	END BIT TAGLIENTE LAT.	019T
	3		**76021399**	1	FACA LATERAL CUCHILLA LAT.	END BIT TAGLIENTE LAT.	019T
	4		**75235265**	1	FACA DA CAÇAMBA CUCHILLA LAT.	BUCKET CUTTING TAGLIENTE BENNA	0071
	5	**85801095**	**75280707**	6	PORTA DENTE CUERPO DIENTE	TOOTH SHANK CORPO DENTE	0092
	6	**85801096**	**75280715**	6	PONTA DO DENTE PUNTA DIENTE	TOOTH TIP PUNTA DENTE	492P
	7	**85801097**		6	PINO BULON	PIN PERNO	080P
	8	**85801098**		6	ANEL ELÁSTICO ANILLO ELASTICO	SNAP RING ANELLO ELASTICO	187A
	9	**85801099**	**75280720**	6	DENTE CAÇAMBA DIENTE CUCHARA	BUCKET TOOTH DENTE BENNA	089D
	10	**85801238**	**75245835**	1	CAÇAMBA CUCHARA	BUCKET BENNA	035B

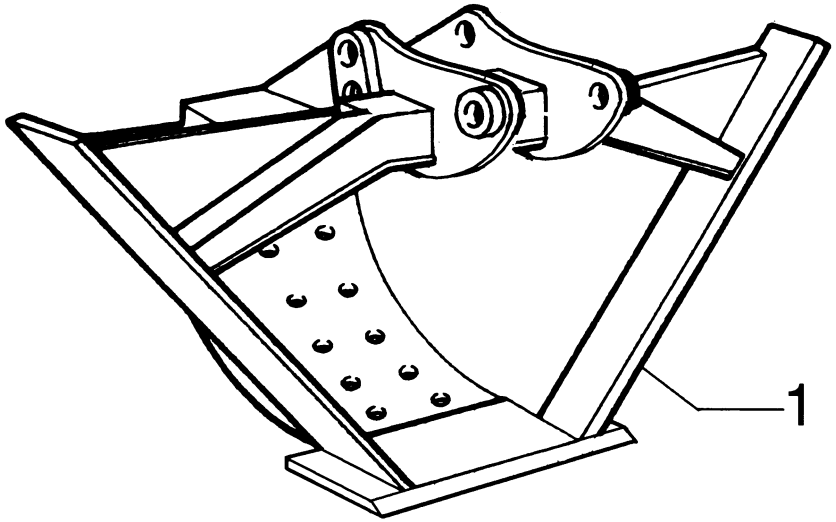

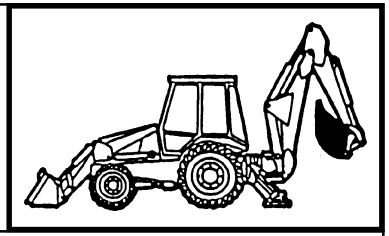

MOD	R	P/N. Imola	P/N. Brazil	Q	Descrição Denominacion	Description Descrizione	L.C.
	1		**75258463**	1	CAÇAMBA CUCHARA	BUCKET BENNA	035B

FB80.3 - FB100.3

CAÇAMBA DA RETRO - LARGURA 36"
CUCHARA DE LA RETRO - ANCHURA 36"
BUCKET, REAR - WIDTH 36"
BENNA RETRO - LARGHEZZA 36"

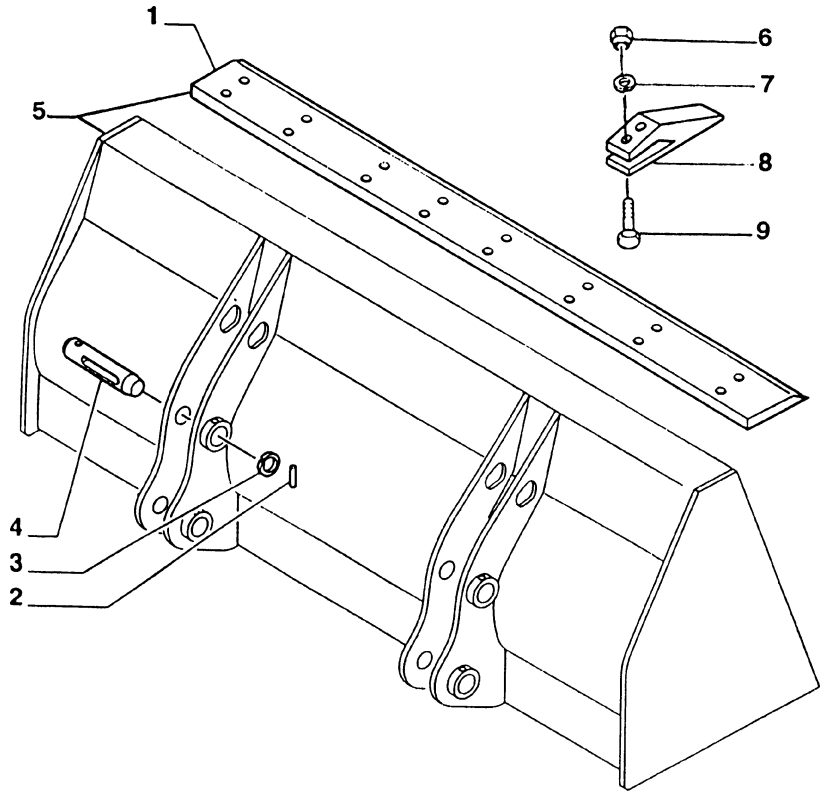

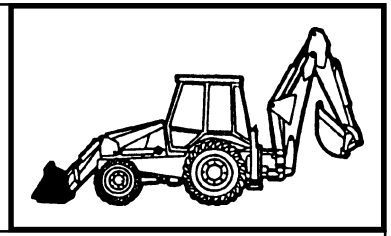

MOD	R	P/N. Imola	P/N. Brazil	Q	Descrição Denominacion	Description Descrizione	L.C.
	1		**75238130**	1	FACA DA CAÇAMBA CUCHILLA LAT.	BUCKET CUTTING TAGLIENTE BENNA	0071
	2	**85802993**		4	PINO BULON	PIN PERNO	080P
	3	**85802992**	**75244879**	4	ANEL ARO	RING ANELLO	045A
	4	**85801051**	**75247594**	4	PINO BULON	PIN PERNO	080P
	5		**75246726**	1	CAÇAMBA CUCHARA	BUCKET BENNA	035B
	6		**12164121**	16	PORCA TUERCA	NUT DADO	010D
	7		**10520221**	16	ARRUELA ARANDELA	WASHER ROSETTA	131R
	8		**75238350**	8	DENTE FORJADO DIENTE	BUCKET TOOTH DENTE BENNA	F089
	8		**456299**	8	DENTE LAMINADO DIENTE	BUCKET TOOTH DENTE BENNA	L089
	9		**75238351**	16	PARAFUSO TORNILLO	SCREW VITE	040V

FB80.3 - FB100.3

CAÇAMBA STANDARD DE 0,88 M3
CUCHARON ESTANDAR 0,88 METRO CUBICO
BUCKET, STANDARD 0,88 M
BENNA STANDARD DA 0,88 M CUBO

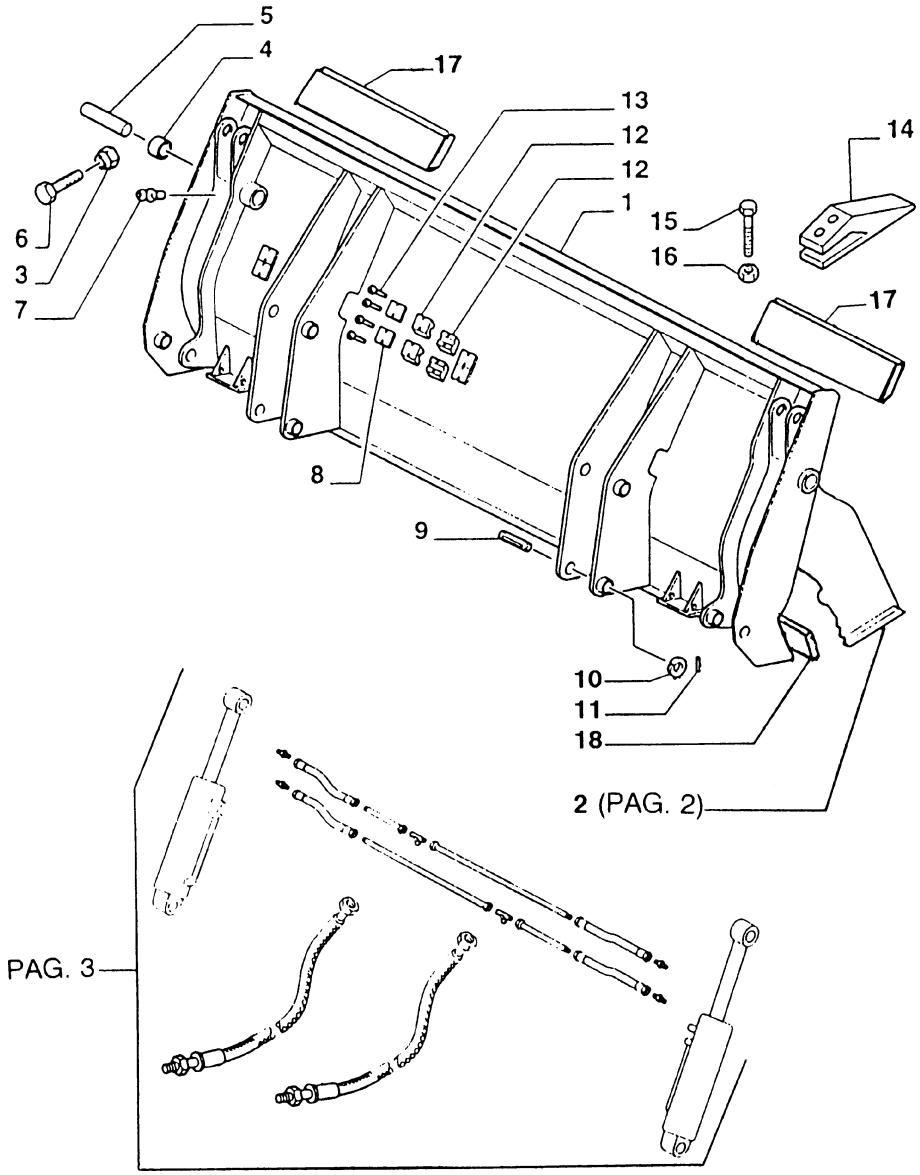

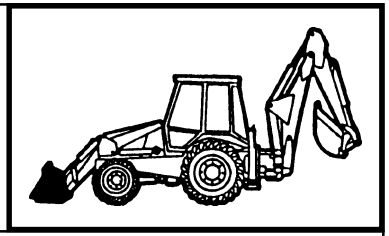

MOD	R	P/N. Imola	P/N. Brazil	Q	Descrição Denominacion	Description Descrizione	L.C.
	1	**9969125**		1	CAÇAMBA CUCHARA	BUCKET BENNA	035B
	2	**9969122**		1	CAÇAMBA CUCHARA	BUCKET BENNA	035B
	3	**9968152**		2	PORCA TUERCA	NUT DADO	010D
	4	**85805922**		4	BUCHA BUJE	BUSHING BOCCOLA	095B
	5	**9968160**		2	PINO BULON	PIN PERNO	080P
	6	**9968174**		2	PARAFUSO TORNILLO	SCREW VITE	040V
	7	**9969124**		2	PINO GRAXEIRO ENGRASADOR	GREASE FITTING INGRASSATORE	060I
	8	**9968171**		8	PLACA PLACA	PLATE PIASTRINA	110P
	9	**85801051**		4	PINO BULON	PIN PERNO	080P
	10	**85802992**		4	ARRUELA ARANDELA	WASHER ROSETTA	131R
	11	**85802993**		4	PINO BULON	PIN PERNO	080P
	12	**9968170**		16	PRESILHA ABRESADERA	CLIP FERMAGLIO	045F
	13	**9968172**		16	PARAFUSO TORNILLO	SCREW VITE	040V
	14	**85801109**		8	DENTE DIENTES	TOOTH DENTI	0087
	15	**70617127**		16	PARAFUSO TORNILLO	SCREW VITE	040V
	16	**85801470**	**70911029**	16	PORCA TUERCA	NUT DADO	010D
	17	**85806172**		2	FACA LATERAL CUCHILLA LAT.	END BIT TAGLIENTE LAT.	019T
	18	**85806171**		1	FACA DA CAÇAMBA CUCHILLA LAT.	BUCKET CUTTING TAGLIENTE BENNA	0071

FB80.3 - FB100.3

CAÇAMBA MULTIUSO 4x1 (1M3)
CUCHARON 4x1 (1 METRO CUBO)
BUCKET 4x1 (1M)
BENNA 4x1 (1 M.CUBO)

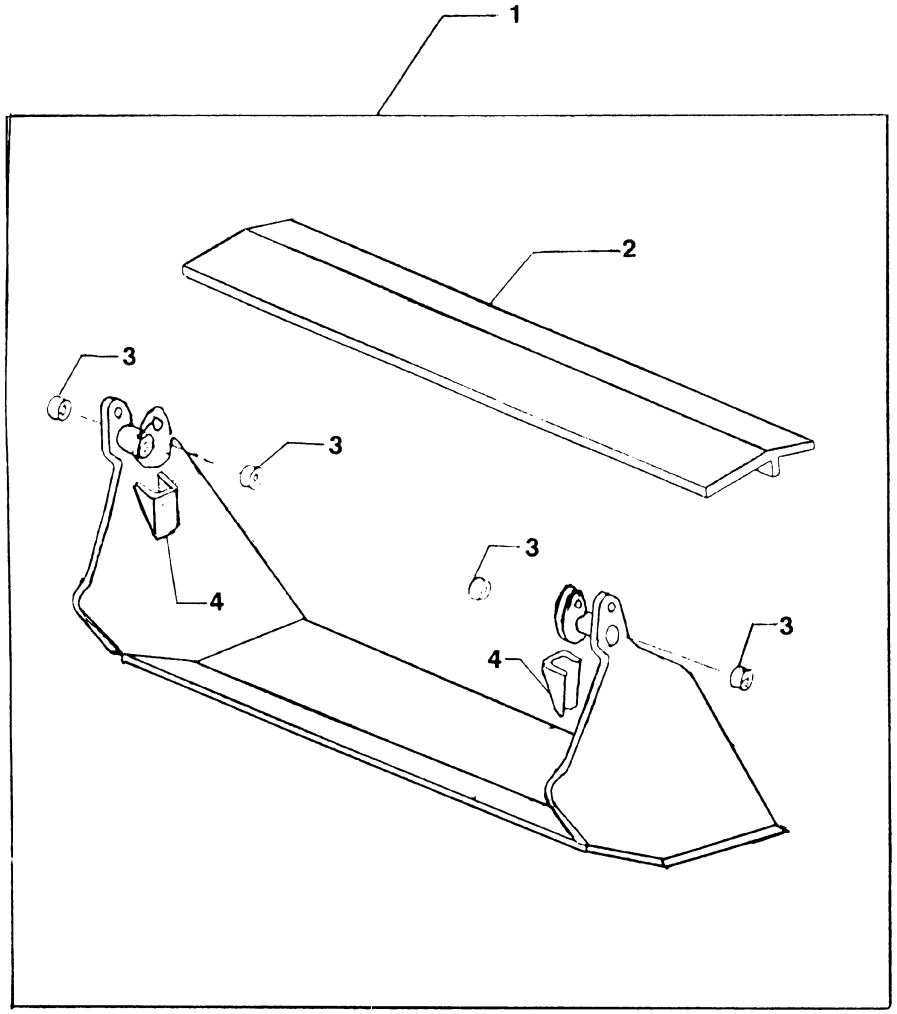

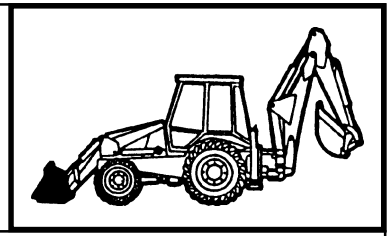

MOD	R	P/N. Imola	P/N. Brazil	Q	Descrição Denominacion	Description Descrizione	L.C.
	1	**9969122**		1	CAÇAMBA CUCHARA	BUCKET BENNA	035B
	2	**9969347**		1	REFORÇO REFUERZO	REINFORCEMENT RINFORZO	060R
	3	**85805922**		4	BUCHA BUJE	BUSHING BOCCOLA	095B
	4	**85805926**		2	SUPORTE SOPORTE	SUPPORT SUPPORTO	300S

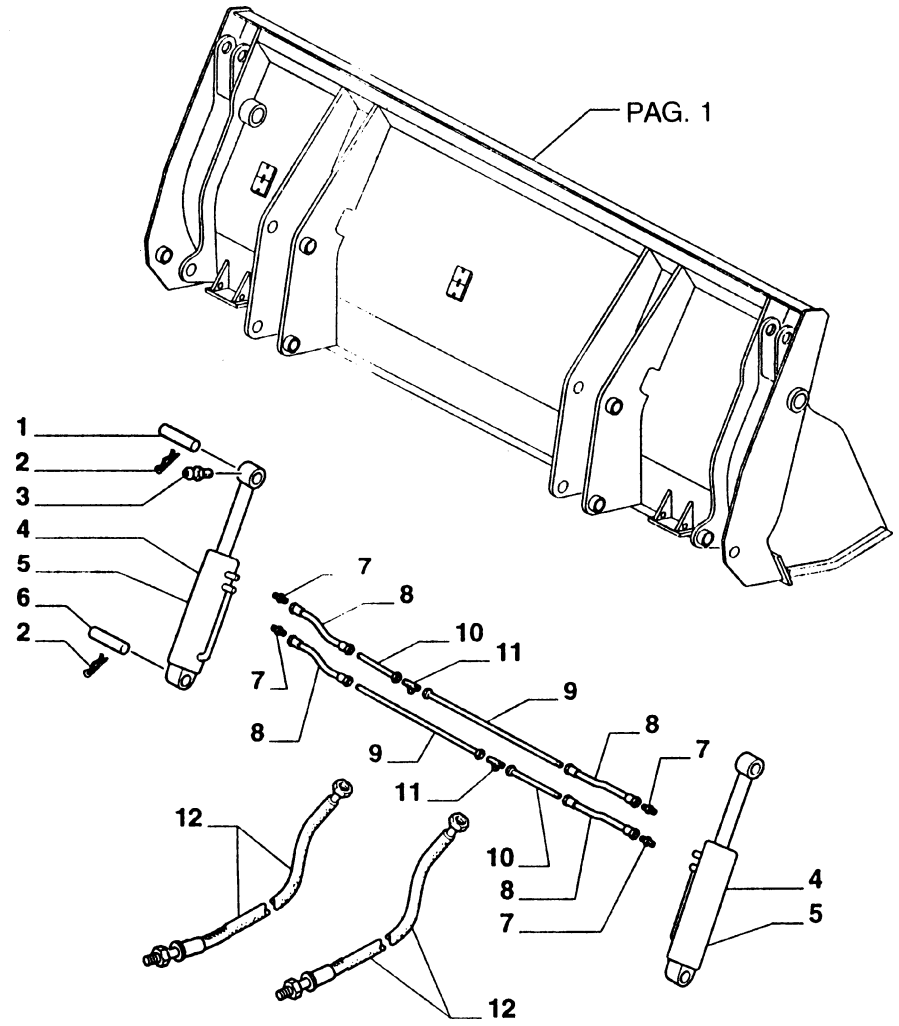

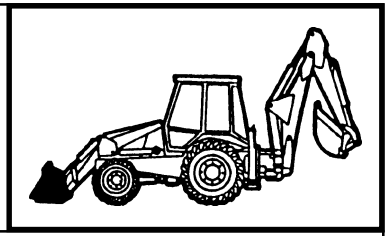

MOD	R	P/N. Imola	P/N. Brazil	Q	Descrição Denominacion	Description Descrizione	L.C.
	1	**9968158**		2	PINO BULON	PIN PERNO	080P
	2	**9969123**		4	PINO BULON	PIN PERNO	080P
	3	**9968173**		2	PINO GRAXEIRO ENGRASADOR	GREASE FITTING INGRASSATORE	060I
	4	**9968163**		2	CILINDRO CILINDRO	CYLINDER CILINDRO	164C
	5	**9968164**		2	JOGO DE ANEIS CONUNTO DE JUNTAS	KIT OF SEALS SERIE GUARNIZIONI	630S
	6	**9968162**		2	PINO BULON	PIN PERNO	080P
	7	**9968165**		4	CONEXÃO RACOR	FITTING RACCORDO	020R
	8	**9968166**		4	MANGUEIRA MANGA C/RACORDE	HOSE ASSY TUBO FLESSIBILE	192T
	9	**9968167**		2	TUBO TUBO	TUBE TUBO RIGIDO	193T
	10	**9968169**		2	TUBO TUBO	TUBE TUBO RIGIDO	193T
	11	**9968168**		2	CONEXÃO 3 VIAS CONECTOR DE 3 VIAS	THREE-WAY CONNECTION RACCORDO A TRE VIE	016R
	12	**85803225**		2	MANGUEIRA MANGA C/RACORDE	HOSE ASSY TUBO FLESSIBILE	192T

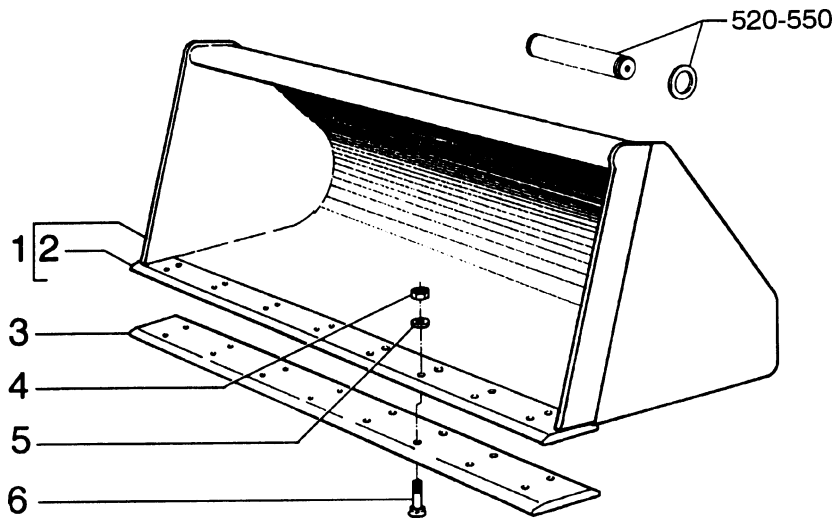

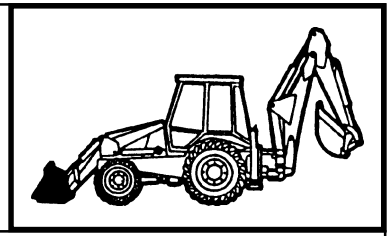

MOD	R	P/N. Imola	P/N. Brazil	Q	Descrição Denominacion	Description Descrizione	L.C.
	1		**75246726**	1	CAÇAMBA 0,88 M3 CUCHARA - 0,88 METRO	BUCKET, 0,88 M3 BENNA 0,88 M CUBO	P251
	1		**75245563**	1	CAÇAMBA 1,00 M3 CUCHARA - 1 METRO	BUCKET, 1.00 M3 BENNA 1,00 M CUBO	G251
	2		**75238130**	1	FACA DA CAÇAMBA CUCHILLA LAT.	BUCKET CUTTING TAGLIENTE BENNA	0071
	3		**75246669**	1	FACA REVERSIVEL CUCHILLA REVERSIBLE	CUTTING EDGE TAGLIENTE	R018
	4		**12164121**	16	PORCA TUERCA	NUT DADO	010D
	5		**10520221**	16	ARRUELA ARANDELA	WASHER ROSETTA	131R
	6		**75238351**	16	PARAFUSO TORNILLO	SCREW VITE	040V

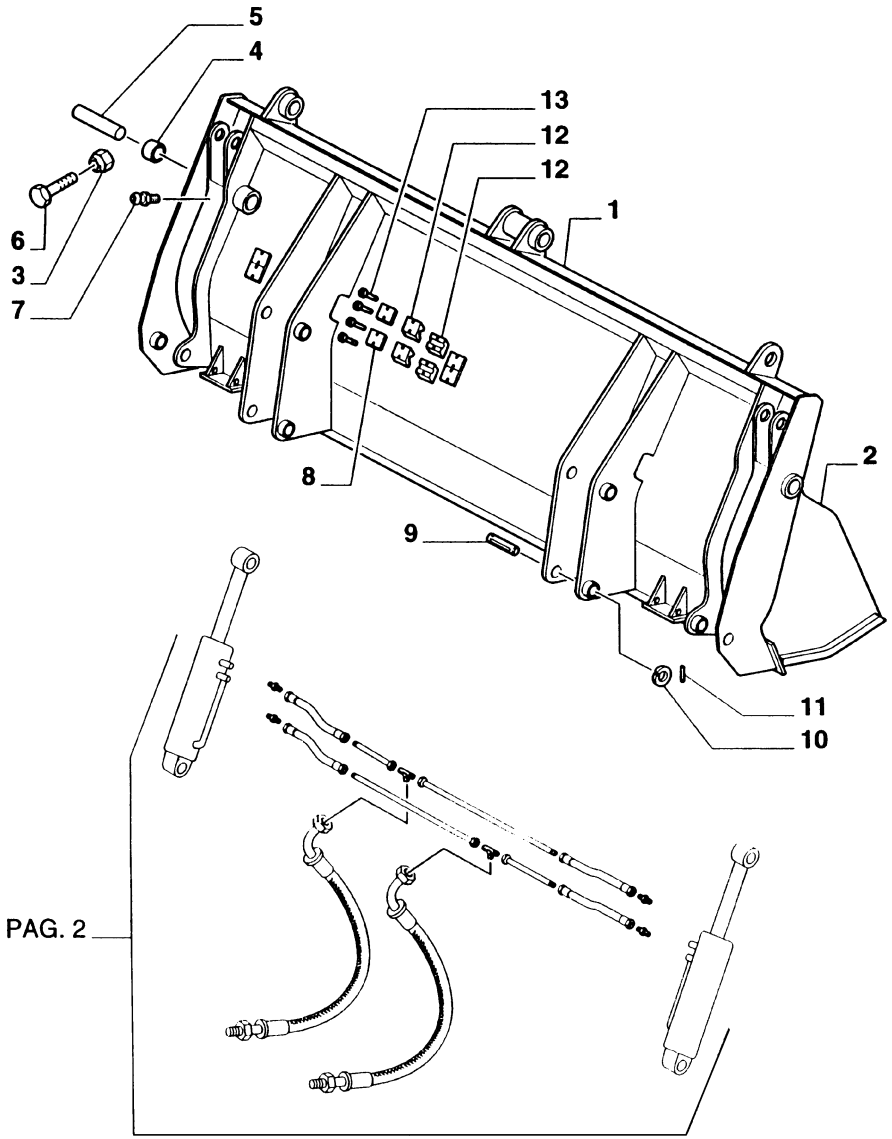

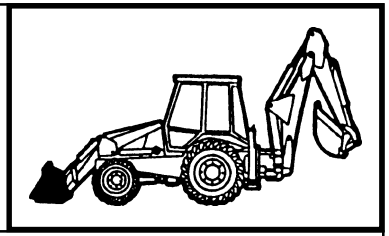

MOD	R	P/N. Imola	P/N. Brazil	Q	Descrição Denominacion	Description Descrizione	L.C.
	1	**9968157**		1	CAÇAMBA CUCHARA	BUCKET BENNA	035B
	2	**9968175**		1	CAÇAMBA CUCHARA	BUCKET BENNA	035B
	3	**9968152**		2	PORCA TUERCA	NUT DADO	010D
	4	**9968159**		2	BUCHA BUJE	BUSHING BOCCOLA	095B
	5	**9968160**		2	PINO BULON	PIN PERNO	080P
	6	**9968174**		2	PARAFUSO TORNILLO	SCREW VITE	040V
	7	**9968173**		2	PINO GRAXEIRO ENGRASADOR	GREASE FITTING INGRASSATORE	060I
	8	**9968171**		6	PLACA PLACA	PLATE PIASTRINA	110P
	9	**85801051**		4	PINO BULON	PIN PERNO	080P
	10	**85802992**		4	ARRUELA ARANDELA	WASHER ROSETTA	131R
	11	**85802993**		4	PINO BULON	PIN PERNO	080P
	12	**9968170**		12	PRESILHA ABRESADERA	CLIP FERMAGLIO	045F
	13	**9968172**		12	PARAFUSO TORNILLO	SCREW VITE	040V

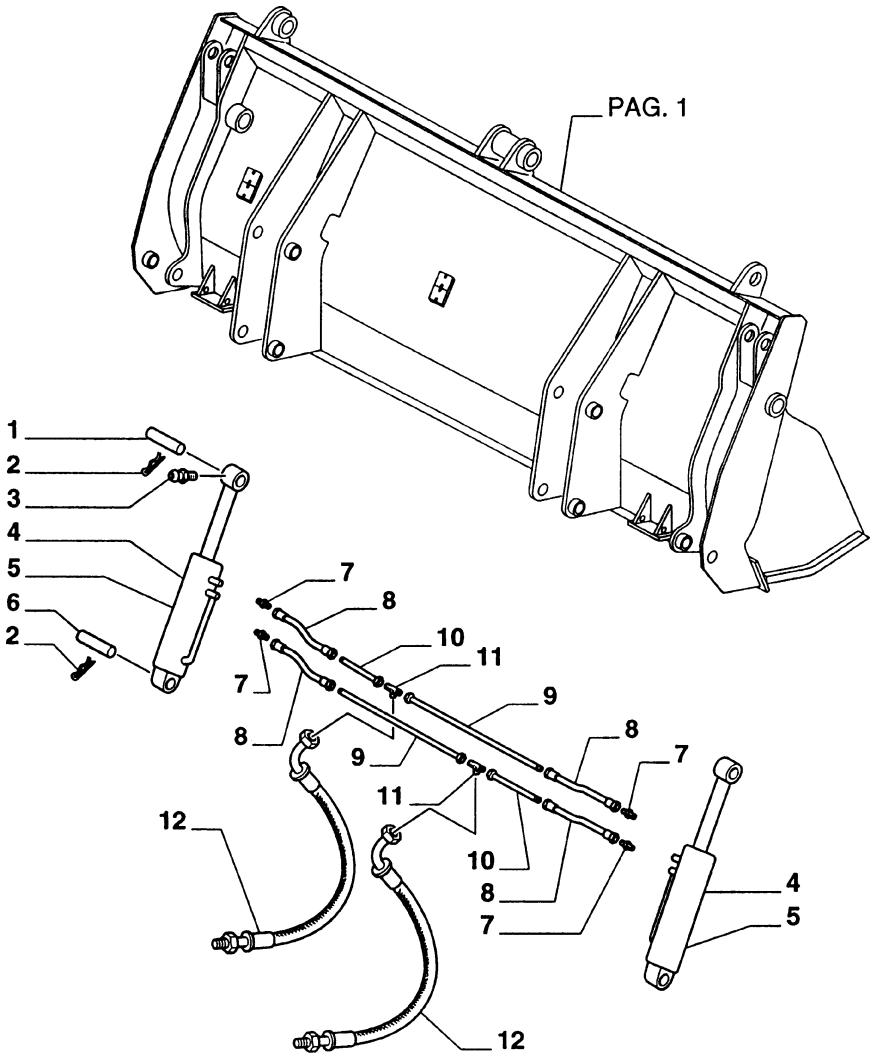

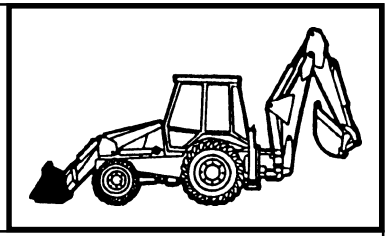

MOD	R	P/N. Imola	P/N. Brazil	Q	Descrição Denominacion	Description Descrizione	L.C.
	1	**9968158**		2	PINO BULON	PIN PERNO	080P
	2	**9968161**		4	PINO BULON	PIN PERNO	080P
	3	**9968173**		2	PINO GRAXEIRO ENGRASADOR	GREASE FITTING INGRASSATORE	060I
	4	**9968163**		2	CILINDRO CILINDRO	CYLINDER CILINDRO	164C
	5	**9968164**		2	JOGO DE ANEIS CONUNTO DE JUNTAS	KIT OF SEALS SERIE GUARNIZIONI	630S
	6	**9968162**		2	PINO BULON	PIN PERNO	080P
	7	**9968165**		4	CONEXÃO RACOR	FITTING RACCORDO	020R
	8	**9968166**		4	MANGUEIRA MANGA C/RACORDE	HOSE ASSY TUBO FLESSIBILE	192T
	9	**9968167**		2	TUBO TUBO	TUBE TUBO RIGIDO	193T
	10	**9968169**		2	TUBO TUBO	TUBE TUBO RIGIDO	193T
	11	**9968168**		2	CONEXÃO 3 VIAS CONECTOR DE 3 VIAS	THREE-WAY CONNECTION RACCORDO A TRE VIE	016R
	12	**85803225**		2	MANGUEIRA MANGA C/RACORDE	HOSE ASSY TUBO FLESSIBILE	192T

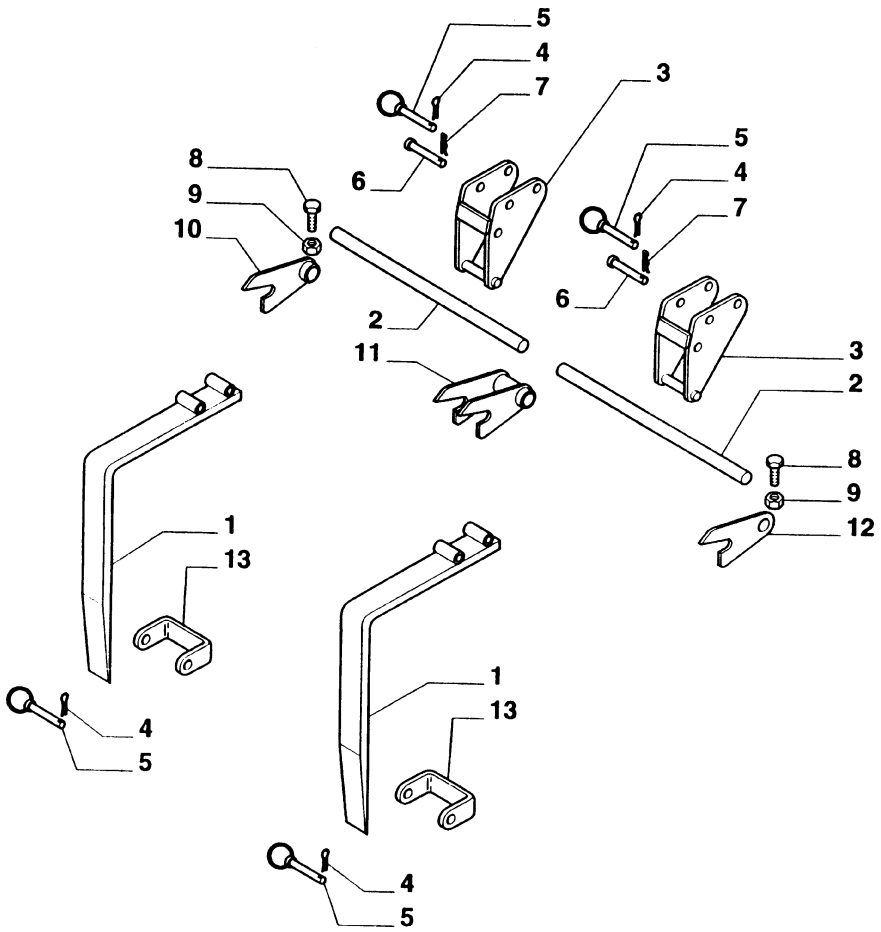

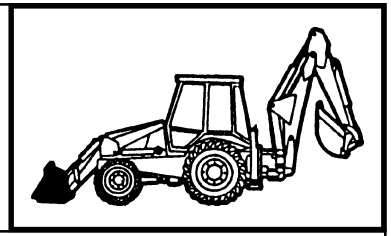

MOD	R	P/N. Imola	P/N. Brazil	Q	Descrição Denominacion	Description Descrizione	L.C.
	1	**9968144**		2	GARFO HORCA	FORK FORCA	125F
	2	**9968145**		2	HASTE VARILLA	ROD ASTA	090A
	3	**9968146**		2	SUPORTE SOPORTE	SUPPORT SUPPORTO	300S
	4	**9968147**	**70911279**	4	PINO BULON	PIN PERNO	080P
	5	**9968148**		4	PINO BULON	PIN PERNO	080P
	6	**9968149**		2	PINO BULON	PIN PERNO	080P
	7	**9968150**	**70911279**	2	CONTRA PINO CHAVETA PARTIDA	COTTER PIN COPIGLIA	270C
	8	**9968151**		2	PARAFUSO TORNILLO	SCREW VITE	040V
	9	**9968152**		2	PORCA TUERCA	NUT DADO	010D
	10	**9968153**		1	SUPORTE SOPORTE	SUPPORT SUPPORTO	300S
	11	**9968154**		1	SUPORTE SOPORTE	SUPPORT SUPPORTO	300S
	12	**9968155**		1	SUPORTE SOPORTE	SUPPORT SUPPORTO	300S
	13	**9968156**		2	ABRAÇADEIRA ABRAZADERA	CLAMP FASCETTA	031F

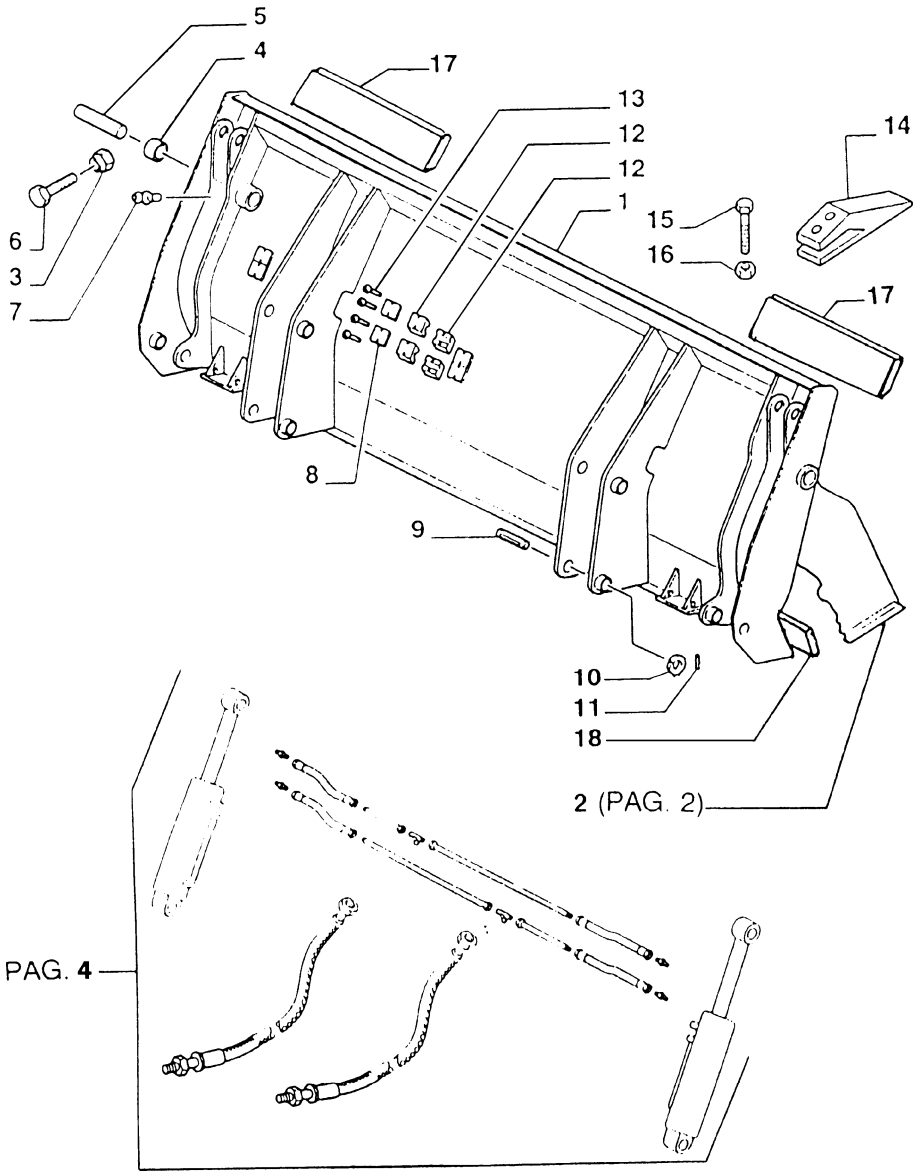

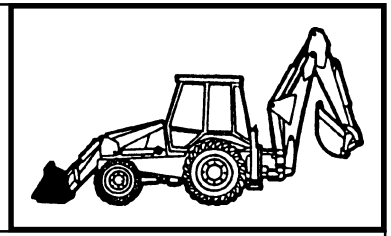

MOD	R	P/N. Imola	P/N. Brazil	Q	Descrição Denominacion	Description Descrizione	L.C.
	1	**9969121**		1	CAÇAMBA CUCHARA	BUCKET BENNA	035B
	2	**9969122**		1	CAÇAMBA CUCHARA	BUCKET BENNA	035B
	3	**9968152**		2	PORCA TUERCA	NUT DADO	010D
	4	**85805922**		4	BUCHA BUJE	BUSHING BOCCOLA	095B
	5	**9968160**		2	PINO BULON	PIN PERNO	080P
	6	**9968174**		2	PARAFUSO TORNILLO	SCREW VITE	040V
	7	**9969124**		2	PINO GRAXEIRO ENGRASADOR	GREASE FITTING INGRASSATORE	060I
	8	**9968171**		8	PLACA PLACA	PLATE PIASTRINA	110P
	9	**85801051**		4	PINO BULON	PIN PERNO	080P
	10	**85802992**		4	ANEL ELÁSTICO ANILLO ELASTICO	SNAP RING ANELLO ELASTICO	187A
	11	**85802993**		4	PINO BULON	PIN PERNO	080P
	12	**9968170**		16	PRESILHA ABRESADERA	CLIP FERMAGLIO	045F
	13	**9968172**		16	PARAFUSO TORNILLO	SCREW VITE	040V
	14	**85801109**		8	DENTE DO RIPPER DIENTE ESCARIF.	RIPPER SHANK DENTE RIPPER	025D
	15	**70617127**		16	PARAFUSO TORNILLO	SCREW VITE	040V
	16	**85801470**		16	PORCA TUERCA	NUT DADO	010D
	17	**85806172**		2	FACA LATERAL CUCHILLA LAT.	END BIT TAGLIENTE LAT.	019T
	18	**85806171**		1	FACA DA CAÇAMBA CUCHILLA LAT.	BUCKET CUTTING TAGLIENTE BENNA	0071

FB80.3 - FB100.3

CAÇAMBA MULTIUSO 6x1 (1 M3)
CUCHARON 6x1 (1 METRO CUBO)
BUCKET 6x1 (1 M)
BENNA 6x1 (1 M CUBO)

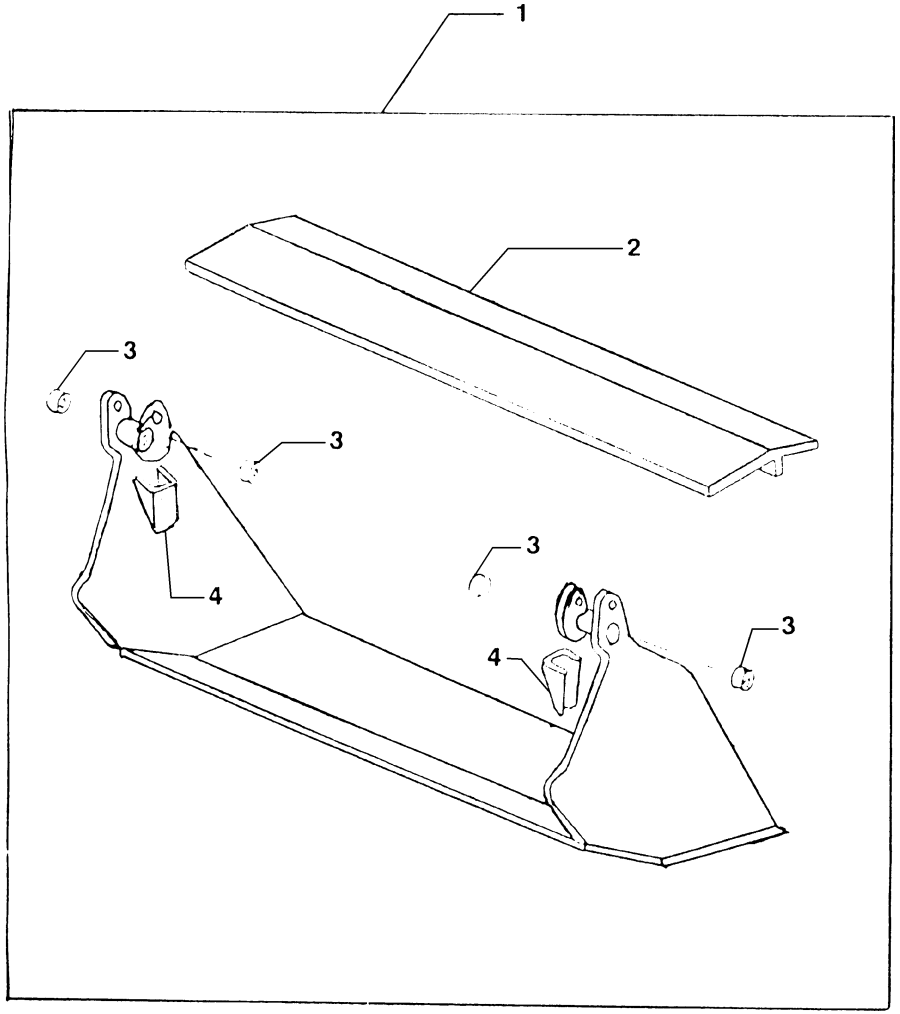

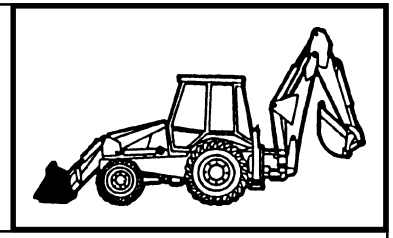

MOD	R	P/N. Imola	P/N. Brazil	Q	Descrição Denominacion	Description Descrizione	L.C.
	1	**9969122**		1	CAÇAMBA CUCHARA	BUCKET BENNA	035B
	2	**9969347**		1	REFORÇO REFUERZO	REINFORCEMENT RINFORZO	060R
	3	**85805922**		4	BUCHA BUJE	BUSHING BOCCOLA	095B
	4	**85805926**		2	SUPORTE SOPORTE	SUPPORT SUPPORTO	300S

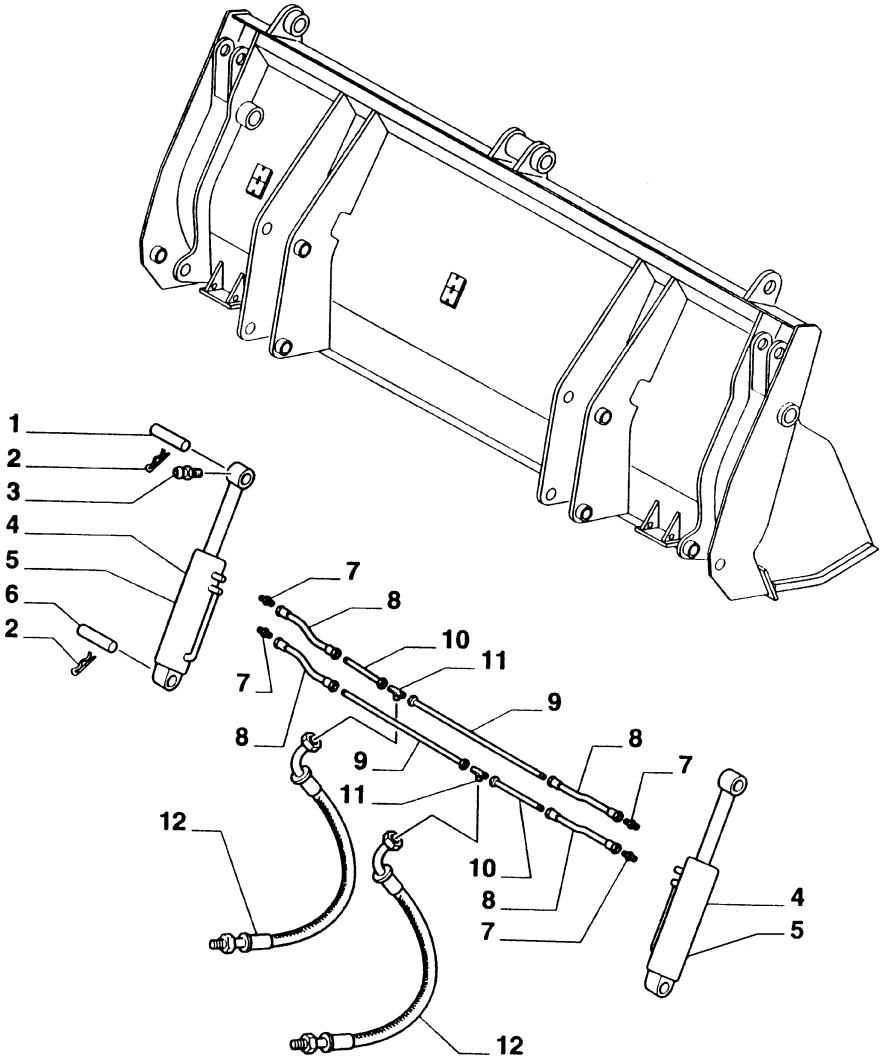

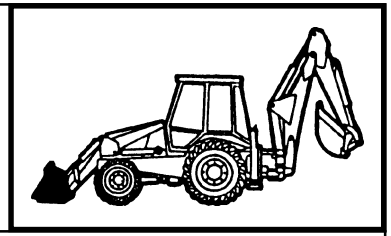

MOD	R	P/N. Imola	P/N. Brazil	Q	Descrição Denominacion	Description Descrizione	L.C.
	1	**9968158**		2	PINO BULON	PIN PERNO	080P
	2	**9969123**		4	PINO BULON	PIN PERNO	080P
	3	**9968173**		2	PINO GRAXEIRO ENGRASADOR	GREASE FITTING INGRASSATORE	060I
	4	**9968163**		2	CILINDRO CILINDRO	CYLINDER CILINDRO	164C
	5	**9968164**		2	JOGO DE ANEIS CONUNTO DE JUNTAS	KIT OF SEALS SERIE GUARNIZIONI	630S
	6	**9968162**		2	PINO BULON	PIN PERNO	080P
	7	**9968165**		4	CONEXÃO RACOR	FITTING RACCORDO	020R
	8	**9968166**		4	MANGUEIRA MANGA C/RACORDE	HOSE ASSY TUBO FLESSIBILE	192T
	9	**9968167**		2	TUBO TUBO	TUBE TUBO RIGIDO	193T
	10	**9968169**		2	TUBO TUBO	TUBE TUBO RIGIDO	193T
	11	**9968168**		2	CONEXÃO 3 VIAS CONECTOR DE 3 VIAS	THREE-WAY CONNECTION RACCORDO A TRE VIE	016R
	12	**85803225**		2	MANGUEIRA MANGA C/RACORDE	HOSE ASSY TUBO FLESSIBILE	192T

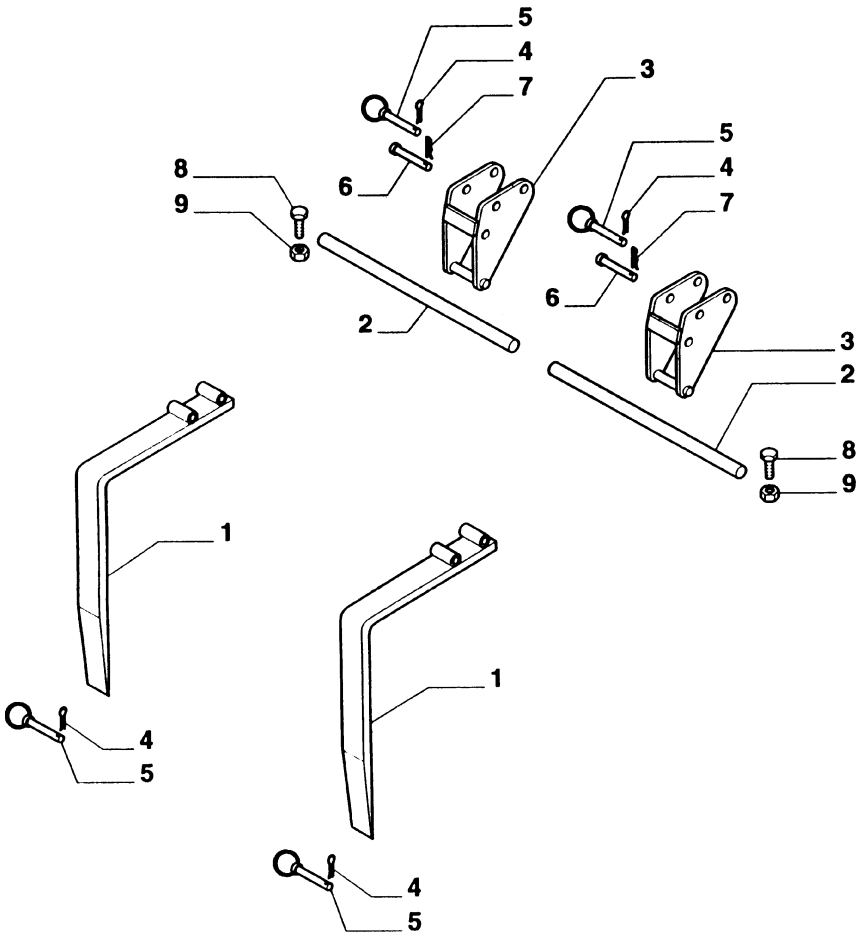

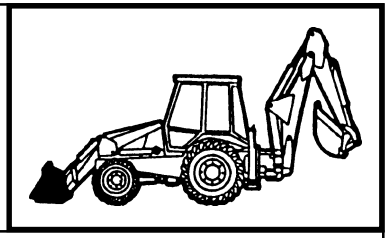

MOD	R	P/N. Imola	P/N. Brazil	Q	Descrição Denominacion	Description Descrizione	L.C.
	1	**9968144**		2	GARFO HORCA	FORK FORCA	125F
	2	**9968585**		2	HASTE VARILLA	ROD ASTA	090A
	3	**9968176**		2	SUPORTE SOPORTE	SUPPORT SUPPORTO	300S
	4	**9968147**		4	PINO PASADOR	PIN SPINA	200S
	5	**9968148**		4	PINO BULON	PIN PERNO	080P
	6	**9968150**		2	PINO BULON	PIN PERNO	080P
	7	**9968149**		2	PINO BULON	PIN PERNO	080P
	8	**9968586**		2	PARAFUSO TORNILLO	SCREW VITE	040V
	9	**9968152**		2	PORCA TUERCA	NUT DADO	010D

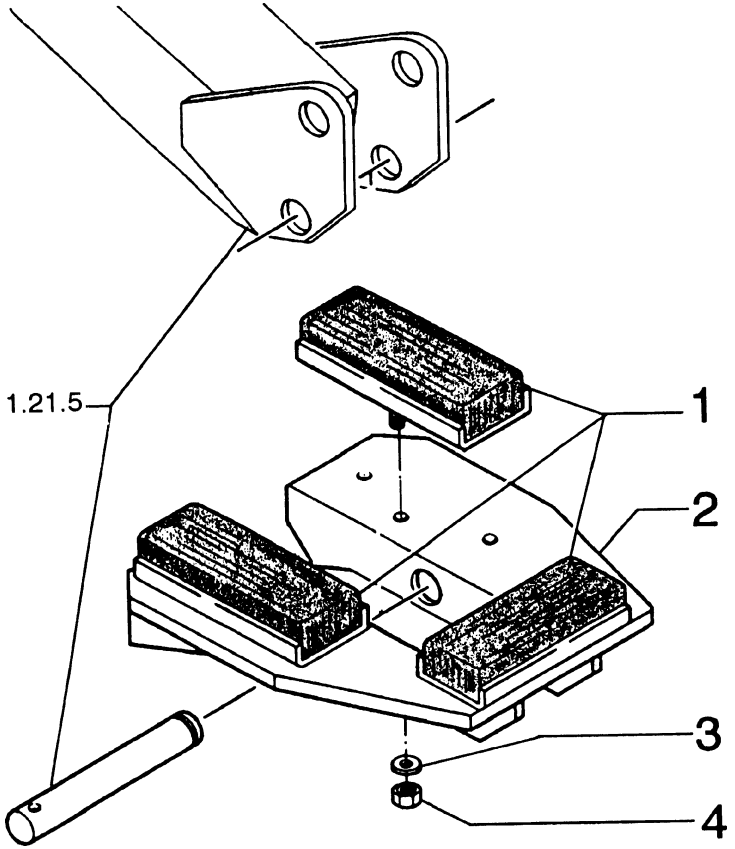

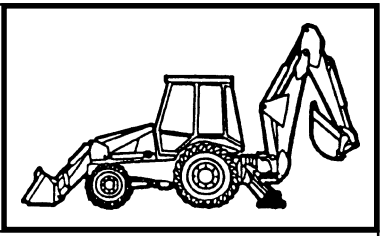

MOD	R	P/N. Imola	P/N. Brazil	Q	Descrição Denominacion	Description Descrizione	L.C.
	1		**81873219**	6	SAPATA ZAPATA	SHOE SUOLA	295S
	2		**81873218**	2	SUPORTE SOPORTE	SUPPORT SUPPORTO	300S
	3		**70926191**	18	ARRUELA ARANDELA	WASHER ROSETTA	131R
	4		**70925748**	18	PORCA TUERCA	NUT DADO	010D

FB80.3 - FB100.3

SAPATAS REVERSÍVEIS
ZAPATAS REVERSIBLE
STABILIZER FOOT
PIEDE STABILIZZATORE

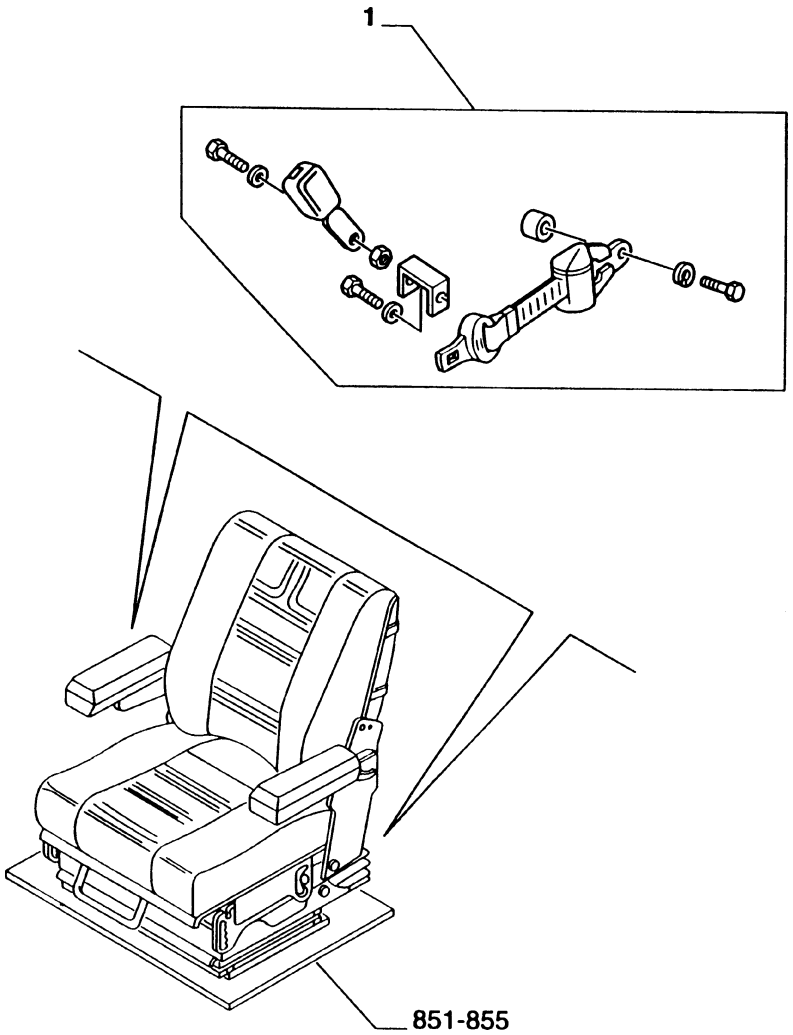

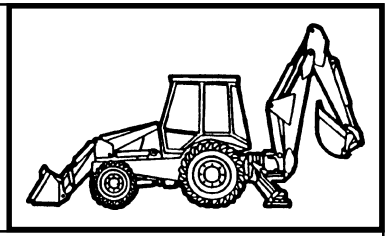

MOD	R	P/N. Imola	P/N. Brazil	Q	Descrição Denominacion	Description Descrizione	L.C.
	1	**85803351**		1	CINTO SEGURANÇA 2" CINTURON 2"	SAFETY BELT 2" CINTURA SICUR 2"	1822
	1	**85803352**		1	CINTO SEGURANÇA 3" CINTURON 3"	SAFETY BELT 3" CINTURA SICUR 3"	1823

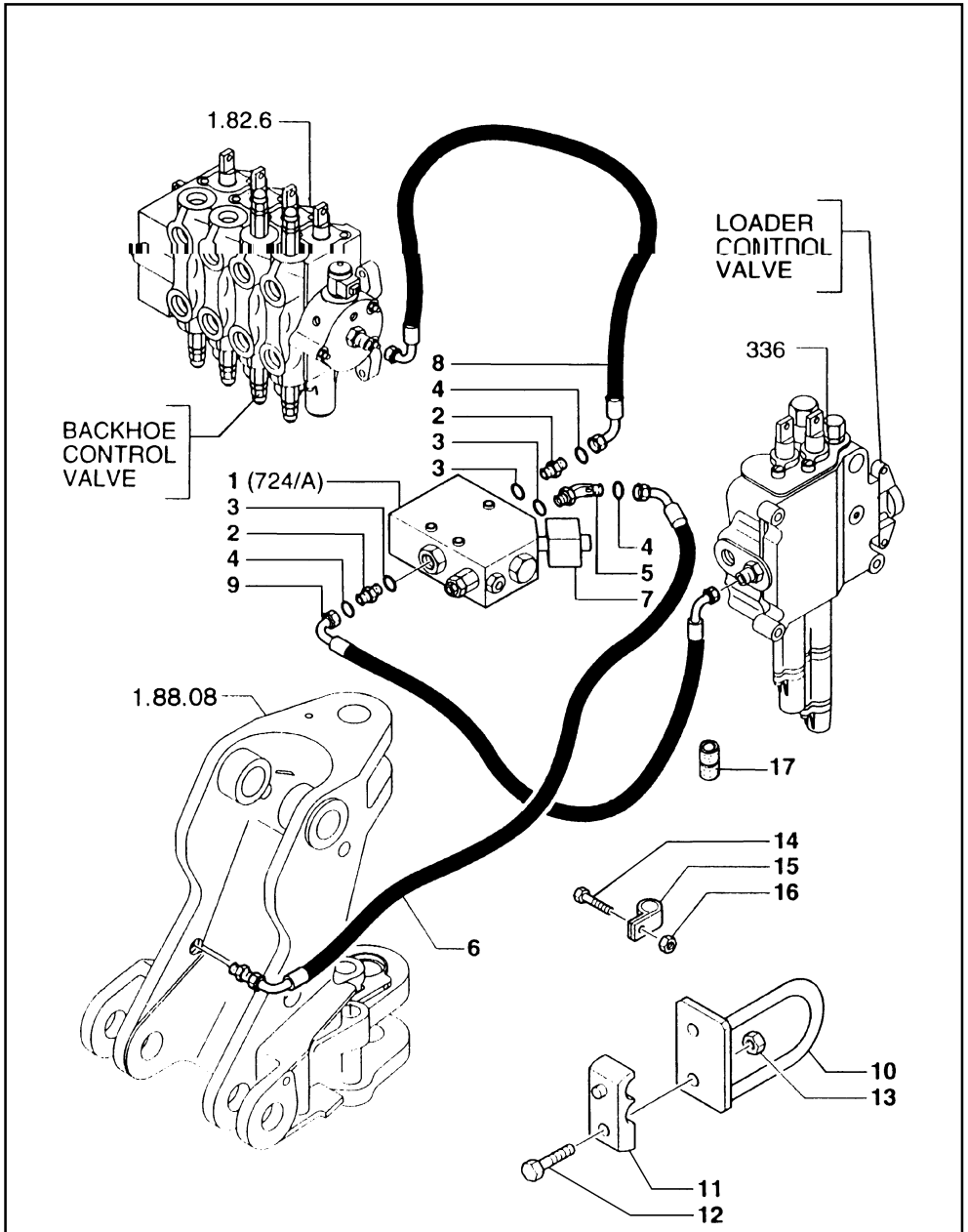

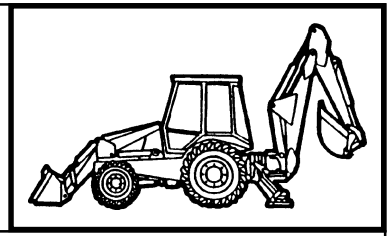

MOD	R	P/N. Imola	P/N. Brazil	Q	Descrição Denominacion	Description Descrizione	L.C.
	1	**85801210**		1	REGULADOR REGULADOR	REGULATOR REGOLATORE	169R
	2	**85803486**		2	CONEXÃO RACOR	FITTING RACCORDO	020R
	3	**80167266**		3	O'RING JUNTA TORICA	O'RING GUARNIZIONE O-R	158G
	4	**81844851**		3	O'RING JUNTA TORICA	O'RING GUARNIZIONE O-R	158G
	5	**85803487**		1	CONEXÃO RACOR	FITTING RACCORDO	020R
	6	**85803426**		1	MANGUEIRA MANGA C/RACORDE	HOSE ASSY TUBO FLESSIBILE	192T
	7	**85801211**		1	TRANSMISSOR TRANSMISSOR	LASERPLANE-TRAN LASERPLANE-TRAS	1022
	8	**85803428**		1	MANGUEIRA MANGA C/RACORDE	HOSE ASSY TUBO FLESSIBILE	192T
	9	**85802776**		1	MANGUEIRA MANGA C/RACORDE	HOSE ASSY TUBO FLESSIBILE	192T
	10	**85802214**		2	SUPORTE SOPORTE	SUPPORT SUPPORTO	300S
	11	**85804442**		2	ABRAÇADEIRA ABRAZADERA	CLAMP FASCETTA	031F
	12	**16044224**		2	PARAFUSO TORNILLO	SCREW VITE	040V
	13	**16104111**		2	PORCA TUERCA	NUT DADO	010D
	14	**15970724**		1	PARAFUSO TORNILLO	SCREW VITE	040V
	15	**85802890**		1	PRESILHA ABRESADERA	CLIP FERMAGLIO	045F
	16	**12574511**		1	PORCA TUERCA	NUT DADO	010D
	17	**10398580**		1	BUCHA DE BORRACHA CASQUILLO DE GOMA	BUSH, RUBBER BOCCOLA DI GOMMA	100B

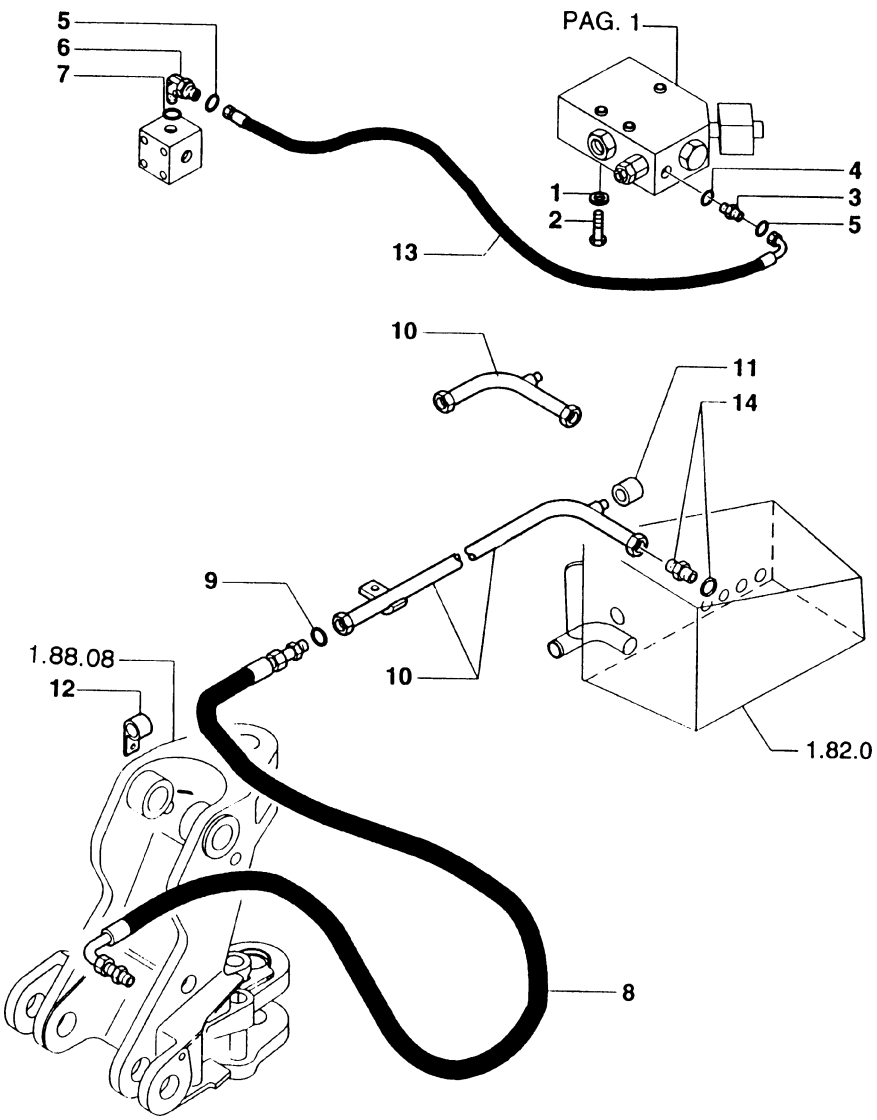

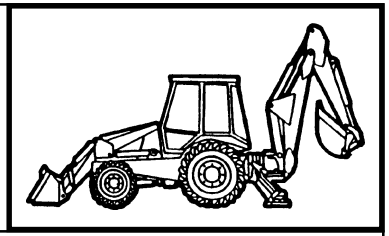

MOD	R	P/N. Imola	P/N. Brazil	Q	Descrição Denominacion	Description Descrizione	L.C.
	1	**11193874**		3	ARRUELA ARANDELA	WASHER ROSETTA	131R
	2	**16044831**		3	PARAFUSO TORNILLO	SCREW VITE	040V
	3	**89993143**		1	CONEXÃO RACOR	FITTING RACCORDO	020R
	4	**80165202**		1	O'RING JUNTA TORICA	O'RING GUARNIZIONE O-R	158G
	5	**81844851**		2	O'RING JUNTA TORICA	O'RING GUARNIZIONE O-R	158G
	6	**85803233**		1	CONEXÃO RACOR	FITTING RACCORDO	020R
	7	**80128825**		1	O'RING JUNTA TORICA	O'RING GUARNIZIONE O-R	158G
	8	**85802341**		1	MANGUEIRA MANGA C/RACORDE	HOSE ASSY TUBO FLESSIBILE	192T
	9	**89824051**		1	O'RING JUNTA TORICA	O'RING GUARNIZIONE O-R	158G
	10	**85802335**		1	TUBO TUBO	TUBE TUBO RIGIDO	193T
	11	**83987627**		1	BUJÃO TAPON	PLUG TAPPO	050T
	12	**85803514**		1	ABRAÇADEIRA ABRAZADERA	CLAMP FASCETTA	031F
	13	**85803429**		1	MANGUEIRA MANGA C/RACORDE	HOSE ASSY TUBO FLESSIBILE	192T
	14	**85802801**		1	CONEXÃO RACOR	FITTING RACCORDO	020R

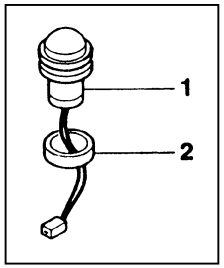

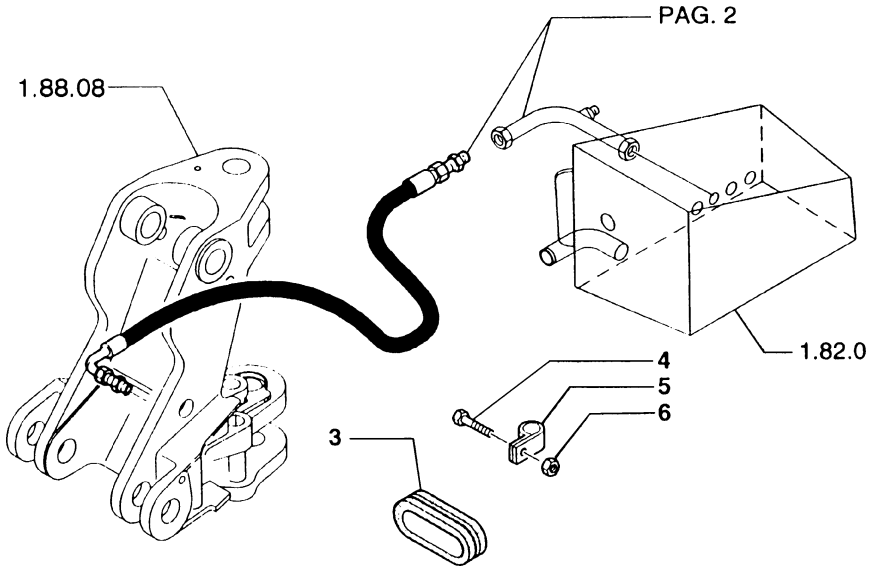

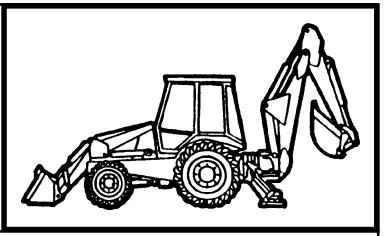

MOD	R	P/N. Imola	P/N. Brazil	Q	Descrição Denominacion	Description Descrizione	L.C.
	1	**85804458**		1	INTERRUPTOR PULSADOR	PUSH BUTTON PULSANTE	236P
	2	**85803488**		1	ESPAÇADOR SEPARADOR	SPACER DISTANZIALE	075D
	3	**71431555**		2	BUCHA DE BORRACHA CASQUILLO DE GOMA	BUSH, RUBBER BOCCOLA DI GOMMA	100B
	4	**15970724**		1	PARAFUSO TORNILLO	SCREW VITE	040V
	5	**85802890**		1	ABRAÇADEIRA ABRAZADERA	CLAMP FASCETTA	031F
	6	**12574511**		1	PORCA TUERCA	NUT DADO	010D

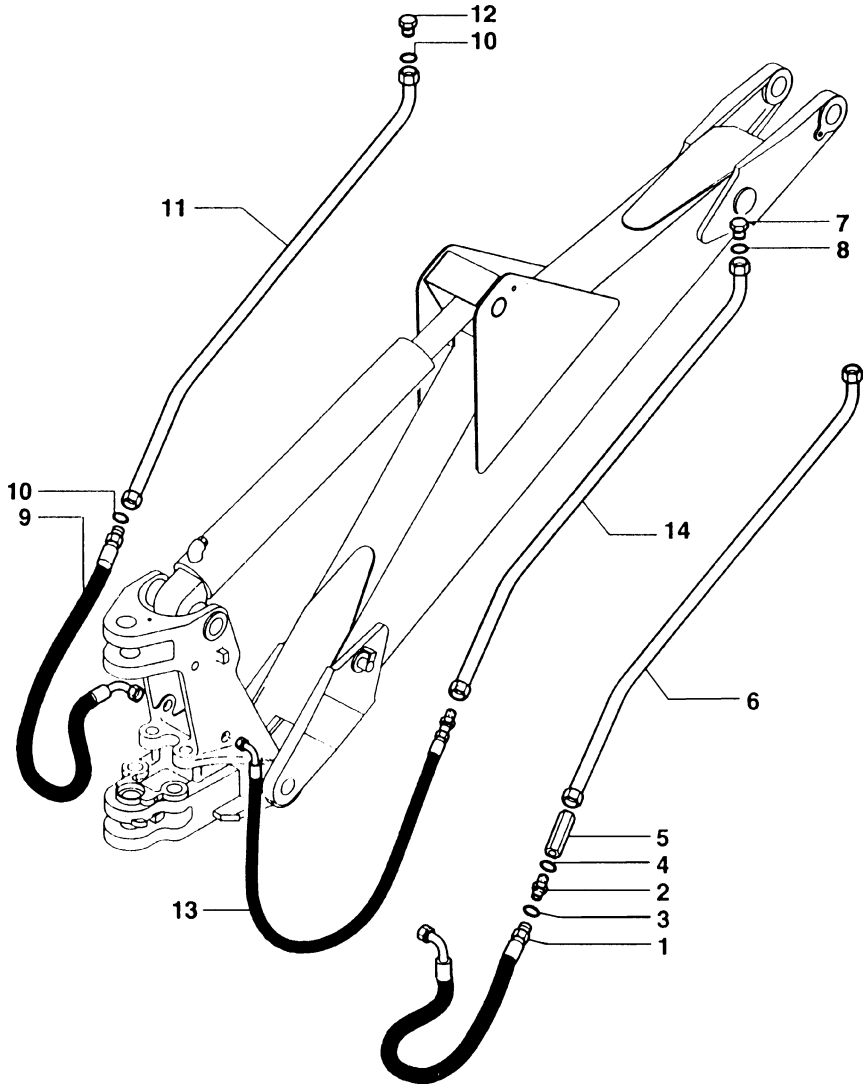

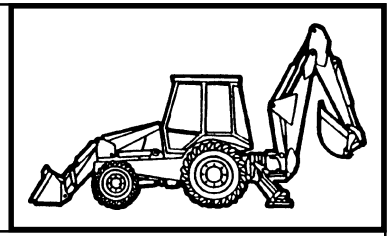

MOD	R	P/N. Imola	P/N. Brazil	Q	Descrição Denominacion	Description Descrizione	L.C.
	1	**85803424**		1	MANGUEIRA MANGA C/RACORDE	HOSE ASSY TUBO FLESSIBILE	192T
	2	**85803486**		1	CONEXÃO RACOR	FITTING RACCORDO	020R
	3	**81844851**		1	O'RING JUNTA TORICA	O'RING GUARNIZIONE O-R	158G
	4	**80167266**		1	O'RING JUNTA TORICA	O'RING GUARNIZIONE O-R	158G
	5	**85803523**		1	VÁLVULA VALVULA	VALVE VALVOLA	010V
	6	**85803188**		1	TUBO TUBO	TUBE TUBO RIGIDO	193T
	7	**85801397**	**70935842**	1	BUJÃO TAPON	PLUG TAPPO	050T
	8	**89824050**		1	O'RING JUNTA TORICA	O'RING GUARNIZIONE O-R	158G
	9	**85803425**		1	MANGUEIRA MANGA C/RACORDE	HOSE ASSY TUBO FLESSIBILE	192T
	10	**89824051**		2	O'RING JUNTA TORICA	O'RING GUARNIZIONE O-R	158G
	11	**85803184**		1	TUBO TUBO	TUBE TUBO RIGIDO	193T
	12	**85801452**		1	BUJÃO TAPON	PLUG TAPPO	050T
	13	**85802253**		1	MANGUEIRA MANGA C/RACORDE	HOSE ASSY TUBO FLESSIBILE	192T
	14	**85802454**		1	TUBO TUBO	TUBE TUBO RIGIDO	193T

FB80.3 - FB100.3

SISTEMA HIDRAULICO DO MARTELO DEMOLIDOR RETRO
CIRCUITO HIDRAULICO DEL MARTILLO DEMOLEDOR PARTE TRASERA
HIDRAULIC SYSTEM FOR REAR DEMOLITION HAMMER
IMPIANTO IDRAULICO MARTELO DEMOLITORE RETRO

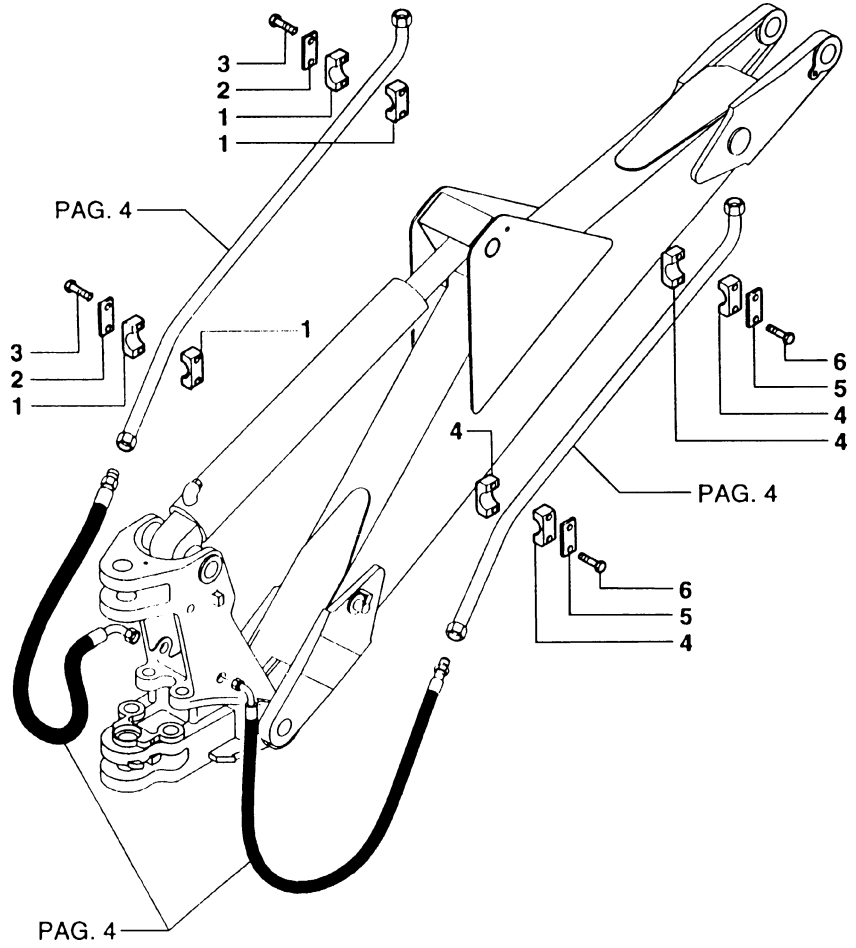

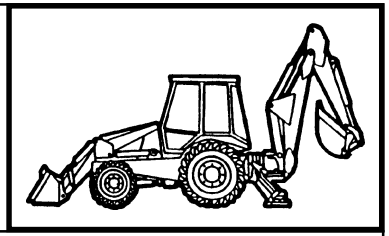

MOD	R	P/N. Imola	P/N. Brazil	Q	Descrição Denominacion	Description Descrizione	L.C.
	1	**85803483**		4	ABRAÇADEIRA ABRAZADERA	CLAMP FASCETTA	031F
	2	**85803440**		2	CHAPA PLACA	PLATE PIASTRA	105P
	3	**10943421**		4	PARAFUSO TORNILLO	SCREW VITE	040V
	4	**85803484**		4	ABRAÇADEIRA ABRAZADERA	CLAMP FASCETTA	031F
	5	**85803485**		2	CHAPA PLACA	PLATE PIASTRA	105P
	6	**10903221**		4	PARAFUSO TORNILLO	SCREW VITE	040V

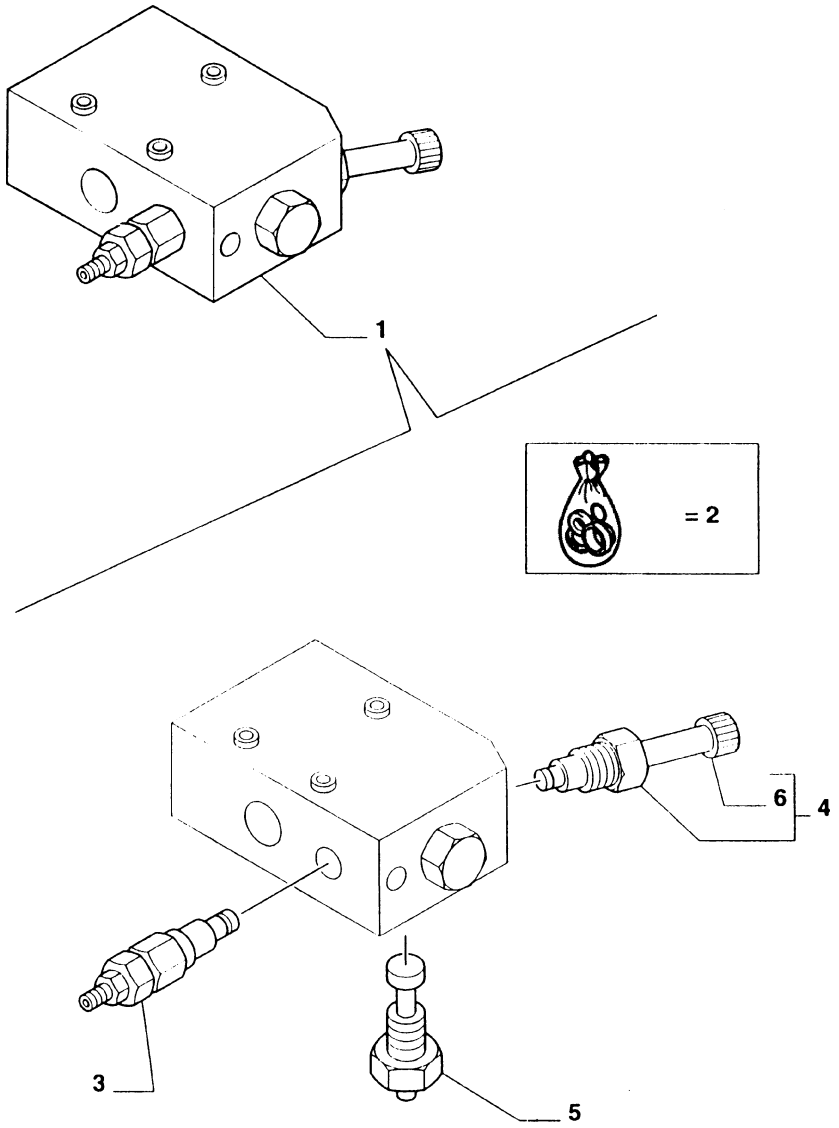

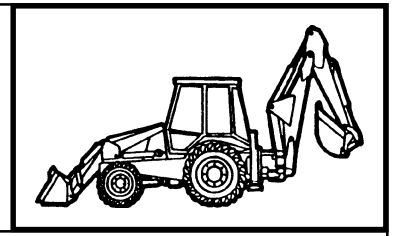

MOD	R	P/N. Imola	P/N. Brazil	Q	Descrição Denominacion	Description Descrizione	L.C.
	1	**85801210**		1	REGULADOR REGULADOR	REGULATOR REGOLATORE	169R
	2	**9970181**		1	JOGO DE ANEIS CONUNTO DE JUNTAS	KIT OF SEALS SERIE GUARNIZIONI	630S
	3	**9970178**		1	VÁLVULA VALVULA	VALVE VALVOLA	010V
	4	**9970180**		1	VÁLVULA VALVULA	VALVE VALVOLA	010V
	5	**9970179**		1	REGULADOR REGULADOR	REGULATOR REGOLATORE	169R
	6	**9970384**		1	PORCA RETENÇÃO VIROLA	RING NUT GHIERA	050G

FB80.3 - FB100.3

SISTEMA HIDRAULICO DO MARTELO DEMOLIDOR RETRO
CIRCUITO HIDRAULICO DEL MARTILLO DEMOLEDOR PARTE TRASERA
HIDRAULIC SYSTEM FOR REAR DEMOLITION HAMMER
IMPIANTO IDRAULICO MARTELO DEMOLITORE RETRO

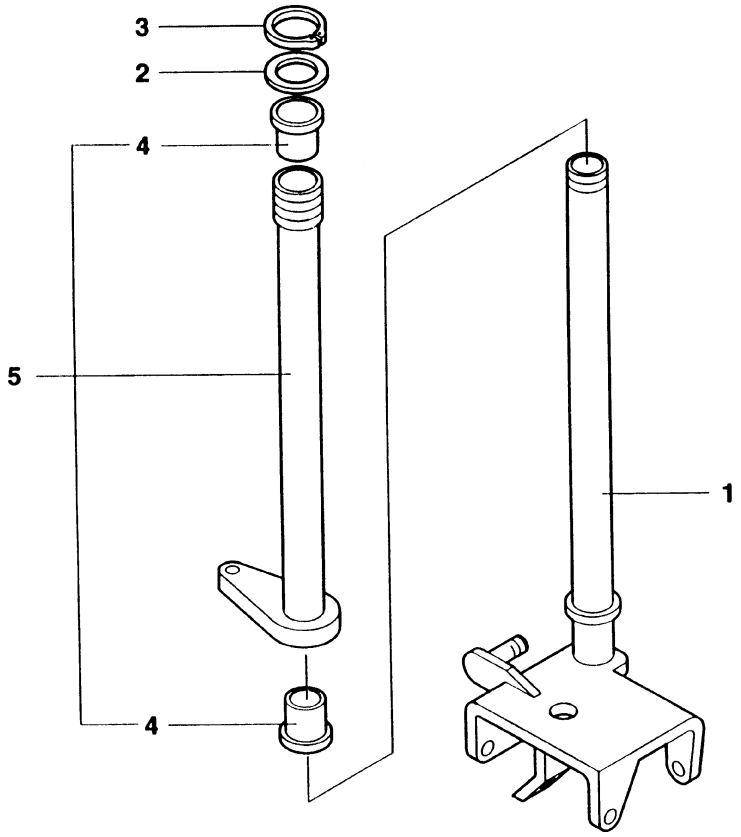

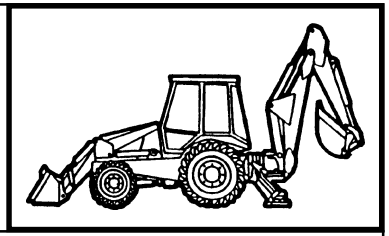

MOD	R	P/N. Imola	P/N. Brazil	Q	Descrição Denominacion	Description Descrizione	L.C.
	1	**85802601**		1	ALAVANCA PALANCA	LEVER LEVA	045L
	2	**83962203**		1	ARRUELA ARANDELA	WASHER ROSETTA	131R
	3	**83962223**		1	ANEL ELÁSTICO ANILLO ELASTICO	SNAP RING ANELLO ELASTICO	187A
	4	**83962208**		2	BUCHA BUJE	BUSHING BOCCOLA	095B
	5	**85802615**		1	BRAÇO DE COMANDO BRAZO DE COMANDO	ARM, TRIP LEVA DI COMANDO	047L

FB80.3 - FB100.3

SISTEMA HIDRAULICO DA CAÇAMBA 4x1 / 6x1
CIRCUITO HIDRAULICO DEL CUCHARON 4x1 / 6x1
HYDRAULIC SYSTEM FOR BUCKET 4x1 / 6x1
IMPIANTO IDRAULICO COMPLETO BENNA 4x1 / 6x1

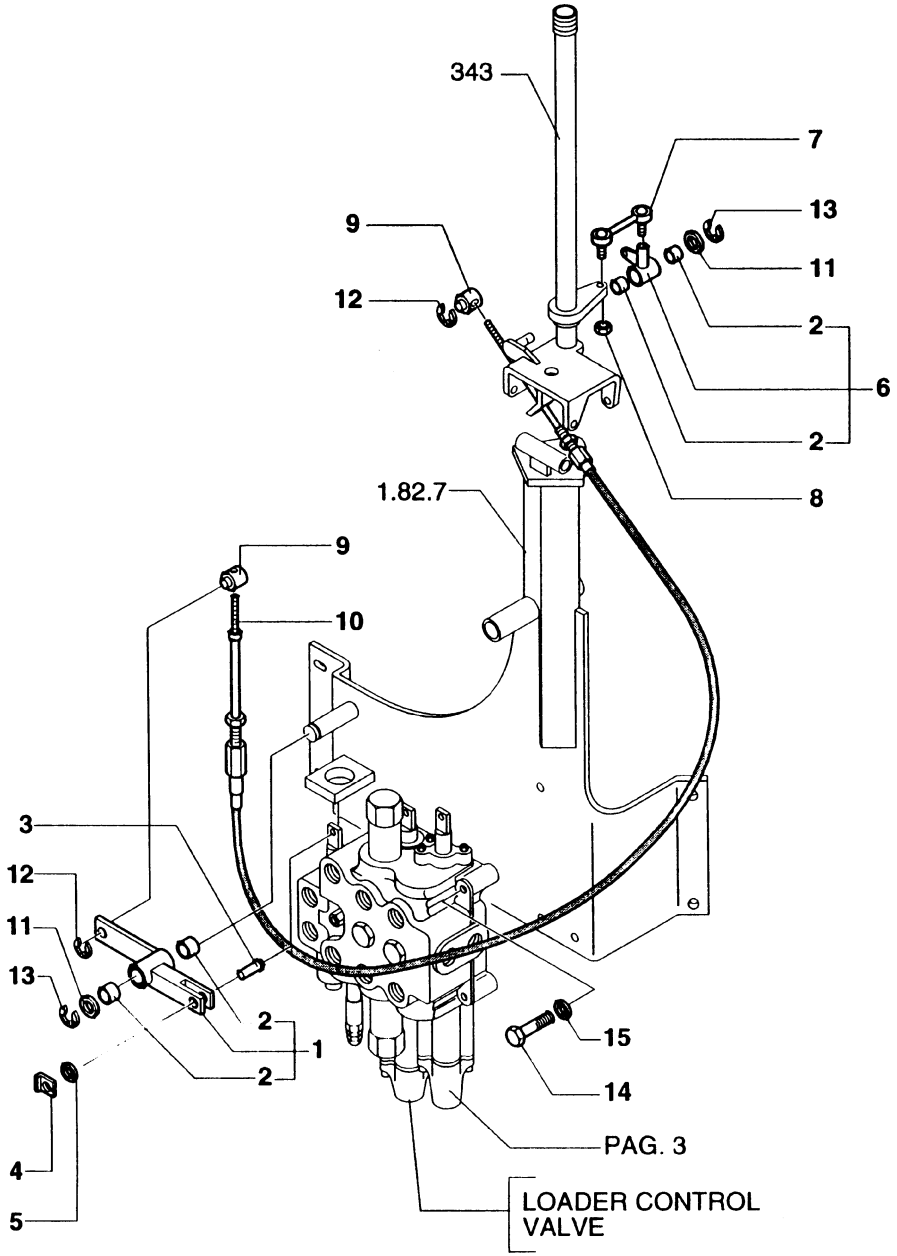

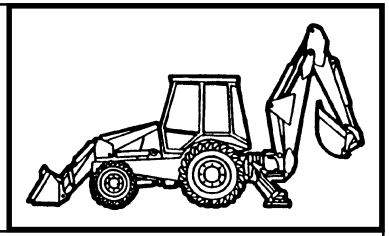

MOD	R	P/N. Imola	P/N. Brazil	Q	Descrição Denominacion	Description Descrizione	L.C.
	1	**85802816**		1	ALAVANCA PALANCA	LEVER LEVA	045L
	2	**8580294**		4	BUCHA BUJE	BUSHING BOCCOLA	095B
	3	**85801561**		1	PINO BULON	PIN PERNO	080P
	4	**11063971**		1	PRESILHA ABRESADERA	CLIP FERMAGLIO	045F
	5	**10519404**		1	ARRUELA ARANDELA	WASHER ROSETTA	131R
	6	**85802587**		1	FORQUILHA HORQUILLA	YOKE FORCELLA	085F
	7	**83962218**		1	BIELA BIELA	LINK BIELLA	050B
	8	**15896221**		1	PORCA TUERCA	NUT DADO	010D
	9	**83962205**		2	PINO BULON	PIN PERNO	080P
	10	**85806155**		1	CABO FLEXIVEL CABLE FLEXIBLE	FLEXIBLE SHAFT TRASMISSIONE FL	165T
	11	**14496921**		2	ARRUELA ARANDELA	WASHER ROSETTA	131R
	12	**83947277**		1	ANEL ELÁSTICO ANILLO ELASTICO	SNAP RING ANELLO ELASTICO	187A
	13	**83911366**		2	ANEL ELÁSTICO ANILLO ELASTICO	SNAP RING ANELLO ELASTICO	187A
	14	**11343731**		3	PARAFUSO TORNILLO	SCREW VITE	040V
	15	**11190574**		3	ARRUELA ARANDELA	WASHER ROSETTA	131R

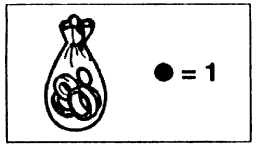

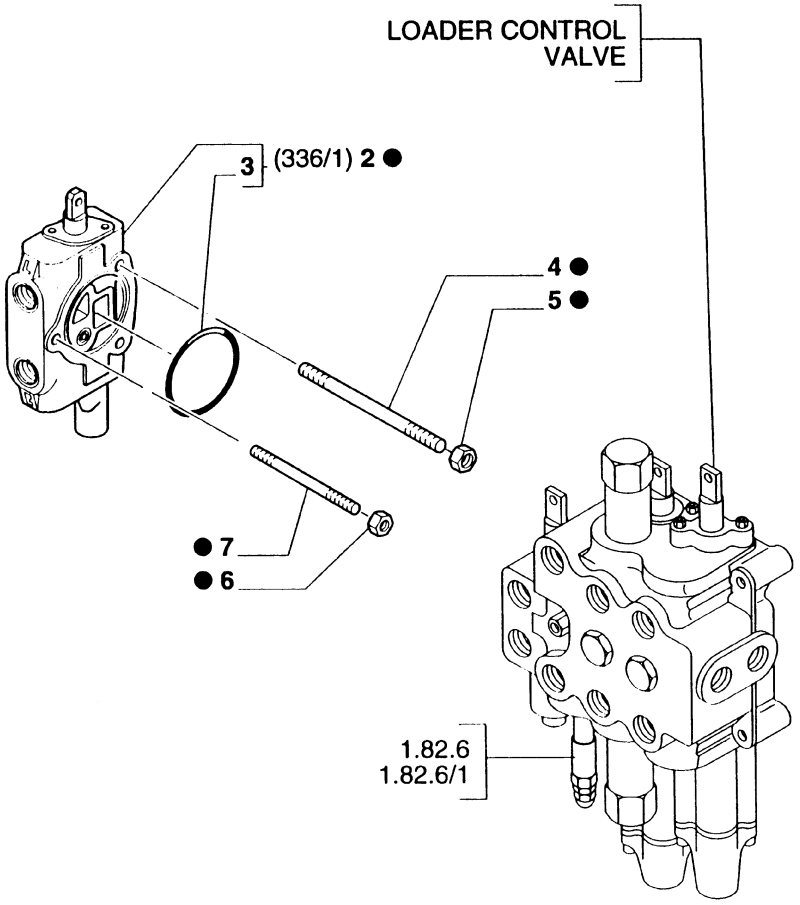

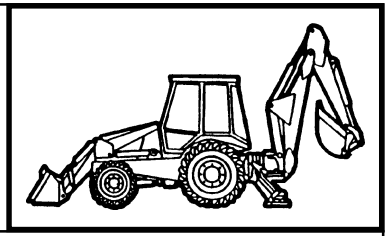

MOD	R	P/N. Imola	P/N. Brazil	Q	Descrição Denominacion	Description Descrizione	L.C.
	1	**85803120**		1	KIT JUEGO	KIT KIT	002K
	2	**9968442**		1	CORPO CUERPO	BODY CORPO	300C
	3	**9968476**		1	O'RING JUNTA TORICA	O'RING GUARNIZIONE O-R	158G
	4	**9968439**		2	PRISIONEIRO ESPARRAGO	STUD PRIGIONIERO	210P
	5	**9968441**		2	PORCA TUERCA	NUT DADO	010D
	6	**9968440**		1	PORCA TUERCA	NUT DADO	010D
	7	**9968438**		1	TIRANTE ROSCADO TIRANTE ROSCADO	TIE-ROD THREADED TIRANTE FILETTATO	141T

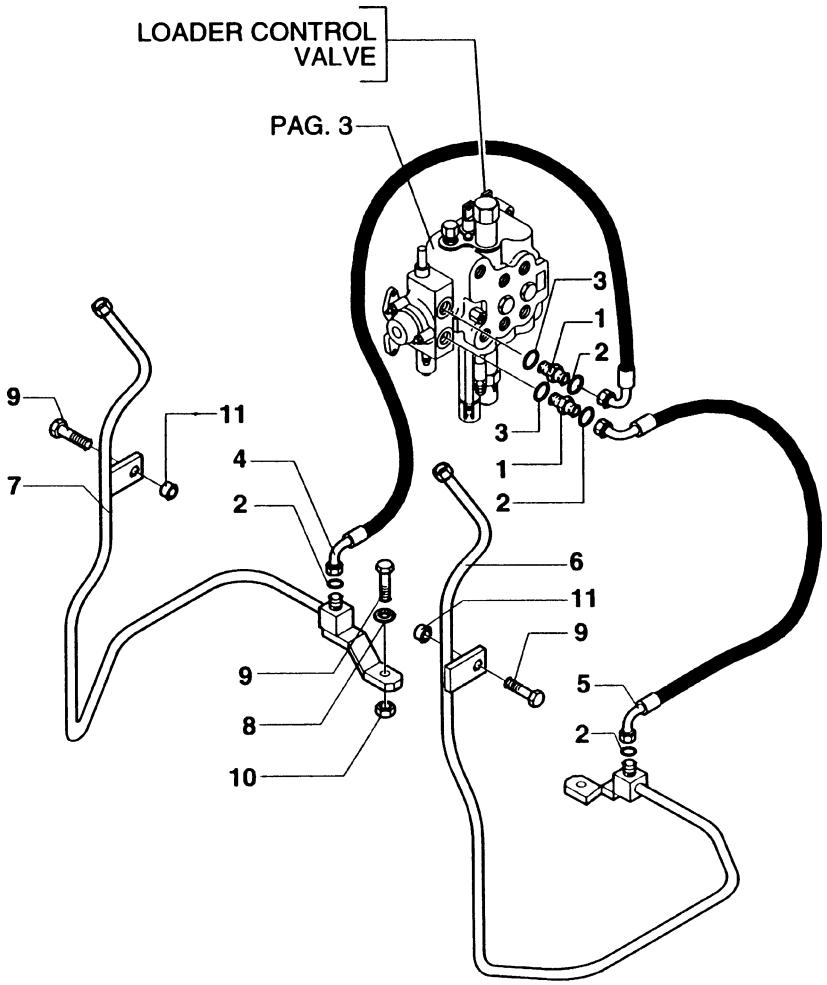

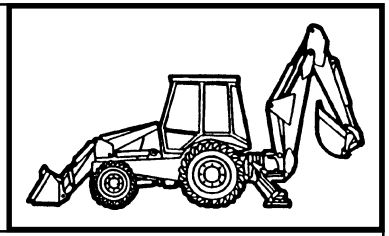

MOD	R	P/N. Imola	P/N. Brazil	Q	Descrição Denominacion	Description Descrizione	L.C.
	1	**83963376**		2	CONEXÃO RACOR	FITTING RACCORDO	020R
	2	**81845038**		4	O'RING JUNTA TORICA	O'RING GUARNIZIONE O-R	158G
	3	**81827365**		2	O'RING JUNTA TORICA	O'RING GUARNIZIONE O-R	158G
	4	**85802879**		1	MANGUEIRA MANGA C/RACORDE	HOSE ASSY TUBO FLESSIBILE	192T
	5	**85802880**		1	MANGUEIRA MANGA C/RACORDE	HOSE ASSY TUBO FLESSIBILE	192T
	6	**85802883**		1	TUBO TUBO	TUBE TUBO RIGIDO	193T
	7	**85802882**		1	TUBO TUBO	TUBE TUBO RIGIDO	193T
	8	**11193974**		1	ARRUELA ARANDELA	WASHER ROSETTA	131R
	9	**16043924**		3	PARAFUSO TORNILLO	SCREW VITE	040V
	10	**16104121**		1	PORCA TUERCA	NUT DADO	010D
	11	**85802891**		2	ESPAÇADOR SEPARADOR	SPACER DISTANZIALE	075D

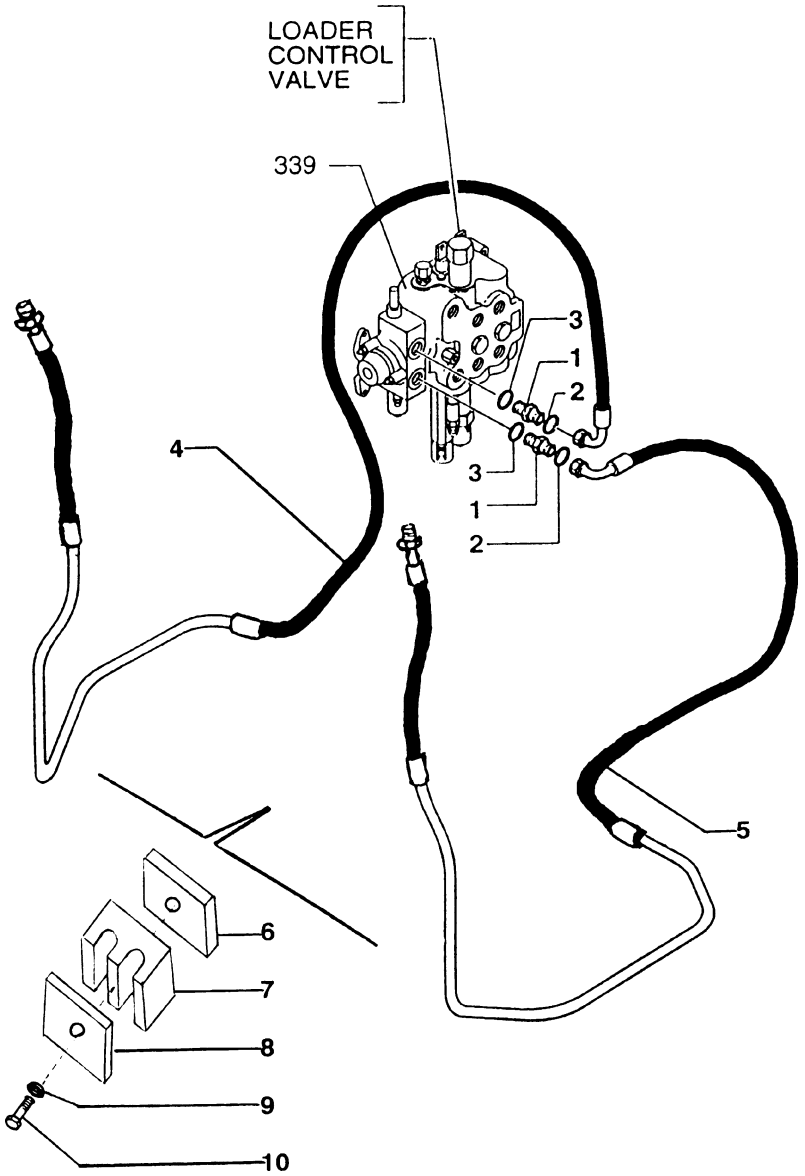

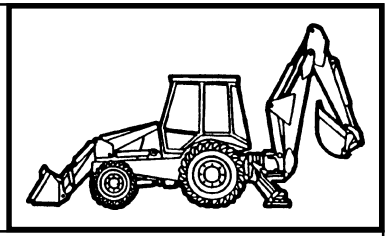

MOD	R	P/N. Imola	P/N. Brazil	Q	Descrição Denominacion	Description Descrizione	L.C.
	1	**83963376**		2	CONEXÃO RACOR	FITTING RACCORDO	020R
	2	**81845038**		4	O'RING JUNTA TORICA	O'RING GUARNIZIONE O-R	158G
	3	**81827365**		2	O'RING JUNTA TORICA	O'RING GUARNIZIONE O-R	158G
	4	**85805863**		1	TUBULAÇÃO TUBERIA	PIPING TUBAZIONI	82GD
	5	**85805862**		1	TUBULAÇÃO TUBERIA	PIPING TUBAZIONI	82GD
	6	**85805340**		2	PLACA PLACA	PLATE PIASTRINA	110P
	7	**85805193**		2	ABRAÇADEIRA ABRAZADERA	CLAMP FASCETTA	031F
	8	**85805195**		2	PLACA PLACA	PLATE PIASTRINA	110P
	9	**11193974**		2	ARRUELA ARANDELA	WASHER ROSETTA	131R
	10	**16043824**		2	PARAFUSO TORNILLO	SCREW VITE	040V

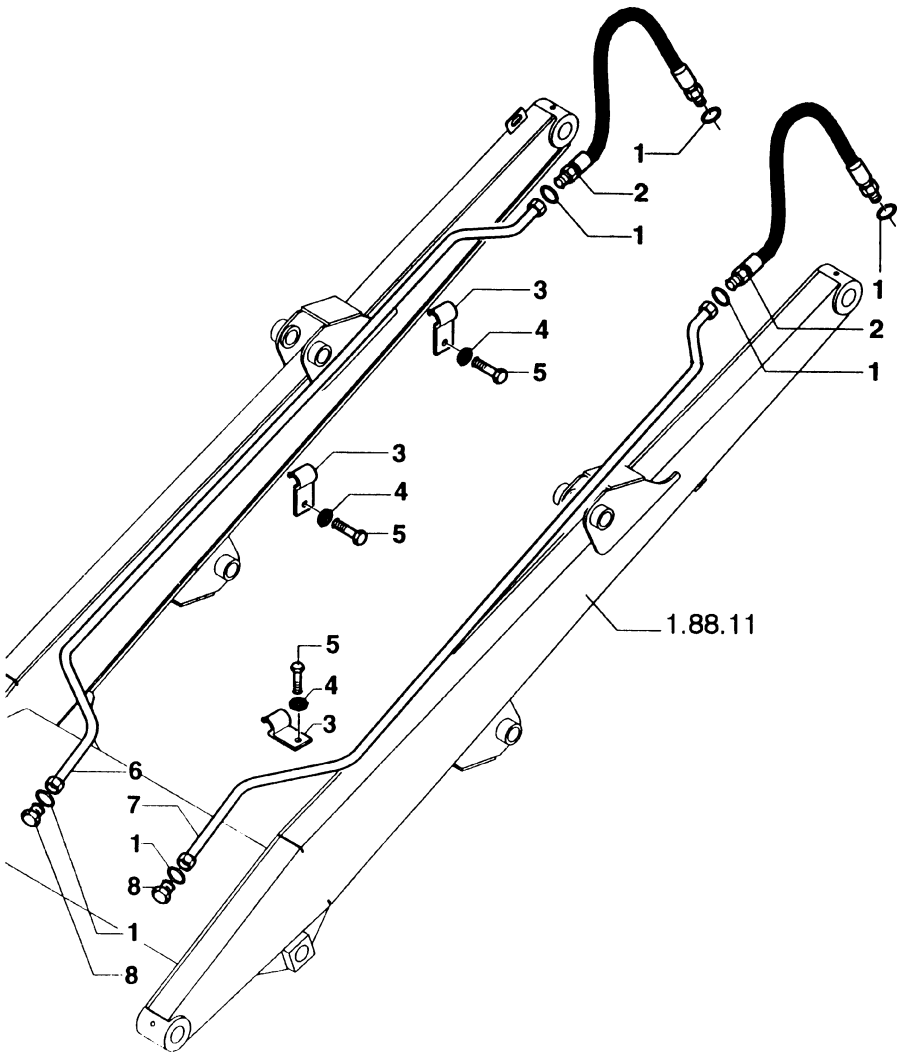

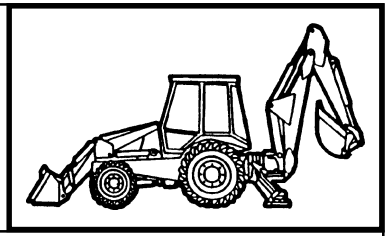

MOD	R	P/N. Imola	P/N. Brazil	Q	Descrição Denominacion	Description Descrizione	L.C.
	1	**81845038**		6	O'RING JUNTA TORICA	O'RING GUARNIZIONE O-R	158G
	2	**85802881**		2	MANGUEIRA MANGA C/RACORDE	HOSE ASSY TUBO FLESSIBILE	192T
	3	**85802892**		3	PRESILHA ABRESADERA	CLIP FERMAGLIO	045F
	4	**11193974**		6	ARRUELA ARANDELA	WASHER ROSETTA	131R
	5	**16044031**		6	PARAFUSO TORNILLO	SCREW VITE	040V
	6	**85805865**		1	TUBO TUBO	TUBE TUBO RIGIDO	193T
	7	**85805864**		1	TUBO TUBO	TUBE TUBO RIGIDO	193T
	8	**85803408**		2	BUJÃO TAPON	PLUG TAPPO	050T

FB80.3 - FB100.3

SISTEMA HIDRAULICO DA CAÇAMBA 4x1 / 6x1
CIRCUITO HIDRAULICO DEL CUCHARON 4x1 / 6x1
HYDRAULIC SYSTEM FOR BUCKET 4x1 / 6x1
IMPIANTO IDRAULICO COMPLETO BENNA 4x1 / 6x1

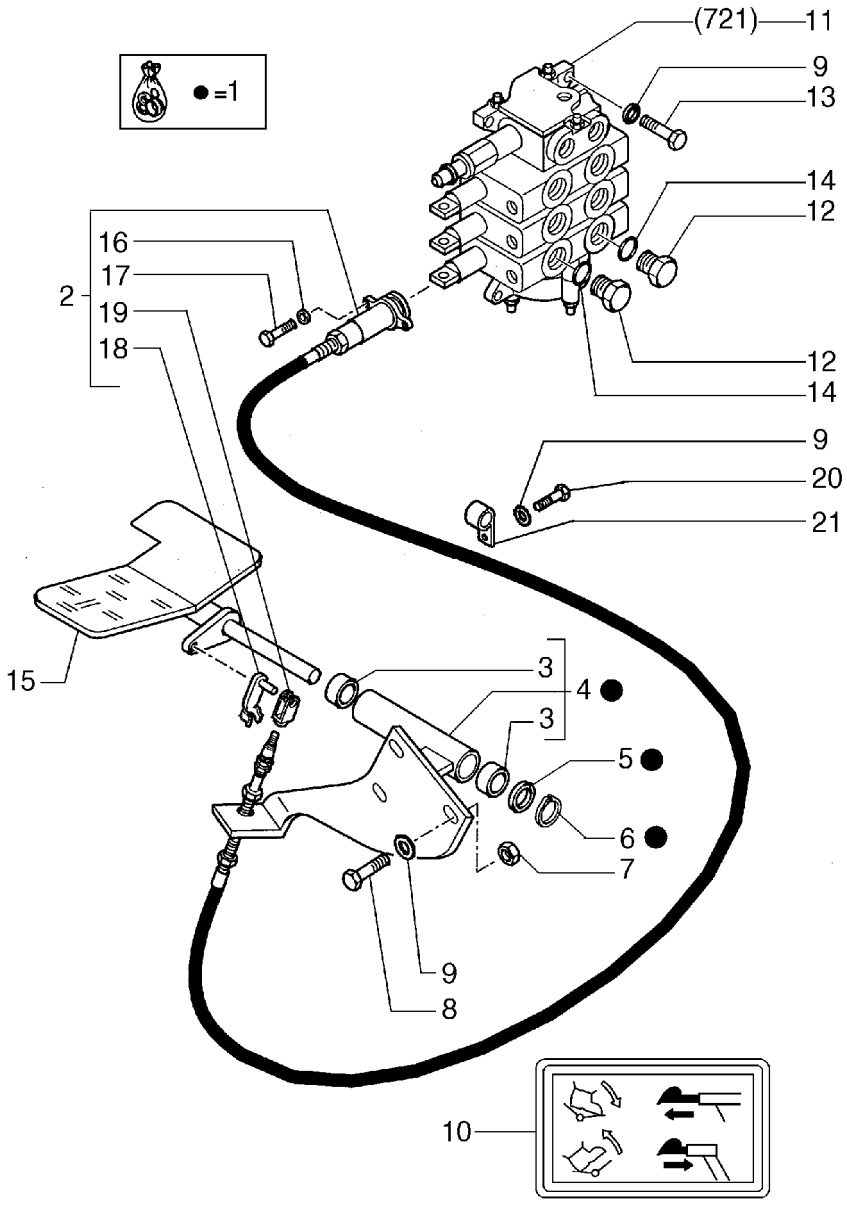

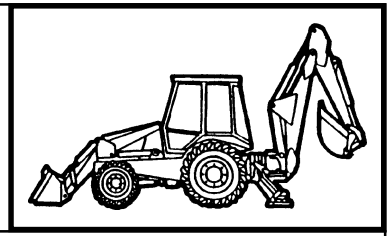

MOD	R	P/N. Imola	P/N. Brazil	Q	Descrição Denominacion	Description Descrizione	L.C.
	1	**85802509**		1	PEDAL PEDAL	PEDAL PEDALE	060P
	2	**85813103**		2	CABO FLEXIVEL CABLE FLEXIBLE	FLEXIBLE SHAFT TRASMISSIONE FL	165T
	3	**85802494**		2	BUCHA BUJE	BUSHING BOCCOLA	095B
	4	**85801599**		1	SUPORTE SOPORTE	SUPPORT SUPPORTO	300S
	5	**14496921**		1	ARRUELA ARANDELA	WASHER ROSETTA	131R
	6	**83911366**		1	ANEL ELÅSTICO ANILLO ELASTICO	SNAP RING ANELLO ELASTICO	187A
	7	**16104121**		3	PORCA TUERCA	NUT DADO	010D
	8	**16043621**		3	PARAFUSO TORNILLO	SCREW VITE	040V
	9		**70929662**	3	ARRUELA PRESSÃO ARANDELA ELAST.	LOCKWASHER ROSETTA ELAST.	170R
	10	**85803786**		1	ADESIVO CALCOMANIA	DECAL TARGA	065T
	12	**85802955**		2	BUJÃO TAPON	PLUG TAPPO	050T
	13	**16043931**		3	PARAFUSO TORNILLO	SCREW VITE	040V
	14	**81832258**		2	RETENTOR JUNTA	SEAL GUARNIZIONE	122G
	15	**85802510**		1	PEDAL PEDAL	PEDAL PEDALE	060P
	16	**85813201**		4	ARRUELA ARANDELA	WASHER ROSETTA	131R
	17	**85813200**		4	PARAFUSO TORNILLO	SCREW VITE	040V
	18	**85813186**		2	ABRAÇADEIRA ABRAZADERA	CLAMP FASCETTA	031F
	19	**85813187**		2	FORQUILHA HORQUILLA	YOKE FORCELLA	085F
	20	**16043621**		1	PARAFUSO TORNILLO	SCREW VITE	040V
	21	**85803393**		1	ABRAÇADEIRA ABRAZADERA	CLAMP FASCETT	031F

FB80.3 - FB100.3

PREDISPOSIÇÃO DO SISTEMA HIDRAULICO DO BRAÇO TELESCÓPICO COMANDO DO PEDAL
PREPARACION DEL CIRCUITO HIDRAULICO BRAZOS TELESCOPICOS MANDO A PEDAL
HYDRAULIC SYSTEM PRESETTING FOR TELESCOPIC LINKS PEDAL OPERATED
PREDISPOSIZIONE IMPIANTO IDRAULICO BRACCI TELESCOPOCI COMANDO A PEDALE

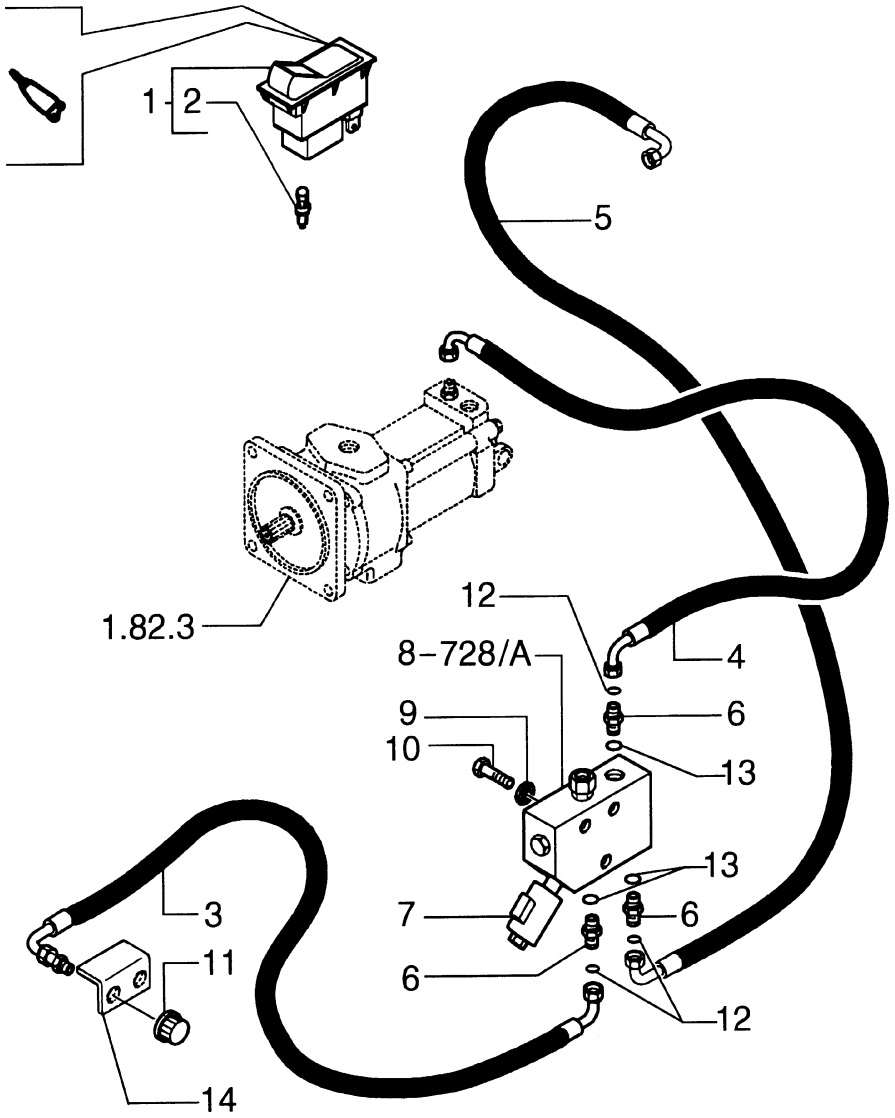

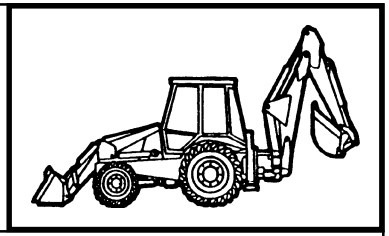

MOD	R	P/N. Imola	P/N. Brazil	Q	Descrição Denominacion	Description Descrizione	L.C.
	1	**85819072**		1	INTERRUPTOR INTERRUPTOR	SWITCH INTERRUTTORE	075I
	2	**14143790**		1	LÂMPADA LAMPARA	LAMP LAMPADA	030L
	3	**85812184**		1	MANGUEIRA MANGA C/RACORDE	HOSE ASSY TUBO FLESSIBILE	192T
	4	**85817236**		1	MANGUEIRA MANGA C/RACORDE	HOSE ASSY TUBO FLESSIBILE	192T
	5	**85819215**		1	MANGUEIRA MANGA C/RACORDE	HOSE ASSY TUBO FLESSIBILE	192T
	6	**85803234**		3	CONEXÃO RACOR	FITTING RACCORDO	020R
	7	**85801211**		1	SOLENÓIDE SOLENOIDE	SOLENOID ELETTROMAGNETE	030E
	8	**85801209**		1	VÁLVULA VALVULA	VALVE VALVOLA	010V
	9	**11190871**		3	ARRUELA ARANDELA	WASHER ROSETTA	131R
	10	**16044331**		3	PARAFUSO TORNILLO	SCREW VITE	040V
	11	**83987627**		1	BUJÃO TAPON	PLUG TAPPO	050T
	12	**70930357**		3	O'RING JUNTA TORICA	O'RING GUARNIZIONE O-R	158G
	13	**70921349**		3	O'RING JUNTA TORICA	O'RING GUARNIZIONE O-R	158G
	14		**75280414**	1	CHAPA PLACA	PLATE PIASTRA	105P

FB80.3 - FB100.3

MARTELO MANUAL
MARTILLO DE MANO
MANUAL HAMMER
MARTELLO A MANO

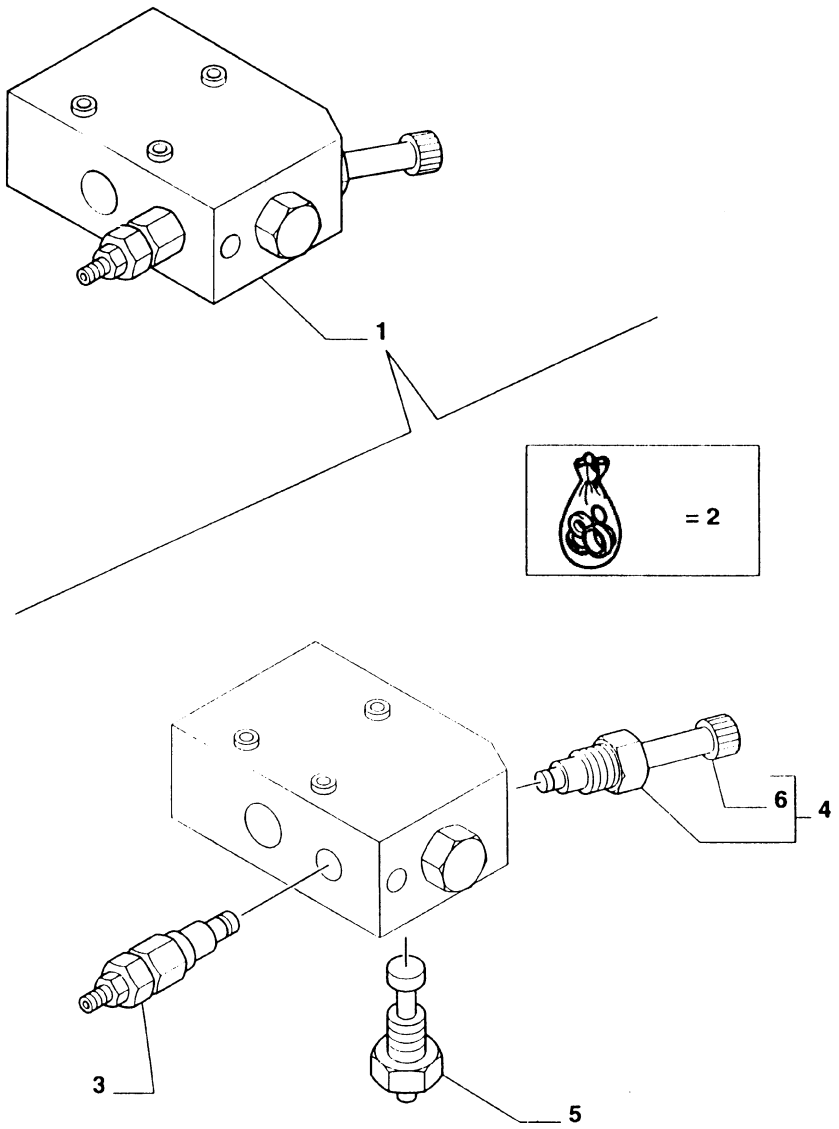

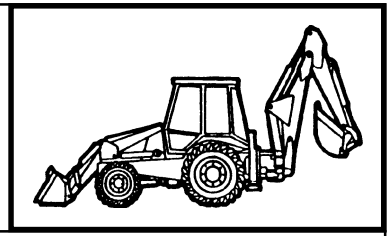

MOD	R	P/N. Imola	P/N. Brazil	Q	Descrição Denominacion	Description Descrizione	L.C.
	1	**85801209**		1	VÁLVULA VALVULA	VALVE VALVOLA	010V
	2	**9970382**		1	KIT JUEGO	KIT KIT	002K
	3	**9970178**		1	VÁLVULA VALVULA	VALVE VALVOLA	010V
	4	**9970180**		1	VÁLVULA VALVULA	VALVE VALVOLA	010V
	5	**9970383**		1	VÁLVULA VALVULA	VALVE VALVOLA	010V
	6	**9970384**		1	PORCA TUERCA	NUT DADO	010D

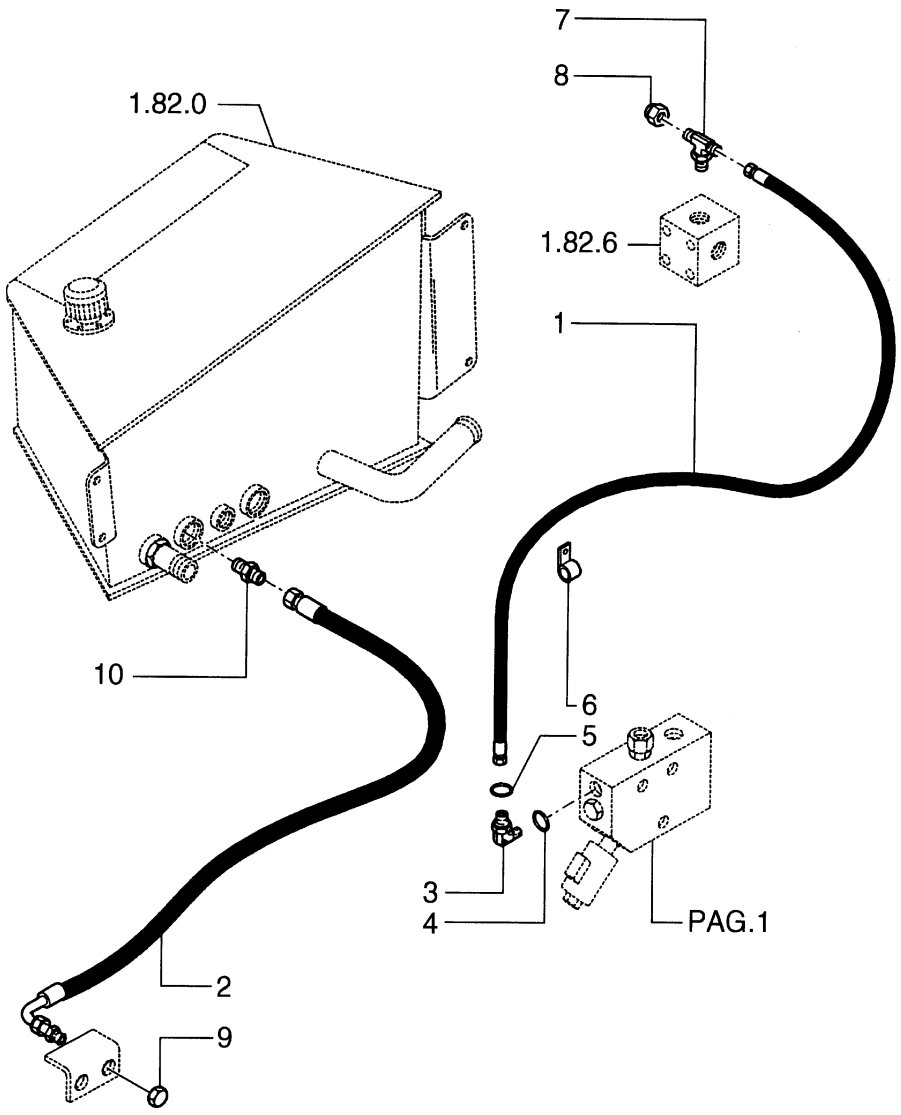

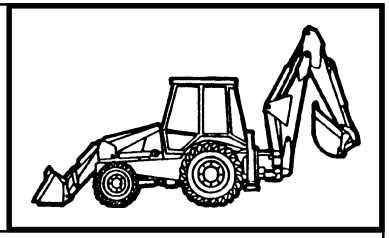

MOD	R	P/N. Imola	P/N. Brazil	Q	Descrição Denominacion	Description Descrizione	L.C.
	1	**85803230**		1	MANGUEIRA MANGA C/RACORDE	HOSE ASSY TUBO FLESSIBILE	192T
	2	**85803231**		1	MANGUEIRA MANGA C/RACORDE	HOSE ASSY TUBO FLESSIBILE	192T
	3	**89840543**		2	CONEXÃO RACOR	FITTING RACCORDO	020R
	4	**89617873**		1	O'RING JUNTA TORICA	O'RING GUARNIZIONE O-R	158G
	5	**81844851**		1	O'RING JUNTA TORICA	O'RING GUARNIZIONE O-R	158G
	6	**85803393**		1	ABRAÇADEIRA ABRAZADERA	CLAMP FASCETTA	031F
	7	**85802780**		1	CONEXÃO RACOR	FITTING RACCORDO	020R
	8	**9840575**		1	BUJÃO TAPON	PLUG TAPPO	050T
	9	**83987627**		1	BUJÃO TAPON	PLUG TAPPO	050T
	10	**85803241**		1	CONEXÃO RACOR	FITTING RACCORDO	020R

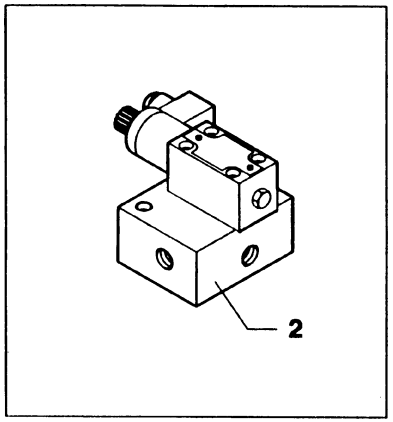

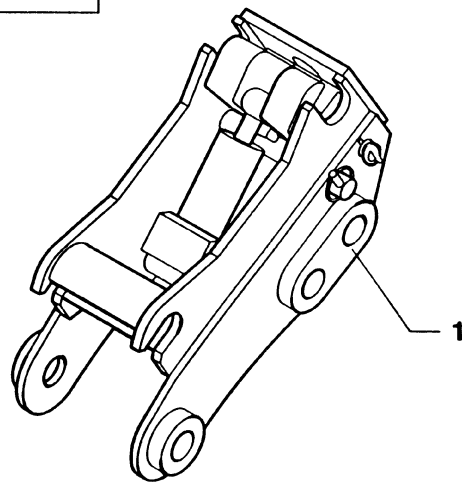

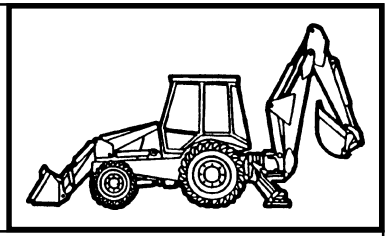

MOD	R	P/N. Imola	P/N. Brazil	Q	Descrição Denominacion	Description Descrizione	L.C.
	1	**85801539**		1	ENGATE RAPIDO ENCHUFE RAPIDO	QUICK COUPLING ATTACCO RAPIDO	1130
	2	**85801543**		1	ELETRO-VÁLVULA VALVULA ELECTRA	ELECTRO-VALVE ELETRROVALVOLA	032E

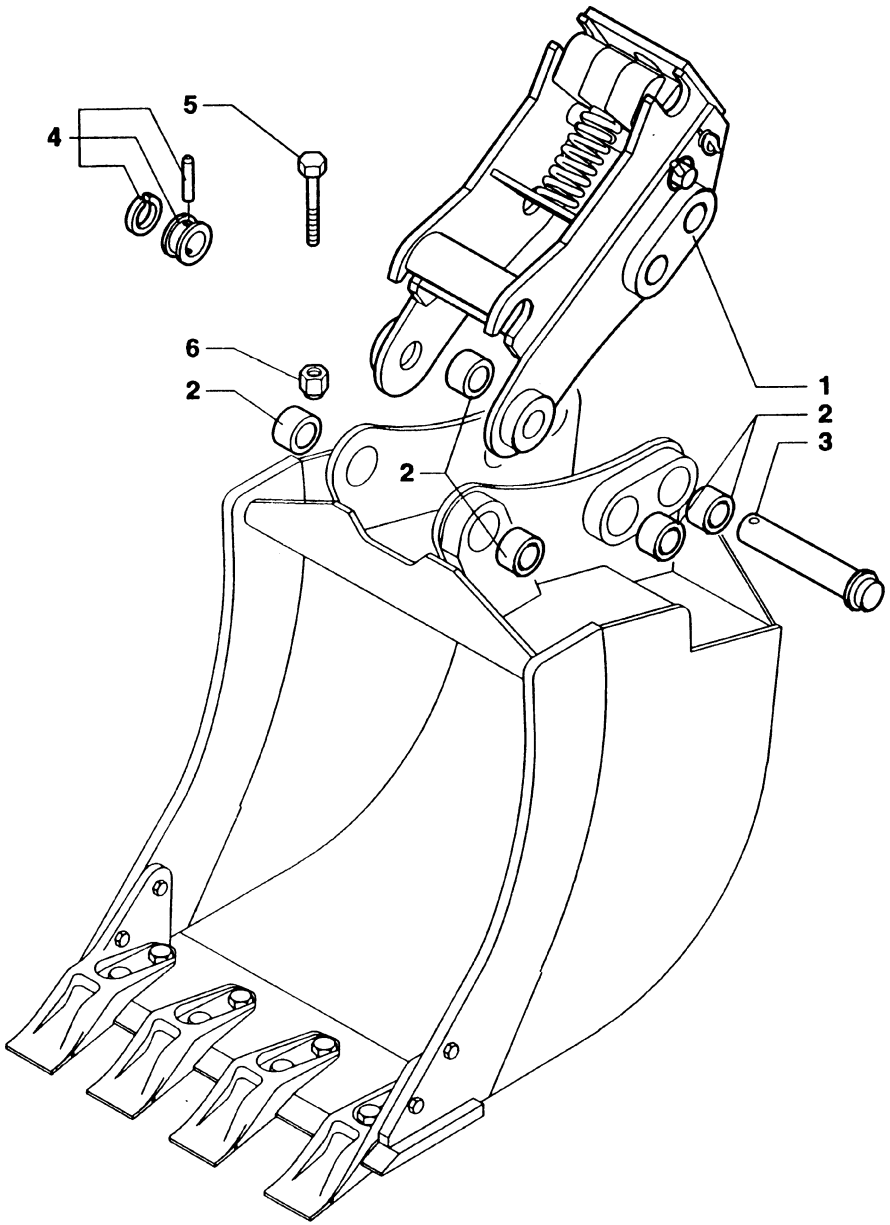

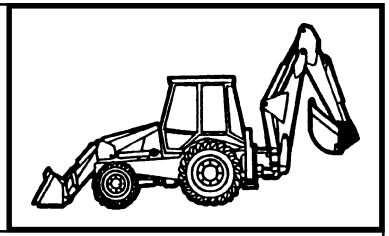

MOD	R	P/N. Imola	P/N. Brazil	Q	Descrição Denominacion	Description Descrizione	L.C.
	1	**85801542**		1	ENGATE RAPIDO ENCHUFE RAPIDO	QUICK COUPLING ATTACCO RAPIDO	1130
	2	**83910634**		6	BUCHA BUJE	BUSHING BOCCOLA	095B
	3	**85803005**		2	PINO BULON	PIN PERNO	080P
	4	**85802975**		2	PINO BULON	PIN PERNO	080P
	5	**15972031**		2	PARAFUSO TORNILLO	SCREW VITE	040V
	6	**12574511**	**12574521**	2	PORCA TUERCA	NUT DADO	010D

12

FB80.3 - FB100.3

ENGATE RÁPIDO MECÂNICO DA RETRO
EMPALME RAPIDO MECANICO PARTE TRASERA
REAR MECHANICAL QUICK-COUPLING
ATTACCO RAPIDO MECCANICO RETRO

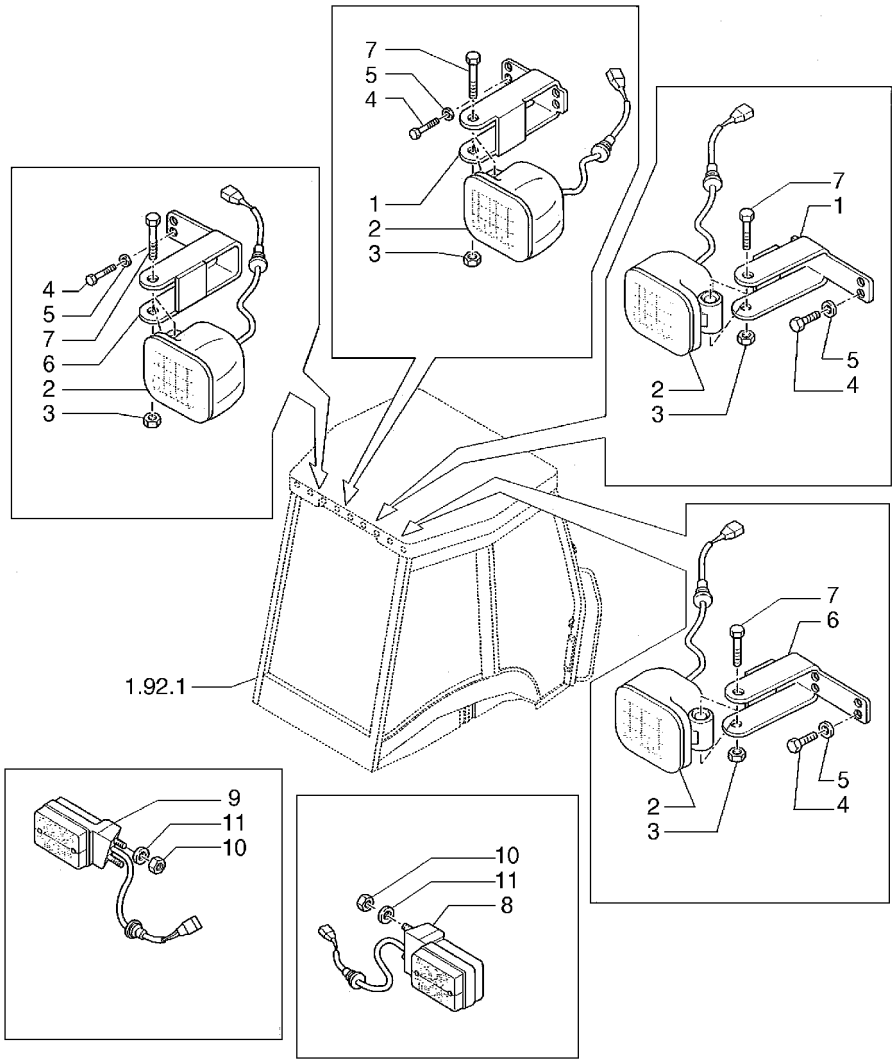

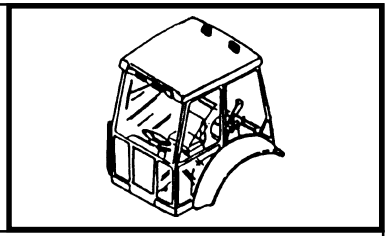

MOD	R	P/N. Imola	P/N. Brazil	Q	Descrição Denominacion	Description Descrizione	L.C.
	1	**85819192**		2	SUPORTE SOPORTE	SUPPORT SUPPORTO	300S
	2	**85819200**		4	FAROL PROYECTOR	FLOODLIGHT PROIETTORE	220P
	3	**16104111**		4	PORCA TUERCA	NUT DADO	010D
	4	**10902131**		8	PARAFUSO TORNILLO	SCREW VITE	040V
	5	**11197774**		8	ARRUELA ARANDELA	WASHER ROSETTA	131R
	6	**85819194**		2	SUPORTE SOPORTE	SUPPORT SUPPORTO	300S
	7	**16044324**		4	PARAFUSO TORNILLO	SCREW VITE	040V
	8	**85819198**		1	LUZ POSTERIOR LUZ POSTERIOR	TAIL LAMP ASSY REA FANALE POSTERIOR	013F
	9	**85819199**		1	LUZ POSTERIOR LUZ POSTERIOR	TAIL LAMP ASSY REA FANALE POSTERIOR	013F
	10	**12574111**		4	PORCA TUERCA	NUT DADO	010D
	11	**12637804**		4	ARRUELA ARANDELA	WASHER ROSETTA	131R

FB80.3 - FB100.3

FAROIS DE SERVIÇO
TRABAJO LAMPARAS
WORKLAMPS
FANALI DI LAVORO

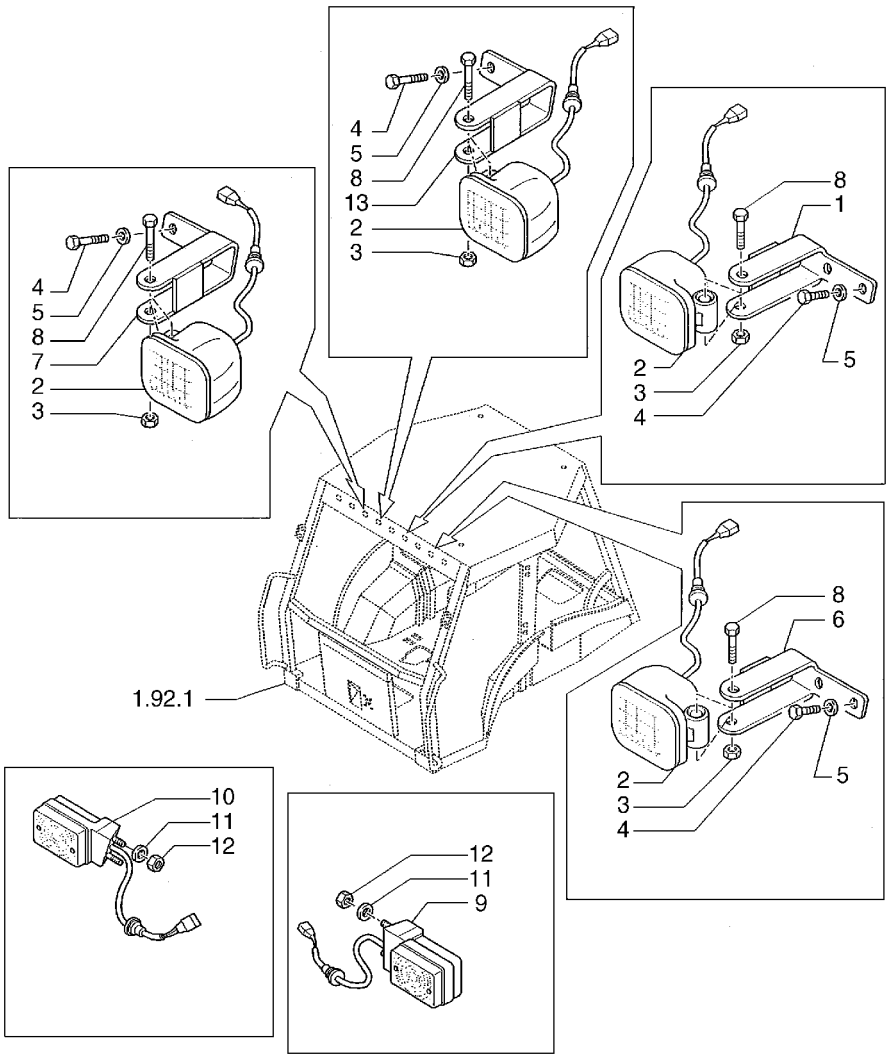

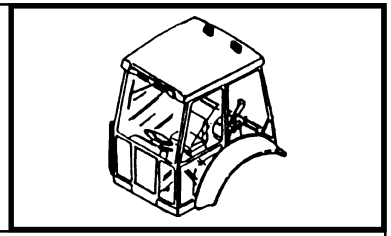

MOD	R	P/N. Imola	P/N. Brazil	Q	Descrição Denominacion	Description Descrizione	L.C.
	1	**85819189**		1	SUPORTE SOPORTE	SUPPORT SUPPORTO	300S
	2	**85819200**		4	FAROL PROYECTOR	FLOODLIGHT PROIETTORE	220P
	3	**16104111**		4	PORCA TUERCA	NUT DADO	010D
	4	**10902124**		8	PARAFUSO TORNILLO	SCREW VITE	040V
	5	**11197774**		8	ARRUELA ARANDELA	WASHER ROSETTA	131R
	6	**85819191**		1	SUPORTE SOPORTE	SUPPORT SUPPORTO	300S
	7	**85819190**		1	SUPORTE SOPORTE	SUPPORT SUPPORTO	300S
	8	**16044324**		4	PARAFUSO TORNILLO	SCREW VITE	040V
	9	**85819197**		1	FAROL DIANTEIRO FARO DELANTERO	LAMP, FRONT FANALE ANTERIORE	010F
	10	**85819196**		1	FAROL DIANTEIRO FARO DELANTERO	LAMP, FRONT FANALE ANTERIORE	010F
	11	**12637804**		4	ARRUELA ARANDELA	WASHER ROSETTA	131R
	12	**12574111**		4	PORCA TUERCA	NUT DADO	010D
	13	**85819188**		1	SUPORTE SOPORTE	SUPPORT SUPPORTO	300S

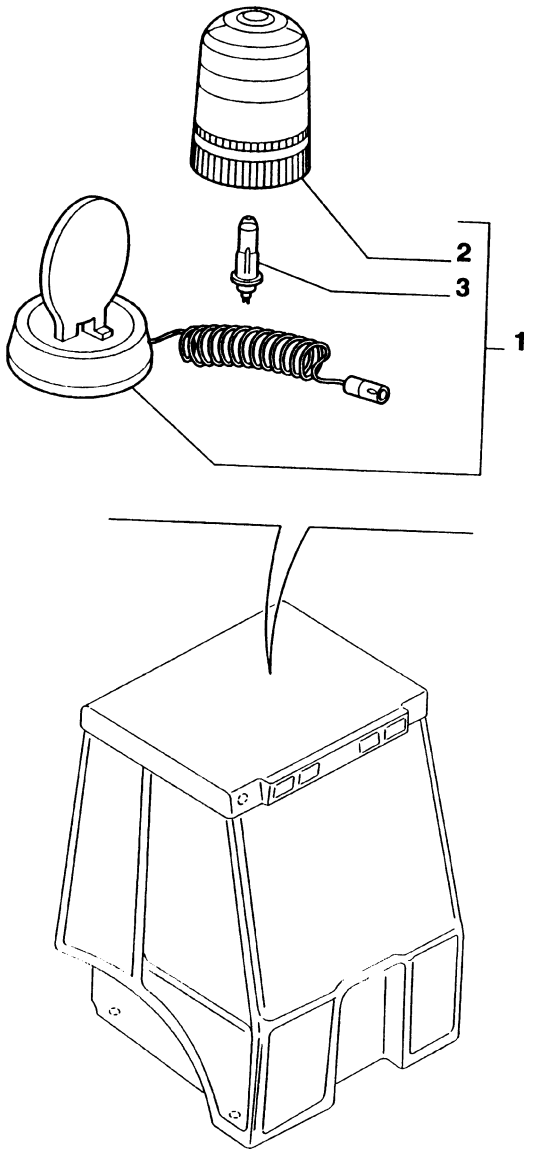

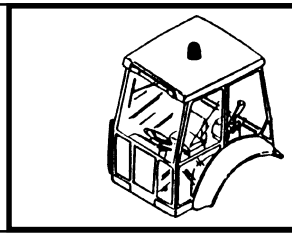

MOD	R	P/N. Imola	P/N. Brazil	Q	Descrição Denominacion	Description Descrizione	L.C.
	1	**2010665**	**83982818**	1	FAROL ROTATIVO LUZ GIRATORIA	ROTARY BEACON LUCE ROTANTE	080L
	2	**2010668**		1	LENTE TRANSLUCIDO	LENS TRASPARENTE	170T
	3	**14151195**		1	LÂMPADA LAMPARA	LAMP LAMPADA	030L

FB80.3 - FB100.3

FAROL ROTATIVO
FARO DE ROTACION
ROTATING BEACON
LAMPADA ROTANTE

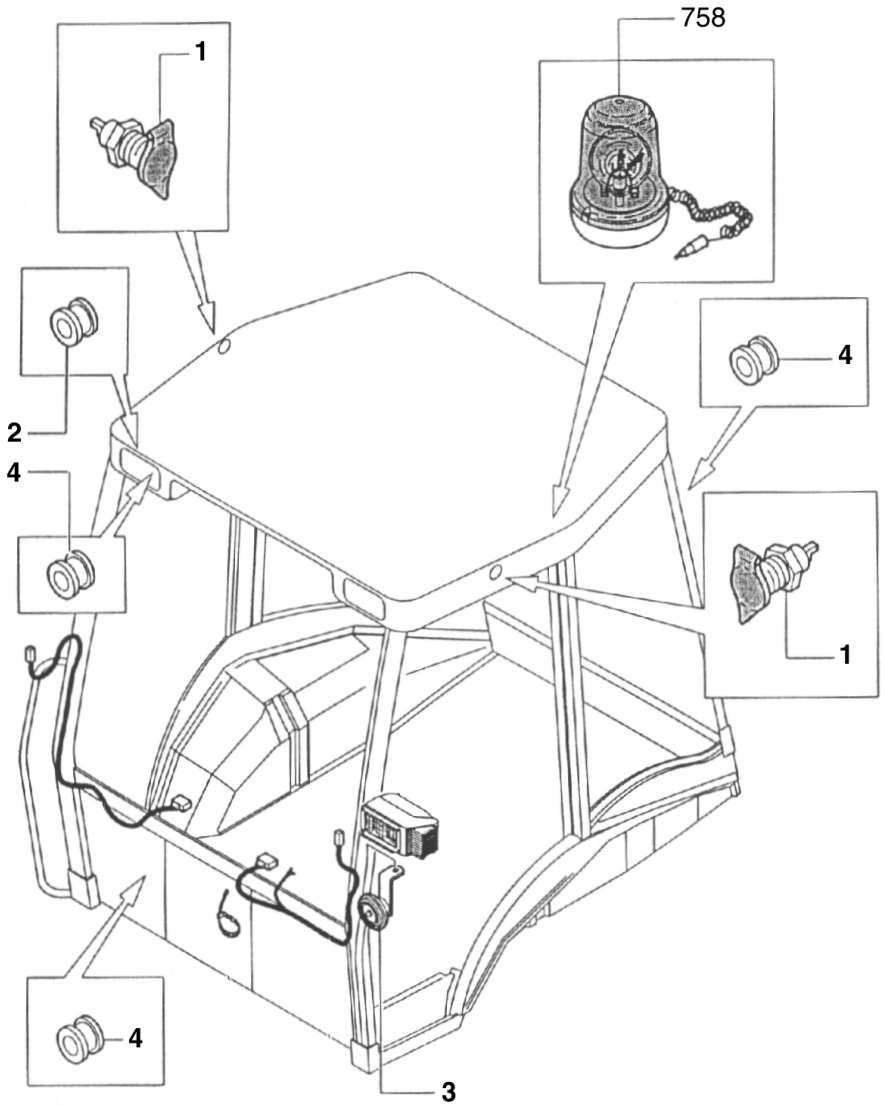

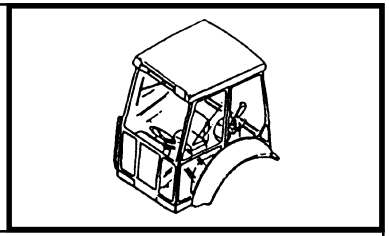

MOD	R	P/N. Imola	P/N. Brazil	Q	Descrição Denominacion	Description Descrizione	L.C.
	1	**82002966**		2	INTERRUPTOR INTERRUPTOR	SWITCH INTERRUTTORE	075I
	2	**10398980**		2	CABO ELETRICO CABLE	CABLE CAVO	111C
	3	**5169413**		1	BUZINA BOCINA	HORN AVVISAT ACUST.	105A
	4	**10398680**		6	ANEL ISOLANTE ANILLO AISLADOR	INSULATING RING ANELLO ISOLANTE	049A

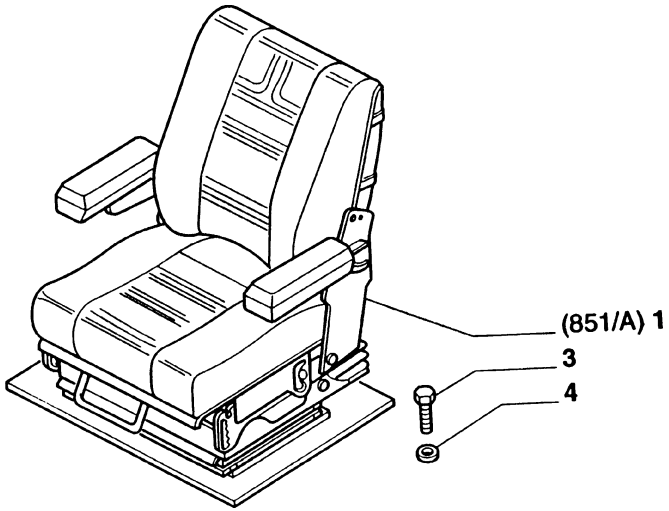

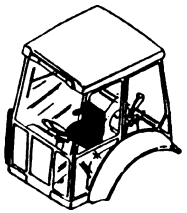

MOD	R	P/N. Imola	P/N. Brazil	Q	Descrição Denominacion	Description Descrizione	L.C.
	1	**85803349**		1	ASSENTO ASIENTO	SEAT SEDILE	080S
	3	**16043424**		8	PARAFUSO TORNILLO	SCREW VITE	040V
	4	**11198071**		8	ARRUELA ARANDELA	WASHER ROSETTA	131R

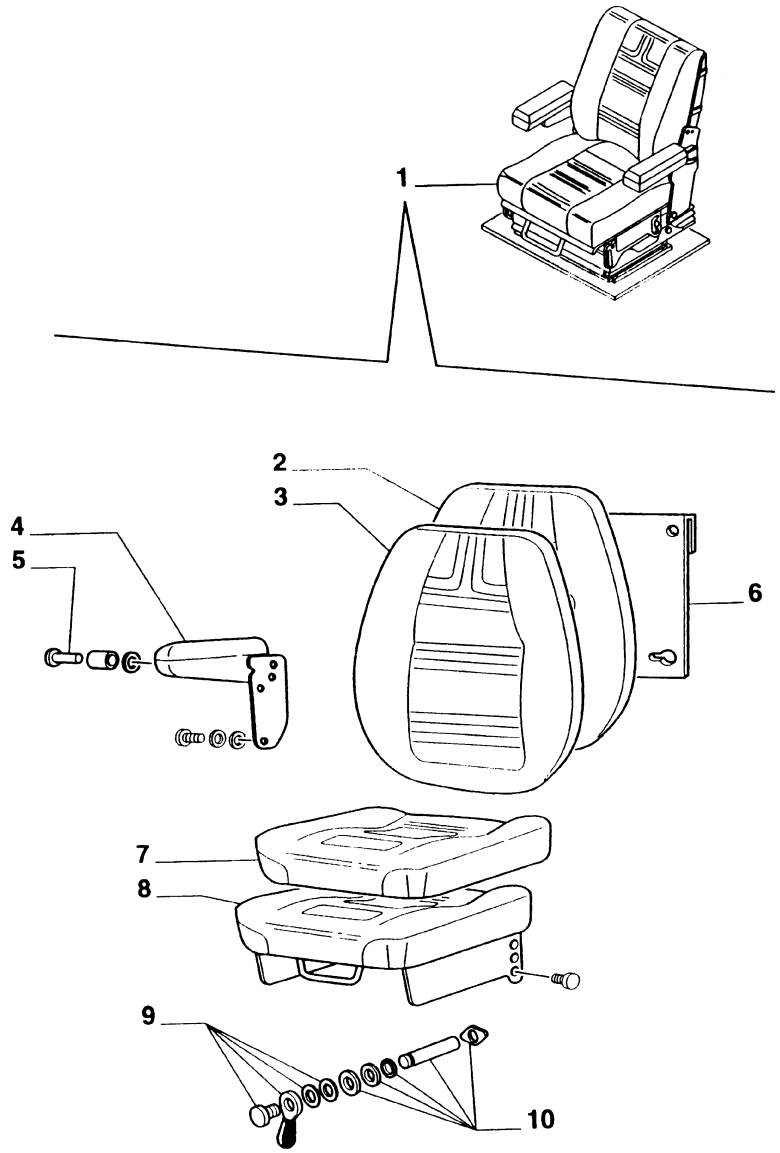

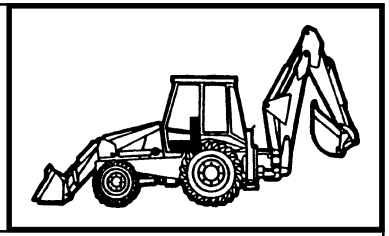

MOD	R	P/N. Imola	P/N. Brazil	Q	Descrição Denominacion	Description Descrizione	L.C.
	1	**85803349**		1	ASSENTO ASIENTO	SEAT SEDILE	080S
	2	**9968930**		1	REVESTIMENTO REVESTIMIENTO	COVERING RIVESTIMENTO	116R
	3	**9968932**		1	COBERTURA COBERTURA	COVER COPERTURA	271C
	4	**9968949**		1	APOIA BRAÇO APOIABRAZO	ARMREST BRACCIOLO SED.	124B
	5	**9968951**		1	KIT JUEGO	KIT KIT	002K
	6	**9968934**		1	BOLSA DE DOCUMENTOS BOLSA PORTA	BRIEF CASE BORSA PORTA	109B
	7	**9968935**		1	COBERTURA COBERTURA	COVER COPERTURA	271C
	8	**9968937**		1	REVESTIMENTO REVESTIMIENTO	COVERING RIVESTIMENTO	116R
	9	**82845166**		1	ALÇA MANIJA	HANDLE MANIGLIA	020M
	10	**82845165**		1	PRISIONEIRO ESPARRAGO	STUD PRIGIONIERO	210P

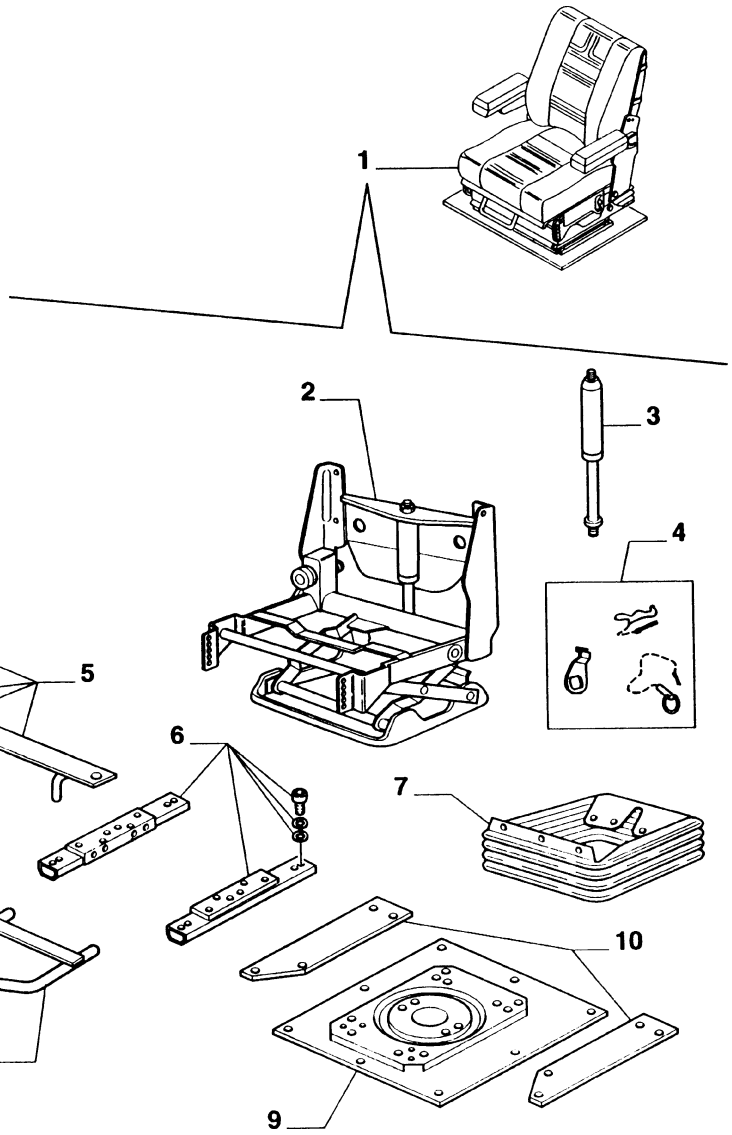

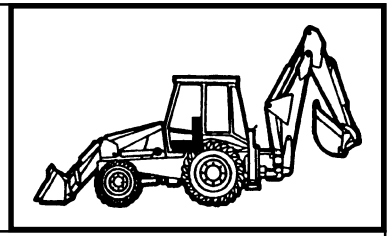

MOD	R	P/N. Imola	P/N. Brazil	Q	Descrição Denominacion	Description Descrizione	L.C.
	1	**85815543**		1	ASSENTO ASIENTO	SEAT SEDILE	080S
	2	**9968942**		1	SUSPENSÃO SUSPENCION	SUSPENSION SOSPENSIONE	172S
	3	**83925522**		1	AMORTECEDOR VIBRAÇ AMORT. VIBRAC.	DAMPER SMORZATORE	164S
	4	**82845164**		1	AJUSTADOR AFINADOR	ADJUSTER ATTREZZO	118A
	5	**9968948**		1	CHAPA PLACA	PLATE PIASTRA	105P
	6	**9968945**		1	KIT JUEGO	KIT KIT	002K
	7	**9968947**		1	COIFA PARA PÓ CAPUCHA	DUST BOOT CUFFIA PARAPOLV	334C
	8	**9968950**		1	ALAVANCA PALANCA	LEVER LEVA	045L
	9	**9968943**		1	KIT JUEGO	KIT KIT	002K
	10	**9968944**		1	KIT JUEGO	KIT KIT	002K

* ATÉ O CHASSI

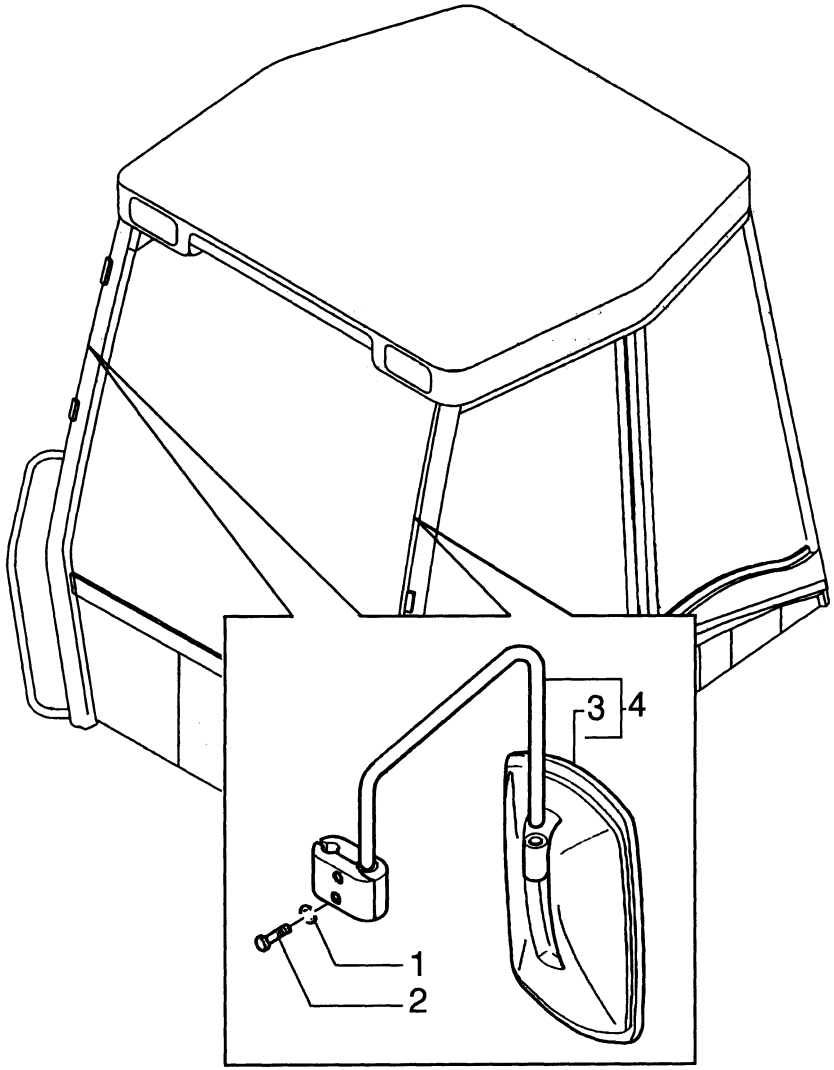

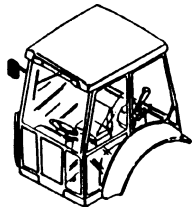

MOD	R	P/N. Imola	P/N. Brazil	Q	Descrição Denominacion	Description Descrizione	L.C.
	1	**11193274**		4	ARRUELA ARANDELA	WASHER ROSETTA	131R
	2	**10902124**		4	PARAFUSO TORNILLO	SCREW VITE	040V
	3	**85820138**		2	CARTER CARTER ACEITE	SUMP COPPA	275C
	4	**85820136**		1	ESPELHO RETROVI	OUTSIDE REAR VI SPECCHIO RETROV	0613
	4	**85820139**		1	ESPELHO RETROVI	OUTSIDE REAR VI SPECCHIO RETROV	0613

12

FB80.3 - FB100.3

CABINE / ESPELHO RETROVISOR DIREITO
CABINA / ESPEJO RETROVISOR
CAB / REAR-VIEW MIRROR R.H.
CABINA / SPECCHIO RETROVISORE

878

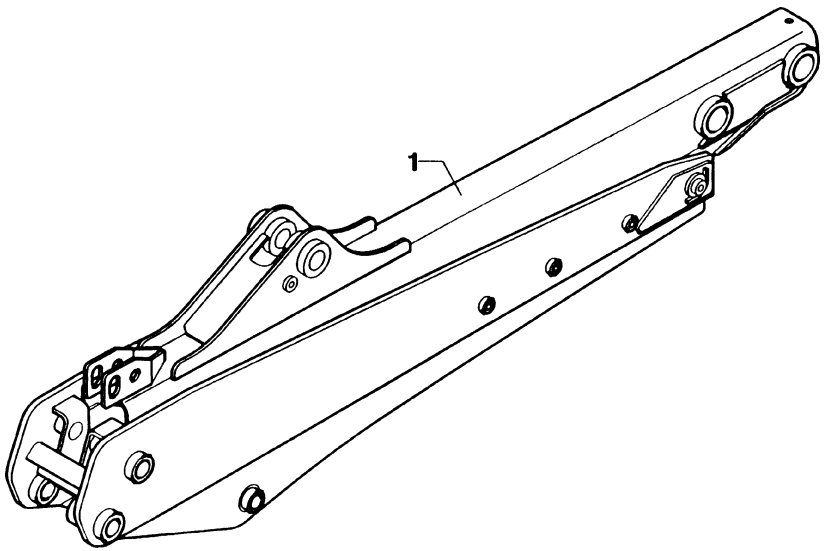

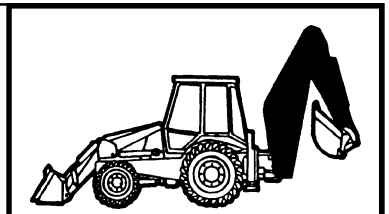

MOD	R	P/N. Imola	P/N. Brazil	Q	Descrição Denominacion	Description Descrizione	L.C.
	1	**85803655**		1	BRAÇO BRAZO	ARM BRACCIO	130B

12

FB80.3 - FB100.3

BRAÇO TELESCOPICO CURTO
BRAZO TELESCOPICO CORTO
SHORT TELESCOPIC ARM
BRACCIO TELESCOPICO CORTO

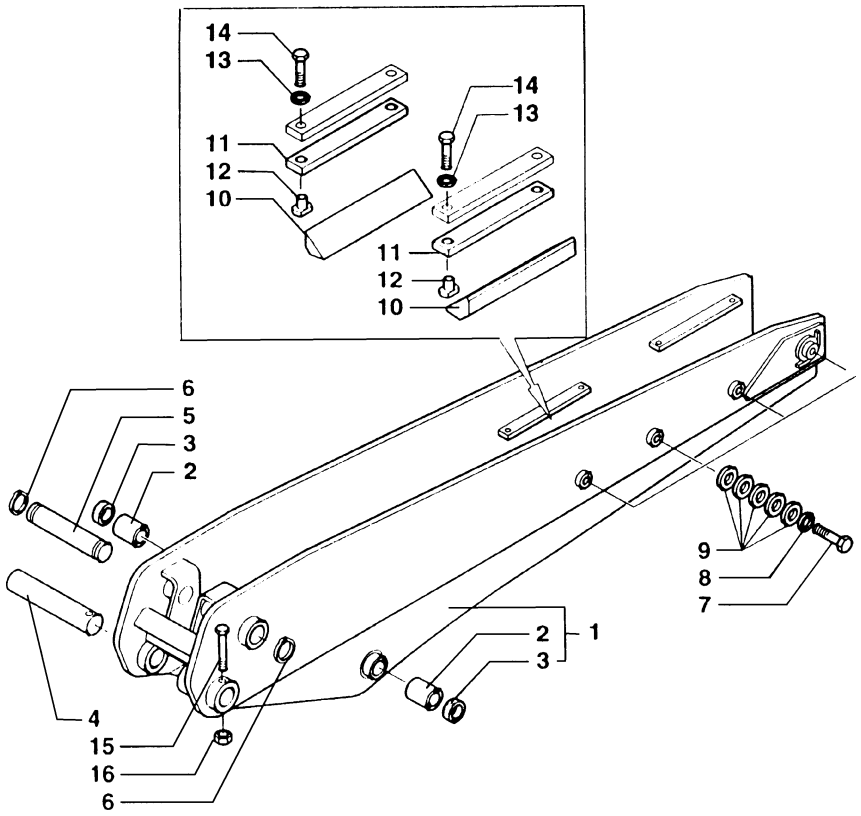

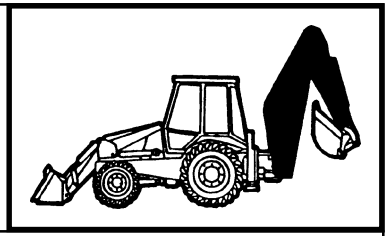

MOD	R	P/N. Imola	P/N. Brazil	Q	Descrição Denominacion	Description Descrizione	L.C.
	1	**85801257**		1	BRAÇO BRAZO	ARM BRACCIO	130B
	2	**83910546**		2	BUCHA BUJE	BUSHING BOCCOLA	095B
	3	**89824067**		2	RETENTOR JUNTA	SEAL GUARNIZIONE	122G
	4	**85801310**		1	PINO BULON	PIN PERNO	080P
	5	**85801309**		1	PINO BULON	PIN PERNO	080P
	6	**83911019**		1	ANEL ELÁSTICO ANILLO ELASTICO	SNAP RING ANELLO ELASTICO	187A
	7	**11124421**		8	PARAFUSO TORNILLO	SCREW VITE	040V
	8	**14497121**		8	ARRUELA ARANDELA	WASHER ROSETTA	131R
	9	**85801307**		40	ARRUELA ARANDELA	WASHER ROSETTA	131R
	10	**85801305**		4	GUIA PATIN	PAD PATTINO	045P
	11	**85801306**		4	GUIA PATIN	PAD PATTINO	045P
	12	**85803029**		8	PORCA TUERCA	NUT DADO	010D
	13	**11197979**		8	ARRUELA ARANDELA	WASHER ROSETTA	131R
	14	**85804373**		8	PARAFUSO TORNILLO	SCREW VITE	040V
	15	**14332521**		1	PARAFUSO TORNILLO	SCREW VITE	040V
	16	**16105021**		1	PORCA TUERCA	NUT DADO	010D

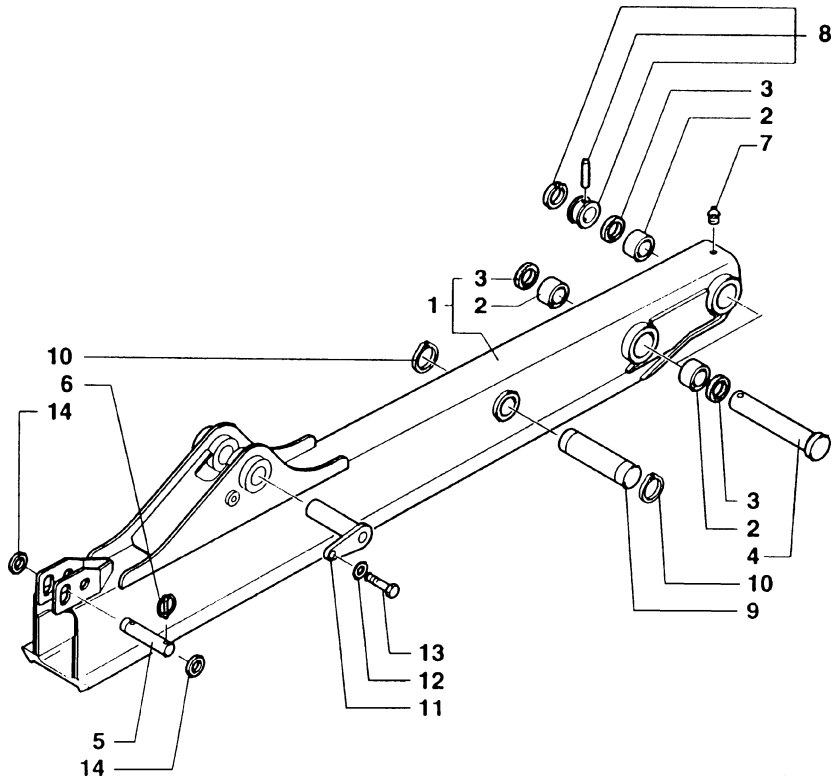

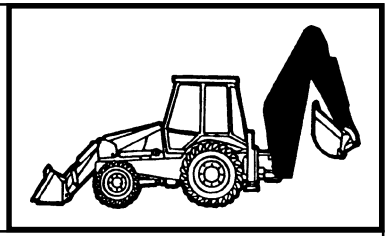

MOD	R	P/N. Imola	P/N. Brazil	Q	Descrição Denominacion	Description Descrizione	L.C.
	1	**85801258**		1	BRAÇO BRAZO	ARM BRACCIO	130B
	2	**83910548**		4	BUCHA BUJE	BUSHING BOCCOLA	095B
	3	**83931289**		4	RETENTOR JUNTA	SEAL GUARNIZIONE	122G
	4	**85803005**		1	PINO BULON	PIN PERNO	080P
	5	**85801314**		1	PINO BULON	PIN PERNO	080P
	6	**83902702**		2	CONTRA PINO CHAVETA PARTIDA	COTTER PIN COPIGLIA	270C
	7	**80080710**		1	PINO GRAXEIRO ENGRASADOR	GREASE FITTING INGRASSATORE	060I
	8	**85802975**		1	TRAVA SEGURO	PAWL NOTTOLINO	050N
	9	**85801308**		1	PINO BULON	PIN PERNO	080P
	10	**83911019**		2	ANEL ELÁSTICO ANILLO ELASTICO	SNAP RING ANELLO ELASTICO	187A
	11	**85803002**		1	PINO BULON	PIN PERNO	080P
	12	**11200271**		1	ARRUELA ARANDELA	WASHER ROSETTA	131R
	13	**85802397**		1	PARAFUSO TORNILLO	SCREW VITE	040V
	14	**14497401**		2	ARRUELA ARANDELA	WASHER ROSETTA	131R

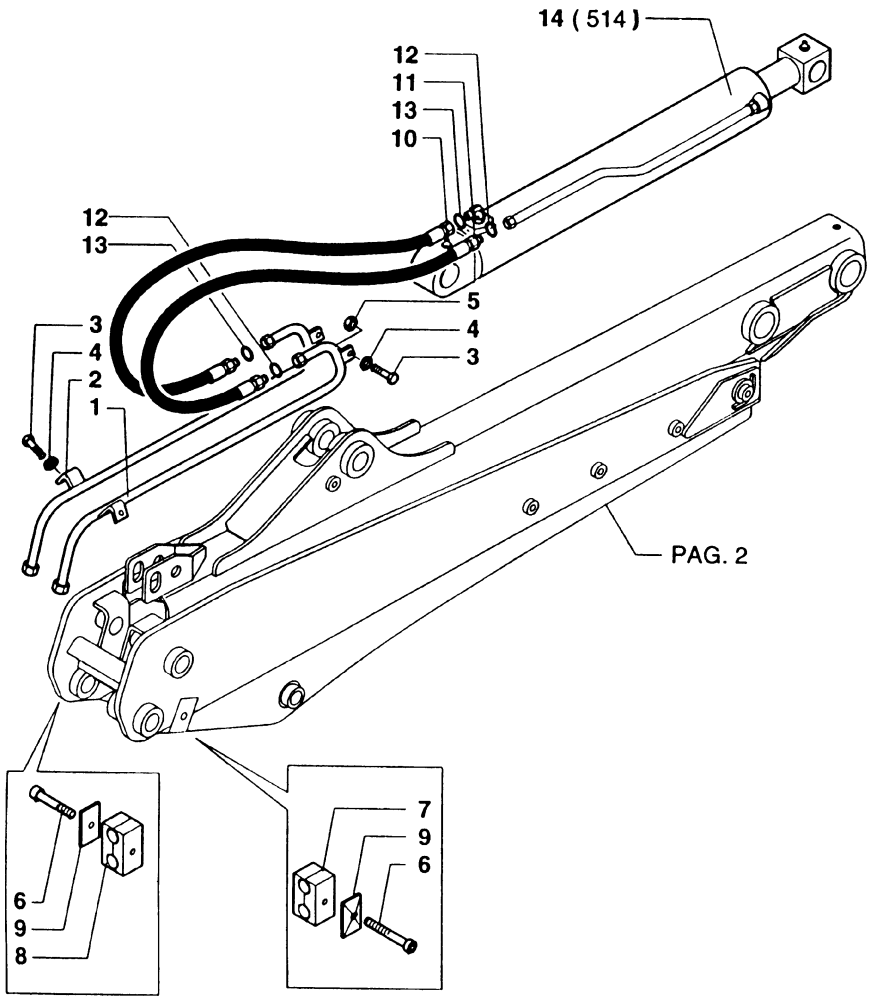

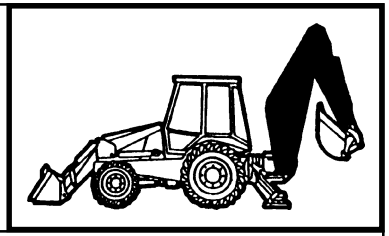

MOD	R	P/N. Imola	P/N. Brazil	Q	Descrição Denominacion	Description Descrizione	L.C.
	1	**85803315**		1	TUBO TUBO	TUBE TUBO RIGIDO	193T
	2	**85803314**		1	TUBO TUBO	TUBE TUBO RIGIDO	193T
	3	**16043624**		4	PARAFUSO TORNILLO	SCREW VITE	040V
	4	**12647121**		4	ARRUELA ARANDELA	WASHER ROSETTA	131R
	5	**14048221**		2	PORCA TUERCA	NUT DADO	010D
	6	**16044131**		2	PARAFUSO TORNILLO	SCREW VITE	040V
	7	**85803088**		1	ABRAÇADEIRA ABRAZADERA	CLAMP FASCETTA	031F
	8	**85802534**		2	ABRAÇADEIRA ABRAZADERA	CLAMP FASCETTA	031F
	9	**85803289**		2	PLACA PLACA	PLATE PIASTRINA	110P
	10	**85804930**		1	MANGUEIRA MANGA C/RACORDE	HOSE ASSY TUBO FLESSIBILE	192T
	11	**85804929**		1	MANGUEIRA MANGA C/RACORDE	HOSE ASSY TUBO FLESSIBILE	192T
	12	**83901443**		2	O'RING JUNTA TORICA	O'RING GUARNIZIONE O-R	158G
	13	**81825117**		2	O'RING JUNTA TORICA	O'RING GUARNIZIONE O-R	158G
	14	**83962129**		1	CILINDRO CILINDRO VUELCO	POSIT.CYLINDER CILINDR.ROVESC.	C409

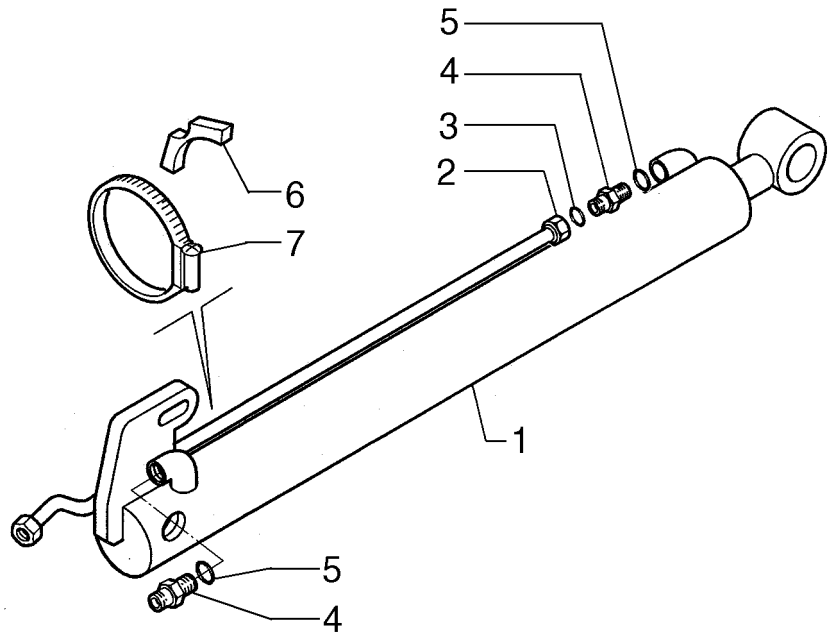

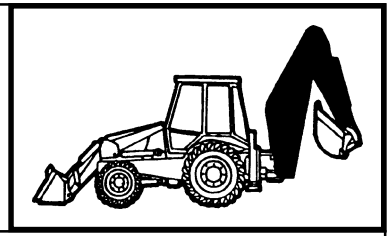

MOD	R	P/N. Imola	P/N. Brazil	Q	Descrição Denominacion	Description Descrizione	L.C.
	1	**85800870**		1	CILINDRO CILINDRO	CYLINDER CILINDRO	164C
	2	**85816811**		1	TUBO TUBO	TUBE TUBO RIGIDO	193T
	3	**81845038**		1	O'RING JUNTA TORICA	O'RING GUARNIZIONE O-R	158G
	4	**83985067**		2	CONEXÃO RACOR	FITTING RACCORDO	020R
	5	**80165202**		2	O'RING JUNTA TORICA	O'RING GUARNIZIONE O-R	158G
	6	**85803010**		1	ABRAÇADEIRA ABRAZADERA	CLAMP FASCETTA	031F
	7	**83963415**		1	SUPORTE SUPORTE	SUPPORT SUPPORTO	300S

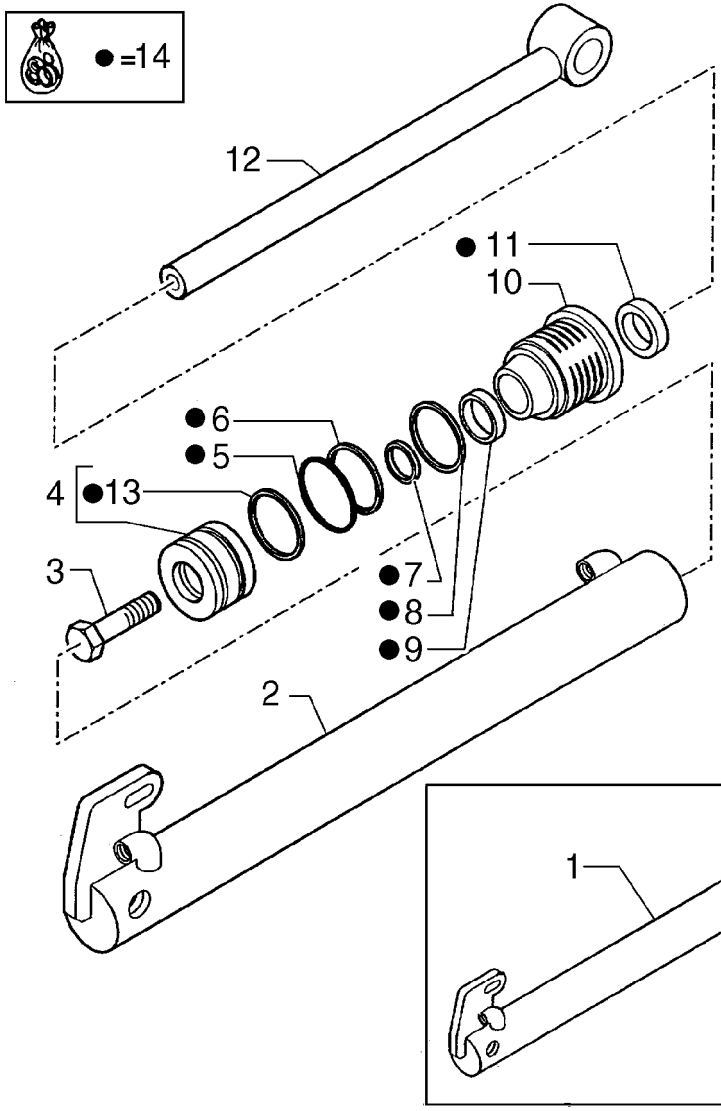

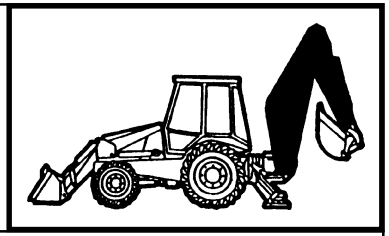

MOD	R	P/N. Imola	P/N. Brazil	Q	Descrição Denominacion	Description Descrizione	L.C.
	1	**85800870**		1	CILINDRO CILINDRO	CYLINDER CILINDRO	164C
	2	**85800806**		1	CAMISA CILINDRO CAMISA CILINDRO	CYLINDER LINER CAMICIA CILINDR	035C
	3	**82866949**		1	PARAFUSO TORNILLO	SCREW VITE	040V
	4	**83962615**		1	ÊMBOLO EMBOLO	PISTON STANTUFFO	235S
	5	**83917181**		1	ANEL ARO	RING ANELLO	045A
	6	**85800001**		1	ANEL DE VEDAÇÃO JUNTA HERMETICA	SEARL RING ANELLO TENUTA	055A
	7	**85800090**		1	RETENTOR JUNTA	SEAL GUARNIZIONE	122G
	8	**83913375**		1	ANEL ARO	RING ANELLO	045A
	9	**85800086**		1	RETENTOR JUNTA	SEAL GUARNIZIONE	122G
	10	**85800972**		1	FUNDO FONDO	BOTTON PLATE FONDELLO	080F
	11	**85800082**		1	RETENTOR JUNTA	SEAL GUARNIZIONE	122G
	12	**85800805**		1	HASTE VARILLA	ROD ASTA	090A
	13	**83912412**		1	ANEL ARO	RING ANELLO	045A
	14	**85819367**		1	KIT JUEGO	KIT KIT	002K

FB80.3 - FB100.3

BRAÇO TELESCOPICO CURTO - CILINDRO HIDR. INTERNO DO BRAÇO
BRAZO TELESCOPICO CORTO - CILINDRO HIDR. PARA BRAZO TELESCOPICO
SHORT TELESCOPIC ARM - HYDR. CYLINDER TELESC. ARM
BRACCIO TELESCOPICO CORTO - CILINDRO IDR. PER BRACCIO

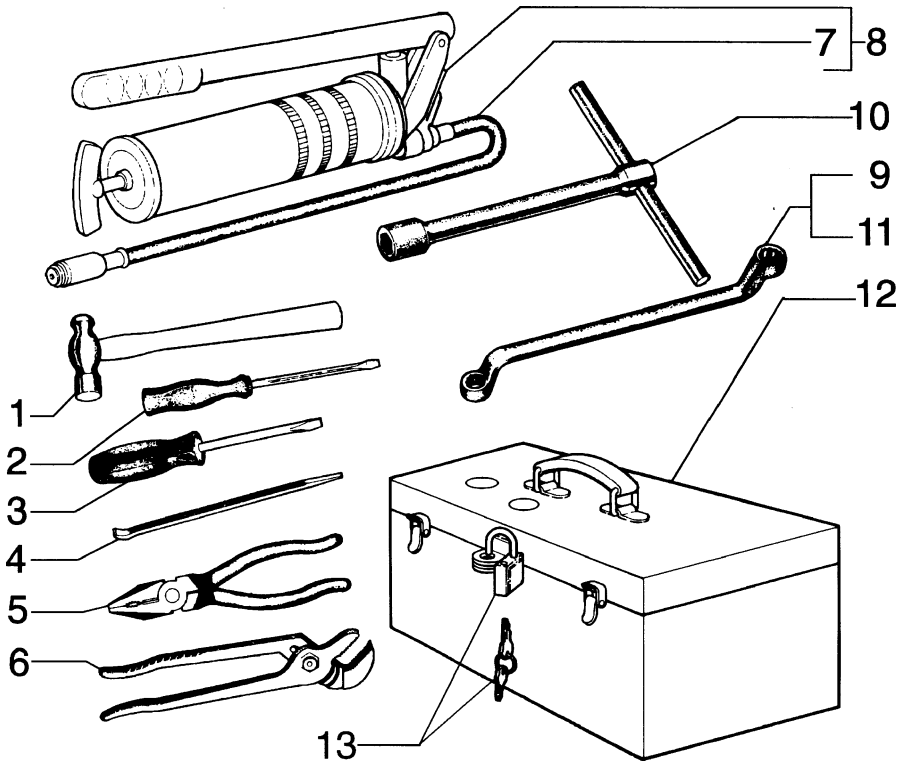

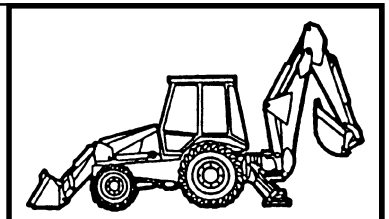

MOD	R	P/N. Imola	P/N. Brazil	Q	Descrição Denominacion	Description Descrizione	L.C.
	1		**75215548**	1	MARTELO MARTILLO	HAMMER MARTELLO	051M
	2		**75215543**	1	CHAVE DE FENDA DESTORNILLADOR	SCREWDRIVER CACCIAVITE	010C
	3		**75215542**	1	CHAVE DE FENDA DESTORNILLADOR	SCREWDRIVER CACCIAVITE	010C
	4		**75215547**	1	ALAVANCA PALANCA	LEVER LEVA	045L
	5		**75215545**	1	ALICATE ALICATES	PLIERS PINZA	125P
	6		**75215546**	1	ALICATE ALICATES	PLIERS PINZA	125P
	7		**75210985**	1	MANGUEIRA TUBO FLEXIBLE	HOSE TUBO FLESSIBILE	285T
	8		**75210969**	1	BOMBA ENGRAXAM. BOMBA	GREASING PUMP POMPA INGRASS.	0992
	9		**75215549**	1	KIT JUEGO	KIT KIT	002K
	10		**75240695**	1	CHAVE LLAVE	KEY CHIAVE	150C
	11		**75215558**	1	KIT JUEGO	KIT KIT	002K
	12		**75215541**	1	CAIXA FERRAM. CAJA HERRAMIENT	TOOL BOX CASSETTA ATTREZ	087C
	13		**70928052**	1	CADEADO CANDADO	PADLOCK LUCCHETTO	081L

ÍNDICE NUMÉRICO

INDEX NUMERIQUE

NUMMERISCHE INDEX

NUMBER INDEX

ZAHLENVERZEICHNIS

NUMMERFORTEGNELSE

ÍNDICE NUMÉRICO - NUMBER INDEX - INDEX NUMERIQUE - ZAHLENVERZEICHNIS - NUMMERISCHE INDEX - NUMMERFORTEGNELSE

Part N.	SGR.	Pag.	R	Part N.	SGR.	Pag.	R	Part N.	SGR.	Pag.	R	Part N.	SGR.	Pag.	R
8	**456299**	520-550	1/1	9	**5142152**	1.95.0	1/5	4	**9966238**	1.94.2	4/4	10	**9968006**	1.40.0	1/4
2	**1909964**	1.19.1	3/5	3	**5148062**	1.95.0	1/5	10	**9966238**	1.94.2/B	13/16	22	**9968006**	415/A	2/10
4	**1930765**	1.19.1	3/5	12	**5148131**	1.91.1	1/1	5	**9966239**	1.94.2	4/4	13	**9968007**	1.40.0	1/4
1	**2010665**	758	1/1	17	**5148131**	1.93.0	1/4	5	**9966239**	1.94.2/B	13/16	25	**9968007**	415/A	2/10
2	**2010668**	758	1/1	15	**5148131**	1.94.2/B	15/16	7	**9966241**	1.94.2	4/4	12	**9968008**	1.40.0	1/4
3	**4600893**	0.04.5	1/1	10	**5148132**	1.91.1	1/1	7	**9966241**	1.94.2/B	13/16	24	**9968008**	415/A	2/10
2	**4624515**	0.04.5	1/1	14	**5148132**	1.93.0	1/4	2	**9966352**	415/A	7/10	2	**9968009**	1.40.0	1/4
7	**4716734**	0.04.5	1/1	13	**5148132**	1.94.2/B	15/16	3	**9966354**	415/A	7/10	27	**9968009**	415/A	2/10
2	**4822229**	1.75.2	1/1	9	**5148946**	1.95.5	1/2	4	**9966356**	415/A	7/10	11	**9968010**	1.40.0	1/4
14	**4858607**	1.95.0	3/5	10	**5148946**	1.95.5/A	2/3	6	**9967672**	415/A	1/10	23	**9968010**	415/A	2/10
3	**4858607**	1.95.0	4/5	6	**5151033**	1.91.4/2	1/1	21	**9967673**	1.40.0	2/4	10	**9968020**	415/A	5/10
3	**4858607**	1.95.0	5/5	6	**5151033**	1.91.4	6/7	23	**9967674**	1.40.0	2/4	1	**9968021**	1.40.0	3/4
10	**4971843**	1.82.0	1/2	5	**5151033**	1.91.4	7/7	25	**9967678**	1.40.0	2/4	7	**9968021**	415/A	3/10
18	**4971843**	1.14.0	1/2	12	**5153180**	1.95.0	2/5	26	**9967679**	1.40.0	2/4	13	**9968028**	1.40.0	3/4
5	**4983992**	1.95.0	1/5	5	**5154844**	1.93.0	2/4	17	**9967681**	415/A	1/10	6	**9968028**	415/A	3/10
3	**4985127**	1.95.1/C	1/2	4	**5154844**	1.96.7	3/3	19	**9967682**	415/A	1/10	2	**9968032**	415/A	5/10
10	**4988275**	1.95.1/C	1/2	10	**5154844**	1.96.7/1	1/1	9	**9967683**	1.40.0	1/4	3	**9968033**	415/A	5/10
8	**4998760**	1.95.5	1/2	2	**5155381**	1.95.0	3/5	21	**9967683**	415/A	2/10	4	**9968034**	415/A	5/10
11	**4998760**	1.95.5/A	2/3	15	**5155701**	1.95.0	3/5	22	**9967684**	1.40.0	2/4	5	**9968036**	415/A	5/10
9	**4999021**	1.93.0	4/4	16	**5155703**	1.95.0	3/5	9	**9967734**	415/A	7/10	6	**9968037**	415/A	5/10
25	**4999021**	1.93.0/A	2/2	4	**5155703**	1.95.0	4/5	11	**9967736**	415/A	7/10	6	**9968038**	415/A	5/10
11	**5105729**	1.95.1/C	1/2	2	**5155703**	1.95.0	5/5	5	**9967739**	415/A	7/10	6	**9968039**	415/A	5/10
13	**5106733**	1.95.1/A	1/1	8	**5162852**	1.94.1	1/1	6	**9967740**	415/A	7/10	6	**9968040**	415/A	5/10
13	**5106733**	1.95.1/B	1/1	3	**5169413**	759	1/1	7	**9967741**	415/A	7/10	6	**9968041**	415/A	5/10
7	**5108180**	1.95.0	4/5	13	**5174275**	1.95.1/C	1/2	6	**9967769**	1.40.0	1/4	6	**9968042**	415/A	5/10
7	**5110153**	1.95.1/C	1/2	7	**5175736**	1.91.5	3/3	28	**9967769**	415/A	2/10	6	**9968043**	415/A	5/10
9	**5110155**	1.95.1/C	1/2	1	**5176441**	1.93.4	1/1	9	**9967883**	1.40.0/B	1/4	6	**9968044**	415/A	5/10
12	**5112712**	1.91.4	1/7	5	**5178468**	1.93.0	1/4	1	**9967990**	1.40.0	1/4	6	**9968045**	415/A	5/10
12	**5112712**	1.91.4/1	3/3	15	**5178468**	1.96.7	1/3	1	**9967990**	415/A	1/10	6	**9968046**	415/A	5/10
13	**5112712**	1.92.6	3/3	8	**5178468**	1.94.2/B	15/16	16	**9967991**	1.40.0	1/4	7	**9968047**	415/A	5/10
3	**5112712**	1.94.2/B	11/16	1	**5178595**	1.94.2/B	13/16	2	**9967991**	415/A	1/10	11	**9968048**	415/A	5/10
11	**5112712**	1.94.2	3/4	6	**5178596**	1.94.2/B	13/16	17	**9967992**	1.40.0	1/4	1	**9968049**	415/A	5/10
14	**5112712**	1.94.2/B	14/16	8	**5183854**	1.92.6	3/3	3	**9967992**	415/A	1/10	13	**9968049**	415/A	6/10
12	**5128431**	1.95.1/C	1/2	11	**5189486**	1.94.2/B	13/16	18	**9967993**	1.40.0	1/4	12	**9968050**	415/A	6/10
8	**5128712**	1.95.1/C	1/2	9	**5192097**	1.94.2/B	13/16	4	**9967993**	415/A	1/10	8	**9968051**	415/A	5/10
8	**5131017**	1.95.1/A	1/1	4	**7535265**	519	1/1	19	**9967994**	1.40.0	1/4	9	**9968052**	415/A	5/10
8	**5131017**	1.95.1/B	1/1	15	**8274447**	1.88.08	2/2	5	**9967994**	415/A	1/10	8	**9968054**	415/A	7/10
6	**5131437**	1.95.1/C	1/2	3	**8291552**	1.88.11/6A	1/1	3	**9967995**	1.40.0	1/4	10	**9968055**	415/A	7/10
13	**5132136**	1.92.9	2/4	2	**8580294**	725	2/6	8	**9967995**	415/A	1/10	4	**9968059**	415/A	8/10
8	**5132136**	1.92.9	3/4	8	**9840575**	728/A	2/2	4	**9967996**	1.40.0	1/4	5	**9968060**	415/A	8/10
2	**5136113**	1.91.5	3/3	8	**9960181**	1.95.5/2A	1/1	9	**9967996**	415/A	1/10	9	**9968070**	1.40.0	4/4
6	**5136951**	1.40.0	4/4	5	**9961829**	1.95.5/2A	1/1	18	**9968004**	415/A	1/10	4	**9968070**	415/A	9/10
2	**5141635**	1.91.1	1/1	9	**9961956**	1.94.2	4/4	20	**9968005**	415/A	1/10	10	**9968071**	1.40.0	4/4

ÍNDICE NUMÉRICO - NUMBER INDEX - INDEX NUMERIQUE - ZAHLENVERZEICHNIS - NUMMERISCHE INDEX - NUMMERFORTEGNELSE

Part N.	SGR.	Pag.	R	Part N.	SGR.	Pag.	R	Part N.	SGR.	Pag.	R	Part N.	SGR.	Pag.	R
5	**9968071**	415/A	9/10	5	**9968164**	523/B	3/4	14	**9968218**	1.28.0/B	12/12	11	**9968250**	1.28.0/B	10/12
2	**9968074**	415/A	10/10	7	**9968165**	521-553	3/3	8	**9968219**	1.28.0/B	2/12	12	**9968251**	1.28.0/A	10/14
8	**9968083**	415/A	10/10	7	**9968165**	523/A	2/3	8	**9968219**	1.28.0/A	2/14	12	**9968251**	1.28.0/B	10/12
7	**9968084**	415/A	10/10	7	**9968165**	523/B	3/4	9	**9968219**	1.28.0/A	3/14	10	**9968252**	1.28.0/A	10/14
1	**9968144**	523/A	3/3	8	**9968166**	521-553	3/3	8	**9968219**	1.28.0/A	4/14	10	**9968252**	1.28.0/B	10/12
1	**9968144**	523/B	4/4	8	**9968166**	523/A	2/3	10	**9968219**	1.28.0/A	14/14	7	**9968253**	1.28.0/A	11/14
2	**9968145**	523/A	3/3	8	**9968166**	523/B	3/4	9	**9968219**	1.28.0/B	3/12	7	**9968253**	1.28.0/B	11/12
3	**9968146**	523/A	3/3	9	**9968167**	521-553	3/3	8	**9968219**	1.28.0/B	4/12	8	**9968254**	1.28.0/A	12/14
4	**9968147**	523/A	3/3	9	**9968167**	523/A	2/3	10	**9968219**	1.28.0/B	12/12	1	**9968255**	1.28.0/A	12/14
4	**9968147**	523/B	4/4	9	**9968167**	523/B	3/4	1	**9968223**	1.28.0/A	11/14	2	**9968256**	1.28.0/A	12/14
5	**9968148**	523/A	3/3	11	**9968168**	521-553	3/3	1	**9968223**	1.28.0/B	11/12	2	**9968257**	1.28.0/A	12/14
5	**9968148**	523/B	4/4	11	**9968168**	523/A	2/3	18	**9968226**	1.28.0/A	7/14	2	**9968258**	1.28.0/A	12/14
6	**9968149**	523/A	3/3	11	**9968168**	523/B	3/4	18	**9968226**	1.28.0/B	7/12	2	**9968259**	1.28.0/A	12/14
7	**9968149**	523/B	4/4	10	**9968169**	521-553	3/3	2	**9968228**	1.28.0/A	7/14	9	**9968260**	1.28.0/A	11/14
7	**9968150**	523/A	3/3	10	**9968169**	523/A	2/3	7	**9968228**	1.28.0/A	9/14	9	**9968260**	1.28.0/B	11/12
6	**9968150**	523/B	4/4	10	**9968169**	523/B	3/4	2	**9968228**	1.28.0/B	7/12	4	**9968261**	1.28.0/A	6/14
8	**9968151**	523/A	3/3	12	**9968170**	521-553	1/3	7	**9968228**	1.28.0/B	9/12	4	**9968261**	1.28.0/B	6/12
3	**9968152**	521-553	1/3	12	**9968170**	523/A	1/3	15	**9968229**	1.28.0/A	13/14	3	**9968262**	1.28.0/A	6/14
3	**9968152**	523/A	1/3	12	**9968170**	523/B	1/4	8	**9968230**	1.28.0/A	9/14	3	**9968262**	1.28.0/B	6/12
9	**9968152**	523/A	3/3	8	**9968171**	521-553	1/3	8	**9968230**	1.28.0/B	9/12	3	**9968263**	1.28.0/A	6/14
9	**9968152**	523/B	4/4	8	**9968171**	523/A	1/3	14	**9968232**	1.28.0/A	13/14	3	**9968263**	1.28.0/B	6/12
3	**9968152**	523/B	1/4	8	**9968171**	523/B	1/4	6	**9968233**	1.28.0/A	13/14	3	**9968264**	1.28.0/A	6/14
10	**9968153**	523/A	3/3	13	**9968172**	521-553	1/3	1	**9968234**	1.28.0/A	13/14	3	**9968264**	1.28.0/B	6/12
11	**9968154**	523/A	3/3	13	**9968172**	523/A	1/3	4	**9968235**	1.28.0/A	13/14	3	**9968265**	1.28.0/A	6/14
12	**9968155**	523/A	3/3	13	**9968172**	523/B	1/4	5	**9968236**	1.28.0/A	13/14	3	**9968265**	1.28.0/B	6/12
13	**9968156**	523/A	3/3	3	**9968173**	521-553	3/3	1	**9968237**	1.28.0/A	2/14	3	**9968266**	1.28.0/A	6/14
1	**9968157**	523/A	1/3	7	**9968173**	523/A	1/3	1	**9968237**	1.28.0/B	2/12	3	**9968266**	1.28.0/B	6/12
1	**9968158**	521-553	3/3	3	**9968173**	523/A	2/3	12	**9968238**	1.28.0/B	5/12	3	**9968267**	1.28.0/A	6/14
1	**9968158**	523/A	2/3	3	**9968173**	523/B	3/4	9	**9968239**	1.28.0/A	12/14	3	**9968267**	1.28.0/B	6/12
1	**9968158**	523/B	3/4	6	**9968174**	521-553	1/3	7	**9968240**	1.28.0/A	12/14	1	**9968268**	1.28.0/A	6/14
4	**9968159**	523/A	1/3	6	**9968174**	523/A	1/3	12	**9968241**	1.28.0/A	1/14	1	**9968268**	1.28.0/B	6/12
5	**9968160**	521-553	1/3	6	**9968174**	523/B	1/4	12	**9968241**	1.28.0/B	1/12	3	**9968269**	1.28.0/A	11/14
5	**9968160**	523/A	1/3	2	**9968175**	523/A	1/3	4	**9968244**	1.28.0/A	12/14	3	**9968269**	1.28.0/B	11/12
5	**9968160**	523/B	1/4	3	**9968176**	523/B	4/4	8	**9968245**	1.28.0/A	11/14	8	**9968270**	1.28.0/A	10/14
2	**9968161**	523/A	2/3	2	**9968216**	1.28.0/A	2/14	8	**9968245**	1.28.0/B	11/12	3	**9968270**	1.28.0/A	14/14
6	**9968162**	521-553	3/3	3	**9968217**	1.28.0/A	2/14	4	**9968246**	1.28.0/A	11/14	8	**9968270**	1.28.0/B	10/12
6	**9968162**	523/A	2/3	7	**9968218**	1.28.0/B	2/12	4	**9968246**	1.28.0/B	11/12	3	**9968270**	1.28.0/B	12/12
6	**9968162**	523/B	3/4	9	**9968218**	1.28.0/A	2/14	2	**9968247**	1.28.0/A	11/14	6	**9968271**	1.28.0/A	10/14
4	**9968163**	521-553	3/3	18	**9968218**	1.28.0/A	3/14	2	**9968247**	1.28.0/B	11/12	5	**9968271**	1.28.0/A	14/14
4	**9968163**	523/A	2/3	15	**9968218**	1.28.0/A	4/14	13	**9968248**	1.28.0/A	10/14	6	**9968271**	1.28.0/B	10/12
4	**9968163**	523/B	3/4	14	**9968218**	1.28.0/A	14/14	13	**9968248**	1.28.0/B	10/12	5	**9968271**	1.28.0/B	12/12
5	**9968164**	521-553	3/3	11	**9968218**	1.28.0/B	3/12	9	**9968249**	1.28.0/A	10/14	7	**9968272**	1.28.0/A	10/14
5	**9968164**	523/A	2/3	3	**9968218**	1.28.0/B	4/12	11	**9968250**	1.28.0/A	10/14	4	**9968272**	1.28.0/A	14/14

ÍNDICE NUMÉRICO - NUMBER INDEX - INDEX NUMERIQUE - ZAHLENVERZEICHNIS - NUMMERISCHE INDEX - NUMMERFORTEGNELSE

Part N.	SGR.	Pag.	R	Part N.	SGR.	Pag.	R	Part N.	SGR.	Pag.	R	Part N.	SGR.	Pag.	R
7	**9968272**	1.28.0/B	10/12	10	**9968288**	1.28.0/B	8/12	16	**9968298**	1.28.0/B	7/12	11	**9968317**	1.28.0/A	14/14
4	**9968272**	1.28.0/B	12/12	12	**9968289**	1.28.0/A	7/14	6	**9968298**	1.28.0/B	8/12	11	**9968317**	1.28.0/B	12/12
7	**9968273**	1.28.0/A	10/14	8	**9968289**	1.28.0/A	8/14	14	**9968299**	1.28.0/A	5/14	12	**9968318**	1.28.0/A	14/14
4	**9968273**	1.28.0/A	14/14	12	**9968289**	1.28.0/B	7/12	14	**9968299**	1.28.0/B	5/12	12	**9968318**	1.28.0/B	12/12
7	**9968273**	1.28.0/B	10/12	8	**9968289**	1.28.0/B	8/12	10	**9968300**	1.28.0/A	13/14	6	**9968319**	1.28.0/A	14/14
4	**9968273**	1.28.0/B	12/12	11	**9968290**	1.28.0/A	7/14	8	**9968301**	1.28.0/A	13/14	6	**9968319**	1.28.0/B	12/12
7	**9968274**	1.28.0/A	10/14	9	**9968290**	1.28.0/A	8/14	4	**9968302**	1.28.0/A	7/14	7	**9968322**	1.28.0/A	14/14
4	**9968274**	1.28.0/A	14/14	11	**9968290**	1.28.0/B	7/12	10	**9968302**	1.28.0/A	9/14	7	**9968322**	1.28.0/B	12/12
7	**9968274**	1.28.0/B	10/12	9	**9968290**	1.28.0/B	8/12	4	**9968302**	1.28.0/B	7/12	13	**9968323**	1.28.0/A	14/14
4	**9968274**	1.28.0/B	12/12	8	**9968291**	1.28.0/A	6/14	10	**9968302**	1.28.0/B	9/12	13	**9968323**	1.28.0/B	12/12
7	**9968275**	1.28.0/A	10/14	6	**9968291**	1.28.0/A	7/14	3	**9968304**	1.28.0/A	7/14	9	**9968324**	1.28.0/A	5/14
4	**9968275**	1.28.0/A	14/14	3	**9968291**	1.28.0/A	9/14	6	**9968304**	1.28.0/A	9/14	9	**9968324**	1.28.0/B	5/12
7	**9968275**	1.28.0/B	10/12	8	**9968291**	1.28.0/B	6/12	3	**9968304**	1.28.0/B	7/12	11	**9968326**	1.28.0/A	5/14
4	**9968275**	1.28.0/B	12/12	6	**9968291**	1.28.0/B	7/12	6	**9968304**	1.28.0/B	9/12	11	**9968326**	1.28.0/B	5/12
9	**9968276**	1.28.0/A	9/14	3	**9968291**	1.28.0/B	9/12	9	**9968305**	1.28.0/A	6/14	10	**9968327**	1.28.0/A	5/14
3	**9968276**	1.28.0/A	12/14	7	**9968292**	1.28.0/A	7/14	9	**9968305**	1.28.0/B	6/12	10	**9968327**	1.28.0/B	5/12
7	**9968276**	1.28.0/A	13/14	2	**9968292**	1.28.0/A	9/14	2	**9968306**	1.28.0/A	10/14	7	**9968328**	1.28.0/A	5/14
9	**9968276**	1.28.0/B	9/12	7	**9968292**	1.28.0/B	7/12	12	**9968306**	1.28.0/A	13/14	7	**9968328**	1.28.0/B	5/12
1	**9968277**	1.28.0/A	14/14	2	**9968292**	1.28.0/B	9/12	2	**9968306**	1.28.0/B	10/12	6	**9968333**	1.28.0/A	3/14
1	**9968277**	1.28.0/B	12/12	8	**9968293**	1.28.0/A	7/14	14	**9968307**	1.28.0/A	10/14	6	**9968333**	1.28.0/B	3/12
10	**9968278**	1.28.0/A	11/14	1	**9968293**	1.28.0/A	9/14	5	**9968307**	1.28.0/A	11/14	2	**9968334**	1.28.0/A	3/14
10	**9968278**	1.28.0/B	11/12	8	**9968293**	1.28.0/B	7/12	14	**9968307**	1.28.0/B	10/12	2	**9968334**	1.28.0/B	3/12
1	**9968279**	1.28.0/A	7/14	1	**9968293**	1.28.0/B	9/12	5	**9968307**	1.28.0/B	11/12	7	**9968336**	1.28.0/A	4/14
4	**9968279**	1.28.0/A	9/14	13	**9968294**	1.28.0/A	7/14	1	**9968308**	1.28.0/A	10/14	7	**9968336**	1.28.0/B	4/12
1	**9968279**	1.28.0/B	7/12	5	**9968294**	1.28.0/A	8/14	13	**9968308**	1.28.0/A	13/14	3	**9968337**	1.28.0/A	4/14
4	**9968279**	1.28.0/B	9/12	13	**9968294**	1.28.0/B	7/12	1	**9968308**	1.28.0/B	10/12	6	**9968340**	1.28.0/A	4/14
2	**9968280**	1.28.0/A	14/14	5	**9968294**	1.28.0/B	8/12	3	**9968309**	1.28.0/A	10/14	6	**9968341**	1.28.0/A	6/14
2	**9968280**	1.28.0/B	12/12	15	**9968295**	1.28.0/A	7/14	11	**9968309**	1.28.0/A	13/14	6	**9968341**	1.28.0/B	6/12
2	**9968281**	1.28.0/A	6/14	3	**9968295**	1.28.0/A	8/14	3	**9968309**	1.28.0/B	10/12	7	**9968342**	1.28.0/A	6/14
2	**9968281**	1.28.0/B	6/12	15	**9968295**	1.28.0/B	7/12	4	**9968310**	1.28.0/A	10/14	7	**9968342**	1.28.0/B	6/12
1	**9968282**	1.28.0/A	8/14	3	**9968295**	1.28.0/B	8/12	4	**9968310**	1.28.0/B	10/12	7	**9968343**	1.28.0/A	6/14
1	**9968282**	1.28.0/B	8/12	14	**9968296**	1.28.0/A	7/14	10	**9968311**	1.28.0/A	1/14	7	**9968343**	1.28.0/B	6/12
5	**9968285**	1.28.0/A	9/14	4	**9968296**	1.28.0/A	8/14	10	**9968311**	1.28.0/B	1/12	7	**9968344**	1.28.0/A	6/14
5	**9968285**	1.28.0/B	9/12	14	**9968296**	1.28.0/B	7/12	1	**9968312**	1.28.0/A	1/14	7	**9968344**	1.28.0/B	6/12
5	**9968286**	1.28.0/A	7/14	4	**9968296**	1.28.0/B	8/12	1	**9968312**	1.28.0/B	1/12	7	**9968345**	1.28.0/A	6/14
5	**9968286**	1.28.0/B	7/12	17	**9968297**	1.28.0/A	7/14	7	**9968313**	1.28.0/A	1/14	7	**9968345**	1.28.0/B	6/12
9	**9968287**	1.28.0/A	7/14	7	**9968297**	1.28.0/A	8/14	7	**9968313**	1.28.0/B	1/12	5	**9968347**	1.28.0/B	6/12
11	**9968287**	1.28.0/A	8/14	3	**9968297**	1.28.0/A	13/14	2	**9968314**	1.28.0/A	8/14	1	**9968350**	1.28.0/A	3/14
9	**9968287**	1.28.0/B	7/12	17	**9968297**	1.28.0/B	7/12	2	**9968314**	1.28.0/B	8/12	1	**9968350**	1.28.0/B	3/12
11	**9968287**	1.28.0/B	8/12	7	**9968297**	1.28.0/B	8/12	9	**9968315**	1.28.0/A	14/14	11	**9968351**	1.28.0/A	3/14
10	**9968288**	1.28.0/A	7/14	16	**9968298**	1.28.0/A	7/14	9	**9968315**	1.28.0/B	12/12	12	**9968354**	1.28.0/A	4/14
10	**9968288**	1.28.0/A	8/14	6	**9968298**	1.28.0/A	8/14	8	**9968316**	1.28.0/A	14/14	12	**9968354**	1.28.0/B	4/12
10	**9968288**	1.28.0/B	7/12	2	**9968298**	1.28.0/A	13/14	8	**9968316**	1.28.0/B	12/12	5	**9968356**	1.28.0/A	2/14

ÍNDICE NUMÉRICO - NUMBER INDEX - INDEX NUMERIQUE - ZAHLENVERZEICHNIS - NUMMERISCHE INDEX - NUMMERFORTEGNELSE

Part N.	SGR.	Pag.	R	Part N.	SGR.	Pag.	R	Part N.	SGR.	Pag.	R	Part N.	SGR.	Pag.	R
5	**9968356**	1.28.0/B	2/12	2	**9968394**	1.28.0/B	2/12	5	**9968455**	339	1/6	16	**9968469**	339	3/6
5	**9968357**	1.28.0/A	10/14	3	**9968395**	1.28.0/B	2/12	6	**9968456**	336	3/5	5	**9968470**	336	1/5
9	**9968357**	1.28.0/A	13/14	9	**9968396**	1.28.0/B	10/12	6	**9968456**	339	1/6	9	**9968470**	339	3/6
5	**9968357**	1.28.0/B	10/12	2	**9968409**	1.38.1	1/1	5	**9968457**	336	3/5	4	**9968471**	336	1/5
6	**9968358**	1.28.0/A	11/14	3	**9968410**	1.38.1	1/1	8	**9968457**	339	1/6	8	**9968471**	339	3/6
6	**9968358**	1.28.0/B	11/12	5	**9968438**	339	2/6	11	**9968458**	1.82.6/A	1/1	3	**9968472**	336	1/5
6	**9968359**	1.28.0/A	1/14	7	**9968438**	725	3/6	11	**9968458**	1.82.6/B	1/1	7	**9968472**	339	3/6
6	**9968359**	1.28.0/B	1/12	7	**9968438**	725	3/6	7	**9968458**	336	3/5	2	**9968473**	336	1/5
13	**9968359**	0.01.0	1/1	8	**9968439**	339	2/6	7	**9968458**	339	1/6	6	**9968473**	339	3/6
4	**9968360**	1.28.0/A	1/14	4	**9968439**	725	3/6	12	**9968460**	1.82.6/A	1/1	2	**9968476**	336	2/5
4	**9968360**	1.28.0/B	1/12	8	**9968440**	336	2/5	12	**9968460**	1.82.6/B	1/1	3	**9968476**	339	2/6
5	**9968361**	1.28.0/A	1/14	6	**9968440**	339	2/6	8	**9968460**	336	3/5	8	**9968476**	344	1/1
5	**9968361**	1.28.0/B	1/12	4	**9968440**	344	1/1	11	**9968460**	339	1/6	3	**9968476**	356	1/1
2	**9968362**	1.28.0/A	1/14	5	**9968440**	356	1/1	12	**9968460**	339/A	1/1	8	**9968476**	395/1	5/5
2	**9968362**	1.28.0/B	1/12	14	**9968440**	395/1	5/5	12	**9968460**	356/A	1/1	3	**9968476**	725	3/6
12	**9968364**	1.28.0/A	3/14	6	**9968440**	725	3/6	12	**9968460**	395/1A	1/1	9	**9968477**	339/A	1/1
12	**9968364**	1.28.0/B	3/12	6	**9968441**	336	2/5	6	**9968461**	336	5/5	9	**9968477**	356/A	1/1
9	**9968365**	1.28.0/B	2/12	9	**9968441**	339	2/6	6	**9968461**	339	5/6	9	**9968477**	395/1A	1/1
11	**9968365**	1.28.0/A	2/14	7	**9968441**	339	2/6	16	**9968464**	336	2/5	10	**9968478**	339/A	1/1
16	**9968365**	1.28.0/A	3/14	6	**9968441**	344	1/1	10	**9968464**	336	4/5	10	**9968478**	356/A	1/1
16	**9968365**	1.28.0/B	3/12	7	**9968441**	356	1/1	19	**9968464**	339	3/6	10	**9968478**	395/1A	1/1
10	**9968368**	1.28.0/A	3/14	13	**9968441**	395/1	5/5	10	**9968464**	339	6/6	11	**9968480**	339/A	1/1
10	**9968368**	1.28.0/B	3/12	5	**9968441**	725	3/6	2	**9968465**	336	5/5	11	**9968480**	356/A	1/1
5	**9968371**	1.28.0/A	3/14	2	**9968442**	725	3/6	2	**9968465**	339	5/6	11	**9968480**	395/1A	1/1
5	**9968371**	1.28.0/B	3/12	3	**9968443**	336	2/5	12	**9968466**	336	2/5	4	**9968481**	339/A	1/1
11	**9968374**	1.28.0/A	4/14	4	**9968443**	339	2/6	4	**9968466**	336	4/5	4	**9968481**	356/A	1/1
11	**9968374**	1.28.0/B	4/12	6	**9968444**	336	1/5	4	**9968466**	336	5/5	4	**9968481**	395/1A	1/1
10	**9968375**	1.28.0/A	4/14	10	**9968444**	339	3/6	4	**9968466**	339	5/6	6	**9968483**	339/A	1/1
10	**9968375**	1.28.0/B	4/12	7	**9968445**	336	1/5	4	**9968466**	339	6/6	6	**9968483**	356/A	1/1
8	**9968377**	1.28.0/A	3/14	11	**9968445**	339	3/6	11	**9968467**	336	2/5	6	**9968483**	395/1A	1/1
8	**9968377**	1.28.0/B	3/12	8	**9968446**	336	1/5	3	**9968467**	336	4/5	7	**9968484**	339/A	1/1
3	**9968378**	1.28.0/B	3/12	12	**9968446**	339	3/6	3	**9968467**	336	5/5	7	**9968484**	356/A	1/1
3	**9968378**	1.28.0/A	3/14	11	**9968447**	336	1/5	3	**9968467**	339	5/6	7	**9968484**	395/1A	1/1
4	**9968379**	1.28.0/A	3/14	15	**9968447**	339	3/6	3	**9968467**	339	6/6	4	**9968486**	339	3/6
4	**9968379**	1.28.0/B	3/12	9	**9968448**	1.82.6/C	1/1	3	**9968467**	339	3/6	8	**9968486**	339/A	1/1
13	**9968380**	1.28.0/A	1/14	10	**9968448**	336	1/5	8	**9968468**	1.82.6/C	1/1	8	**9968486**	356/A	1/1
13	**9968380**	1.28.0/B	1/12	14	**9968448**	339	3/6	13	**9968468**	336	2/5	8	**9968486**	395/1A	1/1
15	**9968382**	1.28.0/A	3/14	9	**9968449**	336	1/5	5	**9968468**	336	4/5	14	**9968488**	336	2/5
15	**9968382**	1.28.0/B	3/12	12	**9968451**	336	3/5	5	**9968468**	336	5/5	8	**9968488**	336	4/5
14	**9968383**	1.28.0/A	3/14	13	**9968451**	339	1/6	5	**9968468**	339	5/6	18	**9968488**	339	3/6
14	**9968383**	1.28.0/B	3/12	14	**9968454**	336	3/5	5	**9968468**	339	6/6	8	**9968488**	339	6/6
5	**9968392**	1.28.0/A	12/14	14	**9968454**	339	1/6	5	**9968468**	339	3/6	3	**9968492**	1.82.6	14/15
6	**9968393**	1.28.0/A	12/14	4	**9968455**	336	3/5	12	**9968469**	336	1/5	1	**9968492**	1.82.6/A	1/1

ÍNDICE NUMÉRICO - NUMBER INDEX - INDEX NUMERIQUE - ZAHLENVERZEICHNIS - NUMMERISCHE INDEX - NUMMERFORTEGNELSE

Part N.	SGR.	Pag.	R	Part N.	SGR.	Pag.	R	Part N.	SGR.	Pag.	R	Part N.	SGR.	Pag.	R
5	**9968493**	1.82.6	14/15	8	**9968528**	356	1/1	13	**9968969**	1.94.2/A	1/1	2	**9970382**	728/A	1/2
1	**9968493**	1.82.6/B	1/1	6	**9968528**	395/1	5/5	14	**9968970**	1.94.2/A	1/1	5	**9970383**	728/A	1/2
6	**9968494**	1.82.6	14/15	6	**9968529**	356	1/1	1	**9969121**	523/B	1/4	6	**9970384**	728/A	1/2
4	**9968495**	1.82.6	14/15	12	**9968529**	395/1	5/5	2	**9969122**	521-553	1/3	6	**9970384**	724/A	1/1
2	**9968496**	1.82.6	14/15	5	**9968531**	356/A	1/1	1	**9969122**	521-553	2/3	11	**9970494**	1.94.2	4/4
1	**9968496**	1.82.6/C	1/1	5	**9968531**	395/1A	1/1	2	**9969122**	523/B	1/4	3	**10250640**	1.94.2/C	1/1
6	**9968497**	1.82.6/C	1/1	12	**9968532**	344	1/1	1	**9969122**	523/B	2/4	2	**10279985**	0.14.0/A	2/3
7	**9968498**	1.82.6/C	1/1	10	**9968533**	344	1/1	2	**9969123**	521-553	3/3	4	**10279985**	0.14.0/A	2/3
10	**9968499**	1.82.6/C	1/1	2	**9968585**	523/B	4/4	2	**9969123**	523/B	3/4	3	**10295485**	1.82.0	1/2
4	**9968500**	1.82.6/C	1/1	8	**9968586**	523/B	4/4	7	**9969124**	521-553	1/3	23	**10296260**	1.82.0	2/2
2	**9968501**	1.82.6/C	1/1	4	**9968594**	356	1/1	7	**9969124**	523/B	1/4	16	**10296260**	1.14.0	1/2
3	**9968502**	1.82.6/C	1/1	15	**9968594**	395/1	5/5	1	**9969125**	521-553	1/3	1	**10298460**	1.14.2	1/1
5	**9968503**	1.82.6/C	1/1	2	**9968595**	1.82.6	15/15	9	**9969205**	1.95.1/C	3/3	11	**10398280**	1.95.3	1/1
7	**9968504**	1.82.6	15/15	3	**9968596**	1.82.6	15/15	10	**9969206**	1.95.1/C	3/3	7	**10398580**	1.96.7/1	1/1
6	**9968505**	1.82.6	15/15	13	**9968598**	339	3/6	2	**9969207**	1.95.1/C	3/3	17	**10398580**	724	1/5
9	**9968506**	1.82.6	15/15	4	**9968676**	1.28.0/A	4/14	6	**9969212**	0.14.0	3/3	2	**10398680**	1.88.01	1/3
8	**9968507**	1.82.6	15/15	4	**9968676**	1.28.0/B	4/12	13	**9969281**	1.28.0/A	5/14	11	**10398680**	1.91.4/1	3/3
4	**9968508**	1.82.6	15/15	17	**9968678**	1.28.0/A	5/14	13	**9969281**	1.28.0/B	5/12	14	**10398680**	1.96.2	1/1
5	**9968509**	1.82.6	15/15	17	**9968678**	1.28.0/B	5/12	2	**9969344**	1.28.0/A	5/14	4	**10398680**	759	1/1
9	**9968510**	1.82.6/A	1/1	15	**9968926**	1.28.0/A	5/14	2	**9969344**	1.28.0/B	5/12	16	**10398980**	1.91.4	1/7
9	**9968510**	1.82.6/B	1/1	15	**9968926**	1.28.0/B	5/12	2	**9969347**	521-553	2/3	13	**10398980**	1.91.4/1	3/3
10	**9968511**	1.82.6/A	1/1	16	**9968927**	1.28.0/A	5/14	2	**9969347**	523/B	2/4	8	**10398980**	1.94.2/B	9/16
10	**9968511**	1.82.6/B	1/1	16	**9968927**	1.28.0/B	5/12	11	**9969437**	1.94.2/A	1/1	2	**10398980**	759	1/1
4	**9968512**	1.82.6/A	1/1	2	**9968930**	851/A	1/2	8	**9969438**	1.94.2/A	1/1	3	**10398980**	1.94.2/B	15/16
4	**9968512**	1.82.6/B	1/1	3	**9968932**	851/A	1/2	6	**9969439**	1.94.2/A	1/1	3	**10399280**	1.94.2	2/4
7	**9968513**	1.82.6/A	1/1	6	**9968934**	851/A	1/2	7	**9969440**	1.94.2/A	1/1	4	**10399580**	1.91.6	1/1
7	**9968513**	1.82.6/B	1/1	7	**9968935**	851/A	1/2	2	**9969441**	1.94.2/A	1/1	9	**10427200**	1.93.0	2/4
19	**9968513**	336	3/5	8	**9968937**	851/A	1/2	10	**9969444**	1.28.0/B	2/12	16	**10427200**	1.93.0/A	1/2
5	**9968514**	1.82.6/A	1/1	2	**9968942**	851/A	2/2	10	**9969444**	1.28.0/A	2/14	5	**10427200**	1.91.1/1	1/1
5	**9968514**	1.82.6/B	1/1	9	**9968943**	851/A	2/2	17	**9969444**	1.28.0/A	3/14	11	**10450090**	1.91.4	1/7
6	**9968515**	1.82.6/A	1/1	10	**9968944**	851/A	2/2	17	**9969444**	1.28.0/B	3/12	18	**10450090**	1.91.4/1	3/3
6	**9968515**	1.82.6/B	1/1	6	**9968945**	851/A	2/2	4	**9969445**	1.28.0/A	5/14	8	**10450590**	395/1	1/5
8	**9968516**	1.82.6/A	1/1	7	**9968947**	851/A	2/2	4	**9969445**	1.28.0/B	5/12	11	**10516671**	1.17.0	1/1
8	**9968516**	1.82.6/B	1/1	5	**9968948**	851/A	2/2	6	**9969449**	1.28.0/B	4/12	4	**10516671**	1.87.2	1/1
7	**9968520**	336	2/5	4	**9968949**	851/A	1/2	9	**9970107**	344	1/1	2	**10516671**	1.91.4/3	1/1
5	**9968521**	336	2/5	8	**9968950**	851/A	2/2	9	**9970107**	395/1	5/5	11	**10516674**	1.17.0	1/1
7	**9968524**	344	1/1	5	**9968951**	851/A	1/2	1	**9970107**	395/1A	1/1	10	**10516674**	1.82.6	7/15
7	**9968524**	395/1	5/5	12	**9968960**	1.94.2/A	1/1	3	**9970178**	724/A	1/1	12	**10516674**	1.82.6	9/15
2	**9968526**	356	1/1	15	**9968961**	1.94.2/A	1/1	3	**9970178**	728/A	1/2	2	**10516674**	1.91.4/3	1/1
1	**9968526**	356/A	1/1	10	**9968962**	1.94.2/A	1/1	5	**9970179**	724/A	1/1	10	**10516871**	1.82.6	7/15
10	**9968526**	395/1	5/5	9	**9968964**	1.94.2/A	1/1	4	**9970180**	728/A	1/2	12	**10516871**	1.82.6	9/15
11	**9968527**	344	1/1	3	**9968965**	1.94.2/A	1/1	4	**9970180**	724/A	1/1	16	**10517071**	1.82.0	1/2
11	**9968527**	395/1	5/5	5	**9968966**	1.94.2/A	1/1	2	**9970181**	724/A	1/1	13	**10517071**	1.14.0	1/2

ÍNDICE NUMÉRICO - NUMBER INDEX - INDEX NUMERIQUE - ZAHLENVERZEICHNIS - NUMMERISCHE INDEX - NUMMERFORTEGNELSE

Part N.	SGR.	Pag.	R	Part N.	SGR.	Pag.	R	Part N.	SGR.	Pag.	R	Part N.	SGR.	Pag.	R
8	**10517271**	1.95.0	1/5	3	**10615779**	0.36.0	1/1	10	**10902431**	1.17.5	1/1	4	**11088071**	1.95.1/C	3/3
8	**10517271**	250	1/1	34	**10717311**	1.88.11/5	2/3	10	**10902621**	1.93.0	4/4	8	**11088076**	1.96.9	1/1
8	**10517271**	251	1/1	6	**10730101**	1.82.6	13/15	10	**10902621**	1.95.0	3/5	3	**11088170**	1.88.11/5	1/3
17	**10519201**	1.91.4	1/7	3	**10730101**	1.96.9	1/1	22	**10902624**	1.91.4	2/7	1	**11088176**	1.95.0	1/5
14	**10519201**	1.91.4	4/7	9	**10733601**	1.44.0/A	12/12	17	**10902624**	1.94.2/B	6/16	6	**11106221**	1.88.01	2/3
12	**10519201**	1.91.4/1	1/3	9	**10766901**	1.44.0/A	12/12	5	**10902724**	1.87.2	1/1	5	**11106231**	1.82.6	6/15
2	**10519201**	1.14.0	1/2	13	**10788811**	1.75.2/A	1/1	5	**10902821**	1.29.1	1/1	10	**11106231**	1.82.6	13/15
2	**10519211**	1.14.0	1/2	17	**10788811**	1.75.2	1/1	5	**10902821**	1.87.2	1/1	4	**11106424**	1.94.2/B	2/16
12	**10519211**	1.96.2	1/1	7	**10791021**	1.95.1/C	3/3	2	**10902824**	1.96.9	1/1	6	**11106431**	1.15.0/B	1/1
2	**10519260**	1.91.4	4/7	7	**10791411**	1.88.01	1/3	2	**10902831**	1.96.9	1/1	6	**11106431**	1.15.0/A	1/1
6	**10519260**	1.96.7	1/3	12	**10791411**	1.95.5/A	2/3	5	**10903024**	1.29.1	1/1	9	**11106431**	1.82.6	7/15
14	**10519404**	1.92.4	1/3	7	**10791421**	1.95.5	1/2	6	**10903221**	1.92.4	2/3	11	**11106431**	1.82.6	9/15
1	**10519404**	1.92.4	2/3	4	**10794014**	1.91.4/1	2/3	6	**10903221**	724	5/5	17	**11107331**	1.88.08	1/2
3	**10519404**	1.94.0	1/1	6	**10802801**	1.44.0/A	12/12	3	**10943421**	724	5/5	5	**11112221**	1.28.6	1/1
5	**10519404**	725	2/6	3	**10863090**	1.91.1	1/1	7	**10978024**	1.95.1/A	1/1	5	**11112231**	1.28.6	1/1
10	**10519404**	343	2/2	30	**10902124**	1.88.11/5	2/3	7	**10978024**	1.95.1/B	1/1	15	**11112431**	1.82.6	13/15
11	**10519601**	0.40.0/A	1/1	7	**10902124**	1.94.2	3/4	8	**11054590**	1.91.4	5/7	10	**11112431**	1.82.7	1/2
3	**10519604**	1.93.0	4/4	4	**10902124**	754-755	2/2	6	**11054590**	1.91.4/1	1/3	10	**11112431**	393	1/2
10	**10519604**	1.92.6	1/3	2	**10902124**	878	1/1	7	**11054790**	1.91.4	5/7	11	**11112631**	1.28.0	1/1
6	**10519624**	1.91.4/1	2/3	8	**10902124**	1.75.2	1/1	7	**11054790**	1.91.4/1	1/3	15	**11112821**	1.82.6	13/15
16	**10520121**	1.82.7	2/2	4	**10902131**	1.91.7	1/3	9	**11054890**	1.91.4	5/7	10	**11112821**	1.82.7	1/2
8	**10520121**	1.88.08	2/2	4	**10902131**	1.91.7	2/3	8	**11054890**	1.91.4/1	1/3	26	**11113231**	393	2/2
6	**10520221**	514	1/8	4	**10902131**	1.91.7	3/3	3	**11054990**	1.91.4	5/7	7	**11118537**	514	1/8
7	**10520221**	520-550	1/1	10	**10902131**	1.91.4/1	2/3	3	**11054990**	1.91.4/1	1/3	7	**11124421**	902	2/5
5	**10520221**	522/2-551	1/1	4	**10902131**	754-755	1/2	5	**11055090**	1.91.4	5/7	7	**11133524**	1.94.2/B	2/16
9	**10520421**	1.87.8	1/1	30	**10902131**	1.88.11/5	2/3	5	**11055090**	1.91.4/1	1/3	7	**11190574**	1.88.01	2/3
9	**10520421**	1.87.8/A	1/1	5	**10902221**	1.82.6	13/15	4	**11055190**	1.91.4	5/7	5	**11190574**	1.82.6	2/15
7	**10520421**	1.88.11/9	1/1	10	**10902221**	1.82.6	11/15	4	**11055190**	1.91.4/1	1/3	4	**11190574**	1.95.5	1/2
9	**10520431**	1.87.8	1/1	5	**10902224**	1.82.6	13/15	9	**11063971**	343	2/2	11	**11190574**	1.82.6	13/15
9	**10520431**	1.87.8/A	1/1	14	**10902224**	1.94.2/B	7/16	4	**11063971**	725	2/6	3	**11190574**	1.94.2/B	2/16
3	**10520431**	415	1/2	3	**10902224**	1.94.2/B	13/16	3	**11064176**	1.95.0	3/5	3	**11190574**	1.94.2/B	3/16
7	**10520431**	1.88.11/9	1/1	9	**10902224**	1.96.7	1/3	3	**11065976**	1.92.6	3/3	8	**11190574**	1.95.0	2/5
8	**10523211**	1.88.08	2/2	2	**10902224**	1.17.5	1/1	9	**11066276**	1.88.08	1/2	2	**11190574**	336	3/5
4	**10569374**	1.95.0	3/5	10	**10902224**	1.82.6	11/15	10	**11067376**	1.95.0	1/5	6	**11190574**	1.95.5/A	2/3
4	**10615274**	1.91.4	1/7	6	**10902424**	1.95.3	1/1	7	**11069071**	514	3/8	2	**11190574**	339	1/6
4	**10615274**	1.91.4/1	3/3	4	**10902424**	1.93.4	1/1	37	**11087371**	1.88.11/5	2/3	15	**11190574**	725	2/6
10	**10615274**	1.91.4	4/7	6	**10902424**	1.94.2/B	5/16	18	**11087876**	1.88.11/5	1/3	13	**11190574**	902	2/5
5	**10615274**	1.91.4/1	2/3	13	**10902424**	1.94.2/B	7/16	27	**11087876**	1.88.11/5	2/3	14	**11190579**	343	2/2
10	**10615371**	1.95.1/A	1/1	11	**10902424**	1.14.0	1/2	12	**11087876**	1.92.4	1/3	14	**11190579**	343	2/2
10	**10615371**	1.95.1/B	1/1	10	**10902424**	1.17.5	1/1	18	**11087970**	1.88.11/5	1/3	6	**11190679**	1.82.6	6/15
5	**10615479**	1.91.7	1/3	21	**10902431**	1.82.0	2/2	27	**11087970**	1.88.11/5	2/3	12	**11190679**	1.88.11/5	1/3
5	**10615479**	1.91.7	2/3	7	**10902431**	1.95.1/A	1/1	23	**11087970**	393	2/2	9	**11190774**	1.17.0	1/1
7	**10615479**	1.82.0	1/2	11	**10902431**	1.14.0	1/2	3	**11087976**	1.95.1/C	3/3	10	**11190774**	1.28.0	1/1

ÍNDICE NUMÉRICO - NUMBER INDEX - INDEX NUMERIQUE - ZAHLENVERZEICHNIS - NUMMERISCHE INDEX - NUMMERFORTEGNELSE

Part N.	SGR.	Pag.	R	Part N.	SGR.	Pag.	R	Part N.	SGR.	Pag.	R	Part N.	SGR.	Pag.	R
6	**11190774**	1.28.6	1/1	5	**11193874**	1.92.5/1	1/1	5	**11391534**	251	1/1	13	**12574221**	1.82.6	11/15
4	**11190774**	1.82.3	1/1	2	**11193874**	344	1/1	9	**11599521**	514	2/8	16	**12574511**	724	1/5
13	**11190774**	1.82.6	2/15	9	**11193874**	395/1	2/5	11	**11701621**	1.95.0	2/5	6	**12574511**	724	3/5
9	**11190774**	1.82.6	4/15	2	**11193874**	395/1	5/5	2	**11701721**	1.95.0	2/5	6	**12574511**	732	1/1
14	**11190774**	1.82.6	13/15	1	**11193874**	724	2/5	2	**11702921**	1.88.11/5	1/3	6	**12574511**	732	1/1
6	**11190774**	1.82.7	1/2	10	**11193879**	1.75.2/A	1/1	11	**11991971**	1.82.7	2/2	16	**12574521**	1.82.6	2/15
10	**11190774**	1.83.0	1/1	5	**11193879**	1.75.2	1/1	26	**11991971**	1.88.11/5	2/3	4	**12574921**	250	1/1
19	**11190774**	1.14.0	1/2	4	**11193974**	1.28.6	1/1	21	**11991971**	393	2/2	4	**12574921**	251	1/1
21	**11190774**	1.14.0	2/2	16	**11193974**	1.95.3	1/1	6	**12059980**	1.94.2/C	1/1	6	**12574921**	0.41.0	1/1
9	**11190871**	728	1/1	4	**11193974**	725	6/6	9	**12163321**	514	1/8	9	**12574921**	1.28.0	1/1
3	**11193274**	1.88.01	1/3	9	**11193974**	725	5/6	11	**12164121**	1.95.0	1/5	4	**12574921**	1.87.8	1/1
5	**11193274**	1.95.3	1/1	8	**11193974**	725	4/6	14	**12164121**	1.83.0	1/1	4	**12574921**	1.87.8/A	1/1
23	**11193274**	1.91.4	2/7	22	**11193979**	1.93.0/A	2/2	6	**12164121**	520-550	1/1	16	**12574921**	1.83.0	1/1
3	**11193274**	1.91.3	1/1	28	**11193979**	1.82.6	10/15	4	**12164121**	522/2-551	1/1	10	**12575121**	1.87.8	1/1
7	**11193274**	1.94.2/B	5/16	4	**11194674**	1.87.2	1/1	16	**12173890**	1.17.2	1/1	10	**12575121**	1.87.8/A	1/1
11	**11193274**	1.94.2/B	6/16	1	**11194779**	1.88.11/7	1/1	11	**12173890**	1.17.2/A	1/1	2	**12575121**	215	1/1
3	**11193274**	1.94.2/B	7/16	3	**11194779**	1.88.11/7	1/1	2	**12174190**	1.17.2/A	1/1	9	**12575121**	1.88.11/9	1/1
7	**11193274**	1.94.2	2/4	10	**11194779**	1.14.0	1/2	12	**12174790**	1.17.2	1/1	10	**12575127**	1.87.8	1/1
8	**11193274**	1.94.2	3/4	6	**11197774**	1.29.1	1/1	5	**12174890**	1.19.1	5/5	10	**12575127**	1.87.8/A	1/1
13	**11193274**	1.94.2/B	13/16	3	**11197774**	1.91.3/1	1/1	3	**12174990**	1.19.1	5/5	9	**12575127**	1.88.11/9	1/1
11	**11193274**	1.95.0	3/5	5	**11197774**	1.91.7	3/3	13	**12179190**	1.17.2	1/1	10	**12575321**	1.44.0/A	1/12
2	**11193274**	1.94.2/B	16/16	5	**11197774**	754-755	1/2	10	**12179190**	1.17.2/A	1/1	2	**12575411**	1.95.5/A	1/3
10	**11193274**	1.96.7	1/3	5	**11197774**	754-755	2/2	7	**12574011**	1.91.4	1/7	2	**12575421**	1.95.5	2/2
9	**11193274**	1.91.4/1	2/3	8	**11197874**	1.17.2	1/1	7	**12574011**	1.91.4/1	3/3	12	**12575421**	1.17.5	1/1
2	**11193274**	1.91.8/1	1/1	6	**11197874**	1.38.1	1/1	5	**12574011**	1.91.4	4/7	12	**12577211**	1.94.2/B	2/16
1	**11193274**	878	1/1	16	**11197874**	1.95.1/C	1/2	15	**12574011**	1.91.4	4/7	8	**12577221**	1.15.0/B	1/1
31	**11193279**	1.88.11/5	2/3	3	**11197879**	1.82.6	9/15	4	**12574011**	1.94.2/C	1/1	8	**12577221**	1.15.0/A	1/1
4	**11193871**	1.19.1	1/5	13	**11197979**	902	2/5	5	**12574011**	1.96.7	1/3	7	**12598370**	1.82.7	2/2
4	**11193871**	1.19.1	2/5	11	**11198071**	1.92.9	4/4	13	**12574011**	1.91.4/1	1/3	16	**12598370**	393	1/2
3	**11193871**	1.96.8	1/1	2	**11198071**	1.96.7	1/3	4	**12574111**	1.91.3/1	1/1	6	**12601370**	1.82.7	2/2
3	**11193871**	1.83.0	1/1	4	**11198071**	851-855	1/1	1	**12574111**	1.91.7	1/3	15	**12601370**	393	1/2
8	**11193874**	1.88.01	1/3	11	**11198174**	1.94.2/B	3/16	10	**12574111**	1.91.7	2/3	6	**12601474**	1.94.2/B	2/16
2	**11193874**	1.88.01	2/3	6	**11198179**	395/1	1/5	4	**12574111**	1.91.3	1/1	12	**12604171**	1.95.3	1/1
14	**11193874**	1.88.01	3/3	5	**11198179**	514	5/8	8	**12574111**	1.92.9	4/4	11	**12637804**	1.91.7	1/3
8	**11193874**	1.82.6	3/15	7	**11198179**	514	6/8	1	**12574111**	1.96.0	1/1	1	**12637804**	1.91.7	2/3
3	**11193874**	1.83.0	1/1	12	**11200271**	902	3/5	10	**12574111**	754-755	1/2	11	**12637804**	754-755	1/2
7	**11193874**	1.94.2/B	3/16	6	**11200279**	514	1/8	12	**12574111**	754-755	2/2	11	**12637804**	754-755	2/2
2	**11193874**	1.94.2/B	6/16	1	**11200679**	1.44.0/A	1/12	3	**12574211**	1.94.2/B	6/16	12	**12637811**	1.75.2/A	1/1
2	**11193874**	1.94.2/B	9/16	14	**11343731**	725	2/6	3	**12574211**	1.92.4	2/3	16	**12637811**	1.75.2	1/1
8	**11193874**	1.94.2	1/4	13	**11383631**	1.88.11	1/1	16	**12574211**	1.92.9	2/4	9	**12637821**	1.92.9	4/4
4	**11193874**	1.95.1/A	1/1	5	**11390531**	250	1/1	11	**12574211**	1.96.7	1/3	11	**12638104**	1.93.0	1/4
4	**11193874**	1.95.1/B	1/1	5	**11390531**	251	1/1	12	**12574211**	1.17.5	1/1	12	**12638104**	1.94.2/B	15/16
5	**11193874**	1.96.2	1/1	5	**11391534**	250	1/1	8	**12574221**	1.82.6	13/15	16	**12638501**	1.92.4	1/3

ÍNDICE NUMÉRICO - NUMBER INDEX - INDEX NUMERIQUE - ZAHLENVERZEICHNIS - NUMMERISCHE INDEX - NUMMERFORTEGNELSE

Part N.	SGR.	Pag.	R	Part N.	SGR.	Pag.	R	Part N.	SGR.	Pag.	R	Part N.	SGR.	Pag.	R
14	**12638501**	1.92.4	2/3	3	**12647121**	1.82.6	13/15	4	**13406911**	1.92.6	3/3	5	**14303031**	1.95.1/A	1/1
8	**12638501**	1.92.9	2/4	4	**12647121**	902	4/5	6	**13423271**	1.95.0	3/5	4	**14303031**	1.95.1/B	1/1
9	**12638501**	1.92.9	3/4	26	**12647121**	1.82.6	10/15	5	**13517020**	1.94.0	1/1	2	**14303324**	1.94.2/C	1/1
11	**12638511**	1.75.2	1/1	3	**12647601**	1.96.9	1/1	2	**13517021**	1.94.0/1	1/1	3	**14305221**	1.94.2/B	16/16
2	**12638624**	1.95.5	1/2	3	**12647601**	1.17.5	1/1	5	**13517021**	1.94.1	1/1	8	**14305724**	1.94.2	2/4
3	**12638624**	1.95.5/A2/2	2/2	8	**12648521**	1.15.0	1/1	4	**13577604**	1.91.4	4/7	12	**14305921**	1.95.0	4/5
11	**12640604**	1.93.0	4/4	4	**13000190**	1.14.2	1/1	9	**13736611**	1.29.1	1/1	9	**14306424**	1.92.9	2/4
2	**12640604**	1.92.6	2/3	2	**13000190**	1.15.0	1/1	13	**13769401**	1.95.3	1/1	12	**14306424**	1.92.9	4/4
11	**12640604**	1.17.5	1/1	8	**13000290**	1.17.2/A	1/1	4	**13796621**	393/A	1/1	5	**14306424**	1.95.0	3/5
8	**12642521**	1.95.1/C	3/3	4	**13000490**	1.94.2/A	1/1	13	**13796621**	393	1/2	15	**14306920**	1.95.1/C	1/2
5	**12642701**	514	5/8	2	**13000990**	1.94.2	3/4	9	**13796921**	1.29.1	1/1	3	**14308221**	336	3/5
7	**12642701**	514	6/8	2	**13000990**	1.94.2/B	12/16	14	**13907470**	1.88.11/5	1/3	3	**14308221**	339	1/6
1	**12642804**	1.93.5	2/2	10	**13271814**	1.92.1	1/1	14	**14048211**	1.75.2	1/1	15	**14308221**	343	2/2
5	**12642804**	1.94.2/C	1/1	1	**13272111**	1.14.0	1/2	3	**14048221**	1.94.1	1/1	15	**14332521**	902	2/5
6	**12642804**	1.93.5/1	1/1	1	**13272214**	1.14.0	1/2	3	**14048221**	1.92.6	1/3	7	**14372671**	1.93.5	2/2
5	**12642821**	1.95.0	2/5	21	**13272214**	1.91.4	2/7	11	**14048221**	1.92.6	3/3	10	**14372671**	1.94.2	4/4
15	**12643704**	1.92.4	2/3	10	**13272214**	1.91.4/1	3/3	8	**14048221**	1.94.0	1/1	5	**14420431**	1.17.0	1/1
5	**12643704**	1.92.6	1/3	4	**13272214**	1.96.7	1/3	5	**14048221**	902	4/5	3	**14422021**	1.82.6	1/15
3	**12643721**	1.87.2	1/1	2	**13272477**	1.93.4	1/1	6	**14084011**	1.93.0	1/4	5	**14440027**	1.95.1/A	1/1
5	**12644321**	1.94.0/1	1/1	6	**13272477**	1.95.0	2/5	14	**14084011**	1.96.7	1/3	5	**14440027**	1.95.1/B	1/1
14	**12644421**	1.82.0	1/2	11	**13272477**	1.96.2	1/1	9	**14084011**	1.94.2/B	15/16	4	**14440327**	1.93.5	1/2
20	**12644421**	1.82.0	1/2	6	**13273911**	1.92.6	1/3	7	**14084814**	1.93.0	1/4	3	**14441521**	1.93.0	3/4
3	**12644421**	1.87.2	1/1	2	**13274411**	1.91.3/1	1/1	16	**14084814**	1.93.0	2/4	11	**14442427**	1.92.6	1/3
8	**12644421**	0.14.0/A	2/3	3	**13275917**	1.91.8/1	1/1	10	**14084814**	1.93.0/A	1/2	6	**14447021**	1.95.0	5/5
10	**12644421**	1.14.0	1/2	2	**13276017**	1.94.0	1/1	1	**14143790**	1.96.0/A	1/1	7	**14452581**	1.91.4	4/7
10	**12644921**	1.44.0/A	12/12	18	**13276217**	1.92.9	2/4	5	**14143790**	1.91.4/2	1/1	11	**14453081**	1.82.6	15/15
4	**12645031**	1.28.6	1/1	2	**13276414**	1.91.3	1/1	5	**14143790**	1.91.4	6/7	10	**14457481**	1.82.6	15/15
6	**12646204**	1.92.5/1	1/1	3	**13276611**	1.92.6	2/3	4	**14143790**	1.91.4	7/7	12	**14458980**	1.95.0	1/5
5	**12646704**	1.91.5	3/3	6	**13276617**	1.93.0	3/4	9	**14143790**	1.91.4	1/7	5	**14463081**	0.30.0	1/1
6	**12646704**	1.92.9	1/4	6	**13297842**	1.91.6	1/1	8	**14143790**	1.91.1	1/1	7	**14463580**	1.28.6	1/1
4	**12646721**	1.75.2	1/1	2	**13301717**	1.93.7	1/1	15	**14143790**	1.93.0	1/4	10	**14463580**	1.91.5	3/3
3	**12646721**	1.91.4/3	1/1	14	**13309417**	1.91.4	1/7	14	**14143790**	1.94.2/B	15/16	7	**14463580**	1.28.6	1/1
5	**12646904**	1.92.9	2/4	10	**13311017**	1.93.0	2/4	4	**14143790**	415	2/2	2	**14463881**	0.30.2	1/1
7	**12646904**	1.94.0	1/1	14	**13311017**	1.93.0/A	1/2	2	**14143790**	728	1/1	5	**14464681**	1.82.6	1/15
5	**12646921**	1.95.1/C	3/3	6	**13311217**	1.93.0	2/4	4	**14144190**	1.91.1	1/1	9	**14465880**	1.88.11/6A	1/1
9	**12646921**	1.17.0	1/1	4	**13311217**	1.93.0/A	1/2	3	**14151195**	758	1/1	11	**14466080**	1.88.11/6A	1/1
4	**12646921**	1.82.0	1/2	7	**13311617**	1.95.3	1/1	5	**14161771**	1.92.9	3/4	4	**14466880**	1.82.3/A	1/1
10	**12646921**	514	2/8	10	**13311617**	1.95.3	1/1	7	**14183471**	1.91.1	1/1	2	**14466880**	1.82.3	1/1
19	**12646921**	1.14.0	1/2	2	**13311817**	1.91.6	1/1	6	**14189176**	1.93.5	2/2	14	**14496204**	1.93.0	2/4
20	**12646924**	1.82.6	3/15	8	**13313417**	1.92.9	1/4	4	**14189276**	1.93.5/1	1/1	3	**14496401**	1.95.5	2/2
2	**12646924**	1.94.1	1/1	2	**13313417**	1.96.7/1	1/1	3	**14197790**	1.93.4	1/1	6	**14496404**	1.82.6	13/15
10	**12647004**	1.92.9	2/4	5	**13400773**	1.95.1/C	1/2	11	**14215480**	1.91.1	1/1	1	**14496404**	1.94.2/B	6/16
16	**12647121**	1.82.6	3/15	8	**13406911**	1.44.0/A	12/12	4	**14301521**	1.96.0	1/1	3	**14496404**	1.95.5/A	1/3

ÍNDICE NUMÉRICO - NUMBER INDEX - INDEX NUMERIQUE - ZAHLENVERZEICHNIS - NUMMERISCHE INDEX - NUMMERFORTEGNELSE

Part N.	SGR.	Pag.	R	Part N.	SGR.	Pag.	R	Part N.	SGR.	Pag.	R	Part N.	SGR.	Pag.	R
10	**14496404**	343	2/2	5	**15540321**	1.82.7	1/2	7	**15970724**	1.95.5/A	2/3	7	**16043324**	1.91.4/1	2/3
12	**14496404**	1.82.6	11/15	20	**15540321**	1.14.0	2/2	14	**15970724**	724	1/5	5	**16043421**	1.19.1	1/5
9	**14496404**	1.75.2	1/1	17	**15540331**	1.82.0	1/2	4	**15970724**	724	3/5	5	**16043421**	1.19.1	2/5
15	**14496429**	1.92.9	2/4	5	**15540331**	1.82.7	1/2	5	**15970725**	1.95.5	1/2	17	**16043424**	1.95.3	1/1
12	**14496531**	1.92.1	1/1	8	**15540331**	393	1/2	12	**15970731**	1.82.6	2/15	10	**16043424**	1.94.2/B	3/16
11	**14496621**	1.82.6	13/15	20	**15540331**	1.14.0	2/2	5	**15972031**	732	1/1	6	**16043424**	1.94.2/B	6/16
29	**14496631**	1.88.11/5	2/3	5	**15540431**	1.82.0	1/2	6	**15981031**	250	1/1	7	**16043424**	1.94.2	1/4
24	**14496821**	1.82.0	2/2	8	**15540531**	1.17.0	1/1	6	**15981031**	251	1/1	5	**16043424**	1.95.0	3/5
21	**14496821**	1.14.0	2/2	14	**15540631**	1.14.0	1/2	7	**15981231**	1.83.0	1/1	3	**16043424**	1.95.1/A	1/1
5	**14496921**	726	1/1	4	**15540824**	1.29.1	1/1	13	**15981231**	1.83.0	1/1	3	**16043424**	1.95.1/B	1/1
3	**14496921**	250	1/1	19	**15540824**	1.82.6	3/15	7	**15981531**	0.41.0	1/1	3	**16043424**	1.96.7	1/3
3	**14496921**	251	1/1	14	**15540831**	1.82.6	2/15	4	**15981531**	1.28.0	1/1	21	**16043424**	1.93.0/A	2/2
5	**14496921**	343	2/2	4	**15540831**	1.29.1	1/1	6	**15982131**	1.87.8	1/1	3	**16043424**	851-855	1/1
11	**14496921**	725	2/6	8	**15541531**	1.82.6	4/15	6	**15982131**	1.87.8/A	1/1	2	**16043431**	1.96.8	1/1
3	**14496931**	250	1/1	8	**15541631**	1.82.6	4/15	5	**15982531**	1.87.8	1/1	8	**16043621**	726	1/1
3	**14496931**	251	1/1	14	**15570321**	1.14.0	1/2	5	**15982531**	1.87.8/A	1/1	20	**16043621**	726	1/1
5	**14496931**	343	2/2	9	**15627011**	1.93.0	1/4	13	**15988737**	1.88.11	1/1	9	**16043624**	1.88.01	1/3
13	**14497121**	1.44.0/A	12/12	15	**15688101**	1.96.2	1/1	8	**15988737**	1.88.11/5	1/3	3	**16043624**	1.88.01	2/3
8	**14497121**	902	2/5	2	**15693301**	1.93.5	2/2	6	**15988931**	1.88.11/9	1/1	15	**16043624**	1.94.2/B	9/16
13	**14497131**	1.44.0/A	12/12	6	**15693507**	1.93.0	2/4	4	**15989131**	415	1/2	10	**16043624**	1.92.9	3/4
9	**14497331**	1.44.0/A	1/12	3	**15693507**	1.93.5	2/2	6	**15989131**	1.88.11/9	1/1	6	**16043624**	1.96.2	1/1
14	**14497401**	902	3/5	11	**15693507**	1.95.1/A	1/1	4	**15989137**	415	1/2	8	**16043624**	395/1	2/5
3	**14560187**	1.75.2/A	1/1	11	**15693507**	1.95.1/B	1/1	8	**15989531**	1.87.8	1/1	3	**16043624**	902	4/5
16	**14560187**	1.94.2/A	1/1	3	**15693507**	1.93.5/1	1/1	8	**15989531**	1.87.8/A	1/1	11	**16043631**	1.92.1	1/1
13	**14560187**	1.95.0	3/5	11	**15811387**	1.92.9	2/4	4	**15991131**	215	1/1	4	**16043824**	1.93.0	4/4
7	**14560187**	1.17.2/A	1/1	7	**15811387**	1.92.9	4/4	4	**15998731**	120	1/1	10	**16043824**	725	5/6
3	**14568887**	1.82.7	1/2	7	**15882731**	1.88.11/6A	1/1	4	**15998737**	120	1/1	12	**16043831**	0.14.0/A	2/3
10	**14568887**	1.93.5	1/2	7	**15882731**	1.88.11/9B	1/1	11	**15999431**	1.44.0/A	1/12	9	**16043834**	1.17.2	1/1
2	**14568887**	1.93.0	3/4	4	**15896211**	1.94.2/B	6/16	11	**16040821**	1.94.2/B	2/16	7	**16043834**	1.17.5	1/1
7	**14568887**	393/A	1/1	13	**15896211**	343	2/2	11	**16043021**	1.75.2/A	1/1	10	**16043924**	1.95.0	2/5
11	**14568887**	1.95.1/A	1/1	4	**15896221**	1.94.2/B	13/16	3	**16043124**	1.17.0	1/1	5	**16043924**	395/1	1/5
2	**14575380**	1.95.0	4/5	4	**15896221**	1.96.9	1/1	13	**16043124**	1.88.01	3/3	3	**16043924**	395/1	5/5
3	**14590887**	1.82.7	1/2	13	**15896221**	343	2/2	4	**16043124**	1.83.0	1/1	9	**16043924**	725	4/6
3	**14590887**	1.95.1/A	1/1	8	**15896221**	725	2/6	8	**16043124**	1.91.4/1	2/3	13	**16043931**	726	1/1
14	**14642192**	1.93.5	2/2	5	**15902604**	1.91.1	1/1	3	**16043131**	1.28.6	1/1	3	**16043931**	344	1/1
10	**14642192**	1.94.2	1/4	3	**15910606**	1.94.2	4/4	3	**16043131**	1.17.0	1/1	1	**16044031**	1.92.5	1/1
5	**14642192**	1.93.5/1	1/1	13	**15915101**	1.29.1	1/1	4	**16043131**	1.83.0	1/1	5	**16044031**	725	6/6
13	**14644190**	1.93.0	2/4	9	**15916901**	1.94.2	3/4	7	**16043224**	1.82.6	3/15	18	**16044031**	1.82.6	7/15
13	**14644190**	1.93.0	2/4	6	**15930316**	1.95.5	2/2	5	**16043224**	1.94.2/B	6/16	2	**16044031**	1.82.6	9/15
11	**14644190**	1.94.2/B	11/16	6	**15930316**	1.95.5/A	1/3	9	**16043231**	1.17.2	1/1	4	**16044124**	1.92.5/1	1/1
5	**15212721**	1.95.0	5/5	9	**15970524**	1.95.0	2/5	3	**16043231**	1.28.6	1/1	6	**16044131**	902	4/5
4	**15212921**	1.88.01	1/3	11	**15970531**	1.88.11/5	1/3	7	**16043231**	1.17.5	1/1	6	**16044131**	514	5/8
5	**15540321**	1.82.0	1/2	12	**15970724**	1.82.6	2/15	5	**16043324**	1.92.9	1/4	6	**16044131**	514	6/8

ÍNDICE NUMÉRICO - NUMBER INDEX - INDEX NUMERIQUE - ZAHLENVERZEICHNIS - NUMMERISCHE INDEX - NUMMERFORTEGNELSE

Part N.	SGR.	Pag.	R	Part N.	SGR.	Pag.	R	Part N.	SGR.	Pag.	R	Part N.	SGR.	Pag.	R
6	**16044224**	514	5/8	14	**16104121**	393	1/2	6	**70915276**	1.88.11/6A	1/1	3	**70926538**	1.82.6	5/15
6	**16044224**	514	6/8	6	**16105011**	1.95.1/C	3/3	8	**70916170**	0.41.0	1/1	8	**70926538**	1.82.6	6/15
12	**16044224**	724	1/5	10	**16105011**	1.17.0	1/1	9	**70918433**	1.88.11/5	1/3	13	**70926538**	1.82.6	9/15
8	**16044321**	1.91.7	1/3	3	**16105011**	1.29.1	1/1	4	**70919326**	1.17.0	1/1	3	**70927174**	1.28.0	1/1
7	**16044321**	1.91.7	2/3	10	**16105021**	1.17.0	1/1	2	**70920329**	1.88.11/7	1/1	7	**70927218**	0.40.0/A	1/1
1	**16044321**	1.91.7	3/3	3	**16105021**	1.29.1	1/1	4	**70921076**	0.36.0	1/1	10	**70927328**	0.40.0/A	1/1
7	**16044324**	754-755	1/2	16	**16105021**	902	2/5	4	**70921216**	1.82.6	5/15	5	**70927328**	0.41.0	1/1
8	**16044324**	754-755	2/2	6	**16105111**	1.92.9	2/4	14	**70921216**	1.82.6	6/15	8	**70927328**	1.28.0	1/1
10	**16044331**	728	1/1	7	**16105111**	1.92.9	3/4	2	**70921235**	1.82.6	6/15	6	**70927328**	1.83.0	1/1
4	**16044424**	1.82.6	13/15	14	**16204524**	902	2/5	13	**70921349**	728	1/1	13	**70928052**	990	1/1
4	**16044531**	1.82.6	13/15	7	**17152621**	1.92.1	1/1	1	**70921886**	1.82.6	2/15	10	**70928178**	1.28.0	1/1
2	**16044831**	724	2/5	3	**19032781**	1.17.2	1/1	5	**70922200**	1.19.1	4/5	13	**70928178**	1.82.6	2/15
8	**16045824**	1.94.2/B	3/16	2	**44910052**	1.92.6	1/3	1	**70922200**	1.19.1	5/5	14	**70928178**	1.82.6	13/15
1	**16100811**	1.15.0	1/1	8	**44910053**	1.92.6	1/3	2	**70922200**	1.19.1	1/5	2	**70928178**	393	1/2
9	**16101521**	1.83.0	1/1	2	**70096481**	81.33	1/1	1	**70922200**	1.19.1	2/5	9	**70928182**	0.14.0/A	2/3
1	**16101521**	393	1/2	2	**70096481**	82.76	1/1	8	**70922262**	0.40.0/A	1/1	6	**70928190**	1.29.1	1/1
9	**16101521**	393	1/2	2	**70096481**	83.90	1/1	4	**70922287**	0.36.0	1/1	31	**70928190**	1.88.11/5	2/3
2	**16102311**	1.82.7	2/2	6	**70097578**	81.33	1/1	14	**70922544**	1.44.0/A	12/12	3	**70928190**	1.88.11/7	1/1
21	**16102311**	1.88.11/5	2/3	5	**70241522**	1.14.0	1/2	3	**70922925**	0.40.0/A	1/1	10	**70928190**	1.95.1/A	1/1
18	**16102311**	393	1/2	15	**70617127**	521-553	1/3	4	**70922925**	1.91.4/3	1/1	11	**70928190**	1.17.5	1/1
10	**16102321**	1.75.2	1/1	15	**70617127**	523/B	1/4	8	**70923355**	1.82.6	7/15	2	**70928358**	0.41.0	1/1
6	**16102411**	1.91.5	3/3	13	**70677010**	1.88.08	1/2	3	**70923841**	1.82.6	7/15	3	**70928358**	415	1/2
4	**16102911**	1.82.7	2/2	11	**70677010**	1.88.08	2/2	6	**70923841**	1.82.6	9/15	6	**70928460**	1.28.6	1/1
25	**16102911**	1.88.11/5	2/3	16	**70677010**	514	1/8	6	**70923841**	1.88.11/7	1/1	9	**70928460**	1.82.6	4/15
20	**16102911**	393	1/2	1	**70741298**	1.94.2	3/4	3	**70923841**	514	4/8	7	**70928486**	1.82.6	2/15
22	**16104111**	1.82.6	8/15	6	**70900805**	1.44.0/A	12/12	14	**70923841**	514	5/8	14	**70928486**	1.82.6	4/15
17	**16104111**	1.82.6	9/15	2	**70910324**	0.36.0	1/1	8	**70923841**	514	7/8	5	**70928486**	1.82.6	5/15
3	**16104111**	1.91.7	1/3	1	**70911025**	1.91.4/3	1/1	15	**70923841**	1.82.6	11/15	7	**70928486**	1.82.6	7/15
6	**16104111**	1.94.2/B	3/16	16	**70911029**	521-553	1/3	3	**70923843**	1.82.6	2/15	12	**70928486**	1.82.6	7/15
3	**16104111**	1.91.7	2/3	4	**70911279**	523/A	3/3	6	**70923843**	1.82.6	2/15	19	**70928486**	1.82.6	9/15
3	**16104111**	1.91.7	3/3	7	**70911279**	523/A	3/3	12	**70923843**	1.82.6	4/15	1	**70928486**	1.82.6	12/15
12	**16104111**	1.92.9	2/4	17	**70913177**	1.44.0/A	12/12	3	**70925483**	0.41.0	1/1	14	**70928486**	1.82.6	11/15
3	**16104111**	754-755	1/2	2	**70914465**	1.95.0	1/5	4	**70925748**	536	1/1	10	**70928844**	1.88.08	1/2
3	**16104111**	754-755	2/2	6	**70914465**	1.21.5	1/2	2	**70925927**	1.92.5	1/1	9	**70929156**	0.40.0/A	1/1
13	**16104111**	724	1/5	4	**70914465**	1.21.5	2/2	10	**70926108**	1.15.0/B	1/1	8	**70929276**	1.88.11/6A	1/1
12	**16104121**	1.82.6	13/15	11	**70914465**	1.88.08	1/2	10	**70926108**	1.15.0/A	1/1	10	**70929276**	514/B	4/4
6	**16104121**	1.94.0/1	1/1	4	**70914465**	1.88.08	2/2	7	**70926180**	1.15.0/B	1/1	2	**70929292**	0.40.0/A	1/1
7	**16104121**	726	1/1	7	**70914465**	1.88.11	1/1	7	**70926180**	1.15.0/A	1/1	8	**70929292**	1.17.2	1/1
1	**16104121**	1.91.4/1	2/3	3	**70914465**	1.88.11/1	1/2	6	**70926191**	1.82.7	1/2	21	**70929292**	1.82.6	8/15
10	**16104121**	725	4/6	5	**70914465**	514	1/8	10	**70926191**	1.83.0	1/1	3	**70929292**	1.82.6	13/15
22	**16104121**	1.82.6	8/15	2	**70914465**	514	3/8	3	**70926191**	536	1/1	3	**70929402**	1.14.2	1/1
17	**16104121**	1.82.6	9/15	5	**70914465**	1.88.11/9	1/1	1	**70926538**	1.39.8	1/1	15	**70929402**	0.14.0/A	2/3
5	**16104121**	0.14.0/A	2/3	2	**70915276**	1.88.11/1	1/2	11	**70926538**	1.82.6	4/15	4	**70929562**	1.91.8	1/1

ÍNDICE NUMÉRICO - NUMBER INDEX - INDEX NUMERIQUE - ZAHLENVERZEICHNIS - NUMMERISCHE INDEX - NUMMERFORTEGNELSE

Part N.	SGR.	Pag.	R	Part N.	SGR.	Pag.	R	Part N.	SGR.	Pag.	R	Part N.	SGR.	Pag.	R
9	**70929662**	726	1/1	8	**73160099**	1.95.1/A	1/1	3	**75237796**	1.15.0/B	1/1	24	**75245693**	1.88.11/5	2/3
2	**70929662**	344	1/1	8	**73160099**	1.95.1/B	1/1	5	**75237919**	1.91.4/3	1/1	22	**75245693**	393	2/2
12	**70930357**	728	1/1	15	**73160778**	1.82.7	2/2	4	**75237932**	516	1/1	9	**75245697**	0.41.0	1/1
1	**70930357**	1.82.6	2/15	27	**73160978**	393	2/2	3	**75237996**	1.15.0/A	1/1	1	**75245698**	0.41.0	1/1
27	**70930357**	1.82.6	8/15	8	**75201058**	1.82.0	1/2	4	**75238098**	515	1/1	1	**75245702**	0.02.1	1/2
8	**70930357**	1.82.6	9/15	17	**75201058**	1.14.0	1/2	1	**75238130**	520-550	1/1	7	**75245750**	1.17.0/A	1/1
5	**70930357**	1.82.6	12/15	4	**75201642**	1.14.2	1/1	2	**75238130**	522/2-551	1/1	2	**75245752**	1.17.0/A	1/1
8	**70930357**	514	8/8	13	**75209270**	1.82.6	1/15	8	**75238350**	520-550	1/1	6	**75245753**	1.17.0/A	1/1
20	**70930357**	514	5/8	2	**75210383**	1.82.0	1/2	9	**75238351**	520-550	1/1	10	**75245835**	519	1/1
4	**70930357**	514	4/8	8	**75210383**	1.14.0	1/2	6	**75238351**	522/2-551	1/1	9	**75245898**	1.82.6	12/15
8	**70930357**	514	6/8	8	**75210969**	990	1/1	4	**75240035**	1.74.1	1/1	1	**75245908**	1.28.6	1/1
9	**70930357**	514	7/8	7	**75210985**	990	1/1	10	**75240695**	990	1/1	7	**75245921**	1.28.0	1/1
7	**70930357**	514	8/8	3	**75211345**	1.91.8	1/1	3	**75240702**	1.14.0	1/2	7	**75245951**	514	5/8
2	**70930370**	1.88.08	1/2	12	**75214200**	1.82.0	1/2	11	**75241002**	1.82.0	1/2	3	**75245952**	514	5/8
6	**70930370**	1.82.6	6/15	12	**75215541**	990	1/1	6	**75241002**	1.14.0	1/2	4	**75245953**	514	6/8
6	**70930370**	0.14.0/A	2/3	3	**75215542**	990	1/1	2	**75241002**	0.01.0	1/1	6	**75245967**	1.82.6	12/15
3	**70931640**	1.39.8	1/1	2	**75215543**	990	1/1	13	**75242314**	1.82.7	2/2	7	**75245971**	1.82.6	12/15
10	**70931640**	1.82.6	4/15	5	**75215545**	990	1/1	14	**75242314**	1.88.11/5	1/3	2	**75245975**	514	4/8
8	**70931640**	1.82.6	5/15	6	**75215546**	990	1/1	1	**75242367**	0.36.0	1/1	13	**75245975**	514	5/8
3	**70931640**	1.82.6	6/15	4	**75215547**	990	1/1	7	**75242369**	0.34.7	1/2	13	**75245999**	1.88.11/9B	1/1
11	**70931640**	1.82.6	6/15	1	**75215548**	990	1/1	3	**75244354**	1.88.11	1/1	1	**75246056**	1.21.5	2/2
1	**70934150**	1.88.11/7	1/1	9	**75215549**	990	1/1	3	**75244355**	1.88.11	1/1	11	**75246056**	514	2/8
13	**70935175**	1.82.6	4/15	11	**75215558**	990	1/1	11	**75244437**	1.21.5	2/2	4	**75246117**	83.90	1/1
4	**70935175**	1.82.6	12/15	6	**75216315**	1.91.4/3	1/1	11	**75244438**	1.21.5	2/2	9	**75246123**	1.82.7	1/2
21	**70935175**	514	5/8	5	**75222518**	514	6/8	3	**75244879**	520-550	1/1	4	**75246144**	1.88.11/7	1/1
7	**70935175**	514	7/8	4	**75235259**	517	1/1	1	**75245052**	1.91.8	1/1	1	**75246170**	1.82.6	9/15
6	**70935175**	514	8/8	4	**75235262**	518	1/1	2	**75245053**	1.91.8	1/1	1	**75246171**	1.82.6	7/15
16	**70935176**	1.82.6	4/15	3	**75235714**	1.87.8	1/1	1	**75245290**	514	4/8	25	**75246221**	1.82.6	10/15
11	**70935176**	1.82.6	7/15	3	**75235714**	1.87.8/A	1/1	6	**75245375**	1.88.11/5	1/3	15	**75246227**	1.82.6	9/15
14	**70935176**	1.88.11/7	1/1	7	**75235715**	1.87.8	1/1	7	**75245455**	1.21.5	2/2	24	**75246228**	1.82.6	10/15
7	**70935842**	724	4/5	7	**75235715**	1.87.8/A	1/1	1	**75245456**	1.17.2	1/1	16	**75246229**	1.82.6	9/15
15	**71314915**	1.95.5/2A	1/1	2	**75236506**	514	8/8	5	**75245456**	1.17.2/A	1/1	17	**75246230**	1.82.6	7/15
1	**71403846**	1.91.1	1/1	16	**75236507**	514	5/8	1	**75245563**	522/2-551	1/1	25	**75246231**	1.82.6	8/15
7	**71415445**	1.21.5	1/2	4	**75236507**	514	7/8	2	**75245575**	1.87.8	1/1	16	**75246232**	1.82.6	7/15
10	**71415883**	1.82.6	9/15	5	**75236507**	514	8/8	2	**75245575**	1.87.8/A	1/1	26	**75246233**	1.82.6	8/15
3	**71416437**	1.95.0	2/5	5	**75236793**	1.82.6	4/15	1	**75245582**	1.83.0	1/1	5	**75246252**	1.88.11/6A	1/1
3	**71431555**	724	3/5	6	**75236793**	1.82.6	5/15	4	**75245616**	82.76	1/1	1	**75246261**	1.88.11/6A	1/1
3	**73077381**	1.92.8/1	1/1	6	**75236793**	1.82.6	7/15	5	**75245675**	81.33	1/1	2	**75246264**	1.88.11/6A	1/1
6	**73111466**	1.82.0	1/2	5	**75236793**	1.82.6	9/15	4	**75245676**	81.33	1/1	14	**75246265**	1.88.11/6A	1/1
1	**73124631**	0.01.0	1/1	3	**75236793**	1.82.6	12/15	3	**75245676**	83.90	1/1	20	**75246283**	1.82.6	7/15
13	**73124631**	1.82.0	1/2	2	**75236979**	1.74.1	1/1	6	**75245692**	1.88.11	1/1	12	**75246290**	514	5/8
11	**73125303**	1.44.0/A	12/12	12	**75237610**	1.87.8	1/1	14	**75245692**	1.88.11	1/1	4	**75246291**	1.82.6	7/15
5	**73146386**	1.28.0	1/1	12	**75237610**	1.87.8/A	1/1	2	**75245692**	1.88.11/5	3/3	5	**75246293**	1.82.6	7/15

ÍNDICE NUMÉRICO - NUMBER INDEX - INDEX NUMERIQUE - ZAHLENVERZEICHNIS - NUMMERISCHE INDEX - NUMMERFORTEGNELSE

Part N.	SGR.	Pag.	R	Part N.	SGR.	Pag.	R	Part N.	SGR.	Pag.	R	Part N.	SGR.	Pag.	R
9	**75246295**	1.82.6	9/15	3	**75247178**	514	6/8	5	**75249766**	82.76	1/1	6	**75258146**	1.98.0	4/5
1	**75246312**	1.44.0/A	12/12	13	**75247179**	1.88.11/7	1/1	8	**75249769**	82.76	1/1	10	**75258150**	1.98.0	4/5
15	**75246316**	1.44.0/A	12/12	2	**75247179**	415	2/2	8	**75249770**	82.76	1/1	9	**75258192**	1.98.0	3/5
16	**75246319**	1.44.0/A	12/12	4	**75247188**	1.82.6	4/15	1	**75250274**	81.33	1/1	9	**75258192**	1.98.0	4/5
5	**75246324**	1.44.0/A	12/12	8	**75247190**	1.82.6	12/15	1	**75250278**	83.90	1/1	1	**75258205**	1.96.8	1/1
2	**75246335**	1.83.0	1/1	2	**75247284**	1.15.0/B	1/1	5	**75250280**	83.90	1/1	18	**75258401**	1.82.0	1/2
4	**75246352**	1.15.0/B	1/1	5	**75247358**	1.15.0/B	1/1	6	**75250288**	82.76	1/1	2	**75258446**	1.91.4/2	1/1
4	**75246352**	1.15.0/A	1/1	5	**75247358**	1.15.0/A	1/1	3	**75250381**	1.91.4	3/7	2	**75258446**	1.91.4	6/7
12	**75246363**	1.83.0	1/1	22	**75247363**	1.82.0	2/2	10	**75250573**	0.14.0/A	2/3	1	**75258463**	519/A	1/1
22	**75246543**	1.88.11/5	2/3	9	**75247374**	1.15.0/B	1/1	12	**75250573**	0.14.0/A	3/3	1	**75258467**	1.87.8/A	1/1
19	**75246544**	1.88.11/5	1/3	9	**75247374**	1.15.0/A	1/1	1	**75251457**	120	1/1	1	**75258468**	1.92.0	2/2
20	**75246545**	1.88.11/5	1/3	8	**75247391**	1.88.11	1/1	13	**75252397**	0.14.0/A	2/3	13	**75280066**	1.92.1	1/1
2	**75246614**	1.82.6	5/15	2	**75247406**	1.28.6	1/1	9	**75254117**	1.21.5	1/2	2	**75280114**	1.15.0/A	1/1
7	**75246623**	1.44.0/A	12/12	4	**75247476**	1.44.0/A	12/12	8	**75254118**	1.21.5	1/2	8	**75280261**	1.17.5	1/1
3	**75246669**	522/2-551	1/1	2	**75247480**	1.44.0/A	12/12	7	**75255036**	1.17.0	1/1	3	**75280297**	1.98.0	3/5
5	**75246726**	520-550	1/1	4	**75247594**	520-550	1/1	6	**75255037**	1.17.0	1/1	3	**75280297**	1.98.0	4/5
1	**75246726**	522/2-551	1/1	4	**75247595**	1.88.11/1	1/2	1	**75255097**	1.17.0	1/1	2	**75280312**	1.98.0	3/5
7	**75246762**	1.14.2	1/1	7	**75247612**	1.82.7	1/2	2	**75255098**	1.17.0	1/1	2	**75280312**	1.98.0	4/5
5	**75246763**	1.14.2	1/1	6	**75247612**	393	1/2	1	**75257110**	1.87.8	1/1	1	**75280378**	1.98.0	3/5
6	**75246764**	1.14.2	1/1	15	**75247636**	1.14.0	1/2	2	**75257367**	514	7/8	1	**75280378**	1.98.0	4/5
11	**75246790**	1.87.8	1/1	3	**75247748**	1.74.1	1/1	1	**75257371**	514	7/8	14	**75280414**	728	1/1
11	**75246790**	1.87.8/A	1/1	9	**75247999**	514	6/8	2	**75257373**	514	5/8	6	**75280417**	1.17.5	1/1
1	**75246821**	1.88.11/9	1/1	3	**75248059**	81.33	1/1	1	**75257375**	514	5/8	4	**75280418**	1.17.5	1/1
7	**75246887**	1.39.8	1/1	16	**75248202**	1.88.11	1/1	2	**75257380**	514	6/8	9	**75280421**	1.82.6	2/15
6	**75246888**	1.39.8	1/1	8	**75248224**	1.21.5	2/2	1	**75257382**	514	6/8	1	**75280445**	250	1/1
7	**75246915**	1.82.6	9/15	8	**75248225**	1.21.5	2/2	1	**75257428**	514	8/8	10	**75280651**	518	1/1
13	**75246956**	1.82.6	13/15	15	**75248366**	1.82.0	1/2	1	**75257546**	514	3/8	10	**75280657**	517	1/1
7	**75246956**	393	1/2	1	**75248611**	1.88.11/6A	1/1	1	**75257596**	1.82.0	1/2	1	**75280671**	1.92.8/1	1/1
2	**75246961**	1.17.2	1/1	14	**75248612**	1.88.11/6A	1/1	7	**75257619**	1.14.0	1/2	2	**75280674**	1.92.8/1	1/1
11	**75246965**	1.17.2	1/1	1	**75248637**	1.94.0	1/1	19	**75257656**	1.82.0	1/2	36	**75280675**	1.88.11/5	2/3
15	**75246966**	1.17.2	1/1	1	**75249025**	251	1/1	1	**75257712**	1.94.1	1/1	5	**75280707**	517	1/1
7	**75246969**	1.17.2	1/1	2	**75249083**	250	1/1	1	**75257724**	1.87.8	1/1	5	**75280707**	518	1/1
3	**75247076**	1.19.1	4/5	2	**75249083**	251	1/1	3	**75257804**	1.94.0/1	1/1	5	**75280707**	515	1/1
11	**75247119**	1.82.6	2/15	2	**75249084**	250	1/1	10	**75258091**	1.98.0	3/5	5	**75280707**	516	1/1
2	**75247120**	1.82.6	4/15	2	**75249084**	251	1/1	4	**75258098**	1.98.0	3/5	5	**75280707**	519	1/1
14	**75247122**	1.82.6	7/15	3	**75249263**	514	6/8	4	**75258098**	1.98.0	4/5	6	**75280715**	517	1/1
21	**75247122**	1.82.6	10/15	9	**75249272**	1.82.7	2/2	5	**75258099**	1.98.0	3/5	6	**75280715**	518	1/1
1	**75247123**	1.82.6	5/15	14	**75249274**	1.82.7	2/2	5	**75258099**	1.98.0	4/5	6	**75280715**	515	1/1
3	**75247124**	1.82.6	4/15	16	**75249319**	1.88.11/5	1/3	8	**75258100**	1.98.0	3/5	6	**75280715**	516	1/1
8	**75247127**	1.82.6	2/15	4	**75249428**	1.88.11/9	1/1	8	**75258100**	1.98.0	4/5	6	**75280715**	519	1/1
4	**75247129**	1.82.6	2/15	2	**75249444**	1.82.6	13/15	7	**75258101**	1.98.0	3/5	9	**75280720**	516	1/1
7	**75247137**	1.88.11/5	1/3	9	**75249446**	1.82.6	13/15	7	**75258101**	1.98.0	4/5	9	**75280720**	517	1/1
38	**75247140**	1.88.11/5	2/3	5	**75249765**	82.76	1/1	6	**75258145**	1.98.0	3/5	9	**75280720**	515	1/1

ÍNDICE NUMÉRICO - NUMBER INDEX - INDEX NUMERIQUE - ZAHLENVERZEICHNIS - NUMMERISCHE INDEX - NUMMERFORTEGNELSE

Part N.	SGR.	Pag.	R	Part N.	SGR.	Pag.	R	Part N.	SGR.	Pag.	R	Part N.	SGR.	Pag.	R
9	**75280720**	518	1/1	16	**75311283**	0.36.0/A	1/1	5	**76022818**	1.39.8	1/1	9	**80080681**	0.34.7/A	1/1
9	**75280720**	519	1/1	13	**75311284**	0.36.0/A	1/1	5	**79005245**	120	1/1	6	**80080710**	1.21.5	1/2
10	**75280771**	516	1/1	8	**75311285**	0.36.0/A	1/1	1	**79010153**	1.74.1	1/1	4	**80080710**	1.21.5	2/2
10	**75280778**	515	1/1	1	**75312617**	1.98.0	1/5	14	**79010217**	0.14.0/A	2/3	17	**80080710**	1.88.11/6	2/2
11	**75280841**	1.82.6	12/15	1	**75312618**	1.98.0	2/5	10	**79021911**	1.88.11/6A	1/1	11	**80080710**	1.88.08	1/2
10	**75280842**	1.82.6	12/15	6	**75312622**	1.98.0	5/5	13	**79043231**	514	1/8	4	**80080710**	1.88.08	2/2
2	**75280845**	120	1/1	4	**76003599**	514	5/8	13	**79043234**	514	1/8	7	**80080710**	1.88.11	1/1
3	**75280846**	120	1/1	8	**76003599**	514	5/8	3	**79046227**	1.91.4	4/7	3	**80080710**	1.88.11/1	1/2
13	**75288194**	1.88.11/6A	1/1	7	**76006491**	250	1/1	12	**79047728**	1.88.11/6A	1/1	5	**80080710**	514	1/8
9	**75288234**	0.01.0	1/1	7	**76006491**	251	1/1	4	**79071472**	1.88.11/6A	1/1	7	**80080710**	514/A	1/2
10	**75288838**	0.14.0/A	3/3	15	**76021240**	1.82.6	4/15	39	**79076055**	1.88.11/5	2/3	6	**80080710**	514/A	2/2
9	**75288839**	0.14.0/A	3/3	10	**76021244**	1.88.11/7	1/1	17	**79083845**	1.17.2	1/1	12	**80080710**	514/C	1/1
8	**75288840**	0.14.0/A	3/3	9	**76021263**	1.88.11/7	1/1	14	**79087360**	1.82.6	3/15	7	**80080710**	514/1A	1/2
6	**75288841**	0.14.0/A	3/3	3	**76021263**	1.82.6	11/15	8	**79089592**	1.93.5	1/2	6	**80080710**	514/1A	2/2
7	**75288842**	0.14.0/A	3/3	12	**76021264**	1.88.11/7	1/1	7	**79089592**	1.93.0	4/4	7	**80080710**	902	3/5
11	**75288843**	0.14.0/A	3/3	2	**76021398**	519	1/1	2	**79089592**	1.93.0	1/4	5	**80080710**	1.88.11/9	1/1
4	**75288844**	0.14.0/A	3/3	3	**76021399**	519	1/1	1	**79089592**	1.93.0	2/4	2	**80080710**	1.88.11/9A	2/2
7	**75288845**	0.01.0	1/1	2	**76021430**	517	1/1	13	**79089592**	1.93.0/A	1/2	15	**80084057**	0.08.4	1/2
5	**75288845**	0.14.0/A	3/3	2	**76021430**	518	1/1	4	**79104494**	1.14.0	1/2	2	**80084264**	1.44.0/A	11/12
3	**75288846**	0.14.0/A	3/3	2	**76021430**	515	1/1	9	**79104494**	1.82.0	1/2	3	**80087307**	1.44.0/A	12/12
13	**75288847**	0.14.0/A	3/3	2	**76021430**	516	1/1	9	**79105220**	1.93.5	1/2	6	**80087340**	0.08.4	1/2
2	**75288848**	0.14.0/A	3/3	3	**76021431**	517	1/1	8	**79105220**	1.93.0	4/4	10	**80087657**	0.30.0	1/1
1	**75288849**	0.14.0/A	3/3	3	**76021431**	518	1/1	3	**79105220**	1.93.0	1/4	9	**80087657**	1.94.2/B	3/16
3	**75288850**	0.14.0/A	2/3	3	**76021431**	515	1/1	2	**79105220**	1.93.0	2/4	12	**80087872**	0.40.0/A	1/1
1	**75288852**	0.14.0/A	2/3	3	**76021431**	516	1/1	7	**79105220**	1.93.0/A	1/2	5	**80088011**	1.94.2/B	3/16
10	**75289709**	1.96.8	2/4	12	**76021466**	514	3/8	12	**79111815**	1.93.0/A	1/2	5	**80088556**	0.08.4	1/2
11	**75310522**	0.14.0/A	2/3	3	**76021649**	215	1/1	9	**79111978**	1.91.1	1/1	5	**80088702**	1.44.0/A	7/12
16	**75310523**	0.14.0/A	2/3	19	**76021723**	1.82.6	4/15	12	**79111978**	1.92.9	1/4	9	**80122056**	0.14.0/B	3/13
9	**75310665**	0.36.0/A	1/1	4	**76021723**	1.39.8	1/1	13	**79111978**	1.93.0	1/4	18	**80128825**	1.82.6	3/15
6	**75311269**	0.36.0/A	1/1	1	**76021723**	1.82.6	4/15	18	**79111978**	1.93.0	1/4	16	**80128825**	1.82.6	11/15
7	**75311270**	0.36.0/A	1/1	3	**76021725**	514	7/8	2	**79111978**	1.96.7	3/3	16	**80128825**	1.82.6	4/15
12	**75311271**	0.36.0/A	1/1	4	**76022229**	0.41.0	1/1	4	**79111978**	1.96.7/1	1/1	11	**80128825**	1.82.6	7/15
17	**75311272**	0.36.0/A	1/1	6	**76022229**	1.28.0	1/1	7	**79111978**	1.94.2/B	15/16	7	**80128825**	1.95.5/1	1/1
11	**75311273**	0.36.0/A	1/1	3	**76022306**	415	2/2	23	**79111978**	1.93.0/A	2/2	14	**80128825**	1.88.11/7	1/1
5	**75311274**	0.36.0/A	1/1	14	**76022686**	514	1/8	1	**79112049**	415	2/2	7	**80128825**	724	2/5
18	**75311275**	0.36.0/A	1/1	15	**76022744**	514	1/8	33	**79113969**	1.88.11/5	2/3	9	**80140160**	0.34.7	1/2
3	**75311276**	0.36.0/A	1/1	2	**76022766**	1.82.6	2/15	6	**80012934**	0.34.7	1/2	6	**80163044**	1.44.0/A	2/12
14	**75311277**	0.36.0/A	1/1	6	**76022766**	1.82.6	4/15	6	**80033323**	0.14.0	2/3	10	**80165202**	1.95.5/1	1/1
1	**75311278**	0.36.0/A	1/1	13	**76022766**	1.82.6	7/15	6	**80050020**	0.04.3	2/2	11	**80165202**	1.95.0	4/5
2	**75311279**	0.36.0/A	1/1	20	**76022766**	1.82.6	10/15	4	**80050020**	0.07.7	1/1	5	**80165202**	902	5/5
4	**75311280**	0.36.0/A	1/1	2	**76022766**	1.82.6	12/15	3	**80050458**	0.14.0/B	12/13	4	**80165202**	724	2/5
15	**75311281**	0.36.0/A	1/1	2	**76022816**	1.82.6	7/15	12	**80052491**	1.44.0/A	6/12	6	**80167266**	0.30.2	1/1
10	**75311282**	0.36.0/A	1/1	2	**76022816**	1.82.6	11/15	7	**80080681**	0.04.3	1/2	6	**80167266**	1.82.6	1/15

Part N.	SGR.	Pag.	R	Part N.	SGR.	Pag.	R	Part N.	SGR.	Pag.	R	Part N.	SGR.	Pag.	R
13	**80167266**	1.82.6	4/15	7	**81802560**	1.44.0/A	11/12	5	**81805624**	0.34.7	2/2	2	**81824478**	1.44.0/A	6/12
15	**80167266**	514	5/8	14	**81803219**	0.04.3	1/2	11	**81806277**	0.14.0	1/3	6	**81825117**	1.82.6	2/15
7	**80167266**	514	7/8	5	**81803273**	1.44.0/A	4/12	7	**81808472**	0.04.0	1/2	12	**81825117**	1.82.6	4/15
6	**80167266**	514	8/8	6	**81803275**	1.44.0/A	4/12	8	**81809406**	1.44.0/A	1/12	6	**81825117**	395/1	3/5
3	**80167266**	724	1/5	10	**81803334**	1.44.0/A	3/12	15	**81810777**	0.12.0	1/1	13	**81825117**	902	4/5
4	**80167266**	724	4/5	3	**81803336**	1.44.0/A	11/12	5	**81810928**	0.14.0/B	13/13	2	**81825360**	0.14.0/A	1/3
1	**80167268**	1.39.8	1/1	5	**81803345**	1.44.0/A	11/12	3	**81810932**	0.14.0/B	10/13	3	**81825363**	0.14.0/A	1/3
11	**80167268**	1.82.6	4/15	8	**81803369**	1.44.0/A	6/12	9	**81810977**	0.14.0/B	9/13	8	**81825520**	0.08.4	2/2
3	**80167268**	1.82.6	5/15	5	**81803413**	1.44.0/A	5/12	9	**81811013**	0.14.0/B	2/13	12	**81825865**	1.44.0/A	4/12
8	**80167268**	1.82.6	6/15	6	**81803420**	1.44.0/A	5/12	10	**81811018**	0.14.0/B	13/13	6	**81827354**	1.44.0/A	6/12
13	**80167268**	1.82.6	9/15	11	**81803424**	1.44.0/A	5/12	4	**81811019**	0.14.0/B	13/13	7	**81827365**	1.82.6	2/15
16	**80167269**	339	1/6	13	**81803445**	1.44.0/A	5/12	3	**81811687**	0.14.0/B	8/13	14	**81827365**	1.82.6	4/15
9	**80182977**	0.30.2	1/1	9	**81803450**	1.44.0/A	4/12	8	**81811694**	0.14.0/B	11/13	5	**81827365**	1.82.6	5/15
8	**80229317**	0.14.0/A	1/3	15	**81803451**	1.44.0/A	5/12	4	**81811703**	0.14.0/B	8/13	7	**81827365**	1.82.6	7/15
9	**80236535**	1.44.0/A	2/12	1	**81803474**	1.44.0/A	5/12	5	**81811884**	0.14.0/A	1/3	12	**81827365**	1.82.6	7/15
3	**80263136**	1.44.0/A	1/12	1	**81803502**	1.44.0/A	8/12	10	**81811886**	0.34.7	2/2	19	**81827365**	1.82.6	9/15
13	**80271233**	1.44.0/A	2/12	1	**81803503**	1.44.0/A	8/12	3	**81812261**	1.44.0/A	5/12	1	**81827365**	1.82.6	12/15
7	**80280244**	1.15.0/B	1/1	1	**81803504**	1.44.0/A	8/12	9	**81812929**	0.14.0/B	13/13	3	**81827365**	725	5/6
10	**80280244**	1.15.0/B	1/1	1	**81803505**	1.44.0/A	8/12	11	**81812972**	0.14.0/B	10/13	3	**81827365**	725	4/6
7	**80280244**	1.15.0/A	1/1	1	**81803506**	1.44.0/A	8/12	3	**81812975**	0.14.0/B	11/13	14	**81827365**	1.82.6	11/15
10	**80280244**	1.15.0/A	1/1	1	**81803507**	1.44.0/A	8/12	4	**81813686**	0.14.0/B	11/13	14	**81832258**	726	1/1
6	**80280248**	1.44.0/A	7/12	1	**81803508**	1.44.0/A	8/12	10	**81813686**	0.14.0/B	12/13	3	**81832258**	395/1	1/5
11	**80280734**	0.14.0/B	2/13	1	**81803509**	1.44.0/A	8/12	10	**81816246**	1.44.0/A	5/12	3	**81832258**	395/1	1/5
9	**80300614**	0.14.0/B	1/13	1	**81803510**	1.44.0/A	8/12	5	**81818397**	1.44.0/A	2/12	4	**81833781**	0.14.0/A	1/3
15	**80510137**	0.04.3	1/2	1	**81803511**	1.44.0/A	8/12	15	**81818731**	0.06.0	3/4	12	**81833911**	0.14.0/B	10/13
4	**80510137**	0.04.5	1/1	1	**81803515**	1.44.0/A	10/12	3	**81818824**	1.88.11/2	1/2	9	**81834042**	1.44.0/A	7/12
2	**80510185**	0.14.0	1/3	1	**81803516**	1.44.0/A	10/12	16	**81818824**	1.88.11/6	2/2	2	**81834073**	1.44.0/A	7/12
17	**80510884**	1.44.0/A	5/12	1	**81803517**	1.44.0/A	10/12	2	**81818824**	1.88.11/1	1/2	1	**81840745**	0.14.0/B	6/13
16	**80510892**	1.44.0/A	5/12	1	**81803518**	1.44.0/A	10/12	6	**81818824**	1.88.11/6A	1/1	1	**81840747**	0.14.0/B	6/13
8	**80529070**	0.31.0	1/1	1	**81803519**	1.44.0/A	10/12	7	**81820047**	1.44.0/A	2/12	5	**81844835**	0.08.4	1/2
2	**80570186**	1.82.6	6/15	1	**81803520**	1.44.0/A	10/12	5	**81820799**	0.14.0/B	1/13	10	**81844851**	1.82.6	3/15
11	**80678966**	1.44.0/A	2/12	1	**81803521**	1.44.0/A	10/12	8	**81820846**	1.44.0/A	4/12	9	**81844851**	1.95.5/1	1/1
4	**80784122**	1.91.1/1	1/1	1	**81803522**	1.44.0/A	10/12	3	**81820849**	1.44.0/A	4/12	5	**81844851**	728/A	2/2
4	**81412030**	0.14.0/B	6/13	3	**81803542**	1.44.0/A	6/12	7	**81821207**	1.15.0	1/1	4	**81844851**	724	1/5
8	**81728114**	1.44.0/A	5/12	6	**81804020**	0.12.0	1/1	10	**81821262**	0.34.7/A	1/1	3	**81844851**	724	4/5
12	**81800471**	1.44.0/A	5/12	2	**81804024**	0.12.0	1/1	6	**81821380**	0.34.7	1/2	5	**81844851**	724	2/5
7	**81800472**	1.44.0/A	5/12	3	**81804038**	514	4/8	5	**81821507**	0.04.3	1/2	3	**81845038**	1.82.6	7/15
2	**81800474**	1.44.0/A	5/12	4	**81804059**	0.08.4	2/2	3	**81821513**	0.08.2/A	1/1	6	**81845038**	1.82.6	9/15
4	**81800475**	1.44.0/A	5/12	6	**81804217**	0.04.3	1/2	17	**81822462**	1.44.0/A	12/12	8	**81845038**	1.95.5/1	1/1
4	**81800480**	1.44.0/A	11/12	7	**81804316**	0.06.0	3/4	2	**81822547**	0.04.0	2/2	4	**81845038**	1.82.6	12/15
2	**81800486**	1.44.0/A	12/12	9	**81804341**	0.06.0	3/4	10	**81823235**	0.04.5	1/1	6	**81845038**	1.88.11/7	1/1
7	**81800488**	1.44.0/A	12/12	1	**81804978**	1.44.0/A	11/12	4	**81823610**	1.44.0/A	4/12	4	**81845038**	395/1	1/5
10	**81802548**	1.44.0/A	2/12	11	**81805231**	1.44.0/A	12/12	3	**81823836**	0.08.2	1/1	11	**81845038**	395/1	2/5

Part N.	SGR.	Pag.	R	Part N.	SGR.	Pag.	R	Part N.	SGR.	Pag.	R	Part N.	SGR.	Pag.	R
14	**81845038**	514	5/8	7	**81867216**	0.24.0/A	1/1	10	**81868877**	0.14.0	1/3	9	**81872613**	0.14.0/B	6/13
8	**81845038**	514	7/8	3	**81867218**	0.24.0/A	1/1	1	**81868877**	0.14.0/C	1/1	3	**81872614**	0.14.0/B	9/13
3	**81845038**	902	5/5	5	**81867220**	0.24.0/A	1/1	10	**81868878**	0.14.0	1/3	4	**81872615**	0.14.0/B	9/13
1	**81845038**	725	6/6	6	**81867226**	0.24.0/A	1/1	1	**81868878**	0.14.0/C	1/1	10	**81872616**	0.14.0/B	5/13
2	**81845038**	725	5/6	2	**81867227**	0.24.0/A	1/1	1	**81869023**	0.08.0	1/1	13	**81872617**	0.14.0/B	5/13
2	**81845038**	725	4/6	9	**81867417**	0.14.0/B	5/13	7	**81869029**	0.30.2	1/1	8	**81872629**	0.14.0/B	9/13
15	**81845038**	1.82.6	11/15	11	**81867527**	0.14.0/C	1/1	8	**81869030**	0.30.2	1/1	8	**81872633**	0.14.0/B	9/13
5	**81845711**	1.44.0/A	6/12	8	**81867530**	0.14.0/C	1/1	14	**81869031**	0.30.2	1/1	6	**81872636**	0.14.0/B	9/13
4	**81845713**	1.44.0/A	7/12	9	**81867531**	0.14.0/C	1/1	13	**81869032**	0.24.0	1/1	4	**81872638**	0.14.0/B	12/13
10	**81845714**	1.44.0/A	7/12	7	**81867532**	0.14.0/C	1/1	8	**81869035**	0.30.2	1/1	6	**81872639**	0.14.0/B	12/13
11	**81846884**	1.44.0/A	4/12	6	**81867533**	0.14.0/C	1/1	9	**81869613**	0.14.0	2/3	7	**81872640**	0.14.0/B	12/13
7	**81847146**	1.44.0/A	6/12	4	**81867534**	0.14.0/C	1/1	10	**81869714**	1.92.6	3/3	2	**81872682**	0.08.0	1/1
1	**81847148**	1.44.0/A	9/12	10	**81867537**	0.14.0/C	1/1	16	**81870039**	1.93.0	1/4	15	**81872695**	0.14.0/B	13/13
1	**81847149**	1.44.0/A	9/12	10	**81867538**	0.14.0/C	1/1	2	**81870402**	514/1A	2/2	14	**81872696**	0.14.0/B	13/13
1	**81847150**	1.44.0/A	9/12	3	**81867564**	0.14.0/C	1/1	16	**81870404**	514/1A	1/2	12	**81872697**	0.14.0/B	13/13
1	**81847151**	1.44.0/A	9/12	12	**81867742**	1.92.6	3/3	8	**81870468**	0.34.7/A	1/1	13	**81872698**	0.14.0/B	13/13
1	**81847152**	1.44.0/A	9/12	8	**81867743**	1.92.6	3/3	5	**81871346**	514/A	2/2	11	**81872699**	0.14.0/B	13/13
1	**81847153**	1.44.0/A	9/12	9	**81867918**	0.08.4	2/2	2	**81871346**	514/B	1/2	2	**81873150**	0.14.0/B	8/13
1	**81847154**	1.44.0/A	9/12	8	**81867931**	0.04.3	2/2	5	**81871346**	514/1A	2/2	5	**81873151**	0.14.0/B	8/13
1	**81847155**	1.44.0/A	9/12	8	**81867931**	0.34.7	1/2	15	**81871439**	1.92.4	1/3	14	**81873152**	0.14.0/B	8/13
1	**81847156**	1.44.0/A	9/12	8	**81867943**	0.04.3	2/2	1	**81871476**	0.14.0	2/3	12	**81873153**	0.14.0/B	8/13
1	**81847157**	1.44.0/A	9/12	6	**81868095**	0.34.7	1/2	1	**81871476**	0.14.0/A	1/3	11	**81873154**	0.14.0/B	8/13
1	**81847158**	1.44.0/A	9/12	1	**81868398**	0.34.7	1/2	6	**81871477**	0.14.0/A	1/3	10	**81873155**	0.14.0/B	8/13
1	**81847159**	1.44.0/A	9/12	5	**81868410**	0.04.0	2/2	9	**81871478**	0.14.0/A	1/3	9	**81873156**	0.14.0/B	8/13
1	**81847160**	1.44.0/A	9/12	6	**81868411**	0.04.0	2/2	4	**81871478**	0.01.0	1/1	6	**81873157**	0.14.0/B	8/13
1	**81847161**	1.44.0/A	9/12	7	**81868455**	0.24.0	1/1	12	**81871479**	0.14.0/A	1/3	4	**81873163**	0.14.0/B	10/13
1	**81847162**	1.44.0/A	9/12	2	**81868456**	0.24.0	1/1	13	**81871480**	0.14.0/A	1/3	2	**81873166**	0.14.0/B	11/13
2	**81854753**	1.44.0/A	4/12	1	**81868467**	0.08.4	2/2	11	**81871481**	0.14.0/A	1/3	10	**81873172**	0.14.0/B	10/13
38	**81855916**	1.88.11/5	2/3	3	**81868468**	0.08.4	2/2	14	**81871482**	0.14.0/A	1/3	14	**81873173**	0.14.0/B	5/13
9	**81862801**	0.30.2	1/1	2	**81868470**	0.08.4	2/2	4	**81871496**	0.24.0	1/1	15	**81873174**	0.14.0/B	5/13
11	**81862805**	0.24.0	1/1	6	**81868473**	0.07.1	1/1	3	**81871498**	0.24.0	1/1	15	**81873175**	0.14.0/B	12/13
8	**81862808**	0.24.0	1/1	7	**81868474**	0.07.1	1/1	10	**81871864**	1.92.4	1/3	8	**81873176**	0.14.0/B	13/13
13	**81862931**	0.04.3	1/2	2	**81868477**	0.14.0	2/3	10	**81871864**	1.92.4	2/3	7	**81873177**	0.14.0/B	13/13
4	**81863681**	0.34.7/A	1/1	6	**81868477**	0.24.0	1/1	7	**81872028**	1.92.4	2/3	2	**81873182**	0.14.0/B	5/13
2	**81865085**	0.06.0	4/4	3	**81868478**	0.14.0	2/3	6	**81872036**	1.92.4	1/3	10	**81873185**	0.14.0/B	3/13
2	**81865086**	0.06.0	4/4	5	**81868478**	0.24.0	1/1	2	**81872155**	0.14.0/B	3/13	8	**81873186**	0.14.0/B	3/13
1	**81865092**	0.06.0	4/4	15	**81868534**	0.24.0	1/1	7	**81872599**	0.14.0/B	6/13	3	**81873187**	0.14.0/B	3/13
1	**81865093**	0.06.0	4/4	1	**81868537**	0.30.0	1/1	8	**81872602**	0.14.0/B	6/13	7	**81873204**	0.14.0/B	4/13
6	**81865194**	0.06.0	1/4	5	**81868595**	0.30.2	1/1	5	**81872604**	0.14.0/B	6/13	8	**81873205**	0.14.0/B	2/13
6	**81865195**	0.06.0	1/4	9	**81868718**	0.30.0	1/1	6	**81872606**	0.14.0/B	6/13	2	**81873218**	536	1/1
6	**81865196**	0.06.0	1/4	2	**81868721**	0.30.0	1/1	12	**81872608**	0.14.0/B	6/13	1	**81873219**	536	1/1
14	**81865543**	0.24.0	1/1	4	**81868740**	0.07.1	1/1	12	**81872611**	0.14.0/B	7/13	3	**81873248**	0.14.0/B	2/13
4	**81866390**	1.44.0/A	2/12	10	**81868740**	0.14.0	2/3	8	**81872612**	0.14.0/B	8/13	7	**81873249**	0.14.0/B	1/13

ÍNDICE NUMÉRICO - NUMBER INDEX - INDEX NUMERIQUE - ZAHLENVERZEICHNIS - NUMMERISCHE INDEX - NUMMERFORTEGNELSE

Part N.	SGR.	Pag.	R	Part N.	SGR.	Pag.	R	Part N.	SGR.	Pag.	R	Part N.	SGR.	Pag.	R
3	**81873250**	0.14.0/B	1/13	4	**81876945**	0.30.0	1/1	5	**82850875**	0.14.0	1/3	13	**83416158**	0.14.0/B	8/13
4	**81873251**	0.14.0/B	4/13	8	**81876948**	0.04.3	2/2	7	**82851776**	0.14.0/B	2/13	14	**83416168**	0.14.0/B	3/13
2	**81873252**	0.14.0/B	4/13	8	**81876966**	0.04.0	1/2	6	**82851777**	0.14.0/B	2/13	4	**83416207**	0.04.5	1/1
12	**81873258**	0.14.0/B	2/13	13	**81876966**	0.04.0	1/2	7	**82851787**	0.04.0	2/2	4	**83416242**	514/B	2/2
7	**81873263**	0.14.0/B	10/13	4	**81877117**	0.14.0	1/3	10	**82851789**	0.04.0	1/2	17	**83417040**	0.06.0	3/4
7	**81873264**	0.14.0/B	10/13	10	**81877662**	0.12.0	1/1	10	**82851790**	0.04.0	1/2	3	**83417056**	0.31.0	1/1
8	**81873266**	0.14.0/B	4/13	4	**81877667**	0.08.0	1/1	3	**82851791**	0.04.0	2/2	6	**83417133**	1.44.0/A	1/12
9	**81873281**	0.14.0/B	7/13	5	**81877668**	0.08.0	1/1	4	**82851792**	0.04.0	2/2	5	**83417161**	0.08.4	2/2
2	**81873317**	0.14.0/B	2/13	10	**81877890**	0.06.0	3/4	4	**82851915**	0.04.3	2/2	11	**83417169**	1.44.0/A	6/12
11	**81873387**	0.14.0/B	6/13	12	**81878514**	1.44.0/A	2/12	12	**82852337**	0.12.0	1/1	1	**83901443**	1.82.6	2/15
10	**81873389**	0.14.0/B	6/13	3	**81879213**	0.34.7	2/2	5	**82852825**	0.07.7	1/1	1	**83901443**	1.82.6	2/15
1	**81873450**	0.08.2	1/1	5	**81900328**	1.88.11	1/1	3	**82853374**	0.34.7	1/2	27	**83901443**	1.82.6	8/15
1	**81873452**	0.08.2	1/1	5	**81900328**	1.88.11/1	1/2	3	**82853724**	0.04.2	1/1	8	**83901443**	1.82.6	9/15
1	**81873453**	0.08.2	1/1	1	**81900328**	1.88.11/5	3/3	9	**82853807**	0.14.0	1/3	5	**83901443**	1.82.6	12/15
1	**81873457**	0.08.2/A	1/1	2	**81901809**	1.88.11	1/1	11	**82853846**	1.88.11/9A	1/2	19	**83901443**	514	5/8
1	**81873458**	0.08.2/A	1/1	6	**81901837**	1.21.5	2/2	2	**82854702**	0.04.2	1/1	5	**83901443**	395/1	3/5
6	**81873459**	514/B	2/2	4	**81901837**	1.88.11/2	1/2	7	**82855493**	0.14.0	1/3	4	**83901443**	514	4/8
1	**81873460**	0.08.2/A	1/1	10	**81901896**	1.88.11	1/1	1	**82859922**	1.92.4	1/3	9	**83901443**	514	7/8
4	**81873468**	0.14.0/B	2/13	10	**81901897**	1.88.11/2	1/2	12	**82860069**	0.30.2	1/1	7	**83901443**	514	8/8
5	**81873469**	0.14.0/B	2/13	8	**81902174**	1.88.11/2	1/2	8	**82866720**	0.34.7	2/2	12	**83901443**	902	4/5
15	**81873524**	0.30.2	1/1	8	**81902174**	1.88.11/1	1/2	3	**82866944**	514/C	1/1	4	**83901828**	514	8/8
12	**81873921**	0.14.0	1/3	6	**81902463**	1.88.11	1/1	3	**82866945**	1.88.11/9A	1/2	6	**83902702**	902	3/5
12	**81874127**	0.30.0	1/1	14	**81902463**	1.88.11	1/1	14	**82866947**	1.88.11/6	1/2	15	**83902710**	1.88.11	1/1
6	**81874462**	1.44.0/A	3/12	2	**81902463**	1.88.11/5	3/3	11	**82866949**	1.88.11/2	2/2	9	**83902710**	1.88.11/1	2/2
5	**81874478**	1.44.0/A	3/12	9	**82000409**	1.92.6	3/3	7	**82866949**	1.88.11/1	2/2	2	**83903032**	0.14.0/B	6/13
2	**81874575**	0.14.0/B	11/13	9	**82001688**	0.04.0	1/2	3	**82866949**	902/A	1/1	10	**83903045**	0.14.0/B	10/13
4	**81875232**	1.88.11/9A	1/2	9	**82002692**	1.95.3	1/1	7	**82872313**	1.96.7	1/3	10	**83903046**	0.14.0/B	10/13
4	**81875248**	1.21.5	1/2	6	**82002775**	1.94.2	4/4	29	**82879400**	1.88.11/5	2/3	10	**83903047**	0.14.0/B	10/13
7	**81875252**	1.44.0/A	3/12	8	**82002777**	1.94.2	4/4	17	**82880843**	0.24.0	1/1	11	**83903421**	0.34.7/A	1/1
8	**81875253**	1.44.0/A	3/12	8	**82002777**	1.94.2/B	13/16	3	**82880843**	0.40.0/A	1/1	2	**83903589**	0.06.0	3/4
9	**81875256**	1.88.11/9A	1/2	19	**82002966**	1.91.4	1/7	4	**82880843**	1.91.4/3	1/1	8	**83904461**	1.96.7	1/3
4	**81875622**	0.08.2	1/1	9	**82002966**	1.91.4/1	3/3	5	**82894853**	0.31.0	1/1	2	**83904591**	1.92.8	1/1
3	**81876599**	0.04.3	1/2	1	**82002966**	1.91.4	3/7	9	**82895561**	0.08.4	1/2	16	**83904750**	1.44.0/A	12/12
4	**81876604**	0.04.3	1/2	1	**82002966**	759	1/1	10	**82926938**	0.30.2	1/1	10	**83904858**	1.88.11/9A	1/2
1	**81876753**	0.06.0	1/4	5	**82003283**	1.96.7	3/3	12	**82934397**	0.34.7/A	1/1	9	**83907851**	0.04.3	2/2
5	**81876756**	0.06.0	1/4	9	**82003369**	1.95.0	3/5	9	**82935806**	0.40.0/A	1/1	1	**83909101**	0.12.0	1/1
5	**81876763**	0.06.0	1/4	4	**82845164**	851/A	2/2	6	**82936390**	0.04.5	1/1	12	**83909107**	1.44.0/A	1/12
5	**81876768**	0.06.0	1/4	10	**82845165**	851/A	1/2	5	**82950128**	0.04.0	1/2	3	**83909957**	0.08.4	1/2
3	**81876796**	0.06.0	3/4	9	**82845166**	851/A	1/2	6	**82958118**	1.44.0/A	11/12	13	**83910528**	514/C	1/1
6	**81876801**	0.07.7	1/1	2	**82850521**	0.06.0	4/4	4	**82958961**	1.44.0/A	6/12	2	**83910546**	514	2/8
14	**81876885**	1.44.0/A	5/12	2	**82850523**	0.06.0	4/4	1	**82974967**	1.88.11/5	1/3	2	**83910546**	902	2/5
5	**81876943**	0.04.2	1/1	1	**82850528**	0.06.0	4/4	8	**83416019**	0.12.0	1/1	3	**83910547**	514/B	2/2
8	**81876945**	0.04.3	1/2	1	**82850530**	0.06.0	4/4	6	**83416156**	0.14.0/B	4/13	7	**83910547**	514/C	1/1

ÍNDICE NUMÉRICO - NUMBER INDEX - INDEX NUMERIQUE - ZAHLENVERZEICHNIS - NUMMERISCHE INDEX - NUMMERFORTEGNELSE

Part N.	SGR.	Pag.	R	Part N.	SGR.	Pag.	R	Part N.	SGR.	Pag.	R	Part N.	SGR.	Pag.	R
4	**83910548**	514	2/8	4	**83913202**	0.34.7	1/2	5	**83943917**	0.34.7/A	1/1	4	**83958102**	0.06.0	3/4
2	**83910548**	902	3/5	8	**83913375**	902/A	1/1	13	**83943981**	0.30.0	1/1	3	**83958239**	0.06.0	2/4
4	**83910551**	514/A	1/2	7	**83914036**	0.14.0/A	1/3	14	**83944110**	514/1A	1/2	11	**83958244**	0.04.3	1/2
4	**83910551**	514/1A	1/2	10	**83916922**	0.14.0/A	1/3	7	**83946431**	0.08.4	2/2	3	**83958249**	0.30.2	1/1
3	**83910557**	514	1/8	5	**83916922**	0.01.0	1/1	11	**83946434**	0.06.0	3/4	8	**83958605**	0.04.3	2/2
7	**83910558**	514/B	2/2	5	**83917181**	902/A	1/1	2	**83946457**	0.34.7	2/2	2	**83958605**	0.07.1	1/1
5	**83910599**	1.88.11/9A	1/2	2	**83917421**	0.14.0/C	1/1	9	**83946468**	0.34.7	2/2	10	**83958605**	0.14.0	2/3
5	**83910601**	1.88.11/9A	2/2	8	**83917424**	0.14.0/B	4/13	11	**83946521**	0.40.0/A	1/1	2	**83958629**	0.08.2	1/1
13	**83910629**	1.21.5	2/2	3	**83917428**	0.14.0/B	6/13	7	**83947107**	1.44.0/A	7/12	1	**83958890**	1.44.0/A	6/12
12	**83910630**	1.21.5	2/2	8	**83918488**	0.14.0/B	7/13	2	**83947277**	343	2/2	2	**83959395**	0.04.3	2/2
1	**83910634**	517	1/1	7	**83918492**	0.14.0/B	7/13	12	**83947277**	725	2/6	10	**83959396**	0.04.3	1/2
1	**83910634**	518	1/1	1	**83919776**	1.15.0/A	1/1	5	**83947824**	0.14.0	2/3	6	**83959398**	0.34.7/A	1/1
1	**83910634**	515	1/1	7	**83923678**	0.12.0	1/1	2	**83948300**	0.06.0	1/4	6	**83959426**	0.34.7	2/2
1	**83910634**	516	1/1	3	**83925522**	851/A	2/2	5	**83948308**	1.44.0/A	12/12	10	**83959876**	0.04.3	2/2
1	**83910634**	519	1/1	8	**83925582**	0.14.0	1/3	1	**83948451**	0.06.0	3/4	5	**83959938**	0.14.0/C	1/1
2	**83910634**	732	1/1	8	**83925618**	0.04.0	2/2	12	**83948687**	0.08.4	1/2	16	**83960174**	0.06.0	3/4
5	**83910645**	1.21.5	1/2	7	**83926005**	0.34.7/A	1/1	11	**83949104**	0.30.2	1/1	2	**83960218**	0.04.0	1/2
2	**83910645**	1.88.11/9	1/1	4	**83928174**	0.14.0/B	7/13	2	**83949109**	0.06.0	2/4	11	**83960218**	0.08.4	2/2
2	**83910977**	1.21.5	2/2	2	**83931281**	514	1/8	2	**83949153**	0.08.4	1/2	1	**83960219**	0.31.0	1/1
2	**83910977**	1.88.08	2/2	1	**83931281**	514	2/8	1	**83949810**	1.44.0/A	7/12	2	**83960222**	0.31.0	1/1
5	**83910977**	514	3/8	5	**83931289**	514	2/8	10	**83949811**	1.44.0/A	4/12	6	**83961127**	0.31.0	1/1
1	**83911019**	1.21.5	2/2	5	**83931289**	514/B	2/2	8	**83949812**	1.44.0/A	7/12	13	**83961521**	1.91.4	1/7
3	**83911019**	1.88.08	2/2	14	**83931289**	514/C	1/1	1	**83949838**	1.44.0/A	12/12	4	**83961542**	1.95.0	2/5
10	**83911019**	902	3/5	3	**83931289**	902	3/5	13	**83952336**	0.06.0	3/4	10	**83961823**	1.93.0	1/4
6	**83911019**	902	2/5	12	**83931289**	1.88.11/9A	2/2	12	**83952337**	0.06.0	3/4	11	**83961823**	1.94.2/B	15/16
5	**83911020**	1.21.5	2/2	7	**83931313**	1.88.11/9A	1/2	8	**83952702**	1.44.0/A	2/12	3	**83961985**	1.92.4	1/3
6	**83911020**	1.88.11/2	1/2	8	**83931372**	514	2/8	4	**83952932**	1.44.0/A	12/12	8	**83961985**	1.92.4	2/3
8	**83911131**	1.88.11/7	1/1	6	**83931373**	514	2/8	2	**83955247**	0.04.3	1/2	13	**83961987**	1.92.4	1/3
6	**83911131**	514	7/8	9	**83931373**	514	3/8	2	**83955462**	1.44.0/A	1/12	12	**83961987**	1.92.4	2/3
6	**83911366**	726	1/1	15	**83931388**	514/1A	1/2	2	**83955490**	1.44.0/A	2/12	6	**83961987**	1.92.6	2/3
6	**83911366**	343	2/2	9	**83931389**	514/B	1/2	8	**83956433**	0.08.4	1/2	8	**83962050**	1.92.4	1/3
13	**83911366**	725	2/6	5	**83931398**	514/C	1/1	6	**83956679**	0.04.0	1/2	14	**83962129**	902	4/5
3	**83911409**	1.88.11/1	2/2	15	**83931399**	514/C	1/1	4	**83956692**	0.12.0	1/1	5	**83962145**	514/A	1/2
7	**83911410**	1.88.11/2	2/2	10	**83931400**	1.88.11/2	2/2	12	**83956700**	0.04.3	1/2	5	**83962145**	514/1A	1/2
4	**83911410**	514/C	1/1	16	**83931400**	514/C	1/1	14	**83956710**	0.06.0	3/4	10	**83962178**	1.82.6	2/15
10	**83911642**	0.24.0	1/1	5	**83931482**	1.92.4	1/3	3	**83957021**	0.06.0	1/4	2	**83962203**	343	1/2
12	**83911642**	1.15.0/B	1/1	8	**83933065**	0.40.0/A	1/1	4	**83957022**	0.04.0	1/2	2	**83962203**	725	1/6
14	**83911686**	1.44.0/A	12/12	8	**83933675**	0.07.1	1/1	3	**83957023**	0.04.0	1/2	12	**83962204**	343	2/2
3	**83912246**	1.44.0/A	7/12	8	**83935490**	0.04.5	1/1	4	**83957025**	0.06.0	1/4	1	**83962205**	343	2/2
13	**83912252**	1.44.0/A	6/12	11	**83935845**	1.15.0/B	1/1	11	**83957026**	0.04.0	1/2	9	**83962205**	725	2/6
13	**83912378**	1.88.11/9A	2/2	11	**83937074**	0.12.0	1/1	10	**83957533**	1.44.0/A	6/12	4	**83962208**	343	1/2
13	**83912412**	902/A	1/1	9	**83937315**	1.88.11/1	1/2	11	**83957692**	0.08.4	1/2	4	**83962208**	725	1/6
6	**83912413**	1.88.11/1	2/2	12	**83937326**	1.88.11/6	1/2	5	**83957730**	0.12.0	1/1	11	**83962218**	343	2/2

ÍNDICE NUMÉRICO - NUMBER INDEX - INDEX NUMERIQUE - ZAHLENVERZEICHNIS - NUMMERISCHE INDEX - NUMMERFORTEGNELSE

Part N.	SGR.	Pag.	R	Part N.	SGR.	Pag.	R	Part N.	SGR.	Pag.	R	Part N.	SGR.	Pag.	R
7	**83962218**	725	2/6	1	**83963740**	0.08.4	1/2	5	**83982443**	0.14.0/B	10/13	7	**83991667**	0.06.0	2/4
3	**83962223**	343	1/2	16	**83963839**	0.08.4	1/2	9	**83982482**	0.14.0/B	10/13	6	**83991680**	0.08.2	1/1
3	**83962223**	725	1/6	2	**83964146**	1.92.6	3/3	8	**83982486**	0.14.0/B	10/13	6	**83991680**	0.08.2/A	1/1
18	**83962530**	514	5/8	4	**83964188**	514/A	2/2	6	**83982545**	0.14.0/B	10/13	7	**83991682**	0.08.2	1/1
7	**83962538**	1.82.6	1/15	3	**83964188**	514/B	1/2	3	**83982546**	0.14.0/B	5/13	7	**83991682**	0.08.2/A	1/1
5	**83962538**	1.82.6	4/15	4	**83964188**	514/1A	2/2	6	**83982555**	0.14.0/B	7/13	7	**83993005**	0.07.7	1/1
16	**83962538**	514	5/8	2	**83971549**	1.82.6	7/15	2	**83982563**	0.14.0/B	1/13	9	**83993005**	0.24.0	1/1
5	**83962539**	514	8/8	2	**83971549**	1.82.6	11/15	9	**83982572**	0.14.0/B	12/13	1	**83993005**	1.15.0/B	1/1
4	**83962615**	902/A	1/1	15	**83971567**	1.44.0/A	12/12	5	**83982575**	0.14.0/B	12/13	13	**83994150**	1.92.9	1/4
5	**83962658**	1.88.11/5	1/3	27	**83971589**	1.82.6	10/15	6	**83982580**	0.14.0/B	13/13	1	**83994150**	1.96.7	3/3
4	**83962659**	1.88.11/5	1/3	14	**83976351**	0.14.0	2/3	11	**83982598**	0.14.0/B	12/13	6	**83994150**	1.96.7/1	1/1
2	**83962729**	0.08.2/A	1/1	4	**83976357**	1.92.4	2/3	14	**83982609**	0.14.0/B	12/13	6	**83994372**	1.92.6	3/3
5	**83962807**	1.88.11/1	2/2	5	**83976375**	0.06.0	2/4	2	**83982610**	0.14.0/B	13/13	7	**83994378**	1.92.6	3/3
7	**83962811**	1.88.11/1	1/2	9	**83976853**	0.04.0	2/2	12	**83982619**	0.14.0/B	12/13	5	**83994395**	1.92.6	3/3
8	**83962857**	1.82.7	1/2	2	**83977174**	1.82.7	1/2	13	**83982623**	0.14.0/B	12/13	18	**83994579**	1.44.0/A	5/12
7	**83962857**	343	2/2	4	**83977909**	0.24.0/A	1/1	11	**83982651**	0.14.0/B	3/13	12	**83995273**	0.14.0	2/3
2	**83963000**	1.82.6	2/15	5	**83980546**	0.34.7	1/2	7	**83982652**	0.14.0/B	3/13	1	**83995298**	1.93.7	1/1
2	**83963000**	1.82.6	2/15	3	**83980619**	0.30.0	1/1	13	**83982657**	0.14.0/B	3/13	3	**83998053**	0.08.0	1/1
13	**83963000**	1.82.6	7/15	2	**83981012**	0.14.0/B	12/13	6	**83982665**	0.14.0/B	3/13	10	**83998292**	0.04.0	2/2
20	**83963000**	1.82.6	10/15	6	**83981018**	0.14.0/B	1/13	5	**83982667**	0.14.0/B	3/13	10	**83998857**	0.08.4	2/2
3	**83963173**	0.12.0	1/1	4	**83981019**	0.14.0/B	1/13	15	**83982672**	0.14.0/B	3/13	6	**83998890**	0.08.4	2/2
14	**83963174**	0.12.0	1/1	3	**83981126**	0.14.0/B	7/13	6	**83982674**	0.14.0	1/3	8	**83998909**	1.88.11/9A	1/2
9	**83963231**	1.88.11/6	1/2	13	**83981426**	0.14.0/B	7/13	4	**83982674**	0.14.0/B	3/13	2	**83999186**	0.02.1	1/2
6	**83963252**	514/C	1/1	2	**83981427**	0.14.0/B	7/13	3	**83982702**	0.14.0/B	4/13	2	**83999187**	0.02.1	2/2
8	**83963263**	514/C	1/1	10	**83981428**	0.14.0/B	7/13	5	**83982706**	0.14.0/B	4/13	15	**83999194**	0.14.0	2/3
9	**83963264**	514/1A	1/2	11	**83981431**	0.14.0/B	7/13	13	**83982726**	0.14.0/B	2/13	2	**83999221**	0.07.7	1/1
9	**83963271**	514/C	1/1	7	**83981432**	0.14.0/B	9/13	10	**83982729**	0.14.0/B	4/13	9	**83999236**	0.12.0	1/1
10	**83963280**	514/C	1/1	2	**83981439**	0.14.0/B	9/13	10	**83982752**	0.14.0/B	2/13	1	**83999247**	0.24.0	1/1
17	**83963374**	1.82.6	3/15	9	**83981441**	0.14.0/B	4/13	14	**83982754**	0.14.0/B	2/13	1	**83999247**	0.24.0/A	1/1
3	**83963374**	1.95.5/1	1/1	8	**83981442**	0.14.0/B	5/13	1	**83982818**	758	1/1	3	**83999300**	0.07.1	1/1
9	**83963374**	1.88.11/7	1/1	11	**83981443**	0.14.0/B	5/13	5	**83984176**	0.07.1	1/1	14	**83999466**	1.21.5	2/2
2	**83963374**	395/1	1/5	6	**83981444**	0.14.0/B	5/13	7	**83984176**	0.34.7	2/2	4	**83999649**	0.30.2	1/1
3	**83963374**	1.82.6	11/15	12	**83981490**	0.14.0/B	5/13	3	**83984176**	0.34.7/A	1/1	7	**83999691**	0.30.0	1/1
4	**83963375**	1.39.8	1/1	4	**83981638**	0.14.0/B	5/13	13	**83984698**	514/1A	1/2	11	**83999692**	0.30.0	1/1
6	**83963376**	1.82.6	7/15	5	**83981720**	0.14.0/B	5/13	12	**83985067**	1.88.11/7	1/1	8	**83999693**	0.30.0	1/1
5	**83963376**	1.82.6	9/15	7	**83981728**	0.14.0/B	5/13	4	**83985067**	902	5/5	6	**83999696**	0.30.0	1/1
1	**83963376**	725	5/6	8	**83981830**	0.14.0/B	12/13	12	**83987148**	0.14.0/B	3/13	6	**83999742**	0.06.0	3/4
1	**83963376**	725	4/6	5	**83981964**	0.14.0/B	9/13	9	**83987627**	728/A	2/2	6	**84990888**	0.40.0/A	1/1
9	**83963376**	1.82.6	11/15	7	**83982119**	0.14.0/B	8/13	11	**83987627**	728	1/1	1	**84990890**	0.40.0/A	1/1
4	**83963415**	514	8/8	7	**83982120**	0.14.0/B	11/13	11	**83987627**	724	2/5	4	**84990893**	0.40.0/A	1/1
7	**83963415**	902	5/5	6	**83982122**	0.14.0/B	11/13	9	**83989915**	1.44.0/A	5/12	10	**85700121**	0.34.7	1/2
10	**83963422**	1.88.11/5	1/3	2	**83982421**	0.14.0/B	10/13	10	**83990589**	0.08.4	1/2	9	**85700130**	1.88.11	1/1
6	**83963433**	1.88.11/5	1/3	5	**83982437**	0.14.0/B	11/13	3	**83991490**	0.14.0	1/3	3	**85700204**	82.76	1/1

ÍNDICE NUMÉRICO - NUMBER INDEX - INDEX NUMERIQUE - ZAHLENVERZEICHNIS - NUMMERISCHE INDEX - NUMMERFORTEGNELSE

Part N.	SGR.	Pag.	R	Part N.	SGR.	Pag.	R	Part N.	SGR.	Pag.	R	Part N.	SGR.	Pag.	R
4	**85700327**	1.82.6	9/15	1	**85800150**	1.88.11/2	1/2	13	**85800961**	1.88.11/6	1/2	11	**85801088**	1.88.11	1/1
16	**85700656**	0.24.0	1/1	1	**85800150**	1.88.11/2	2/2	14	**85800965**	1.88.11/9A	2/2	12	**85801092**	1.95.0	3/5
7	**85700681**	1.29.1	1/1	3	**85800202**	514/A	2/2	9	**85800966**	1.88.11/9A	2/2	11	**85801093**	1.91.4	4/7
2	**85700728**	1.21.5	1/2	3	**85800202**	514/1A	2/2	6	**85800967**	514/B	1/2	17	**85801093**	1.95.0	3/5
6	**85800001**	902/A	1/1	2	**85800203**	514/A	2/2	5	**85800968**	514/B	1/2	5	**85801095**	517	1/1
2	**85800002**	1.88.11/1	2/2	13	**85800205**	514/A	1/2	2	**85800971**	514/B	2/2	5	**85801095**	518	1/1
8	**85800004**	1.88.11/6	1/2	15	**85800206**	514/A	1/2	10	**85800972**	902/A	1/1	5	**85801095**	515	1/1
10	**85800005**	514/B	1/2	14	**85800207**	514/A	1/2	6	**85800973**	1.88.11/2	2/2	5	**85801095**	516	1/1
6	**85800007**	1.88.11/9A	2/2	8	**85800210**	514/A	2/2	2	**85800975**	514/A	1/2	5	**85801095**	519	1/1
9	**85800007**	514/A	1/2	17	**85800211**	514/A	1/2	2	**85800977**	514/1A	1/2	6	**85801096**	517	1/1
10	**85800017**	514/1A	1/2	10	**85800212**	514/A	1/2	10	**85800978**	1.88.11/1	1/2	6	**85801096**	518	1/1
7	**85800018**	1.88.11/9A	2/2	1	**85800250**	514/A	1/2	4	**85800979**	1.88.11/6	1/2	6	**85801096**	515	1/1
12	**85800081**	1.88.11/1	1/2	1	**85800250**	514/A	2/2	8	**85800981**	1.88.11/2	2/2	6	**85801096**	516	1/1
2	**85800082**	1.88.11/2	2/2	5	**85800270**	514	4/8	11	**85800982**	1.88.11/6	1/2	6	**85801096**	519	1/1
4	**85800082**	1.88.11/9A	2/2	15	**85800303**	1.88.11/9A	2/2	4	**85800983**	514/B	1/2	7	**85801097**	517	1/1
11	**85800082**	902/A	1/1	11	**85800307**	1.88.11/9A	2/2	6	**85800990**	1.88.11/9A	1/2	7	**85801097**	518	1/1
5	**85800083**	1.88.11/6	1/2	2	**85800342**	1.88.11/9A	1/2	11	**85800991**	514/B	1/2	7	**85801097**	515	1/1
3	**85800084**	514/A	1/2	8	**85800355**	1.82.6	11/15	2	**85800992**	514/C	1/1	7	**85801097**	516	1/1
13	**85800084**	514/B	1/2	3	**85800355**	1.88.11/9	1/1	7	**85801002**	1.38.1	1/1	7	**85801097**	519	1/1
3	**85800084**	514/1A	1/2	1	**85800355**	1.88.11/9A	1/2	1	**85801003**	1.38.1	1/1	8	**85801098**	517	1/1
11	**85800085**	1.88.11/1	1/2	1	**85800355**	1.88.11/9A	2/2	1	**85801012**	1.88.11	1/1	8	**85801098**	518	1/1
3	**85800086**	1.88.11/2	2/2	8	**85800402**	514/1A	2/2	4	**85801025**	1.88.08	1/2	8	**85801098**	515	1/1
3	**85800086**	1.88.11/9A	2/2	1	**85800450**	514/1A	1/2	7	**85801025**	514/A	2/2	8	**85801098**	516	1/1
9	**85800086**	902/A	1/1	1	**85800450**	514/1A	2/2	7	**85801025**	514/1A	2/2	8	**85801098**	519	1/1
7	**85800087**	1.88.11/6	1/2	8	**85800504**	1.88.11/1	2/2	1	**85801026**	1.88.08	2/2	9	**85801099**	516	1/1
11	**85800088**	514/A	1/2	1	**85800550**	1.88.11/1	1/2	7	**85801028**	1.88.08	1/2	9	**85801099**	517	1/1
8	**85800088**	514/B	1/2	1	**85800550**	1.88.11/1	2/2	3	**85801029**	1.88.08	1/2	9	**85801099**	515	1/1
4	**85800089**	1.88.11/1	2/2	1	**85800600**	1.88.11/6	1/2	3	**85801048**	1.88.11/5	3/3	9	**85801099**	518	1/1
4	**85800090**	1.88.11/2	2/2	3	**85800603**	1.88.11/6	1/2	4	**85801049**	1.88.11/1	1/2	9	**85801099**	519	1/1
10	**85800090**	1.88.11/9A	2/2	2	**85800604**	1.88.11/6	1/2	4	**85801050**	1.88.11/1	1/2	14	**85801109**	521-553	1/3
7	**85800090**	902/A	1/1	1	**85800650**	1.88.11/6	1/2	2	**85801050**	1.88.11/2	1/2	14	**85801109**	523/D	1/5
10	**85800091**	1.88.11/6	1/2	12	**85800805**	902/A	1/1	9	**85801051**	521-553	1/3	14	**85801109**	523/B	1/4
12	**85800092**	514/A	1/2	2	**85800806**	902/A	1/1	4	**85801051**	520-550	1/1	3	**85801110**	1.21.5	1/2
7	**85800092**	514/B	1/2	5	**85800840**	514	4/8	9	**85801051**	523/A	1/3	1	**85801115**	1.21.5	1/2
12	**85800092**	514/1A	1/2	1	**85800870**	902/A	1/1	9	**85801051**	523/B	1/4	8	**85801153**	1.88.11/9	1/1
5	**85800093**	1.88.11/2	2/2	1	**85800870**	902	5/5	3	**85801052**	1.88.11	1/1	13	**85801191**	1.88.08	2/2
8	**85800093**	1.88.11/9A	2/2	1	**85800901**	514/B	1/2	3	**85801053**	1.88.11	1/1	10	**85801192**	515	1/1
6	**85800094**	1.88.11/6	1/2	1	**85800901**	514/B	2/2	4	**85801056**	1.88.11	1/1	10	**85801193**	516	1/1
8	**85800095**	514/A	1/2	17	**85800901**	514	5/8	8	**85801057**	1.88.11	1/1	1	**85801204**	82.76	1/1
12	**85800095**	514/B	1/2	1	**85800911**	514/C	1/1	14	**85801076**	1.88.08	1/2	8	**85801209**	728	1/1
8	**85800095**	514/1A	1/2	10	**85800913**	514	6/8	5	**85801079**	1.88.08	2/2	1	**85801209**	728/A	1/2
7	**85800103**	1.88.11/2	1/2	17	**85800950**	514	5/8	5	**85801086**	1.88.11/2	1/2	1	**85801210**	724	1/5
9	**85800105**	1.88.11/2	1/2	9	**85800960**	1.88.11/2	2/2	12	**85801087**	1.88.11	1/1	1	**85801210**	724/A	1/1

ÍNDICE NUMÉRICO - NUMBER INDEX - INDEX NUMERIQUE - ZAHLENVERZEICHNIS - NUMMERISCHE INDEX - NUMMERFORTEGNELSE

Part N.	SGR.	Pag.	R	Part N.	SGR.	Pag.	R	Part N.	SGR.	Pag.	R	Part N.	SGR.	Pag.	R
7	**85801211**	724	1/5	6	**85801518**	393	1/2	6	**85801801**	1.94.1	1/1	1	**85801968**	1.96.7	1/3
7	**85801211**	728	1/1	4	**85801525**	395/1	3/5	6	**85801801**	1.94.0	1/1	11	**85801973**	1.93.5	1/2
9	**85801215**	1.14.0	1/2	10	**85801526**	395/1	2/5	11	**85801804**	1.92.4	1/3	1	**85801976**	1.95.5	2/2
12	**85801216**	1.14.0	1/2	1	**85801539**	731	1/1	2	**85801806**	1.92.4	2/3	1	**85801976**	1.95.5/A	1/3
22	**85801218**	1.82.0	2/2	1	**85801542**	732	1/1	3	**85801811**	1.92.9	1/4	5	**85801979**	1.93.0	3/4
15	**85801218**	1.14.0	1/2	2	**85801543**	731	1/1	1	**85801812**	1.92.9	2/4	11	**85801991**	1.92.9	1/4
7	**85801220**	1.14.0	1/2	5	**85801544**	1.82.7	2/2	2	**85801813**	1.92.9	2/4	7	**85801991**	1.93.0	2/4
10	**85801231**	518	1/1	4	**85801561**	343	2/2	3	**85801814**	1.92.9	2/4	4	**85801991**	1.93.5	2/2
10	**85801238**	519	1/1	3	**85801561**	725	2/6	4	**85801815**	1.92.9	2/4	12	**85801991**	1.95.1/B	1/1
1	**85801257**	902	2/5	12	**85801562**	1.82.7	2/2	7	**85801816**	1.92.9	2/4	12	**85801991**	1.95.1/A	1/1
1	**85801258**	902	3/5	3	**85801564**	1.82.7	2/2	1	**85801820**	1.92.9	4/4	3	**85801991**	1.93.0/A	1/2
3	**85801262**	1.21.5	2/2	8	**85801566**	1.82.7	2/2	10	**85801821**	1.92.9	4/4	2	**85801991**	1.93.5/1	1/1
10	**85801305**	902	2/5	4	**85801573**	1.38.1	1/1	4	**85801823**	1.92.9	4/4	2	**85802018**	1.92.9	4/4
11	**85801306**	902	2/5	9	**85801582**	1.82.7	1/2	5	**85801824**	1.92.9	4/4	10	**85802045**	1.91.4	1/7
9	**85801307**	902	2/5	16	**85801591**	1.88.11/5	1/3	6	**85801825**	1.92.9	4/4	15	**85802045**	1.91.4/1	3/3
9	**85801308**	902	3/5	4	**85801599**	726	1/1	9	**85801826**	1.92.9	1/4	7	**85802062**	1.92.4	1/3
5	**85801309**	902	2/5	1	**85801605**	1.94.2	1/4	14	**85801827**	1.92.9	2/4	2	**85802063**	1.92.4	1/3
4	**85801310**	902	2/5	11	**85801619**	0.01.0	1/1	7	**85801828**	1.92.9	1/4	4	**85802075**	1.92.5	1/1
5	**85801314**	902	3/5	3	**85801619**	1.94.2	1/4	10	**85801829**	1.92.9	1/4	1	**85802075**	1.92.5/1	1/1
10	**85801325**	517	1/1	1	**85801621**	1.92.3	1/1	2	**85801830**	1.92.9	3/4	3	**85802076**	1.92.5	1/1
5	**85801356**	1.83.0	1/1	2	**85801622**	1.92.3	1/1	1	**85801831**	1.92.9	3/4	2	**85802076**	1.92.5/1	1/1
7	**85801397**	724	4/5	3	**85801623**	1.92.3	1/1	3	**85801832**	1.92.9	3/4	7	**85802090**	1.96.9	1/1
7	**85801444**	82.76	1/1	7	**85801624**	1.92.6	2/3	4	**85801833**	1.92.9	3/4	3	**85802107**	1.91.6	1/1
12	**85801452**	724	4/5	9	**85801625**	1.92.6	2/3	6	**85801834**	1.92.9	3/4	4	**85802113**	1.94.0/1	1/1
1	**85801469**	215	1/1	3	**85801626**	1.92.4	3/3	7	**85801844**	1.94.1	1/1	4	**85802113**	1.94.0	1/1
16	**85801470**	521-553	1/3	2	**85801628**	1.92.4	3/3	4	**85801851**	1.94.2	1/4	8	**85802141**	1.93.5	2/2
16	**85801470**	523/B	1/4	4	**85801630**	1.92.3	1/1	5	**85801852**	1.94.2	1/4	12	**85802141**	1.93.5/1	1/1
13	**85801480**	1.82.6	13/15	5	**85801631**	1.92.3	1/1	6	**85801853**	1.94.2	1/4	9	**85802142**	1.93.5	2/2
12	**85801488**	393	1/2	2	**85801632**	1.92.9	1/4	1	**85801857**	1.95.0	2/5	9	**85802142**	1.93.5/1	1/1
12	**85801492**	514	1/8	3	**85801639**	1.93.0	2/4	7	**85801860**	1.95.0	1/5	10	**85802143**	1.93.5	2/2
8	**85801493**	1.83.0	1/1	4	**85801649**	1.93.0	2/4	2	**85801863**	1.92.1	1/1	10	**85802143**	1.93.5/1	1/1
4	**85801502**	393	1/2	2	**85801649**	1.93.0/A	1/2	11	**85801883**	1.92.4	2/3	11	**85802144**	1.93.5	2/2
5	**85801502**	393/A	1/1	4	**85801651**	1.93.0	3/4	13	**85801884**	1.92.4	2/3	11	**85802144**	1.93.5/1	1/1
1	**85801503**	393/A	1/1	7	**85801651**	1.93.0	3/4	3	**85801938**	1.96.0	1/1	12	**85802145**	1.93.5	2/2
2	**85801504**	393/A	1/1	1	**85801654**	1.92.2	1/1	8	**85801941**	1.95.0	3/5	8	**85802145**	1.93.5/1	1/1
10	**85801505**	393/A	1/1	2	**85801655**	1.92.2	1/1	3	**85801941**	1.96.7/1	1/1	13	**85802146**	1.93.5	2/2
3	**85801506**	393/A	1/1	2	**85801659**	1.94.2	1/4	5	**85801941**	1.95.5/A	2/3	13	**85802146**	1.93.5/1	1/1
9	**85801509**	1.82.6	6/15	1	**85801739**	1.92.9	1/4	2	**85801942**	1.95.5/A	2/3	1	**85802166**	1.96.9	1/1
24	**85801514**	393	2/2	1	**85801798**	1.92.6	3/3	8	**85801942**	1.95.5/A	2/3	6	**85802179**	1.96.9	1/1
19	**85801515**	393	1/2	4	**85801799**	1.92.6	2/3	8	**85801953**	1.93.0	2/4	5	**85802180**	1.96.9	1/1
1	**85801517**	1.82.7	2/2	5	**85801800**	1.92.6	2/3	5	**85801954**	1.92.5	1/1	6	**85802204**	1.91.1	1/1
17	**85801517**	393	1/2	12	**85801801**	1.92.6	2/3	2	**85801959**	1.95.1/A	1/1	10	**85802214**	724	1/5
7	**85801518**	1.82.7	1/2	4	**85801801**	1.94.0/1	1/1	2	**85801959**	1.95.1/B	1/1	13	**85802227**	1.93.0	4/4

ÍNDICE NUMÉRICO - NUMBER INDEX - INDEX NUMERIQUE - ZAHLENVERZEICHNIS - NUMMERISCHE INDEX - NUMMERFORTEGNELSE

Part N.	SGR.	Pag.	R	Part N.	SGR.	Pag.	R	Part N.	SGR.	Pag.	R	Part N.	SGR.	Pag.	R
24	**85802227**	1.93.0/A	2/2	1	**85802509**	726	1/1	28	**85802741**	1.88.11/5	2/3	4	**85802838**	1.82.6	4/15
6	**85802230**	1.95.5	1/2	15	**85802510**	726	1/1	23	**85802742**	1.88.11/5	2/3	3	**85802839**	1.82.6	4/15
9	**85802230**	1.95.5/A	2/3	12	**85802513**	1.44.0/A	12/12	5	**85802743**	1.19.1	4/5	8	**85802840**	1.82.6	2/15
13	**85802253**	724	4/5	18	**85802515**	1.44.0/A	12/12	1	**85802743**	1.19.1	5/5	4	**85802841**	1.82.6	2/15
12	**85802259**	1.93.0	4/4	8	**85802534**	902	4/5	2	**85802743**	1.19.1	1/5	4	**85802842**	1.82.7	1/2
20	**85802259**	1.93.0/A	1/2	12	**85802587**	343	2/2	1	**85802743**	1.19.1	2/5	6	**85802843**	393/A	1/1
1	**85802276**	1.91.8/1	1/1	6	**85802587**	725	2/6	5	**85802744**	514	7/8	2	**85802844**	1.19.1	4/5
12	**85802284**	1.96.7	1/3	1	**85802601**	343	1/2	3	**85802745**	343	2/2	5	**85802846**	1.82.6	3/15
3	**85802293**	1.15.0	1/1	1	**85802601**	725	1/6	3	**85802758**	1.44.0/A	2/12	8	**85802847**	1.29.1	1/1
5	**85802294**	1.93.5	2/2	5	**85802615**	343	1/2	2	**85802760**	1.39.8	1/1	10	**85802872**	1.88.08	2/2
7	**85802294**	1.93.5/1	1/1	5	**85802615**	725	1/6	7	**85802760**	1.82.6	5/15	14	**85802876**	1.17.2	1/1
10	**85802307**	1.92.6	2/3	11	**85802617**	1.82.7	1/2	5	**85802761**	1.95.5/1	1/1	6	**85802876**	1.17.2/A	1/1
3	**85802309**	1.96.7	3/3	1	**85802617**	390	1/1	9	**85802763**	1.96.2	1/1	1	**85802877**	1.17.2	1/1
5	**85802309**	1.96.7/1	1/1	7	**85802620**	1.88.11/7	1/1	6	**85802768**	1.19.1	5/5	5	**85802877**	1.17.2/A	1/1
1	**85802320**	1.94.2	2/4	5	**85802626**	1.14.2	1/1	4	**85802769**	1.19.1	5/5	4	**85802879**	725	4/6
1	**85802321**	1.94.2	2/4	6	**85802638**	1.95.5/1	1/1	4	**85802770**	1.19.1	4/5	5	**85802880**	725	4/6
12	**85802326**	0.01.0	1/1	4	**85802639**	1.95.5/1	1/1	2	**85802770**	1.19.1	5/5	2	**85802881**	725	6/6
9	**85802326**	1.94.2	1/4	1	**85802640**	1.95.5/1	1/1	11	**85802776**	1.82.6	2/15	6	**85802881**	725	6/6
6	**85802334**	1.92.3	1/1	10	**85802642**	1.82.6	2/15	9	**85802776**	724	1/5	7	**85802882**	725	4/6
8	**85802334**	1.92.6	2/3	6	**85802642**	1.82.6	4/15	2	**85802777**	1.82.6	4/15	6	**85802883**	725	4/6
10	**85802335**	724	2/5	9	**85802670**	1.17.2/A	1/1	7	**85802780**	728/A	2/2	5	**85802889**	1.75.2/A	1/1
8	**85802341**	724	2/5	10	**85802672**	1.17.2	1/1	3	**85802784**	1.19.1	4/5	13	**85802890**	1.82.6	3/15
3	**85802351**	1.92.9	4/4	1	**85802672**	1.17.2/A	1/1	13	**85802791**	1.82.6	6/15	15	**85802890**	1.82.6	2/15
6	**85802373**	1.91.4	4/7	3	**85802673**	1.17.2/A	1/1	7	**85802793**	1.82.6	6/15	17	**85802890**	1.82.6	4/15
13	**85802396**	1.88.08	1/2	2	**85802674**	1.28.6	1/1	10	**85802793**	0.01.0	1/1	15	**85802890**	724	1/5
11	**85802396**	1.88.08	2/2	1	**85802675**	1.28.6	1/1	7	**85802799**	1.82.6	4/15	5	**85802890**	724	3/5
10	**85802396**	514	2/8	2	**85802679**	1.29.1	1/1	4	**85802800**	1.82.6	5/15	11	**85802891**	725	4/6
12	**85802397**	1.88.08	1/2	11	**85802682**	393	1/2	14	**85802800**	1.82.6	6/15	3	**85802892**	725	6/6
12	**85802397**	1.88.08	2/2	9	**85802682**	393/A	1/1	10	**85802801**	1.82.6	5/15	11	**85802893**	514	5/8
7	**85802397**	514	1/8	13	**85802683**	1.28.0/A	3/14	10	**85802801**	1.82.6	6/15	9	**85802894**	514	5/8
9	**85802397**	514	2/8	13	**85802683**	1.28.0/B	3/12	14	**85802801**	724	2/5	10	**85802895**	514	5/8
13	**85802397**	902	3/5	3	**85802683**	1.82.3	1/1	10	**85802803**	1.95.0	4/5	4	**85802899**	514	5/8
4	**85802398**	1.91.5	3/3	19	**85802684**	1.28.0/A	3/14	5	**85802804**	1.17.2	1/1	8	**85802900**	514	5/8
4	**85802403**	1.88.11/5	3/3	5	**85802684**	1.82.3	1/1	8	**85802805**	1.28.6	1/1	3	**85802901**	514	5/8
2	**85802440**	1.91.4/1	2/3	15	**85802695**	1.88.11/5	1/3	2	**85802808**	1.82.0	1/2	4	**85802901**	514	6/8
14	**85802454**	724	4/5	13	**85802724**	1.88.11/5	1/3	8	**85802808**	1.14.0	1/2	7	**85802902**	514	5/8
2	**85802478**	1.91.4	1/7	1	**85802731**	1.82.6	13/15	8	**85802816**	343	2/2	5	**85802909**	514	6/8
2	**85802478**	1.91.4/1	3/3	22	**85802734**	1.88.11/5	2/3	1	**85802816**	725	2/6	18	**85802925**	1.82.6	9/15
9	**85802478**	1.91.4	4/7	20	**85802735**	1.88.11/5	1/3	11	**85802820**	1.88.11/7	1/1	14	**85802926**	1.82.6	9/15
3	**85802478**	1.91.4/1	2/3	17	**85802736**	1.88.11/5	1/3	8	**85802828**	393/A	1/1	23	**85802927**	1.82.6	10/15
8	**85802494**	1.82.7	1/2	19	**85802737**	1.88.11/5	1/3	1	**85802833**	1.82.6	5/15	19	**85802939**	1.82.6	7/15
3	**85802494**	726	1/1	10	**85802738**	1.82.7	2/2	13	**85802836**	1.88.11/7	1/1	24	**85802940**	1.82.6	8/15
7	**85802494**	343	2/2	24	**85802738**	1.88.11/5	2/3	1	**85802837**	1.82.6	6/15	23	**85802941**	1.82.6	8/15

ÍNDICE NUMÉRICO - NUMBER INDEX - INDEX NUMERIQUE - ZAHLENVERZEICHNIS - NUMMERISCHE INDEX - NUMMERFORTEGNELSE

Part N.	SGR.	Pag.	R	Part N.	SGR.	Pag.	R	Part N.	SGR.	Pag.	R	Part N.	SGR.	Pag.	R
1	**85802947**	1.29.1	1/1	1	**85803010**	1.19.1	4/5	6	**85803193**	1.88.08	1/2	1	**85803384**	1.95.1/A	1/1
12	**85802949**	1.29.1	1/1	3	**85803010**	1.19.1	5/5	15	**85803194**	1.88.08	1/2	1	**85803384**	1.95.1/B	1/1
33	**85802950**	1.88.11/5	2/3	6	**85803010**	902	5/5	9	**85803195**	1.88.08	1/2	3	**85803386**	395/1	2/5
12	**85802951**	1.83.0	1/1	12	**85803012**	1.17.2	1/1	7	**85803195**	1.88.08	2/2	21	**85803393**	726	1/1
1	**85802952**	1.87.2	1/1	16	**85803012**	1.17.2	1/1	1	**85803196**	1.88.08	1/2	6	**85803393**	728/A	2/2
2	**85802953**	1.87.2	1/1	2	**85803012**	1.17.2/A	1/1	5	**85803197**	1.88.08	1/2	7	**85803401**	395/1	2/5
11	**85802954**	1.82.6	11/15	11	**85803012**	1.17.2/A	1/1	6	**85803198**	1.88.08	2/2	6	**85803402**	395/1	2/5
15	**85802955**	1.82.6	4/15	1	**85803012**	1.82.6	1/15	5	**85803202**	395/1	2/5	7	**85803407**	1.17.2	1/1
12	**85802955**	726	1/1	3	**85803013**	1.14.2	1/1	4	**85803203**	395/1	2/5	8	**85803408**	725	6/6
1	**85802955**	1.82.6	11/15	13	**85803013**	1.17.2	1/1	12	**85803209**	902	2/5	1	**85803424**	724	4/5
2	**85802957**	514	8/8	10	**85803013**	1.17.2/A	1/1	7	**85803215**	1.88.11/5	1/3	9	**85803425**	724	4/5
9	**85802958**	1.82.6	2/15	4	**85803018**	1.17.2	1/1	12	**85803225**	521-553	3/3	6	**85803426**	724	1/5
4	**85802960**	1.82.6	6/15	6	**85803019**	1.17.2	1/1	12	**85803225**	523/A	2/3	8	**85803428**	724	1/5
12	**85802962**	1.82.6	6/15	5	**85803026**	1.17.5	1/1	12	**85803225**	523/B	3/4	13	**85803429**	724	2/5
5	**85802965**	1.88.11/7	1/1	8	**85803039**	1.88.11/9	1/1	1	**85803230**	728/A	2/2	2	**85803440**	724	5/5
11	**85802974**	514	3/8	14	**85803040**	1.95.3	1/1	2	**85803231**	728/A	2/2	5	**85803451**	1.39.8	1/1
7	**85802975**	514	2/8	1	**85803055**	1.82.7	1/2	6	**85803233**	724	2/5	4	**85803452**	1.17.2/A	1/1
10	**85802975**	514	3/8	4	**85803057**	1.94.2	2/4	6	**85803234**	728	1/1	1	**85803453**	1.17.5	1/1
8	**85802975**	902	3/5	3	**85803063**	1.14.0	1/2	10	**85803238**	1.29.1	1/1	9	**85803481**	1.82.6	5/15
4	**85802975**	732	1/1	1	**85803079**	1.94.2/B	7/16	11	**85803239**	1.29.1	1/1	9	**85803481**	1.82.6	5/15
13	**85802991**	1.88.11/2	1/2	5	**85803079**	1.94.2	2/4	14	**85803240**	1.29.1	1/1	1	**85803483**	724	5/5
16	**85802992**	1.21.5	2/2	6	**85803082**	1.19.1	1/5	10	**85803241**	728/A	2/2	4	**85803484**	724	5/5
12	**85802992**	1.88.11/2	1/2	6	**85803082**	1.19.1	2/5	7	**85803245**	1.14.2	1/1	5	**85803485**	724	5/5
10	**85802992**	521-553	1/3	3	**85803086**	1.19.1	3/5	9	**85803246**	1.88.08	2/2	2	**85803486**	724	1/5
3	**85802992**	520-550	1/1	1	**85803087**	1.19.1	3/5	7	**85803255**	1.95.0	3/5	2	**85803486**	724	4/5
10	**85802992**	523/A	1/3	7	**85803088**	902	4/5	32	**85803277**	1.88.11/5	2/3	5	**85803487**	724	1/5
10	**85802992**	523/B	1/4	5	**85803094**	1.19.1	5/5	35	**85803279**	1.88.11/5	2/3	2	**85803488**	724	3/5
17	**85802993**	1.21.5	2/2	2	**85803108**	395/1	2/5	9	**85803289**	902	4/5	12	**85803514**	724	2/5
11	**85802993**	1.88.11/2	1/2	1	**85803109**	395/1	2/5	4	**85803312**	1.95.0	5/5	5	**85803523**	724	4/5
6	**85802993**	1.88.11/1	1/2	1	**85803110**	395/1	3/5	2	**85803314**	902	4/5	1	**85803524**	1.75.2/A	1/1
11	**85802993**	521-553	1/3	2	**85803111**	395/1	3/5	1	**85803315**	902	4/5	8	**85803545**	1.38.1	1/1
2	**85802993**	520-550	1/1	1	**85803120**	725	3/6	2	**85803344**	1.94.2	2/4	6	**85803576**	1.87.2	1/1
11	**85802993**	523/A	1/3	4	**85803121**	395/1	5/5	1	**85803349**	851/A	2/2	7	**85803577**	1.87.2	1/1
11	**85802993**	523/B	1/4	3	**85803124**	393	1/2	1	**85803349**	851/A	1/2	8	**85803578**	1.87.2	1/1
14	**85802994**	1.88.11/2	1/2	5	**85803124**	393	1/2	1	**85803349**	851-855	1/1	1	**85803616**	1.88.11/9	1/1
8	**85803002**	514	2/8	7	**85803131**	1.82.6	13/15	1	**85803351**	705-706	1/1	16	**85803638**	1.88.08	1/2
11	**85803002**	902	3/5	1	**85803131**	356	1/1	1	**85803352**	705-706	1/1	1	**85803655**	902	1/5
6	**85803005**	514	2/8	9	**85803139**	1.21.5	2/2	7	**85803355**	395/1	1/5	10	**85803786**	726	1/1
9	**85803005**	514	3/8	15	**85803140**	1.21.5	2/2	3	**85803357**	395/1	3/5	5	**85803788**	1.98.0	5/5
4	**85803005**	902	3/5	10	**85803141**	1.21.5	2/2	8	**85803380**	1.95.3	1/1	3	**85803789**	1.98.0	5/5
3	**85803005**	732	1/1	11	**85803184**	724	4/5	10	**85803381**	1.96.2	1/1	16	**85803797**	1.88.08	2/2
15	**85803008**	1.88.11/7	1/1	6	**85803188**	724	4/5	6	**85803383**	1.95.1/A	1/1	9	**85803820**	1.17.5	1/1
3	**85803008**	514	8/8	8	**85803192**	1.88.08	1/2	6	**85803383**	1.95.1/B	1/1	2	**85803879**	1.75.2/A	1/1

ÍNDICE NUMÉRICO - NUMBER INDEX - INDEX NUMERIQUE - ZAHLENVERZEICHNIS - NUMMERISCHE INDEX - NUMMERFORTEGNELSE

Part N.	SGR.	Pag.	R	Part N.	SGR.	Pag.	R	Part N.	SGR.	Pag.	R	Part N.	SGR.	Pag.	R
7	**85803881**	1.75.2/A	1/1	1	**85804618**	1.92.0	1/2	2	**85804974**	1.94.2/B	7/16	8	**85805200**	1.94.2/B	11/16
7	**85803882**	1.75.2	1/1	8	**85804637**	1.95.0	4/5	9	**85804975**	1.94.2/B	7/16	16	**85805200**	1.96.7	1/3
9	**85803884**	1.75.2/A	1/1	5	**85804638**	1.95.0	4/5	4	**85804975**	1.94.2/B	8/16	19	**85805201**	1.96.7	2/3
12	**85803885**	1.75.2	1/1	6	**85804639**	1.95.0	4/5	6	**85804980**	1.94.2/B	7/16	20	**85805202**	1.96.7	2/3
2	**85803957**	1.91.4	3/7	1	**85804640**	1.95.0	4/5	5	**85804981**	1.94.2/B	12/16	1	**85805257**	1.95.0	3/5
2	**85803977**	1.91.4/A	3/5	1	**85804646**	1.95.1/C	3/3	4	**85804983**	1.94.2/B	12/16	7	**85805277**	1.95.0	2/5
1	**85803986**	1.91.4	5/7	1	**85804674**	1.91.4	1/7	3	**85804984**	1.94.2/B	12/16	6	**85805283**	1.95.0	1/5
9	**85803986**	1.91.4/1	1/3	1	**85804674**	1.91.4/1	3/3	12	**85804985**	1.94.2/B	12/16	4	**85805285**	1.95.0	1/5
5	**85803989**	415	2/2	1	**85804674**	1.91.1/1	1/1	15	**85804987**	1.94.2/B	12/16	11	**85805308**	1.93.0/A	1/2
2	**85804035**	1.94.2/B	4/16	3	**85804675**	1.91.4	1/7	13	**85804988**	1.94.2/B	12/16	5	**85805323**	1.93.5	1/2
12	**85804037**	1.94.2/B	10/16	3	**85804675**	1.91.4/1	3/3	10	**85804989**	1.94.2/B	7/16	5	**85805328**	1.93.0/A	1/2
13	**85804038**	1.94.2/B	10/16	2	**85804675**	1.91.1/1	1/1	14	**85805003**	1.94.2/B	10/16	6	**85805340**	725	5/6
6	**85804039**	1.94.2/B	10/16	2	**85804676**	1.96.0	1/1	15	**85805004**	1.94.2/B	10/16	12	**85805347**	1.94.2/B	11/16
3	**85804041**	1.94.2/B	5/16	1	**85804688**	1.96.7/1	1/1	16	**85805005**	1.94.2/B	10/16	9	**85805347**	1.94.2/B	12/16
11	**85804043**	1.94.2/B	9/16	8	**85804691**	1.96.7/1	1/1	1	**85805006**	1.94.2/B	8/16	8	**85805383**	1.91.4	1/7
3	**85804044**	1.94.2/B	9/16	9	**85804694**	1.15.0	1/1	17	**85805006**	1.94.2/B	10/16	8	**85805383**	1.91.4/1	3/3
6	**85804046**	1.94.2	2/4	3	**85804705**	1.95.5	1/2	9	**85805007**	1.94.2/B	10/16	6	**85805385**	415	2/2
7	**85804051**	1.94.2/B	7/16	4	**85804705**	1.95.5/A	2/3	10	**85805008**	1.94.2/B	10/16	13	**85805437**	1.96.7	1/3
2	**85804065**	1.94.2/B	10/16	9	**85804723**	1.95.1/A	1/1	11	**85805009**	1.94.2/B	10/16	1	**85805438**	1.95.1/C	1/2
10	**85804072**	1.94.2/B	9/16	9	**85804723**	1.95.1/B	1/1	9	**85805013**	1.94.2/B	6/16	4	**85805440**	1.95.1/C	1/2
6	**85804150**	1.75.2	1/1	9	**85804734**	1.96.7/1	1/1	1	**85805013**	1.94.2/B	10/16	2	**85805441**	1.95.1/C	1/2
13	**85804200**	1.96.2	1/1	1	**85804739**	1.92.8	1/1	11	**85805065**	1.92.6	2/3	8	**85805446**	1.91.5	3/3
1	**85804323**	1.94.2/C	1/1	7	**85804750**	1.93.5	1/2	7	**85805065**	1.92.3	1/1	1	**85805447**	1.95.0	5/5
1	**85804344**	1.98.0	5/5	17	**85804750**	1.93.0	2/4	12	**85805065**	1.93.0	2/4	9	**85805448**	1.92.4	1/3
2	**85804345**	1.98.0	5/5	18	**85804750**	1.93.0/A	1/2	9	**85805065**	1.93.0/A	1/2	9	**85805448**	1.92.4	2/3
4	**85804346**	1.98.0	5/5	15	**85804830**	1.83.0	1/1	9	**85805067**	1.92.1	1/1	14	**85805509**	1.94.2/B	11/16
5	**85804362**	1.91.6	1/1	1	**85804838**	215	1/1	8	**85805104**	1.91.4	4/7	7	**85805548**	1.95.0	5/5
1	**85804367**	1.75.2	1/1	3	**85804840**	1.92.1	1/1	10	**85805104**	1.91.4/1	1/3	16	**85805571**	1.93.0	4/4
3	**85804370**	1.75.2	1/1	4	**85804841**	1.92.1	1/1	1	**85805105**	1.91.4	4/7	1	**85805571**	1.92.8	1/1
14	**85804373**	902	2/5	5	**85804842**	1.92.1	1/1	1	**85805106**	1.91.4/1	1/3	1	**85805571**	1.92.8/2	1/1
5	**85804412**	1.94.2/B	9/16	2	**85804863**	1.93.0	4/4	11	**85805134**	1.94.2	1/4	4	**85805591**	1.93.0	3/4
19	**85804416**	1.94.2/B	6/16	5	**85804864**	1.93.0	4/4	1	**85805134**	1.94.2/A	1/1	1	**85805624**	1.95.5	1/2
4	**85804424**	1.94.2/B	3/16	1	**85804865**	1.93.0	3/4	11	**85805135**	1.91.4/1	1/3	1	**85805624**	1.95.5/2A	1/1
8	**85804441**	1.94.2/B	10/16	6	**85804866**	1.93.0	4/4	6	**85805136**	1.94.2	3/4	1	**85805624**	1.95.5/A	2/3
11	**85804442**	724	1/5	4	**85804869**	1.92.4	1/3	2	**85805144**	1.91.4	5/7	5	**85805637**	1.94.2	3/4
12	**85804447**	514	2/8	5	**85804870**	1.92.4	2/3	2	**85805144**	1.91.4/1	1/3	1	**85805659**	1.92.6	2/3
1	**85804458**	724	3/5	3	**85804873**	1.94.2	3/4	1	**85805146**	1.94.2	4/4	15	**85805686**	1.75.2	1/1
1	**85804568**	1.91.3/1	1/1	10	**85804874**	1.94.2	3/4	2	**85805160**	1.94.2/B	13/16	9	**85805690**	1.82.7	2/2
1	**85804568**	1.91.3	1/1	4	**85804876**	1.94.2	3/4	2	**85805161**	1.94.2	4/4	14	**85805692**	1.82.7	2/2
5	**85804571**	1.38.1	1/1	6	**85804889**	83.90	1/1	1	**85805163**	1.91.6	1/1	27	**85805700**	1.40.0	2/4
2	**85804573**	1.82.6	13/15	11	**85804929**	902	4/5	12	**85805173**	1.91.4	4/7	1	**85805701**	1.82.6	14/15
9	**85804574**	1.82.6	13/15	10	**85804930**	902	4/5	7	**85805193**	725	5/6	1	**85805701**	1.82.6	15/15
1	**85804617**	1.92.4	3/3	2	**85804955**	415	1/2	8	**85805195**	725	5/6	25	**85805701**	393	2/2

ÍNDICE NUMÉRICO - NUMBER INDEX - INDEX NUMERIQUE - ZAHLENVERZEICHNIS - NUMMERISCHE INDEX - NUMMERFORTEGNELSE

Part N.	SGR.	Pag.	R	Part N.	SGR.	Pag.	R	Part N.	SGR.	Pag.	R	Part N.	SGR.	Pag.	R
17	**85805701**	1.82.6	2/15	5	**85805775**	1.95.5	2/2	3	**85805976**	415/A	3/10	1	**85806004**	415/A	7/10
14	**85805703**	1.40.0	1/4	4	**85805775**	1.95.5/A	1/3	11	**85805977**	1.40.0	3/4	7	**85806006**	415/A	9/10
24	**85805704**	1.40.0	2/4	9	**85805777**	1.94.1	1/1	4	**85805977**	415/A	3/10	8	**85806007**	415/A	9/10
8	**85805705**	1.40.0	1/4	10	**85805786**	1.15.0	1/1	12	**85805978**	1.40.0	3/4	9	**85806008**	415/A	9/10
7	**85805706**	1.40.0	1/4	1	**85805790**	1.44.0	1/1	5	**85805978**	415/A	3/10	10	**85806009**	415/A	9/10
5	**85805707**	1.40.0	1/4	6	**85805803**	1.93.0/A	1/2	2	**85805979**	1.40.0	3/4	4	**85806010**	1.40.0	4/4
2	**85805707**	1.40.0	4/4	1	**85805818**	1.28.0/B	5/12	8	**85805979**	415/A	3/10	11	**85806010**	415/A	9/10
18	**85805708**	1.40.0	3/4	1	**85805818**	1.28.0/A	5/14	3	**85805980**	1.40.0	3/4	1	**85806011**	415/A	10/10
4	**85805709**	415/A	10/10	5	**85805862**	725	5/6	9	**85805980**	415/A	3/10	3	**85806012**	415/A	10/10
3	**85805710**	1.40.0	4/4	4	**85805863**	725	5/6	4	**85805981**	1.40.0	3/4	1	**85806013**	1.40.0	4/4
3	**85805710**	1.40.0/B	4/4	7	**85805864**	725	6/6	10	**85805981**	415/A	3/10	5	**85806014**	415/A	10/10
7	**85805711**	1.40.0	4/4	6	**85805865**	725	6/6	5	**85805982**	1.40.0	3/4	6	**85806015**	415/A	10/10
6	**85805711**	415/A	9/10	7	**85805884**	1.94.2/B	12/16	11	**85805982**	415/A	3/10	9	**85806016**	415/A	10/10
14	**85805715**	0.40.0/B	1/2	8	**85805885**	1.94.2/B	12/16	6	**85805983**	1.40.0	3/4	4	**85806023**	1.94.2/B	11/16
15	**85805716**	0.40.0/B	1/2	10	**85805886**	1.94.2/B	12/16	12	**85805983**	415/A	3/10	6	**85806023**	1.94.2/B	11/16
16	**85805717**	0.40.0/B	1/2	11	**85805887**	1.94.2/B	12/16	7	**85805984**	1.40.0	3/4	17	**85806023**	1.96.7	1/3
19	**85805718**	0.40.0/B	1/2	15	**85805888**	1.93.0	2/4	13	**85805984**	415/A	3/10	14	**85806048**	1.94.2/B	12/16
18	**85805719**	0.40.0/B	1/2	17	**85805888**	1.93.0/A	1/2	15	**85805985**	1.40.0	3/4	3	**85806056**	1.93.0	2/4
6	**85805720**	0.40.0/B	1/2	6	**85805888**	1.91.1/1	1/1	14	**85805985**	415/A	3/10	11	**85806057**	1.93.0	2/4
8	**85805721**	0.40.0/B	1/2	15	**85805911**	1.93.0	4/4	16	**85805986**	1.40.0	3/4	8	**85806057**	1.93.0/A	1/2
17	**85805722**	0.40.0/B	1/2	3	**85805911**	1.92.8	1/1	15	**85805986**	415/A	3/10	2	**85806069**	250	1/1
9	**85805723**	0.40.0/B	1/2	4	**85805922**	521-553	1/3	17	**85805987**	1.40.0	3/4	2	**85806069**	250	1/1
10	**85805724**	0.40.0/B	1/2	3	**85805922**	521-553	2/3	16	**85805987**	415/A	3/10	7	**85806070**	250	1/1
12	**85805725**	0.40.0/B	1/2	4	**85805922**	523/B	1/4	17	**85805988**	415/A	3/10	7	**85806070**	251	1/1
11	**85805726**	0.40.0/B	1/2	3	**85805922**	523/B	2/4	14	**85805989**	1.40.0	3/4	1	**85806071**	250	1/1
7	**85805727**	0.40.0/B	1/2	4	**85805926**	521-553	2/3	18	**85805989**	415/A	3/10	6	**85806089**	1.93.5	1/2
1	**85805728**	0.40.0/B	1/2	4	**85805926**	523/B	2/4	20	**85805990**	1.40.0	3/4	4	**85806095**	1.91.5	2/3
23	**85805729**	0.40.0/B	2/2	15	**85805965**	1.40.0	1/4	19	**85805990**	415/A	3/10	1	**85806097**	1.91.5	2/3
5	**85805730**	0.40.0/B	1/2	7	**85805965**	415/A	1/10	20	**85805991**	415/A	3/10	3	**85806098**	1.91.5	2/3
2	**85805731**	0.40.0/B	1/2	11	**85805966**	415/A	1/10	19	**85805992**	1.40.0	3/4	2	**85806100**	1.95.5/1	1/1
3	**85805732**	0.40.0/B	1/2	10	**85805967**	415/A	1/10	21	**85805992**	415/A	4/10	17	**85806102**	1.82.6	2/15
13	**85805733**	0.40.0/B	1/2	12	**85805968**	415/A	1/10	1	**85805993**	415/A	8/10	15	**85806130**	1.95.3	1/1
20	**85805734**	0.40.0/B	1/2	13	**85805969**	415/A	1/10	2	**85805994**	415/A	8/10	20	**85806131**	1.91.4	1/7
21	**85805735**	0.40.0/B	2/2	14	**85805970**	415/A	1/10	3	**85805995**	415/A	8/10	17	**85806131**	1.91.4/1	3/3
22	**85805736**	0.40.0/B	2/2	15	**85805971**	415/A	1/10	6	**85805997**	415/A	8/10	18	**85806132**	1.91.4	1/7
4	**85805737**	0.40.0/B	1/2	16	**85805972**	415/A	1/10	7	**85805998**	415/A	8/10	16	**85806132**	1.91.4/1	3/3
24	**85805738**	0.40.0/B	2/2	20	**85805973**	1.40.0	1/4	8	**85805999**	415/A	8/10	6	**85806134**	1.91.4	5/7
25	**85805739**	0.40.0/B	2/2	26	**85805973**	415/A	2/10	9	**85806000**	415/A	8/10	13	**85806135**	1.91.4	4/7
7	**85805770**	1.92.6	1/3	8	**85805974**	1.40.0	3/4	11	**85806001**	1.40.0	4/4	12	**85806154**	1.93.0	1/4
4	**85805771**	1.92.6	1/3	1	**85805974**	415/A	3/10	1	**85806001**	415/A	9/10	10	**85806154**	1.94.2/B	15/16
4	**85805772**	1.95.5	2/2	9	**85805975**	1.40.0	3/4	2	**85806002**	415/A	9/10	10	**85806155**	725	2/6
7	**85805772**	1.95.5	2/2	2	**85805975**	415/A	3/10	8	**85806003**	1.40.0	4/4	18	**85806171**	521-553	1/3
5	**85805772**	1.95.5/A	1/3	10	**85805976**	1.40.0	3/4	3	**85806003**	415/A	9/10	18	**85806171**	523/B	1/4

ÍNDICE NUMÉRICO - NUMBER INDEX - INDEX NUMERIQUE - ZAHLENVERZEICHNIS - NUMMERISCHE INDEX - NUMMERFORTEGNELSE

Part N.	SGR.	Pag.	R	Part N.	SGR.	Pag.	R	Part N.	SGR.	Pag.	R	Part N.	SGR.	Pag.	R
17	**85806172**	521-553	1/3	7	**85808380**	1.95.5/2A	1/1	2	**85812061**	1.94.2/B	3/16	3	**85812339**	1.91.5	3/3
17	**85806172**	523/B	1/4	17	**85808381**	1.95.5/2A	1/1	1	**85812062**	1.94.2/B	3/16	17	**85812364**	1.92.9	2/4
1	**85806184**	1.91.5	1/3	18	**85808382**	1.95.5/2A	1/1	1	**85812063**	1.94.2/B	2/16	14	**85812365**	1.92.9	1/4
2	**85806185**	1.91.5	1/3	19	**85808383**	1.95.5/2A	1/1	7	**85812064**	1.94.2/B	10/16	5	**85813054**	1.40.0	4/4
6	**85806187**	1.92.1	1/1	4	**85808385**	1.95.5/2A	1/1	2	**85812065**	1.94.2/B	2/16	5	**85813074**	1.15.0	1/1
7	**85806210**	1.94.2/B	11/16	12	**85808386**	1.95.5/2A	1/1	5	**85812078**	344	1/1	6	**85813075**	1.15.0	1/1
18	**85806210**	1.96.7	1/3	2	**85808390**	1.95.5/2A	1/1	14	**85812080**	1.93.0	4/4	4	**85813076**	1.15.0	1/1
13	**85806214**	1.75.2	1/1	5	**85808401**	339/A	1/1	15	**85812081**	1.93.0/A	1/2	2	**85813079**	1.94.2/B	5/16
5	**85806249**	0.04.5	1/1	2	**85808402**	339	2/6	6	**85812083**	1.28.0/A	2/14	1	**85813097**	1.95.3	1/1
7	**85807003**	1.28.0/A	3/14	1	**85808402**	339/A	1/1	6	**85812083**	1.28.0/B	2/12	2	**85813099**	1.95.3	1/1
5	**85807003**	1.28.0/A	6/14	11	**85808403**	336	3/5	9	**85812085**	1.28.0/A	4/14	2	**85813103**	726	1/1
7	**85807003**	1.28.0/B	3/12	12	**85808403**	339	1/6	9	**85812085**	1.28.0/B	4/12	16	**85813104**	1.96.2	1/1
7	**85807296**	0.14.0/A	2/3	5	**85808419**	1.88.01	1/3	1	**85812086**	1.28.0/A	4/14	6	**85813132**	1.88.01	1/3
3	**85807298**	1.19.1	2/5	15	**85808460**	1.91.4	1/7	2	**85812086**	1.28.0/B	4/12	4	**85813133**	1.96.2	1/1
3	**85807299**	1.19.1	1/5	14	**85808460**	1.91.4/1	3/3	2	**85812087**	1.28.0/A	4/14	2	**85813134**	1.96.2	1/1
1	**85807300**	1.19.1	1/5	19	**85808460**	1.93.0	1/4	1	**85812087**	1.28.0/B	4/12	3	**85813135**	1.96.2	1/1
2	**85807301**	1.19.1	2/5	11	**85808472**	902	2/5	18	**85812092**	1.28.0/A	5/14	1	**85813136**	1.96.2	1/1
5	**85807302**	1.19.1	3/5	10	**85808473**	902	2/5	18	**85812092**	1.28.0/B	5/12	8	**85813137**	1.96.2	1/1
4	**85807303**	1.19.1	3/5	2	**85811870**	1.82.6	1/15	15	**85812095**	1.94.2/B	6/16	7	**85813138**	1.96.2	1/1
2	**85807304**	1.19.1	3/5	9	**85811963**	1.94.2/B	11/16	6	**85812109**	1.95.5/2A	1/1	3	**85813140**	1.95.3	1/1
8	**85807304**	0.01.0	1/1	10	**85811964**	1.94.2/B	11/16	9	**85812110**	1.95.5/2A	1/1	18	**85813186**	726	1/1
9	**85807800**	0.04.5	1/1	1	**85811965**	1.94.2/B	11/16	11	**85812111**	1.95.5/2A	1/1	18	**85813186**	1.96.2	1/1
1	**85807835**	1.94.0/1	1/1	1	**85811966**	344	1/1	10	**85812112**	1.95.5/2A	1/1	19	**85813187**	726	1/1
4	**85807835**	1.94.1	1/1	7	**85811969**	1.94.2/B	9/16	14	**85812131**	1.95.5/2A	1/1	17	**85813187**	1.96.2	1/1
9	**85807835**	1.94.0	1/1	9	**85811970**	1.94.2/B	9/16	13	**85812132**	1.95.5/2A	1/1	12	**85813188**	1.88.01	3/3
7	**85807855**	1.91.1/1	1/1	13	**85811972**	1.94.2/B	9/16	16	**85812133**	1.95.5/2A	1/1	17	**85813200**	726	1/1
1	**85807856**	0.04.5	1/1	9	**85811972**	1.94.2/B	14/16	20	**85812134**	1.95.5/2A	1/1	19	**85813200**	1.96.2	1/1
4	**85807857**	336	2/5	12	**85811976**	1.94.2/B	13/16	3	**85812135**	1.95.5/2A	1/1	16	**85813201**	726	1/1
11	**85807857**	336	4/5	9	**85811993**	1.91.5	3/3	12	**85812154**	514	5/8	20	**85813201**	1.96.2	1/1
26	**85807857**	339	4/6	13	**85812021**	1.94.2/B	11/16	1	**85812170**	1.82.6	3/15	2	**85813244**	1.82.3/A	1/1
11	**85807857**	339	6/6	4	**85812043**	1.94.2/B	9/16	2	**85812171**	1.82.6	3/15	12	**85813300**	1.28.0/A	5/14
15	**85807858**	336	2/5	1	**85812044**	1.94.2/B	4/16	13	**85812178**	514	5/8	3	**85813304**	1.28.0/A	5/14
9	**85807858**	336	4/5	1	**85812045**	1.94.2/B	1/16	3	**85812184**	728	1/1	3	**85813304**	1.28.0/B	5/12
25	**85807858**	339	4/6	8	**85812045**	1.94.2/B	2/16	15	**85812185**	1.82.6	7/15	6	**85813318**	1.28.0/A	5/14
9	**85807858**	339	6/6	9	**85812046**	1.94.2/B	2/16	22	**85812185**	1.82.6	10/15	6	**85813318**	1.28.0/B	5/12
11	**85807859**	0.04.5	1/1	10	**85812048**	1.94.2/B	2/16	2	**85812212**	415	2/2	12	**85813324**	1.94.2/B	14/16
3	**85807866**	1.91.1/1	1/1	16	**85812049**	1.94.2/B	6/16	11	**85812217**	1.94.2/B	7/16	8	**85813338**	1.28.0/A	5/14
8	**85807880**	1.92.1	1/1	5	**85812051**	1.94.2/B	2/16	1	**85812252**	1.92.6	1/3	8	**85813338**	1.28.0/B	5/12
1	**85807933**	120	1/1	5	**85812052**	1.94.2/B	8/16	9	**85812253**	1.92.6	1/3	11	**85813400**	1.88.01	3/3
2	**85807934**	120	1/1	8	**85812053**	1.94.2/B	6/16	4	**85812254**	1.92.4	3/3	10	**85813401**	1.88.01	3/3
3	**85807935**	120	1/1	7	**85812054**	1.94.2/B	6/16	4	**85812255**	1.92.4	3/3	9	**85813407**	1.88.01	2/3
5	**85807951**	120	1/1	18	**85812055**	1.94.2/B	10/16	4	**85812278**	1.88.01	2/3	2	**85813418**	339/A	1/1
2	**85808307**	1.94.2/B	11/16	3	**85812057**	1.94.2/B	8/16	3	**85812338**	1.92.5/1	1/1	2	**85813418**	356/A	1/1

ÍNDICE NUMÉRICO - NUMBER INDEX - INDEX NUMERIQUE - ZAHLENVERZEICHNIS - NUMMERISCHE INDEX - NUMMERFORTEGNELSE

Part N.	SGR.	Pag.	R	Part N.	SGR.	Pag.	R	Part N.	SGR.	Pag.	R	Part N.	SGR.	Pag.	R
2	**85813418**	395/1A	1/1	14	**85817004**	1.28.0/A	4/14	5	**85817299**	1.94.2/B	7/16	2	**85819144**	1.96.0/A	1/1
3	**85813419**	339/A	1/1	14	**85817004**	1.28.0/B	4/12	4	**85817303**	1.94.2/B	7/16	13	**85819188**	754-755	2/2
3	**85813419**	356/A	1/1	14	**85817004**	0.01.0	1/1	10	**85817308**	1.94.2/B	6/16	1	**85819189**	754-755	2/2
3	**85813419**	395/1A	1/1	13	**85817025**	336	3/5	18	**85817531**	1.82.6	4/15	7	**85819190**	1.91.7	1/3
8	**85813469**	514	3/8	15	**85817025**	339	1/6	16	**85817531**	336	3/5	7	**85819190**	754-755	2/2
4	**85815517**	514	3/8	3	**85817038**	514	2/8	7	**85817531**	336	4/5	6	**85819191**	1.91.7	1/3
11	**85815533**	1.83.0	1/1	3	**85817047**	514	2/8	21	**85817531**	339	4/6	6	**85819191**	754-755	2/2
11	**85815568**	1.82.6	1/15	3	**85817134**	514	3/8	7	**85817531**	339	6/6	1	**85819192**	754-755	1/2
9	**85815569**	1.82.6	1/15	9	**85817163**	1.28.0/A	1/14	6	**85817586**	1.91.4	7/7	6	**85819194**	1.91.7	3/3
12	**85815575**	1.94.2/B	6/16	5	**85817163**	1.28.0/A	5/14	12	**85817596**	1.82.6	1/15	6	**85819194**	1.91.7	2/3
13	**85815576**	1.94.2/B	6/16	9	**85817163**	1.28.0/B	1/12	11	**85817620**	1.28.0/A	1/14	6	**85819194**	754-755	1/2
10	**85815581**	1.82.6	1/15	5	**85817163**	1.28.0/B	5/12	11	**85817620**	1.28.0/B	1/12	10	**85819196**	1.91.7	1/3
9	**85815582**	1.82.6	3/15	4	**85817164**	1.28.0/A	2/14	5	**85817658**	1.94.2/B	11/16	10	**85819196**	754-755	2/2
2	**85815586**	1.28.0	1/1	7	**85817164**	1.28.0/A	2/14	6	**85817662**	1.94.2/B	12/16	9	**85819197**	1.91.7	1/3
1	**85815587**	1.28.0	1/1	4	**85817164**	1.28.0/B	2/12	1	**85817664**	1.94.2/B	12/16	9	**85819197**	754-755	2/2
4	**85815588**	1.82.6	1/15	13	**85817165**	1.28.0/A	4/14	8	**85817672**	1.75.2/A	1/1	8	**85819198**	1.91.7	2/3
8	**85815607**	514	1/8	13	**85817165**	1.28.0/B	4/12	5	**85817685**	1.93.4	1/1	8	**85819198**	754-755	1/2
10	**85815627**	514	1/8	3	**85817169**	1.28.0/A	1/14	7	**85817686**	1.93.4	1/1	9	**85819199**	1.91.7	2/3
11	**85815628**	514	1/8	3	**85817169**	1.28.0/B	1/12	6	**85817687**	1.93.4	1/1	9	**85819199**	754-755	1/2
9	**85815667**	336	2/5	2	**85817171**	1.94.2/B	1/16	1	**85818817**	1.91.4/2	1/1	2	**85819200**	1.91.7	1/3
2	**85815667**	336	4/5	3	**85817172**	1.94.2/B	1/16	1	**85818817**	1.91.4	6/7	2	**85819200**	1.91.7	2/3
2	**85815667**	339	3/6	4	**85817173**	1.94.2/B	1/16	4	**85818818**	1.91.4/2	1/1	2	**85819200**	1.91.7	3/3
2	**85815667**	339	6/6	5	**85817174**	1.94.2/B	1/16	4	**85818818**	1.91.4	6/7	2	**85819200**	754-755	1/2
10	**85815668**	336	2/5	6	**85817175**	1.94.2/B	1/16	3	**85818819**	1.91.4/2	1/1	2	**85819200**	754-755	2/2
6	**85815668**	336	4/5	6	**85817186**	1.94.2/B	8/16	3	**85818819**	1.91.4	6/7	6	**85819201**	1.91.4	1/7
20	**85815668**	339	3/6	14	**85817187**	1.94.2/B	9/16	5	**85818821**	1.91.4/1	3/3	8	**85819213**	1.91.4/2	1/1
6	**85815668**	339	6/6	5	**85817188**	1.94.2/B	10/16	5	**85818823**	1.91.4	1/7	8	**85819213**	1.91.4	6/7
4	**85815696**	514	1/8	8	**85817189**	1.94.2/B	5/16	1	**85818826**	1.91.4	7/7	7	**85819214**	1.91.4/2	1/1
3	**85816544**	1.94.2/B	14/16	14	**85817189**	1.94.2/B	6/16	3	**85818827**	1.91.4	7/7	7	**85819214**	1.91.4	6/7
1	**85816762**	1.93.0	4/4	1	**85817201**	336	5/5	2	**85818828**	1.91.4	7/7	24	**85819214**	1.91.4	2/7
19	**85816763**	1.93.0/A	1/2	1	**85817201**	339	5/6	13	**85818891**	1.94.2/B	14/16	5	**85819215**	728	1/1
1	**85816793**	336	4/5	4	**85817226**	1.82.6	3/15	6	**85818892**	1.75.2/A	1/1	4	**85819218**	1.75.2/A	1/1
1	**85816793**	339	6/6	4	**85817236**	728	1/1	13	**85818916**	514	1/8	1	**85819276**	1.94.2/B	15/16
1	**85816800**	514	1/8	18	**85817287**	1.94.2/B	6/16	6	**85818916**	514	3/8	1	**85819277**	1.93.0	1/4
15	**85816804**	336	3/5	3	**85817288**	1.94.2/B	10/16	1	**85818997**	1.82.3/A	1/1	4	**85819283**	1.93.0	1/4
12	**85816804**	336	4/5	1	**85817289**	1.94.2/B	5/16	1	**85818997**	1.82.3	1/1	4	**85819285**	1.94.2/B	15/16
24	**85816804**	339	4/6	4	**85817291**	1.94.2/B	10/16	4	**85819017**	1.92.9	1/4	6	**85819287**	1.94.2/B	15/16
12	**85816804**	339	6/6	2	**85817292**	1.94.2/B	8/16	4	**85819018**	1.92.9	1/4	16	**85819299**	514/A	1/2
2	**85816811**	902	5/5	12	**85817293**	1.94.2/B	9/16	3	**85819043**	1.92.2	1/1	14	**85819350**	514/B	1/2
8	**85817001**	1.28.0/A	1/14	8	**85817294**	1.94.2/B	7/16	1	**85819072**	728	1/1	9	**85819350**	514/B	2/2
8	**85817001**	1.28.0/B	1/12	12	**85817295**	1.94.2/B	7/16	1	**85819080**	1.92.1	1/1	12	**85819352**	1.88.11/2	2/2
5	**85817002**	1.28.0/A	4/14	4	**85817297**	1.94.2/B	16/16	3	**85819096**	1.82.3/A	1/1	12	**85819353**	1.88.11/9A	1/2
5	**85817002**	1.28.0/B	4/12	1	**85817298**	1.94.2/B	16/16	4	**85819096**	1.95.3	1/1	16	**85819353**	1.88.11/9A	2/2

ÍNDICE NUMÉRICO - NUMBER INDEX - INDEX NUMERIQUE - ZAHLENVERZEICHNIS - NUMMERISCHE INDEX - NUMMERFORTEGNELSE

Part N.	SGR.	Pag.	R	Part N.	SGR.	Pag.	R	Part N.	SGR.	Pag.	R	Part N.	SGR.	Pag.	R
17	**85819354**	514/1A	1/2	5	**85819591**	1.94.2/B	15/16	12	**86505157**	0.04.0	1/2	13	**87800083**	0.30.2	1/1
13	**85819355**	1.88.11/1	1/2	9	**85819604**	1.88.01	3/3	8	**86505999**	1.44.0/A	1/12	6	**87800083**	0.01.0	1/1
10	**85819355**	1.88.11/1	2/2	5	**85819635**	1.94.2/B	5/16	14	**86507012**	1.95.1/C	1/2	2	**87800109**	0.34.7/A	1/1
15	**85819356**	1.88.11/6	2/2	4	**85819636**	1.94.2/B	5/16	5	**86507337**	1.88.11/5	3/3	1	**87800118**	0.34.7	2/2
17	**85819358**	514/C	1/1	6	**85819637**	1.94.2/B	9/16	4	**86508737**	339	1/6	1	**87800118**	0.34.7/A	1/1
1	**85819365**	1.93.0/A	1/2	14	**85819638**	1.94.2/B	13/16	2	**86511315**	0.40.0/A	1/1	2	**87800147**	0.34.7	1/2
14	**85819367**	902/A	1/1	1	**85819649**	336	1/5	1	**86511646**	1.44.0/A	2/12	8	**87800187**	0.14.0	2/3
1	**85819373**	1.91.5	3/3	1	**85819649**	336	2/5	4	**86529646**	1.44.0/A	3/12	11	**87800188**	0.14.0	2/3
1	**85819407**	1.93.5	1/2	1	**85819649**	336	3/5	4	**86536748**	1.44.0/A	1/12	5	**87800191**	0.04.3	2/2
5	**85819451**	1.94.2/B	14/16	1	**85819650**	339	3/6	5	**86536749**	1.44.0/A	1/12	5	**87800192**	0.14.0	3/3
6	**85819452**	1.94.2/B	14/16	16	**85819650**	343	2/2	9	**86536750**	1.44.0/A	3/12	2	**87800193**	0.14.0	3/3
4	**85819453**	1.94.2/B	14/16	1	**85819650**	339	1/6	9	**86536751**	1.44.0/A	3/12	1	**87800194**	0.14.0	3/3
3	**85819454**	1.93.5	1/2	1	**85819650**	339	2/6	1	**86536752**	1.44.0/A	3/12	3	**87800195**	0.14.0	3/3
8	**85819454**	1.94.2/B	14/16	2	**85819675**	1.94.2/B	15/16	1	**86536753**	1.44.0/A	3/12	5	**87800196**	0.40.0/A	1/1
6	**85819460**	1.91.4/1	3/3	11	**85819685**	726	1/2	3	**86539263**	1.44.0/A	3/12	16	**87800220**	0.14.0	2/3
1	**85819467**	1.88.01	3/3	1	**85819685**	395/1	1/5	2	**86539458**	1.44.0/A	3/12	3	**87800220**	0.01.0	1/1
10	**85819468**	1.88.01	2/3	1	**85819685**	395/1	5/5	1	**86546391**	1.44.0/A	4/12	1	**87800237**	0.07.1	1/1
2	**85819469**	1.88.01	3/3	5	**85819721**	395/1	5/5	7	**86546392**	1.44.0/A	4/12	4	**87800243**	0.14.0	2/3
3	**85819471**	1.88.01	3/3	13	**85819722**	336	1/5	7	**86552793**	1.44.0/A	1/12	1	**87800270**	0.02.1	1/2
11	**85819472**	1.88.01	2/3	17	**85819722**	339	3/6	7	**86552794**	1.44.0/A	1/12	4	**87800410**	0.14.0	3/3
4	**85819473**	1.88.01	3/3	4	**85819727**	1.82.6	11/15	5	**87790261**	0.08.0	1/1	7	**87800411**	0.31.0	1/1
6	**85819474**	1.88.01	3/3	7	**85819728**	1.82.6	11/15	5	**87790262**	0.08.0	1/1	4	**87800419**	0.08.4	1/2
5	**85819475**	1.88.01	3/3	5	**85819729**	1.82.6	11/15	5	**87790263**	0.08.0	1/1	7	**87800517**	0.06.0	1/4
12	**85819477**	1.88.01	2/3	6	**85819730**	1.82.6	11/15	5	**87790264**	0.08.0	1/1	1	**87800523**	0.08.0	1/1
13	**85819478**	1.88.01	2/3	1	**85819751**	1.88.01	1/3	5	**87790265**	0.08.0	1/1	1	**87800537**	0.08.2/A	1/1
14	**85819479**	1.88.01	2/3	3	**85819826**	1.91.5	1/3	4	**87790267**	0.08.0	1/1	1	**87800547**	0.30.2	1/1
17	**85819480**	1.88.01	2/3	2	**85819827**	1.91.5	2/3	4	**87790268**	0.08.0	1/1	7	**87800609**	0.14.0	2/3
15	**85819481**	1.88.01	2/3	14	**85819945**	336	1/5	4	**87790269**	0.08.0	1/1	9	**87800621**	0.04.3	1/2
16	**85819482**	1.88.01	2/3	28	**85819945**	339	4/6	4	**87790270**	0.08.0	1/1	1	**87800661**	0.07.7	1/1
1	**85819483**	1.88.01	2/3	4	**85820136**	878	1/1	4	**87790271**	0.08.0	1/1	13	**87800677**	0.14.0	2/3
8	**85819485**	1.88.01	2/3	3	**85820138**	878	1/1	8	**87790304**	0.08.2	1/1	3	**87800681**	0.04.3	2/2
7	**85819486**	1.88.01	3/3	4	**85820139**	878	1/1	8	**87790304**	0.08.2/A	1/1	7	**87800696**	0.04.3	2/2
8	**85819487**	1.88.01	3/3	2	**85999136**	1.82.6/A	1/1	8	**87790305**	0.08.2	1/1	13	**87800706**	0.08.4	1/2
5	**85819488**	1.88.01	2/3	2	**85999136**	1.82.6/B	1/1	8	**87790305**	0.08.2/A	1/1	7	**87800709**	0.08.4	1/2
14	**85819494**	1.88.08	2/2	9	**85999136**	336	3/5	8	**87790306**	0.08.2	1/1	14	**87800710**	0.08.4	1/2
2	**85819567**	1.93.5	1/2	9	**85999136**	339	1/6	8	**87790306**	0.08.2/A	1/1	4	**87800722**	0.31.0	1/1
1	**85819574**	1.94.2/B	9/16	3	**85999138**	1.82.6/A	1/1	8	**87790307**	0.08.2	1/1	9	**87800723**	0.31.0	1/1
10	**85819575**	1.94.2/B	14/16	3	**85999138**	1.82.6/B	1/1	8	**87790307**	0.08.2/A	1/1	1	**87800799**	0.02.1	2/2
1	**85819576**	1.94.2/B	14/16	10	**85999138**	336	3/5	8	**87790308**	0.08.2	1/1	4	**87800842**	0.34.7	2/2
11	**85819577**	1.94.2/B	14/16	10	**85999138**	339	1/6	8	**87790308**	0.08.2/A	1/1	12	**87800859**	0.24.0	1/1
2	**85819578**	1.94.2/B	14/16	11	**85999325**	514/C	1/1	8	**87790309**	0.08.2	1/1	1	**87800887**	0.04.3	1/2
7	**85819581**	1.94.2/B	14/16	11	**85999325**	514/1A	1/2	8	**87790309**	0.08.2/A	1/1	4	**87800918**	0.06.0	2/4
8	**85819591**	1.93.0	1/4	5	**86500548**	0.14.0/B	7/13	1	**87800077**	0.04.3	2/2	1	**87800919**	0.06.0	2/4

ÍNDICE NUMÉRICO - NUMBER INDEX - INDEX NUMERIQUE - ZAHLENVERZEICHNIS - NUMMERISCHE INDEX - NUMMERFORTEGNELSE

Part N.	SGR.	Pag.	R
1	**87801071**	0.08.2	1/1
9	**87801086**	0.08.2/A	1/1
9	**87801087**	0.08.2/A	1/1
9	**87801088**	0.08.2/A	1/1
9	**87801089**	0.08.2/A	1/1
9	**87801095**	0.08.2	1/1
9	**87801096**	0.08.2	1/1
9	**87801097**	0.08.2	1/1
9	**87801098**	0.08.2	1/1
6	**87801109**	0.06.0	2/4
4	**87801219**	0.08.2/A	1/1
8	**87801302**	0.06.0	3/4
1	**87801309**	0.02.1	2/2
14	**87801534**	0.30.0	1/1
3	**87801551**	0.07.7	1/1
1	**87801635**	0.04.5	1/1
5	**87840154**	0.06.0	3/4
4	**87840324**	0.04.2	1/1
1	**87840431**	0.04.2	1/1
13	**87840522**	0.14.0	1/3
1	**87840555**	0.04.0	2/2
13	**87840571**	0.12.0	1/1
1	**87840745**	0.14.0	1/3
1	**87840745**	0.14.0/B	1/13
1	**87840745**	0.14.0/B	2/13
1	**87840745**	0.14.0/B	3/13
1	**87840745**	0.14.0/B	4/13
1	**87840745**	0.14.0/B	5/13
1	**87840745**	0.14.0/B	7/13
1	**87840745**	0.14.0/B	8/13
1	**87840745**	0.14.0/B	9/13
1	**87840745**	0.14.0/B	10/13
1	**87840745**	0.14.0/B	11/13
1	**87840745**	0.14.0/B	12/13
1	**87840745**	0.14.0/B	13/13
1	**87840747**	0.14.0	1/3
1	**87840747**	0.14.0/B	1/13
1	**87840747**	0.14.0/B	2/13
1	**87840747**	0.14.0/B	3/13
1	**87840747**	0.14.0/B	4/13
1	**87840747**	0.14.0/B	5/13
1	**87840747**	0.14.0/B	7/13
1	**87840747**	0.14.0/B	8/13
1	**87840747**	0.14.0/B	9/13
1	**87840747**	0.14.0/B	10/13
1	**87840747**	0.14.0/B	11/13
1	**87840747**	0.14.0/B	12/13
1	**87840747**	0.14.0/B	13/13
1	**87840861**	0.04.0	1/2
5	**87840994**	0.08.2/A	1/1
5	**87840995**	0.08.2	1/1
12	**89617873**	1.82.6	3/15
10	**89617873**	1.88.11/7	1/1
4	**89617873**	728/A	2/2
3	**89626929**	1.82.6	2/15
20	**89626929**	336	3/5
15	**89626929**	336	4/5
27	**89626929**	339	4/6
15	**89626929**	339	6/6
9	**89706729**	1.44.0/A	6/12
8	**89706755**	0.14.0/B	1/13
18	**89711034**	0.24.0	1/1
11	**89712608**	0.34.7	2/2
3	**89824050**	1.39.8	1/1
10	**89824050**	1.82.6	4/15
8	**89824050**	1.82.6	5/15
3	**89824050**	1.82.6	6/15
11	**89824050**	1.82.6	6/15
18	**89824050**	336	3/5
13	**89824050**	336	4/5
22	**89824050**	339	4/6
13	**89824050**	339	6/6
8	**89824050**	724	4/5
3	**89824051**	1.82.6	6/15
10	**89824051**	724	4/5
9	**89824051**	724	2/5
1	**89824055**	1.82.6	4/15
1	**89824067**	514	2/8
6	**89824067**	514/A	1/2
8	**89824067**	514/B	2/2
6	**89824067**	514/1A	1/2
3	**89824067**	902	2/5
9	**89825770**	1.28.6	1/1
9	**89825770**	1.95.0	4/5
17	**89825770**	336	3/5
14	**89825770**	336	4/5
23	**89825770**	339	4/6
14	**89825770**	339	6/6
3	**89827059**	0.14.0/B	13/13
4	**89832923**	0.04.2	1/1
3	**89840543**	728/A	2/2
8	**89991976**	1.82.6	1/15
11	**89992298**	1.82.6	3/15
15	**89992298**	1.82.6	3/15
17	**89992298**	1.82.6	11/15
3	**89993143**	1.82.6	3/15
3	**89993143**	724	2/5