https://truckmanualshub.com/

PM240 R1

PARTS MANUAL

BX50 SERIES FORKLIFT TRUCKS

Federal Environmental Protection Agency (EPA) Emission Control Compliant

BX50 S/N 200001A~

BX50 - Gasoline & LP	**FG20/25/28/30/32/35-16**
BX50 - Diesel	**FD20/25/28/30/32/35-16**

RUTHZIL TRATOR COMERCIAL DE PEÇAS LTDA 11 97083-6812 ROLANDO CITRANGULO

BX50



WARNING

Read and observe all warnings on this unit before operating it.
DO NOT operate this equipment unless all factory installed guards and shields are properly secured in place.

Komatsu Forklift USA, Inc.

REVISED OCTOBER 2006

https://truckmanualshub.com/

The information and specifications contained herein were accurate at the time of publication, but may change without notice as required for product improvements. Neither Komatsu Forklift USA, Inc., nor its parent company nor any of its subsidiaries will be held responsible for damages due to misuse or inappropriate use of its products.

Requests for information, comments and other inquiries should be sent to:

Komatsu Forklift USA, Inc.
14481 Lochridge Blvd., Bldg. #2
Covington, Georgia 30014-4908

Voice phone: (770) 385-4815
Fax phone: (770) 385-4838

© Copyright 2006, Komatsu Forklift USA, Inc. all rights reserved. No part of this document may be photocopied or reproduced in any way without prior written consent of Komatsu Forklift USA, Inc.

https://truckmanualshub.com/

Komatsu Forklift U.S.A., Inc
Attn: Technical Publications
14481 Lochridge Blvd., Bldg 2
Covington, Georgia 30014
U.S.A.

PROPOSAL FOR MANUAL REVISIONS/CORRECTIONS

	Date	
Originator	Individual's Name	
	Company Name	
	Department	
	Street Address	
	City, State & ZIP	
	Voice Phone	Fax Phone

Book description

Truck model & S/N

Problem location and description. Attach supporting photo, sketch or other material as necessary.
Book or Tech Bulletin No. _____
Section No. and/or Name _____
Page No. _____
Item No. (if parts book) _____
Item Description (if in parts book) _____
Note made in K-Link? _____ Name of Note _____ (attach copy)

Corrective Action and Date

Fax this completed form to: 770-385-4838

https://truckmanualshub.com/

This Page Intentionally Left Blank

https://truckmanualshub.com/

CONTENTS

	Fig. No.	Page No.
COPYRIGHT STATEMENT		
CONTENTS		1
INTRODUCTION		11
FORKLIFT TRUCKS COVERED IN THIS PUBLICATION (S/N 200001A~)		13
CHAPTER 00 - RECOMMENDED STOCK LIST		
Fast Moving Stock List (FMSL) -	00-0000	00- 01
Full Recommended Stock List (FRSL) -	00-0001	00- 05
EPA Related Stock List (EPASL) -	00-0002	00- 011
Filters	00-0003	00- 015
CHAPTER 01 - ENGINE AND RELATED PARTS		
Engine Units - (K21/K25 Gas/LP/Dual-Fuel)	01-0001	01- 01
Transmission-to-Engine Mounting Parts - (K21/K25)	01-0002	01- 03
Engine Mounting Parts - (K21/K25)	01-0003	01- 05
Air Cleaner Assy - (K21/K25)	01-0010	01- 07
Engine Assy & Short Block Assy (K21/K25)	01-0200	01- 09
Bare Engine Block & Oil Pan (K21/K25)	01-0205	01- 011
Cylinder Head & Rocker Cover (K21/K25)	01-0210	01- 013
Crankcase Ventilation (K21/K25)	01-0215	01- 015
Piston, Crankshaft & Flywheel (K21/K25)	01-0220	01- 017
Camshaft & Valve Mechanism (K21/K25)	01-0225	01- 021
Front Cover & Fittings (K21/K25)	01-0230	01- 023
Manifold Assembly (K21/K25)	01-0235	01- 025
Fuel Rail & Injector Assembly (K21/K25 Gasoline)	01-0240	01- 027
Fuel Injector Holder Assembly (K21/K25 LPG)	01-0241	01- 029
Fuel Rail & Injector Holder Assembly - Press. Reg. (K21/K25 Dual-Fuel)	01-0242	01- 031
Fuel Rail & Injector Holder Assembly - Press. Reg. (K21/K25)	01-0242A	01- 033
Fuel Injection System (K21/K25)	01-0242B	01- 035
Lubricating System (K21/K25)	01-0245	01- 038
Water Pump, Cooling Fan & Thermostat (K21/K25)	01-0250	01- 039
Ignition System (K21/K25)	01-2055	01- 041
Bracketry - Ignition / Cooling (K21/K25)	01-0260	01- 043
Vacuum Piping (K21/K25)	01-0265	01- 045
Alternator (K21/K25)	01-0270	01- 047
Starter Motor (K21/K25)	01-0275	01- 049
Gasket Kit (K21/K25)	01-0280	01- 051
Fuel Pump Block-Off (K21/K25)	01-0285	01- 053
Vaporizer (K21/K25 LP & Dual-Fuel)	01-0290	01- 055
Caution Plate & Label (K21/K25)	01-0295	01- 057
Engine - (4D94LE Diesel)	01-1001	01- 059
Engine Mounting Parts - (4D94LE)	01-1001A	01- 061
Air Cleaner Assy - (4D94LE)	01-1001B	01- 063
Cylinder Block	01-1002	01- 065
Gear Housing (4D94LE)	01-1002A	01- 067
Flywheel Housing & Oil Sump (4D94LE)	01-1002B	01- 069
Cylinder Head & Bonnet (4D94LE)	01-1002C	01- 071
Intake Manifold (4D94LE)	01-1002D	01- 075
Exhaust Manifold (4D94LE)	01-1002E	01- 077
Camshaft & Driving Gear (4D94LE)	01-1002F	01- 079

https://truckmanualshub.com/

Cooling Water System (4D94LE) . . . . . .01-1002G 01- 081
Fuel Injection Pump (4D94LE) . . . . . .01-1015 . . . . . 01- 087
Fuel Injection Valve (4D94LE). . . . . .01-1020 . . . . . 01- 089
Fuel Filter (4D94LE) . . . . . .01-1025 . . . . . 01- 091
Starting Motor (4D94LE) . . . . . .01-1030 . . . . . 01- 093
Alternator - STD (4D94LE) . . . . . .01-1035 . . . . . 01- 095
Alternator - UL-DS (4D94LE) . . . . . .01-1040 . . . . . 01- 097
Gasket Set (4D94LE) . . . . . .01-1045 . . . . . 01- 099

CHAPTER 03 - EXHAUST SYSTEM
Muffler & Exhaust - (K21/K25 Pneumatic) . . . . . .03-0001 . . . . . 03- 01
Muffler & Exhaust - (K21/K25 Cushion) . . . . . .03-0002 . . . . . 03- 03
Muffler & Exhaust - (4D94LE) . . . . . .03-0003 . . . . . 03- 05

CHAPTER 04 - COOLING SYSTEM
Radiator - (K21/K25) . . . . . .04-0001 . . . . . 04- 01
Radiator - (4D94LE) . . . . . .04-0002 . . . . . 04- 03
Radiator Shroud & Hoses - (K21/K25) . . . . . .04-0010 . . . . . 04- 05
Radiator Shroud & Hoses - All Except 3.5T Diesel - (4D94LE) . . . . . .04-0011. . . . . 04- 07
Radiator Shroud & Hoses - 3.5T Diesel (4D94LE) . . . . . .04-0012 . . . . . 04- 09
Radiator Back Cover (All Models). . . . . .04-0015 . . . . . 04- 011
Cooling System Reserve Tank - (K21/K25). . . . . .04-0020 . . . . . 04 013
Cooling System Reserve Tank - (4D94LE) . . . . . .04-0021 . . . . . 04- 015
TorCon Cooler & Piping - (K21) . . . . . .04-0050 . . . . . 04- 017
TorCon Cooler & Piping - (K25). . . . . .04-0051 . . . . . 04- 019
TorCon Cooler & Piping - All Diesel Except 3.2 & 3.5T - (4D94LE) . . . . . .04-0055 . . . . . 04- 021
TorCon Cooler & Piping - 3.2 & 3.5T Diesel - (4D94LE) . . . . . .04-0056 . . . . . 04- 023

CHAPTER 05 - FUEL SYSTEM - GAS
Fuel System - Gasoline - Tank - (K21/K25) . . . . . .05-0001 . . . . . 05- 01
Fuel System - Diesel - Tank - (4D94LE) . . . . . .05-0002 . . . . . 05- 03
Fuel System - Diesel - Tank Unit - (4D94LE) . . . . . .05-0003 . . . . . 05- 05

CHAPTER 06 - FUEL SYSTEM - LPG & DUAL-FUEL
LPG Fuel System - Overview . . . . . .06-0001 . . . . . 06- 01
LPG Fuel System - Clips & Clamps . . . . . .06-0002 . . . . . 06- 03
LPG Fuel System - LPG Gas Hose Assy . . . . . .06-0010 . . . . . 06- 05

CHAPTER 13 - TORQUE CONVERTER
Torque Converter - Mounting & Inner Parts . . . . . .13-0001 . . . . . 13- 01
Converter & Pump Detail - (All Models Except Export). . . . . .13-0002 . . . . . 13- 03
Converter & Pump Detail - (Export Only) . . . . . .13-0003 . . . . . 13- 07

CHAPTER 15 - TORQFLOW TRANSMISSION
Unit Assy & Case . . . . . .15-0001 . . . . . 15- 01
Input & Idler Assy (All Except 3.2 & 3.5T) . . . . . .15-0002 . . . . . 15- 03
Input & Idler Assy (3.2 & 3.5T) . . . . . .15-0003 . . . . . 15- 07
Valve Assy. . . . . .15-0004 . . . . . 15- 011
Valve Assy Detail . . . . . .15-0005 . . . . . 15- 013
Solenoid Valve Parts . . . . . .15-0006 . . . . . 15- 015
External Case Parts . . . . . .15-0007 . . . . . 15- 017
Universal Joint. . . . . .15-0010 . . . . . 15- 019

https://truckmanualshub.com/

CHAPTER 21 - DRIVE AXLE

Drive Axle Assy - (2.0 & 2.5T Pneumatic) . . . . . 21-0001 . . . . . 21- 01
Drive Axle Assy - (2.8 & 3.0T Pneumatic) . . . . . 21-0002 . . . . . 21- 03
Drive Axle Assy - (3.2 & 3.5T Pneumatic) . . . . . 21-0003 . . . . . 21- 05
Drive Axle Assy - (Cushion) . . . . . 21-0010 . . . . . 21- 07
Drive Axle Assy - Detail - (Cushion) . . . . . 21-0011 . . . . . 21- 09
Differential Gear Assy - (All) . . . . . 21-0050 . . . . . 21- 011
Differential - Coupling Shaft - (All) . . . . . 21-0100 . . . . . 21- 015

CHAPTER 24 - STEER AXLE

Steering Axle Assy - (Pneumatic) . . . . . 24-0001 . . . . . 24- 01
Steering Axle Assy - Detail - (Pneumatic) . . . . . 24-0002 . . . . . 24- 05
Steering Axle Assy - (Cushion) . . . . . 24-0003 . . . . . 24- 09
Steering Axle Assy - Detail - (Cushion) . . . . . 24-0004 . . . . . 24- 011
Stabilizer Assy (FG) . . . . . 24-0010 . . . . . 24- 013

CHAPTER 27 - FRONT (DRIVE) WHEELS & TIRES

Front Wheels & Tires - (Cushion) . . . . . 27-0001 . . . . . 27- 01
Front Wheels & Tires - (Pneumatic) . . . . . 27-0002 . . . . . 27- 03

CHAPTER 28 - REAR (STEERING) WHEELS & TIRES

Rear Wheels & Tires - (Cushion) . . . . . 28-0001 . . . . . 28- 01
Rear Wheels & Tires - (Pneumatic) . . . . . 28-0002 . . . . . 28- 03

CHAPTER 30 - BRAKES, SERVICE / PARKING

Brake System - Service - (2.0 & 2.5T Pneumatic) . . . . . 30-0001 . . . . . 30- 01
Brake System - Service - (3.0T Pneumatic) . . . . . 30-0002 . . . . . 30- 05
Brake System - Service - (3.2 & 3.5T Pneumatic) . . . . . 30-0003 . . . . . 30- 09
Brake System - Service - (Cushion) . . . . . 30-0010 . . . . . 30- 013
Brake System - Service - (Cushion - Wheel Cyl.) . . . . . 30-0010A 30- 017
Brakes - Service - Master Cyl & Piping, Front (All Except 3.2 & 3.5T) . . . . 30-0050 . . . . . 30- 019
Brakes - Power - Booster Assy & Piping, Front (3.2 & 3.5T) . . . . . 30-0051 . . . . . 30- 021
Brakes - Master Cylinder - Exploded View (All Except 3.2 & 3.5T) . . . . . 30-0055 . . . . . 30- 023
Brakes - Booster Assy - Exploded View (3.2 & 3.5T) . . . . . 30-0056 . . . . . 30- 027
Parking Brake Lever Assy W/ Alarm . . . . . 30-0060 . . . . . 30- 029

CHAPTER 33 - STEERING HANDWHEEL

Steering Wheel . . . . . 33-0001 . . . . . 33- 01

CHAPTER 34 - STEERING COLUMN & WHEEL ASSEMBLY

Steering Column - Power Steering Valve . . . . . 34-0001 . . . . . 34- 01

CHAPTER 36 - PEDALS, BRAKE & INCHING

Inching & Brake Pedals - Torqflow Spec - . . . . . 36-0001 . . . . . 36- 01

CHAPTER 37 - PEDAL, ACCELERATOR

Accelerator Pedal - (FG Models) . . . . . 37-0001 . . . . . 37- 01
Accelerator Pedal Assy - (FD Models) . . . . . 37-0002 . . . . . 37- 03

CHAPTER 41 - FRAME AND CHASSIS

Frame Assy . . . . . 41-0001 . . . . . 41- 01
Frame Assy - Rear View . . . . . 41-0002 . . . . . 41- 03
Frame Assy - Tilt Accessories . . . . . 41-0003 . . . . . 41- 05

https://truckmanualshub.com/

Frame - Fuel Cover (LPG Models) . . . . . 41-0010 . . . . . 41- 07
Frame - Fuel Cap(Except UL-S) . . . . . 41-0011. . . . . 41- 09
Frame - Fuel Cap (UL-S) . . . . . 41-0012 . . . . . 41- 011
Frame - Under Cover Bracket . . . . . 41-0020 . . . . . 41- 013

CHAPTER 43 - COUNTERWEIGHTS & SUBWEIGHTS

Counterweights . . . . . 43-0001 . . . . . 43- 01
Sub-Weights . . . . . 43-0010 . . . . . 43- 03

CHAPTER 50 - OUTER PANEL, OVERHEAD GUARD, OPERATOR COMPARTMENT

Seats, Operator's . . . . . 50-0001 . . . . . 50- 01
Insulator Assy - Frame - (Pneumatic) . . . . . 50-0050 . . . . . 50- 05
Insulator Assy - Frame - (Cushion) . . . . . 50-0051 . . . . . 50- 07
Insulator Assy - Step, Sub-Bonnet, Radiator. . . . . 50-0052 . . . . . 50- 09
Dashboard. . . . . 50-0100 . . . . . 50- 011
Dashboard & Step Covers, External . . . . . 50-0101 . . . . . 50- 013
Overhead Guard . . . . . 50-0200 . . . . . 50- 015
Overhead Guard - Mounts . . . . . 50-0201 . . . . . 50- 017
Sub-Bonnet . . . . . 50-0301 . . . . . 50- 019

CHAPTER 55 - ELECTRICAL SYSTEM

Engine Area / Speed Sensor - (K21/K25) . . . . . 55-0001 . . . . . 55- 01
Attachments - Battery Holder - (K21/K25). . . . . 55-0002 . . . . . 55- 03
Attachments - Condenser - (K21/K25) . . . . . 55-0003 . . . . . 55- 05
Attachments - Battery - (K21/K25) . . . . . 55-0004 . . . . . 55- 07
E/G Harness / Relays / Fuse Box - (K21/K25) . . . . . 55-0010 . . . . . 55- 09
Komatsu Operator Presence System (K.O.P.S.) - Relays - (K21/K25) . . . . 55-0011. . . . . 55- 011
Bonnet Sub-Assy - Seat Switch (All Models) . . . . . 55-0020 . . . . . 55- 013
Dashboard - (K21/K25) w/o Power Brakes . . . . . 55-0030 . . . . . 55- 015
Dashboard - (K25) w/ Power Brakes. . . . . 55-0031 . . . . . 55- 017
Electrical - UL-S (GS & LPS) - (K21/K25) - Part 1 . . . . . 55-0040 . . . . . 55- 019
Electrical - UL-S (GS & LPS) - (K21/K25) - Part 2 . . . . . 55-0041 . . . . . 55- 021
Head Lamps . . . . . 55-0250 . . . . . 55- 023
Front Combination Lamps. . . . . 55-0251 . . . . . 55- 025
Rear "LED" Combination Lamp. . . . . 55-0252 . . . . . 55- 029
Engine Control Unit (ECU) - (K21/K25). . . . . 55-0400 . . . . . 55- 031
LP Driver / SSC Speed Control - (K21/K25) . . . . . 55-0410 . . . . . 55- 033
K.O.P.S. Controller - Frame . . . . . 55-0420 . . . . . 55- 035
Engine Harness - (4D94LE) . . . . . 55-0500 . . . . . 55- 037
Attachments - Battery - (4D94LE). . . . . 55-0504 . . . . . 55- 039
Dashboard - (4D94LE) . . . . . 55-0530 . . . . . 55- 041
Electrical - UL-S (DS) - (4D94LE) - Part 1 . . . . . 55-0540 . . . . . 55- 043
Electrical - UL-S (DS) - (4D94LE) - Part 2 . . . . . 55-0541 . . . . . 55- 045

CHAPTER 56 - METER PANEL

Meter Panel Assy & Combination Switch . . . . . 56-0001 . . . . . 56- 01
Meter Panel Display . . . . . 56-0002 . . . . . 56- 03
Meter Panel - Bulbs & Detail . . . . . 56-0003 . . . . . 56- 05

CHAPTER 60 - HYDRAULIC PUMP

Hydraulic Pump (FG) . . . . . 60-0001 . . . . . 60- 01
Hydraulic Pump (FG) - Detail (K21 Engine) . . . . . 60-0002 . . . . . 60- 03
Hydraulic Pump (FG) - Detail (K25 Engine) . . . . . 60-0003 . . . . . 60- 05
Hydraulic Pump (All FD Except 3.5 Ton)) . . . . . 60-0010 . . . . . 60- 07

https://truckmanualshub.com/

Hydraulic Pump (3.5 Ton FD) . . . . . 60-0011 . . . . . 60- 09

CHAPTER 61 - HYDRAULIC CONTROL VALVE

Hydraulic C/V & Conversion Kit . . . . . 61-0001 . . . . . 61- 01
Hydraulic C/V 3-Spool - Detail. . . . . 61-0001A 61- 03
Hydraulic C/V 4-Spool - Detail . . . . . 61-0001B 61- 05
Hydraulic Control Valve Lever Assy . . . . . 61-0010 . . . . . 61- 07
Hydraulic Control Valve Piping - 3-Spool (Except 3.5T) . . . . . 61-0020 . . . . . 61- 09
Hydraulic Control Valve Piping - 3-Spool (3.5T) . . . . . 61-0021 . . . . . 61- 011

CHAPTER 64 - TILT CYLINDER

Tilt Cylinders - (All) . . . . . 64-0001 . . . . . 64- 01
Tilt Cylinder Detail - (2.0 & 2.5T Pneumatic). . . . . 64-0001A 64- 05
Tilt Cylinder Detail - (2.8, 3.0, 3.2 & 3.5T Pneumatic). . . . . 64-0001B 64- 09
Tilt Cylinder Detail - (2.0 & 2.5T Cushion). . . . . 64-0001C 64- 011
Tilt Cylinder Detail - (2.8, 3.0, 3.2T Cushion) . . . . . 64-0001D 64- 015
Tilt Cylinder Boot Assy . . . . . 64-0010 . . . . . 64- 017

CHAPTER 65 - POWER STEERING CYLINDER

Power Steering Cylinder Assy - (Pneumatic) . . . . . 65-0001 . . . . . 65- 01
Power Steering Cylinder Assy - (Cushion) . . . . . 65-0002 . . . . . 65- 03

CHAPTER 66 - HYDRAULIC SYSTEMS

Power Steering Cyl. Piping . . . . . 66-0001 . . . . . 66- 01
Power Steering Pump Return . . . . . 66-0010 . . . . . 66- 03
Hydraulic System - Tank Cover w/o Power Brakes . . . . . 66-0020 . . . . . 66- 05
Hydraulic System - Tank Cover w/ Power Brakes - (3.5T) . . . . . 66-0021 . . . . . 66- 07
Hydraulic Piping - Return Lines . . . . . 66-0031 . . . . . 66- 09
Hydraulic Pump Piping - (Std FG w/o Power Brakes) . . . . . 66-0041 . . . . . 66- 011
Hydraulic Pump Piping - (FG Pneumatic w/ Power Brakes) . . . . . 66-0042 . . . . . 66- 013
Hydraulic Pump Piping - (Std FD w/o Power Brakes). . . . . 66-0051 . . . . . 66- 015
Hydraulic Pump Piping - (FD w/ Power Brakes). . . . . 66-0052 . . . . . 66- 017
Hydraulic Control Valve Piping . . . . . 66-0061 . . . . . 66- 019
Hydraulic Piping - Lift Piping at Control Valve (& Accumulator) . . . . . 66-0071 . . . . . 66- 021
Hydraulic Tilt Piping . . . . . 66-0081 . . . . . 66- 023
Hydraulic Power Brake Piping - Part 1 . . . . . 66-0091 . . . . . 66- 025
Hydraulic Power Brake Piping - Part 2 . . . . . 66-0092 . . . . . 66- 027
Hydraulic Power Brake Piping - Part 3 . . . . . 66-0093 . . . . . 66- 029

CHAPTER 72 - MASTS

Mast Bushings. . . . . 72-0000 . . . . . 72- 01

E50-MD Dual Mast

Safety Decals . . . . . 72-0010 . . . . . 72- 03
Main Lift Cylinder - Left Side . . . . . 72-0020 . . . . . 72- 05
Main Lift Cylinder - Right Side. . . . . 72-0021 . . . . . 72- 07
Free Lift Cylinder. . . . . 72-0025 . . . . . 72- 09
Uprights / Weldments . . . . . 72-0030 . . . . . 72- 011
Carriage - 4-Roller. . . . . 72-0040 . . . . . 72- 013
Carriage - 6-roller . . . . . 72-0045 . . . . . 72- 015
Hoist Chains . . . . . 72-0050 . . . . . 72- 017
Load Backrest . . . . . 72-0060 . . . . . 72- 019
Mounting Parts - Cushion Tire Trucks . . . . . 72-0070 . . . . . 72- 021
Mounting Parts - Pneumatic Tire Trucks . . . . . 72-0071 . . . . . 72- 023

https://truckmanualshub.com/

Lowering Control Valve . . . . . 72-0085 . . . . . 72- 025
Internal Hose Reeving - Single Function (Pneumatic) . . . . . 72-0090 . . . . . 72- 027
Internal Hose Reeving - Single Function (Cushion) . . . . . 72-0091 . . . . . 72- 031
Internal Hose Reeving - Double Function (Pneumatic). . . . . 72-0095 . . . . . 72- 035
Internal Hose Reeving - Double Function (Cushion). . . . . 72-0096 . . . . . 72- 039
Recommended Stock List (RSL). . . . . 72-0099 . . . . . 72- 043

E50-MS 2-Stage Mast
Safety Decals . . . . . 72-0100 . . . . . 72- 047
Main Lift Cylinders. . . . . 72-0200 . . . . . 72- 049
Outer Upright. . . . . 72-0300 . . . . . 72- 051
Inner Upright . . . . . 72-0360 . . . . . 72- 053
Carriage - 4-Roller. . . . . 72-0400 . . . . . 72- 055
Carriage - 6-roller . . . . . 72-0450 . . . . . 72- 057
Hoist Chains . . . . . 72-0500 . . . . . 72- 059
Load Backrest . . . . . 72-0600 . . . . . 72- 061
Mounting Parts - Cushion Tire Trucks. . . . . 72-0700 . . . . . 72- 063
Mounting Parts - Pneumatic Tire Trucks . . . . . 72-0701 . . . . . 72- 065
Lowering Control Valve . . . . . 72-0850 . . . . . 72- 067
Internal Hose Reeving - Single Function - 55”-66” OCL (Pneumatic). . . . . 72-0900 . . . . . 72- 069
Internal Hose Reeving - Single Function - 67” ~ (Cushion) . . . . . 72-0901 . . . . . 72- 071
Internal Hose Reeving - Double Function - (Pneumatic). . . . . 72-0950 . . . . . 72- 073
Internal Hose Reeving - Double Function - (Cushion) . . . . . 72-0951 . . . . . 72- 075
Recommended Stock List (RSL). . . . . 72-0999 . . . . . 72- 077

E50-MT 3-Stage Mast
Safety Decals . . . . . 72-1100. . . . . 72- 081
Main Lift Cylinders. . . . . 72-1200 . . . . . 72- 083
Free Lift Cylinder. . . . . 72-1250 . . . . . 72- 085
Outer Upright. . . . . 72-1300 . . . . . 72- 087
Intermediate Upright . . . . . 72-1330 . . . . . 72- 089
Inner Upright . . . . . 72-1360 . . . . . 72- 091
Carriage - 4-Roller. . . . . 72-1400 . . . . . 72- 093
Carriage - 6-Roller. . . . . 72-1450 . . . . . 72- 095
Hoist Chains & Free Lift Hose. . . . . 72-1500 . . . . . 72- 097
Load Backrest . . . . . 72-1600 . . . . . 72- 099
Mounting Parts - Cushion Tire Trucks. . . . . 72-1700 . . . . . 72- 101
Mounting Parts - Pneumatic Tire Trucks . . . . . 72-1701 . . . . . 72- 103
Lowering Control Valve . . . . . 72-1850 . . . . . 72- 105
Internal Hose Reeving - Single Function - 56”-66” OCL . . . . . 72-1900 . . . . . 72- 107
Internal Hose Reeving - Single Function - 67” ~. . . . . 72-1901 . . . . . 72- 109
Internal Hose Reeving - Double Function . . . . . 72-1950 . . . . . 72- 111
Recommended Stock List (RSL). . . . . 72-1999 . . . . . 72- 115

E60-MS 2-Stage Mast
Safety Decals . . . . . 72-2100 . . . . . 72- 119
Main Lift Cylinders. . . . . 72-2200 . . . . . 72- 121
Outer Upright. . . . . 72-2300 . . . . . 72- 123
Inner Upright . . . . . 72-2360 . . . . . 72- 125
Carriage - 6-Roller. . . . . 72-2450 . . . . . 72- 127
Hoist Chains . . . . . 72-2500 . . . . . 72- 129
Load Backrest . . . . . 72-2600 . . . . . 72- 131
Installation Components - (Pneumatic). . . . . 72-2700 . . . . . 72- 133
Installation Components - (Cushion). . . . . 72-2701 . . . . . 72- 135

https://truckmanualshub.com/

Lowering Control Valve . . . . . 72-2850 . . . . . 72- 137
Internal Hose Reeving - Single Function - (Cushion) . . . . . 72-2900 . . . . . 72- 139
Internal Hose Reeving - Double Function - (Cushion) . . . . . 72-2950 . . . . . 72- 141
Recommended Stock List (RSL) . . . . . 72-2999 . . . . . 72- 143

E60-MT 3-Stage Mast
Safety Decals . . . . . 72-3100 . . . . . 72- 147
Main Lift Cylinder . . . . . 72-3200 . . . . . 72- 149
Free Lift Cylinder . . . . . 72-3250 . . . . . 72- 151
Outer Upright . . . . . 72-3300 . . . . . 72- 153
Intermediate Upright . . . . . 72-3330 . . . . . 72- 155
Inner Upright . . . . . 72-3360 . . . . . 72- 157
Carriage - 4-Roller . . . . . 72-3400 . . . . . 72- 159
Carriage - 6-Roller . . . . . 72-3450 . . . . . 72- 161
Hoist Chains & Free Lift Hose . . . . . 72-3500 . . . . . 72- 163
Load Backrest . . . . . 72-3600 . . . . . 72- 167
Installation Components - (Cushion) . . . . . 72-3700 . . . . . 72- 169
Installation Components - (Pneumatic) . . . . . 72-3701 . . . . . 72- 171
Lowering Control Valve . . . . . 72-3850 . . . . . 72- 173
Internal Hose Reeving - Single Function - 56”-66” OCL . . . . . 72-3900 . . . . . 72- 175
Internal Hose Reeving - Single Function - 67” OCL ~ . . . . . 72-3901 . . . . . 72- 179
Internal Hose Reeving - Double Function . . . . . 72-3950 . . . . . 72- 183
Recommended Stock List (RSL) . . . . . 72-3999 . . . . . 72- 187

E65-MS 2-Stage Mast
Safety Decals . . . . . 72-4100 . . . . . 72- 191
Main Lift Cylinders . . . . . 72-4200 . . . . . 72- 193
Outer Upright . . . . . 72-4300 . . . . . 72- 195
Inner Upright . . . . . 72-4360 . . . . . 72- 197
Carriage - 6-Roller . . . . . 72-4450 . . . . . 72- 199
Hoist Chains . . . . . 72-4500 . . . . . 72- 201
Load Backrest . . . . . 72-4600 . . . . . 72- 203
Installation Components - (Cushion) . . . . . 72-4700 . . . . . 72- 205
Installation Components - (Pneumatic) . . . . . 72-4701 . . . . . 72- 207
Lowering Control Valve . . . . . 72-4850 . . . . . 72- 209
Internal Hose Reeving - Single Function . . . . . 72-4900 . . . . . 72- 211
Internal Hose Reeving - Double Function . . . . . 72-4950 . . . . . 72- 213
Recommended Stock List (RSL) . . . . . 72-4999 . . . . . 72- 215

E65-MT 3-Stage Mast
Safety Decals . . . . . 72-5100 . . . . . 72- 219
Main Lift Cylinder . . . . . 72-5200 . . . . . 72- 221
Free Lift Cylinder . . . . . 72-5250 . . . . . 72- 223
Outer Upright . . . . . 72-5300 . . . . . 72- 225
Intermediate Upright . . . . . 72-5330 . . . . . 72- 227
Inner Upright . . . . . 72-5360 . . . . . 72- 229
Carriage - 6-Roller . . . . . 72-5450 . . . . . 72- 231
Hoist Chains & Free Lift Hose . . . . . 72-5500 . . . . . 72- 233
Load Backrest . . . . . 72-5600 . . . . . 72- 235
Installation Components - (Pneumatic) . . . . . 72-5700 . . . . . 72- 237
Installation Components - (Cushion) . . . . . 72-5701 . . . . . 72- 239
Lowering Control Valve . . . . . 72-5850 . . . . . 72- 241
Internal Hose Reeving - Single Function . . . . . 72-5900 . . . . . 72- 243
Internal Hose Reeving - Double Function . . . . . 72-5950 . . . . . 72- 245

https://truckmanualshub.com/

Recommended Stock List (RSL) . . . . . 72-5999 . . . . . 72- 249

45D-MQ 4-Stage Quad Mast

Safety Decals . . . . . 72-6100 . . . . . 72- 253
Main Lift Cylinder - Right Side (See Designated PID #) . . . . . 72-6200 . . . . . 72- 255
Main Lift Cylinder - Right Side (See Designated PID #) . . . . . 72-6201 . . . . . 72- 257
Main Lift Cylinder - Right Side (PID # 45D-MQ-6359~) . . . . . 72-6202 . . . . . 72- 259
Main Lift Cylinder - Left Side (See Designated PID #) . . . . . 72-6203 . . . . . 72- 261
Main Lift Cylinder - LeftSide (See Designated PID #) . . . . . 72-6204 . . . . . 72- 263
Main Lift Cylinder - Left Side (PID # 45D-MQ-6359~) . . . . . 72-6202 . . . . . 72- 265
Free Lift Cylinder - (See Designated PID #) . . . . . 72-6250 . . . . . 72- 267
Free Lift Cylinder - (See Designated PID #) . . . . . 72-6251 . . . . . 72- 269
Free Lift Cylinder - (PID # 45D-MQ-6359~) . . . . . 72-6252 . . . . . 72- 271
Outer Upright - (PID # 45D-MQ-001~) . . . . . 72-6300 . . . . . 72- 273
Outer Intermediate Upright - (PID # 45D-MQ-001 to 6358) . . . . . 72-6330 . . . . . 72- 275
Outer Intermediate Upright - (PID # 45D-MQ-6359~) . . . . . 72-6331 . . . . . 72- 279
Inner Intermediate Upright - (PID # 45D-MQ-001~) . . . . . 72-6340 . . . . . 72- 283
Inner Upright - (PID # 45D-MQ-001 to 883) . . . . . 72-6360 . . . . . 72- 285
Inner Upright - (PID # 45D-MQ-884 to 6358) . . . . . 72-6361 . . . . . 72- 287
Inner Upright - (PID # 45D-MQ-6359~) . . . . . 72-6362 . . . . . 72- 289
Carriage - 4-Roller . . . . . 72-6400 . . . . . 72- 291
Carriage - 6-Roller . . . . . 72-6450 . . . . . 72- 293
Hoist Chains & Free Lift Hoses - (PID # 45D-MQ-001 to 6358) . . . . . 72-6500 . . . . . 72- 295
Hoist Chains & Free Lift Hoses - (PID # 45D-MQ-6359~) . . . . . 72-6501 . . . . . 72- 297
Load Backrest . . . . . 72-6600 . . . . . 72- 299
Mast Installation Parts . . . . . 72-6700 . . . . . 72- 301
Lowering Control Valve & Bracket . . . . . 72-6850 . . . . . 72- 303
Internal Hose Reeving - Single Function - StdVis -
(PID # 45D-MQ-001 to 883) . . . . . 72-6900 . . . . . 72- 305
Internal Hose Reeving - Single Function - StdVis -
(PID # 45D-MQ-884~) . . . . . 72-6901 . . . . . 72- 309
Internal Hose Reeving - Single Function - HiVis -
(PID # 45D-MQ-884~) . . . . . 72-6902 . . . . . 72- 313
Internal Hose Reeving - Single Function - HiVis - Left Side -
(PID # 45D-MQ-884~) . . . . . 72-6903 . . . . . 72- 317
Internal Hose Reeving - Double Function - StdVis -
(PID # 45D-MQ-001 to 883) . . . . . 72-6950 . . . . . 72- 321
Internal Hose Reeving - Double Function - StdVis -
(PID # 45D-MQ-884) . . . . . 72-6951 . . . . . 72- 325
Internal Hose Reeving - Double Function - HiVis -
(PID # 45D-MQ-884~) . . . . . 72-6952 . . . . . 72- 329
Internal Hose Reeving - Double Function - HiVis - Left Side -
(PID # 45D-MQ-884~) . . . . . 72-6953 . . . . . 72- 333
Recommended Stock List (RSL) . . . . . 72-6999 . . . . . 72- 337

55D-MQ 4-Stage Quad Mast

Safety Decals . . . . . 72-7100 . . . . . 72- 343
Main Lift Cylinder - Right Hand . . . . . 72-7200 . . . . . 72- 345
Main Lift Cylinder - Left Hand . . . . . 72-7203 . . . . . 72- 347
Free Lift Cylinder . . . . . 72-7250 . . . . . 72- 349
Weldments (Uprights) . . . . . 72-7300 . . . . . 72- 351
4-Roller Carriages . . . . . 72-7400 . . . . . 72- 355
6-Roller Carriages . . . . . 72-7450 . . . . . 72- 357
Hoist Chains & Free Lift Hoses . . . . . 72-7500 . . . . . 72- 359

https://truckmanualshub.com/

Load Backrest . . . . . 72-7600 . . . . . 72- 361
Mast Installation Parts . . . . . 72-7700 . . . . . 72- 363
Lowering Control Valve & Brackets . . . . . 72-7850 . . . . . 72- 365
Internal Hose Reeving - Single Function - Standard Mast . . . . . 72-7900 . . . . . 72- 367
Internal Hose Reeving - Double Function - Standard Mast . . . . . 72-7950 . . . . . 72- 371
Internal Hose Reeving - Single Fuction - Hi-Visibility Mast . . . . . 72-7955 . . . . . 72- 375
Internal Hose Reeving - Double Function - Hi-Visibility Mast . . . . . 72-7960 . . . . . 72- 379
Internal Hose Reeving - Single Function - Hi-Vis - Left Hand Only . . . . . 72-7970 . . . . . 72- 383
Internal Hose Reeving - Double Function - Hi-Vis - Left Hand Only . . . . . 72-7975 . . . . . 72- 387
Recommended Stock List (RSL) . . . . . 72-7999 . . . . . 72- 391

CHAPTER 83 - OPTIONS

Strobe Light . . . . . 83-0001 . . . . . 83- 01
Back-up Buzzer 83-0002 . . . . . 83- 03
Protector, Under-Carriage . . . . . 83-0003 . . . . . 83- 05
Protector, Under-Carriage - Detail . . . . . 83-0003A 83- 07
Options - Misc. . . . . 83-0010 . . . . . 83- 09

CHAPTER 93 - FORKS

Forks . . . . . 93-0001 . . . . . 93- 01

CHAPTER 96 - NAME PLATES AND DECALS

Top and Side Views - . . . . . 96-0001 . . . . . 96- 01
Rear View & Detail - . . . . . 96-0002 . . . . . 96- 05
Misc. Locations (Dashboard, Counterweight, Mast) . . . . . 96-0003 . . . . . 96- 09

CHAPTER 98 - PAINT

Paint - . . . . . 98-0001 . . . . . 98- 01

CHAPTER 99 - APPENDIX - NUMERICAL PARTS INDEX

Numerical Parts Index - BX50 . . . . . 99-0000 . . . . . 99- 01

https://truckmanualshub.com/

NOTES:

https://truckmanualshub.com/

GENERAL

This parts book lists engine, chassis and mast service parts for the machine shown on the title page.

We reserve the right to make changes or add improvements at any time without incurring any obligation to install such changes on products previously sold.

ILLUSTRATIONS

Illustrated items are given item numbers which correspond to the same number in the parts list. Item numbers may point to more than one identical item. The quantity of items shipped will depend on the quantity ordered. Illustrations are of typical parts only and may not exactly match your application.

METHOD OF LISTING

The parts list and its associated illustration is the essential content of the Parts Book. Each parts list is arranged in numeric sequence by Chapter, Figure Number and by page number.

The parts list page is divided into five columns for easy use:

1. **ITEM Column** - This column contains keys to the illustration so the part can be located on the associated illustration. If there is no key number for the part, the part is not shown and is not on the associated illustration. In this case “NS” (Not Shown), or some other key, may appear in the column.

2. **PART NUMBER Column** - This column contains the part number of each serviceable part. The part number, in conjunction with the description of the part, is the key to locating needed service parts. If “ * ” appears, the part is “NSS” (Not Sold Separately).

3. **DESCRIPTION Column** - This column contains the description of each part. It can be used to find needed parts when the part number is not known. Indentation of an item, preceded by a dot (.), indicates that it is a component part (or subassembly) of the item shown above the item indented. There may be 2 or 3 dots in some cases.

4. **QTY Column** - This column contains the total quantity of each part number listed as needed for the product.

5. **SERIAL NO. Column -** This column contains the serial number range of each part number listed. The serial number is displayed in the page heading if it applies to all parts on that page.

PRODUCT GRAPHICS

The owner and/or operator must replace any and all safety and warning product graphics, plates or decals if they are defaced, illegible or missing from the machine, or have become inaccurate due to a change of equipment or attachments. This is an operational and a safety issue and is very important.

ABBREVIATIONS

The following abbreviations will be used in the parts listing:

AR - As Required
F1, F2, etc. - Footnote
NS - Not Shown
K - Kit
* - Part Not Available Separately
OP - Optional Parts
O.S. - Oversize
NSS - Not Serviced Separately
L.H. - Left Hand
R.H. - Right Hand
S/N - Serial Number
(--) - Part Shown for Reference Only
Forklift Model: S = Indoor / H = High Speed

NOTE: Left and right sides of the machine are determined by sitting in the operator's seat and facing forward.

https://truckmanualshub.com/

COMMON HARDWARE

Mounting hardware, including bolts, nuts, cotter pins and so forth, are illustrated in most cases.

ORDERING PARTS

When ordering parts, always give the following information:

1. The complete part number, including prefix or suffix letters, the name of the part and the quantity required.
2. The complete model number, machine serial number and engine serial number of the machine. See PRODUCT IDENTIFICATION NUMBERS, which follows.
3. When ordering parts for items which have their own serial numbers (such as transmissions, torque converters or axles) also include the serial numbers of the transmission, torque converter and/or axle. We recommend that you write the model and machine serial numbers of your machine and all major components in the spaces provided below.

Date Received _____

Machine Model _____ Serial No. _____

Engine Model _____ Serial No. _____

Hydraulic Pump Model _____ Serial No. _____

Final Drive Model _____ Serial No. _____

_____ _____

_____ _____

_____ _____

_____ _____

PRODUCT IDENTIFICATION NUMBERS

Machine Model	Engine Model	Chassis Serial Number

https://truckmanualshub.com/

FORKLIFT TRUCKS COVERED IN THIS PUBLICATION

BX50 S/N 200001A~

KOMATSU MODEL DESIGNATION	DESCRIPTION
Gasoline, LPG and Dual-Fuel Engine Models	
FG20ST-16	4,000 lb. capacity, K21 gasoline engine, cushion tires
FG20STLS-16	4,000 lb. capacity, K21 LPG engine, cushion tires, “LPS”
FG20SHT-16	4,000 lb. capacity, K25 gasoline engine, cushion tires
FG20SHTLS-16	4,000 lb. capacity, K25 gasoline engine, cushion tires, “LPS”
FG20T-16	4,000 lb. capacity, K21 gasoline engine, pneumatic tires
FG20TUS-16	4,000 lb. capacity, K21 gasoline engine, pneumatic tires, “GS”
FG20TLS-16	4,000 lb. capacity, K21 LPG engine, pneumatic tires, “LPS”
FG20HT-16	4,000 lb. capacity, K25 gasoline engine, pneumatic tires
FG20HTUS-16	4,000 lb. capacity, K25 gasoline engine, pneumatic tires, “GS”
FG20HTLS-16	4,000 lb. capacity, K25 LPG engine, pneumatic tires, “LPS”
FG25ST-16	5,000 lb. capacity, K21 gasoline engine, cushion tires
FG25STLS-16	5,000 lb. capacity, K21 LPG engine, cushion tires, “LPS”
FG25SHT-16	5,000 lb. capacity, K25 gasoline engine, cushion tires
FG25SHTLS-16	5,000 lb. capacity, K25 LPG engine, cushion tires, “LPS”
FG25T-16	5,000 lb. capacity, K21 gasoline engine, pneumatic tires
FG25TUS-16	5,000 lb. capacity, K21 gasoline engine, pneumatic tires, “GS”
FG25TLS-16	5,000 lb. capacity, K21 LPG engine, pneumatic tires, “LPS”
FG25HT-16	5,000 lb. capacity, K25 gasoline engine, pneumatic tires
FG25HTUS-16	5,000 lb. capacity, K25 gasoline engine, pneumatic tires, “GS”
FG25HTLS-16	5,000 lb. capacity, K25 LPG engine, pneumatic tires, “LPS”
FG28SHT-16	5,500 lb. capacity, K25 gasoline engine, cushion tires
FG28SHTLS-16	5,500 lb. capacity, K25 LPG engine, cushion tires, “LPS”
FG28HT-16	5,500 lb. capacity, K25 gasoline engine, pneumatic tires
FG28HTUS-16	5,500 lb. capacity, K25 gasoline engine, pneumatic tires, “GS”
Table Continued on Next Page	

https://truckmanualshub.com/

BX50 S/N 200001A~

KOMATSU MODEL DESIGNATION	DESCRIPTION
FG28HTLS-16	5,500 lb. capacity, K25 LPG engine, pneumatic tires, “LPS”
FG30SHT-16	6,000 lb. capacity, K25 gasoline engine, cushion tires
FG30SHTLS-16	6,000 lb. capacity, K25 LPG engine, cushion tires, “LPS”
FG30HT-16	6,000 lb. capacity, K25 gasoline engine, pneumatic tires
FG30HTUS-16	6,000 lb. capacity, K25 gasoline engine, pneumatic tires, “GS”
FG30HTLS-16	6,000 lb. capacity, K25 LPG engine, pneumatic tires, “LPS”
FG32HT-16	6,500 lb. capacity, K25 gasoline engine, cushion tires
FG32SHTLS-16	6,500 lb. capacity, K25 LPG engine, cushion tires, “LPS”
FG32HT-16	6,500 lb. capacity, K25 gasoline engine, pneumatic tires
FG32HTUS-16	6,500 lb. capacity, K25 gasoline engine, pneumatic tires, “GS”
FG32HTLS-16	6,500 lb. capacity, K25 LPG engine, pneumatic tires, “LPS”
FG35AHT-16	7,000 lb. capacity, K25 gasoline engine, pneumatic tires
FG35AHTUS-16	7,000 lb. capacity, K25 gasoline engine, pneumatic tires, “GS”
FG35AHTLS-16	7,000 lb. capacity, K25 LPG engine, pneumatic tires, “LPS”
Diesel Engine Models	
FD20T-16	4,000 lb. capacity, 4D94E diesel engine, pneumatic tires
FD20TUS-16	4,000 lb. capacity, 4D94E diesel engine, pneumatic tires, “DS”
FD25T-16	5,000 lb. capacity, 4D94E diesel engine, pneumatic tires
FD25TUS-16	5,000 lb. capacity, 4D94E diesel engine, pneumatic tires, “DS”
FD28T-16	5,500 lb. capacity, 4D94E diesel engine, pneumatic tires
FD28TUS-16	5,500 lb. capacity, 4D94E diesel engine, pneumatic tires. “DS”
FD30T-16	6,000 lb. capacity, 4D94E diesel engine, pneumatic tires
FD30TUS-16	6,000 lb. capacity, 4D94E diesel engine, pneumatic tires. “DS”
FD32T-16	6,500 lb. capacity, 4D94E diesel engine, pneumatic tires
FD32TUS-16	6,500 lb. capacity, 4D94E diesel engine, pneumatic tires, “DS”
FD35AT-16	7,000 lb. capacity, 4D94E diesel engine, pneumatic tires
FD35ATUS-16	7,000 lb. capacity, 4D94E diesel engine, pneumatic tires, “DS”

NOTES:

https://truckmanualshub.com/

FAST MOVING STOCK LIST (FMSL) - S/N 200001A~

NO

ILLUSTRATION

REQUIRED

RECOMMENDED STOCK LIST - NEW FORMAT

THE RECOMMENDED STOCK LIST (RSL) IS NOW BROKEN INTO THREE (3) PARTS FOR EASE OF USE.

1. **EPASL = EPA STOCK LIST - CONTAINS EPA EMISSION CONTROL RELATED PARTS.**
2. **FMSL = FAST MOVING STOCK LIST - CONTAINS TYPICALLY FAST MOVING PARTS.**
3. **FRSL = FULL RECOMMENDED STOCK LIST - CONTAINS THE BALANCE OF COMMON PARTS.**

https://truckmanualshub.com/

FAST MOVING STOCK LIST (FMSL) - S/N 200001A~

Item	Part Number	Description	Qty per Truck Serviced	

FAST MOVING STOCK LIST --

ENGINE

15255-1P110	ENGINE OIL FILL CAP (K21/K25)	1
	ENGINE OIL FILL CAP (4D94LE)	1
3EA-01-A5390	FILTER, AIR (K21/K25)	12
3EB-01-A5392	FILTER, AIR (4D94LE)	12
15208-01B02	FILTER, OIL (K21/K25)	12
YM129150-35151	FILTER, OIL (4D94LE)	12
NSS	FILTER, FUEL (SOCK TYPE ON FUEL PUMP - NOT SOLD SEPARATELY) (K21/K25)	N/A
YM129901-55860	FILTER, FUEL (4D94LE)	12

ENGINE ELECTRICAL

23100-FU410	ALTERNATOR (G/LP/DUAL-FUEL (50 AMP))	1
23100-GY360	ALTERNATOR (GS/LS (UL SAFETY)) (MUST USE W/ ALT. BELT # 02117-22023 FOR STATIC REDUCTION)	1
YM129930-77212	ALTERNATOR (STD) (4D94LE)	1
YM129930-77200	ALTERNATOR (4D94LE UL-DS)	1
3EB-55-31130	RELAY, STARTER (K21/K25)	2
23300-FU410	STARTER (K21/25)	1
3EB-55-31270	RELAY, STARTER (4D94LE)	1
YM129900-77010	STARTER (4D94LE)	1
3EB-55-33150	FUSE - 10 AMP (QTY 5)	10
37B-1EJ-2020	FUSE - 15 AMP	10
3EB-55-33160	FUSE - 5 AMP (QTY 1)	10

COOLING SYSTEM

02117-21521	FAN BELT (K21) (ALL EXCEPT UL-GS & UL-LS)	1
02117-23523	FAN BELT (K25) (ALL EXCEPT UL-GS & UL-LS)	1
02117-22023	FAN BELT (K21/K25) (UL-GS & UL-LS MODELS)	1
YM129930-42480	FAN BELT (4D94LE)	1
21060-FU410	FAN, COOLING (K21/K25)	2
YM129900-44700	FAN, COOLING (4D94LE)	2
21010-FU425	WATER PUMP ASSY (K21/K25)	1
21014-07N00	WATER PUMP GASKET (K21/K25)	1
YM129900-42055	WATER PUMP ASSY (4D94LE)	1
YM129900-42061	WATER PUMP GASKET (4D94LE)	1
3EB-04-A7510	HOSE, LOWER (K21/K25)	5
3EB-04-A7520	HOSE, UPPER (K21/K25)	5

https://truckmanualshub.com/

FAST MOVING STOCK LIST (FMSL) - S/N 200001A~

Item	Part Number	Description	Qty per Truck Serviced	
	3EB-04-A7560	HOSE, RADIATOR, LOWER (ALL 4D94LE EXC. 3.5T)	1	
	3EB-04-A7470	HOSE, RADIATOR, LOWER (4D94LE 3.5T) . . .	1	
	3EB-04-A7570	HOSE, RADIATOR, UPPER (ALL 4D94LE EXC. 3.5T)	1	
	3EB-04-A7480	HOSE, RADIATOR, UPPER (4D94LE 3.5T) . . .	1	
	21200-50K00	THERMOSTAT ASSY (K21/K25)	2	
	11072-50K01	THERMOSTAT GASKET (K21/K25)	2	
	YM121850-49810	THERMOSTAT (4D94LE).	2	
	YM121850-49550	THERMOSTAT GASKET (4D94LE)	2	
	3EB-04-21130	RADIATOR CAP (ALL).	2	
TRANSMISSION				
	30B-13-11390	FILTER, TRANSMISSION (ALL)	6	
	AS35303-3601	STRAINER, TRANSMISSION (ALL)	2	
	07030-00252	BREATHER (ALL)	2	
BRAKES / DRIVE AXLE				
	3EB-21-05070	KIT, SEAL - HUB INNER (CUSHION)	2	
	3EB-21-05060	KIT, SEAL - HUB INNER (PNEUMATIC)	2	
	3EB-K3-02030	BRAKE SHOE KIT, LH (2.0, 2.5T O/D & ALL I/D)	4	
	3EB-K3-02040	BRAKE SHOE KIT, RH (2.0, 2.5T O/D & ALL I/D)	4	
	3EB-K3-02050	BRAKE SHOE KIT, LH (2.8, 3.0T O/D)	4	
	3EB-K3-02060	BRAKE SHOE KIT, RH (2.8, 3.0T O/D)	4	
	3EB-K3-04010	BRAKE SHOE KIT, LH (3.2, 3.5T O/D)	4	
	3EB-K3-04020	BRAKE SHOE KIT, RH (3.2, 3.5T O/D)	4	
	3EB-30-00010	WHEEL CYLINDER SERVICE KIT (2.0 TO 3.0T)	4	
	3EB-30-41440	WHEEL CYLINDER ASSY (2.0 TO 3.0T O/D & ALL I/D)	6	
	3EC-30-33110	WHEEL CYLINDER ASSY (3.2, 3.5T)	4	
OPERATOR COMPARTMENT				
	3EB-50-A5322	SEAT ASSY - STD	1	
	3EB-50-A6112	SEAT - SUSPENSION	1	
CHASSIS ELECTRICAL				
	3EB-55-A5112	BULB, HEADLAMP	10	
	08105-01220	BULB, TURN SIGNAL - FRONT, & RR COMBI & LED	8	
	3EB-55-11290	BULB, PARKING LAMP (REAR COMBI & LED)	8	
	3EB-55-41271	HORN (ALL).	2	
	3EB-55-A3641	KEY (QTY 2).	2	

https://truckmanualshub.com/

FAST MOVING STOCK LIST (FMSL) - S/N 200001A~

Item	Part Number	Description	Qty per Truck Serviced	
	3EB-55-A3621	KEY SWITCH ASSY W/ KEYS (GAS/LP)	1	
	3EB-55-A6260	LAMP ASSY, HEAD (12V)	2	
	37B-1EH-2011	LAMP ASSY, REAR COMBINATION (LED). . . .	2	
	HYDRAULIC			
	34B-66-15180	STRAINER, HYDRAULIC TANK	3	
	37B-1PB-4030	BREATHER, HYDRAULIC TANK (W/O P/BRAKES)	1	
	37B-1PB-4040	BREATHER, HYDRAULIC TANK (W/ P/BRAKES)	1	
	ON43001-07502	KIT, SEAL - POWER STEER CYLINDER	1	
	150N4044	KIT, SEAL - STEER VALVE	1	
	3BB-64-A6310	KIT, SEAL - TILT CYLINDER (70 MM UNITS). .	4	
	3BB-64-A6410	KIT, SEAL - TILT CYLINDER (80 MM UNITS) . .	4	
	PAINT - NEW EPA COLORS			
	3EB-99-A6110	PAINT, NATURAL YELLOW - SPRAY CAN . . .	12	
	3EB-99-A6210	PAINT, NATURAL YELLOW - GALLON	6	
	3EB-99-A6120	PAINT, BLACK GRAY - SPRAY CAN	12	
	3EB-99-A6220	PAINT, BLACK GRAY - GALLON	6	
	3EB-99-A6130	PAINT, SUMMER GREEN - SPRAY CAN	12	
	3EB-99-A6230	PAINT, SUMMER GREEN - GALLON	6	
	OPERATOR PRESENCE SYSTEM (K.O.P.S.)			
	3EB-55-51711	CONTROLLER.	1	
	HU60955-1	INTERLOCK, HYDRAULIC SOLENOID.	1	

https://truckmanualshub.com/

FULL RECOMMENDED STOCK LIST (FRSL) - S/N 200001A~

NO

ILLUSTRATION

REQUIRED

https://truckmanualshub.com/

FULL RECOMMENDED STOCK LIST (FRSL) - S/N 200001A~

Item	Part Number	Description	Qty per Truck Serviced	

FULL RECOMMENDED STOCK LIST --

ENGINE

12312-50K00	FLYWHEEL RING GEAR	1
10101-FY525	GASKET SET - (K21/K25)	1
11042-FY525	GASKET SET, VALVE REGRIND - (K21/K25) (HEADS GASKET NOT INCLUDED)	1
11044-FU400	GASKET, HEAD (GAS)	1
11044-FU460	GASKET, HEAD (LPG & DUAL-FUEL)	1
13270-FY50A	GASKET. VALVE COVER	1
3EB-01-51130	MOTOR MOUNT, RUBBER CUSHION	4
11140-FT860	OIL GUAGE ASSY - DIPSTICK	1
13510-FF200	SEAL, FRONT CRANKSHAFT	2
13207-53F00	SEAL, VALVE STEM	8
25240-FJ10A	OIL PRESSURE SWITCH	1

EXHAUST SYSTEM

20692-65J00	GASKET, CONVERTER.	4
3EB-03-A7210	MUFFLER - CUSHION SPEC	1
3EB-03-A7511	MUFFLER - CUSHION UL-SPECIAL.	1
3EB-03-A7110	MUFFLER - FG PNEUMATIC SPEC	1
3EB-03-A7411	MUFFLER - FG PNEUMATIC UL-SPECIAL	1
3EB-03-A7120	PIPE-TO-CONVERTER - FG PNEUMATIC	1
3EB-03-A7130	PIPE-TO-MANIFOLD - FG	1
3EB-03-A7220	PIPE-TO-CONVERTER - FG CUSHION	1

COOLING SYSTEM

3EA-04-51110	RADIATOR ASSY - (2.0T,2.5T W/ K21)	1
3EB-04-A7210	RADIATOR ASSY - (2.8T, 3.0T, 3.2T, 3.5T W/ K25)	1
3EB-04-52610	RADIATOR ASSY - STD (2.0T > 3.0T W/ 4D94LE)	1
3EB-04-53110	RADIATOR ASSY - STD (3.2T, 3.5T W/ 4D94LE)	1

FUEL SYSTEM

3FD-42-21310	FUEL CAP (STD)	1
3EB-44-17170	FUEL CAP (UL-S)	1

TRANSMISSION

30B-13-11120	FLEX PLATE (EPA MODELS)	1
3EB-15-05500	KIT, SEAL - TRANSMISSION (ALL)	2
30B-13-05010	REPAIR KIT, TORQUE CONVERTER	1

https://truckmanualshub.com/

FULL RECOMMENDED STOCK LIST (FRSL) - S/N 200001A~

Item	Part Number	Description	Qty per Truck Serviced	
	DRIVE AXLE			
	06002-30214	BEARING, INNER/OUTER DRIVE WHEEL (CUSHION)	4	
	14X-14-19241	BEARING, INNER DR. WHEEL (PNEU) (2.0T, 2.5T)	4	
	3EB-21-52350	BEARING, OUTER DR. WHEEL (PNEU) (2.0T, 2.5T)	4	
	316-22-21250	BEARING, INNER DR. WHEEL (PNEU) (2.8T > 3.5T)	4	
	06002-32213	BEARING, OUTER DR. WHEEL (PNEU) (2.8T, 3.0T)	4	
	3EB-21-52750	BEARING, OUTER DR. WHEEL (PNEU) (3.2T, 3.5T)	4	
	3EB-21-05500	SEAL KIT, DIFFERENTIAL GEAR	2	
	STEER AXLE			
	TBA	KING PIN KIT	4	
	3EB-24-51221	KNUCKLE ASSY - L.H. (2.0T > 3.0T))	1	
	3EB-24-51211	KNUCKLE ASSY - R.H. (2.0T > 3.0T)	1	
	3EB-24-53221	KNUCKLE ASSY - L.H. (3.2T, 3.5T)	1	
	3EB-24-53211	KNUCKLE ASSY - R.H. (3.2T, 3.5T)	1	
	3EB-24-51261	KINGPIN, LH	2	
	3EB-24-51271	KINGPIN, RH	2	
	3EB-24-32440	BEARING (KINGPIN TOP & BOTTOM)	8	
	3EB-24-42320	BEARING (KINGPIN, UPPER) (2.0T, 2.5T)	4	
	3EB-24-52460	BEARING (KINGPIN, UPPER) (2.8T > 3.5T)	4	
	06300-32010	BEARING, HUB, INNER (PNEU 2.0T, 2.5T)	4	
	3EB-24-32260	BEARING, HUB, INNER (PNEU 2.8T > 3.5T)	4	
	06300-32007	BEARING, HUB, OUTER (PNEU 2.0T, 2.5T)	4	
	06300-30207	BEARING, HUB, OUTER (PNEU 2.8T > 3.5T)	4	
	3EB-24-32260	BEARING, WHEEL, INNER (CUSHION)	4	
	06300-30207	BEARING, WHEEL, OUTER (CUSHION)	4	
	3EB-24-A7920	TIE ROD ASSY, LH (ALL)	4	
	3EB-24-A7930	TIE ROD ASSY, RH (ALL)	4	
	DRIVE WHEEL			
	34B-21-14151	NUT, LUG - DRIVE WHEEL (ALL)	12	
	3EB-22-21170	STUD - DRIVE WHEEL (CUSHION)	12	
	3EB-21-52380	STUD - DRIVE WHEEL (2.0T, 2.5T PNEUMATIC)	12	
	3EB-21-25170	STUD - DRIVE WHEEL (2.8T > 3.5T PNEUMATIC)	12	
	3EB-21-05060	SEAL KIT, FRONT HUB	2	

https://truckmanualshub.com/

FULL RECOMMENDED STOCK LIST (FRSL) - S/N 200001A~

Item	Part Number	Description	Qty per Truck Serviced	
	STEER WHEEL			
	01593-13018	NUT, SPINDLE (ALL)	6	
	34B-24-11221	STUD, STEER WHEEL (PNEUMATIC)	12	
	BRAKE SYSTEM			
	3EB-30-51110	BRAKE CABLE - L.H. (2.0T, 2.5T, 2.8T, 3.0T)	2	
	3EB-30-51120	BRAKE CABLE - R.H. (2.0T, 2.5T, 2.8T, 3.0T)	2	
	3EB-30-51210	BRAKE CABLE - L.H. (3.2T, 3.5T)	2	
	3EB-30-51220	BRAKE CABLE - R.H. (3.2T, 3.5T)	2	
	3EB-22-45610	BRAKE DRUM (HUB) (CUSHION)	2	
	3EB-21-52320	BRAKE DRUM (HUB) (PNEUMATIC 2.0T, 2.5T)	2	
	3EB-21-42230	BRAKE DRUM (PNEU 2.8T, 3.0T)	2	
	3EB-21-52730	BRAKE DRUM (PNEU 3.2T, 3.5T)	2	
	3EB-36-51180	BRAKE, MASTER CYLINDER (2.0T > 3.0T)	2	
	3EB-56-51590	BRAKE BOOSTER ASSY (3.2T, 3.5T)	1	
	3EB-30-00010	BRAKE KIT, WHEEL CYLINDER (CUSHION)	2	
	TBA	BRAKE KIT, WHEEL CYLINDER (PNEUMATIC)	2	
	OPERATOR COMPARTMENT			
	3EB-50-41150	BONNET STAY DAMPENER	1	
	ELECTRICAL			
	37A-1CP-A710	METER PANEL ASSY (GASOLINE)	1	
	37A-1CP-A720	METER PANEL ASSY (LPG)	1	
	37A-1CP-A750	METER PANEL ASSY (DIESEL)	1	
	37B-1CS-A010	SWITCH, COMBINATION	1	
	3EB-55-A5610	FLASHER	1	
	HYDRAULIC SYSTEM			
	37B-1PB-4030	HYDRAULIC TANK BREATHER (W/O P/BRAKES)	4	
	37B-1PB-4040	HYDRAULIC TANK BREATHER (W/ P/BRAKES)	4	
	34B-66-15180	HYDRAULIC STRAINER	2	
	3EB-98-A31252	HYDRAULIC VALVE CONVERSION KIT (3-TO-4)	1	
	TBA	HYDRAULIC C/V SEAL KIT (3-SPOOL)	2	
	37B-1KA-A710	HYDRAULIC PUMP ASSY (ALL FG 2.0T > 3.0T & FG 3.2T CUSHION)	1	
	37B-1KC-5020	HYDRAULIC PUMP ASSY (3.2T, 3.5T PNEUMATIC W/ K25)	1	

https://truckmanualshub.com/

FULL RECOMMENDED STOCK LIST (FRSL) - S/N 200001A~

Item	Part Number	Description	Qty per Truck Serviced	
	37B-1KB-5040	HYDRAULIC PUMP ASSY (ALL 4D94LE EXCEPT 3.5T)	1	
	37B-1KD-5040	HYDRAULIC PUMP ASSY (3.5T W/ 4D94LE)	1	
	KBB591A-20007	HYD. PUMP REPAIR KIT (W/ K21) & (W/ 4D94LE ENGINE (EXC. 3.5T))	2	
	KBB591B-20045	HYD. PUMP KIT, FRONT UNIT (W/ K21 ENGINE)	2	
	KBB591B-20030	HYD. PUMP KIT, REAR UNIT (W/ K21 ENGINE)	2	
	KBB591A-30001	HYD. PUMP REPAIR KIT (W/ K25 ENGINE & 3.5T 4D94LE ENGINE)	2	
	KBB591B-20036	HYD. PUMP KIT, FRONT UNIT (W/ K25 ENGINE)	2	
	KBB591B-20030	HYD. PUMP KIT, CENTER UNIT (W/ K25 ENGINE)	2	
	KBB591B-30020	HYD. PUMP KIT, REAR UNIT (W/ K25 ENGINE)	2	
	KBB591B-20029	HYD. PUMP KIT, FRONT UNIT (W/ 4D94LE)	2	
	KBB591B-20030	HYD. PUMP KIT, REAR UNIT (W/ 4D94LE)	2	
	KBB591B-20030	HYD. PUMP KIT, CENTER UNIT (W/ 3.5T 4D94LE)	2	
	KBB591B-30020	HYD. PUMP KIT, REAR (3.5T) (ALL)	2	
	3EB-34-51510	STEERING VALVE	1	
	OPERATOR PRESENCE SYSTEM (K.O.P.S.)			
	3EB-55-41450	RELAY	5	
	3EB-55-51760	RELAY	1	

https://truckmanualshub.com/

NOTES:

https://truckmanualshub.com/

EPA RELATED STOCK LIST (EPASL) - S/N 200001A~

NO

ILLUSTRATION

REQUIRED

https://truckmanualshub.com/

EPA RELATED STOCK LIST (EPASL) - S/N 200001A~

Item	Part Number	Description	Qty per Truck Serviced	

EPA RELATED STOCK LIST --

ENGINE ELECTRICAL

28351-89902	CONDENSOR	1
37B-1DD-5210	ECU (K21 ONLY)	1
37B-1DD-5220	ECU (K25 ONLY)	1
16119-FU460	ELECTRONIC THROTTLE CONTROL	1
22448-AR215	IGNITION COIL PACK	2
22680-FU460	MASS AIR FLOW SENSOR	1
22690-FU460	O2 EXHAUST SENSOR	1
3EB-55-41450	RELAY (ENGINE RELAY BOX - QTY 6)	6
18919-AM810	SENSOR, ACCELERATOR (AT ACC PEDAL)	1
23731-6N206	SENSOR, CAMSHAFT (PHASE)	1
23731-6J906	SENSOR, CRANKSHAFT (POS)	1
22401-FU412	SPARK PLUGS	8
37B-1DD-5320	SPEED SIGNAL CONVERTER #2 (SSC) (OUTDOOR - TORQFLOW - 3-TON)	1
37B-1DD-5330	SPEED SIGNAL CONVERTER #4 (SSC) (INDOOR - ALL)	1
37B-1DD-5320	SPEED SIGNAL CONVERTER #5 (SSC) (OUTDOOR - TORQFLOW - 2.0/2.5-TON)	1
22630-44B20	WATER TEMPERATURE SENSOR - ECU	1

FUEL - GASOLINE

16600-FU460	FUEL INJECTOR - GAS	4
37B-1DU-3031	FUEL PUMP ASSY - GAS (IN FUEL TANK)	1

FUEL - LPG

16197-FU461	LPG ASSSIST INJECTOR	1
16638-GX11A	LPG FUEL PRESSURE SENSOR	1
17904-FT860	LPG FUEL SOLENOID VALVE	1
16600-FU471	LPG INJECTOR (K21 ENGINE)	1
16600-FU571	LPG INJECTOR (K25 ENGINE)	1
16310-GS40A	LPG VAPORIZER ASSY	1

ELECTRICAL

07003-12228	SPEED SENSOR, GASKET	1
3EC-55-37180	SPEED SENSOR ASSY, VEHICLE	1

https://truckmanualshub.com/

FILTERS - S/N 200001A~

NO

ILLUSTRATION

REQUIRED

https://truckmanualshub.com/

FILTERS - S/N 200001A~

Item	Part Number	Description	Qty per Truck Serviced	
	15208-01B02	OIL FILTER - K21/K25 ENGINES	1	
	YM129150-35151	OIL FILTER - 4D94LE ENGINES.	1	
	3EA-01-A5390	AIR FILTER - K21/K25 ENGINES	1	
	3EB-01-A5392	AIR FILTER - 4D94LE ENGINES.	1	
	34B-66-15180	HYDRAULIC TANK STRAINER.	1	
	30B-13-11390	TRANSMISSION FILTER (ALL).	1	
	NSS	FUEL FILTER (GASOLINE) (PART OF FUEL PUMP)	1	
	YM129901-55850	FUEL FILTER (DIESEL).	1	

https://truckmanualshub.com/

ENGINE - K21/K25 GASOLINE / LP / DUAL-FUEL - S/N 200001A~

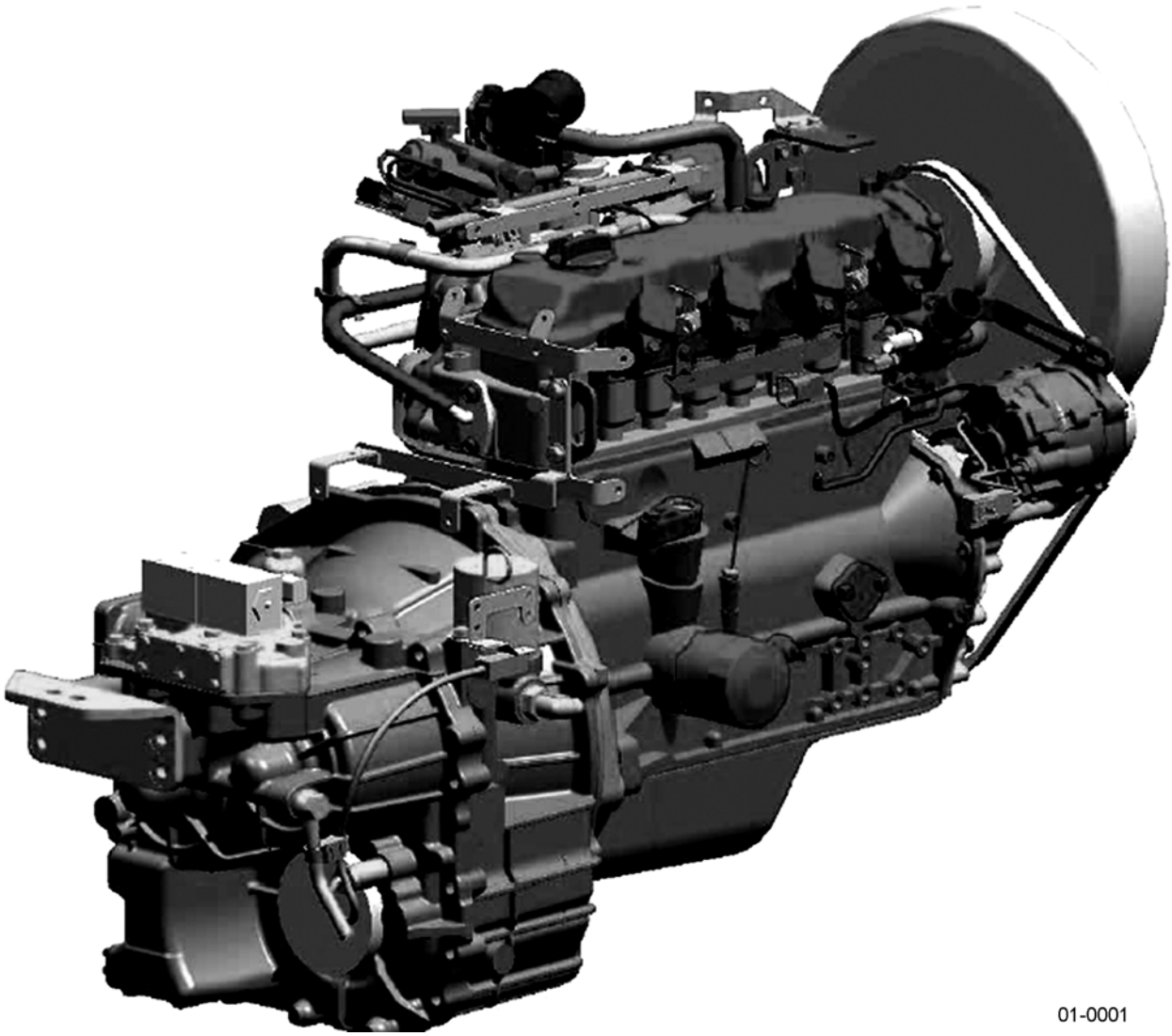

01-0001

https://truckmanualshub.com/

ENGINE - K21/K25 GASOLINE / LP / DUAL-FUEL - S/N 200001A~

Item	Part Number	Description	Qty	
		K21 ENGINES		
	37B-1DD-5010	K21 ENGINE ASSY - GASOLINE (EPA)	1	
	37B-1DD-5020	K21 ENGINE ASSY - GAS AND LP (EPA)	1	
	37B-1DD-5030	K21 ENGINE ASSY - LP.	1	
	37B-1DD-5110	K21 ENGINE ASSY - GS	1	
	37B-1DD-5130	K21 ENGINE ASSY - LPS	1	
	37B-1DA-5320	K21 ENGINE ASSY - GASOLINE (EXPORT)	1	
	37B-1DA-5331	K21 ENGINE ASSY - G/LP (EXPORT).	1	
		K25 ENGINES		
	37B-1DD-5040	K25 ENGINE ASSY - GASOLINE (EPA)	1	
	37B-1DD-5050	K25 ENGINE ASSY - GAS AND LP (EPA)	1	
	37B-1DD-5060	K25 ENGINE ASSY - LP.	1	
	37B-1DD-5140	K25 ENGINE ASSY - GS	1	
	37B-1DD-5160	K25 ENGINE ASSY - LPS	1	
	37B-1DA-5350	K25 ENGINE ASSY - GASOLINE (EXPORT)	1	
	37B-1DA-5361	K25 ENGINE ASSY - G/LP (EXPORT).	1	

https://truckmanualshub.com/

TRANSMISSION-TO-ENGINE MOUNTING PARTS - K21/K25 - S/N 200001A~

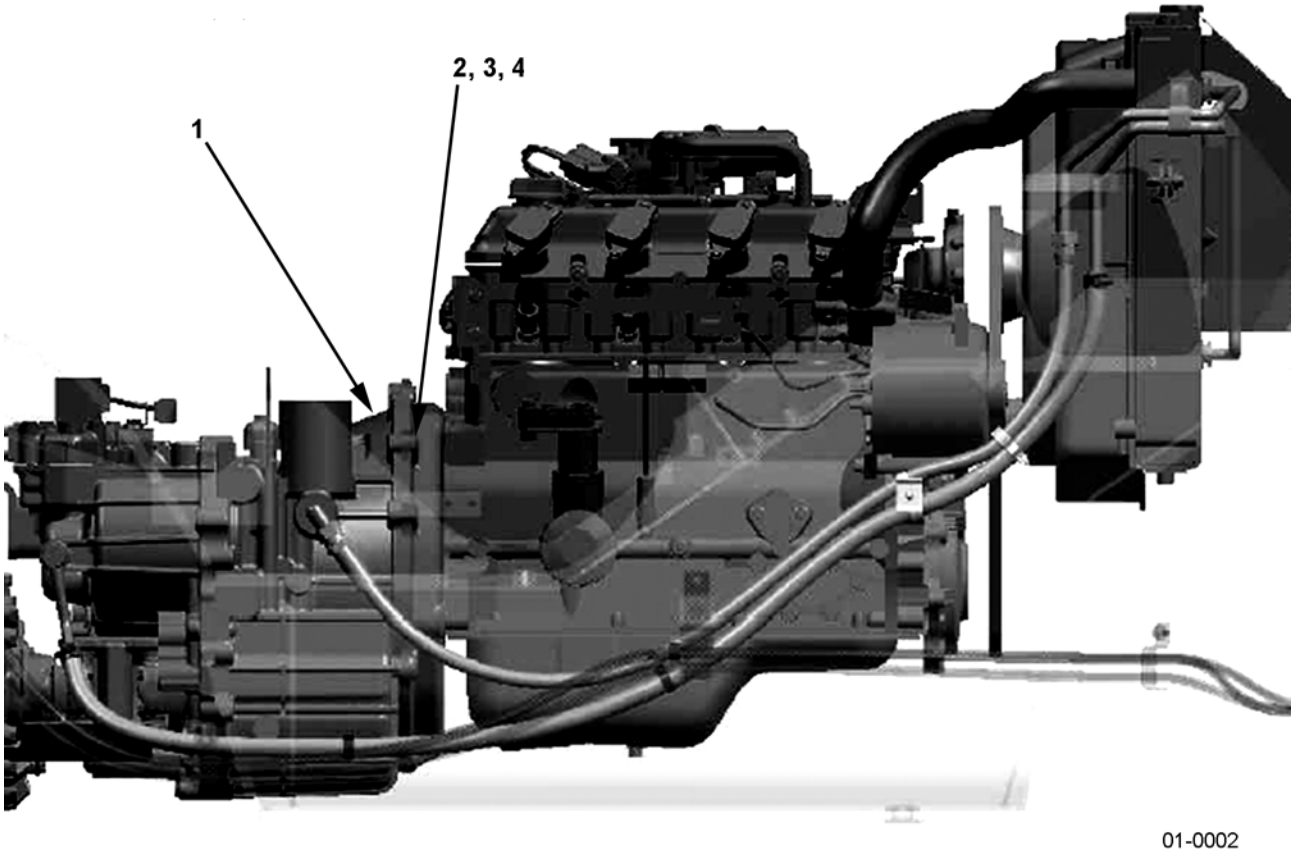

https://truckmanualshub.com/

TRANSMISSION-TO-ENGINE MOUNTING PARTS - K21/K25 - S/N 200001A~

Item	Part Number	Description	Qty	
1	37B-1AZ-5030	TRANSMISSION ASSY (2.0T, 2.5T, 2.8T, 3.0T) .	1	
	37B-1AZ-5050	TRANSMISSION ASSY (3.2T, 3.5T).	1	
2	01010-81045	BOLT.	8	
3	01602-21030	WASHER	8	
4	01580-11008	NUT.	8	
NS	01010-80816	BOLT - TORQUE CONVERTER-TO-FLEX PLATE	6	
NS	01643-50823	WASHER - TORQUE CONV.-TO-FLEX PLATE .	6	

https://truckmanualshub.com/

ENGINE MOUNTING PARTS - K21/K25 - S/N 200001A~

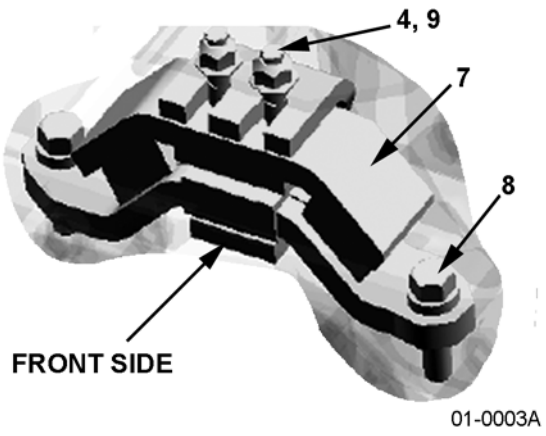

01-0003A

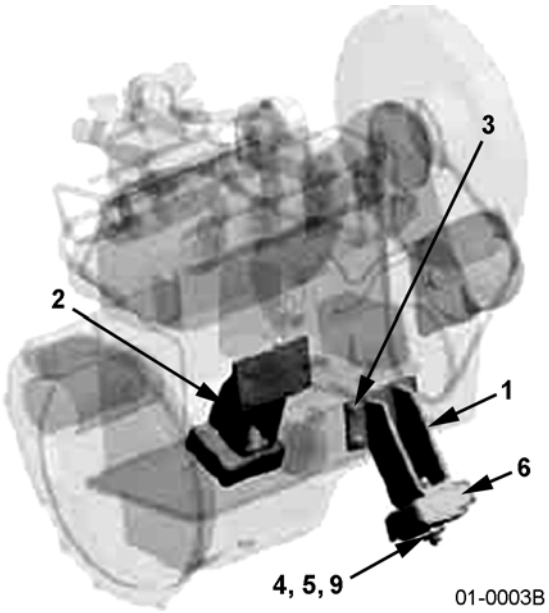

01-0003B

https://truckmanualshub.com/

ENGINE MOUNTING PARTS - K21/K25 - S/N 200001A~

Item	Part Number	Description	Qty	
1	3EB-01-51110	BRACKET, LH	1	
2	3EB-01-51121	BRACKET, RH	1	
3	01024-81025	BOLT	6	
4	34A-01-35120	U-NUT	6	
5	3EB-01-51190	WASHER	2	
6	3EB-01-51130	MOUNT	2	
7	3EB-02-52130	MOUNT	1	
8	3EA-71-12790	BOLT	2	
9	01643-31232	WASHER	6	

https://truckmanualshub.com/

AIR CLEANER ASSY - K21/K25 - S/N 200001A~

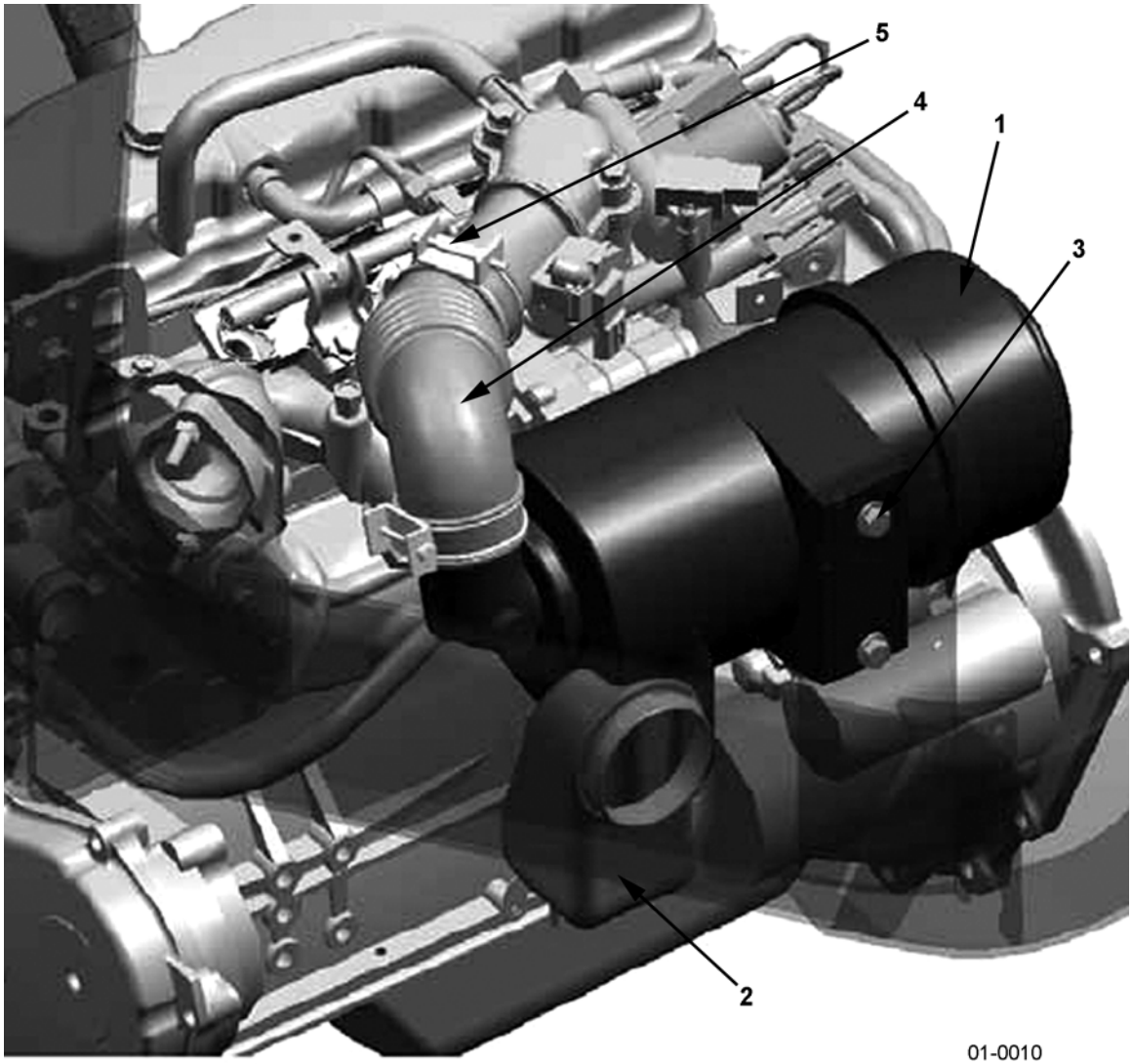

01-0010

OVERHEAD GUARD



01-0010A

https://truckmanualshub.com/

AIR CLEANER ASSY - K21/K25 - S/N 200001A~

Item	Part Number	Description	Qty	
1	3EB-01-A7910	AIR CLEANER ASSY	1	
2	3EB-01-A7922	CONNECTOR	1	
3	01024-80816	BOLT	2	
4	3EB-01-51280	HOSE	1	
5	07280-05729	CLAMP	2	
6	3EB-01-D6110	COVER	1	
N/S	3EA-01-A5390	AIR FILTER ELEMENT (GASOLINE/LP/DUAL-FUEL K21/K25 ONLY)	1	

https://truckmanualshub.com/

ENGINE ASSEMBLY & SHORT BLOCK ENGINE ASSEMBLY - K21/K25 GAS, LP & DUAL FUEL - S/N 200001A~

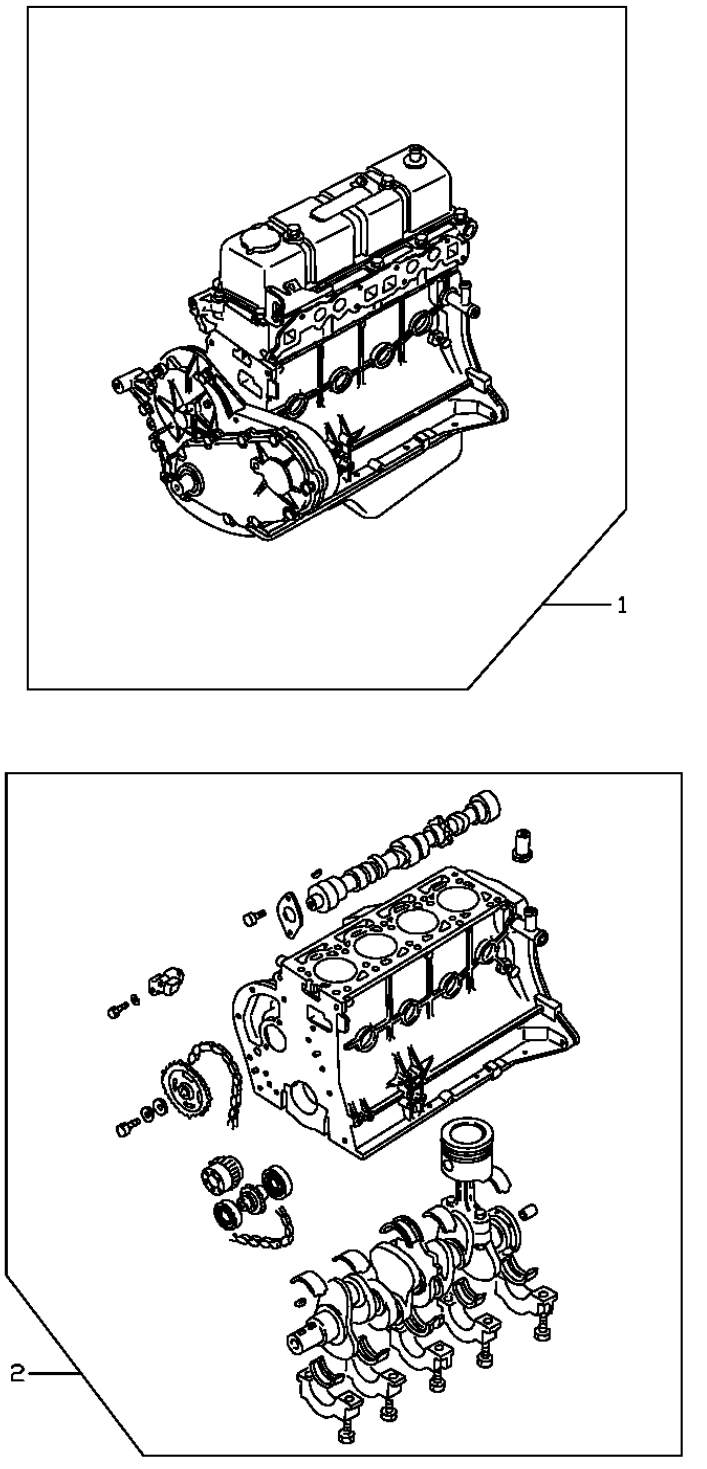

K13A101_1

https://truckmanualshub.com/

ENGINE ASSEMBLY & SHORT BLOCK ENGINE ASSEMBLY - K21/K25 GAS, LP & DUAL FUEL - S/N 200001A~

Item	Part Number	Description	Qty	Serial Number
1	10102-GW460	ENGINE ASSY (W/CYLINDER HEAD AND OIL PAN), K21, GAS, DUAL FUEL	1	K21 K00001X
	10102-GW461	ENGINE ASSY (W/CYLINDER HEAD AND OIL PAN), K21, LP	1	K21 K00001X
	10102-GW560	ENGINE ASSY (W/CYLINDER HEAD AND OIL PAN), K25, GAS, DUAL	1	K25 K01001X
	10102-GW561	ENGINE ASSY (W/CYLINDER HEAD AND OIL PAN), K25, LP	1	K25 K01001X
2	10103-GW400	ENGINE ASSY, SHORT BLOCK (NO CYLINDER HEAD, NO OIL PAN), K21, ALL	1	K21 K00001X
	10103-GW500	ENGINE ASSY, SHORT BLOCK (NO CYLINDER HEAD, NO OIL PAN), K25, ALL	1	K25 K01001X

https://truckmanualshub.com/

BARE ENGINE BLOCK & OIL PAN - K21/K25 - S/N ALL GAS, LP & DUAL FUEL

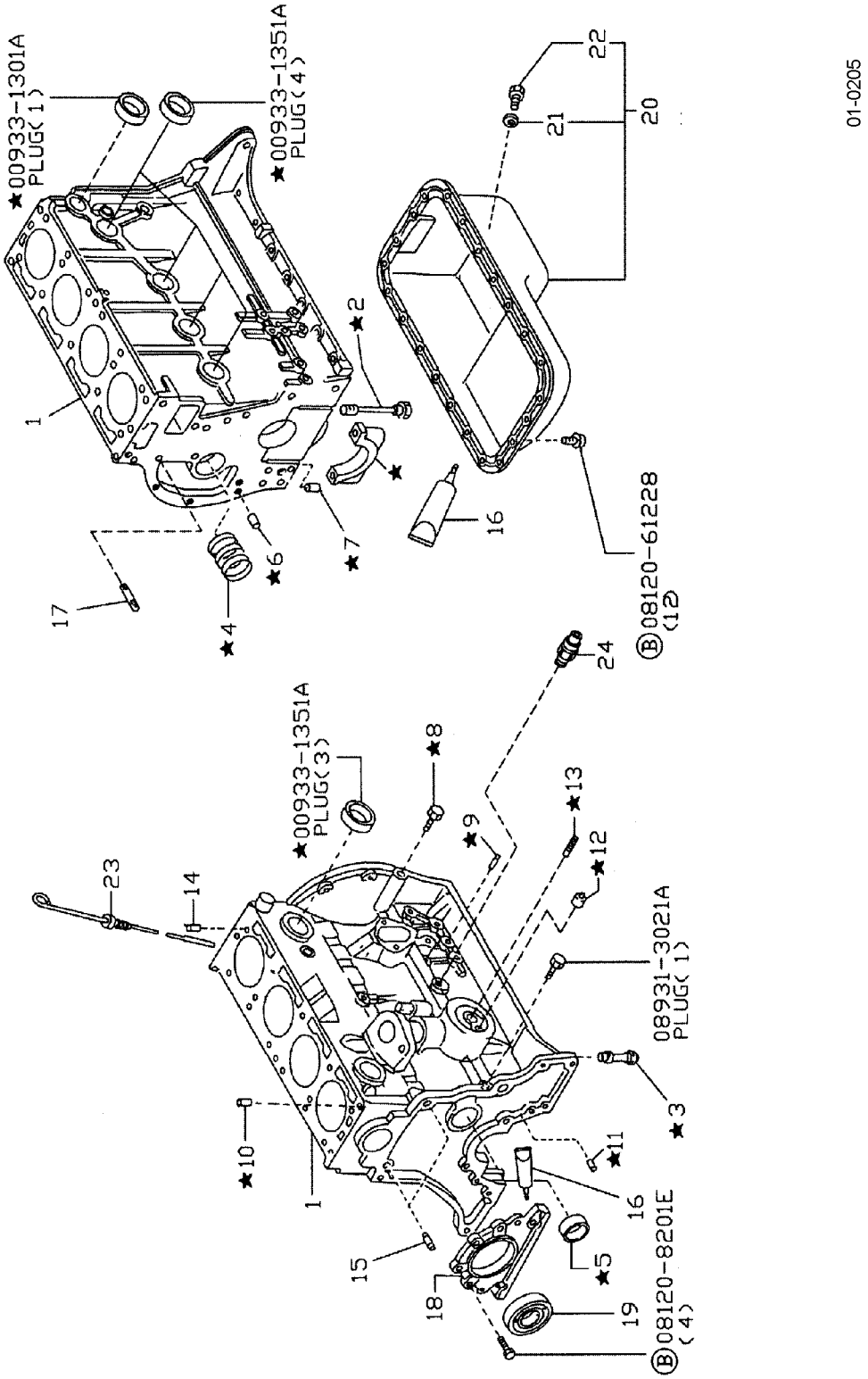

https://truckmanualshub.com/

BARE ENGINE BLOCK & OIL PAN - K21/K25 - S/N ALL
GAS, LP & DUAL FUEL

Item	Part Number	Description	Qty	Serial Number
1	11000-FU400	ASSY, BLOCK, ENGINE, BARE, K21, ALL	1	K21 K00001X
	11000-FY500	ASSY, BLOCK, ENGINE, BARE, K25, ALL	1	K25 K01001X
2	12293-P0500	. BOLT, MAIN BEARING CAP	10	
3	15075-FF200	. BUSHING, OIL PUMP DRIVE SPINDLE	1	
4	13002-71200	. BUSHING SET	1	
5	11019-32201	. PLUG, WELCH	1	
6	11024-K0100	. PLUG, TAPER	2	
7	11024-78200	. PLUG, BLIND	1	
8	11024-85G00	. PLUG, TAPER	2	
9	11023-78200	. PLUG, TAPER, CAMSHAFT	1	
10	11046-73402	. DOWEL, BLOCK TO HEAD	4	
11	11024-85G01	. PLUG, TAPER	4	
12	15213-21002	. STUD, OIL FILTER.	1	
13	15241-16A01	. VALVE ASSY, RELIEF	1	
14	11053-73400	DOWEL	2	
15	30412-P5100	DOWEL	2	
16	KA760-15000	LIQUID GASKET	AR	
17	11392-50K00	STUD	2	
18	12297-FU400	RETAINER ASSY, OIL SEAL, REAR	1	
19	12279-FF200	SEAL, OIL, CRANKSHAFT, REAR.	1	
20	11110-FU400	OIL PAN ASSY	1	
21	11026-01M02	WASHER, DRAIN PLUG	1	
22	11128-01M00	DRAIN PLUG	1	
23	11140-FT860	GAUGE ASSY, OIL LEVEL (DIPSTICK)	1	
24	25240-FJ10A	SWITCH, OIL PRESSURE.	1	

https://truckmanualshub.com/

CYLINDER HEAD & ROCKER COVER - K21/K25 - S/N ALL
GAS, LP & DUAL FUEL

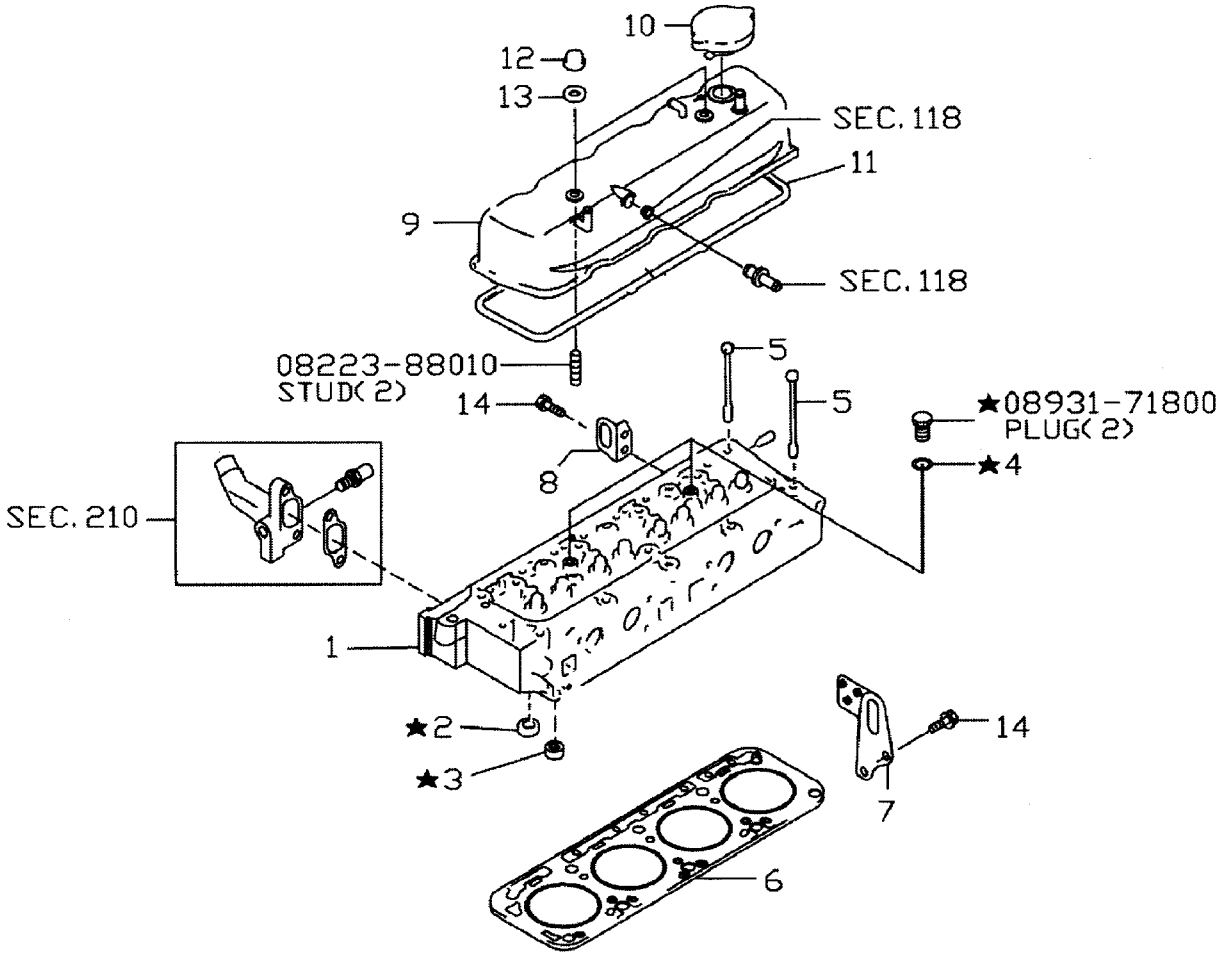

01-0210

https://truckmanualshub.com/

CYLINDER HEAD & ROCKER COVER - K21/K25 - S/N ALL
GAS, LP & DUAL FUEL

Item	Part Number	Description	Qty	Serial Number
1	11040-FY501	ASSY, HEAD, CYLINDER, K21/K25, ALL	1	
2	11099-FY500	. SEAT, VALVE, EXHAUST	4	
3	11098-FY500	. SEAT, VALVE, INTAKE	4	
4	11026-53J00	GASKET	2	
5	11056-FY500	BOLT, CYLINDER HEAD	10	
6	11044-FU400	GASKET, CYLINDER HEAD, GAS & DUAL-FUEL	1	
	11044-FU460	GASKET, CYLINDER HEAD, LP	1	
7	10005-FU410	SLINGER, ENGINE, FRONT	1	
8	10006-FU410	SLINGER, ENGINE, REAR	1	
9	13264-FU400	COVER ASSY, VALVE, ROCKER	1	
10	15255-1P110	CAP ASSY, OIL FILLER	1	
11	13270-FY50A	GASKET, ROCKER COVER	1	
12	13274-B1101	NUT- CAP, VALVE, ROCKER	2	
13	13268-88V62	WASHER, NUT CAP	2	
14	01121-05351	BOLT - SLINGER	4	

https://truckmanualshub.com/

CRANKCASE VENTILATION - K21/K25 - S/N ALL GAS, LP & DUAL FUEL

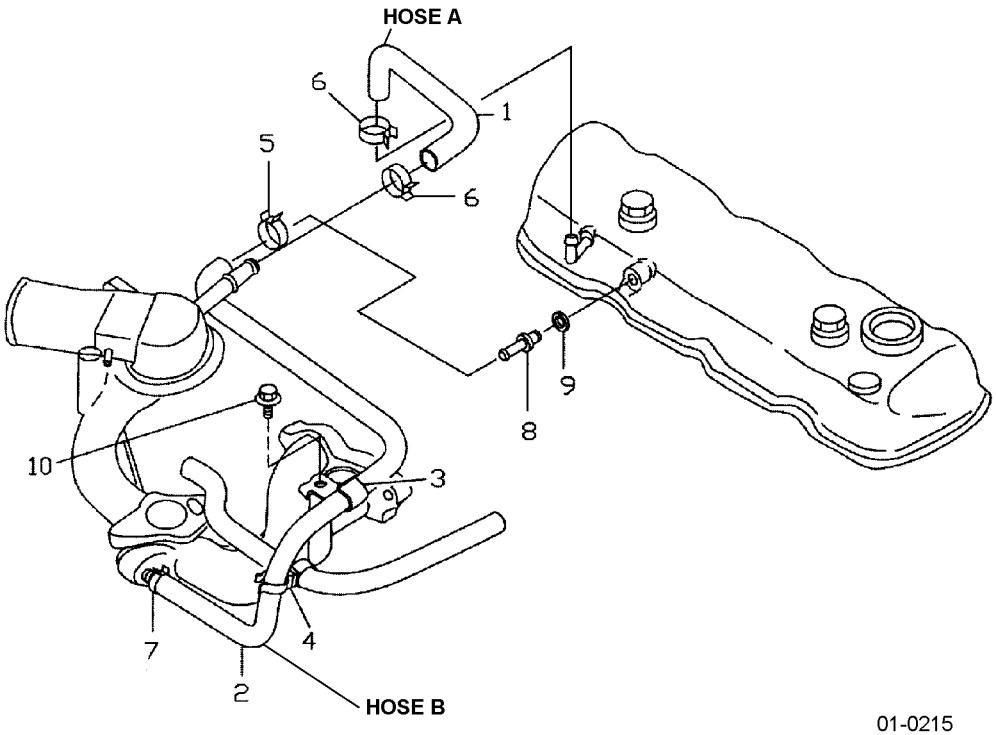

https://truckmanualshub.com/

CRANKCASE VENTILATION - K21/K25 - S/N ALL
GAS, LP & DUAL FUEL

Item	Part Number	Description	Qty	Serial Number
1	11828-FU400	HOSE A, BLOWBY GAS	1	
2	11823-FU400	HOSE B, BLOWBY GAS	1	
3	24220-FU400	CLIP	1	
4	24220-79901	CLIP	1	
5	16439-42L01	HOSE CLAMP, HOSE B	1	
6	16439-V5000	HOSE CLAMP, HOSE A	2	
7	16439-17B00	HOSE CLAMP, HOSE B	1	
8	11810-75T00	PCV VALVE ASSY, BLOWBY GAS CONTROL	1	
9	11812-41B00	INSULATOR, PCV VALVE	1	
10	08120-61633	BOLT	1	

https://truckmanualshub.com/

PISTON, CRANKSHAFT & FLYWHEEL - K21/K25 - S/N ALL GAS, LP & DUAL FUEL

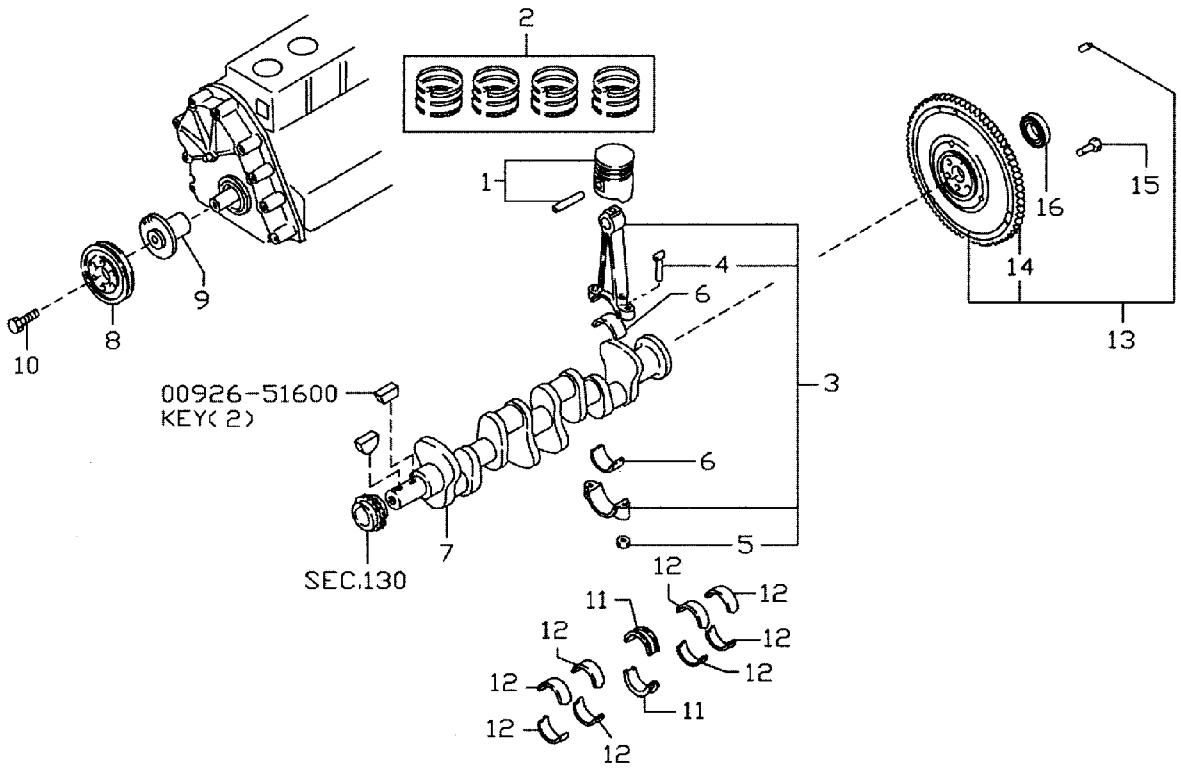

01-0220

https://truckmanualshub.com/

PISTON, CRANKSHAFT & FLYWHEEL - K21/K25 - S/N ALL GAS, LP & DUAL FUEL

Item	Part Number	Description	Qty	Serial Number
1	12010-FU420	PISTON W/ PIN, K21, ALL, STD GRADE 1	4	
	12010-FU421	PISTON W/ PIN, K21, ALL, STD GRADE 2	4	
	12010-FU422	PISTON W/ PIN, K21, ALL, STD GRADE 3	4	
	12010-FU423	PISTON W/ PIN, K21, ALL, STD GRADE 4	4	
	12010-FU424	PISTON W/ PIN, K21, ALL, STD GRADE 5	4	
	12010-FU470	PISTON W/ PIN, K21, ALL, OVERSIZE = 0.5	4	
	12010-FU471	PISTON W/ PIN, K21, ALL, OVERSIZE = 1.0	4	
	12010-FU520	PISTON W/ PIN, K25, ALL, STD GRADE 1	4	
	12010-FU521	PISTON W/ PIN, K25, ALL, STD GRADE 2	4	
	12010-FU522	PISTON W/ PIN, K25, ALL, STD GRADE 3	4	
	12010-FU523	PISTON W/ PIN, K25, ALL, STD GRADE 4	4	
	12010-FU524	PISTON W/ PIN, K25, ALL, STD GRADE 5	4	
	12010-FU570	PISTON W/ PIN, K25, ALL, OVERSIZE = 0.5	4	
	12010-FU571	PISTON W/ PIN, K25, ALL, OVERSIZE = 1.0	4	
2	12033-4E110	RING SET, PISTON, STD	4	
	12036-4E110	RING SET, PISTON, OS=0.5	4	
	12038-4E110	RING SET, PISTON, OS=1.0	4	
3	12100-FU400	ROD ASSY, CONNECTING, K21	4	
	12100-FY500	ROD ASSY, CONNECTING, K25	4	
4	12109-D0210	. BOLT, CONNECTING ROD	8	
5	12112-H1000	. NUT, CONNECTING ROD	8	
6	12111-FY500	. BEARING SET, CONNECTING ROD, STD	8	
	12117-FY500	. BEARING SET, CONNECTING ROD, US = 0.08	8	
	12118-FY500	. BEARING SET, CONNECTING ROD, US = 0.12	8	
	12119-FY500	. BEARING SET, CONNECTING ROD, US = 0.25	8	
7	12201-FU400	ASSY, CRANKSHAFT, K21	1	K21 K00001X
	12201-FY500	ASSY, CRANKSHAFT, K25	1	K25 K01001X
8	12303-FU400	PULLEY, CRANKSHAFT	1	
9	12307-FU460	BUSHING	1	
10	12309-FU400	BOLT, PULLEY, CRANKSHAFT	1	
11	12247-50K00	MAIN BEARING, CTR, STD	2	
	12248-50K00	BEARING, CTR, US = 0.02	2	
	12249-50K00	BEARING, CTR, US = 0.25	2	
	12250-50K00	BEARING, CTR, US = 0.50	2	
	12251-50K00	BEARING, CTR, US = 0.75	2	
	12252-50K00	BEARING, CTR, US = 1.00	2	
12	12231-FY500	BEARING MAIN, STD	8	
	12232-FY500	BEARING MAIN, INTERNAL, US = 0.02	8	

PARTS LIST CONTINUED ON NEXT PAGE

https://truckmanualshub.com/

PISTON, CRANKSHAFT & FLYWHEEL - K21/K25 - S/N ALL
GAS, LP & DUAL FUEL

Item	Part Number	Description	Qty	Serial Number
	12233-FY500	BEARING MAIN, US=0.25	8	
	12234-FY500	BEARING MAIN, US=0.50	8	
	12235-FY500	BEARING MAIN, US=0.75	8	
	12236-FY500	BEARING MAIN, US=1.00	8	
13	12310-K9302	FLYWHEEL ASSY	1	
14	12312-50K00	. GEAR, RING	1	
15	12315-58S00	. BOLT, FLYWHEEL	6	
16	32203-FU400	BEARING, BALL	1	

https://truckmanualshub.com/

NOTES

https://truckmanualshub.com/

CAMSHAFT & VALVE MECHANISM - K21/K25 - S/N ALL GAS, LP & DUAL FUEL

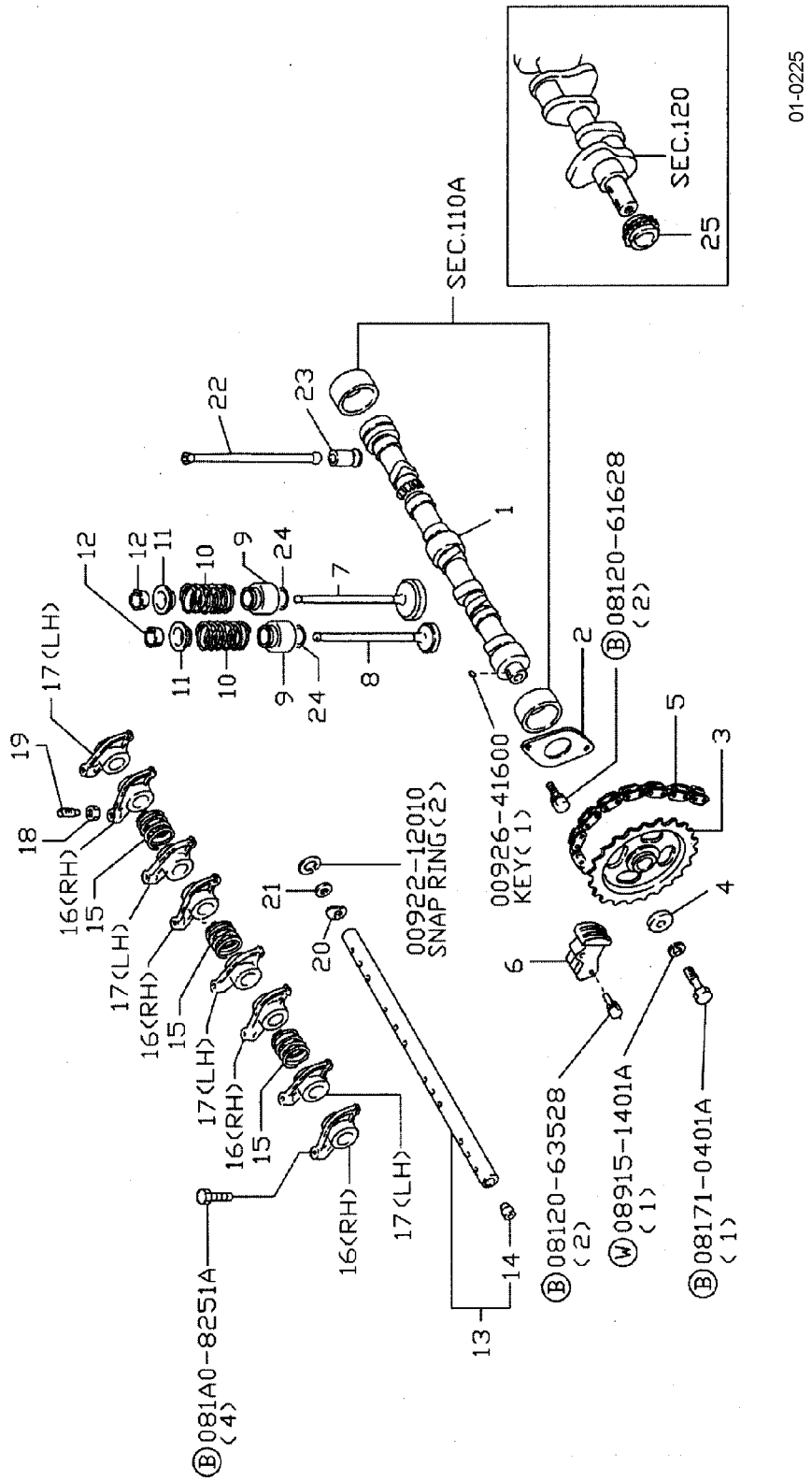

https://truckmanualshub.com/

CAMSHAFT & VALVE MECHANISM - K21/K25 - S/N ALL
GAS, LP & DUAL FUEL

Item	Part Number	Description	Qty	Serial Number
1	13001-50K00	CAMSHAFT	1	
2	13010-78201	PLATE, LOCATING, CAMSHAFT	1	
3	13024-FY500	SPROCKET, CAMSHAFT	1	
4	13013-78200	WASHER, CAM SPROCKET	1	
5	13028-FU400	CHAIN, TIMING, CAMSHAFT	1	
6	13070-50K00	TENSION ASSY, CHAIN	1	
7	13201-FY500	VALVE, INTAKE	4	
8	13202-FU400	VALVE, EXHAUST	4	
9	13207-53F00	OIL SEAL, VALVE STEM	8	
10	13203-FY50A	SPRING, VALVE	8	
11	13209-V7200	RETAINER, VALVE STEM	8	
12	13210-16A00	COLLET, VALVE SPRING	16	
13	13252-FY500	SHAFT ASSY, VALVE ROCKER	1	
14	13254-02N00	PLUG, ROCKER SHAFT	2	
15	13256-W0400	SPRING, VALVE ROCKER	3	
16	13258-FY500	ROCKER, VALVE - ARM - RH	4	
17	13258-FY510	ROCKER, VALVE - ARM - LH	4	
18	13235-78200	NUT, LOCK, ROCKER PIVOT SCREW	8	
19	13234-78200	SCREW, ADJUSTING, VALVE ROCKER	8	
20	13255-58000	SPRING - OUTSIDE, VALVE ROCKER	2	
21	13289-58000	WASHER, ROCKER SHAFT	2	
22	13238-FY500	PUSH ROD	8	
23	13231-H1001	LIFTER, VALVE	8	
24	13205-40F00	SEAT, VALVE SPRING, OUTER	8	
25	13021-FY500	SPROCKET, CAMSHAFT	1	

https://truckmanualshub.com/

FRONT COVER & FITTINGS - K21/K25 - S/N ALL
GAS, LP & DUAL FUEL

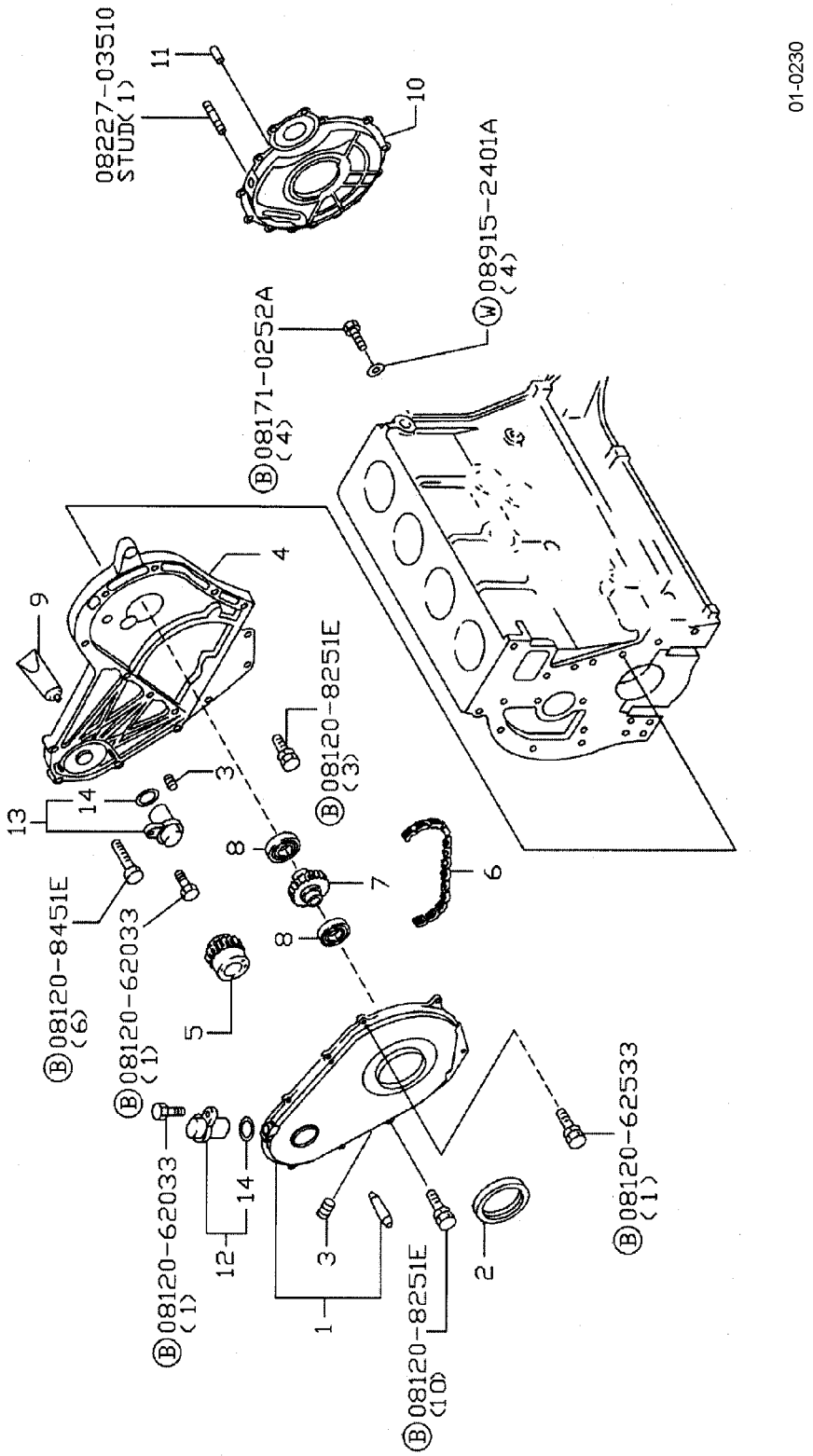

https://truckmanualshub.com/

FRONT COVER & FITTINGS - K21/K25 - S/N ALL
GAS, LP & DUAL FUEL

Item	Part Number	Description	Qty	Serial Number
1	13501-FU400	COVER, FRONT	1	
2	13510-FF200	SEAL, OIL - FRONT COVER	1	
3	11046-73402	DOWEL PIN	1	
4	13034-FU400	HOUSING, TIMING CHAIN	1	
5	12351-FU400	SPROCKET, PTO	1	
6	12352-GW300	CHAIN, PTO	1	
7	12353-GW300	SPROCKET, PTO-DRIVEN	1	
8	12354-50K00	BEARING, SPROCKET	2	
9	KA760-15000	GASKET, HOUSING, TIMING CHAIN - LIQUID.	AR	
10	12320-K9303	FLYWHEEL HOUSING.	1	
11	30412-FY600	DOWEL, PIN	2	
12	23731-6J906	SENSOR ASSY, CAMSHAFT	1	
13	23731-6N206	SENSOR ASSY, CAMSHAFT	1	
14	22131-4M505	SEAL, O-RING	2	

https://truckmanualshub.com/

MANIFOLD ASSEMBLY - K21/K25 - S/N ALL
GAS, LP & DUAL FUEL

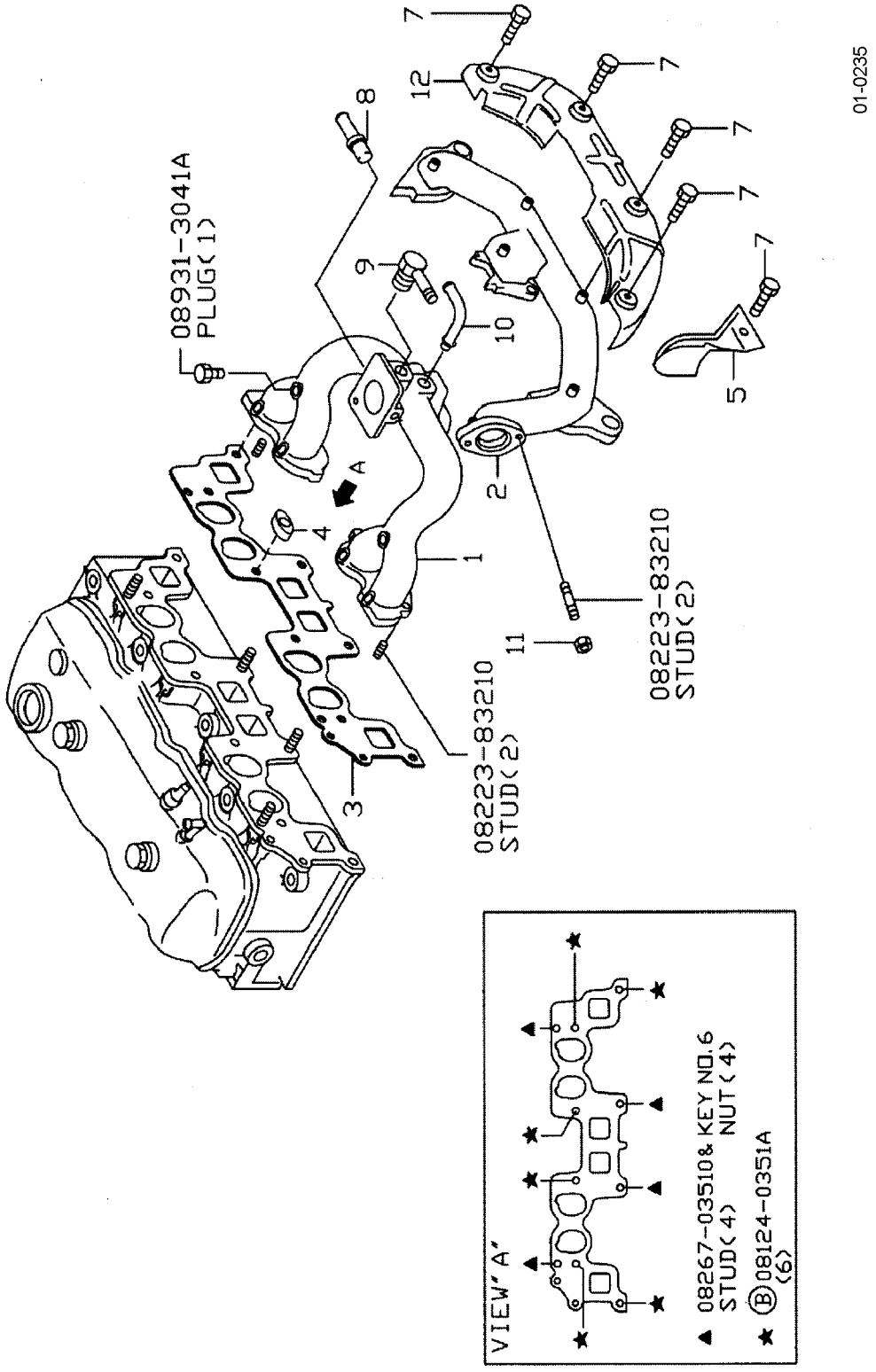

https://truckmanualshub.com/

MANIFOLD ASSEMBLY - K21/K25 - S/N ALL
GAS, LP & DUAL FUEL

Item	Part Number	Description	Qty	Serial Number
1	14003-FU460	MANIFOLD ASSY, GAS, UL-GS, DUAL	1	
	14003-FU461	MANIFOLD ASSY, GAS, LP	1	
2	14004-FU400	MANIFOLD, EXHAUST, FRONT	1	
3	14035-FY500	GASKET, MANIFOLD	1	
4	14037-42L01	YOKE - FIX, MANIFOLD	6	
5	16590-FU461	COVER, MANIFOLD, EXHAUST	1	
6	14094-31U00	NUT	4	
7	14069-82F00	BOLT, HEX HEAD, SPL	5	
8	14875-P6500	CONNECTOR, WATER	1	
9	14053-E0600	CONNECTOR, WATER	1	
10	11831-FU460	CONNECTOR, BLOWBY	1	
11	20602-01M00	NUT, EXHAUST TUBE	2	
12	16590-FU462	COVER, EXHAUST MANIFOLD	1	

https://truckmanualshub.com/

FUEL RAIL & INJECTOR HOLDER ASSY - K21/K25 - S/N ALL GASOLINE

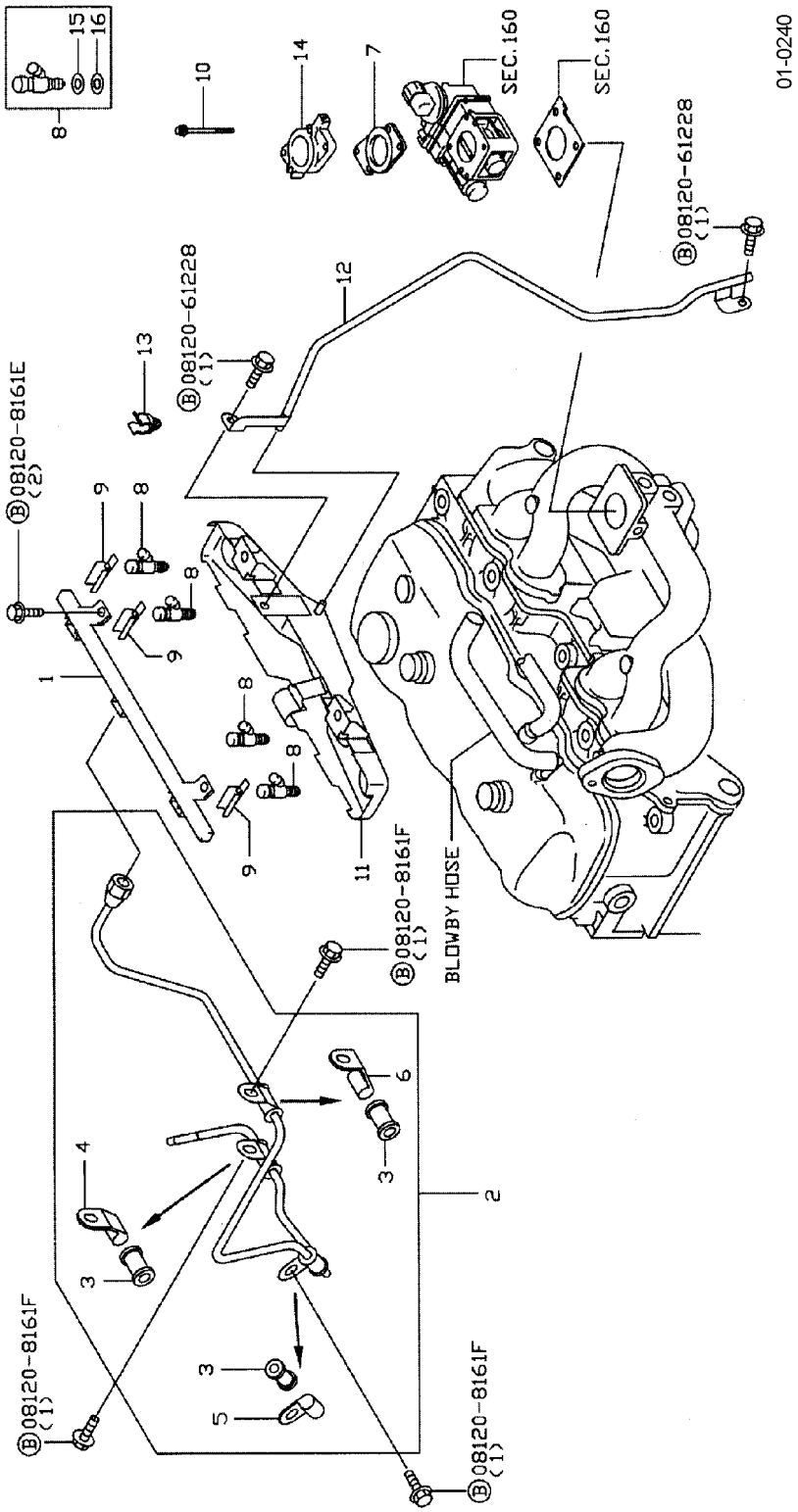

https://truckmanualshub.com/

FUEL RAIL & INJECTOR HOLDER ASSY - K21/K25 - S/N ALL GASOLINE

Item	Part Number	Description	Qty	Serial Number
1	17520-GY361	TUBE ASSY - FUEL	1	
2	17522-FU463	TUBE ASSY - FUEL	1	
3	17108-K7005	INSULATOR - FUEL TUBE	3	
4	17111-50K00	TUBE CLAMP	1	
5	17111-50K60	TUBE CLAMP	1	
6	17111-FU400	CLAMP	1	
7	16175-FU470	GASKET - INJECTOR	1	
8	16600-FU460	INJECTOR ASSY, FUEL	4	
9	17571-5L300	CLIP	4	
10	16185-FU460	BOLT	2	
11	14330-GY360	PLATE - FUEL, RECEIVER	1	
12	16318-GY360	DRAIN TUBE	1	
13	17571-5V002	CLIP	1	
14	16270-FU460	SPACER - INJECTOR	1	
15	16618-5L300	SEAL, O-RING	4	
16	16618-FU460	SEAL, O-RING	4	

https://truckmanualshub.com/

FUEL INJECTOR HOLDER ASSY - K21/K25 - S/N ALL LPG

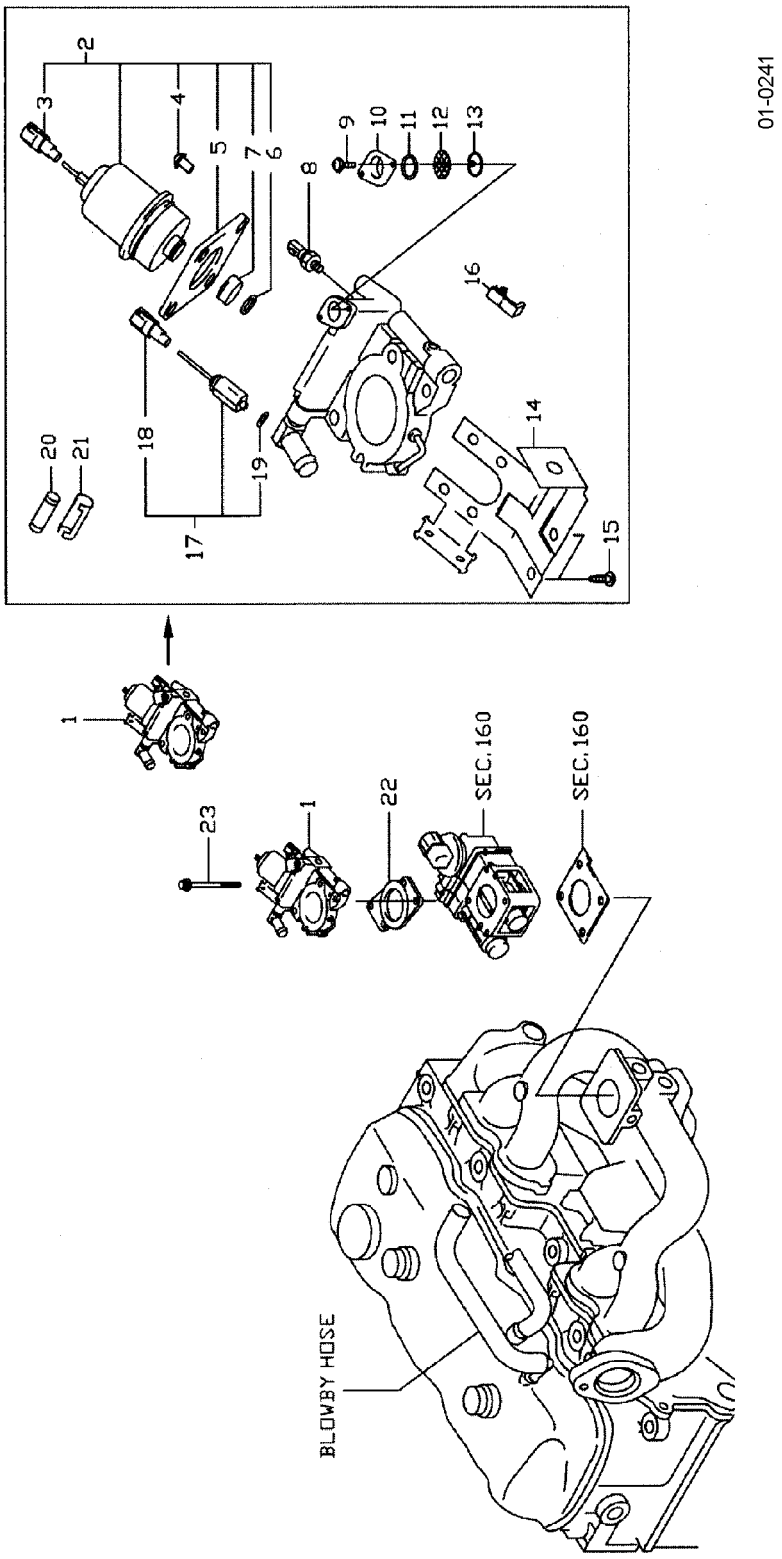

https://truckmanualshub.com/

FUEL INJECTOR HOLDER ASSY - K21/K25 - S/N ALL
LPG

Item	Part Number	Description	Qty	Serial Number
1	16610-GX11A	HOLDER ASSY - INJECTOR, LPG (K21)	1	
	16610-GX21A	HOLDER ASSY - INJECTOR, LPG (K25)	1	
2	16600-FU471	INJECTOR ASSY, LPG (K21)	1	
	16600-FU571	INJECTOR ASSY, LPG (K25)	1	
3	24341-10Y03	HOUSING - CONNECTOR, MALE	1	
4	16065-FU460	SCREW	4	
5	16290-FU460	PLATE - HOLDER, LPG	1	
6	16349-VS002	SEAL, O-RING	1	
7	16349-VS001	SEAL, O-RING	1	
8	16638-GX11A	SENSOR ASSY - PRESSURE CNG	1	
9	16214-A8800	SCREW	2	
10	16291-GX11A	PLATE	1	
11	16618-GX11A	SEAL, O-RING	1	
12	16098-FU460	FILTER	1	
13	16156-FU460	CLIP	1	
14	16263-FU460	BRACKET - CONNECTOR	1	
15	16065-OH600	SCREW	2	
16	24346-VS000	CLIP - CONNECTOR	3	
17	16197-FU46A	SOLENOID ASSY	1	
18	24341-10Y01	HOUSING, CONNECTOR - MALE	1	
19	16094-B8500	PACKING - SOLENOID	1	
20	24319-C9905	FUSE	1	
21	16277-FU461	CLAMP	1	
22	16175-FU470	GASKET - INJECTOR	1	
23	16185-FU460	BOLT	2	

https://truckmanualshub.com/

FUEL RAIL & INJECTOR HOLDER ASSY - PRESS. REG. - K21/K25 - S/N ALL DUAL-FUEL (ALSO SEE FIG. 01-0242A)

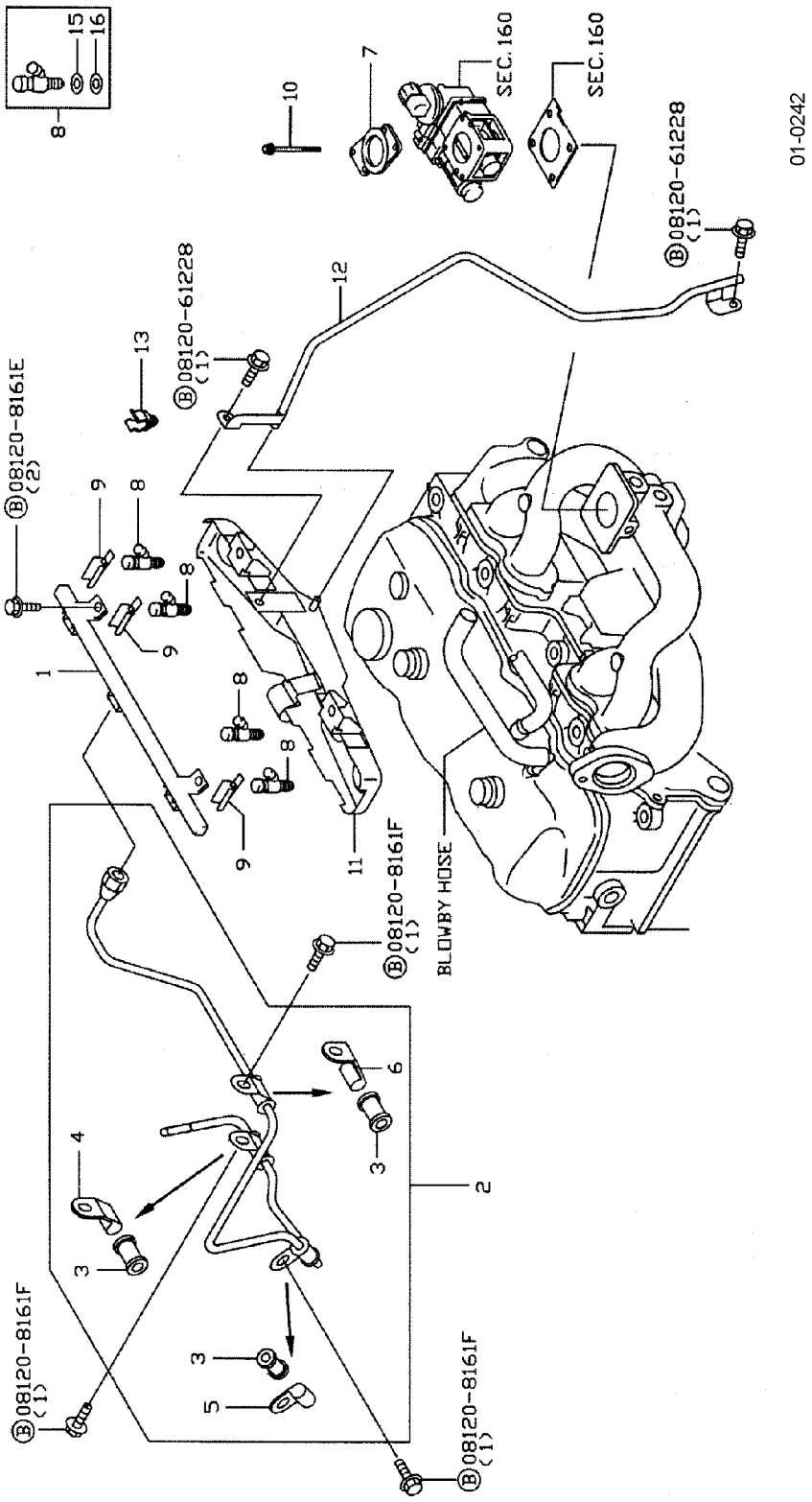

https://truckmanualshub.com/

FUEL RAIL & INJECTOR HOLDER ASSY - PRESS. REG. - K21/K25 - S/N ALL DUAL-FUEL (ALSO SEE FIG. 01-0242A)

Item	Part Number	Description	Qty	Serial Number
1	17520-GY361	TUBE ASSY - FUEL	1	
2	17522-FU4634	TUBE ASSY - FUEL	1	
3	17108-K7005	INSULATOR - FUEL TUBE	3	
4	17111-50K00	CLAMP - TUBE	1	
5	17111-50K60	CLAMP - TUBE	1	
6	17111-FU400	CLAMP	1	
7	16175-FU470	GASKET - INJECTOR	1	
8	16600-FU461	INJECTOR ASSY - FUEL	4	
9	17571-5L300	CLIP	4	
10	16185-FU460	BOLT	2	
11	14330-GY360	PLATE - FUEL, RECEIVER	1	
12	16318-GY360	DRAIN TUBE	1	
13	17571-5V002	CLIP	1	
14	16610-GX11A	HOLDER ASSY - INJECTOR, LPG (K21)	1	
	16610-GX21A	HOLDER ASSY - INJECTOR, LPG (K25)	1	
15	16156-FU460	CLIP	1	
16	16600-FU471	INJECTOR ASSY - FUEL, LPG (K21)	1	
	16600-FU571	INJECTOR ASSY - FUEL, LPG (K25)	1	
17	16065-FU460	SCREW	4	
18	16290-FU460	PLATE - HOLDER, LPG	1	
19	16349-VS002	SEAL, O-RING	1	
20	16349-VS001	SEAL, O-RING	1	
21	24346-VS000	CLIP - CONNECTOR	3	
22	16263-FU460	BRACKET - CONNECTOR	1	
23	16065-OH600	SCREW	2	
24	16638-GX11A	SENSOR ASSY - PRESSURE CNG	1	
25	24319-C9905	FUSE	1	
26	16277-FU461	CLAMP	1	
27	16197-FU46A	SOLENOID ASSY	1	
28	16098-FU460	FILTER	1	
29	16618-GX11A	SEAL, O-RING	1	
30	24341-10Y03	HOUSING - CONNECTOR, MALE	1	
31	24341-10Y01	HOUSING - CONNECTOR, MALE	1	
32	16214-A8800	SCREW	2	
33	16291-GX11A	PLATE	1	
34	16094-B8500	PACKING - SOLENOID	1	

https://truckmanualshub.com/

FUEL RAIL & INJECTOR HOLDER ASSY - PRESS. REG. - K21/K25 - S/N ALL DUAL-FUEL (ALSO SEE FIG. 01-0242)

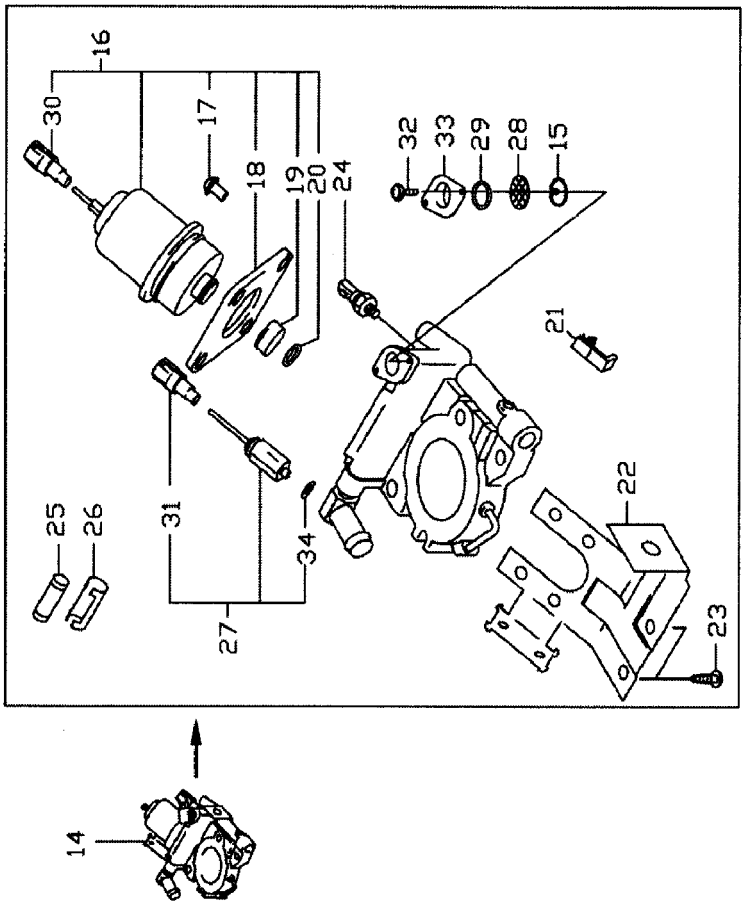

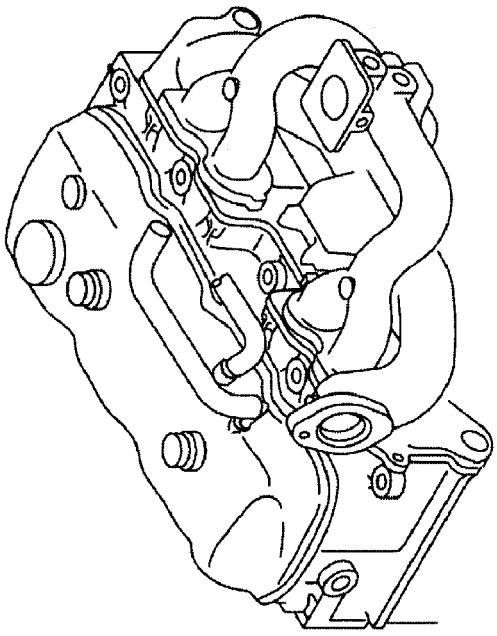

https://truckmanualshub.com/

FUEL RAIL & INJECTOR HOLDER ASSY - PRESS. REG. - K21/K25 - S/N ALL DUAL-FUEL (ALSO SEE FIG. 01-0242)

Item	Part Number	Description	Qty	Serial Number
1	17520-GY361	TUBE ASSY - FUEL	1	
2	17522-FU4634	TUBE ASSY - FUEL	1	
3	17108-K7005	INSULATOR - FUEL TUBE	3	
4	17111-50K00	CLAMP - TUBE	1	
5	17111-50K60	CLAMP - TUBE	1	
6	17111-FU400	CLAMP	1	
7	16175-FU470	GASKET - INJECTOR	1	
8	16600-FU461	INJECTOR ASSY - FUEL	4	
9	17571-5L300	CLIP	4	
10	16185-FU460	BOLT	2	
11	14330-GY360	PLATE - FUEL, RECEIVER	1	
12	16318-GY360	DRAIN TUBE	1	
13	17571-5V002	CLIP	1	
14	16610-GX11A	HOLDER ASSY - INJECTOR, LPG (K21)	1	
	16610-GX21A	HOLDER ASSY - INJECTOR, LPG (K25)	1	
15	16156-FU460	CLIP	1	
16	16600-FU471	INJECTOR ASSY - FUEL, LPG (K21)	1	
	16600-FU571	INJECTOR ASSY - FUEL, LPG (K25)	1	
17	16065-FU460	SCREW	4	
18	16290-FU460	PLATE - HOLDER, LPG	1	
19	16349-VS002	SEAL, O-RING	1	
20	16349-VS001	SEAL, O-RING	1	
21	24346-VS000	CLIP - CONNECTOR	3	
22	16263-FU460	BRACKET - CONNECTOR	1	
23	16065-OH600	SCREW	2	
24	16638-GX11A	SENSOR ASSY - PRESSURE CNG	1	
25	24319-C9905	FUSE	1	
26	16277-FU461	CLAMP	1	
27	16197-FU46A	SOLENOID ASSY	1	
28	16098-FU460	FILTER	1	
29	16618-GX11A	SEAL, O-RING	1	
30	24341-10Y03	HOUSING - CONNECTOR, MALE	1	
31	24341-10Y01	HOUSING - CONNECTOR, MALE	1	
32	16214-A8800	SCREW	2	
33	16291-GX11A	PLATE	1	
34	16094-B8500	PACKING - SOLENOID	1	

https://truckmanualshub.com/

FUEL INJECTION SYSTEM - K21/K25 - S/N ALL

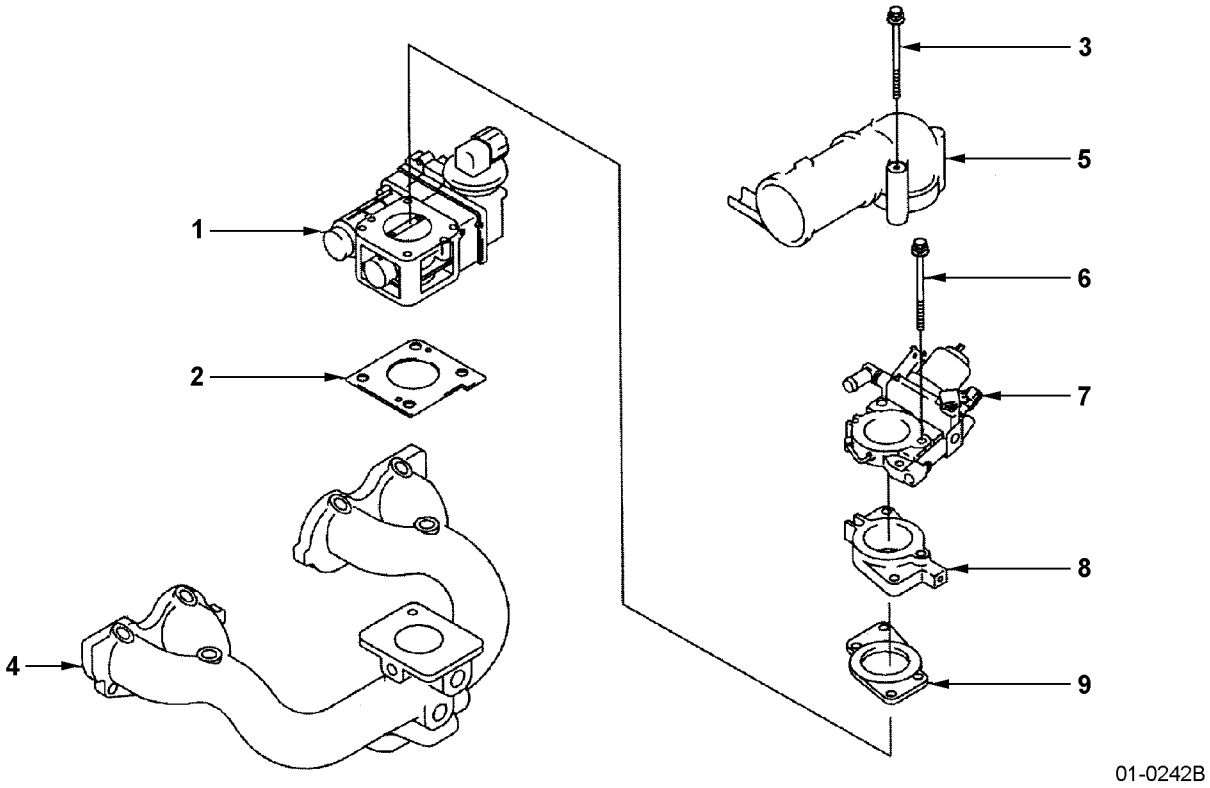

https://truckmanualshub.com/

FUEL INJECTION SYSTEM - K21/K25 - S/N ALL

Item	Part Number	Description	Qty	Serial Number
1	16119-FU460	THROTTLE CHAMBER ASSY	1	
2	16175-FU460	GASKET	1	
3	01121-00082	BOLT	2	
4	14003-FU460	INTAKE MANIFOLD	1	
5	16267-FU460	AIR HORN	1	
6	16185-FU460	BOLT	2	
7	16610-GX11A	HOLDER ASSY, INJECTOR (LPG & DUAL-FUEL)	1	
8	16270-FU460	SPACER - INJECTOR (GAS)	1	
9	16175-FU470	GASKET - INJECTOR	1	

https://truckmanualshub.com/

LUBRICATING SYSTEM - K21/K25 - S/N ALL
GAS, LP & DUAL FUEL

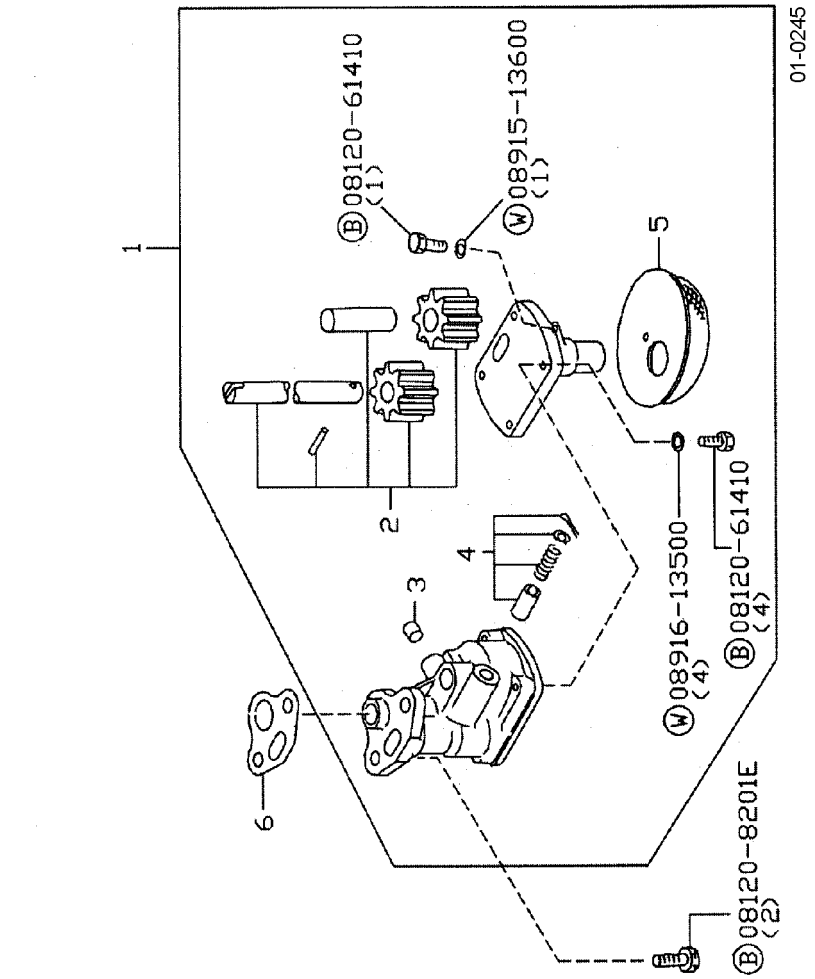

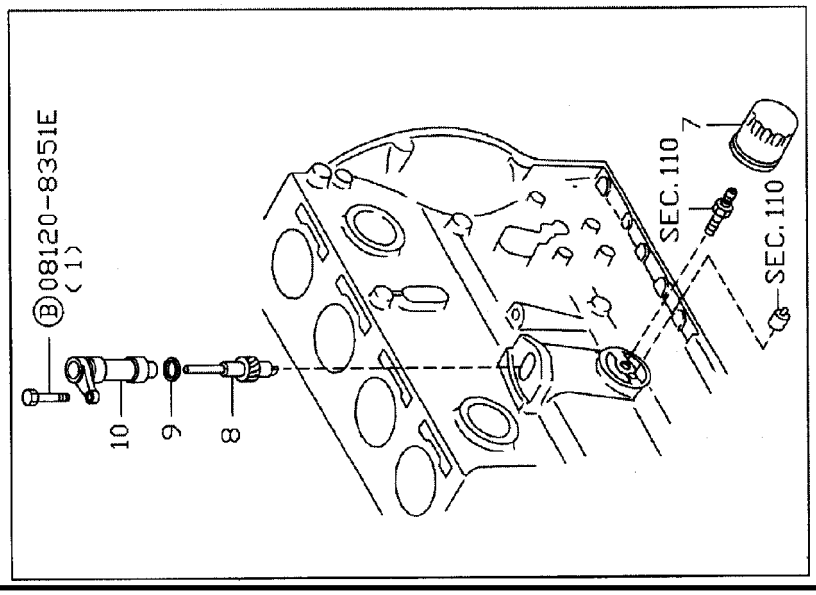

https://truckmanualshub.com/

LUBRICATING SYSTEM - K21/K25 - S/N ALL
GAS, LP & DUAL FUEL

Item	Part Number	Description	Qty	Serial Number
1	15010-66202	PUMP ASSY, OIL	1	
2	15020-78205	SHAFT ASSY, OIL PUMP	1	
3	11065-30000	PLUG, OIL FILTER	1	
4	15132-66000	VALVE ASSY, OIL REGULATOR	1	
5	15050-66201	STRAINER ASSY, OIL	1	
6	15066-78200	GASKET, OIL PUMP-TO-CYLINDER BLOCK	1	
7	15208-01B02	FILTER, OIL	1	
8	15040-FU460	SPINDLE ASSY, DRIVE, OIL	1	
9	22131-55K10	SEAL, O-RING	1	
10	22177-FU460	SUPPORT ASSY, SPINDLE	1	

https://truckmanualshub.com/

WATER PUMP, COOLING FAN & THERMOSTAT ASSEMBLY - K21/K25 - S/N ALL GAS, LP & DUAL FUEL

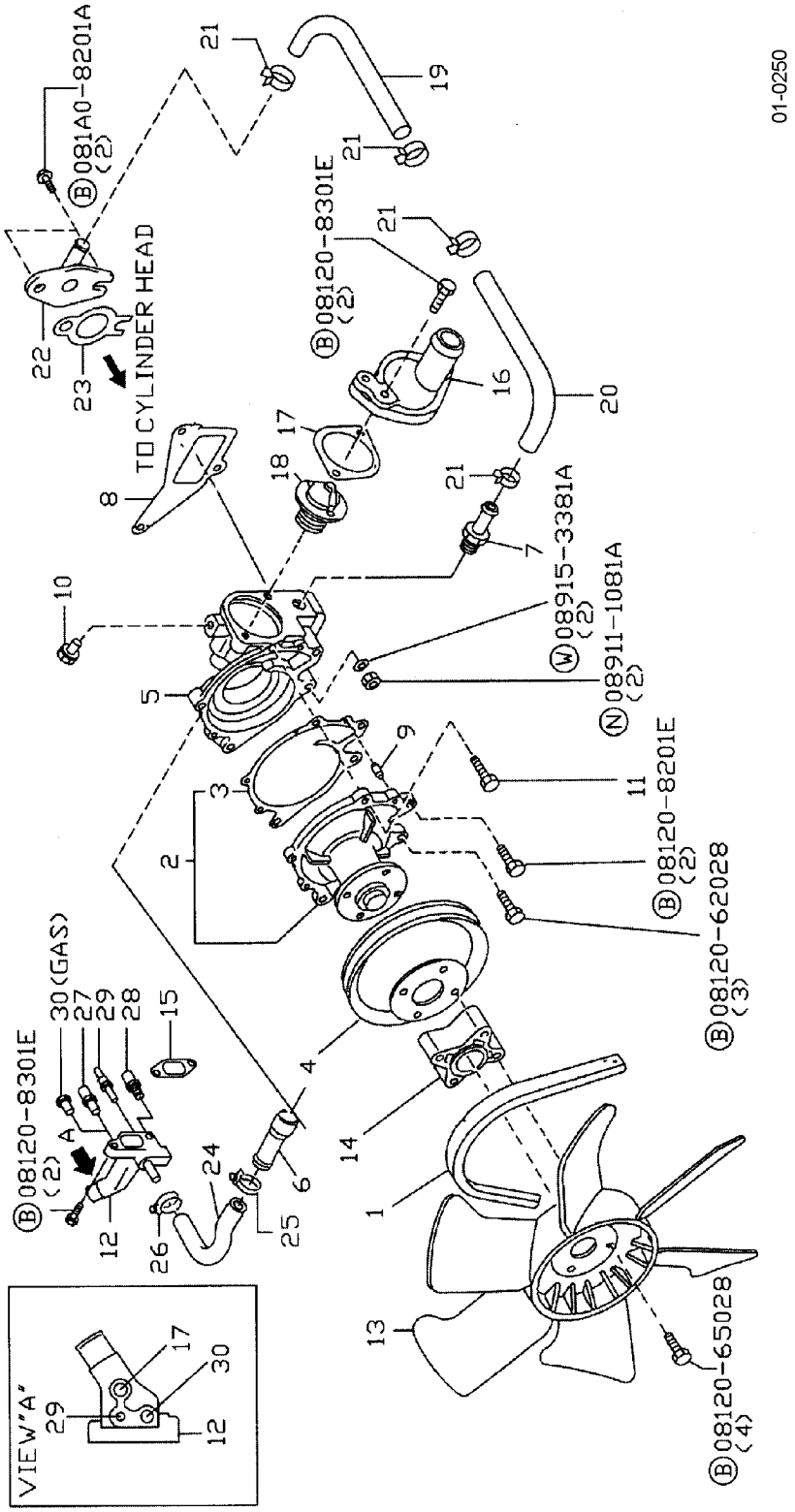

https://truckmanualshub.com/

WATER PUMP, COOLING FAN & THERMOSTAT ASSEMBLY - K21/K25 - S/N ALL GAS, LP & DUAL FUEL

Item	Part Number	Description	Qty	Serial Number
1	02117-23021	BELT, FAN (K21 G, LP, DUAL)	1	
	02117-21521	BELT, FAN (K25 G, LP, DUAL)	1	
	02117-23523	BELT, FAN (ALL UL SPEC)	1	
	02117-20021	BELT, FAN (COTTON CORE RADIATOR)	1	
2	21010-FU425	WATER PUMP ASSY	1	
3	21014-07N00	. GASKET, WATER PUMP	1	
4	21051-FU500	PULLEY, FAN & WATER PUMP	1	
	21051-GY360	PULLEY, FAN & WATER PUMP (COTTON CORE RADIATOR)		
5	11061-FU400	THERMOSTAT HOUSING	1	
6	14075-40F04	CONNECTOR ASSY, WATER BYPASS	1	
7	14049-76001	CONNECTOR ASSY, HEATER, GAS & UL-GS.	1	
	14075-FU460	CONNECTOR ASSY, HEATER, ALL OTHERS .	1	
8	11072-50K01	GASKET, THERMOSTAT HOUSING	1	
9	11046-73402	DOWEL - WATER PUMP	2	
10	14053-42L00	PLUG, WATER PUMP	1	
11	21079-K9760	BOLT, THERMOSTAT HOUSING	1	
12	11060-FU400	WATER OUTLET	1	
13	21060-FU410	COOLING FAN	1	
14	21064-GY30A	FAN SPACER	1	
15	11062-FY500	GASKET, WATER OUTLET	1	
16	11060-W7001	WATER OUTLET	1	
17	11062-07N00	GASKET	1	
18	21200-50K00	THERMOSTAT ASSY	1	
19	14055-GX74A	WATER HOSE	1	
20	14055-FF100	WATER HOSE	1	
21	16439-42L00	CLAMP, HOSE	4	
22	14053-FU400	PIPE ASSY, HEATER, FEED	1	
23	13050-FU400	GASKET, HEATER CONNECTOR	1	
24	14080-50K00	HOSE, WATER BYPASS	1	
25	01555-00261	CLAMP, HOSE	1	
26	16439-26E00	CLAMP, HOSE	1	
27	01691-00052	CONNECTOR, WATER HOSE	1	
28	22630-44B20	TEMPERATURE SENSOR ASSY, GUAGE	1	
29	25080-89903	GAUGE, TEMPERATURE	1	
30	11024-25N00	PLUG - BLIND	1	

https://truckmanualshub.com/

IGNITION SYSTEM - K21/K25 - S/N ALL
GAS, LP & DUAL FUEL

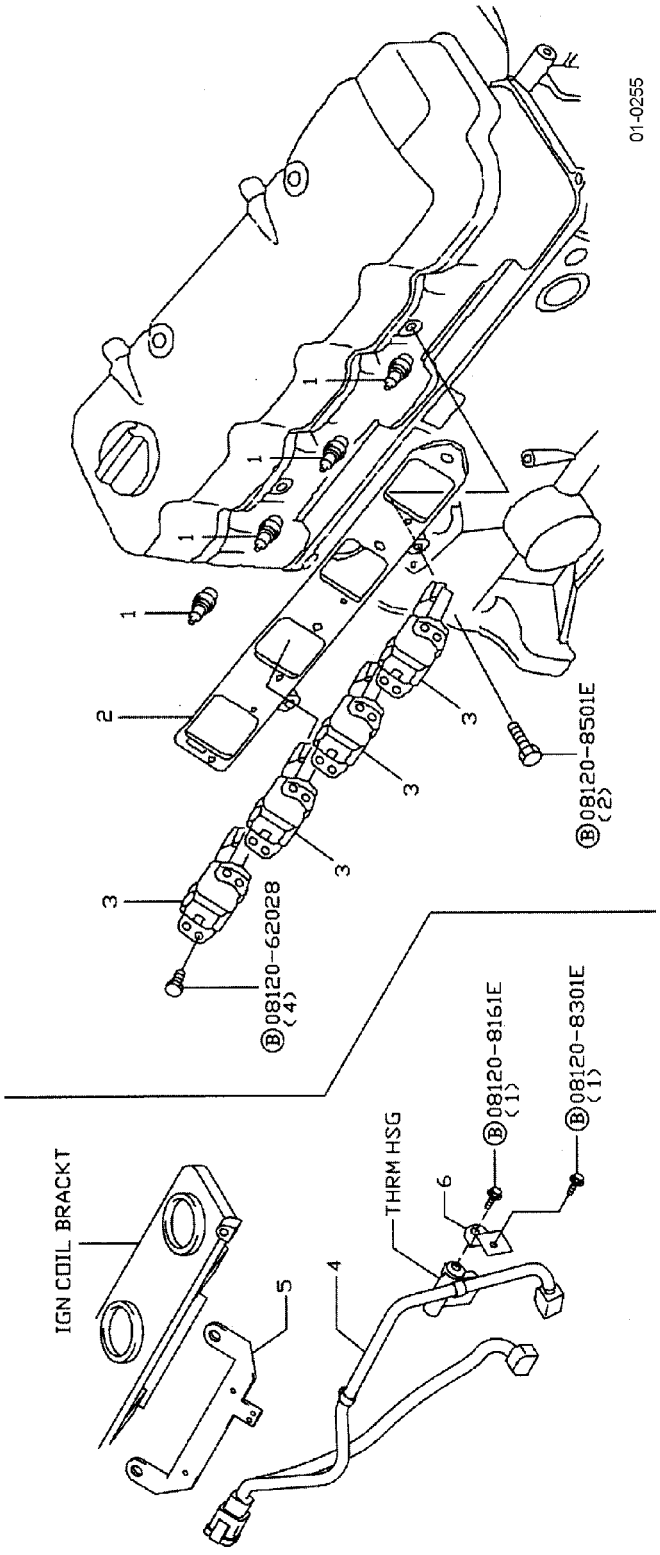

https://truckmanualshub.com/

IGNITION SYSTEM - K21/K25 - S/N ALL
GAS, LP & DUAL FUEL

Item	Part Number	Description	Qty	Serial Number
1	22401-FU412	SPARK PLUG	4	
2	22435-FU400	BRACKET, IGNITION COIL	1	
3	22448-AR215	COIL ASSY, IGNITION	4	
4	24075-GY360	SUB-HARNESS ASSY	1	
5	24136-GU21A	BRACKET, SUB-HARNESS	1	
6	24136-GY360	BRACKET, SUB-HARNESS	1	

https://truckmanualshub.com/

BRACKETRY - IGNITION / COOLING - K21/K25 - S/N ALL GAS, LP & DUAL FUEL

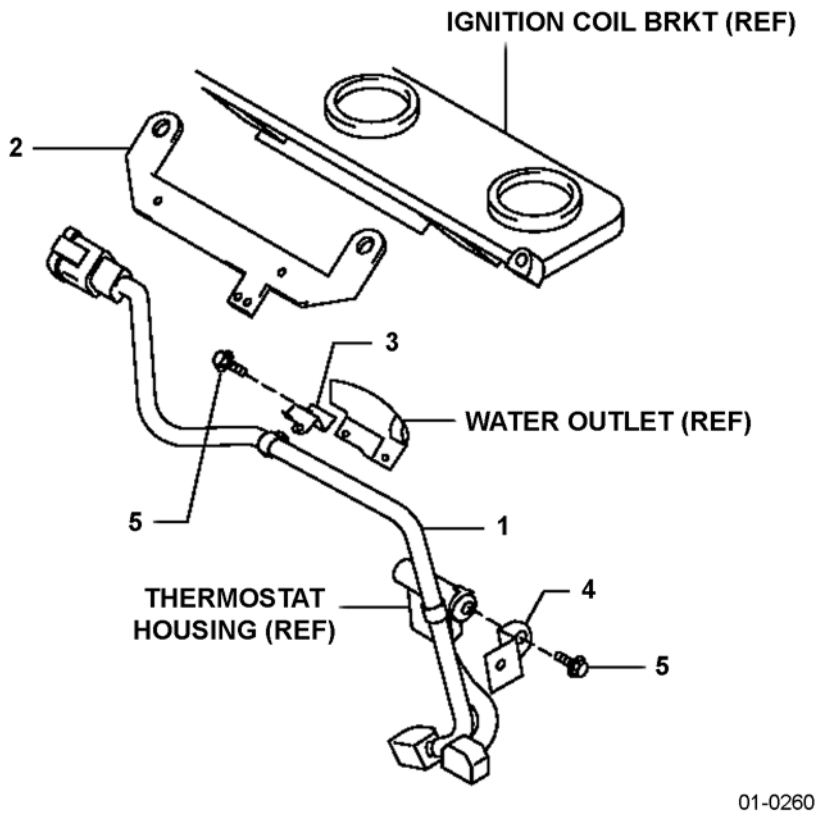

https://truckmanualshub.com/

BRACKETRY - IGNITION / COOLING - K21/K25 - S/N ALL GAS, LP & DUAL FUEL

Item	Part Number	Description	Qty	Serial Number
1	24075-GY360	SUB-HARNESS, ENGINE REVOLUTION	1	
2	24136-FU460	BRACKET, SWITCH, SUB-HARNESS, ENGINE REVOLUTION	1	
3	24136-FU461	BRACKET, SUB-HARNESS.	1	
4	24136-FU461	BRACKET, EGI HARNESS	1	
5	08120-8161E	BOLT	2	

https://truckmanualshub.com/

VACUUM PIPING - K21/K25 - S/N ALL
GAS, LP & DUAL FUEL

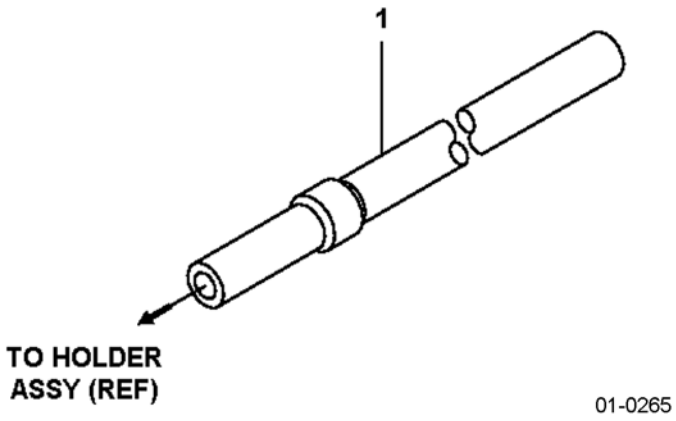

https://truckmanualshub.com/

VACUUM PIPING - K21/K25 - S/N ALL
GAS, LP & DUAL FUEL

Item	Part Number	Description	Qty	Serial Number
1	22318-FU460	HOSE, VACUUM CONTROL (62 MM)	1	

https://truckmanualshub.com/

ALTERNATOR - K21/K25 - S/N ALL
GAS, LP & DUAL FUEL

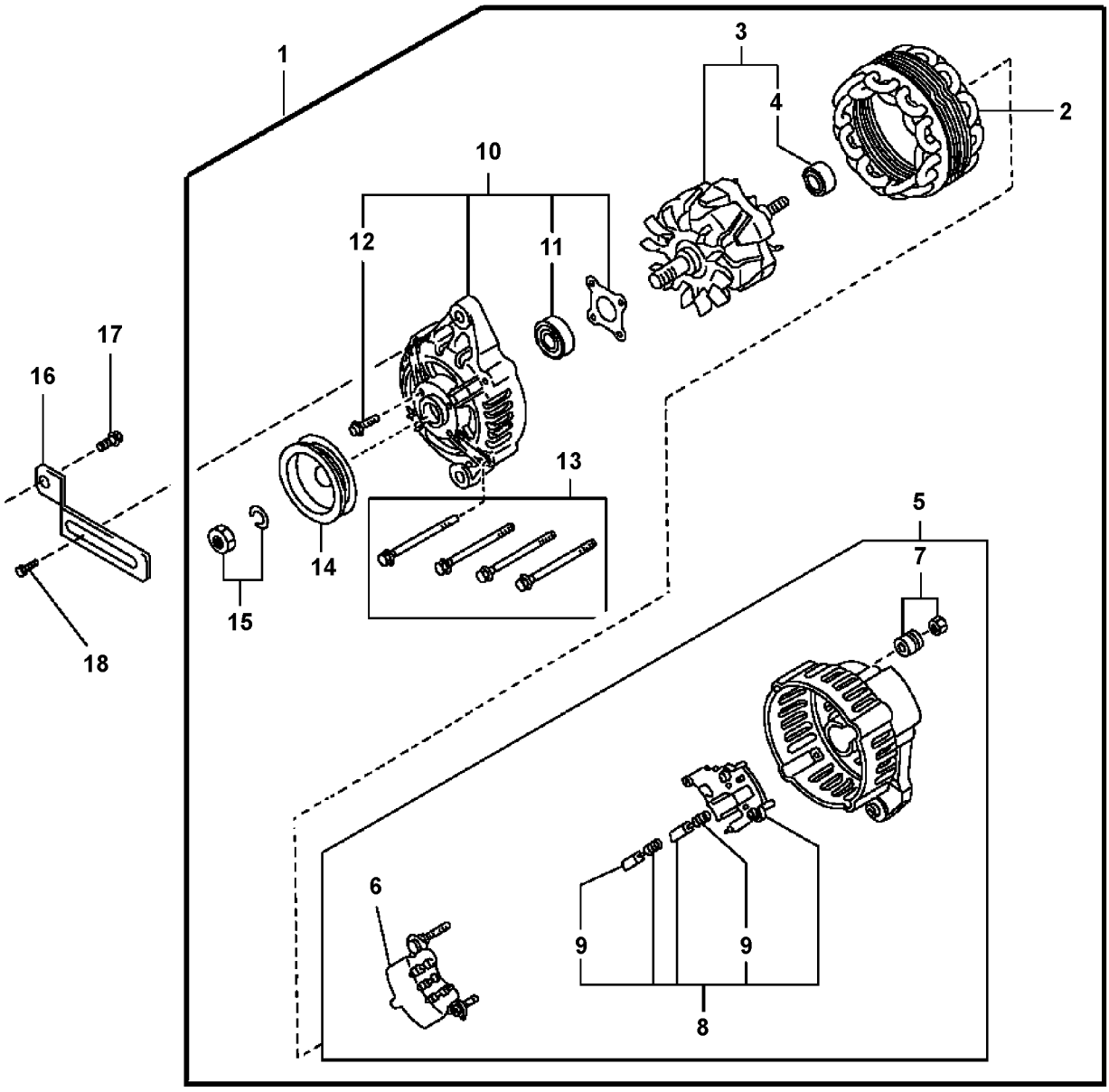

01-0270

https://truckmanualshub.com/

ALTERNATOR - K21/K25 - S/N ALL GAS, LP & DUAL FUEL

Item	Part Number	Description	Qty	Serial Number
1	23100-FU410	ALTERNATOR (K21/K25 GAS/LP & DUAL-FUEL) (50 AMP)	1	
	23100-GY360	ALTERNATOR (K21/K25 UL-GS, UL-LS) (35 AMP)	1	
2	23102-50K15	. STATOR ASSY (K21/K25 GAS/LP & DUAL-FUEL)	1	
	23102-GY360	. STATOR ASSY (K21/K25 UL-GS, UL-LS)	1	
3	23108-50K15	. ROTOR (K21/K25 GAS/LP & DUAL-FUEL)	1	
	23108-GY360	. ROTOR (K21/K25 UL-GS, UL-LS)	1	
4	23120-30R10	. . BEARING, BALL	1	
5	23127-FF110	. COVER ASSY, REAR (K21/K25 GAS/LP & DUAL-FUEL)	1	
	23127-GY360	. COVER ASSY, REAR (K21/K25 UL-GS, UL-LS)	1	
6	23124-FF110	. . RECTIFIER ASSY (K21/K25 GAS/LP & DUAL-FUEL)	1	
	23124-GY360	. . RECTIFIER ASSY (K21/K25 UL-GS, UL-LS)		
7	23156-08000	. . NUT, SET	1	
8	23215-3S416	. . REGULATOR, IC (K21/K25 GAS/LP & DUAL-FUEL)	1	
	23215-GY360	. . REGULATOR, IC (K21/K25 UL-GS, UL-LS)	1	
9	23142-0B000	. . . BRUSH, F	2	
10	23118-47N10	. COVER ASSY, FRONT (K21/K25 GAS/LP & DUAL-FUEL)	1	
	23118-GY360	.COVER ASSY, FRONT (K21/K25 UL-GS, UL-LS)	1	
11	23120-22J20	. . BEARING, BALL	1	
12	23115-47N10	. . SCREW, SET (K21/K25 GAS/LP & DUAL-FUEL)	1	
	23115-20P10	. SCREW, SET (K21/K25 UL-GS, UL-LS)	1	
13	23131-20P10	. BOLT, THROUGH	1	
14	23150-FU410	. PULLEY ASSY (K21/K25 GAS/LP & DUAL-FUEL)	1	
	23150-GY360	. PULLEY ASSY (K21/K25 UL-GS, UL-LS)	1	
15	23153-70T12	. NUT ASSY, PULLEY	1	
16	11715-FU400	. HOLDER	1	
17	08124-0201F	. BOLT	1	
18	08120-8201F	. BOLT	1	
NS	02117-21521	FAN BELT (K21)	1	
NS	02117-23523	FAN BELT (K25)	1	
NS	11715-FU400	BAR, ADJUSTING	1	

https://truckmanualshub.com/

STARTER MOTOR - K21/K25 ENGINE - S/N ALL GAS, LP & DUAL FUEL

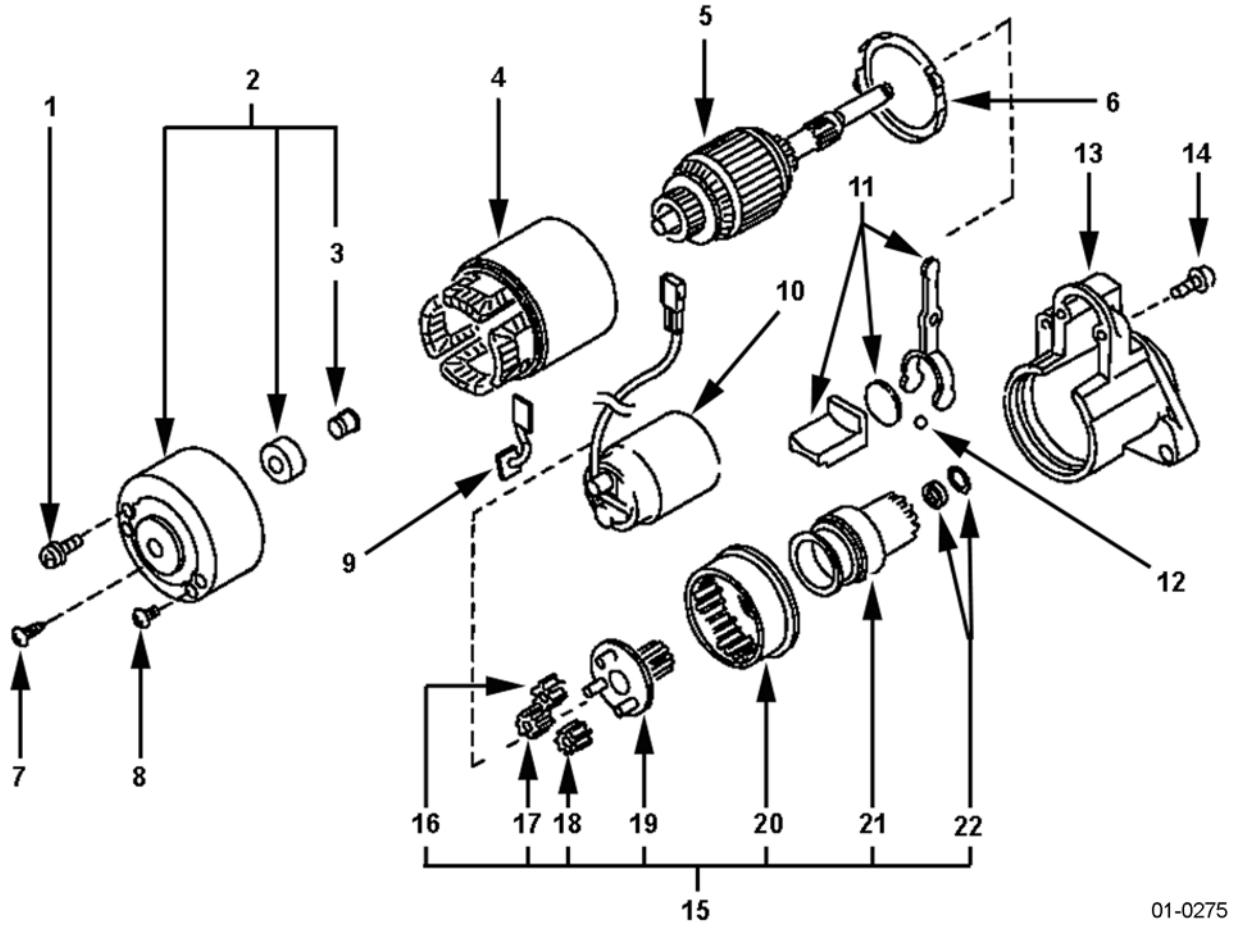

https://truckmanualshub.com/

STARTER MOTOR - K21/K25 ENGINE - S/N ALL GAS, LP & DUAL FUEL

Item	Part Number	Description	Qty	Serial Number
	23300-FU410	STARTER MOTOR	1	
1	23340-0M210	. BOLT, THROUGH (STARTER-TO-ENGINE)	1	
2	23337-0W011	. COVER ASSY, REAR	1	
3	23338-01N10	. COVER, METAL, REAR	1	
4	23302-6J010	. YOKE	1	
5	23310-0M210	. ARMATURE ASSY	1	
6	23385-50Y12	. PACKING	1	
7	23480-M0110	. SCREW SET, 5 X 8.5 (2 EACH)	1	
8	23480-M0110	. SCREW SET, 6 X 23 (2 EACH)	1	
9	23381-FU410	. BRUSH SET	1	
10	23343-FU410	. SWITCH ASSY, MAGNETIC	1	
11	23322-50Y12	. LEVER SET, SHIFT	1	
12	23325-42L70	. BEARING	1	
13	23318-FU410	. CASE ASSY, GEAR	1	
14	23480-M0110	. SCREW SET, 6 X 23 (2 EACH)	1	
15	23312-0W010	. PINION ASSY	1	
16	23361-42L70	. GEAR	1	
17	23361-42L70	. GEAR	1	
18	23361-42L70	. GEAR	1	
19	23312-1S710	. PINION ASSY	1	
20	23360-0M210	. GEAR & SHAFT SET	1	
21	23354-W9810	. CLUTCH ASSY	1	
22	23465-W9810	. STOPPER SET, PINION	1	
NS	23110-GY360	. SPACER	AR	
NS	08911-1401G	NUT (WIRE AT MAGNETIC SWITCH)	1	
NS	08124-0251F	BOLT, THROUGH (ENGINE-TO-STARTER)	1	

https://truckmanualshub.com/

GASKET KIT - K21/K25 - S/N ALL
GAS, LP & DUAL FUEL

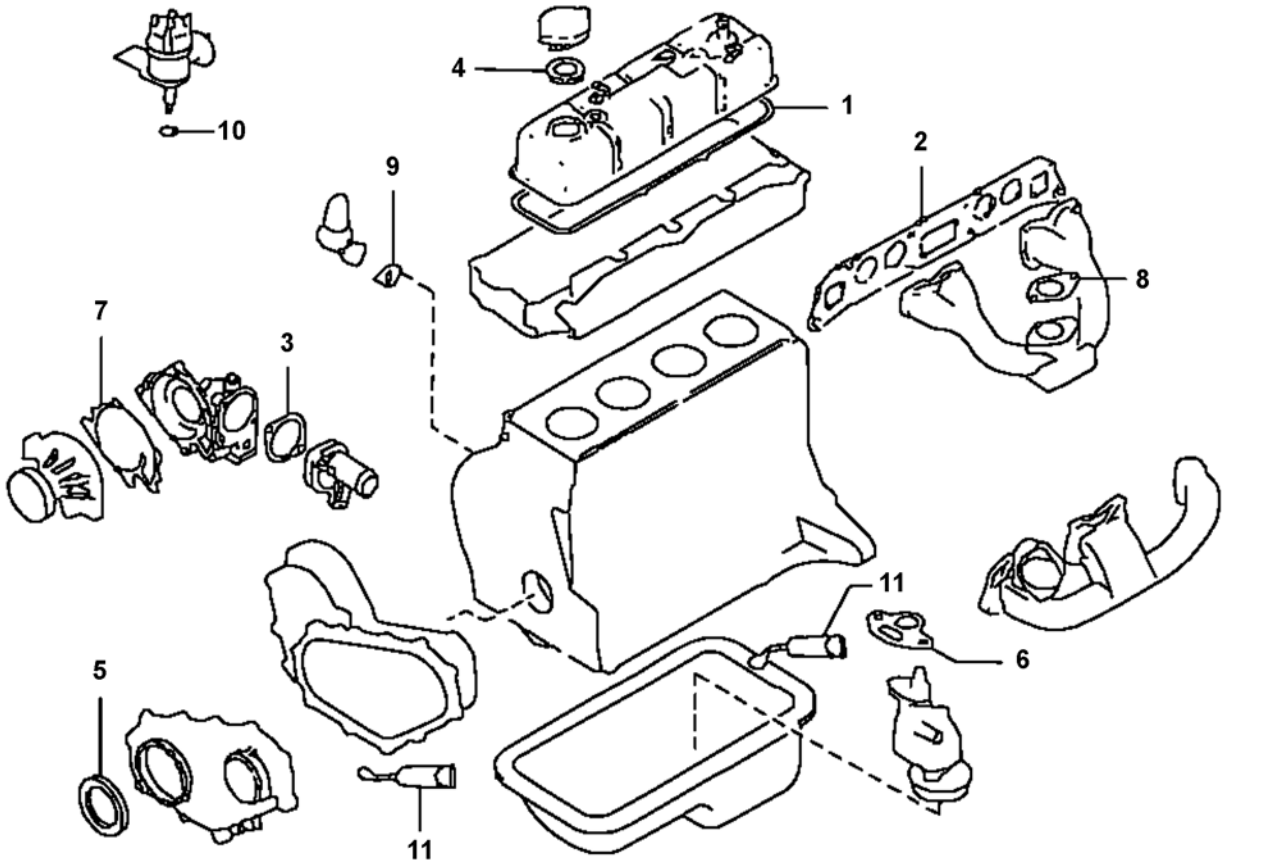

https://truckmanualshub.com/

GASKET KIT - K21/K25 - S/N ALL
GAS, LP & DUAL FUEL

Item	Part Number	Description	Qty	Serial Number
	10101-FY52K	KIT, GASKET, K21/K25, ENGINE REPAIR (INCLUDES ITEMS 1 THROUGH 11; HEAD GASKET SOLD SEPARATELY, SEE ASSY 01-0102)	K	
	11042-FY52K	KIT, GASKET, K21/K25, ENGINE VALVE REGRIND (INCLUDES ONLY ITEMS 1, 2 AND 3; HEAD GASKET SOLD SEPARATELY, SEE ASSY 01-0102))	K	
1	*	. GASKET, ROCKER COVER	1	
2	*	. GASKET, MANIFOLD	1	
3	*	. GASKET, WATER OUTLET	1	
4	*	. SEAL, OIL, CRANKSHAFT, REAR	1	
5	*	. SEAL, OIL	1	
6	*	. GASKET, OIL PUMP	1	
7	*	. GASKET, WATER PUMP	1	
8	*	. INSULATOR	1	
9	*	. SPACER, FUEL PUMP	1	
10	*	. SEAL, O-RING	1	
11	*	. GASKET, LIQUID	AR	
NS	11044-FU400	GASKET HEAD, GAS	1	
NS	11044-FU460	GASKET HEAD, LP & DUAL FUEL	1	

https://truckmanualshub.com/

FUEL PUMP BLOCK-OFF - K21/K25 - S/N ALL GAS, LP & DUAL FUEL

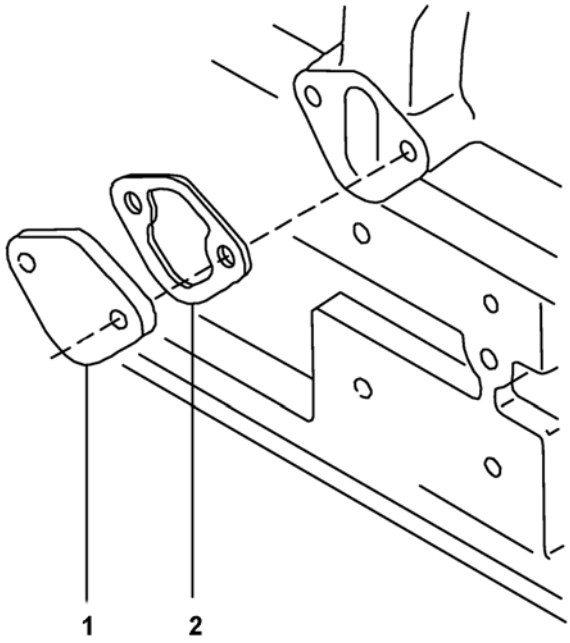

01-0285

https://truckmanualshub.com/

FUEL PUMP BLOCK-OFF - K21/K25 - S/N ALL
GAS, LP & DUAL FUEL

Item	Part Number	Description	Qty	Serial Number
1	16420-E0100	PLATE, BLOCK-OFF, FUEL PUMP	1	
2	17099-85G00	GASKET	1	
NS	08110-8201B	BOLT W/WASHER	2	

https://truckmanualshub.com/

VAPORIZER - K21/K25 - S/N ALL
LP & DUAL FUEL

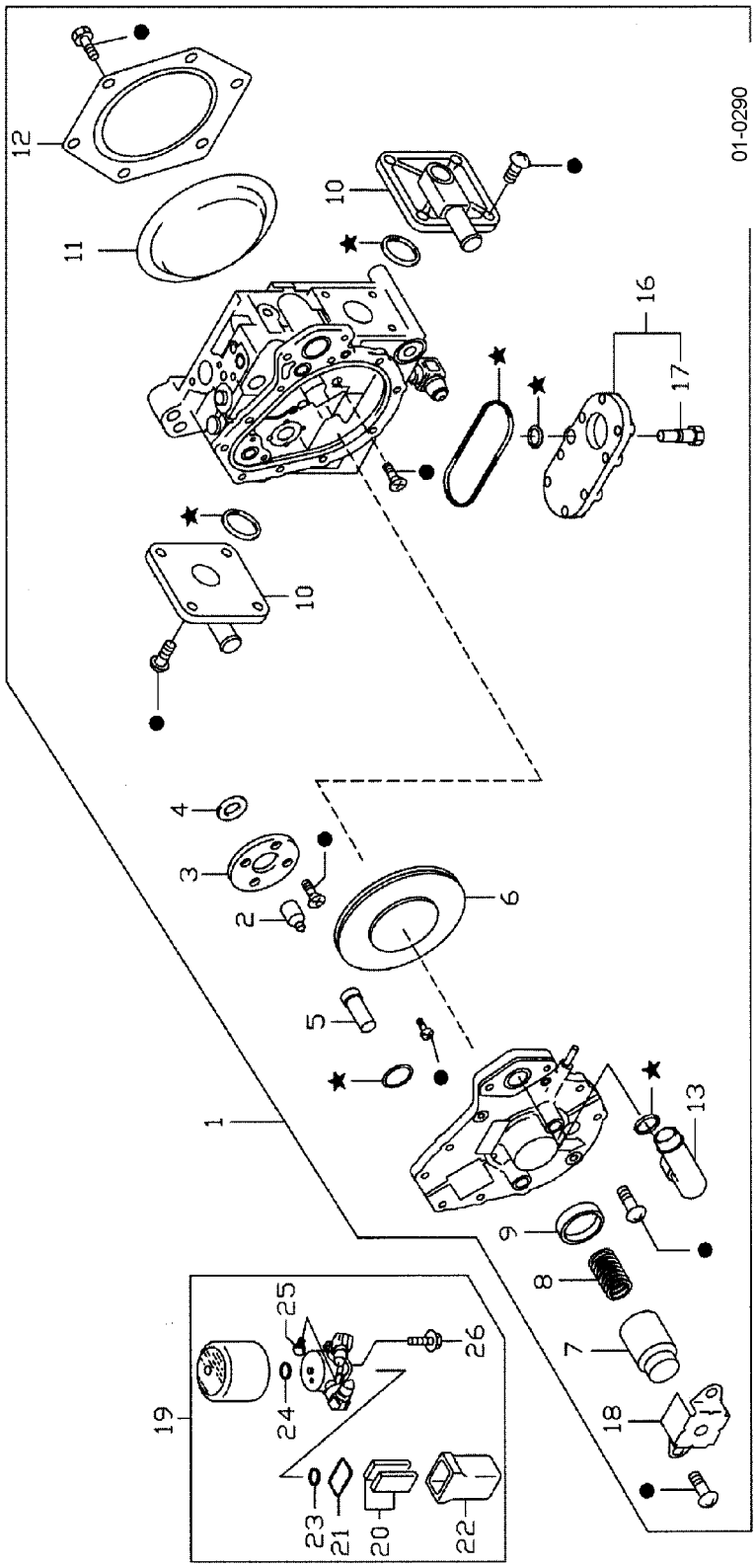

https://truckmanualshub.com/

VAPORIZER - K21/K25 - S/N ALL
LP & DUAL FUEL

Item	Part Number	Description	Qty	Serial Number
1	16310-GU20A	VAPORIZER ASSY	1	
2	16388-FU460	. ROD, BALANCE	1	
3	16237-FU460	. PLATE, BALANCE	1	
4	17053-FU460	. DIAPHRAGM ASSY	1	
5	17962-FU460	. VALVE COMPLETE - 1ST	1	
6	17960-VR500	. DIAPHRAGM ASSY	1	
7	16379-FU460	. SCREW, ADJUSTING	1	
8	17052-FU460	. SPRING - DIAPHRAGM	1	
9	16214-16811	. NUT	1	
10	16389-FU460	. COVER - THERMO	2	
11	17054-FU460	. DIAPHRAGM	1	
12	16375-FU460	. COVER - REGULATOR	1	
13	16356-FU460	. PIPE - FUEL	1	
14	16328-GY010	. SPACER - ADAPTOR	1	
15	16065-GY010	. SCREW	1	
16	17959-GU20A	. COVER ASSY - VAPORIZER	1	
17	17958-16811	. PLUG	1	
18	16476-GY010	. PLATE, LOCK	1	
19	17904-GU20A	SOLENOID VALVE ASSY - LPG	1	
20	16919-W1602	. FILTER ASSY - SOLENOIDVALVE	1	
21	17937-Y4400	. SEAL, O-RING	1	
22	16125-Y4400	. CHAMBER - FILTER	1	
23	16349-18V00	. SEAL, O-RING	1	
24	17937-Y4410	. SEAL, O-RING	1	
25	17958-16811	. PLUG	1	
26	16163-Y4403	. BOLT	1	

IMPORTANT NOTE! REPLACE THE VAPORIZER AS ASSEMBLY ONLY DURING WARRANTY PERIOD. DO NOT DISASSEMBLE. THE WARRANTY PERIOD IS 60 MONTHS OR 3,500 HOURS OF SERVICE (WHICHEVER OCCURS FIRST).

https://truckmanualshub.com/

CAUTION PLATE & LABEL - K21/K25 (LP & DUAL-FUEL)

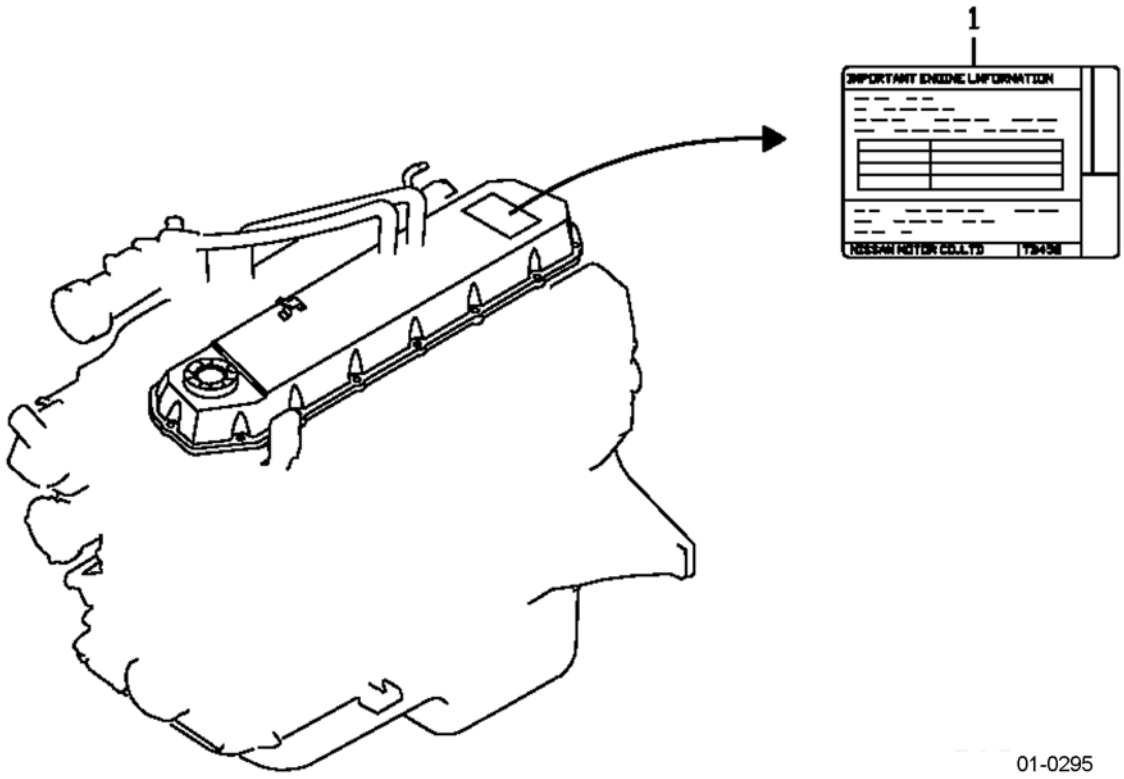

https://truckmanualshub.com/

CAUTION PLATE & LABEL - K21/K25 (LP & DUAL-FUEL)

Item	Part Number	Description	Qty	Serial Number
1	(CONTACT KFI)	LABEL, CERTIFICATION.	1	

https://truckmanualshub.com/

ENGINE - 4D94LE DIESEL (EPA) - S/N 200001A~

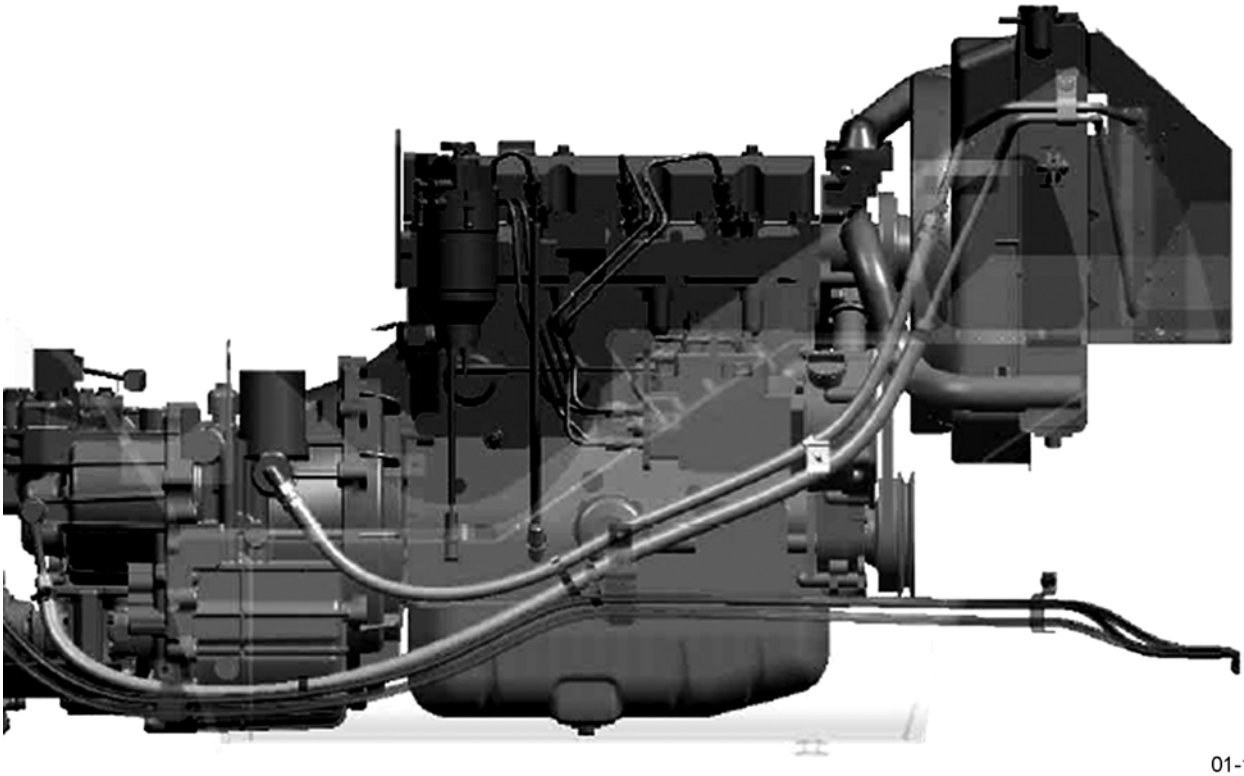

01-1001

https://truckmanualshub.com/

ENGINE - 4D94LE DIESEL (EPA) - S/N 200001A~

Item	Part Number	Description	Qty	
	37B-1DE-5351	ENGINE - 4D94LE (EPA) (STD)	1	
	37B-1DE-5361	ENGINE - 4D94LE (EPA) (UL-DS)	1	

https://truckmanualshub.com/

ENGINE MOUNTING PARTS - 4D94LE - S/N 200001A~

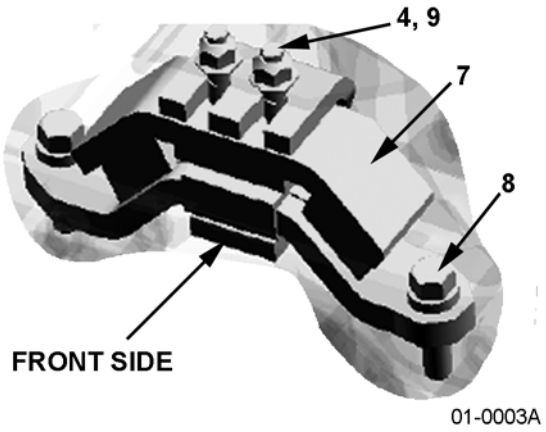

01-0003A

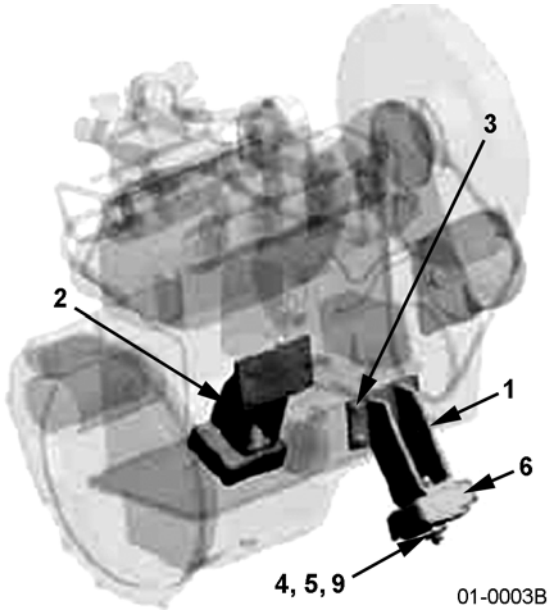

01-0003B

https://truckmanualshub.com/

ENGINE MOUNTING PARTS - 4D94LE - S/N 200001A~

Item	Part Number	Description	Qty	
1	3EB-01-52110	BRACKET, LH	1	
2	3EB-01-52120	BRACKET, RH	1	
3	01024-81025	BOLT	8	
4	34A-01-35120	U-NUT	6	
5	3EB-01-51190	WASHER	2	
6	3EB-01-51130	MOUNT	2	
7	3EB-02-52130	MOUNT	1	
8	3EA-71-12790	BOLT	2	
9	01643-31232	WASHER	6	

https://truckmanualshub.com/

AIR CLEANER ASSY - 4D94LE DIESEL (EPA) - S/N 200001A~

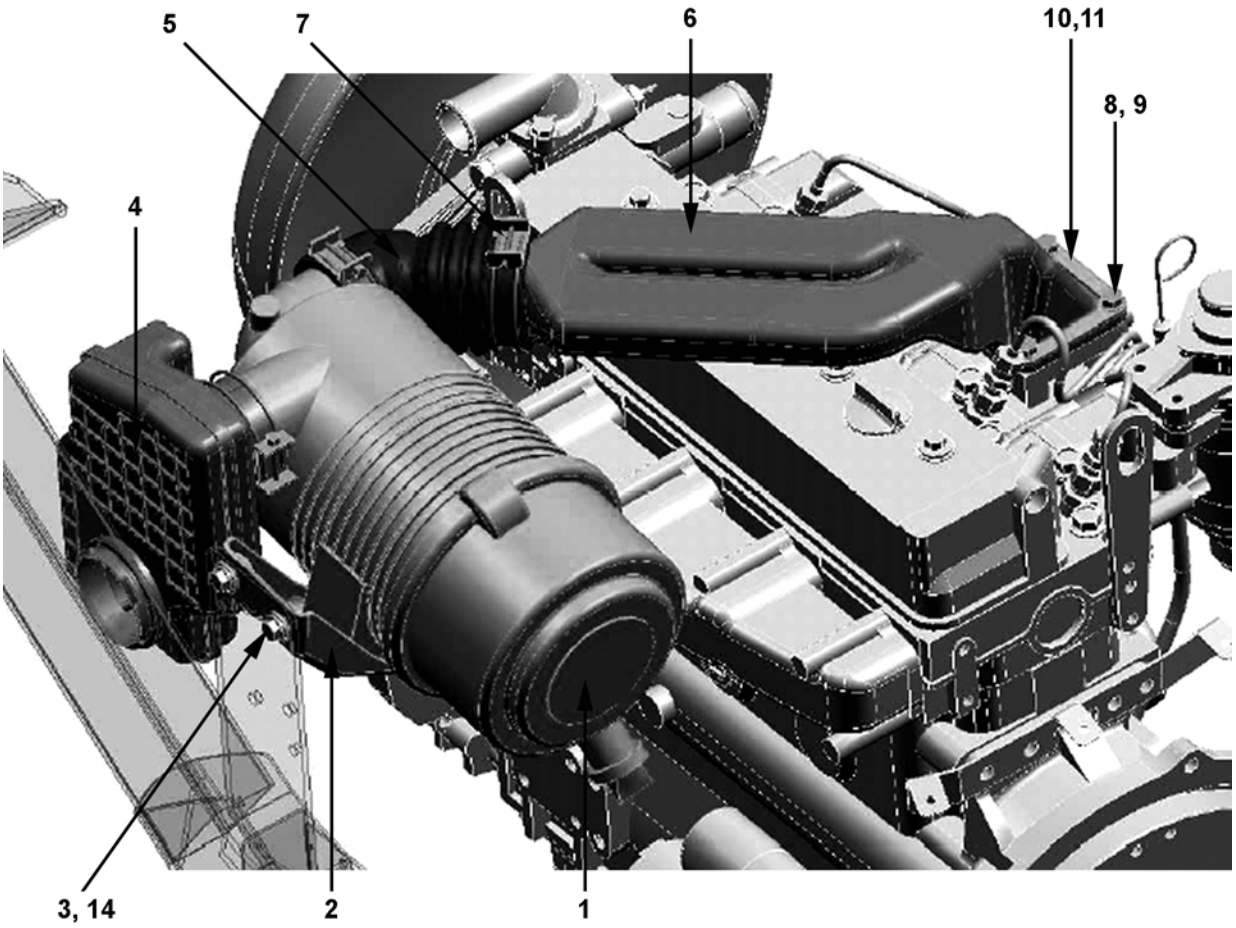

01-1010

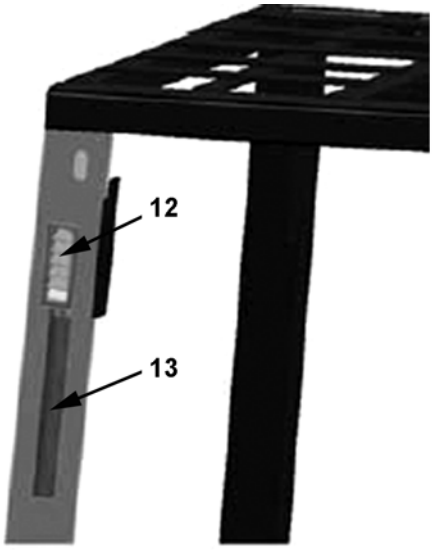

01-1010A

https://truckmanualshub.com/

AIR CLEANER ASSY - 4D94LE DIESEL (EPA) - S/N 200001A~

Item	Part Number	Description	Qty	
1	3EB-02-A7910	AIR CLEANER ASSY - 4D94LE (EPA)	1	
2	3EB-02-41730	BRACKET	1	
3	01024-80816	BOLT	4	
4	3EB-02-A7921	SILENCER	1	
5	3EB-02-A7950	HOSE	1	
6	3EB-02-A7931	CONNECTOR	1	
7	07280-07429	CLAMP	3	
8	01010-80825	BOLT	4	
9	01602-20825	WASHER, LOCK	4	
10	3EB-02-34630	PLATE	1	
11	07000-72075	O-RING	1	
12	3EB-01-D6110	COVER	1	
13	3EB-01-51291	HOSE	1	
14	34A-42-41130	WASHER	2	
N/S	3EB-01-A5392	AIR FILTER ELEMENT (DIESEL ONLY)	1	

https://truckmanualshub.com/

ENGINE - 4D94LE DIESEL (EPA) CYLINDER BLOCK - S/N 200001A~

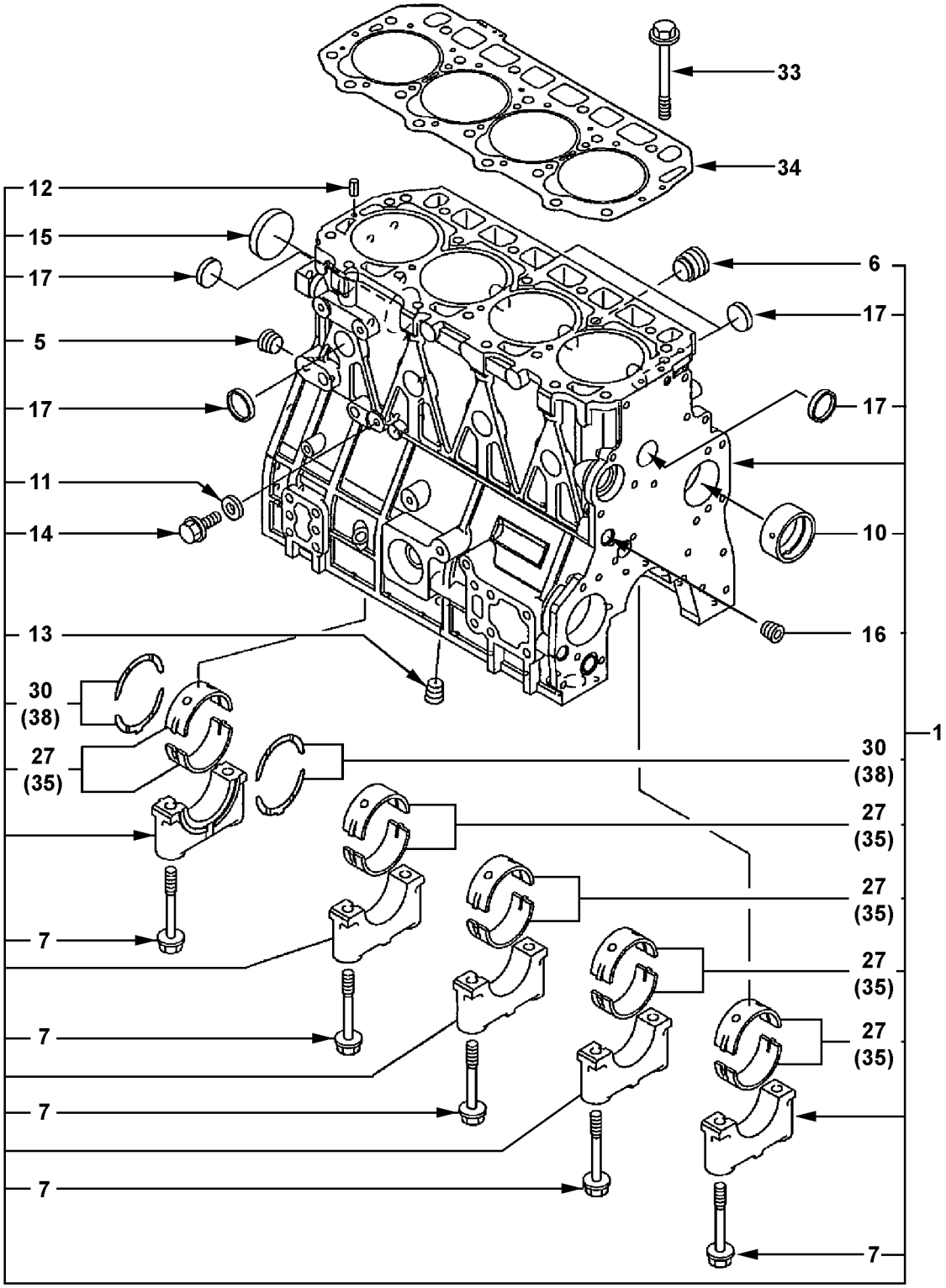

https://truckmanualshub.com/

ENGINE - 4D94LE DIESEL (EPA) CYLINDER BLOCK - S/N 200001A~

Item	Part Number	Description	Qty	
1	YM729901-01570	BLOCK ASSY, CYLINDER	1	
5	YM23876-030000	.PLUG PT 3/8, SCREW	1	
6	YM171051-01921	.PLUG	1	
7	YM129900-02020	.BOLT, METAL CAP	10	
10	YM129900-02410	.BUSHING, CAMSHAFT	1	
11	YM22190-080002	.SEAL WASHER, 8S	1	
12	YM22351-060012	.SPRING PIN, 6 X 12	2	
13	YM23876-030000	.PLUG, PT 3/8, SCREW	1	
14	YM26106-080122	.BOLT M 8X 12 PLATED	1	
15	YM129900-01250	.PLUG 55	1	
16	YM23876-030000	.PLUG PT 3/8, SCREW	1	
17	YM27241-300000	.PLUG 30	8	
27	YM729900-02800	.MAIN BEARING SET	5	
30	YM129900-02930	.BEARING ASSY, THRUST	2	
33	YM129900-01200	BOLT, HEAD	18	
34	YM129901-01350	GASKET, HEAD	1	
35	YM129900-02340	MAIN BEARING 0.25 US	5	
38	YM129900-02940	BEARING, THRUST 0.25 OS	2	

https://truckmanualshub.com/

ENGINE - 4D94LE DIESEL (EPA) GEAR HOUSING - S/N 200001A~

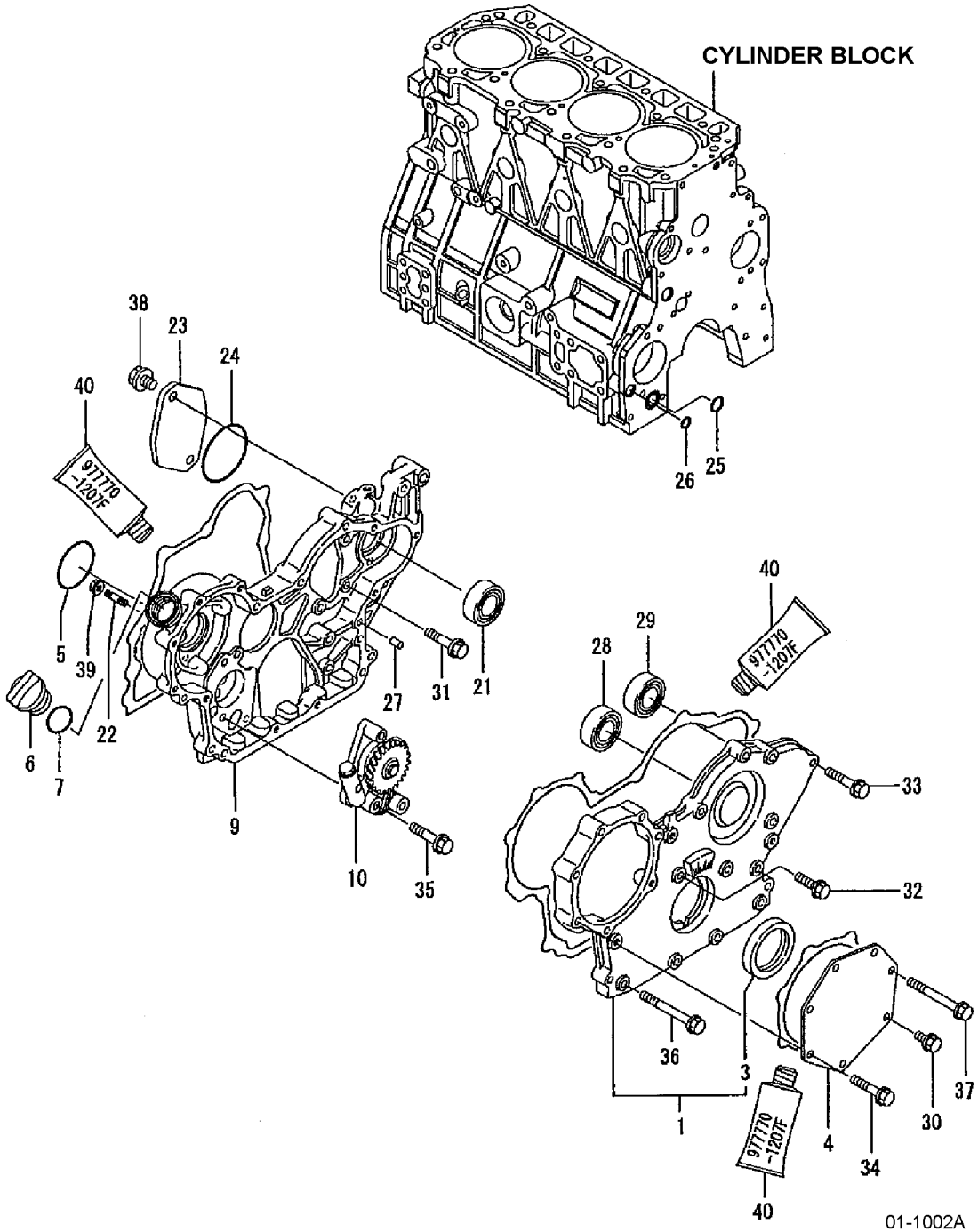

https://truckmanualshub.com/

ENGINE - 4D94LE DIESEL (EPA) GEAR HOUSING - S/N 200001A~

Item	Part Number	Description	Qty	
1	YM729900-01500	COVER ASSY, GEAR CASE	1	
3	YM129900-01780	SEAL, OIL	1	
4	YM129951-01740	COVER, FUEL INJECTION PUMP	1	
5	YM24341-000500	O-RING 1A S-50.0	1	
6	YM124160-01751	COVER, FILLER	1	
7	YM24311-000320	O-RING 1A P-32.0	1	
9	YM129901-01500	HOUSING, GEAR	1	
10	YM129900-32001	PUMP ASSY, LUBE OIL	1	
21	YM129900-26250	BALL BEARING	1	
22	YM26226-080302	STUD M 8X 30 PLATED	3	
23	YM129930-01870	COVER, BRAIND	1	
24	YM24321-000850	O-RING 1A GS-85.0	1	
25	YM129900-32030	O-RING P20	1	
26	YM129900-32040	O-RING P14	1	
27	YM129100-01580	PARALLEL PIN 8X16	4	
28	YM129900-14140	BEARING #6205	1	
29	YM129900-26250	BALL BEARING	1	
30	YM26106-080162	BOLT M 8X 16 PLATED	1	
31	YM26106-080202	BOLT M 8X 20 PLATED	3	
32	YM26106-080302	BOLT M 8X 30 PLATED	1	
33	YM26106-080402	BOLT M 8X 40 PLATED	5	
34	YM26106-080402	BOLT M 8X 40 PLATED	5	
35	YM26106-080452	BOLT M 8X 45 PLATED	3	
36	YM129001-91810	BOLT M 8X 70 PLATED	6	
37	YM129001-91810	BOLT M 8X 70 PLATED	1	
38	YM26106-100122	BOLT M10X 12 PLATED	2	
39	YM26306-080002	NUT	3	
40	YM977770-1207F	GASKET, LIQUID	1	

https://truckmanualshub.com/

ENGINE - 4D94LE DIESEL (EPA) FLYWHEEL HSG & OIL SUMP - S/N 200001A~

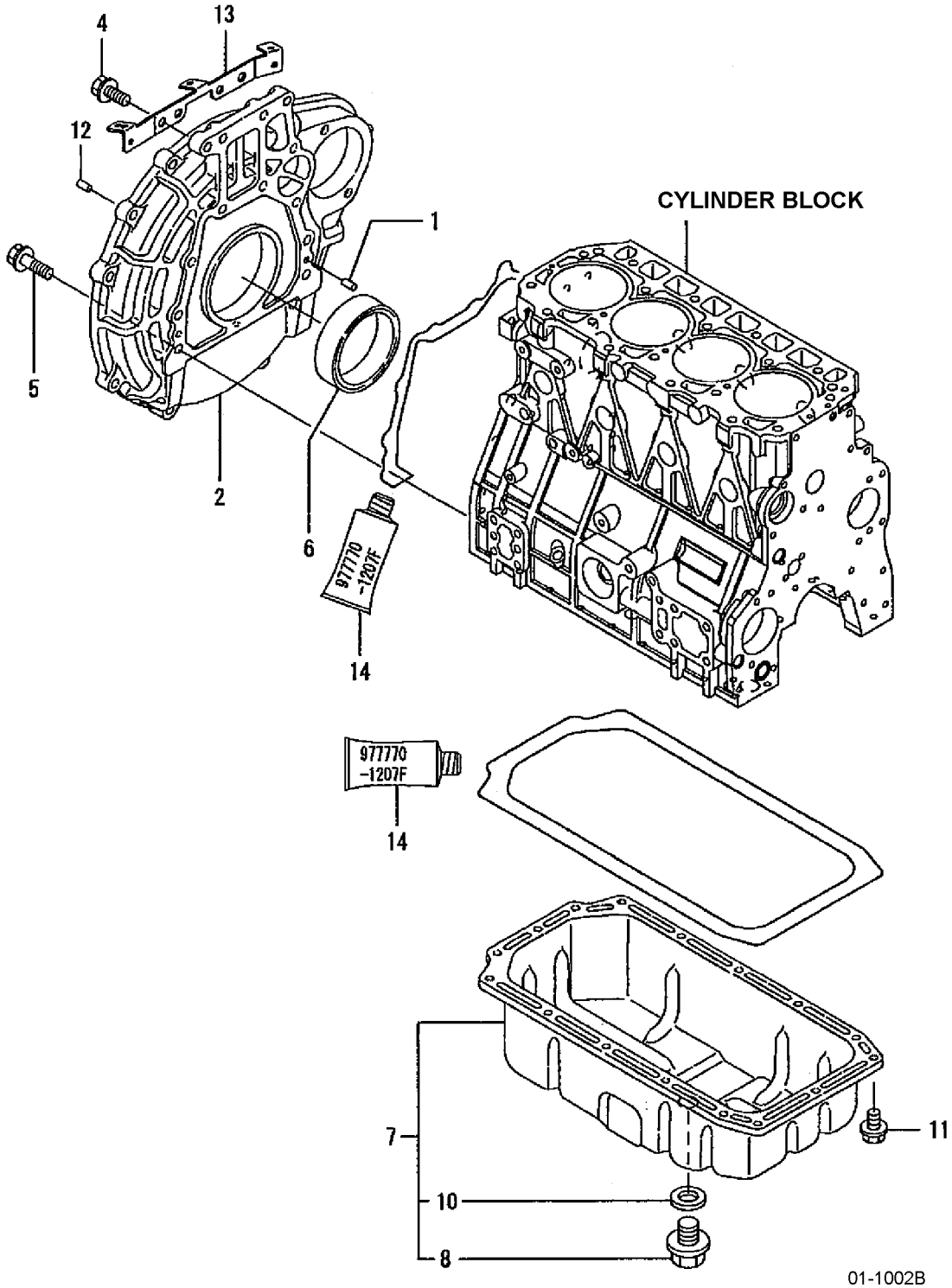

https://truckmanualshub.com/

ENGINE - 4D94LE DIESEL (EPA) FLYWHEEL HSG & OIL SUMP - S/N 200001A~

Item	Part Number	Description	Qty	
1	YM129100-01580	PARALLEL PIN 8 X 16	2	
2	YM129930-01620	HOUSING, FLYWHEEL	1	
4	YM26206-100252	BOLT M10 X 25	4	
5	YM26206-100352	BOLT M10 X 35 PLATED	9	
6	YM124411-01780	SEAL HTC95, 115, 12	1	
7	YM129931-01710	SUMP ASSY, LUBE OIL	1	
8	YM105425-01690	PLUG M16	1	
10	YM22190-160002	SEAL WASHER 16S	1	
11	YM26106-080122	BOLT M 8X 12 PLATED	16	
12	YM22312-120200	PARALLEL PIN 12 X 20	2	
13	YM129930-91120	BRACKET, BATTERY CORD	1	
14	YM977770-1207F	GASKET, LIQUID	1	

https://truckmanualshub.com/

ENGINE - 4D94LE DIESEL (EPA) CYLINDER HEAD & BONNET - S/N 200001A~

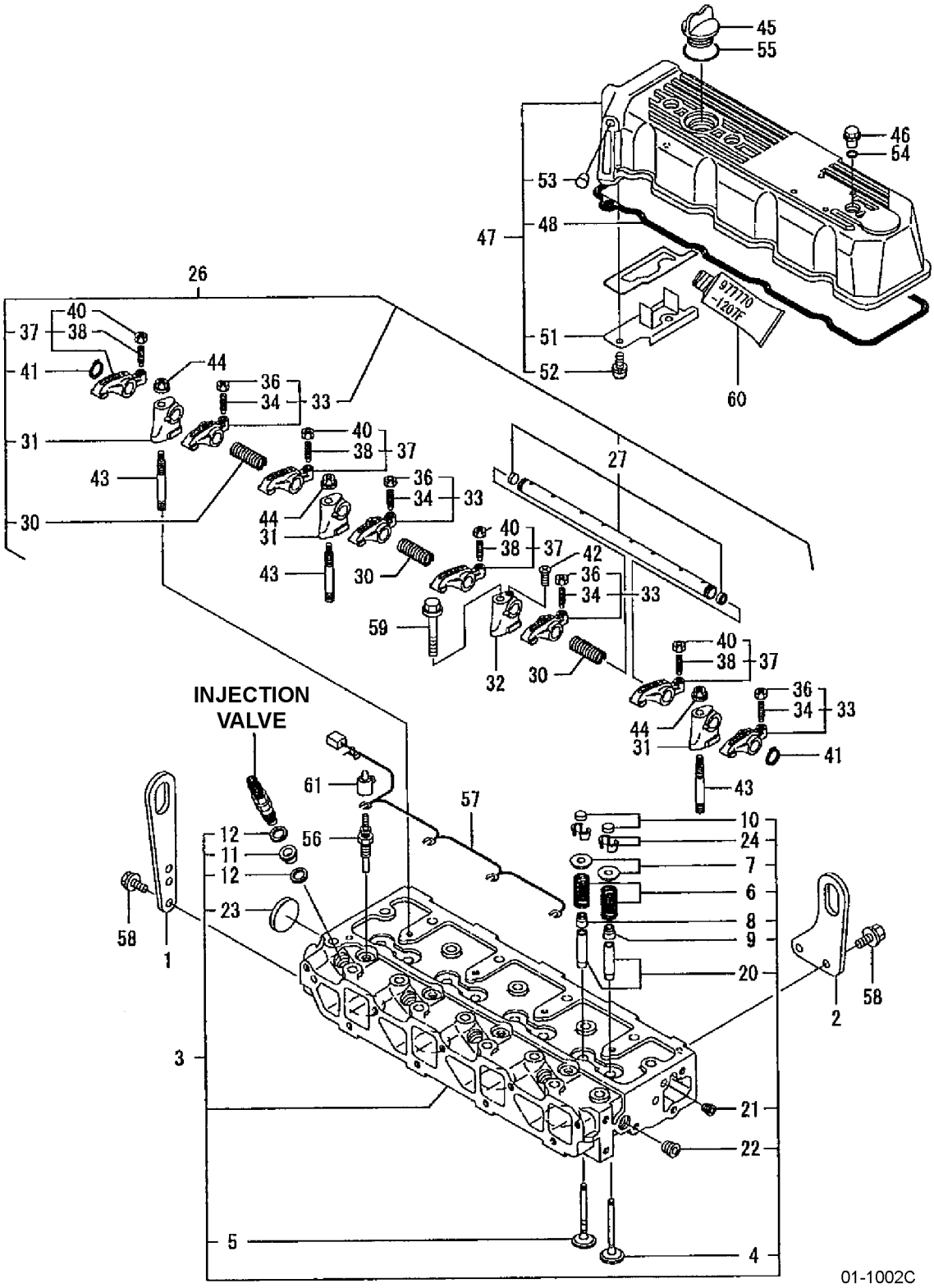

https://truckmanualshub.com/

ENGINE - 4D94LE DIESEL (EPA) CYLINDER HEAD & BONNET - S/N 200001A~

Item	Part Number	Description	Qty
1	YM129900-07900	LIFTER, ENGINE	1
2	YM129910-07910	LIFTER, ENGINE	1
3	YM129931-11700	HEAD ASSY, CYLINDER	1
4	YM129900-11100	.VALVE, INTAKE	4
5	YM129900-11110	.VALVE, EXHAUST	4
6	YM129900-11120	.VALVE SPRING	8
7	YM129795-11180	.RETAINER, SPRING	8
8	YM121400-11340	.SEAL, VALVE STEM	4
9	YM124460-11340	.SEAL, VALVE STEM	4
10	YM129150-11370	.CAP, VALVE	8
11	YM129901-11450	.PROTECTOR, NOZZLE	4
12	YM119600-11460	.GASKET, NOZZLE	8
20	YM129150-11810	.GUIDE, VALVE	8
21	YM23871-005000	.PLUG PT 1/16	1
22	YM23876-030000	.PLUG PT 3/8, SCREW	1
23	YM27241-400000	.PLUG 40	1
24	YM27310-080001	.COTTER	8
26	YM129900-11200	SUPPORT ASSY, ROCKER ARM	1
27	YM129900-11240	.SHAFT ASSY, ROCKER ARM	1
30	YM129900-11280	.SPRING	3
31	YM129900-11510	.SUPPORT	3
32	YM129900-11520	.SUPPORT	1
33	YM129900-11650	.ARM KIT, INTAKE ROCKER	4
34	YM129150-11230	..SCREW, VALVE	4
36	YM129150-11750	..NUT M8 X P1.0	4
37	YM129900-11660	.ARM KIT, EXHAUST ROCKER	4
38	YM129150-11230	..SCREW, VALVE	4
40	YM129150-11750	..NUT M8 X P1.0	4
41	YM22242-000180	.CIRCLIP 18	2
42	YM26577-040162	.SCREW M4 X 16	1
43	YM129900-11530	STUD BOLT	3
44	YM26306-100002	NUT	3
45	YM124160-01751	COVER, FILLER	1
46	YM124160-11360	KNOB	3
47	YM129900-11370	BONNET (VALVE COVER) ASSY	1
48	YM129900-11310	.GASKET, VALVE COVER	1
51	YM129900-11600	.PLATE	1
52	YM22857-500100	.SCREW 5 X 10, TAPPING	2
53	YM27225-080080	.PLUG 8 X 8	1

PARTS LIST CONTINUED ON NEXT PAGE

https://truckmanualshub.com/

ENGINE - 4D94LE DIESEL (EPA) CYLINDER HEAD & BONNET - S/N 200001A~

Item	Part Number	Description	Qty	
54	YM24311-000120	O-RING 1A P 12.0	3	
55	YM24311-000320	O-RING 1A P 32.0	1	
56	YM119717-77800	GLOW PLUG	4	
57	YM129931-77820	CONNECTOR, GLOW PLUG	1	
58	YM26106-080162	BOLT M8 X 16 PLATED	4	
59	YM26106-100652	BOLT M10 X 65 PLATED	1	
60	YM977770-1207F	GASKET, LIQUID	1	
61	YM119326-77820	COVER, GLOW PLUG	4	

https://truckmanualshub.com/

NOTES:

https://truckmanualshub.com/

ENGINE - 4D94LE DIESEL (EPA) INTAKE MANIFOLD - S/N 200001A~

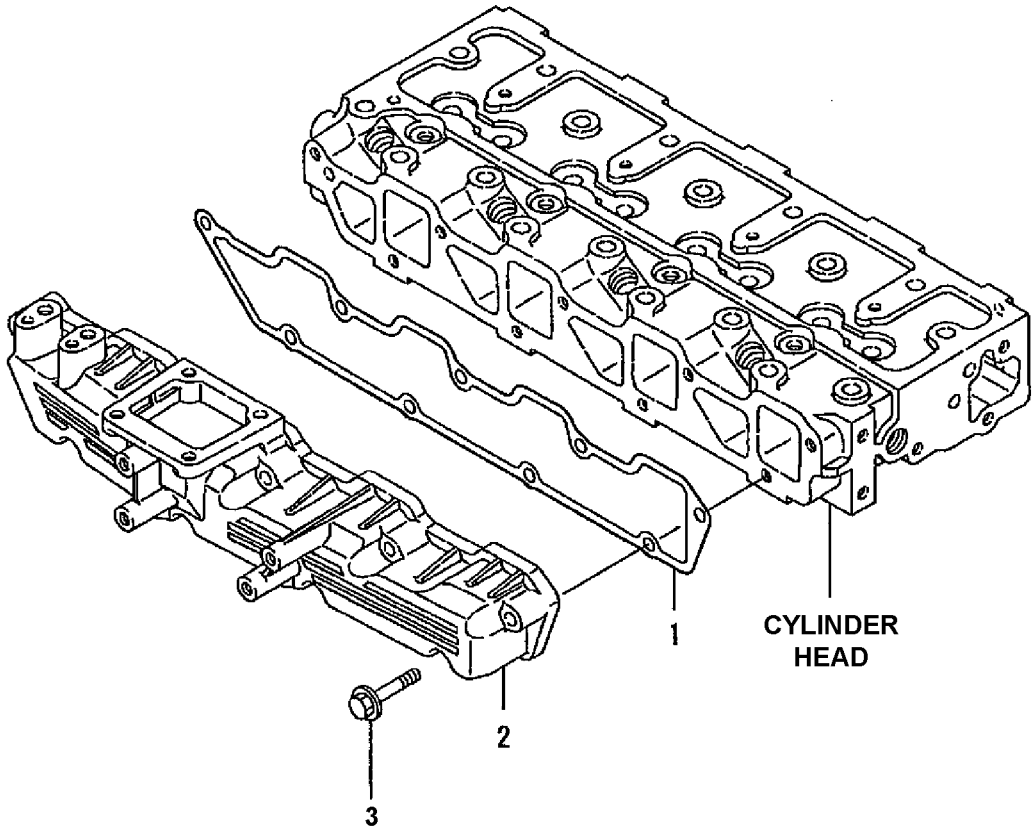

01-1002D

https://truckmanualshub.com/

ENGINE - 4D94LE DIESEL (EPA) INTAKE MANIFOLD - S/N 200001A~

Item	Part Number	Description	Qty	
1	YM129900-12050	GASKET, INTAKE MANIFOLD	1	
2	YM129900-12100	INTAKE MANIFOLD	1	
3	YM26106-080452	BOLT M8 X 45 PLATED	9	

https://truckmanualshub.com/

ENGINE - 4D94LE DIESEL (EPA) EXHAUST MANIFOLD - S/N 200001A~

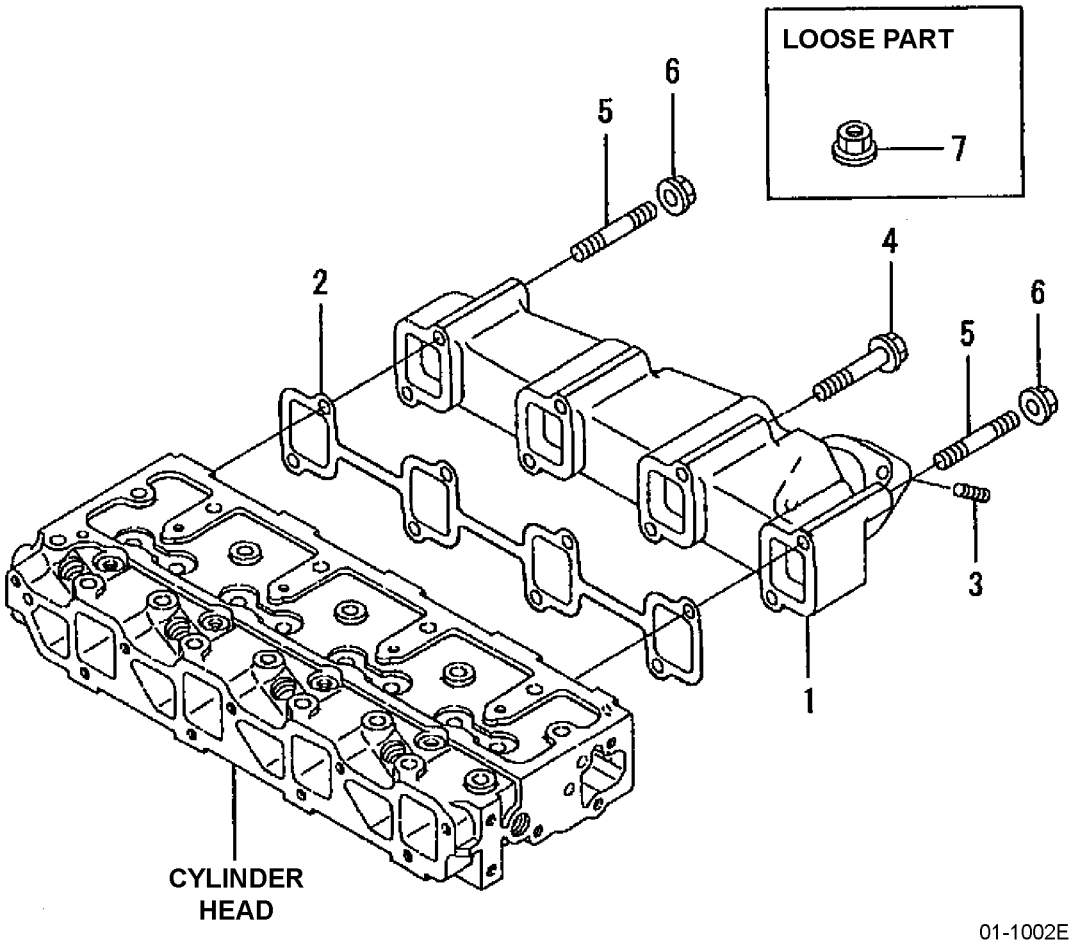

https://truckmanualshub.com/

ENGINE - 4D94LE DIESEL (EPA) EXHAUST MANIFOLD - S/N 200001A~

Item	Part Number	Description	Qty	
1	YM129930-13100	MANIFOLD, EXHAUST	1	
2	YM129900-13251	GASKET	1	
3	YM129930-13130	STUD 8 X 30	2	
4	YM123900-13630	BOLT 8 X 80	6	
5	YM123900-13610	STUD BOLT M8 X 80	2	
6	YM26306-080002	NUT	2	
7	YM26306-080002	NUT	2	

https://truckmanualshub.com/

ENGINE - 4D94LE DIESEL (EPA) CAMSHAFT & DRIVING GEAR - S/N 200001A~

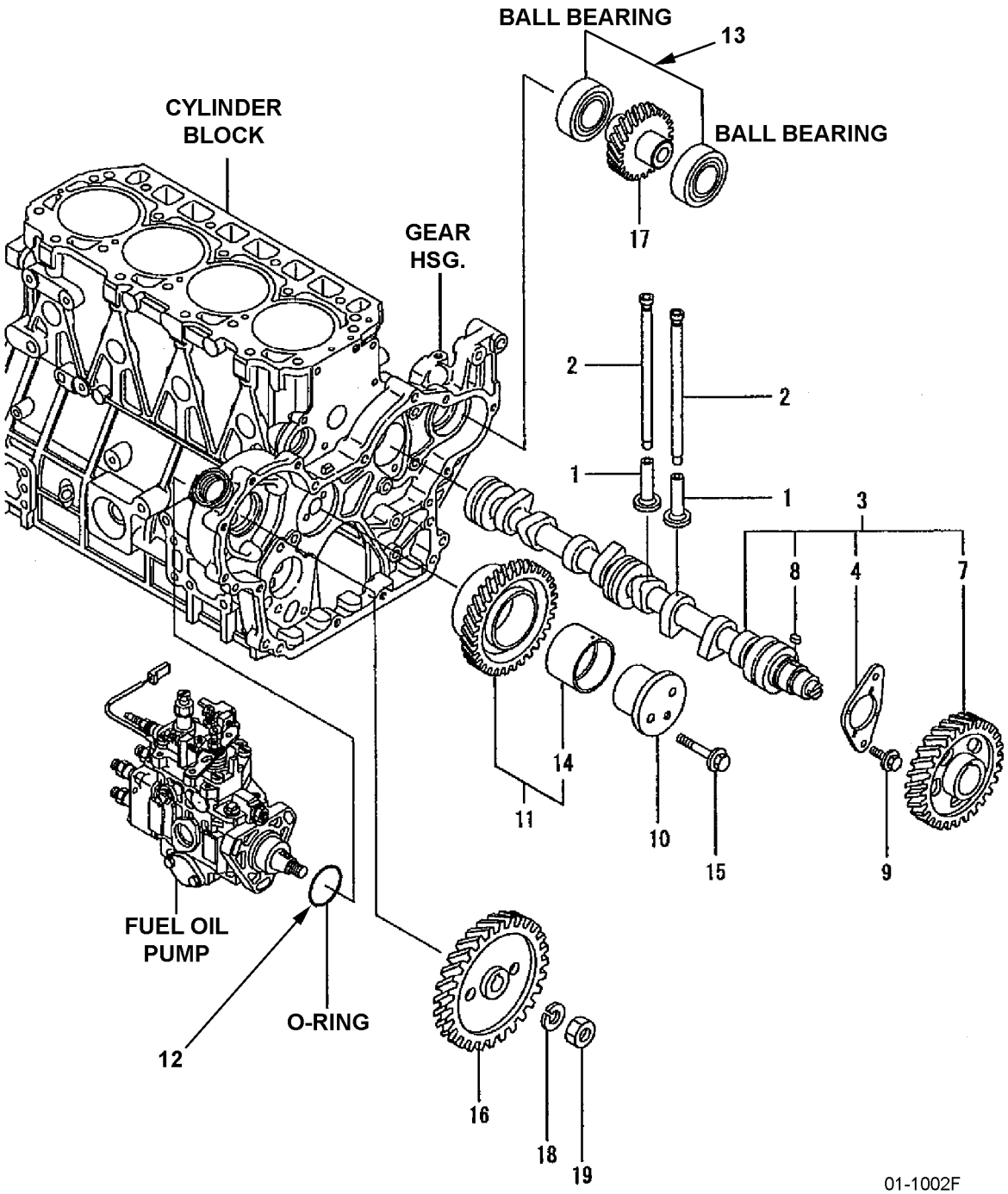

https://truckmanualshub.com/

ENGINE - 4D94LE DIESEL (EPA) CAMSHAFT & DRIVING GEAR - S/N 200001A~

Item	Part Number	Description	Qty
1	YM129150-14200	TAPPET	8
2	YM129900-14400	PUSH ROD	8
3	YM129900-14590	CAMSHAFT ASSY	1
4	YM129150-02450	.METAL THRUST PLATE, CAM	1
7	YM129900-14110	.GEAR, CAMSHAFT	1
8	YM22512-070140	.KEY 7 X 14	1
9	YM26106-080142	BOLT 8 X 14 PLATED	2
10	YM129900-25060	SHAFT, IDLER	1
11	YM129900-25110	GEAR ASSY, IDLER	1
12	YM24341-000500	O-RING	1
13	YM129900-26250	BALL BEARING	2
14	YM129150-25920	BUSHING, IDLER GEAR	1
15	YM26106-080552	BOLT M8 X 55 PLATED	2
16	YM129901-25900	GEAR, FI-P	1
17	YM129970-26200	GEAR ASSY, HYDRAULIC PUMP	1
18	YM22217-140000	SPRING WASHER 14	1
19	YM26776-140002	LOCK NUT M14 PLATED	1

https://truckmanualshub.com/

ENGINE - 4D94LE DIESEL (EPA) COOLING WATER SYSTEM - S/N 200001A~

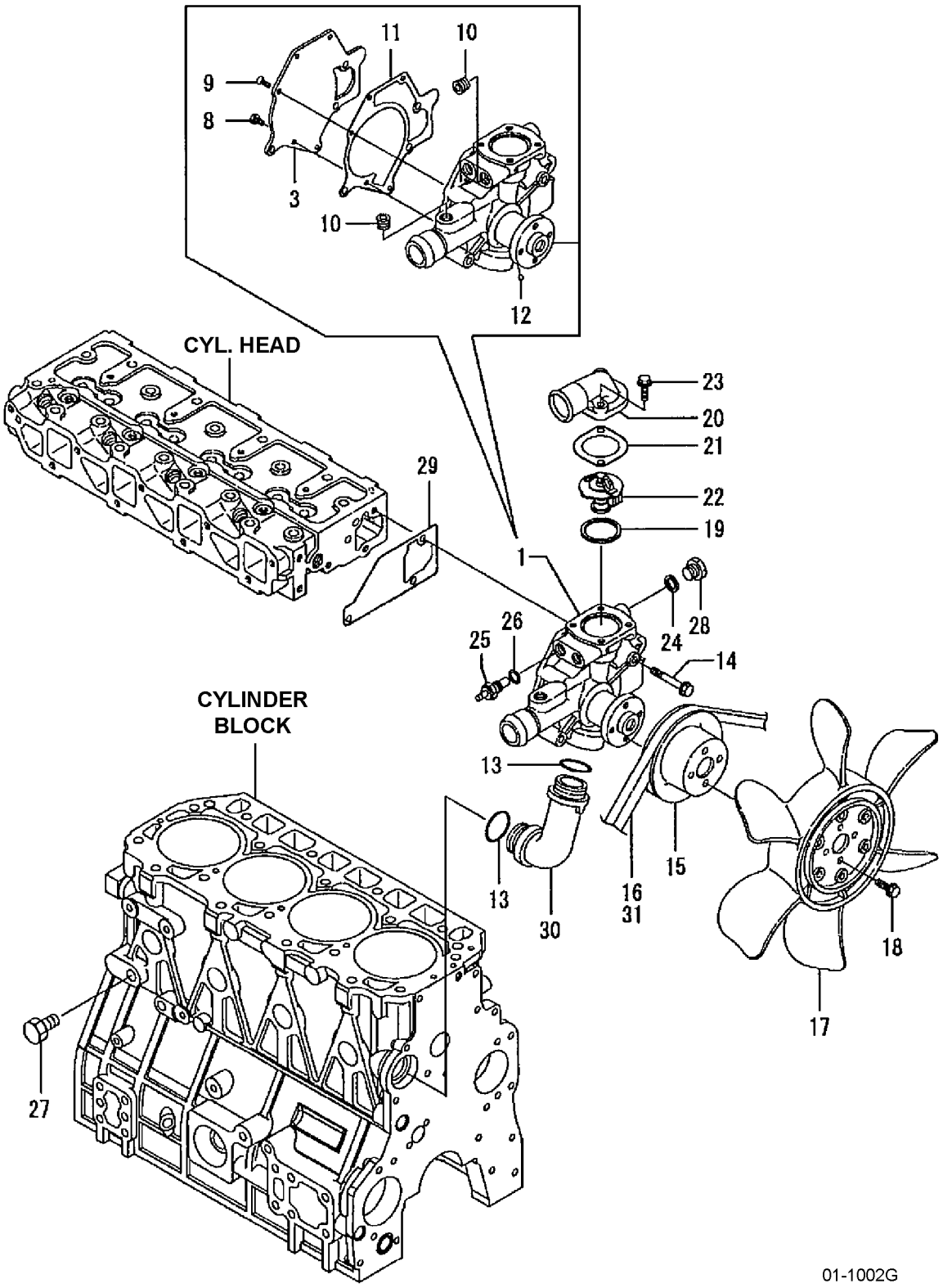

https://truckmanualshub.com/

ENGINE - 4D94LE DIESEL (EPA) COOLING WATER SYSTEM - S/N 200001A~

Item	Part Number	Description	Qty
1	YM129900-42055	PUMP, WATER (HIGH-POSI)	1
3	YM129900-42161	.COVER	1
8	YM26116-060162	.BOLT 6 X 16	2
9	YM26577-060152	.SCREW M6 X 15	3
10	YM23875-030000	.PLUG PT 3/8, STEEL	2
11	YM129900-42170	.GASKET	1
12	YM24190-080001	.BALL 1/4, STEEL	1
13	YM129900-42140	O-RING P-36	2
14	YM26106-080552	BOLT M8 X 55 PLATED	3
15	YM129900-42461	PULLEY, WATER PUMP (STANDARD & UL-DS))	1
16	YM25132-004500	V-BELT (STANDARD APPLICATION)	1
	YM25132-004600	V-BELT (UL-DS APPLICATION)	1
17	YM129900-44700	FAN	1
18	YM26014-080162	BOLT M8 X 16	4
19	YM121850-49550	GASKET, THERMOSTAT	1
20	YM129900-49551	COVER, THERMOSTAT	1
21	YM129900-49560	GASKET (NON-ASBESTOS)	1
22	YM121850-49810	THERMOSTAT	1
23	YM26106-080252	BOLT M8 X 25 PLATED	2
24	YM124465-44950	GASKET 16	1
25	YM171056-49351	SENSOR	1
26	YM129150-49360	GASKET 10	1
27	YM171056-49120	DRAIN PLUG	1
28	YM121450-42450	PLUG M16	1
29	YM129900-42061	GASKET, WATER PUMP	1
30	YM129900-42070	PIPE, WATER PUMP	1
31	YM25132-004600	V-BELT	1

https://truckmanualshub.com/

FUEL INJECTION PUMP - 4D94LE - S/N ALL
DIESEL

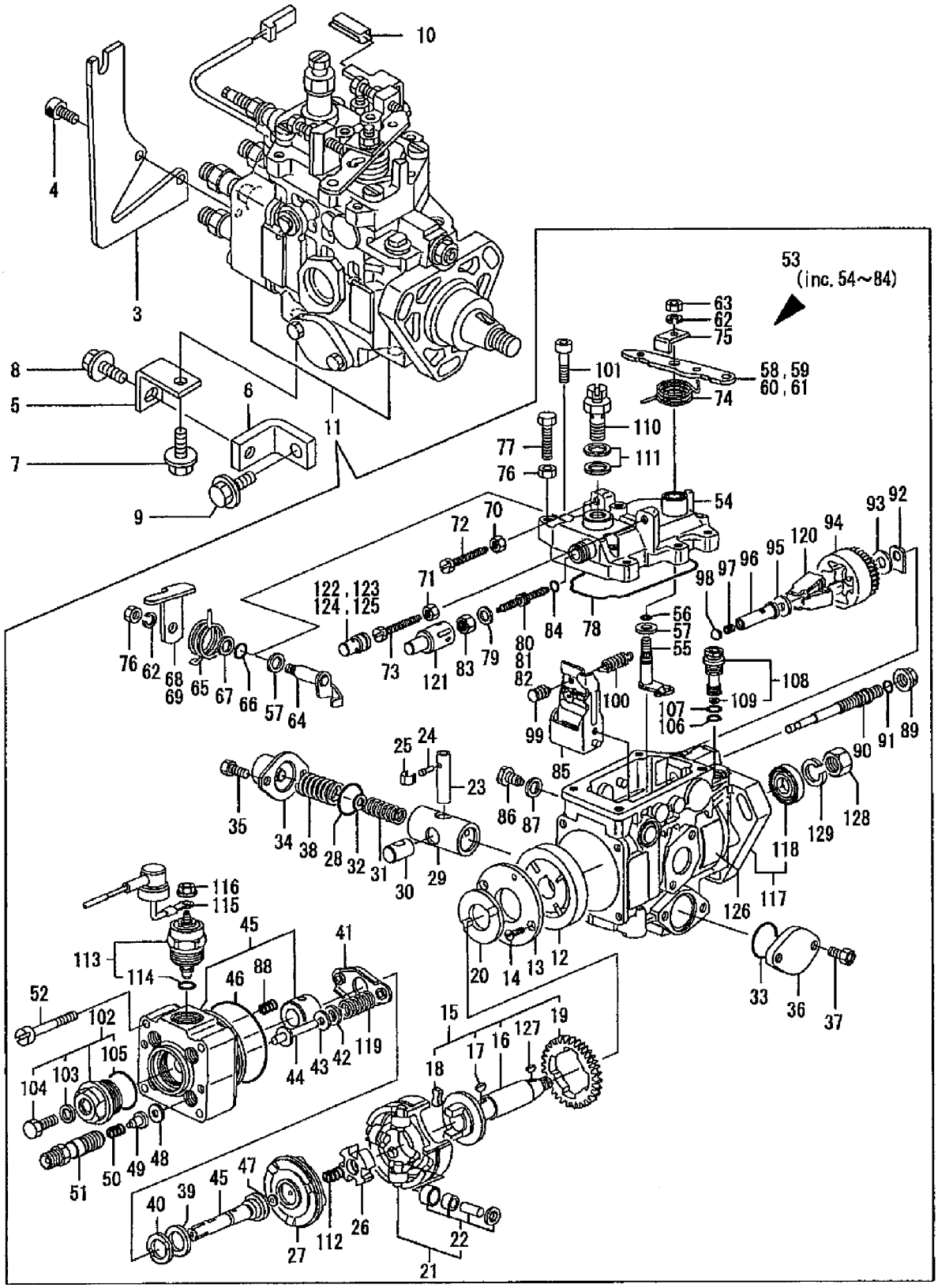

https://truckmanualshub.com/

FUEL INJECTION PUMP - 4D94LE - S/N ALL
DIESEL

Item	Part Number	Description	Qty	Serial Number
1	NOT USED			
2	NOT USED			
3	YM129930-67010	BRACKET, AXLE WIRE	1	
4	YM26450-060252	BOLT M6X25	2	
5	YM129901-01950	BRACKET	1	
6	YM129901-01960	STAY, BRACKET	1	
7	YM26106-100142	BOLT M10X14 PLATED	1	
8	YM26106-100162	BOLT M10X16 PLATED	1	
9	YM26106-100202	BOLT M10X20 PLATED	1	
10	YM129930-61990	SIMM	1	
11	YM129931-51010	PUMP ASSY, FUEL OIL	1	
12	YMX1461000220	..FEED PUMP	1	
13	YMX1461030100	..COVER	1	
14	YMX1391040000	..SCREW	2	
15	YMX1462000320	..DRIVE SHAFT	1	
16	YMX1462000300	...DRIVE SHAFT	1	
17	YMX1462010000	...KEY	1	
18	YMX1462020100	...DAMPER	2	
19	YMX1462030000	...GEAR	1	
20	YMX1462040000	..WASHER	1	
21	YMX1462105320	..ROLLER ASSY	1	
22	YMX1462105820	...ROLLER KIT	1	
23	YMX1463030000	..PIN	1	
24	YMX1463040000	..PIN	1	
25	YMX1463050000	..CLIP	1	
26	YMX1462050000	..DISK	1	
27	YMX1462206620	..CAM DISK	1	
28	YMX1466000800	..O-RING	1	
29	YMX1463115420	..PISTON	1	
30	YMX1463010000	..SLIDER	1	
31	YMX1463125100	..SPRING	1	
32	YMX0299986840	..SHIM SET	1	
33	YMX1466000800	..O-RING	1	
34	YMX1463104020	..COVER	1	
35	YMX1466205000	..BOLT	2	
36	YMX1463105100	..COVER	1	
37	YMX1466205000	..BOLT	2	
38	YMX1463121900	..SPRING	1	
39	YMX1462300000	..SHIM	1	

PARTS LIST CONTINUED ON NEXT PAGE

https://truckmanualshub.com/

FUEL INJECTION PUMP - 4D94LE - S/N ALL
DIESEL

Item	Part Number	Description	Qty	Serial Number
40	YMX1462300100	..WASHER	1	
41	YMX1462310001	..SPRING SEAT	1	
42	YMX1462330000	..SPRING SEAT	2	
43	YMX0299980570	..SHIM SET	1	
44	YMX1462340500	..GUIDE PIN	2	
45	YMX1464013020	..HEAD	1	
46	YMX1466000000	..O-RING	1	
47	YMX0299980300	..SHIM SET	1	
48	YMX1464330100	..GASKET	4	
49	YMX1464303820	..DELIVERY VALVE	4	
50	YMX1464320000	..SPRING	4	
51	YMX1464400220	..HOLDER	4	
52	YMX1391060100	..SCREW	4	
53	YMX1468209620	..COVER	1	
54	YMX1468052120	...COVER	1	
55	YMX1465152520	...CONTROL SHAFT	1	
56	YMX1466000100	...O-RING	1	
57	YMX1393100200	...WASHER	2	
58	YMX1465300000	...LEVER	1	
59	YMX1465300100	...LEVER	1	
60	YMX1468321500	...LEVER	1	
61	YMX1468321600	...LEVER	1	
62	YMX0141106440	...SPRING WASHER	2	
63	YMX0130206040	...NUT	1	
64	YMX1465151820	...LEVER SHAFT	1	
65	YMX1465920400	...SPRING	1	
66	YMX1466000200	...O-RING	1	
67	YMX1466020100	...WASHER	1	
68	YMX1465404000	...LEVER	1	
69	YMX1465404100	...LEVER	1	
70	YMX1466211700	...NUT	1	
71	YMX1466211700	...NUT	1	
72	YMX1465262800	...BOLT	1	
73	YMX1465266400	...BOLT	1	
74	YMX1465927900	...SPRING	1	
75	YMX1465410000	...ANGLE	1	
76	YMX0130206040	...NUT	2	
77	YMX1390060200	...BOLT	1	
78	YMX1466004400	...SEAL RING	1	

PARTS LIST CONTINUED ON NEXT PAGE

https://truckmanualshub.com/

FUEL INJECTION PUMP - 4D94LE - S/N ALL
DIESEL

Item	Part Number	Description	Qty	Serial Number
79	YMX1393080300	...WASHER	1	
80	YMX1465453400	...LOAD SCREW	1	
81	YMX1465453500	...LOAD SCREW	1	
82	YMX1465453600	...LOAD SCREW	1	
83	YMX1392080900	...NUT	1	
84	YMX1466001200	...O-RING	1	
85	YMX1468551320	..GOVERNOR LEVER	1	
86	YMX1465680000	..PIVOT BOLT	2	
87	YMX0265081140	..GASKET	2	
88	YMX1465880500	..SPRING	2	
89	YMX1465690300	..NUT	1	
90	YMX1465700100	..GOVERNOR SHAFT	1	
91	YMX1466000400	..O-RING	1	
92	YMX0299984130	..SHIM SET	1	
93	YMX1466020600	..WASHER	1	
94	YMX1465720020	..HOLDER	1	
95	YMX1466020500	..WASHER	1	
96	YMX1469753601	..SLEEVE	1	
97	YMX1465760400	..CAP	1	
98	YMX0299985870	..PLUG SET	1	
99	YMX1468796720	..PIN	1	
100	YMX1465804100	..SPRING	1	
101	YMX1391060200	..SCREW	4	
102	YMX1464211020	..PLUG	1	
103	YMX1395080200	...GASKET	1	
104	YMX1464220300	...BOLT	1	
105	YMX1466000500	...O-RING	1	
106	YMX1466000600	..O-RING	1	
107	YMX1466000700	..O-RING	1	
108	YMX1461100220	..VALVE	1	
109	YMX1461140000	...SPRING RING	1	
110	YMX1461200120	..VALVE	1	
111	YMX1395120500	..GASKET	2	
112	YMX1462060100	..SPRING	1	
113	YMX1466501220	..VALVE	1	
114	YMX1466001700	...O-RING	1	
115	YMX1466584820	..WIRE	1	
116	YMX1466214901	..NUT	1	
117	YMX1460186820	..HOUSING	1	

PARTS LIST CONTINUED ON NEXT PAGE

https://truckmanualshub.com/

FUEL INJECTION PUMP - 4D94LE - S/N ALL
DIESEL

Item	Part Number	Description	Qty	Serial Number
118	YMX1466010700	...OIL SEAL	1	
119	YMX1462320320	..SPRING	1	
120	YMX1465740320	..FLYWEIGHT	1	
121	YMX1465981000	..CAP	1	
122	YMX1465980800	..CAP	1	
123	YMX1465980900	..CAP	1	
124	YMX1465980600	..CAP	1	
125	YMX1465980700	..CAP	1	
126	YMX1469109400	..NUMBER PLATE	1	
127	YMX0294704030	..WOODRUFF KEY	1	
128	YMX0131214140	..NUT	1	
129	YMX0293214050	..SPRING WASHER	1	

https://truckmanualshub.com/

NOTES

https://truckmanualshub.com/

FUEL INJECTION VALVE - 4D94LE - S/N ALL
DIESEL

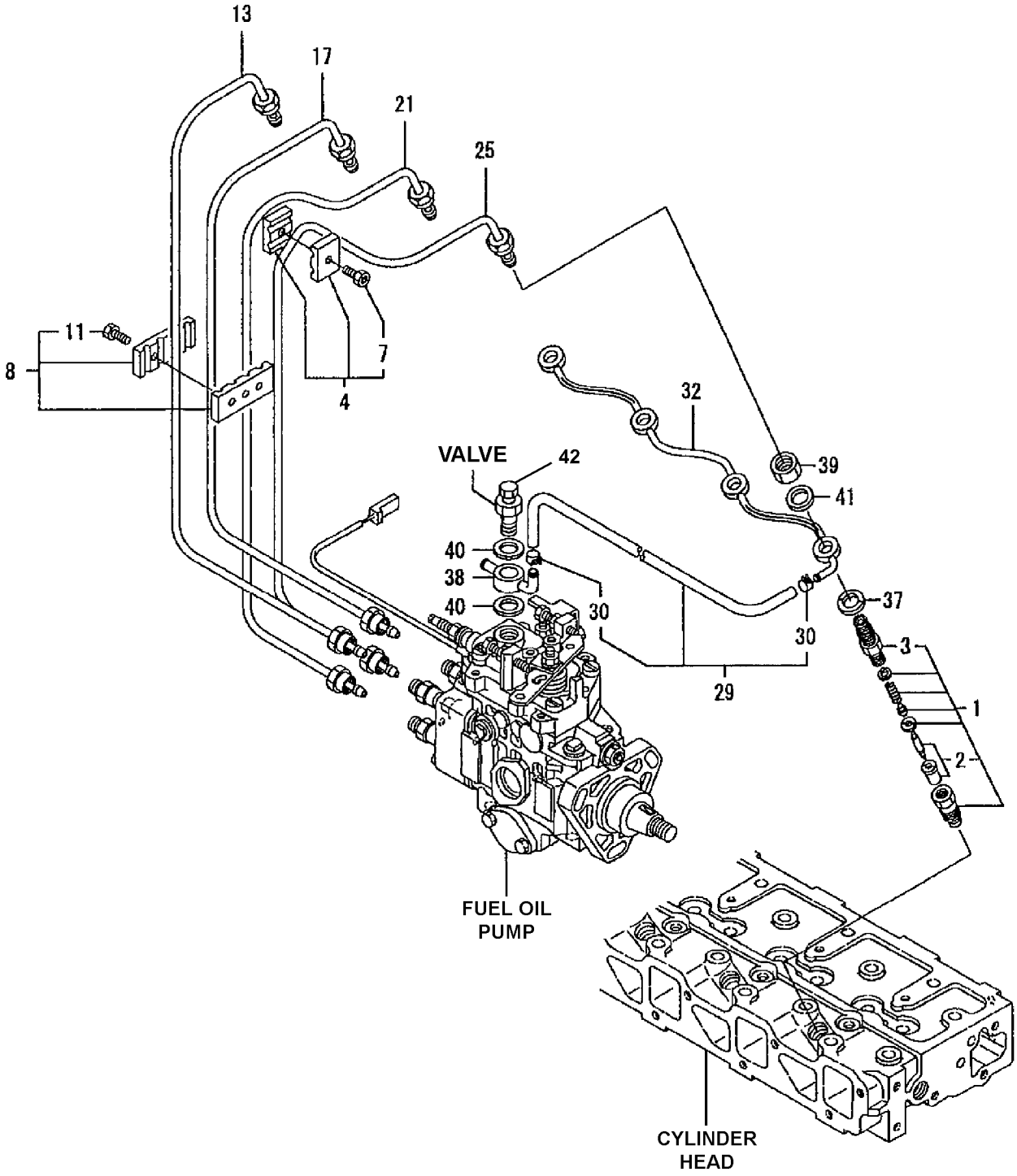

https://truckmanualshub.com/

FUEL INJECTION VALVE - 4D94LE - S/N ALL
DIESEL

Item	Part Number	Description	Qty	Serial Number
1	YM129931-53000	VALVE ASSY, INJECTION	4	
2	YM119717-53010	..NOZZLE ASSY.	4	
3	YM129901-53020	..RETAINER	4	
4	YM119305-59120	RETAINER	2	
7	YM129150-59131	..BOLT M4X14, HEX SOCKET.	2	
8	YM129550-59120	RETAINER	1	
11	YM129150-59131	..BOLT M4X14, HEX SOCKET.	2	
13	YM129901-59810	PIPE NO.1, F. INJECT..	1	
17	YM129901-59820	PIPE NO.2, F. INJECT.	1	
21	YM129901-59830	PIPE NO.3, F. INJECT.	1	
25	YM129901-59840	PIPE NO.4, F. INJECT.	1	
29	YM129930-59520	PIPE ASSY, F.O. RETURN	1	
30	YM124066-59100	..CLAMP 8	2	
32	YM129901-59510	PIPE, FUEL RETURN	1	
37	YM129901-59560	GASKET, RETURN	4	
38	YM129901-59580	JOINT, PIPE	1	
39	YM119620-59700	NUT	4	
40	YM22190-120002	SEAL WASHER 12	2	
41	YM22190-120002	SEAL WASHER 12	4	
42	YMX1461200120	VALVE	1	

https://truckmanualshub.com/

FUEL FILTER - 4D94LE - S/N ALL
DIESEL

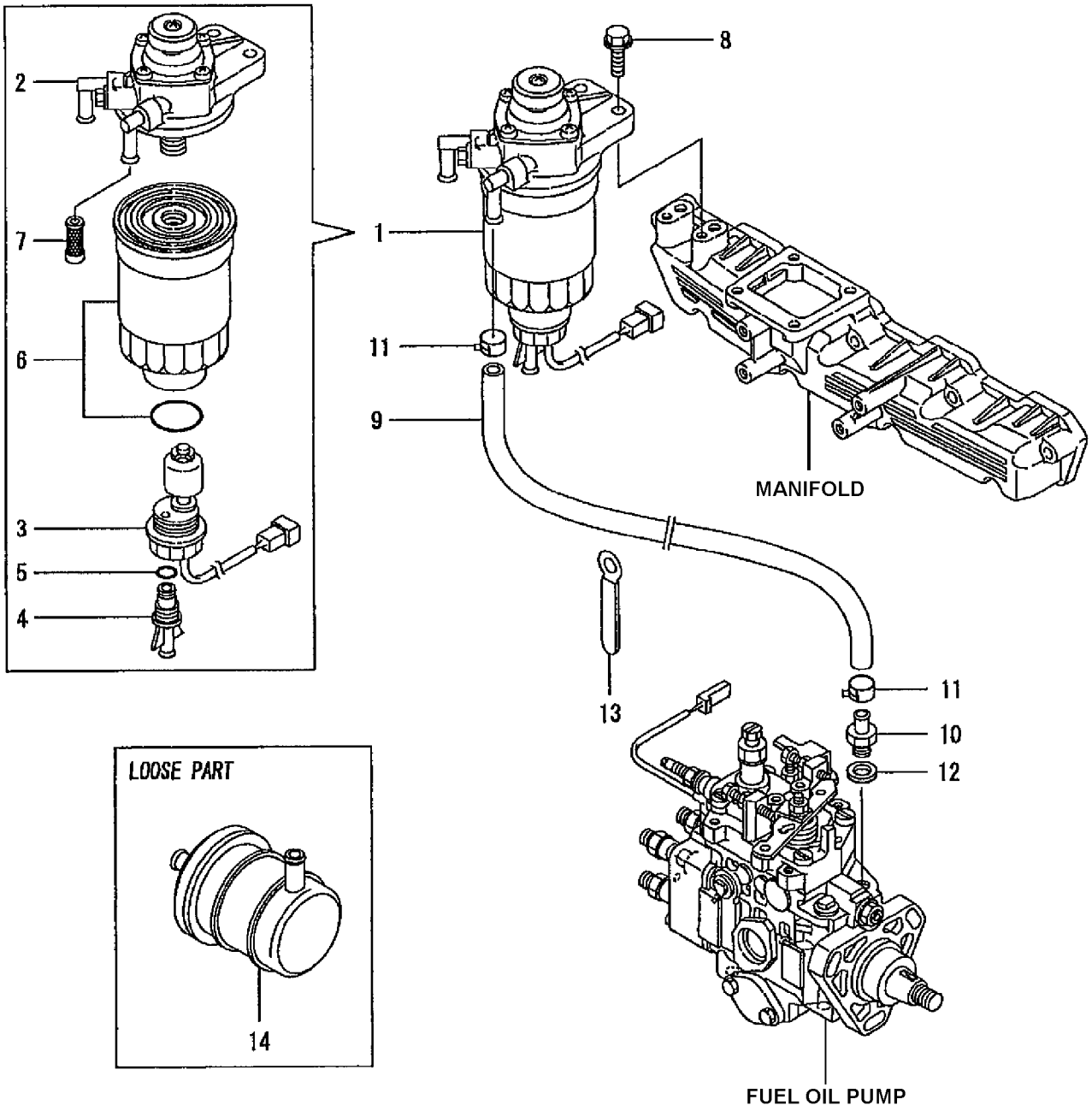

https://truckmanualshub.com/

FUEL FILTER - 4D94LE - S/N ALL
DIESEL

Item	Part Number	Description	Qty	Serial Number
1	YM129901-55800	FILTER, FUEL OIL	1	
2	YM129901-55810	..BODY, SUB. ASSY	1	
3	YM129901-55820	..SENSOR ASSY	1	
4	YM129901-55830	..PLUG, DRAIN	1	
5	YM129901-55840	..O-RING	1	
6	YM129901-55850	..ELEMENT KIT	1	
7	YM129901-55860	..FILTER	1	
8	YM26106-080252	BOLT M8X25 PLATED	2	
9	YM129930-59500	PIPE, FUEL	1	
10	YM119171-59910	JOINT, PIPE	1	
11	YM23000-013000	CLAMP 13	2	
12	YM22190-120002	SEAL WASHER 12	1	
13	YM105430-67110	CLAMP	2	
14	YM129052-55630	STRAINER, FUEL OIL (IN)	1	

https://truckmanualshub.com/

STARTING MOTOR - 4D94LE - S/N ALL
DIESEL

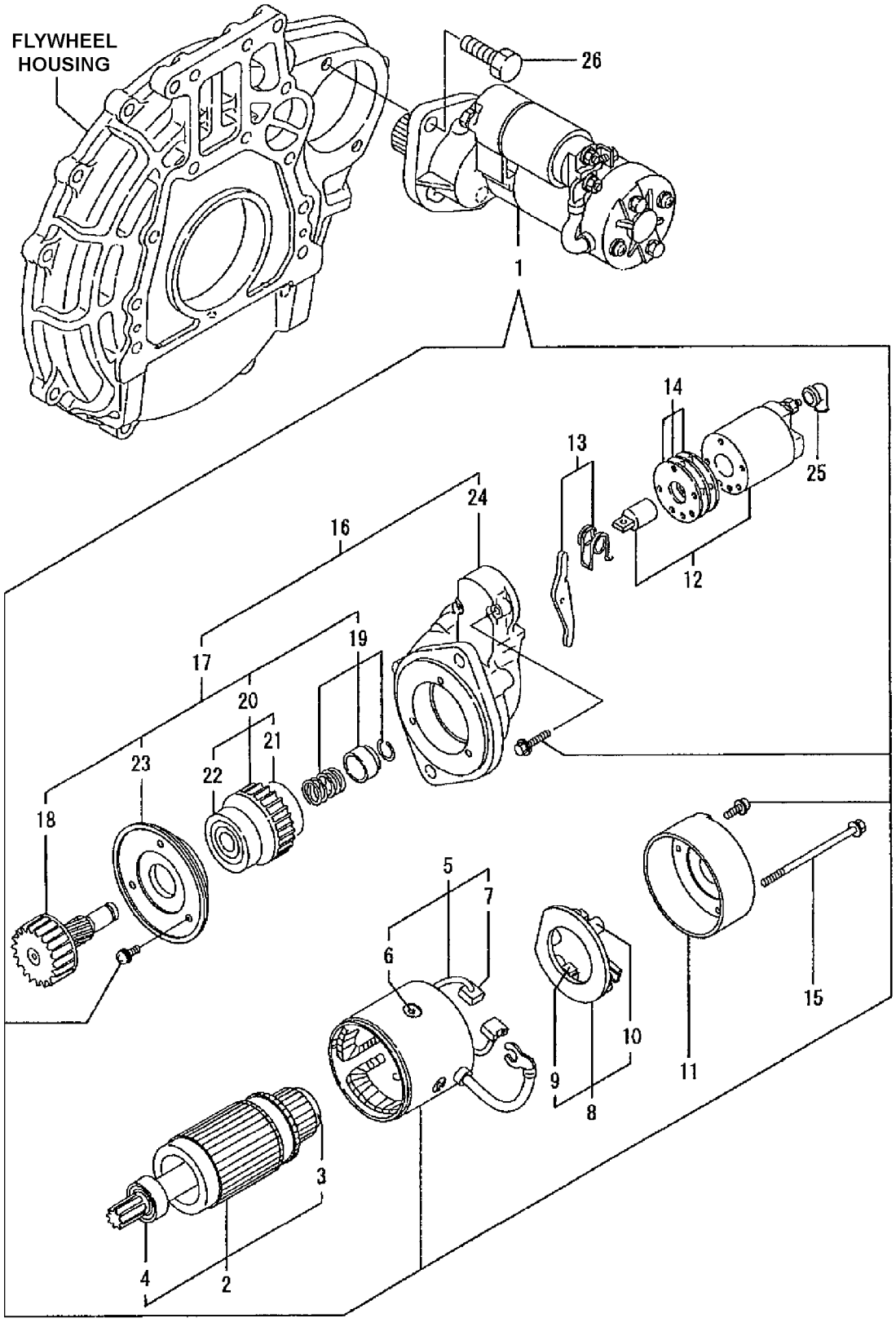

https://truckmanualshub.com/

STARTING MOTOR - 4D94LE - S/N ALL
DIESEL

Item	Part Number	Description	Qty	Serial Number
1	YM129900-77010	STARTER (2.3 KW)	1	
2	YM129900-77400	..ARMATURE ASSY	1	
3	YMX2114155110	...BALL BEARING	1	
4	YMX2114255110	...BALL BEARING	1	
5	YM129900-77440	..COIL ASSY, FIELD	1	
6	YM171008-77450	...SCREW, POLE CORE SET	4	
7	YM129900-77450	...BRUSH (+)	2	
8	YM129900-77480	..HOLDER ASSY, BRASH	1	
9	YM129900-77450	...BRUSH (+)	2	
10	YMX2130631300	...BRUSH SPRING	4	
11	YM129900-77460	..COVER, REAR	1	
12	YM129900-77591	..SWITCH ASSY, MAGNETIC	1	
13	YM129900-77620	..SHIFT LEVER SET	1	
14	YM129900-77650	..COVER ASSY, DUST	1	
15	YM129900-77640	..BOLT, THROUGH	2	
16	YM129900-77700	..GEAR CASE ASSY	1	
17	YM129900-77510	...PINION ASSY	1	
18	YM129900-77540	....SHAFT, PINION	1	
19	YM129900-77550	....STOPPER SET	1	
20	YM129900-77520	....CLUTCH ASSY	1	
21	YM171008-77730	....BALL BEARING (3)	1	
22	YM171008-77740	....BALL BEARING (4)	1	
23	YM129900-77610	....RETAINER, BEARING	1	
24	YM129900-77710	...HOUSING, GEARS	1	
25	YM171008-77750	..COVER, M TERMINAL	1	
26	YM26116-120302	BOLT M12 X 30, PLATED	2	

https://truckmanualshub.com/

ALTERNATOR (STD) - 4D94LE - S/N ALL
DIESEL

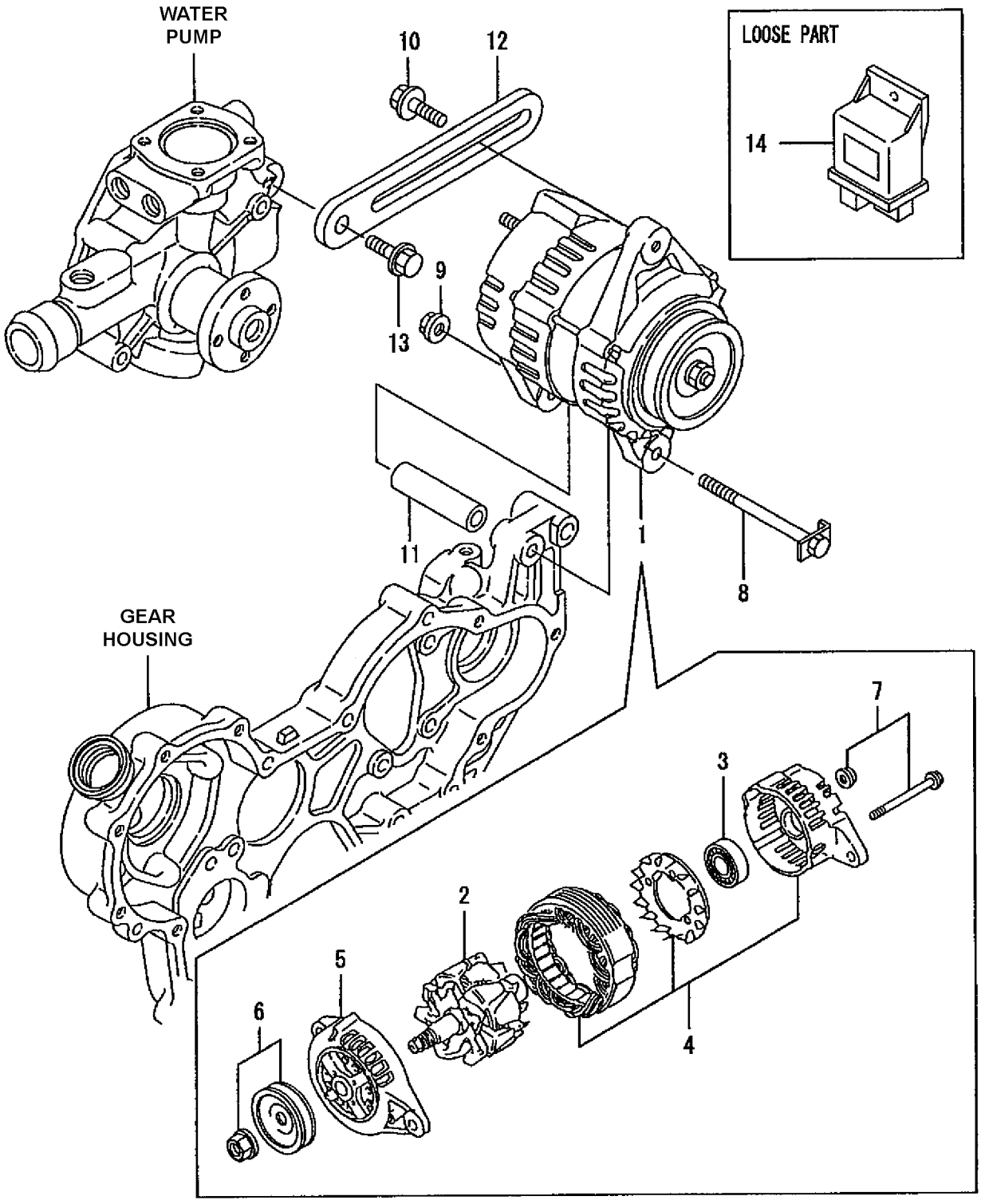

https://truckmanualshub.com/

ALTERNATOR (STD) - 4D94LE - S/N ALL DIESEL

Item	Part Number	Description	Qty	Serial Number
1	YM129930-77212	ALTERNATOR	1	
2	YM129612-77700	..ROTOR ASSY	1	
3	YM129612-77710	..BALL BEARING	1	
4	YM129930-77930	..BRACKET, REAR	1	
5	YM129612-77730	..FRONT BRACKET ASSY	1	
6	YM129930-77740	..PULLEY	1	
7	YM129612-77750	..SCREW KIT	1	
8	YM129136-77261	BOLT M 8X110	1	
9	YM129612-77260	NUT, ALTERNATOR	1	
10	YM119810-77340	BOLT	1	
11	YM129150-77340	SPACER	1	
12	YM129900-77330	BELT ADJUSTER	1	
13	YM260140-80252	BOLT M8 X 25	1	
14	YM129930-77950	CONTROLLER	1	

https://truckmanualshub.com/

ALTERNATOR (UL-DS) - 4D94LE - S/N ALL
DIESEL

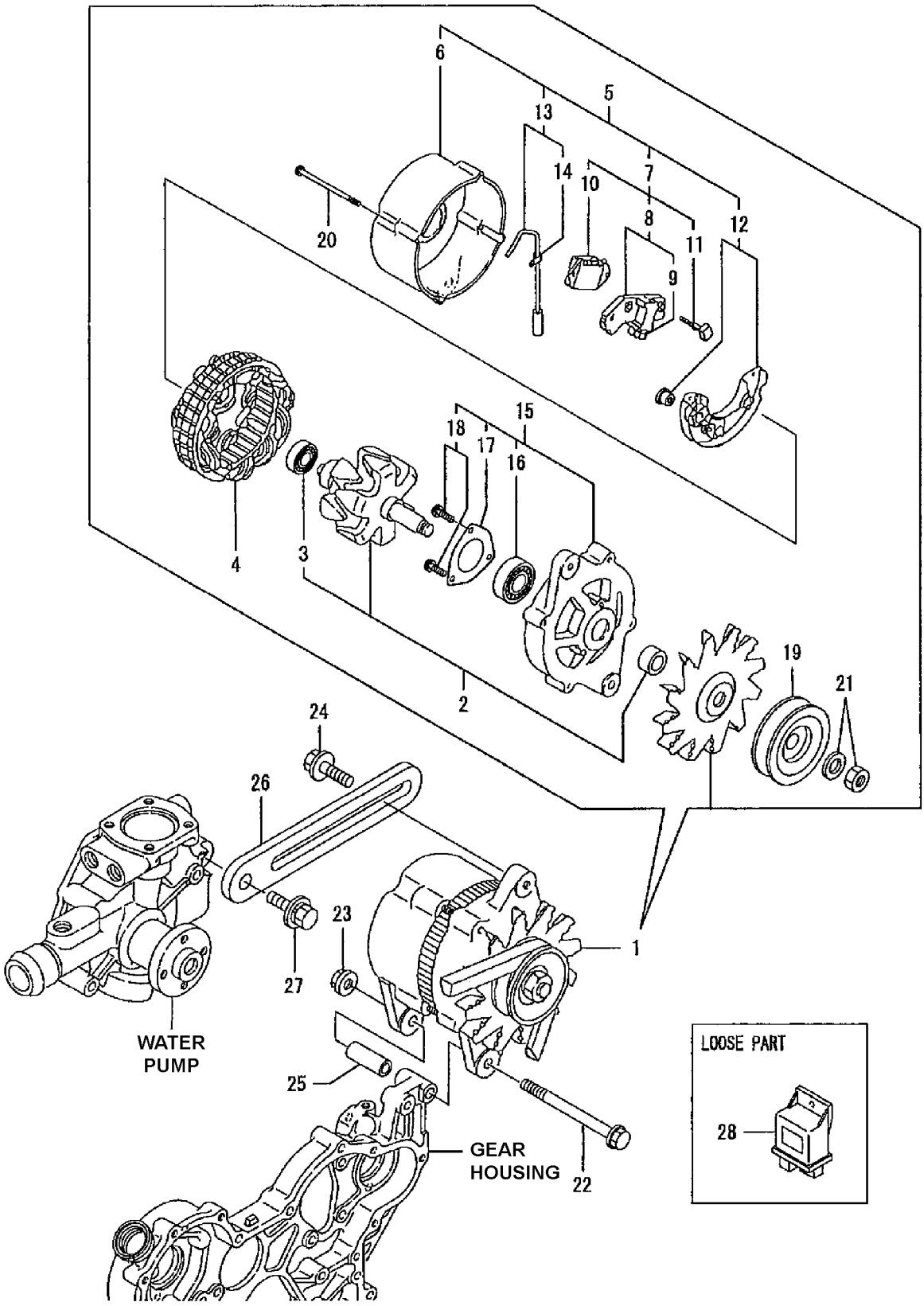

https://truckmanualshub.com/

ALTERNATOR (UL-DS) - 4D94LE - S/N ALL DIESEL

Item	Part Number	Description	Qty	Serial Number
1	YM129930-77200	ALTERNATOR ASSY	1	
2	YMXL24OG5100	..ROTOR ASSY	1	
3	YM119129-77320	...BALL BEARING	1	
4	YMXL125G1200	..STATOR ASSY	1	
5	YMXL125G1300	..REAR COVER ASSY	1	
6	YMXL125G1301	...COVER, REAR	1	
7	YMXL125G1315	...BRUSH REGULATOR ASSY	1	
8	YMXL125G1330	....BRUSH ASSY	1	
9	YMXL15073251	....BRUSH SET	2	
10	YM124080-77390	....REGULATOR ASSY	1	
11	YM124080-77520	....BOLT M5	2	
12	YMXL1807320	...DIODE ASSY	1	
13	YM119129-77250	...WIRE	1	
14	YM119129-77260	....CLAMP, LEAD WIRE	1	
15	YMXL125GI400	..COVER ASSY, FRONT	1	
16	YM119129-77850	...BALL BEARING	1	
17	YM119129-77870	...RETAINER, BEARING	1	
18	YM119129-77930	...SCREW KIT	1	
19	YMXL125G1500	..PULLEY ASSY	1	
20	YM119129-77890	..BOLT, THROUGH	4	
21	YM119129-77900	..NUT ASSY, PULLEY	1	
22	YM26116-101202	BOLT M10 X 120 PLATED	1	
23	YM26306-100002	NUT	1	
24	YM119810-77340	BOLT	1	
25	YM129470-77340	SPACER	1	
26	YM129900-77330	ADJUSTER, BELT	1	
27	YM26014-080252	BOLT M8 X 25	1	
28	YM129930-77950	CONTROLLER	1	

https://truckmanualshub.com/

GASKET SET - 4D94LE - S/N ALL
DIESEL

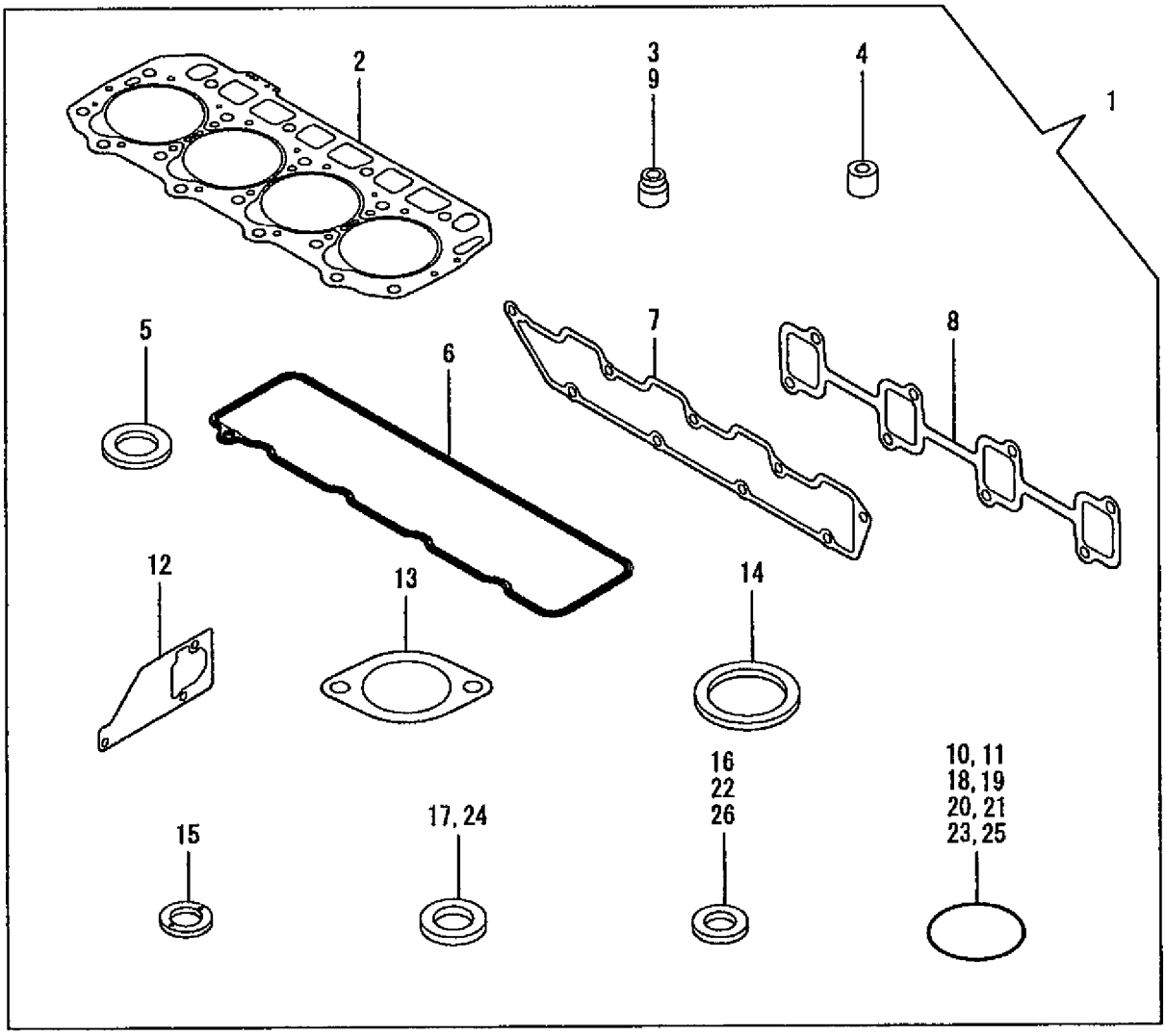

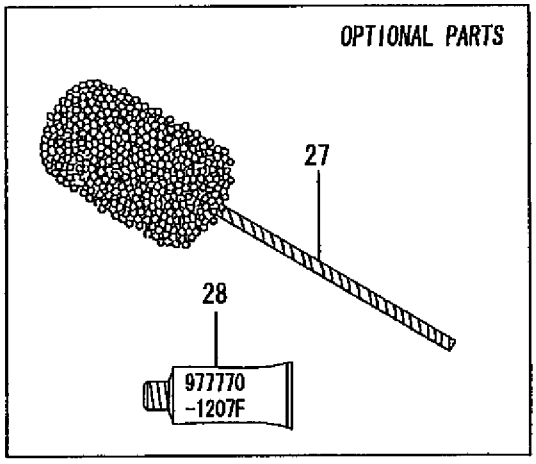

https://truckmanualshub.com/

GASKET SET - 4D94LE - S/N ALL
DIESEL

Item	Part Number	Description	Qty	Serial Number
1	YM729901-92690	GASKET SET (NON-ASBESTOS)	1	
2	YM129901-01350	..GASKET, HEAD	1	
3	YM124460-11340	..SEAL, VALVE STEM	4	
4	YM129901-11450	..PROTECTER, NOZZLE	4	
5	YM119600-11460	..GASKET, NOZZLE	8	
6	YM129900-11310	..GASKET, BONNET	1	
7	YM129900-12050	..GASKET, INTAKE MANIFOLD	1	
8	YM129900-13251	..GASKET	1	
9	YM121400-11340	..SEAL, VALVE STEM	4	
10	YM129900-32030	..O-RING P20	2	
11	YM129900-32040	..O-RING P14	1	
12	YM129900-42061	..GASKET, COOLING WATER PUMP	1	
13	YM129900-49560	..GASKET, (NON-ASBESTOS)	1	
14	YM121850-49550	..GASKET, THERMOSTAT	1	
15	YM129901-59560	..GASKET, RETURN	4	
16	YM22190-120002	..SEAL WASHER 12	7	
17	YM124465-44950	..GASKET 16	1	
18	YM24311-240100	..O-RING 1A P-10A	1	
19	YM24311-000120	..O-RING 1A P-12.0	3	
20	YM24311-000320	..O-RING 1A P-32.0	2	
21	YM24341-000500	..O-RING 1A S-50.0	1	
22	YM22190-080002	..SEAL WASHER 8S	4	
23	YM24321-000850	..O-RING 1A G-85.0	1	
24	YM12915049360	..GASKET 10	1	
25	YM129900-42140	..O-RING P36	2	
26	YM22190-160002	..SEAL WASHER 16S	1	
27	YM129400-92440	FLEX HORN	1	
28	YM977770-1207F	GASKET, LIQUID	1	

https://truckmanualshub.com/

EXHAUST - K21/K25 GASOLINE / LP / DUAL-FUEL - PNEUMATIC - S/N 200001A~

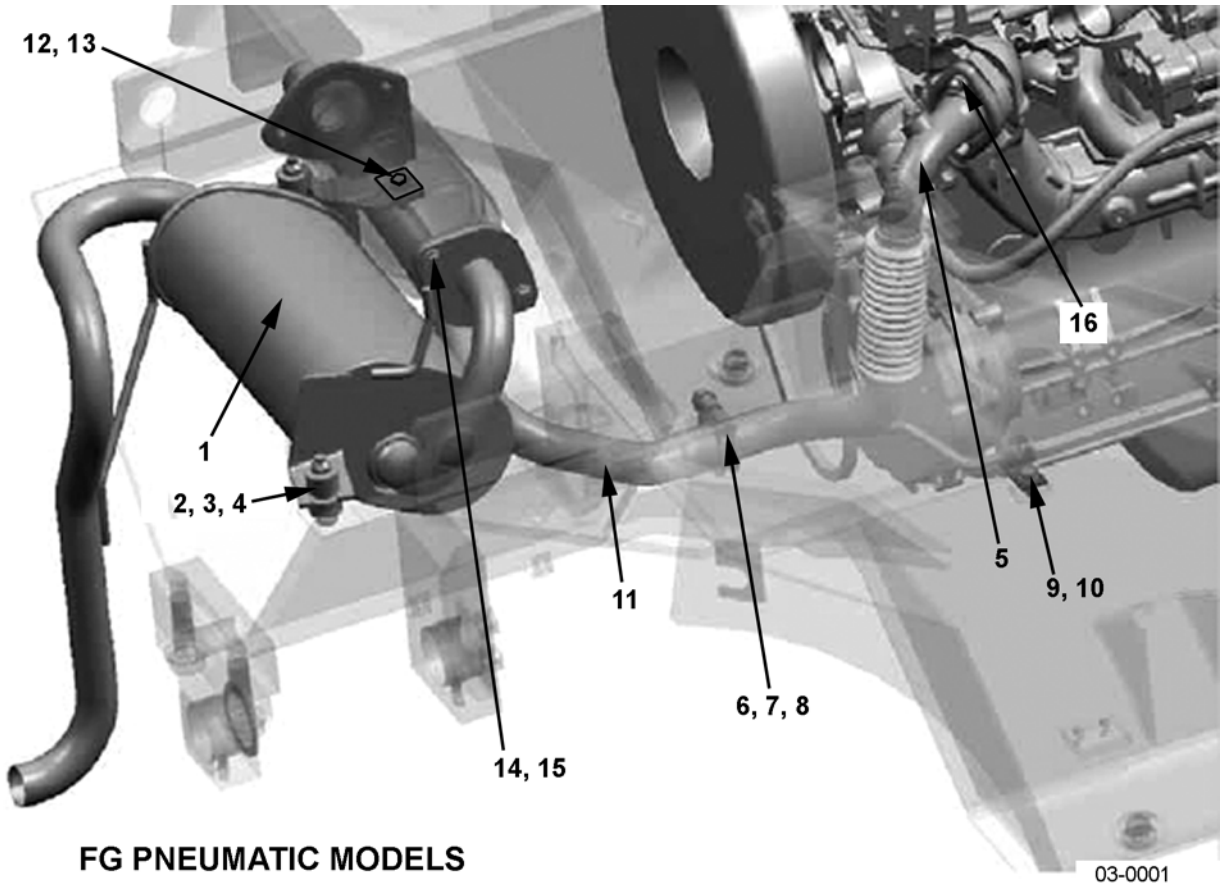

FG PNEUMATIC MODELS

https://truckmanualshub.com/

EXHAUST - K21/K25 GASOLINE / LP / DUAL-FUEL - PNEUMATIC - S/N 200001A~

Item	Part Number	Description	Qty	
1	3EB-03-A7110	MUFFLER (PNEUMATIC)	1	
	3EB-03-A7411	MUFFLER (UL-S, LPS) (PNEUMATIC)	1	
2	3EB-03-51131	COLLAR	2	
3	01596-01009	NUT	2	
4	3EB-03-41120	RUBBER	2	
5	3EB-03-A7130	PIPE	1	
6	3EB-03-31530	CLAMP	1	
7	01643-31032	WASHER	4	
8	01582-11008	NUT	2	
9	3EB-03-51170	BRACKET	1	
10	01024-80820	BOLT	1	
11	3EB-03-A7120	PIPE	1	
12	01050-51025	BOLT	2	
13	3EB-03-A7240	PLATE	1	
14	01643-31032	WASHER	4	
15	01050-51020	BOLT	4	
16	20602-01M00	NUT	2	

https://truckmanualshub.com/

EXHAUST - K21/K25 GASOLINE/LP/DUAL-FUEL - CUSHION - S/N 200001A~

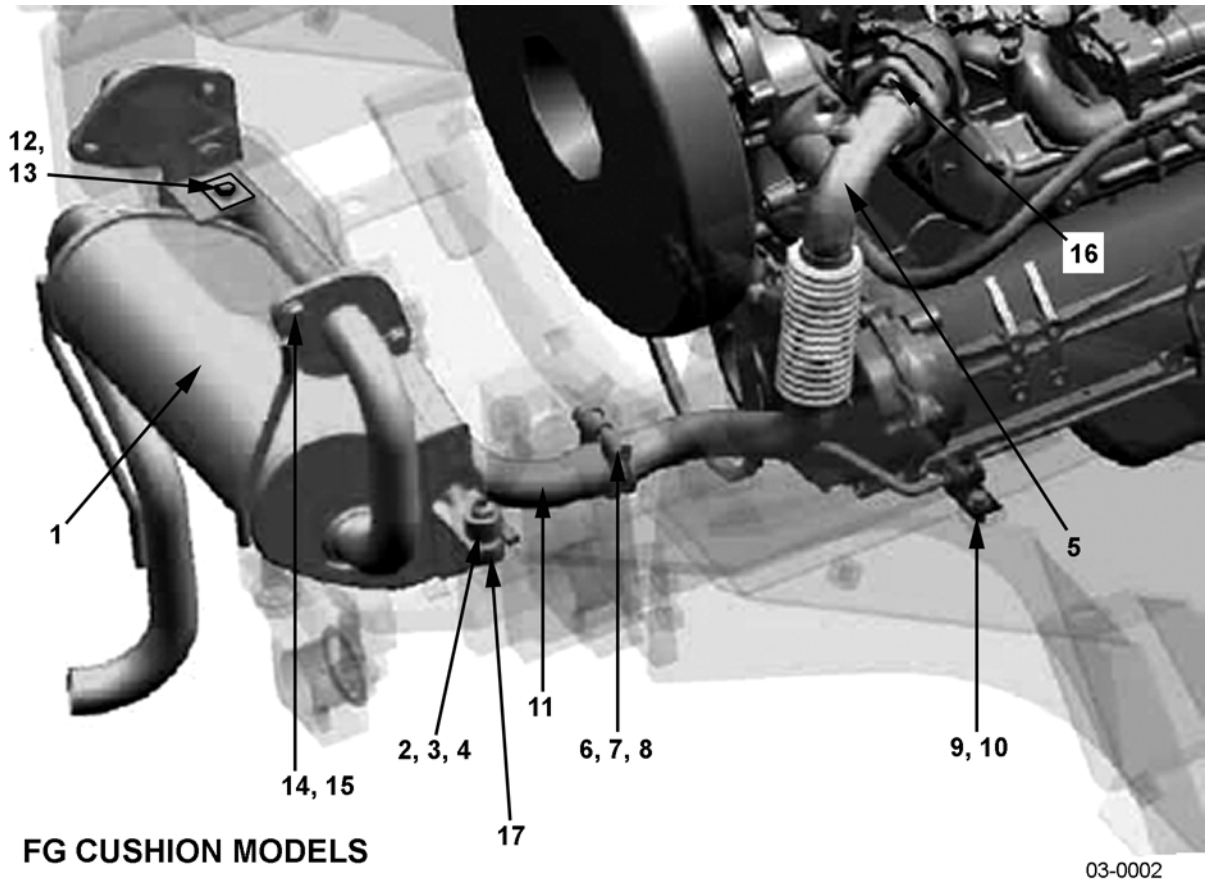

FG CUSHION MODELS

https://truckmanualshub.com/

EXHAUST - K21/K25 GASOLINE/LP/DUAL-FUEL - CUSHION - S/N 200001A~

Item	Part Number	Description	Qty	
1	3EB-03-A7210	MUFFLER (CUSHION)	1	
	3EB-03-A7511	MUFFLER (UL-S) (CUSHION)	1	
2	3EB-03-51131	COLLAR	2	
3	01596-01009	NUT	2	
4	3EB-03-41120	RUBBER	2	
5	3EB-03-A7130	PIPE	1	
6	3EB-03-31530	CLAMP	1	
7	01643-31032	WASHER	4	
8	01582-11008	NUT	2	
9	3EB-03-51170	BRACKET	1	
10	01024-80820	BOLT	1	
11	3EB-03-A7220	PIPE	1	
12	01050-51025	BOLT	2	
13	3EB-03-A7240	PLATE	1	
14	01643-31032	WASHER	4	
15	01050-51020	BOLT	4	
16	3EB-01-34120	NUT	2	
17	3EA-51-11390	WASHER (BETWEEN RUBBER & FRAME)	2	

https://truckmanualshub.com/

EXHAUST - 4D94LE DIESEL - S/N 200001A~

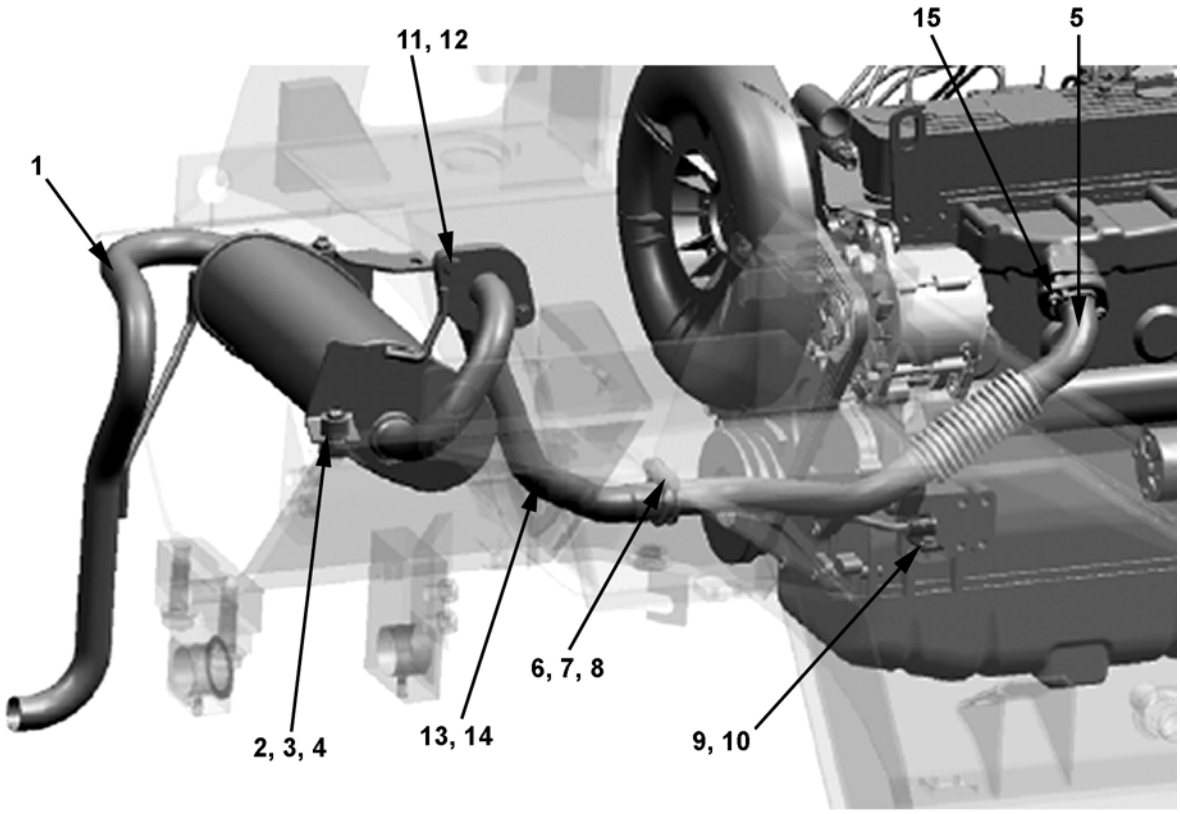

FD MODELS

03-0003

https://truckmanualshub.com/

EXHAUST - 4D94LE DIESEL - S/N 200001A~

Item	Part Number	Description	Qty	
1	3EB-03-A7110	MUFFLER (STD DIESEL)	1	
	3EB-03-A7610	MUFFLER (UL-S)	1	
2	3EB-03-51131	COLLAR	2	
3	01596-01009	NUT	2	
4	3EB-03-41120	RUBBER	2	
5	3EB-03-A7330	PIPE	1	
6	3EB-03-31530	CLAMP	1	
7	01643-31032	WASHER	1	
8	01582-11008	NUT	4	
9	3EB-03-51170	BRACKET	1	
10	01024-80820	BOLT	1	
11	01643-31032	WASHER	4	
12	01050-51035	BOLT	2	
13	3EB-03-A7321	PIPE (ALL EXCEPT 3.2T, 3.5T)	1	
	3EB-03-A7810	PIPE (3.2T, 3.5T ONLY)	1	
14	20692-65J00	EXHAUST GASKET	2	
15	26366-080002	NUT (COMES W/ ENGINE ASSY)	2	

https://truckmanualshub.com/

COOLING SYSTEM - RADIATOR - K21/K25 GASOLINE / LP / DUAL-FUEL - S/N 200001A~

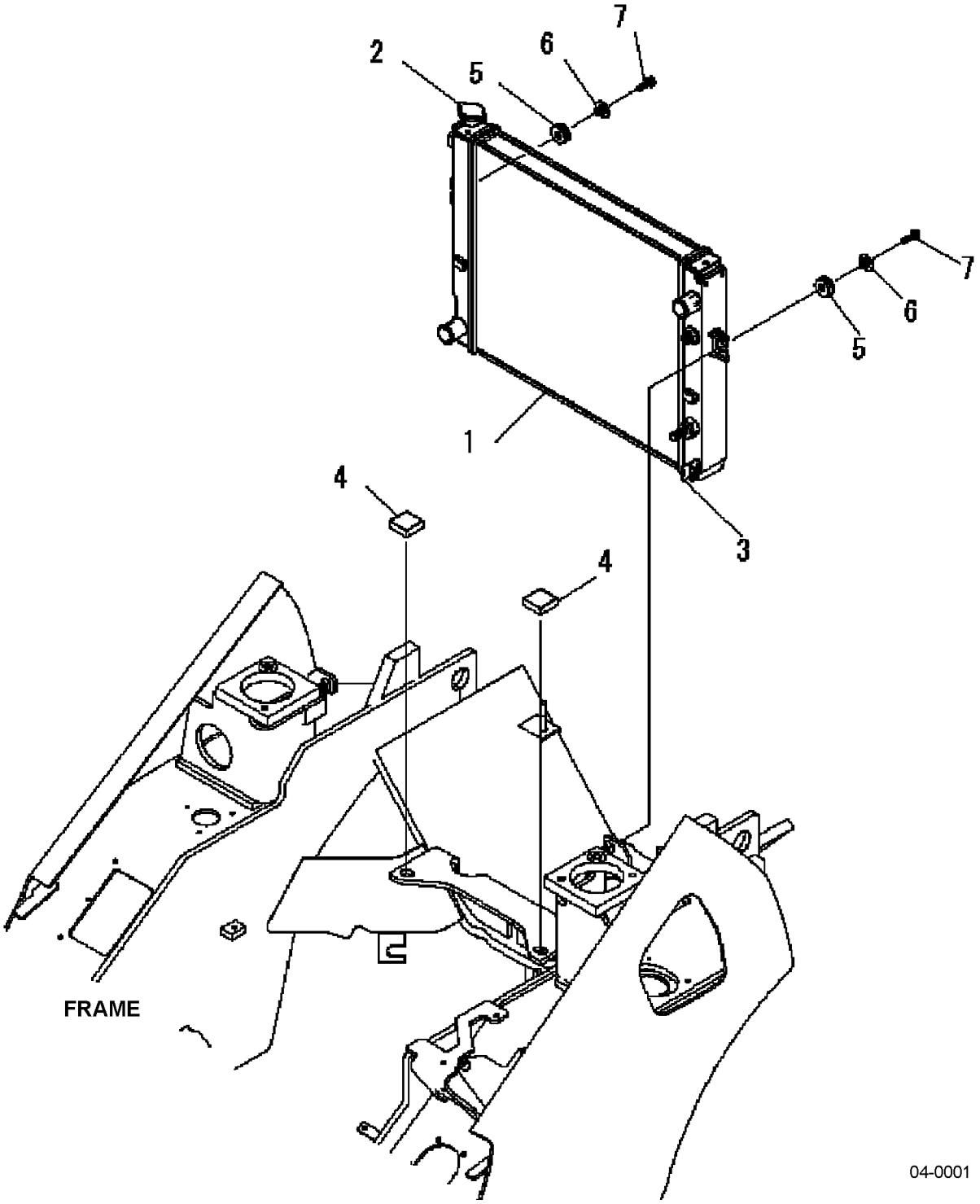

https://truckmanualshub.com/

COOLING SYSTEM - RADIATOR - K21/K25 GASOLINE / LP / DUAL-FUEL - S/N 200001A~

Item	Part Number	Description	Qty	
1	3EA-04-51110	RADIATOR (STD) (2.0T, 2.5T K21 FG)	1	
	3EB-04-A7210	RADIATOR (STD) (2.8T, 3.0T, 3.2T, 3.5T K25 FG)	1	
	3EB-04-A7110	RADIATOR, COTTON CORE (2.0T, 2.5T K21 FG)	1	
	3EB-04-A7120	RADIATOR, COTTON CORE (K21 UL-S) (MUST USE W/ FAN BELT P/N 02117-22023)	1	
	3EB-04-A7160	RADIATOR, COTTON CORE (ALL K25 FG) (USE W/ FAN BELT P/N 02117-20021).	1	
	3EB-04-A7180	RADIATOR, COTTON CORE (K25 UL-S) (MUST USE W/ FAN BELT P/N 02117-22023)	1	
2	3EB-04-21130	.CAP	1	
3	3EB-04-31140	.COCK ASSY	1	
4	3EB-04-41160	RUBBER.	2	
5	3EB-04-31170	RUBBER.	2	
6	3EB-04-31180	COLLAR	2	
7	01024-80830	BOLT.	2	

https://truckmanualshub.com/

COOLING SYSTEM - RADIATOR - 4D94E DIESEL - S/N 200001A~

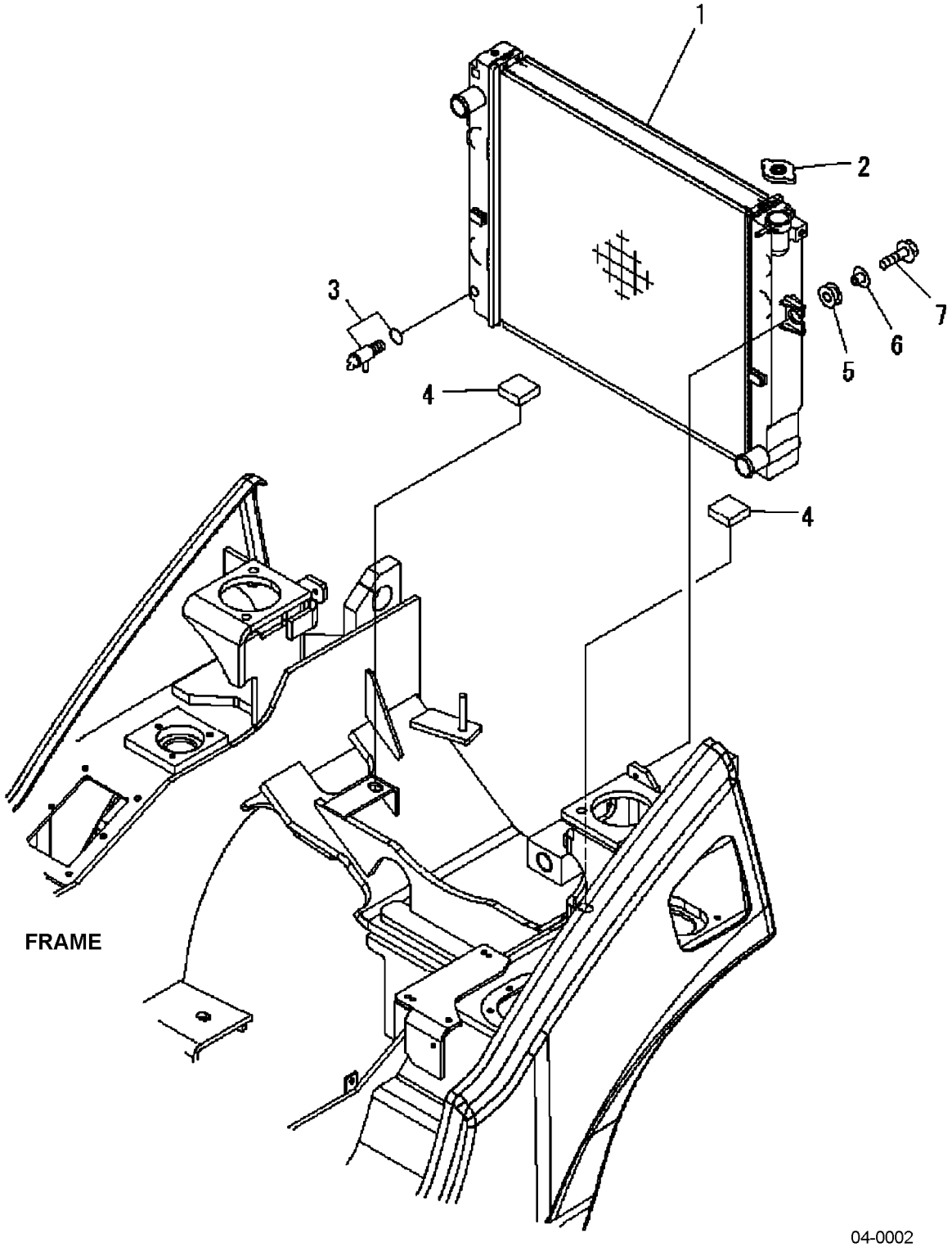

https://truckmanualshub.com/

COOLING SYSTEM - RADIATOR - 4D94E DIESEL - S/N 200001A~

Item	Part Number	Description	Qty	
1	3EB-04-52610	RADIATOR (STD) (2.0T, 2.5T, 2.8T, 3.0T FD) . .	1	
	3EB-04-53110	RADIATOR (STD) (3.2T, 3.5T FD)	1	
	3EB-04-A7310	RADIATOR, COTTON CORE (2.0T, 2.5T, 2.8T, 3.0T FD)	1	
	3EB-04-A7360	RADIATOR, COTTON CORE (3.2T, 3.5T FD) . .	1	
2	3EB-04-21130	.CAP	1	
3	3EB-04-31140	.COCK ASSY	1	
4	3EB-04-41160	RUBBER.	2	
5	3EB-04-31170	RUBBER.	2	
6	3EB-04-31180	COLLAR	2	
7	01024-80830	BOLT.	2	

https://truckmanualshub.com/

COOLING SYSTEM - SHROUD & HOSES - FG MODELS - S/N 200001A~

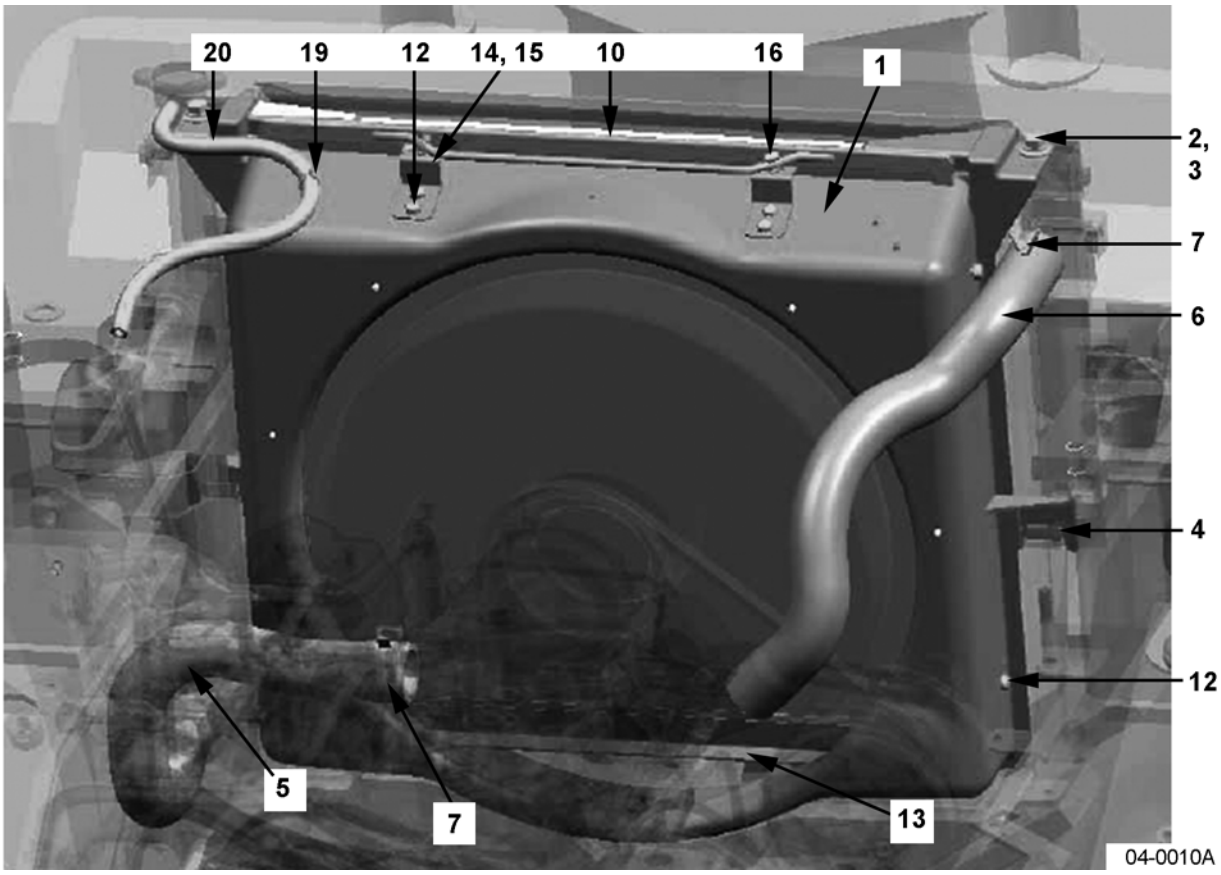

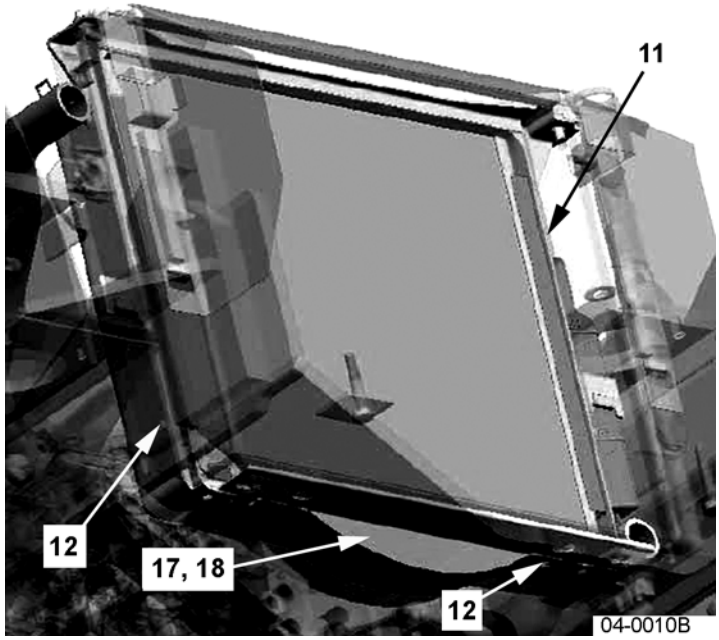

https://truckmanualshub.com/

COOLING SYSTEM - SHROUD & HOSES - FG MODELS - S/N 200001A~

Item	Part Number	Description	Qty	
1	3EB-04-A7542	SHROUD	1	
	3EB-04-A7542	SHROUD (LATIN AMERICAN DUAL-FUEL 2.0>3.0T) (EXPORT)	1	
2	01024-80820	BOLT	2	
3	34A-42-41130	WASHER	2	
4	3EB-04-42140	RUBBER	2	
5	3EB-04-A7511	HOSE, RADIATOR - LOWER	1	
6	3EB-04-A7521	HOSE, RADIATOR - UPPER	1	
	3EB-04-A7261	HOSE, UPPER (LATIN AMERICAN - DUAL-FUEL 2.0>3.0T) (EXPORT)	1	
7	37B-1FH-A020	CLAMP	2	
8	NOT USED			
9	NOT USED			
10	3EB-04-56620	SCREEN	1	
11	3EB-04-46620	BRACKET	2	
12	01023-10616	SCREW	12	
13	3EB-04-56630	BRACKET	1	
14	3EB-04-56640	BRACKET	2	
15	3EB-04-56650	PLATE	2	
16	3EC-04-34130	HOLDER	2	
17	3EB-04-A7580	RUBBER	1	
18	3EB-04-A7590	PLATE	1	
19	3EB-04-A7630	CLIP	1	
20	37B-1AC-A170	HOSE - OVERFLOW	1	
N/S	3EB-04-A7231	RING, COOLING (FOR SHROUD) (LATIN AMERICAN 2.0>3.0T) (EXPORT)	1	
N/S	3EB-04-51180	WASHER (FOR RING)	2	
N/S	01010-B0616	BOLT (FOR RING)	2	
N/S	01643-30623	WASHER (FOR RING)	2	
N/S	3EB-04-56520	CLIP (FOR RING)	2	
N/S	3EB-04-56530	CLIP (FOR RING)	2	

https://truckmanualshub.com/

COOLING SYSTEM - SHROUD & HOSES - FD MODELS - S/N 200001A~
(ALSO SEE FIG. 04-0012)

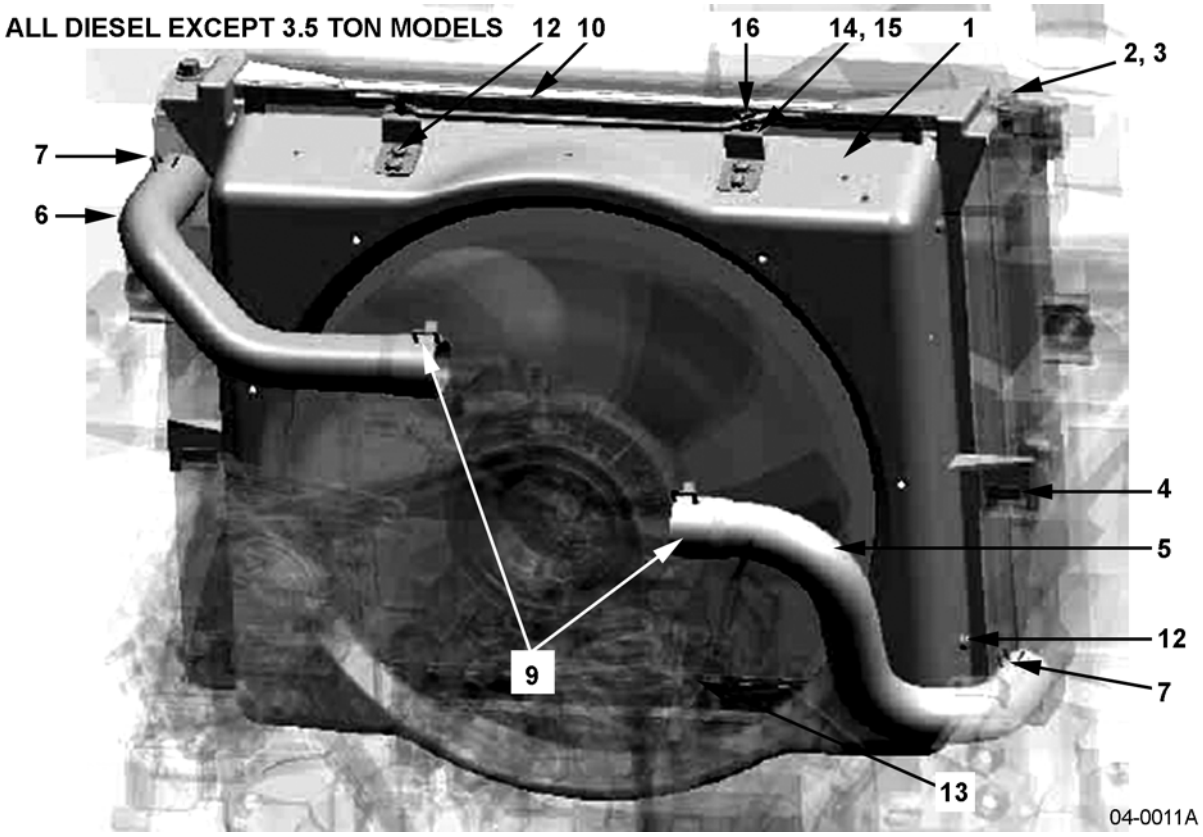

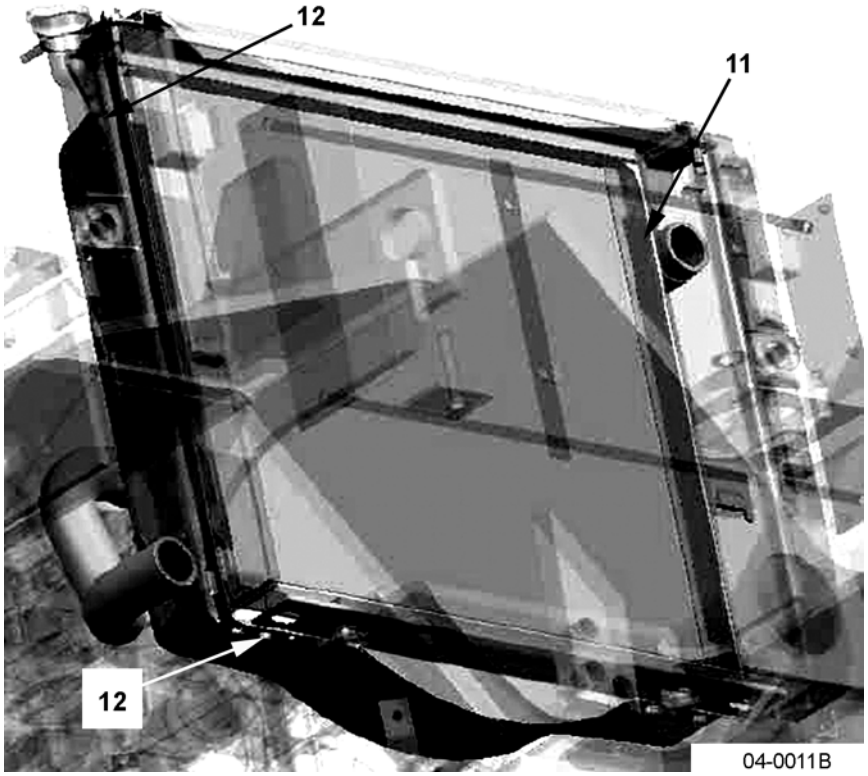

https://truckmanualshub.com/

COOLING SYSTEM - SHROUD & HOSES - FD MODELS - S/N 200001A~
(ALSO SEE FIG. 04-0012)

Item	Part Number	Description	Qty	
1	3EB-04-A7491	SHROUD (ALL EXCEPT 3.5T)	1	
	3EB-52-A7510	SHROUD (3.5T)	1	
2	01024-80820	BOLT	2	
3	34A-42-41130	WASHER	2	
4	3EB-04-42140	RUBBER	2	
5	3EB-04-A7561	HOSE, RADIATOR - LOWER (ALL EXCEPT 3.5T)	1	
	3EB-04-A7471	HOSE, RADIATOR - LOWER (3.5T)	1	
6	3EB-04-A7571	HOSE, RADIATOR - UPPER (ALL EXCEPT 3.5T)	1	
	3EB-04-A7481	HOSE, RADIATOR - UPPER (3.5T)	1	
7	37B-1FH-3010	CLAMP (ALL EXCEPT 3.5T)	2	
	37B-1FH-3010	CLAMP (3.5T)	1	
8	07280-05026	CLAMP (3.5T)	1	
9	37B-1FH-A020	CLAMP (ALL EXCEPT 3.5T)	2	
10	3EB-04-56620	SCREEN (ALL EXCEPT 3.5T)	1	
	3EB-04-56770	SCREEN (3.5T)	1	
11	3EB-04-46620	BRACKET	2	
12	01023-10616	SCREW	12	
13	3EB-04-56630	BRACKET	1	
14	3EB-04-56640	BRACKET	2	
15	3EB-04-56650	PLATE	2	
16	3EC-04-34130	HOLDER	2	
17	3EB-04-A7580	RUBBER	1	
18	3EB-04-A7590	PLATE	1	
19	3EB-04-A7630	CLIP	1	
20	37B-1AC-A170	HOSE - OVERFLOW (ALL EXCEPT 3.5T)	1	
	37B-1AC-A180	HOSE - OVERFLOW (3.5T)	1	
N/S	3EB-04-A7240	RING, COOLING (FOR SHROUD)	1	
N/S	3EB-04-51180	WASHER (FOR RING)	2	
N/S	01010-B0616	BOLT (FOR RING)	2	
N/S	01643-30623	WASHER	2	

https://truckmanualshub.com/

COOLING SYSTEM - SHROUD & HOSES - FD MODELS - S/N 200001A~ (ALSO SEE FIG. 04-0011)

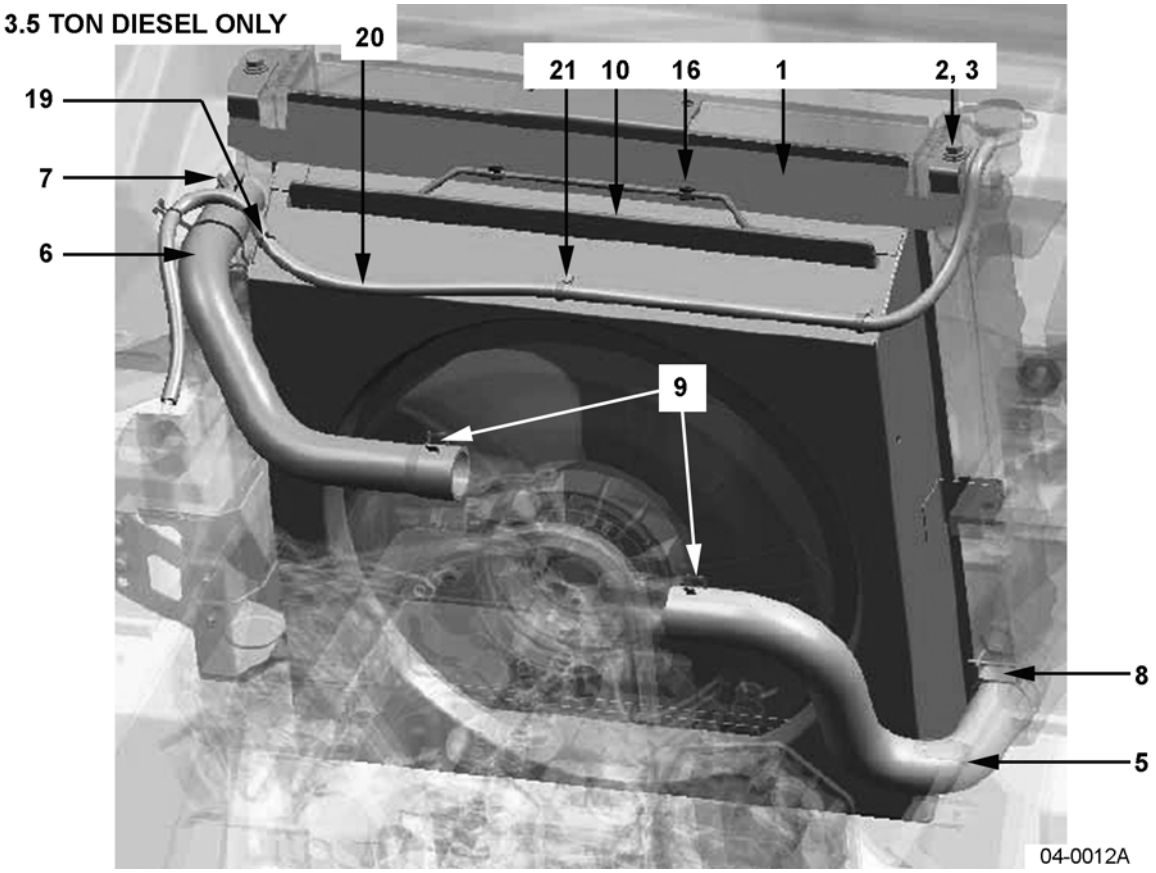

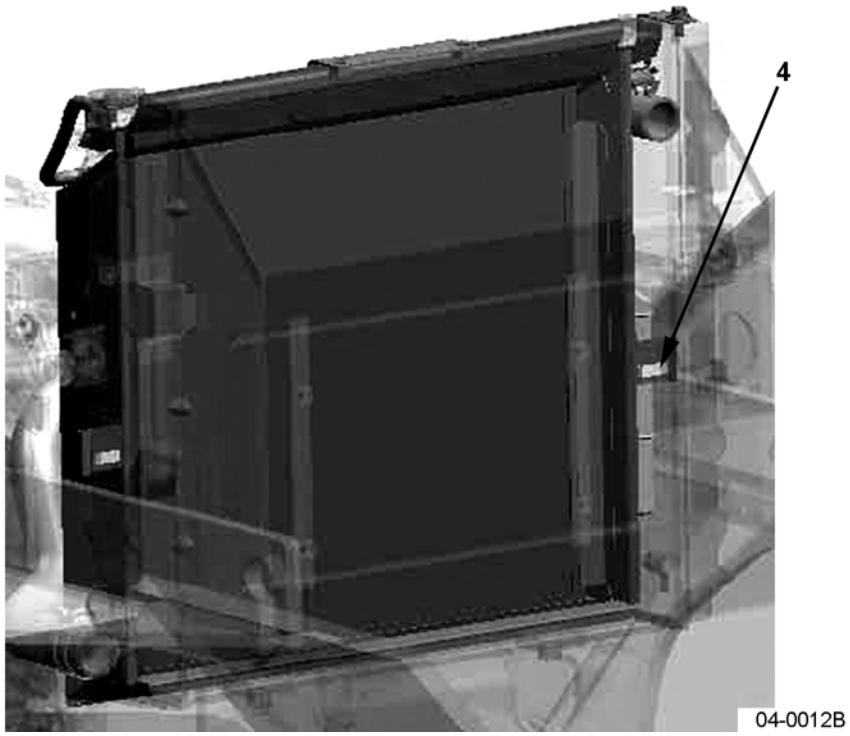

https://truckmanualshub.com/

COOLING SYSTEM - SHROUD & HOSES - FD MODELS - S/N 200001A~ (ALSO SEE FIG. 04-0011)

Item	Part Number	Description	Qty	
1	3EB-04-A7491	SHROUD (ALL EXCEPT 3.5T)	1	
	3EB-52-A7510	SHROUD (3.5T)	1	
2	01024-80820	BOLT	2	
3	34A-42-41130	WASHER	2	
4	3EB-04-42140	RUBBER	2	
5	3EB-04-A7561	HOSE, RADIATOR - LOWER (ALL EXCEPT 3.5T)	1	
	3EB-04-A7471	HOSE, RADIATOR - LOWER (3.5T)	1	
6	3EB-04-A7571	HOSE, RADIATOR - UPPER (ALL EXCEPT 3.5T)	1	
	3EB-04-A7481	HOSE, RADIATOR - UPPER (3.5T)	1	
7	37B-1FH-3010	CLAMP (ALL EXCEPT 3.5T)	2	
	37B-1FH-3010	CLAMP (3.5T)	1	
8	07280-05026	CLAMP (3.5T)	1	
9	37B-1FH-3020	CLAMP (ALL EXCEPT 3.5T)	2	
10	3EB-04-56620	SCREEN (ALL EXCEPT 3.5T)	1	
	3EB-04-56770	SCREEN (3.5T)	1	
11	3EB-04-46620	BRACKET	2	
12	01023-10616	SCREW	12	
13	3EB-04-56630	BRACKET	1	
14	3EB-04-56640	BRACKET	2	
15	3EB-04-56650	PLATE	2	
16	3EC-04-34130	HOLDER	2	
17	3EB-04-A7580	RUBBER	1	
18	3EB-04-A7590	PLATE	1	
19	3EB-04-A7630	CLIP	1	
20	37B-1AC-A170	HOSE - OVERFLOW (ALL EXCEPT 3.5T)	1	
	37B-1AC-A180	HOSE - OVERFLOW (3.5T)	1	
21	3EB-04-25140	CLAMP (3.5T)	2	

https://truckmanualshub.com/

COOLING SYSTEM - RADIATOR BACK COVER - ALL ENGINES - S/N 200001A~

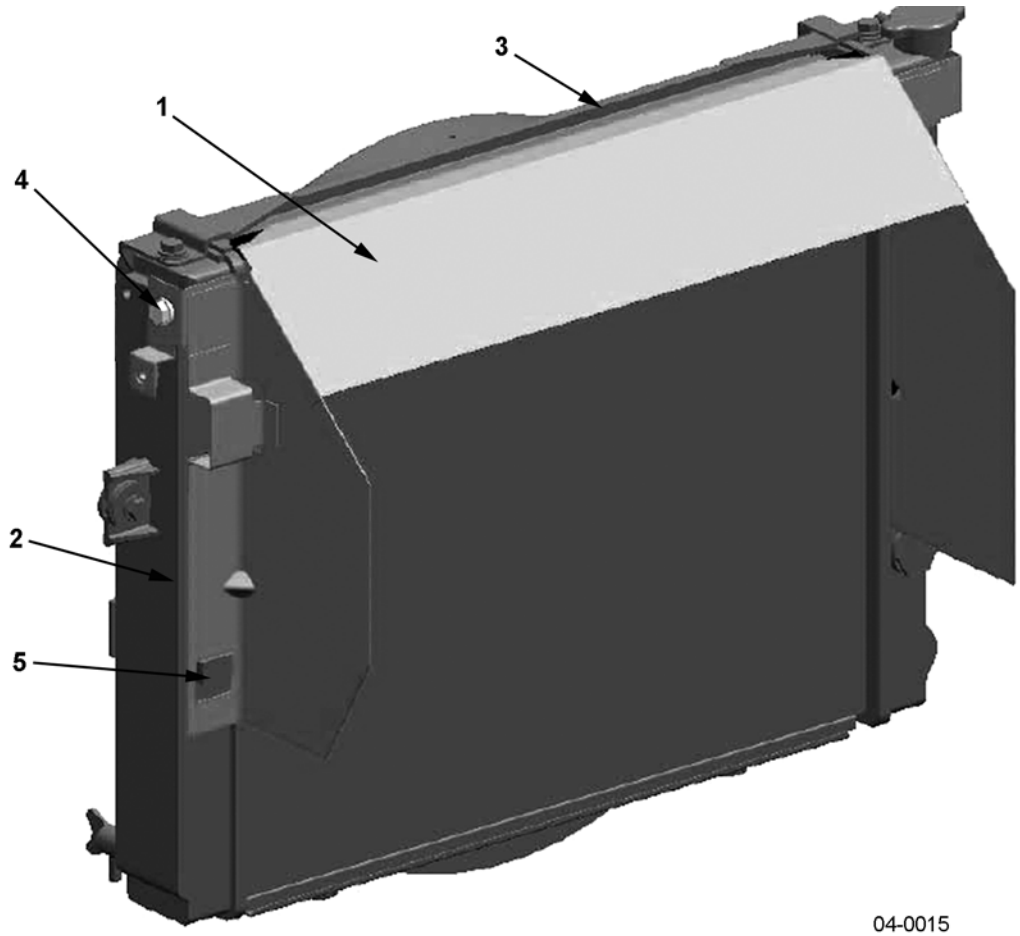

https://truckmanualshub.com/

COOLING SYSTEM - RADIATOR BACK COVER - ALL ENGINES - S/N 200001A~

Item	Part Number	Description	Qty	
1	3EB-04-A7410	BACK COVER ASSY, RADIATOR (FG)	1	
	3EB-04-52910	BACK COVER ASSY, RADIATOR (FD)	1	
2	3EB-04-A7420	SPONGE (FG)	2	
	3EB-04-51420	SPONGE (FD)	2	
3	3EB-04-51430	SPONGE, TRANSVERSE (ALL)	1	
4	01024-80816	BOLT (COVER-TO-RADIATOR)	2	
5	3EB-04-32140	RUBBER (COVER SIDES)	2	

https://truckmanualshub.com/

COOLING SYSTEM - RESERVE TANK - K21/K25 ENGINES - S/N 200001A~

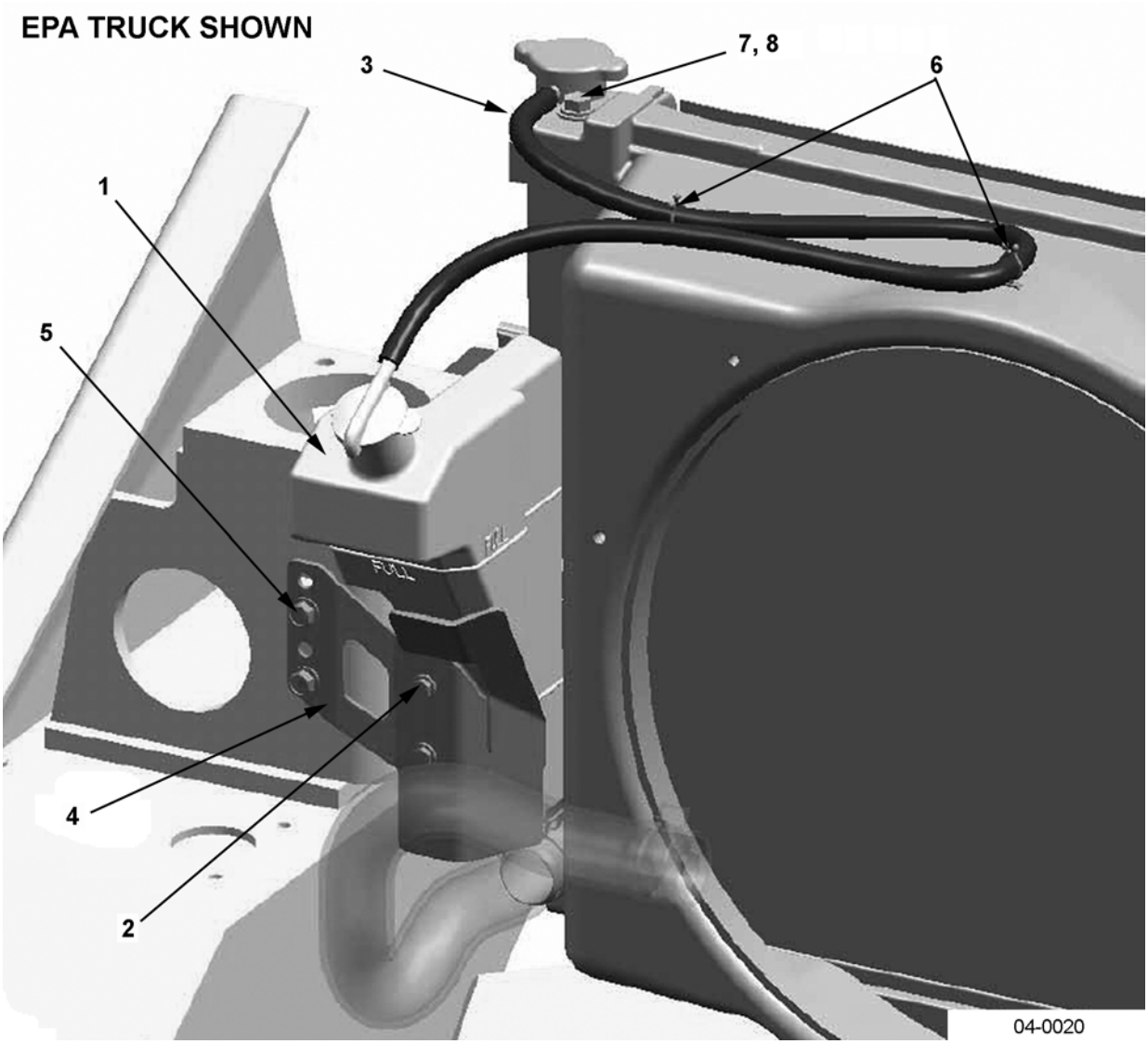

https://truckmanualshub.com/

COOLING SYSTEM - RESERVE TANK - K21/K25 ENGINES - S/N 200001A~

Item	Part Number	Description	Qty	
1	3EB-04-A7640	RESERVE TANK ASSY (FG)	1	
2	01024-80612	BOLT (RADIATOR SIDE OF BRACKET)	2	
3	37B-1AC-A150	HOSE, OVERFLOW (EPA)	1	
	37B-1AC-A110	HOSE, OVERFLOW (FG EXPORT 3.2T, 3.5T) .	1	
4	3EB-04-A7621	BRACKET	1	
5	01435-00812	BOLT (BRACKET-TO-FRAME)(EXPORT 3.2T, 3.5T USES 3 BOLTS)	2	
6	3EB-04-A7630	CLIP (FOR OVERFLOW HOSE) (EPA ONLY) . .	2	
7	01024-80820	BOLT	2	
8	34A-42-41130	WASHER.	2	
N/S	04434-51308	CLIP (AT RADIATOR END OF OVERFLOW HOSE) (EXPORT 3.2T, 3.5T MODELS ONLY)	1	

https://truckmanualshub.com/

COOLING SYSTEM - RESERVE TANK - 4D94E ENGINES - S/N 200001A~

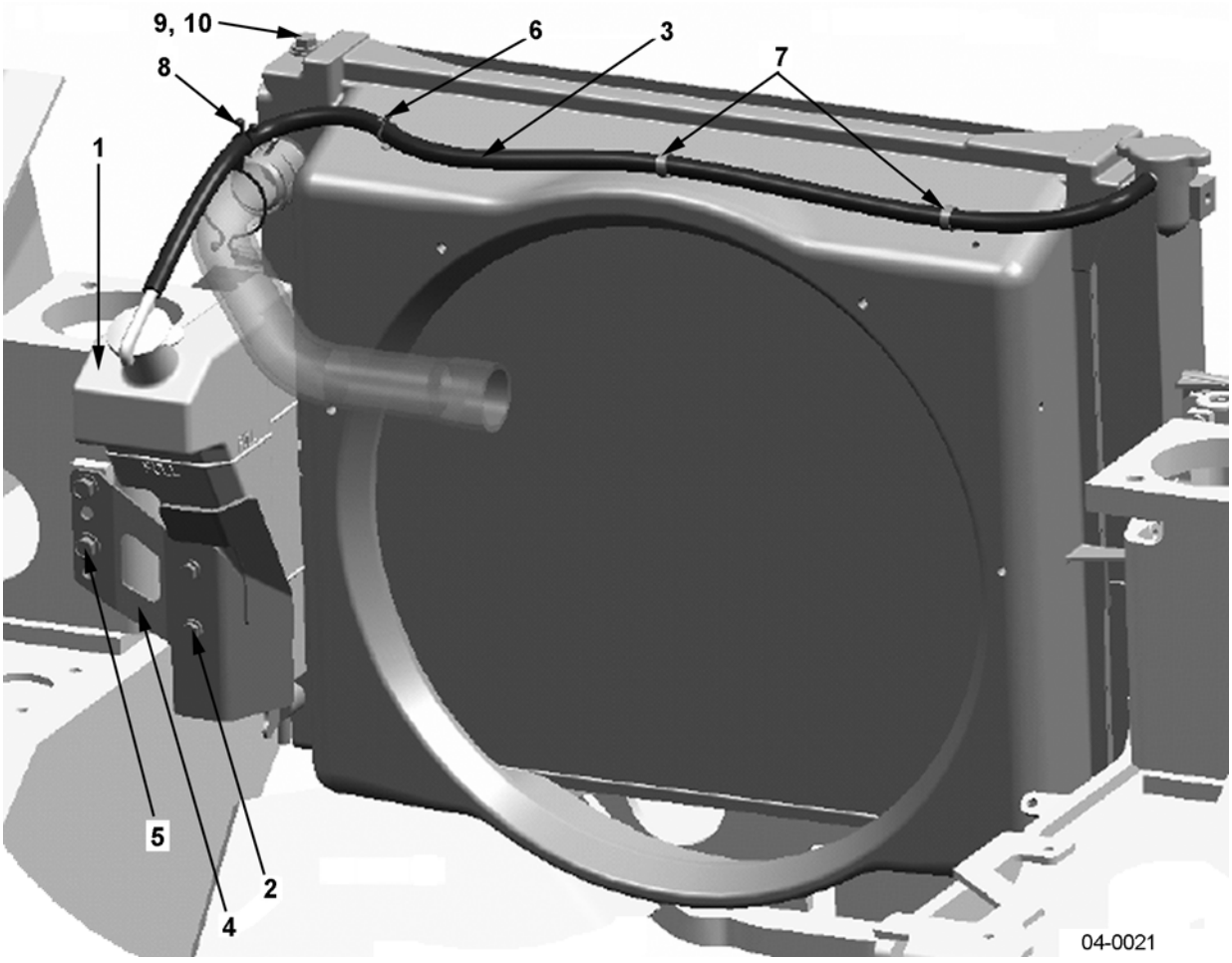

https://truckmanualshub.com/

COOLING SYSTEM - RESERVE TANK - 4D94E ENGINES - S/N 200001A~

Item	Part Number	Description	Qty	
1	3EB-04-A7640	RESERVE TANK ASSY(FD)	1	
2	01024-80612	BOLT (RADIATOR SIDE OF BRACKET)	2	
3	37B-1AC-A150	HOSE, OVERFLOW (EXC. 3.2T, 3.5T)	1	
	37B-1AC-A160	HOSE, OVERFLOW (3.2T, 3.5T)	1	
4	3EB-04-A7621	BRACKET	1	
5	01435-00812	BOLT (BRACKET-TO-FRAME)	2	
6	3EB-04-A7630	CLIP (FOR OVERFLOW HOSE)	1	
7	3EB-04-25140	CLAMP (FOR HOSE)	2	
8	37B-1EP-4020	LOCK (FOR HOSE)	1	
9	01024-80820	BOLT	2	
10	34A-42-41130	WASHER	2	

https://truckmanualshub.com/

COOLING SYSTEM - TORCON COOLER - K21 ENGINES - S/N 200001A~

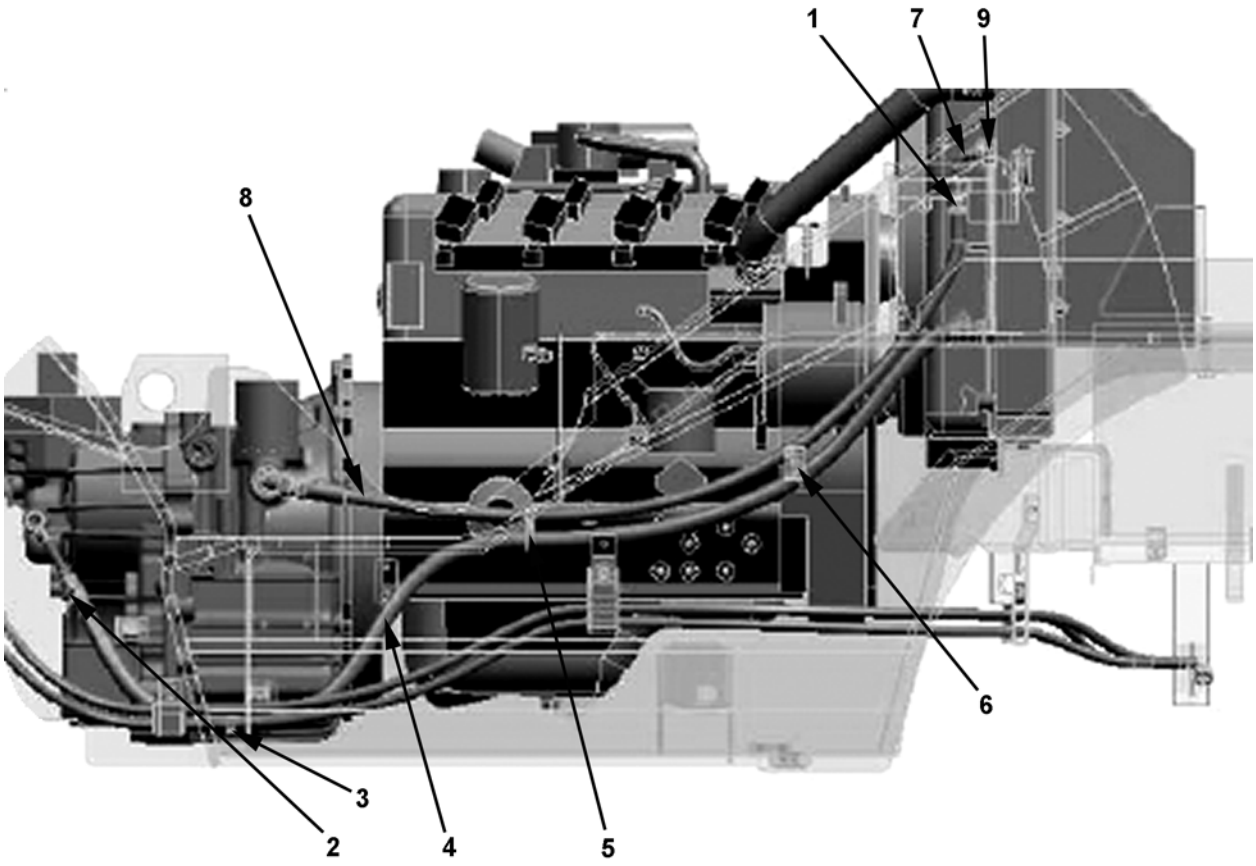

K21 ENGINES

04-0050

https://truckmanualshub.com/

COOLING SYSTEM - TORCON COOLER - K21 ENGINES - S/N 200001A~

Item	Part Number	Description	Qty	
1	02896-21009	O-RING	1	
2	07281-00229	CLAMP	2	
3	37B-1PC-5060	CLAMP (CLAMP HOSE-TO-P/S HOSE)	1	
4	3EB-04-A7810	HOSE	1	
5	3EB-04-34550	CLAMP (DOUBLE)	1	
6	3EB-04-44190	CLAMP (DOUBLE)	1	
7	3EB-04-48110	PIPE ASSY	1	
8	3EB-04-A7820	HOSE	1	
9	3EB-04-48140	O-RING	1	

https://truckmanualshub.com/

COOLING SYSTEM - TORCON COOLER - K25 ENGINES / GAS - S/N 200001A~

K25 ENGINES

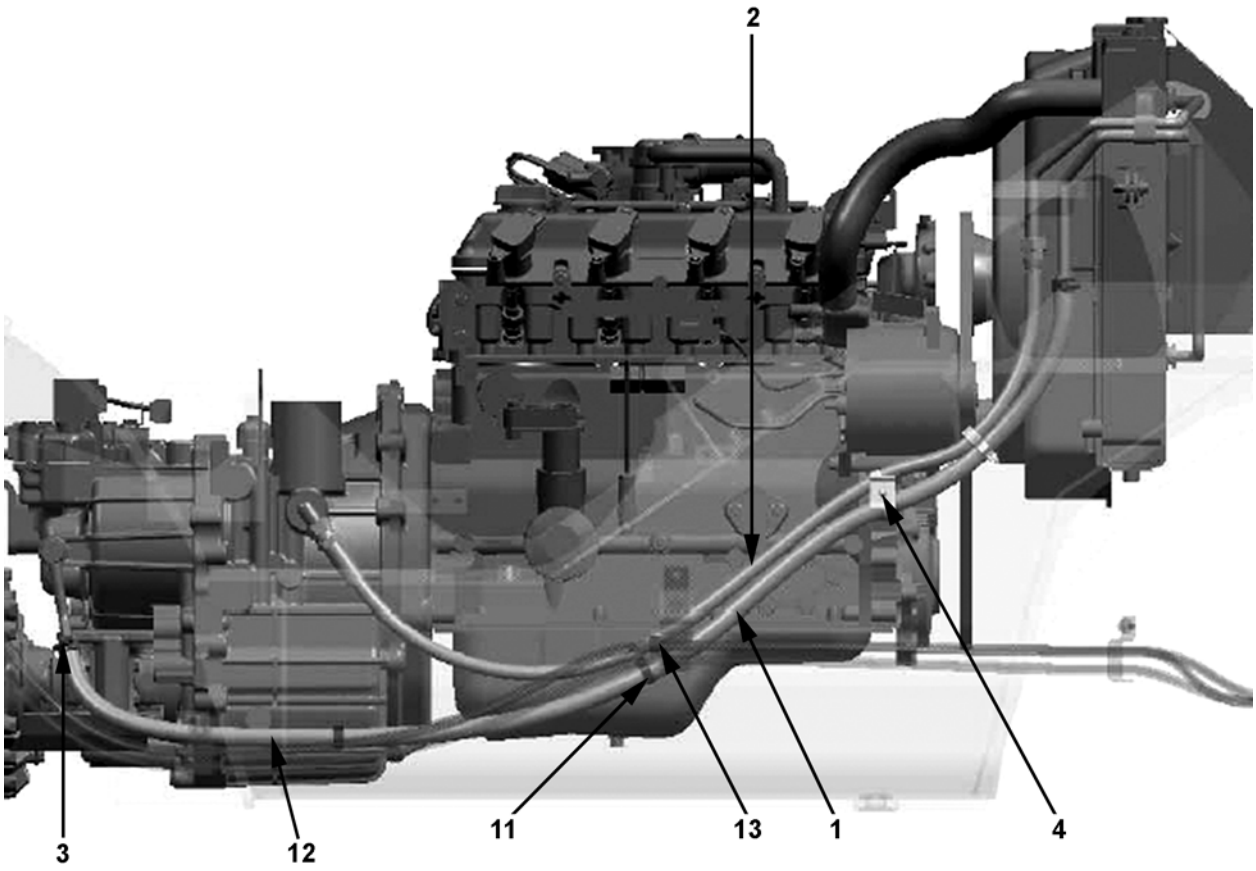

04-0051

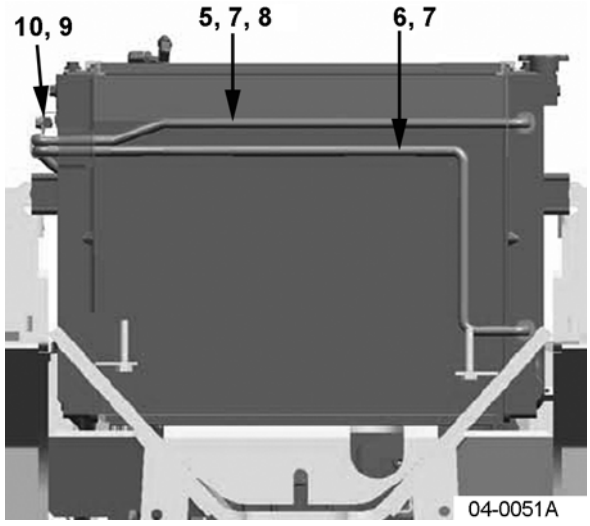

04-0051A



TOP VIEW

04-0051B

https://truckmanualshub.com/

COOLING SYSTEM - TORCON COOLER - K25 ENGINES / GAS - S/N 200001A~

Item	Part Number	Description	Qty	
1	3EB-04-A7810	HOSE	1	
2	3EB-04-A7820	HOSE	1	
3	07281-00229	CLAMP	2	
4	3EB-04-44190	CLAMP (DOUBLE)	3	
5	3EB-04-A7910	PIPE ASSY	1	
6	3EB-04-A7920	PIPE ASSY	1	
7	3EB-04-48140	O-RING	2	
8	02896-21009	O-RING	1	
9	04435-51308	CLIP	1	
10	01435-00814	BOLT	1	
11	3EB-04-34550	CLAMP	1	
12	37B-1PC-5060	CLAMP (ITEM # 1 HOSE-TO-P/S HOSE)	1	
13	3EB-66-41461	CLAMP	1	

https://truckmanualshub.com/

COOLING SYSTEM - TORCON COOLER - 4D94LE ENGINES - S/N 200001A~ ALL FD EXCEPT 3.2T & 3.5T

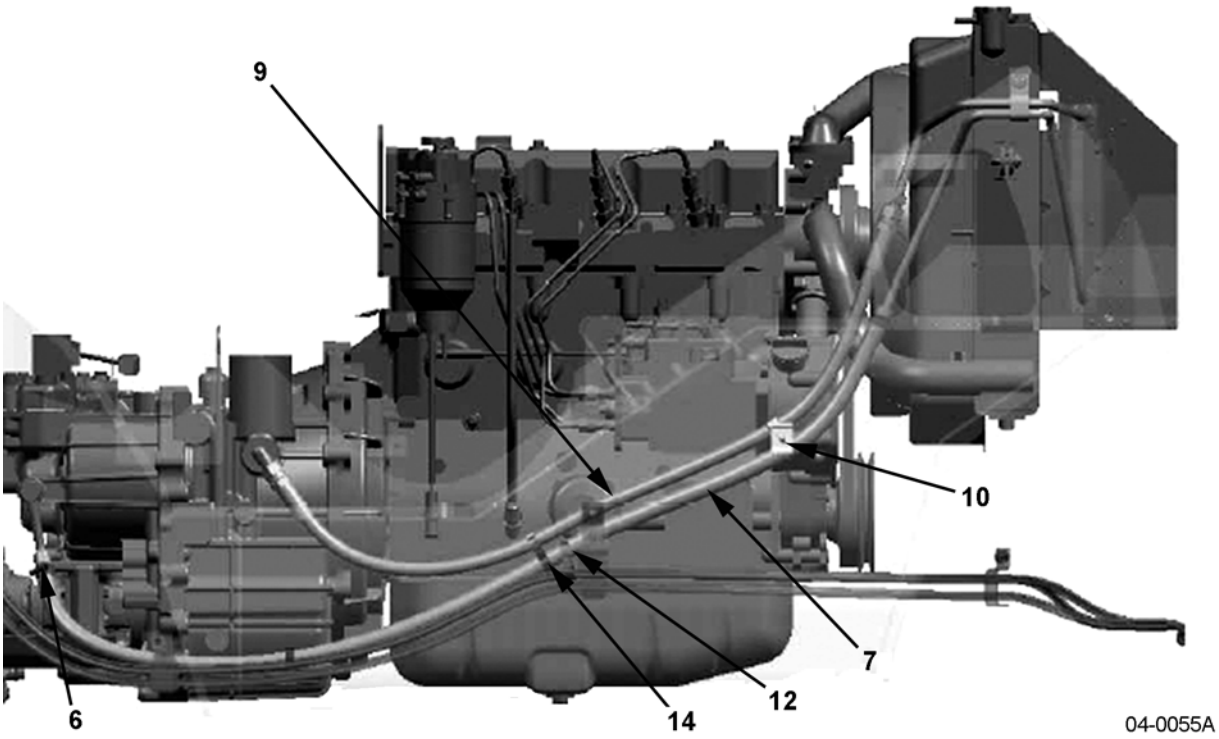

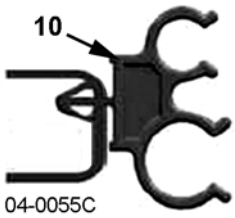

https://truckmanualshub.com/

COOLING SYSTEM - TORCON COOLER - 4D94LE ENGINES - S/N 200001A~ ALL FD EXCEPT 3.2T & 3.5T

Item	Part Number	Description	Qty	
1	3EB-04-51230	OIL COOLER	1	
2	01435-00814	BOLT	5	
3	07000-A2018	O-RING	2	
4	3EA-M1-17170	NIPPLE	2	
5	3EB-04-51711	PIPE	1	
6	07281-00229	CLAMP	2	
7	3EB-04-A7870	HOSE	1	
8	3EB-04-51721	PIPE	1	
9	07102-203A9	HOSE	1	
10	3EB-04-44190	CLAMP (DOUBLE)	1	
11	04435-51208	CLIP	1	
12	3EB-66-41461	CLAMP	1	
13	37B-1PC-5060	CLAMP (CLAMP W/ P/S HOSE)	1	
14	37B-1PC-5090	CLAMP (DOUBLE)	1	

https://truckmanualshub.com/

COOLING SYSTEM - TORCON COOLER - 4D94LE ENGINES - S/N 200001A~ ALL 3.2T & 3.5T

FD 3.2T, 3.5T

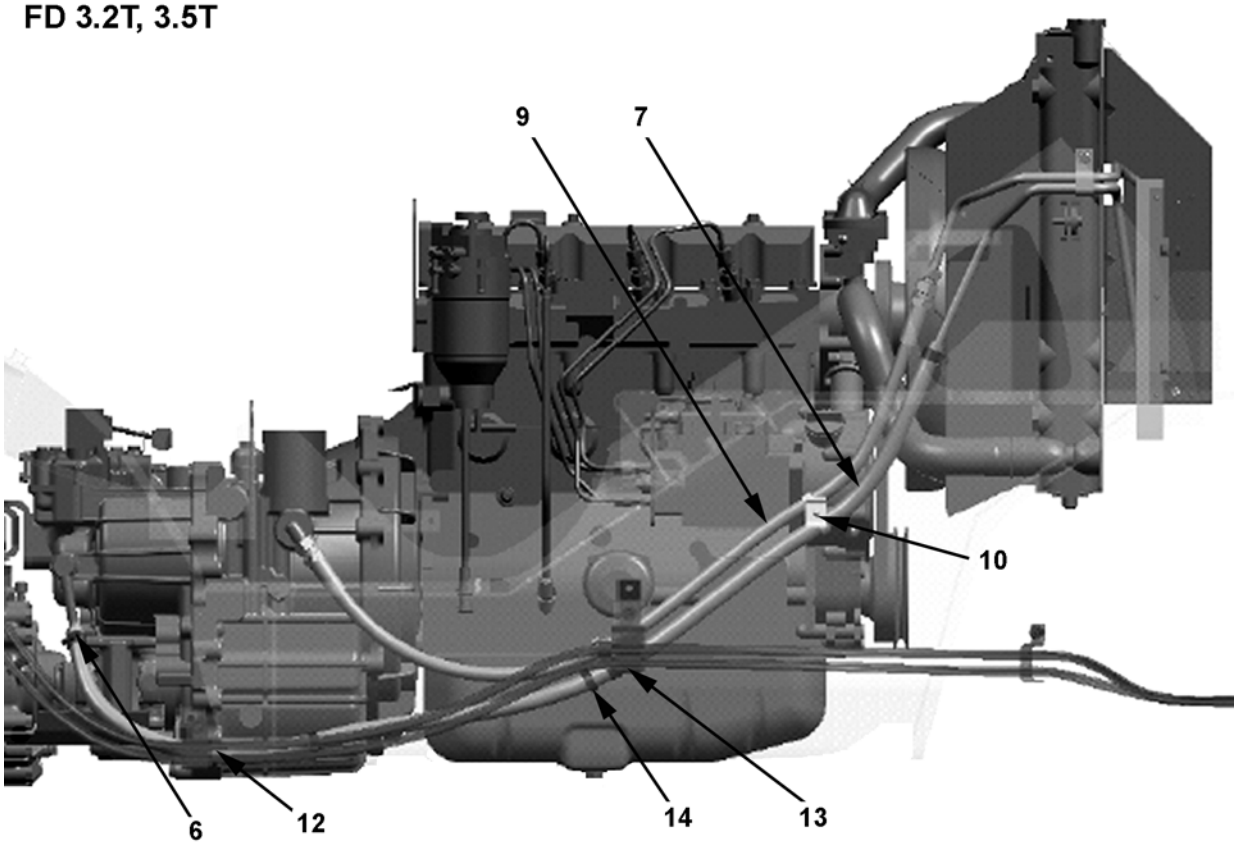

04-0056

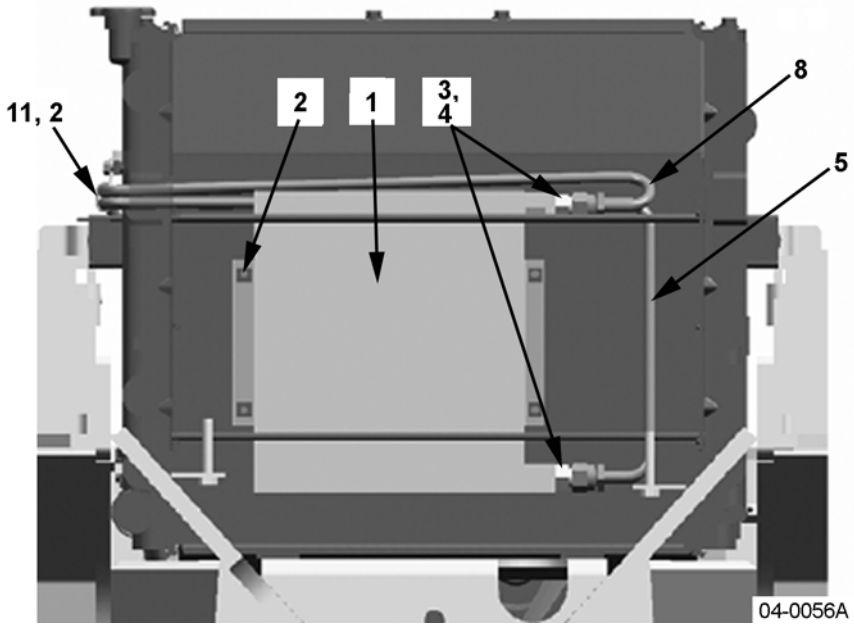

04-0056A

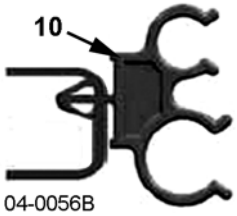

04-0056B

https://truckmanualshub.com/

COOLING SYSTEM - TORCON COOLER - 4D94LE ENGINES - S/N 200001A~ ALL 3.2T & 3.5T

Item	Part Number	Description	Qty	
1	3EB-04-35510	OIL COOLER	1	
2	01435-00814	BOLT	5	
3	07000-A2018	O-RING	2	
4	3EA-M1-17170	NIPPLE	2	
5	3EB-04-53410	PIPE	1	
6	07281-00229	CLAMP	2	
7	3EB-04-A7870	HOSE	1	
8	3EB-04-53420	PIPE	1	
9	07102-203A9	HOSE	1	
10	3EB-04-44190	CLAMP	1	
11	04435-51208	CLIP	1	
12	37B-1PC-5060	CLAMP (CLAMP TOGETHER W/ P/S HOSE)	1	
13	3EB-66-41461	CLAMP	1	
14	37B-1PC-5090	CLAMP	1	

https://truckmanualshub.com/

FUEL SYSTEM - GASOLINE - TANK - S/N 200001A~

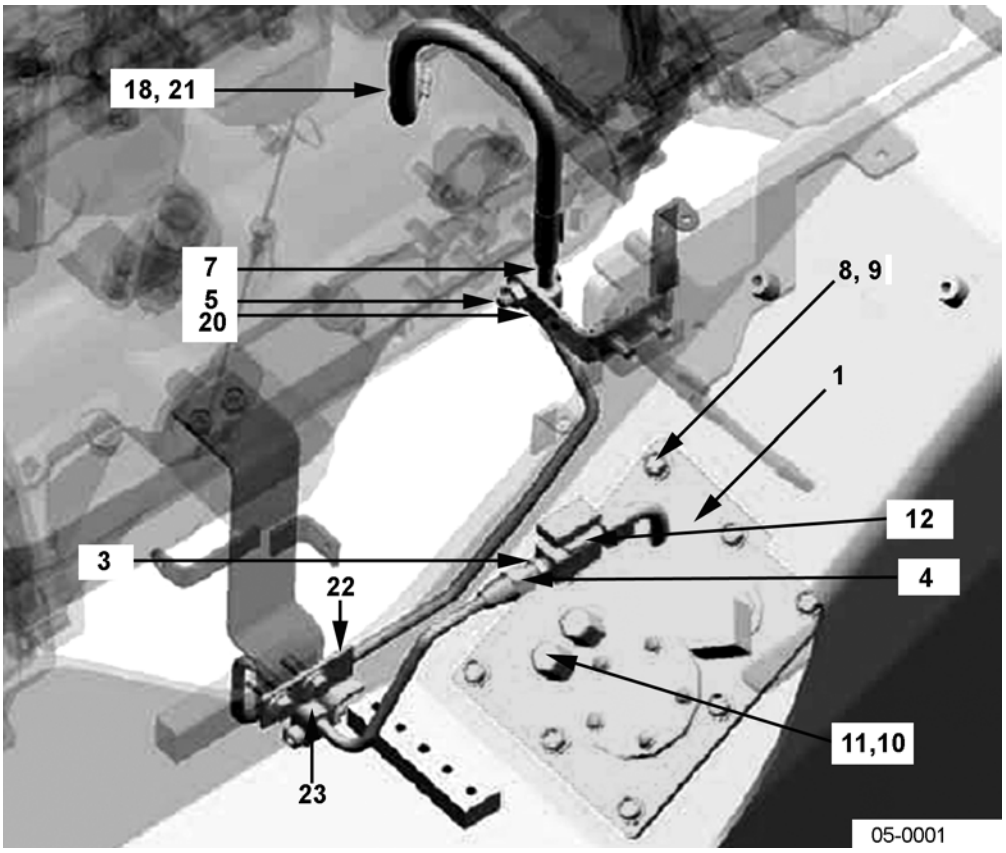

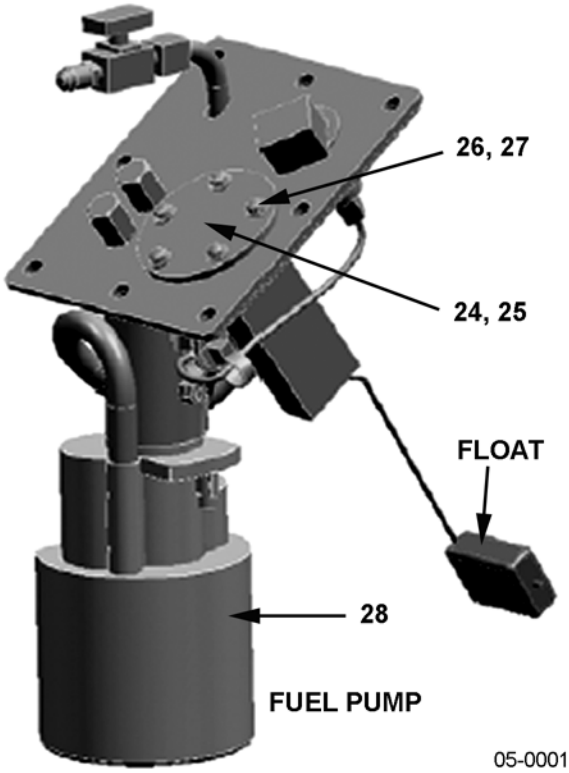

https://truckmanualshub.com/

FUEL SYSTEM - GASOLINE - TANK - S/N 200001A~

Item	Part Number	Description	Qty	
1	3EB-05-A7491	COVER ASSY.	1	
2	3EB-05-A7420	GASKET . . . . . (NOT SHOWN)	1	
3	3EA-05-A6130	NIPPLE	1	
4	3EB-05-A7451	PIPE (PNEUMATIC) (WHITE PAINT ON SLEEVE NUT)	1	
	3EB-05-A7551	PIPE (CUSHION) (NO PAINT ON SLEEVE NUT)	1	
5	01252-70830	BOLT.	2	
6	3EB-05-A7460	BRACKET. . . . . (NOT SHOWN)	1	
7	3EB-05-A7480	PIPING CLIP.	2	
8	3EB-66-43670	BOLT.	8	
9	3EB-55-47130	COLLAR	8	
10	3EB-05-A7430	WIRE (JUMPER)	2	
11	3EA-66-33581	SEAL WASHER	2	
12	3EA-05-A6110	COCK	1	
13	08059-00310	CLAMP . . . . . (NOT SHOWN)	2	
14	01010-80660	BOLT. . . . . (NOT SHOWN)	2	
15	01580-10605	NUT. . . . . (NOT SHOWN)	4	
16	01640-20610	WASHER . . . . . (NOT SHOWN)	2	
17	3EB-05-A7470	CLIP . . . . . (NOT SHOWN)	1	
18	3FD-05-26130	CLAMP	4	
19	3EB-05-A7530	NIPPLE. . . . . (NOT SHOWN)	1	
20	3EB-05-A7570	BRACKET.	1	
21	3FD-05-26140	HOSE	1	
22	01024-80825	BOLT.	2	
23	3EB-05-A7580	BRACKET.	2	
24	3EB-55-51410	TANK UNIT	1	
25	3EB-55-51430	PACKING	1	
26	01220-40512	SCREW.	5	
27	3SB-55-11380	GASKET	5	
28	37B-1DU-3031	FUEL PUMP ASSY.	1	

https://truckmanualshub.com/

FUEL SYSTEM - DIESEL - TANK - S/N 200001A~

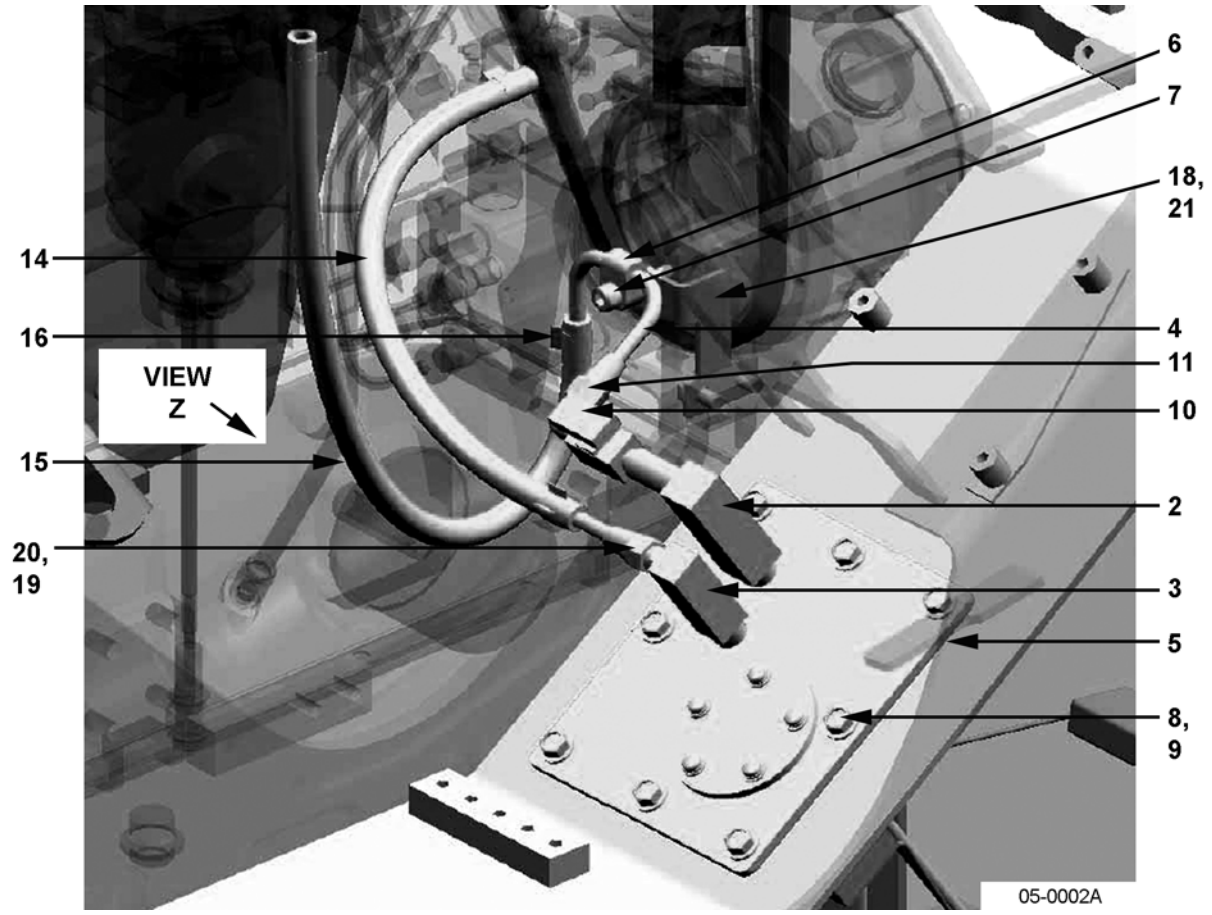

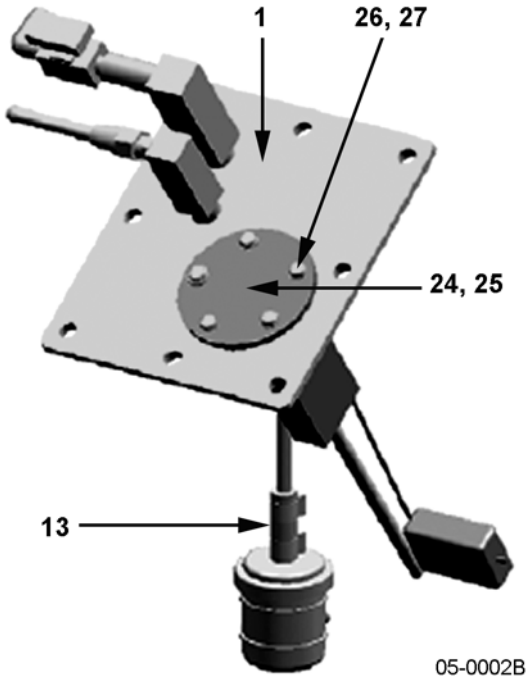

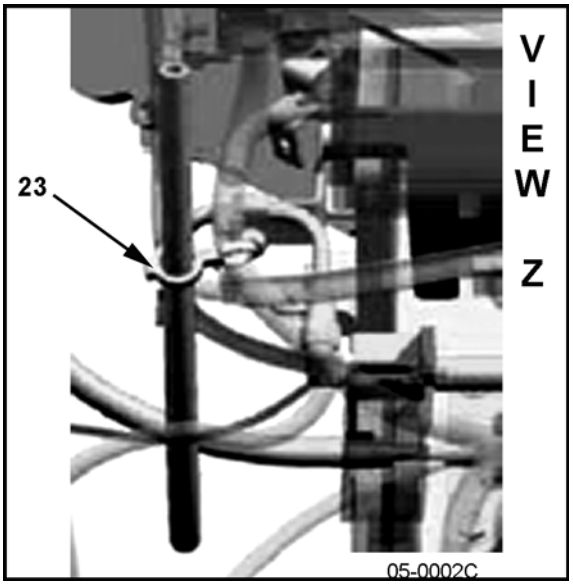

https://truckmanualshub.com/

FUEL SYSTEM - DIESEL - TANK - S/N 200001A~

Item	Part Number	Description	Qty	
1	3EB-05-A7910	COVER	1	
2	3EB-05-A7921	BLOCK	1	
3	3EB-05-A7930	BLOCK	1	
4	3EB-05-A7940	PIPE	1	
5	3EB-05-A7420	GASKET	1	
6	3EB-05-A7480	PIPING CLIP	1	
7	01252-70835	BOLT	1	
8	3EB-66-43670	BOLT	8	
9	3EB-55-47130	COLLAR	8	
10	3EA-05-A6110	COCK	1	
11	3EA-05-A6120	ELBOW	1	
12	NOT USED			
13	3EB-05-34130	HOSE	1	
14	37B-1FA-A050	HOSE (340 MM LONG)	1	
15	37B-1FA-A070	HOSE (500 MM LONG)	1	
16	07285-00130	CLIP	6	
17	NOT USED			
18	01024-80816	BOLT	2	
19	3EA-05-A6130	NIPPLE	1	
20	3EB-05-A7620	PIPE	1	
21	3EB-05-A7630	PLATE	1	
22	NOT USED			
23	3EB-05-A7610	CLIP	2	
24	3EB-55-51410	TANK UNIT	1	
25	3EB-55-51430	PACKING	1	
26	01220-40512	SCREW	5	
27	3SB-55-11380	GASKET	5	

https://truckmanualshub.com/

FUEL SYSTEM - DIESEL - TANK UNIT - S/N 200001A~

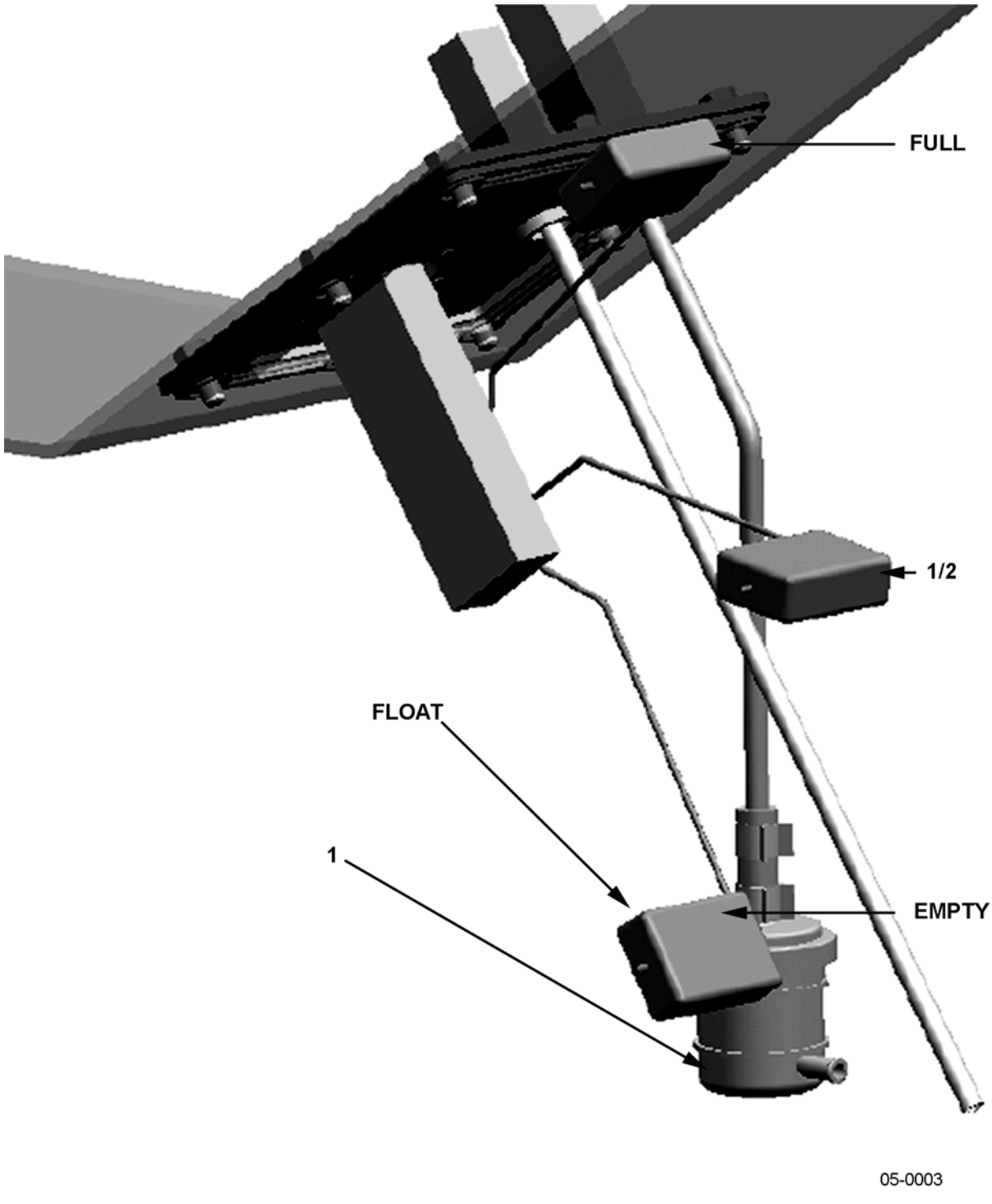

https://truckmanualshub.com/

FUEL SYSTEM - DIESEL - TANK UNIT - S/N 200001A~

Item	Part Number	Description	Qty	
1	3EB-55-51410	TANK UNIT	1	

https://truckmanualshub.com/

LPG FUEL SYSTEM - OVERVIEW - S/N 200001A~
(ALSO SEE FIG. 06-0002)

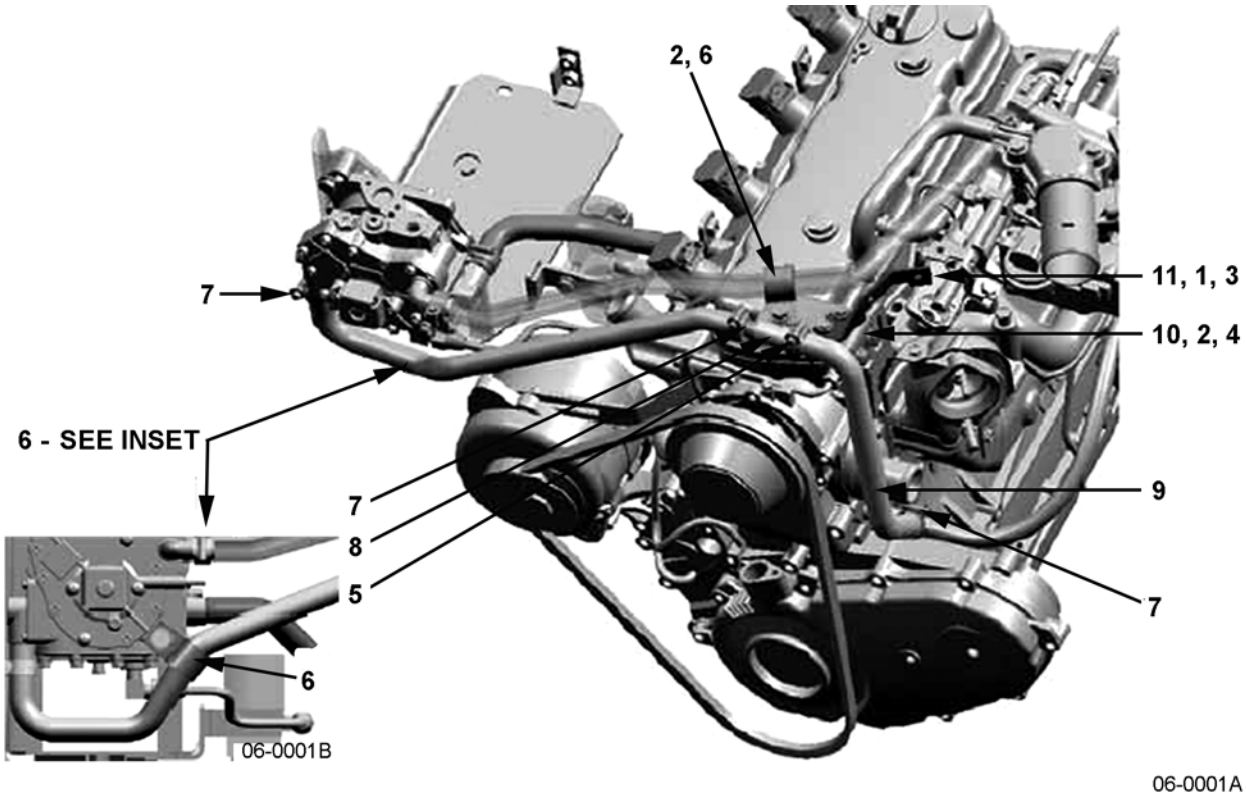

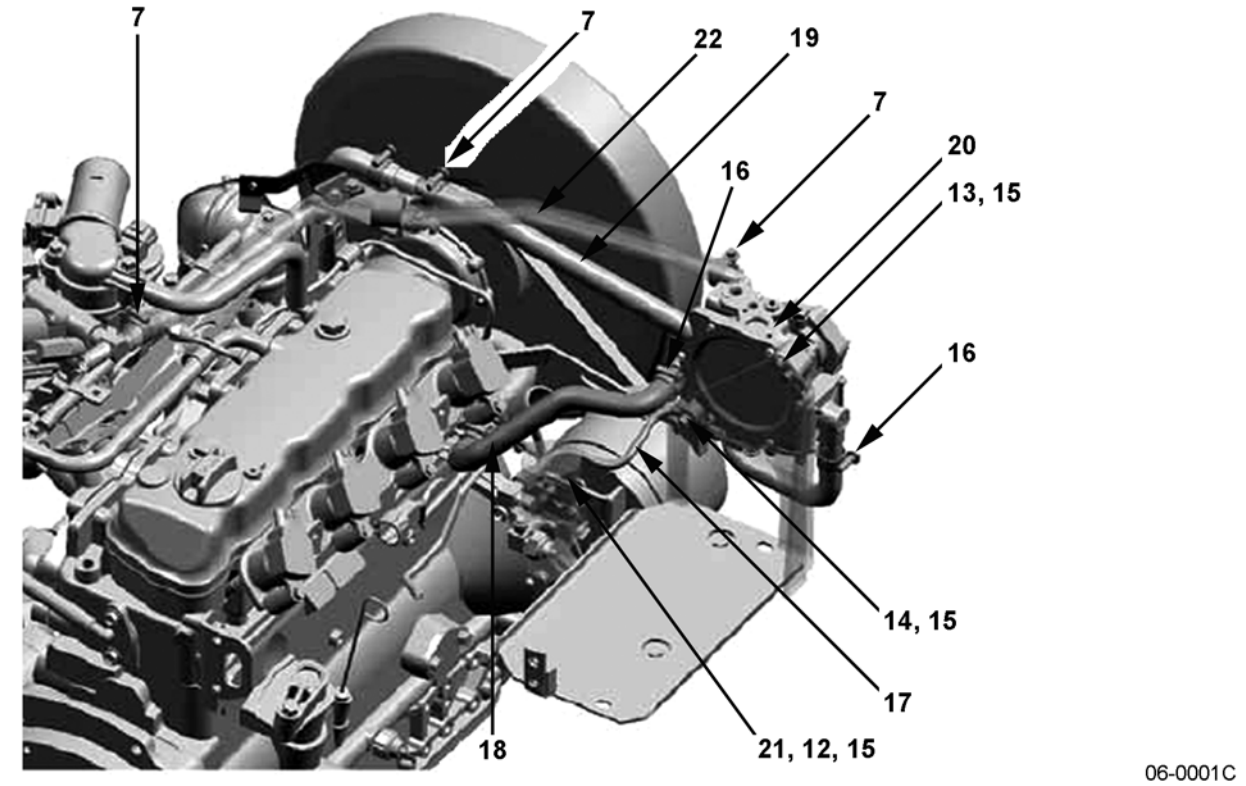

https://truckmanualshub.com/

LPG FUEL SYSTEM - OVERVIEW - S/N 200001A~
(ALSO SEE FIG. 06-0002)

Item	Part Number	Description	Qty	
1	01010-80616	BOLT	2	
2	01010-80820	BOLT	3	
3	01643-30623	WASHER	2	
4	01643-30823	WASHER	3	
5	04434-51408	CLIP	1	
6	04434-52310	CLIP	2	
7	07281-00259	CLAMP	5	
8	3EA-05-39950	PIPE	1	
9	3EB-05-A7230	HOSE	1	
10	3EB-05-A7260	BRACKET	1	
11	3EB-05-A7270	BRACKET	1	
12	01010-80816	BOLT	2	
13	01010-80835	BOLT	1	
14	01010-80890	BOLT	1	
15	01643-30823	WASHER	4	
16	07281-00259	CLAMP	3	
17	3EA-05-A7610	PIPE	1	
18	3EB-05-A7180	HOSE (WATER SUPPLY)	1	
19	3EB-05-A7290	HOSE (WATER RETURN)	1	
20	16310-GU20A	VAPORIZER (COMPLETE)	1	
21	17904-GU20A	SOLENOID VALVE ASSY	1	
22	17527-GU24A	HOSE	1	
23	3EA-05-39680	PURSE LOCK (NOT SHOWN)	5	

https://truckmanualshub.com/

LPG FUEL SYSTEM - CLIPS & CLAMPS - S/N 200001A~
(ALSO SEE FIG. 06-0001)

TOP VIEW

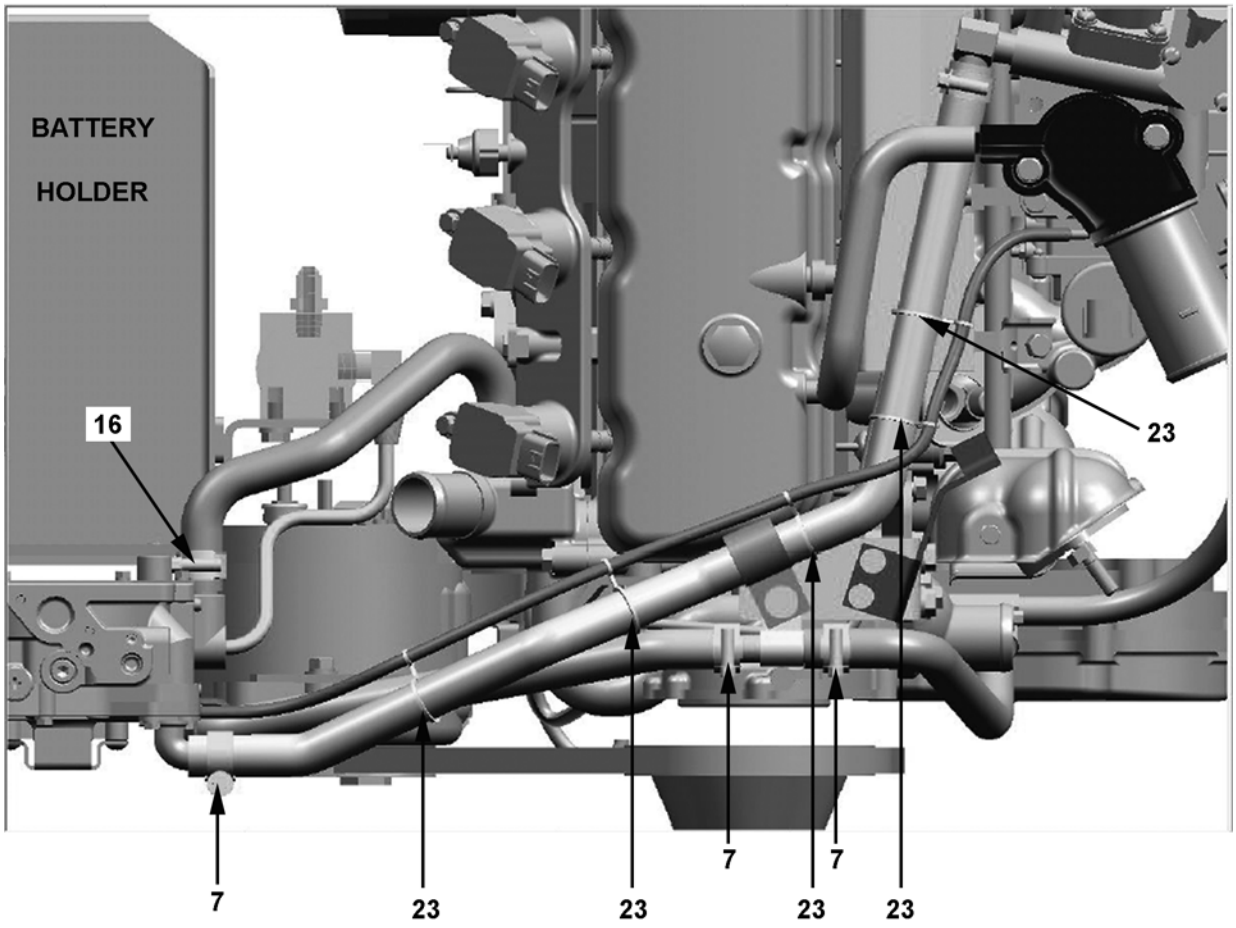

06-0002

https://truckmanualshub.com/

LPG FUEL SYSTEM - CLIPS & CLAMPS - S/N 200001A~
(ALSO SEE FIG. 06-0001)

Item	Part Number	Description	Qty	
1	01010-80616	BOLT	2	
2	01010-80820	BOLT	3	
3	01643-30623	WASHER	2	
4	01643-30823	WASHER	3	
5	04434-51408	CLIP	1	
6	04434-52310	CLIP	2	
7	07281-00259	CLAMP	5	
8	3EA-05-39950	PIPE	1	
9	3EB-05-A7230	HOSE	1	
10	3EB-05-A7260	BRACKET	1	
11	3EB-05-A7270	BRACKET	1	
12	01010-80816	BOLT	2	
13	01010-80835	BOLT	1	
14	01010-80890	BOLT	1	
15	01643-30823	WASHER	4	
16	07281-00259	CLAMP	3	
17	3EA-05-A7610	PIPE	1	
18	3EB-05-A7180	HOSE (WATER SUPPLY)	1	
19	3EB-05-A7290	HOSE (WATER RETURN)	1	
20	16310-GU20A	VAPORIZER (COMPLETE)	1	
21	17904-GU20A	SOLENOID VALVE ASSY	1	
22	17527-GU24A	HOSE	1	
23	3EA-05-39680	PURSE LOCK	5	
N/S	3EB-55-A7990	PLATE (DUAL-FUEL) (BETWEEN WATER HOSE & WIRING HARNESS)	1	
N/S	3EB-55-39640	CLIP (GAS & DUAL-FUEL) (BETWEEN WATER HOSE & PIPE)	1	

https://truckmanualshub.com/

LPG FUEL SYSTEM - LPG GAS HOSE ASSY - S/N 200001A~

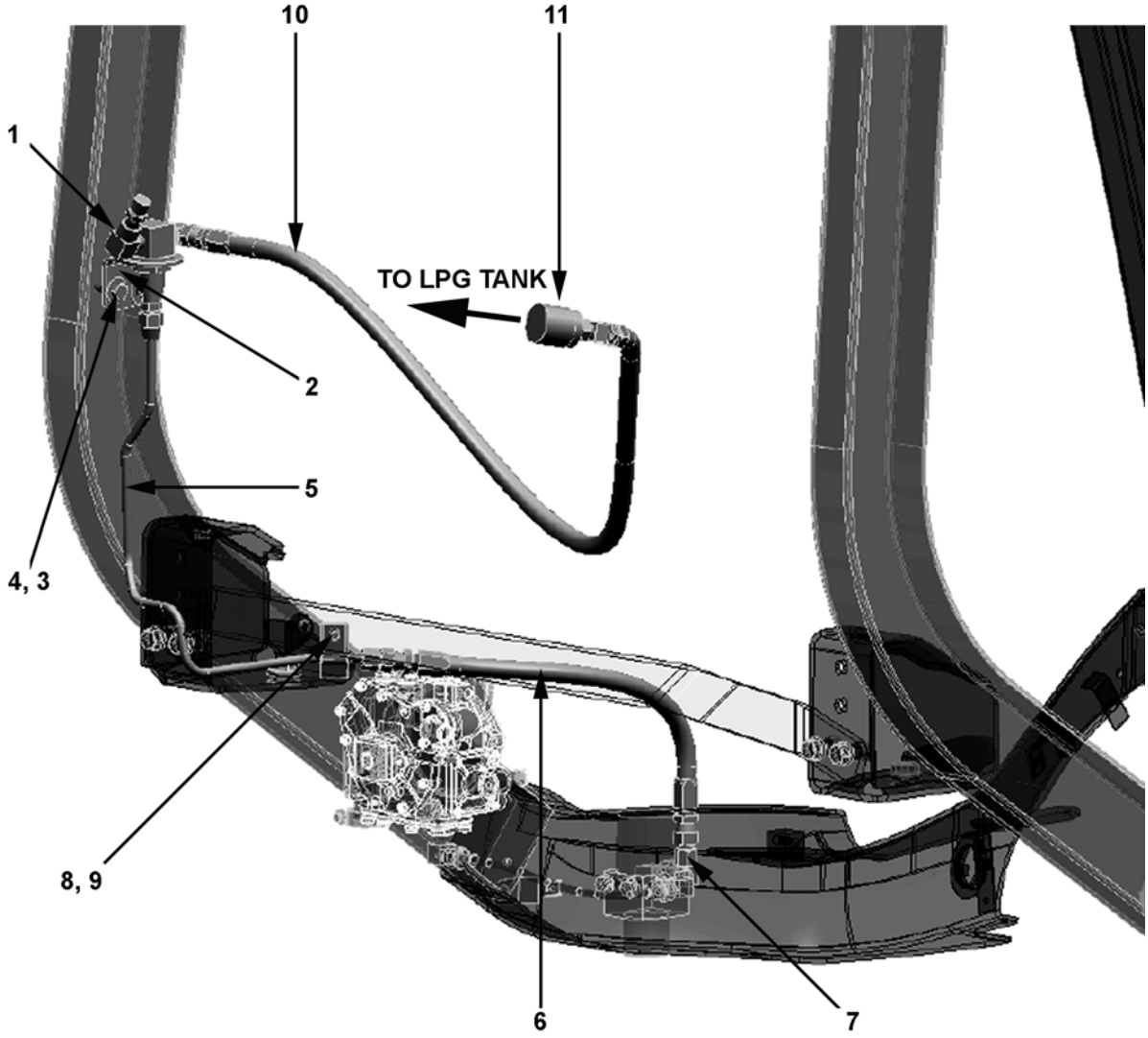

https://truckmanualshub.com/

LPG FUEL SYSTEM - LPG GAS HOSE ASSY - S/N 200001A~

Item	Part Number	Description	Qty	
1	3EA-05-A7920	VALVE ASSY	1	
2	3EB-05-A7710	BRACKET	1	
3	01010-80825	BOLT	2	
4	3BA-50-69330	WASHER	2	
5	3EB-05-A7810	PIPE	1	
6	37B-1FF-A170	HOSE (STD WHEELBASE)	1	
7	3EB-06-A5141	FITTING (RW)	1	
8	01024-80812	BOLT	1	
9	04434-50808	CLIP	1	
10	37B-1FF-A150	HOSE (LONG WHEELBASE)	1	
11	3EA-05-A6630	FITTING ASSY	1	

https://truckmanualshub.com/

TORQUE CONVERTER - MOUNTING & INNER PARTS - S/N 200001A~

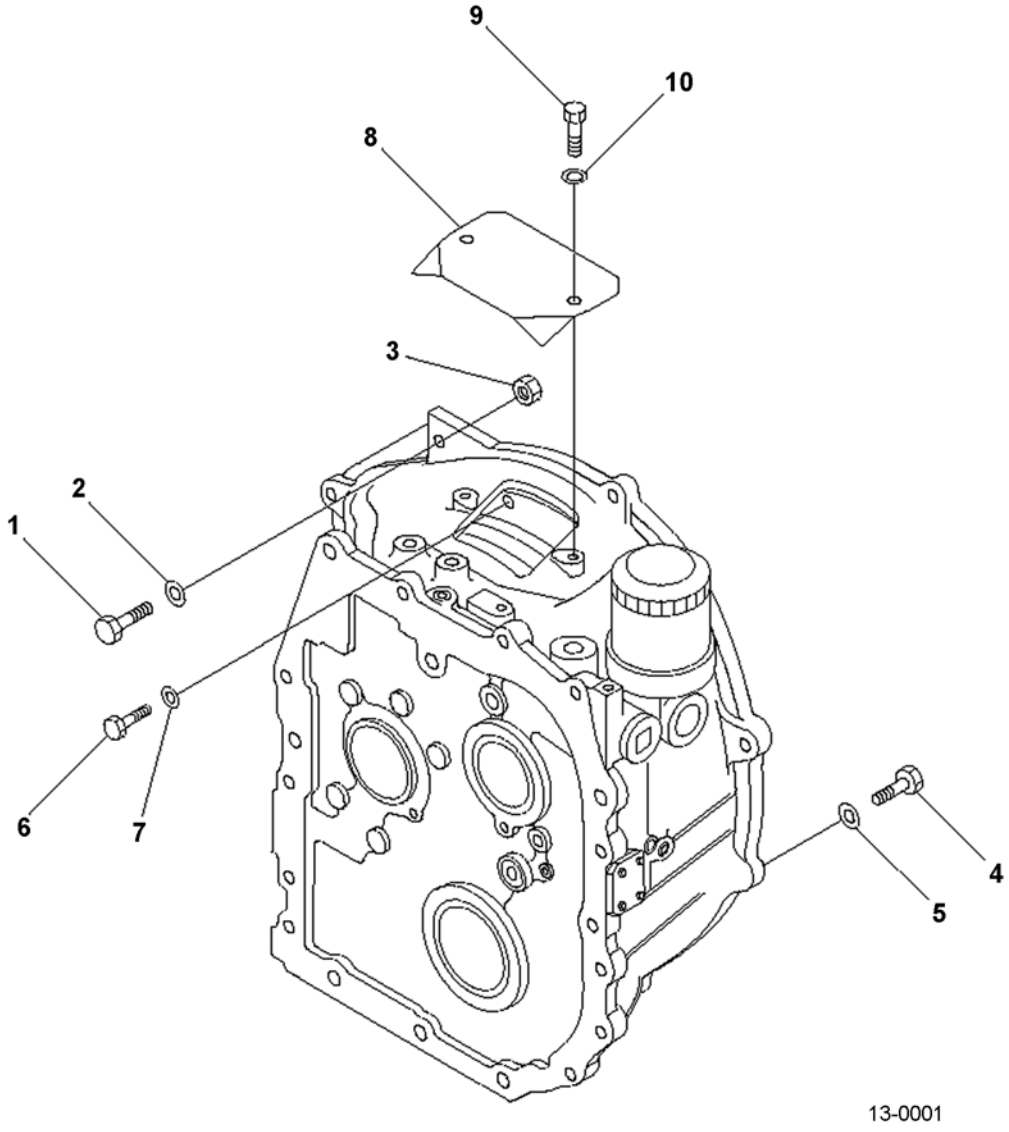

https://truckmanualshub.com/

TORQUE CONVERTER - MOUNTING & INNER PARTS - S/N 200001A~

Item	Part Number	Description	Qty	
1	01010-81050	BOLT	3	
2	01643-31032	WASHER	3	
3	01580-11008	NUT	3	
4	01010-81040	BOLT	3	
5	01643-31032	WASHER	3	
6	01010-80816	BOLT	6	
7	01643-50823	WASHER	6	
8	3EB-13-51250	PLATE	1	
9	01010-80818	BOLT	2	
10	01642-20810	WASHER	2	

https://truckmanualshub.com/

TORQUE CONVERTER - CONVERTER & PUMP DETAIL - S/N 200001A~ ALL MODELS EXCEPT EXPORT

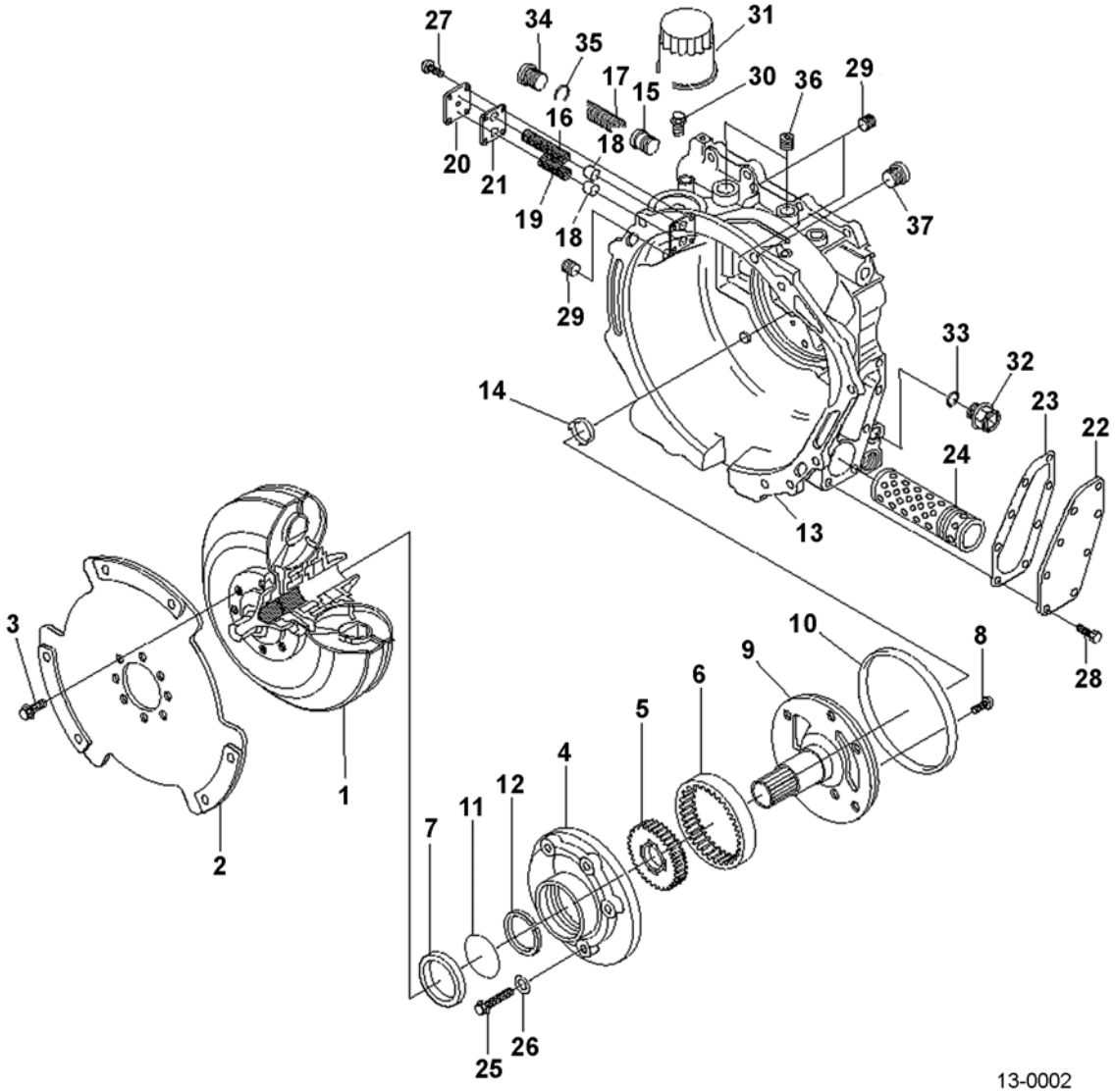

https://truckmanualshub.com/

TORQUE CONVERTER - CONVERTER & PUMP DETAIL - S/N 200001A~ ALL MODELS EXCEPT EXPORT

Item	Part Number	Description	Qty	
	3EB-13-51200	TORQUE CONVERTER ASSY.	1	
	30B-13-11100	.CONVERTER SUB-ASSY	1	
1	30B-13-11110	..CONVERTER	1	
2	30B-13-11120	..PLATE, INPUT	1	
3	30B-13-11130	..BOLT.	8	
	30B-13-11200	.GEAR PUMP ASSY.	1	
4	NSS	..GEAR, CASTING	1	
5	NSS	..GEAR, DRIVE.	1	
6	NSS	..GEAR, DRIVEN	1	
7	3EB-13-22422	..SEAL, OIL . . . . . (K32)	1	
8	3EB-13-22432	..SCREW.	1	
9	30B-13-11140	..SUPPORT, STATOR	1	
10	30B-13-11150	..O-RING . . . . . (K32)	1	
11	30B-13-11160	..RING, INNER	1	
12	30B-13-11170	..RING, SEAL . . . . . (K32)	1	
	30B-13-11300	.HOUSING ASSY	1	
13	NSS	..HOUSING	1	
14	NSS	..COLLAR	1	
15	30B-13-11190	.PISTON	1	
16	30B-13-11240	.SPRING, PRESSURE	1	
17	30B-13-11250	.SPRING, PRESSURE	1	
18	3EB-13-12730	.PISTON	2	
19	30B-13-11260	.SPRING, PRESSURE	1	
20	30B-13-11270	.COVER	1	
21	30B-13-11280	.GASKET . . . . . (K32)	1	
22	30B-13-11290	.COVER	1	
23	30B-13-11310	.GASKET . . . . . (K32)	1	
24	3EB-15-51600	.STRAINER. . . . . (K32)	1	
25	30B-13-11330	.BOLT	5	
26	30B-13-11340	.GASKET . . . . . (K32)	5	
27	30B-13-11350	.BOLT	4	
28	30B-13-11360	.BOLT	8	
29	30B-13-11370	.PLUG	3	
30	30B-13-11380	.NIPPLE	1	
31	30B-13-11390	.FILTER. . . . . (K32)	1	
32	30B-13-11410	.PLUG	1	
33	30B-13-11420	.O-RING . . . . . (K32)	1	
34	30B-13-11430	.PLUG	1	
35	30B-13-11440	.O-RING . . . . . (K32)	1	

PARTS LIST CONTINUED ON NEXT PAGE

https://truckmanualshub.com/

TORQUE CONVERTER - CONVERTER & PUMP DETAIL - S/N 200001A~ ALL MODELS EXCEPT EXPORT

Item	Part Number	Description	Qty	
36	30B-13-11460	.PLUG	2	
37	30B-13-11470	.PLUG	1	
		SERVICE KIT		
K32	30B-13-05010	REPAIR KIT, TORQUE CONVERTER	1	

https://truckmanualshub.com/

NOTES:

https://truckmanualshub.com/

TORQUE CONVERTER - CONVERTER & PUMP DETAIL - S/N 200001A~ EXPORT MODELS ONLY

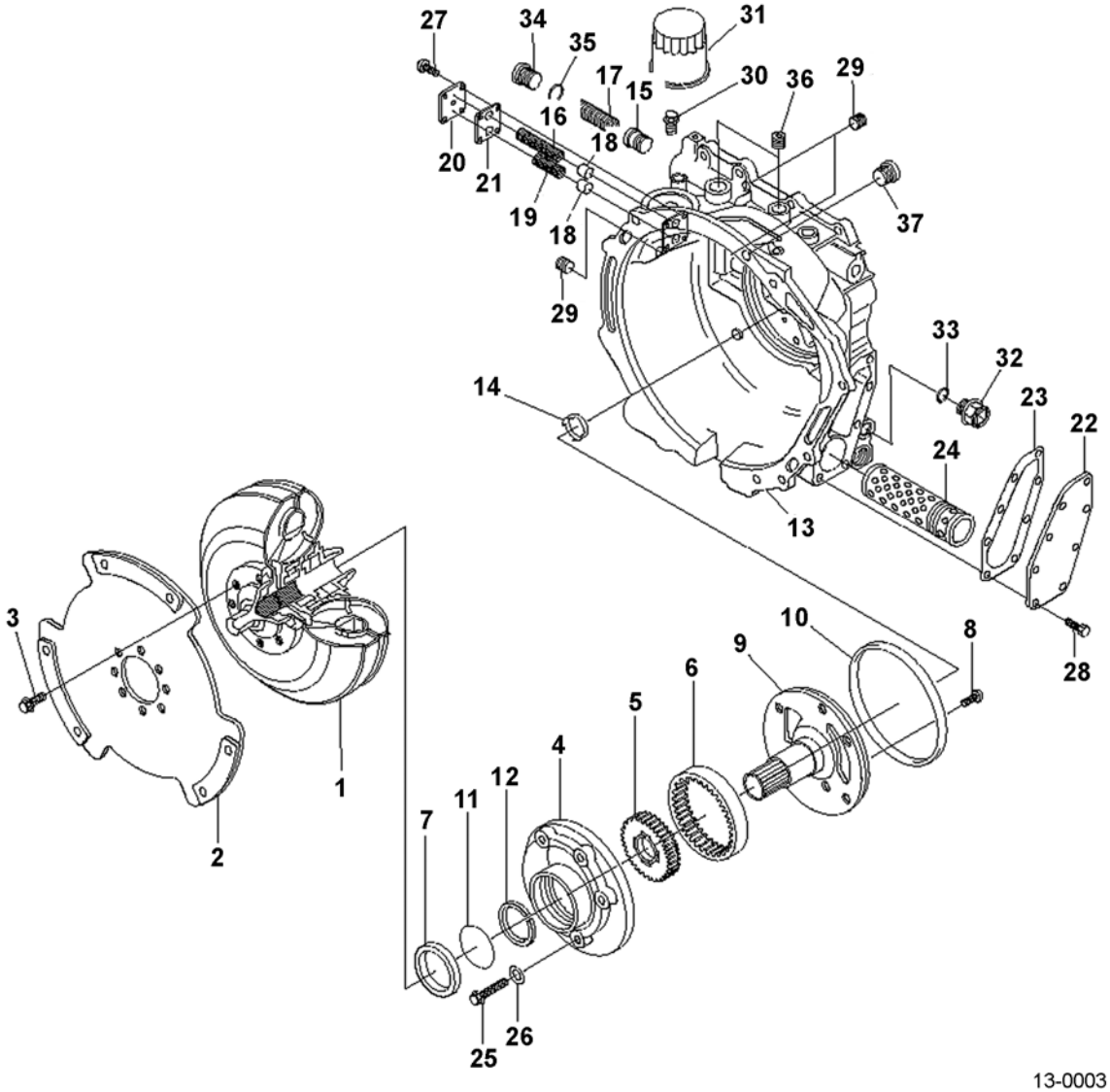

13-0003

https://truckmanualshub.com/

TORQUE CONVERTER - CONVERTER & PUMP DETAIL - S/N 200001A~ EXPORT MODELS ONLY

Item	Part Number	Description	Qty	
	3EA-13-51200	TORQUE CONVERTER ASSY.	1	
	30A-13-11100	.CONVERTER SUB-ASSY	1	
1	30A-13-11110	..CONVERTER	1	
2	30B-13-11120	..PLATE, INPUT	1	
3	30B-13-11130	..BOLT.	8	
	30B-13-11200	.GEAR PUMP ASSY.	1	
4	NSS	..GEAR, CASTING	1	
5	NSS	..GEAR, DRIVE.	1	
6	NSS	..GEAR, DRIVEN	1	
7	3EB-13-22422	..SEAL, OIL . . . . . (K32)	1	
8	3EB-13-22432	..SCREW.	1	
9	30B-13-11140	..SUPPORT, STATOR	1	
10	30B-13-11150	..O-RING . . . . . (K32)	1	
11	30B-13-11160	..RING, INNER	1	
12	30B-13-11170	..RING, SEAL . . . . . (K32)	1	
	30B-13-11300	.HOUSING ASSY	1	
13	NSS	..HOUSING	1	
14	NSS	..COLLAR	1	
15	30B-13-11190	.PISTON	1	
16	30B-13-11240	.SPRING, PRESSURE	1	
17	30B-13-11250	.SPRING, PRESSURE	1	
18	3EB-13-12730	.PISTON	2	
19	30B-13-11260	.SPRING, PRESSURE	1	
20	30B-13-11270	.COVER	1	
21	30B-13-11280	.GASKET . . . . . (K32)	1	
22	30B-13-11290	.COVER	1	
23	30B-13-11310	.GASKET . . . . . (K32)	1	
24	3EB-15-51600	.STRAINER. . . . . (K32)	1	
25	30B-13-11330	.BOLT	5	
26	30B-13-11340	.GASKET . . . . . (K32)	5	
27	30B-13-11350	.BOLT	4	
28	30B-13-11360	.BOLT	8	
29	30B-13-11370	.PLUG	3	
30	30B-13-11380	.NIPPLE	1	
31	30B-13-11390	.FILTER. . . . . (K32)	1	
32	30B-13-11410	.PLUG	1	
33	30B-13-11420	.O-RING . . . . . (K32)	1	
34	30B-13-11430	.PLUG	1	
35	30B-13-11440	.O-RING . . . . . (K32)	1	

PARTS LIST CONTINUED ON NEXT PAGE

https://truckmanualshub.com/

TORQUE CONVERTER - CONVERTER & PUMP DETAIL - S/N 200001A~ EXPORT MODELS ONLY

Item	Part Number	Description	Qty	
36	30B-13-11460	.PLUG	2	
37	30B-13-11470	.PLUG	1	
		SERVICE KIT		
K32	30B-13-05010	REPAIR KIT, TORQUE CONVERTER	1	

https://truckmanualshub.com/

NOTES:

https://truckmanualshub.com/

TORQFLOW TRANSMISSION - UNIT ASSY & CASE - S/N 200001A~

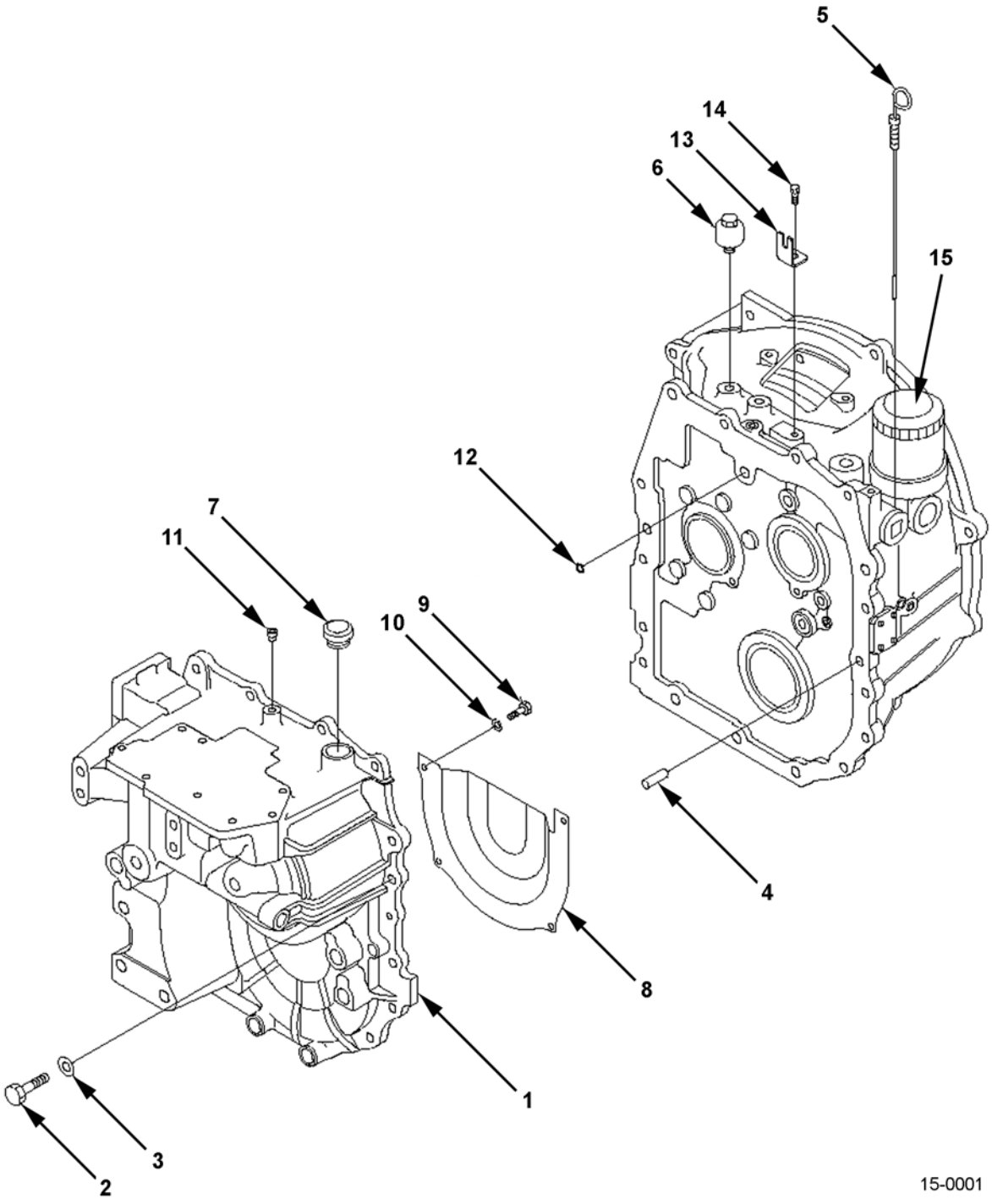

https://truckmanualshub.com/

TORQFLOW TRANSMISSION - UNIT ASSY & CASE - S/N 200001A~

Item	Part Number	Description	Qty	
	37B-1AZ-5030	TRANSMISSION ASSY, TORQFLOW (2.0T, 2.5T, 2.8T, 3.0T)	1	
	37B-1AZ-5050	TRANSMISSION ASSY, TORQFLOW (3.2T, 3.5T)	1	
1	3EB-15-51111	.CASE	1	
2	01010-81040	BOLT	16	
3	01643-31032	WASHER	16	
4	04020-01024	DOWEL PIN	2	
5	3EB-15-51180	GAUGE	1	
6	07030-00252	BREATHER	1	
7	3EB-15-31271	CAP	1	
8	3EB-15-51610	COVER	1	
9	01010-80616	BOLT	4	
10	01643-30623	WASHER	4	
11	07042-80108	PLUG	1	
12	07000-72020	O-RING	1	
13	3EB-15-58410	PLATE	1	
14	01010-80818	BOLT	1	
15	30B-13-11390	FILTER	1	
N/S	3EB-15-51600	STRAINER	1	

https://truckmanualshub.com/

TORQFLOW TRANSMISSION - INPUT & IDLER ASSY - S/N 200001A~
2.0, 2.5, 2.8 & 3.0 TON TRUCKS

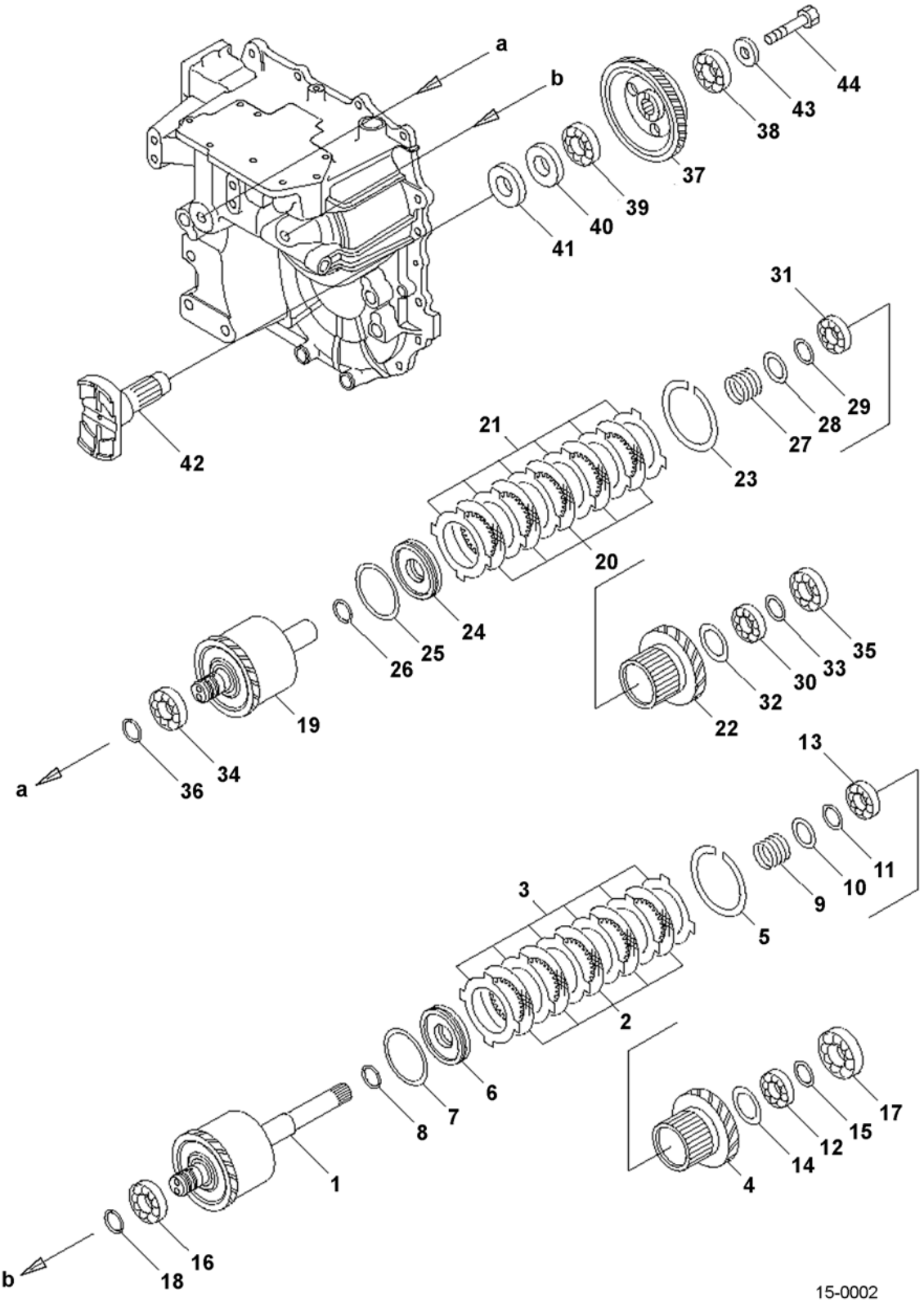

https://truckmanualshub.com/

TORQFLOW TRANSMISSION - INPUT & IDLER ASSY - S/N 200001A~ 2.0, 2.5, 2.8 & 3.0 TON TRUCKS

Item	Part Number	Description	Qty
	37B-1AZ-5030	TRANSMISSION ASSY, TORQFLOW (2.0T, 2.5T, 2.8T, 3.0T)	1
	3EB-15-52010	PACK ASSY, INPUT	1
1	3EB-15-52110	.SHAFT ASSY, INPUT	1
2	3EB-15-51170	.DISC	5
3	3EA-15-11180	.PLATE	6
4	3EB-15-53230	.GEAR	1
5	34B-15-11360	RING	1
6	3EB-15-51230	PISTON	1
7	3EB-15-51290	SEAL RING	1
8	3EB-15-51280	SEAL RING	1
9	3EB-15-51250	SPRING	1
10	3EB-15-11260	WASHER	1
11	04064-03515	SNAP RING	1
12	06300-06006	BEARING	1
13	06301-06006	BEARING	1
14	04065-05520	RING	1
15	3EB-16-21390	SPACER	1
16	06300-06206	BEARING	1
17	06300-06306	BEARING	1
18	3EB-15-51360	SEAL (K6)	3
	3EB-15-52020	PACK ASSY, IDLER	1
19	3EB-15-52120	.SHAFT ASSY, IDLER	1
20	3EB-15-51170	.DISC	5
21	3EA-15-11180	.PLATE	6
22	3EB-15-53230	.GEAR	1
23	34B-15-11360	RING	1
24	3EB-15-51230	PISTON	1
25	3EB-15-51290	SEAL RING	1
26	3EB-15-51280	SEAL RING	1
27	3EB-15-51250	SPRING	1
28	3EB-15-11260	WASHER	1
29	04064-03515	SNAP RING	1
30	06300-06006	BEARING	1
31	06301-06006	BEARING	1
32	04065-05520	RING	1
33	3EB-16-21390	SPACER	1
34	06300-06206	BEARING	1
35	06300-06206	BEARING	1

PARTS LIST CONTINUED ON NEXT PAGE

https://truckmanualshub.com/

TORQFLOW TRANSMISSION - INPUT & IDLER ASSY - S/N 200001A~
2.0, 2.5, 2.8 & 3.0 TON TRUCKS

Item	Part Number	Description	Qty	
36	3EB-15-51360	SEAL . . . . . (K6)	2	
37	3EB-15-53220	GEAR	1	
38	06300-06306	BEARING	1	
39	06300-06307	BEARING	1	
40	07012-C0045	SEAL . . . . . (K6)	1	
41	3EB-15-53290	SEAL . . . . . (K6)	1	
42	3EB-15-53250	COUPLING SHAFT	1	
43	3EB-15-53260	HOLDER	1	
44	01010-81280	BOLT	1	
		SERVICE KIT		
K6	3EB-15-05500	SEAL KIT, TORQFLOW TRANSMISSION	1	

https://truckmanualshub.com/

NOTES:

https://truckmanualshub.com/

TORQFLOW TRANSMISSION - INPUT & IDLER ASSY - S/N 200001A~
3.2 & 3.5 TON TRUCKS

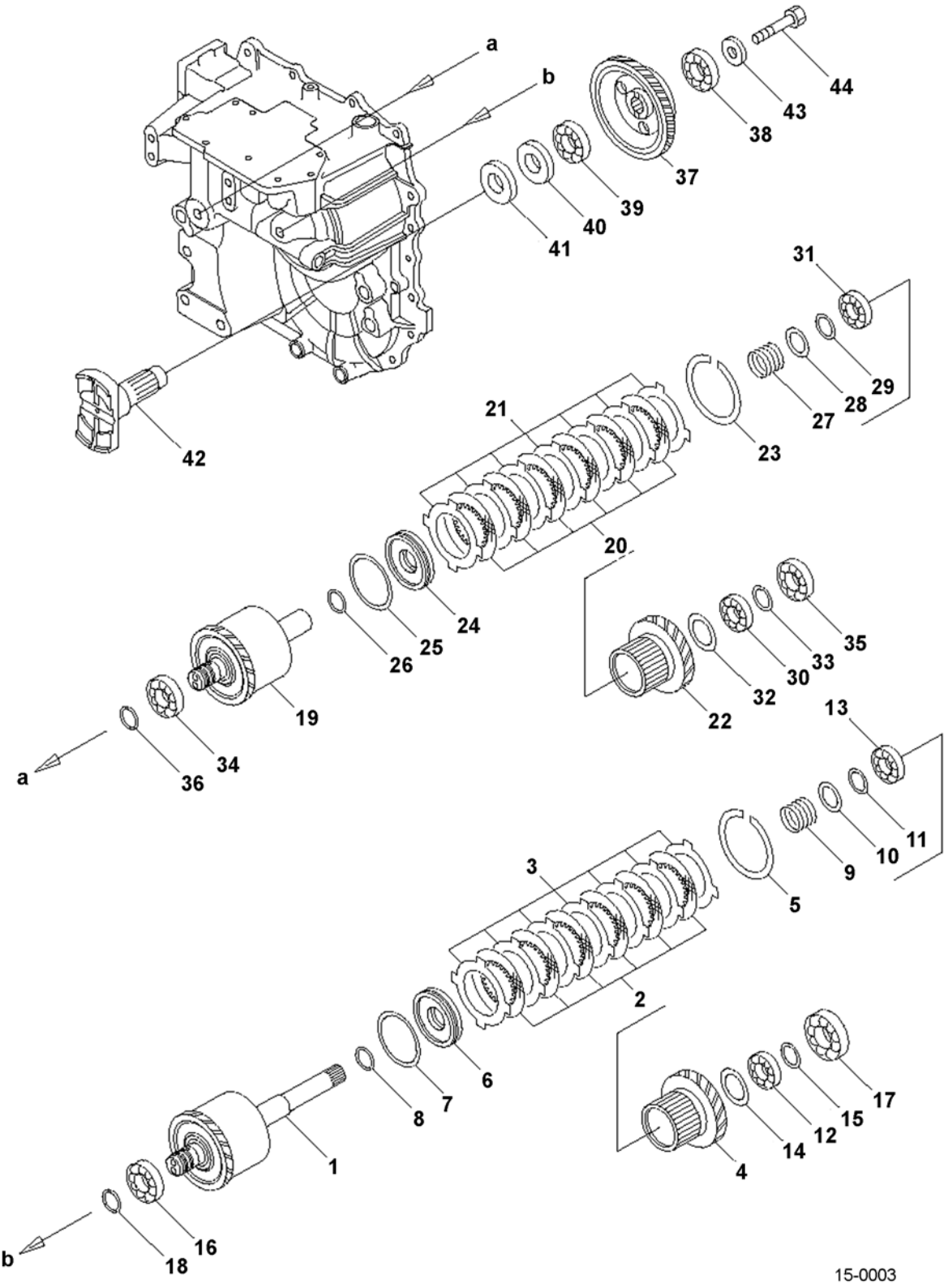

https://truckmanualshub.com/

TORQFLOW TRANSMISSION - INPUT & IDLER ASSY - S/N 200001A~ 3.2 & 3.5 TON TRUCKS

Item	Part Number	Description	Qty	
	37B-1AZ-5050	TRANSMISSION ASSY, TORQFLOW (3.2T, 3.5T)	1	
	3EB-15-52030	PACK ASSY, INPUT	1	
1	3EB-15-52130	.SHAFT ASSY, INPUT	1	
2	3EB-15-51170	.DISC	6	
3	3EA-15-11180	.PLATE	7	
4	3EB-15-53210	.GEAR	1	
5	34B-15-11360	RING	1	
6	3EB-15-51230	PISTON	1	
7	3EB-15-51290	SEAL RING	1	
8	3EB-15-51280	SEAL RING	1	
9	3EB-15-51250	SPRING	1	
10	3EB-15-11260	WASHER	1	
11	04064-03515	SNAP RING	1	
12	06300-06006	BEARING	1	
13	06301-06006	BEARING	1	
14	04065-05520	RING	1	
15	3EB-16-21390	SPACER	1	
16	06300-06206	BEARING	1	
17	06300-06306	BEARING	1	
18	3EB-15-51360	SEAL (K6)	3	
	3EB-15-52040	PACK ASSY, IDLER	1	
19	3EB-15-52140	.SHAFT ASSY, IDLER	1	
20	3EB-15-51170	.DISC	6	
21	3EA-15-11180	.PLATE	7	
22	3EB-15-53210	.GEAR	1	
23	34B-15-11360	RING	1	
24	3EB-15-51230	PISTON	1	
25	3EB-15-51290	SEAL RING	1	
26	3EB-15-51280	SEAL RING	1	
27	3EB-15-51250	SPRING	1	
28	3EB-15-11260	WASHER	1	
29	04064-03515	SNAP RING	1	
30	06300-06006	BEARING	1	
31	06301-06006	BEARING	1	
32	04065-05520	RING	1	
33	3EB-16-21390	SPACER	1	
34	06300-06206	BEARING	1	
35	06300-06206	BEARING	1	
36	3EB-15-51360	SEAL (K6)	2	

PARTS LIST CONTINUED ON NEXT PAGE

https://truckmanualshub.com/

TORQFLOW TRANSMISSION - INPUT & IDLER ASSY - S/N 200001A~ 3.2 & 3.5 TON TRUCKS

Item	Part Number	Description	Qty	
37	3EB-15-53220	GEAR	1	
38	06300-06306	BEARING	1	
39	06300-06307	BEARING	1	
40	07012-C0045	SEAL (K6)	1	
41	3EB-15-53290	SEAL (K6)	1	
42	3EB-21-53210	COUPLING SHAFT	1	
43	3EB-15-53260	HOLDER	1	
44	01010-81280	BOLT	1	
		SERVICE KIT		
K6	3EB-15-05500	SEAL KIT, TORQFLOW TRANSMISSION	1	

https://truckmanualshub.com/

NOTES:

https://truckmanualshub.com/

TORQFLOW TRANSMISSION - VALVE ASSY - S/N 200001A~

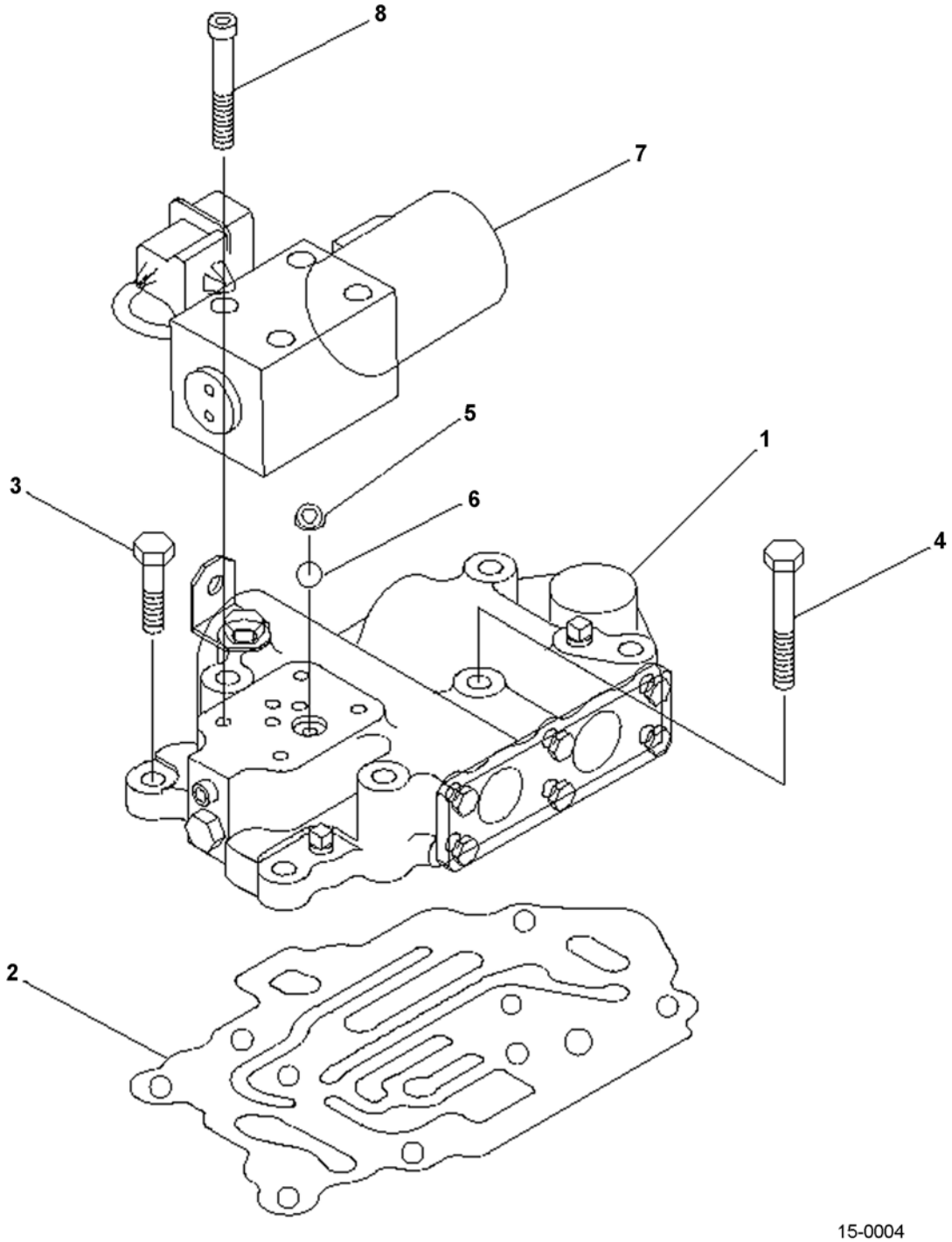

https://truckmanualshub.com/

TORQFLOW TRANSMISSION - VALVE ASSY - S/N 200001A~

Item	Part Number	Description	Qty	
1	3EB-15-58010	VALVE ASSY, TORQFLOW	1	
2	3EB-15-58210	GASKET . . . . . (K6)	1	
3	01010-80830	BOLT.	2	
4	01010-80855	BOLT.	5	
5	3EA-15-33220	FILTER	1	
6	07000-71009	O-RING. . . . . (K6)	1	
7	3EB-15-58610	VALVE ASSY, SOLENOID	1	
8	01252-60545	BOLT.	4	
		SERVICE KIT		
K6	3EB-15-05500	SEAL KIT, TORQFLOW	1	

https://truckmanualshub.com/

TORQFLOW TRANSMISSION - VALVE ASSY DETAIL - S/N 200001A~

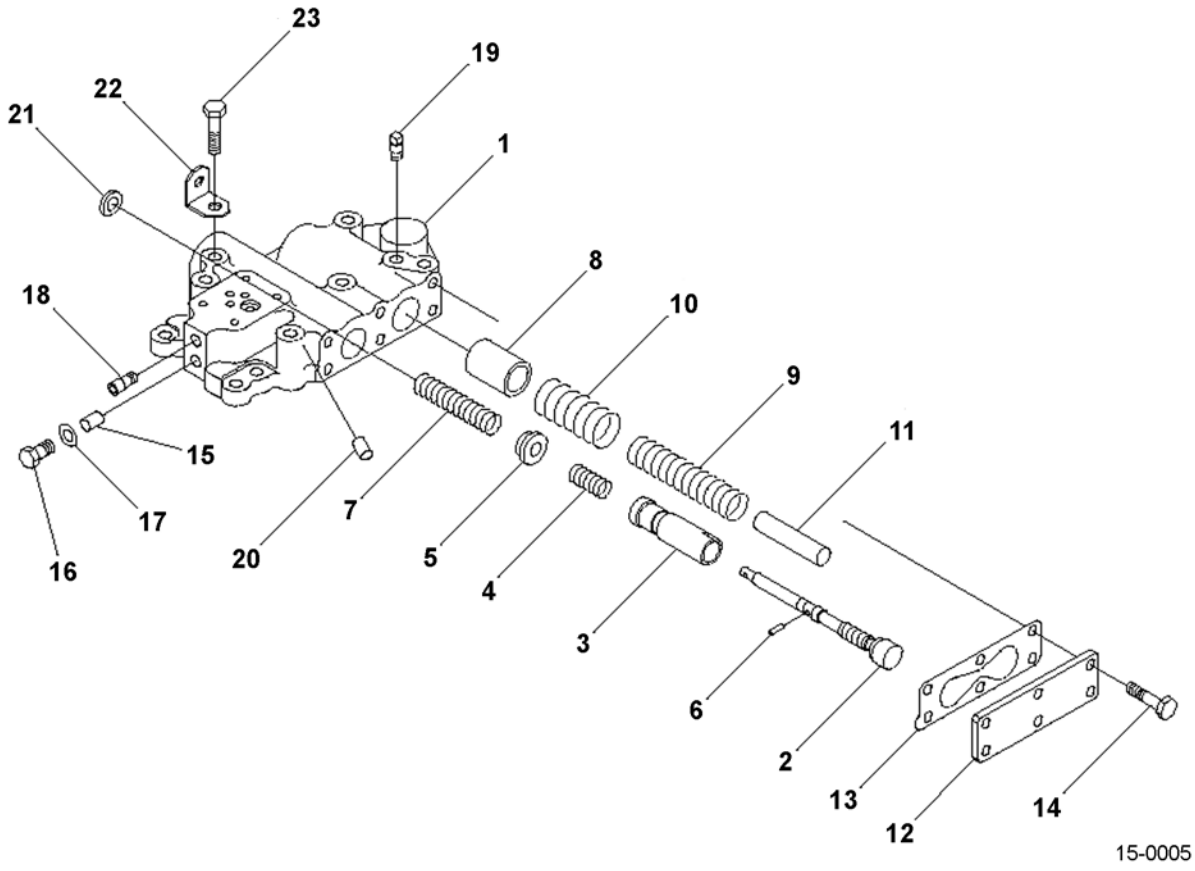

https://truckmanualshub.com/

TORQFLOW TRANSMISSION - VALVE ASSY DETAIL - S/N 200001A~

Item	Part Number	Description	Qty	
	3EB-15-58010	VALVE ASSY, TORQFLOW	1	
1	3EB-15-58110	.VALVE BODY	1	
2	3EB-15-58310	.SPOOL	1	
3	3EB-15-58320	.VALVE	1	
4	3EB-15-58540	.SPRING	1	
5	3EB-15-58330	.SPACER	1	
6	04025-00316	.PIN, SPRING	1	
7	3EB-15-58530	.SPRING	1	
8	3EB-15-48310	.PISTON	1	
9	3EB-15-48340	.SPRING	1	
10	3EB-15-48330	.SPRING	1	
11	3EB-15-48320	.PIN	1	
12	3EB-15-58120	.PLATE	1	
13	3EB-15-58130	.GASKET	1	
14	01010-80616	.BOLT	6	
15	3EB-15-48350	.PISTON	1	
16	07040-11007	.PLUG	1	
17	07005-01012	.GASKET	1	
18	07043-70108	.PLUG	1	
19	07042-80108	.PLUG	2	
20	3EB-15-58510	.ORIFICE	1	
21	3EB-15-58520	.OIL SEAL	1	
22	3EB-15-48650	.PLATE	1	
23	01010-80810	.BOLT	1	

https://truckmanualshub.com/

TORQFLOW TRANSMISSION - SOLENOID VALVE PARTS - S/N 200001A~

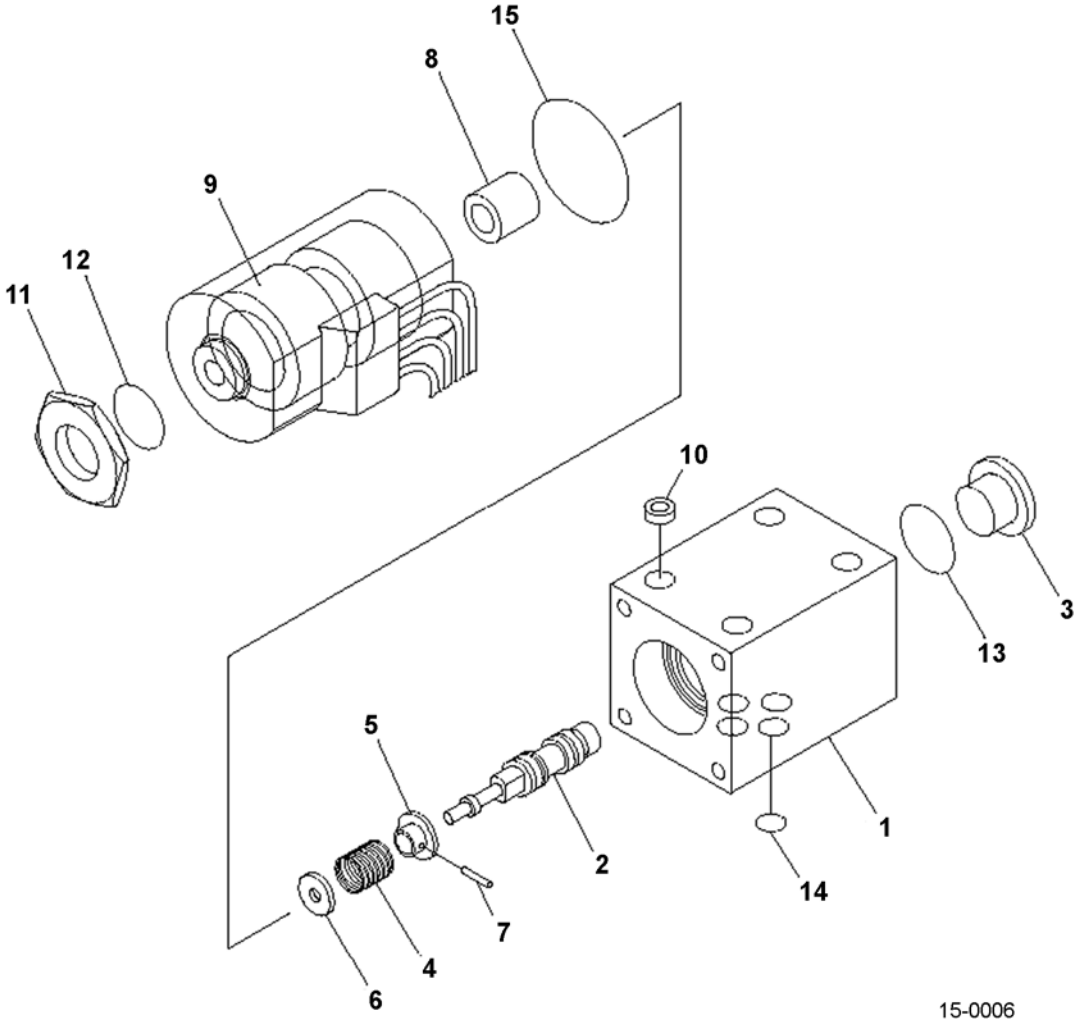

https://truckmanualshub.com/

TORQFLOW TRANSMISSION - SOLENOID VALVE PARTS - S/N 200001A~

Item	Part Number	Description	Qty	
	3EB-15-58610	VALVE ASSY, SOLENOID	1	
1	NSS	.BODY	1	
2	NSS	.SPOOL	1	
3	NSS	.PLUG	1	
4	NSS	.SPRING	1	
5	NSS	.RETAINER	1	
6	NSS	.RETAINER	1	
7	NSS	.PIN	1	
8	NSS	.GUIDE	1	
9	30B-15-11110	.COIL	1	
10	NSS	.SPACER	4	
11	30B-15-11120	.NUT	1	
12	30E-15-11130	.O-RING	1	
13	30E-15-11130	.O-RING	2	
14	30B-15-11140	.O-RING	4	
15	30B-15-11150	.O-RING, COMP. STD B1X	2	

https://truckmanualshub.com/

TORQFLOW TRANSMISSION - EXTERNAL CASE PARTS - S/N 200001A~

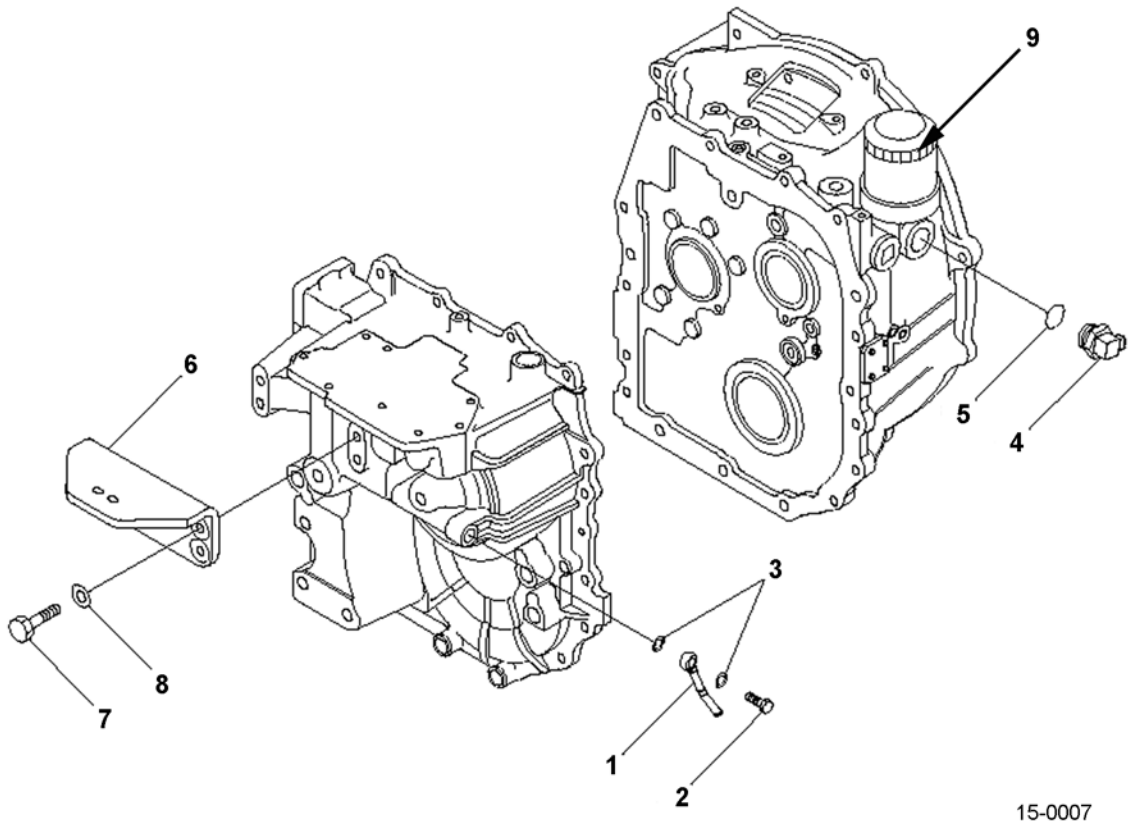

https://truckmanualshub.com/

TORQFLOW TRANSMISSION - EXTERNAL CASE PARTS - S/N 200001A~

Item	Part Number	Description	Qty	
1	3EB-15-51690	PIPE	1	
2	07206-31216	JOINT	1	
3	07005-01612	GASKET (K6)	2	
4	07235-10315	ELBOW	1	
5	07002-22034	O-RING (K6)	1	
6	3EB-20-56130	BRACKET	1	
7	01010-81235	BOLT	4	
8	01643-31232	WASHER	4	
9	30B-13-11390	FILTER	1	
		SERVICE KIT		
K6	3EB-15-05500	SEAL KIT, TORQFLOW	1	

https://truckmanualshub.com/

TORQFLOW TRANSMISSION - UNIVERSAL JOINT - S/N 200001A~

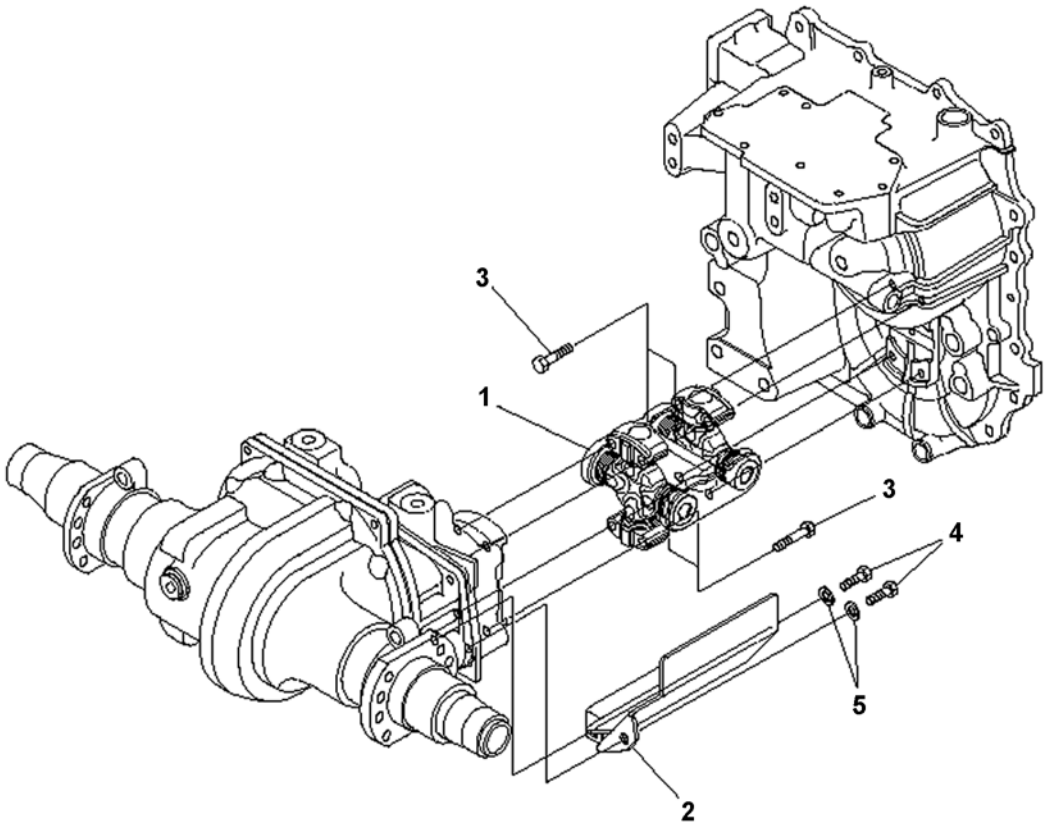

https://truckmanualshub.com/

TORQFLOW TRANSMISSION - UNIVERSAL JOINT - S/N 200001A~

Item	Part Number	Description	Qty	
1	3EA-20-51210	PROPELLER SHAFT ASSY	1	
2	3EA-20-51710	COVER	1	
3	3EB-20-51810	BOLT	8	
4	01010-80820	BOLT	2	
5	01643-30823	WASHER	2	

https://truckmanualshub.com/

DRIVE AXLE ASSEMBLY - PNEUMATIC - S/N 200001A~
2.0 & 2.5 TON MODELS

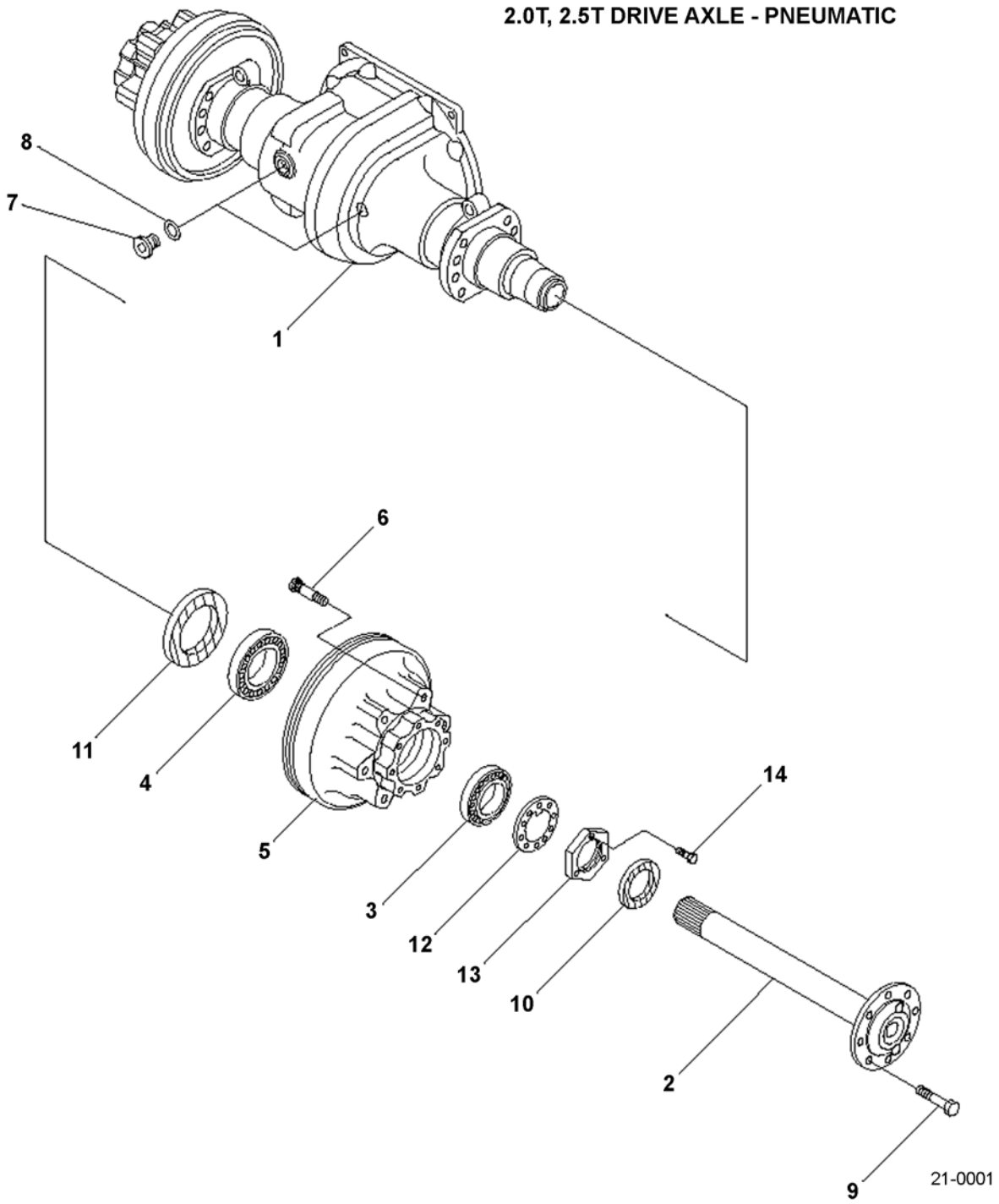

https://truckmanualshub.com/

DRIVE AXLE ASSEMBLY - PNEUMATIC - S/N 200001A~ 2.0 & 2.5 TON MODELS

Item	Part Number	Description	Qty	
	37B-1FB-5021	DRIVE AXLE ASSY, USA	1	
	37B-1FB-5031	DRIVE AXLE ASSY, EXPORT	1	
1	3EB-21-52310	HOUSING	1	
2	3EB-21-32162	SHAFT	2	
3	3EB-21-52350	BEARING	2	
4	14X-14-19241	BEARING	2	
5	3EB-21-52320	HUB	2	
6	3EB-21-52380	BOLT	12	
7	34B-41-12910	PLUG	2	
8	34B-41-12920	GASKET	2	
9	01010-81235	BOLT	16	
10	3EB-21-32180	SEAL (K1)	2	
11	3EB-21-15130	SEAL (K1)	2	
12	3BB-21-31230	PLATE	2	
13	3BB-21-31240	NUT	2	
14	01010-80612	BOLT	2	
		SERVICE KIT		
K1	3EB-21-05060	SEAL KIT, FRONT HUB	2	

https://truckmanualshub.com/

DRIVE AXLE ASSEMBLY - PNEUMATIC - S/N 200001A~ 2.8 & 3.0 TON MODELS

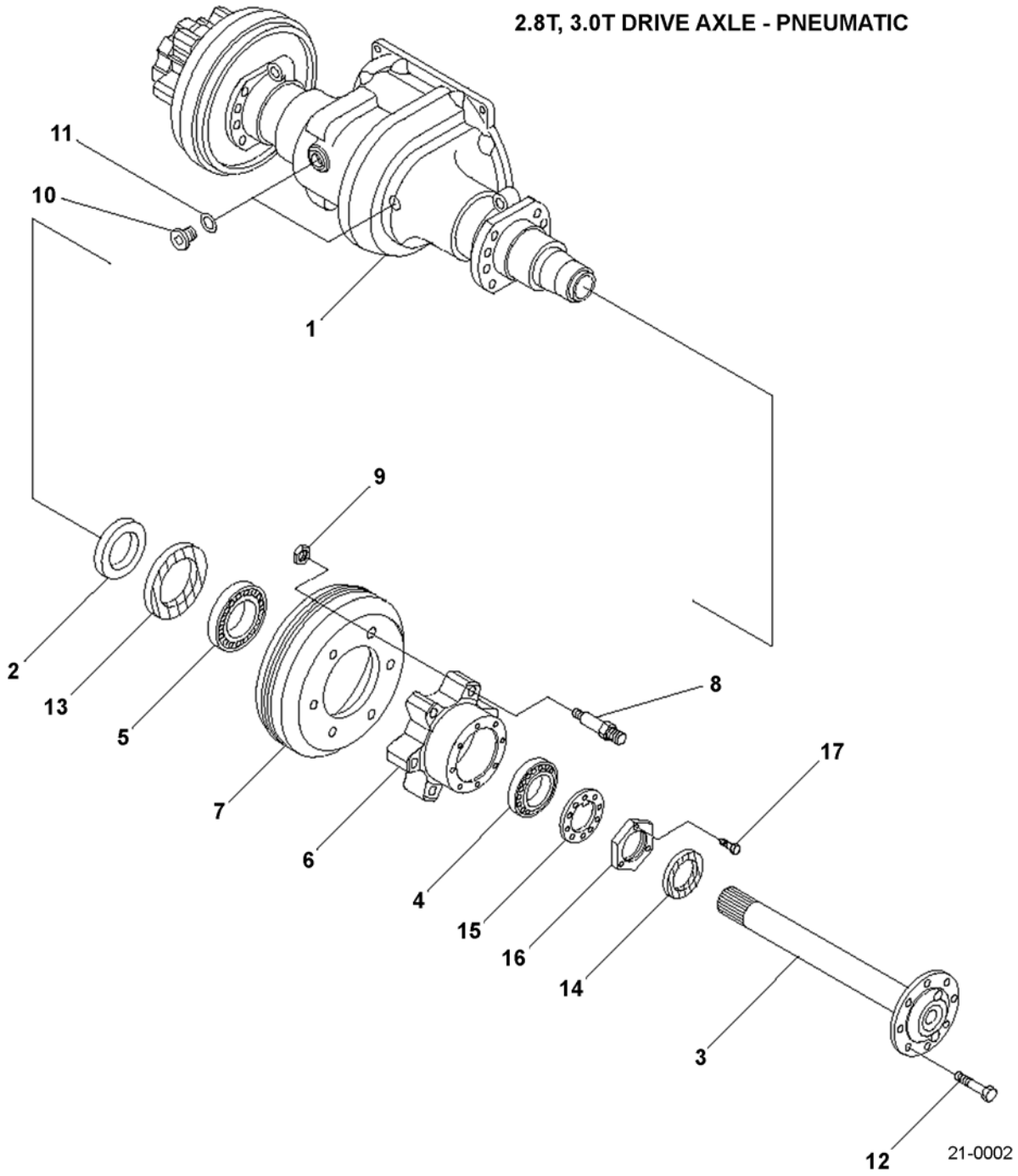

https://truckmanualshub.com/

DRIVE AXLE ASSEMBLY - PNEUMATIC - S/N 200001A~
2.8 & 3.0 TON MODELS

Item	Part Number	Description	Qty	
	37B-1FC-5031	DRIVE AXLE ASSY, USA	1	
	37B-1FC-5041	DRIVE AXLE ASSY, EXPORT	1	
1	3EB-21-52510	HOUSING	1	
2	3EB-21-42191	RETAINER	2	
3	3EB-21-32162	SHAFT	2	
4	06002-32213	BEARING	2	
5	316-22-21250	BEARING	2	
6	3EB-21-42170	HUB	2	
7	3EB-21-42230	DRUM	2	
8	3EB-21-25170	BOLT	12	
9	01582-11815	NUT	12	
10	34B-41-12910	PLUG	2	
11	34B-41-12920	GASKET	2	
12	01010-81235	BOLT	16	
13	3EB-21-32180	SEAL (K1)	2	
14	3EB-21-15130	SEAL (K1)	2	
15	3BB-21-31230	PLATE	2	
16	3BB-21-31240	NUT	2	
17	01010-80612	BOLT	2	
		SERVICE KIT		
K1	3EB-21-05060	SEAL KIT, FRONT HUB	2	

https://truckmanualshub.com/

DRIVE AXLE ASSEMBLY - PNEUMATIC - S/N 200001A~
3.2 & 3.5 TON MODELS

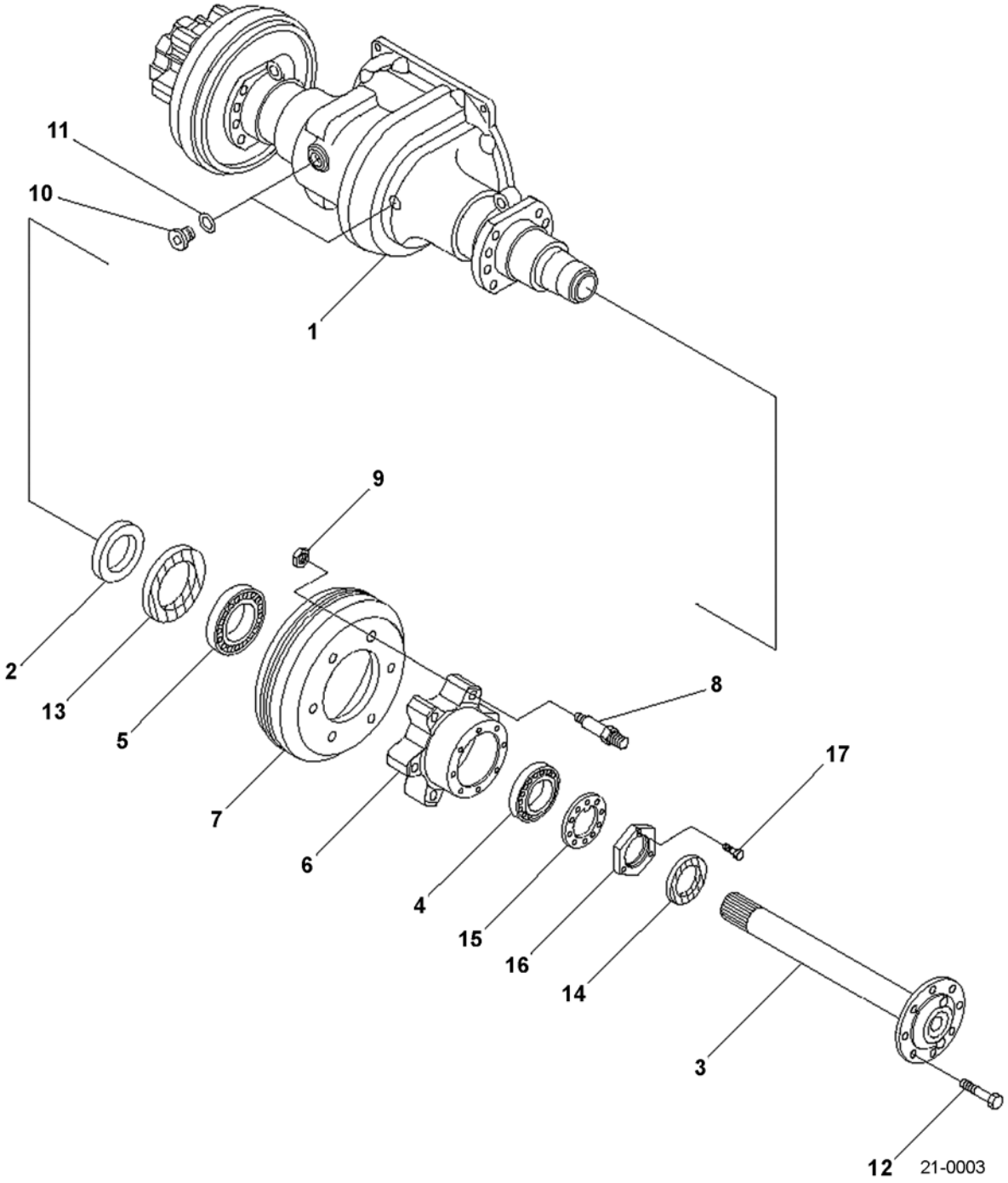

https://truckmanualshub.com/

DRIVE AXLE ASSEMBLY - PNEUMATIC - S/N 200001A~ 3.2 & 3.5 TON MODELS

Item	Part Number	Description	Qty
	37B-1FD-5051	DRIVE AXLE ASSY, USA & EXPORT	1
1	3EB-21-52710	HOUSING	1
2	3EB-21-42191	RETAINER	2
3	3EB-21-52760	SHAFT	2
4	3EB-21-52750	BEARING	2
5	316-22-21250	BEARING	2
6	3EB-21-52740	HUB	2
7	3EB-21-52730	DRUM	2
8	3EB-21-25170	BOLT	12
9	01582-11815	NUT (STANDARD)	12
	34B-27-11340	NUT (THREADED SPACER USED W/ NARROW DUAL-TIRE OPTION TIRES 6.00 X 15 X 10PR ONLY)	12
	34B-27-11350	LUG NUT (USED WITH 34B-27-11340)	12
10	34B-41-12910	PLUG	2
11	34B-41-12920	GASKET	2
12	01010-81235	BOLT	16
13	3EB-21-32180	SEAL (K1)	2
14	3EB-21-15130	SEAL (K1)	2
15	3BB-21-31230	PLATE	2
16	3BB-21-31240	NUT	2
17	01010-80612	BOLT	2
		SERVICE KIT	
K1	3EB-21-05060	SEAL KIT, FRONT HUB	2

https://truckmanualshub.com/

DRIVE AXLE ASSEMBLY - CUSHION - S/N 200001A~
(ALSO SEE FIG. 21-0011)

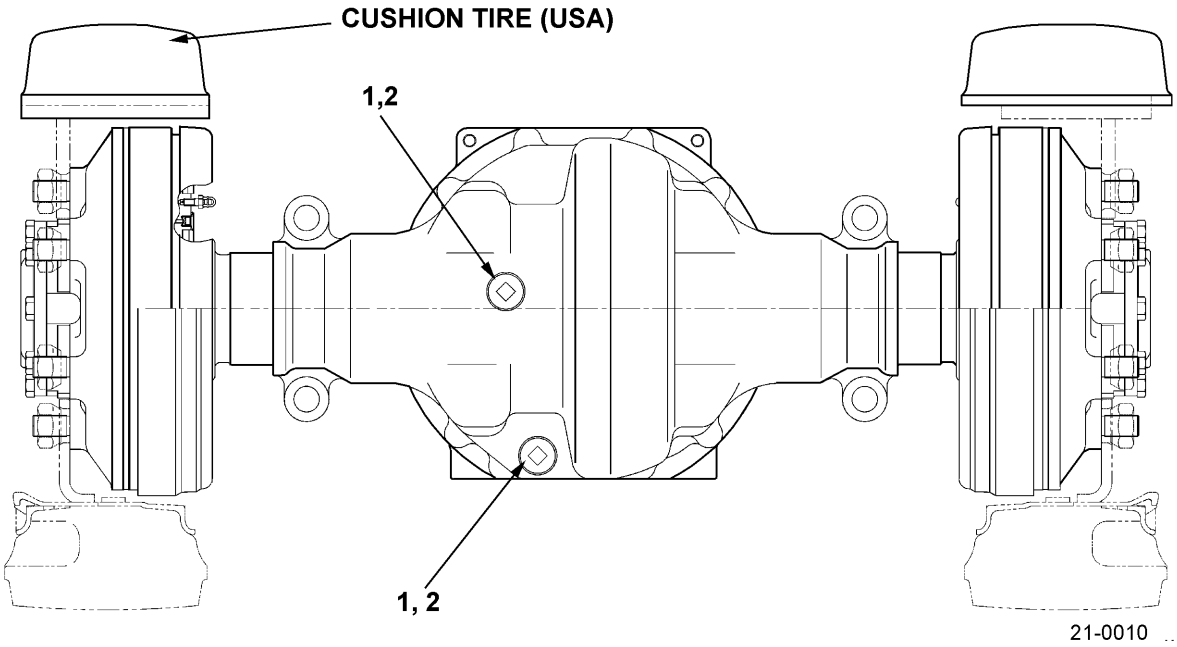

https://truckmanualshub.com/

DRIVE AXLE ASSEMBLY - CUSHION - S/N 200001A~
(ALSO SEE FIG. 21-0011)

Item	Part Number	Description	Qty	
	37B-1FE-5211	DRIVE AXLE ASSY	1	
	3EB-21-51501	CARRIER ASSY	1	
1	34B-41-12910	PLUG	2	
2	34B-41-12920	GASKET	2	

https://truckmanualshub.com/

DRIVE AXLE ASSEMBLY - CUSHION - DETAIL - S/N 200001A~
(ALSO SEE FIG. 21-0010)

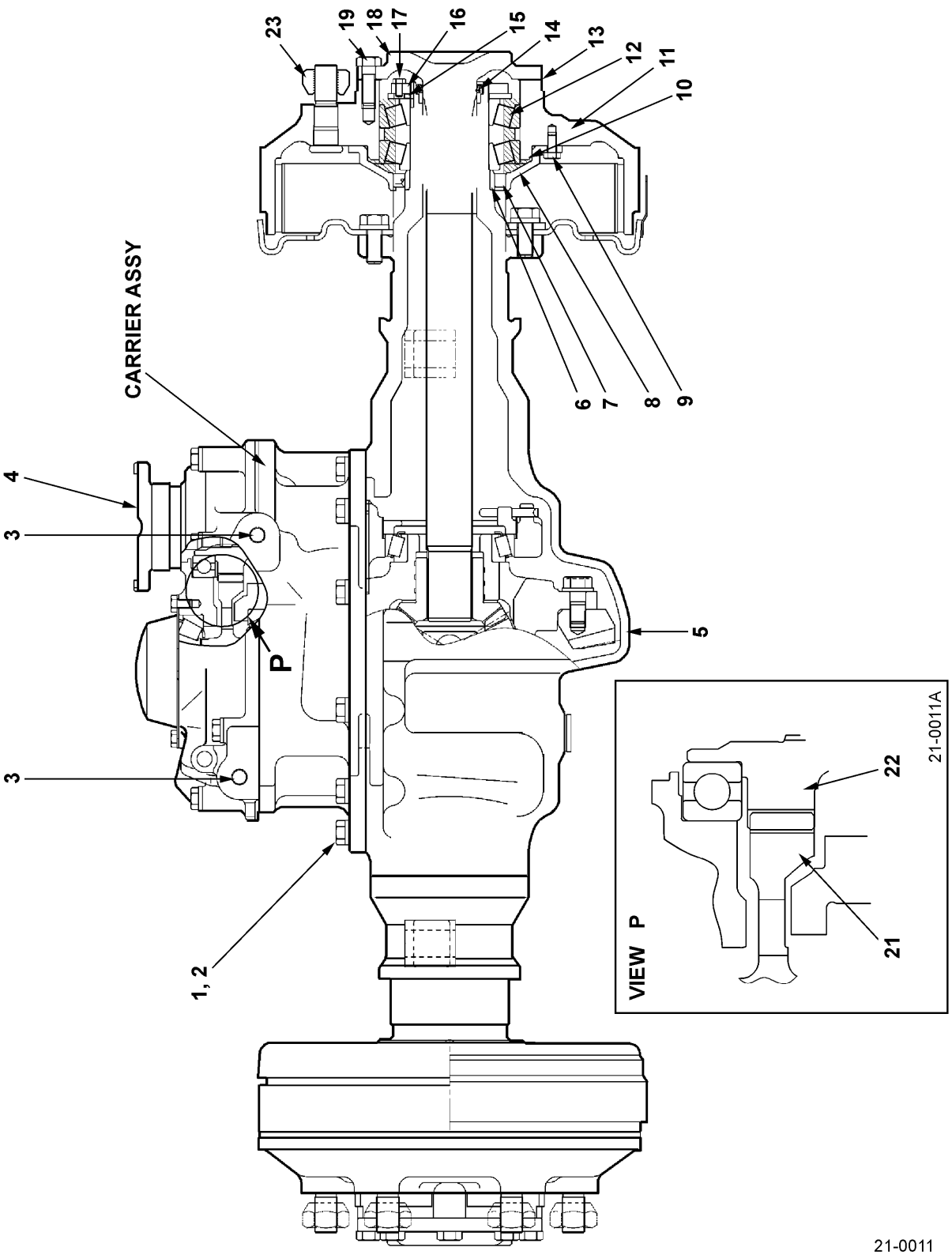

https://truckmanualshub.com/

DRIVE AXLE ASSEMBLY - CUSHION - DETAIL - S/N 200001A~
(ALSO SEE FIG. 21-0010)

Item	Part Number	Description	Qty	
	37B-1FE-5211	DRIVE AXLE ASSY (CUSHION)	1	
	3EB-21-51501	CARRIER ASSY	1	
1	01010-81235	BOLT	13	
2	01643-51232	WASHER	13	
3	3EA-71-12780	WASHER	1	
4	3EB-21-53200	COUPLING ASSY	1	
5	3EB-22-52111	HOUSING	1	
6	3EB-22-55190	.RETAINER	2	
7	3EB-22-21160	.SEAL	2	
8	3EB-22-21150	.CAGE	2	
9	01010-80816	.BOLT	6	
10	07000-02145	.O-RING	2	
11	3EB-22-45610	.HUB	2	
12	06002-30214	.BEARING	4	
13	3EB-22-45150	.GASKET	2	
14	3EB-21-15140	.SEAL	2	
15	3EB-21-25150	.PLATE	2	
16	3EB-21-25140	.NUT	2	
17	01010-80612	.BOLT	2	
18	3EB-22-35541	.SHAFT	2	
19	01010-81235	.BOLT	16	
20	3EB-22-21170	.HUB BOLT	12	
21	37B-1TH-5010	.DRIVE GEAR	1	
22	37B-1TJ-5010	.DRIVEN GEAR	1	
23	34B-21-14151	HUB (LUG) NUT	12	
K1	3EB-21-05060	SEAL KIT, FRONT HUB	2	

https://truckmanualshub.com/

DIFFERENTIAL GEAR - ALL MODELS - S/N 200001A~

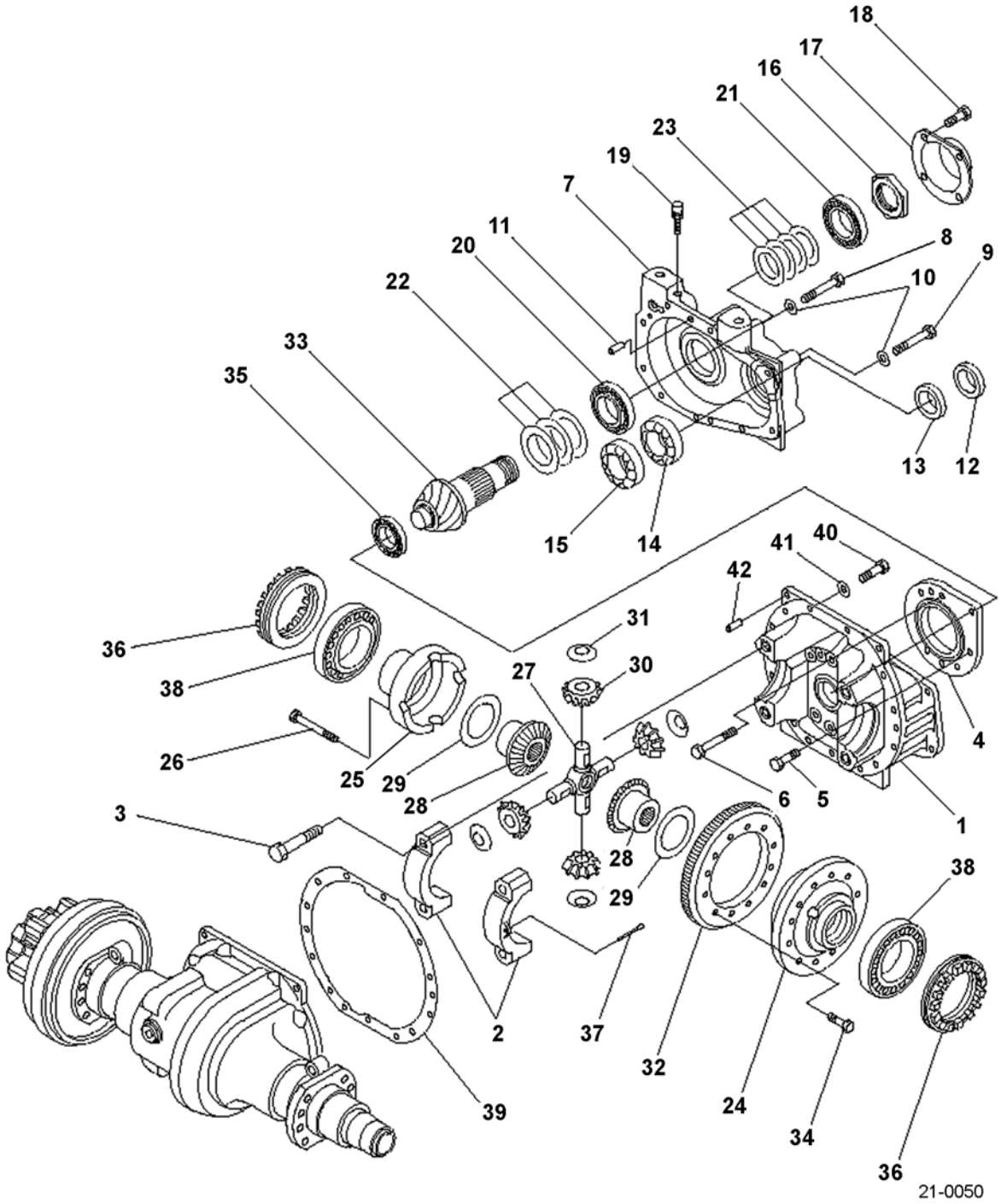

https://truckmanualshub.com/

DIFFERENTIAL GEAR - ALL MODELS - S/N 200001A~

Item	Part Number	Description	Qty	
	3EB-21-51531	CARRIER ASSY, PILOT	1	
1	NSS	.CARRIER, PILOT	1	
2	NSS	.CAP	2	
3	3EB-21-11190	.BOLT	4	
4	3EB-21-51551	CAGE, PINION	1	
5	01010-81235	BOLT	3	
6	01010-81290	BOLT	5	
7	3EB-21-53110	CASE, TRANSFER	1	
8	01010-81050	BOLT	2	
9	01010-81070	BOLT	8	
10	01643-31032	WASHER	10	
11	04020-01228	PIN	2	
12	3EB-21-53140	SEAL, DUST (K3)	1	
13	07012-00040	SEAL (K3)	1	
14	3EB-21-53180	BEARING	1	
15	3EB-21-53170	BEARING	1	
16	3EB-21-53150	NUT	1	
17	3EB-21-53161	COVER	1	
18	01010-80812	BOLT	4	
19	07030-01030	BREATHER	1	
20	3EB-21-51720	BEARING	1	
21	3EB-21-51710	BEARING	1	
22	3EB-15-00030	SHIM ASSY	1	
23	3EB-21-00050	SHIM ASSY	1	
	3EB-21-51110	DIFFERENTIAL ASSY	1	
	3EB-21-51120	.CASE ASSY	1	
24	NSS	..CASE, FLANGE	1	
25	NSS	..CASE	1	
26	3EB-21-51190	..BOLT	16	
27	3EB-21-11160	.SPIDER	1	
28	3EB-21-31141	.GEAR	2	
29	34B-21-12141	.BUSHING	2	
30	3EB-21-11340	.GEAR	4	
31	3EB-21-11370	.BUSHING	4	
	3EB-21-51510	GEAR ASSY	1	
32	NSS	.GEAR	1	
33	NSS	.SHAFT, PINION	1	
34	3EB-21-11230	BOLT	12	
35	3EB-14-11451	BEARING	1	

PARTS LIST CONTINUED ON NEXT PAGE

https://truckmanualshub.com/

DIFFERENTIAL GEAR - ALL MODELS - S/N 200001A~

Item	Part Number	Description	Qty	
36	3EB-21-51170	SCREW	2	
37	04050-18050	PIN, COTTER	2	
38	14X-14-19241	BEARING	2	
39	3EB-21-52140	GASKET (K3)	1	
40	01010-81235	BOLT	13	
41	01643-51232	WASHER	13	
42	04020-01228	PIN	2	
		SERVICE KIT		
K3	3EB-21-05500	SEAL KIT, DIFFERENTIAL GEAR	1	

https://truckmanualshub.com/

NOTES:

https://truckmanualshub.com/

DIFFERENTIAL GEAR - COUPLING SHAFT - S/N 200001A~

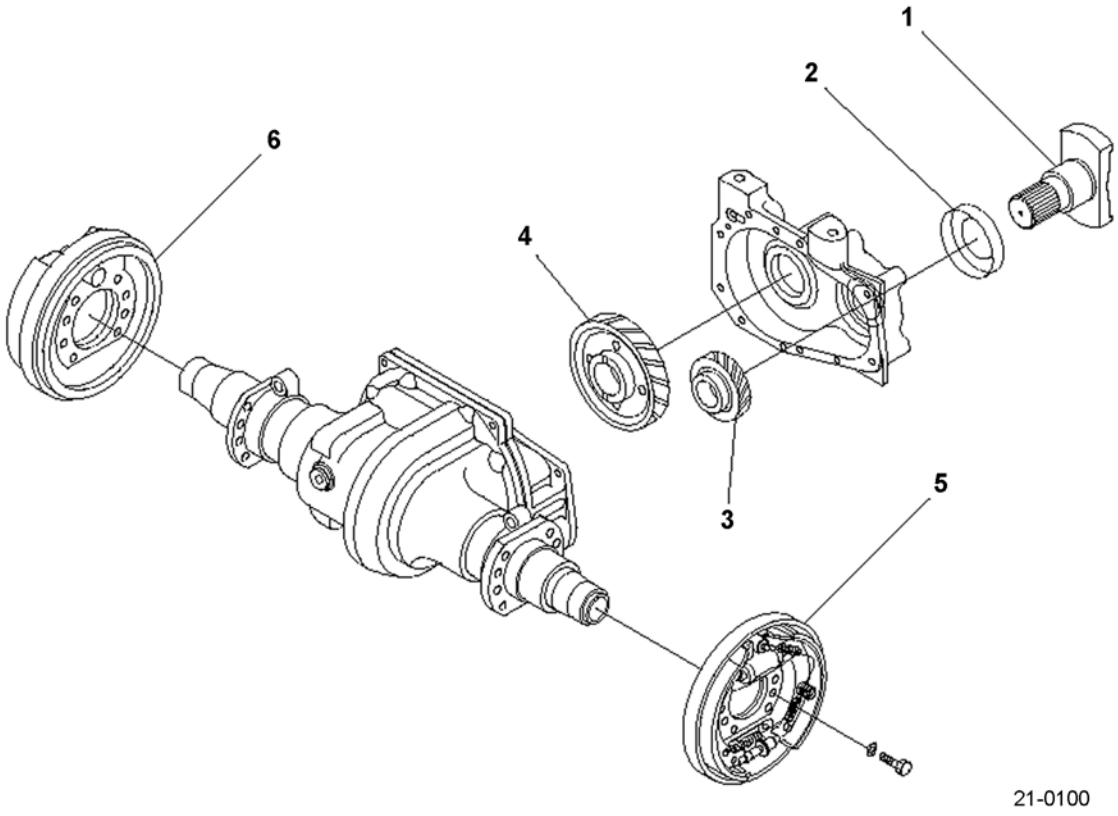

https://truckmanualshub.com/

DIFFERENTIAL GEAR - COUPLING SHAFT - S/N 200001A~

Item	Part Number	Description	Qty	
	3EA-20-51090	SHAFT ASSY, COUPLING	1	
1	3EA-20-51210	.SHAFT, COUPLING (PROPELLER SHAFT) . . .	1	
2	3EA-20-51710	.COVER, PROTECTOR	1	
3	37B-1TH-5020	GEAR, DRIVE	1	
4	37B-1TJ-5020	GEAR, DRIVEN	1	
5	(37B-1BR-5110)	BRAKE ASSY, LH	1	
6	(37B-1BR-5120)	BRAKE ASSY, RH	1	

https://truckmanualshub.com/

STEERING AXLE ASSEMBLY - PNEUMATIC - S/N 200001A~
(ALSO SEE FIG. 24-0002)

STEERING AXLE FRONT VIEW

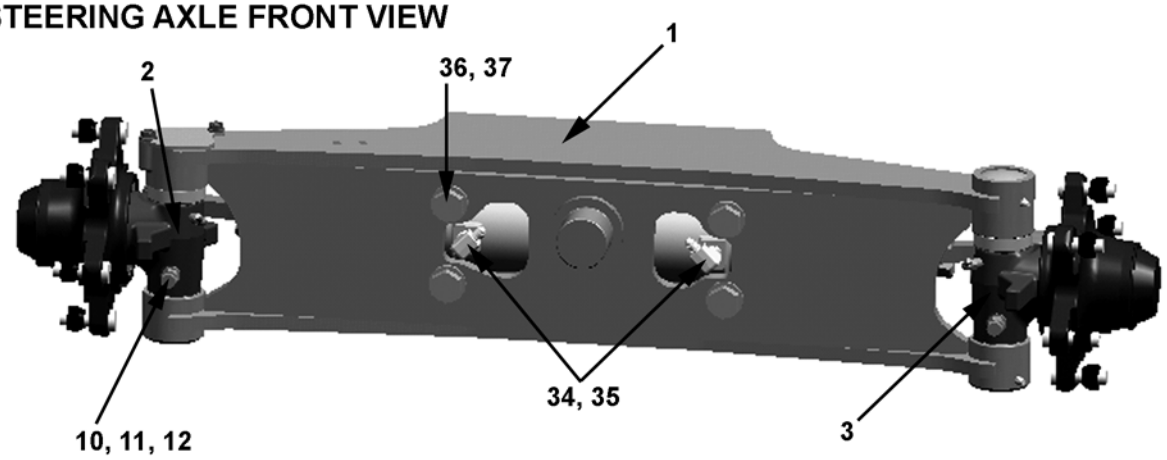

24-0001A

STEERING AXLE REAR VIEW

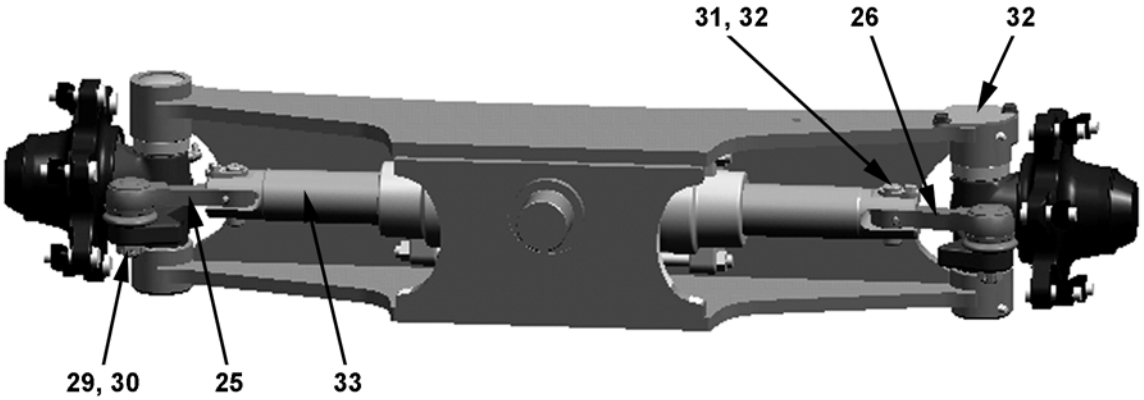

24-0001B

KNUCKLE ASSY

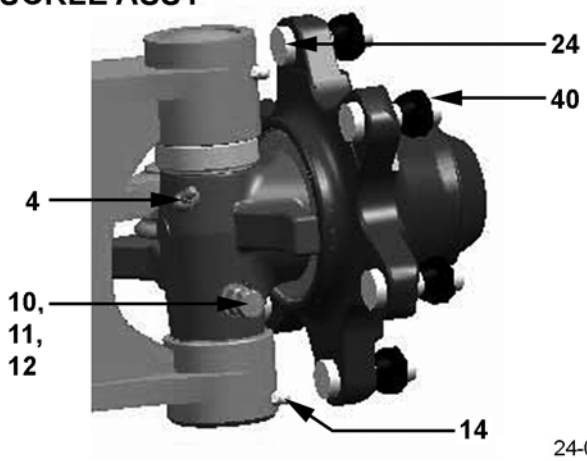

24-0001C

https://truckmanualshub.com/

STEERING AXLE ASSEMBLY - PNEUMATIC - S/N 200001A~
(ALSO SEE FIG. 24-0002)

Item	Part Number	Description	Qty	
1	3EB-24-51112	STEERING AXLE (2.0T, 2.5T PNEUMATIC) . . .	1	
	3EB-24-52112	STEERING AXLE (2.8T, 3.0T PNEUMATIC) . . .	1	
	3EB-24-53112	STEERING AXLE (3.2T, 3.5T PNEUMATIC) . . .	1	
2	3EB-24-51211	KNUCKLE ASSY, RH (2.0T, 2.5T, 2.8T, 3.0T). . .	1	
	3EB-24-53211	KNUCKLE ASSY, RH (3.2T, 3.5T)	1	
3	3EB-24-51221	KNUCKLE ASSY, LH (2.0T, 2.5T, 2.8T, 3.0T) . . .	1	
	3EB-24-53221	KNUCKLE ASSY, LH (3.2T, 3.5T).	1	
4	07020-00675	FITTING, GREASE	2	
5	3EB-24-51261	KINGPIN, LH.	1	
6	3EB-24-51271	KINGPIN, RH	1	
7	3EB-24-32440	BEARING	4	
8	3EB-24-42320	BEARING (2.0T, 2.5T)	2	
	3EB-24-52460	BEARING (2.8T, 3.0T, 3.2T, 3.5T).	2	
9	360-27-11220	SHIM.	6	
10	3EB-24-51380	BOLT.	2	
11	3EB-24-51390	NUT.	2	
12	01643-51032	WASHER	2	
13	3EB-24-41320	SEAL.	2	
14	07020-00001	FITTING, GREASE	4	
15	07046-14520	PLUG	3	
16	3EB-24-51230	HUB (2.0T, 2.5T).	2	
	3EB-24-41230	HUB (2.8T, 3.0T, 3.2T, 3.5T)	2	
17	3EB-24-41330	SEAL.	2	
18	06300-32010	BEARING (2.0T, 2.5T)	2	
	3EB-24-32260	BEARING (2.8T, 3.0T, 3.2T, 3.5T).	2	
19	06300-32007	BEARING (2.0T, 2.5T)	2	
	06300-30207	BEARING (2.8T, 3.0T, 3.2T, 3.5T).	2	
20	3EB-24-32390	WASHER	2	
21	01593-13018	NUT.	2	
22	04025-00650	PIN	2	
23	3EB-24-11160	CAP.	2	
24	34B-24-11221	SERRATION BOLT	12	
25	3EB-24-A7920	TIE ROD ASSY, LH.	1	
26	3EB-24-A7930	TIE ROD ASSY, RH	1	
27	3EB-24-A7910	BUSHING	2	
28	3EB-24-A7940	WASHER	4	
29	3EB-24-21270	NUT.	2	
30	04050-13025	COTTER PIN	2	
31	3EB-25-A7170	PIN	2	

PARTS LIST CONTINUED ON NEXT PAGE

https://truckmanualshub.com/

STEERING AXLE ASSEMBLY - PNEUMATIC - S/N 200001A~
(ALSO SEE FIG. 24-0002)

Item	Part Number	Description	Qty	
32	01435-00814	BOLT	4	
33	3EB-64-A7110	POWER STEERING CYLINDER ASSY	1	
34	3EB-66-53410	ELBOW	2	
35	3EB-66-53460	O-RING	2	
36	01010-81845	BOLT	4	
37	01643-31845	WASHER	4	
38	3EB-24-51510	PLATE	1	
39	3EB-24-51520	GASKET	1	
40	300-22-31241	HUB (LUG) NUT	12	

https://truckmanualshub.com/

NOTES:

https://truckmanualshub.com/

STEERING AXLE ASSEMBLY - PNEUMATIC - DETAIL - S/N 200001A~ (ALSO SEE FIG. 24-0001)

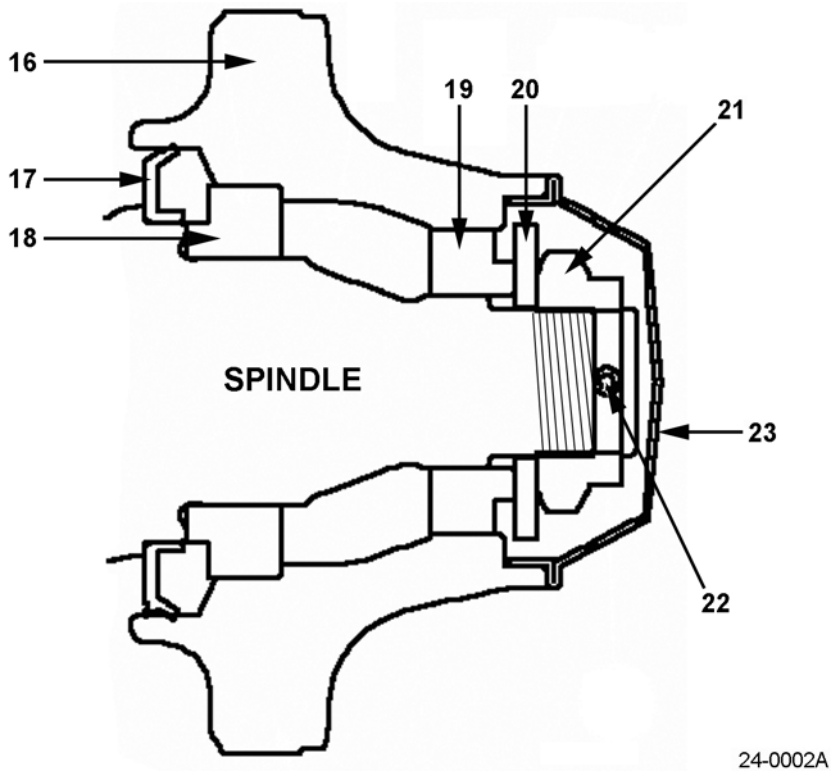

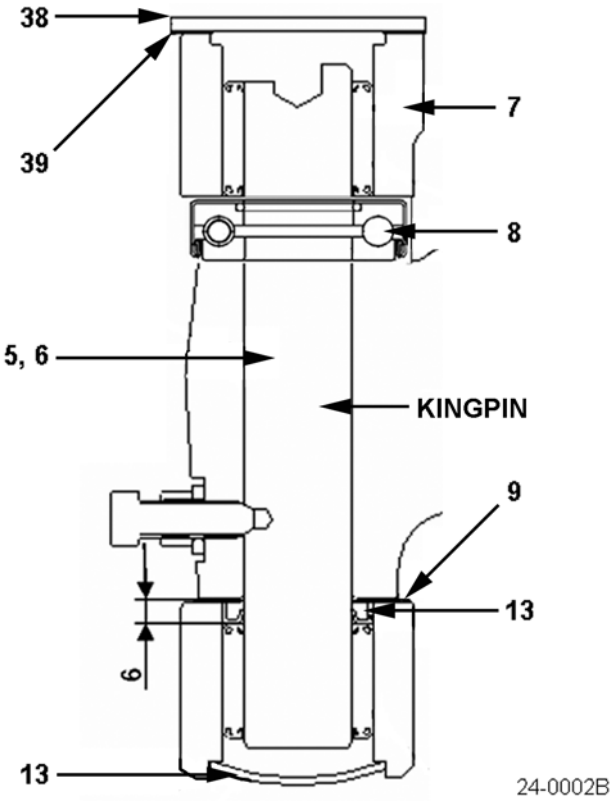

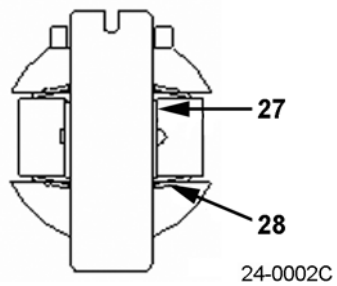

TIE ROD END

https://truckmanualshub.com/

STEERING AXLE ASSEMBLY - PNEUMATIC - DETAIL - S/N 200001A~
(ALSO SEE FIG. 24-0001)

Item	Part Number	Description	Qty	
1	3EB-24-51112	STEERING AXLE (2.0T, 2.5T PNEUMATIC) . . .	1	
	3EB-24-52112	STEERING AXLE (2.8T, 3.0T PNEUMATIC) . . .	1	
	3EB-24-53112	STEERING AXLE (3.2T, 3.5T PNEUMATIC) . . .	1	
2	3EB-24-51211	KNUCKLE ASSY, RH (2.0T, 2.5T, 2.8T, 3.0T). . .	1	
	3EB-24-53211	KNUCKLE ASSY, RH (3.2T, 3.5T)	1	
3	3EB-24-51221	KNUCKLE ASSY, LH (2.0T, 2.5T, 2.8T, 3.0T) . . .	1	
	3EB-24-53221	KNUCKLE ASSY, LH (3.2T, 3.5T).	1	
4	07020-00675	FITTING, GREASE	2	
5	3EB-24-51261	PIN, LH	1	
6	3EB-24-51271	PIN, RH.	1	
7	3EB-24-32440	BEARING	4	
8	3EB-24-42320	BEARING (2.0T, 2.5T)	2	
	3EB-24-52460	BEARING (2.8T, 3.0T, 3.2T, 3.5T).	2	
9	360-27-11220	SHIM.	6	
10	3EB-24-51380	BOLT.	2	
11	3EB-24-51390	NUT.	2	
12	01643-51032	WASHER	2	
13	3EB-24-41320	SEAL.	2	
14	07020-00001	FITTING, GREASE	4	
15	07046-14520	PLUG	3	
16	3EB-24-51230	HUB (2.0T, 2.5T).	2	
	3EB-24-41230	HUB (2.8T, 3.0T, 3.2T, 3.5T)	2	
17	3EB-24-41330	SEAL.	2	
18	06300-32010	BEARING (2.0T, 2.5T)	2	
	3EB-24-32260	BEARING (2.8T, 3.0T, 3.2T, 3.5T).	2	
19	06300-32007	BEARING (2.0T, 2.5T)	2	
	06300-30207	BEARING (2.8T, 3.0T, 3.2T, 3.5T).	2	
20	3EB-24-32390	WASHER	2	
21	01593-13018	NUT, SPINDLE	2	
22	04025-00650	COTTER PIN	2	
23	3EB-24-11160	CAP.	2	
24	34B-24-11221	SERRATION BOLT	12	
25	3EB-24-A7920	TIE ROD ASSY, LH.	1	
26	3EB-24-A7930	TIE ROD ASSY, RH	1	
27	3EB-24-A7910	BUSHING	2	
28	3EB-24-A7940	WASHER	4	
29	3EB-24-21270	NUT.	2	
30	04050-13025	COTTER PIN	2	
31	3EB-25-A7170	PIN	2	

PARTS LIST CONTINUED ON NEXT PAGE

https://truckmanualshub.com/

STEERING AXLE ASSEMBLY - PNEUMATIC - DETAIL - S/N 200001A~ (ALSO SEE FIG. 24-0001)

Item	Part Number	Description	Qty	
32	01435-00814	BOLT	4	
33	3EB-64-A7110	POWER STEERING CYLINDER ASSY	1	
34	3EB-66-53410	ELBOW	2	
35	3EB-66-53460	O-RING	2	
36	01010-81845	BOLT	4	
37	01643-31845	WASHER	4	
38	3EB-24-51510	PLATE	1	
39	3EB-24-51520	GASKET	1	
40	300-22-31241	HUB (LUG) NUT	12	

https://truckmanualshub.com/

NOTES:

https://truckmanualshub.com/

STEERING AXLE ASSEMBLY - CUSHION - S/N 200001A~
(ALSO SEE FIG. 24-0004)

STEERING AXLE FRONT VIEW

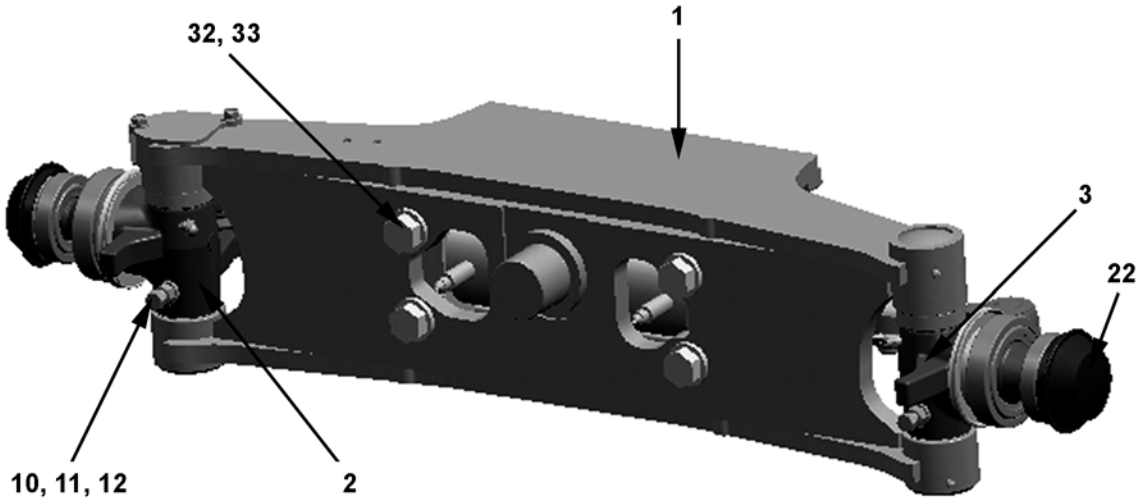

24-0003A

STEERING AXLE REAR VIEW

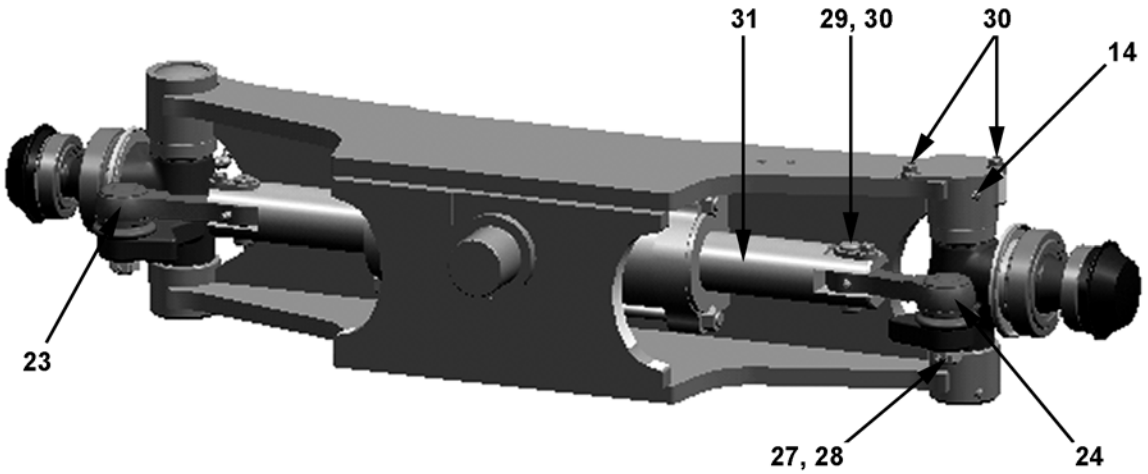

24-0003B

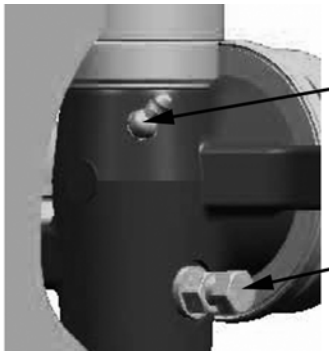

24-0003C

https://truckmanualshub.com/

STEERING AXLE ASSEMBLY - CUSHION - S/N 200001A~
(ALSO SEE FIG. 24-0004)

Item	Part Number	Description	Qty	
1	3EB-25-A7110	STEERING AXLE (2.0T, 2.5T)	1	
	3EB-25-A7210	STEERING AXLE (2.8T, 3.0T, 3.2T, 3.5T)	1	
2	3EB-24-51211	KNUCKLE, RH (2.0T, 2.5T, 2.8T, 3.0T)	1	
	3EB-24-53211	KNUCKLE, RH (3.2T, 3.5T)	1	
3	3EB-24-51221	KNUCKLE, LH (2.0T, 2.5T, 2.8T, 3.0T)	1	
	3EB-24-53221	KNUCKLE, LH (3.3T, 3.5T)	1	
4	07020-00675	FITTING, GREASE	2	
5	3EB-24-51261	KINGPIN, LH	1	
6	3EB-24-51271	KINGPIN, RH	1	
7	3EB-24-32440	BEARING	4	
8	3EB-24-42320	BEARING (2.0T, 2.5T, 2.8T, 3.0T)	2	
	3EB-24-52460	BEARING (3.2T, 3.5T)	2	
9	360-27-11220	SHIM	6	
10	3EB-24-51380	BOLT	2	
11	3EB-24-51390	NUT	2	
12	01643-51032	WASHER	2	
13	3EB-24-41320	SEAL	2	
14	07020-00001	FITTING, GREASE	4	
15	07046-14520	PLUG	3	
16	3EB-24-41330	SEAL	2	
17	3EB-24-32260	BEARING	2	
18	06300-30207	BEARING	2	
19	3EB-24-32390	WASHER	2	
20	01593-13018	NUT	2	
21	04025-00650	PIN	2	
22	3EB-24-11160	CAP	2	
23	3EB-24-A7920	TIE ROD ASSY, LH	1	
24	3EB-24-A7930	TIE ROD ASSY, RH	1	
25	3EB-24-A7910	BUSHING	2	
26	3EB-24-A7940	WASHER	4	
27	3EB-24-21270	NUT	2	
28	04050-13025	COTTER PIN	2	
29	3EB-25-A7170	PIN	2	
30	01435-00814	BOLT	4	
31	3EB-64-A7210	POWER STEERING CYLINDER ASSY	1	
32	01010-81845	BOLT	4	
33	01643-31845	WASHER	4	
34	3EB-24-51510	PLATE	1	
35	3EB-24-51520	GASKET	1	

https://truckmanualshub.com/

STEERING AXLE ASSEMBLY - CUSHION - DETAIL - S/N 200001A~
(ALSO SEE FIG. 24-0003)

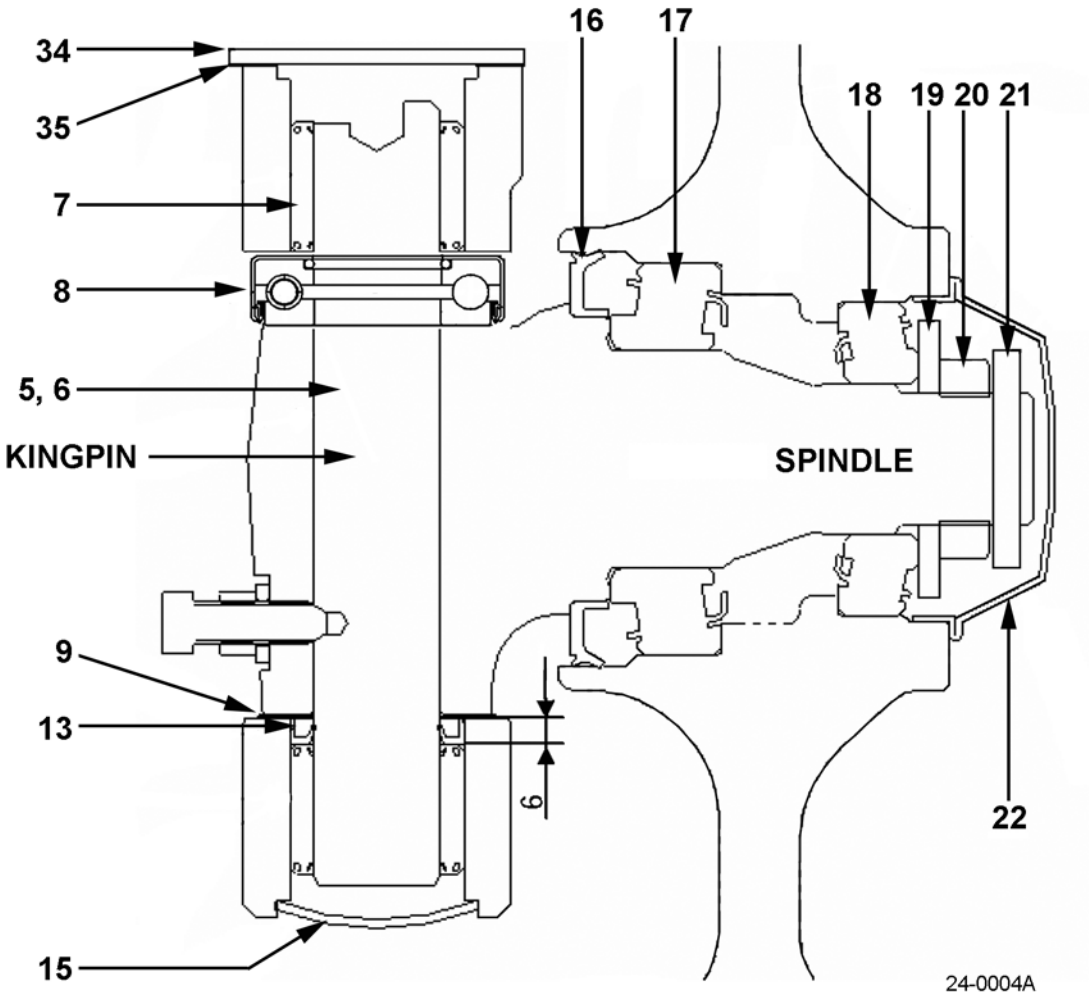

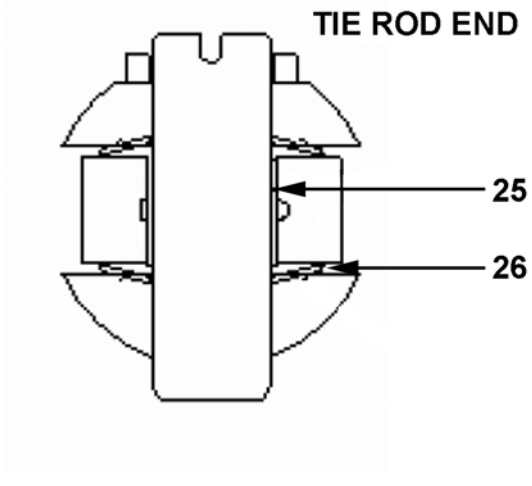

https://truckmanualshub.com/

STEERING AXLE ASSEMBLY - CUSHION - DETAIL - S/N 200001A~ (ALSO SEE FIG. 24-0003)

Item	Part Number	Description	Qty	
1	3EB-25-A7110	STEERING AXLE (2.0T, 2.5T)	1	
	3EB-25-A7210	STEERING AXLE (2.8T, 3.0T, 3.2T, 3.5T)	1	
2	3EB-24-51211	KNUCKLE, RH (2.0T, 2.5T, 2.8T, 3.0T)	1	
	3EB-24-53211	KNUCKLE, RH (3.2T, 3.5T)	1	
3	3EB-24-51221	KNUCKLE, LH (2.0T, 2.5T, 2.8T, 3.0T)	1	
	3EB-24-53221	KNUCKLE, LH (3.3T, 3.5T)	1	
4	07020-00675	FITTING, GREASE	2	
5	3EB-24-51261	KINGPIN, LH	1	
6	3EB-24-51271	KINGPIN, RH	1	
7	3EB-24-32440	BEARING	4	
8	3EB-24-42320	BEARING (2.0T, 2.5T, 2.8T, 3.0T)	2	
	3EB-24-52460	BEARING (3.2T, 3.5T)	2	
9	360-27-11220	SHIM	6	
10	3EB-24-51380	BOLT	2	
11	3EB-24-51390	NUT	2	
12	01643-51032	WASHER	2	
13	3EB-24-41320	SEAL	2	
14	07020-00001	FITTING, GREASE	4	
15	07046-14520	PLUG	3	
16	3EB-24-41330	SEAL	2	
17	3EB-24-32260	BEARING	2	
18	06300-30207	BEARING	2	
19	3EB-24-32390	WASHER	2	
20	01593-13018	NUT	2	
21	04025-00650	PIN	2	
22	3EB-24-11160	CAP	2	
23	3EB-24-A7920	TIE ROD ASSY, LH	1	
24	3EB-24-A7930	TIE ROD ASSY, RH	1	
25	3EB-24-A7910	BUSHING	2	
26	3EB-24-A7940	WASHER	4	
27	3EB-24-21270	NUT	2	
28	04050-13025	COTTER PIN	2	
29	3EB-25-A7170	PIN	2	
30	01435-00814	BOLT	4	
31	3EB-64-A7210	POWER STEERING CYLINDER ASSY	1	
32	01010-81845	BOLT	4	
33	01643-31845	WASHER	4	
34	3EB-24-51510	PLATE	1	
35	3EB-24-51520	GASKET	1	

https://truckmanualshub.com/

STEERING AXLE - STABILIZER ASSY (FG) - S/N 200001A~

STABILIZER SYSTEM

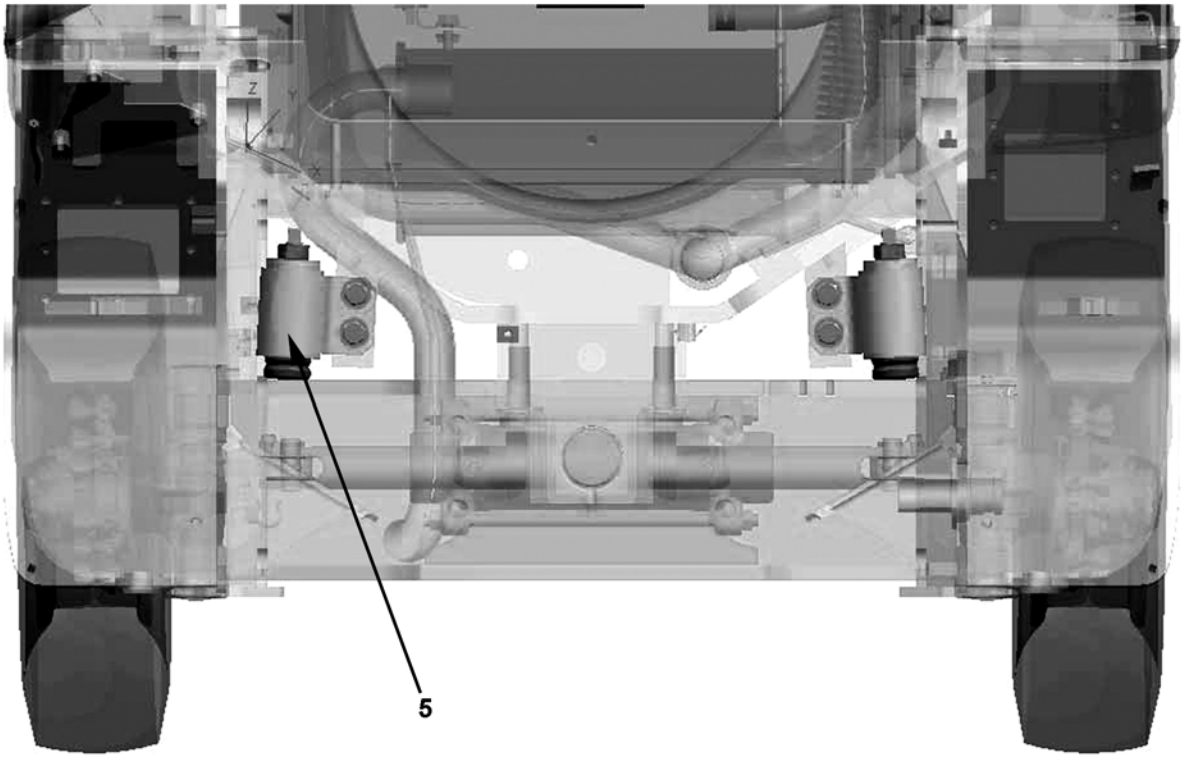

24-0010

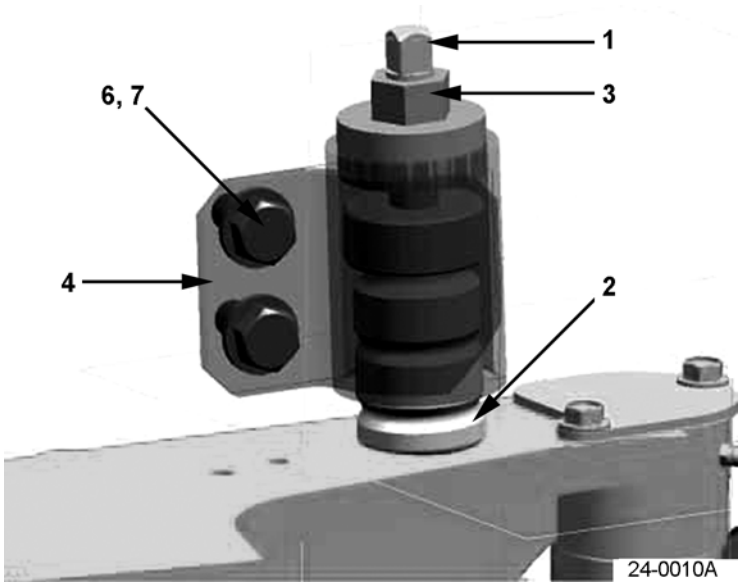

https://truckmanualshub.com/

STEERING AXLE - STABILIZER ASSY (FG) - S/N 200001A~

Item	Part Number	Description	Qty	
1	3EB-25-A7570	STUD	2	
2	3EB-25-A7580	CUSHION	2	
3	01580-11613	NUT	2	
4	3EB-25-A7510	BRACKET, RH	1	
5	3EB-25-A7520	BRACKET, LH	1	
6	01643-51645	WASHER	4	
7	01010-81645	BOLT	4	

https://truckmanualshub.com/

FRONT WHEELS & TIRES - CUSHION - S/N 200001A~

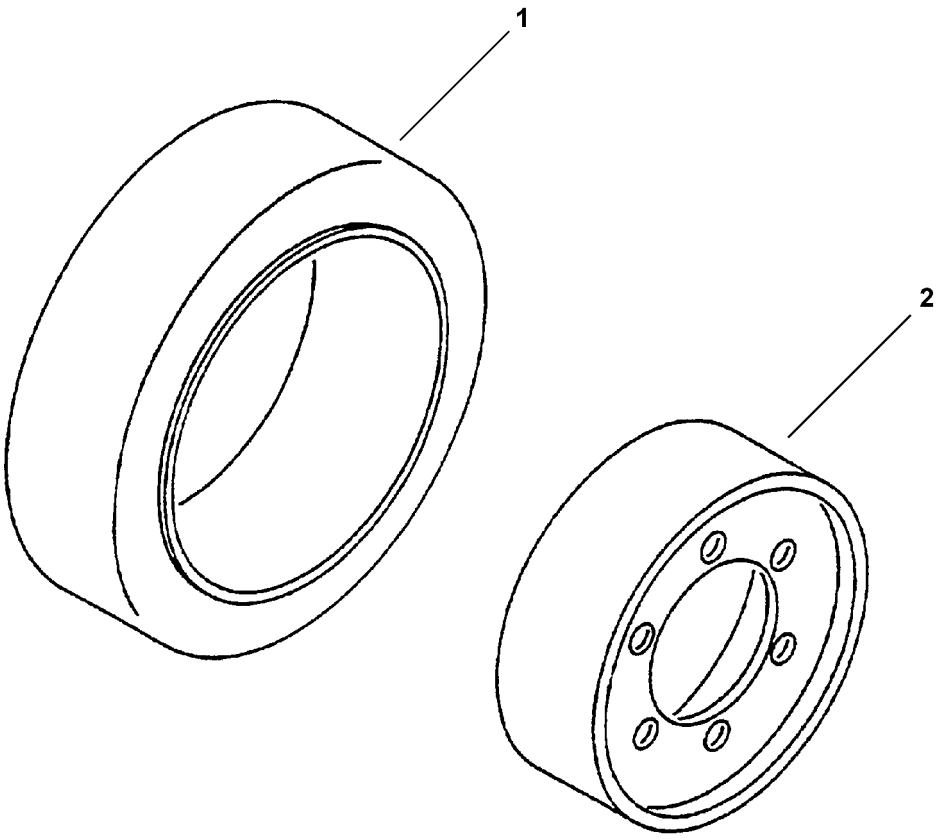

27-0001

https://truckmanualshub.com/

FRONT WHEELS & TIRES - CUSHION - S/N 200001A~

Item	Part Number	Description	Qty	
	2.0 & 2.5 TON TRUCKS			
1	MIT06605101	TIRE, 21 X 7 X 15 - STD & WIDE	1	
	MIT06605102	TIRE, 21 X 7 X 15 - NON-MARKING & WIDE NON-MARKING	1	
	MIT06605001	TIRE, 21 X 7 X 15 - SMOOTH	1	
	MIT06605002	TIRE, 21 X 7 X 15 - SMOOTH NON-MARKING	1	
	2.8, 3.0 & 3.2 TON TRUCKS			
	MIT06610101	TIRE, 21 X 8 X 15 - STD & WIDE	1	
	MIT06610102	TIRE, 21 X 8 X 15 - NON-MARKING & WIDE NON-MARKING	1	
	MIT06610001	TIRE, 21 X 8 X 15 - SMOOTH	1	
	MIT06610002	TIRE, 21 X 8 X 15 - SMOOTH NON-MARKING	1	
2	3EB-27-A5810	RIM	1	

https://truckmanualshub.com/

FRONT WHEELS & TIRES - PNEUMATIC - S/N 200001A~

2.0 & 2.5 TON TRUCKS

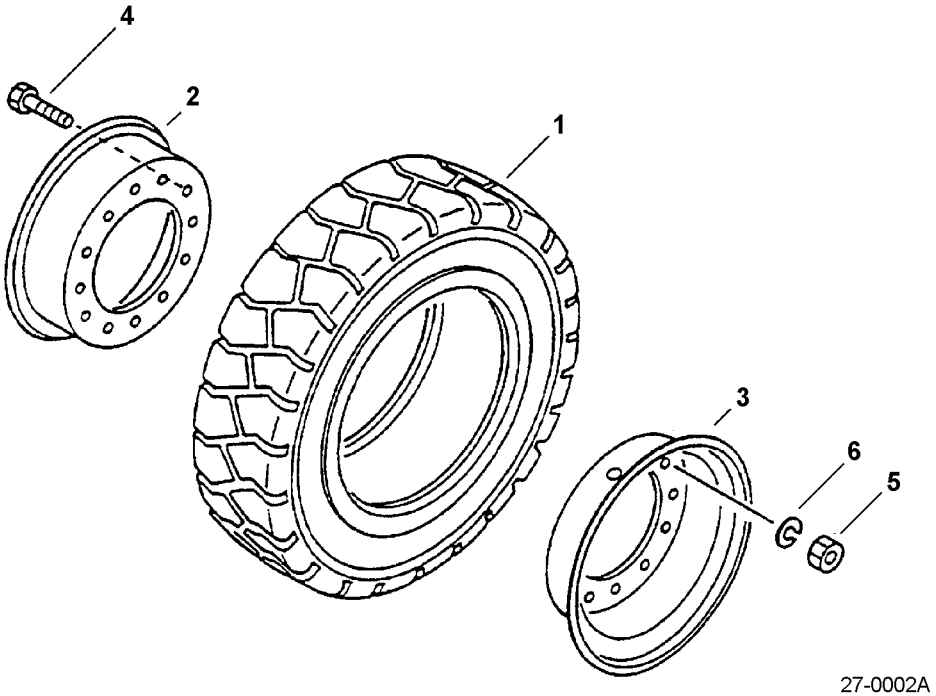

27-0002A

2.8, 3.0, 3.2, 3.5 TON TRUCKS

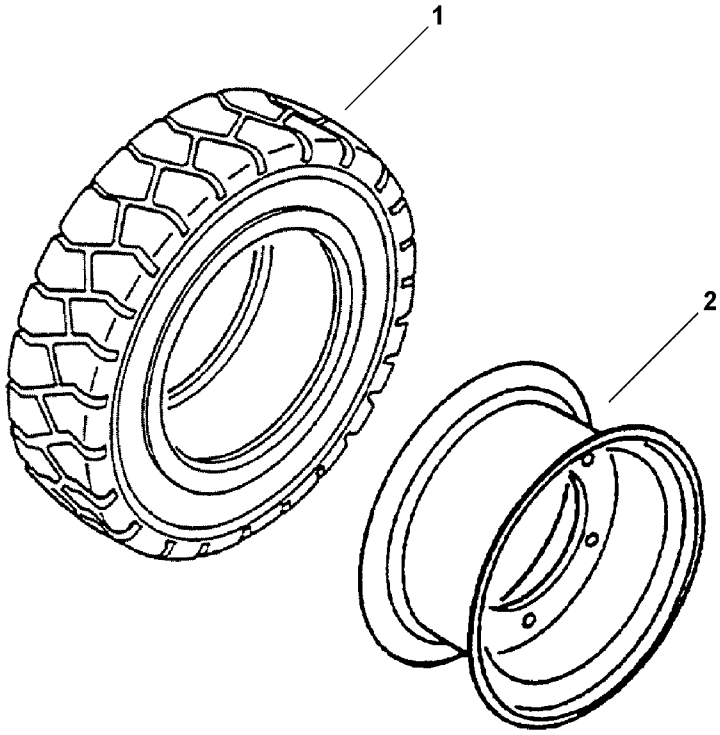

27-0002B

https://truckmanualshub.com/

FRONT WHEELS & TIRES - PNEUMATIC - S/N 200001A~

Item	Part Number	Description	Qty	
	2.0 & 2.5 TON TRUCKS			
1	MIT304000GS	TIRE, 7.00 X 12 - STD (SINGLE TIRE).	1	
	MIT27400102	TIRE, 7.00 X 12 - SOFT NON-MARKING.	1	
	MIT24400101	TIRE, 7.00 X 12 - SOFT SOLID (SINGLE TIRE SPEC)	1	
	OPTION	TIRE, 7.00 X 12 - FOAM FILLED	1	
	MIT304000GS	TIRE, 7.00 X 12 - DUAL TIRE SPEC	1	
	MIT24400101	TIRE, 7.00 X 12 - SOFT SOLID (DUAL TIRE SPEC)	1	
N/S	MIT42400000	TUBE.	1	
2	34B-27-11131	RIM HALF, INNER STD (ONLY AVAIL. W/ # 34B-27-11141)	1	
3	34B-27-11141	RIM HALF, OUTER STD (ONLY AVAIL. W/ # 34B-27-11131)	1	
4	34B-27-32320	BOLT, RIM.	6	
5	01580-11613	NUT, RIM.	6	
6	01602-21648	WASHER, RIM	6	
N/S	34B-27-00210	RIM ASSY, DUAL-WHEEL OPTION (7.00 X 12 X 12)	2	
N/S	34B-21-14151	NUT, DUAL-WHEEL OPTION.	12	
N/S	34B-27-11340	NUT, DUAL-WHEEL OPTION.	12	
N/S	34B-27-11350	NUT, DUAL-WHEEL OPTION.	12	
N/S	3EB-27-A5160	SPACER, DUAL-WHEEL OPTION	2	
N/S	34B-27-32330	SERRATION BOLT	12	
N/S	3EB-27-52310YL	FENDER, LH.	1	
N/S	3EB-27-52320YL	FENDER, RH	1	
N/S	01010-81025	BOLT, FENDER.	8	
N/S	34A-50-22140	WASHER, FENDER	8	
	2.8, 3.0, 3.2, 3.5 TON TRUCKS			
1	MIT305800GS	TIRE, 8.15 X 15 - STD	1	
	MIT27580102	TIRE, 8.15 X 15 - SOFT NON-MARKING.	1	
	MIT24580101	TIRE, 8.15 X 15 - SOFT SOLID (SINGLE TIRE SPEC)	1	
	OPTION	TIRE, 8.15 X 15 - FOAM FILLED	1	
	MIT305800GS	TIRE, 8.15 X 15 X 14 - DUAL TIRE SPEC	1	
	MIT24580101	TIRE, 8.15 X 15 X 14 - SOFT SOLID (DUAL TIRE SPEC)	1	
N/S	MIT42580000	TUBE.	1	
2	3EB-27-F5710	RIM STD	1	
N/S	3EB-27-F5710	RIM ASSY, DUAL-WHEEL OPTION	2	
N/S	34B-21-14151	NUT, DUAL-WHEEL OPTION.	12	
N/S	34B-27-11340	NUT, DUAL-WHEEL OPTION.	12	
N/S	34B-27-11350	NUT, DUAL-WHEEL OPTION.	12	
N/S	300-919-9040	CONNECTOR, DUAL-WHEEL OPTION.	2	
N/S	34B-27-32411SA	SPACER, DUAL-WHEEL OPTION	2	

PARTS LIST CONTINUED ON NEXT PAGE

https://truckmanualshub.com/

FRONT WHEELS & TIRES - PNEUMATIC - S/N 200001A~

Item	Part Number	Description	Qty	
N/S	34B-27-32330	SERRATION BOLT	12	
N/S	34B-27-32440	HOSE	2	
N/S	3EB-27-52310YL	COVER, LH	1	
N/S	3EB-27-52320YL	COVER, RH	1	
N/S	01010-81025	BOLT FOR COVERS	8	
N/S	34A-50-22140	WASHER FOR COVERS	8	
N/S	3EB-27-52910	FENDER, LH (2.8, 3.0, 3.2T) (NARROW DUAL-TIRE OPTION)	1	
N/S	3EB-27-52920	FENDER, RH (2.8, 3.0, 3.2T) (NARROW DUAL-TIRE OPTION)	1	
N/S	3EB-27-52710	FENDER, LH (3.5T) (NARROW DUAL-TIRE OPTION)	1	
N/S	3EB-27-52720	FENDER, LH (3.5T) (NARROW DUAL-TIRE OPTION)	1	
	3.2, 3.5 TON TRUCKS - DUAL TIRE STANDARD OPTION (NARROW)			
	TBA	TIRE, 6.00 X 15 X 10PR - NARROW	2	
	3EB-27-52620	RIM ASSY	1	
	3EB-27-52640	RIM ASSY	1	
	3EB-27-52710	COVER, LH	1	
	3EB-27-52720	COVER, RH	1	

https://truckmanualshub.com/

NOTES:

https://truckmanualshub.com/

REAR WHEELS & TIRES - CUSHION - S/N 200001A~

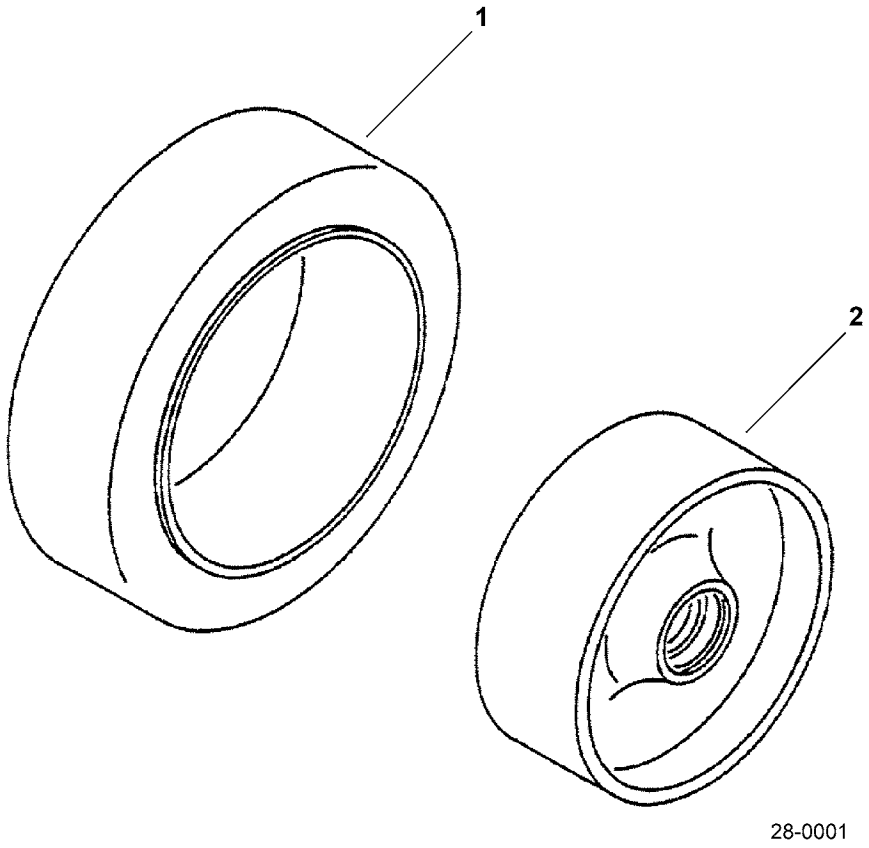

https://truckmanualshub.com/

REAR WHEELS & TIRES - CUSHION - S/N 200001A~

Item	Part Number	Description	Qty	
		2.0 & 2.5 TON TRUCKS		
1	MIT06415101	TIRE, REAR - STD (16.25 X 5 X 11.25)	1	
	MIT06415102	TIRE, REAR - NON-MARKING (16.25 X 5 X 11.25)	1	
	MIT06415001	TIRE, REAR - SMOOTH (16.25 X 5 X 11.25). . .	1	
	MIT06415002	TIRE, REAR - SMOOTH NON-MARKING (16.25 X 5 X 11.25)	1	
		2.8, 3.0, 3.2 & 3.5 TON TRUCKS		
	MIT06420101	TIRE, REAR - STD (650 X 10 X 10)	1	
	MIT06420102	TIRE, REAR - NON-MARKING (650 X 10 X 10)	1	
	MIT06420001	TIRE, REAR - SMOOTH (650 X 10 X 10).	1	
	MIT06420002	TIRE, REAR - SMOOTH NON-MARKING (650 X 10 X 10).	1	
2	3EB-24-A7410	HUB (ALL).	1	

https://truckmanualshub.com/

REAR WHEELS & TIRES - PNEUMATIC - S/N 200001A~

2.0 & 2.5 TON TRUCKS

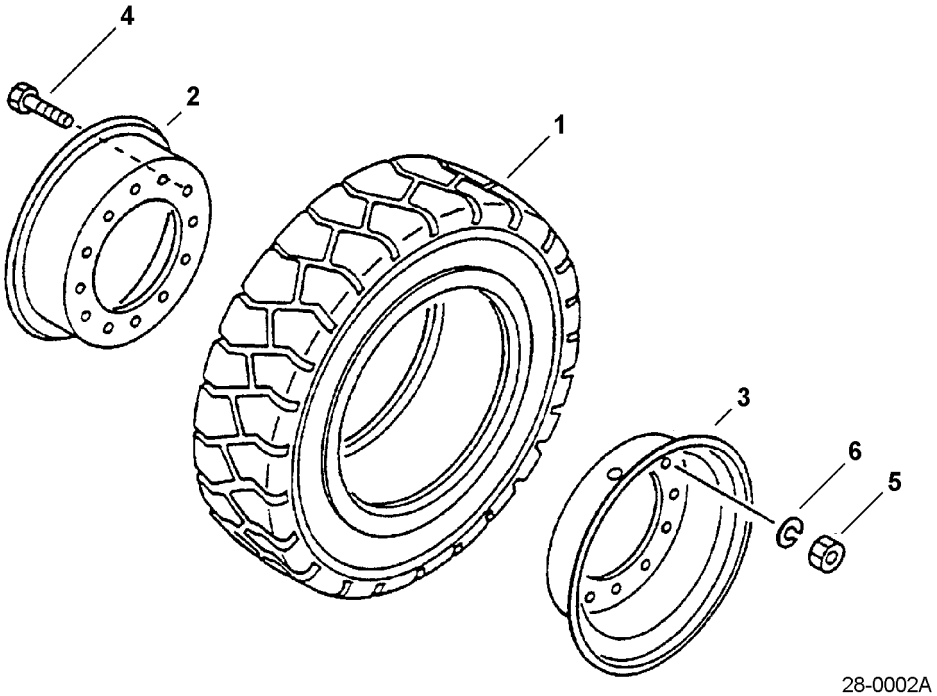

28-0002A

2.8, 3.0, 3.2, 3.5 TON TRUCKS

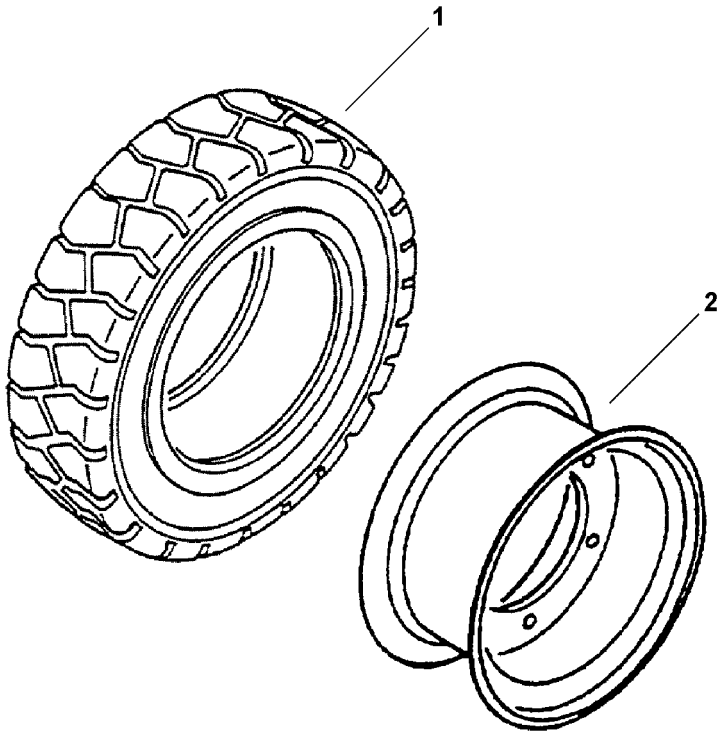

28-0002B

https://truckmanualshub.com/

REAR WHEELS & TIRES - PNEUMATIC - S/N 200001A~

Item	Part Number	Description	Qty	
	2.0 & 2.5 TON TRUCKS			
1	MIT303000GS	TIRE, REAR - STD (600 X 9)	1	
	MIT27300101	TIRE, REAR - SOFT SOLID (600 X 9)	1	
	MIT27300102	TIRE, REAR - SOFT NON-MARKING (600 X 9)	1	
	OPTION	TIRE, REAR - FOAM FILLED (600 X 9)	1	
N/S	MIT42300000	TUBE	1	
2	37A-27-14120	RIM (HALF) (ONLY AVAILABLE W/ # 37A-27-14130)	1	
3	37A-27-14130	RIM (HALF) (ONLY AVAILABLE W/ # 37A-27-14120)	1	
4	37A-27-18111	BOLT.	6	
5	01582-11210	NUT.	6	
6	01602-21236	WASHER	6	
	2.8, 3.0 & 3.2 TON TRUCKS			
1	MIT303300GS	TIRE, REAR - STD (650 X 10)	1	
	MIT27340101	TIRE, REAR - SOFT SOLID (650 X 10)	1	
	MIT27340102	TIRE, REAR - SOFT NON-MARKING (650 X 10)	1	
	OPTION	TIRE, REAR - FOAM FILLED (650 X 10)	1	
N/S	MIT42330100	TUBE	1	
2	3EB-28-A7520	RIM	1	

https://truckmanualshub.com/

BRAKES - SERVICE - PNEUMATIC 2.0 & 2.5 TON - S/N 200001A~

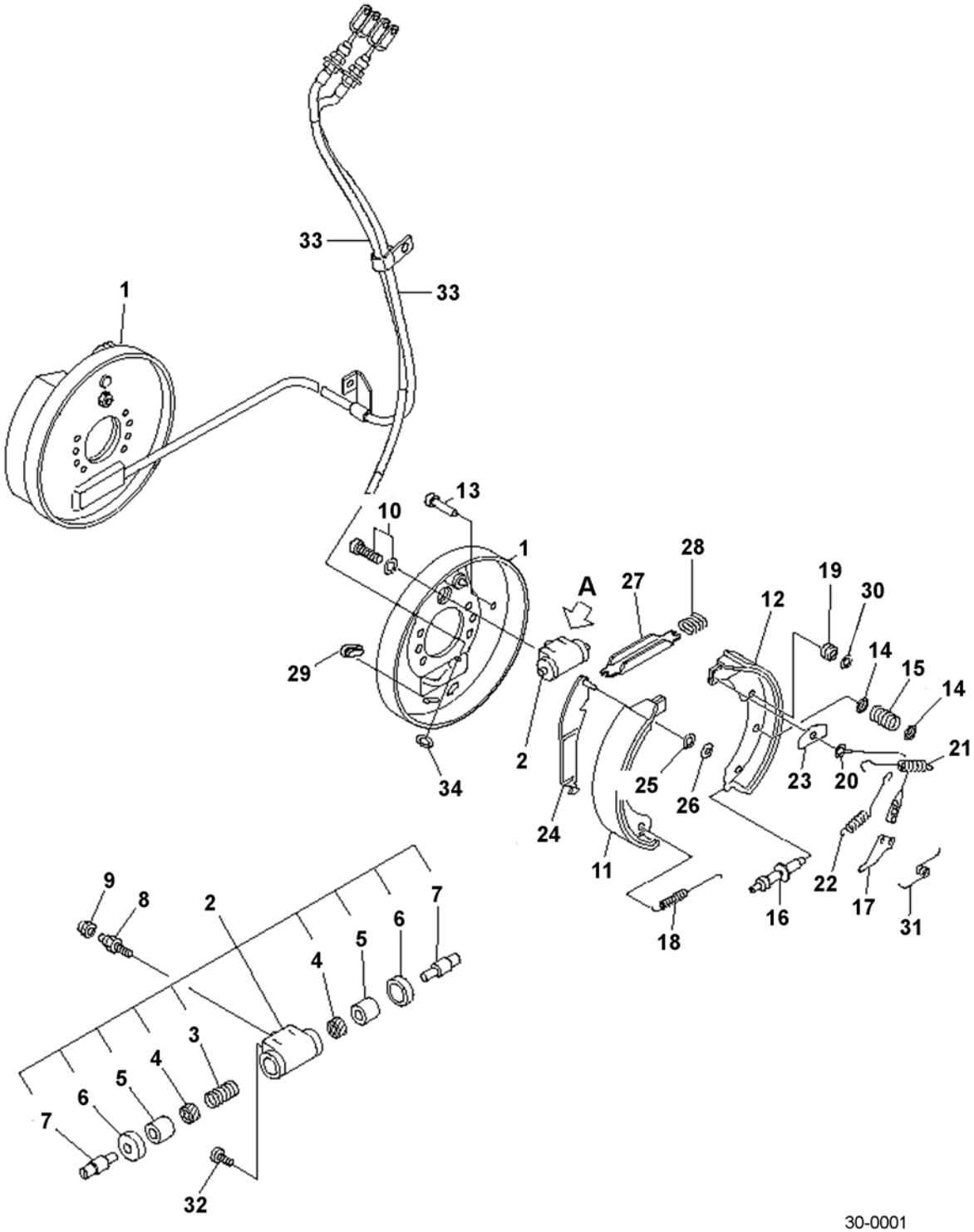

https://truckmanualshub.com/

BRAKES - SERVICE - PNEUMATIC 2.0 & 2.5 TON - S/N 200001A~

Item	Part Number	Description	Qty	
	37B-1BR-5110	BRAKE ASSY, LH	1	
	37B-1BR-5120	BRAKE ASSY, RH	1	
1	3EB-30-41130	.PLATE ASSY, LH	1	
	3EB-30-41140	.PLATE ASSY, RH	1	
2	3EB-30-41440	.WHEEL CYLINDER ASSY	1	
3	NSS	..SPRING (K26)	1	
4	NSS	..CUP (K26)	2	
5	NSS	..PISTON (K26)	2	
6	NSS	..BOOT (K26)	2	
7	3EB-30-44570	..ROD	2	
8	34B-30-14550	.BLEEDER	1	
9	34B-30-14560	.CAP	1	
10	3EB-30-44460	.BOLT	2	
11	NSS	.LINING ASSY (SEE BRAKE SHOE KIT)	1	
12	NSS	.LINING ASSY, LH (SEE BRAKE SHOE KIT)	1	
	NSS	.LINING ASSY, RH (SEE BRAKE SHOE KIT)	1	
13	3EC-30-11380	.PIN	2	
14	3ED-30-31240	.CUP	4	
15	3EB-30-44420	.SPRING	2	
16	3EB-30-51430	.ADJUSTER ASSY, LH	1	
	3EB-30-51450	.ADJUSTER ASSY, RH	1	
17	3EB-30-41540	.LEVER, LH	1	
	3EB-30-41550	.LEVER, RH	1	
18	3EB-30-31320	.SPRING	1	
19	3EC-30-11180	.SHEAVE	1	
20	3BB-30-12190	.CABLE	1	
21	3EC-30-11340	.SPRING	1	
22	34B-30-14351	.SPRING	1	
23	3EC-30-11170	.PLATE	1	
24	3EB-30-41650	.PARKING LEVER ASSY, LH	1	
	3EB-30-41660	.PARKING LEVER ASSY, RH	1	
25	34B-30-14440	.WASHER	1	
26	34B-30-14450	.RING, RETAINER	1	
27	34B-30-14160	.STRUT, LH	1	
	34B-30-14260	.STRUT, RH	1	
28	34B-30-14320	.SPRING	1	
29	34B-30-14480	.COVER	1	
30	3EC-30-11510	.WASHER	1	
31	3EB-30-42160	.SPRING, LH	1	

PARTS LIST CONTINUED ON NEXT PAGE

https://truckmanualshub.com/

BRAKES - SERVICE - PNEUMATIC 2.0 & 2.5 TON - S/N 200001A~

Item	Part Number	Description	Qty	
31	3EB-30-42260	.SPRING, RH	1	
32	3EB-30-44590	.PROTECTOR, THREAD	1	
33	3EB-30-51110	.CABLE, LH	1	
	3EB-30-51120	.CABLE, RH	1	
34	34B-30-14470	.RING, SNAP	1	
K26	3EB-30-00010	SERVICE KIT (CYLINDER)	2	
KIT	3EB-K3-02030	BRAKE SHOE KIT, LH	1	
	3EB-K3-02040	BRAKE SHOE KIT, RH	1	

https://truckmanualshub.com/

NOTES:

https://truckmanualshub.com/

BRAKES - SERVICE - PNEUMATIC 2.8 & 3.0 TON - S/N 200001A~

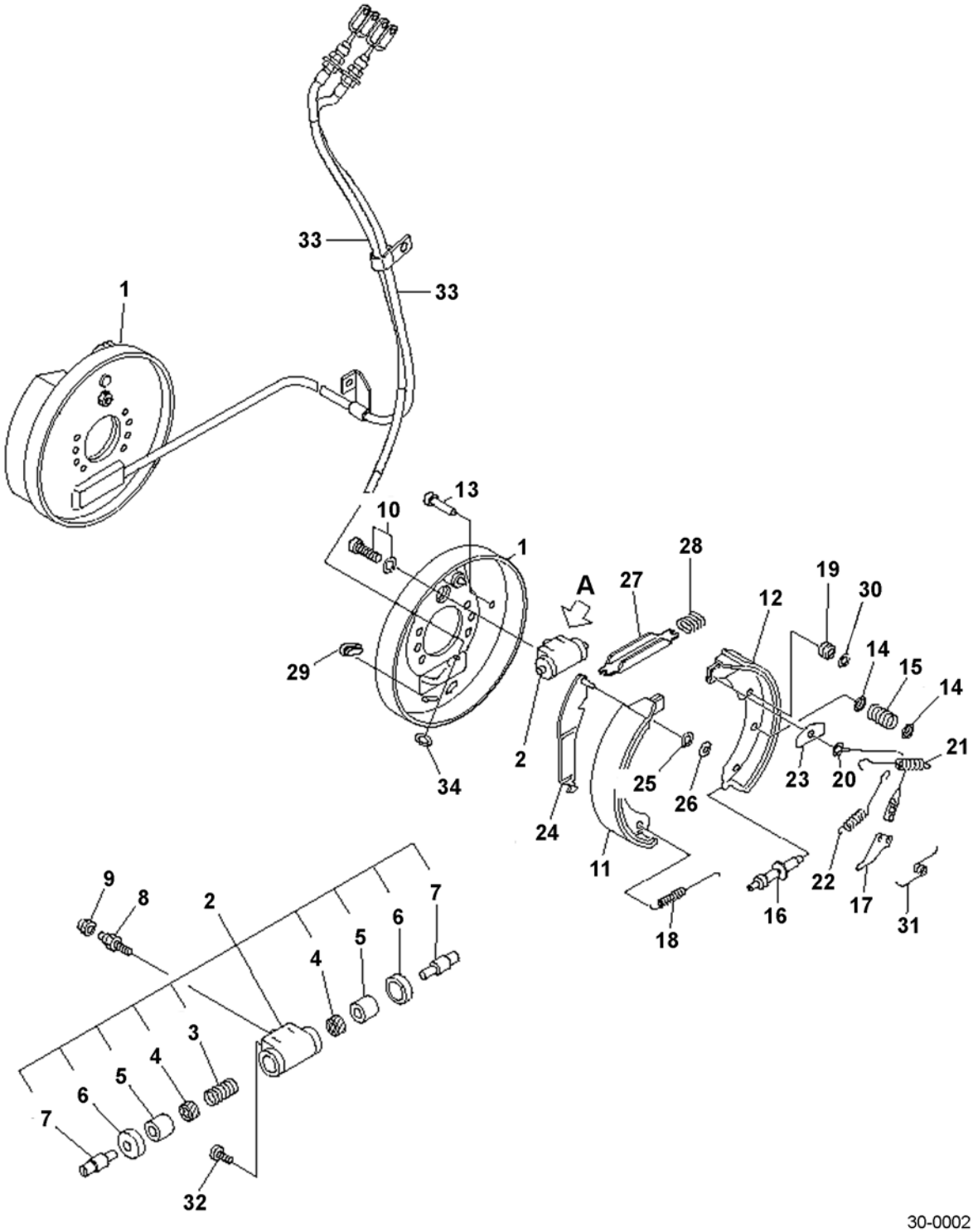

https://truckmanualshub.com/

BRAKES - SERVICE - PNEUMATIC 2.8 & 3.0 TON - S/N 200001A~

Item	Part Number	Description	Qty	
	37B-1BR-5130	BRAKE ASSY, LH	1	
	37B-1BR-5140	BRAKE ASSY, RH	1	
1	3EB-30-41130	.PLATE ASSY, LH	1	
	3EB-30-41140	.PLATE ASSY, RH	1	
2	3EB-30-41440	.WHEEL CYLINDER ASSY	1	
3	NSS	..SPRING (K26)	1	
4	NSS	..CUP (K26)	2	
5	NSS	..PISTON (K26)	2	
6	NSS	..BOOT (K26)	2	
7	3EB-30-44570	..ROD	2	
8	34B-30-14550	.BLEEDER	1	
9	34B-30-14560	.CAP	1	
10	3EB-30-44460	.BOLT	2	
11	NSS	.LINING ASSY (SEE BRAKE SHOE KIT)	1	
12	NSS	.LINING ASSY, LH (SEE BRAKE SHOE KIT)	1	
	NSS	.LINING ASSY, RH (SEE BRAKE SHOE KIT)	1	
13	3EC-30-11380	.PIN	2	
14	3ED-30-31240	.CUP	4	
15	3EB-30-44420	.SPRING	2	
16	3EB-30-51430	.ADJUSTER ASSY, LH	1	
	3EB-30-51450	.ADJUSTER ASSY, RH	1	
17	3EB-30-41540	.LEVER, LH	1	
	3EB-30-41550	.LEVER, RH	1	
18	3EB-30-31320	.SPRING	1	
19	3EC-30-11180	.SHEAVE	1	
20	3BB-30-12190	.CABLE	1	
21	3EC-30-11340	.SPRING	1	
22	34B-30-14351	.SPRING	1	
23	3EC-30-11170	.PLATE	1	
24	3EB-30-41650	.PARKING LEVER ASSY, LH	1	
	3EB-30-41660	.PARKING LEVER ASSY, RH	1	
25	34B-30-14440	.WASHER	1	
26	34B-30-14450	.RING, RETAINER	1	
27	34B-30-14160	.STRUT, LH	1	
	34B-30-14260	.STRUT, RH	1	
28	34B-30-14320	.SPRING	1	
29	34B-30-14480	.COVER	1	
30	3EC-30-11510	.WASHER	1	
31	3EB-30-42160	.SPRING, LH	1	

PARTS LIST CONTINUED ON NEXT PAGE

https://truckmanualshub.com/

BRAKES - SERVICE - PNEUMATIC 2.8 & 3.0 TON - S/N 200001A~

Item	Part Number	Description	Qty	
31	3EB-30-42260	.SPRING, RH	1	
32	3EB-30-44590	.PROTECTOR, THREAD	1	
33	3EB-30-51110	.CABLE, LH	1	
	3EB-30-51120	.CABLE, RH	1	
34	34B-30-14470	.RING, SNAP	1	
K26	3EB-30-00010	SERVICE KIT (CYLINDER)	2	
KIT	3EB-K3-02050	BRAKE SHOE KIT, LH		1
	3EB-K3-02060	BRAKE SHOE KIT, RH		1

https://truckmanualshub.com/

NOTES:

https://truckmanualshub.com/

BRAKES - SERVICE - PNEUMATIC 3.2 & 3.5 TON - S/N 200001A~

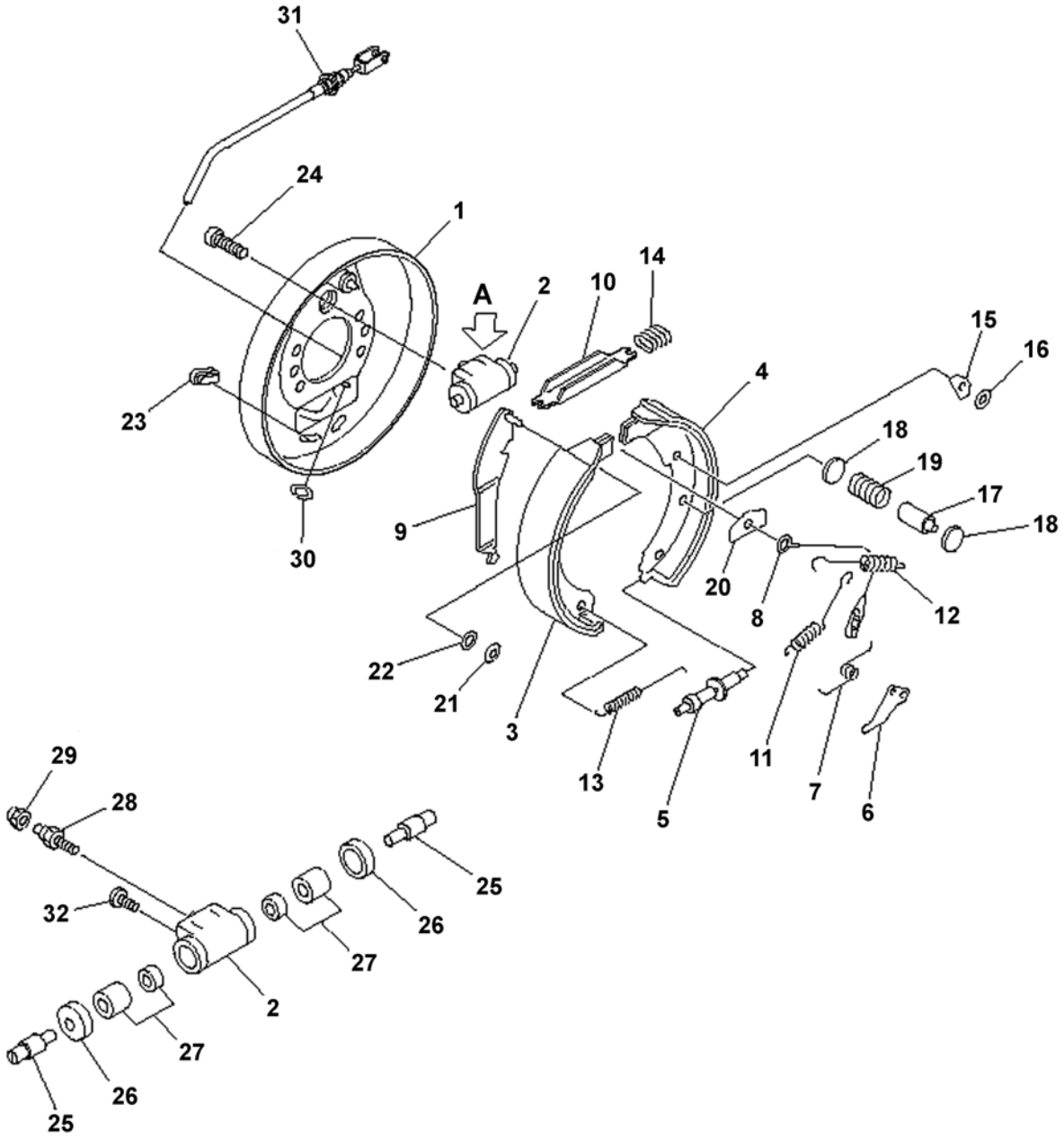

30-0003

https://truckmanualshub.com/

BRAKES - SERVICE - PNEUMATIC 3.2 & 3.5 TON - S/N 200001A~

Item	Part Number	Description	Qty	
	37B-1BR-5310	BRAKE ASSY, LH	1	
	37B-1BR-5320	BRAKE ASSY, RH	1	
1	3EC-30-11110	.PLATE ASSY, LH	1	
	3EC-30-11210	.PLATE ASSY, RH	1	
2	3EC-30-33110	.WHEEL CYLINDER ASSY	1	
3	NSS	.SHOE ASSY (SEE BRAKE SHOE KIT)	1	
4	NSS	.SHOE ASSY, LH (SEE BRAKE SHOE KIT)	1	
	NSS	.SHOE ASSY, RH (SEE BRAKE SHOE KIT)	1	
5	3EC-30-11150	.ADJUSTER ASSY, LH	1	
	3EC-30-11230	.ADJUSTER ASSY, RH	1	
6	3EC-30-11190	.LEVER, LH	1	
	3EC-30-11240	.LEVER, RH	1	
7	3EC-30-11310	.SPRING, LH	1	
	3EC-30-11250	.SPRING, RH	1	
8	3EC-30-11160	.CABLE ASSY	1	
9	3EC-30-11450	.LEVER ASSY, LH	1	
	3EC-30-11270	.LEVER ASSY, RH	1	
10	3EC-30-11320	.STRUT, LH	1	
	3EC-30-11260	.STRUT, RH	1	
11	34B-30-14351	.SPRING	1	
12	3EC-30-11340	.SPRING	1	
13	3EC-30-31320	.SPRING	1	
14	34B-30-14320	.SPRING	1	
15	3EC-30-11180	.SHEAVE	1	
16	3EC-30-11510	.WASHER	1	
17	3EC-30-11380	.PIN	2	
18	3EC-30-11370	.SEAL	4	
19	3EC-30-11390	.SPRING	2	
20	3EC-30-11170	.PLATE	1	
21	34B-30-14450	.RING, RETAINER	1	
22	34B-30-14440	.WASHER, WAVE	1	
23	34B-30-14480	.COVER	1	
24	3EC-30-11430	.BOLT	2	
25	34B-30-14570	.ROD	2	
26	3EC-30-14540	.BOOT	2	
27	3EC-30-33160	.PISTON ASSY	2	
28	3EC-30-11710	.BLEEDER	1	
29	34B-30-14560	.CAP	1	
30	34B-30-14470	.RING, SNAP	1	

PARTS LIST CONTINUED ON NEXT PAGE

https://truckmanualshub.com/

BRAKES - SERVICE - PNEUMATIC 3.2 & 3.5 TON - S/N 200001A~

Item	Part Number	Description	Qty	
31	3EB-30-51210	.CABLE ASSY, LH	1	
	3EB-30-51220	.CABLE ASSY, RH	1	
31	3EB-30-44590	.PROTECTOR, THREAD	1	
KIT	3EB-K3-04010	BRAKE SHOE KIT, LH	1	
	3EB-K3-04020	BRAKE SHOE KIT, RH	1	

https://truckmanualshub.com/

NOTES:

https://truckmanualshub.com/

BRAKES - SERVICE - CUSHION - S/N 200001A~
(ALSO SEE FIG. 30-0010A)

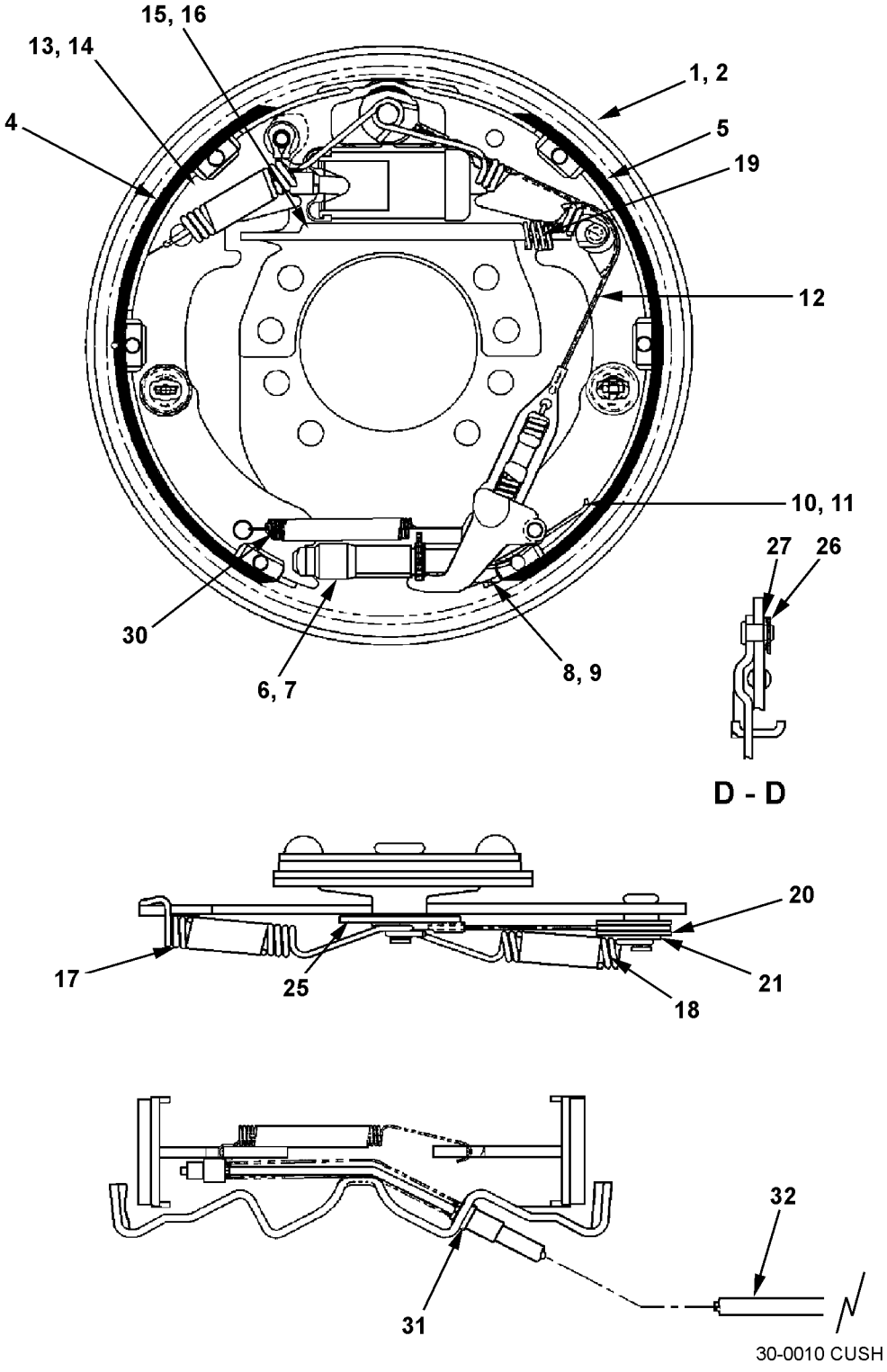

https://truckmanualshub.com/

BRAKES - SERVICE - CUSHION - S/N 200001A~
(ALSO SEE FIG. 30-0010A)

Item	Part Number	Description	Qty	
	37B-1BR-5210	BRAKE ASSY - LH	1	
	37B-1BR-5220	BRAKE ASSY - RH	1	
1	3EB-30-43130	BACKING PLATE ASSY - LH	1	
2	3EB-30-43140	BACKING PLATE ASSY - RH	1	
3	3EB-30-41440	WHEEL CYLINDER ASSY	2	
A	3EB-30-44560	.BODY	2	
B	3EB-30-44570	.CONNECTING LINK	4	
C	34B-30-14540	.BOOT	4	
D	3EC-30-12650	.PISTON	4	
E	34B-30-14521	.CUP, WHEEL CYLINDER	4	
F	3EB-30-43670	.SPRING, WHEEL CYLINDER	2	
G	34B-30-14550	.BLEEDER SCREW	2	
H	34B-30-14560	.BLEEDER CAP	2	
I	3EB-30-44590	.THREAD PROTECTOR	2	
4	NSS	BRAKE SHOE, LINING ASSY(SEE BRAKE SHOE KIT)	1	
5	NSS	BRAKE SHOE, LINING & PIN ASSY(SEE BRAKE SHOE KIT)	1	
6	3EB-30-41430	ADJUSTER ASSY - LH	1	
7	3EB-30-41450	ADJUSTER ASSY - RH	1	
8	3EB-30-41540	LEVER - LH	1	
9	3EB-30-41550	LEVER - RH	1	
10	3EB-30-42160	SPRING - LH	1	
11	3EB-30-42260	SPRING - RH)	1	
12	3BB-30-12190	SPRING & CABLE ASSY	2	
13	3EB-30-41210	PARKING LEVER ASSY - LH	1	
14	3EB-30-41220	PARKING LEVER ASSY - RH	1	
15	34B-30-14160	STRUT - LH	1	
16	34B-30-14260	STRUT - RH	1	
17	34B-30-14351	SPRING	2	
18	3EC-30-11340	SPRING	2	
19	34B-30-14320	SPRING	2	
20	3EC-30-11180	SHEAVE	2	
21	3EC-30-11510	WASHER, PLAIN	2	
22	3EC-30-11380	PIN, SHOE HOLD-DOWN	4	
23	3ED-30-31240	CUP, SHOE HOLD-DOWN	8	
24	3EB-30-44420	SPRING, SHOE HOLD-DOWN	4	
25	3EC-30-11170	PLATE	2	
26	34B-30-14450	RETAINER	2	

PARTS LIST CONTINUED ON NEXT PAGE

https://truckmanualshub.com/

BRAKES - SERVICE - CUSHION - S/N 200001A~
(ALSO SEE FIG. 30-0010A)

Item	Part Number	Description	Qty	
27	34B-30-14440	WAVE WASHER	2	
28	34B-30-14480	COVER, BACKING PLATE ADJUSTING HOLE	2	
29	3EB-30-44460	BOLT, SEMS - WHEEL CYLINDER	4	
30	3EB-30-31320	SPRING	2	
31	34B-30-14470	SNAP RING, "E" TYPE	2	
32	3EB-30-51110	CABLE ASSY, PARKING - LH	1	
	3EB-30-51120	CABLE ASSY, PARKING - RH	1	
KIT	3EB-K3-02030	BRAKE SHOE KIT, LH	1	
	3EB-K3-02040	BRAKE SHOE KIT, RH	1	

https://truckmanualshub.com/

NOTES:

https://truckmanualshub.com/

BRAKES - SERVICE - CUSHION - WHEEL CYLINDER - S/N 200001A~ (ALSO SEE FIG. 30-0010)

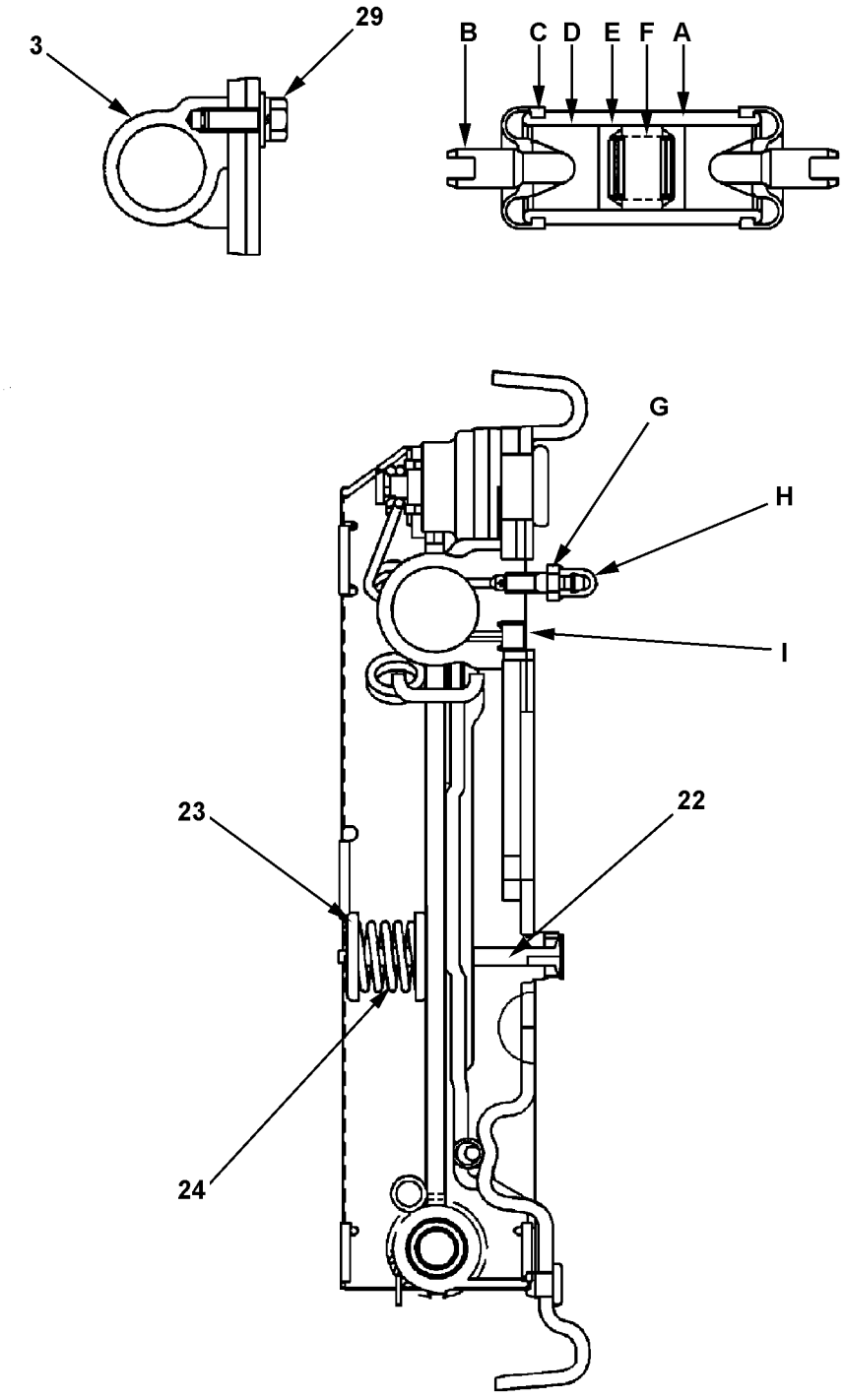

30-0010a

https://truckmanualshub.com/

BRAKES - SERVICE - CUSHION - WHEEL CYLINDER - S/N 200001A~ (ALSO SEE FIG. 30-0010)

Item	Part Number	Description	Qty	
	37B-1BR-5210	BRAKE ASSY - LH	1	
	37B-1BR-5220	BRAKE ASSY - RH	1	
1	3EB-30-43130	BACKING PLATE ASSY - LH	1	
2	3EB-30-43140	BACKING PLATE ASSY - RH	1	
3	3EB-30-41440	WHEEL CYLINDER ASSY	2	
A	3EB-30-44560	.BODY	2	
B	3EB-30-44570	.CONNECTING LINK	4	
C	34B-30-14540	.BOOT	4	
D	3EC-30-12650	.PISTON	4	
E	34B-30-14521	.CUP, WHEEL CYLINDER	4	
F	3EB-30-43670	.SPRING, WHEEL CYLINDER	2	
G	34B-30-14550	.BLEEDER SCREW	2	
H	34B-30-14560	.BLEEDER CAP	2	
I	3EB-30-44590	.THREAD PROTECTOR	2	
4	3EB-30-41160	BRAKE SHOE & LINING ASSY	1	
5	3EB-30-41170	BRAKE SHOE, LINING & PIN ASSY	1	
6	3EB-30-41430	ADJUSTER ASSY - LH	1	
7	3EB-30-41450	ADJUSTER ASSY - RH	1	
8	3EB-30-41540	LEVER - LH	1	
9	3EB-30-41550	LEVER - RH	1	
10	3EB-30-42160	SPRING - LH	1	
11	3EB-30-42260	SPRING - RH)	1	
12	3BB-30-12190	SPRING & CABLE ASSY	2	
13	3EB-30-41210	PARKING LEVER ASSY - LH	1	
14	3EB-30-41220	PARKING LEVER ASSY - RH	1	
15	34B-30-14160	STRUT - LH	1	
16	34B-30-14260	STRUT - RH	1	
17	34B-30-14351	SPRING	2	
18	3EC-30-11340	SPRING	2	
19	34B-30-14320	SPRING	2	
20	3EC-30-11180	SHEAVE	2	
21	3EC-30-11510	WASHER, PLAIN	2	
22	3EC-30-11380	PIN, SHOE HOLD-DOWN	4	
23	3ED-30-31240	CUP, SHOE HOLD-DOWN	8	
24	3EB-30-44420	SPRING, SHOE HOLD-DOWN	4	
25	3EC-30-11170	PLATE	2	
26	34B-30-14450	RETAINER	2	
27	34B-30-14440	WAVE WASHER	2	
28	34B-30-14480	COVER, BACKING PLATE ADJUSTING HOLE	2	

PARTS LIST CONTINUED ON NEXT PAGE

https://truckmanualshub.com/

BRAKES - SERVICE - CUSHION - WHEEL CYLINDER - S/N 200001A~ (ALSO SEE FIG. 30-0010)

Item	Part Number	Description	Qty	
29	3EB-30-44460	BOLT, SEMS - WHEEL CYLINDER	4	
30	3EB-30-31320	SPRING	2	
31	34B-30-14470	SNAP RING, "E" TYPE	2	
32	3EB-30-51110	CABLE ASSY, PARKING - LH	1	
	3EB-30-51120	CABLE ASSY, PARKING - RH	1	

https://truckmanualshub.com/

NOTES:

https://truckmanualshub.com/

BRAKES - SERVICE - MASTER CYL. & PIPING (FRONT) - S/N 200001A~ ALL MODELS EXCEPT 3.2 & 3.5 TON TRUCKS

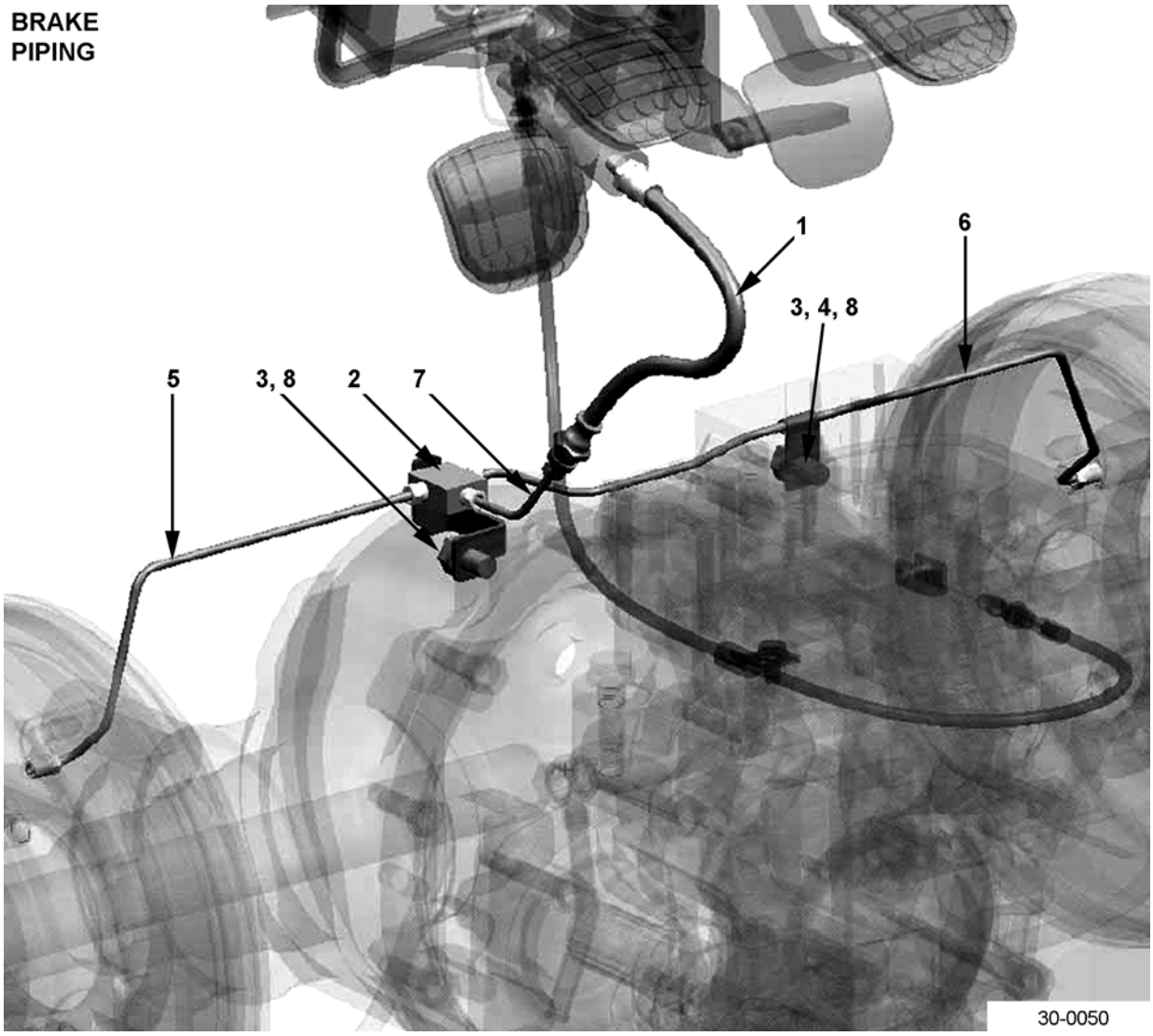

https://truckmanualshub.com/

BRAKES - SERVICE - MASTER CYL. & PIPING (FRONT) - S/N 200001A~ ALL MODELS EXCEPT 3.2 & 3.5 TON TRUCKS

Item	Part Number	Description	Qty	
	3EB-36-51180	MASTER CYLINDER ASSY	1	
1	3EB-38-41170	HOSE	1	
2	3EB-38-41120	TEE	1	
3	01010-81220	BOLT	2	
4	04434-50612	CLIP	1	
5	3EB-38-51130	PIPE (PNEUMATIC)	1	
	3EB-38-51630	PIPE (CUSHION)	1	
6	3EB-38-A7610	PIPE (PNEUMATIC)	1	
	3EB-38-A7110	PIPE (CUSHION)	1	
7	3EB-38-51150	PIPE	1	
8	01643-51232	WASHER	2	

https://truckmanualshub.com/

BRAKES - POWER - BOOSTER ASSY & PIPING (FRONT) - S/N 200001A~ 3.2 & 3.5 TON TRUCKS

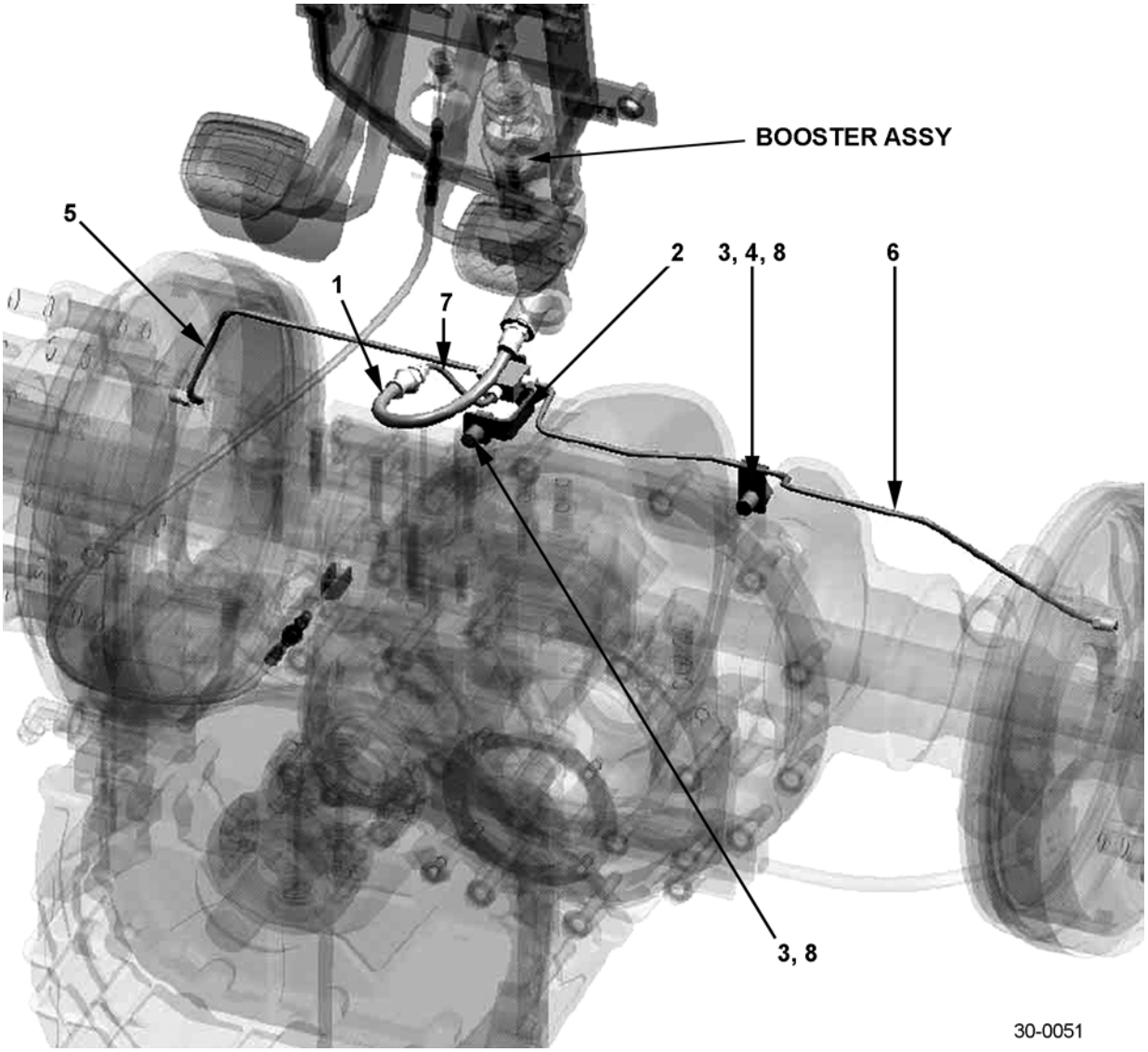

https://truckmanualshub.com/

BRAKES - POWER - BOOSTER ASSY & PIPING (FRONT) - S/N 200001A~ 3.2 & 3.5 TON TRUCKS

Item	Part Number	Description	Qty	
	3EB-56-51590	BOOSTER ASSY, BRAKE	1	
1	3EB-38-41110	HOSE	1	
2	3EB-38-41120	TEE	1	
3	01010-81220	BOLT	2	
4	04434-50612	CLIP	1	
5	3EB-38-51430	PIPE	1	
6	3EB-38-A7710	PIPE	1	
7	3EB-38-51530	PIPE	1	
8	01643-51232	WASHER	2	
N/S	3EB-66-A7960	PIPE, FRONT, DIESEL ONLY (AVOIDS INTERFERENCE W/ EXHAUST PIPE)	1	
N/S	3EB-66-A7970	HOSE, FRONT, DIESEL ONLY (AVOIDS INTERFERENCE W/ EXHAUST PIPE)	1	

https://truckmanualshub.com/

BRAKES - MASTER CYLINDER - S/N 200001A~
ALL MODELS EXCEPT 3.2 & 3.5 TON

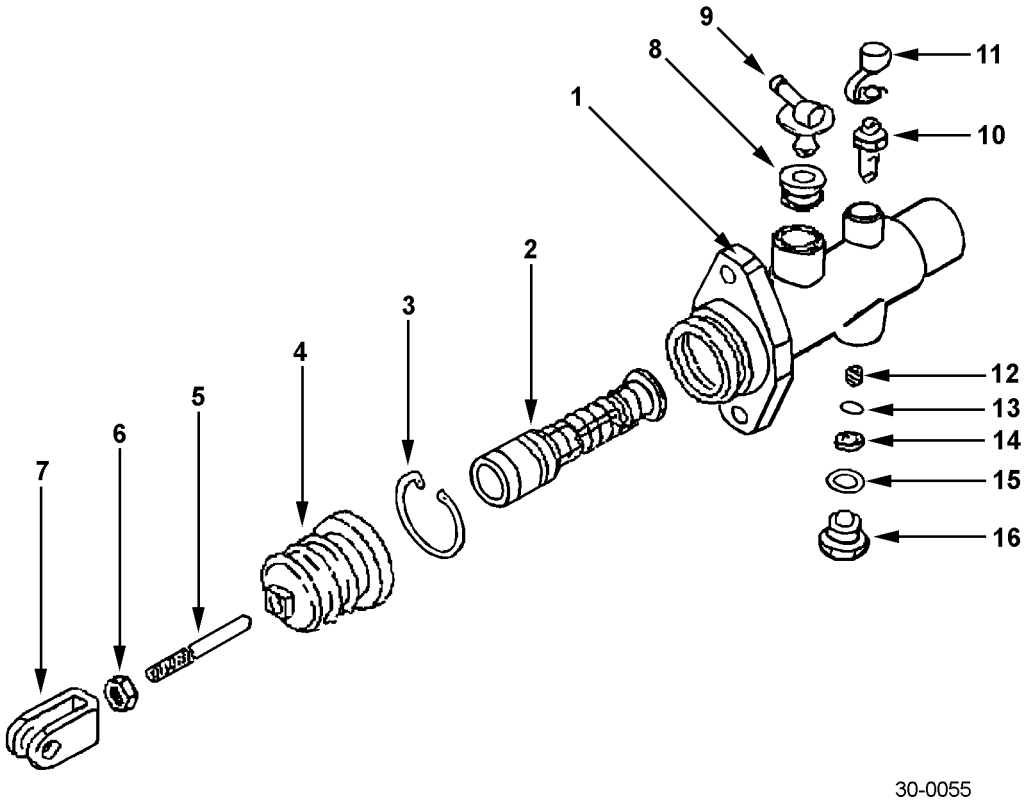

https://truckmanualshub.com/

BRAKES - MASTER CYLINDER - S/N 200001A~ ALL MODELS EXCEPT 3.2 & 3.5 TON

Item	Part Number	Description	Qty	
	3EB-36-51180	BRAKE MASTER CYLINDER (ALL EXCEPT 3.2 & 3.5 PNEUMATIC MODELS)	1	
1	NSS	.CYLINDER	1	
2	NSS	.PISTON ASSY (K14)	1	
3	NSS	.SNAP RING (K14)	1	
4	NSS	.BOOT (K14)	1	
5	30B-36-12150	.PUSHROD	1	
6	30B-36-12160	.NUT	1	
7	30B-36-12170	.YOKE	1	
8	30B-36-12180	.UNION	1	
9	30B-36-12310	.BUSHING	1	
10	30B-36-12320	.BLEEDER	1	
11	30B-36-12330	.CAP	1	
12	NSS	.SPRING (K14)	1	
	NSS	.VALVE ASSY (K14)	1	
13	NSS	..SEAT	1	
14	NSS	..RUBBER		
15	NSS	.GASKET (K14)	1	
16	NSS	.BOLT (K14)	1	
K14	30B-36-05020	REPAIR KIT, BRAKE MASTER CYLINDER	1	

https://truckmanualshub.com/

BRAKES - BOOSTER ASSY - S/N 200001A~ 3.2 & 3.5 TON MODELS W/ POWER BRAKES

BOOSTER ASSY - 3.2, 3.5 TON MODELS W/ POWER BRAKES

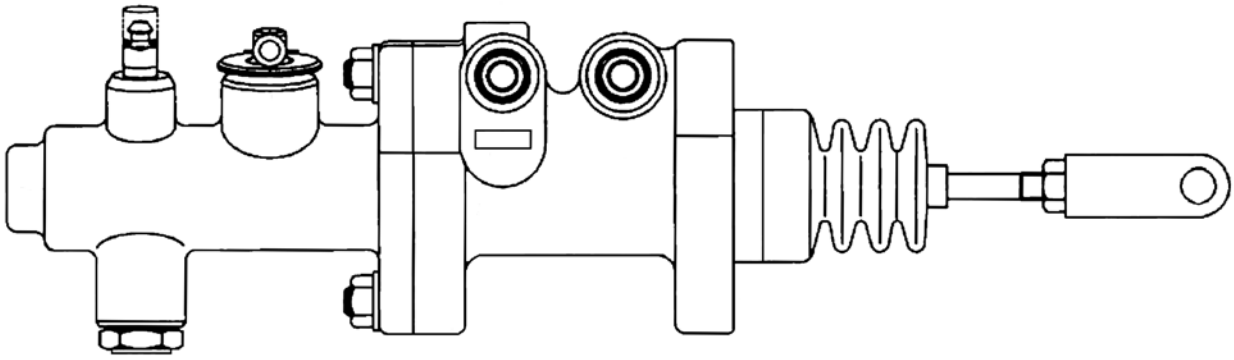

30-0056A

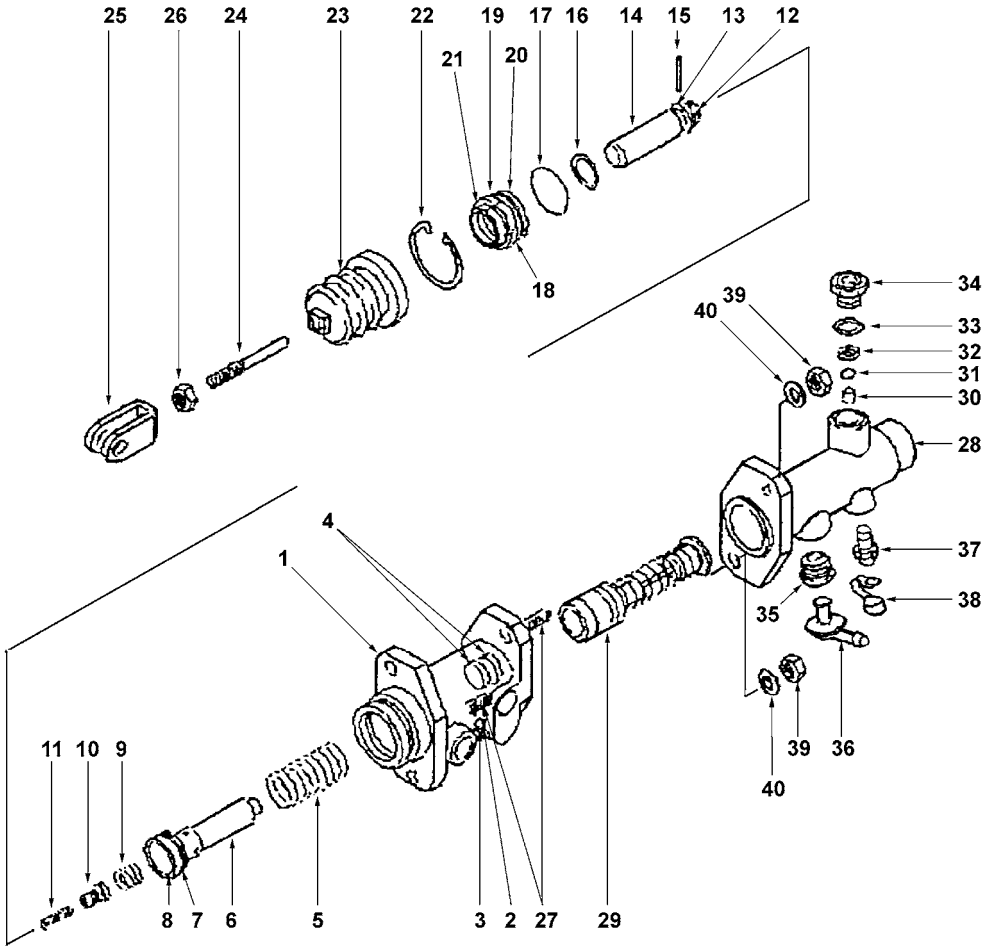

30-0056

https://truckmanualshub.com/

BRAKES - BOOSTER ASSY - S/N 200001A~ 3.2 & 3.5 TON MODELS W/ POWER BRAKES

Item	Part Number	Description	Qty	
	3EB-36-51590	BRAKE BOOSTER ASSY (3.2, 3.5 TON PNEUMATIC)	1	
1	NSS	.BODY	1	
2	NSS	.BALL	1	
3	30B-36-12670	.SCREW	1	
4	NSS	.Y-PACKING	1	
5	30B-36-12450	.SPRING (K15)	1	
6	30B-36-12660	.PISTON ASSY	1	
7	NSS	.SEAL	1	
8	NSS	.O-RING	1	
9	30B-36-12590	.SPRING (K15)	1	
10	30B-36-12650	.VALVE ASSY (K15)	1	
11	30B-36-12580	.SPRING (K15)	1	
12	NSS	.BACK-UP RING	1	
13	NSS	.O-RING (K15)	1	
14	30B-36-12410	.PISTON	1	
15	NSS	.PIN (K15)	1	
16	30B-36-12530	.WASHER (K15)	1	
17	NSS	.SNAP RING	1	
18	NSS	.GUIDE, CYLINDER	1	
19	NSS	.CUP	1	
20	NSS	.O-RING	1	
21	NSS	.Y-PACKING	3	
22	NSS	.SNAP RING	1	
23	NSS	.BOOT (K15)	1	
24	NSS	.PUSHROD	1	
25	NSS	.YOKE	1	
26	30B-36-12160	.NUT	1	
27	30B-36-12620	.STUD (K15)	1	
	30B-36-12640	.CYLINDER ASSY	1	
28	NSS	..CYLINDER	1	
29	NSS	..PISTON ASSY	1	
30	NSS	..SPRING	1	
31	NSS	..SEAT	1	
32	NSS	..RUBBER	1	
33	NSS	..GASKET	1	
34	NSS	..BOLT	1	
35	30B-36-12180	..BUSHING	1	
36	30B-36-12310	..UNION	1	
37	NSS	..BLEEDER	1	

PARTS LIST CONTINUED ON NEXT PAGE

https://truckmanualshub.com/

BRAKES - BOOSTER ASSY - S/N 200001A~
3.2 & 3.5 TON MODELS W/ POWER BRAKES

Item	Part Number	Description	Qty	
38	NSS	..CAP.	1	
39	30B-36-12160	..NUT.	2	
40	NSS	..WASHER	2	
K15	30B-36-12690	REPAIR KIT, BRAKE BOOSTER ASSY	1	

https://truckmanualshub.com/

NOTES:

https://truckmanualshub.com/

PARKING BRAKE LEVER ASSEMBLY W/ ALARM - S/N 200001A~

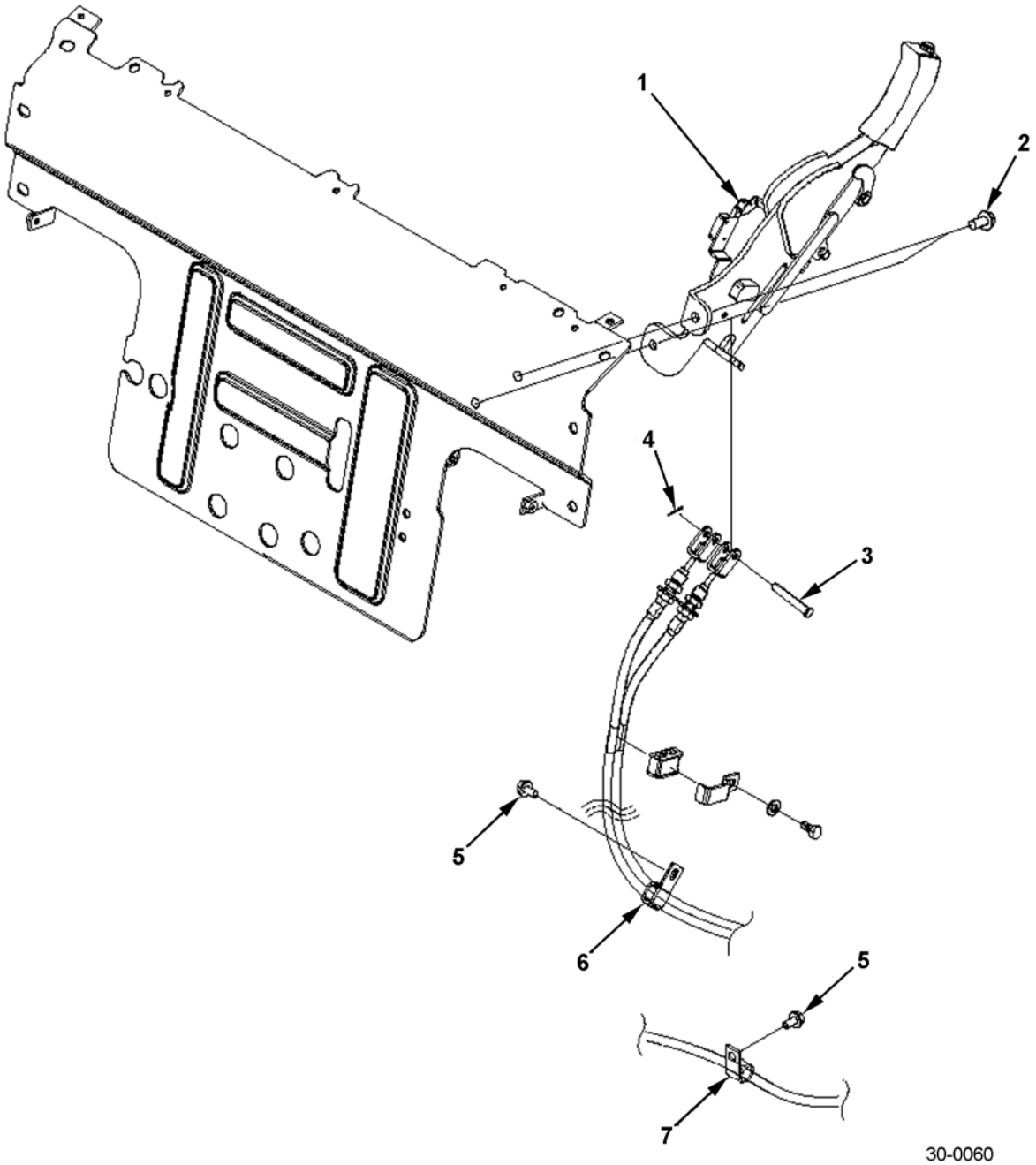

https://truckmanualshub.com/

PARKING BRAKE LEVER ASSEMBLY W/ ALARM - S/N 200001A~

Item	Part Number	Description	Qty	
1	3EB-39-41112	PARKING LEVER W/ ALARM	1	
2	01435-01020	BOLT	2	
3	3EB-39-41130	PIN	1	
4	04050-12015	PIN, COTTER	1	
5	01435-00816	BOLT	2	
6	04435-51008	CLIP	1	
7	04434-51008	CLIP	1	

https://truckmanualshub.com/

STEERING WHEEL - S/N 200001A~

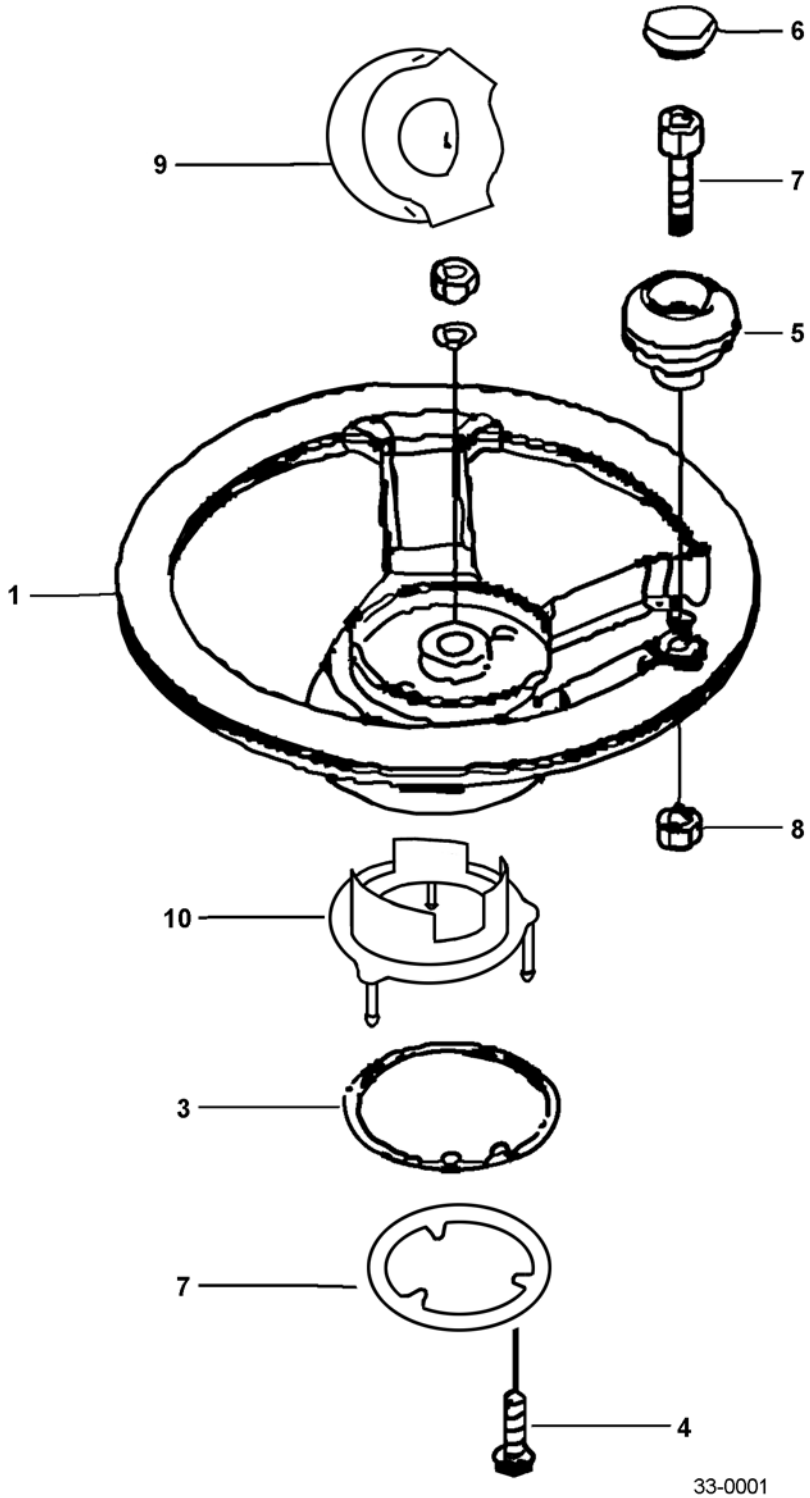

https://truckmanualshub.com/

STEERING WHEEL - S/N 200001A~

Item	Part Number	Description	Qty	
1	3BB-33-57110	STEERING WHEEL ASSY W/O KNOB	1	
	3EB-33-41111	STEERING WHEEL ASSY W/ KNOB	1	
2	MYGS135-00050A	.RING	1	
3	MYGS242-00020B	.SPRING	1	
4	MY63870-03850	.SCREW	6	
	MY891-6010-00	.KNOB ASSY	1	
5	NSS	..KNOB, STEERING	1	
6	NSS	..CAP	1	
7	NSS	..BOLT	1	
8	NSS	..NUT	1	
	3EB-33-41130	.PAD ASSY	1	
9	NSS	..PAD, STEERING WHEEL	1	
10	NSS	..CUP	1	

https://truckmanualshub.com/

STEERING COLUMN - POWER STEERING VALVE - S/N 200001A~

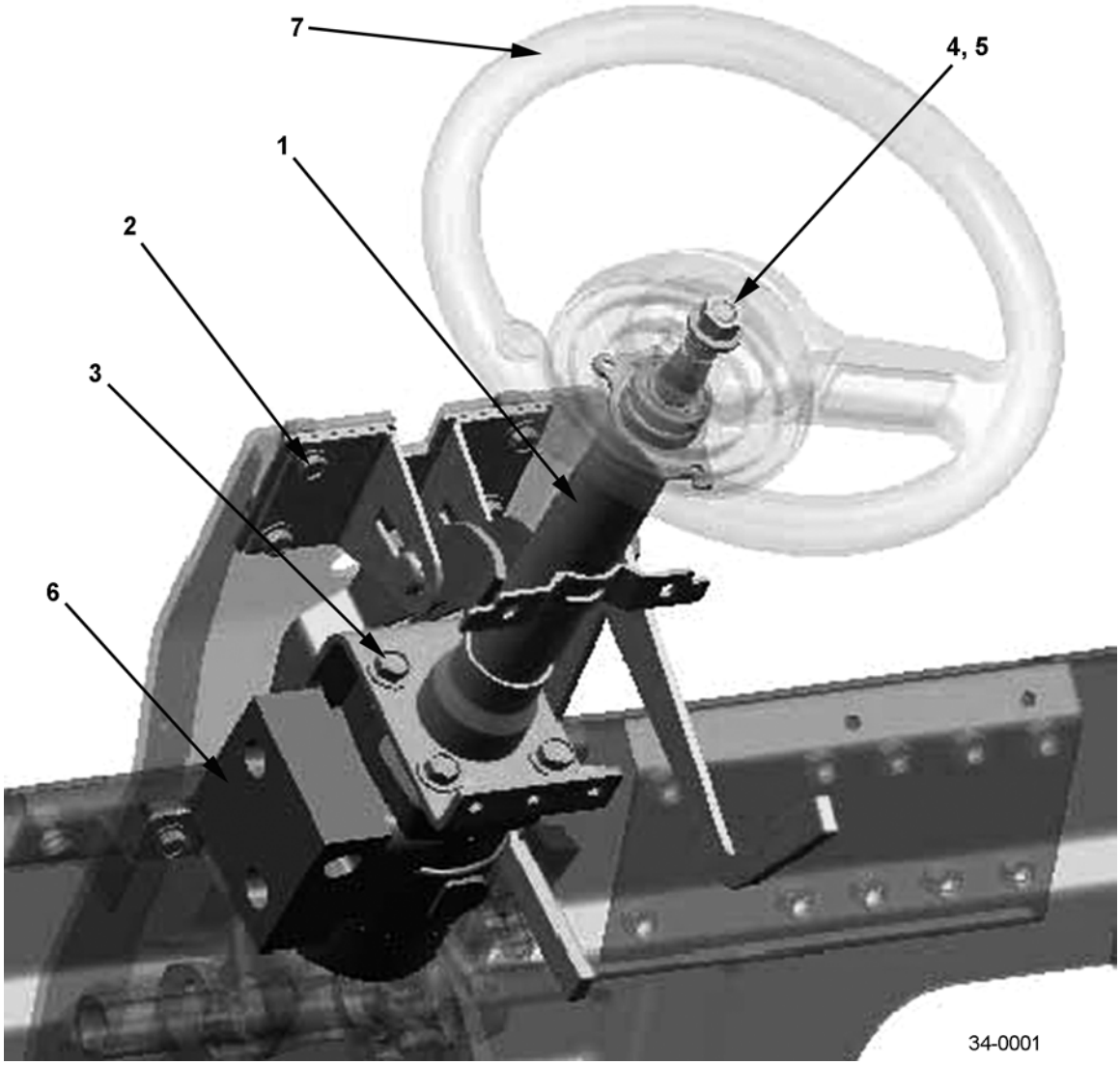

https://truckmanualshub.com/

STEERING COLUMN - POWER STEERING VALVE - S/N 200001A~

Item	Part Number	Description	Qty	
1	3EB-34-53111	SHAFT ASSY, STEERING COLUMN	1	
2	01435-00820	BOLT.	6	
3	01435-01030	BOLT.	4	
4	01643-31232	WASHER	1	
5	34A-10-81150	NUT.	1	
6	3EB-34-51510	STEERING VALVE	1	
7	3BB-33-57110	STEERING WHEEL (W/O KNOB)	1	
	3EB-33-41111	STEERING WHEEL (W/ KNOB) (OPTIONAL) . .	1	

https://truckmanualshub.com/

INCHING PEDAL / BRAKE PEDAL ASSEMBLY - S/N 200001A~

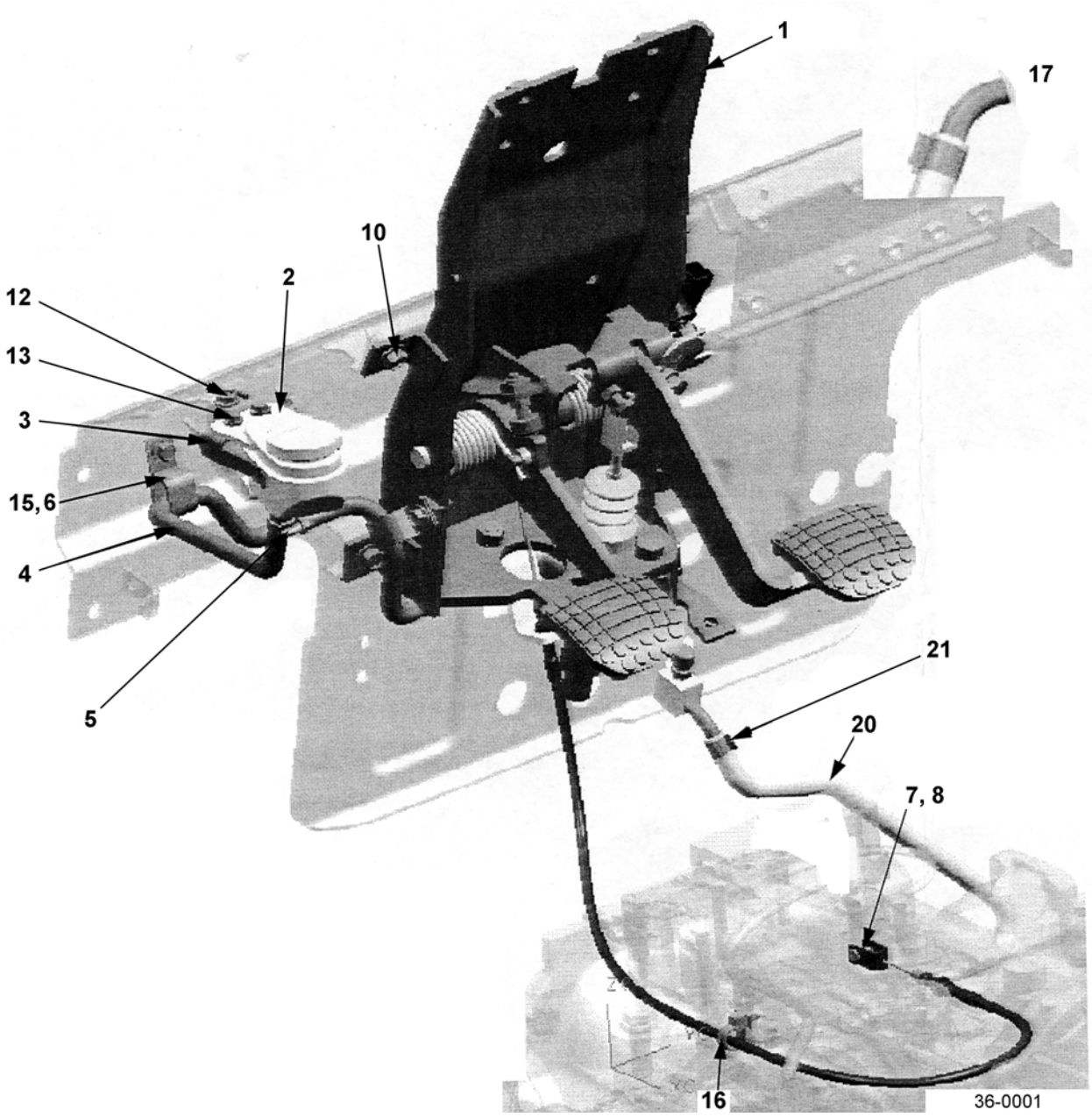

https://truckmanualshub.com/

INCHING PEDAL / BRAKE PEDAL ASSEMBLY - S/N 200001A~

Item	Part Number	Description	Qty	
1	3EB-36-52133	PEDAL SUB-ASSY, INCHING & BRAKE (2.0T, 2.2T, 2.5T, 2.8T, 3.0T (FG/FD) & 3.2T (CUSHION)) . .	1	
	3EB-36-52400	PEDAL SUB-ASSY, INCHING & BRAKE (3.2T, 3.5T FG/FD PNEUMATIC ONLY)	1	
2	3EB-36-51460	RESERVOIR, BRAKE FLUID	1	
3	3EB-36-51440	BRACKET	1	
4	3EB-36-51421	HOSE	1	
5	07281-00167	CLAMP	2	
6	04435-51408	CLIP (NOT SHOWN)	2	
7	04205-10518	PIN	1	
8	04050-11210	COTTER PIN	1	
9	NOT USED			
10	01435-01020	BOLT	4	
11	01435-00825	BOLT (NOT SHOWN)	1	
12	01435-00816	BOLT	1	
13	01024-80616	BOLT	2	
14	NOT USED			
15	01435-00812	BOLT	1	
16	08059-00310	CLIP	1	
17	3EB-21-51360	JOINT (LOCATION SHOWN)	1	
18	07030-01030	BREATHER (NOT SHOWN)	1	
19	01435-00816	BOLT (NOT SHOWN)	1	
20	3EB-21-51370	HOSE	1	
21	07285-00130	CLIP	2	
N/S	3EB-36-51180	MASTER CYLINDER ASSY	1	

https://truckmanualshub.com/

ACCELERATOR PEDAL - S/N 200001A~ FG MODELS

ACCELERATOR PEDAL - FG

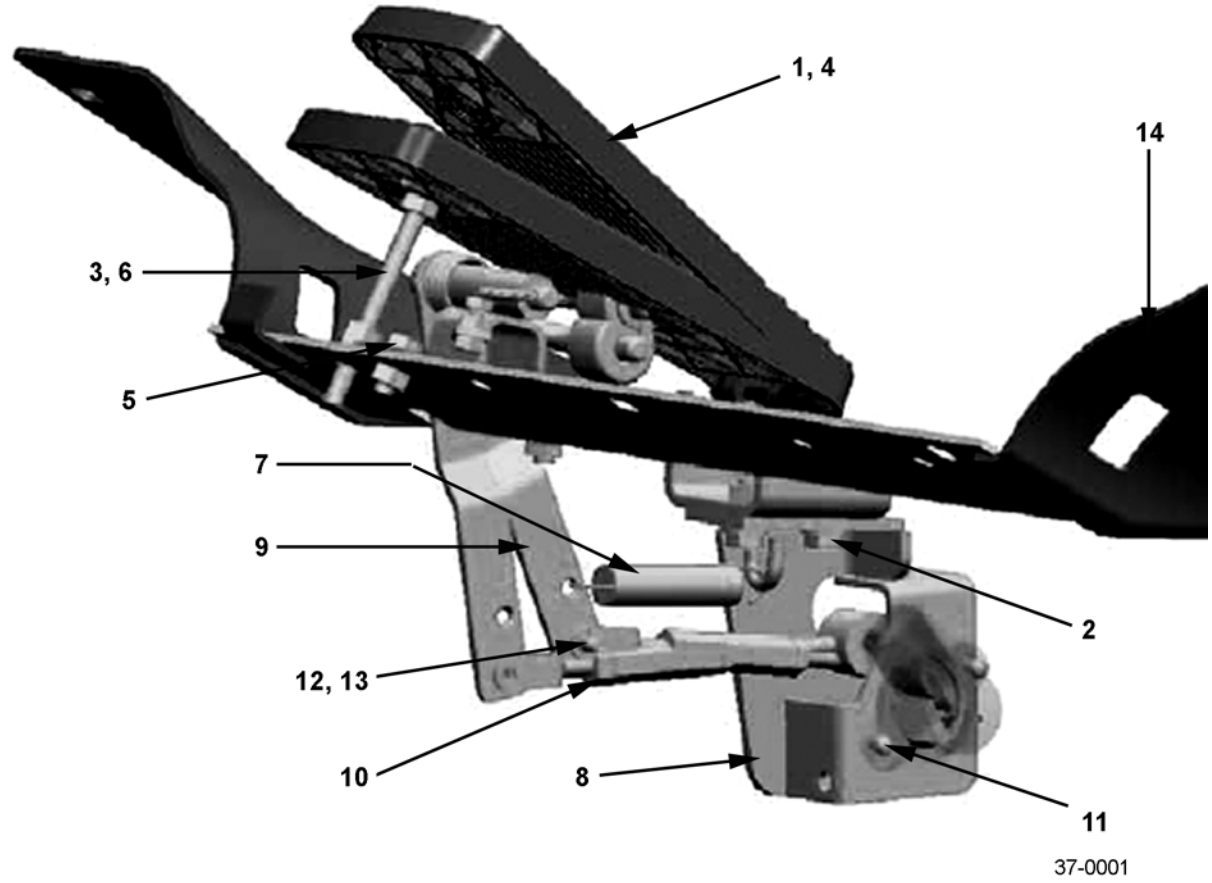

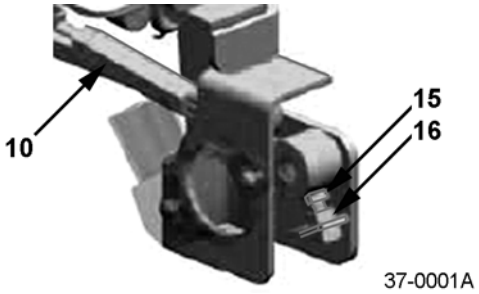

https://truckmanualshub.com/

ACCELERATOR PEDAL - S/N 200001A~ FG MODELS

Item	Part Number	Description	Qty	
1	3EB-37-41160	PEDAL ASSY, ACCELERATOR	1	
2	01024-80820	BOLT	2	
3	01016-50880	BOLT (STOPPER)	1	
4	01435-00616	BOLT	2	
5	01435-00816	BOLT	2	
6	01580-10806	NUT	1	
7	3BA-37-51140	SPRING	1	
8	3EB-37-A7211	BRACKET	1	
9	3EB-37-A7290	LEVER SUB-ASSY	1	
10	3EB-37-A7251	ROD (TURNBUCKLE)	1	
11	01023-10412	SCREW	2	
12	04050-11610	PIN, COTTER	1	
13	04205-10616	PIN, COTTER	1	
14	3EB-37-A7280	FLOOR PLATE	1	
15	01010-80616	BOLT	1	
16	01580-10605	NUT	1	

https://truckmanualshub.com/

ACCELERATOR PEDAL - S/N 200001A~
FD MODELS

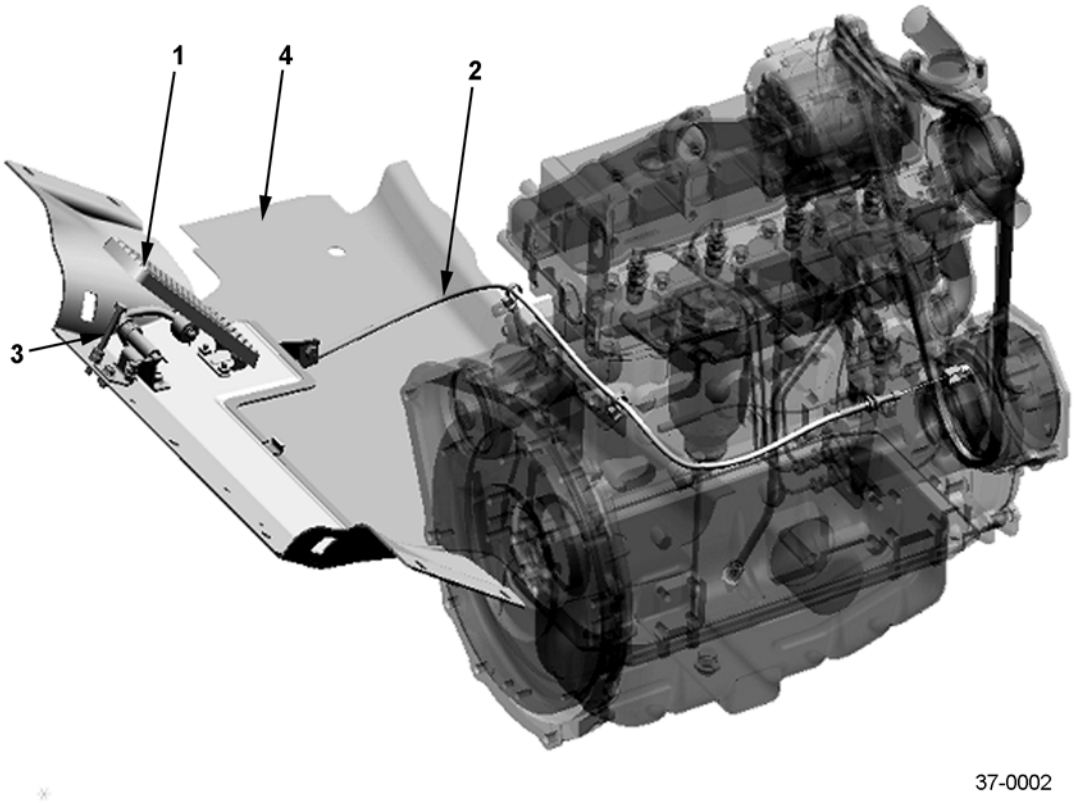

https://truckmanualshub.com/

ACCELERATOR PEDAL - S/N 200001A~ FD MODELS

Item	Part Number	Description	Qty	
1	3EB-37-41160	PEDAL ASSY, ACCELERATOR	1	
2	3EB-37-41141	CABLE	1	
3	01016-50880	BOLT (STOPPER)	1	
4	3EB-50-51621	FLOOR PLATE	1	
N/S	3EB-37-51390	LEVER SUB-ASSY	1	

https://truckmanualshub.com/

FRAME ASSY - S/N 200001A~
(ALSO SEE FIG. # 41-0002)

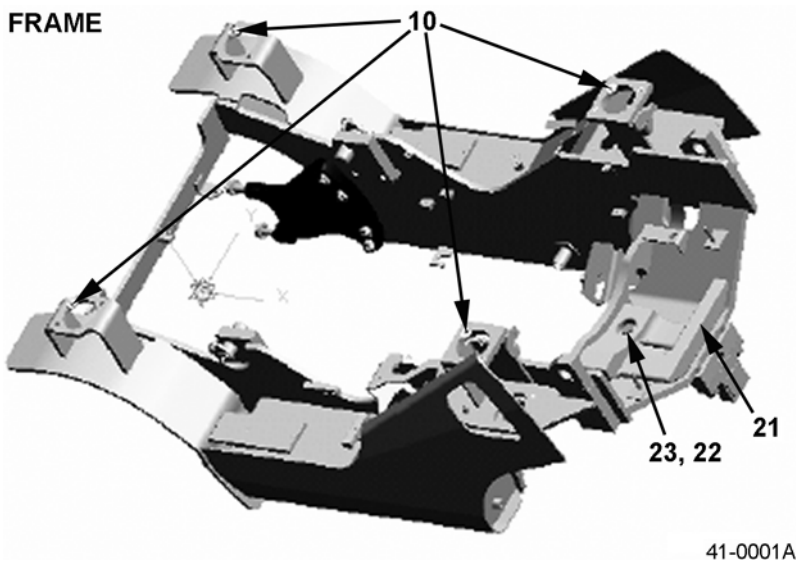

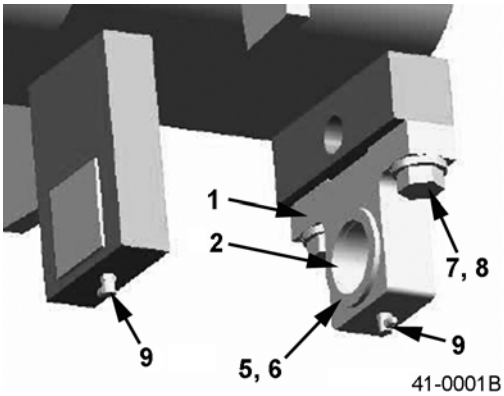

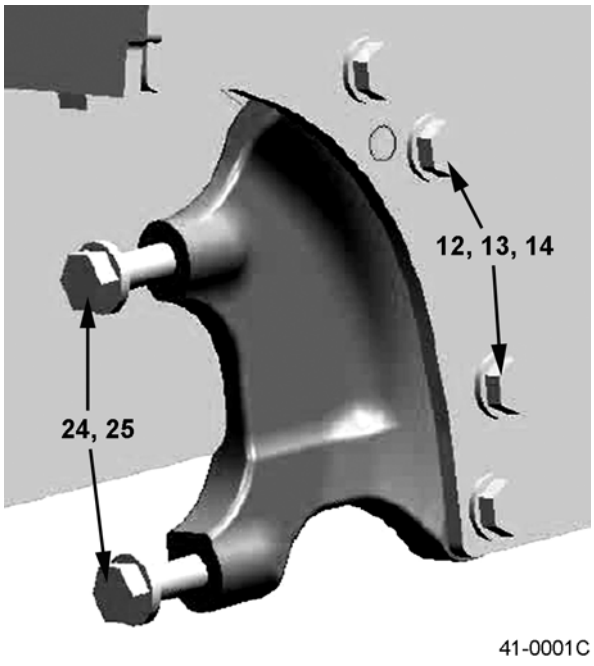

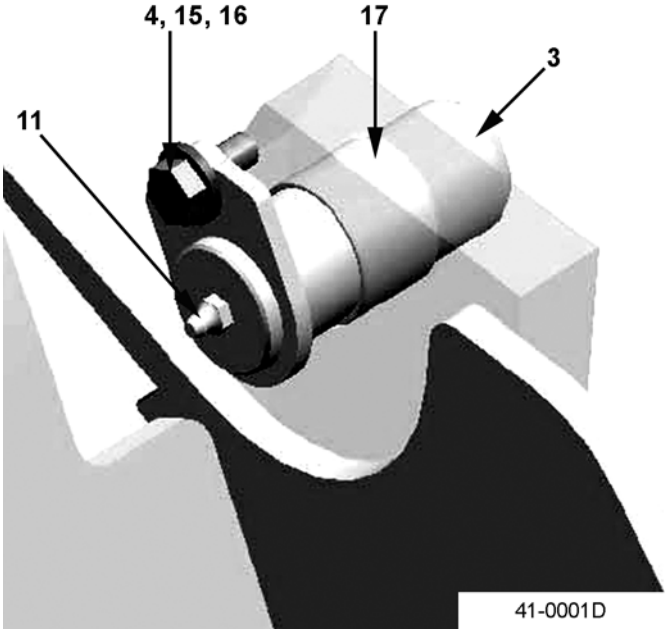

https://truckmanualshub.com/

FRAME ASSY - S/N 200001A~
(ALSO SEE FIG. # 41-0002)

Item	Part Number	Description	Qty	
	37B-1FZ-A810	FRAME ASSY - FG PNEUMATIC (2.0T, 2.5T) . .	1	
	37B-1FZ-A7820	FRAME ASSY - FG PNEUMATIC (2.8T, 3.0T, 3.2T, 3.5T)	1	
	37B-1FZ-A7890	FRAME ASSY - FD PNEUMATIC (3.2T, 3.5T) . .	1	
	37B-1FT-A711	FRAME ASSY - FG CUSHION (2.0T, 2.5T)	1	
	37B-1FT-A721	FRAME ASSY - FG CUSHION (2.8T, 3.0T, 3.2T)	1	
1	3EB-41-31791	SUPPORT.	1	
2	34A-42-11411	BUSHING	2	
3	3EB-41-51750	PIN - TILT FRAME	2	
4	01010-81025	BOLT.	2	
5	3EB-41-31950	SHIM.	2	
6	3EB-41-31960	SHIM.	2	
7	01010-82060	BOLT.	2	
8	01643-32060	WASHER	2	
9	07020-00900	FITTING, GREASE	2	
10	01640-21426	WASHER	4	
11	07020-00000	FITTING, GREASE	2	
12	01010-81865	BOLT.	8	
13	01643-31845	WASHER	8	
14	01580-11815	NUT.	8	
15	3EB-41-41490	BOSS	2	
16	3EB-41-44530	WASHER	2	
17	3EB-41-41980	BUSHING	2	
18	01024-80825	BOLT - FD PNEUMATIC (3.2T, 3.5T ONLY). . . .	4	
19	3EB-41-52550	BRACKET, LH - FD PNEUMATIC (3.2T, 3.5T ONLY)	1	
20	3EB-41-52560	BRACKET, RH - FD PNEUMATIC (3.2T, 3.5T ONLY)	1	
21	3EB-43-A7710	SUB-WEIGHT - FG CUSHION (2.0T, 2.5T)	1	
22	01010-81640	BOLT - FG CUSHION (2.0T, 2.5T)	1	
23	01643-31645	WASHER - FG CUSHION (2.0T, 2.5T).	1	
24	01010-82075	BOLT - FG PNEUMATIC & CUSHION (2.0T, 2.5T)	4	
	01011-82015	BOLT - FG PNEUMATIC (2.8T, 3.0T)	4	
	01011-82215	BOLT - FG PNEUMATIC (3.2T, 3.5T)	4	
25	01643-32060	WASHER - FG PNEUMATIC (2.0T, 2.5T, 2.8T, 3.0T)	4	
	01643-32260	WASHER - FG PNEUMATIC (3.2T, 3.5T).	4	
	01643-32060	WASHER - FG CUSHION (2.0T, 2.5T)	4	

https://truckmanualshub.com/

FRAME ASSY - REAR VIEW - S/N 200001A~
(ALSO SEE FIG. # 41-0001)

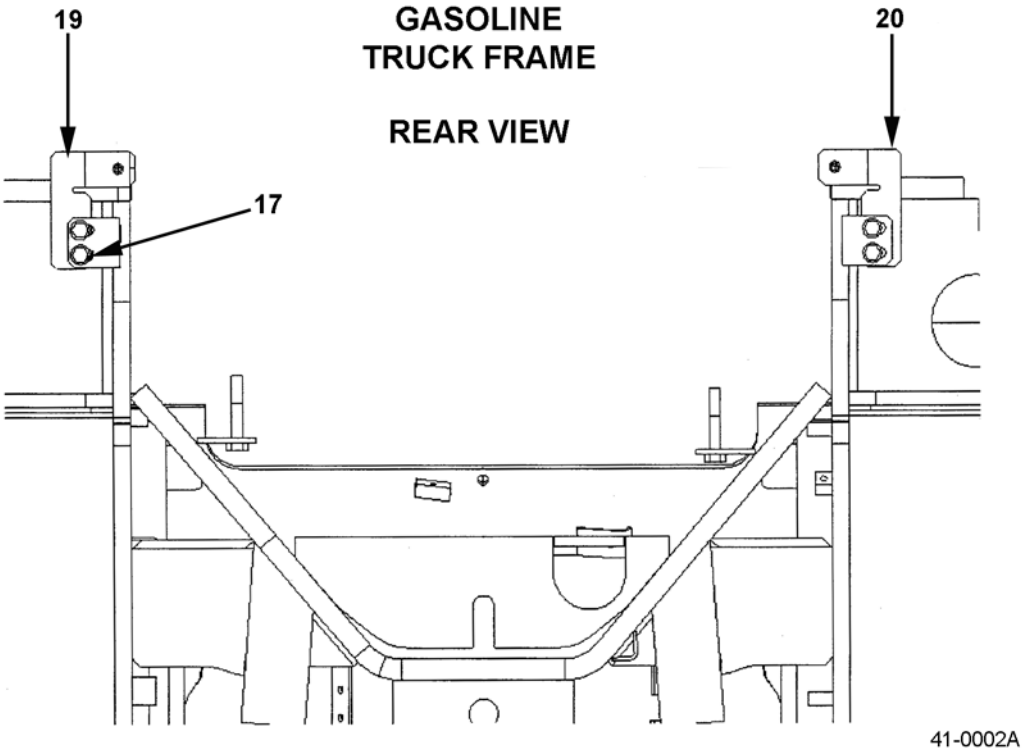

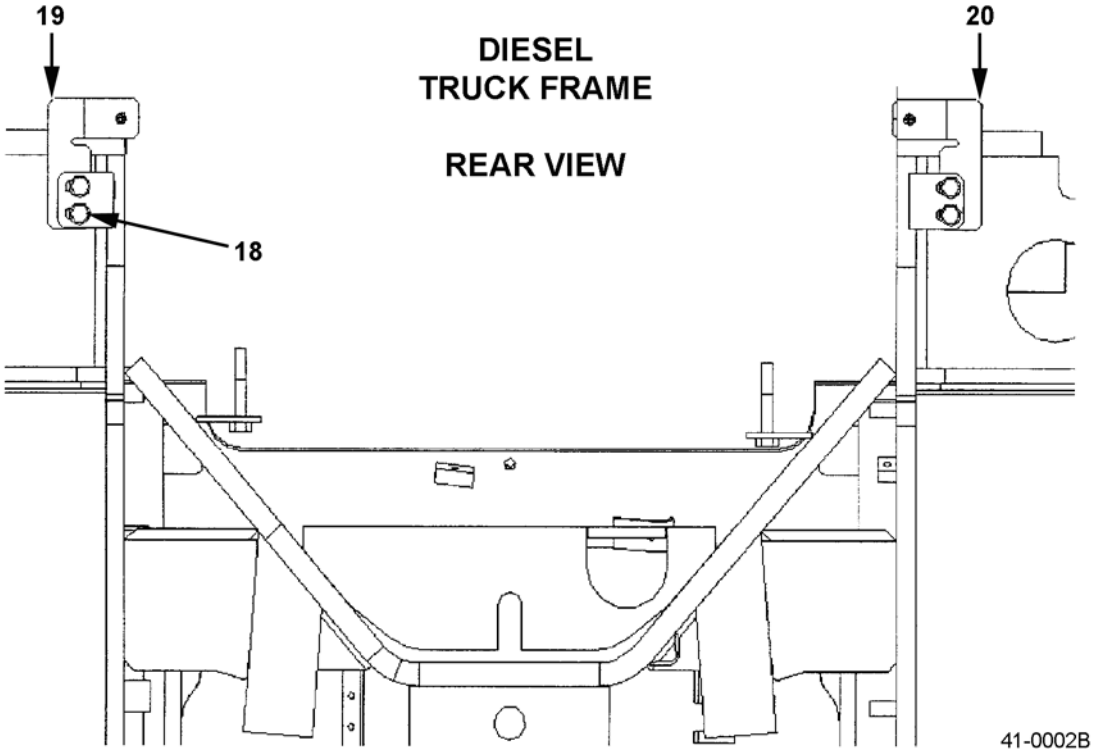

https://truckmanualshub.com/

FRAME ASSY - REAR VIEW - S/N 200001A~
(ALSO SEE FIG. # 41-0001)

Item	Part Number	Description	Qty	
	37B-1FZ-A810	FRAME ASSY - FG PNEUMATIC (2.0T, 2.5T) . .	1	
	37B-1FZ-A7820	FRAME ASSY - FG PNEUMATIC (2.8T, 3.0T, 3.2T, 3.5T)	1	
	37B-1FZ-A7890	FRAME ASSY - FD PNEUMATIC (3.2T, 3.5T) . .	1	
	37B-1FT-A711	FRAME ASSY - FG CUSHION (2.0T, 2.5T)	1	
	37B-1FT-A721	FRAME ASSY - FG CUSHION (2.8T, 3.0T, 3.2T)	1	
1	3EB-41-31791	SUPPORT.	1	
2	34A-42-11411	BUSHING	2	
3	3EB-41-51750	PIN - TILT FRAME	2	
4	01010-81025	BOLT.	2	
5	3EB-41-31950	SHIM.	2	
6	3EB-41-31960	SHIM.	2	
7	01010-82060	BOLT.	2	
8	01643-32060	WASHER	2	
9	07020-00900	FITTING, GREASE	2	
10	01640-21426	WASHER	4	
11	07020-00000	FITTING, GREASE	2	
12	01010-81865	BOLT.	8	
13	01643-31845	WASHER	8	
14	01580-11815	NUT.	8	
15	3EB-41-41490	BOSS	2	
16	3EB-41-44530	WASHER	2	
17	3EB-41-41980	BUSHING	2	
18	01024-80825	BOLT - FD PNEUMATIC (3.2T, 3.5T ONLY). . . .	4	
19	3EB-41-52550	BRACKET, LH - FD PNEUMATIC (3.2T, 3.5T ONLY)	1	
20	3EB-41-52560	BRACKET, RH - FD PNEUMATIC (3.2T, 3.5T ONLY)	1	
21	3EB-43-A7710	SUB-WEIGHT - FG CUSHION (2.0T, 2.5T)	1	
22	01010-81640	BOLT - FG CUSHION (2.0T, 2.5T)	1	
23	01643-31645	WASHER - FG CUSHION (2.0T, 2.5T).	1	
24	01010-82075	BOLT - FG PNEUMATIC & CUSHION (2.0T, 2.5T)	4	
	01011-82015	BOLT - FG PNEUMATIC (2.8T, 3.0T)	4	
	01011-82215	BOLT - FG PNEUMATIC (3.2T, 3.5T)	4	
25	01643-32060	WASHER - FG PNEUMATIC (2.0T, 2.5T, 2.8T, 3.0T)	4	
	01643-32260	WASHER - FG PNEUMATIC (3.2T, 3.5T).	4	
	01643-32060	WASHER - FG CUSHION (2.0T, 2.5T)	4	

https://truckmanualshub.com/

FRAME ASSY - TILT ACCESSORIES - S/N 200001A~

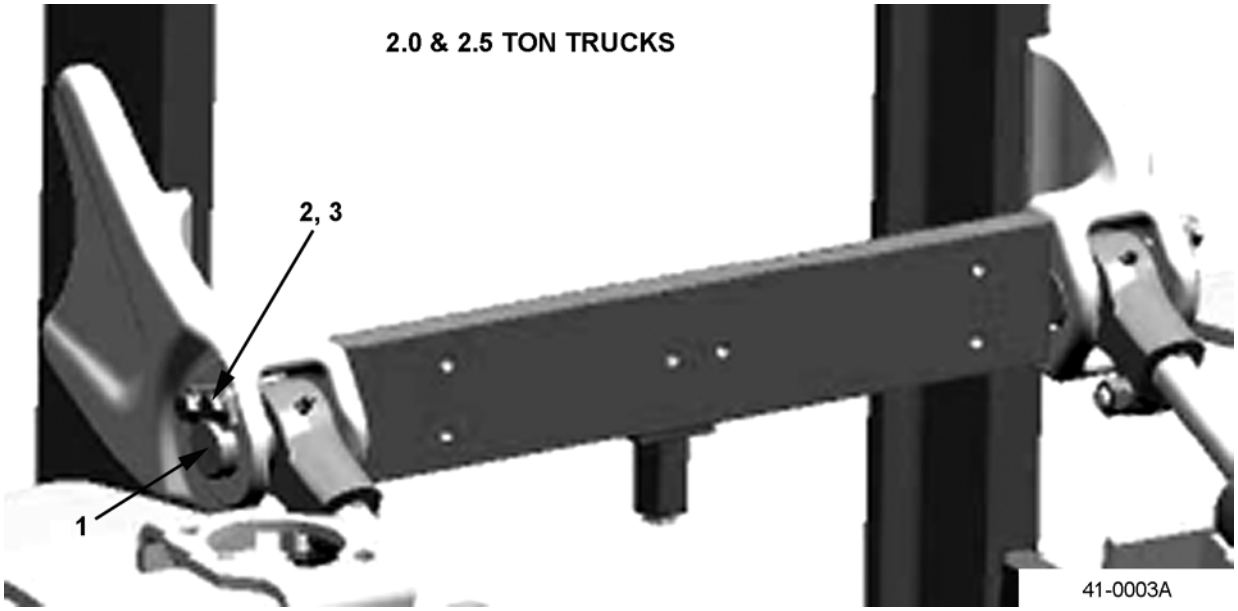

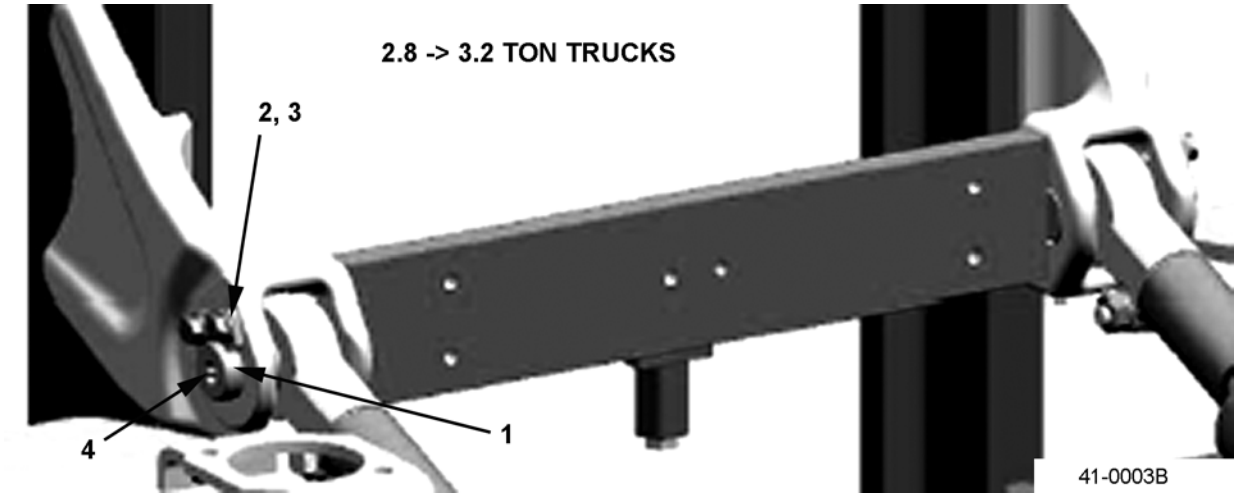

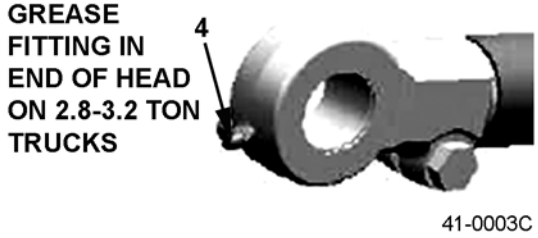

https://truckmanualshub.com/

FRAME ASSY - TILT ACCESSORIES - S/N 200001A~

Item	Part Number	Description	Qty	
	37B-1FZ-A810	FRAME ASSY - FG PNEUMATIC (2.0T, 2.5T) . .	1	
	37B-1FZ-A7820	FRAME ASSY - FG PNEUMATIC (2.8T, 3.0T, 3.2T, 3.5T)	1	
	37B-1FZ-A7890	FRAME ASSY - FD PNEUMATIC (3.2T, 3.5T) . .	1	
	37B-1FT-A711	FRAME ASSY - FG CUSHION (2.0T, 2.5T)	1	
	37B-1FT-A721	FRAME ASSY - FG CUSHION (2.8T, 3.0T, 3.2T)	1	
1	3EB-71-61870	PIN - TILT MAST (2.0T, 2.5T)	2	
	3EB-41-A7460	PIN - TILT MAST (2.8T, 3.0T, 3.2T).	2	
	3EB-71-51871	PIN - TILT MAST (3.5T)	2	
2	3EB-71-51881	PLATE (ALL)	2	
3	01024-81025	BOLT	4	
4	07020-00001	FITTING (GREASE) (2.8T, 3.0T, 3.2T)	2	
	07020-00000	FITTING (GREASE) (3.5T)	2	

https://truckmanualshub.com/

FRAME - FUEL COVER (LPG) - S/N 200001A~

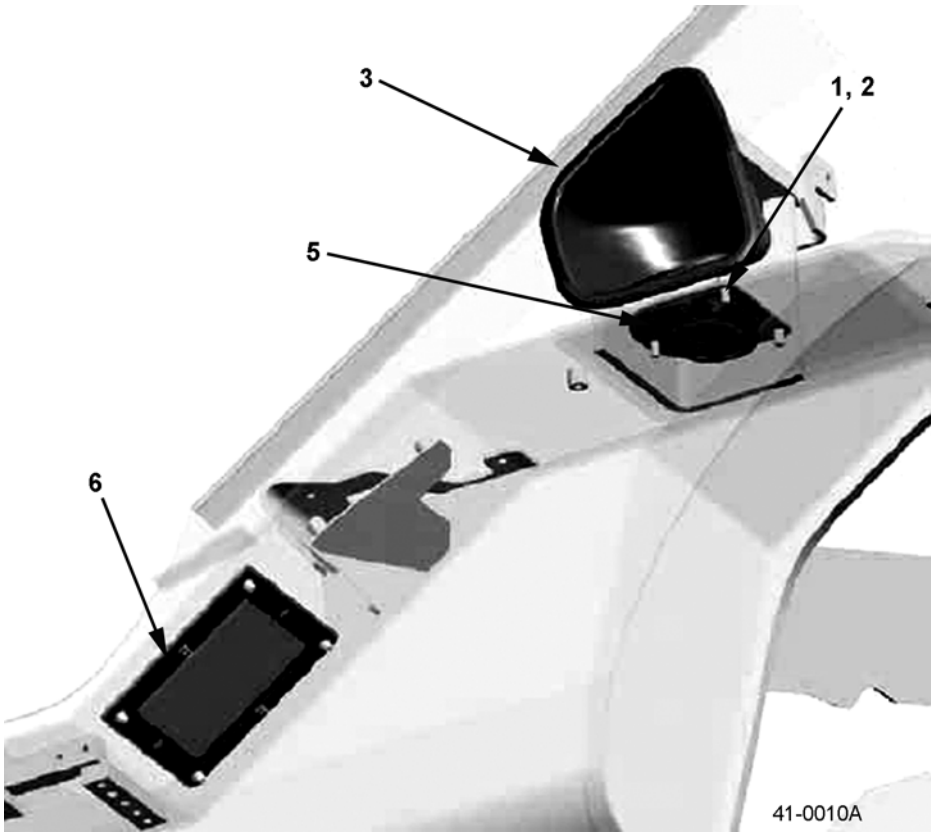

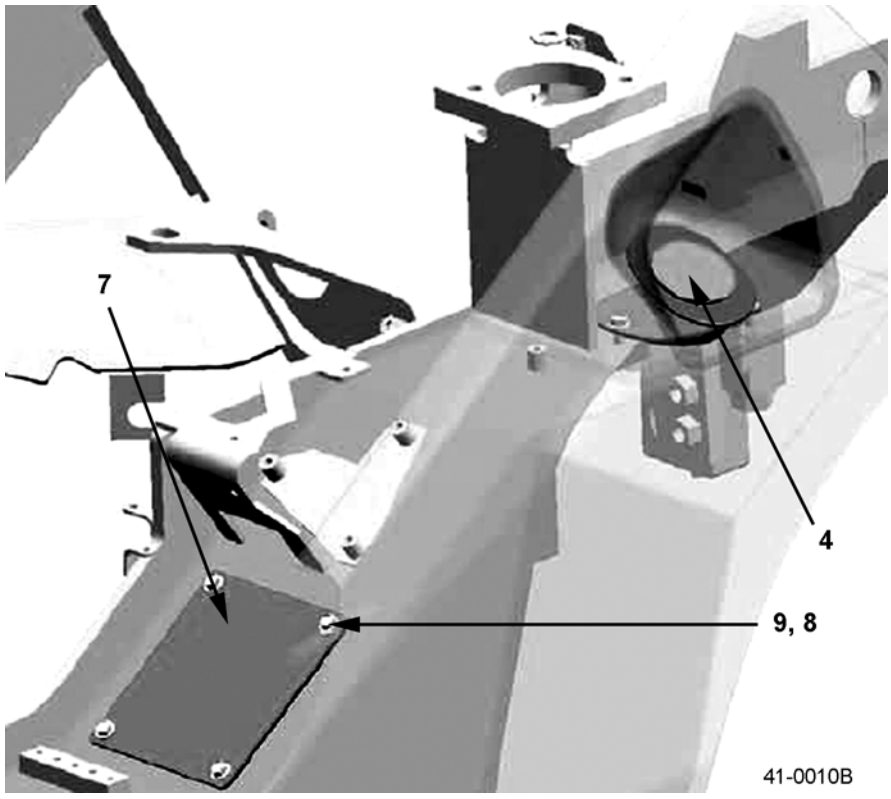

https://truckmanualshub.com/

FRAME - FUEL COVER (LPG) - S/N 200001A~

Item	Part Number	Description	Qty	
1	3EB-42-56810	PLATE	1	
2	01435-00816	BOLT	3	
3	3EB-41-56120	COVER (PNEUMATIC)	1	
	3EB-42-56120	COVER (CUSHION)	1	
4	3EB-42-56820	COVER	1	
5	3EB-41-56130	PACKING	1	
6	3EB-05-A7420	GASKET	1	
7	3EB-41-A7690	PLATE	1	
8	3EB-55-47130	COLLAR	4	
9	3EB-66-43670	BOLT	4	

https://truckmanualshub.com/

FRAME - FUEL CAP - S/N 200001A~

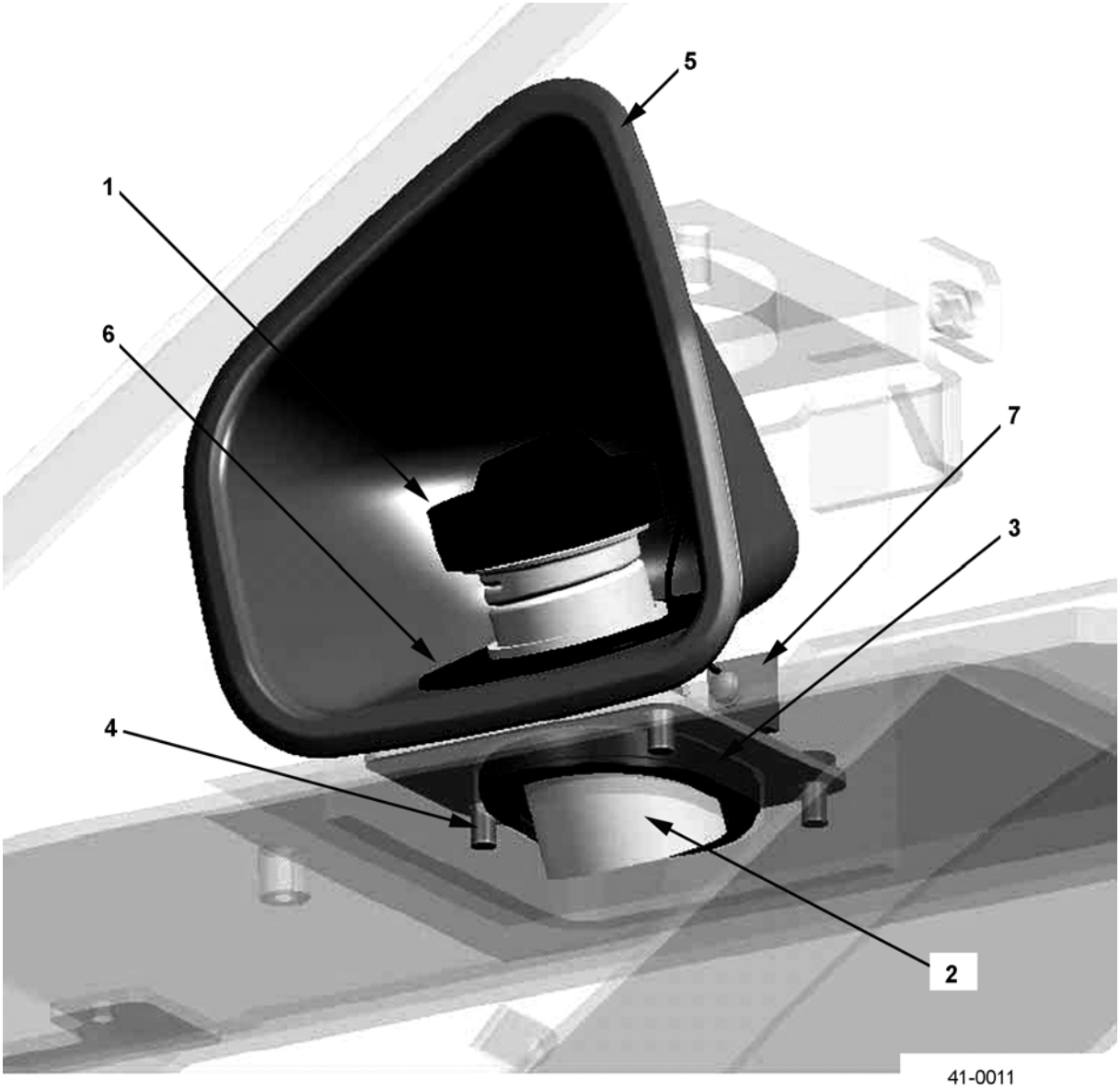

https://truckmanualshub.com/

FRAME - FUEL CAP - S/N 200001A~

Item	Part Number	Description	Qty	
1	3FD-42-21310	CAP (STRAP)	1	
2	3EB-42-A7810	PIPE	1	
3	3EB-41-56130	PACKING	1	
4	01435-00816	BOLT	3	
5	3EB-41-56120	COVER (PNEUMATIC)	1	
	3EB-42-56120	COVER (CUSHION)	1	
6	3EB-41-56140	COVER	1	
7	01023-10614	SCREW	1	

https://truckmanualshub.com/

FRAME - FUEL CAP (UL-S) - S/N 200001A~

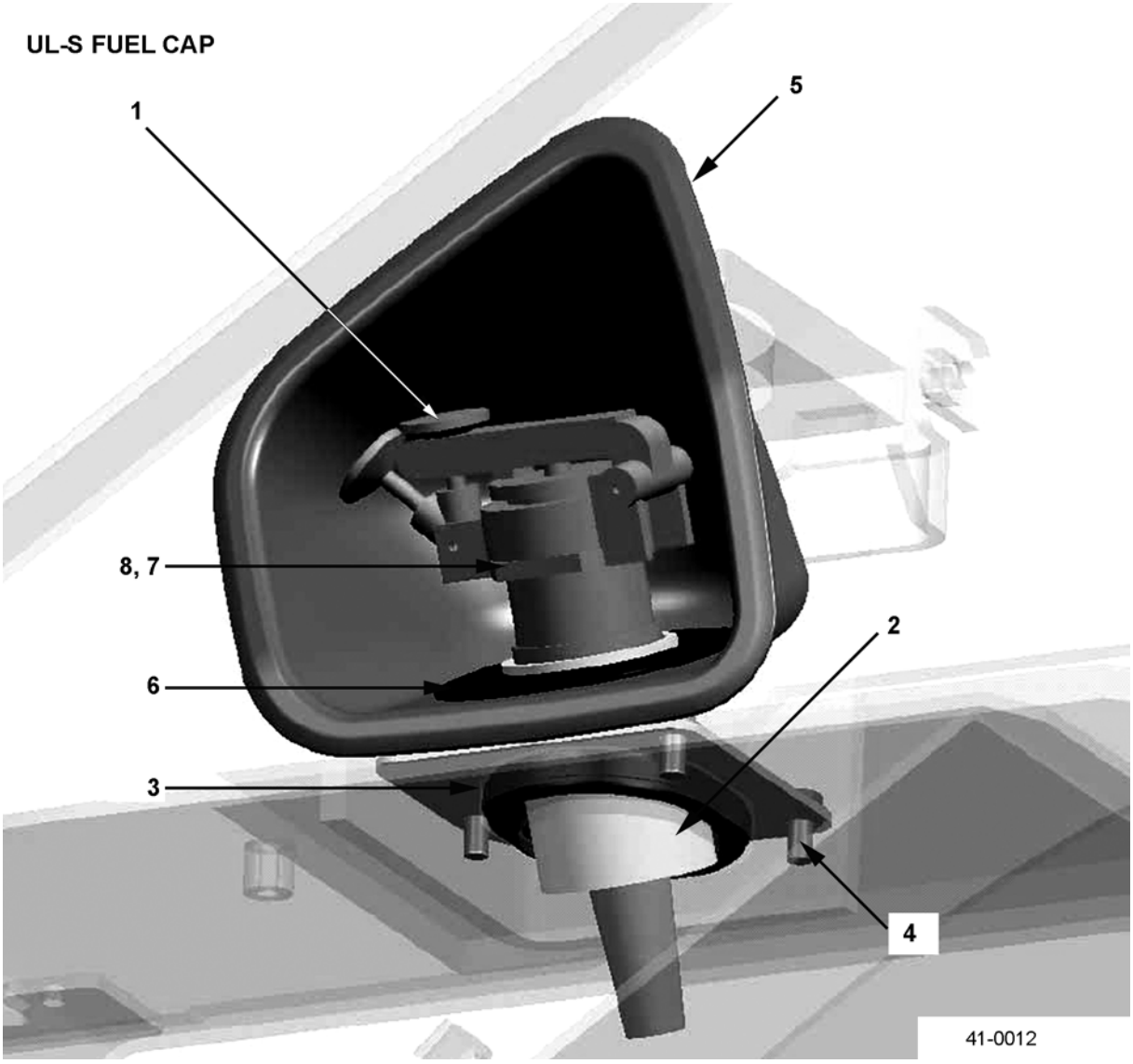

https://truckmanualshub.com/

FRAME - FUEL CAP (UL-S) - S/N 200001A~

Item	Part Number	Description	Qty	
1	3EB-44-17170	CAP (UL-S)	1	
2	3EB-42-A7710	PIPE	1	
3	3EB-41-56130	PACKING	1	
4	01435-00816	BOLT	3	
5	3EB-41-56120	COVER	1	
6	3EB-41-56140	COVER	1	
7	3EB-41-35120	NUT	1	
8	3EB-44-17180	GASKET	1	

https://truckmanualshub.com/

FRAME - UNDER COVER - S/N 200001A~

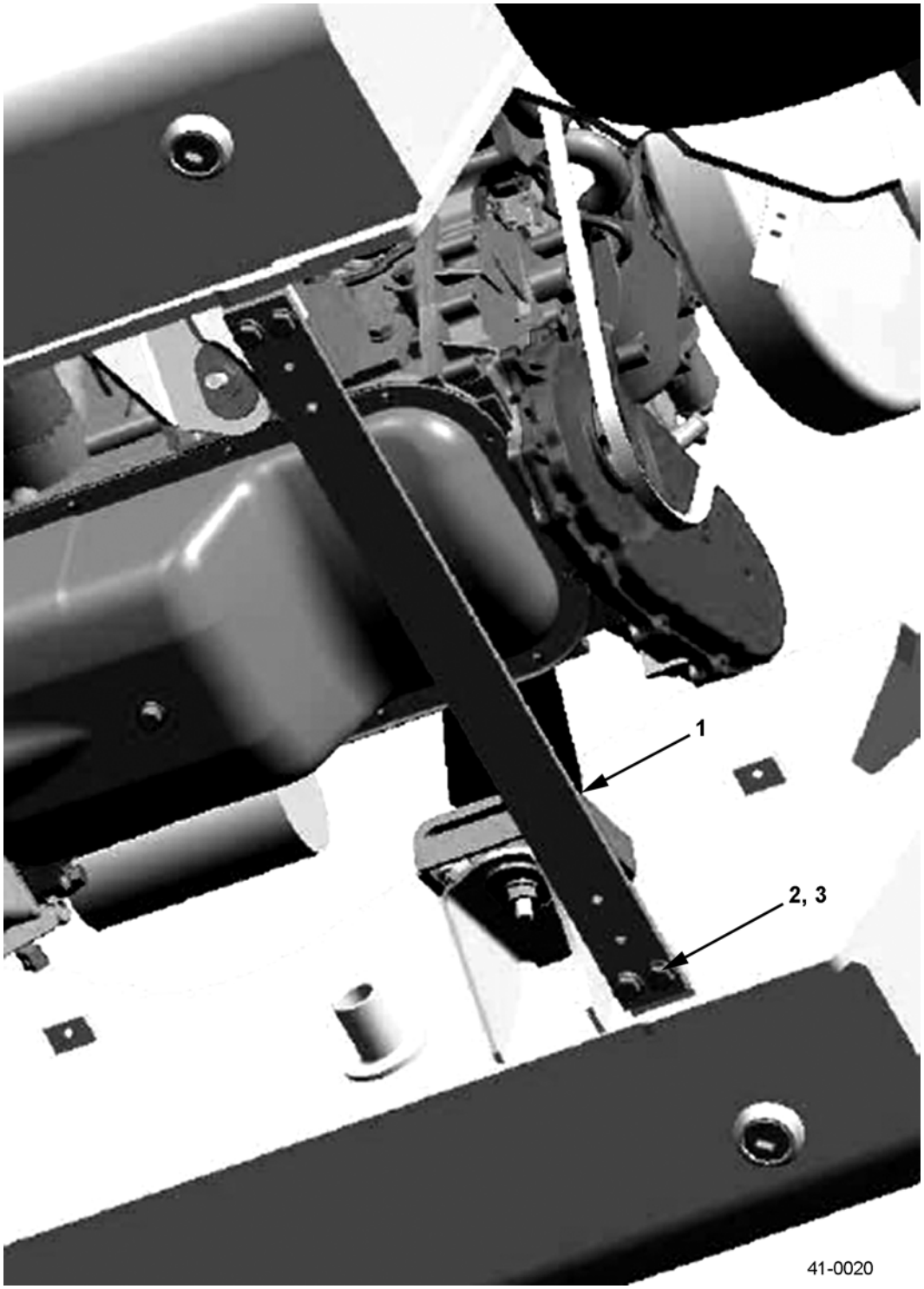

https://truckmanualshub.com/

FRAME - UNDER COVER - S/N 200001A~

Item	Part Number	Description	Qty	
1	3EB-52-51611	BRACKET (CROSSMEMBER)	1	
2	01010-81025	BOLT	4	
3	01643-31032	WASHER.	4	

https://truckmanualshub.com/

COUNTERWEIGHTS - S/N 200001A~

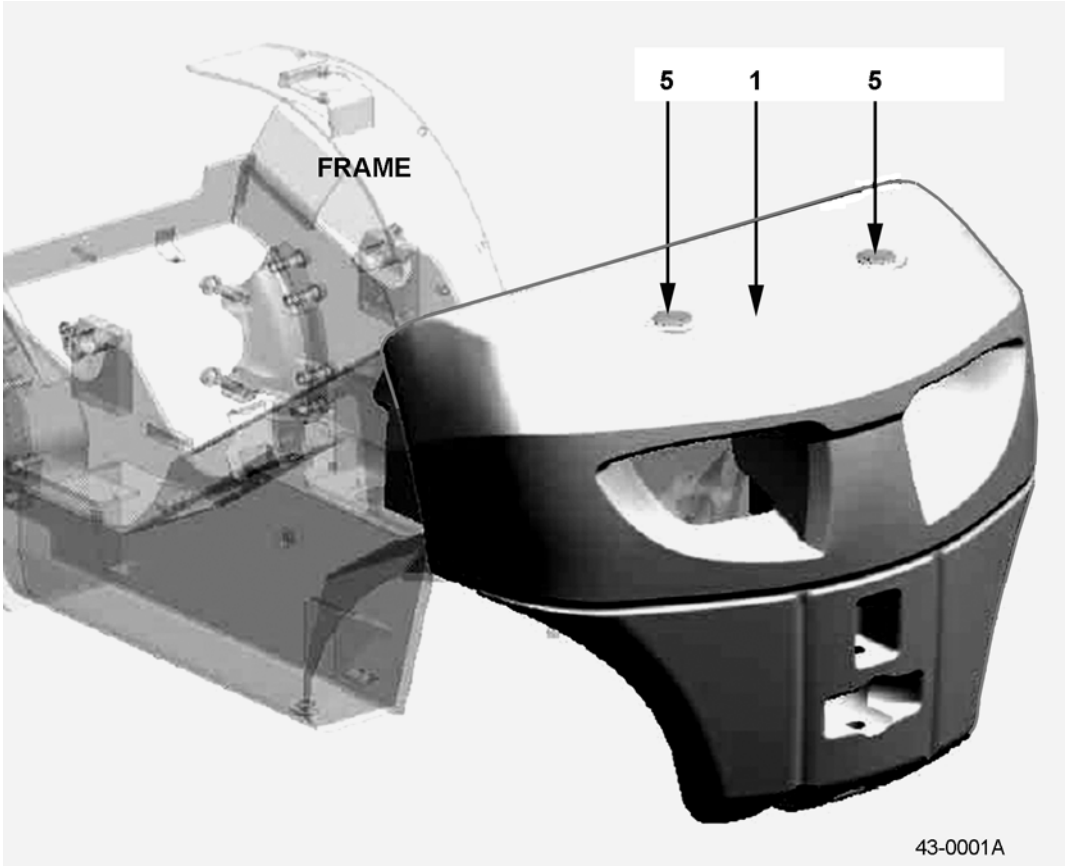

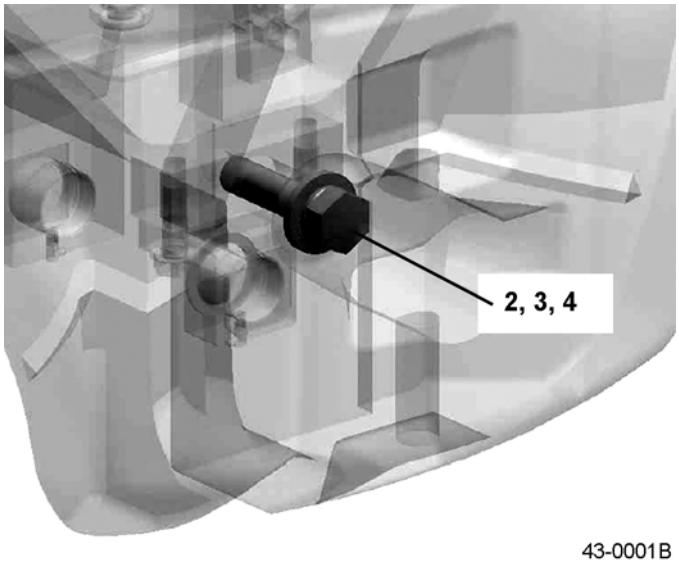

https://truckmanualshub.com/

COUNTERWEIGHTS - S/N 200001A~

Item	Part Number	Description	Qty	
		PNEUMATIC SPEC TRUCKS		
1	3EB-43-A7160	COUNTERWEIGHT (2.0T)	1	
	3EB-43-A7260	COUNTERWEIGHT (2.5T)	1	
	3EB-43-A7360	COUNTERWEIGHT (2.8T)	1	
	3EB-43-A7460	COUNTERWEIGHT (3.0T)	1	
	3EB-43-A7560	COUNTERWEIGHT (3.2T)	1	
	3EB-43-A7660	COUNTERWEIGHT (3.5T)	1	
2	01011-83030	BOLT	1	
3	01601-23075	WASHER	1	
4	01643-33080	WASHER	1	
5	3EB-43-41720	CAP	2	
N/S	3EA-43-21160	PIN (DRAW BAR)	1	
		CUSHION SPEC TRUCKS		
1	3EB-43-A7110	COUNTERWEIGHT (2.0T)	1	
	3EB-43-A7210	COUNTERWEIGHT (2.5T)	1	
	3EB-43-A7310	COUNTERWEIGHT (2.8T)	1	
	3EB-43-A7410	COUNTERWEIGHT (3.0T)	1	
	3EB-43-A7510	COUNTERWEIGHT (3.2T)	1	
2	01011-83030	BOLT	1	
3	01601-23075	WASHER	1	
4	01643-33080	WASHER	1	
5	3EB-43-41720	CAP	2	
N/S	3EA-43-21160	PIN (DRAW BAR)	1	

https://truckmanualshub.com/

SUB-WEIGHTS - S/N 200001A~

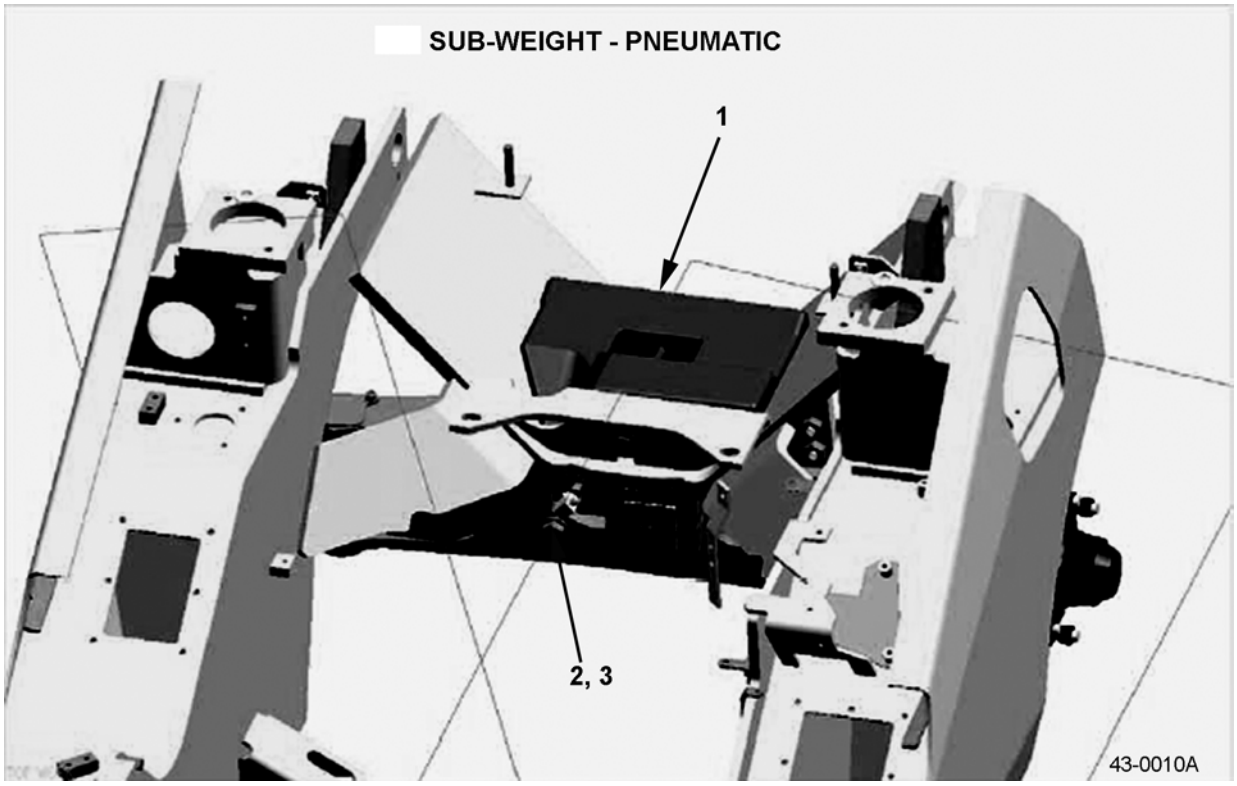

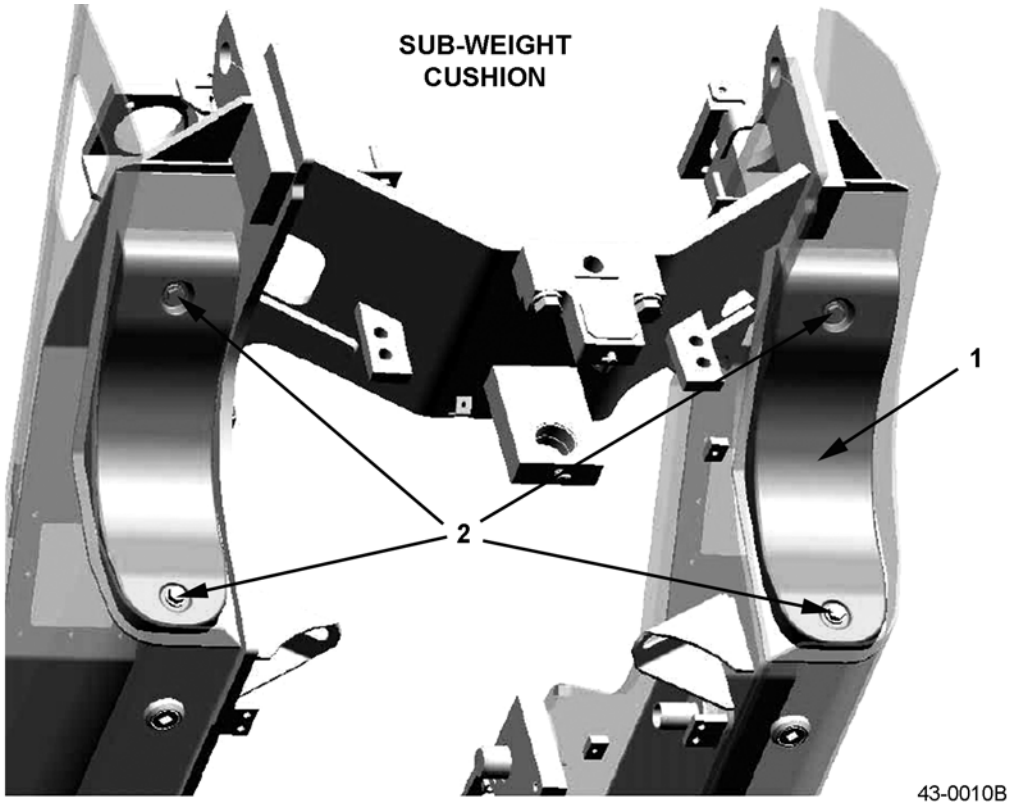

https://truckmanualshub.com/

SUB-WEIGHTS - S/N 200001A~

Item	Part Number	Description	Qty	
		PNEUMATIC SPEC TRUCKS		
1	3EB-43-A7760	SUB-WEIGHT	1	
2	01010-51640	BOLT	1	
3	01643-31365	WASHER	1	
		CUSHION SPEC TRUCKS		
1	3EB-43-A7721	SUB-WEIGHT	2	
2	01024-81230	BOLT	4	

https://truckmanualshub.com/

OPERATOR'S SEATS & K.O.P.S. SWITCH- S/N 200001A~

NO

ILLUSTRATION

AVAILABLE

https://truckmanualshub.com/

OPERATOR'S SEATS & K.O.P.S. SWITCH- S/N 200001A~

Item	Part Number	Description	Qty	
	3EB-50-A5322	SEAT ASSY (STD)	1	
	3EB-50-F5313	SEAT ASSY (CLOTH).	1	
	3EB-50-A6112	SEAT ASSY (SUSPENSION)	1	
	3EB-50-F5442	SEAT ASSY (SUSPENSION - CLOTH)	1	
1	3EB-50-A6331	.SEAT SWITCH (K.O.P.S.)	1	
2	3EB-50-A6342	.WIRE HARNESS (K.O.P.S.)	1	
3	01642-20810	WASHER	4	
4	02205-10508	NUT.	4	

https://truckmanualshub.com/

INSULATOR ASSEMBLY - FRAME - PNEUMATIC MODELS - S/N 200001A~

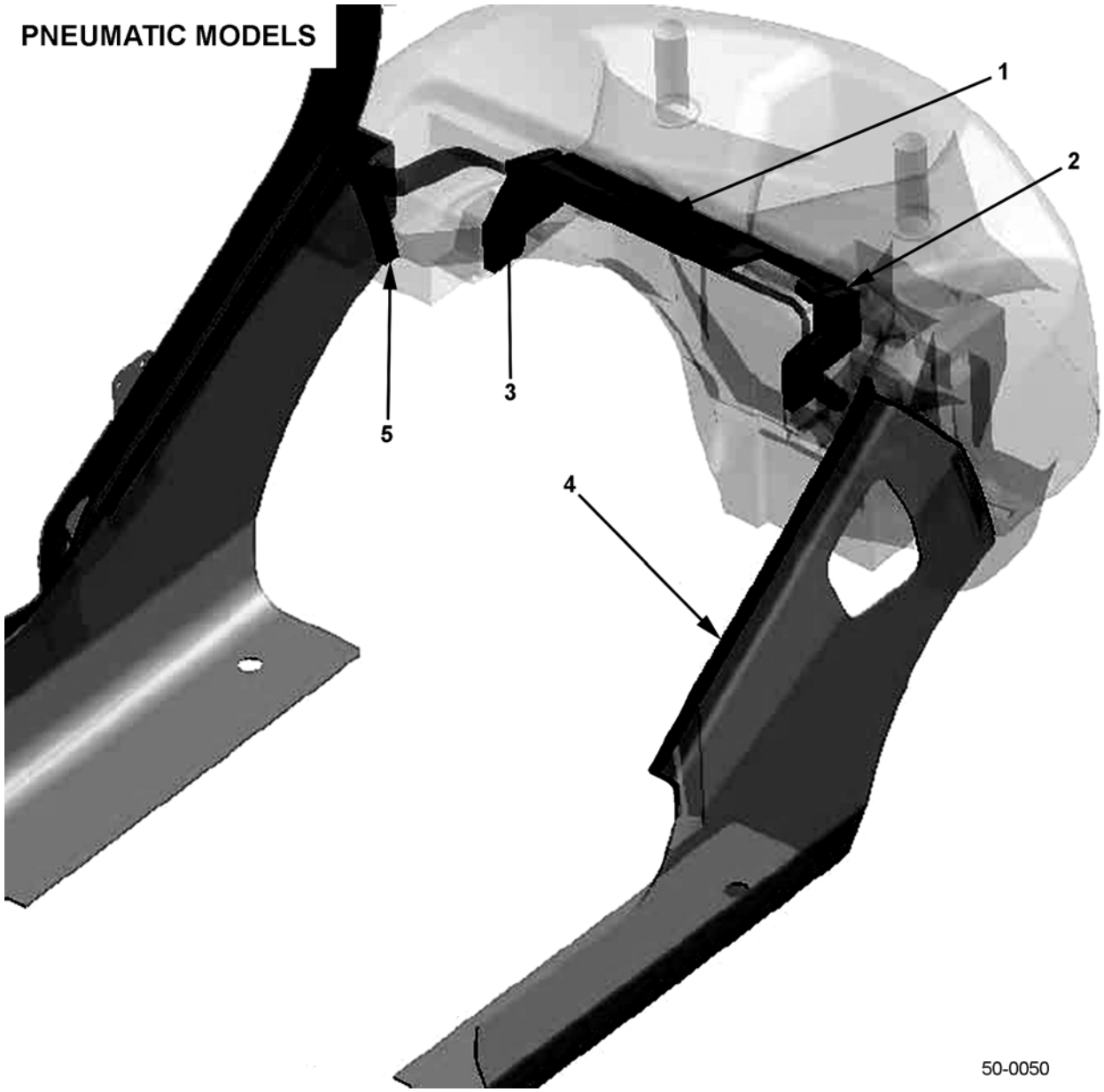

https://truckmanualshub.com/

INSULATOR ASSEMBLY - FRAME - PNEUMATIC MODELS - S/N 200001A~

Item	Part Number	Description	Qty	
1	3EB-52-51130	SPONGE (PNEUMATIC)	1	
2	3EB-52-51140	SPONGE, LH (PNEUMATIC)	1	
3	3EB-52-51150	SPONGE, RH (PNEUMATIC)	1	
4	3EB-52-51160	SEAL RUBBER (PNEUMATIC)	2	
5	3EB-52-41611	SPONGE (PNEUMATIC)	2	

https://truckmanualshub.com/

INSULATOR ASSEMBLY - FRAME - CUSHION MODELS - S/N 200001A~

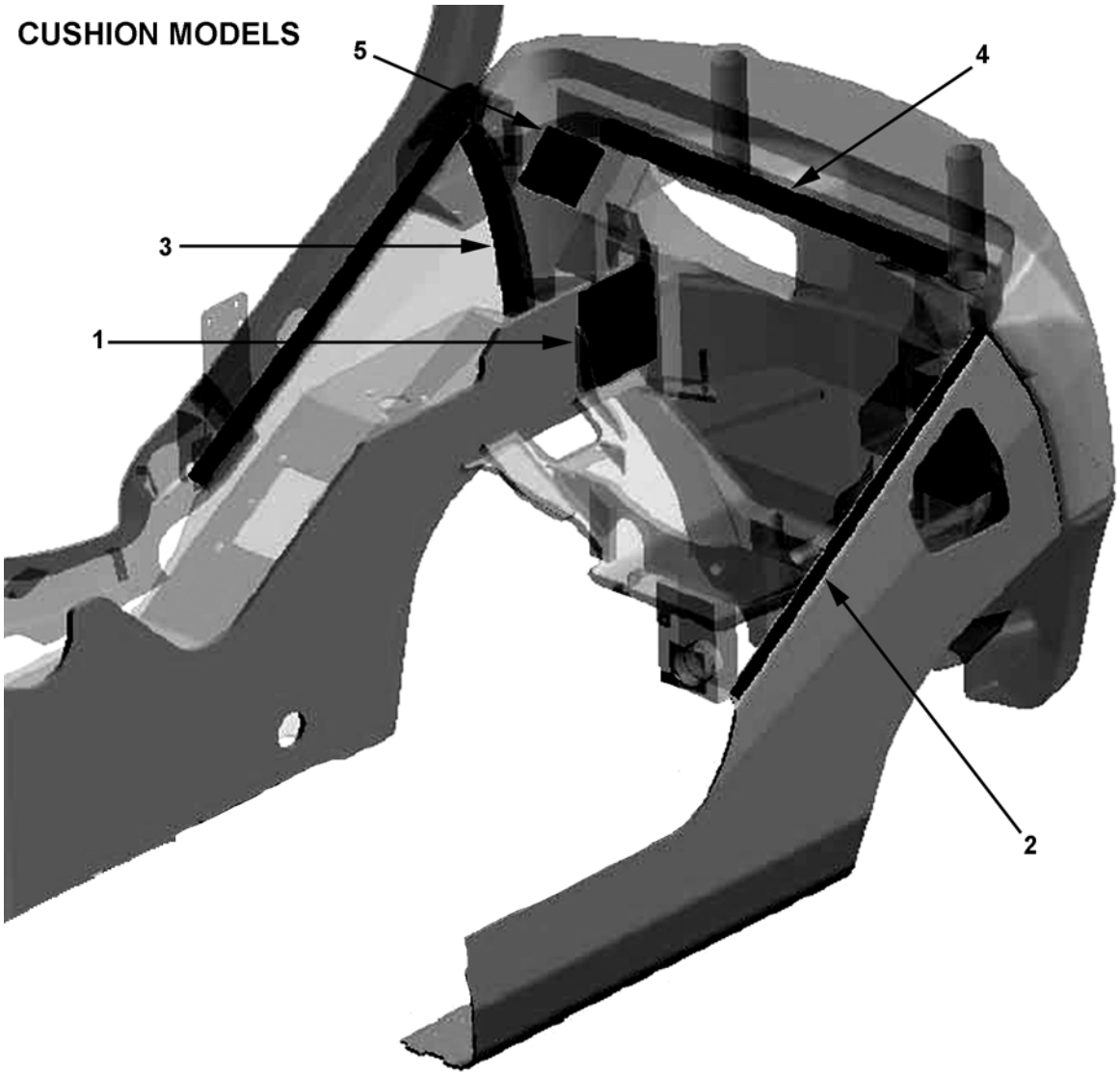

50-0051

https://truckmanualshub.com/

INSULATOR ASSEMBLY - FRAME - CUSHION MODELS - S/N 200001A~

Item	Part Number	Description	Qty	
1	3EB-52-56160	SPONGE (CUSHION).	2	
2	3EB-52-56171	SEAL RUBBER (CUSHION).	2	
3	3EB-52-56180	SPONGE (CUSHION).	2	
4	3EB-52-41230	SPONGE (CUSHION).	1	
5	3EB-52-41240	SPONGE (CUSHION).	1	

https://truckmanualshub.com/

INSULATOR ASSEMBLY - STEP, SUB-BONNET, RADIATOR - S/N 200001A~

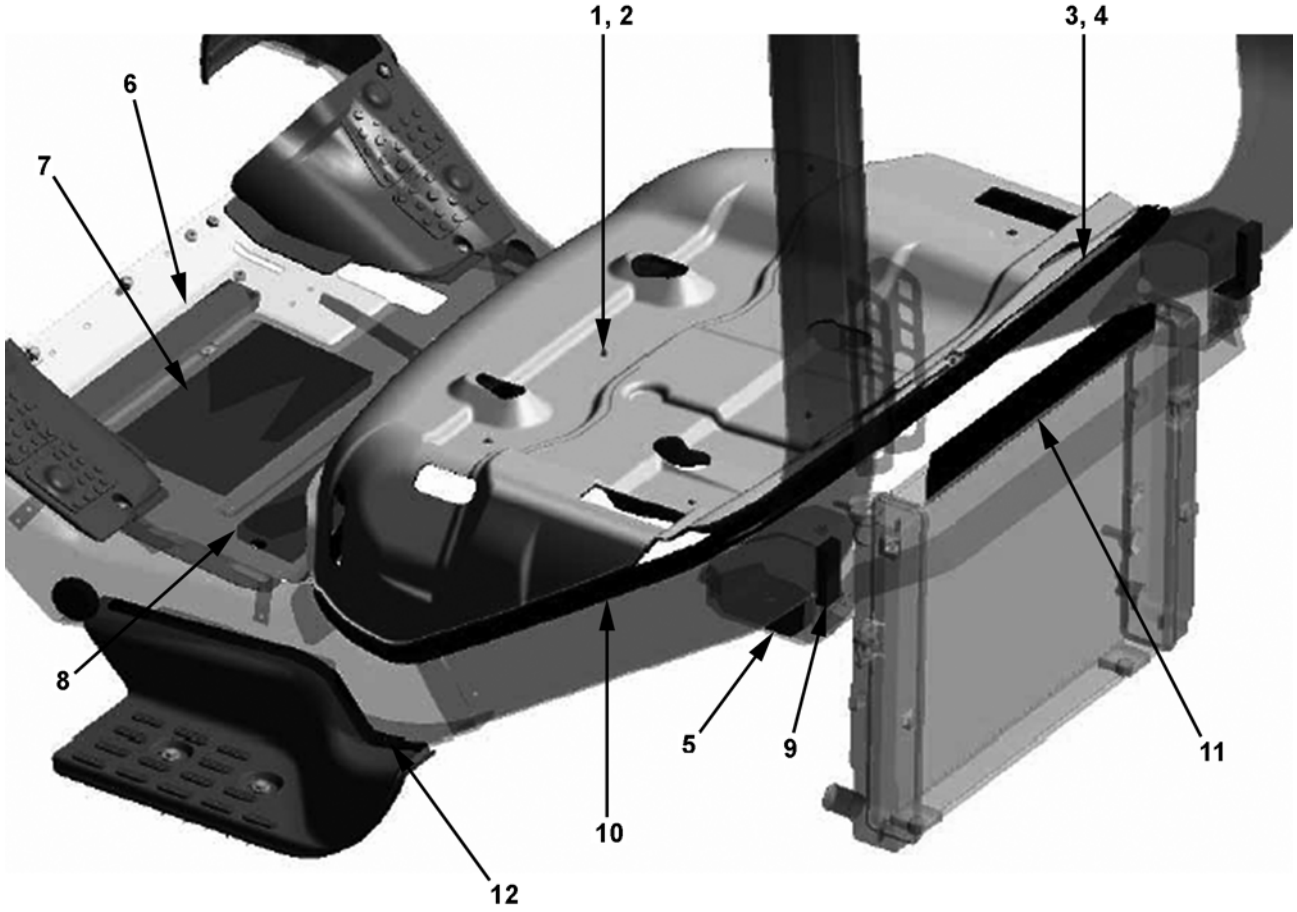

50-0052

https://truckmanualshub.com/

INSULATOR ASSEMBLY - STEP, SUB-BONNET, RADIATOR - S/N 200001A~

Item	Part Number	Description	Qty	
1	3EB-52-A7210	GLASS WOOL	1	
2	34B-50-12730	CLIP	6	
3	3EB-52-51121	PLATE	1	
4	01023-60612	SCREW	1	
5	3EB-52-51540	SPONGE	2	
6	3EB-52-51710	SPONGE	1	
7	3EB-52-51720	SPONGE	1	
8	3EB-52-51730	SPONGE	1	
9	3EB-52-51770	SPONGE	2	
10	3EB-52-41510	SEAL RUBBER	1	
11	3EB-52-51740	SPONGE	1	
12	37B-1CV-2121	SPONGE	2	
N/S	3EB-50-51810	FLOOR MAT	1	

https://truckmanualshub.com/

OPERATOR'S COMPARTMENT - DASHBOARD - S/N 200001A~

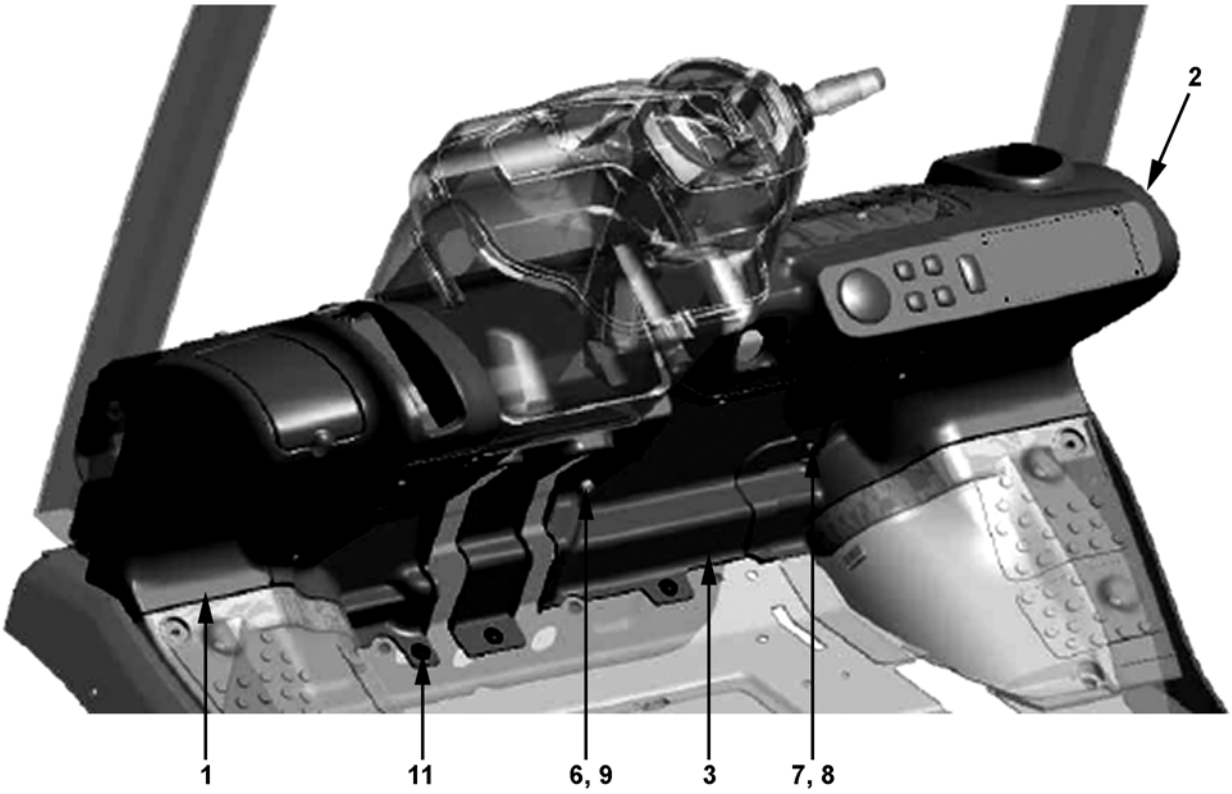

50-0100A

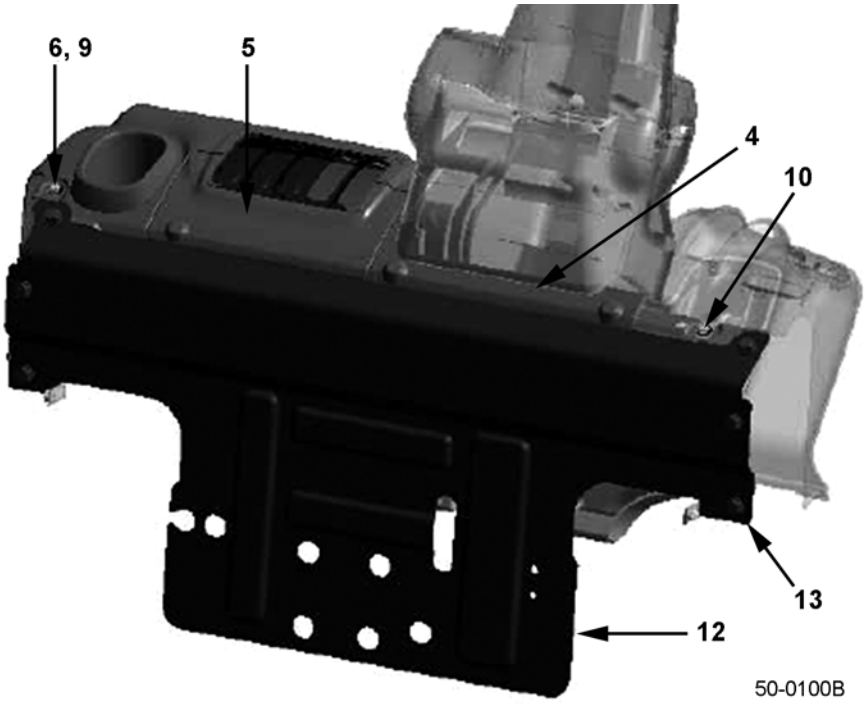

50-0100B

https://truckmanualshub.com/

OPERATOR'S COMPARTMENT - DASHBOARD - S/N 200001A~

Item	Part Number	Description	Qty	
1	3EB-50-52511	COVER, LH.	1	
2	3EB-50-52520	COVER, RH (STD)	1	
	3EB-50-A7810	COVER, RH (UL-S)	1	
	3EB-50-A7880	COVER, RH (DELUXE)	1	
	3EB-50-A7760	COVER, RH (DELUXE / STD)	1	
3	3EB-50-52531	COVER	1	
4	3EB-50-52540	COVER	1	
5	3EB-50-42540	COVER	1	
6	01435-40616	BOLT.	6	
7	01370-40416	SCREW.	7	
8	01642-40405	WASHER	7	
9	01642-40810	WASHER	6	
10	3EB-50-52570	SPRING NUT	5	
11	3EB-50-51950	CLIP	3	
12	3EB-50-A7412	DASHBOARD	1	
13	01024-81025	BOLT.	6	
N/S	3EB-50-51810	FLOOR MAT	1	

https://truckmanualshub.com/

DASHBOARD & STEP - COVERS / EXTERNAL - S/N 200001A~

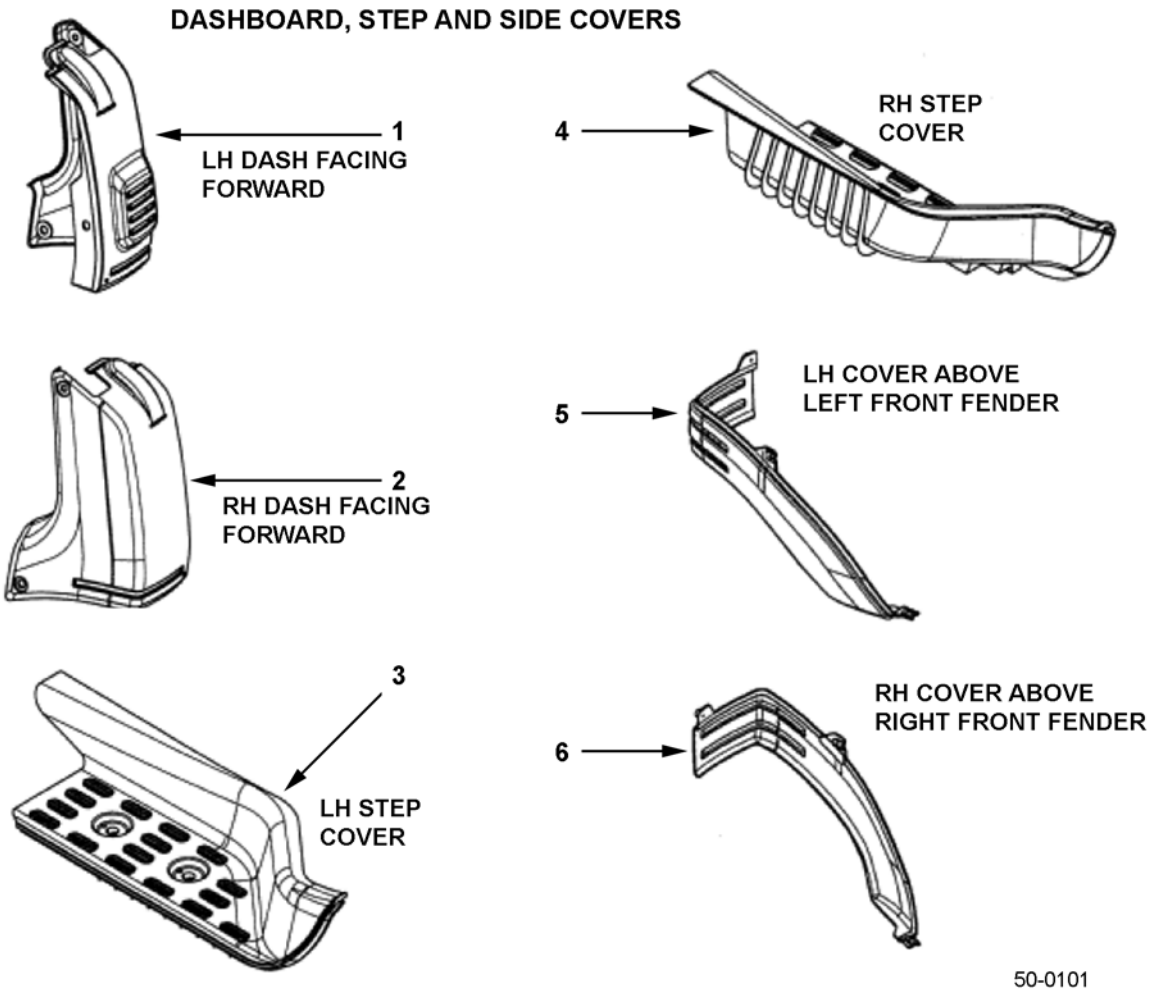

https://truckmanualshub.com/

DASHBOARD & STEP - COVERS / EXTERNAL - S/N 200001A~

Item	Part Number	Description	Qty	
1	3EB-50-51932	DASHBOARD COVER, LH - FORWARD FACING	1	
2	3EB-50-51942	DASHBOARD COVER, RH - FORWARD FACING	1	
3	3EB-50-56911	STEP COVER, LH	1	
4	3EB-50-56921	STEP COVER, RH	1	
5	3EB-50-56930	COVER, LH - ABOVE LEFT FRONT FENDER .	1	
6	3EB-50-56940	COVER, RH - ABOVE RIGHT FRONT FENDER	1	
N/S	3EB-50-51810	FLOOR MAT	1	

https://truckmanualshub.com/

OPERATOR'S COMPARTMENT - OVERHEAD GUARD - S/N 200001A~ (ALSO SEE FIG. 50-0201)

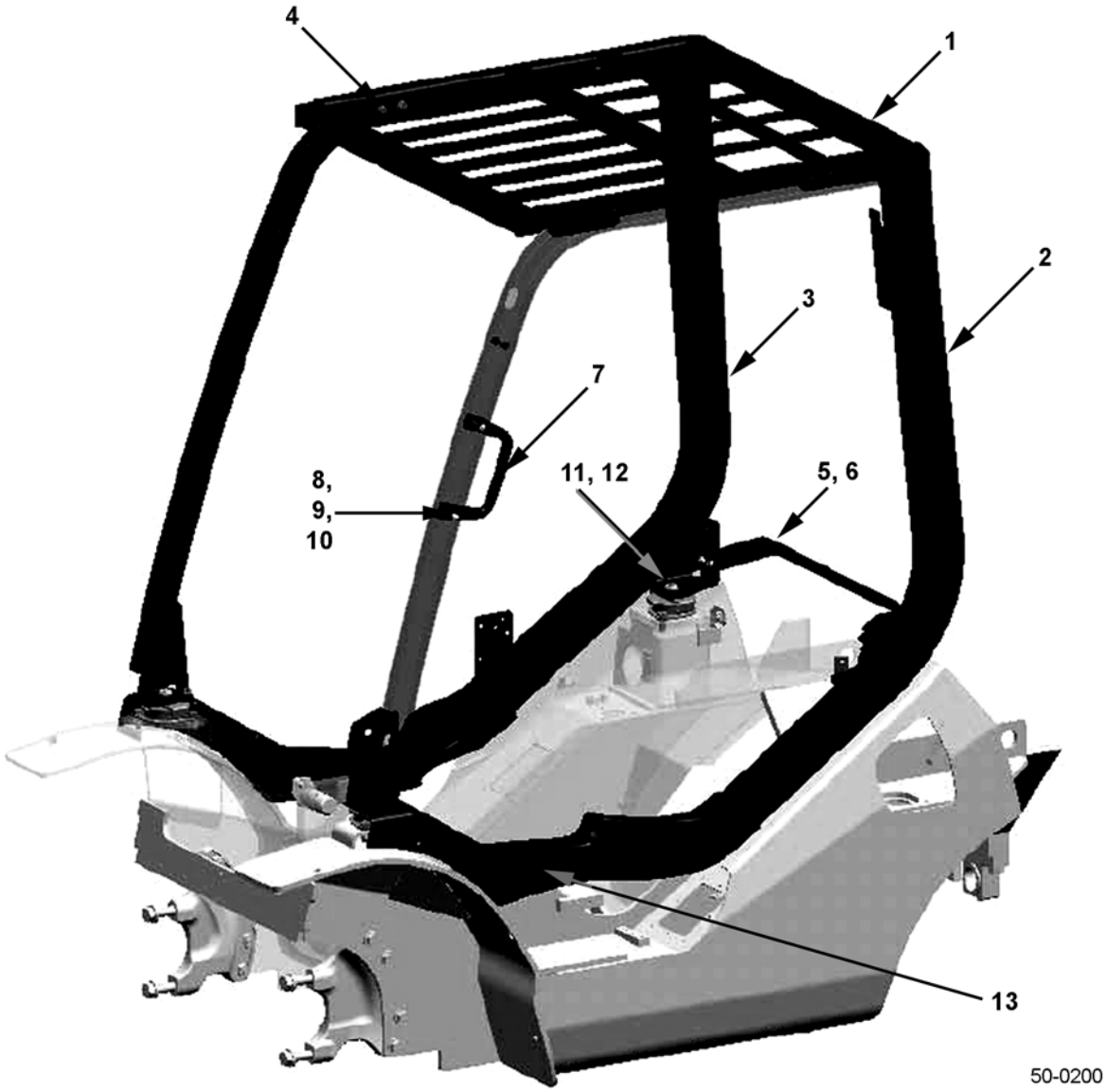

https://truckmanualshub.com/

OPERATOR'S COMPARTMENT - OVERHEAD GUARD - S/N 200001A~ (ALSO SEE FIG. 50-0201)

Item	Part Number	Description	Qty	
1	3EB-51-A7110	HEAD GUARD	1	
2	3EB-51-A7312	STAY, LH	1	
3	3EB-51-A7511	STAY, RH	1	
4	01024-81235	BOLT	8	
5	3EB-51-51720	PLATE (STD)	1	
	3EB-51-51811	PLATE (3.5T)	1	
6	01024-81030	BOLT	4	
7	3EB-51-51731	ASSIST GRIP	1	
8	01252-80660	BOLT	2	
9	01642-40608	WASHER	2	
10	3EB-51-21380	NUT	2	
11	01643-31445	WASHER	4	
12	01583-11408	NUT	4	
13	3EB-50-42580	COVER	2	
14	01640-21426	WASHER	2	
15	3EA-51-42110	CUSHION (STD)	1	
	3EB-51-42110	CUSHION (3.2T)	1	
16	3EA-51-42120	CUSHION (STD)	1	
	3EB-51-42120	CUSHION (3.2T)	1	
17	3EA-51-42120	CUSHION (STD)	1	
	3EB-51-42130	CUSHION (3.2T)	1	
18	3EA-51-42110	CUSHION (STD)	1	
	3EB-51-42140	CUSHION (3.2T)	1	
19	01024-81235	BOLT	8	
N/S	3EB-27-52310	FENDER, LH (COVER) (NARROW DUAL-TIRE OPTION) (FG20/25 ONLY)	1	
N/S	3EB-27-52320	FENDER, RH (COVER) (NARROW DUAL-TIRE OPTION) (FG20/25 ONLY)	1	
N/S	3EB-27-52910	FENDER, LH (COVER) (NARROW DUAL-TIRE OPTION) (FG(D)28/30/32 ONLY)	1	
N/S	3EB-27-52920	FENDER, RH (COVER) (NARROW DUAL-TIRE OPTION) (FG(D)28/30/32 ONLY)	1	
N/S	3EB-27-52710	FENDER, LH (COVER) (NARROW DUAL-TIRE OPTION) (FG35(D) ONLY)	1	
N/S	3EB-27-52720	FENDER, RH (COVER) (NARROW DUAL-TIRE OPTION) (FG(D)35 ONLY)	1	

https://truckmanualshub.com/

OPERATOR'S COMPARTMENT - OVERHEAD GUARD - MOUNTS - S/N 200001A~ (ALSO SEE FIG. 50-0200)

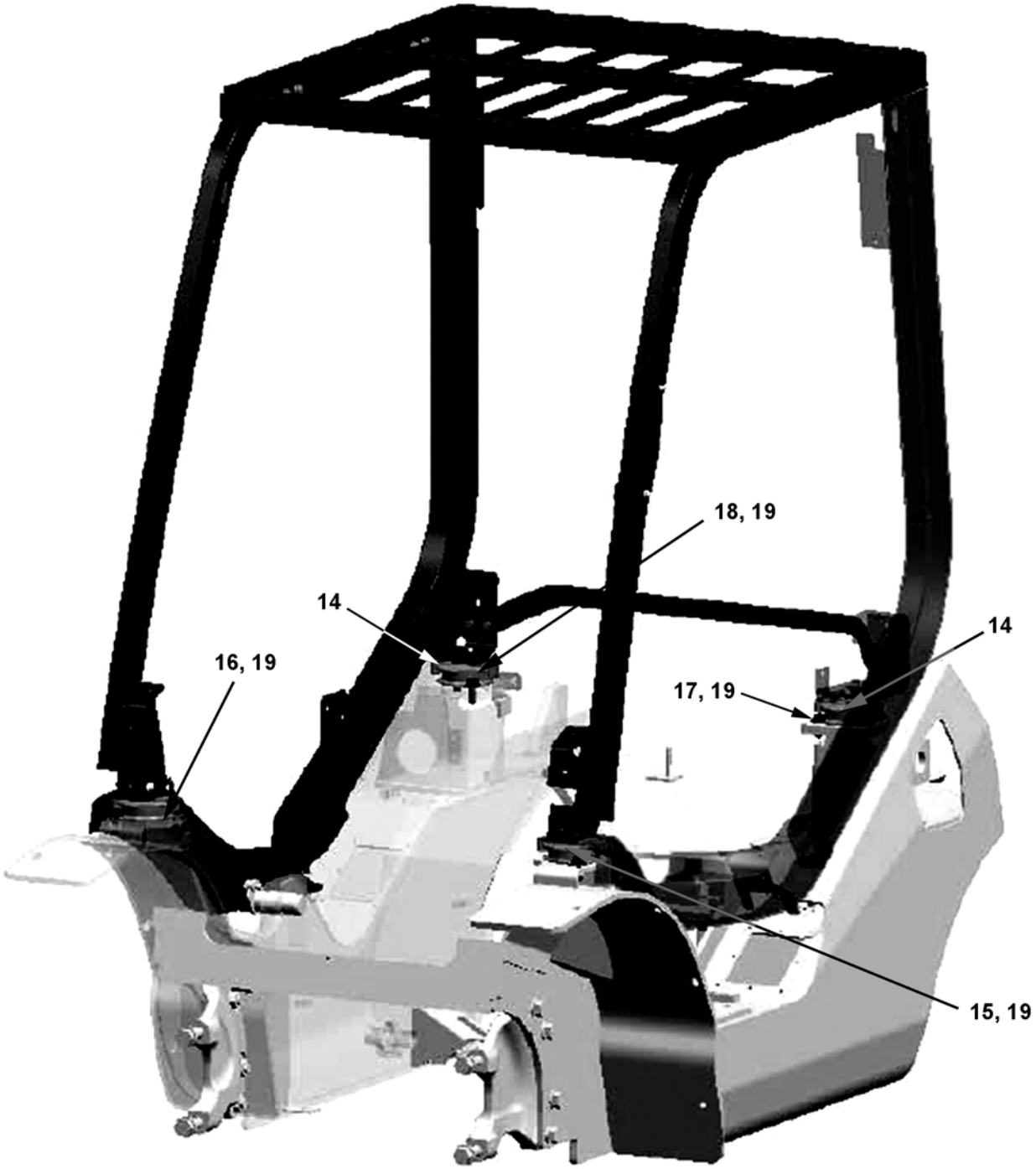

https://truckmanualshub.com/

OPERATOR'S COMPARTMENT - OVERHEAD GUARD - MOUNTS - S/N 200001A~ (ALSO SEE FIG. 50-0200)

Item	Part Number	Description	Qty	
1	3EB-51-A7110	HEAD GUARD	1	
2	3EB-51-A7312	STAY, LH	1	
3	3EB-51-A7511	STAY, RH	1	
4	01024-81235	BOLT	8	
5	3EB-51-51720	PLATE (STD)	1	
	3EB-51-51811	PLATE (3.5T)	1	
6	01024-81030	BOLT	4	
7	3EB-51-51731	ASSIST GRIP	1	
8	01252-80660	BOLT	2	
9	01642-40608	WASHER	2	
10	3EB-51-21380	NUT	2	
11	01643-31445	WASHER	4	
12	01583-11408	NUT	4	
13	3EB-50-42580	COVER	2	
14	01640-21426	WASHER	2	
15	3EA-51-42110	CUSHION (STD)	1	
16	3EA-51-42120	CUSHION (STD)	1	
17	3EA-51-42120	CUSHION (STD)	1	
18	3EA-51-42110	CUSHION (STD)	1	
19	01024-81235	BOLT	8	

https://truckmanualshub.com/

OPERATOR'S COMPARTMENT - SUB-BONNET - S/N 200001A~

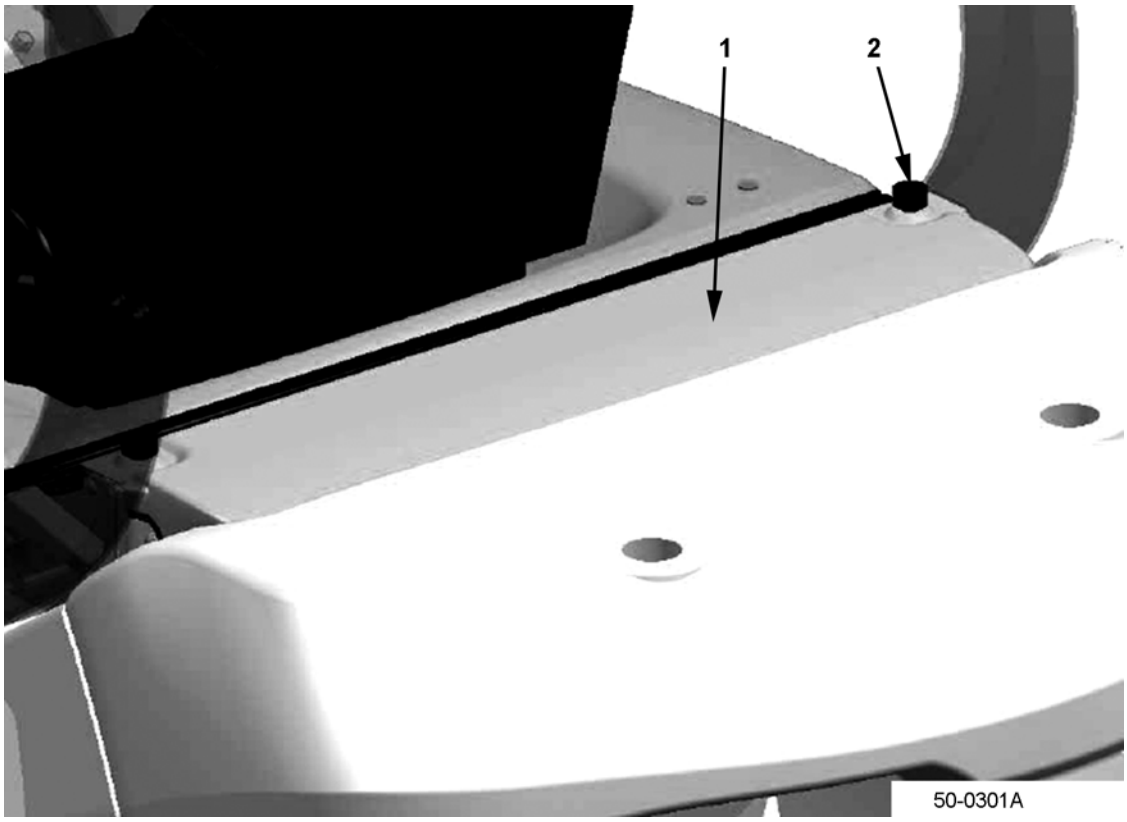

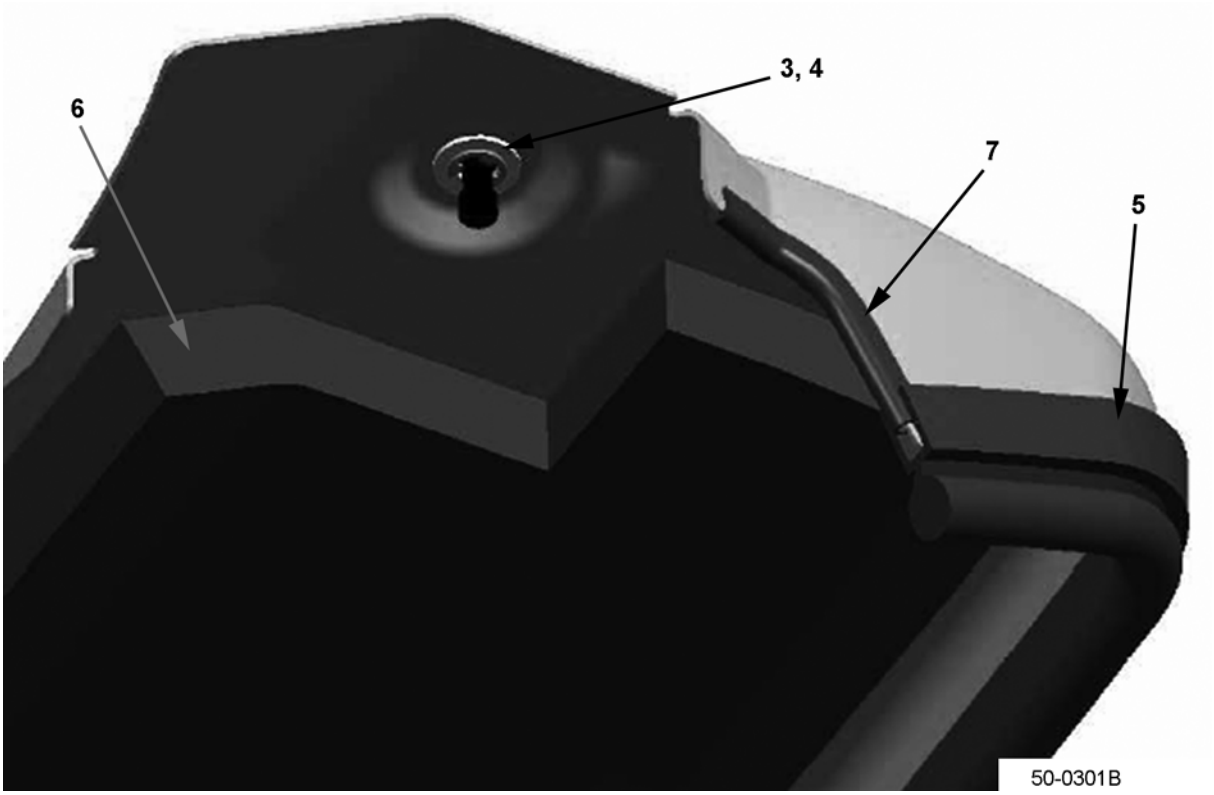

https://truckmanualshub.com/

OPERATOR'S COMPARTMENT - SUB-BONNET - S/N 200001A~

Item	Part Number	Description	Qty	
1	3EB-50-A7310	COVER REWORK (PNEUMATIC EXC. 3.2T, 3.5 TON)	1	
	3EB-50-A7210	COVER REWORK (CUSHION)	1	
	3EB-50-A7360	COVER REWORK (PNEUMATIC 3.2T, 3.5T). . .	1	
2	3EB-50-31420	KNOB	2	
3	3EC-50-31820	E-RING	2	
4	01640-20816	WASHER	2	
5	37B-1CW-3100	SEAL RUBBER (ALL EXC. 3.5T)	1	
	37B-1CW-3030	SEAL RUBBER (3.5T)	1	
6	3EB-52-41750	SPONGE.	1	
7	3EB-50-A7230	GASKET	1	

https://truckmanualshub.com/

ELECTRICAL - ENGINE AREA / SPEED SENSOR - K21/K25 MODELS - S/N 200001A~

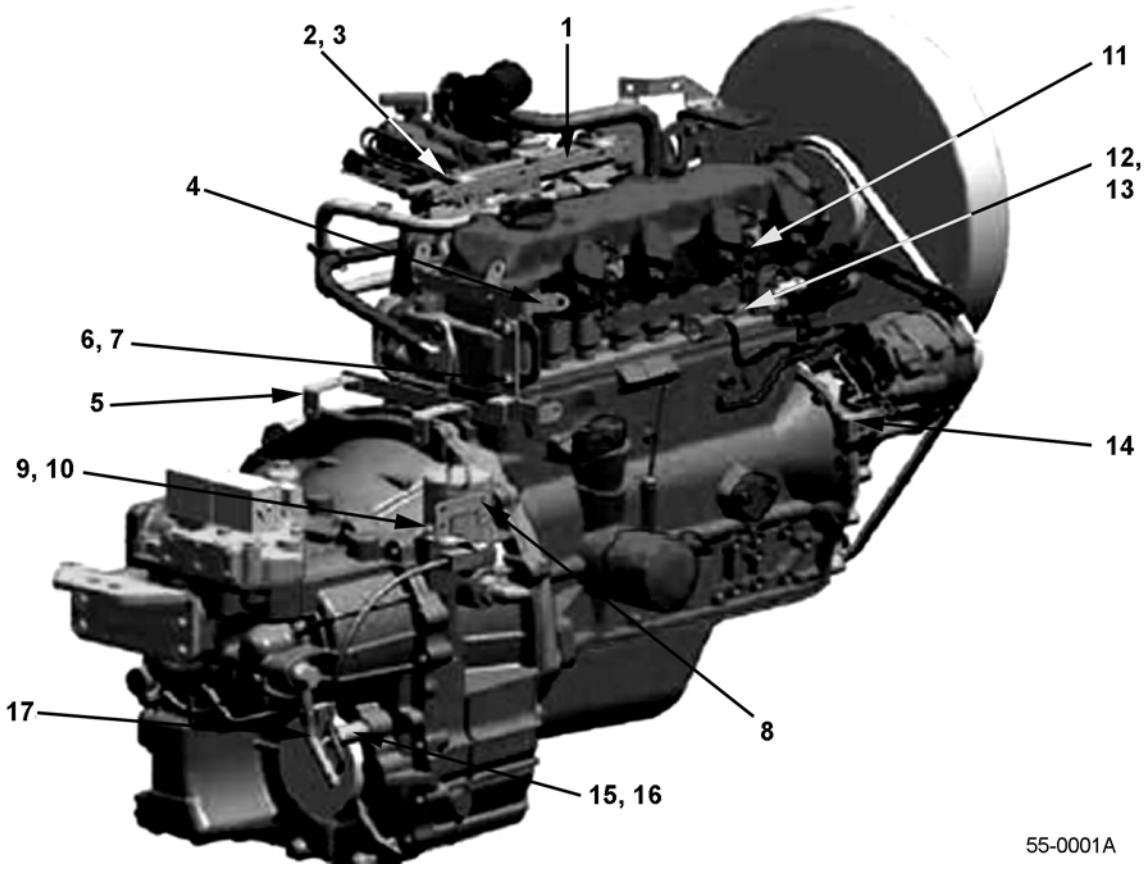

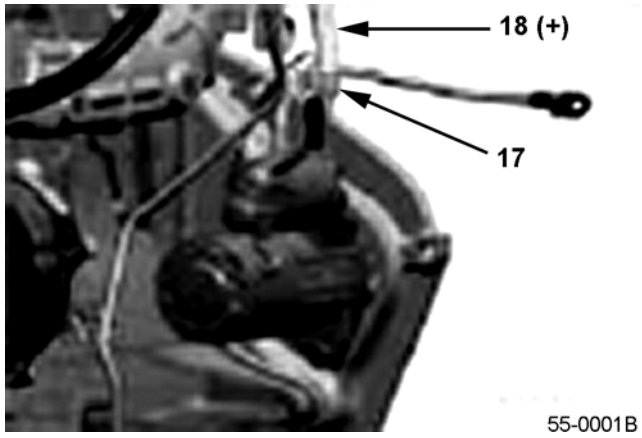

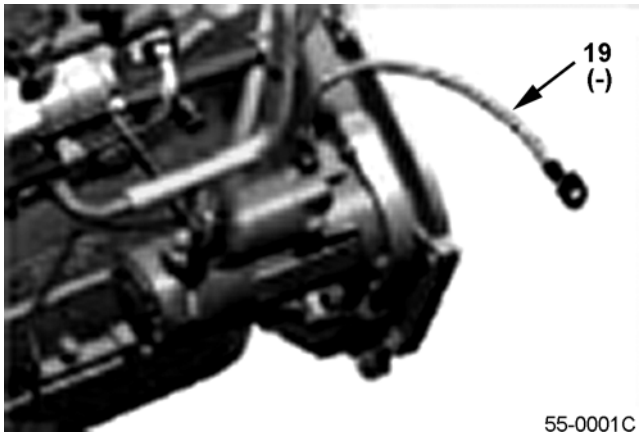

https://truckmanualshub.com/

ELECTRICAL - ENGINE AREA / SPEED SENSOR - K21/K25 MODELS - S/N 200001A~

Item	Part Number	Description	Qty	
1	3EB-55-A7260	BRACKET	1	
2	01010-80616	BOLT	2	
3	01643-30623	WASHER	2	
4	3EB-55-A7130	BRACKET	1	
5	3EB-55-A7141	BRACKET	1	
6	01010-80820	BOLT	2	
7	01643-30823	WASHER	2	
8	3EB-55-A7840	BRACKET	1	
9	01010-80816	BOLT	1	
10	01643-30823	WASHER	1	
11	3EB-55-A7930	BRACKET	2	
12	01010-80816	BOLT	2	
13	01643-30823	WASHER	2	
14	3EB-55-A7230	WIRE (ALT)	1	
15	3EC-55-37180	SPEED SENSOR ASSY	1	
16	07003-12228	GASKET	1	
17	3EB-55-A7920	CLAMP (DOUBLE)	2	
18	37B-1LH-A720	CABLE (+)	1	
19	3EB-55-51390	CABLE (-)	1	

https://truckmanualshub.com/

ELECTRICAL - ATTACHMENTS - BATTERY HOLDER - K21/K25 MODELS - S/N 200001A~

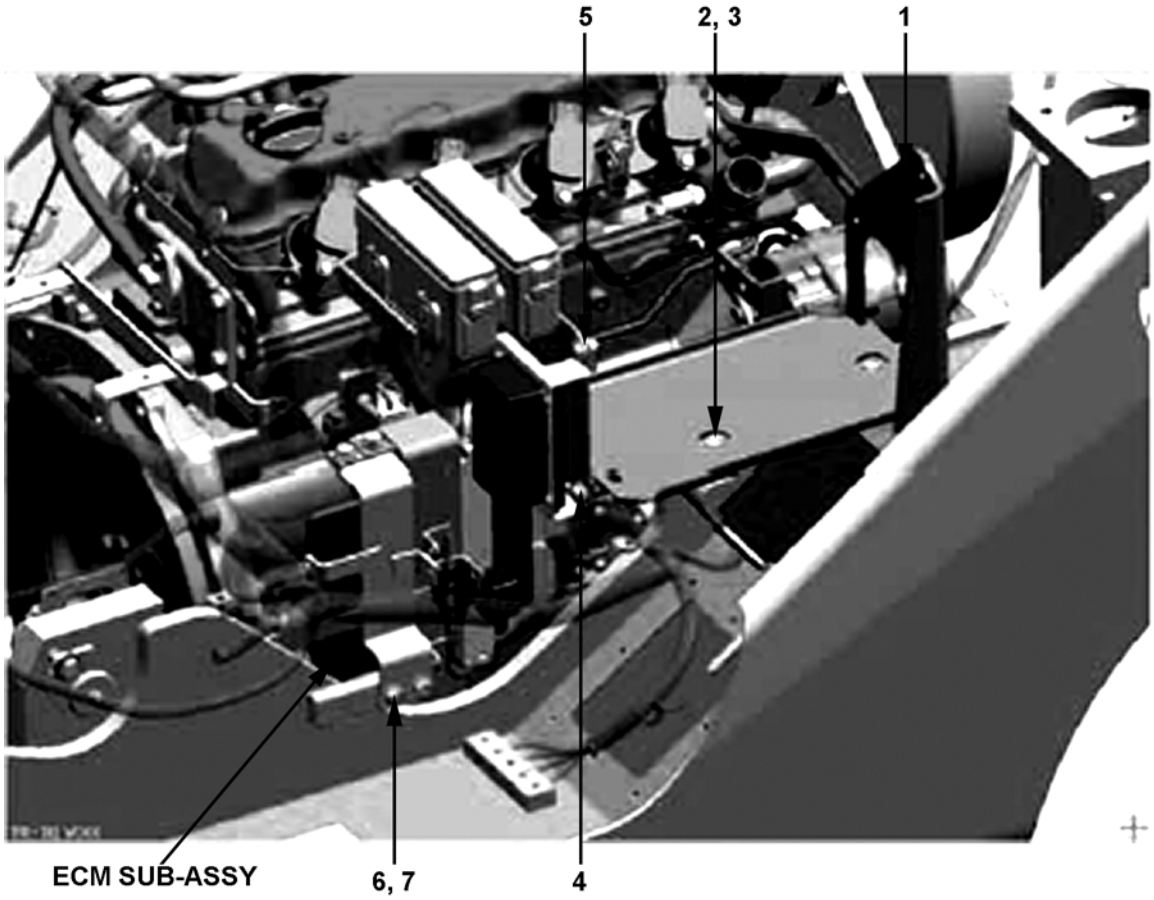

55-0002

https://truckmanualshub.com/

ELECTRICAL - ATTACHMENTS - BATTERY HOLDER - K21/K25 MODELS - S/N 200001A~

Item	Part Number	Description	Qty	
1	3EB-55-A7111	HOLDER	1	
2	01010-80816	BOLT	2	
3	01643-30823	WASHER	2	
4	01024-80816	BOLT	2	
5	01024-80816	BOLT	2	
6	01010-80820	BOLT	2	
7	01643-30823	WASHER	2	

https://truckmanualshub.com/

ELECTRICAL - ATTACHMENTS - CONDENSER - K21/K25 MODELS - S/N 200001A~

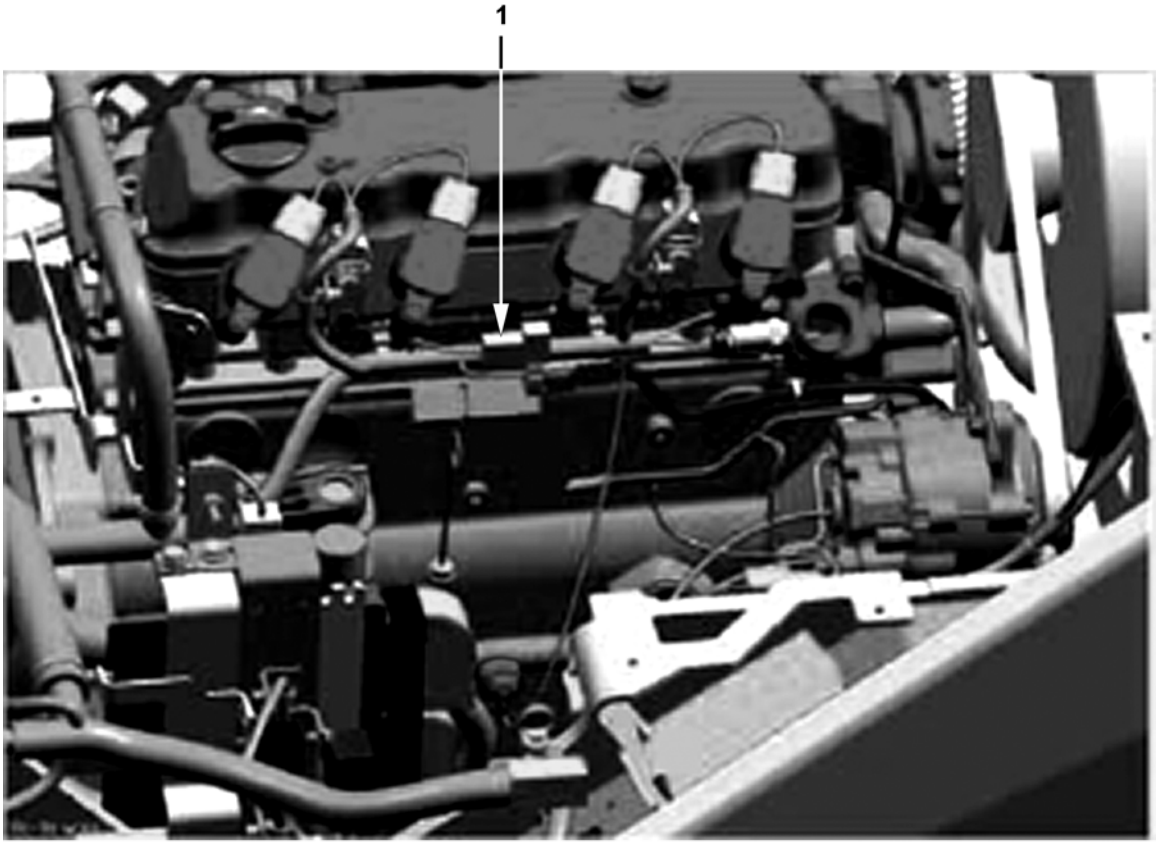

55-0003A

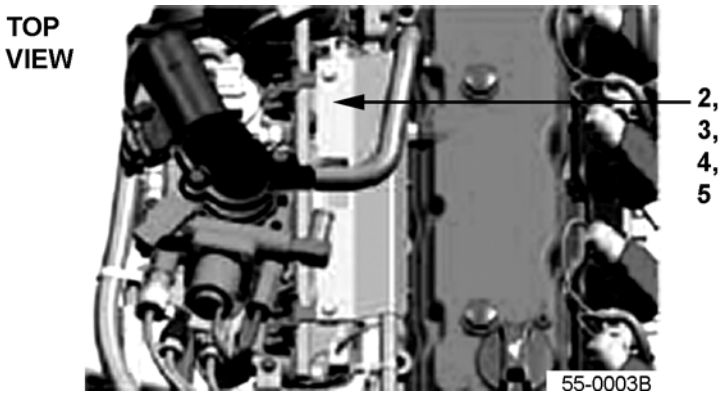

https://truckmanualshub.com/

ELECTRICAL - ATTACHMENTS - CONDENSER - K21/K25 MODELS - S/N 200001A~

Item	Part Number	Description	Qty	
1	28351-89902	CONDENSER	1	
2	3EB-55-A7770	COVER (GAS/LP ONLY)	1	
3	3EB-55-A7260	BRACKET (GAS/LP ONLY)	1	
4	01010-80816	BOLT (GAS/LP ONLY)	2	
5	01643-30623	WASHER (GAS/LP ONLY)	2	

https://truckmanualshub.com/

ELECTRICAL - ATTACHMENTS - BATTERY - K21/K25 MODELS - S/N 200001A~

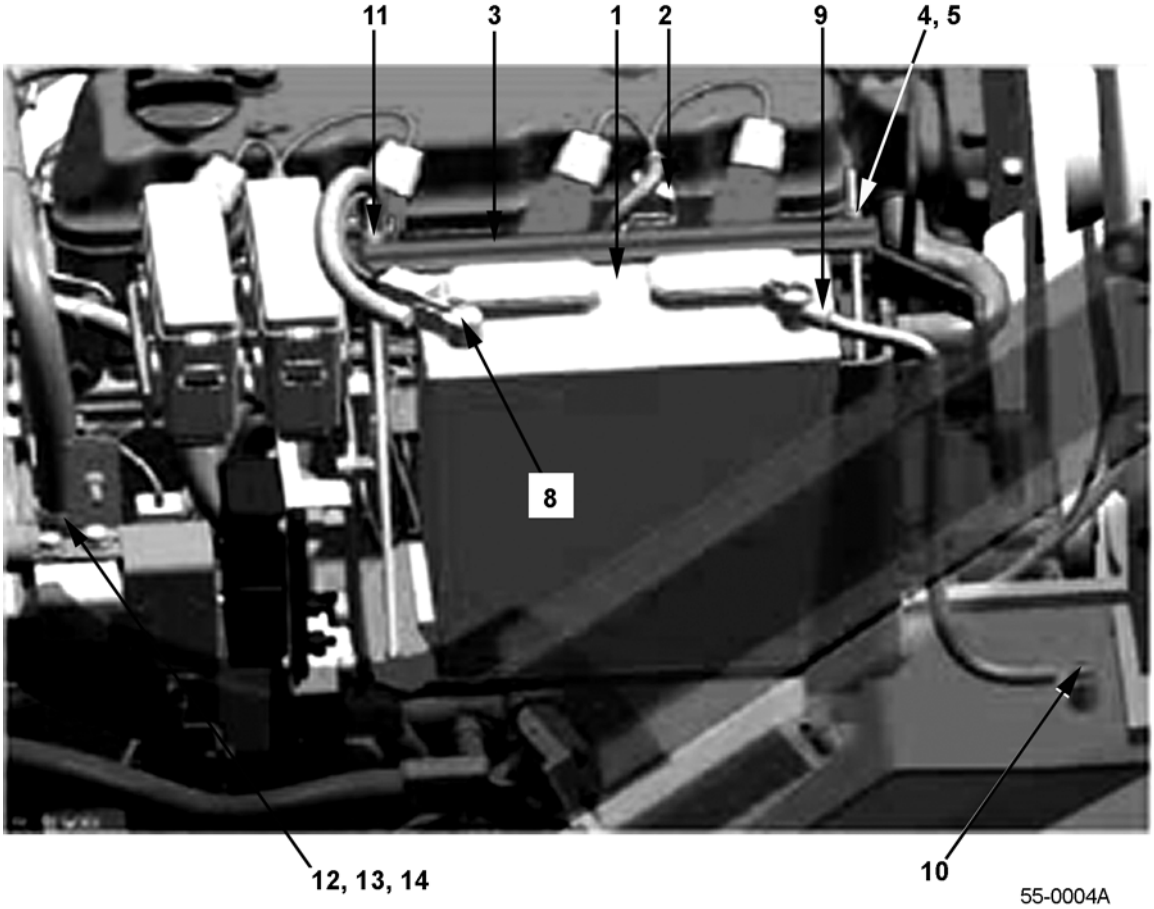

55-0004A

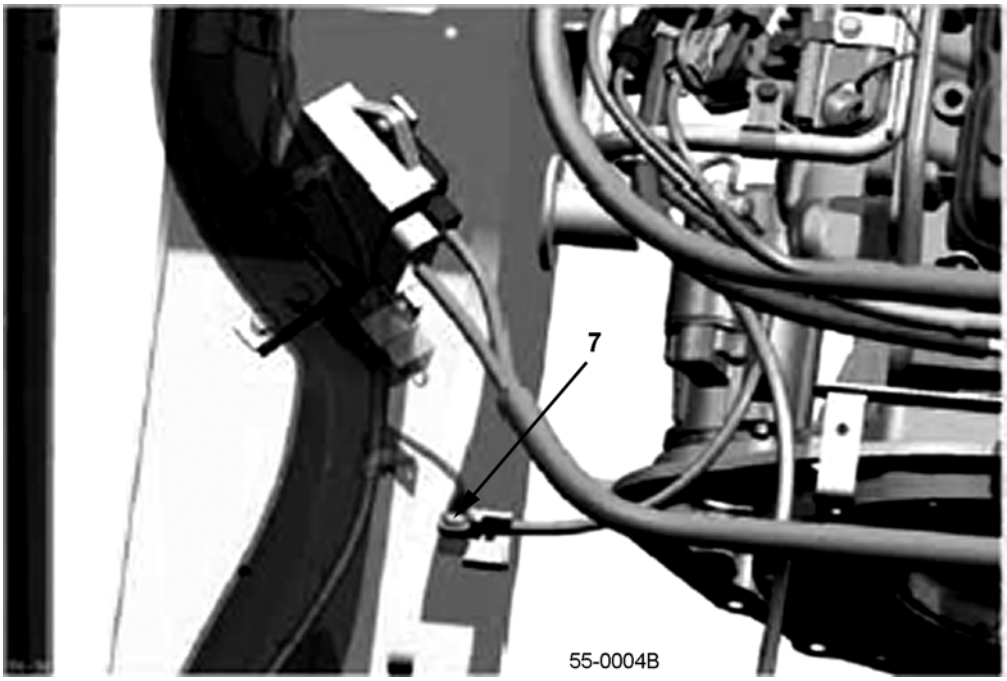

55-0004B

https://truckmanualshub.com/

ELECTRICAL - ATTACHMENTS - BATTERY - K21/K25 MODELS - S/N 200001A~

Item	Part Number	Description	Qty	
1	3EA-55-A1810	BATTERY	1	
2	3EB-55-43430	CLAMP	2	
3	3EB-55-43220	BRACKET	1	
4	01580-10605	NUT	2	
5	01641-20608	WASHER	2	
6	NOT USED			
7	01435-00816	BOLT	1	
8	37B-1LH-A720	CABLE (+)	1	
9	37A-1LK-2210	CABLE (-)	1	
10	01435-00816	BOLT	1	
11	3EB-55-A7940	CLAMP	2	
12	3EB-56-A7390	PLATE (GAS/LP ONLY)	1	
13	3EB-55-A7980	NAME PLATE (GAS/LP ONLY)	1	
14	3EB-55-A7681	HARNESS (GAS/LP ONLY)	1	

https://truckmanualshub.com/

ELECTRICAL - E/G HARNESS / RELAYS - K21/K25 MODELS - S/N 200001A~
(E/G HARNESS, RELAY BOX & FUSE BOX)

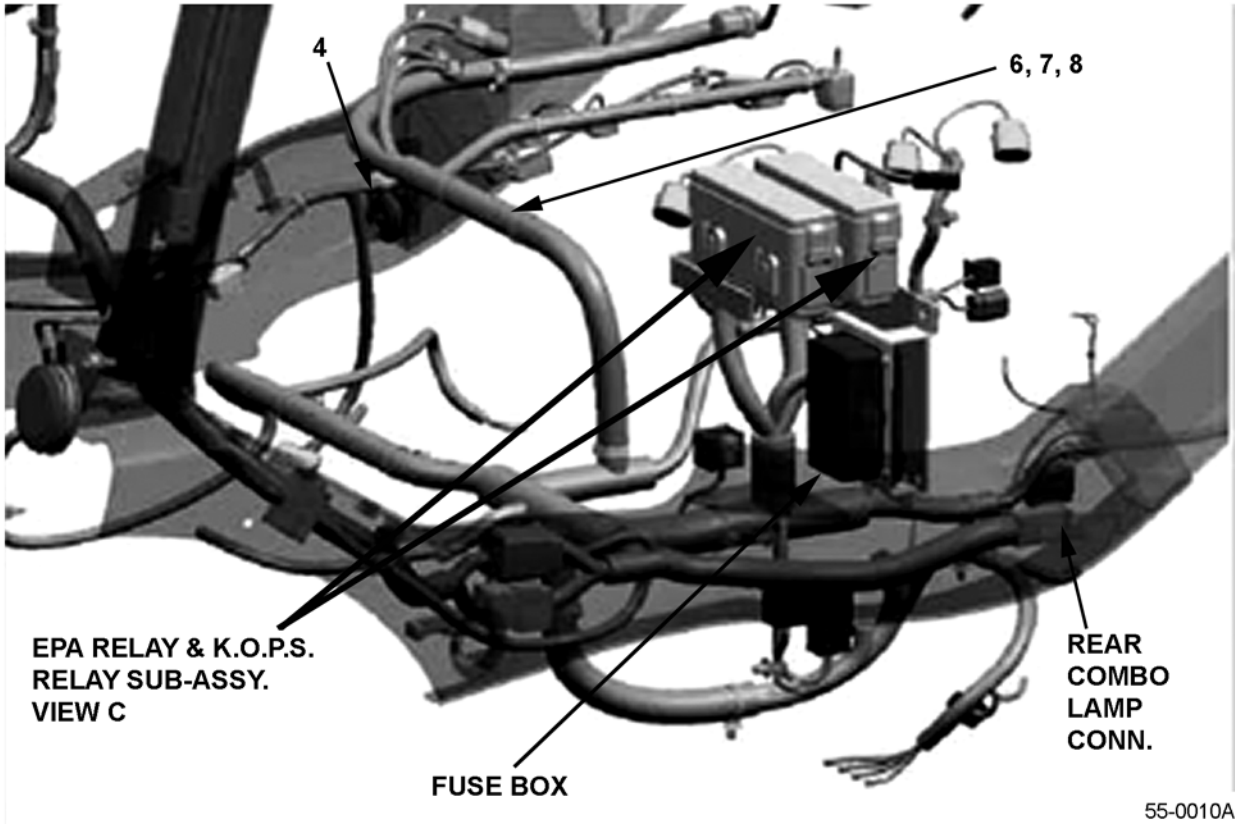

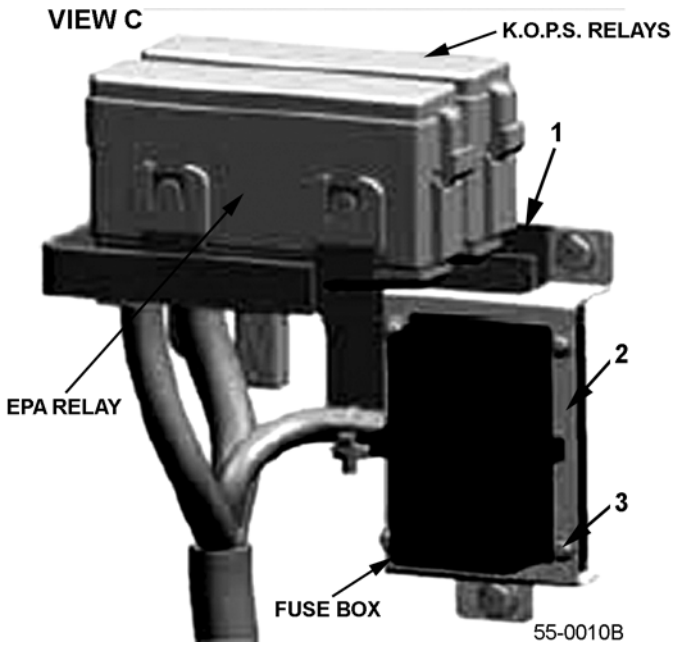

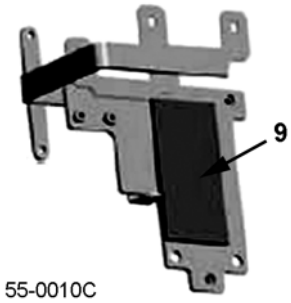



https://truckmanualshub.com/

ELECTRICAL - E/G HARNESS / RELAYS - K21/K25 MODELS - S/N 200001A~ (E/G HARNESS, RELAY BOX & FUSE BOX)

Item	Part Number	Description	Qty	
1	3EB-56-A7420	BRACKET	1	
2	3EB-56-A7430	BRACKET	1	
3	3EB-55-A7270	SCREW	4	
4	3EB-55-23340	GROMMET	1	
5	NOT USED			
6	3EB-55-A7313	E/G HARNESS (LP ONLY)	1	
7	3EB-55-A7713	E/G HARNESS (GAS ONLY)	1	
8	3EB-55-A7913	E/G HARNESS (DUAL-FUEL)	1	
9	3EB-56-A7590	SPONGE (SEE DETAIL)	1	
10	3EB-55-31130	RELAY (SEE DETAIL)	1	
11	01023-10612	SCREW (SEE DETAIL)	1	
12	3EA-55-39670	RELAYS (K.O.P.S.)	6	

https://truckmanualshub.com/

ELECTRICAL - K.O.P.S. RELAYS - K21/K25 MODELS - S/N 200001A~ (OPERATOR PRESENCE SYSTEM)

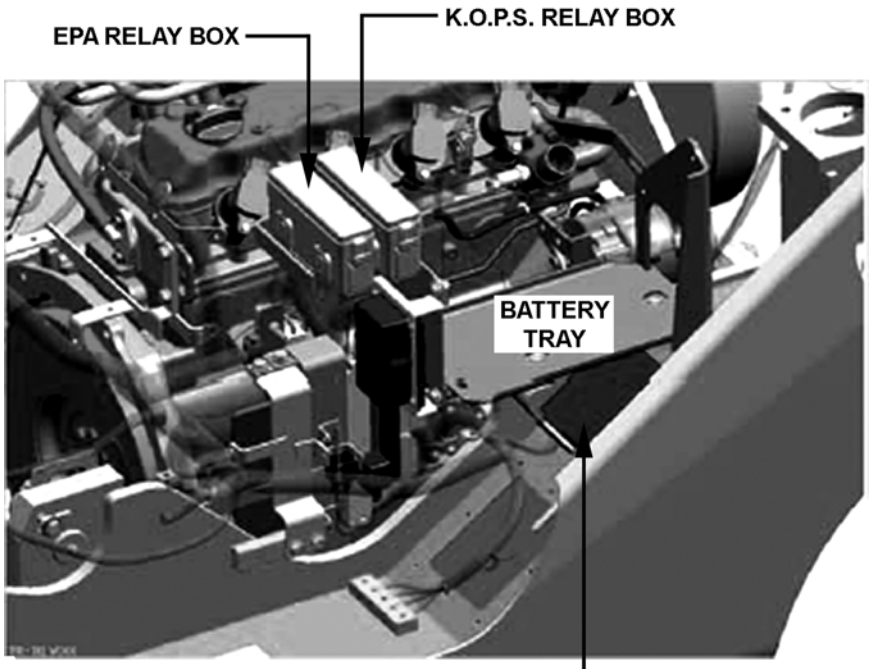

55-0011

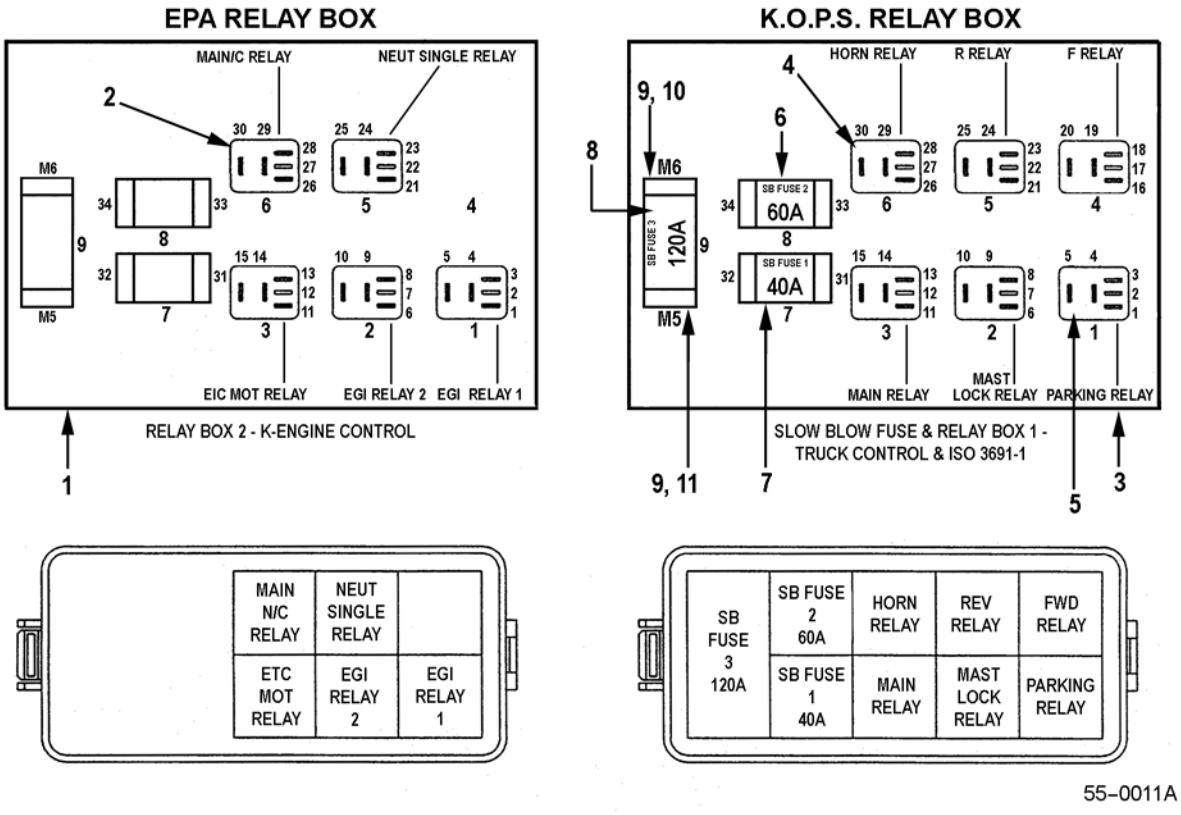

55-0011A

https://truckmanualshub.com/

ELECTRICAL - K.O.P.S. RELAYS - K21/K25 MODELS - S/N 200001A~ (OPERATOR PRESENCE SYSTEM)

Item	Part Number	Description	Qty	
1	3EB-55-41230	RELAY BOX ASSY (EPA)	1	
2	3EB-55-41450	RELAY (ALL SAME IN RELAY BOX 2)	5	
3	3EB-55-41230	RELAY BOX ASSY (K.O.P.S.)	1	
4	3EB-55-41450	RELAY	5	
5	3EB-55-51760	PARKING RELAY	1	
6	37B-1EK-4030	SB FUSE 2 (60 AMP)	1	
7	37B-1EK-4010	SB FUSE 1 (40 AMP)	1	
8	37B-1EL-4020	SB FUSE 3 (120 AMP)	1	
9	01023-10508	SCREW	2	
10	01640-20610	WASHER	1	
11	01640-20508	WASHER	1	

https://truckmanualshub.com/

ELECTRICAL - BONNET SUB-ASSY - ALL MODELS - S/N 200001A~



https://truckmanualshub.com/

ELECTRICAL - BONNET SUB-ASSY - ALL MODELS - S/N 200001A~

Item	Part Number	Description	Qty	
1	3EB-55-A7671	HARNESS, SEAT SWITCH	1	
2	3EB-55-23340	GROMMET	1	

https://truckmanualshub.com/

ELECTRICAL - DASHBOARD - K21/K25 MODELS - S/N 200001A~ (WITHOUT POWER BRAKES)

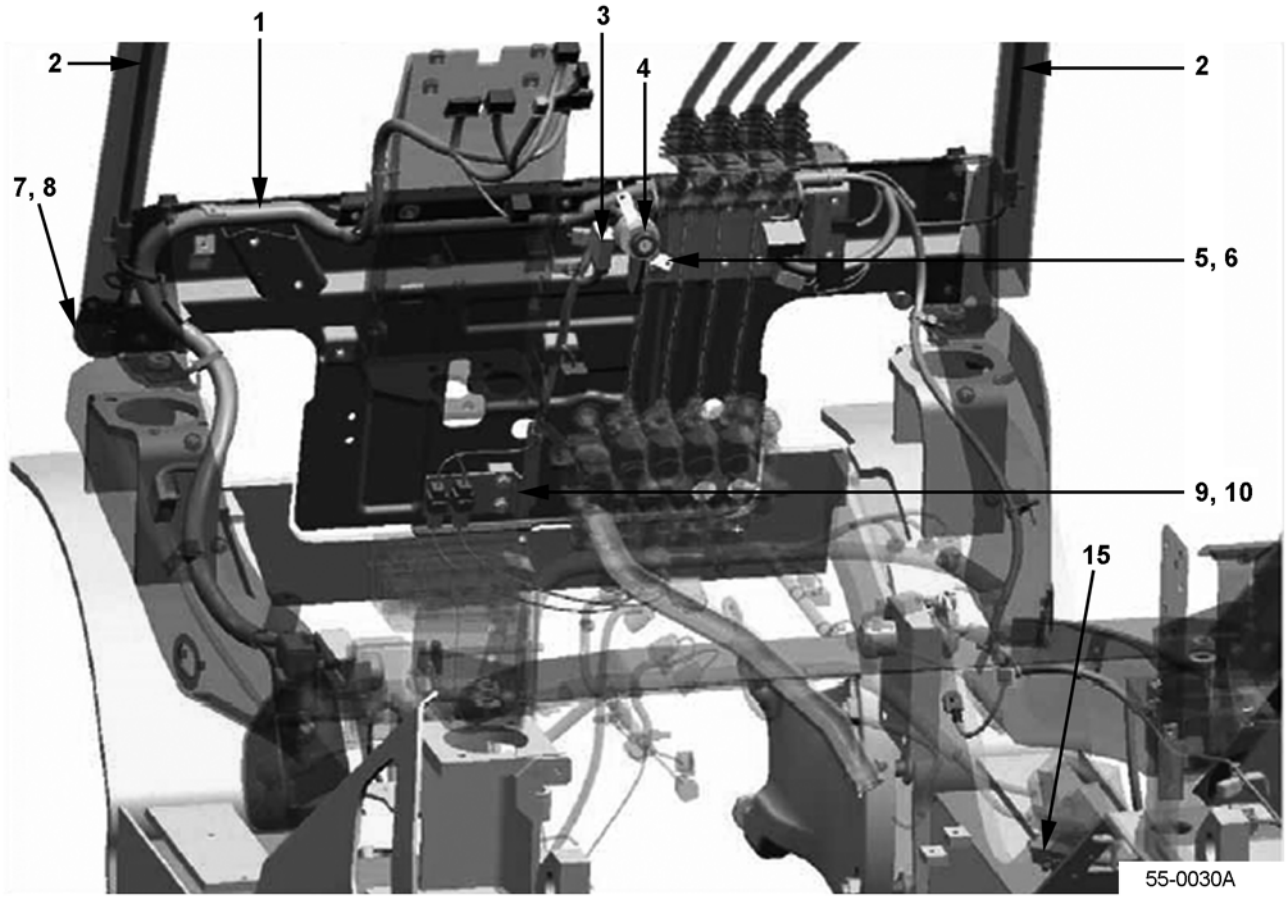

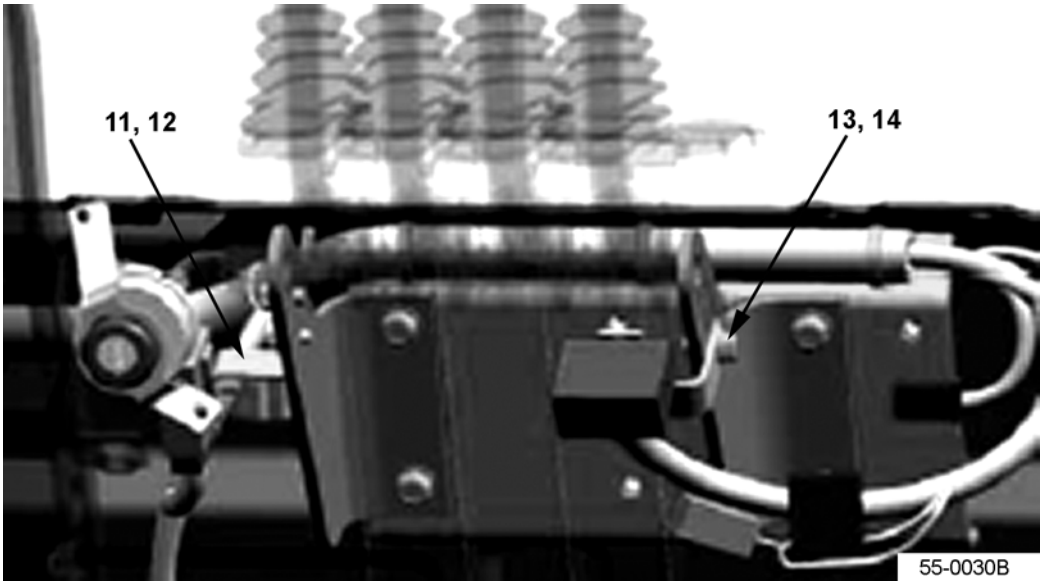

https://truckmanualshub.com/

ELECTRICAL - DASHBOARD - K21/K25 MODELS - S/N 200001A~ (WITHOUT POWER BRAKES)

Item	Part Number	Description	Qty	
1	3EA-55-A7411	DASHBOARD HARNESS	1	
2	3EB-55-A7321	HARNESS, HEAD LAMP	2	
3	3EB-55-A7170	HARNESS	1	
4	3EB-55-A3621	SWITCH SUB-ASSY	1	
5	3EB-55-A7290	PLATE	1	
6	01370-00410	SCREW	2	
7	3EB-55-41271	HORN	1	
8	01435-00816	BOLT	1	
9	3EB-55-A7420	BRACKET	1	
10	01024-80816	BOLT	2	
11	3EB-55-A7480	PLATE	1	
12	01024-80612	BOLT	2	
13	3EA-55-A7440	PLATE	1	
14	01024-80616	BOLT	1	
15	3EB-55-A7430	WIRE (JUMPER)	1	

https://truckmanualshub.com/

ELECTRICAL - DASHBOARD - K25 MODELS - S/N 200001A~ (WITH POWER BRAKES)

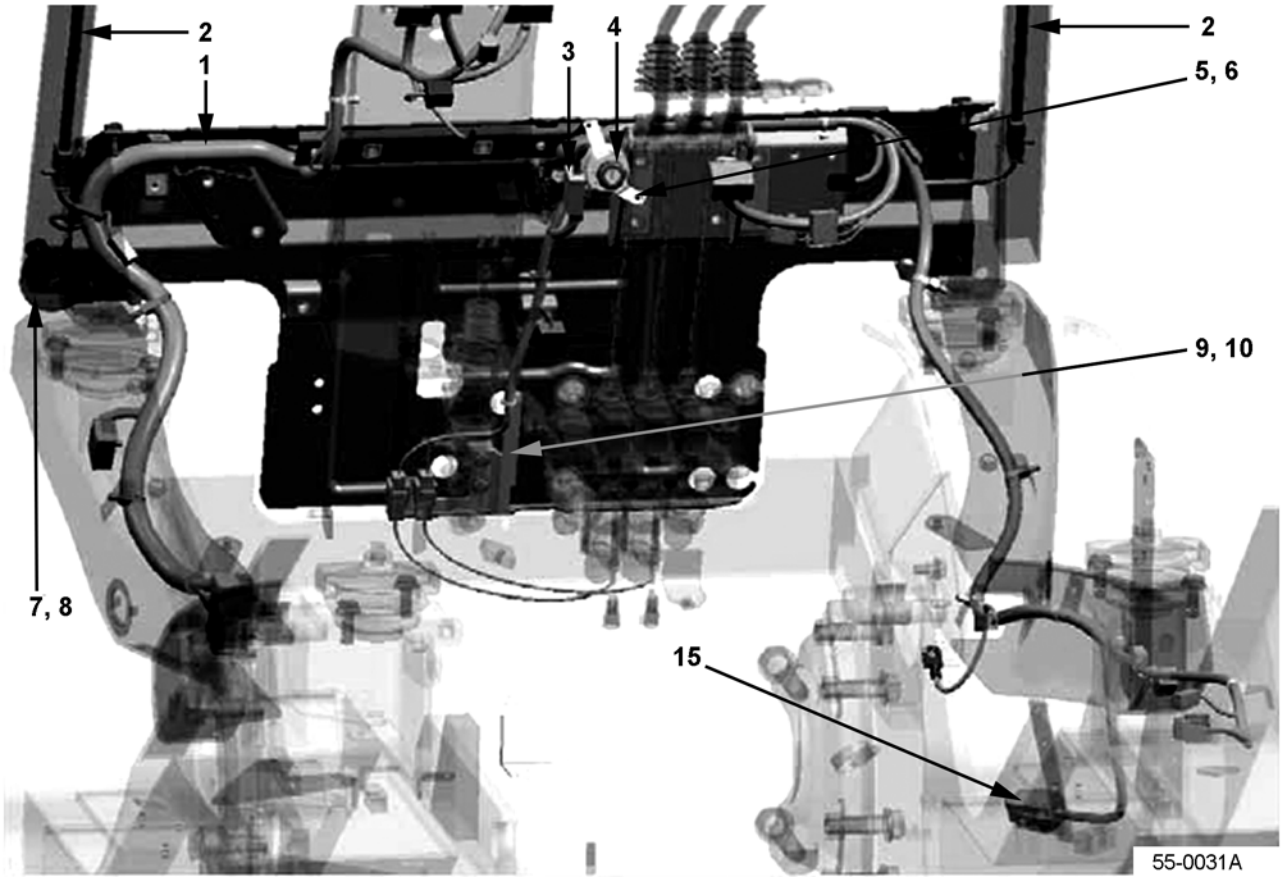

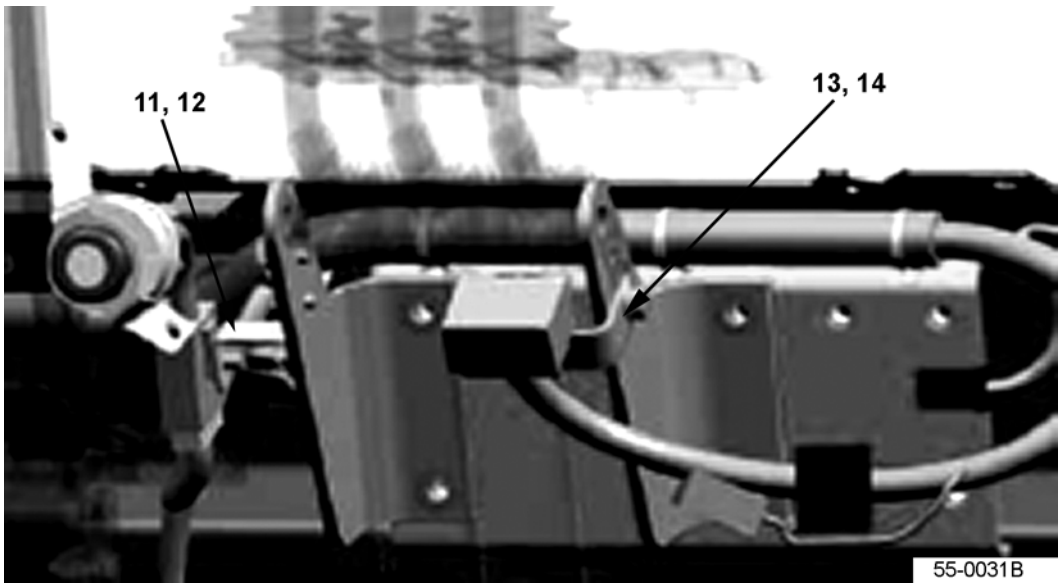

https://truckmanualshub.com/

ELECTRICAL - DASHBOARD - K25 MODELS - S/N 200001A~ (WITH POWER BRAKES)

Item	Part Number	Description	Qty	
1	3EA-55-A7411	DASHBOARD HARNESS (3.2T, 3.5T PNEUMATIC W/ POWER BRAKES)	1	
2	3EB-55-A7321	HARNESS, HEAD LAMP	2	
3	3EB-55-A7170	HARNESS	1	
4	3EB-55-A3621	SWITCH SUB-ASSY	1	
5	3EB-55-A7290	PLATE	1	
6	01370-00410	SCREW	2	
7	3EB-55-41271	HORN	1	
8	01435-00816	BOLT	1	
9	3EB-55-A7440	BRACKET	1	
10	01024-80816	BOLT	2	
11	3EB-55-A7480	PLATE	1	
12	01024-80612	BOLT	2	
13	3EA-55-A7440	PLATE	1	
14	01024-80616	BOLT	1	
15	3EB-55-A7430	WIRE (JUMPER)	1	

https://truckmanualshub.com/

ELECTRICAL - K21/K25 UL-S (GS & LPS) MODELS - S/N 200001A~
(ALSO SEE FIG. 55-0041)

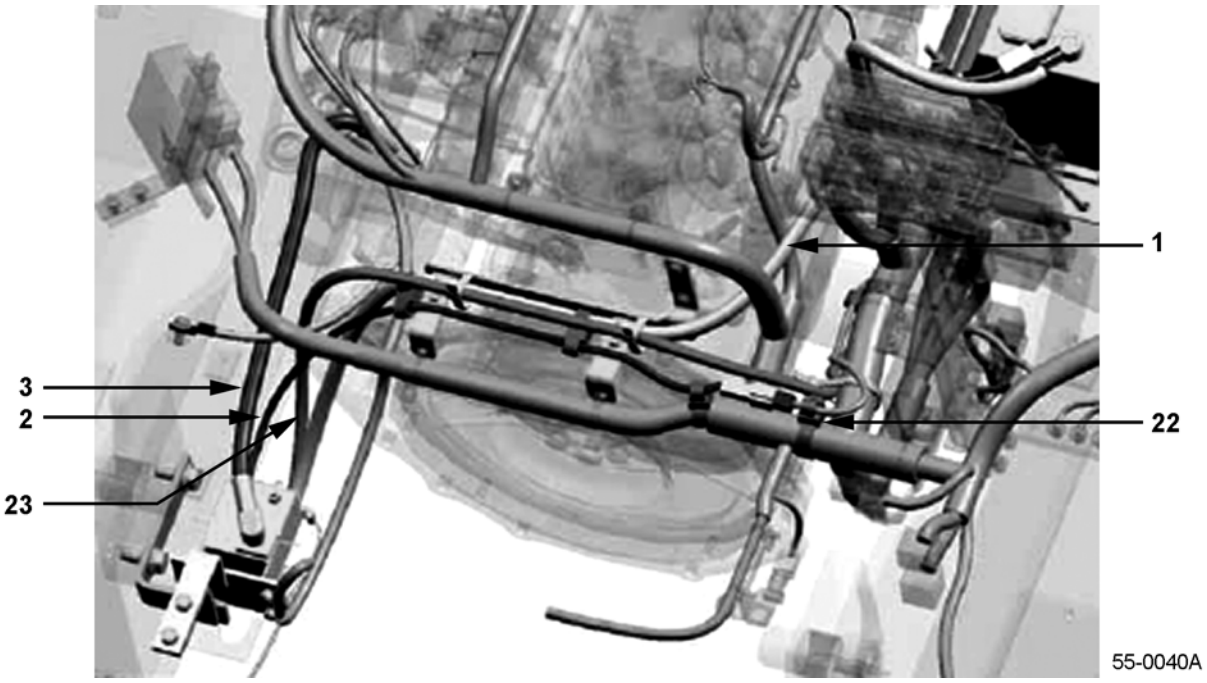

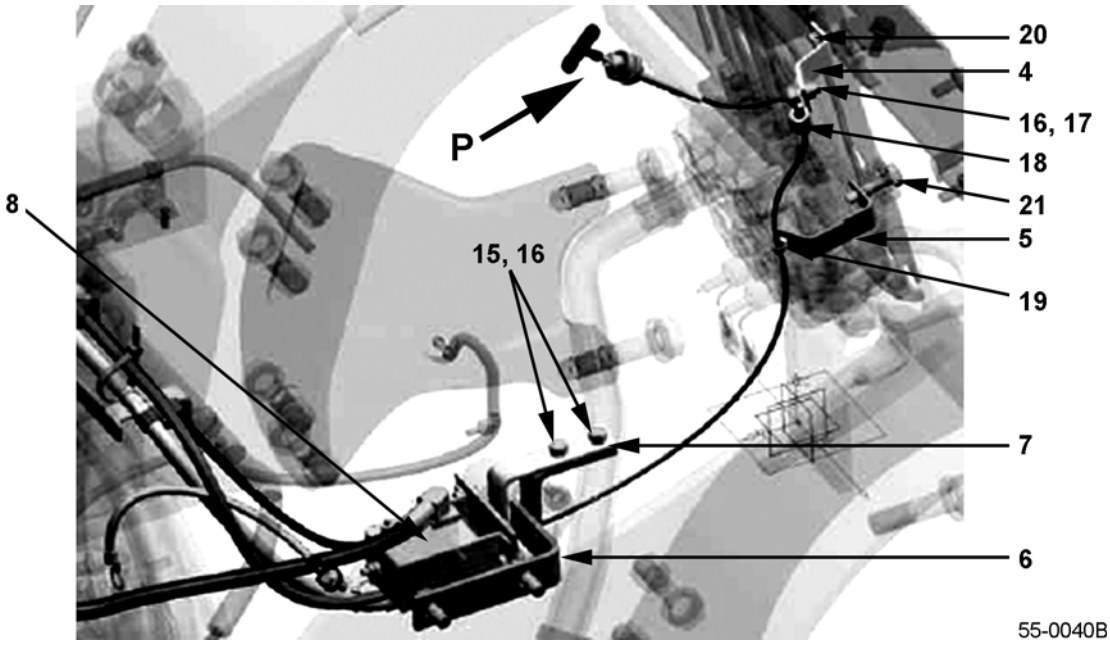

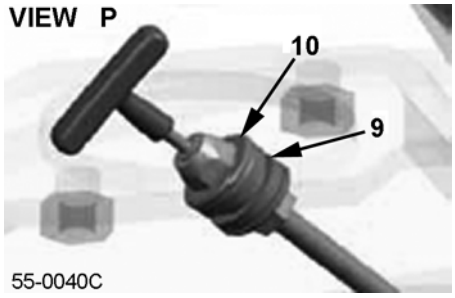

https://truckmanualshub.com/

ELECTRICAL - K21/K25 UL-S (GS & LPS) MODELS - S/N 200001A~ (ALSO SEE FIG. 55-0041)

Item	Part Number	Description	Qty	
1	37A-1LH-2371	CABLE (+)	1	
2	37B-1LJ-A710	WIRE (UL-S)	1	
3	37A-1LM-2010	CABLE	1	
4	3EB-56-A7460	BRACKET	1	
5	3EB-56-A7470	PLATE	1	
6	3EB-56-A7480	BRACKET	1	
7	3EB-56-A7490	BRACKET	1	
8	3EB-56-A5210	BATTERY CUT SWITCH	1	
9	3EB-56-F5210	GROMMET	1	
10	01640-21223	WASHER	2	
11	02215-10406	NUT	3	
12	01602-20720	WASHER	3	
13	01010-81230	BOLT	2	
14	01643-31232	WASHER	2	
15	01010-80816	BOLT	2	
16	01602-20825	WASHER	3	
17	01010-80820	BOLT	1	
18	04434-51008	CLIP	1	
19	3EB-55-A7940	CLIP	1	
20	01435-00820	BOLT	1	
21	01050-51025	BOLT	1	
22	3EB-55-A7920	CLAMP	5	
23	3EA-56-38650	WIRE	1	
24	01602-20825	WASHER	1	
25	01580-10806	NUT	1	
26	37B-1AE-6030	BAND	5	
27	3EB-56-39220	WIRE	1	
28	01023-10508	SCREW	1	
29	3EB-55-31490	WIRING CLIP	1	

https://truckmanualshub.com/

ELECTRICAL - K21/K25 UL-S (GS & LPS) MODELS - S/N 200001A~ (ALSO SEE FIG. 55-0040)

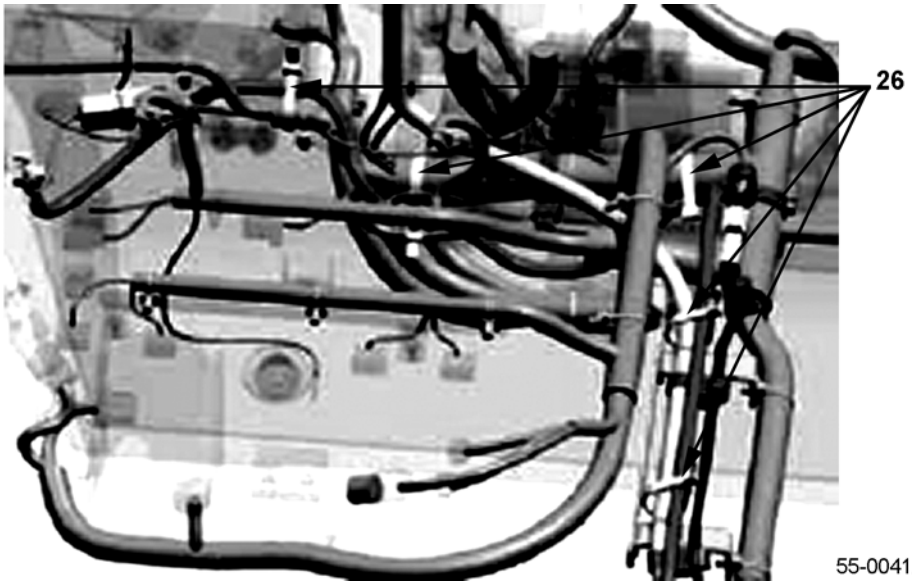

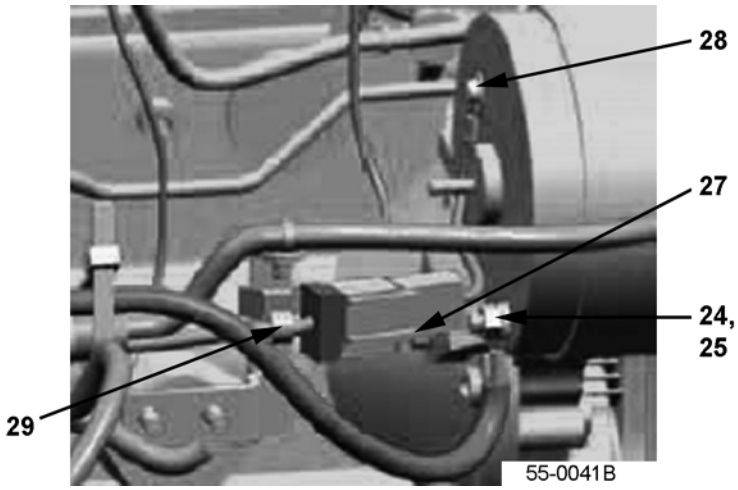

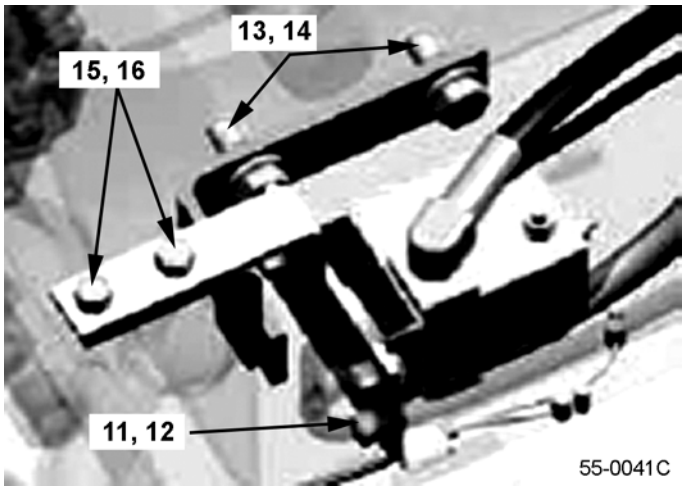

https://truckmanualshub.com/

ELECTRICAL - K21/K25 UL-S (GS & LPS) MODELS - S/N 200001A~ (ALSO SEE FIG. 55-0040)

Item	Part Number	Description	Qty	
1	37A-1LH-2371	CABLE (+)	1	
2	37B-1LJ-A710	WIRE (UL-S)	1	
3	37A-1LM-2010	CABLE	1	
4	3EB-56-A7460	BRACKET	1	
5	3EB-56-A7470	PLATE	1	
6	3EB-56-A7480	BRACKET	1	
7	3EB-56-A7490	BRACKET	1	
8	3EB-56-A5210	BATTERY CUT SWITCH	1	
9	3EB-56-F5210	GROMMET	1	
10	01640-21223	WASHER	2	
11	02215-10406	NUT	3	
12	01602-20720	WASHER	3	
13	01010-81230	BOLT	2	
14	01643-31232	WASHER	2	
15	01010-80816	BOLT	2	
16	01602-20825	WASHER	3	
17	01010-80820	BOLT	1	
18	04434-51008	CLIP	1	
19	3EB-55-A7940	CLIP	1	
20	01435-00820	BOLT	1	
21	01050-51025	BOLT	1	
22	3EB-55-A7920	CLAMP	5	
23	3EA-56-38650	WIRE	1	
24	01602-20825	WASHER	1	
25	01580-10806	NUT	1	
26	37B-1AE-6030	BAND	5	
27	3EB-56-39220	WIRE	1	
28	01023-10508	SCREW	1	
29	3EB-55-31490	WIRING CLIP	1	

https://truckmanualshub.com/

ALTERNATOR - K21/K25 MODELS - S/N 200001A~

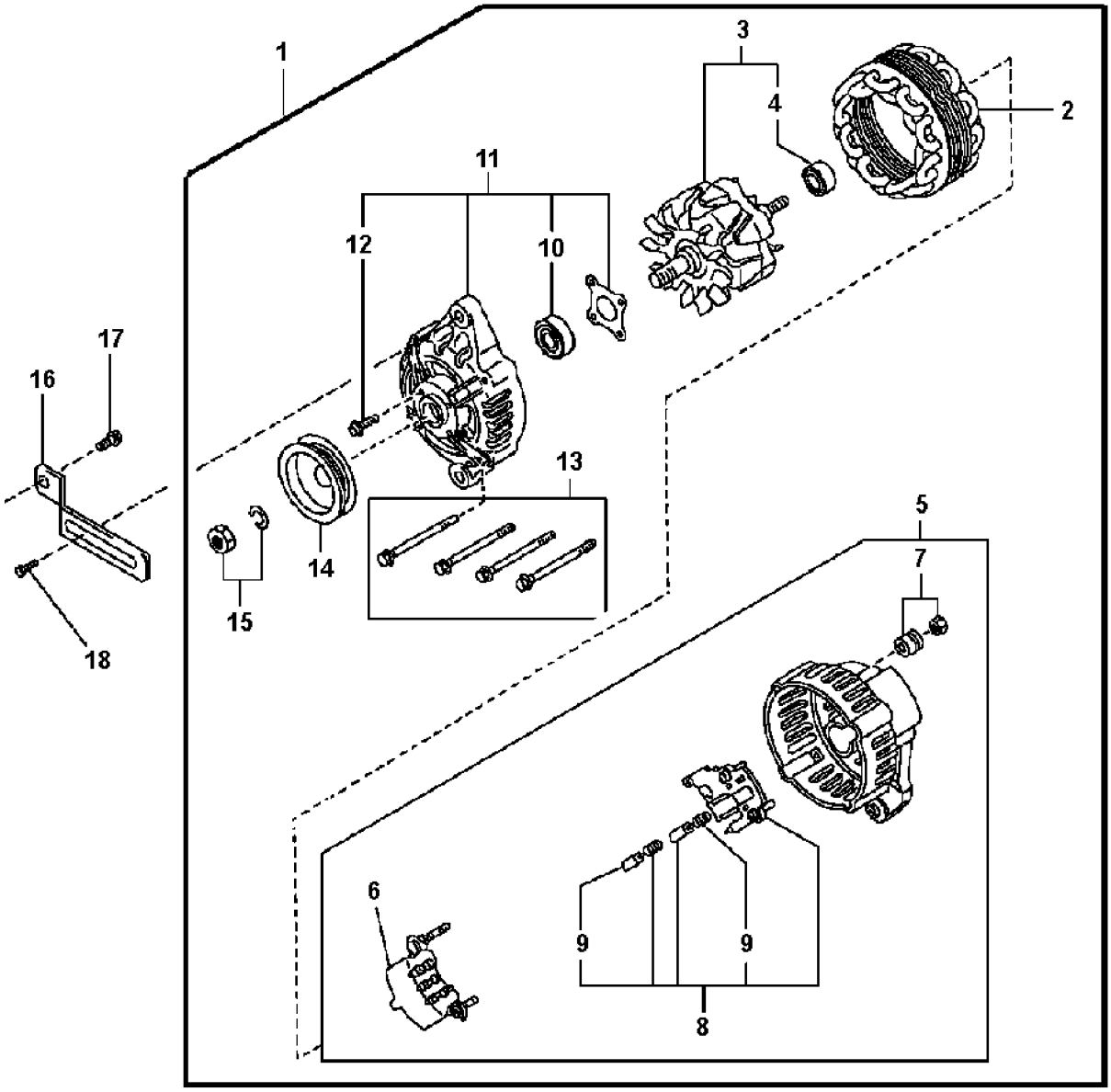

55-0100A

https://truckmanualshub.com/

ALTERNATOR - K21/K25 MODELS - S/N 200001A~

Item	Part Number	Description	Qty	
1	23100-FU410	ALTERNATOR (K21/K25 GAS/LP & DUAL-FUEL)	1	
	23100-GY360	ALTERNATOR (K21/K25 UL-GS, UL-LS) (**MUST** USE WITH FAN BELT 02117-22023 FOR STATIC REDUCTION)	1	
2	23102-50K15	. STATOR ASSY (K21/K25 GAS/LP & DUAL-FUEL)	1	
	23102-GY360	. STATOR ASSY (K21/K25 UL-GS, UL-LS)	1	
3	23108-50K15	. ROTOR (K21/K25 GAS/LP & DUAL-FUEL) . . .	1	
	23108-GY360	. ROTOR (K21/K25 UL-GS, UL-LS)	1	
4	23120-30R10	. . BEARING, BALL	1	
5	23127-FF110	. COVER ASSY, REAR (K21/K25 GAS/LP & DUAL-FUEL)	1	
	23127-GY360	. COVER ASSY, REAR (K21/K25 UL-GS, UL-LS)	1	
6	23124-FF110	. . RECTIFIER ASSY (K21/K25 GAS/LP & DUAL-FUEL)	1	
	23124-GY360	. . RECTIFIER ASSY (K21/K25 UL-GS, UL-LS)	1	
7	23156-08000	. . NUT, SET	1	
8	23215-3S416	. . REGULATOR, IC (K21/K25 GAS/LP & DUAL-FUEL)	1	
	23215-GY360	. . REGULATOR, IC (K21/K25 UL-GS, UL-LS).	1	
9	23142-0B000	. . . BRUSH, F	1	
10	23118-47N10	. COVER ASSY, FRONT (K21/K25 GAS/LP & DUAL-FUEL)	1	
	23118-GY360	.COVER ASSY, FRONT (K21/K25 UL-GS, UL-LS)	1	
11	23120-22J20	. . BEARING, BALL	1	
12	23115-47N10	. . SCREW, SET (K21/K25 GAS/LP & DUAL-FUEL)	1	
	23115-20P10	. SCREW, SET (K21/K25 UL-GS, UL-LS)	1	
13	23131-20P10	. BOLT, THROUGH	4	
14	23150-FU410	. PULLEY ASSY (K21/K25 GAS/LP & DUAL-FUEL)	1	
	23150-GY360	. PULLEY ASSY (K21/K25 UL-GS, UL-LS)	1	
15	23153-70T12	. NUT ASSY, PULLEY.	1	
16	11715-FU400	. HOLDER	1	
17	08124-0201F	. BOLT	1	
18	08120-8201F	. BOLT	1	
N/S	02117-23021	FAN BELT (K21)	1	
N/S	02117-21521	FAN BELT (K25)	1	
N/S	02117-22023	FAN BELT (UL-GS, UL-LS) (**MUST** USE WITH ALTERNATOR 23100-GY360 FOR STATIC REDUCTION)	1	
NS	11715-FU400	BAR, ADJUSTING	1	

https://truckmanualshub.com/

STARTER - K21/K25 MODELS - S/N 200001A~

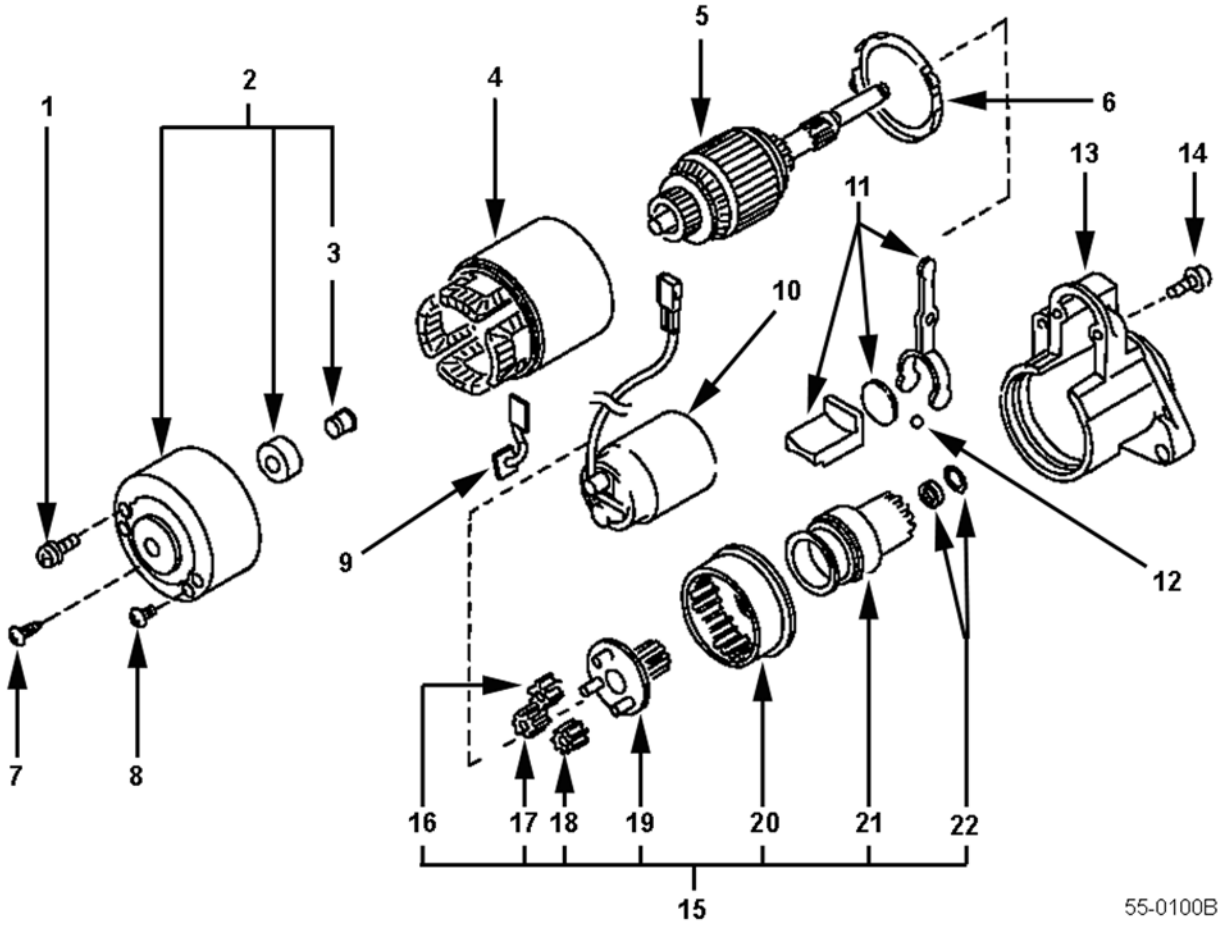

https://truckmanualshub.com/

STARTER - K21/K25 MODELS - S/N 200001A~

Item	Part Number	Description	Qty	
	23300-FU410	STARTER MOTOR	1	
1	23340-0M210	BOLT - THROUGH (STARTER-TO-ENGINE)	1	
2	23337-0W011	COVER ASSY - REAR	1	
3	23338-01N10	.COVER - METAL - REAR	1	
4	23302-6J010	YOKE	1	
5	23310-0M210	ARMATURE ASSY	1	
6	23385-50Y12	PACKING	1	
7	23480-M0110	SCREW SET - 5 X 8.5 (2 EACH)	1	
8	23480-M0110	SCREW SET - 6 X 23 (2 EACH)	1	
9	23381-FU410	BRUSH SET	1	
10	23343-FU410	SWITCH ASSY - MAGNETIC	1	
11	23322-50Y12	LEVER SET - SHIFT	1	
12	23325-42L70	BEARING	1	
13	23318-FU410	CASE ASSY - GEAR	1	
14	23480-M0110	SCREW SET - 6 X 23 (2 EACH)	1	
15	23312-0W010	PINION ASSY	1	
16	23361-42L70	.GEAR	1	
17	23361-42L70	.GEAR	1	
18	23361-42L70	.GEAR	1	
19	23312-1S710	.PINION ASSY	1	
20	23360-0M210	.GEAR & SHAFT SET	1	
21	23354-W9810	.CLUTCH ASSY	1	
22	23465-W9810	.STOPPER SET - PINION	1	
NS	23110-GY360	SPACER	AR	
NS	08911-1401G	NUT (WIRE AT MAGNETIC SWITCH)	1	
NS	08124-0251F	BOLT - THROUGH (ENGINE-TO-STARTER)	1	

https://truckmanualshub.com/

HEAD LAMP - S/N 200001A~

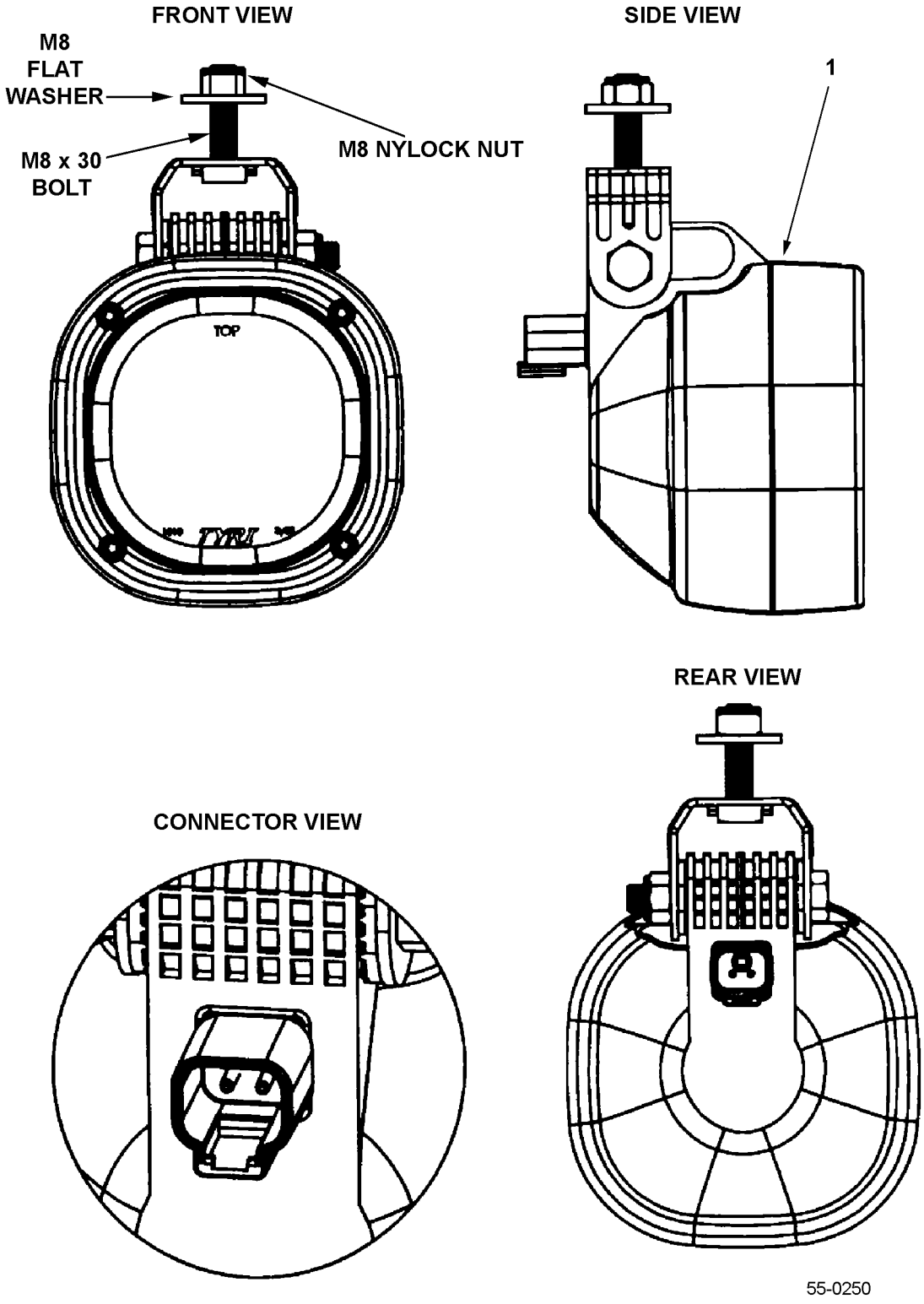

https://truckmanualshub.com/

HEAD LAMP - S/N 200001A~

Item	Part Number	Description	Qty	
1	3EB-55-A6260	HEAD LAMP (12V)	2	
N/S	3EB-55-38181	COVER	4	
N/S	3EB-55-A5112	BULB (12V).	2	

https://truckmanualshub.com/

REAR "LED" COMBINATION LAMP - S/N 200001A~

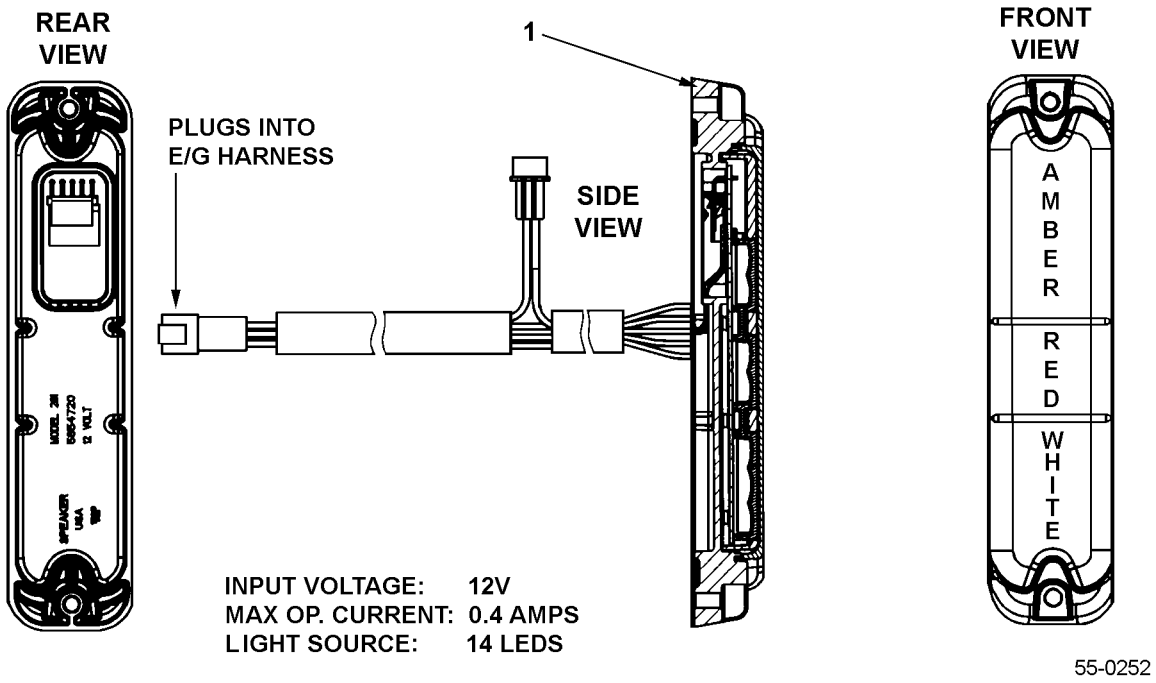

https://truckmanualshub.com/

REAR "LED" COMBINATION LAMP - S/N 200001A~

Item	Part Number	Description	Qty	
1	3EB-55-A7720	REAR LED COMB. LAMP (12V).	2	

https://truckmanualshub.com/

ELECTRICAL - ENGINE CONTROL UNIT (ECU) - K21/K25 MODELS - S/N 200001A~

ECM - K21/K25

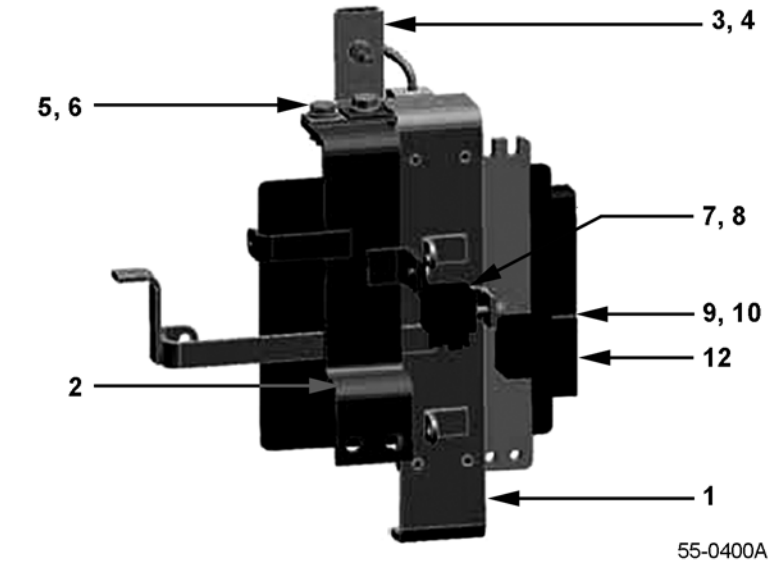

55-0400A

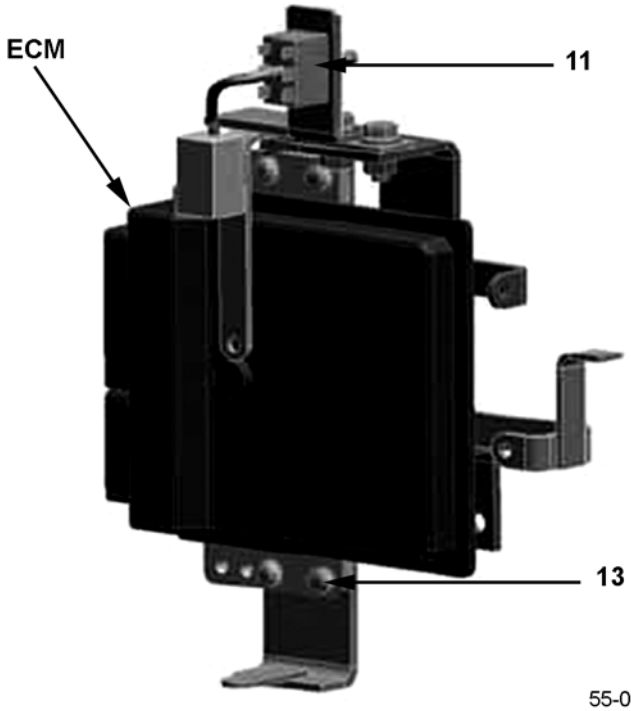

55-0400B

https://truckmanualshub.com/

ELECTRICAL - ENGINE CONTROL UNIT (ECU) - K21/K25 MODELS - S/N 200001A~

Item	Part Number	Description	Qty	
	37B-1DD-5210	ECU ASSY (K21 ONLY)	1	
	37B-1DD-5220	ECU ASSY (K25 ONLY)	1	
1	3EB-55-A7121	BRACKET	1	
2	3EB-55-A7250	BRACKET	1	
3	3EB-56-A7390	BRACKET (G / LP)	1	
4	3EB-55-A7980	NAME PLATE (G / LP)	1	
5	01010-80820	BOLT	2	
6	01643-30823	WASHER	2	
7	3EB-55-31270	RELAY	1	
8	01023-10508	SCREW	1	
9	3EB-55-31260	PLATE	1	
10	01023-10612	SCREW	1	
11	3EB-55-A7681	HARNESS	1	
12	25230-C9971	HEATER RELAY	1	
13	01023-10612	SCREW	4	

https://truckmanualshub.com/

LP DRIVER / SSC SPEED CONTROL - K21/K25 MODELS - S/N 200001A~

LPG DRIVER

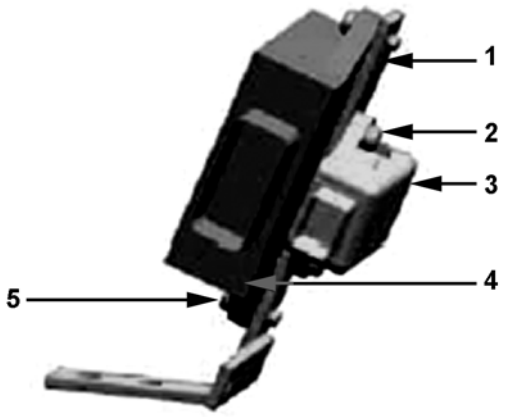

55-0410

https://truckmanualshub.com/

LP DRIVER / SSC SPEED CONTROL - K21/K25 MODELS - S/N 200001A~

Item	Part Number	Description	Qty	
1	22710-FU460	LPG SWITCHING MODULE.	1	
2	01023-10612	SCREW.	2	
3	37B-1DG-5320	SSC SPEED CONTROL MODULE (PNEUMATIC)	1	
	37B-1DG-5330	SSC SPEED CONTROL MODULE (CUSHION)	1	
4	3EB-55-A7830	PLATE.	1	
5	01023-10620	SCREW.	2	
N/S	01010-80816	BOLT (MOUNT TO FRAME - RIGHT SIDE). . . .	2	
N/S	01643-30823	WASHER (MOUNT TO FRAME - RIGHT SIDE)	2	

https://truckmanualshub.com/

ELECTRICAL - K.O.P. SYSTEM CONTROLLER - S/N 200001A~ (KOMATSU OPERATOR PRESENCE SYSTEM)

MOUNTED TO FRAME - LEFT SIDE

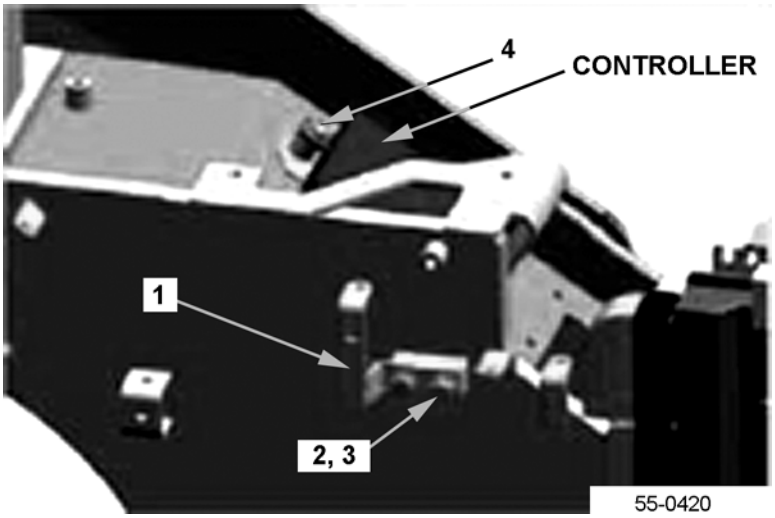

https://truckmanualshub.com/

ELECTRICAL - K.O.P. SYSTEM CONTROLLER - S/N 200001A~ (KOMATSU OPERATOR PRESENCE SYSTEM)

Item	Part Number	Description	Qty	
	3EB-55-51711	CONTROLLER, K.O.P. SYSTEM	1	
1	3EB-55-A7510	BRACKET	1	
2	01010-80820	BOLT	2	
3	01643-30823	WASHER	2	
4	01435-00812	BOLT	3	

https://truckmanualshub.com/

ELECTRICAL - ENGINE HARNESS - 4D94LE MODELS - S/N 200001A~

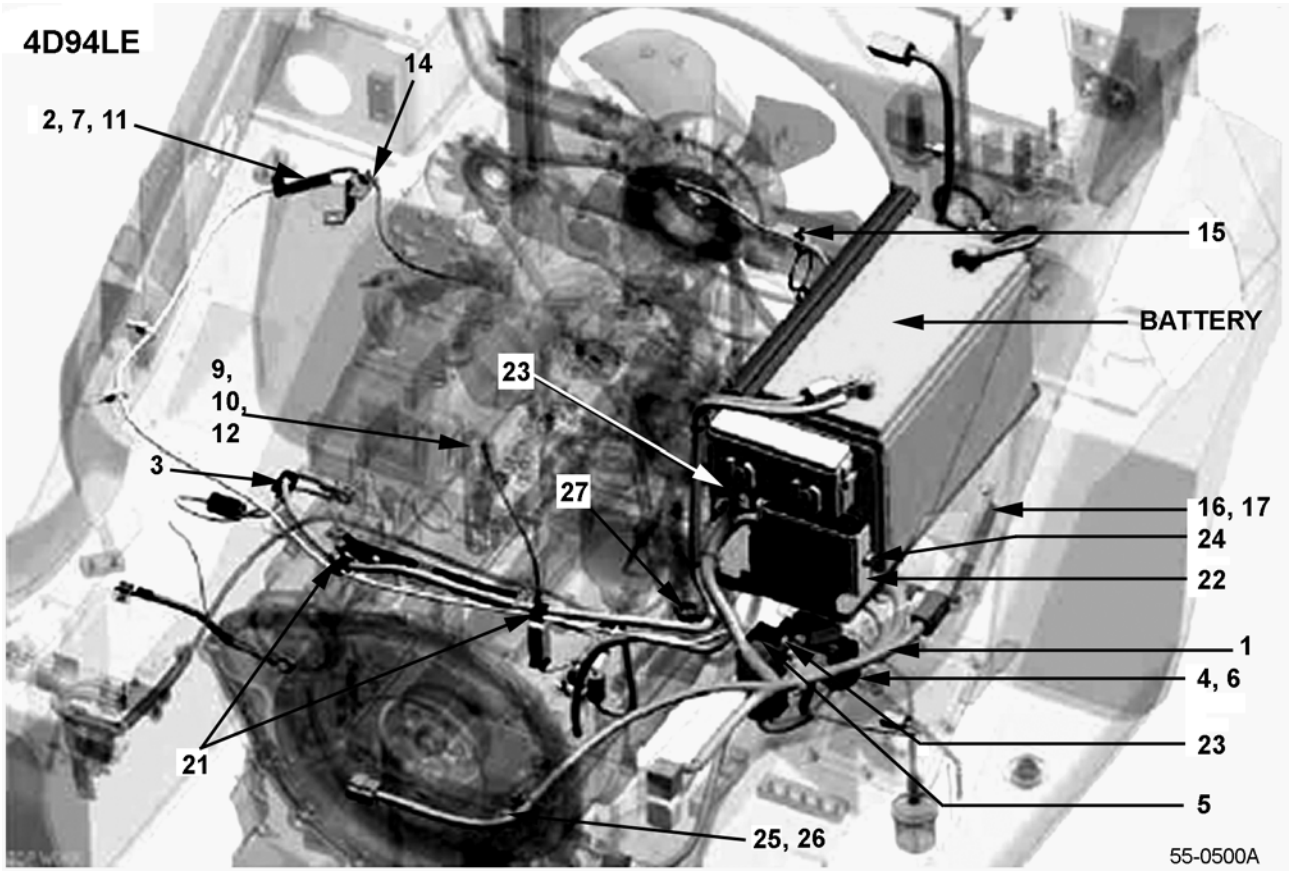

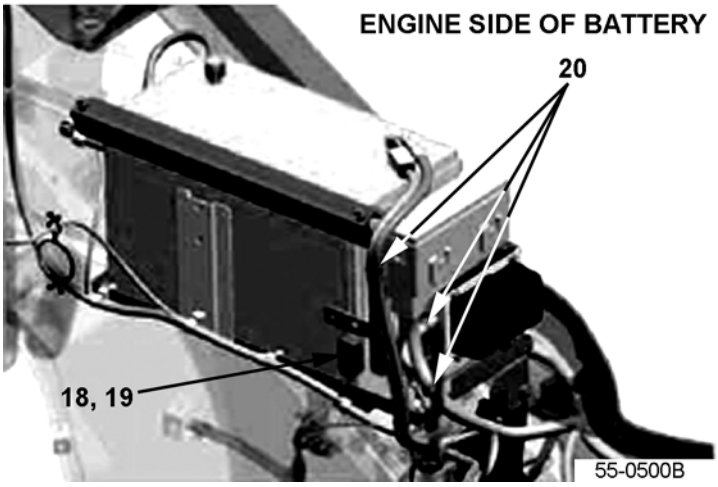

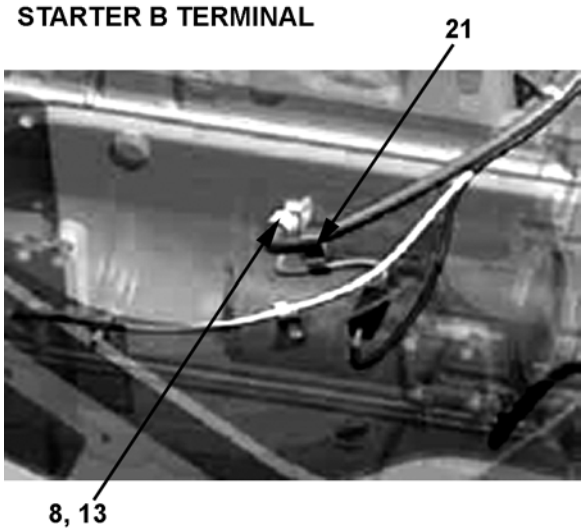

https://truckmanualshub.com/

ELECTRICAL - ENGINE HARNESS - 4D94LE MODELS - S/N 200001A~

Item	Part Number	Description	Qty	
1	3EB-55-A7612	ENGINE HARNESS	1	
2	3EB-55-A7620	WIRE	1	
3	3EB-55-A7690	WIRE	1	
4	3EB-55-31270	RELAY	1	
5	01023-10614	SCREW	1	
6	01023-10514	SCREW	1	
7	01580-10504	NUT	1	
8	01580-10806	NUT	1	
9	01580-10403	NUT	1	
10		SCREW	1	
11	01601-20513	WASHER	1	
12	01601-20410	WASHER	1	
13	01602-20825	WASHER	1	
14	3EB-55-41461	PLATE	1	
15	37B-1EP-4020	LOCK	1	
16	3EB-55-51710	CONTROLLER	1	
17	01435-00812	BOLT	3	
18	3EB-55-31130	RELAY	1	
19	01023-10612	SCREW	1	
20	3EB-55-A7940	CLIP	3	
21	3EB-55-A7920	CLAMP	3	
22	3EB-56-A7320	BRACKET	1	
23	3EB-55-A7270	SCREW	4	
24	01024-80812	BOLT	2	
25	3EB-55-55330	PLATE	1	
26	01435-00812	BOLT	1	
27	3EB-05-A7610	CLIP	1	

https://truckmanualshub.com/

ELECTRICAL - ATTACHMENTS - BATTERY - 4D94LE MODELS - S/N 200001A~

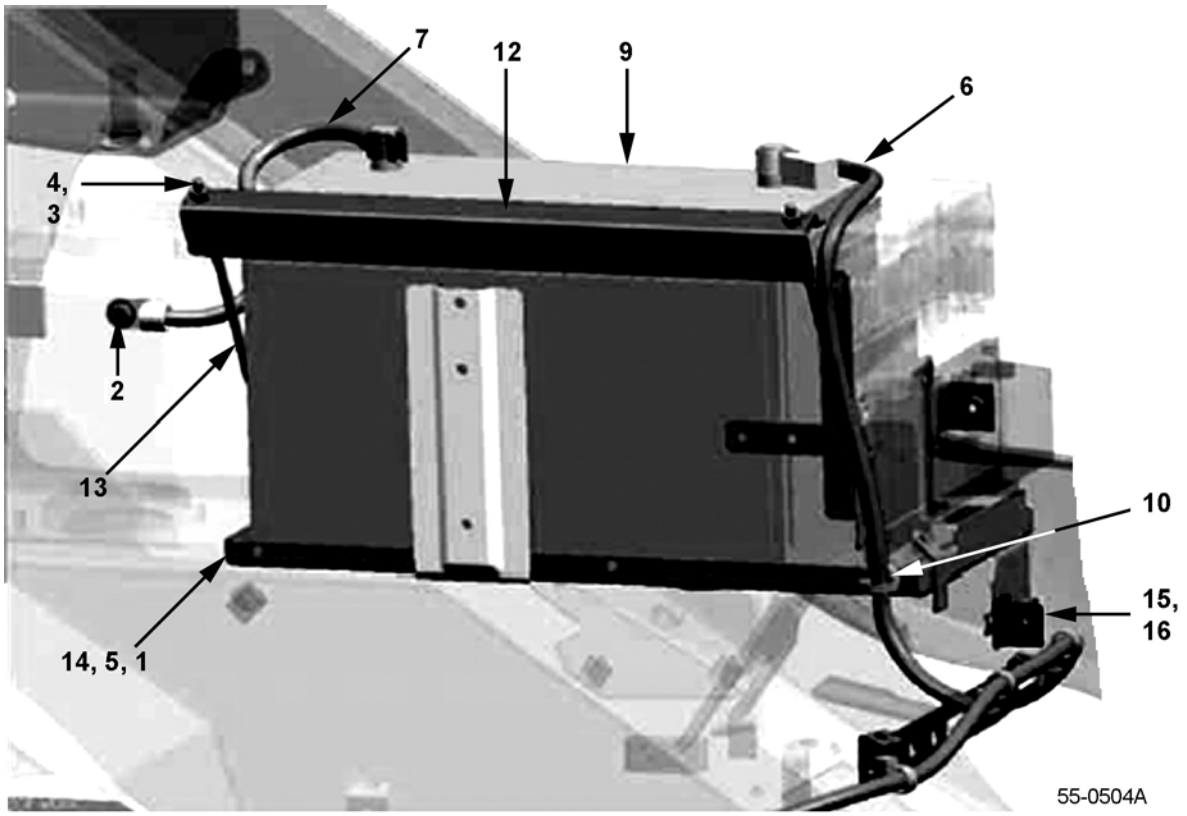



https://truckmanualshub.com/

ELECTRICAL - ATTACHMENTS - BATTERY - 4D94LE MODELS - S/N 200001A~

Item	Part Number	Description	Qty	
1	01010-80812	BOLT	2	
2	01435-00816	BOLT	2	
3	01580-10605	NUT	2	
4	01641-20608	WASHER	2	
5	01643-30823	WASHER	2	
6	37B-1LH-A710	CABLE	1	
7	37B-1LK-4010	CABLE	1	
8	3EB-05-41280	CLAMP	2	
9	3EB-55-A2460	BATTERY	1	
10	3EB-55-A7940	CLIP	1	
11	3EB-55-51390	CABLE	1	
12	3EB-56-A7290	BRACKET	1	
13	3EB-55-43430	CLAMP	2	
14	3EB-56-A7310	HOLDER	1	
15	3EB-55-52320	PLATE	1	
16	01024-80612	BOLT	1	

https://truckmanualshub.com/

ELECTRICAL - DASHBOARD - 4D94LE MODELS - S/N 200001A~

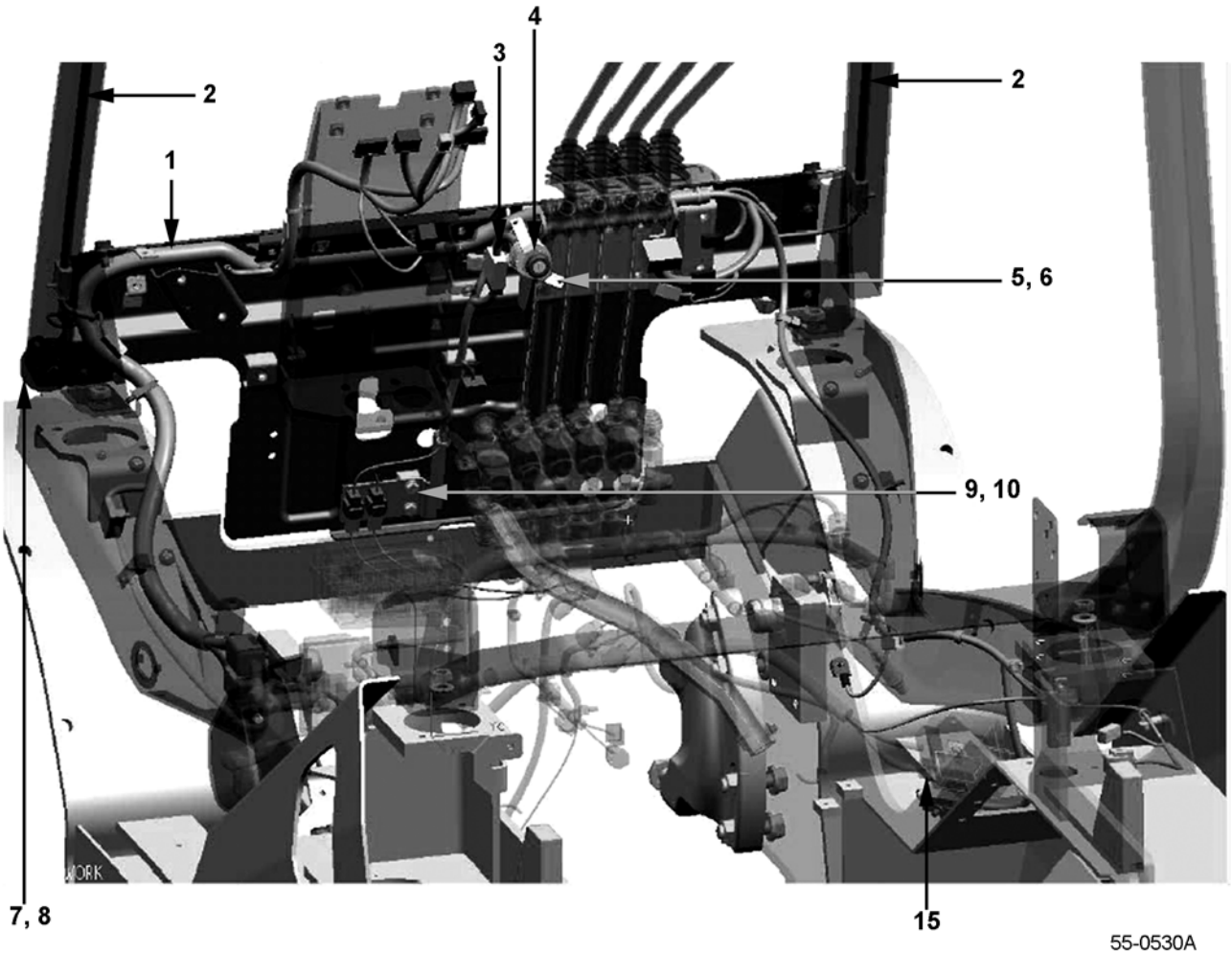

55-0530A

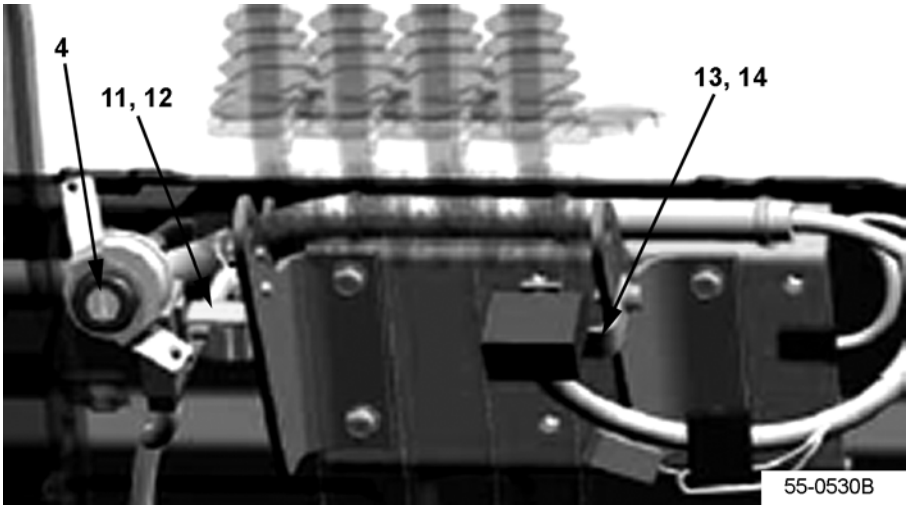

55-0530B

https://truckmanualshub.com/

ELECTRICAL - DASHBOARD - 4D94LE MODELS - S/N 200001A~

Item	Part Number	Description	Qty	
1	3EA-55-A7461	DASHBOARD HARNESS	1	
2	3EB-55-A7321	HARNESS, HEAD LAMP	2	
3	3EB-55-A7170	HARNESS	1	
4	3EB-55-A3621	KEY SWITCH SUB-ASSY	1	
5	3EB-55-A7290	PLATE	1	
6	01370-00410	SCREW	2	
7	3EB-55-41271	HORN	1	
8	01435-00816	BOLT	1	
9	3EB-55-A7420	BRACKET	1	
10	01024-80816	BOLT	2	
11	3EB-55-A7480	PLATE	1	
12	01024-80612	BOLT	2	
13	3EA-55-A7440	PLATE	1	
14	01024-80616	BOLT	1	
15	3EB-55-A7430	WIRE (JUMPER)	1	

https://truckmanualshub.com/

ELECTRICAL - 4D94LE UL-S (DS) MODELS - S/N 200001A~
(ALSO SEE FIG. 55-0541)

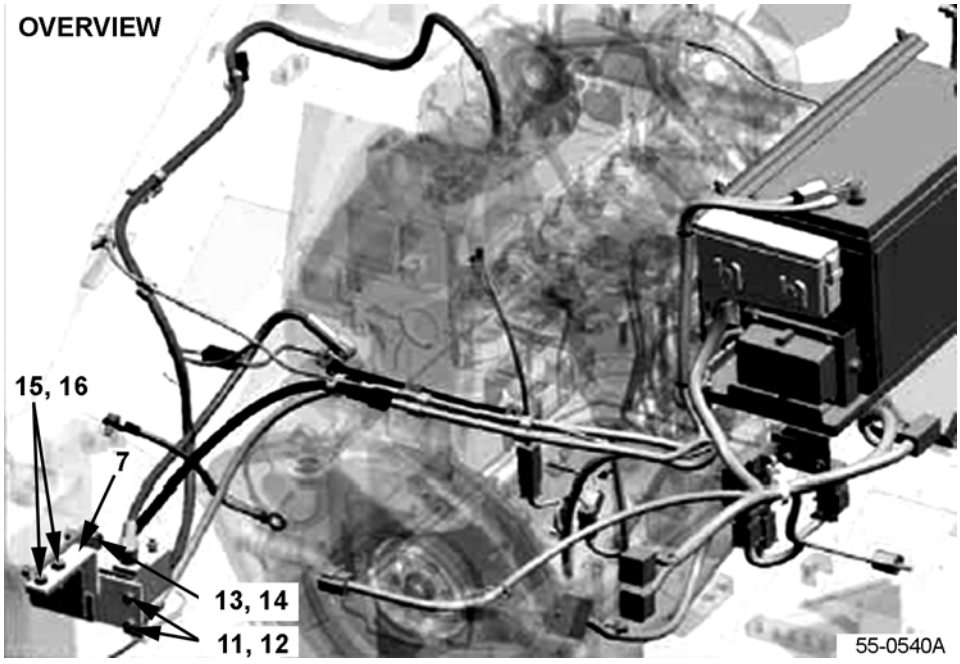

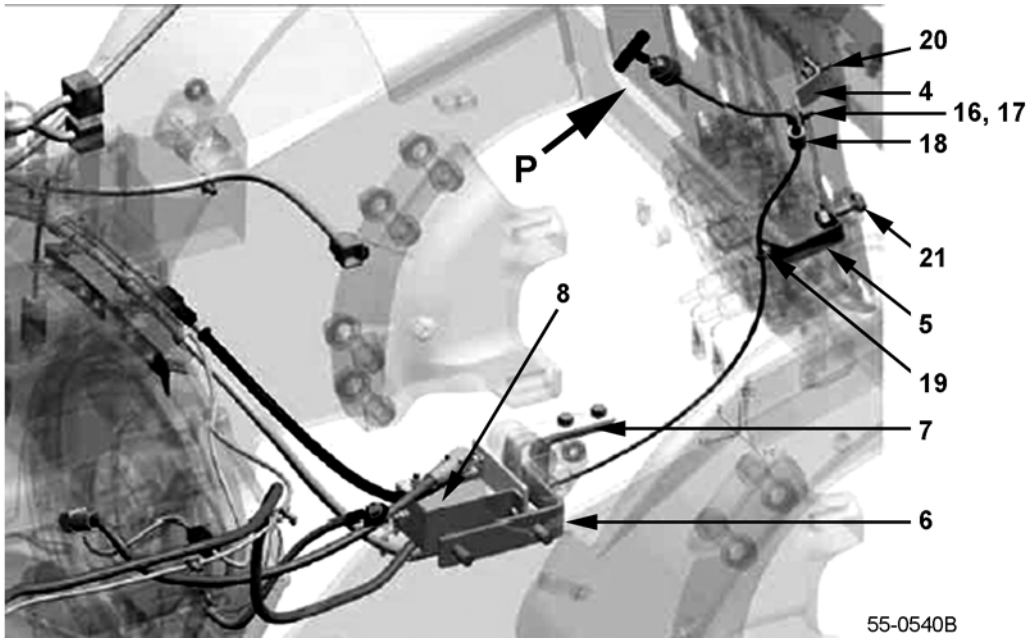

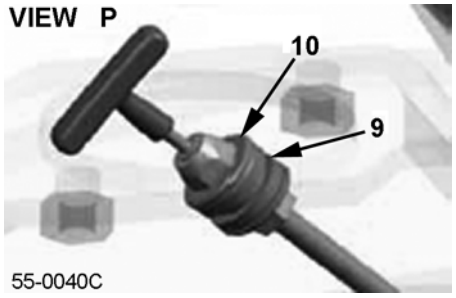

https://truckmanualshub.com/

ELECTRICAL - 4D94LE UL-S (DS) MODELS - S/N 200001A~
(ALSO SEE FIG. 55-0541)

Item	Part Number	Description	Qty	
1	37A-1LH-2361	CABLE (+)	1	
2	37B-1LJ-A720	WIRE (UL-S)	1	
3	37A-1LM-2040	CABLE	1	
4	3EB-56-A7460	BRACKET	1	
5	3EB-56-A7470	PLATE	1	
6	3EB-56-A7480	BRACKET	1	
7	3EB-56-A7490	BRACKET	1	
8	3EB-56-A5210	BATTERY CUT SWITCH	1	
9	3EB-56-F5210	GROMMET	1	
10	01640-21223	WASHER	2	
11	02215-10406	NUT	3	
12	01602-20720	WASHER	3	
13	01010-81230	BOLT	2	
14	01643-31232	WASHER	2	
15	01010-80816	BOLT	2	
16	01602-20825	WASHER	3	
17	01010-80820	BOLT	1	
18	04434-51008	CLIP	1	
19	3EB-55-A7940	CLIP	1	
20	01435-00820	BOLT	1	
21	01050-51025	BOLT	1	
22	3EB-55-A7920	CLAMP	6	
23	3EA-56-38650	WIRE	1	
24	01640-20508	WASHER	2	
25	01601-20513	WASHER	1	
26	01580-10504	NUT	1	

https://truckmanualshub.com/

ELECTRICAL - 4D94LE UL-S (DS) MODELS - S/N 200001A~
(ALSO SEE FIG. 55-0540)

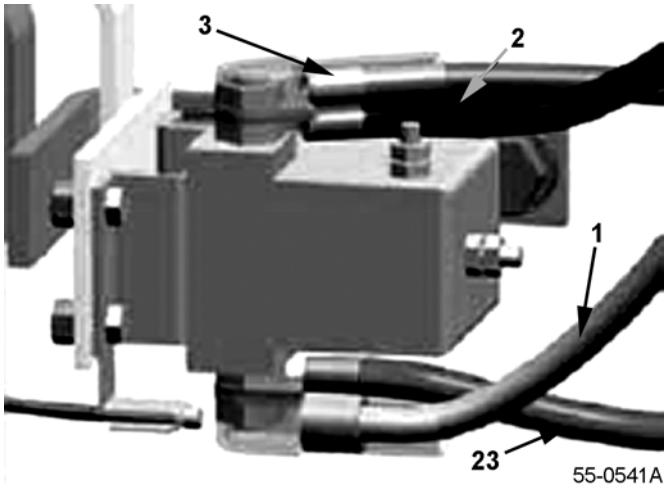

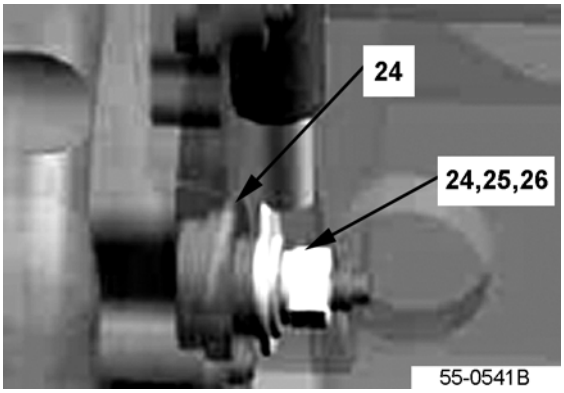

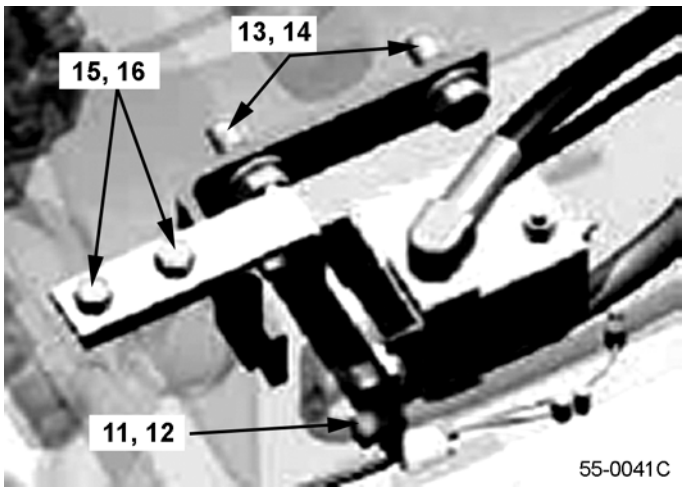

https://truckmanualshub.com/

ELECTRICAL - 4D94LE UL-S (DS) MODELS - S/N 200001A~
(ALSO SEE FIG. 55-0540)

Item	Part Number	Description	Qty	
1	37A-1LH-2361	CABLE (+)	1	
2	37B-1LJ-A720	WIRE (UL-S)	1	
3	37A-1LM-2040	CABLE	1	
4	3EB-56-A7460	BRACKET	1	
5	3EB-56-A7470	PLATE	1	
6	3EB-56-A7480	BRACKET	1	
7	3EB-56-A7490	BRACKET	1	
8	3EB-56-A5210	BATTERY CUT SWITCH	1	
9	3EB-56-F5210	GROMMET	1	
10	01640-21223	WASHER	2	
11	02215-10406	NUT	3	
12	01602-20720	WASHER	3	
13	01010-81230	BOLT	2	
14	01643-31232	WASHER	2	
15	01010-80816	BOLT	2	
16	01602-20825	WASHER	3	
17	01010-80820	BOLT	1	
18	04434-51008	CLIP	1	
19	3EB-55-A7940	CLIP	1	
20	01435-00820	BOLT	1	
21	01050-51025	BOLT	1	
22	3EB-55-A7920	CLAMP	6	
23	3EA-56-38650	WIRE	1	
24	01640-20508	WASHER	2	
25	01601-20513	WASHER	1	
26	01580-10504	NUT	1	

https://truckmanualshub.com/

METER PANEL ASSY & COMBINATION SWITCH - S/N 200001A~



56-0001A

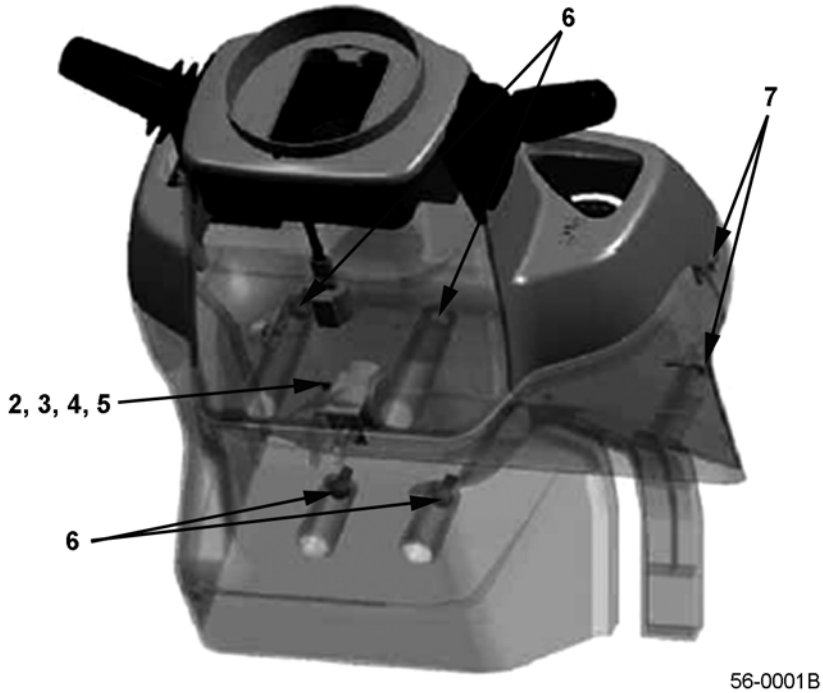

56-0001B

https://truckmanualshub.com/

METER PANEL ASSY & COMBINATION SWITCH - S/N 200001A~

Item	Part Number	Description	Qty	
1	37A-1CP-A710	METER PANEL ASSY (GAS MODELS)	1	
	37A-1CP-A720	METER PANEL ASSY (LPG MODELS)	1	
	37A-1CP-A750	METER PANEL ASSY (DIESEL MODELS)	1	
1A	37B-1CS-A010	. COMBINATION SWITCH	1	
2	3EB-55-A5610	FLASHER	1	
3	3EB-55-A5620	BRACKET, FLASHER.	1	
4	01370-00414	SCREW.	1	
5	01640-20408	WASHER	1	
6	01023-20616	SCREW.	4	
7	3EB-55-54310	SCREW.	5	

https://truckmanualshub.com/

METER PANEL DISPLAY - S/N 200001A~

1 - GASOLINE & DUAL-FUEL SPEC

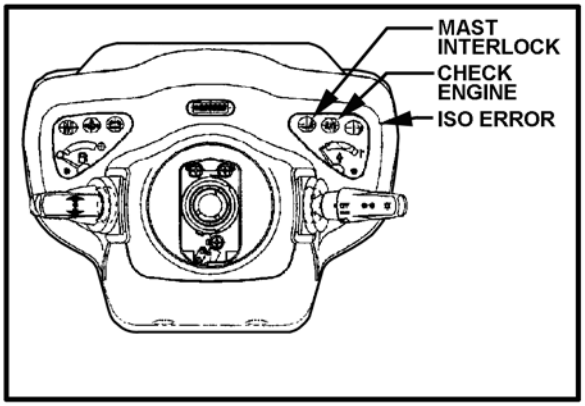

2 - DIESEL SPEC

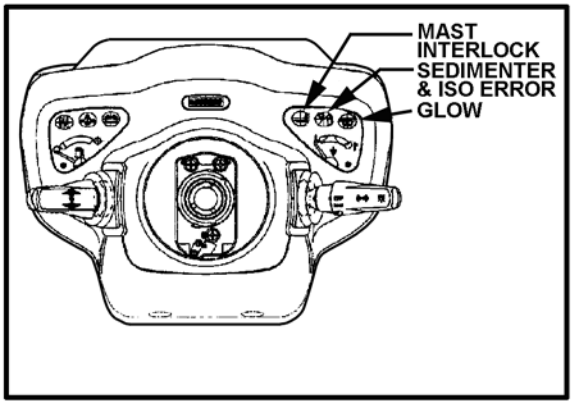

3 - LPG SPEC

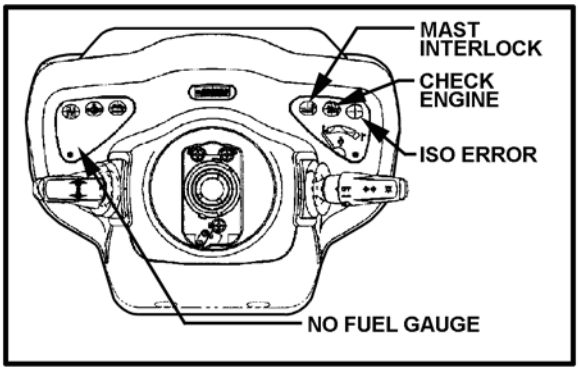

56-0002

https://truckmanualshub.com/

METER PANEL DISPLAY - S/N 200001A~

Item	Part Number	Description	Qty	
1	37A-1CP-A710	METER PANEL ASSY (GAS MODELS)	1	
2	37A-1CP-A750	METER PANEL ASSY (DIESEL MODELS)	1	
3	37A-1CP-A720	METER PANEL ASSY (LPG MODELS)	1	
N/S	3EB-55-A5610	FLASHER (FOR LED REAR COMBI LAMPS) . .	1	
N/S	3EB-55-A5620	BRACKET, FLASHER (FOR LED REAR COMBI LAMPS)	1	

https://truckmanualshub.com/

METER PANEL - BULBS & DETAIL - FRONT & REAR - S/N 200001A~

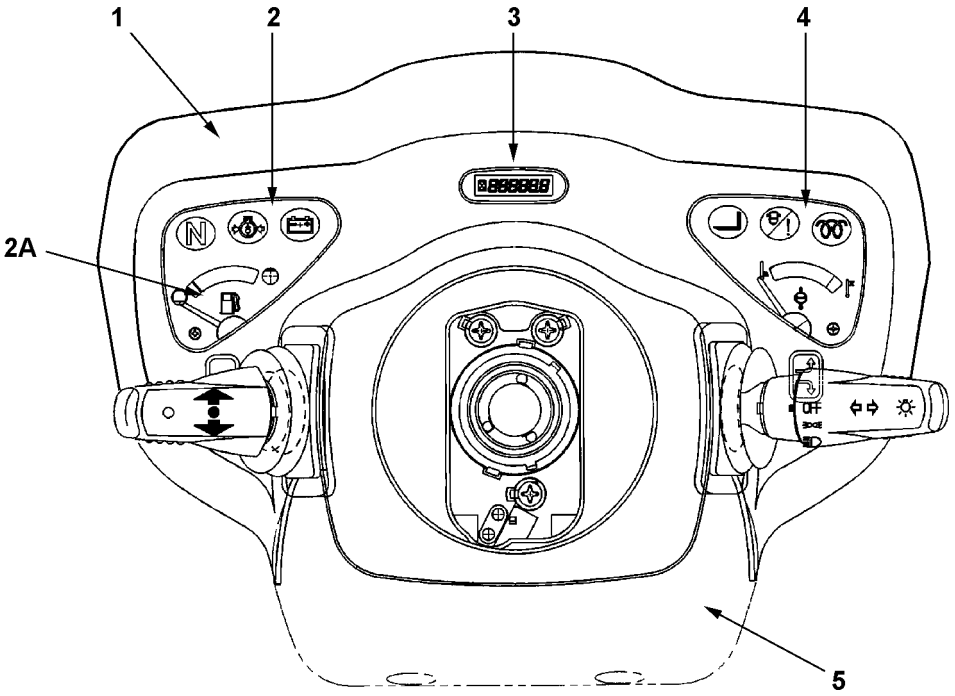

56-0003

REAR VIEW

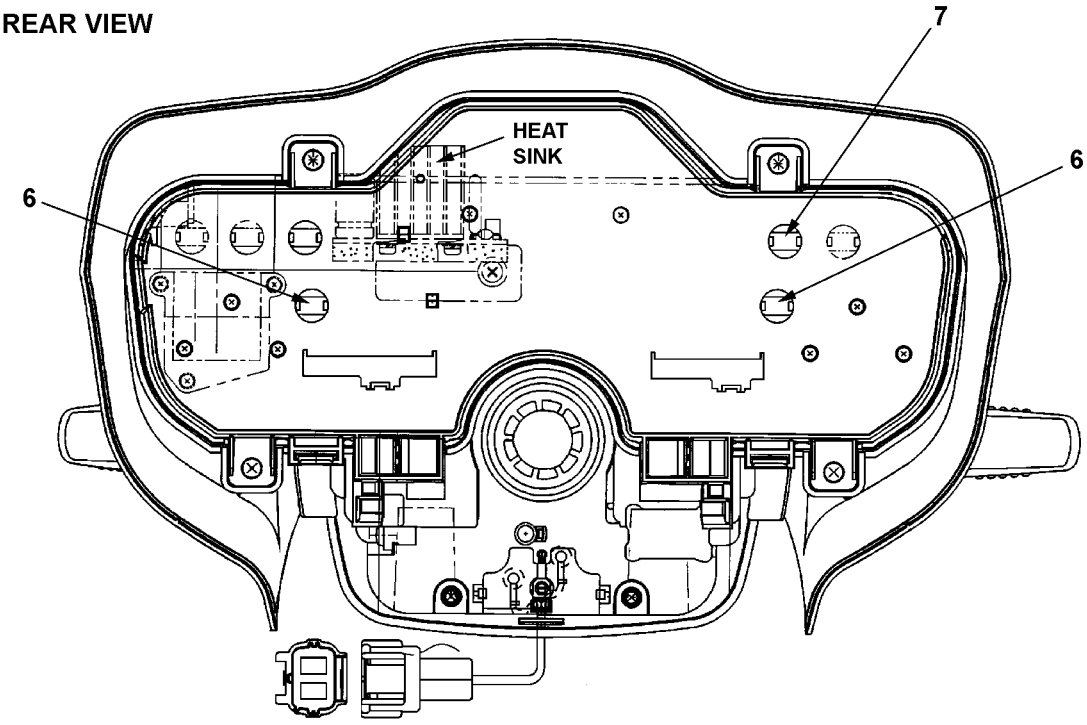

56-0003B

https://truckmanualshub.com/

METER PANEL - BULBS & DETAIL - FRONT & REAR - S/N 200001A~

Item	Part Number	Description	Qty	
1	37A-1CP-A710	METER PANEL ASSY (GAS MODELS)	1	
	37A-1CP-A720	METER PANEL ASSY (LPG MODELS)	1	
	37A-1CP-A750	METER PANEL ASSY (DIESEL MODELS)	1	
2	YZ54522--050	FUEL GAUGE ASSY SET	1	
2A	YZ769298-140	WARNING LENS (LPG ONLY W/O FUEL GAUGE)	1	
3	YZ68322-080	HOUR GAUGE	1	
4	NSS	WATER TEMPERATURE GAUGE (INC. W/ PANEL ASSY)	1	
5	YZ769100-883	PANEL ASSY	1	
6	YZ769540-066	BULB (12V, 4W ILLUMINATION)	2	
7	YZ769540-054	BULB (12V, 4W WARNING)	1	

https://truckmanualshub.com/

HYDRAULIC PUMP (FG) - S/N 200001A~

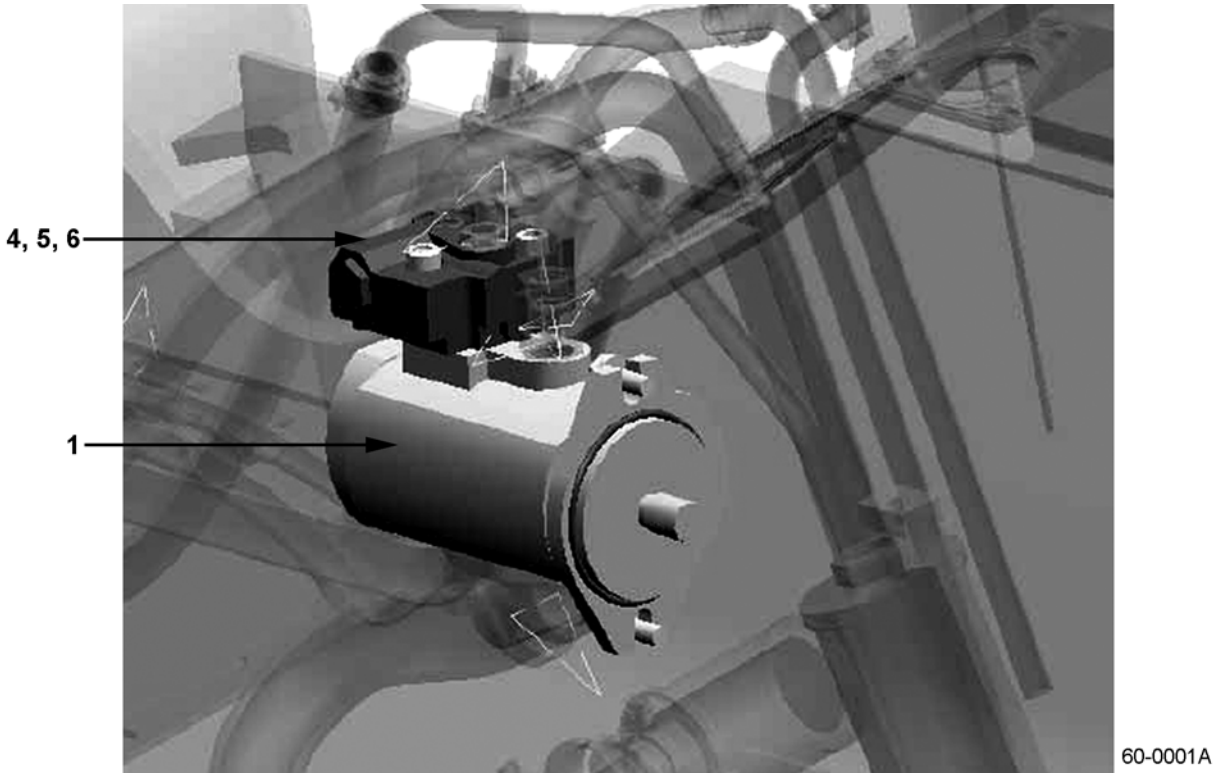

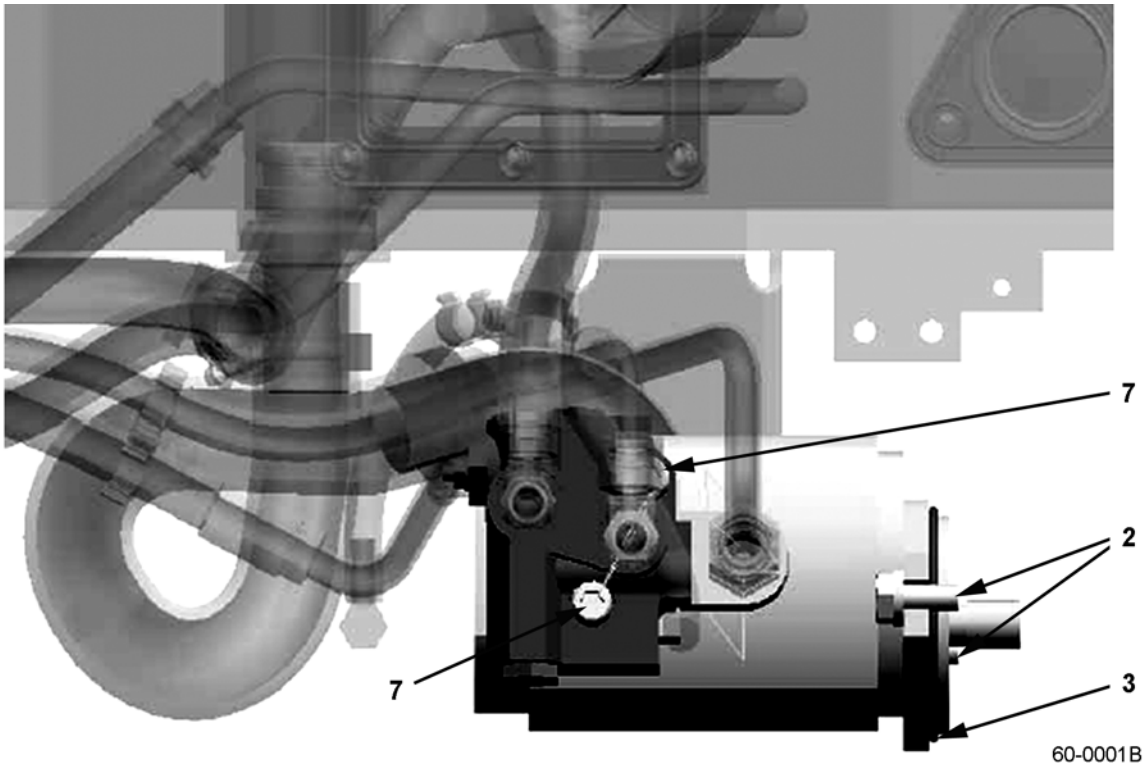

https://truckmanualshub.com/

HYDRAULIC PUMP (FG) - S/N 200001A~

Item	Part Number	Description	Qty	
1	37B-1KA-A710	PUMP ASSY, HYDRAULIC (2.0T, 2.5T, 2.8T, 3.0T ALL & 3.2T CUSHION)	1	
	37B-1KC-5020	PUMP ASSY, HYDRAULIC (3.2T,3.5T PNEUMATIC W/ K25 ENGINE)	1	
2	01024-81030	BOLT	2	
3	02892-03081	O-RING	1	
4	37B-1KE-5030	FLOW DIVIDER	1	
5	07000-12015	O-RING	1	
6	07000-11006	O-RING	1	
7	01252-71045	BOLT	2	

https://truckmanualshub.com/

HYDRAULIC PUMP (FG) W/ K21 ENGINE - DETAIL - S/N 200001A~

HYD. PUMP ASSY - 2.0 > 3.2-TON FG TRUCKS

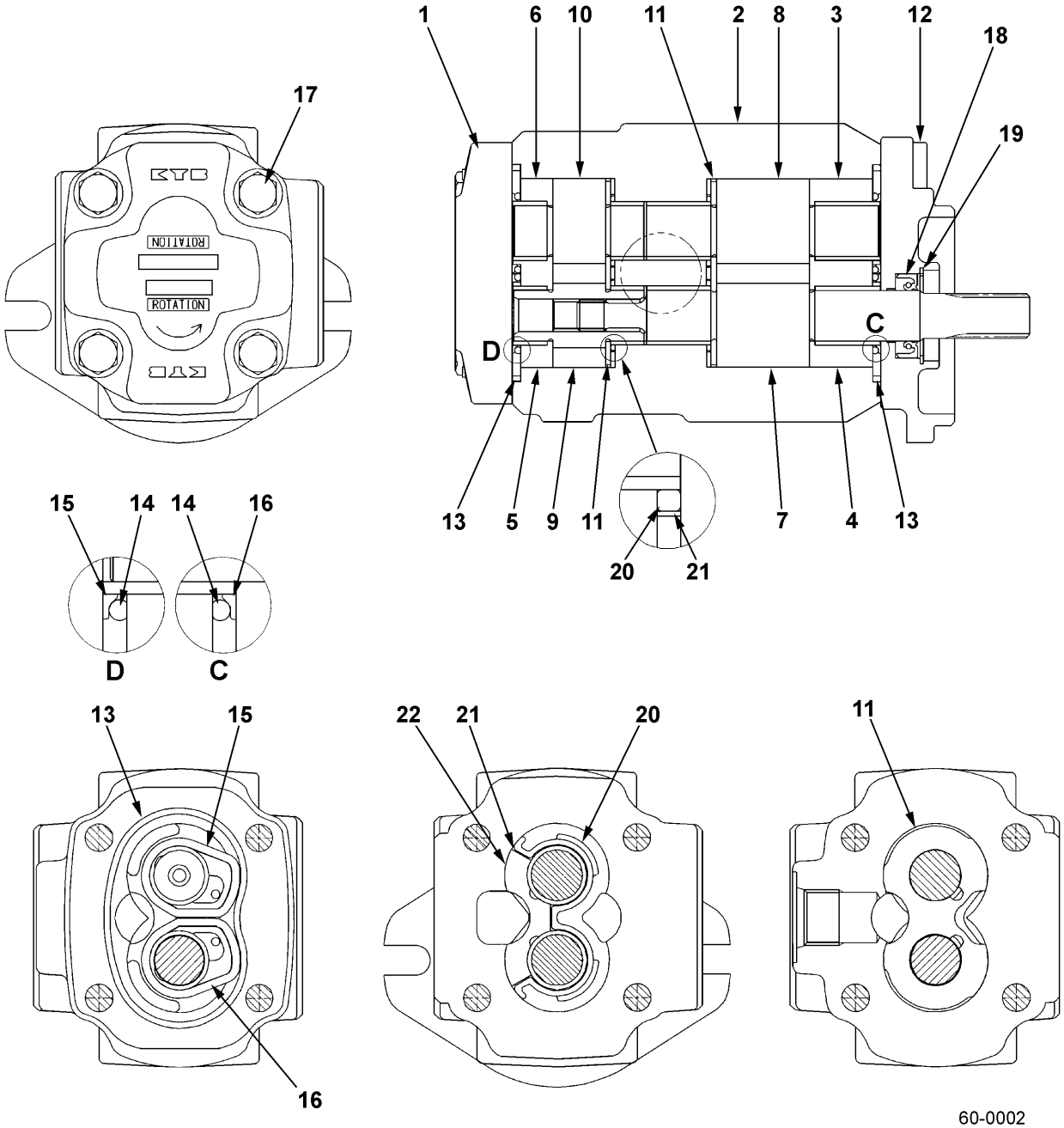

60-0002

https://truckmanualshub.com/

HYDRAULIC PUMP (FG) W/ K21 ENGINE - DETAIL - S/N 200001A~

Item	Part Number	Description	Qty	
	37B-1KA-A710	PUMP ASSY, HYDRAULIC (2.0T, 2.5T, 2.8T, 3.0T, 3.2T) W/ K21 ENGINE	1	
1	KBB5911-11101	COVER	1	
2	KBB5912-22011	BODY	1	
3	KB20122-30417	BUSHING "BR" ASSY (FR. PUMP KIT)	1	
4	KB20122-30418	BUSHING "BL" ASSY (FR. PUMP KIT)	1	
5	KBB5912-11302	BUSHING "ER" ASSY (REAR PUMP KIT)	1	
6	KBB5912-11303	BUSHING "EL" ASSY (REAR PUMP KIT)	1	
7	KBB5911-23266	GEAR, DRIVE, FRONT (FR. PUMP KIT)	1	
8	KB20121-36407	GEAR, DRIVEN, FRONT (FR. PUMP KIT)	1	
9	KBB5911-13610	GEAR, DRIVE, REAR (REAR PUMP KIT)	1	
10	KB20121-38311	GEAR, DRIVEN, REAR (REAR PUMP KIT)	1	
11	KBB5911-11401	SIDE PLATE	2	
12	KBB5911-10902	MOUNTING FLANGE	1	
13	KB20121-30801	SEAL, BODY (REPAIR KIT)	2	
14	KB20121-30901	SEAL, BUSHING (REPAIR KIT)	2	
15	KB20121-31001	BACKING, RH (REPAIR KIT)	2	
16	KB20121-31101	BACKING RING, LH (REPAIR KIT)	2	
17	KBT1112-09315	HEX. BOLT W/ FLANGE	4	
18	KB20121-31406	OIL SEAL (REPAIR KIT)	1	
19	KB94721-34151	SNAP RING (REPAIR KIT)	1	
20	KBB5911-11501	SEAL, PLATE (REPAIR KIT)	2	
21	KBB5911-11601	SEAL, BACK-UP (REPAIR KIT)	2	
22	KBB5911-11901	PLATE, ISOLATION	2	
KIT	KBB591A-20007	REPAIR KIT	1	
KIT	KBB591B-20045	FRONT PUMP KIT	1	
KIT	KBB591B-20030	REAR PUMP KIT	1	

https://truckmanualshub.com/

HYDRAULIC PUMP (FG) 3.2, 3.5 TON W/ K25 ENGINE - DETAIL - S/N 200001A~

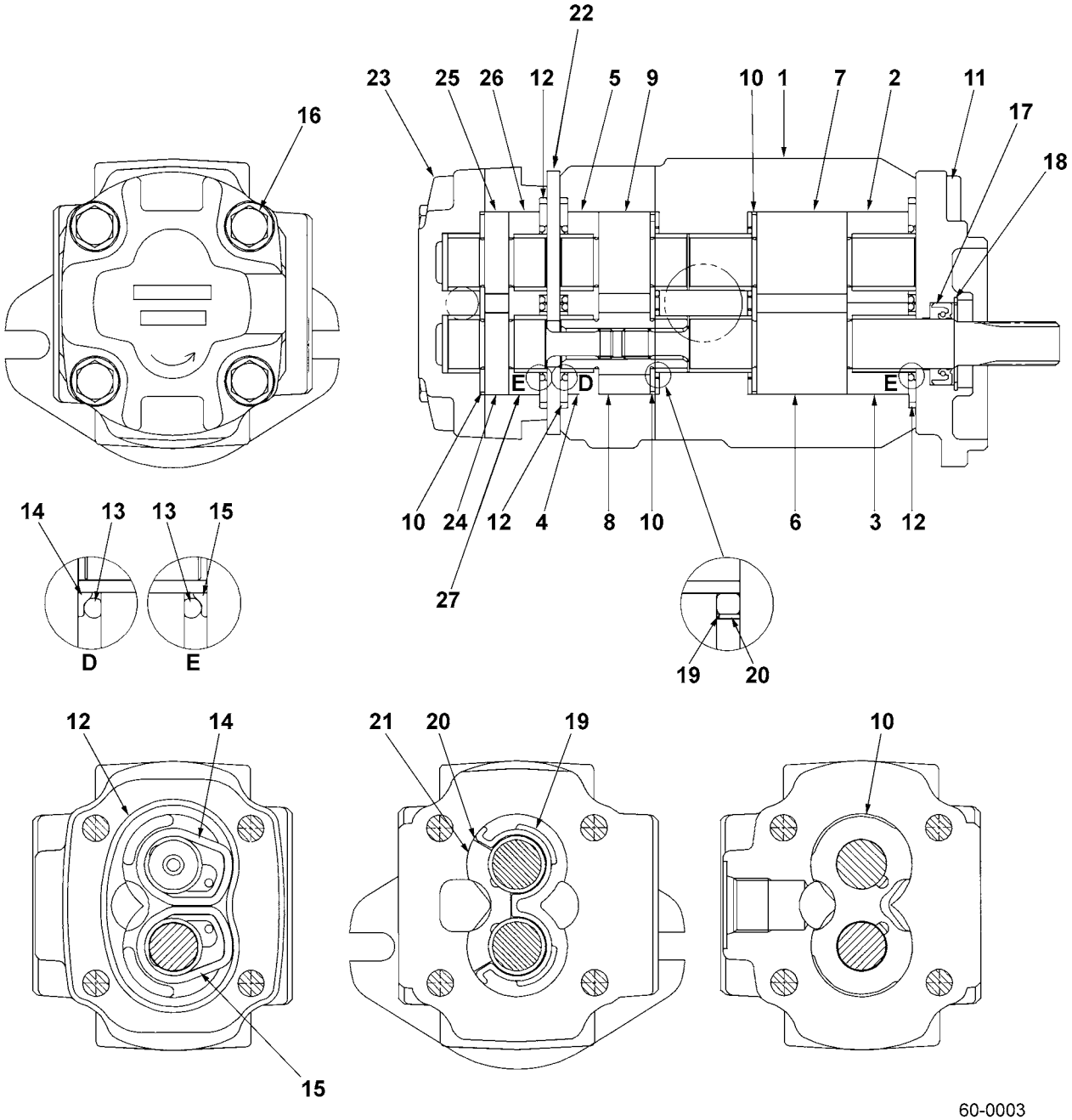

https://truckmanualshub.com/

HYDRAULIC PUMP (FG) 3.2, 3.5 TON W/ K25 ENGINE - DETAIL - S/N 200001A~

Item	Part Number	Description	Qty	
	37B-1KC-5020	PUMP ASSY, HYDRAULIC (3.2T, 3.5T) W/ K25 ENGINE	1	
1	KBB5912-23911	BODY	1	
2	KB20122-30417	BUSHING "BR" ASSY (FR. PUMP KIT)	1	
3	KB20122-30418	BUSHING "BL" ASSY (FR. PUMP KIT)	1	
4	KBB5912-11302	BUSHING "ER" ASSY (CTR PUMP KIT)	1	
5	KBB5912-11303	BUSHING "EL" ASSY (CTR PUMP KIT)	1	
6	KBB5911-23261	GEAR, DRIVE, FRONT (FR. PUMP KIT)	1	
7	KB20121-36414	GEAR, DRIVEN (FR. PUMP KIT)	1	
8	KBB5911-13610	GEAR, DRIVE, REAR (CTR PUMP KIT)	1	
9	KB20121-38311	GEAR, DRIVEN (CTR PUMP KIT)	1	
10	KBB5911-11401	SIDE PLATE	3	
11	KBB5911-10902	MOUNTING FLANGE	1	
12	KB20121-30801	SEAL, BODY (REPAIR KIT)	3	
13	KB20121-30901	SEAL, BUSHING (REPAIR KIT)	3	
14	KB20121-31001	BACKING RING, RH (REPAIR KIT)	3	
15	KB20121-31101	BACKING RING, LH (REPAIR KIT)	3	
16	KBT1112-09313	HEX BOLT W/ FLANGE	4	
17	KB20121-31406	SEAL, OIL	1	
18	KB94721-34151	SNAP RING	1	
19	KBB5911-11501	SEAL, PLATE	2	
20	KBB5911-11601	SEAL, BACK-UP	2	
21	KBB5911-11901	PLATE, ISOLATION	2	
22	KBB5911-24101	PLATE, CENTER	1	
23	KBB5912-24001	BODY ASSY, REAR	1	
24	KBB5911-23406	GEAR, DRIVE, REAR (REAR PUMP KIT)	1	
25	KB20121-38303	GEAR, DRIVEN (REAR PUMP KIT)	1	
26	KBB5912-11302	BUSHING "ER" ASSY (REAR PUMP KIT)	1	
27	KBB5912-11303	BUSHING "EL" ASSY (REAR PUMP KIT)	1	
KIT	KBB591A-30001	REPAIR KIT	1	
KIT	KBB591B-20036	FRONT PUMP KIT	1	
KIT	KBB591B-20030	CENTER PUMP KIT	1	
KIT	KBB591B-30020	REAR PUMP KIT	1	

https://truckmanualshub.com/

HYDRAULIC PUMP (FD) ENGINE - DETAIL - S/N 200001A~ ALL DIESEL MODELS EXCEPT 3.5 TON

HYD. PUMP ASSY - ALL DIESEL EXCEPT 3.5 TON MODELS

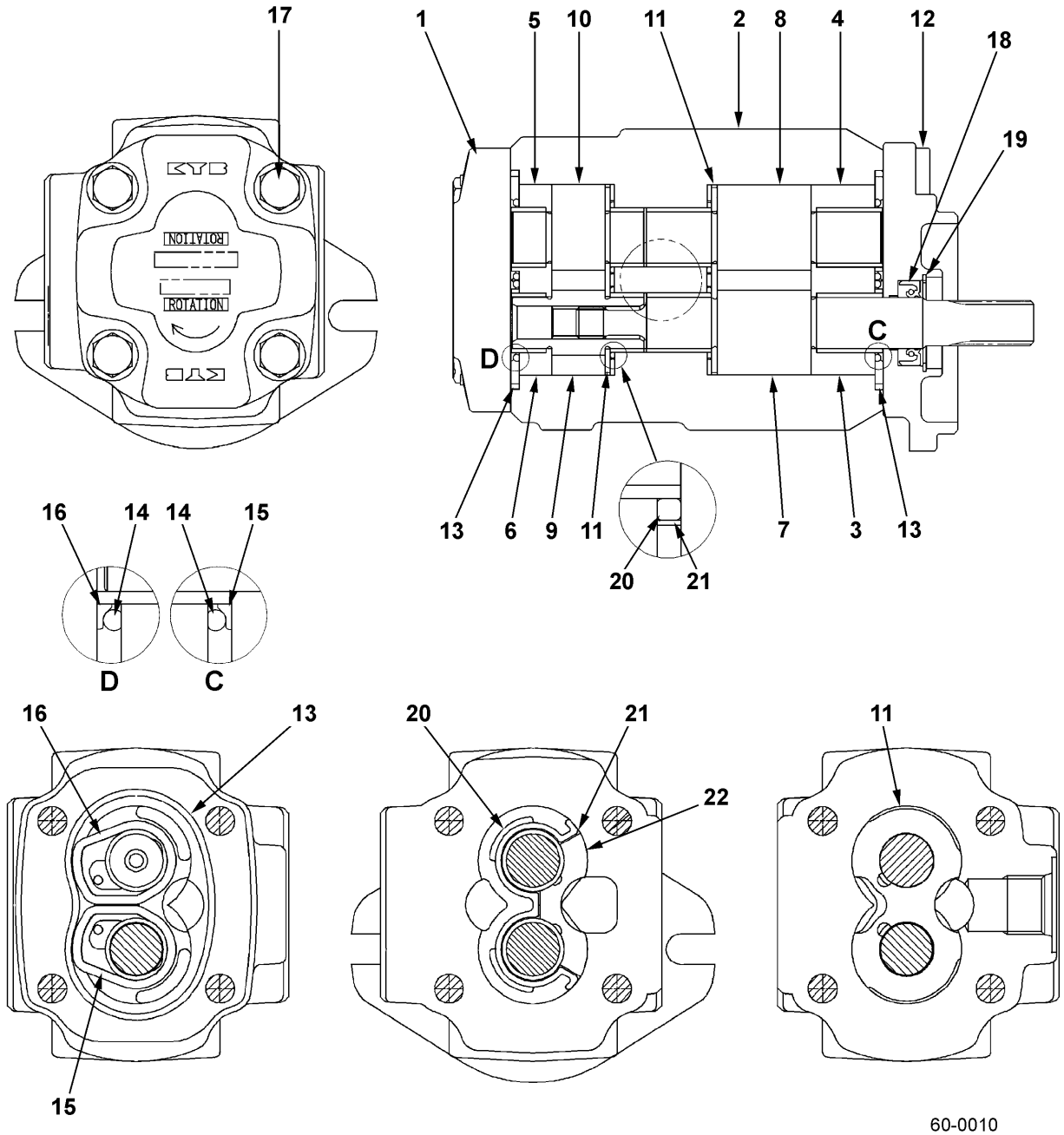

https://truckmanualshub.com/

HYDRAULIC PUMP (FD) ENGINE - DETAIL - S/N 200001A~ ALL DIESEL MODELS EXCEPT 3.5 TON

Item	Part Number	Description	Qty	
	37B-1KB-5040	PUMP ASSY, HYDRAULIC W/ 4D94LE ENGINE (EXCEPT 3.5 TON)	1	
1	KBB5911-11101	COVER	1	
2	KBB5912-22007	BODY	1	
3	KB20122-30417	BUSHING "BR" ASSY (FR PUMP KIT)	1	
4	KB20122-30418	BUSHING "BL" ASSY (FR PUMP KIT)	1	
5	KBB5912-11302	BUSHING "ER" ASSY (REAR PUMP KIT)	1	
6	KBB5912-11303	BUSHING "EL" ASSY (REAR PUMP KIT)	1	
7	KBB5911-23211	GEAR, DRIVE, FRONT (FR PUMP KIT)	1	
8	KB20121-36414	GEAR, DRIVEN (FR PUMP KIT)	1	
9	KBB5911-13610	GEAR, DRIVE, REAR (REAR PUMP KIT)	1	
10	KB20121-38311	GEAR, DRIVEN (REAR PUMP KIT)	1	
11	KBB5911-11401	SIDE PLATE	2	
12	KBB5911-10902	MOUNTING FLANGE	1	
13	KB20121-30801	SEAL, BODY (REPAIR KIT)	2	
14	KB20121-30901	SEAL, BUSHING (REPAIR KIT)	2	
15	KB20121-31001	BACKING RING, RH (REPAIR KIT)	2	
16	KB20121-31101	BACKING RING, LH (REPAIR KIT)	2	
17	KBT1112-09314	HEX BOLT W/ FLANGE	4	
18	KB20121-31406	SEAL, OIL (REPAIR KIT)	1	
19	KB94721-34151	SNAP RING (REPAIR KIT)	1	
20	KBB5911-11501	SEAL, PLATE (REPAIR KIT)	2	
21	KBB5911-11601	SEAL, BACK-UP (REPAIR KIT)	2	
22	KBB5911-11901	PLATE, ISOLATION	2	
KIT	KBB591A-20007	REPAIR KIT	1	
KIT	KBB591B-20029	FRONT PUMP KIT	1	
KIT	KBB591B-20030	REAR PUMP KIT	1	

https://truckmanualshub.com/

HYDRAULIC PUMP (FD) ENGINE - DETAIL - S/N 200001A~ ALL DIESEL 3.5 TON

HYD. PUMP ASSY - 3.5 TON DIESEL MODELS

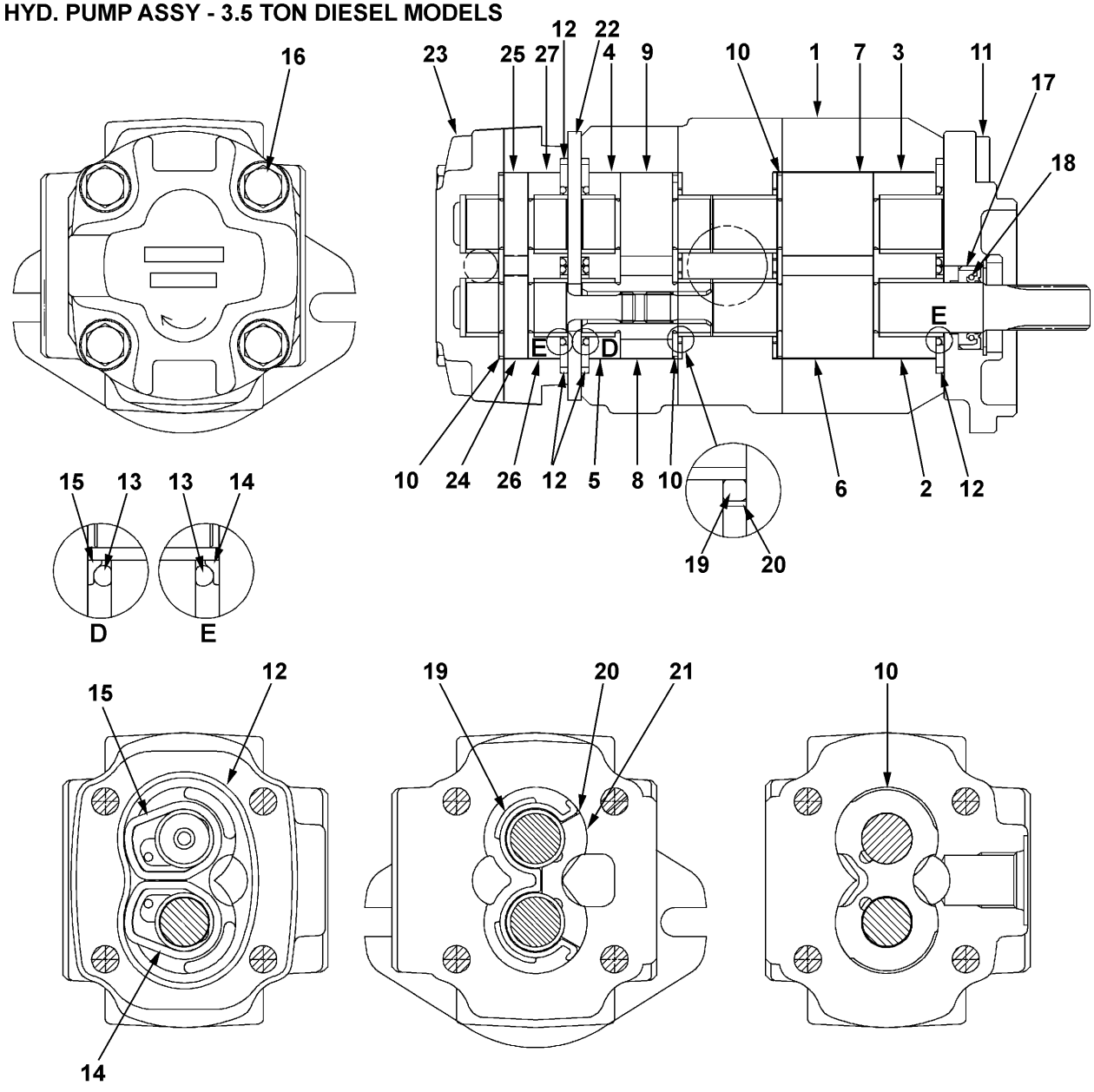

60-0011

https://truckmanualshub.com/

HYDRAULIC PUMP (FD) ENGINE - DETAIL - S/N 200001A~
ALL DIESEL 3.5 TON

Item	Part Number	Description	Qty	
	37B-1KD-5040	PUMP ASSY, HYDRAULIC W/ 4D94LE ENGINE (3.5 TON ONLY)	1	
1	KBB5912-23911	BODY	1	
2	KB20122-30417	BUSHING "BR" ASSY (FR PUMP KIT)	1	
3	KB20122-30418	BUSHING "BL" ASSY (FR PUMP KIT)	1	
4	KBB5912-11302	BUSHING "ER" ASSY (CTR PUMP KIT)	1	
5	KBB5912-11303	BUSHING "EL" ASSY (CTR PUMP KIT)	1	
6	KBB5911-23211	GEAR, DRIVE, FRONT (FR PUMP KIT)	1	
7	KB20121-36414	GEAR, DRIVEN (FR PUMP KIT)	1	
8	KBB5911-13610	GEAR, DRIVE, REAR (CTR PUMP KIT)	1	
9	KB20121-38311	GEAR, DRIVEN (CTR PUMP KIT)	1	
10	KBB5911-11401	SIDE PLATE	3	
11	KBB5911-10902	MOUNTING PLATE	1	
12	KB20121-30801	SEAL, BODY. (REPAIR KIT)	3	
13	KB20121-30901	SEAL, BUSHING (REPAIR KIT)	3	
14	KB20121-31001	BACKING RING, RH (REPAIR KIT)	3	
15	KB20121-31101	BACKING RING, LH (REPAIR KIT)	3	
16	KBT1112-09313	HEX BOLT W/ FLANGE	4	
17	KB20121-31406	OIL SEAL (REPAIR KIT)	1	
18	KB94721-34151	SNAP RING (REPAIR KIT)	1	
19	KBB5911-11501	SEAL, PLATE (REPAIR KIT)	2	
20	KBB5911-11601	SEAL, BACK-UP (REPAIR KIT)	2	
21	KBB5911-11901	PLATE, ISOLATION	2	
22	KBB5911-24101	PLATE, CENTER	1	
23	KBB5912-24001	BODY ASSY, REAR	1	
24	KBB5911-23406	GEAR, DRIVE, REAR (REAR PUMP KIT)	1	
25	KB20121-38303	GEAR, DRIVEN (REAR PUMP KIT)	1	
26	KBB5912-11302	BUSHING "ER" ASSY (REAR PUMP KIT)	1	
27	KBB5912-11303	BUSHING "EL" ASSY (REAR PUMP KIT)	1	
KIT	KBB591A-30001	REPAIR KIT	1	
KIT	KBB591B-20029	FRONT PUMP KIT	1	
KIT	KBB591B-20030	CENTER PUMP KIT	1	
KIT	KBB591B-30020	REAR PUMP KIT	1	

https://truckmanualshub.com/

HYDRAULIC CONTROL VALVE & CONVERSION KIT - S/N 200001A~

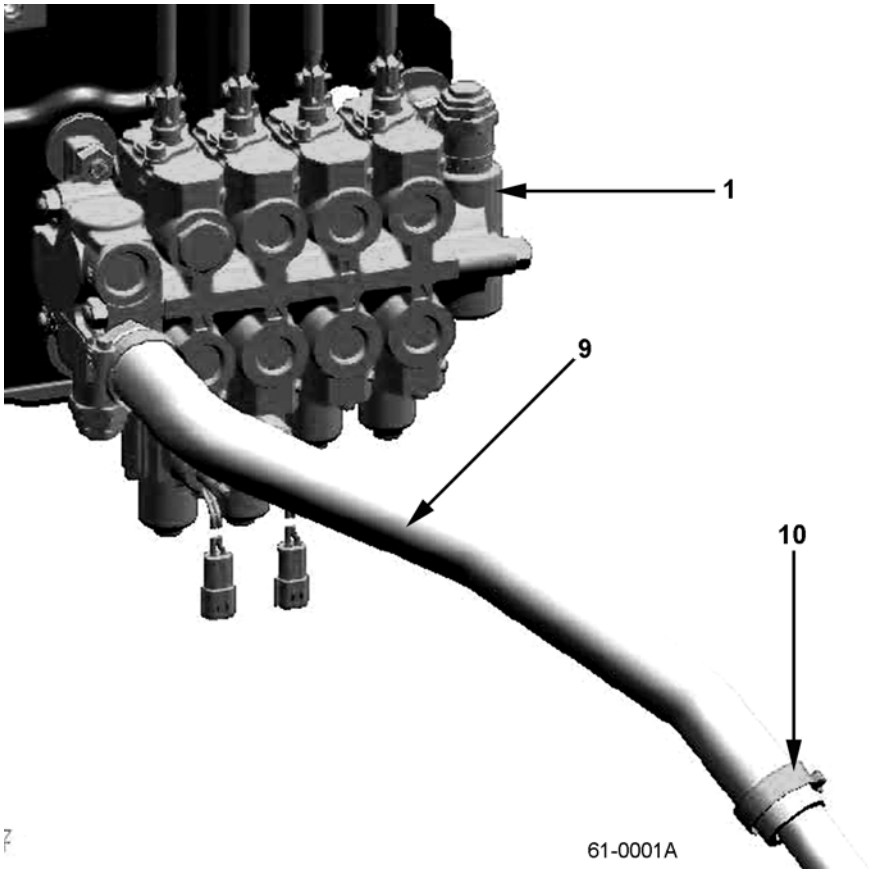

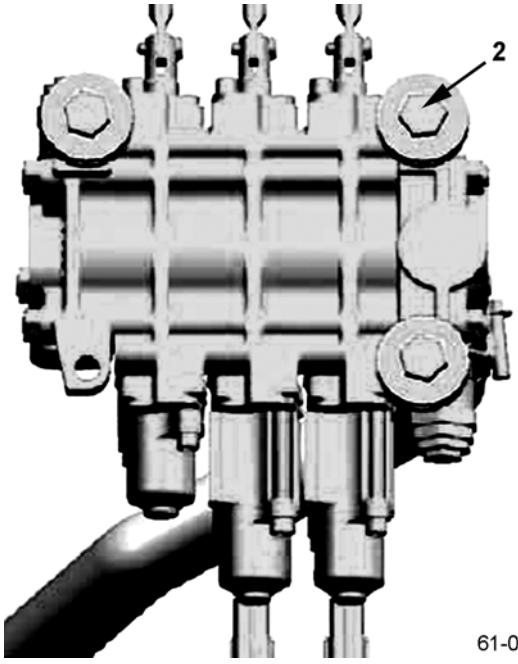

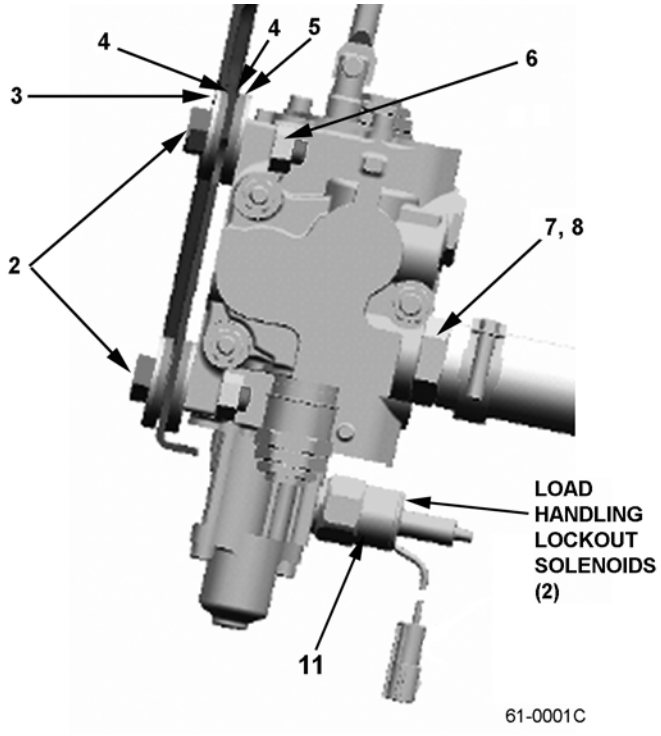

https://truckmanualshub.com/

HYDRAULIC CONTROL VALVE & CONVERSION KIT - S/N 200001A~

Item	Part Number	Description	Qty	
1	3EB-61-A7110	CONTROL VALVE, 3-WAY	1	
	3EB-61-A7210	CONTROL VALVE, 4-WAY	1	
2	01050-51040	BOLT	3	
3	3EB-61-42140	WASHER	3	
4	3EB-61-42120	CUSHION	6	
5	3EB-61-42130	COLLAR	3	
6	01582-11008	NUT	3	
7	3EB-66-A7210	NIPPLE	1	
8	540-62-12540	O-RING	1	
9	3EB-66-A7220	HOSE	1	
10	07281-00419	CLAMP	2	
11	HU60955-1	LOAD HANDLING LOCKOUT SOLENOID (12V)	2	
KIT	3EB-98-A31252	3-SPOOL TO 4-SPOOL CONVERSION KIT (INCLUDES LEVER)	1	
KIT	HU61108	SEAL KIT	1	
N/S	3EB-68-A7410	HOSE - C/V TO MAST (3RD SECTION)	1	
N/S	3EB-68-A7420	HOSE - C/V TO MAST (4TH SECTION)	1	

https://truckmanualshub.com/

HYDRAULIC CONTROL VALVE - 3-SPOOL - DETAIL - S/N 200001A~

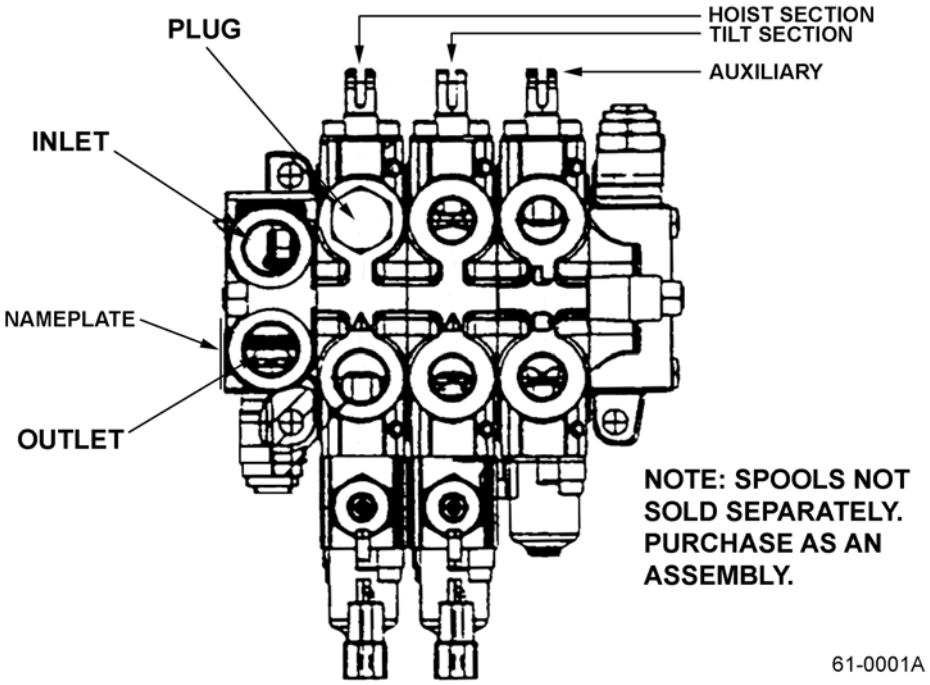

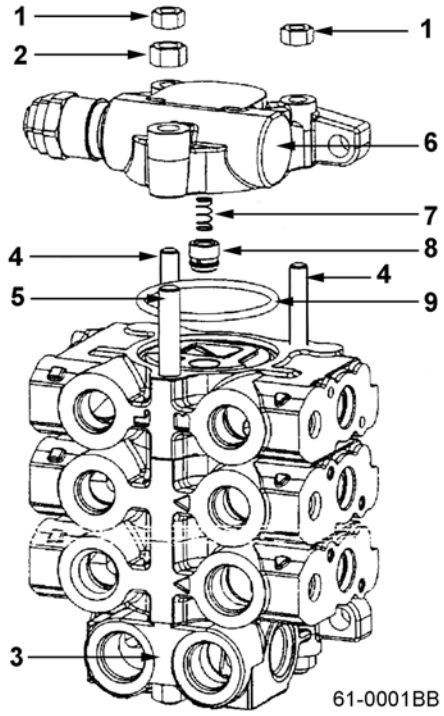

https://truckmanualshub.com/

HYDRAULIC CONTROL VALVE - 3-SPOOL - DETAIL - S/N 200001A~

Item	Part Number	Description	Qty	
	3EB-61-A7110	CONTROL VALVE, 3-WAY	1	
1	HU1861	NUT	4	
2	HU1052	NUT	2	
3	HU5006-JA2	HOUSING	1	
4	HU5069-3	THROUGH BOLT	2	
5	HU5089-3	THROUGH BOLT	1	
6	HU5004-A1	HOUSING	1	
7	HU5064	SPRING	3	
8	HU5011	POPPET	3	
9	HU564	O-RING	4	
KIT	HU61108	SEAL KIT	1	

https://truckmanualshub.com/

HYDRAULIC CONTROL VALVE - 4-SPOOL - DETAIL - S/N 200001A~

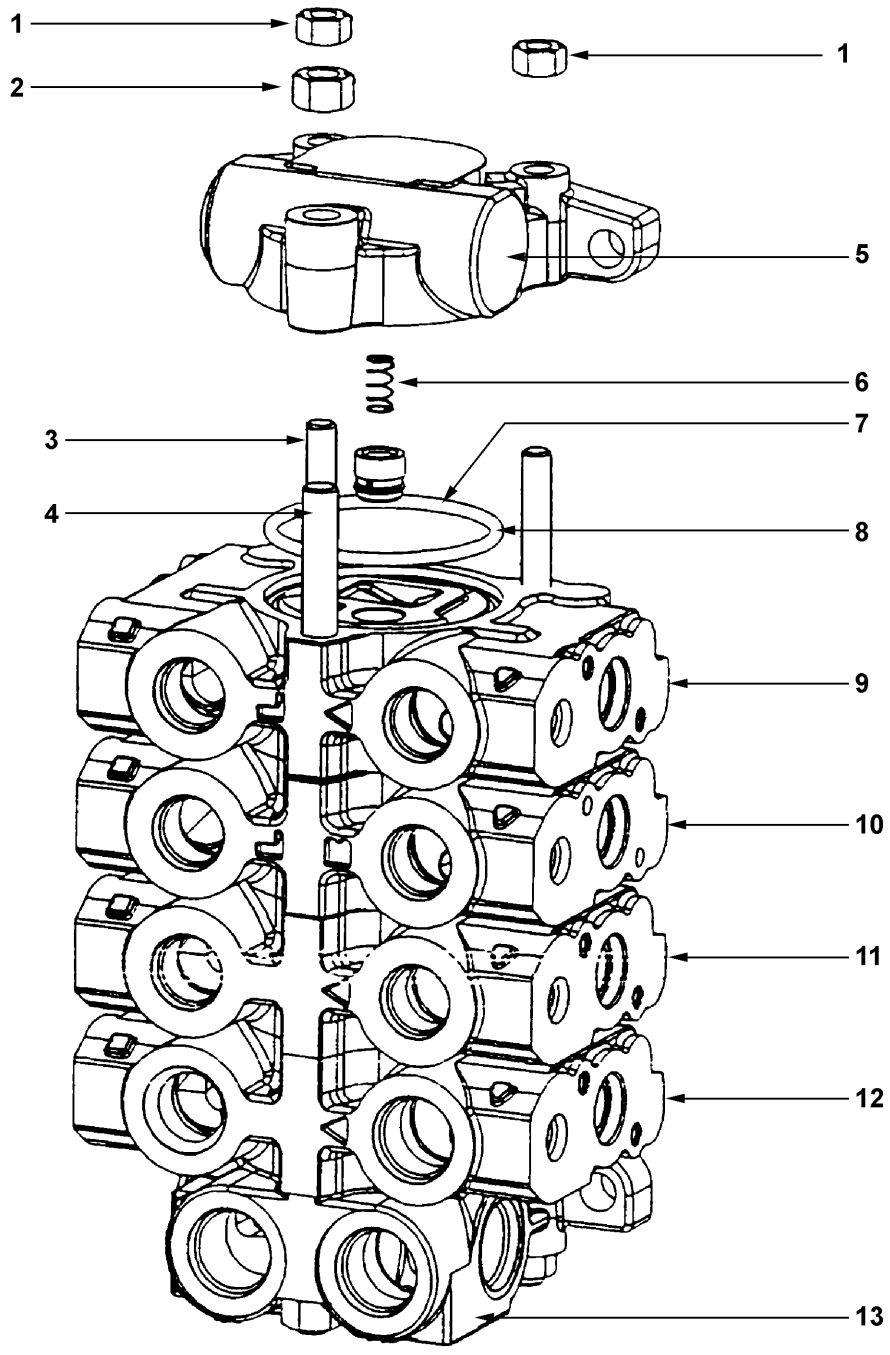

61-0001C

https://truckmanualshub.com/

HYDRAULIC CONTROL VALVE - 4-SPOOL - DETAIL - S/N 200001A~

Item	Part Number	Description	Qty	
	3EB-61-A7210	CONTROL VALVE, 4-WAY	1	
1	HU1861	NUT	4	
2	HU1052	NUT	2	
3	HU5069-4	THROUGH BOLT	2	
4	HU5089-4	THROUGH BOLT	1	
5	HU5003-JA1	OUTLET SECTION ASSY	1	
6	HU5064	SPRING	4	
7	HU5011	POPPET	4	
8	HU564	O-RING	5	
9	HU5002-V5	SPOOL SECTION ASSY, AUXILIARY 4TH FUNCTION	1	
10	HU5002-W4	SPOOL SECTION ASSY, 3RD FUNCTION	1	
11	HU294B1-10	SPOOL SECTION ASSY, TILT	1	
12	HUAX294B1-3	SPOOL SECTION ASSY, LIFT	1	
13	HU5001-A59	INLET SECTION ASSY	1	

https://truckmanualshub.com/

HYDRAULIC CONTROL VALVE - LEVER ASSY - S/N 200001A~

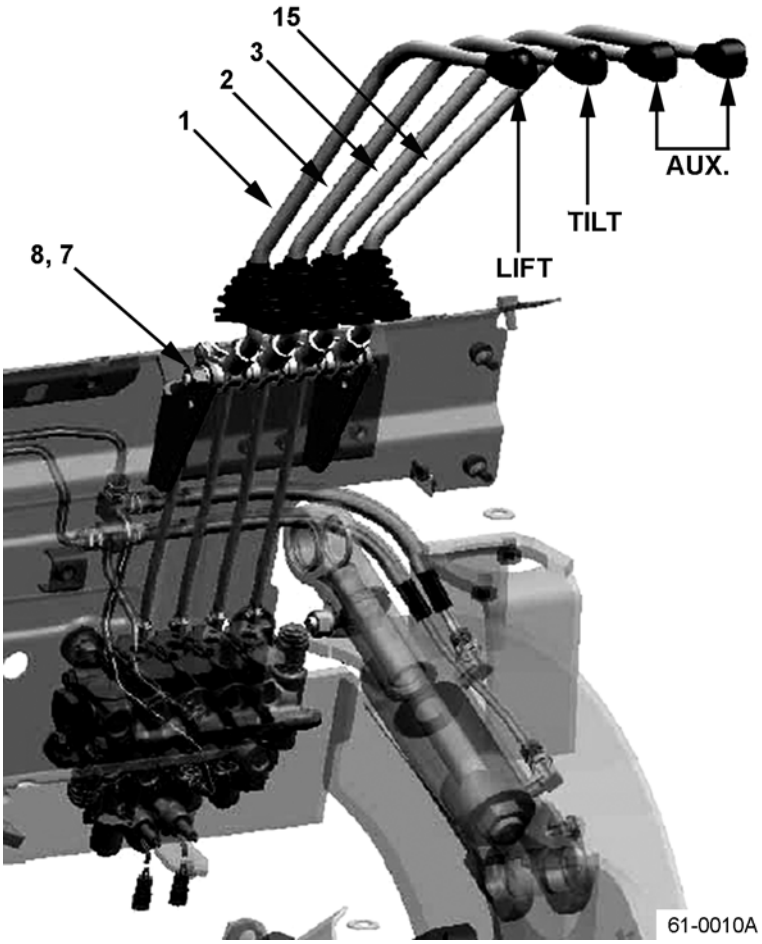

61-0010A

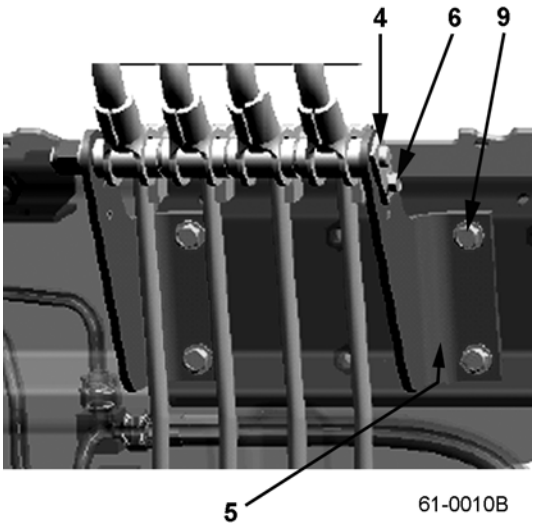

61-0010B

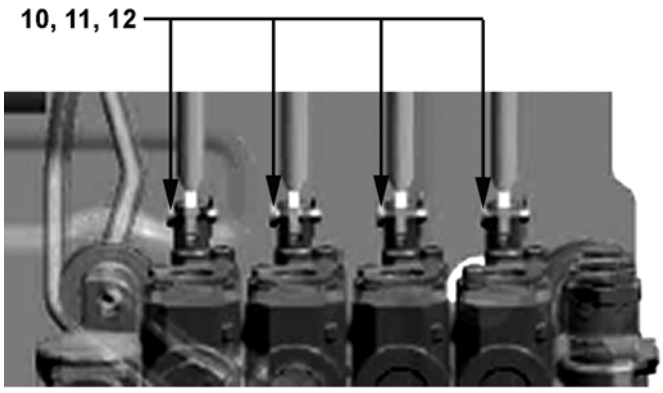

61-0010C

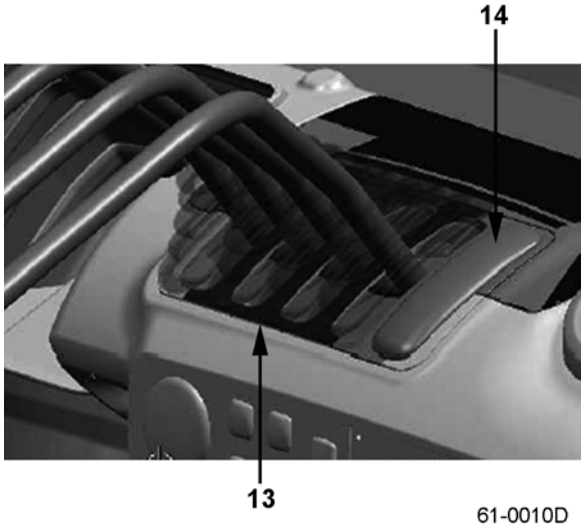

61-0010D

https://truckmanualshub.com/

HYDRAULIC CONTROL VALVE - LEVER ASSY - S/N 200001A~

Item	Part Number	Description	Qty	
1	37B-1HA-A710	LEVER SUB-ASSY	1	
2	37B-1HA-A720	LEVER SUB-ASSY	1	
3	37B-1HA-A730	LEVER SUB-ASSY	1	
4	37B-1HD-5030	SHAFT, 3-WAY C/V	1	
	37B-1HD-5040	SHAFT, 4-WAY C/V	1	
5	3EB-61-51110	BRACKET	2	
6	01435-00612	BOLT	1	
7	01599-01214	NUT	1	
8	01643-51232	WASHER	1	
9	01435-00820	BOLT	4	
10	358-60-15250	PIN, 3-WAY C/V	3	
	358-60-15250	PIN, 4-WAY C/V	4	
11	01641-20508	WASHER, 3-WAY C/V	3	
	01641-20508	WASHER, 4-WAY C/V	4	
12	04050-11212	COTTER PIN, 3-WAY C/V	3	
	04050-11212	COTTER PIN, 4-WAY C/V	4	
13	3EB-50-42560	COVER, 3-WAY C/V	2	
	3EB-50-42560	COVER, 4-WAY C/V	3	
14	3EB-50-42570	COVER, 3-WAY C/V	2	
	3EB-50-42570	COVER, 4-WAY C/V	1	
15	37B-1HA-A740	LEVER SUB-ASSY, 4-WAY C/V ONLY	1	

https://truckmanualshub.com/

HYDRAULIC CONTROL VALVE - PIPING - S/N 200001A~ 3-WAY VALVE (EXCEPT 3.5 TON TRUCKS)

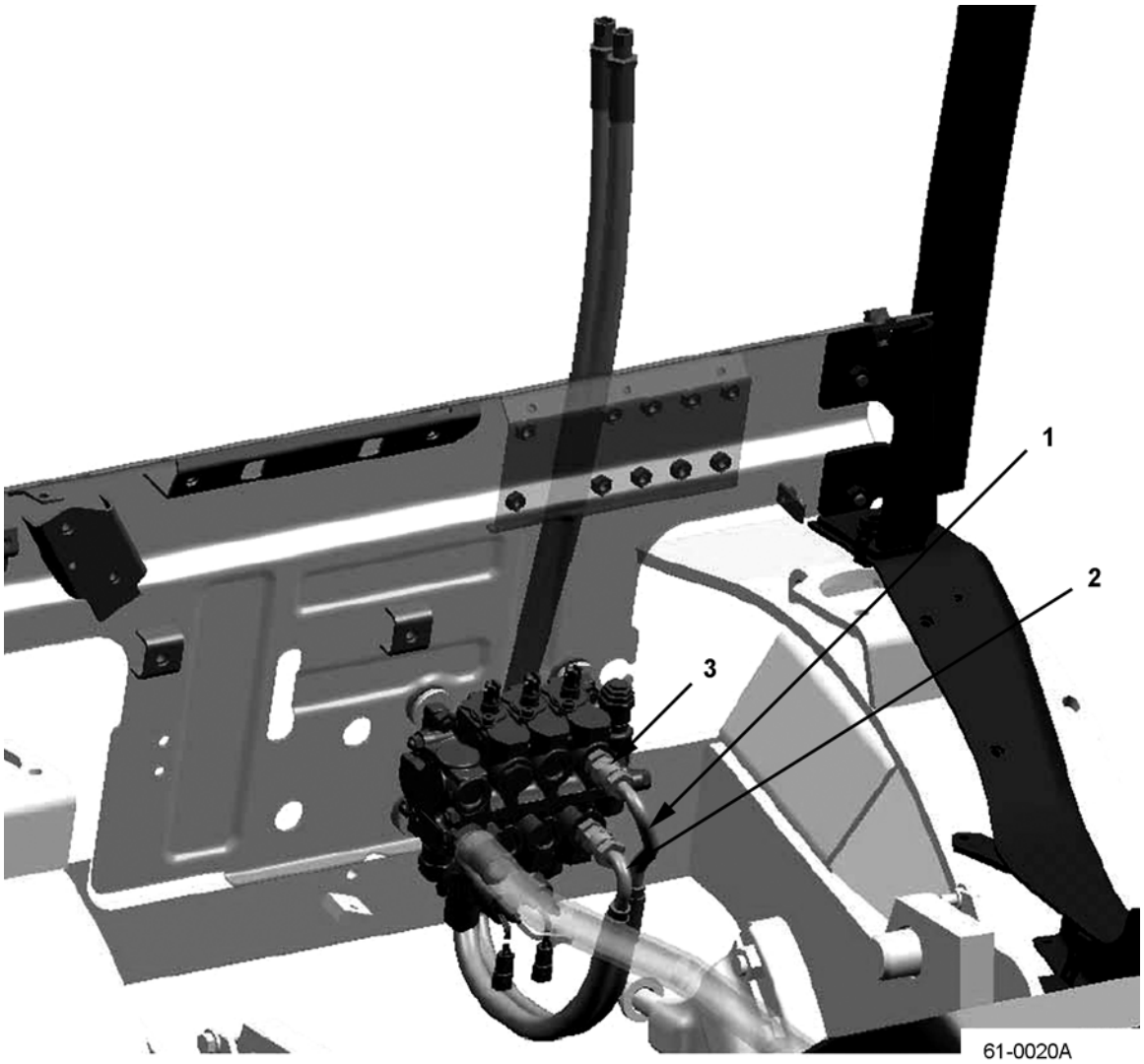

https://truckmanualshub.com/

HYDRAULIC CONTROL VALVE - PIPING - S/N 200001A~ 3-WAY VALVE (EXCEPT 3.5 TON TRUCKS)

Item	Part Number	Description	Qty	
1	3EB-68-A7310	HOSE	1	
2	3EB-68-A7320	HOSE	1	
3	3EC-66-A1910	NIPPLE	2	

https://truckmanualshub.com/

HYDRAULIC CONTROL VALVE - PIPING - S/N 200001A~ 3-WAY VALVE (3.5 TON TRUCKS)

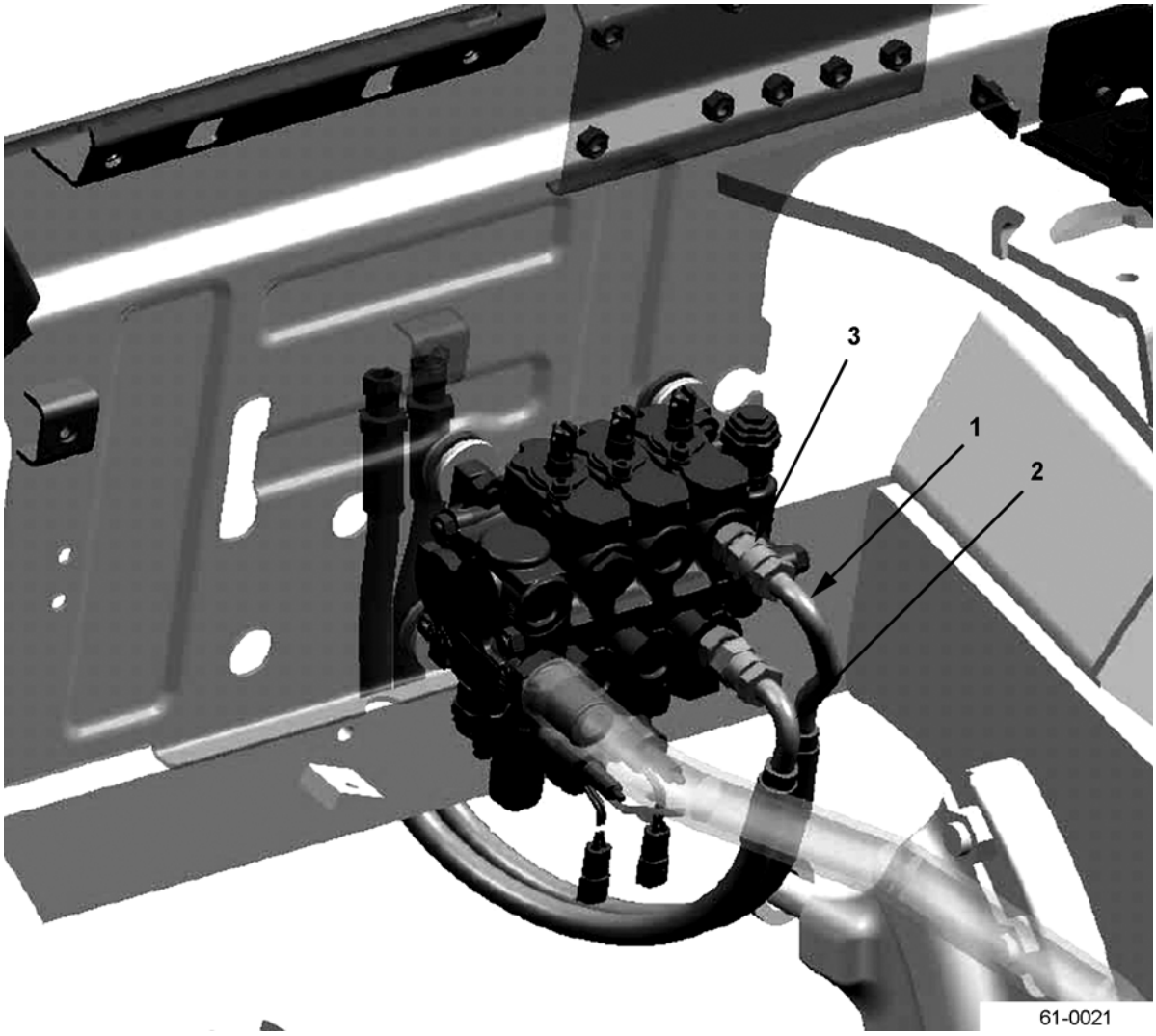

https://truckmanualshub.com/

HYDRAULIC CONTROL VALVE - PIPING - S/N 200001A~
3-WAY VALVE (3.5 TON TRUCKS)

Item	Part Number	Description	Qty	
1	3EB-68-A7360	HOSE (3-STAGE MAST)	1	
	3EB-68-A7660	HOSE (2-STAGE MAST)	1	
2	3EB-68-A7370	HOSE (3-STAGE MAST)	1	
	3EB-68-A7670	HOSE (2-STAGE MAST)	1	
3	3EC-66-A1910	NIPPLE	2	

https://truckmanualshub.com/

TILT CYLINDERS - S/N 200001A~

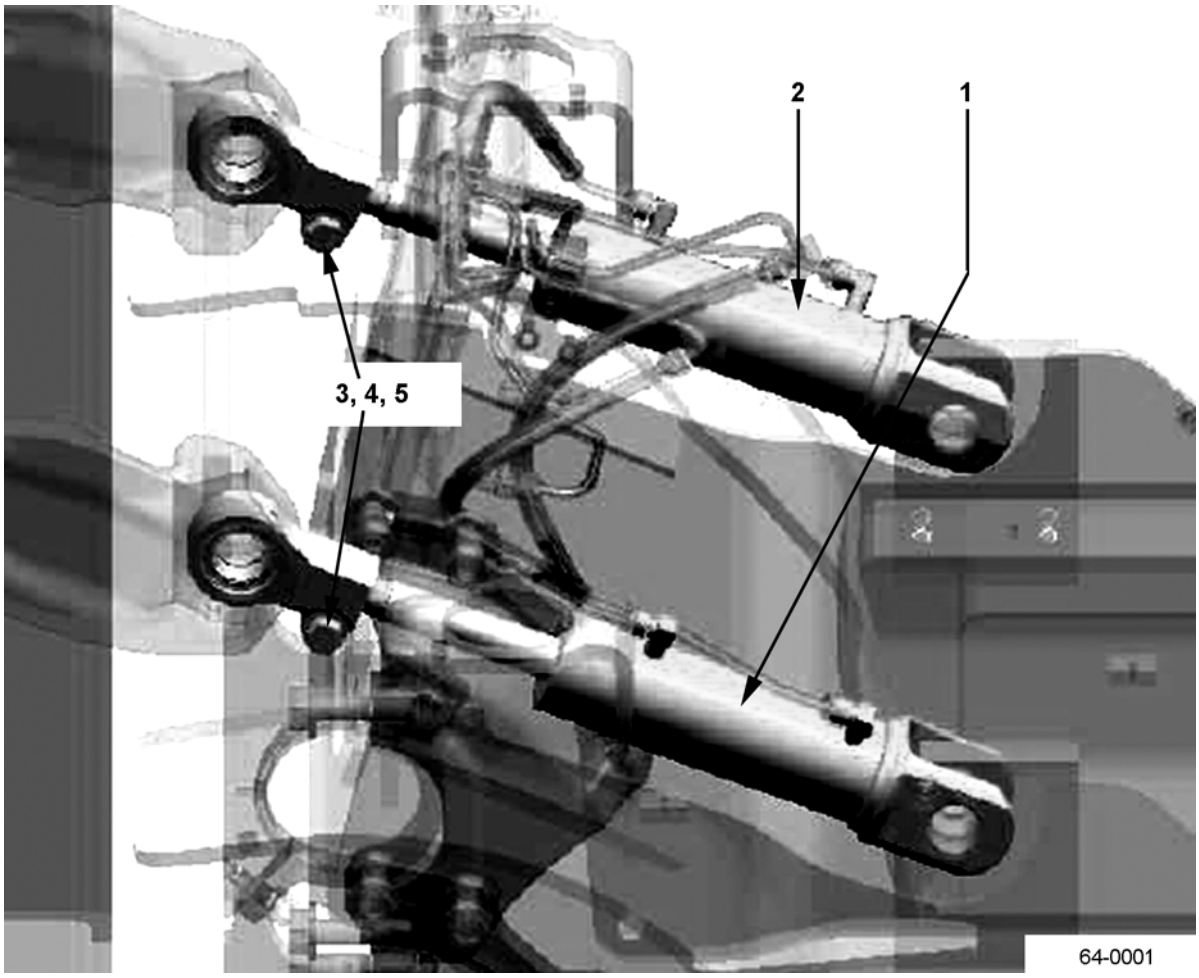

https://truckmanualshub.com/

TILT CYLINDERS - S/N 200001A~

Item	Part Number	Description	Qty	
1	37B-1JV-A410	TILT CYL, LH - 6°/5° (2.0T, 2.5T PNEU) (70 MM) (W/ SPACER)	1	
	37B-1JV-A420	TILT CYL, LH - 6°/12° (2.0T, 2.5T PNEU) (70 MM) (NO SPACER)	1	
	37B-1JV-A430	TILT CYL, LH - 10°/5° (2.0T, 2.5T PNEU) (70 MM) (W/ SPACER)	1	
	37B-1JV-A440	TILT CYL, LH - 3°/3° (2.0T, 2.5T PNEU) (70 MM) (W/ SPACER)	1	
	37B-1JV-A810	TILT CYL, LH - 6°/5° (3.5T PNEU) (80 MM) (W/ SPACER)	1	
	37B-1JV-A820	TILT CYL, LH - 6°/12° (3.5T PNEU) (80 MM) (NO SPACER)	1	
	37B-1JW-A410	TILT CYL, LH - 6°/5° (2.0T, 2.5T CUSHION) (70 MM) (W/ SPACER)	1	
	37B-1JW-A420	TILT CYL, LH - 6°/8° (2.0T, 2.5T CUSHION) (70 MM) (NO SPACER)	1	
	37B-1JW-A810	TILT CYL, LH - 6°/5° (2.8T, 3.0T, 3.2T CUSHION) (70 MM) (W/ SPACER)	1	
	37B-1JW-A820	TILT CYL, LH - 6°/8° (2.8T, 3.0T, 3.2T CUSHION) (70 MM) (NO SPACER)	1	
2	37B-1JV-A510	TILT CYL, RH - 6°/5° (2.0T, 2.5T PNEU) (70 MM) (W/ SPACER)	1	
	37B-1JV-A520	TILT CYL, RH - 6°/12° (2.0T, 2.5T PNEU) (70 MM) (NO SPACER)	1	
	37B-1JV-A530	TILT CYL, RH - 10°/5° (2.0T, 2.5T PNEU) (70 MM) (NO SPACER)	1	
	37B-1JV-A540	TILT CYL, RH - 3°/3° (2.0T, 2.5T PNEU) (70 MM) (W/ SPACER)	1	
	37B-1JV-A910	TILT CYL, RH - 6°/5° (3.5T PNEU) (80 MM) (W/ SPACER)	1	
	37B-1JV-A920	TILT CYL, RH - 6°/12° (3.5T PNEU) (80 MM) (NO SPACER)	1	
	37B-1JW-A510	TILT CYL, RH - 6°/5° (2.0T, 2.5T CUSHION) (70 MM) (W/ SPACER)	1	
	37B-1JW-A520	TILT CYL, RH - 6°/8° (2.0T, 2.5T CUSHION) (70 MM) (NO SPACER)	1	
	37B-1JW-A910	TILT CYL, RH - 6°/5° (2.8T, 3.0T, 3.2T CUSHION) (70 MM) (W/ SPACER)	1	
	37B-1JW-A920	TILT CYL, RH - 6°/8° (2.8T, 3.0T, 3.2T CUSHION) (70 MM) (NO SPACER)	1	
3	01050-51460	BOLT	2	

PARTS LIST CONTINUED ON NEXT PAGE

https://truckmanualshub.com/

TILT CYLINDERS - S/N 200001A~

4	01602-21442	WASHER	2
5	01582-11411	NUT.	2
KIT	3BB-64-A6310	SEAL KIT (70 MM UNITS)	1
KIT	3BB-64-A6210	SEAL KIT (80 MM UNITS)	1

https://truckmanualshub.com/

NOTES:

https://truckmanualshub.com/

TILT CYLINDERS - PNEUMATIC MODELS - DETAIL - S/N 200001A~ 2.0 & 2.5 TON TRUCKS

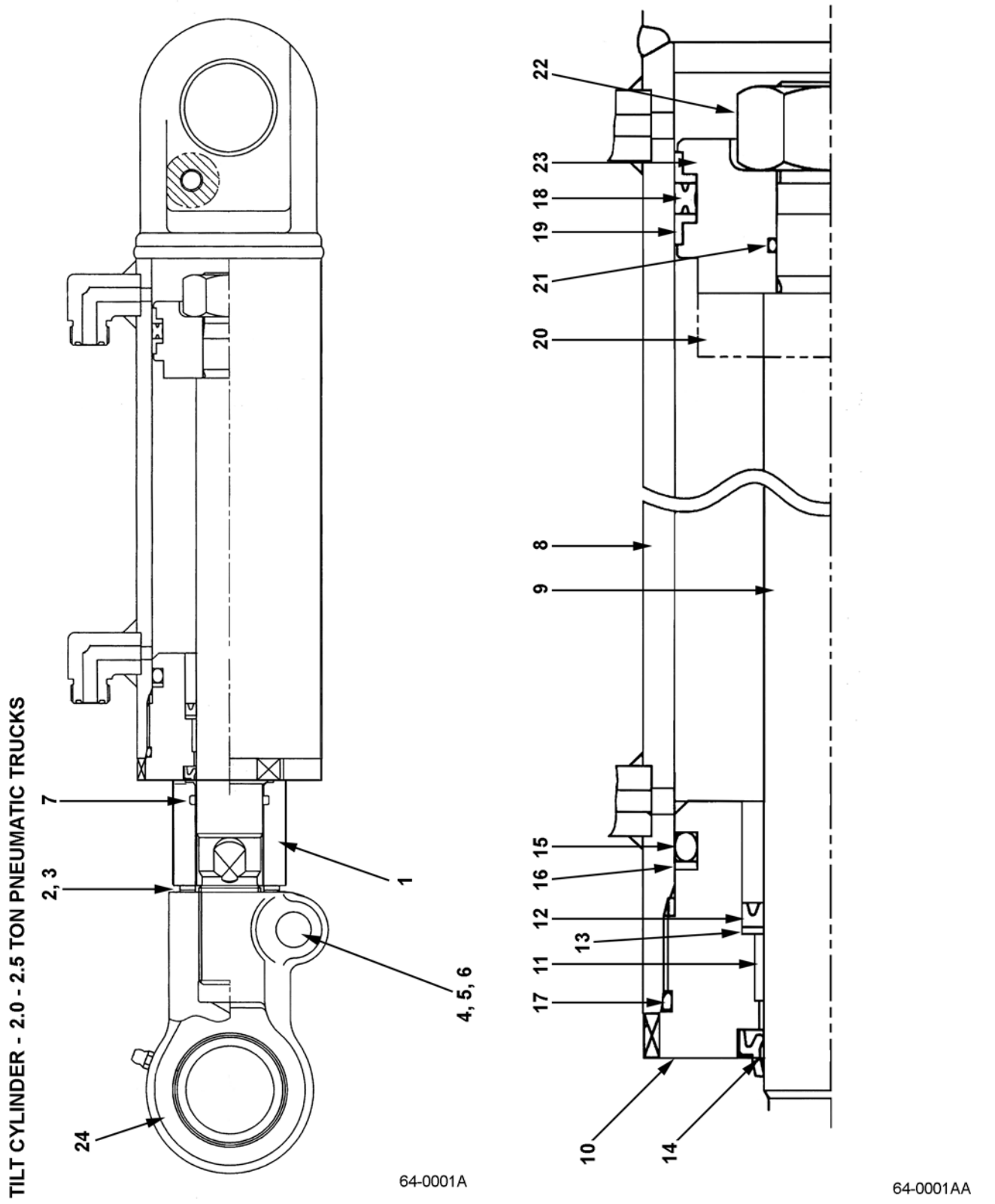

https://truckmanualshub.com/

TILT CYLINDERS - PNEUMATIC MODELS - DETAIL - S/N 200001A~ 2.0 & 2.5 TON TRUCKS

Item	Part Number	Description	Qty
	37B-1JV-A410	TILT CYL ASSY - LH (6°/5°) (3-STAGE) (70 MM)	1
	37B-1JV-A510	TILT CYL ASSY - RH (6°/5°) (3-STAGE) (70 MM)	1
1	37B-1JE-A410	SPACER (6°/5°) (ONE FOR EACH CYLINDER)	1
2	37B-1AJ-9010	SHIM - T1.0 (ALL)	3
3	37B-1AP-1010	SHIM - T2.0 (ALL)	2
	37B-1JV-A420	TILT CYL ASSY - LH (6°/12°) (2-STAGE) (70 MM)	1
	37B-1JV-A520	TILT CYL ASSY - RH (6°/12°) (2-STAGE) (70 MM)	1
1	NOT USED	SPACER	0
2	NOT USED	SHIM	0
3	NOT USED	SHIM	0
	37B-1JV-A430	TILT CYL ASSY - LH (10°/5°) (BOTTLER'S) (70 MM)	1
	37B-1JV-A530	TILT CYL ASSY - RH (10°/5°) (BOTTLER'S) (70 MM)	1
1	37B-1JE-A410	SPACER (10°/5°) (ONE FOR EACH CYLINDER)	1
2	37B-1AJ-9010	SHIM - T1.0 (ALL)	3
3	37B-1AP-1010	SHIM - T2.0 (ALL)	2
	37B-1JV-A440	TILT CYL ASSY - LH (3°/3°) (QUAD) (70 MM) (W/ SPACER)	1
	37B-1JV-A540	TILT CYL ASSY - RH (3°/3°) (QUAD) (70 MM) (W/ SPACER)	1
1	37B-1JE-A420	SPACER (3°/3°) (ONE FOR EACH CYLINDER)	1
2	37B-1AJ-9010	SHIM - T1.0 (ALL)	3
3	37B-1AP-1010	SHIM - T2.0 (ALL)	2
4	01050-51460	BOLT	2
5	01602-21442	WASHER	2
6	01582-11411	NUT	2
7	07000-13030	O-RING	1
8	SEE ASSY	TILT CYLINDER SUB-ASSY	1
9	ON65531-07057	ROD	1
10	3BB-64-A6540	HEAD	1
11	3EB-64-13280	BUSHING	1
12	3EB-64-22950	PACKING (SEAL KIT)	1
13	3EB-64-22960	BACK-UP RING (SEAL KIT)	1
14	3BB-64-A6390	DUST SEAL (SEAL KIT)	1
15	3BB-64-A6360	O-RING (SEAL KIT)	1
16	3BB-64-A6370	BACK-UP RING (SEAL KIT)	1

PARTS LIST CONTINUED ON NEXT PAGE

https://truckmanualshub.com/

TILT CYLINDERS - PNEUMATIC MODELS - DETAIL - S/N 200001A~ 2.0 & 2.5 TON TRUCKS

Item	Part Number	Description	Qty	
17	3BB-64-A6350	O-RING . . . . . (SEAL KIT)	1	
18	3BB-64-A6320	PACKING . . . . . (SEAL KIT)	1	
19	3BB-64-A6330	BACK-UP RING . . . . . (SEAL KIT)	2	
20	SEE ABOVE	SPACER	1	
21	3BB-64-A6340	O-RING . . . . . (SEAL KIT)	1	
22	3BB-64-A6530	NUT	1	
23	3BB-64-A6520	PISTON	1	
24		ROD HEAD ASSY (ORDER PARTS INDIVIDUALLY)	1	
	3BB-64-A6560	.ROD HEAD	1	
	3SB-24-51640	.PIN SEAL	2	
	07020-00001	.GREASE NIPPLE	1	
KIT	3BB-64-A6310	SEAL KIT	1	

https://truckmanualshub.com/

NOTES:

https://truckmanualshub.com/

TILT CYLINDERS - PNEUMATIC MODELS - DETAIL - S/N 200001A~ 2.8, 3.0, 3.2 & 3.5 TON TRUCKS

TILT CYLINDER - 2.8 - 3.5 TON PNEUMATIC TRUCKS

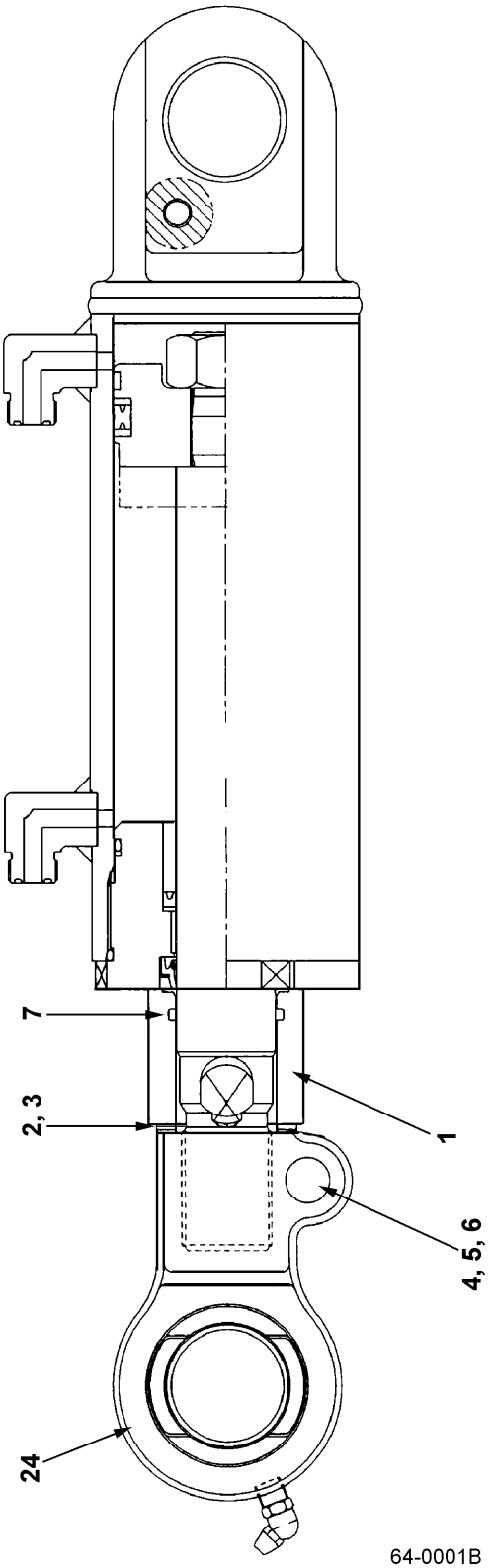

64-0001B

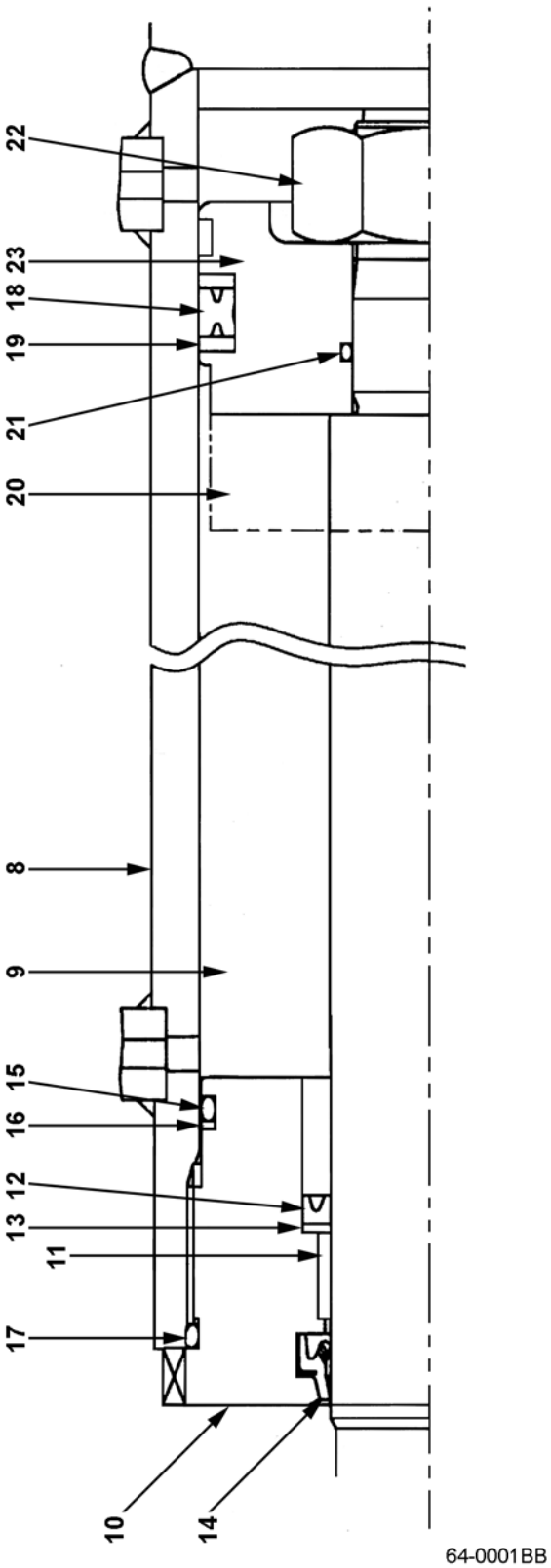

64-0001BB

https://truckmanualshub.com/

TILT CYLINDERS - PNEUMATIC MODELS - DETAIL - S/N 200001A~ 2.8, 3.0, 3.2 & 3.5 TON TRUCKS

Item	Part Number	Description	Qty
	37B-1JV-A810	TILT CYL ASSY - LH (6°/5°) (3-STAGE) (3.5T) (80 MM)	1
	37B-1JV-A910	TILT CYL ASSY - RH (6°/5°) (3-STAGE) (3.5T) (80 MM)	1
1	37B-1JE-A610	SPACER (6°/5°) (ONE FOR EACH CYLINDER)	1
2	37B-1AJ-9020	SHIM - T1.0 MM	3
3	37B-1AP-1020	SHIM - T2.0 MM	2
	37B-1JV-A820	TILT CYL ASSY - LH (6°/12°) (2-STAGE) (3.5T) (80 MM)	1
	37B-1JV-A920	TILT CYL ASSY - RH (6°/12°) (2-STAGE) (3.5T) (80 MM)	1
1	NOT USED	SPACER	0
2	NOT USED	SHIM	0
3	NOT USED	SHIM	0
4	01050-51460	BOLT	2
5	01602-21442	WASHER	2
6	01582-11411	NUT	2
7	07000-13035	O-RING	1
8	SEE ASSY	CYLINDER SUB-ASSY	1
9	NSS	ROD	1
10	3BB-64-A6440	GUIDE	1
11	3EB-64-A6450	BUSHING	1
12	3BB-64-A6270	PACKING (SEAL KIT)	1
13	3BB-64-A6280	BACK-UP RING (SEAL KIT)	1
14	3BB-64-A6290	DUST SEAL (SEAL KIT)	1
15	3BB-64-A6260	O-RING (SEAL KIT)	1
16	3BB-64-A6380	BACK-UP RING (SEAL KIT)	1
17	3BB-64-A6250	O-RING (SEAL KIT)	1
18	3BB-64-A6220	PACKING (SEAL KIT)	1
19	3BB-64-A6230	BACK-UP RING (SEAL KIT)	2
20	SEE ABOVE	SPACER	1
21	3BB-64-A6240	O-RING (SEAL KIT)	1
22	3BB-64-A6430	NUT	1
23	3BB-64-A6420	PISTON	1
24		ROD HEAD ASSY (ORDER PARTS INDIVIDUALLY)	1
	3EB-64-A7810	.ROD HEAD	1
	3EB-64-A7820	.PIN BUSHING	1
	3EB-64-A7830	.GREASE NIPPLE	1
KIT	3BB-64-A6210	SEAL KIT	1

https://truckmanualshub.com/

TILT CYLINDERS - CUSHION MODELS - DETAIL - S/N 200001A~ 2.0 & 2.5 TON TRUCKS

TILT CYLINDER - 2.0 - 2.5 TON CUSHION TRUCKS

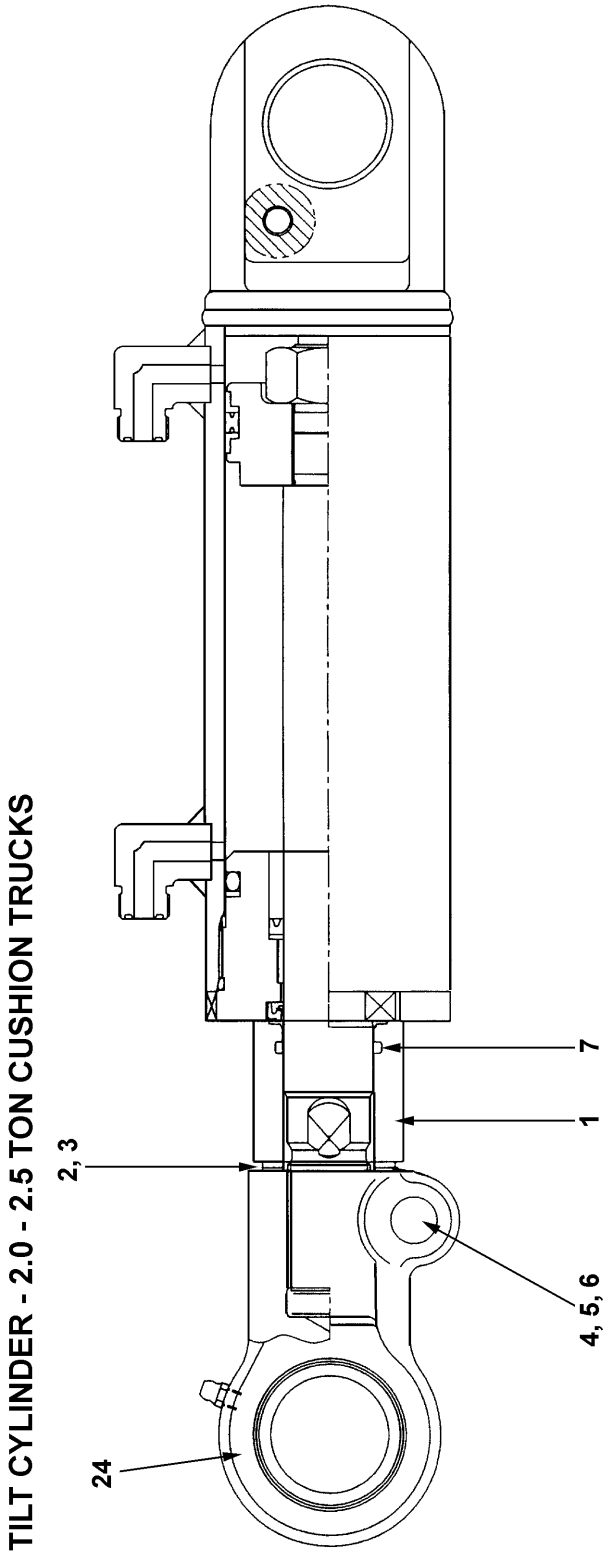

64-0001C

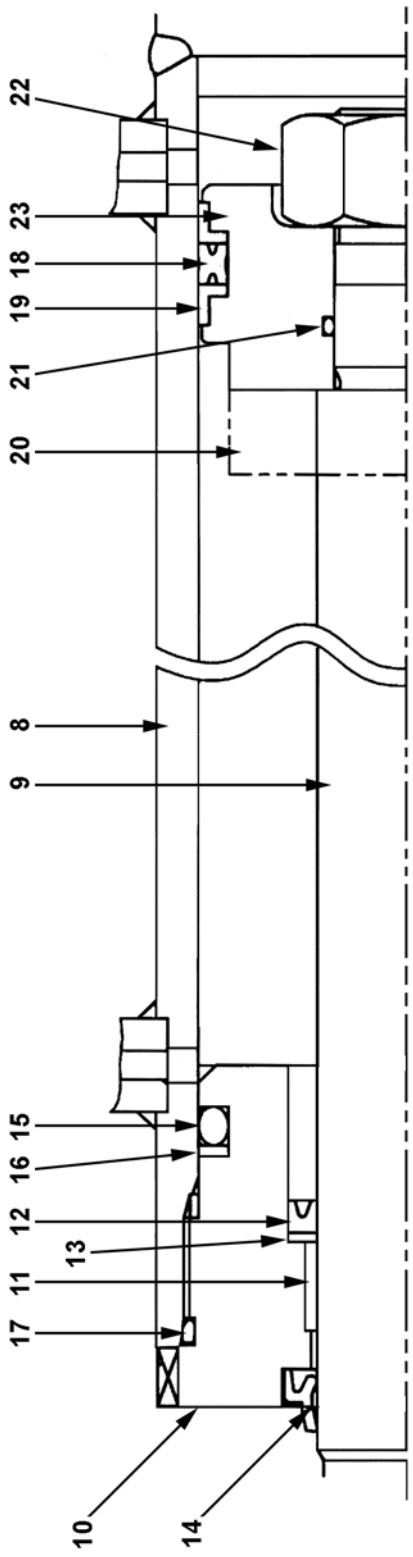

64-0001CC

https://truckmanualshub.com/

TILT CYLINDERS - CUSHION MODELS - DETAIL - S/N 200001A~ 2.0 & 2.5 TON TRUCKS

Item	Part Number	Description	Qty	
	37B-1JW-A410	TILT CYL ASSY - LH (6°/5°) (3-STAGE) (70 MM)	1	
	37B-1JW-A510	TILT CYL ASSY - RH (6°/5°) (3-STAGE) (70 MM)	1	
1	37B-1JE-A410	SPACER (6°/5°) (ONE FOR EACH CYLINDER)	1	
2	37B-1AJ-9010	SHIM - T1.0 (ALL)	3	
3	37B-1AP-1010	SHIM - T2.0 (ALL)	2	
	37B-1JW-A420	TILT CYL ASSY - LH (6°/8°) (2-STAGE) (70 MM)	1	
	37B-1JW-A520	TILT CYL ASSY - RH (6°/8°) (2-STAGE) (70 MM)	1	
1	NOT USED	SPACER	0	
2	NOT USED	SHIM	0	
3	NOT USED	SHIM	0	
	37B-1JW-A440	TILT CYL ASSY - LH (3°/3°) (QUAD) (80 MM)	1	
	37B-1JW-A540	TILT CYL ASSY - RH (3°/3°) (QUAD) (80 MM)	1	
1	37B-1JE-A420	SPACER (3°/3°) (ONE FOR EACH CYLINDER)	1	
2	37B-1AJ-9010	SHIM - T1.0 (ALL)	3	
3	37B-1AP-1010	SHIM - T2.0 (ALL)	2	
4	01050-51460	BOLT	2	
5	01602-21442	WASHER	2	
6	01582-11411	NUT	2	
7	07000-13030	O-RING	1	
8	SEE ASSY	CYLINDER SUB-ASSY	1	
9	ON65531-07057	ROD	1	
10	3BB-64-A6540	HEAD	1	
11	3EB-64-13280	BUSHING	1	
12	3EB-64-22950	PACKING (SEAL KIT)	1	
13	3EB-64-22960	BACK-UP RING (SEAL KIT)	1	
14	3BB-64-A6390	DUST SEAL (SEAL KIT)	1	
15	3BB-64-A6360	O-RING (SEAL KIT)	1	
16	3BB-64-A6370	BACK-UP RING (SEAL KIT)	1	
17	3BB-64-A6350	O-RING (SEAL KIT)	1	
18	3BB-64-A6320	PACKING (SEAL KIT)	1	
19	3BB-64-A6330	BACK-UP RING (SEAL KIT)	2	
20	SEE ABOVE	SPACER	1	
21	3BB-64-A6340	O-RING (SEAL KIT)	1	
22	3BB-64-A6530	NUT	1	
23	3BB-64-A6520	PISTON	1	
24		ROD HEAD ASSY	1	

PARTS LIST CONTINUED ON NEXT PAGE

https://truckmanualshub.com/

TILT CYLINDERS - CUSHION MODELS - DETAIL - S/N 200001A~ 2.0 & 2.5 TON TRUCKS

Item	Part Number	Description	Qty	
	3BB-64-A6560	.HEAD	1	
	3SB-24-51640	.PIN SEAL.	2	
	07020-00001	.GREASE NIPPLE	1	
KIT	3BB-64-A6310	SEAL KIT	1	

https://truckmanualshub.com/

NOTES:

https://truckmanualshub.com/

TILT CYLINDERS - CUSHION MODELS - DETAIL - S/N 200001A~ 2.8, 3.0 & 3.2 TON TRUCKS

TILT CYLINDER - 2.8 - 3.2 TON CUSHION TRUCKS

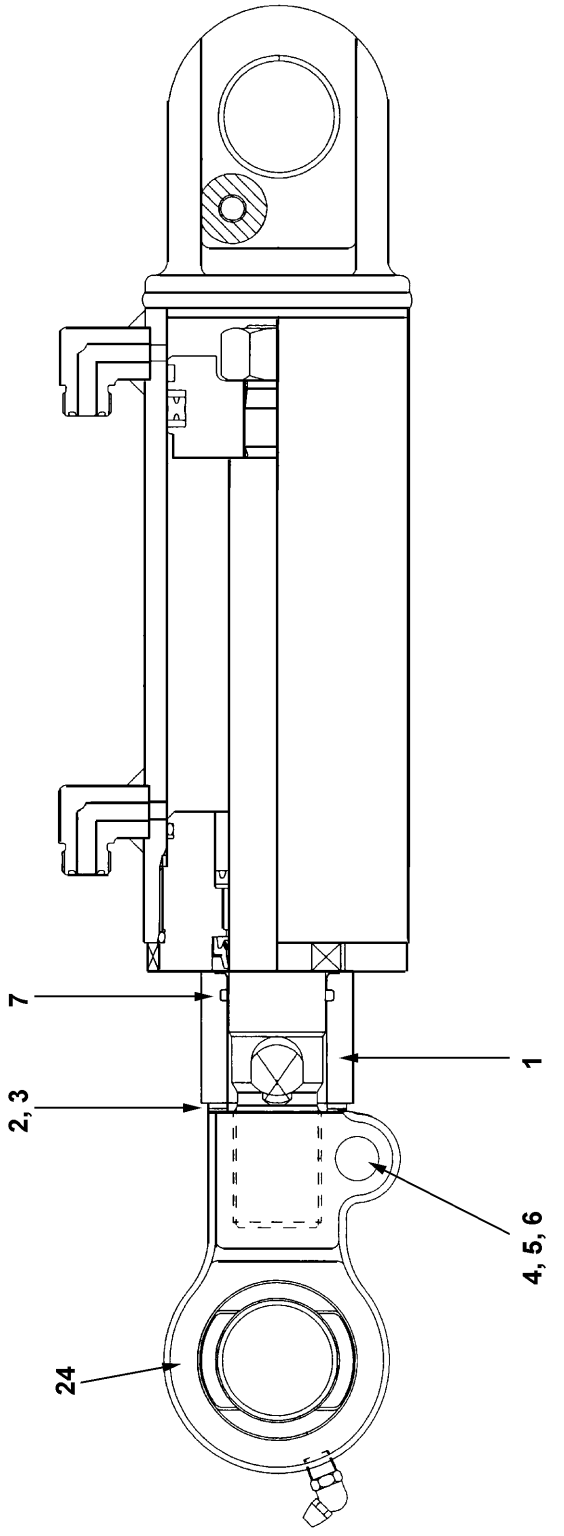

64-0001D

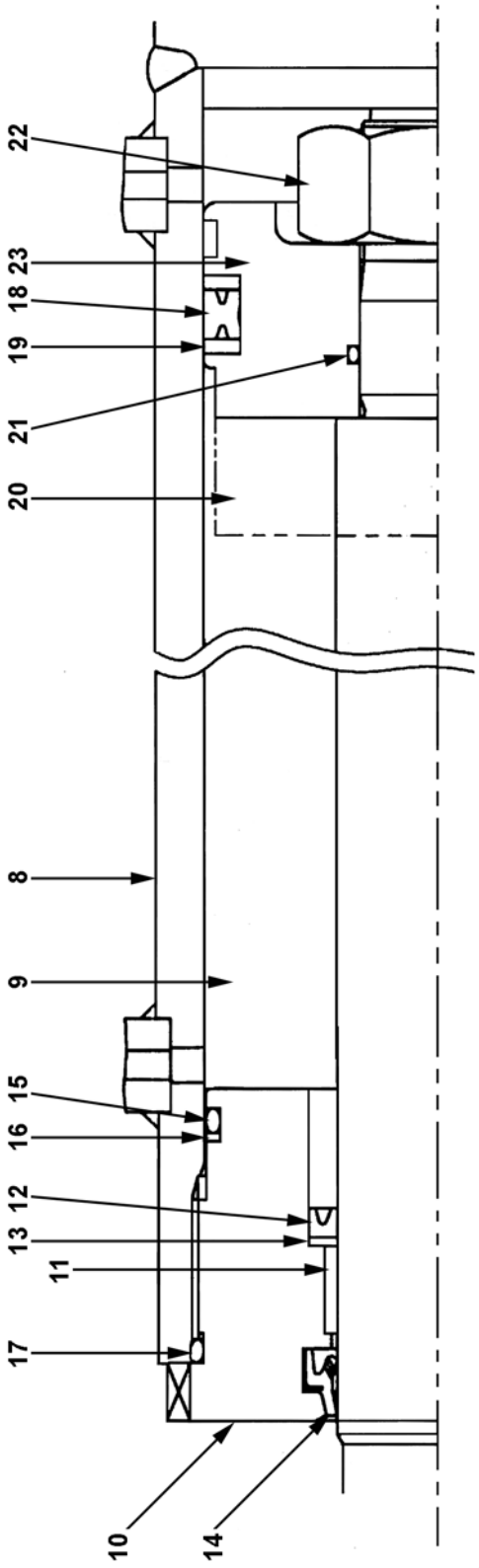

64-0001DD

https://truckmanualshub.com/

TILT CYLINDERS - CUSHION MODELS - DETAIL - S/N 200001A~ 2.8, 3.0 & 3.2 TON TRUCKS

Item	Part Number	Description	Qty	
	37B-1JW-A810	TILT CYL ASSY - LH (6°/5°) (3-STAGE) (70 MM)	1	
	37B-1JW-A910	TILT CYL ASSY - RH (6°/5°) (3-STAGE) (70 MM)	1	
1	37B-1JE-A650	SPACER (6°/5°) (ONE FOR EACH CYLINDER)	1	
2	37B-1AJ-9020	SHIM - T1.0 MM	3	
3	37B-1AP-1020	SHIM - T2.0 MM	2	
	37B-1JW-A820	TILT CYL ASSY - LH (6°/8°) (2-STAGE) (70 MM)	1	
	37B-1JW-A920	TILT CYL ASSY - RH (6°/8°) (2-STAGE) (70 MM)	1	
1	NOT USED	SPACER	0	
2	NOT USED	SHIM	0	
3	NOT USED	SHIM	0	
4	01050-51460	BOLT	2	
5	01602-21442	WASHER	2	
6	01582-11411	NUT	2	
7	07000-13035	O-RING	1	
8	SEE ASSY	CYLINDER SUB-ASSY	1	
9	ON65536-08035	ROD	1	
10	3BB-64-A6440	GUIDE	1	
11	3EB-64-A6450	BUSHING	1	
12	3BB-64-A6270	PACKING (SEAL KIT)	1	
13	3BB-64-A6280	BACK-UP RING (SEAL KIT)	1	
14	3BB-64-A6290	DUST SEAL (SEAL KIT)	1	
15	3BB-64-A6260	O-RING (SEAL KIT)	1	
16	3BB-64-A6380	BACK-UP RING (SEAL KIT)	1	
17	3BB-64-A6250	O-RING (SEAL KIT)	1	
18	3BB-64-A6220	PACKING	1	
19	3BB-64-A6230	BACK-UP RING (SEAL KIT)	2	
20	SEE ABOVE	SPACER	1	
21	3BB-64-A6240	O-RING (SEAL KIT)	1	
22	3BB-64-A6430	NUT	1	
23	3BB-64-A6420	PISTON	1	
24		ROD HEAD ASSY (ORDER PARTS INDIVIDUALLY)	1	
	3EB-64-A7810	.ROD HEAD	1	
	3EB-64-A7820	.PIN BUSHING	1	
	3EB-64-A7830	.GREASE NIPPLE	1	
KIT	3BB-64-A6210	SEAL KIT	1	

https://truckmanualshub.com/

TILT CYLINDERS - BOOT ASSY - S/N 200001A~

TILT CYLINDER BOOTS

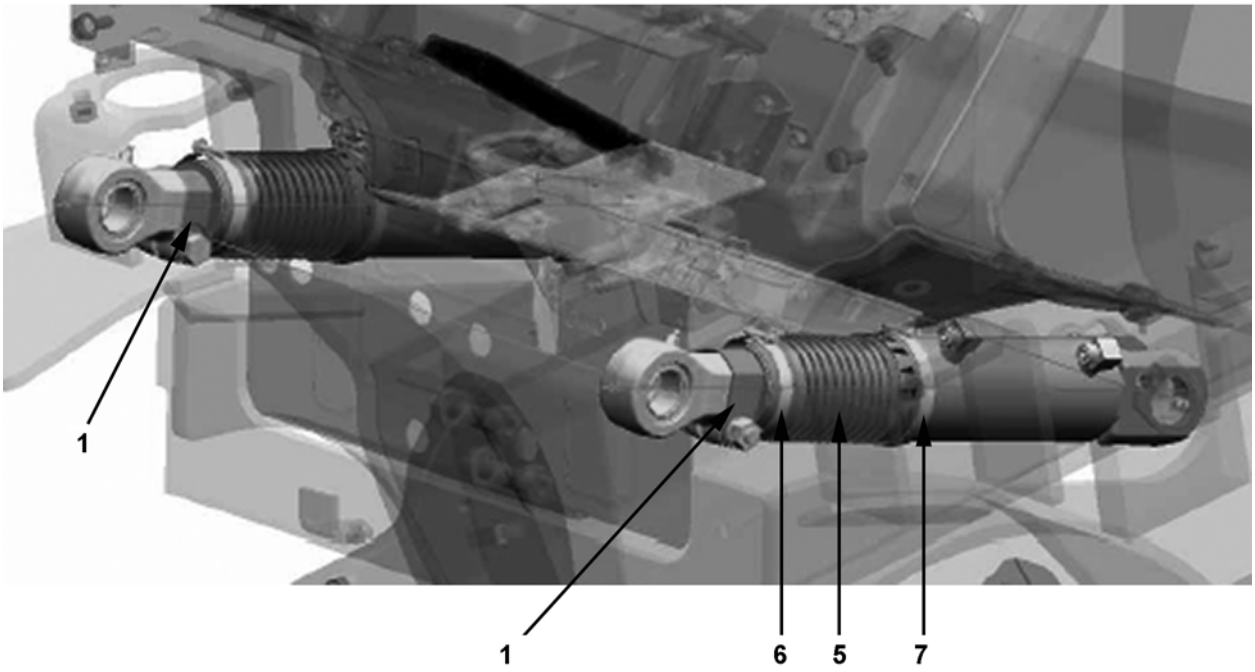

64-0010A

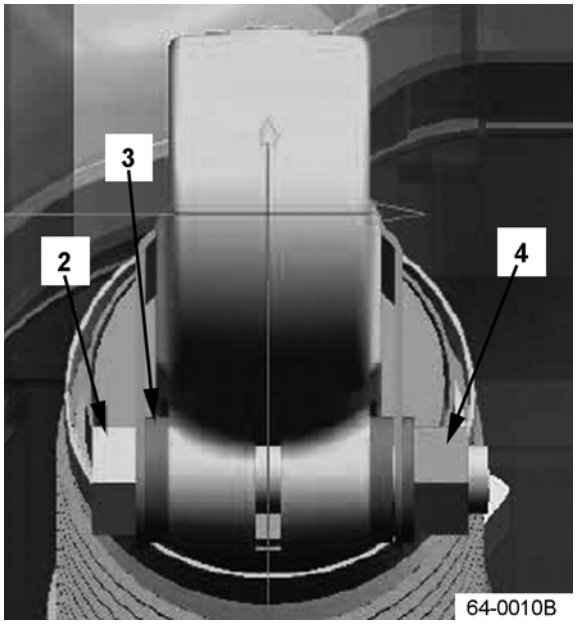

64-0010B

https://truckmanualshub.com/

TILT CYLINDERS - BOOT ASSY - S/N 200001A~

Item	Part Number	Description	Qty	
1	3EB-65-A7110	BRACKET	2	
2	01050-41470	BOLT	2	
3	01641-31423	WASHER	10	
4	01582-31411	NUT	2	
5	3EB-65-A7120	BOOT (2.0T, 2.5T)	2	
	3EB-65-A7210	BOOT (2.8T, 3.0T, 3.2T, 3.5T)	2	
6	07281-10809	CLAMP	2	
7	07281-10909	CLAMP (2.0T, 2.5T)	2	
	07281-11029	CLAMP (2.8T, 3.0T, 3.2T, 3.5T)	2	

https://truckmanualshub.com/

POWER STEERING CYLINDER - PNEUMATIC MODELS - DETAIL - S/N 200001A~

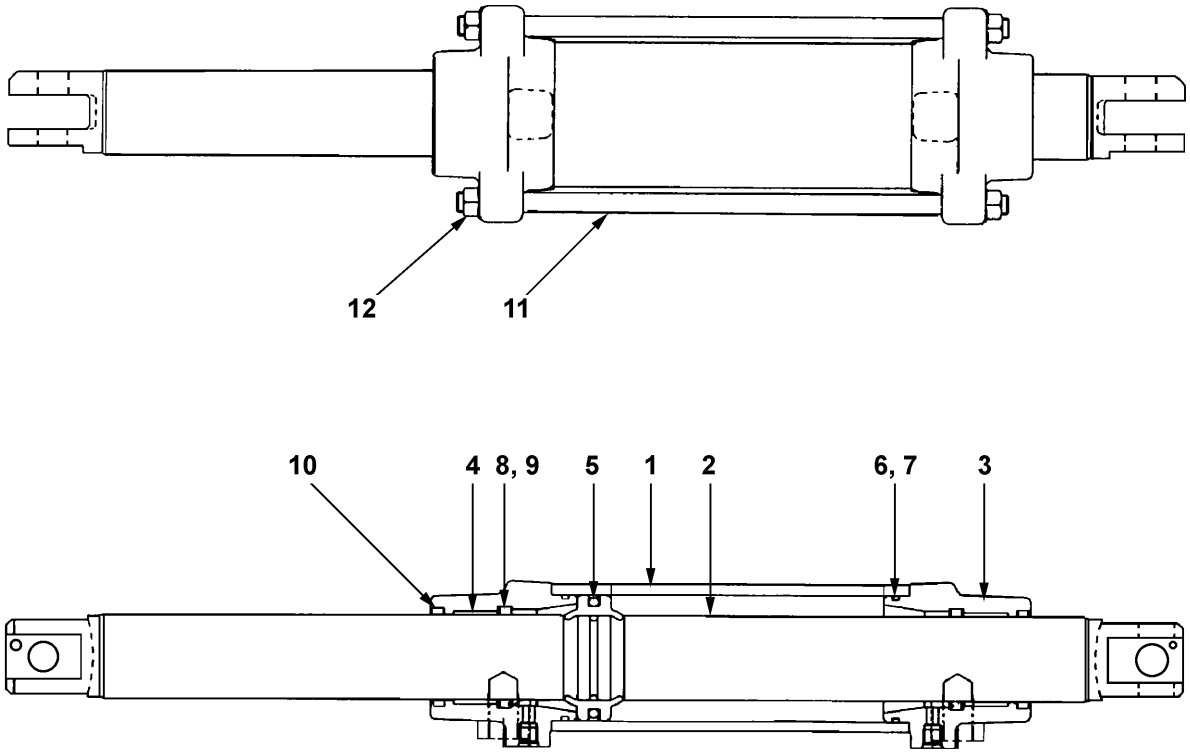

65-0001

https://truckmanualshub.com/

POWER STEERING CYLINDER - PNEUMATIC MODELS - DETAIL - S/N 200001A~

Item	Part Number	Description	Qty	
	3EB-64-A7110	POWER STEERING CYLINDER ASSY - PNEUMATIC	1	
1	ON43511-07521	CYLINDER	1	
2	ON43503-07502-B	ROD SUB-ASSY	1	
3	ON43561-07521	HEAD	2	
4	ON43566-08020	BUSHING	2	
5	ON43556-07563	PACKING (KIT)	1	
6	ON96751-03070	O-RING (KIT)	2	
7	ON43567-07567	BACK-UP RING (KIT)	2	
8	ON43564-08020	PACKING (KIT)	2	
9	ON43563-07567	BACK-UP RING (KIT)	2	
10	ON43565-07502	DUST SEAL (KIT)	2	
11	ON43535-07502	TIE ROD	2	
12	01580-11210	NUT	4	
KIT	ON43001-07502	SEAL KIT (ONE SET)	1	

https://truckmanualshub.com/

POWER STEERING CYLINDER - CUSHION MODELS - DETAIL - S/N 200001A~

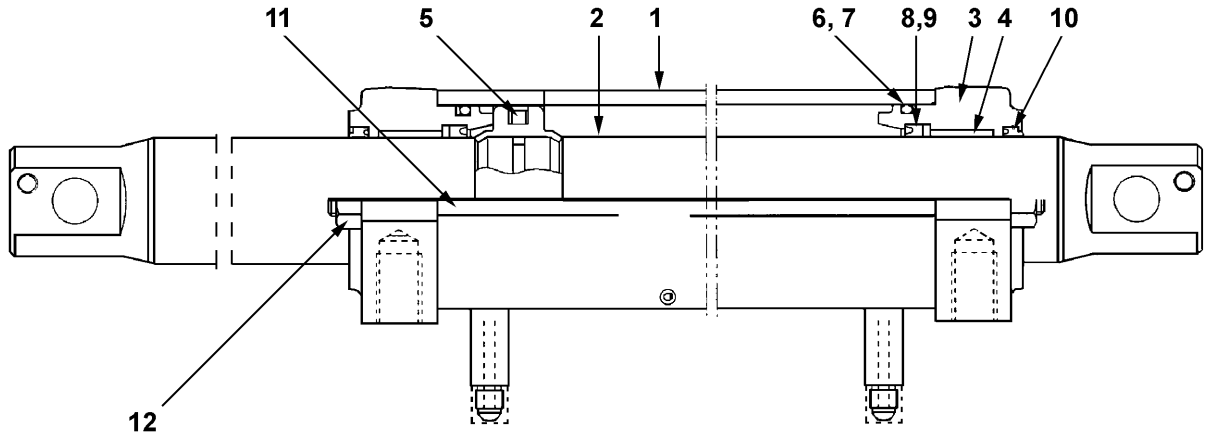

65-0002

https://truckmanualshub.com/

POWER STEERING CYLINDER - CUSHION MODELS - DETAIL - S/N 200001A~

Item	Part Number	Description	Qty	
	3EB-64-A7210	POWER STEERING CYLINDER ASSY - CUSHION	1	
1	ON43501-07526	CYLINDER SUB-ASSY.	1	
2	ON43503-07520	ROD SUB-ASSY.	1	
3	ON43561-07520	HEAD	1	
4	ON43566-08020	BUSHING	2	
5	ON43556-07563	PACKING . . . . . (KIT)	1	
6	ON96751-03070	O-RING. . . . . (KIT)	2	
7	ON43567-07567	BACK-UP RING . . . . . (KIT)	2	
8	ON43564-08020	PACKING . . . . . (KIT)	2	
9	ON43563-07567	BACK-UP RING . . . . . (KIT)	2	
10	ON43565-07502	DUST SEAL . . . . . (KIT)	2	
11	ON43535-07526	TIE ROD	2	
12	01580-11210	NUT.	4	
KIT	ON43001-07502	SEAL KIT (ONE SET).	1	

https://truckmanualshub.com/

HYDRAULIC SYSTEM - POWER STEERING CYL. PIPING - S/N 200001A~

POWER STEERING CYLINDER PIPING

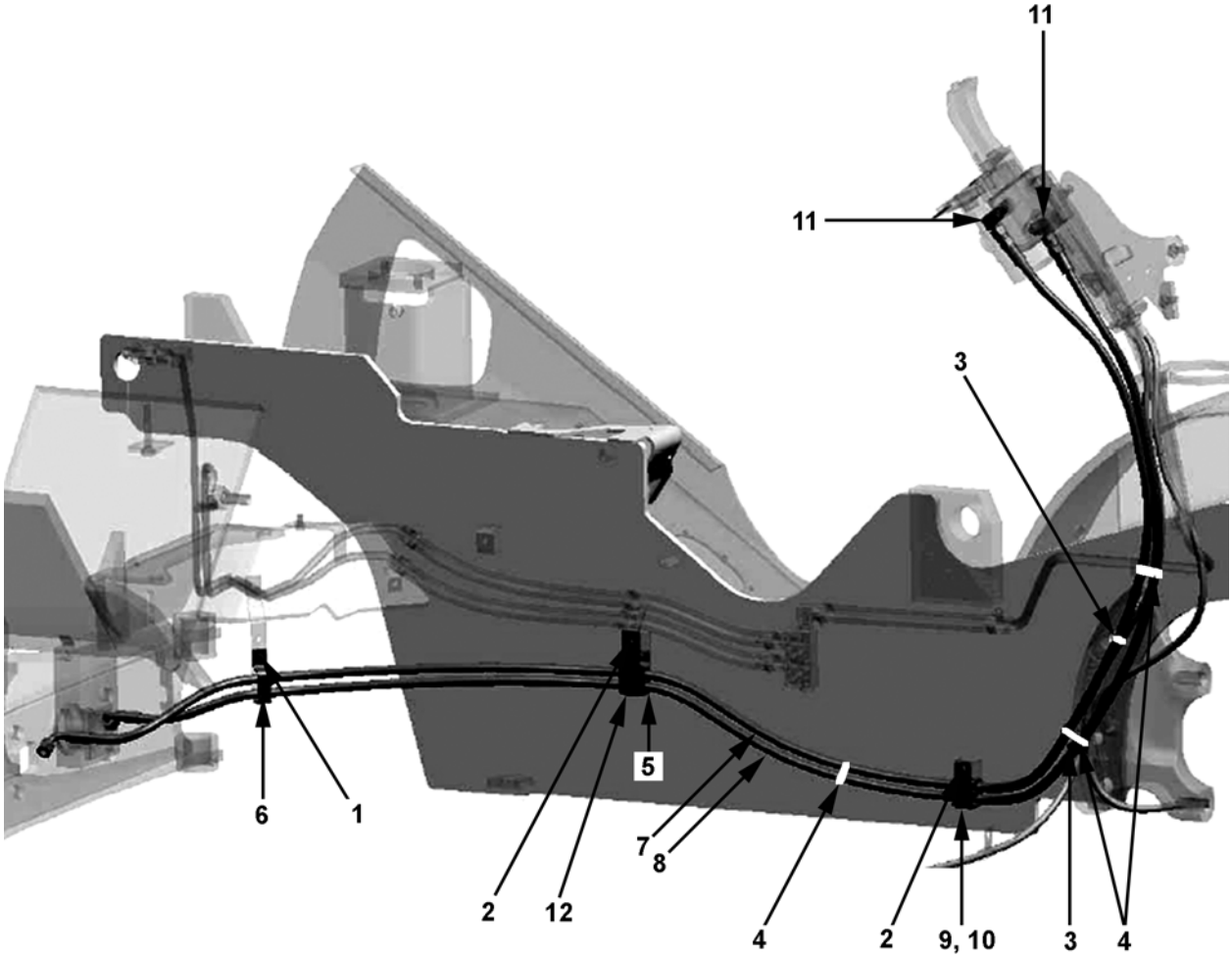

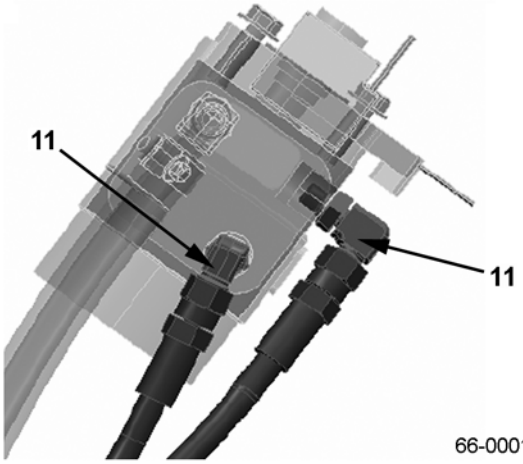

66-0001

https://truckmanualshub.com/

HYDRAULIC SYSTEM - POWER STEERING CYL. PIPING - S/N 200001A~

Item	Part Number	Description	Qty	
1	01024-80812	BOLT	1	
2	01024-80816	BOLT	2	
3	37B-1PC-5010	CLAMP	2	
4	37B-1PC-5020	CLAMP	3	
5	3EB-66-43390	CUSHION	1	
6	3EB-66-43490	CLAMP	1	
7	3EB-66-53420	HOSE	1	
8	3EB-66-53430	HOSE	1	
9	3EB-66-53440	CUSHION	1	
10	3EB-66-53450	CLAMP	1	
11	37B-1RB-5060	FITTING ASSY	2	
12	3EB-66-53532	CLAMP	1	

https://truckmanualshub.com/

HYDRAULIC SYSTEM - POWER STEERING PUMP RETURN - S/N 200001A~

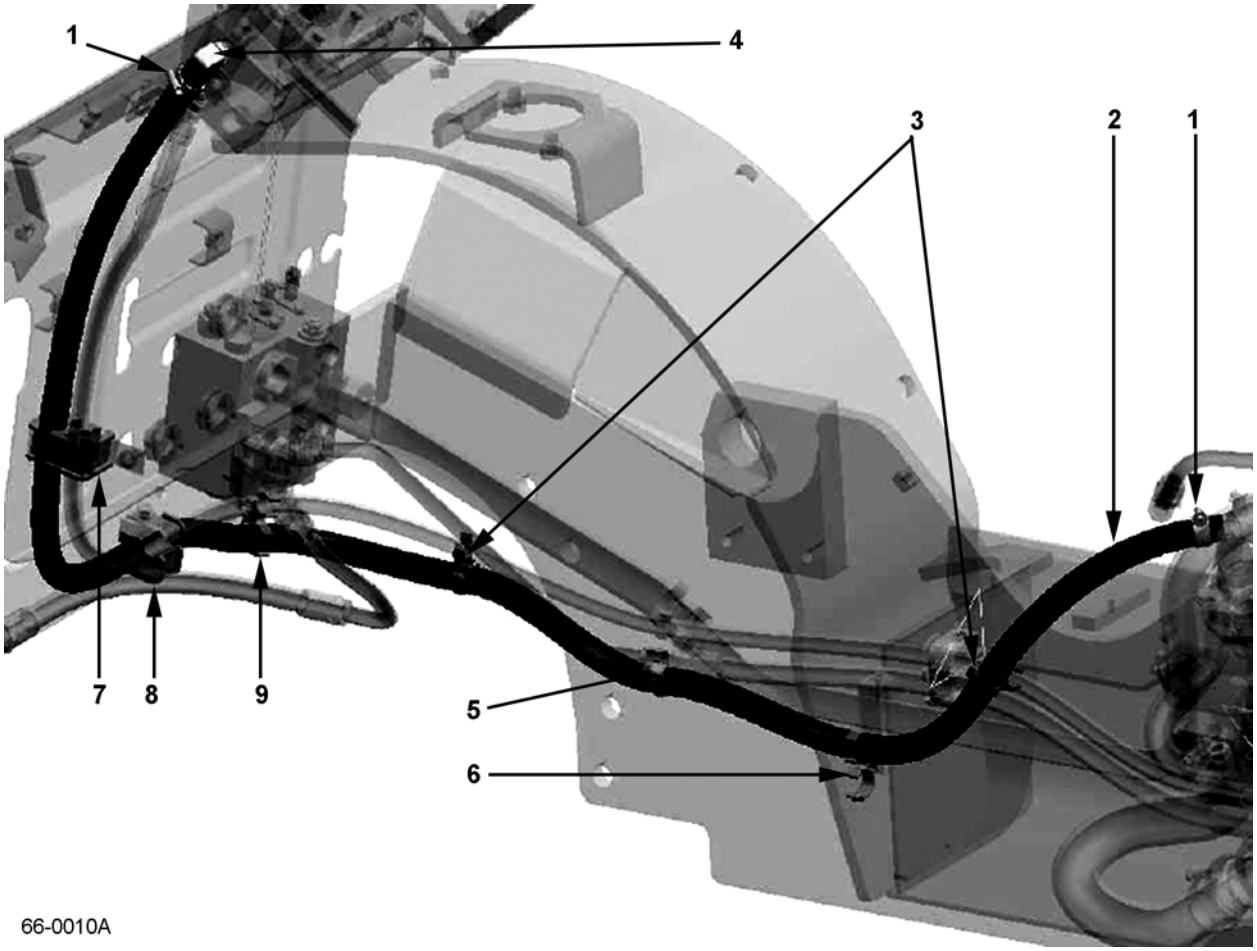

66-0010A

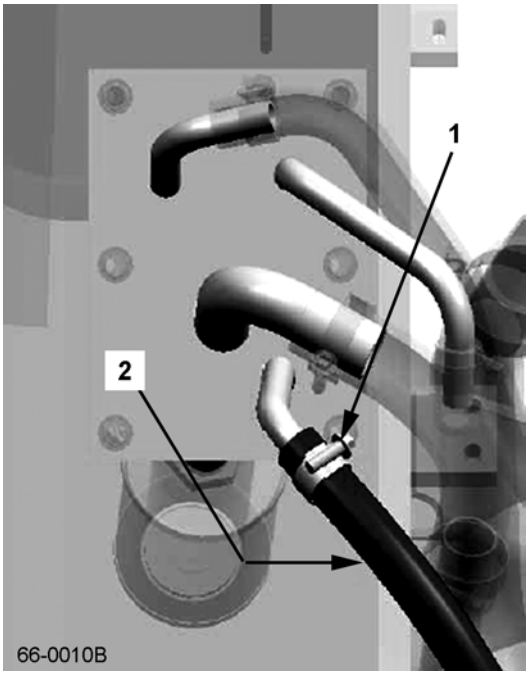

66-0010B

https://truckmanualshub.com/

HYDRAULIC SYSTEM - POWER STEERING PUMP RETURN - S/N 200001A~

Item	Part Number	Description	Qty	
1	07281-00259	CLAMP	2	
2	37A-502-8130	HOSE	1	
3	37B-1PC-5030	CLAMP	2	
4	37B-1RC-5010	FITTING ASSY	1	
5	37B-1PC-5070	CLAMP	1	
6	3EB-66-54220	CLAMP	1	
7	3EB-66-52180	CLAMP	1	
8	3EB-66-51170	CLAMP	1	
9	3EB-66-52190	CLAMP	1	

https://truckmanualshub.com/

HYDRAULIC SYSTEM - TANK COVER (W/O POWER BRAKES) - S/N 200001A~

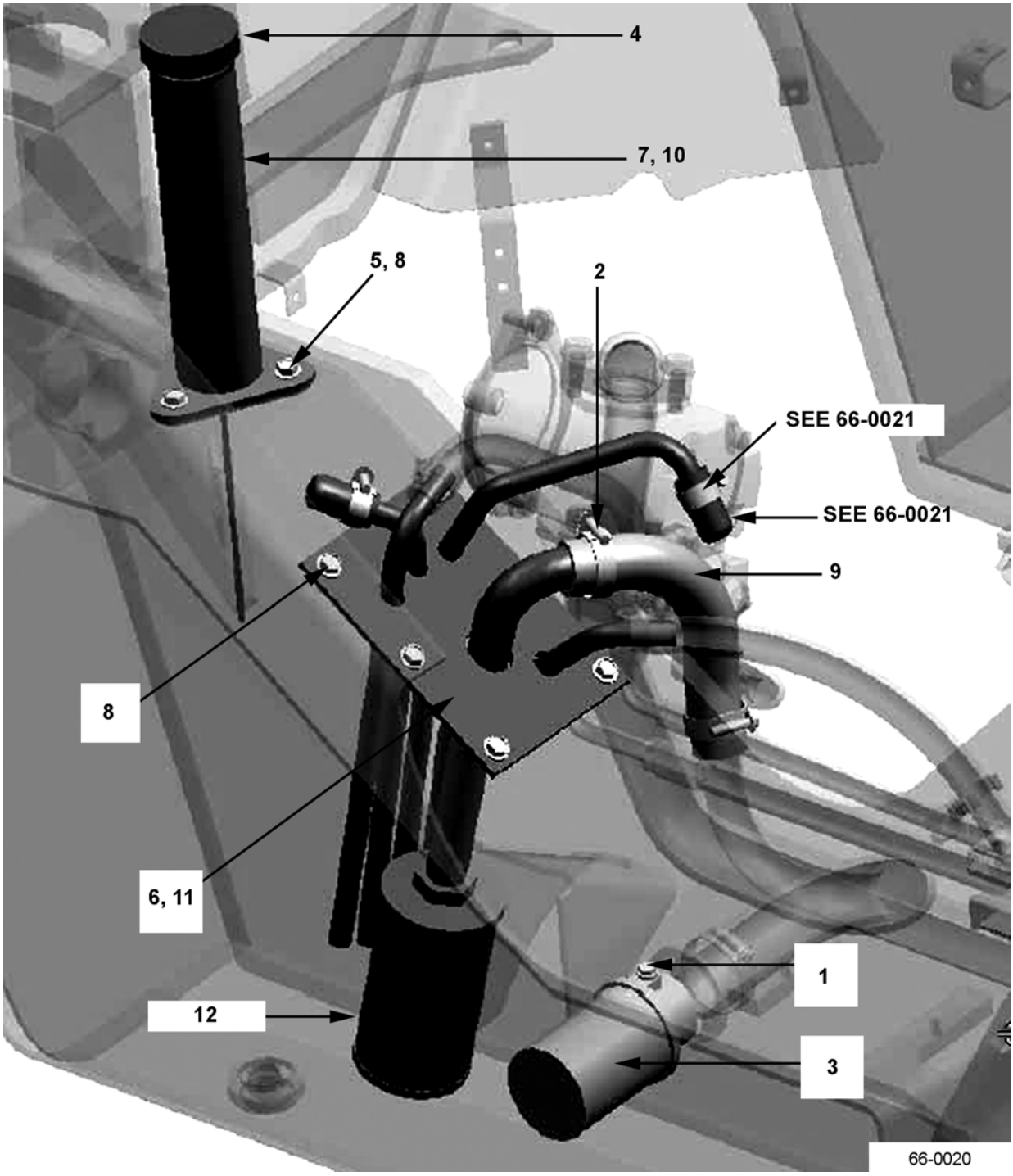

https://truckmanualshub.com/

HYDRAULIC SYSTEM - TANK COVER (W/O POWER BRAKES) - S/N 200001A~

Item	Part Number	Description	Qty	
1	01024-80616	BOLT	1	
2	07281-00419	CLAMP	2	
3	34B-66-15180	STRAINER, HYD. TANK	1	
4	37B-1PB-4030	BREATHER	1	
5	3EB-55-47130	COLLAR	3	
6	3EB-66-43620	GASKET	1	
7	3EB-66-43661	GASKET	1	
8	3EB-66-43670	BOLT	9	
9	3EB-66-53830	HOSE	1	
10	3EB-66-53840	PIPE	1	
11	3EB-66-59030	COVER	1	
12	3EB-66-43630	HYDRAULIC TANK FILTER	1	

https://truckmanualshub.com/

HYDRAULIC SYSTEM - TANK COVER (W/ POWER BRAKES) - S/N 200001A~ 3.5 TON TRUCKS

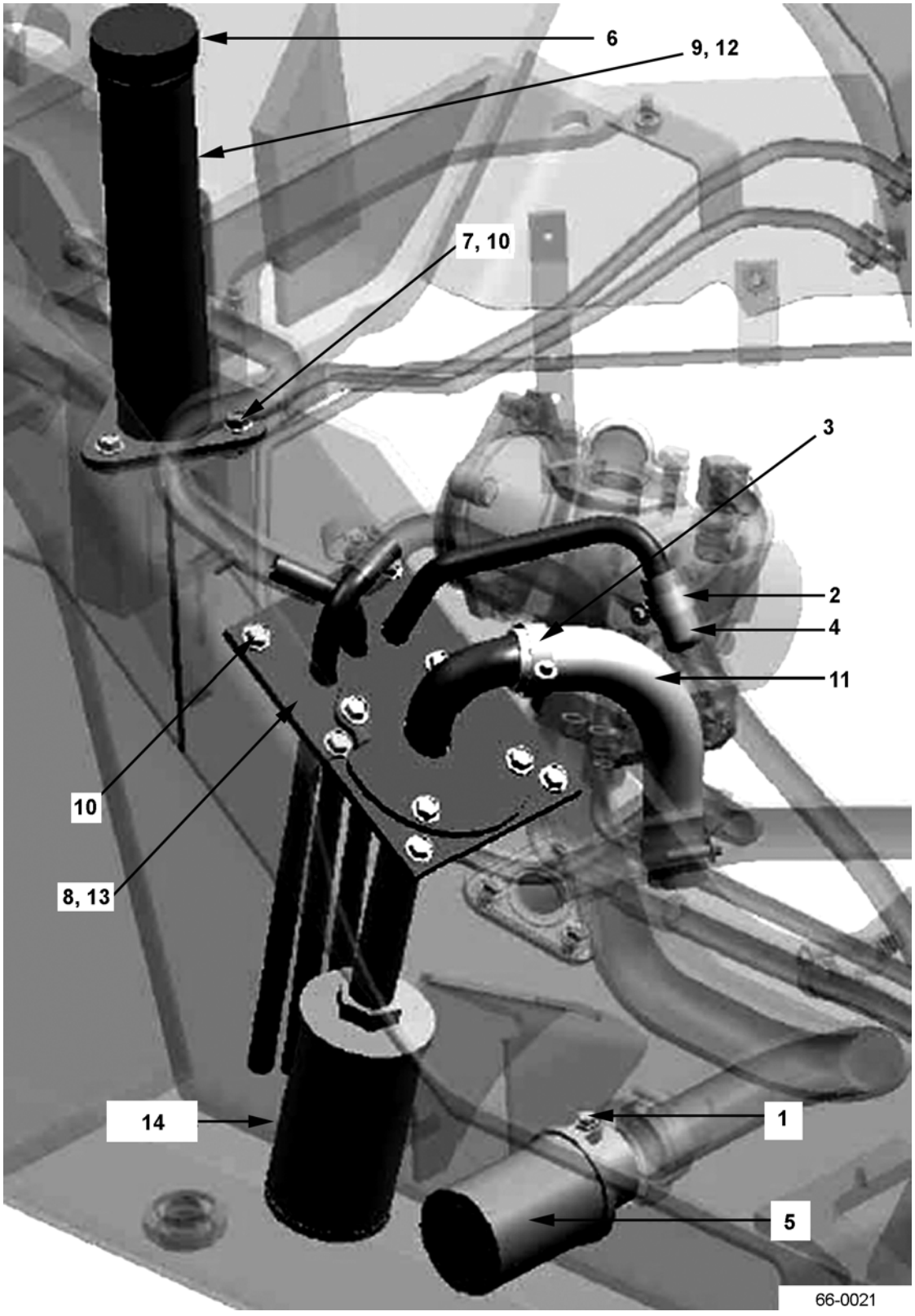

https://truckmanualshub.com/

HYDRAULIC SYSTEM - TANK COVER (W/ POWER BRAKES) - S/N 200001A~ 3.5 TON TRUCKS

Item	Part Number	Description	Qty	
1	01024-80616	BOLT	1	
2	07281-00259	CLAMP	1	
3	07281-00419	CLAMP	2	
4	34A-76-42110	CAP	1	
5	34B-66-15180	STRAINER, HYD. TANK	1	
6	37B-1PB-4040	BREATHER	1	
7	3EB-55-47130	COLLAR	3	
8	3EB-66-43620	GASKET	1	
9	3EB-66-43661	GASKET	1	
10	3EB-66-43670	BOLT	9	
11	3EB-66-53830	HOSE	1	
12	3EB-66-53840	PIPE	1	
13	3EB-66-59070	COVER	1	
14	3EB-66-43630	HYDRAULIC TANK FILTER	1	

https://truckmanualshub.com/

HYDRAULIC SYSTEM - RETURN PIPING - S/N 200001A~

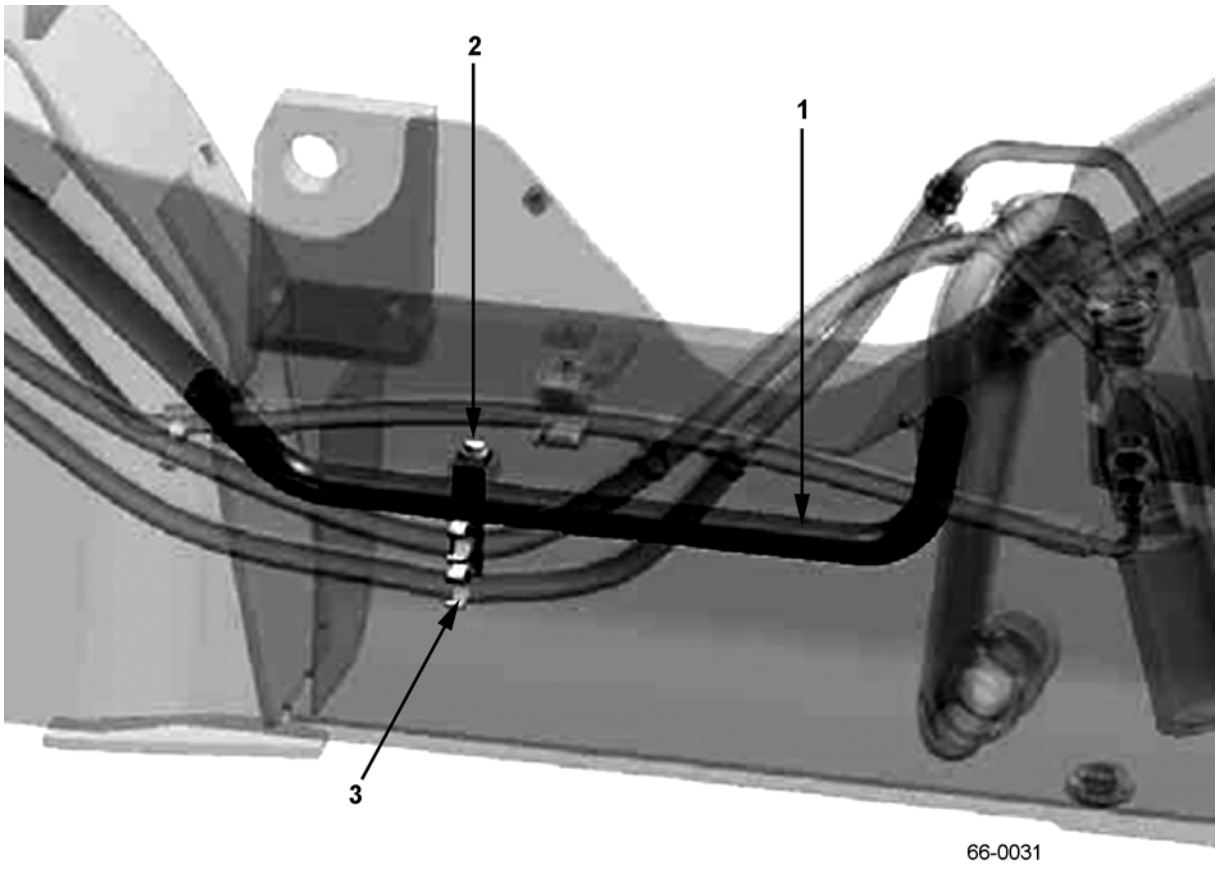

https://truckmanualshub.com/

HYDRAULIC SYSTEM - RETURN PIPING - S/N 200001A~

Item	Part Number	Description	Qty	
1	3EB-66-54210	PIPE (2.0T, 2.5T, 2.8T, 3.0T, 3.2T)	1	
	3EB-66-54310	PIPE (3.5T)	1	
2	01024-80816	BOLT	1	
3	3EB-66-54221	CLAMP	1	

https://truckmanualshub.com/

HYDRAULIC SYSTEM - HYD. PUMP PIPING - S/N 200001A~ FG MODELS - STD (EXCEPT POWER BRAKES)

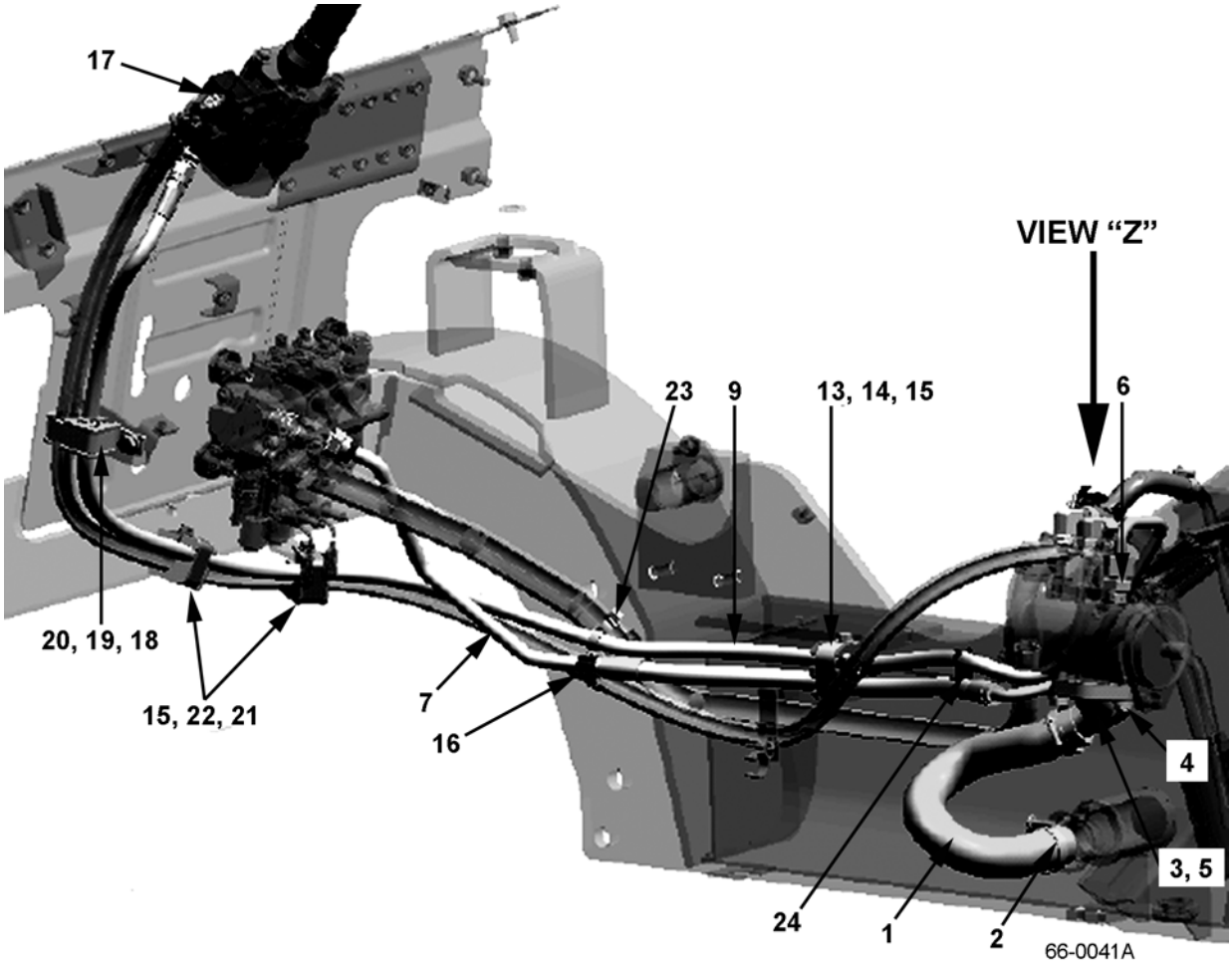

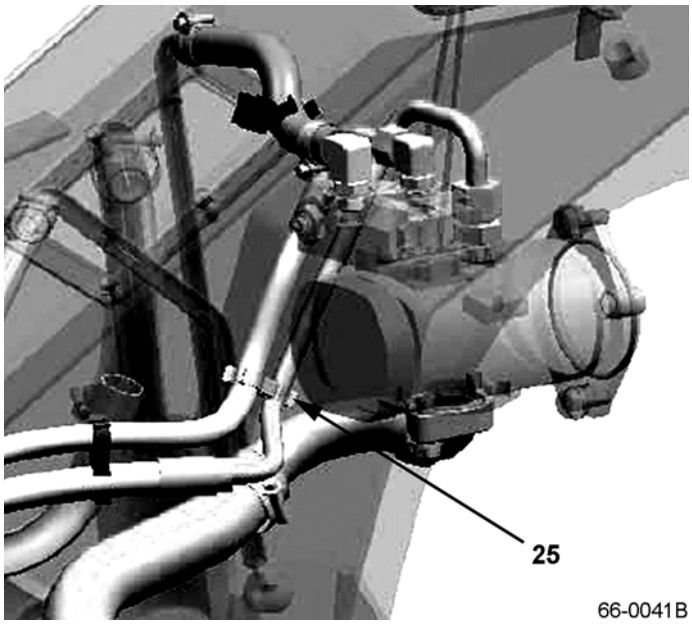

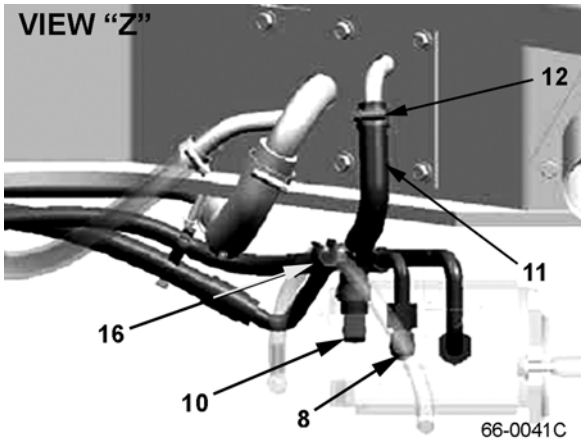

https://truckmanualshub.com/

HYDRAULIC SYSTEM - HYD. PUMP PIPING - S/N 200001A~ FG MODELS - STD (EXCEPT POWER BRAKES)

Item	Part Number	Description	Qty	
1	3EB-66-51110	HOSE	1	
2	07281-00489	CLAMP	2	
3	3EB-66-41120	PIPE	1	
4	01024-81030	BOLT	2	
5	07000-13034	O-RING	1	
6	37B-1RB-5010	FITTING ASSY	1	
7	3EB-66-A7140	HOSE	1	
8	37B-1RB-5030	FITTING ASSY	1	
9	3EB-66-A7110	HOSE	1	
10	37B-1RC-5010	FITTING ASSY	1	
11	3EB-66-51150	HOSE	1	
12	07281-00259	CLAMP	2	
13	3EB-66-41180	CLAMP	1	
14	3EB-66-41191	CUSHION	1	
15	01024-80816	BOLT	3	
16	37B-1PC-5070	CLAMP	2	
17	37B-1RB-5040	FITTING ASSY	1	
18	3EB-66-52170	CLAMP	1	
19	3EB-66-52180	CUSHION	1	
20	01024-80820	BOLT	1	
21	3EB-66-51170	CUSHION	2	
22	3EB-66-51180	CLAMP	2	
23	3EB-66-41271	CLAMP	1	
24	37B-1PC-5090	CLAMP	1	
25	3EB-66-41461	CLAMP	1	

https://truckmanualshub.com/

HYDRAULIC SYSTEM - HYD. PUMP PIPING - S/N 200001A~
PNEUMATIC FG MODELS - 3.2 & 3.5 TON (W/ POWER BRAKES)

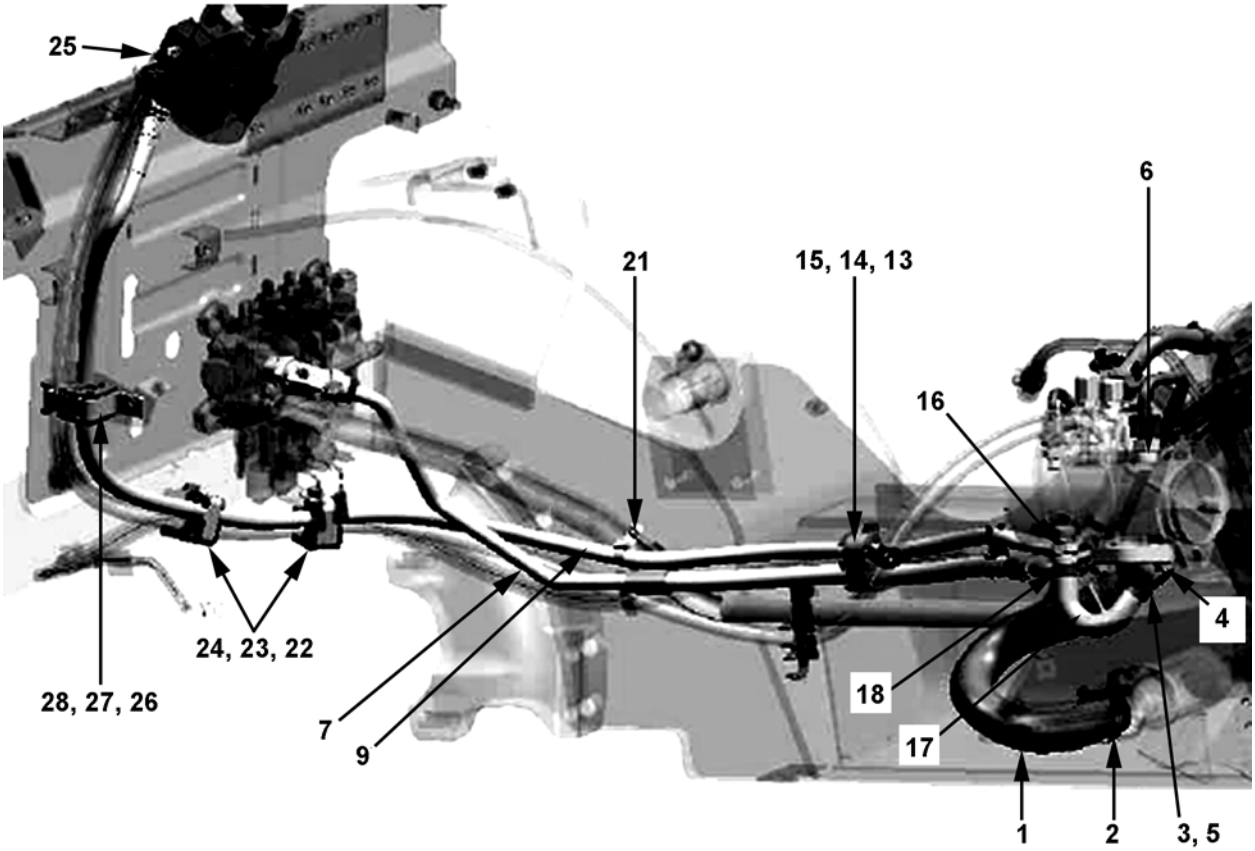

66-0042A

BACKSIDE OF PUMP

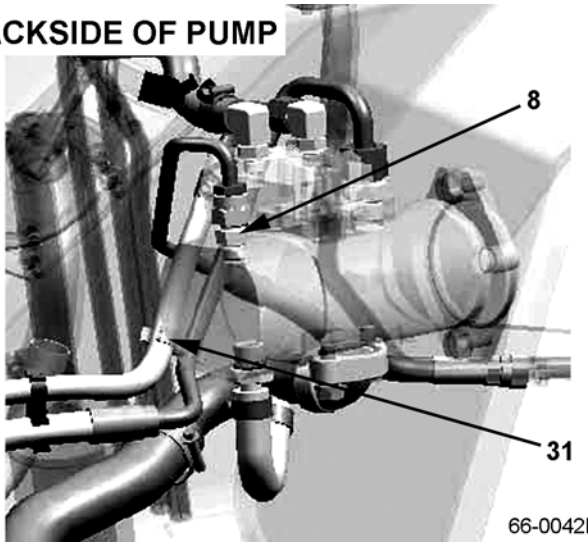

66-0042B

TOP VIEW OF PUMP

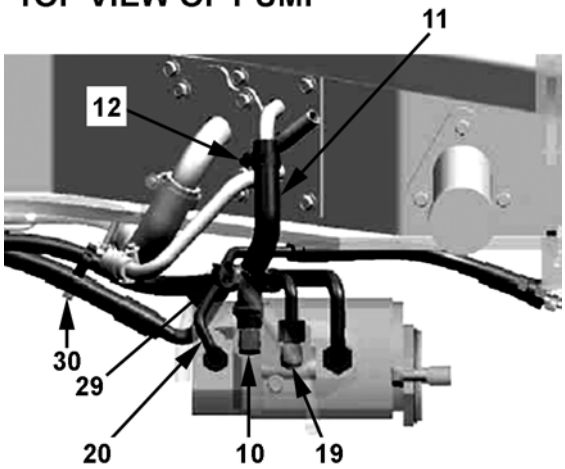

66-0042C

https://truckmanualshub.com/

HYDRAULIC SYSTEM - HYD. PUMP PIPING - S/N 200001A~
PNEUMATIC FG MODELS - 3.2 & 3.5 TON (W/ POWER BRAKES)

Item	Part Number	Description	Qty	
1	3EB-66-51110	HOSE	1	
2	07281-00489	CLAMP	2	
3	3EB-66-41220	PIPE	1	
4	01024-81030	BOLT	2	
5	07000-13034	O-RING	1	
6	37B-1RB-5010	FITTING ASSY	1	
7	3EB-66-A7140	HOSE	1	
8	37B-1RB-5020	FITTING ASSY	1	
9	3EB-66-A7110	HOSE	1	
10	37B-1RC-5010	FITTING ASSY	1	
11	3EB-66-51150	HOSE	1	
12	07281-00259	CLAMP	2	
13	3EB-66-41180	CLAMP	1	
14	3EB-66-41191	CUSHION	1	
15	01024-80816	BOLT	3	
16	37B-1PC-5070	CLAMP	2	
17	3EB-66-41210	HOSE	1	
18	07281-00259	CLAMP	2	
19	37B-1RB-5030	FITTING ASSY	1	
20	3EB-66-51411	HOSE	1	
21	3EB-66-41271	CLAMP	1	
22	3EB-66-51170	CUSHION	2	
23	3EB-66-51180	CLAMP	1	
24	01024-80816	BOLT	2	
25	37B-1RB-5040	FITTING ASSY	1	
26	3EB-66-52170	CLAMP	1	
27	01024-80820	BOLT	1	
28	3EB-66-52180	CUSHION	1	
29	37B-1PC-5070	CLAMP	1	
30	37B-1PC-5090	CLAMP	1	
31	3EB-66-41461	CLAMP	1	

https://truckmanualshub.com/

HYDRAULIC SYSTEM - HYD. PUMP PIPING - S/N 200001A~
FD MODELS - STD (EXCEPT POWER BRAKES)

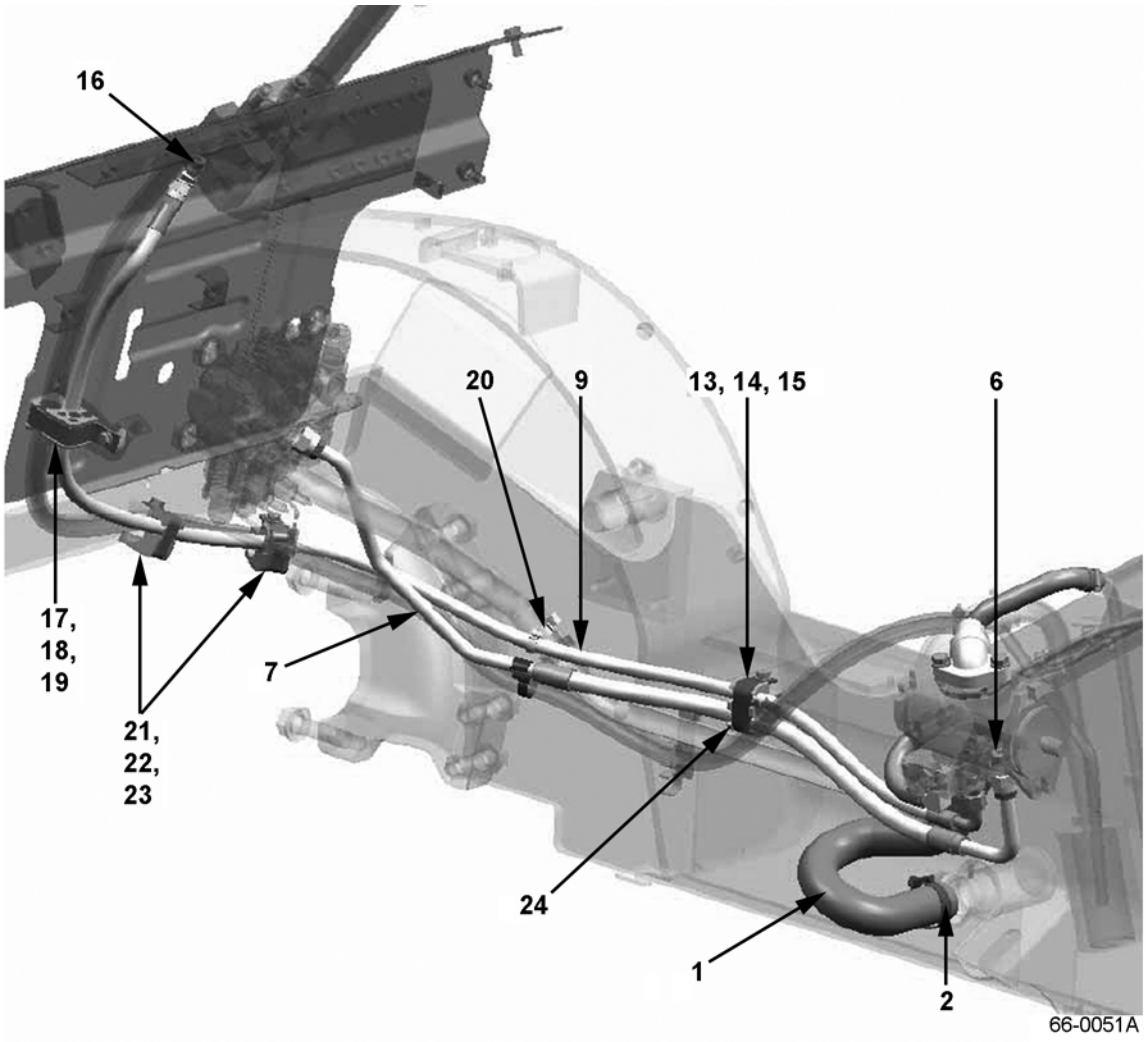

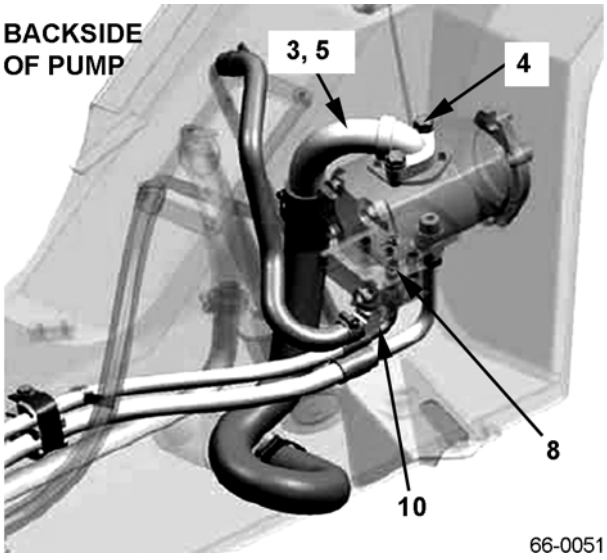

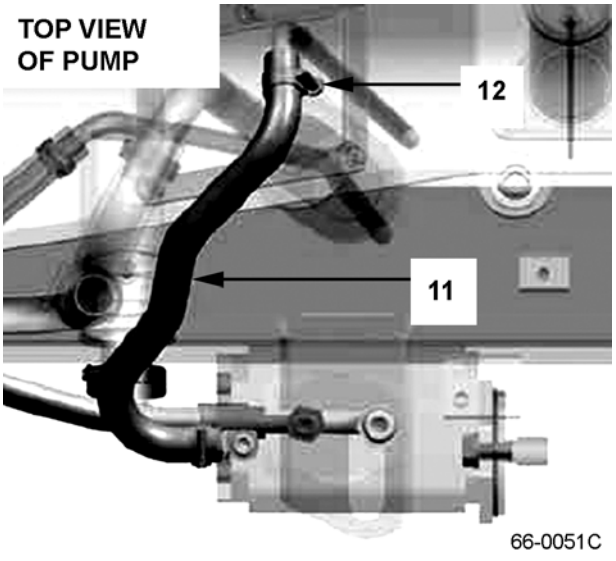

https://truckmanualshub.com/

HYDRAULIC SYSTEM - HYD. PUMP PIPING - S/N 200001A~
FD MODELS - STD (EXCEPT POWER BRAKES)

Item	Part Number	Description	Qty	
1	3EB-66-52110	HOSE	1	
2	07281-00489	CLAMP	2	
3	3EB-66-41420	PIPE	1	
4	01024-81030	BOLT	2	
5	07000-13034	O-RING	1	
6	37B-1RB-5010	FITTING ASSY	1	
7	3EB-66-A7160	HOSE	1	
8	37B-1RB-5020	FITTING ASSY	1	
9	3EB-66-52140	HOSE	1	
10	37B-1RC-5010	FITTING ASSY	1	
11	3EB-66-52150	HOSE	1	
12	07281-00259	CLAMP	2	
13	3EB-66-41180	CLAMP	1	
14	3EB-66-41191	CUSHION	1	
15	01024-80816	BOLT	1	
16	37B-1RB-5040	FITTING ASSY	1	
17	3EB-66-52170	CLAMP	1	
18	01024-80820	BOLT	1	
19	3EB-66-52180	CUSHION	1	
20	3EB-66-41271	CLAMP	1	
21	3EB-66-51170	CLAMP	2	
22	3EB-66-51180	CLAMP	2	
23	01024-80816	BOLT	2	
24	37B-1PC-5070	CLAMP	1	

https://truckmanualshub.com/

HYDRAULIC SYSTEM - HYD. PUMP PIPING - S/N 200001A~
FD MODELS - (W/ POWER BRAKES)

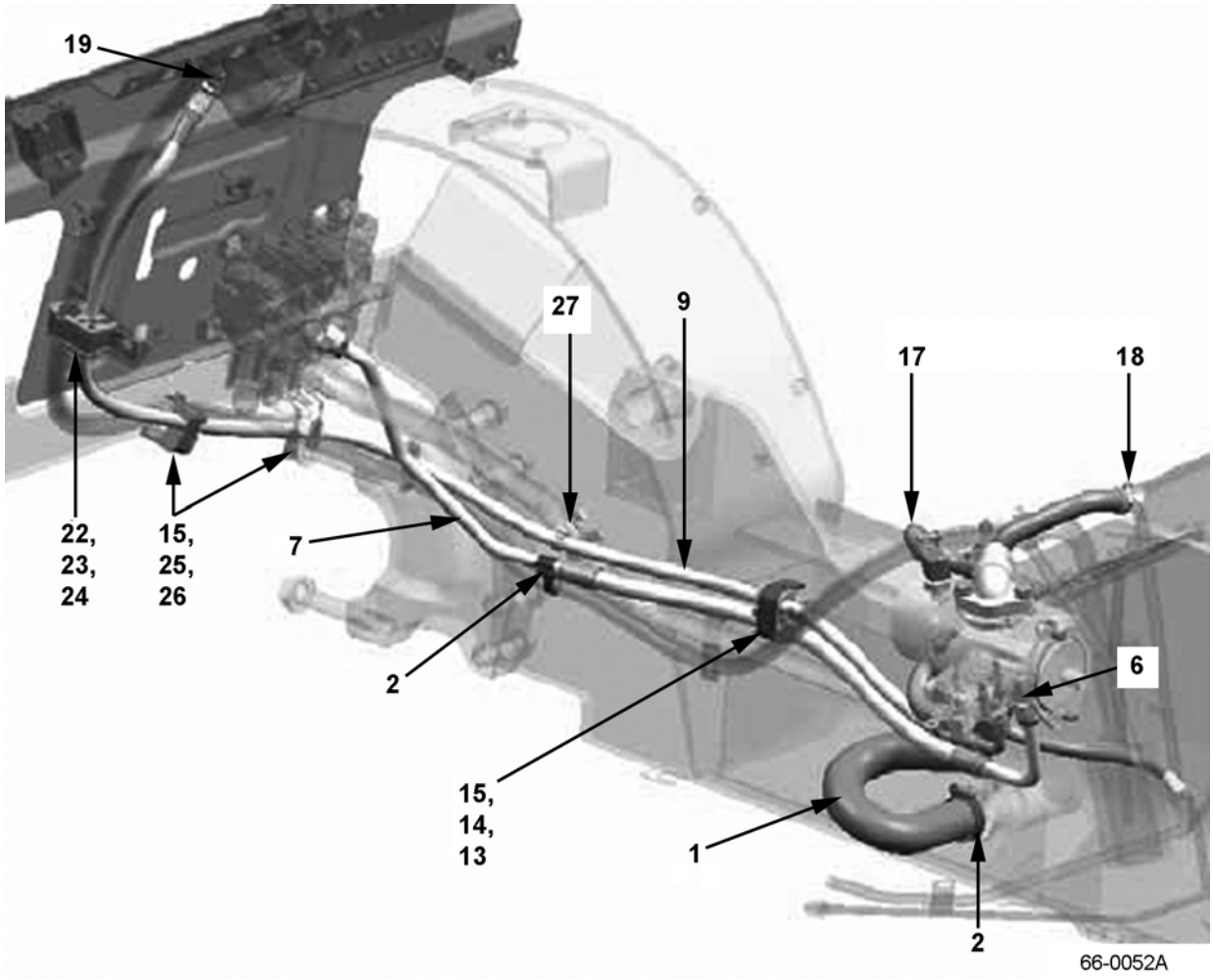

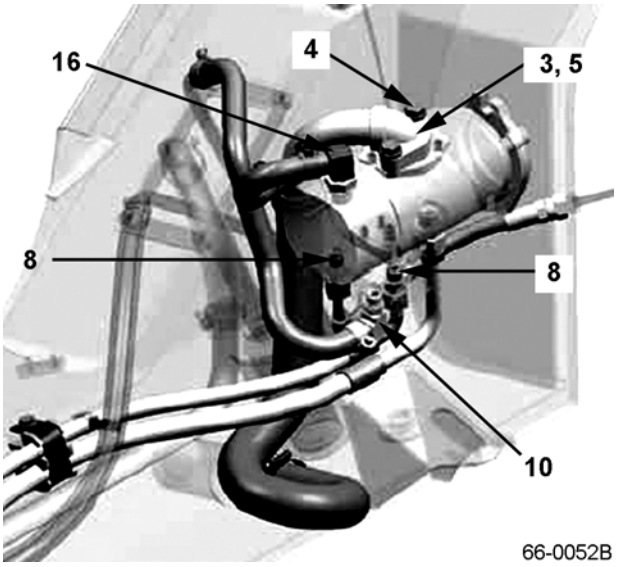

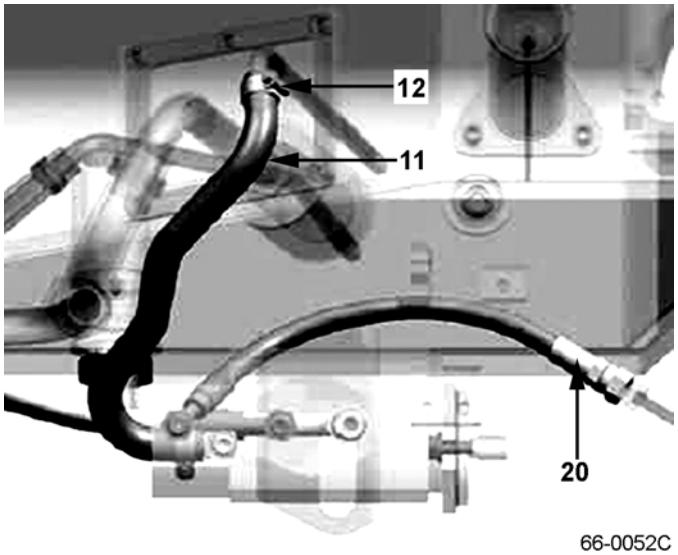

https://truckmanualshub.com/

HYDRAULIC SYSTEM - HYD. PUMP PIPING - S/N 200001A~
FD MODELS - (W/ POWER BRAKES)

Item	Part Number	Description	Qty	
1	3EB-66-52110	HOSE	1	
2	07281-00489	CLAMP	2	
3	3EB-66-41520	PIPE	1	
4	01024-81030	BOLT	2	
5	07000-13034	O-RING	1	
6	37B-1RB-5010	FITTING ASSY	1	
7	3EB-66-A7160	HOSE	1	
8	37B-1RB-5020	FITTING ASSY	2	
9	3EB-66-52140	HOSE	1	
10	37B-1RC-5010	FITTING ASSY	1	
11	3EB-66-52150	HOSE	1	
12	07281-00259	CLAMP	2	
13	3EB-66-41180	CLAMP	1	
14	3EB-66-41191	CUSHION	1	
15	01024-80816	BOLT	3	
16	37B-1RC-5030	FITTING ASSY	1	
17	3EB-66-41510	HOSE	1	
18	07281-00259	CLAMP	2	
19	37B-1RB-5040	FITTING ASSY	1	
20	3EB-66-52410	HOSE	1	
21	3EB-66-52190	CLAMP	1	
22	3EB-66-52170	CLAMP	1	
23	01024-80820	BOLT	1	
24	3EB-66-52180	CUSHION	1	
25	3EB-66-51170	CUSHION	2	
26	3EB-66-51180	CLAMP	2	
27	3EB-66-41271	CLAMP	1	
28	37B-1PC-5070	CLAMP	1	

https://truckmanualshub.com/

HYDRAULIC SYSTEM - CONTROL VALVE PIPING - S/N 200001A~

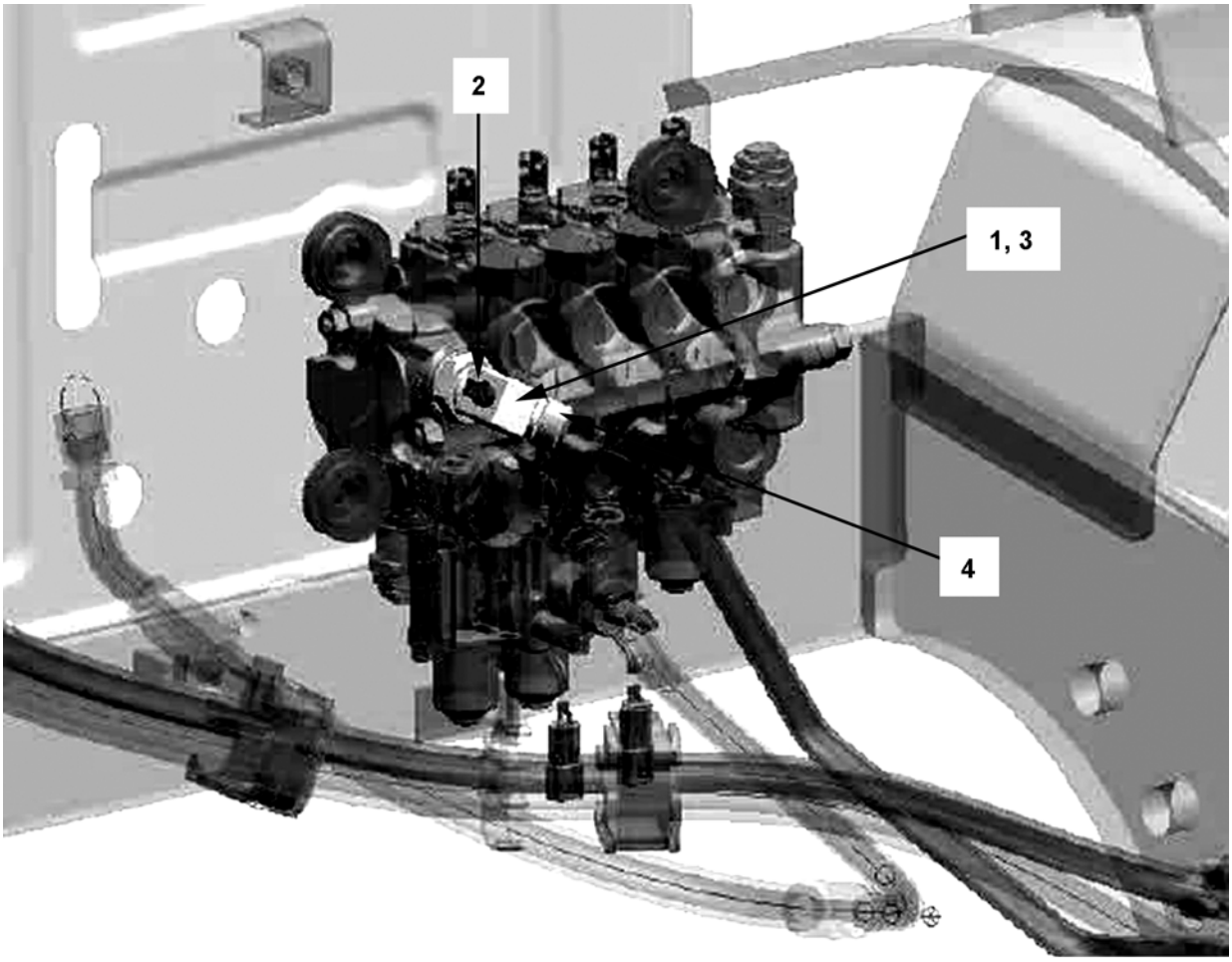

66-0061A

https://truckmanualshub.com/

HYDRAULIC SYSTEM - CONTROL VALVE PIPING - S/N 200001A~

Item	Part Number	Description	Qty	
1	3EB-66-A7410	ELBOW	1	
2	07042-30108	PLUG	1	
3	540-62-12540	O-RING	1	
4	02896-11012	O-RING	1	

https://truckmanualshub.com/

HYDRAULIC SYSTEM - LIFT PIPING AT CONTROL VALVE - S/N 200001A~ & OPTIONAL ACCUMULATOR

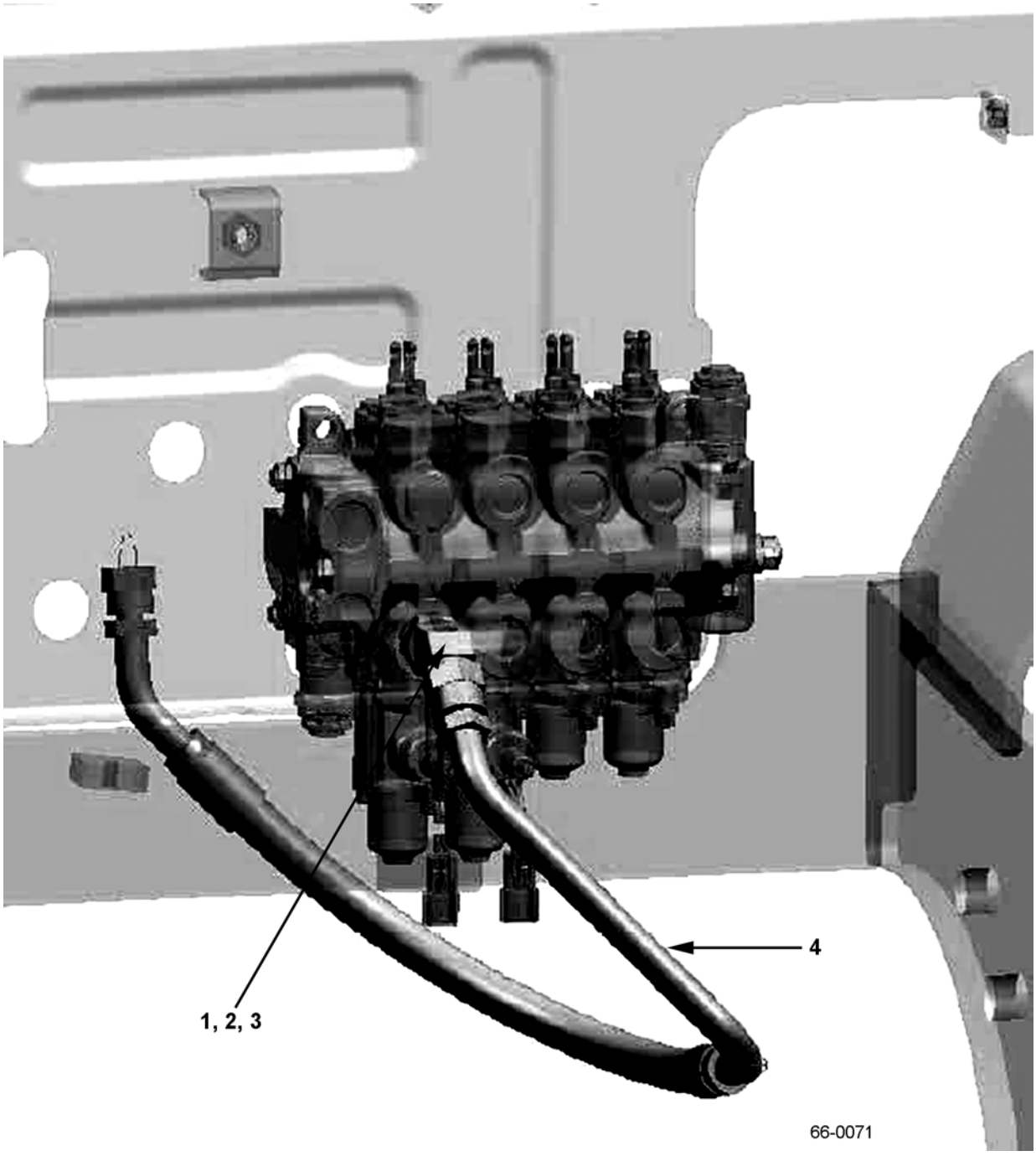

https://truckmanualshub.com/

HYDRAULIC SYSTEM - LIFT PIPING AT CONTROL VALVE - S/N 200001A~ & OPTIONAL ACCUMULATOR

Item	Part Number	Description	Qty	
1	3EB-66-A7520	ELBOW	1	
2	540-62-12540	O-RING	1	
3	07042-30211	PLUG	1	
4	3EB-66-A7510	HOSE	1	
N/S	3EB-61-F5590	ACCUMULATOR, 2 QT. (OPTION)	1	

https://truckmanualshub.com/

HYDRAULIC SYSTEM - TILT PIPING - S/N 200001A~

TILT PIPING

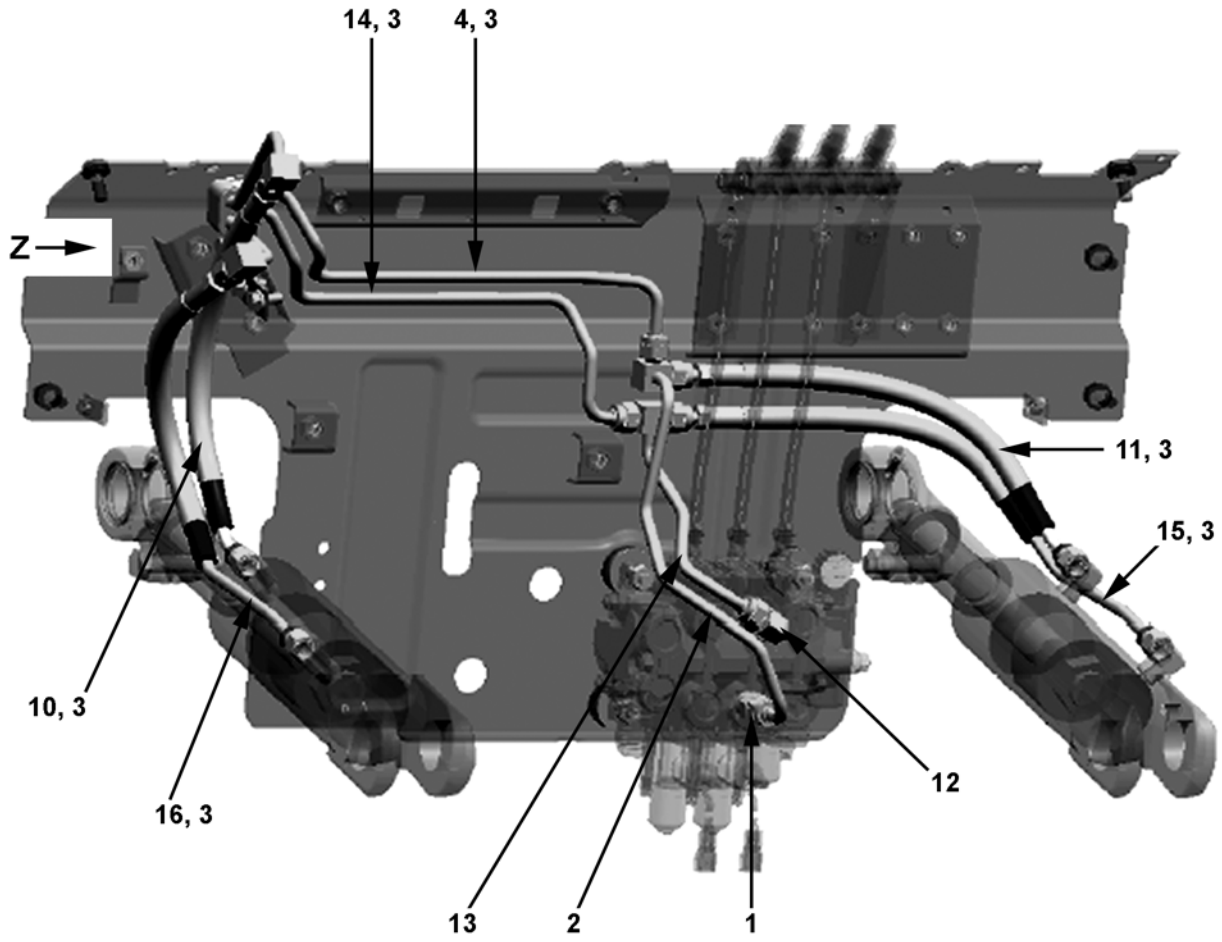

66-0081A

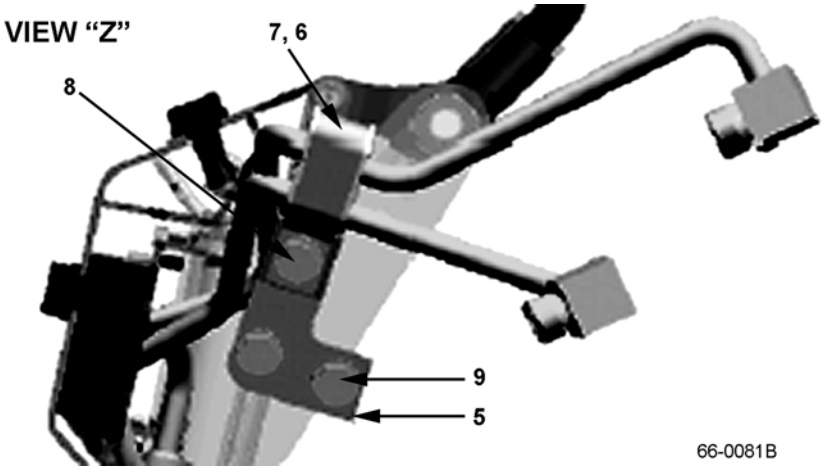

66-0081B

https://truckmanualshub.com/

HYDRAULIC SYSTEM - TILT PIPING - S/N 200001A~

Item	Part Number	Description	Qty	
1	3EB-66-A7350	FITTING	1	
2	3EB-66-A7310	PIPE	1	
3	02896-11009	O-RING	10	
4	3EB-66-A7340	PIPE	1	
5	3EB-66-53181	BRACKET	1	
6	3EB-66-33170	CLAMP	1	
7	3EB-66-42180	RUBBER	1	
8	01024-80816	BOLT	1	
9	01024-80820	BOLT	2	
10	3EB-66-A7390	HOSE	1	
11	3EB-66-A7380	HOSE	1	
12	3BB-66-A6370	ELBOW	1	
13	3EB-66-A7320	PIPE	1	
14	3EB-66-A7330	PIPE	1	
15	3EB-66-A7370	HOSE	1	
16	3EB-66-A7360	HOSE	1	

https://truckmanualshub.com/

HYDRAULIC SYSTEM - POWER BRAKE PIPING - S/N 200001A~
(ALSO SEE FIG. 66-0092 & 66-0093)

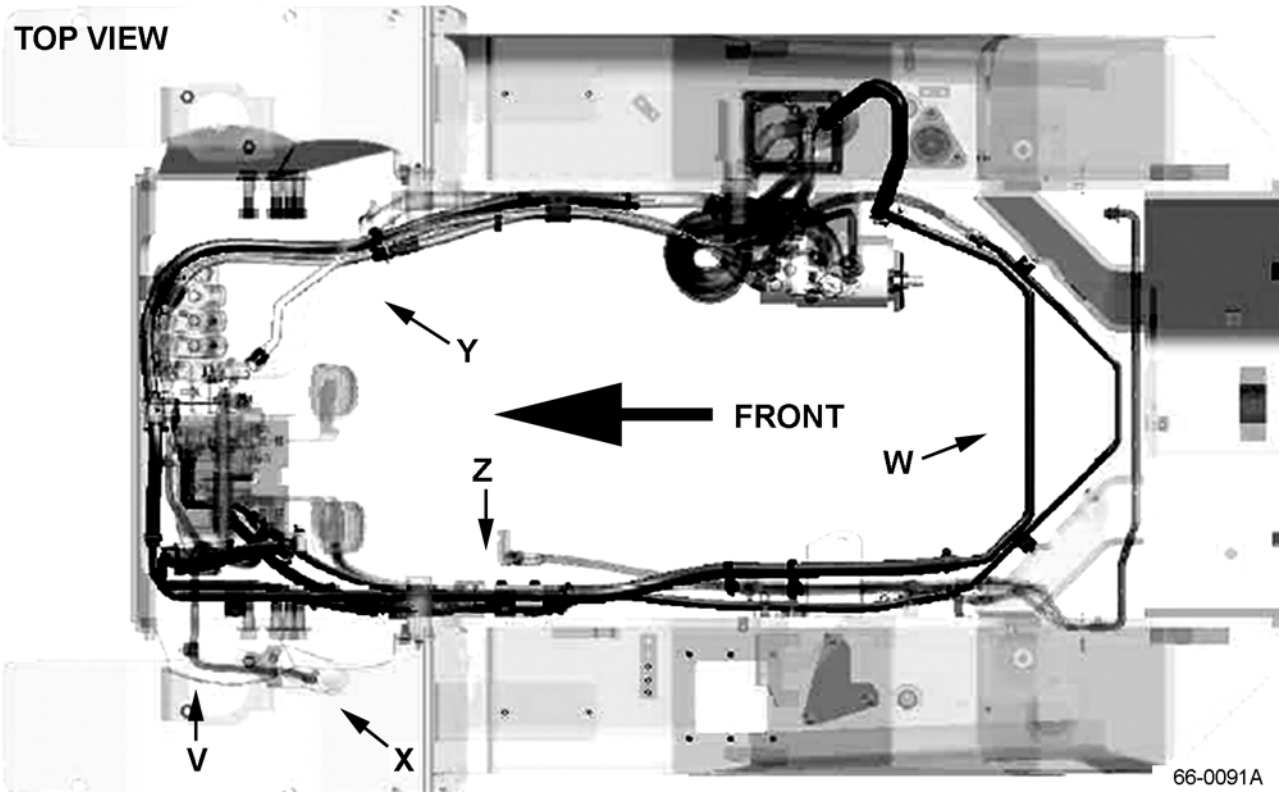

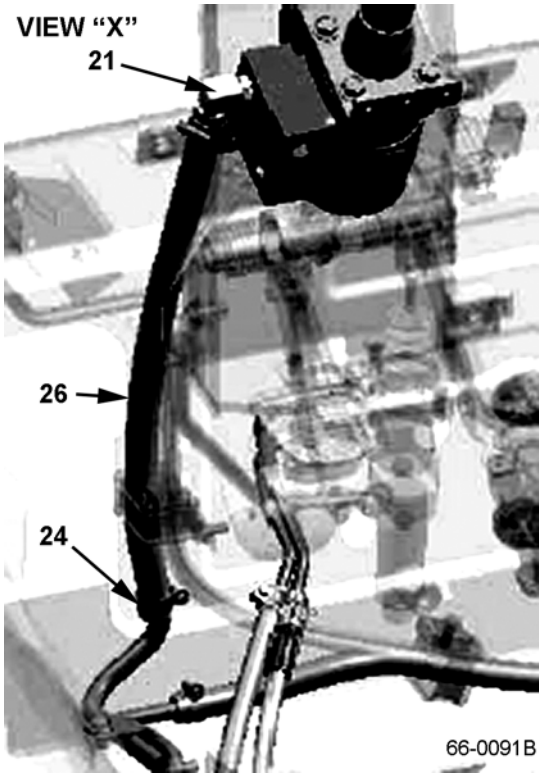

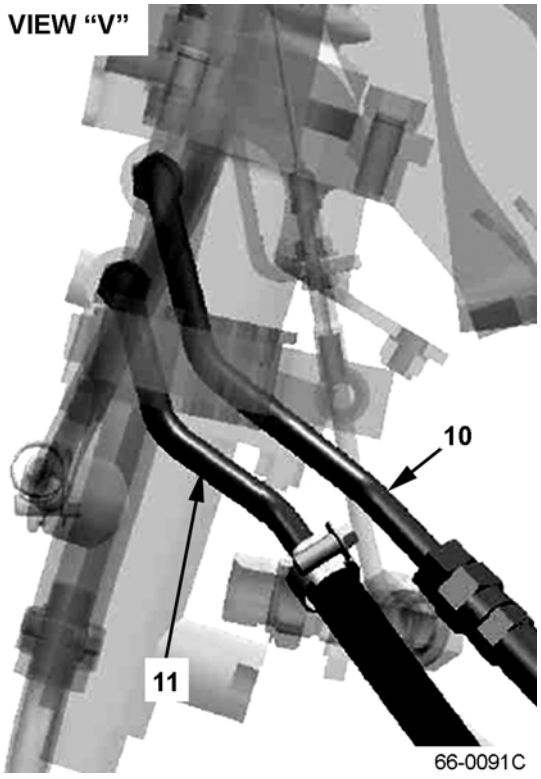

https://truckmanualshub.com/

HYDRAULIC SYSTEM - POWER BRAKE PIPING - S/N 200001A~
(ALSO SEE FIG. 66-0092 & 66-0093)

Item	Part Number	Description	Qty	
1	02896-11009	O-RING	1	
2	01024-80816	BOLT	5	
3	37B-1PW-4030	HOSE	1	
4	3EB-66-44110	FLOW DIVIDER	1	
5	01024-80850	BOLT	3	
6	3EB-66-44660	ELBOW	1	
7	3EB-66-44620	ELBOW	1	
8	540-62-13330	O-RING	2	
9	3EB-66-55180	HOSE	1	
10	3EB-66-55540	PIPE	1	
11	3EB-66-55530	PIPE	1	
12	07260-20940	HOSE	1	
13	07281-00197	CLAMP	2	
14	3EB-66-55520	HOSE	1	
15	37B-1PW-5010	HOSE	1	
16	07281-00229	CLAMP	6	
17	37B-1PW-5040	HOSE	1	
18	37B-1PC-5090	CLAMP	3	
19	3EB-94-46410	CLAMP	1	
20	3EB-66-A7920	PIPE (FG)	1	
	3EB-66-A7960	PIPE (FD)	1	
21	37B-1RC-5010	FITTING ASSY	1	
22	3EB-66-A7910	PIPE	1	
23	3EB-66-A7930	HOSE (FG)	1	
	3EB-66-A7970	HOSE (FD)	1	
24	07281-00259	CLAMP	6	
25	07260-21463	HOSE	1	
26	07260-21450	HOSE	1	
27	01024-80820	BOLT	1	
28	3EB-66-55510	PIPE	1	
29	3EA-05-46140	CLAMP	1	
30	3EA-05-46180	CLAMP	1	

https://truckmanualshub.com/

HYDRAULIC SYSTEM - POWER BRAKE PIPING - S/N 200001A~
(ALSO SEE FIG. 66-0091 & 66-0093)

SIDE VIEW

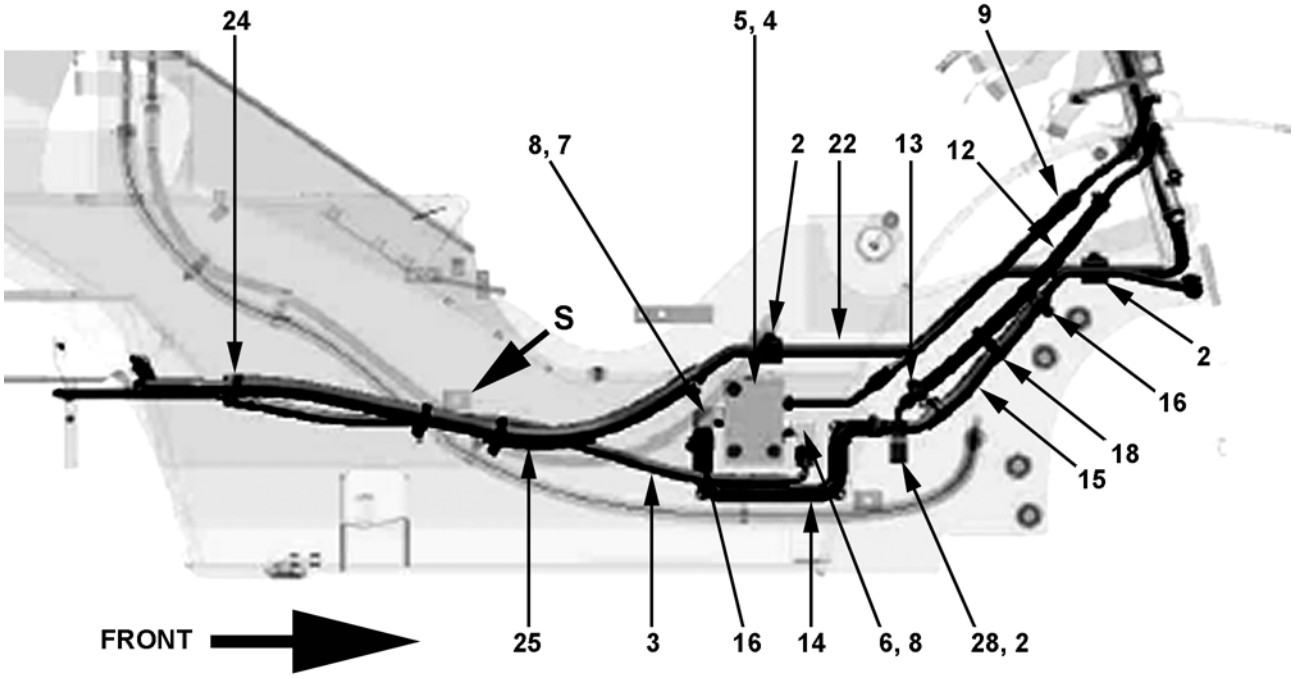

66-0092A

VIEW "S"

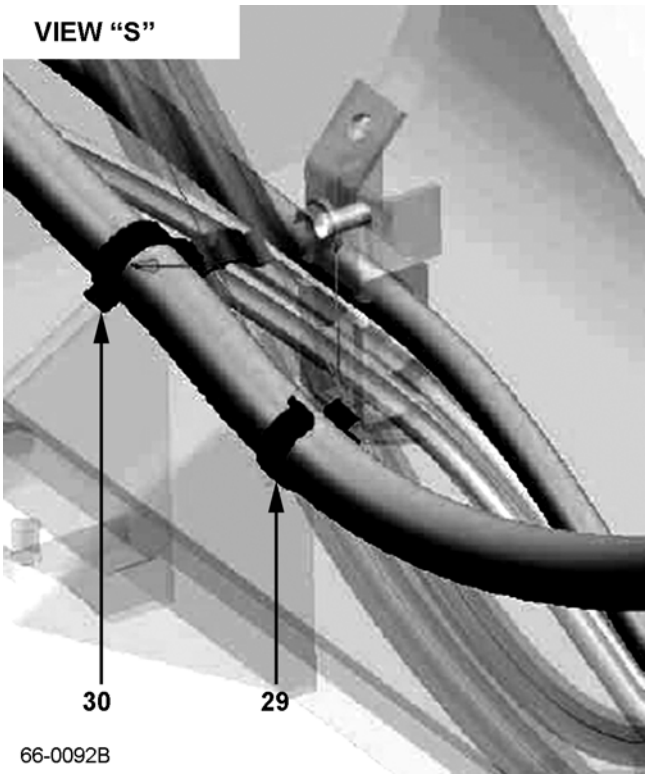

66-0092B

https://truckmanualshub.com/

HYDRAULIC SYSTEM - POWER BRAKE PIPING - S/N 200001A~
(ALSO SEE FIG. 66-0091 & 66-0093)

Item	Part Number	Description	Qty	
1	02896-11009	O-RING	1	
2	01024-80816	BOLT	5	
3	37B-1PW-4030	HOSE	1	
4	3EB-66-44110	FLOW DIVIDER	1	
5	01024-80850	BOLT	3	
6	3EB-66-44660	ELBOW	1	
7	3EB-66-44620	ELBOW	1	
8	540-62-13330	O-RING	2	
9	3EB-66-55180	HOSE	1	
10	3EB-66-55540	PIPE	1	
11	3EB-66-55530	PIPE	1	
12	07260-20940	HOSE	1	
13	07281-00197	CLAMP	2	
14	3EB-66-55520	HOSE	1	
15	37B-1PW-5010	HOSE	1	
16	07281-00229	CLAMP	6	
17	37B-1PW-5040	HOSE	1	
18	37B-1PC-5090	CLAMP	3	
19	3EB-94-46410	CLAMP	1	
20	3EB-66-A7920	PIPE (FG)	1	
	3EB-66-A7960	PIPE (FD)	1	
21	37B-1RC-5010	FITTING ASSY	1	
22	3EB-66-A7910	PIPE	1	
23	3EB-66-A7930	HOSE (FG)	1	
	3EB-66-A7970	HOSE (FD)	1	
24	07281-00259	CLAMP	6	
25	07260-21463	HOSE	1	
26	07260-21450	HOSE	1	
27	01024-80820	BOLT	1	
28	3EB-66-55510	PIPE	1	
29	3EA-05-46140	CLAMP	1	
30	3EA-05-46180	CLAMP	1	

https://truckmanualshub.com/

HYDRAULIC SYSTEM - POWER BRAKE PIPING - S/N 200001A~
(ALSO SEE FIG. 66-0091 & 66-0092)

VIEW “Y”

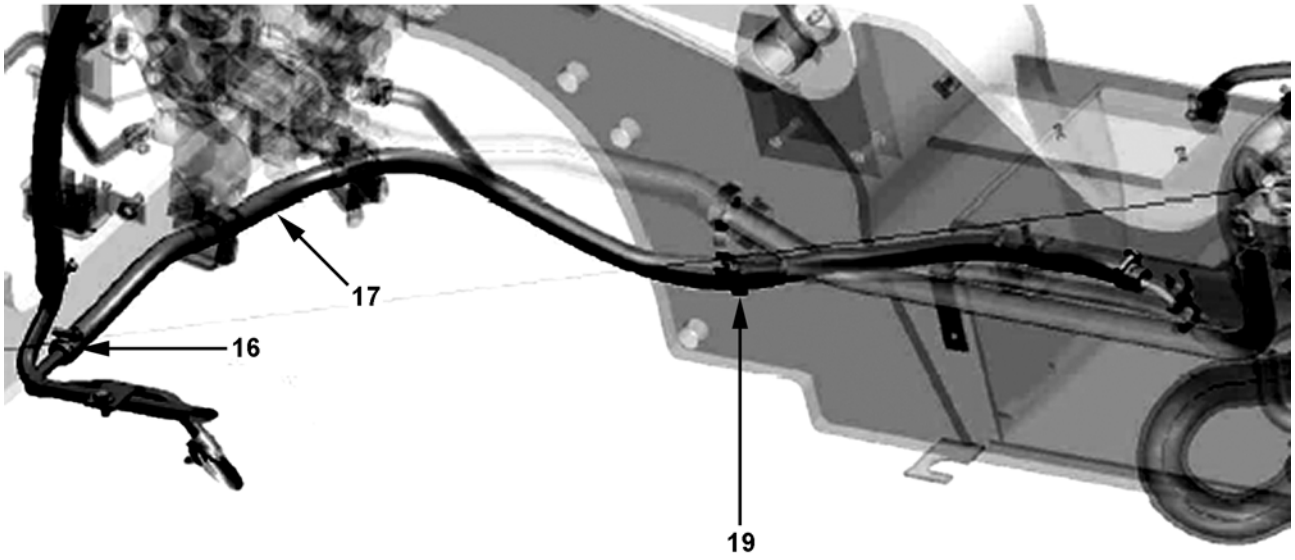

66-0093A

VIEW “W”

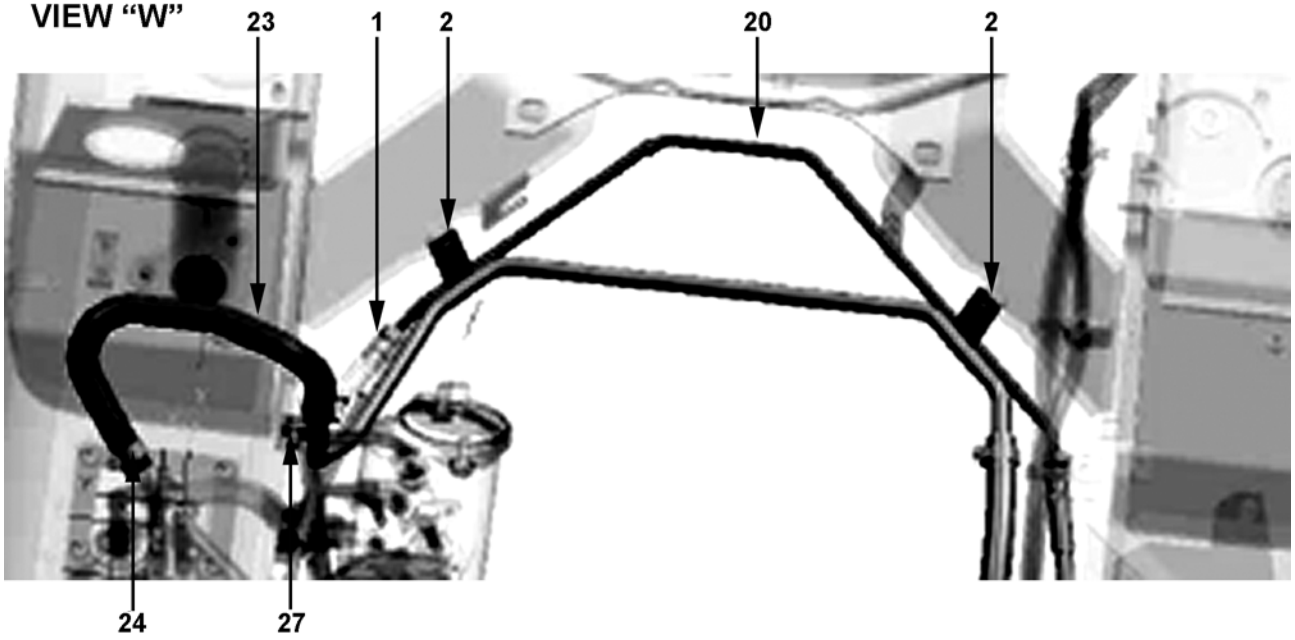

66-0093B

https://truckmanualshub.com/

HYDRAULIC SYSTEM - POWER BRAKE PIPING - S/N 200001A~
(ALSO SEE FIG. 66-0091 & 66-0092)

Item	Part Number	Description	Qty	
1	02896-11009	O-RING	1	
2	01024-80816	BOLT	5	
3	37B-1PW-4030	HOSE	1	
4	3EB-66-44110	FLOW DIVIDER	1	
5	01024-80850	BOLT	3	
6	3EB-66-44660	ELBOW	1	
7	3EB-66-44620	ELBOW	1	
8	540-62-13330	O-RING	2	
9	3EB-66-55180	HOSE	1	
10	3EB-66-55540	PIPE	1	
11	3EB-66-55530	PIPE	1	
12	07260-20940	HOSE	1	
13	07281-00197	CLAMP	2	
14	3EB-66-55520	HOSE	1	
15	37B-1PW-5010	HOSE	1	
16	07281-00229	CLAMP	6	
17	37B-1PW-5040	HOSE	1	
18	37B-1PC-5090	CLAMP	3	
19	3EB-94-46410	CLAMP	1	
20	3EB-66-A7920	PIPE (FG)	1	
	3EB-66-A7960	PIPE (FD)	1	
21	37B-1RC-5010	FITTING ASSY	1	
22	3EB-66-A7910	PIPE	1	
23	3EB-66-A7930	HOSE (FG)	1	
	3EB-66-A7970	HOSE (FD)	1	
24	07281-00259	CLAMP	6	
25	07260-21463	HOSE	1	
26	07260-21450	HOSE	1	
27	01024-80820	BOLT	1	
28	3EB-66-55510	PIPE	1	
29	3EA-05-46140	CLAMP	1	
30	3EA-05-46180	CLAMP	1	

https://truckmanualshub.com/

MAST BUSHING
ALL MODELS - S/N 200001A~

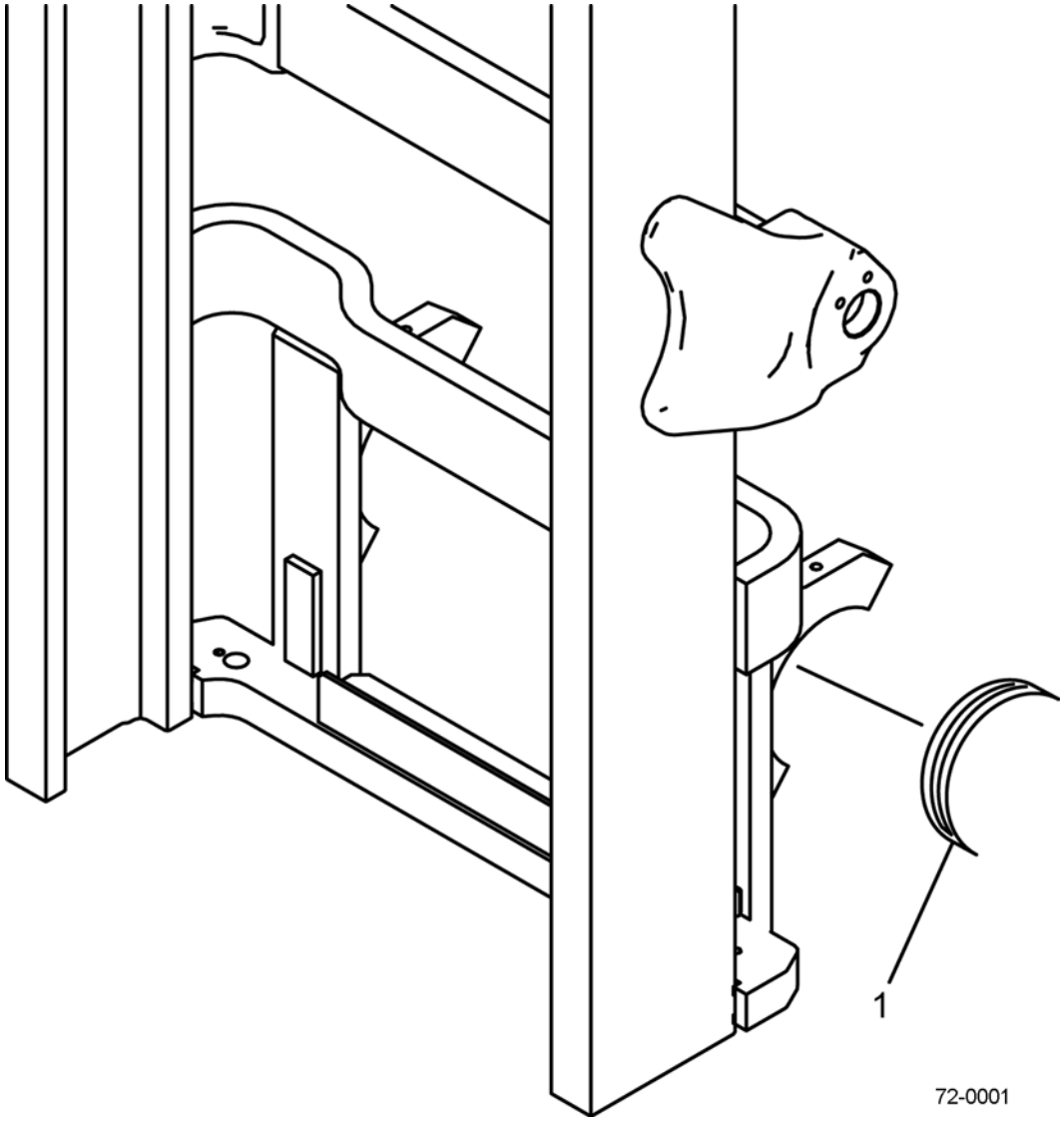

https://truckmanualshub.com/

MAST BUSHING
ALL MODELS - S/N 200001A~

Item	Part Number	Description	Qty	Serial Number
1	3EB-84-51290	BUSHING (ALL CUSHION MODELS)	2	
	3EB-71-51290	BUSHING (2.0T, 2.5T, 2.8T, 3.0T PNEUMATIC).	2	
	3EB-71-61790	BUSHING (3.2T, 3.5T PNEUMATIC)	2	

https://truckmanualshub.com/

E50-MD DUAL MAST - SAFETY DECALS - S/N 200001A~

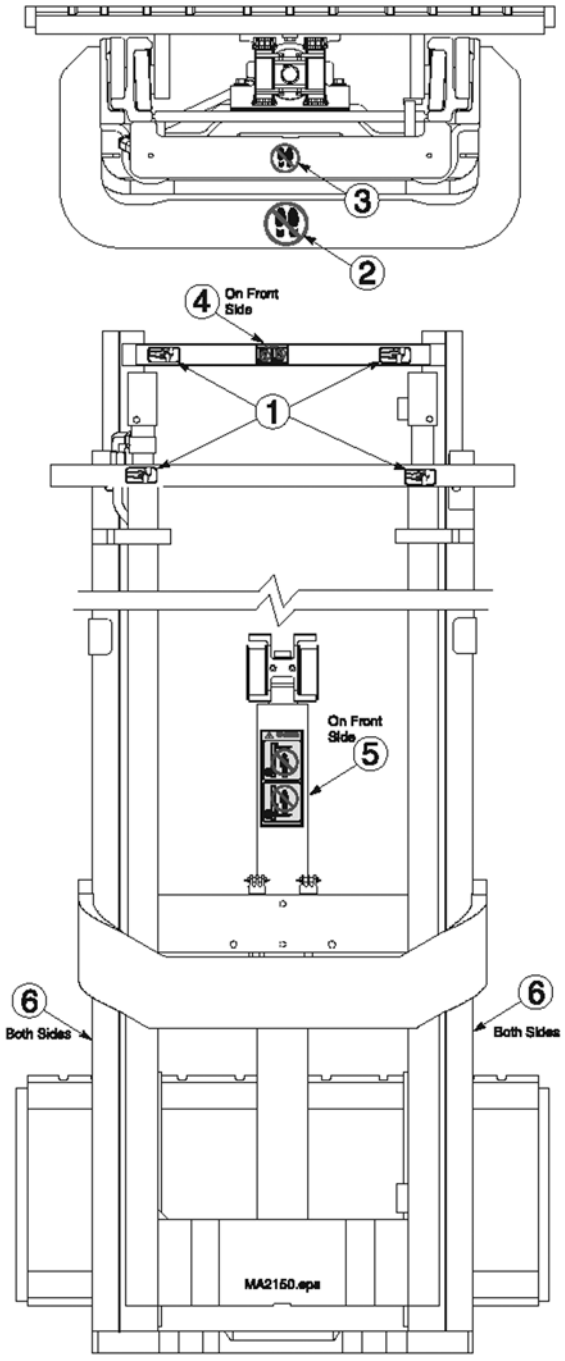

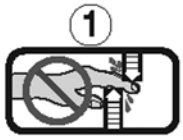











72-0010

https://truckmanualshub.com/

E50-MD DUAL MAST - SAFETY DECALS - S/N 200001A~

Item	Part Number	Description	Qty	Serial Number
1	3EB-79-A6010	DECAL - HANDS OFF	4	
2	3EB-79-A6020	DECAL - NO STEP	1	
3	3EB-79-A6030	DECAL - NO STEP	1	
4	CC210850	DECAL - WARNING	1	
5	3EB-79-A5310	DECAL - WARNING	1	
6	CC224053	DECAL - FORK STOP	2	

https://truckmanualshub.com/

E50-MD DUAL MAST - LEFT HAND MAIN LIFT CYLINDER - S/N 200001A~

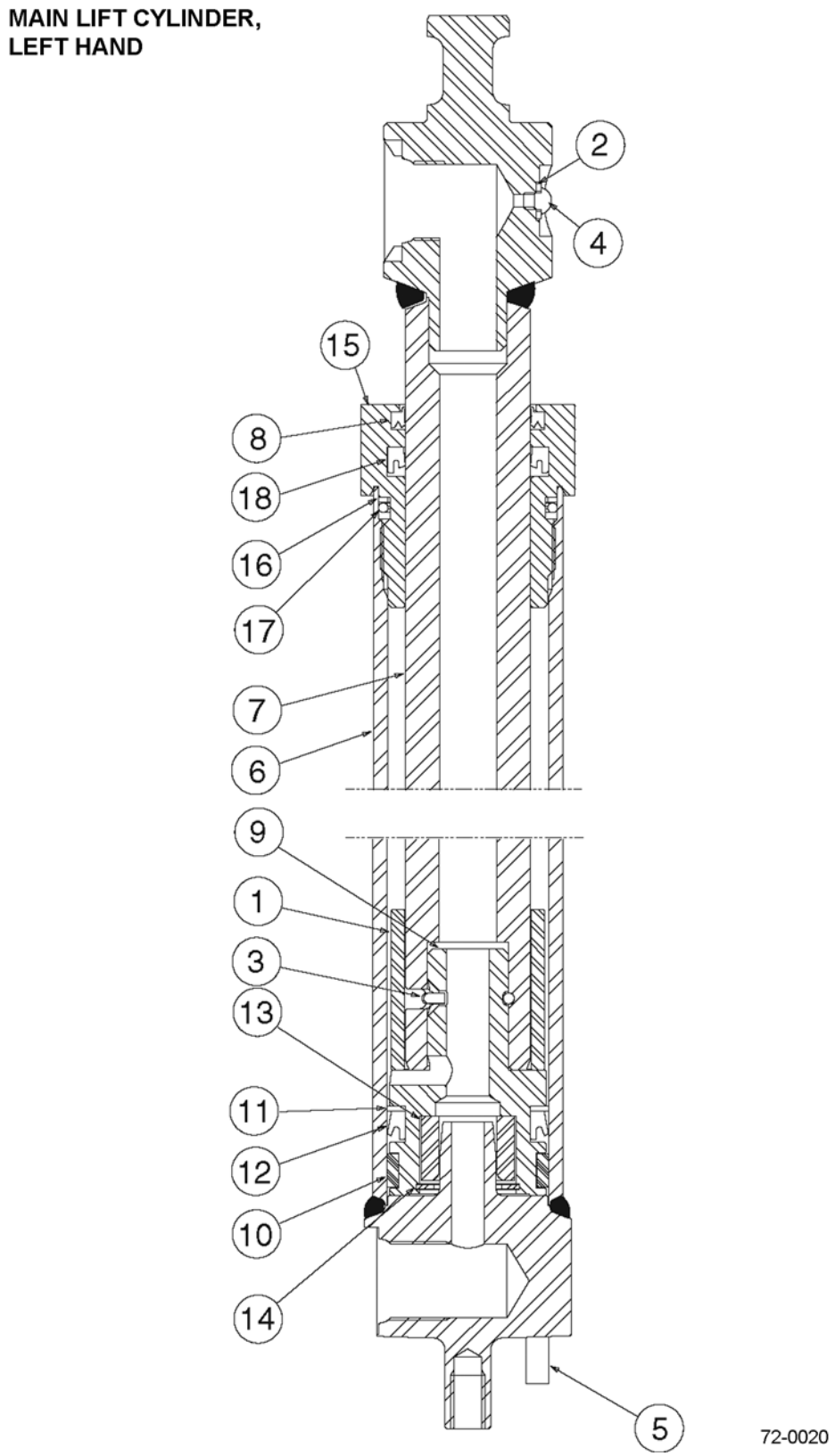

https://truckmanualshub.com/

E50-MD DUAL MAST - LEFT HAND MAIN LIFT CYLINDER - S/N 200001A~

Item	Part Number	Description	Qty	Serial Number
1	NSS	SPACER	1	
2	NSS	SEAL WASHER	1	
3	NSS	PULL WIRE. (SEAL KIT)	1	
4	NSS	BLEED SCREW	1	
5	NSS	PIN	1	
6	NSS	SHELL ASSY	1	
7	NSS	ROD	1	
8	NSS	WIPER (SEAL KIT)	1	
9	NSS	PISTON.	1	
10	NSS	WEAR RING (SEAL KIT)	1	
11	NSS	NYLON RING (SEAL KIT)	1	
12	NSS	PISTON SEAL (SEAL KIT)	1	
13	NSS	SLEEVE	1	
14	NSS	CIRCLIP	1	
15	CC423385	RETAINER	1	
16	NSS	BACK-UP RING (SEAL KIT)	1	
17	NSS	O-RING (SEAL KIT)	1	
18	NSS	ROD SEAL (SEAL KIT)	1	
KIT	CC423412	SEAL KIT	1	
	OCL = OUTER CHANNEL LENGTH, MFH = MAXIMUM FORK HEIGHT			
	CC1001256	MAIN LIFT CYL., LH (OCL 69 IN.) (MFH = 106 IN.)	1	
	CC1001261	MAIN LIFT CYL., LH (OCL 74 IN.) (MFH = 116 IN.)	1	
	CC1001267	MAIN LIFT CYL., LH (OCL 80 IN.) (MFH = 128 IN.)	1	

https://truckmanualshub.com/

E50-MD DUAL MAST - RIGHT HAND MAIN LIFT CYLINDER - S/N 200001A~

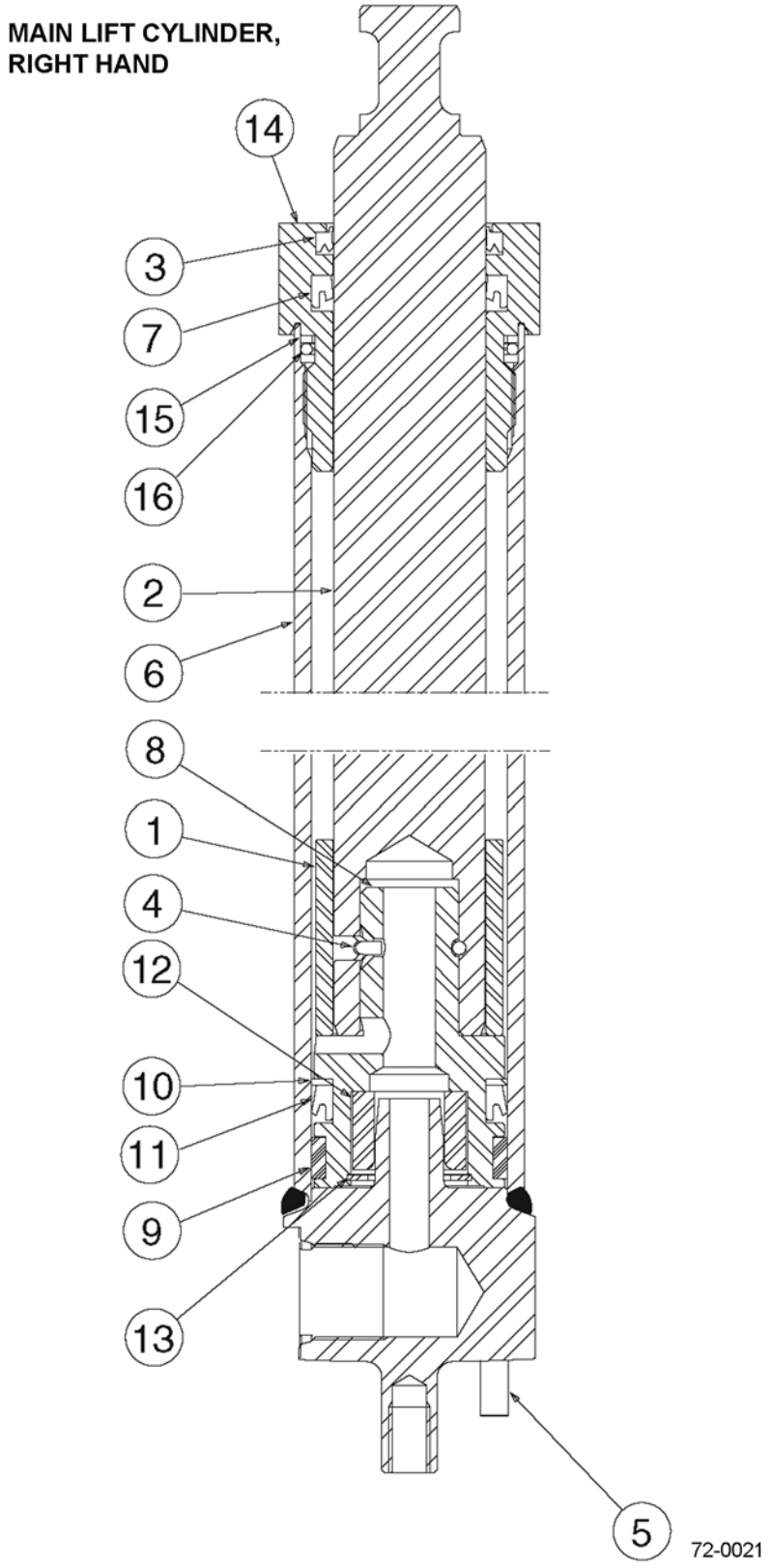

https://truckmanualshub.com/

E50-MD DUAL MAST - RIGHT HAND MAIN LIFT CYLINDER - S/N 200001A~

Item	Part Number	Description	Qty	Serial Number
1	NSS	SPACER	1	
2	NSS	ROD	1	
3	NSS	WIPER (SEAL KIT)	1	
4	NSS	PULL WIRE (SEAL KIT)	1	
5	NSS	PIN	1	
6	NSS	SHELL ASSY	1	
7	NSS	ROD SEAL (SEAL KIT)	1	
8	NSS	PISTON	1	
9	NSS	WEAR RING (SEAL KIT)	1	
10	NSS	NYLON RING (SEAL KIT)	1	
11	NSS	PISTON SEAL (SEAL KIT)	1	
12	NSS	SLEEVE	1	
13	NSS	RETAINING RING	1	
14	CC423385	RETAINER	1	
15	NSS	BACK-UP RING (SEAL KIT)	1	
16	NSS	O-RING (SEAL KIT)	1	
KIT	CC423412	SEAL KIT	1	
	OCL = OUTER CHANNEL LENGTH, MFH = MAXIMUM FORK HEIGHT			
	CC1001210	MAIN LIFT CYL., RH (OCL 69 IN.) (MFH = 106 IN.)	1	
	CC1001215	MAIN LIFT CYL., RH (OCL 74 IN.) (MFH = 116 IN.)	1	
	CC1001221	MAIN LIFT CYL., RH (OCL 80 IN.) (MFH = 128 IN.)	1	

https://truckmanualshub.com/

E50-MD DUAL MAST - FREE LIFT CYLINDER - S/N 200001A~

FREE LIFT CYLINDER

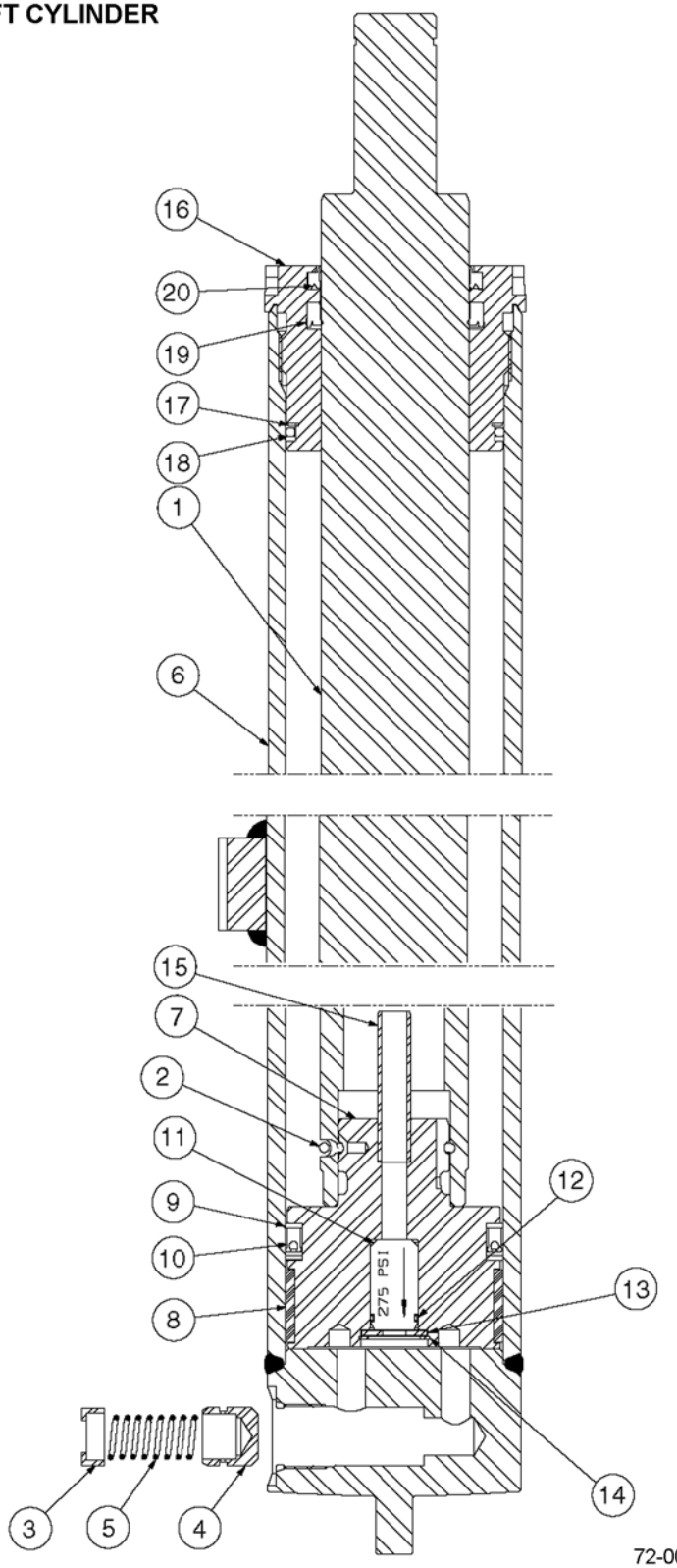

https://truckmanualshub.com/

E50-MD DUAL MAST - FREE LIFT CYLINDER - S/N 200001A~

Item	Part Number	Description	Qty	Serial Number
1	NSS	ROD / PLUNGER	1	
2	NSS	PULL WIRE. (SEAL KIT)	1	
3	CC564107	FUSE SPRING GUIDE	1	
4	CC560470	FUSE PISTON	1	
5	CC565085	FUSE SPRING	1	
6	NSS	SHELL.	1	
7	NSS	PISTON.	1	
8	NSS	WEAR RING (SEAL KIT)	1	
9	NSS	NYLON RING (SEAL KIT)	2	
10	NSS	PISTON SEAL (SEAL KIT)	1	
11	NSS	CHECK VALVE (CHECK VALVE KIT)	1	
12	NSS	O-RING (SEAL KIT)	1	
13	NSS	WASHER (CHECK VALVE KIT)	1	
14	NSS	RETAINING RING. (CHECK VALVE KIT)	1	
15	NSS	STAND TUBE	1	
16	CC422817	RETAINER	1	
17	NSS	BACK-UP RING (SEAL KIT)	1	
18	NSS	O-RING (SEAL KIT)	1	
19	NSS	ROD SEAL (SEAL KIT)	1	
20	NSS	WIPER (SEAL KIT)	1	
KIT	CC422818	SEAL KIT	1	
KIT	CC563904	CHECK VALVE KIT.	1	

OCL = OUTER CHANNEL LENGTH, MFH = MAXIMUM FORK HEIGHT

CC1000225	FREE LIFT CYL. (OCL = 69 IN.) (MFH = 106 IN.)	1
CC1000230	FREE LIFT CYL. (OCL = 74 IN.) (MFH = 116 IN.)	1
CC1000236	FREE LIFT CYL. (OCL = 80 IN.) (MFH = 128 IN.)	1

https://truckmanualshub.com/

E50-MD DUAL MAST - UPRIGHTS / WELDMENTS - S/N 200001A~

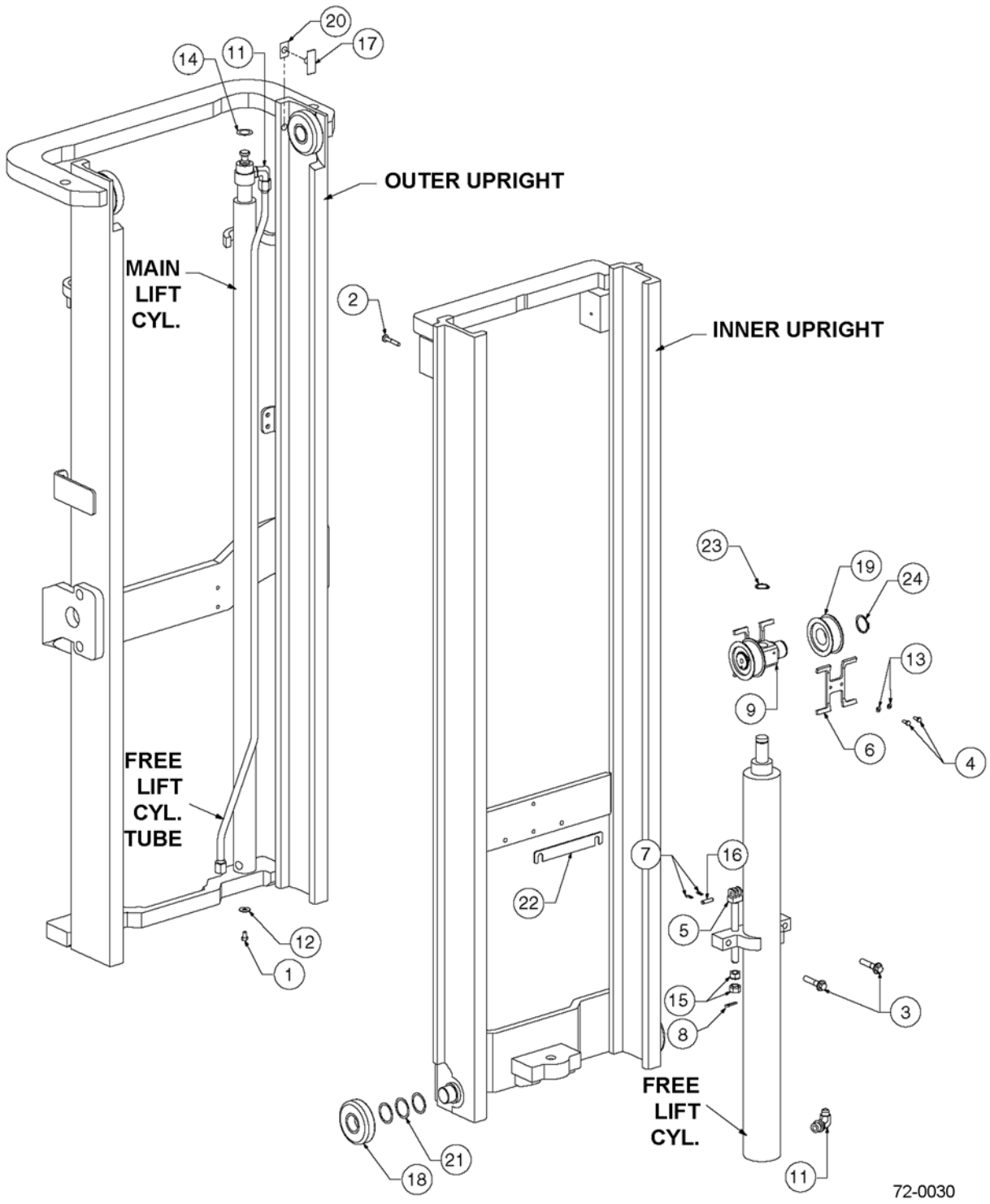

https://truckmanualshub.com/

E50-MD DUAL MAST - UPRIGHTS / WELDMENTS - S/N 200001A~

Item	Part Number	Description	Qty	Serial Number
1	3EB-79-A5340	BOLT	2	
2	3EB-79-A5380	BOLT	2	
3	3EB-73-A5320	CAPSCREW	2	
4	3EB-73-A5350	CAPSCREW, M6 X 16 LG (GUARD KIT)	4	
5	CC248892	CHAIN ANCHOR	2	
6	3EB-73-A5130	CHAIN GUARD (GUARD KIT)	2	
7	3EB-79-A6080	COTTER PIN	4	
8	3EB-79-A6081	COTTER PIN	2	
9	3EB-73-A5310	CROSSHEAD	1	
10	CC210851	DECAL KIT (NOT SHOWN)	1	
11	CC642649	90 DEGREE FITTING	2	
12	3EB-79-A5350	FLAT WASHER	2	
13	3EB-73-A5340	M6 LOCK WASHER (GUARD KIT)	4	
14	CC238137	MAIN LIFT CYL. SHIM KIT	1	
15	3EB-79-A6090	FULL NUT	4	
16	3EB-79-A5150	CHAIN ANCHOR PIN	2	
17	CC215719	WEAR PLUG (WEAR PLUG KIT)	2	
18	3EB-79-A5210	LOAD ROLLER	4	
19	3EB-73-A5010	SHEAVE	2	
20	CC203388	WEAR PLUG SHIM (WEAR PLUG KIT)	2	
21	3EB-79-A6050	LOAD ROLLER SHIM	AR	
22	3EB-79-A5390	FREE LIFT CYL. SHIM PLATE(WEAR PLUG KIT)	4	
23	3EB-73-A5330	SNAP RING	1	
24	3EB-79-A6070	SNAP RING	2	
	OCL = OUTER CHANNEL LENGTH, MFH = MAXIMUM FORK HEIGHT			
	CC241569	OUTER UPRIGHT (OCL = 69 IN.)(MFH = 106 IN.)	1	
	CC241574	OUTER UPRIGHT (OCL = 74 IN.)(MFH = 116 IN.)	1	
	CC241580	OUTER UPRIGHT (OCL = 80 IN.)(MFH = 128 IN.)	1	
	CC241615	INNER UPRIGHT (OCL = 69 IN.) (MFH = 106 IN.)	1	
	CC241620	INNER UPRIGHT (OCL = 74 IN.) (MFH = 116 IN.)	1	
	CC241626	INNER UPRIGHT (OCL = 80 IN.) (MFH = 128 IN.)	1	
	CC238446	TUBE (OCL = 69 IN.) (MFH = 106 IN.)	1	
	CC238451	TUBE (OCL = 74 IN.) (MFH = 116 IN.)	1	
	CC238457	TUBE (OCL = 80 IN.) (MFH = 128 IN.)	1	
KIT	CC212587	WEAR PLUG KIT	1	
KIT	CC246821	GUARD KIT, CROSSHEAD	1	

https://truckmanualshub.com/

E50-MD DUAL MAST - CARRIAGE - 4-ROLLER - S/N 200001A~

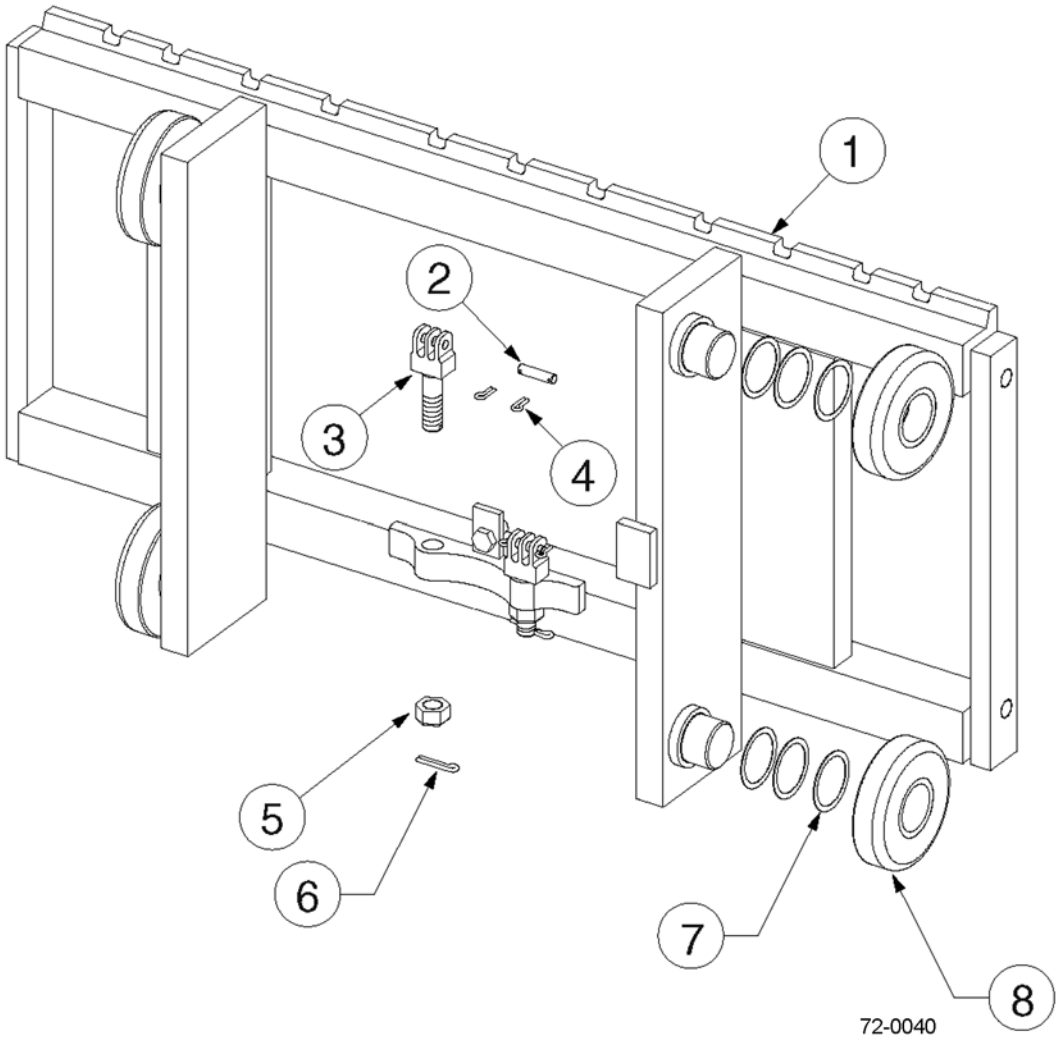

https://truckmanualshub.com/

E50-MD DUAL MAST - CARRIAGE - 4-ROLLER - S/N 200001A~

Item	Part Number	Description	Qty	Serial Number
1	CC238401	CARRIAGE, 37 IN. - CUSHION MODELS	1	
	CC238402	CARRIAGE, 41 IN. - CUSHION MODELS	1	
	CC238403	CARRIAGE, 37 IN. - PNEUMATIC MODELS	1	
	CC238404	CARRIAGE, 41 IN. - PNEUMATIC MODELS	1	
2	3EB-79-A5150	CHAIN ANCHOR PIN	2	
3	3EB-79-A5140	CHAIN ANCHOR	2	
4	3EB-79-A6080	COTTER PIN	4	
5	3EB-73-A5450	NUT	2	
6	3EB-79-A6081	COTTER PIN	2	
7	3EB-79-A6050	LOAD ROLLER SHIM	AR	
8	3EB-79-A5210	LOAD ROLLER	4	

https://truckmanualshub.com/

E50-MD DUAL MAST - CARRIAGE - 6-ROLLER - S/N 200001A~

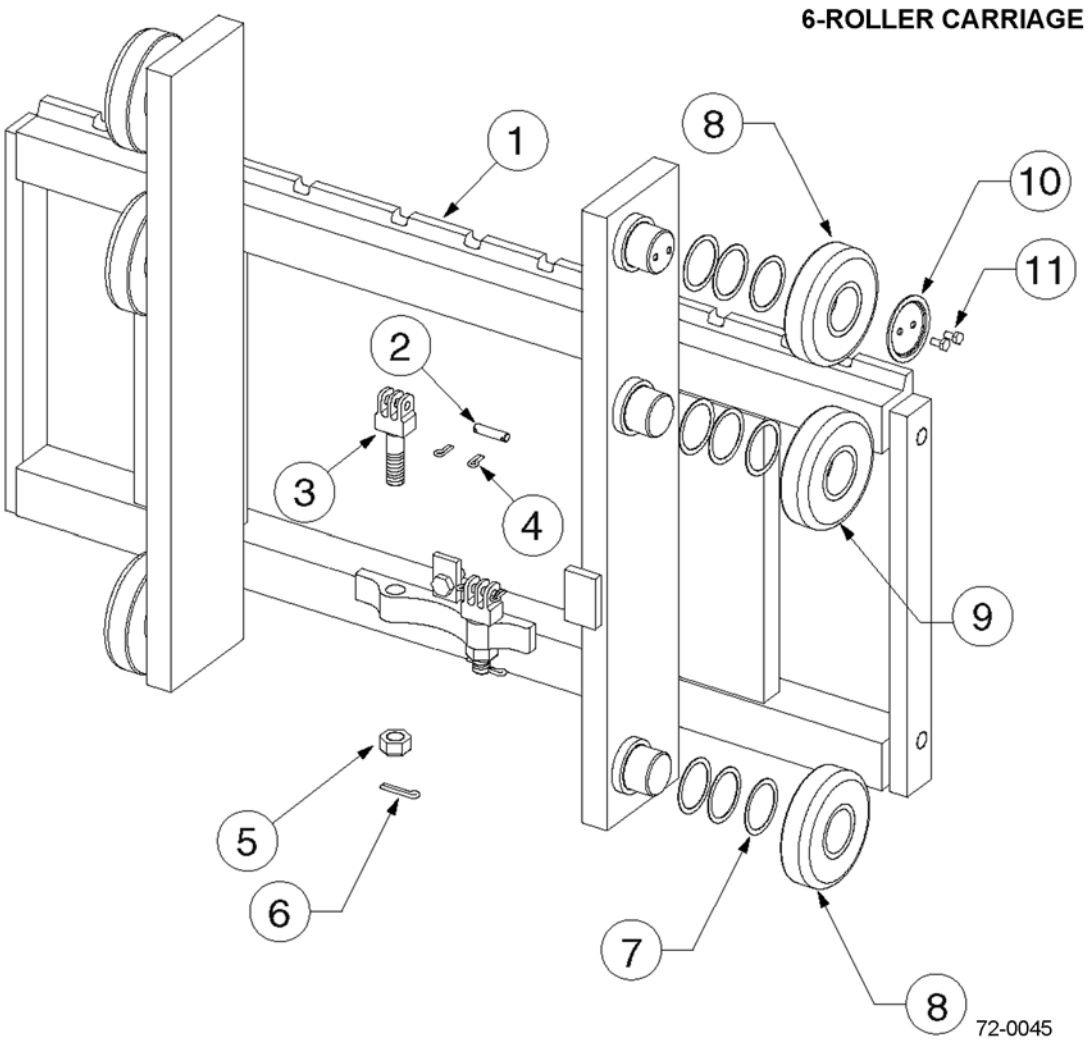

https://truckmanualshub.com/

E50-MD DUAL MAST - CARRIAGE - 6-ROLLER - S/N 200001A~

Item	Part Number	Description	Qty	Serial Number
1	CC238409	CARRIAGE, 37 IN. - CUSHION MODELS	1	
	CC238410	CARRIAGE, 41 IN. - CUSHION MODELS	1	
	CC238411	CARRIAGE, 37 IN. - PNEUMATIC MODELS	1	
	CC238412	CARRIAGE, 41 IN. - PNEUMATIC MODELS	1	
2	3EB-79-A5150	CHAIN ANCHOR PIN	2	
3	3EB-79-A5140	CHAIN ANCHOR	2	
4	3EB-79-A6080	COTTER PIN	4	
5	3EB-73-A5450	NUT	2	
6	3EB-79-A6081	COTTER PIN	2	
7	3EB-79-A6050	LOAD ROLLER SHIM	AR	
8	3EB-79-A5210	LOAD ROLLER	4	
9	3EB-79-A5220	LOAD ROLLER	2	
10	3EB-73-A5460	RETAINER	2	
11	3EB-73-A5470	CAPSCREW, M6 X 12 LG	4	

https://truckmanualshub.com/

E50-MD DUAL MAST - HOIST CHAINS - S/N 200001A~

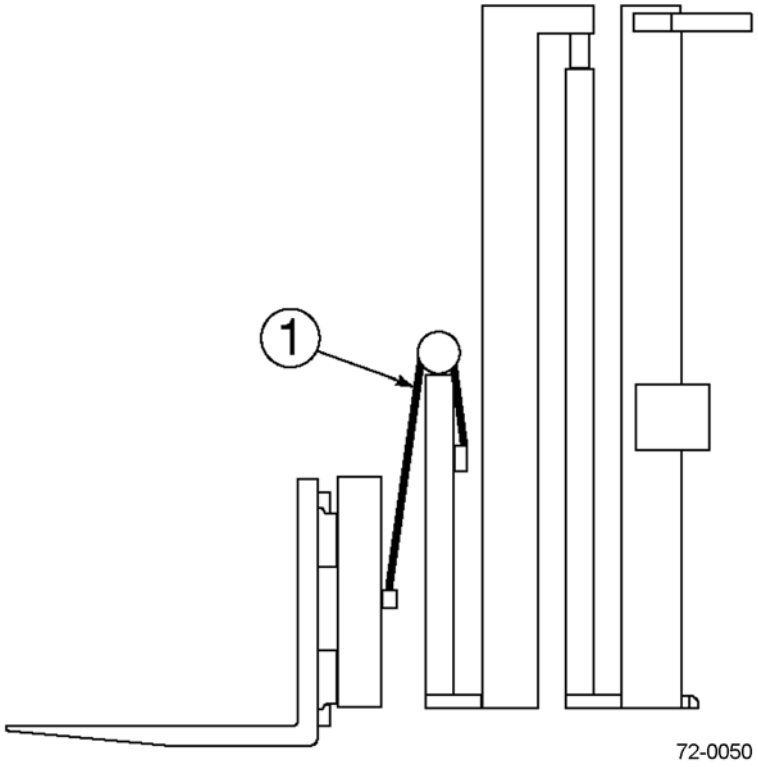

https://truckmanualshub.com/

E50-MD DUAL MAST - HOIST CHAINS - S/N 200001A~

Item	Part Number	Description	Qty	Serial Number
		OCL = OUTER CHANNEL LENGTH, MFH = MAXIMUM FORK HEIGHT		
1	CC683893	FREE LIFT CHAINS (OCL = 69 IN.) (MFH = 106 IN.)	2	
	CC683763	FREE LIFT CHAINS (OCL = 74 IN.) (MFH = 116 IN.)	2	
	CC683766	FREE LIFT CHAINS (OCL = 80 IN.) (MFH = 128 IN.)	2	

https://truckmanualshub.com/

E50-MD DUAL MAST - LOAD BACKREST - S/N 200001A~

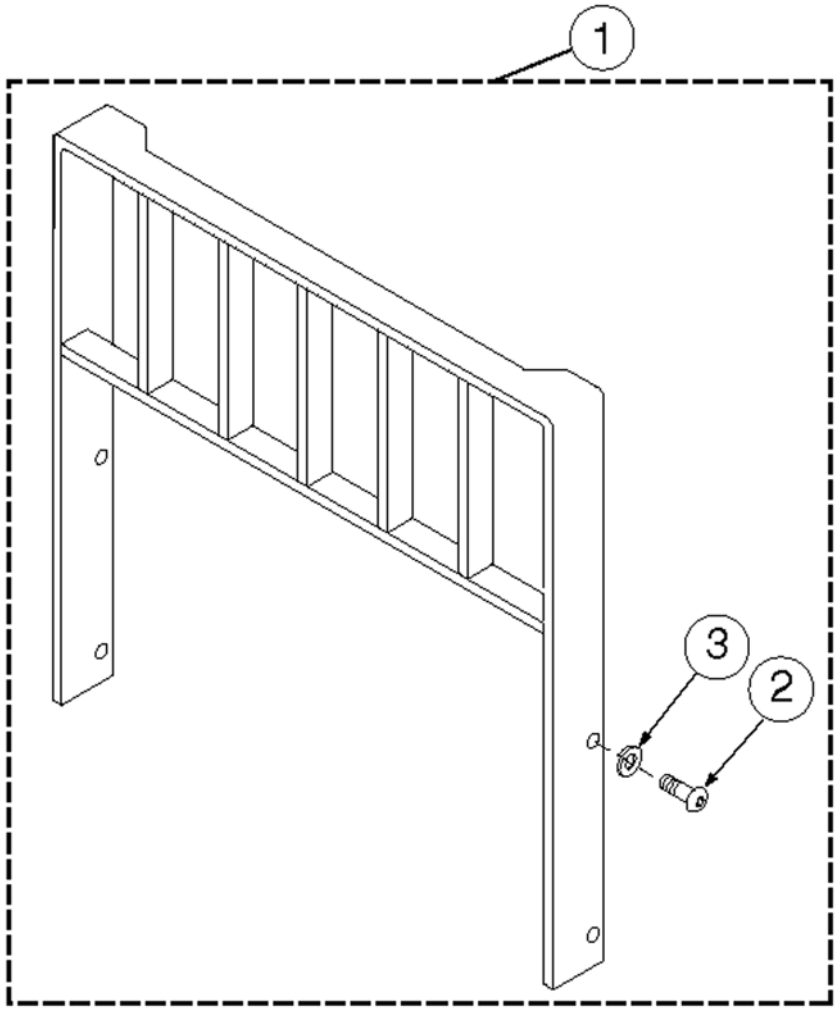

72-0060

https://truckmanualshub.com/

E50-MD DUAL MAST - LOAD BACKREST - S/N 200001A~

Item	Part Number	Description	Qty	Serial Number
1	CC684772	BACKREST, 37 X 36 IN. (CLASS II).	1	
	3EB-73-A5810	BACKREST, 37 X 48 IN. (CLASS II).	1	
	CC684774	BACKREST, 37 X 60 IN. (CLASS II).	1	
	CC684775	BACKREST, 41 X 36 IN. (CLASS II).	1	
	3EB-73-A5820	BACKREST, 41 X 48 IN. (CLASS II).	1	
	CC684777	BACKREST, 41 X 60 IN. (CLASS II).	1	
2	CC200173	CAPSCREW, M16 X 2.0 X 35-8.8	4	
3	3EB-71-A6030	LOCK WASHER, M16.	4	

https://truckmanualshub.com/

E50-MD DUAL MAST - MOUNTING PARTS - CUSHION MODELS - S/N 200001A~

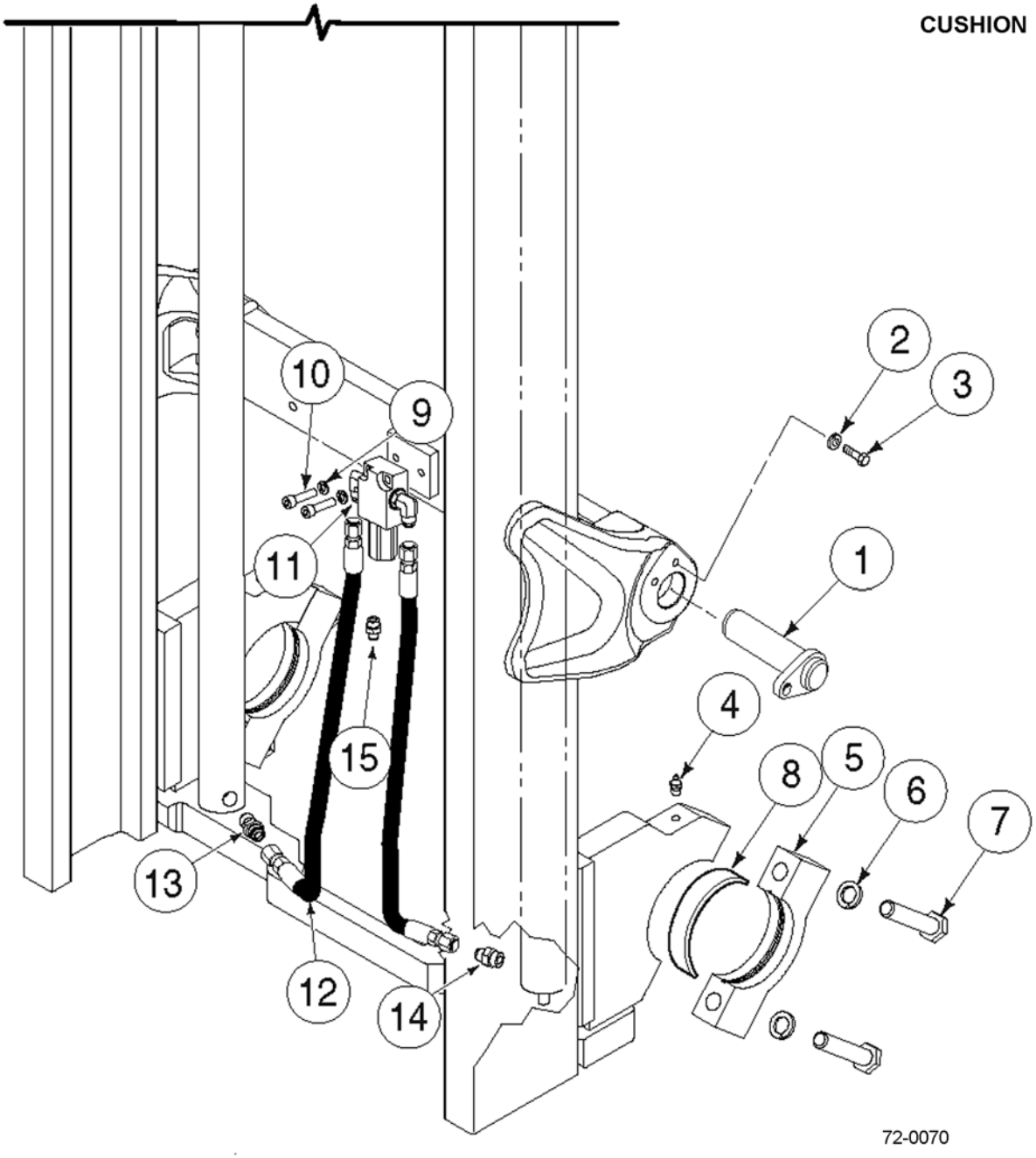

https://truckmanualshub.com/

E50-MD DUAL MAST - MOUNTING PARTS - CUSHION MODELS - S/N 200001A~

Item	Part Number	Description	Qty	Serial Number
1	3EB-41-51750	TILT PIN	2	
2	3EB-79-A6040	LOCK WASHER	2	
3	CC212632	CAPSCREW	2	
4	CC7418	GREASE FITTING	2	
5	CC251901	CAP	2	
6	3EB-71-A6030	LOCK WASHER	4	
7	CC251906	CAPSCREW	4	
8	3EB-84-51290	BUSHING (CUSHION ONLY)	2	
9	CC767611	CAPSCREW	2	
10	3EB-79-A6040	LOCK WASHER	2	
11	CC601250	FITTING # 8 - 90 DEGREE ELBOW	2	
12	CC255666	MAIN LIFT HOSE, RH	1	
	CC255665	MAIN LIFT HOSE, LH	1	
13	CC611289	FITTING # 8-# 10 STRAIGHT	1	
14	CC238570	EXTERNAL FUSE, 12 GPM	1	
15	CC601377	FITTING	1	
N/S	CC255672	MOUNTING GROUP	--	
N/S	CC255596	INSTALLATION KIT	1	
N/S	CC255770	HYDRAULIC GROUP	--	

https://truckmanualshub.com/

E50-MD DUAL MAST - MOUNTING PARTS - PNEUMATIC MODELS - S/N 200001A~

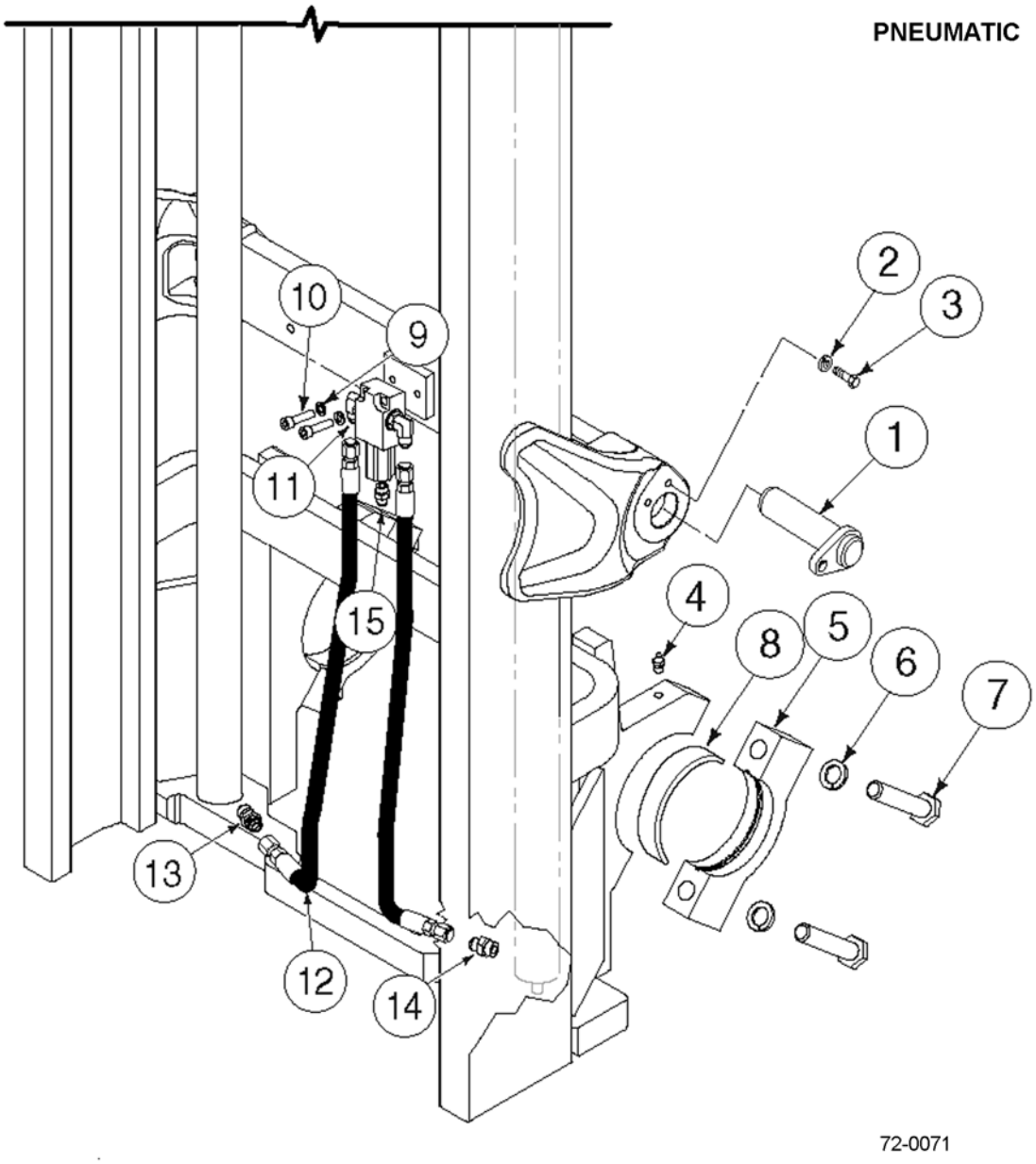

https://truckmanualshub.com/

E50-MD DUAL MAST - MOUNTING PARTS - PNEUMATIC MODELS - S/N 200001A~

Item	Part Number	Description	Qty	Serial Number
1	3EB-41-51750	TILT PIN	2	
2	3EB-79-A6040	LOCK WASHER	2	
3	CC212632	CAPSCREW	2	
4	CC7418	GREASE FITTING	2	
5	CC253118	CAP	2	
6	3EB-71-A6030	LOCK WASHER	4	
7	CC253120	CAPSCREW	4	
8	3EB-71-51290	BUSHING (PNEUMATIC 2.0-3.0 TON ONLY))	2	
	3EB-71-61790	BUSHING (PNEUMATIC 3.2 & 3.5 TON ONLY)	2	
9	CC767611	CAPSCREW	2	
10	3EB-79-A6040	LOCK WASHER	2	
11	CC601250	FITTING # 8 - 90 DEGREE ELBOW	2	
12	CC255651	MAIN LIFT HOSE, RH	1	
	CC238174	MAIN LIFT HOSE, LH	1	
13	CC611289	FITTING # 8-# 10 STRAIGHT	1	
14	CC238570	EXTERNAL FUSE, 12 GPM	1	
15	CC601377	FITTING	1	
N/S	CC255729	MOUNTING GROUP	--	
N/S	CC255596	INSTALLATION KIT	1	
N/S	CC255730	HYDRAULIC GROUP	--	

https://truckmanualshub.com/

E50-MD DUAL MAST - LOWERING CONTROL VALVE - S/N 200001A~

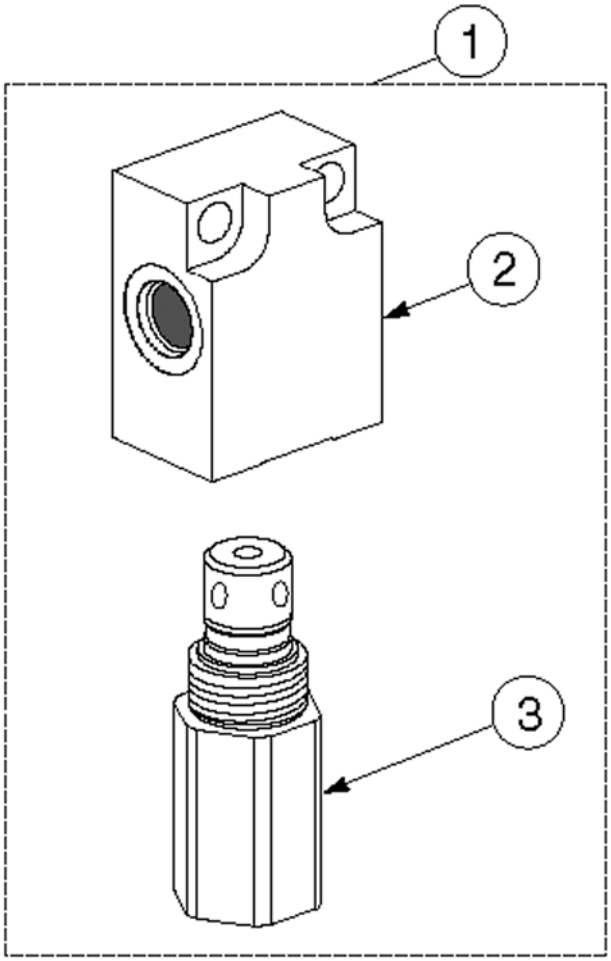

72-0085

https://truckmanualshub.com/

E50-MD DUAL MAST - LOWERING CONTROL VALVE - S/N 200001A~

Item	Part Number	Description	Qty	Serial Number
1	3EB-73-A5930	LOWERING CONTROL VALVE ASSY (17 GPM)	1	
2	CC214793	.VALVE BODY.	1	
3	3EB-73-A5920	.VALVE CARTRIDGE - 17 GPM	1	

https://truckmanualshub.com/

E50-MD DUAL MAST - INTERNAL HOSE REEVING - SINGLE - S/N 200001A~ PNEUMATIC MODELS

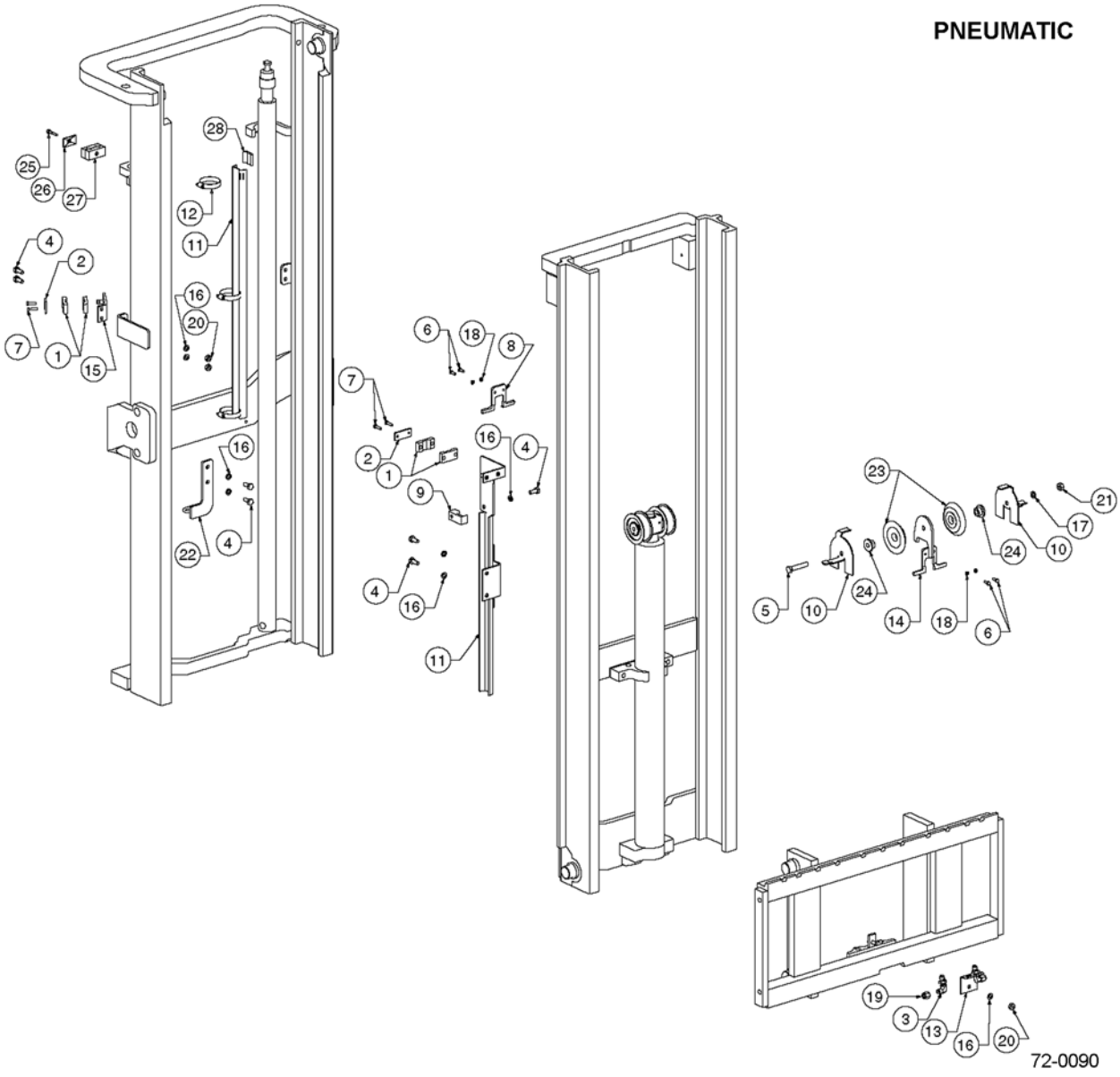

https://truckmanualshub.com/

E50-MD DUAL MAST - INTERNAL HOSE REEVING - SINGLE - S/N 200001A~ PNEUMATIC MODELS

Item	Part Number	Description	Qty	Serial Number
1	3EB-73-A5150	HOSE CLAMP	4	
2	3EB-73-A5160	HOSE CLAMP BAR	2	
3	3EB-71-A6010	BULKHEAD UNION FITTING	2	
4	3EB-73-A5490	CAPSCREW, M10 X 25 LG	7	
5	3EB-79-A5230	CAPSCREW, M12 X 65 LG	1	
6	3EB-73-A5350	CAPSCREW, M6 X 16 LG	4	
7	3EB-79-A5240	CAPSCREW, M6 X 25 LG	4	
8	3EB-73-A5170	CHAIN / HOSE GUARD	1	
9	CC688216	HOSE CLAMP	1	
10	3EB-73-A5180	CHAIN / HOSE GUARD	2	
11	SEE BELOW	GUIDE	2	
12	CC238534	HOSE CLAMP	3	
13	3EB-73-A5610	CARRIAGE BRACKET	1	
14	3EB-73-A5620	BRACKET	1	
15	3EB-73-A5640	BRACKET	1	
16	3EB-79-A6040	LOCK WASHER, M10	8	
17	3EB-79-A5360	LOCK WASHER, M12	1	
18	3EB-73-A5340	LOCK WASHER, M6	4	
19	3EB-79-A5250	#6 CAP PLUG	2	
20	3EB-79-A5180	NUT, M10	3	
21	3EB-79-A5270	NUT, M12	1	
22	3EB-73-A5650	BRACKET, RH	1	
23	3EB-73-A5030	SHEAVE	2	
24	3EB-73-A5230	STUBSHAFT	2	
25	CC290465	BOLT	1	
26	CC290464	COVER PLATE	1	
27	CC291445	#6 CLAMP	1	
28	CC250066	#6 HOSE INSERT	1	
	OCL = OUTER CHANNEL LENGTH, MFH = MAXIMUM FORK HEIGHT			
	CC242169	IHR KIT (OCL = 69 IN.) (MFH = 106 IN.)	1	
	CC242174	IHR KIT (OCL = 74 IN.) (MFH = 116 IN.)	1	
	CC242180	IHR KIT (OCL = 80 IN.) (MFH = 128 IN.)	1	
	CC238525	OUTER GUIDE (OCL = 69 IN.) (MFH = 106 IN.)	1	
	CC238525	OUTER GUIDE (OCL = 74 IN.) (MFH = 116 IN.)	1	
	CC238526	OUTER GUIDE (OCL = 80 IN.) (MFH = 128 IN.)	1	
	CC245229	INNER GUIDE (OCL = 69 IN.) (MFH = 106 IN.)	1	
	CC245230	INNER GUIDE (OCL = 74 IN.) (MFH = 116 IN.)	1	
	CC245231	INNER GUIDE (OCL = 80 IN.) (MFH = 128 IN.)	1	
	CC216928	HOSE (OCL = 69 IN.) (MFH = 106 IN.)	2	

PARTS LIST CONTINUED ON NEXT PAGE

https://truckmanualshub.com/

E50-MD DUAL MAST - INTERNAL HOSE REEVING - SINGLE - S/N 200001A~ PNEUMATIC MODELS

Item	Part Number	Description	Qty	Serial Number
	CC234987	HOSE (OCL = 74 IN.) (MFH = 116 IN.).	2	
	CC234993	HOSE (OCL = 80 IN.) (MFH = 128 IN.)	2	

https://truckmanualshub.com/

NOTES:

https://truckmanualshub.com/

E50-MD DUAL MAST - INTERNAL HOSE REEVING - SINGLE - S/N 200001A~ CUSHION MODELS

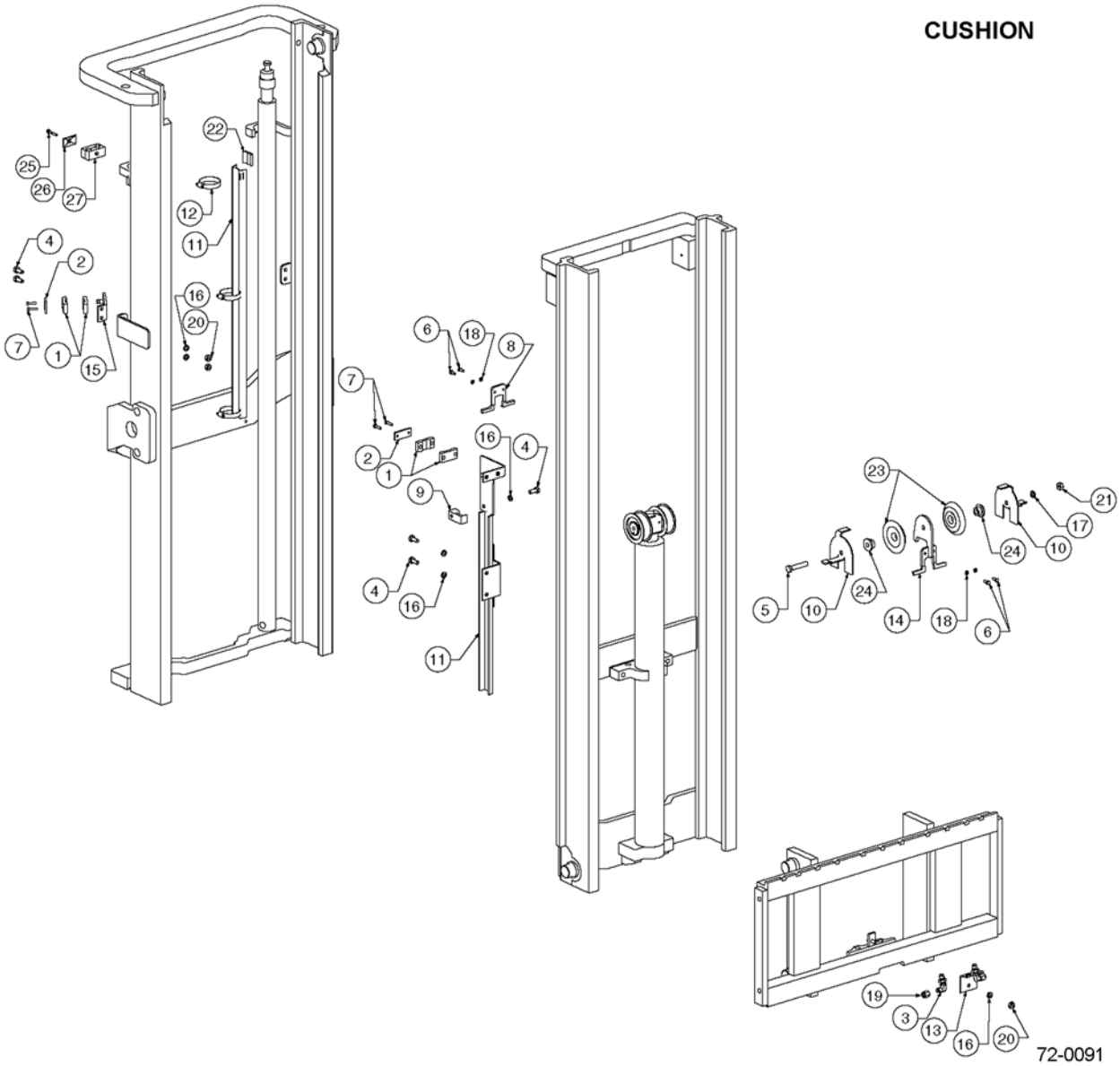

https://truckmanualshub.com/

E50-MD DUAL MAST - INTERNAL HOSE REEVING - SINGLE - S/N 200001A~ CUSHION MODELS

Item	Part Number	Description	Qty	Serial Number
1	3EB-73-A5150	HOSE CLAMP	4	
2	3EB-73-A5160	HOSE CLAMP BAR	2	
3	3EB-71-A6010	BULKHEAD UNION FITTING	2	
4	3EB-73-A5490	CAPSCREW, M10 X 25 LG	7	
5	3EB-79-A5230	CAPSCREW, M12 X 65 LG	1	
6	3EB-73-A5350	CAPSCREW, M6 X 16 LG	4	
7	3EB-79-A5240	CAPSCREW, M6 X 25 LG	4	
8	3EB-73-A5170	CHAIN / HOSE GUARD	1	
9	CC688216	HOSE CLAMP	1	
10	3EB-73-A5180	CHAIN / HOSE GUARD	2	
11	SEE BELOW	GUIDE	2	
12	CC238534	HOSE CLAMP	3	
13	3EB-73-A5610	CARRIAGE BRACKET	1	
14	3EB-73-A5620	BRACKET	1	
15	3EB-73-A5640	BRACKET	1	
16	3EB-79-A6040	LOCK WASHER, M10	8	
17	3EB-79-A5360	LOCK WASHER, M12	1	
18	3EB-73-A5340	LOCK WASHER, M6	4	
19	3EB-79-A5250	#6 CAP PLUG	2	
20	3EB-79-A5180	NUT, M10	3	
21	3EB-79-A5270	NUT, M12	1	
22	CC250066	#6 HOSE INSERT	1	
23	3EB-73-A5030	SHEAVE	2	
24	3EB-73-A5230	STUBSHAFT	2	
25	CC290465	BOLT	1	
26	CC290464	COVER PLATE	1	
27	CC291445	#6 CLAMP	1	
	OCL = OUTER CHANNEL LENGTH, MFH = MAXIMUM FORK HEIGHT			
	CC255304	IHR KIT (OCL = 69 IN.) (MFH = 106 IN.)	1	
	CC255309	IHR KIT (OCL = 74 IN.) (MFH = 116 IN.)	1	
	CC255315	IHR KIT (OCL = 80 IN.) (MFH = 128 IN.)	1	
	CC238525	OUTER GUIDE (OCL = 69 IN.) (MFH = 106 IN.)	1	
	CC238525	OUTER GUIDE (OCL = 74 IN.) (MFH = 116 IN.)	1	
	CC238526	OUTER GUIDE (OCL = 80 IN.) (MFH = 128 IN.)	1	
	CC245229	INNER GUIDE (OCL = 69 IN.) (MFH = 106 IN.)	1	
	CC245230	INNER GUIDE (OCL = 74 IN.) (MFH = 116 IN.)	1	
	CC245231	INNER GUIDE (OCL = 80 IN.) (MFH = 128 IN.)	1	
	CC210803	HOSE (OCL = 69 IN.) (MFH = 106 IN.)	2	

PARTS LIST CONTINUED ON NEXT PAGE

https://truckmanualshub.com/

E50-MD DUAL MAST - INTERNAL HOSE REEVING - SINGLE - S/N 200001A~ CUSHION MODELS

Item	Part Number	Description	Qty	Serial Number
	CC216928	HOSE (OCL = 74 IN.) (MFH = 116 IN.).	2	
	CC234988	HOSE (OCL = 80 IN.) (MFH = 128 IN.)	2	

https://truckmanualshub.com/

NOTES:

https://truckmanualshub.com/

E50-MD DUAL MAST - INTERNAL HOSE REEVING - DOUBLE - S/N 200001A~ PNEUMATIC MODELS

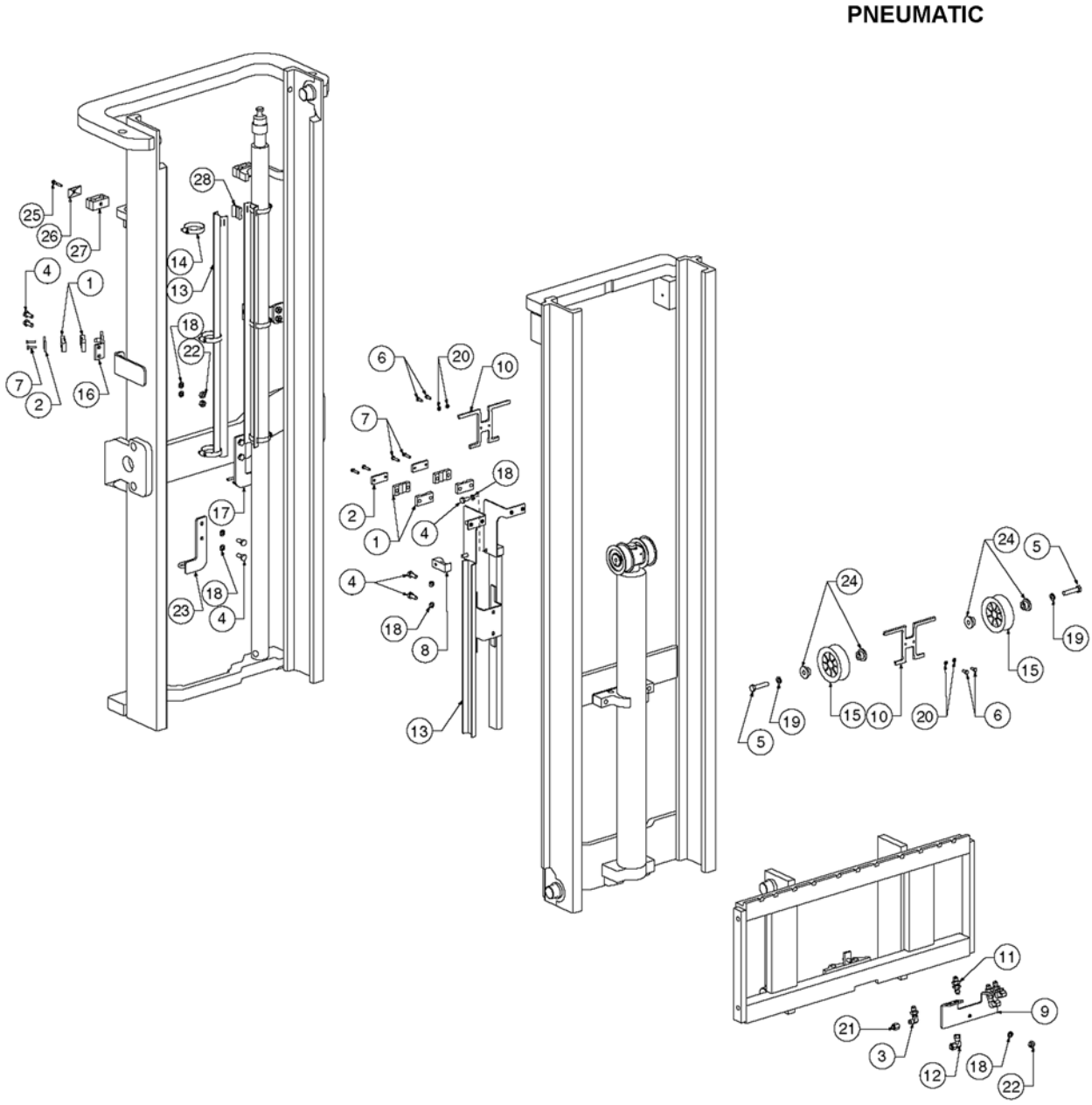

https://truckmanualshub.com/

E50-MD DUAL MAST - INTERNAL HOSE REEVING - DOUBLE - S/N 200001A~ PNEUMATIC MODELS

Item	Part Number	Description	Qty	Serial Number
1	3EB-73-A5150	HOSE CLAMP	8	
2	3EB-73-A5160	HOSE CLAMP BAR	4	
3	3EB-71-A6010	BULKHEAD UNION FITTING	2	
4	3EB-73-A5490	CAPSCREW, M10 X 25 LG	12	
5	CC684650	CAPSCREW, M12 X 55 LG	2	
6	3EB-73-A5350	CAPSCREW, M6 X 16 LG	4	
7	3EB-79-A5240	CAPSCREW, M6 X 25 LG	8	
8	CC688216	HOSE CLAMP	2	
9	CC238150	CARRIAGE IHR BRACKET	1	
10	CC245262	CHAIN / HOSE GUARD	2	
11	3EB-71-A6040	BULKHEAD FITTING	2	
12	CC2680	FITTING	2	
13	SEE BELOW	GUIDE	3	
14	CC238534	HOSE CLAMP	6	
15	CC677267	SHEAVE	2	
16	3EB-73-A5640	IHR BRACKET	2	
17	3EB-73-A6020	LH BRACKET	1	
18	3EB-79-A6040	LOCK WASHER, M10	13	
19	3EB-79-A5360	LOCKWASHER, M12	2	
20	3EB-73-A5340	LOCK WASHER, M6	4	
21	3EB-79-A5250	#6 CAP PLUG	4	
22	3EB-79-A5180	NUT, M10	5	
23	3EB-73-A5650	RH BRACKET	1	
24	3EB-73-A5230	STUBSHAFT	4	
25	CC290465	BOLT	2	
26	CC290464	COVER PLATE	2	
27	CC291445	#6 CLAMP	2	
28	CC250066	#6 INSERT	2	
	OCL = OUTER CHANNEL LENGTH, MFH = MAXIMUM FORK HEIGHT			
	CC242215	IHR KIT (OCL = 69 IN.) (MFH = 106 IN.)	1	
	CC242220	IHR KIT (OCL = 74 IN.) (MFH = 116 IN.)	1	
	CC242226	IHR KIT (OCL = 80 IN.) (MFH = 128 IN.)	1	
	CC238525	OUTER GUIDE (OCL = 69 IN.) (MFH = 106 IN.)	2	
	CC238525	OUTER GUIDE (OCL = 74 IN.) (MFH = 116 IN.)	2	
	CC238526	OUTER GUIDE (OCL = 80 IN.) (MFH = 128 IN.)	2	
	CC245235	INNER GUIDE (OCL = 69 IN.) (MFH = 106 IN.)	1	
	CC245236	INNER GUIDE (OCL = 74 IN.) (MFH = 116 IN.)	1	
	CC245237	INNER GUIDE (OCL = 80 IN.) (MFH = 128 IN.)	1	
	CC210803	HOSE (OCL = 69 IN.) (MFH = 106 IN.)	4	

PARTS LIST CONTINUED ON NEXT PAGE

https://truckmanualshub.com/

E50-MD DUAL MAST - INTERNAL HOSE REEVING - DOUBLE - S/N 200001A~ PNEUMATIC MODELS

Item	Part Number	Description	Qty	Serial Number
	CC216928	HOSE (OCL = 74 IN.) (MFH = 116 IN.).	4	
	CC234988	HOSE (OCL = 80 IN.) (MFH = 128 IN.)	4	

https://truckmanualshub.com/

NOTES:

https://truckmanualshub.com/

E50-MD DUAL MAST - INTERNAL HOSE REEVING - DOUBLE - S/N 200001A~ CUSHION MODELS

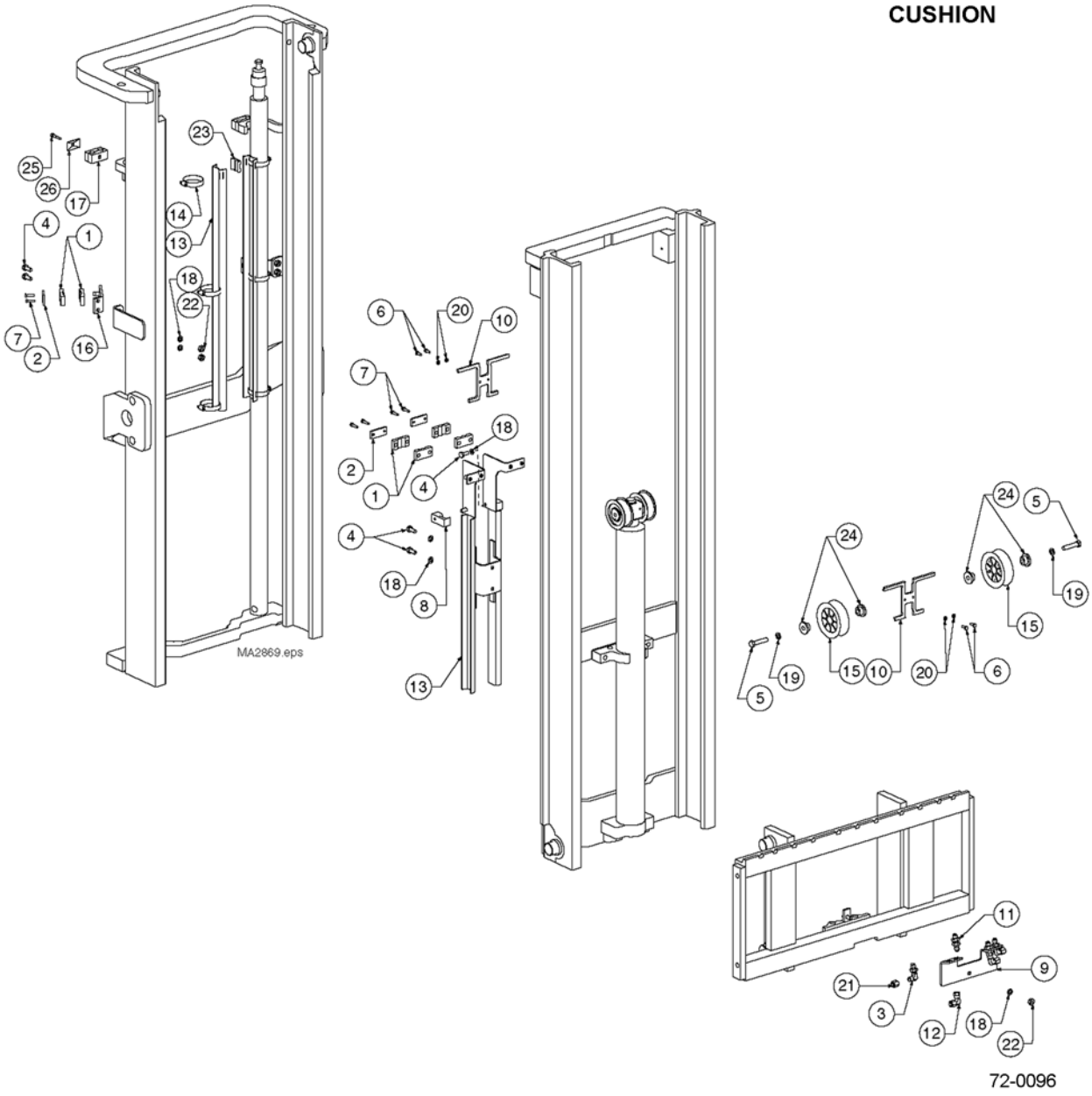

https://truckmanualshub.com/

E50-MD DUAL MAST - INTERNAL HOSE REEVING - DOUBLE - S/N 200001A~ CUSHION MODELS

Item	Part Number	Description	Qty	Serial Number
1	3EB-73-A5150	HOSE CLAMP	8	
2	3EB-73-A5160	HOSE CLAMP BAR	4	
3	3EB-71-A6010	BULKHEAD UNION FITTING	2	
4	3EB-73-A5490	CAPSCREW, M10 X 25 LG	8	
5	CC684650	CAPSCREW, M12 X 55 LG	2	
6	3EB-73-A5350	CAPSCREW, M6 X 16 LG	4	
7	3EB-79-A5240	CAPSCREW, M6 X 25 LG	8	
8	CC688216	HOSE CLAMP	2	
9	CC238150	CARRIAGE IHR BRACKET	1	
10	CC245262	CHAIN / HOSE GUARD	2	
11	3EB-71-A6040	BULKHEAD FITTING	2	
12	CC2680	FITTING	2	
13	SEE BELOW	GUIDE	3	
14	CC238534	HOSE CLAMP	6	
15	CC677267	SHEAVE	2	
16	3EB-73-A5640	IHR BRACKET	2	
17	CC291445	#6 CLAMP	2	
18	3EB-79-A6040	LOCK WASHER, M10	9	
19	3EB-79-A5360	LOCKWASHER, M12	2	
20	3EB-73-A5340	LOCK WASHER, M6	4	
21	3EB-79-A5250	#6 CAP PLUG	4	
22	3EB-79-A5180	NUT, M10	5	
23	CC250066	#6 INSERT	2	
24	3EB-73-A5230	STUBSHAFT	4	
25	CC290465	BOLT	2	
26	CC290464	COVER PLATE	2	

OCL = OUTER CHANNEL LENGTH, MFH = MAXIMUM FORK HEIGHT

CC255350	IHR KIT (OCL = 69 IN.) (MFH = 106 IN.)	1
CC255355	IHR KIT (OCL = 74 IN.) (MFH = 116 IN.)	1
CC255361	IHR KIT (OCL = 80 IN.) (MFH = 128 IN.)	1
CC238525	OUTER GUIDE (OCL = 69 IN.) (MFH = 106 IN.)	2
CC238525	OUTER GUIDE (OCL = 74 IN.) (MFH = 116 IN.)	2
CC238526	OUTER GUIDE (OCL = 80 IN.) (MFH = 128 IN.)	2
CC245235	INNER GUIDE (OCL = 69 IN.) (MFH = 106 IN.)	1
CC245236	INNER GUIDE (OCL = 74 IN.) (MFH = 116 IN.)	1
CC245237	INNER GUIDE (OCL = 80 IN.) (MFH = 128 IN.)	1
CC234971	HOSE (OCL = 69 IN.) (MFH = 106 IN.)	4

PARTS LIST CONTINUED ON NEXT PAGE

https://truckmanualshub.com/

E50-MD DUAL MAST - INTERNAL HOSE REEVING - DOUBLE - S/N 200001A~ CUSHION MODELS

Item	Part Number	Description	Qty	Serial Number
	CC210803	HOSE (OCL = 74 IN.) (MFH = 116 IN.).	4	
	CC234982	HOSE (OCL = 80 IN.) (MFH = 128 IN.)	4	

https://truckmanualshub.com/

NOTES:

https://truckmanualshub.com/

E50-MD DUAL MAST — RECOMMENDED STOCK LIST (RSL)

NO

ILLUSTRATION

REQUIRED

https://truckmanualshub.com/

E50-MD DUAL MAST — RECOMMENDED STOCK LIST (RSL)

Item	Part Number	Description	Qty	No. of Masts Serviced
		MAIN LIFT CYLINDERS		
	SEE PARTS PG	MAIN LIFT CYL ASSY	0	1 - 19
	SEE PARTS PG	MAIN LIFT CYL ASSY	1	20 - 50
	SEE PARTS PG	SEAL KIT	2	1 - 5
	SEE PARTS PG	SEAL KIT	4	6 - 19
	SEE PARTS PG	SEAL KIT	8	20 - 50
		FREE LIFT CYLINDER		
	SEE PARTS PG	FREE LIFT CYLINDER ASSY	0	1 - 5
	SEE PARTS PG	FREE LIFT CYLINDER ASSY	1	6 - 19
	SEE PARTS PG	FREE LIFT CYLINDER ASSY	2	20 - 50
	SEE PARTS PG	SEAL KIT	2	1 - 5
	SEE PARTS PG	SEAL KIT	4	6 - 19
	SEE PARTS PG	SEAL KIT	8	20 - 50
		INTERNAL REEVING		
	SEE PARTS PG	HOSE	2	1 - 5
	SEE PARTS PG	HOSE	4	6 - 19
	SEE PARTS PG	HOSE	8	20 - 50
	3EB-71-A6010	FITTING	1	1 - 5
	3EB-71-A6010	FITTING	2	6 - 19
	3EB-71-A6010	FITTING	4	20 - 50
	3EB-73-A5030	SHEAVE, IHR, SINGLE & DOUBLE IHR	1	1 - 5
	3EB-73-A5030	SHEAVE, IHR, SINGLE & DOUBLE IHR	2	6 - 19
	3EB-73-A5030	SHEAVE, IHR, SINGLE & DOUBLE IHR	4	20 - 50
	CC677267	SHEAVE - DOUBLE IHR	1	1 - 5
	CC677267	SHEAVE - DOUBLE IHR	2	6 - 19
	CC677267	SHEAVE - DOUBLE IHR	4	20 - 50
		UPRIGHTS		
	CC248892	CHAIN ANCHOR	1	1 - 5
	CC248892	CHAIN ANCHOR	2	6 - 19
	CC248892	CHAIN ANCHOR	4	20 - 50
	3EB-79-A5150	PIN, CHAIN	6	1 - 5
	3EB-79-A5150	PIN, CHAIN	12	6 - 19
	3EB-79-A5150	PIN, CHAIN	36	20 - 50
	3EB-79-A6090	NUT	6	1 - 5
	3EB-79-A6090	NUT	12	6 - 19
	3EB-79-A6090	NUT	24	20 - 50
	3EB-79-A6081	PIN, COTTER	6	1 - 5
	3EB-79-A6081	PIN, COTTER	12	6 - 19

PARTS LIST CONTINUED ON NEXT PAGE

https://truckmanualshub.com/

E50-MD DUAL MAST — RECOMMENDED STOCK LIST (RSL)

Item	Part Number	Description	Qty	No. of Masts Serviced
	3EB-79-A6081	PIN, COTTER	24	20 - 50
	3EB-79-A6080	PIN, COTTER	6	1 - 5
	3EB-79-A6080	PIN, COTTER	12	6 - 19
	3EB-79-A6080	PIN, COTTER	36	20 - 50
	3EB-79-A6050	SHIM, .03 IN.	16	1 - 5
	3EB-79-A6050	SHIM, .03 IN.	32	6 - 19
	3EB-79-A6050	SHIM, .03 IN.	64	20 - 50
	3EB-79-A5210	ROLLER	8	1 - 5
	3EB-79-A5210	ROLLER	24	6 - 19
	3EB-79-A5210	ROLLER	48	20 - 50
	CC212587	SERVICE KIT, WEAR PLUG	2	1 - 5
	CC212587	SERVICE KIT, WEAR PLUG	4	6 - 19
	CC212587	SERVICE KIT, WEAR PLUG	8	20 - 50
		CARRIAGE AND CHAINS		
	SEE PARTS PG	FREE LIFT CHAINS	2	1 - 5
	SEE PARTS PG	FREE LIFT CHAINS	4	6 - 19
	SEE PARTS PG	FREE LIFT CHAINS	8	20 - 50
	3EB-79-A5210	CARRIAGE ROLLER.	4	1 - 5
	3EB-79-A5210	CARRIAGE ROLLER.	8	6 - 19
	3EB-79-A5210	CARRIAGE ROLLER.	16	20 - 50
	3EB-79-A5220	ROLLER - 6-ROLLER CARRIAGE	2	1 - 5
	3EB-79-A5220	ROLLER - 6-ROLLER CARRIAGE	4	6 - 19
	3EB-79-A5220	ROLLER - 6-ROLLER CARRIAGE	8	20 - 50
	3EB-79-A5140	CHAIN ANCHOR	1	1 - 5
	3EB-79-A5140	CHAIN ANCHOR	2	6 - 19
	3EB-79-A5140	CHAIN ANCHOR	4	20 - 50
	3EB-79-A6081	PIN, COTTER	2	1 - 5
	3EB-79-A6081	PIN, COTTER	4	6 - 19
	3EB-79-A6081	PIN, COTTER	8	20 - 50
	3EB-79-A6080	PIN, COTTER	4	1 - 5
	3EB-79-A6080	PIN, COTTER	8	6 - 19
	3EB-79-A6080	PIN, COTTER	16	20 - 50
	3EB-79-A5150	CHAIN PIN.	4	1 - 19
	3EB-79-A5150	CHAIN PIN.	8	20 - 50
	3EB-73-A5450	NUT	2	1 - 50

https://truckmanualshub.com/

NOTES:

https://truckmanualshub.com/

E50-MS 2-STAGE MAST - SAFETY DECALS
S/N 200001A~

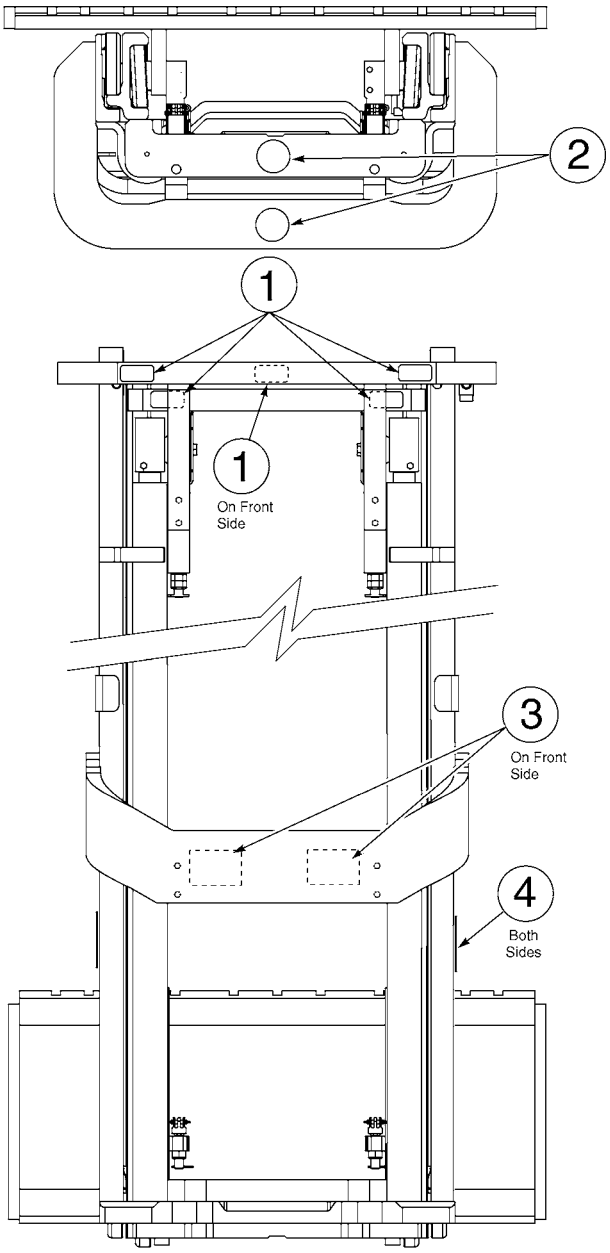

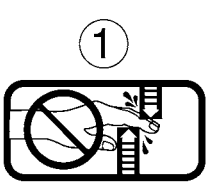

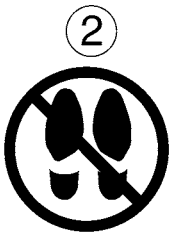

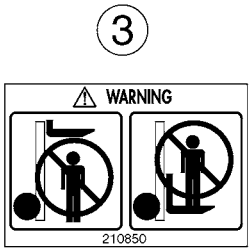



72-0100

https://truckmanualshub.com/

E50-MS 2-STAGE MAST - SAFETY DECALS
S/N 200001A~

Item	Part Number	Description	Qty	Serial Number
1	3EB-79-A6010	DECAL - "HANDS OFF"	5	
2	3EB-79-A6020	DECAL - "NO STEP"	2	
3	CC210850	DECAL - "WARNING"	2	
4	CC224053	DECAL - "FORK STOP"	2	

https://truckmanualshub.com/

E50-MS 2-STAGE MAST - MAIN LIFT CYLINDERS
S/N 200001A~

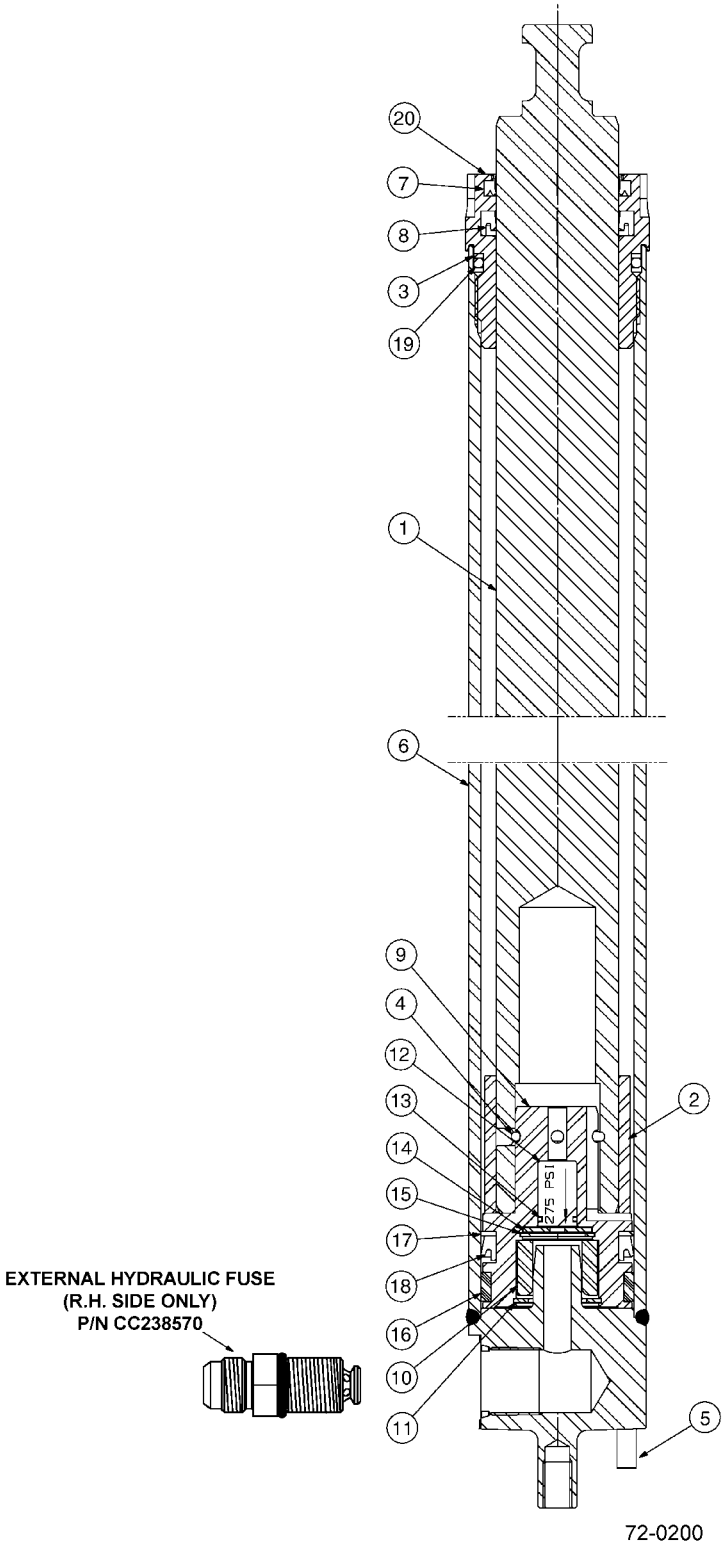

https://truckmanualshub.com/

E50-MS 2-STAGE MAST - MAIN LIFT CYLINDERS
S/N 200001A~

Item	Part Number	Description	Qty	Serial Number
1	NSS	ROD/PLUNGER	1	
2	NSS	SPACER	1	
3	NSS	BACK-UP RING (SEAL KIT)	1	
4	NSS	PULL-IN WIRE (SEAL KIT)	1	
5	CC7910	ROLL PIN	1	
6	NSS	SHELL	1	
7	NSS	WIPER (SEAL KIT)	1	
8	NSS	ROD SEAL (SEAL KIT)	1	
9	NSS	PISTON	1	
10	NSS	SLEEVE	1	
11	NSS	RETAINING RING (CHECK VALVE KIT)	1	
12	NSS	CHECK VALVE (CHECK VALVE KIT)	1	
13	NSS	O-RING (CHECK VALVE KIT)	1	
14	NSS	WASHER (CHECK VALVE KIT)	1	
15	NSS	RETAINING RING (SEAL KIT)	1	
16	NSS	WEAR RING (SEAL KIT)	1	
17	NSS	NYLON RING (SEAL KIT)	1	
18	NSS	PISTON SEAL (SEAL KIT)	1	
19	NSS	O-RING (SEAL KIT)	1	
20	CC422809	RETAINER	1	
KIT	3EB-73-A5430	SEAL KIT	1	
KIT	CC3101894	CHECK VALVE KIT	1	
	OCL = OUTER CHANNEL LENGTH			
	CC1001115	MAIN LIFT CYLINDER - (57" OCL) (82" MFH)	1	
	CC1001127	MAIN LIFT CYLINDER - (69" OCL) (106" MFH)	1	
	CC1001131	MAIN LIFT CYLINDER - (73" OCL) (114" MFH)	1	
	CC1001138	MAIN LIFT CYLINDER - (80" OCL) (128" MFH)	1	
	CC1001139	MAIN LIFT CYLINDER - (81" OCL) (130" MFH)	1	
	CC1001147	MAIN LIFT CYLINDER - (89" OCL) (146" MFH)	1	
	CC1001153	MAIN LIFT CYLINDER - (95" OCL) (158" MFH)	1	
	CC1001159	MAIN LIFT CYLINDER - (101" OCL) (170" MFH)	1	

https://truckmanualshub.com/

E50-MS 2-STAGE MAST - OUTER UPRIGHT
S/N 200001A~

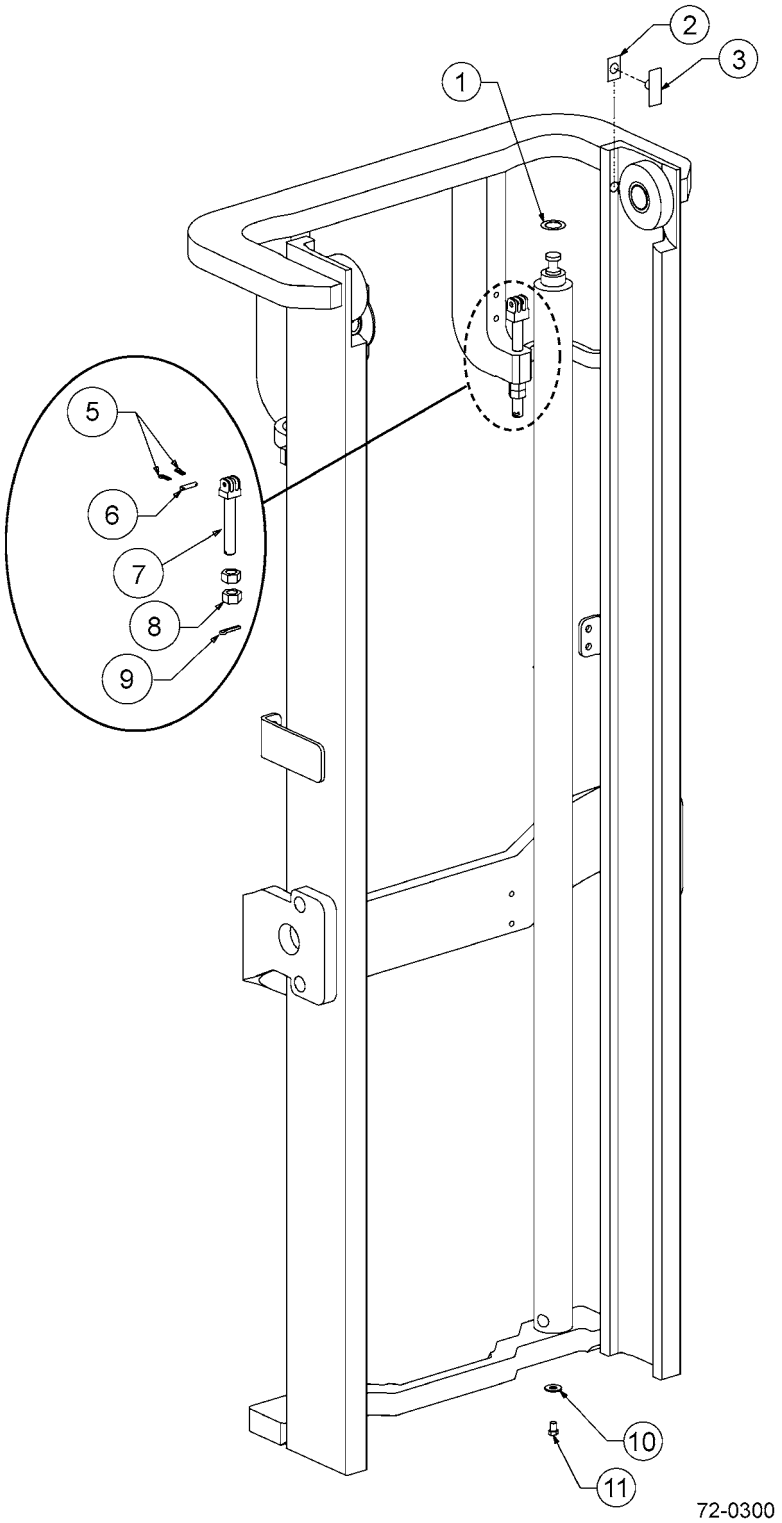

https://truckmanualshub.com/

E50-MS 2-STAGE MAST - OUTER UPRIGHT
S/N 200001A~

Item	Part Number	Description	Qty	Serial Number
	OCL = OUTER CHANNEL LENGTH			
	CC235978	OUTER UPRIGHT - (57" OCL) (82" MFH)	1	
	CC235990	OUTER UPRIGHT - (69" OCL) (106" MFH)	1	
	CC235994	OUTER UPRIGHT - (73" OCL) (114" MFH)	1	
	CC236001	OUTER UPRIGHT - (80" OCL) (128" MFH)	1	
	CC236002	OUTER UPRIGHT - (81" OCL) (130" MFH)	1	
	CC236010	OUTER UPRIGHT - (89" OCL) (146" MFH)	1	
	CC236016	OUTER UPRIGHT - (95" OCL) (158" MFH)	1	
	CC236022	OUTER UPRIGHT - (101" OCL) (170" MFH) . . .	1	
1	CC238137	MAIN LIFT CYL SHIM KIT	2	
2	NSS	WEAR PLUG SHIM . . . . . (WEAR PLUG KIT)	AR	
3	NSS	WEAR PLUG . . . . . (WEAR PLUG KIT)	1	
4	NOT USED			
5	3EB079-A6080	COTTER PIN	4	
6	3EB-79-A5150	CHAIN ANCHOR PIN	2	
7	3EB-79-A5110	CHAIN ANCHOR	2	
8	3EB-79-A6090	NUT.	4	
9	3EB-79-A6081	COTTER PIN	2	
10	3EB-79-A5350	FLAT WASHER.	2	
11	3EB-79-A5340	BOLT.	2	

https://truckmanualshub.com/

E50-MS 2-STAGE MAST - INNER UPRIGHT
S/N 200001A~

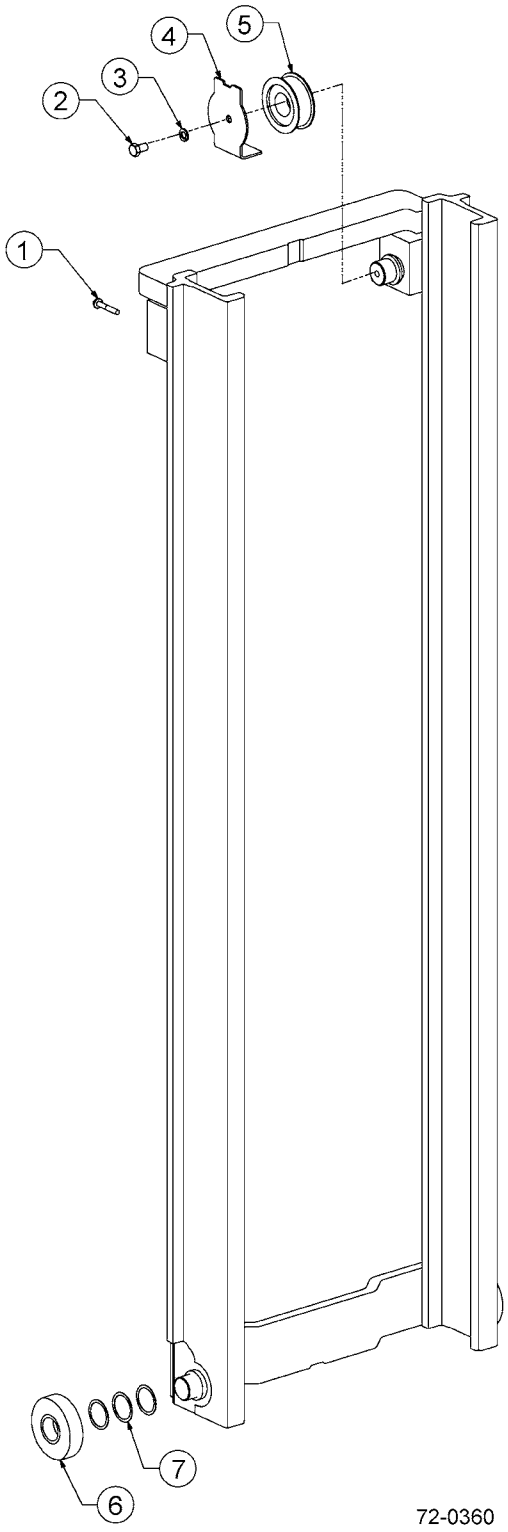

https://truckmanualshub.com/

E50-MS 2-STAGE MAST - INNER UPRIGHT
S/N 200001A~

Item	Part Number	Description	Qty	Serial Number
		OCL = OUTER CHANNEL LENGTH, MFH = MAXIMUM FORK HEIGHT		
	CC236049	INNER UPRIGHT - (57" OCL) (82" MFH)	1	
	CC236061	INNER UPRIGHT - (69" OCL) (106" MFH)	1	
	CC236065	INNER UPRIGHT - (73" OCL) (114" MFH)	1	
	CC236072	INNER UPRIGHT - (80" OCL) (128" MFH)	1	
	CC236073	INNER UPRIGHT - (81" OCL) (130" MFH)	1	
	CC236081	INNER UPRIGHT - (89" OCL) (146" MFH)	1	
	CC236087	INNER UPRIGHT - (95" OCL) (158" MFH)	1	
	CC236093	INNER UPRIGHT - (101" OCL) (170" MFH)	1	
1	3EB-79-A5380	BOLT	2	
2	3EB-79-A5370	M12 X 20 LG CAPSCREW	2	
3	3EB-79-A5360	M12 WASHER, LOCK	2	
4	3EB-73-A5140	CHAIN GUARD	2	
5	3EB-73-A5010	SHEAVE	2	
6	3EB-79-A5210	LOAD ROLLER	4	
7	3EB-79-A6050	SHIM, LOAD ROLLER	AR	

https://truckmanualshub.com/

E50-MS 2-STAGE MAST - CARRIAGE - 4-ROLLER
S/N 200001A~

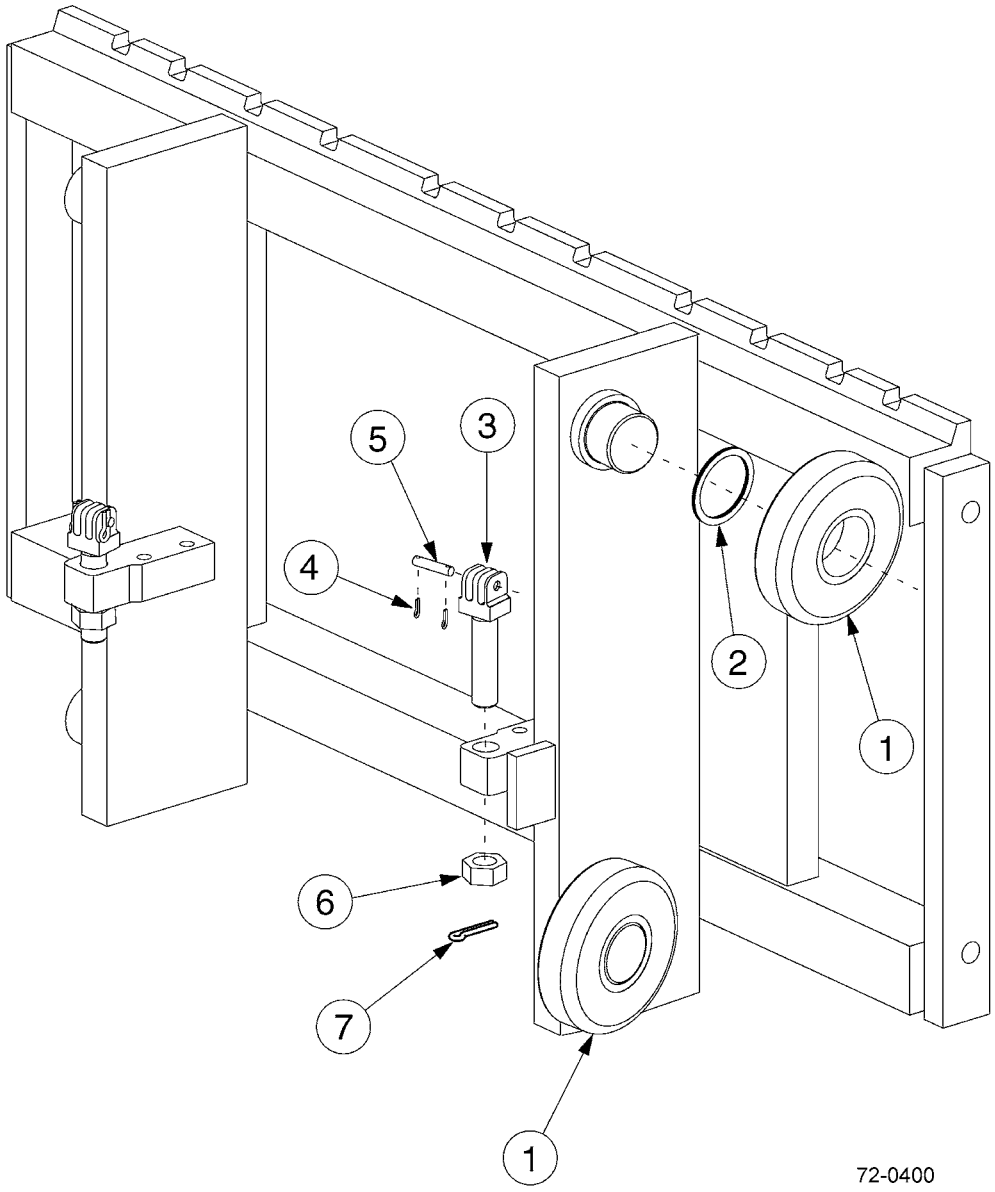

https://truckmanualshub.com/

E50-MS 2-STAGE MAST - CARRIAGE - 4-ROLLER
S/N 200001A~

Item	Part Number	Description	Qty	Serial Number
	CC236907	CARRIAGE - 37" - CUSHION TIRE SPEC	1	
	CC236908	CARRIAGE - 41" - CUSHION TIRE SPEC	1	
	CC236909	CARRIAGE - 37" - PNEUMATIC SPEC	1	
	CC236910	CARRIAGE - 41" - PNEUMATIC SPEC	1	
1	3EB-79-A5210	LOAD ROLLER	4	
2	3EB-79-A6050	SHIM, LOAD ROLLER	AR	
3	3EB-79-A5140	CHAIN ANCHOR	2	
4	3EB-79-A6080	PIN, COTTER	4	
5	3EB-79-A5150	PIN, CHAIN ANCHOR	2	
6	3EB-73-A5450	NUT	2	
7	3EB-79-A6081	PIN, COTTER	2	

https://truckmanualshub.com/

E50-MS 2-STAGE MAST - CARRIAGE - 6-ROLLER
S/N 200001A~

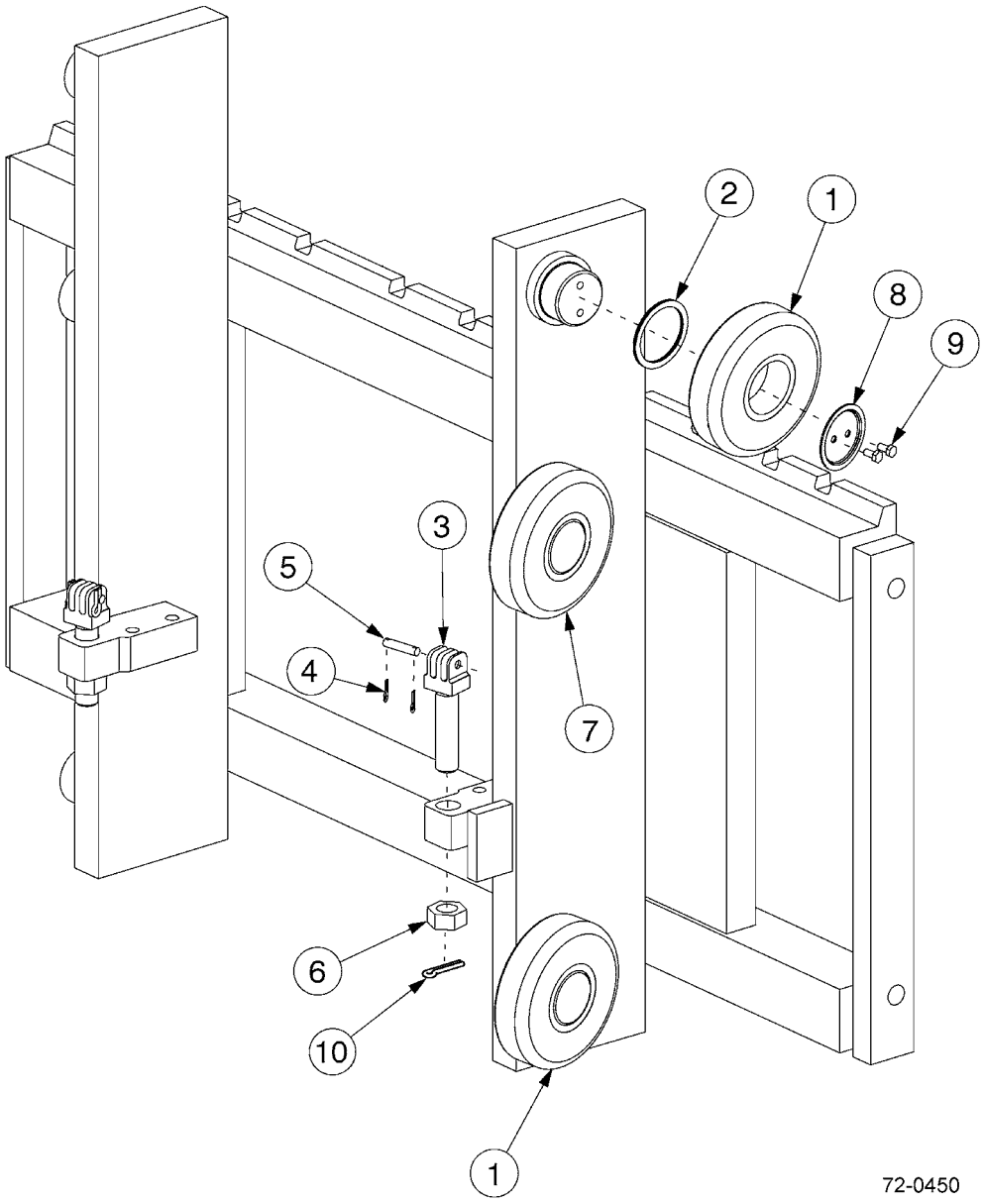

https://truckmanualshub.com/

E50-MS 2-STAGE MAST - CARRIAGE - 6-ROLLER
S/N 200001A~

Item	Part Number	Description	Qty	Serial Number
	CC253144	CARRIAGE - 37" - CUSHION TIRE SPEC (TRUCKER SPECIAL)	1	
	CC236915	CARRIAGE - 37" - CUSHION TIRE SPEC	1	
	CC236916	CARRIAGE - 41" - CUSHION TIRE SPEC	1	
	CC252857	CARRIAGE - 31" - PNEUMATIC SPEC	1	
	CC236917	CARRIAGE - 37" - PNEUMATIC SPEC	1	
	CC236918	CARRIAGE - 41" - PNEUMATIC SPEC	1	
	CC251443	CARRIAGE - 53" - PNEUMATIC SPEC	1	
1	3EB-79-A5210	LOAD ROLLER	4	
2	3EB-79-A6050	SHIM, LOAD ROLLER	AR	
3	3EB-79-A5140	CHAIN ANCHOR	2	
4	3EB-79-A6080	PIN, COTTER	4	
5	3EB-79-A5150	PIN, CHAIN ANCHOR	2	
6	3EB-73-A5450	NUT	2	
7	3EB-79-A5220	LOAD ROLLER	2	
8	3EB-73-A5460	RETAINER	2	
9	3EB-73-A5470	CAPSCREW - M6 X 12LG	4	
10	3EB-79-A6081	PIN, COTTER	2	

https://truckmanualshub.com/

E50-MS 2-STAGE MAST - HOIST CHAINS
S/N 200001A~

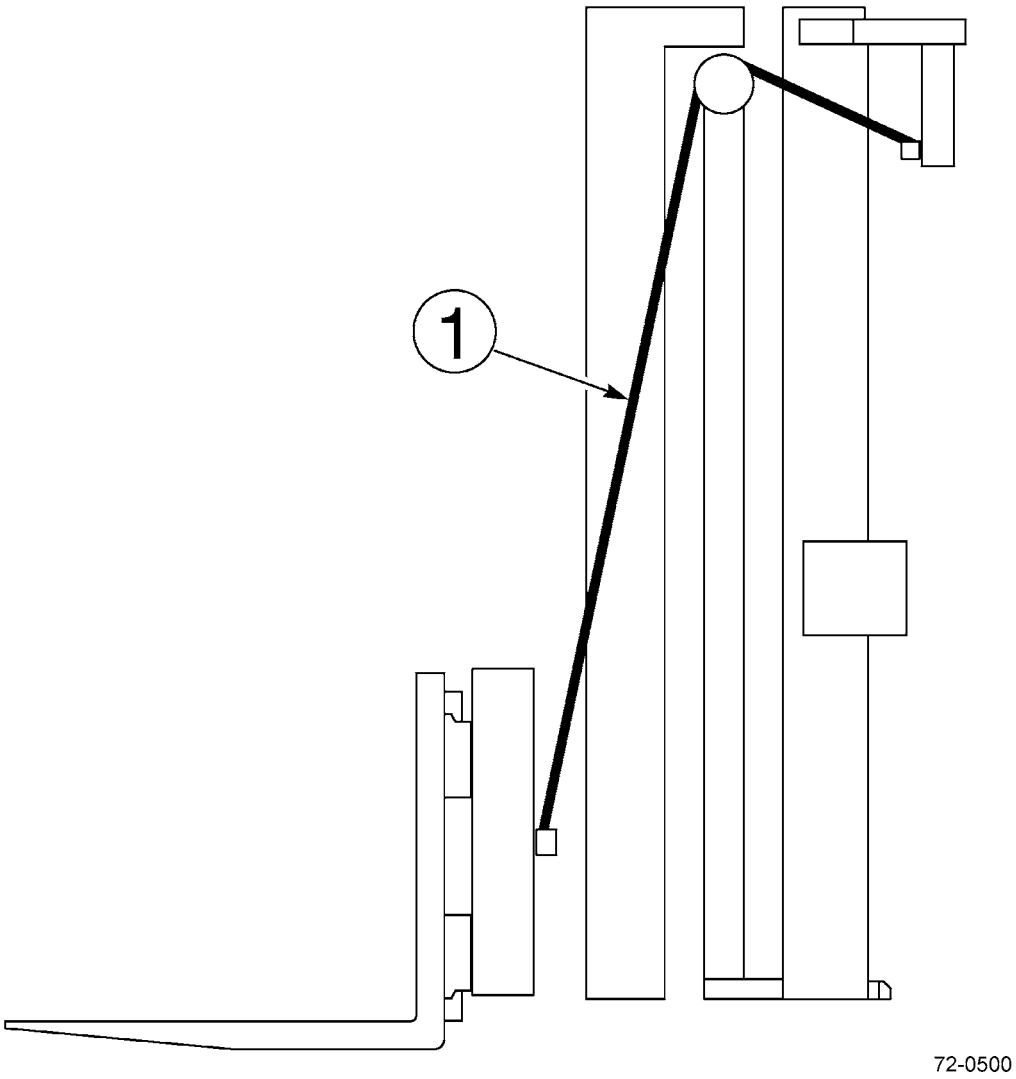

https://truckmanualshub.com/

E50-MS 2-STAGE MAST - HOIST CHAINS
S/N 200001A~

Item	Part Number	Description	Qty	Serial Number
	OCL = OUTER CHANNEL LENGTH			
1	CC683763	MAIN LIFT CHAIN - (57" OCL)	2	
	3EB-74-A5390	MAIN LIFT CHAIN - (69" OCL)	2	
	CC678658	MAIN LIFT CHAIN - (73" OCL)	2	
	CC683775	MAIN LIFT CHAIN - (80" OCL)	2	
	3EB-74-A5190	MAIN LIFT CHAIN - (81" OCL)	2	
	CC683780	MAIN LIFT CHAIN - (89" OCL)	2	
	CC683784	MAIN LIFT CHAIN - (95" OCL)	2	
	CC683788	MAIN LIFT CHAIN - (101" OCL)	2	

https://truckmanualshub.com/

E50-MS 2-STAGE MAST - LOAD BACKREST
S/N 200001A~

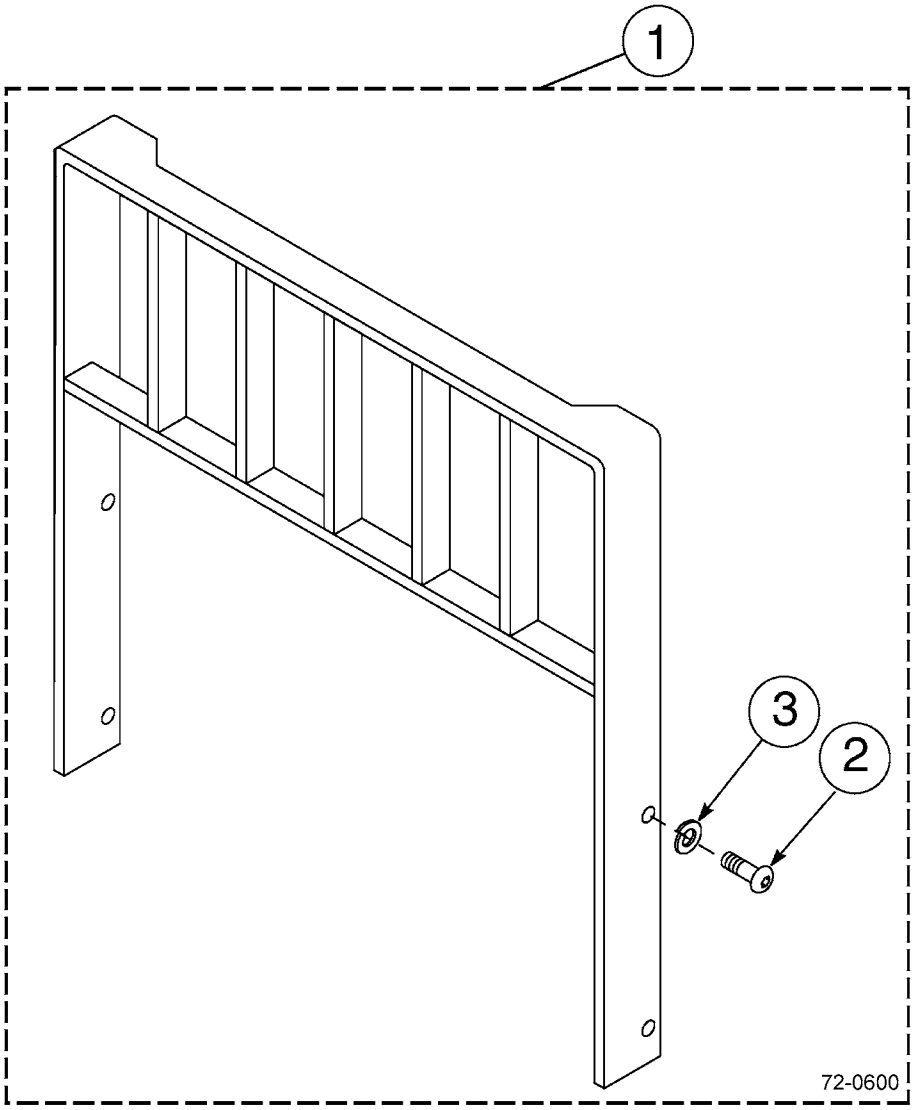

https://truckmanualshub.com/

E50-MS 2-STAGE MAST - LOAD BACKREST
S/N 200001A~

Item	Part Number	Description	Qty	Serial Number
		CLASS II LOAD BACKRESTS (HEIGHT X WIDTH)		
1	CC209407	BACKREST - 31" X 36"	1	
	CC684770	BACKREST - 31" X 48"	1	
	CC209408	BACKREST - 31" X 60"	1	
	CC684772	BACKREST - 37" X 36"	1	
	CC226827	BACKREST - 37" X 40"	1	
	CC225390	BACKREST - 37" X 42"	1	
	3EB-73-A5810	BACKREST - 37" X 48"	1	
	CC361238	BACKREST - 37" X 52"	1	
	CC684774	BACKREST - 37" X 60"	1	
	CC245151	BACKREST - 37" X 65"	1	
	CC369519	BACKREST - 37" X 72"	1	
	CC684775	BACKREST - 41" X 36"	1	
	3EB-73-A5820	BACKREST - 41" X 48"	1	
	CC684777	BACKREST - 41" X 60"	1	
	CC248948	BACKREST - 46" X 48"	1	
	CC684778	BACKREST - 49" X 36"	1	
	CC684779	BACKREST - 49" X 48"	1	
	CC684780	BACKREST - 49" X 60"	1	
	CC231595	BACKREST - 52" X 48"	1	
	CC684781	BACKREST - 61" X 36"	1	
	CC684782	BACKREST - 61" X 48"	1	
	CC684783	BACKREST - 61" X 60"	1	
2	CC200173	.CAPSCREW - M16 X 2.0 X 35-8.8	4	
3	3EB-71-A6030	WASHER, LOCK - M16	4	

https://truckmanualshub.com/

E50-MS 2-STAGE MAST - MOUNTING PARTS - CUSHION MODELS
S/N 200001A~

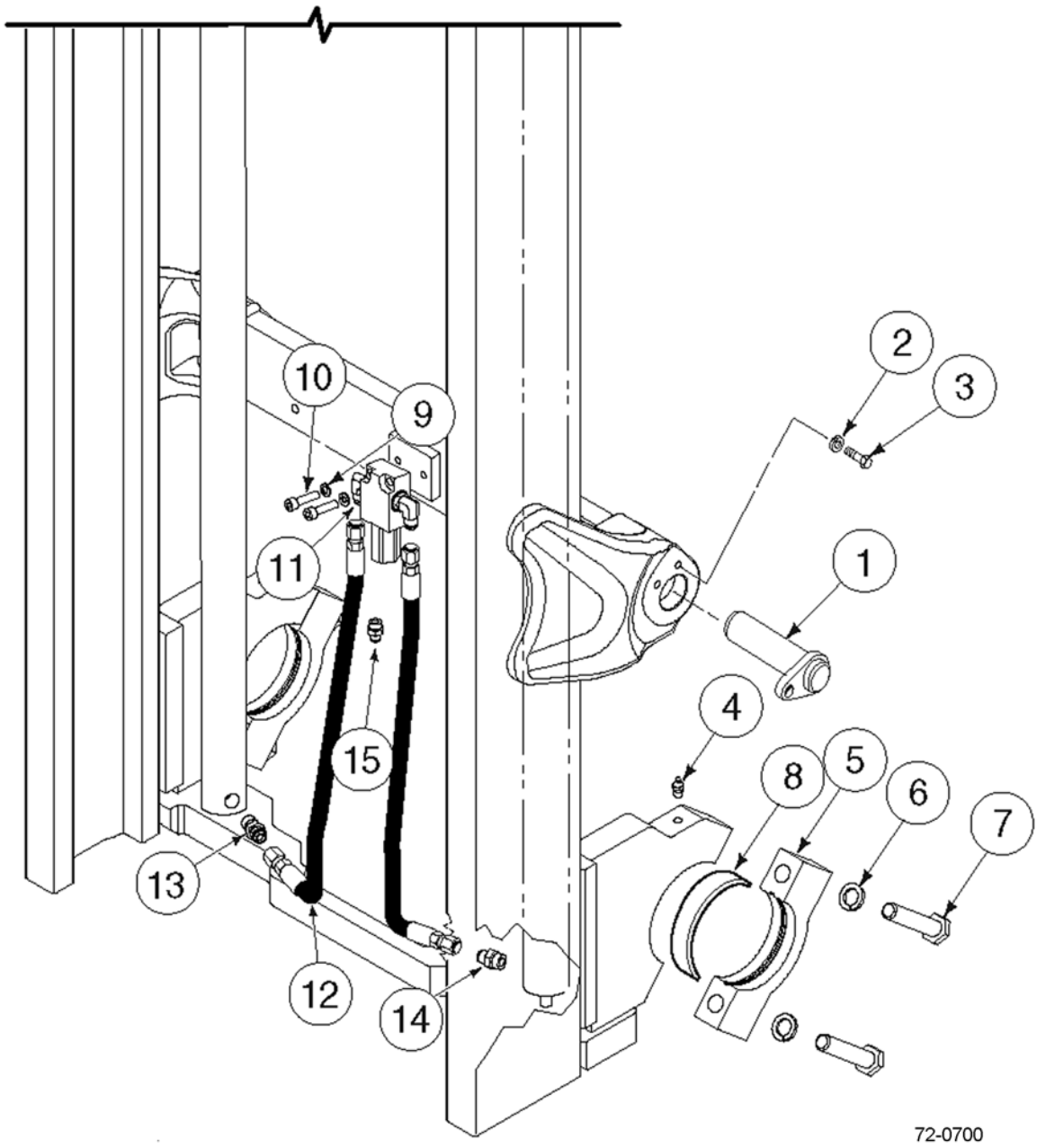

https://truckmanualshub.com/

E50-MS 2-STAGE MAST - MOUNTING PARTS - CUSHION MODELS
S/N 200001A~

Item	Part Number	Description	Qty	Serial Number
1	3EB-41-51570	TILT PIN	2	
2	3EB-79-A6040	WASHER, LOCK.	2	
3	CC212632	CAPSCREW	2	
4	CC7418	FITTING, GREASE	2	
5	CC251901	CAP.	2	
6	3EB-71-A6030	WASHER, LOCK.	4	
7	CC251906	CAPSCREW	4	
8	34A-42-11411	BUSHING	2	
9	CC681238	WASHER, LOCK.	2	
10	CC767611	CAPSCREW	2	
11	CC601250	FITTING # 8 - 90° ELBOW	2	
12	CC255666	MAIN LIFT HOSE, RH	1	
	CC255665	MAIN LIFT HOSE, LH.	1	
13	CC611289	FITTING # 8-# 10 STR.	1	
14	CC238570	12 GPM EXTERNAL FUSE	1	
15	CC601377	FITTING	1	
KIT	CC255596	INSTALLATION KIT (& CC254411).	1	

https://truckmanualshub.com/

E50-MS 2-STAGE MAST - MOUNTING PARTS - PNEUMATIC MODELS
S/N 200001A~

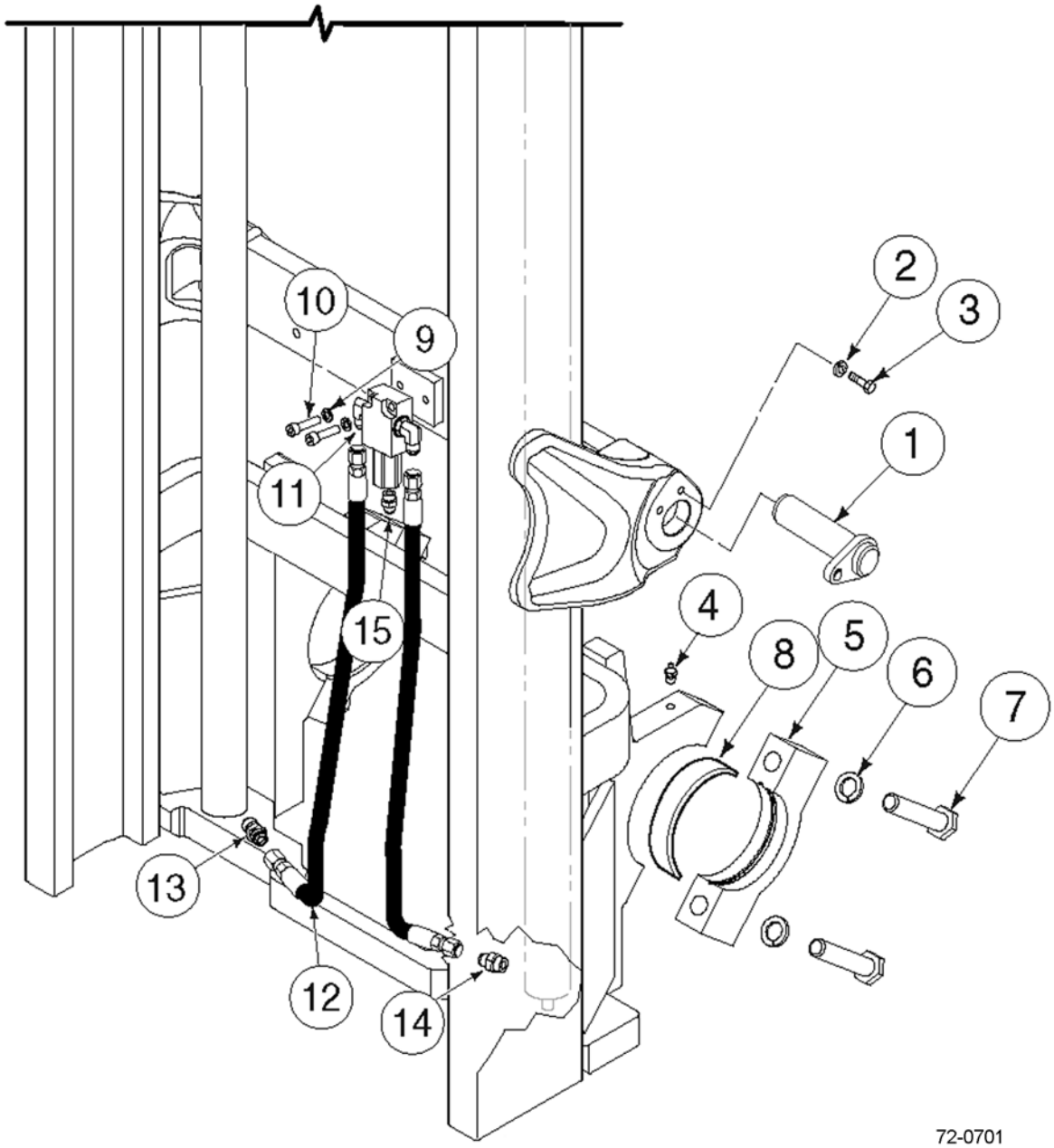

https://truckmanualshub.com/

E50-MS 2-STAGE MAST - MOUNTING PARTS - PNEUMATIC MODELS
S/N 200001A~

Item	Part Number	Description	Qty	Serial Number
1	3EB-41-51570	TILT PIN	2	
2	3EB-79-A6040	WASHER, LOCK.	2	
3	CC212632	CAPSCREW	2	
4	CC7418	FITTING, GREASE	2	
5	CC253119	CAP.	2	
6	3EB-71-A6030	WASHER, LOCK.	4	
7	CC253120	CAPSCREW	4	
8	34A-42-11411	BUSHING	2	
9	CC681238	WASHER, LOCK.	2	
10	CC767611	CAPSCREW	2	
11	CC601250	FITTING # 8 - 90° ELBOW	2	
12	CC255651	MAIN LIFT HOSE, RH	1	
	CC238174	MAIN LIFT HOSE, LH.	1	
13	CC611289	FITTING # 8-# 10 STR.	1	
14	CC238570	12 GPM EXTERNAL FUSE	1	
15	CC611303	FITTING	1	
KIT	CC255596	INSTALLATION KIT	1	

https://truckmanualshub.com/

E50-MS 2-STAGE MAST - LOWERING CONTROL VALVE
S/N 200001A~

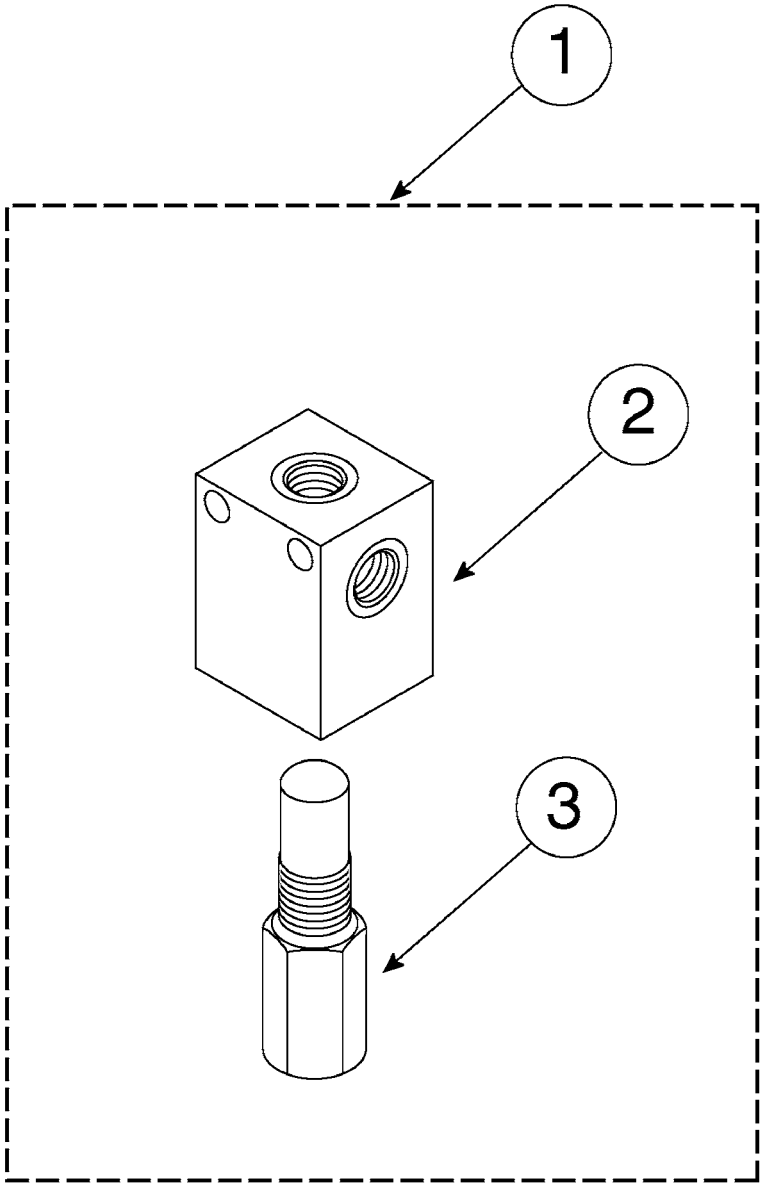

72-0850

https://truckmanualshub.com/

E50-MS 2-STAGE MAST - LOWERING CONTROL VALVE
S/N 200001A~

Item	Part Number	Description	Qty	Serial Number
1	CC684810	CONTROL VALVE - 2600 PSI - 17 GPM	1	
2	CC684152	.VALVE BODY.	1	
3	3EB-73-A5920	.VALVE CARTRIDGE	1	

https://truckmanualshub.com/

E50-MS 2-STAGE MAST - INTERNAL HOSE REEVING - SINGLE - PNEUMATIC MODELS
59-66 INCH OCL ONLY - S/N 200001A~

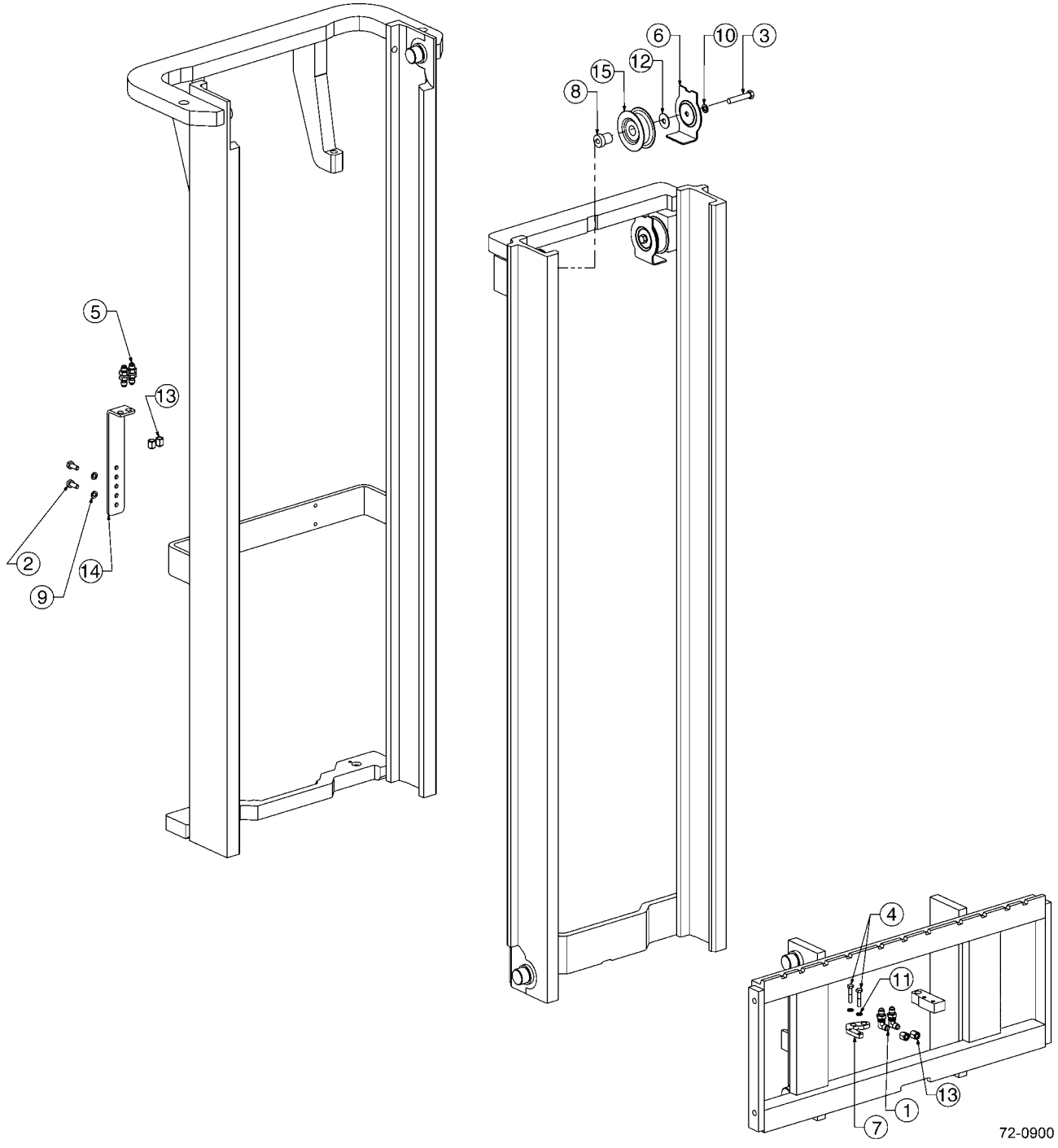

https://truckmanualshub.com/

E50-MS 2-STAGE MAST - INTERNAL HOSE REEVING - SINGLE - PNEUMATIC MODELS 59-66 INCH OCL ONLY - S/N 200001A~

Item	Part Number	Description	Qty	Serial Number
1	3EB-71-A6010	BULKHEAD UNION FITTING	2	
2	3EB-73-A5490	CAPSCREW - M10 X 25LG	2	
3	3EB-79-A5230	CAPSCREW - M12 X 60LG	1	
4	CC203202	CAPSCREW - M8 X 40 LG	2	
5	3EB-71-A6040	BULKHEAD UNION FITTING	2	
6	3EB-73-A5120	HOSE GUARD	1	
7	CC253343	BRACKET	1	
8	CC235879	IHR STUB SHAFT	1	
9	3EB-79-A6040	WASHER, LOCK - M10	2	
10	3EB-79-A5360	WASHER, LOCK - M12	1	
11	CC206315	WASHER, LOCK - M8	2	
12	CC250035	IHR BRACKET - R.H.	1	
13	3EB-79-A5250	CAP	4	
14	CC253188	REAR TERMINATON BRACKET	1	
15	3EB-73-A5020	SHEAVE	1	
N/S	3EB-79-A5280	WASHER	1	

OCL = OUTER CHANNEL LENGTH, MFH = MAXIMUM FORK HEIGHT

CC3550-1531	HOSE (IHR KIT #253194) (54/56" OCL) (80" MFH)	2
CC3550-1581	HOSE (IHR KIT #253195) (57" OCL) (82" MFH)	2

NOTE: 54" TRUCKER SPECIAL USES SAME IHR AS 56" BECAUSE OF SPECIAL CARRIAGE.

https://truckmanualshub.com/

E50-MS 2-STAGE MAST - INTERNAL HOSE REEVING - SINGLE - CUSHION MODELS 67 INCH OCL AND UP - S/N 200001A~

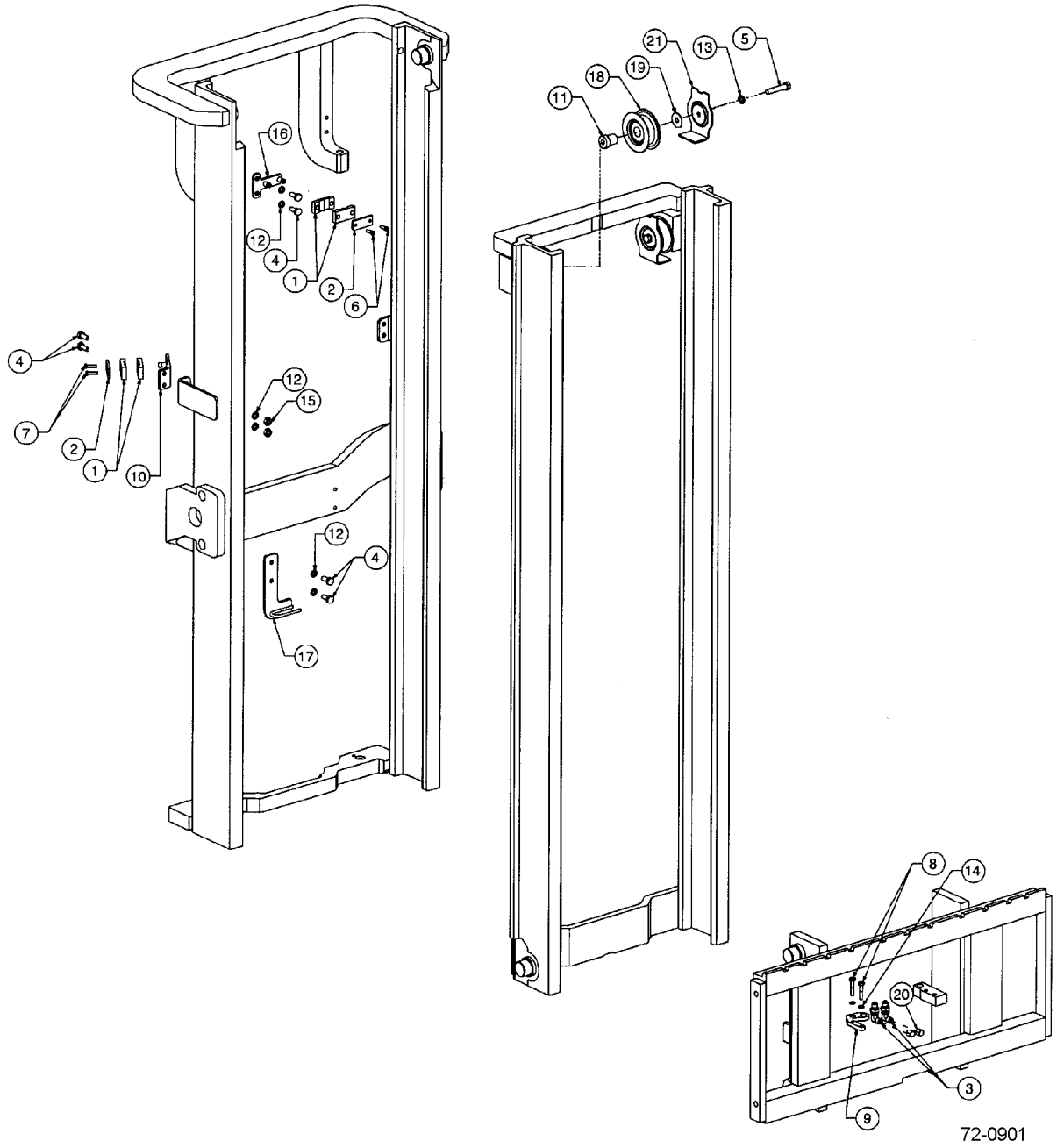

https://truckmanualshub.com/

E50-MS 2-STAGE MAST - INTERNAL HOSE REEVING - SINGLE - CUSHION MODELS 67 INCH OCL AND UP - S/N 200001A~

Item	Part Number	Description	Qty	Serial Number
1	3EB-73-A5150	CLAMP, HOSE	4	
2	3EB-73-A5160	HOSE CLAMP BAR	2	
3	3EB-71-A6010	FITTING, BULKHEAD UNION	2	
4	3EB-73-A5490	CAPSCREW - M10 X 25LG	6	
5	3EB-79-A5230	CAPSCREW - M12 X 60LG	1	
6	CC761170	CAPSCREW - M6 X 20LG	2	
7	3EB-79-A5240	CAPSCREW - M6 X 25LG	2	
8	CC203202	CAPSCREW - M8 X 40 LG	2	
9	CC235886	BRACKET - CARRIAGE IHR	1	
10	3EB-73-A5640	IHR BRACKET	1	
11	CC235879	IHR STUB SHAFT	1	
12	3EB-79-A6040	WASHER, LOCK - M10	6	
13	3EB-79-A5360	WASHER, LOCK - M12	1	
14	CC206315	WASHER, LOCK - M8	2	
15	3EB-79-A5180	NUT - M10	2	
16	CC236902	IHR BRACKET - OUTER	1	
17	CC238170	IHR BRACKET - R.H.	1	
18	3EB-73-A5020	SHEAVE	1	
19	3EB-79-A5280	WASHER	1	
20	3EB-79-A5250	CAP	2	
21	CC216052	HOSE GUARD	1	
OCL = OUTER CHANNEL LENGTH				
	CC234958	HOSE (IHR KIT #255162) (69" OCL) (106" MFH)	2	
	CC234962	HOSE (IHR KIT #255166) (73" OCL) (114" MFH)	2	
	CC234969	HOSE (IHR KIT #255173) (80" OCL) (128" MFH)	2	
	CC213919	HOSE (IHR KIT #255174) (81" OCL) (130" MFH)	2	
	CC234975	HOSE (IHR KIT #255182) (89" OCL) (146" MFH)	2	
	CC216928	HOSE (IHR KIT #255188) (95" OCL) (158" MFH)	2	
	CC234988	HOSE (IHR KIT #255194) (101" OCL) (170" MFH)	2	

https://truckmanualshub.com/

E50-MS 2-STAGE MAST - INTERNAL HOSE REEVING - DOUBLE - PNEUMATIC MODELS S/N 200001A~

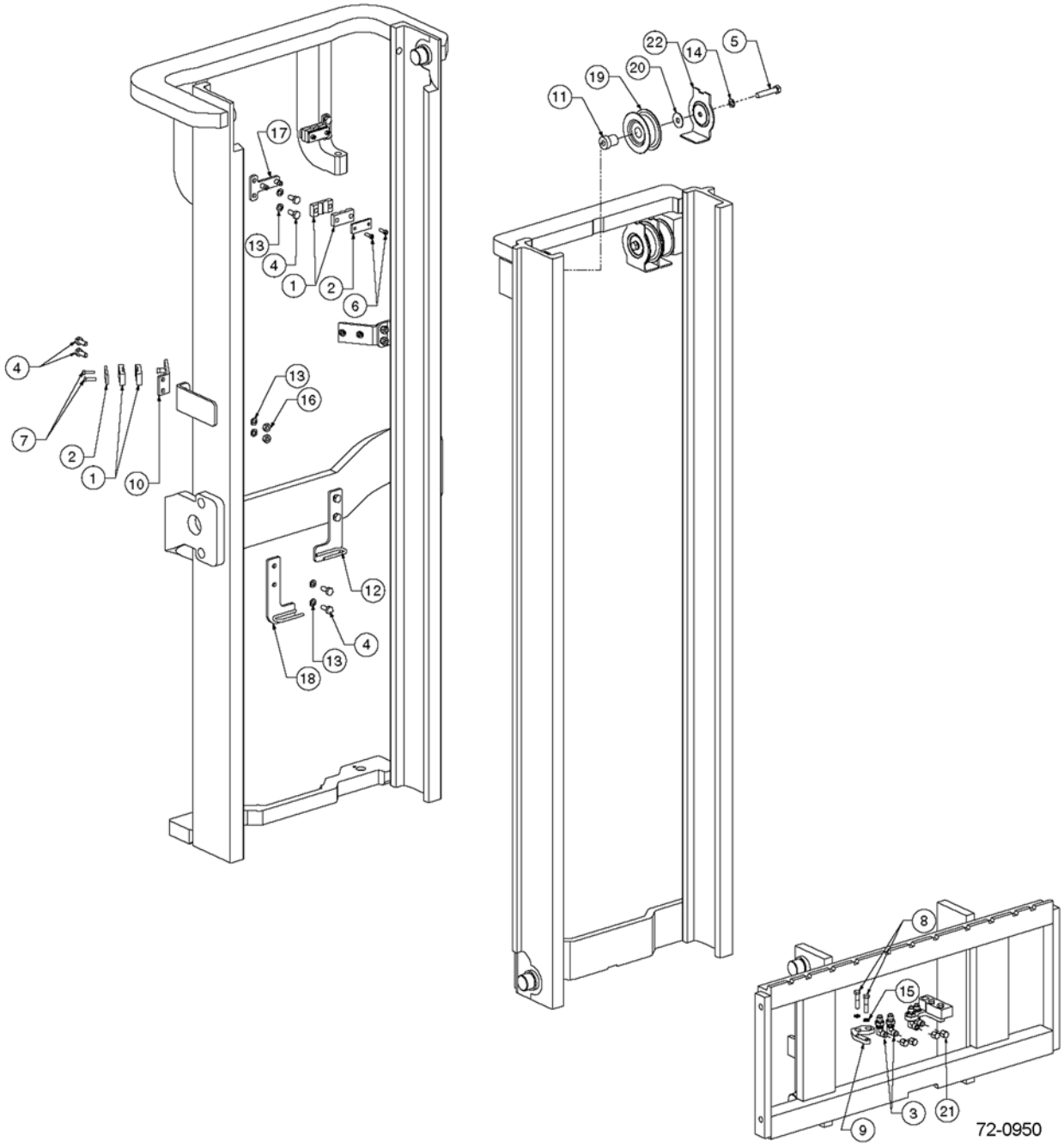

https://truckmanualshub.com/

E50-MS 2-STAGE MAST - INTERNAL HOSE REEVING - DOUBLE - PNEUMATIC MODELS S/N 200001A~

Item	Part Number	Description	Qty	Serial Number
1	3EB-73-A5150	CLAMP, HOSE	8	
2	3EB-73-A5160	HOSE CLAMP BAR	4	
3	3EB-71-A6010	FITTING, BULKHEAD UNION	4	
4	3EB-73-A5490	CAPSCREW - M10 X 25LG	12	
5	3EB-79-A5230	CAPSCREW - M12 X 60LG	2	
6	CC761170	CAPSCREW - M6 X 20LG	4	
7	3EB-79-A5240	CAPSCREW - M6 X 25LG	4	
8	CC203202	CAPSCREW - M8 X 40 LG	4	
9	CC235886	BRACKET - CARRIAGE IHR	2	
10	3EB-73-A5640	IHR BRACKET	2	
11	CC235879	IHR STUB SHAFT	2	
12	CC250036	IHR BRACKET - L.H.	1	
13	3EB-79-A6040	WASHER, LOCK - M10	12	
14	3EB-79-A5360	WASHER, LOCK - M12	2	
15	CC206315	WASHER, LOCK - M8	4	
16	3EB-79-A5180	NUT - M10	4	
17	CC236902	IHR BRACKET - OUTER	2	
18	CC250035	IHR BRACKET - R.H.	1	
19	3EB-73-A5020	SHEAVE	2	
20	3EB-79-A5280	WASHER	2	
21	3EB-79-A5250	CAP	4	
22	CC216052	HOSE GUARD	2	
	OCL = OUTER CHANNEL LENGTH, MFH = MAXMUM FORK HEIGHT			
	CC234958	HOSE (IHR KIT CC237757) (69" OCL) (106" MFH)	4	
	CC234962	HOSE (IHR KIT CC237761) (73" OCL) (114" MFH)	4	
	CC234969	HOSE (IHR KIT CC237768) (80" OCL) (128" MFH)	4	
	CC213919	HOSE (IHR KIT CC237769) (81" OCL) (130" MFH)	4	
	CC234975	HOSE (IHR KIT CC237777) (89" OCL) (146" MFH)	4	
	CC216928	HOSE (IHR KIT CC237783) (95" OCL) (158" MFH)	4	
	CC234988	HOSE (IHR KIT CC237789)(101" OCL) (170" MFH)	4	

https://truckmanualshub.com/

E50-MS 2-STAGE MAST - INTERNAL HOSE REEVING - DOUBLE - CUSHION MODELS S/N 200001A~

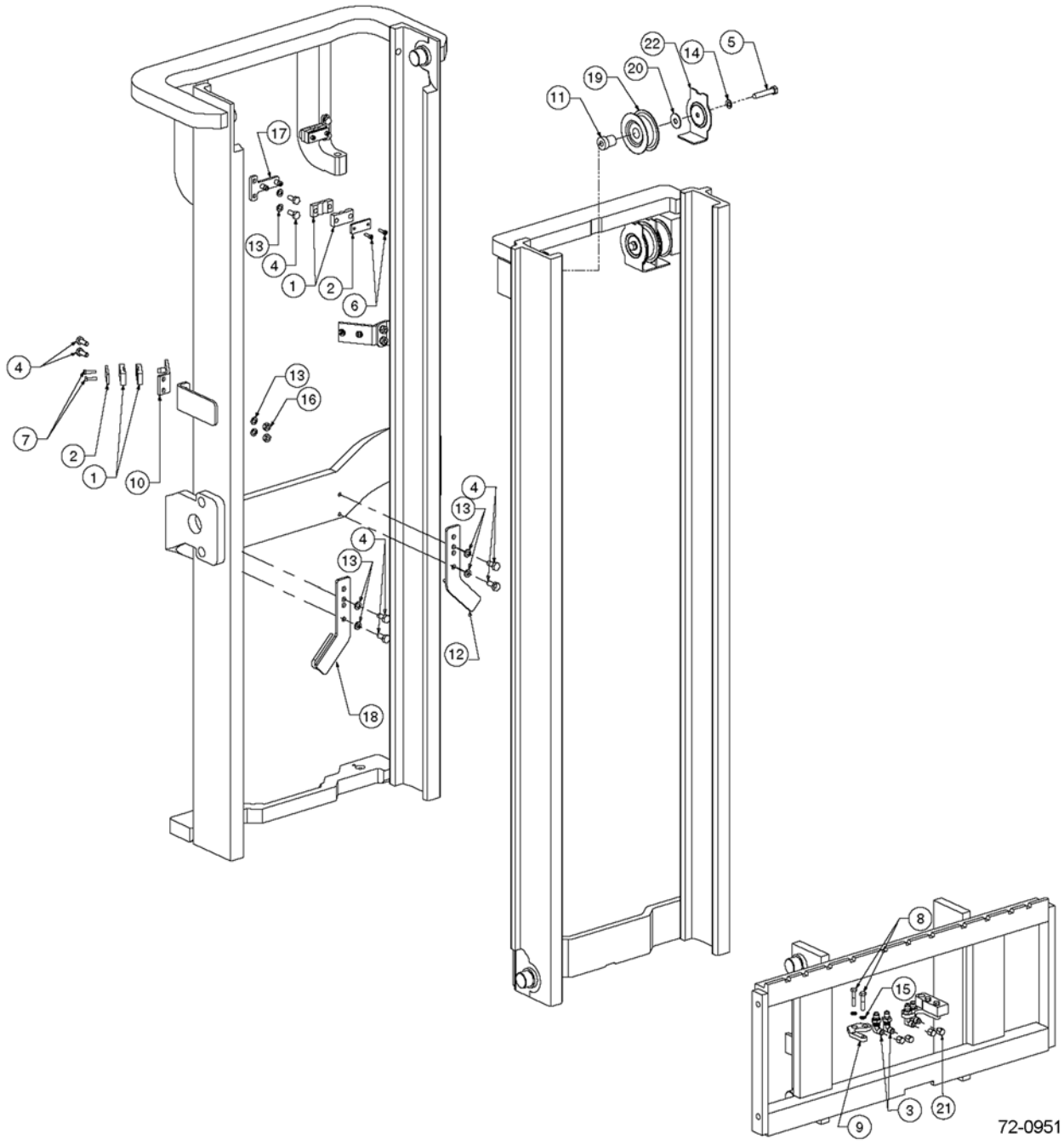

https://truckmanualshub.com/

E50-MS 2-STAGE MAST - INTERNAL HOSE REEVING - DOUBLE - CUSHION MODELS S/N 200001A~

Item	Part Number	Description	Qty	Serial Number
1	3EB-73-A5150	CLAMP, HOSE	8	
2	3EB-73-A5160	HOSE CLAMP BAR	4	
3	3EB-71-A6010	FITTING, BULKHEAD UNION	4	
4	3EB-73-A5490	CAPSCREW - M10 X 25LG	12	
5	3EB-79-A5230	CAPSCREW - M12 X 60LG	2	
6	CC761170	CAPSCREW - M6 X 20LG	4	
7	3EB-79-A5240	CAPSCREW - M6 X 25LG	4	
8	CC203202	CAPSCREW - M8 X 40 LG	4	
9	CC235886	BRACKET - CARRIAGE IHR	2	
10	3EB-73-A5640	IHR BRACKET	2	
11	CC235879	IHR STUB SHAFT	2	
12	3EB-73-A6020	IHR BRACKET - L.H.	1	
13	3EB-79-A6040	WASHER, LOCK - M10	12	
14	3EB-79-A5360	WASHER, LOCK - M12	2	
15	CC206315	WASHER, LOCK - M8	4	
16	3EB-79-A5180	NUT - M10	4	
17	CC236902	IHR BRACKET - OUTER	2	
18	3EB-73-A5650	IHR BRACKET - R.H.	1	
19	3EB-73-A5020	SHEAVE	2	
20	3EB-79-A5280	WASHER	2	
21	3EB-79-A5250	CAP	4	
22	CC216052	HOSE GUARD	2	
OCL = OUTER CHANNEL LENGTH				
	CC234936	HOSE (IHR KIT #237745) (57" OCL) (82" MFH)	4	
	CC234958	HOSE (IHR KIT #237757) (69" OCL) (106" MFH)	4	
	CC234962	HOSE (IHR KIT #237761) (73" OCL) (114" MFH)	4	
	CC234969	HOSE (IHR KIT #237768) (80" OCL) (128" MFH)	4	
	CC213919	HOSE (IHR KIT #237769) (81" OCL) (130" MFH)	4	
	CC234975	HOSE (IHR KIT #237777) (89" OCL) (146" MFH)	4	
	CC216928	HOSE (IHR KIT #237783) (95" OCL) (158" MFH)	4	
	CC234988	HOSE (IHR KIT #237789) (101" OCL) (170" MFH)	4	

https://truckmanualshub.com/

E50-MS 2-STAGE MAST — RECOMMENDED STOCK LIST (RSL)

NO

ILLUSTRATION

REQUIRED

https://truckmanualshub.com/

E50-MS 2-STAGE MAST — RECOMMENDED STOCK LIST (RSL)

Item	Part Number	Description	Qty	No. of Masts Serviced
		MAIN LIFT CYLINDERS		
	SEE PARTS PG	MAIN LIFT CYL ASSY	0	1 - 19
	SEE PARTS PG	MAIN LIFT CYL ASSY	1	20 - 50
	SEE PARTS PG	SEAL KIT	2	1 - 5
	SEE PARTS PG	SEAL KIT	4	6 - 19
	SEE PARTS PG	SEAL KIT	8	20 - 50
		INTERNAL REEVING		
	SEE PARTS PG	HOSE	2	1 - 5
	SEE PARTS PG	HOSE	4	6 - 19
	SEE PARTS PG	HOSE	8	20 - 50
	3EB-71-A6010	FITTING	1	1 - 5
	3EB-71-A6010	FITTING	2	6 - 19
	3EB-71-A6010	FITTING	4	20 - 50
	3EB-73-A5020	SHEAVE, IHR, SINGLE IHR	1	1 - 5
	3EB-73-A5020	SHEAVE, IHR, SINGLE IHR	2	6 - 19
	3EB-73-A5020	SHEAVE, IHR, SINGLE IHR	4	20 - 50
	3EB-73-A5020	SHEAVE, IHR, DOUBLE IHR	2	1 - 5
	3EB-73-A5020	SHEAVE, IHR, DOUBLE IHR	4	6 - 19
	3EB-73-A5020	SHEAVE, IHR, DOUBLE IHR	8	20 - 50
		UPRIGHTS		
	3EB-79-A5110	CHAIN ANCHOR	1	1 - 5
	3EB-79-A5110	CHAIN ANCHOR	2	6 - 19
	3EB-79-A5110	CHAIN ANCHOR	4	20 - 50
	3EB-79-A5150	PIN, CHAIN ANCHOR	1	1 - 5
	3EB-79-A5150	PIN, CHAIN ANCHOR	2	6 - 19
	3EB-79-A5150	PIN, CHAIN ANCHOR	4	20 - 50
	3EB-79-A6090	NUT	4	1 - 5
	3EB-79-A6090	NUT	8	6 - 19
	3EB-79-A6090	NUT	32	20 - 50
	3EB-79-A6080	PIN, COTTER	6	1 - 5
	3EB-79-A6080	PIN, COTTER	12	6 - 19
	3EB-79-A6080	PIN, COTTER	36	20 - 50
	3EB-79-A6050	SHIM, .03 IN.	16	1 - 5
	3EB-79-A6050	SHIM, .03 IN.	32	6 - 19
	3EB-79-A6050	SHIM, .03 IN.	64	20 - 50
	3EB-79-A5210	ROLLER	8	1 - 5
	3EB-79-A5210	ROLLER	24	6 - 19
	3EB-79-A5210	ROLLER	48	20 - 50

PARTS LIST CONTINUED ON NEXT PAGE

https://truckmanualshub.com/

E50-MS 2-STAGE MAST — RECOMMENDED STOCK LIST (RSL)

Item	Part Number	Description	Qty	No. of Masts Serviced
	CC212587	SERVICE KIT, WEAR PLUG	2	1 - 5
	CC212587	SERVICE KIT, WEAR PLUG	4	6 - 19
	CC212587	SERVICE KIT, WEAR PLUG	8	20 - 50
		CARRIAGE AND CHAINS		
	SEE PARTS PG	MAIN LIFT CHAINS	2	1 - 5
	SEE PARTS PG	MAIN LIFT CHAINS	4	6 - 19
	SEE PARTS PG	MAIN LIFT CHAINS	8	20 - 50
	3EB-79-A5210	CARRIAGE ROLLER	4	1 - 5
	3EB-79-A5210	CARRIAGE ROLLER	8	6 - 19
	3EB-79-A5210	CARRIAGE ROLLER	16	20 - 50
	3EB-79-A5220	ROLLER - 6-ROLLER CARRIAGE	8	1 - 5
	3EB-79-A5220	ROLLER - 6-ROLLER CARRIAGE	16	6 - 19
	3EB-79-A5220	ROLLER - 6-ROLLER CARRIAGE	32	20 - 50
	CC215719	WEAR PLUG	1	1 - 5
	CC215719	WEAR PLUG	2	6 - 19
	CC215719	WEAR PLUG	4	20 - 50
	3EB-79-A6081	PIN, COTTER	4	1 - 5
	3EB-79-A6081	PIN, COTTER	8	6 - 19
	3EB-79-A6081	PIN, COTTER	16	20 - 50
	3EB-79-A6080	PIN, COTTER	4	1 - 5
	3EB-79-A6080	PIN, COTTER	8	6 - 19
	3EB-79-A6080	PIN, COTTER	16	20 - 50
	3EB-79-A5150	CHAIN PIN	8	1 - 19
	3EB-79-A5150	CHAIN PIN	16	20 - 50
	3EB-73-A5450	NUT	2	1 - 50

https://truckmanualshub.com/

NOTES:

https://truckmanualshub.com/

E50-MT 3-STAGE MAST - SAFETY DECALS
S/N 200001A~

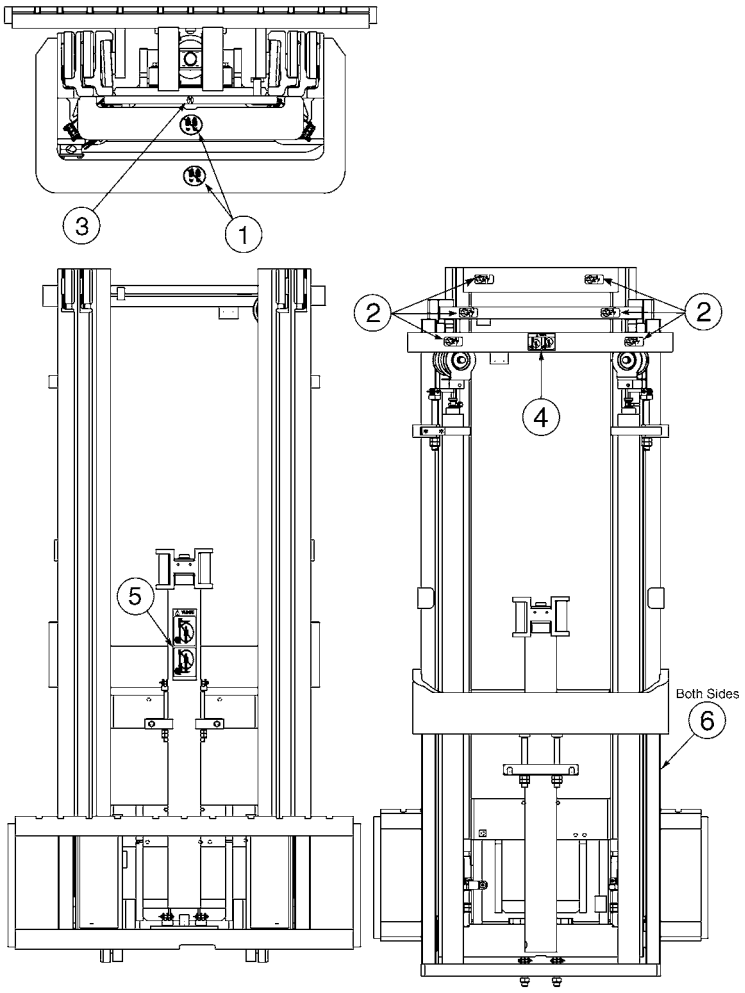

DECAL KIT P/N CC210851

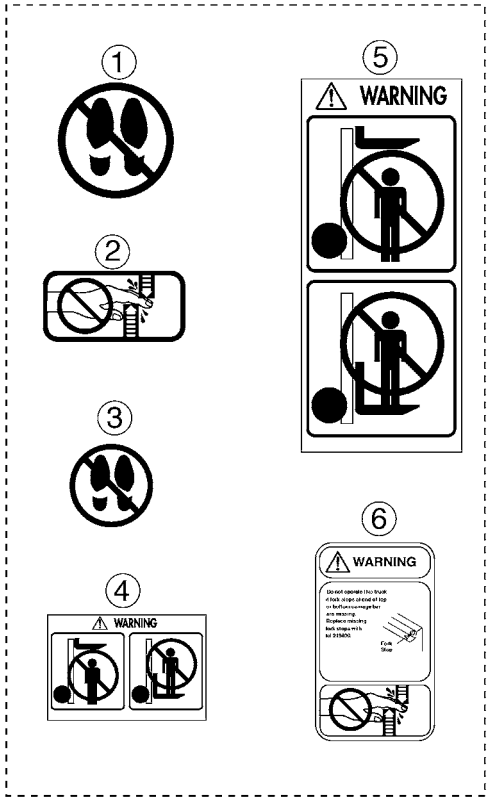

72-1100

https://truckmanualshub.com/

E50-MT 3-STAGE MAST - SAFETY DECALS
S/N 200001A~

Item	Part Number	Description	Qty	Serial Number
1	3EB-79-A6020	DECAL - "NO STEP"	2	
2	3EB-79-A6010	DECAL - "HANDS OFF"	6	
3	3EB-79-A6030	DECAL - "NO STEP"	1	
4	CC210850	DECAL - "WARNING"	1	
5	3EB-79-A5310	DECAL - "WARNING"	1	
6	CC224053	DECAL - "FORK STOP"	2	
KIT	CC210851	DECAL - KIT PACKAGE (ALL)	1	

https://truckmanualshub.com/

E50-MT 3-STAGE MAST - MAIN LIFT CYLINDERS
S/N 200001A~

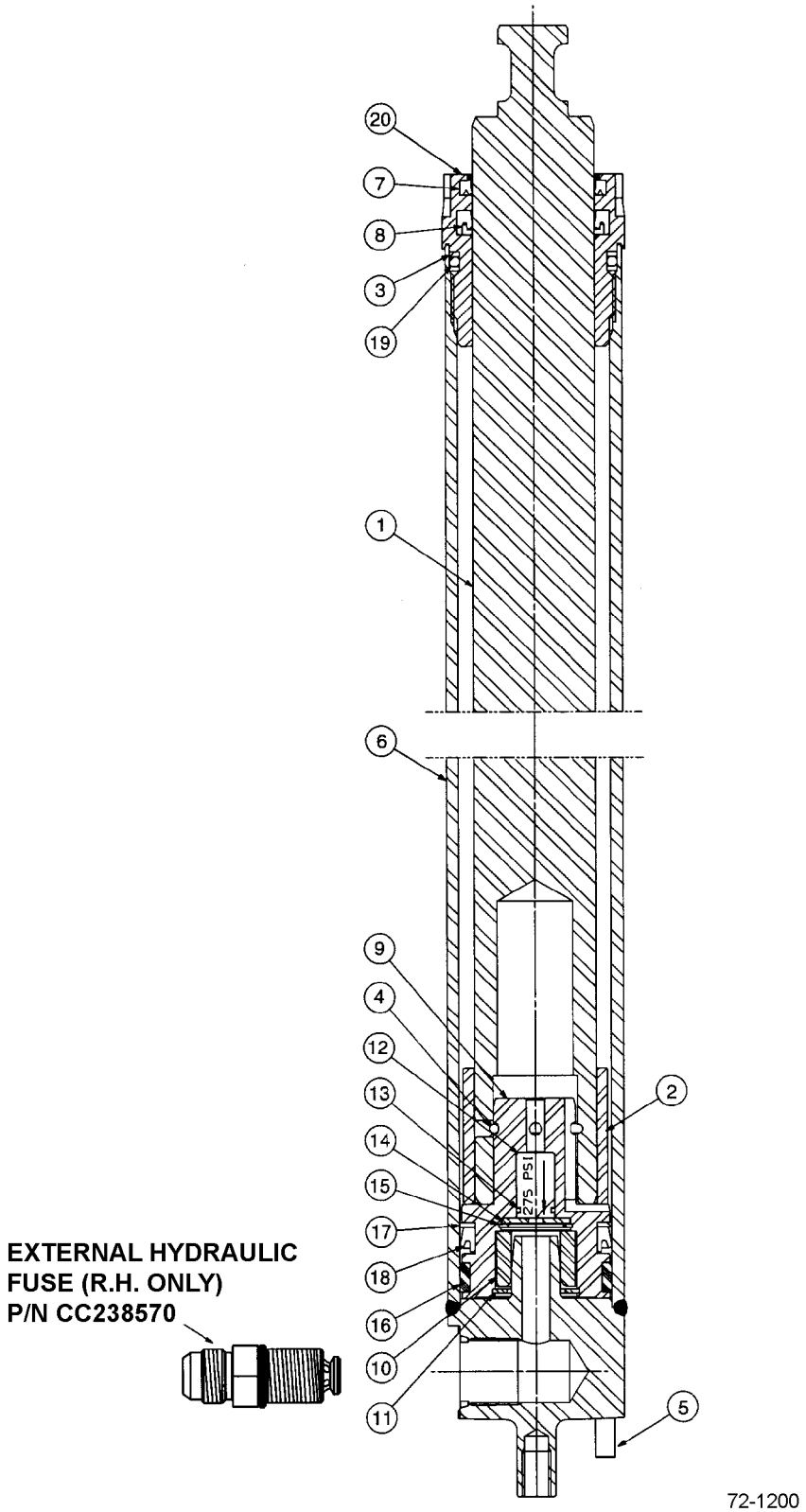

https://truckmanualshub.com/

E50-MT 3-STAGE MAST - MAIN LIFT CYLINDERS
S/N 200001A~

Item	Part Number	Description	Qty	Serial Number
1	NSS	ROD/PLUNGER	1	
2	NSS	SPACER	1	
3	NSS	BACK-UP RING (SEAL KIT)	1	
4	NSS	PULL-IN WIRE (SEAL KIT)	1	
5	CC7910	ROLL PIN	1	
6	NSS	SHELL	1	
7	NSS	WIPER (SEAL KIT)	1	
8	NSS	ROD SEAL (SEAL KIT)	1	
9	NSS	PISTON	1	
10	NSS	SLEEVE	1	
11	NSS	RETAINING RING (CHECK VALVE KIT)	1	
12	NSS	CHECK VALVE (CHECK VALVE KIT)	1	
13	NSS	O-RING (CHECK VALVE KIT)	1	
14	NSS	WASHER (CHECK VALVE KIT)	1	
15	NSS	RETAINING RING (SEAL KIT)	1	
16	NSS	WEAR RING (SEAL KIT)	1	
17	NSS	NYLON RING (SEAL KIT)	1	
18	NSS	PISTON SEAL (SEAL KIT)	1	
19	NSS	O-RING (SEAL KIT)	1	
20	CC422809	RETAINER	1	
KIT	3EB-73-A5430	SEAL KIT	1	
KIT	CC3101894	CHECK VALVE KIT	1	
	OCL = OUTER CHANNEL LENGTH (BASED ON 5.5" UNDERCLEARANCE)			
	MFH = MAXIMUM FORK HEIGHT			
	3EB-78-A5120	MAIN LIFT CYLINDER - (68" OCL) (152" MFH).	1	
	3EB-78-A5150	MAIN LIFT CYLINDER - (74" OCL) (170" MFH).	1	
	3EB-78-A5150	MAIN LIFT CYLINDER - (80" OCL) (188" MFH).	1	
	3EB-78-A5190	MAIN LIFT CYLINDER - (84" OCL) (198" MFH).	1	
	3EB-78-A5210	MAIN LIFT CYLINDER - (92" OCL) (216" MFH).	1	
	3EB-78-A5230	MAIN LIFT CYLINDER - (101" OCL) (235" MFH)	1	
	3EB-78-A5240	MAIN LIFT CYLINDER - (110" OCL) (254" MFH)	1	

https://truckmanualshub.com/

E50-MT 3-STAGE MAST - FREE LIFT CYLINDER
S/N 200001A~

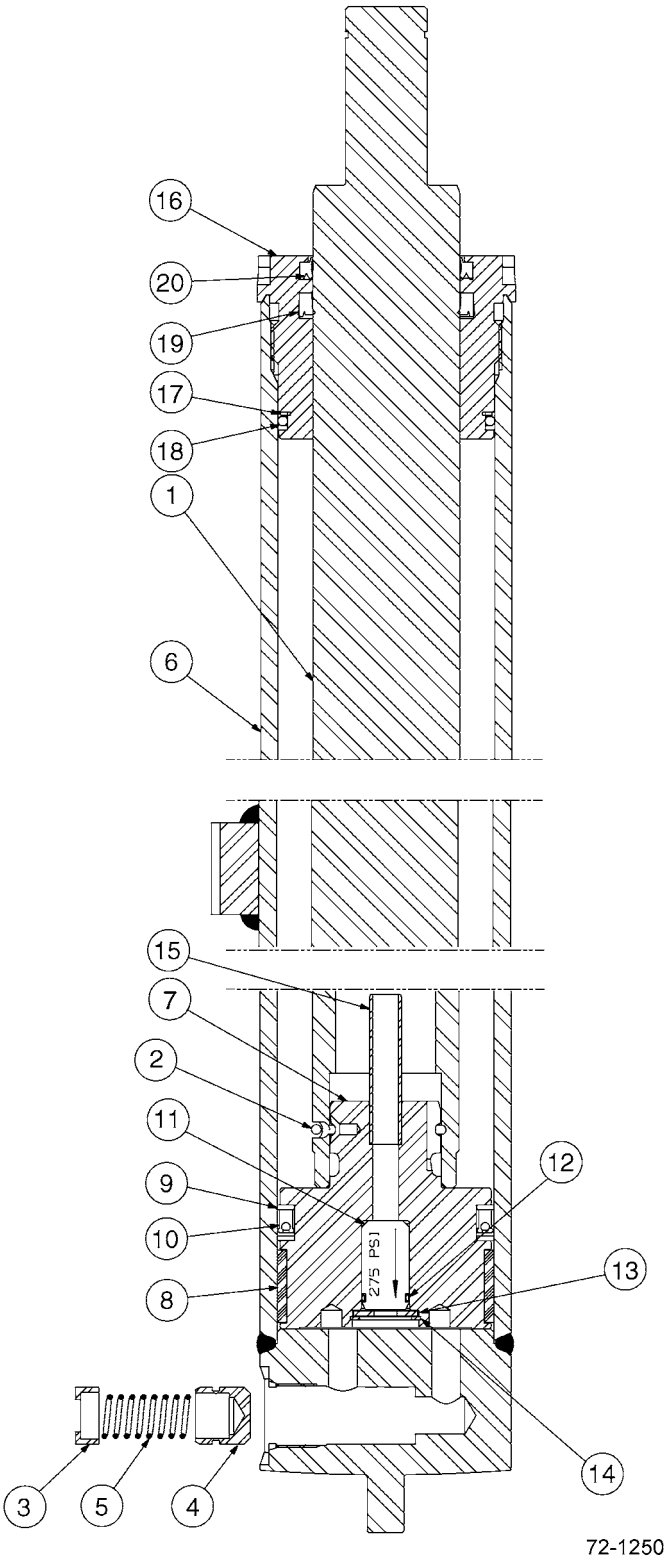

https://truckmanualshub.com/

E50-MT 3-STAGE MAST - FREE LIFT CYLINDER
S/N 200001A~

Item	Part Number	Description	Qty	Serial Number
1	NSS	ROD/PLUNGER	1	
2	NSS	PULL WIRE. (SEAL KIT)	1	
3	CC564107	FUSE SPRING GUIDE	1	
4	CC560470	FUSE PISTON	1	
5	CC565085	FUSE SPRING	1	
6	NSS	SHELL.	1	
7	NSS	PISTON.	1	
8	NSS	WEAR RING (SEAL KIT)	1	
9	NSS	NYLON RING (SEAL KIT)	2	
10	NSS	PISTON SEAL (SEAL KIT)	1	
11	NSS	CHECK VALVE (CHECK VALVE KIT)	1	
12	NSS	O-RING (SEAL KIT)	1	
13	NSS	WASHER (CHECK VALVE KIT)	1	
14	NSS	RETAINING RING. (CHECK VALVE KIT)	1	
15	NSS	STAND TUBE	1	
16	CC422817	RETAINER	1	
17	NSS	BACK-UP RING (SEAL KIT)	1	
18	NSS	O-RING (SEAL KIT)	1	
19	NSS	ROD SEAL (SEAL KIT)	1	
20	NSS	WIPER (SEAL KIT)	1	
KIT	3EB-73-A5440	SEAL KIT	1	
KIT	CC1358999	CHECK VALVE KIT.	1	
	OCL = OUTER CHANNEL LENGTH (BASED ON 5.5" UNDERCLEARANCE)			
	MFH = MAXIMUM FORK HEIGHT			
	3EB-78-A5320	FREE LIFT CYLINDER - (68" OCL) (152" MFH)	1	
	3EB-78-A5350	FREE LIFT CYLINDER - (74" OCL) (170" MFH)	1	
	3EB-78-A5370	FREE LIFT CYLINDER - (80" OCL) (188" MFH)	1	
	3EB-78-A5390	FREE LIFT CYLINDER - (84" OCL) (198" MFH)	1	
	3EB-78-A5410	FREE LIFT CYLINDER - (92" OCL) (216" MFH)	1	
	3EB-78-A5430	FREE LIFT CYLINDER - (101" OCL) (235" MFH)	1	
	3EB-78-A5440	FREE LIFT CYLINDER - (110" OCL) (254" MFH)	1	

https://truckmanualshub.com/

E50-MT 3-STAGE MAST - OUTER UPRIGHT
S/N 200001A~

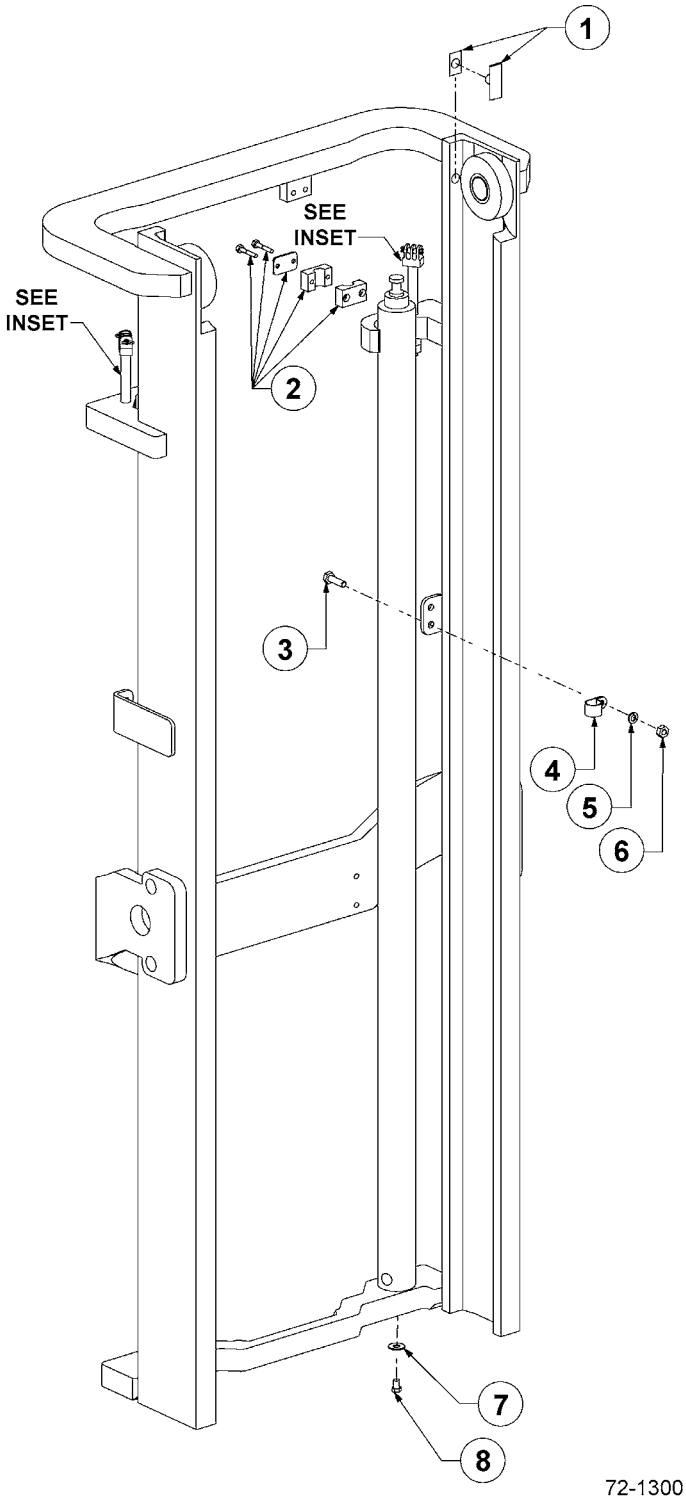

72-1300

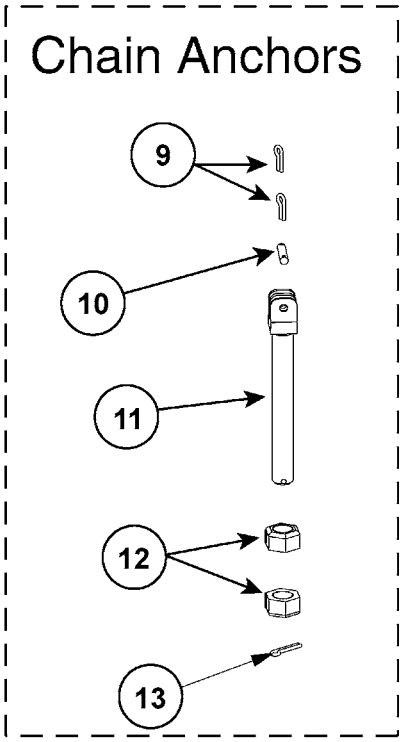

72-1300A

https://truckmanualshub.com/

E50-MT 3-STAGE MAST - OUTER UPRIGHT
S/N 200001A~

Item	Part Number	Description	Qty	Serial Number
		OCL = OUTER CHANNEL LENGTH, MFH = MAXIMUM FORK HEIGHT		
	3EB-75-A5120	OUTER UPRIGHT - (68" OCL) (152" MFH)	1	
	3EB-75-A5150	OUTER UPRIGHT - (74" OCL) (170" MFH)	1	
	3EB-75-A5170	OUTER UPRIGHT - (80" OCL) (188" MFH)	1	
	3EB-75-A5190	OUTER UPRIGHT - (84" OCL) (198" MFH)	1	
	3EB-75-A5210	OUTER UPRIGHT - (92" OCL) (216" MFH)	1	
	3EB-75-A5230	OUTER UPRIGHT - (101" OCL) (235" MFH)	1	
	3EB-75-A5240	OUTER UPRIGHT - (110" OCL) (254" MFH)	1	
1	3EB-73-A5720	THRUST PLUG SERVICE KIT	1	
2	CC237555	CLAMP KIT	1	
3	CC200788	CAPSCREW - M10 X 35	1	
4	CC230765	HOSE CLAMP	1	
5	3EB-79-A6040	WASHER, LOCK - M10	2	
6	3EB-79-A6040	WASHER, LOCK - M10	1	
7	3EB-79-A5350	WASHER, FLAT	2	
8	3EB-79-A5340	BOLT	2	
9	3EB-79-A6080	PIN, COTTER	12	
10	3EB-79-A5150	PIN, CHAIN ANCHOR	6	
11	3EB-79-A5110	CHAIN ANCHOR	4	
12	3EB-79-A6090	NUT	12	
13	3EB-79-A6081	PIN, COTTER	6	

https://truckmanualshub.com/

E50-MT 3-STAGE MAST - INTERMEDIATE UPRIGHT
S/N 200001A~

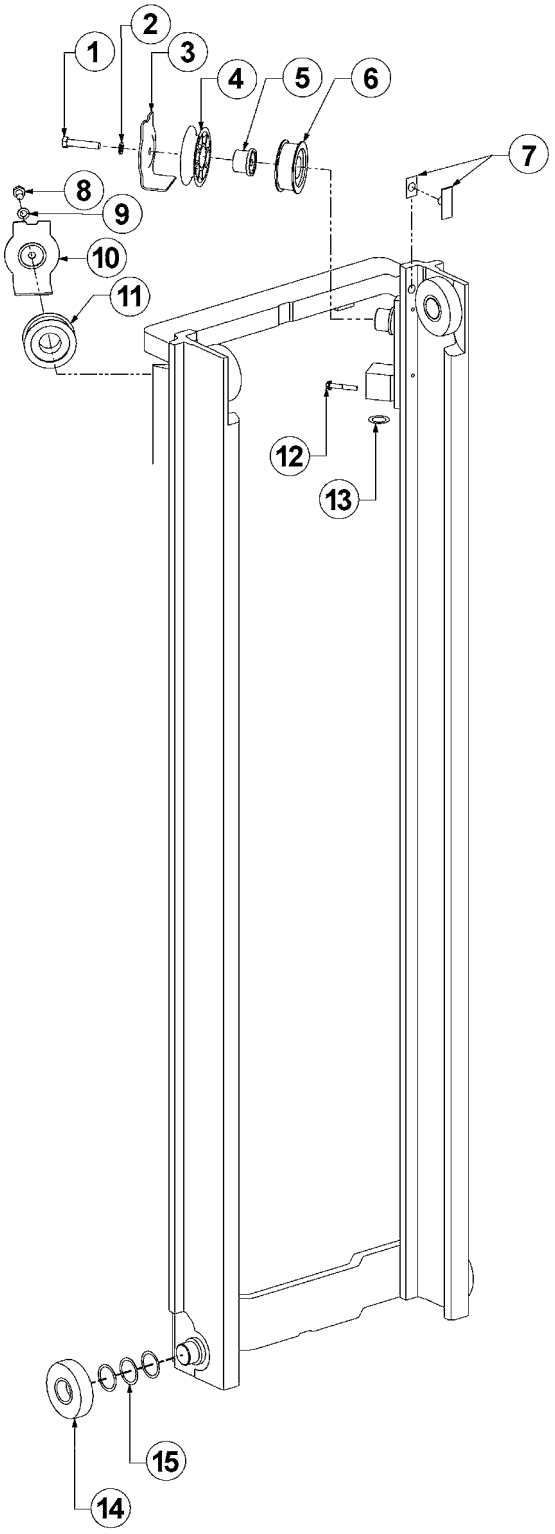

72-1330

https://truckmanualshub.com/

E50-MT 3-STAGE MAST - INTERMEDIATE UPRIGHT
S/N 200001A~

Item	Part Number	Description	Qty	Serial Number
		OCL = OUTER CHANNEL LENGTH, MFH = MAXIMUM FORK HEIGHT		
	3EB-75-A5320	INTERMEDIATE UPRIGHT - (68" OCL)	1	
	3EB-75-A5350	INTERMEDIATE UPRIGHT - (74" OCL)	1	
	3EB-75-A5370	INTERMEDIATE UPRIGHT - (80" OCL)	1	
	3EB-75-A5390	INTERMEDIATE UPRIGHT - (84" OCL)	1	
	3EB-75-A5410	INTERMEDIATE UPRIGHT - (92" OCL)	1	
	3EB-75-A5430	INTERMEDIATE UPRIGHT - (101" OCL)	1	
	CC233187	INTERMEDIATE UPRIGHT - (110" OCL)	1	
1	3EB-79-A6060	CAPSCREW - M12 X 60	1	
2	3EB-79-A5360	WASHER, LOCK - M12	2	
3	3EB-73-A5120	HOSE GUARD	1	
4	3EB-73-A5070	HOSE SHEAVE	1	
5	3EB-73-A5210	STUBSHAFT	1	
6	3EB-73-A5010	CHAIN SHEAVE	4	
7	3EB-73-A5720	THRUST PLUG SERVICE KIT	1	
8	3EB-79-A5270	CAPSCREW - M12 X 20	1	
9	3EB-79-A5360	WASHER, LOCK - M12	2	
10	3EB-73-A5140	HOSE GUARD	1	
11	3EB-73-A5010	CHAIN SHEAVE	4	
12	3EB-79-A5380	BOLT	2	
13	CC238137	SHIM KIT - MAIN LIFT CYLINDER	2	
14	3EB-79-A5210	ROLLER	8	
15	3EB-79-A6050	SHIM (USE AS REQUIRED)	24	

https://truckmanualshub.com/

E50-MT 3-STAGE MAST - INNER UPRIGHT
S/N 200001A~

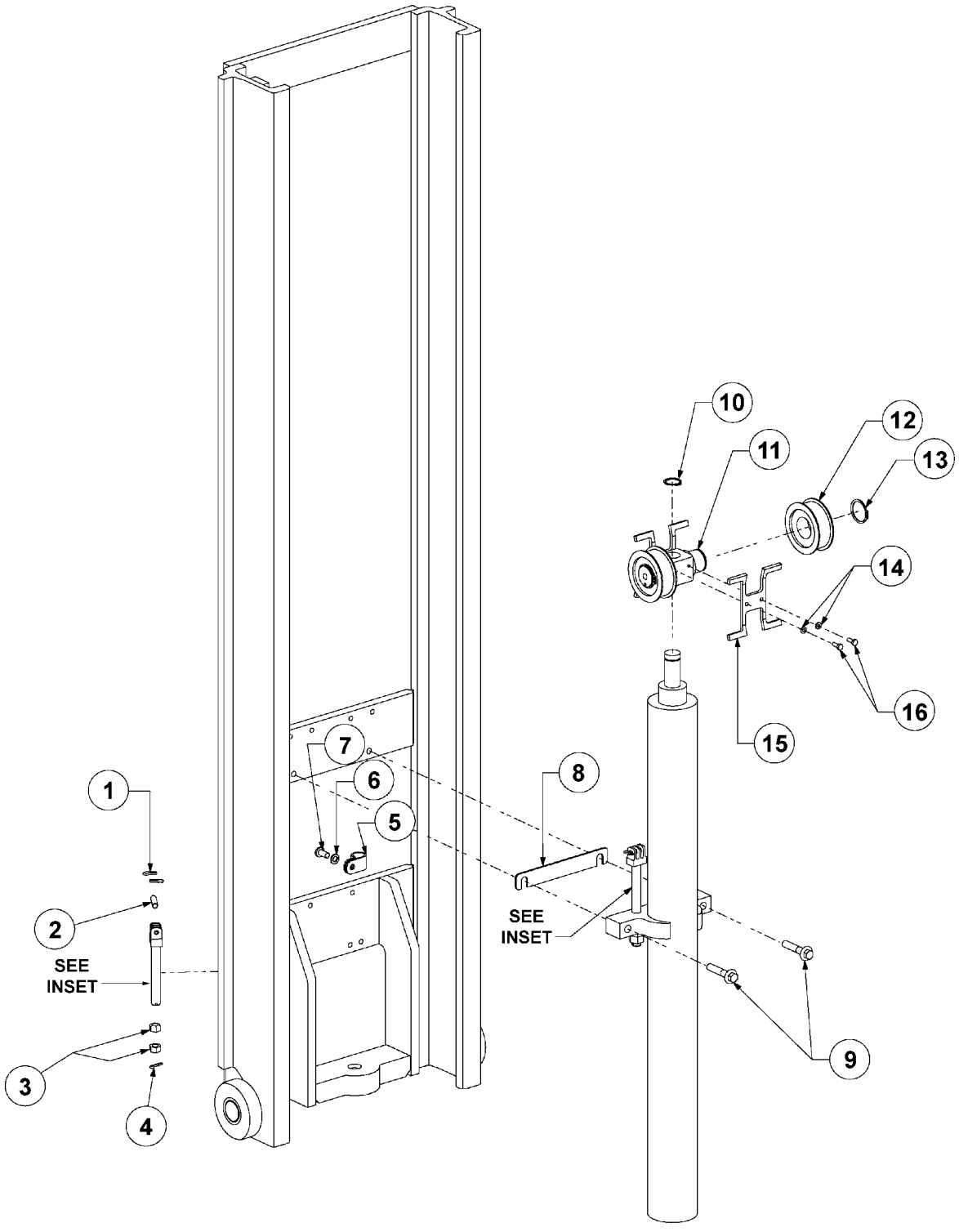

https://truckmanualshub.com/

E50-MT 3-STAGE MAST - INNER UPRIGHT
S/N 200001A~

Item	Part Number	Description	Qty	Serial Number
		OCL = OUTER CHANNEL LENGTH, MAXIMUM FORK HEIGHT		
	3EB-75-A5520	INNER UPRIGHT - (68" OCL) (152" MFH)	1	
	3EB-75-A5550	INNER UPRIGHT - (74" OCL) (170" MFH)	1	
	3EB-75-A5570	INNER UPRIGHT - (80" OCL) (188" MFH)	1	
	3EB-75-A5590	INNER UPRIGHT - (84" OCL) (198" MFH)	1	
	3EB-75-A5610	INNER UPRIGHT - (92" OCL) (216" MFH)	1	
	3EB-75-A5630	INNER UPRIGHT - (101" OCL) (235" MFH)	1	
	CC233188	INNER UPRIGHT - (110" OCL) (254" MFH)	1	
1	3EB-79-A6060	CAPSCREW - M12 X 60	1	
2	3EB-79-A5360	WASHER, LOCK - M12	2	
3	3EB-73-A5120	HOSE GUARD	1	
4	3EB-73-A5070	HOSE SHEAVE	1	
5	3EB-73-A5210	STUBSHAFT	1	
6	3EB-73-A5010	CHAIN SHEAVE	4	
7	3EB-73-A5720	THRUST PLUG SERVICE KIT	1	
8	3EB-79-A5270	CAPSCREW - M12 X 20	1	
9	3EB-79-A5360	WASHER, LOCK - M12	2	
10	3EB-73-A5140	HOSE GUARD	1	
11	3EB-73-A5010	CHAIN SHEAVE	4	
12	3EB-79-A5380	BOLT	2	
13	CC238137	SHIM KIT - MAIN LIFT CYLINDER	2	
14	3EB-79-A5210	ROLLER	8	
15	3EB-79-A6050	SHIM (USE AS REQUIRED)	24	

https://truckmanualshub.com/

E50-MT 3-STAGE MAST - CARRIAGE - 4-ROLLER
S/N 200001A~

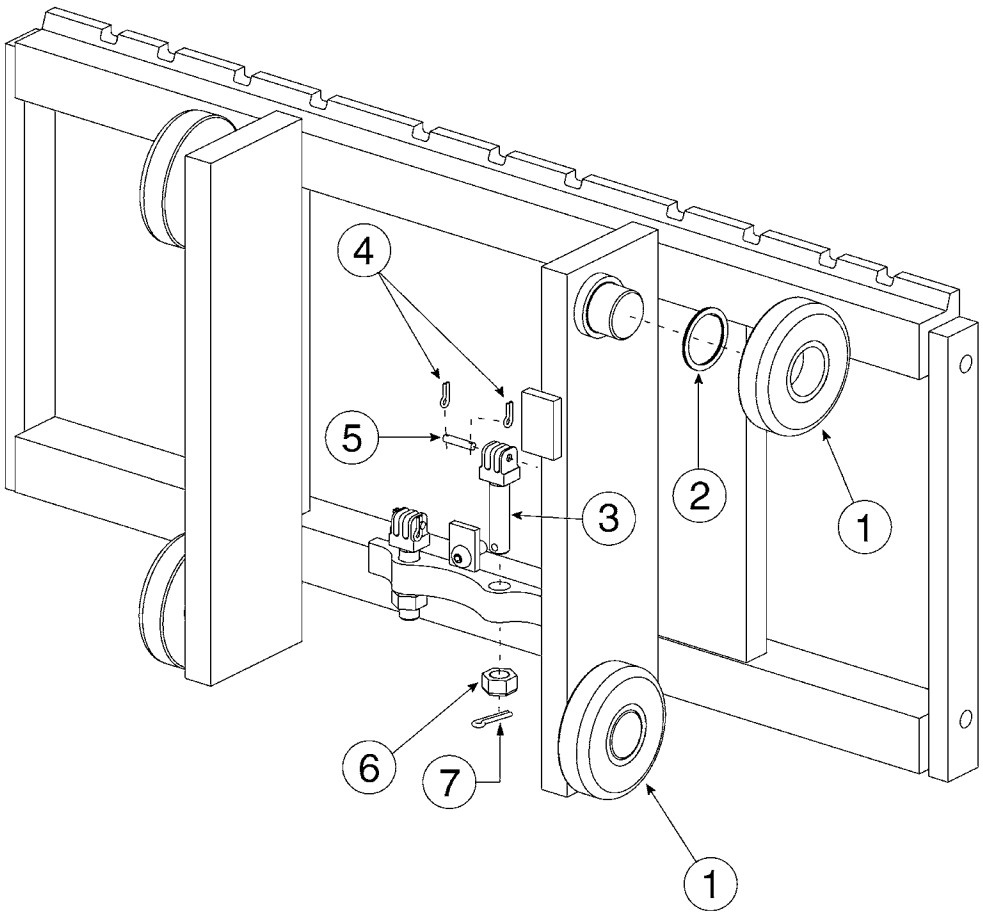

72-1400

https://truckmanualshub.com/

E50-MT 3-STAGE MAST - CARRIAGE - 4-ROLLER
S/N 200001A~

Item	Part Number	Description	Qty	Serial Number
	3EB-73-A5510	CARRIAGE - 37" - CUSHION TIRE SPEC	1	
	CC248640	CARRIAGE - 37" - CUSHION TIRE SPEC (W/ EURO NOTCH)	1	
	CC280095	CARRIAGE - 41" - CUSHION TIRE SPEC	1	
	CC248641	CARRIAGE - 41" - CUSHION TIRE SPEC (W/ EURO NOTCH)	1	
	CC280096	CARRIAGE - 49" - CUSHION TIRE SPEC	1	
1	3EB-79-A5210	LOAD ROLLER	4	
2	3EB-79-A6050	SHIM, LOAD ROLLER	AR	
3	3EB-79-A5140	CHAIN ANCHOR	2	
4	3EB-79-A6080	PIN, COTTER	4	
5	3EB-79-A5150	PIN, CHAIN ANCHOR	2	
6	3EB-73-A5450	NUT	2	
7	3EB-79-A6081	PIN, COTTER	2	

https://truckmanualshub.com/

E50-MT 3-STAGE MAST - CARRIAGE - 6-ROLLER
S/N 200001A~

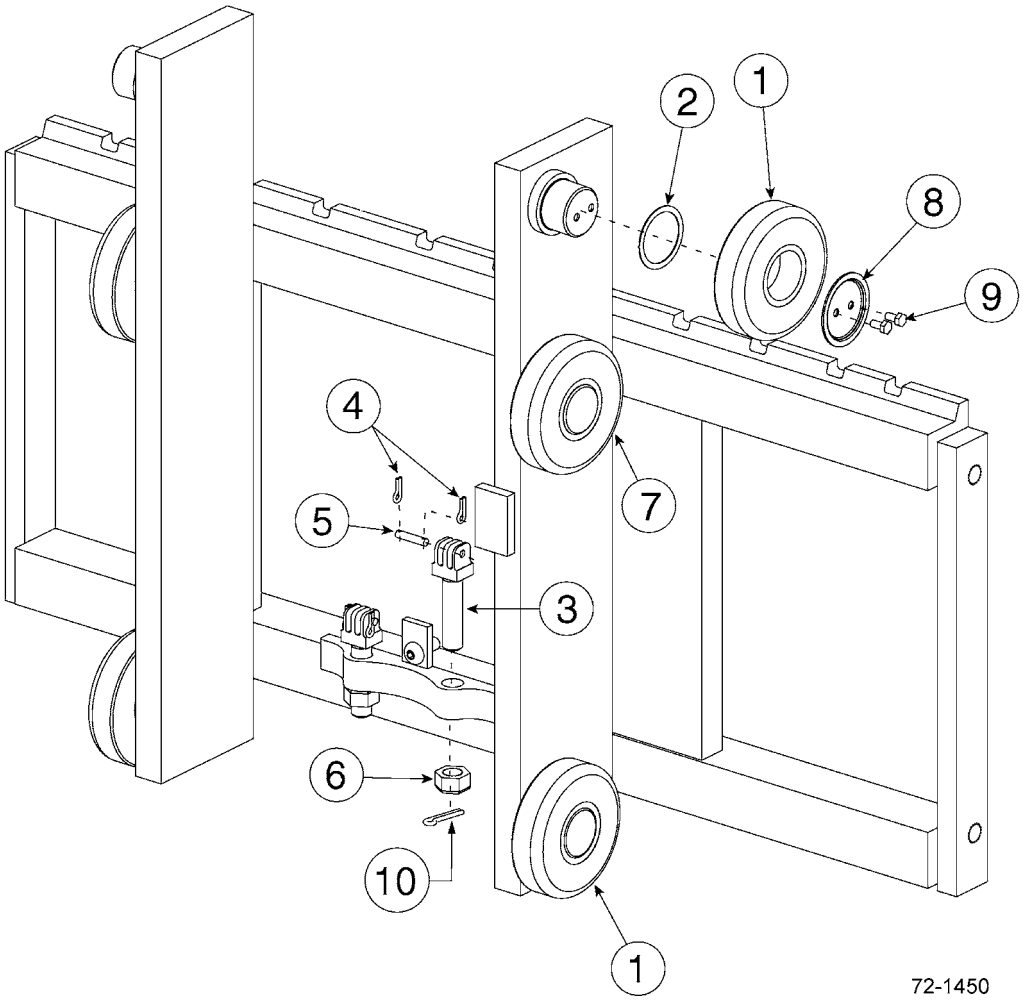

https://truckmanualshub.com/

E50-MT 3-STAGE MAST - CARRIAGE - 6-ROLLER
S/N 200001A~

Item	Part Number	Description	Qty	Serial Number
	CC252597	CARRIAGE - 31" - CUSHION TIRE SPEC	1	
	CC280111	CARRIAGE - 37" - CUSHION TIRE SPEC	1	
	CC248626	CARRIAGE - 37" - CUSHION TIRE SPEC (W/ EURO NOTCH)	1	
	CC280112	CARRIAGE - 41" - CUSHION TIRE SPEC	1	
	CC248627	CARRIAGE - 41" - CUSHION TIRE SPEC (W/ EURO NOTCH)	1	
	CC280113	CARRIAGE - 49" - CUSHION TIRE SPEC	1	
	CC280127	CARRIAGE - 53" - CUSHION TIRE SPEC	1	
1	3EB-79-A5210	LOAD ROLLER	4	
2	3EB-79-A6050	SHIM, LOAD ROLLER	AR	
3	3EB-79-A5140	CHAIN ANCHOR	2	
4	3EB-79-A6080	PIN, COTTER	4	
5	3EB-79-A5150	PIN, CHAIN ANCHOR	2	
6	3EB-73-A5450	NUT	2	
7	3EB-79-A5220	LOAD ROLLER	2	
8	3EB-73-A5460	RETAINER	2	
9	3EB-73-A5470	CAPSCREW - M6 X 12LG	4	
10	3EB-79-A6081	PIN, COTTER	2	

https://truckmanualshub.com/

E50-MT 3-STAGE MAST - HOIST CHAINS & FREE LIFT HOSE
S/N 200001A~

Hoist Chains

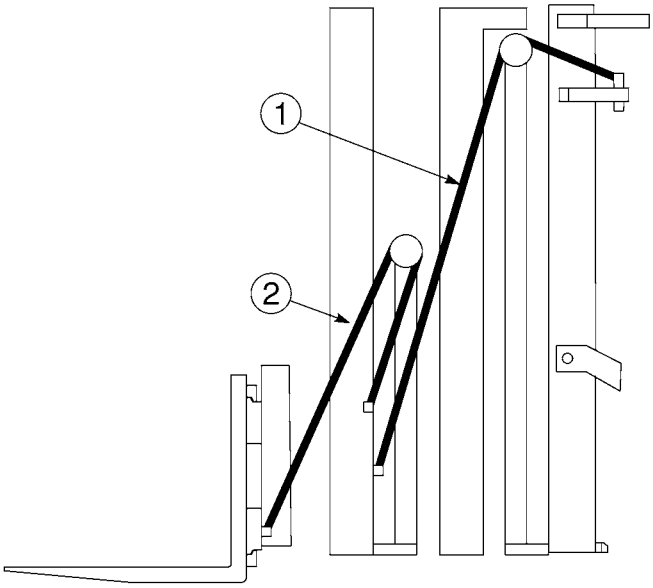

Free Lift Hose

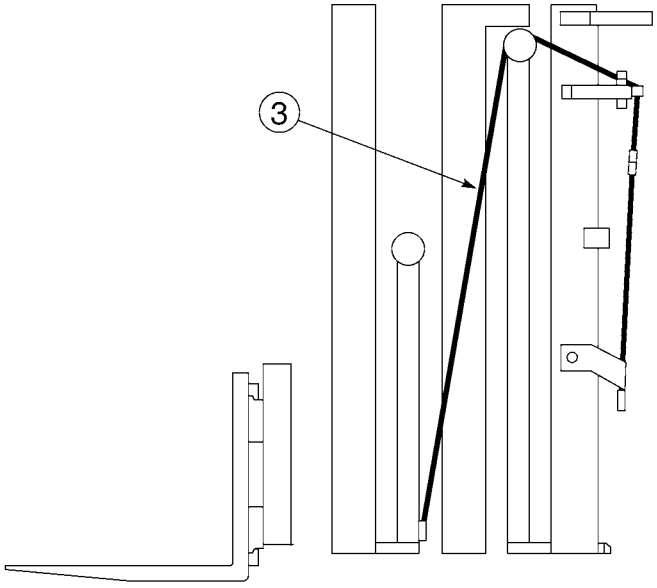

72-1500

https://truckmanualshub.com/

E50-MT 3-STAGE MAST - HOIST CHAINS & FREE LIFT HOSE
S/N 200001A~

Item	Part Number	Description	Qty	Serial Number
	OCL = OUTER CHANNEL LENGTH			
1	CC683767	MAIN LIFT CHAIN - (68" OCL)	2	
	3EB-74-A5150	MAIN LIFT CHAIN - (74" OCL)	2	
	3EB-74-A5170	MAIN LIFT CHAIN - (80" OCL)	2	
	3EB-74-A5190	MAIN LIFT CHAIN - (84" OCL)	2	
	CC683780	MAIN LIFT CHAIN - (92" OCL)	2	
	CC683786	MAIN LIFT CHAIN - (101" OCL)	2	
	3EB-74-A5240	MAIN LIFT CHAIN - (110" OCL)	2	
2	CC678655	FREE LIFT CHAIN - (68" OCL)	2	
	CC678656	FREE LIFT CHAIN - (74" OCL)	2	
	3EB-74-A5370	FREE LIFT CHAIN - (80" OCL)	2	
	3EB-74-A5150	FREE LIFT CHAIN - (84" OCL)	2	
	CC683774	FREE LIFT CHAIN - (92" OCL)	2	
	3EB-74-A5390	FREE LIFT CHAIN - (101" OCL)	2	
	3EB-74-A5440	FREE LIFT CHAIN - (110" OCL)	2	
3	3EB-74-A5520	FREE LIFT HOSE - (68" OCL)	1	
	3EB-74-A5550	FREE LIFT HOSE - (74" OCL)	1	
	3EB-74-A5570	FREE LIFT HOSE - (80" OCL)	1	
	3EB-74-A5590	FREE LIFT HOSE - (84" OCL)	1	
	3EB-74-A5610	FREE LIFT HOSE - (92" OCL)	1	
	3EB-74-A5630	FREE LIFT HOSE - (101" OCL)	1	
	3EB-74-A5640	FREE LIFT HOSE - (110" OCL)	1	

https://truckmanualshub.com/

E50-MT 3-STAGE MAST - LOAD BACKREST
S/N 200001A~

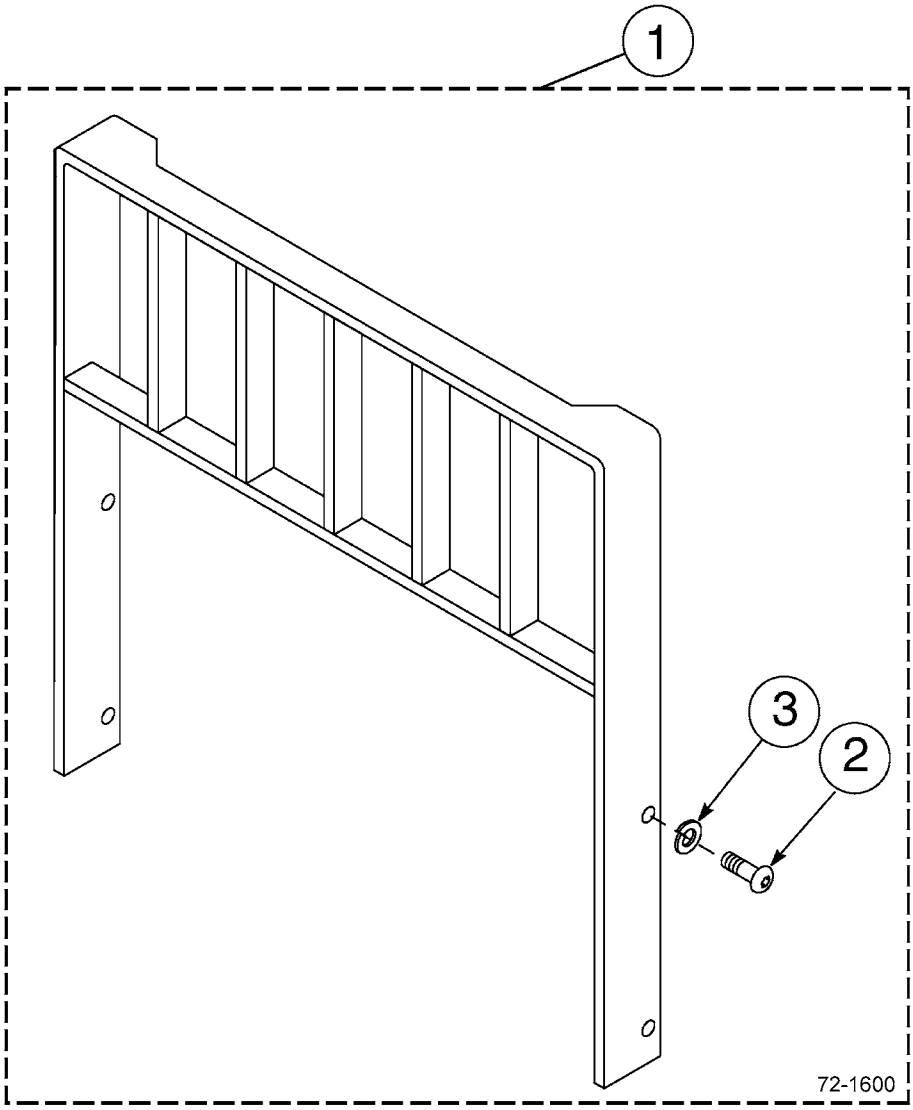

https://truckmanualshub.com/

E50-MT 3-STAGE MAST - LOAD BACKREST
S/N 200001A~

Item	Part Number	Description	Qty	Serial Number
		CLASS II LOAD BACKRESTS (HEIGHT X WIDTH)		
1	CC209407	BACKREST - 31" X 36"	1	
	CC684770	BACKREST - 31" X 48"	1	
	CC209408	BACKREST - 31" X 60"	1	
	CC684772	BACKREST - 37" X 36"	1	
	CC226827	BACKREST - 37" X 40"	1	
	CC225390	BACKREST - 37" X 42"	1	
	3EB-73-A5810	BACKREST - 37" X 48"	1	
	CC361238	BACKREST - 37" X 52"	1	
	CC684774	BACKREST - 37" X 60"	1	
	CC245151	BACKREST - 37" X 65"	1	
	CC369519	BACKREST - 37" X 72"	1	
	CC684775	BACKREST - 41" X 36"	1	
	3EB-73-A5820	BACKREST - 41" X 48"	1	
	CC684777	BACKREST - 41" X 60"	1	
	CC248948	BACKREST - 46" X 48"	1	
	CC684778	BACKREST - 49" X 36"	1	
	CC684779	BACKREST - 49" X 48"	1	
	CC684780	BACKREST - 49" X 60"	1	
	CC231595	BACKREST - 52" X 48"	1	
	CC684781	BACKREST - 61" X 36"	1	
	CC684782	BACKREST - 61" X 48"	1	
	CC684783	BACKREST - 61" X 60"	1	
2	CC200173	.CAPSCREW - M16 X 2, 0 X 35-8.8	4	
3	3EB-71-A6030	.WASHER, LOCK - M16	4	

https://truckmanualshub.com/

E50-MT 3-STAGE MAST - MOUNTING PARTS
CUSHION TIRE MODELS - S/N 200001A~

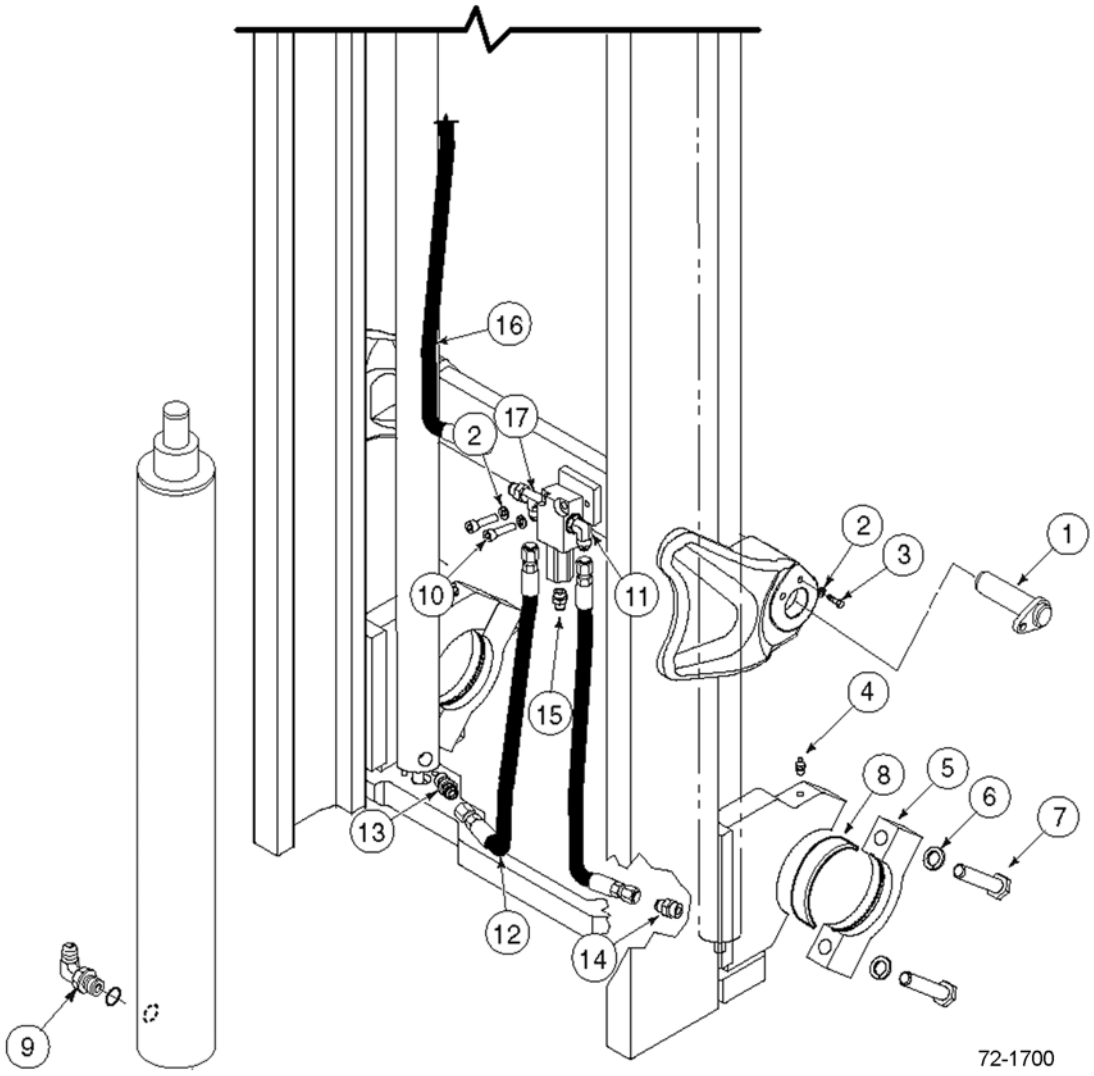

https://truckmanualshub.com/

E50-MT 3-STAGE MAST - MOUNTING PARTS
CUSHION TIRE MODELS - S/N 200001A~

Item	Part Number	Description	Qty	Serial Number
1	3EB-41-51750	TILT PIN	2	
2	3EB-79-A6040	WASHER, LOCK.	4	
3	CC212632	CAPSCREW	2	
4	CC7418	FITTING, GREASE	2	
5	CC251901	CAP.	2	
6	3EB-71-A6030	WASHER, LOCK.	4	
7	CC251906	CAPSCREW	4	
8	3EB-84-51290	BUSHING (CUSHION ONLY)	2	
9	CC642649	FITTING 90° - 8-10	1	
10	CC767611	CAPSCREW	2	
11	CC601250	FITTING # 8 - 90° ELBOW	1	
12	CC255666	MAIN LIFT HOSE - RH	1	
	CC255665	MAIN LIFT HOSE - LH	1	
13	CC611289	FITTING # 8 -# 10 STRAIGHT	1	
14	CC238570	12 GPM EXTERNAL FUSE	1	
15	CC601377	FITTING	1	
16	CC234037	FL JUMPER HOSE	1	
17	CC610402	FITTING # 8 - 90° TEE	1	
KIT	CC255596	INSTALLATION KIT	1	

https://truckmanualshub.com/

E50-MT 3-STAGE MAST - MOUNTING PARTS
PNEUMATIC TIRE MODELS - S/N 200001A~

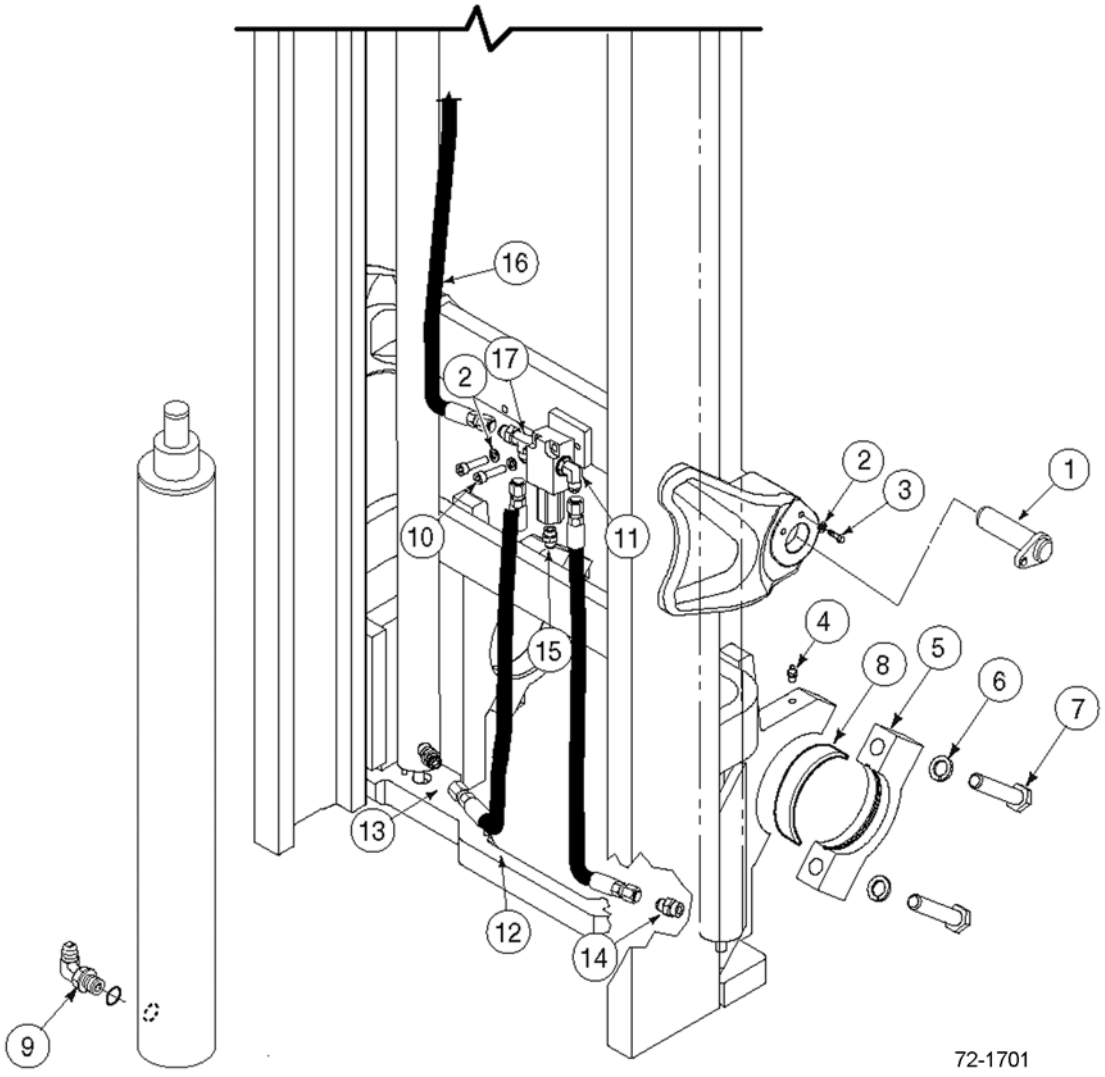

https://truckmanualshub.com/

E50-MT 3-STAGE MAST - MOUNTING PARTS
PNEUMATIC TIRE MODELS - S/N 200001A~

Item	Part Number	Description	Qty	Serial Number
1	3EB-41-51750	TILT PIN	2	
2	3EB-79-A6040	WASHER, LOCK.	4	
3	CC212632	CAPSCREW	2	
4	CC7418	FITTING, GREASE	2	
5	CC253119	CAP.	2	
6	3EB-71-A6030	WASHER, LOCK.	4	
7	CC253120	CAPSCREW	4	
8	3EB-71-51290	BUSHING (2.0T, 2.5T, 2.8T, 3.0T).	2	
	3EB-71-61790	BUSHING (3.2T, 3.5T)	2	
9	CC642649	FITTING 90° - 8-10	1	
10	CC767611	CAPSCREW	2	
11	CC601250	FITTING # 8 - 90° ELBOW	1	
12	CC255651	MAIN LIFT HOSE - RH	1	
	CC238174	MAIN LIFT HOSE - LH	1	
13	CC611289	FITTING # 8 -# 10 STRAIGHT	1	
14	CC238570	12 GPM EXTERNAL FUSE	1	
15	CC601377	FITTING	1	
16	CC255624	FL JUMPER HOSE.	1	
17	CC610402	FITTING # 8 - 90° TEE	1	
KIT	CC255596	INSTALLATION KIT	1	

https://truckmanualshub.com/

E50-MT 3-STAGE MAST - LOWERING CONTROL VALVE
S/N 200001A~

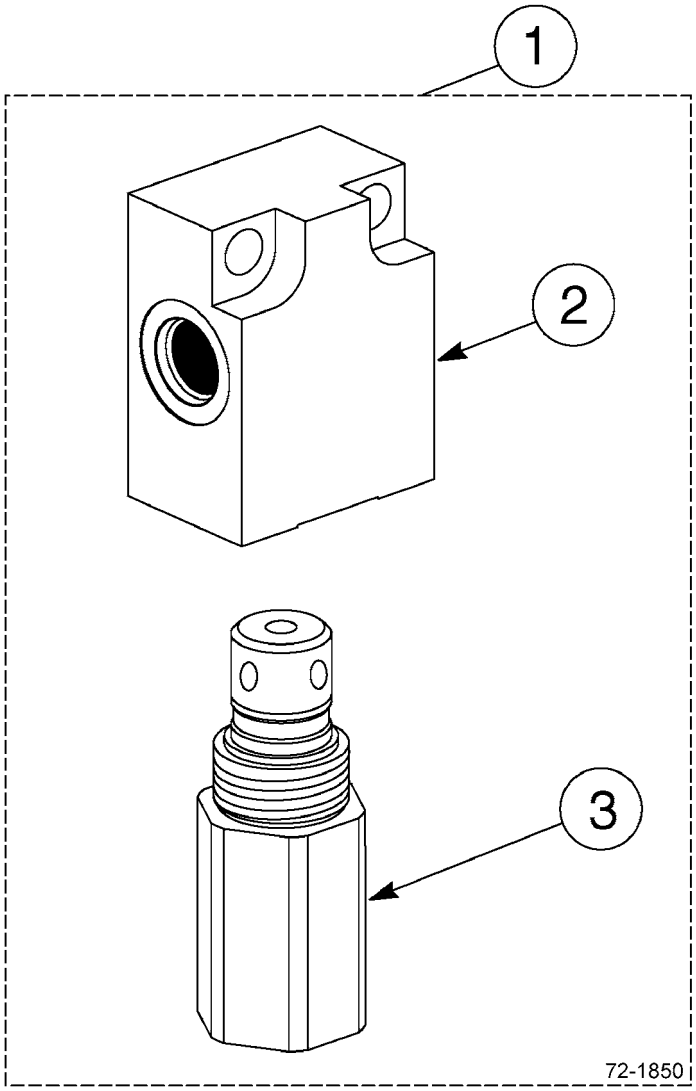

https://truckmanualshub.com/

E50-MT 3-STAGE MAST - LOWERING CONTROL VALVE
S/N 200001A~

Item	Part Number	Description	Qty	Serial Number
1	3EB-73-A5930	CONTROL VALVE - 2600 PSI - 17 GPM	1	
2	CC214793	.VALVE BODY.	1	
3	3EB-73-A5920	.VALVE CARTRIDGE (17 GPM)	1	

https://truckmanualshub.com/

E50-MT 3-STAGE MAST - INTERNAL HOSE REEVING - SINGLE
56-66 INCH OCL ONLY - S/N 200001A~

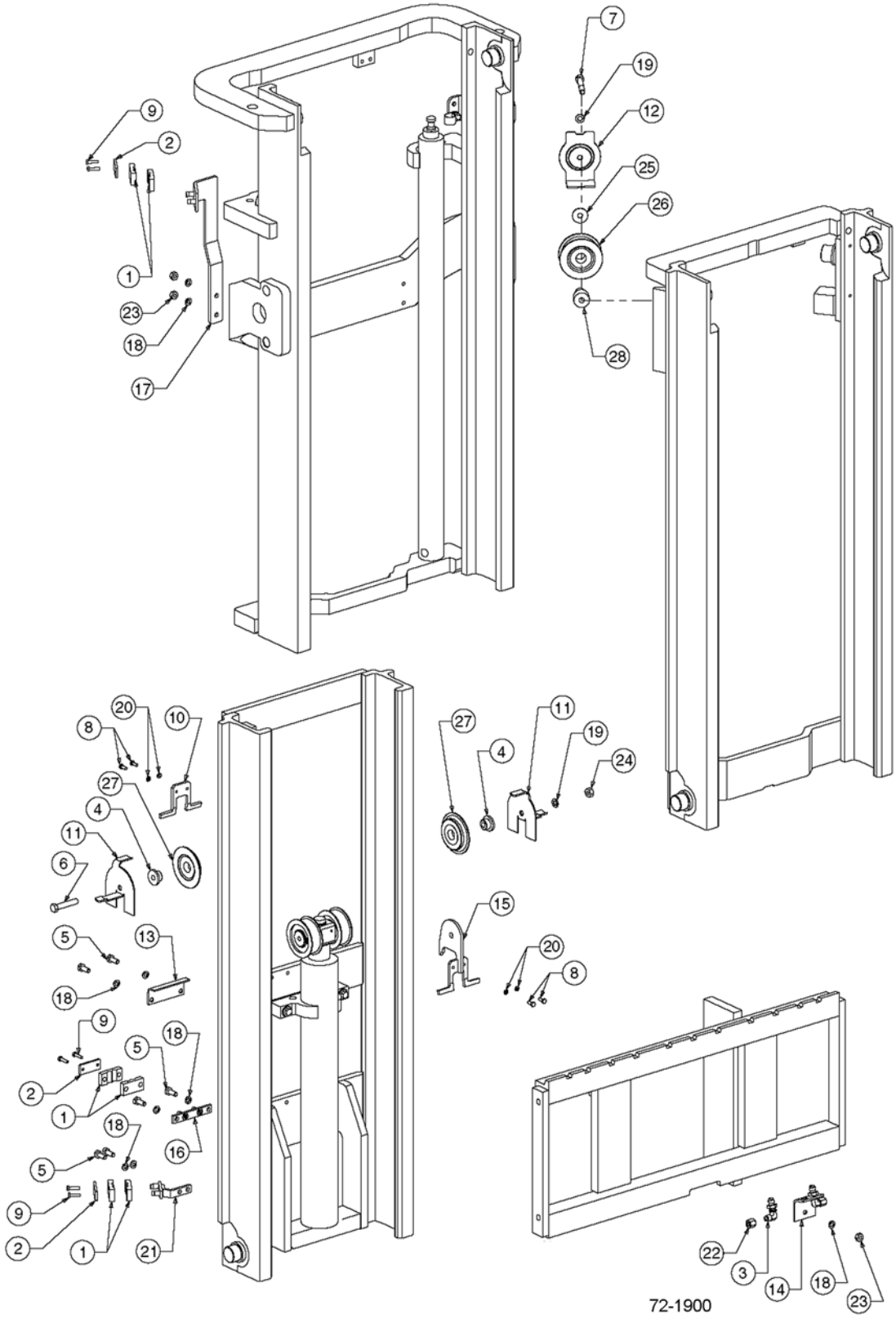

https://truckmanualshub.com/

E50-MT 3-STAGE MAST - INTERNAL HOSE REEVING - SINGLE
56-66 INCH OCL ONLY - S/N 200001A~

Item	Part Number	Description	Qty	Serial Number
1	3EB-73-A5150	HOSE CLAMP	6	
2	3EB-73-A5160	HOSE CLAMP BAR	3	
3	3EB-71-A6010	BULKHEAD UNION - 90°	2	
4	3EB-73-A5230	SINGLE IHR STUBSHAFT	2	
5	3EB-73-A5490	CAPSCREW - M10 X 25	6	
6	3EB-79-A5230	CAPSCREW - M12 X 65	1	
7	3EB-79-A5190	CAPSCREW - M12 X 80	1	
8	3EB-73-A5350	CAPSCREW - M6 X 16	4	
9	3EB-79-A5240	CAPSCREW - M6 X 25	6	
10	3EB-73-A5170	CHAIN GUARD	1	
11	3EB-73-A5180	IHR AND CHAIN GUARD	2	
12	CC216052	HOSE GUARD	1	
13	3EB-73-A5190	HOSE GUARD	1	
14	3EB-73-A5610	CARRIAGE IHR BRACKET	1	
15	3EB-73-A5620	IHR BRACKET	1	
16	3EB-73-A5630	IHR BRACKET	1	
17	CC253651	IHR BRACKET	1	
18	3EB-79-A6040	WASHER, LOCK - M10	9	
19	3EB-79-A5360	WASHER, LOCK - M12	2	
20	3EB-73-A5340	WASHER, LOCK - M6	4	
21	3EB-73-A5660	LOWER BRACKET	1	
22	3EB-79-A5250	NUT - # 6 - CAP	2	
23	3EB-79-A5180	NUT - M10	3	
24	3EB-79-A5270	NUT - M12 DIN 934	1	
25	3EB-73-A5650	IHR BRACKET	1	
26	3EB-73-A5020	SHEAVE	1	
27	3EB-73-A5030	IHR SHEAVE	2	
28	3EB-73-A5220	STUBSHAFT	1	
OCL = OUTER CHANNEL LENGTH				
	CC216914	HOSE (IHR KIT #233540) (56" OCL)	2	
	CC216926	HOSE (IHR KIT #233541) (57" OCL)	2	
	CC216927	HOSE (IHR KIT #233542) (58" OCL)	2	
	CC216928	HOSE (IHR KIT #233543) (59" OCL)	2	
	CC230717	HOSE (IHR KIT #233544) (60" OCL)	2	
	CC213922	HOSE (IHR KIT #233545) (61" OCL)	2	
	CC210804	HOSE (IHR KIT #233546) (62" OCL)	2	
	CC216930	HOSE (IHR KIT #233547) (63" OCL)	2	
	CC223461	HOSE (IHR KIT #233548) (64" OCL)	2	
	CC216931	HOSE (IHR KIT #233549) (65" OCL)	2	
	CC225416	HOSE (IHR KIT #233550) (66" OCL)	2	

https://truckmanualshub.com/

E50-MT 3-STAGE MAST - INTERNAL HOSE REEVING - SINGLE 67 INCH OCL AND UP - S/N 200001A~

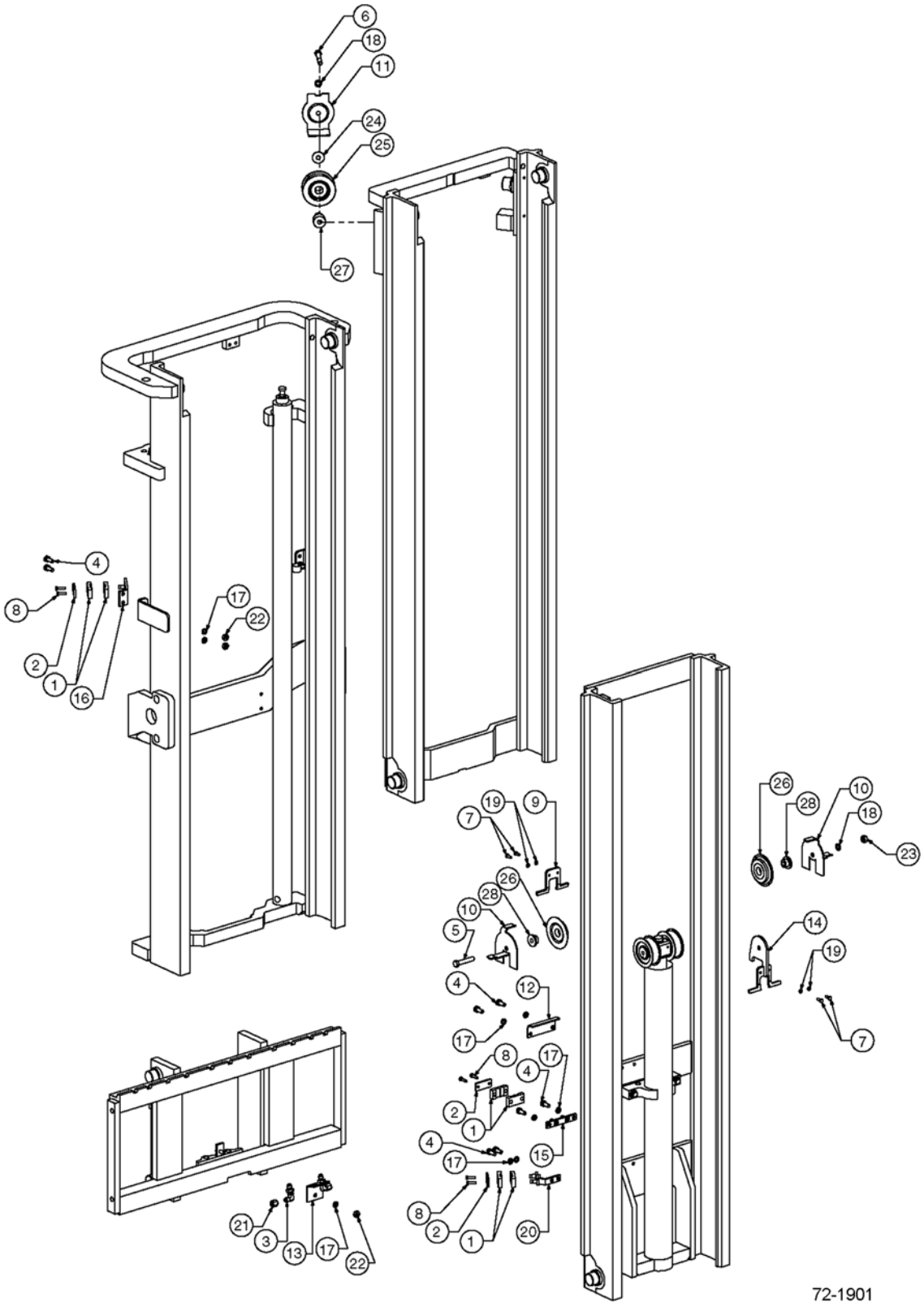

https://truckmanualshub.com/

E50-MT 3-STAGE MAST - INTERNAL HOSE REEVING - SINGLE
67 INCH OCL AND UP - S/N 200001A~

Item	Part Number	Description	Qty	Serial Number
1	3EB-73-A5150	CLAMP, HOSE	6	
2	3EB-73-A5160	HOSE CLAMP BAR	3	
3	3EB-71-A6010	FITTING, BULKHEAD UNION - 90°	2	
4	3EB-73-A5490	CAPSCREW - M10 X 25	10	
5	3EB-79-A5230	CAPSCREW - M12 X 65	1	
6	3EB-79-A5190	CAPSCREW - M12 X 80	1	
7	3EB-73-A5350	CAPSCREW - M6 X 16	4	
8	3EB-79-A5240	CAPSCREW - M6 X 25	6	
9	3EB-73-A5170	CHAIN GUARD	1	
10	3EB-73-A5180	IHR & CHAIN GUARD	2	
11	3EB-73-A5120	HOSE GUARD	1	
12	3EB-73-A5190	HOSE GUARD	1	
13	3EB-73-A5610	CARRIAGE IHR BRACKET	1	
14	3EB-73-A5620	IHR BRACKET	1	
15	3EB-73-A5630	IHR BRACKET	1	
16	3EB-73-A5640	IHR BRACKET	1	
17	3EB-79-A6040	WASHER, LOCK - M10	11	
18	3EB-79-A5360	WASHER, LOCK - M12	2	
19	3EB-73-A5340	WASHER, LOCK - M6	4	
20	3EB-73-A5660	BRACKET, LOWER	1	
21	3EB-79-A5250	NUT - #6 CAP	2	
22	3EB-79-A5180	NUT - M10	3	
23	3EB-79-A5270	NUT - M12 DIN 934	1	
24	3EB-79-A5280	WASHER	1	
25	3EB-73-A5020	SHEAVE	1	
26	3EB-73-A5030	IHR SHEAVE	2	
27	3EB-73-A5220	STUBSHAFT	1	
28	3EB-73-A5230	SINGLE IHR STUBSHAFT	2	

OCL = OUTER CHANNEL LENGTH, MFH = MAXIMUM FORK HEIGHT

3EB-74-A5720	HOSE (IHR KIT #233552) (68" OCL) (152" MFH)	2
3EB-74-A5750	HOSE (IHR KIT #233558) (74" OCL) (170" MFH)	2
3EB-74-A5770	HOSE (IHR KIT #233564) (80" OCL) (188" MFH)	2
3EB-74-A5790	HOSE (IHR KIT #233568) (84" OCL) (198" MFH)	2
3EB-74-A5810	HOSE (IHR KIT #233576) (92" OCL) (216" MFH)	2
3EB-74-A5830	HOSE (IHR KIT #233585) (101" OCL) (235" MFH)	2
3EB-74-A5840	HOSE (IHR KIT #233594) (110" OCL) (254" MFH)	2

https://truckmanualshub.com/

E50-MT 3-STAGE MAST - INTERNAL HOSE REEVING - DOUBLE
S/N 200001A~

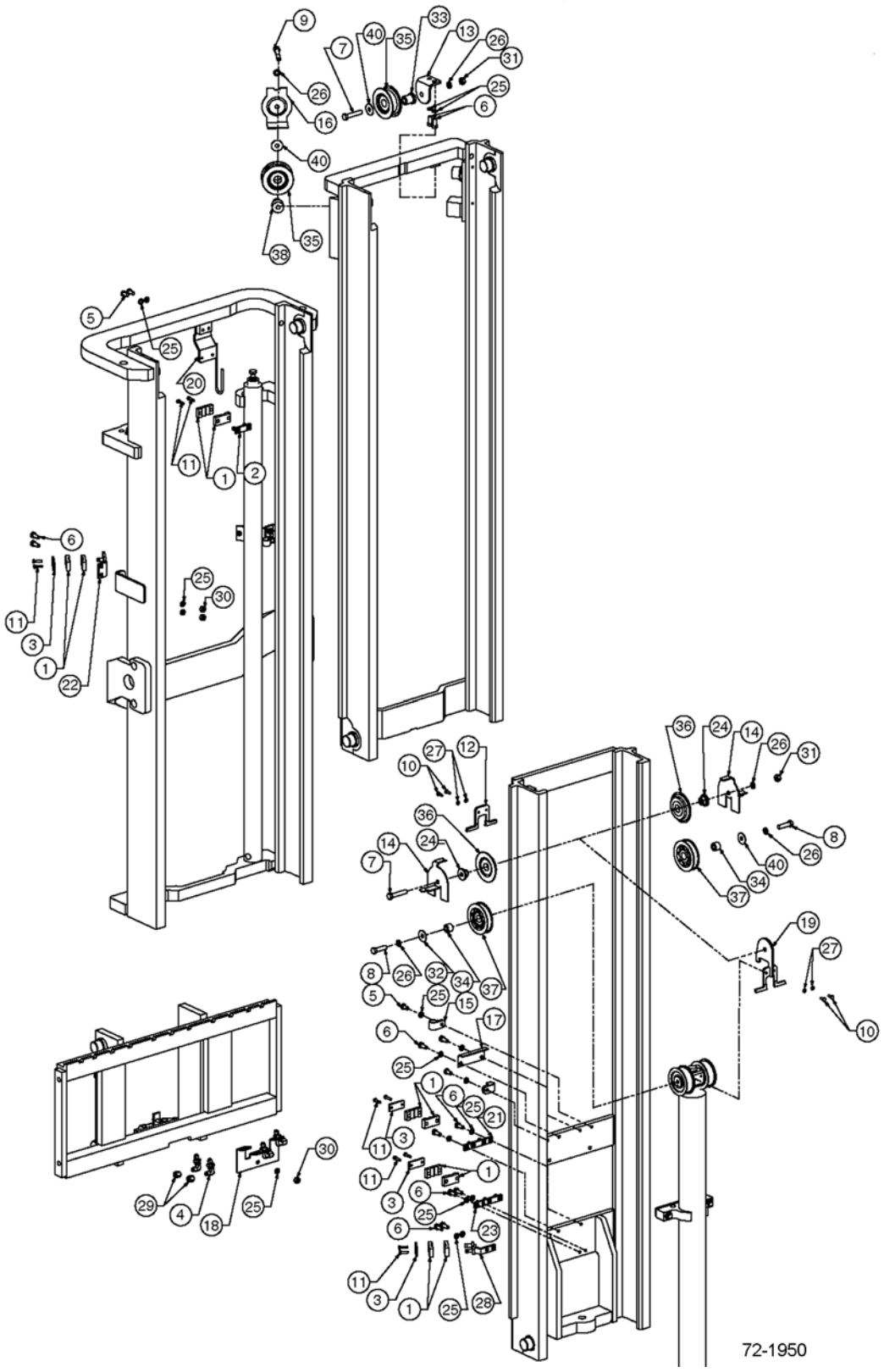

https://truckmanualshub.com/

E50-MT 3-STAGE MAST - INTERNAL HOSE REEVING - DOUBLE
S/N 200001A~

Item	Part Number	Description	Qty	Serial Number
1	3EB-73-A5150	CLAMP, HOSE	12	
2	3EB-73-A6010	BAR ASSY	1	
3	3EB-73-A5160	HOSE CLAMP BAR	5	
4	3EB-71-A6010	BULKHEAD UNION - 90°	4	
5	3EB-79-A5330	CAPSCREW - M10 X 20	4	
6	3EB-73-A5490	CAPSCREW - M10 X 25	18	
7	3EB-79-A5230	CAPSCREW - M12 X 65	2	
8	3EB-79-A5290	CAPSCREW - M12 X 45	2	
9	3EB-79-A5190	CAPSCREW - M12 X 80	1	
10	3EB-73-A5350	CAPSCREW - M6 X 16	4	
11	3EB-79-A5240	CAPSCREW - M6 X 25	12	
12	3EB-73-A5170	IHR & CHAIN GUARD	1	
13	3EB-73-A5670	DOUBLE IHR BRACKET	1	
14	3EB-73-A5180	IHR & CHAIN GUARD	2	
15	3EB-79-A5160	HOSE CLAMP	2	
16	3EB-73-A5120	HOSE GUARD	1	
17	3EB-73-A5190	HOSE GUARD	1	
18	3EB-73-A5680	CARRIAGE IHR BRACKET	1	
19	3EB-73-A5620	IHR BRACKET	1	
20	3EB-73-A6030	IHR BRACKET	1	
21	3EB-73-A5630	IHR BRACKET	1	
22	3EB-73-A5640	IHR BRACKET ASSY	2	
23	3EB-73-A5690	IHR BRACKET ASSY	1	
24	3EB-73-A5230	SHEAVE, SINGLE FUNCTION	1	
25	3EB-79-A6040	WASHER, LOCK - M10	23	
26	3EB-79-A5360	WASHER, LOCK - M12	5	
27	3EB-73-A5340	WASHER, LOCK - M6	4	
28	3EB-73-A5660	BRACKET, LOWER	1	
29	3EB-79-A5250	NUT - #6 CAP	4	
30	3EB-79-A5180	NUT - M10	5	
31	3EB-79-A5270	NUT - M12	2	
32	3EB-79-A5280	WASHER	4	
33	3EB-73-A5240	SHAFT	1	
34	3EB-73-A5250	SHAFT	2	
35	3EB-73-A5020	SHEAVE - IHR	2	
36	3EB-73-A5030	SHEAVE - IHR	2	
37	3EB-73-A5060	SHEAVE - SINGLE	2	
38	3EB-73-A5220	STUBSHAFT	1	

PARTS LIST CONTINUED ON NEXT PAGE

https://truckmanualshub.com/

E50-MT 3-STAGE MAST - INTERNAL HOSE REEVING - DOUBLE
S/N 200001A~

Item	Part Number	Description	Qty	Serial Number
		OCL = OUTER CHANNEL LENGTH, MFH = MAXIMUM FORK HEIGHT		
		INNER HOSE - RIGHT SIDE		
	3EB-74-A5720	HOSE (IHR KIT #233623) (68" OCL) (152" MFH)	1	
	3EB-74-A5750	HOSE (IHR KIT #233629) (74" OCL) (170" MFH)	1	
	3EB-74-A5770	HOSE (IHR KIT #233635) (80" OCL) (188" MFH)	1	
	3EB-74-A5790	HOSE (IHR KIT #233639) (84" OCL) (198" MFH)	1	
	3EB-74-A5810	HOSE (IHR KIT #233647) (92" OCL) (216" MFH)	1	
	3EB-74-A5830	HOSE (IHR KIT #233656) (101" OCL) (235" MFH)	1	
	3EB-74-A5840	HOSE (IHR KIT #233665) (110" OCL) (254" MFH)	1	
		INNER HOSE - LEFT SIDE		
	CC234955	HOSE (IHR KIT #233623) (68" OCL) (152" MFH)	1	
	CC216935	HOSE (IHR KIT #233629) (74" OCL) (170" MFH)	1	
	CC216941	HOSE (IHR KIT #233635) (80" OCL) (188" MFH)	1	
	CC216944	HOSE (IHR KIT #233639) (84" OCL) (198" MFH)	1	
	CC216950	HOSE (IHR KIT #233647) (92" OCL) (216" MFH)	1	
	CC235043	HOSE (IHR KIT #233656) (101" OCL) (235" MFH)	1	
	CC235060	HOSE (IHR KIT #233665) (110" OCL) (254" MFH)	1	
		OUTER HOSES (SHORTEST)		
	CC234991	HOSE (IHR KIT #233623) (68" OCL) (152" MFH)	2	
	CC235001	HOSE (IHR KIT #233629) (74" OCL) (170" MFH)	2	
	CC235010	HOSE (IHR KIT #233635) (80" OCL) (188" MFH)	2	
	CC216942	HOSE (IHR KIT #233639) (84" OCL) (198" MFH)	2	
	CC232707	HOSE (IHR KIT #233647) (92" OCL) (216" MFH)	2	
	CC235038	HOSE (IHR KIT #233656) (101" OCL) (235" MFH)	2	
	CC235055	HOSE (IHR KIT #233665) (110" OCL) (254" MFH)	2	

https://truckmanualshub.com/

NOTES:

https://truckmanualshub.com/

E50-MT 3-STAGE MAST — RECOMMENDED STOCK LIST (RSL)

NO

ILLUSTRATION

REQUIRED

https://truckmanualshub.com/

E50-MT 3-STAGE MAST — RECOMMENDED STOCK LIST (RSL)

Item	Part Number	Description	Qty	No. of Masts Serviced
		MAIN LIFT CYLINDERS		
	SEE PARTS PG	MAIN LIFT CYL ASSY	0	1 - 19
	SEE PARTS PG	MAIN LIFT CYL ASSY	1	20 - 50
	SEE PARTS PG	SEAL KIT	2	1 - 5
	SEE PARTS PG	SEAL KIT	4	6 - 19
	SEE PARTS PG	SEAL KIT	8	20 - 50
		FREE LIFT CYLINDER		
	SEE PARTS PG	FREE LIFT CYLINDER ASSY	0	1 - 5
	SEE PARTS PG	FREE LIFT CYLINDER ASSY	1	6 - 19
	SEE PARTS PG	FREE LIFT CYLINDER ASSY	2	20 - 50
	SEE PARTS PG	SEAL KIT	2	1 - 5
	SEE PARTS PG	SEAL KIT	4	6 - 19
	SEE PARTS PG	SEAL KIT	8	20 - 50
		INTERNAL REEVING		
	SEE PARTS PG	HOSE	2	1 - 5
	SEE PARTS PG	HOSE	4	6 - 19
	SEE PARTS PG	HOSE	8	20 - 50
	3EB-71-A6040	FITTING	1	1 - 5
	3EB-71-A6040	FITTING	2	6 - 19
	3EB-71-A6040	FITTING	4	20 - 50
	3EB-73-A5030	SHEAVE, IHR, SINGLE & DOUBLE IHR	1	1 - 5
	3EB-73-A5030	SHEAVE, IHR, SINGLE & DOUBLE IHR	2	6 - 19
	3EB-73-A5030	SHEAVE, IHR, SINGLE & DOUBLE IHR	4	20 - 50
	3EB-73-A5060	SHEAVE - DOUBLE IHR	1	1 - 5
	3EB-73-A5060	SHEAVE - DOUBLE IHR	2	6 - 19
	3EB-73-A5060	SHEAVE - DOUBLE IHR	4	20 - 50
	3EB-73-A5020	SHEAVE - SINGLE & DOUBLE IHR	1	1 - 5
	3EB-73-A5020	SHEAVE - SINGLE & DOUBLE IHR	2	6 - 19
	3EB-73-A5020	SHEAVE - SINGLE & DOUBLE IHR	4	20 - 50
		UPRIGHTS		
	3EB-79-A5110	CHAIN ANCHOR	1	1 - 5
	3EB-79-A5110	CHAIN ANCHOR	2	6 - 19
	3EB-79-A5110	CHAIN ANCHOR	4	20 - 50
	3EB-79-A5120	CHAIN ANCHOR	1	1 - 5
	3EB-79-A5120	CHAIN ANCHOR	2	6 - 19
	3EB-79-A5120	CHAIN ANCHOR	4	20 - 50
	3EB-79-A5150	PIN, CHAIN	6	1 - 5
	3EB-79-A5150	PIN, CHAIN	12	6 - 19

PARTS LIST CONTINUED ON NEXT PAGE

https://truckmanualshub.com/

E50-MT 3-STAGE MAST — RECOMMENDED STOCK LIST (RSL)

Item	Part Number	Description	Qty	No. of Masts Serviced
	3EB-79-A5150	PIN, CHAIN	36	20 - 50
	3EB-79-A6090	NUT	6	1 - 5
	3EB-79-A6090	NUT	12	6 - 19
	3EB-79-A6090	NUT	24	20 - 50
	3EB-79-A6081	PIN, COTTER	6	1 - 5
	3EB-79-A6081	PIN, COTTER	12	6 - 19
	3EB-79-A6081	PIN, COTTER	24	20 - 50
	3EB-79-A6080	PIN, COTTER	6	1 - 5
	3EB-79-A6080	PIN, COTTER	12	6 - 19
	3EB-79-A6080	PIN, COTTER	36	20 - 50
	3EB-79-A6050	SHIM, .03 IN.	16	1 - 5
	3EB-79-A6050	SHIM, .03 IN.	32	6 - 19
	3EB-79-A6050	SHIM, .03 IN.	64	20 - 50
	3EB-79-A5210	ROLLER	8	1 - 5
	3EB-79-A5210	ROLLER	24	6 - 19
	3EB-79-A5210	ROLLER	48	20 - 50
	3EB-73-A5720	SERVICE KIT, WEAR PLUG	2	1 - 5
	3EB-73-A5720	SERVICE KIT, WEAR PLUG	4	6 - 19
	3EB-73-A5720	SERVICE KIT, WEAR PLUG	8	20 - 50
		CROSSHEAD		
	3EB-73-A5010	CHAIN SHEAVE	4	1 - 5
	3EB-73-A5010	CHAIN SHEAVE	8	6 - 19
	3EB-73-A5010	CHAIN SHEAVE	16	20 - 50
	3EB-73-A5330	RETAINER CLIP	4	1 - 5
	3EB-73-A5330	RETAINER CLIP	8	6 - 19
	3EB-73-A5330	RETAINER CLIP	16	20 - 50
	3EB-79-A6070	SNAP RING	2	1 - 5
	3EB-79-A6070	SNAP RING	4	6 - 19
	3EB-79-A6070	SNAP RING	8	20 - 50
		CARRIAGE AND CHAINS		
	SEE PARTS PG	FREE LIFT CHAINS	2	1 - 5
	SEE PARTS PG	FREE LIFT CHAINS	4	6 - 19
	SEE PARTS PG	FREE LIFT CHAINS	8	20 - 50
	SEE PARTS PG	MAIN LIFT CHAINS	2	1 - 5
	SEE PARTS PG	MAIN LIFT CHAINS	4	6 - 19
	SEE PARTS PG	MAIN LIFT CHAINS	8	20 - 50
	3EB-79-A5210	CARRIAGE ROLLER	4	1 - 5
	3EB-79-A5210	CARRIAGE ROLLER	8	6 - 19

PARTS LIST CONTINUED ON NEXT PAGE

https://truckmanualshub.com/

E50-MT 3-STAGE MAST — RECOMMENDED STOCK LIST (RSL)

Item	Part Number	Description	Qty	No. of Masts Serviced
	3EB-79-A5210	CARRIAGE ROLLER.	16	20 - 50
	3EB-79-A5220	ROLLER - 6-ROLLER CARRIAGE	2	1 - 5
	3EB-79-A5220	ROLLER - 6-ROLLER CARRIAGE	4	6 - 19
	3EB-79-A5220	ROLLER - 6-ROLLER CARRIAGE	8	20 - 50
	3EB-79-A5140	CHAIN ANCHOR.	1	1 - 5
	3EB-79-A5140	CHAIN ANCHOR.	2	6 - 19
	3EB-79-A5140	CHAIN ANCHOR.	4	20 - 50
	3EB-79-A6081	PIN, COTTER	2	1 - 5
	3EB-79-A6081	PIN, COTTER	4	6 - 19
	3EB-79-A6081	PIN, COTTER	8	20 - 50
	3EB-79-A6080	PIN, COTTER	4	1 - 5
	3EB-79-A6080	PIN, COTTER	8	6 - 19
	3EB-79-A6080	PIN, COTTER	16	20 - 50
	3EB-79-A5150	CHAIN PIN.	4	1 - 19
	3EB-79-A5150	CHAIN PIN.	8	20 - 50
	3EB-73-A5450	NUT	2	1 - 50

https://truckmanualshub.com/

E60-MS 2-STAGE MAST - SAFETY DECALS
S/N 200001A~

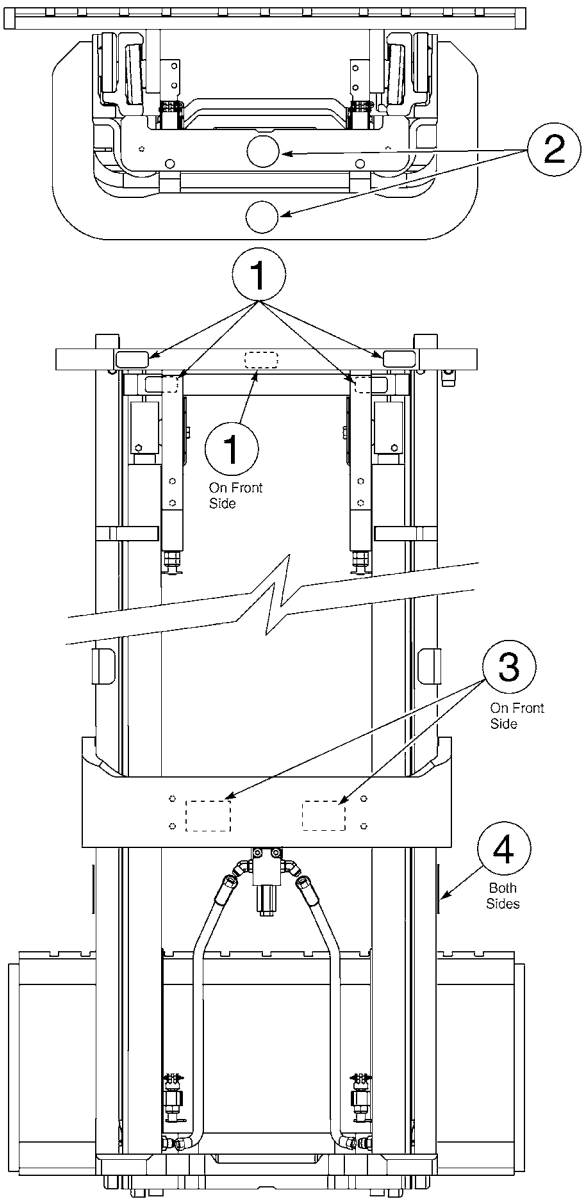

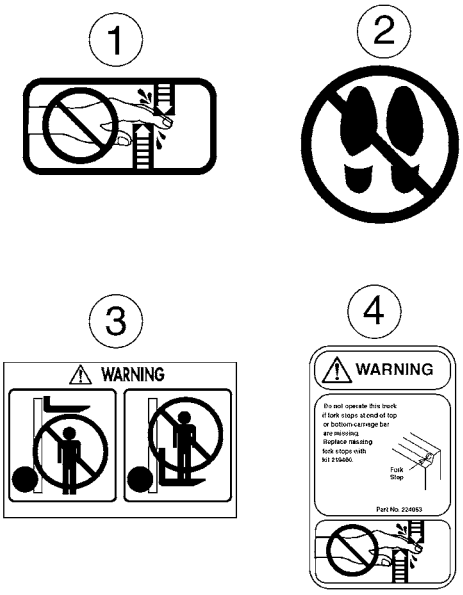

72-2100

https://truckmanualshub.com/

E60-MS 2-STAGE MAST - SAFETY DECALS
S/N 200001A~

Item	Part Number	Description	Qty	Serial Number
1	3EB-79-A6010	DECAL - "HANDS OFF"	5	
2	3EB-79-A6020	DECAL - "NO STEP"	2	
3	CC210850	DECAL - "WARNING"	2	
4	CC224053	DECAL - "FORK STOP"	2	

https://truckmanualshub.com/

E60-MS 2-STAGE MAST - MAIN LIFT CYLINDERS
S/N 200001A~

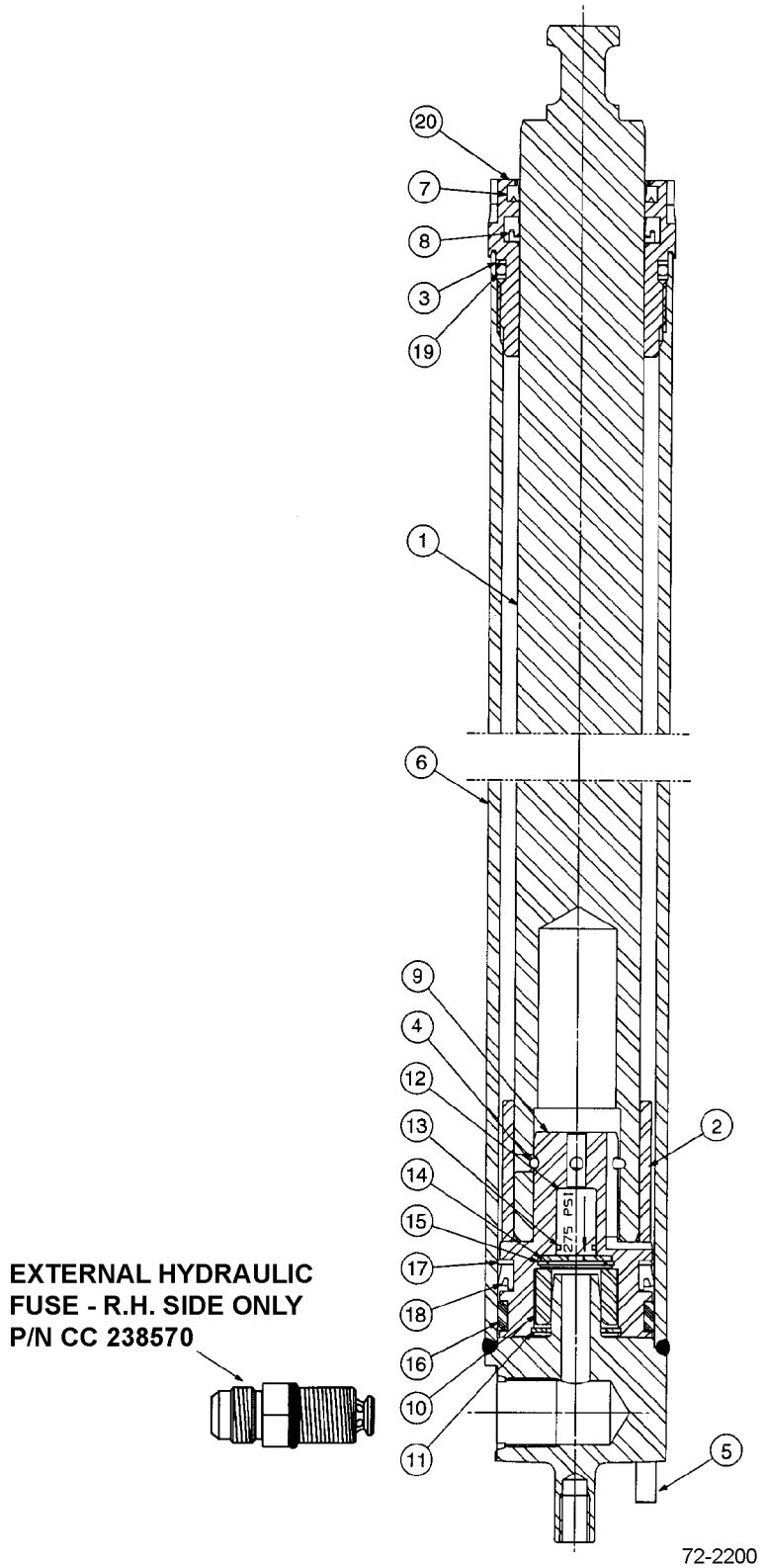

https://truckmanualshub.com/

E60-MS 2-STAGE MAST - MAIN LIFT CYLINDERS
S/N 200001A~

Item	Part Number	Description	Qty	Serial Number
1	NSS	ROD/PLUNGER	1	
2	NSS	SPACER	1	
3	NSS	BACK-UP RING (SEAL KIT)	1	
4	NSS	PULL-IN WIRE (SEAL KIT)	1	
5	CC7910	ROLL PIN	1	
6	NSS	SHELL	1	
7	NSS	WIPER (SEAL KIT)	1	
8	NSS	ROD SEAL (SEAL KIT)	1	
9	NSS	PISTON	1	
10	NSS	SLEEVE	1	
11	NSS	RETAINING RING (CHECK VALVE KIT)	1	
12	NSS	CHECK VALVE (CHECK VALVE KIT)	1	
13	NSS	O-RING (CHECK VALVE KIT)	1	
14	NSS	WASHER (CHECK VALVE KIT)	1	
15	NSS	RETAINING RING (SEAL KIT)	1	
16	NSS	WEAR RING (SEAL KIT)	1	
17	NSS	NYLON RING (SEAL KIT)	1	
18	NSS	PISTON SEAL (SEAL KIT)	1	
19	NSS	O-RING (SEAL KIT)	1	
20	CC422809	RETAINER	1	
KIT	3EB-73-A5430	SEAL KIT	1	
KIT	CC3101894	CHECK VALVE KIT	1	
	OCL = OUTER CHANNEL LENGTH, MFH = MAXIMUM FORK HEIGHT			
	CC1001115	MAIN LIFT CYLINDER - (57" OCL) (81.5" MFH)	1	
	CC1001127	MAIN LIFT CYLINDER - (69" OCL) (105.5" MFH)	1	
	CC1001131	MAIN LIFT CYLINDER - (73" OCL) (113.5" MFH)	1	
	CC1001138	MAIN LIFT CYLINDER - (80" OCL) (127.5" MFH)	1	
	CC1001139	MAIN LIFT CYLINDER - (81" OCL) (129.5" MFH)	1	
	CC1001147	MAIN LIFT CYLINDER - (89" OCL) (145.5" MFH)	1	
	CC1001153	MAIN LIFT CYLINDER - (95" OCL) (157.5" MFH)	1	
	CC1001159	MAIN LIFT CYLINDER - (101" OCL) (169.5" MFH)	1	

https://truckmanualshub.com/

E60-MS 2-STAGE MAST - OUTER UPRIGHT
S/N 200001A~

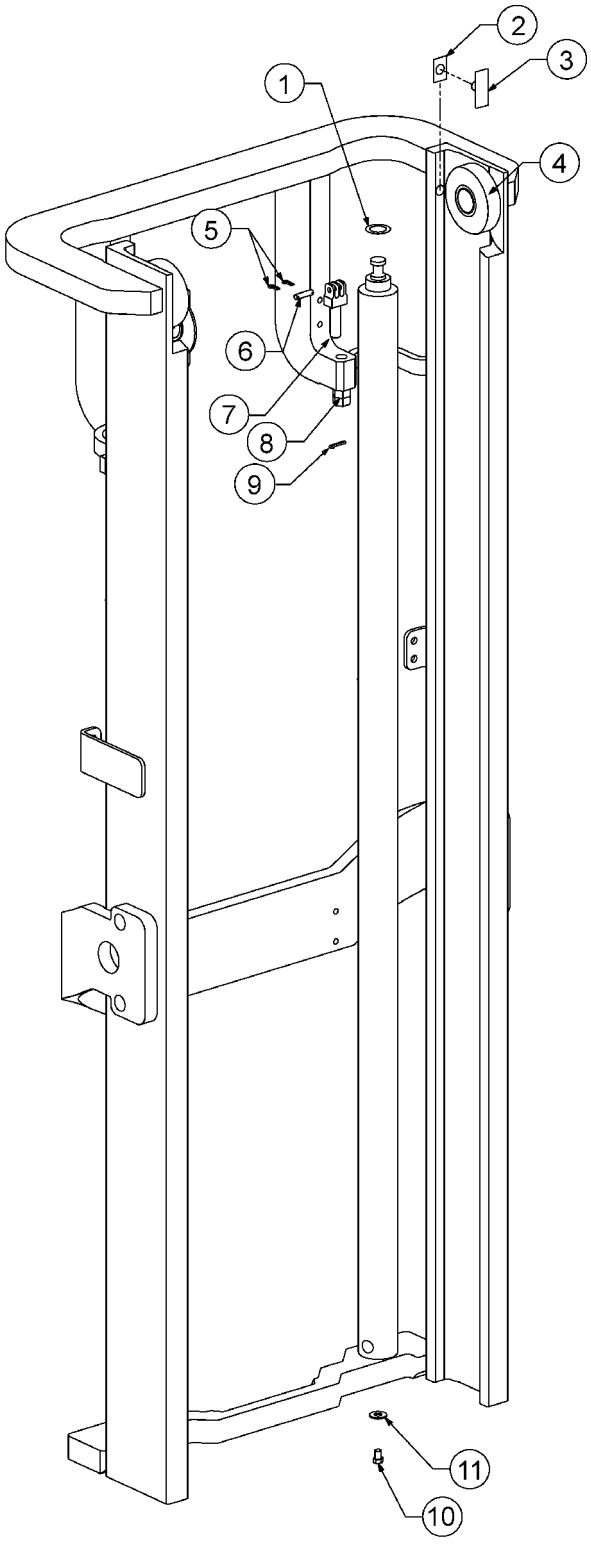

https://truckmanualshub.com/

E60-MS 2-STAGE MAST - OUTER UPRIGHT
S/N 200001A~

Item	Part Number	Description	Qty	Serial Number
		OCL = OUTER CHANNEL LENGTH, MFH = MAXIMUM FORK HEIGHT		
	CC236191	OUTER UPRIGHT - (57" OCL) (81.5" MFH) . . .	1	
	CC236203	OUTER UPRIGHT - (69" OCL) (105.5" MFH) . .	1	
	CC236207	OUTER UPRIGHT - (73" OCL) (113.5" MFH). . .	1	
	CC236214	OUTER UPRIGHT - (80" OCL) (127.5" MFH) . .	1	
	CC236215	OUTER UPRIGHT - (81" OCL) (129.5" MFH) . .	1	
	CC236223	OUTER UPRIGHT - (89" OCL) (145.5" MFH) . .	1	
	CC236229	OUTER UPRIGHT - (95" OCL) (157.5" MFH) . .	1	
	CC236235	OUTER UPRIGHT - (101" OCL) (169.5" MFH) .	1	
1	CC238137	SHIM KIT - MAIN LIFT CYL	2	
2	CC215719	WEAR PLUG SHIM . . . . . (WEAR PLUG KIT)	AR	
3	CC203388	WEAR PLUG . . . . . (WEAR PLUG KIT)	2	
4	3EB-79-A5210	LOAD ROLLER.	2	
5	3EB-79-A6080	PIN, COTTER	2	
6	3EB-79-A5150	PIN, CHAIN ANCHOR	2	
7	3EB-79-A5110	CHAIN ANCHOR	2	
8	3EB-79-A6090	NUT.	4	
9	3EB-79-A6081	PIN, COTTER	2	
10	3EB-79-A5340	BOLT.	2	
11	3EB-79-A5350	WASHER, FLAT	2	

https://truckmanualshub.com/

E60-MS 2-STAGE MAST - INNER UPRIGHT
S/N 200001A~

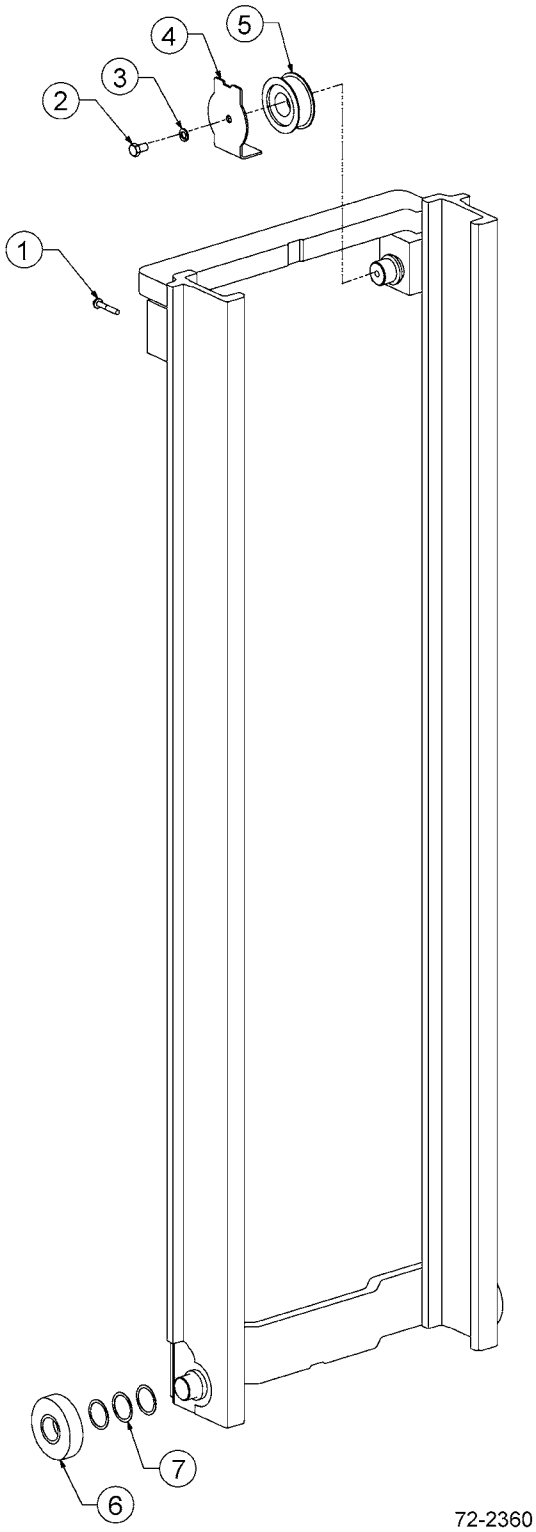

https://truckmanualshub.com/

E60-MS 2-STAGE MAST - INNER UPRIGHT
S/N 200001A~

Item	Part Number	Description	Qty	Serial Number
		OCL = OUTER CHANNEL LENGTH, MFH = MAXIMUM FORK HEIGHT		
	CC236262	INNER UPRIGHT - (57" OCL) (81.5" MFH)	1	
	CC236274	INNER UPRIGHT - (69" OCL) (105.5" MFH)	1	
	CC236278	INNER UPRIGHT - (73" OCL) (113.5" MFH)	1	
	CC236285	INNER UPRIGHT - (80" OCL) (127.5" MFH)	1	
	CC236286	INNER UPRIGHT - (81" OCL) (129.5" MFH)	1	
	CC236294	INNER UPRIGHT - (89" OCL) (145.5" MFH)	1	
	CC236300	INNER UPRIGHT - (95" OCL) (157.5" MFH)	1	
	CC236306	INNER UPRIGHT - (101" OCL) (169.5" MFH)	1	
1	3EB-79-A5380	BOLT	2	
2	3EB-79-A5370	M12 X 20 LG CAPSCREW	2	
3	3EB-79-A5360	M12 WASHER, LOCK	2	
4	3EB-73-A5140	CHAIN GUARD	2	
5	3EB-73-A5010	SHEAVE	2	
6	3EB-79-A5210	LOAD ROLLER	2	
7	3EB-79-A6050	SHIM, LOAD ROLLER	AR	

https://truckmanualshub.com/

E60-MS 2-STAGE MAST - CARRIAGE - 6-ROLLER
S/N 200001A~

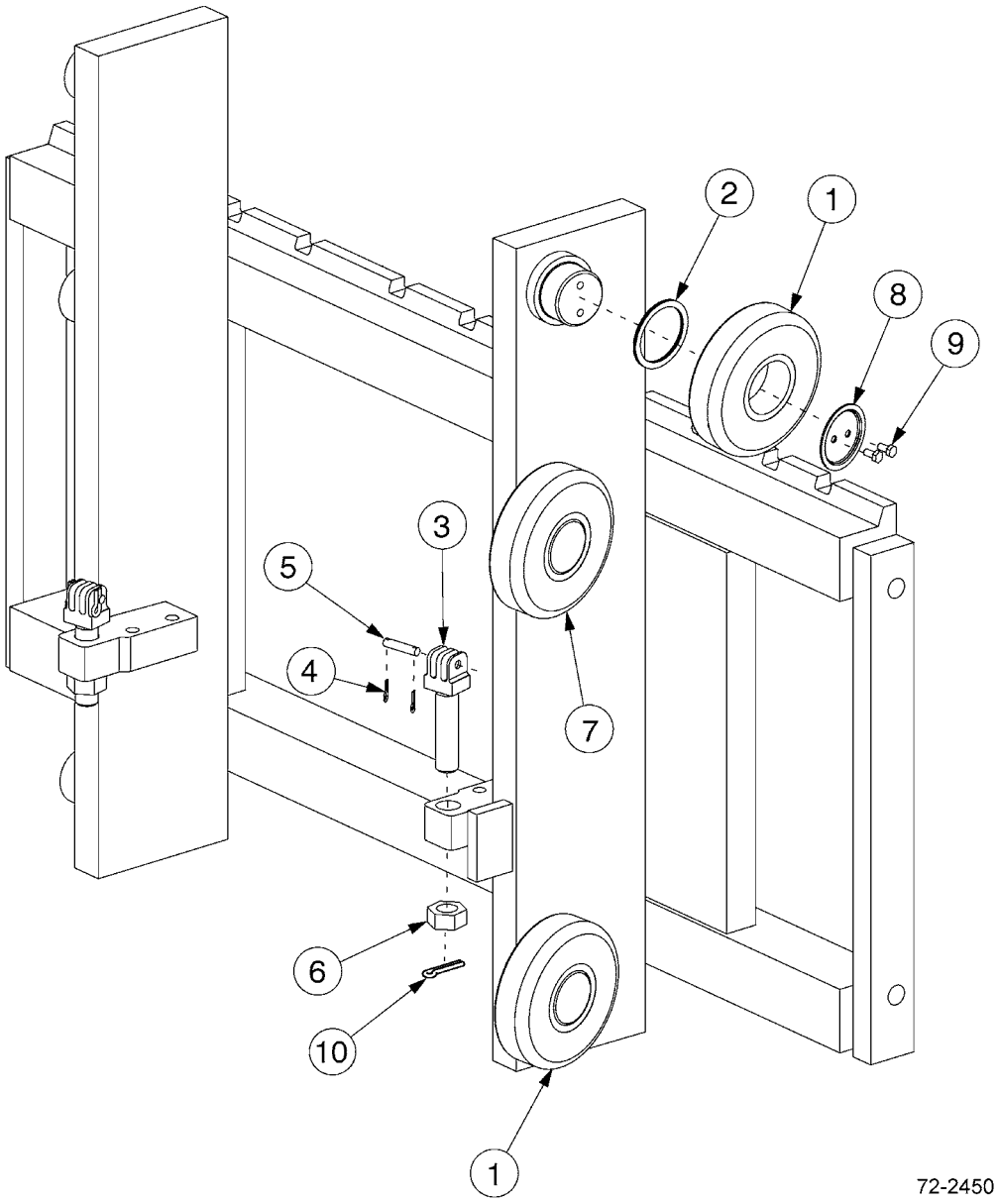

https://truckmanualshub.com/

E60-MS 2-STAGE MAST - CARRIAGE - 6-ROLLER
S/N 200001A~

Item	Part Number	Description	Qty	Serial Number
	CC236923	CARRIAGE - 37" - CUSHION TIRE SPEC.	1	
	CC236924	CARRIAGE - 41" - CUSHION TIRE SPEC.	1	
	CC236925	CARRIAGE - 37" - PNEUMATIC TIRE SPEC. . .	1	
	CC236926	CARRIAGE - 41" - PNEUMATIC TIRE SPEC. . .	1	
	CC252613	CARRIAGE - 49" - PNEUMATIC TIRE SPEC. . .	1	
	CC251401	CARRIAGE - 53" - PNEUMATIC TIRE SPEC. . .	1	
1	3EB-79-A5210	LOAD ROLLER.	4	
2	3EB-79-A6050	SHIM, LOAD ROLLER	AR	
3	3EB-79-A5140	CHAIN ANCHOR	2	
4	3EB-79-A6080	PIN, COTTER	4	
5	3EB-79-A5150	PIN, CHAIN ANCHOR	2	
6	3EB-73-A5450	NUT.	2	
7	3EB-79-A5220	LOAD ROLLER.	2	
8	3EB-73-A5460	RETAINER	2	
9	3EB-73-A5470	CAPSCREW - M6 X 12LG	4	
10	3EB-79-A6081	PIN, COTTER	2	

https://truckmanualshub.com/

E60-MS 2-STAGE MAST - HOIST CHAINS
S/N 200001A~

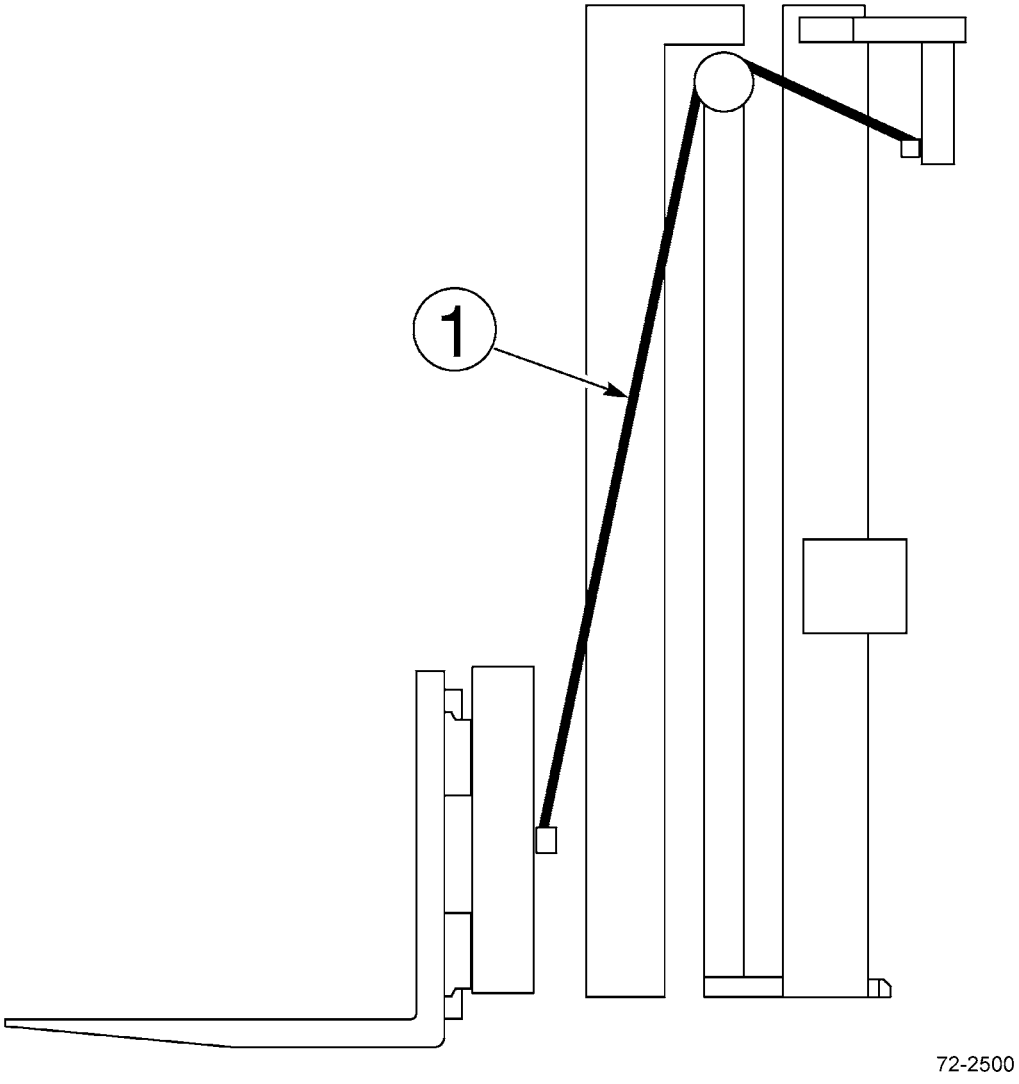

https://truckmanualshub.com/

E60-MS 2-STAGE MAST - HOIST CHAINS
S/N 200001A~

Item	Part Number	Description	Qty	Serial Number
		OCL = OUTER CHANNEL LENGTH, MFH = MAXIMUM FORK HEIGHT		
1	CC683977	MAIN LIFT CHAIN - (57" OCL) (81.5" MFH). . . .	2	
	CC678770	MAIN LIFT CHAIN - (69" OCL) (105.5" MFH). . .	2	
	CC680459	MAIN LIFT CHAIN - (73" OCL) (113.5" MFH). . .	2	
	CC678796	MAIN LIFT CHAIN - (80" OCL) (127.5" MFH). . .	2	
	CC683990	MAIN LIFT CHAIN - (81" OCL) (129.5" MFH). . .	2	
	CC683994	MAIN LIFT CHAIN - (89" OCL) (145.5" MFH). . .	2	
	CC683998	MAIN LIFT CHAIN - (95" OCL) (157.5" MFH). . .	2	
	CC678837	MAIN LIFT CHAIN - (101" OCL) (169.5" MFH). .	2	

https://truckmanualshub.com/

E60-MS 2-STAGE MAST - LOAD BACKREST
S/N 200001A~

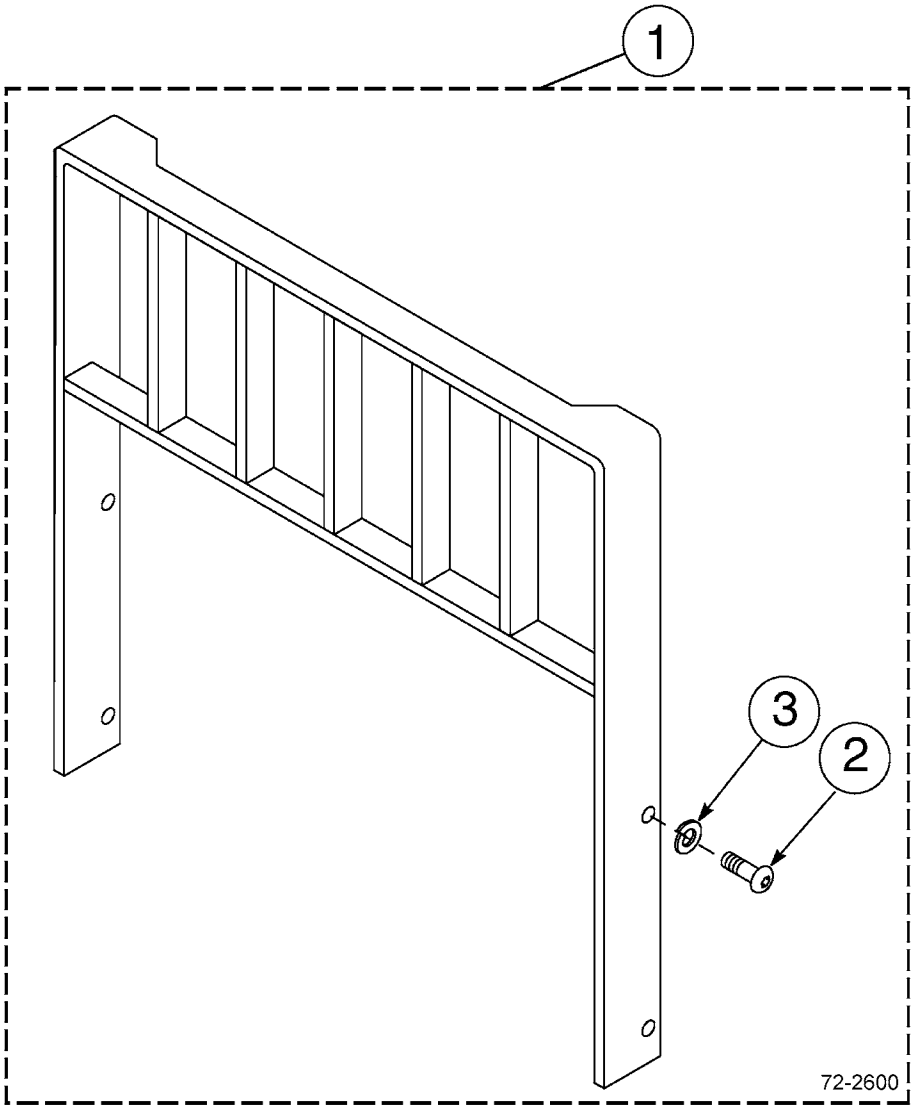

https://truckmanualshub.com/

E60-MS 2-STAGE MAST - LOAD BACKREST
S/N 200001A~

Item	Part Number	Description	Qty	Serial Number
		CLASS III LOAD BACKRESTS (HEIGHT X WIDTH)		
1	CC684784	BACKREST - 37" X 36"	1	
	CC684785	BACKREST - 37" X 48"	1	
	CC684786	BACKREST - 37" X 60"	1	
	CC684787	BACKREST - 41" X 36"	1	
	CC684788	BACKREST - 41" X 48"	1	
	CC684789	BACKREST - 41" X 60"	1	
	CC684790	BACKREST - 49" X 36"	1	
	CC684791	BACKREST - 49" X 48"	1	
	CC684792	BACKREST - 49" X 60"	1	
	CC357671	BACKREST - 53" X 48"	1	
2	CC200173	.CAPSCREW - M16 X 2.0 X 35-8.8	4	
3	3EB-71-A6030	.WASHER, LOCK - M16	4	

https://truckmanualshub.com/

E60-MS 2-STAGE MAST - INSTALLATION COMPONENTS
PNEUMATIC TIRE MODELS - S/N 200001A~

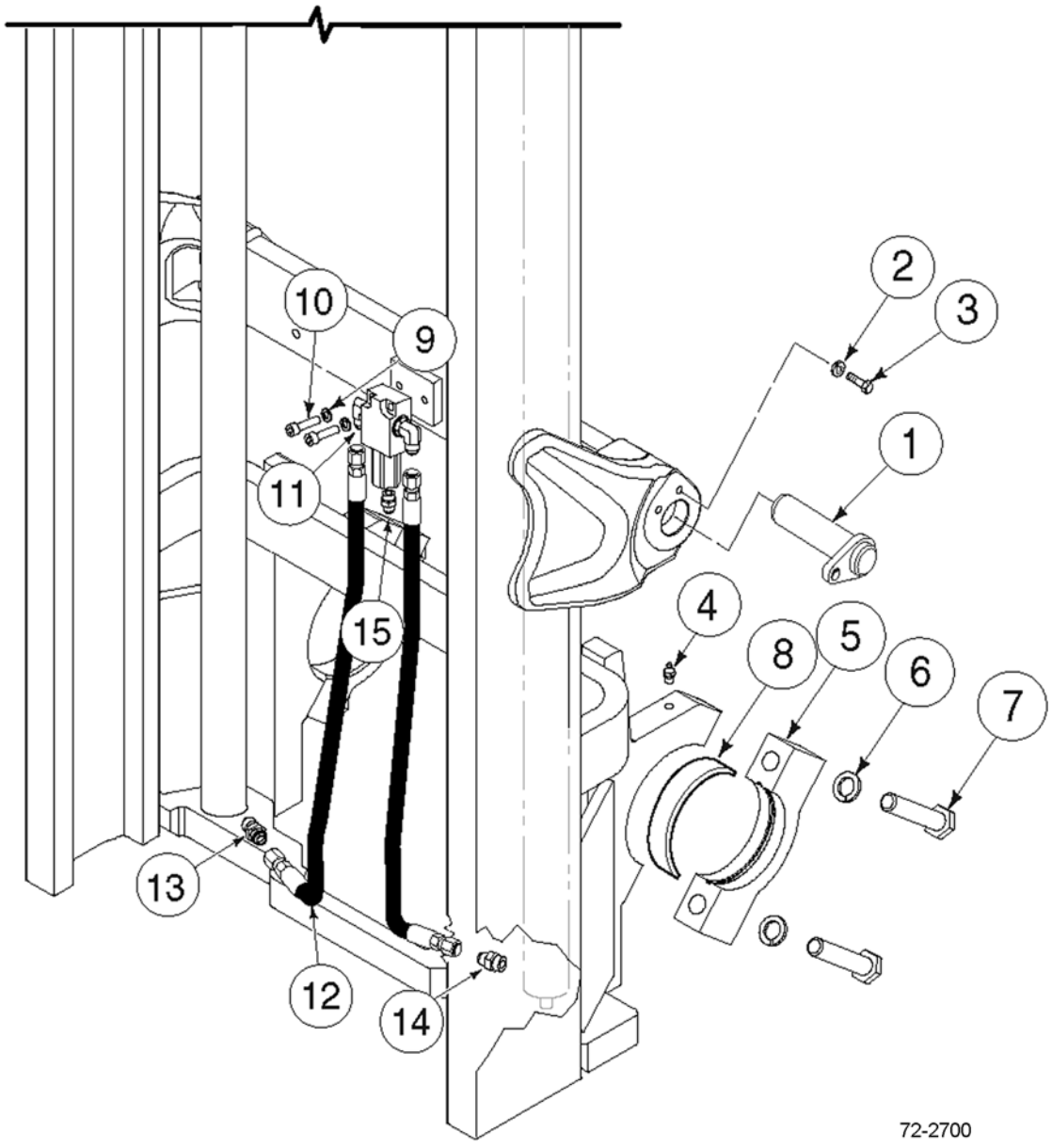

https://truckmanualshub.com/

E60-MS 2-STAGE MAST - INSTALLATION COMPONENTS
PNEUMATIC TIRE MODELS - S/N 200001A~

Item	Part Number	Description	Qty	Serial Number
1	3EB-41-51750	TILT PIN	2	
2	3EB-79-A6040	WASHER, LOCK.	2	
3	CC212632	CAPSCREW	2	
4	CC7418	FITTING, GREASE	2	
5	CC252686	CAP.	2	
6	3EB-71-A6030	WASHER, LOCK.	4	
7	CC251906	CAPSCREW	4	
8	3EB-71-51290	BUSHING (2.0T, 2.5T, 2.8T, 3.0T).	2	
	3EB-71-61790	BUSHING (3.2T, 3.5T)	2	
9	CC767611	CAPSCREW	2	
10	3EB-79-A6040	WASHER, LOCK.	2	
11	CC601250	FITTING # 8 - 90° ELBOW	2	
12	CC253793	MAIN LIFT HOSE, RH	1	
	CC255652	MAIN LIFT HOSE, LH.	1	
13	CC611289	FITTING # 8 -#10 STRAIGHT.	1	
14	CC238750	12 GPM EXTERNAL FUSE	1	
15	CC601377	FITTING	1	
KIT	CC255596	INSTALLATION KIT	1	

https://truckmanualshub.com/

E60-MS 2-STAGE MAST - INSTALLATION COMPONENTS
CUSHION TIRE MODELS - S/N 200001A~

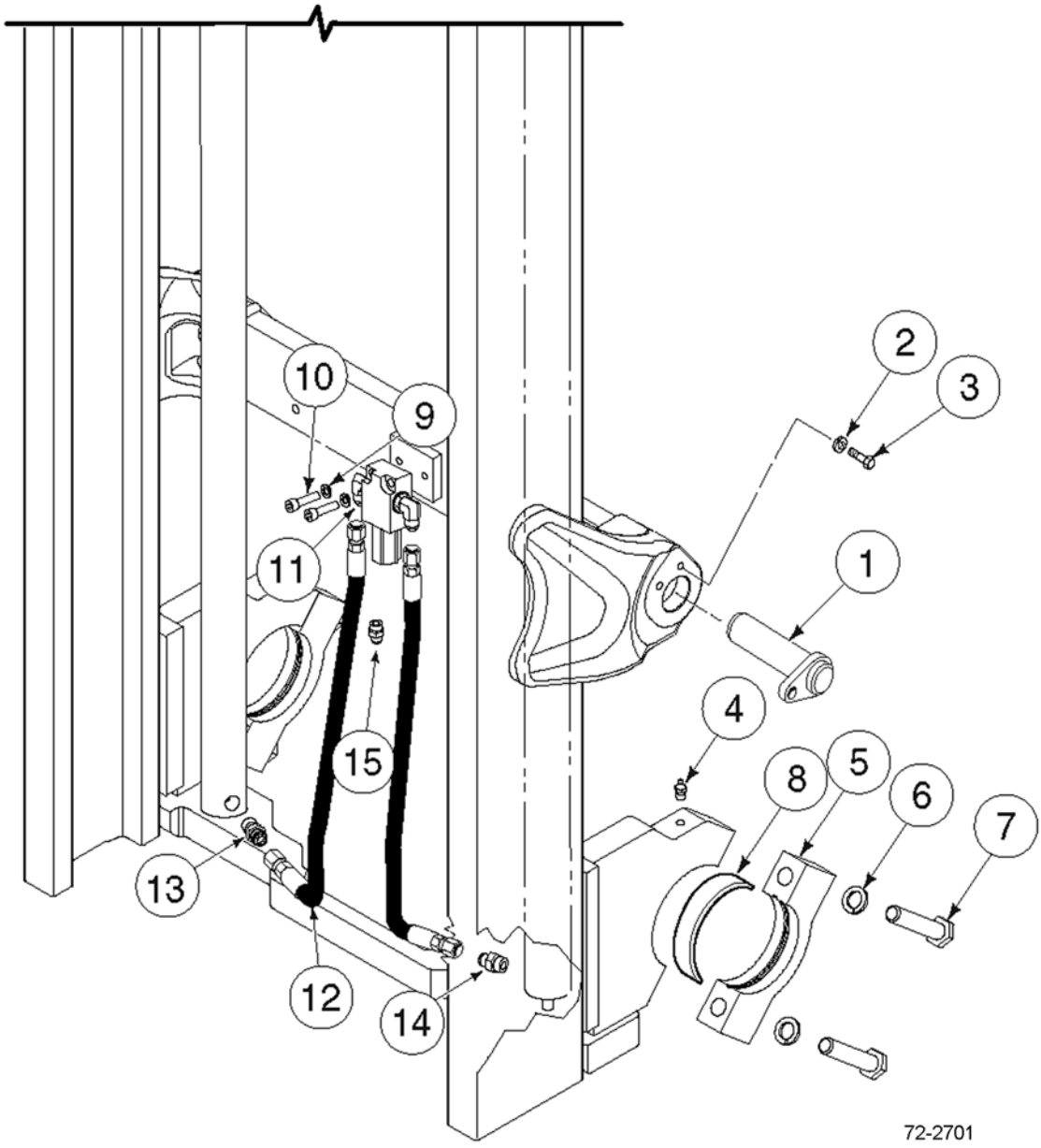

https://truckmanualshub.com/

E60-MS 2-STAGE MAST - INSTALLATION COMPONENTS
CUSHION TIRE MODELS - S/N 200001A~

Item	Part Number	Description	Qty	Serial Number
1	3EB-41-51750	TILT PIN	2	
2	3EB-79-A6040	WASHER, LOCK.	2	
3	CC212632	CAPSCREW	2	
4	CC7418	FITTING, GREASE	2	
5	CC251901	CAP.	2	
6	3EB-71-A6030	WASHER, LOCK.	4	
7	CC251906	CAPSCREW	4	
8	3EB-84-51290	BUSHING (CUSHION ONLY)	2	
9	CC767611	CAPSCREW	2	
10	3EB-79-A6040	WASHER, LOCK.	2	
11	CC601250	FITTING # 8 - 90° ELBOW	2	
12	CC255666	MAIN LIFT HOSE, RH	1	
	CC255665	MAIN LIFT HOSE, LH.	1	
13	CC611289	FITTING # 8 -#10 STRAIGHT.	1	
14	CC238750	12 GPM EXTERNAL FUSE	1	
15	CC601377	FITTING	1	
KIT	CC255596	INSTALLATION KIT	1	

https://truckmanualshub.com/

E60-MS 2-STAGE MAST - LOWERING CONTROL VALVE
S/N 200001A~

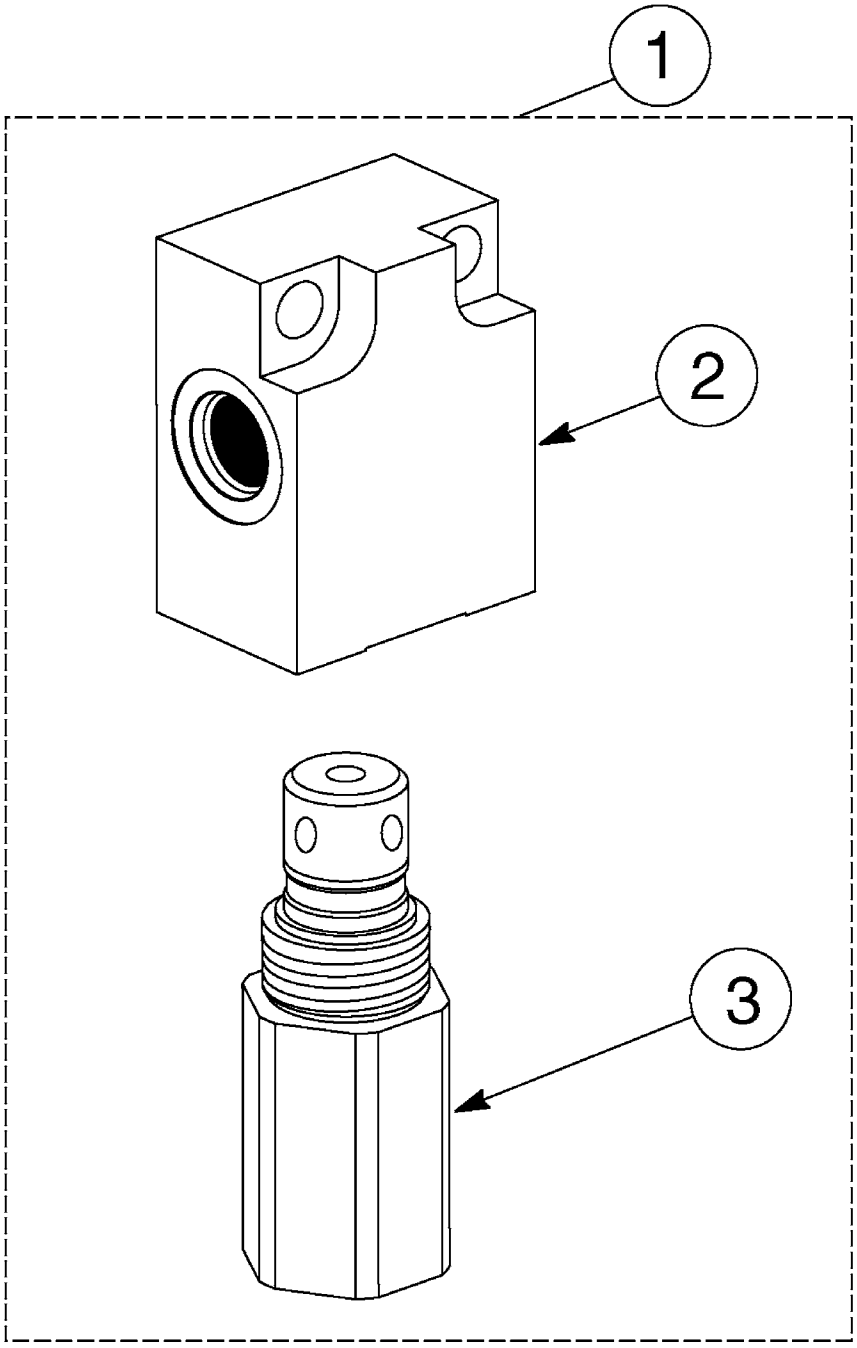

72-2850

https://truckmanualshub.com/

E60-MS 2-STAGE MAST - LOWERING CONTROL VALVE
S/N 200001A~

Item	Part Number	Description	Qty	Serial Number
1	3EB-73-A5930	CONTROL VALVE - 2600 PSI - 17 GPM	1	
2	3EB-73-A5910	.VALVE BODY.	1	
3	3EB-73-A5920	.VALVE CARTRIDGE (17 GPM)	1	

https://truckmanualshub.com/

E60-MS 2-STAGE MAST - INTERNAL HOSE REEVING - SINGLE CUSHION TIRE MODELS - S/N 200001A~

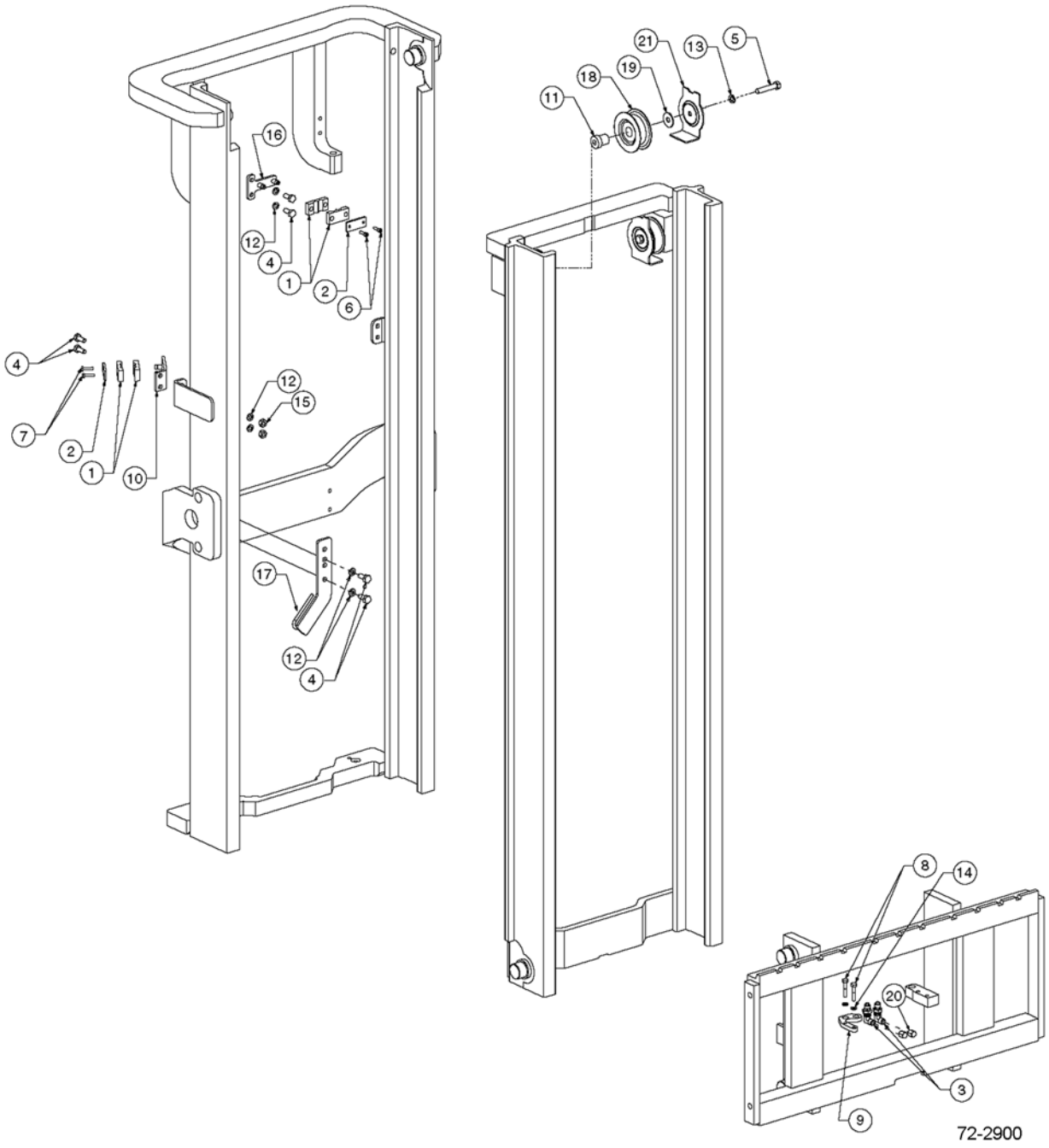

https://truckmanualshub.com/

E60-MS 2-STAGE MAST - INTERNAL HOSE REEVING - SINGLE CUSHION TIRE MODELS - S/N 200001A~

Item	Part Number	Description	Qty	Serial Number
1	3EB-73-A5150	CLAMP, HOSE	4	
2	3EB-73-A5160	HOSE CLAMP BAR	2	
3	3EB-71-A6010	FITTING, BULKHEAD UNION	2	
4	3EB-73-A5490	CAPSCREW - M10 X 25LG	6	
5	3EB-79-A5230	CAPSCREW - M12 X 60LG	1	
6	CC761170	CAPSCREW - M6 X 20LG	2	
7	3EB-79-A5240	CAPSCREW - M6 X 25LG	2	
8	CC203202	CAPSCREW - M8 X 40 LG	2	
9	CC235886	BRACKET - CARRIAGE IHR	1	
10	3EB-73-A5640	IHR BRACKET	1	
11	CC235879	IHR STUB SHAFT	1	
12	3EB-79-A6040	WASHER, LOCK - M10	6	
13	3EB-79-A5360	WASHER, LOCK - M12	1	
14	CC206315	WASHER, LOCK - M8	2	
15	3EB-79-A5180	NUT - M10	2	
16	CC236902	IHR BRACKET - OUTER	1	
17	CC238170	IHR BRACKET - R.H.	1	
18	3EB-73-A5020	SHEAVE	1	
19	3EB-79-A5280	WASHER	1	
20	3EB-79-A5250	CAP	2	
21	CC216052	HOSE GUARD	1	
	OCL = OUTER CHANNEL LENGTH, MFH = MAXIMUM FORK HEIGHT			
	CC234936	HOSE (IHR KIT # N/A) (57" OCL) (81.5" MFH)	2	
	CC234958	HOSE (IHR KIT #255162) (69" OCL) (105.5" MFH)	2	
	CC234962	HOSE (IHR KIT #255166) (73" OCL) (113.5" MFH)	2	
	CC234969	HOSE (IHR KIT #255173) (80" OCL) (127.5" MFH)	2	
	CC213919	HOSE (IHR KIT #255174) (81" OCL) (129.5" MFH)	2	
	CC234975	HOSE (IHR KIT #255182) (89" OCL) (145.5" MFH)	2	
	CC216928	HOSE (IHR KIT #255188) (95" OCL) (157.5" MFH)	2	
	CC234988	HOSE (IHR KIT #255194) (101" OCL) (169.5" MFH)	2	

https://truckmanualshub.com/

E60-MS 2-STAGE MAST - INTERNAL HOSE REEVING - DOUBLE CUSHION TIRE MODELS - S/N 200001A~

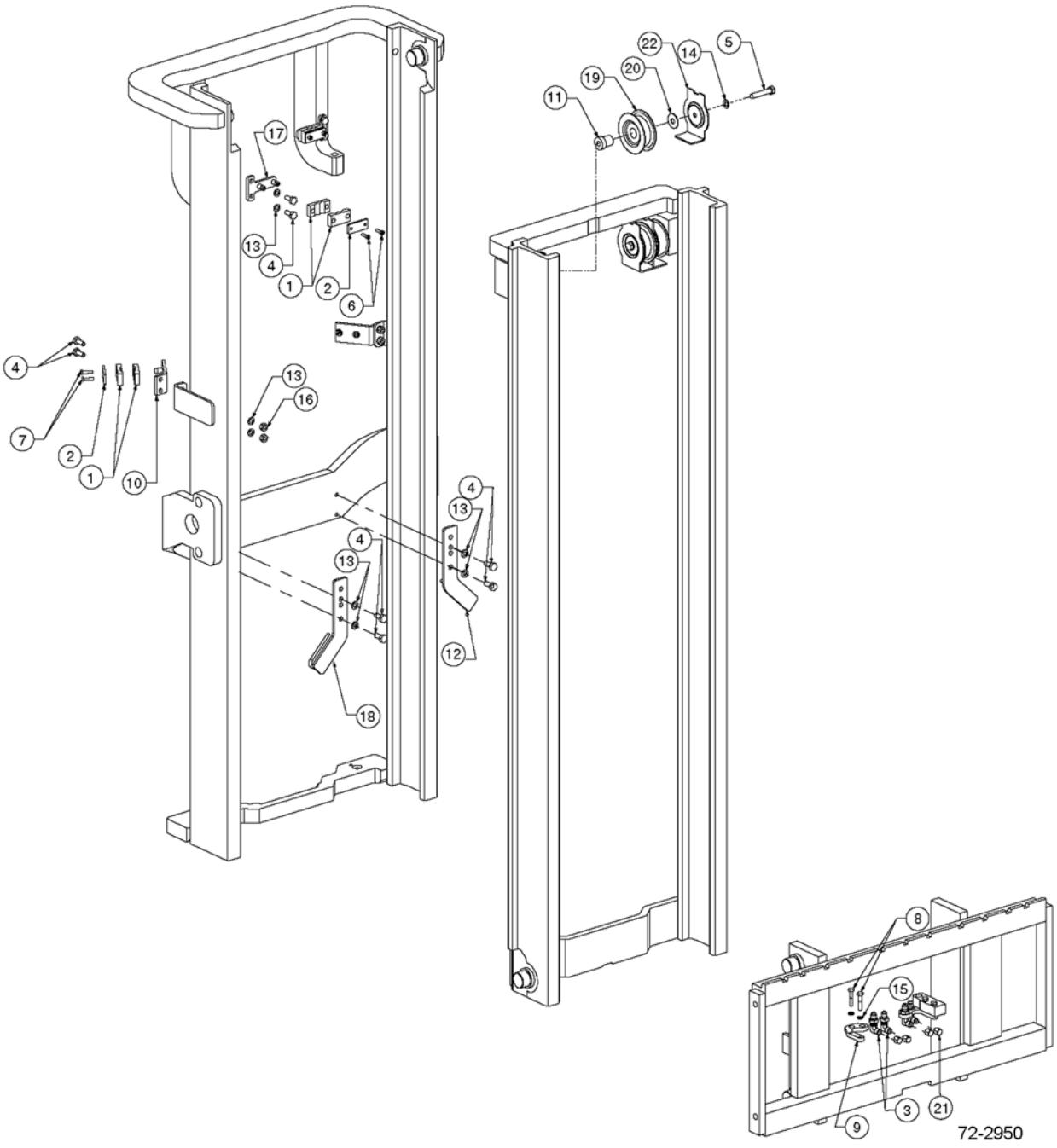

https://truckmanualshub.com/

E60-MS 2-STAGE MAST - INTERNAL HOSE REEVING - DOUBLE CUSHION TIRE MODELS - S/N 200001A~

Item	Part Number	Description	Qty	Serial Number
1	3EB-73-A5150	CLAMP, HOSE	8	
2	3EB-73-A5160	HOSE CLAMP BAR	4	
3	3EB-71-A6010	FITTING, BULKHEAD UNION	4	
4	3EB-73-A5490	CAPSCREW - M10 X 25LG	12	
5	3EB-79-A6060	CAPSCREW - M12 X 60LG	2	
6	CC761170	CAPSCREW - M6 X 20LG	4	
7	3EB-79-A5240	CAPSCREW - M6 X 25LG	4	
8	CC203202	CAPSCREW - M8 X 40 LG	4	
9	CC235886	BRACKET - CARRIAGE IHR	2	
10	3EB-73-A5640	IHR BRACKET	2	
11	CC235879	IHR STUB SHAFT	2	
12	CC250036	IHR BRACKET - L.H.	1	
13	3EB-79-A6040	WASHER, LOCK - M10	12	
14	3EB-79-A5360	WASHER, LOCK - M12	2	
15	CC206315	WASHER, LOCK - M8	4	
16	3EB-79-A5180	NUT - M10	4	
17	CC236902	IHR BRACKET - OUTER	2	
18	CC250035	IHR BRACKET - R.H.	1	
19	3EB-73-A5020	SHEAVE	2	
20	3EB-79-A5280	WASHER	2	
21	3EB-79-A5250	CAP	4	
22	CC216052	HOSE GUARD	2	
	OCL = OUTER CHANNEL LENGTH, MFH = MAXIMUM FORK HEIGHT			
	CC234936	HOSE (IHR KIT # N/A) (57" OCL) (81.5" MFH)	4	
	CC234958	HOSE (IHR KIT #255333) (69" OCL) (105.5" MFH)	4	
	CC234962	HOSE (IHR KIT #255337) (73" OCL) (113.5" MFH)	4	
	CC234969	HOSE (IHR KIT #255344) (80" OCL) (127.5" MFH)	4	
	CC213919	HOSE (IHR KIT #255345) (81" OCL) (129.5" MFH)	4	
	CC234975	HOSE (IHR KIT #255353) (89" OCL) (145.5" MFH)	4	
	CC216928	HOSE (IHR KIT #255359) (95" OCL) (157.5" MFH)	4	
	CC234988	HOSE (IHR KIT #237789) (101" OCL) (169.5" MFH)	4	

https://truckmanualshub.com/

E60-MS 2-STAGE MAST — RECOMMENDED STOCK LIST (RSL)

NO

ILLUSTRATION

REQUIRED

https://truckmanualshub.com/

E60-MS 2-STAGE MAST — RECOMMENDED STOCK LIST (RSL)

Item	Part Number	Description	Qty	No. of Masts Serviced
		MAIN LIFT CYLINDERS		
	SEE PARTS PG	MAIN LIFT CYL ASSY	0	1 - 19
	SEE PARTS PG	MAIN LIFT CYL ASSY	1	20 - 50
	SEE PARTS PG	SEAL KIT	2	1 - 5
	SEE PARTS PG	SEAL KIT	4	6 - 19
	SEE PARTS PG	SEAL KIT	8	20 - 50
		INTERNAL REEVING		
	SEE PARTS PG	HOSE	2	1 - 5
	SEE PARTS PG	HOSE	4	6 - 19
	SEE PARTS PG	HOSE	8	20 - 50
	3EB-71-A6010	FITTING	1	1 - 5
	3EB-71-A6010	FITTING	2	6 - 19
	3EB-71-A6010	FITTING	4	20 - 50
	3EB-73-A5020	SHEAVE, IHR, SINGLE IHR	1	1 - 5
	3EB-73-A5020	SHEAVE, IHR, SINGLE IHR	2	6 - 19
	3EB-73-A5020	SHEAVE, IHR, SINGLE IHR	4	20 - 50
	3EB-73-A5020	SHEAVE, IHR, DOUBLE	2	1 - 5
	3EB-73-A5020	SHEAVE, IHR, DOUBLE	4	6 - 19
	3EB-73-A5020	SHEAVE, IHR, DOUBLE	8	20 - 50
		UPRIGHTS		
	3EB-79-A5110	CHAIN ANCHOR	1	1 - 5
	3EB-79-A5110	CHAIN ANCHOR	2	6 - 19
	3EB-79-A5110	CHAIN ANCHOR	4	20 - 50
	3EB-79-A5150	PIN, CHAIN ANCHOR	1	1 - 5
	3EB-79-A5150	PIN, CHAIN ANCHOR	2	6 - 19
	3EB-79-A5150	PIN, CHAIN ANCHOR	4	20 - 50
	3EB-79-A6090	NUT	4	1 - 5
	3EB-79-A6090	NUT	8	6 - 19
	3EB-79-A6090	NUT	32	20 - 50
	3EB-79-A6080	PIN, COTTER	6	1 - 5
	3EB-79-A6080	PIN, COTTER	12	6 - 19
	3EB-79-A6080	PIN, COTTER	36	20 - 50
	3EB-79-A6081	PIN, COTTER	4	1 - 5
	3EB-79-A6081	PIN, COTTER	8	6 - 19
	3EB-79-A6081	PIN, COTTER	16	20 - 50
	3EB-79-A6050	SHIM, .03 IN.	16	1 - 5
	3EB-79-A6050	SHIM, .03 IN.	32	6 - 19
	3EB-79-A6050	SHIM, .03 IN.	64	20 - 50

PARTS LIST CONTINUED ON NEXT PAGE

https://truckmanualshub.com/

E60-MS 2-STAGE MAST — RECOMMENDED STOCK LIST (RSL)

Item	Part Number	Description	Qty	No. of Masts Serviced
	3EB-79-A5210	ROLLER	8	1 - 5
	3EB-79-A5210	ROLLER	24	6 - 19
	3EB-79-A5210	ROLLER	48	20 - 50
	3EB-73-A5720	SERVICE KIT, WEAR PLUG	2	1 - 5
	3EB-73-A5720	SERVICE KIT, WEAR PLUG	4	6 - 19
	3EB-73-A5720	SERVICE KIT, WEAR PLUG	8	20 - 50
		CARRIAGE AND CHAINS		
	SEE PARTS PG	MAIN LIFT CHAINS	2	1 - 5
	SEE PARTS PG	MAIN LIFT CHAINS	4	6 - 19
	SEE PARTS PG	MAIN LIFT CHAINS	8	20 - 50
	3EB-79-A5220	ROLLER - 6-ROLLER CARRIAGE	8	1 - 5
	3EB-79-A5220	ROLLER - 6-ROLLER CARRIAGE	16	6 - 19
	3EB-79-A5220	ROLLER - 6-ROLLER CARRIAGE	32	20 - 50
	CC234001	CHAIN ANCHOR	1	1 - 5
	CC234001	CHAIN ANCHOR	2	6 - 19
	CC234001	CHAIN ANCHOR	4	20 - 50
	3EB-79-A6081	PIN, COTTER	4	1 - 5
	3EB-79-A6081	PIN, COTTER	8	6 - 19
	3EB-79-A6081	PIN, COTTER	16	20 - 50
	3EB-79-A6080	PIN, COTTER	4	1 - 5
	3EB-79-A6080	PIN, COTTER	8	6 - 19
	3EB-79-A6080	PIN, COTTER	16	20 - 50
	3EB-79-A5150	CHAIN PIN	8	1 - 19
	3EB-79-A5150	CHAIN PIN	16	20 - 50
	3EB-73-A5450	NUT	2	1 - 50

https://truckmanualshub.com/

NOTES:

https://truckmanualshub.com/

E60-MT 3-STAGE MAST - SAFETY DECALS
S/N 200001A~

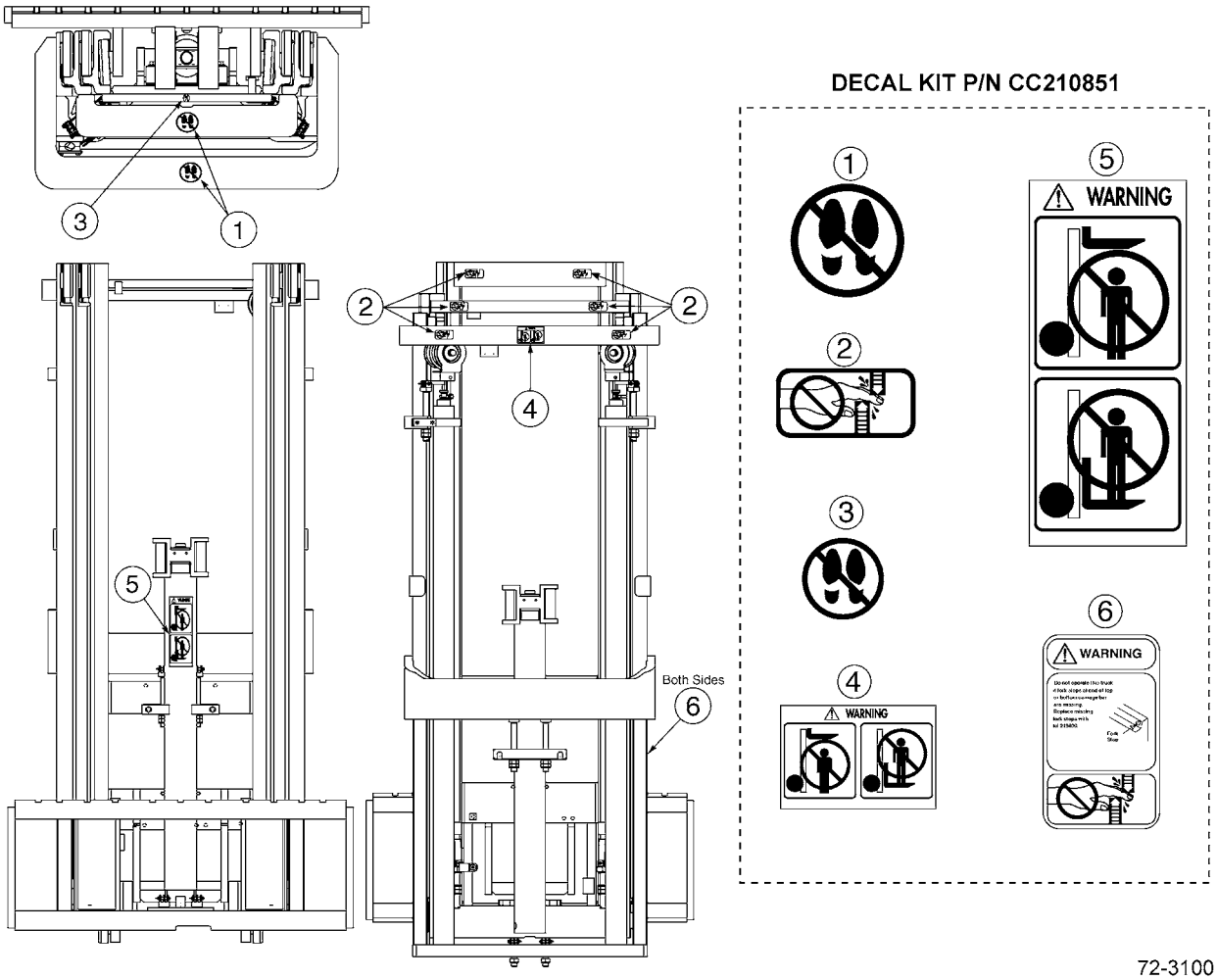

https://truckmanualshub.com/

E60-MT 3-STAGE MAST - SAFETY DECALS
S/N 200001A~

Item	Part Number	Description	Qty	Serial Number
1	3EB-79-A6020	DECAL - "NO STEP"	2	
2	3EB-79-A6010	DECAL - "HANDS OFF"	6	
3	3EB-79-A6030	DECAL - "NO STEP"	1	
4	CC210850	DECAL - "WARNING"	1	
5	3EB-79-A5310	DECAL - "WARNING"	1	
6	CC224053	DECAL - "FORK STOP"	2	
KIT	CC210851	DECAL - KIT PACKAGE (ALL)	1	

https://truckmanualshub.com/

E60-MT 3-STAGE MAST - MAIN LIFT CYLINDERS
S/N 200001A~

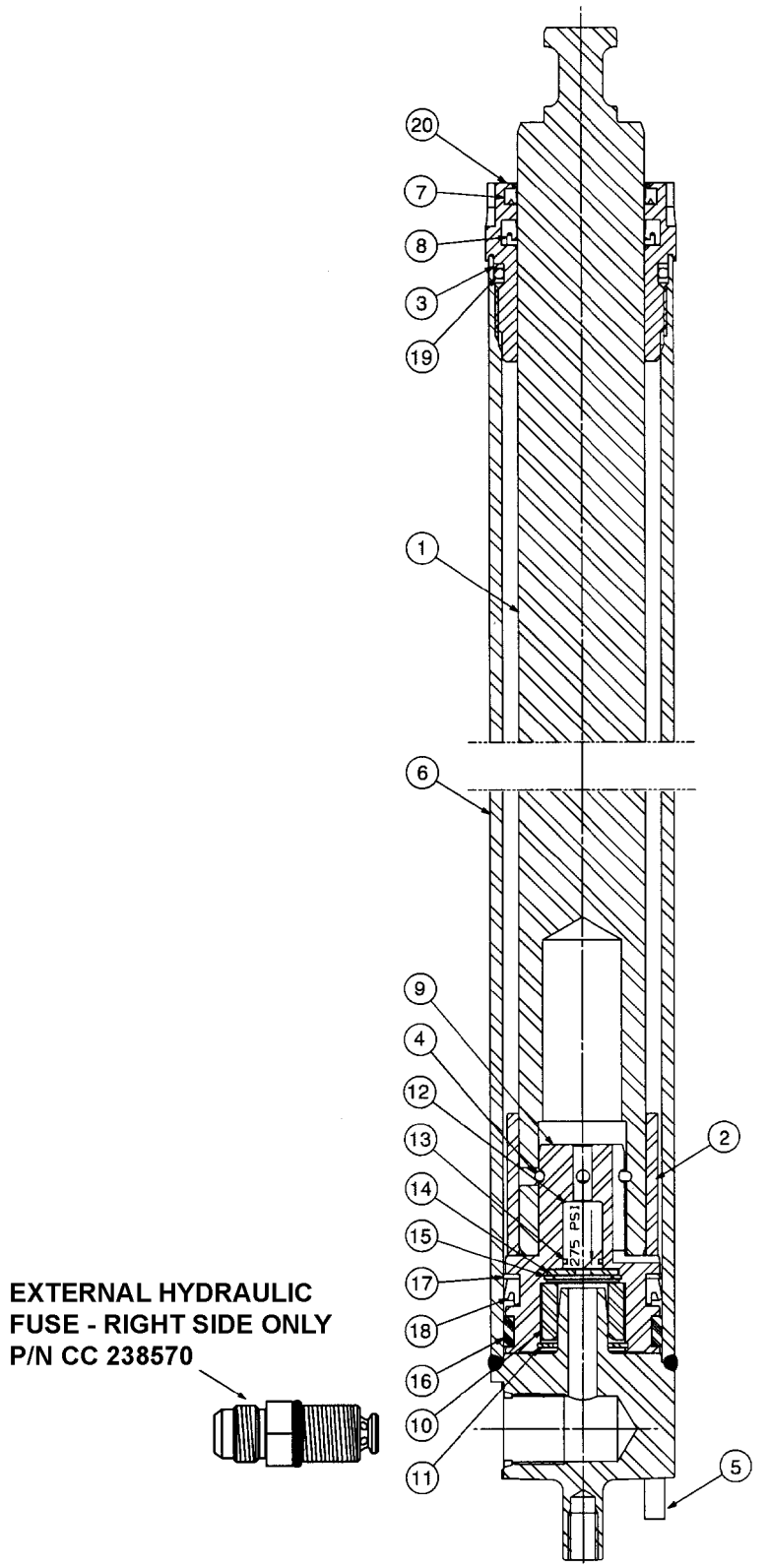

https://truckmanualshub.com/

E60-MT 3-STAGE MAST - MAIN LIFT CYLINDERS
S/N 200001A~

Item	Part Number	Description	Qty	Serial Number
1	NSS	ROD/PLUNGER	1	
2	NSS	SPACER	1	
3	NSS	BACK-UP RING (SEAL KIT)	1	
4	NSS	PULL-IN WIRE (SEAL KIT)	1	
5	CC7910	ROLL PIN	1	
6	NSS	SHELL	1	
7	NSS	WIPER (SEAL KIT)	1	
8	NSS	ROD SEAL (SEAL KIT)	1	
9	NSS	PISTON	1	
10	NSS	SLEEVE	1	
11	NSS	RETAINING RING (CHECK VALVE KIT)	1	
12	NSS	CHECK VALVE (CHECK VALVE KIT)	1	
13	NSS	O-RING (CHECK VALVE KIT)	1	
14	NSS	WASHER (CHECK VALVE KIT)	1	
15	NSS	RETAINING RING (SEAL KIT)	1	
16	NSS	WEAR RING (SEAL KIT)	1	
17	NSS	NYLON RING (SEAL KIT)	1	
18	NSS	PISTON SEAL (SEAL KIT)	1	
19	NSS	O-RING (SEAL KIT)	1	
20	CC422809	RETAINER	1	
KIT	3EB-73-A5430	SEAL KIT	1	
KIT	CC3101894	CHECK VALVE KIT	1	
	OCL = OUTER CHANNEL LENGTH			
	MFH = MAXIMUM FORK HEIGHT			
	CC1000470	MAIN LIFT CYL - (69" OCL) (150" MFH) (ALL)	1	
	CC1000474	MAIN LIFT CYL - (73" OCL) (162" MFH) (CUSHION ONLY))	1	
	CC1000476	MAIN LIFT CYL - (75" OCL) (168" MFH) (PNEUMATIC ONLY)	1	
	CC1000481	MAIN LIFT CYL - (80" OCL) (183" MFH) (ALL)	1	
	CC1000484	MAIN LIFT CYL - (83" OCL) (190" MFH) (ALL)	1	
	CC1000493	MAIN LIFT CYL - (92" OCL) (211" MFH) (ALL)	1	
	CC1000495	MAIN LIFT CYL - (94" OCL) (217" MFH) (CUSHION ONLY)	1	
	CC1000502	MAIN LIFT CYL - (101" OCL) (230" MFH) (ALL)	1	
	CC1000505	MAIN LIFT CYL - (104" OCL) (237" MFH) (PNEUMATIC ONLY)	1	
	CC1000508	MAIN LIFT CYL - (107" OCL) (242" MFH) (PNEUMATIC ONLY)	1	

https://truckmanualshub.com/

E60-MT 3-STAGE MAST - FREE LIFT CYLINDER
S/N 200001A~

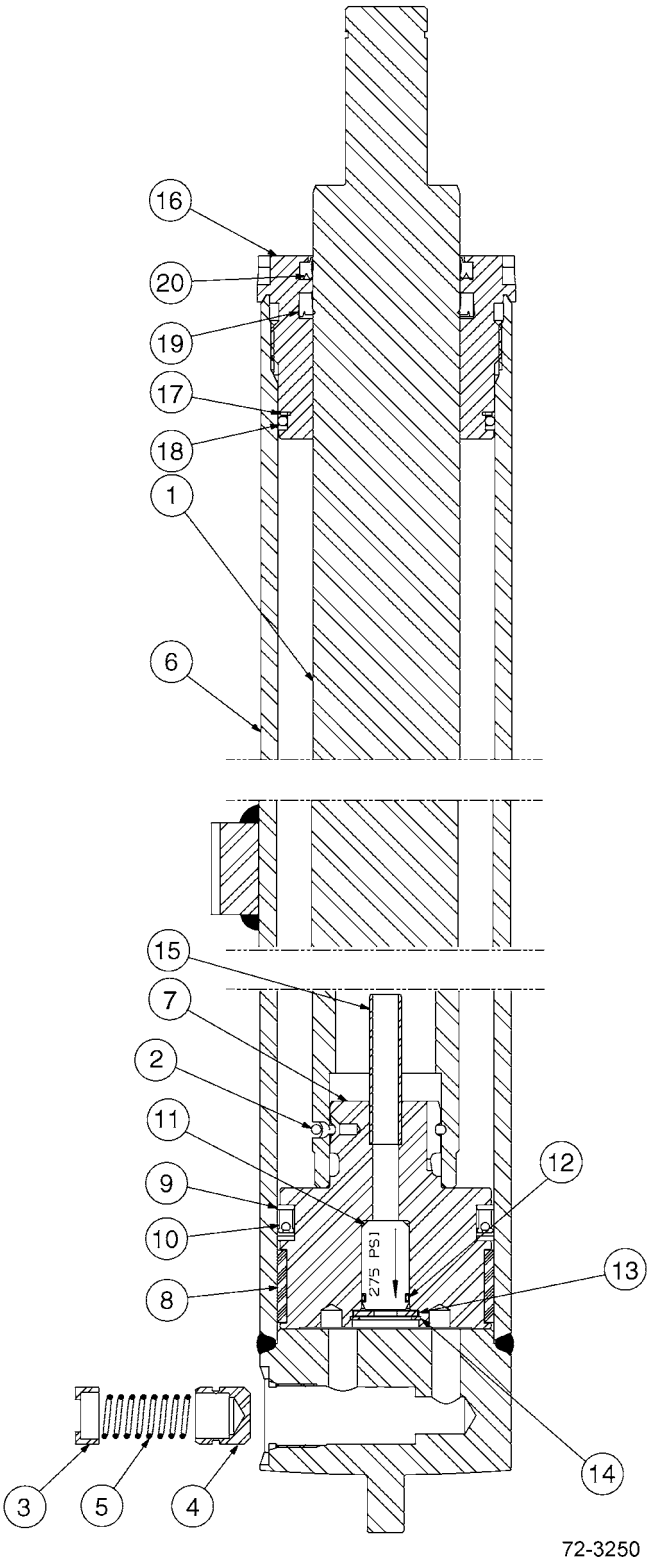

https://truckmanualshub.com/

E60-MT 3-STAGE MAST - FREE LIFT CYLINDER
S/N 200001A~

Item	Part Number	Description	Qty	Serial Number
1	NSS	ROD/PLUNGER	1	
2	NSS	PULL WIRE. (SEAL KIT)	1	
3	CC564107	FUSE SPRING GUIDE	1	
4	CC560470	FUSE PISTON	1	
5	CC565085	FUSE SPRING	1	
6	NSS	SHELL.	1	
7	NSS	PISTON.	1	
8	NSS	WEAR RING (SEAL KIT)	1	
9	NSS	NYLON RING (SEAL KIT)	2	
10	NSS	PISTON SEAL (SEAL KIT)	1	
11	NSS	CHECK VALVE (CHECK VALVE KIT)	1	
12	NSS	O-RING (SEAL KIT)	1	
13	NSS	WASHER (CHECK VALVE KIT)	1	
14	NSS	RETAINING RING. (CHECK VALVE KIT)	1	
15	NSS	STAND TUBE	1	
16	CC422817	RETAINER	1	
17	NSS	BACK-UP RING (SEAL KIT)	1	
18	NSS	O-RING (SEAL KIT)	1	
19	NSS	ROD SEAL (SEAL KIT)	1	
20	NSS	WIPER (SEAL KIT)	1	
KIT	3EB-73-A5440	SEAL KIT	1	
KIT	CC563904	CHECK VALVE KIT.	1	
	OCL = OUTER CHANNEL LENGTH			
	MFH = MAXIMUM FORK HEIGHT			
	CC1000541	FREE LIFT CYL - (69" OCL) (150" MFH) (ALL) .	1	
	CC1000545	FREE LIFT CYL - (73" OCL) (162" MFH) (CUSHION ONLY)	1	
	CC1000547	FREE LIFT CYL - (75" OCL) (168" MFH) (PNEUMATIC ONLY)	1	
	CC1000552	FREE LIFT CYL - (80" OCL) (183" MFH) (ALL) .	1	
	3EB-78-A5122	FREE LIFT CYL - (83" OCL) (190" MFH) (ALL) .	1	
	CC1000564	FREE LIFT CYL - (92" OCL) (211" MFH) (ALL) .	1	
	CC1000566	FREE LIFT CYL - (94" OCL) (217" MFH) (CUSHION ONLY)	1	
	CC1000573	FREE LIFT CYL - (101" OCL) (230" MFH) (ALL)	1	
	CC1000576	FREE LIFT CYL - (104" OCL) (237" MFH) (PNEUMATIC ONLY)	1	
	CC1000579	FREE LIFT CYL - (107" OCL) (242" MFH) (PNEUMATIC ONLY)	1	

https://truckmanualshub.com/

E60-MT 3-STAGE MAST - OUTER UPRIGHT
S/N 200001A~

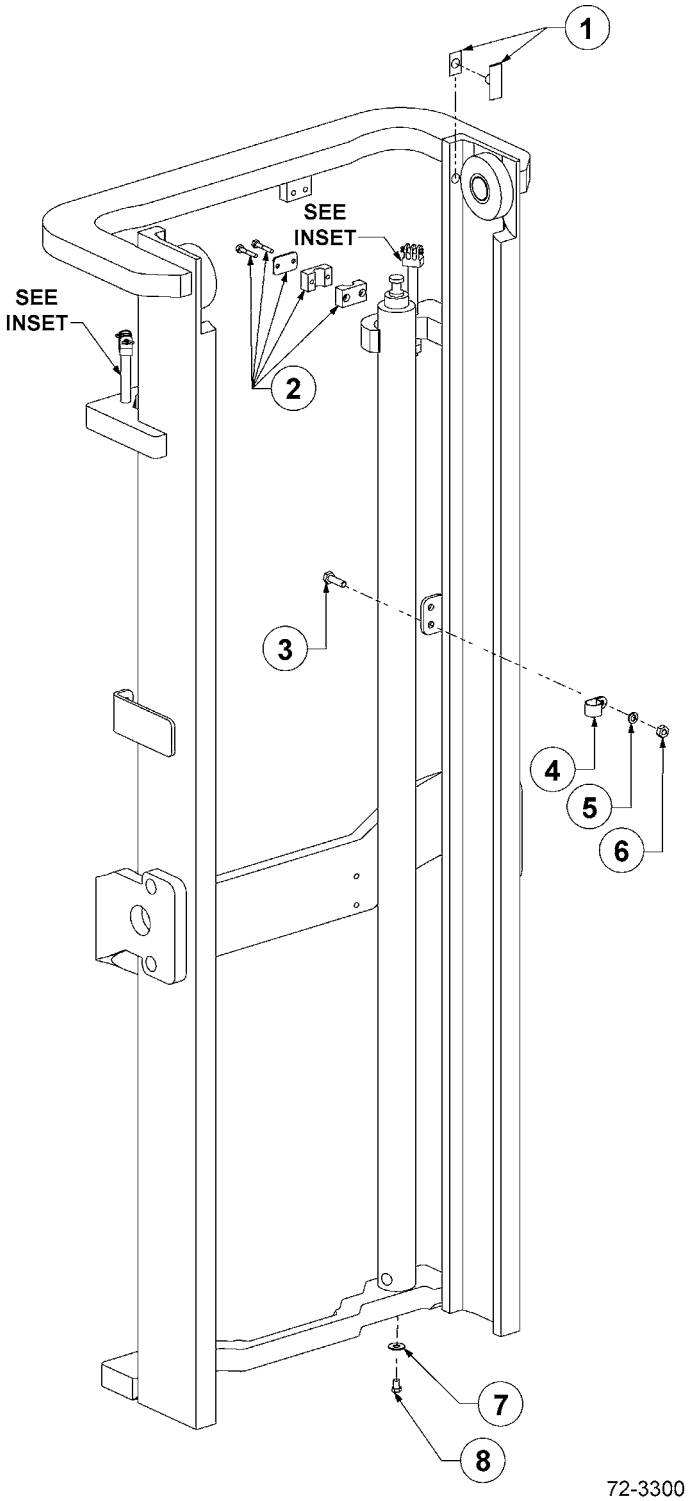

72-3300

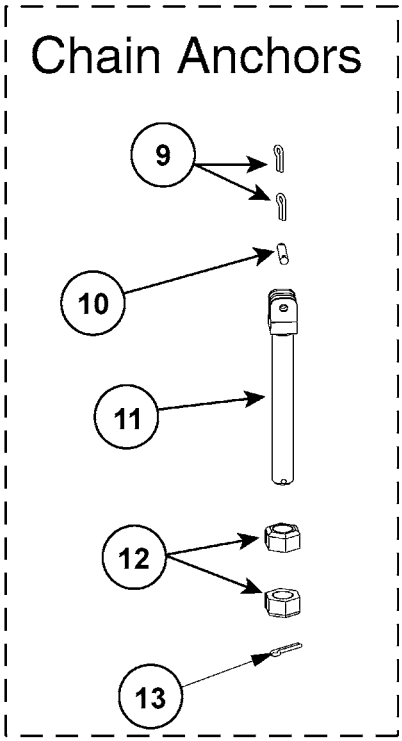

72-3300A

https://truckmanualshub.com/

E60-MT 3-STAGE MAST - OUTER UPRIGHT
S/N 200001A~

Item	Part Number	Description	Qty	Serial Number
		OCL = OUTER CHANNEL LENGTH, MFH = MAXIMUM FORK HEIGHT		
	CC233366	OUTER UPRIGHT - (69" OCL) (150" MFH) (ALL)	1	
	CC233378	OUTER UPRIGHT - (73" OCL) (162" MFH) (CUSHION ONLY)	1	
	CC233384	OUTER UPRIGHT - (75" OCL) (168" MFH) (PNEUMATIC ONLY)	1	
	CC233399	OUTER UPRIGHT - (80" OCL) (183" MFH) (ALL)	1	
	CC233408	OUTER UPRIGHT - (83" OCL) (190" MFH) (ALL)	1	
	CC233435	OUTER UPRIGHT - (92" OCL) (211" MFH) (ALL)	1	
	CC233441	OUTER UPRIGHT - (94" OCL) (217" MFH) (CUSHION ONLY)	1	
	CC233462	OUTER UPRIGHT - (101" OCL) (230" MFH) (ALL)	1	
	CC233471	OUTER UPRIGHT - (104" OCL) (237" MFH) (PNEUMATIC ONLY)	1	
	CC233480	OUTER UPRIGHT - (107" OCL) (242" MFH) (PNEUMATIC ONLY)	1	
1	3EB-73-A5720	THRUST PLUG SERVICE KIT	1	
2	CC237555	CLAMP KIT	1	
3	CC200788	CAPSCREW - M10 X 35	1	
4	CC230765	HOSE CLAMP	1	
5	3EB-79-A6040	WASHER, LOCK - M10	2	
6	3EB-79-A6040	WASHER, LOCK - M10	1	
7	3EB-79-A5350	WASHER, FLAT	2	
8	3EB-79-A5340	BOLT	2	
9	3EB-79-A6080	PIN, COTTER	12	
10	3EB-79-A5150	PIN, CHAIN ANCHOR	6	
11	3EB-79-A5110	CHAIN ANCHOR	4	
12	3EB-79-A6090	NUT	12	
13	3EB-79-A6081	PIN, COTTER	6	

https://truckmanualshub.com/

E60-MT 3-STAGE MAST - INTERMEDIATE UPRIGHT
S/N 200001A~

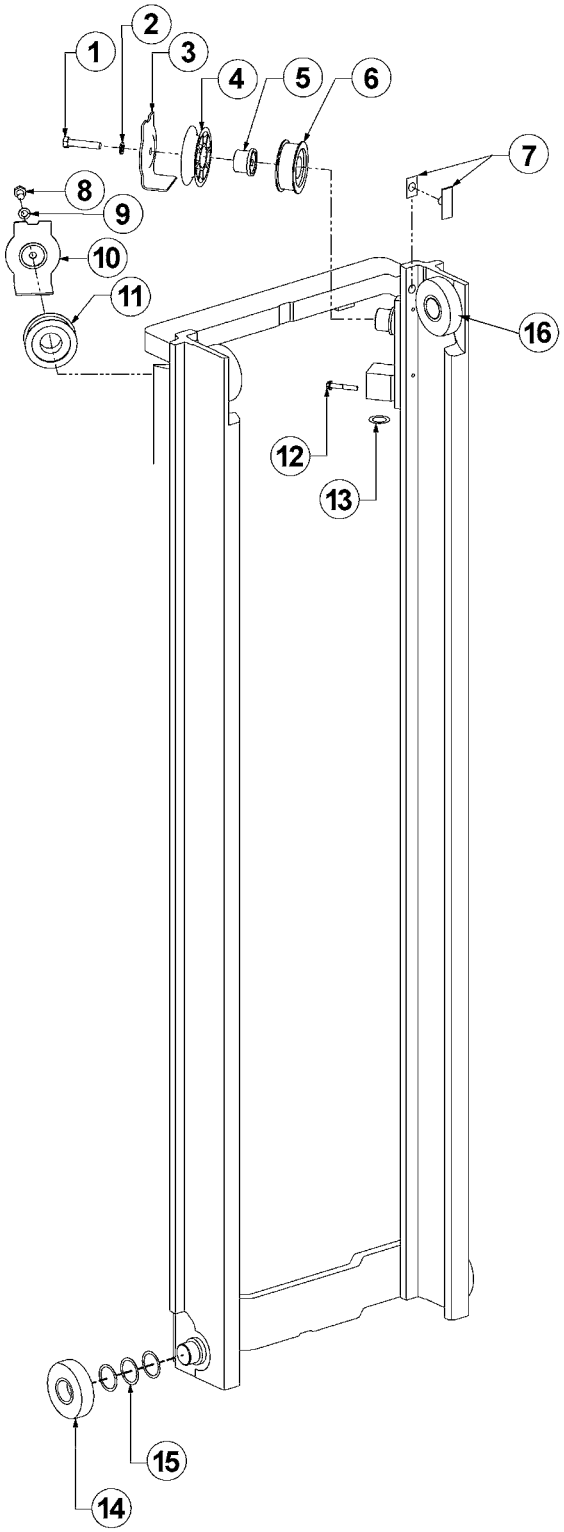

72-3330

https://truckmanualshub.com/

E60-MT 3-STAGE MAST - INTERMEDIATE UPRIGHT
S/N 200001A~

Item	Part Number	Description	Qty	Serial Number
		OCL = OUTER CHANNEL LENGTH, MFH = MAXIMUM FORK HEIGHT		
	CC233367	INTERMEDIATE UPRIGHT - (69" OCL) (150" MFH) (ALL)	1	
	CC233379	INTERMEDIATE UPRIGHT - (73" OCL) (162" MFH) (CUSHION ONLY)	1	
	CC233385	INTERMEDIATE UPRIGHT - (75" OCL) (168" MFH) (PNEUMATIC ONLY)	1	
	CC233400	INTERMEDIATE UPRIGHT - (80" OCL) (183" MFH) (ALL)	1	
	CC233409	INTERMEDIATE UPRIGHT - (83" OCL) (190" MFH) (ALL)	1	
	CC233436	INTERMEDIATE UPRIGHT - (92" OCL) (211" MFH) (ALL)	1	
	CC233442	INTERMEDIATE UPRIGHT - (94" OCL) (217" MFH) (CUSHION ONLY)	1	
	CC233463	INTERMEDIATE UPRIGHT - (101" OCL) (230" MFH) (ALL)	1	
	CC233472	INTERMEDIATE UPRIGHT - (104" OCL) (237" MFH) (PNEUMATIC ONLY)	1	
	CC233481	INTERMEDIATE UPRIGHT - (107" OCL) (242" MFH) (PNEUMATIC ONLY)	1	
1	3EB-79-A6060	CAPSCREW - M12 X 60	1	
2	3EB-79-A5360	WASHER, LOCK - M12	2	
3	3EB-73-A5120	HOSE GUARD	1	
4	3EB-73-A5070	HOSE SHEAVE	1	
5	3EB-73-A5210	STUBSHAFT	1	
6	3EB-73-A5010	CHAIN SHEAVE	4	
7	3EB-73-A5720	THRUST PLUG SERVICE KIT	1	
8	3EB-79-A5270	CAPSCREW - M12 X 20	1	
9	3EB-79-A5360	WASHER, LOCK - M12	2	
10	3EB-73-A5140	HOSE GUARD	1	
11	3EB-73-A5010	CHAIN SHEAVE	4	
12	3EB-79-A5380	BOLT	2	
13	CC238137	SHIM KIT - MAIN LIFT CYLINDER	2	
14	3EB-79-A5210	ROLLER	8	
15	3EB-79-A6050	SHIM (USE AS REQUIRED)	24	
16	3EB-79-A5210	LOAD ROLLER	2	

https://truckmanualshub.com/

E60-MT 3-STAGE MAST - INNER UPRIGHT
S/N 200001A~

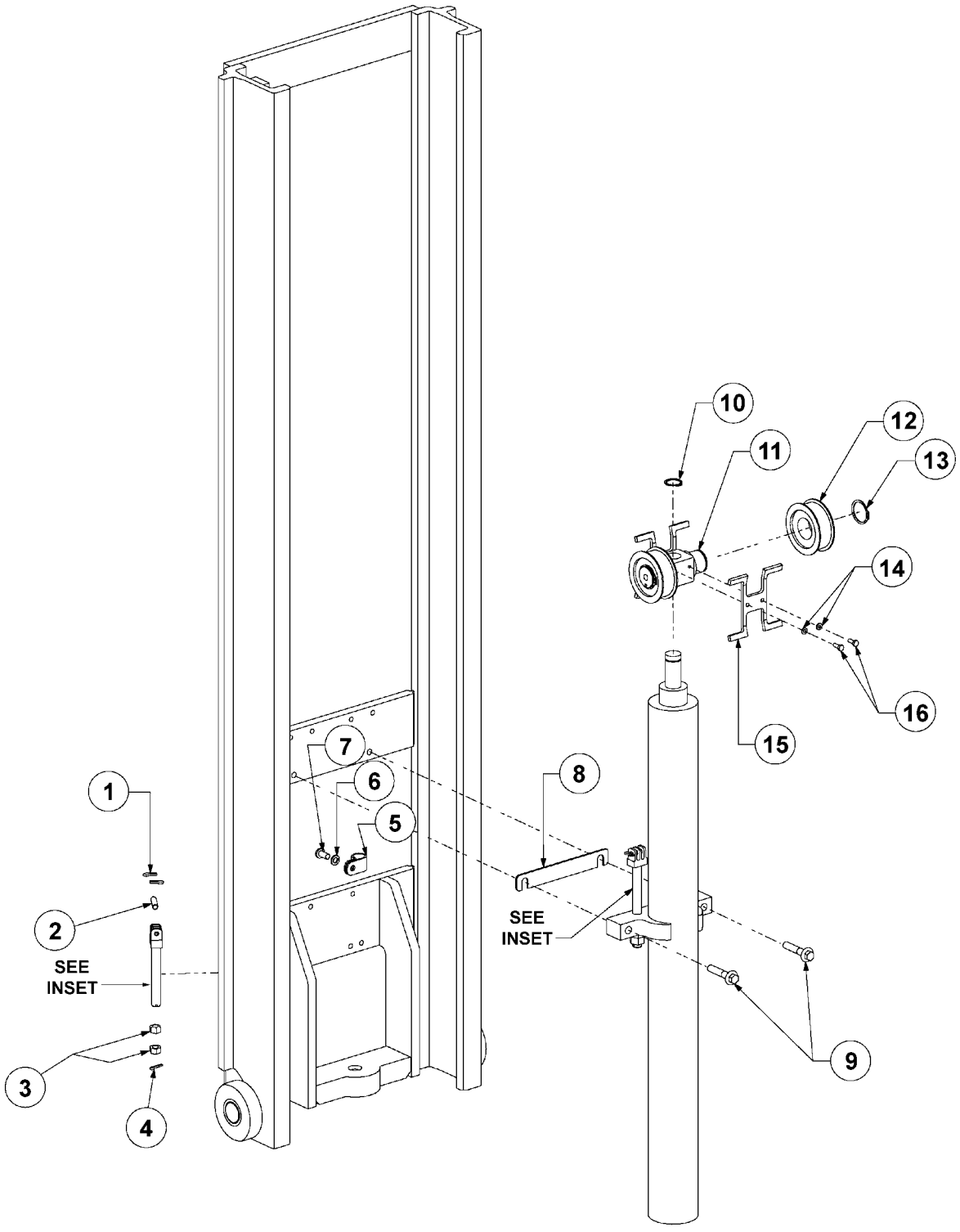

https://truckmanualshub.com/

E60-MT 3-STAGE MAST - INNER UPRIGHT
S/N 200001A~

Item	Part Number	Description	Qty	Serial Number
		OCL = INNER CHANNEL LENGTH, MFH = MAXIMUM FORK HEIGHT		
	CC233368	INNER UPRIGHT - (69" OCL) (150" MFH) (ALL)	1	
	CC233380	INNER UPRIGHT - (73" OCL) (162" MFH) (CUSHION ONLY)	1	
	CC233386	INNER UPRIGHT - (75" OCL) (168" MFH) (PNEUMATIC ONLY)	1	
	CC233401	INNER UPRIGHT - (80" OCL) (183" MFH) (ALL)	1	
	CC233410	INNER UPRIGHT - (83" OCL) (190" MFH) (ALL)	1	
	CC233437	INNER UPRIGHT - (92" OCL) (211" MFH) (ALL)	1	
	CC233443	INNER UPRIGHT - (94" OCL) (217" MFH) (CUSHION ONLY)	1	
	CC233464	INNER UPRIGHT - (101" OCL) (230" MFH) (ALL)	1	
	CC233473	INNER UPRIGHT - (104" OCL) (237" MFH) (PNEUMATIC ONLY)	1	
	CC233482	INNER UPRIGHT - (107" OCL) (242" MFH) (PNEUMATIC ONLY)	1	
1	CC6508	PIN, COTTER	12	
2	CC684305	PIN, CHAIN ANCHOR	6	
3	CC200006	NUT	12	
4	CC6518	PIN, COTTER	6	
5	CC210752	CLAMP, HOSE	1	
6	CC681238	WASHER, LOCK - M10	1	
7	CC200429	CAPSCREW - M10 X 12	1	
8	CC231060	SHIM PLATE	4	
9	CC234868	CAPSCREW - M12	2	
10	CC3133	SNAP RING - 29MM	1	
11	CC231058	CROSSHEAD	1	
12	CC231427	SHEAVE, CHAIN	4	
13	CC3140	SNAP RING - 40MM	2	
KIT	CC246821	CHAIN GUARD KIT	1	
14	CC206323	.WASHER, LOCK - M6	4	
15	CC231059	.CHAIN GUARD	2	
16	CC206321	.CAPSCREW - M6	4	

https://truckmanualshub.com/

E60-MT 3-STAGE MAST - CARRIAGE - 4-ROLLER
S/N 200001A~

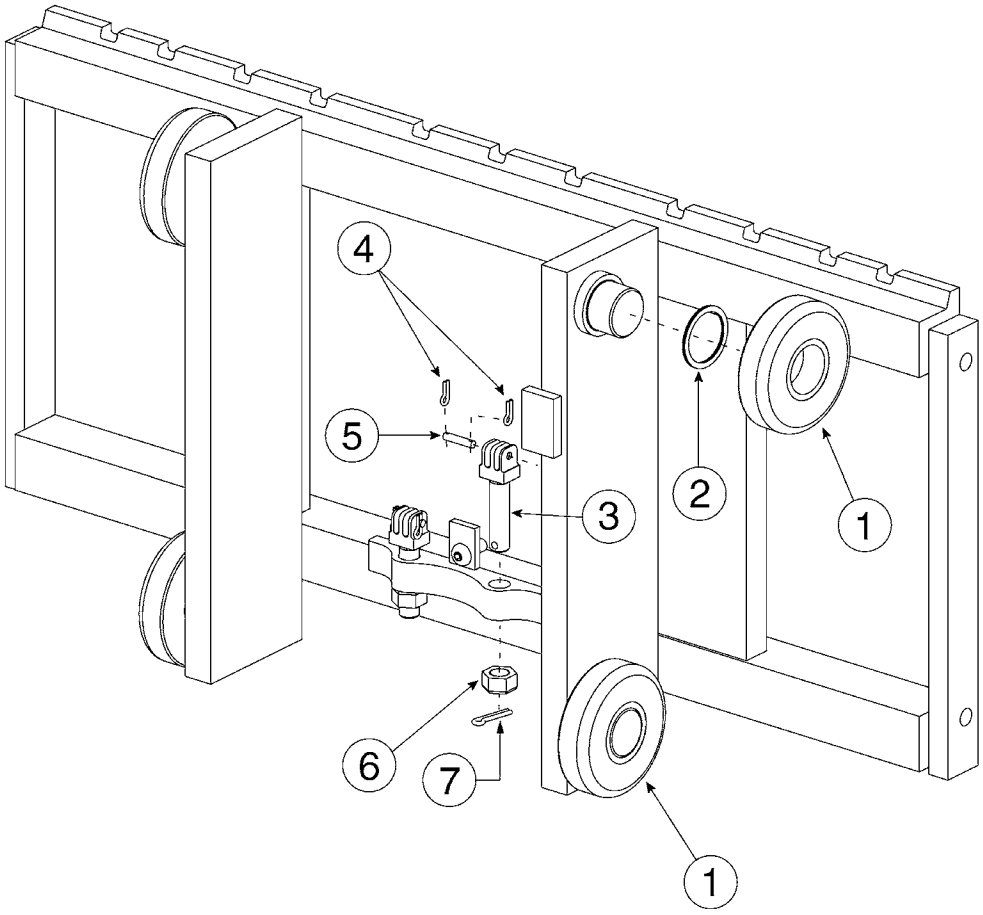

72-3400

https://truckmanualshub.com/

E60-MT 3-STAGE MAST - CARRIAGE - 4-ROLLER
S/N 200001A~

Item	Part Number	Description	Qty	Serial Number
	CC280171	CARRIAGE - 37" - CUSHION TIRE SPEC.	1	
	CC280172	CARRIAGE - 41" - CUSHION TIRE SPEC.	1	
	CC231380	CARRIAGE - 37" - PNEUMATIC TIRE SPEC. . .	1	
	CC231382	CARRIAGE - 41" - PNEUMATIC TIRE SPEC. . .	1	
1	3EB-79-A5210	LOAD ROLLER.	4	
2	3EB-79-A6050	SHIM, LOAD ROLLER	AR	
3	CC234001	CHAIN ANCHOR	2	
4	3EB-79-A6080	PIN, COTTER	4	
5	CC684305	PIN, CHAIN ANCHOR	2	
6	CC234004	NUT.	2	
7	3EB-79-A6081	PIN, COTTER	2	

https://truckmanualshub.com/

E60-MT 3-STAGE MAST - CARRIAGE - 6-ROLLER
S/N 200001A~

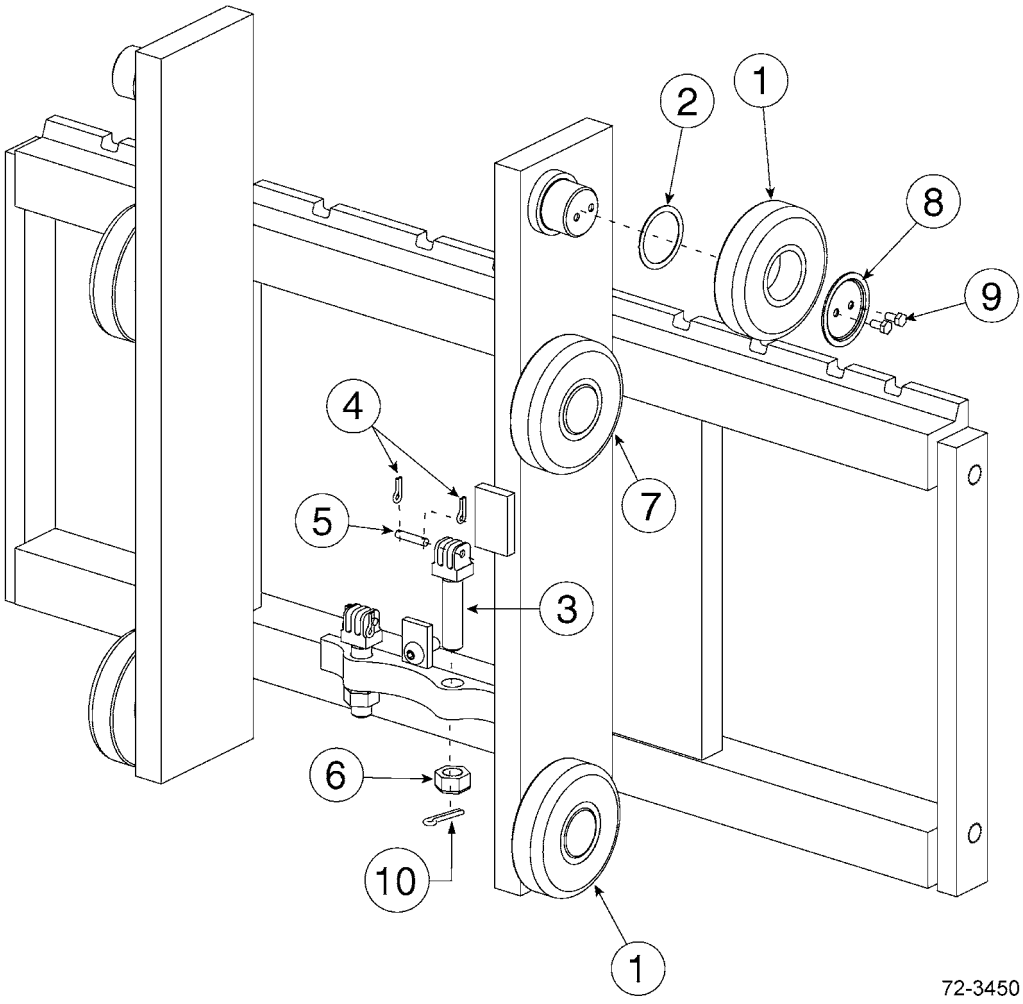

https://truckmanualshub.com/

E60-MT 3-STAGE MAST - CARRIAGE - 6-ROLLER
S/N 200001A~

Item	Part Number	Description	Qty	Serial Number
	CC280183	CARRIAGE - 37" - CUSHION TIRE SPEC.	1	
	CC280184	CARRIAGE - 41" - CUSHION TIRE SPEC.	1	
	CC280115	CARRIAGE - 53" - CUSHION TIRE SPEC.	1	
	CC253733	CARRIAGE - 31" - PNEUMATIC TIRE SPEC. . .	1	
	CC280177	CARRIAGE - 37" - PNEUMATIC TIRE SPEC. . .	1	
	CC280178	CARRIAGE - 41" - PNEUMATIC TIRE SPEC. . .	1	
	CC280114	CARRIAGE - 53" - PNEUMATIC TIRE SPEC. . .	1	
1	3EB-79-A5210	LOAD ROLLER.	4	
2	3EB-79-A6050	SHIM, LOAD ROLLER	AR	
3	CC234001	CHAIN ANCHOR	2	
4	3EB-79-A6080	PIN, COTTER	4	
5	CC684305	PIN, CHAIN ANCHOR	2	
6	3EB-73-A5450	NUT.	2	
7	3EB-79-A5220	LOAD ROLLER.	2	
8	3EB-73-A5460	RETAINER	2	
9	3EB-73-A5470	CAPSCREW - M6 X 12LG	4	
10	3EB-79-A6081	PIN, COTTER	2	

https://truckmanualshub.com/

E60-MT 3-STAGE MAST - HOIST CHAINS & FREE LIFT HOSE
S/N 200001A~

Hoist Chains

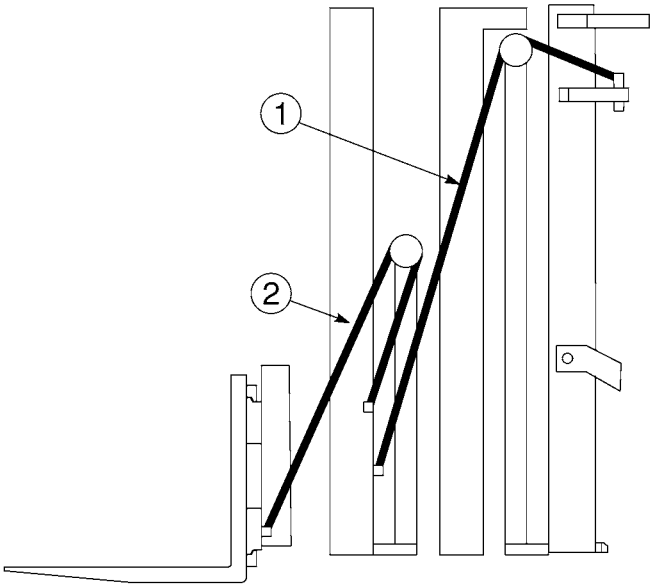

Free Lift Hose

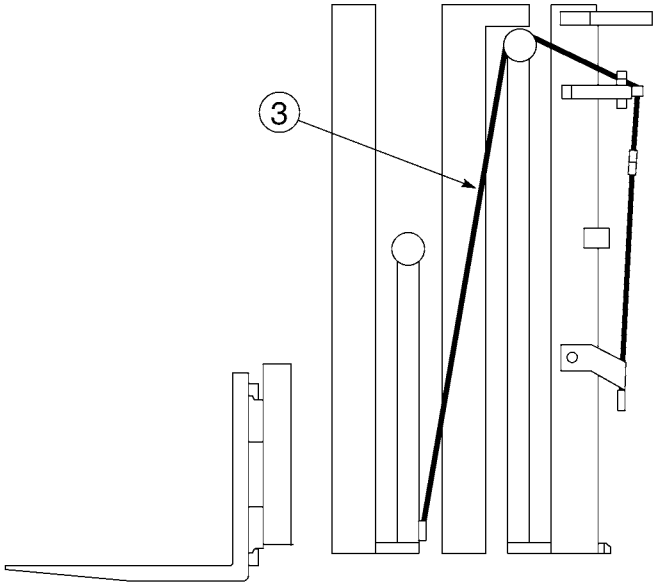

72-3500

https://truckmanualshub.com/

E60-MT 3-STAGE MAST - HOIST CHAINS & FREE LIFT HOSE
S/N 200001A~

Item	Part Number	Description	Qty	Serial Number
		OCL = OUTER CHANNEL LENGTH, MFH = MAXIMUM FORK HEIGHT		
1	CC683982	MAIN LIFT CHAIN - (69" OCL) (150" MFH) (ALL)	2	
	CC678770	MAIN LIFT CHAIN - (73" OCL) (162" MFH) (CUSHION ONLY)	2	
	CC683985	MAIN LIFT CHAIN - (75" OCL) (168" MFH) (PNEUMATIC ONLY)	2	
	CC683987	MAIN LIFT CHAIN - (80" OCL) (183" MFH) (ALL)	2	
	CC678796	MAIN LIFT CHAIN - (83" OCL) (190" MFH) (ALL)	2	
	CC683994	MAIN LIFT CHAIN - (92" OCL) (211" MFH) (ALL)	2	
	CC683995	MAIN LIFT CHAIN - (94" OCL) (217" MFH) (CUSHION ONLY)	2	
	CC684000	MAIN LIFT CHAIN - (101" OCL) (230" MFH) (ALL)	2	
	CC678837	MAIN LIFT CHAIN - (104" OCL) (237" MFH) (PNEUMATIC ONLY)	2	
	CC688157	MAIN LIFT CHAIN - (107" OCL) (242" MFH) (PNEUMATIC ONLY)	2	
2	CC683976	FREE LIFT CHAIN - (69" OCL) (150" MFH) (ALL)	2	
	CC683979	FREE LIFT CHAIN - (73" OCL) (162" MFH) (CUSHION ONLY)	2	
	CC681429	FREE LIFT CHAIN - (75" OCL) (168" MFH) (PNEUMATIC ONLY)	2	
	CC683982	FREE LIFT CHAIN - (80" OCL) (183" MFH) (ALL)	2	
	CC678770	FREE LIFT CHAIN - (83" OCL) (190" MFH) (ALL)	2	
	CC683988	FREE LIFT CHAIN - (92" OCL) (211" MFH) (ALL)	2	
	CC683980	FREE LIFT CHAIN - (94" OCL) (217" MFH) (CUSHION ONLY)	2	
	CC678770	FREE LIFT CHAIN - (101" OCL) (230" MFH) (ALL)	2	
	CC683781	FREE LIFT CHAIN - (104" OCL) (237" MFH) (PNEUMATIC ONLY)	2	
	CC683783	FREE LIFT CHAIN - (107" OCL) (242" MFH) (PNEUMATIC ONLY)	2	
3	CC233025	FREE LIFT HOSE - (69" OCL) (150" MFH) (ALL)	1	
	3EB-73-A5080	FREE LIFT HOSE - (73" OCL) (162" MFH) (CUSHION ONLY)	1	
	CC233049	FREE LIFT HOSE - (75" OCL) (168" MFH) (PNEUMATIC ONLY)	1	
	3EB-74-A5570	FREE LIFT HOSE - (80" OCL) (183" MFH) (ALL)	1	
	CC233081	FREE LIFT HOSE - (83" OCL) (190" MFH) (ALL)	1	
	3EB-74-A5610	FREE LIFT HOSE - (92" OCL) (211" MFH) (ALL)	1	

PARTS LIST CONTINUED ON NEXT PAGE

https://truckmanualshub.com/

E60-MT 3-STAGE MAST - HOIST CHAINS & FREE LIFT HOSE
S/N 200001A~

Item	Part Number	Description	Qty	Serial Number
	CC233125	FREE LIFT HOSE - (94" OCL) (217" MFH) (CUSHION ONLY)	1	
	3EB-74-A5630	FREE LIFT HOSE - (101" OCL) (230" MFH) (ALL)	1	
	CC233165	FREE LIFT HOSE - (104" OCL) (237" MFH) (PNEUMATIC ONLY)	1	
	CC233177	FREE LIFT HOSE - (107" OCL) (242" MFH) (PNEUMATIC ONLY)	1	

https://truckmanualshub.com/
NOTES:

https://truckmanualshub.com/

E60-MT 3-STAGE MAST - LOAD BACKREST
S/N 200001A~

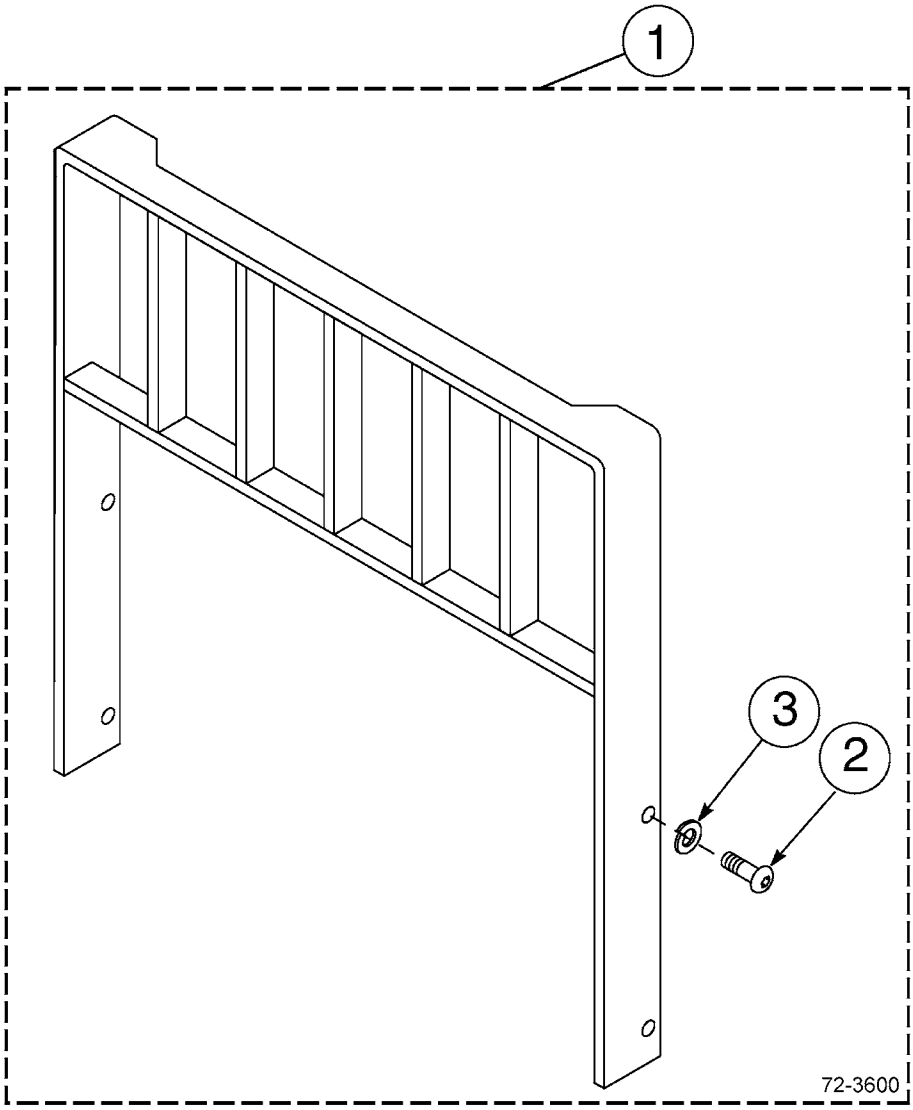

https://truckmanualshub.com/

E60-MT 3-STAGE MAST - LOAD BACKREST
S/N 200001A~

Item	Part Number	Description	Qty	Serial Number
		CLASS III LOAD BACKRESTS (HEIGHT X WIDTH)		
1	CC684784	BACKREST - 37" X 36"	1	
	CC684785	BACKREST - 37" X 48"	1	
	CC226831	BACKREST - 37" X 54"	1	
	CC684786	BACKREST - 37" X 60"	1	
	CC684787	BACKREST - 41" X 36"	1	
	CC684788	BACKREST - 41" X 48"	1	
	CC684789	BACKREST - 41" X 60"	1	
	CC362796	BACKREST - 41" X 72"	1	
	CC246396	BACKREST - 43.3" X 48"	1	
	CC684790	BACKREST - 49" X 36"	1	
	CC684791	BACKREST - 49" X 48"	1	
	CC684792	BACKREST - 49" X 60"	1	
	CC231212	BACKREST - 53" X 30"	1	
	CC231260	BACKREST - 53" X 36"	1	
	CC357671	BACKREST - 53" X 48"	1	
	CC249220	BACKREST - 55.3" X 48"	1	
	CC235370	BACKREST - 60" X 48"	1	
	CC684793	BACKREST - 61" X 36"	1	
	CC226834	BACKREST - 61" X 40"	1	
	CC684794	BACKREST - 61" X 48"	1	
	CC684795	BACKREST - 61" X 60"	1	
	CC226828	BACKREST - 62" X 48"	1	
	CC225576	BACKREST - 72" X 48"	1	
2	CC200173	.CAPSCREW - M16 X 2, 0 X 35-8.8	4	
3	3EB-71-A6030	.WASHER, LOCK - M16	4	

https://truckmanualshub.com/

E60-MT 3-STAGE MAST - MAST INSTALLATION COMPONENTS
CUSHION TIRE MODELS - S/N 200001A~

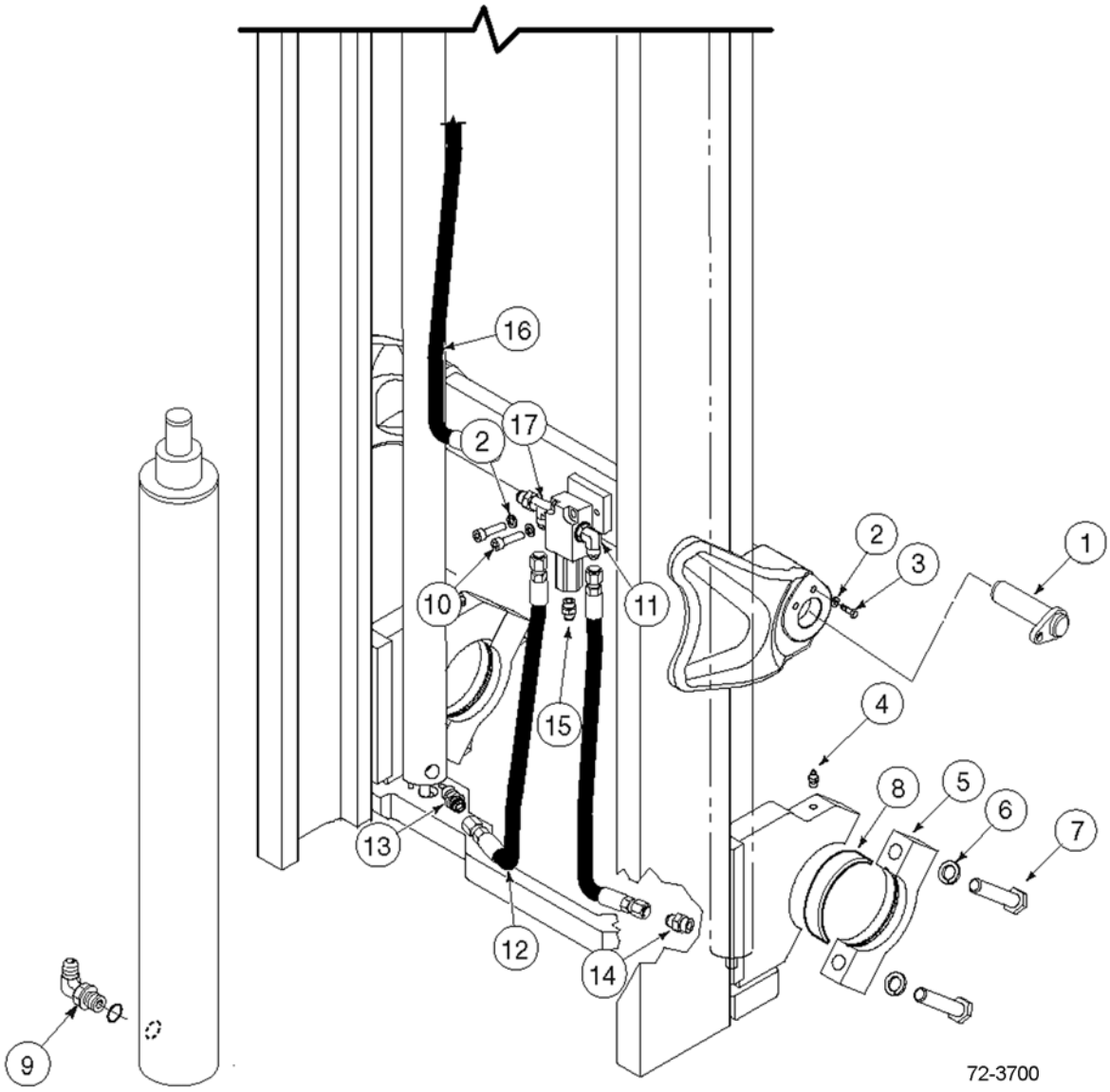

https://truckmanualshub.com/

E60-MT 3-STAGE MAST - MAST INSTALLATION COMPONENTS
CUSHION TIRE MODELS - S/N 200001A~

Item	Part Number	Description	Qty	Serial Number
1	3EB-41-51750	TILT PIN	2	
2	3EB-79-A6040	WASHER, LOCK.	4	
3	CC212632	CAPSCREW	2	
4	CC7418	FITTING, GREASE	2	
5	CC251901	CAP.	2	
6	3EB-71-A6030	WASHER, LOCK.	4	
7	CC251906	CAPSCREW	4	
8	3EB-84-51290	BUSHING (CUSHION ONLY)	2	
9	CC642649	FITTING #8 - #10 - 90°	1	
10	CC767611	CAPSCREW	2	
11	CC601250	FITTING # 8 - 90° ELBOW	1	
12	CC255666	MAIN LIFT HOSE - RH	1	
	CC255665	MAIN LIFT HOSE - LH	1	
13	CC611289	FITTING #8 -#10 - STRAIGHT	1	
14	CC238570	12 GPM EXTERNAL FUSE	1	
15	CC601377	FITTING	1	
16	CC234037	FL JUMPER HOSE	1	
17	CC601402	FITTING # 8 - 90° TEE	1	
KIT	CC255596	INSTALLATION KIT	1	

https://truckmanualshub.com/

E60-MT 3-STAGE MAST - MAST INSTALLATION COMPONENTS
PNEUMATIC TIRE MODELS - S/N 200001A~

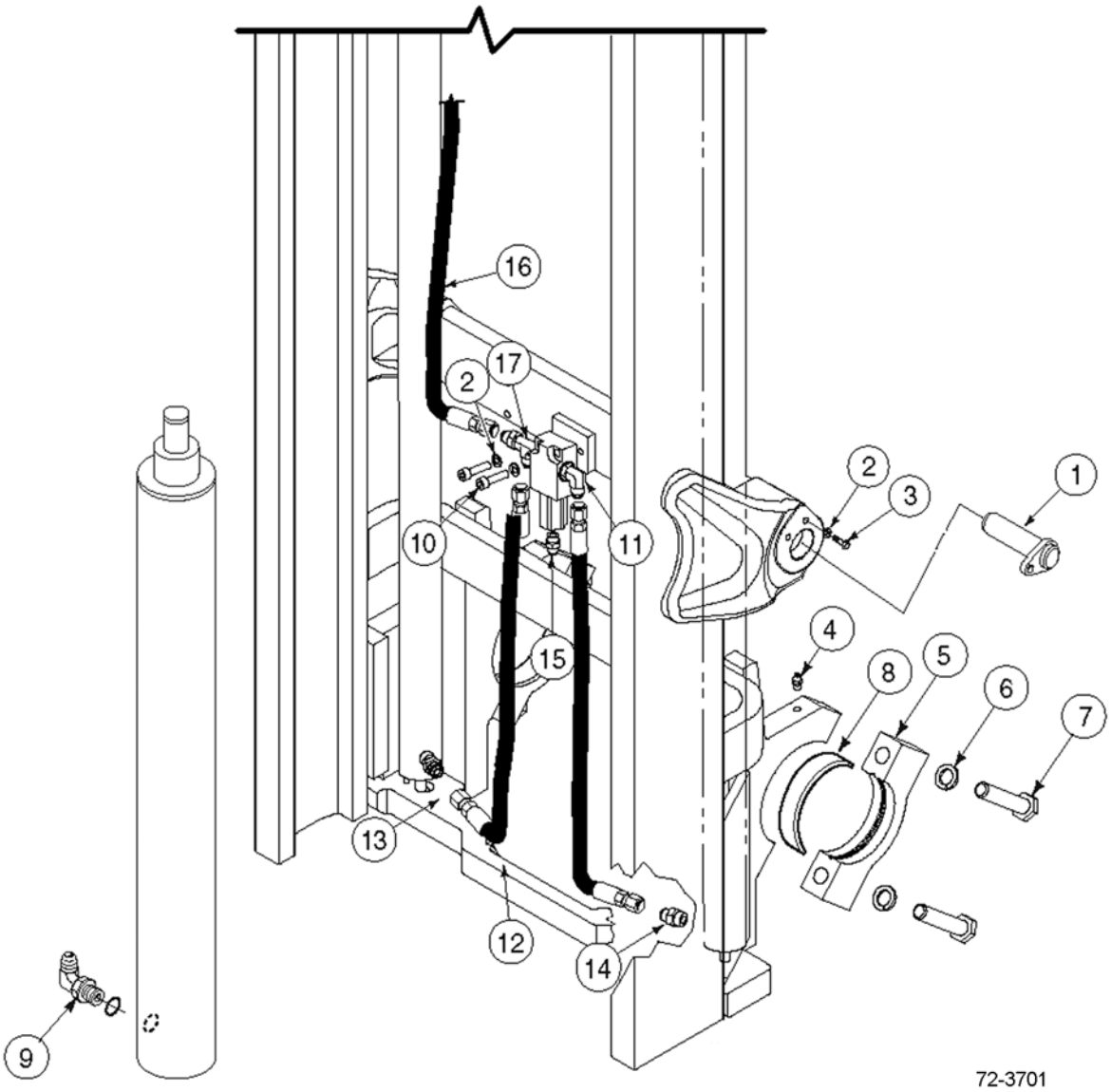

https://truckmanualshub.com/

E60-MT 3-STAGE MAST - MAST INSTALLATION COMPONENTS
PNEUMATIC TIRE MODELS - S/N 200001A~

Item	Part Number	Description	Qty	Serial Number
1	3EB-41-51750	TILT PIN	2	
2	3EB-79-A6040	WASHER, LOCK	4	
3	CC212632	CAPSCREW	2	
4	CC7418	FITTING, GREASE	2	
5	CC252686	CAP	2	
6	3EB-71-A6030	WASHER, LOCK	4	
7	CC251906	CAPSCREW	4	
8	3EB-71-51290	BUSHING (2.0T, 2.5T, 2.8T, 3.0T)	2	
	3EB-71-61790	BUSHING (3.2T, 3.5T)	2	
9	CC642649	FITTING #8 - #10 - 90°	1	
10	CC767611	CAPSCREW	2	
11	CC601250	FITTING # 8 - 90° ELBOW	1	
12	CC253793	MAIN LIFT HOSE - RH	1	
	CC255652	MAIN LIFT HOSE - LH	1	
13	CC611289	FITTING #8 -#10 - STRAIGHT	1	
14	CC238570	12 GPM EXTERNAL FUSE	1	
15	CC601377	FITTING	1	
16	CC253720	FL JUMPER HOSE	1	
17	CC610402	FITTING # 8 - 90° TEE	1	
KIT	CC255596	INSTALLATION KIT	1	

https://truckmanualshub.com/

E60-MT 3-STAGE MAST - LOWERING CONTROL VALVE
S/N 200001A~

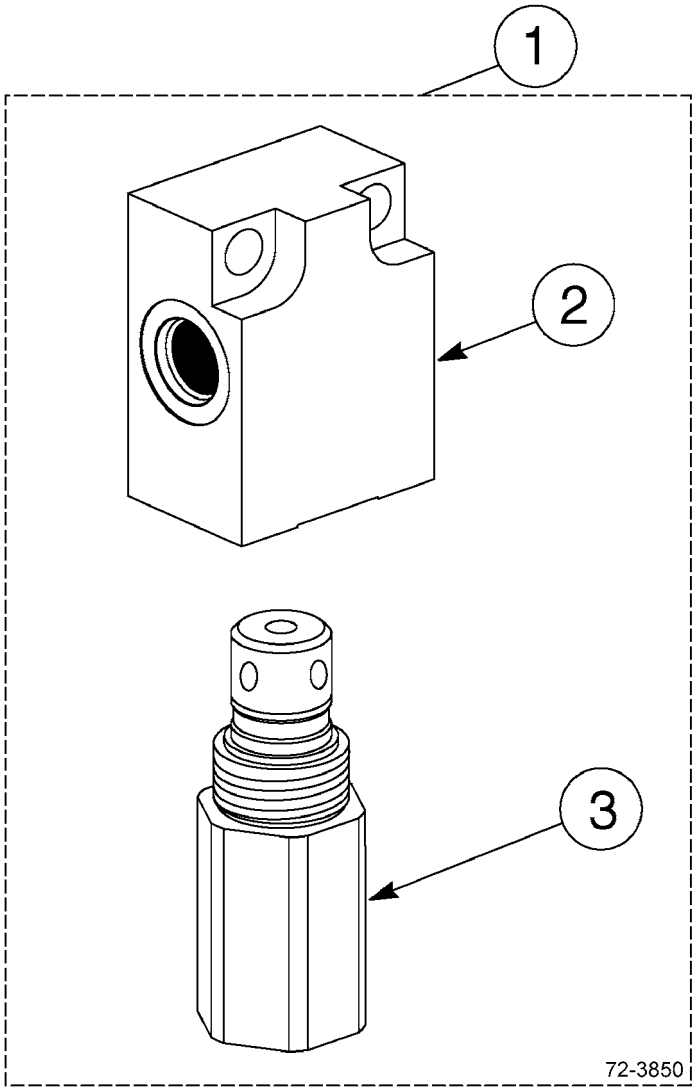

https://truckmanualshub.com/

E60-MT 3-STAGE MAST - LOWERING CONTROL VALVE
S/N 200001A~

Item	Part Number	Description	Qty	Serial Number
1	3EB-73-A5930	CONTROL VALVE - 2600 PSI - 17 GPM	1	
2	3EB-73-A5910	.VALVE BODY.	1	
3	3EB-73-A5920	.VALVE CARTRIDGE (17 GPM)	1	

https://truckmanualshub.com/

E60-MT 3-STAGE MAST - INTERNAL HOSE REEVING - SINGLE
56" TO 66" OCL - S/N 200001A~

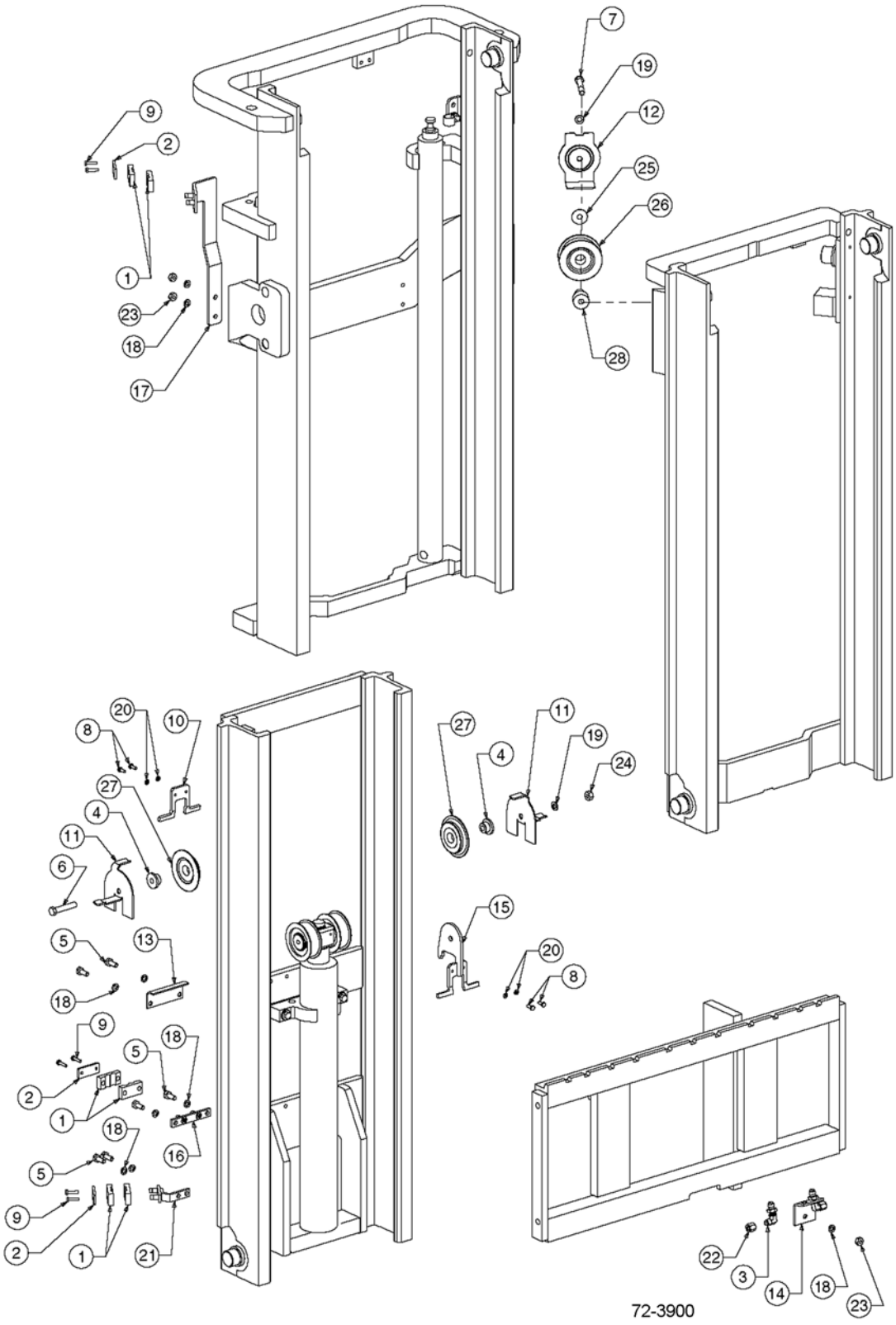

https://truckmanualshub.com/

E60-MT 3-STAGE MAST - INTERNAL HOSE REEVING - SINGLE
56" TO 66" OCL - S/N 200001A~

Item	Part Number	Description	Qty	Serial Number
1	3EB-73-A5150	CLAMP, HOSE	6	
2	3EB-73-A5160	HOSE CLAMP BAR	3	
3	3EB-71-A6010	FITTING, BULKHEAD UNION - 90°	2	
4	3EB-73-A5230	SINGLE IHR STUBSHAFT	2	
5	3EB-73-A5490	CAPSCREW, M10 X 25	6	
6	3EB-79-A5230	CAPSCREW, M12 X 65	1	
7	3EB-79-A5190	CAPSCREW. M12 X 80	1	
8	3EB-73-A5350	CAPSCREW, M6 X 16	4	
9	3EB-79-A5240	CAPSCREW, M6 X 25	6	
10	3EB-73-A5170	CHAIN GUARD	1	
11	3EB-73-A5180	IHR & CHAIN GUARD	2	
12	CC216052	HOSE GUARD	1	
13	3EB-73-A5190	HOSE GUARD	1	
14	3EB-73-A5610	CARRIAGE IHR BRACKET	1	
15	3EB-73-A5620	IHR BRACKET	1	
16	3EB-73-A5630	IHR BRACKET	1	
17	CC253651	IHR BRACKET	1	
18	3EB-79-A6040	LOCK WASHER, M10	9	
19	3EB-79-A5360	LOCK WASHER, M12	2	
20	3EB-73-A5340	LOCK WASHER, M6	4	
21	3EB-73-A5660	LOWER BRACKET	1	
22	3EB-79-A5250	NUT - #6 CAP	2	
23	3EB-79-A5180	NUT - M10	3	
24	3EB-79-A5270	NUT - M12 - DIN 934	1	
25	3EB-79-A5280	WASHER	1	
26	3EB-73-A5020	SHEAVE	1	
27	3EB-73-A5030	IHR SHEAVE	2	
28	3EB-73-A5220	STUBSHAFT	1	

OCL = OUTER CHANNEL LENGTH, MFH = MAXIMUM FORK HEIGHT

CC216924	HOSE (IHR KIT #255067) (56" OCL) (111" MFH)	2
CC216926	HOSE (IHR KIT #255068) (57" OCL) (114" MFH)	2
CC216927	HOSE (IHR KIT #255069) (58" OCL) (117" MFH)	2
CC216928	HOSE (IHR KIT #255070) (59" OCL) (120" MFH)	2
CC230717	HOSE (IHR KIT #255071) (60" OCL) (123" MFH)	2
CC213922	HOSE (IHR KIT #255072) (61" OCL) (126" MFH)	2
CC210804	HOSE (IHR KIT #255073) (62" OCL) (129" MFH)	2
CC216930	HOSE (IHR KIT #255074) (63" OCL) (132" MFH)	2
CC223461	HOSE (IHR KIT #255075) (64" OCL) (135" MFH)	2

PARTS LIST CONTINUED ON NEXT PAGE

https://truckmanualshub.com/

E60-MT 3-STAGE MAST - INTERNAL HOSE REEVING - SINGLE 56" TO 66" OCL - S/N 200001A~

Item	Part Number	Description	Qty	Serial Number
	CC216931	HOSE (IHR KIT #255076) (65" OCL) (138" MFH)	2	
	CC226416	HOSE (IHR KIT #255077) (66" OCL) (141" MFH)	2	

https://truckmanualshub.com/

NOTES:

https://truckmanualshub.com/

E60-MT 3-STAGE MAST - INTERNAL HOSE REEVING - SINGLE
67" ~ OUTER CHANEL LENGTH - S/N 200001A~

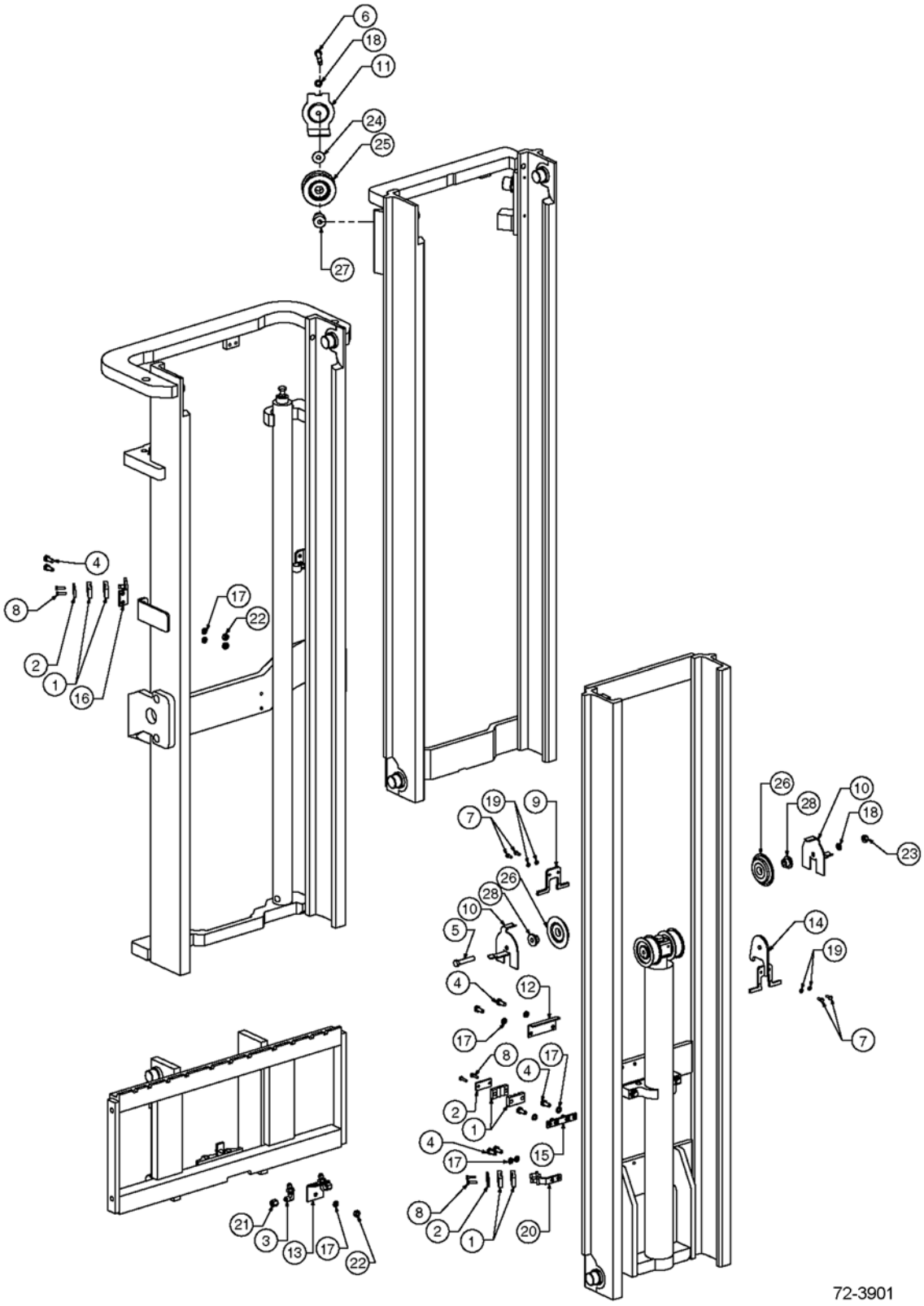

https://truckmanualshub.com/

E60-MT 3-STAGE MAST - INTERNAL HOSE REEVING - SINGLE
67" ~ OUTER CHANEL LENGTH - S/N 200001A~

Item	Part Number	Description	Qty	Serial Number
1	3EB-73-A5150	CLAMP, HOSE	6	
2	3EB-73-A5160	HOSE CLAMP BAR	3	
3	3EB-71-A6010	FITTING, BULKHEAD UNION - 90°	2	
4	3EB-73-A5490	CAPSCREW, M10 X 25	8	
5	3EB-79-A5230	CAPSCREW, M12 X 65	1	
6	3EB-79-A5190	CAPSCREW. M12 X 80	1	
7	3EB-73-A5350	CAPSCREW, M6 X 16	4	
8	3EB-79-A5240	CAPSCREW, M6 X 25	6	
9	3EB-73-A5170	CHAIN GUARD	1	
10	3EB-73-A5180	IHR & CHAIN GUARD	2	
11	CC216052	HOSE GUARD	1	
12	3EB-73-A5190	HOSE GUARD	1	
13	3EB-73-A5610	CARRIAGE IHR BRACKET	1	
14	3EB-73-A5620	IHR BRACKET	1	
15	3EB-73-A5630	IHR BRACKET	1	
16	CC253651	IHR BRACKET	1	
17	3EB-79-A6040	LOCK WASHER, M10	9	
18	3EB-79-A5360	LOCK WASHER, M12	2	
19	3EB-73-A5340	LOCK WASHER, M6	4	
20	3EB-73-A5660	LOWER BRACKET	1	
21	3EB-79-A5250	NUT - #6 CAP	2	
22	3EB-79-A5180	NUT - M10	3	
23	3EB-79-A5270	NUT - M12 - DIN 934	1	
24	3EB-79-A5280	WASHER	1	
25	3EB-73-A5020	SHEAVE	1	
26	3EB-73-A5030	IHR SHEAVE	2	
27	3EB-73-A5220	STUBSHAFT	1	
28	3EB-73-A5230	SINGLE IHR STUBSHAFT	2	
	OCL = OUTER CHANNEL LENGTH, MFH = MAXIMU FORK HEIGHT			
	CC216933	HOSE (IHR KIT #255009) (69" OCL) (150" MFH) (ALL)	2	
	CC213923	HOSE (IHR KIT #255013) (73" OCL) (162" MFH) (CUSHION ONLY)	2	
	CC216935	HOSE (IHR KIT #255015) (75" OCL) (168" MFH) (PNEUMATIC ONLY)	2	
	3EB-74-A5770	HOSE (IHR KIT #255020) (80" OCL) (183" MFH) (ALL)	2	
	CC233971	HOSE (IHR KIT #255023) (83" OCL) (190" MFH) (ALL)	2	

PARTS LIST CONTINUED ON NEXT PAGE

https://truckmanualshub.com/

E60-MT 3-STAGE MAST - INTERNAL HOSE REEVING - SINGLE
67" ~ OUTER CHANEL LENGTH - S/N 200001A~

Item	Part Number	Description	Qty	Serial Number
	3EB-74-A5810	HOSE (IHR KIT #255032) (92" OCL) (211" MFH) (ALL)	2	
	CC231256	HOSE (IHR KIT #255034) (94" OCL) (217" MFH) (CUSHION ONLY)	2	
	3EB-74-A5830	HOSE (IHR KIT #255041) (101" OCL) (230" MFH) (ALL)	2	
	CC233977	HOSE (IHR KIT #255044) (104" OCL) (237" MFH) (PNEUMATIC ONLY)	2	
	CC210811	HOSE (IHR KIT #255047) (107" OCL) (242" MFH) (PNEUMATIC ONLY)	2	

https://truckmanualshub.com/

NOTES:

https://truckmanualshub.com/

E60-MT 3-STAGE MAST - INTERNAL HOSE REEVING - DOUBLE
S/N 200001A~

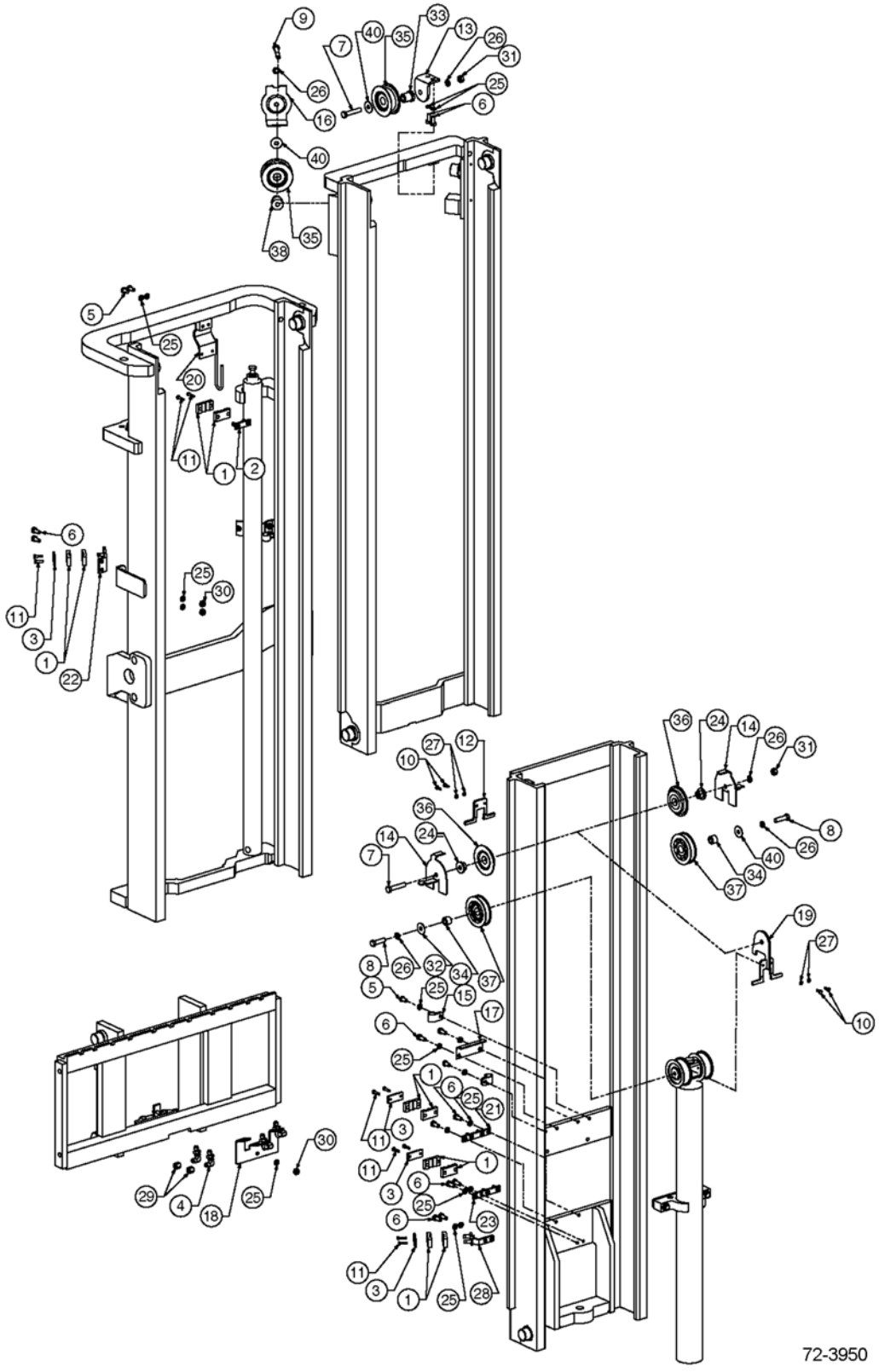

https://truckmanualshub.com/

E60-MT 3-STAGE MAST - INTERNAL HOSE REEVING - DOUBLE
S/N 200001A~

Item	Part Number	Description	Qty	Serial Number
1	3EB-73-A5150	CLAMP, HOSE	12	
2	3EB-73-A6010	BAR ASSY	1	
3	3EB-73-A5160	HOSE CLAMP BAR	5	
4	3EB-71-A6010	BULKHEAD UNION - 90°	4	
5	3EB-79-A5330	CAPSCREW - M10 X 20	4	
6	3EB-73-A5490	CAPSCREW - M10 X 25	18	
7	3EB-79-A5230	CAPSCREW - M12 X 65	2	
8	3EB-79-A5290	CAPSCREW - M12 X 45	2	
9	3EB-79-A5190	CAPSCREW - M12 X 80	1	
10	3EB-73-A5350	CAPSCREW - M6 X 16	4	
11	3EB-79-A5240	CAPSCREW - M6 X 25	12	
12	3EB-73-A5170	IHR & CHAIN GUARD	1	
13	3EB-73-A5670	DOUBLE IHR BRACKET	1	
14	3EB-73-A5180	IHR & CHAIN GUARD	2	
15	3EB-79-A5160	HOSE CLAMP	2	
16	3EB-73-A5120	HOSE GUARD	1	
17	3EB-73-A5190	HOSE GUARD	1	
18	3EB-73-A5680	CARRIAGE IHR BRACKET	1	
19	3EB-73-A5620	IHR BRACKET	1	
20	3EB-73-A6030	IHR BRACKET	1	
21	3EB-73-A5630	IHR BRACKET	1	
22	3EB-73-A5640	IHR BRACKET ASSY	2	
23	3EB-73-A5690	IHR BRACKET ASSY	1	
24	3EB-73-A5230	SINGLE FUNCTION SHEAVE	2	
25	3EB-79-A6040	WASHER, LOCK - M10	23	
26	3EB-79-A5360	WASHER, LOCK - M12	5	
27	3EB-73-A5340	WASHER, LOCK - M6	4	
28	3EB-73-A5660	BRACKET, LOWER	1	
29	3EB-79-A5250	NUT - #6 CAP	4	
30	3EB-79-A5180	NUT - M10	5	
31	3EB-79-A5270	NUT - M12	2	
32	3EB-79-A5280	WASHER	4	
33	3EB-73-A5240	SHAFT	1	
34	3EB-73-A5250	SHAFT	2	
35	3EB-73-A5020	SHEAVE - IHR	2	
36	3EB-73-A5030	SHEAVE - IHR	2	
37	3EB-73-A5060	SHEAVE - SINGLE	2	
38	3EB-73-A5220	STUBSHAFT	1	

PARTS LIST CONTINUED ON NEXT PAGE

https://truckmanualshub.com/

E60-MT 3-STAGE MAST - INTERNAL HOSE REEVING - DOUBLE
S/N 200001A~

Item	Part Number	Description	Qty	Serial Number
		OCL = OUTER CHANNEL LENGTH, MFH = MAXIMUM FORK HEIGHT		
		INNER HOSE - RIGHT SIDE		
	CC216933	HOSE (IHR KIT #255091) (69" OCL) (150" MFH)	1	
	CC213923	HOSE (IHR KIT #255095) (73" OCL) (162" MFH)	1	
	CC216935	HOSE (IHR KIT #255097) (75" OCL) (168" MFH)	1	
	3EB-74-A5770	HOSE (IHR KIT #255102) (80" OCL) (183" MFH)	1	
	CC233971	HOSE (IHR KIT #255105) (83" OCL) (190" MFH)	1	
	3EB-74-A5810	HOSE (IHR KIT #255114) (92" OCL) (211" MFH)	1	
	CC231256	HOSE (IHR KIT #255116) (94" OCL) (217" MFH)	1	
	3EB-74-A5830	HOSE (IHR KIT #255123) (101" OCL) (230" MFH)	1	
	CC233977	HOSE (IHR KIT #255126) (104" OCL) (237" MFH)	1	
	CC210811	HOSE (IHR KIT #255129) (107" OCL) (242" MFH)	1	
		INNER HOSE - LEFT SIDE		
	CC234997	HOSE (IHR KIT #255091) (69" OCL) (150" MFH)	1	
	CC216938	HOSE (IHR KIT #255095) (73" OCL) (162" MFH)	1	
	CC235007	HOSE (IHR KIT #255097) (75" OCL) (168" MFH)	1	
	CC216941	HOSE (IHR KIT #255102) (80" OCL) (183" MFH)	1	
	CC235018	HOSE (IHR KIT #255105) (83" OCL) (190" MFH)	1	
	CC216950	HOSE (IHR KIT #255114) (92" OCL) (211" MFH)	1	
	CC233975	HOSE (IHR KIT #255116) (94" OCL) (217" MFH)	1	
	CC235043	HOSE (IHR KIT #255123) (101" OCL) (230" MFH)	1	
	CC233978	HOSE (IHR KIT #255126) (104" OCL) (237" MFH)	1	
	CC235055	HOSE (IHR KIT #255129) (107" OCL) (242" MFH)	1	
		OUTER HOSES (SHORTEST)		
	CC234992	HOSE (IHR KIT #255091) (69" OCL) (150" MFH)	2	
	CC235000	HOSE (IHR KIT #255095) (73" OCL) (162" MFH)	2	
	CC213923	HOSE (IHR KIT #255097) (75" OCL) (168" MFH)	2	
	CC235010	HOSE (IHR KIT #255102) (80" OCL) (183" MFH)	2	
	CC233970	HOSE (IHR KIT #255105) (83" OCL) (190" MFH)	2	
	CC232707	HOSE (IHR KIT #255114 (92" OCL) (211" MFH)	2	
	CC235027	HOSE (IHR KIT #255116) (94" OCL) (217" MFH)	2	
	CC235038	HOSE (IHR KIT #255123) (101" OCL) (230" MFH)	2	
	CC235044	HOSE (IHR KIT #255126) (104" OCL) (237" MFH)	2	
	CC235050	HOSE (IHR KIT #255129) (107" OCL) (242" MFH)	2	

https://truckmanualshub.com/

NOTES:

https://truckmanualshub.com/

E60-MT 3-STAGE MAST — RECOMMENDED STOCK LIST (RSL)

NO

ILLUSTRATION

REQUIRED

https://truckmanualshub.com/

E60-MT 3-STAGE MAST — RECOMMENDED STOCK LIST (RSL)

Item	Part Number	Description	Qty	No. of Masts Serviced
		MAIN LIFT CYLINDERS		
	SEE PARTS PG	MAIN LIFT CYL ASSY	0	1 - 19
	SEE PARTS PG	MAIN LIFT CYL ASSY	1	20 - 50
	SEE PARTS PG	SEAL KIT	2	1 - 5
	SEE PARTS PG	SEAL KIT	4	6 - 19
	SEE PARTS PG	SEAL KIT	8	20 - 50
		FREE LIFT CYLINDER		
	SEE PARTS PG	FREE LIFT CYLINDER ASSY	0	1 - 5
	SEE PARTS PG	FREE LIFT CYLINDER ASSY	1	6 - 19
	SEE PARTS PG	FREE LIFT CYLINDER ASSY	2	20 - 50
	SEE PARTS PG	SEAL KIT	2	1 - 5
	SEE PARTS PG	SEAL KIT	4	6 - 19
	SEE PARTS PG	SEAL KIT	8	20 - 50
		INTERNAL REEVING		
	SEE PARTS PG	HOSE	2	1 - 5
	SEE PARTS PG	HOSE	4	6 - 19
	SEE PARTS PG	HOSE	8	20 - 50
	3EB-71-A6040	FITTING	1	1 - 5
	3EB-71-A6040	FITTING	2	6 - 19
	3EB-71-A6040	FITTING	4	20 - 50
	3EB-73-A5030	SHEAVE, IHR, SINGLE & DOUBLE IHR	1	1 - 5
	3EB-73-A5030	SHEAVE, IHR, SINGLE & DOUBLE IHR	2	6 - 19
	3EB-73-A5030	SHEAVE, IHR, SINGLE & DOUBLE IHR	4	20 - 50
	3EB-73-A5060	SHEAVE - DOUBLE IHR	1	1 - 5
	3EB-73-A5060	SHEAVE - DOUBLE IHR	2	6 - 19
	3EB-73-A5060	SHEAVE - DOUBLE IHR	4	20 - 50
	3EB-73-A5020	SHEAVE - SINGLE & DOUBLE IHR	1	1 - 5
	3EB-73-A5020	SHEAVE - SINGLE & DOUBLE IHR	2	6 - 19
	3EB-73-A5020	SHEAVE - SINGLE & DOUBLE IHR	4	20 - 50
		UPRIGHTS		
	CC201435	CHAIN ANCHOR	2	1 - 5
	CC201435	CHAIN ANCHOR	4	6 - 19
	CC201435	CHAIN ANCHOR	8	20 - 50
	CC684242	CHAIN ANCHOR	1	1 - 5
	CC684242	CHAIN ANCHOR	2	6 - 19
	CC684242	CHAIN ANCHOR	4	20 - 50
	CC684305	PIN, CHAIN	8	1 - 5
	CC684305	PIN, CHAIN	8	6 - 19

PARTS LIST CONTINUED ON NEXT PAGE

https://truckmanualshub.com/

E60-MT 3-STAGE MAST — RECOMMENDED STOCK LIST (RSL)

Item	Part Number	Description	Qty	No. of Masts Serviced
	CC684305	PIN, CHAIN	16	20 - 50
	3EB-79-A6090	NUT	6	1 - 5
	3EB-79-A6090	NUT	12	6 - 19
	3EB-79-A6090	NUT	24	20 - 50
	3EB-79-A6081	PIN, COTTER	6	1 - 5
	3EB-79-A6081	PIN, COTTER	12	6 - 19
	3EB-79-A6081	PIN, COTTER	24	20 - 50
	3EB-79-A6080	PIN, COTTER	6	1 - 5
	3EB-79-A6080	PIN, COTTER	12	6 - 19
	3EB-79-A6080	PIN, COTTER	36	20 - 50
	3EB-79-A6050	SHIM, .03 IN.	16	1 - 5
	3EB-79-A6050	SHIM, .03 IN.	32	6 - 19
	3EB-79-A6050	SHIM, .03 IN.	64	20 - 50
	3EB-79-A5210	ROLLER	8	1 - 5
	3EB-79-A5210	ROLLER	24	6 - 19
	3EB-79-A5210	ROLLER	48	20 - 50
	CC662145	ROLLER	2	1 - 5
	CC662145	ROLLER	4	6 - 19
	CC662145	ROLLER	16	20 - 50
	3EB-73-A5720	SERVICE KIT, WEAR PLUG	2	1 - 5
	3EB-73-A5720	SERVICE KIT, WEAR PLUG	4	6 - 19
	3EB-73-A5720	SERVICE KIT, WEAR PLUG	8	20 - 50
		CROSSHEAD		
	3EB-73-A5010	CHAIN SHEAVE	4	1 - 5
	3EB-73-A5010	CHAIN SHEAVE	8	6 - 19
	3EB-73-A5010	CHAIN SHEAVE	16	20 - 50
	3EB-73-A5330	RETAINER CLIP	4	1 - 5
	3EB-73-A5330	RETAINER CLIP	8	6 - 19
	3EB-73-A5330	RETAINER CLIP	16	20 - 50
	3EB-79-A6070	SNAP RING	2	1 - 5
	3EB-79-A6070	SNAP RING	4	6 - 19
	3EB-79-A6070	SNAP RING	8	20 - 50
		CARRIAGE AND CHAINS		
	SEE PARTS PG	FREE LIFT CHAINS	2	1 - 5
	SEE PARTS PG	FREE LIFT CHAINS	4	6 - 19
	SEE PARTS PG	FREE LIFT CHAINS	8	20 - 50
	SEE PARTS PG	MAIN LIFT CHAINS	2	1 - 5
	SEE PARTS PG	MAIN LIFT CHAINS	4	6 - 19

PARTS LIST CONTINUED ON NEXT PAGE

https://truckmanualshub.com/

E60-MT 3-STAGE MAST — RECOMMENDED STOCK LIST (RSL)

Item	Part Number	Description	Qty	No. of Masts Serviced
	SEE PARTS PG	MAIN LIFT CHAINS	8	20 - 50
	3EB-79-A5210	CARRIAGE ROLLER	4	1 - 5
	3EB-79-A5210	CARRIAGE ROLLER	8	6 - 19
	3EB-79-A5210	CARRIAGE ROLLER	16	20 - 50
	3EB-79-A5220	ROLLER - 6-ROLLER CARRIAGE	2	1 - 5
	3EB-79-A5220	ROLLER - 6-ROLLER CARRIAGE	4	6 - 19
	3EB-79-A5220	ROLLER - 6-ROLLER CARRIAGE	8	20 - 50
	CC234001	CHAIN ANCHOR	1	1 - 5
	CC234001	CHAIN ANCHOR	2	6 - 19
	CC234001	CHAIN ANCHOR	4	20 - 50
	3EB-79-A6081	PIN, COTTER	2	1 - 5
	3EB-79-A6081	PIN, COTTER	4	6 - 19
	3EB-79-A6081	PIN, COTTER	8	20 - 50
	3EB-79-A6080	PIN, COTTER	4	1 - 5
	3EB-79-A6080	PIN, COTTER	8	6 - 19
	3EB-79-A6080	PIN, COTTER	16	20 - 50
	CC684305	CHAIN PIN	4	1 - 19
	CC684305	CHAIN PIN	8	20 - 50
	3EB-73-A5450	NUT	2	1 - 50

https://truckmanualshub.com/

E65-MS 2-STAGE MAST - SAFETY DECALS
S/N 200001A~

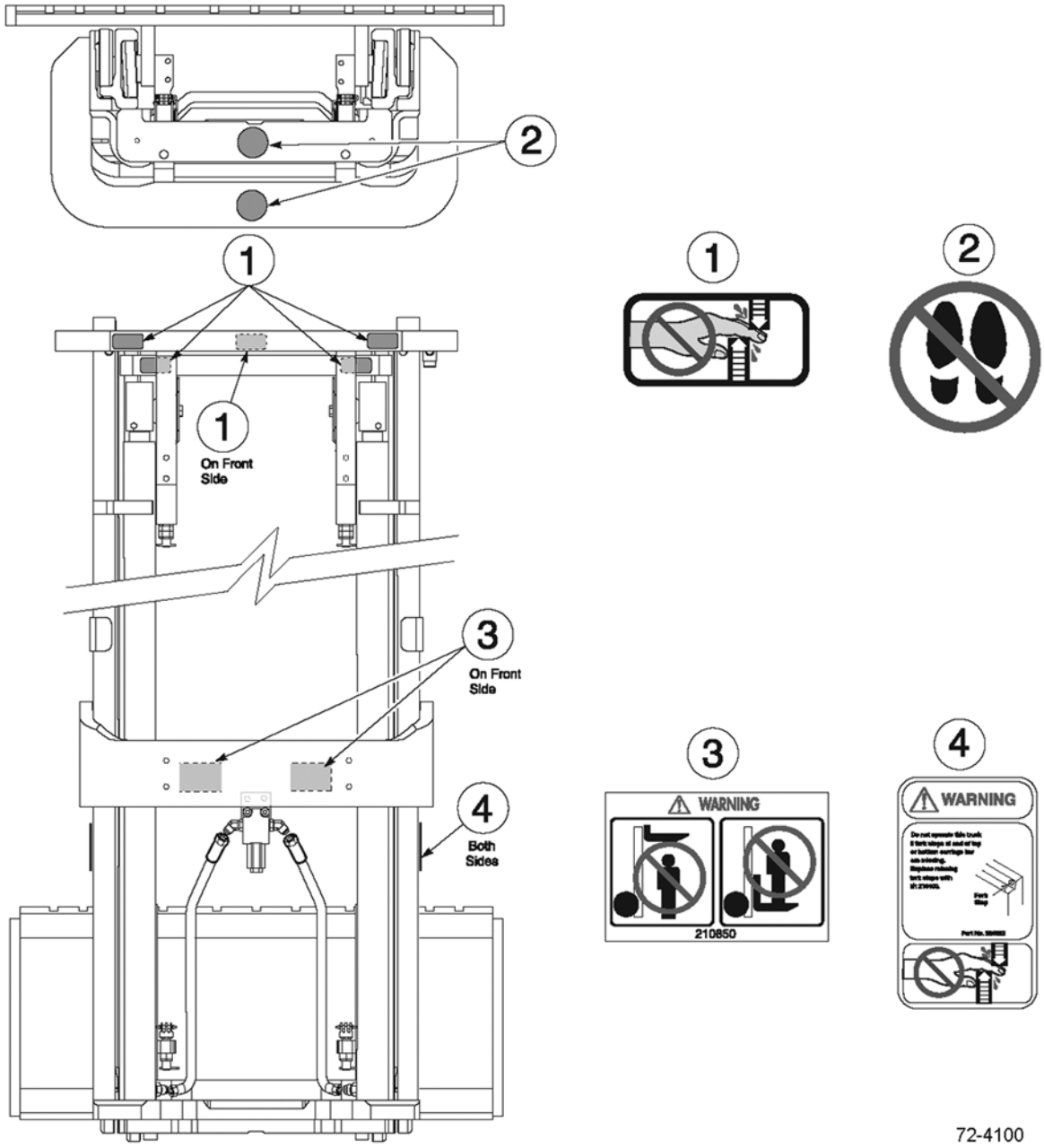

72-4100

https://truckmanualshub.com/

E65-MS 2-STAGE MAST - SAFETY DECALS
S/N 200001A~

Item	Part Number	Description	Qty	Serial Number
1	3EB-79-A6010	DECAL - "HANDS OFF"	5	
2	3EB-79-A6020	DECAL - "NO STEP"	2	
3	CC210850	DECAL - "WARNING"	2	
4	CC224053	DECAL - "FORK STOP"	2	

https://truckmanualshub.com/

E65-MS 2-STAGE MAST - MAIN LIFT CYLINDERS
S/N 200001A~

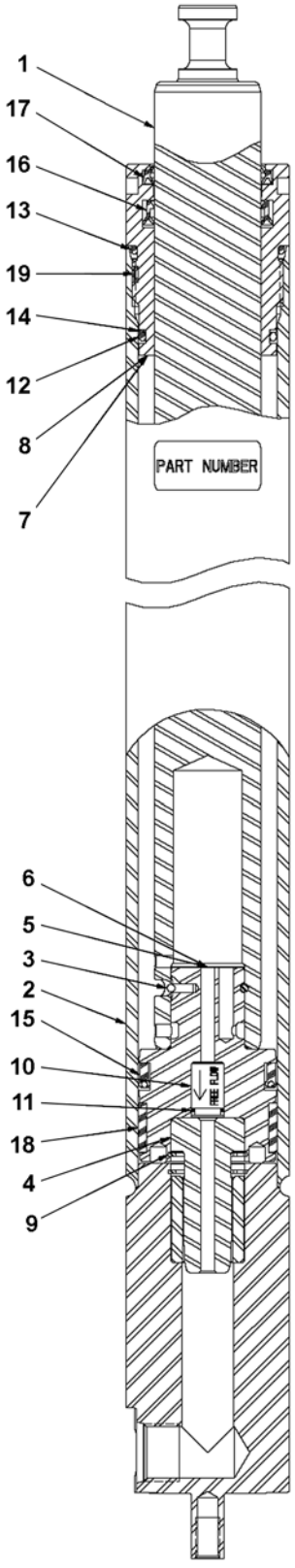

72-4100

https://truckmanualshub.com/

E65-MS 2-STAGE MAST - MAIN LIFT CYLINDERS
S/N 200001A~

Item	Part Number	Description	Qty	Serial Number
1	NSS	ROD	1	
2	NSS	SHELL	1	
3	NSS	WRAP-IN WIRE (SEAL KIT)	1	
4	NSS	CUSHION PLUNGER	1	
5	NSS	PISTON (PISTON KIT)	1	
6	NSS	PISTON ASSY (PISTON KIT)	1	
7	NSS	RETAINER GLAND (RETAINER KIT)	1	
8	NSS	RETAINER ASSY (RETAINER KIT)	1	
9	NSS	SNAP RING (CHECK VALVE KIT)	1	
10	NSS	CHECK VALVE (CHECK VALVE KIT)	1	
11	NSS	O-RING (SEAL KIT)	1	
12	NSS	O-RING (SEAL KIT)	1	
13	NSS	O-RING (SEAL KIT)	1	
14	NSS	BACKUP RING (SEAL KIT)	1	
15	NSS	POLYPAK (SEAL KIT)	1	
16	NSS	UBR SEAL (SEAL KIT)	1	
17	NSS	ROD WIPER (SEAL KIT)	1	
18	NSS	WEARBAND (SEAL KIT)	1	
19	NSS	LOCKING INSERT (SEAL KIT)	1	
KIT	CC1004775	SEAL KIT	1	
KIT	CC1004774	PISTON KIT	1	
KIT	CC1004776	RETAINER KIT	1	
KIT	CC1004777	CHECK VALVE KIT	1	

OCL = OUTER CHANNEL LENGTH, MFH = MAXIMUM FORK HEIGHT

CC1003428	MAIN LIFT CYLINDER - (72" OCL) (106" MFH).	1
CC1003433	MAIN LIFT CYLINDER - (77" OCL) (116" MFH).	1
CC1003439	MAIN LIFT CYLINDER - (83" OCL) (128" MFH).	1
CC1003448	MAIN LIFT CYLINDER - (92" OCL) (146" MFH).	1
CC1003451	MAIN LIFT CYLINDER - (95" OCL) (152" MFH).	1
CC1003454	MAIN LIFT CYLINDER - (98" OCL) (158" MFH).	1
CC1003460	MAIN LIFT CYLINDER - (104" OCL) (170" MFH)	1

https://truckmanualshub.com/

E65-MS 2-STAGE MAST - OUTER UPRIGHT
S/N 200001A~

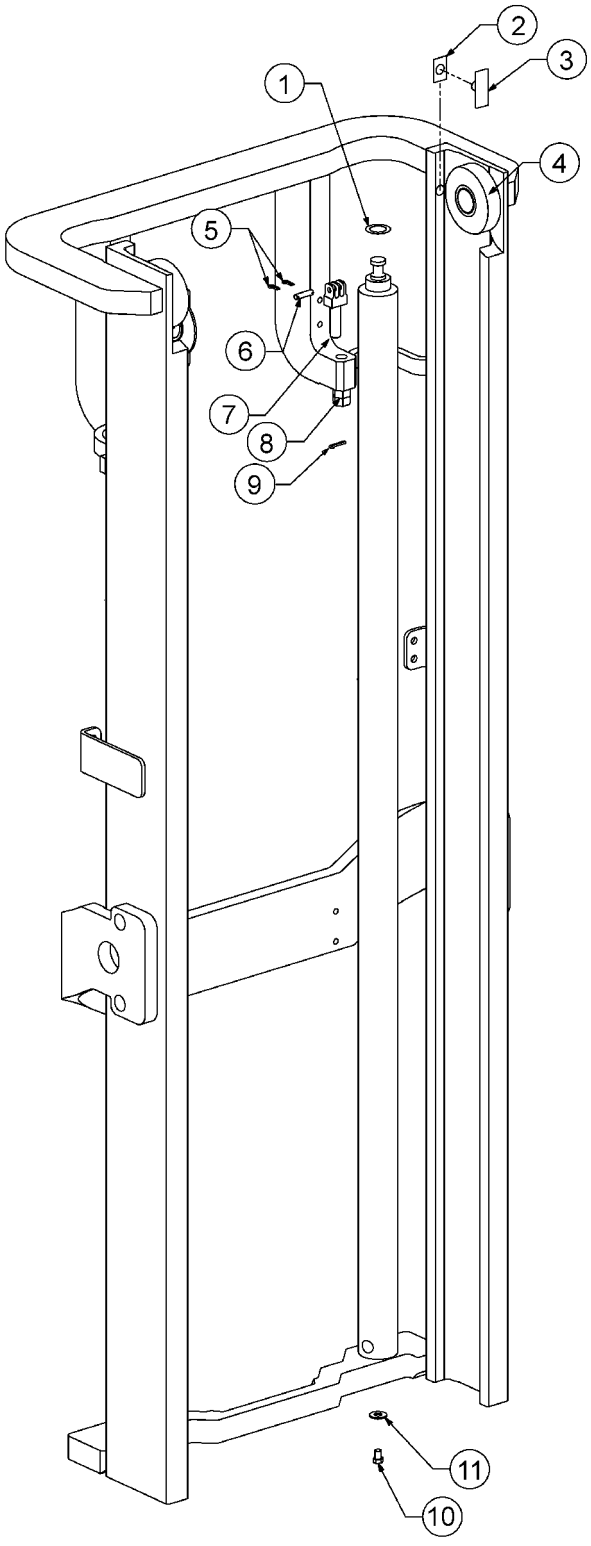

https://truckmanualshub.com/

E65-MS 2-STAGE MAST - OUTER UPRIGHT
S/N 200001A~

Item	Part Number	Description	Qty	Serial Number
		OCL = OUTER CHANNEL LENGTH, MFH = MAXIMUM FORK HEIGHT		
	CC236206	OUTER UPRIGHT - (72" OCL) (106" MFH)	1	
	CC236211	OUTER UPRIGHT - (77" OCL) (116" MFH)	1	
	CC236217	OUTER UPRIGHT - (83" OCL) (128" MFH)	1	
	CC236226	OUTER UPRIGHT - (92" OCL) (146" MFH)	1	
	CC236229	OUTER UPRIGHT - (95" OCL) (152" MFH)	1	
	CC236232	OUTER UPRIGHT - (98" OCL) (158" MFH)	1	
	CC236238	OUTER UPRIGHT - (104" OCL) (170" MFH) . . .	1	
1	CC238137	SHIM KIT - MAIN LIFT CYL	2	
2	CC203388	WEAR PLUG SHIM . . . . . (WEAR PLUG KIT)	AR	
3	CC215719	WEAR PLUG . . . . . (WEAR PLUG KIT)	2	
4	3EB-79-A5210	LOAD ROLLER.	2	
5	3EB-79-A6080	PIN, COTTER	4	
6	3EB-79-A5150	PIN, CHAIN ANCHOR	2	
7	3EB-79-A5110	CHAIN ANCHOR	2	
8	3EB-79-A6090	NUT.	4	
9	3EB-79-A6081	PIN, COTTER	2	
10	3EB-79-A5340	BOLT.	2	
11	3EB-79-A5350	WASHER, FLAT	2	
KIT	CC212587	WEAR PLUG KIT	1	

https://truckmanualshub.com/

E65-MS 2-STAGE MAST - INNER UPRIGHT
S/N 200001A~

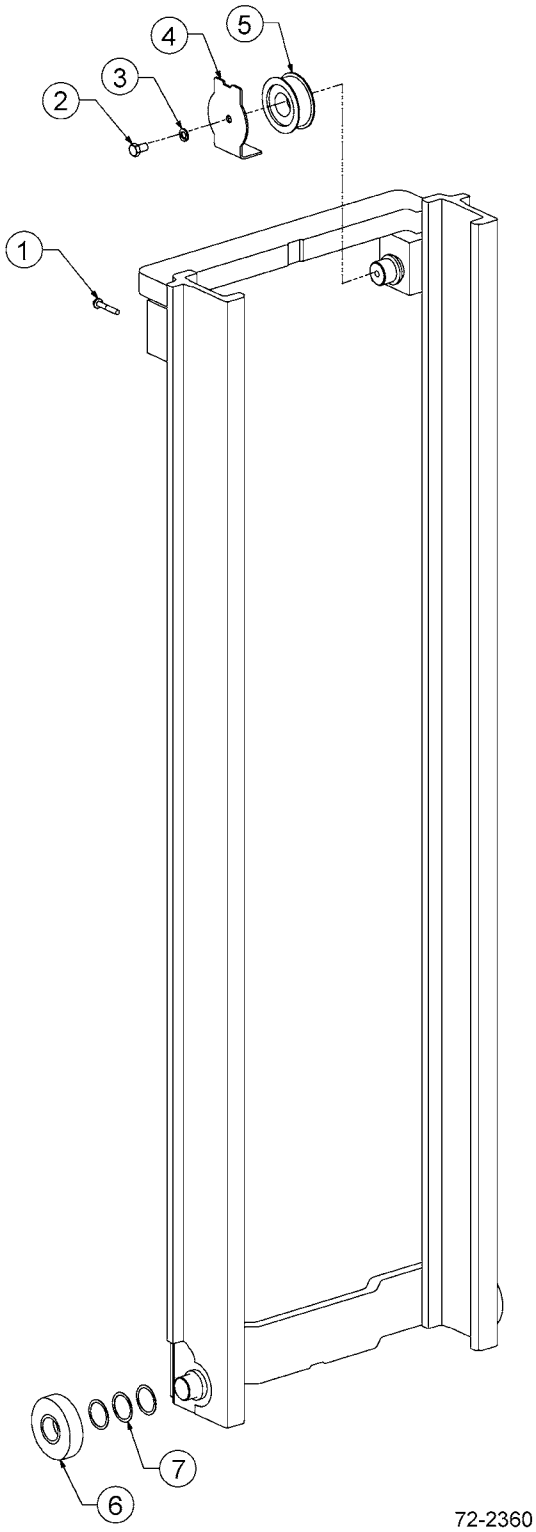

https://truckmanualshub.com/

E65-MS 2-STAGE MAST - INNER UPRIGHT
S/N 200001A~

Item	Part Number	Description	Qty	Serial Number
		OCL = OUTER CHANNEL LENGTH, MFH = MAXIMUM FORK HEIGHT		
	CC236277	INNER UPRIGHT - (72" OCL) (106" MFH)	1	
	CC236282	INNER UPRIGHT - (77" OCL) (116" MFH)	1	
	CC236288	INNER UPRIGHT - (83" OCL) (128" MFH)	1	
	CC236297	INNER UPRIGHT - (92" OCL) (146" MFH)	1	
	CC236300	INNER UPRIGHT - (95" OCL) (152" MFH)	1	
	CC236303	INNER UPRIGHT - (98" OCL) (158" MFH)	1	
	CC236309	INNER UPRIGHT - (104" OCL) (170" MFH)	1	
1	3EB-79-A5380	BOLT	2	
2	3EB-79-A5370	M12 X 20 LG CAPSCREW	2	
3	3EB-79-A5360	M12 WASHER, LOCK	2	
4	CC201435	CHAIN GUARD	2	
5	3EB-73-A5010	SHEAVE	2	
6	CC662145	LOAD ROLLER	2	
7	3EB-79-A6050	SHIM, LOAD ROLLER	AR	

https://truckmanualshub.com/

E65-MS 2-STAGE MAST - CARRIAGE - 6-ROLLER
S/N 200001A~

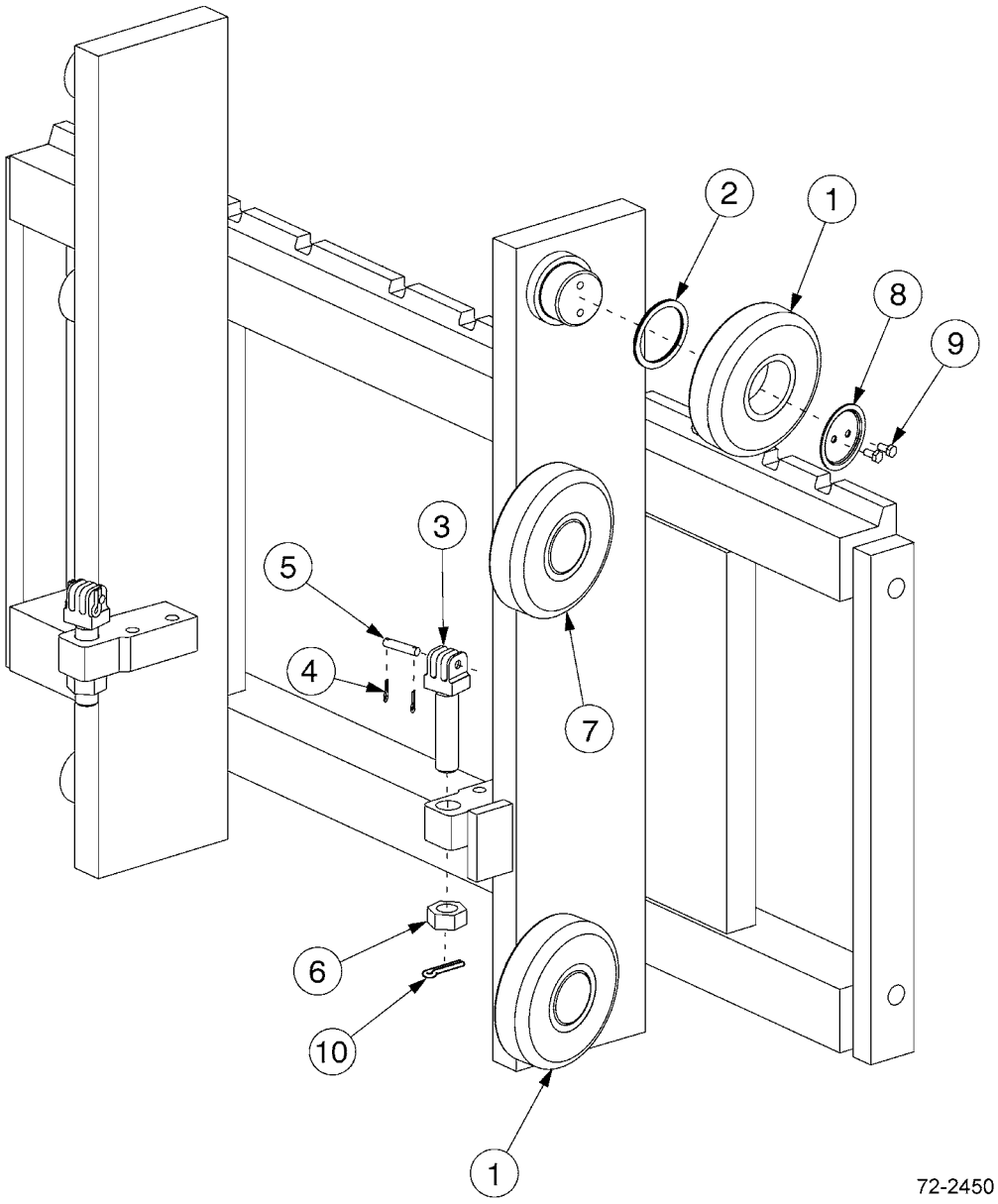

https://truckmanualshub.com/

E65-MS 2-STAGE MAST - CARRIAGE - 6-ROLLER
S/N 200001A~

Item	Part Number	Description	Qty	Serial Number
	CC251820	CARRIAGE - 37" - CUSHION TIRE SPEC.	1	
	CC251821	CARRIAGE - 41" - CUSHION TIRE SPEC.	1	
	CC251822	CARRIAGE - 37" - PNEUMATIC TIRE SPEC. . .	1	
	CC251823	CARRIAGE - 41" - PNEUMATIC TIRE SPEC. . .	1	
1	3EB-79-A5210	LOAD ROLLER.	4	
2	3EB-79-A6050	SHIM, LOAD ROLLER	AR	
3	3EB-79-A5140	CHAIN ANCHOR	2	
4	3EB-79-A6080	PIN, COTTER	4	
5	3EB-79-A5150	PIN, CHAIN ANCHOR	2	
6	3EB-73-A5450	NUT.	2	
7	3EB-79-A5220	LOAD ROLLER.	2	
8	3EB-73-A5460	RETAINER	2	
9	3EB-73-A5470	CAPSCREW - M6 X 12LG	4	
10	3EB-79-A6081	PIN, COTTER	2	

https://truckmanualshub.com/

E65-MS 2-STAGE MAST - HOIST CHAINS
S/N 200001A~

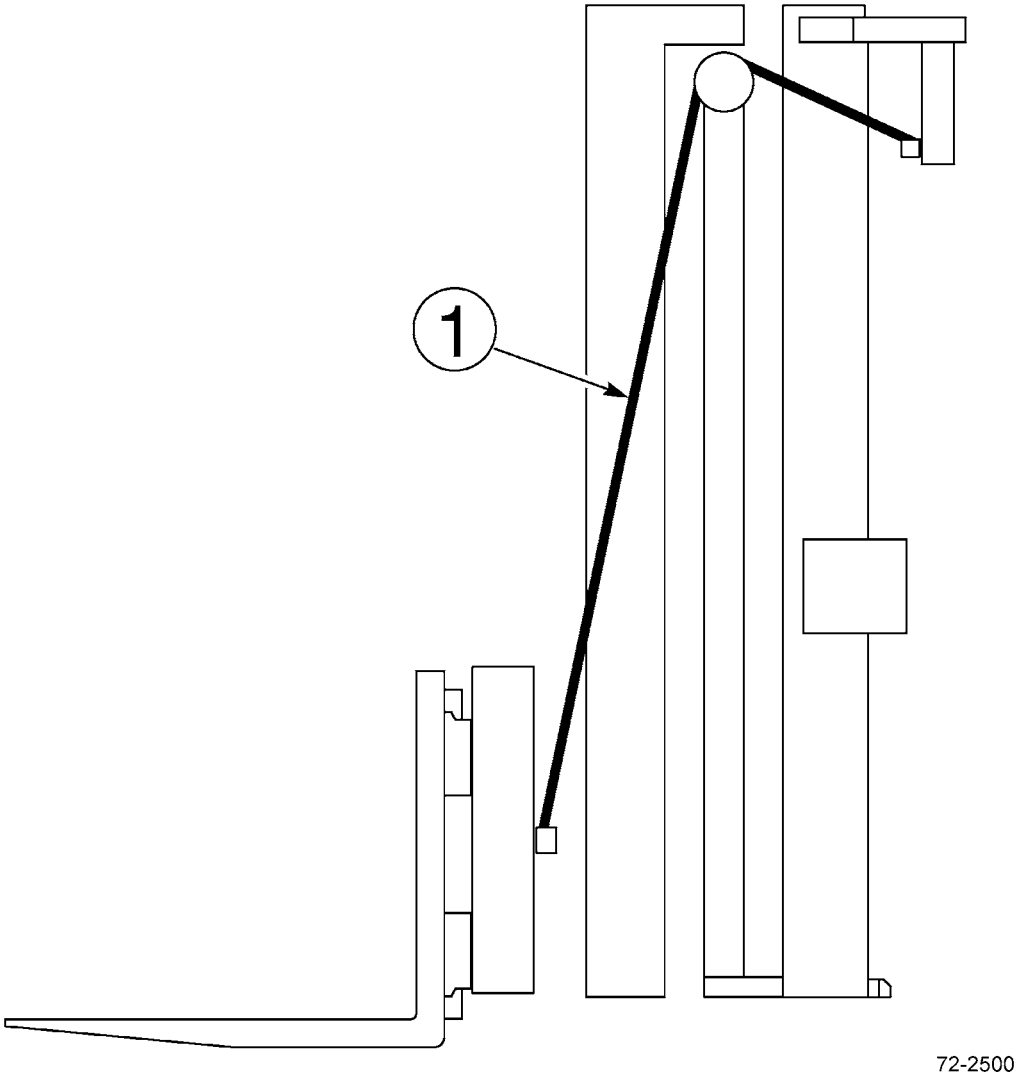

https://truckmanualshub.com/

E65-MS 2-STAGE MAST - HOIST CHAINS
S/N 200001A~

Item	Part Number	Description	Qty	Serial Number
		OCL = OUTER CHANNEL LENGTH, MFH = MAXIMUM FORK HEIGHT		
1	CC683895	MAIN LIFT CHAIN - (72" OCL) (106" MFH)	2	
	CC683987	MAIN LIFT CHAIN - (77" OCL) (116" MFH)	2	
	CC678797	MAIN LIFT CHAIN - (83" OCL) (128" MFH)	2	
	CC678800	MAIN LIFT CHAIN - (92" OCL) (146" MFH)	2	
	CC683998	MAIN LIFT CHAIN - (95" OCL) (152" MFH)	2	
	CC684000	MAIN LIFT CHAIN - (98" OCL) (158" MFH)	2	
	CC688157	MAIN LIFT CHAIN - (104" OCL) (170" MFH) . . .	2	

https://truckmanualshub.com/

E65-MS 2-STAGE MAST - LOAD BACKREST
S/N 200001A~

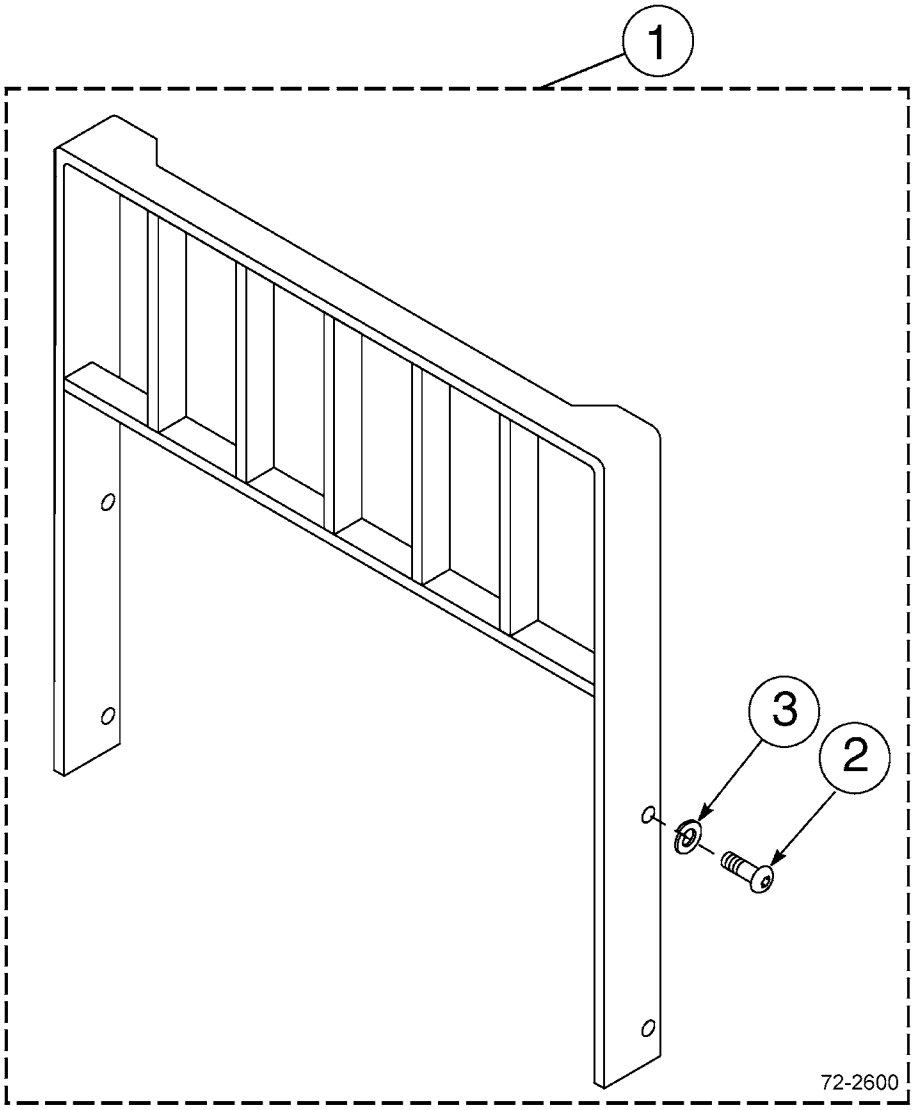

https://truckmanualshub.com/

E65-MS 2-STAGE MAST - LOAD BACKREST
S/N 200001A~

Item	Part Number	Description	Qty	Serial Number
		CLASS III LOAD BACKRESTS (HEIGHT X WIDTH)		
1	CC684784	BACKREST - 37" X 36"	1	
	CC684785	BACKREST - 37" X 48"	1	
	CC684786	BACKREST - 37" X 60"	1	
	CC684787	BACKREST - 41" X 36"	1	
	CC684788	BACKREST - 41" X 48"	1	
	CC684789	BACKREST - 41" X 60"	1	
2	CC200173	.CAPSCREW - M16 X 2.0 X 35-8.8	4	
3	3EB-71-A6030	.WASHER, LOCK - M16	4	

https://truckmanualshub.com/

E65-MS 2-STAGE MAST - INSTALLATION COMPONENTS
CUSHION TIRE MODELS - S/N 200001A~

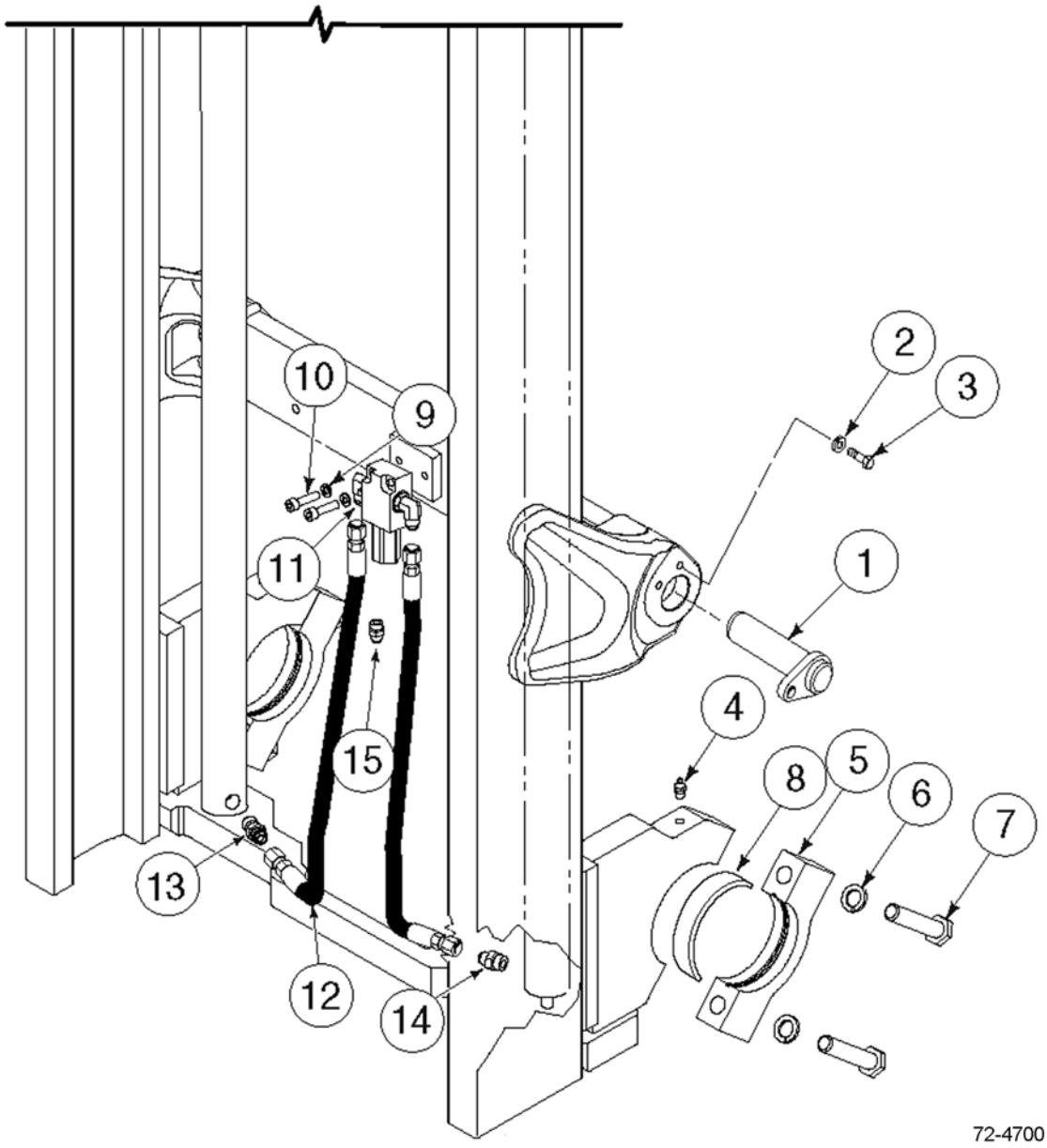

https://truckmanualshub.com/

E65-MS 2-STAGE MAST - INSTALLATION COMPONENTS
CUSHION TIRE MODELS - S/N 200001A~

Item	Part Number	Description	Qty	Serial Number
1	3EB-41-51750	TILT PIN	2	
2	3EB-79-A6040	WASHER, LOCK.	2	
3	CC212632	CAPSCREW	2	
4	CC7418	FITTING, GREASE	2	
5	CC251901	CAP.	2	
6	3EB-71-A6030	WASHER, LOCK.	4	
7	CC251906	CAPSCREW	4	
8	3EB-84-51290	BUSHING	2	
9	CC767611	CAPSCREW	2	
10	3EB-79-A6040	WASHER, LOCK.	2	
11	CC601250	FITTING # 8 - 90° ELBOW	2	
12	CC255666	MAIN LIFT HOSE - RH	1	
	CC255665	MAIN LEFT HOSE - LH	1	
13	CC611289	FITTING # 8 -#10 STRAIGHT.	1	
14	CC238750	12 GPM EXTERNAL FUSE	1	
15	CC601377	FITTING	1	
KIT	CC255596	INSTALLATION KIT	1	

https://truckmanualshub.com/

E65-MS 2-STAGE MAST - INSTALLATION COMPONENTS
PNEUMATIC TIRE MODELS - S/N 200001A~

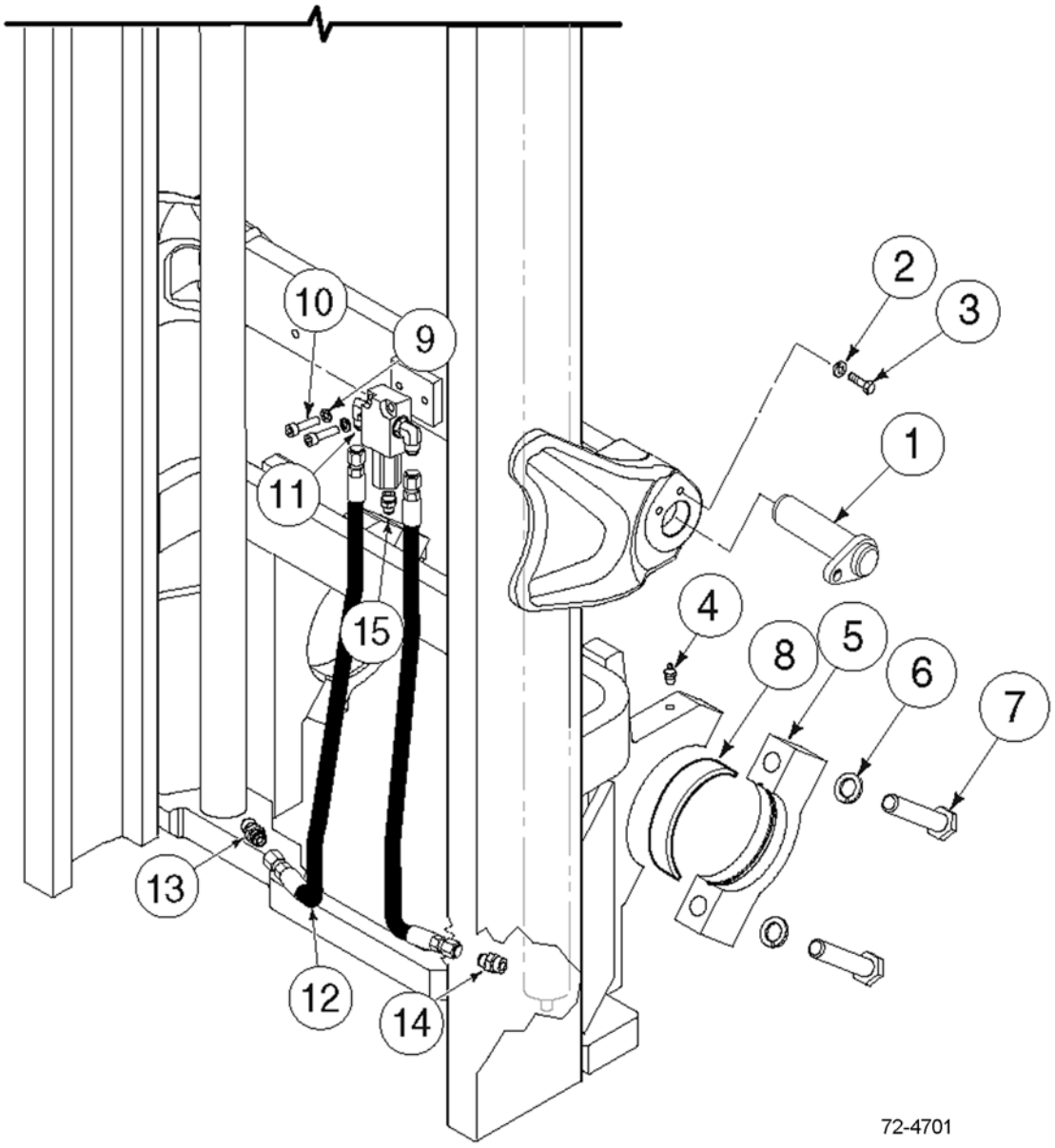

https://truckmanualshub.com/

E65-MS 2-STAGE MAST - INSTALLATION COMPONENTS
PNEUMATIC TIRE MODELS - S/N 200001A~

Item	Part Number	Description	Qty	Serial Number
1	3EB-41-51750	TILT PIN	2	
2	3EB-79-A6040	WASHER, LOCK.	2	
3	CC212632	CAPSCREW	2	
4	CC7418	FITTING, GREASE	2	
5	CC252686	CAP.	2	
6	3EB-71-A6030	WASHER, LOCK.	4	
7	CC251906	CAPSCREW	4	
8	3EB-71-51290	BUSHING (ALL)	2	
9	CC767611	CAPSCREW	2	
10	3EB-79-A6040	WASHER, LOCK.	2	
11	CC601250	FITTING # 8 - 90° ELBOW	2	
12	CC253793	MAIN LIFT HOSE - RH	1	
	CC255652	MAIN LEFT HOSE - LH	1	
13	CC611289	FITTING # 8 -#10 STRAIGHT.	1	
14	CC238750	12 GPM EXTERNAL FUSE	1	
15	CC601377	FITTING	1	
KIT	CC255596	INSTALLATION KIT	1	

https://truckmanualshub.com/

E65-MS 2-STAGE MAST - LOWERING CONTROL VALVE
S/N 200001A~

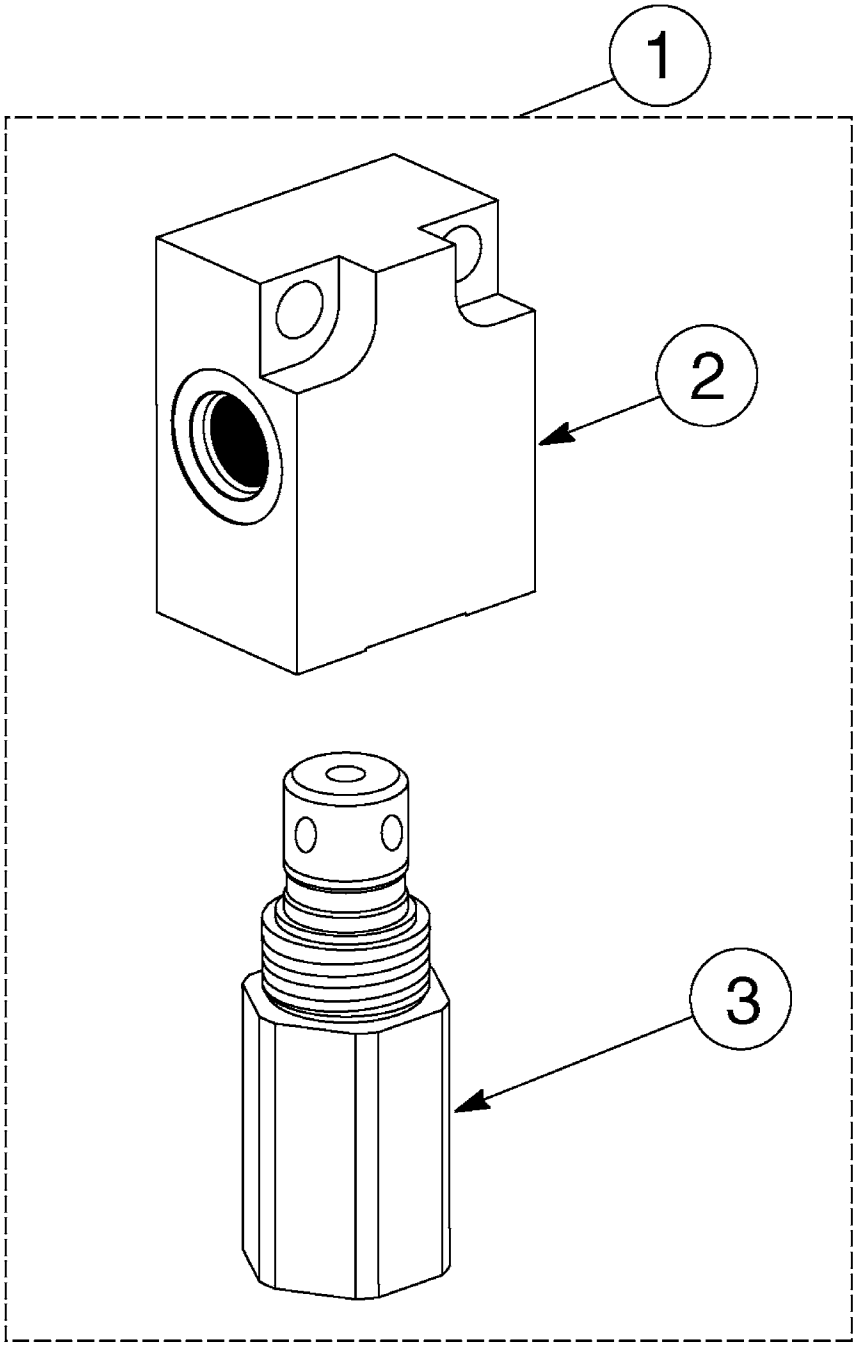

72-2850

https://truckmanualshub.com/

E65-MS 2-STAGE MAST - LOWERING CONTROL VALVE
S/N 200001A~

Item	Part Number	Description	Qty	Serial Number
1	CC253243	CONTROL VALVE - 20 GPM	1	
2	CC214793	.VALVE BODY.	1	
3	CC253242	.VALVE CARTRIDGE - 20 GPM	1	

https://truckmanualshub.com/

E65-MS 2-STAGE MAST - INTERNAL HOSE REEVING - SINGLE
S/N 200001A~

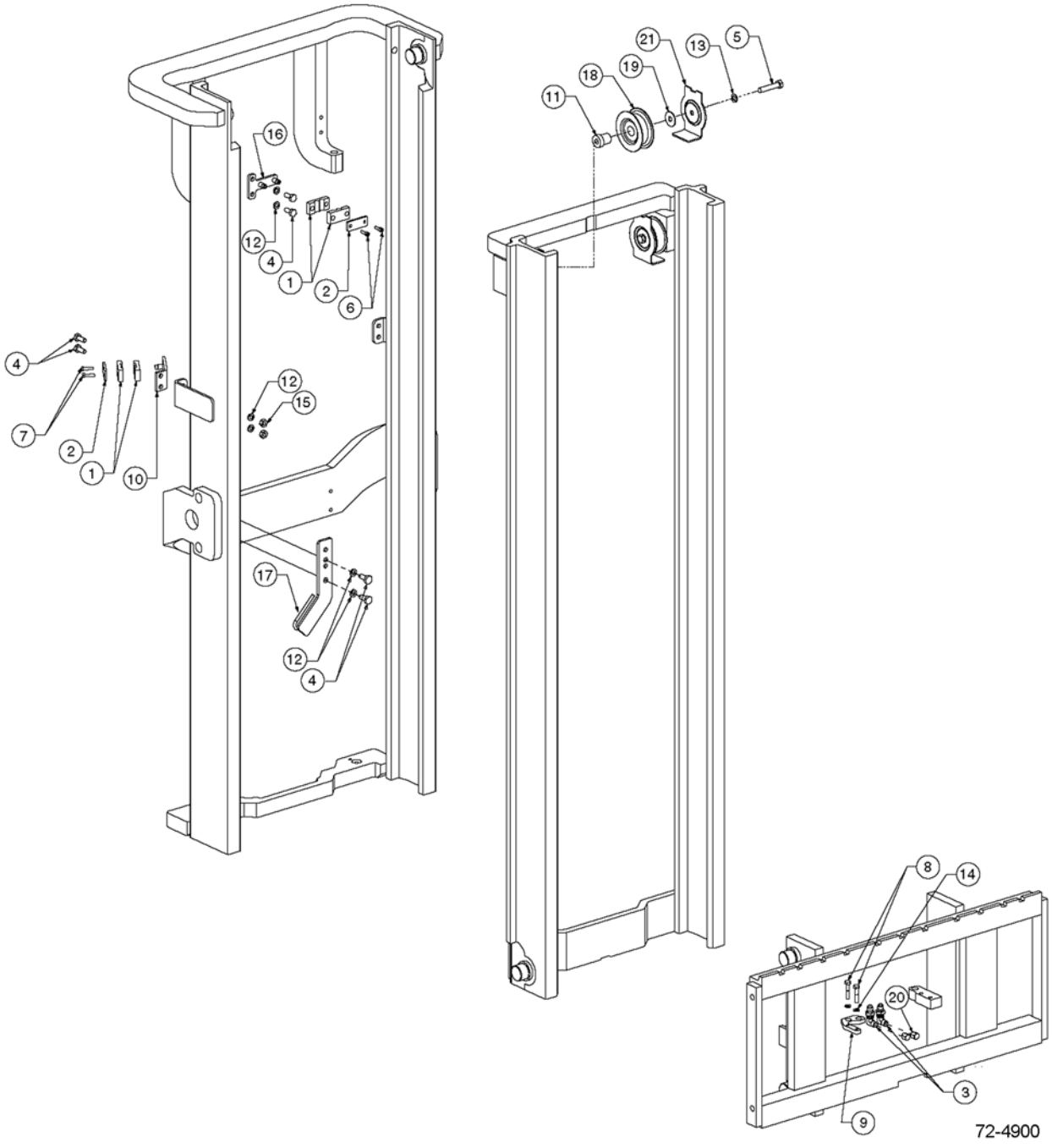

https://truckmanualshub.com/

E65-MS 2-STAGE MAST - INTERNAL HOSE REEVING - SINGLE
S/N 200001A~

Item	Part Number	Description	Qty	Serial Number
1	3EB-73-A5150	CLAMP, HOSE	4	
2	3EB-73-A5160	HOSE CLAMP BAR	2	
3	3EB-71-A6010	FITTING, BULKHEAD UNION	2	
4	3EB-73-A5490	CAPSCREW - M10 X 25LG	6	
5	3EB-79-A5230	CAPSCREW - M12 X 60LG	1	
6	CC761170	CAPSCREW - M6 X 20LG	2	
7	3EB-79-A5240	CAPSCREW - M6 X 25LG	2	
8	CC203202	CAPSCREW - M8 X 40 LG	2	
9	CC235886	BRACKET - CARRIAGE IHR	1	
10	3EB-73-A5640	IHR BRACKET	1	
11	CC235879	IHR STUB SHAFT	1	
12	3EB-79-A6040	WASHER, LOCK - M10	6	
13	3EB-79-A5360	WASHER, LOCK - M12	1	
14	CC206315	WASHER, LOCK - M8	2	
15	3EB-79-A5180	NUT - M10	2	
16	CC236902	IHR BRACKET - OUTER	1	
17	CC238170	IHR BRACKET - R.H.	1	
18	3EB-73-A5020	SHEAVE	1	
19	3EB-79-A5280	WASHER	1	
20	3EB-79-A5250	CAP	2	
21	CC216052	HOSE GUARD	1	
	OCL = OUTER CHANNEL LENGTH, MFH = MAXIMUM FORK HEIGHT			
	CC213003	HOSE (IHR KIT #255165) (72" OCL) (106" MFH)	2	
	CC213918	HOSE (IHR KIT #255170) (77" OCL) (116" MFH)	2	
	CC216918	HOSE (IHR KIT #255176) (83" OCL) (128" MFH)	2	
	CC234978	HOSE (IHR KIT #255185) (92" OCL) (146" MFH)	2	
	CC216928	HOSE (IHR KIT #255188) (95" OCL) (152" MFH)	2	
	CC213922	HOSE (IHR KIT #255191) (98" OCL) (158" MFH)	2	
	CC234991	HOSE (IHR KIT #255197) (104" OCL) (170" MFH)	2	

https://truckmanualshub.com/

E60-MS 2-STAGE MAST - INTERNAL HOSE REEVING - DOUBLE
S/N 200001A~

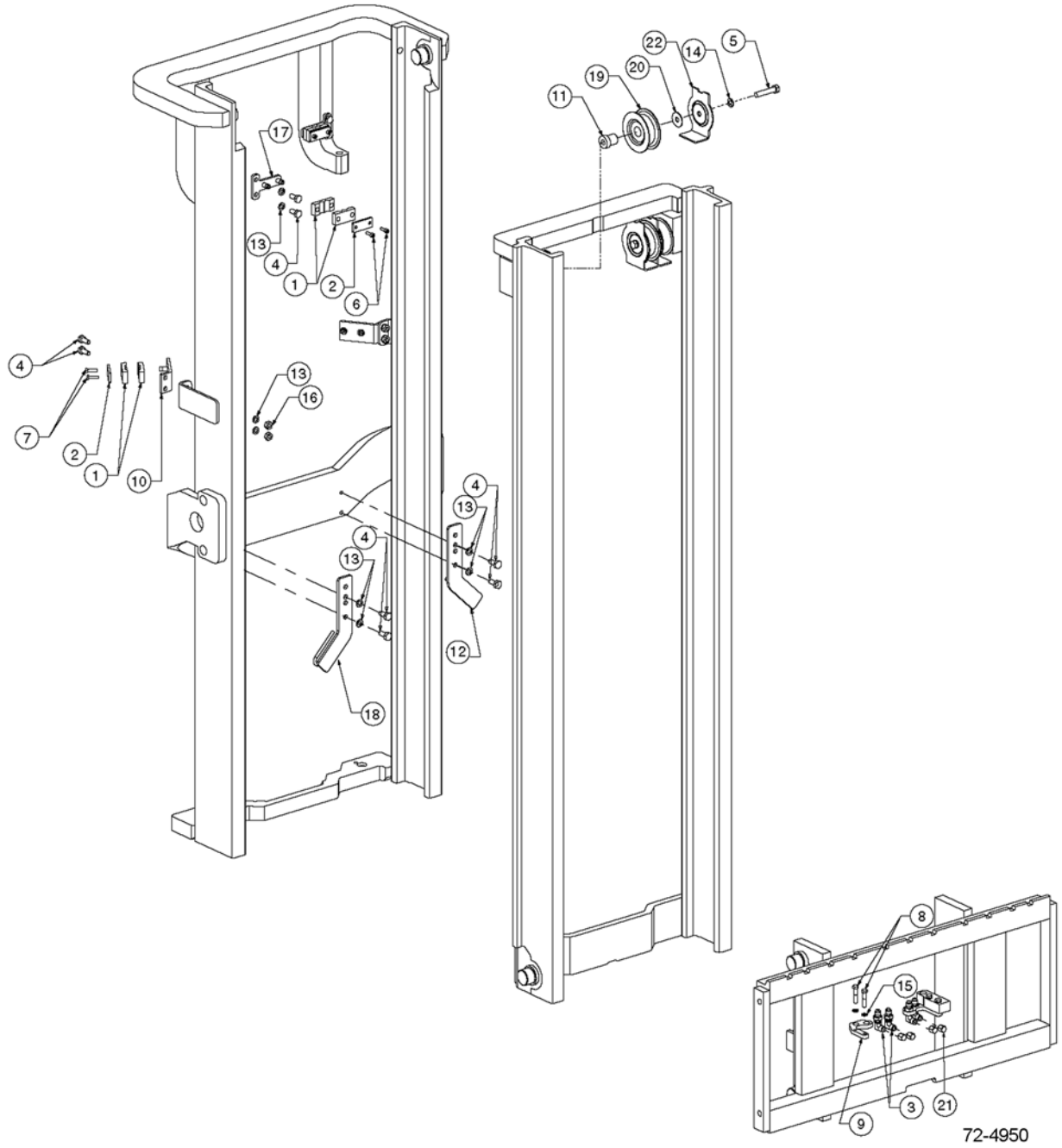

https://truckmanualshub.com/

E60-MS 2-STAGE MAST - INTERNAL HOSE REEVING - DOUBLE
S/N 200001A~

Item	Part Number	Description	Qty	Serial Number
1	3EB-73-A5150	CLAMP, HOSE	8	
2	3EB-73-A5160	HOSE CLAMP BAR	4	
3	3EB-71-A6010	FITTING, BULKHEAD UNION	4	
4	3EB-73-A5490	CAPSCREW - M10 X 25LG	12	
5	3EB-79-A6060	CAPSCREW - M12 X 60LG	2	
6	CC761170	CAPSCREW - M6 X 20LG	4	
7	3EB-79-A5240	CAPSCREW - M6 X 25LG	4	
8	CC203202	CAPSCREW - M8 X 40 LG	4	
9	CC235886	BRACKET - CARRIAGE IHR	2	
10	3EB-73-A5640	IHR BRACKET	2	
11	CC235879	IHR STUB SHAFT	2	
12	CC238171	IHR BRACKET - L.H.	1	
13	3EB-79-A6040	WASHER, LOCK - M10	12	
14	3EB-79-A5360	WASHER, LOCK - M12	2	
15	CC206315	WASHER, LOCK - M8	4	
16	3EB-79-A5180	NUT - M10	4	
17	CC236902	IHR BRACKET - OUTER	2	
18	CC238170	IHR BRACKET - R.H.	1	
19	3EB-73-A5020	SHEAVE	2	
20	3EB-79-A5280	WASHER	2	
21	3EB-79-A5250	CAP	4	
22	CC216052	HOSE GUARD	1	
	OCL = OUTER CHANNEL LENGTH, MFH = MAXIMUM FORK HEIGHT			
	CC213003	HOSE (IHR KIT #255336) (72" OCL) (106" MFH)	4	
	CC213918	HOSE (IHR KIT #255341) (77" OCL) (116" MFH)	4	
	CC216918	HOSE (IHR KIT #255347) (83" OCL) (128" MFH)	4	
	CC234978	HOSE (IHR KIT #255356) (92" OCL) (146" MFH)	4	
	CC216928	HOSE (IHR KIT #255359) (95" OCL) (152" MFH)	4	
	CC213922	HOSE (IHR KIT #255362) (98" OCL) (158" MFH)	4	
	CC234991	HOSE (IHR KIT #255368) (104" OCL) (170" MFH)	4	

https://truckmanualshub.com/

E65-MS 2-STAGE MAST — RECOMMENDED STOCK LIST (RSL)

NO

ILLUSTRATION

REQUIRED

https://truckmanualshub.com/

E65-MS 2-STAGE MAST — RECOMMENDED STOCK LIST (RSL)

Item	Part Number	Description	Qty	No. of Masts Serviced
		MAIN LIFT CYLINDERS		
	SEE PARTS PG	MAIN LIFT CYL ASSY	0	1 - 19
	SEE PARTS PG	MAIN LIFT CYL ASSY	1	20 - 50
	SEE PARTS PG	SEAL KIT	2	1 - 5
	SEE PARTS PG	SEAL KIT	4	6 - 19
	SEE PARTS PG	SEAL KIT	8	20 - 50
		INTERNAL REEVING		
	SEE PARTS PG	HOSE	2	1 - 5
	SEE PARTS PG	HOSE	4	6 - 19
	SEE PARTS PG	HOSE	8	20 - 50
	3EB-71-A6010	FITTING	1	1 - 5
	3EB-71-A6010	FITTING	2	6 - 19
	3EB-71-A6010	FITTING	4	20 - 50
	3EB-73-A5020	SHEAVE, IHR, SINGLE IHR	1	1 - 5
	3EB-73-A5020	SHEAVE, IHR, SINGLE IHR	2	6 - 19
	3EB-73-A5020	SHEAVE, IHR, SINGLE IHR	4	20 - 50
	3EB-73-A5020	SHEAVE, IHR, DOUBLE	2	1 - 5
	3EB-73-A5020	SHEAVE, IHR, DOUBLE	4	6 - 19
	3EB-73-A5020	SHEAVE, IHR, DOUBLE	8	20 - 50
		UPRIGHTS		
	3EB-79-A5110	CHAIN ANCHOR	1	1 - 5
	3EB-79-A5110	CHAIN ANCHOR	2	6 - 19
	3EB-79-A5110	CHAIN ANCHOR	4	20 - 50
	3EB-79-A5150	PIN, CHAIN ANCHOR	1	1 - 5
	3EB-79-A5150	PIN, CHAIN ANCHOR	2	6 - 19
	3EB-79-A5150	PIN, CHAIN ANCHOR	4	20 - 50
	3EB-79-A6090	NUT	4	1 - 5
	3EB-79-A6090	NUT	8	6 - 19
	3EB-79-A6090	NUT	32	20 - 50
	3EB-79-A6080	PIN, COTTER	6	1 - 5
	3EB-79-A6080	PIN, COTTER	12	6 - 19
	3EB-79-A6080	PIN, COTTER	36	20 - 50
	3EB-79-A6081	PIN, COTTER	4	1 - 5
	3EB-79-A6081	PIN, COTTER	8	6 - 19
	3EB-79-A6081	PIN, COTTER	16	20 - 50
	3EB-79-A6050	SHIM, .03 IN.	16	1 - 5
	3EB-79-A6050	SHIM, .03 IN.	32	6 - 19
	3EB-79-A6050	SHIM, .03 IN.	64	20 - 50

PARTS LIST CONTINUED ON NEXT PAGE

https://truckmanualshub.com/

E65-MS 2-STAGE MAST — RECOMMENDED STOCK LIST (RSL)

Item	Part Number	Description	Qty	No. of Masts Serviced
	3EB-79-A5210	ROLLER	8	1 - 5
	3EB-79-A5210	ROLLER	24	6 - 19
	3EB-79-A5210	ROLLER	48	20 - 50
	3EB-73-A5720	SERVICE KIT, WEAR PLUG	2	1 - 5
	3EB-73-A5720	SERVICE KIT, WEAR PLUG	4	6 - 19
	3EB-73-A5720	SERVICE KIT, WEAR PLUG	8	20 - 50
		CARRIAGE AND CHAINS		
	SEE PARTS PG	MAIN LIFT CHAINS	2	1 - 5
	SEE PARTS PG	MAIN LIFT CHAINS	4	6 - 19
	SEE PARTS PG	MAIN LIFT CHAINS	8	20 - 50
	3EB-79-A5220	ROLLER - 6-ROLLER CARRIAGE	8	1 - 5
	3EB-79-A5220	ROLLER - 6-ROLLER CARRIAGE	16	6 - 19
	3EB-79-A5220	ROLLER - 6-ROLLER CARRIAGE	32	20 - 50
	3EB-79-A5140	CHAIN ANCHOR	1	1 - 5
	3EB-79-A5140	CHAIN ANCHOR	2	6 - 19
	3EB-79-A5140	CHAIN ANCHOR	4	20 - 50
	3EB-79-A6081	PIN, COTTER	4	1 - 5
	3EB-79-A6081	PIN, COTTER	8	6 - 19
	3EB-79-A6081	PIN, COTTER	16	20 - 50
	3EB-79-A6080	PIN, COTTER	4	1 - 5
	3EB-79-A6080	PIN, COTTER	8	6 - 19
	3EB-79-A6080	PIN, COTTER	16	20 - 50
	3EB-79-A5150	CHAIN PIN	8	1 - 19
	3EB-79-A5150	CHAIN PIN	16	20 - 50
	3EB-73-A5450	NUT	2	1 - 50

https://truckmanualshub.com/

NOTES:

https://truckmanualshub.com/

E65-MT 3-STAGE MAST - SAFETY DECALS
S/N 200001A~

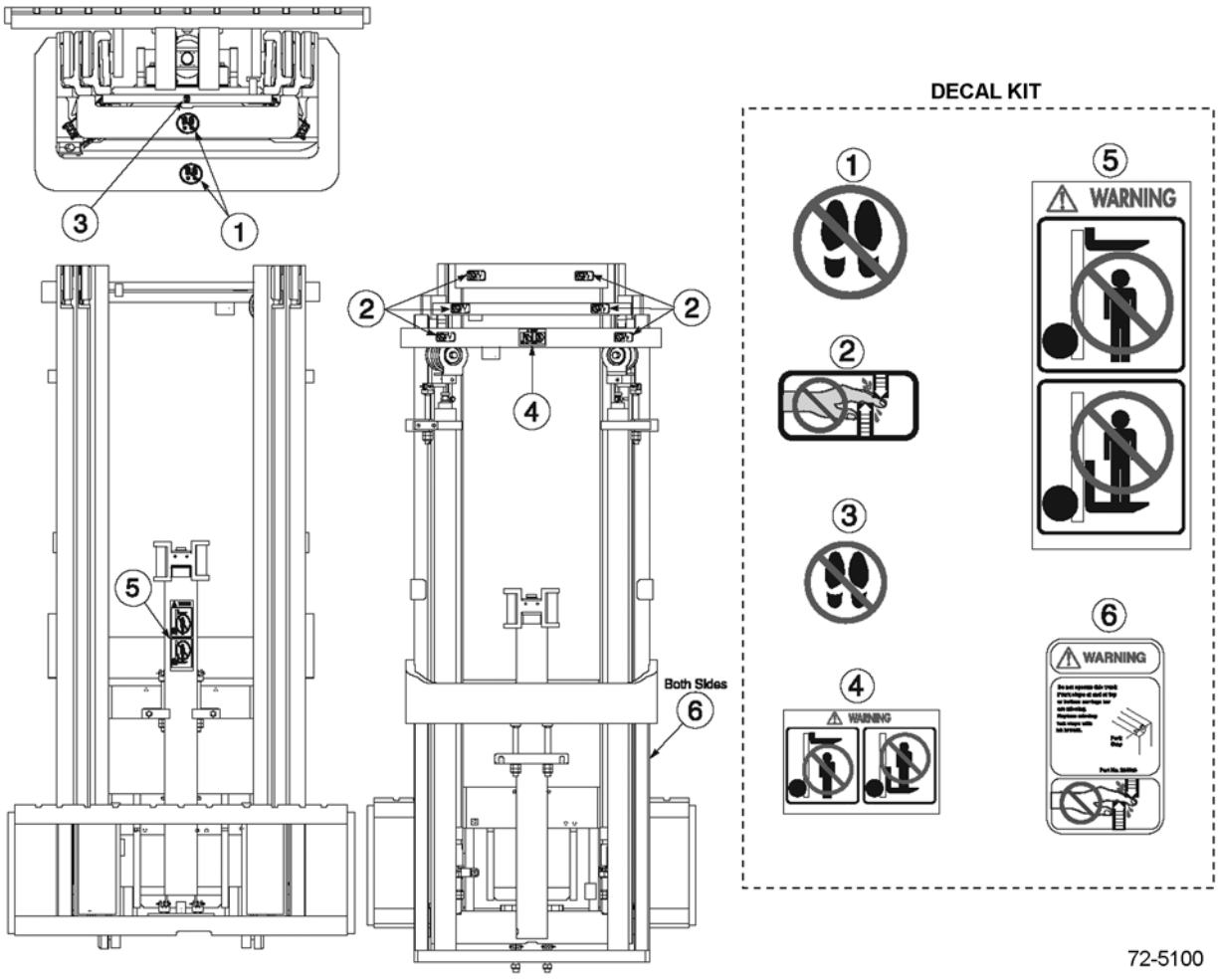

https://truckmanualshub.com/

E65-MT 3-STAGE MAST - SAFETY DECALS
S/N 200001A~

Item	Part Number	Description	Qty	Serial Number
1	3EB-79-A6020	DECAL - "NO STEP"	2	
2	3EB-79-A6010	DECAL - "HANDS OFF"	6	
3	3EB-79-A6030	DECAL - "NO STEP"	1	
4	CC210850	DECAL - "WARNING"	1	
5	3EB-79-A5310	DECAL - "WARNING:	1	
6	CC224053	DECAL - "FORK STOP"	2	
KIT	CC210851	DECAL KIT	1	

https://truckmanualshub.com/

E65-MT 3-STAGE MAST - MAIN LIFT CYLINDERS
S/N 200001A~

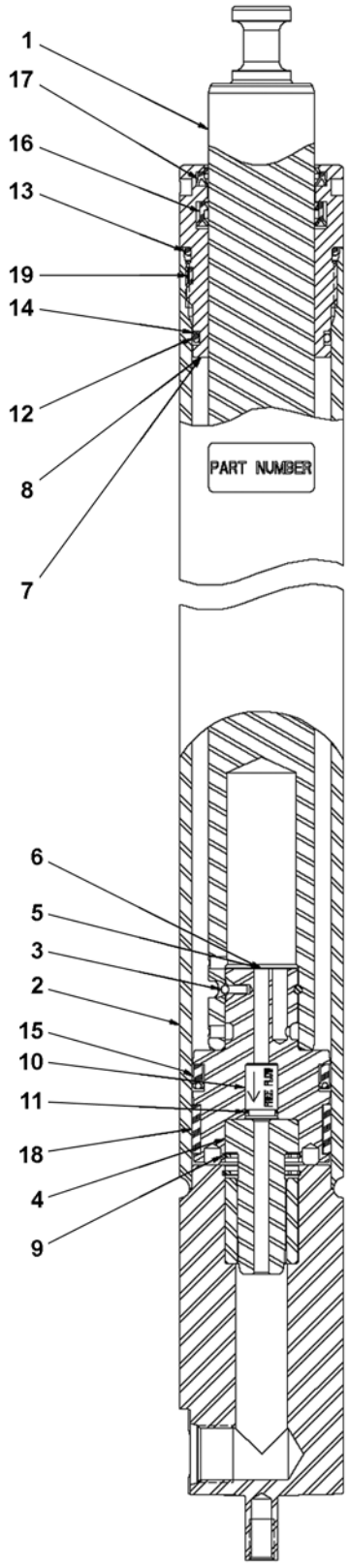

72-5200

https://truckmanualshub.com/

E65-MT 3-STAGE MAST - MAIN LIFT CYLINDERS
S/N 200001A~

Item	Part Number	Description	Qty	Serial Number
1	NSS	ROD	1	
2	NSS	SHELL	1	
3	NSS	WRAP-IN WIRE (SEAL KIT)	1	
4	NSS	CUSHION PLUNGER	1	
5	NSS	PISTON (PISTON KIT)	1	
6	NSS	PISTON ASSY (PISTON KIT)	1	
7	NSS	RETAINER GLAND (RETAINER KIT)	1	
8	NSS	RETAINER ASSY (RETAINER KIT)	1	
9	NSS	SNAP RING (CHECK VALVE KIT)	1	
10	NSS	CHECK VALVE (CHECK VALVE KIT)	1	
11	NSS	O-RING (SEAL KIT)	1	
12	NSS	O-RING (SEAL KIT)	1	
13	NSS	O-RING (SEAL KIT)	1	
14	NSS	BACKUP RING (SEAL KIT)	1	
15	NSS	POLYPAK (SEAL KIT)	1	
16	NSS	UBR SEAL (SEAL KIT)	1	
17	NSS	ROD WIPER (SEAL KIT)	1	
18	NSS	WEAR BAND (SEAL KIT)	1	
19	NSS	LOCKING INSERT (SEAL KIT)	1	
KIT	CC1004776	RETAINER KIT	1	
KIT	CC1004775	SEAL KIT	1	
KIT	CC1004774	PISTON KIT	1	
KIT	CC1004777	CHECK VALVE KIT	1	
	OCL = OUTER CHANNEL LENGTH, MFH = MAXIMUM FORK HEIGHT			
	CC1003245	MAIN LIFT CYLINDER - (71" OCL) (150" MFH).	1	
	CC1003251	MAIN LIFT CYLINDER - (77" OCL) (168" MFH).	1	
	CC1003256	MAIN LIFT CYLINDER - (82" OCL) (183" MFH).	1	
	CC1003260	MAIN LIFT CYLINDER - (86" OCL) (189" MFH).	1	
	CC1003272	MAIN LIFT CYLINDER - (98" OCL) (217" MFH).	1	
	CC1003279	MAIN LIFT CYLINDER - (105" OCL) (230" MFH)	1	
	CC1003283	MAIN LIFT CYLINDER - (109" OCL) (238" MFH)	1	

https://truckmanualshub.com/

E65-MT 3-STAGE MAST - FREE LIFT CYLINDER
S/N 200001A~

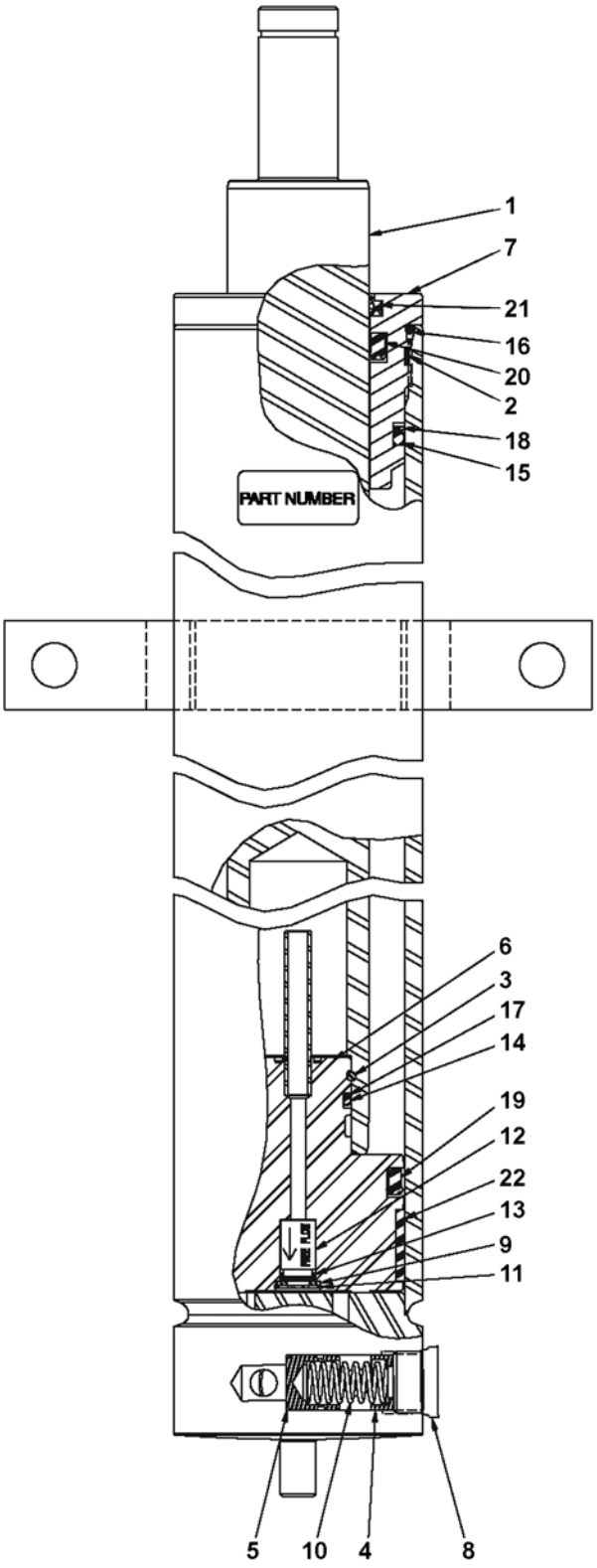

https://truckmanualshub.com/

E65-MT 3-STAGE MAST - FREE LIFT CYLINDER
S/N 200001A~

Item	Part Number	Description	Qty	Serial Number
1	NSS	FREE LIFT ROD	1	
2	NSS	LOCKING INSERT (SEAL KIT)	1	
3	NSS	WRAP-IN WIRE (SEAL KIT)	1	
4	CC1004783	SPRING GUIDE (CHECK VALVE KIT)	1	
5	CC1004782	FUSE PISTON (CHECK VALVE KIT)	1	
6	NSS	FREE LIFT PISTON ASSY (PISTON KIT)	1	
7	CC1004780	RETAINER	1	
8	NSS	PLUG	1	
9	NSS	WASHER	2	
10	CC1004781	COMPRESSION SPRING (CHECK VALVE KIT)	1	
11	NSS	SNAP RING (PISTON KIT)	1	
12	NSS	CHECK VALVE (PISTON KIT)	1	
13	NSS	O-RING (SEAL KIT)	1	
14	NSS	O-RING (SEAL KIT)	1	
15	NSS	O-RING (SEAL KIT)	1	
16	NSS	O-RING (SEAL KIT)	1	
17	NSS	BACK-UP RING (SEAL KIT)	1	
18	NSS	BACKUP RING (SEAL KIT)	1	
19	NSS	BACKUP U-CUP (SEAL KIT)	1	
20	NSS	U-CUP (SEAL KIT)	1	
21	NSS	ROD WIPER (SEAL KIT)	1	
22	NSS	WEARBAND (SEAL KIT)	1	
KIT	CC1004779	SEAL KIT	1	
KIT	CC1004777	CHECK VALVE KIT	1	
KIT	CC1004778	PISTON KIT	1	
	OCL = OUTER CHANNEL LENGTH, MFH = MAXIMUM FORK HEIGHT			
	CC1003305	FREE LIFT CYLINDER - (71" OCL) (150" MFH)	1	
	CC1003311	FREE LIFT CYLINDER - (77" OCL) (168" MFH)	1	
	CC1003316	FREE LIFT CYLINDER - (82" OCL) (183" MFH)	1	
	CC1003320	FREE LIFT CYLINDER - (86" OCL) (189" MFH)	1	
	CC1003332	FREE LIFT CYLINDER - (98" OCL) (217" MFH)	1	
	CC1003339	FREE LIFT CYLINDER - (105" OCL) (230" MFH)	1	
	CC1003343	FREE LIFT CYLINDER - (109" OCL) (238" MFH)	1	

https://truckmanualshub.com/

E65-MT 3-STAGE MAST - OUTER UPRIGHT
S/N 200001A~

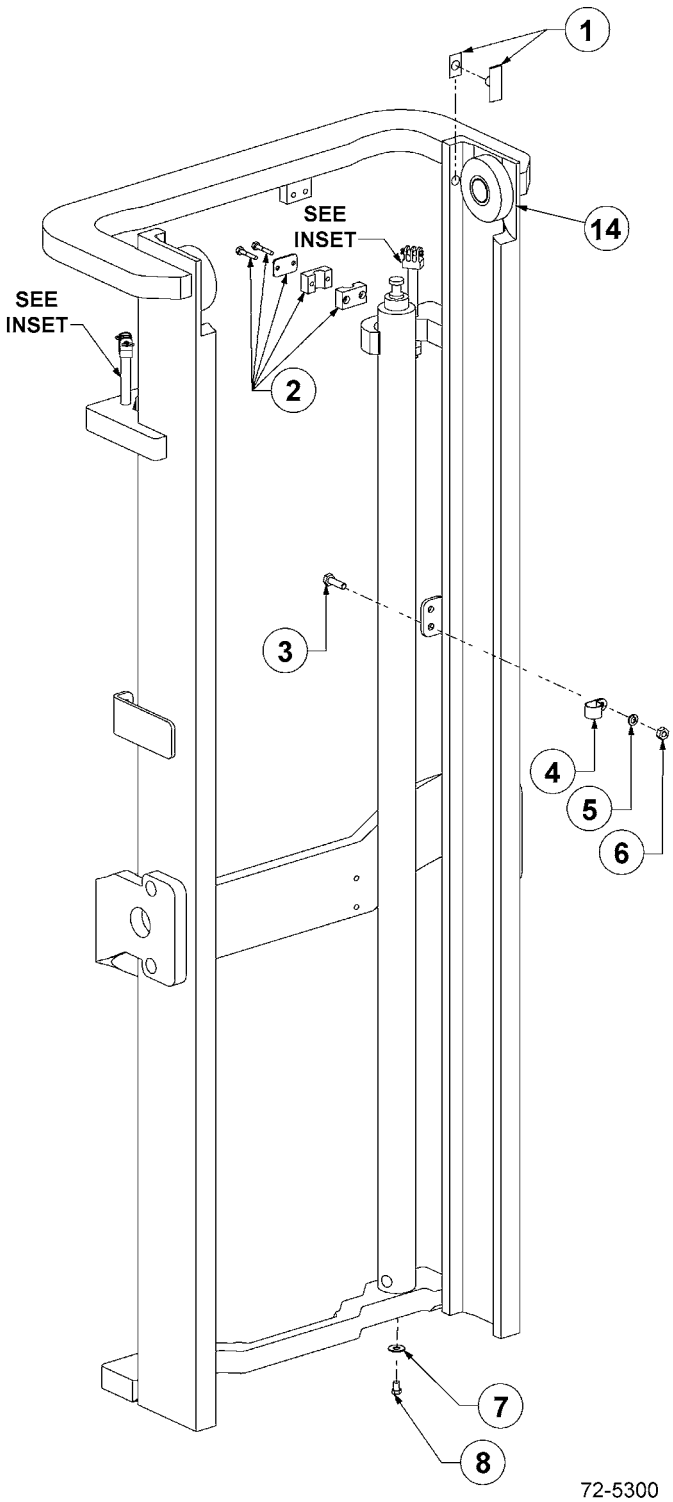

72-5300

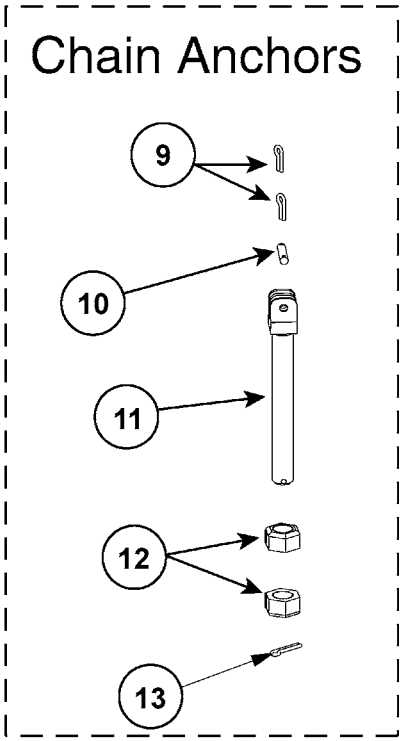

72-3300A

https://truckmanualshub.com/

E65-MT 3-STAGE MAST - OUTER UPRIGHT
S/N 200001A~

Item	Part Number	Description	Qty	Serial Number
		OCL = OUTER CHANNEL LENGTH, MFH = MAXIMUM FORK HEIGHT		
	CC233372	OUTER UPRIGHT - (71" OCL) (150" MFH)	1	
	CC233390	OUTER UPRIGHT - (77" OCL) (168" MFH)	1	
	CC233405	OUTER UPRIGHT - (82" OCL) (183" MFH)	1	
	CC233417	OUTER UPRIGHT - (86" OCL) (189" MFH)	1	
	CC233453	OUTER UPRIGHT - (98" OCL) (217" MFH)	1	
	CC233474	OUTER UPRIGHT - (105" OCL) (230" MFH)	1	
	CC233486	OUTER UPRIGHT - (109" OCL) (238" MFH)	1	
1	3EB-73-A5720	THRUST PLUG SERVICE KIT	1	
2	CC237555	CLAMP KIT	1	
3	CC200788	CAPSCREW - M10 X 35	1	
4	CC230765	HOSE CLAMP	1	
5	3EB-79-A6040	WASHER, LOCK - M10	2	
6	3EB-79-A6040	WASHER, LOCK - M10	1	
7	3EB-79-A5350	WASHER, FLAT	2	
8	3EB-79-A5340	BOLT	2	
9	3EB-79-A6080	PIN, COTTER	12	
10	CC684305	PIN, CHAIN ANCHOR	6	
11	CC201435	CHAIN ANCHOR	4	
12	3EB-79-A6090	NUT	12	
13	3EB-79-A6081	PIN, COTTER	6	
14	3EB-79-A5210	LOAD ROLLER	2	

https://truckmanualshub.com/

E65-MT 3-STAGE MAST - INTERMEDIATE UPRIGHT
S/N 200001A~

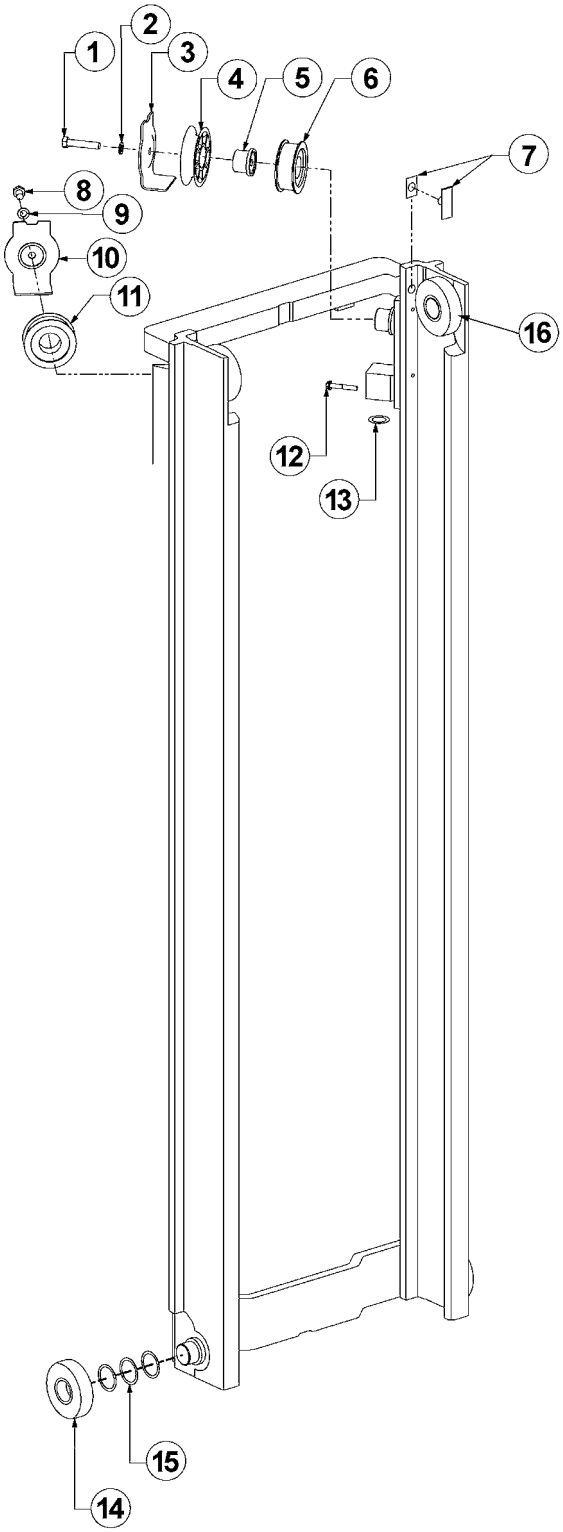

72-5330

https://truckmanualshub.com/

E65-MT 3-STAGE MAST - INTERMEDIATE UPRIGHT
S/N 200001A~

Item	Part Number	Description	Qty	Serial Number
		OCL = OUTER CHANNEL LENGTH, MFH = MAXIMUM FORK HEIGHT		
	CC253962	INTERMEDIATE UPRIGHT - (71" OCL) (150" MFH)	1	
	CC253968	INTERMEDIATE UPRIGHT - (77" OCL) (168" MFH)	1	
	CC253973	INTERMEDIATE UPRIGHT - (82" OCL) (183" MFH)	1	
	CC253977	INTERMEDIATE UPRIGHT - (86" OCL) (189" MFH)	1	
	CC253989	INTERMEDIATE UPRIGHT - (98" OCL) (217" MFH)	1	
	CC253996	INTERMEDIATE UPRIGHT - (105" OCL) (230" MFH).	1	
	CC254000	INTERMEDIATE UPRIGHT - (109" OCL) (238" MFH)	1	
1	3EB-79-A6060	CAPSCREW - M12 X 60.	1	
2	3EB-79-A5360	WASHER, LOCK - M12	2	
3	3EB-73-A5120	HOSE GUARD	1	
4	3EB-73-A5070	HOSE SHEAVE	1	
5	3EB-73-A5210	STUBSHAFT.	1	
6	3EB-73-A5010	CHAIN SHEAVE	4	
7	3EB-73-A5720	THRUST PLUG SERVICE KIT	1	
8	3EB-79-A5270	CAPSCREW - M12 X 20.	1	
9	3EB-79-A5360	WASHER, LOCK - M12	2	
10	3EB-73-A5140	HOSE GUARD	1	
11	3EB-73-A5010	CHAIN SHEAVE	4	
12	3EB-79-A5380	BOLT.	2	
13	CC238137	SHIM KIT - MAIN LIFT CYLINDER.	2	
14	3EB-79-A5210	ROLLER	8	
15	3EB-79-A6050	SHIM (USE AS REQUIRED)	24	
16	3EB-79-A5210	LOAD ROLLER.	2	

https://truckmanualshub.com/

E65-MT 3-STAGE MAST - INNER UPRIGHT
S/N 200001A~

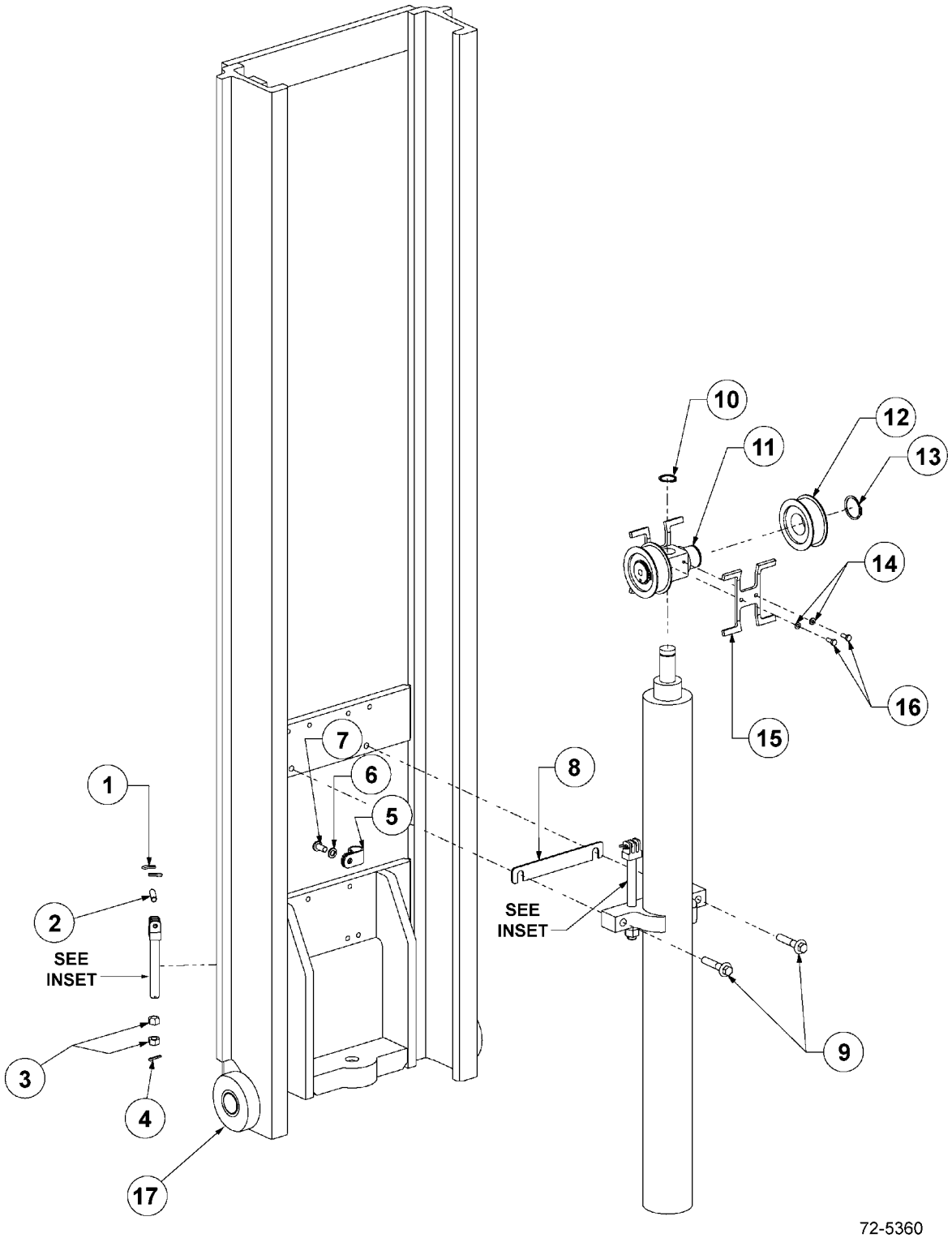

https://truckmanualshub.com/

E65-MT 3-STAGE MAST - INNER UPRIGHT
S/N 200001A~

Item	Part Number	Description	Qty	Serial Number
		OCL = INNER CHANNEL LENGTH, MFH = MAXIMUM FORK HEIGHT		
	CC233374	INNER UPRIGHT - (71" OCL) (150" MFH)	1	
	CC233392	INNER UPRIGHT - (77" OCL) (168" MFH)	1	
	CC233407	INNER UPRIGHT - (82" OCL) (183" MFH)	1	
	CC233419	INNER UPRIGHT - (86" OCL) (189" MFH)	1	
	CC233455	INNER UPRIGHT - (98" OCL) (217" MFH)	1	
	CC233476	INNER UPRIGHT - (105" OCL) (230" MFH)	1	
	CC233488	INNER UPRIGHT - (109" OCL) (238" MFH)	1	
1	3EB-79-A6080	PIN, COTTER	12	
2	CC684305	PIN, CHAIN ANCHOR	6	
3	3EB-79-A6090	NUT	12	
4	3EB-79-A6081	PIN, COTTER	6	
5	3EB-73-A5110	CLAMP, HOSE	1	
6	3EB-79-A6040	WASHER, LOCK - M10	1	
7	3EB-79-A5330	CAPSCREW - M10 X 12	1	
8	3EB-79-A5390	SHIM PLATE	4	
9	3EB-73-A5320	CAPSCREW - M12	2	
10	3EB-73-A5330	SNAP RING - 29MM	1	
11	3EB-73-A5310	CROSSHEAD	1	
12	3EB-73-A5010	SHEAVE, CHAIN	4	
13	3EB-79-A6070	SNAP RING - 40MM	2	
14	3EB-73-A5340	.WASHER, LOCK - M6	4	
15	3EB-73-A5140	.CHAIN GUARD	2	
16	3EB-73-A5350	.CAPSCREW - M6	4	
17	3EB-79-A5210	LOAD ROLLER	2	
KIT	CC246821	CHAIN GUARD KIT	1	

https://truckmanualshub.com/

E65-MT 3-STAGE MAST - CARRIAGE - 6-ROLLER
S/N 200001A~

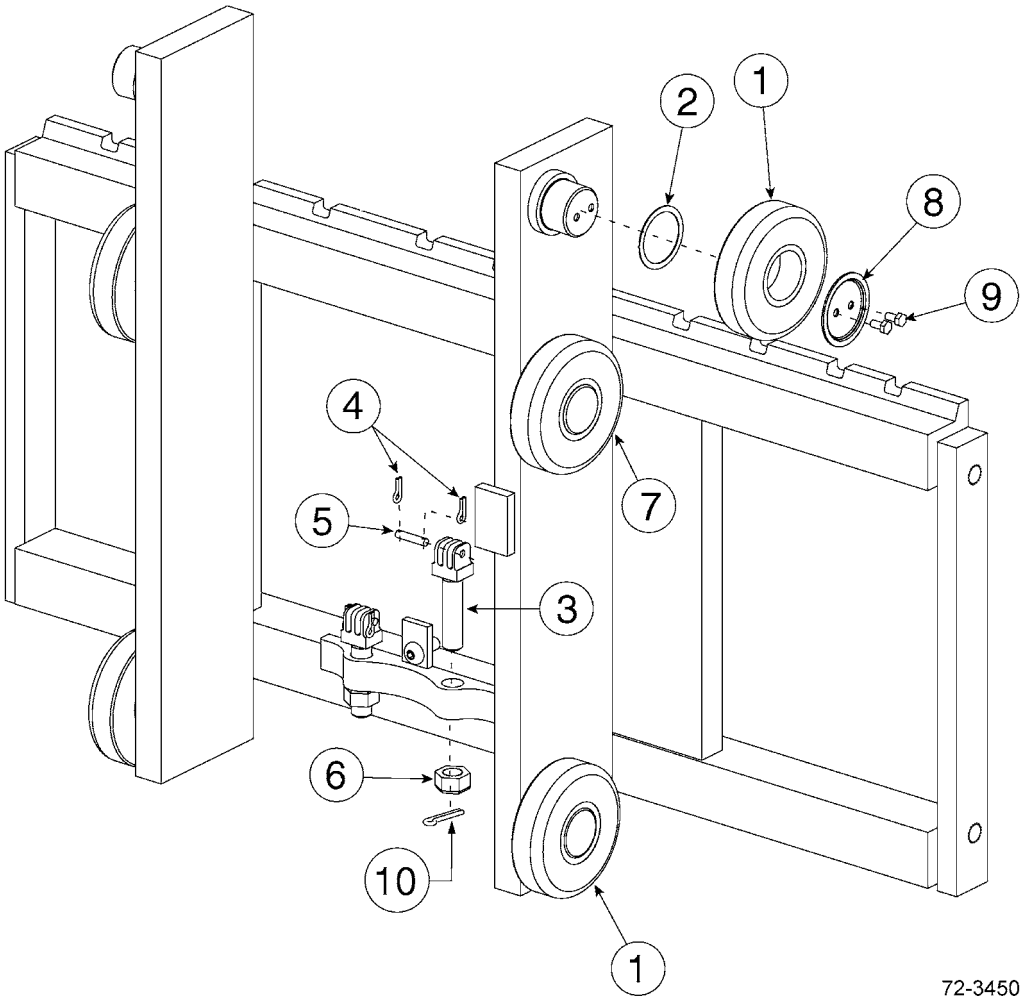

https://truckmanualshub.com/

E65-MT 3-STAGE MAST - CARRIAGE - 6-ROLLER
S/N 200001A~

Item	Part Number	Description	Qty	Serial Number
	CC251519	CARRIAGE - 37" - CUSHION TIRE SPEC	1	
	CC251520	CARRIAGE - 41" - CUSHION TIRE SPEC	1	
	CC251521	CARRIAGE - 37" - PNEUMATIC TIRE SPEC	1	
	CC251522	CARRIAGE - 41" - PNEUMATIC TIRE SPEC	1	
1	3EB-79-A5210	LOAD ROLLER	4	
2	3EB-79-A6050	SHIM, LOAD ROLLER	AR	
3	CC234001	CHAIN ANCHOR	2	
4	3EB-79-A6080	PIN, COTTER	4	
5	3EB-79-A6080	PIN, CHAIN ANCHOR	2	
6	3EB-73-A5450	NUT	2	
7	3EB-79-A5220	LOAD ROLLER (TOP ROLLER KIT)	2	
8	3EB-73-A5460	RETAINER (TOP ROLLER KIT)	2	
9	3EB-73-A5470	CAPSCREW - M6 X 12LG (TOP ROLLER KIT)	4	
10	3EB-79-A6081	PIN, COTTER	2	
KIT	CC234005	TOP ROLLER KIT	1	

https://truckmanualshub.com/

E65-MT 3-STAGE MAST - HOIST CHAINS & FREE LIFT HOSE
S/N 200001A~

Hoist Chains

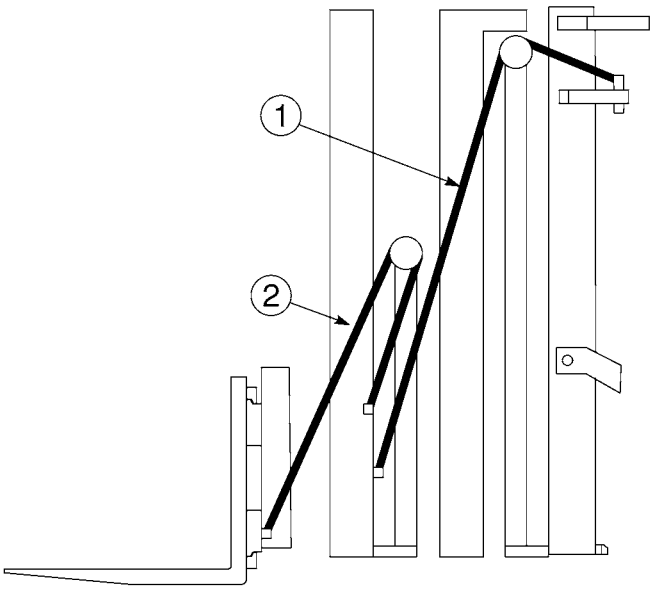

Free Lift Hose

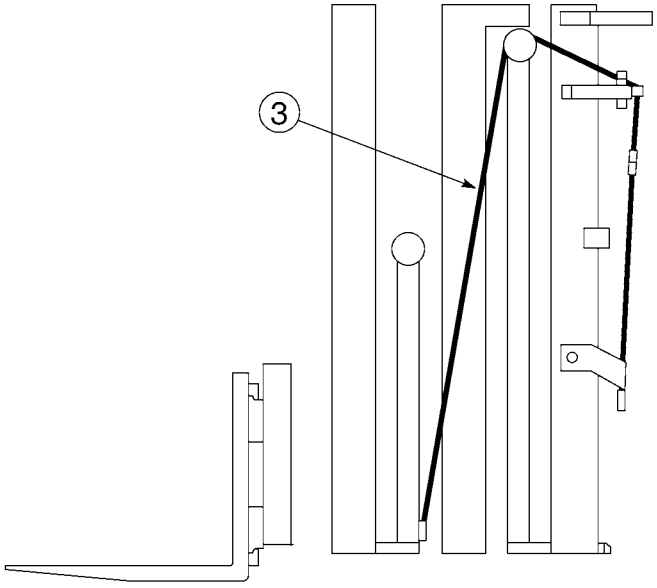

72-3500

https://truckmanualshub.com/

E65-MT 3-STAGE MAST - HOIST CHAINS & FREE LIFT HOSE
S/N 200001A~

Item	Part Number	Description	Qty	Serial Number
		OCL = OUTER CHANNEL LENGTH, MFH = MAXIMUM FORK HEIGHT		
1	CC681430	MAIN LIFT CHAIN - (71" OCL) (150" MFH)	2	
	CC680459	MAIN LIFT CHAIN - (77" OCL) (168" MFH)	2	
	CC683988	MAIN LIFT CHAIN - (82" OCL) (183" MFH)	2	
	CC678797	MAIN LIFT CHAIN - (86" OCL) (189" MFH)	2	
	CC683996	MAIN LIFT CHAIN - (98" OCL) (217" MFH)	2	
	CC678777	MAIN LIFT CHAIN - (105" OCL) (230" MFH) . . .	2	
	CC683958	MAIN LIFT CHAIN - (109" OCL) (238" MFH) . . .	2	
2	CC683977	FREE LIFT CHAIN - (71" OCL) (150" MFH). . . .	2	
	CC683980	FREE LIFT CHAIN - (77" OCL) (168" MFH). . . .	2	
	CC678770	FREE LIFT CHAIN - (82" OCL) (183" MFH). . . .	2	
	CC683985	FREE LIFT CHAIN - (86" OCL) (189" MFH). . . .	2	
	CC683982	FREE LIFT CHAIN - (98" OCL) (217" MFH). . . .	2	
	CC683782	FREE LIFT CHAIN - (105" OCL) (230" MFH). . .	2	
	CC683785	FREE LIFT CHAIN - (109" OCL) (238" MFH). . .	2	
3	CC233033	FREE LIFT HOSE - (71" OCL) (150" MFH)	1	
	CC233057	FREE LIFT HOSE - (77" OCL) (168" MFH)	1	
	CC233077	FREE LIFT HOSE - (82" OCL) (183" MFH)	1	
	CC233093	FREE LIFT HOSE - (86" OCL) (189" MFH)	1	
	CC233141	FREE LIFT HOSE - (98" OCL) (217" MFH)	1	
	CC233169	FREE LIFT HOSE - (105" OCL) (230" MFH) . . .	1	
	CC233185	FREE LIFT HOSE - (109" OCL) (238" MFH) . . .	1	

https://truckmanualshub.com/

E65-MT 3-STAGE MAST - LOAD BACKREST
S/N 200001A~

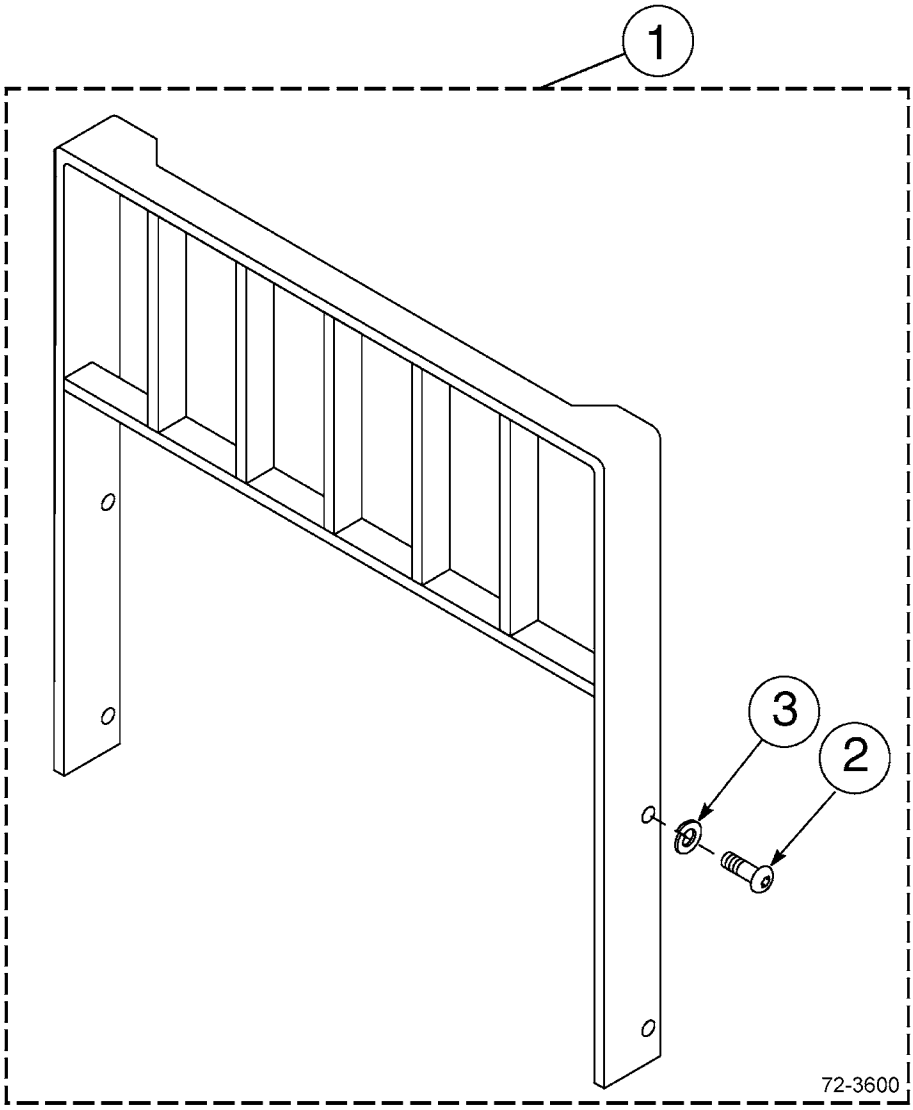

https://truckmanualshub.com/

E65-MT 3-STAGE MAST - LOAD BACKREST
S/N 200001A~

Item	Part Number	Description	Qty	Serial Number
		CLASS III LOAD BACKRESTS (HEIGHT X WIDTH)		
1	CC684784	BACKREST - 37" X 36"	1	
	CC684785	BACKREST - 37" X 48"	1	
	CC226831	BACKREST - 37" X 54"	1	
	CC684786	BACKREST - 37" X 60"	1	
	CC684787	BACKREST - 41" X 36"	1	
	CC684788	BACKREST - 41" X 48"	1	
	CC684789	BACKREST - 41" X 60"	1	
	CC362796	BACKREST - 41" X 72"	1	
	CC246396	BACKREST - 43.3" X 48"	1	
	CC684790	BACKREST - 49" X 36"	1	
	CC684791	BACKREST - 49" X 48"	1	
	CC684792	BACKREST - 49" X 60"	1	
	CC226825	BACKREST - 51" X 48"	1	
	CC231212	BACKREST - 53" X 30"	1	
	CC231260	BACKREST - 53" X 36"	1	
	CC357671	BACKREST - 53" X 48"	1	
	CC249220	BACKREST - 55.3" X 48"	1	
	CC235370	BACKREST - 60" X 48"	1	
	CC684793	BACKREST - 61" X 36"	1	
	CC226834	BACKREST - 61" X 40"	1	
	CC684794	BACKREST - 61" X 48"	1	
	CC684795	BACKREST - 61" X 60"	1	
	CC226828	BACKREST - 62" X 48"	1	
	CC225576	BACKREST - 72" X 48"	1	
2	CC200173	.CAPSCREW - M16 X 2, 0 X 35-8.8	4	
3	3EB-71-A6030	.WASHER, LOCK - M16	4	

https://truckmanualshub.com/

E65-MT 3-STAGE MAST - INSTALLATION COMPONENTS
PNEUMATIC TIRE MODELS - S/N 200001A~

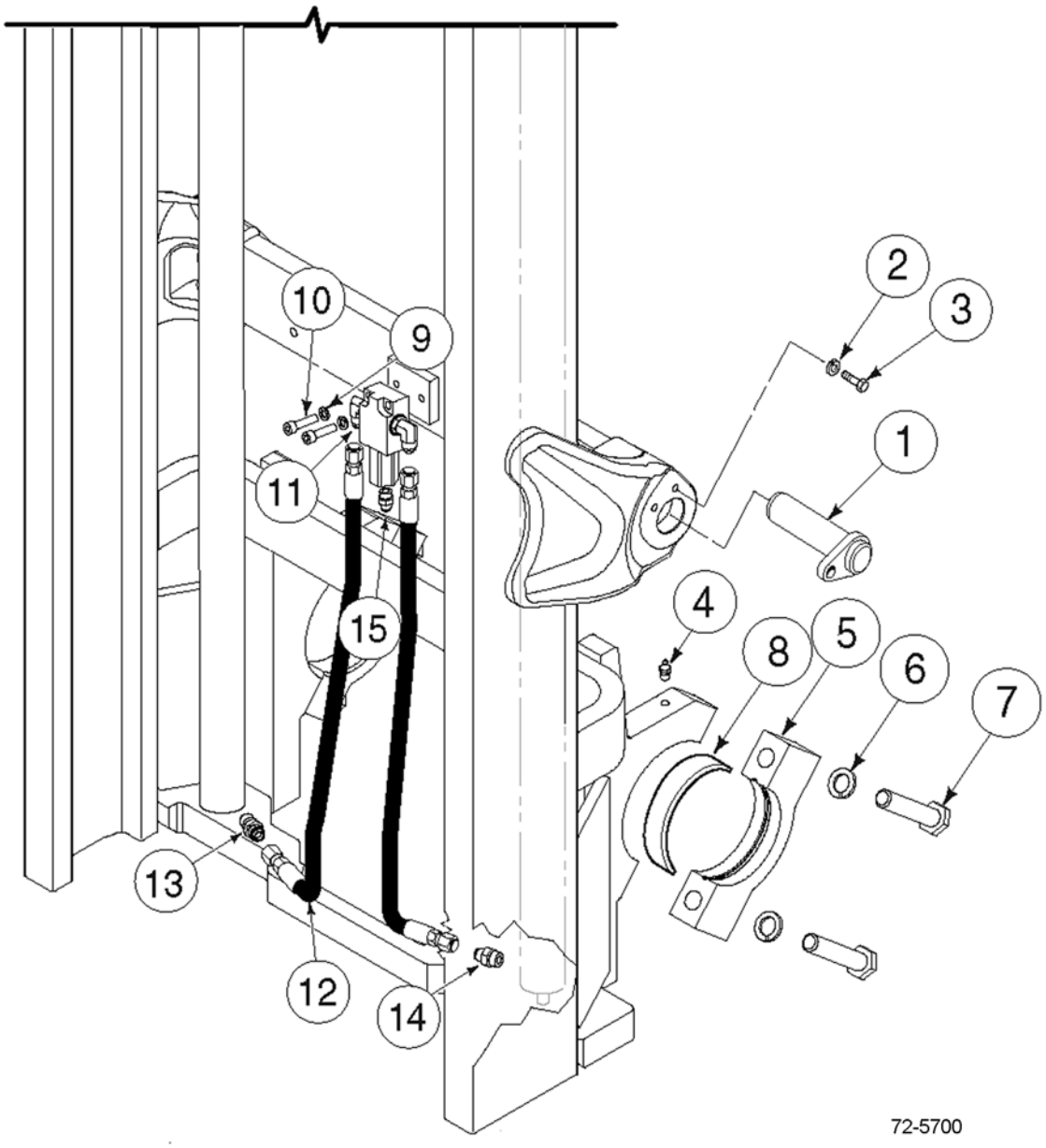

https://truckmanualshub.com/

E65-MT 3-STAGE MAST - INSTALLATION COMPONENTS
PNEUMATIC TIRE MODELS - S/N 200001A~

Item	Part Number	Description	Qty	Serial Number
1	3EB-41-51750	TILT PIN	2	
2	3EB-79-A6040	WASHER, LOCK.	4	
3	CC212632	CAPSCREW	2	
4	CC7418	FITTING, GREASE	2	
5	CC252686	CAP.	2	
6	3EB-71-A6030	WASHER, LOCK.	4	
7	CC251906	CAPSCREW	4	
8	3EB-71-51290	BUSHING (2.0T, 2.5T, 2.8T, 3.0T).	2	
	3EB-71-61790	BUSHING (3.2T, 3.5T)	2	
9	CC642649	FITTING #8 - #10 - 90°	1	
10	CC767611	CAPSCREW	2	
11	CC601250	FITTING # 8 - 90° ELBOW	1	
12	CC252793	MAIN LIFT HOSE - RH	1	
	CC255652	MAIN LIFT HOSE - LH	1	
13	CC611289	FITTING #8 -#10 - STRAIGHT	1	
14	CC251997	14 GPM EXTERNAL FUSE	1	
15	CC601377	FITTING	1	
KIT	CC255596	INSTALLATION KIT	1	

https://truckmanualshub.com/

E65-MT 3-STAGE MAST - INSTALLATION COMPONENTS
CUSHION TIRE MODELS - S/N 200001A~

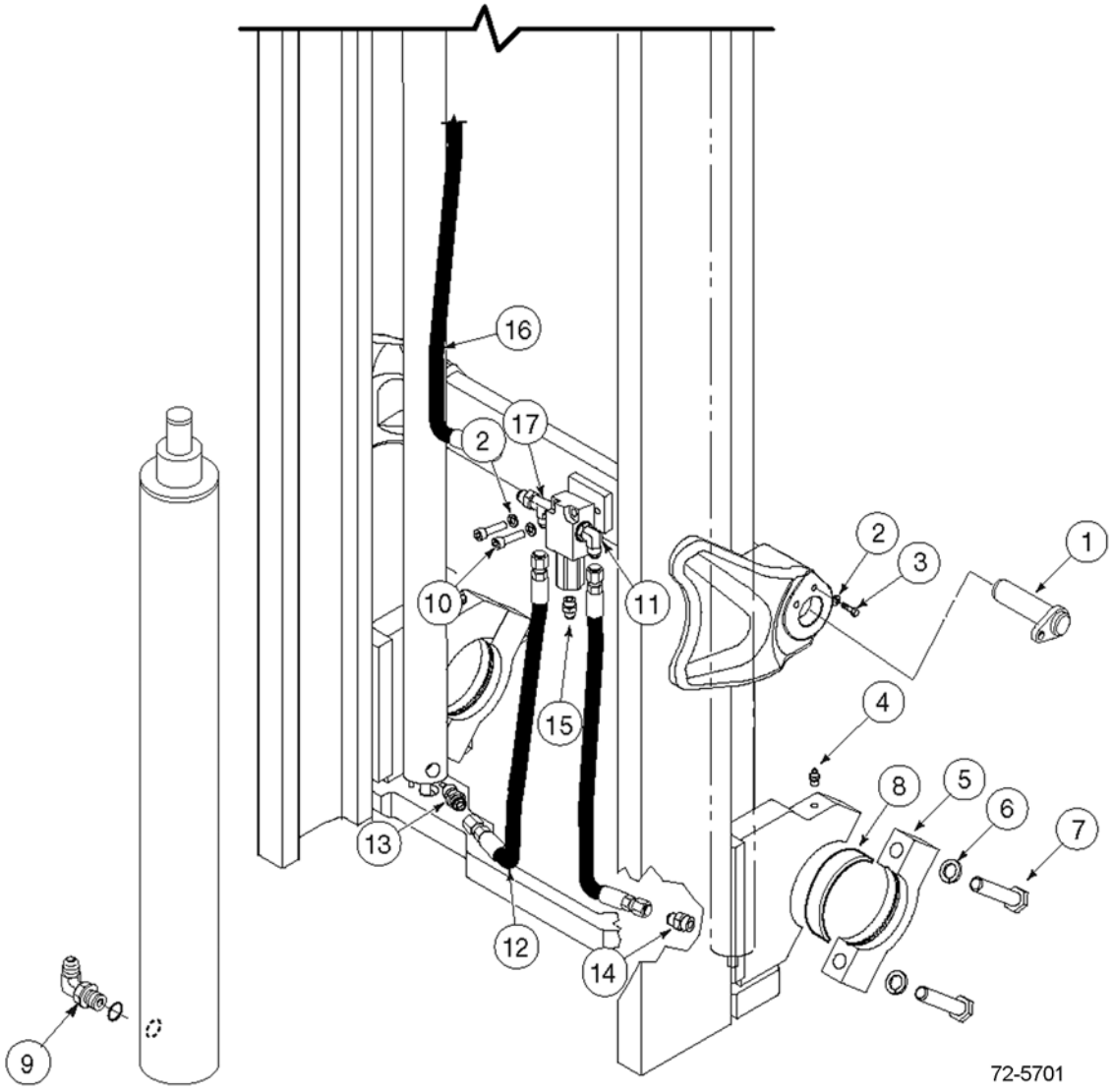

https://truckmanualshub.com/

E65-MT 3-STAGE MAST - INSTALLATION COMPONENTS
CUSHION TIRE MODELS - S/N 200001A~

Item	Part Number	Description	Qty	Serial Number
1	3EB-41-51750	TILT PIN	2	
2	3EB-79-A6040	WASHER, LOCK.	4	
3	CC212632	CAPSCREW	2	
4	CC7418	FITTING, GREASE	2	
5	CC251901	CAP.	2	
6	3EB-71-A6030	WASHER, LOCK.	4	
7	CC251906	CAPSCREW	4	
8	3EB-84-51290	BUSHING (CUSHION ONLY)	2	
9	CC642649	FITTING #8 - #10 - 90°	1	
10	CC767611	CAPSCREW	2	
11	CC601250	FITTING # 8 - 90° ELBOW	1	
12	CC255666	MAIN LIFT HOSE - RH	1	
	CC255665	MAIN LIFT HOSE - LH	1	
13	CC611289	FITTING #8 -#10 - STRAIGHT	1	
14	CC251997	14 GPM EXTERNAL FUSE	1	
15	CC601377	FITTING	1	
16	CC234037	FREE LIFT JUMPER HOSE	1	
17	CC610402	FITTING # 8 - 90° TEE	1	
KIT	CC255596	INSTALLATION KIT	1	

https://truckmanualshub.com/

E65-MT 3-STAGE MAST - LOWERING CONTROL VALVE
S/N 200001A~

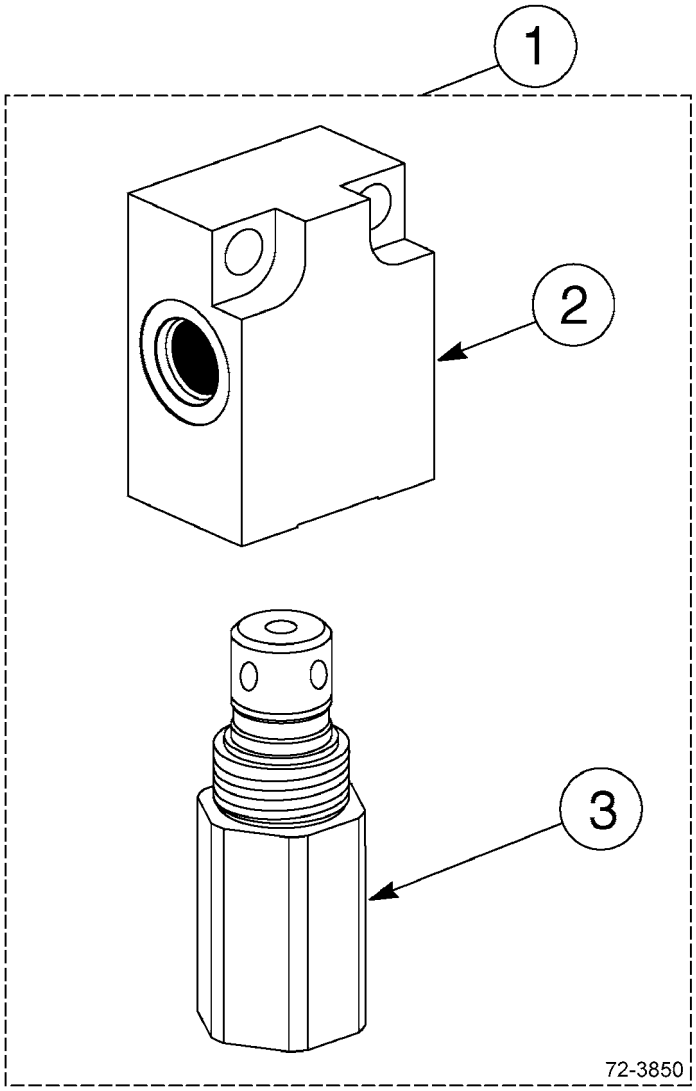

https://truckmanualshub.com/

E65-MT 3-STAGE MAST - LOWERING CONTROL VALVE
S/N 200001A~

Item	Part Number	Description	Qty	Serial Number
1	CC253243	CONTROL VALVE - 20 GPM	1	
2	CC214793	.VALVE BODY.	1	
3	CC253242	.VALVE CARTRIDGE - 20 GPM	1	

https://truckmanualshub.com/

E65-MT 3-STAGE MAST - INTERNAL HOSE REEVING - SINGLE
S/N 200001A~

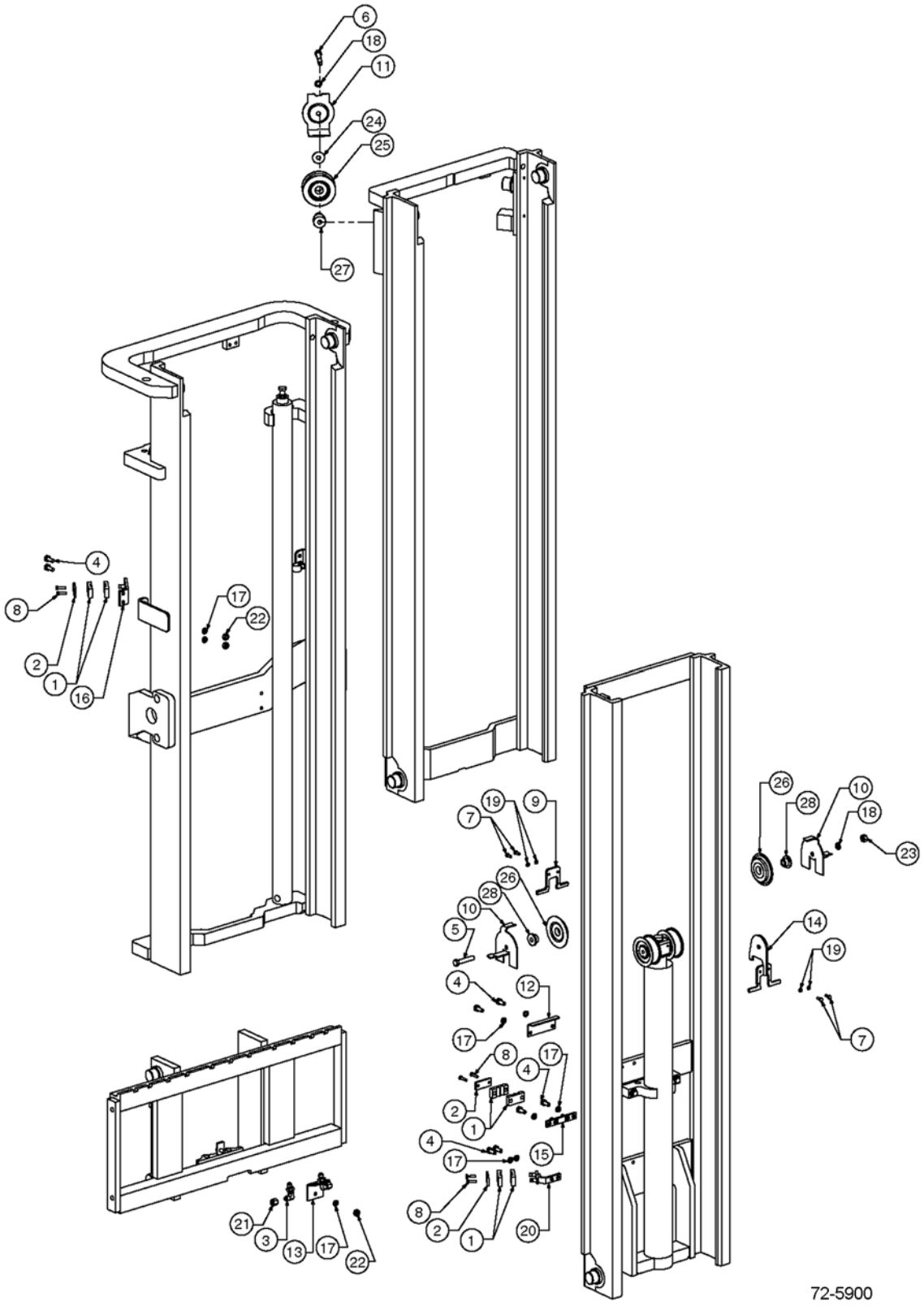

https://truckmanualshub.com/

E65-MT 3-STAGE MAST - INTERNAL HOSE REEVING - SINGLE
S/N 200001A~

Item	Part Number	Description	Qty	Serial Number
1	3EB-73-A5150	CLAMP, HOSE	6	
2	3EB-73-A5160	HOSE CLAMP BAR	3	
3	3EB-71-A6010	FITTING, BULKHEAD UNION - 90°	2	
4	3EB-73-A5490	CAPSCREW - M10 X 25	8	
5	3EB-79-A5230	CAPSCREW - M12 X 65	1	
6	3EB-79-A5190	CAPSCREW - M12 X 80	1	
7	3EB-73-A5350	CAPSCREW - M6 X 16	4	
8	3EB-79-A5240	CAPSCREW - M6 X 25	6	
9	3EB-73-A5170	CHAIN GUARD	1	
10	3EB-73-A5180	IHR & CHAIN GUARD	2	
11	3EB-73-A5120	HOSE GUARD	1	
12	3EB-73-A5190	HOSE GUARD	1	
13	3EB-73-A5610	CARRIAGE IHR BRACKET	1	
14	3EB-73-A5620	IHR BRACKET	1	
15	3EB-73-A5630	IHR BRACKET	1	
16	3EB-73-A5640	IHR BRACKET	1	
17	3EB-79-A6040	WASHER, LOCK - M10	9	
18	3EB-79-A5360	WASHER, LOCK - M12	2	
19	3EB-73-A5340	WASHER, LOCK - M6	4	
20	3EB-73-A5660	BRACKET, LOWER	1	
21	3EB-79-A5150	NUT - #6 CAP	2	
22	3EB-79-A5180	NUT - M10	3	
23	3EB-79-A5270	NUT - M12 DIN 934	1	
24	3EB-79-A5280	WASHER	1	
25	3EB-73-A5020	SHEAVE	1	
26	3EB-73-A5030	IHR SHEAVE	2	
27	3EB-73-A5220	STUBSHAFT	1	
28	3EB-73-A5230	SINGLE IHR STUBSHAFT	2	

OCL = OUTER CHANNEL LENGTH, MFH = MAXIMUM FORK HEIGHT

CC223462	HOSE (IHR KIT #255011) (71" OCL) (150" MFH)	2
CC210807	HOSE (IHR KIT #255017) (77" OCL) (168" MFH)	2
CC216942	HOSE (IHR KIT #255022) (82" OCL) (183" MFH)	2
CC233972	HOSE (IHR KIT #255026) (86" OCL) (189" MFH)	2
CC210810	HOSE (IHR KIT #255038) (98" OCL) (217" MFH)	2
CC233978	HOSE (IHR KIT #255045) (105" OCL) (230" MFH)	2
CC233980	HOSE (IHR KIT #255049) (109" OCL) (238" MFH)	2

https://truckmanualshub.com/

E65-MT 3-STAGE MAST - INTERNAL HOSE REEVING - DOUBLE
S/N 200001A~

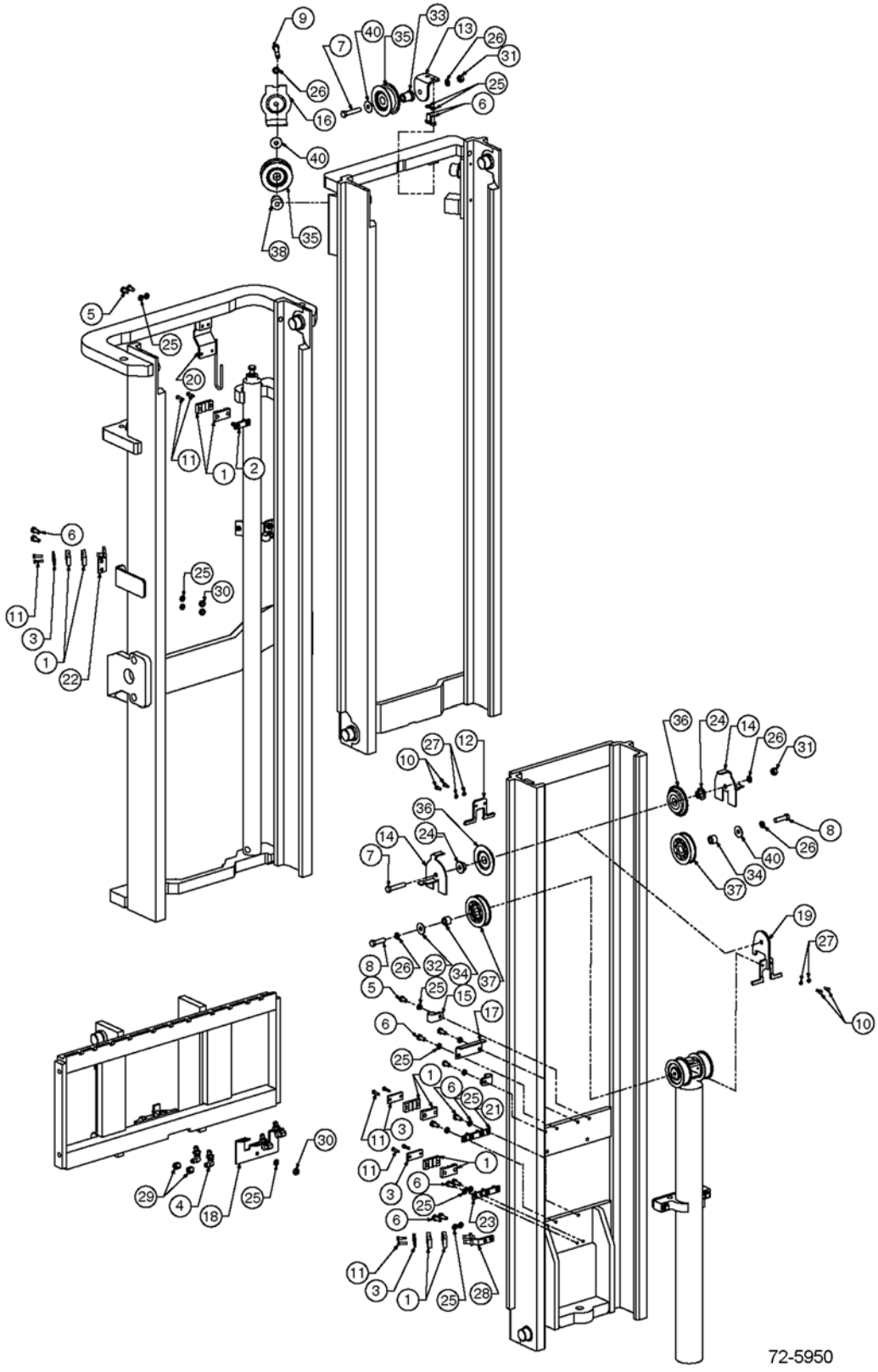

https://truckmanualshub.com/

E65-MT 3-STAGE MAST - INTERNAL HOSE REEVING - DOUBLE
S/N 200001A~

Item	Part Number	Description	Qty	Serial Number
1	3EB-73-A5150	CLAMP, HOSE	12	
2	3EB-73-A6010	BAR ASSY	1	
3	3EB-73-A5160	HOSE CLAMP BAR	5	
4	3EB-71-A6010	BULKHEAD UNION - 90°	4	
5	3EB-79-A5330	CAPSCREW - M10 X 20	4	
6	3EB-73-A5490	CAPSCREW - M10 X 25	18	
7	3EB-79-A5230	CAPSCREW - M12 X 65	2	
8	3EB-79-A5290	CAPSCREW - M12 X 45	2	
9	3EB-79-A5190	CAPSCREW - M12 X 80	1	
10	3EB-73-A5350	CAPSCREW - M6 X 16	4	
11	3EB-79-A5240	CAPSCREW - M6 X 25	12	
12	3EB-73-A5170	IHR & CHAIN GUARD	1	
13	3EB-73-A5670	DOUBLE IHR BRACKET	1	
14	3EB-73-A5180	IHR & CHAIN GUARD	2	
15	3EB-79-A5160	HOSE CLAMP	2	
16	3EB-73-A5120	HOSE GUARD	1	
17	3EB-73-A5190	HOSE GUARD	1	
18	3EB-73-A5680	CARRIAGE IHR BRACKET	1	
19	3EB-73-A5620	IHR BRACKET	1	
20	3EB-73-A6030	IHR BRACKET	1	
21	3EB-73-A5630	IHR BRACKET	1	
22	3EB-73-A5640	IHR BRACKET ASSY	2	
23	3EB-73-A5690	IHR BRACKET ASSY	1	
24	3EB-73-A5230	SINGLE FUNCTION SHEAVE	2	
25	3EB-79-A6040	WASHER, LOCK - M10	23	
26	3EB-79-A5360	WASHER, LOCK - M12	5	
27	3EB-73-A5340	WASHER, LOCK - M6	4	
28	3EB-73-A5660	BRACKET, LOWER	1	
29	3EB-79-A5250	NUT - #6 CAP	4	
30	3EB-79-A5180	NUT - M10	5	
31	3EB-79-A5270	NUT - M12	2	
32	3EB-79-A5280	WASHER	4	
33	3EB-73-A5240	SHAFT	1	
34	3EB-73-A5250	SHAFT	2	
35	3EB-73-A5020	SHEAVE - IHR	2	
36	3EB-73-A5030	SHEAVE - IHR	2	
37	3EB-73-A5060	SHEAVE - SINGLE	2	
38	3EB-73-A5220	STUBSHAFT	1	
39	3EB-73-A5230	SHEAVE, SINGLE FUNCTION ONLY	2	

PARTS LIST CONTINUED ON NEXT PAGE

https://truckmanualshub.com/

E65-MT 3-STAGE MAST - INTERNAL HOSE REEVING - DOUBLE
S/N 200001A~

Item	Part Number	Description	Qty	Serial Number
40	3EB-79-A5280	WASHER	4	
	OCL = OUTER CHANNEL LENGTH, MFH = MAXIMUM FORK HEIGHT			
	INNER HOSE - RIGHT SIDE			
	CC223462	HOSE (IHR KIT #255093) (71" OCL) (150" MFH)	1	
	CC210807	HOSE (IHR KIT #255099) (77" OCL) (168" MFH)	1	
	CC216942	HOSE (IHR KIT #255104) (82" OCL) (183" MFH)	1	
	CC233972	HOSE (IHR KIT #255108) (86" OCL) (189" MFH)	1	
	CC210810	HOSE (IHR KIT #255120) (98" OCL) (217" MFH)	1	
	CC233978	HOSE (IHR KIT #255127) (105" OCL) (230" MFH)	1	
	CC233980	HOSE (IHR KIT #255131) (109" OCL) (238" MFH)	1	
	INNER HOSE - LEFT SIDE			
	CC235001	HOSE (IHR KIT #255093) (71" OCL) (150" MFH)	1	
	CC216939	HOSE (IHR KIT #255099) (77" OCL) (168" MFH)	1	
	CC216943	HOSE (IHR KIT #255104) (82" OCL) (183" MFH)	1	
	CC233973	HOSE (IHR KIT #255108) (86" OCL) (189" MFH)	1	
	CC216953	HOSE (IHR KIT #255120) (98" OCL) (217" MFH)	1	
	CC235051	HOSE (IHR KIT #255127) (105" OCL) (230" MFH)	1	
	3EB-74-A5840	HOSE (IHR KIT #255131) (109" OCL) (238" MFH)	1	
	OUTER HOSES (SHORTEST)			
	CC234996	HOSE (IHR KIT #255093) (71" OCL) (150" MFH)	2	
	CC235006	HOSE (IHR KIT #255099) (77" OCL) (168" MFH)	2	
	CC235014	HOSE (IHR KIT #255104) (82" OCL) (183" MFH)	2	
	3EB-74-A5790	HOSE (IHR KIT #255108) (86" OCL) (189" MFH)	2	
	CC233976	HOSE (IHR KIT #255120) (98" OCL) (217" MFH)	2	
	CC235046	HOSE (IHR KIT #255127) (105" OCL) (230" MFH)	2	
	CC210811	HOSE (IHR KIT #255131) (109" OCL) (238" MFH)	2	

https://truckmanualshub.com/

NOTES:

https://truckmanualshub.com/

E65-MT 3-STAGE MAST — RECOMMENDED STOCK LIST (RSL)

NO

ILLUSTRATION

REQUIRED

https://truckmanualshub.com/

E65-MT 3-STAGE MAST — RECOMMENDED STOCK LIST (RSL)

Item	Part Number	Description	Qty	No. of Masts Serviced
		MAIN LIFT CYLINDERS		
	SEE PARTS PG	MAIN LIFT CYL ASSY	0	1 - 19
	SEE PARTS PG	MAIN LIFT CYL ASSY	1	20 - 50
	SEE PARTS PG	SEAL KIT	2	1 - 5
	SEE PARTS PG	SEAL KIT	4	6 - 19
	SEE PARTS PG	SEAL KIT	8	20 - 50
		FREE LIFT CYLINDER		
	SEE PARTS PG	FREE LIFT CYLINDER ASSY	0	1 - 5
	SEE PARTS PG	FREE LIFT CYLINDER ASSY	1	6 - 19
	SEE PARTS PG	FREE LIFT CYLINDER ASSY	2	20 - 50
	SEE PARTS PG	SEAL KIT	2	1 - 5
	SEE PARTS PG	SEAL KIT	4	6 - 19
	SEE PARTS PG	SEAL KIT	8	20 - 50
		INTERNAL REEVING		
	SEE PARTS PG	HOSE	2	1 - 5
	SEE PARTS PG	HOSE	4	6 - 19
	SEE PARTS PG	HOSE	8	20 - 50
	3EB-71-A6040	FITTING	1	1 - 5
	3EB-71-A6040	FITTING	2	6 - 19
	3EB-71-A6040	FITTING	4	20 - 50
	3EB-73-A5030	SHEAVE, IHR, SINGLE & DOUBLE IHR	1	1 - 5
	3EB-73-A5030	SHEAVE, IHR, SINGLE & DOUBLE IHR	2	6 - 19
	3EB-73-A5030	SHEAVE, IHR, SINGLE & DOUBLE IHR	4	20 - 50
	3EB-73-A5060	SHEAVE - DOUBLE IHR	1	1 - 5
	3EB-73-A5060	SHEAVE - DOUBLE IHR	2	6 - 19
	3EB-73-A5060	SHEAVE - DOUBLE IHR	4	20 - 50
	3EB-73-A5020	SHEAVE - SINGLE & DOUBLE IHR	1	1 - 5
	3EB-73-A5020	SHEAVE - SINGLE & DOUBLE IHR	2	6 - 19
	3EB-73-A5020	SHEAVE - SINGLE & DOUBLE IHR	4	20 - 50
		UPRIGHTS		
	CC201435	CHAIN ANCHOR	2	1 - 5
	CC201435	CHAIN ANCHOR	4	6 - 19
	CC201435	CHAIN ANCHOR	8	20 - 50
	CC680242	CHAIN ANCHOR	1	1 - 5
	CC680242	CHAIN ANCHOR	2	6 - 19
	CC680242	CHAIN ANCHOR	4	20 - 50
	CC684305	PIN, CHAIN	8	1 - 5
	CC684305	PIN, CHAIN	8	6 - 19

PARTS LIST CONTINUED ON NEXT PAGE

https://truckmanualshub.com/

E65-MT 3-STAGE MAST — RECOMMENDED STOCK LIST (RSL)

Item	Part Number	Description	Qty	No. of Masts Serviced
	CC684305	PIN, CHAIN	16	20 - 50
	3EB-79-A6090	NUT	6	1 - 5
	3EB-79-A6090	NUT	12	6 - 19
	3EB-79-A6090	NUT	24	20 - 50
	3EB-79-A6081	PIN, COTTER	6	1 - 5
	3EB-79-A6081	PIN, COTTER	12	6 - 19
	3EB-79-A6081	PIN, COTTER	24	20 - 50
	3EB-79-A6080	PIN, COTTER	6	1 - 5
	3EB-79-A6080	PIN, COTTER	12	6 - 19
	3EB-79-A6080	PIN, COTTER	36	20 - 50
	3EB-79-A6050	SHIM, .03 IN.	16	1 - 5
	3EB-79-A6050	SHIM, .03 IN.	32	6 - 19
	3EB-79-A6050	SHIM, .03 IN.	64	20 - 50
	3EB-79-A5210	ROLLER	8	1 - 5
	3EB-79-A5210	ROLLER	24	6 - 19
	3EB-79-A5210	ROLLER	48	20 - 50
	CC662145	ROLLER	2	1 - 5
	CC662145	ROLLER	4	6 - 19
	CC662145	ROLLER	16	20 - 50
	3EB-73-A5720	SERVICE KIT, WEAR PLUG	2	1 - 5
	3EB-73-A5720	SERVICE KIT, WEAR PLUG	4	6 - 19
	3EB-73-A5720	SERVICE KIT, WEAR PLUG	8	20 - 50
		CROSSHEAD		
	3EB-73-A5010	CHAIN SHEAVE	4	1 - 5
	3EB-73-A5010	CHAIN SHEAVE	8	6 - 19
	3EB-73-A5010	CHAIN SHEAVE	16	20 - 50
	3EB-73-A5330	RETAINER CLIP	4	1 - 5
	3EB-73-A5330	RETAINER CLIP	8	6 - 19
	3EB-73-A5330	RETAINER CLIP	16	20 - 50
	3EB-79-A6070	SNAP RING	2	1 - 5
	3EB-79-A6070	SNAP RING	4	6 - 19
	3EB-79-A6070	SNAP RING	8	20 - 50
		CARRIAGE AND CHAINS		
	SEE PARTS PG	FREE LIFT CHAINS	2	1 - 5
	SEE PARTS PG	FREE LIFT CHAINS	4	6 - 19
	SEE PARTS PG	FREE LIFT CHAINS	8	20 - 50
	SEE PARTS PG	MAIN LIFT CHAINS	2	1 - 5
	SEE PARTS PG	MAIN LIFT CHAINS	4	6 - 19

PARTS LIST CONTINUED ON NEXT PAGE

https://truckmanualshub.com/

E65-MT 3-STAGE MAST — RECOMMENDED STOCK LIST (RSL)

Item	Part Number	Description	Qty	No. of Masts Serviced
	SEE PARTS PG	MAIN LIFT CHAINS	8	20 - 50
	3EB-79-A5210	CARRIAGE ROLLER	4	1 - 5
	3EB-79-A5210	CARRIAGE ROLLER	8	6 - 19
	3EB-79-A5210	CARRIAGE ROLLER	16	20 - 50
	3EB-79-A5220	ROLLER - 6-ROLLER CARRIAGE	2	1 - 5
	3EB-79-A5220	ROLLER - 6-ROLLER CARRIAGE	4	6 - 19
	3EB-79-A5220	ROLLER - 6-ROLLER CARRIAGE	8	20 - 50
	CC234001	CHAIN ANCHOR	1	1 - 5
	CC234001	CHAIN ANCHOR	2	6 - 19
	CC234001	CHAIN ANCHOR	4	20 - 50
	3EB-79-A6081	PIN, COTTER	2	1 - 5
	3EB-79-A6081	PIN, COTTER	4	6 - 19
	3EB-79-A6081	PIN, COTTER	8	20 - 50
	3EB-79-A6080	PIN, COTTER	4	1 - 5
	3EB-79-A6080	PIN, COTTER	8	6 - 19
	3EB-79-A6080	PIN, COTTER	16	20 - 50
	CC684305	CHAIN PIN	4	1 - 19
	CC684305	CHAIN PIN	8	20 - 50
	3EB-73-A5450	NUT	2	1 - 50

https://truckmanualshub.com/

45D-MQ 4-STAGE MAST (QUAD) - SAFETY DECALS
S/N 200001A~

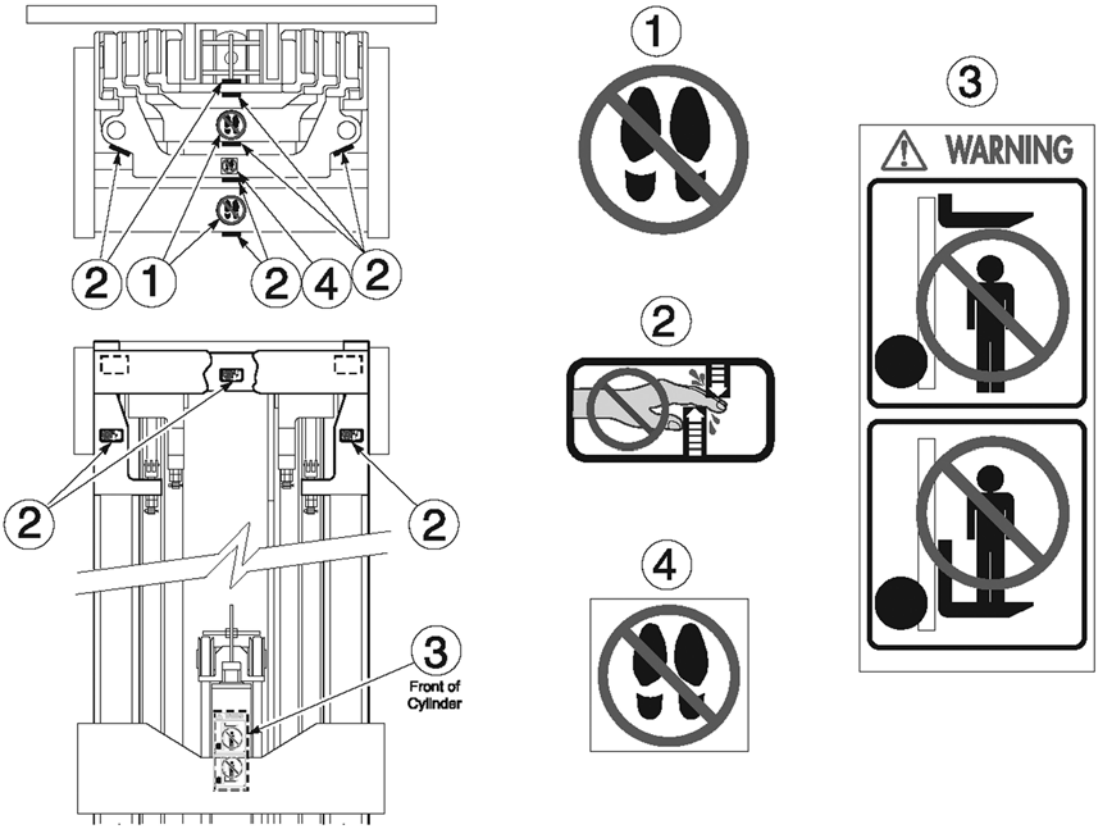

72-6100

https://truckmanualshub.com/

45D-MQ 4-STAGE MAST (QUAD) - SAFETY DECALS
S/N 200001A~

Item	Part Number	Description	Qty	Serial Number
1	3EB-79-A6020	DECAL - "NO STEP"	2	
2	3EB-79-A6010	DECAL - "HANDS OFF"	9	
3	3EB-79-A5310	DECAL - "WARNING"	1	
4	3EB-79-A6030	DECAL - "NO STEP"	2	

https://truckmanualshub.com/

45D-MQ 4-STAGE MAST (QUAD) - MAIN LIFT CYLINDER - RIGHT SIDE
PID AS DESIGNATED - S/N 200001A~

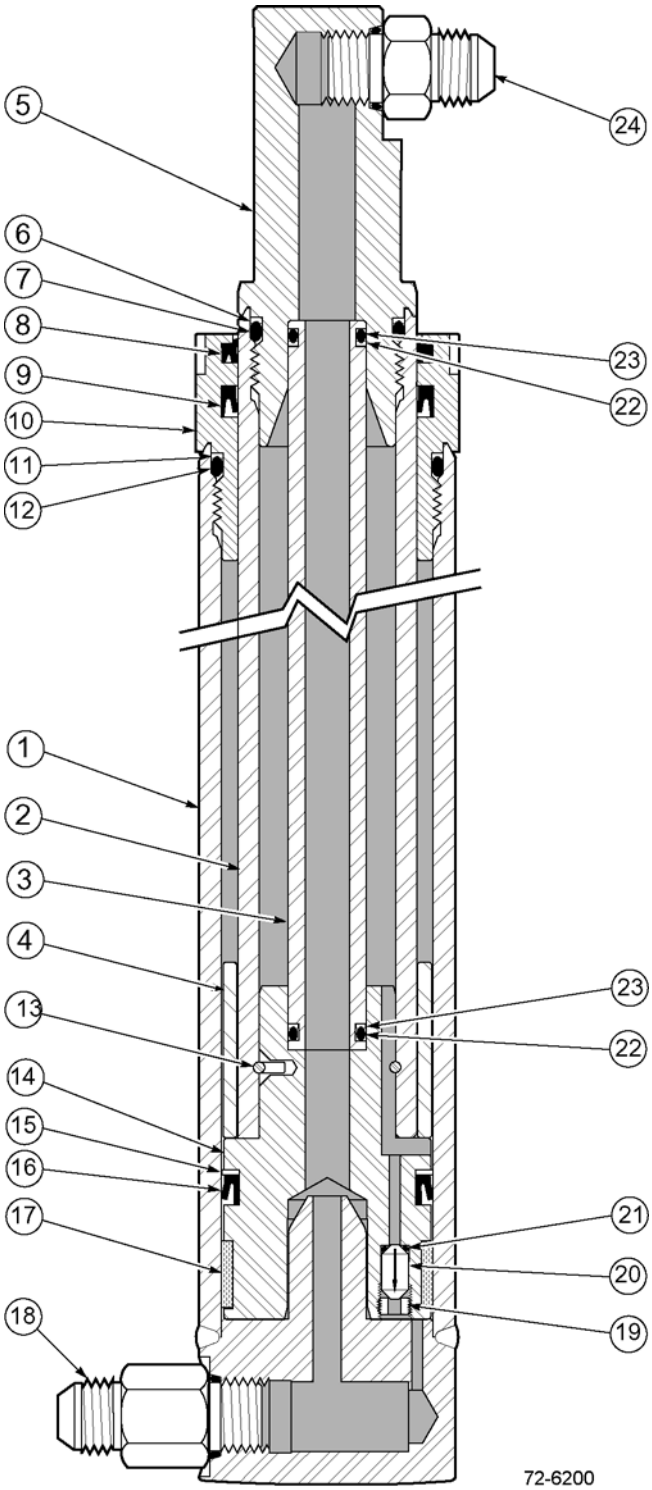

THIS CYLINDER APPLIES TO THE FOLLOWING MAST PIDS:

45D-MQ-001 THROUGH 45D-MQ-4724
45D-MQ-4726
45D-MQ-4727
45D-MQ-4736
45D-MQ-4741
45D-MQ-4751
45D-MQ-4757
45D-MQ-4760
45D-MQ-4761
45D-MQ-4762
45D-MQ-4763
45D-MQ-4769
45D-MQ-4770
45D-MQ-4771
45D-MQ-4772
45D-MQ-4776
45D-MQ-4778
45D-MQ-4780
45D-MQ-4781
45D-MQ-4782
45D-MQ-4783
45D-MQ-4788
45D-MQ-4789
45D-MQ-4790
45D-MQ-4792
45D-MQ-4793
45D-MQ-4795
45D-MQ-4797
45D-MQ-4801
45D-MQ-4803
45D-MQ-4804
45D-MQ-4805
45D-MQ-4816
45D-MQ-4817
45D-MQ-4822
45D-MQ-4825
45D-MQ-4826
45D-MQ-4829
45D-MQ-4835
45D-MQ-4837
45D-MQ-4843
45D-MQ-4844
45D-MQ-4845
45D-MQ-4846
45D-MQ-4848
45D-MQ-4850
45D-MQ-4853
45D-MQ-4856
45D-MQ-4857
45D-MQ-4858
45D-MQ-4860
45D-MQ-4864
45D-MQ-4869
45D-MQ-4872
45D-MQ-4873
45D-MQ-4874
45D-MQ-4875
45D-MQ-4876
45D-MQ-4879
45D-MQ-4881
45D-MQ-4882
45D-MQ-4885
45D-MQ-4886
45D-MQ-4893
45D-MQ-4896
45D-MQ-4897
45D-MQ-4899
45D-MQ-4905
45D-MQ-4906
45D-MQ-4924
45D-MQ-4925
45D-MQ-4927
45D-MQ-4930
45D-MQ-4931
45D-MQ-4932
45D-MQ-4936
45D-MQ-4939
45D-MQ-4940
45D-MQ-5207
45D-MQ-5368

https://truckmanualshub.com/

45D-MQ 4-STAGE MAST (QUAD) - MAIN LIFT CYLINDER - RIGHT SIDE
PID AS DESIGNATED - S/N 200001A~

Item	Part Number	Description	Qty	Serial Number
1	NSS	SHELL	1	
2	NSS	ROD	1	
3	NSS	PIPE	1	
4	NSS	SPACER	1	
5	NSS	PLUG	1	
6	NSS	BACK-UP RING (CYL SERVICE KIT)	1	
7	NSS	O-RING (CYL SERVICE KIT)	1	
8	NSS	WIPER (CYL SERVICE KIT)	1	
9	NSS	ROD SEAL (CYL SERVICE KIT)	1	
10	CC562630	RETAINER	1	
11	NSS	BACK-UP RING (CYL SERVICE KIT)	1	
12	NSS	O-RING (CYL SERVICE KIT)	1	
13	NSS	PULL WIRE (BOTH KITS)	1	
14	NSS	PISTON (BOTH KITS)	1	
15	NSS	BACK-UP RING (CYL SERVICE KIT)	1	
16	NSS	PISTON SEAL (CYL SERVICE KIT)	1	
17	NSS	WEAR RING (CYL SERVICE KIT)	1	
18	CC611289	FITTING	1	
19	NSS	SCREW	1	
20	CC667586	CHECK VALVE	1	
21	NSS	O-RING (CYL SERVICE KIT)	1	
22	NSS	O-RING (CYL SERVICE KIT)	1	
23	NSS	BACK-UP RING (CYL SERVICE KIT)	1	
24	CC611291	FITTING	1	
KIT	CC564051	PISTON SERVICE KIT	1	
KIT	CC564050	CYLINDER SERVICE KIT	1	
OCL = OUTER CHANNEL LENGTH , MFH = MAXIMUM FORK HEIGHT				
	CC583931	MAIN LIFT CYLINDER - (68" OCL) (193" MFH).	1	
	CC583932	MAIN LIFT CYLINDER - (74" OCL) (217" MFH).	1	
	CC583933	MAIN LIFT CYLINDER - (80" OCL) (241" MFH).	1	
	CC583934	MAIN LIFT CYLINDER - (86" OCL) (259" MFH).	1	
	CC583935	MAIN LIFT CYLINDER - (92" OCL) (277" MFH).	1	
	CC583936	MAIN LIFT CYLINDER - (98" OCL) (295" MFH).	1	

https://truckmanualshub.com/

45D-MQ 4-STAGE MAST (QUAD) - MAIN LIFT CYLINDER - RIGHT SIDE
PID AS DESIGNATED - S/N 200001A~

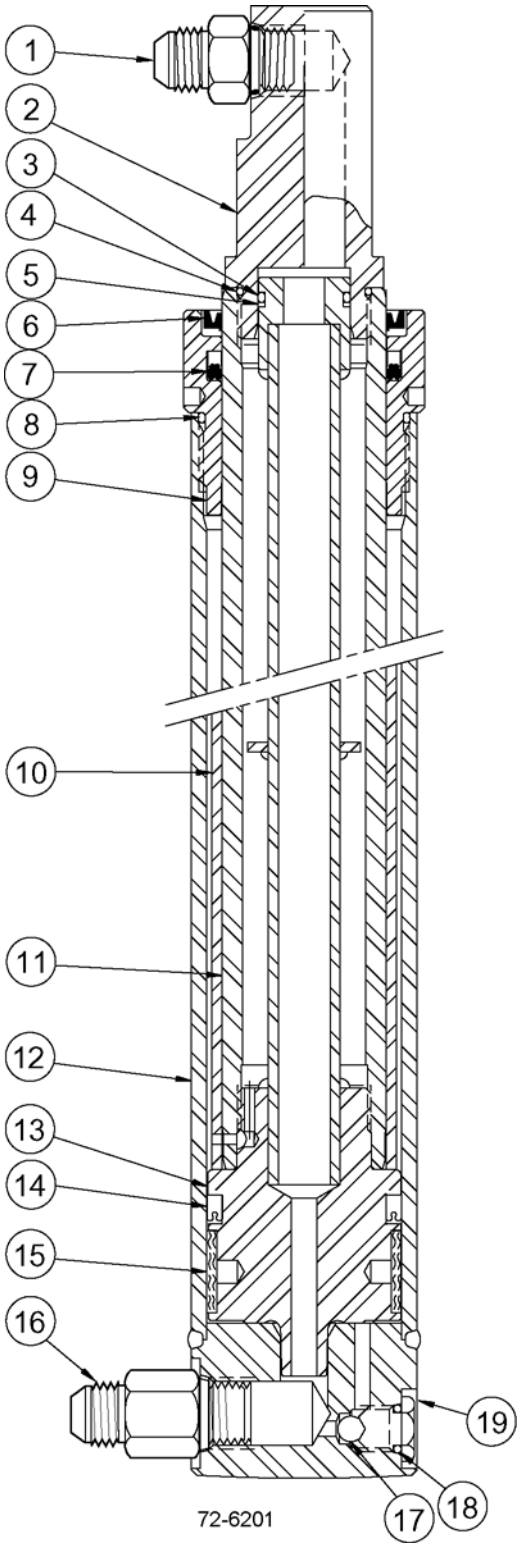

THIS CYLINDER APPLIES TO THE FOLLOWING MAST PIDS:

45D-MQ-4725
45D-MQ-4728 - 4740
45D-MQ-4742 - 4750
45D-MQ-4752 - 4759
45D-MQ-4764 - 4768
45D-MQ-4773
45D-MQ-4774
45D-MQ-4775
45D-MQ-4779
45D-MQ-4794
45D-MQ-4785
45D-MQ-4786
45D-MQ-4787
45D-MQ-4791
45D-MQ-4794
45D-MQ-4796
45D-MQ-4798
45D-MQ-4799
45D-MQ-4800
45D-MQ-4802
45D-MQ-4806 - 4813
45D-MQ-4815
45D-MQ-4818 - 4821
45D-MQ-4823
45D-MQ-4824
45D-MQ-4827
45D-MQ-4827
45D-MQ-4828
45D-MQ-4830 - 4834
45D-MQ-4836
45D-MQ-4838 - 4842
45D-MQ-4847
45D-MQ-4849
45D-MQ-4851
45D-MQ-4852
45D-MQ-4854
45D-MQ-4855
45D-MQ-4859
45D-MQ-4861
45D-MQ-4862
45D-MQ-4863
45D-MQ-4865 - 4867
45D-MQ-4868
45D-MQ-4870
45D-MQ-4871
45D-MQ-4878
45D-MQ-4880
45D-MQ-4883
45D-MQ-4884
45D-MQ-4887 - 4892
45D-MQ-4994
45D-MQ-4895
45D-MQ-4898
45D-MQ-4900 - 4904
45D-MQ-4907 - 4923
45D-MQ-4926
45D-MQ-4928
45D-MQ-4928
45D-MQ-4929
45D-MQ-4933
45D-MQ-4934
45D-MQ-4935
45D-MQ-4937
45D-MQ-4938
45D-MQ-4941 - 5206
45D-MQ-5208 - 5367
45D-MQ-5369 - 6358

https://truckmanualshub.com/

45D-MQ 4-STAGE MAST (QUAD) - MAIN LIFT CYLINDER - RIGHT SIDE
PID AS DESIGNATED - S/N 200001A~

Item	Part Number	Description	Qty	Serial Number
1	CC611291	FITTING	1	
2	CC1349732	ROD END	1	
3	NSS	O-RING (KIT)	1	
4	NSS	O-RING (KIT)	1	
5	NSS	BACK-UP RING (KIT)	1	
6	NSS	WIPER (KIT)	1	
7	NSS	ROD SEAL (KIT)	1	
8	NSS	O-RING (KIT)	1	
9	CC1356992	RETAINER	1	
10	NSS	SPACER	1	
11	NSS	ROD	1	
12	NSS	SHELL	1	
13	NSS	PISTON (KIT)	1	
14	NSS	PISTON SEAL (KIT)	1	
15	NSS	WEAR RING (KIT)	1	
16	CC611289	FITTING	1	
17	CC17010R1	BALL	1	
18	NSS	O-RING (KIT)	1	
19	CC1348729	PLUG	1	
KIT	CC564050	CYLINDER SERVICE KIT	1	
	OCL = OUTER CHANNEL LENGTH, MFH = MAXIMUM FORK HEIGHT			
	CC1000649	MAIN LIFT CYLINDER - (68" OCL) (193" MFH).	1	
	CC1000650	MAIN LIFT CYLINDER - (74" OCL) (217" MFH).	1	
	CC1000666	MAIN LIFT CYLINDER - (75" OCL) (221" MFH).	1	
	CC1000651	MAIN LIFT CYLINDER - (80" OCL) (241" MFH).	1	
	CC1000652	MAIN LIFT CYLINDER - (86" OCL) (259" MFH).	1	
	CC1000653	MAIN LIFT CYLINDER - (92" OCL) (277" MFH).	1	
	CC1000654	MAIN LIFT CYLINDER - (98" OCL) (295" MFH).	1	
	CC1000655	MAIN LIFT CYLINDER - (104" OCL) (313" MFH)	1	

https://truckmanualshub.com/

45D-MQ 4-STAGE MAST (QUAD) - MAIN LIFT CYLINDER - RIGHT SIDE
PID # 45D-MQ-6359~ - S/N 200001A~

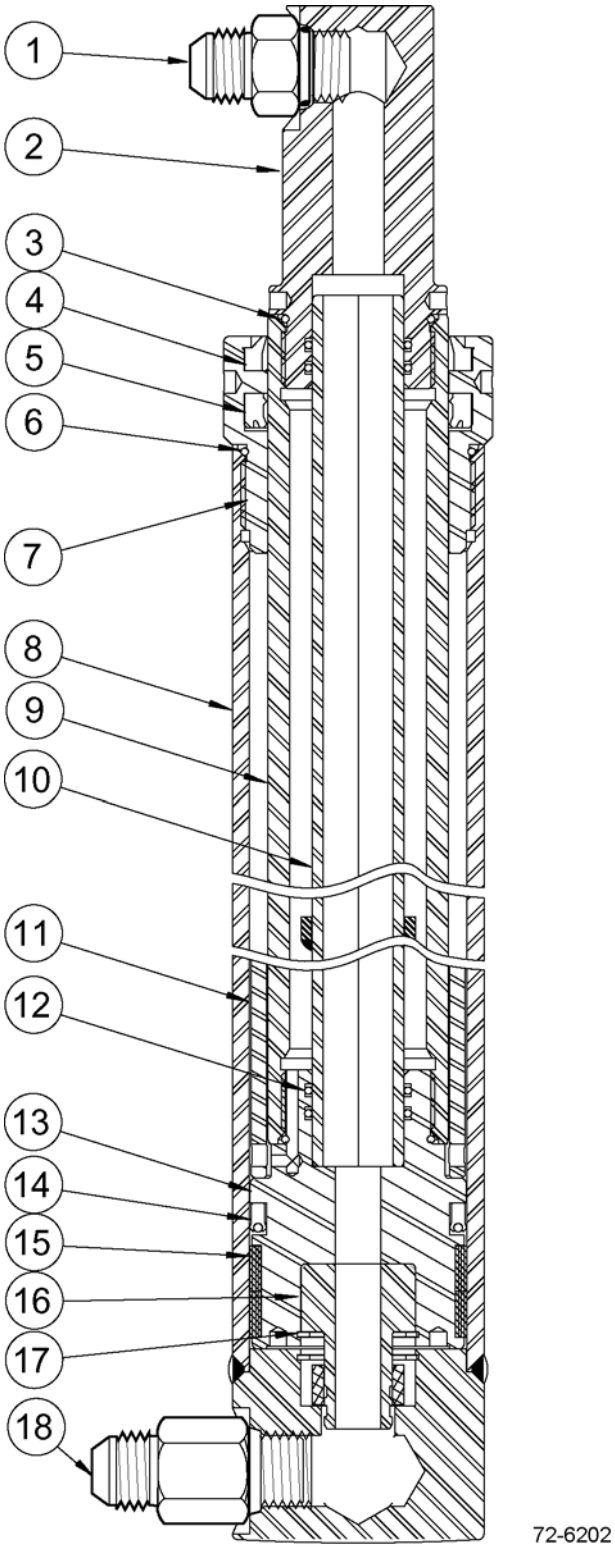

https://truckmanualshub.com/

45D-MQ 4-STAGE MAST (QUAD) - MAIN LIFT CYLINDER - RIGHT SIDE
PID # 45D-MQ-6359~ - S/N 200001A~

Item	Part Number	Description	Qty	Serial Number
1	CC611291	FITTING	1	
2	NSS	ROD END	1	
3	NSS	O-RING (KIT)	1	
4	NSS	WIPER (KIT)	1	
5	NSS	ROD SEAL (KIT)	1	
6	NSS	O-RING (KIT)	1	
7	CC78481	RETAINER	1	
8	NSS	SHELL	1	
9	NSS	ROD	1	
10	NSS	STAND TUBE	1	
11	NSS	SPACER	1	
12	NSS	O-RING (KIT)	1	
13	NSS	PISTON (KIT)	1	
14	NSS	PISTON SEAL (KIT)	1	
15	NSS	WEAR RING (KIT)	1	
16	NSS	PLUG	1	
17	NSS	RETAINING RING (KIT)	1	
18	CC611289	FITTING	1	
KIT	CC1002525	CYLINDER SERVICE KIT	1	
	OCL = OUTER CHANNEL LENGTH , MFH = MAXIMUM FORK HEIGHT			
	CC1002002	MAIN LIFT CYLINDER - (68" OCL) (193" MFH).	1	
	CC1002003	MAIN LIFT CYLINDER - (69" OCL) (197" MFH).	1	
	CC1002008	MAIN LIFT CYLINDER - (74" OCL) (217" MFH).	1	
	CC1002014	MAIN LIFT CYLINDER - (80" OCL) (241" MFH).	1	
	CC1002020	MAIN LIFT CYLINDER - (86" OCL) (259" MFH).	1	
	CC1002026	MAIN LIFT CYLINDER - (92" OCL) (277" MFH).	1	
	CC1002032	MAIN LIFT CYLINDER - (98" OCL) (295" MFH).	1	
	CC1002038	MAIN LIFT CYLINDER - (104" OCL) (313" MFH)	1	

https://truckmanualshub.com/

45D-MQ 4-STAGE MAST (QUAD) - MAIN LIFT CYLINDER - LEFT SIDE
PID AS DESIGNATED - S/N 200001A~

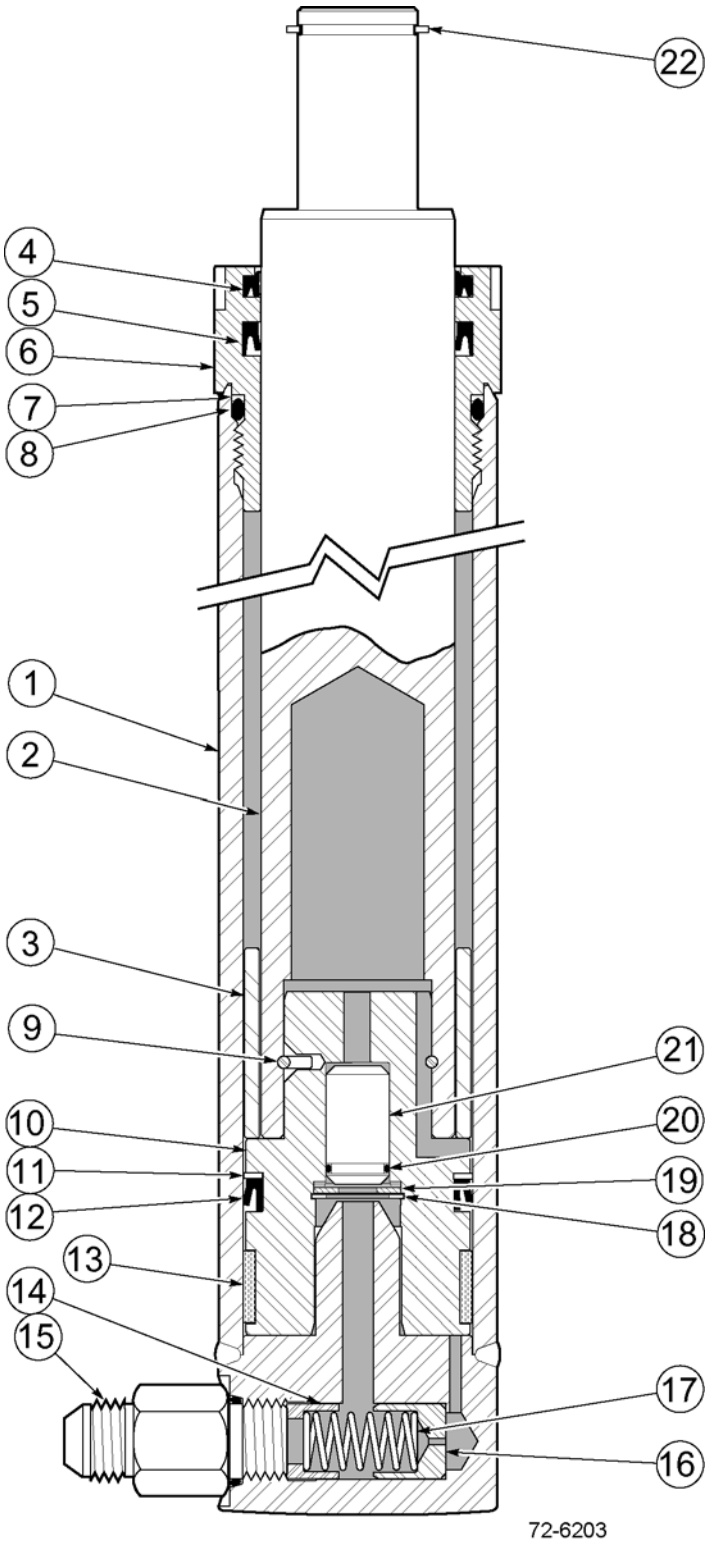

THIS CYLINDER APPLIES TO THE FOLLOWING MAST PIDS:

45D-MQ-001 THROUGH 45D-MQ-4724
45D-MQ-4726
45D-MQ-4727
45D-MQ-4736
45D-MQ-4741
45D-MQ-4751
45D-MQ-4757
45D-MQ-4760
45D-MQ-4761
45D-MQ-4762
45D-MQ-4763
45D-MQ-4769
45D-MQ-4770
45D-MQ-4771
45D-MQ-4772
45D-MQ-4776
45D-MQ-4778
45D-MQ-4780
45D-MQ-4781
45D-MQ-4782
45D-MQ-4783
45D-MQ-4788
45D-MQ-4789
45D-MQ-4790
45D-MQ-4792
45D-MQ-4793
45D-MQ-4795
45D-MQ-4797
45D-MQ-4801
45D-MQ-4803
45D-MQ-4804
45D-MQ-4805
45D-MQ-4816
45D-MQ-4817
45D-MQ-4822
45D-MQ-4825
45D-MQ-4826
45D-MQ-4829
45D-MQ-4835
45D-MQ-4837
45D-MQ-4843
45D-MQ-4844
45D-MQ-4845
45D-MQ-4846
45D-MQ-4848
45D-MQ-4850
45D-MQ-4853
45D-MQ-4856
45D-MQ-4857
45D-MQ-4858
45D-MQ-4860
45D-MQ-4864
45D-MQ-4869
45D-MQ-4872
45D-MQ-4873
45D-MQ-4874
45D-MQ-4875
45D-MQ-4876
45D-MQ-4879
45D-MQ-4881
45D-MQ-4882
45D-MQ-4885
45D-MQ-4886
45D-MQ-4893
45D-MQ-4896
45D-MQ-4897
45D-MQ-4899
45D-MQ-4905
45D-MQ-4906
45D-MQ-4924
45D-MQ-4925
45D-MQ-4927
45D-MQ-4930
45D-MQ-4931
45D-MQ-4932
45D-MQ-4936
45D-MQ-4939
45D-MQ-4940
45D-MQ-5207
45D-MQ-5368

https://truckmanualshub.com/

45D-MQ 4-STAGE MAST (QUAD) - MAIN LIFT CYLINDER - LEFT SIDE
PID AS DESIGNATED - S/N 200001A~

Item	Part Number	Description	Qty	Serial Number
1	NSS	SHELL	1	
2	NSS	ROD	1	
3	NSS	SPACER	1	
4	NSS	WIPER (CYL SERVICE KIT)	1	
5	NSS	ROD SEAL (CYL SERVICE KIT)	1	
6	CC562630	RETAINER	1	
7	NSS	BACK-UP RING (CYL SERVICE KIT)	1	
8	NSS	O-RING (CYL SERVICE KIT)	1	
9	NSS	PULL WIRE (BOTH KITS)	1	
10	NSS	PISTON (PISTON SERVICE KIT)	1	
11	NSS	BACK-UP RING (CYL SERVICE KIT)	1	
12	NSS	PISTON SEAL (CYL SERVICE KIT)	1	
13	NSS	WEAR RING (CYL SERVICE KIT)	1	
14	CC564054	SPRING GUIDE	1	
15	CC611289	FITTING	1	
16	CC563782	FUSE PISTON	1	
17	CC562847	SPRING	1	
18	CC3015	RETAINING RING	1	
19	CC5508	SPACER	1	
20	CC689937	O-RING	1	
21	CC626664	CHECK VALVE	1	
22	CC3135	SNAP RING	1	
KIT	CC564050	PISTON SERVICE KIT	1	
KIT	CC564052	CYLINDER SERVICE KIT	1	
	OCL = OUTER CHANNEL LENGTH, MFH = MAXIMUM FORK HEIGHT			
	CC583924	MAIN LIFT CYLINDER - (68" OCL) (193" MFH).	1	
	CC583925	MAIN LIFT CYLINDER - (74" OCL) (217" MFH).	1	
	CC583926	MAIN LIFT CYLINDER - (80" OCL) (241" MFH).	1	
	CC583927	MAIN LIFT CYLINDER - (86" OCL) (259" MFH).	1	
	CC583928	MAIN LIFT CYLINDER - (92" OCL) (277" MFH).	1	
	CC583929	MAIN LIFT CYLINDER - (98" OCL) (295" MFH).	1	
	CC583930	MAIN LIFT CYLINDER - (104" OCL) (313" MFH)	1	

https://truckmanualshub.com/

45D-MQ 4-STAGE MAST (QUAD) - MAIN LIFT CYLINDER - LEFT SIDE
PID AS DESIGNATED - S/N 200001A~

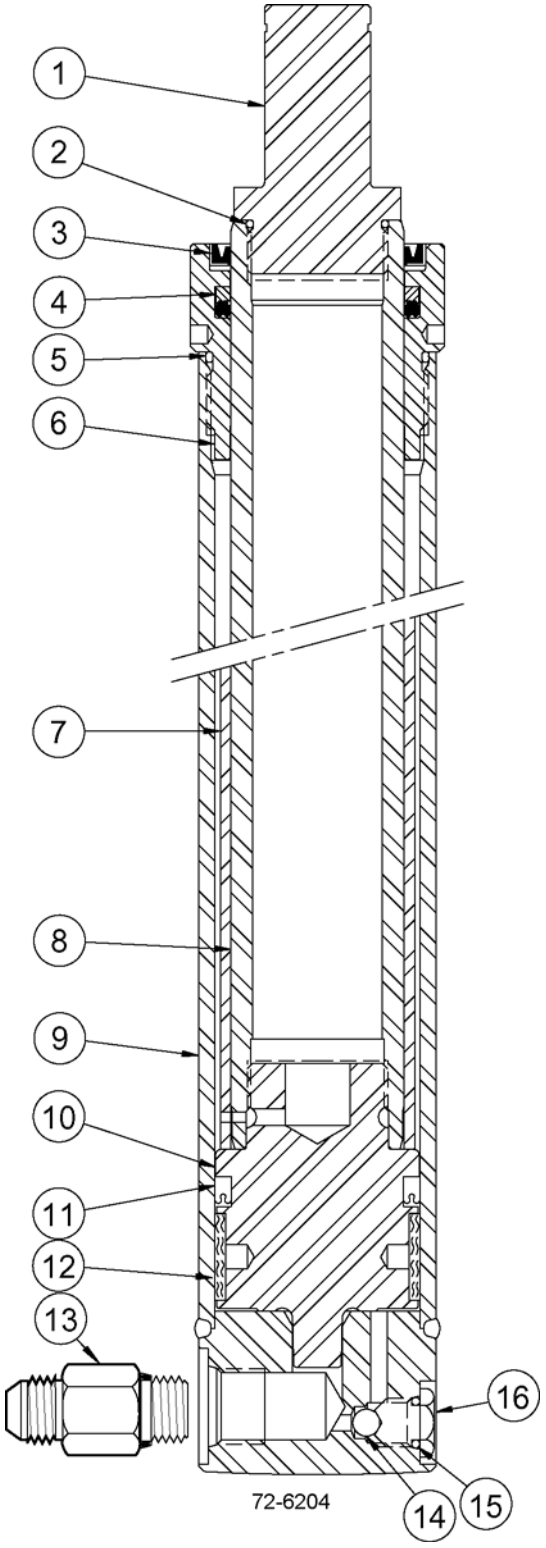

THIS CYLINDER APPLIES TO THE FOLLOWING MAST PIDS:

45D-MQ-4725
45D-MQ-4728 - 4740
45D-MQ-4742 - 4750
45D-MQ-4752 - 4759
45D-MQ-4764 - 4768
45D-MQ-4773
45D-MQ-4774
45D-MQ-4775
45D-MQ-4779
45D-MQ-4794
45D-MQ-4785
45D-MQ-4786
45D-MQ-4787
45D-MQ-4791
45D-MQ-4794
45D-MQ-4796
45D-MQ-4798
45D-MQ-4799
45D-MQ-4800
45D-MQ-4802
45D-MQ-4806 - 4813
45D-MQ-4815
45D-MQ-4818 - 4821
45D-MQ-4823
45D-MQ-4824
45D-MQ-4827
45D-MQ-4827
45D-MQ-4828
45D-MQ-4830 - 4834
45D-MQ-4836
45D-MQ-4838 - 4842
45D-MQ-4847
45D-MQ-4849
45D-MQ-4851
45D-MQ-4852
45D-MQ-4854
45D-MQ-4855
45D-MQ-4859
45D-MQ-4861
45D-MQ-4862
45D-MQ-4863
45D-MQ-4865 - 4867
45D-MQ-4868
45D-MQ-4870
45D-MQ-4871
45D-MQ-4878
45D-MQ-4880
45D-MQ-4883
45D-MQ-4884
45D-MQ-4887 - 4892
45D-MQ-4994
45D-MQ-4895
45D-MQ-4898
45D-MQ-4900 - 4904
45D-MQ-4907 - 4923
45D-MQ-4926
45D-MQ-4928
45D-MQ-4928
45D-MQ-4929
45D-MQ-4933
45D-MQ-4934
45D-MQ-4935
45D-MQ-4937
45D-MQ-4938
45D-MQ-4941 - 5206
45D-MQ-5208 - 5367
45D-MQ-5369 - 6358

https://truckmanualshub.com/

45D-MQ 4-STAGE MAST (QUAD) - MAIN LIFT CYLINDER - LEFT SIDE
PID AS DESIGNATED - S/N 200001A~

Item	Part Number	Description	Qty	Serial Number
1	CC1349747	ROD END	1	
2	NSS	O-RING (KIT)	1	
3	NSS	WIPER (KIT)	1	
4	NSS	ROD SEAL (KIT)	1	
5	NSS	O-RING (KIT)	1	
6	CC1356992	RETAINER	1	
7	NSS	SPACER	1	
8	NSS	ROD	1	
9	NSS	SHELL	1	
10	CC1349748	PISTON	1	
11	NSS	PISTON SEAL (KIT)	1	
12	NSS	WEAR RING (KIT)	1	
13	CC231325	EXTERNAL FUSE	1	
14	CC17010R1	BALL	1	
15	NSS	O-RING (KIT)	1	
16	CC1348729	PLUG	1	
KIT	CC1000785	CYLINDER SERVICE KIT	1	
	OCL = OUTER CHANNEL LENGTH, MFH = MAXIMUM FORK HEIGHT			
	CC1000698	MAIN LIFT CYLINDER - (68" OCL) (193" MFH).	1	
	CC1000699	MAIN LIFT CYLINDER - (74" OCL) (217" MFH).	1	
	CC1000700	MAIN LIFT CYLINDER - (80" OCL) (241" MFH).	1	
	CC1000701	MAIN LIFT CYLINDER - (86" OCL) (259" MFH).	1	
	CC1000702	MAIN LIFT CYLINDER - (92" OCL) (277" MFH).	1	
	CC1000703	MAIN LIFT CYLINDER - (98" OCL) (295" MFH).	1	
	CC1000704	MAIN LIFT CYLINDER - (104" OCL) (313" MFH)	1	

https://truckmanualshub.com/

45D-MQ 4-STAGE MAST (QUAD) - MAIN LIFT CYLINDER - LEFT SIDE
PID # 45D-MQ-6359~ - S/N 200001A~

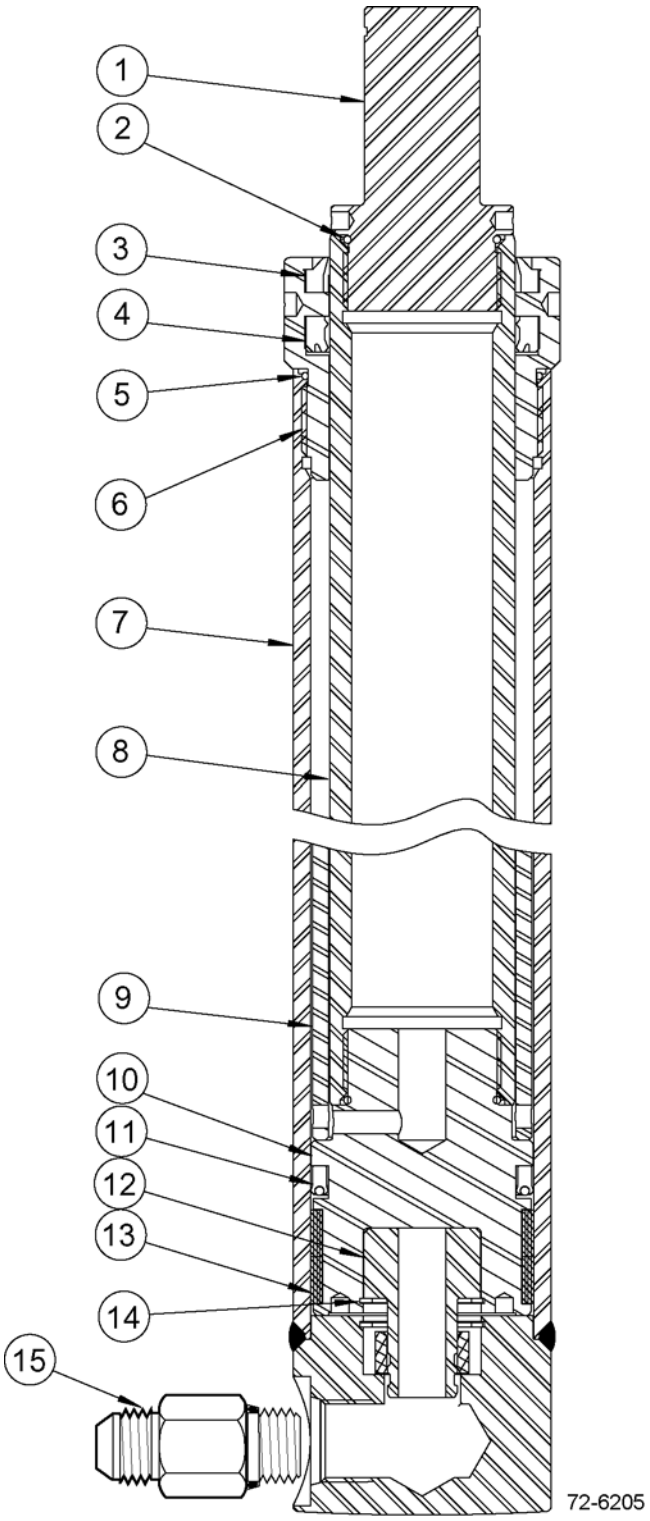

https://truckmanualshub.com/

45D-MQ 4-STAGE MAST (QUAD) - MAIN LIFT CYLINDER - LEFT SIDE
PID # 45D-MQ-6359~ - S/N 200001A~

Item	Part Number	Description	Qty	Serial Number
1	NSS	ROD END	1	
2	NSS	O-RING (KIT)	1	
3	NSS	WIPER (KIT)	1	
4	NSS	ROD SEAL (KIT)	1	
5	NSS	O-RING (KIT)	1	
6	NSS	RETAINER	1	
7	NSS	SHELL	1	
8	NSS	ROD	1	
9	NSS	SPACER	1	
10	NSS	PISTON	1	
11	NSS	PISTON SEAL (KIT)	1	
12	NSS	PLUG	1	
13	NSS	WEAR RING (KIT)	1	
14	NSS	RETAINING RING	1	
15	CC231325	EXTERNAL FUSE	1	
KIT	CC1002526	CYLINDER SERVICE KIT	1	
	OCL = OUTER CHANNEL LENGTH, MFH = MAXIMUM FORK HEIGHT			
	CC1002044	MAIN LIFT CYLINDER - (68" OCL) (193" MFH).	1	
	CC1002045	MAIN LIFT CYLINDER - (69" OCL) (197"MFH) .	1	
	CC1002050	MAIN LIFT CYLINDER - (74" OCL) (217" MFH).	1	
	CC1002056	MAIN LIFT CYLINDER - (80" OCL) (241" MFH).	1	
	CC1002062	MAIN LIFT CYLINDER - (86" OCL) (259" MFH).	1	
	CC1002068	MAIN LIFT CYLINDER - (92" OCL) (277" MFH).	1	
	CC1002074	MAIN LIFT CYLINDER - (98" OCL) (295" MFH).	1	
	CC1002080	MAIN LIFT CYLINDER - (104" OCL) (313" MFH)	1	

https://truckmanualshub.com/

45D-MQ 4-STAGE MAST (QUAD) - FREE LIFT CYLINDER
PID AS DESIGNATED - S/N 200001A~

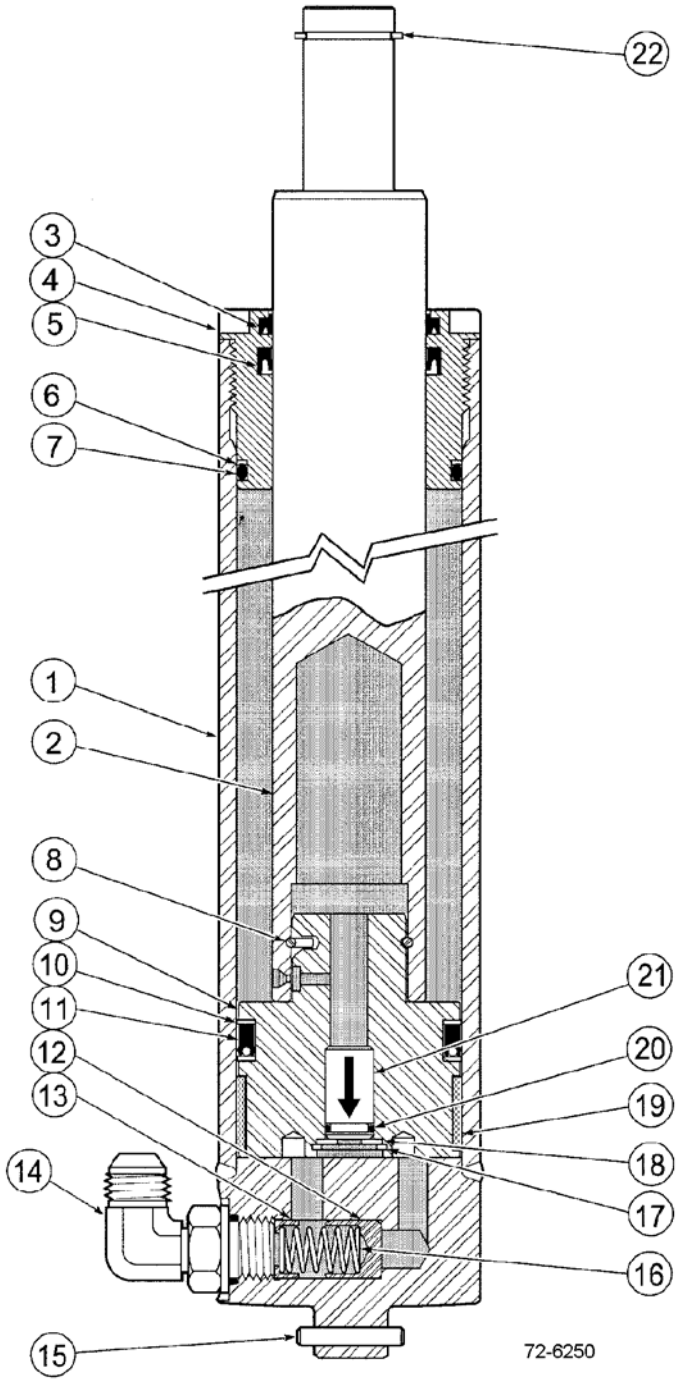

THIS CYLINDER APPLIES TO THE FOLLOWING MAST PIDS:

45D-MQ-001 THROUGH 45D-MQ-4724
45D-MQ-4726
45D-MQ-4727
45D-MQ-4736
45D-MQ-4741
45D-MQ-4751
45D-MQ-4757
45D-MQ-4760
45D-MQ-4761
45D-MQ-4762
45D-MQ-4763
45D-MQ-4769
45D-MQ-4770
45D-MQ-4771
45D-MQ-4772
45D-MQ-4776
45D-MQ-4778
45D-MQ-4780
45D-MQ-4781
45D-MQ-4782
45D-MQ-4783
45D-MQ-4788
45D-MQ-4789
45D-MQ-4790
45D-MQ-4792
45D-MQ-4793
45D-MQ-4795
45D-MQ-4797
45D-MQ-4801
45D-MQ-4803
45D-MQ-4804
45D-MQ-4805
45D-MQ-4816
45D-MQ-4817
45D-MQ-4822
45D-MQ-4825
45D-MQ-4826
45D-MQ-4829
45D-MQ-4835
45D-MQ-4837
45D-MQ-4843
45D-MQ-4844
45D-MQ-4845
45D-MQ-4846
45D-MQ-4848
45D-MQ-4850
45D-MQ-4853
45D-MQ-4856
45D-MQ-4857
45D-MQ-4858
45D-MQ-4860
45D-MQ-4864
45D-MQ-4869
45D-MQ-4872
45D-MQ-4873
45D-MQ-4874
45D-MQ-4875
45D-MQ-4876
45D-MQ-4879
45D-MQ-4881
45D-MQ-4882
45D-MQ-4885
45D-MQ-4886
45D-MQ-4893
45D-MQ-4896
45D-MQ-4897
45D-MQ-4899
45D-MQ-4905
45D-MQ-4906
45D-MQ-4924
45D-MQ-4925
45D-MQ-4927
45D-MQ-4930
45D-MQ-4931
45D-MQ-4932
45D-MQ-4936
45D-MQ-4939
45D-MQ-4940
45D-MQ-5207
45D-MQ-5368

https://truckmanualshub.com/

45D-MQ 4-STAGE MAST (QUAD) - FREE LIFT CYLINDER
PID AS DESIGNATED - S/N 200001A~

Item	Part Number	Description	Qty	Serial Number
1	NSS	SHELL	1	
2	NSS	ROD	1	
3	NSS	WIPER (CYL SERVICE KIT)	1	
4	CC559982	RETAINER	1	
5	NSS	ROD SEAL (CYL SERVICE KIT)	1	
6	NSS	BACK-UP RING (CYL SERVICE KIT)	1	
7	NSS	O-RING (CYL SERVICE KIT)	1	
8	NSS	PULL WIRE (PISTON SERVICE KIT)	1	
9	NSS	PISTON (PISTON SERVICE KIT)	1	
10	NSS	BACK-UP RING (CYL SERVICE KIT)	1	
11	NSS	PISTON SEAL (CYL SERVICE KIT)	1	
12	CC560470	FUSE PISTON	1	
13	CC564107	SPRING GUIDE	1	
14	CC611299	FITTING	1	
15	CC769018	PIN	1	
16	CC564108	FUSE SPRING	1	
17	NSS	RETAINING RING (CHECK VALVE KIT)	1	
18	NSS	WASHER (CHECK VALVE KIT)	1	
19	NSS	WEAR RING (CYL SERVICE KIT)	1	
20	NSS	O-RING (CYL SERVICE & CHECK VALVE KITS)	1	
21	NSS	CHECK VALVE (CHECK VALVE KIT)	1	
22	3EB-73-A5330	SNAP RING	1	
KIT	CC561242	PISTON SERVICE KIT	1	
KIT	CC560349	CYLINDER SERVICE KIT	1	
KIT	CC563904	CHECK VALVE KIT	1	
	OCL = OUTER CHANNEL LENGTH, MFH = MAXIMUM FORK HEIGHT			
	CC582668	MAIN LIFT CYLINDER - (68" OCL) (193" MFH).	1	
	CC582680	MAIN LIFT CYLINDER - (74" OCL) (217" MFH).	1	
	CC582692	MAIN LIFT CYLINDER - (80" OCL) (241" MFH).	1	
	CC582704	MAIN LIFT CYLINDER - (86" OCL) (259" MFH).	1	
	CC582716	MAIN LIFT CYLINDER - (92" OCL) (277" MFH).	1	
	CC582728	MAIN LIFT CYLINDER - (98" OCL) (295" MFH).	1	
	CC582740	MAIN LIFT CYLINDER - (104" OCL) (313" MFH)	1	

https://truckmanualshub.com/

45D-MQ 4-STAGE MAST (QUAD) - FREE LIFT CYLINDER
PID AS DESIGNATED - S/N 200001A~

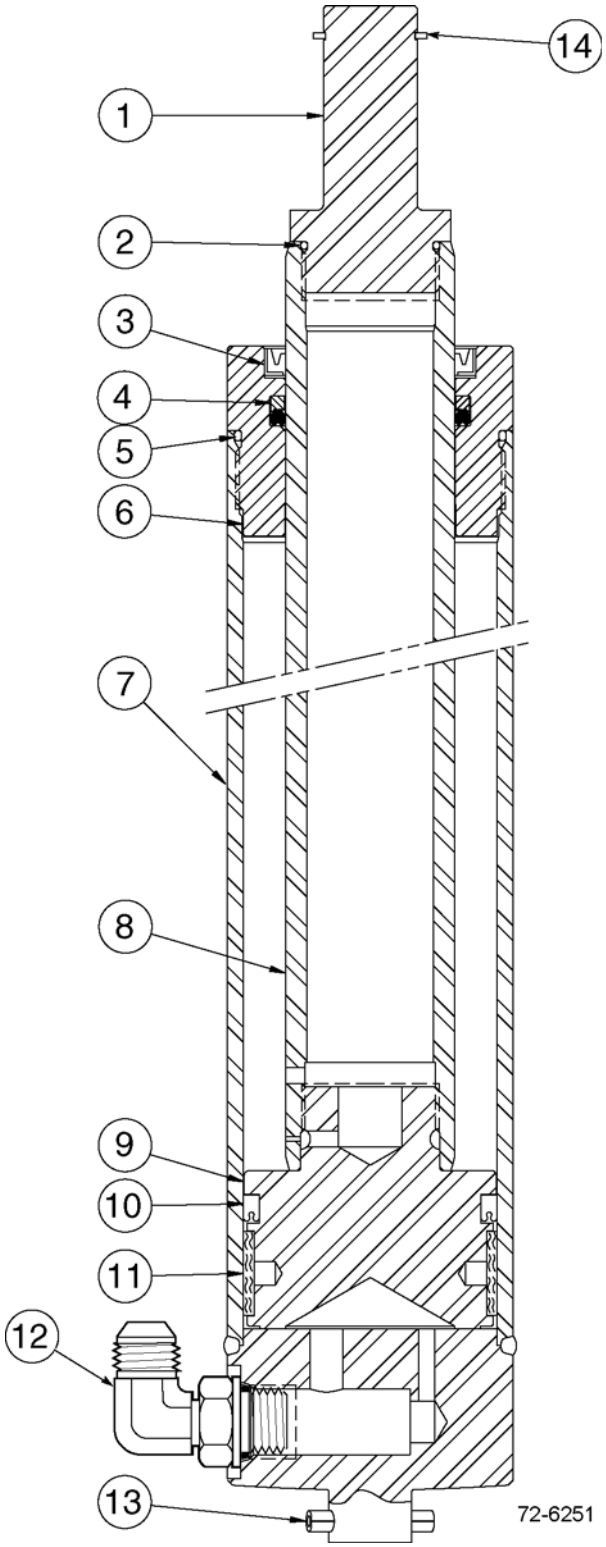

THIS CYLINDER APPLIES TO THE FOLLOWING MAST PIDS:

45D-MQ-4725
45D-MQ-4728 - 4740
45D-MQ-4742 - 4750
45D-MQ-4752 - 4759
45D-MQ-4764 - 4768
45D-MQ-4773
45D-MQ-4774
45D-MQ-4775
45D-MQ-4779
45D-MQ-4794
45D-MQ-4785
45D-MQ-4786
45D-MQ-4787
45D-MQ-4791
45D-MQ-4794
45D-MQ-4796
45D-MQ-4798
45D-MQ-4799
45D-MQ-4800
45D-MQ-4802
45D-MQ-4806 - 4813
45D-MQ-4815
45D-MQ-4818 - 4821
45D-MQ-4823
45D-MQ-4824
45D-MQ-4827
45D-MQ-4827
45D-MQ-4828
45D-MQ-4830 - 4834
45D-MQ-4836
45D-MQ-4838 - 4842
45D-MQ-4847
45D-MQ-4849
45D-MQ-4851
45D-MQ-4852
45D-MQ-4854
45D-MQ-4855
45D-MQ-4859
45D-MQ-4861
45D-MQ-4862
45D-MQ-4863
45D-MQ-4865 - 4867
45D-MQ-4868
45D-MQ-4870
45D-MQ-4871
45D-MQ-4878
45D-MQ-4880
45D-MQ-4883
45D-MQ-4884
45D-MQ-4887 - 4892
45D-MQ-4994
45D-MQ-4895
45D-MQ-4898
45D-MQ-4900 - 4904
45D-MQ-4907 - 4923
45D-MQ-4926
45D-MQ-4928
45D-MQ-4928
45D-MQ-4929
45D-MQ-4933
45D-MQ-4934
45D-MQ-4935
45D-MQ-4937
45D-MQ-4938
45D-MQ-4941 - 5206
45D-MQ-5208 - 5367
45D-MQ-5369 - 6358

https://truckmanualshub.com/

45D-MQ 4-STAGE MAST (QUAD) - FREE LIFT CYLINDER
PID AS DESIGNATED - S/N 200001A~

Item	Part Number	Description	Qty	Serial Number
1	NSS	ROD END	1	
2	NSS	O-RING (KIT)	1	
3	NSS	WIPER (KIT)	1	
4	NSS	ROD SEAL (KIT)	1	
5	NSS	O-RING (KIT)	1	
6	CC1350241	RETAINER	1	
7	NSS	SHELL	1	
8	NSS	ROD	1	
9	CC1350240	PISTON	1	
10	NSS	PISTON SEAL (KIT)	1	
11	NSS	WEAR RING (KIT)	1	
12	CC611299	FITTING	1	
13	CC769018	PIN	1	
14	3EB-73-A5330	SNAP RING	1	
KIT	CC1000786	CYLINDER SERVICE KIT	1	
	OCL = OUTER CHANNEL LENGTH, MFH = MAXIMUM FORK HEIGHT			
	CC1000748	MAIN LIFT CYLINDER - (68" OCL) (193" MFH).	1	
	CC1000751	MAIN LIFT CYLINDER - (74" OCL) (217" MFH).	1	
	CC1000757	MAIN LIFT CYLINDER - (80" OCL) (241" MFH).	1	
	CC1000762	MAIN LIFT CYLINDER - (86" OCL) (259" MFH).	1	
	CC1000768	MAIN LIFT CYLINDER - (92" OCL) (277" MFH).	1	
	CC1000772	MAIN LIFT CYLINDER - (98" OCL) (295" MFH).	1	
	CC1000776	MAIN LIFT CYLINDER - (104" OCL) (313" MFH)	1	

https://truckmanualshub.com/

45D-MQ 4-STAGE MAST (QUAD) - FREE LIFT CYLINDER
PID # 45D-MQ-6359~ - S/N 200001A~

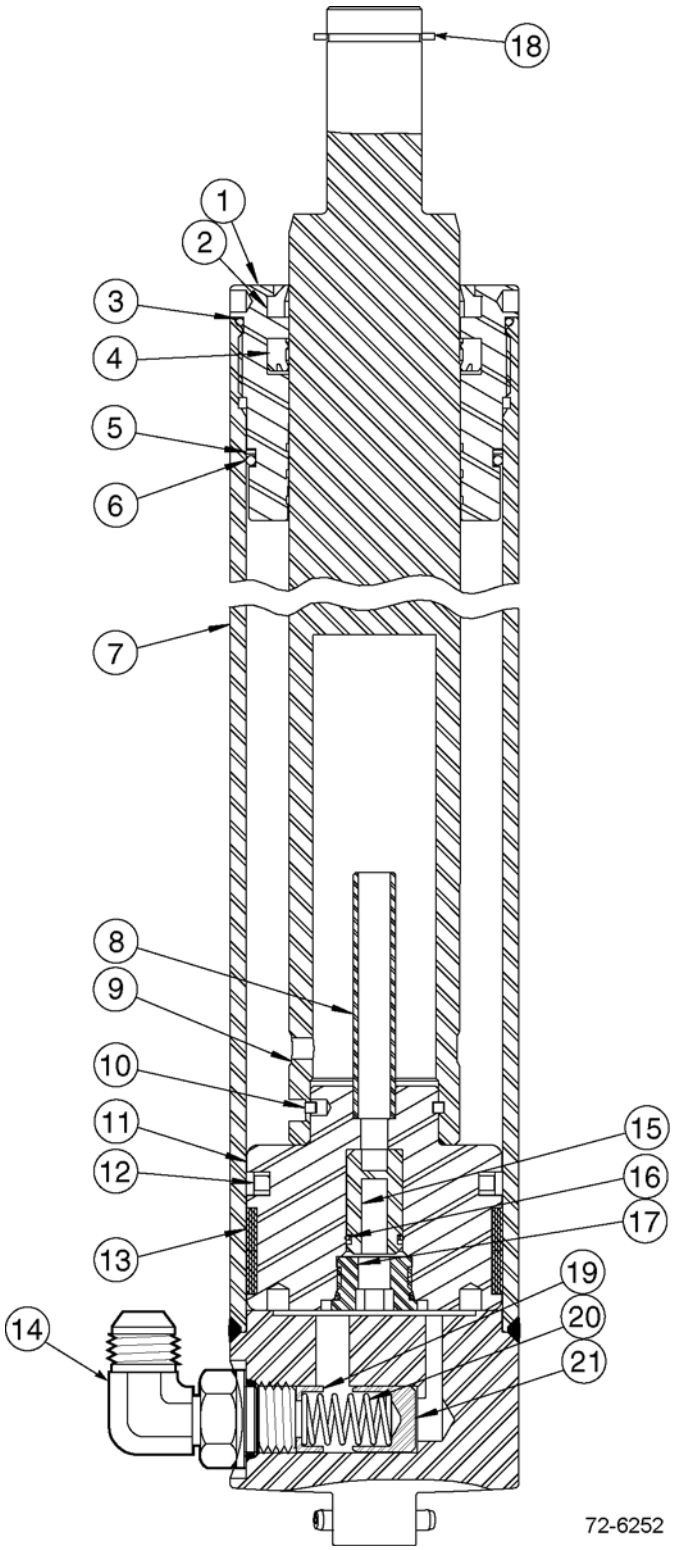

https://truckmanualshub.com/

45D-MQ 4-STAGE MAST (QUAD) - FREE LIFT CYLINDER
PID # 45D-MQ-6359~ - S/N 200001A~

Item	Part Number	Description	Qty	Serial Number
1	CC78476	RETAINER	1	
2	NSS	WIPER (CYL SERVICE KIT)	1	
3	NSS	O-RING (CYL SERVICE KIT)	1	
4	NSS	ROD SEAL (CYL SERVICE KIT)	1	
5	NSS	BACK-UP RING (CYL SERVICE KIT)	1	
6	NSS	O-RING (CYL SERVICE KIT)	1	
7	NSS	SHELL	1	
8	NSS	STAND TUBE	1	
9	NSS	ROD	1	
10	NSS	PULL-IN WIRE (DO NOT REMOVE)	1	
11	NSS	PISTON	1	
12	NSS	PISTON SEAL (CYL SERVICE KIT)	1	
13	NSS	WEAR RING (CYL SERVICE KIT)	1	
14	CC611299	FITTING	1	
15	NSS	CHECK VALVE (CHECK VALVE KIT)	1	
16	NSS	O-RING (BOTH KITS)	1	
17	NSS	PLUG	1	
18	3EB-73-A5330	SNAP RING	1	
19	CC564107	SPRING GUIDE	1	
20	CC565085	SPRING	1	
21	CC252678	FUSE PISTON	1	
KIT	CC1002525	CYLINDER SERVICE KIT	1	
KIT	CC1358999	CHECK VALVE KIT	1	
	OCL = OUTER CHANNEL LENGTH, MFH = MAXIMUM FORK HEIGHT			
	CC1001746	MAIN LIFT CYLINDER - (68" OCL) (193" OCL)	1	
	CC1001747	MAIN LIFT CYLINDER - (69" OCL) (197" MFH)	1	
	CC1001752	MAIN LIFT CYLINDER - (74" OCL) (217" MFH)	1	
	CC1001758	MAIN LIFT CYLINDER - (80" OCL) (241" MFH)	1	
	CC1001764	MAIN LIFT CYLINDER - (86" OCL) (259" MFH)	1	
	CC1001770	MAIN LIFT CYLINDER - (92" OCL) (277" MFH)	1	
	CC1001776	MAIN LIFT CYLINDER - (98" OCL) (295" MFH)	1	
	CC1001782	MAIN LIFT CYLINDER - (104" OCL) (313" MFH)	1	

https://truckmanualshub.com/

45D-MQ 4-STAGE MAST (QUAD) - OUTER UPRIGHT (WELDMENT)
PID # 45D-MQ-001~ - S/N 200001A~

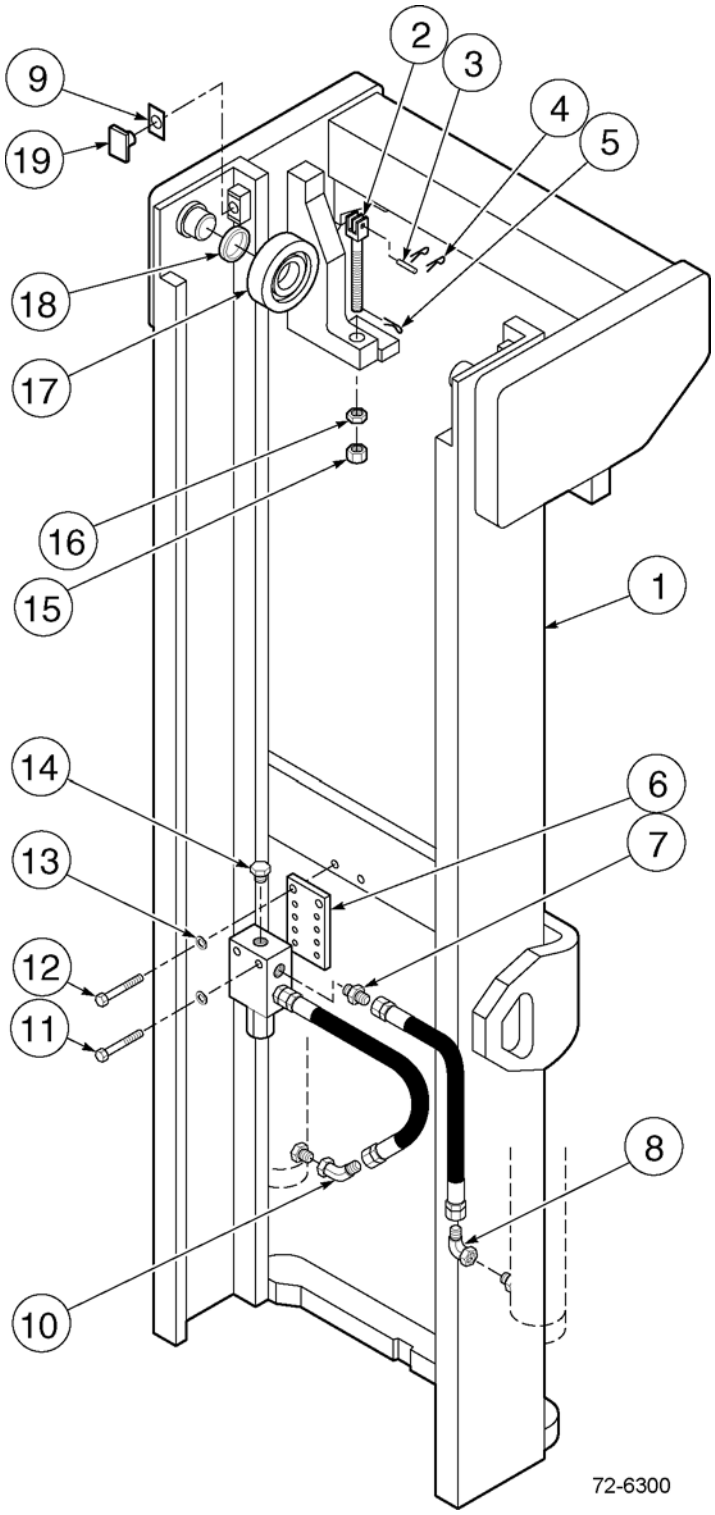

https://truckmanualshub.com/

45D-MQ 4-STAGE MAST (QUAD) - OUTER UPRIGHT (WELDMENT)
PID # 45D-MQ-001~ - S/N 200001A~

Item	Part Number	Description	Qty	Serial Number
		OCL = OUTER CHANNEL LENGTH, MFH = MAXIMUM FORK HEIGHT		
1	CC203277	OUTER UPRIGHT (68" OCL) (193" MFH)	1	
	CC203278	OUTER UPRIGHT (74" OCL) (217" MFH)	1	
	CC203279	OUTER UPRIGHT (80" OCL) (241" MFH)	1	
	CC203280	OUTER UPRIGHT (86" OCL) (259" MFH)	1	
	CC203281	OUTER UPRIGHT (92" OCL) (277" MFH)	1	
	CC203282	OUTER UPRIGHT (98" OCL) (295" MFH)	1	
	CC203283	OUTER UPRIGHT (104" OCL) (313" MFH)	1	
2	CC679144	CHAIN ANCHOR	2	
3	CC679149	PIN	2	
4	3EB-79-A6080	COTTER PIN	4	
5	3EB-79-A6081	COTTER PIN	2	
6	NSS	LCV MOUNTING BRACKET (SEE LOWERING CONTROL VALVE FOR PART NUMBERS)	1	
7	CC601377	FITTING	2	
8	CC605761	FITTING	2	
9	CC203388	SHIM	AR	
10	CC605948	FITTING	1	
11	CC683823	CAPSCREW, M10 X 50 LONG	2	
12	3EB-73-A5490	CAPSCREW, M10 X 25 LONG	2	
13	3EB-79-A6040	LOCKWASHER, M10	4	
14	CC601378	FITTING	1	
15	CC200242	FULL HEX NUT	2	
16	CC200244	JAM HEX NUT	2	
17	CC201493	ROLLER ASSY	2	
18	CC637536	SHIM (16 EACH)	AR	
19	CC201494	WEAR PLUG	2	

https://truckmanualshub.com/

45D-MQ 4-STAGE MAST (QUAD) - OUTER INTERMEDIATE UPRIGHT (WELDMENT)
PID # 45D-MQ-001 TO 6358 - S/N 200001A~

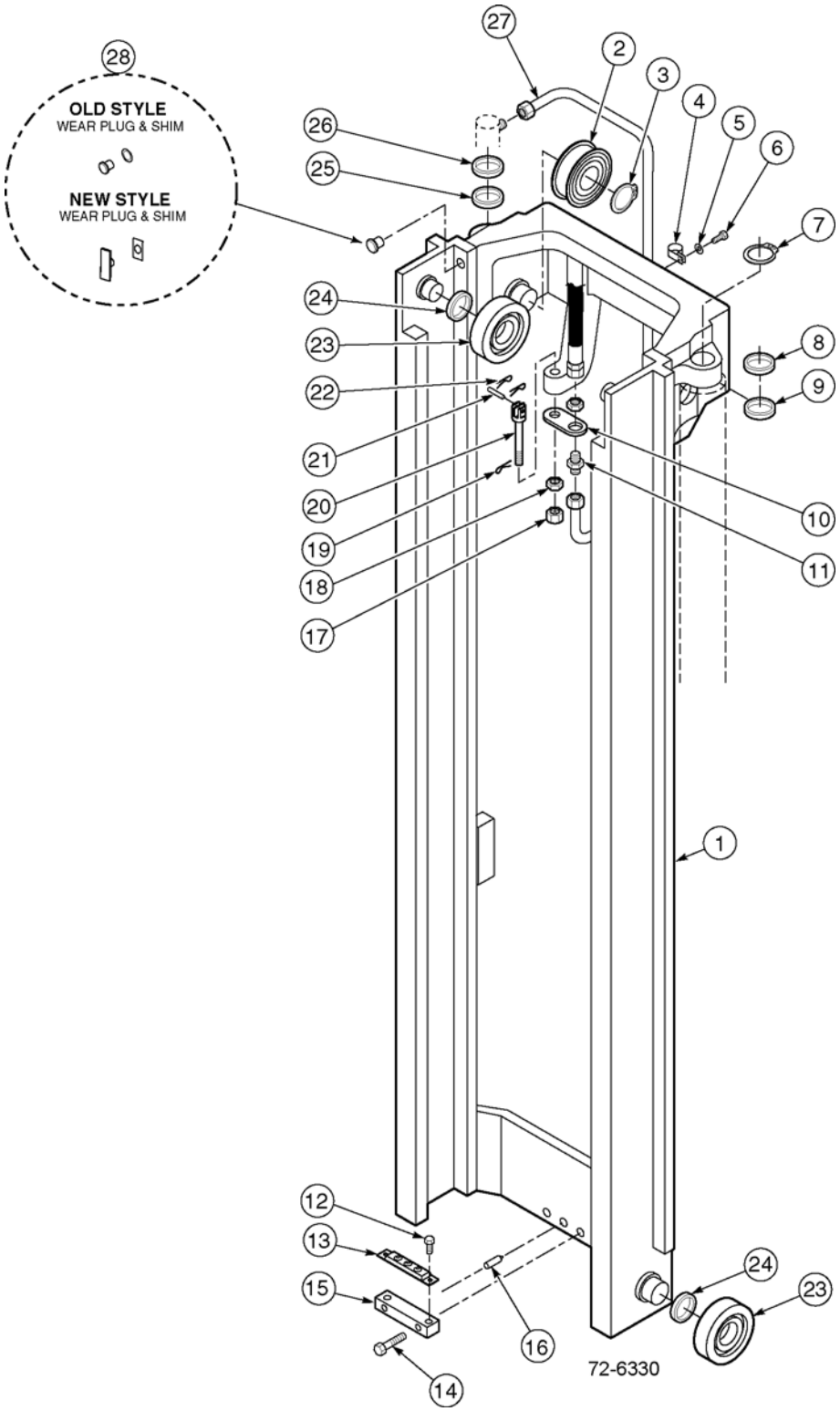

https://truckmanualshub.com/

45D-MQ 4-STAGE MAST (QUAD) - OUTER INTERMEDIATE UPRIGHT (WELDMENT)
PID # 45D-MQ-001 TO 6358 - S/N 200001A~

Item	Part Number	Description	Qty	Serial Number
		OCL = OUTER CHANNEL LENGTH, MFH = MAXIMUM FORK HEIGHT		
1	CC203284	OUTER INTERMEDIATE UPRIGHT (68" OCL) (193" MFH)	1	
	CC203285	OUTER INTERMEDIATE UPRIGHT (74" OCL) (217" MFH)	1	
	CC203286	OUTER INTERMEDIATE UPRIGHT (80" OCL) (241" MFH)	1	
	CC203287	OUTER INTERMEDIATE UPRIGHT (86" OCL) (259" MFH)	1	
	CC203288	OUTER INTERMEDIATE UPRIGHT (92" OCL) (277" MFH)	1	
	CC203289	OUTER INTERMEDIATE UPRIGHT (98" OCL) (295" MFH)	1	
	CC203290	OUTER INTERMEDIATE UPRIGHT (104" OCL) (313" MFH)	1	
2	CC657852	SHEAVE	2	
3	CC3147	SNAP RING	2	
4	3EB-79-A5160	CLAMP	1	
5	3EB-79-A6040	LOCKWASHER, M10	1	
6	3EB-79-A5330	CAPSCREW, M10 X 1.5 X 20-10.9	1	
7	CC3135	SNAP RING	1	
8	CC203404	WASHER (KIT)	AR	
9	CC205198	SHIM, .01" (0.3MM) (KIT)	AR	
	CC205199	SHIM, .03" (0.7MM) (KIT)	AR	
	CC205196	SHIM, .06" (1.5MM) (KIT)	AR	
	CC205197	SHIM, .09" (2.3MM) (KIT)	AR	
10	CC203263	BRACKET (HI-VIS) (NOT SHOWN)	1	
	CC683831	BRACKET (STANDARD)	1	
11	CC2377	FITTING, 10-10	1	
12	3EB-73-A5470	CAPSCREW, M6 X 12-8.8	2	
13	CC661786	PAD	1	
14	CC769572	CAPSCREW, M12 X 35-12.9	2	
15	CC203291	BAR	1	
16	CC606212	DOWEL PIN	1	
17	3EB-79-A6090	NUT	2	
18	CC200007	JAM NUT	2	
19	3EB-79-A6081	COTTER PIN	2	
20	CC680242	CHAIN ANCHOR	2	
21	CC684305	PIN	2	

PARTS LIST CONTINUED ON NEXT PAGE

https://truckmanualshub.com/

45D-MQ 4-STAGE MAST (QUAD) - OUTER INTERMEDIATE UPRIGHT (WELDMENT)
PID # 45D-MQ-001 TO 6358 - S/N 200001A~

Item	Part Number	Description	Qty	Serial Number
22	3EB-79-A6080	COTTER PIN	4	
23	CC662145	ROLLER	4	
24	3EB-79-A6050	SHIM, .03" (0.7MM) (16 EACH)	AR	
25	CC203403	WASHER, .08" (2.0MM) (2 EACH)	AR	
26	CC203314	WASHER, .09" (2.2MM) (2 EACH)	AR	
27	CC203386	TUBE	1	
28	CC215720	WEAR PLUG (4.2MM) (KIT)	2	
	CC215721	WEAR PLUG (6.2MM) (KIT)	2	
29	CC215722	.WEAR PLUG SHIM (KIT)	2	
KIT	CC210767	SERVICE KIT	1	

https://truckmanualshub.com/

NOTES:

https://truckmanualshub.com/

45D-MQ 4-STAGE MAST(QUAD) - OUTER INTERMEDIATE UPRIGHT (WELDMENT)
PID # 45D-MQ-6359~ - S/N 200001A~

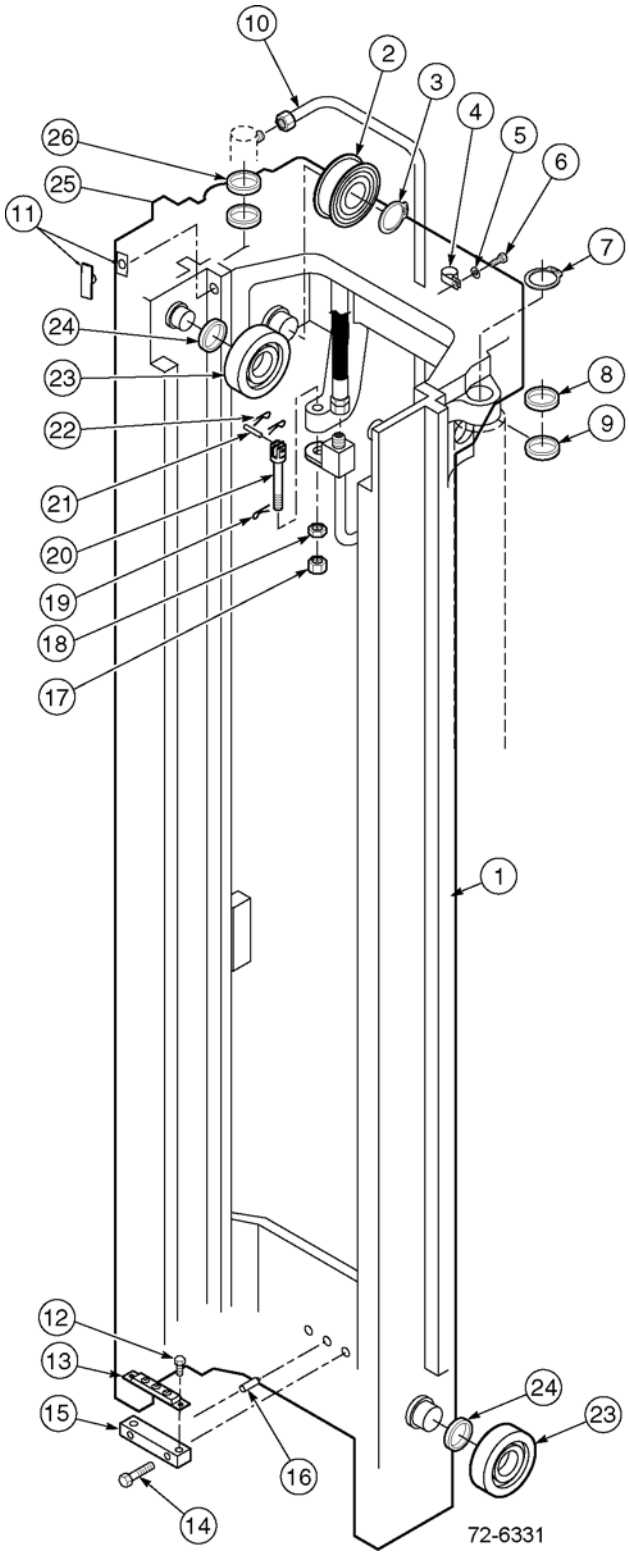

https://truckmanualshub.com/

45D-MQ 4-STAGE MAST(QUAD) - OUTER INTERMEDIATE UPRIGHT (WELDMENT)
PID # 45D-MQ-6359~ - S/N 200001A~

Item	Part Number	Description	Qty	Serial Number
		OCL = OUTER CHANNEL LENGTH, MFH = MAXIMUM FORK HEIGHT		
1	CC203284	OUTER INTERMEDIATE UPRIGHT (68" OCL) (193" MFH)	1	
	CC203285	OUTER INTERMEDIATE UPRIGHT (74" OCL)	1	
	CC203286	OUTER INTERMEDIATE UPRIGHT (80" OCL) (241" MFH)	1	
	CC203287	OUTER INTERMEDIATE UPRIGHT (86" OCL) (259" MFH)	1	
	CC203288	OUTER INTERMEDIATE UPRIGHT (92" OCL) (277" MFH)	1	
	CC203289	OUTER INTERMEDIATE UPRIGHT (98" OCL) (295" MFH)	1	
	CC203290	OUTER INTERMEDIATE UPRIGHT (104" OCL) (313" MFH)	1	
2	CC657852	SHEAVE	2	
3	CC3147	SNAP RING	2	
4	3EB-79-A5160	CLAMP	1	
5	3EB-79-A6040	LOCKWASHER, M10	1	
6	3EB-79-A5330	CAPSCREW, M10 X 1.5 X 20-10.9	1	
7	CC3135	SNAP RING	1	
8	CC203404	WASHER (KIT)	AR	
9	CC205198	SHIM, .01" (0.3MM) (KIT)	AR	
	CC205199	SHIM, .03" (0.7MM) (KIT)	AR	
	CC205196	SHIM, .06" (1.5MM) (KIT)	AR	
	CC205197	SHIM, .09" (2.3MM) (KIT)	AR	
10	CC248902	TUBE	1	
11	CC215720	WEAR PLUG (4.2MM) (2 EACH) (KIT)	AR	
	CC215721	WEAR PLUG (6.2MM) (2 EACH) (KIT)	AR	
	CC215722	WEAR PLUG SHIM (2 EACH) (KIT)	AR	
12	3EB-73-A5470	CAPSCREW, M6 X 12-8.8	2	
13	CC661786	PAD	1	
14	CC769572	CAPSCREW, M12 X 35-12.9	2	
15	CC203291	BAR	1	
16	CC606212	DOWEL PIN	1	
17	CC200006	NUT	2	
18	CC200007	JAM NUT	2	
19	CC6518	COTTER PIN	2	
20	CC680242	CHAIN ANCHOR	2	

PARTS LIST CONTINUED ON NEXT PAGE

https://truckmanualshub.com/

45D-MQ 4-STAGE MAST(QUAD) - OUTER INTERMEDIATE UPRIGHT (WELDMENT)
PID # 45D-MQ-6359~ - S/N 200001A~

Item	Part Number	Description	Qty	Serial Number
21	CC684305	PIN	2	
22	3EB-79-A6080	COTTER PIN	4	
23	CC662145	ROLLER	4	
24	3EB-79-A6050	SHIM, .03" (0.7MM) (16 EACH) (KIT)	AR	
25	CC203403	WASHER, .08" (2.0MM) (2 EACH) (KIT)	AR	
26	CC203314	WASHER, .09" (2.2MM) (2 EACH) (KIT)	AR	
KIT	CC210767	SERVICE KIT	1	

https://truckmanualshub.com/

NOTES:

https://truckmanualshub.com/

45D-MQ 4-STAGE MAST (QUAD) - INNER INTERMEDIATE UPRIGHT (WELDMENT)
PID # 45D-MQ-001~ - S/N 200001A~

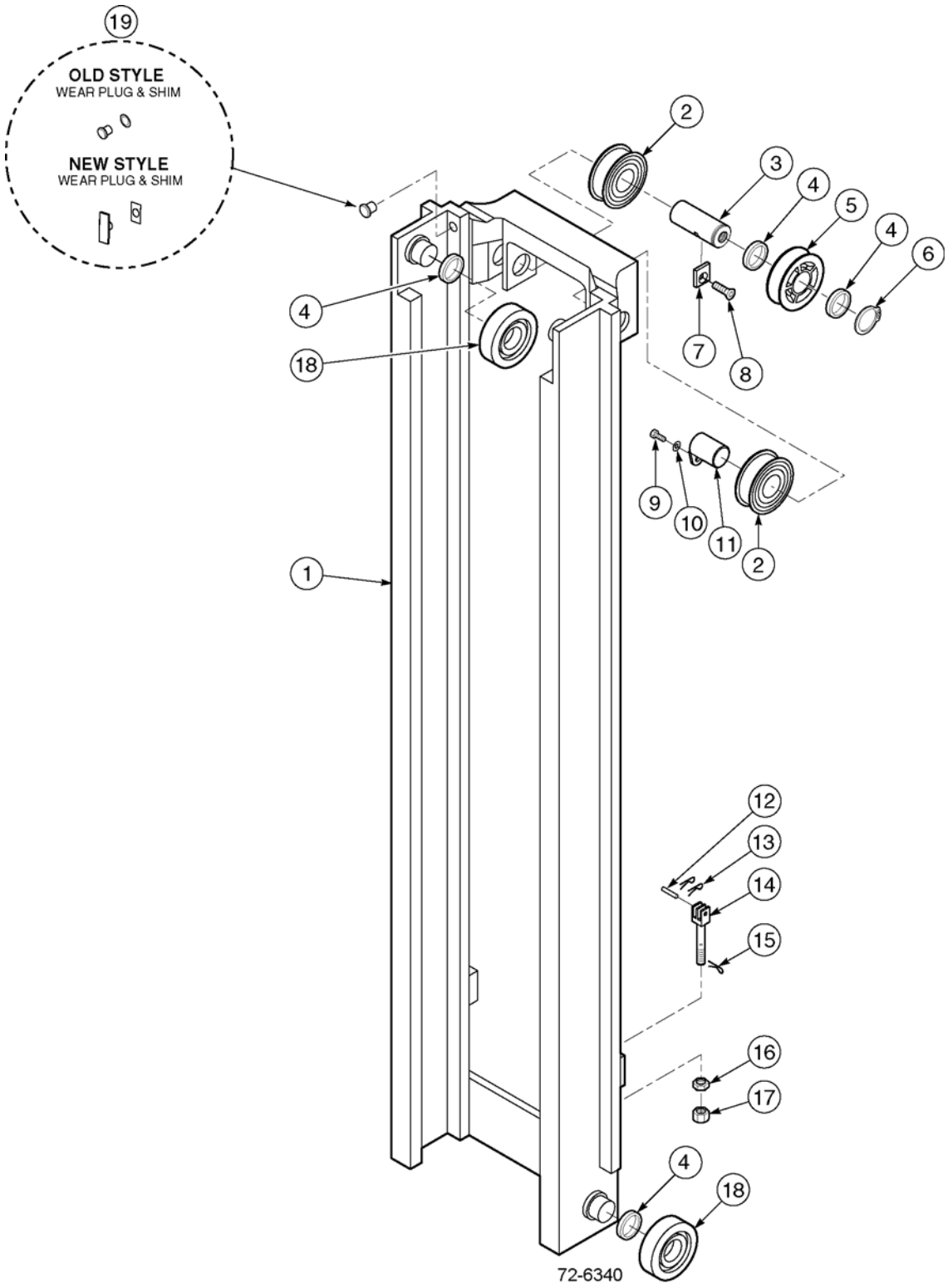

https://truckmanualshub.com/

45D-MQ 4-STAGE MAST (QUAD) - INNER INTERMEDIATE UPRIGHT (WELDMENT)
PID # 45D-MQ-001~ - S/N 200001A~

Item	Part Number	Description	Qty	Serial Number
		OCL = OUTER CHANNEL LENGTH, MFH = MAXIMUM FORK HEIGHT		
1	CC249045	INNER INTERMEDIATE UPRIGHT (68" OCL) (193" MFH)	1	
	CC249048	INNER INTERMEDIATE UPRIGHT (74" OCL) (217" MFH)	1	
	CC249052	INNER INTERMEDIATE UPRIGHT (80" OCL) (241" MFH)	1	
	CC249058	INNER INTERMEDIATE UPRIGHT (86" OCL) (259" MFH)	1	
	CC249064	INNER INTERMEDIATE UPRIGHT (92" OCL) (277" MFH)	1	
	CC249070	INNER INTERMEDIATE UPRIGHT (98" OCL) (295" MFH)	1	
	CC249075	INNER INTERMEDIATE UPRIGHT (104" OCL) (313" MFH)	1	
2	CC660051	SHEAVE	2	
3	CC203267	SHAFT	1	
4	3EB-79-A6050	SHIM, .03" (0.7MM) (16 EACH) (KIT)	AR	
5	CC203385	SHEAVE	1	
6	3EB-79-A6070	SNAP RING	1	
7	CC203266	RETAINER	1	
8	CC768690	CAPSCREW, M18 X 12-8.8	1	
9	CC683820	CAPSCREW, M10 X 1.5 X 16-8.8	1	
10	3EB-79-A6040	LOCKWASHER, M10	1	
11	CC203269	SHAFT	1	
12	CC679149	PIN	2	
13	3EB-79-A6080	COTTER PIN	4	
14	CC679146	CHAIN ANCHOR	2	
15	3EB-79-A6081	COTTER PIN	2	
16	CC200244	JAM NUT	2	
17	CC200242	NUT.	2	
18	CC662145	ROLLER	4	
19	CC215720	WEAR PLUG (4.2MM) (2 EACH) (KIT)	AR	
	CC215721	WEAR PLUG (6.2MM) (2 EACH) (KIT)	AR	
	CC215722	.WEAR PLUG SHIM (2 EACH)	AR	
KIT	CC210767	SERVICE KIT	1	

https://truckmanualshub.com/

45D-MQ 4-STAGE MAST (QUAD) - INNER UPRIGHT (WELDMENT)
PID # 45D-MQ-001 TO 883 - S/N 200001A~

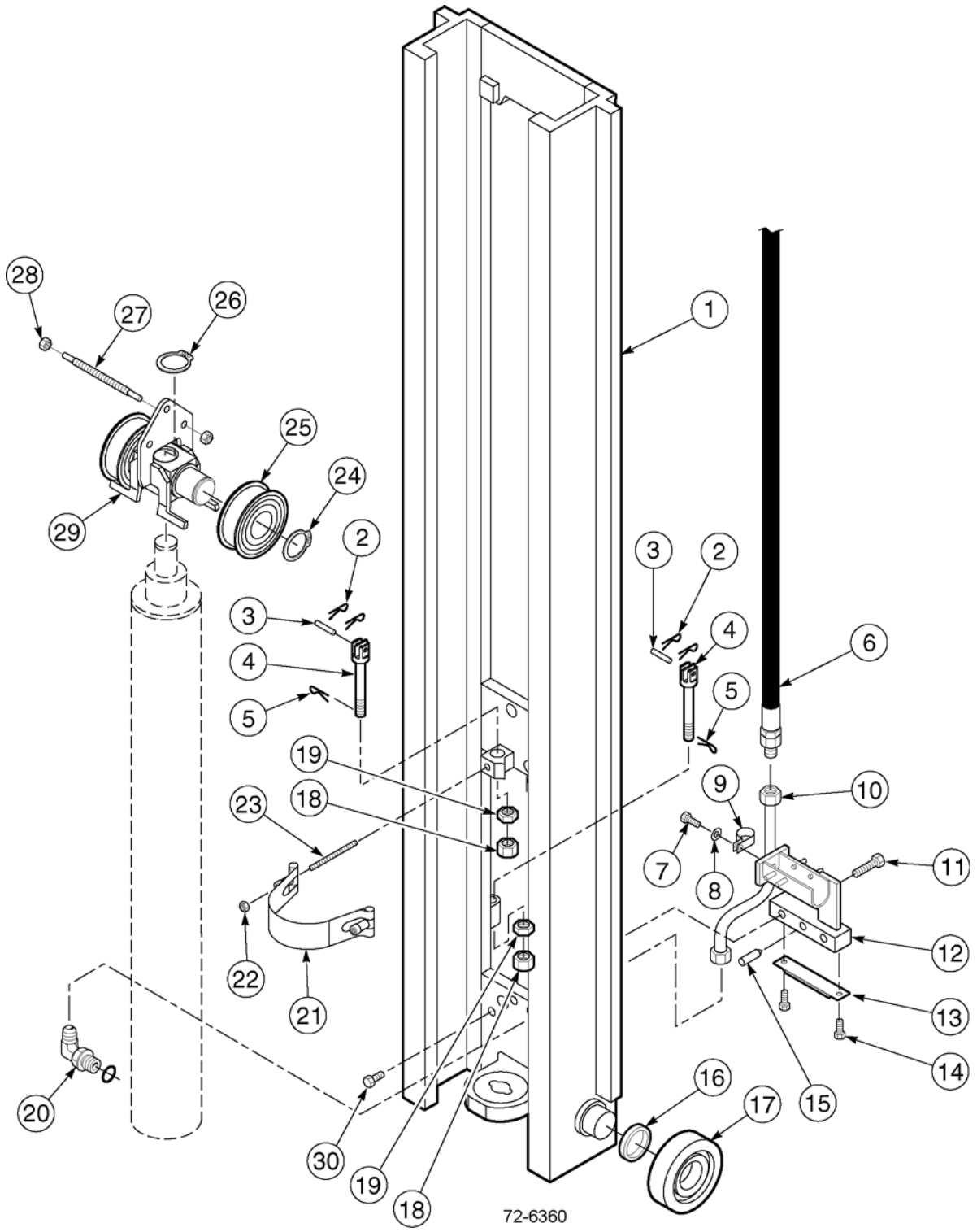

https://truckmanualshub.com/

45D-MQ 4-STAGE MAST (QUAD) - INNER UPRIGHT (WELDMENT)
PID # 45D-MQ-001 TO 883 - S/N 200001A~

Item	Part Number	Description	Qty	Serial Number
		OCL = OUTER CHANNEL LENGTH, MFH = MAXIMUM FORK HEIGHT		
1	CC203377	INNER UPRIGHT (68" OCL) (193" MFH)	1	
	CC203378	INNER UPRIGHT (74" OCL) (217" MFH)	1	
	CC203379	INNER UPRIGHT (80" OCL) (241" MFH)	1	
	CC203380	INNER UPRIGHT (86" OCL) (259" MFH)	1	
	CC203381	INNER UPRIGHT (92" OCL) (277" MFH)	1	
	CC203382	INNER UPRIGHT (98" OCL) (295" MFH)	1	
	CC203383	INNER UPRIGHT (104" OCL) (313" MFH)	1	
2	3EB-79-A6080	COTTER PIN	4	
3	CC684305	PIN	2	
4	CC680242	CHAIN ANCHOR	2	
5	3EB-79-A6081	COTTER PIN	2	
6	SEE PARTS PG	HOSE - SEE FIG. 72-6500		
7	CC200429	CAPSCREW, M10 X 1.5 X 20-10.9	1	
8	3EB-79-A6040	LOCKWASHER, M10	1	
9	CC206655	TUBE CLAMP	1	
10	CC203387	TUBE	1	
11	CC769572	CAPSCREW, M12 X 35-12.9	2	
12	CC203477	STANDARD IHR BRACKET	1	
13	CC661786	PAD	1	
14	3EB-73-A5470	CAPSCREW, M6 X 12-8.8	2	
15	CC606212	DOWEL PIN	1	
16	3EB-79-A6050	SHIM, .03" (0.7MM) (16 EACH)	AR	
17	CC662145	ROLLER	2	
18	3EB-79-A6090	NUT	4	
19	CC200007	JAM NUT	4	
20	CC611299	FITTING, 10-10	1	
21	CC206042	BAND	1	
22	CC786881	NUT, M8	2	
23	CC206319	STUD	2	
24	3EB-79-A6070	SNAP RING	2	
25	CC660051	SHEAVE	2	
26	3EB-73-A5330	SNAP RING	1	
27	CC203262	BAR	1	
28	CC763023	NUT, M10	2	
29	CC201497	CROSSHEAD	1	
30	CC203406	CAPSCREW, M12 X 1.75 X 16-12.9	2	

https://truckmanualshub.com/

45D-MQ 4-STAGE MAST (QUAD) - INNER UPRIGHT (WELDMENT)
PID # 45D-MQ-884 TO 6358 - S/N 200001A~

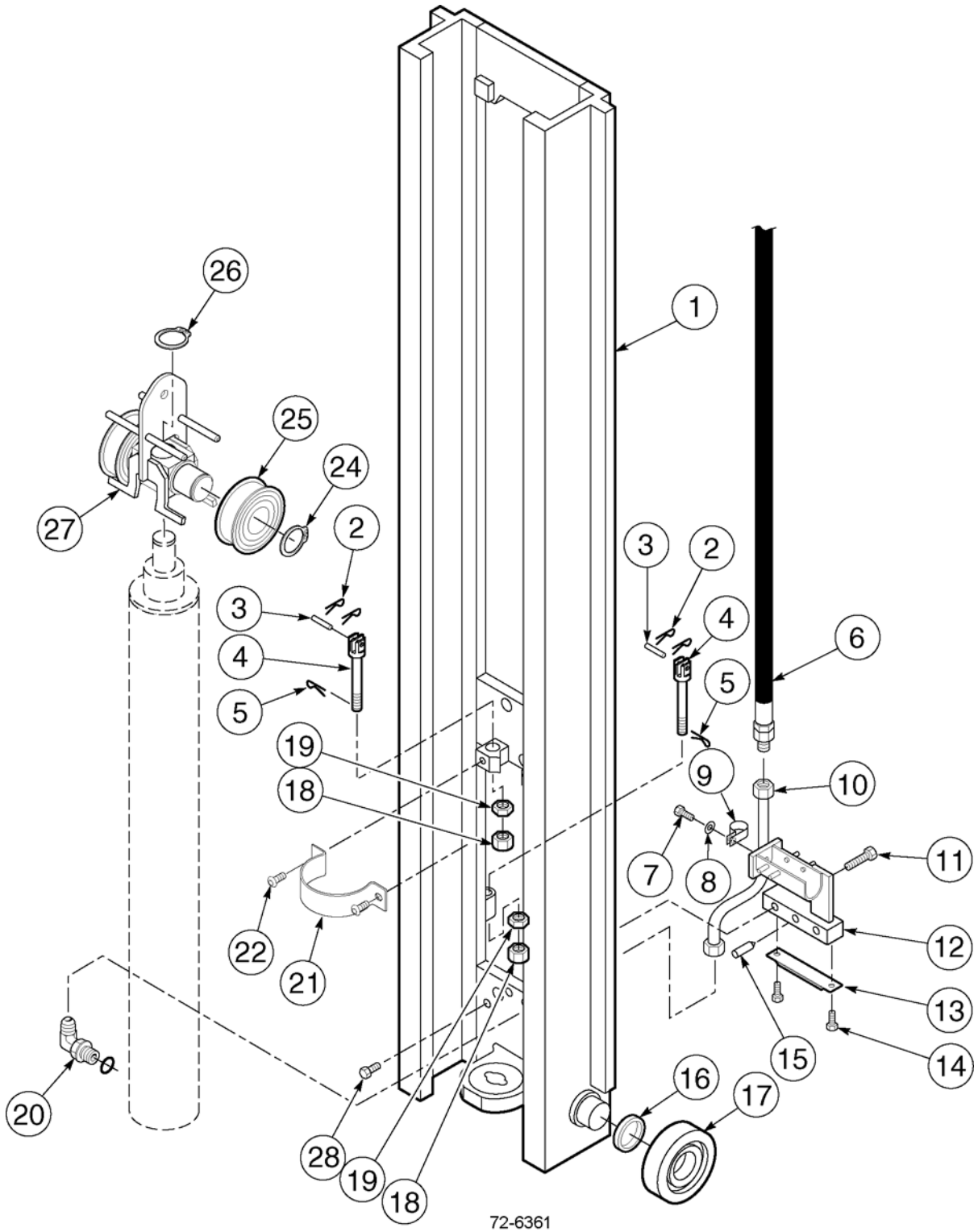

https://truckmanualshub.com/

45D-MQ 4-STAGE MAST (QUAD) - INNER UPRIGHT (WELDMENT)
PID # 45D-MQ-884 TO 6358 - S/N 200001A~

Item	Part Number	Description	Qty	Serial Number
		OCL = OUTER CHANNEL LENGTH, MFH = MAXIMUM FORK HEIGHT		
1	CC203377	INNER UPRIGHT (68" OCL) (193" MFH)	1	
	CC203378	INNER UPRIGHT (74" OCL) (217" MFH)	1	
	CC203379	INNER UPRIGHT (80" OCL) (241" MFH)	1	
	CC203380	INNER UPRIGHT (86" OCL) (259" MFH)	1	
	CC203381	INNER UPRIGHT (92" OCL) (277" MFH)	1	
	CC203382	INNER UPRIGHT (98" OCL) (295" MFH)	1	
	CC203383	INNER UPRIGHT (104" OCL) (313" MFH)	1	
2	3EB-79-A6080	COTTER PIN	4	
3	CC684305	PIN	2	
4	CC680242	CHAIN ANCHOR	2	
5	3EB-79-A6081	COTTER PIN	2	
6	SEE PARTS PG	SEE FIG. 72-6500		
7	3EB-79-A5330	CAPSCREW, M10 X 1.5 X 20-10.9	1	
8	3EB-79-A6040	LOCKWASHER, M10	1	
9	CC206655	TUBE CLAMP	1	
10	CC203387	TUBE	1	
11	CC769572	CAPSCREW, M12 X 35-12.9	2	
12	CC203477	IHR BRACKET, STANDARD	1	
	CC238353	IHR BRACKET, L.H.	1	
	CC230805	IHR BRACKET, R.H.	1	
13	CC661786	PAD	1	
14	3EB-73-A5470	CAPSCREW, M6 X 12-8.8	2	
15	CC606212	DOWEL PIN	1	
16	3EB-79-A6050	SHIM, .03" (0.7MM) (16 EACH)	AR	
17	CC662145	ROLLER	2	
18	3EB-79-A6090	NUT	4	
19	CC200007	JAM NUT	4	
20	CC611299	FITTING, 10-10	1	
21	CC206042	BAND	1	
22	CC786881	NUT, M8	2	
23	NOT USED			
24	CC3140	SNAP RING	2	
25	CC660051	SHEAVE	2	
26	3EB-73-A5330	SNAP RING	1	
27	CC210169	CROSSHEAD	1	
28	CC203406	CAPSCREW, M12 X 1.75 X 16-12.9	2	

https://truckmanualshub.com/

45D-MQ 4-STAGE MAST (QUAD) - INNER UPRIGHT (WELDMENT)
PID # 45D-MQ-6359~ - S/N 200001A~

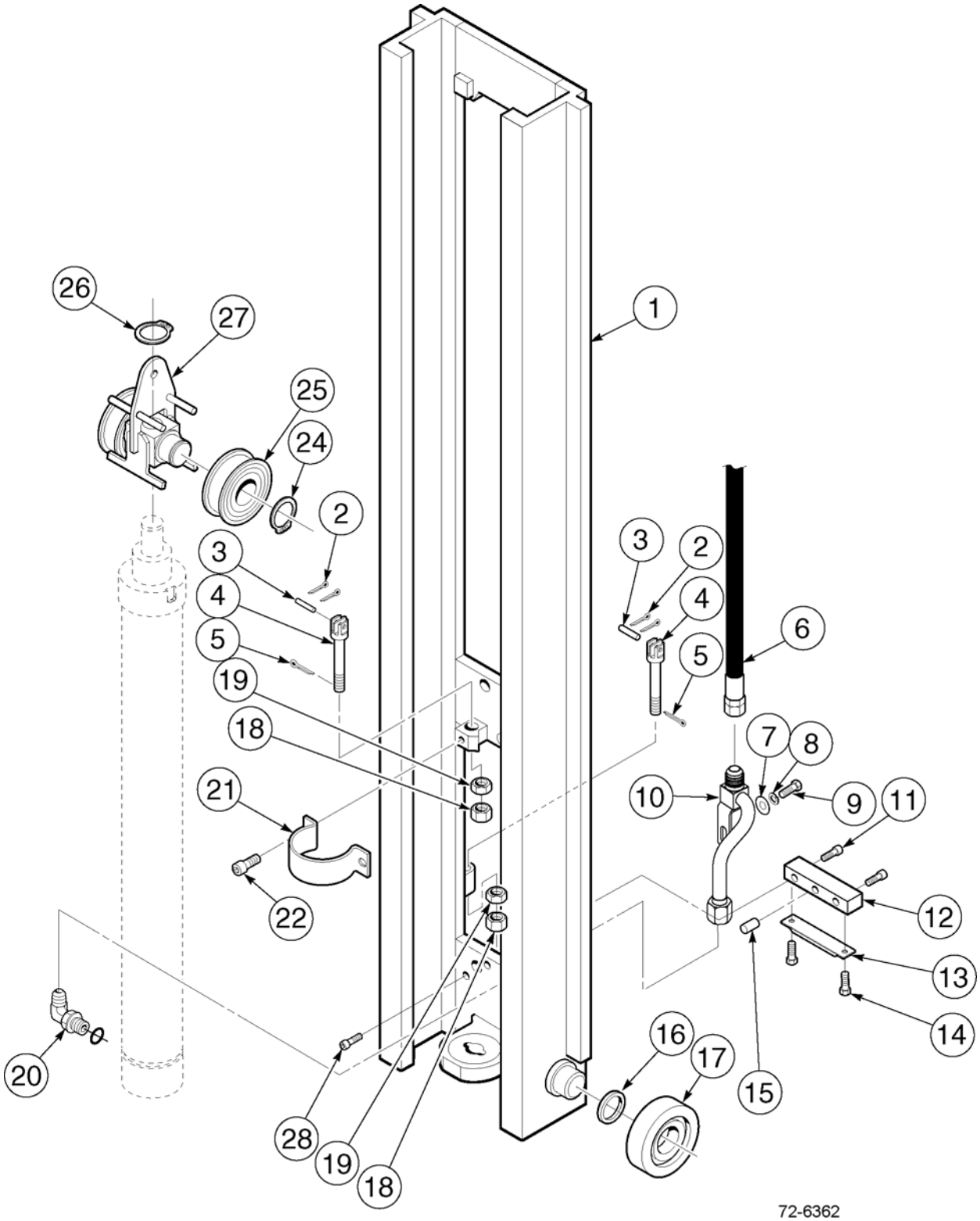

https://truckmanualshub.com/

45D-MQ 4-STAGE MAST (QUAD) - INNER UPRIGHT (WELDMENT)
PID # 45D-MQ-6359~ - S/N 200001A~

Item	Part Number	Description	Qty	Serial Number
		OCL = OUTER CHANNEL LENGTH, MFH = MAXIMUM FORK HEIGHT		
1	CC203377	INNER UPRIGHT (68" OCL) (193" MFH)	1	
	CC203378	INNER UPRIGHT (74" OCL) (217" MFH)	1	
	CC203379	INNER UPRIGHT (80" OCL) (241" MFH)	1	
	CC203380	INNER UPRIGHT (86" OCL) (259" MFH)	1	
	CC203381	INNER UPRIGHT (92" OCL) (277" MFH)	1	
	CC203382	INNER UPRIGHT (98" OCL) (295" MFH)	1	
	CC203383	INNER UPRIGHT (104" OCL) (313" MFH)	1	
2	3EB-79-A6080	COTTER PIN	4	
3	CC684305	PIN	2	
4	CC680242	CHAIN ANCHOR	2	
5	3EB-79-A6081	COTTER PIN	2	
6	SEE PARTS PG	SEE FIG. 72-6501		
7	CC787398	FLAT WASHER, M8	1	
8	CC206315	LOCKWASHER, M8	1	
9	CC209742	CAPSCREW, M8 X 16	1	
10	CC248901	TUBE	1	
11	CC769572	CAPSCREW, M12 X 35-12.9 (KIT)	2	
12	CC203291	NON-IHR STOP BRACKET, STANDARD (KIT)	2	
13	CC661786	PAD (KIT)	1	
14	CC680218	CAPSCREW, M6 X 12-8.8 (KIT)	2	
15	CC606212	DOWEL PIN (KIT)	1	
16	3EB-79-A6050	SHIM, .03" (0.7MM) (16 EACH)	AR	
17	CC662145	ROLLER	2	
18	3EB-79-A6090	NUT	4	
19	CC200007	JAM NUT	4	
20	CC611299	FITTING, 10-10	1	
21	CC209625	BAND	1	
22	CC219596	NUT, M8	2	
23	NOT USED			
24	3EB-79-A6070	SNAP RING	2	
25	CC660051	SHEAVE	2	
26	3EB-73-A5330	SNAP RING	1	
27	CC210169	CROSSHEAD	1	
28	CC203406	CAPSCREW, M12 X 1.75 X 16-12.9	2	
KIT	CC249002	NON-IHR INNER MAST BUMPER STOP KIT	1	

https://truckmanualshub.com/

45D-MQ 4-STAGE MAST (QUAD) - 4-ROLLER CARRIAGES
S/N 200001A~

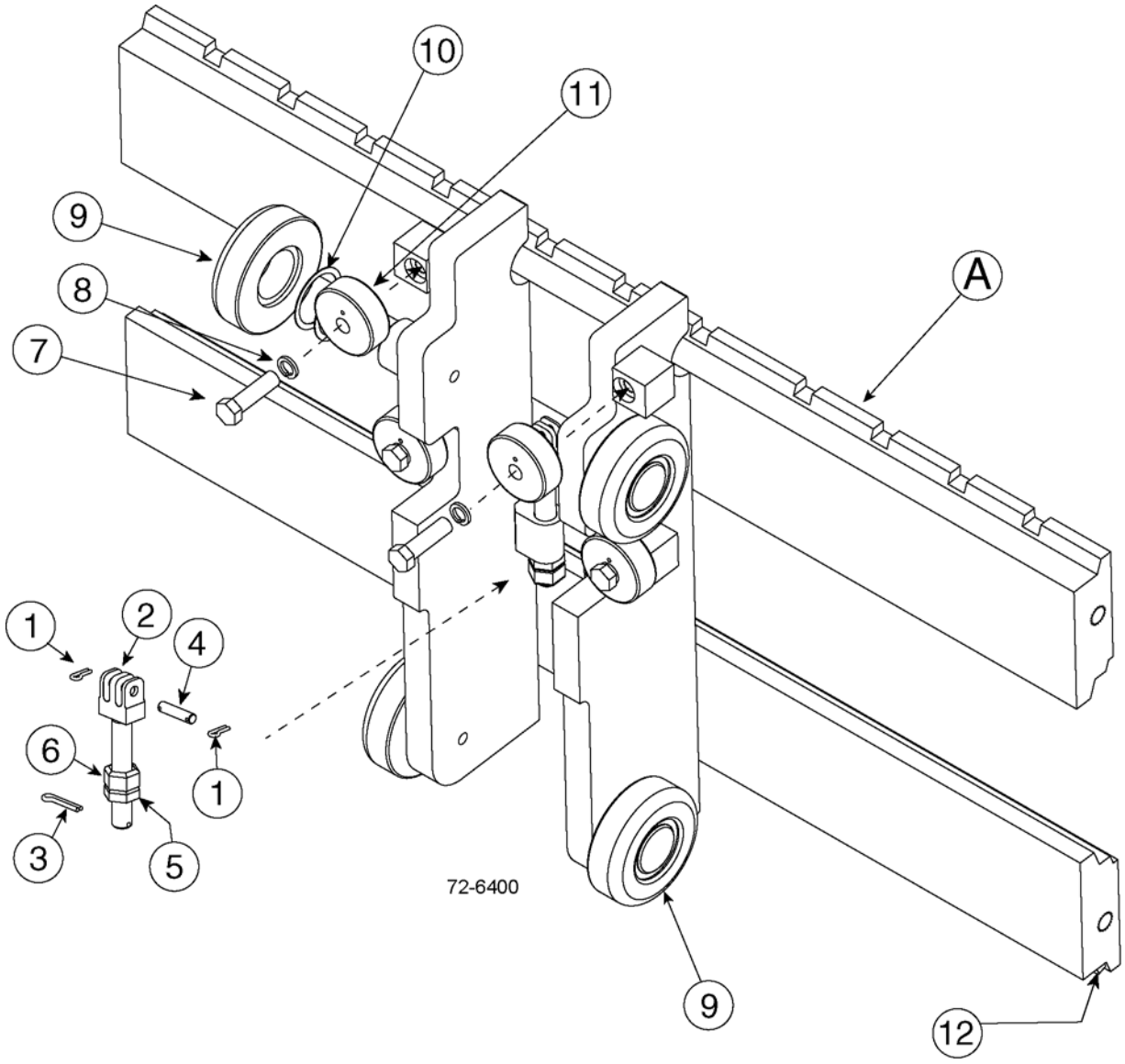

https://truckmanualshub.com/

45D-MQ 4-STAGE MAST (QUAD) - 4-ROLLER CARRIAGES
S/N 200001A~

Item	Part Number	Description	Qty	Serial Number
A	CC203323	CARRIAGE (37") - CUSHION TIRE TRUCKS . .	1	
	CC203324	CARRIAGE (41") - CUSHION TIRE TRUCKS . .	1	
	CC219851	CARRIAGE (31") - PNEUMATIC TIRE TRUCKS	1	
	CC203325	CARRIAGE (37") - PNEUMATIC TIRE TRUCKS	1	
	CC216747	CARRIAGE (38.5") - PNEUMATIC TIRE TRUCKS	1	
	CC203326	CARRIAGE (41") - PNEUMATIC TIRE TRUCKS	1	
1	3EB-79-A6080	COTTER PIN	4	
2	CC683817	CHAIN ANCHOR	2	
3	3EB-79-A6081	COTTER PIN	2	
4	CC684305	PIN	2	
5	CC200007	NUT, .625	2	
6	3EB-79-A6090	JAM NUT	2	
7	3EB-79-A5290	CAPSCREW, M12 X 45	4	
8	CC684660	LOCKWASHER, M12	4	
9	CC662145	ROLLER ASSY	4	
10	3EB-79-A6050	SHIM (16 EACH).	AR	
11	CC683819	THRUST ROLLER ASSY	4	
12	CC219400	FORKSTOP KIT	1	

https://truckmanualshub.com/

45D-MQ 4-STAGE MAST (QUAD) - 6-ROLLER CARRIAGES
S/N 200001A~

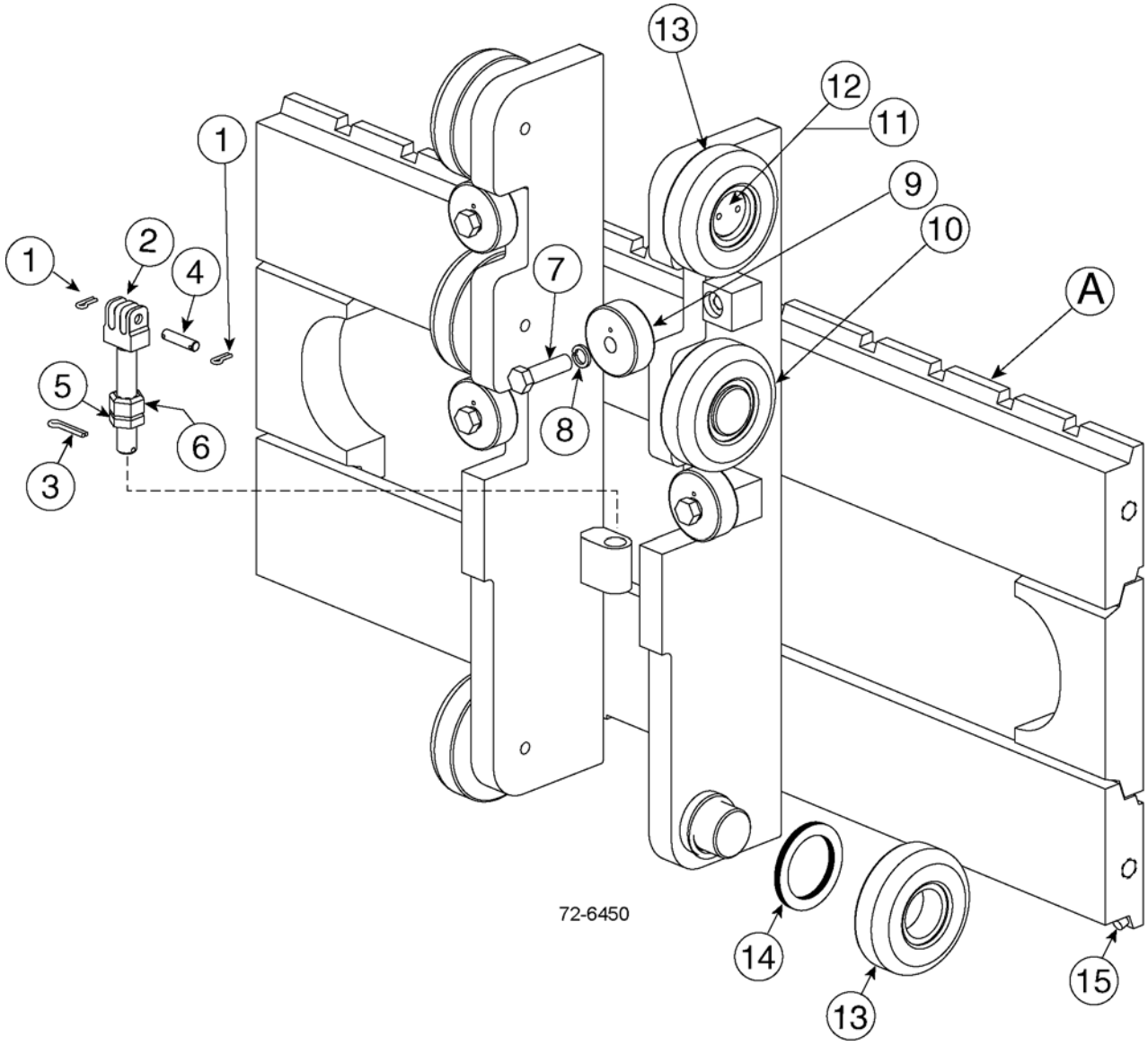

https://truckmanualshub.com/

45D-MQ 4-STAGE MAST (QUAD) - 6-ROLLER CARRIAGES
S/N 200001A~

Item	Part Number	Description	Qty	Serial Number
A	CC233777	CARRIAGE (36.5") STD - CUSHION TIRE TRUCKS	1	
	CC203391	CARRIAGE (37") STD - CUSHION TIRE TRUCKS	1	
	CC203469	CARRIAGE (37") HD - CUSHION TIRE TRUCKS	1	
	CC203392	CARRIAGE (41") STD - CUSHION TIRE TRUCKS	1	
	CC203470	CARRIAGE (41") HD - CUSHION TIRE TRUCKS	1	
	CC250010	CARRIAGE (43") HD - CUSHION TIRE TRUCKS	1	
	CC245079	CARRIAGE (47") STD - CUSHION TIRE TRUCKS	1	
	CC203417	CARRIAGE (49") STD - CUSHION TIRE TRUCKS	1	
	CC203471	CARRIAGE (49") HD - CUSHION TIRE TRUCKS	1	
	CC203418	CARRIAGE (61") STD - CUSHION TIRE TRUCKS	1	
	CC203472	CARRIAGE (61") HD - CUSHION TIRE TRUCKS	1	
	CC214333	CARRIAGE (62") HD - CUSHION TIRE TRUCKS	1	
	CC203393	CARRIAGE (37") STD - PNEUMATIC TIRE TRUCKS	1	
	CC203473	CARRIAGE (37") HD - PNEUMATIC TIRE TRUCKS	1	
	CC203394	CARRIAGE (41") STD - PNEUMATIC TIRE TRUCKS	1	
	CC203474	CARRIAGE (41") HD - PNEUMATIC TIRE TRUCKS	1	
	CC203419	CARRIAGE (49") STD - PNEUMATIC TIRE TRUCKS	1	
	CC203475	CARRIAGE (49") HD - PNEUMATIC TIRE TRUCKS	1	
	CC220811	CARRIAGE (58") STD - PNEUMATIC TIRE TRUCKS	1	
	CC203420	CARRIAGE (61") STD - PNEUMATIC TIRE TRUCKS	1	
	CC203476	CARRIAGE (61") HD - PNEUMATIC TIRE TRUCKS	1	
1	3EB-79-A6080	COTTER PIN	4	
2	CC683817	CHAIN ANCHOR	2	
3	3EB-79-A6081	COTTER PIN	2	
4	CC684305	PIN	2	
5	CC200007	NUT, .625	2	
6	3EB-79-A6090	JAM NUT	2	
7	3EB079-A5290	CAPSCREW, M12 X 45	4	
8	CC684660	LOCKWASHER, M12	4	
9	CC662145	ROLLER ASSY	4	
10	CC660050	LOAD ROLLER	2	
11	CC658378	RETAINER PLATE	2	
12	CC680218	HEX HEAD, M6 X 12 LONG	4	
13	CC662145	LOAD ROLLER	4	
14	3EB-79-A6050	SHIM, LOAD ROLLER (16 EACH)	AR	
15	CC219400	FORKSTOP KIT	1	
KIT	CC688378	TOP ROLLER KIT	1	

https://truckmanualshub.com/

45D-MQ 4-STAGE MAST (QUAD) - HOIST CHAINS & FREE LIFT HOSES
PID # 45D-MQ-001 - 6358 - S/N 200001A~

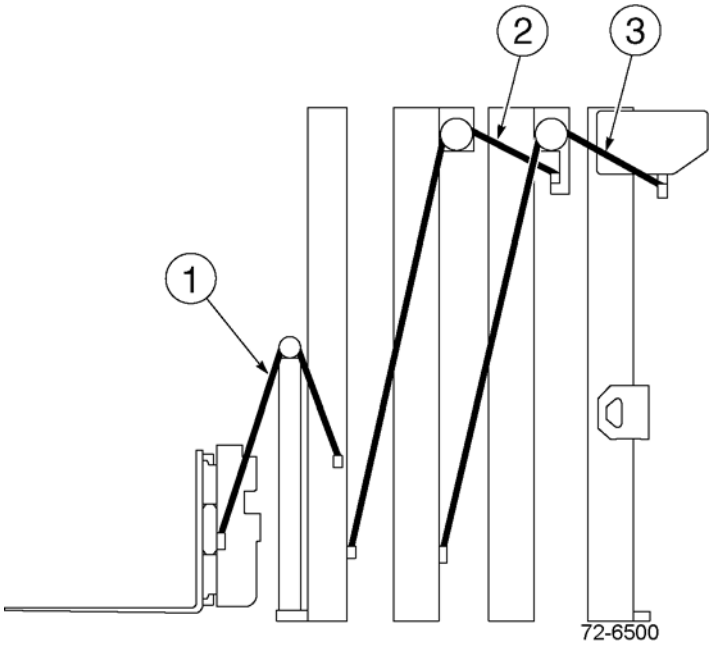

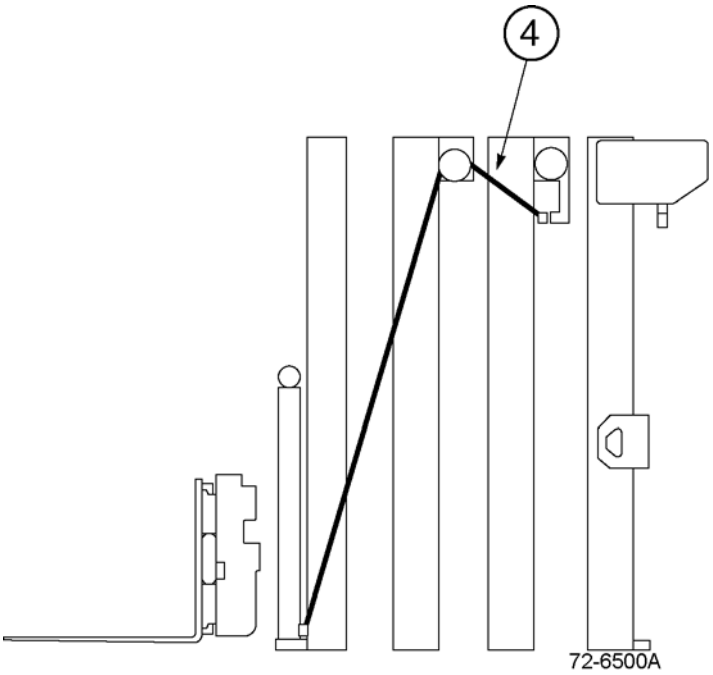

https://truckmanualshub.com/

45D-MQ 4-STAGE MAST (QUAD) - HOIST CHAINS & FREE LIFT HOSES
PID # 45D-MQ-001 - 6358 - S/N 200001A~

Item	Part Number	Description	Qty	Serial Number
		OCL = OUTER CHANNEL LENGTH, MFH = MAXIMUM FORK HEIGHT		
1	CC680458	FREE LIFT CHAIN (68" OCL) (193" MFH)	2	
	CC681428	FREE LIFT CHAIN (74" OCL) (217" MFH)	2	
	CC683979	FREE LIFT CHAIN (80" OCL) (241" MFH)	2	
	CC683982	FREE LIFT CHAIN (86" OCL) (259" MFL)	2	
	CC683985	FREE LIFT CHAIN (92" OCL) (277" MFH)	2	
	CC683988	FREE LIFT CHAIN (98" OCL) (295" MFH)	2	
	CC683992	FREE LIFT CHAIN (104" OCL) (313" MFH)	1	
2	CC681429	INNER CHAIN (68" OCL) (193" MFH)	2	
	CC681430	INNER CHAIN (74" OCL) (217" MFH)	2	
	CC680459	INNER CHAIN (80" OCL) (241" MFH)	2	
	CC678796	INNER CHAIN (86" OCL) (259" MFH)	2	
	CC681431	INNER CHAIN (92" OCL) (277" MFH)	2	
	CC678800	INNER CHAIN (98" OCL) (295" MFH)	2	
	CC684000	INNER CHAIN (104" OCL) (313" MFH)	1	
3	CC205984	OUTER CHAIN (68" OCL) (193" MFH)	2	
	CC205989	OUTER CHAIN (74" OCL) (217" MFH)	2	
	CC205204	OUTER CHAIN (80" OCL) (241" MFH)	2	
	CC205996	OUTER CHAIN (86" OCL) (259" MFH)	2	
	CC205999	OUTER CHAIN (92" OCL) (277" MFH)	2	
	CC206002	OUTER CHAIN (98" OCL) (295" MFH)	2	
	CC206005	OUTER CHAIN (104" OCL) (313" MFH)	1	
4	CC206247	FREE LIFT HOSE (68" OCL) (193" MFH)	1	
	CC206248	FREE LIFT HOSE (74" OCL) (217" MFH)	1	
	CC206249	FREE LIFT HOSE (80" OCL) (241" MFH)	1	
	CC206250	FREE LIFT HOSE (86" OCL) (259" MFH)	1	
	CC206251	FREE LIFT HOSE (92" OCL) (277" MFH)	1	
	CC206252	FREE LIFT HOSE (98" OCL) (295" MFH)	1	
	CC206253	FREE LIFT HOSE (104" OCL) (313" MFH)	1	

https://truckmanualshub.com/

45D-MQ 4-STAGE MAST (QUAD) - HOIST CHAINS & FREE LIFT HOSES
PID # 45D-MQ-6359~ - S/N 200001A~

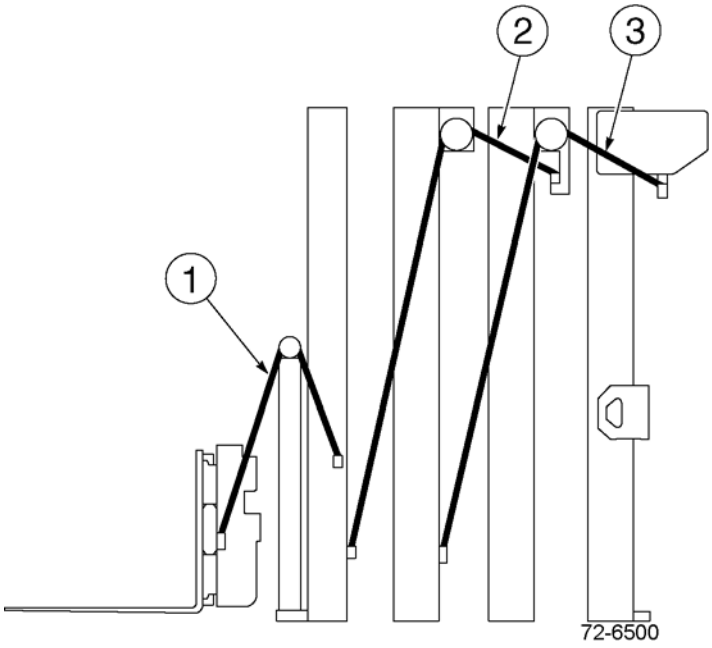

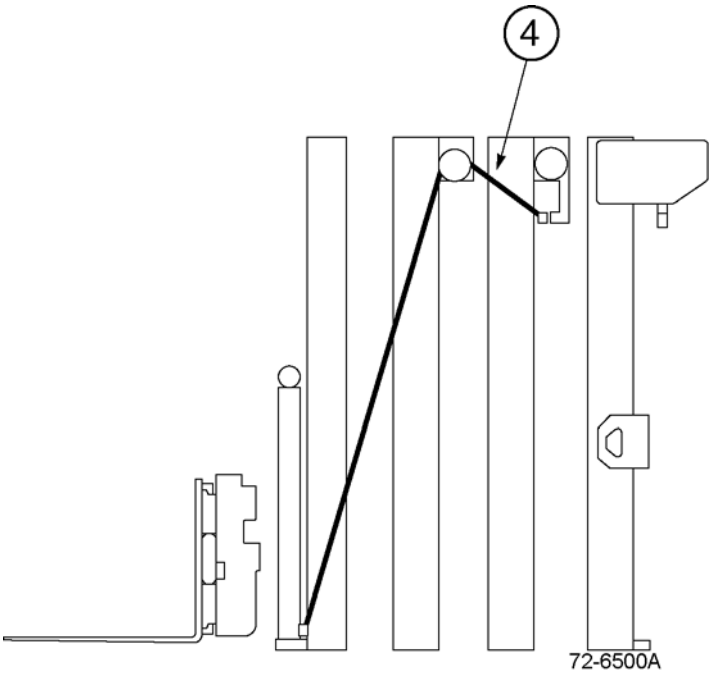

https://truckmanualshub.com/

45D-MQ 4-STAGE MAST (QUAD) - HOIST CHAINS & FREE LIFT HOSES
PID # 45D-MQ-6359~ - S/N 200001A~

Item	Part Number	Description	Qty	Serial Number
		OCL = OUTER CHANNEL LENGTH, MFH = MAXIMUM FORK HEIGHT		
1	CC680458	FREE LIFT CHAIN (68" OCL) (193" MFH)	2	
	CC681428	FREE LIFT CHAIN (74" OCL) (217" MFH)	2	
	CC683979	FREE LIFT CHAIN (80" OCL) (241" MFH)	2	
	CC683982	FREE LIFT CHAIN (86" OCL) (259" MFL)	2	
	CC683985	FREE LIFT CHAIN (92" OCL) (277" MFH)	2	
	CC683988	FREE LIFT CHAIN (98" OCL) (295" MFH)	2	
	CC683992	FREE LIFT CHAIN (104" OCL) (313" MFH)	1	
2	CC681429	INNER CHAIN (68" OCL) (193" MFH)	2	
	CC681430	INNER CHAIN (74" OCL) (217" MFH)	2	
	CC680459	INNER CHAIN (80" OCL) (241" MFH)	2	
	CC678796	INNER CHAIN (86" OCL) (259" MFH)	2	
	CC681431	INNER CHAIN (92" OCL) (277" MFH)	2	
	CC678800	INNER CHAIN (98" OCL) (295" MFH)	2	
	CC684000	INNER CHAIN (104" OCL) (313" MFH)	1	
3	CC205984	OUTER CHAIN (68" OCL) (193" MFH)	2	
	CC205989	OUTER CHAIN (74" OCL) (217" MFH)	2	
	CC205204	OUTER CHAIN (80" OCL) (241" MFH)	2	
	CC205996	OUTER CHAIN (86" OCL) (259" MFH)	2	
	CC205999	OUTER CHAIN (92" OCL) (277" MFH)	2	
	CC206002	OUTER CHAIN (98" OCL) (295" MFH)	2	
	CC206005	OUTER CHAIN (104" OCL) (313" MFH)	1	
4	CC249088	FREE LIFT HOSE (68" OCL) (193" MFH)	1	
	CC249094	FREE LIFT HOSE (74" OCL) (217" MFH)	1	
	CC249100	FREE LIFT HOSE (80" OCL) (241" MFH)	1	
	CC249106	FREE LIFT HOSE (86" OCL) (259" MFH)	1	
	CC249111	FREE LIFT HOSE (92" OCL) (277" MFH)	1	
	CC249117	FREE LIFT HOSE (98" OCL) (295" MFH)	1	
	CC249123	FREE LIFT HOSE (104" OCL) (313" MFH)	1	

https://truckmanualshub.com/

45D-MQ 4-STAGE MAST (QUAD) - LOAD BACKREST
S/N 200001A~

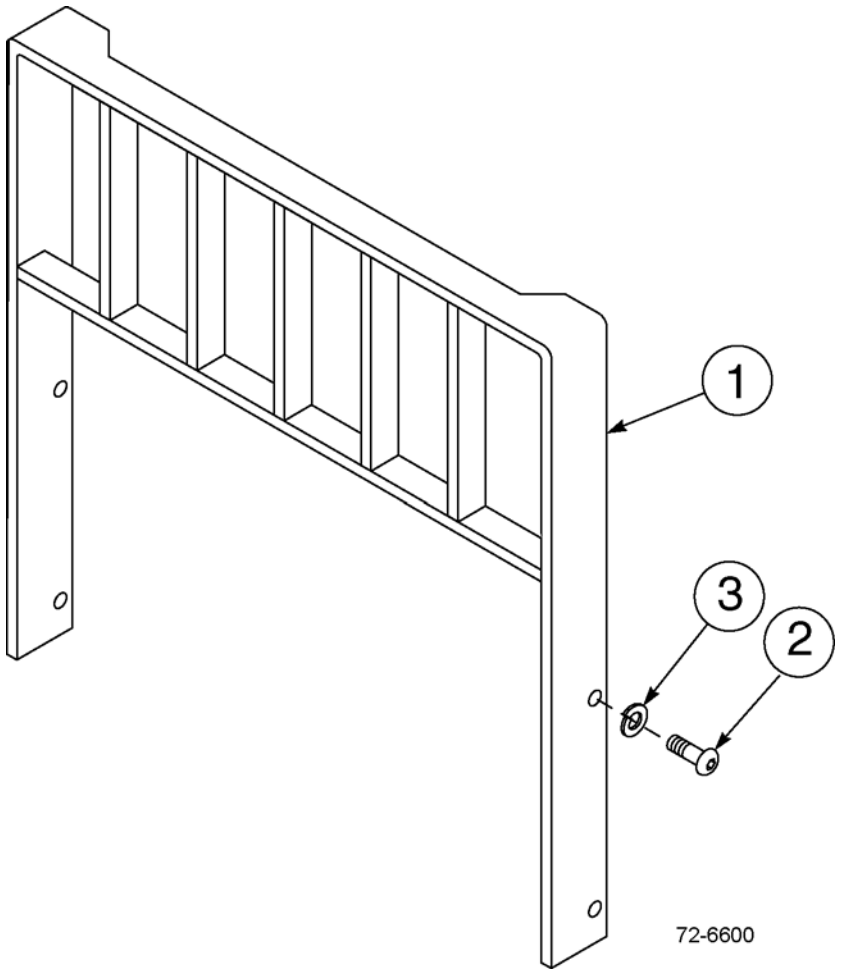

https://truckmanualshub.com/

45D-MQ 4-STAGE MAST (QUAD) - LOAD BACKREST
S/N 200001A~

Item	Part Number	Description	Qty	Serial Number
1	CC684769	BACKREST (31" X 36")	1	
	CC684770	BACKREST (31" X 48")	1	
	CC684771	BACKREST (31" X 60")	1	
	CC226822	BACKREST (37" X 30")	1	
	CC214063	BACKREST (37" X 31")	1	
	CC250091	BACKREST (37" X 34")	1	
	CC684772	BACKREST (37" X 36")	1	
	CC234649	BACKREST (37" X 38")	1	
	CC226827	BACKREST (37" X 40")	1	
	CC246383	BACKREST (37" X 41")	1	
	CC684773	BACKREST (37" X 48")	1	
	CC226835	BACKREST (37" X 54")	1	
	CC235274	BACKREST (37" X 55")	1	
	CC684774	BACKREST (37" X 60")	1	
	CC246397	BACKREST (37" X 64")	1	
	CC230896	BACKREST (37" X 72")	1	
	CC230596	BACKREST (37" X 74")	1	
	CC238567	BACKREST (41" X 30")	1	
	CC249220	BACKREST (41" X 32")	1	
	CC684775	BACKREST (41" X 36")	1	
	CC684776	BACKREST (41" X 48")	1	
	CC246640	BACKREST (41" X 54")	1	
	CC684777	BACKREST (41" X 60")	1	
	CC245083	BACKREST (47" X 30")	1	
	CC684778	BACKREST (49" X 36")	1	
	CC684779	BACKREST (49" X 48")	1	
	CC684780	BACKREST (49" X 60")	1	
	CC226830	BACKREST (58" X 48")	1	
	CC684781	BACKREST (61" X 36")	1	
	CC684782	BACKREST (61" X 48")	1	
	CC684783	BACKREST (61" X 60")	1	
	CC245168	BACKREST (61" X 62")	1	
2	CC200173	CAPSCREW, M16 X 2.0 X 35-8.8	4	
3	3EB-71-A6030	LOCKWASHER, M16	4	

https://truckmanualshub.com/

45D-MQ 4-STAGE MAST (QUAD) - MAST INSTALLATION PARTS
S/N 200001A~

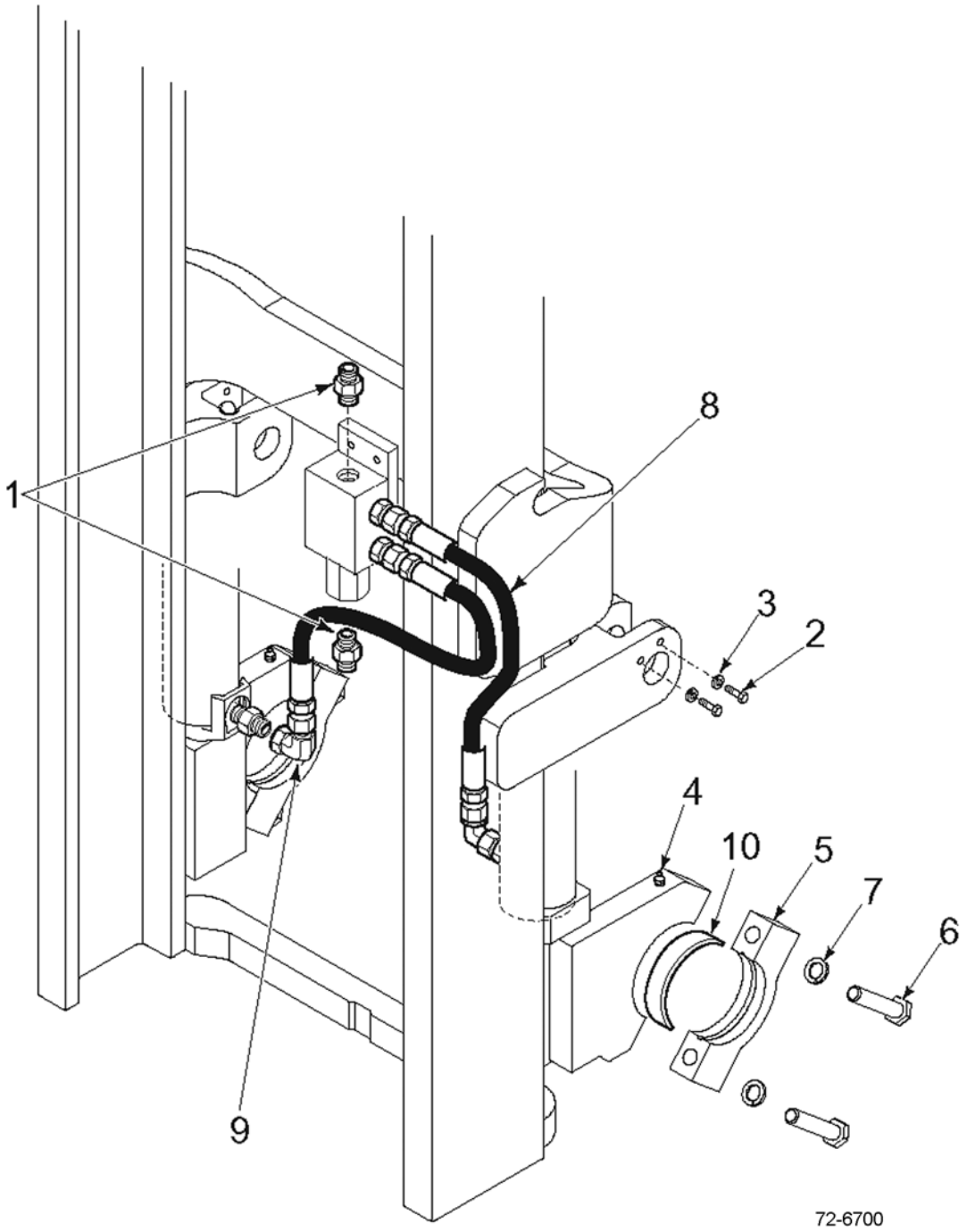

https://truckmanualshub.com/

45D-MQ 4-STAGE MAST (QUAD) - MAST INSTALLATION PARTS
S/N 200001A~

Item	Part Number	Description	Qty	Serial Number
1	CC601377	FITTING, 8-8	2	
2	CC212632	CAPSCREW, M10 X 1.5 X 20-8.8	4	
3	3EB-79-A6040	LOCKWASHER, M10	4	
4	CC7418	GREASE FITTING	2	
5	CC251901	CAP	2	
6	CC251906	CAPSCREW, M18 X 2.5 X 80-8.8	4	
7	3EB-71-A6030	LOCKWASHER, M18	4	
8	CC217524	HOSE	2	
9	CC605761	FITTING, 90° 8-8	2	
10	3EB-84-51290	BUSHING	2	

https://truckmanualshub.com/

45D-MQ 4-STAGE MAST (QUAD) - LOWERING CONTROL VALVE & BRACKET
S/N 200001A~

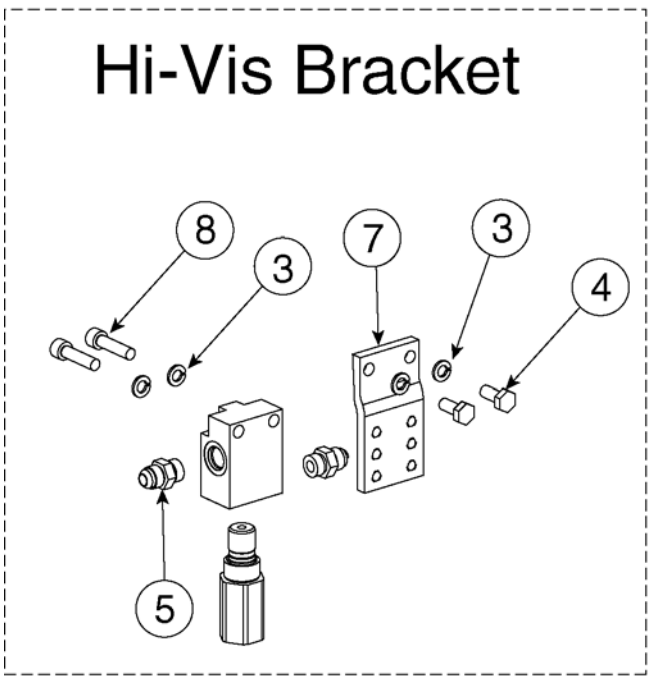

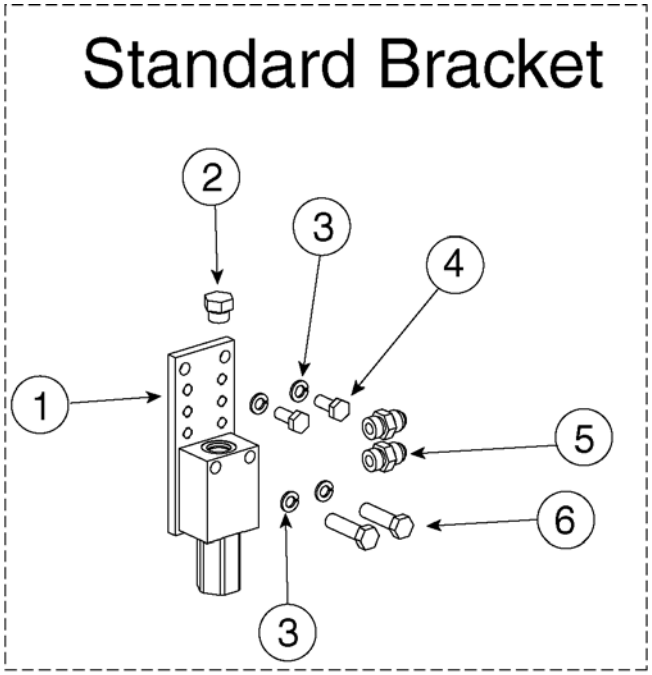

PARTS VARY BY PID #. CONTACT YOUR DEALER FOR SPECIFIC PART NUMBERS.

72-6850

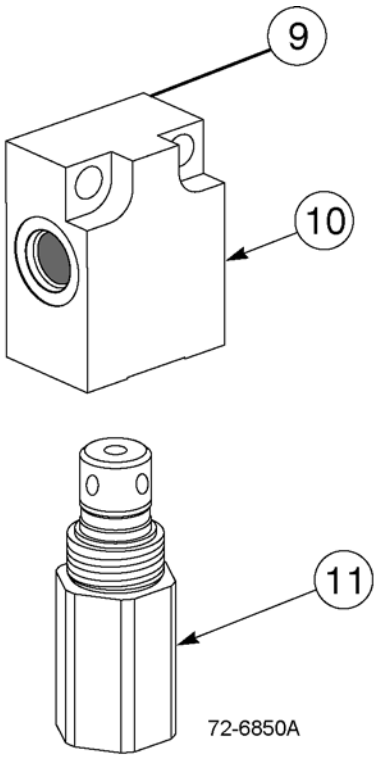

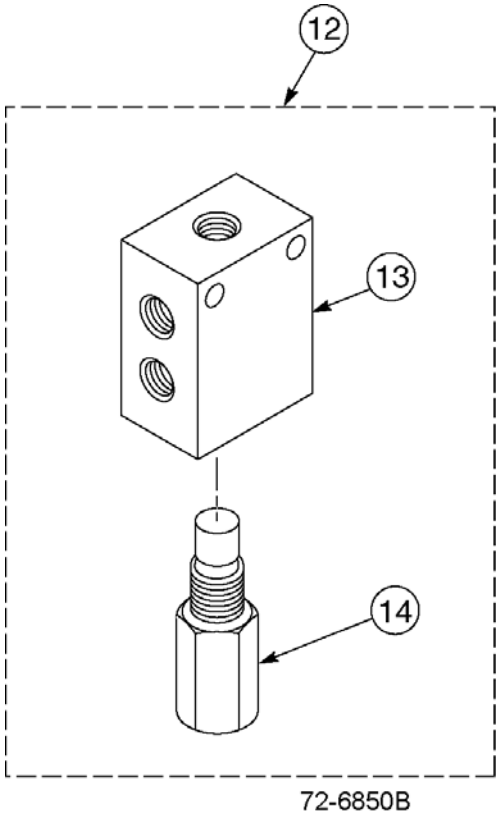

https://truckmanualshub.com/

45D-MQ 4-STAGE MAST (QUAD) - LOWERING CONTROL VALVE & BRACKET
S/N 200001A~

Item	Part Number	Description	Qty	Serial Number
1	CC683831	MOUNTING BAR, STANDARD	1	
2	CC601378	FITTING	1	
3	3EB-79-A6040	LOCKWASHER, M10	4	
4	3EB-73-A5490	CAPSCREW, M10	2	
5	CC601377	FITTING	2	
6	CC683823	CAPSCREW, M10	2	
7	CC216402	MOUNTING BAR, HI-VIS	1	
8	CC767611	CAPSCREW, M10	2	
9	3EB-73-A5930	LOWERING CONTROL VALVE ASSY - 17 GPM (SINGLE PORT)	1	
10	CC214793	.VALVE BODY	1	
11	3EB-73-A5920	.VALVE CARTRIDGE - 17 GPM (2600 PSI)	1	
12	CC684810	LOWERING CONTROL VALVE ASSY - 17 GPM (DUAL PORT)	1	
13	CC684152	.VALVE BODY	1	
14	3EB-73-A5920	.VALVE CARTRIDGE - 17 GPM (2600 PSI)	1	

https://truckmanualshub.com/

45D-MQ 4-STAGE MAST - INTERNAL HOSE REEVING - SINGLE FUNCTION - STD-VIS
PID # 45D-MQ-001 TO 883 - S/N 200001A~

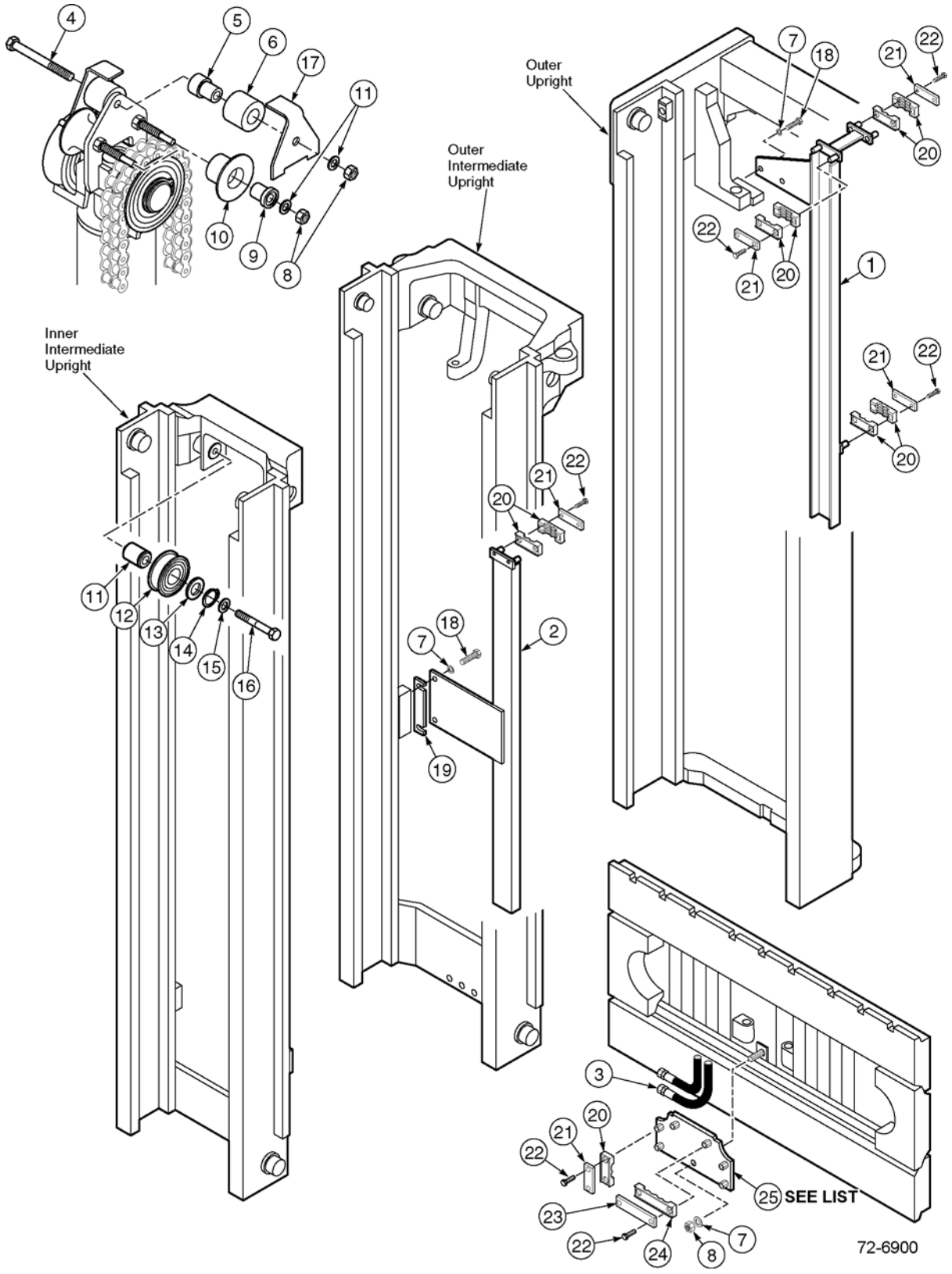

https://truckmanualshub.com/

45D-MQ 4-STAGE MAST - INTERNAL HOSE REEVING - SINGLE FUNCTION - STD-VIS
PID # 45D-MQ-001 TO 883 - S/N 200001A~

Item	Part Number	Description	Qty	Serial Number
		RCL = OCL = RETRACTED CHANNEL LENGTH		
		MASTS WITH 3" UNDERCLEARANCE		
1	CC203792	UPPER GUIDE CHANNEL (68" RCL)	1	
	CC203793	UPPER GUIDE CHANNEL (74" RCL)	1	
	CC203794	UPPER GUIDE CHANNEL (80" RCL)	1	
	CC203795	UPPER GUIDE CHANNEL (86" RCL)	1	
	CC203796	UPPER GUIDE CHANNEL (92" RCL)	1	
	CC203797	UPPER GUIDE CHANNEL (98" RCL)	1	
	CC203798	UPPER GUIDE CHANNEL (104" RCL)	1	
2	CC203806	LOWER GUIDE CHANNEL (68" RCL)	1	
	CC203807	LOWER GUIDE CHANNEL (74" RCL)	1	
	CC203808	LOWER GUIDE CHANNEL (80" RCL)	1	
	CC203809	LOWER GUIDE CHANNEL (86" RCL)	1	
	CC203810	LOWER GUIDE CHANNEL (92" RCL)	1	
	CC203811	LOWER GUIDE CHANNEL (98" RCL)	1	
	CC203812	LOWER GUIDE CHANNEL (104" RCL)	1	
3	CC206254	HOSE (68" RCL)	4	
	CC206256	HOSE (74" RCL)	4	
	CC206258	HOSE (80" RCL)	4	
	CC206260	HOSE (86" RCL)	4	
	CC206262	HOSE (92" RCL)	4	
	CC206264	HOSE (98" RCL)	4	
	CC206266	HOSE (104" RCL)	4	
		MASTS WITH 5" UNDERCLEARANCE		
1	CC203792	UPPER GUIDE CHANNEL (68" RCL)	1	
	CC203793	UPPER GUIDE CHANNEL (74" RCL)	1	
	CC203794	UPPER GUIDE CHANNEL (80" RCL)	1	
	CC203795	UPPER GUIDE CHANNEL (86" RCL)	1	
	CC203796	UPPER GUIDE CHANNEL (92" RCL)	1	
	CC203797	UPPER GUIDE CHANNEL (98" RCL)	1	
	CC203798	UPPER GUIDE CHANNEL (104" RCL)	1	
2	CC203806	LOWER GUIDE CHANNEL (68" RCL)	1	
	CC203807	LOWER GUIDE CHANNEL (74" RCL)	1	
	CC203808	LOWER GUIDE CHANNEL (80" RCL)	1	
	CC203809	LOWER GUIDE CHANNEL (86" RCL)	1	
	CC203810	LOWER GUIDE CHANNEL (92" RCL)	1	
	CC203811	LOWER GUIDE CHANNEL (98" RCL)	1	
	CC203812	LOWER GUIDE CHANNEL (104" RCL)	4	
3	CC206255	HOSE (68" RCL)	4	

PARTS LIST CONTINUED ON NEXT PAGE

https://truckmanualshub.com/

45D-MQ 4-STAGE MAST - INTERNAL HOSE REEVING - SINGLE FUNCTION - STD-VIS
PID # 45D-MQ-001 TO 883 - S/N 200001A~

Item	Part Number	Description	Qty	Serial Number
	CC206257	HOSE (74" RCL)	4	
	CC206259	HOSE (80" RCL)	4	
	CC206261	HOSE (86" RCL)	4	
	CC206263	HOSE (92" RCL)	4	
	CC206265	HOSE (98" RCL)	4	
	CC206267	HOSE (104" RCL)	4	
4	CC768549	CAPSCREW, M10 X 1.5 X 100-8.8	1	
5	CC203296	SHAFT	2	
6	CC208673	TIRE	2	
7	CC683826	LOCKWASHER, M10	10	
8	CC763023	NUT, M10	4	
9	CC203295	SHAFT	4	
10	CC203294	TIRE	4	
11	CC203264	SHAFT	1	
12	CC677267	SHEAVE	2	
13	CC200524	SHIM	1	
14	CC3130	SNAP RING	1	
15	CC682822	LOCKWASHER, M12	1	
16	CC205206	CAPSCREW, M12 X 1.75 X 55-8.8	1	
17	CC203292	HOSE GUARD	2	
18	CC684649	CAPSCREW, M10 X 1.5 X 25-8.8	4	
19	CC206884	SPACER	1	
20	CC206886	INSERT	9	
21	CC203408	BAR	5	
22	CC763169	CAPSCREW, M6 X 1.0 X 20-8.8	14	
23	CC203407	BAR	1	
24	CC208731	INSERT	1	
25	CC210846	BRACKET (REPLACES PREVIOUS BRACKET) (WHEN REPLACING BRACKET, MUST ALSO REPLACE FREE LIFT HOSES - SEE FIG. 72-6901)	1	
N/S	3EB-71-A6010	FITTING (MUST GO WITH CC210846 BRACKET)	1	
N/S	3EB-71-A6040	FITTING (MUST GO WITH CC210846 BRACKET)	1	
N/S	CC2680	FITTING (MUST GO WITH CC210846 BRACKET)	1	

https://truckmanualshub.com/

NOTES:

https://truckmanualshub.com/

45D-MQ 4-STAGE MAST - INTERNAL HOSE REEVING - SINGLE FUNCTION - STD-VIS
PID # 45D-MQ-884~ - S/N 200001A~

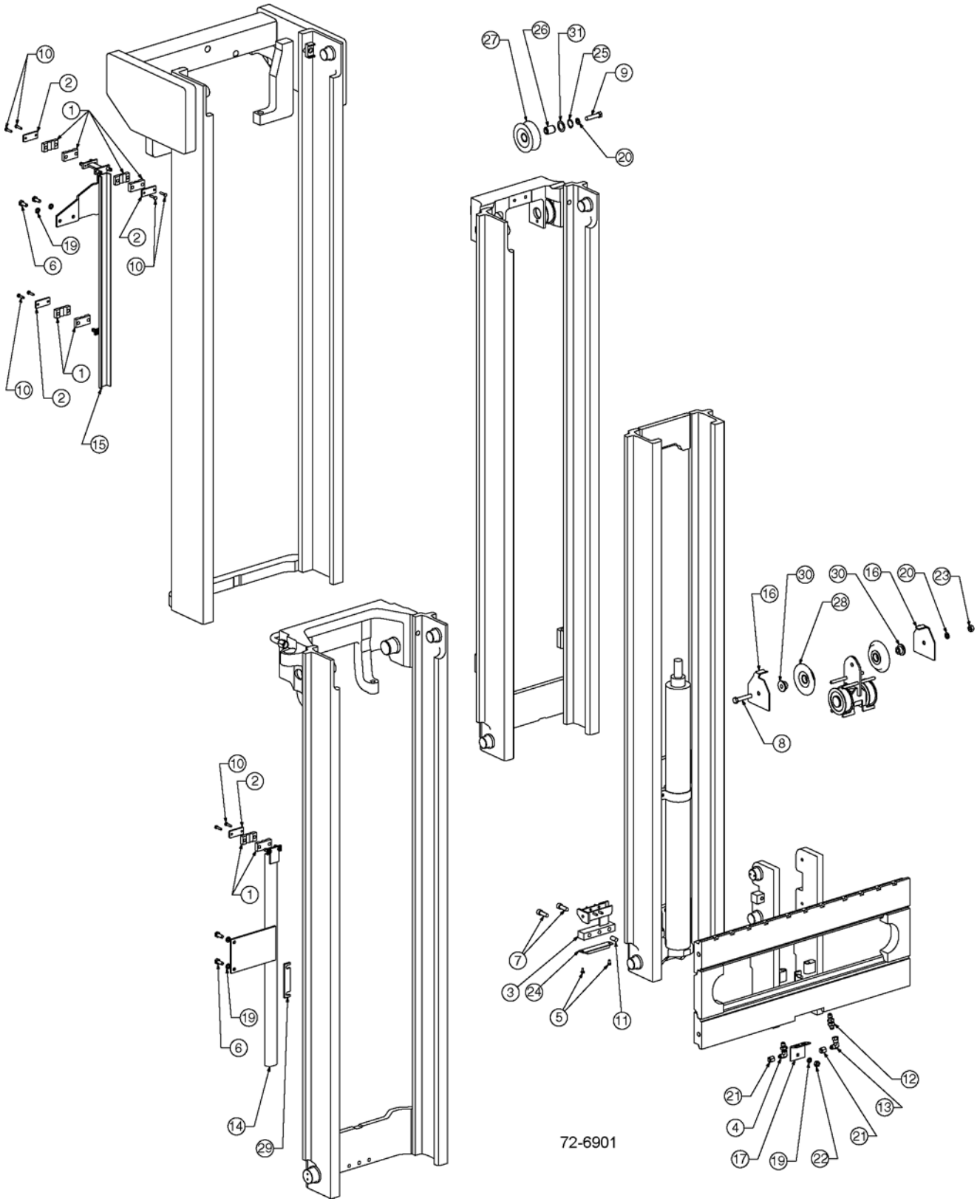

https://truckmanualshub.com/

45D-MQ 4-STAGE MAST - INTERNAL HOSE REEVING - SINGLE FUNCTION - STD-VIS
PID # 45D-MQ-884~ - S/N 200001A~

Item	Part Number	Description	Qty	Serial Number
	OCL = OUTER CHANNEL LENGTH			
1	3EB-73-A5150	HOSE CLAMP	8	
2	3EB-73-A5160	HOSECLAMP BAR	4	
3	CC203477	LOWER INNER BRACKET	1	
4	CC2454	90° BULKHEAD FITTING	1	
5	3EB-73-A5470	CAPSCREW	2	
6	3EB-73-A5490	CAPSCREW, M10 X 25 LG	4	
7	CC769572	CAPSCREW, M12 X 35 LG	2	
8	3EB-79-A5230	CAPSCREW, M12 X 65 LG	1	
9	CC205206	CAPSCREW, M12 X 55 LG	1	
10	3EB-79-A5240	CAPSCREW, M6 X 25 LG	8	
11	CC606212	DOWEL PIN	1	
12	3EB-71-A6040	BULKHEAD UNION	1	
13	CC2680	FITTING	1	
14	SEE BELOW	LOWER GUIDE	1	
15	SEE BELOW	UPPER GUIDE	1	
16	CC210174	HOSE GUARD	2	
17	3EB-73-A5610	CARRIAGE BRACKET	1	
18	NOT USED			
19	3EB-79-A6040	LOCKWASHER, M10	5	
20	3EB-79-A5360	LOCKWASHER, M12	2	
21	3EB-79-A5250	CAP PLUG, # 6	2	
22	3EB-79-A5180	NUT, M10	1	
23	3EB-79-A5270	NUT, M12	1	
24	CC661786	BUMPER PAD	1	
25	CC3130	SNAP RING	1	
26	CC203264	SHAFT	1	
27	CC204156	SHEAVE	1	
28	CC210175	SHEAVE	2	
29	CC206884	SPACER	1	
30	CC210173	STUBSHAFT	2	
31	CC200524	WASHER	1	
	OCL = OUTER CHANNEL LENGTH, MFH = MAXIMUM FORK HEIGHT			
	CC249427	IHR KIT - SINGLE FUNCTION (74" OCL) (217" MFH)	1	
	CC249433	IHR KIT - SINGLE FUNCTION (80" OCL) (241" MFH)	1	
	CC249439	IHR KIT - SINGLE FUNCTION (86" OCL) (259" MFH)	1	

PARTS LIST CONTINUED ON NEXT PAGE

https://truckmanualshub.com/

45D-MQ 4-STAGE MAST - INTERNAL HOSE REEVING - SINGLE FUNCTION - STD-VIS
PID # 45D-MQ-884~ - S/N 200001A~

Item	Part Number	Description	Qty	Serial Number
	CC249445	IHR KIT - SINGLE FUNCTION (92" OCL) (277" MFH)	1	
	CC249451	IHR KIT - SINGLE FUNCTION (98" OCL) (295" MFH)	1	
	CC249457	IHR KIT - SINGLE FUNCTION (104" OCL) (313" MFH)	1	
	CC203793	UPPER GUIDE (74" OCL) (217" MFH)	1	
	CC203794	UPPER GUIDE (80" OCL) (241" MFH)	1	
	CC203795	UPPER GUIDE (86" OCL) (259" MFH)	1	
	CC203796	UPPER GUIDE (92" OCL) (277" MFH)	1	
	CC203797	UPPER GUIDE (98" OCL) (295" MFH)	1	
	CC203798	UPPER GUIDE (104" OCL) (313" MFH)	1	
	CC203807	LOWER GUIDE (74" OCL) (217" MFH)	1	
	CC203808	LOWER GUIDE (80" OCL) (241" MFH)	1	
	CC203809	LOWER GUIDE (86" OCL) (259" MFH)	1	
	CC203810	LOWER GUIDE (92" OCL) (277" MFH)	1	
	CC203811	LOWER GUIDE (98" OCL) (295" MFH)	1	
	CC203812	LOWER GUIDE (104" OCL) (313" MFH)	1	
	CC237109	HOSE (74" OCL) (217" MFH)	2	
	CC211509	HOSE (80" OCL) (241" MFH)	2	
	CC231279	HOSE (86" OCL) (259" MFH)	2	
	CC216392	HOSE (92" OCL) (277" MFH)	2	
	CC218482	HOSE (98" OCL) (295" MFH)	2	
	CC237147	HOSE (104" OCL) (313" MFH)	2	
	CC211574	FREE LIFT HOSE (74" OCL) (217" MFH)	2	
	CC211520	FREE LIFT HOSE (80" OCL) (241" MFH)	2	
	CC211521	FREE LIFT HOSE (86" OCL) (259" MFH)	2	
	CC211522	FREE LIFT HOSE (92" OCL) (277" MFH)	2	
	CC211523	FREE LIFT HOSE (98" OCL) (295" MFH)	2	
	CC211524	FREE LIFT HOSE (104" OCL) (313" MFH)	2	

https://truckmanualshub.com/

NOTES:

https://truckmanualshub.com/

45D-MQ 4-STAGE MAST - INTERNAL HOSE REEVING - SINGLE FUNCTION - HI-VIS
PID # 45D-MQ-884~ - S/N 200001A~

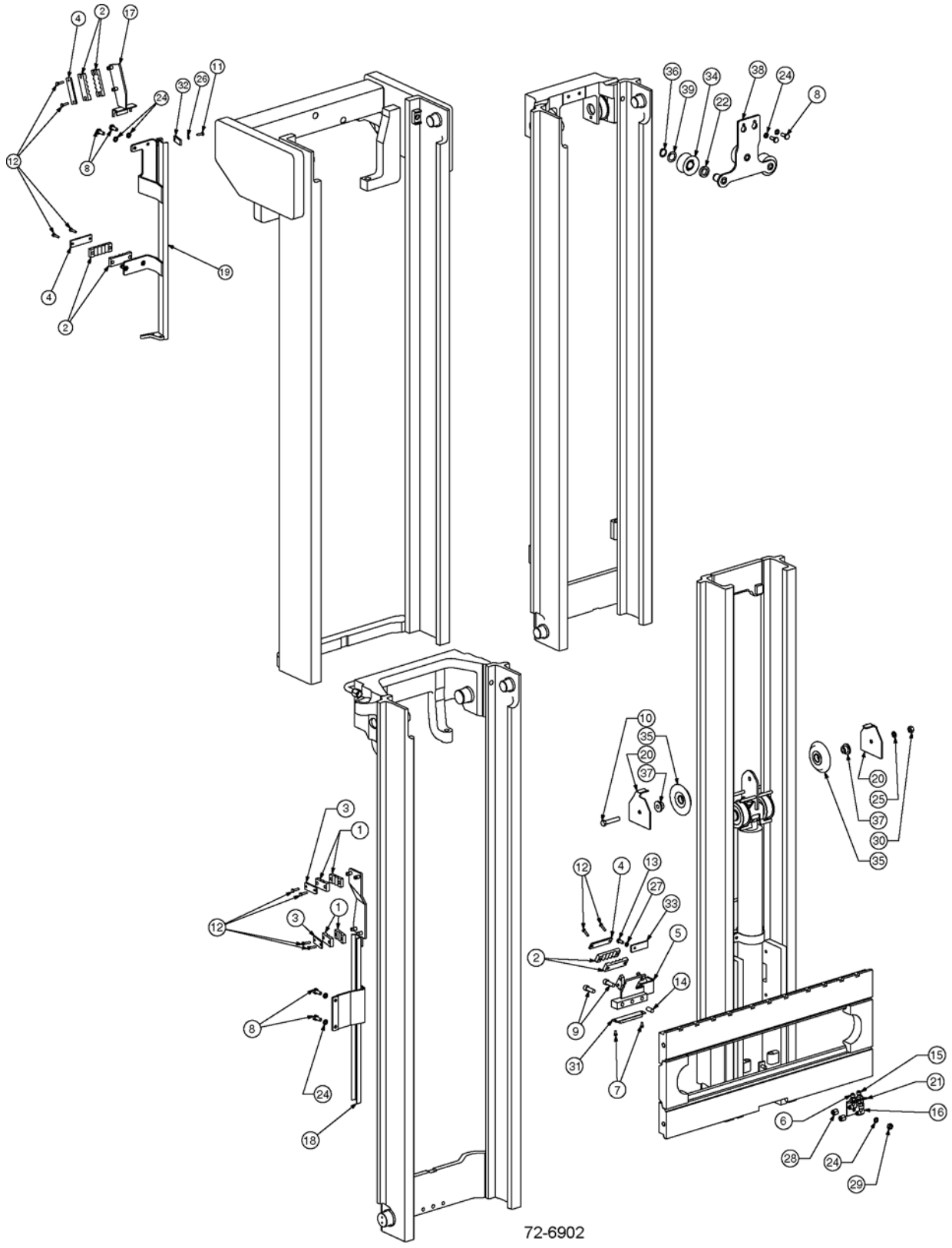

https://truckmanualshub.com/

45D-MQ 4-STAGE MAST - INTERNAL HOSE REEVING - SINGLE FUNCTION - HI-VIS
PID # 45D-MQ-884~ - S/N 200001A~

Item	Part Number	Description	Qty	Serial Number
	OCL = OUTER CHANNEL LENGTH			
1	3EB-73-A5150	HOSE CLAMP	4	
2	CC227854	HOSE CLAMP	6	
3	3EB-73-A5160	HOSE CLAMP BAR	2	
4	CC227885	HOSE CLAMP BAR	3	
5	CC230805	LOWER INNER BRACKET	1	
6	3EB-71-A6010	90° BULKHEAD UNION	1	
7	3EB-73-A5470	CAPSCREW	2	
8	3EB-73-A5490	CAPSCREW, M10 X 25 LG	6	
9	CC769572	CAPSCREW, M12 X 35 LG	2	
10	3EB-79-A5230	CAPSCREW, M12 X 65 LG	1	
11	CC763169	CAPSCREW, M6 X 20 LG	1	
12	3EB-79-A5240	CAPSCREW, M6 X 25 LG	10	
13	CC787372	CAPSCREW, M8 X 20 LG	1	
14	CC606212	DOWEL PIN	1	
15	3EB-71-A6040	BULKHEAD FITTING	1	
16	CC2680	FITTING	1	
17	CC214931	GUIDE BAR	1	
18	**SEE BELOW**	LOWER GUIDE	1	
19	**SEE BELOW**	UPPER GUIDE	1	
20	CC210174	HOSE GUARD	2	
21	3EB-73-A5610	CARRIAGE BRACKET	1	
22	CC241395	IHR SPACER	3	
23	**NOT USED**			
24	3EB-79-A6040	LOCKWASHER, M10	7	
25	CC682382	LOCKWASHER, M12	1	
26	3EB-73-A5340	LOCKWASHER, M6	1	
27	CC206315	LOCKWASHER, M8	1	
28	3EB-79-A5250	CAP PLUG, #6	2	
29	3EB-79-A5180	NUT, M10	1	
30	3EB-79-A5270	NUT, M12	1	
31	CC661786	BUMPER PAD	1	
32	CC215799	HOSE RETAINER PLATE	1	
33	CC230606	HOSE RETAINER PLATE	1	
34	CC215772	SHEAVE	3	
35	CC210175	SHEAVE	2	
36	CC688935	SNAP RING	3	
37	3EB-73-A5230	STUBSHAFT	2	
38	CC238809	UPPER BRACKET	1	

PARTS LIST CONTINUED ON NEXT PAGE

https://truckmanualshub.com/

45D-MQ 4-STAGE MAST - INTERNAL HOSE REEVING - SINGLE FUNCTION - HI-VIS
PID # 45D-MQ-884~ - S/N 200001A~

Item	Part Number	Description	Qty	Serial Number
39	CC205086	WASHER	3	
	OCL = OUTER CHANNEL LENGTH, MFH = MAXIMUM FORK HEIGHT			
	CC248797	IHR KIT - SINGLE FUNCTION (74" OCL) (217" MFH)	1	
	CC253914	IHR KIT - SINGLE - HI-PRESSURE (74" OCL) (217" MFH)	1	
	CC248801	IHR KIT - SINGLE FUNCTION (80" OCL) (241" MFH)	1	
	CC253918	IHR KIT - SINGLE - HI-PRESSURE (80" OCL) (241" MFH)	1	
	CC248806	IHR KIT - SINGLE FUNCTION (86" OCL) (259" MFH)	1	
	CC253922	IHR KIT - SINGLE - HI-PRESSURE (86" OCL) (259" MFH)	1	
	CC248811	IHR KIT - SINGLE FUNCTION (92" OCL) (277" MFH)	1	
	CC253927	IHR KIT - SINGLE - HI-PRESSURE (92" OCL) (277" MFH)	1	
	CC248817	IHR KIT - SINGLE FUNCTION (98" OCL) (295" MFH)	1	
	CC253933	IHR KIT - SINGLE - HI-PRESSURE (98" OCL) (295" MFH)	1	
	CC248821	IHR KIT - SINGLE - HI-PRESSURE (104"" OCL) (313" MFH)	1	
	CC253937	IHR KIT - SINGLE - HI-PRESSURE (104" OCL) (313" MFH)	1	
	CC216491	UPPER GUIDE (74" OCL) (217" MFH)	1	
	CC216492	UPPER GUIDE (80" OCL) (241" MFH)	1	
	CC216493	UPPER GUIDE (86" OCL) (259" MFH)	1	
	CC216494	UPPER GUIDE (92" OCL) (277" MFH)	1	
	CC216495	UPPER GUIDE (98" OCL) (295" MFH)	1	
	CC216496	UPPER GUIDE (104" OCL) (313" MFH)	1	
	CC216485	LOWER GUIDE (74" OCL) (217" MFH)	1	
	CC216486	LOWER GUIDE (80" OCL) (241" MFH)	1	
	CC216487	LOWER GUIDE (86" OCL) (259" MFH)	1	
	CC216488	LOWER GUIDE (92" OCL) (277" MFH)	1	
	CC216489	LOWER GUIDE (98" OCL) (295" MFH)	1	
	CC216490	LOWER GUIDE (104" OCL) (313" MFH)		
	CC237113	HOSE (74" OCL) (217" MFH)	2	

PARTS LIST CONTINUED ON NEXT PAGE

https://truckmanualshub.com/

45D-MQ 4-STAGE MAST - INTERNAL HOSE REEVING - SINGLE FUNCTION - HI-VIS
PID # 45D-MQ-884~ - S/N 200001A~

Item	Part Number	Description	Qty	Serial Number
	CC218379	HOSE (80" OCL) (241" MFH)	2	
	CC237129	HOSE (86" OCL) (259" MFH)	2	
	CC214939	HOSE (92" OCL) (277" MFH)	2	
	CC206257	HOSE (98" OCL) (295" MFH)	2	
	CC237151	HOSE (104" OCL) (313" MFH)	2	
	CC246223	HOSE - HIGH PRESSURE (74" OCL) (217" MFH)	2	
	CC246238	HOSE - HIGH PRESSURE (80" OCL) (241" MFH)	2	
	CC246253	HOSE - HIGH PRESSURE (86" OCL) (259" MFH)	2	
	CC246268	HOSE - HIGH PRESSURE (92" OCL) (277" MFH)	2	
	CC246283	HOSE - HIGH PRESSURE (98" OCL) (295" MFH)	2	
	CC246298	HOSE - HIGH PRESSURE (104" OCL) (313" MFH)	2	
	CC211574	FREE LIFT HOSE (74" OCL) (217" MFH)	2	
	CC211520	FREE LIFT HOSE (80" OCL) (241" MFH)	2	
	CC211521	FREE LIFT HOSE (86" OCL) (259" MFH)	2	
	CC211522	FREE LIFT HOSE (92" OCL) (277" MFH)	2	
	CC211523	FREE LIFT HOSE (98" OCL) (295" MFH)	2	
	CC211524	FREE LIFT HOSE (104" OCL) (313" MFH)	2	

45D-MQ 4-STAGE MAST - INTERNAL HOSE REEVING - SINGLE FUNCTION - HI-VIS LEFT HAND - PID # 45D-MQ-884~ - S/N 200001A~

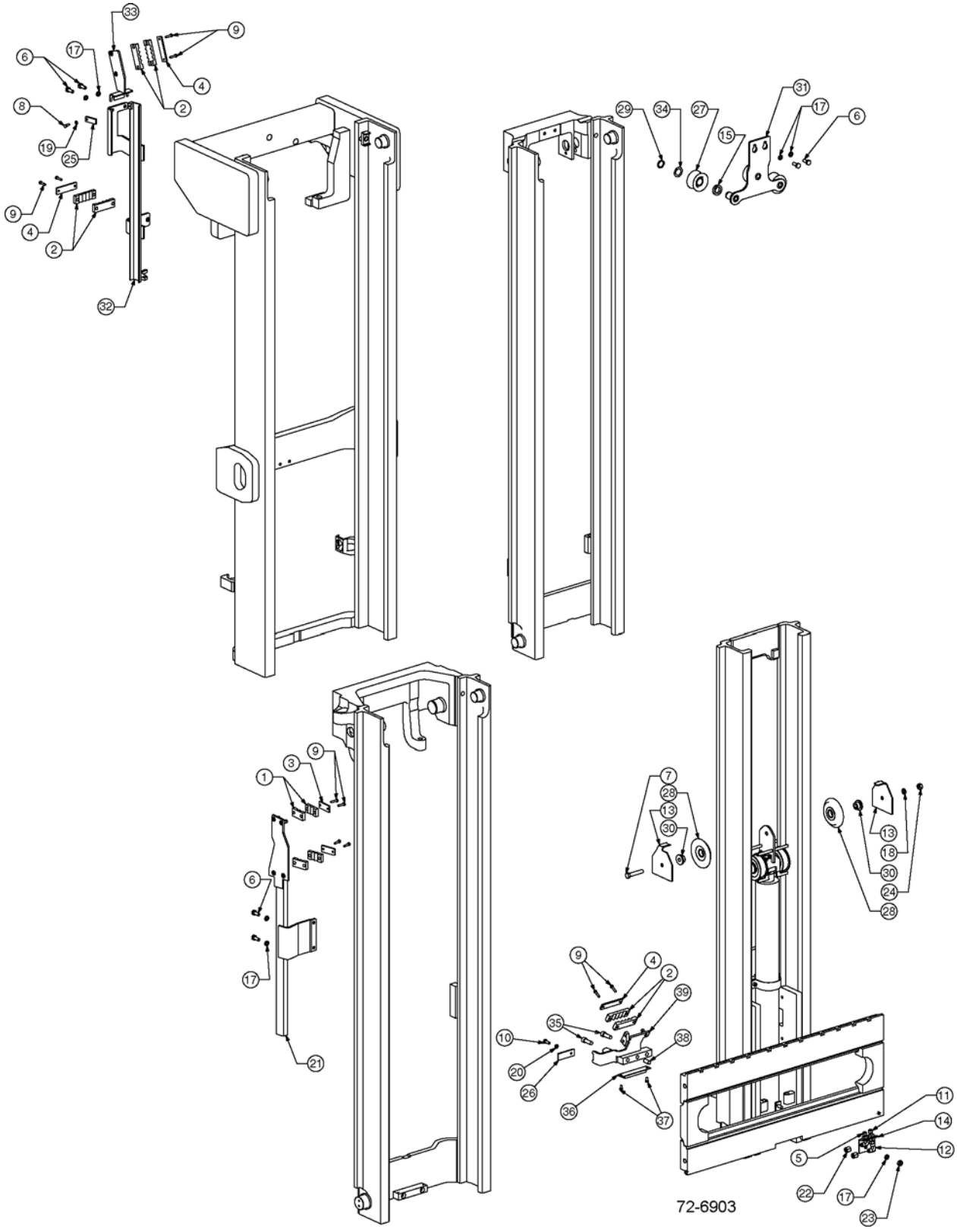

https://truckmanualshub.com/

45D-MQ 4-STAGE MAST - INTERNAL HOSE REEVING - SINGLE FUNCTION - HI-VIS LEFT HAND - PID # 45D-MQ-884~ - S/N 200001A~

Item	Part Number	Description	Qty	Serial Number
	OCL = OUTER CHANNEL LENGTH			
1	3EB-73-A5150	HOSE CLAMP	4	
2	CC227854	HOSE CLAMP	6	
3	3EB-73-A5160	HOSE CLAMP BAR	2	
4	CC227885	HOSE CLAMP BAR	3	
5	3EB-71-A6010	90° BULKHEAD UNION	1	
6	3EB-73-A5490	CAPSCREW, M10 X 25 LG	6	
7	3EB-79-A5230	CAPSCREW, M12 X 65 LG	1	
8	CC763169	CAPSCREW, M6 X 20 LG	1	
9	3EB-79-A5240	CAPSCREW, M6 X 25 LG	10	
10	CC787372	CAPSCREW, M8 X 20 LG	1	
11	3EB-71-A6040	BULKHEAD FITTING	1	
12	CC2680	FITTING	1	
13	CC210174	HOSE GUARD	2	
14	3EB-73-A5610	CARRIAGE BRACKET	1	
15	CC241395	IHR SPACER	3	
16	**NOT USED**			
17	3EB-79-A6040	LOCKWASHER, M10	7	
18	3EB-79-A5360	LOCKWASHER, M12	1	
19	3EB-73-A5340	LOCKWASHER, M6	1	
20	CC206315	LOCKWASHER, M8	1	
21	**SEE BELOW**	LOWER GUIDE	1	
22	3EB-79-A5250	CAP PLUG, #6	2	
23	3EB-79-A5180	NUT, M10	1	
24	3EB-79-A5270	NUT, M12	1	
25	CC215779	HOSE RETAINER PLATE	1	
26	CC230606	HOSE RETAINER PLATE	1	
27	CC215772	SHEAVE	3	
28	CC210175	SHEAVE	2	
29	CC688935	SNAP RING	3	
30	3EB-73-A5230	STUBSHAFT	2	
31	CC238809	UPPER BRACKET	1	
32	**SEE BELOW**	UPPER GUIDE	1	
33	CC238696	UPPER GUIDE BRACKET	1	
34	CC205086	WASHER	3	
35	CC769582	CAPSCREW, M12 X 35 LG	2	
36	CC661786	BUMPER PAD	1	
37	3EB-73-A5470	CAPSCREW	2	
38	CC606212	DOWEL PIN	1	

PARTS LIST CONTINUED ON NEXT PAGE

https://truckmanualshub.com/

45D-MQ 4-STAGE MAST - INTERNAL HOSE REEVING - SINGLE FUNCTION - HI-VIS LEFT HAND - PID # 45D-MQ-884~ - S/N 200001A~

Item	Part Number	Description	Qty	Serial Number
39	CC238353	LOWER BRACKET	1	
	OCL = OUTER CHANNEL LENGTH, MFH = MAXIMUM FORK HEIGHT			
	CC249357	IHR KIT - SINGLE FUNCTION (74" OCL) (217" MFH)	1	
	CC249363	IHR KIT - SINGLE FUNCTION (80" OCL) (241" MFH)	1	
	CC249370	IHR KIT - SINGLE FUNCTION (86" OCL) (259" MFH)	1	
	CC249376	IHR KIT - SINGLE FUNCTION (92" OCL) (277" MFH)	1	
	CC249382	IHR KIT - SINGLE FUNCTION (98" OCL) (295" MFH)	1	
	CC249388	IHR KIT - SINGLE FUNCTION (104" OCL) (313" MFH)	1	
	CC238720	UPPER GUIDE (74" OCL) (217" MFH)	1	
	CC238721	UPPER GUIDE (80" OCL) (241" MFH)	1	
	CC238722	UPPER GUIDE (86" OCL) (259" MFH)	1	
	CC238723	UPPER GUIDE (92" OCL) (277" MFH)	1	
	CC238724	UPPER GUIDE (98" OCL) (295" MFH)	1	
	CC238725	UPPER GUIDE (104" OCL) (313" MFH)	1	
	CC238708	LOWER GUIDE (74" OCL) (217" MFH)	1	
	CC238709	LOWER GUIDE (80" OCL) (241" MFH)	1	
	CC238710	LOWER GUIDE (86" OCL) (259" MFH)	1	
	CC238711	LOWER GUIDE (92" OCL) (277" MFH)	1	
	CC238712	LOWER GUIDE (98" OCL) (295" MFH)	1	
	CC238713	LOWER GUIDE (104" OCL) (313" MFH)	2	
	CC237113	HOSE (74" OCL) (217" MFH)	2	
	CC218379	HOSE (80" OCL) (241" MFH)	2	
	CC237129	HOSE (86" OCL) (259" MFH)	2	
	CC214939	HOSE (92" OCL) (277" MFH)	2	
	CC206257	HOSE (98" OCL) (295" ,FH)	2	
	CC237151	HOSE (104" OCL) (313" MFH)	2	
	CC211574	FREE LIFT HOSE (74" OCL) (217" MFH)	2	
	CC211520	FREE LIFT HOSE (80" OCL) (241" MFH)	2	
	CC211521	FREE LIFT HOSE (86" OCL) (259" MFH)	2	
	CC211522	FREE LIFT HOSE (92" OCL) (277" MFH)	2	
	CC211523	FREE LIFT HOSE (98" OCL) (295" MFH)	2	
	CC211524	FREE LIFT HOSE (104" OCL) (313" MFH)	2	

https://truckmanualshub.com/

NOTES:

https://truckmanualshub.com/

45D-MQ 4-STAGE MAST - INTERNAL HOSE REEVING - DOUBLE FUNCTION - STD-VIS
PID # 45D-MQ-001 TO 883 - S/N 200001A~

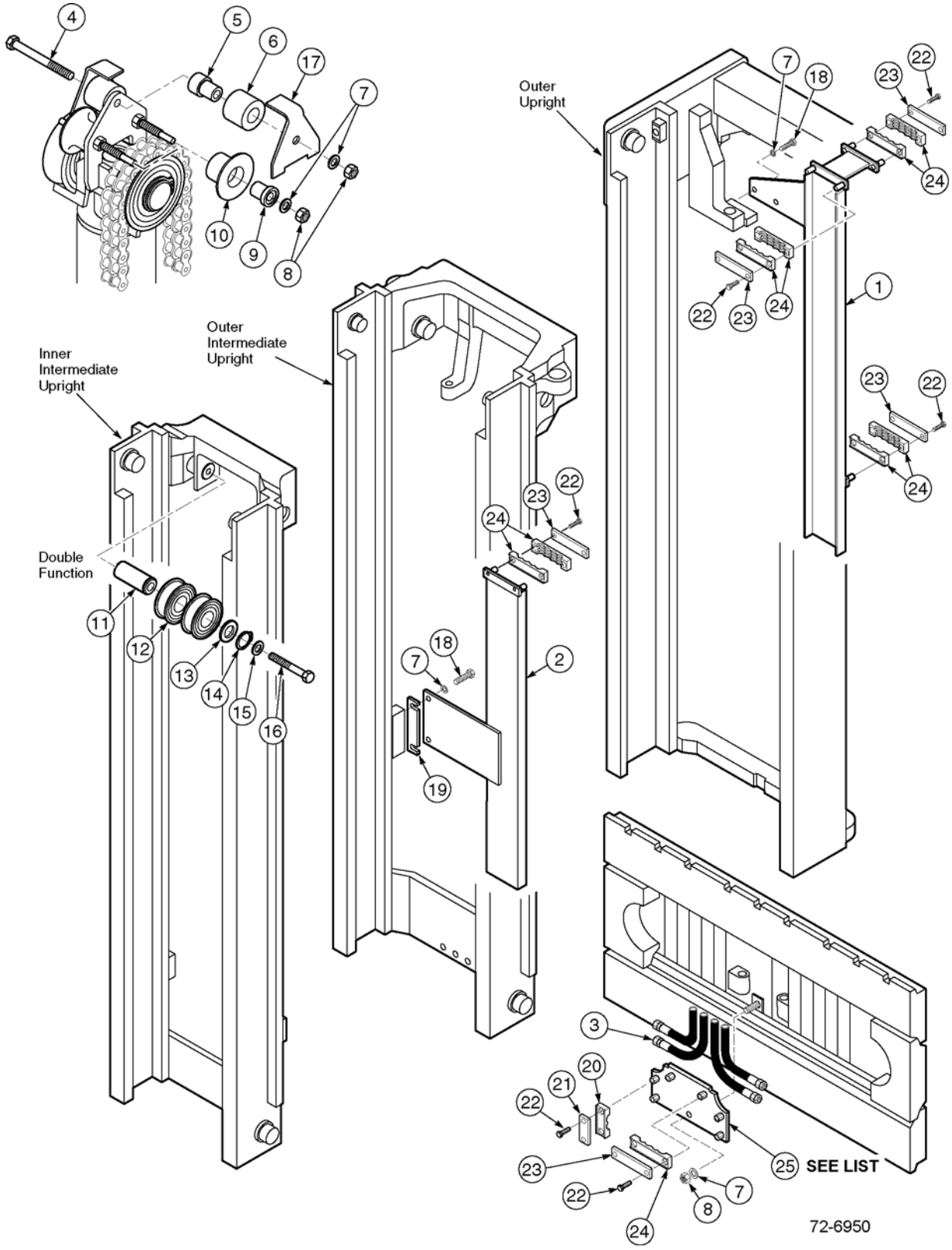

https://truckmanualshub.com/

45D-MQ 4-STAGE MAST - INTERNAL HOSE REEVING - DOUBLE FUNCTION - STD-VIS
PID # 45D-MQ-001 TO 883 - S/N 200001A~

Item	Part Number	Description	Qty	Serial Number
		RCL = OCL = RETRACTED CHANNEL LENGTH		
		MASTS WITH 3" UNDERCLEARANCE		
1	CC203799	UPPER GUIDE CHANNEL (68" RCL) (193" MFH)	1	
	CC203800	UPPER GUIDE CHANNEL (74" RCL) (217" MFH)	1	
	CC203801	UPPER GUIDE CHANNEL (80" RCL) (241" MFH)	1	
	CC203802	UPPER GUIDE CHANNEL (86" RCL) (259" MFH)	1	
	CC203803	UPPER GUIDE CHANNEL (92" RCL) (277" MFH)	1	
	CC203804	UPPER GUIDE CHANNEL (98" RCL) (295" MFH)	1	
	CC203805	UPPER GUIDE CHANNEL (104" RCL) (313" MFH)	1	
2	CC203813	LOWER GUIDE CHANNEL (68" RCL) (193" MFH)	1	
	CC203814	LOWER GUIDE CHANNEL (74" RCL) (217" MFH)	1	
	CC203815	LOWER GUIDE CHANNEL (80" RCL) (241" MFH)	1	
	CC203816	LOWER GUIDE CHANNEL (86" RCL) (259" MFH)	1	
	CC203817	LOWER GUIDE CHANNEL (92" RCL) (277" MFH)	1	
	CC203818	LOWER GUIDE CHANNEL (98" RCL) (295" MFH)	1	
	CC203819	LOWER GUIDE CHANNEL (104" RCL) (313" MFH)	1	
3	CC206254	HOSE (68" RCL) (193" MFH)	4	
	CC206256	HOSE (74" RCL) (217" MFH)	4	
	CC206258	HOSE (80" RCL) (241" MFH)	4	
	CC206260	HOSE (86" RCL) (259" MFH)	4	
	CC206262	HOSE (92" RCL) (277" MFH)	4	
	CC206264	HOSE (98" RCL) (295" MFH)	4	
	CC206266	HOSE (104" RCL) (313" MFH)	4	
		MASTS WITH 5" UNDERCLEARANCE		
1	CC203799	UPPER GUIDE CHANNEL (68" RCL) (193" MFH)	1	
	CC203800	UPPER GUIDE CHANNEL (74" RCL) (217" MFH)	1	
	CC203801	UPPER GUIDE CHANNEL (80" RCL) (241" MFH)	1	
	CC203802	UPPER GUIDE CHANNEL (86" RCL) (259" MFH)	1	
	CC203803	UPPER GUIDE CHANNEL (92" RCL) (277" MFH)	1	
	CC203804	UPPER GUIDE CHANNEL (98" RCL) (295" MFH)	1	
	CC203805	UPPER GUIDE CHANNEL (104" RCL) (313" MFH)	1	
2	CC203813	LOWER GUIDE CHANNEL (68" RCL) (193" MFH)	1	
	CC203814	LOWER GUIDE CHANNEL (74" RCL) (217" MFH)	1	
	CC203815	LOWER GUIDE CHANNEL (80" RCL) (241" MFH)	1	
	CC203816	LOWER GUIDE CHANNEL (86" RCL) (259" MFH)	1	
	CC203817	LOWER GUIDE CHANNEL (92" RCL) (277" MFH)	1	

PARTS LIST CONTINUED ON NEXT PAGE

https://truckmanualshub.com/

45D-MQ 4-STAGE MAST - INTERNAL HOSE REEVING - DOUBLE FUNCTION - STD-VIS
PID # 45D-MQ-001 TO 883 - S/N 200001A~

Item	Part Number	Description	Qty	Serial Number
	CC203818	LOWER GUIDE CHANNEL (98" RCL) (295" MFH)	1	
	CC203819	LOWER GUIDE CHANNEL (104" RCL) (313" MFH)	1	
3	CC206255	HOSE (68" RCL) (193" MFH)	4	
	CC206257	HOSE (74" RCL) (217" MFH)	4	
	CC206259	HOSE (80" RCL) (241" MFH)	4	
	CC206261	HOSE (86" RCL) (259" MFH)	4	
	CC206263	HOSE (92" RCL) (277" MFH)	4	
	CC206265	HOSE (98" RCL) (295" MFH)	4	
	CC206267	HOSE (104" RCL) (313" MFH)	4	
4	CC768549	CAPSCREW, M10 X 1.5 X 100-8.8	1	
5	CC203296	SHAFT	2	
6	CC203293	TIRE	2	
7	CC683826	LOCKWASHER, M10	10	
8	3EB-79-A5180	NUT, M10	4	
9	CC203295	SHAFT	4	
10	CC203294	TIRE	4	
11	CC203265	SHAFT	1	
12	CC677267	SHEAVE	2	
13	CC200524	SHIM	1	
14	CC3130	SNAP RING	1	
15	CC682822	LOCKWASHER, M12	1	
16	CC205205	CAPSCREW, M12 X 1.75 X 55-8.8	1	
17	CC203292	HOSE GUARD	2	
18	3EB-73-A5490	CAPSCREW, M10 X 1.5 X 25-8.8	4	
19	CC206884	SPACER	1	
20	CC206886	INSERT	9	
21	CC203408	BAR	5	
22	CC763169	CAPSCREW, M6 X 1.0 X 20-8.8	14	
23	CC203407	BAR	1	
24	CC206887	INSERT	1	
25	CC214932	BRACKET (REPLACES PREVIOUS BRACKET) (WHEN REPLACING BRACKET, MUST ALSO REPLACE FREE LIFT HOSES) (SEE FIG. 72-6901)	1	
N/S	3EB-71-A6010	FITTING (MUST USE WITH CC214932 BRACKET)	1	

https://truckmanualshub.com/

NOTES:

https://truckmanualshub.com/

45D-MQ 4-STAGE MAST - INTERNAL HOSE REEVING - DOUBLE FUNCTION - STD-VIS
PID # 45D-MQ-884~ - S/N 200001A~

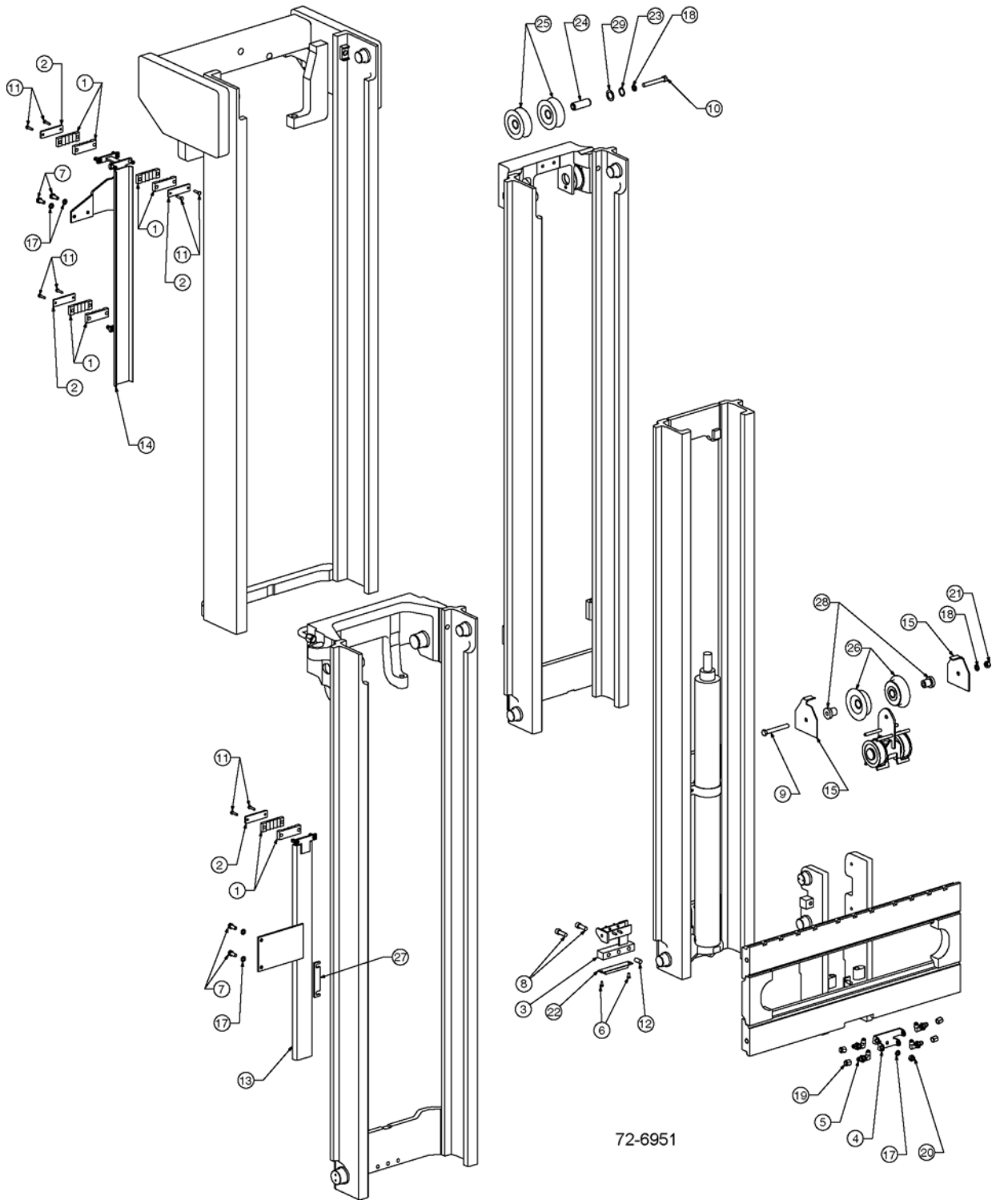

https://truckmanualshub.com/

45D-MQ 4-STAGE MAST - INTERNAL HOSE REEVING - DOUBLE FUNCTION - STD-VIS
PID # 45D-MQ-884~ - S/N 200001A~

Item	Part Number	Description	Qty	Serial Number
		OCL = OUTER CHANNEL LENGTH, MFH = MAXIMUM FORK HEIGHT		
1	CC227854	HOSE CLAMP	8	
2	CC227885	HOSE CLAMP BAR	4	
3	CC203477	LOWER INNER BRACKET	1	
4	CC214932	CARRIAGE BRACKET	1	
5	3EB-71-A6010	90° BULKHEAD FITTING	4	
6	3EB-73-A5470	CAPSCREW	2	
7	3EB-73-A5490	CAPSCREW, M10 X 25 LG	4	
8	CC769572	CAPSCREW, M12 X 35 LG	2	
9	CC684800	CAPSCREW, M12 X 100 LG	1	
10	CC205205	CAPSCREW, M12 X 90 LG	1	
11	3EB-79-A5240	CAPSCREW, M6 X 25 LG	8	
12	CC606212	DOWEL PIN	1	
13	**SEE BELOW**	LOWER GUIDE	1	
14	**SEE BELOW**	UPPER GUIDE	1	
15	CC210174	HOSE GUARD	2	
16	**NOT USED**			
17	3EB-79-A6040	LOCKWASHER, M10	5	
18	3EB-79-A5360	LOCKWASHER, M12	2	
19	3EB-79-A5250	CAP PLUG, #6	4	
20	3EB-79-A5180	NUT, M10	1	
21	3EB-79-A5270	NUT, M12	1	
22	CC661786	BUMPER PAD	1	
23	CC3130	SNAP RING	1	
24	CC203265	SHAFT	1	
25	CC204156	SHEAVE	1	
26	CC210172	SHEAVE	2	
27	CC206884	SPACER	1	
28	CC210216	STUBSHAFT	2	
29	CC200524	WASHER	1	
	CC249458	IHR KIT - DOUBLE FUNCTION (74" OCL) (217" MFH)	1	
	CC249464	IHR KIT - DOUBLE FUNCTION (80" OCL) (241" MFH)	1	
	CC249470	IHR KIT - DOUBLE FUNCTION (86" OCL) (259" MFH)	1	
	CC249476	IHR KIT - DOUBLE FUNCTION (92" OCL) (277" MFH)	1	

PARTS LIST CONTINUED ON NEXT PAGE

https://truckmanualshub.com/

45D-MQ 4-STAGE MAST - INTERNAL HOSE REEVING - DOUBLE FUNCTION - STD-VIS
PID # 45D-MQ-884~ - S/N 200001A~

Item	Part Number	Description	Qty	Serial Number
	CC249482	IHR KIT - DOUBLE FUNCTION (98" OCL) (295" MFH)	1	
	CC249488	IHR KIT - DOUBLE FUNCTION (104" OCL) (313" MFH)	1	
	CC203800	UPPER GUIDE (74" OCL) (217" MFH)	1	
	CC203801	UPPER GUIDE (80" OCL) (241" MFH)	1	
	CC203802	UPPER GUIDE (86" OCL) (259" MFH)	1	
	CC203803	UPPER GUIDE (92" OCL) (277" MFH)	1	
	CC203804	UPPER GUIDE (98" OCL) (295" MFH)	1	
	CC203805	UPPER GUIDE (104" OCL) (313" MFH)	1	
	CC203814	LOWER GUIDE (74" OCL) (217" MFH)	1	
	CC203815	LOWER GUIDE (80" OCL) (241" MFH)	1	
	CC203816	LOWER GUIDE (86" OCL) (259" MFH)	1	
	CC203817	LOWER GUIDE (92" OCL) (277" MFH)	1	
	CC203818	LOWER GUIDE (98" OCL) (295" MFH)	1	
	CC203819	LOWER GUIDE (104" OCL) (313" MFH)	1	
	CC237109	HOSE (74" OCL) (217" MFH)	2	
	CC211509	HOSE (80" OCL) (241" MFH)	2	
	CC231279	HOSE (86" OCL) (259" MFH)	2	
	CC216392	HOSE (92" OCL) (277" MFH)	2	
	CC218482	HOSE (98" OCL) (295" MFH)	2	
	CC237147	HOSE (104" OCL) (313" MFH)	2	
	CC211574	FREE LIFT HOSE (74" OCL) (217" MFH)	2	
	CC211520	FREE LIFT HOSE (80" OCL) (241" MFH)	2	
	CC211521	FREE LIFT HOSE (86" OCL) (259" MFH)	2	
	CC211522	FREE LIFT HOSE (92" OCL) (277" MFH)	2	
	CC211523	FREE LIFT HOSE (98" OCL) (295" MFH)	2	
	CC211524	FREE LIFT HOSE (104" OCL) (313" MFH)	2	

https://truckmanualshub.com/

NOTES:

https://truckmanualshub.com/

45D-MQ 4-STAGE MAST - INTERNAL HOSE REEVING - DOUBLE FUNCTION - HI-VIS
PID # 45D-MQ-884~ - S/N 200001A~

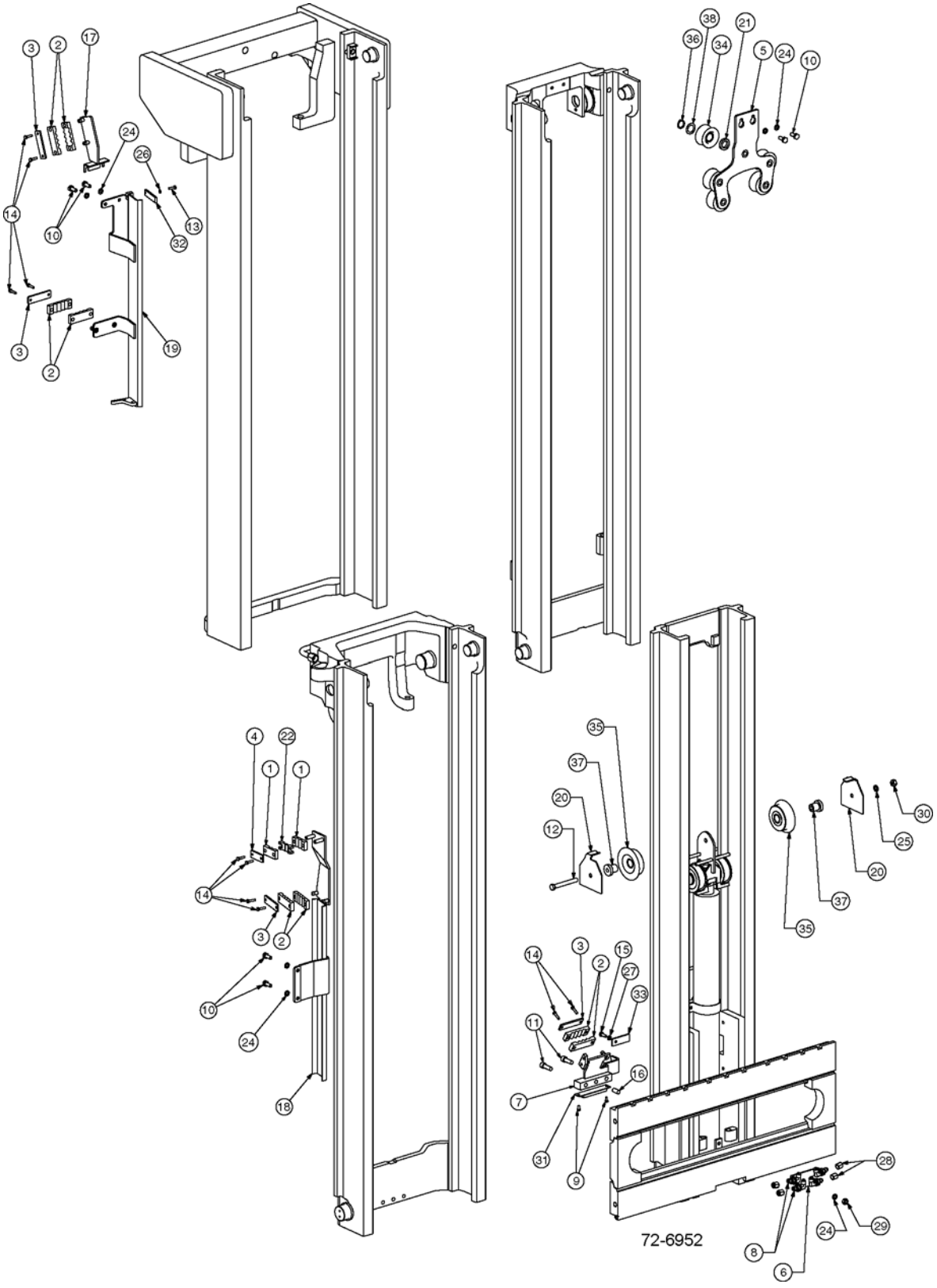

https://truckmanualshub.com/

45D-MQ 4-STAGE MAST - INTERNAL HOSE REEVING - DOUBLE FUNCTION - HI-VIS
PID # 45D-MQ-884~ - S/N 200001A~

Item	Part Number	Description	Qty	Serial Number
		OCL = OUTER CHANNEL LENGTH, MFH = MAXIMUM FORK HEIGHT		
1	3EB-73-A5150	HOSE CLAMP	2	
2	CC227854	HOSE CLAMP	8	
3	CC227885	HOSE CLAMP BAR	4	
4	3EB-73-A5160	HOSE CLAMP BAR	1	
5	CC238394	UPPER IHR BRACKET	1	
6	CC214932	CARRIAGE BRACKET	1	
7	CC230805	LOWER INNER BRACKET	1	
8	3EB-71-A6010	90° BULKHEAD FITTING	4	
9	3EB-73-A5470	CAPSCREW	2	
10	3EB-73-A5490	CAPSCREW, M10 X 25 LG	6	
11	CC769572	CAPSCREW, M12 X 35 LG	2	
12	CC684800	CAPSCREW, M12 X 100 LG	1	
13	CC763169	CAPSCREW, M6 X 20 LG	1	
14	3EB-79-A5240	CAPSCREW, M6 X 25 LG	10	
15	CC787372	CAPSCREW, M8 X 20 LG	1	
16	CC606212	DOWEL PIN	1	
17	CC214931	GUIDE BAR	1	
18	**SEE BELOW**	LOWER GUIDE	1	
19	**SEE BELOW**	UPPER GUIDE	1	
20	CC210174	HOSE GUARD	2	
21	CC241395	IHR SPACER	5	
22	CC246778	LOWER INTERMEDIATE INSERT	1	
23	**NOT USED**			
24	3EB-79-A6040	LOCKWASHER, M10	7	
25	CC682382	LOCKWASHER, M12	1	
26	3EB-73-A5340	LOCKWASHER, M6	1	
27	CC206315	LOCKWASHER, M8	1	
28	3EB-79-A5250	CAP PLUG, #6	2	
29	3EB-79-A5180	NUT, M10	1	
30	3EB-79-A5270	NUT, M12	1	
31	CC661786	BUMPER PAD	1	
32	CC215789	HOSE RETAINER PLATE	1	
33	CC230606	HOSE RETAINER PLATE	1	
34	CC215772	SHEAVE	5	
35	CC210172	SHEAVE	2	
36	CC688935	SNAP RING	5	
37	CC210216	STUBSHAFT	2	
38	CC205086	WASHER	5	

PARTS LIST CONTINUED ON NEXT PAGE

https://truckmanualshub.com/

45D-MQ 4-STAGE MAST - INTERNAL HOSE REEVING - DOUBLE FUNCTION - HI-VIS
PID # 45D-MQ-884~ - S/N 200001A~

Item	Part Number	Description	Qty	Serial Number
	CC248824	IHR KIT - DOUBLE FUNCTION (74" OCL) (217" MFH)	1	
	CC248827	IHR KIT - DOUBLE FUNCTION (80" OCL) (241" MFH)	1	
	CC248832	IHR KIT - DOUBLE FUNCTION (86" OCL) (259" MFH)	1	
	CC248837	IHR KIT - DOUBLE FUNCTION (92" OCL) (277" MFH)	1	
	CC248840	IHR KIT - DOUBLE FUNCTION (98" OCL) (295" MFH)	1	
	CC248842	IHR KIT - DOUBLE FUNCTION (104" OCL) (313" MFH)	1	
	CC216470	UPPER GUIDE (74" OCL) (217" MFH)	1	
	CC216471	UPPER GUIDE (80" OCL) (241" MFH)	1	
	CC216472	UPPER GUIDE (86" OCL) (259" MFH)	1	
	CC216473	UPPER GUIDE (92" OCL) (277" MFH)	1	
	CC216474	UPPER GUIDE (98" OCL) (295" MFH)	1	
	CC216475	UPPER GUIDE (104" OCL) (313" MFH)	1	
	CC216464	LOWER GUIDE (74" OCL) (217" MFH)	1	
	CC216465	LOWER GUIDE (80" OCL) (241" MFH)	1	
	CC216466	LOWER GUIDE (86" OCL) (259" MFH)	1	
	CC216467	LOWER GUIDE (92" OCL) (277" MFH)	1	
	CC216468	LOWER GUIDE (98" OCL) (295" MFH)	1	
	CC216469	LOWER GUIDE (104" OCL) (313" MFH)	1	
	CC237109	HOSE - LEFT SIDE (74" OCL) (217" MFH)	2	
	CC211509	HOSE - LEFT SIDE (80" OCL) (241" MFH)	2	
	CC231279	HOSE - LEFT SIDE (86" OCL) (259" MFH)	2	
	CC216392	HOSE - LEFT SIDE (92" OCL) (277" MFH)	2	
	CC218482	HOSE - LEFT SIDE (98" OCL) (295" MFH)	2	
	CC237147	HOSE - LEFT SIDE (104" OCL) (313" MFH)	2	
	CC246217	HOSE - LEFT - HIGH PRESSURE (74" OCL) (217" MFH)	2	
	CC246232	HOSE - LEFT - HIGH PRESSURE (80" OCL) (241" MFH)	2	
	CC246247	HOSE - LEFT - HIGH PRESSURE (86" OCL) (259" MFH)	2	
	CC246262	HOSE - LEFT - HIGH PRESSURE (92" OCL) (277" MFH)	2	

PARTS LIST CONTINUED ON NEXT PAGE

https://truckmanualshub.com/

45D-MQ 4-STAGE MAST - INTERNAL HOSE REEVING - DOUBLE FUNCTION - HI-VIS
PID # 45D-MQ-884~ - S/N 200001A~

Item	Part Number	Description	Qty	Serial Number
	CC246277	HOSE - LEFT - HIGH PRESSURE (98" OCL) (295" MFH)	2	
	CC246292	HOSE - LEFT - HIGH PRESSURE (104" OCL) (313" MFH)	2	
	CC237117	HOSE - RIGHT SIDE - (74" OCL) (217" MFH)	2	
	CC210233	HOSE - RIGHT SIDE - (80" OCL) (241" MFH)	2	
	CC206255	HOSE - RIGHT SIDE - (86" OCL) (259" MFH)	2	
	CC237138	HOSE - RIGHT SIDE - (92" OCL) (277" MFH)	2	
	CC210239	HOSE - RIGHT SIDE - (98" OCL) (295" MFH)	2	
	CC206329	HOSE - RIGHT SIDE - (104" OCL) (313" MFH)	2	
	CC246229	HOSE - RIGHT - HIGH PRESSURE (74" OCL) (217" MFH)	2	
	CC246244	HOSE - RIGHT - HIGH PRESSURE (80" OCL) (241" MFH)	2	
	CC246259	HOSE - RIGHT - HIGH PRESSURE (86" OCL) (259" MFH)	2	
	CC246274	HOSE - RIGHT - HIGH PRESSURE (92" OCL) (277" MFH)	2	
	CC246289	HOSE - RIGHT - HIGH PRESSURE (98" OCL) (295" MFH)	2	
	CC246304	HOSE - RIGHT - HIGH PRESSURE (104" OCL) (313" MFH)	2	

https://truckmanualshub.com/

45D-MQ 4-STAGE MAST - INTERNAL HOSE REEVING - DOUBLE FUNCTION - HI-VIS LEFT HAND - PID # 45D-MQ-884~ - S/N 200001A~

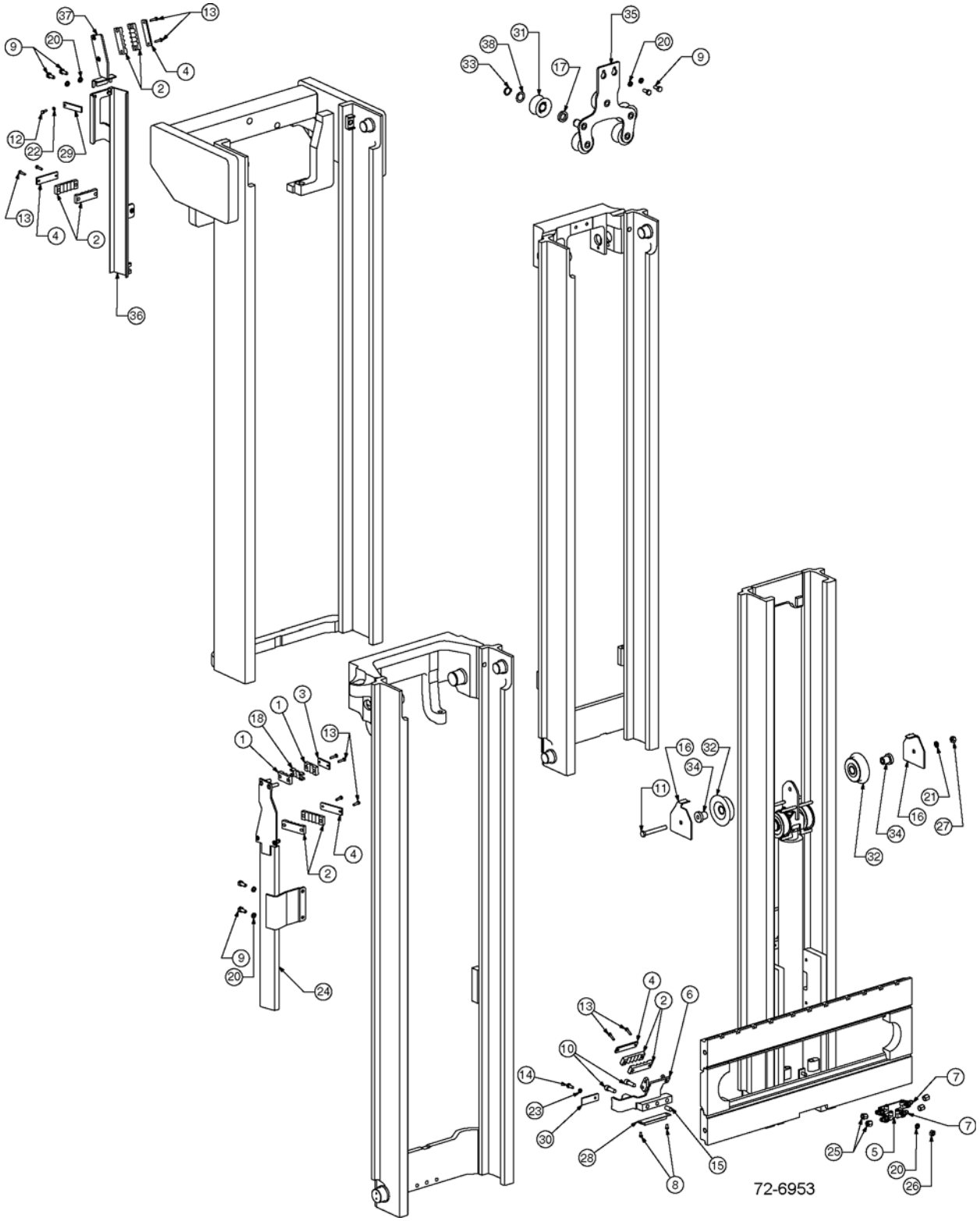

https://truckmanualshub.com/

45D-MQ 4-STAGE MAST - INTERNAL HOSE REEVING - DOUBLE FUNCTION - HI-VIS LEFT HAND - PID # 45D-MQ-884~ - S/N 200001A~

Item	Part Number	Description	Qty	Serial Number
		OCL = OUTER CHANNEL LENGTH, MFH = MAXIMUM FORK HEIGHT		
1	3EB-73-A5150	HOSE CLAMP	2	
2	CC227854	HOSE CLAMP	8	
3	3EB-73-A5160	HOSE CLAMP BAR	1	
4	CC227885	HOSE CLAMP BAR	4	
5	CC214932	CARRIAGE BRACKET	1	
6	CC238353	LH BRACKET	1	
7	3EB-71-A6010	90° BULKHEAD UNION	4	
8	3EB-73-A5470	CAPSCREW	2	
9	3EB-73-A5490	CAPSCREW, M10 X 25 LG	6	
10	CC769572	CAPSCREW, M12 X 35 LG	2	
11	CC684800	CAPSCREW, M12 X 100 LG	1	
12	CC763169	CAPSCREW, M6 X 20 LG	1	
13	3EB-79-A5240	CAPSCREW, M6 X 25 LG	10	
14	CC787372	CAPSCREW, M8 X 20 LG	1	
15	CC606212	DOWEL PIN	1	
16	CC210174	HOSE GUARD	2	
17	CC241395	SPACER	5	
18	CC246778	LOWER INTERMEDIATE INSERT	1	
19	**NOT USED**			
20	3EB-79-A6040	LOCKWASHER, M10	7	
21	CC683822	LOCKWASHER, M12	1	
22	3EB-73-A5340	LOCKWASHER, M6	1	
23	CC206315	LOCKWASHER, M8	1	
24	**SEE BELOW**	LOWER GUIDE	1	
25	3EB-79-A5250	CAP PLUG, #6	4	
26	3EB-79-A5180	NUT, M10	1	
27	3EB-79-A5270	NUT, M12	1	
28	CC661786	BUMPER PAD	1	
29	CC215789	HOSE RETAINER PLATE	1	
30	CC230606	HOSE RETAINER PLATE	1	
31	CC215772	SHEAVE	5	
32	CC210172	SHEAVE	2	
33	CC688935	SNAP RING	5	
34	CC210216	STUBSHAFT	2	
35	CC238811	UPPER BRACKET	1	
36	**SEE BELOW**	UPPER GUIDE	1	
37	CC238696	UPPER GUIDE BRACKET	1	
38	CC205086	WASHER	5	

PARTS LIST CONTINUED ON NEXT PAGE

https://truckmanualshub.com/

45D-MQ 4-STAGE MAST - INTERNAL HOSE REEVING - DOUBLE FUNCTION - HI-VIS LEFT HAND - PID # 45D-MQ-884~ - S/N 200001A~

Item	Part Number	Description	Qty	Serial Number
	CC249396	IHR KIT - DOUBLE FUNCTION (74" OCL) (217" MFH)	1	
	CC249402	IHR KIT - DOUBLE FUNCTION (80" OCL) (241" MFH)	1	
	CC249408	IHR KIT - DOUBLE FUNCTION (86" OCL) (259" MFH)	1	
	CC249414	IHR KIT - DOUBLE FUNCTION (92" OCL) (277" MFH)	1	
	CC249420	IHR KIT - DOUBLE FUNCTION (98" OCL) (295" MFH)	1	
	CC249426	IHR KIT - DOUBLE FUNCTION (104" OCL) (313" MFH)	1	
	CC238726	UPPER GUIDE (74" OCL) (217" MFH)	1	
	CC238727	UPPER GUIDE (80" OCL) (241" MFH)	1	
	CC238728	UPPER GUIDE (86" OCL) (259" MFH)	1	
	CC238729	UPPER GUIDE (92" OCL) (277" MFH)	1	
	CC238730	UPPER GUIDE (98" OCL) (295" MFH)	1	
	CC238731	UPPER GUIDE (104" OCL) (313" MFH)	1	
	CC238714	LOWER GUIDE (74" OCL) (217" MFH)	1	
	CC238715	LOWER GUIDE (80" OCL) (241" MFH)	1	
	CC238716	LOWER GUIDE (86" OCL) (259" MFH)	1	
	CC238717	LOWER GUIDE (92" OCL) (277" MFH)	1	
	CC238718	LOWER GUIDE (98" OCL) (295" MFH)	1	
	CC238719	LOWER GUIDE (104" OCL) (313" MFH)	1	
	CC237109	HOSE - LEFT SIDE (74" OCL) (217" MFH)	2	
	CC211509	HOSE - LEFT SIDE (80" OCL) (241" MFH)	2	
	CC231279	HOSE - LEFT SIDE (86" OCL) (259" MFH)	2	
	CC216392	HOSE - LEFT SIDE (92" OCL) (277" MFH)	2	
	CC218482	HOSE - LEFT SIDE (98" OCL) (295" MFH)	2	
	CC237147	HOSE - LEFT SIDE (104" OCL) (313" MFH)	2	
	CC237117	HOSE - RIGHT SIDE (74" OCL) (217" MFH)	2	
	CC210233	HOSE - RIGHT SIDE (80" OCL) (241" MFH)	2	
	CC206255	HOSE - RIGHT SIDE (86" OCL) (259" MFH)	2	
	CC237138	HOSE - RIGHT SIDE (92" OCL) (277" MFH)	2	
	CC210239	HOSE - RIGHT SIDE (98" OCL) (295" MFH)	2	
	CC206329	HOSE - RIGHT SIDE (104" OCL) (313" MFH)	2	
	CC211574	FREE LIFT HOSE (74" OCL) (217" MFH)	2	
	CC211520	FREE LIFT HOSE (80" OCL) (241" MFH)	2	
	CC211521	FREE LIFT HOSE (86" OCL) (259" MFH)	2	

PARTS LIST CONTINUED ON NEXT PAGE

https://truckmanualshub.com/

45D-MQ 4-STAGE MAST - INTERNAL HOSE REEVING - DOUBLE FUNCTION - HI-VIS LEFT HAND - PID # 45D-MQ-884~ - S/N 200001A~

Item	Part Number	Description	Qty	Serial Number
	CC211522	FREE LIFT HOSE (92" OCL) (277" MFH)	2	
	CC211523	FREE LIFT HOSE (98" OCL) (295" MFH)	2	
	CC211524	FREE LIFT HOSE (104" OCL) (313" MFH)	2	

https://truckmanualshub.com/

45D-MQ 4-STAGE MAST — RECOMMENDED STOCK LIST (RSL)

NO

ILLUSTRATION

REQUIRED

https://truckmanualshub.com/

45D-MQ 4-STAGE MAST — RECOMMENDED STOCK LIST (RSL)

Item	Part Number	Description	Qty	No. of Masts Serviced
		MAIN LIFT CYLINDERS		
	SEE PARTS PG	MAIN LIFT CYL ASSY	0	1 - 19
	SEE PARTS PG	MAIN LIFT CYL ASSY	1	20 - 50
	SEE PARTS PG	SEAL KIT	2	1 - 5
	SEE PARTS PG	SEAL KIT	4	6 - 19
	SEE PARTS PG	SEAL KIT	8	20 - 50
	SEE PARTS PG	CHECK VALVE KIT	2	1 - 5
	SEE PARTS PG	CHECK VALVE KIT	4	6 - 19
	SEE PARTS PG	CHECK VALVE KIT	8	20 - 50
		FREE LIFT CYLINDER		
	SEE PARTS PG	FREE LIFT CYLINDER ASSY	0	1 - 5
	SEE PARTS PG	FREE LIFT CYLINDER ASSY	1	6 - 19
	SEE PARTS PG	FREE LIFT CYLINDER ASSY	2	20 - 50
	SEE PARTS PG	SEAL KIT	2	1 - 5
	SEE PARTS PG	SEAL KIT	4	6 - 19
	SEE PARTS PG	SEAL KIT	8	20 - 50
	SEE PARTS PG	CHECK VALVE KIT	2	1 - 5
	SEE PARTS PG	CHECK VALVE KIT	4	6 - 19
	SEE PARTS PG	CHECK VALVE KIT	8	20 - 50
		INTERNAL REEVING		
	SEE PARTS PG	HOSE, RH & LH	2	1 - 5
	SEE PARTS PG	HOSE, RH & LH	4	6 - 19
	SEE PARTS PG	HOSE, RH & LH	8	20 - 50
	3EB-71-A6010	FITTING	1	1 - 5
	3EB-71-A6010	FITTING	2	6 - 19
	3EB-71-A6010	FITTING	4	20 - 50
	CC210175	CROSSHEAD SHEAVE, IHR, SINGLE IHR	1	1 - 5
	CC210175	CROSSHEAD SHEAVE, IHR, SINGLE IHR	2	6 - 19
	CC210175	CROSSHEAD SHEAVE, IHR, SINGLE IHR	4	20 - 50
	CC210172	CROSSHEAD SHEAVE, IHR, DOUBLE IHR	2	1 - 5
	CC210172	CROSSHEAD SHEAVE, IHR, DOUBLE IHR	4	6 - 19
	CC210172	CROSSHEAD SHEAVE, IHR, DOUBLE IHR	8	20 - 50
	CC204156	STD IHR - SHEAVE, SINGLE IHR	2	1 - 5
	CC204156	STD IHR - SHEAVE, SINGLE IHR	4	6 - 19
	CC204156	STD IHR - SHEAVE, SINGLE IHR	8	20 - 50
	CC204156	STD IHR - SHEAVE, DOUBLE IHR	2	1 - 5
	CC204156	STD IHR - SHEAVE, DOUBLE IHR	4	6 - 19
	CC204156	STD IHR - SHEAVE, DOUBLE IHR	8	20 - 50

PARTS LIST CONTINUED ON NEXT PAGE

https://truckmanualshub.com/

45D-MQ 4-STAGE MAST — RECOMMENDED STOCK LIST (RSL)

Item	Part Number	Description	Qty	No. of Masts Serviced
	CC215772	HI-VIS - SHEAVE, SINGLE IHR	2	1 - 5
	CC215772	HI-VIS - SHEAVE, SINGLE IHR	4	6 - 19
	CC215772	HI-VIS - SHEAVE, SINGLE IHR	8	20 - 50
	CC215772	HI-VIS - SHEAVE, DOUBLE IHR.	4	1 - 5
	CC215772	HI-VIS - SHEAVE, DOUBLE IHR.	8	6 - 19
	CC215772	HI-VIS - SHEAVE, DOUBLE IHR.	16	20 - 50
		UPRIGHTS		
	3EB-79-A6080	COTTER PIN	20	1 - 19
	3EB-79-A6080	COTTER PIN	40	20 - 50
	CC679146	CHAIN ANCHOR	2	1 - 5
	CC679146	CHAIN ANCHOR	4	6 - 19
	CC679146	CHAIN ANCHOR	8	20 - 50
	CC679144	CHAIN ANCHOR	2	1 - 5
	CC679144	CHAIN ANCHOR	4	6 - 19
	CC679144	CHAIN ANCHOR	8	20 - 50
	CC679149	PIN, CHAIN ANCHOR	4	1 - 5
	CC679149	PIN, CHAIN ANCHOR	8	6 - 19
	CC679149	PIN, CHAIN ANCHOR	16	20 - 50
	CC680242	CHAIN ANCHOR	6	1 - 5
	CC680242	CHAIN ANCHOR	12	6 - 19
	CC680242	CHAIN ANCHOR	24	20 - 50
	CC684305	CHAIN ANCHOR PIN	2	1 - 5
	CC684305	CHAIN ANCHOR PIN	4	6 - 19
	CC684305	CHAIN ANCHOR PIN	8	20 - 50
	3EB-79-A6090	NUT	6	1 - 5
	3EB-79-A6090	NUT	12	6 - 19
	3EB-79-A6090	NUT	24	20 - 50
	CC200007	JAM NUT	6	1 - 5
	CC200007	JAM NUT	12	6 - 19
	CC200007	JAM NUT	24	20 - 50
	3EB-79-A6081	PIN, COTTER	6	1 - 5
	3EB-79-A6081	PIN, COTTER	12	6 - 19
	3EB-79-A6081	PIN, COTTER	24	20 - 50
	3EB-79-A6050	SHIM, .03 IN.	16	1 - 5
	3EB-79-A6050	SHIM, .03 IN.	32	6 - 19
	3EB-79-A6050	SHIM, .03 IN.	64	20 - 50
	CC662145	LOAD ROLLER	10	1 - 5
	CC662145	LOAD ROLLER	20	6 - 19

PARTS LIST CONTINUED ON NEXT PAGE

https://truckmanualshub.com/

45D-MQ 4-STAGE MAST — RECOMMENDED STOCK LIST (RSL)

Item	Part Number	Description	Qty	No. of Masts Serviced
	CC662145	LOAD ROLLER	40	20 - 50
	CC201493	LOAD ROLLER - OUTER	2	1 - 5
	CC201493	LOAD ROLLER - OUTER	4	6 - 19
	CC201493	LOAD ROLLER - OUTER	16	20 - 50
	CC210767	SERVICE KIT, WEAR PLUG	4	1 - 5
	CC210767	SERVICE KIT, WEAR PLUG	8	6 - 19
	CC210767	SERVICE KIT, WEAR PLUG	16	20 - 50
		CROSSHEAD		
	CC660051	CHAIN SHEAVE	4	1 - 5
	CC660051	CHAIN SHEAVE	8	6 - 19
	CC660051	CHAIN SHEAVE	16	20 - 50
	3EB-73-A5330	SNAP RING	4	1 - 5
	3EB-73-A5330	SNAP RING	8	6 - 19
	3EB-73-A5330	SNAP RING	16	20 - 50
	3EB-79-A6070	SNAP RING	2	1 - 5
	3EB-79-A6070	SNAP RING	4	6 - 19
	3EB-79-A6070	SNAP RING	8	20 - 50
		CARRIAGE AND CHAINS		
	SEE PARTS PG	FREE LIFT CHAINS	2	1 - 5
	SEE PARTS PG	FREE LIFT CHAINS	4	6 - 19
	SEE PARTS PG	FREE LIFT CHAINS	8	20 - 50
	SEE PARTS PG	MAIN LIFT CHAINS	2	1 - 5
	SEE PARTS PG	MAIN LIFT CHAINS	4	6 - 19
	SEE PARTS PG	MAIN LIFT CHAINS	8	20 - 50
	CC683819	CARRIAGE SIDE THRUST ROLLER	4	1 - 5
	CC683819	CARRIAGE SIDE THRUST ROLLER	16	6 - 19
	CC683819	CARRIAGE SIDE THRUST ROLLER	32	20 - 50
	CC660050	CARRIAGE ROLLER	4	1 - 5
	CC660050	CARRIAGE ROLLER	8	6 - 19
	CC660050	CARRIAGE ROLLER	16	20 - 50
	CC662145	LOAD ROLLER	8	1 - 5
	CC662145	LOAD ROLLER	16	6 - 19
	CC662145	LOAD ROLLER	32	20 - 50
	CC683817	CHAIN ANCHOR	2	1 - 5
	CC683817	CHAIN ANCHOR	4	6 - 19
	CC683817	CHAIN ANCHOR	8	20 - 50
	3EB-79-A6080	PIN, COTTER	4	1 - 5
	3EB-79-A6080	PIN, COTTER	8	6 - 19

PARTS LIST CONTINUED ON NEXT PAGE

https://truckmanualshub.com/

45D-MQ 4-STAGE MAST — RECOMMENDED STOCK LIST (RSL)

Item	Part Number	Description	Qty	No. of Masts Serviced
	3EB-79-A6080	PIN, COTTER	16	20 - 50
	CC684305	CHAIN PIN.	4	1 - 19
	CC684305	CHAIN PIN.	8	20 - 50

https://truckmanualshub.com/

NOTES:

https://truckmanualshub.com/

55D-MQ 4-STAGE MAST (QUAD) - SAFETY DECALS
S/N 200001A~

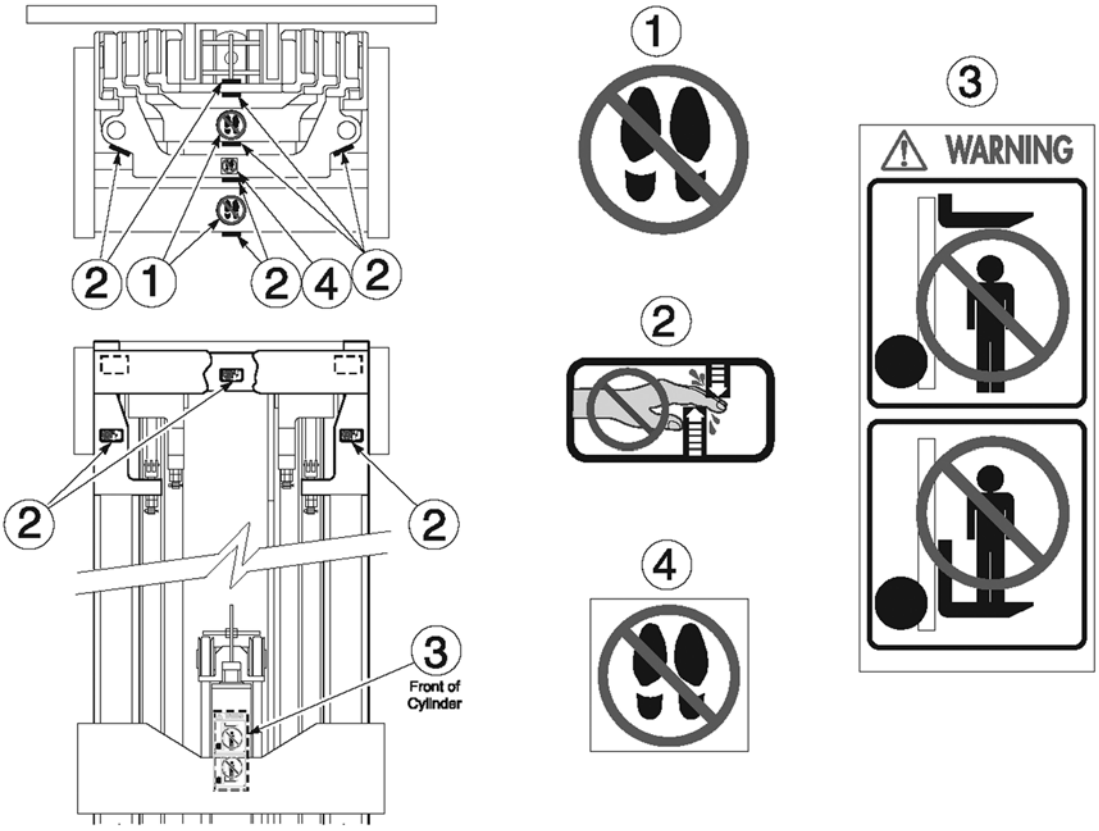

72-6100

https://truckmanualshub.com/

55D-MQ 4-STAGE MAST (QUAD) - SAFETY DECALS
S/N 200001A~

Item	Part Number	Description	Qty	Serial Number
1	3EB-79-A6020	DECAL - "NO STEP"	2	
2	3EB-79-A6010	DECAL - "HANDS OFF"	9	
3	3EB-79-A5310	DECAL - "WARNING"	1	
4	3EB-79-A6030	DECAL - "NO STEP"	2	

https://truckmanualshub.com/

55D-MQ 4-STAGE MAST (QUAD) - MAIN LIFT CYLINDER - RIGHT SIDE
S/N 200001A~

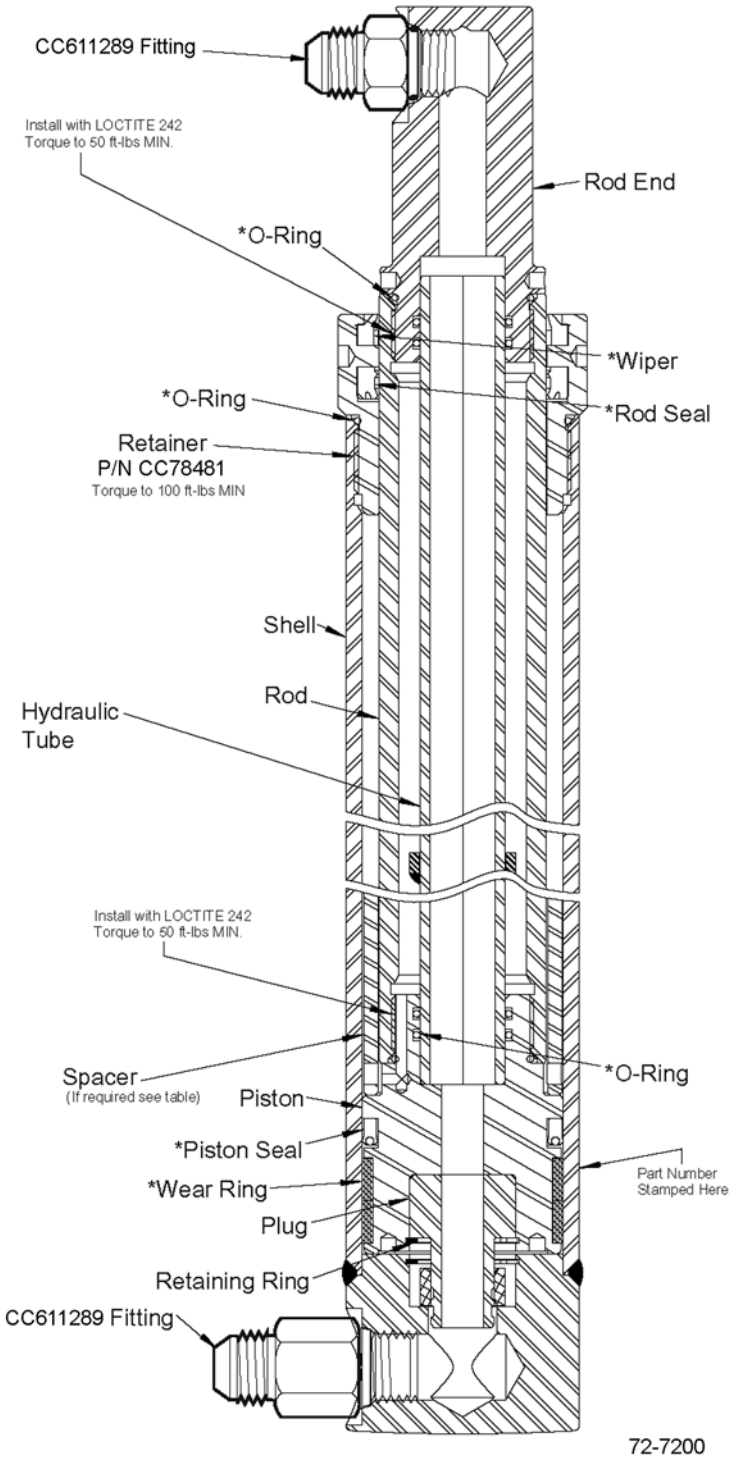

https://truckmanualshub.com/

55D-MQ 4-STAGE MAST (QUAD) - MAIN LIFT CYLINDER - RIGHT SIDE
S/N 200001A~

Item	Part Number	Description	Qty	Serial Number
		OCL = OUTER CHANNEL LENGTH , MFH = MAXIMUM FORK HEIGHT		
	CC1003069	MAIN LIFT CYLINDER - (68" OCL) (MFH)	1	
	CC1003075	MAIN LIFT CYLINDER - (74" OCL) (MFH)	1	
	CC1003081	MAIN LIFT CYLINDER - (80" OCL) (MFH)	1	
	CC1003087	MAIN LIFT CYLINDER - (86" OCL) (MFH)	1	
	CC1003093	MAIN LIFT CYLINDER - (92" OCL) (MFH)	1	
	CC1003099	MAIN LIFT CYLINDER - (98" OCL) (MFH)	1	
	CC1003105	MAIN LIFT CYLINDER - (104" OCL) (MFH)	1	
KIT	CC1002524	SEAL KIT	1	

https://truckmanualshub.com/

55D-MQ 4-STAGE MAST (QUAD) - MAIN LIFT CYLINDER - LEFT SIDE
S/N 200001A~

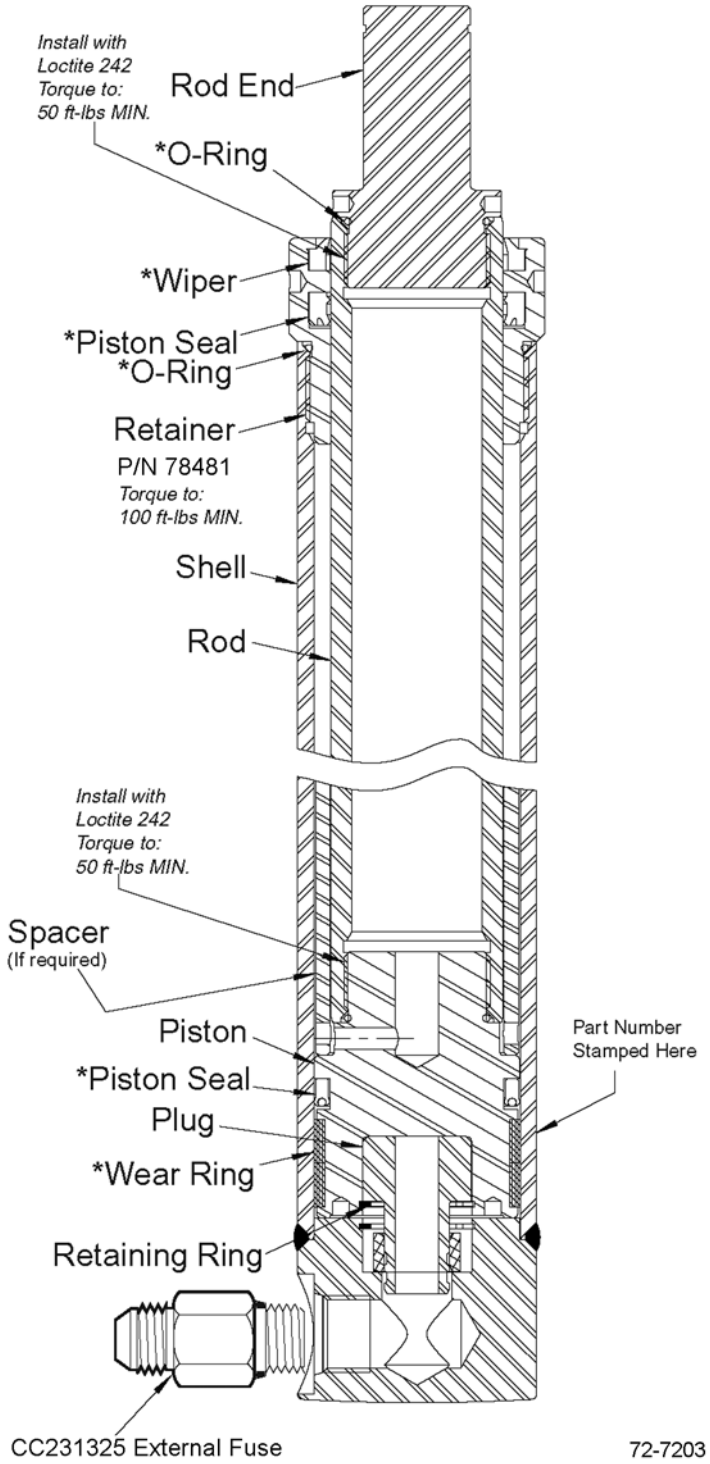

https://truckmanualshub.com/

55D-MQ 4-STAGE MAST (QUAD) - MAIN LIFT CYLINDER - LEFT SIDE
S/N 200001A~

Item	Part Number	Description	Qty	Serial Number
		OCL = OUTER CHANNEL LENGTH, MFH = MAXIMUM FORK HEIGHT		
	CC1003016	MAIN LIFT CYLINDER - (68" OCL) (MFH)	1	
	CC1003022	MAIN LIFT CYLINDER - (74" OCL) (MFH)	1	
	CC1003028	MAIN LIFT CYLINDER - (80" OCL) (MFH)	1	
	CC1003034	MAIN LIFT CYLINDER - (86" OCL) (MFH)	1	
	CC1003040	MAIN LIFT CYLINDER - (92" OCL) (MFH)	1	
	CC1003046	MAIN LIFT CYLINDER - (98" OCL) (MFH)	1	
	CC1003052	MAIN LIFT CYLINDER - (104" OCL) (MFH)	1	
KIT	CC1002526	SEAL KIT	1	

https://truckmanualshub.com/

55D-MQ 4-STAGE MAST (QUAD) - FREE LIFT CYLINDER
S/N 200001A~

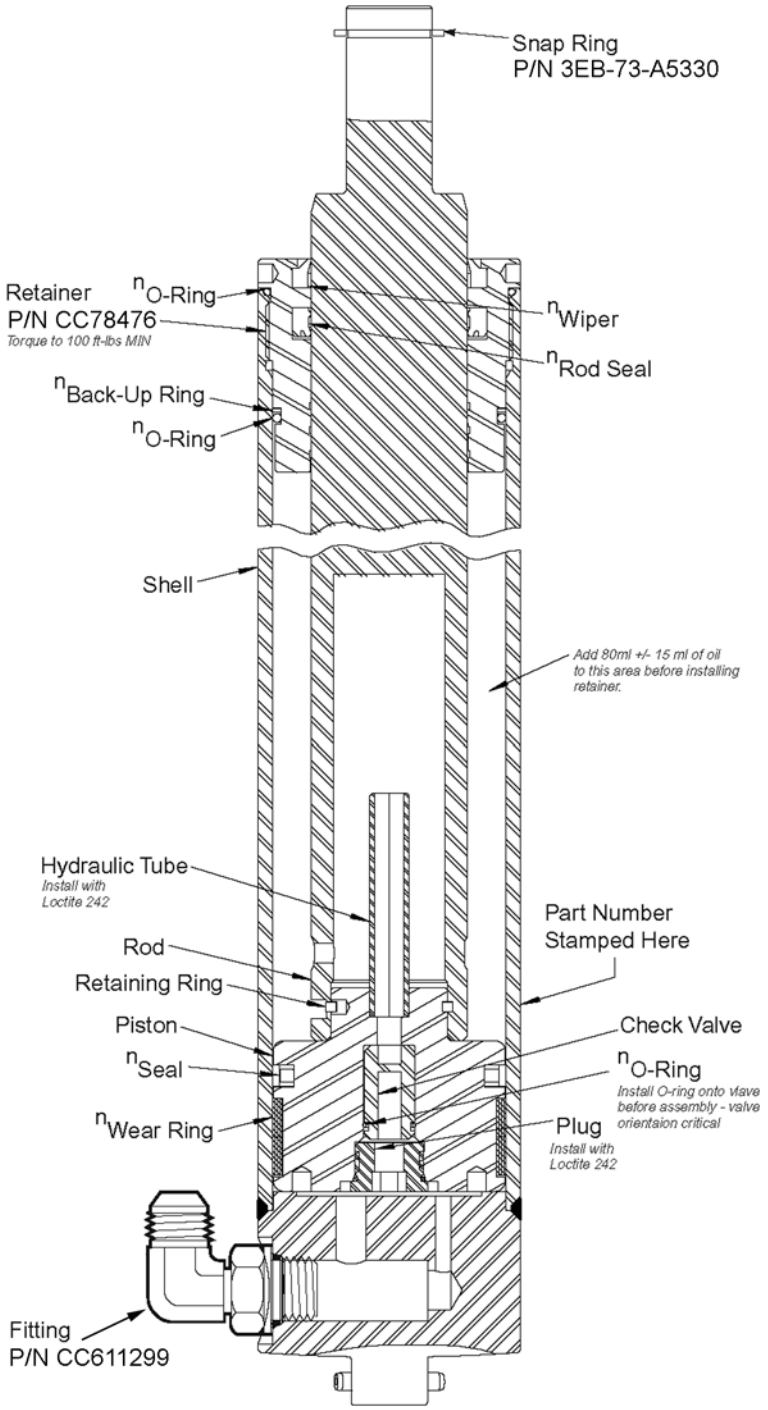

https://truckmanualshub.com/

55D-MQ 4-STAGE MAST (QUAD) - FREE LIFT CYLINDER
S/N 200001A~

Item	Part Number	Description	Qty	Serial Number
		OCL = OUTER CHANNEL LENGTH, MFH = MAXIMUM FORK HEIGHT		
	CC1001746	MAIN LIFT CYLINDER - (68" OCL) (MFH)	1	
	CC1001752	MAIN LIFT CYLINDER - (74" OCL) (MFH)	1	
	CC1001758	MAIN LIFT CYLINDER - (80" OCL) (MFH)	1	
	CC1001764	MAIN LIFT CYLINDER - (86" OCL) (MFH)	1	
	CC1001770	MAIN LIFT CYLINDER - (92" OCL) (MFH)	1	
	CC1001776	MAIN LIFT CYLINDER - (98" OCL) (MFH)	1	
	CC1001782	MAIN LIFT CYLINDER - (104" OCL) (MFH)	1	
KIT	CC1002524	SEAL KIT	1	

https://truckmanualshub.com/

55D-MQ 4-STAGE MAST (QUAD) - WELDMENTS (UPRIGHTS)
S/N 200001A~

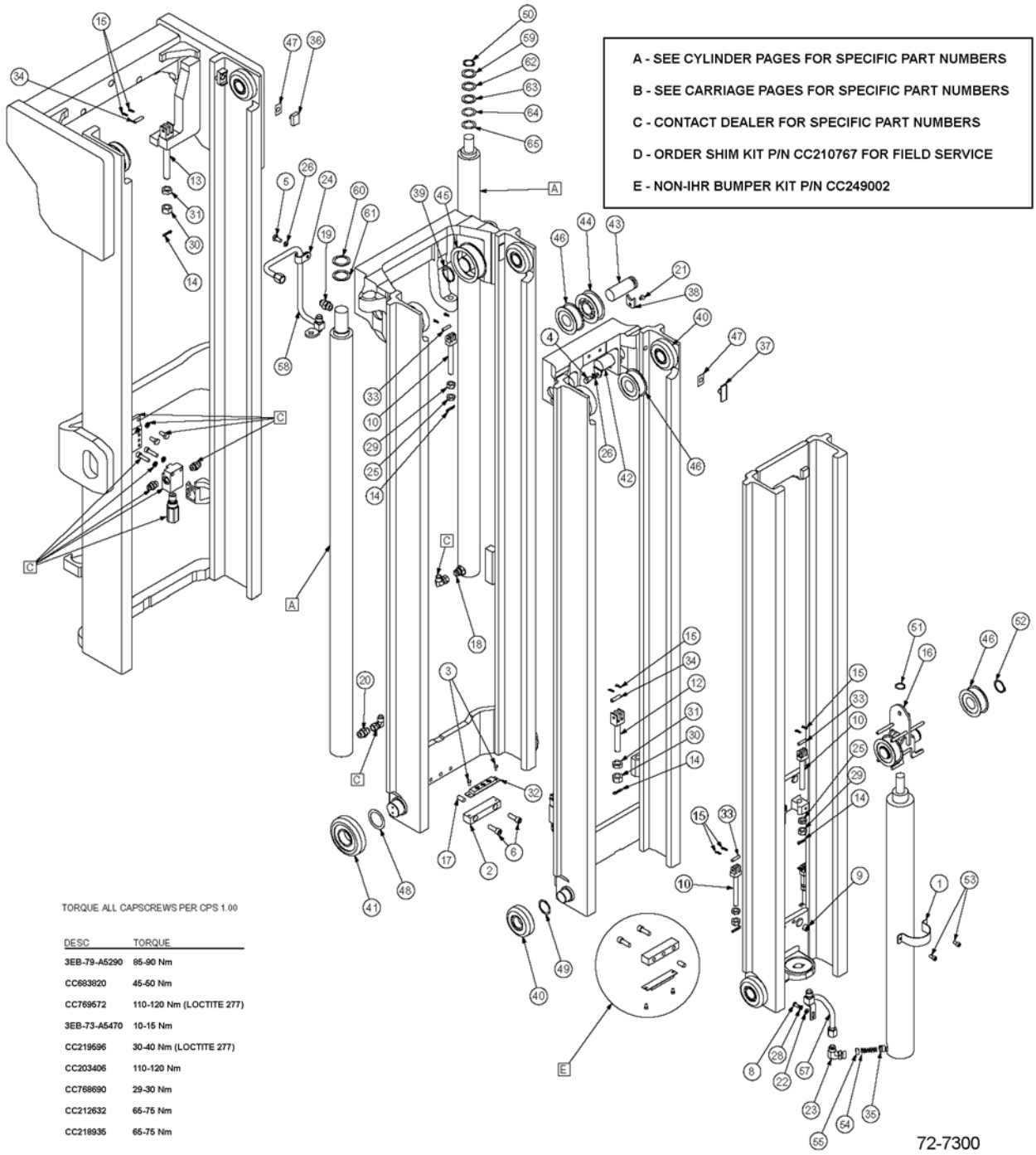

TORQUE ALL CAPSCREWS PER CPS 1.00

DESC	TORQUE
3EB-79-A5290	85-90 Nm
CC683820	45-50 Nm
CC769572	110-120 Nm (LOCTITE 277)
3EB-73-A5470	10-15 Nm
CC219696	30-40 Nm (LOCTITE 277)
CC203406	110-120 Nm
CC768690	29-30 Nm
CC212632	65-75 Nm
CC218935	65-75 Nm

https://truckmanualshub.com/

55D-MQ 4-STAGE MAST (QUAD) - WELDMENTS (UPRIGHTS)
S/N 200001A~

Item	Part Number	Description	Qty	Serial Number
		OCL = OUTER CHANNEL LENGTH, MFH = MAXIMUM FORK HEIGHT		
A	SEE PARTS PG	OUTER WELDMENT (UPRIGHT)	1	
B	SEE PARTS PG	OUTER INTERMEDIATE WELDMENT (UPRIGHT)	1	
C	SEE PARTS PG	INTERMEDIATE INNER WELDMENT (UPRIGHT)	1	
D	SEE PARTS PG	INNER WELDMENT (UPRIGHT)	1	
E	SEE PARTS PG	FREE LIFT CYLINDER.	1	
F	SEE PARTS PG	MAIN LIFT CYLINDER	2	
	CC249821	BASE UNIT NO. (68" OCL) (MFH)	1	
	CC249827	BASE UNIT NO. (74" OCL) (MFH)	1	
	CC249833	BASE UNIT NO. (80" OCL) (MFH)	1	
	CC249839	BASE UNIT NO. (86" OCL) (MFH)	1	
	CC249845	BASE UNIT NO. (92" OCL) (MFH)	1	
	CC249854	BASE UNIT NO. (104" OCL) (MFH)	1	
A	CC249869	OUTER UPRIGHT (68" OCL) (MFH)	1	
	CC249875	OUTER UPRIGHT (74" OCL) (MFH)	1	
	CC249881	OUTER UPRIGHT (80" OCL) (MFH)	1	
	CC249887	OUTER UPRIGHT (86" OCL) (MFH)	1	
	CC249893	OUTER UPRIGHT (92" OCL) (MFH)	1	
	CC249902	OUTER UPRIGHT (104" OCL) (MFH)	1	
B	CC203284	OUTER INTER. UPRIGHT (68" OCL) (MFH) . . .	1	
	CC203285	OUTER INTER. UPRIGHT (74" OCL) (MFH) . . .	1	
	CC203286	OUTER INTER. UPRIGHT (80" OCL) (MFH) . . .	1	
	CC203287	OUTER INTER. UPRIGHT (86" OCL) (MFH) . . .	1	
	CC203288	OUTER INTER. UPRIGHT (92" OCL) (MFH) . . .	1	
	CC381280	OUTER INTER. UPRIGHT (104" OCL) (MFH) . .	1	
C	CC249045	INNER INTER. UPRIGHT (68" OCL) (MFH). . . .	1	
	CC249048	INNER INTER. UPRIGHT (74" OCL) (MFH). . . .	1	
	CC249052	INNER INTER. UPRIGHT (80" OCL) (MFH). . . .	1	
	CC249058	INNER INTER. UPRIGHT (86" OCL) (MFH). . . .	1	
	CC249064	INNER INTER. UPRIGHT (92" OCL) (MFH). . . .	1	
	CC249073	INNER INTER. UPRIGHT (104" OCL) (MFH). . .	1	
D	CC203377	INNER UPRIGHT (68" OCL) (MFH)	1	
	CC203378	INNER UPRIGHT (74" OCL) (MFH)	1	
	CC203379	INNER UPRIGHT (80" OCL) (MFH)	1	
	CC203380	INNER UPRIGHT (86" OCL) (MFH)	1	
	CC203381	INNER UPRIGHT (92" OCL) (MFH)	1	
	CC381282	INNER UPRIGHT (104" OCL) (MFH)	1	

PARTS LIST CONTINUED ON NEXT PAGE

https://truckmanualshub.com/

55D-MQ 4-STAGE MAST (QUAD) - WELDMENTS (UPRIGHTS)
S/N 200001A~

Item	Part Number	Description	Qty	Serial Number
1	CC209625	FREE LIFT CYLINDER BAND	1	
2	CC203291	BAR STOP	1	
3	3EB-73-A5470	CAPSCREW, HEX HEAD	2	
4	CC683820	CAPSCREW, M10 X 17LG	1	
5	CC212632	CAPSCREW, M10 X 20LG	1	
6	CC769572	CAPSCREW, M12 X 35LG	2	
7	SEE PARTS PG	CARRIAGE	--	
8	CC209742	CAPSCREW, M8 X 16LG BH	1	
9	CC203406	CAPSCREW, SOCKET HEAD	2	
10	CC680242	CHAIN ANCHOR	6	
11	SEE PARTS PG	CARRIAGE	--	
12	CC223080	CHAIN ANCHOR	2	
13	CC223079	CHAIN ANCHOR	2	
14	3EB-79-A6081	COTTER PIN	10	
15	3EB-79-A6080	COTTER PIN	20	
16	CC210169	CROSSHEAD WELDMENT	1	
17	CC606212	DOWEL PIN	1	
18	CC231325	EXTERNAL FUSE ASSY	1	
19	CC611291	FITTING	1	
20	CC611289	FITTING	1	
21	CC768690	CAPSCREW, FLAT HEAD	1	
22	CC787398	FLAT WASHER, M8	1	
23	CC611299	ELBOW FITTING, 90°	1	
24	3EB-79-A5160	HOSE CLAMP	1	
25	CC200007	JAM NUT	6	
26	3EB-79-A6040	LOCK WASHER, M10	2	
27	SEE PARTS PG	CARRIAGE	--	
28	CC206315	LOCK WASHER, M8	1	
29	3EB-79-A6090	FULL NUT	6	
30	CC200242	FULL NUT	4	
31	CC200244	JAM NUT	4	
32	CC661786	BUMPER PAD	1	
33	CC684305	CHAIN ANCHOR PIN	6	
34	CC679149	CHAIN ANCHOR PIN	4	
35	CC560470	FUSE PISTON	1	
36	CC201494	PLUG	2	
37	CC215720	WEAR PLUG	4	
38	CC248905	RETAINING BAR	1	
39	CC3147	RETAINER CLIP	2	

PARTS LIST CONTINUED ON NEXT PAGE

https://truckmanualshub.com/

55D-MQ 4-STAGE MAST (QUAD) - WELDMENTS (UPRIGHTS)
S/N 200001A~

Item	Part Number	Description	Qty	Serial Number
40	CC662145	LOAD ROLLER	10	
41	CC201493	LOAD ROLLER	2	
42	CC203269	SHAFT	1	
43	CC248909	SHAFT	1	
44	CC203385	SHEAVE	1	
45	CC249493	SHEAVE	2	
46	CC660051	SHEAVE	4	
47	CC203388	SHIM	AR	
48	CC637536	SHIM	AR	
49	3EB-79-A6050	LOAD ROLLER SHIM	AR	
50	CC3135	SNAP RING	1	
51	3EB-73-A5330	SNAP RING	1	
52	3EB-79-A6070	SNAP RING	2	
53	CC219596	SOCKET SCREW	2	
54	CC565085	FUSE SPRING	1	
55	CC564107	FUSE SPRING GUIDE	1	
56	SEE PARTS PG	CARRIAGE	--	
57	CC248901	TUBE ASSY	1	
58	CC248902	TUBE ASSY	1	
59	CC203404	CYLINDER SHIM	AR	
60	CC203403	CYLINDER SHIM	AR	
61	CC203314	CYLINDER SHIM	AR	
62	CC205196	CYLINDER SHIM	AR	
63	CC205197	CYLINDER SHIM	AR	
64	CC205198	CYLINDER SHIM	AR	
65	CC205199	CYLINDER SHIM	AR	

https://truckmanualshub.com/

55D-MQ 4-STAGE MAST (QUAD) - 4-ROLLER CARRIAGES
S/N 200001A~

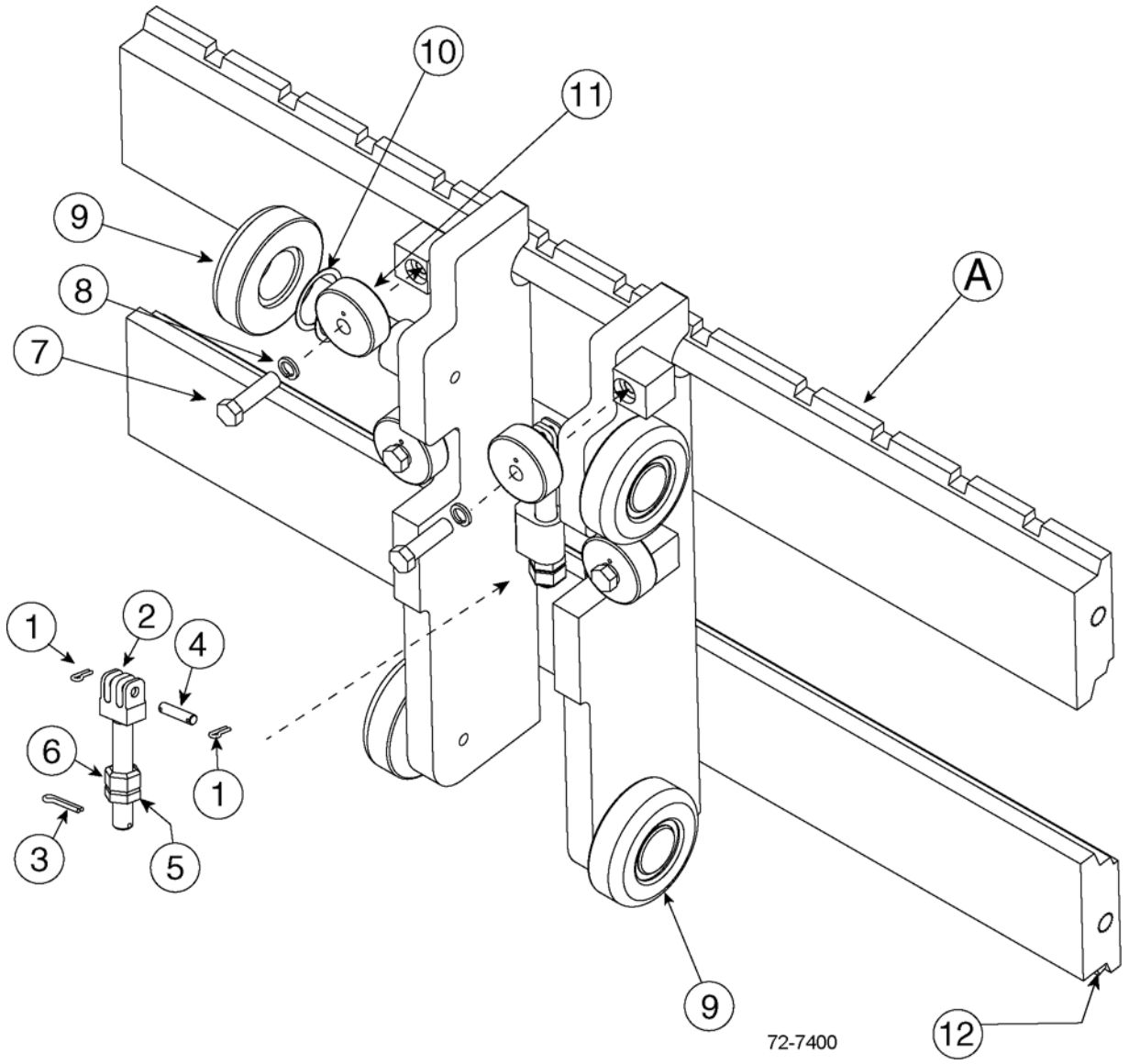

https://truckmanualshub.com/

55D-MQ 4-STAGE MAST (QUAD) - 4-ROLLER CARRIAGES
S/N 200001A~

Item	Part Number	Description	Qty	Serial Number
A	CC203323	CARRIAGE (37") - CUSHION TIRE TRUCKS . .	1	
	CC203324	CARRIAGE (41") - CUSHION TIRE TRUCKS . .	1	
	CC203325	CARRIAGE (37") - PNEUMATIC TIRE TRUCKS	1	
	CC203326	CARRIAGE (41") - PNEUMATIC TIRE TRUCKS	1	
1	3EB-79-A6080	COTTER PIN	4	
2	CC683817	CHAIN ANCHOR	2	
3	3EB-79-A6081	COTTER PIN	2	
4	CC684305	PIN	2	
5	CC200007	NUT, .625	2	
6	3EB-79-A6090	JAM NUT	2	
7	3EB-79-A5290	CAPSCREW, M12 X 45	4	
8	CC684660	LOCKWASHER, M12	4	
9	CC662145	LOAD ROLLER ASSY	4	
10	3EB-79-A6050	LOAD ROLLER SHIM.	AR	
11	CC683819	THRUST ROLLER ASSY	4	
12	CC219400	FORKSTOP KIT	1	

https://truckmanualshub.com/

55D-MQ 4-STAGE MAST (QUAD) - 6-ROLLER CARRIAGES
S/N 200001A~

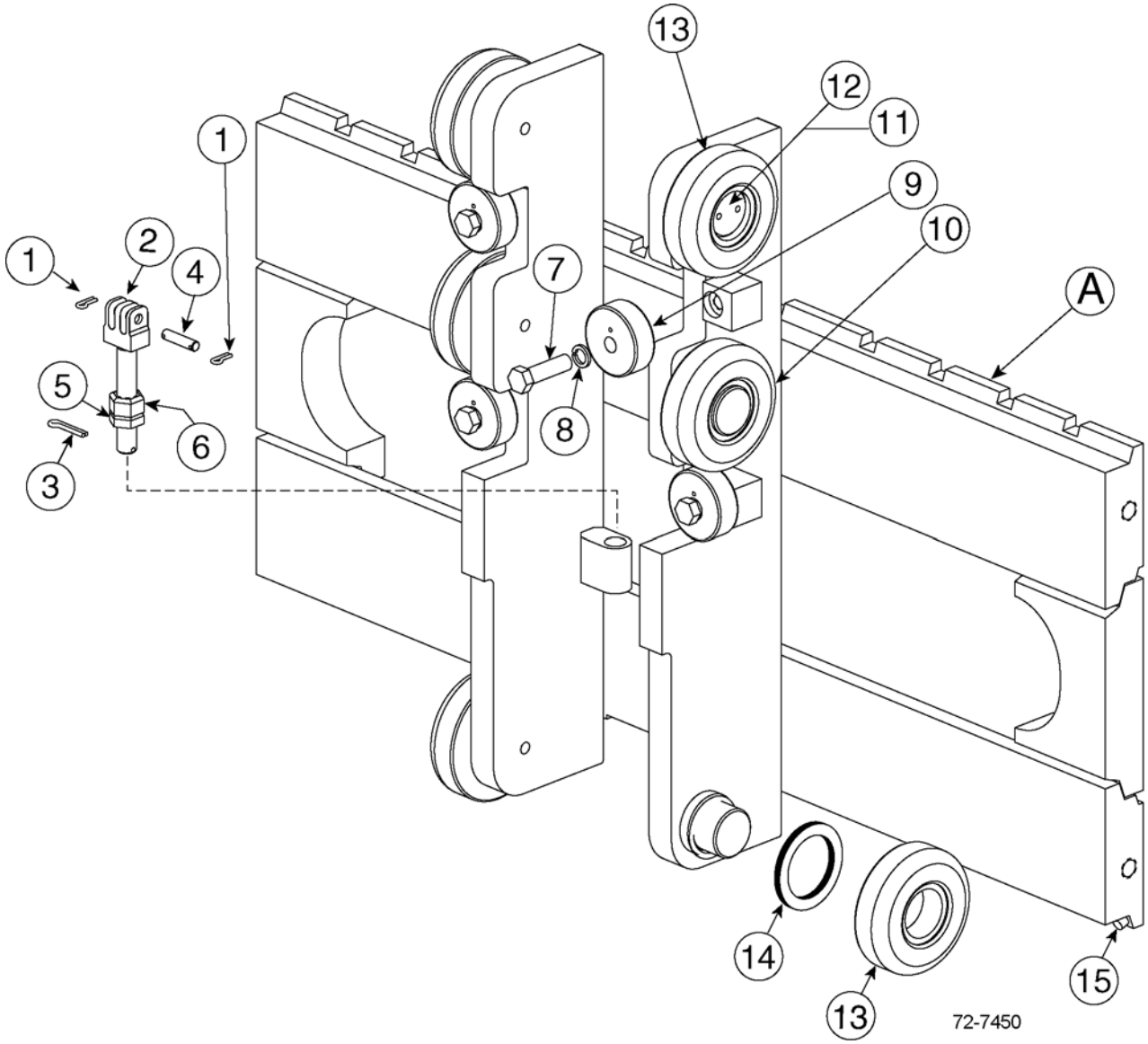

https://truckmanualshub.com/

55D-MQ 4-STAGE MAST (QUAD) - 6-ROLLER CARRIAGES
S/N 200001A~

Item	Part Number	Description	Qty	Serial Number
A	CC203391	CARRIAGE (37") STD - CUSHION TIRE TRUCKS	1	
	CC203469	CARRIAGE (37") HD - CUSHION TIRE TRUCKS	1	
	CC203392	CARRIAGE (41") STD - CUSHION TIRE TRUCKS	1	
	CC203470	CARRIAGE (41") HD - CUSHION TIRE TRUCKS	1	
	CC203417	CARRIAGE (49") STD - CUSHION TIRE TRUCKS	1	
	CC203471	CARRIAGE (49") HD - CUSHION TIRE TRUCKS	1	
	CC203393	CARRIAGE (37") STD - PNEUMATIC TIRE TRUCKS	1	
	CC203473	CARRIAGE (37") HD - PNEUMATIC TIRE TRUCKS	1	
	CC203394	CARRIAGE (41") STD - PNEUMATIC TIRE TRUCKS	1	
	CC203474	CARRIAGE (41") HD - PNEUMATIC TIRE TRUCKS	1	
	CC203419	CARRIAGE (49") STD - PNEUMATIC TIRE TRUCKS	1	
	CC203475	CARRIAGE (49") HD - PNEUMATIC TIRE TRUCKS	1	
1	3EB-79-A6080	COTTER PIN	4	
2	CC683817	CHAIN ANCHOR	2	
3	3EB-79-A6081	COTTER PIN	2	
4	CC684305	PIN	2	
5	CC200007	NUT, .625	2	
6	3EB-79-A6090	JAM NUT	2	
7	3EB-79-A5290	CAPSCREW, M12 X 45	4	
8	CC684660	LOCKWASHER, M12	4	
9	CC683819	THRUST ROLLER ASSY	4	
10	CC660050	UNDERSIZED ROLLER	2	
11	CC658378	RETAINER PLATE	2	
12	CC680218	HEX HEAD, M6 X 12 LONG	4	
13	CC662145	LOAD ROLLER ASSY	4	
14	3EB-79-A6050	SHIM, LOAD ROLLER	AR	
15	CC219400	FORKSTOP KIT	1	

https://truckmanualshub.com/

55D-MQ 4-STAGE MAST (QUAD) - HOIST CHAINS & FREE LIFT HOSES S/N 200001A~

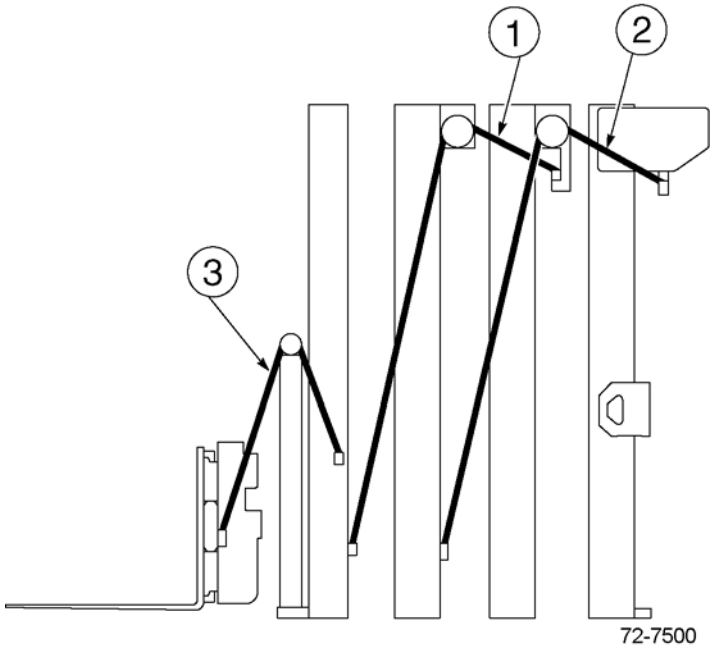

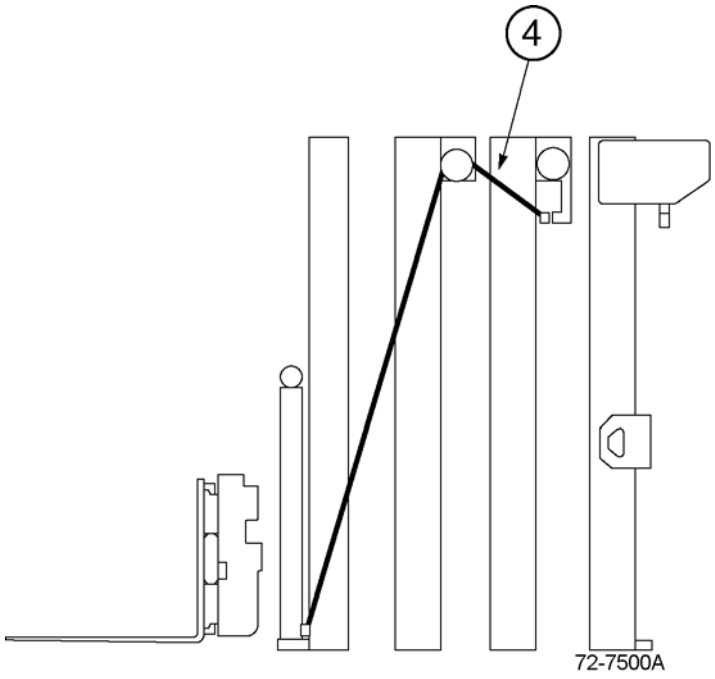

https://truckmanualshub.com/

55D-MQ 4-STAGE MAST (QUAD) - HOIST CHAINS & FREE LIFT HOSES
S/N 200001A~

Item	Part Number	Description	Qty	Serial Number
		OCL = OUTER CHANNEL LENGTH, MFH = MAXIMUM FORK HEIGHT		
1	CC680458	FREE LIFT CHAIN (68" OCL) (193" MFH)	2	
	CC681428	FREE LIFT CHAIN (74" OCL) (217" MFH)	2	
	CC683979	FREE LIFT CHAIN (80" OCL) (241" MFH)	2	
	CC683982	FREE LIFT CHAIN (86" OCL) (259" MFL)	2	
	CC683985	FREE LIFT CHAIN (92" OCL) (277" MFH)	2	
	CC683990	FREE LIFT CHAIN (104" OCL) (313" MFH)	2	
2	CC681429	INNER CHAIN (68" OCL) (193" MFH)	2	
	CC681430	INNER CHAIN (74" OCL) (217" MFH)	2	
	CC680459	INNER CHAIN (80" OCL) (241" MFH)	2	
	CC678796	INNER CHAIN (86" OCL) (259" MFH)	2	
	CC681431	INNER CHAIN (92" OCL) (277" MFH)	2	
	CC683998	INNER CHAIN (104" OCL) (313" MFH)	2	
3	CC224931	OUTER CHAIN (68" OCL) (193" MFH).	2	
	CC205989	OUTER CHAIN (74" OCL) (217" MFH).	2	
	CC220707	OUTER CHAIN (80" OCL) (241" MFH).	2	
	CC224937	OUTER CHAIN (86" OCL) (259" MFH).	2	
	CC220708	OUTER CHAIN (92" OCL) (277" MFH).	2	
	CC224944	OUTER CHAIN (104" OCL) (313" MFH).	1	
4	CC249088	FREE LIFT HOSE (68" OCL) (193" MFH)	1	
	CC249094	FREE LIFT HOSE (74" OCL) (217" MFH)	1	
	CC249100	FREE LIFT HOSE (80" OCL) (241" MFH)	1	
	CC249106	FREE LIFT HOSE (86" OCL) (259" MFH)	1	
	CC249111	FREE LIFT HOSE (92" OCL) (277" MFH)	1	
	CC249120	FREE LIFT HOSE (104" OCL) (313" MFH)	1	

https://truckmanualshub.com/

55D-MQ 4-STAGE MAST (QUAD) - LOAD BACKREST
S/N 200001A~

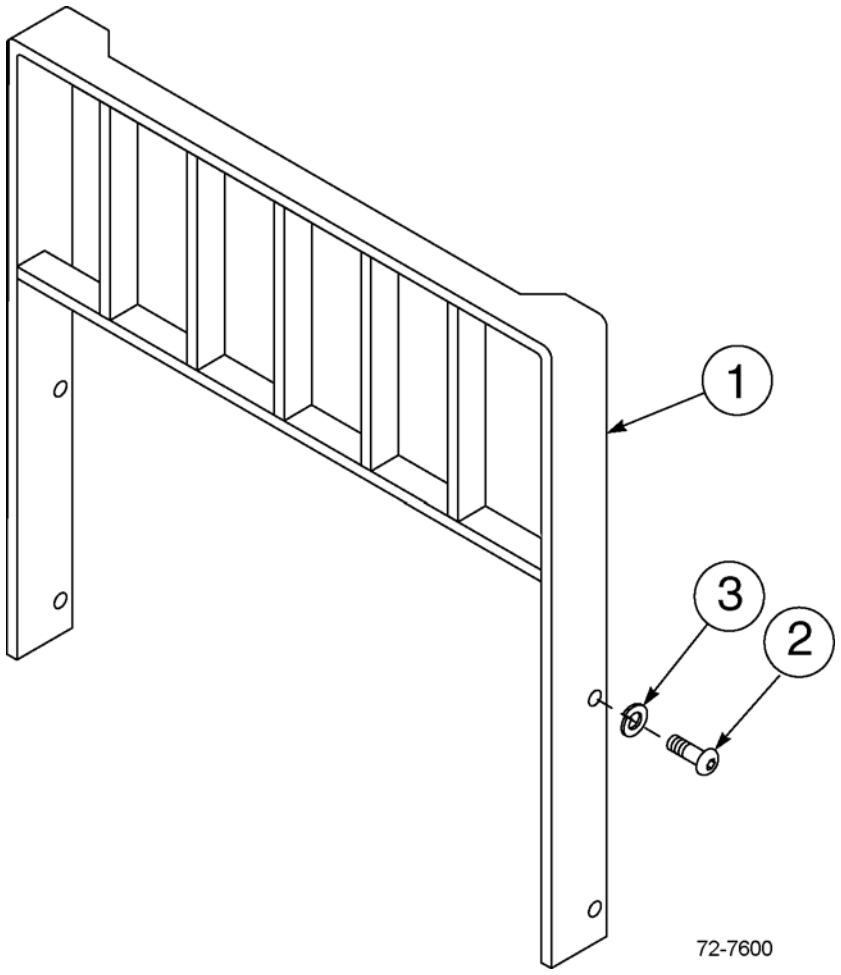

https://truckmanualshub.com/

55D-MQ 4-STAGE MAST (QUAD) - LOAD BACKREST
S/N 200001A~

Item	Part Number	Description	Qty	Serial Number
1	CC684772	BACKREST (37" X 36")	1	
	CC684773	BACKREST (37" X 48")	1	
	CC684774	BACKREST (37" X 60")	1	
	CC684775	BACKREST (41" X 36")	1	
	CC684776	BACKREST (41" X 48")	1	
	CC684777	BACKREST (41" X 60")	1	
2	CC200173	.CAPSCREW, M16 X 2.0 X 35-8.8	4	
3	3EB-71-A6030	.LOCKWASHER, M16.	4	

https://truckmanualshub.com/

55D-MQ 4-STAGE MAST (QUAD) - MAST INSTALLATION PARTS
S/N 200001A~

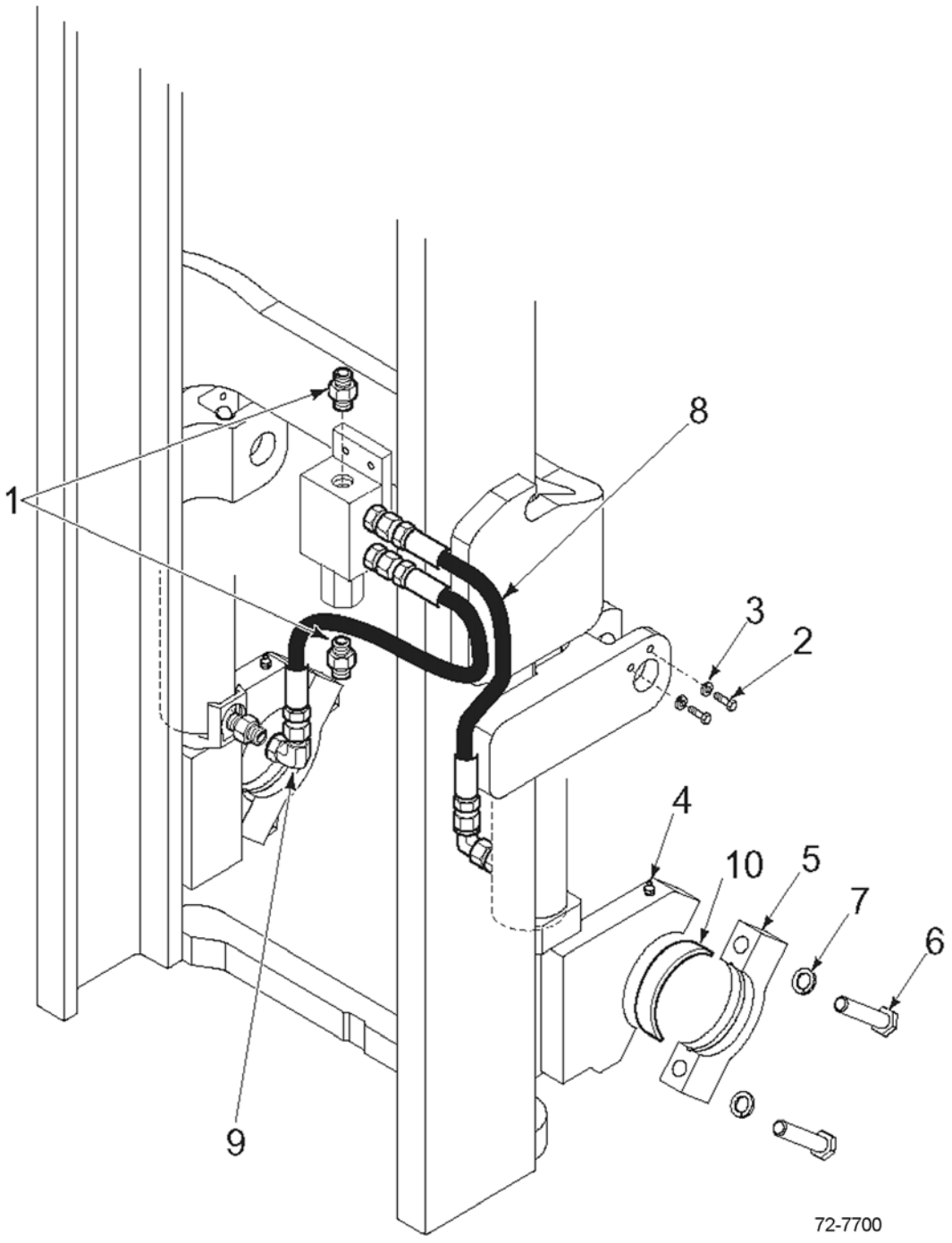

https://truckmanualshub.com/

55D-MQ 4-STAGE MAST (QUAD) - MAST INSTALLATION PARTS
S/N 200001A~

Item	Part Number	Description	Qty	Serial Number
1	CC601377	FITTING, 8-8	2	
2	CC212632	CAPSCREW, M10 X 1.5 X 20-8.8	4	
3	3EB-79-A6040	LOCKWASHER, M10	4	
4	CC7418	GREASE FITTING	2	
5	CC252686	CAP	2	
6	CC251906	CAPSCREW, M18 X 2.5 X 80-8.8	4	
7	3EB-71-A6030	LOCKWASHER, M18	4	
8	CC217524	HOSE	2	
9	CC605761	FITTING, 90° 8-8	2	
10	3EB-84-51290	BUSHING (CUSHION TRUCKS)	2	
	3EB-71-51290	BUISHING (PNEUMATIC TRUCKS)	2	

https://truckmanualshub.com/

55D-MQ 4-STAGE MAST (QUAD) - LOWERING CONTROL VALVE & BRACKET
S/N 200001A~

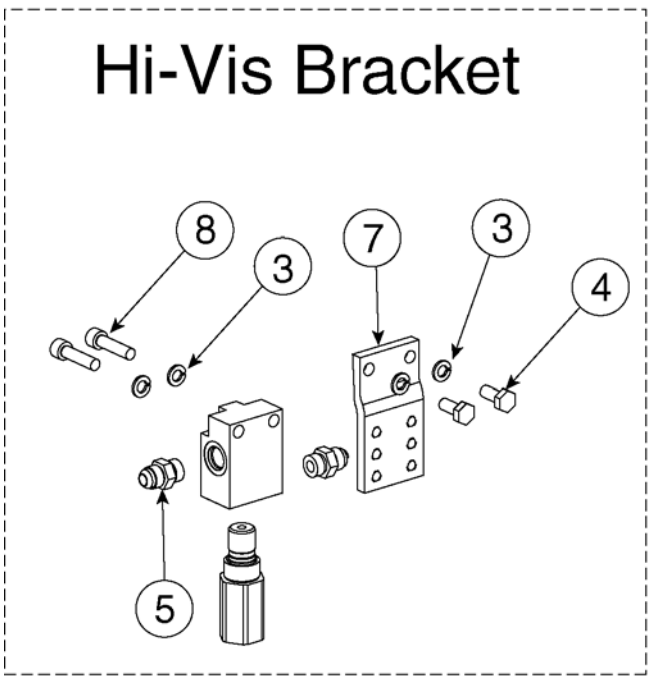

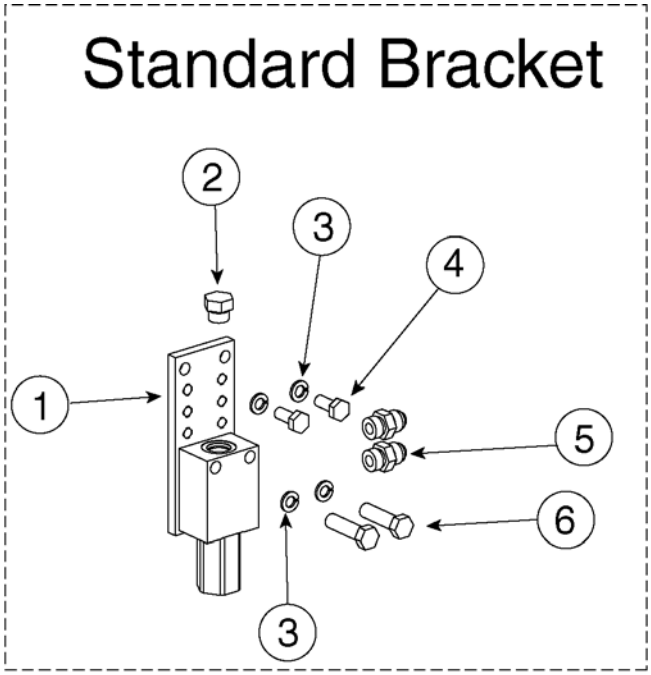

PARTS VARY BY PID #. CONTACT YOUR DEALER FOR SPECIFIC PART NUMBERS.

72-6850

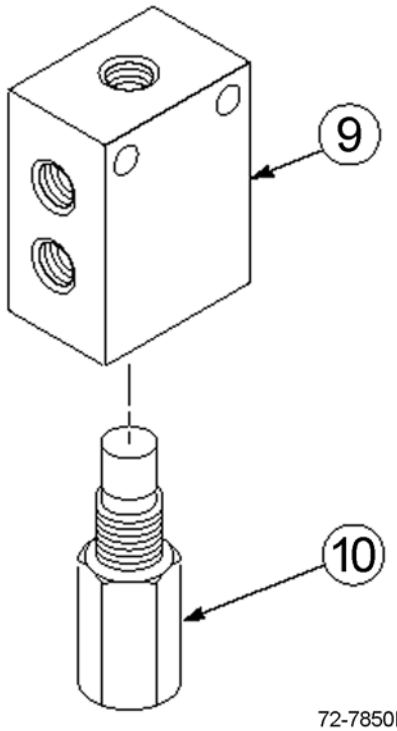

72-7850B

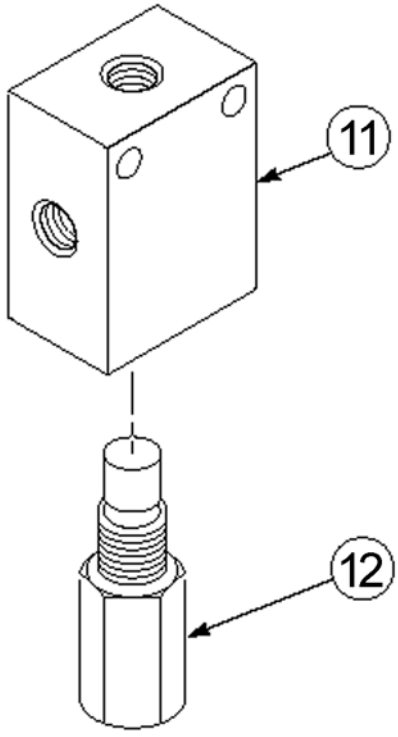

72-7850C

https://truckmanualshub.com/

55D-MQ 4-STAGE MAST (QUAD) - LOWERING CONTROL VALVE & BRACKET
S/N 200001A~

Item	Part Number	Description	Qty	Serial Number
1	CC683831	MOUNTING BAR, STANDARD	1	
2	CC601378	FITTING	1	
3	3EB-79-A6040	LOCKWASHER, M10	4	
4	3EB-73-A5490	CAPSCREW, M10	2	
5	CC601377	FITTING	2	
6	CC683823	CAPSCREW, M10	2	
7	CC216402	MOUNTING BAR, HI-VIS	1	
8	CC767611	CAPSCREW, M10	2	
9	CC684810	LOWERING CONTROL VALVE ASSY - 17 GPM (DUAL PORT)	1	
	CC684812	LOWERING CONTROL VALVE ASSY - 24 GPM (DUAL PORT)	1	
9	CC684152	.VALVE BODY	1	
10	3EB-73-A5920	.VALVE CARTRIDGE - 17 GPM (2600 PSI)	1	
	CC684154	.VALVE CARTRIDGE - 24 GPM (2600 PSI)	1	
11	3EB-73-A5930	LOWERING CONTROL VALVE ASSY - 17 GPM (SINGLE PORT)	1	
12	3EB-73-A5910	.VALVE BODY	1	
13	3EB-73-A5920	.VALVE CARTRIDGE - 17 GPM (2600 PSI)	1	

https://truckmanualshub.com/

55D-MQ 4-STAGE MAST - INTERNAL HOSE REEVING - SINGLE FUNCTION - STD
S/N 200001A~

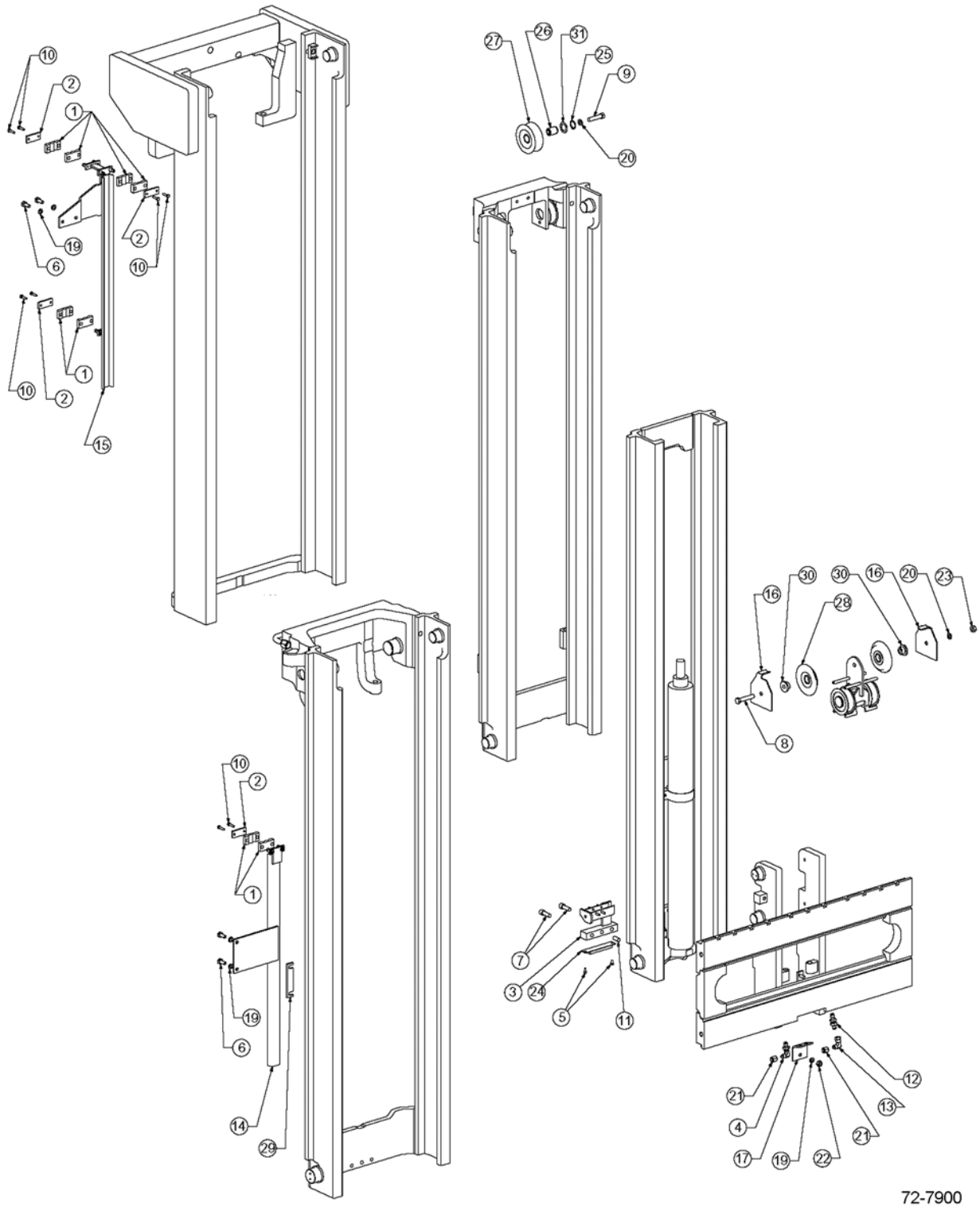

https://truckmanualshub.com/

55D-MQ 4-STAGE MAST - INTERNAL HOSE REEVING - SINGLE FUNCTION - STD
S/N 200001A~

Item	Part Number	Description	Qty	Serial Number
		RCL = OCL = RETRACTED (OVERALL) CHANNEL LENGTH		
	CC249427	I.H.R. KIT (74" RCL)	1	
	CC249433	I.H.R. KIT (80" RCL)	1	
	CC249439	I.H.R. KIT (86" RCL)	1	
	CC249445	I.H.R. KIT (92" RCL)	1	
	CC249451	I.H.R. KIT (98" RCL)	1	
	CC249457	I.H.R. KIT (104" RCL)	1	
	CC203793	UPPER GUIDE CHANNEL (74" RCL)	1	
	CC203794	UPPER GUIDE CHANNEL (80" RCL)	1	
	CC203795	UPPER GUIDE CHANNEL (86" RCL)	1	
	CC203796	UPPER GUIDE CHANNEL (92" RCL)	1	
	CC203797	UPPER GUIDE CHANNEL (98" RCL)	1	
	CC203798	UPPER GUIDE CHANNEL (104" RCL)	1	
	CC203807	LOWER GUIDE CHANNEL (74" RCL)	1	
	CC203808	LOWER GUIDE CHANNEL (80" RCL)	1	
	CC203809	LOWER GUIDE CHANNEL (86" RCL)	1	
	CC203810	LOWER GUIDE CHANNEL (92" RCL)	1	
	CC203811	LOWER GUIDE CHANNEL (98" RCL)	1	
	CC203812	LOWER GUIDE CHANNEL (104" RCL)	1	
	CC237109	HOSE (74" RCL)	2	
	CC211509	HOSE (80" RCL)	2	
	CC231279	HOSE (86" RCL)	2	
	CC216392	HOSE (92" RCL)	2	
	CC218482	HOSE (98" RCL)	2	
	CC237147	HOSE (104" RCL)	2	
	CC211574	FREE LIFT HOSE (74" RCL)	2	
	CC211520	FREE LIFT HOSE (80" RCL)	2	
	CC211521	FREE LIFT HOSE (86" RCL)	2	
	CC211522	FREE LIFT HOSE (92" RCL)	2	
	CC211523	FREE LIFT HOSE (98" RCL)	2	
	CC211524	FREE LIFT HOSE (104" RCL)	2	
1	CC227855	HOSE CLAMP	8	
2	3EB-73-A5160	HOSE CLAMP BAR	4	
3	CC203477	LOWER INNER BRACKET	1	
4	CC2454	BULKHEAD FITTING, 90°	1	
5	3EB-73-A5470	CAPSCREW	2	
6	3EB-73-A5490	CAPSCREW, M10 X 25 LG	4	
7	CC769572	CAPSCREW, M12 X 35 LG	2	
8	3EB-79-A5230	CAPSCREW, M12 X 65 LG	1	

PARTS LIST CONTINUED ON NEXT PAGE

https://truckmanualshub.com/

55D-MQ 4-STAGE MAST - INTERNAL HOSE REEVING - SINGLE FUNCTION - STD
S/N 200001A~

Item	Part Number	Description	Qty	Serial Number
9	CC205206	CAPSCREW, M12 X 55 LG	1	
10	3EB-79-A5240	CAPSCREW, M6 X 25 LG	8	
11	CC606212	DOWEL PIN	1	
12	3EB-71-A6040	BULKHEAD UNION	1	
13	CC2680	FITTING	1	
14	SEE ABOVE	LOWER GUIDE	--	
15	SEE ABOVE	UPPER GUIDE	--	
16	CC210174	HOSE GUARD	2	
17	3EB-73-A5610	CARRIAGE BRACKET	1	
18	NOT USED			
19	3EB-79-A6040	LOCK WASHER, M10	5	
20	3EB-79-A5360	LOCK WASHER, M12	2	
21	3EB-79-A5250	#6 CAP PLUG	2	
22	3EB-79-A5180	NUT, M10	1	
23	3EB-79-A5270	NUT, M12	1	
24	CC661786	BUMPER PAD	1	
25	CC3130	SNAP RING	1	
26	CC203264	SHAFT	1	
27	CC204156	SHEAVE	1	
28	CC210175	SHEAVE	2	
29	CC206884	SPACER	1	
30	3EB-73-A5230	STUBSHAFT	2	
31	CC200524	WASHER	1	

https://truckmanualshub.com/

NOTES:

72-7950

55D-MQ 4-STAGE MAST - INTERNAL HOSE REEVING - DOUBLE FUNCTION - STD
S/N 200001A~

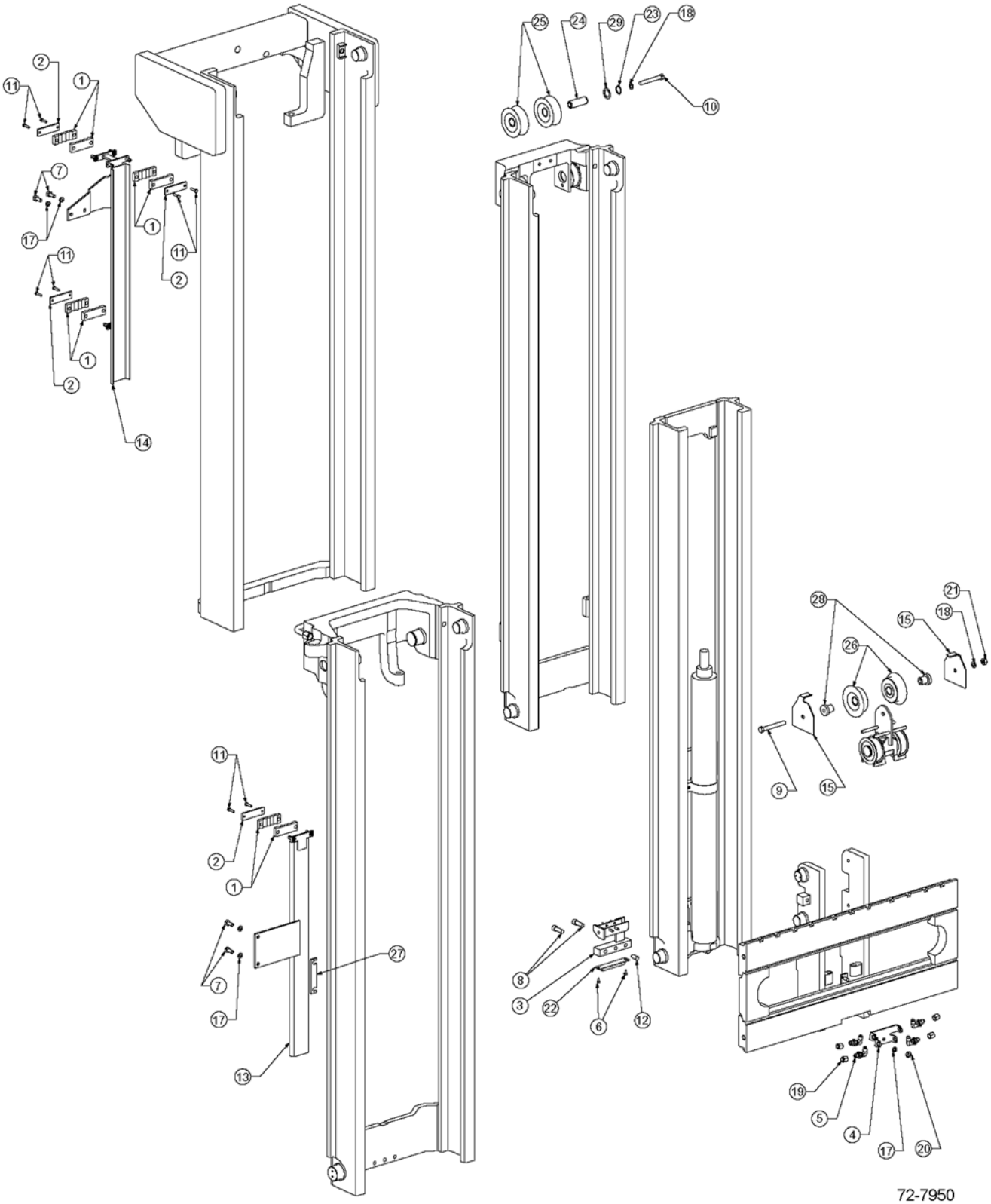

https://truckmanualshub.com/

55D-MQ 4-STAGE MAST - INTERNAL HOSE REEVING - DOUBLE FUNCTION - STD
S/N 200001A~

Item	Part Number	Description	Qty	Serial Number
		RCL = OCL = RETRACTED CHANNEL LENGTH		
	CC249458	DOUBLE I.H.R. KIT (74" OCL)	1	
	CC249464	DOUBLE I.H.R. KIT (80" OCL)	1	
	CC249470	DOUBLE I.H.R. KIT (86" OCL)	1	
	CC249476	DOUBLE I.H.R. KIT (92" OCL)	1	
	CC249482	DOUBLE I.H.R. KIT (98" OCL)	1	
	CC249488	DOUBLE I.H.R. KIT (104" OCL)	1	
	CC203800	UPPER GUIDE CHANNEL (74" RCL) (217" MFH)	1	
	CC203801	UPPER GUIDE CHANNEL (80" RCL) (241" MFH)	1	
	CC203802	UPPER GUIDE CHANNEL (86" RCL) (259" MFH)	1	
	CC203803	UPPER GUIDE CHANNEL (92" RCL) (277" MFH)	1	
	CC203804	UPPER GUIDE CHANNEL (98" RCL) (295" MFH)	1	
	CC203805	UPPER GUIDE CHANNEL (104" RCL) (313" MFH)	1	
	CC203814	LOWER GUIDE CHANNEL (74" RCL) (217" MFH)	1	
	CC203815	LOWER GUIDE CHANNEL (80" RCL) (241" MFH)	1	
	CC203816	LOWER GUIDE CHANNEL (86" RCL) (259" MFH)	1	
	CC203817	LOWER GUIDE CHANNEL (92" RCL) (277" MFH)	1	
	CC203818	LOWER GUIDE CHANNEL (98" RCL) (295" MFH)	1	
	CC203819	LOWER GUIDE CHANNEL (104" RCL) (313" MFH)	1	
	CC237109	HOSE (74" RCL) (217" MFH)	4	
	CC211509	HOSE (80" RCL) (241" MFH)	4	
	CC231279	HOSE (86" RCL) (259" MFH)	4	
	CC216392	HOSE (92" RCL) (277" MFH)	4	
	CC218482	HOSE (98" RCL) (295" MFH)	4	
	CC237147	HOSE (104" RCL) (313" MFH)	4	
	CC211574	FREE LIFT HOSE (74" OCL) (241" MFH)	4	
	CC211520	FREE LIFT HOSE (80" OCL) (217" MFH)	4	
	CC211521	FREE LIFT HOSE (86" OCL) (259" MFH)	4	
	CC211522	FREE LIFT HOSE (92" OCL) (277" MFH)	4	
	CC211523	FREE LIFT HOSE (98" OCL) (295" MFH)	4	
	CC211524	FREE LIFT HOSE (104" OCL) (313" MFH)	4	
1	CC227854	HOSE CLAMP	8	
2	CC227885	HOSE CLAMP BAR	4	
3	CC203477	LOWER INNER BRACKET	1	
4	CC214932	CARRIAGE BRACKET	1	
5	3EB-71-A6010	BULKHEAD FITTING, 90°	4	
6	3EB-73-A5470	CAPSCREW	2	
7	3EB-73-A5490	CAPSCREW, M10 X 25 LG	4	
8	CC769572	CAPSCREW, M12 X 35 LG	2	

PARTS LIST CONTINUED ON NEXT PAGE

https://truckmanualshub.com/

55D-MQ 4-STAGE MAST - INTERNAL HOSE REEVING - DOUBLE FUNCTION - STD S/N 200001A~

Item	Part Number	Description	Qty	Serial Number
9	CC684800	CAPSCREW, M12 X 100 LG	1	
10	CC205205	CAPSCREW, M12 X 90 LG	1	
11	3EB-79-A5240	CAPSCREW, MG X 25 LG	8	
12	CC606212	DOWEL PIN	1	
13	SEE PARTS PG	LOWER GUIDE CHANNEL	1	
14	SEE PARTS PG	UPPER GUIDE CHANNEL	1	
15	CC210174	HOSE GUARD	2	
16	NOT USED			
17	3EB-79-A6040	LOCKWASHER, M10	5	
18	3EB-79-A5360	LOCKWASHER, M12	2	
19	3EB-79-A5250	#6 CAP PLUG	4	
20	3EB-79-A5180	NUT, M10	1	
21	3EB-79-A5270	NUT, M12	1	
22	CC661786	BUMPER PAD	1	
23	CC3130	SNAP RING	1	
24	CC203265	SHAFT	1	
25	CC204156	SHEAVE	2	
26	CC210172	SHEAVE	2	
27	CC206684	SPACER	1	
28	CC210216	STUBSHAFT	2	
29	CC200524	WASHER	1	

https://truckmanualshub.com/

NOTES:

https://truckmanualshub.com/

55D-MQ 4-STAGE MAST - INTERNAL HOSE REEVING - SINGLE FUNCTION - HI-VIS
S/N 200001A~

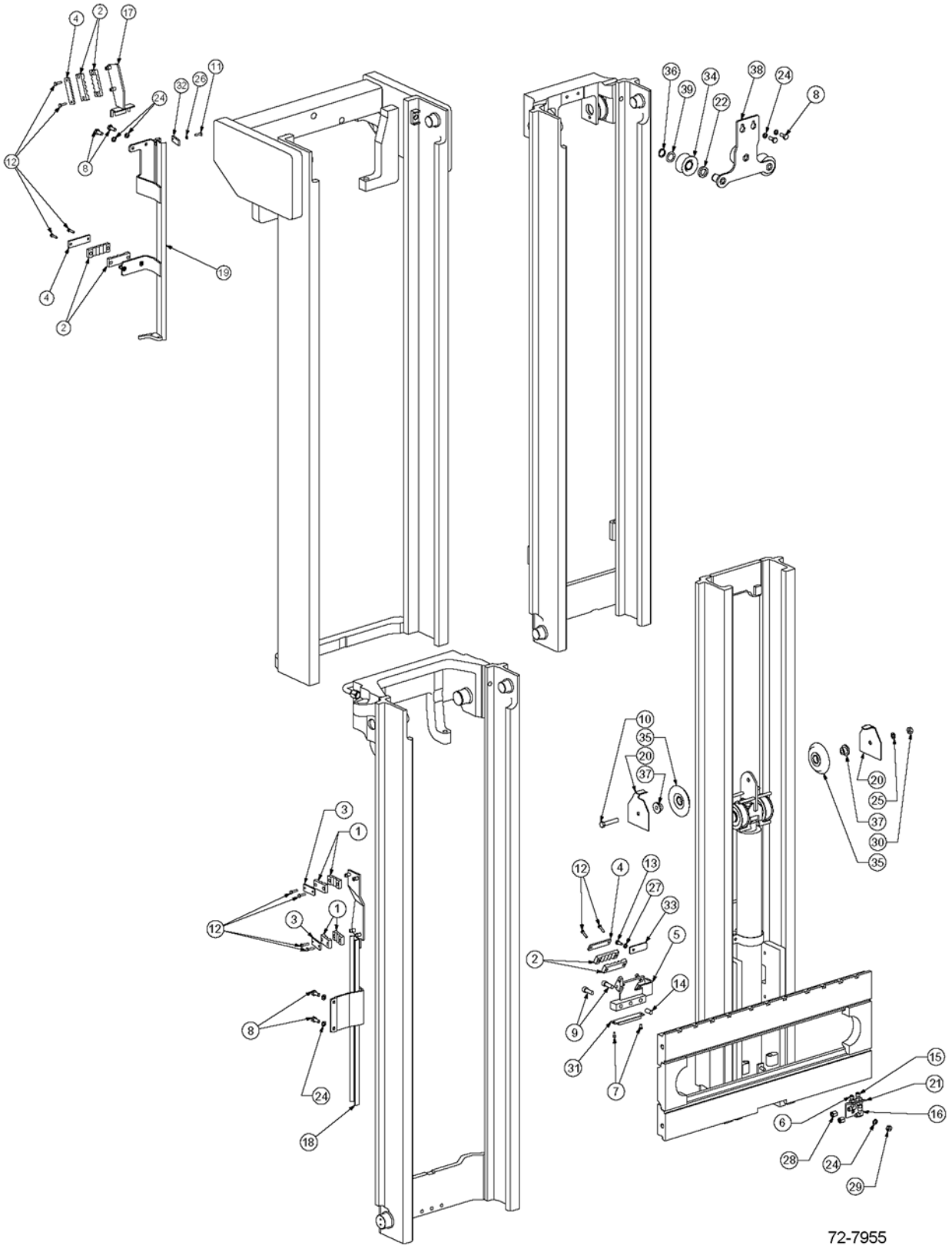

https://truckmanualshub.com/

55D-MQ 4-STAGE MAST - INTERNAL HOSE REEVING - SINGLE FUNCTION - HI-VIS
S/N 200001A~

Item	Part Number	Description	Qty	Serial Number
		OCL = OUTER CHANNEL LENGTH, MFH = MAXIMUM FORK HEIGHT		
	CC248795	IHR KIT - SINGLE FUNCTION (68" OCL) (193" MFH)	1	
	CC248797	IHR KIT - SINGLE FUNCTION (74" OCL) (217" MFH)	1	
	CC248801	IHR KIT - SINGLE FUNCTION (80" OCL) (241" MFH)	1	
	CC248808	IHR KIT - SINGLE FUNCTION (86" OCL) (259" MFH)	1	
	CC248811	IHR KIT - SINGLE FUNCTION (92" OCL) (277" MFH)	1	
	CC248817	IHR KIT - SINGLE FUNCTION (98" OCL) (295" MFH)	1	
	CC248821	IHR KIT - SINGLE FUNCTION (104" OCL) (313" MFH)	1	
	CC216491	UPPER GUIDE (68" OCL) (193" MFH)	1	
	CC216491	UPPER GUIDE (74" OCL) (217" MFH)	1	
	CC216492	UPPER GUIDE (80" OCL) (241" MFH)	1	
	CC216493	UPPER GUIDE (86" OCL) (259" MFH)	1	
	CC216494	UPPER GUIDE (92" OCL) (277" MFH)	1	
	CC216495	UPPER GUIDE (98" OCL) (295" MFH)	1	
	CC216496	UPPER GUIDE (104" OCL) (313" MFH)	1	
	CC216485	LOWER GUIDE (68" OCL) (193" MFH)	1	
	CC216485	LOWER GUIDE (74" OCL) (217" MFH)	1	
	CC216486	LOWER GUIDE (80" OCL) (241" MFH)	1	
	CC216487	LOWER GUIDE (86" OCL) (259" MFH)	1	
	CC216488	LOWER GUIDE (92" OCL) (277" MFH)	1	
	CC216489	LOWER GUIDE (98" OCL) (295" MFH)	1	
	CC216490	LOWER GUIDE (104" OCL) (313" MFH)	1	
	CC237104	HOSE (68" OCL) (193" MFH)	2	
	CC237113	HOSE (74" OCL) (217" MFH)	2	
	CC218379	HOSE (80" OCL) (241" MFH)	2	
	CC237129	HOSE (86" OCL) (259" MFH)	2	
	CC214939	HOSE (92" OCL) (277" MFH)	2	
	CC206257	HOSE (98" OCL) (295" MFH)	2	
	CC237151	HOSE (104" OCL) (313" MFH)	2	
	CC211573	FREE LIFT HOSE (68" OCL) (193" MFH)	2	
	CC211574	FREE LIFT HOSE (74" OCL) (217" MFH)	2	
	CC211520	FREE LIFT HOSE (80" OCL) (241" MFH)	2	

PARTS LIST CONTINUED ON NEXT PAGE

https://truckmanualshub.com/

55D-MQ 4-STAGE MAST - INTERNAL HOSE REEVING - SINGLE FUNCTION - HI-VIS
S/N 200001A~

Item	Part Number	Description	Qty	Serial Number
	CC211521	FREE LIFT HOSE (86" OCL) (259" MFH)	2	
	CC211522	FREE LIFT HOSE (92" OCL) (277" MFH)	2	
	CC211523	FREE LIFT HOSE (98" OCL) (295" MFH)	2	
	CC211524	FREE LIFT HOSE (104" OCL) (313" MFH)	2	
1	3EB-73-A5150	HOSE CLAMP	4	
2	CC227854	HOSE CLAMP	6	
3	3EB-73-A5160	HOSE CLAMP BAR	2	
4	CC227885	HOSE CLAMP BAR	3	
5	CC230805	LOWER INNER BRACKET	1	
6	3EB-71-A6010	BULKHEAD UNION, 90°	1	
7	3EB-73-A5470	CAPSCREW	2	
8	3EB-73-A5490	CAPSCREW, M10 X 25 LG	6	
9	CC769572	CAPSCREW, M12 X 35 LG	2	
10	3EB-79-A5230	CAPSCREW, M12 X 65 LG	1	
11	CC763169	CAPSCREW, M6 X 20 LG	1	
12	3EB-79-A5240	CAPSCREW, M6 X 25 LG	10	
13	CC787372	CAPSCREW, M8 X 20 LG	1	
14	CC606212	DOWEL PIN	1	
15	3EB-71-A6040	BULKHEAD FITTING	1	
16	CC2680	FITTING	1	
17	CC214931	GUIDE BAR	1	
18	SEE PARTS PG	LOWER GUIDE	1	
19	SEE PARTS PG	UPPER GUIDE	1	
20	CC210174	HOSE GUARD	2	
21	3EB-73-A5610	CARRIAGE BRACKET	1	
22	CC241395	IHR SPACER	3	
23	NOT USED			
24	3EB-79-A6040	LOCKWASHER, M10	7	
25	3EB-79-A5360	LOCKWASHER, M12	1	
26	3EB-73-A5340	LOCKWASHER, M6	1	
27	CC206315	LOCKWASHER, M8	1	
28	3EB-79-A5250	#6 CAP PLUG	2	
29	3EB-79-A5180	NUT, M10	1	
30	3EB-79-A5270	NUT, M12	1	
31	CC661786	BUMPER PAD	1	
32	CC215799	HOSE RETAINER PLATE	1	
33	CC230606	HOSE RETAINER PLATE	1	
34	CC215772	SHEAVE	3	
35	CC210175	SHEAVE	2	

PARTS LIST CONTINUED ON NEXT PAGE

https://truckmanualshub.com/

55D-MQ 4-STAGE MAST - INTERNAL HOSE REEVING - SINGLE FUNCTION - HI-VIS S/N 200001A~

Item	Part Number	Description	Qty	Serial Number
36	CC688935	SNAP RING	3	
37	3EB-73-A5230	STUBSHAFT	2	
38	CC238809	UPPER BRACKET	1	
39	CC205086	WASHER	3	

https://truckmanualshub.com/

55D-MQ 4-STAGE MAST - INTERNAL HOSE REEVING - DOUBLE FUNCTION - HI-VIS S/N 200001A~

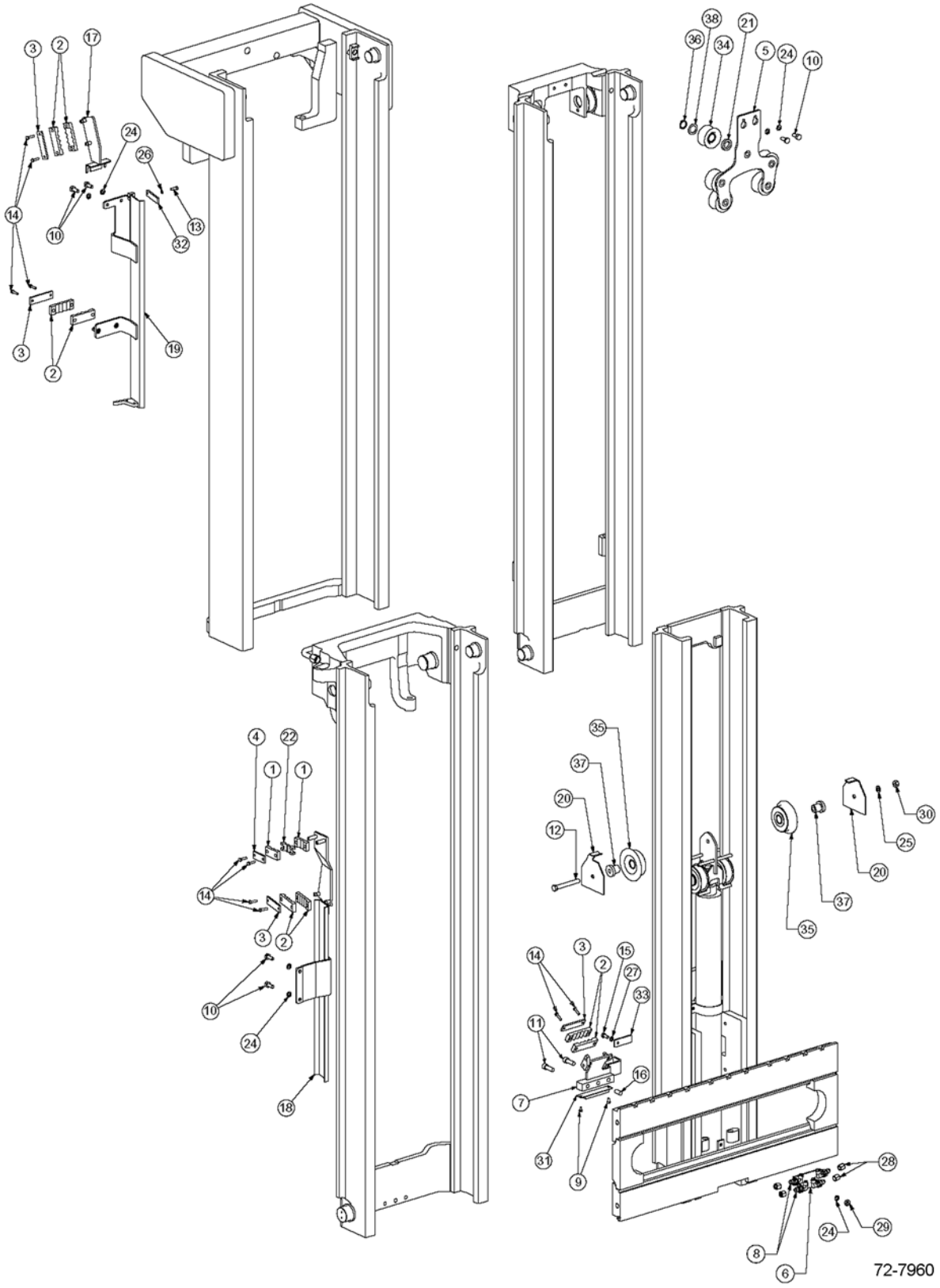

https://truckmanualshub.com/

55D-MQ 4-STAGE MAST - INTERNAL HOSE REEVING - DOUBLE FUNCTION - HI-VIS
S/N 200001A~

Item	Part Number	Description	Qty	Serial Number
		OCL = OUTER CHANNEL LENGTH, MFH = MAXIMUM FORK HEIGHT		
	CC248822	IHR KIT - DOUBLE FUNCTION (68" OCL) (193" MFH)	1	
	CC248824	IHR KIT - DOUBLE FUNCTION (74" OCL) (217" MFH)	1	
	CC248827	IHR KIT - DOUBLE FUNCTION (80" OCL) (241" MFH)	1	
	CC248832	IHR KIT - DOUBLE FUNCTION (86" OCL) (259" MFH)	1	
	CC248837	IHR KIT - DOUBLE FUNCTION (92" OCL) (277" MFH)	1	
	CC248840	IHR KIT - DOUBLE FUNCTION (98" OCL) (295" MFH)	1	
	CC248842	IHR KIT - DOUBLE FUNCTION (104" OCL) (313" MFH)	1	
	CC216470	UPPER GUIDE (68" OCL) (193" MFH)	1	
	CC216470	UPPER GUIDE (74" OCL) (217" MFH)	1	
	CC216471	UPPER GUIDE (80" OCL) (241" MFH)	1	
	CC216472	UPPER GUIDE (86" OCL) (259" MFH)	1	
	CC216473	UPPER GUIDE (92" OCL) (277" MFH)	1	
	CC216474	UPPER GUIDE (98" OCL) (295" MFH)	1	
	CC216475	UPPER GUIDE (104" OCL) (313" MFH)	1	
	CC216464	LOWER GUIDE (68" OCL) (193" MFH)	1	
	CC216464	LOWER GUIDE (74" OCL) (217" MFH)	1	
	CC216465	LOWER GUIDE (80" OCL) (241" MFH)	1	
	CC216466	LOWER GUIDE (86" OCL) (259" MFH)	1	
	CC216467	LOWER GUIDE (92" OCL) (277" MFH)	1	
	CC216468	LOWER GUIDE (98" OCL) (295" MFH)	1	
	CC216469	LOWER GUIDE (104" OCL) (313" MFH)	1	
	CC237100	LEFT HAND HOSE (68" OCL) (193" MFH)	2	
	CC237109	LEFT HAND HOSE (74" OCL) (217" MFH)	2	
	CC211509	LEFT HAND HOSE (80" OCL) (241" MFH)	2	
	CC231279	LEFT HAND HOSE (86" OCL) (259" MFH)	2	
	CC216392	LEFT HAND HOSE (92" OCL) (277" MFH)	2	
	CC218482	LEFT HAND HOSE (98" OCL) (295" MFH)	2	
	CC237147	LEFT HAND HOSE (104" OCL) (313" MFH)	2	
	CC218380	RIGHT HAND HOSE (68" OCL) (193" MFH)	2	
	CC237117	RIGHT HAND HOSE (74" OCL) (217" MFH)	2	
	CC210233	RIGHT HAND HOSE (80" OCL) (241" MFH)	2	

PARTS LIST CONTINUED ON NEXT PAGE

https://truckmanualshub.com/

55D-MQ 4-STAGE MAST - INTERNAL HOSE REEVING - DOUBLE FUNCTION - HI-VIS
S/N 200001A~

Item	Part Number	Description	Qty	Serial Number
	CC206255	RIGHT HAND HOSE (86" OCL) (259" MFH) . . .	2	
	CC237138	RIGHT HAND HOSE (92" OCL) (277" MFH) . . .	2	
	CC210239	RIGHT HAND HOSE (98" OCL) (295" MFH) . . .	2	
	CC206329	RIGHT HAND HOSE (104" OCL) (313" MFH) . .	2	
	CC211573	FREE LIFT HOSE (68" OCL) (193" MFH)	2	
	CC211574	FREE LIFT HOSE (74" OCL) (217" MFH)	2	
	CC211520	FREE LIFT HOSE (80" OCL) (241" MFH)	2	
	CC211521	FREE LIFT HOSE (86" OCL) (259" MFH)	2	
	CC211522	FREE LIFT HOSE (92" OCL) (277" MFH)	2	
	CC211523	FREE LIFT HOSE (98" OCL) (295" MFH)	2	
	CC211524	FREE LIFT HOSE (104" OCL) (313" MFH)	2	
1	3EB-73-A5150	HOSE CLAMP	2	
2	CC227854	HOSE CLAMP	8	
3	CC227885	HOSE CLAMP BAR	4	
4	3EB-73-A5160	HOSE CLAMP BAR	1	
5	CC238394	UPPER IHR BRACKET	1	
6	CC214932	CARRIAGE BRACKET	1	
7	CC230805	LOWER INNER BRACKET.	1	
8	3EB-71-A6010	BULKHEAD FITTING, 90°.	4	
9	3EB-73-A5470	CAPSCREW	2	
10	3EB-73-A5490	CAPSCREW, M10 X 25 LG	6	
11	CC769572	CAPSCREW, M12 X 35 LG	2	
12	CC684800	CAPSCREW, M12 X 100 LG	1	
13	CC763169	CAPSCREW, M6 X 20 LG	1	
14	3EB-79-A5240	CAPSCREW, M6 X 25 LG	10	
15	CC787372	CAPSCREW, M8 X 20 LG	1	
16	CC606212	DOWEL PIN	1	
17	CC214931	GUIDE BAR	1	
18	SEE PARTS PG	LOWER GUIDE	1	
19	SEE PARTS PG	UPPER GUIDE	1	
20	CC210174	HOSE GUARD	2	
21	CC241395	I.H.R. SPACER	5	
22	CC246778	LOWER INTERMEDIATE INSERT	1	
23	NOT USED			
24	3EB-79-A6040	LOCKWASHER, M10	7	
25	3EB-79-A5360	LOCKWASHER, M12	1	
26	3EB-73-A5340	LOCKWASHER, M6	1	
27	CC206315	LOCKWASHER, M8	1	
28	3EB-79-A5250	#6 CAP PLUG.	4	

PARTS LIST CONTINUED ON NEXT PAGE

https://truckmanualshub.com/

55D-MQ 4-STAGE MAST - INTERNAL HOSE REEVING - DOUBLE FUNCTION - HI-VIS S/N 200001A~

Item	Part Number	Description	Qty	Serial Number
29	3EB-79-A5180	NUT, M10	1	
30	3EB-79-A5270	NUT, M12	1	
31	CC661786	BUMPER PAD	1	
32	CC215789	HOSE RETAINER PLATE	1	
33	CC230606	HOSE RETAINER PLATE	1	
34	CC215772	SHEAVE	5	
35	CC210172	SHEAVE	2	
36	CC688935	SNAP RING	5	
37	CC210216	STUBSHAFT	2	
38	CC205086	WASHER	5	

https://truckmanualshub.com/

55D-MQ 4-STAGE MAST - INTERNAL HOSE REEVING - SINGLE FUNCTION - HI-VIS LEFT HAND ONLY - S/N 200001A~

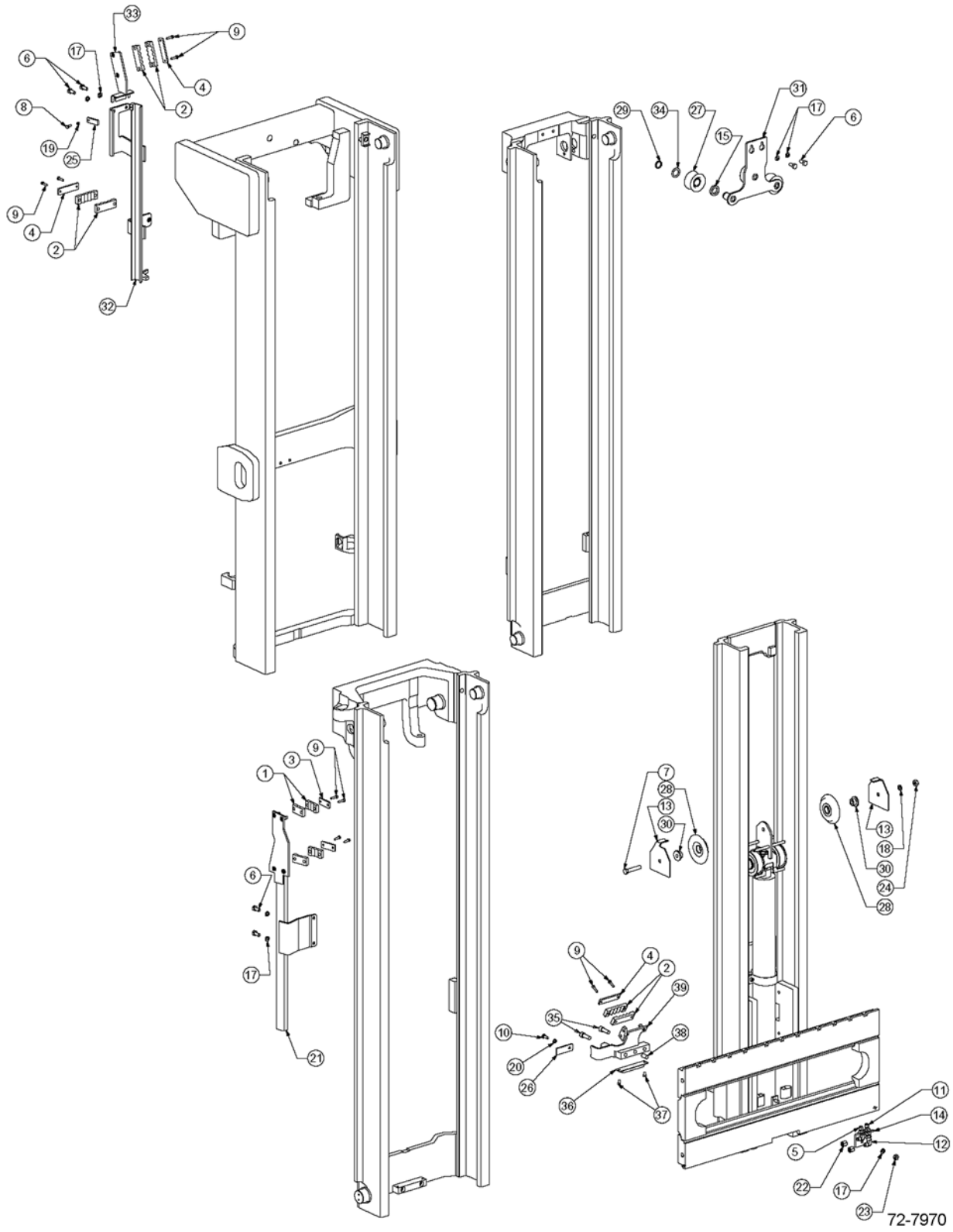

https://truckmanualshub.com/

55D-MQ 4-STAGE MAST - INTERNAL HOSE REEVING - SINGLE FUNCTION - HI-VIS LEFT HAND ONLY - S/N 200001A~

Item	Part Number	Description	Qty	Serial Number
		OCL = OUTER CHANNEL LENGTH, MFH = MAXIMUM FORK HEIGHT		
	CC249351	IHR KIT - SINGLE FUNCTION (68" OCL) (193" MFH)	1	
	CC249357	IHR KIT - SINGLE FUNCTION (74" OCL) (217" MFH)	1	
	CC249363	IHR KIT - SINGLE FUNCTION (80" OCL) (241" MFH)	1	
	CC249370	IHR KIT - SINGLE FUNCTION (86" OCL) (259" MFH)	1	
	CC249376	IHR KIT - SINGLE FUNCTION (92" OCL) (277" MFH)	1	
	CC249382	IHR KIT - SINGLE FUNCTION (98" OCL) (295" MFH)	1	
	CC249388	IHR KIT - SINGLE FUNCTION (104" OCL) (313" MFH)	1	
	CC238720	UPPER GUIDE (68" OCL) (193" MFH)	1	
	CC238720	UPPER GUIDE (74" OCL) (217" MFH)	1	
	CC238721	UPPER GUIDE (80" OCL) (241" MFH)	1	
	CC238722	UPPER GUIDE (86" OCL) (259" MFH)	1	
	CC238723	UPPER GUIDE (92" OCL) (277" MFH)	1	
	CC238724	UPPER GUIDE (98" OCL) (295" MFH)	1	
	CC238725	UPPER GUIDE (104" OCL) (313" MFH)	1	
	CC238708	LOWER GUIDE (68" OCL) (193" MFH)	1	
	CC238708	LOWER GUIDE (74" OCL) (217" MFH)	1	
	CC238709	LOWER GUIDE (80" OCL) (241" MFH)	1	
	CC238710	LOWER GUIDE (86" OCL) (259" MFH)	1	
	CC238711	LOWER GUIDE (92" OCL) (277" MFH)	1	
	CC238712	LOWER GUIDE (98" OCL) (295" MFH)	1	
	CC238713	LOWER GUIDE (104" OCL) (313" MFH)	1	
	CC237104	HOSE (68" OCL) (193" MFH)	2	
	CC237113	HOSE (74" OCL) (217" MFH)	2	
	CC218379	HOSE (80" OCL) (241" MFH)	2	
	CC237129	HOSE (86" OCL) (259" MFH)	2	
	CC214939	HOSE (92" OCL) (277" MFH)	2	
	CC206257	HOSE (98" OCL) (295" MFH)	2	
	CC237151	HOSE (104" OCL) (313" MFH)	2	
	CC211573	FREE LIFT HOSE (68" OCL) (193" MFH)	2	
	CC211574	FREE LIFT HOSE (74" OCL) (217" MFH)	2	
	CC211520	FREE LIFT HOSE (80" OCL) (241" MFH)	2	

PARTS LIST CONTINUED ON NEXT PAGE

https://truckmanualshub.com/

55D-MQ 4-STAGE MAST - INTERNAL HOSE REEVING - SINGLE FUNCTION - HI-VIS LEFT HAND ONLY - S/N 200001A~

Item	Part Number	Description	Qty	Serial Number
	CC211521	FREE LIFT HOSE (86" OCL) (259" MFH)	2	
	CC211522	FREE LIFT HOSE (92" OCL) (277" MFH)	2	
	CC211523	FREE LIFT HOSE (98" OCL) (295" MFH)	2	
	CC211524	FREE LIFT HOSE (104" OCL) (313" MFH)	2	
1	3EB-73-A5150	HOSE CLAMP	4	
2	CC227854	HOSE CLAMP	6	
3	3EB-73-A5160	HOSE CLAMP BAR	2	
4	CC227885	HOSE CLAMP BAR	3	
5	3EB-71-A6010	BULKHEAD UNION, 90°	1	
6	3EB-73-A5490	CAPSCREW, M10 X 25 LG	6	
7	3EB-79-A5230	CAPSCREW, M12 X 65 LG	1	
8	CC763169	CAPSCREW, M6 X 20 LG	1	
9	3EB-79-A5240	CAPSCREW, M6 X 25 LG	10	
10	CC787372	CAPSCREW, M8 X 20 LG	1	
11	3EB-71-A6040	BULKHEAD FITTING	1	
12	CC2680	FITTING	1	
13	CC210174	HOSE GUARD	2	
14	3EB-73-A5610	CARRIAGE BRACKET	1	
15	CC241395	SPACER	3	
16	NOT USED			
17	3EB-79-A6040	LOCKWASHER, M10	7	
18	3EB-79-A5360	LOCKWASHER, M12	1	
19	3EB-73-A5340	LOCKWASHER, M6	1	
20	CC206315	LOCKWASHER, M8	1	
21	SEE PARTS PG	LOWER GUIDE	1	
22	3EB-79-A5250	#6 CAP PLUG	2	
23	3EB-79-A5180	NUT, M10	1	
24	3EB-79-A5270	NUT, M12	1	
25	CC215779	HOSE RETAINER PLATE	1	
26	CC230606	HOSE RETAINER PLATE	1	
27	CC215772	SHEAVE	3	
28	CC210175	SHEAVE	2	
29	CC688935	SNAP RING	3	
30	3EB-73-A5230	STUBSHAFT	2	
31	CC238809	UPPER BRACKET	1	
32	SEE PARTS PG	UPPER GUIDE	1	
33	CC238696	UPPER GUIDE BRACKET	1	
34	CC205086	WASHER	3	
35	CC769572	CAPSCREW, M12 X 35 LG	2	

PARTS LIST CONTINUED ON NEXT PAGE

https://truckmanualshub.com/

55D-MQ 4-STAGE MAST - INTERNAL HOSE REEVING - SINGLE FUNCTION - HI-VIS LEFT HAND ONLY - S/N 200001A~

Item	Part Number	Description	Qty	Serial Number
36	CC661786	BUMPER PAD	1	
37	3EB-73-A5470	CAPSCREW	2	
38	CC606212	DOWEL PIN	1	
39	CC238353	LOWER BRACKET	1	

https://truckmanualshub.com/

55D-MQ 4-STAGE MAST - INTERNAL HOSE REEVING - DOUBLE FUNCTION - HI-VIS LEFT HAND ONLY - S/N 200001A~

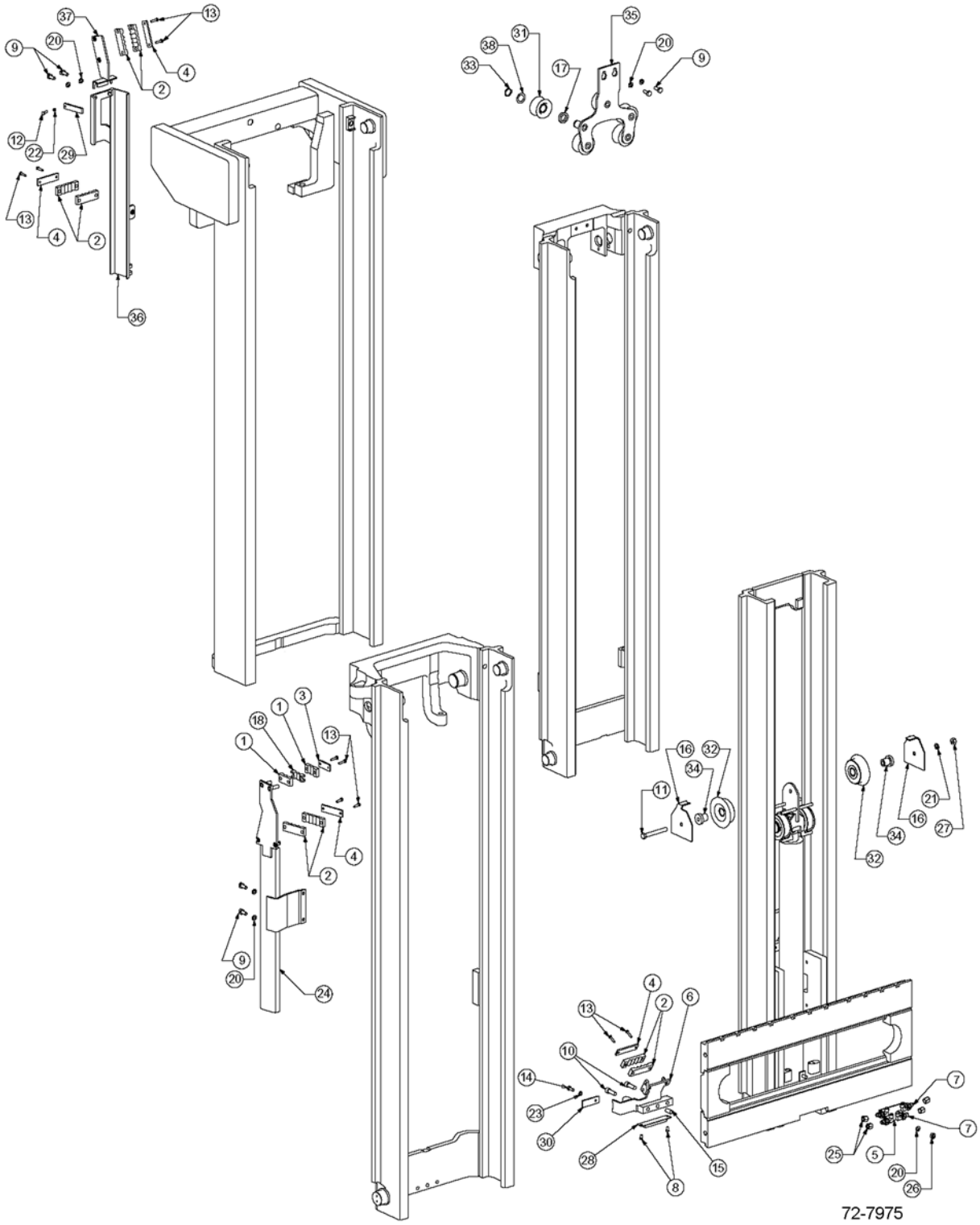

https://truckmanualshub.com/

55D-MQ 4-STAGE MAST - INTERNAL HOSE REEVING - DOUBLE FUNCTION - HI-VIS LEFT HAND ONLY - S/N 200001A~

Item	Part Number	Description	Qty	Serial Number
		OCL = OUTER CHANNEL LENGTH, MFH = MAXIMUM FORK HEIGHT		
	CC249390	IHR KIT - DOUBLE FUNCTION (68" OCL) (193" MFH)	1	
	CC249396	IHR KIT - DOUBLE FUNCTION (74" OCL) (217" MFH)	1	
	CC249402	IHR KIT - DOUBLE FUNCTION (80" OCL) (241" MFH)	1	
	CC249408	IHR KIT - DOUBLE FUNCTION (86" OCL) (259" MFH)	1	
	CC249414	IHR KIT - DOUBLE FUNCTION (92" OCL) (277" MFH)	1	
	CC249420	IHR KIT - DOUBLE FUNCTION (98" OCL) (295" MFH)	1	
	CC249426	IHR KIT - DOUBLE FUNCTION (104" OCL) (313" MFH)	1	
	CC238726	UPPER GUIDE (68" OCL) (193" MFH)	1	
	CC238726	UPPER GUIDE (74" OCL) (217" MFH)	1	
	CC238727	UPPER GUIDE (80" OCL) (241" MFH)	1	
	CC238728	UPPER GUIDE (86" OCL) (259" MFH)	1	
	CC238729	UPPER GUIDE (92" OCL) (277" MFH)	1	
	CC238730	UPPER GUIDE (98" OCL) (295" MFH)	1	
	CC238731	UPPER GUIDE (104" OCL) (313" MFH)	1	
	CC238714	LOWER GUIDE (68" OCL) (193" MFH)	1	
	CC238714	LOWER GUIDE (74" OCL) (217" MFH)	1	
	CC238715	LOWER GUIDE (80" OCL) (241" MFH)	1	
	CC238716	LOWER GUIDE (86" OCL) (259" MFH)	1	
	CC238717	LOWER GUIDE (92" OCL) (277" MFH)	1	
	CC238718	LOWER GUIDE (98" OCL) (295" MFH)	1	
	CC238719	LOWER GUIDE (104" OCL) (313" MFH)	1	
	CC237100	LEFT HAND HOSE (68" OCL) (193" MFH)	2	
	CC237109	LEFT HAND HOSE (74" OCL) (217" MFH)	2	
	CC211509	LEFT HAND HOSE (80" OCL) (241" MFH)	2	
	CC231279	LEFT HAND HOSE (86" OCL) (259" MFH)	2	
	CC216392	LEFT HAND HOSE (92" OCL) (277" MFH)	2	
	CC218482	LEFT HAND HOSE (98" OCL) (295" MFH)	2	
	CC237147	LEFT HAND HOSE (104" OCL) (313" MFH)	2	
	CC218380	RIGHT HAND HOSE (68" OCL) (193" MFH)	2	
	CC237117	RIGHT HAND HOSE (74" OCL) (217" MFH)	2	
	CC210233	RIGHT HAND HOSE (80" OCL) (241" MFH)	2	

PARTS LIST CONTINUED ON NEXT PAGE

https://truckmanualshub.com/

55D-MQ 4-STAGE MAST - INTERNAL HOSE REEVING - DOUBLE FUNCTION - HI-VIS LEFT HAND ONLY - S/N 200001A~

Item	Part Number	Description	Qty	Serial Number
	CC206255	RIGHT HAND HOSE (86" OCL) (259" MFH)	2	
	CC227138	RIGHT HAND HOSE (92" OCL) (277" MFH)	2	
	CC210239	RIGHT HAND HOSE (98" OCL) (295" MFH)	2	
	CC206329	RIGHT HAND HOSE (104" OCL) (313" MFH)	2	
	CC211573	FREE LIFT HOSE (68" OCL) (193" MFH)	4	
	CC211574	FREE LIFT HOSE (74" OCL) (217" MFH)	4	
	CC211520	FREE LIFT HOSE (80" OCL) (241" MFH)	4	
	CC211521	FREE LIFT HOSE (86" OCL) (259" MFH)	4	
	CC211522	FREE LIFT HOSE (92" OCL) (277" MFH)	4	
	CC211523	FREE LIFT HOSE (98" OCL) (295" MFH)	4	
	CC211524	FREE LIFT HOSE (104" OCL) (313" MFH)	4	
1	3EB-73-A5150	HOSE CLAMP	2	
2	CC227854	HOSE CLAMP	8	
3	3EB-73-A5160	HOSE CLAMP BAR	1	
4	CC227885	HOSE CLAMP BAR	4	
5	CC214932	CARRIAGE BRACKET	1	
6	CC238353	LH BRACKET	1	
7	3EB-71-A6010	BULKHEAD UNION, 90°	4	
8	3EB-73-A5470	CAPSCREW	2	
9	3EB-73-A5490	CAPSCREW, M10 X 25 LG	6	
10	CC769572	CAPSCREW, M12 X 35 LG	2	
11	CC684800	CAPSCREW, M12 X 100 LG	1	
12	CC763169	CAPSCREW, M6 X 20 LG	1	
13	3EB-79-A5240	CAPSCREW, M6 X 25 LG	10	
14	CC787372	CAPSCREW, M8 X 20 LG	1	
15	CC606212	DOWEL PIN	1	
16	CC210174	HOSE GUARD	2	
17	CC241395	SPACER	5	
18	CC246778	LOWER INTERMEDIATE INSERT	1	
19	NOT USED			
20	3EB-79-A6040	LOCKWASHER, M10	7	
21	3EB-79-A5360	LOCKWASHER, M12	1	
22	3EB-73-A5340	LOCKWASHER, M6	1	
23	CC206315	LOCKWASHER, M8	1	
24	SEE PARTS PG	LOWER GUIDE	1	
25	3EB-79-A5250	#6 CAP PLUG	4	
26	3EB-79-A5180	NUT, M10	1	
27	3EB-79-A5270	NUT, M12	1	
28	CC661786	BUMPER PAD	1	

PARTS LIST CONTINUED ON NEXT PAGE

https://truckmanualshub.com/

55D-MQ 4-STAGE MAST - INTERNAL HOSE REEVING - DOUBLE FUNCTION - HI-VIS LEFT HAND ONLY - S/N 200001A~

Item	Part Number	Description	Qty	Serial Number
29	CC215789	HOSE RETAINER PLATE	1	
30	CC230606	HOSE RETAINER PLATE	1	
31	CC215772	SHEAVE	5	
32	CC210172	SHEAVE	2	
33	CC688935	SNAP RING	5	
34	CC210216	STUBSHAFT	2	
35	CC238811	UPPER BRACKET	1	
36	SEE PARTS PG	UPPER GUIDE	1	
37	CC238696	UPPER GUIDE BRACKET	1	
38	CC205086	WASHER	5	

https://truckmanualshub.com/

55D-MQ 4-STAGE MAST — RECOMMENDED STOCK LIST (RSL)

NO

ILLUSTRATION

REQUIRED

https://truckmanualshub.com/

55D-MQ 4-STAGE MAST — RECOMMENDED STOCK LIST (RSL)

Item	Part Number	Description	Qty	No. of Masts Serviced
		MAIN LIFT CYLINDERS		
	SEE PARTS PG	MAIN LIFT CYL ASSY	0	1 - 19
	SEE PARTS PG	MAIN LIFT CYL ASSY	1	20 - 50
	SEE PARTS PG	SEAL KIT	2	1 - 5
	SEE PARTS PG	SEAL KIT	4	6 - 19
	SEE PARTS PG	SEAL KIT	8	20 - 50
	SEE PARTS PG	CHECK VALVE KIT	2	1 - 5
	SEE PARTS PG	CHECK VALVE KIT	4	6 - 19
	SEE PARTS PG	CHECK VALVE KIT	8	20 - 50
		FREE LIFT CYLINDER		
	SEE PARTS PG	FREE LIFT CYLINDER ASSY	0	1 - 5
	SEE PARTS PG	FREE LIFT CYLINDER ASSY	1	6 - 19
	SEE PARTS PG	FREE LIFT CYLINDER ASSY	2	20 - 50
	SEE PARTS PG	SEAL KIT	2	1 - 5
	SEE PARTS PG	SEAL KIT	4	6 - 19
	SEE PARTS PG	SEAL KIT	8	20 - 50
	SEE PARTS PG	CHECK VALVE KIT	2	1 - 5
	SEE PARTS PG	CHECK VALVE KIT	4	6 - 19
	SEE PARTS PG	CHECK VALVE KIT	8	20 - 50
		INTERNAL REEVING		
	SEE PARTS PG	HOSE, RH & LH	2	1 - 5
	SEE PARTS PG	HOSE, RH & LH	4	6 - 19
	SEE PARTS PG	HOSE, RH & LH	8	20 - 50
	3EB-71-A6040	FITTING	1	1 - 5
	3EB-71-A6040	FITTING	2	6 - 19
	3EB-71-A6040	FITTING	4	20 - 50
	CC214937	CROSSHEAD SHEAVE, IHR, SINGLE IHR	1	1 - 5
	CC214937	CROSSHEAD SHEAVE, IHR, SINGLE IHR	2	6 - 19
	CC214937	CROSSHEAD SHEAVE, IHR, SINGLE IHR	4	20 - 50
	CC214935	CROSSHEAD SHEAVE, IHR, DOUBLE IHR	2	1 - 5
	CC214935	CROSSHEAD SHEAVE, IHR, DOUBLE IHR	4	6 - 19
	CC214935	CROSSHEAD SHEAVE, IHR, DOUBLE IHR	8	20 - 50
	CC215772	STD IHR - SHEAVE, SINGLE IHR	2	1 - 5
	CC215772	STD IHR - SHEAVE, SINGLE IHR	4	6 - 19
	CC215772	STD IHR - SHEAVE, SINGLE IHR	8	20 - 50
	CC215772	STD IHR - SHEAVE, DOUBLE IHR	2	1 - 5
	CC215772	STD IHR - SHEAVE, DOUBLE IHR	4	6 - 19
	CC215772	STD IHR - SHEAVE, DOUBLE IHR	8	20 - 50

PARTS LIST CONTINUED ON NEXT PAGE

https://truckmanualshub.com/

55D-MQ 4-STAGE MAST — RECOMMENDED STOCK LIST (RSL)

Item	Part Number	Description	Qty	No. of Masts Serviced
		UPRIGHTS		
	3EB-79-A6080	COTTER PIN	20	1 - 19
	3EB-79-A6080	COTTER PIN	40	20 - 50
	CC201435	CHAIN ANCHOR	2	1 - 5
	CC201435	CHAIN ANCHOR	4	6 - 19
	CC201435	CHAIN ANCHOR	8	20 - 50
	CC680240	CHAIN ANCHOR	2	1 - 5
	CC680240	CHAIN ANCHOR	4	6 - 19
	CC680240	CHAIN ANCHOR	8	20 - 50
	CC680242	CHAIN ANCHOR	6	1 - 5
	CC680242	CHAIN ANCHOR	12	6 - 19
	CC680242	CHAIN ANCHOR	24	20 - 50
	3EB-79-A6090	NUT	6	1 - 5
	3EB-79-A6090	NUT	12	6 - 19
	3EB-79-A6090	NUT	24	20 - 50
	CC200007	JAM NUT	6	1 - 5
	CC200007	JAM NUT	12	6 - 19
	CC200007	JAM NUT	24	20 - 50
	3EB-79-A6081	PIN, COTTER	6	1 - 5
	3EB-79-A6081	PIN, COTTER	12	6 - 19
	3EB-79-A6081	PIN, COTTER	24	20 - 50
	3EB-79-A6050	SHIM,.03 IN.	16	1 - 5
	3EB-79-A6050	SHIM,.03 IN.	32	6 - 19
	3EB-79-A6050	SHIM,.03 IN.	64	20 - 50
	CC664206	LOAD ROLLER	10	1 - 5
	CC664206	LOAD ROLLER	20	6 - 19
	CC664206	LOAD ROLLER	40	20 - 50
	CC661549	LOAD ROLLER - OVERSIZED	2	1 - 5
	CC661549	LOAD ROLLER - OVERSIZED	4	6 - 19
	CC661549	LOAD ROLLER - OVERSIZED	16	20 - 50
	CC212588	SERVICE KIT, WEAR PLUG	4	1 - 5
	CC212588	SERVICE KIT, WEAR PLUG	8	6 - 19
	CC212588	SERVICE KIT, WEAR PLUG	16	20 - 50
		CROSSHEAD		
	CC661550	CHAIN SHEAVE	4	1 - 5
	CC661550	CHAIN SHEAVE	8	6 - 19
	CC661550	CHAIN SHEAVE	16	20 - 50
	3EB-73-A5330	SNAP RING	4	1 - 5

PARTS LIST CONTINUED ON NEXT PAGE

https://truckmanualshub.com/

55D-MQ 4-STAGE MAST — RECOMMENDED STOCK LIST (RSL)

Item	Part Number	Description	Qty	No. of Masts Serviced
	3EB-73-A5330	SNAP RING	8	6 - 19
	3EB-73-A5330	SNAP RING	16	20 - 50
	3EB-79-A6070	SNAP RING	2	1 - 5
	3EB-79-A6070	SNAP RING	4	6 - 19
	3EB-79-A6070	SNAP RING	8	20 - 50
		CARRIAGE AND CHAINS		
	SEE PARTS PG	FREE LIFT CHAINS	2	1 - 5
	SEE PARTS PG	FREE LIFT CHAINS	4	6 - 19
	SEE PARTS PG	FREE LIFT CHAINS	8	20 - 50
	SEE PARTS PG	MAIN LIFT CHAINS	2	1 - 5
	SEE PARTS PG	MAIN LIFT CHAINS	4	6 - 19
	SEE PARTS PG	MAIN LIFT CHAINS	8	20 - 50
	CC683819	CARRIAGE SIDE THRUST ROLLER	4	1 - 5
	CC683819	CARRIAGE SIDE THRUST ROLLER	16	6 - 19
	CC683819	CARRIAGE SIDE THRUST ROLLER	32	20 - 50
	CC664206	LOAD ROLLER	4	1 - 5
	CC664206	LOAD ROLLER	8	6 - 19
	CC664206	LOAD ROLLER	16	20 - 50
	CC661549	LOAD ROLLER, OVERSIZED	8	1 - 5
	CC661549	LOAD ROLLER, OVERSIZED	16	6 - 19
	CC661549	LOAD ROLLER, OVERSIZED	32	20 - 50
	CC680240	CHAIN ANCHOR	2	1 - 5
	CC680240	CHAIN ANCHOR	4	6 - 19
	CC680240	CHAIN ANCHOR	8	20 - 50
	3EB-79-A6081	PIN, COTTER	4	1 - 5
	3EB-79-A6081	PIN, COTTER	8	6 - 19
	3EB-79-A6081	PIN, COTTER	16	20 - 50
	CC680460	CHAIN PIN	4	1 - 19
	CC680460	CHAIN PIN	8	20 - 50
	3EB-79-A6080	COTTER PIN	8	1 - 5
	3EB-79-A6080	COTTER PIN	16	6 - 19
	3EB-79-A6080	COTTER PIN	32	20 - 50
	3EB-79-A6090	NUT	6	1 - 5
	3EB-79-A6090	NUT	12	6 - 19
	3EB-79-A6090	NUT	24	20 - 50
	CC200007	JAM NUT	6	1 - 5
	CC200007	JAM NUT	12	6 - 19
	CC200007	JAM NUT	24	20 - 50

https://truckmanualshub.com/

OPTIONS - STROBE LIGHT - S/N 200001A~

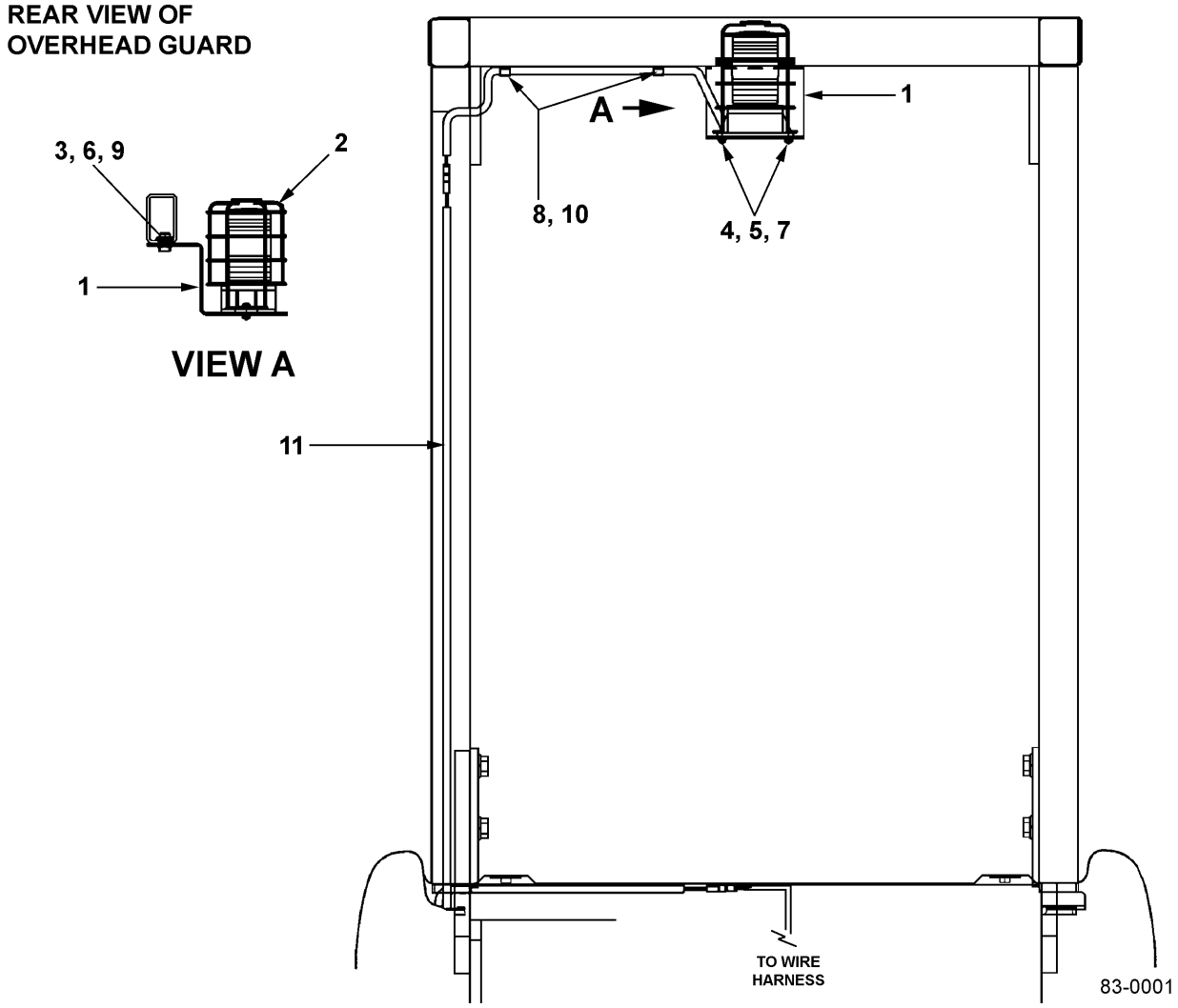

https://truckmanualshub.com/

OPTIONS - STROBE LIGHT - S/N 200001A~

Item	Part Number	Description	Qty	
	3BB-56-A6210	STROBE LIGHT - AMBER	1	
	3BB-56-A6260	STROBE LIGHT - BLUE	1	
	3BB-56-A6310	STROBE LIGHT - RED	1	
1	3BB-56-A6220	BRACKET	1	
2	3EA-56-F1122	GUARD ASSY	1	
3	01010-80820	BOLT	2	
4	01580-10504	NUT	2	
5	01601-20513	WASHER	2	
6	01602-20825	LOCK WASHER	2	
7	3EB-56-F2990	MACHINE SCREW	2	
8	37B-1ES-F310	RIVET	2	
9	37B-1EU-F170	NUTSERT	2	
10	37B-1EV-A150	CLAMP, WIRE	2	
11	3BA-56-A5610	WIRE ASSY	1	

https://truckmanualshub.com/

OPTIONS - BACK-UP BUZZER - S/N 200001A~

FRONT VIEW

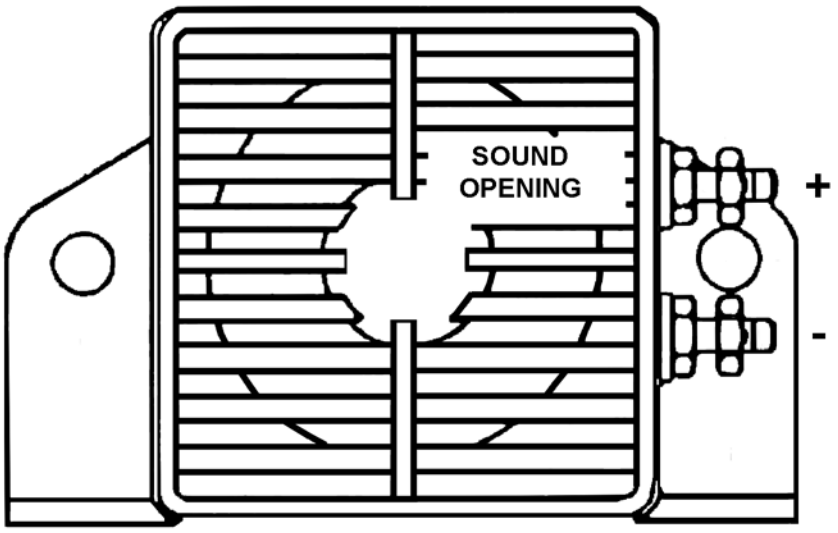

83-0002

https://truckmanualshub.com/

OPTIONS - BACK-UP BUZZER - S/N 200001A~

Item	Part Number	Description	Qty	
1	3EA-56-F2210	BACK-UP BUZZER ASSY (12-48 VOLT)	1	
N/S	01010-80816	BOLT.	2	
N/S	01023-10612	SCREW.	2	
N/S	01643-30823	WASHER	2	
N/S	3EB-55-A7180	WIRE.	1	
N/S	3EB-56-A7980	BRACKET	1	

https://truckmanualshub.com/

OPTIONS - UNDER-CARRIAGE PROTECTOR ASSY - S/N 200001A~ ALL PNEUMATIC MODELS (ALSO SEE FIG. 83-0003A)

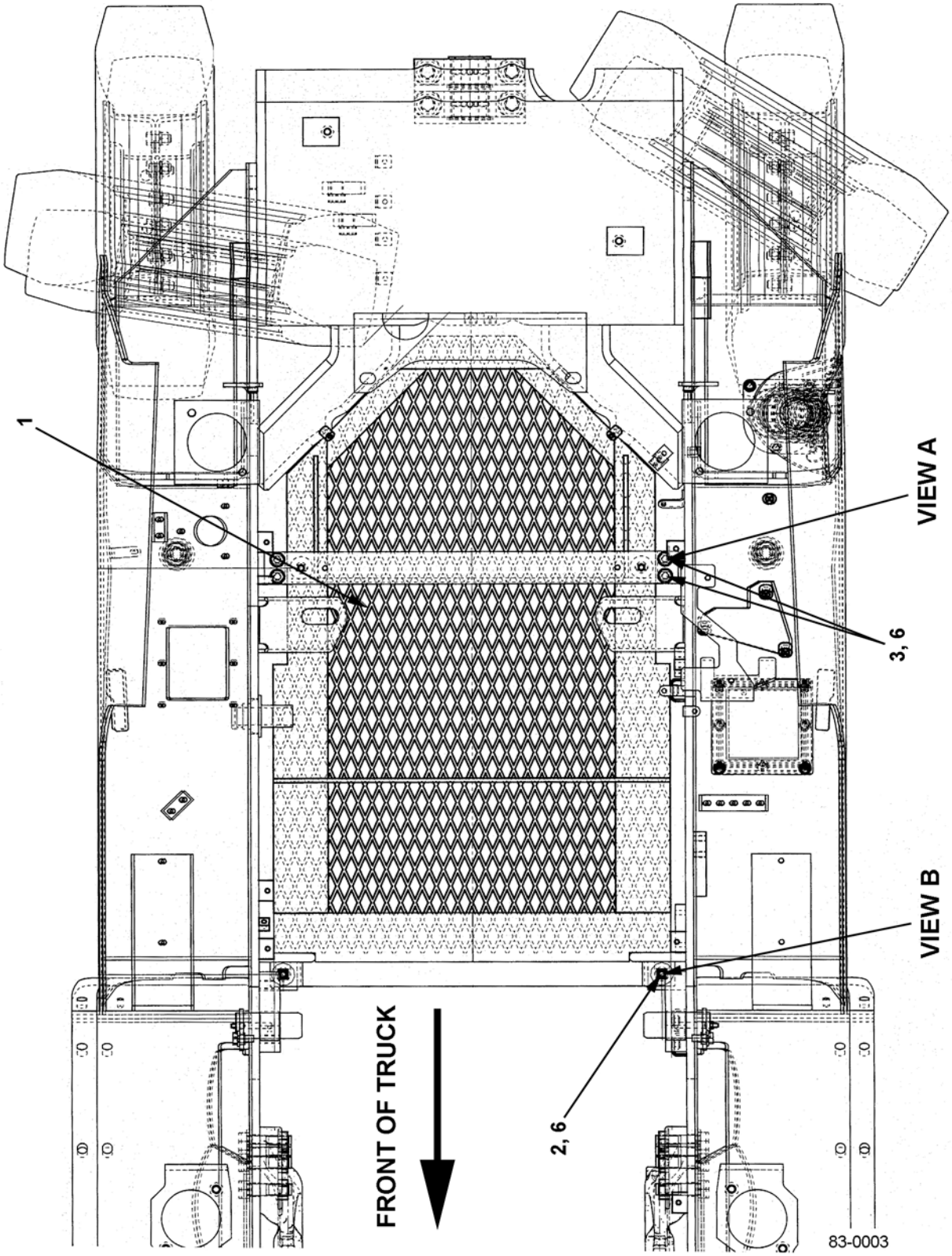

https://truckmanualshub.com/

OPTIONS - UNDER-CARRIAGE PROTECTOR ASSY - S/N 200001A~ ALL PNEUMATIC MODELS (ALSO SEE FIG. 83-0003A)

Item	Part Number	Description	Qty	
1	3EB-52-A7810	PROTECTOR	1	
2	01435-00830	BOLT	2	
3	01435-00835	BOLT	2	
4	01594-00807	LOCK NUT	2	
5	3EB-04-31170	RUBBER	2	
6	3EB-52-32140	WASHER	4	

https://truckmanualshub.com/

OPTIONS - UNDER-CARRIAGE PROTECTOR ASSY - DETAIL - S/N 200001A~ ALL PNEUMATIC MODELS (ALSO SEE FIG. 83-0003)

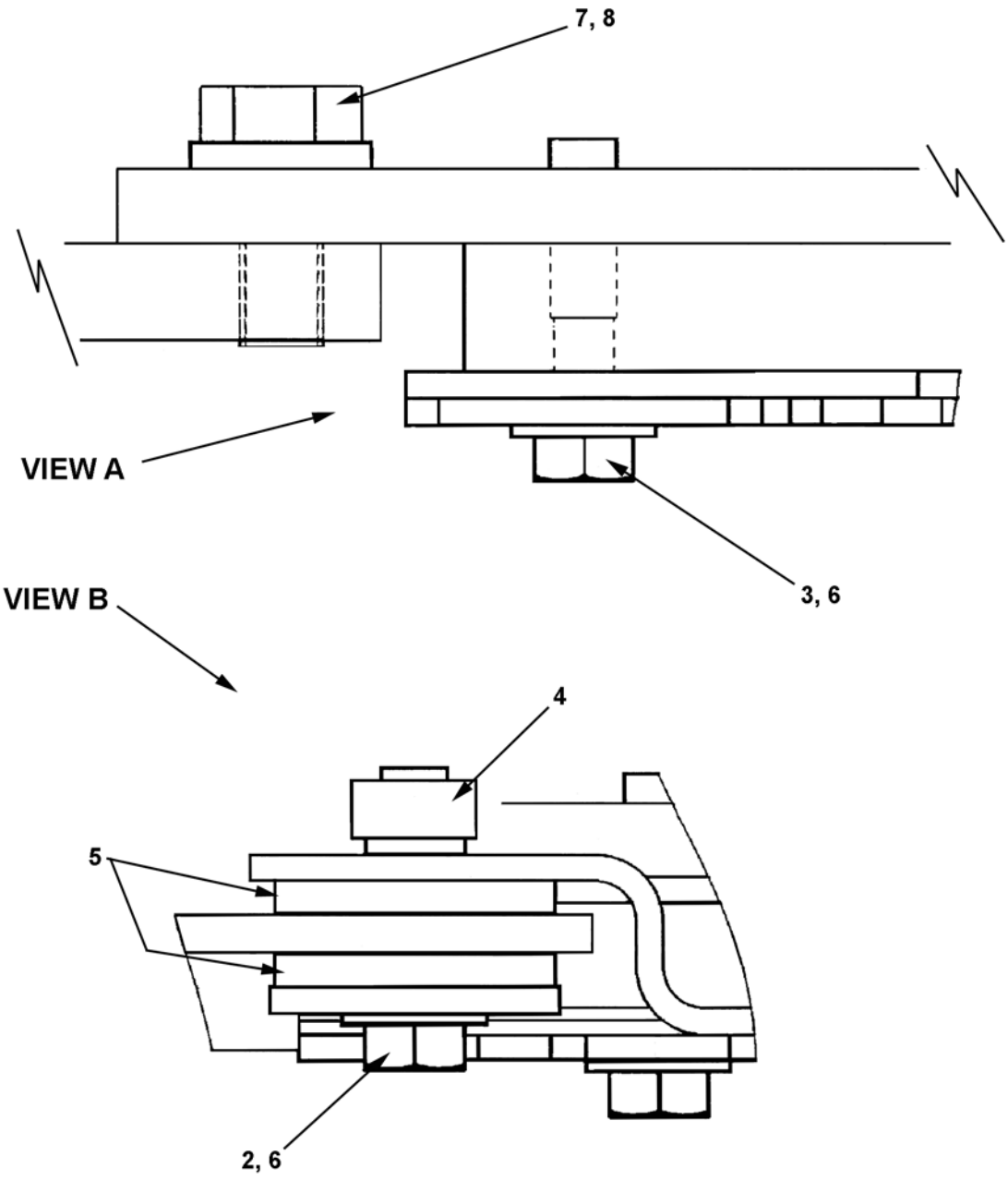

https://truckmanualshub.com/

OPTIONS - UNDER-CARRIAGE PROTECTOR ASSY - DETAIL - S/N 200001A~ ALL PNEUMATIC MODELS (ALSO SEE FIG. 83-0003)

Item	Part Number	Description	Qty	
1	3EB-52-A7810	PROTECTOR	1	
2	01435-00830	BOLT	2	
3	01435-00835	BOLT	2	
4	01570-00808	NUT	2	
5	3EB-04-31170	RUBBER	2	
6	3EB-52-32140	WASHER	4	
7	01010-81025	BOLT	4	
8	01643-31032	WASHER	4	

https://truckmanualshub.com/

OPTIONS - MISC. - S/N 200001A~

NO

ILLUSTRATION

AVAILABLE

https://truckmanualshub.com/

OPTIONS - MISC. - S/N 200001A~

Item	Part Number	Description	Qty	

LP LOW FUEL INDICATOR

3EB-50-A7910	COVER RH, RW	1
3EB-57-A7471	WIRE (DX LP FUEL)	1
3EB-57-A7861	HARNESS	1
3EP-05-17160	SWITCH	1
37B-1EM-4080	LAMP	1
3EB-57-A7862	HARNESS, LP LOW FUEL (LP, LPS, ECO MODE)	1

ENGINE SHUT-DOWN SYSTEM (GASOLINE / LP / DUAL-FUEL ONLY)

01010-81235	BOLT	2
01023-60516	SCREW	2
01643-31232	WASHER	2
3EB-01-A7560	LOP KIT, GASOLINE	1
3EB-01-A7570	.LOP BRACKET	1
3EB-01-A7580	.LOP MODULE	1
3EB-01-A7590	.DECAL - LOP	1

TRAVEL ALARM

01010-80816	BOLT	2
01023-10612	SCREW	2
01643-30823	WASHER	2
3EA-56-F2210	BACK-UP ALARM (BUZZER	1
3EB-56-A7960	HARNESS, TRAVEL ALARM	1
3EB-56-A7980	BRACKET	1

ACCUMULATOR, 1 QT. (BX50)

3EB-61-A7380	ACCUMULATOR, 1 QT.	1
PH12F50X-S	ST. THREAD CONNECTOR	1
01011-81020A	BOLT	4
01435-00816	BOLT	2
01435-00845	BOLT	1
01594-00807	NUT	2
01602-21030	SPRING WASHER	4
01643-31032	WASHER	5
3EB-04-31170	RUBBER	1
3EB-52-A7870	PLATE (CROSSMEMBER)	1
3EB-52-32140	WASHER	2
3EB-52-51611	BRACKET	1
3EB-61-A7330	PIPE	1

https://truckmanualshub.com/

OPTIONS - MISC. - S/N 200001A~

Item	Part Number	Description	Qty	
	3EB-61-A7460	PLATE	1	
	3EB-61-A7470	PIPE	1	
	3EB-61-F5580	PLATE, ACCUMULATOR	2	
	3EB-66-A7511	HOSE	1	
		ACCUMULATOR, 2 QT. (BX50)		
	3EB-61-F5590	ACCUMULATOR, 2 QT. (OPTIONAL)	1	
		REAR WORK LIGHT, SINGLE		
	3BB-56-A6610	REARK LIGHT (LED)	1	
	3EB-56-A5612	WORK LIGHT BRACKET	1	
	01220-40525	SCREW	2	
	01580-10504	NUT	2	
	01641-20508	WASHER	2	
	3EB-56-A7260	REAR WORK LIGHT STAY	1	
	08192-12810	RECEPTACLE ASSY	1	
	08192-12910	PLUG ASSY	1	
	3BB-55-F2180	100’ ROLL, 1/4 CONV. LOOM	1	
	3EB-56-A7270	FUSE	1	
	12015323	PLUG (DELPHI)	1	
	12129409	TERMINAL (DELPHI)	1	
	08192-12910	PLUG ASSY	1	
	37B-1ER-F160	RING 5/16-3/8 INCH	1	
	37B-1AE-6010	TIE WRAP, SMALL	4	
		REAR WORK LIGHT, DOUBLE		
	3BB-56-A6610	REAR WORK LIGHT, LED	2	
	3EB-56-A7261	REAR WORK LIGHT, STAY HARNESS	1	
	08192-12810	.RECEPTACLE ASSY	1	
	08192-12910	.PLUG ASSY	1	
	3BB-55-F2180	.1/4 CONV. LOOM, 100 FT. ROLL	1	
	3EB-56-A7270	REAR WORK LIGHT FUSE HARNESS	1	
	12015323	.PLUG	1	
	12129409	.TERMINAL	1	
	08192-12910	.PLUG ASSY	1	
	3BB-55-F2180	.1/4 CONV. LOOM, 100 FT. ROLL	1	
	37B-1ER-F160	.RING, (5/16-3/8 IN.)	1	
	3EB-56-A7760	DUAL REAR WORK LIGT HARNESS	1	
	08192-12810	.RECEPTACLE ASSY	1	

https://truckmanualshub.com/

OPTIONS - MISC. - S/N 200001A~

Item	Part Number	Description	Qty	
	08192-12910	.PLUG ASSY.	1	
	3BB-55-F2180	.1/4 CONV. LOOM, 100 FT. ROLL	1	
	3EB-56-F5612	WORK LIGHT BRACKET - LH	1	
	3EB-56-A5671	WORK LIGHT BRACKET - RH	1	
	37B-1AE-6010	TIE WRAP (SMALL)	6	
	37B-1ES-F310	RIVET	4	
	37B-1EV-A150	WIRE CLAMP	4	
	BLOCK HEATER (GASOLINE / LP / DUAL-FUEL)			
	3EB-56-F5450	BLOCK HEATER ASSY	1	
	3EB-56-F5460	BLOCK HEATER	1	
	ECO MODE			
	3EB-57-A7862	ECO MODE HARNESS	1	
	AMP1-174664-1	LOCK PLATE (12P)	1	
	AMP172748-2	DUMMY SEAL	8	
	AMP172888-2	SEAL	4	
	AMP173706-1	TERMINAL	4	
	AMP174663-2	CONNECTOR (12P)	1	
	08191-00770	SEALING PLUG	4	
	08192-12100	RECEPTACLE (CAP)	1	
	08192-12200	PLUG (CAP)	1	
	08192-12810	RECEPTACLE ASSY	1	
	08192-12910	PLUG ASSY	1	
	3EB-57-A7890	ECO MODE JUMPER	1	
	FIRE EXTINGUISHER			
	3EC-51-A2620	FIRE EXTINGUISHER ASSY (ALL MODELS)	1	
	3EB-94-F2110	.FIRE EXTINGUISHER (ALL MODELS)	1	
	3EB-94-F2120	.BRACKET (ALL MODELS)	1	
	37B-1EU-F150	NUTSERT (ALL MODELS)	4	
	01010-80616	BOLT	4	
	01580-10605	NUT	4	
	01602-20619	SPRING WASHER	4	
	01642-20608	WASHER	8	
	3EB-51-A7450	SUB-BONNET RW (CUSHION)	1	
	3EB-51-A7420	SPONGE RW (CUSHION)	1	
	3EB-51-A7460	STAY RW (PNEUMATIC)	1	

https://truckmanualshub.com/

OPTIONS - MISC. - S/N 200001A~

Item	Part Number	Description	Qty	
		OPERATOR FAN ASSEMBLY		
	3EB-56-A7550	OPERATOR FAN ASSY	1	
	3EB-56-A7560	OPERATOR FAN (12V)	1	
	01010-80825	BOLT	2	
	01023-60425	SCREW	4	
	01580-10403	NUT	4	
	01641-20405	WASHER	4	
	01642-20810	WASHER	2	
	08192-12910	PLUG ASSY	1	
	3BB-55-F2180	100’ ROLL, 1/4 CONV. LOOM	1	
	3EB-56-A7580	HARNESS	1	
	08192-12810	RECEPTACLE ASSY	1	
	3EB-56-F2980	CLIP	2	
	3EB-56-F6220	BRACKET	1	
	3EB-56-F6230	PLATE	1	
	3EB-57-A7862	HARNESS	1	
	AMP1-174664-1	LOCK PLATE (12P)	1	
	AMP172748-2	DUMMY SEAL	8	
	AMP172888-2	SEAL	4	
	AMP173706-1	TERMINAL	4	
	AMP174662-2	CONNECTOR (12P)	1	
	08191-00770	SEALING PLUG	4	
	08192-12100	RECEPTACLE (CAP)	1	
	08192-12200	PLUG (CAP)	1	
		KEYLESS ENTRY SYSTEM		
	3EB-57-A7750	SWITCH, KEYLESS ENTRY	1	
	3EB-57-A7760	KEYLESS SWITCH RW	1	
	3EB-55-F5210	SWITCH ASSY (KEYLESS, ANTI-RESTART)	1	
		PRE-CLEANER ASSY		
	3EB-01-A7950	PRE-CLEANER ASSY	1	
	3EB-01-A7960	STAY REWORK	1	
	3EB-01-F5130	PIPE	1	
	3EB-01-F5120	PRE-CLEANER (FLEETGUARD)	1	
	3EB-01-31760	COVER, AIR INTAKE, SOLID	1	
		MIRROR, REAR VIEW		
	3EC-56-F3310	MIRROR	1	

https://truckmanualshub.com/

OPTIONS - MISC. - S/N 200001A~

Item	Part Number	Description	Qty	

STATIC STRAP OPTION

3EB-42-A7550	STATIC STRAP ASSY (INDOOR)	1
3EB-56-A7650	STATIC STRAP ASSY (OUTDOOR)	1
01024-80816	BOLT (INDOOR)	1
01024-80820	BOLT (INDOOR & OUTDOOR)	1
3BA-41-A5620	STATIC STRAP RW (INDOOR)	1
3EB-56-A7660	STATIC STRAP RW (OUTDOOR)	1
3BB-55-A3710	STATIC STRAP (ALL)	1

SKID PLATE (2.8, 3.0 TON PNEUMATIC)

3EB-52-A7470	FRAME REWORK	1
3BB-52-A7260	SKID PLATE	1
3BB-52-A7380	PLATE	2
01010-80825	BOLT	4
01643-30823	WASHER	4

SWITCH, ANTI-RESTART W/ KEY

3EB-55-A3621	KEY SWITCH ASSY	1
3EB-55-A3630	. SWITCH	1
3EB-55-A3641	. KEY (KOMATSU)	1
3EB-55-F5910	SWITCH ASSY, ANTI-RESTART	1

https://truckmanualshub.com/

FORKS - S/N 200001A~

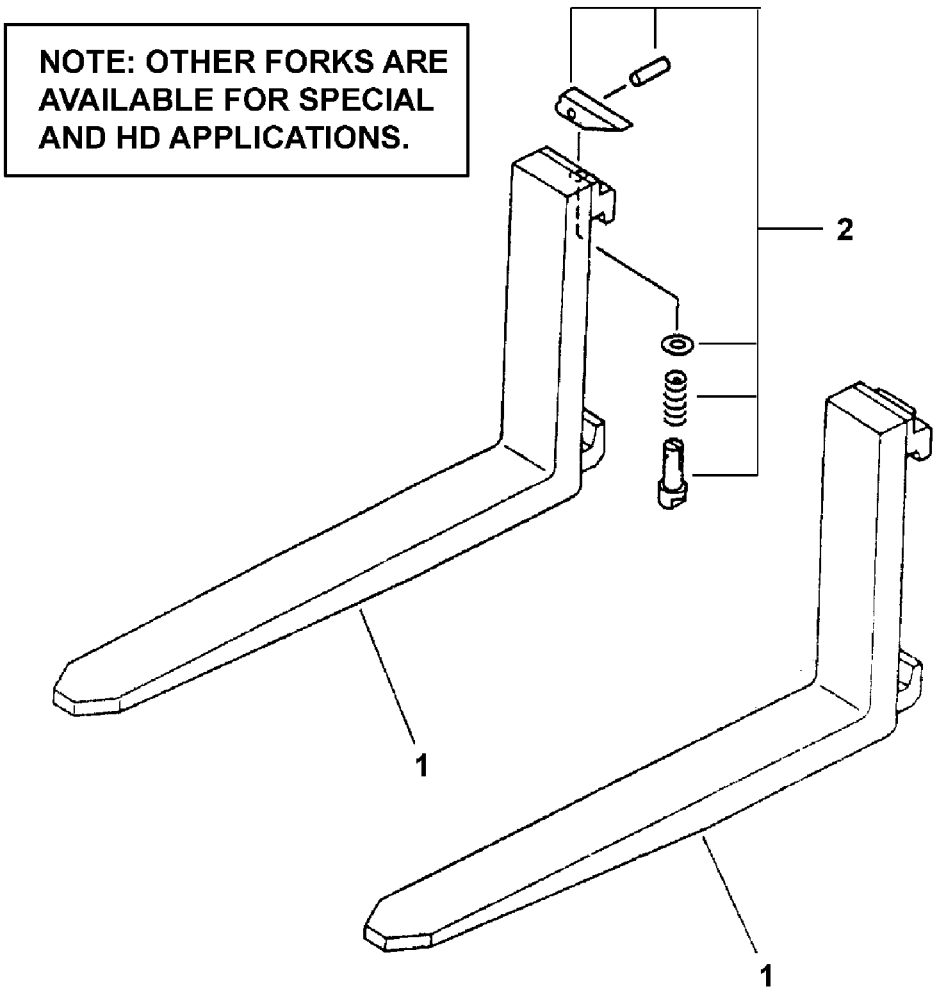

93-0001

https://truckmanualshub.com/

FORKS - S/N 200001A~

Item	Part Number	Description	Qty	

CLASS II FORKS - STANDARD TAPER STYLE FOR E50-MS, MD, MT, 45D-MQ MASTS (WIDTH X THICKNESS X LENGTH) (FG(D)20/25)

1	37B-741-A611	4" X 1.58" X 36" (915 MM)	1
	37B-741-A621	4" X 1.58" X 42" (1065 MM)	1
	37B-741-A631	4" X 1.75" X 48" (1220 MM)	1
	45B-AAX-1140	4" X 1.75" X 54" (1370 MM)	1
	45B-AAX-1150	4" X 1.75" X 60" (1525 MM)	1
	45B-AAX-1180	4" X 1.75" X 72" (1830 MM)	1

CLASS II FORKS - FULL TAPER AND POLISHED STYLE FOR E50-MS, MD, MT, 45D-MQ MASTS (FG(D)20/25)

	45B-AAX-1810	4" X 1.75" X 36" (915 MM)	1
	45B-AAX-1830	4" X 1.75" X 42" (1065 MM)	1
	45B-AAX-1840	4" X 1.75" X 48" (1220 MM)	1
	45B-AAX-1850	4" X 1.75" X 54" (1370 MM)	1
	45B-AAX-1860	4" X 1.75" X 60" (1525 MM)	1
	45B-AAX-1980	4" X 1.75" X 72" (1830 MM)	1

CLASS II FORKS - STANDARD TAPER STYLE FOR 55D-MQ MASTS (FG(D)30)

	37B-741-A611	4" X 1.58" X 36" (915 MM)	1
	37B-741-A621	4" X 1.58" X 42" (1065 MM)	1
	37B-741-A631	4" X 1.58" X 48" (1220 MM)	1
	45B-AAX-1140	4" X 1.75" X 54" (1370 MM)	1
	45B-AAX-1150	4" X 1.75" X 60" (1525 MM)	1
	45B-AAX-1180	4" X 1.75" X 72" (1830 MM)	1

CLASS II FORKS - FULL TAPER AND POLISHED STYLE FOR 55D-MQ MASTS (FG(D)30)

	45B-AAX-1810	4" X 1.75" X 36" (915 MM)	1
	45B-AAX-1830	4" X 1.75" X 42" (1065 MM)	1
	45B-AAX-1840	4" X 1.75" X 48" (1220 MM)	1
	45B-AAX-1850	4" X 1.75" X 54" (1370 MM)	1
	45B-AAX-1860	4" X 1.75" X 60" (1525 MM)	1
	45B-AAX-1980	4" X 1.75" X 72" (1830 MM)	1

CLASS III FORKS - STANDARD TAPER STYLE FOR E65-MS, MT MASTS (FG(D)30)

	37B-741-A511	5" X 2" X 42" (1065 MM).	1
	37B-741-A521	5" X 2" X 48" (1220 MM).	1
	37B-741-A531	5" X 2" X 54" (1370 MM).	1
	37B-741-A541	5" X 2" X 60" (1525 MM).	1

PARTS LIST CONTINUED ON NEXT PAGE

https://truckmanualshub.com/

FORKS - S/N 200001A~

Item	Part Number	Description	Qty	
	37B-741-A561	5" X 2" X 72" (1830 MM)	1	
	37B-741-A571	5" X 2" X 96" (2440 MM)	1	
		CLASS III FORKS - FULL TAPER & POLISHED STYLE FOR E65-MS, MT MASTS (FG(D)30)		
	45B-AAX-1930	5" X 2" X 42" (1065 MM)	1	
	45B-AAX-1940	5" X 2" X 48" (1220 MM)	1	
	45B-AAX-1950	5" X 2" X 54" (1370 MM)	1	
	45B-AAX-1960	5" X 2" X 60" (1525 MM)	1	
		CLASS II FORKS - STANDARD TAPER STYLE FOR 55D-MQ MASTS (FG(D)32/35)		
	37B-741-A611	4" X 1.58" X 36" (915 MM)	1	
	37B-741-A621	4" X 1.58" X 42" (1065 MM)	1	
	37B-741-A631	4" X 1.58" X 48" (1220 MM)	1	
	45B-AAX-1140	4" X 1.75" X 54" (1370 MM)	1	
	45B-AAX-1150	4" X 1.75" X 60" (1525 MM)	1	
	45B-AAX-1180	4" X 1.75" X 72" (1830 MM)	1	
		CLASS II FORKS - FULL TAPER & POLISHED STYLE FOR 55D-MQ MASTS (FG(D)32/35)		
	45B-AAX-1810	4" X 1.75" X 36" (915 MM)	1	
	45B-AAX-1830	4" X 1.75" X 42" (1065 MM)	1	
	45B-AAX-1840	4" X 1.75" X 48" (1220 MM)	1	
	45B-AAX-1850	4" X 1.75" X 54" (1370 MM)	1	
	45B-AAX-1860	4" X 1.75" X 60" (1525 MM)	1	
		CLASS III FORKS - STANDARD TAPER STYLE FOR E65MS, MT, KFL 2 & 3-STAGE MASTS (FG(D)32/35)		
	37B-741-A511	5" X 2" X 42" (1065 MM)	1	
	37B-741-A521	5" X 2" X 48" (1220 MM)	1	
	37B-741-A531	5" X 2" X 54" (1370 MM)	1	
	37B-741-A541	5" X 2" X 60" (1525 MM)	1	
	37B-741-A561	5" X 2" X 72" (1830 MM)	1	
	37B-741-A571	5" X 2" X 96" (2440 MM)	1	
		CLASS III FORKS - STANDARD TAPER STYLE FOR E65MS, MT, KFL 2 & 3-STAGE MASTS (FG(D)32/35)		
	45B-AAX-1930	5" X 2" X 42" (1065 MM)	1	
	45B-AAX-1940	5" X 2" X 48" (1220 MM)	1	
	45B-AAX-1950	5" X 2" X 54" (1370 MM)	1	
	45B-AAX-1960	5" X 2" X 60" (1525 MM)	1	

PARTS LIST CONTINUED ON NEXT PAGE

https://truckmanualshub.com/

FORKS - S/N 200001A~

Item	Part Number	Description	Qty	
2	3EB-72-121FR	CLASS II FORK PIN KIT (LEVER STYLE) (FOR ONE FORK) (.617" DIA. X 2.112" LONG PIN)	1	
	3EC-72-121FR	CLASS III FORK PIN KIT (LEVER STYLE) (FOR ONE FORK) (.617" DIA. X 2.284" LONG PIN)	1	

https://truckmanualshub.com/

NAMEPLATES & DECALS - TOP & SIDE VIEWS - S/N 200001A~
(ALSO SEE FIG. 96-0002, 96-0003)

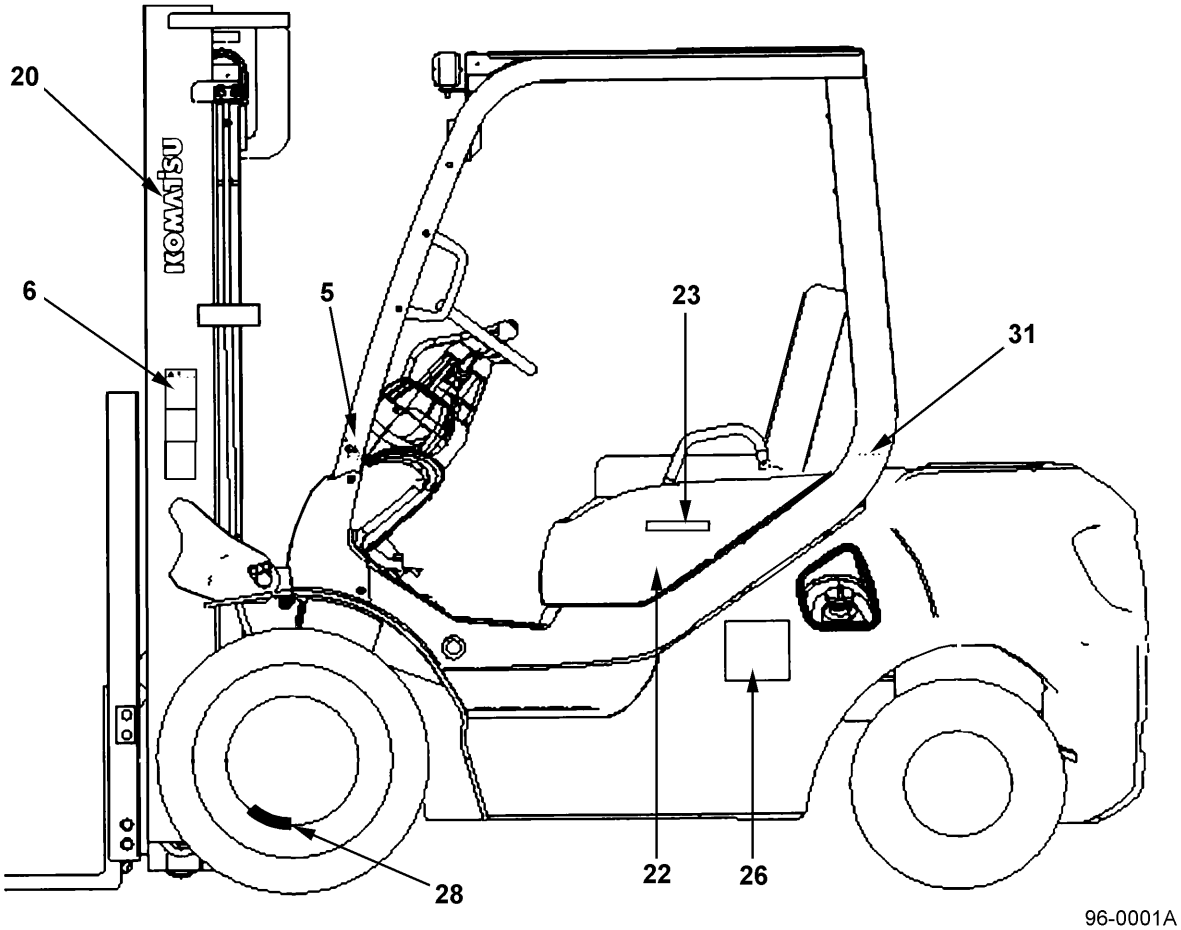

96-0001A

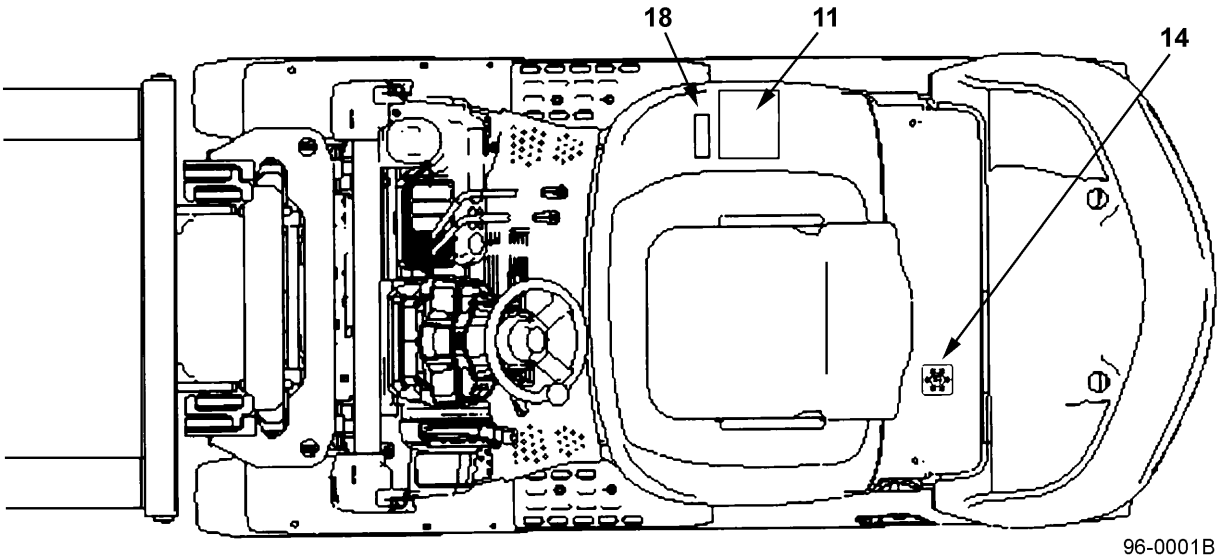

96-0001B

https://truckmanualshub.com/

NAMEPLATES & DECALS - TOP & SIDE VIEWS - S/N 200001A~
(ALSO SEE FIG. 96-0002, 96-0003)

Item	Part Number	Description	Qty	
1	09842-A0481	NAME PLATE, ENGINE START	1	
2	3EB-96-A5111	NAME PLATE, TIP-OVER CAUTION	1	
3	3EB-96-A7560	NAME PLATE, BONNET OPEN	1	
4	3EB-96-A5821	NAME PLATE, PARKING BRAKE	1	
5	3EB-96-A5910	NAME PLATE, NO PASSENGER	2	
6	3EB-96-A5920	NAME PLATE, NO STAND/RIDE FORK	2	
7	3EB-96-A5930	NAME PLATE, FAN CAUTION	2	
8	3EB-96-A5940	NAME PLATE, PINCH POINT	1	
9	3EB-96-A5960	NAME PLATE, START CAUTION	1	
10	3EB-96-A6110	NAME PLATE, CLEAN AIR	1	
11	3EB-96-A6120	NAME PLATE, GENERAL OPERATING	1	
12	3EB-96-A7110	NAME PLATE, MAINTENANCE	1	
13	3EB-96-25520	NAME PLATE, LIFTING	1	
14	37A-1AV-1030	NAME PLATE, ANTIFREEZE	1	
15	37A-2BS-1011	NAME PLATE, HYDRAULIC OIL	1	
16	3EB-96-51120	RIVET	4	
17	3EB-96-A7210	NAME PLATE	1	
18	3EB-96-A5510	NAME PLATE, ASSEMBLED IN USA	1	
19	3EB-96-A5520	NAME PLATE	1	
20	37B-1QF-A020	NAME PLATE, KOMATSU, WHITE	2	
21	09690-P0200	NAME PLATE, KOMATSU - CW	1	
22	37B-1QL-A030	NAME MARK 20 (2.0T)	2	
	37B-1QL-A040	NAME MARK 25 (2.5T)	2	
	37B-1QL-A060	NAME MARK 28 (2.8T)	2	
	37B-1QL-A050	NAME MARK 30 (3.0T)	2	
	37B-1QL-A070	NAME MARK 32 (3.2T)	2	
	37B-1QL-A080	NAME MARK 35 (3.5T)	2	
23	09690-C0160	MARK	2	
24	37B-1QM-A011	NAME PLATE (G)	1	
	37B-1QM-A021	NAME PLATE (GS)	1	
	37B-1QM-A031	NAME PLATE (LP)	1	
	37B-1QM-A041	NAME PLATE (LPS)	1	
	37B-1QM-A051	NAME PLATE (DUAL-FUEL)	1	
	37B-1QM-A061	NAME PLATE (D)	1	
25	37B-1ES-F310	RIVET	4	
26	3EB-96-13210	NAME PLATE (GS)	1	
	3EB-96-13410	NAME PLATE (LPS)	1	
27	37B-1QA-3010	NAME PLATE (G)	1	
	37B-1QB-3010	NAME PLATE (D)	1	

PARTS LIST CONTINUED ON NEXT PAGE

https://truckmanualshub.com/

NAMEPLATES & DECALS - TOP & SIDE VIEWS - S/N 200001A~
(ALSO SEE FIG. 96-0002, 96-0003)

Item	Part Number	Description	Qty	
28	3EB-96-A5970	NAME PLATE, DEFLATE TIRE	1	
29	37B-1QT-A030	NAME PLATE, HEADGUARD STRENGTH	1	
30	3EB-96-A5950	NAME PLATE, LP CAUTION	1	
31	37A-2BK-A020	NAME PLATE, TIRE PRESSURE	1	
N/S	3EB-96-A5530	NAME PLATE, BATTERY DISCONNECT (G, ULS)	1	
N/S	3EB-96-A7710	NAME PLATE, CAPACITY PLATE (SECONDARY) (ADHESIVE BACKING)	1	

https://truckmanualshub.com/

NOTES:

https://truckmanualshub.com/

NAMEPLATES & DECALS - REAR VIEW & DETAILS - S/N 200001A~
(ALSO SEE FIG. 96-0001, 96-0003)

REAR VIEW

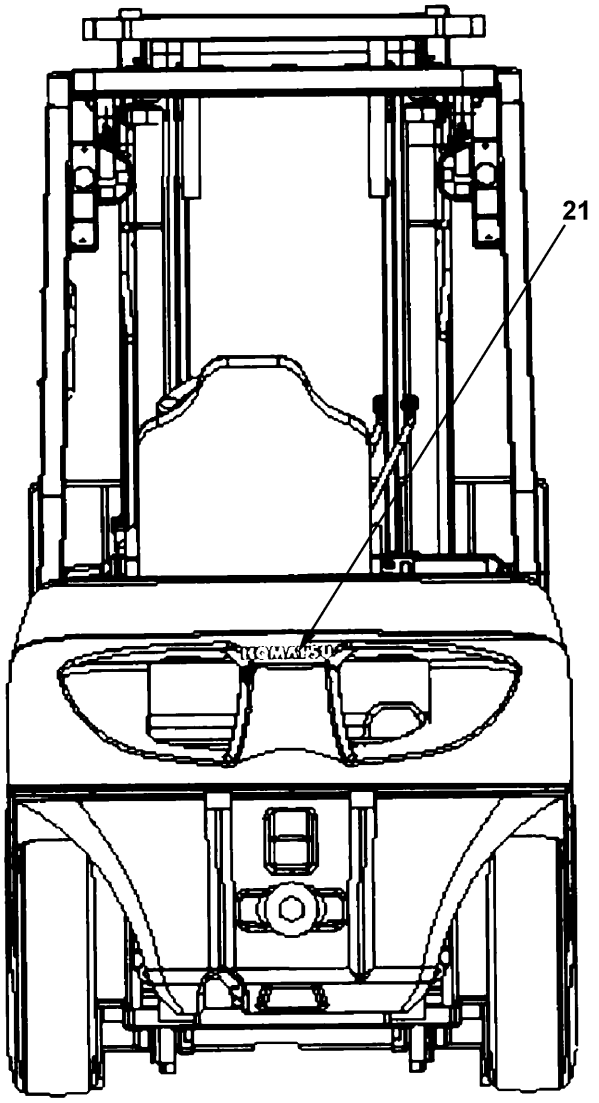

96-0002A

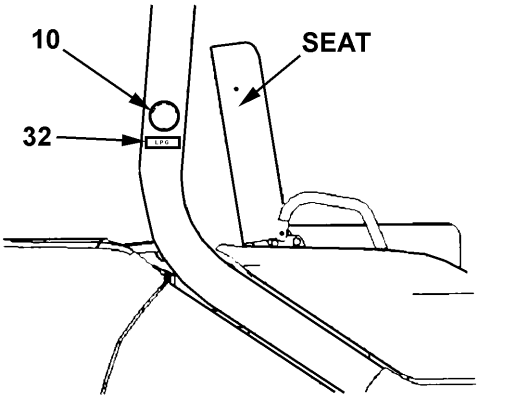

96-0002B

FAN SHROUD

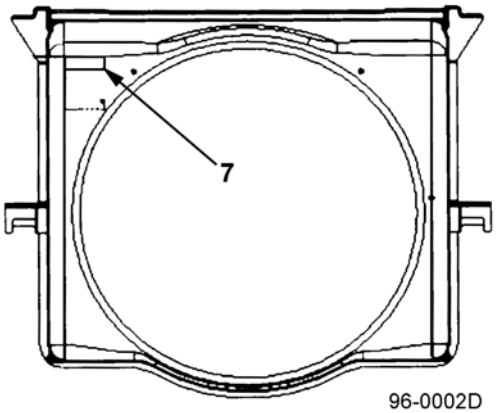

96-0002D

HYDRAULIC TANK COVER

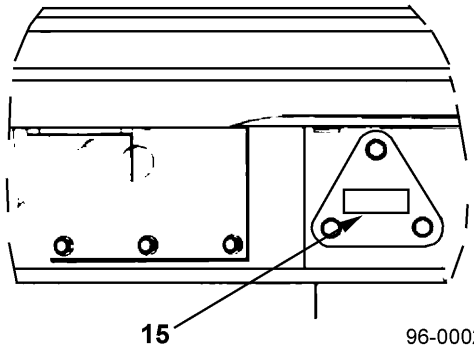

96-0002C

DASHBOARD

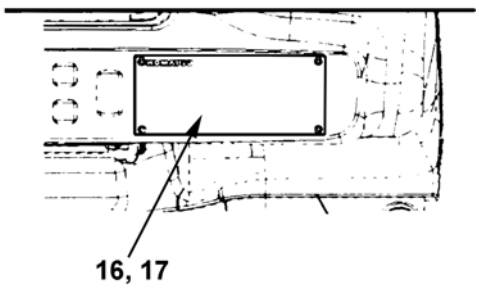

96-0002E

https://truckmanualshub.com/

NAMEPLATES & DECALS - REAR VIEW & DETAILS - S/N 200001A~
(ALSO SEE FIG. 96-0001, 96-0003)

Item	Part Number	Description	Qty	
1	09842-A0481	NAME PLATE, ENGINE START	1	
2	3EB-96-A5111	NAME PLATE, TIP-OVER CAUTION	1	
3	3EB-96-A7560	NAME PLATE, BONNET OPEN	1	
4	3EB-96-A5821	NAME PLATE, PARKING BRAKE	1	
5	3EB-96-A5910	NAME PLATE, NO PASSENGER	2	
6	3EB-96-A5920	NAME PLATE, NO STAND/RIDE FORK	2	
7	3EB-96-A5930	NAME PLATE, FAN CAUTION	2	
8	3EB-96-A5940	NAME PLATE, PINCH POINT	1	
9	3EB-96-A5960	NAME PLATE, START CAUTION	1	
10	3EB-96-A6110	NAME PLATE, CLEAN AIR	1	
11	3EB-96-A6120	NAME PLATE, GENERAL OPERATING	1	
12	3EB-96-A7110	NAME PLATE, MAINTENANCE	1	
13	3EB-96-25520	NAME PLATE, LIFTING	1	
14	37A-1AV-1030	NAME PLATE, ANTIFREEZE	1	
15	37A-2BS-1011	NAME PLATE, HYDRAULIC OIL	1	
16	3EB-96-51120	RIVET	4	
17	3EB-96-A7210	NAME PLATE	1	
18	3EB-96-A5510	NAME PLATE, ASSEMBLED IN USA	1	
19	3EB-96-A5520	NAME PLATE	1	
20	37B-1QF-A020	NAME PLATE, KOMATSU, WHITE	2	
21	09690-P0200	NAME PLATE, KOMATSU - CW	1	
22	37B-1QL-A030	NAME MARK 20 (2.0T)	2	
	37B-1QL-A040	NAME MARK 25 (2.5T)	2	
	37B-1QL-A060	NAME MARK 28 (2.8T)	2	
	37B-1QL-A050	NAME MARK 30 (3.0T)	2	
	37B-1QL-A070	NAME MARK 32 (3.2T)	2	
	37B-1QL-A080	NAME MARK 35 (3.5T)	2	
23	09690-C0160	MARK	2	
24	37B-1QM-A011	NAME PLATE (G)	1	
	37B-1QM-A021	NAME PLATE (GS)	1	
	37B-1QM-A031	NAME PLATE (LP)	1	
	37B-1QM-A041	NAME PLATE (LPS)	1	
	37B-1QM-A051	NAME PLATE (DUAL-FUEL)	1	
	37B-1QM-A061	NAME PLATE (D)	1	
25	37B-1ES-F310	RIVET	4	
26	3EB-96-13210	NAME PLATE (GS)	1	
	3EB-96-13410	NAME PLATE (LPS)	1	
27	37B-1QA-3010	NAME PLATE (G)	1	
	37B-1QB-3010	NAME PLATE (D)	1	

PARTS LIST CONTINUED ON NEXT PAGE

https://truckmanualshub.com/

NAMEPLATES & DECALS - REAR VIEW & DETAILS - S/N 200001A~
(ALSO SEE FIG. 96-0001, 96-0003)

Item	Part Number	Description	Qty	
28	3EB-96-A5970	NAME PLATE, DEFLATE TIRE	1	
29	37B-1QT-A030	NAME PLATE, HEADGUARD STRENGTH	1	
30	3EB-96-A5950	NAME PLATE, LP CAUTION	1	
31	37A-2BK-A020	NAME PLATE, TIRE PRESSURE	1	
32	3EB-96-34910	NAME PLATE, LPG	1	

https://truckmanualshub.com/

NOTES:

https://truckmanualshub.com/

NAMEPLATES & DECALS - MISC. LOCATIONS - S/N 200001A~
(ALSO SEE FIG. 96-0001, 96-0002)

TOP RIGHT SIDE - DASHBOARD

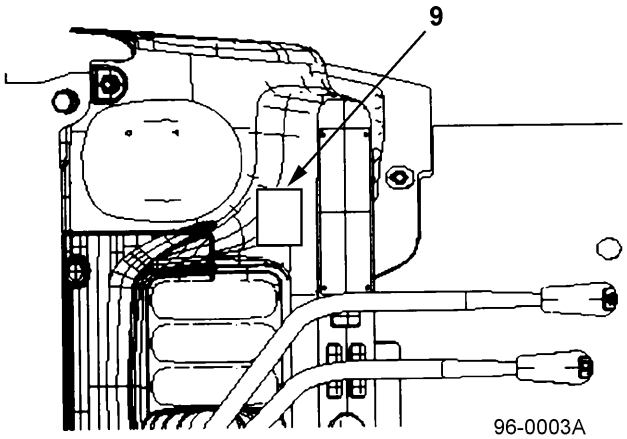

96-0003A

COUNTERWEIGHT - TOP

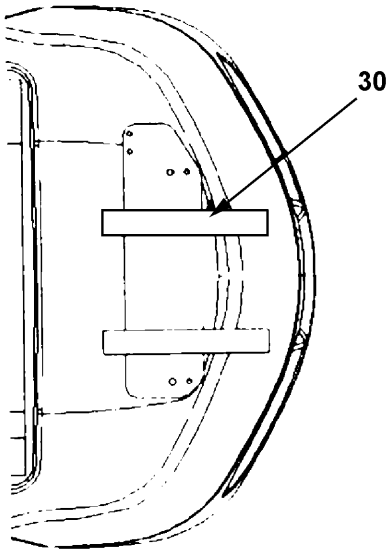

96-0003B

DASHBOARD

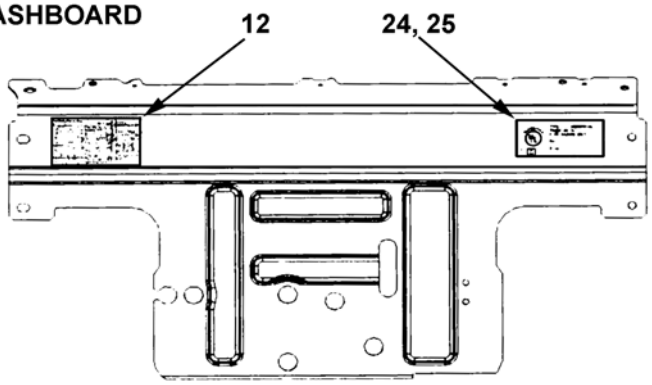

96-0003C

BACK OF MAST

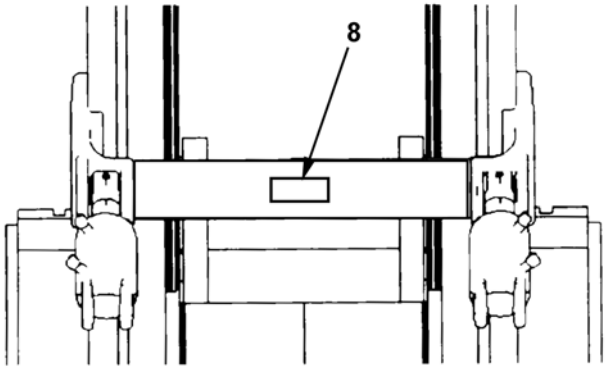

96-0003D

https://truckmanualshub.com/

NAMEPLATES & DECALS - MISC. LOCATIONS - S/N 200001A~
(ALSO SEE FIG. 96-0001, 96-0002)

Item	Part Number	Description	Qty	
1	09842-A0481	NAME PLATE, ENGINE START	1	
2	3EB-96-A5111	NAME PLATE, TIP-OVER CAUTION	1	
3	3EB-96-A7560	NAME PLATE, BONNET OPEN	1	
4	3EB-96-A5821	NAME PLATE, PARKING BRAKE	1	
5	3EB-96-A5910	NAME PLATE, NO PASSENGER	2	
6	3EB-96-A5920	NAME PLATE, NO STAND/RIDE FORK	2	
7	3EB-96-A5930	NAME PLATE, FAN CAUTION	2	
8	3EB-96-A5940	NAME PLATE, PINCH POINT	1	
9	3EB-96-A5960	NAME PLATE, START CAUTION	1	
10	3EB-96-A6110	NAME PLATE, CLEAN AIR	1	
11	3EB-96-A6120	NAME PLATE, GENERAL OPERATING	1	
12	3EB-96-A7110	NAME PLATE, MAINTENANCE	1	
13	3EB-96-25520	NAME PLATE, LIFTING	1	
14	37A-1AV-1030	NAME PLATE, ANTIFREEZE	1	
15	37A-2BS-1011	NAME PLATE, HYDRAULIC OIL	1	
16	3EB-96-51120	RIVET	4	
17	3EB-96-A7210	NAME PLATE	1	
18	3EB-96-A5510	NAME PLATE, ASSEMBLED IN USA	1	
19	3EB-96-A5520	NAME PLATE	1	
20	37B-1QF-A020	NAME PLATE, KOMATSU, WHITE	2	
21	09690-P0200	NAME PLATE, KOMATSU - CW	1	
22	37B-1QL-A030	NAME MARK 20 (2.0T)	2	
	37B-1QL-A040	NAME MARK 25 (2.5T)	2	
	37B-1QL-A060	NAME MARK 28 (2.8T)	2	
	37B-1QL-A050	NAME MARK 30 (3.0T)	2	
	37B-1QL-A070	NAME MARK 32 (3.2T)	2	
	37B-1QL-A080	NAME MARK 35 (3.5T)	2	
23	09690-C0160	MARK	2	
24	37B-1QM-A011	NAME PLATE (G)	1	
	37B-1QM-A021	NAME PLATE (GS)	1	
	37B-1QM-A031	NAME PLATE (LP)	1	
	37B-1QM-A041	NAME PLATE (LPS)	1	
	37B-1QM-A051	NAME PLATE (DUAL-FUEL)	1	
	37B-1QM-A061	NAME PLATE (D)	1	
25	37B-1ES-F310	RIVET	4	
26	3EB-96-13210	NAME PLATE (GS)	1	
	3EB-96-13410	NAME PLATE (LPS)	1	
27	37B-1QA-3010	NAME PLATE (G)	1	
	37B-1QB-3010	NAME PLATE (D)	1	

PARTS LIST CONTINUED ON NEXT PAGE

https://truckmanualshub.com/

NAMEPLATES & DECALS - MISC. LOCATIONS - S/N 200001A~
(ALSO SEE FIG. 96-0001, 96-0002)

Item	Part Number	Description	Qty	
28	3EB-96-A5970	NAME PLATE, DEFLATE TIRE	1	
29	37B-1QT-A030	NAME PLATE, HEADGUARD STRENGTH	1	
30	3EB-96-A5950	NAME PLATE, LP CAUTION	1	
31	37A-2BK-A020	NAME PLATE, TIRE PRESSURE	1	
32	3EB-96-34910	NAME PLATE, LPG	1	

https://truckmanualshub.com/

NOTES:

https://truckmanualshub.com/

PAINT - S/N 200001A~

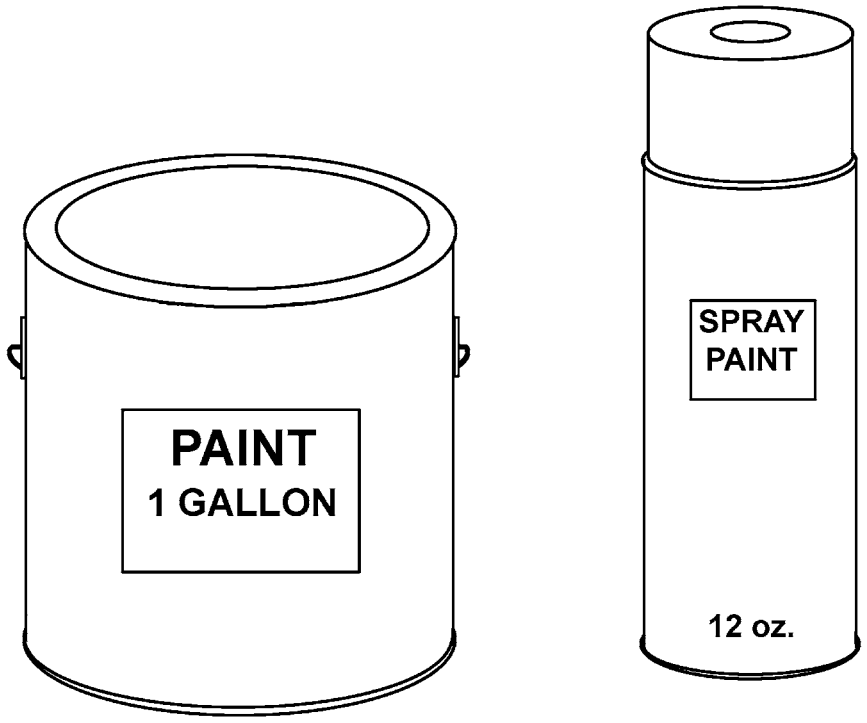

98-0001

https://truckmanualshub.com/

PAINT - S/N 200001A~

Item	Part Number	Description	Qty	
	3EB-99-A6110	NATURAL YELLOW - 12 OZ. SPRAY CAN	1	
	3EB-99-A6210	NATURAL YELLOW - 1 GALLON CAN	1	
	3EB-99-A6120	BLACK GRAY - 12 OZ. SPRAY CAN	1	
	3EB-99-A6220	BLACK GRAY - 1 GALLON CAN	1	
	3EB-99-A6130	SUMMER GREEN - 12 OZ. SPRAY CAN	1	
	3EB-99-A6230	SUMMEWR GREEN - 1 GALLON CAN	1	

https://truckmanualshub.com/

NOTES:

NUMERICAL INDEX

Part Number	Page	Part Number	Page	Part Number	Page
01010-51640	43-4	01010-80835	6-2	01011-82015	41-4
01010-80612	21-10	01010-80835	6-4	01011-82215	41-2
01010-80612	21-2	01010-80855	15-12	01011-82215	41-4
01010-80612	21-4	01010-80890	6-2	01011-83030	43-2
01010-80612	21-6	01010-80890	6-4	01011-83030	43-2
01010-80616	15-14	01010-81025	27-4	01016-50880	37-2
01010-80616	15-2	01010-81025	27-5	01016-50880	37-4
01010-80616	37-2	01010-81025	41-14	01023-10412	37-2
01010-80616	55-2	01010-81025	41-2	01023-10508	55-12
01010-80616	6-2	01010-81025	41-4	01023-10508	55-20
01010-80616	6-4	01010-81025	83-8	01023-10508	55-22
01010-80616	83-12	01010-81040	13-2	01023-10508	55-32
01010-80660	5-2	01010-81040	15-2	01023-10514	55-38
01010-80810	15-14	01010-81045	1-4	01023-10612	55-10
01010-80812	21-12	01010-81050	13-2	01023-10612	55-32
01010-80812	55-40	01010-81050	21-12	01023-10612	55-32
01010-80816	13-2	01010-81070	21-12	01023-10612	55-34
01010-80816	1-4	01010-81220	30-22	01023-10612	55-38
01010-80816	21-10	01010-81220	30-24	01023-10612	83-10
01010-80816	55-2	01010-81230	55-20	01023-10612	83-4
01010-80816	55-2	01010-81230	55-22	01023-10614	41-10
01010-80816	55-20	01010-81230	55-44	01023-10616	4-10
01010-80816	55-22	01010-81230	55-46	01023-10616	4-6
01010-80816	55-34	01010-81235	21-10	01023-10616	4-8
01010-80816	55-4	01010-81235	21-12	01023-10620	55-34
01010-80816	55-44	01010-81235	21-13	01023-20616	56-2
01010-80816	55-46	01010-81235	21-2	01023-60425	83-13
01010-80816	55-6	01010-81235	21-4	01023-60516	83-10
01010-80816	6-2	01010-81235	21-6	01023-60612	50-8
01010-80816	6-4	01010-81235	83-10	01024-80612	4-14
01010-80816	83-10	01010-81280	15-5	01024-80612	4-16
01010-80816	83-4	01010-81280	15-9	01024-80612	55-16
01010-80818	13-2	01010-81290	21-12	01024-80612	55-18
01010-80818	15-2	01010-81640	41-2	01024-80612	55-40
01010-80820	55-2	01010-81640	41-4	01024-80612	55-42
01010-80820	55-20	01010-81645	24-14	01024-80616	36-2
01010-80820	55-22	01010-81845	24-10	01024-80616	55-16
01010-80820	55-32	01010-81845	24-12	01024-80616	55-18
01010-80820	55-36	01010-81845	24-3	01024-80616	55-42
01010-80820	55-4	01010-81845	24-7	01024-80616	66-6
01010-80820	55-44	01010-81865	41-2	01024-80616	66-8
01010-80820	55-46	01010-81865	41-4	01024-80812	55-38
01010-80820	6-2	01010-82060	41-2	01024-80812	6-6
01010-80820	6-4	01010-82060	41-4	01024-80812	66-2
01010-80820	83-2	01010-82075	41-2	01024-80816	1-64
01010-80825	1-64	01010-82075	41-4	01024-80816	1-8
01010-80825	6-6	01010-B0616	4-6	01024-80816	4-12
01010-80825	83-13	01010-B0616	4-8	01024-80816	5-4
01010-80825	83-14	01011-81020A	83-10	01024-80816	55-16
01010-80830	15-12	01011-82015	41-2	01024-80816	55-18

NUMERICAL INDEX

Part Number	Page	Part Number	Page	Part Number	Page
01024-80816	55-4	01024-81030	66-14	01435-00814	24-3
01024-80816	55-4	01024-81030	66-16	01435-00814	24-7
01024-80816	55-42	01024-81030	66-18	01435-00814	4-20
01024-80816	66-10	01024-81230	43-4	01435-00814	4-22
01024-80816	66-12	01024-81235	50-14	01435-00814	4-24
01024-80816	66-14	01024-81235	50-14	01435-00816	30-32
01024-80816	66-14	01024-81235	50-16	01435-00816	36-2
01024-80816	66-16	01024-81235	50-16	01435-00816	36-2
01024-80816	66-16	01050-41470	64-18	01435-00816	37-2
01024-80816	66-18	01050-51020	3-2	01435-00816	41-10
01024-80816	66-2	01050-51020	3-4	01435-00816	41-12
01024-80816	66-24	01050-51025	3-2	01435-00816	41-8
01024-80816	66-26	01050-51025	3-4	01435-00816	55-16
01024-80816	66-28	01050-51025	55-20	01435-00816	55-18
01024-80816	66-30	01050-51025	55-22	01435-00816	55-40
01024-80816	83-14	01050-51025	55-44	01435-00816	55-42
01024-80820	3-2	01050-51025	55-46	01435-00816	55-8
01024-80820	3-4	01050-51035	3-6	01435-00816	55-8
01024-80820	3-6	01050-51040	61-2	01435-00816	83-10
01024-80820	37-2	01050-51460	64-10	01435-00820	34-2
01024-80820	4-10	01050-51460	64-12	01435-00820	55-20
01024-80820	4-14	01050-51460	64-16	01435-00820	55-22
01024-80820	4-16	01050-51460	64-2	01435-00820	55-44
01024-80820	4-6	01050-51460	64-6	01435-00820	55-46
01024-80820	4-8	01121-00082	1-36	01435-00820	61-8
01024-80820	66-12	01121-05351	1-14	01435-00825	36-2
01024-80820	66-14	01220-40512	5-2	01435-00830	83-6
01024-80820	66-16	01220-40512	5-4	01435-00830	83-8
01024-80820	66-18	01220-40525	83-11	01435-00835	83-6
01024-80820	66-24	01252-60545	15-12	01435-00835	83-8
01024-80820	66-26	01252-70830	5-2	01435-00845	83-10
01024-80820	66-28	01252-70835	5-4	01435-01020	30-32
01024-80820	66-30	01252-71045	60-2	01435-01020	36-2
01024-80820	83-14	01252-80660	50-14	01435-01030	34-2
01024-80825	41-2	01252-80660	50-16	01435-40616	50-10
01024-80825	41-4	01370-00410	55-16	01555-00261	1-40
01024-80825	5-2	01370-00410	55-18	01570-00808	83-8
01024-80830	4-2	01370-00410	55-42	01580-10403	55-38
01024-80830	4-4	01370-00414	56-2	01580-10403	83-13
01024-80850	66-26	01370-40416	50-10	01580-10504	55-38
01024-80850	66-28	01435-00612	61-8	01580-10504	55-44
01024-80850	66-30	01435-00616	37-2	01580-10504	55-46
01024-81025	1-6	01435-00812	36-2	01580-10504	83-11
01024-81025	1-62	01435-00812	4-14	01580-10504	83-2
01024-81025	41-6	01435-00812	4-16	01580-10605	37-2
01024-81025	50-10	01435-00812	55-36	01580-10605	5-2
01024-81030	50-14	01435-00812	55-38	01580-10605	55-40
01024-81030	50-16	01435-00812	55-38	01580-10605	55-8
01024-81030	60-2	01435-00814	24-10	01580-10605	83-12
01024-81030	66-12	01435-00814	24-12	01580-10806	37-2

https://truckmanualshub.com/

NUMERICAL INDEX

Part Number	Page	Part Number	Page	Part Number	Page
01580-10806	55-20	01602-20825	55-20	01643-30623	55-2
01580-10806	55-22	01602-20825	55-20	01643-30623	55-6
01580-10806	55-38	01602-20825	55-22	01643-30623	6-2
01580-11008	13-2	01602-20825	55-22	01643-30623	6-4
01580-11008	1-4	01602-20825	55-38	01643-30823	55-2
01580-11210	65-2	01602-20825	55-44	01643-30823	55-2
01580-11210	65-2	01602-20825	55-46	01643-30823	55-2
01580-11613	24-14	01602-20825	83-2	01643-30823	55-32
01580-11613	27-4	01602-21030	1-4	01643-30823	55-34
01580-11815	41-2	01602-21030	83-10	01643-30823	55-36
01580-11815	41-4	01602-21236	28-4	01643-30823	55-4
01582-11008	3-2	01602-21442	64-10	01643-30823	55-4
01582-11008	3-4	01602-21442	64-12	01643-30823	55-40
01582-11008	3-6	01602-21442	64-16	01643-30823	6-2
01582-11008	61-2	01602-21442	64-3	01643-30823	6-2
01582-11210	28-4	01602-21442	64-6	01643-30823	6-4
01582-11411	64-10	01602-21648	27-4	01643-30823	6-4
01582-11411	64-12	01640-20408	56-2	01643-30823	83-10
01582-11411	64-16	01640-20508	55-12	01643-30823	83-14
01582-11411	64-3	01640-20508	55-44	01643-30823	83-4
01582-11411	64-6	01640-20508	55-46	01643-31032	13-2
01582-11815	21-4	01640-20610	5-2	01643-31032	13-2
01582-11815	21-6	01640-20610	55-12	01643-31032	15-2
01582-31411	64-18	01640-20816	50-18	01643-31032	21-12
01583-11408	50-14	01640-21223	55-20	01643-31032	3-2
01583-11408	50-16	01640-21223	55-22	01643-31032	3-2
01593-13018	0-8	01640-21223	55-44	01643-31032	3-4
01593-13018	24-10	01640-21223	55-46	01643-31032	3-4
01593-13018	24-12	01640-21426	41-2	01643-31032	3-6
01593-13018	24-2	01640-21426	41-4	01643-31032	3-6
01593-13018	24-6	01640-21426	50-14	01643-31032	41-14
01594-00807	83-10	01640-21426	50-16	01643-31032	83-10
01594-00807	83-6	01641-20405	83-13	01643-31032	83-8
01596-01009	3-2	01641-20508	61-8	01643-31232	1-6
01596-01009	3-4	01641-20508	61-8	01643-31232	1-62
01596-01009	3-6	01641-20508	83-11	01643-31232	34-2
01599-01214	61-8	01641-20608	55-40	01643-31232	55-20
01601-20410	55-38	01641-20608	55-8	01643-31232	55-22
01601-20513	55-38	01641-31423	64-18	01643-31232	55-44
01601-20513	55-44	01642-20608	83-12	01643-31232	55-46
01601-20513	55-46	01642-20810	13-2	01643-31232	83-10
01601-20513	83-2	01642-20810	50-2	01643-31365	43-4
01601-23075	43-2	01642-20810	83-13	01643-31445	50-14
01601-23075	43-2	01642-40405	50-10	01643-31445	50-16
01602-20619	83-12	01642-40608	50-14	01643-31645	41-2
01602-20720	55-20	01642-40608	50-16	01643-31645	41-4
01602-20720	55-22	01642-40810	50-10	01643-31845	24-10
01602-20720	55-44	01643-30623	15-2	01643-31845	24-12
01602-20720	55-46	01643-30623	4-6	01643-31845	24-3
01602-20825	1-64	01643-30623	4-8	01643-31845	24-7

NUMERICAL INDEX

Part Number	Page	Part Number	Page	Part Number	Page
01643-31845	41-2	04020-01228	21-12	06300-06006	15-4
01643-31845	41-4	04020-01228	21-13	06300-06006	15-8
01643-32060	41-2	04025-00316	15-14	06300-06006	15-8
01643-32060	41-2	04025-00650	24-10	06300-06206	15-4
01643-32060	41-2	04025-00650	24-12	06300-06206	15-4
01643-32060	41-4	04025-00650	24-2	06300-06206	15-4
01643-32060	41-4	04025-00650	24-6	06300-06206	15-8
01643-32060	41-4	04050-11210	36-2	06300-06206	15-8
01643-32260	41-2	04050-11212	61-8	06300-06206	15-8
01643-32260	41-4	04050-11212	61-8	06300-06306	15-4
01643-33080	43-2	04050-11610	37-2	06300-06306	15-5
01643-33080	43-2	04050-12015	30-32	06300-06306	15-8
01643-50823	13-2	04050-13025	24-10	06300-06306	15-9
01643-50823	1-4	04050-13025	24-12	06300-06307	15-5
01643-51032	24-10	04050-13025	24-2	06300-06307	15-9
01643-51032	24-12	04050-13025	24-6	06300-30207	0-7
01643-51032	24-2	04050-18050	21-13	06300-30207	0-7
01643-51032	24-6	04064-03515	15-4	06300-30207	24-10
01643-51232	21-13	04064-03515	15-4	06300-30207	24-12
01643-51232	30-22	04064-03515	15-8	06300-30207	24-2
01643-51232	30-24	04064-03515	15-8	06300-30207	24-6
01643-51232	61-8	04065-05520	15-4	06300-32007	0-7
01643-51645	24-14	04065-05520	15-4	06300-32007	24-2
01691-00052	1-40	04065-05520	15-8	06300-32007	24-6
02117-20021	1-40	04065-05520	15-8	06300-32010	0-7
02117-21521	0-2	04205-10518	36-2	06300-32010	24-2
02117-21521	1-40	04205-10616	37-2	06300-32010	24-6
02117-21521	1-48	04434-50612	30-22	06301-06006	15-4
02117-21521	55-24	04434-50612	30-24	06301-06006	15-4
02117-22023	0-2	04434-50808	6-6	06301-06006	15-8
02117-22023	55-24	04434-51008	30-32	06301-06006	15-8
02117-23021	1-40	04434-51008	55-20	07000-02145	21-10
02117-23021	55-24	04434-51008	55-22	07000-11006	60-2
02117-23523	0-2	04434-51008	55-44	07000-12015	60-2
02117-23523	1-40	04434-51008	55-46	07000-13030	64-12
02117-23523	1-48	04434-51308	4-14	07000-13030	64-6
02205-10508	50-2	04434-51408	6-2	07000-13034	66-12
02215-10406	55-20	04434-51408	6-4	07000-13034	66-14
02215-10406	55-22	04434-52310	6-2	07000-13034	66-16
02215-10406	55-44	04434-52310	6-4	07000-13034	66-18
02215-10406	55-46	04435-51008	30-32	07000-13035	64-10
02892-03081	60-2	04435-51208	4-22	07000-13035	64-16
02896-11009	66-24	04435-51208	4-24	07000-71009	15-12
02896-11009	66-26	04435-51308	4-20	07000-72020	15-2
02896-11009	66-28	04435-51408	36-2	07000-72075	1-64
02896-11009	66-30	06002-30214	0-7	07000-A2018	4-22
02896-11012	66-20	06002-30214	21-10	07000-A2018	4-24
02896-21009	4-18	06002-32213	0-7	07003-12228	0-12
02896-21009	4-20	06002-32213	21-4	07003-12228	55-2
04020-01024	15-2	06300-06006	15-4	07005-01012	15-14

NUMERICAL INDEX

Part Number	Page	Part Number	Page	Part Number	Page
07012-00040	21-12	07281-00197	66-28	08192-12100	83-13
07012-C0045	15-5	07281-00197	66-30	08192-12200	83-12
07012-C0045	15-9	07281-00229	4-18	08192-12200	83-13
07020-00000	41-2	07281-00229	4-20	08192-12810	83-11
07020-00000	41-4	07281-00229	4-22	08192-12810	83-11
07020-00000	41-6	07281-00229	4-24	08192-12810	83-11
07020-00001	24-10	07281-00229	66-26	08192-12810	83-12
07020-00001	24-12	07281-00229	66-28	08192-12810	83-13
07020-00001	24-2	07281-00229	66-30	08192-12910	83-11
07020-00001	24-6	07281-00259	6-2	08192-12910	83-11
07020-00001	41-6	07281-00259	6-2	08192-12910	83-11
07020-00001	64-13	07281-00259	6-4	08192-12910	83-11
07020-00001	64-7	07281-00259	6-4	08192-12910	83-12
07020-00675	24-10	07281-00259	66-12	08192-12910	83-12
07020-00675	24-12	07281-00259	66-14	08192-12910	83-13
07020-00675	24-2	07281-00259	66-14	08911-1401G	1-50
07020-00675	24-6	07281-00259	66-16	08911-1401G	55-26
07020-00900	41-2	07281-00259	66-18	09690-C0160	96-10
07020-00900	41-4	07281-00259	66-18	09690-C0160	96-2
07030-00252	0-3	07281-00259	66-26	09690-C0160	96-6
07030-00252	15-2	07281-00259	66-28	09690-P0200	96-10
07030-01030	21-12	07281-00259	66-30	09690-P0200	96-2
07030-01030	36-2	07281-00259	66-4	09690-P0200	96-6
07040-11007	15-14	07281-00259	66-8	09842-A0481	96-10
07042-30108	66-20	07281-00419	61-2	09842-A0481	96-2
07042-30211	66-22	07281-00419	66-6	09842-A0481	96-6
07042-80108	15-14	07281-00419	66-8	10005-FU410	1-14
07042-80108	15-2	07281-00489	66-12	10006-FU410	1-14
07043-70108	15-14	07281-00489	66-14	10101-FY525	0-6
07046-14520	24-10	07281-00489	66-16	10101-FY52K	1-52
07046-14520	24-12	07281-00489	66-18	10102-GW460	1-10
07046-14520	24-2	07281-10809	64-18	10102-GW461	1-10
07046-14520	24-6	07281-10909	64-18	10102-GW560	1-10
07102-203A9	4-22	07281-11029	64-18	10102-GW561	1-10
07102-203A9	4-24	07285-00130	36-2	10103-GW400	1-10
07260-20940	66-26	07285-00130	5-4	10103-GW500	1-10
07260-20940	66-28	08059-00310	36-2	11000-FU400	1-12
07260-20940	66-30	08059-00310	5-2	11000-FY500	1-12
07260-21450	66-26	08105-01220	0-3	11019-32201	1-12
07260-21450	66-28	08110-8201B	1-54	11023-78200	1-12
07260-21450	66-30	08120-8161E	1-44	11024-25N00	1-40
07260-21463	66-26	08120-8201F	1-48	11024-78200	1-12
07260-21463	66-28	08120-8201F	55-24	11024-85G00	1-12
07260-21463	66-30	08124-0201F	1-48	11024-85G01	1-12
07280-05026	4-10	08124-0201F	55-24	11024-K0100	1-12
07280-05026	4-8	08124-0251F	1-50	11026-01M02	1-12
07280-05729	1-8	08124-0251F	55-26	11026-53J00	1-14
07280-07429	1-64	08191-00770	83-12	11040-FY501	1-14
07281-00167	36-2	08191-00770	83-13	11042-FY525	0-6
07281-00197	66-26	08192-12100	83-12	11042-FY52K	1-52

NUMERICAL INDEX

Part Number	Page	Part Number	Page	Part Number	Page
11044-FU400	0-6	12015323	83-11	13034-FU400	1-24
11044-FU400	1-14	12033-4E110	1-18	13050-FU400	1-40
11044-FU400	1-52	12036-4E110	1-18	13070-50K00	1-22
11044-FU460	0-6	12038-4E110	1-18	13201-FY500	1-22
11044-FU460	1-14	12100-FU400	1-18	13202-FU400	1-22
11044-FU460	1-52	12100-FY500	1-18	13203-FY50A	1-22
11046-73402	1-12	12109-D0210	1-18	13205-40F00	1-22
11046-73402	1-24	12111-FY500	1-18	13207-53F00	0-6
11046-73402	1-40	12112-H1000	1-18	13207-53F00	1-22
11053-73400	1-12	12117-FY500	1-18	13209-V7200	1-22
11056-FY500	1-14	12118-FY500	1-18	13210-16A00	1-22
11060-FU400	1-40	12119-FY500	1-18	13231-H1001	1-22
11060-W7001	1-40	12129409	83-11	13234-78200	1-22
11061-FU400	1-40	12129409	83-11	13235-78200	1-22
11062-07N00	1-40	12201-FU400	1-18	13238-FY500	1-22
11062-FY500	1-40	12201-FY500	1-18	13252-FY500	1-22
11065-30000	1-38	12231-FY500	1-18	13254-02N00	1-22
11072-50K01	0-3	12232-FY500	1-18	13255-58000	1-22
11072-50K01	1-40	12233-FY500	1-19	13256-W0400	1-22
11098-FY500	1-14	12234-FY500	1-19	13258-FY500	1-22
11099-FY500	1-14	12235-FY500	1-19	13258-FY510	1-22
11110-FU400	1-12	12236-FY500	1-19	13264-FU400	1-14
11128-01M00	1-12	12247-50K00	1-18	13268-88V62	1-14
11140-FT860	0-6	12248-50K00	1-18	13270-FY50A	0-6
11140-FT860	1-12	12249-50K00	1-18	13270-FY50A	1-14
11392-50K00	1-12	12250-50K00	1-18	13274-B1101	1-14
11715-FU400	1-48	12251-50K00	1-18	13289-58000	1-22
11715-FU400	1-48	12252-50K00	1-18	13501-FU400	1-24
11715-FU400	55-24	12279-FF200	1-12	13510-FF200	0-6
11715-FU400	55-24	12293-P0500	1-12	13510-FF200	1-24
11810-75T00	1-16	12297-FU400	1-12	14003-FU460	1-26
11812-41B00	1-16	12303-FU400	1-18	14003-FU460	1-36
11823-FU400	1-16	12307-FU460	1-18	14003-FU461	1-26
11828-FU400	1-16	12309-FU400	1-18	14004-FU400	1-26
11831-FU460	1-26	12310-K9302	1-19	14035-FY500	1-26
12010-FU420	1-18	12312-50K00	0-6	14037-42L01	1-26
12010-FU421	1-18	12312-50K00	1-19	14049-76001	1-40
12010-FU422	1-18	12315-58S00	1-19	14053-42L00	1-40
12010-FU423	1-18	12320-K9303	1-24	14053-E0600	1-26
12010-FU424	1-18	12351-FU400	1-24	14053-FU400	1-40
12010-FU470	1-18	12352-GW300	1-24	14055-FF100	1-40
12010-FU471	1-18	12353-GW300	1-24	14055-GX74A	1-40
12010-FU520	1-18	12354-50K00	1-24	14069-82F00	1-26
12010-FU521	1-18	13001-50K00	1-22	14075-40F04	1-40
12010-FU522	1-18	13002-71200	1-12	14075-FU460	1-40
12010-FU523	1-18	13010-78201	1-22	14080-50K00	1-40
12010-FU524	1-18	13013-78200	1-22	14094-31U00	1-26
12010-FU570	1-18	13021-FY500	1-22	14330-GY360	1-28
12010-FU571	1-18	13024-FY500	1-22	14330-GY360	1-32
12015323	83-11	13028-FU400	1-22	14330-GY360	1-34

NUMERICAL INDEX

Part Number	Page	Part Number	Page	Part Number	Page
14875-P6500	1-26	16197-FU461	0-12	16476-GY010	1-56
14X-14-19241	0-7	16197-FU46A	1-30	16590-FU461	1-26
14X-14-19241	21-13	16197-FU46A	1-32	16590-FU462	1-26
14X-14-19241	21-2	16197-FU46A	1-34	16600-FU460	0-12
15010-66202	1-38	16214-16811	1-56	16600-FU460	1-28
15020-78205	1-38	16214-A8800	1-30	16600-FU461	1-32
15040-FU460	1-38	16214-A8800	1-32	16600-FU461	1-34
15050-66201	1-38	16214-A8800	1-34	16600-FU471	0-12
15066-78200	1-38	16237-FU460	1-56	16600-FU471	1-30
15075-FF200	1-12	16263-FU460	1-30	16600-FU471	1-32
150N4044	0-4	16263-FU460	1-32	16600-FU471	1-34
15132-66000	1-38	16263-FU460	1-34	16600-FU571	0-12
15208-01B02	0-14	16267-FU460	1-36	16600-FU571	1-30
15208-01B02	0-2	16270-FU460	1-28	16600-FU571	1-32
15208-01B02	1-38	16270-FU460	1-36	16600-FU571	1-34
15213-21002	1-12	16277-FU461	1-30	16610-GX11A	1-30
15241-16A01	1-12	16277-FU461	1-32	16610-GX11A	1-32
15255-1P110	0-2	16277-FU461	1-34	16610-GX11A	1-34
15255-1P110	1-14	16290-FU460	1-30	16610-GX11A	1-36
16065-FU460	1-30	16290-FU460	1-32	16610-GX21A	1-30
16065-FU460	1-32	16290-FU460	1-34	16610-GX21A	1-32
16065-FU460	1-34	16291-GX11A	1-30	16610-GX21A	1-34
16065-GY010	1-56	16291-GX11A	1-32	16618-5L300	1-28
16065-OH600	1-30	16291-GX11A	1-34	16618-FU460	1-28
16065-OH600	1-32	16310-GS40A	0-12	16618-GX11A	1-30
16065-OH600	1-34	16310-GU20A	1-56	16618-GX11A	1-32
16094-B8500	1-30	16310-GU20A	6-2	16618-GX11A	1-34
16094-B8500	1-32	16310-GU20A	6-4	16638-GX11A	0-12
16094-B8500	1-34	16318-GY360	1-28	16638-GX11A	1-30
16098-FU460	1-30	16318-GY360	1-32	16638-GX11A	1-32
16098-FU460	1-32	16318-GY360	1-34	16638-GX11A	1-34
16098-FU460	1-34	16328-GY010	1-56	16919-W1602	1-56
16119-FU460	0-12	16349-18V00	1-56	17052-FU460	1-56
16119-FU460	1-36	16349-VS001	1-30	17053-FU460	1-56
16125-Y4400	1-56	16349-VS001	1-32	17054-FU460	1-56
16156-FU460	1-30	16349-VS001	1-34	17099-85G00	1-54
16156-FU460	1-32	16349-VS002	1-30	17108-K7005	1-28
16156-FU460	1-34	16349-VS002	1-32	17108-K7005	1-32
16163-Y4403	1-56	16349-VS002	1-34	17108-K7005	1-34
16175-FU460	1-36	16356-FU460	1-56	17111-50K00	1-28
16175-FU470	1-28	16375-FU460	1-56	17111-50K00	1-32
16175-FU470	1-30	16379-FU460	1-56	17111-50K00	1-34
16175-FU470	1-32	16388-FU460	1-56	17111-50K60	1-28
16175-FU470	1-34	16389-FU460	1-56	17111-50K60	1-32
16175-FU470	1-36	16420-E0100	1-54	17111-50K60	1-34
16185-FU460	1-28	16439-17B00	1-16	17111-FU400	1-28
16185-FU460	1-30	16439-26E00	1-40	17111-FU400	1-32
16185-FU460	1-32	16439-42L00	1-40	17111-FU400	1-34
16185-FU460	1-34	16439-42L01	1-16	17520-GY361	1-28
16185-FU460	1-36	16439-V5000	1-16	17520-GY361	1-32

NUMERICAL INDEX

Part Number	Page	Part Number	Page	Part Number	Page
17520-GY361	1-34	22630-44B20	1-40	23156-08000	1-48
17522-FU463	1-28	22680-FU460	0-12	23156-08000	55-24
17522-FU4634	1-32	22690-FU460	0-12	23215-3S416	1-48
17522-FU4634	1-34	22710-FU460	55-34	23215-3S416	55-24
17527-GU24A	6-2	23100-FU410	0-2	23215-GY360	1-48
17527-GU24A	6-4	23100-FU410	1-48	23215-GY360	55-24
17571-5L300	1-28	23100-FU410	55-24	23300-FU410	0-2
17571-5L300	1-32	23100-GY360	0-2	23300-FU410	1-50
17571-5L300	1-34	23100-GY360	1-48	23300-FU410	55-26
17571-5V002	1-28	23100-GY360	55-24	23302-6J010	1-50
17571-5V002	1-32	23102-50K15	1-48	23302-6J010	55-26
17571-5V002	1-34	23102-50K15	55-24	23310-0M210	1-50
17904-FT860	0-12	23102-GY360	1-48	23310-0M210	55-26
17904-GU20A	1-56	23102-GY360	55-24	23312-0W010	1-50
17904-GU20A	6-2	23108-50K15	1-48	23312-0W010	55-26
17904-GU20A	6-4	23108-50K15	55-24	23312-1S710	1-50
17937-Y4400	1-56	23108-GY360	1-48	23312-1S710	55-26
17937-Y4410	1-56	23108-GY360	55-24	23318-FU410	1-50
17958-16811	1-56	23110-GY360	1-50	23318-FU410	55-26
17958-16811	1-56	23110-GY360	55-26	23322-50Y12	1-50
17959-GU20A	1-56	23115-20P10	1-48	23322-50Y12	55-26
17960-VR500	1-56	23115-20P10	55-24	23325-42L70	1-50
17962-FU460	1-56	23115-47N10	1-48	23325-42L70	55-26
18919-AM810	0-12	23115-47N10	55-24	23337-0W011	1-50
20602-01M00	1-26	23118-47N10	1-48	23337-0W011	55-26
20602-01M00	3-2	23118-47N10	55-24	23338-01N10	1-50
20692-65J00	0-6	23118-GY360	1-48	23338-01N10	55-26
20692-65J00	3-6	23118-GY360	55-24	23340-0M210	1-50
21010-FU425	0-2	23120-22J20	1-48	23340-0M210	55-26
21010-FU425	1-40	23120-22J20	55-24	23343-FU410	1-50
21014-07N00	0-2	23120-30R10	1-48	23343-FU410	55-26
21014-07N00	1-40	23120-30R10	55-24	23354-W9810	1-50
21051-FU500	1-40	23124-FF110	1-48	23354-W9810	55-26
21051-GY360	1-40	23124-FF110	55-24	23360-0M210	1-50
21060-FU410	0-2	23124-GY360	1-48	23360-0M210	55-26
21060-FU410	1-40	23124-GY360	55-24	23361-42L70	1-50
21064-GY30A	1-40	23127-FF110	1-48	23361-42L70	1-50
21079-K9760	1-40	23127-FF110	55-24	23361-42L70	1-50
21200-50K00	0-3	23127-GY360	1-48	23361-42L70	55-26
21200-50K00	1-40	23127-GY360	55-24	23361-42L70	55-26
22131-4M505	1-24	23131-20P10	1-48	23361-42L70	55-26
22131-55K10	1-38	23131-20P10	55-24	23381-FU410	1-50
22177-FU460	1-38	23142-0B000	1-48	23381-FU410	55-26
22318-FU460	1-46	23142-0B000	55-24	23385-50Y12	1-50
22401-FU412	0-12	23150-FU410	1-48	23385-50Y12	55-26
22401-FU412	1-42	23150-FU410	55-24	23465-W9810	1-50
22435-FU400	1-42	23150-GY360	1-48	23465-W9810	55-26
22448-AR215	0-12	23150-GY360	55-24	23480-M0110	1-50
22448-AR215	1-42	23153-70T12	1-48	23480-M0110	1-50
22630-44B20	0-12	23153-70T12	55-24	23480-M0110	1-50

NUMERICAL INDEX

Part Number	Page	Part Number	Page	Part Number	Page
23480-M0110	55-26	30B-13-11130	13-4	30B-13-11420	13-8
23480-M0110	55-26	30B-13-11130	13-8	30B-13-11430	13-4
23480-M0110	55-26	30B-13-11140	13-4	30B-13-11430	13-8
23731-6J906	0-12	30B-13-11140	13-8	30B-13-11440	13-4
23731-6J906	1-24	30B-13-11150	13-4	30B-13-11440	13-8
23731-6N206	0-12	30B-13-11150	13-8	30B-13-11460	13-5
23731-6N206	1-24	30B-13-11160	13-4	30B-13-11460	13-9
24075-GY360	1-42	30B-13-11160	13-8	30B-13-11470	13-5
24075-GY360	1-44	30B-13-11170	13-4	30B-13-11470	13-9
24136-FU460	1-44	30B-13-11170	13-8	30B-15-11110	15-16
24136-FU461	1-44	30B-13-11190	13-4	30B-15-11120	15-16
24136-FU461	1-44	30B-13-11190	13-8	30B-15-11140	15-16
24136-GU21A	1-42	30B-13-11200	13-4	30B-15-11150	15-16
24136-GY360	1-42	30B-13-11200	13-8	30B-36-05020	30-26
24220-79901	1-16	30B-13-11240	13-4	30B-36-12150	30-26
24220-FU400	1-16	30B-13-11240	13-8	30B-36-12160	30-26
24319-C9905	1-30	30B-13-11250	13-4	30B-36-12160	30-28
24319-C9905	1-32	30B-13-11250	13-8	30B-36-12160	30-29
24319-C9905	1-34	30B-13-11260	13-4	30B-36-12170	30-26
24341-10Y01	1-30	30B-13-11260	13-8	30B-36-12180	30-26
24341-10Y01	1-32	30B-13-11270	13-4	30B-36-12180	30-28
24341-10Y01	1-34	30B-13-11270	13-8	30B-36-12310	30-26
24341-10Y03	1-30	30B-13-11280	13-4	30B-36-12310	30-28
24341-10Y03	1-32	30B-13-11280	13-8	30B-36-12320	30-26
24341-10Y03	1-34	30B-13-11290	13-4	30B-36-12330	30-26
24346-VS000	1-30	30B-13-11290	13-8	30B-36-12410	30-28
24346-VS000	1-32	30B-13-11300	13-4	30B-36-12450	30-28
24346-VS000	1-34	30B-13-11300	13-8	30B-36-12530	30-28
25080-89903	1-40	30B-13-11310	13-4	30B-36-12580	30-28
25230-C9971	55-32	30B-13-11310	13-8	30B-36-12590	30-28
25240-FJ10A	0-6	30B-13-11330	13-4	30B-36-12620	30-28
25240-FJ10A	1-12	30B-13-11330	13-8	30B-36-12640	30-28
26366-080002	3-6	30B-13-11340	13-4	30B-36-12650	30-28
28351-89902	0-12	30B-13-11340	13-8	30B-36-12660	30-28
28351-89902	55-6	30B-13-11350	13-4	30B-36-12670	30-28
300-22-31241	24-3	30B-13-11350	13-8	30B-36-12690	30-29
300-22-31241	24-7	30B-13-11360	13-4	30E-15-11130	15-16
300-919-9040	27-4	30B-13-11360	13-8	30E-15-11130	15-16
30412-FY600	1-24	30B-13-11370	13-4	316-22-21250	0-7
30412-P5100	1-12	30B-13-11370	13-8	316-22-21250	21-4
30A-13-11100	13-8	30B-13-11380	13-4	316-22-21250	21-6
30A-13-11110	13-8	30B-13-11380	13-8	32203-FU400	1-19
30B-13-05010	0-6	30B-13-11390	0-14	34A-01-35120	1-6
30B-13-05010	13-5	30B-13-11390	0-3	34A-01-35120	1-62
30B-13-05010	13-9	30B-13-11390	13-4	34A-10-81150	34-2
30B-13-11100	13-4	30B-13-11390	13-8	34A-42-11411	41-2
30B-13-11110	13-4	30B-13-11390	15-2	34A-42-11411	41-4
30B-13-11120	0-6	30B-13-11410	13-4	34A-42-11411	72-64
30B-13-11120	13-4	30B-13-11410	13-8	34A-42-11411	72-66
30B-13-11120	13-8	30B-13-11420	13-4	34A-42-41130	1-64

https://truckmanualshub.com/

NUMERICAL INDEX

Part Number	Page	Part Number	Page	Part Number	Page
34A-42-41130	4-10	34B-30-14351	30-2	360-27-11220	24-10
34A-42-41130	4-14	34B-30-14351	30-6	360-27-11220	24-12
34A-42-41130	4-16	34B-30-14440	30-10	360-27-11220	24-2
34A-42-41130	4-6	34B-30-14440	30-15	360-27-11220	24-6
34A-42-41130	4-8	34B-30-14440	30-18	37A-1AV-1030	96-10
34A-50-22140	27-4	34B-30-14440	30-2	37A-1AV-1030	96-2
34A-50-22140	27-5	34B-30-14440	30-6	37A-1AV-1030	96-6
34A-76-42110	66-8	34B-30-14450	30-10	37A-1CP-A710	0-8
34B-15-11360	15-4	34B-30-14450	30-14	37A-1CP-A710	56-2
34B-15-11360	15-4	34B-30-14450	30-18	37A-1CP-A710	56-4
34B-15-11360	15-8	34B-30-14450	30-2	37A-1CP-A710	56-6
34B-15-11360	15-8	34B-30-14450	30-6	37A-1CP-A720	0-8
34B-21-12141	21-12	34B-30-14470	30-10	37A-1CP-A720	56-2
34B-21-14151	0-7	34B-30-14470	30-15	37A-1CP-A720	56-4
34B-21-14151	21-10	34B-30-14470	30-19	37A-1CP-A720	56-6
34B-21-14151	27-4	34B-30-14470	30-3	37A-1CP-A750	0-8
34B-21-14151	27-4	34B-30-14470	30-7	37A-1CP-A750	56-2
34B-24-11221	0-8	34B-30-14480	30-10	37A-1CP-A750	56-4
34B-24-11221	24-2	34B-30-14480	30-15	37A-1CP-A750	56-6
34B-24-11221	24-6	34B-30-14480	30-18	37A-1LH-2361	55-44
34B-27-00210	27-4	34B-30-14480	30-2	37A-1LH-2361	55-46
34B-27-11131	27-4	34B-30-14480	30-6	37A-1LH-2371	55-20
34B-27-11141	27-4	34B-30-14521	30-14	37A-1LH-2371	55-22
34B-27-11340	21-6	34B-30-14521	30-18	37A-1LK-2210	55-8
34B-27-11340	27-4	34B-30-14540	30-14	37A-1LM-2010	55-20
34B-27-11340	27-4	34B-30-14540	30-18	37A-1LM-2010	55-22
34B-27-11350	21-6	34B-30-14550	30-14	37A-1LM-2040	55-44
34B-27-11350	27-4	34B-30-14550	30-18	37A-1LM-2040	55-46
34B-27-11350	27-4	34B-30-14550	30-2	37A-27-14120	28-4
34B-27-32320	27-4	34B-30-14550	30-6	37A-27-14130	28-4
34B-27-32330	27-4	34B-30-14560	30-10	37A-27-18111	28-4
34B-27-32330	27-5	34B-30-14560	30-14	37A-2BK-A020	96-11
34B-27-32411SA	27-4	34B-30-14560	30-18	37A-2BK-A020	96-3
34B-27-32440	27-5	34B-30-14560	30-2	37A-2BK-A020	96-7
34B-30-14160	30-14	34B-30-14560	30-6	37A-2BS-1011	96-10
34B-30-14160	30-18	34B-30-14570	30-10	37A-2BS-1011	96-2
34B-30-14160	30-2	34B-41-12910	21-2	37A-2BS-1011	96-6
34B-30-14160	30-6	34B-41-12910	21-4	37A-502-8130	66-4
34B-30-14260	30-14	34B-41-12910	21-6	37B-1AC-A110	4-14
34B-30-14260	30-18	34B-41-12920	21-2	37B-1AC-A150	4-14
34B-30-14260	30-2	34B-41-12920	21-4	37B-1AC-A150	4-16
34B-30-14260	30-6	34B-41-12920	21-6	37B-1AC-A160	4-16
34B-30-14320	30-10	34B-50-12730	50-8	37B-1AC-A170	4-10
34B-30-14320	30-14	34B-66-15180	0-14	37B-1AC-A170	4-6
34B-30-14320	30-18	34B-66-15180	0-4	37B-1AC-A170	4-8
34B-30-14320	30-2	34B-66-15180	0-8	37B-1AC-A180	4-10
34B-30-14320	30-6	34B-66-15180	66-6	37B-1AC-A180	4-8
34B-30-14351	30-10	34B-66-15180	66-8	37B-1AE-6010	83-11
34B-30-14351	30-14	358-60-15250	61-8	37B-1AE-6010	83-12
34B-30-14351	30-18	358-60-15250	61-8	37B-1AE-6030	55-20

NUMERICAL INDEX

Part Number	Page	Part Number	Page	Part Number	Page
37B-1AE-6030	55-22	37B-1DD-5210	0-12	37B-1FT-A711	41-2
37B-1AJ-9010	64-12	37B-1DD-5210	55-32	37B-1FT-A711	41-4
37B-1AJ-9010	64-12	37B-1DD-5220	0-12	37B-1FT-A721	41-2
37B-1AJ-9010	64-6	37B-1DD-5220	55-32	37B-1FT-A721	41-4
37B-1AJ-9010	64-6	37B-1DD-5320	0-12	37B-1FZ-A7820	41-2
37B-1AJ-9010	64-6	37B-1DD-5320	0-12	37B-1FZ-A7820	41-4
37B-1AJ-9020	64-10	37B-1DD-5330	0-12	37B-1FZ-A7890	41-2
37B-1AJ-9020	64-16	37B-1DE-5351	1-60	37B-1FZ-A7890	41-4
37B-1AP-1010	64-12	37B-1DE-5361	1-60	37B-1FZ-A810	41-2
37B-1AP-1010	64-12	37B-1DG-5320	55-34	37B-1FZ-A810	41-4
37B-1AP-1010	64-6	37B-1DG-5330	55-34	37B-1HA-A710	61-8
37B-1AP-1010	64-6	37B-1DU-3031	0-12	37B-1HA-A720	61-8
37B-1AP-1010	64-6	37B-1DU-3031	5-2	37B-1HA-A730	61-8
37B-1AP-1020	64-10	37B-1EH-2011	0-4	37B-1HA-A740	61-8
37B-1AP-1020	64-16	37B-1EJ-2020	0-2	37B-1HD-5030	61-8
37B-1AZ-5030	1-4	37B-1EK-4010	55-12	37B-1HD-5040	61-8
37B-1AZ-5030	15-2	37B-1EK-4030	55-12	37B-1JE-A410	64-12
37B-1AZ-5030	15-4	37B-1EL-4020	55-12	37B-1JE-A410	64-6
37B-1AZ-5050	15-8	37B-1EM-4080	83-10	37B-1JE-A410	64-6
37B-1AZ-5050	1-4	37B-1EP-4020	4-16	37B-1JE-A420	64-12
37B-1AZ-5050	15-2	37B-1EP-4020	55-38	37B-1JE-A420	64-6
37B-1BR-5110	30-2	37B-1ER-F160	83-11	37B-1JE-A610	64-10
37B-1BR-5120	30-2	37B-1ER-F160	83-11	37B-1JE-A650	64-16
37B-1BR-5130	30-6	37B-1ES-F310	83-12	37B-1JV-A410	64-2
37B-1BR-5140	30-6	37B-1ES-F310	83-2	37B-1JV-A410	64-6
37B-1BR-5210	30-14	37B-1ES-F310	96-10	37B-1JV-A420	64-2
37B-1BR-5210	30-18	37B-1ES-F310	96-2	37B-1JV-A420	64-6
37B-1BR-5220	30-14	37B-1ES-F310	96-6	37B-1JV-A430	64-2
37B-1BR-5220	30-18	37B-1EU-F150	83-12	37B-1JV-A430	64-6
37B-1BR-5310	30-10	37B-1EU-F170	83-2	37B-1JV-A440	64-2
37B-1BR-5320	30-10	37B-1EV-A150	83-12	37B-1JV-A440	64-6
37B-1CS-A010	0-8	37B-1EV-A150	83-2	37B-1JV-A510	64-2
37B-1CS-A010	56-2	37B-1FA-A050	5-4	37B-1JV-A510	64-6
37B-1CV-2121	50-8	37B-1FA-A070	5-4	37B-1JV-A520	64-2
37B-1CW-3030	50-18	37B-1FB-5021	21-2	37B-1JV-A520	64-6
37B-1CW-3100	50-18	37B-1FB-5031	21-2	37B-1JV-A530	64-2
37B-1DA-5320	1-2	37B-1FC-5031	21-4	37B-1JV-A530	64-6
37B-1DA-5331	1-2	37B-1FC-5041	21-4	37B-1JV-A540	64-2
37B-1DA-5350	1-2	37B-1FD-5051	21-6	37B-1JV-A540	64-6
37B-1DA-5361	1-2	37B-1FE-5211	21-10	37B-1JV-A810	64-10
37B-1DD-5010	1-2	37B-1FE-5211	21-8	37B-1JV-A810	64-2
37B-1DD-5020	1-2	37B-1FF-A150	6-6	37B-1JV-A820	64-10
37B-1DD-5030	1-2	37B-1FF-A170	6-6	37B-1JV-A820	64-2
37B-1DD-5040	1-2	37B-1FH-3010	4-10	37B-1JV-A910	64-10
37B-1DD-5050	1-2	37B-1FH-3010	4-10	37B-1JV-A910	64-2
37B-1DD-5060	1-2	37B-1FH-3010	4-8	37B-1JV-A920	64-10
37B-1DD-5110	1-2	37B-1FH-3010	4-8	37B-1JV-A920	64-2
37B-1DD-5130	1-2	37B-1FH-3020	4-10	37B-1JW-A410	64-12
37B-1DD-5140	1-2	37B-1FH-A020	4-6	37B-1JW-A410	64-2
37B-1DD-5160	1-2	37B-1FH-A020	4-8	37B-1JW-A420	64-12

NUMERICAL INDEX

Part Number	Page	Part Number	Page	Part Number	Page
37B-1JW-A420	64-2	37B-1PC-5070	66-18	37B-1QM-A021	96-6
37B-1JW-A440	64-12	37B-1PC-5070	66-4	37B-1QM-A031	96-10
37B-1JW-A510	64-12	37B-1PC-5090	4-22	37B-1QM-A031	96-2
37B-1JW-A510	64-2	37B-1PC-5090	4-24	37B-1QM-A031	96-6
37B-1JW-A520	64-12	37B-1PC-5090	66-12	37B-1QM-A041	96-10
37B-1JW-A520	64-2	37B-1PC-5090	66-14	37B-1QM-A041	96-2
37B-1JW-A540	64-12	37B-1PC-5090	66-26	37B-1QM-A041	96-6
37B-1JW-A810	64-16	37B-1PC-5090	66-28	37B-1QM-A051	96-10
37B-1JW-A810	64-2	37B-1PC-5090	66-30	37B-1QM-A051	96-2
37B-1JW-A820	64-16	37B-1PW-4030	66-26	37B-1QM-A051	96-6
37B-1JW-A820	64-2	37B-1PW-4030	66-28	37B-1QM-A061	96-10
37B-1JW-A910	64-16	37B-1PW-4030	66-30	37B-1QM-A061	96-2
37B-1JW-A910	64-2	37B-1PW-5010	66-26	37B-1QM-A061	96-6
37B-1JW-A920	64-16	37B-1PW-5010	66-28	37B-1QT-A030	96-11
37B-1JW-A920	64-2	37B-1PW-5010	66-30	37B-1QT-A030	96-3
37B-1KA-A710	0-8	37B-1PW-5040	66-26	37B-1QT-A030	96-7
37B-1KA-A710	60-2	37B-1PW-5040	66-28	37B-1RB-5010	66-12
37B-1KA-A710	60-4	37B-1PW-5040	66-30	37B-1RB-5010	66-14
37B-1KB-5040	0-9	37B-1QA-3010	96-10	37B-1RB-5010	66-16
37B-1KB-5040	60-8	37B-1QA-3010	96-2	37B-1RB-5010	66-18
37B-1KC-5020	0-8	37B-1QA-3010	96-6	37B-1RB-5020	66-14
37B-1KC-5020	60-2	37B-1QB-3010	96-10	37B-1RB-5020	66-16
37B-1KC-5020	60-6	37B-1QB-3010	96-2	37B-1RB-5020	66-18
37B-1KD-5040	0-9	37B-1QB-3010	96-6	37B-1RB-5030	66-12
37B-1KD-5040	60-10	37B-1QF-A020	96-10	37B-1RB-5030	66-14
37B-1KE-5030	60-2	37B-1QF-A020	96-2	37B-1RB-5040	66-12
37B-1LH-A720	55-2	37B-1QF-A020	96-6	37B-1RB-5040	66-14
37B-1LH-A720	55-8	37B-1QL-A030	96-10	37B-1RB-5040	66-16
37B-1LJ-A710	55-20	37B-1QL-A030	96-2	37B-1RB-5040	66-18
37B-1LJ-A710	55-22	37B-1QL-A030	96-6	37B-1RB-5060	66-2
37B-1LJ-A720	55-44	37B-1QL-A040	96-10	37B-1RC-5010	66-12
37B-1LJ-A720	55-46	37B-1QL-A040	96-2	37B-1RC-5010	66-14
37B-1LK-4010	55-40	37B-1QL-A040	96-6	37B-1RC-5010	66-16
37B-1PB-4030	0-4	37B-1QL-A050	96-10	37B-1RC-5010	66-18
37B-1PB-4030	0-8	37B-1QL-A050	96-2	37B-1RC-5010	66-26
37B-1PB-4030	66-6	37B-1QL-A050	96-6	37B-1RC-5010	66-28
37B-1PB-4040	0-4	37B-1QL-A060	96-10	37B-1RC-5010	66-30
37B-1PB-4040	0-8	37B-1QL-A060	96-2	37B-1RC-5010	66-4
37B-1PB-4040	66-8	37B-1QL-A060	96-6	37B-1RC-5030	66-18
37B-1PC-5010	66-2	37B-1QL-A070	96-10	37B-1TH-5010	21-10
37B-1PC-5020	66-2	37B-1QL-A070	96-2	37B-1TH-5020	21-16
37B-1PC-5030	66-4	37B-1QL-A070	96-6	37B-1TJ-5010	21-10
37B-1PC-5060	4-18	37B-1QL-A080	96-10	37B-1TJ-5020	21-16
37B-1PC-5060	4-20	37B-1QL-A080	96-2	37B-741-A511	93-2
37B-1PC-5060	4-22	37B-1QL-A080	96-6	37B-741-A511	93-3
37B-1PC-5060	4-24	37B-1QM-A011	96-10	37B-741-A521	93-2
37B-1PC-5070	66-12	37B-1QM-A011	96-2	37B-741-A521	93-3
37B-1PC-5070	66-14	37B-1QM-A011	96-6	37B-741-A531	93-2
37B-1PC-5070	66-14	37B-1QM-A021	96-10	37B-741-A531	93-3
37B-1PC-5070	66-16	37B-1QM-A021	96-2	37B-741-A541	93-2

NUMERICAL INDEX

Part Number	Page	Part Number	Page	Part Number	Page
37B-741-A541	93-3	3BB-64-A6230	64-16	3EA-01-A5390	0-2
37B-741-A561	93-3	3BB-64-A6240	64-10	3EA-01-A5390	1-8
37B-741-A561	93-3	3BB-64-A6240	64-16	3EA-04-51110	0-6
37B-741-A571	93-3	3BB-64-A6250	64-10	3EA-04-51110	4-2
37B-741-A571	93-3	3BB-64-A6250	64-16	3EA-05-39680	6-2
37B-741-A611	93-2	3BB-64-A6260	64-10	3EA-05-39680	6-4
37B-741-A611	93-2	3BB-64-A6260	64-16	3EA-05-39950	6-2
37B-741-A611	93-3	3BB-64-A6270	64-10	3EA-05-39950	6-4
37B-741-A621	93-2	3BB-64-A6270	64-16	3EA-05-46140	66-26
37B-741-A621	93-2	3BB-64-A6280	64-10	3EA-05-46140	66-28
37B-741-A621	93-3	3BB-64-A6280	64-16	3EA-05-46140	66-30
37B-741-A631	93-2	3BB-64-A6290	64-10	3EA-05-46180	66-26
37B-741-A631	93-2	3BB-64-A6290	64-16	3EA-05-46180	66-28
37B-741-A631	93-3	3BB-64-A6310	0-4	3EA-05-46180	66-30
3BA-37-51140	37-2	3BB-64-A6310	64-13	3EA-05-A6110	5-2
3BA-41-A5620	83-14	3BB-64-A6310	64-3	3EA-05-A6110	5-4
3BA-50-69330	6-6	3BB-64-A6310	64-7	3EA-05-A6120	5-4
3BA-56-A5610	83-2	3BB-64-A6320	64-12	3EA-05-A6130	5-2
3BB-21-31230	21-2	3BB-64-A6320	64-7	3EA-05-A6130	5-4
3BB-21-31230	21-4	3BB-64-A6330	64-12	3EA-05-A6630	6-6
3BB-21-31230	21-6	3BB-64-A6330	64-7	3EA-05-A7610	6-2
3BB-21-31240	21-2	3BB-64-A6340	64-12	3EA-05-A7610	6-4
3BB-21-31240	21-4	3BB-64-A6340	64-7	3EA-05-A7920	6-6
3BB-21-31240	21-6	3BB-64-A6350	64-12	3EA-13-51200	13-8
3BB-30-12190	30-14	3BB-64-A6350	64-7	3EA-15-11180	15-4
3BB-30-12190	30-18	3BB-64-A6360	64-12	3EA-15-11180	15-4
3BB-30-12190	30-2	3BB-64-A6360	64-6	3EA-15-11180	15-8
3BB-30-12190	30-6	3BB-64-A6370	64-12	3EA-15-11180	15-8
3BB-33-57110	33-2	3BB-64-A6370	64-6	3EA-15-33220	15-12
3BB-33-57110	34-2	3BB-64-A6380	64-10	3EA-20-51090	21-16
3BB-52-A7260	83-14	3BB-64-A6380	64-16	3EA-43-21160	43-2
3BB-52-A7380	83-14	3BB-64-A6390	64-12	3EA-43-21160	43-2
3BB-55-A3710	83-14	3BB-64-A6390	64-6	3EA-51-11390	3-4
3BB-55-F2180	83-11	3BB-64-A6410	0-4	3EA-51-42110	50-14
3BB-55-F2180	83-11	3BB-64-A6420	64-10	3EA-51-42110	50-14
3BB-55-F2180	83-11	3BB-64-A6420	64-16	3EA-51-42110	50-16
3BB-55-F2180	83-12	3BB-64-A6430	64-10	3EA-51-42110	50-16
3BB-55-F2180	83-13	3BB-64-A6430	64-16	3EA-51-42120	50-14
3BB-56-A6210	83-2	3BB-64-A6440	64-10	3EA-51-42120	50-14
3BB-56-A6220	83-2	3BB-64-A6440	64-16	3EA-51-42120	50-16
3BB-56-A6260	83-2	3BB-64-A6520	64-12	3EA-51-42120	50-16
3BB-56-A6310	83-2	3BB-64-A6520	64-7	3EA-55-39670	55-10
3BB-56-A6610	83-11	3BB-64-A6530	64-12	3EA-55-A1810	55-8
3BB-56-A6610	83-11	3BB-64-A6530	64-7	3EA-55-A7411	55-16
3BB-64-A6210	64-10	3BB-64-A6540	64-12	3EA-55-A7411	55-18
3BB-64-A6210	64-16	3BB-64-A6540	64-6	3EA-55-A7440	55-16
3BB-64-A6210	64-3	3BB-64-A6560	64-13	3EA-55-A7440	55-18
3BB-64-A6220	64-10	3BB-64-A6560	64-7	3EA-55-A7440	55-42
3BB-64-A6220	64-16	3BB-66-A6370	66-24	3EA-55-A7461	55-42
3BB-64-A6230	64-10	3EA-01-A5390	0-14	3EA-56-38650	55-20

https://truckmanualshub.com/

NUMERICAL INDEX

Part Number	Page	Part Number	Page	Part Number	Page
3EA-56-38650	55-22	3EB-03-31530	3-6	3EB-04-41160	4-2
3EA-56-38650	55-44	3EB-03-41120	3-2	3EB-04-41160	4-4
3EA-56-38650	55-46	3EB-03-41120	3-4	3EB-04-42140	4-10
3EA-56-F1122	83-2	3EB-03-41120	3-6	3EB-04-42140	4-6
3EA-56-F2210	83-10	3EB-03-51131	3-2	3EB-04-42140	4-8
3EA-56-F2210	83-4	3EB-03-51131	3-4	3EB-04-44190	4-18
3EA-66-33581	5-2	3EB-03-51131	3-6	3EB-04-44190	4-20
3EA-71-12780	21-10	3EB-03-51170	3-2	3EB-04-44190	4-22
3EA-71-12790	1-6	3EB-03-51170	3-4	3EB-04-44190	4-24
3EA-71-12790	1-62	3EB-03-51170	3-6	3EB-04-46620	4-10
3EA-M1-17170	4-22	3EB-03-A7110	0-6	3EB-04-46620	4-6
3EA-M1-17170	4-24	3EB-03-A7110	3-2	3EB-04-46620	4-8
3EB-01-31760	83-13	3EB-03-A7110	3-6	3EB-04-48110	4-18
3EB-01-34120	3-4	3EB-03-A7120	0-6	3EB-04-48140	4-18
3EB-01-51110	1-6	3EB-03-A7120	3-2	3EB-04-48140	4-20
3EB-01-51121	1-6	3EB-03-A7130	0-6	3EB-04-51180	4-6
3EB-01-51130	0-6	3EB-03-A7130	3-2	3EB-04-51180	4-8
3EB-01-51130	1-6	3EB-03-A7130	3-4	3EB-04-51230	4-22
3EB-01-51130	1-62	3EB-03-A7210	0-6	3EB-04-51420	4-12
3EB-01-51190	1-6	3EB-03-A7210	3-4	3EB-04-51430	4-12
3EB-01-51190	1-62	3EB-03-A7220	0-6	3EB-04-51711	4-22
3EB-01-51280	1-8	3EB-03-A7220	3-4	3EB-04-51721	4-22
3EB-01-51291	1-64	3EB-03-A7240	3-2	3EB-04-52610	0-6
3EB-01-52110	1-62	3EB-03-A7240	3-4	3EB-04-52610	4-4
3EB-01-52120	1-62	3EB-03-A7321	3-6	3EB-04-52910	4-12
3EB-01-A5392	0-14	3EB-03-A7330	3-6	3EB-04-53110	0-6
3EB-01-A5392	0-2	3EB-03-A7411	0-6	3EB-04-53110	4-4
3EB-01-A5392	1-64	3EB-03-A7411	3-2	3EB-04-53410	4-24
3EB-01-A7560	83-10	3EB-03-A7511	0-6	3EB-04-53420	4-24
3EB-01-A7570	83-10	3EB-03-A7511	3-4	3EB-04-56520	4-6
3EB-01-A7580	83-10	3EB-03-A7610	3-6	3EB-04-56530	4-6
3EB-01-A7590	83-10	3EB-03-A7810	3-6	3EB-04-56620	4-10
3EB-01-A7910	1-8	3EB-04-21130	0-3	3EB-04-56620	4-6
3EB-01-A7922	1-8	3EB-04-21130	4-2	3EB-04-56620	4-8
3EB-01-A7950	83-13	3EB-04-21130	4-4	3EB-04-56630	4-10
3EB-01-A7960	83-13	3EB-04-25140	4-10	3EB-04-56630	4-6
3EB-01-D6110	1-64	3EB-04-25140	4-16	3EB-04-56630	4-8
3EB-01-D6110	1-8	3EB-04-31140	4-2	3EB-04-56640	4-10
3EB-01-F5120	83-13	3EB-04-31140	4-4	3EB-04-56640	4-6
3EB-01-F5130	83-13	3EB-04-31170	4-2	3EB-04-56640	4-8
3EB-02-34630	1-64	3EB-04-31170	4-4	3EB-04-56650	4-10
3EB-02-41730	1-64	3EB-04-31170	83-10	3EB-04-56650	4-6
3EB-02-52130	1-6	3EB-04-31170	83-6	3EB-04-56650	4-8
3EB-02-52130	1-62	3EB-04-31170	83-8	3EB-04-56770	4-10
3EB-02-A7910	1-64	3EB-04-31180	4-2	3EB-04-56770	4-8
3EB-02-A7921	1-64	3EB-04-31180	4-4	3EB-04-A7110	4-2
3EB-02-A7931	1-64	3EB-04-32140	4-12	3EB-04-A7120	4-2
3EB-02-A7950	1-64	3EB-04-34550	4-18	3EB-04-A7160	4-2
3EB-03-31530	3-2	3EB-04-34550	4-20	3EB-04-A7180	4-2
3EB-03-31530	3-4	3EB-04-35510	4-24	3EB-04-A7210	0-6

NUMERICAL INDEX

Part Number	Page	Part Number	Page	Part Number	Page
3EB-04-A7210	4-2	3EB-04-A7920	4-20	3EB-15-05500	0-6
3EB-04-A7231	4-6	3EB-05-34130	5-4	3EB-15-05500	15-12
3EB-04-A7240	4-8	3EB-05-41280	55-40	3EB-15-05500	15-18
3EB-04-A7261	4-6	3EB-05-A7180	6-2	3EB-15-05500	15-5
3EB-04-A7310	4-4	3EB-05-A7180	6-4	3EB-15-05500	15-9
3EB-04-A7360	4-4	3EB-05-A7230	6-2	3EB-15-11260	15-4
3EB-04-A7410	4-12	3EB-05-A7230	6-4	3EB-15-11260	15-4
3EB-04-A7420	4-12	3EB-05-A7260	6-2	3EB-15-11260	15-8
3EB-04-A7470	0-3	3EB-05-A7260	6-4	3EB-15-11260	15-8
3EB-04-A7471	4-10	3EB-05-A7270	6-2	3EB-15-31271	15-2
3EB-04-A7471	4-8	3EB-05-A7270	6-4	3EB-15-48310	15-14
3EB-04-A7480	0-3	3EB-05-A7290	6-2	3EB-15-48320	15-14
3EB-04-A7481	4-10	3EB-05-A7290	6-4	3EB-15-48330	15-14
3EB-04-A7481	4-8	3EB-05-A7420	41-8	3EB-15-48340	15-14
3EB-04-A7491	4-10	3EB-05-A7420	5-2	3EB-15-48350	15-14
3EB-04-A7491	4-8	3EB-05-A7420	5-4	3EB-15-48650	15-14
3EB-04-A7510	0-2	3EB-05-A7430	5-2	3EB-15-51111	15-2
3EB-04-A7511	4-6	3EB-05-A7451	5-2	3EB-15-51170	15-4
3EB-04-A7520	0-2	3EB-05-A7460	5-2	3EB-15-51170	15-4
3EB-04-A7521	4-6	3EB-05-A7470	5-2	3EB-15-51170	15-8
3EB-04-A7542	4-6	3EB-05-A7480	5-2	3EB-15-51170	15-8
3EB-04-A7542	4-6	3EB-05-A7480	5-4	3EB-15-51180	15-2
3EB-04-A7560	0-3	3EB-05-A7491	5-2	3EB-15-51230	15-4
3EB-04-A7561	4-10	3EB-05-A7530	5-2	3EB-15-51230	15-4
3EB-04-A7561	4-8	3EB-05-A7551	5-2	3EB-15-51230	15-8
3EB-04-A7570	0-3	3EB-05-A7570	5-2	3EB-15-51230	15-8
3EB-04-A7571	4-10	3EB-05-A7580	5-2	3EB-15-51250	15-4
3EB-04-A7571	4-8	3EB-05-A7610	5-4	3EB-15-51250	15-4
3EB-04-A7580	4-10	3EB-05-A7610	55-38	3EB-15-51250	15-8
3EB-04-A7580	4-6	3EB-05-A7620	5-4	3EB-15-51250	15-8
3EB-04-A7580	4-8	3EB-05-A7630	5-4	3EB-15-51280	15-4
3EB-04-A7590	4-10	3EB-05-A7710	6-6	3EB-15-51280	15-4
3EB-04-A7590	4-6	3EB-05-A7810	6-6	3EB-15-51280	15-8
3EB-04-A7590	4-8	3EB-05-A7910	5-4	3EB-15-51280	15-8
3EB-04-A7621	4-14	3EB-05-A7921	5-4	3EB-15-51290	15-4
3EB-04-A7621	4-16	3EB-05-A7930	5-4	3EB-15-51290	15-4
3EB-04-A7630	4-10	3EB-05-A7940	5-4	3EB-15-51290	15-8
3EB-04-A7630	4-14	3EB-06-A5141	6-6	3EB-15-51290	15-8
3EB-04-A7630	4-16	3EB079-A5290	72-294	3EB-15-51360	15-4
3EB-04-A7630	4-6	3EB079-A6080	72-52	3EB-15-51360	15-5
3EB-04-A7630	4-8	3EB-13-12730	13-4	3EB-15-51360	15-8
3EB-04-A7640	4-14	3EB-13-12730	13-8	3EB-15-51360	15-8
3EB-04-A7640	4-16	3EB-13-22422	13-4	3EB-15-51600	13-4
3EB-04-A7810	4-18	3EB-13-22422	13-8	3EB-15-51600	13-8
3EB-04-A7810	4-20	3EB-13-22432	13-4	3EB-15-51600	15-2
3EB-04-A7820	4-18	3EB-13-22432	13-8	3EB-15-51610	15-2
3EB-04-A7820	4-20	3EB-13-51200	13-4	3EB-15-52010	15-4
3EB-04-A7870	4-22	3EB-13-51250	13-2	3EB-15-52020	15-4
3EB-04-A7870	4-24	3EB-14-11451	21-12	3EB-15-52030	15-8
3EB-04-A7910	4-20	3EB-15-00030	21-12	3EB-15-52040	15-8

NUMERICAL INDEX

Part Number	Page	Part Number	Page	Part Number	Page
3EB-15-52110	15-4	3EB-21-15140	21-10	3EB-21-53180	21-12
3EB-15-52120	15-4	3EB-21-25140	21-10	3EB-21-53200	21-10
3EB-15-52130	15-8	3EB-21-25150	21-10	3EB-21-53210	15-9
3EB-15-52140	15-8	3EB-21-25170	0-7	3EB-22-21150	21-10
3EB-15-53210	15-8	3EB-21-25170	21-4	3EB-22-21160	21-10
3EB-15-53210	15-8	3EB-21-25170	21-6	3EB-22-21170	0-7
3EB-15-53220	15-5	3EB-21-31141	21-12	3EB-22-21170	21-10
3EB-15-53220	15-9	3EB-21-32162	21-2	3EB-22-35541	21-10
3EB-15-53230	15-4	3EB-21-32162	21-4	3EB-22-45150	21-10
3EB-15-53230	15-4	3EB-21-32180	21-2	3EB-22-45610	0-8
3EB-15-53250	15-5	3EB-21-32180	21-4	3EB-22-45610	21-10
3EB-15-53260	15-5	3EB-21-32180	21-6	3EB-22-52111	21-10
3EB-15-53260	15-9	3EB-21-42170	21-4	3EB-22-55190	21-10
3EB-15-53290	15-5	3EB-21-42191	21-4	3EB-24-11160	24-10
3EB-15-53290	15-9	3EB-21-42191	21-6	3EB-24-11160	24-12
3EB-15-58110	15-14	3EB-21-42230	0-8	3EB-24-11160	24-2
3EB-15-58120	15-14	3EB-21-42230	21-4	3EB-24-11160	24-6
3EB-15-58130	15-14	3EB-21-51110	21-12	3EB-24-21270	24-10
3EB-15-58210	15-12	3EB-21-51120	21-12	3EB-24-21270	24-12
3EB-15-58310	15-14	3EB-21-51170	21-13	3EB-24-21270	24-2
3EB-15-58320	15-14	3EB-21-51190	21-12	3EB-24-21270	24-6
3EB-15-58330	15-14	3EB-21-51360	36-2	3EB-24-32260	0-7
3EB-15-58410	15-2	3EB-21-51370	36-2	3EB-24-32260	0-7
3EB-15-58510	15-14	3EB-21-51501	21-8	3EB-24-32260	24-10
3EB-15-58520	15-14	3EB-21-51510	21-12	3EB-24-32260	24-12
3EB-15-58530	15-14	3EB-21-51531	21-12	3EB-24-32260	24-2
3EB-15-58540	15-14	3EB-21-51551	21-12	3EB-24-32260	24-6
3EB-15-58610	15-12	3EB-21-51710	21-12	3EB-24-32390	24-10
3EB-16-21390	15-4	3EB-21-51720	21-12	3EB-24-32390	24-12
3EB-16-21390	15-4	3EB-21-52140	21-13	3EB-24-32390	24-2
3EB-16-21390	15-8	3EB-21-52310	21-2	3EB-24-32390	24-6
3EB-16-21390	15-8	3EB-21-52320	0-8	3EB-24-32440	0-7
3EB-21-00050	21-12	3EB-21-52320	21-2	3EB-24-32440	24-10
3EB-21-05060	0-3	3EB-21-52350	0-7	3EB-24-32440	24-12
3EB-21-05060	0-7	3EB-21-52350	21-2	3EB-24-32440	24-2
3EB-21-05060	21-10	3EB-21-52380	0-7	3EB-24-32440	24-6
3EB-21-05060	21-2	3EB-21-52380	21-2	3EB-24-41230	24-2
3EB-21-05060	21-4	3EB-21-52510	21-4	3EB-24-41230	24-6
3EB-21-05060	21-6	3EB-21-52710	21-6	3EB-24-41320	24-10
3EB-21-05070	0-3	3EB-21-52730	0-8	3EB-24-41320	24-12
3EB-21-05500	0-7	3EB-21-52730	21-6	3EB-24-41320	24-2
3EB-21-05500	21-13	3EB-21-52740	21-6	3EB-24-41320	24-6
3EB-21-11160	21-12	3EB-21-52750	0-7	3EB-24-41330	24-10
3EB-21-11190	21-12	3EB-21-52750	21-6	3EB-24-41330	24-12
3EB-21-11230	21-12	3EB-21-52760	21-6	3EB-24-41330	24-2
3EB-21-11340	21-12	3EB-21-53110	21-12	3EB-24-41330	24-6
3EB-21-11370	21-12	3EB-21-53140	21-12	3EB-24-42320	0-7
3EB-21-15130	21-2	3EB-21-53150	21-12	3EB-24-42320	24-10
3EB-21-15130	21-4	3EB-21-53161	21-12	3EB-24-42320	24-12
3EB-21-15130	21-6	3EB-21-53170	21-12	3EB-24-42320	24-2

https://truckmanualshub.com/

NUMERICAL INDEX

Part Number	Page	Part Number	Page	Part Number	Page
3EB-24-42320	24-6	3EB-24-53211	0-7	3EB-27-52710	27-5
3EB-24-51112	24-2	3EB-24-53211	24-10	3EB-27-52710	50-14
3EB-24-51112	24-6	3EB-24-53211	24-12	3EB-27-52720	27-5
3EB-24-51211	0-7	3EB-24-53211	24-2	3EB-27-52720	27-5
3EB-24-51211	24-10	3EB-24-53211	24-6	3EB-27-52720	50-14
3EB-24-51211	24-12	3EB-24-53221	0-7	3EB-27-52910	27-5
3EB-24-51211	24-2	3EB-24-53221	24-10	3EB-27-52910	50-14
3EB-24-51211	24-6	3EB-24-53221	24-12	3EB-27-52920	27-5
3EB-24-51221	0-7	3EB-24-53221	24-2	3EB-27-52920	50-14
3EB-24-51221	24-10	3EB-24-53221	24-6	3EB-27-A5160	27-4
3EB-24-51221	24-12	3EB-24-A7410	28-2	3EB-27-A5810	27-2
3EB-24-51221	24-2	3EB-24-A7910	24-10	3EB-27-F5710	27-4
3EB-24-51221	24-6	3EB-24-A7910	24-12	3EB-27-F5710	27-4
3EB-24-51230	24-2	3EB-24-A7910	24-2	3EB-28-A7520	28-4
3EB-24-51230	24-6	3EB-24-A7910	24-6	3EB-30-00010	0-3
3EB-24-51261	0-7	3EB-24-A7920	0-7	3EB-30-00010	0-8
3EB-24-51261	24-10	3EB-24-A7920	24-10	3EB-30-00010	30-3
3EB-24-51261	24-12	3EB-24-A7920	24-12	3EB-30-00010	30-7
3EB-24-51261	24-2	3EB-24-A7920	24-2	3EB-30-31320	30-15
3EB-24-51261	24-6	3EB-24-A7920	24-6	3EB-30-31320	30-19
3EB-24-51271	0-7	3EB-24-A7930	0-7	3EB-30-31320	30-2
3EB-24-51271	24-10	3EB-24-A7930	24-10	3EB-30-31320	30-6
3EB-24-51271	24-12	3EB-24-A7930	24-12	3EB-30-41130	30-2
3EB-24-51271	24-2	3EB-24-A7930	24-2	3EB-30-41130	30-6
3EB-24-51271	24-6	3EB-24-A7930	24-6	3EB-30-41140	30-2
3EB-24-51380	24-10	3EB-24-A7940	24-10	3EB-30-41140	30-6
3EB-24-51380	24-12	3EB-24-A7940	24-12	3EB-30-41160	30-18
3EB-24-51380	24-2	3EB-24-A7940	24-2	3EB-30-41170	30-18
3EB-24-51380	24-6	3EB-24-A7940	24-6	3EB-30-41210	30-14
3EB-24-51390	24-10	3EB-25-A7110	24-10	3EB-30-41210	30-18
3EB-24-51390	24-12	3EB-25-A7110	24-12	3EB-30-41220	30-14
3EB-24-51390	24-2	3EB-25-A7170	24-10	3EB-30-41220	30-18
3EB-24-51390	24-6	3EB-25-A7170	24-12	3EB-30-41430	30-14
3EB-24-51510	24-10	3EB-25-A7170	24-2	3EB-30-41430	30-18
3EB-24-51510	24-12	3EB-25-A7170	24-6	3EB-30-41440	0-3
3EB-24-51510	24-3	3EB-25-A7210	24-10	3EB-30-41440	30-14
3EB-24-51510	24-7	3EB-25-A7210	24-12	3EB-30-41440	30-18
3EB-24-51520	24-10	3EB-25-A7510	24-14	3EB-30-41440	30-2
3EB-24-51520	24-12	3EB-25-A7520	24-14	3EB-30-41440	30-6
3EB-24-51520	24-3	3EB-25-A7570	24-14	3EB-30-41450	30-14
3EB-24-51520	24-7	3EB-25-A7580	24-14	3EB-30-41450	30-18
3EB-24-52112	24-2	3EB-27-52310	50-14	3EB-30-41540	30-14
3EB-24-52112	24-6	3EB-27-52310YL	27-4	3EB-30-41540	30-18
3EB-24-52460	0-7	3EB-27-52310YL	27-5	3EB-30-41540	30-2
3EB-24-52460	24-10	3EB-27-52320	50-14	3EB-30-41540	30-6
3EB-24-52460	24-12	3EB-27-52320YL	27-4	3EB-30-41550	30-14
3EB-24-52460	24-2	3EB-27-52320YL	27-5	3EB-30-41550	30-18
3EB-24-52460	24-6	3EB-27-52620	27-5	3EB-30-41550	30-2
3EB-24-53112	24-2	3EB-27-52640	27-5	3EB-30-41550	30-6
3EB-24-53112	24-6	3EB-27-52710	27-5	3EB-30-41650	30-2

NUMERICAL INDEX

Part Number	Page	Part Number	Page	Part Number	Page
3EB-30-41650	30-6	3EB-30-51430	30-2	3EB-41-41490	41-4
3EB-30-41660	30-2	3EB-30-51430	30-6	3EB-41-41980	41-2
3EB-30-41660	30-6	3EB-30-51450	30-2	3EB-41-41980	41-4
3EB-30-42160	30-14	3EB-30-51450	30-6	3EB-41-44530	41-2
3EB-30-42160	30-18	3EB-33-41111	33-2	3EB-41-44530	41-4
3EB-30-42160	30-2	3EB-33-41111	34-2	3EB-41-51570	72-64
3EB-30-42160	30-6	3EB-33-41130	33-2	3EB-41-51570	72-66
3EB-30-42260	30-14	3EB-34-51510	0-9	3EB-41-51750	41-2
3EB-30-42260	30-18	3EB-34-51510	34-2	3EB-41-51750	41-4
3EB-30-42260	30-3	3EB-34-53111	34-2	3EB-41-51750	72-102
3EB-30-42260	30-7	3EB-36-51180	0-8	3EB-41-51750	72-104
3EB-30-43130	30-14	3EB-36-51180	30-22	3EB-41-51750	72-134
3EB-30-43130	30-18	3EB-36-51180	30-26	3EB-41-51750	72-136
3EB-30-43140	30-14	3EB-36-51180	36-2	3EB-41-51750	72-170
3EB-30-43140	30-18	3EB-36-51421	36-2	3EB-41-51750	72-172
3EB-30-43670	30-14	3EB-36-51440	36-2	3EB-41-51750	72-206
3EB-30-43670	30-18	3EB-36-51460	36-2	3EB-41-51750	72-208
3EB-30-44420	30-14	3EB-36-51590	30-28	3EB-41-51750	72-22
3EB-30-44420	30-18	3EB-36-52133	36-2	3EB-41-51750	72-238
3EB-30-44420	30-2	3EB-36-52400	36-2	3EB-41-51750	72-24
3EB-30-44420	30-6	3EB-37-41141	37-4	3EB-41-51750	72-240
3EB-30-44460	30-15	3EB-37-41160	37-2	3EB-41-52550	41-2
3EB-30-44460	30-19	3EB-37-41160	37-4	3EB-41-52550	41-4
3EB-30-44460	30-2	3EB-37-51390	37-4	3EB-41-52560	41-2
3EB-30-44460	30-6	3EB-37-A7211	37-2	3EB-41-52560	41-4
3EB-30-44560	30-14	3EB-37-A7251	37-2	3EB-41-56120	41-10
3EB-30-44560	30-18	3EB-37-A7280	37-2	3EB-41-56120	41-12
3EB-30-44570	30-14	3EB-37-A7290	37-2	3EB-41-56120	41-8
3EB-30-44570	30-18	3EB-38-41110	30-24	3EB-41-56130	41-10
3EB-30-44570	30-2	3EB-38-41120	30-22	3EB-41-56130	41-12
3EB-30-44570	30-6	3EB-38-41120	30-24	3EB-41-56130	41-8
3EB-30-44590	30-11	3EB-38-41170	30-22	3EB-41-56140	41-10
3EB-30-44590	30-14	3EB-38-51130	30-22	3EB-41-56140	41-12
3EB-30-44590	30-18	3EB-38-51150	30-22	3EB-41-A7460	41-6
3EB-30-44590	30-3	3EB-38-51430	30-24	3EB-41-A7690	41-8
3EB-30-44590	30-7	3EB-38-51530	30-24	3EB-42-56120	41-10
3EB-30-51110	0-8	3EB-38-51630	30-22	3EB-42-56120	41-8
3EB-30-51110	30-15	3EB-38-A7110	30-22	3EB-42-56810	41-8
3EB-30-51110	30-19	3EB-38-A7610	30-22	3EB-42-56820	41-8
3EB-30-51110	30-3	3EB-38-A7710	30-24	3EB-42-A7550	83-14
3EB-30-51110	30-7	3EB-39-41112	30-32	3EB-42-A7710	41-12
3EB-30-51120	0-8	3EB-39-41130	30-32	3EB-42-A7810	41-10
3EB-30-51120	30-15	3EB-41-31791	41-2	3EB-43-41720	43-2
3EB-30-51120	30-19	3EB-41-31791	41-4	3EB-43-41720	43-2
3EB-30-51120	30-3	3EB-41-31950	41-2	3EB-43-A7110	43-2
3EB-30-51120	30-7	3EB-41-31950	41-4	3EB-43-A7160	43-2
3EB-30-51210	0-8	3EB-41-31960	41-2	3EB-43-A7210	43-2
3EB-30-51210	30-11	3EB-41-31960	41-4	3EB-43-A7260	43-2
3EB-30-51220	0-8	3EB-41-35120	41-12	3EB-43-A7310	43-2
3EB-30-51220	30-11	3EB-41-41490	41-2	3EB-43-A7360	43-2

NUMERICAL INDEX

Part Number	Page	Part Number	Page	Part Number	Page
3EB-43-A7410	43-2	3EB-50-A7880	50-10	3EB-52-A7470	83-14
3EB-43-A7460	43-2	3EB-50-A7910	83-10	3EB-52-A7510	4-10
3EB-43-A7510	43-2	3EB-50-F5313	50-2	3EB-52-A7510	4-8
3EB-43-A7560	43-2	3EB-50-F5442	50-2	3EB-52-A7810	83-6
3EB-43-A7660	43-2	3EB-51-21380	50-14	3EB-52-A7810	83-8
3EB-43-A7710	41-2	3EB-51-21380	50-16	3EB-52-A7870	83-10
3EB-43-A7710	41-4	3EB-51-42110	50-14	3EB-55-11290	0-3
3EB-43-A7721	43-4	3EB-51-42120	50-14	3EB-55-23340	55-10
3EB-43-A7760	43-4	3EB-51-42130	50-14	3EB-55-23340	55-14
3EB-44-17170	0-6	3EB-51-42140	50-14	3EB-55-31130	0-2
3EB-44-17170	41-12	3EB-51-51720	50-14	3EB-55-31130	55-10
3EB-44-17180	41-12	3EB-51-51720	50-16	3EB-55-31130	55-38
3EB-50-31420	50-18	3EB-51-51731	50-14	3EB-55-31260	55-32
3EB-50-41150	0-8	3EB-51-51731	50-16	3EB-55-31270	0-2
3EB-50-42540	50-10	3EB-51-51811	50-14	3EB-55-31270	55-32
3EB-50-42560	61-8	3EB-51-51811	50-16	3EB-55-31270	55-38
3EB-50-42560	61-8	3EB-51-A7110	50-14	3EB-55-31490	55-20
3EB-50-42570	61-8	3EB-51-A7110	50-16	3EB-55-31490	55-22
3EB-50-42570	61-8	3EB-51-A7312	50-14	3EB-55-33150	0-2
3EB-50-42580	50-14	3EB-51-A7312	50-16	3EB-55-33160	0-2
3EB-50-42580	50-16	3EB-51-A7420	83-12	3EB-55-38181	55-28
3EB-50-51621	37-4	3EB-51-A7450	83-12	3EB-55-39640	6-4
3EB-50-51810	50-10	3EB-51-A7460	83-12	3EB-55-41230	55-12
3EB-50-51810	50-12	3EB-51-A7511	50-14	3EB-55-41230	55-12
3EB-50-51810	50-8	3EB-51-A7511	50-16	3EB-55-41271	0-3
3EB-50-51932	50-12	3EB-52-32140	83-10	3EB-55-41271	55-16
3EB-50-51942	50-12	3EB-52-32140	83-6	3EB-55-41271	55-18
3EB-50-51950	50-10	3EB-52-32140	83-8	3EB-55-41271	55-42
3EB-50-52511	50-10	3EB-52-41230	50-6	3EB-55-41450	0-12
3EB-50-52520	50-10	3EB-52-41240	50-6	3EB-55-41450	0-9
3EB-50-52531	50-10	3EB-52-41510	50-8	3EB-55-41450	55-12
3EB-50-52540	50-10	3EB-52-41611	50-4	3EB-55-41450	55-12
3EB-50-52570	50-10	3EB-52-41750	50-18	3EB-55-41461	55-38
3EB-50-56911	50-12	3EB-52-51121	50-8	3EB-55-43220	55-8
3EB-50-56921	50-12	3EB-52-51130	50-4	3EB-55-43430	55-40
3EB-50-56930	50-12	3EB-52-51140	50-4	3EB-55-43430	55-8
3EB-50-56940	50-12	3EB-52-51150	50-4	3EB-55-47130	41-8
3EB-50-A5322	0-3	3EB-52-51160	50-4	3EB-55-47130	5-2
3EB-50-A5322	50-2	3EB-52-51540	50-8	3EB-55-47130	5-4
3EB-50-A6112	0-3	3EB-52-51611	41-14	3EB-55-47130	66-6
3EB-50-A6112	50-2	3EB-52-51611	83-10	3EB-55-47130	66-8
3EB-50-A6331	50-2	3EB-52-51710	50-8	3EB-55-51390	55-2
3EB-50-A6342	50-2	3EB-52-51720	50-8	3EB-55-51390	55-40
3EB-50-A7210	50-18	3EB-52-51730	50-8	3EB-55-51410	5-2
3EB-50-A7230	50-18	3EB-52-51740	50-8	3EB-55-51410	5-4
3EB-50-A7310	50-18	3EB-52-51770	50-8	3EB-55-51410	5-6
3EB-50-A7360	50-18	3EB-52-56160	50-6	3EB-55-51430	5-2
3EB-50-A7412	50-10	3EB-52-56171	50-6	3EB-55-51430	5-4
3EB-50-A7760	50-10	3EB-52-56180	50-6	3EB-55-51710	55-38
3EB-50-A7810	50-10	3EB-52-A7210	50-8	3EB-55-51711	0-4

NUMERICAL INDEX

Part Number	Page	Part Number	Page	Part Number	Page
3EB-55-51711	55-36	3EB-55-A7480	55-42	3EB-56-A7390	55-32
3EB-55-51760	0-9	3EB-55-A7510	55-36	3EB-56-A7390	55-8
3EB-55-51760	55-12	3EB-55-A7612	55-38	3EB-56-A7420	55-10
3EB-55-52320	55-40	3EB-55-A7620	55-38	3EB-56-A7430	55-10
3EB-55-54310	56-2	3EB-55-A7671	55-14	3EB-56-A7460	55-20
3EB-55-55330	55-38	3EB-55-A7681	55-32	3EB-56-A7460	55-22
3EB-55-A2460	55-40	3EB-55-A7681	55-8	3EB-56-A7460	55-44
3EB-55-A3621	0-4	3EB-55-A7690	55-38	3EB-56-A7460	55-46
3EB-55-A3621	55-16	3EB-55-A7713	55-10	3EB-56-A7480	55-20
3EB-55-A3621	55-18	3EB-55-A7720	55-30	3EB-56-A7480	55-22
3EB-55-A3621	55-42	3EB-55-A7770	55-6	3EB-56-A7480	55-44
3EB-55-A3621	83-14	3EB-55-A7830	55-34	3EB-56-A7480	55-46
3EB-55-A3630	83-14	3EB-55-A7840	55-2	3EB-56-A7490	55-20
3EB-55-A3641	0-3	3EB-55-A7913	55-10	3EB-56-A7490	55-22
3EB-55-A3641	83-14	3EB-55-A7920	55-2	3EB-56-A7490	55-44
3EB-55-A5112	0-3	3EB-55-A7920	55-20	3EB-56-A7490	55-46
3EB-55-A5112	55-28	3EB-55-A7920	55-22	3EB-56-A7550	83-13
3EB-55-A5610	0-8	3EB-55-A7920	55-38	3EB-56-A7560	83-13
3EB-55-A5610	56-2	3EB-55-A7920	55-44	3EB-56-A7580	83-13
3EB-55-A5610	56-4	3EB-55-A7920	55-46	3EB-56-A7590	55-10
3EB-55-A5620	56-2	3EB-55-A7930	55-2	3EB-56-A7650	83-14
3EB-55-A5620	56-4	3EB-55-A7940	55-20	3EB-56-A7660	83-14
3EB-55-A6260	0-4	3EB-55-A7940	55-22	3EB-56-A7760	83-11
3EB-55-A6260	55-28	3EB-55-A7940	55-38	3EB-56-A7960	83-10
3EB-55-A7111	55-4	3EB-55-A7940	55-40	3EB-56-A7980	83-10
3EB-55-A7121	55-32	3EB-55-A7940	55-44	3EB-56-A7980	83-4
3EB-55-A7130	55-2	3EB-55-A7940	55-46	3EB-56-F2980	83-13
3EB-55-A7141	55-2	3EB-55-A7940	55-8	3EB-56-F2990	83-2
3EB-55-A7170	55-16	3EB-55-A7980	55-32	3EB-56-F5210	55-20
3EB-55-A7170	55-18	3EB-55-A7980	55-8	3EB-56-F5210	55-22
3EB-55-A7170	55-42	3EB-55-A7990	6-4	3EB-56-F5210	55-44
3EB-55-A7180	83-4	3EB-55-F5210	83-13	3EB-56-F5210	55-46
3EB-55-A7230	55-2	3EB-55-F5910	83-14	3EB-56-F5450	83-12
3EB-55-A7250	55-32	3EB-56-39220	55-20	3EB-56-F5460	83-12
3EB-55-A7260	55-2	3EB-56-39220	55-22	3EB-56-F5612	83-12
3EB-55-A7260	55-6	3EB-56-51590	0-8	3EB-56-F6220	83-13
3EB-55-A7270	55-10	3EB-56-51590	30-24	3EB-56-F6230	83-13
3EB-55-A7270	55-38	3EB-56-A5210	55-20	3EB-57-A7471	83-10
3EB-55-A7313	55-10	3EB-56-A5210	55-22	3EB-57-A7750	83-13
3EB-55-A7321	55-16	3EB-56-A5210	55-44	3EB-57-A7760	83-13
3EB-55-A7321	55-18	3EB-56-A5210	55-46	3EB-57-A7861	83-10
3EB-55-A7321	55-42	3EB-56-A5612	83-11	3EB-57-A7862	83-10
3EB-55-A7420	55-16	3EB-56-A5671	83-12	3EB-57-A7862	83-12
3EB-55-A7420	55-42	3EB-56-A7260	83-11	3EB-57-A7862	83-13
3EB-55-A7430	55-16	3EB-56-A7261	83-11	3EB-57-A7890	83-12
3EB-55-A7430	55-18	3EB-56-A7270	83-11	3EB-61-42120	61-2
3EB-55-A7430	55-42	3EB-56-A7270	83-11	3EB-61-42130	61-2
3EB-55-A7440	55-18	3EB-56-A7290	55-40	3EB-61-42140	61-2
3EB-55-A7480	55-16	3EB-56-A7310	55-40	3EB-61-51110	61-8
3EB-55-A7480	55-18	3EB-56-A7320	55-38	3EB-61-A7110	61-2

NUMERICAL INDEX

Part Number	Page	Part Number	Page	Part Number	Page
3EB-61-A7110	61-4	3EB-66-41461	4-20	3EB-66-52170	66-12
3EB-61-A7210	61-2	3EB-66-41461	4-22	3EB-66-52170	66-14
3EB-61-A7210	61-6	3EB-66-41461	4-24	3EB-66-52170	66-16
3EB-61-A7330	83-10	3EB-66-41461	66-12	3EB-66-52170	66-18
3EB-61-A7380	83-10	3EB-66-41461	66-14	3EB-66-52180	66-12
3EB-61-A7460	83-11	3EB-66-41510	66-18	3EB-66-52180	66-14
3EB-61-A7470	83-11	3EB-66-41520	66-18	3EB-66-52180	66-16
3EB-61-F5580	83-11	3EB-66-42180	66-24	3EB-66-52180	66-18
3EB-61-F5590	66-22	3EB-66-43390	66-2	3EB-66-52180	66-4
3EB-61-F5590	83-11	3EB-66-43490	66-2	3EB-66-52190	66-18
3EB-64-13280	64-12	3EB-66-43620	66-6	3EB-66-52190	66-4
3EB-64-13280	64-6	3EB-66-43620	66-8	3EB-66-52410	66-18
3EB-64-22950	64-12	3EB-66-43630	66-6	3EB-66-53181	66-24
3EB-64-22950	64-6	3EB-66-43630	66-8	3EB-66-53410	24-3
3EB-64-22960	64-12	3EB-66-43661	66-6	3EB-66-53410	24-7
3EB-64-22960	64-6	3EB-66-43661	66-8	3EB-66-53420	66-2
3EB-64-A6450	64-10	3EB-66-43670	41-8	3EB-66-53430	66-2
3EB-64-A6450	64-16	3EB-66-43670	5-2	3EB-66-53440	66-2
3EB-64-A7110	24-3	3EB-66-43670	5-4	3EB-66-53450	66-2
3EB-64-A7110	24-7	3EB-66-43670	66-6	3EB-66-53460	24-3
3EB-64-A7110	65-2	3EB-66-43670	66-8	3EB-66-53460	24-7
3EB-64-A7210	24-10	3EB-66-44110	66-26	3EB-66-53532	66-2
3EB-64-A7210	24-12	3EB-66-44110	66-28	3EB-66-53830	66-6
3EB-64-A7210	65-2	3EB-66-44110	66-30	3EB-66-53830	66-8
3EB-64-A7810	64-10	3EB-66-44620	66-26	3EB-66-53840	66-6
3EB-64-A7810	64-16	3EB-66-44620	66-28	3EB-66-53840	66-8
3EB-64-A7820	64-10	3EB-66-44620	66-30	3EB-66-54210	66-10
3EB-64-A7820	64-16	3EB-66-44660	66-26	3EB-66-54220	66-4
3EB-64-A7830	64-10	3EB-66-44660	66-28	3EB-66-54221	66-10
3EB-64-A7830	64-16	3EB-66-44660	66-30	3EB-66-54310	66-10
3EB-65-A7110	64-18	3EB-66-51110	66-12	3EB-66-55180	66-26
3EB-65-A7120	64-18	3EB-66-51110	66-14	3EB-66-55180	66-28
3EB-65-A7210	64-18	3EB-66-51150	66-12	3EB-66-55180	66-30
3EB-66-33170	66-24	3EB-66-51150	66-14	3EB-66-55510	66-26
3EB-66-41120	66-12	3EB-66-51170	66-12	3EB-66-55510	66-28
3EB-66-41180	66-12	3EB-66-51170	66-14	3EB-66-55510	66-30
3EB-66-41180	66-14	3EB-66-51170	66-16	3EB-66-55520	66-26
3EB-66-41180	66-16	3EB-66-51170	66-18	3EB-66-55520	66-28
3EB-66-41180	66-18	3EB-66-51170	66-4	3EB-66-55520	66-30
3EB-66-41191	66-12	3EB-66-51180	66-12	3EB-66-55530	66-26
3EB-66-41191	66-14	3EB-66-51180	66-14	3EB-66-55530	66-28
3EB-66-41191	66-16	3EB-66-51180	66-16	3EB-66-55530	66-30
3EB-66-41191	66-18	3EB-66-51180	66-18	3EB-66-55540	66-26
3EB-66-41210	66-14	3EB-66-51411	66-14	3EB-66-55540	66-28
3EB-66-41220	66-14	3EB-66-52110	66-16	3EB-66-55540	66-30
3EB-66-41271	66-12	3EB-66-52110	66-18	3EB-66-59030	66-6
3EB-66-41271	66-14	3EB-66-52140	66-16	3EB-66-59070	66-8
3EB-66-41271	66-16	3EB-66-52140	66-18	3EB-66-A7110	66-12
3EB-66-41271	66-18	3EB-66-52150	66-16	3EB-66-A7110	66-14
3EB-66-41420	66-16	3EB-66-52150	66-18	3EB-66-A7140	66-12

NUMERICAL INDEX

Part Number	Page	Part Number	Page	Part Number	Page
3EB-66-A7140	66-14	3EB-71-51290	72-364	3EB-71-A6010	72-70
3EB-66-A7160	66-16	3EB-71-51871	41-6	3EB-71-A6010	72-72
3EB-66-A7160	66-18	3EB-71-51881	41-6	3EB-71-A6010	72-74
3EB-66-A7210	61-2	3EB-71-61790	72-104	3EB-71-A6010	72-76
3EB-66-A7220	61-2	3EB-71-61790	72-134	3EB-71-A6010	72-78
3EB-66-A7310	66-24	3EB-71-61790	72-172	3EB-71-A6010	72-78
3EB-66-A7320	66-24	3EB-71-61790	72-2	3EB-71-A6010	72-78
3EB-66-A7330	66-24	3EB-71-61790	72-238	3EB-71-A6030	72-100
3EB-66-A7340	66-24	3EB-71-61790	72-24	3EB-71-A6030	72-102
3EB-66-A7350	66-24	3EB-71-61870	41-6	3EB-71-A6030	72-104
3EB-66-A7360	66-24	3EB-71-A6010	72-108	3EB-71-A6030	72-132
3EB-66-A7370	66-24	3EB-71-A6010	72-110	3EB-71-A6030	72-134
3EB-66-A7380	66-24	3EB-71-A6010	72-112	3EB-71-A6030	72-136
3EB-66-A7390	66-24	3EB-71-A6010	72-140	3EB-71-A6030	72-168
3EB-66-A7410	66-20	3EB-71-A6010	72-142	3EB-71-A6030	72-170
3EB-66-A7510	66-22	3EB-71-A6010	72-144	3EB-71-A6030	72-172
3EB-66-A7511	83-11	3EB-71-A6010	72-144	3EB-71-A6030	72-20
3EB-66-A7520	66-22	3EB-71-A6010	72-144	3EB-71-A6030	72-204
3EB-66-A7910	66-26	3EB-71-A6010	72-176	3EB-71-A6030	72-206
3EB-66-A7910	66-28	3EB-71-A6010	72-180	3EB-71-A6030	72-208
3EB-66-A7910	66-30	3EB-71-A6010	72-184	3EB-71-A6030	72-22
3EB-66-A7920	66-26	3EB-71-A6010	72-212	3EB-71-A6030	72-236
3EB-66-A7920	66-28	3EB-71-A6010	72-214	3EB-71-A6030	72-238
3EB-66-A7920	66-30	3EB-71-A6010	72-216	3EB-71-A6030	72-24
3EB-66-A7930	66-26	3EB-71-A6010	72-216	3EB-71-A6030	72-240
3EB-66-A7930	66-28	3EB-71-A6010	72-216	3EB-71-A6030	72-300
3EB-66-A7930	66-30	3EB-71-A6010	72-244	3EB-71-A6030	72-302
3EB-66-A7960	30-24	3EB-71-A6010	72-246	3EB-71-A6030	72-362
3EB-66-A7960	66-26	3EB-71-A6010	72-28	3EB-71-A6030	72-364
3EB-66-A7960	66-28	3EB-71-A6010	72-307	3EB-71-A6030	72-62
3EB-66-A7960	66-30	3EB-71-A6010	72-314	3EB-71-A6030	72-64
3EB-66-A7970	30-24	3EB-71-A6010	72-318	3EB-71-A6030	72-66
3EB-66-A7970	66-26	3EB-71-A6010	72-32	3EB-71-A6040	72-116
3EB-66-A7970	66-28	3EB-71-A6010	72-323	3EB-71-A6040	72-116
3EB-66-A7970	66-30	3EB-71-A6010	72-326	3EB-71-A6040	72-116
3EB-68-A7310	61-10	3EB-71-A6010	72-330	3EB-71-A6040	72-188
3EB-68-A7320	61-10	3EB-71-A6010	72-334	3EB-71-A6040	72-188
3EB-68-A7360	61-12	3EB-71-A6010	72-338	3EB-71-A6040	72-188
3EB-68-A7370	61-12	3EB-71-A6010	72-338	3EB-71-A6040	72-250
3EB-68-A7410	61-2	3EB-71-A6010	72-338	3EB-71-A6040	72-250
3EB-68-A7420	61-2	3EB-71-A6010	72-36	3EB-71-A6040	72-250
3EB-68-A7660	61-12	3EB-71-A6010	72-372	3EB-71-A6040	72-307
3EB-68-A7670	61-12	3EB-71-A6010	72-377	3EB-71-A6040	72-310
3EB-71-51290	72-104	3EB-71-A6010	72-381	3EB-71-A6040	72-36
3EB-71-51290	72-134	3EB-71-A6010	72-385	3EB-71-A6040	72-369
3EB-71-51290	72-172	3EB-71-A6010	72-389	3EB-71-A6040	72-377
3EB-71-51290	72-2	3EB-71-A6010	72-40	3EB-71-A6040	72-392
3EB-71-51290	72-208	3EB-71-A6010	72-44	3EB-71-A6040	72-392
3EB-71-51290	72-238	3EB-71-A6010	72-44	3EB-71-A6040	72-392
3EB-71-51290	72-24	3EB-71-A6010	72-44	3EB-71-A6040	72-40

NUMERICAL INDEX

Part Number	Page	Part Number	Page	Part Number	Page
3EB-71-A6040	72-70	3EB-73-A5020	72-216	3EB-73-A5060	72-250
3EB-72-121FR	93-4	3EB-73-A5020	72-216	3EB-73-A5070	72-156
3EB-73-A5010	72-117	3EB-73-A5020	72-244	3EB-73-A5070	72-228
3EB-73-A5010	72-117	3EB-73-A5020	72-246	3EB-73-A5070	72-90
3EB-73-A5010	72-117	3EB-73-A5020	72-250	3EB-73-A5070	72-92
3EB-73-A5010	72-12	3EB-73-A5020	72-250	3EB-73-A5080	72-164
3EB-73-A5010	72-126	3EB-73-A5020	72-250	3EB-73-A5110	72-230
3EB-73-A5010	72-156	3EB-73-A5020	72-70	3EB-73-A5120	72-110
3EB-73-A5010	72-156	3EB-73-A5020	72-72	3EB-73-A5120	72-112
3EB-73-A5010	72-189	3EB-73-A5020	72-74	3EB-73-A5120	72-156
3EB-73-A5010	72-189	3EB-73-A5020	72-76	3EB-73-A5120	72-184
3EB-73-A5010	72-189	3EB-73-A5020	72-78	3EB-73-A5120	72-228
3EB-73-A5010	72-198	3EB-73-A5020	72-78	3EB-73-A5120	72-244
3EB-73-A5010	72-228	3EB-73-A5020	72-78	3EB-73-A5120	72-246
3EB-73-A5010	72-228	3EB-73-A5020	72-78	3EB-73-A5120	72-70
3EB-73-A5010	72-230	3EB-73-A5020	72-78	3EB-73-A5120	72-90
3EB-73-A5010	72-251	3EB-73-A5020	72-78	3EB-73-A5120	72-92
3EB-73-A5010	72-251	3EB-73-A5030	72-108	3EB-73-A5130	72-12
3EB-73-A5010	72-251	3EB-73-A5030	72-110	3EB-73-A5140	72-126
3EB-73-A5010	72-54	3EB-73-A5030	72-112	3EB-73-A5140	72-156
3EB-73-A5010	72-90	3EB-73-A5030	72-116	3EB-73-A5140	72-228
3EB-73-A5010	72-90	3EB-73-A5030	72-116	3EB-73-A5140	72-230
3EB-73-A5010	72-92	3EB-73-A5030	72-116	3EB-73-A5140	72-54
3EB-73-A5010	72-92	3EB-73-A5030	72-176	3EB-73-A5140	72-90
3EB-73-A5020	72-108	3EB-73-A5030	72-180	3EB-73-A5140	72-92
3EB-73-A5020	72-110	3EB-73-A5030	72-184	3EB-73-A5150	72-108
3EB-73-A5020	72-112	3EB-73-A5030	72-188	3EB-73-A5150	72-110
3EB-73-A5020	72-116	3EB-73-A5030	72-188	3EB-73-A5150	72-112
3EB-73-A5020	72-116	3EB-73-A5030	72-188	3EB-73-A5150	72-140
3EB-73-A5020	72-116	3EB-73-A5030	72-244	3EB-73-A5150	72-142
3EB-73-A5020	72-140	3EB-73-A5030	72-246	3EB-73-A5150	72-176
3EB-73-A5020	72-142	3EB-73-A5030	72-250	3EB-73-A5150	72-180
3EB-73-A5020	72-144	3EB-73-A5030	72-250	3EB-73-A5150	72-184
3EB-73-A5020	72-144	3EB-73-A5030	72-250	3EB-73-A5150	72-212
3EB-73-A5020	72-144	3EB-73-A5030	72-28	3EB-73-A5150	72-214
3EB-73-A5020	72-144	3EB-73-A5030	72-32	3EB-73-A5150	72-244
3EB-73-A5020	72-144	3EB-73-A5030	72-44	3EB-73-A5150	72-246
3EB-73-A5020	72-144	3EB-73-A5030	72-44	3EB-73-A5150	72-28
3EB-73-A5020	72-176	3EB-73-A5030	72-44	3EB-73-A5150	72-310
3EB-73-A5020	72-180	3EB-73-A5060	72-112	3EB-73-A5150	72-314
3EB-73-A5020	72-184	3EB-73-A5060	72-116	3EB-73-A5150	72-318
3EB-73-A5020	72-188	3EB-73-A5060	72-116	3EB-73-A5150	72-32
3EB-73-A5020	72-188	3EB-73-A5060	72-116	3EB-73-A5150	72-330
3EB-73-A5020	72-188	3EB-73-A5060	72-184	3EB-73-A5150	72-334
3EB-73-A5020	72-212	3EB-73-A5060	72-188	3EB-73-A5150	72-36
3EB-73-A5020	72-214	3EB-73-A5060	72-188	3EB-73-A5150	72-377
3EB-73-A5020	72-216	3EB-73-A5060	72-188	3EB-73-A5150	72-381
3EB-73-A5020	72-216	3EB-73-A5060	72-246	3EB-73-A5150	72-385
3EB-73-A5020	72-216	3EB-73-A5060	72-250	3EB-73-A5150	72-389
3EB-73-A5020	72-216	3EB-73-A5060	72-250	3EB-73-A5150	72-40

NUMERICAL INDEX

Part Number	Page	Part Number	Page	Part Number	Page
3EB-73-A5150	72-72	3EB-73-A5180	72-28	3EB-73-A5330	72-117
3EB-73-A5150	72-74	3EB-73-A5180	72-32	3EB-73-A5330	72-117
3EB-73-A5150	72-76	3EB-73-A5190	72-108	3EB-73-A5330	72-117
3EB-73-A5160	72-108	3EB-73-A5190	72-110	3EB-73-A5330	72-12
3EB-73-A5160	72-110	3EB-73-A5190	72-112	3EB-73-A5330	72-189
3EB-73-A5160	72-112	3EB-73-A5190	72-176	3EB-73-A5330	72-189
3EB-73-A5160	72-140	3EB-73-A5190	72-180	3EB-73-A5330	72-189
3EB-73-A5160	72-142	3EB-73-A5190	72-184	3EB-73-A5330	72-230
3EB-73-A5160	72-176	3EB-73-A5190	72-244	3EB-73-A5330	72-251
3EB-73-A5160	72-180	3EB-73-A5190	72-246	3EB-73-A5330	72-251
3EB-73-A5160	72-184	3EB-73-A5210	72-156	3EB-73-A5330	72-251
3EB-73-A5160	72-212	3EB-73-A5210	72-228	3EB-73-A5330	72-268
3EB-73-A5160	72-214	3EB-73-A5210	72-90	3EB-73-A5330	72-270
3EB-73-A5160	72-244	3EB-73-A5210	72-92	3EB-73-A5330	72-272
3EB-73-A5160	72-246	3EB-73-A5220	72-108	3EB-73-A5330	72-286
3EB-73-A5160	72-28	3EB-73-A5220	72-110	3EB-73-A5330	72-288
3EB-73-A5160	72-310	3EB-73-A5220	72-112	3EB-73-A5330	72-290
3EB-73-A5160	72-314	3EB-73-A5220	72-176	3EB-73-A5330	72-340
3EB-73-A5160	72-318	3EB-73-A5220	72-180	3EB-73-A5330	72-340
3EB-73-A5160	72-32	3EB-73-A5220	72-184	3EB-73-A5330	72-340
3EB-73-A5160	72-330	3EB-73-A5220	72-244	3EB-73-A5330	72-354
3EB-73-A5160	72-334	3EB-73-A5220	72-246	3EB-73-A5330	72-393
3EB-73-A5160	72-36	3EB-73-A5230	72-108	3EB-73-A5330	72-394
3EB-73-A5160	72-368	3EB-73-A5230	72-110	3EB-73-A5330	72-394
3EB-73-A5160	72-377	3EB-73-A5230	72-112	3EB-73-A5340	72-108
3EB-73-A5160	72-381	3EB-73-A5230	72-176	3EB-73-A5340	72-110
3EB-73-A5160	72-385	3EB-73-A5230	72-180	3EB-73-A5340	72-112
3EB-73-A5160	72-389	3EB-73-A5230	72-184	3EB-73-A5340	72-12
3EB-73-A5160	72-40	3EB-73-A5230	72-244	3EB-73-A5340	72-176
3EB-73-A5160	72-72	3EB-73-A5230	72-246	3EB-73-A5340	72-180
3EB-73-A5160	72-74	3EB-73-A5230	72-246	3EB-73-A5340	72-184
3EB-73-A5160	72-76	3EB-73-A5230	72-28	3EB-73-A5340	72-230
3EB-73-A5170	72-108	3EB-73-A5230	72-314	3EB-73-A5340	72-244
3EB-73-A5170	72-110	3EB-73-A5230	72-318	3EB-73-A5340	72-246
3EB-73-A5170	72-112	3EB-73-A5230	72-32	3EB-73-A5340	72-28
3EB-73-A5170	72-176	3EB-73-A5230	72-36	3EB-73-A5340	72-314
3EB-73-A5170	72-180	3EB-73-A5230	72-369	3EB-73-A5340	72-318
3EB-73-A5170	72-184	3EB-73-A5230	72-378	3EB-73-A5340	72-32
3EB-73-A5170	72-244	3EB-73-A5230	72-385	3EB-73-A5340	72-330
3EB-73-A5170	72-246	3EB-73-A5230	72-40	3EB-73-A5340	72-334
3EB-73-A5170	72-28	3EB-73-A5240	72-112	3EB-73-A5340	72-36
3EB-73-A5170	72-32	3EB-73-A5240	72-184	3EB-73-A5340	72-377
3EB-73-A5180	72-108	3EB-73-A5240	72-246	3EB-73-A5340	72-381
3EB-73-A5180	72-110	3EB-73-A5250	72-112	3EB-73-A5340	72-385
3EB-73-A5180	72-112	3EB-73-A5250	72-184	3EB-73-A5340	72-389
3EB-73-A5180	72-176	3EB-73-A5250	72-246	3EB-73-A5340	72-40
3EB-73-A5180	72-180	3EB-73-A5310	72-12	3EB-73-A5350	72-108
3EB-73-A5180	72-184	3EB-73-A5310	72-230	3EB-73-A5350	72-110
3EB-73-A5180	72-244	3EB-73-A5320	72-12	3EB-73-A5350	72-112
3EB-73-A5180	72-246	3EB-73-A5320	72-230	3EB-73-A5350	72-12

NUMERICAL INDEX

Part Number	Page	Part Number	Page	Part Number	Page
3EB-73-A5350	72-176	3EB-73-A5470	72-314	3EB-73-A5510	72-94
3EB-73-A5350	72-180	3EB-73-A5470	72-318	3EB-73-A5610	72-108
3EB-73-A5350	72-184	3EB-73-A5470	72-326	3EB-73-A5610	72-110
3EB-73-A5350	72-230	3EB-73-A5470	72-330	3EB-73-A5610	72-176
3EB-73-A5350	72-244	3EB-73-A5470	72-334	3EB-73-A5610	72-180
3EB-73-A5350	72-246	3EB-73-A5470	72-353	3EB-73-A5610	72-244
3EB-73-A5350	72-28	3EB-73-A5470	72-368	3EB-73-A5610	72-28
3EB-73-A5350	72-32	3EB-73-A5470	72-372	3EB-73-A5610	72-310
3EB-73-A5350	72-36	3EB-73-A5470	72-377	3EB-73-A5610	72-314
3EB-73-A5350	72-40	3EB-73-A5470	72-381	3EB-73-A5610	72-318
3EB-73-A5430	72-122	3EB-73-A5470	72-386	3EB-73-A5610	72-32
3EB-73-A5430	72-150	3EB-73-A5470	72-389	3EB-73-A5610	72-369
3EB-73-A5430	72-50	3EB-73-A5470	72-58	3EB-73-A5610	72-377
3EB-73-A5430	72-84	3EB-73-A5470	72-96	3EB-73-A5610	72-385
3EB-73-A5440	72-152	3EB-73-A5490	72-108	3EB-73-A5620	72-108
3EB-73-A5440	72-86	3EB-73-A5490	72-110	3EB-73-A5620	72-110
3EB-73-A5450	72-118	3EB-73-A5490	72-112	3EB-73-A5620	72-112
3EB-73-A5450	72-128	3EB-73-A5490	72-140	3EB-73-A5620	72-176
3EB-73-A5450	72-14	3EB-73-A5490	72-142	3EB-73-A5620	72-180
3EB-73-A5450	72-145	3EB-73-A5490	72-176	3EB-73-A5620	72-184
3EB-73-A5450	72-16	3EB-73-A5490	72-180	3EB-73-A5620	72-244
3EB-73-A5450	72-162	3EB-73-A5490	72-184	3EB-73-A5620	72-246
3EB-73-A5450	72-190	3EB-73-A5490	72-212	3EB-73-A5620	72-28
3EB-73-A5450	72-200	3EB-73-A5490	72-214	3EB-73-A5620	72-32
3EB-73-A5450	72-217	3EB-73-A5490	72-244	3EB-73-A5630	72-108
3EB-73-A5450	72-232	3EB-73-A5490	72-246	3EB-73-A5630	72-110
3EB-73-A5450	72-252	3EB-73-A5490	72-274	3EB-73-A5630	72-112
3EB-73-A5450	72-45	3EB-73-A5490	72-28	3EB-73-A5630	72-176
3EB-73-A5450	72-56	3EB-73-A5490	72-304	3EB-73-A5630	72-180
3EB-73-A5450	72-58	3EB-73-A5490	72-310	3EB-73-A5630	72-184
3EB-73-A5450	72-79	3EB-73-A5490	72-314	3EB-73-A5630	72-244
3EB-73-A5450	72-94	3EB-73-A5490	72-318	3EB-73-A5630	72-246
3EB-73-A5450	72-96	3EB-73-A5490	72-32	3EB-73-A5640	72-110
3EB-73-A5460	72-128	3EB-73-A5490	72-323	3EB-73-A5640	72-112
3EB-73-A5460	72-16	3EB-73-A5490	72-326	3EB-73-A5640	72-140
3EB-73-A5460	72-162	3EB-73-A5490	72-330	3EB-73-A5640	72-142
3EB-73-A5460	72-200	3EB-73-A5490	72-334	3EB-73-A5640	72-184
3EB-73-A5460	72-232	3EB-73-A5490	72-36	3EB-73-A5640	72-212
3EB-73-A5460	72-58	3EB-73-A5490	72-366	3EB-73-A5640	72-214
3EB-73-A5460	72-96	3EB-73-A5490	72-368	3EB-73-A5640	72-244
3EB-73-A5470	72-128	3EB-73-A5490	72-372	3EB-73-A5640	72-246
3EB-73-A5470	72-16	3EB-73-A5490	72-377	3EB-73-A5640	72-28
3EB-73-A5470	72-162	3EB-73-A5490	72-381	3EB-73-A5640	72-32
3EB-73-A5470	72-200	3EB-73-A5490	72-385	3EB-73-A5640	72-36
3EB-73-A5470	72-232	3EB-73-A5490	72-389	3EB-73-A5640	72-40
3EB-73-A5470	72-276	3EB-73-A5490	72-40	3EB-73-A5640	72-72
3EB-73-A5470	72-280	3EB-73-A5490	72-70	3EB-73-A5640	72-74
3EB-73-A5470	72-286	3EB-73-A5490	72-72	3EB-73-A5640	72-76
3EB-73-A5470	72-288	3EB-73-A5490	72-74	3EB-73-A5650	72-108
3EB-73-A5470	72-310	3EB-73-A5490	72-76	3EB-73-A5650	72-28

NUMERICAL INDEX

Part Number	Page	Part Number	Page	Part Number	Page
3EB-73-A5650	72-36	3EB-73-A5920	72-106	3EB-74-A5770	72-185
3EB-73-A5650	72-76	3EB-73-A5920	72-138	3EB-74-A5790	72-110
3EB-73-A5660	72-108	3EB-73-A5920	72-174	3EB-74-A5790	72-113
3EB-73-A5660	72-110	3EB-73-A5920	72-26	3EB-74-A5790	72-247
3EB-73-A5660	72-112	3EB-73-A5920	72-304	3EB-74-A5810	72-110
3EB-73-A5660	72-176	3EB-73-A5920	72-304	3EB-74-A5810	72-113
3EB-73-A5660	72-180	3EB-73-A5920	72-366	3EB-74-A5810	72-181
3EB-73-A5660	72-184	3EB-73-A5920	72-366	3EB-74-A5810	72-185
3EB-73-A5660	72-244	3EB-73-A5920	72-68	3EB-74-A5830	72-110
3EB-73-A5660	72-246	3EB-73-A5930	72-106	3EB-74-A5830	72-113
3EB-73-A5670	72-112	3EB-73-A5930	72-138	3EB-74-A5830	72-181
3EB-73-A5670	72-184	3EB-73-A5930	72-174	3EB-74-A5830	72-185
3EB-73-A5670	72-246	3EB-73-A5930	72-26	3EB-74-A5840	72-110
3EB-73-A5680	72-112	3EB-73-A5930	72-304	3EB-74-A5840	72-113
3EB-73-A5680	72-184	3EB-73-A5930	72-366	3EB-74-A5840	72-247
3EB-73-A5680	72-246	3EB-73-A6010	72-112	3EB-75-A5120	72-88
3EB-73-A5690	72-112	3EB-73-A6010	72-184	3EB-75-A5150	72-88
3EB-73-A5690	72-184	3EB-73-A6010	72-246	3EB-75-A5170	72-88
3EB-73-A5690	72-246	3EB-73-A6020	72-36	3EB-75-A5190	72-88
3EB-73-A5720	72-117	3EB-73-A6020	72-76	3EB-75-A5210	72-88
3EB-73-A5720	72-117	3EB-73-A6030	72-112	3EB-75-A5230	72-88
3EB-73-A5720	72-117	3EB-73-A6030	72-184	3EB-75-A5240	72-88
3EB-73-A5720	72-145	3EB-73-A6030	72-246	3EB-75-A5320	72-90
3EB-73-A5720	72-145	3EB-74-A5150	72-98	3EB-75-A5350	72-90
3EB-73-A5720	72-145	3EB-74-A5150	72-98	3EB-75-A5370	72-90
3EB-73-A5720	72-154	3EB-74-A5170	72-98	3EB-75-A5390	72-90
3EB-73-A5720	72-156	3EB-74-A5190	72-60	3EB-75-A5410	72-90
3EB-73-A5720	72-189	3EB-74-A5190	72-98	3EB-75-A5430	72-90
3EB-73-A5720	72-189	3EB-74-A5240	72-98	3EB-75-A5520	72-92
3EB-73-A5720	72-189	3EB-74-A5370	72-98	3EB-75-A5550	72-92
3EB-73-A5720	72-217	3EB-74-A5390	72-60	3EB-75-A5570	72-92
3EB-73-A5720	72-217	3EB-74-A5390	72-98	3EB-75-A5590	72-92
3EB-73-A5720	72-217	3EB-74-A5440	72-98	3EB-75-A5610	72-92
3EB-73-A5720	72-226	3EB-74-A5520	72-98	3EB-75-A5630	72-92
3EB-73-A5720	72-228	3EB-74-A5550	72-98	3EB-78-A5120	72-84
3EB-73-A5720	72-251	3EB-74-A5570	72-164	3EB-78-A5122	72-152
3EB-73-A5720	72-251	3EB-74-A5570	72-98	3EB-78-A5150	72-84
3EB-73-A5720	72-251	3EB-74-A5590	72-98	3EB-78-A5150	72-84
3EB-73-A5720	72-88	3EB-74-A5610	72-164	3EB-78-A5190	72-84
3EB-73-A5720	72-90	3EB-74-A5610	72-98	3EB-78-A5210	72-84
3EB-73-A5720	72-92	3EB-74-A5630	72-165	3EB-78-A5230	72-84
3EB-73-A5810	72-100	3EB-74-A5630	72-98	3EB-78-A5240	72-84
3EB-73-A5810	72-20	3EB-74-A5640	72-98	3EB-78-A5320	72-86
3EB-73-A5810	72-62	3EB-74-A5720	72-110	3EB-78-A5350	72-86
3EB-73-A5820	72-100	3EB-74-A5720	72-113	3EB-78-A5370	72-86
3EB-73-A5820	72-20	3EB-74-A5750	72-110	3EB-78-A5390	72-86
3EB-73-A5820	72-62	3EB-74-A5750	72-113	3EB-78-A5410	72-86
3EB-73-A5910	72-138	3EB-74-A5770	72-110	3EB-78-A5430	72-86
3EB-73-A5910	72-174	3EB-74-A5770	72-113	3EB-78-A5440	72-86
3EB-73-A5910	72-366	3EB-74-A5770	72-180	3EB-79-A5110	72-116

https://truckmanualshub.com/

NUMERICAL INDEX

Part Number	Page	Part Number	Page	Part Number	Page
3EB-79-A5110	72-116	3EB-79-A5150	72-154	3EB-79-A5180	72-326
3EB-79-A5110	72-116	3EB-79-A5150	72-16	3EB-79-A5180	72-330
3EB-79-A5110	72-124	3EB-79-A5150	72-196	3EB-79-A5180	72-334
3EB-79-A5110	72-144	3EB-79-A5150	72-200	3EB-79-A5180	72-36
3EB-79-A5110	72-144	3EB-79-A5150	72-216	3EB-79-A5180	72-369
3EB-79-A5110	72-144	3EB-79-A5150	72-216	3EB-79-A5180	72-373
3EB-79-A5110	72-154	3EB-79-A5150	72-216	3EB-79-A5180	72-377
3EB-79-A5110	72-196	3EB-79-A5150	72-217	3EB-79-A5180	72-382
3EB-79-A5110	72-216	3EB-79-A5150	72-217	3EB-79-A5180	72-385
3EB-79-A5110	72-216	3EB-79-A5150	72-244	3EB-79-A5180	72-389
3EB-79-A5110	72-216	3EB-79-A5150	72-44	3EB-79-A5180	72-40
3EB-79-A5110	72-52	3EB-79-A5150	72-44	3EB-79-A5180	72-72
3EB-79-A5110	72-78	3EB-79-A5150	72-44	3EB-79-A5180	72-74
3EB-79-A5110	72-78	3EB-79-A5150	72-45	3EB-79-A5180	72-76
3EB-79-A5110	72-78	3EB-79-A5150	72-45	3EB-79-A5190	72-108
3EB-79-A5110	72-88	3EB-79-A5150	72-52	3EB-79-A5190	72-110
3EB-79-A5120	72-116	3EB-79-A5150	72-56	3EB-79-A5190	72-112
3EB-79-A5120	72-116	3EB-79-A5150	72-58	3EB-79-A5190	72-176
3EB-79-A5120	72-116	3EB-79-A5150	72-78	3EB-79-A5190	72-180
3EB-79-A5140	72-118	3EB-79-A5150	72-78	3EB-79-A5190	72-184
3EB-79-A5140	72-118	3EB-79-A5150	72-78	3EB-79-A5190	72-244
3EB-79-A5140	72-118	3EB-79-A5150	72-79	3EB-79-A5190	72-246
3EB-79-A5140	72-128	3EB-79-A5150	72-79	3EB-79-A5210	72-117
3EB-79-A5140	72-14	3EB-79-A5150	72-88	3EB-79-A5210	72-117
3EB-79-A5140	72-16	3EB-79-A5150	72-94	3EB-79-A5210	72-117
3EB-79-A5140	72-200	3EB-79-A5150	72-96	3EB-79-A5210	72-117
3EB-79-A5140	72-217	3EB-79-A5160	72-112	3EB-79-A5210	72-117
3EB-79-A5140	72-217	3EB-79-A5160	72-184	3EB-79-A5210	72-118
3EB-79-A5140	72-217	3EB-79-A5160	72-246	3EB-79-A5210	72-12
3EB-79-A5140	72-45	3EB-79-A5160	72-276	3EB-79-A5210	72-124
3EB-79-A5140	72-45	3EB-79-A5160	72-280	3EB-79-A5210	72-126
3EB-79-A5140	72-45	3EB-79-A5160	72-353	3EB-79-A5210	72-128
3EB-79-A5140	72-56	3EB-79-A5180	72-108	3EB-79-A5210	72-14
3EB-79-A5140	72-58	3EB-79-A5180	72-110	3EB-79-A5210	72-145
3EB-79-A5140	72-94	3EB-79-A5180	72-112	3EB-79-A5210	72-145
3EB-79-A5140	72-96	3EB-79-A5180	72-140	3EB-79-A5210	72-145
3EB-79-A5150	72-116	3EB-79-A5180	72-142	3EB-79-A5210	72-156
3EB-79-A5150	72-116	3EB-79-A5180	72-176	3EB-79-A5210	72-156
3EB-79-A5150	72-117	3EB-79-A5180	72-180	3EB-79-A5210	72-16
3EB-79-A5150	72-118	3EB-79-A5180	72-184	3EB-79-A5210	72-160
3EB-79-A5150	72-118	3EB-79-A5180	72-212	3EB-79-A5210	72-162
3EB-79-A5150	72-12	3EB-79-A5180	72-214	3EB-79-A5210	72-189
3EB-79-A5150	72-124	3EB-79-A5180	72-244	3EB-79-A5210	72-189
3EB-79-A5150	72-128	3EB-79-A5180	72-246	3EB-79-A5210	72-189
3EB-79-A5150	72-14	3EB-79-A5180	72-28	3EB-79-A5210	72-190
3EB-79-A5150	72-144	3EB-79-A5180	72-310	3EB-79-A5210	72-190
3EB-79-A5150	72-144	3EB-79-A5180	72-314	3EB-79-A5210	72-190
3EB-79-A5150	72-144	3EB-79-A5180	72-318	3EB-79-A5210	72-196
3EB-79-A5150	72-145	3EB-79-A5180	72-32	3EB-79-A5210	72-200
3EB-79-A5150	72-145	3EB-79-A5180	72-323	3EB-79-A5210	72-217

NUMERICAL INDEX

Part Number	Page	Part Number	Page	Part Number	Page
3EB-79-A5210	72-217	3EB-79-A5220	72-252	3EB-79-A5240	72-334
3EB-79-A5210	72-217	3EB-79-A5220	72-252	3EB-79-A5240	72-36
3EB-79-A5210	72-226	3EB-79-A5220	72-45	3EB-79-A5240	72-369
3EB-79-A5210	72-228	3EB-79-A5220	72-45	3EB-79-A5240	72-373
3EB-79-A5210	72-228	3EB-79-A5220	72-45	3EB-79-A5240	72-377
3EB-79-A5210	72-230	3EB-79-A5220	72-58	3EB-79-A5240	72-381
3EB-79-A5210	72-232	3EB-79-A5220	72-79	3EB-79-A5240	72-385
3EB-79-A5210	72-251	3EB-79-A5220	72-79	3EB-79-A5240	72-389
3EB-79-A5210	72-251	3EB-79-A5220	72-79	3EB-79-A5240	72-40
3EB-79-A5210	72-251	3EB-79-A5220	72-96	3EB-79-A5240	72-72
3EB-79-A5210	72-252	3EB-79-A5230	72-108	3EB-79-A5240	72-74
3EB-79-A5210	72-252	3EB-79-A5230	72-110	3EB-79-A5240	72-76
3EB-79-A5210	72-252	3EB-79-A5230	72-112	3EB-79-A5250	72-108
3EB-79-A5210	72-45	3EB-79-A5230	72-140	3EB-79-A5250	72-110
3EB-79-A5210	72-45	3EB-79-A5230	72-176	3EB-79-A5250	72-112
3EB-79-A5210	72-45	3EB-79-A5230	72-180	3EB-79-A5250	72-140
3EB-79-A5210	72-45	3EB-79-A5230	72-184	3EB-79-A5250	72-142
3EB-79-A5210	72-45	3EB-79-A5230	72-212	3EB-79-A5250	72-176
3EB-79-A5210	72-45	3EB-79-A5230	72-244	3EB-79-A5250	72-180
3EB-79-A5210	72-54	3EB-79-A5230	72-246	3EB-79-A5250	72-184
3EB-79-A5210	72-56	3EB-79-A5230	72-28	3EB-79-A5250	72-212
3EB-79-A5210	72-58	3EB-79-A5230	72-310	3EB-79-A5250	72-214
3EB-79-A5210	72-78	3EB-79-A5230	72-314	3EB-79-A5250	72-246
3EB-79-A5210	72-78	3EB-79-A5230	72-318	3EB-79-A5250	72-28
3EB-79-A5210	72-78	3EB-79-A5230	72-32	3EB-79-A5250	72-310
3EB-79-A5210	72-79	3EB-79-A5230	72-368	3EB-79-A5250	72-314
3EB-79-A5210	72-79	3EB-79-A5230	72-377	3EB-79-A5250	72-318
3EB-79-A5210	72-79	3EB-79-A5230	72-385	3EB-79-A5250	72-32
3EB-79-A5210	72-90	3EB-79-A5230	72-70	3EB-79-A5250	72-326
3EB-79-A5210	72-92	3EB-79-A5230	72-72	3EB-79-A5250	72-330
3EB-79-A5210	72-94	3EB-79-A5230	72-74	3EB-79-A5250	72-334
3EB-79-A5210	72-96	3EB-79-A5230	72-76	3EB-79-A5250	72-36
3EB-79-A5220	72-118	3EB-79-A5240	72-108	3EB-79-A5250	72-369
3EB-79-A5220	72-118	3EB-79-A5240	72-110	3EB-79-A5250	72-373
3EB-79-A5220	72-118	3EB-79-A5240	72-112	3EB-79-A5250	72-377
3EB-79-A5220	72-128	3EB-79-A5240	72-140	3EB-79-A5250	72-381
3EB-79-A5220	72-145	3EB-79-A5240	72-142	3EB-79-A5250	72-385
3EB-79-A5220	72-145	3EB-79-A5240	72-176	3EB-79-A5250	72-389
3EB-79-A5220	72-145	3EB-79-A5240	72-180	3EB-79-A5250	72-40
3EB-79-A5220	72-16	3EB-79-A5240	72-184	3EB-79-A5250	72-70
3EB-79-A5220	72-162	3EB-79-A5240	72-212	3EB-79-A5250	72-72
3EB-79-A5220	72-190	3EB-79-A5240	72-214	3EB-79-A5250	72-74
3EB-79-A5220	72-190	3EB-79-A5240	72-244	3EB-79-A5250	72-76
3EB-79-A5220	72-190	3EB-79-A5240	72-246	3EB-79-A5270	72-108
3EB-79-A5220	72-200	3EB-79-A5240	72-28	3EB-79-A5270	72-110
3EB-79-A5220	72-217	3EB-79-A5240	72-310	3EB-79-A5270	72-112
3EB-79-A5220	72-217	3EB-79-A5240	72-314	3EB-79-A5270	72-156
3EB-79-A5220	72-217	3EB-79-A5240	72-318	3EB-79-A5270	72-176
3EB-79-A5220	72-232	3EB-79-A5240	72-32	3EB-79-A5270	72-180
3EB-79-A5220	72-252	3EB-79-A5240	72-326	3EB-79-A5270	72-184

NUMERICAL INDEX

Part Number	Page	Part Number	Page	Part Number	Page
3EB-79-A5270	72-228	3EB-79-A5330	72-246	3EB-79-A5360	72-72
3EB-79-A5270	72-244	3EB-79-A5330	72-276	3EB-79-A5360	72-74
3EB-79-A5270	72-246	3EB-79-A5330	72-280	3EB-79-A5360	72-76
3EB-79-A5270	72-28	3EB-79-A5330	72-288	3EB-79-A5360	72-90
3EB-79-A5270	72-310	3EB-79-A5340	72-12	3EB-79-A5360	72-90
3EB-79-A5270	72-314	3EB-79-A5340	72-124	3EB-79-A5360	72-92
3EB-79-A5270	72-318	3EB-79-A5340	72-154	3EB-79-A5360	72-92
3EB-79-A5270	72-32	3EB-79-A5340	72-196	3EB-79-A5370	72-126
3EB-79-A5270	72-326	3EB-79-A5340	72-226	3EB-79-A5370	72-198
3EB-79-A5270	72-330	3EB-79-A5340	72-52	3EB-79-A5370	72-54
3EB-79-A5270	72-334	3EB-79-A5340	72-88	3EB-79-A5380	72-12
3EB-79-A5270	72-369	3EB-79-A5350	72-12	3EB-79-A5380	72-126
3EB-79-A5270	72-373	3EB-79-A5350	72-124	3EB-79-A5380	72-156
3EB-79-A5270	72-377	3EB-79-A5350	72-154	3EB-79-A5380	72-198
3EB-79-A5270	72-382	3EB-79-A5350	72-196	3EB-79-A5380	72-228
3EB-79-A5270	72-385	3EB-79-A5350	72-226	3EB-79-A5380	72-54
3EB-79-A5270	72-389	3EB-79-A5350	72-52	3EB-79-A5380	72-90
3EB-79-A5270	72-90	3EB-79-A5350	72-88	3EB-79-A5380	72-92
3EB-79-A5270	72-92	3EB-79-A5360	72-108	3EB-79-A5390	72-12
3EB-79-A5280	72-110	3EB-79-A5360	72-110	3EB-79-A5390	72-230
3EB-79-A5280	72-112	3EB-79-A5360	72-112	3EB-79-A6010	72-120
3EB-79-A5280	72-140	3EB-79-A5360	72-126	3EB-79-A6010	72-148
3EB-79-A5280	72-142	3EB-79-A5360	72-140	3EB-79-A6010	72-192
3EB-79-A5280	72-176	3EB-79-A5360	72-142	3EB-79-A6010	72-220
3EB-79-A5280	72-180	3EB-79-A5360	72-156	3EB-79-A6010	72-254
3EB-79-A5280	72-184	3EB-79-A5360	72-156	3EB-79-A6010	72-344
3EB-79-A5280	72-212	3EB-79-A5360	72-176	3EB-79-A6010	72-4
3EB-79-A5280	72-214	3EB-79-A5360	72-180	3EB-79-A6010	72-48
3EB-79-A5280	72-244	3EB-79-A5360	72-184	3EB-79-A6010	72-82
3EB-79-A5280	72-246	3EB-79-A5360	72-198	3EB-79-A6020	72-120
3EB-79-A5280	72-247	3EB-79-A5360	72-212	3EB-79-A6020	72-148
3EB-79-A5280	72-70	3EB-79-A5360	72-214	3EB-79-A6020	72-192
3EB-79-A5280	72-72	3EB-79-A5360	72-228	3EB-79-A6020	72-220
3EB-79-A5280	72-74	3EB-79-A5360	72-228	3EB-79-A6020	72-254
3EB-79-A5280	72-76	3EB-79-A5360	72-244	3EB-79-A6020	72-344
3EB-79-A5290	72-112	3EB-79-A5360	72-246	3EB-79-A6020	72-4
3EB-79-A5290	72-184	3EB-79-A5360	72-28	3EB-79-A6020	72-48
3EB-79-A5290	72-246	3EB-79-A5360	72-310	3EB-79-A6020	72-82
3EB-79-A5290	72-292	3EB-79-A5360	72-318	3EB-79-A6030	72-148
3EB-79-A5290	72-356	3EB-79-A5360	72-32	3EB-79-A6030	72-220
3EB-79-A5290	72-358	3EB-79-A5360	72-36	3EB-79-A6030	72-254
3EB-79-A5310	72-148	3EB-79-A5360	72-369	3EB-79-A6030	72-344
3EB-79-A5310	72-220	3EB-79-A5360	72-373	3EB-79-A6030	72-4
3EB-79-A5310	72-254	3EB-79-A5360	72-377	3EB-79-A6030	72-82
3EB-79-A5310	72-344	3EB-79-A5360	72-381	3EB-79-A6040	72-102
3EB-79-A5310	72-4	3EB-79-A5360	72-385	3EB-79-A6040	72-104
3EB-79-A5310	72-82	3EB-79-A5360	72-389	3EB-79-A6040	72-108
3EB-79-A5330	72-112	3EB-79-A5360	72-40	3EB-79-A6040	72-110
3EB-79-A5330	72-184	3EB-79-A5360	72-54	3EB-79-A6040	72-112
3EB-79-A5330	72-230	3EB-79-A5360	72-70	3EB-79-A6040	72-134

NUMERICAL INDEX

Part Number	Page	Part Number	Page	Part Number	Page
3EB-79-A6040	72-134	3EB-79-A6040	72-373	3EB-79-A6050	72-339
3EB-79-A6040	72-136	3EB-79-A6040	72-377	3EB-79-A6050	72-339
3EB-79-A6040	72-136	3EB-79-A6040	72-381	3EB-79-A6050	72-354
3EB-79-A6040	72-140	3EB-79-A6040	72-385	3EB-79-A6050	72-356
3EB-79-A6040	72-142	3EB-79-A6040	72-389	3EB-79-A6050	72-358
3EB-79-A6040	72-154	3EB-79-A6040	72-40	3EB-79-A6050	72-393
3EB-79-A6040	72-154	3EB-79-A6040	72-64	3EB-79-A6050	72-393
3EB-79-A6040	72-170	3EB-79-A6040	72-66	3EB-79-A6050	72-393
3EB-79-A6040	72-172	3EB-79-A6040	72-70	3EB-79-A6050	72-45
3EB-79-A6040	72-176	3EB-79-A6040	72-72	3EB-79-A6050	72-45
3EB-79-A6040	72-180	3EB-79-A6040	72-74	3EB-79-A6050	72-45
3EB-79-A6040	72-184	3EB-79-A6040	72-76	3EB-79-A6050	72-54
3EB-79-A6040	72-206	3EB-79-A6040	72-88	3EB-79-A6050	72-56
3EB-79-A6040	72-206	3EB-79-A6040	72-88	3EB-79-A6050	72-58
3EB-79-A6040	72-208	3EB-79-A6050	72-117	3EB-79-A6050	72-78
3EB-79-A6040	72-208	3EB-79-A6050	72-117	3EB-79-A6050	72-78
3EB-79-A6040	72-212	3EB-79-A6050	72-117	3EB-79-A6050	72-78
3EB-79-A6040	72-214	3EB-79-A6050	72-12	3EB-79-A6050	72-90
3EB-79-A6040	72-22	3EB-79-A6050	72-126	3EB-79-A6050	72-92
3EB-79-A6040	72-22	3EB-79-A6050	72-128	3EB-79-A6050	72-94
3EB-79-A6040	72-226	3EB-79-A6050	72-14	3EB-79-A6050	72-96
3EB-79-A6040	72-226	3EB-79-A6050	72-144	3EB-79-A6060	72-142
3EB-79-A6040	72-230	3EB-79-A6050	72-144	3EB-79-A6060	72-156
3EB-79-A6040	72-238	3EB-79-A6050	72-144	3EB-79-A6060	72-214
3EB-79-A6040	72-24	3EB-79-A6050	72-156	3EB-79-A6060	72-228
3EB-79-A6040	72-24	3EB-79-A6050	72-16	3EB-79-A6060	72-90
3EB-79-A6040	72-240	3EB-79-A6050	72-160	3EB-79-A6060	72-92
3EB-79-A6040	72-244	3EB-79-A6050	72-162	3EB-79-A6070	72-117
3EB-79-A6040	72-246	3EB-79-A6050	72-189	3EB-79-A6070	72-117
3EB-79-A6040	72-274	3EB-79-A6050	72-189	3EB-79-A6070	72-117
3EB-79-A6040	72-276	3EB-79-A6050	72-189	3EB-79-A6070	72-12
3EB-79-A6040	72-28	3EB-79-A6050	72-198	3EB-79-A6070	72-189
3EB-79-A6040	72-280	3EB-79-A6050	72-200	3EB-79-A6070	72-189
3EB-79-A6040	72-284	3EB-79-A6050	72-216	3EB-79-A6070	72-189
3EB-79-A6040	72-286	3EB-79-A6050	72-216	3EB-79-A6070	72-230
3EB-79-A6040	72-288	3EB-79-A6050	72-216	3EB-79-A6070	72-251
3EB-79-A6040	72-302	3EB-79-A6050	72-228	3EB-79-A6070	72-251
3EB-79-A6040	72-304	3EB-79-A6050	72-232	3EB-79-A6070	72-251
3EB-79-A6040	72-310	3EB-79-A6050	72-251	3EB-79-A6070	72-284
3EB-79-A6040	72-314	3EB-79-A6050	72-251	3EB-79-A6070	72-286
3EB-79-A6040	72-318	3EB-79-A6050	72-251	3EB-79-A6070	72-290
3EB-79-A6040	72-32	3EB-79-A6050	72-277	3EB-79-A6070	72-340
3EB-79-A6040	72-326	3EB-79-A6050	72-281	3EB-79-A6070	72-340
3EB-79-A6040	72-330	3EB-79-A6050	72-284	3EB-79-A6070	72-340
3EB-79-A6040	72-334	3EB-79-A6050	72-286	3EB-79-A6070	72-354
3EB-79-A6040	72-353	3EB-79-A6050	72-288	3EB-79-A6070	72-394
3EB-79-A6040	72-36	3EB-79-A6050	72-290	3EB-79-A6070	72-394
3EB-79-A6040	72-364	3EB-79-A6050	72-292	3EB-79-A6070	72-394
3EB-79-A6040	72-366	3EB-79-A6050	72-294	3EB-79-A6080	72-117
3EB-79-A6040	72-369	3EB-79-A6050	72-339	3EB-79-A6080	72-117

NUMERICAL INDEX

Part Number	Page	Part Number	Page	Part Number	Page
3EB-79-A6080	72-117	3EB-79-A6080	72-294	3EB-79-A6081	72-162
3EB-79-A6080	72-118	3EB-79-A6080	72-339	3EB-79-A6081	72-189
3EB-79-A6080	72-118	3EB-79-A6080	72-339	3EB-79-A6081	72-189
3EB-79-A6080	72-118	3EB-79-A6080	72-340	3EB-79-A6081	72-189
3EB-79-A6080	72-12	3EB-79-A6080	72-340	3EB-79-A6081	72-190
3EB-79-A6080	72-124	3EB-79-A6080	72-341	3EB-79-A6081	72-190
3EB-79-A6080	72-128	3EB-79-A6080	72-353	3EB-79-A6081	72-190
3EB-79-A6080	72-14	3EB-79-A6080	72-356	3EB-79-A6081	72-196
3EB-79-A6080	72-144	3EB-79-A6080	72-358	3EB-79-A6081	72-200
3EB-79-A6080	72-144	3EB-79-A6080	72-393	3EB-79-A6081	72-216
3EB-79-A6080	72-144	3EB-79-A6080	72-393	3EB-79-A6081	72-216
3EB-79-A6080	72-145	3EB-79-A6080	72-394	3EB-79-A6081	72-216
3EB-79-A6080	72-145	3EB-79-A6080	72-394	3EB-79-A6081	72-217
3EB-79-A6080	72-145	3EB-79-A6080	72-394	3EB-79-A6081	72-217
3EB-79-A6080	72-154	3EB-79-A6080	72-45	3EB-79-A6081	72-217
3EB-79-A6080	72-16	3EB-79-A6080	72-45	3EB-79-A6081	72-226
3EB-79-A6080	72-160	3EB-79-A6080	72-45	3EB-79-A6081	72-230
3EB-79-A6080	72-162	3EB-79-A6080	72-45	3EB-79-A6081	72-232
3EB-79-A6080	72-189	3EB-79-A6080	72-45	3EB-79-A6081	72-251
3EB-79-A6080	72-189	3EB-79-A6080	72-45	3EB-79-A6081	72-251
3EB-79-A6080	72-189	3EB-79-A6080	72-56	3EB-79-A6081	72-251
3EB-79-A6080	72-190	3EB-79-A6080	72-58	3EB-79-A6081	72-252
3EB-79-A6080	72-190	3EB-79-A6080	72-78	3EB-79-A6081	72-252
3EB-79-A6080	72-190	3EB-79-A6080	72-78	3EB-79-A6081	72-252
3EB-79-A6080	72-196	3EB-79-A6080	72-78	3EB-79-A6081	72-274
3EB-79-A6080	72-200	3EB-79-A6080	72-79	3EB-79-A6081	72-276
3EB-79-A6080	72-216	3EB-79-A6080	72-79	3EB-79-A6081	72-284
3EB-79-A6080	72-216	3EB-79-A6080	72-79	3EB-79-A6081	72-286
3EB-79-A6080	72-216	3EB-79-A6080	72-88	3EB-79-A6081	72-288
3EB-79-A6080	72-217	3EB-79-A6080	72-94	3EB-79-A6081	72-290
3EB-79-A6080	72-217	3EB-79-A6080	72-96	3EB-79-A6081	72-292
3EB-79-A6080	72-217	3EB-79-A6081	72-117	3EB-79-A6081	72-294
3EB-79-A6080	72-226	3EB-79-A6081	72-117	3EB-79-A6081	72-339
3EB-79-A6080	72-230	3EB-79-A6081	72-117	3EB-79-A6081	72-339
3EB-79-A6080	72-232	3EB-79-A6081	72-118	3EB-79-A6081	72-339
3EB-79-A6080	72-232	3EB-79-A6081	72-118	3EB-79-A6081	72-353
3EB-79-A6080	72-251	3EB-79-A6081	72-118	3EB-79-A6081	72-356
3EB-79-A6080	72-251	3EB-79-A6081	72-12	3EB-79-A6081	72-358
3EB-79-A6080	72-251	3EB-79-A6081	72-124	3EB-79-A6081	72-393
3EB-79-A6080	72-252	3EB-79-A6081	72-128	3EB-79-A6081	72-393
3EB-79-A6080	72-252	3EB-79-A6081	72-14	3EB-79-A6081	72-393
3EB-79-A6080	72-252	3EB-79-A6081	72-144	3EB-79-A6081	72-394
3EB-79-A6080	72-274	3EB-79-A6081	72-144	3EB-79-A6081	72-394
3EB-79-A6080	72-277	3EB-79-A6081	72-144	3EB-79-A6081	72-394
3EB-79-A6080	72-281	3EB-79-A6081	72-145	3EB-79-A6081	72-44
3EB-79-A6080	72-284	3EB-79-A6081	72-145	3EB-79-A6081	72-44
3EB-79-A6080	72-286	3EB-79-A6081	72-145	3EB-79-A6081	72-45
3EB-79-A6080	72-288	3EB-79-A6081	72-154	3EB-79-A6081	72-45
3EB-79-A6080	72-290	3EB-79-A6081	72-16	3EB-79-A6081	72-45
3EB-79-A6080	72-292	3EB-79-A6081	72-160	3EB-79-A6081	72-45

NUMERICAL INDEX

Part Number	Page	Part Number	Page	Part Number	Page
3EB-79-A6081	72-52	3EB-79-A6090	72-44	3EB-96-A5920	96-10
3EB-79-A6081	72-56	3EB-79-A6090	72-52	3EB-96-A5920	96-2
3EB-79-A6081	72-58	3EB-79-A6090	72-78	3EB-96-A5920	96-6
3EB-79-A6081	72-79	3EB-79-A6090	72-78	3EB-96-A5930	96-10
3EB-79-A6081	72-79	3EB-79-A6090	72-78	3EB-96-A5930	96-2
3EB-79-A6081	72-79	3EB-79-A6090	72-88	3EB-96-A5930	96-6
3EB-79-A6081	72-88	3EB-84-51290	72-102	3EB-96-A5940	96-10
3EB-79-A6081	72-94	3EB-84-51290	72-136	3EB-96-A5940	96-2
3EB-79-A6081	72-96	3EB-84-51290	72-170	3EB-96-A5940	96-6
3EB-79-A6090	72-117	3EB-84-51290	72-2	3EB-96-A5950	96-11
3EB-79-A6090	72-117	3EB-84-51290	72-206	3EB-96-A5950	96-3
3EB-79-A6090	72-117	3EB-84-51290	72-22	3EB-96-A5950	96-7
3EB-79-A6090	72-12	3EB-84-51290	72-240	3EB-96-A5960	96-10
3EB-79-A6090	72-124	3EB-84-51290	72-302	3EB-96-A5960	96-2
3EB-79-A6090	72-144	3EB-84-51290	72-364	3EB-96-A5960	96-6
3EB-79-A6090	72-144	3EB-94-46410	66-26	3EB-96-A5970	96-11
3EB-79-A6090	72-144	3EB-94-46410	66-28	3EB-96-A5970	96-3
3EB-79-A6090	72-154	3EB-94-46410	66-30	3EB-96-A5970	96-7
3EB-79-A6090	72-189	3EB-94-F2110	83-12	3EB-96-A6110	96-10
3EB-79-A6090	72-189	3EB-94-F2120	83-12	3EB-96-A6110	96-2
3EB-79-A6090	72-189	3EB-96-13210	96-10	3EB-96-A6110	96-6
3EB-79-A6090	72-196	3EB-96-13210	96-2	3EB-96-A6120	96-10
3EB-79-A6090	72-216	3EB-96-13210	96-6	3EB-96-A6120	96-2
3EB-79-A6090	72-216	3EB-96-13410	96-10	3EB-96-A6120	96-6
3EB-79-A6090	72-216	3EB-96-13410	96-2	3EB-96-A7110	96-10
3EB-79-A6090	72-226	3EB-96-13410	96-6	3EB-96-A7110	96-2
3EB-79-A6090	72-230	3EB-96-25520	96-10	3EB-96-A7110	96-6
3EB-79-A6090	72-251	3EB-96-25520	96-2	3EB-96-A7210	96-10
3EB-79-A6090	72-251	3EB-96-25520	96-6	3EB-96-A7210	96-2
3EB-79-A6090	72-251	3EB-96-34910	96-11	3EB-96-A7210	96-6
3EB-79-A6090	72-276	3EB-96-34910	96-7	3EB-96-A7560	96-10
3EB-79-A6090	72-286	3EB-96-51120	96-10	3EB-96-A7560	96-2
3EB-79-A6090	72-288	3EB-96-51120	96-2	3EB-96-A7560	96-6
3EB-79-A6090	72-290	3EB-96-51120	96-6	3EB-96-A7710	96-3
3EB-79-A6090	72-292	3EB-96-A5111	96-10	3EB-98-A31252	0-8
3EB-79-A6090	72-294	3EB-96-A5111	96-2	3EB-98-A31252	61-2
3EB-79-A6090	72-339	3EB-96-A5111	96-6	3EB-99-A6110	0-4
3EB-79-A6090	72-339	3EB-96-A5510	96-10	3EB-99-A6110	98-2
3EB-79-A6090	72-339	3EB-96-A5510	96-2	3EB-99-A6120	0-4
3EB-79-A6090	72-353	3EB-96-A5510	96-6	3EB-99-A6120	98-2
3EB-79-A6090	72-356	3EB-96-A5520	96-10	3EB-99-A6130	0-4
3EB-79-A6090	72-358	3EB-96-A5520	96-2	3EB-99-A6130	98-2
3EB-79-A6090	72-393	3EB-96-A5520	96-6	3EB-99-A6210	0-4
3EB-79-A6090	72-393	3EB-96-A5530	96-3	3EB-99-A6210	98-2
3EB-79-A6090	72-393	3EB-96-A5821	96-10	3EB-99-A6220	0-4
3EB-79-A6090	72-394	3EB-96-A5821	96-2	3EB-99-A6220	98-2
3EB-79-A6090	72-394	3EB-96-A5821	96-6	3EB-99-A6230	0-4
3EB-79-A6090	72-394	3EB-96-A5910	96-10	3EB-99-A6230	98-2
3EB-79-A6090	72-44	3EB-96-A5910	96-2	3EB-K3-02030	0-3
3EB-79-A6090	72-44	3EB-96-A5910	96-6	3EB-K3-02030	30-15

https://truckmanualshub.com/

NUMERICAL INDEX

Part Number	Page	Part Number	Page	Part Number	Page
3EB-K3-02030	30-3	3EC-30-11450	30-10	45B-AAX-1840	93-2
3EB-K3-02040	0-3	3EC-30-11510	30-10	45B-AAX-1840	93-2
3EB-K3-02040	30-15	3EC-30-11510	30-14	45B-AAX-1840	93-3
3EB-K3-02040	30-3	3EC-30-11510	30-18	45B-AAX-1850	93-2
3EB-K3-02050	0-3	3EC-30-11510	30-2	45B-AAX-1850	93-2
3EB-K3-02050	30-7	3EC-30-11510	30-6	45B-AAX-1850	93-3
3EB-K3-02060	0-3	3EC-30-11710	30-10	45B-AAX-1860	93-2
3EB-K3-02060	30-7	3EC-30-12650	30-14	45B-AAX-1860	93-2
3EB-K3-04010	0-3	3EC-30-12650	30-18	45B-AAX-1860	93-3
3EB-K3-04010	30-11	3EC-30-14540	30-10	45B-AAX-1930	93-3
3EB-K3-04020	0-3	3EC-30-31320	30-10	45B-AAX-1930	93-3
3EB-K3-04020	30-11	3EC-30-33110	0-3	45B-AAX-1940	93-3
3EC-04-34130	4-10	3EC-30-33110	30-10	45B-AAX-1940	93-3
3EC-04-34130	4-6	3EC-30-33160	30-10	45B-AAX-1950	93-3
3EC-04-34130	4-8	3EC-50-31820	50-18	45B-AAX-1950	93-3
3EC-30-11110	30-10	3EC-51-A2620	83-12	45B-AAX-1960	93-3
3EC-30-11150	30-10	3EC-55-37180	0-12	45B-AAX-1960	93-3
3EC-30-11160	30-10	3EC-55-37180	55-2	45B-AAX-1980	93-2
3EC-30-11170	30-10	3EC-56-F3310	83-13	45B-AAX-1980	93-2
3EC-30-11170	30-14	3EC-66-A1910	61-10	540-62-12540	61-2
3EC-30-11170	30-18	3EC-66-A1910	61-12	540-62-12540	66-20
3EC-30-11170	30-2	3EC-72-121FR	93-4	540-62-12540	66-22
3EC-30-11170	30-6	3ED-30-31240	30-14	540-62-13330	66-26
3EC-30-11180	30-10	3ED-30-31240	30-18	540-62-13330	66-28
3EC-30-11180	30-14	3ED-30-31240	30-2	540-62-13330	66-30
3EC-30-11180	30-18	3ED-30-31240	30-6	AMP1-174664-1	83-12
3EC-30-11180	30-2	3EP-05-17160	83-10	AMP1-174664-1	83-13
3EC-30-11180	30-6	3FD-05-26130	5-2	AMP172748-2	83-12
3EC-30-11190	30-10	3FD-05-26140	5-2	AMP172748-2	83-13
3EC-30-11210	30-10	3FD-42-21310	0-6	AMP172888-2	83-12
3EC-30-11230	30-10	3FD-42-21310	41-10	AMP172888-2	83-13
3EC-30-11240	30-10	3SB-24-51640	64-13	AMP173706-1	83-12
3EC-30-11250	30-10	3SB-24-51640	64-7	AMP173706-1	83-13
3EC-30-11260	30-10	3SB-55-11380	5-2	AMP174662-2	83-13
3EC-30-11270	30-10	3SB-55-11380	5-4	AMP174663-2	83-12
3EC-30-11310	30-10	45B-AAX-1140	93-2	AS35303-3601	0-3
3EC-30-11320	30-10	45B-AAX-1140	93-2	CC1000225	72-10
3EC-30-11340	30-10	45B-AAX-1140	93-3	CC1000230	72-10
3EC-30-11340	30-14	45B-AAX-1150	93-2	CC1000236	72-10
3EC-30-11340	30-18	45B-AAX-1150	93-2	CC1000470	72-150
3EC-30-11340	30-2	45B-AAX-1150	93-3	CC1000474	72-150
3EC-30-11340	30-6	45B-AAX-1180	93-2	CC1000476	72-150
3EC-30-11370	30-10	45B-AAX-1180	93-2	CC1000481	72-150
3EC-30-11380	30-10	45B-AAX-1180	93-3	CC1000484	72-150
3EC-30-11380	30-14	45B-AAX-1810	93-2	CC1000493	72-150
3EC-30-11380	30-18	45B-AAX-1810	93-2	CC1000495	72-150
3EC-30-11380	30-2	45B-AAX-1810	93-3	CC1000502	72-150
3EC-30-11380	30-6	45B-AAX-1830	93-2	CC1000505	72-150
3EC-30-11390	30-10	45B-AAX-1830	93-2	CC1000508	72-150
3EC-30-11430	30-10	45B-AAX-1830	93-3	CC1000541	72-152

NUMERICAL INDEX

Part Number	Page	Part Number	Page	Part Number	Page
CC1000545	72-152	CC1001221	72-8	CC1003081	72-346
CC1000547	72-152	CC1001256	72-6	CC1003087	72-346
CC1000552	72-152	CC1001261	72-6	CC1003093	72-346
CC1000564	72-152	CC1001267	72-6	CC1003099	72-346
CC1000566	72-152	CC1001746	72-272	CC1003105	72-346
CC1000573	72-152	CC1001746	72-350	CC1003245	72-222
CC1000576	72-152	CC1001747	72-272	CC1003251	72-222
CC1000579	72-152	CC1001752	72-272	CC1003256	72-222
CC1000649	72-258	CC1001752	72-350	CC1003260	72-222
CC1000650	72-258	CC1001758	72-272	CC1003272	72-222
CC1000651	72-258	CC1001758	72-350	CC1003279	72-222
CC1000652	72-258	CC1001764	72-272	CC1003283	72-222
CC1000653	72-258	CC1001764	72-350	CC1003305	72-224
CC1000654	72-258	CC1001770	72-272	CC1003311	72-224
CC1000655	72-258	CC1001770	72-350	CC1003316	72-224
CC1000666	72-258	CC1001776	72-272	CC1003320	72-224
CC1000698	72-264	CC1001776	72-350	CC1003332	72-224
CC1000699	72-264	CC1001782	72-272	CC1003339	72-224
CC1000700	72-264	CC1001782	72-350	CC1003343	72-224
CC1000701	72-264	CC1002002	72-260	CC1003428	72-194
CC1000702	72-264	CC1002003	72-260	CC1003433	72-194
CC1000703	72-264	CC1002008	72-260	CC1003439	72-194
CC1000704	72-264	CC1002014	72-260	CC1003448	72-194
CC1000748	72-270	CC1002020	72-260	CC1003451	72-194
CC1000751	72-270	CC1002026	72-260	CC1003454	72-194
CC1000757	72-270	CC1002032	72-260	CC1003460	72-194
CC1000762	72-270	CC1002038	72-260	CC1004774	72-194
CC1000768	72-270	CC1002044	72-266	CC1004774	72-222
CC1000772	72-270	CC1002045	72-266	CC1004775	72-194
CC1000776	72-270	CC1002050	72-266	CC1004775	72-222
CC1000785	72-264	CC1002056	72-266	CC1004776	72-194
CC1000786	72-270	CC1002062	72-266	CC1004776	72-222
CC1001115	72-122	CC1002068	72-266	CC1004777	72-194
CC1001115	72-50	CC1002074	72-266	CC1004777	72-222
CC1001127	72-122	CC1002080	72-266	CC1004777	72-224
CC1001127	72-50	CC1002524	72-346	CC1004778	72-224
CC1001131	72-122	CC1002524	72-350	CC1004779	72-224
CC1001131	72-50	CC1002525	72-260	CC1004780	72-224
CC1001138	72-122	CC1002525	72-272	CC1004781	72-224
CC1001138	72-50	CC1002526	72-266	CC1004782	72-224
CC1001139	72-122	CC1002526	72-348	CC1004783	72-224
CC1001139	72-50	CC1003016	72-348	CC1348729	72-258
CC1001147	72-122	CC1003022	72-348	CC1348729	72-264
CC1001147	72-50	CC1003028	72-348	CC1349732	72-258
CC1001153	72-122	CC1003034	72-348	CC1349747	72-264
CC1001153	72-50	CC1003040	72-348	CC1349748	72-264
CC1001159	72-122	CC1003046	72-348	CC1350240	72-270
CC1001159	72-50	CC1003052	72-348	CC1350241	72-270
CC1001210	72-8	CC1003069	72-346	CC1356992	72-258
CC1001215	72-8	CC1003075	72-346	CC1356992	72-264

NUMERICAL INDEX

Part Number	Page	Part Number	Page	Part Number	Page
CC1358999	72-272	CC200788	72-88	CC203285	72-276
CC1358999	72-86	CC201435	72-188	CC203285	72-280
CC17010R1	72-258	CC201435	72-188	CC203285	72-352
CC17010R1	72-264	CC201435	72-188	CC203286	72-276
CC200006	72-158	CC201435	72-198	CC203286	72-280
CC200006	72-280	CC201435	72-226	CC203286	72-352
CC200007	72-276	CC201435	72-250	CC203287	72-276
CC200007	72-280	CC201435	72-250	CC203287	72-280
CC200007	72-286	CC201435	72-250	CC203287	72-352
CC200007	72-288	CC201435	72-393	CC203288	72-276
CC200007	72-290	CC201435	72-393	CC203288	72-280
CC200007	72-292	CC201435	72-393	CC203288	72-352
CC200007	72-294	CC201493	72-274	CC203289	72-276
CC200007	72-339	CC201493	72-340	CC203289	72-280
CC200007	72-339	CC201493	72-340	CC203290	72-276
CC200007	72-339	CC201493	72-340	CC203290	72-280
CC200007	72-353	CC201493	72-354	CC203291	72-276
CC200007	72-356	CC201494	72-274	CC203291	72-280
CC200007	72-358	CC201494	72-353	CC203291	72-290
CC200007	72-393	CC201497	72-286	CC203291	72-353
CC200007	72-393	CC203202	72-140	CC203292	72-307
CC200007	72-393	CC203202	72-142	CC203292	72-323
CC200007	72-394	CC203202	72-212	CC203293	72-323
CC200007	72-394	CC203202	72-214	CC203294	72-307
CC200007	72-394	CC203202	72-70	CC203294	72-323
CC200173	72-100	CC203202	72-72	CC203295	72-307
CC200173	72-132	CC203202	72-74	CC203295	72-323
CC200173	72-168	CC203202	72-76	CC203296	72-307
CC200173	72-20	CC203262	72-286	CC203296	72-323
CC200173	72-204	CC203263	72-276	CC203314	72-277
CC200173	72-236	CC203264	72-307	CC203314	72-281
CC200173	72-300	CC203264	72-310	CC203314	72-354
CC200173	72-362	CC203264	72-369	CC203323	72-292
CC200173	72-62	CC203265	72-323	CC203323	72-356
CC200242	72-274	CC203265	72-326	CC203324	72-292
CC200242	72-284	CC203265	72-373	CC203324	72-356
CC200242	72-353	CC203266	72-284	CC203325	72-292
CC200244	72-274	CC203267	72-284	CC203325	72-356
CC200244	72-284	CC203269	72-284	CC203326	72-292
CC200244	72-353	CC203269	72-354	CC203326	72-356
CC200429	72-158	CC203277	72-274	CC203377	72-286
CC200429	72-286	CC203278	72-274	CC203377	72-288
CC200524	72-307	CC203279	72-274	CC203377	72-290
CC200524	72-310	CC203280	72-274	CC203377	72-352
CC200524	72-323	CC203281	72-274	CC203378	72-286
CC200524	72-326	CC203282	72-274	CC203378	72-288
CC200524	72-369	CC203283	72-274	CC203378	72-290
CC200524	72-373	CC203284	72-276	CC203378	72-352
CC200788	72-154	CC203284	72-280	CC203379	72-286
CC200788	72-226	CC203284	72-352	CC203379	72-288

NUMERICAL INDEX

Part Number	Page	Part Number	Page	Part Number	Page
CC203379	72-290	CC203418	72-294	CC203799	72-322
CC203379	72-352	CC203419	72-294	CC203799	72-322
CC203380	72-286	CC203419	72-358	CC203800	72-322
CC203380	72-288	CC203420	72-294	CC203800	72-322
CC203380	72-290	CC203469	72-294	CC203800	72-327
CC203380	72-352	CC203469	72-358	CC203800	72-372
CC203381	72-286	CC203470	72-294	CC203801	72-322
CC203381	72-288	CC203470	72-358	CC203801	72-322
CC203381	72-290	CC203471	72-294	CC203801	72-327
CC203381	72-352	CC203471	72-358	CC203801	72-372
CC203382	72-286	CC203472	72-294	CC203802	72-322
CC203382	72-288	CC203473	72-294	CC203802	72-322
CC203382	72-290	CC203473	72-358	CC203802	72-327
CC203383	72-286	CC203474	72-294	CC203802	72-372
CC203383	72-288	CC203474	72-358	CC203803	72-322
CC203383	72-290	CC203475	72-294	CC203803	72-322
CC203385	72-284	CC203475	72-358	CC203803	72-327
CC203385	72-354	CC203476	72-294	CC203803	72-372
CC203386	72-277	CC203477	72-286	CC203804	72-322
CC203387	72-286	CC203477	72-288	CC203804	72-322
CC203387	72-288	CC203477	72-310	CC203804	72-327
CC203388	72-12	CC203477	72-326	CC203804	72-372
CC203388	72-124	CC203477	72-368	CC203805	72-322
CC203388	72-196	CC203477	72-372	CC203805	72-322
CC203388	72-274	CC203792	72-306	CC203805	72-327
CC203388	72-354	CC203792	72-306	CC203805	72-372
CC203391	72-294	CC203793	72-306	CC203806	72-306
CC203391	72-358	CC203793	72-306	CC203806	72-306
CC203392	72-294	CC203793	72-311	CC203807	72-306
CC203392	72-358	CC203793	72-368	CC203807	72-306
CC203393	72-294	CC203794	72-306	CC203807	72-311
CC203393	72-358	CC203794	72-306	CC203807	72-368
CC203394	72-294	CC203794	72-311	CC203808	72-306
CC203394	72-358	CC203794	72-368	CC203808	72-306
CC203403	72-277	CC203795	72-306	CC203808	72-311
CC203403	72-281	CC203795	72-306	CC203808	72-368
CC203403	72-354	CC203795	72-311	CC203809	72-306
CC203404	72-276	CC203795	72-368	CC203809	72-306
CC203404	72-280	CC203796	72-306	CC203809	72-311
CC203404	72-354	CC203796	72-306	CC203809	72-368
CC203406	72-286	CC203796	72-311	CC203810	72-306
CC203406	72-288	CC203796	72-368	CC203810	72-306
CC203406	72-290	CC203797	72-306	CC203810	72-311
CC203406	72-353	CC203797	72-306	CC203810	72-368
CC203407	72-307	CC203797	72-311	CC203811	72-306
CC203407	72-323	CC203797	72-368	CC203811	72-306
CC203408	72-307	CC203798	72-306	CC203811	72-311
CC203408	72-323	CC203798	72-306	CC203811	72-368
CC203417	72-294	CC203798	72-311	CC203812	72-306
CC203417	72-358	CC203798	72-368	CC203812	72-306

NUMERICAL INDEX

Part Number	Page	Part Number	Page	Part Number	Page
CC203812	72-311	CC205197	72-280	CC206257	72-319
CC203812	72-368	CC205197	72-354	CC206257	72-323
CC203813	72-322	CC205198	72-276	CC206257	72-376
CC203813	72-322	CC205198	72-280	CC206257	72-384
CC203814	72-322	CC205198	72-354	CC206258	72-306
CC203814	72-322	CC205199	72-276	CC206258	72-322
CC203814	72-327	CC205199	72-280	CC206259	72-307
CC203814	72-372	CC205199	72-354	CC206259	72-323
CC203815	72-322	CC205204	72-296	CC206260	72-306
CC203815	72-322	CC205204	72-298	CC206260	72-322
CC203815	72-327	CC205205	72-326	CC206261	72-307
CC203815	72-372	CC205205	72-323	CC206261	72-323
CC203816	72-322	CC205205	72-373	CC206262	72-306
CC203816	72-322	CC205206	72-307	CC206262	72-322
CC203816	72-327	CC205206	72-310	CC206263	72-307
CC203816	72-372	CC205206	72-369	CC206263	72-323
CC203817	72-322	CC205984	72-296	CC206264	72-306
CC203817	72-322	CC205984	72-298	CC206264	72-322
CC203817	72-327	CC205989	72-296	CC206265	72-307
CC203817	72-372	CC205989	72-298	CC206265	72-323
CC203818	72-322	CC205989	72-360	CC206266	72-306
CC203818	72-323	CC205996	72-296	CC206266	72-322
CC203818	72-327	CC205996	72-298	CC206267	72-307
CC203818	72-372	CC205999	72-296	CC206267	72-323
CC203819	72-322	CC205999	72-298	CC206315	72-140
CC203819	72-323	CC206002	72-296	CC206315	72-142
CC203819	72-327	CC206002	72-298	CC206315	72-212
CC203819	72-372	CC206005	72-296	CC206315	72-214
CC204156	72-310	CC206005	72-298	CC206315	72-290
CC204156	72-326	CC206042	72-286	CC206315	72-314
CC204156	72-338	CC206042	72-288	CC206315	72-318
CC204156	72-338	CC206247	72-296	CC206315	72-330
CC204156	72-338	CC206248	72-296	CC206315	72-334
CC204156	72-338	CC206249	72-296	CC206315	72-353
CC204156	72-338	CC206250	72-296	CC206315	72-377
CC204156	72-338	CC206251	72-296	CC206315	72-381
CC204156	72-369	CC206252	72-296	CC206315	72-385
CC204156	72-373	CC206253	72-296	CC206315	72-389
CC205086	72-315	CC206254	72-306	CC206315	72-70
CC205086	72-318	CC206254	72-322	CC206315	72-72
CC205086	72-330	CC206255	72-306	CC206315	72-74
CC205086	72-334	CC206255	72-323	CC206315	72-76
CC205086	72-378	CC206255	72-332	CC206319	72-286
CC205086	72-382	CC206255	72-335	CC206321	72-158
CC205086	72-385	CC206255	72-381	CC206323	72-158
CC205086	72-390	CC206255	72-389	CC206329	72-332
CC205196	72-276	CC206256	72-306	CC206329	72-335
CC205196	72-280	CC206256	72-322	CC206329	72-381
CC205196	72-354	CC206257	72-307	CC206329	72-389
CC205197	72-276	CC206257	72-316	CC206655	72-286

NUMERICAL INDEX

Part Number	Page	Part Number	Page	Part Number	Page
CC206655	72-288	CC210175	72-338	CC211509	72-327
CC206684	72-373	CC210175	72-369	CC211509	72-331
CC206884	72-307	CC210175	72-377	CC211509	72-335
CC206884	72-310	CC210175	72-385	CC211509	72-368
CC206884	72-323	CC210216	72-326	CC211509	72-372
CC206884	72-326	CC210216	72-330	CC211509	72-380
CC206884	72-369	CC210216	72-334	CC211509	72-388
CC206886	72-307	CC210216	72-373	CC211520	72-311
CC206886	72-323	CC210216	72-382	CC211520	72-316
CC206887	72-323	CC210216	72-390	CC211520	72-319
CC208673	72-307	CC210233	72-332	CC211520	72-327
CC208731	72-307	CC210233	72-335	CC211520	72-335
CC209407	72-100	CC210233	72-380	CC211520	72-368
CC209407	72-62	CC210233	72-388	CC211520	72-372
CC209408	72-100	CC210239	72-332	CC211520	72-376
CC209408	72-62	CC210239	72-335	CC211520	72-381
CC209625	72-290	CC210239	72-381	CC211520	72-384
CC209625	72-353	CC210239	72-389	CC211520	72-389
CC209742	72-290	CC210752	72-158	CC211521	72-311
CC209742	72-353	CC210767	72-277	CC211521	72-316
CC210169	72-288	CC210767	72-281	CC211521	72-319
CC210169	72-290	CC210767	72-284	CC211521	72-327
CC210169	72-353	CC210767	72-340	CC211521	72-335
CC210172	72-326	CC210767	72-340	CC211521	72-368
CC210172	72-330	CC210767	72-340	CC211521	72-372
CC210172	72-334	CC210803	72-32	CC211521	72-377
CC210172	72-338	CC210803	72-36	CC211521	72-381
CC210172	72-338	CC210803	72-41	CC211521	72-385
CC210172	72-338	CC210804	72-108	CC211521	72-389
CC210172	72-373	CC210804	72-176	CC211522	72-311
CC210172	72-382	CC210807	72-244	CC211522	72-316
CC210172	72-390	CC210807	72-247	CC211522	72-319
CC210173	72-310	CC210810	72-244	CC211522	72-327
CC210174	72-310	CC210810	72-247	CC211522	72-336
CC210174	72-314	CC210811	72-181	CC211522	72-368
CC210174	72-318	CC210811	72-185	CC211522	72-372
CC210174	72-326	CC210811	72-247	CC211522	72-377
CC210174	72-330	CC210846	72-307	CC211522	72-381
CC210174	72-334	CC210850	72-120	CC211522	72-385
CC210174	72-369	CC210850	72-148	CC211522	72-389
CC210174	72-373	CC210850	72-192	CC211523	72-311
CC210174	72-377	CC210850	72-220	CC211523	72-316
CC210174	72-381	CC210850	72-4	CC211523	72-319
CC210174	72-385	CC210850	72-48	CC211523	72-327
CC210174	72-389	CC210850	72-82	CC211523	72-336
CC210175	72-310	CC210851	72-12	CC211523	72-368
CC210175	72-314	CC210851	72-148	CC211523	72-372
CC210175	72-318	CC210851	72-220	CC211523	72-377
CC210175	72-338	CC210851	72-82	CC211523	72-381
CC210175	72-338	CC211509	72-311	CC211523	72-385

NUMERICAL INDEX

Part Number	Page	Part Number	Page	Part Number	Page
CC211523	72-389	CC212632	72-302	CC215719	72-124
CC211524	72-311	CC212632	72-353	CC215719	72-196
CC211524	72-316	CC212632	72-364	CC215719	72-79
CC211524	72-319	CC212632	72-64	CC215719	72-79
CC211524	72-327	CC212632	72-66	CC215719	72-79
CC211524	72-336	CC213003	72-212	CC215720	72-277
CC211524	72-368	CC213003	72-214	CC215720	72-280
CC211524	72-372	CC213918	72-212	CC215720	72-284
CC211524	72-377	CC213918	72-214	CC215720	72-353
CC211524	72-381	CC213919	72-140	CC215721	72-277
CC211524	72-385	CC213919	72-142	CC215721	72-280
CC211524	72-389	CC213919	72-72	CC215721	72-284
CC211573	72-376	CC213919	72-74	CC215722	72-277
CC211573	72-381	CC213919	72-76	CC215722	72-280
CC211573	72-384	CC213922	72-108	CC215722	72-284
CC211573	72-389	CC213922	72-176	CC215772	72-314
CC211574	72-311	CC213922	72-212	CC215772	72-318
CC211574	72-316	CC213922	72-214	CC215772	72-330
CC211574	72-319	CC213923	72-180	CC215772	72-334
CC211574	72-327	CC213923	72-185	CC215772	72-339
CC211574	72-335	CC213923	72-185	CC215772	72-339
CC211574	72-368	CC214063	72-300	CC215772	72-339
CC211574	72-372	CC214333	72-294	CC215772	72-339
CC211574	72-376	CC214793	72-106	CC215772	72-339
CC211574	72-381	CC214793	72-210	CC215772	72-339
CC211574	72-384	CC214793	72-242	CC215772	72-377
CC211574	72-389	CC214793	72-26	CC215772	72-382
CC212587	72-12	CC214793	72-304	CC215772	72-385
CC212587	72-196	CC214931	72-314	CC215772	72-390
CC212587	72-45	CC214931	72-330	CC215772	72-392
CC212587	72-45	CC214931	72-377	CC215772	72-392
CC212587	72-45	CC214931	72-381	CC215772	72-392
CC212587	72-79	CC214932	72-323	CC215772	72-392
CC212587	72-79	CC214932	72-326	CC215772	72-392
CC212587	72-79	CC214932	72-330	CC215772	72-392
CC212588	72-393	CC214932	72-334	CC215779	72-318
CC212588	72-393	CC214932	72-372	CC215779	72-385
CC212588	72-393	CC214932	72-381	CC215789	72-330
CC212632	72-102	CC214932	72-389	CC215789	72-334
CC212632	72-104	CC214935	72-392	CC215789	72-382
CC212632	72-134	CC214935	72-392	CC215789	72-390
CC212632	72-136	CC214935	72-392	CC215799	72-314
CC212632	72-170	CC214937	72-392	CC215799	72-377
CC212632	72-172	CC214937	72-392	CC216052	72-108
CC212632	72-206	CC214937	72-392	CC216052	72-140
CC212632	72-208	CC214939	72-316	CC216052	72-142
CC212632	72-22	CC214939	72-319	CC216052	72-176
CC212632	72-238	CC214939	72-376	CC216052	72-180
CC212632	72-24	CC214939	72-384	CC216052	72-212
CC212632	72-240	CC215719	72-12	CC216052	72-214

NUMERICAL INDEX

Part Number	Page	Part Number	Page	Part Number	Page
CC216052	72-72	CC216490	72-315	CC216942	72-244
CC216052	72-74	CC216490	72-376	CC216942	72-247
CC216052	72-76	CC216491	72-315	CC216943	72-247
CC216392	72-311	CC216491	72-376	CC216944	72-113
CC216392	72-327	CC216491	72-376	CC216950	72-113
CC216392	72-331	CC216492	72-315	CC216950	72-185
CC216392	72-335	CC216492	72-376	CC216953	72-247
CC216392	72-368	CC216493	72-315	CC217524	72-302
CC216392	72-372	CC216493	72-376	CC217524	72-364
CC216392	72-380	CC216494	72-315	CC218379	72-316
CC216392	72-388	CC216494	72-376	CC218379	72-319
CC216402	72-304	CC216495	72-315	CC218379	72-376
CC216402	72-366	CC216495	72-376	CC218379	72-384
CC216464	72-331	CC216496	72-315	CC218380	72-380
CC216464	72-380	CC216496	72-376	CC218380	72-388
CC216464	72-380	CC216747	72-292	CC218482	72-311
CC216465	72-331	CC216914	72-108	CC218482	72-327
CC216465	72-380	CC216918	72-212	CC218482	72-331
CC216466	72-331	CC216918	72-214	CC218482	72-335
CC216466	72-380	CC216924	72-176	CC218482	72-368
CC216467	72-331	CC216926	72-108	CC218482	72-372
CC216467	72-380	CC216926	72-176	CC218482	72-380
CC216468	72-331	CC216927	72-108	CC218482	72-388
CC216468	72-380	CC216927	72-176	CC219400	72-292
CC216469	72-331	CC216928	72-108	CC219400	72-294
CC216469	72-380	CC216928	72-140	CC219400	72-356
CC216470	72-331	CC216928	72-142	CC219400	72-358
CC216470	72-380	CC216928	72-176	CC219596	72-290
CC216470	72-380	CC216928	72-212	CC219596	72-354
CC216471	72-331	CC216928	72-214	CC219851	72-292
CC216471	72-380	CC216928	72-28	CC220707	72-360
CC216472	72-331	CC216928	72-33	CC220708	72-360
CC216472	72-380	CC216928	72-37	CC220811	72-294
CC216473	72-331	CC216928	72-72	CC223079	72-353
CC216473	72-380	CC216928	72-74	CC223080	72-353
CC216474	72-331	CC216928	72-76	CC223461	72-108
CC216474	72-380	CC216930	72-108	CC223461	72-176
CC216475	72-331	CC216930	72-176	CC223462	72-244
CC216475	72-380	CC216931	72-108	CC223462	72-247
CC216485	72-315	CC216931	72-177	CC224053	72-120
CC216485	72-376	CC216933	72-180	CC224053	72-148
CC216485	72-376	CC216933	72-185	CC224053	72-192
CC216486	72-315	CC216935	72-113	CC224053	72-220
CC216486	72-376	CC216935	72-180	CC224053	72-4
CC216487	72-315	CC216935	72-185	CC224053	72-48
CC216487	72-376	CC216938	72-185	CC224053	72-82
CC216488	72-315	CC216939	72-247	CC224931	72-360
CC216488	72-376	CC216941	72-113	CC224937	72-360
CC216489	72-315	CC216941	72-185	CC224944	72-360
CC216489	72-376	CC216942	72-113	CC225390	72-100

NUMERICAL INDEX

Part Number	Page	Part Number	Page	Part Number	Page
CC225390	72-62	CC230717	72-176	CC233187	72-90
CC225416	72-108	CC230765	72-154	CC233188	72-92
CC225576	72-168	CC230765	72-226	CC233366	72-154
CC225576	72-236	CC230765	72-88	CC233367	72-156
CC226416	72-177	CC230805	72-288	CC233368	72-158
CC226822	72-300	CC230805	72-314	CC233372	72-226
CC226825	72-236	CC230805	72-330	CC233374	72-230
CC226827	72-100	CC230805	72-377	CC233378	72-154
CC226827	72-300	CC230805	72-381	CC233379	72-156
CC226827	72-62	CC230896	72-300	CC233380	72-158
CC226828	72-168	CC231058	72-158	CC233384	72-154
CC226828	72-236	CC231059	72-158	CC233385	72-156
CC226830	72-300	CC231060	72-158	CC233386	72-158
CC226831	72-168	CC231212	72-168	CC233390	72-226
CC226831	72-236	CC231212	72-236	CC233392	72-230
CC226834	72-168	CC231256	72-181	CC233399	72-154
CC226834	72-236	CC231256	72-185	CC233400	72-156
CC226835	72-300	CC231260	72-168	CC233401	72-158
CC227138	72-389	CC231260	72-236	CC233405	72-226
CC227854	72-314	CC231279	72-311	CC233407	72-230
CC227854	72-318	CC231279	72-327	CC233408	72-154
CC227854	72-326	CC231279	72-331	CC233409	72-156
CC227854	72-330	CC231279	72-335	CC233410	72-158
CC227854	72-334	CC231279	72-368	CC233417	72-226
CC227854	72-372	CC231279	72-372	CC233419	72-230
CC227854	72-377	CC231279	72-380	CC233435	72-154
CC227854	72-381	CC231279	72-388	CC233436	72-156
CC227854	72-385	CC231325	72-264	CC233437	72-158
CC227854	72-389	CC231325	72-266	CC233441	72-154
CC227855	72-368	CC231325	72-353	CC233442	72-156
CC227885	72-314	CC231380	72-160	CC233443	72-158
CC227885	72-318	CC231382	72-160	CC233453	72-226
CC227885	72-326	CC231427	72-158	CC233455	72-230
CC227885	72-330	CC231595	72-100	CC233462	72-154
CC227885	72-334	CC231595	72-62	CC233463	72-156
CC227885	72-372	CC232707	72-113	CC233464	72-158
CC227885	72-377	CC232707	72-185	CC233471	72-154
CC227885	72-381	CC233025	72-164	CC233472	72-156
CC227885	72-385	CC233033	72-234	CC233473	72-158
CC227885	72-389	CC233049	72-164	CC233474	72-226
CC230596	72-300	CC233057	72-234	CC233476	72-230
CC230606	72-314	CC233077	72-234	CC233480	72-154
CC230606	72-318	CC233081	72-164	CC233481	72-156
CC230606	72-330	CC233093	72-234	CC233482	72-158
CC230606	72-334	CC233125	72-165	CC233486	72-226
CC230606	72-377	CC233141	72-234	CC233488	72-230
CC230606	72-382	CC233165	72-165	CC233777	72-294
CC230606	72-385	CC233169	72-234	CC233970	72-185
CC230606	72-390	CC233177	72-165	CC233971	72-180
CC230717	72-108	CC233185	72-234	CC233971	72-185

NUMERICAL INDEX

Part Number	Page	Part Number	Page	Part Number	Page
CC233972	72-244	CC234971	72-40	CC235879	72-212
CC233972	72-247	CC234975	72-140	CC235879	72-214
CC233973	72-247	CC234975	72-142	CC235879	72-70
CC233975	72-185	CC234975	72-72	CC235879	72-72
CC233976	72-247	CC234975	72-74	CC235879	72-74
CC233977	72-181	CC234975	72-76	CC235879	72-76
CC233977	72-185	CC234978	72-212	CC235886	72-140
CC233978	72-185	CC234978	72-214	CC235886	72-142
CC233978	72-244	CC234982	72-41	CC235886	72-212
CC233978	72-247	CC234987	72-29	CC235886	72-214
CC233980	72-244	CC234988	72-140	CC235886	72-72
CC233980	72-247	CC234988	72-142	CC235886	72-74
CC234001	72-145	CC234988	72-33	CC235886	72-76
CC234001	72-145	CC234988	72-37	CC235978	72-52
CC234001	72-145	CC234988	72-72	CC235990	72-52
CC234001	72-160	CC234988	72-74	CC235994	72-52
CC234001	72-162	CC234988	72-76	CC236001	72-52
CC234001	72-190	CC234991	72-113	CC236002	72-52
CC234001	72-190	CC234991	72-212	CC236010	72-52
CC234001	72-190	CC234991	72-214	CC236016	72-52
CC234001	72-232	CC234992	72-185	CC236022	72-52
CC234001	72-252	CC234993	72-29	CC236049	72-54
CC234001	72-252	CC234996	72-247	CC236061	72-54
CC234001	72-252	CC234997	72-185	CC236065	72-54
CC234004	72-160	CC235000	72-185	CC236072	72-54
CC234005	72-232	CC235001	72-113	CC236073	72-54
CC234037	72-102	CC235001	72-247	CC236081	72-54
CC234037	72-170	CC235006	72-247	CC236087	72-54
CC234037	72-240	CC235007	72-185	CC236093	72-54
CC234649	72-300	CC235010	72-113	CC236191	72-124
CC234868	72-158	CC235010	72-185	CC236203	72-124
CC234936	72-140	CC235014	72-247	CC236206	72-196
CC234936	72-142	CC235018	72-185	CC236207	72-124
CC234936	72-76	CC235027	72-185	CC236211	72-196
CC234955	72-113	CC235038	72-113	CC236214	72-124
CC234958	72-140	CC235038	72-185	CC236215	72-124
CC234958	72-142	CC235043	72-113	CC236217	72-196
CC234958	72-72	CC235043	72-185	CC236223	72-124
CC234958	72-74	CC235044	72-185	CC236226	72-196
CC234958	72-76	CC235046	72-247	CC236229	72-124
CC234962	72-140	CC235050	72-185	CC236229	72-196
CC234962	72-142	CC235051	72-247	CC236232	72-196
CC234962	72-72	CC235055	72-113	CC236235	72-124
CC234962	72-74	CC235055	72-185	CC236238	72-196
CC234962	72-76	CC235060	72-113	CC236262	72-126
CC234969	72-140	CC235274	72-300	CC236274	72-126
CC234969	72-142	CC235370	72-168	CC236277	72-198
CC234969	72-72	CC235370	72-236	CC236278	72-126
CC234969	72-74	CC235879	72-140	CC236282	72-198
CC234969	72-76	CC235879	72-142	CC236285	72-126

NUMERICAL INDEX

Part Number	Page	Part Number	Page	Part Number	Page
CC236286	72-126	CC237129	72-376	CC238409	72-16
CC236288	72-198	CC237129	72-384	CC238410	72-16
CC236294	72-126	CC237138	72-332	CC238411	72-16
CC236297	72-198	CC237138	72-335	CC238412	72-16
CC236300	72-126	CC237138	72-381	CC238446	72-12
CC236300	72-198	CC237147	72-311	CC238451	72-12
CC236303	72-198	CC237147	72-327	CC238457	72-12
CC236306	72-126	CC237147	72-331	CC238525	72-28
CC236309	72-198	CC237147	72-335	CC238525	72-28
CC236902	72-140	CC237147	72-368	CC238525	72-32
CC236902	72-142	CC237147	72-372	CC238525	72-32
CC236902	72-212	CC237147	72-380	CC238525	72-36
CC236902	72-214	CC237147	72-388	CC238525	72-36
CC236902	72-72	CC237151	72-316	CC238525	72-40
CC236902	72-74	CC237151	72-319	CC238525	72-40
CC236902	72-76	CC237151	72-376	CC238526	72-28
CC236907	72-56	CC237151	72-384	CC238526	72-32
CC236908	72-56	CC237555	72-154	CC238526	72-36
CC236909	72-56	CC237555	72-226	CC238526	72-40
CC236910	72-56	CC237555	72-88	CC238534	72-28
CC236915	72-58	CC2377	72-276	CC238534	72-32
CC236916	72-58	CC238137	72-12	CC238534	72-36
CC236917	72-58	CC238137	72-124	CC238534	72-40
CC236918	72-58	CC238137	72-156	CC238567	72-300
CC236923	72-128	CC238137	72-196	CC238570	72-102
CC236924	72-128	CC238137	72-228	CC238570	72-104
CC236925	72-128	CC238137	72-52	CC238570	72-170
CC236926	72-128	CC238137	72-90	CC238570	72-172
CC237100	72-380	CC238137	72-92	CC238570	72-22
CC237100	72-388	CC238150	72-36	CC238570	72-24
CC237104	72-376	CC238150	72-40	CC238570	72-64
CC237104	72-384	CC238170	72-140	CC238570	72-66
CC237109	72-311	CC238170	72-212	CC238696	72-318
CC237109	72-327	CC238170	72-214	CC238696	72-334
CC237109	72-331	CC238170	72-72	CC238696	72-385
CC237109	72-335	CC238171	72-214	CC238696	72-390
CC237109	72-368	CC238174	72-104	CC238708	72-319
CC237109	72-372	CC238174	72-24	CC238708	72-384
CC237109	72-380	CC238174	72-66	CC238708	72-384
CC237109	72-388	CC238353	72-288	CC238709	72-319
CC237113	72-315	CC238353	72-319	CC238709	72-384
CC237113	72-319	CC238353	72-334	CC238710	72-319
CC237113	72-376	CC238353	72-386	CC238710	72-384
CC237113	72-384	CC238353	72-389	CC238711	72-319
CC237117	72-332	CC238394	72-330	CC238711	72-384
CC237117	72-335	CC238394	72-381	CC238712	72-319
CC237117	72-380	CC238401	72-14	CC238712	72-384
CC237117	72-388	CC238402	72-14	CC238713	72-319
CC237129	72-316	CC238403	72-14	CC238713	72-384
CC237129	72-319	CC238404	72-14	CC238714	72-335

NUMERICAL INDEX

Part Number	Page	Part Number	Page	Part Number	Page
CC238714	72-388	CC241395	72-330	CC246274	72-332
CC238714	72-388	CC241395	72-334	CC246277	72-332
CC238715	72-335	CC241395	72-377	CC246283	72-316
CC238715	72-388	CC241395	72-381	CC246289	72-332
CC238716	72-335	CC241395	72-385	CC246292	72-332
CC238716	72-388	CC241395	72-389	CC246298	72-316
CC238717	72-335	CC241569	72-12	CC246304	72-332
CC238717	72-388	CC241574	72-12	CC246383	72-300
CC238718	72-335	CC241580	72-12	CC246396	72-168
CC238718	72-388	CC241615	72-12	CC246396	72-236
CC238719	72-335	CC241620	72-12	CC246397	72-300
CC238719	72-388	CC241626	72-12	CC246640	72-300
CC238720	72-319	CC242169	72-28	CC246778	72-330
CC238720	72-384	CC242174	72-28	CC246778	72-334
CC238720	72-384	CC242180	72-28	CC246778	72-381
CC238721	72-319	CC242215	72-36	CC246778	72-389
CC238721	72-384	CC242220	72-36	CC246821	72-12
CC238722	72-319	CC242226	72-36	CC246821	72-158
CC238722	72-384	CC245079	72-294	CC246821	72-230
CC238723	72-319	CC245083	72-300	CC248626	72-96
CC238723	72-384	CC245151	72-100	CC248627	72-96
CC238724	72-319	CC245151	72-62	CC248640	72-94
CC238724	72-384	CC245168	72-300	CC248641	72-94
CC238725	72-319	CC245229	72-28	CC248795	72-376
CC238725	72-384	CC245229	72-32	CC248797	72-315
CC238726	72-335	CC245230	72-28	CC248797	72-376
CC238726	72-388	CC245230	72-32	CC248801	72-315
CC238726	72-388	CC245231	72-28	CC248801	72-376
CC238727	72-335	CC245231	72-32	CC248806	72-315
CC238727	72-388	CC245235	72-36	CC248808	72-376
CC238728	72-335	CC245235	72-40	CC248811	72-315
CC238728	72-388	CC245236	72-36	CC248811	72-376
CC238729	72-335	CC245236	72-40	CC248817	72-315
CC238729	72-388	CC245237	72-36	CC248817	72-376
CC238730	72-335	CC245237	72-40	CC248821	72-315
CC238730	72-388	CC245262	72-36	CC248821	72-376
CC238731	72-335	CC245262	72-40	CC248822	72-380
CC238731	72-388	CC2454	72-310	CC248824	72-331
CC238750	72-134	CC2454	72-368	CC248824	72-380
CC238750	72-136	CC246217	72-331	CC248827	72-331
CC238750	72-206	CC246223	72-316	CC248827	72-380
CC238750	72-208	CC246229	72-332	CC248832	72-331
CC238809	72-314	CC246232	72-331	CC248832	72-380
CC238809	72-318	CC246238	72-316	CC248837	72-331
CC238809	72-378	CC246244	72-332	CC248837	72-380
CC238809	72-385	CC246247	72-331	CC248840	72-331
CC238811	72-334	CC246253	72-316	CC248840	72-380
CC238811	72-390	CC246259	72-332	CC248842	72-331
CC241395	72-314	CC246262	72-331	CC248842	72-380
CC241395	72-318	CC246268	72-316	CC248892	72-12

NUMERICAL INDEX

Part Number	Page	Part Number	Page	Part Number	Page
CC248892	72-44	CC249382	72-319	CC249881	72-352
CC248892	72-44	CC249382	72-384	CC249887	72-352
CC248892	72-44	CC249388	72-319	CC249893	72-352
CC248901	72-290	CC249388	72-384	CC249902	72-352
CC248901	72-354	CC249390	72-388	CC250010	72-294
CC248902	72-280	CC249396	72-335	CC250035	72-142
CC248902	72-354	CC249396	72-388	CC250035	72-70
CC248905	72-353	CC249402	72-335	CC250035	72-74
CC248909	72-354	CC249402	72-388	CC250036	72-142
CC248948	72-100	CC249408	72-335	CC250036	72-74
CC248948	72-62	CC249408	72-388	CC250066	72-28
CC249002	72-290	CC249414	72-335	CC250066	72-32
CC249045	72-284	CC249414	72-388	CC250066	72-36
CC249045	72-352	CC249420	72-335	CC250066	72-40
CC249048	72-284	CC249420	72-388	CC250091	72-300
CC249048	72-352	CC249426	72-335	CC251401	72-128
CC249052	72-284	CC249426	72-388	CC251443	72-58
CC249052	72-352	CC249427	72-310	CC251519	72-232
CC249058	72-284	CC249427	72-368	CC251520	72-232
CC249058	72-352	CC249433	72-310	CC251521	72-232
CC249064	72-284	CC249433	72-368	CC251522	72-232
CC249064	72-352	CC249439	72-310	CC251820	72-200
CC249070	72-284	CC249439	72-368	CC251821	72-200
CC249073	72-352	CC249445	72-311	CC251822	72-200
CC249075	72-284	CC249445	72-368	CC251823	72-200
CC249088	72-298	CC249451	72-311	CC251901	72-102
CC249088	72-360	CC249451	72-368	CC251901	72-136
CC249094	72-298	CC249457	72-311	CC251901	72-170
CC249094	72-360	CC249457	72-368	CC251901	72-206
CC249100	72-298	CC249458	72-326	CC251901	72-22
CC249100	72-360	CC249458	72-372	CC251901	72-240
CC249106	72-298	CC249464	72-326	CC251901	72-302
CC249106	72-360	CC249464	72-372	CC251901	72-64
CC249111	72-298	CC249470	72-326	CC251906	72-102
CC249111	72-360	CC249470	72-372	CC251906	72-134
CC249117	72-298	CC249476	72-326	CC251906	72-136
CC249120	72-360	CC249476	72-372	CC251906	72-170
CC249123	72-298	CC249482	72-327	CC251906	72-172
CC249220	72-168	CC249482	72-372	CC251906	72-206
CC249220	72-236	CC249488	72-327	CC251906	72-208
CC249220	72-300	CC249488	72-372	CC251906	72-22
CC249351	72-384	CC249493	72-354	CC251906	72-238
CC249357	72-319	CC249821	72-352	CC251906	72-240
CC249357	72-384	CC249827	72-352	CC251906	72-302
CC249363	72-319	CC249833	72-352	CC251906	72-364
CC249363	72-384	CC249839	72-352	CC251906	72-64
CC249370	72-319	CC249845	72-352	CC251997	72-238
CC249370	72-384	CC249854	72-352	CC251997	72-240
CC249376	72-319	CC249869	72-352	CC252597	72-96
CC249376	72-384	CC249875	72-352	CC252613	72-128

NUMERICAL INDEX

Part Number	Page	Part Number	Page	Part Number	Page
CC252678	72-272	CC255596	72-134	CC280112	72-96
CC252686	72-134	CC255596	72-136	CC280113	72-96
CC252686	72-172	CC255596	72-170	CC280114	72-162
CC252686	72-208	CC255596	72-172	CC280115	72-162
CC252686	72-238	CC255596	72-206	CC280127	72-96
CC252686	72-364	CC255596	72-208	CC280171	72-160
CC252793	72-238	CC255596	72-22	CC280172	72-160
CC252857	72-58	CC255596	72-238	CC280177	72-162
CC253118	72-24	CC255596	72-24	CC280178	72-162
CC253119	72-104	CC255596	72-240	CC280183	72-162
CC253119	72-66	CC255596	72-64	CC280184	72-162
CC253120	72-104	CC255596	72-66	CC290464	72-28
CC253120	72-24	CC255624	72-104	CC290464	72-32
CC253120	72-66	CC255651	72-104	CC290464	72-36
CC253144	72-58	CC255651	72-24	CC290464	72-40
CC253188	72-70	CC255651	72-66	CC290465	72-28
CC253242	72-210	CC255652	72-134	CC290465	72-32
CC253242	72-242	CC255652	72-172	CC290465	72-36
CC253243	72-210	CC255652	72-208	CC290465	72-40
CC253243	72-242	CC255652	72-238	CC291445	72-28
CC253343	72-70	CC255665	72-102	CC291445	72-32
CC253651	72-108	CC255665	72-136	CC291445	72-36
CC253651	72-176	CC255665	72-170	CC291445	72-40
CC253651	72-180	CC255665	72-206	CC3015	72-262
CC253720	72-172	CC255665	72-22	CC3101894	72-122
CC253733	72-162	CC255665	72-240	CC3101894	72-150
CC253793	72-134	CC255665	72-64	CC3101894	72-50
CC253793	72-172	CC255666	72-102	CC3101894	72-84
CC253793	72-208	CC255666	72-136	CC3130	72-307
CC253914	72-315	CC255666	72-170	CC3130	72-310
CC253918	72-315	CC255666	72-206	CC3130	72-323
CC253922	72-315	CC255666	72-22	CC3130	72-326
CC253927	72-315	CC255666	72-240	CC3130	72-369
CC253933	72-315	CC255666	72-64	CC3130	72-373
CC253937	72-315	CC255672	72-22	CC3133	72-158
CC253962	72-228	CC255729	72-24	CC3135	72-262
CC253968	72-228	CC255730	72-24	CC3135	72-276
CC253973	72-228	CC255770	72-22	CC3135	72-280
CC253977	72-228	CC2680	72-307	CC3135	72-354
CC253989	72-228	CC2680	72-310	CC3140	72-158
CC253996	72-228	CC2680	72-314	CC3140	72-288
CC254000	72-228	CC2680	72-318	CC3147	72-276
CC255304	72-32	CC2680	72-36	CC3147	72-280
CC255309	72-32	CC2680	72-369	CC3147	72-353
CC255315	72-32	CC2680	72-377	CC3550-1531	72-70
CC255350	72-40	CC2680	72-385	CC3550-1581	72-70
CC255355	72-40	CC2680	72-40	CC357671	72-132
CC255361	72-40	CC280095	72-94	CC357671	72-168
CC255596	72-102	CC280096	72-94	CC357671	72-236
CC255596	72-104	CC280111	72-96	CC361238	72-100

NUMERICAL INDEX

Part Number	Page	Part Number	Page	Part Number	Page
CC361238	72-62	CC565085	72-272	CC601377	72-302
CC362796	72-168	CC565085	72-354	CC601377	72-304
CC362796	72-236	CC565085	72-86	CC601377	72-364
CC369519	72-100	CC582668	72-268	CC601377	72-366
CC369519	72-62	CC582680	72-268	CC601377	72-64
CC381280	72-352	CC582692	72-268	CC601378	72-274
CC381282	72-352	CC582704	72-268	CC601378	72-304
CC422809	72-122	CC582716	72-268	CC601378	72-366
CC422809	72-150	CC582728	72-268	CC601402	72-170
CC422809	72-50	CC582740	72-268	CC605761	72-274
CC422809	72-84	CC583924	72-262	CC605761	72-302
CC422817	72-10	CC583925	72-262	CC605761	72-364
CC422817	72-152	CC583926	72-262	CC605948	72-274
CC422817	72-86	CC583927	72-262	CC606212	72-276
CC422818	72-10	CC583928	72-262	CC606212	72-280
CC423385	72-6	CC583929	72-262	CC606212	72-286
CC423385	72-8	CC583930	72-262	CC606212	72-288
CC423412	72-6	CC583931	72-256	CC606212	72-290
CC423412	72-8	CC583932	72-256	CC606212	72-310
CC5508	72-262	CC583933	72-256	CC606212	72-318
CC559982	72-268	CC583934	72-256	CC606212	72-326
CC560349	72-268	CC583935	72-256	CC606212	72-330
CC560470	72-10	CC583936	72-256	CC606212	72-334
CC560470	72-152	CC601250	72-102	CC606212	72-353
CC560470	72-268	CC601250	72-104	CC606212	72-369
CC560470	72-353	CC601250	72-134	CC606212	72-373
CC560470	72-86	CC601250	72-136	CC606212	72-377
CC561242	72-268	CC601250	72-170	CC606212	72-381
CC562630	72-256	CC601250	72-172	CC606212	72-386
CC562630	72-262	CC601250	72-206	CC606212	72-389
CC562847	72-262	CC601250	72-208	CC610402	72-102
CC563782	72-262	CC601250	72-22	CC610402	72-104
CC563904	72-10	CC601250	72-238	CC610402	72-172
CC563904	72-152	CC601250	72-24	CC610402	72-240
CC563904	72-268	CC601250	72-240	CC611289	72-102
CC564050	72-256	CC601250	72-64	CC611289	72-104
CC564050	72-258	CC601250	72-66	CC611289	72-134
CC564050	72-262	CC601377	72-102	CC611289	72-136
CC564051	72-256	CC601377	72-104	CC611289	72-170
CC564052	72-262	CC601377	72-134	CC611289	72-172
CC564054	72-262	CC601377	72-136	CC611289	72-206
CC564107	72-10	CC601377	72-170	CC611289	72-208
CC564107	72-152	CC601377	72-172	CC611289	72-22
CC564107	72-268	CC601377	72-206	CC611289	72-238
CC564107	72-272	CC601377	72-208	CC611289	72-24
CC564107	72-354	CC601377	72-22	CC611289	72-240
CC564107	72-86	CC601377	72-238	CC611289	72-256
CC564108	72-268	CC601377	72-24	CC611289	72-258
CC565085	72-10	CC601377	72-240	CC611289	72-260
CC565085	72-152	CC601377	72-274	CC611289	72-262

NUMERICAL INDEX

Part Number	Page	Part Number	Page	Part Number	Page
CC611289	72-353	CC661549	72-394	CC664206	72-394
CC611289	72-64	CC661550	72-393	CC664206	72-394
CC611289	72-66	CC661550	72-393	CC664206	72-394
CC611291	72-256	CC661550	72-393	CC667586	72-256
CC611291	72-258	CC661786	72-276	CC677267	72-307
CC611291	72-260	CC661786	72-280	CC677267	72-323
CC611291	72-353	CC661786	72-286	CC677267	72-36
CC611299	72-268	CC661786	72-288	CC677267	72-40
CC611299	72-270	CC661786	72-290	CC677267	72-44
CC611299	72-272	CC661786	72-310	CC677267	72-44
CC611299	72-286	CC661786	72-314	CC677267	72-44
CC611299	72-288	CC661786	72-318	CC678655	72-98
CC611299	72-290	CC661786	72-326	CC678656	72-98
CC611299	72-353	CC661786	72-330	CC678658	72-60
CC611303	72-66	CC661786	72-334	CC678770	72-130
CC626664	72-262	CC661786	72-353	CC678770	72-164
CC637536	72-274	CC661786	72-369	CC678770	72-164
CC637536	72-354	CC661786	72-373	CC678770	72-164
CC642649	72-102	CC661786	72-377	CC678770	72-234
CC642649	72-104	CC661786	72-382	CC678777	72-234
CC642649	72-12	CC661786	72-386	CC678796	72-130
CC642649	72-170	CC661786	72-389	CC678796	72-164
CC642649	72-172	CC662145	72-189	CC678796	72-296
CC642649	72-238	CC662145	72-189	CC678796	72-298
CC642649	72-240	CC662145	72-189	CC678796	72-360
CC6508	72-158	CC662145	72-198	CC678797	72-202
CC6518	72-158	CC662145	72-251	CC678797	72-234
CC6518	72-280	CC662145	72-251	CC678800	72-202
CC657852	72-276	CC662145	72-251	CC678800	72-296
CC657852	72-280	CC662145	72-277	CC678800	72-298
CC658378	72-294	CC662145	72-281	CC678837	72-130
CC658378	72-358	CC662145	72-284	CC678837	72-164
CC660050	72-294	CC662145	72-286	CC679144	72-274
CC660050	72-340	CC662145	72-288	CC679144	72-339
CC660050	72-340	CC662145	72-290	CC679144	72-339
CC660050	72-340	CC662145	72-292	CC679144	72-339
CC660050	72-358	CC662145	72-294	CC679146	72-284
CC660051	72-284	CC662145	72-294	CC679146	72-339
CC660051	72-286	CC662145	72-339	CC679146	72-339
CC660051	72-288	CC662145	72-339	CC679146	72-339
CC660051	72-290	CC662145	72-340	CC679149	72-274
CC660051	72-340	CC662145	72-340	CC679149	72-284
CC660051	72-340	CC662145	72-340	CC679149	72-339
CC660051	72-340	CC662145	72-340	CC679149	72-339
CC660051	72-354	CC662145	72-354	CC679149	72-339
CC661549	72-393	CC662145	72-356	CC679149	72-353
CC661549	72-393	CC662145	72-358	CC680218	72-290
CC661549	72-393	CC664206	72-393	CC680218	72-294
CC661549	72-394	CC664206	72-393	CC680218	72-358
CC661549	72-394	CC664206	72-393	CC680240	72-393

NUMERICAL INDEX

Part Number	Page	Part Number	Page	Part Number	Page
CC680240	72-393	CC682822	72-323	CC683979	72-296
CC680240	72-393	CC683763	72-18	CC683979	72-298
CC680240	72-394	CC683763	72-60	CC683979	72-360
CC680240	72-394	CC683766	72-18	CC683980	72-164
CC680240	72-394	CC683767	72-98	CC683980	72-234
CC680242	72-250	CC683774	72-98	CC683982	72-164
CC680242	72-250	CC683775	72-60	CC683982	72-164
CC680242	72-250	CC683780	72-60	CC683982	72-234
CC680242	72-276	CC683780	72-98	CC683982	72-296
CC680242	72-280	CC683781	72-164	CC683982	72-298
CC680242	72-286	CC683782	72-234	CC683982	72-360
CC680242	72-288	CC683783	72-164	CC683985	72-164
CC680242	72-290	CC683784	72-60	CC683985	72-234
CC680242	72-339	CC683785	72-234	CC683985	72-296
CC680242	72-339	CC683786	72-98	CC683985	72-298
CC680242	72-339	CC683788	72-60	CC683985	72-360
CC680242	72-353	CC683817	72-292	CC683987	72-164
CC680242	72-393	CC683817	72-294	CC683987	72-202
CC680242	72-393	CC683817	72-340	CC683988	72-164
CC680242	72-393	CC683817	72-340	CC683988	72-234
CC680458	72-296	CC683817	72-340	CC683988	72-296
CC680458	72-298	CC683817	72-356	CC683988	72-298
CC680458	72-360	CC683817	72-358	CC683990	72-130
CC680459	72-130	CC683819	72-292	CC683990	72-360
CC680459	72-234	CC683819	72-340	CC683992	72-296
CC680459	72-296	CC683819	72-340	CC683992	72-298
CC680459	72-298	CC683819	72-340	CC683994	72-130
CC680459	72-360	CC683819	72-356	CC683994	72-164
CC680460	72-394	CC683819	72-358	CC683995	72-164
CC680460	72-394	CC683819	72-394	CC683996	72-234
CC681238	72-158	CC683819	72-394	CC683998	72-130
CC681238	72-64	CC683819	72-394	CC683998	72-202
CC681238	72-66	CC683820	72-284	CC683998	72-360
CC681428	72-296	CC683820	72-353	CC684000	72-164
CC681428	72-298	CC683822	72-334	CC684000	72-202
CC681428	72-360	CC683823	72-274	CC684000	72-296
CC681429	72-164	CC683823	72-304	CC684000	72-298
CC681429	72-296	CC683823	72-366	CC684152	72-304
CC681429	72-298	CC683826	72-307	CC684152	72-366
CC681429	72-360	CC683826	72-323	CC684152	72-68
CC681430	72-234	CC683831	72-276	CC684154	72-366
CC681430	72-296	CC683831	72-304	CC684242	72-188
CC681430	72-298	CC683831	72-366	CC684242	72-188
CC681430	72-360	CC683893	72-18	CC684242	72-188
CC681431	72-296	CC683895	72-202	CC684305	72-158
CC681431	72-298	CC683958	72-234	CC684305	72-160
CC681431	72-360	CC683976	72-164	CC684305	72-162
CC682382	72-314	CC683977	72-130	CC684305	72-188
CC682382	72-330	CC683977	72-234	CC684305	72-188
CC682822	72-307	CC683979	72-164	CC684305	72-189

NUMERICAL INDEX

Part Number	Page	Part Number	Page	Part Number	Page
CC684305	72-190	CC684775	72-300	CC684789	72-204
CC684305	72-190	CC684775	72-362	CC684789	72-236
CC684305	72-226	CC684775	72-62	CC684790	72-132
CC684305	72-230	CC684776	72-300	CC684790	72-168
CC684305	72-250	CC684776	72-362	CC684790	72-236
CC684305	72-250	CC684777	72-100	CC684791	72-132
CC684305	72-251	CC684777	72-20	CC684791	72-168
CC684305	72-252	CC684777	72-300	CC684791	72-236
CC684305	72-252	CC684777	72-362	CC684792	72-132
CC684305	72-276	CC684777	72-62	CC684792	72-168
CC684305	72-281	CC684778	72-100	CC684792	72-236
CC684305	72-286	CC684778	72-300	CC684793	72-168
CC684305	72-288	CC684778	72-62	CC684793	72-236
CC684305	72-290	CC684779	72-100	CC684794	72-168
CC684305	72-292	CC684779	72-300	CC684794	72-236
CC684305	72-294	CC684779	72-62	CC684795	72-168
CC684305	72-339	CC684780	72-100	CC684795	72-236
CC684305	72-339	CC684780	72-300	CC684800	72-326
CC684305	72-339	CC684780	72-62	CC684800	72-330
CC684305	72-341	CC684781	72-100	CC684800	72-373
CC684305	72-341	CC684781	72-300	CC684800	72-381
CC684305	72-353	CC684781	72-62	CC684810	72-304
CC684305	72-356	CC684782	72-100	CC684810	72-366
CC684305	72-358	CC684782	72-300	CC684810	72-68
CC684649	72-307	CC684782	72-62	CC684812	72-366
CC684650	72-36	CC684783	72-100	CC688157	72-164
CC684650	72-40	CC684783	72-300	CC688157	72-202
CC684660	72-292	CC684783	72-62	CC688216	72-28
CC684660	72-294	CC684784	72-132	CC688216	72-32
CC684660	72-356	CC684784	72-168	CC688216	72-36
CC684660	72-358	CC684784	72-204	CC688216	72-40
CC684769	72-300	CC684784	72-236	CC688378	72-294
CC684770	72-100	CC684785	72-132	CC688935	72-314
CC684770	72-300	CC684785	72-168	CC688935	72-318
CC684770	72-62	CC684785	72-204	CC688935	72-330
CC684771	72-300	CC684785	72-236	CC688935	72-334
CC684772	72-100	CC684786	72-132	CC688935	72-378
CC684772	72-20	CC684786	72-168	CC688935	72-382
CC684772	72-300	CC684786	72-204	CC688935	72-385
CC684772	72-362	CC684786	72-236	CC688935	72-390
CC684772	72-62	CC684787	72-132	CC689937	72-262
CC684773	72-300	CC684787	72-168	CC7418	72-102
CC684773	72-362	CC684787	72-204	CC7418	72-104
CC684774	72-100	CC684787	72-236	CC7418	72-134
CC684774	72-20	CC684788	72-132	CC7418	72-136
CC684774	72-300	CC684788	72-168	CC7418	72-170
CC684774	72-362	CC684788	72-204	CC7418	72-172
CC684774	72-62	CC684788	72-236	CC7418	72-206
CC684775	72-100	CC684789	72-132	CC7418	72-208
CC684775	72-20	CC684789	72-168	CC7418	72-22

NUMERICAL INDEX

Part Number	Page	Part Number	Page	Part Number	Page
CC7418	72-238	CC769572	72-288	HU564	61-4
CC7418	72-24	CC769572	72-290	HU564	61-6
CC7418	72-240	CC769572	72-310	HU60955-1	0-4
CC7418	72-302	CC769572	72-314	HU60955-1	61-2
CC7418	72-364	CC769572	72-326	HU61108	61-2
CC7418	72-64	CC769572	72-330	HU61108	61-4
CC7418	72-66	CC769572	72-334	HUAX294B1-3	61-6
CC761170	72-140	CC769572	72-353	KA760-15000	1-12
CC761170	72-142	CC769572	72-368	KA760-15000	1-24
CC761170	72-212	CC769572	72-372	KB20121-30801	60-10
CC761170	72-214	CC769572	72-377	KB20121-30801	60-4
CC761170	72-72	CC769572	72-385	KB20121-30801	60-6
CC761170	72-74	CC769572	72-389	KB20121-30801	60-8
CC761170	72-76	CC769582	72-318	KB20121-30901	60-10
CC763023	72-286	CC78476	72-272	KB20121-30901	60-4
CC763023	72-307	CC78481	72-260	KB20121-30901	60-6
CC763169	72-307	CC786881	72-286	KB20121-30901	60-8
CC763169	72-314	CC786881	72-288	KB20121-31001	60-10
CC763169	72-318	CC787372	72-314	KB20121-31001	60-4
CC763169	72-323	CC787372	72-318	KB20121-31001	60-6
CC763169	72-330	CC787372	72-334	KB20121-31001	60-8
CC763169	72-334	CC787372	72-377	KB20121-31101	60-10
CC763169	72-381	CC787372	72-381	KB20121-31101	60-4
CC763169	72-385	CC787372	72-385	KB20121-31101	60-6
CC763169	72-389	CC787372	72-389	KB20121-31101	60-8
CC767611	72-102	CC787398	72-290	KB20121-31406	60-10
CC767611	72-104	CC787398	72-353	KB20121-31406	60-4
CC767611	72-134	CC7910	72-122	KB20121-31406	60-6
CC767611	72-136	CC7910	72-150	KB20121-31406	60-8
CC767611	72-170	CC7910	72-50	KB20121-36407	60-4
CC767611	72-172	CC7910	72-84	KB20121-36414	60-10
CC767611	72-206	HU1052	61-4	KB20121-36414	60-6
CC767611	72-208	HU1052	61-6	KB20121-36414	60-8
CC767611	72-22	HU1861	61-4	KB20121-38303	60-10
CC767611	72-238	HU1861	61-6	KB20121-38303	60-6
CC767611	72-24	HU294B1-10	61-6	KB20121-38311	60-10
CC767611	72-240	HU5001-A59	61-6	KB20121-38311	60-4
CC767611	72-304	HU5002-V5	61-6	KB20121-38311	60-6
CC767611	72-366	HU5002-W4	61-6	KB20121-38311	60-8
CC767611	72-64	HU5003-JA1	61-6	KB20122-30417	60-10
CC767611	72-66	HU5004-A1	61-4	KB20122-30417	60-4
CC768549	72-307	HU5006-JA2	61-4	KB20122-30417	60-6
CC768549	72-323	HU5011	61-4	KB20122-30417	60-8
CC768690	72-284	HU5011	61-6	KB20122-30418	60-10
CC768690	72-353	HU5064	61-4	KB20122-30418	60-4
CC769018	72-268	HU5064	61-6	KB20122-30418	60-6
CC769018	72-270	HU5069-3	61-4	KB20122-30418	60-8
CC769572	72-276	HU5069-4	61-6	KB94721-34151	60-10
CC769572	72-280	HU5089-3	61-4	KB94721-34151	60-4
CC769572	72-286	HU5089-4	61-6	KB94721-34151	60-6

NUMERICAL INDEX

Part Number	Page	Part Number	Page	Part Number	Page
KB94721-34151	60-8	KBB5912-23911	60-6	MIT24580101	27-4
KBB5911-10902	60-10	KBB5912-24001	60-10	MIT24580101	27-4
KBB5911-10902	60-4	KBB5912-24001	60-6	MIT27300101	28-4
KBB5911-10902	60-6	KBB591A-20007	0-9	MIT27300102	28-4
KBB5911-10902	60-8	KBB591A-20007	60-4	MIT27340101	28-4
KBB5911-11101	60-4	KBB591A-20007	60-8	MIT27340102	28-4
KBB5911-11101	60-8	KBB591A-30001	0-9	MIT27400102	27-4
KBB5911-11401	60-10	KBB591A-30001	60-10	MIT27580102	27-4
KBB5911-11401	60-4	KBB591A-30001	60-6	MIT303000GS	28-4
KBB5911-11401	60-6	KBB591B-20029	0-9	MIT303300GS	28-4
KBB5911-11401	60-8	KBB591B-20029	60-10	MIT304000GS	27-4
KBB5911-11501	60-10	KBB591B-20029	60-8	MIT304000GS	27-4
KBB5911-11501	60-4	KBB591B-20030	0-9	MIT305800GS	27-4
KBB5911-11501	60-6	KBB591B-20030	0-9	MIT305800GS	27-4
KBB5911-11501	60-8	KBB591B-20030	0-9	MIT42300000	28-4
KBB5911-11601	60-10	KBB591B-20030	0-9	MIT42330100	28-4
KBB5911-11601	60-4	KBB591B-20030	60-10	MIT42400000	27-4
KBB5911-11601	60-6	KBB591B-20030	60-4	MIT42580000	27-4
KBB5911-11601	60-8	KBB591B-20030	60-6	MY63870-03850	33-2
KBB5911-11901	60-10	KBB591B-20030	60-8	MY891-6010-00	33-2
KBB5911-11901	60-4	KBB591B-20036	0-9	MYGS135-00050A	33-2
KBB5911-11901	60-6	KBB591B-20036	60-6	MYGS242-00020B	33-2
KBB5911-11901	60-8	KBB591B-20045	0-9	ON43001-07502	0-4
KBB5911-13610	60-10	KBB591B-20045	60-4	ON43001-07502	65-2
KBB5911-13610	60-4	KBB591B-30020	0-9	ON43001-07502	65-2
KBB5911-13610	60-6	KBB591B-30020	0-9	ON43501-07526	65-2
KBB5911-13610	60-8	KBB591B-30020	60-10	ON43503-07502-B	65-2
KBB5911-23211	60-10	KBB591B-30020	60-6	ON43503-07520	65-2
KBB5911-23211	60-8	KBT1112-09313	60-10	ON43511-07521	65-2
KBB5911-23261	60-6	KBT1112-09313	60-6	ON43535-07502	65-2
KBB5911-23266	60-4	KBT1112-09314	60-8	ON43535-07526	65-2
KBB5911-23406	60-10	KBT1112-09315	60-4	ON43556-07563	65-2
KBB5911-23406	60-6	MIT06415001	28-2	ON43556-07563	65-2
KBB5911-24101	60-10	MIT06415002	28-2	ON43561-07520	65-2
KBB5911-24101	60-6	MIT06415101	28-2	ON43561-07521	65-2
KBB5912-11302	60-10	MIT06415102	28-2	ON43563-07567	65-2
KBB5912-11302	60-10	MIT06420001	28-2	ON43563-07567	65-2
KBB5912-11302	60-4	MIT06420002	28-2	ON43564-08020	65-2
KBB5912-11302	60-6	MIT06420101	28-2	ON43564-08020	65-2
KBB5912-11302	60-6	MIT06420102	28-2	ON43565-07502	65-2
KBB5912-11302	60-8	MIT06605001	27-2	ON43565-07502	65-2
KBB5912-11303	60-10	MIT06605002	27-2	ON43566-08020	65-2
KBB5912-11303	60-10	MIT06605101	27-2	ON43566-08020	65-2
KBB5912-11303	60-4	MIT06605102	27-2	ON43567-07567	65-2
KBB5912-11303	60-6	MIT06610001	27-2	ON43567-07567	65-2
KBB5912-11303	60-6	MIT06610002	27-2	ON65531-07057	64-12
KBB5912-11303	60-8	MIT06610101	27-2	ON65531-07057	64-6
KBB5912-22007	60-8	MIT06610102	27-2	ON65536-08035	64-16
KBB5912-22011	60-4	MIT24400101	27-4	ON96751-03070	65-2
KBB5912-23911	60-10	MIT24400101	27-4	ON96751-03070	65-2

NUMERICAL INDEX

Part Number	Page	Part Number	Page	Part Number	Page
PH12F50X-S	83-10	YM129150-11230	1-72	YM129900-13251	1-100
YM105425-01690	1-70	YM129150-11370	1-72	YM129900-13251	1-78
YM105430-67110	1-92	YM129150-11750	1-72	YM129900-14110	1-80
YM119129-77250	1-98	YM129150-11750	1-72	YM129900-14140	1-68
YM119129-77260	1-98	YM129150-11810	1-72	YM129900-14400	1-80
YM119129-77320	1-98	YM129150-14200	1-80	YM129900-14590	1-80
YM119129-77850	1-98	YM129150-25920	1-80	YM129900-25060	1-80
YM119129-77870	1-98	YM129150-35151	0-14	YM129900-25110	1-80
YM119129-77890	1-98	YM129150-35151	0-2	YM129900-26250	1-68
YM119129-77900	1-98	YM12915049360	1-100	YM129900-26250	1-68
YM119129-77930	1-98	YM129150-49360	1-82	YM129900-26250	1-80
YM119171-59910	1-92	YM129150-59131	1-90	YM129900-32001	1-68
YM119305-59120	1-90	YM129150-59131	1-90	YM129900-32030	1-100
YM119326-77820	1-73	YM129150-77340	1-96	YM129900-32030	1-68
YM119600-11460	1-100	YM129400-92440	1-100	YM129900-32040	1-100
YM119600-11460	1-72	YM129470-77340	1-98	YM129900-32040	1-68
YM119620-59700	1-90	YM129550-59120	1-90	YM129900-42055	0-2
YM119717-53010	1-90	YM129612-77260	1-96	YM129900-42055	1-82
YM119717-77800	1-73	YM129612-77700	1-96	YM129900-42061	0-2
YM119810-77340	1-96	YM129612-77710	1-96	YM129900-42061	1-100
YM119810-77340	1-98	YM129612-77730	1-96	YM129900-42061	1-82
YM121400-11340	1-100	YM129612-77750	1-96	YM129900-42070	1-82
YM121400-11340	1-72	YM129795-11180	1-72	YM129900-42140	1-100
YM121450-42450	1-82	YM129900-01200	1-66	YM129900-42140	1-82
YM121850-49550	0-3	YM129900-01250	1-66	YM129900-42161	1-82
YM121850-49550	1-100	YM129900-01780	1-68	YM129900-42170	1-82
YM121850-49550	1-82	YM129900-02020	1-66	YM129900-42461	1-82
YM121850-49810	0-3	YM129900-02340	1-66	YM129900-44700	0-2
YM121850-49810	1-82	YM129900-02410	1-66	YM129900-44700	1-82
YM123900-13610	1-78	YM129900-02930	1-66	YM129900-49551	1-82
YM123900-13630	1-78	YM129900-02940	1-66	YM129900-49560	1-100
YM124066-59100	1-90	YM129900-07900	1-72	YM129900-49560	1-82
YM124080-77390	1-98	YM129900-11100	1-72	YM129900-77010	0-2
YM124080-77520	1-98	YM129900-11110	1-72	YM129900-77010	1-94
YM124160-01751	1-68	YM129900-11120	1-72	YM129900-77330	1-96
YM124160-01751	1-72	YM129900-11200	1-72	YM129900-77330	1-98
YM124160-11360	1-72	YM129900-11240	1-72	YM129900-77400	1-94
YM124411-01780	1-70	YM129900-11280	1-72	YM129900-77440	1-94
YM124460-11340	1-100	YM129900-11310	1-100	YM129900-77450	1-94
YM124460-11340	1-72	YM129900-11310	1-72	YM129900-77450	1-94
YM124465-44950	1-100	YM129900-11370	1-72	YM129900-77460	1-94
YM124465-44950	1-82	YM129900-11510	1-72	YM129900-77480	1-94
YM129001-91810	1-68	YM129900-11520	1-72	YM129900-77510	1-94
YM129001-91810	1-68	YM129900-11530	1-72	YM129900-77520	1-94
YM129052-55630	1-92	YM129900-11600	1-72	YM129900-77540	1-94
YM129100-01580	1-68	YM129900-11650	1-72	YM129900-77550	1-94
YM129100-01580	1-70	YM129900-11660	1-72	YM129900-77591	1-94
YM129136-77261	1-96	YM129900-12050	1-100	YM129900-77610	1-94
YM129150-02450	1-80	YM129900-12050	1-76	YM129900-77620	1-94
YM129150-11230	1-72	YM129900-12100	1-76	YM129900-77640	1-94

https://truckmanualshub.com/

NUMERICAL INDEX

Part Number	Page	Part Number	Page	Part Number	Page
YM129900-77650	1-94	YM129931-51010	1-84	YM26014-080252	1-98
YM129900-77700	1-94	YM129931-53000	1-90	YM26106-080122	1-66
YM129900-77710	1-94	YM129931-77820	1-73	YM26106-080122	1-70
YM129901-01350	1-100	YM129951-01740	1-68	YM26106-080142	1-80
YM129901-01350	1-66	YM129970-26200	1-80	YM26106-080162	1-68
YM129901-01500	1-68	YM171008-77450	1-94	YM26106-080162	1-73
YM129901-01950	1-84	YM171008-77730	1-94	YM26106-080202	1-68
YM129901-01960	1-84	YM171008-77740	1-94	YM26106-080252	1-82
YM129901-11450	1-100	YM171008-77750	1-94	YM26106-080252	1-92
YM129901-11450	1-72	YM171051-01921	1-66	YM26106-080302	1-68
YM129901-25900	1-80	YM171056-49120	1-82	YM26106-080402	1-68
YM129901-53020	1-90	YM171056-49351	1-82	YM26106-080402	1-68
YM129901-55800	1-92	YM22190-080002	1-100	YM26106-080452	1-68
YM129901-55810	1-92	YM22190-080002	1-66	YM26106-080452	1-76
YM129901-55820	1-92	YM22190-120002	1-100	YM26106-080552	1-80
YM129901-55830	1-92	YM22190-120002	1-90	YM26106-080552	1-82
YM129901-55840	1-92	YM22190-120002	1-90	YM26106-100122	1-68
YM129901-55850	0-14	YM22190-120002	1-92	YM26106-100142	1-84
YM129901-55850	1-92	YM22190-160002	1-100	YM26106-100162	1-84
YM129901-55860	0-2	YM22190-160002	1-70	YM26106-100202	1-84
YM129901-55860	1-92	YM22217-140000	1-80	YM26106-100652	1-73
YM129901-59510	1-90	YM22242-000180	1-72	YM26116-060162	1-82
YM129901-59560	1-100	YM22312-120200	1-70	YM26116-101202	1-98
YM129901-59560	1-90	YM22351-060012	1-66	YM26116-120302	1-94
YM129901-59580	1-90	YM22512-070140	1-80	YM26206-100252	1-70
YM129901-59810	1-90	YM22857-500100	1-72	YM26206-100352	1-70
YM129901-59820	1-90	YM23000-013000	1-92	YM26226-080302	1-68
YM129901-59830	1-90	YM23871-005000	1-72	YM26306-080002	1-68
YM129901-59840	1-90	YM23875-030000	1-82	YM26306-080002	1-78
YM129910-07910	1-72	YM23876-030000	1-66	YM26306-080002	1-78
YM129930-01620	1-70	YM23876-030000	1-66	YM26306-100002	1-72
YM129930-01870	1-68	YM23876-030000	1-66	YM26306-100002	1-98
YM129930-13100	1-78	YM23876-030000	1-72	YM26450-060252	1-84
YM129930-13130	1-78	YM24190-080001	1-82	YM26577-040162	1-72
YM129930-42480	0-2	YM24311-000120	1-100	YM26577-060152	1-82
YM129930-59500	1-92	YM24311-000120	1-73	YM26776-140002	1-80
YM129930-59520	1-90	YM24311-000320	1-100	YM27225-080080	1-72
YM129930-61990	1-84	YM24311-000320	1-68	YM27241-300000	1-66
YM129930-67010	1-84	YM24311-000320	1-73	YM27241-400000	1-72
YM129930-77200	0-2	YM24311-240100	1-100	YM27310-080001	1-72
YM129930-77200	1-98	YM24321-000850	1-100	YM729900-01500	1-68
YM129930-77212	0-2	YM24321-000850	1-68	YM729900-02800	1-66
YM129930-77212	1-96	YM24341-000500	1-100	YM729901-01570	1-66
YM129930-77740	1-96	YM24341-000500	1-68	YM729901-92690	1-100
YM129930-77930	1-96	YM24341-000500	1-80	YM977770-1207F	1-100
YM129930-77950	1-96	YM25132-004500	1-82	YM977770-1207F	1-68
YM129930-77950	1-98	YM25132-004600	1-82	YM977770-1207F	1-70
YM129930-91120	1-70	YM25132-004600	1-82	YM977770-1207F	1-73
YM129931-01710	1-70	YM26014-080162	1-82	YMX0130206040	1-85
YM129931-11700	1-72	YM260140-80252	1-96	YMX0130206040	1-85

https://truckmanualshub.com/

NUMERICAL INDEX

Part Number	Page	Part Number	Page	Part Number	Page
YMX0131214140	1-87	YMX1463050000	1-84	YMX1466000700	1-86
YMX0141106440	1-85	YMX1463104020	1-84	YMX1466000800	1-84
YMX0265081140	1-86	YMX1463105100	1-84	YMX1466000800	1-84
YMX0293214050	1-87	YMX1463115420	1-84	YMX1466001200	1-86
YMX0294704030	1-87	YMX1463121900	1-84	YMX1466001700	1-86
YMX0299980300	1-85	YMX1463125100	1-84	YMX1466004400	1-85
YMX0299980570	1-85	YMX1464013020	1-85	YMX1466010700	1-87
YMX0299984130	1-86	YMX1464211020	1-86	YMX1466020100	1-85
YMX0299985870	1-86	YMX1464220300	1-86	YMX1466020500	1-86
YMX0299986840	1-84	YMX1464303820	1-85	YMX1466020600	1-86
YMX1390060200	1-85	YMX1464320000	1-85	YMX1466205000	1-84
YMX1391040000	1-84	YMX1464330100	1-85	YMX1466205000	1-84
YMX1391060100	1-85	YMX1464400220	1-85	YMX1466211700	1-85
YMX1391060200	1-86	YMX1465151820	1-85	YMX1466211700	1-85
YMX1392080900	1-86	YMX1465152520	1-85	YMX1466214901	1-86
YMX1393080300	1-86	YMX1465262800	1-85	YMX1466501220	1-86
YMX1393100200	1-85	YMX1465266400	1-85	YMX1466584820	1-86
YMX1395080200	1-86	YMX1465300000	1-85	YMX1468052120	1-85
YMX1395120500	1-86	YMX1465300100	1-85	YMX1468209620	1-85
YMX1460186820	1-86	YMX1465404000	1-85	YMX1468321500	1-85
YMX1461000220	1-84	YMX1465404100	1-85	YMX1468321600	1-85
YMX1461030100	1-84	YMX1465410000	1-85	YMX1468551320	1-86
YMX1461100220	1-86	YMX1465453400	1-86	YMX1468796720	1-86
YMX1461140000	1-86	YMX1465453500	1-86	YMX1469109400	1-87
YMX1461200120	1-86	YMX1465453600	1-86	YMX1469753601	1-86
YMX1461200120	1-90	YMX1465680000	1-86	YMX2114155110	1-94
YMX1462000300	1-84	YMX1465690300	1-86	YMX2114255110	1-94
YMX1462000320	1-84	YMX1465700100	1-86	YMX2130631300	1-94
YMX1462010000	1-84	YMX1465720020	1-86	YMXL125G1200	1-98
YMX1462020100	1-84	YMX1465740320	1-87	YMXL125G1300	1-98
YMX1462030000	1-84	YMX1465760400	1-86	YMXL125G1301	1-98
YMX1462040000	1-84	YMX1465804100	1-86	YMXL125G1315	1-98
YMX1462050000	1-84	YMX1465880500	1-86	YMXL125G1330	1-98
YMX1462060100	1-86	YMX1465920400	1-85	YMXL125G1500	1-98
YMX1462105320	1-84	YMX1465927900	1-85	YMXL125GI400	1-98
YMX1462105820	1-84	YMX1465980600	1-87	YMXL15073251	1-98
YMX1462206620	1-84	YMX1465980700	1-87	YMXL1807320	1-98
YMX1462300000	1-84	YMX1465980800	1-87	YMXL24OG5100	1-98
YMX1462300100	1-85	YMX1465980900	1-87	YZ54522--050	56-6
YMX1462310001	1-85	YMX1465981000	1-87	YZ68322-080	56-6
YMX1462320320	1-87	YMX1466000000	1-85	YZ769100-883	56-6
YMX1462330000	1-85	YMX1466000100	1-85	YZ769298-140	56-6
YMX1462340500	1-85	YMX1466000200	1-85	YZ769540-054	56-6
YMX1463010000	1-84	YMX1466000400	1-86	YZ769540-066	56-6
YMX1463030000	1-84	YMX1466000500	1-86		
YMX1463040000	1-84	YMX1466000600	1-86		

KOMATSU FORKLIFT USA, INC.
14481 Lochridge Blvd., Bldg. #2
Covington, GA 30014-4908

VOICE PHONE: (770) 385-4815
FAX PHONE: (770) 385-4838