NOVEMBRO 1990

RUTHZIL TRATOR COMERCIAL DE PEÇAS LTDA 11 97083-6812 ROLANDO CITRANGULO

FIATALLIS®

FD9

crawler tractor

SERVICE MANUAL COMPLETE

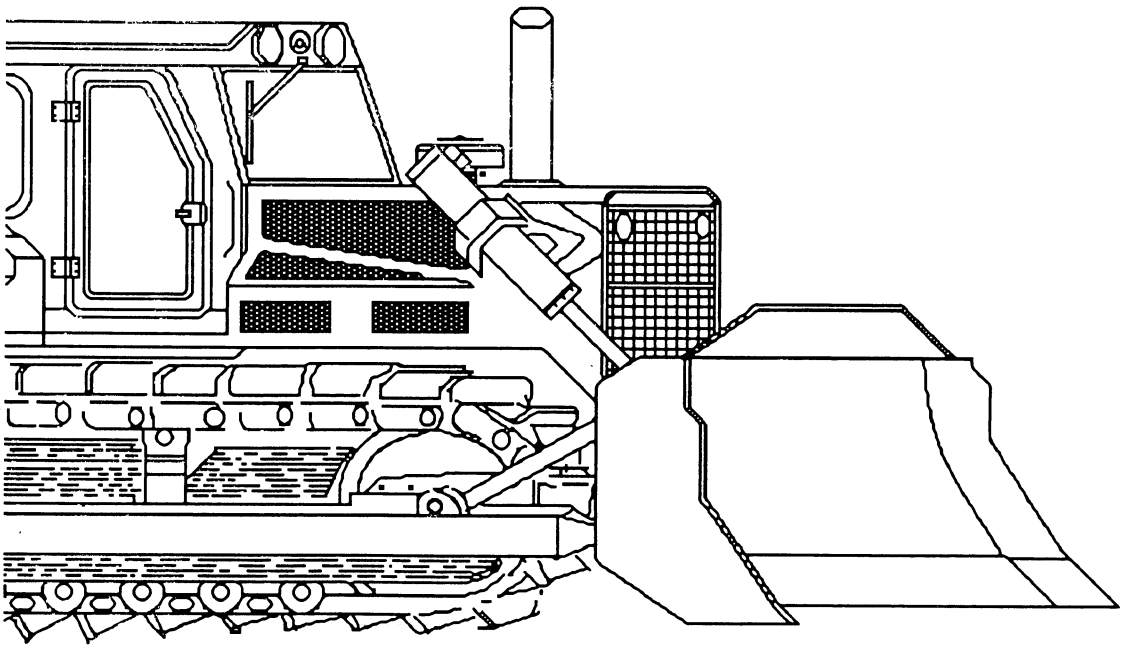

Form 73159768 English
11/90
Reprinted

FD9

crawler tractor

SERVICE MANUAL COMPLETE

S/N D9B-1T *000000*

Form 73159768 English

WARNING

STUDY THE OPERATION AND MAINTENANCE INSTRUCTION MANUAL THROUGH BEFORE STARTING, OPERATING, MAINTAINING, FUELING OR SERVICING THIS MACHINE.

The Operation and Maintenance Instruction Manual provides the instructions and procedures for starting, operating, maintaining, fueling, shutdown and servicing that are necessary for properly conducting the procedures for overhaul of the related components outlined in this Service Manual.

This symbol is your safety alert sign. It MEANS ATTENTION! BECOME ALERT! YOUR SAFETY IS INVOLVED.

Read and heed all safety instructions carrying the signal words WARNING and DANGER.

Machine mounted safety signs have been color coded yellow with black borders and lettering for warning and red with white borders and lettering for danger points.

SAFETY RULES

GENERAL

Study the Operation and Maintenance Instruction Manual before starting, operating, maintaining, fueling, or servicing machine.

Read and heed all machine-mounted safety signs before starting, operating, maintaining, fueling or servicing machine.

Machine-mounted safety signs have been color coded yellow with black border and lettering for ***WARNING*** and red with white border and lettering for ***DANGER*** points.

Never attempt to operate the machine or its tools from any position other than seated in the operator's seat. Keep head, body, limbs, hands and feet inside operator's compartment at all times to reduce exposure to hazards outside the operator's compartment.

Do not allow unauthorized personnel to operate service or maintain this machine.

Always check work area for dangerous features. The following are examples of dangerous work areas: slopes, over hangs, timber, demolitions, fire, high walls, drop off, back fills, rough terrain, ditches, ridges, excavations, heavy traffic, crowded parking, crowded maintenance and closed areas. Use extreme care when in areas such as these.

An operator must know the machine's capabilities. When working on slopes or near drop offs be alert to avoid loose or soft conditions that could cause sudden tipping or loss of control.

Do not jump on or off machine. Keep two hands and one foot, or two feet and one hand, in contact with steps grab rails and handles at all times.

Do not use controls or hoses as hand holds when climbing on or off machine. Hoses and controls are movable and do not provide a solid support. Controls also may be inadvertently moved causing accidental machine or equipment movement.

Keep operator's compartment, stepping points, grab-rails and handles clear of foreign objects, oil, grease, mud or snow accumulation to minimize the danger of slipping or stumbling. Clean mud or grease from shoes before attempting to mount or operate the machine.

Be careful of slippery conditions on stepping points, hand rails, and on the ground. Wear safety boots or shoes that have a high slip resistant sole material.

For your personal protection. Do not attempt to climb on or off machine while machine is in motion.

Never leave the machine unattended with the engine running.

Always lock up machine when leaving it unattended. Return keys to authorized security. Heed all shut down procedures of the Operation and Maintenance Instruction Manual. Always set the parking brake when leaving the machine for any reason.

Do not wear rings, wrist watches, jewelry, loose or hanging apparel, such as ties, torn clothing, scarves, unbuttoned or unzipped jackets that can catch on moving parts. Wear proper safety equipment as authorized for the job. Examples: hard hats, safety shoes, heavy gloves, ear protectors, safety glasses or goggles, reflector vests, or respirators. Consult your employer for specific safety equipment requirements.

Do not carry loose objects in pockets that might fall unnoticed into open compartments. Do not use machine to carry loose objects by means other than attachments for carrying such objects.

DO NOT CARRY RIDERS unless the machine is equipped for carrying people to reduce personal exposure to being thrown off.

Do not operate machinery in a condition of extreme fatigue or illness. Be especially careful towards the end of the shift.

Roll Over Protective Structures are required on wheel loaders, dozer tractors, track type loaders, graders and scrapers by local or national requirements. *DO NOT* operate this machine without a Roll Over Protective Structure.

Do not operate a machine without a falling object protective structure (FOPS).

Do not operate this machine without a rear canopy screen when machine is equipped with rear mounted towing winch.

Seat belts are required to be provided with roll over protective structures or roll protection cabs by local or national regulations. Keep the safety belt fastened around you during operation.

Where noise exposure exceeds 90 dBA for 8 hours, wear authorized ear protective equipment per local or national requirements that apply.

Keep clutches and brakes on machine and attachments such as power control units, winches and master clutches adjusted according to Operation and Maintenance Instruction Manuals of the manufacturers at all times. *DO NOT* adjust machine with engine running except as specified.

Do not operate a machine with brakes out of adjustment. See the Operation and Maintenance Instruction Manual.

Move carefully when under, in or near machine or implements. Wear required protective equipment, such as hard hat, safety glasses, safety shoes, ear protectors.

To move a disabled machine, use a trailer or low boy truck if available. If towing is necessary, provide warning signals as required by local rules and regulations and follow Operation and Maintenance Instruction Manual recommendations. Load and unload on a level area that gives full support to the trailer wheels. Use ramps of adequate strength, low angle and proper height. Keep trailer bed clean of clay, oil and all materials that become slippery. Tie machine down securely to truck or trailer bed and block tracks (or wheels) as required by the carrier.

SAFETY RULES

To prevent entrapment in cabs or mounted enclosures, observe and know the mechanics of alternate exit routes.

On machines equipped with suction radiator fans, be sure to periodically check all engine exhaust parts for leaks as exhaust gases are dangerous to the operator. Keep a vent open to outside air at all times when operating within a closed cab.

STARTING FLUID IS FLAMMABLE. Follow the recommendations as outlined in the Operation and Maintenance Instruction Manual and as marked on the containers. Store containers in cool, well-ventilated place secure from unauthorized personnel. *DO NOT PUNCTURE OR BURN CONTAINERS.*

Follow the recommendations of the manufacturer for storage and disposal.

Wire rope develops steel slivers. Use authorized protective equipment such as heavy gloves, safety glasses when handling.

OPERATION

Before starting machine, check, adjust and lock the operator's seat for maximum comfort and control of the machine.

DO NOT START OR OPERATE AN UNSAFE MACHINE. Before working the machine, be sure that any unsafe condition has been satisfactorily remedied. Check brakes, steering and attachment controls before moving. Advise the proper maintenance authority of any malfunctioning part or system. Be sure all protective guards or panels are in place, and all safety devices provided are in place and in good operating condition.

Check instruments at start-up and frequently during operation.

Do not run the engine of this machine in closed areas without proper ventilation to remove deadly exhaust gases.

Be sure exposed personnel in the area of operation are clear of the machine before moving the machine or its attachments. *WALK COMPLETELY AROUND* the machine before mounting. Sound horn. Obey flag man, safety signals and signs.

Know the principles of cross steering of crawler tractors. Read section in Operation and Maintenance Instruction Manual on cross steering.

Keep engine exhaust system and exhaust manifolds clear of combustible material. Equip machine with screens and guards when working under conditions of flying combustible material.

If engine has a tendency to stall for any reason under load or idle, report this for adjustment to a proper maintenance authority immediately. Do not continue to operate machine until condition has been corrected.

Never use bucket as a man-lift.

Use recommended bucket for machine and material load ability and heaping characteristics of material, terrain, and other pertinent job conditions.

Avoid abrupt starts and stops when transporting a loaded bucket.

Inspect your seat belt webbing and hardware at least twice a year for signs of fraying, wear or other weakness that could lead to failure.

Use only designated towing or pulling attachment points. Use care in making attachment. Be sure pins and locks as provided are secure before pulling. Stay clear of draw bars, cables or chains under load.

When pulling or towing through a cable or chain, do not start suddenly at full throttle. Take up slack carefully. Guard against kinking chains or cables. Inspect carefully for flaws before using. Do not pull through a kinked chain or cable due to the high stresses and possibility of failure of the kinked area. Always wear heavy gloves when handling chain or cable.

Be sure cables are anchored and the anchor point is strong enough to handle the expected load. Keep exposed personnel clear of anchor point and cable or chain. *DO NOT PULL OR TOW UNLESS OPERATOR'S COMPARTMENT OF MACHINES INVOLVED ARE PROPERLY GUARDED AGAINST POTENTIAL CABLE OR CHAIN BACKLASH.*

During operation always carry ripper in full raised position when not in use and lowered to ground when parked.

When counterweights have been provided, do not work machine if they have been removed unless their equivalent weight has been replaced. See the Operation and Maintenance Instruction Manual.

When operating a machine know what clearances will be encountered, overhead doors, wires, pipes, aisles, roadways; also the weight limitations of ground, floor, and ramps.

Know bridge and culvert load limits and do not exceed them. Know machine's height, width, and weight. Use a signal person when clearance is close.

Be sure that the exact location of gas lines, utility lines, sewers, overhead and buried power lines, and other obstructions or hazards are known. Such locations should be precisely marked by the proper authorities to reduce the risk of accidents. Obtain shut-down or relocation of any such facilities before starting work, if necessary.

Be certain to comply with all local, state, and federal regulations regarding working in the vicinity of power lines.

When roading find out what conditions are likely to be met - clearances, congestion, type of surface, etc. Be aware of fog, smoke or dust element that obscure visibility.

When backing, always look to where the machine is to be moved. Be alert to the position of exposed personnel. *DO NOT OPERATE* if exposed personnel enter the immediate work area.

SAFETY RULES

Never travel a machine on a job site, in a congested area, or around people without a signal person to guide the operator.

In darkness, check area of operation carefully before moving in with machine. Use all lights provided. Do not move into area of restricted visibility.

Maintain clear vision of all areas of travel or work. Keep cab windows clean and repaired. Carry blade low for maximum visibility while traveling. Obtain and use fan blast deflectors where tractors are used a pusher tractors in tandem.

Transport a loaded bucket with the bucket as far tipped back and in as low a position as possible for maximum visibility, stability, and safest transport of the machine. Carry it at a proper speed for the load and ground conditions.

Carry the bucket low when traveling with a load.

Maintain a safe distance from other machines. Provide sufficient clearance for ground and visibility conditions. Yield right-of-way to loaded machines.

Avoid going over obstacles such as rough terrain, rocks, logs, curbs, ditches ridges, and railroad tracks whenever possible. When obstructions must be crossed, do so with extreme care at an angle if possible. Reduce speed - down-shift. Ease up to the break over point - pass the balance point slowly on the obstruction and ease down on the other side.

Cross gullies or ditches at an angle with reduced speed after insuring ground conditions will permit a safe traverse.

Be alert to soft ground conditions close to newly constructed walls. The fill material and weight of machine may cause the wall to collapse under the machine.

Operate at speeds slow enough to insure complete control at all times. Travel slowly over rough ground, on slopes or near drop offs, in congested areas or on ice or slippery surfaces.

Be alert to avoid changes in traction conditions that could cause loss of control. *DO NOT* drive on ice or frozen ground conditions when working the machine on steep slopes or near drop offs.

Keep the machine well back from the edge of an excavation.

Be especially careful when traveling up or down slopes. Position the bucket in such a way as to provide a possible anchorage on the ground in case of a slide.

When proceeding across a hill side proceed slowly. Never turn sharply up hill or down hill.

Avoid side hill travel whenever possible. Drive up and down the slope. Should the machine start slipping sideways on a grade, turn it immediately downhill.

In steep down hill operation, do not allow engine to over speed. Select proper gear before starting down grade.

There is no substitute for good judgement when working on slopes.

The grade of slope you should attempt will be limited by such factors as condition of the ground, load being handled, the type of machine, speed of machine and visibility.

NEVER COAST the machine down grades and slopes with the transmission in neutral on power shift machines, or clutch disengaged on manually shifted machines.

To reduce the danger of uncontrolled machine, choose a gear speed before proceeding down grade that will hold machine to proper speeds for conditions.

Operating in virgin rough terrain that includes previously mentioned hazards is called pioneering. Be sure you know how this is done. Danger from falling branches and upturning roots is acute in these areas.

When pushing over trees, the machine must be equipped with proper over head guarding. Never allow a machine to climb up on the root structure particularly while the tree is being felled. Use extreme care when pushing over any tree with dead branches.

Avoid brush piles, logs or rocks. *DO NOT DRIVE THE MACHINE ONTO BRUSH PILES, LOGS, LARGE ROCKS* or other surface irregularities that break traction with the ground especially when on slopes or near drop offs.

Avoid operating equipment too close to an over hang or high wall either above or below the machine. Be on the look out for caving edges, falling objects and slides.Beware of concealment by brush and under growth of these dangers.

Park in a non-operating and non-traffic area or as instructed. Park on firm level ground if possible. Where not possible, position machine at a right angle to the slope, making sure there is no danger of uncontrolled sliding movement. Set the parking brake.

Never park on an incline without carefully blocking the machine to prevent movement.

If parking in traffic lanes cannot be avoided, provide appropriate flags, barriers, flares and warning signals as required. Also provide advance warning signals in the traffic lane of approaching traffic.

Move the machine away from pits, trenches, overhangs and over head power lines before shutting down for the day.

When stopping operation of the machine for any reason, always return the transmission or hydrostatic drive control to neutral and engage the control lock to secure the machine for a safe start up. Set parking brake, if so equipped.

Never lower attachments or tools from any position other than seated in operator's seat. Sound the horn. Make sure the area near the attachment is clear. Lower the attachment slowly. *DO NOT USE* float position to lower hydraulic equipment.

SAFETY RULES

Always before leaving the operator's seat and after making certain all people are clear of the machine, slowly lower the attachments or tools flat to the ground in a positive ground support position. Move any multi purpose tool to positive closed position. Return the controls to hold. Place transmission control in neutral and move engine controls to off position. Engage all control locks, set parking brake, and open and lock the master (key, if so equipped) switch. Consult Operation and Maintenance Instruction Manual.

Always follow the shut down instructions as outlined in the Operation and Maintenance Instruction Manual.

MAINTENANCE

Do not perform any work on equipment that is not authorized. Follow the Maintenance or Service Manual procedures.

Machine should not be serviced with anyone in the operator's seat unless they are qualified to operate the machine and are assisting in the servicing.

Shut off engine and disengage the Power Take Off lever if so equipped before attempting adjustments or service.

Always turn the master switch (key switch if so equipped) to the *OFF* position before cleaning, repairing, or servicing and when parking machine to forestall unintended or unauthorized starting.

Disconnect batteries and *TAG* all controls according to local or national requirements to warn that work is in progress. Block the machine and all attachments that must be raised per local or national requirements.

Never lubricate, service or adjust a machine with the engine running, except as called for in the Operation and Maintenance Instruction Manual. Do not wear loose clothing or jewelry near moving parts.

Do not run engine when refueling and use care if engine is hot due to the increased possibility of a fire if fuel is spilled.

Do not smoke or permit any open flame or spark near when refueling, or handling highly flammable materials.

Always place the fuel nozzle against the side of the filler opening before starting and during fuel flow. To reduce the chance of a static electricity spark, keep contact until after fuel flow is shut off.

Do not adjust engine fuel pump when the machine is in motion.

Never attempt to check or adjust fan belts when engine is running.

When making equipment checks that require running of the engine, have an operator in the operator's seat at all times with the mechanic in sight. Place the transmission in neutral and set the brakes and lock. *KEEP HANDS AND CLOTHING AWAY FROM MOVING PARTS.*

Avoid running engine with open unprotected air inlets. If such running is unavoidable for service reasons, place protective screens over all inlet openings before servicing engine.

Do not place head, body, limbs, feet, fingers, or hands near rotating fan or belts. Be especially alert around a pusher fan.

Keep head, body, limbs, feet, fingers, or hands away from bucket, blade or ripper when in raised position.

If movement of an attachment by means of machine's hydraulic system or winches is required for service or maintenance, do not raise or lower attachments from any position other than when seated in the operator's seat. Before starting machine or moving attachments or tools, set brakes, sound horn and call for an all clear. Raise attachments slowly.

Never place head, body, limbs, feet, fingers, or hands into an exposed portion between uncontrolled or unguarded scissor points of machine without first providing secure blocking.

Never align holes with fingers or hands - Use the proper aligning tool.

Disconnect batteries before working on electrical system or repair work of any kind.

Check for fuel or battery electrolyte leaks before starting service or maintenance work. Eliminate leaks before proceeding.

BATTERY GAS IS HIGHLY FLAMMABLE. Leave battery box open to improve ventilation when charging batteries. Never check charge by placing metal objects across the posts. Keep sparks or open flame away from batteries. Do not smoke near battery to guard against the possibility of an accidental explosion.

Do not charge batteries in a closed area. Provide proper ventilation to guard against an accidental explosion from an accumulation of explosive gases given off in the charging process.

Be sure to connect the booster cables to the proper terminals (+ to +) and (- to -) at both ends. Avoid shorting clamps. Follow the Operation and Maintenance Instruction Manual procedure.

Due to the presence of flammable fluid, never check or fill fuel tanks, storage batteries or use starter fluid near lighted smoking materials or open flame or sparks.

Rust inhibitors are volatile and flammable. Prepare parts in well ventilated place. Keep open flame away - *DO NOT SMOKE.* Store containers in a cool well ventilated place secured against unauthorized personnel.

Do not use an open flame as a light source to look for leaks or for inspection anywhere on the machine.

DO NOT pile oily or greasy rags - they are a fire hazard. Store in a closed metal container.

SAFETY RULES

Never use gasoline or solvent or other flammable fluid to clean parts. Use authorized commercial, non-flammable, non-toxic solvents.

Never place gasoline or diesel fuel in an open pan.

Shut off engine and be sure all pressure in system has been relieved before removing panels, housings, covers, and caps. See Operation and Maintenance Instruction Manual.

Do not remove hoses or check valves in the hydraulic system without first removing load and relieving pressure on the supporting cylinders. Turn radiator cap slowly to relieve pressure before removing. Add coolant only with engine stopped or idling if hot. See Operation and Maintenance Instruction Manual.

Fluid escaping under pressure from a very small hole can almost be invisible and can have sufficient force to penetrate the skin. Use a piece of card board or wood to search for suspected pressure leaks. *DO NOT USE HANDS.* If injured by escaping fluid, see a doctor at once. Serious infection or reaction can develop if proper medical treatment is not administered immediately.

Never use any gas other than dry nitrogen to charge accumulators. See Operation and Maintenance Instruction Manual.

When making pressure checks use the correct gauge for expected pressure. See the Operation and Maintenance Instruction Manual or Service Manual for guidance.

For field service, move machine to level ground if possible and block machine. If work is absolutely necessary on an incline, block machine and its attachments securely. Move the machine to level ground as soon as possible.

Brakes are inoperative when manually released for servicing. Provision must be made to maintain control of the machine by blocking or other means.

Block all wheels before bleeding or disconnecting any brake system lines and cylinders.

Never use make shift jacks when adjusting track tension. Follow the Undercarriage Service Manual.

Know your jacking equipment and its capacity. Be sure the jacking point used on the machine is appropriate for the load to be applied. Be sure the support of the jack at the machine and under the jack is appropriate and stable. Any equipment up on a jack is dangerous. Transfer load to appropriate blocking as a safety measure before proceeding with service or maintenance work according to local or national requirements.

Always block with external support any linkage or part on machine that requires work under the raised linkage, parts, or machine per local or national requirements. Never allow anyone to walk under or be near unblocked raised equipment. Avoid working or walking under raised blocked equipment unless you are assured of your safety.

When servicing or maintenance requires access to areas that cannot be reached from the ground, use a ladder or step platform that meets local or national requirements to reach the service point. If such ladders or platforms are not available, use the machine hand holds and steps as provided. Perform all service or maintenance carefully.

Shop or field service platforms and ladders used to maintain or service machinery should be constructed and maintained according to local or national requirements.

Lift and handle all heavy parts with a lifting device of proper capacity. Be sure parts are supported by proper slings and hooks. Use lifting eyes if provided. Watch out for people in the vicinity.

In lifting and handling heavy parts, slings must be of adequate strength for the purpose intended and must be in good condition.

Handle all parts with extreme care. Keep hands and fingers from between parts. Wear authorized protective equipment such as safety glasses, heavy gloves, safety shoes.

When using compressed air for cleaning parts use safety glasses with side shields or goggles. Limit the pressure to 207 kPa (30 psi) according to local or national requirements.

Wear welders protective equipment such as dark safety glasses, helmets, protective clothing, gloves and safety shoes when welding or burning. Wear dark safety glasses near welding. *DO NOT LOOK AT ARC WITHOUT PROPER EYE PROTECTION.*

Replace seat belts every two years on open canopy units and every three years on machines with cabs or at change of ownership.

Wear proper protective equipment such as safety goggles or safety glasses with side shields, hard hat, safety shoes, heavy gloves when metal or other particles are apt to fly or fall.

Use only grounded auxiliary power source for heaters, chargers, pumps and similar equipment to reduce the hazards of electrical shock.

Keep maintenance area *CLEAN* and *DRY.* Remove water or oil slicks immediately.

Remove sharp edges and burrs from reworked parts.

Be sure all mechanics tools are in good condition. *DO NOT* use tools with mushroomed heads. Always wear safety glasses with side shields.

Do not strike hardened steel parts with anything other than a soft iron or non-ferrous hammer.

Do not rush. Walk, do not run.

Know and use the hand signals used on particular jobs and know who has the responsibility for signaling.

SAFETY RULES

Face the access system when climbing up and down.

Apply the parking device and place the transmission in neutral before starting the machine.

Do not bypass the starter safety switch. Repair the starter safety controls if they malfunction.

Fasten seat belt before operating.

Steering should be checked to both right and left. Brakes should be tested against engine power. Clutch and transmission controls should be moved through or to neutral positions to assure disengagement. Operate all controls to insure proper operation. If any malfunctions are found, park machine, shut off engine, report and repair before using machine.

If the power steering or the engine ceases operating, stop the machine motion as quickly as possible. Lower equipment, set parking device and keep machine securely parked until the malfunction is corrected or the machine can be safety towed. Never lift loads in excess of capacity.

Should the machine become stuck or frozen to the ground, back out to avoid roll over.

Know and understand the job site traffic flow patterns.

Keep the machine in the same gear going down hill as used for going up hill.

When roading a machine, know and use the signaling devices required on the machine. Provide an escort for roading where required.

Always use the recommended transport devices when roading the machine.

Do not attempt repairs unless proper training has been provided.

Use extreme caution when removing radiator caps, drain plugs, grease fittings or pressure taps. Park the machine and let it cool down before opening a pressurized compartment.

Release all pressure before working on systems which have an accumulator.

When necessary to tow the machine, do not exceed the recommended towing speed, be sure the towing machine has sufficient braking capacity to stop the towed load. If the towed machine cannot be braked, a tow bar must be used or two towing machines must be used - one in front pulling and one in the rear to retard. Avoid towing over long distances.

Observe proper maintenance and repair of all pivot pins, hydraulic cylinders, hoses, snap rings and main attaching bolts.

Always keep the brakes and steering systems in good operating condition.

Replace all missing, illegible or damaged safety signs. Keep all safety signs clean.

Do not fill the fuel tank to capacity. Allow room for expansion.

Wipe up spilled fuel immediately.

Always tighten the fuel tank cap securely. Should the fuel cap be lost, replace it only with the original manufacturers approved cap. Use of a non-approved cap may result in overpressurization of the tank.

Never drive the machine near open fires.

Use the correct fuel grade for the operating season.

FOREWORD

Always furnish serial number if making an inquiry to dealer or factory about this machine.

Many equipment owners employ the Dealer Service Department for all work other than routine lubrication and minor service. This practice is encouraged, as our Dealers are well informed and equipped to render efficient service by factory trained mechanics.

This manual may not be reprinted or reproduced, either in whole or in part, without written permission of Fiatallis ®.

Illustrations show standard and optional items.

IMPORTANT

The information in this manual was current at the time of publication. It is our policy to constantly improve our product and to make available additional items. These changes may affect procedures outlined in this manual. If variances are observed, verify the information through your Dealer.

Fiatallis is not responsible for any liability arising from any damage resulting from defects caused by parts and/or components not approved by Fiatallis for use in maintaining and/or repairing products manufactured or merchandized by Fiatallis.

In any case, no warranty of any kind is made or shall be imposed with respect to products manufactured or merchandized by Fiatallis when failures are caused by the use of parts and/or components not approved by Fiatallis.

1. GENERAL DESCRIPTION

1.1	MODEL IDENTIFICATION	
	Model	FD9 Crawler Tractor
	Product Identification Number	D9B-1T *000000*
1.2	ENGINE	
	Make	IVECO
	Model	8065.25.095
	Type	Direct Injection Diesel, 4 cycle turbocharged
	Weight, wet	535 Kg (1180 lbs.)
	No. Cylinders	6
	Bore	104 mm (4.09")
	Stroke	115 mm (4.52")
	Displacement	5861 cu cm (357.6 cu.in)
	Firing Order	1-5-3-6-2-4
	Low Idle	825-875 rpm
	High Idle	2270-2370 rpm
	Converter stall	1910-1960 rpm
	Lubrication forced by gear pump full pressure, full flow	
	Valve Clearance-Intake (cold)	0.25 mm (0.010")
	Valve Clearance-Exhaust (cold)	0.35 mm (0.014")
	Injector timing	25° ± 1°
1.2.1	FAN	
	Type	Pusher
	Blade	7
1.2.2	COOLING	
	Type	Forced; with centrifugal water pump
	Radiator	Staggered core with 5 rows of tubes
	Fins	Copper with 3.5 mm spacing
	Core Front Area	0.488 sq.m.
	System Pressure	0.75 bar (11 psi)
1.2.3	AIR CLEANER	
	Type	Dry with Service Indicator
1.2.4	ADDITIONAL FEATURES	
	Resilient Engine Mounts	
	Oil-Water Heat exchanger	
1.3	STEERING AND BRAKES	
1.3.1	Steering Clutches	2 required; actuated with hand steering controls
	Type	Multidisc, oil bath, hydraulic control
	Friction Disc	10 discs provide 20 friction surfaces, each clutch

	Friction Material	Sintered metal
	Friction Area Each Surface	285.8 sq cm (44.30 sq. in.)
	Friction Area Each Clutch	5716 sq cm (886 sq. in.)
1.3.2	Steering Pump	
	Type	1 section; gear A 33X
	Make	Fiatallis
	Volume	36.3 lit./min. at 22.5 bar 9.6 gpm at 330 psi
	Filtration	Full flow 1 replaceable suction and 1 replaceable return filter (25 micron)
1.3.3	Steering Brakes	
	Number	2 required, actuated with foot pedals. Hydraulically boosted
	Type	Oil bath, contracting band acting on steering clutch outer drums
	Band Adjustment	External
	Total Brake Area (each brake)	616 sq cm (95.5 sq. in.)
1.4.	POWER TRAIN	
1.4.1	Torque Converter	
	Make	Twin Disc
	Type	Single stage, single phase
	Torque ratio at stall	2.78 to 1
	Cooling	Engine mounted, oil to coolant heat exchanger
1.4.2	Engine Clutch	
	Type	Dual plate, 14 in., oil bath
	Operation	Hydraulic, synchronized with transmission
	Release	Coil Springs
	Clutch plates	Two, sintered friction facings
1.4.3	Drive Shaft	
	Type	U-joint sliding on the transmission input shaft
1.4.4	Transmission with Torque Converter	
	Control	Hydraulic
	Speeds	3 forward; 3 reverse
	Total Transmission Reduction	
	1st Forward	2.838 : 1
	2nd Forward	1.799 : 1
	3rd Forward	0.968 : 1
	1st Reverse	2.361 : 1
	2nd Reverse	1.497 : 1
	3rd Reverse	0.805 : 1
1.4.5	Transmission with Engine Clutch	
	Control	Hydraulic
	Speeds	4 forward; 4 reverse
	Total Transmission Reduction	
	1st Forward	3.196 : 1
	2nd Forward	2.104 : 1
	3rd Forward	1.564 : 1
	4th Forward	1.029 : 1
	1st Reverse	2.639 : 1
	2nd Reverse	1.737 : 1
	3rd Reverse	1.291 : 1
	4th Reverse	0.850 : 1
	Cooling	Engine mounted, oil to coolant heat exchanger (same as converter)

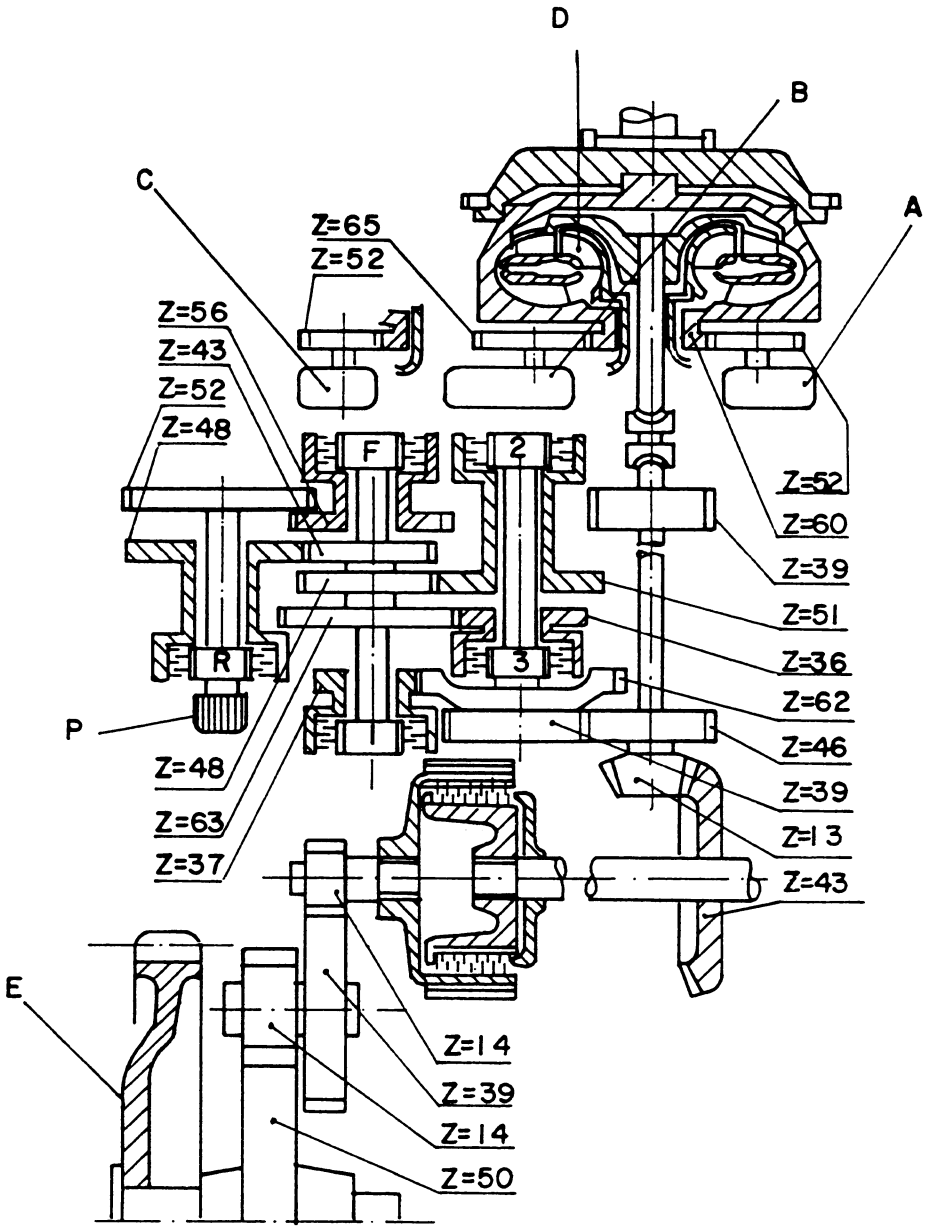

FIG. 1-1 POWER TRAIN SCHEMATIC
(WITH CONVERTER)

A - Brake-steering pump
B - Implement pump
C - Transmission double pump
D - Torque converter
E - Sprocket
F - Forward Clutch
R - Reverse
1 - 1 st speed clutch
2 - 2 nd speed clutch
3 - 3 rd speed clutch
P - Power take-off

Study SAFETY RULES in the front of this manual thoroughly for the protection of machine and safety of personnel.

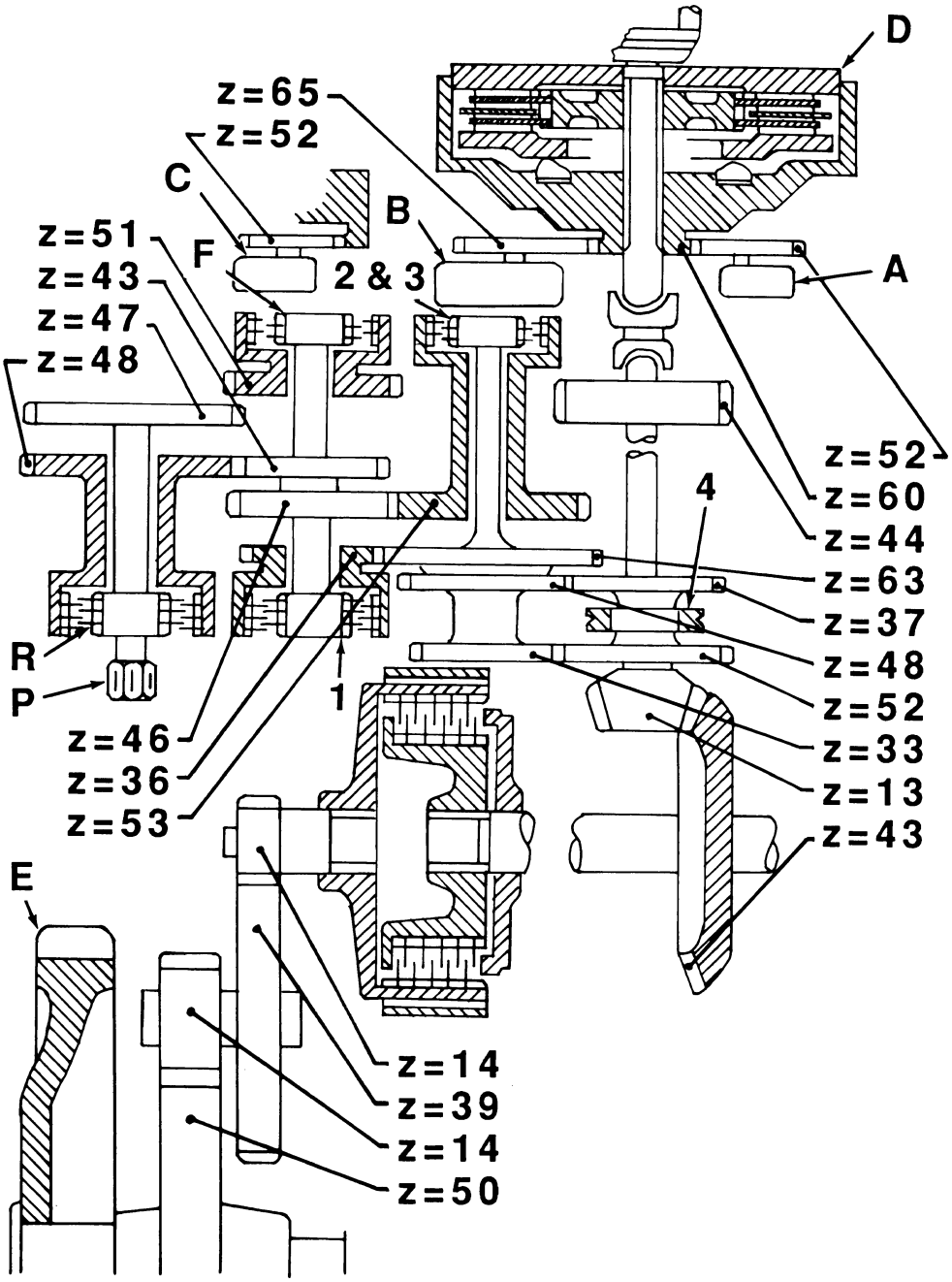

FIG. 1-2 POWER TRAIN SCHEMATIC
(WITH ENGINE CLUTCH)

A - Brake-steering pump
B - Implement pump
C - Transmission double pump
D - Engine clutch
E - Sprocket
F - Forward clutch
R - Reverse clutch
1 - 1st speed clutch
2 & 3 - 2nd & 3rd speed clutch
4 - 4th speed gear (manual operated)
P - Power take-off

1.4.6	Transmission Pump with Torque Converter	
	Type	2 section; gear
	Main pump volume	67 lit./min. (17.7 gpm)
	Scavenge pump volume	70.6 lit./min. (18.6 gpm)
	Filtration	Replaceable element on delivery side (30 micron). Mesh screen on suction side (100 micron).
1.4.7	Transmission Pump with Engine Clutch	
	Type	2 section; gear
	Main pump volume	39 lit./min. (10.3 gal/min)
	Scavenge pump volume	70.6 lit./min. (18.6 gal/min)
	Filtration	Replaceable element on delivery side (30 micron). Mesh screen on suction side (100 micron)
1.4.8	Bevel Gear and Final Drive	
	Type	Double reduction
	Reduction	
	. Bevel gear and pinion	3.31 : 1
	. Final drive	9.98 : 1
1.4.9	Power Take Off Shaft	Accessible through rear opening in main housing
	Speed	Varies with applied load 0 rpm with torque of 130 daNm 1770 rpm with torque of 0 daNm
1.4.10	Sprocket	
	Type	Integral
	Number of teeth	27
1.5	UNDERCARRIAGE	
1.5.1	Track Frame	Oscillating
1.5.2	Oscillating Beam	Supports front of tractor main frame at center pivot point. Ends supported by resilient pads on forward portion of track frames.
	Oscillation	315 mm (12.4")
1.5.3	Idlers	
	Number	1 each track
	Bearings	Bushings
	Lubrication	Engine Oil
1.5.4	Track Rollers	
	Number	6 rollers (2 double flange 4 single flange) each track
	Rolling diameter	185 mm (7.3")
	Bearings	Bushings
	Lubrication	Engine Oil
1.5.5	Carrier Rollers	
	Number	2 each track
	Roller diameter	155 mm (6.1")
	Bearings	Bushings
	Lubrication	Engine Oil

1.5.6	Track	
	Length on Ground	2245 mm (88.4")
	Tread width	1630 mm (64.1")
	Number of shoes per track	40
	Shoe width (standard)	450 mm (17.7")
	Optional	500 mm (19.7")
	Optional	550 mm (21.6")
	Ground Contact Area	
	450 mm (17.7") shoe standard	20205 sq cm (3131 sq. in.)
	500 mm (19.7") shoe optional	22450 sq cm (3480 sq. in.)
	550 mm (21.6") shoe optional	24695 sq cm (3827 sq. in.)

Note : For ground pressure, divide ground contact area into total operating weight of tractor.

1.6	DOZER HYDRAULIC SYSTEM	
1.6.1	Main Hydraulic Pump	
	Type	Gear with wear automatic adjustment Fiatallis A 130 X
	Volume	114 lit./min. (30 gpm)
1.6.2	Control Valve	
	Type	Monobloc 3 balanced spools
	Spools	(dozer, tilt and angle). A diverter valve on the angle circuit allows use of rear implements.
	Main relief valve	147 bar (2140 psi)
1.6.3	Dozers cylinder	Double acting
1.6.4	Filtration	2 full flow; suction screen100 micron with magnets; return line 20 micron.

1.7	ELECTRICAL		
1.7.1	Operating Voltage	24 volt	
1.7.2	Batteries	2 - 12 volt (series)	
	Ampere Hour Capacity	8	
1.7.3	Ground	Negative	
1.7.4	Alternator (with internal voltage regulator)		
	Make	Delco-remy	Bosch
	Model	20SI	K1 N1 28V
	Output	45A	55A
1.7.5	Starter		
	Make	Delco-remy	Bosch
	Model	30 MT - 190	KB - 24V - 5.4 kw

1.8 CAPACITIES (Approximate)		**lit.**	**Gal**
Fuel Tank		198	52.4
Cooling system		23	6
Engine Crankcase (includes filters)		14	3.70
Steering and Brakes		15.5	4.2
Torque converter and Transmission		24.5	6.5
Engine clutch and transmission		28	7.5
Final drive (each side)		13	3.5
Track idlers and rollers		7.5	2
Hydraulic System	Angle/Bull	43	11.3
	All Hydraulic	49	13

Add 5 lit. (1.3 gal) when equipped with ripper

1.9 OVERALL DIMENSIONS

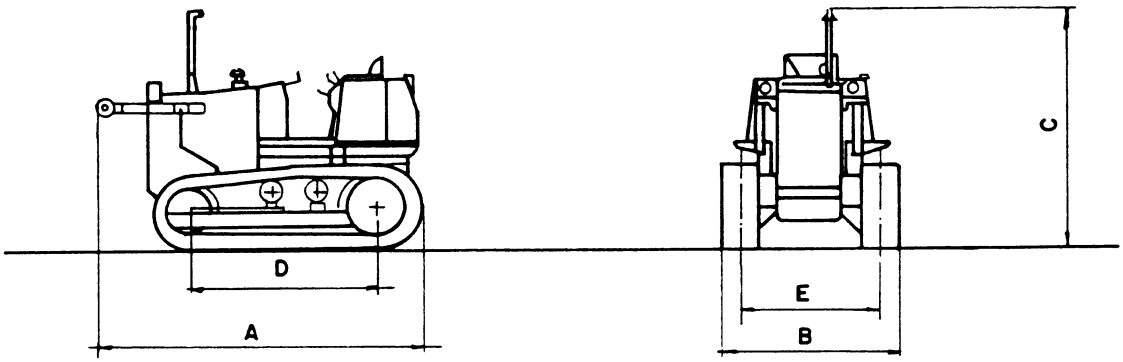

FIG. 1-3 BASIC TRACTOR DIMENSIONS

1.9.1 BASIC TRACTOR (FIG. 1-3)

(450 mm shoes)

-Max length (A)	142"	3615 mm
-Max width (B)	82"	2080 mm
-Max height (C)	116.5"	2960 mm
-Length of track on ground (D)	88.4"	2245 mm
-Track gauge (E)	64"	1630 mm
-Ground clearance	15.1"	385 mm
-Ground contact area	3131 sq.in.	20205 sq cm
-Ground pressure (angledozer)	7.4 lbs/sq.in.	0.5 bar

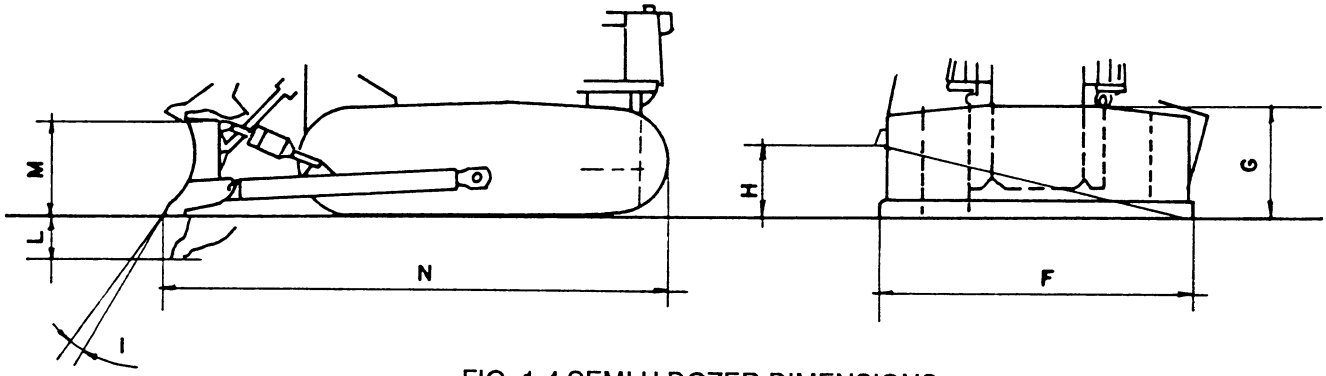

FIG. 1-4 SEMI U DOZER DIMENSIONS

1.9.2 TRACTOR WITH SEMI U DOZER (FIG. 1-4)

	Semi-U	
Max board width (F)	109"	2770 mm
Height (G)	40"	1020 mm
Max tilt (H)	26.3"	670 mm
Pitch (I)	±6°	±6°
Max depth (L)	14.5"	370 mm
Max height (M)	38.4"	975 mm
Total length	168.6"	4283 mm

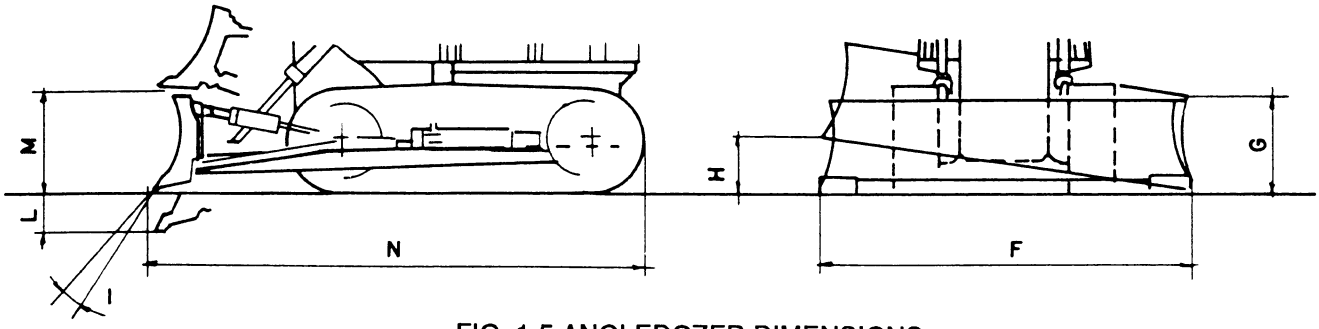

FIG. 1-5 ANGLEDOZER DIMENSIONS

1.9.3 TRACTOR WITH ANGLEDOZER (FIG. 1-5)

		Angledozer
Max board width (F)	135.2"	3435 mm
Max board width (angled)	121.2"	3080 mm
Height (G)	35.4"	900 mm
Max tilt (H)	18.5"	470 mm
Pitch (I)	±10°	±10°
Angle	±25°	±25°
Max depth (L)	14.3"	365 mm
Max height (M)	39.3"	1000 mm
Total Length (N)	172.4"	4380 mm

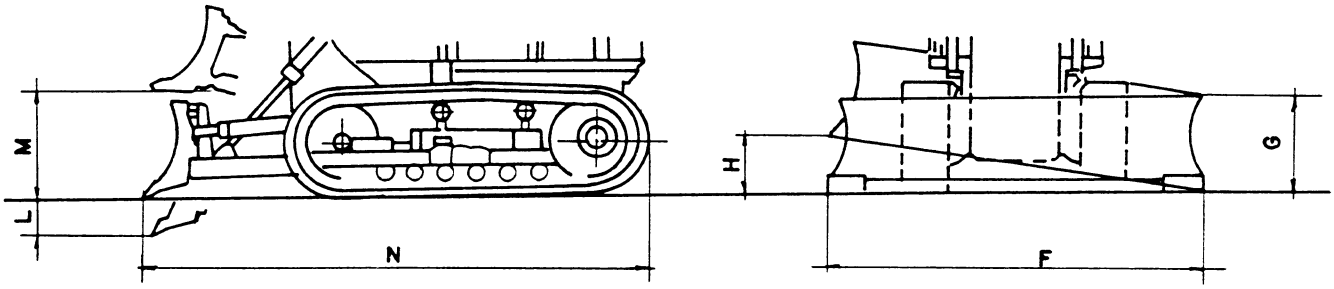

FIG. 1-6 ALL HYDRAULIC DIMENSIONS

1.9.4 TRACTOR WITH ALL-HYDRAULIC

		All-hydraulic
Max board width (F)	104.3"	2650 mm
Max board width (angled)	94.4"	2400 mm
Height (G)	39.3"	1000 mm
Max tilt (H)	15.7"	400 mm
Pitch (I)	-	-
Angle	±25°	±25°
Max depth (L)	15.5"	395 mm
Max height (M)	37.4"	950 mm
Total length (N)	171.2"	4350 mm

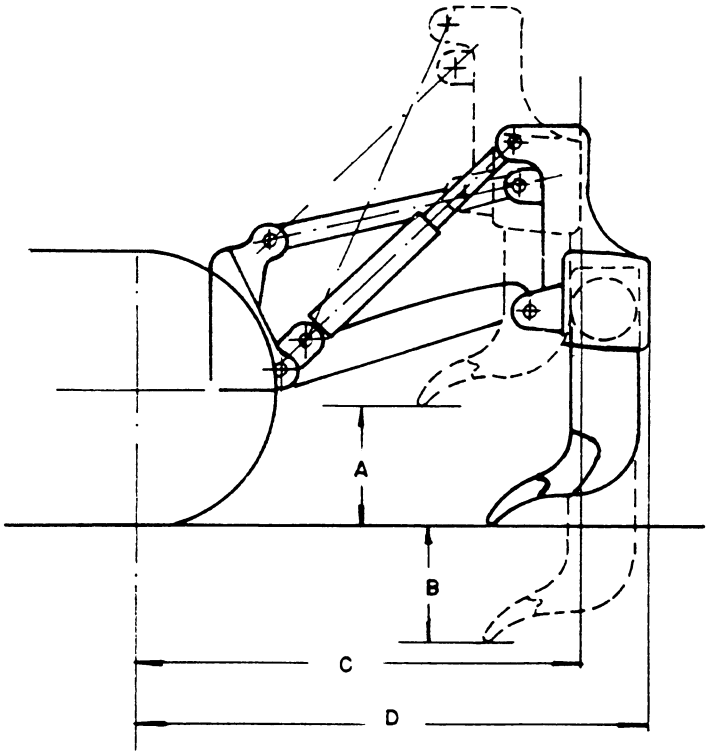

FIG. 1-7 RIPPER SPECIFICATIONS

1.9.5 RIPPER SPECIFICATIONS (FIG. 1-7)

RIPPER

Model		PD9
Type		Parallelogram
Max ripping depth (B)	430 mm	17"
Max width depth	1620 mm	63.7"
Max ripping width	1500 mm	59"
Standard shanks	3	3
Max clearance under shanks (A)	415 mm	16.3"
Shank pitch	750 mm	29.5"
Shank weight	65 kg	143 lbs.
Total weight	1110 kg	2448 lbs.
Total length (C)	1300 mm	51.2"
Total length with shank on ground (D)	1630 mm	64"
Hydraulic cylinder, double acting	1	1
Bore x stroke	125 mm x 362 mm	4.9" x 14.2"

1.10 SHIPPING WEIGHTS

	kg	lbs
Standard tractor (less dozer) (Includes fuel, lubricants, dozer lift cylinders and operator)	9270	20440
Add or subtract weight (from standard as indicated)		
Semi U dozer (Blade, push beams, struts and tilt cylinders, trunnions)	+ 1415	3120
Angledozers (Blade and struts, frame, trunnions)	+ 1445	3186
All hydraulic (Blade, frame, trunnion, angle and tilt cylinders)	+ 1430	3153
Ripper (Includes piping, control and shanks)	+ 1300	2866
Rops canopy	+225	496
Enclosed cab	+ 270	595

⚠ WARNING

Use linkage safety support provided whenever it is necessary to put linkage in the raised position for any reason. Implement must be empty when using safety support. Remove support and secure immediately after use for operation and transporting according to the Operation and Maintenance Instruction Manual. Do not substitute any other device for these supports. Lock up linkage with an external support capable of holding up the linkage when work is required under the linkage, according to local or national requirements.

1.11 NOTES FOR SPARES

To insure perfect machine operation, only original parts should be used for replacements.

When ordering spares, specify
- Chassis No. and type;
- Engine No. and type;
- Catalog Part No. of the part requested.

The complete instructions for ordering spares are shown on the spare parts catalog.

1.12 FILL-UP DATA

See the "Operation and Maintenance Instruction Manual".

1.13 GENERAL FITTING NOTES

INSTALLING FLOATING RING SEALS

Thoroughly inspect metal rings **M** ensuring that their sealing surfaces are free from score marks, dents or signs of wear due to misalignment or flatness errors.

Both metal rings **M** with rubber seals **G** should be renewed even if only one is found to be defective.

Do not pair new and worn metal rings together, nor used rings of different pairs. To install seals proceed as follows:
- remove all sharp corners and burrs and thoroughly clean rubber seal housings;
- thoroughly clean the rubber seals;
- couple each metal ring **M** to the associated rubber seal **G** as shown in detail **a**, pushing as indicated by the arrows;
- ensure that each metal ring is correctly seated. Dimension **I** (detail **b**) should be equal all round;
- place each seal assembly in position by manually pressing the rubber seal as shown in detail **c**;
- before pairing the seal assemblies (see detail **d**) clean sealing surfaces **F** using a lint-free cloth and smear a light film of thin oil on the contact surfaces.

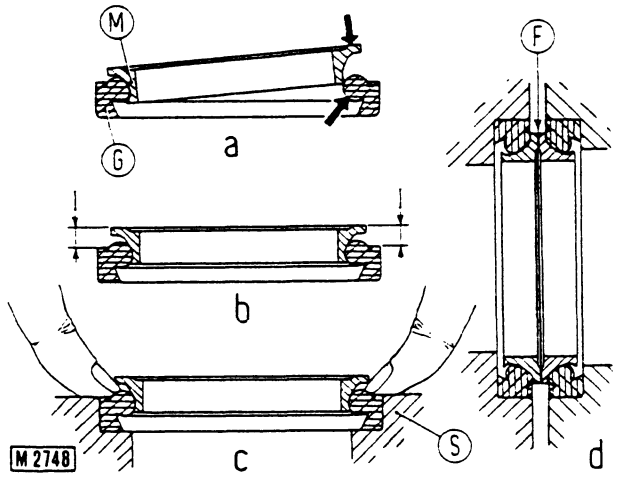

⚠ WARNING

Use proper tools to bring holes into alignment. *DO NOT USE FINGERS OR HANDS.*

INSTALLING ROTARY SHAFT SEALS

To install rotary shaft seals proceed as follows:
- prior to installation soak the seals for at least half an hour in the same oil as that in which they will operate;
- thoroughly clean the shaft and ensure that the contact surface is free from damage;
- turn sealing lip towards the fluid; if of the thrower lip type, turn the grooves so that during shaft rotation the fluid is thrown back;
- smear the sealing lip with a thin film of lubricant (oil is better than grease);
- install the seal into the housing by pressing or using a flat ended punch; on no accounts use a hammer;
- avoid entry of the seal into the recess in a tilted position. After installations ensure that the seal is pressed fully home;
- to prevent sealing lip damage during installation, use some sort of protection between seal and shaft.

REMOVING/INSTALLING FACE SEALING RINGS

To remove proceed as follows:
- press one end of the ring into its seat (see **a**);
- hold ring in position and insert a scriber point beneath the other end to separate the interlocking ends as shown (**a**);

To install proceed as follows:
- press one end of the seal into the seat (**b**);
- hold in position and lift the free end (**b**) to lock the two ends together (**c**).

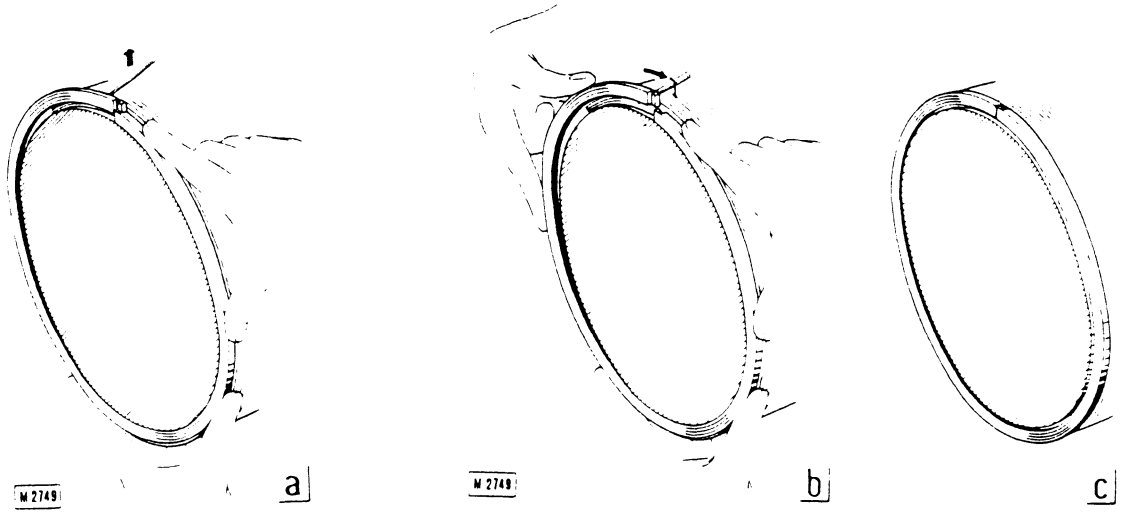

INSTALLING O-RINGS
Lubricate O-rings before installation and do not twist them when installing, otherwise leakage will result.

⚠ WARNING

Handle all parts with extreme care. Keep hands and fingers from between parts. Wear authorized protective equipment such as safety glasses, heavy gloves, safety shoes.

DISASSEMBLY AND REASSEMBLY OF UNITS
The following general information is aimed at helping disassembly and reassembly of units. Read it attentively and bear it in mind when carrying out the work.

CLEANING
After disconnecting the electric system thoroughly clean the parts to be disassembled, if possible with a jet of steam.

Many repair or service shops use caustic compounds to remove traces of grease, dirt, paint and remains of gaskets etc. Such compounds are extremely useful and effective if employed correctly, but may cause considerable damage to certain materials.

Materials such as aluminium, rubber, fibers, sintered bronze and binding agents are particularly sensitive to all high-concentration caustic compounds.

Certain heat exchangers and radiators have aluminium fins. To clean both inside and outside of these parts we recommend the use of solvents that do not react with aluminium.

DISASSEMBLY
When operating on the engine or on other units removed from the machine always use stands. Place small items in containers. Be careful not to damage the machine surfaces of components and rest them on shelves or on wood blocks.

When dismantling a like components, such as valves, valve lifters etc., place them in suitable containers to avoid incorrect reassembly.

ASSEMBLY
Carefully clean all parts to be refitted as described in the manual. We recommend the use of the special tools illustrated. Whenever possible, drive in bushings to their correct position using a press. If it is necessary to use a hammer to install the bushing, employ a suitable punch to prevent any damage.

Lubricate ball bearings before assembly and bushings prior to installing their pins. Lubricate the sealing lip on all seals before installing (see Section 1.4).

Wherever possible, use new seals. Cylinder head gaskets should always be new.

Use screws with the dimensions and characterics indicated, making reference to part numbers in the Spare Parts Catalog.

Where indicated, use washers, cotter pins, locking wire etc.

Respect specified torque loadings as indicated in the appropriate section of this manual, using a suitable torque wrench.

Self-locking nuts should be replaced every time a disassembly operation is carried out, so as to guarantee a constantly good seal.

⚠ DANGER

Adhesives are extremely flammable. Follow the manufacturers instructions when applying.

PRESSURE LINES, FITTINGS, HOSES AND TUBING

This section is to provide guidance to correctly install hose assemblies.

- When working with hoses, tubes and fittings, keep all interior and mating surfaces clean.
- Do not remove any caps or plugs until connection is ready to be made and plug immediately the free openings.
- Do not use flange halves that are warped or distorted more than 0.6mm (0.024 in) at center (see Figure below).

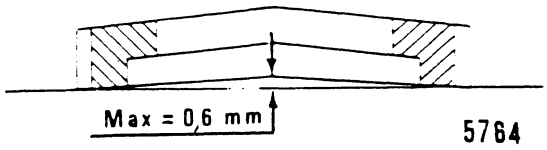

5764

- Be sure O-ring seat is not damaged.
- Lubricate O-ring.
- Be sure O-ring is seated properly.
- Tighten capscrews evenly in criss-cross pattern to prevent binding and O-ring damage.
- Install tubing and tube clamps (leave clamp slightly loose).
- Tighten tubing connections to fixed units (valves, etc.) and other tubes.
- Be sure that tubing fits the end connections and in the tubing clamps without being forced into position. Improve fit by adjusting fittings and fixed units if possible. If necessary, bend the tubing to eliminate strain at ends.
- Be sure that the tube touches nothing except end connections and tube clamps.
- Install hose with end connection snug but not tight.
- Hoses must not be twisted (see Figure below).

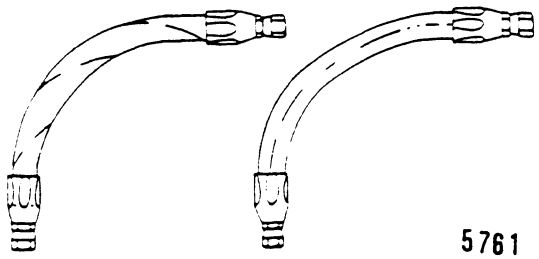

5761

Wrong Right

- Hoses must not touch each other or other objects, especially moving parts.
- If hose is installed essentially straight, there must be sufficient slack to allow for hose contraction under pressure.



Wrong Right

5760

- Be sure clamp is correct size to prevent hose movement in clamp and possible abrasion of hose (see Figure above).

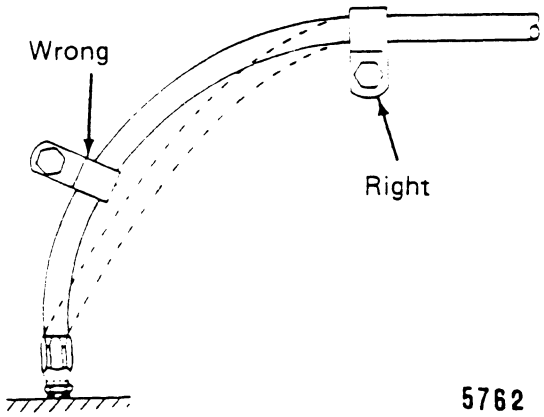

5762

- Do not clamp on a curve with a minimum radius to avoid undue strain when pressure is applied (see Figure above). The dashed portion shows the possible contraction of hose under pressure.

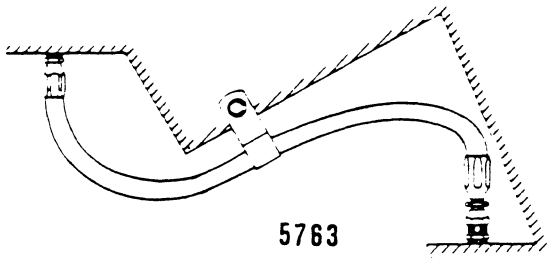

5763

- Be sure clamp is correctly positioned to keep hose away from other objects (see Figure above).

1.14 STANDARD PART CLASSIFICATION TO DETERMINE TORQUE DATA

IMPORTANT: When a specific torque is not given the FIAT STANDARD TORQUE CHART should be used after fully indentifying the part.

Part may only be fully identified by the eight-digit code number, as follows:

l / a b c d e / f g

l - Standard part code
Always represented by figure 1. Such a number indicates that the part can be produced in various versions which differ in material and coating.

a-b-c-d-e-Standard part basic number

It always consists in five figures to identify the part in its dimensional characteristics.

f - Material code number
This number represents the material provided for a specific part. Its meaning is indicated in the table below.

g - Coating code number
This number represents the coating provided for a specific part.

1.15 FIAT STANDARD TORQUE CHARTS

When a specific fastener torque is not given, the following charts may be used:

IMPORTANT
- Fasteners with nominal diameter up to 24 mm to be lubricated with engine oil, major diameter fasteners with tallow.

- Torques for cadmium plated fasteners are valid also for not coated parts.

- Nominal torque tolerance is ±5%

- R80, R100, R120 strength classes are to be considered as follows:

10.9 replaces R100
12.9 replaces R120 bolts & screws

10 replaces R80
12 replaces R100 nuts

- Coating abreviation meaning:

CDT = Cadmium plated
FOSF = Phosphatized
ZNT = Zinc plated

Material code (f)	FIAT	Strength class and type of material				
		UNI	DIN	SAE	BSI	BNA
0	R40	4D - 4S - 4A		1	A	42
1	R50	5S - 6S		3	P	56
2	R80	8G		5	T	80
3	R100	100	10K	8	V	100
4	Ottone	Ottone	Messing	Brass	Brass	Laiton
5	Alluminio	Alluminio	Aluminium	Aluminium	Aluminium	Aluminium
6	Rame	Rame	Kupfer	Copper	Copper	Cuivre
7	open to other metallic material					

1. GENERAL

BOLT AND SCREW TORQUE CHART

Diameter and width of thread mm	Strength class: 10.9				Strength class: 12.9	
	standard ZNT daNm (*/**) lbs ft (°/°°)	self locking ZNT daNm (*/**) lbs ft (°/°°)	standard CDT daNm (*/**) lbs ft(°/°°)	self locking CDT daNm (*/**) lbs ft (°/°°)	standard FOSF daNm (*/**) lbs ft (°/°°)	self locking FOSF daNm (*/**) lbs ft (°/°°)
M6 x 1	1.3 (9.5/6.5) 9.6 (0.37/0.25)	-	-	-	1.4 (12/8) 10 (0.47/0.31)	-
M8 x 1.25	3.2 (12.5/9) 23 (0.5/0.35)	3.5 (12/8) 26 (0.47/0.31)	-	3 (13.5/9.5) 22(0.53/.037)	3.5 (16.5/11) 26 (0.65/0.43)	3.8 (16.5/11) 28 (0.65/0.43)
M10 x 1.25	-	7.9 (18/12.5) 58 (0.70/0.50)	-	6.5 (18/12.5) 48 (0.70/0.50)	-	-
M10 x 1.5	6.5 (16/11) 48 (0.63/0.43)	7 (15.5/10.5) 52 (0.61/0.41)	-	6 (17/11.5) 44 (0.66/0.45)	7 (21/14) 52 (0.82/0.55)	7.8 (21/14.5) 57 (0.82/0.57)
M12 X 1.25	-	13.9 (23/15.5) 102 (0.90/0.61)	-	11.4 (23/15.5) 84 (0.90/0.61)	-	-
M12 X 1.75	11 (19.5/13.5) 81 (0.76/0.53	12 (18.5/12.5) 88 (0.73/0.50)	-	10.1 (20.5/14) 74 (0.80/0.55)	12 (26/17.5) 88 (1.02/0.68)	13 (26/17.5) 96 (1.02/0.68)
M14 X 1.5	-	22 (26.25/18) 162 (1.04/0.70)	-	18 (26.5/18) 132 (1.04/0.70)	-	-
M14 X 2	18 (23/16) 133 (0.90/0.62)	19 (22/15) 140 (0.86/0.59)	-	16.2 (24/16.5) 119 (0.94/0.65)	19 (30/20) 140 (1.18/0.78)	21 (30/20) 155 (1.18/0.78)
M16 X 1.5	30 (30/20) 221(1.18/0.78)	33 (29/19.5) 243 (1.14/0.76)	25 (31/21) 184 (1.22/0.82)	27 (31/21) 199 (1.22/0.82)	33 (40/26.5) 243 (1.57/1.04)	36 (40/26.5) 265 (1.57/1.04)
M16 X 2	-	-	23 (28.5/19.5) 170 (1.12/0.76)	24.8 (28/19.5) 183 (1.10/0.76)	-	-
M18 X 1.5	45 (34/23) 332 (1.34/0.91)	48 (33.5/22) 354 (1.21/0.86)	36 (35.5/24) 265 (1.39/0.76)	39 (35.5/24) 288 (1.39/0.94)	48 (46/30.5) 354 (1.81/1.20)	52 (46.5/30.5) 383 (1.83/1.20)
M18 X 2.5	-	-	31 (30.5/21) 229 (1.20/0.82)	33.5 (30.5/21) 247 (1.20/0.82)	-	-
M20 X 1.5	60 (38/25.5) 412 (1.50/1.00)	65 (38/25) 479 (1.50/0.98)	50 (39.5/26.5) 369 (1.55/1.04)	-	65 (52.5/34.5) 479 (2.06/1.35)	70 (53/35) 516 (2.08/1.37)
M20 X 2.5	-	-	44 (35/44) 324 (1.37/1.73)	-	-	-
M22 X 1.5	80 (42/28) 590 (1.65/1.10)	90 (42.5/28) 664 (1.67/1.10)	66 (44/29.5) 487 (1.73/1.16)	-	90 (59/38.5) 664 (2.32/1.51)	95 (59.5/39) 700 (2.34/2.32)
M22 X 2.5	-	-	59 (39/26.5) 435 (1.53/1.04)	-	-	-
M24 X 2	100 (44/29.5) 737 (1.73/1.16)	110 (44.5/29.5) 811 (1.75/1.16)	83 (45.5/31) 612 (1.79/1.22)	-	110 (62/40.5) 811 (2.44/1.59)	120 (62/41) 885 (2.44/1.61)
M24 X 3	-	-	74 (41/28) 545 (1.61/1.10)	-	-	-
M27 X 2	100 (54/36) 737 (2.12/1.41)	-	-	-	100 (75/50) 811 (2.95/1.96)	-
M30 X 2	140 (61/40.5) 1032 (2.40/1.60)	-	-	-	150 (85/56) 1106 (3.34/2.20)	-
M33 X 2	190 (68/45) 1401 (2.67/1.77)	-	-	-	200 (95/63) 1475 (3.74/2.48)	-
M36 X 3	240 (71/47) 1770 (2.80/1.85)	-	-	-	250 (97/65) 1844 (3.81/2.55)	-

(*/) Minimum thread length in mm, specified for cast iron with 255 N/mm² tensile strength- (/**)Minimum thread length in mm, specificed for steel with 510 N/² tensile strength - (°/)Minimum tread length in inches, specified for cast iron with 37,000 psi tensile strength- (/°°)Minimum tread length in inches, specified for steel with 74,000 psi tensile strength.

1. GENERAL

NUTS TORQUE CHART - Unit of measure daNm (lbs ft)

Diameter and width of thread mm	Strength class: 10 (RBO)					Strength class 12 (R100)
	standard ZNT	standard CDT	jam type	with polyamide ring		standard FOSF
				standard	jam type	
M6 x 1	1.3 (96)	-	-	-	-	1.4 (10)
M8 x 1.25	3.2 (23)	-	*2.6 (19)	*3.9 (19)	*3.2 (23)	3.5 (26)
M10 x 1.25	-	-	*5.2 (38)	*8.2 (60)	*6.2 (48)	-
M10 x 1.5	6.5 (48)	7.2 (53)	*5 (37)	*7.7 (57)	*6 (44)	7 (52)
M12 X 1.25	-	13 (96)	*8.7 (64)	*14.5 (107)	*10.2 (75)	-
M12 X 1.75	11 (81)	-	*8.1 (60)	*12.9 (95)	*9.6 (71)	12 (88)
M14 X 1.5	-	19.5 (144)	*13 (96)	*21.6 (159)	*15 (110)	-
M14 X 2	18 (133)	-	*12.5 (92)	*20 (147)	*14.6 (107)	19 (140)
M16 X 1.5	30 (221)	23.5 (173)	°13 (96)	°26.8 (198)	°16 (118)	30 (221)
M16 X 2	-	23 (170)	°12.5 (92)	°26.5 (195)	°16 (118)	-
M18 X 1.5	45 (332)	34.5 (254)	°19 (140)	°39 (236)	°23.5 (173)	45 (332)
M18 X 2.5	-	32 (236)	°17.5 (129)	°36.5 (269)	°22 (162)	-
M20 X 1.5	60 (442)	46 (339)	°23.5 (173)	°51.7 (381)	°29 (214)	60 (442)
M20 X 2.5	-	44.5 (328)	°21.5 (158)	°50 (369)	°27 (199)	-
M22 X 1.5	80(590)	62 (457)	°32 (236)	-	-	80 (590)
M22 X 2.5	-	61 (450)	°29.5 (217)	-	-	-
M24 X 2	100 (737)	78 (575)	°37 (273)	°85.8 (633)	°45 (332)	100 (737)
M24 X 3	-	76 (560)	°33 (243)	°84 (619)	°41 (302)	-
M27 X 2	95 (700)	-	-	-	-	95 (700)
M30 X 2	130 (959)	-	-	-	-	130 (959)
M33 X 2	170 (1254)	-	-	-	-	160 (1180
M36 X 3	220 (1622)	-	-	-	-	220 (1622)

*ZNT (Zinc plated) °CDT(Cadmium plated)

CAPSCREW AND TORQUE VALUES

Capscrew Head Markings	SAE Grade Number	Capscrew Size									
Manufacturer's marks may vary		1/4	5/16	3/8	7/16	1/2	9/16	5/8	3/4	7/8	1
		Threads per inch									
		20	18	16	14	13	12	11	10	9	8
		28	24	24	20	20	18	18	16	14	14
	1 or 2	Torque Ft-Lb									
		5	11	18	28	39	51	83	105	160	235
		6	13	20	30	41	55	95	115	175	250
	5	8	17	31	49	75	110	150	270	395	590
		10	19	35	55	85	120	170	295	435	660
	6 or 7	10	19	34	55	85	120	167	280	440	660
		12	21	38	61	95	130	187	300	480	730
 	8	12	24	44	70	105	155	210	375	605	910
		14	27	49	78	120	170	240	420	675	990

Notes:

1. Always use the torque values listed above when specific torque values are not available.
2. Do not use above values in place of those specified in other sections of this manual; special attention should be observed.
3. The above is based on use of clean, dry threads.
4. Reduce torque by 10% when engine oil is used as a lubricant.
5. Reduce torque by 20% if new plated capscrews are used.
6. Capscrews threaded into aluminum may require reductions in torque of 30% of more of Grade 5 capscrews torque and must attain two capscrew diameters of thread engagement.

CAUTION:

If replacement capscrews are of a higher grade than originally supplied, adhere to torque specifications for that replacement.

2. ENGINE RELATED COMPONENTS

2.1 GENERAL

Data, characteristics and repair procedures listed in this manual refer exclusively to the removal and installation of the 8065.25.094 engine on model FD9. Individual engine components and repair are dealt with in the 8065 Engine Service Manual, part number 73121213.

⚠ WARNING

This symbol is your safety alert sign. It means "ATTENTION!" "BECOME ALERT!" "YOUR SAFETY IS INVOLVED".

Read and heed all safety instructions carrying the signal words "WARNING" and "DANGER".

2.2 REMOVAL

Remove the Angledozer C-frame and moldboard or the Dozer pushbeams, modboard and tilt cylinder to facilitate engine removal.

Turn the master electrical switch to the "OFF" position.

Remove the engine and transmission bottom guards, the engine side panels and the fenders.

Drain the oil from the transmission and from the hydraulic tank.

Disconnect and tag hydraulic hoses to the moldboard lift cylinders and remove the two cylinders.

Remove the air cleaner pre-cleaner, muffler extension pipe and hood assembly.

Disconnect the air cleaner from the air intake manifold and remove the air cleaner.

Loosen the radiator cap and drain coolant through the drain cock.

Remove the fan guards and shroud assembly.

Disconnect all wiring and related clamps to the front headlights on the radiator guard.

Attach a suitable lifting device to the radiator guard. Remove the capscrews attaching the guard to the main frame and lift the radiator guard clear of the machine.

Disconnect hoses from the radiator assembly. Attach a suitable lifting device to the radiator and remove the two capscrews attaching the radiator to the main frame and remove the radiator.

Remove the operator's seat and close the tap on the fuel supply line.

Remove all floor plates.

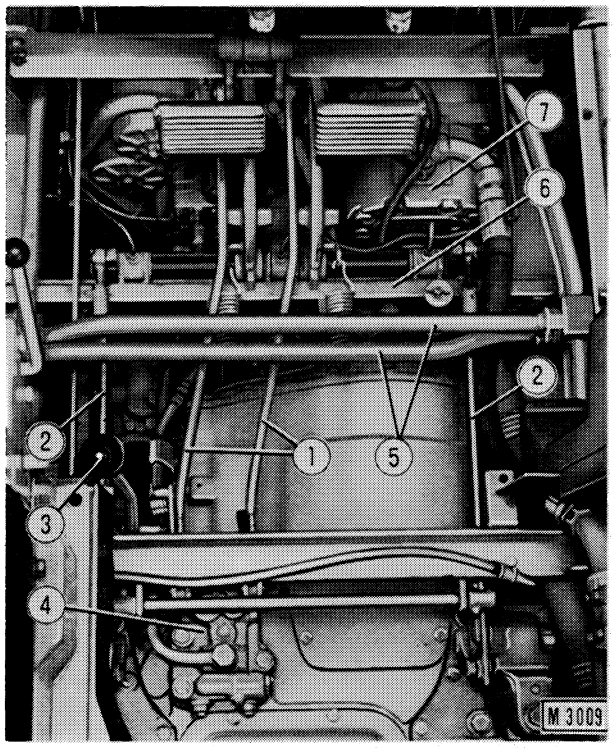

Fig. 2-1 - Removing pedal assembly
1. Steering clutch control rods - 2. Brake control rods - 3. Brake pedal lock-up device(parking brake) - 4. Steering clutch control valve - 5.Moldboard hydraulic fluid lines. 6.Pedal crossmember - 7. Attachments pump

Remove pins attaching tierods to the steering clutches and brakes linkages.

Disconnect the accelerator and decelerator linkage.

Remove the cross bar complete with steering and brake pedal assemblies.

Disconnect and tag all electric cables and wiring from the engine and torque converter (or engine clutch).

Disconnect all hydraulic pump lines from the torque converter (or engine clutch) housing.

Disconnect the drive shaft from the transmission to the torque converter (or engine clutch).

Attach a suitable lifting device to the engine and torque converter (or engine clutch) and take up slack using a hoist.

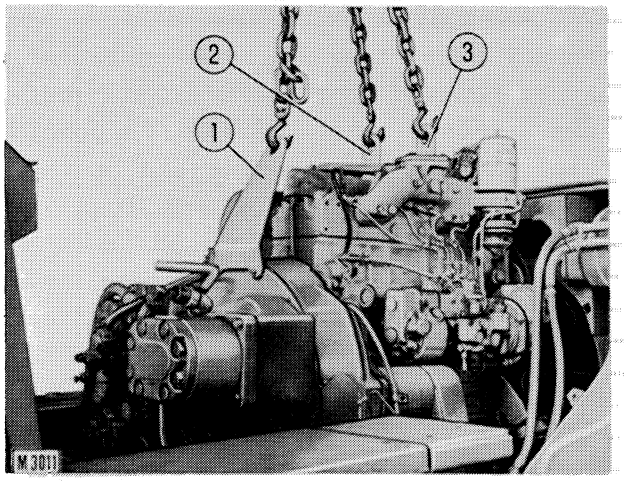

Fig. 2-2 - Removing or installing engine using sling 75290740.

1. Bracket 75293204 on converter cover - 2. Bracket 75293203 on exhaust manifold - 3. Bracket 75293202 on intake manifold.

⚠ WARNING

Lift and handle all heavy parts with a lifting device of proper capacity. Be sure parts are supported by proper slings and hooks. Use lifting eyes if provided. Watch out for people in the vicinity.

Disconnect the engine and converter (engine clutch) mounting pads from the main frame. Lift and remove the engine and converter from the machine and place on a suitable stand for overhaul.

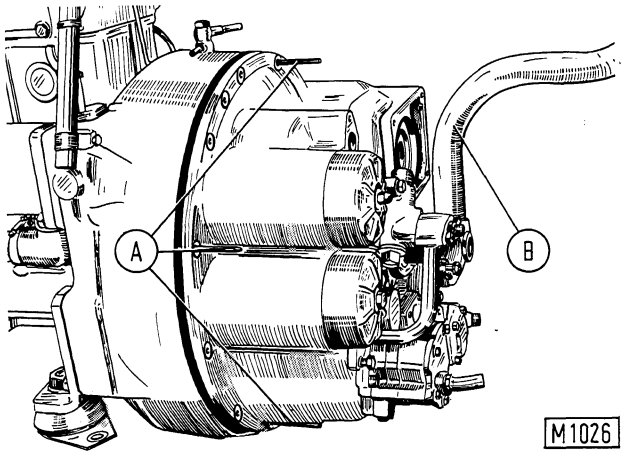

Fig. 2-3 - Removing or installing converter (or clutch) assembly.

A. Engine guide pins 75291525 - B. Lift hook 75291359 with bracket 75291516.

Disconnect the torque converter (or engine clutch) from the engine using lift hook 75291359.

3. ENGINE CLUTCH

This section covers engine clutch overhaul only. The associated hydraulic circuit, together with the transmission control circuit is dealt with is section 5, headed Clutch-Transmission-Hydraulic System.

⚠ WARNING

Do not work under or near unblocked or unsupported linkage, parts or machine.

3.1 REMOVAL

Proceed as follows:

- Remove transmission lower rear and center covers, front and rear footboards, dashboard lower guard, operator's seat complete with skuttle and batteries.
- Drain oil from engine clutch/transmission assembly and from equipment oil tank as described in the Operation and Maintenance Instruction Manual.
- To remove crossmember with attached pedals take off steering clutch actuating links 1, fig.3-1, dashboard center guard and lift cylinder lines 5.
- Separate crossmember from left and right brake actuator rods 2, lines and fasteners.
- Remove the following from the bottom of engine clutch/transmission assembly:
- Engine clutch/transmission pump 4, fig. 3-2
- Steering clutch/brake pump 2, suitably raising suction pipe to prevent loss of oil from rear transmission housing.
- Remove the following from the top of engine clutch/transmission assembly.
- Oil filler pipe
- Engine clutch oil inlet line
- Equipment pump 7, fig. 3-1
- Lines connecting engine clutch/transmission assembly to oil cooler
- Transmission/engine clutch drive shaft

⚠ WARNING

Lift and handle all heavy parts with a lifting device of proper capacity. Be sure parts are supported by proper slings and hooks. Use lifting eyes if provided. Watch out for people in the vicinity.

- Install bracket 75295475 to engine clutch shaft hub. Attach hook 75295478, B, fig. 3-15 to bracket.
- Hoist hook and take up slack.

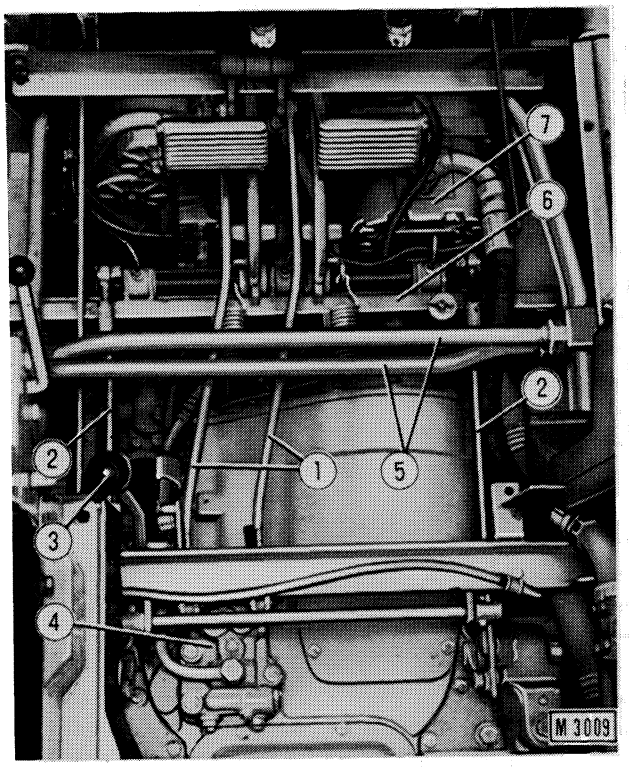

Fig. 3-1 - Top view of engine clutch-transmission
1. Steering clutch linkage - 2. Brake linkage - 3. Brake pedal lock - 4. Steering clutch control valve - 5. Equipment power lines - 6. Pedal crossmember - 7. Equipment pump

⚠ WARNING

Use proper tools to bring holes into alignment. "DO NOT USE FINGERS OR HANDS".

- Back off bell housing capscrews and insert guide pins 75291525, A, fig. 3-15 in two of the capscrew holes.

- Separate clutch assembly from bell housing using forcing screws 75291366.

- Remove engine clutch assembly from machine.

3.2 DISASSEMBLY

Place clutch assembly with attached housing on revolving stand 75290090 or 75290086, using pair of brackets 75291518 as shown in fig. 3-3 and proceeding as follows:

⚠ WARNING

Handle all parts with extreme care. Keep hands and fingers from between parts. Wear authorized protective equipment such as safety glasses, heavy gloves, safety shoes.

- Take off pin and back off nut retaining flange 1, fig. 3-4, using retainer 75296030 as shown in fig. 3-4.

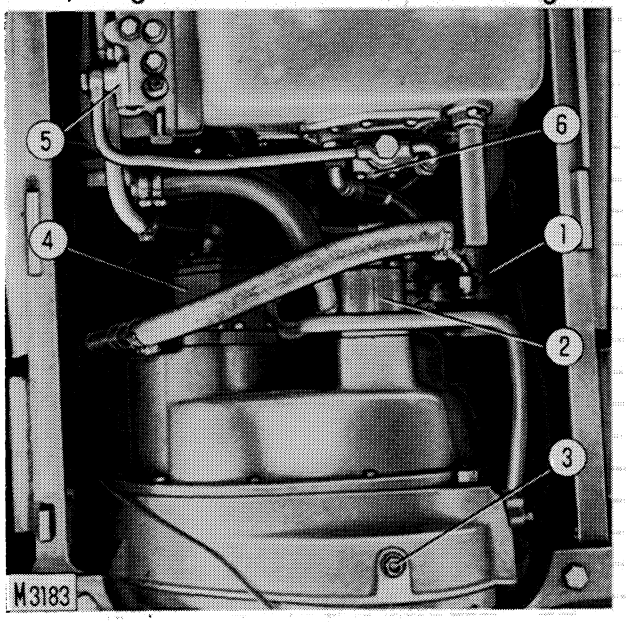

Fig. 3-2 - Bottom view of engine clutch.

1. Equipment pump - 2. Steering clutch pump - 3. Clutch oil drain plug - 4. Engine clutch pump - 5/6. Transmission control valve and trimmer valve.

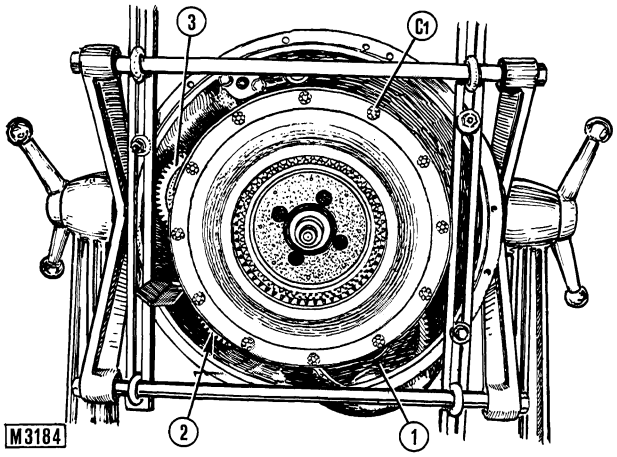

Fig. 3-3 - Clutch on revolving stand 75290086.

C1 Support capscrews - 1. Equipment pump driven gear - 2. Steering clutch pump driven gear - 3. Clutch pump driven gear.

- Punch a reference mark on flange 1, fig. 3-4 and associated spline so that they may be coupled correctly on assembly.

- Take off flange.

- Back off capscrews C1, fig. 3-4, position the unit with the shaft front end facing upward as shown i fig. 3-5 and remove screws C1, fig. 3-4 altogether.

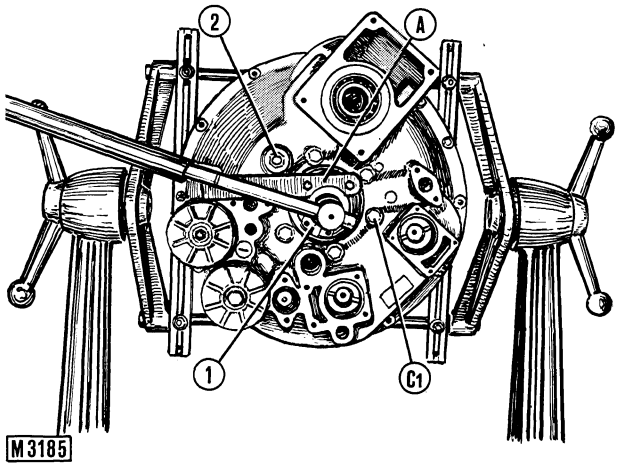

Fig. 3-4 - Removing flange nut.

A. Retainer 75296030 - C1 - Bearing cap capscrews - 1. Flange - 2. Unload valve access plug.

- Remove capscrews retaining equipment pump driven gear 2, fig. 3-5 and take off the gear.

⚠ WARNING

Guard against kinking chain or cables. Always wear heavy gloves when handling chain or cable.

Be sure cables are anchored and the anchor point is strong enough to handle the expected load. Keep exposed personnel clear of anchor point and cables or chain.

- Slacken capscrews C1, fig. 3-5, take off two of them and install lift chain 75291517 holding the latter with a hoist. Position bearing cap 2 so that the lug arrowed does not interfere with the gears and remove the complete clutch assembly.

- Place the clutch over two wood blocks (fig. 3-14) and remove capscrews C1, fig. 3-5 previously slackened.

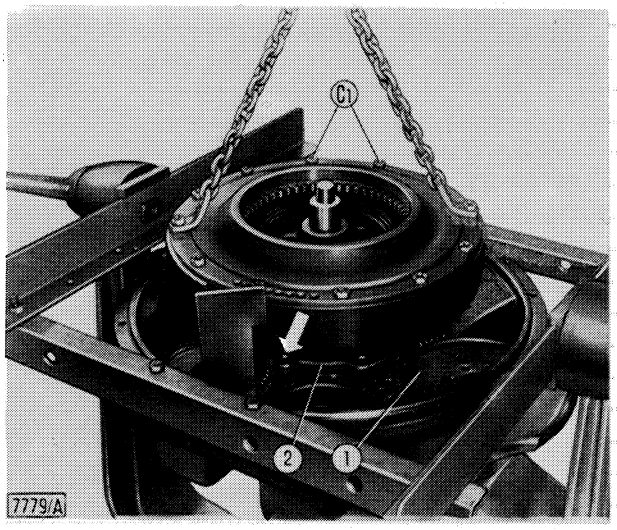

Fig. 3-5 - Removing/installing clutch using lift chain 75291517.

Note - Lug position arrowed.

C1 - Capscrews - 1. Equipment pump driven gear - 2. Bearing cap.

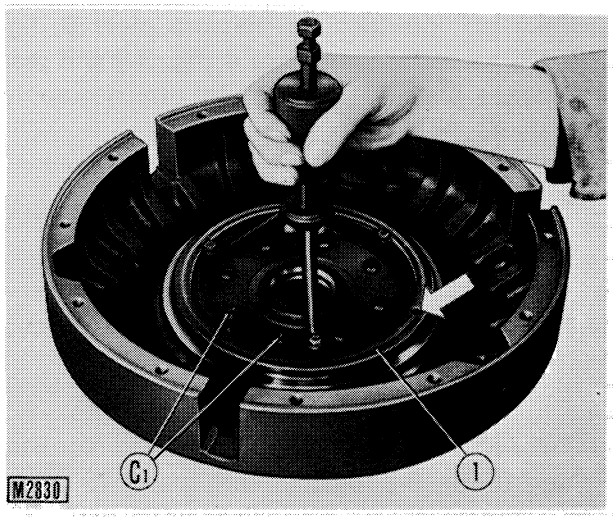

Fig. 3-6 - Removing apply piston using slide hammer puller 75291523.

Note - Pressure plate positioning pin seat arrowed.

C1 - Capscrews - 1. Apply piston.

⚠ WARNING

Handle all parts with extreme care. Keep hands and fingers from between parts. Wear authorized protective equipment such as safety glasses, heavy gloves, safety shoes.

- Remove backplate 3, fig. 3-9 and front driven plate (6).

- Take off clutch shaft meshing the splines with those of spacer 19, fig. 3-9.

⚠ WARNING

Heavy springs compressed. Always follow recomended procedure when disassembling or assembling these parts.

- Compress external springs 1, fig. 3-13 and internal springs 2 using compressor 75291519, P, and take off split cones 5.

- Take off intermediate pressure plate 6, fig. 3-13, second driven plate 4, fig. 3-9 and rear pressure plate 3, fig. 3-12 with attached apply plate 4.

- Take off apply piston 1, fig. 3-6 using slide hammer puller 75291523.

- Take off capscrews 1 and remove bearing cap (fig. 3-7).

- Take off retaining ring 3, fig. 3-7 and rear bearing 16, fig. 3-9 together with spacer 19.

- Overturn bearing cap on bench (fig. 3-11).

- Remove sealing rings 1 and bearing retaining ring 4.

- Take off intermediate bearing 3, fig. 3-11 and pump drive gear 2.

Using suitable pliers, remove retaining rings holding engine clutch and steering clutch gears 2 and 3, fig. 3-8 in position on clutch housing. Take off oil baffle.

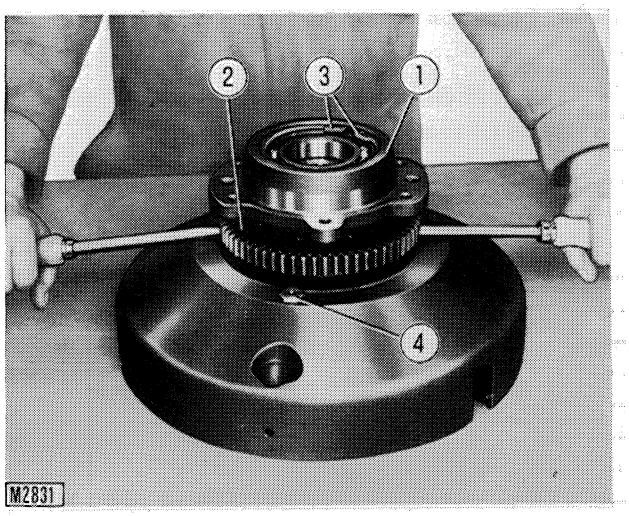

Fig. 3-7 - Removing rear bearing cap.
1. Bearing cap - 2. Hydraulic pump drive gear - 3. Retaining ring - 4. Unload valve.

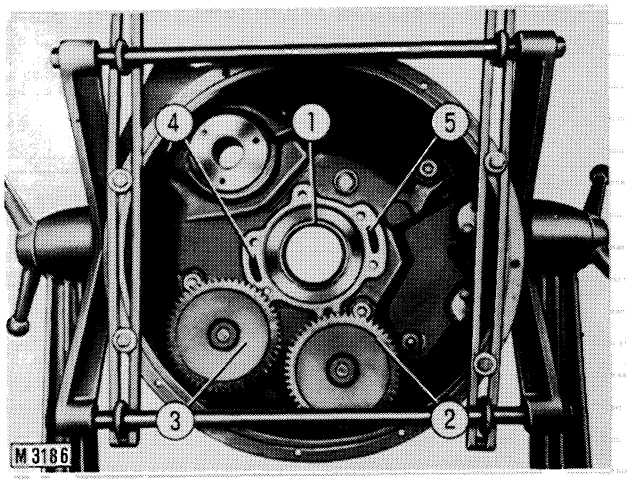

Fig. 3-8 - Engine clutch housing.
1. Seal - 2. Clutch pump driven gear - 3. Steering clutch pump driven gear - 4. Apply oil port - 5. Lubricating oil port.

3.3 INSPECTION

Check driven plates 4 and 6, fig. 3-9 or:

- Sintered surface taper. Maximum taper 0.05 mm (0.002 in)

- Wear of sintered surfaces owing to contaminated oil or clutch working dry; also check for pitting.

If necessary, dress working surfaces of backplate 3, fig. 3-9, intermediate pressure plate 7 and rear pressure plate 9, removing as little material as possible.

Check inner, outer and intermediate springs for distortion and replace as necessary.

⚠ WARNING

Wear safety glasses with side shields or goggles when using compressed air for cleaning to reduce the danger of personal injury from flying particles. Limit pressure to 2 bar (30 psi) according to local or national requirements.

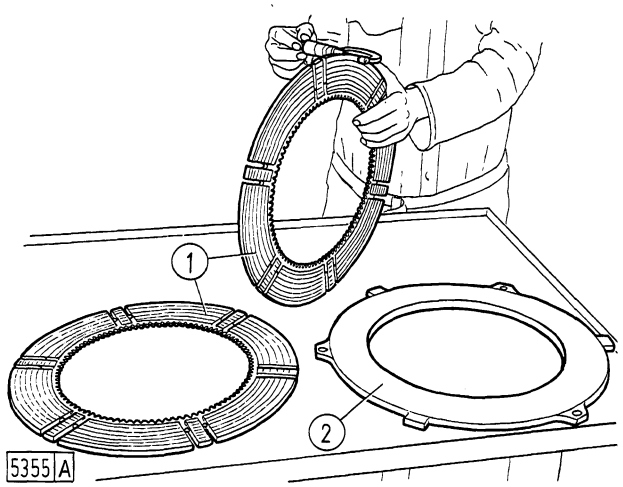

Fig. 3-10 - Checking driven plates and intermediate pressure plate.
1. Driven plate - 2. Intermediate pressure plate.

Clean lubricant oil ports using compressed air and wire to eliminate any foreign particles. Check that unload valve 13, fig. 3-9 is free from foreign matter and that the ball moves freely in its seat.

Check seal 17, fig. 3-9 and replace as necessary.

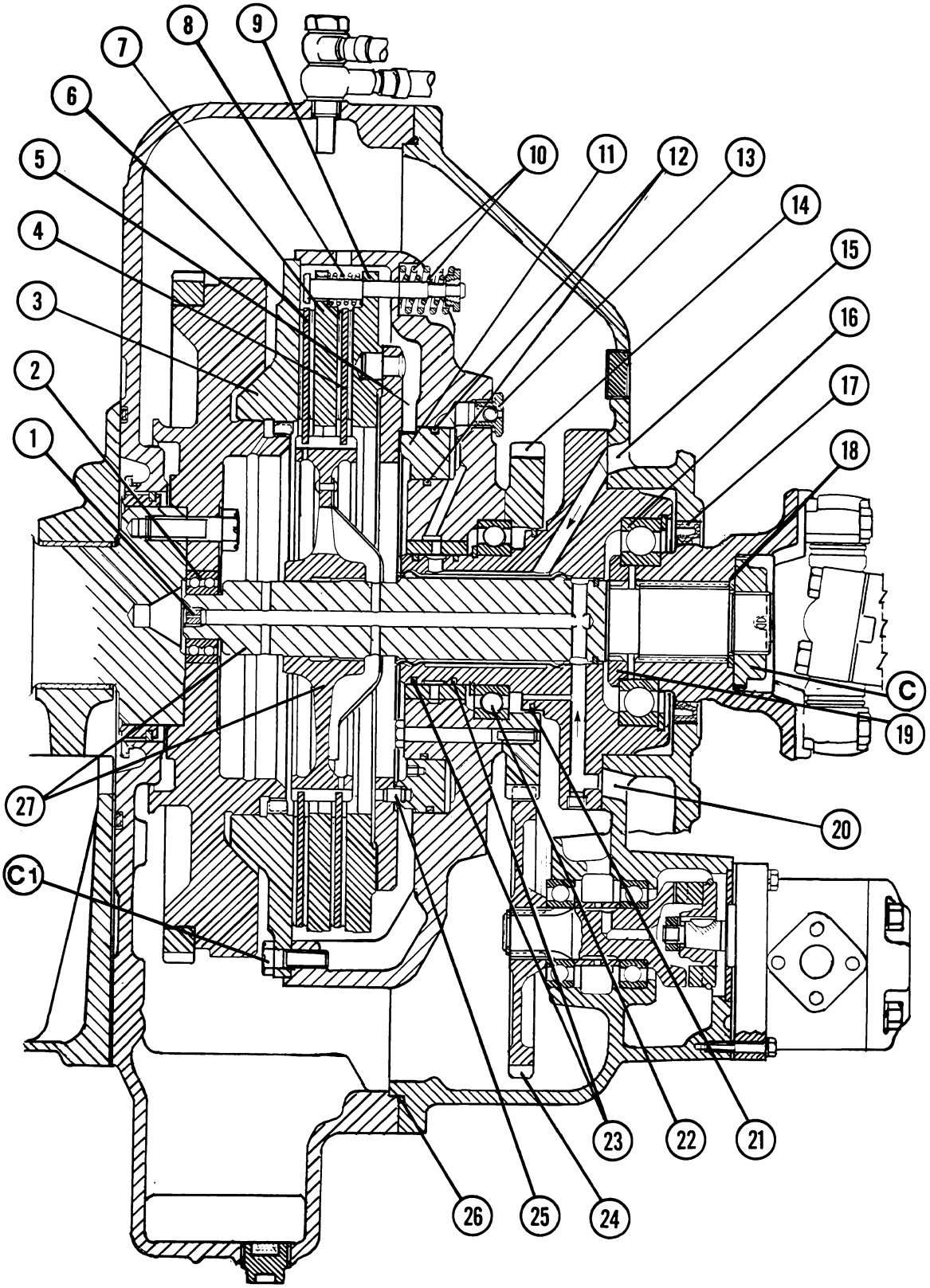

Fig. 3.9 - Cross-section through engine clutch.

C. Nut - C1 - Capscrew - 1. Lubricant port - 2. Front ball bearing - 3. Backplate - 4. Rear driven plate - 5. Apply plate - 6. Front driven plate - 7. Intermediate pressure plate - 8. Intermediate springs - 9. Rear pressure plate - 10. Inner and outer springs - 11. Apply piston - 12. Seals - 13. Unload valve - 14. Hydraulic pump drive gear - 15. Apply oil port - 16. Rear ball bearing - 17. Seal - 18. Sealing washer - 19. Spacer - 20. Lubricating oil port - 21. Sealing ring - 22. Intermediate ball bearing - 23. Sealing rings - 24. Steering clutch pump driven gear - 25. Pressure plate dowel - 26. O-ring - 27. Clutch shaft with hub.

Study SAFETY RULES in the front of this manual thoroughly for the protection of machine and safety of personnel.

3.4 ASSEMBLY

Proceed as follows:

⚠ WARNING

Handle all parts with extreme care. Keep hands and fingers from between parts. Wear authorized protective equipment such as safety glasses, heavy gloves, safety shoes.

- Insert spacer 19, fig. 3-9 in bearing cap and position as shown; install rear bearing 16 followed the associated retaining ring.

- Overturn bearing cap (fig. 3-11). Install sealing ring 21, fig. 3-9 and secure pump drive gear 2, fig. 3-11 which must be positioned as shown.

- Install intermediate bearing 3 followed by retaining ring 4 and sealing rings 1.

- Secure bearing cap to clutch housing capscrews C1, fig. 3-12.

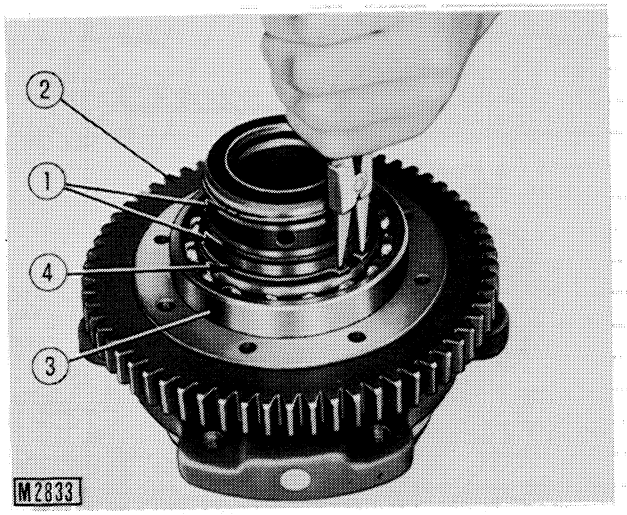

Fig. 3-11 - Removing/installing intermediate ball bearing retaining ring.

1. Sealing rings - 2. Pump driven gear - 3. Intermediate ball bearing - 4. Retaining ring.

- Install seals 12, fig. 3-9: internal seal on cover, external seal on apply piston 11.

- Position piston 11 so that hole arrowed in fig. 3-6 is in register with dowel 25, fig. 3-9 on apply plate.

- Position apply plate 4, fig. 3-12 with attached rear pressure plate 3, inserting dowel 25, fig. 3-9 in the associated seat on apply piston 11, fig. 3-9.

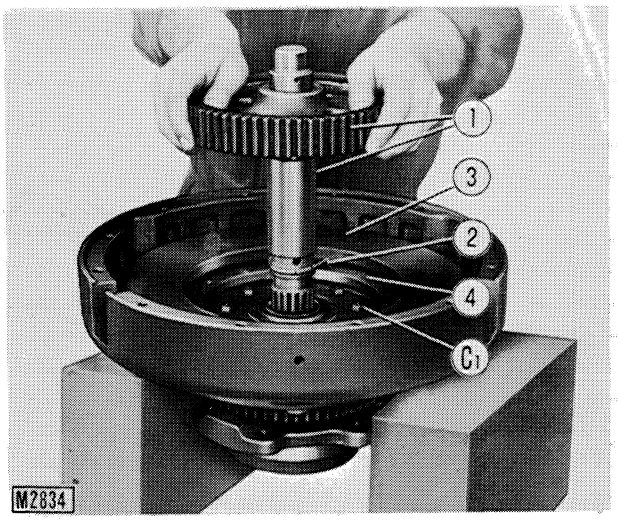

Fig. 3-12 - Installing clutch shaft.

C1 - Capscrews - 1. Clutch shaft - 2. Split sealing rings - 3. Rear pressure plate - 4. Apply plate.

- Place clutch housing over a pair of wood blocks, position split rings 2, fig. 3-12 using grease and insert clutch shaft 1 as shown meshing splines with spacer 19, fig. 3-9.

- Position driven plate 4, fig. 3-9, intermediate springs 8 and intermediate pressure plate 7 in clutch housing as shown.

⚠ WARNING

Heavy springs compressed. Always follow recommended procedure when disassembling or assembling these parts.

- Install outer springs 1, fig. 3-13 and inner springs 2 using compressor 75291519, P, to permit positioning of split cones 5.

- Insert front driven plate 6, fig. 3-9 and backplate 3 without tightening capscrews C1.

Reposition oil baffle and hydraulic pump driven gears 2 and 3, fig. 3-8 in clutch housing.

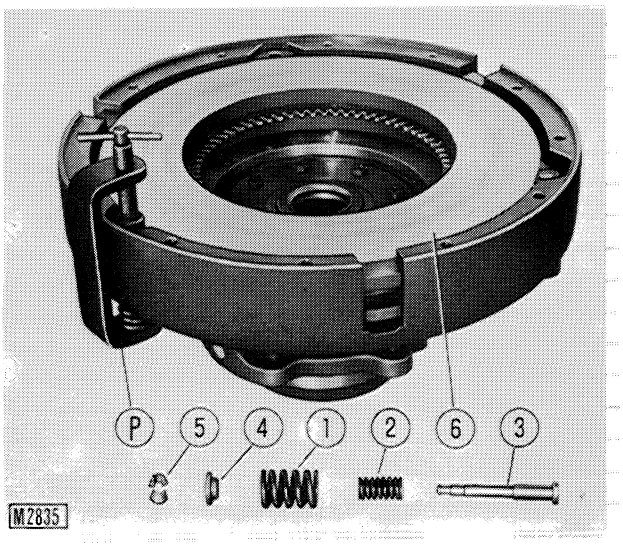

Fig. 3-13 - Installing/removing pressure plate iner and outer springs.

P. compressor 75291519 - 1. Outer springs - 2. Inner springs - 3. Pin - 4. Cup - 5. Split cones - 6. Intermediate pressure plate.

⚠ WARNING

Guard against kinking chain or cables. Always wear heavy gloves when handlig chain or cable.

Be sure cables are anchored and the anchor point is strong enough to handle the expected load. Keep exposed personnel clear of anchor point and cables or chain.

Using lift chain 75291517, lower clutch assembly in clutch housing holding the latter horizontal (fig. 3-5).

Install equipment pump driven gear 1, fig. 3-5 on shaft.

Position bearing carrier 2 fig. 3-5 so that the lug arrowed does not foul the gears and lower the clutch assembly home.

Bring bearing cap to its correct assembly position and install capscrews C1, fig. 3-4 from the bottom and capscrews of gear 1, fig. 3-5 from the top.

Tighten screws C1, fig. 3-3 to the specified torque.

Tighten flange 1, fig. 3-4 with interposed sealing washer 18, fig. 3-9 using retainer 75296030.

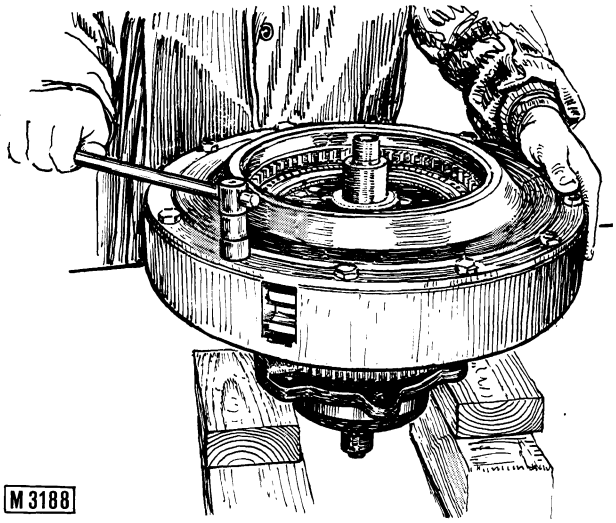

Fig. 3-14 - Installing/removing backplate.

3.5 ENGINE CLUTCH INSTALLATION

Install clutch assembly with attached bell housing noting the following points:

- Ensure that O-ring 26, fig. 3-9 is correctly installed in its groove.

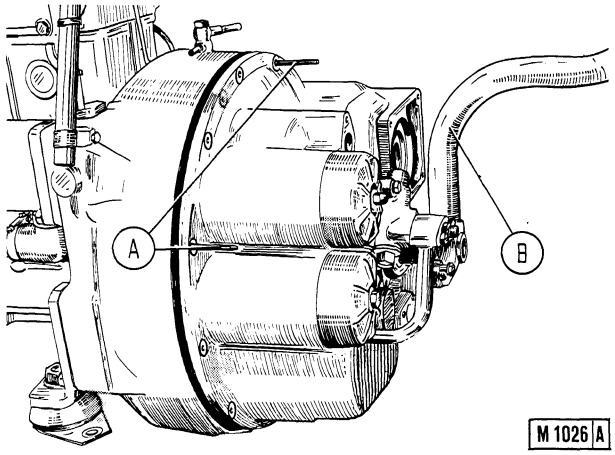

Fig. 3-15 - Installing/removing engine clutch.

A. Guide pins 75291525 - B. Lift hook 75295551 with bracket 75295475.

⚠ WARNING

Lift and handle all heavy parts with a lifting device of proper capacity. Be sure parts are supported by proper slings and hooks. Use lifting eyes if provided. Watch out for people in the vicinity.

Use proper tools to bring holes into alignment. DO NOT USE FINGERS OR HANDS.

- Use pair of guide pins 75291525, A, fig. 3-15, bracket 75295475 and lift hook 75295551, B, for clutch istallation to engine.

- Turn crankshaft slowly to align teeth on flywheel and clutch backplate.

- When installing driven shaft ensure that rear U-joint cork is not missing and that end splines have been coated with lubricant.

3.6 SPECIFICATION AND DATA

ENGINE CLUTCH		
Type	Dual plate, 14 in, oil bath	
Operation	Hydraulic, synchronised with transmission	
Release	Coil springs	
Clutch plates	Two, sintered friction facings	
	mm	in
- Plate diameter:		
Outer	355.3 to 355.8	13.99 to 14.0
Inner	228.3 to 228.7	8.98 to 9.0
- Friction facing thickness	1.35 to 1.60	0.053 to 0.063
- Total plate thickness	7.0 to 7.5	0.275 to 0.295
- Wear limit on total thickness	6	0.236
Intermediate pressure plate thickness	14.85 to 15.15	0.584 to 0.596
Pump gear backlash	0.05 to 0.15	0.0019 to 0.0059
Backplate spline backlash	0.07 to 0.20	0.0027 to 0.0078
Clutch plate spline backlash	0.09 to 0.61	0.0035 to 0.024
Intermediate release spring dimensions:		
- Nominal free length	27	1.06
- Length under 24 to 26 daN (53.9 to 58.4 lb) load	19.5	0.76
Outer release spring dimension:		
- Nominal free length	42	1.65
- Length under 83 to 91 daN (186.5 to 204.5 lb) load	32	1.25
Inner release spring dimensions:		
- Nominal free length	33.2 to 33.5	1.30 to 1.318
- Length under 25 to 27 daN (56.2 to 60.6 lb)	25	0.98

3.7 TORQUE DATA

DESCRIPTION	Torque (wet engine oil)	
	daNm	lb.ft.
Capscrew, bearing cap (C1, fig 3.4)	8.5	63
Nut, clutch shaft flange (C, fig. 3.9)	51	376
Capscrew, clutch backplate (C1, fig. 3-9)	6	44
Capscrew, self locking, pump drive gear	3	22
Capscrew, oil catcher to clutch housing	6	44
Capscrew, clutch housing to engine	6	44
Capscrew, clutch to transmission shaft	6.5	48

3.8 SERVICE TOOLS

Part No.	Description
75291366	Screw, forcing, clutch cover
75291517	Chain, lift (fig. 3-5)
75291519	Compressor, clutch spring (fig. 3-13)
75291523	Puller, apply piston (fig. 3-6)
75291525	Guide pins (fig. 3-15)
75295475	Bracket, use with hook 75295551 (fig. 3-15)
75295551	Hook, lift, clutch, use with bracket 75295475 (fig. 3-15)
75296030	Retainer, shaft (fig. 3-4)

4. TRANSMISSION WITH ENGINE CLUTCH

This section covers transmission overhaul only. The associated hydraulic system is dealt with together with the clutch system in the section headed Clutch-Transmission Hydraulic System.

⚠ WARNING

Do not adjust engine fuel pump when the machine is in motion.

4.1 REMOVAL

NOTE - Transmission may be removed from either above or below. However, if the transmission is to be removed from the bottom, a pit will be required.

Proceed as follows:

- Remove transmission lower, rear and center covers, front and rear footboards, operator's seat complete with skuttle, batteries and associated tray.

- Drain oil from engine clutch/transmission assembly and equipment oil tank as directed in Operation and Maintenance Instruction Manual.

⚠ DANGER

Fluid under pressure. Always lower hydraulic equipment to ground. Shut off engine, move control levers to each position several times, loosen and retighten hydraulic tank filler cap to relieve trapped pressure before loosening hydraulic connections.

- To remove crossmember with attached pedals, first remove equipment control valve cover, steering clutch link 1, fig. 3-1, dashboard center guard and lift cylinder lines 5.

- Separate crossmember from left and right brake actuator rods 2, fig. 3-1, lines and fasteners.

- From the bottom of the unit, remove transmission lubricating oil line, charging and scavenge pump 4, fig. 3-2, steering clutch pump 2 suitably raising suction line to prevent loss of oil from rear transmission housing.

- From the top of the unit, remove transmission oil filler, oil apply line to engine clutch, equipment pump 7, fig. 3-1, lines to oil cooler, U-jointed drive shaft between engine clutch and transmission, control valve assembly and lubrication oil distributor.

- Disconnect relay linkage from transmission control valve.

- Remove control valve with integral trimmer valves.

⚠ WARNING

Lift and handle all heavy parts with a lifting device of proper capacity. Be sure parts are supported by proper slings and hooks. Use lifting eyes if provided. Watch out for people in the vicinity.

Guard against kinking chain or cables. Always wear heavy gloves when handling chain or cable.

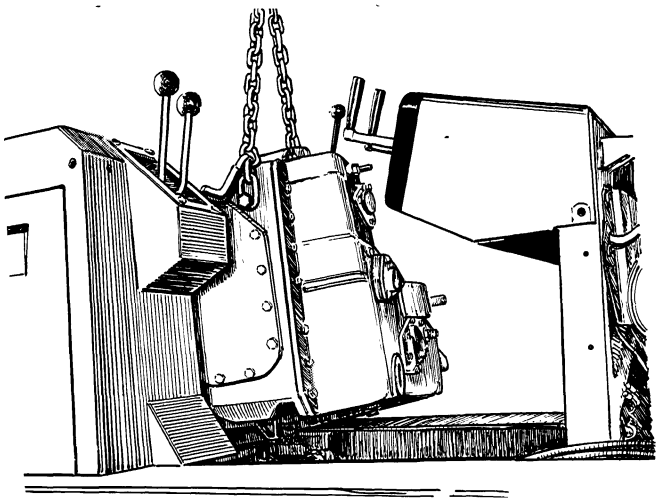

Fig. 4-1 - Removing/installing transmission from top of machine using lift chain 75291517.

⚠ WARNING

Be sure cables are anchored and the anchor point is strong enough to handle the expected load. Keep personnel clear of anchor point and cables or chain.

- Hook lift chain 75291517 to lift points (fig. 4-1) and hoist to take up slack.

- Remove nuts and bolts retaining transmission housing to rear transmission housing.

- Remove transmission unit by pushing forward and then either upward (fig. 4-1) or downward.

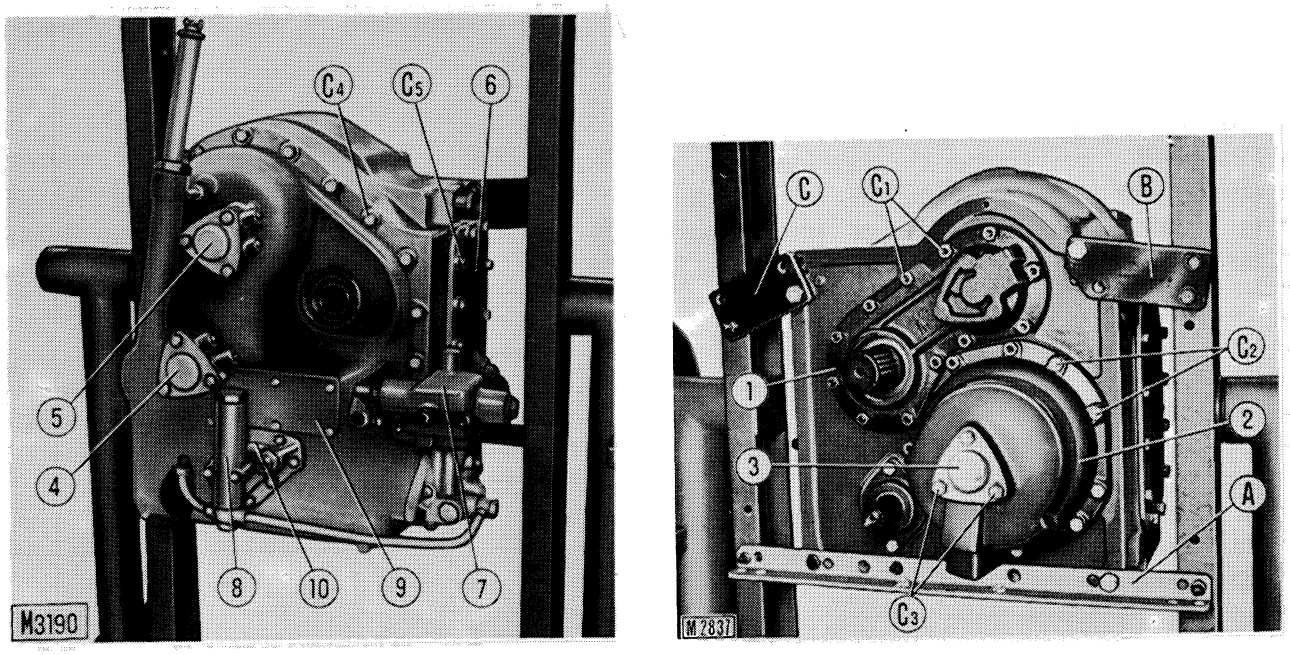

Fig. 4-2 - Front view of transmission on revolving stand 75290090

A. Bracket 75291528 - B. Bracket 75292275 - C. Bracket 75292274 - C1 - Nuts - C2 - Capscrews and nuts - C3 - Capscrews - C4 - Capscrews - C5 - Capscrews - 1. Rear cover - 2. Lower clutch cover - 3. Lower spool cover -4. Forward spool cover -5. High spool cover - 6. Left side cover - 7/8. Control valve and trimmer valve - 9. Inspection cover - 10. Lubrication oil catcher cover.

4.2 DISASSEMBLY

Secure transmission to revolving stand 75290090 using set of brackets shown in fig. 4-2 and proceed as follows:

- Take off catcher cover 10, fig. 4-2 and inspection cover 9.

- Remove covers 3, 4 and 5 fig. 4-2 and take out high, forward and low clutch spools.

NOTE - Withdraw valve spools slowly, taking care not to turn them as otherwise seal damage will result.

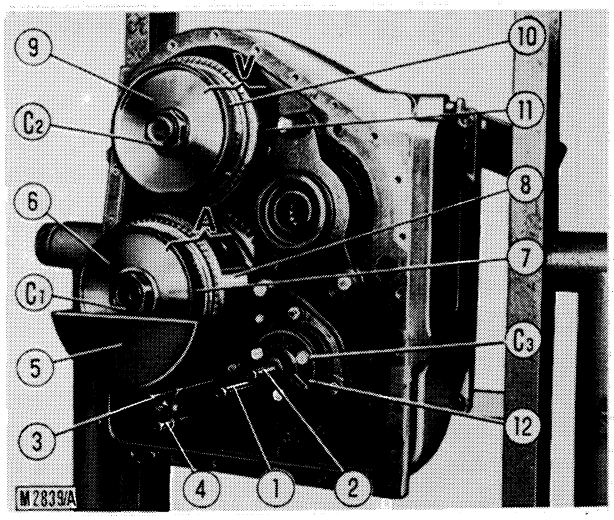

Fig. 4-3 - View of transmission with front cover removed.

A. Forward clutch - B. High clutch - C1 - Nut - C2. Nut - C3. Capscrews - 1. Reverse lubrication oil tube - 2. Reverse pressure oil tube - 3. Low lubrication oil tube - 4. Low pressure oil tube - 5. Oil catcher - 6. Fixed piston - 7. Moving piston - 8. Outer drum - 9. Fixed piston - 10. Moving piston - 11. Outer drum - 12. Reverse clutch spool cover.

⚠ WARNING

Lift and handle all heavy parts with a lifting device of proper capacity. Be sure parts are supported by proper slings and hooks. Use lifting eyes if provided. Watch out for people in the vicinity.

Pull off front cover horizontally using lift hook 75291526, A, fig. 4-19 and a pair of guide pins 75291525, B, remove side covers, low clutch cover 2, fig. 4-2 and rear cover 1.

Disassemble forward and low clutches and shaft as follows:

- Take off tube 1, fig. 4-3 and tube 2.
- Remove tubes 3 and 4 together.

⚠ WARNING

Handle all parts with extreme care. Keep hands and fingers from between parts. Wear authorized protective equipment such as safety glasses, heavy gloves, safety shoes.

- Take off oil catcher 5.
- Back off nut C1 and remove forward clutch pack A.
- Take off C3, fig. 4-21 and remove low clutch L.
- Remove together housing 3, fig. 4-4, low clutch outer drum 4 and forward/low clutch shaft 8 from the front as arrowed in fig. 4-4.
- Remove retaining ring 6 and separate housing 3, fig. 4-4 from gear 5.

NOTE - Low clutch pack L, fig. 4-21 may be removed whole, together with housing 3, fig. 4-4 and shaft 8.

- Take off retaining ring 1, Fig. 4-5 and remove outer drum 8, fig. 403 and forward clutch driven gear 2, fig. 4-5.

⚠ WARNING

Handle all parts with extreme care. Keep hands and fingers from between parts. Wear authorized protective equipment such as safety glasses, heavy gloves, safety shoes.

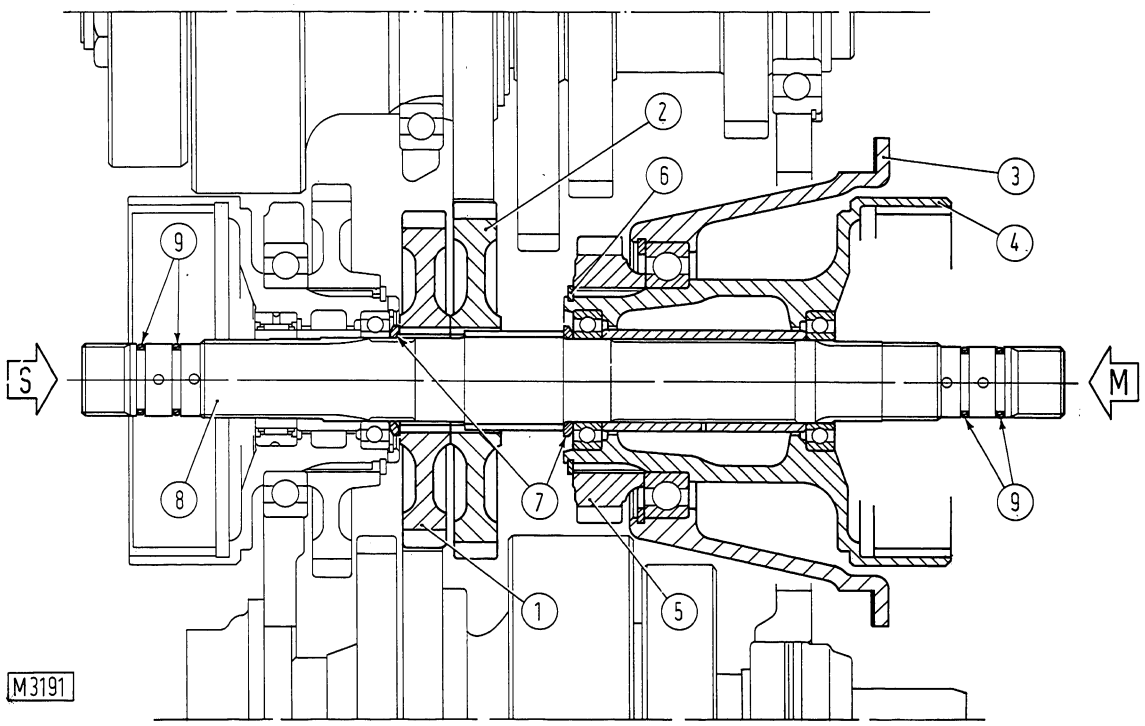

Fig. 4-4 - Disassembling/assembling low clutch housing, drum and shaft.
M. Direction of assembly - S. Direction of disassembly - 1. Reverse idler gear - 2. High idler gear - 3. Housing - 4. Outer drum - 5. Low drive gear - 6. Retaining ring - 7. Thrust rings - 8. Shaft - 9. O-ring.

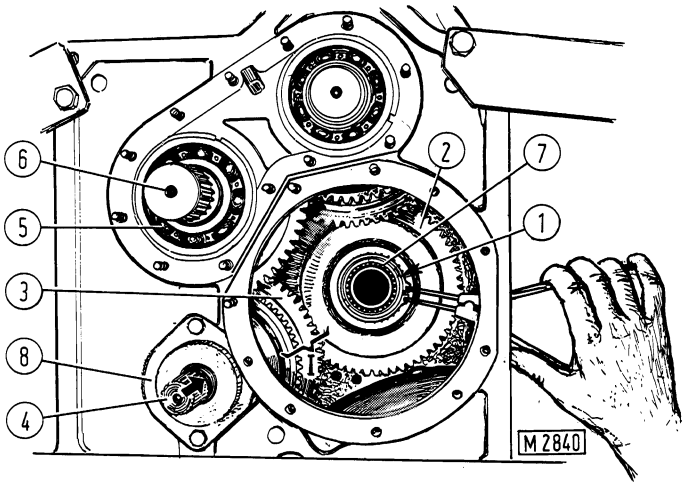

Fig. 4-5 - Installing/removing forward driven gear retaining ring

Note - Direction of shaft removal arrowed.

I. Reverse clutch - 1. Retaining ring - 2. Forward driven gear - 3. Reverse driven gear - 4. Reverse clutch shaft - 5. Rear ball bearing - 6. Low range shaft - 7. Ball bearing - 8. Seal cap.

Disassemble high speed clutch drive gears and shaft noting the following points:

- Place transmission housing horizontal with the front end facing upward, back off nut C2, fig. 4-3, remove high speed clutch shaft 9, fig. 4-21 with attached bearing 10 and retrieve clutch components.

- Take off high speed clutch driven gear retaining ring and remove outer drum 11, fig. 4-3 and driven gear.

Disassemble transmission drive gear, low speed assembly and associated driven gears noting the following points:

- Remove support 1, fig. 4-6 with attached transmission drive gear (2) and bearing (3) (fig. 4-7).

- Take off angle bracket 3, fig. 4-17 and remove reduction unit lubricating oil baffle 1, fig. 4-8.

- Back off capscrew C1, fig. 4-17 and remove shifter rod 4 and retrieve shifter fork 5.

- Remove retaining ring 2, fig. 4-8, position transmission housing horizontal with front end facing upward and remove reduction unit shaft 18, fig. 4-21 from the bottom.

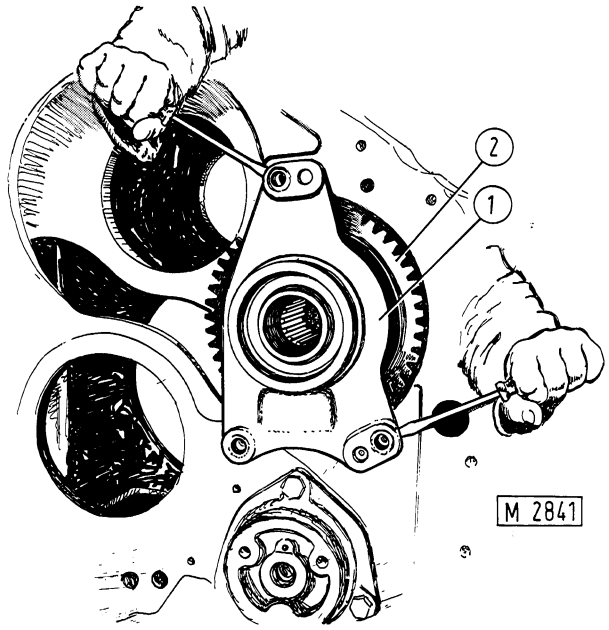

Fig. 4-6 - Disassembling support with attached transmission drive gear.

1. Support - 2. Drive gear.

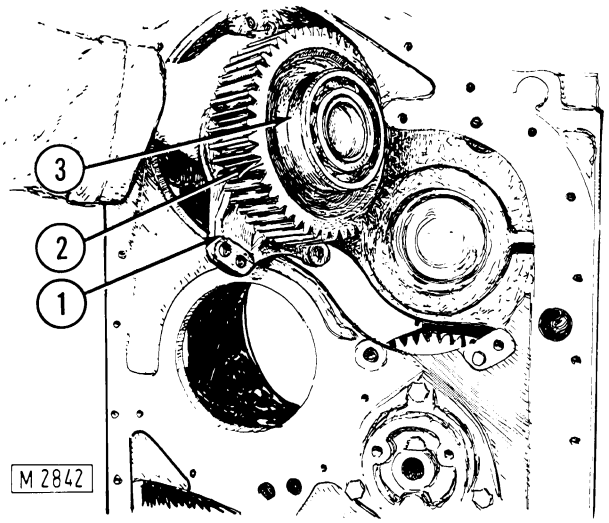

Fig. 4-7 - Removing transmission drive gear and support

1. Support - 2. Drive gear - 3. Bearing

Disassemble reverse apply clutch and associated shaft noting the following points:

- Remove cover 12, fig. 4-3, reverse clutch spool 4, fig. 4-16 and cover 5.

- Take off flange 8, fig. 4-5, install brackets 75295002, B, fig. 4-14, position transmission housing horizontal with the rear uppermost, back off nut C1, remove shaft 1 in the direction arrowed (fig. 4-5) and take off reverse apply clutch I and associated driven gear 3.

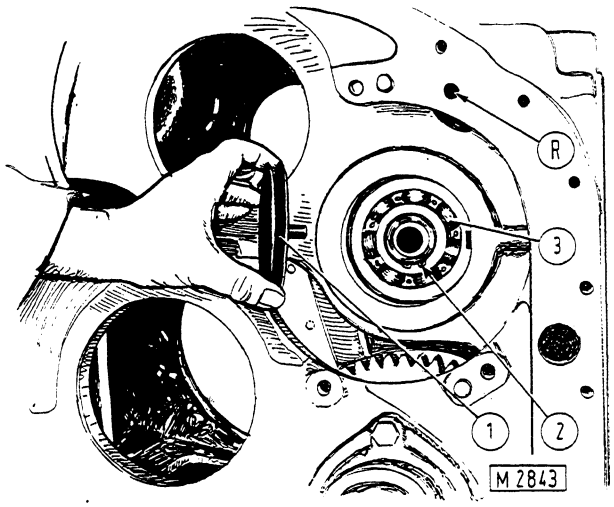

Fig. 4-8 - Removing oil baffle.
R. Oil port - 1. Oil baffle - 2. Retaining ring - 3. Front ball bearing.

4.2.1 APPLY CLUTCH INSPECTION

Check that maximum run-out of each disc 12, 13 and 14, fig. 4-9 is less than 0.4 mm (0.016 in). Moreover, check externally toothed discs 13 for:

- Thickness changes over sintered surfaces, which should not exceed 0.05 mm (0.002 in).
- Excessive wear of sintered surfaces due to contaminated or insufficient oil. Also, check for pitted areas.

Spacer springs 17, fig. 4-9 seldom become weakened, however, check camber by compressing the springs as directed in fig. 4-10.

4.2.2 TRANSMISSION CLUTCH CONSTRUCTION

DESCRIPTION	QUANTITY		
	2nd, 3rd	1st Reverse	Forward
Outer internally toothed steel-driven plate 12, fig. 4-9	1	1	1
Sintered facings plates 13	7	7	8
Intermediate steel plates 14	6	6	7
Spacer springs 17	7	7	8
Shim steel plates 14	AR	AR	AR

4.2.3 GEAR RATIOS

Gear	Ratio	Gear	Ratio
1st forward	3.238 to 1	1st reverse	2.693 to 1
2nd forward	2.440 to 1	2nd reverse	2.030 to 1
3rd forward	2.032 to 1	3rd reverse	1.691 to 1
4th forward	1.742 to 1	4th reverse	1.449 to 1
5th forward	1.532 to 1	5th reverse	1.274 to 1
6th forward	1.093 to 1	6th reverse	0.910 to 1

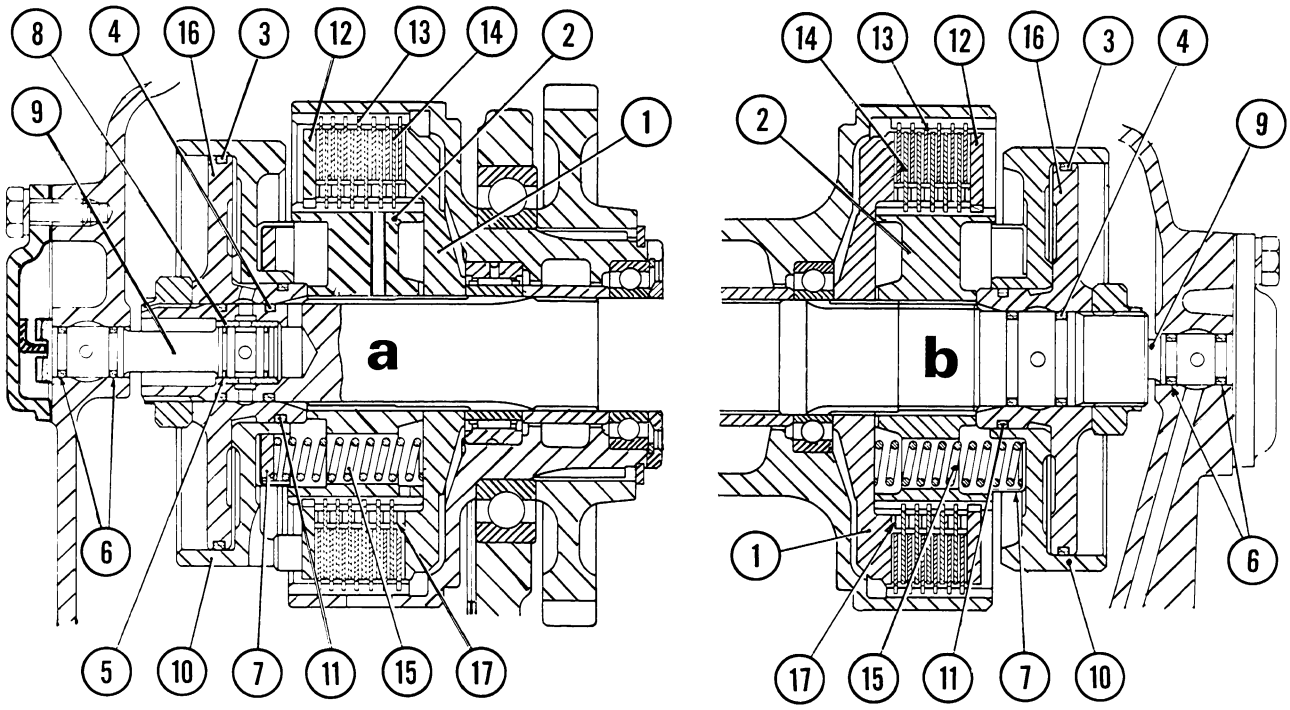

Fig. 4-9 - Cross-sections through apply clutches.

a. High apply clutch (also applicable to low apply clutch) - b. Forward apply clutch (also applicable to reverse apply clutch) - 1. Forward/high/low/reverse clutch backing plate - 2. Forward/high/low/reverse inner drum - 3. O-ring - 4. O-ring - 5. Sealing ring - 6. O-ring - 7. Cup - 8. Bushing - 9. Spool - 10. Moving piston - 11. O-ring - 12. Outer disc - 13. Sintered facing plate - 14. Intermediate disc - 15. Release springs - 16. Fixed piston - 17. Spacer springs.

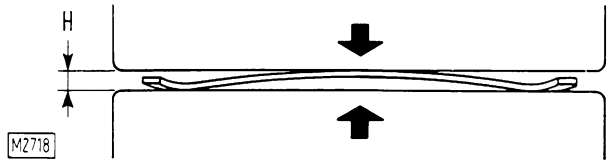

Fig. 4-10 - Checking spacer spring rate.
H =2.6 mm (0.104 in) camber to be obtained without causing spring strain.

4.3 TRANSMISSION REBUILD and ASSEMBLY

Secure transmission housing to revolving stand 75290090 using brackets indicated in fig. 4-2 and follow the sequence given below.

Install reverse apply clutch I; fig. 4-21, shaft 4, fig. 4-5 and driven gear 3.

⚠ WARNING

Handle all parts with extreme care. Keep hands and fingers from between parts. Wear authorized protective equipment such as safety glasses, heavy gloves, safety shoes.

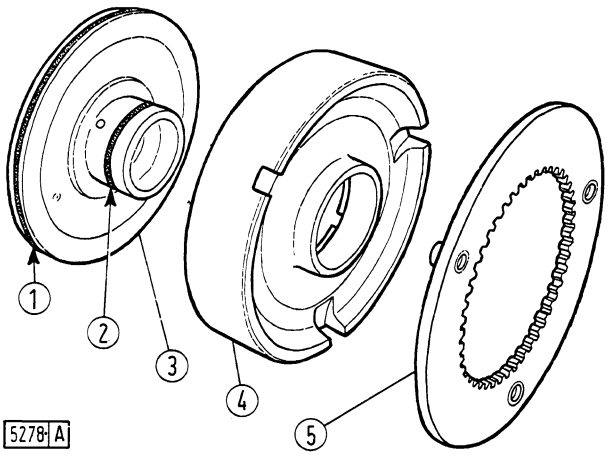

Fig. 4-11 - First/second forward/reverse clutch apply cylinder components.

1. O-ring - 2. O-ring - 3. Piston - 4. Moving piston - 5. Outer disc.

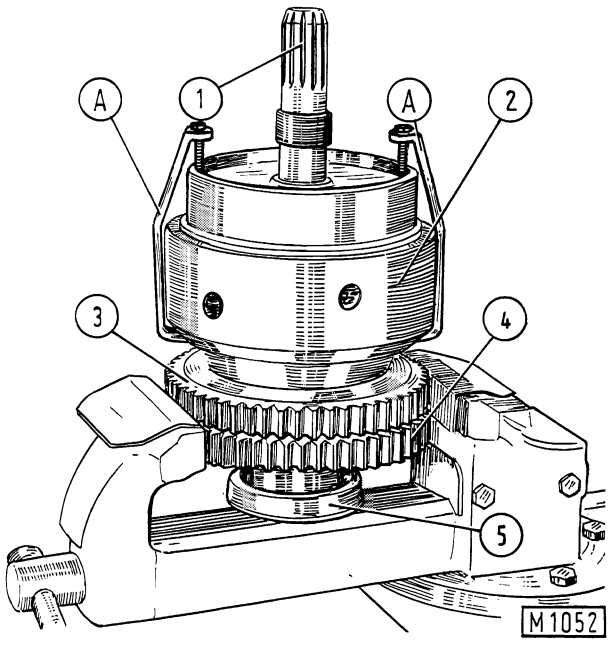

Fig. 4-12 - Rebuilding reverse clutch.

A. Retainers 75295992 - 1. Clutch shaft - 2. Outer drum - 3. Drive gear - 4. Driven gear - 5. Front bearing.

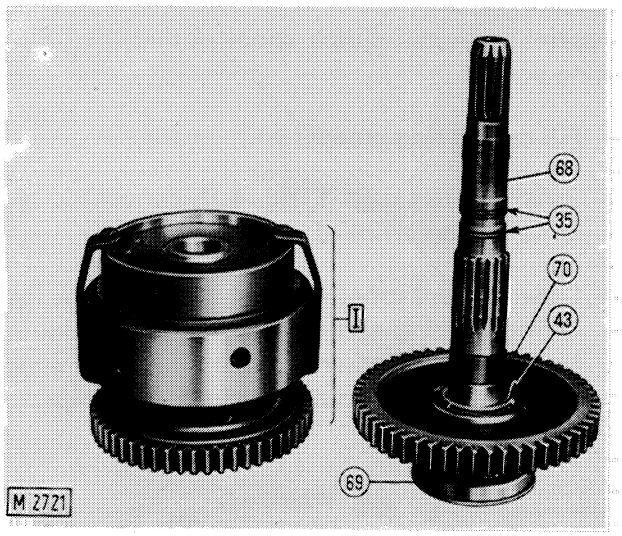

Fig. 4-13 - Rebuilding reverse clutch.

I. Reverse clutch assembly - 35. O-ring - 43. Thrust ring - 68. clutch shaft - 69. Front bearing - 70. Driven gear.

- Rebuild shaft 68, fig. 4-13 with bearing 69, gear 70 thrust ring 43 and outer drum 2, fig. 4-12 with attached gear 3.

- Clamp assembly in a vise (fig. 4-12); install clutch components in drum 2 as shown in detail b, fig. 4-9.

- Install fixed piston 3, fig. 4-11 and moving piston 4 together on shaft 1, fig. 4-12.

- Apply pair of retainers 75295002, A and screw in until clutch pack is tight.

- Remove clutch assembly, I fig. 4-13 from shaft.

- Place transmission housing horizontal with front facing uppermost and introduce clutch assembly I, fig. 4-13, thrust ring 43 and driven gear 70.

- Insert clutch shaft 68 with attached front bearing 69 and O-rings 35 from the top and return transmission housing vertical.

- Slide spacer 14, fig. 4-21 over the shaft and install rear bearing 13.

- Tighten nut C1, fig. 4-14 to the specified torque and stake in two places.

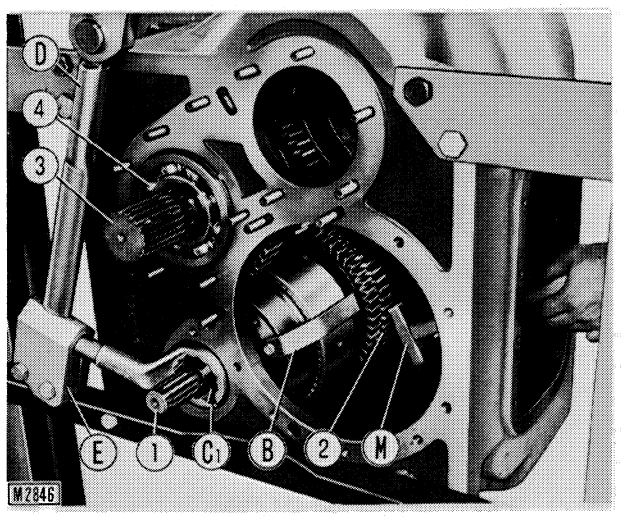

Fig. 4-14 - Tightening reverse clutch shaft nut.

C1 - Nut - B. Bracket 75295002 - D. Torque wrench - E. Adapter 75291283 - M. Bronze hammer - 1. Clutch shaft - 2. Driven gear - 3. Reduction unit shaft - 4. Rear ball bearing.

- Remove retainers B and install flange 8, fig. 4-5 with seals and front cover 5, fig. 4-16.

Assemble reverse clutch spool noting the following points:

- Fill sealing ring grooves with grease.

- Install sealing rings 1, fig. 4-15 concentric relative to centerline of spool 2.

- Slowly insert spool 4, fig. 4-16 with attached O-rings, taking care not to turn the spool in the process as otherwise the uncoupled ends of the sealing rings will damage the O-rings.

⚠ WARNING

Handle all parts with extreme care. Keep hands and fingers from between parts. Wear authorized protective equipment such as safety glasses, heavy gloves, safety shoes.

- Secure spool cover 12, fig. 4-3 using capscrews C3.

Install shaft 3, fig. 4-14 and reduction unit driven gears as follows:

- Place transmission housing horizontal with the front end facing uppermost and install front ball bearing 3, fig. 4-8.
- Install bearing 4, fig. 4-14.
- Install work speed driven gear 8, fig. 4-21, sliding sleeve and hub 5, transfer speed driven gear 4 and front thrust washer in transmission housing.

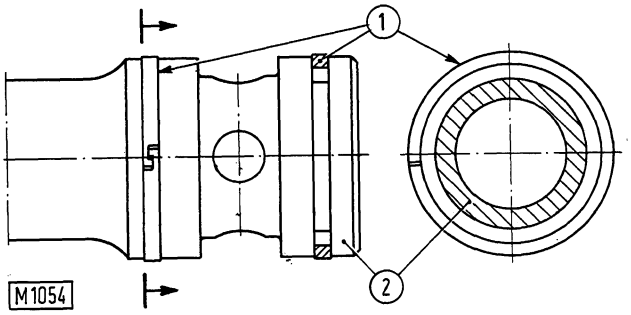

Fig. 4-15 - Assembling sealing rings on valve spool.
1. Sealing ring - 2. Spool.

- Introduce shaft assembly from below and turn transmission housing vertical.
- Press rear end of shaft and bearing 4, fig. 4-14, simultaneously holding front bearing 3, fig. 4-8 with a suitable punch and insert retaining ring 2.
- Install reduction unit shifter fork 5, fig. 4-17, tighten capscrew C1 and secure with locking wire.
- Position oil baffle 1, fig. 4-8 and secure with pin 17, fig. 4-21; install angle bracket 3, fig. 4-17 and press rear bearing (21), fig. 4-21 home in contact with baffle.
- Install support 1, fig. 4-7 with attached transmission drive gear (2).

Assemble 2nd & 3rd speed clutch reduction unit drive gears and shaft as follows:

- Install outer drum 11, fig. 4-3, position driven gear from inside and secure with retaining ring.

⚠ WARNING

Handle all parts with extreme care. Keep hands and fingers from between parts. Wear authorized protective equipment such as safety glasses, heavy gloves, safety shoes.

- Place transmission housing horizontal with rear end facing uppermost.
- Install thrust ring 7, fig. 4-21, low driven gear bolted to transfer speed drive gear together with associated 3rd speed drive gear, shifter sleeve and bushing, and work speed drive gear 20 in transmission housing.
- Insert shaft 9 from above.
- Install rear bearing 10 and split retaining ring 19.

⚠ DANGER

Heavy springs compressed. Always follow recommended procedure when disassembling or assembling these parts.

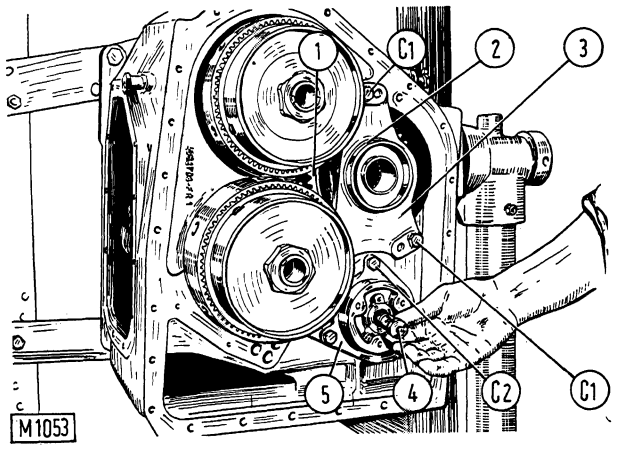

Fig. 4-16 - Installing/removing reverse clutch spool.
C1 - Capscrew - C2 - Capscrew - 1. Transmission drive gear - 2. O-ring - 3. Support - 4. Spool - 5. Front cover.

- Return transmission housing vertical, assemble high clutch pack as shown in detail a, fig. 4-9, ensuring that split ring 19, fig. 4-21 is correctly positioned.

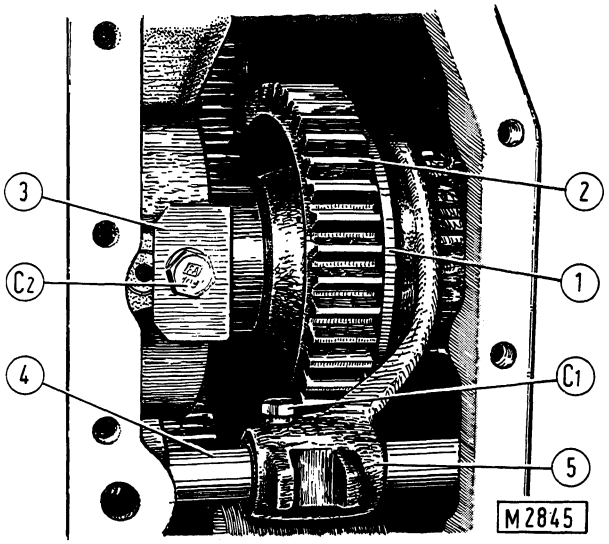

Fig. 4-17 - Reduction unit shift mechanism.
C1 - Capscrew - C2 - Capscrew - 1. Sliding sleeve - 2. Driven gear - 3. Bracket - 4. Shifter rod - 5. Shifter fork.

- Tighten nut C2, fig. 4-3 to the specified torque and stake in position.

Assemble forward/low clutches and shaft as follows:

- Assemble forward clutch outer drum 8, fig. 4-3, driven gear 2, fig. 4-5 from inside and secure with retaining ring 1.
- Place transmission housing horizontal with rear end facing uppermost.
- Install first thrust ring 7, fig. 4-4 and idler gears 1 and 2.
- From above, insert shaft 8, second thrust ring 7 and housing assembly 3 together with outer drum assembly 4 with interposed gasket.
- Install low clutch pack (a, fig. 4-9) and forward clutch pack (b) as shown.

⚠ DANGER

Heavy springs compressed. Always follow recommended procedure when disassembling or assembling these parts.

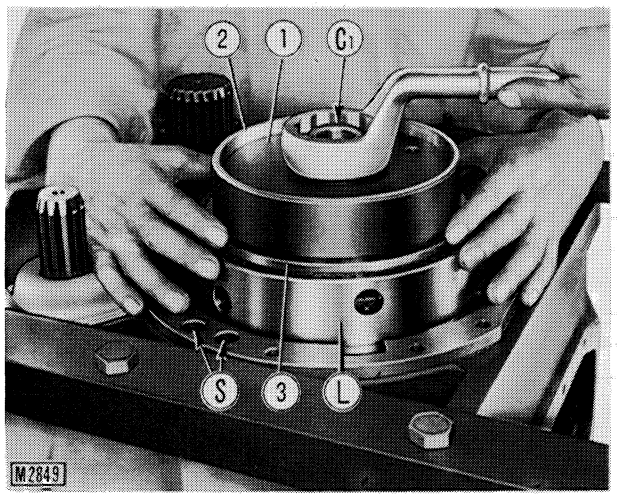

Fig. 4-18 - Assembling low clutch retaining nut.
C1 - Nut - L. Low clutch - S. Pressure and lubrication oil ports - 1. Fixed piston - 2. Moving piston - 3. Outer disc.

- Mesh outer disc 3, fig. 4-18 with inner drum splines and tighten nut C1 to approximately 20 daNm (148 ft. lb.).
- Tighten forward clutch nut C1, fig. 4-21 to the specified torque, check that low clutch nut is tightened to the specified torque and stake in position.
- Hold oil catcher 5, fig. 4-3, connect lines 3 and 4 inserting rear ends in the associated ports S, fig. 4-18 and secure the catcher with capscrews C6, fig. 4-21.

Assemble transmission housing covers as follows:

- Install rear cover assembly 1, fig. 4-2 and low clutch cover 2 with iterposed gaskets.

⚠ DANGER

Use proper tools to bring holes into alignment. DO NOT USE FINGERS OR HANDS.

- Install tubes 1 and 2, fig. 4-3, attach lift hook 75291526, A, fig. 4-19 to front cover and install the latter on housing using guide pins 75291525, B; use a driver to install low clutch lines in the ports of cover.

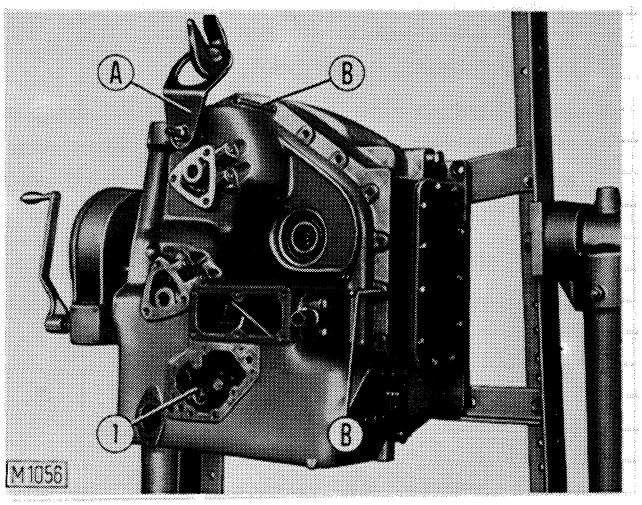

Fig. 4-19 - Installing/removing transmission front cover.

A. Lift hook 75291526 - B. Guide pins 75291525 - 1. Lubrication limiting valve.

- Install right and left covers 6, fig. 4-2, inspection cover 9 and lubrication oil catcher cover 10 with interposed gaskets, ensuring that the O-rings of cover 10 are not missing.

- Insert forward/low/high spools adhering to the instructions given for reverse spool installation.

- Coat gaskets of covers 3, 4 and 5, fig. 4-2 with grease, place in position and install covers.

4.4 TRANSMISSION INSTALLATION

⚠ WARNING

Lift and handle all heavy parts with a lifting device of proper capacity. Be sure parts are supported by proper slings and hooks. Use lifting eyes if provided. Watch out for people in the vicinity.

Guard against kinking chain or cables. Always wear heavy gloves when handling chain or cable.

Be sure cables are anchored and the anchor point is strong enough to handle the expected load. Keep personnel clear of anchor point and cables or chain.

Never use gasoline solvent or other flammable fluids to clean parts. Use authorized commercial, non-flammable, non-toxic solvents.

Use proper tools to bring holes into alignment. DO NOT USE FINGERS OR HANDS.

Install transmission assembly noting the following points:

- Clean and degrease transmission housing and rear transmission mating surfaces and apply Loctite plastic gasket.
- Install transmission to rear transmission housing, using guide pins 75291586 and reversing the sequence of operations described in para. 4.1.

- When installing drive shaft, ensure that rear U-joint cork seal is not missing and coat end spline with lubricant.

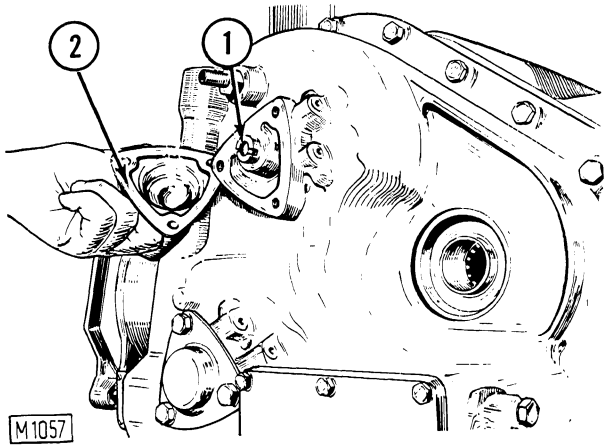

Fig. 4-20 - Installing high/forward/low clutch spool covers.

1. Spool - 2. Cover.

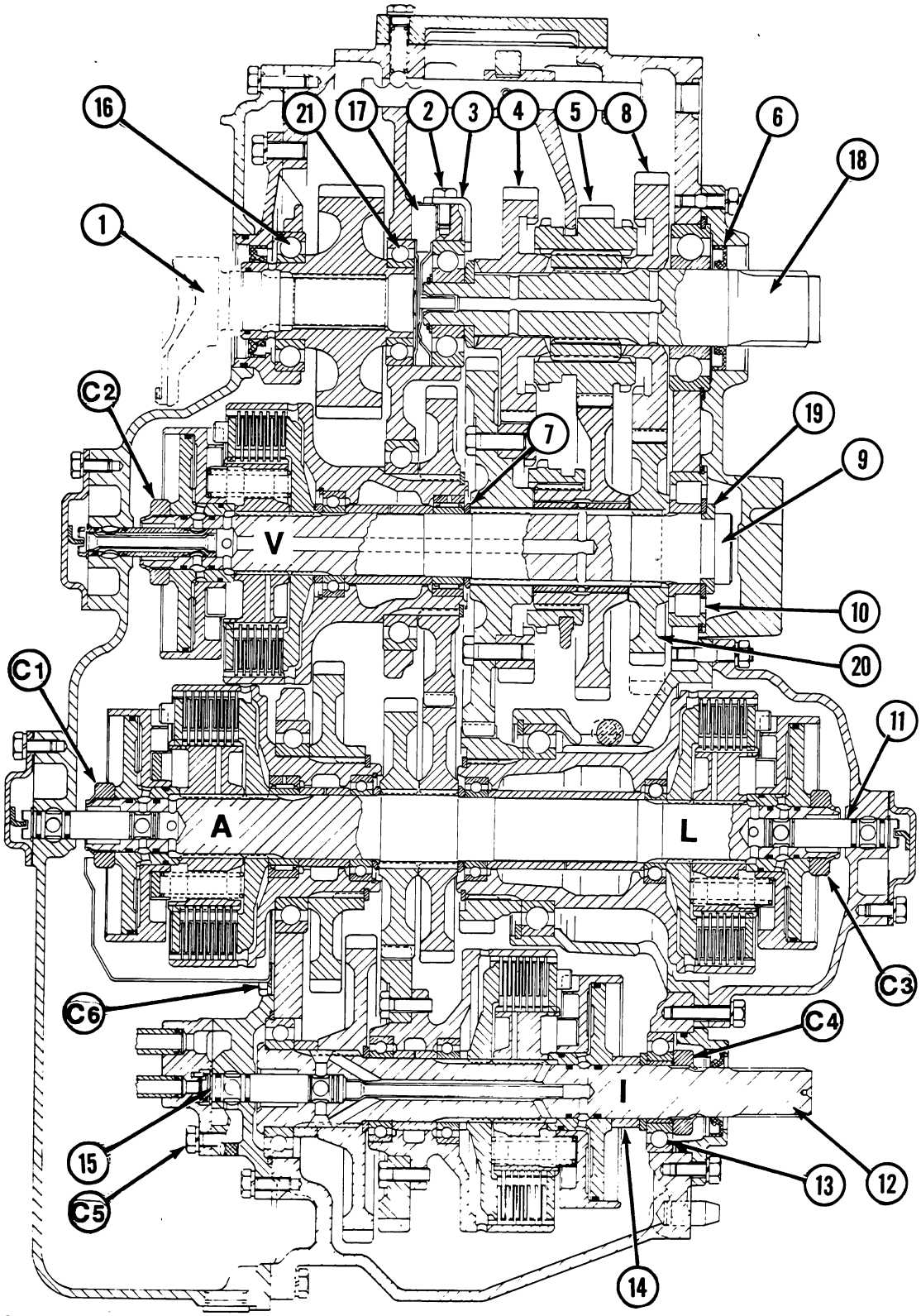

Fig. 4-21 - Cross-section through transmission.

A. Forward clutch - C1 - Nut - C2 - Nut - C3 - Nut - C4 - Nut - C5 - Capscrew - I. Reverse clutch - L. Low clutch - V. High clutch - 1. Transmission drive shaft - 2. Capscrew - 3. Angle bracket - 4. Transfer driven gear - 5. Sliding sleeve - 6. Seal - 7. Thrust ring - 8. Work driven gear - 9. High shaft and reduction unit gears - 10. Rear ball bearing - 11. Forward/low shaft - 12. Reverse shaft - 13. Rear bearing - 14. Spacer - 15. Reverse clutch spool - 16. Rear bearing - 17. Oil catcher retainer - 18. Reduction unit shaft - 19. Split ring - 20. Work speed driven gear - 21. Bearing.

4.5 POWER TAKE-OFF

Power take-off splined shaft 1, fig. 4-22 is coupled to rear end of reverse clutch shaft and is accessible from rear of machine after removal of blanking plug 2 from housing using extraction hole provided (M 12 x 1.25)

A splined extension shaft 3, fig. 4-22 is available on request to bring the drive to rear end of rear transmission housing.

Power is transmitted from engine flywheel to power take-off through engine clutch.

With engine running, power take-off splined shaft is activated by selecting any transmission gear and may be used regardless of whether the machine is stationary (reduction unit in neutral) or on the move (reduction unit in gear).

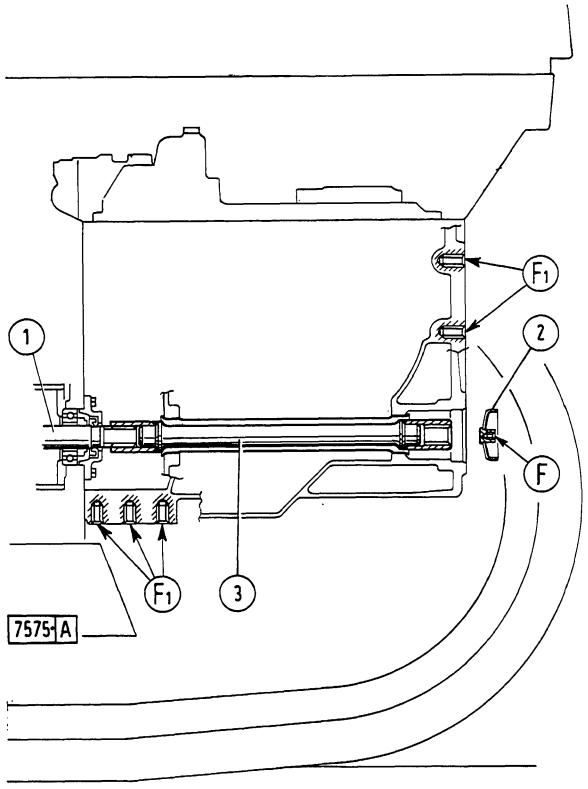

Fig. 4-22 - Power take-off in position on machine.

F. M12 x 1.25 extraction hole - F1 - M24 x 2 mounting holes - 1. PTO shaft - 2. Plug - 3. PTO extension (optional).

Splined shaft rotation (seen from rear of machine) Splines shaft speed (at 2100 rpm)	clockwise 1966 rpm
Transmission shaft output spline dimensions (1, fig. 4-22): - Nominal diameter - Number of splines - Module - Pressure angle	 35 mm (1.378 in) 21 1.587 mm (0.0625 in) 30°
Extension spline dimensions (3, fig. 4-22): - Nominal diameter - Number of splines - Module - Pressure angle	 38 mm (1.496 in) 13 2.75 mm (0.108 in) 30°

4.6 SPECIFICATION AND DATA

TRANSMISSION		
Type	Power shift with mechanical reduction unit	
Speeds	Three forward and three reverse	
Gear type	Spur, constant mesh	
Gear shift	Multi-plate oil bath clutches, hydraulically controlled through engine clutch lever	
Reduction unit ranges	2 (transfer and work) controlled by lever operated sliding sleeve	
Transmission clutches	Four	
	mm	in
Internally toothed driven plate thickness	5.950 to 6.050	0.2322 to 0.2381
Internally toothed drive plate thickness	1.940 to 2.060	0.0763 to 0.0811
Shim plates	2.4 to 2.6	0.0945 to 0.1024
Sintered facing driven plate thickness	3.150 to 3.250	0.1240 to 0.1279
Sintered facing plate wear limit	2.600	0.1023
Plate-to-inner drum backlash	0.150 to 0.350	0.0059 to 0.0137
Sintered facing plate-to-outer drum backlash	0.250 to 0.450	0.0098 to 0.0177
Fixed piston major O.D.	154.894 to 154.957	6.098 to 6.101
Fixed piston minor O.D.	54.924 to 54.970	2.162 to 2.164
Moving piston major I.D.	155.000 to 155.063	6.102 to 6.105
Moving piston minor I.D.	55.000 to 55.046	2.165 to 2.167
Clutch release spring data		
- O.D.	18.8 to 19.2	0.740 to 0.755
- free length	70	2.756
- length under 16.4 to 18.2 daN (36.8-40.8 lbs)	60	2.362

4.7 TORQUE DATA

DESCRIPTION	Torque (°)	
	daNm	ft. lb.
Nut, shaft (C1, C2, C3 and C4, fig. 4-21)	82-89.5	604-660
Capscrew, reverse front bearing cap (C5, fig. 4-21)	5.7-6.3	42-46
Nuts, rear cover (C1, fig. 4-2)	6.1-7.7	45-56.8
Capscrews, inspection cover 9, fig. 4-2	2.4-2.6	17.7-19.2
Capscrew, reduction unit shifter fork C1 fig. 4-17	6.7-7.3	49.4-53.8
Capscrew, drive gear support 1, fig. 4-6	5.4-6.8	39.8-50
Capscrew, transmission to rear transmission housing	21.0-22.9	155-169
Capscrew, side and front covers C4 and C5, fig. 4-2	4.8-6.0	35.4-44.2
Capscrews, spool covers C3, fig. 4-2	3.4-5.7	25-42
Capscrews, seal carrier 8, fig. 4-5	4.8-6.0	35.4-44.2
Capscrews, oil catcher C6, fig. 4-21	2.3-2.9	16.9-21.4

(°) Wet, engine oil.

4.8 SERVICE TOOLS

Part No.	Description
75291283	Adapter, E, fig. 4-14, torque wrench
75291517	Sling, transmission (fig. 4-1)
75291525	Guide pins, B, fig. 4-19, transmission cover
75291526	Hook, lifting, transmission cover A, fig. 4-19
75291586	Guikde pin, transmission to rear transmission housing
75295002	Retainers, reverse clutch, A, fig. 4-12

5. TRANSMISSION AND ENGINE CLUTCH HYDRAULIC SYSTEM

5.1 OPERATION

5.1.1 CHARGING AND SCAVENGING

Charging pump Pa, fig. 5-1 draws oil from transmission housing through filter Fa and supplies circuit through filter Fm.

By-pass valve 5 protects filter Fm from any sudden rise in pressure due to cartridge clogging or excessive oil density. It operates when an abnormal pressure drop occurs inside filtering element, and its function is to ensure oil flow through the system at all times, partially or totally by-passing the cartridge.

Scavenger pump Pr, integral with charging pump Pa draws oil from the clutch bell housing through strainer Fr and oil trapped in rear of transmission housing through filter Fs.

5.1.2 PRESSURE REGULATING VALVE

After flowing through filter Fm the oil from charging pump Pa, fig. 5-1 enters clutch oil pressure regulating valve 4, the functions of which are as follows:

To maintain engine and transmission clutch oil pressure at this specified setting (red sector)

To convey most of the oil to lubricating circuit where it also performs oil cooling and clutch cooling functions as described in para. 5.1.3.

5.1.3 OIL COOLING, LUBRICATION AND CLUTCH COOLING

Oil from pressure regulating valve 4, fig. 5-1 enters the oil cooler, flows through distributor 6 which divides the flow in equal parts to engine clutch and transmission lubrication oil collector 21 from whence it is directed to clutch lubrication and cooling ports.

Maximum lubrication pressure is controlled by regulating valve 22.

Lubricant circuit relief valve 3 protects the lubrication circuit upstream and the oil cooler from accidental increases in pressure which might be due to excessively thick oil upon starting; when activated, the relief valve discharges excess oil into delivery line of charging pump Pa.

Dashboard-mounted temperature gauge T indicates oil temperature upstream of oil cooler.

If lubricant low pressure indicator S lights up or remains lighted with the engine running, stop the machine immediately and trace the fault as directed in para. 5.10.

5.1.4 ENGINE AND TRANSMISSION CLUTCH ENGAGEMENT

Valve 4, fig 5-1 controls transmission clutch oil pressure (red sector) which reaches control valve D.

When gear lever is operated, valves 11, 12 and 17, plus servo valve 18, distribute oil pressure to the selected gear clutch apply cylinders.

Servo valve 18 is hydraulically interlocked with valve 17.

Depending on valve position, gear selection and engagement occurs as indicated in the table below.

Valve	Valve position	Selected speed
11 12 17 18	Up Down Down Down	Low - reverse
11 12 17 18	Down Up Down Down	Low - reverse
11 12 17 18	Up Down Up Up	High - forward
11 12 17 18	Down Up Up Up	High - reverse
11 12 17 18	Up Up Down or up Down or up	Neutral (°)

(°) With gear lever in neutral either low or high clutch is always engaged.

Check valve 14, fig. 5-1 prevents oil pressure from leaving forward (or reverse) clutch apply circuit or that of the other clutch, which is in exhaust.

Moreover, oil pressure from check valve is directed to trimmer valves Va and Vi, fig. 5-1. Trimmer valves permit smooth clutch engagement in forward and reverse by regulating the pressure increase in the apply circuits regardless of operator's handling (see para. 5.1.5).

Oil pressure directed to engine clutch apply piston causes ball 27, figs. 5-1 to close dump valve, then causes restriction piston 23 together with cut out device piston 24 to move against spring opposition, thereby permitting oil to flow into apply cylinder through flats of restriction piston 23.

As flats of piston 23 and the associated spring terminate in a moving restriction, the oil pressure increase occurs in the apply circuit somewhat later than in the transmission clutch circuits. Thus, engine clutch engagement is controlled by gear lever and takes place when both clutches of the selected speed are fully applied.

Oil pressure holds relief valve ball 26 closed during engagement. When control valve is brought back to neutral, forward or reverse clutch circuit is placed in exhaust.

Oil pressure causes engine clutch oil dump valve to open.

The consequent pressure drop causes centrifugal force to prevail over oil pressure and to shift quick relief valve ball 26 outward, facilitating exhaust from apply cylinder which results in rapid engine clutch release.

Dashboard-mounted oil pressure gauge P, fig. 5-1 indicates transmission clutch oil pressure.

5.1.5 TRIMMER VALVES

When gear lever is operated, oil pressure in selected transmission clutches does not build up immediately.

In fact, oil pressure directed to one of trimmer valves Va and Vi, fig. 5-1 causes shutter 19 to open and enters the lower pressure lubrication circuit.

Shutter 19 opens only temporarily, as oil pressure also reaches plunger 28. As the plunger is larger than the shutter, oil pressure tends to return the plunger to its closed position, a build up of oil pressure results.

Plunger return is graduated by orifice 20 which retards oil outflow and by springs 30 which compress to lengthen the distance to be covered by plunger 28.

Spring delay stops when plunger 28 closes shutter 19 through stem 29. Thus, oil pressure builds up quickly to the setting of valve 4.

Valve 31 permits rapid exhaust of oil from chamber of plunger 28 when the circuit is placed in exhaust.

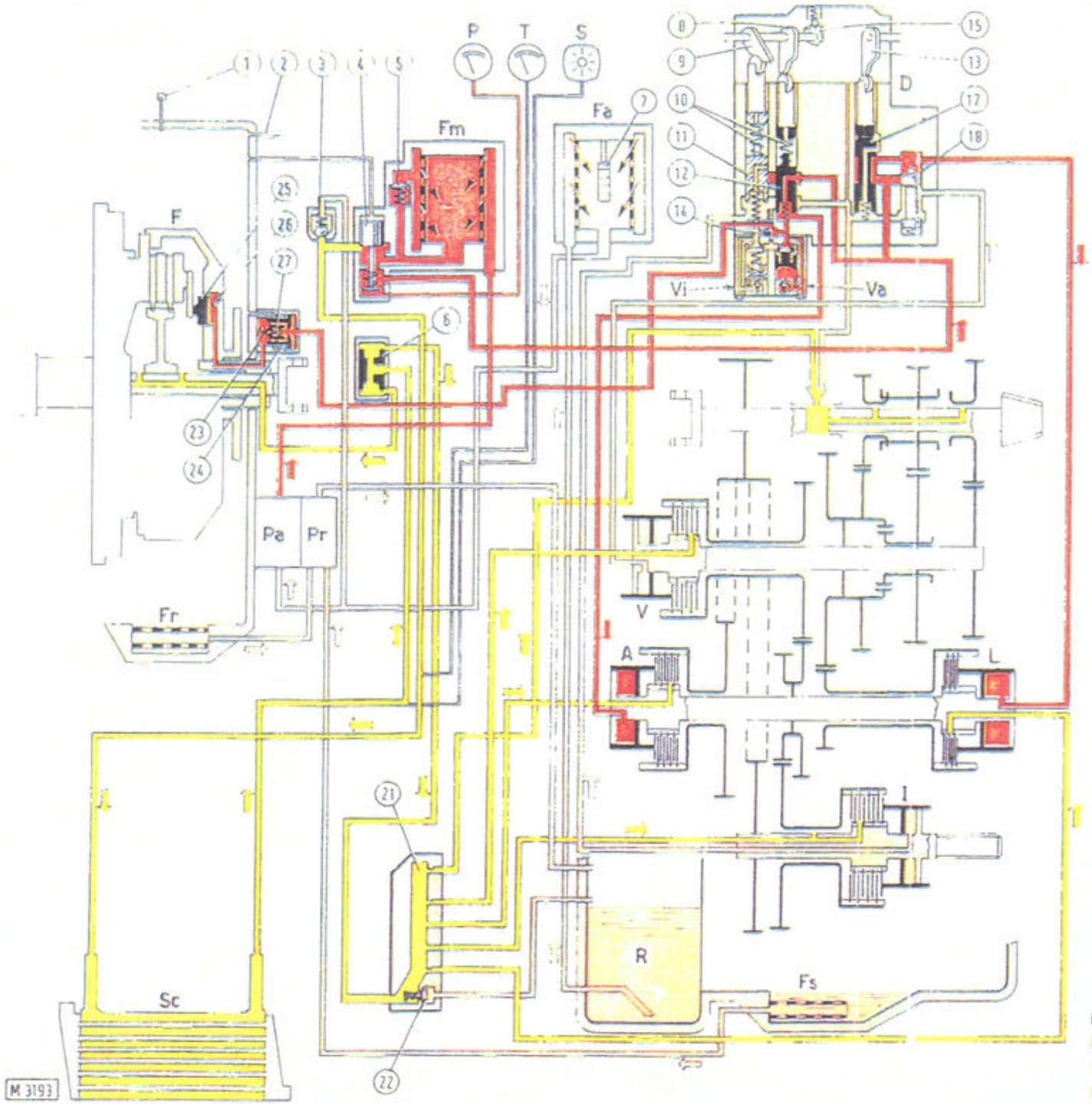

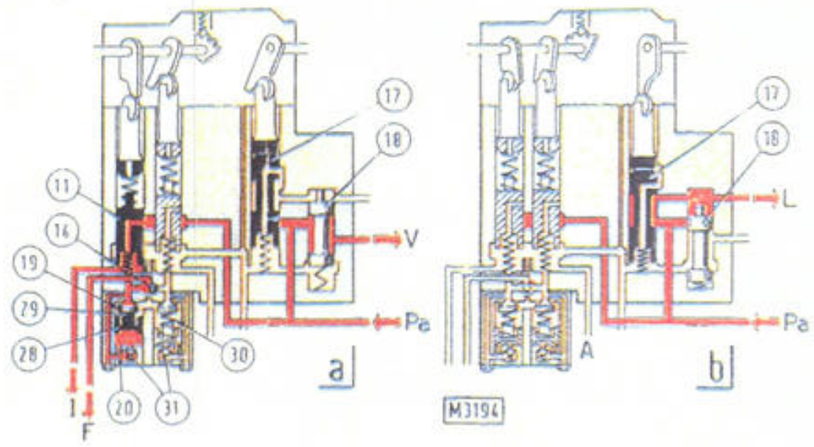

Fig. 5-1 Transmission and Engine Clutch Hydraulic Schematic

Note - General diagram shows low/forward clutches engaged.

a. Detail of transmission control valve with high range and reverse clutches engaged.

b. Detail of transmission control valve in neutral position (low range clutch engaged)

A. Forward clutch - D. Transmission control valve - F. Engine clutch - Fa. Oil pressure pump suction filter with metal cartridge - Fm. Oil pressure pump outlet filter with metal cartridge - Fr. Scavenger pump suction pump screen - Fs. Scavenger pump suction filter screen - I. Reverse clutch - L. Low clutch - P. Transmission/clutch oil pressure gauge - Pa. Oil pressure pump - Pr. Scavenger pump - R. Tank - S. Lubrication low pressure indicator - Sc. Oil cooler - T. Temperature gauge - V. High clutch - Va and Vi. Trimmer valves - 1. Breather - 2. Transmission/engine clutch air tube - 3. Lubricant circuit relief valve - 4. Clutch oil pressure regulating valve - 5. Filter by-pass valve - 6. Lubrication oil distributor - 7. Magnetic plug - 8. Spool cam - 9. Spool cam - 10. Valve springs - 11. Reverse clutch spool - 12. Forward clutch spool - 13. Spool cam - 14. Check valve - 15. Detent cam - 17 and 18. High/low servo valve and spool - 19. Trimmer valve shutter - 20. Trimmer valve opening - 21. Transmission lubrication oil collector - 22. Lubrication oil pressure regulating valve - 23. Engine clutch engaging oil flow restriction piston - 24. Valve cut-out device - 25. Engine clutch engaging oil flow restriction piston - 24. Valve cut-out device - 25. Engine clutch actuating piston - 26. Engine clutch oil quick relief valve - 27. Engine clutch oil pump valve - 28. Trimmer vale plunger - 29. Trimmer valve stem - 30. Trimmer valve spring - 31. Trimmer valve dump valve.

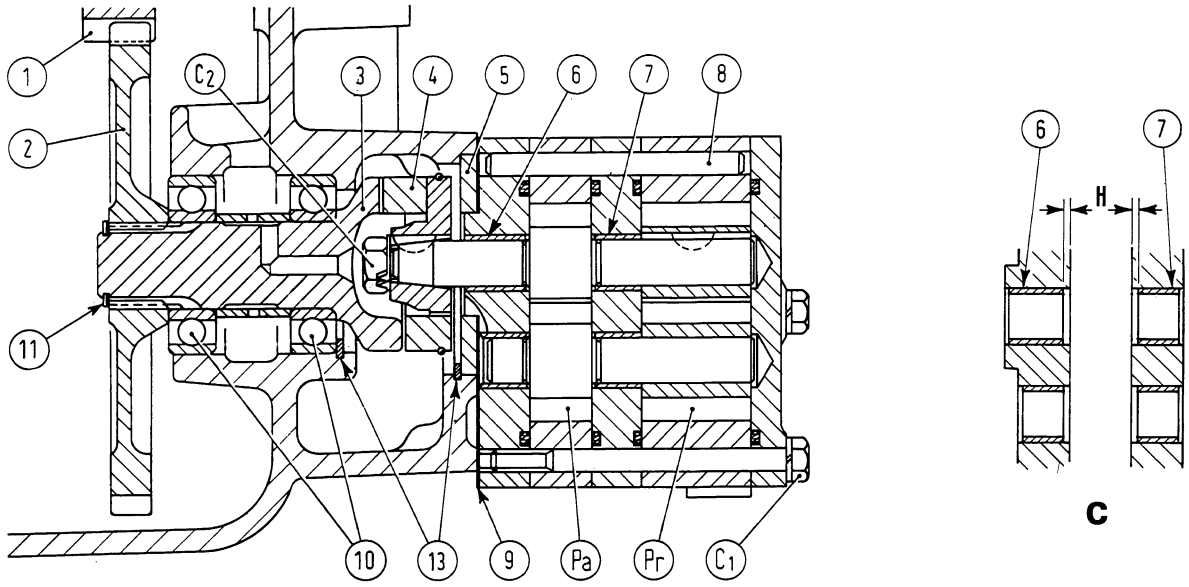

Fig. 5-2 Cross-section through hydraulic pump.

c. Correct bushing installation - C1 - Capscrews - C2 - Nut - H=0.5mm (0.02 in), bushing stand-in - Pa. Charging pump - Pr. Scavenger pump - 1. Flywheel mounted pump drive gear - 2. Pump drive gear - 3. Drive shaft - 4. Drive coupling - 5. Centralizer - 6. Bushing - 7. Bushing - 8. Centralizer - 9. Gasket - 10. Ball bearings - 11. Driven gear retaining ring - 13. Retaining ring

5.2 HYDRAULIC PUMP

⚠ WARNING

Handle all parts with extreme care. Keep hands and fingers from between parts. Wear authorized protective equipment such as safety glasses, heavy gloves, safety shoes.

To disassemble the pump, first remove drive coupling 4, fig. 5-2 using a universal puller and slacken capscrews C1.
Lubricate the parts to be assembled to prevent seizure during initial running. If the bushings have to be replaced, install new bushing 6 and 7 with 0.5 mm (0.02 in) stand-in relative to the faces shown and ream bores A, fig. 5-5 using jig 75291370, M, fig. 5-3 and reamer 75291372, A.

Before installing pump to clutch bell housing ensure that drive shaft rotates without binding.

Pump should never run dry; therefore, after installation, check oil level in transmission housing and prime the pump through repeated short engine starts.

NOTE - After installation fill scavenger pump with oil through breather tube port on top of engine clutch housing to prevent possible seizure.

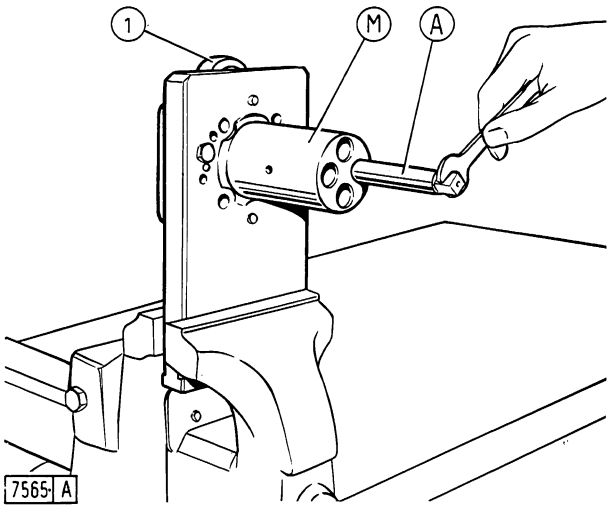

Fig. 5-3 - Reaming hydraulic pump shaft bushing bores.

A. Reamer 75291372 - M. Jig 75291370 - 1. Charging pump front cover.

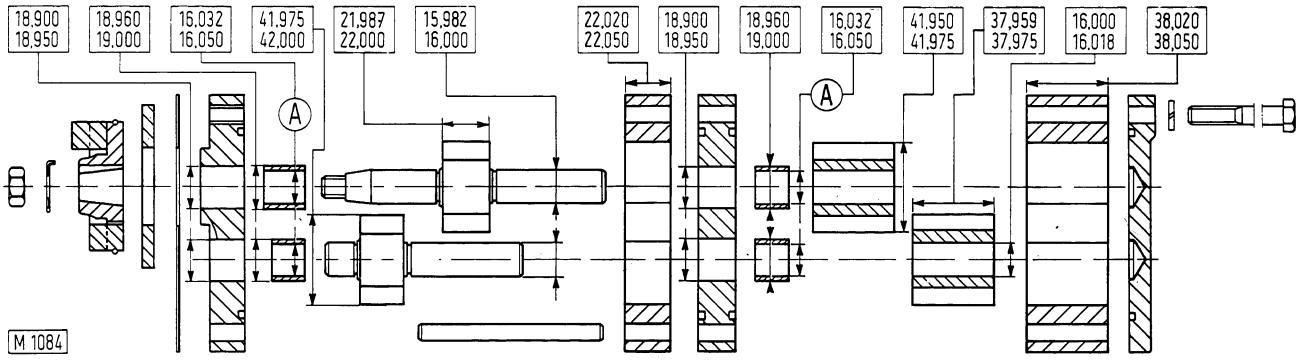

Fig. 5-4 - Hydraulic pump components dimensions.

A. Installed dimensions after reaming.

5.2.1 OUTPUT TEST

⚠ WARNING

DO NOT USE HANDS to search for pressure leaks. Fluid escaping under pressure can penetrate the skin.

⚠ DANGER

Fluid under pressure. Always lower hydraulic equipment to ground. Shut off engine, move control levers to each position several times and loosen and retighten hydraulic tank filler cap to relieve trapped pressure before loosening hydraulic connections.

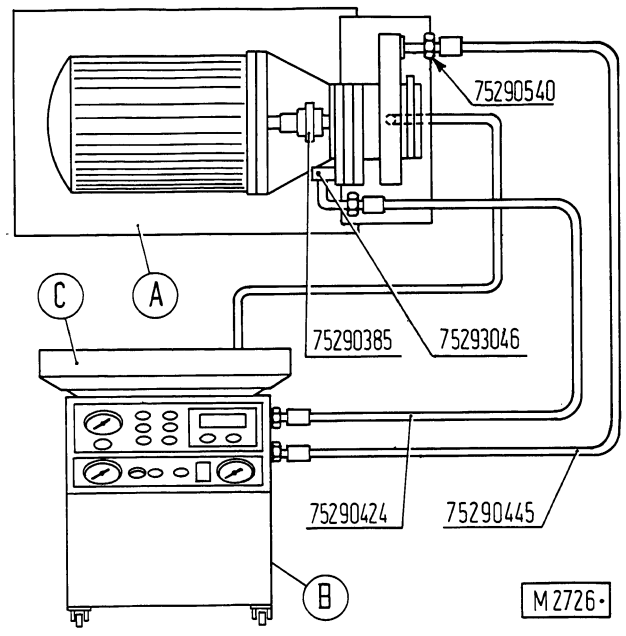

Fig. 5-5 - Charging pump output test layout.

A. Trolley-mounted electric motor 75291235 - B. Output tester 75295501 - C. Oil tray 75293005.

Install pump on trolley-mounted electric motor 75291235, A, fig. 5-5 using support 75293046 and drive coupling 75290385.

Install output tester 75295501, B, fig. 5-5 and connect to charging pump. Use oil supplied with test and perform output tests at the specified temperature and pressure (fig. 5-6).

Output readings resulting from several tests performed at specified pressure and temperature must be compared with the chart of fig. 5-6 noting the following points:

Output readings for new or overhauled pumps should not be significantly lower than the dotted line.

Output readings applicable to used pumps are acceptable if they fall within the shaded area of the curve; if near to or lower than the continuous line over haul or scrap and replace the pump.

NOTE - There is no need to supply scavenger pump during charging pump testing; simply ensure that oil leaking through the bushings is adequate for gear lubrication.

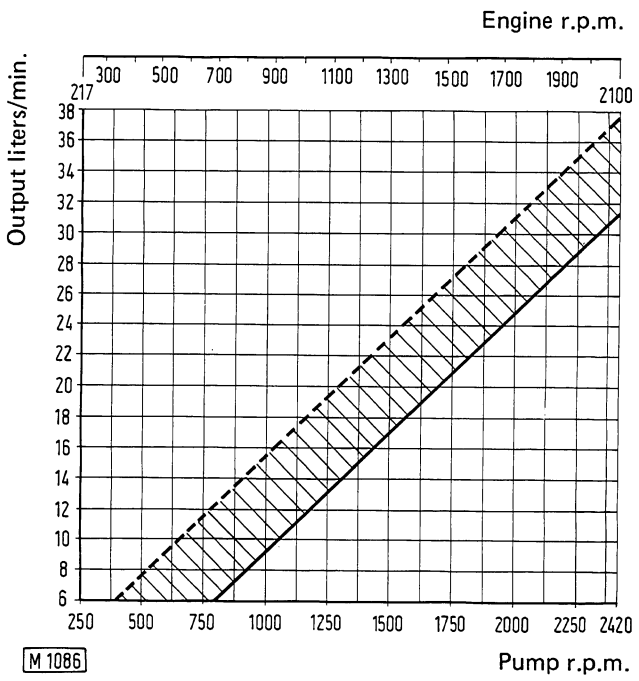

Fig. 5-6 - Charging pump output-speed chart.
Test pressure ..... 15 bar (218 psi)
Oil pressure ..... 55 to 65°C (131 to 140°F)
Pump drive ratio ..... 1.154 to 1

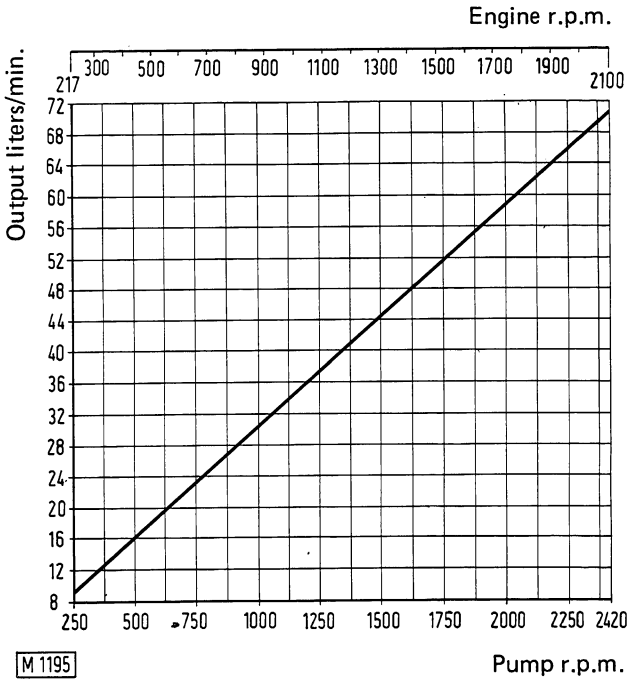

Fig. 5-7 - Scavenger pump performance chart.
Pressure ..... 1 bar (14 psi)
Temperature ..... 55 to 65°C (131 to 140°F)
Pump drive ratio ..... 1.154 to 1

5.3 OIL FILTER

DANGER

Fluid under pressure - turn cap or cover slowly to relieve pressure before removing or until pressure has been relieved as fluid may boil over and cause personal injury.

Engine clutch and transmission hydraulic system oil is filtered by:

Full flow filter Fa, fig. 5-8 with replaceable tinned steel mesh element on suction side of charging pump Pa fig 5-1.

Full flow filter Fm, fig. 5-9 with replaceable finer steel mesh element on delivery side of charging pump Pa, fig. 5-1. In the event of clogging, by-pass valve 5 cuts off element from circuit to admit unfiltered oil to the hydraulic circuit.

The steel mesh filters Fr and Fs, fig. 5-1 on suction side of scavenger pump Pr.

In the course of overhaul, clean filters Fa and Fm fig. 5-1 as follows:

WARNING

Never use gasoline or solvent or other flammable fluid to clean parts. Use authorized commercial, non-flammable, non-toxic solvents.

Clean exterior of covers and containers.

Remove nut 9, fig. 5-8, capscrew 1, fig. 5-9 and filter cartridges followed by magnetic plug.

Wash all parts and containers.

Replace any damaged seals and assemble filters as shown in figs. 5-8 and 5-9.

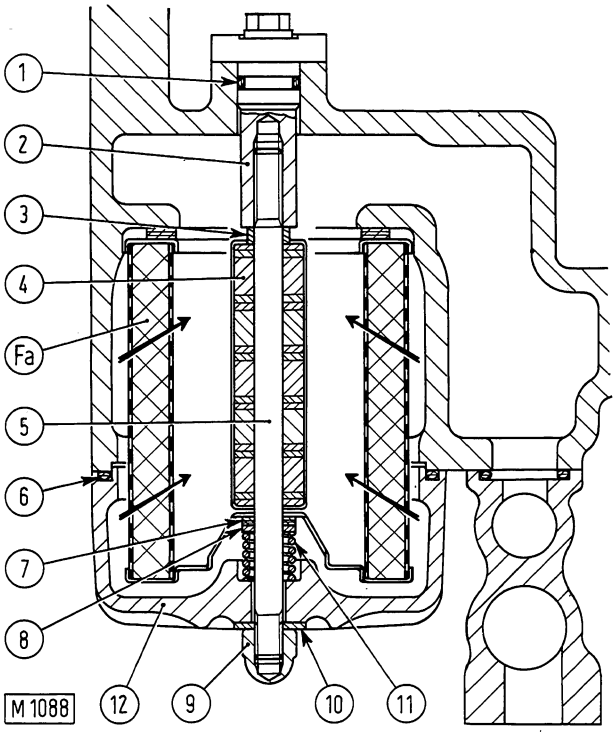

Fig. 5-8 - Section through charging pump suction filter.

Fa. Steel mesh element - 1. O-ring - 6. O-ring - 9. Nut - 10. Copper washer - 11. Spring - 12. Cover.

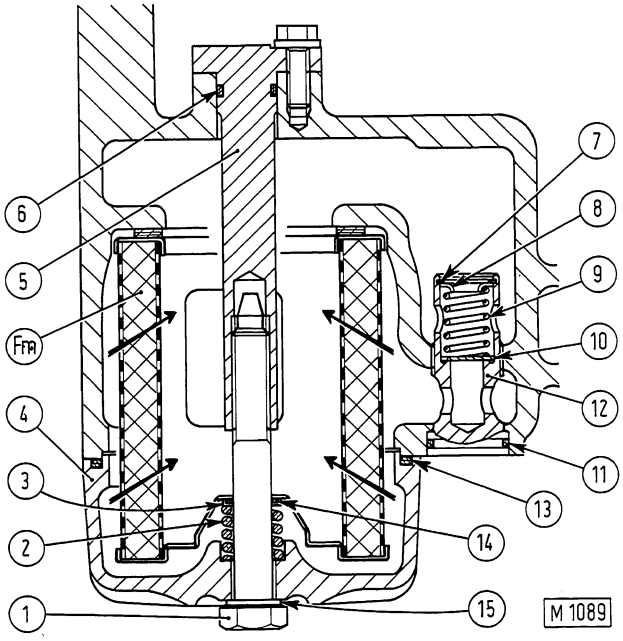

Fig. 5-9 - Section through charging pump delivery filter.

Fm. Steel mesh element - 1. Capscrew - 2. Spring - 3. Cup - 4. Cover - 5. Tie bolt - 6. O-ring - 7. Retaining ring - 8. Cup - 9. Spring - 10. Valve - 11. O-ring - 12. By-pass valve body - 13. O-ring - 14. O-ring - 15. Copper washer.

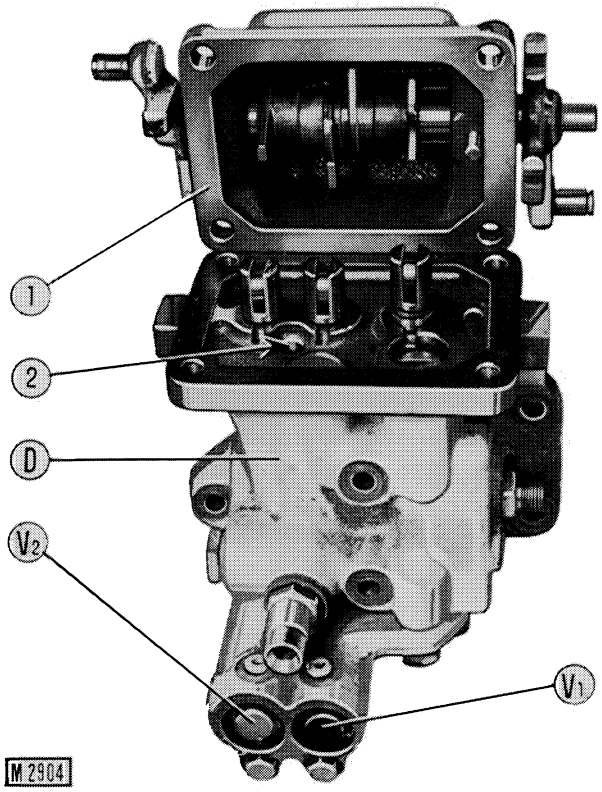

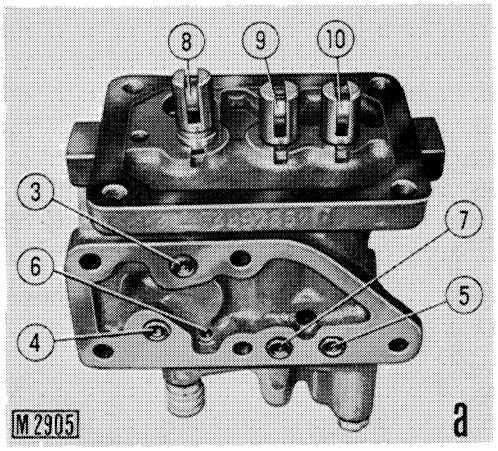

Fig. 5-10 - Transmission control valve.

a. Detail of transmission mounted flange - D. Body - V1. Forward trimmer valve - V2. Reverse trimmer valve - 1. Cover - 2. Exhaust port connected to reduction unit lubricant port - 3. Low clutch apply oil port - 4. High clutch apply oil port - 5. Reverse clutch apply oil port - 6. Exhaust port connected with reduction unit lubricant port - 7. Forward clutch apply oil port - 8. Spool - 9. Spool - 10. Spool.

5.4 TRANSMISSION CONTROL VALVE AND TRIMMER VALVES

⚠ WARNING

Handle all parts with extreme care. Keep hands and fingers from between parts. Wear authorized protective equipment such as safety glasses, heavy gloves, safety shoes.

Control valve fig. 5-10 incorporates 3-speed selector spool valves.

Moreover, the control valve incorporates two trimmer valves for gradual, progressive engagement of forward and reverse.

Disassemble control valve as follows:

Back off capscrews retaining cover 1, fig. 5-10 to body D and separate cover assembly 1 from body.

Back off plug 24, fig. 5-11 and remove retaining pin 25 to permit disassembly of levers and articulations from cover.

Spool 8, 9 and 10 fig. 5-10 are matched to control valve body and, therefore, are only available as spares together with it.

NOTE - Mark relative positions of valves and body on disassembly to facilitate correct positioning on assembly.

Remove trimmer valve assemblies from control valve body and disassemble removing retaining ring 26, fig. 5-11.

Assemble control valve and trimmer valves noting the following points:

Lubricate all parts to be assembled to prevent seizing during initial running.

Use a 0.7 mm (0.028 in) maximum diameter wire to clear any foreign matter, forward trimmer valve, ensuring that the restrictor wire 19, fig. 5-11 is correctly positioned as shown in fig. 5-11.

NOTE - Correct position of forward trimmer valve plug is indicated by two crosses stamped on plug and associated seat in control valve body.

Also make sure that reverse trimmer valve plug orifice is clear of foreign matter. If necessary, clean using a 1mm (0.04 in) max. diameter wire.

Install cover 1, fig. 5-10 to valve body D; position O-rings on oil ports 3, 4, 5 and 7 and install control valve to transmission housing.

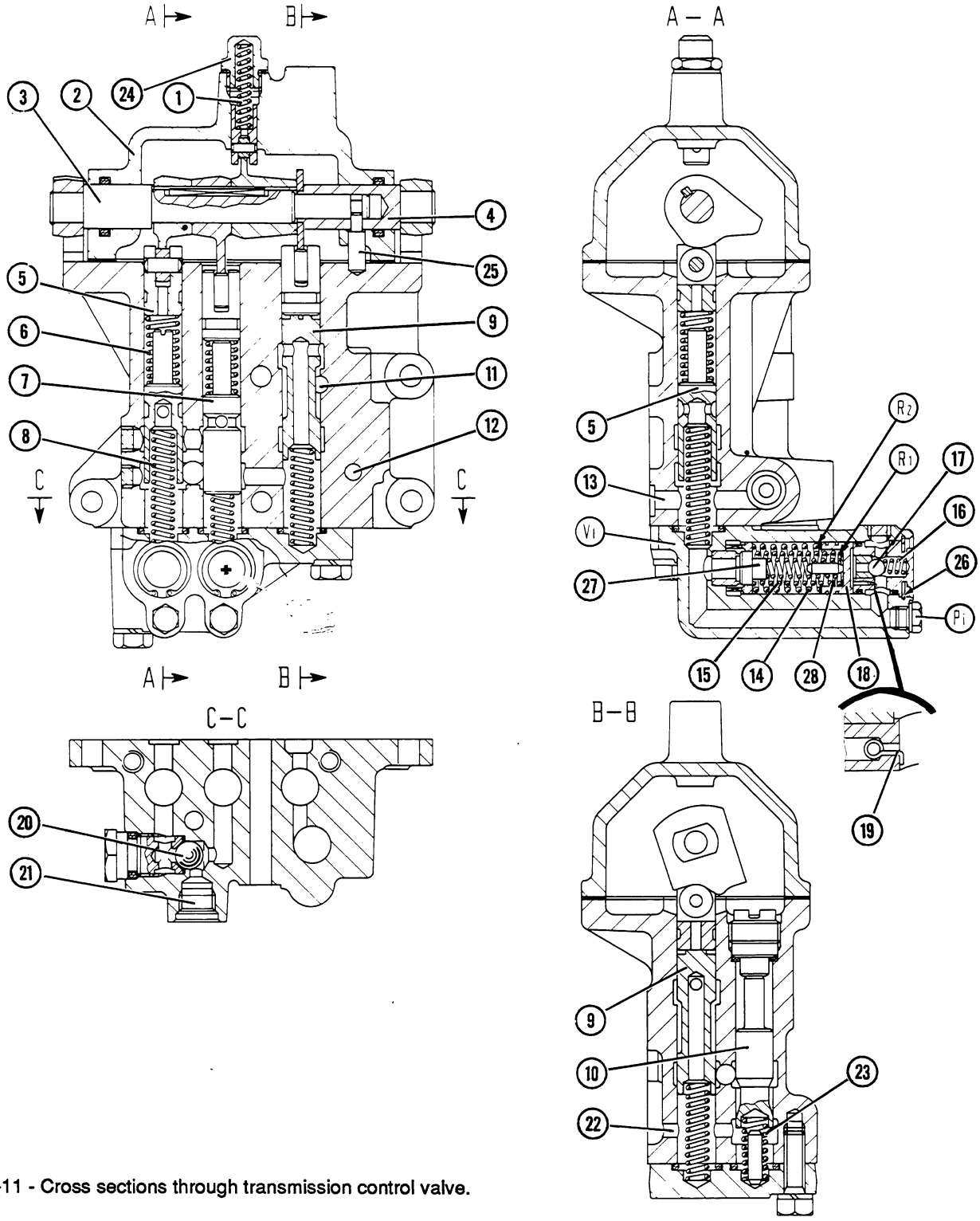

Fig. 5-11 - Cross sections through transmission control valve.

Note - High/forward engaged.

Pi. Reverse oil pressure point - R1 - Inner spring shims - R2 - Outer shim springs - V1 - Revese trimmer valve - 1. Forward/reverse gear lifter release spring - 2. Cover - 3. Shaft - 4. Shaft - 5. Reverse valve - 6. Springs - 7. Forward clutch valve - 8. Springs - 9. Low/high clutch valve - 10. Low/high clutch servo valve - 11. Port to low clutch - 12. Port to high clutch - 13. Port to reverse clutch - 14. Trimmer valve outer spring - 15. Trimmer valve intermediate spring - 16. Dump valve spring - 17. Dump valve -18. Trimer valve plunger - 19. Restrictor wire on forward trimmer valve - 20. Valve check ball - 21. Delivery to engine clutch - 22. Exhaust - 23. Servo valve spring - 24. Plug - 25. Pin - 26. Retaining ring - 27. Plunger - 28. Inner spring

5.4.1 CONTROL VALVE AND TRIMMER VALVE HYDRAULIC TEST

⚠ WARNING

Keep hands and face away from the loosened line nuts while performing tests. Also, wear safety glasses with side shields or goggles.

Prepare the equipment and tool layout as indicated in fig. 5-12 noting that plate 75290552 does not incorporate transmission clutch apply oil pressure regulating valve set to 12.7 - 13.7 bar (185 to 200 psi).

Connect the gauge based on a scale of 25 bar (362 psi) of kit 75291314 to each of the rear connectors on plate 75292262 (detail a, fig. 5-12). Turn on bench electric motor and make sure the control valve is properly working in the various gears.

Check trimmer valves as follows:

Replace plug 29, fig. 5-11 for reverse trimmer valve or forward trimmer valve plug with plug 75293135 (detail b, fig. 5-12) without restrictor orifice.

Remove plug Pi, fig. 5-11 for reverse trimmer valve, or forward trimmer valve plug and connect 9 bar scale gauge of kit 75291314 to pipe C, fig. 5-12.

⚠ WARNING

DO NOT USE HANDS to search for pressure leaks. Fluid escaping under pressure can penetrate the skin.

Set the control of flow regulator 75293156 to 2 litre/min (4 pt/min) with SAE 10W oil at 40°C. (104°F).

Select a gear and make sure that plunger opening pressure indicated on gauge is 0.4 to 0.5 bar (5.8 to 7.2 psi); if the pressure is lower, increase the number of shims R1, if it is higher than specified, reduce as necessary.

Control valve, trimming may be adjusted as follows:

If trimming is sharp, add shims R2, fig. 5-11 to spring 14.

If trimming is slow, remove shims R2.

5.4.2 CONTROL VALVE BENCH TEST

Set up as shown in fig. 5-13. Set control of flow regulator 75293156 to direct full pump output to the control valve.

Turn on electric motor A, fig. 5-13 and set to higher speed (1445 rpm approx) allow oil temperature to reach 60°C (140°F) as indicated by temperature gauge T and carry out the tests indicated below.

NOTE - When hydraulic testing an overhauled transmission , before installing the unit clean pump suction filter.

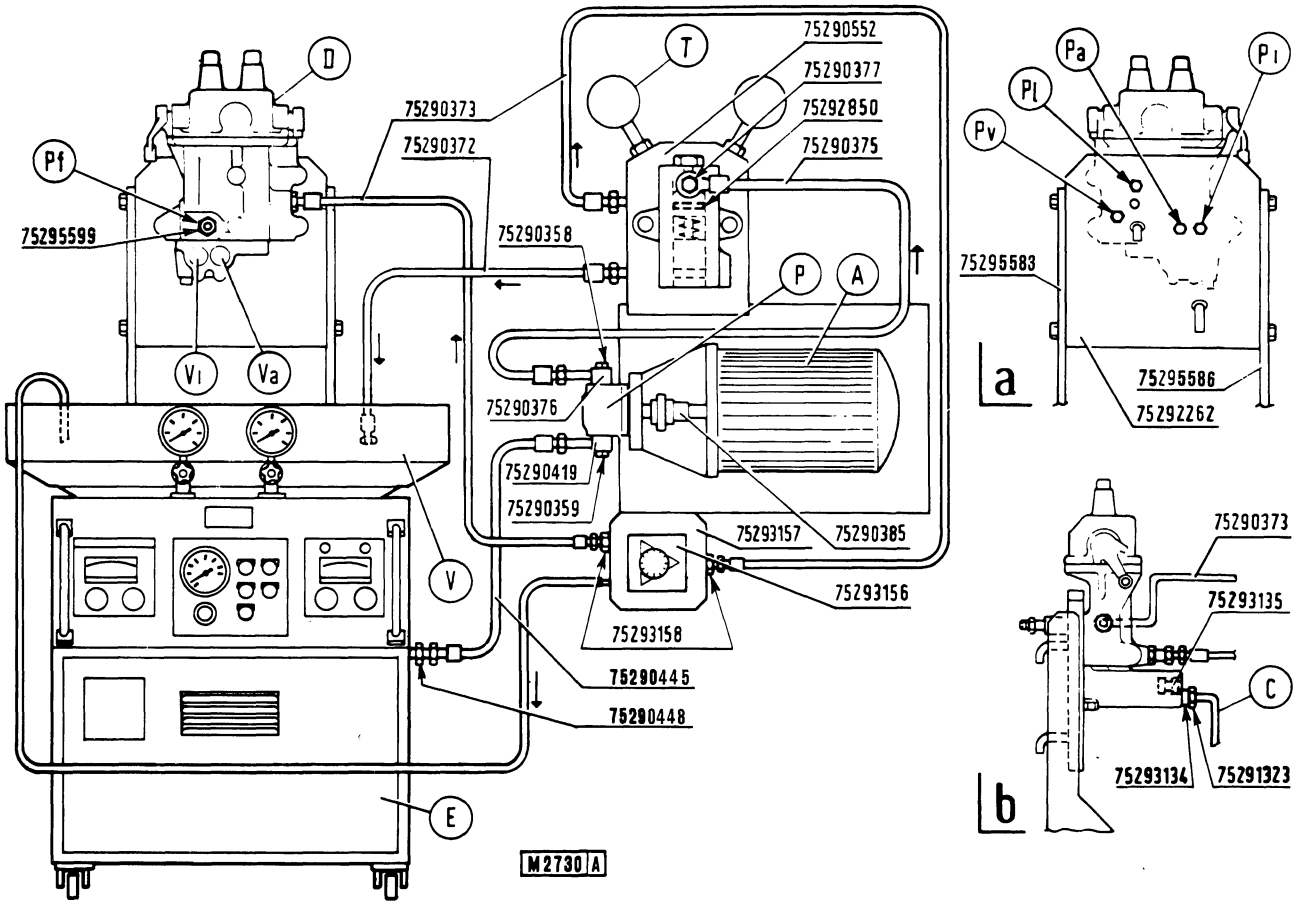

Fig. 5-12 - Control valve and trimmer valve bench test layout

a/b. Detail of pressure lines for control valve and trimmer valve test - A. Electric motor with frame 75291235 - C. Pipe for gauge kit 75291314 - D. Control valve - E. Output tester 75295420 - P. Pump 75292589 (Plessey A42X) - Pa. Forward pressure port - Pi. Reverse pressure port - Pl. Low pressure port - Pv. High pressure port - Pf. Engine clutch apply pressure port - T. Temperature gauge, 130°C scale - V. Oil collector 75293005 - Va. Forward trimmer valve - Vi. Reverse trimmer valve.

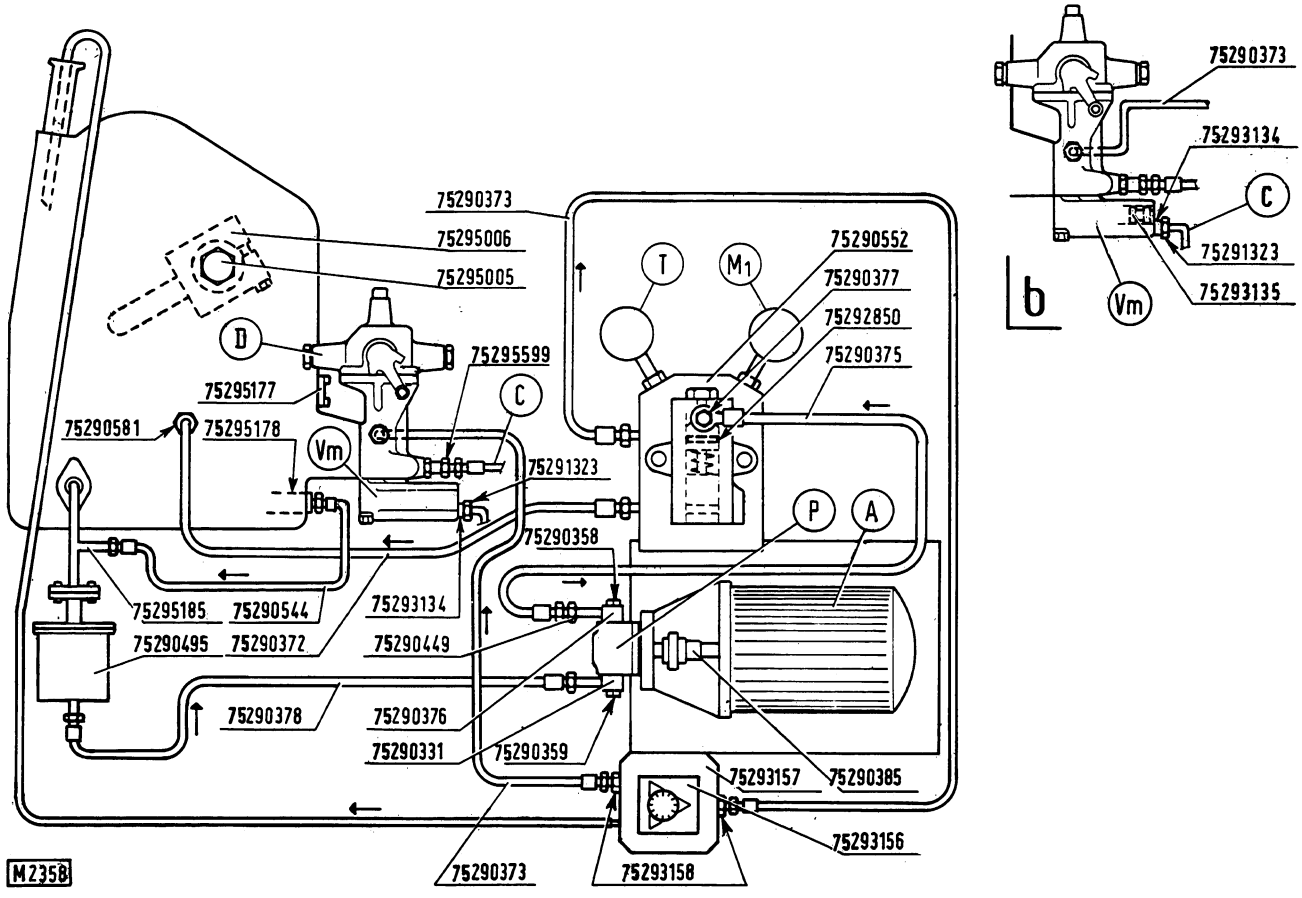

Fig. 5-13 - Transmission bench test layout.

b. Trimmer valve test pressure tube detail - A. Electric motor with frame 75291235 - C. Tube for gauge kit 75291314. D. Control valve - M1 - 25 bar scale pressure gauge - P. pump 75292589 (Plessey A42X) - T. Temperature gauge 130°C (266°F) scale - Vm. Trimmer valves.

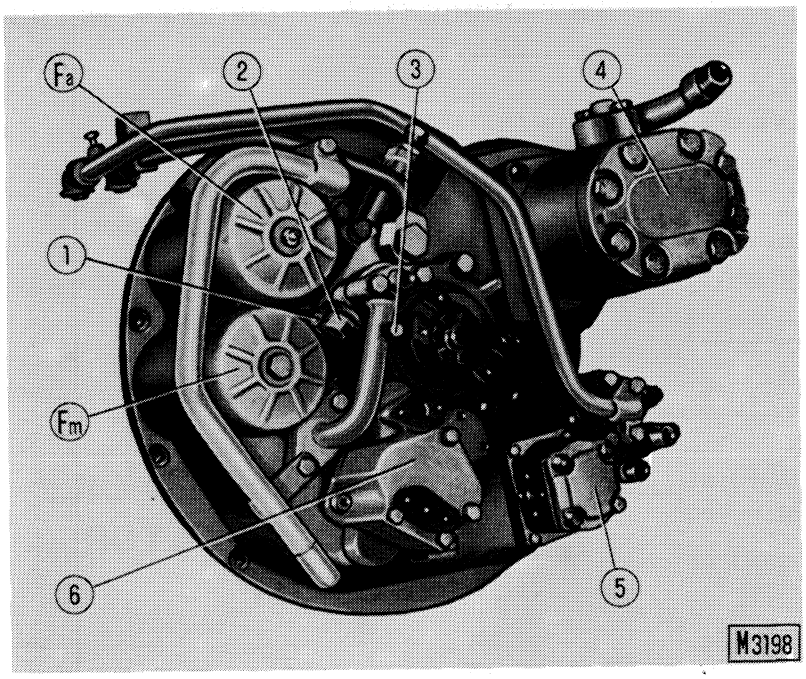

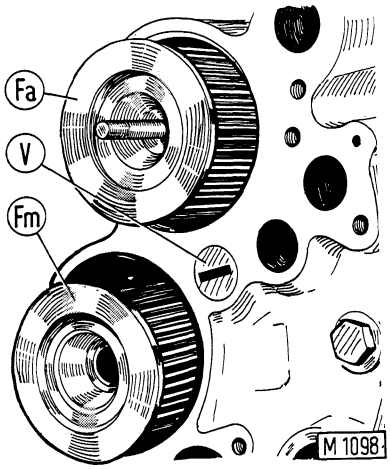

Fig. 5-14 - Transmission/engine clutch hydraulic system pumps and valves.

Fa. Metal cartridge and magnetic plug on pump suction - Fm. Metal cartridge on pump delivery - V. Filter by-pass valve- 1. Lubrication circuit relief valve - 2. Transmission clutch apply oil pressure regulating valve - 3. Oil gauge point for transmission clutch apply pressure check - 4. Equipment pump - 5. Steering clutch pump - 6. Transmission/engine clutch charging and scavenger pump.

⚠ WARNING

DO NOT USE HANDS to search for pressure leaks. Fluid escaping under pressure can penetrate the skin.

⚠ WARNING

Keep hands and face away from the loosened line nuts while performing tests. Also, wear safety glasses with side shields or goggles.

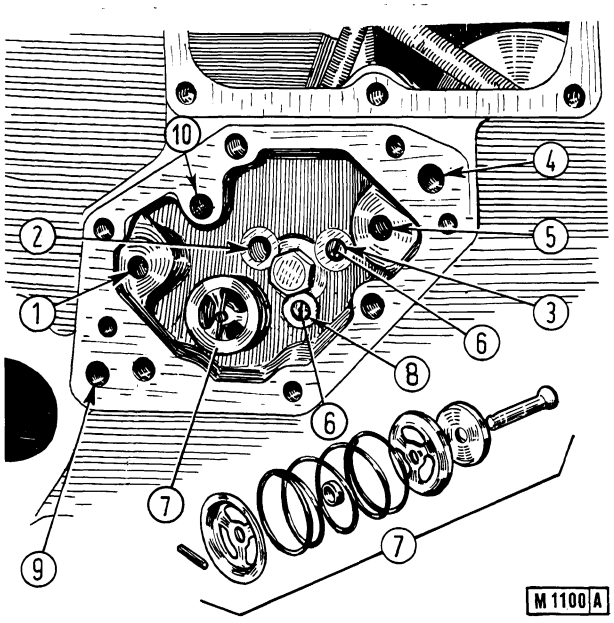

Fig. 5-15 - Lubrication oil collector.

1. Low clutch lubrication oil port - 2. Forward clutch lubrication oil tube - 3. High clutch lubrication oil tube - 4. Reverse clutch apply oil delivery port - 5. Reverse clutch lubrication oil port - 6. Capscrew with 2 mm diameter restriction orifice - 7. Lubrication oil pressure limiting valve (setting 2 bar) (29 psi) - 8. Reduction unit lubrication oil tube - 9. Low clutch apply oil delivery port - 10. Trimmer valve exhaust port.

5.5 VALVE CALIBRATION

5.5.1 TRANSMISSION CLUTCH APPLY OIL PRESSURE REGULATING VALVE

⚠ WARNING

DO NOT USE HANDS to search for pressure leaks. Fluid escaping under pressure can penetrate the skin.

Set up as in diagram a, fig. 5-17.

Allow oil to reach 60°C (140°F); at 10 litre/min (2.5 gals/min) ensure that:

Plunger 7, fig. 5-16 clears exhaust port at 12.7 to 13.7 bar (185 to 200 psi).

Adjust pressure through lock ring 9, fig. 5-16 noting that each lock ring turn alters the pressure by 0.8 bar.

5.5.2 LUBRICATION CIRCUIT RELIEF VALVE

Set up as in diagram b, fig. 5-17.

Allow oil to reach 60°C (140°F); at 10 litre/min (2.5 gals/min) ensure that:

Ball 13, fig. 5-16 clears exhaust port at 6.5 to 8 bar.

If the ball does not lift, check spring 12, fig. 5-16 and replace as necessary.

5.6 LOW LUBRICATION OIL PRESSURE INDICATOR SENDING UNIT

Sealed sending unit of indicator S, fig. 5-1 should cut in at 0.20 to 0.60 bar (2.9 to 8 psi) both when opening (increasing lubrication pressure) and during closing (falling lubrication pressure).

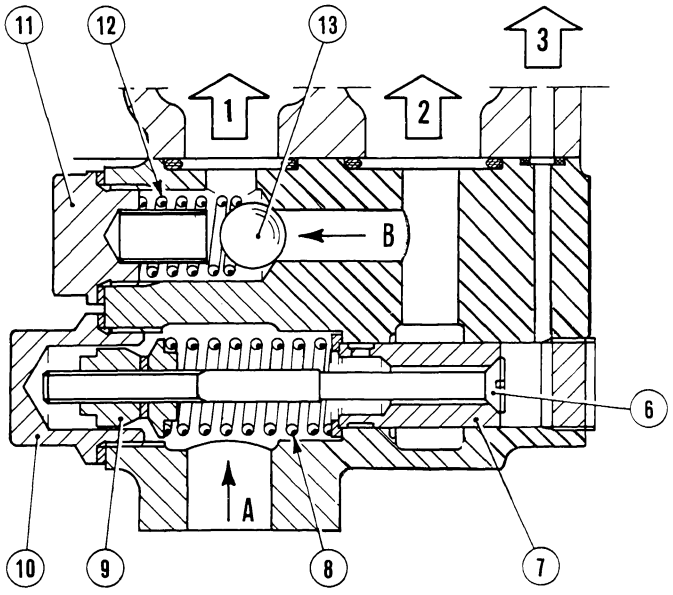

Fig. 5-16 - Cross section of lubrication circuit relief valve and transmission clutch apply oil pressure regulating valve.

Note - Arrows A and B indicate direction of supply for valve calibration check.

1. To suction port - 2. To clutch apply - 3. To clutch housing - 6. Link - 7. Transmission clutch apply oil pressure regulating valve plunger - 8. Spring - 9. Adjusting lock ring - 10. Plug - 11. Plug - 12. Spring - 13. Lubrication circuit relief valve.

5.7 OIL TEMPERATURE GAUGE

Temperature gauge T, fig. 5-1 incorporates a colored scale divided into two sectors whose temperature values within ±5°C: (9°F) are as follows:

Green sector .....40 to 125°C (104 to 257°F)

Red sector.....125 to 150°C (257 to 302°F)

In normal working conditions, the needle should dwell on the green sector.

Test instrument by dipping bulb in oil and checking the scale with a reference thermometer; repeat the check.

5.8 OIL PRESSURE GAUGE

Transmission clutch apply oil pressure gauge P, fig. 5-1 incorporates a colored scale divided into three sectors.
The instrument is sealed and the pressure ranges are:

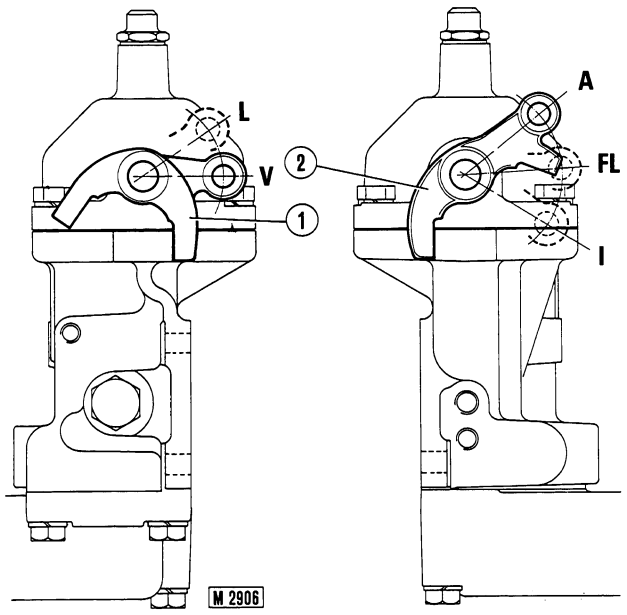

5-18 - Control valve outer lever positions.

A. Forward clutch - FL. Neutral - I. Reverse clutch - L. Low clutch - V. High clutch - 1. Outer lever - 2. Outer lever.

Initial red sector .....0 to 8 bar (0 to 116 psi)
Center green sector .....8 to 15 bar (116 to 217psi)
Final red sector .....15 to 20 bar (217 to 290 psi)

Check the instrument efficiency at 25 ± 5°C (77 ± 9°) using a high precision reference gauge.

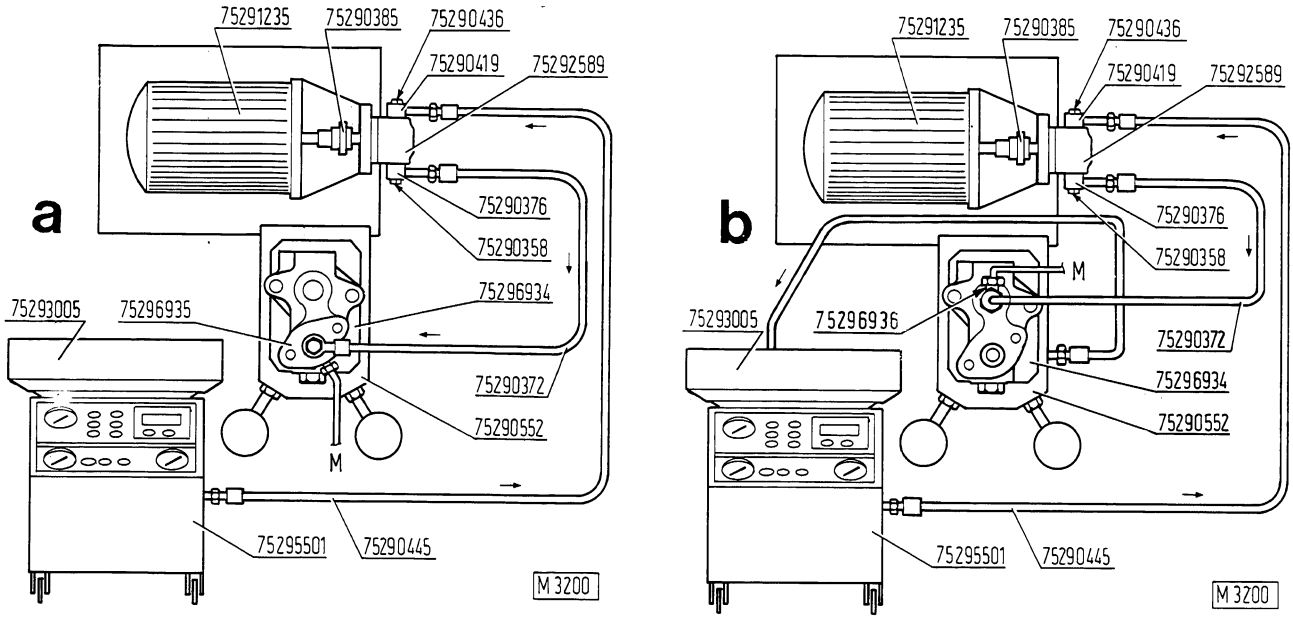

Fig. 5-17 - Transmission clutch apply oil pressure regulating valve test (a) and lubricating circuit relief valve test (b) layout.
M. Tube for gauge kit 75291314.

5.9 TROUBLE SHOOTING

⚠ DANGER

Do not use matches, lighters, or torches for a light source on the machine due to the presence of flammable fluids.

⚠ WARNING

No unauthorized person should be allowed to service or maintain this machine. Study the Operation and Maintenance Instruction Manual before starting operating, maintaining, fueling, or servicing this machine.

Always disconnect the batteries before cleaning, repairing, or servicing the machine.

Never use gasoline, solvent or other flammable fluids to clean parts.

Do not run the engine of this machine in closed areas without proper ventilation to remove deadly exhaust gases.

Never attempt to operate machine or attachment except when seated in the operator's seat. Keep head, body, limbs, hands and feet inside the operator's compartment to reduce exposure to hazards outside the operator's compartment.

⚠ WARNING

Use only grounded auxiliary power source for heaters, chargers, pumps and similar equipment to reduce the hazard of electrical shock.

Never service or adjust the engine running except as called for in the Operation and Maintenance Instruction or Service Manuals to keep from being caught in moving parts or by a moving machine.

Before moving machine or attachments be sure exposed people in the area are clear of the machine. Walk completely around machine before mounting. Sound horn.

Keep people clear of attachments and tools while in raised position, to prevent possible injury.

Warn all people who may be servicing or working around machine before starting engine.

Use lifting eyes, if provided, for handling by lifting devices.

"DO NOT USE HANDS" to search for pressure leaks. Fluid escaping under pressure can penetrate the skin.

Place protection over air inlet openings before operating engine.

Wear safety glasses with side shields or goggles when using compressed air for cleaning to reduce the danger of personal injury from flying particles. Limit pressure to 30 psi (2bar) according to local or national requirements.

FAULT	CAUSE	REMEDY
5.9.1 Low lube oil pressure indicator S, fig. 5-1 on with engine running (stop machine immediately).	Low transmission oil level. Clogged charging pump filters Fa and Fm, fig. 5-1. Leakage due to failed or debonded piping or defective seals. Incorrect oil grade.	Top up. Check filters and wash. Trace leakage by elimination and scrap and replace defective parts. Check grade and change oil as necessary.
5.9.2 Transmission oil pressure indicator (P, fig. 5-1) reading low at all speeds with transmission in neutral (needle over initial red sector).	Low transmission oil level. Defective pressure gauge. Charging pump leakage. Clogged charging pump filters (Fa and Fm, fig.5-1). Incorrectly set pressure regulating valve (4, fig.5-1). Inefficient charging pump.	Top up and remedy leakage. Check and replace as necessary. Check and tighten connections. Check and wash filters para. 5-3. Check valve setting. Overhaul or replace.
5.9.3 Transmission oil pressure indicator (P, fig. 5-1) reading low at high engine speed (needle over initial red sector).	Clogged charging pump inlet filter (Fa, figs. 5-1 and 5-8). Leaking charging pump inlet piping.	Check filter and wash. Check and tighten connections and clips.
5.9.4 Normal transmission oil pressure in neutral, insufficient oil pressure with transmission in gear, machine sluggish in forward or reverse and torque insufficient.	Clogged trimmer valve plug orifice. Stuck trimmer valve plunger.	Clear orifice and inspect filters. Eliminate any foreign matter and inspect filters.
5.9.5 High transmission oil pressure at all engine speeds.	Pressure regulating valve (4, fig. 5-1) stuck closed.	Remove foreign matter and inspect filters.
5.9.6 High transmission oil temperature (needle of gauge T, fig. 5-1 over red sector).	Low transmission oil level. Relief valve (3, figs. 5-1) stuck open. Relief valve (3, fig. 5-1) stuck open owing to oil cooler and line obstruction. Clogged charging pump inlet filter Fa, fig. 5-1. Inefficient charging pump. Low operating pressure and clutch slippage (see Fault 5.9.2). Distorted clutch plates when clutches are released.	Top up. Remove foreign matter and inspect filters. Inspect and clean oil cooler and lines. Inspect and wash filter. Overhaul or replace (para. 5.2.1). See remedies under fault 5.9.2. Replace
5.9.7 Normal transmission oil pressure (see fig. 5-1) but machine starts at high speed only.	Insufficient oil output at low speed.	Inspect filters, check for leakage and inspect charging pump.

FAULT	CAUSE	REMEDY
5.9.8 Machine creeps forward in neutral; machine stops in reverse and overloads engine.	Forward control valve (12, fig. 5-1) stuck open.	Eliminate foreign matter and inspect filters.
5.9.9 Machine creeps back in neutral; machine stops in forward and overloads engine.	Reverse control valve (11, fig. 5-1) stuck open.	Eliminate foreign matter and inspect filters.
5.9.10 Normal transmission oil pressure (P, fig. 5-1) low power output and oil overheating.	Worn or distorted clutch plates. Check valve 14, fig. 5-1 stuck open.	Replace. Clean valve ports and inspect filters.
5.9.11 Low transmission oil pressure on gauge (P, fig. 5-1) upon selection of a specific gear.	Oil leakage to be traced in lines of clutch of gear in question, failed or debonded apply lines, defective seals, broken or worn sealing rings, etc.	Overhaul transmission and scrap and replace defective parts.
5.9.12 Gear lever does not hold selected position.	Transmission actuating linkage out of adjustment.	Adjust links so that outer lever on control valve stroke fully up to stops.
5.9.13 Low transmission oil level and high engine clutch and engine oil level.	Filter Fr, fig. 5-1 clogged. Inefficient scavenger pump.	Inspect filter. Overhaul or replace.
5.9.14 No shift from low to high.	Valve 17, fig. 5-1 stuck in down position.	Eliminate foreign matter and inspect filters.
5.9.15 No shift from low to high and vice versa, engine overloads.	Servo valve 18, fig. 5-1 stuck either down or up.	Eliminate foreign matter and inspect.

5.10 SPECIFICATION AND DATA

HYDRAULIC PUMP	
Type	Double, twin gear charging and scavenger
Pump drive	Pair of gears driven from engine flywheel
Pump drive ratio	1.154 to 1 (gear ratio 60/52)
Maximum rated speed (at 2100 engine rpm)	2420 rpm
Nominal pump output at maximum speed	
Charging pump	39 L/min (10.3 gpm)
Scavenger pump	70.6 L/m (70.6 gpm)

	mm	in
Pump gear bushing O.D.	18.960 to 19.000	0.7464 to 0.7480
Bushing housing bore diameter	18.900 to 18.950	0.7440 to 0.7460
Bushing interference fit in housing	0.010 to 0.100	0.0004 to 0.0040
Bushing installed I.D. after reaming	16.032 to 16.050	0.6311 to 0.6318
Gear shaft diameter	15.982 to 16.000	0.6292 to 0.6300
Shaft clearance in bushing	0.032 to 0.068	0.0012 to 0.0026
Maximum wear clearance	0.15	0.0060
Scavenger pump driven gear to shaft clearance	0.000 to 0.036	0.0000 to 0.0014
Bushing stand-in (on charging pump gear side)	0.5	0.020
OIL FILTERS		
Charging pump suction (fig. 5-8)	Full flow, steel mesh replaceable cartridge and magnetic rod	
Mesh size	100 micron	
Charging pump delivery (fig. 5-9)	Full flow, steel mesh replaceable cartridge	
Mesh size	30 micron	
Scavenger pump suction lines (Fr and Fs, fig. 5-1)	Screen filters, one for each line	
Charging pump outlet filter by-pass valve spring length (9, fig. 5-9):		
Free	56 mm (2.20 in)	
Under 2.2 to 2.4 daN (4.8 to 5.3 lbs.)	26 mm (1.02 in)	

CONTROL VALVE AND TRIMMER VALVES	Spool valves and integral trimmer valves	
	mm	in
Forward/reverse valve spring length (6, fig. 5-11):		
Free	39.5	1.3188
Under 20.2 to 22.2 daN (45.4 to 49.9 lbs.)	26	0.9842
Spring O.D.	17.5	0.6300
Forward/reverse valve spring length (8, fig. 5-11):		
Free	62	2.7559
Under 6.17 to 6.77 daN (13.8 to 15.2 lbs.)	54	2.2047
Spring O.D.	10.3	0.4724
Low/high servo valve spring length (23, fig. 5-11):		
Free	35	1.3779
Under 2.0 to 2.2 daN (4.5 to 4.9 lbs.)	31	1.2204
Spring O.D.	12	0.4724
Forward/reverse gear control lever lifter spring length (1, fig.5-11):		
Free	47	1.8504
Under 4.9 to 5.5 daN (11.0 to 12.4 lbs.)	42	1.6535
Spring O.D.	8	0.3149
Trimmer valve intermediate spring length (15, fig. 5-11):		
Free	46	1.7519
Under 3.05 to 3.35 daN (6.8 to 7.5 lbs.)	26	1.0236
Spring O.D.	16.5	0.6496
Trimmer valve outer spring length (14, fig. 5-11):		
Free	34	1.3385
Under 9.1 to 10.1 daN (20.4 to 22.7 lbs.)	15	0.5905
Spring O.D.	23.5	0.9252
Trimmer valve inner spring length (28, fig. 5-11):		
Free	28	1.1023
Under 6.3 to 6.9 daN (14.2 to 15.5 lbs.)	19	0.7480
Spring O.D.	13	0.5118

Trimmer plunger pressure setting (27, fig. 5-11):		
Control valve trimmer valve	0.4 to 0.5 bar	5.8 to 7.2 psi
Trimmer valve orifice diameter	1 mm	0.03937 in
Trimmer spring shim thickness (R1 and R2)	0.45 to 0.55 mm	0.0177 to 0.0216
TRANSMISSION CLUTCH APPLY OIL PRESSURE REGULATING VALVE		
Valve pressure setting (7, fig. 5-16)	12.7 to 13.7 bar	184.2 to 198.70 psi
Valve spring length (8):		
Free	48 mm	1.889 in
Under 35.4 to 39.3 daN (79.6 to 88.3 lbs.)	39 mm	1.535 in
Spring O.D.	25.2 to 25.8 mm	0.990 to 1.015 in
LUBRICATION CIRCUIT RELIEF VALVE		
Valve pressure setting (13, fig. 5-16)	6.7 to 8.3 bar	97.1 to 120.3 psi
Valve spring length (12):		
Free	36 mm	1.417 in
Under 9.5 to 10.1 daN (21.4 to 22.7 lbs.)	23 mm	0.905 in
Spring O.D.	18 mm	0.708 in
LUBRICATION OIL PRESSURE LIMITING VALVE		
Valve pressure setting (7, fig. 5-15)	2 bar	29 psi
Valve spring length:		
Free	40 mm	1.575 in
Under 8.55 to 9.45 daN (19.22 to 21.24 lbs.)	9.5 mm	0.374 in

5.11 TORQUE DATA

DESCRIPTION	TORQUE(°)	
	daNm	ft. lb.
Capscrew, hydraulic pump (C1, fig. 5-2)	1.86-1.96	13.72-14.46
Capscrew, short, control valve to transmission	6	44
Nut, hydraulic pump coupling (C2, fig. 5-2)	2.06-2.26	15.19-16.67
Capscrew, hydraulic pump	3.92-4.41	28.91-32.53
Capscrew, long, control valve to transmission	6	44

(°) Wet, engine oil.

5.12 SERVICE TOOLS

Part No.	Description
75290090	Revolving stand (for hydraulic testing)
75291370	Jig, reaming, hydraulic pump bushing
75291372	Reamer, hydraulic pump bushing
75290330	Connector
75290331	Connector
75290358	Capscrew (for connector 75290376)
75290359	Capscrews (for connector 75290331)
75290372	Pipe
75290373	Pipe
75290375	Pipe
75290376	Connector
75290377	Connector
75290378	Pipe
75290383	Plug
75290385	Drive Coupling
75290417	Connector
75290419	Connector
75290424	Pipe
75290436	Capscrews (for connector 75290419)
75290445	Pipe
75290448	Reducing adapter
75290449	Connector with restriction
75290469	Valve support
75290495	Suction filter container
75290540	Reducing adapter
75290544	Pipe
75290552	Plate with thermometer gauge and valve
75290581	Connector
75290600	Plug
75291235	Trolley-mounted electric motor
75291314	Pressure gauge kit
75291323	Connector
75292262	Control valve support plate

75292383	Trimmer valve plug
75292459	Trimmer valve retainer
75292520	Trimmer valve connector
75292589	Hydraulic pump (Plessey A42X)
75292850	Washer for valve of plate 75290552
75293005	Oil collector
75293046	Pump bracket
75293134	Spacer
75293135	Trimmer valve plug
75293156	Distributor
75293157	Manifold
75293158	Connector
75295005	Transmission drive gear rotator
75295006	Shaft retainer
75295177	Plug
75295178	Connector
75295185	Spacer
75295420	Output tester
75295501	Output tester
75295583	Control valve side support
75295586	Control valve side support
75295599	Connector
75296934	Adapter
75296935	Connector with pressure point
75296936	Connector

6. TORQUE CONVERTER

This section describes torque converter overhaul only. The associated hydraulic circuit together with the transmission hydraulic circuit is covered in section 8 of this manual headed Transmission Torque converter Hydraulic Circuit.

⚠ WARNING

Do not work under or near unblocked or unsupported linkage, parts or machine.

6.1 REMOVAL

⚠ WARNING

Lift and handle all heavy parts with a lifting device of proper capacity. Be sure parts are supported by proper slings and hooks. Use lifting eyes if provided. Watch out for people in the vicinity.

Handle all parts with extreme care. Keep hands and fingers from between parts. Wear authorized protective equipment such as safety glasses, heavy gloves, safety shoes.

Proceed as follows:

Remove rear and lower center transmission guards, front and rear floor plates, dashboard lower guard, operator's seat together with skuttle and batteries.

Drain torque converter/transmission and equipment hydraulic oil as described in "Operation and Maintenance Instruction Manual".

To remove crossmember together with pedals, remove steering clutch actuating links (1, fig. 6.1), dashboard center guard and lift cylinder lines (5).

Disconnect crossmember from right and left brake actuator rods (2) fasteners and lines.

Working from below, remove charging and scavenging pump and steering clutch pump Pf from the torque converter/transmission unit, raising suction line as necessary to prevent loss of oil from rear transmission housing.

Working from above, remove transmission oil filler pipe, equipment pump (7, fig. 6-1), lines connecting torque converter/transmission unit to oil cooler and drive shaft from torque converter/transmission unit.

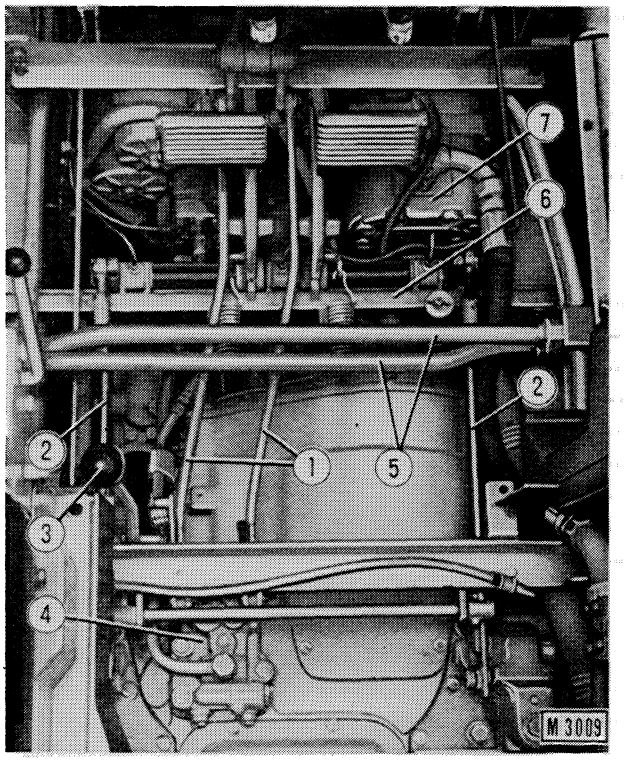

Fig. 6-1 - Top view of converter - transmission assembly
1. Steering clutch control valve actuator links - 2. Brake actuator links - 3. Brake pedal lock - 4. Steering clutch control valve - 5. Equipment power lines - 6. Crossmember - 7. Equipment pump.

⚠ WARNING

Lift and handle all heavy parts with a lifting device of proper capacity. Be sure parts are supported by proper slings and hooks. Use lifting eyes if provided. Watch out for people in the vicinity.

Install bracket 75295475 on output shaft hub and attach hook 75295551 (B, fig. 6-11) to bracket.

Hoist hook and take up slack.

⚠ WARNING

Use proper tools to bring holes into alignment. DO NOT USE FINGERS OR HANDS.

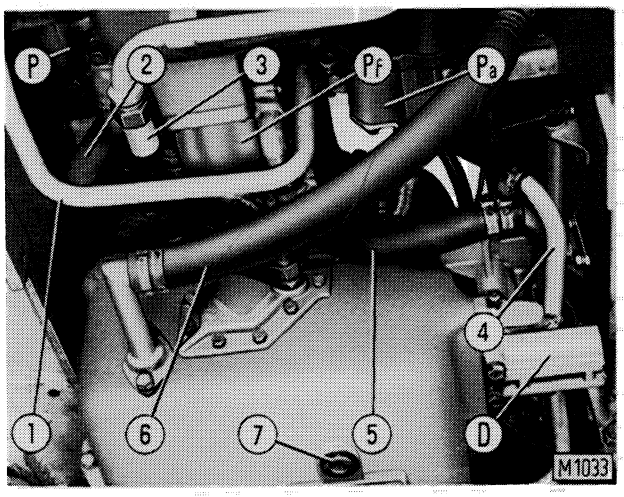

Fig. 6-2 - Bottom view of torque converter/transmission unit.
D. Transmission control valve - P. Equipment pump - Pa. Torque converter/transmission pump - Pf. Steering clutch pump - 1. Scavenging line from oil cooler to transmission lubrication - 4. Transmission scavenging line - 5. Steering clutch pump suction line - 6. Transmission suction line - 7. Oil drain plug.

Back off capscrews retaining torque converter unit to flywheel housing and insert guiding pins 75291525 (A, fig. 6-11) into two of the capscrew holes.

Remove unit using forcing screws 75291366, and lift off through top.

6.2 TORQUE CONVERTER DISASSEMBLY

Install torque converter unit together with housing on rotating stand 75290090 or 75290086 using pair of brackets 75291528 as shown in fig. 6-3 and proceed as follows:

⚠ WARNING

Handle all parts with extreme care. Keep hands and fingers from between parts. Wear authorized protective equipment such as safety glasses, heavy gloves, safety shoes.

Use inch socket wrench set.

Back off capscrews (C2, fig. 6-3) and remove cover (2)

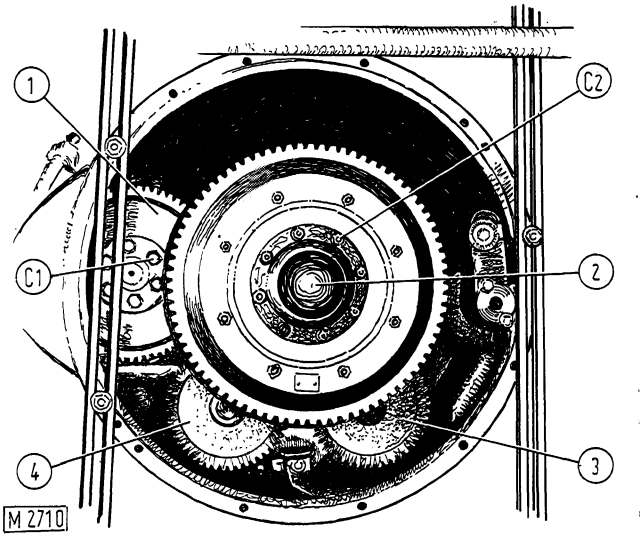

Fig. 6-3 - Torque converter assembly installed on rotating stand 75290086.
C1 - Gear (1) self-locking screws - C2 - Cover (2) capscrews - 1. Equipment pump driven gear - 2. Cover - 3. Torque converter/transmission pump driven gear - 4. Steering clutch pump driven gear.

Install retainer 75296030 as shown in fig. 6-4 and back off retainer (15 fig. 6-7) capscrews. Retrieve retainers and torque converter/transmission shaft flange together with O-ring (8).

Slacken rear bearing carrier capscrews (C2, fig. 6-4).

Position torque converter unit with shaft front end facing outward and back off equipment pump driven gear capscrews (C1, fig. 6-3). Withdraw gear from seat.

Remove previously slackened capscrews (C2, fig. 6-4).

⚠ DANGER

Guard against kinking chain or cables. Always wear heavy gloves when handling chain or cable.

Be sure cables are anchored and the anchor point is strong enough to handle the expected load. Keep personnel clear of anchor point and cables or chain.

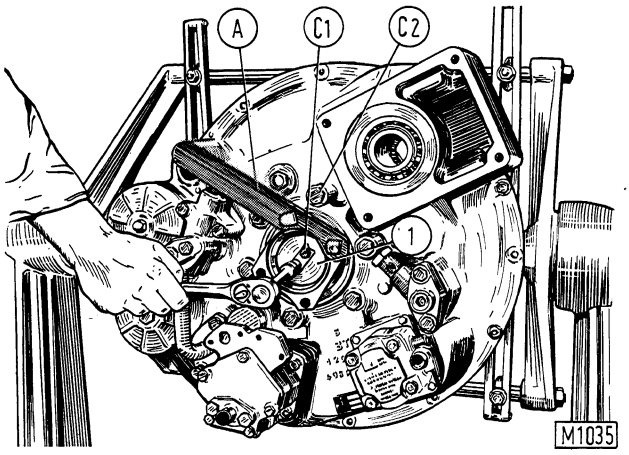

Fig. 6-4 - Removing output shaft hub retainer (1) capscrews (C1).
A. Retainer 75296030 - C2. Rear bearing carrier capscrews.

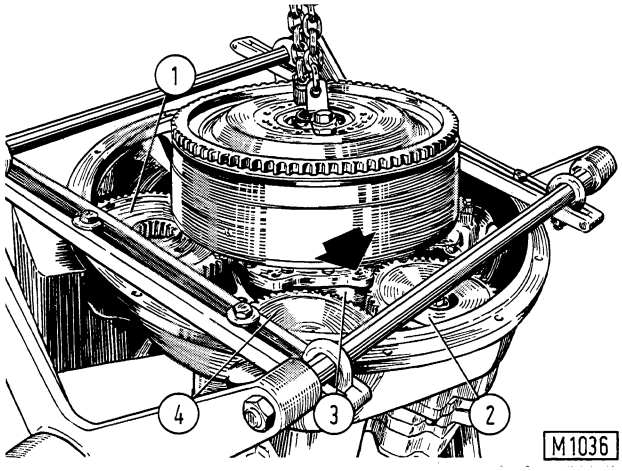

Fig. 6-5 - Removing-installing clutch using lift chain 75291517.
Note - Lug position arrowed.
1. Equipment pump driven gear - 2. Torque converter/ transmission pump driven gear - 3. Rear bearing carrier - 4. Steering clutch pump driven gear.

Attach sling 75291517, position bearing carrier (3, fig. 6-5) so that the arrowed lug does not foul gears (2 and 4) and remove torque converter unit as shown in fig. 6-5.

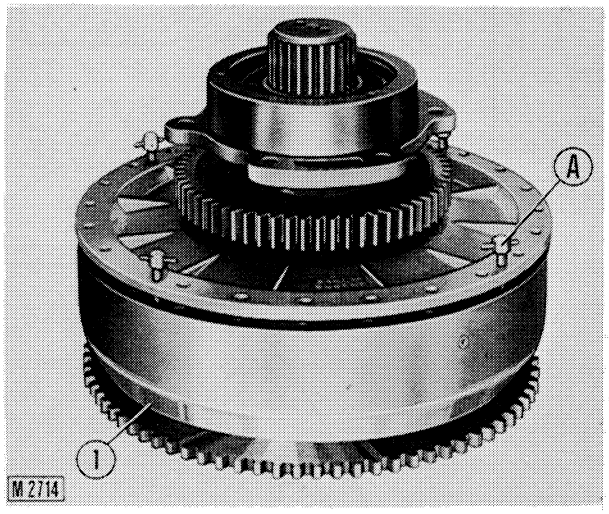

Fig. 6-6 - Disassembling converter wheels using forcing screws.
A. Forcing screws 75295473 - 1. Torque converter housing.

Remove capscrews (C1, fig. 6-7) and detach the hydraulic converter wheel assembly from the housing using forcing screws 75295473 (A, fig. 6-6).

Retrieve thrust ring (2, fig. 6-7) and turbine (3).

Remove retaining ring (16, fig. 6-7), back off capscrews (C4) using inch socket wrench and retrieve stator (13).

Back off capscrews (C2, fig. 6-7) and detach impeller from hydraulic pump (5) drive gear.

Remove intermediate ball bearing (6, fig. 6-7) from drive gear (5) using universal puller.

Remove rear bearing retaining ring (7) and withdraw output shaft together with bearing carrier (10).

Remove retaining rings (2 and 3) from shaft before removing bearing (1, fig. 6-9) from shaft.

Remove transmission/torque converter pump and steering clutch driven gears (2 and 3, fig. 6-8) from torque converter housing.

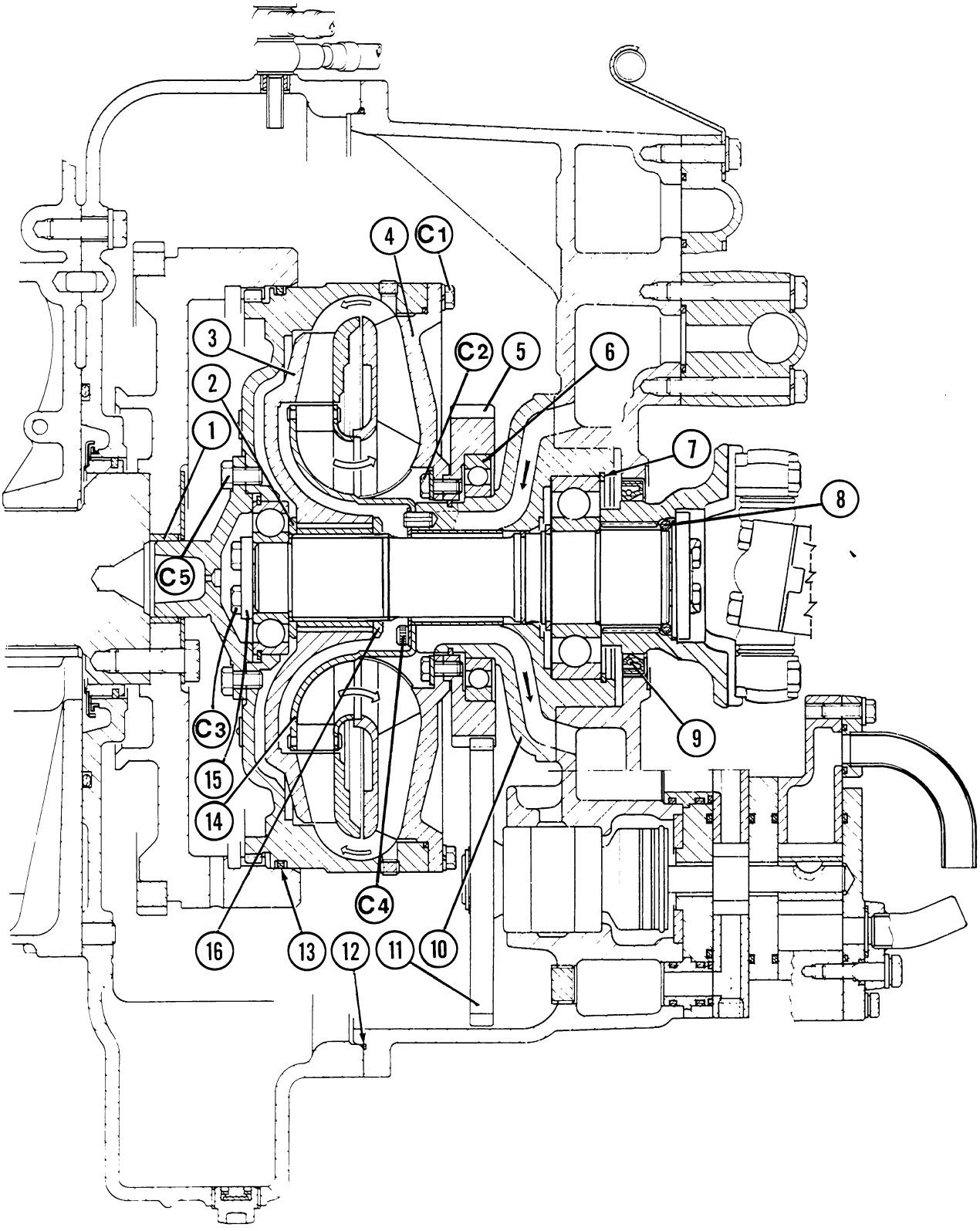

Fig. 6-7 - Cross section through torque converter
C1 - Impeller capscrews - C2 - Pump drive gear capscrews - C3 - Retainer (15) capscrews - 1. Centralizer bushing - 2. Turbine outer thrust ring - 3. Turbine - 4. Impeller - 5. Pump drive gear - 6. Intermediate ball bearing - 7. Retaining ring - 8. O-ring - 9. Seal - 10. Rear bearing carrier - 11. Steering clutch pump driven gear - 12. O-ring - 13. O-ring - 14. Stator - 15. Front bearing retainer. - 16. Retaining ring.

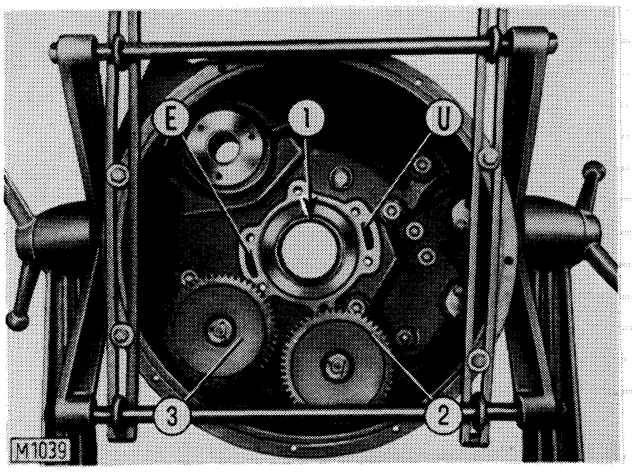

Fig. 6-8 - Torque converter housing
E. Pressure oil inlet - U. Lubricating oil outlet - 1. Seal - 2. Transmission torque converter pump driven gear - 3. Steering clutch pump driven gear.

3.3 TORQUE CONVERTER ASSEMBLY

Proceed as follows:

Install hydraulic pump driven gears (2 and 3, fig. 6-8) in torque converter housing.

Install rear bearing (1, fig. 6-9) on converter shaft, secure using retaining ring and insert retaining ring (3) in seat on shaft.

⚠ WARNING

Handle all parts with extreme care. Keep hands and fingers from between parts. Wear authorized protective equipment such as safety glasses, heavy gloves, safety shoes.

Install shaft assembly in bearing carrier (10, fig. 6-7), secure rear bearing with retaining ring (7).

Secure hydraulic pump (5, fig. 6-7) drive gear to impeller (4) through capscrews (C1, fig. 6-10) provided with associated plates (2).

Couple bearing carrier (10, fig. 6-7) with impeller (4), inserting retaining ring and bearing (6).

Correctly position stator as shown in fig. 6-10, install plates and tighten capscrews (C4, fig. 6-7).

⚠ DANGER

Guard against kinking chain or cables. Always wear heavy gloves when handling chain or cable.

Install retaining ring (16) on output shaft, position turbine (3) as shown in fig. 6-7 and install thrust ring (2) on shaft.

Secure torque converter housing to impeller and tighten capscrews (C1, fig. 6-7) progressively in alternating order.

Using sling 75291517 (fig. 6-5), lower torque converter assembly into horizontally positioned housing. Simultaneously position driven gear (1, fig. 6-5) on equipment pump shaft hub.

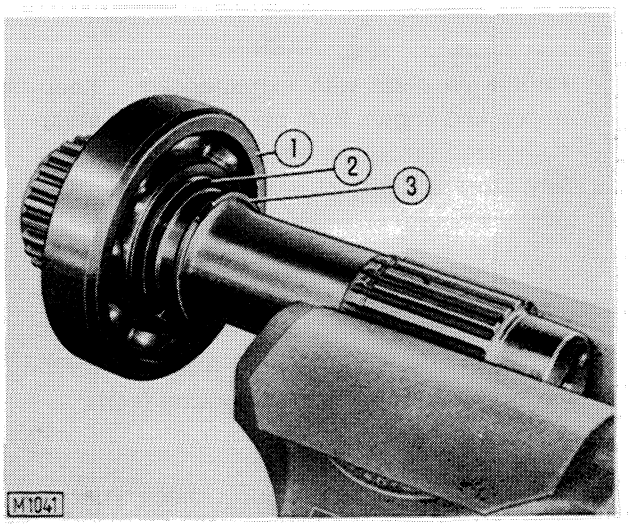

Fig. 6-9 - Installing - removing retaining ring on torque converter shaft.
1. Rear ball bearing - 2. Retaining ring - 3. Retaining ring.

NOTE - Prior to inserting torque converter assembly in housing, check condition of seal (9, fig. 6-7) and replace if necessary.

Position bearing carrier (3, fig. 6-5), being careful not to foul gears (2 and 4) and lower torque converter assembly into final position in housing.

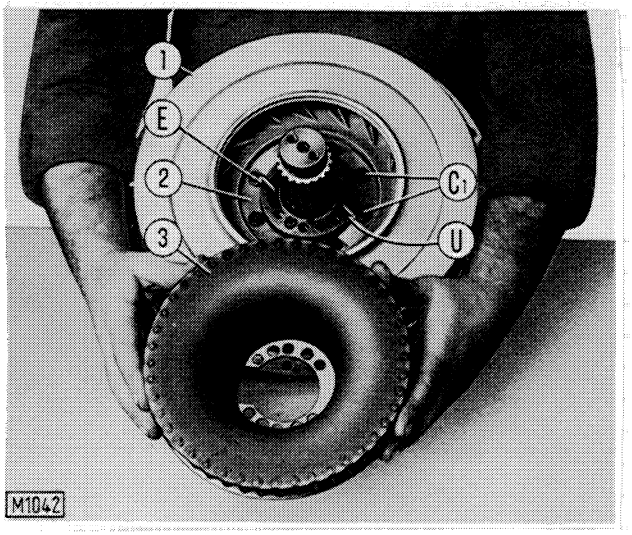

Fig. 6-10 - Assembling - disassembling stator.
C1 - Hydraulic pump drive gear capscrews - E. Pressure oil inlet - U. Lubricating oil outlet - 1. Impeller - 2. Plates - 3. Stator.

⚠ WARNING

Handle all parts with extreme care. Keep hands and fingers from between parts. Wear authorized protective equipment such as safety glasses, heavy gloves, safety shoes.

Place bearing carrier in correct assembly position and tighten bearing carrier capscrews (C2, fig. 6-4) to torque converter housing, working from below.

Fully tighten equipment pump driven gear (1) self-locking screws (C1, fig. 6-3).

Block discs (15, fig. 6-7), together with dowel, flange and associated O-ring (8) with retainer 75296030 placed as shown in figure 6-4.

Install front bearing cover (1, fig. 6-7).

3.4 INSTALLATION

⚠ WARNING

Lift and handle all heavy parts with a lifting device of proper capacity. Be sure parts are supported by proper slings and hooks. Use lifting eyes if provided. Watch out for people in the vicinity.

Install torque converter assembly complete with housing, noting the following:

Check that O-rings (12, fig. 6-7) has been provisionally installed in their grooves.

⚠ DANGER

Use proper tools to bring holes into alignment. DO NOT USE FINGERS OR HANDS.

Using pair of guide pins 75291525, secure bracket 75295475 to output shaft hub. Attach lift hook 75295551 (B, fig. 6-11) to bracket to install torque converter assembly on engine.

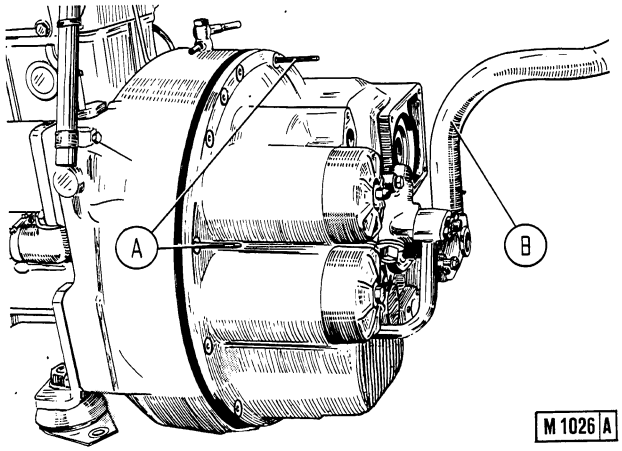

Fig. 6-11 - Installing/removing torque converter assembly
A. Guide pins 75291525 - B. Lift hook 75295551 complete with bracket 75295475.

⚠ WARNING

Handle all parts with extreme care. Keep hands and fingers from between parts. Wear authorized protective equipment such as safety glasses, heavy gloves, safety shoes.

Turn crankshaft slightly to mesh starter ring gear and torque converter housing teeth.

On drive shaft installation, check that rear universal joint is complete with cork seal and that splined end is protected with a coat of lubricant.

6.5 SPECIFICATION AND DATA

Torque converter type	Single-stage, single phase, type 13"
Make	TWIN DISC
Model	6F 1301 MS 300
Number of elements	3 (impeller, turbine and stator)
Stall ratio	2.78 to 1
Max. stall torque and max. engine stall ratio	2.43 to 1
Hydraulic pump drive gear backlash	0.100 to 0.200 mm (0.0039 to 0.0079 in)
Torque converter housing/starter ring gear backlash (max)	0.072 mm (0.003 in)

6.6 TORQUE SPECIFICATION

Description	Torque (°)	
	daNm	ft. lb.
Capscrew, torque converter support	6	44.3
Capscrew, torque converter pressure regulator valve	6	44.3
Capscrew, torque converter relief and transmission drive pressure regulator valve	6	44.3
Capscrew (C2, fig. 6-4), torque converter to housing	8.4	62.0
Capscrew (C4, fig. 6-7), stator	3.4-3.9	25-29
Capscrew (C2, fig. 6-7 and C1, fig. 6-10), hydraulic pump drive gear,	3.4-3.9	25-29
Capscrew (C3 or C5, fig. 6-7)	4.1-4.9	30-36

(°) Lubricate with engine oil

6.7 SERVICE TOOLS

Part no.	Description
85291366	Forcing screws, torque converter housing removal
75291517	Sling
75291525	Guide pins, torque converter removal/installation
75295473	Forcing screws, torque converter cover
75295475	Bracket, torque converter removal/installation. Use with lifting hook 75295551.
75295551	Lifting hook (B) torque converter. Use with bracket 75295475
75296030	Retainer, output shaft (A)

7. TRANSMISSION W/TORQUE CONVERTER

This section covers transmission overhaul. Transmission hydraulic system is covered in section 8 of this manual.

⚠ WARNING

Do not work under or near unsupported linkage parts or machine.

7.1 REMOVAL

NOTE - Transmission may be removed from either above or below. However, if the transmission is to be removed from below, the operation should be carried out over a pit.

⚠ WARNING

Handle all parts with extreme care. Keep hands and fingers from between parts. Wear authorized protective equipment such as safety glasses, heavy gloves, safety shoes.

Proceed as follows:

Remove rear and lower center transmission guards, front and rear floor plates, operator's seat together with skuttle and batteries with associated support.

⚠ DANGER

Fluid under pressure. Always lower hydraulic equipment to ground. Shut off engine, move control levers to each position several times, loosen and retighten hydraulic tank filler cap to relieve trapped pressure before loosening hydraulic connections.

Drain torque converter/transmission and equipment hydraulic oil as described in "Operation and Maintenance Instruction Manual".

To remove crossmember together with pedals, remove steering clutch actuating links (1, fig. 6-1), dashboard center guard and lift cylinder lines (5).

Disconnect crossmember from right and left brake actuator rods (2, fig. 6-1), fasteners and lines.

Working from below, remove charging and scavenger pump (Pa, fig. 6-2) and steering pump (Pf) from the torque converter/transmission unit, raising suction line as necessary to prevent loss of oil from circuit.

Working from above, remove transmission oil filter pipe, equipment pump (7, fig. 6-1), lines connecting torque converter/transmission unit to oil cooler and drive shaft from torque converter/transmission unit.

Disconnect transmission control valve relay link from valve.

Remove control valve with integral trimmer valves.

⚠ DANGER

Guard against kinking chain or cables. Always wear heavy gloves when handling chain or cable.

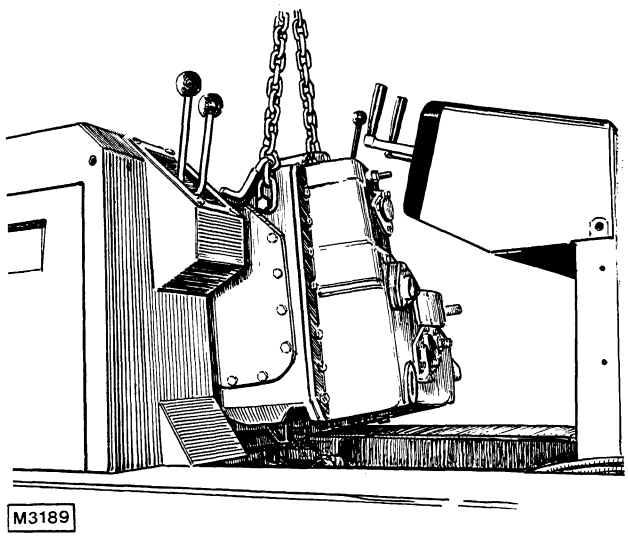

Fig. 7-1 - Removing/installing transmission from top of machine using sling 75291517.

Attach sling 75291517 to pins provided as shown in figure 7-1 and take up slack using a hoist.

Remove transmission, moving it first forward and then up as shown in figure 7-1 (or positioning over a pit if transmission is to be removed from below).

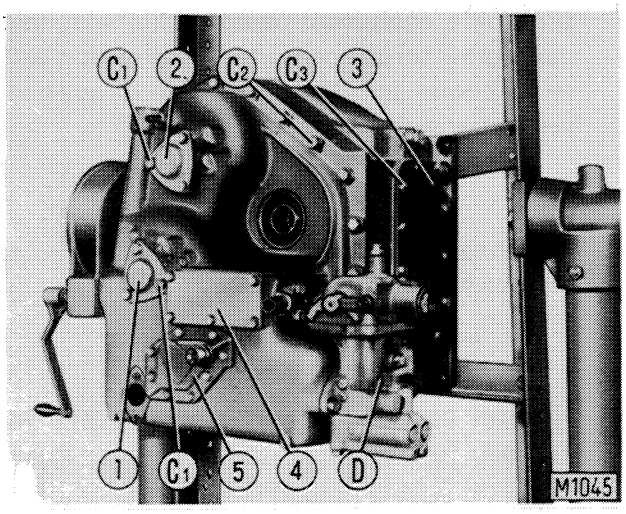

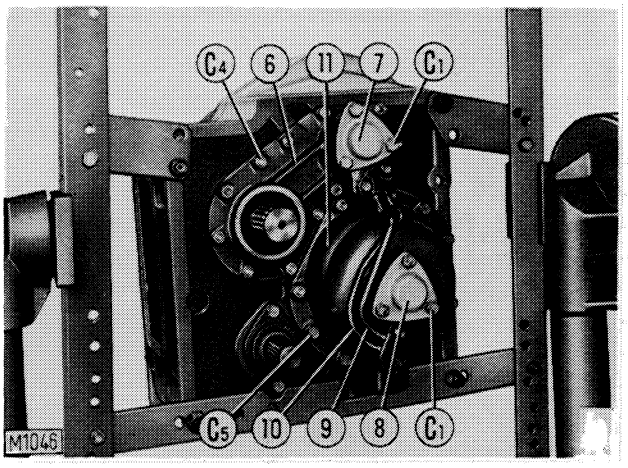

Fig. 7-2 - Front view of transmission on revolving stand 75290090.
C1 - cover (1, 2, 7 and 8) capscrews - C2 - Front cover capscrews - C3 - Cover (3) capscrews - C4 - Cover stud nuts - C5 - Cover (11) stud screws and nuts - D. Control valve - 1. Forward spool cover - 2. Second speed spool - 3. LH side cover - 4. Inspection cover - 5. Lubrication oil collector cover - 6. Rear cover - 7. 3rd speed spool cover - 8. 1st speed spool cover - 9 and 10. Lubrication and 3rd speed clutch lines - 11. 1st speed clutch cover.

7.2 TRANSMISSION DISASSEMBLY

Secure transmission assembly to revolving stand 75290090 using set of brackets shown in fig. 7-2 and proceed as follows:

⚠ WARNING

Handle all parts with extreme care. Keep hands and fingers from between parts. Wear authorized protective equipment such as safety glasses, heavy gloves, safety shoes.

Remove collector cover (5, fig. 7-2) and inspection cover (4).

Remove covers (1, 2, 7 and 8) and withdraw first speed, second speed, third speed and forward spools.

NOTE - Withdraw spools slowly taking care not to rotate them as otherwise seal damage will result.

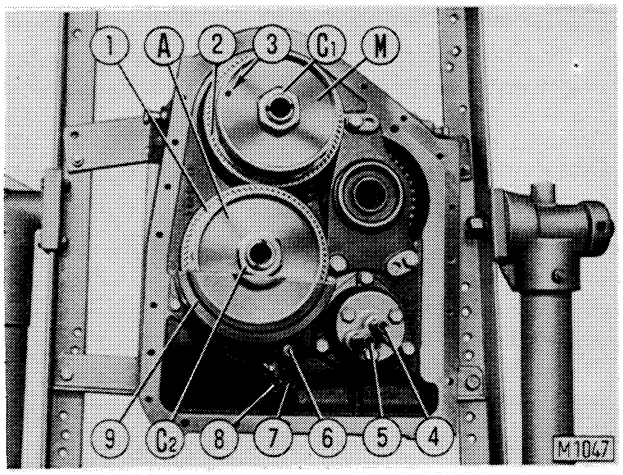

Fig. 7-3 - Transmission with front cover removed.
A. Forward clutch - C1 - 2nd speed shaft nut - C2 - Forward clutch shaft nut - M. 2nd speed clutch - 1 and 2. Outer drum - 3. 2nd speed clutch oil drain valve - 4. Reverse speed pressure oil line - 5. Reverse speed lubrication oil line - 6. 1st and 3rd speed lubrication lines - 7. 1st speed pressure oil line - 8. 3rd speed pressure oil line - 9. Oil collector.

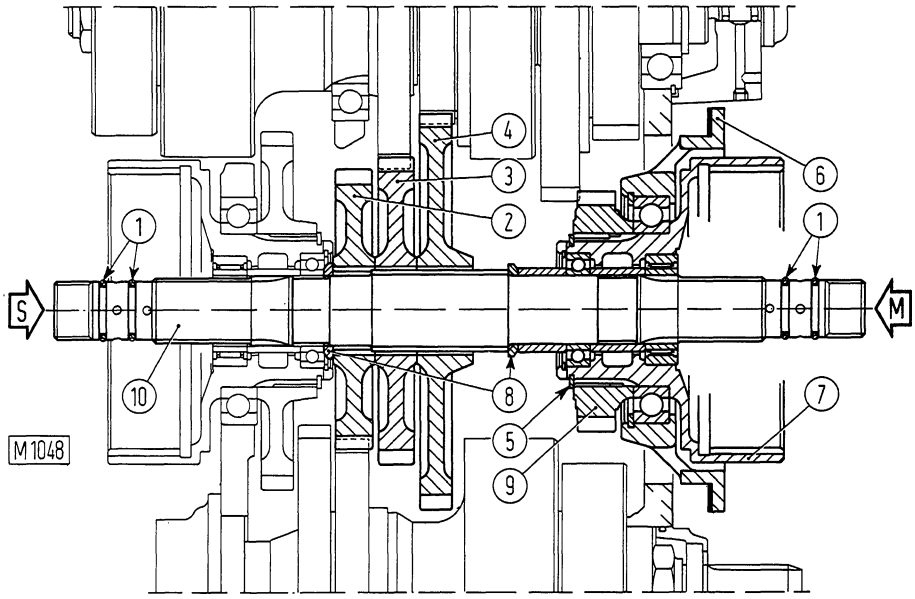

Fig. 7-4 - Disassembling / assembling first speed housing assembly (6) outer drum (7) and clutch shaft (10).
M. Direction of assembly - s. Direction of disassembly - 1. O-ring - 2. Reverse speed idler gear - 3. Second speed idler gear - 4. 3rd speed idler gear - 5. Retaining ring - 8. Thrust ring - 9. 1st speed drive gear.

⚠ WARNING

Guard against kinking chain or cables. Always wear heavy gloves when handling chain or cable.

Remove front cover horizontally using lifting hook 75291526 as shown in figure 7-17.

Remove side covers.

Disconnect 3rd speed pressure oil and lubrication lines and remove covers (6 and 11).

Disassemble 1st and forward speed clutches and associated shaft as follows:

Withdraw lines (5 and 4, fig. 7-3).

Remove lines (6, 7 and 8) together after raising oil collector (9).

Remove oil collector (9).

Back off nut (C2) and disassemble forward clutch pack. Disassemble 1st speed clutch pack (L, fig. 7-19).

⚠ WARNING

Handle all parts with extreme care. Keep hands and fingers from between parts. Wear authorized protective equipment such as safety glasses, heavy gloves, safety shoes.

Withdraw housing (6, fig. 7-4), first speed outer drum (7), forward and first speed shaft assembly (10) together as shown in figure 7-4.

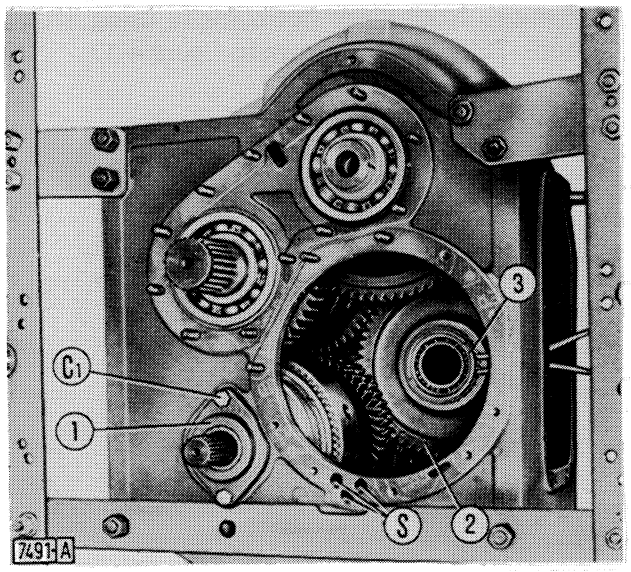

Fig. 7-5 - Removing/installing forward driven gear retaining ring.
C1 - Cover (1) capscrews - S. 1st and 3rd speed pressure and lubrication line rear seats - 1. Seal corner - 2. Forward driven gear - 3. Retaining ring.

Separate housing (6, fig. 7-4) and gear (9) from outer drum (7), removing spool cover.

NOTE - 1st speed clutch pack (L, fig. 7-19) may be removed whole, together with housing (6, fig. 7-4) and shaft (10).

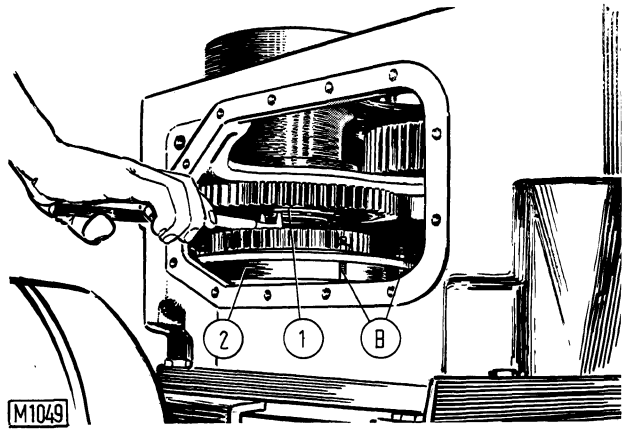

Fig. 7-6 - Removing 2nd speed driven gear retaining ring (1).
B. 3rd speed clutch retainers 75295004 - 2. 3rd speed clutch.

Remove retaining ring (3, fig. 7-3) prior to removing outer drum (1) and forward clutch driven gear (2, fig. 7-5).

Disassemble 2nd, and 3rd speed clutches and associated shafts as follows:

⚠ WARNING

Handle all parts with extreme care. Keep hands and fingers from between parts. Wear authorized protective equipment such as safety glasses, heavy gloves, safety shoes.

Position 3rd speed clutch retainers 75295004 as shown in fig. 7-6, back off nut (C1, fig. 7-3) and remove 2nd speed clutch pack.

Position transmission housing horizontally with front side uppermost and withdraw 2nd and 3rd speed clutch shafts (fig. 7-6) from below together with bearing (7, fig. 7-19).

Raise 2nd speed outer drum, remove thrust ring (8, fig. 7-19), withdraw retaining ring (1, fig. 7-6) and remove drum unit.

Remove 3rd speed clutch assembly from housing.

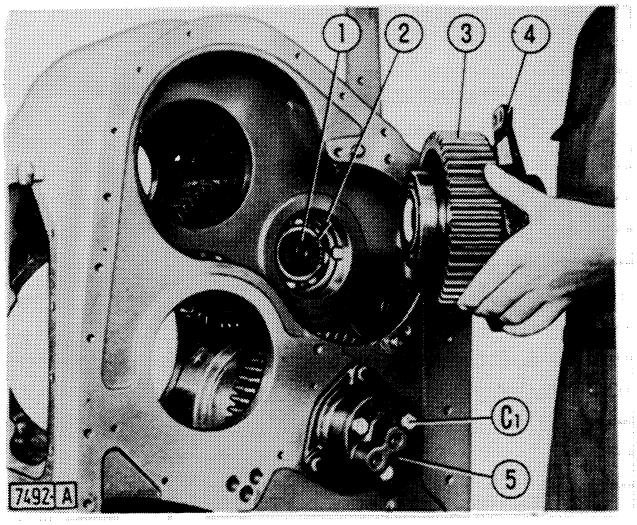

Fig. 7-7 - Removing/installing support (4) together with transmission drive gear (3).
C1 - Cover (5) capscrews - 1. Outer shaft - 2. Retaining rings - 5. Reverse speed spool cover.

Disassemble drive gear and associated output shaft as follows:

Remove support (4, fig. 7-7), complete with transmission drive gear (3).

Remove retaining rings (2, fig. 7-7 and 9, fig. 7-9), output shaft, bearings and driven gear.

Disassemble reverse speed clutch and associated shaft as follows:

Remove cover (5, fig. 7-7), reverse spool (4, fig. 7-14) and cover (5).

Remove seal carrier (1, fig. 7-5), install retainers 75295002 (B, fig. 7-8), position transmission housing horizontally with front side uppermost, back off locknut (C1), withdraw shaft (2) in the direction arrowed in the figure and remove reverse speed clutch assembly and associated driven gear (3).

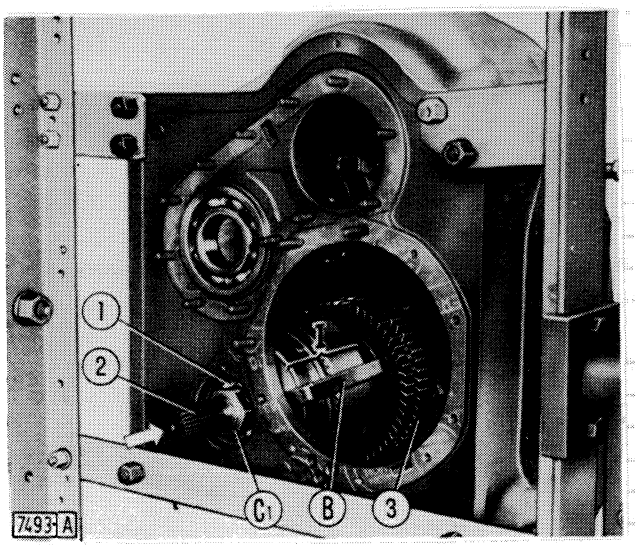

Fig. 7-8 - Disassembling/assembling reverse speed clutch assembly (1).
Note - Direction of shaft (2) removal arrowed - B. Retainers 75295002 - C1 - Reverse speed shaft lock-nut - 1. Rear ball bearing - 2. Reverse speed clutch shaft - 3. Reverse speed driven gear.

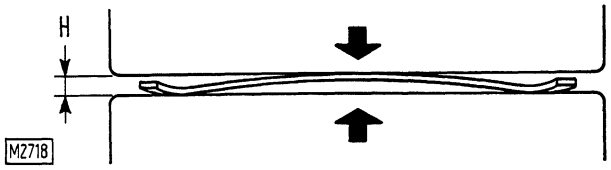

Fig. 7-9 - Checking spacer spring for weakness.
H = 2.6 mm (0.104 in) dimension to be obtained without spring distortion.

7.2.1 CLUTCH INSPECTION

Check that maximum runout of each clutch disc (12, 13 and 14 fig. 7-9) is less than 0.4 mm (0.016 in). Also check externally toothed discs (13) for:

Thickness changes over sintered surfaces which should not exceed 0.05 mm (0.002 in).

Excessive wear of sintered surfaces, due to dirty or insufficient oil, or pitted areas.

Spacer springs seldom become weakened; however, check that they do not become permanently distorted after compression to dimension (H, fig. 7-9) 2.6 mm (0.104 in).

7.2.2 CLUTCH PACK COMPOSITION

DESCRIPTION	QUANTITY		
	1st and 2nd reverse	Forward	3rd
Steel outer disc (12, fig. 4-9)	1	1	1
Discs (13) (sintered metal facing)	7	8	5
Intermediate steel discs (14)	6	7	4
Spacer springs to ring (15)	7	8	5
Shim steel plates (14)	AR	AR	AR

7.3 TRANSMISSION ASSEMBLY

Secure transmission housing to rotating stand 75290090 using brackets shown in figure 7-2 and proceed as follows:
Install reverse speed clutch (1, fig. 7-8) with shaft (2) and driven gear (3):

⚠ WARNING

Handle all parts with extreme care. Keep hands and fingers from between parts. Wear authorized protective equipment such as safety glasses, heavy gloves, safety shoes.

Install bearing (69, fig. 7-13), gear (70), thrust ring (43) and outer drum (2, fig. 7-12), together with gear (3) on shaft (68, fig. 7-13).

Clamp assembly in a vice as shown in figure 7-12 and install clutch pack components in drum (2) as shown in detail (a, fig. 7-10).

Couple fixed piston (3, fig. 7-11) and moving piston (4) to shaft (1, fig. 7-12).

Attach pair of retainers 75295002, A and fully tighten capscrews to block clutch pack.

Withdraw clutch assembly (1, fig. 7-13) from shaft.

Position transmission housing horizontally with front side facing upwards and install clutch assembly (1, fig. 7-13), thrust ring (43) and driven gear (70) in the housing.

Insert clutch shaft (68), complete with front bearing (69) and O-ring (35) from above and return the transmission housing vertical.

Install rear bearing (1, fig. 7-8).

Tighten nut (C1) to specified torque, connecting torque wrench to wrench using adapter 75291283 and stake in two places.

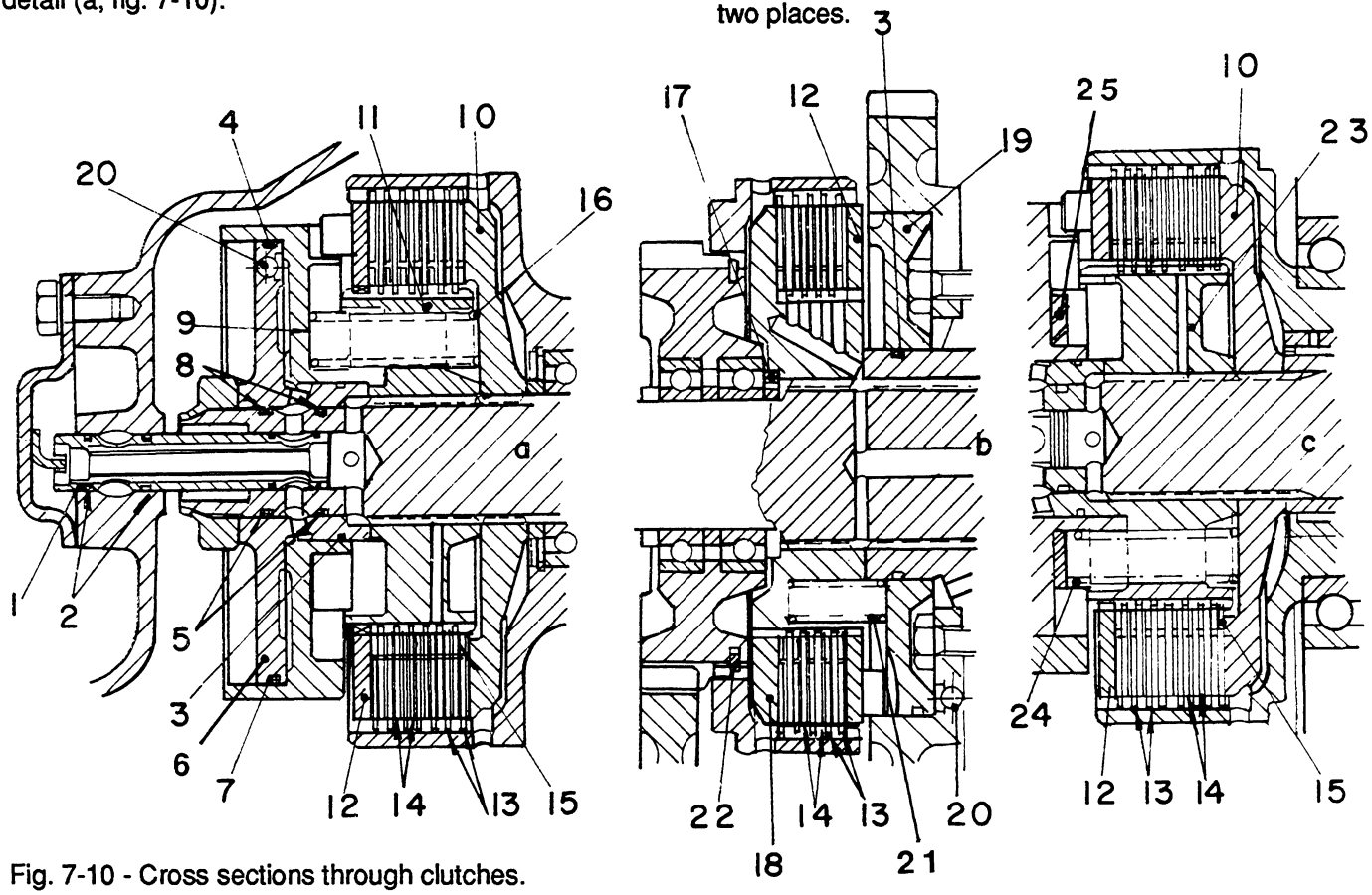

Fig. 7-10 - Cross sections through clutches.
a. 1st, 2nd and reverse speed clutches - b. 3rd speed clutch - c. Forward clutch - 1. Control valve spool - 2, 3, 4 and 5. O-rings - 6. Fixed piston - 7. Moving piston - 8. Retaining ring - 9. Cup - 10. Fixed disc - 11. Inner drum - 12. Outer disc - 13. Disc with sintered metal facings - 14. Intermediate steel disc - 15. Spacer springs - 16. 1st, 2nd and reverse speed clutch release springs - 17. Thrust ring with lubricating oil ports - 18. Inner drum - 19. 3rd speed clutch moving piston - 20. Drain valve - 21. 3rd speed clutch release spring - 22. Retaining ring - 23. Inner drum - 24. Forward clutch release spring - 25. Spring seat.

Remove retainers (B, fig. 7-8) and secure seal carrier (1, fig. 7-5), together with seal and front cover 5, fig. 7-14).

Assemble reverse speed spool (4, fig. 7-14), noting the following:

Pack retaining ring seats with grease.

Install retaining rings (1, fig. 7-15) concentrically relative to spool (2) centerline.

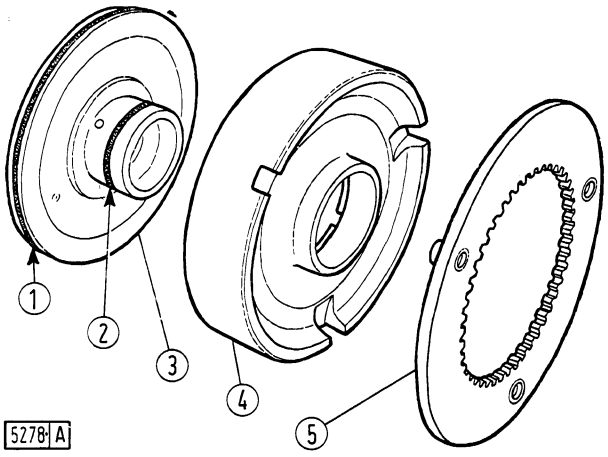

Fig. 7-11 - 1st, 2nd, reverse and forward clutch cylinder parts.
1 and 2. O-rings - 3. Fixed piston - 4. Moving piston - 5. Outer disc.

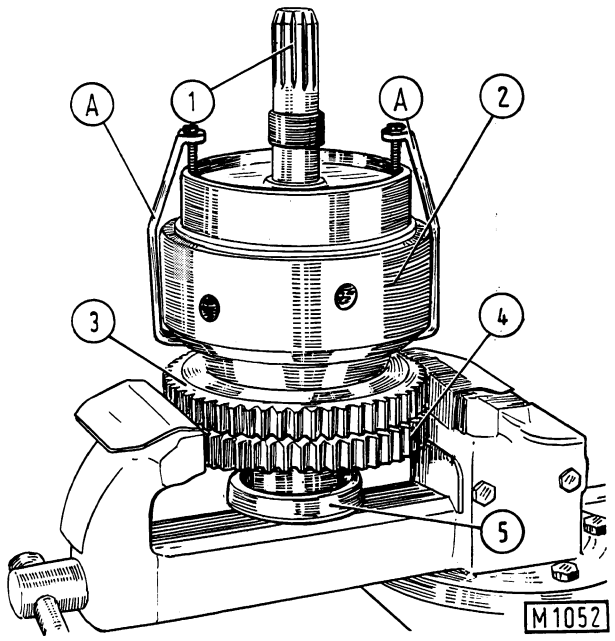

Fig. 7-12 - Rebuilding reverse speed clutch on bench.
A. Retainers 75295002 - 1. Clutch shaft - 2. Outer drum - 3. Drive gear - 4. Driven gear - 5. Front bearing.

Slowly insert spool together with O-rings, being careful not to turn the spool as otherwise the uncoupled teeth will damage the retaining rings.

Secure cover (5, fig. 7-7).

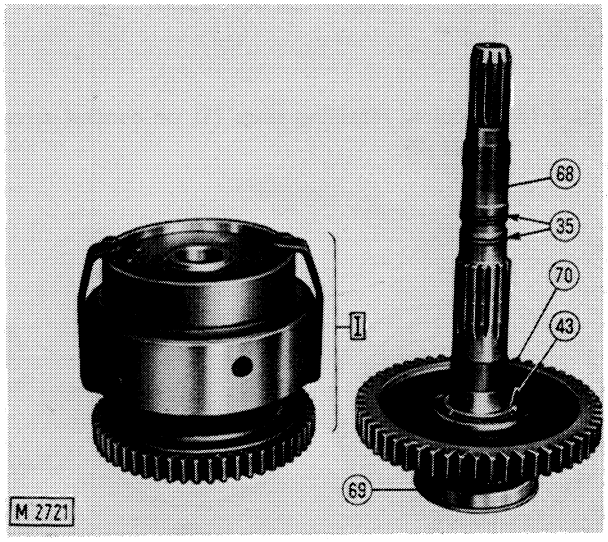

Fig. 7-13 - Assembling reverse speed clutch on bench.
1. Reverse speed clutch assembly - 35. O-ring - 43. Thrust ring - 68. Clutch shaft - 69. Front bearing - 70. Driven gear.

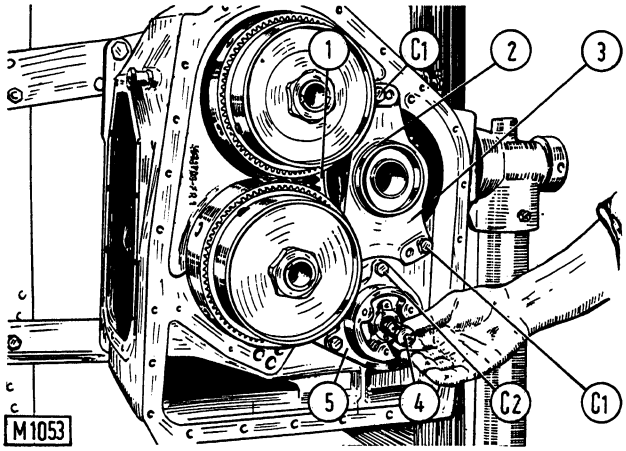

Fig. 7-14 - Installing/removing reverse speed spool.
C1 - Support (3) capscrews - C2 - Cover (5) capscrews - 1. Transmission drive gear - 2. O-ring - 3. Support - 4. Reverse speed spool - 5. Reverse speed clutch shaft front cover.

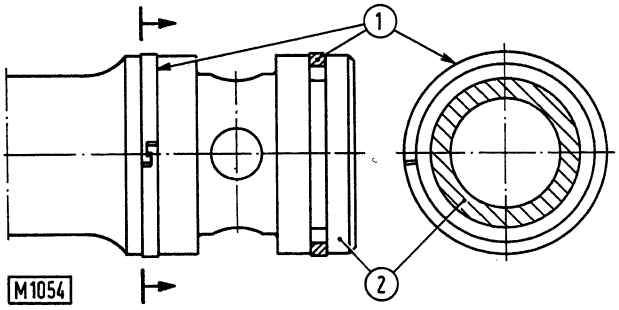

Fig. 7-15 - Installing retaining rings (1) on control valve spool (2).

Assemble transmission drive output shaft as follows:

⚠ WARNING

Handle all parts with extreme care. Keep hands and fingers from between parts. Wear authorized protective equipment such as safety glasses, heavy gloves, safety shoes.

Support driven gear housing (6, fig. 7-19) from inside and install shaft (5).

Install retaining ring (9) from inside housing.

Install retaining ring (2, fig. 7-7)

Install support (4, fig. 7-7) with associated drive gear (3) and bearing.

Assemble 2nd and 3rd speed clutches and associated shafts as follows:

Rebuild 3rd speed clutch pack as shown in detail b, fig. 7-10.

Insert tool 75293324 in inner drum splines as shown in figure 7-16, couple cylinder and piston.

Prevent cylinder from rotating and, acting with a wrench as shown in figure, align splines in order to withdraw tool.

Attach retainers 75295004 (C, fig. 7-16) and prior to tightening, remove tool 75293324 (D).

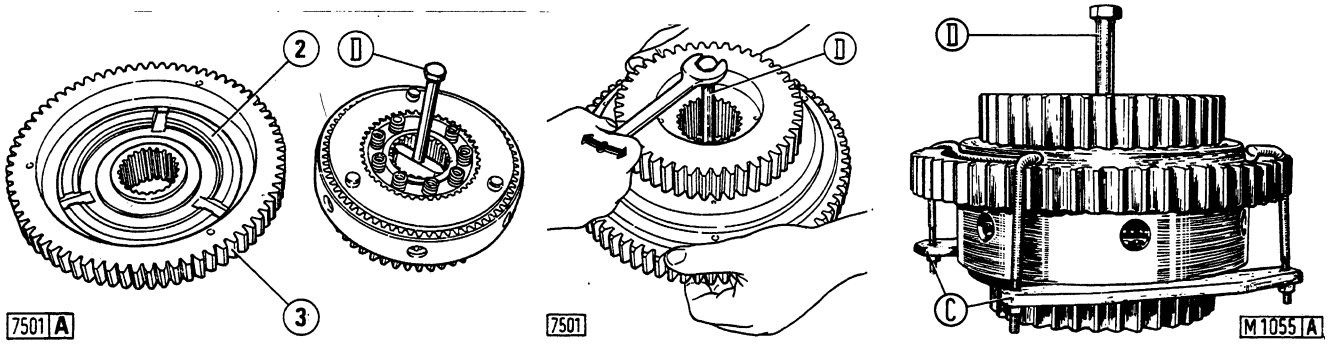

Fig. 7-16 - Rebuilding 3rd speed clutch on bench.
C. Retainers 75295004 - D. Tool 75293324 for positioning inner drum splines - 2. Moving piston - 3. Drive cylinder complete with driven gear.

Position transmission horizontally with front side uppermost and install 3rd speed clutch pack (2, fig. 7-6) and 2nd speed driven gear on inside of housing.

Install 2nd speed drum assembly from the front, raise driven gear and secure with retaining ring (1, fig. 7-6).

Install thrust ring (8, fig. 7-19).

Move transmission housing to horizontal position with rear side facing upward, checking 3rd speed clutch assembly during rotation.

Position oil collector retainer (10, fig. 7-19), bearing (7) and split retaining rings (11) on shaft (2) as shown in figure.

Insert shaft assembly from above.

Return transmission to vertical position.

Assemble 2nd speed clutch pack as shown in fig. 7-10.

Check that split retaining rings (11, fig. 7-19) are correctly positioned in seats.

Tighten nut (C1) to specified torque and stake.

Assemble 1st speed clutch and associated shaft as follows:

Install forward clutch outer drum (1, fig. 7-3).

⚠ WARNING

Handle all parts with extreme care. Keep hands and fingers from between parts. Wear authorized protective equipment such as safety glasses, heavy gloves, safety shoes.

Install driven gear (2, fig. 7-5) from inside and secure with retaining ring (3).

Position transmission housing horizontally with rear side uppermost.

Install first thrust ring (8, fig. 7-4) and idler gears (2, 3 and 4) from inside.

Install from above shaft 910, fig. 7-4), second thrust ring (8) and housing assembly (6), together with outer drum assembly (7), interposing housing gasket.

Assemble 1st speed (L, fig. 7-19) and forward clutch packs as shown in fig. 7-10.

Mesh outer disc (5, fig. 7-11) with inner drum splines, tighten 1st speed clutch nut (C2, fig. 7-19) to 19 daNm (140 ft lbs.).

Tighten forward clutch nut (C4, fig. 7-19) to specified torque, check that 1st speed nut is tightened to specified torque and stake.

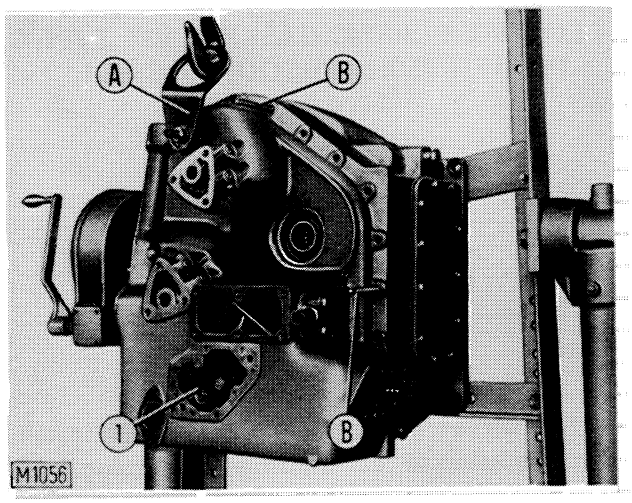

Fig. 7-17 - Assembling/disassembling transmission housing front cover.
A. Lifting hook 75291526 - B. Guide pins 75291525 - 1. Lubricating pressure limiting valve.

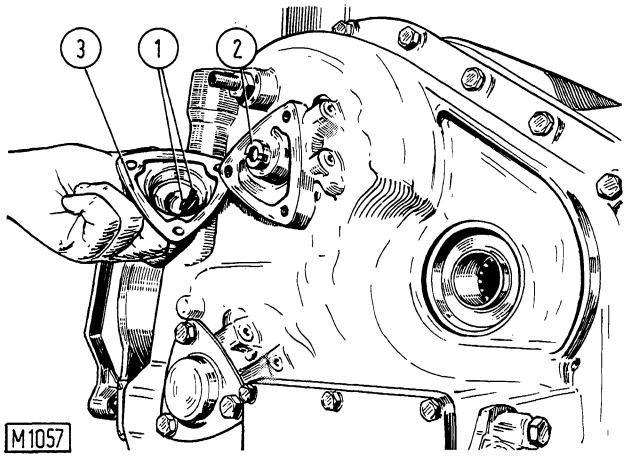

Fig. 7-18 - Installing 1st, 2nd and 3rd speed and forward spool covers.
1. Spool retainers - 2. Spool - 3. Cover.

Support oil collector (9, fig. 7-3), connect lines (6, 7 and 8), inserting rear ends in associated seats (S, fig. 7-5) and secure oil collector by inserting the edge into the grooves on the piping.

Assemble transmission housing outer cover as follows:

Install rear cover assembly (6, fig. 7-2) and 1st speed housing cover (11), interposing associated gaskets and connecting lubricating and 3rd speed oil pressure lines.

Install lines 4 and 5, fig. 7-3.

Secure lifting hook 75291526 (A, fig. 7-17) to front cover, tighten guide pins 75291525, B, to housing and connect slow and fast clutch lines to ports on cover using a pin.

Install left and right side covers (3, fig. 7-2), inspection cover (4) and lubricant oil collector cover, interposing associated gaskets and checking that cover (5) is complete with O-ring.

Install 1st, 2nd, and 3rd speed and forward spools (2, fig. 7-18), noting instructions given previously.

Grease gaskets, install on covers (1, 2, 7 and 8, fig. 7-2) and secure.

7.4 TRANSMISSION INSTALLATION

⚠ WARNING

Lift and handle all heavy parts with a lifting device of proper capacity. Be sure parts are supported by proper slings and hooks. Use lifting eyes if provided. Watch out for people in the vicinity.

Guard against kinking chain or cables. Always wear heavy gloves when handling chain or cable.

Be sure cables are anchored and the anchor point is strong enough to handle the expected load. Keep personnel clear of anchor point and cables or chain.

Never use gasoline or solvent or other flammable fluid to clean parts. Use authorized commercial, non-flammable, non-toxic solvents.

Use proper tools to bring holes into alignment. DO NOT USE FINGERS OR HANDS.

Install transmission assembly noting the following:

Clean and degrease transmission housing and rear transmission mating surfaces before applying Loctite plastic gasket.

Use pair of guide pins 75291586 to install transmission to rear transmission housing.

Installing drive shaft, ensure that rear universal joint is complete with cork seal and that a coat of lubricant has been applied to the splined end.

7.5 POWER TAKE-OFF

Power take-off splined shaft (1, fig. 7-20) is coupled to rear end of reverse speed clutch shaft and is accessible from rear of machine after removal of transmission housing plug (2) using extraction hole provided (thread M12 x 1.25). A splined extension shaft (3) is available on request to bring the axle drive to rear end of transmission housing.
With engine running, power take-off splined shaft rotates regardless of whether the machine is stationary (transmission in neutral, parking brake on), or moving. Power take-off may not be disengaged from converter output shaft but may be disengaged from engine when idling.

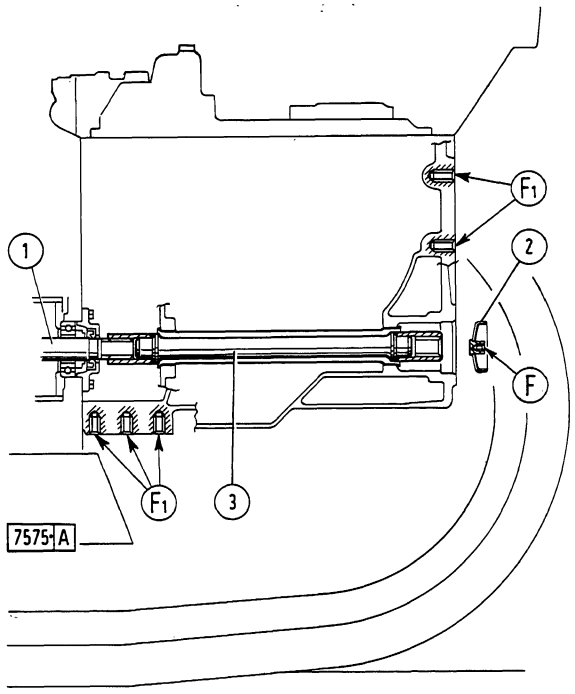

Fig. 7-20 Power take-off in position on machine
F. Plug (2) extraction hole M12x1.25 - F1. Mounting holes M24x2 - 1. PTO shaft - 2. Plug - 3. PTO extension (optional)

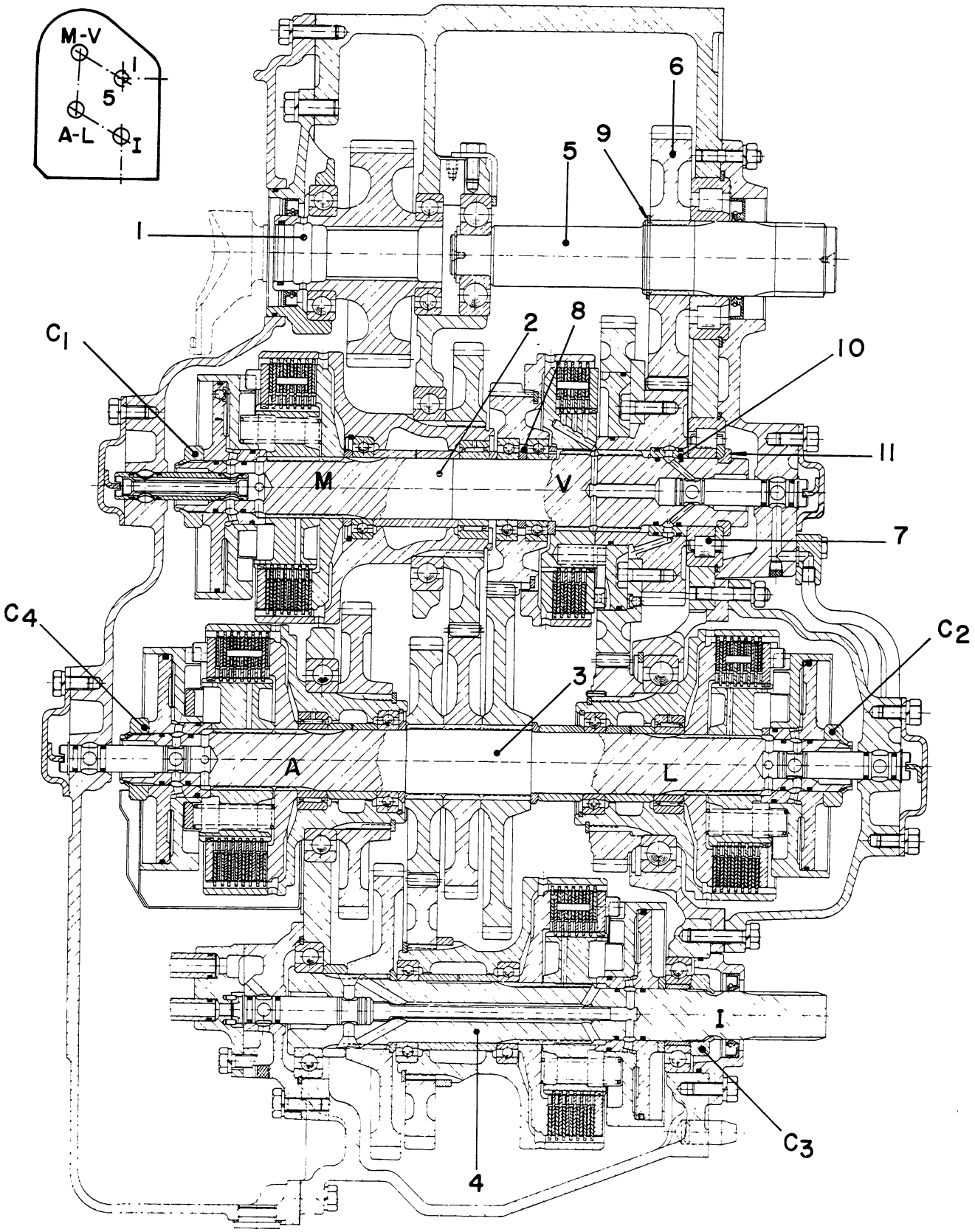

Fig. 7-19 - Cross section through transmission.
A. Forward clutch - C1 - 2nd speed clutch shaft locknut - C2 - 1st speed clutch shaft locknut - C3 - Reverse speed clutch shaft locknut - C4- Forward clutch shaft locknut - I. Reverse speed clutch - L. 1st speed clutch - M. 2nd speed clutch V. 3rd speed clutch - 1. Transmission drive shaft - 2. 2nd and 3rd speed clutch shaft - 3. Forward and 1st speed clutch shaft - 4. Reverse speed clutch shaft with splined end for PTO - 5. Rear ball bearing - 8. Thrust ring - 9. Driven gear retaining ring - 10. Collector ring - 11. Bearing split ring.

Splined shaft rotation (seen from rear of engine)	Clockwise
Splined shaft speed (at 2100 rpm)	1770 rpm
Transmission shaft output spline dimensions (1, fig. 7-20):	
Nominal diameter	35 mm (1.38 in)
Number of teeth	21
Module	1.587 mm (.062 in)
Pressure angle	30°
Extension spline dimensions (3, fig. 7-20):	
Nominal diameter	38 mm (1.50 in)
Number of splines	13
Module	2.75 mm (0.108 in)
Pressure angle	30°

7.6 SPECIFICATION AND DATA

Type	Full power shift	
Speeds	3 forward and 3 reverse	
Number of clutches	5	
Transmission gear ratio:	Forward	Reverse
1st speed	1 : 2.838	1 : 2.361
2nd speed	1 : 1.799	1 : 1.497
3rd speed	1 : 0.968	1 : 0.805
	mm	in
Sintered external spline clutch disc thickness	3.15 to 3.25	0.1240 to 0.1279
Maximum wear limit	2.60	0.102
Internal spline clutch disc thickness	1.94 to 2.06	0.076 to 0.081
Internal spline outer disc thickness	5.95 to 6.05	0.234 to 0.238
Sintered disc-to-clutch outer drum back-lash	0.25 to 0.45	0.010 to 0.018
Rolled disc-to-clutch inner drum backlash	0.15 to 0.35	0.006 to 0.014
1st, 2nd speed, forward and reverse speed clutch fixed piston (6, fig. 7-10) major OD	154.894 to 154.957	6.098 to 6.101
Clutch fixed piston (6, fig. 7-10) minor OD	54.924 to 54.970	2.162 to 2.164
1st, 2nd speed, forward and reverse speed clutch moving piston (7, fig. 7-10) major ID	155.000 to 155.063	6.102 to 6.105
1st, 2nd speed forward and reverse speed clutch moving piston minor ID	55.000 to 55.046	2.165 to 2.167
3rd speed clutch moving piston OD	174.870 to 174.910	6.885 to 6.886
3rd speed clutch moving piston ID	80.036 to 80.066	3.151 to 3.152
3rd speed clutch piston bore diameter (on 1st, 2nd and 3rd speed drive gear hub)	79.940 to 79.970	3.147 to 3.148
3rd speed clutch bore ID (on 1st speed driven gear)	175.000 to 175.063 mm (6.890 to 6.892 in)	
Clutch release piston wear clearance in bore:	Inner	Outer
Forward, reverse, 1st and 2nd speed clutches	0.030 to 0.122 mm (0.001 to 0.005 in)	0.043 to 0.169 mm (0.002 to 0.007 in)
3rd speed clutch	0.066 to 0.126 mm (0.026 to 0.005 in)	0.090 to 0.193 mm (0.003 to 0.008 in)
Clutch springs	3rd speed	Speeds: 1st and 2nd forward and reverse
Quantity per clutch	9	9
O.D.	14.35 to 14.65 mm (0.565 to 0.577 in)	18.80 to 19.20 mm (0.740 to 0.756 in)
Free length	40 mm (1.575 in)	70 mm (2.756 in)
Length under 20 to 22 daN (45 to 49 lbs.)	26 mm (1.024 in)	—
16.4 to 18.2 daN (37 to 41 lbs.)	—	60 mm (2.362 in)

7.7 TORQUE SPECIFICATION

Description	Torque (°)	
	daNm	lbs. ft.
Nut (C1, C2, C3 and C4, fig. 7-19) transmission shaft	82.0-89.5	604.8-660
Capscrews (C1, fig. 7-7), spool cover	3.4-5.7	25-42
Nut (C5, fig. 7-2), 1st speed rear cover	6.1-7.7	45-56.8
Capscrew (C1, fig. 7-14), drive gear support	5.4-6.8	39.8-50
Capscrew, transmission assembly to rear transmission housing	21.0-22.9	155-169
Capscrews (C2 and C3, fig. 7-2), side and front covers	4.8-6.0	35.4-44.2
Capscrews (C1, fig. 7-2), spool cover and (C1, fig. 7-5) reverse Shaft seal carrier.....	3.4-5.7	25-42
Capscrew, oil collector (9, fig. 7-3)	2.3-2.9	17-21.4
Capscrews, oil collector cover, (5, fig. 7-2) and inspection cover (4)	2.3-2.9	17-21.4

(°) Lubricate with engine oil

7.8 SERVICE TOOLS

Part No.	Description
75291283	Adapter, E, fig. 7-14, torque wrench
75291517	Sling, transmission (fig. 7-1)
75291525	Guide pins, B, fig. 7-19, transmission cover
75291526	Hook, lifting, transmission cover A, fig. 7-19
75291586	Guide pin, transmission to rear transmission housing
75293324	Tool for positioning 3rd speed clutch inner drum splines, D, fig. 7-16
75295002	Retainers, reverse clutch, A, fig. 7-12
75295004	Retainers, 3rd gear clutch, B, fig. 7-6 and C, fig. 7-16

8. TORQUE CONVERTER/TRANSMISSION HYDRAULIC SYSTEM

8.1 OPERATION

8.1.1 CHARGING AND SCAVENGING

Charging pump (Pa, fig. 8-1), draws oil from front transmission housing through filter Fa and is delivered to circuit through filter Fm.
Bypass valve (5) protects filter Fm from any sudden rises in pressure due to cartridge clogging or excessive oil density. Valve cuts in when an abnormal pressure drop occurs inside filtering element and its function is to ensure oil flow through the system at all times, partially or totally by passing the cartridge.
Scavenger pump Pr, integral with charging pump Pa, delivers oil trapped in torque converter housing to front transmission housing through strainer Fr and oil trapped in rear transmission housing through filter Fs.

8.1.2 APPLY OIL AND TORQUE CONVERTER PRESSURE REGULATING VALVE

After flowing through filter Fm, the oil from charging pump (Pa, fig. 8-1), enters torque converter/transmission oil pressure regulating valve (4) which has the following functions:

To maintain transmission clutch oil pressure at specified setting (red sector).

To convey most of the oil to torque converter where it has a cooling function and subsequently carries out the cycle described in the following paragraph.

Relief valve (3) protects torque converter and oil cooler from unforeseen pressure increase possibly due to cold and excessively dense oil by discharging excess oil into converter housing.

8.1.3 OIL COOLING AND LUBRICATION

Oil from torque converter passes into oil cooler and then is distributed to clutch lubrication ports through collector (20).
Maximum lubrication pressure is restricted by valve (21).
Dash-mounted temperature gauge indicates the temperature of the oil entering the cooler.
Indicator light (Sc) lights up in the event of insufficient lubricating oil pressure. Should light remain on with engine running, stop the engine immediately and trace the fault as described in paragraph 8.10.

8.1.4 TRANSMISSION CLUTCH ENGAGEMENT

Pressure regulator valve (4, fig. 8-1) controls transmission clutch oil pressure (red sector) which reaches control valve D.
When gear lever is actuated, valves 8, 9 and 16 distribute pressure oil to the selected speed clutch cylinders.
The following speeds are engaged, depending on valve position:

VALVE POSITION	VALVE	SELECTED SPEED
8	Up	1st forward
9	Down	
16	Up	
8	Down	1st reverse
9	Up	
16	Up	
8	Up	2nd forward
9	Down	
16	Intermediate	
8	Down	2nd reverse
9	Up	
16	Intermediate	
8	Up	3rd forward
9	Down	
16	Down	
8	Down	3rd reverse
9	Up	
16	Down	
8	Up	Neutral (*)
9	Up	
16	Down or Up	

(*) with gear lever in neutral either 1st, 2nd or 3rd clutch is always engaged.

Control lever remains in selected position since oil pressure acting on piston (22, Fig. 8-1) overcomes spring action and prevents interaction of safety device which would otherwise return control lever to neutral and place valves (8 and 9) in exhaust.
Trimmer valves Va and Vi permit smooth engagement in forward and reverse by regulating the pressure

increase in the apply circuits regardless of operator's handling (see paragraph 8.1.5).
Clutch engagements may be felt on hand lever through oil pressure acting on valves 8 and 9. During 2nd and 3rd speed, clutch engagement drain valve (23) balls are held in closed position by oil pressure.
When changing from 3rd or 2nd speed to another speed the associated apply cylinder is placed in exhaust and the subsequent pressure drop causes centrifugal force to prevail over oil pressure, shifting balls (19) outward, facilitating exhaust from apply cylinder which results in rapid clutch release.
Dash-mounted oil pressure gauge P indicates transmission clutch oil pressure.

8.1.5 TRIMMER VALVES

When gear lever is operated, oil pressure in selected transmission clutches does not build up immediately. In fact, oil pressure directed to trimmer valves Va or Vi, fig. 8-1, initially opens plunger 10, flows to control valve exhaust port lubricating bearings and transmission output and input shafts.
Plunger 10 opens only temporarily as oil pressure also reaches plunger 12.
As plunger 12 has a larger area than plunger 10 oil pressure tends to return plunger 12 to closed position causing an increase in pressure.
Orifice 24 retards oil outflow allowing smooth plunger return stroke, while springs 15 compress to increase plunger (12) travel.
Spring delaying action stops when plunger 12 closes plunger 10 through stem 11. Thus oil pressure builds up quickly to valve 4 setting (normal setting 14.2 to 14.7 bar (206 to 213 psi)).
Forward trimmer valve orifice 24 cross section is smaller than that of reverse speed trimmer valve orifice due to the presence of a wire restriction which causes a longer trimmer phase in forward position.
Dump valve (14) allows rapid draining of oil from plunger (12) chamber when the circuit is placed in exhaust.

⚠ WARNING

⚠ This symbol is your safety alert sign. It means ATTENTION! BECOME ALERT! YOUR SAFETY IS INVOLVED.

⚠ Read and heed all safety instruction carrying the signal words WARNING and DANGER.

LEGEND FOR FIG. 8-1
NOTE: Outline shows high reverse range clutch engagement.
a. Detail of control valve in intermediate forward range
b. Detail of control valve in idle (with low range clutch engaged)
A. Forward clutch
C. Torque converter
D. Transmission control valve
Fa. Suction line filter with steel mesh and magnetic plug
Fm. Oil supply pump pressure line filter with steel mesh
Fr. Scavenger pump intake filter with net
Fs. Scavenger pump intake filter with net
I. Reverse clutch
L. Low gear clutch
M. Intermediate range clutch
P. Transmission clutch oil pressure gauge
Pa. Oil pressure pump
Pr. Scavenger pump
R. Tank
Sc. Low oil pressure indicator
S. Heat exchanger
T. Oil thermometer
V. High range clutch
Va. Forward gear trimmer valve
Vi. Reverse gear trimmer valve
Vv. Clutch modulating valves

1. Breather
2. Magnetic filter plug (Fa)
3. Torque converter relief valve
4. Transmission/clutch pressure regulating valve
5. Filter by pass valve (Fm)
6. Valve cam
7. Valve cam
8. Valve
9. Valve
10. Trimmer valve bearings and poppets
11. Trimmer valve stem
12. Trimmer valve plunger
13. Trimmer valve bearings and poppets
14. Trimmer valve dumps valve
15. Trimmer valve springs
16. Low, intermediate, high range clutch spool
17. Eccentric
18. Range control detent cam
19. Intermediate and high range clutch oil dump valve
20. Clutch lubrication oil manifold
21. Lubricant pressure relief valve
22. Piston
23. Valve assembly
24. Trimmer valve orifice

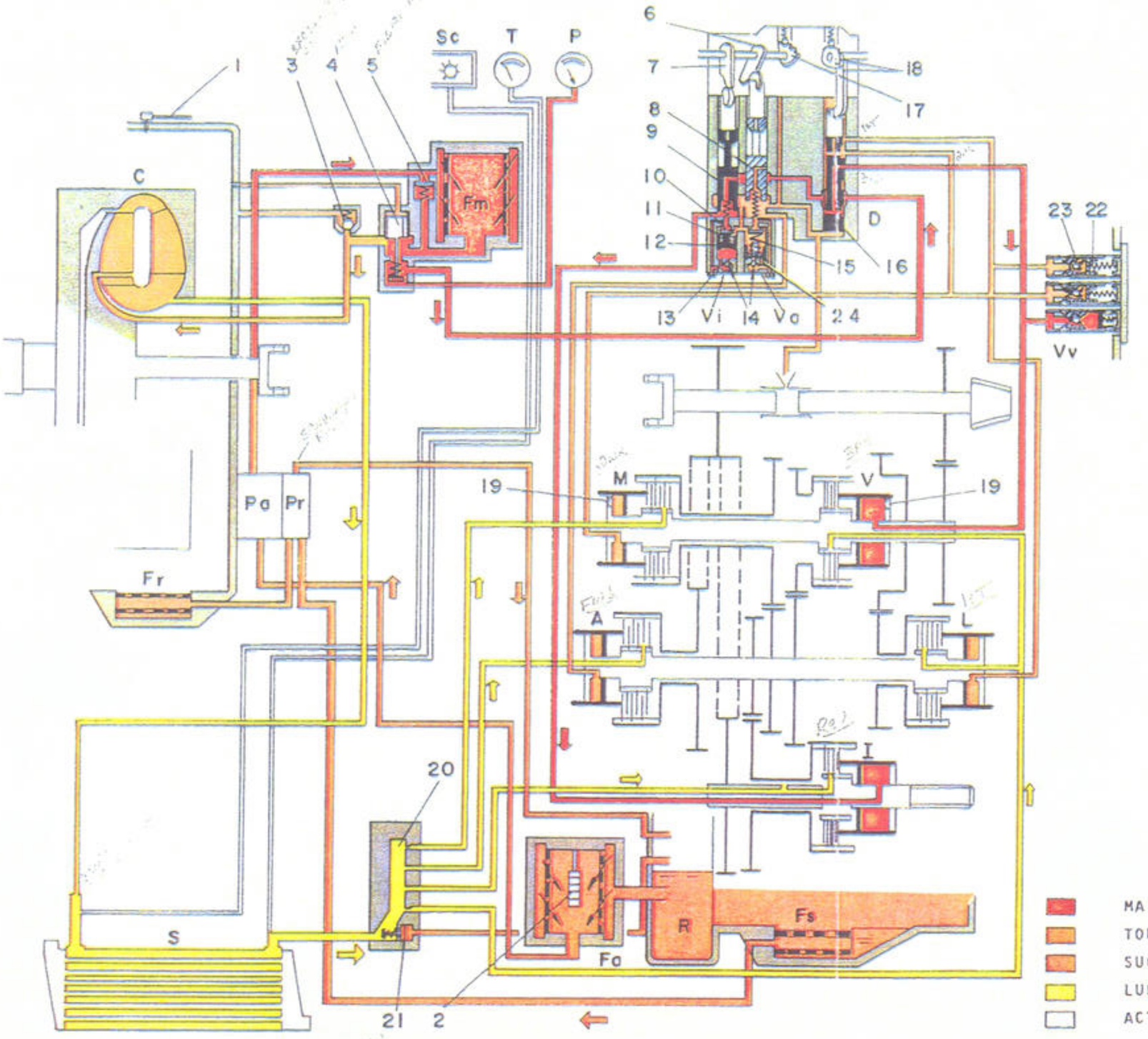

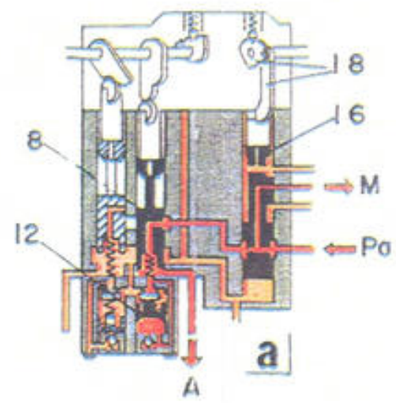

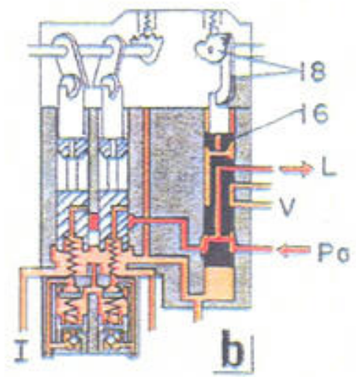

Fig. 8-1 Tranamission and Torque Converter Hydraulic Schematic

OIL CODE

MAIN PRESSURE

TORQUE CONVERTER CHARGING

SUCTION AND SUMP

LUBRICATION

ACTING VALVE

8.2 HYDRAULIC PUMP

⚠ WARNING

Handle all parts with extreme care. Keep hands and fingers from between parts. Wear authorized protective equipment such as safety glasses, heavy gloves, safety shoes.

To disassemble the pump, first remove drive coupling (4, fig. 8-2) using a universal puller and slacken capscrews C1.

Thoroughly clean parts and lubricate to prevent seizure during initial running. If necessary, replace bushings 6 and 7. Install with 0.5 mm(0.02 in) stand-in relative to the faces shown in figure and ream bores using jig 75291370 (11, fig. 8-3) and reamer 75291372 A.

Prior to installing pump to torque converter housing, check that drive shaft rotates without binding.

⚠ WARNING

Never use gasoline or solvent or other flammable fluid to clean parts. Use authorized commercial, non-flammable, non-toxic solvents.

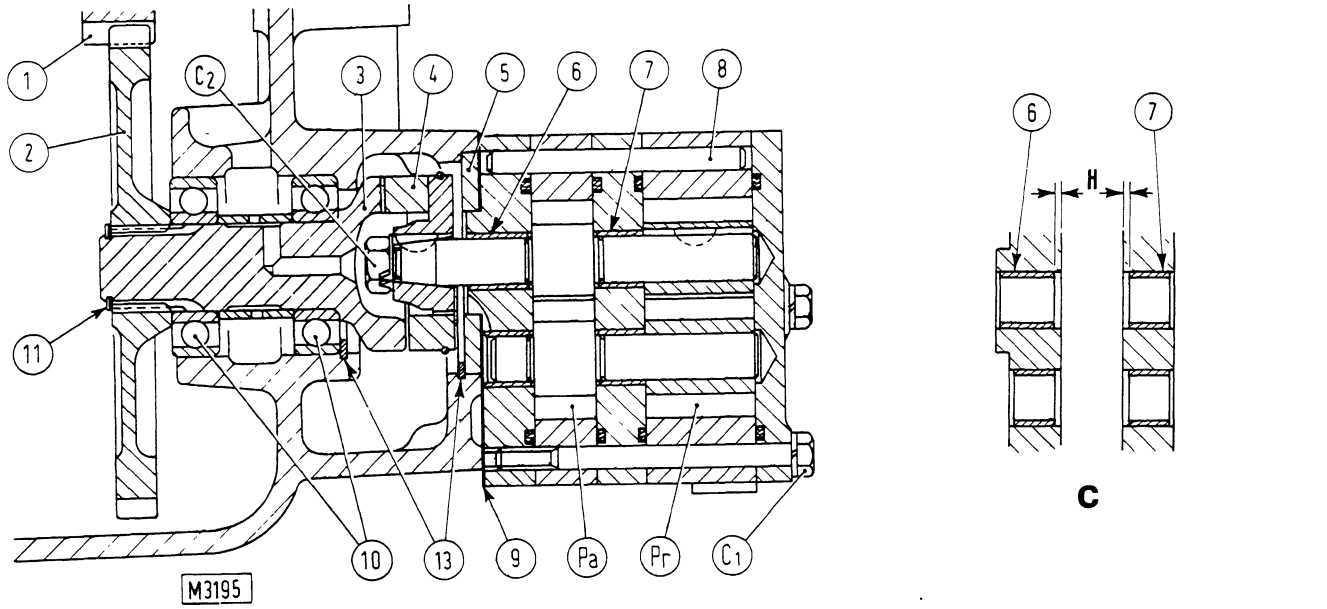

Fig. 8-2 - Cross-section through torque converter/transmission hydraulic pump.
c. Bushing (6 and 7) installation - C1 - Capscrews - C2 - Locknut (4) H. = 0.5 mm (0.02 in) bushing stand-in - Pa. Charging pump - Pr. Scavenging pump - 1. Flywheel mounted pump drive gear - 2. Pump drive gear - 3. Drive shaft - 4. Drive coupling - 5. Centralizer - 6 and 7. Bushings - 8. Centralizer - 9. Gasket - 10. Ball bearings - 11. Driven gear retaining ring - 13. Retaining ring

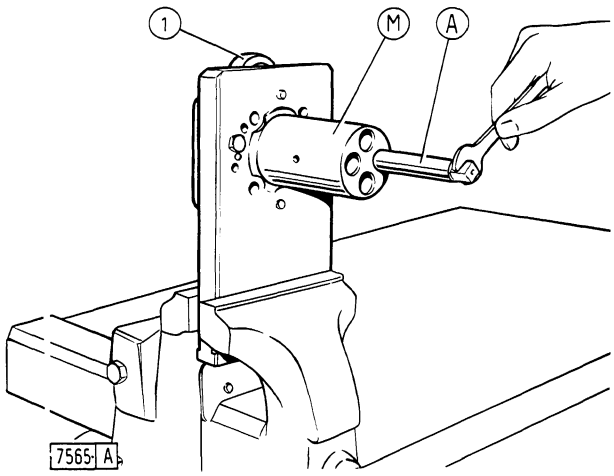

Fig. 8-3 - Reaming hydraulic pump shaft bushing bores. A. Reamer 75291372 - M. Jig 75291370 - 1. Charging pump front cover.

Pump should never run dry; therefore, after installation check oil level in transmission housing and prime the pump through repeated short engine starts.

NOTE - After installation fill torque converter scavenger pump with oil through breather tube port on top of torque converter housing to prevent possible seizure.

8.2.1 OUTPUT TEST

⚠ WARNING

DO NOT USE HANDS to search for pressure leaks. Fluid escaping under pressure can penetrate the skin.

Keep hands and face away from the loosened line nuts while performing tests. Also, wear safety glasses with side shields or goggles.

Install pump oil trolley-mounted electric motor 75291235 (A, fig. 8-5) using support 75293046 and drive coupling 75290385.

Install output tester 75295501 (B,fig. 8-5) and connect to charging pump.

Use oil supplied with tester and perform output tests at the specified temperature and pressure (fig. 8-6).

Output readings resulting from several tests performed at specified temperature and pressure must be compared with chart of fig. 8-6, noting the following points:

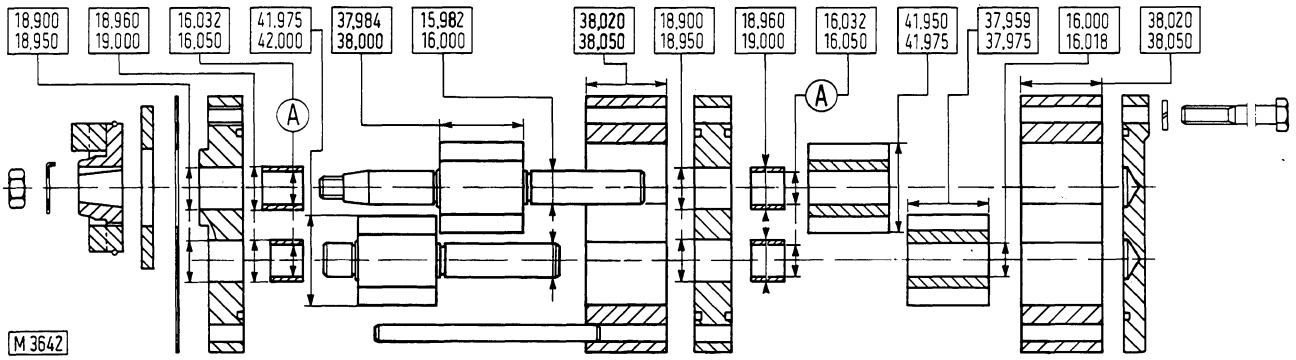

Fig. 8-4 - Hydraulic pump component dimensions.
A. Installed dimensions after reaming.

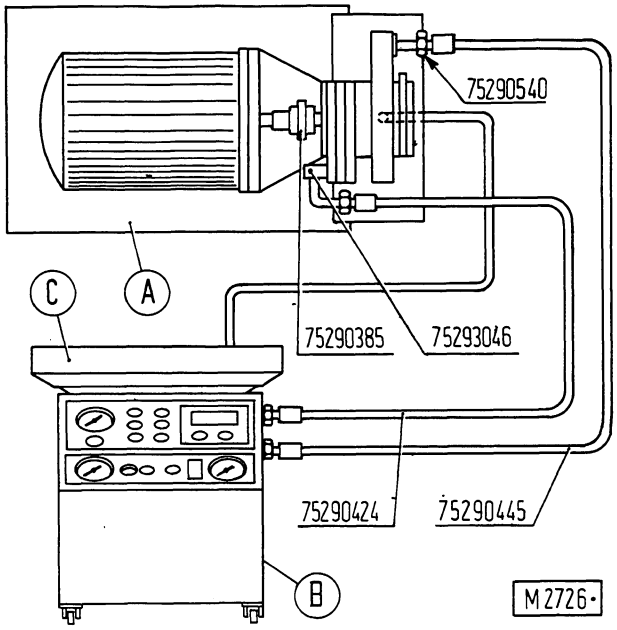

Fig. 8-5 - Charging pump output test layout.
A. Trolley-mounted electric motor 75291235 - B. Output tester 75295501 - C. Oil tray 75293005

Output reading for new or overhauled pumps should not be significantly lower than the dotted line.

Output readings applicable to used pumps are acceptable if they fall within the shaded area of the curve; if near to or lower than the continuous line, overhaul or scrap and replace the pump.

NOTE - There is no need to supply scavenger pump during charging pump testing; simply ensure that oil leaking through the bushings is adequate for gear lubrication.

8.3 TORQUE CONVERTER/TRANSMISSION OIL FILTERS

DANGER

Fluid under pressure - Turn cap or cover slowly to relieve pressure before removing.

Torque converter/transmission hydraulic system oil is filtered by:

Full flow filter (Fa, fig. 8-7) with replaceable tin-plated steel-mesh filter element on charging pump (Pa, fig. 8-1) suction.

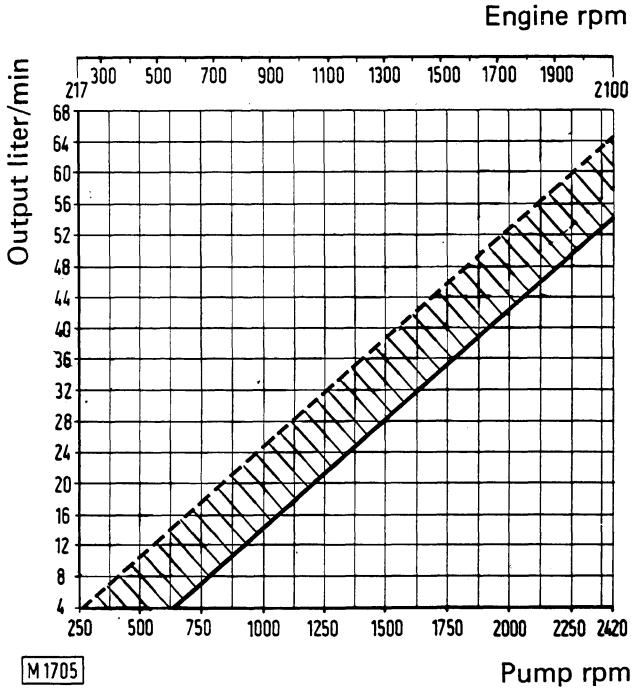

Fig. 8-6 - Charging pump output speed chart.
Test pressure ..... 15 bar (218 psi)
Oil pressure ..... 55° to 65°C (131 to 140°F)
Pump drive ratio ..... 1 to 1.154

Full flow filter (Fm, fig. 8-8) with replaceable finer steel mesh element on charging pump (Pa, fig. 8-1) delivery. In the event of filter restriction, bypass valve (5) diverts most of the oil flow from the filter cartridge to ensure continued supply of non-filtered oil.

Two steel mesh filters (Fr and Fs, fig. 8-1) on scavenging pump Pr suction.

WARNING

Never use gasoline or solvent or other flammable fluid to clean parts. Use authorized commercial, non-flammable, non-toxic solvents.

Wear safety glasses with side shields or goggles when using compressed air for cleaning to reduce the danger of personal injury from flying particles. Limit the pressure to 2 bar (30 psi) according to local or national requirements.

During overhaul, clean filters (Fa and Fm, fig. 8-1) as follows:
Clean exterior of covers and containers.
Remove nut (9, fig. 8-7), capscrew (1, fig. 8-8) and filter cartridges, followed by magnetic rod.
Wash all parts and containers.
Replace any damaged seals and assemble filters as shown in figs. 8-7 and 8-8.

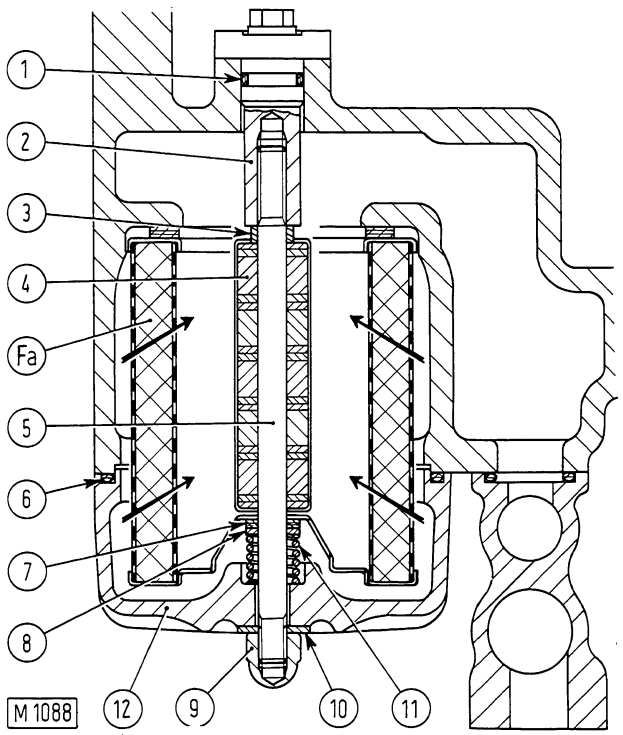

Fig. 8-7 - Section through charging pump suction filter. Fa. Steel mesh filter element - 1/6. O-rings - 2. Tie bolt - 3. Spacer - 4. Magnetic rod - 5. Stud - 7. Seal - 8. Steel washer - 9. Lock nut - 10. Copper washer - 11. Spring - 12. Cover.

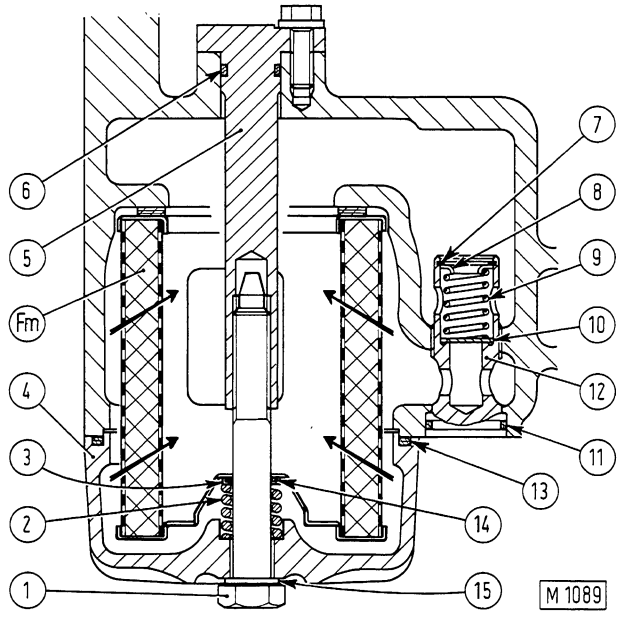

Fig. 8-8 - Section through charging pump delivery filter. Fm. Steel mesh element - 1. Capscrew - 2. Spring - 3. Cup - 4. Cover - 5. Tie bolt - 6/11/13/14 O-rings - 7/8/9/10/12. Retaining ring, cup, spring, plunger and bypass valve body - 15. Copper washer.

8.4 TRANSMISSION CONTROL VALVE AND TRIMMER VALVES

Control valve block (fig. 8-10) houses three speed selection spool valves and safety device for returning gear lever to neutral should clutch apply pressure fail.

Forward trimmer valve Va and reverse speed trimmer valve Vi are incorporated in the control valve.

Disassemble control valve as follows:

Note that valve (5, fig. 8-10) must be removed, together with cover from control valve by withdrawing pivot pin 25.

Remove plug (26) withdraw spring by hand and remove safety device components from cover.

Remove pin (27) to disassemble levers and cams from cover. Valves (3, 4 and 5) are matched with control valve body and are supplied as spares, together with valve body.

Separate trimmer valve assemblies (Va and Vi, fig. 8-10), from control valve body and disassemble, removing retaining ring 28.

Assemble control valve and trimmer valves noting the following:

Clean and lubricate all parts to prevent seizure during initial operation.

Install cams and levers on cover as shown in fig. 8-10, correctly positioning spacer (29, fig. 8-10), and secure with pin 27.

⚠ WARNING

Never use gasoline or solvent or other flammable fluid to clean parts. Use authorized commercial, non-flammable, non-toxic solvents.

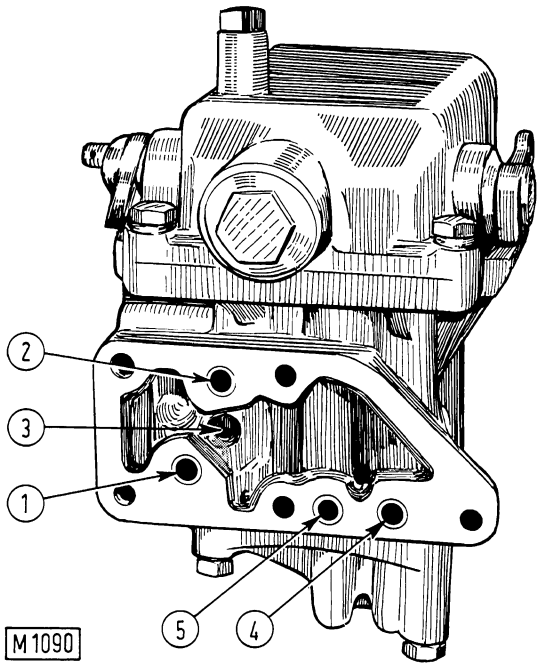

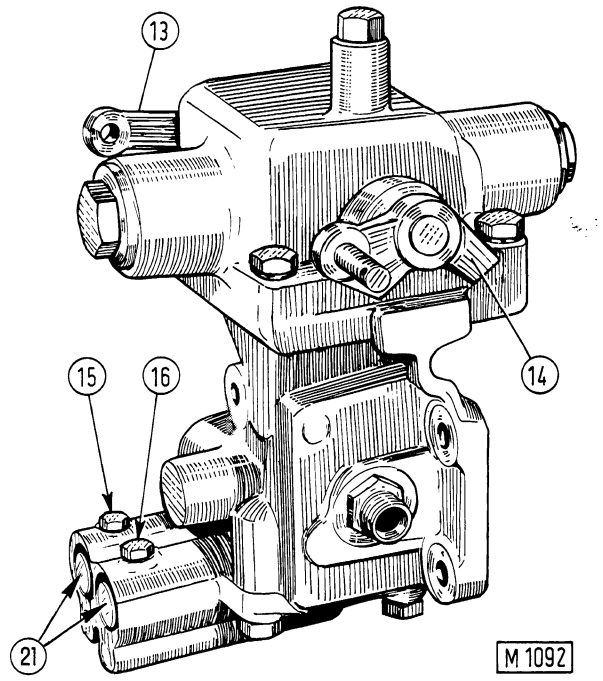

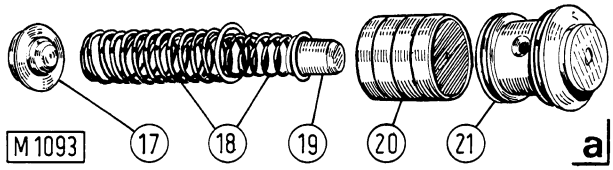

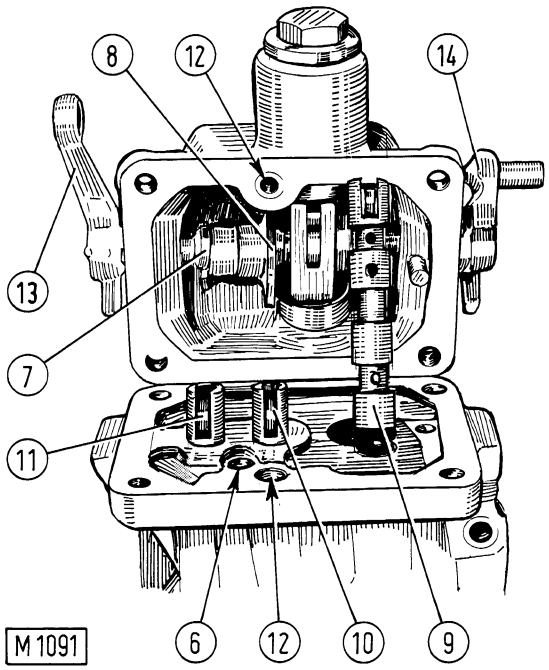

Fig. 8-9 - Transmission control valve.
a. Details of disassemble trimmer valve - 1. 3rd speed clutch apply port - 2. 1st speed clutch apply port - 3. 2nd speed clutch apply port - 4. Reverse speed clutch apply port - 5. Forward clutch apply port - 6. Exhaust ports connected to transmission output and input shaft lube port - 7/8. Reverse speed and forward control valve cams - 9. 1st, 2nd and 3rd speed clutch control valve - 10 and 11. Forward and reverse speed clutch control valve - 12. Safety device ports - 13. Forward and reverse speed clutch control lever - 14. 1st, 2nd and 3rd speed clutch control lever - 15/16. Reverse speed and forward pressure check points - 17/18/19/20/21. Trimmer valve plunger, spring stem, piston and plug.

LEGEND FOR FIG. 8-10

1. Spool return spring
2. Piston detent spring
3. Reverse spool
4. Forward spool
5. Low, intermediate and high range clutch control spool
6. Drive shaft
7. Drive shaft
8. Body
9. Distributor body
10. Trimmer valve piston
11. Spring inner valve
12. Spring outer valve
13. Spring valve quick relief
14. Reverse trimmer valve plug
15. Guide inner spring
16. Forward range clutch oil supply
17. Low range clutch oil supply
18. Intermediate range clutch oil supply
19. High range clutch oil supply
20. Control valve oil pressure inlet
21. Exhaust outlet
22. Trimmer valve poppet
23. Trimmer valve quick relief check valve
24. Poppet seat
25. Valve pivot pin
26. Plug
27. Control lever shaft pin
28. Snap ring
29. Spacer
30. Washer
31. Orifice

Va. Forward clutch trimmer valve
Vi. Reverse clutch trimmer valve
Pa. Forward clutch oil pressure check point
Pi. Reverse clutch oil pressure check point

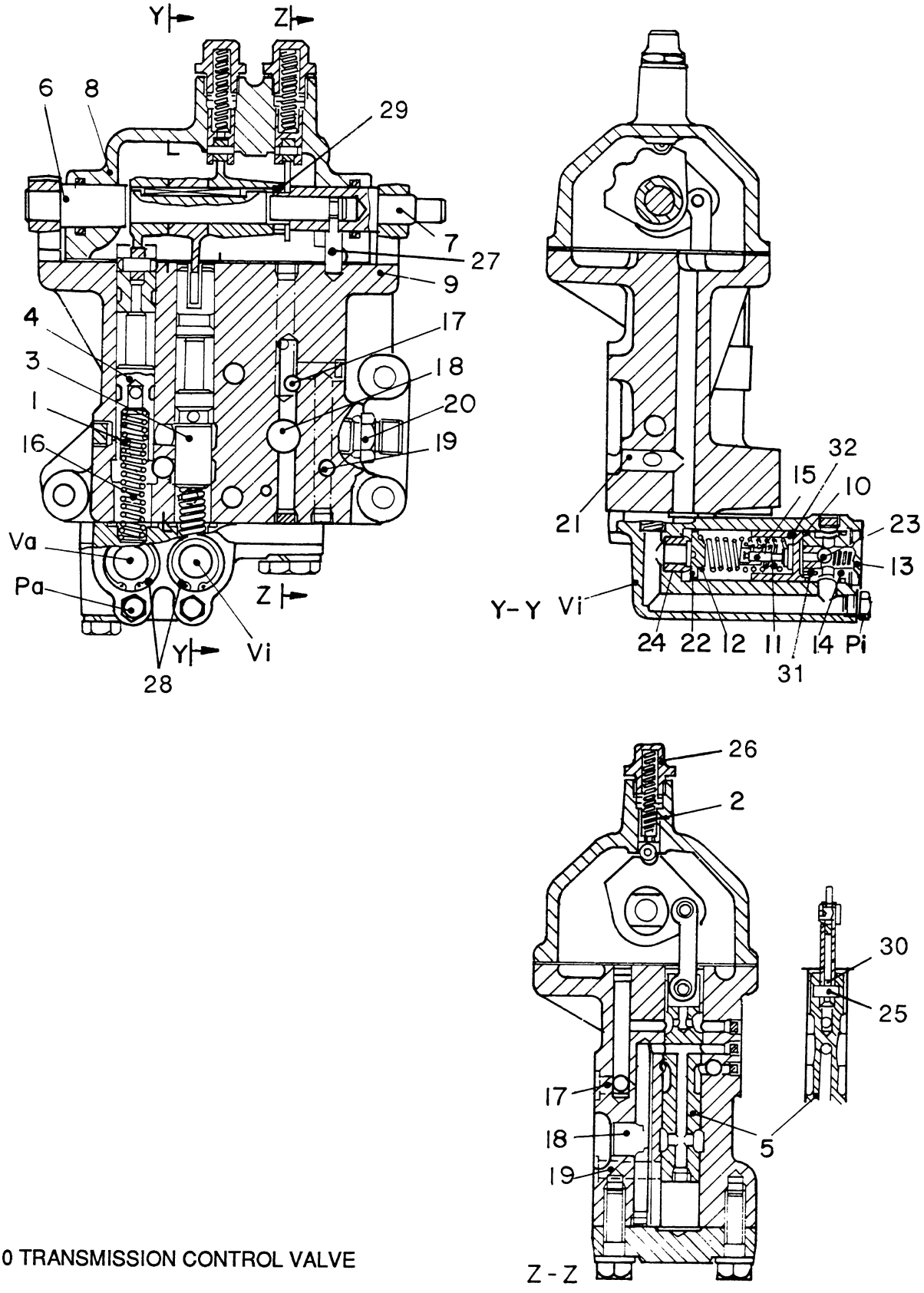

Fig. 8-10 TRANSMISSION CONTROL VALVE

Install washer (30) and connect valve (5) to associated linkage through pin (25) before installing cover on control valve body.

Check that orifice (31) of forward and reverse speed trimmer valve plug (14) is not obstructed; to clear use a 0.7 mm (0.028 in) max. diameter wire.

Install cover on control valve body, insert O-rings on oil ports (1, 2, 4 and 5, fig. 8-9) and install control valve on transmission housing.

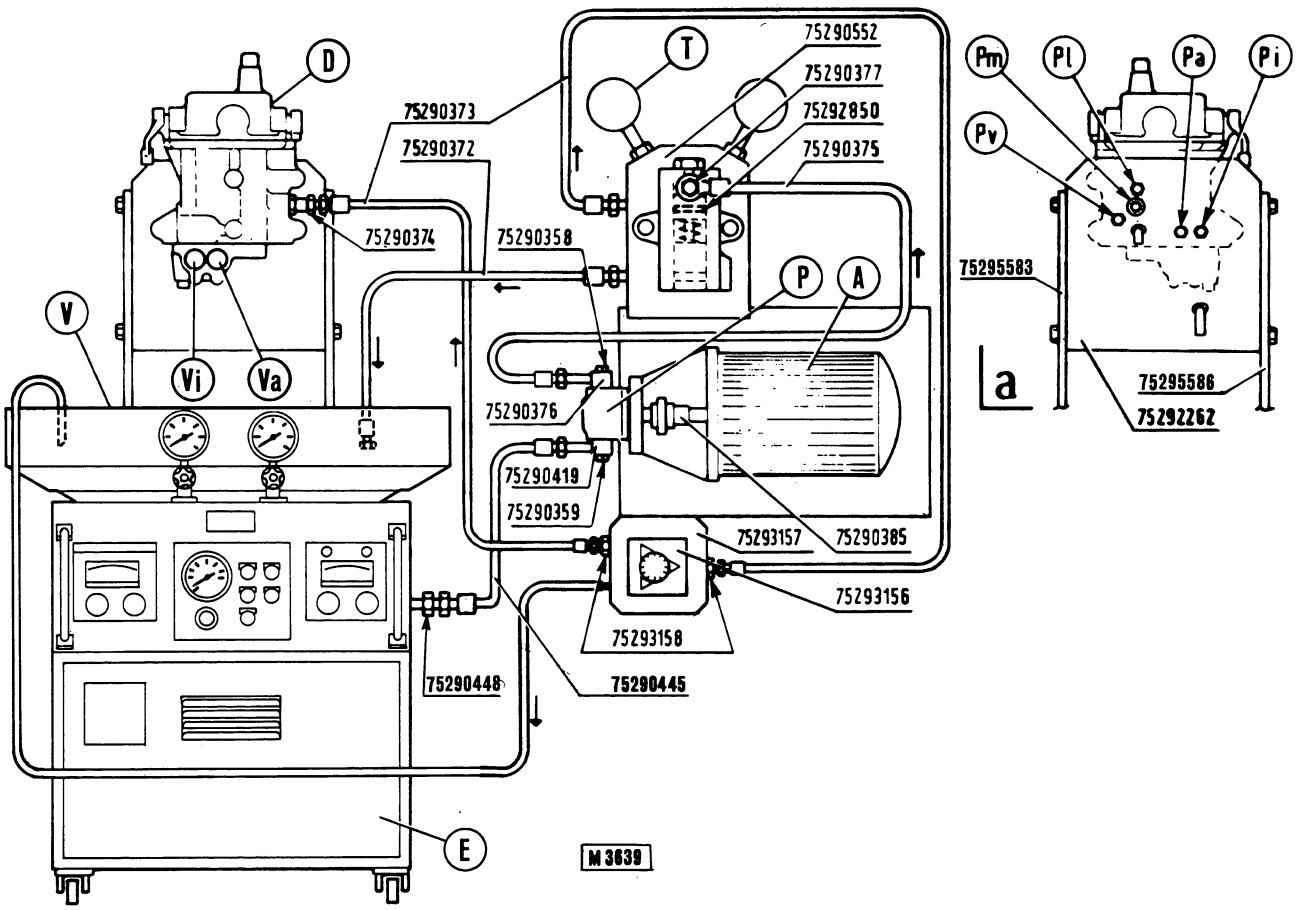

Fig. 8-11 - Control valve and trimmer valve bench test equipment schematic.
a . Detail of control valve and trimmer valve pressure check points - A. Trolley-mounted electric motor 75291235 - C. Pressure gauge kit 75291314 line - D. Control valve - E. Output tester 75295420 - P. Pump 75292589 (Plessey A42X). Pa/Pi/Pl/Pm/Pv. Forward, reverse, 1st, 2nd and 3rd speed pressure check points - T. Temperature gauge to scale 130°C (268°F) - V. Oil collector 75293005 - Va. Forward trimmer valve - Vr. Reverse speed trimmer valve.

8.4.1 CONTROL VALVE AND TRIMMER VALVE HYDRAULIC BENCH TEST

Set up equipment as shown in fig. 8-11, noting that plate 75290552 must incorporate transmission clutch oil pressure regulation valve set to 14.2 - 14.7 bar (206 to 213 psi).

⚠ DANGER

Keep hands and face away from the loosened line nuts while performing tests. Also, wear safety glasses with side shields or goggles.

Connect 25 bar (363 psi) pressure gauge from tool kit 75291314 to each rear connection of plate 75292262 in succession as shown in detail 9, fig. 8-11.

Start trolley-mounted electric motor and check control valve operation during selection of the different speeds.

To test trimmer valves, proceed as follows:

Replace forward and reverse speed trimmer valve plug (14, fig. 8-10) with plug 75293135 (detail b, fig. 8-11) without trimmer orifice.

Remove reverse speed trimmer valve plug (Pi, fig. 8-10) or forward trimmer valve plug Pa and connect 8 bar (116 psi) pressure gauge from tool kit 75291314 to line C, fig. 8-11.

Adjust output to 2L/min (4.2 pints/min) (using SAE 10 W oil at 40°C) through knob on distributor 75293156.

Select a speed and check that valve crack-off pressure shown on pressure gauge is 1.62 to 1.92 bar (23.5 to 27.8 psi); if the reading is lower than specified, increase the number of shims (R1 and R2, fig. 8-10). If the reading is higher than specified, reduce the number of shims as necessary.

8.5 TRANSMISSION BENCH TEST

Position transmission assembly with associated filter, control valve and trimmer valves on rotating stand 75290090, using brackets shown in fig. 7-2.

⚠ WARNING

"DO NOT USE HANDS" to search for pressure leaks. Fluid escaping under pressure can penetrate the skin.

Set up equipment as shown in fig. 8-12, noting the following:

Adjust the setting of transmission clutch oil pressure regulating valve incorporated in plate 75290552 to 14.2 - 14.7 bar (206 to 213 psi) by preloading the springs using shims 75292850.

Place filter (Fa, fig. 8-7) in container 75290495 (fig. 8-12) on pump suction.

Fill transmission housing with specified oil.

Couple hub 75295005 to input shaft spline and prevent output shaft rotation through retainer 75295006.

NOTE - Restrictor 75290449 on pump delivery heats up test oil quickly.

Start trolley-mounted motor and run at the higher speed (1445 rpm): allow oil temperature to increase up to 60°C (140°F) as shown on temperature gauge T and carry out the tests, outlined below.

8.5.1 LUBRICATION PRESSURE CHECK

The pressure shown in gauge M1, fig. 8-12 should be higher than 1.4 bar (20.3 psi).

If the pressure is less, the pressure control valve (7, fig. 8-13) should be checked and the spring replaced.

8.5.2 CLUTCH APPLY CIRCUIT CHECK

Activate control valve outer levers and apply clutches by selecting the various gears. Check that pressure read off pressure gauge M1 rises to 14.2 to 14.7 bar (206 to 213 psi).

8.5.3 APPLY CLUTCH SLIP CHECK

Select a gear and, applying a 90 to 100 daNm (661 to 738 ft. lb.) torque on input shaft, check that the clutch packs do not slip. Select the various gears as indicated in para. 8.5.2 and repeat the slip test.

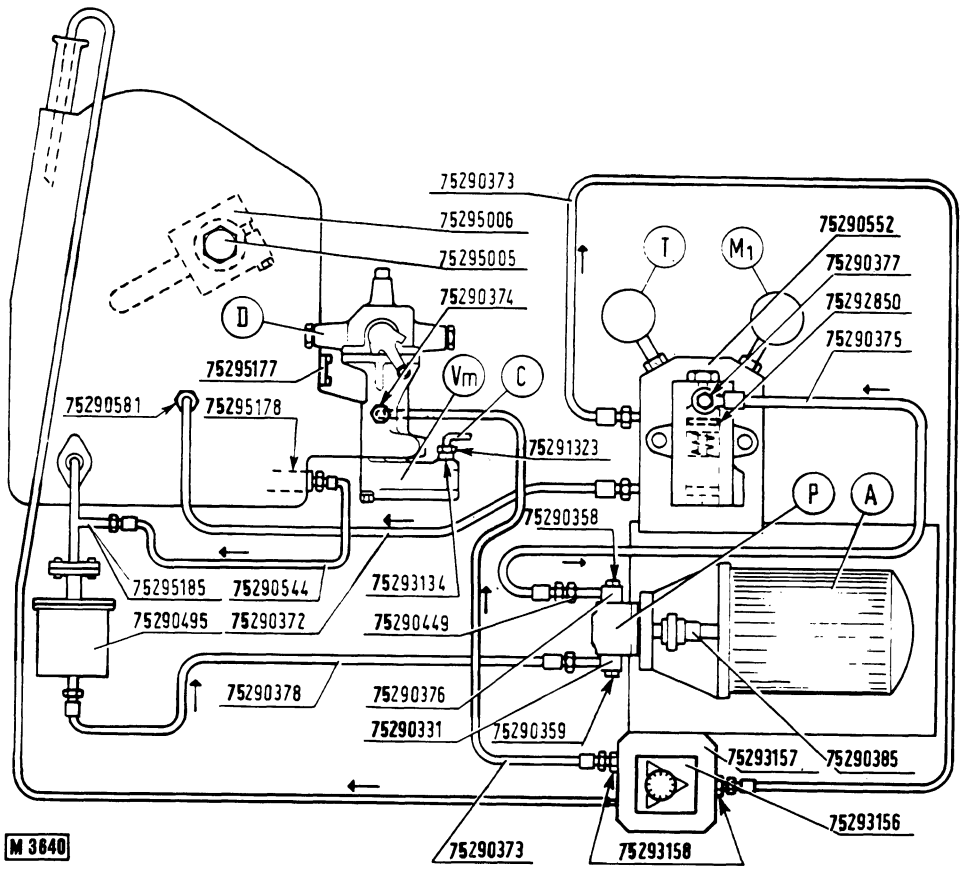

Fig. 8-12 - Transmission bench test equipment schematics.
B. Detail of trimmer valve pressure check point - A. Trolley-mounted electric motor 75291235 - C. Pipe for set of pressure gauges 75291314 - D. Transmission control valve - M1 - 25 bar (363 psi) pressure gauge - P. Pump 75292589 (Plessey A 42 X) - T. 130°C (268°F) temperature gauge - Vm. Trimmer valves.
Note - Valve pressure check points are indicated by P in detail a, Fig. 8-10.

8.5.4 TRIMMER VALVE CALIBRATION CHECK

Replace forward or reverse trimmer valve plug (14, fig. 8-10), with plug 75293135, detail b, fig. 8-12.

Remove reverse speed trimmer valve plug (Pi, fig. 8-10) or forward trimmer valve plug Pa and connect 8 bar (116 psi) pressure gauge supplied with set 75291314 to line C, fig. 8-12.

Adjust output to 2L/min (4.2 pints/min) through knob on distributor 75293156.

Select a speed and check that valve crack-off pressure read off pressure gauge is 1.62 to 1.92 bar (23.5 to 27.8 psi). If the reading is lower than specified increase number of shims (R1 and R2, fig. 8-10). If the reading is higher than specified, decrease the number of shims.

NOTE - When hydraulic testing an overhauled transmission, clear pump suction filter before installing the unit.

8.6 VALVE CALIBRATION

8.6.1 TRANSMISSION CLUTCH APPLY OIL PRESSURE REGULATING VALVE

⚠ WARNING

"DO NOT USE HANDS" to search for pressure leaks. Fluid escaping under pressure can penetrate the skin.

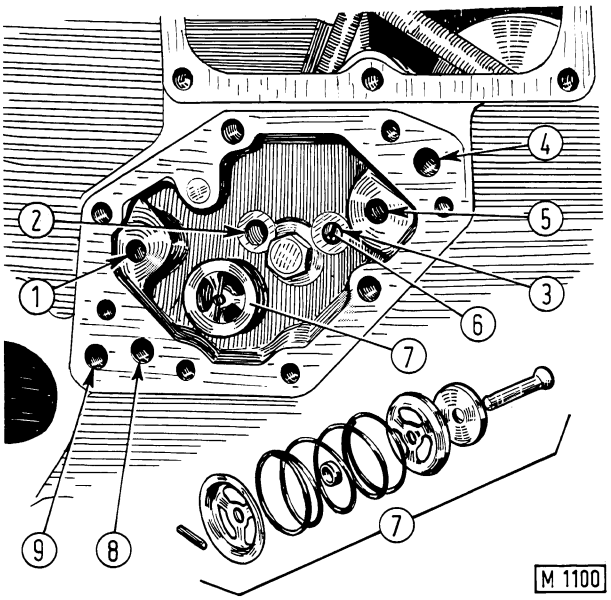

Fig. 8-13 - Lubrication oil collector.
1. 1st and 3rd speed clutch lubrication lines with 3 mm (0.118 in) diameter restriction - 2/3. Forward and 2nd speed lubrication lines - 4. Reverse speed clutch oil delivery port - 5. Reverse speed clutch lubricator port - 6. Screws with 2 mm (0.079 in) in dia. orifice for line (3) restriction - 7. Lubricating oil pressure limiting valve (2 bar, 29 psi, pressure) - 8. 1st speed clutch oil delivery port - 9. 3rd speed clutch oil delivery port.

Set up equipment as shown in detail a, Fig. 8-15. Using SAE 20 W oil at 60°C (140°F), 10 liters/min (2.5 galls/min) output, check that:

Plunger (1, fig. 8-14) clears exhaust port at 14.2 to 14.7 bar (206 to 213 psi).

Adjust pressure through lock ring (7, fig. 8-14), noting that each turn alters the pressure by 0.8 bar (11.6 psi)

8.6.2 TORQUE CONVERTER RELIEF VALVE

⚠ WARNING

Keep hands and face away from the loosened line nuts while performing fuel line and nozzle tests. Also, wear safety glasses with side shields or goggles.

Set up equipment as shown in detail b, fig. 8-15. Using SAE 20W oil at 60°C (140°F), 10 liters/min (2.5 galls/min) output, check that:

Ball (6, fig. 8-14) clears exhaust port at 6.5 to 8.1 bar (94 to 117 psi): if not, check spring (5, fig. 8-14) and replace as necessary.

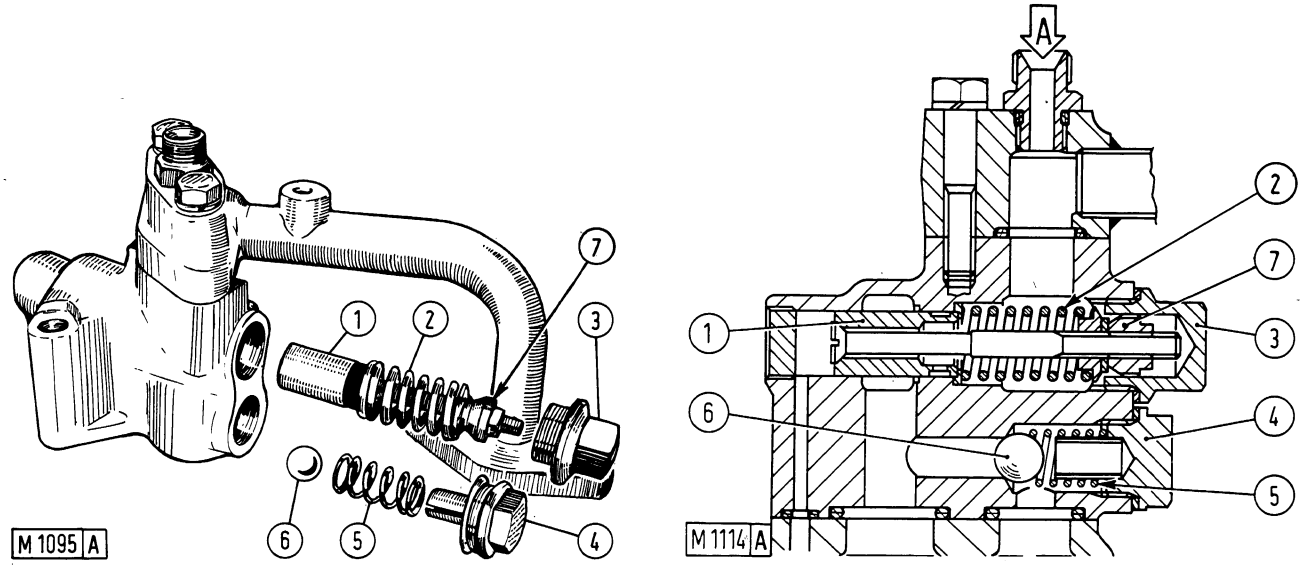

Fig. 8-14 - Torque converter relief valve block and transmission apply pressure regulating valve.
1. Transmission apply pressure regulating valve plunger - 2. Valve (1) spring - 3. Valve (1) plug - 4/5. Valve (6) plug and spring - 6. Torque converter relief valve - 7. Valve (1) setting adjustment lock ring.

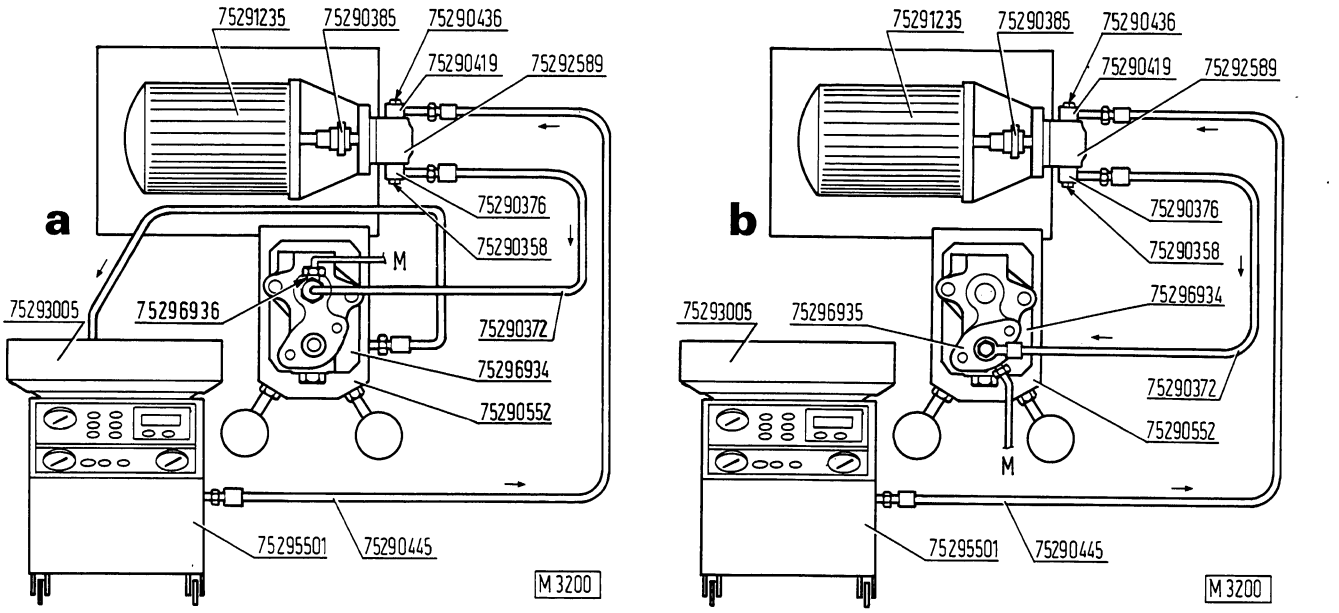

FIG. 8-15 - Transmission clutch apply oil pressure regulating valve (a) and torque converter relief valve (b) calibration.
M. Line for set of pressure gauges 75291314.

8.7 LUBRICATION OIL LOW PRESSURE SENDING UNIT

Lubricator sealed sending unit (Sc, fig. 8-1) should cut in at 0.2 to 0.6 bar (2.9 to 8 psi), both when opening (increasing lubrication pressure) and during closing (decreasing lubrication pressure).

8.8 OIL TEMPERATURE GAUGE

Temperature gauge (T, fig. 8-1) incorporates a colored scale divided into two sectors, average tolerance ±5°C (9°F), as follows:

Green sector ..... 40° to 125°C (104° to 257°F)
Red sector ..... 125° to 150°C (257° to 302°F)

In normal working conditions, the needle should stay on the green sector.

Test instrument by dipping bulb in oil and checking the scale with a reference thermometer. Repeat the check to avoid false readings.

8.9 OIL PRESSURE GAUGE

Transmission clutch apply oil temperature gauge (P, fig. 8-1) incorporates colored scale divided into three sectors.
The instrument is sealed and the pressure ranges are:

Initial red sector ..... 0 to 8 bar (0 to 116 psi)
Center green sector ..... 8 to 15 bar (116 to 217 psi)
Final red sector ..... 15 to 20 bar (217 to 290 psi)

Check the instrument efficiency at 25°C ± 5°C (77°F ± 9°F), using a high precision reference gauge.

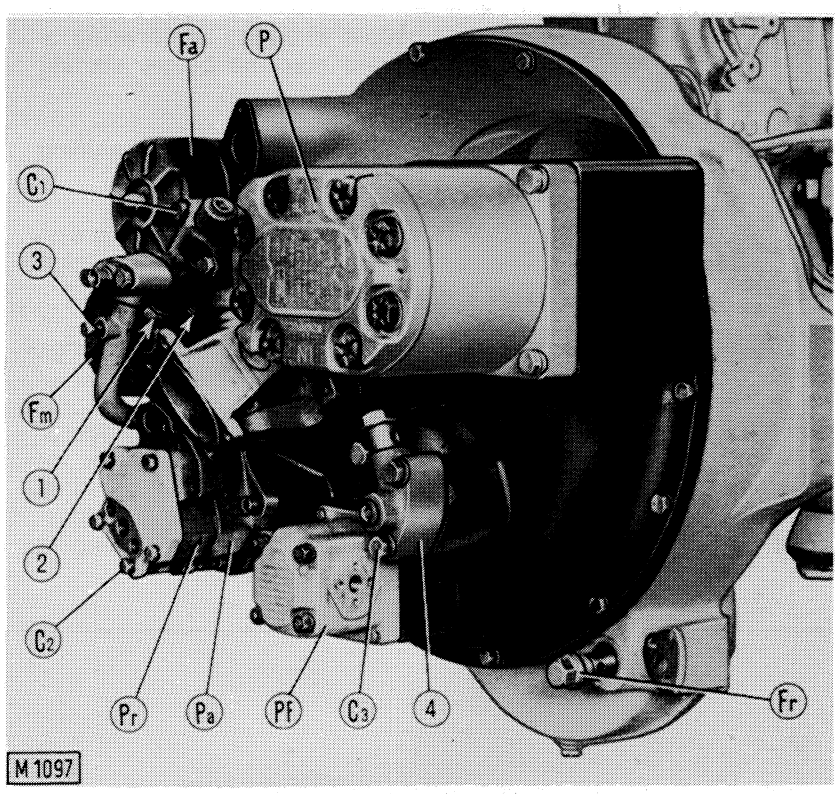

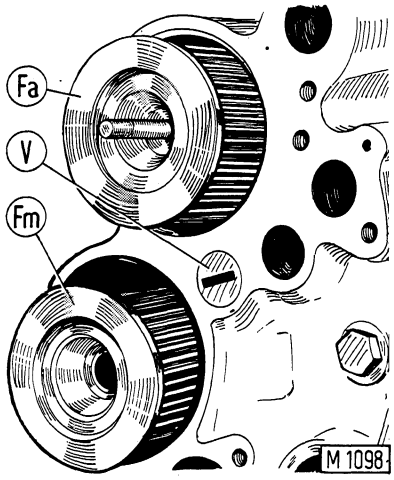

Fig. 8-16 - Installing torque converter/transmission hydraulic pump and valve.
C1 - Valve (1 and 2) capscrews - C2 - Pump capscrews - C3 - Valve (4) capscrew - Fa. Pump (Pa) suction filter - Fm. Pump (Pa) delivery filter - Fr. Pump (Pr) suction filter - P. Pump - Pa. Charging pump - Pf. Steering clutch pump - Pr. Scavenger pump - V. Filter (Fm) bypass valve - 1. Transmission pressure regulating valve (crack-off setting 14.2 to 14.7 bar (206 to 213 psi) - 2. Torque converter relief valve (crack-off setting 6.5 to 8.1 bar (94 to 117 psi) - 3. Pressure gauge point (dash mounted) - 4. Torque converter pressure regulating valve (crack-off setting 0.8 to 1.2 bar (11.6 to 17.4 psi)).

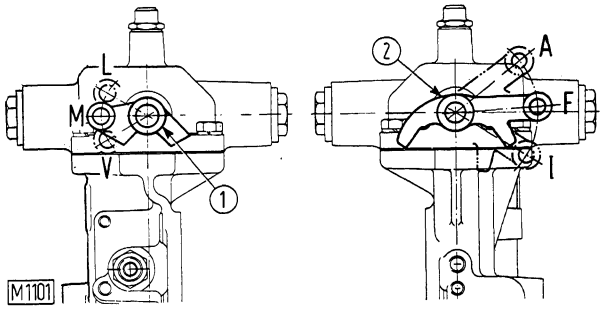

Fig. 8-17 - Control valve outer lever (1 and 2) positions.
A.. Forward clutch - F. Neutral position - 1. Reverse speed clutch - L. 1st speed clutch - M. 2nd speed clutch - V. 3rd speed clutch.

8.10 TROUBLESHOOTING

⚠ DANGER

Do not use matches, lighters, or torches for a light source on the machine due to the presence of flammable fluids.

⚠ WARNING

No unauthorized person should be allowed to service or maintain this machine. Study the Operation and Maintenance Instruction Manual before starting, operating, maintaining, fueling, or servicing this machine.

Always disconnect the batteries before cleaning, repairing, or servicing the machine.

Never use gasoline, solvent or other flammable fluids to clean parts.

Do not run the engine of this machine in closed areas without proper ventilation to remove deadly exhaust gases.

Never attempt to operate machine or attachment except when seated in the operator's seat. Keep head, body, limbs, hands and feet inside the operator's compartment to reduce exposure to hazards outside the operator's compartment.

Use only grounded auxiliary power source for heaters, chargers, pumps and similar equipment to reduce the hazard of electrical shock.

⚠ WARNING

Never service or adjust the engine running except as called for in the Operation and Maintenance Instruction or Service Manuals to keep from being caught in moving parts or by a moving machine.

Before moving machine or attachments be sure people in the area are clear of the unit. Walk completely around machine before mounting. Sound horn.

Keep people clear of attachments and tools while in raised position to prevent possible injury.

Warn all people who may be servicing or working around machine before starting.

Use lifting eyes, if provided, for handling by lifting devices.

DO NOT USE HANDS to search for pressure leaks. Fluid escaping under high pressure can penetrate skin.

Place protection over air inlet openings before operating engine.

Wear safety glasses with side shields or goggles when using compressed air for cleaning to reduce the danger of personal injury from flying particles. Limit the pressure to 30 psi (2 bar) according to local or national requirements.

FAULT	CAUSE	REMEDY
8.10.1 Low lube oil pressure indicator (Sc, fig. 8-1) on with engine running (stop machine immediately).	1. Low transmission oil level.	1. Top up.
	2. Clogged charging pump filters (Fa, Fm, Fig. 8-1).	2. Check filters and wash.
	3. Leakage due to failed or debonded piping or defective seals.	3. Trace leakage by elimina tion and renew defective parts.
	4. Incorrect oil grade	4. Check grade and renew oil if necessary.

8.10.2 Transmission oil pressure (P, fig. 8-1) reading low at all speeds with transmission in neutral (needle over initial red sector).	1. Low transmission oil level. 2. Defective pressure gauge. 3. Charging pump lines leakage. 4. Clogged charging pump filters (Fa and Fm). 5. Incorrectly set pressure regulating valve (4, Fig. 8-1). 6. Inefficient charging pump.	1. Top up and remedy leakage 2. Check and renew if necessary. 3. Check and tighten connections. 4. Check and wash filters. 5. Check valve setting. 6. Overhaul and, if necessary, renew
8.10.3 Transmission oil pressure gauge (P, Fig. 8-1) reading low at high engine speed with transmission in neutral (needle over initial red sector).	1. Clogged charging pump inlet filter (Fa, Figs. 8-1 and 8-7). 2. Leaking charging pump inlet piping.	1. Check filter and wash. 2. Check and tighten connections and clips.
8.10.4 Normal transmission oil pressure in neutral, insufficient oil pressure with transmission in gear, machine sluggish in forward or reverse and torque insufficient.	1. Clogged modulating valve orifice (31, fig. 8-10) 2. Stuck modulating valve piston (32, Fig. 8-10)	1. Clear orifice and inspect filters. 2. Eliminate any foreign matter and inspect filters.
8.10.5 High transmission oil pressure at all engine speeds.	1. Pressure regulating valve (4, Fig. 8-1) stuck closed.	1. Remove foreign matter and inspect filters.
8.10.6 Normal transmission oil pressure (P, Fig. 8-1), low power output in some gears and oil overheating.	1. Worn or distorted clutch plates.	1. Renew
8.10.7 Low transmission oil pressure on gauge (P, Fig. 8-1) upon selection of a specific gear.	1. Leakage to be traced in lines of clutch for gear in question, failed or debonded supply lines, defective seals, broken or worn sealing rings, etc.	1. Overhaul transmission and renew defective parts.
8.10.8 High transmission oil temperature (needle of gauge T, Fig. 8-1 over red sector).	1. Insufficient transmission oil level. 2. Relief valve(3) stuck open. 3. Relief valve (3) stuck open owing to cooler and line obstruction. 4. Charging pump inlet pipe leakage. 5. Clogged charging pump inlet filter (Fa). 6. Inefficient charging pump. 7. Low operating pressure and clutch slippage (see fault no. 2). 8. Distorted clutch plate binding when clutches are released.	1. Top up. 2. Remove foreign matter and inspect filters. 3. Inspect and free cooler and lines. 4. Check and tighten connections and clips. 5. Inspect and wash filter. 6. Overhaul and renew as necessary. 7. See remedies under fault no. 2. 8. Renew.

8.10.9 Normal transmission oil pressure (gauge P, Fig. 8-1) but machine starts at high revs only.	1. Insufficient oil output at low speed.	1. Inspect filters, check for leakage and inspect charging pump.
8.10.10 Machine creeps forward in neutral; machine stops in reverse and overloads engine.	1. Forward speed control valve (12, Fig. 8-1) stuck open.	1. Eliminate foreign matter and inspect filters.
8.10.11 Machine creeps back in neutral; machine stops in forward and overloads engine.	1. Reverse speed control valve (11, Fig. 8-1) stuck open.	1. Eliminate foreign matter and inspect filters.
8.10.12 Gear lever does not hold selected position.	1. Transmission actuating linkage out of adjustment.	1. Adjust links.
8.10.13 Converter oil and engine pan oil level increases with diminishing transmission oil level.	1. Clogged scavenge pump inlet filter (Fr, Fig. 8-1).	1. Inspect.
	2. Faulty scavenge pump.	2. Overhaul and renew if necessary.
8.10.14 Normal transmission oil pressure (gauge P, Fig. 8-1), low power output with hot oil in all gears.	1. Worn or distorted clutch plates	1. Replace

8.11 SPECIFICATION AND DATA

HYDRAULIC PUMP		
Type	Double, twin gear charging and twin gear transmission/torque converter scavenging pump	
Pump drive	Pair of gears driven from engine flywheel	
Pump drive ratio	1.154 to 1	
Maximum rated speed (at 2100 engine rpm)	2420 rpm	
Nominal pump output at maximum speed:		
Charging pump	67 L/min (17.7 galls/min)	
Scavenger pump	70.6 L/min (18.6 galls/min	
	mm	in
Pump gear bushing O.D.	18.960 to 19.00	0.7464 to 0.7480
Bushing housing bore diameter	18.900 to 18.950	0.7440 to 0.7460
Bushing interference fit in housing	0.010 to 0.100	0.0004 to 0.0040
Bushing installed ID after reaming	16.032 to 16.050	0.6311 to 0.6318
Gear shaft diameter	15.982 to 16.000	0.6292 to 0.6300
Shaft clearance in bushing	0.032 to 0.068	0.0012 to 0.0026
Max. wear clearance	0.15	0.0060
Scavenger pump driven gear to shaft clearance	0.000 to 0.036	0.0000 to 0.0014
Bushing stand-in (on charging pump gear side)	0.5	0.020

OIL FILTERS		
Charging pump suction (fig. 8-7)	Full flow, steel mesh replaceable cartridge and magnetic rod	
Mesh size	100 micron	
Charging pump delivery (fig. 8-8)	Full flow, steel mesh replaceable cartridge	
Mesh size	30 micron	
Scavenger pump suction lines (Fr and Fs, fig. 8-1)	Screen filters, one for each line	
Charging pump outlet filter bypass valve spring length (9, fig. 8-8):		
Free	56 mm (2.20 in)	
Under 2.2 to 2.4 daN (4.8 to 5.3 lbs.)	26 mm (1.02 in)	
TRANSMISSION CONTROL VALVE AND TRIMMER VALVES	Spool type, trimmer valves incorporated	
	mm	in
1st, 2nd and 3rd speed linkage detent spring (2, fig. 8-10):		
O.D.	7.9 to 8.1	0.311 to 0.318
Free length	47	1.850
Length under 9.9 to 10.8 daN (22.2 to 24.4 lbs)	37	1.457
Forward and reverse speed control valve return springs (1, fig. 8-10):		
O.D.	11.9 to 12.1	0.468 to 0.476
Free Length	70	2.756
Length under 2.9 to 3.9 daN (6.5 to 7.2 lbs)	56	2.205
Trimmer valve inner spring length (11, fig. 8-10):		
Free	48	1.889
Under 4.67 to 5.03 daN (10.1 to 10.8 lbs.)	22	0.870
Trimmer valve outer spring length (12, fig. 8-10):		
Free	64	2.519
Under 2.05 to 2.25 daN (4.6 to 5.0 lbs.)	46	1.811
Trimmer plunger pressure setting (22, fig. 8-10)	1.25 to 1.55bar	18.13 to 22.48psi
Trimmer valve orifice diameter	0.80 to 0.85mm	0.0315 to 0.0335in
Trimmer spring shim thickness (R1 and R2)	0.45 to 0.55 mm	0.0177 to 0.0216 in
TRANSMISSION CLUTCH APPLY OIL PRESSURE REGULATING VALVE		
Valve pressure setting	14.2 to 14.7 bar	208 to 216psi
Valve spring length (2, fig. 8-14):		
Free	48 mm	1.889 in
Under 35.4 to 39.3 daN (79.5 to 88.3 lbs.)	39 mm	1.535 in

TORQUE CONVERTER RELIEF VALVE		
Valve pressure setting	6.5 to 8.1 bar	95.4 to 118 psi
Torque converter relief valve spring (5, fig. 8-14) length:		
Free	36 mm	1.417 in
Under 9.5 to 10.1 daN (21.3 to 22.7 lbs.)	23 mm	0.905 in
LUBRICATION OIL PRESSURE LIMITING VALVE		
Valve pressure setting (7, fig. 8-13)	2 bar	29 psi
Valve spring length:		
Free	40 mm	1.575 in
Under 8.55 to 9.45 daN (19.22 to 21.24 lbs)	9.5 mm	0.374 in

8.12 TORQUE SPECIFICATION

Description	Torque (°)	
	daNm	ft. lb.
Capscrew (C1, fig. 8-2), hydraulic pump components	1.896-1.96	13.72-14.46
Capscrew, hydraulic pump	3.92-4.41	28.91-32.53
Nut (C2, fig. 8-2), pump drive coupling	2.06-2.26	15.19-16.67
Capscrew (C3, fig. 8-16), torque converter pressure regulating valve	6	44
Capscrew (C1, fig. 8-16), transmission apply oil pressure regulating valve and torque converter safety valve	6	44
Capscrew, control valve body to transmission	6	44

(°) Wet, engine oil.

8.13 SERVICE TOOLS

Part No.	Description
75290090	Revolving stand (for hydraulic testing transmission)
75291370	Jig, reaming, hydraulic pump bushing (fig. 8-3)
75291372	Reamer, hydraulic pump housing (fig. 8-3)
75290331	Connector
75290358	Capscrew (for connector 75290376)
75290359	Capscrew (for connector 75290331)
75290372	Pipe
75290373	Pipe
75290374	Connector
75290375	Pipe
75290376	Connector
75290377	Connector
75290378	Pipe
75290385	Coupling, drive

75290417	Connector
75290419	Connector
75290424	Pipe
75290436	Capscrews for connector 75290419
75290445	Pipe
75290448	Adapter, reducing
75290449	Connector with restriction
75290495	Container, suction filter
75290540	Adapter, reducing
75290544	Pipe
75290552	Plate with thermometer gauge and valve
75291581	Connector
75291235	Motor, electric, trolley-mounted
75291314	Pressure gauge kit
75291323	Connector
75292262	Plate, support, control valve
75292589	Pump, hydraulic (Plessey A 42 X)
75292850	Washer, valve, plate 75290552
75292984	Sleeve, setting, pressure regulating valve,torque converter
75293005	Collector, oil
75293046	Bracket, pump
75293134	Spacer
75293135	Plug, trimmer valve
75293156	Distributor
75293157	Manifold
75293158	Connector
75295005	Rotator, transmission drive gear
75295006	Retainer, shaft
75295177	Plug
75295178	Connector
75295185	Spacer
75295420	Tester, output
75295501	Tester, output
75295583	Support, side, control valve
75295586	Support, side, control valve
75296934	Adapter
75296935	Connector with pressure point
75296936	Connector

9. BEVEL GEAR

9.1 DISASSEMBLY

⚠ WARNING

Lift and handle all heavy parts with a lifting device of proper capacity. Be sure parts are supported by proper slings and hooks. Use lifting eyes if provided. Watch out for people in the vicinity.

Preliminary operations:

Take off fuel/hydraulic oil tank.

Remove transmission assembly.

Drain axle oil.

Remove brake and steering clutch units.

Subsequently, proceed as follows:

Take off cover (2, fig. 9-1), also removing two capscrews (3) retaining inner piping flange

Withdraw inner lube oil piping assembly (2, fig. 9-2)

Take off setscrews (3) and withdraw pipings (1 and 4)

Remove bevel ring gear with bolted shaft, possibly using block and tackle as necessary.

Take off carriers (5 and 9, fig. 9-6) using a pair of service screws 75291585

Take off cover (2, fig. 9-6), withdraw split shims (S) and lift off bevel pinion carrier assembly using pair of puller screws 75291585, fig. 9-3, taking care to displace ring gear pulley to the right (fig. 9-7)

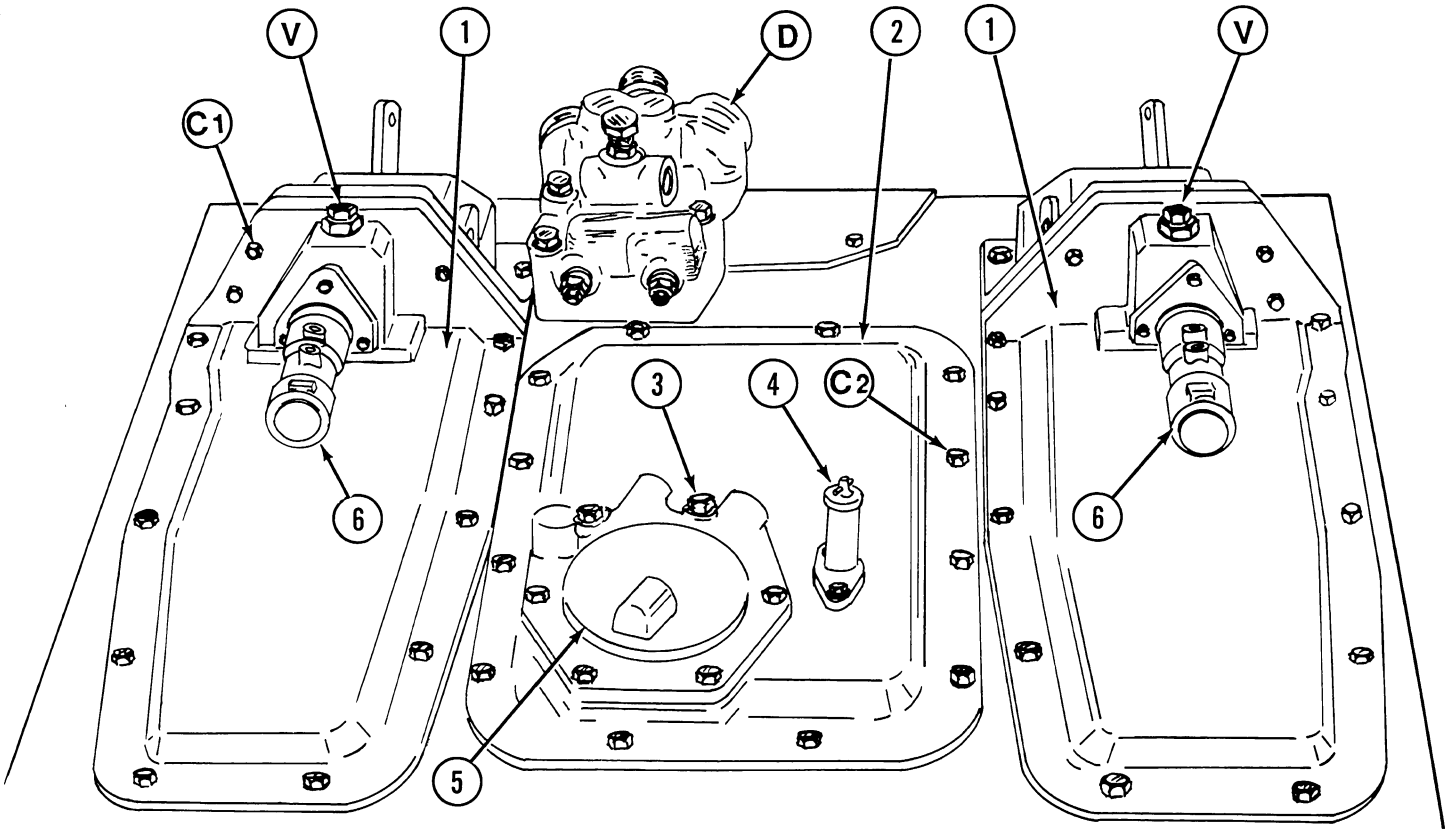

Fig. 9-1 - Final drive housing covers
C1 -.Brake cover capscrew - C2.Steering clutch and bevel gear cover capscrews - D. Steering clutch control valve - V - Brake clearance adjuster - 1. Steering clutch covers - 2. Bevel gear cover - 3. Return oil filter capscrews - 4. Oil filler tube and level dipstick - 5. Oil filter cover - 6. Brake servo cylinder.

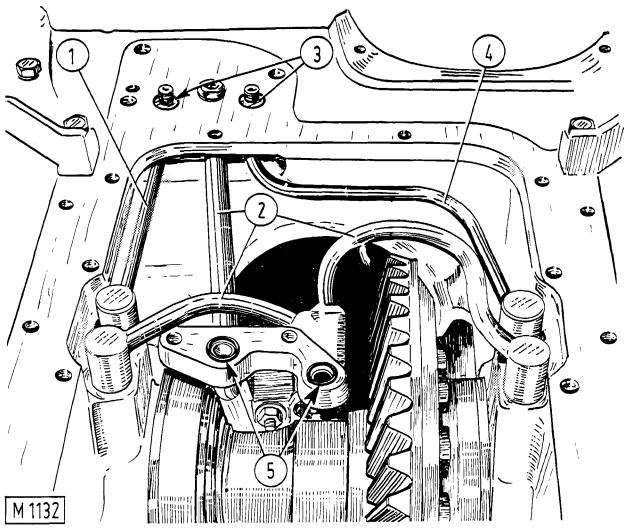

Fig. 9-2 - Inner axle piping.
1. Left steering clutch oil piping - 2. Steering clutch lube oil piping - 3. Piping retaining set screws - 4. Right steering clutch oil piping - 5. O-ring.

Clamp holder 75293213 in a vise, accommodate bevel pinion carrier assembly over it fig. 9-4, fit two retainers (R), raise the washer tab and back off lock ring (C1) using wrench 75293210 (C) and multiplier 75291285 (B)

Remove bevel pinion with attached bearing

Take off ring gear with attached shaft

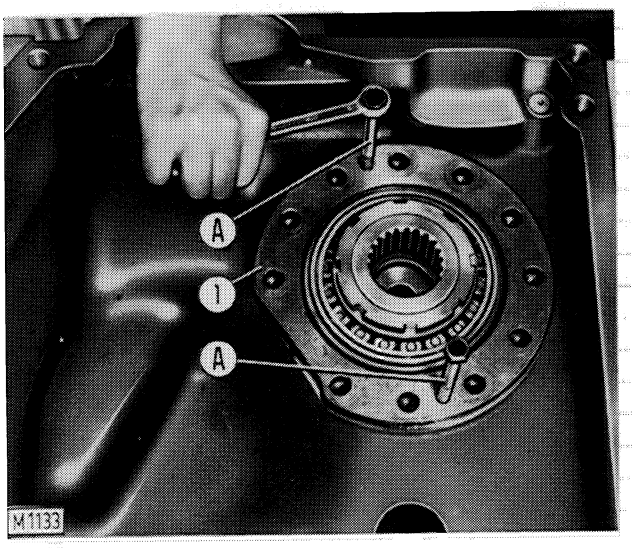

Fig. 9-3 - Removing bevel pinion.
1. Bevel pinion assembly - A. forcing screws 75291585.

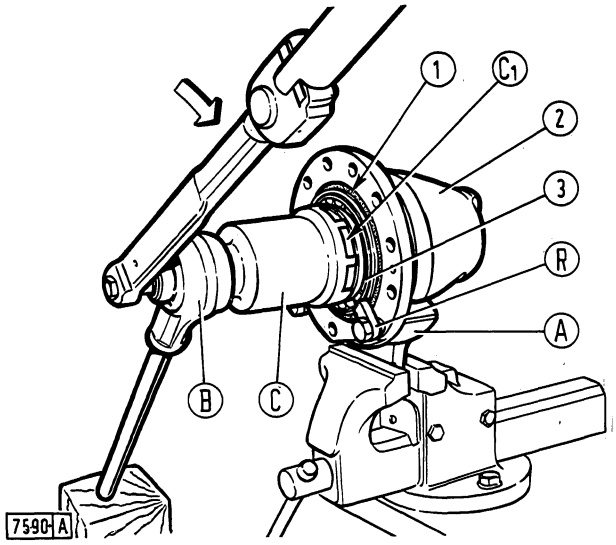

Fig. 9-4 - Removing bevel pinion lock ring.
A. Bevel pinion holder 75293213 - B. Torque multiplier 75291285 - C. Wrench 75293210 - C1. Bevel pinion lock ring - R. Retainer (supplied with tool A) - 1. O-ring - 2. Pinion carrier - 3. Double row tapered roller bearing.

Separate ring gear from shaft using holder 75291221 (A, fig. 9-5) to back off self-locking capscrews C1.

Take off ring gear shaft bearing cones (7 and 8, fig. 9-6) using suitable puller.

Note - in case of replacement of bevel pinion or ring gear, both mating parts are to be replaced together, because they are serviced only as an assembly.

9.2 ASSEMBLY

Proceed as follows:

Clamp ring gear in a vise using holder 75291221, insert ring gear shaft and tighten self-locking capscrews (C1, fig. 9-5)

Fit the ring gear assembly in carrier

Install bevel pinion on bench and, if the end needle roller bearing (11, fig. 9-6) has been replaced, stake inner race at three equi-spaced points and faster outer race using nut C3.

Preassemble bearing (3, fig. 9-6) on bevel pinion and screw in lock ring C5 until contact with the bearing is established.

⚠ WARNING

Handle all parts with extreme care. Keep hands and fingers from between parts. Wear authorized protective equipment such as safety glasses, heavy gloves, safety shoes.

Press the bearing and shaft assembly in bevel pinion carrier and tighten lock ring (C1, fig. 9-4) using holder 75293213, wrench 75293210 and multiplier 75291285

Ensure that O-ring seals (1 and 10, fig. 9-6) are properly seated, move ring gear to the right (fig. 9-7) and introduce bevel pinion carrier assembly into axle casing using pair of pilots 75291586

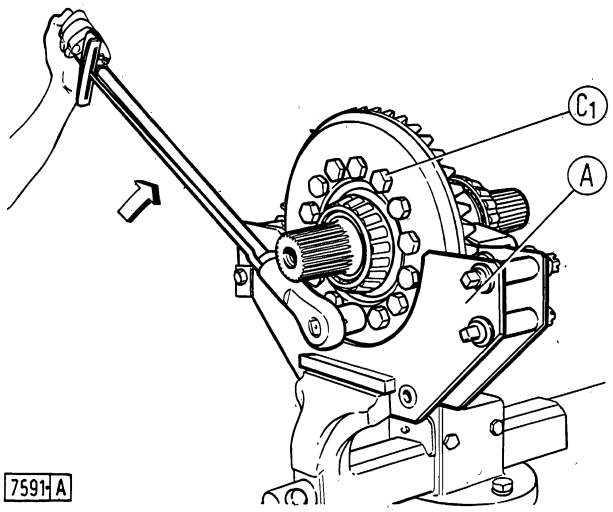

Fig. 9-5 - Assembling ring gear on bench.
A. Holder 75291221 - C1. Ring gear capscrews.

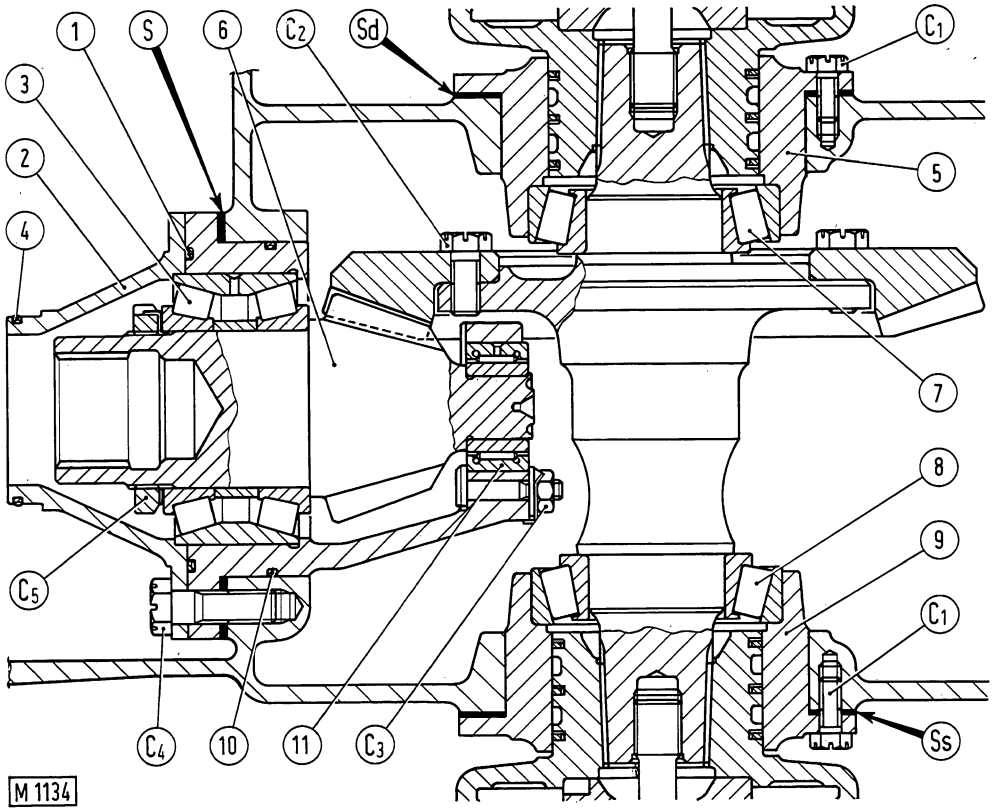

Fig. 9-6 - Cross section of bevel gear and shaft.
C1. Shaft carrier capscrews - C2. - Ring gear self-locking screws - C3. Needle roller bearing nut - C4. Pinion carrier capscrews - C5. Double row taper roller bearing lock ring - S. Pinion shims - Sd/Ss. Ring gear bearing and lash shims - 1, 4 and 10. O-ring - 2. Pinion carrier cover - 3. Double row taper roller bearing - 5. Right ring gear shaft carrier - 6. Bevel pinion - 7, 8. Taper roller bearing - 9. Left ring gear shaft carrier - 11. Needle roller bearing.

Position ring gear shaft carriers (5 and 9, fig. 9-6)

Adjust bevel gear as directed under para. 9.3

Connect steering clutch hydraulic oil pipings (1 and 4, fig. 9-2) with interposed O-ring and fasten by means of set screws (3)

Install inner lube oil piping assembly (2) with O-ring seals (5) in position on the flange

Fit center cover (2, fig. 9-1) to axle casing and tighten piping flange through two capscrews (3)

Refit brake units and steering clutches;

Install transmission assembly and reposition fuel and hydraulic oil tank.

9.3 BEVEL GEAR ADJUSTMENT

Bevel gear adjustment is carried out in three stages as outlined below.

9.3.1 RING GEAR BEARING ADJUSTMENT AND TOTAL SHIM THICKNESS ASSESSMENT (Sc, fig. 9-8).

Lubricate bearings with engine oil.

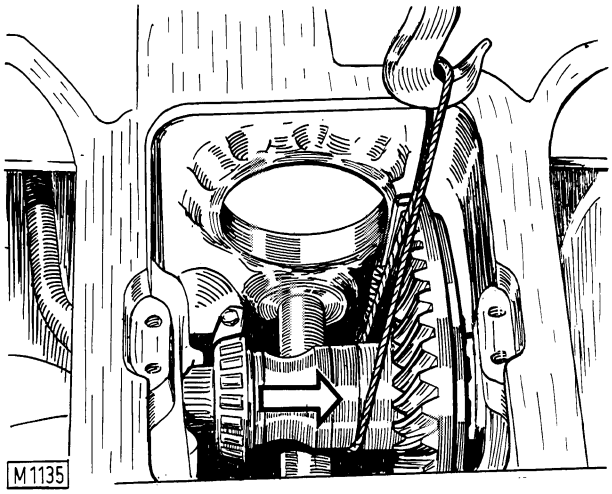

Fig. 9-7 - Moving ring gear for bevel pinion carrier installation.
Note - Direction of ring gear displacement arrowed.

Fit left carrier (1, fig. 9-9) without shims using only four capscrews (C1) tightened to the prescribed torque.

Install right carrier (2, fig. 9-8) without shims and with only two of capscrews (V) without washers, lubricated with engine oil and positioned vertically to facilitate subsequent measurement (fig. 9-11).

Progressively tighten diametrically opposed capscrews (V, fig. 9-10) using torque wrench in 0.1 daNm or 0.7 ft. lb. steps up to 0.7 daNm or 5 ft. lb. on each capscrew, Simultaneously, turn ring gear by hand through a few revolutions (fig. 9-10) to settle the taper roller bearings.

Measure the gap (Sc) between axle case and right carrier applying a feeler gauge at two diametrically opposite points at right angles to the center line of capscrews (V, fig. 9-11).

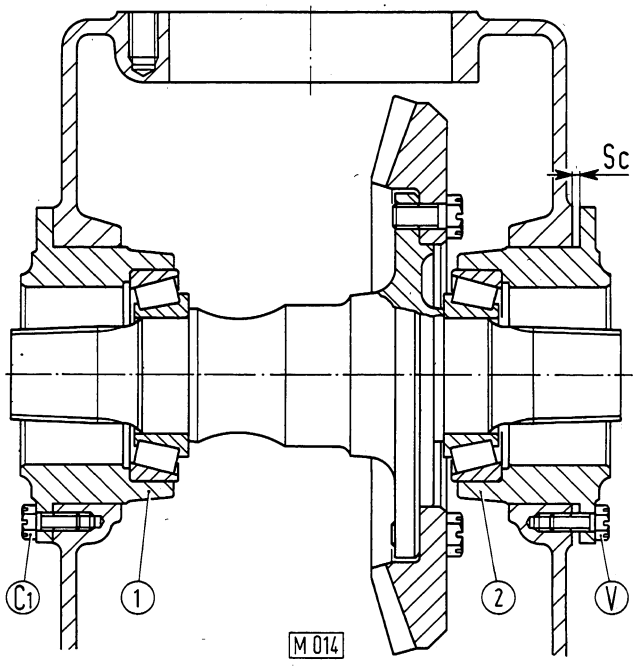

Fig. 9-8 - Adjusting bevel gear bearings.
C1. Ring gear shaft carrier capscrews - Sc. Gap between axle casing and right carrier (total thickness of shim) - V. Adjuster capscrews - 1. Left carrier - 2. Right carrier.

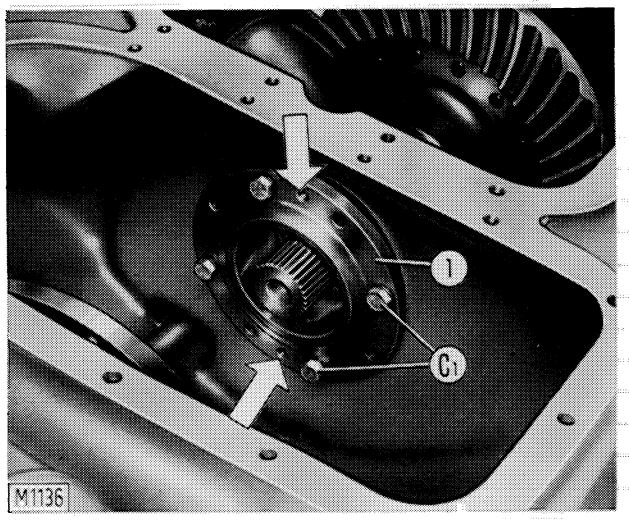

Fig. 9-9 - Installing left carrier for ring gear bearing adjustment.

1. Left carrier. C1 - Carrier capscrews

Note - Carrier extraction holes arrowed.

Average the two readings arithmetically to obtain total thickness of shims (Sc, fig. 9-8) to be applied to the carriers.

Example

If the two readings are 5.25 and 5.30 mm, total shim thickness will be:

$$Sc = \frac{5.25 + 5.30}{2} = 5.275 \text{ mm}$$

Rounded off to 5.30 mm.

Note - Where necessary, round off to the nearest 0.05 mm up.

Insert shim pack (Sc) and tighten right carrier. Apply adapter 75291578 to the end of the ring gear shaft and check ring gear shaft rotating torque with bevel pinion removed; the correct reading should be 0.3 to 0.4 daNm, or 2.1 to 2.9 ft. lb. If the torque is in excess of 0.4 daNm or 2.9 ft. lb. recheck taper roller bearing adjustment.

9.3.2 BEVEL PINION POSITION AND SHIM THICKNESS ASSESSMENT (S, fig. 9-6)

Provisionally insert a pack of shims (S1, fig. 9-12) approximately 3 mm or 0.12 in thick and fasten bevel pinion carrier using only four capscrews (C2) tightened to the prescribed torque.

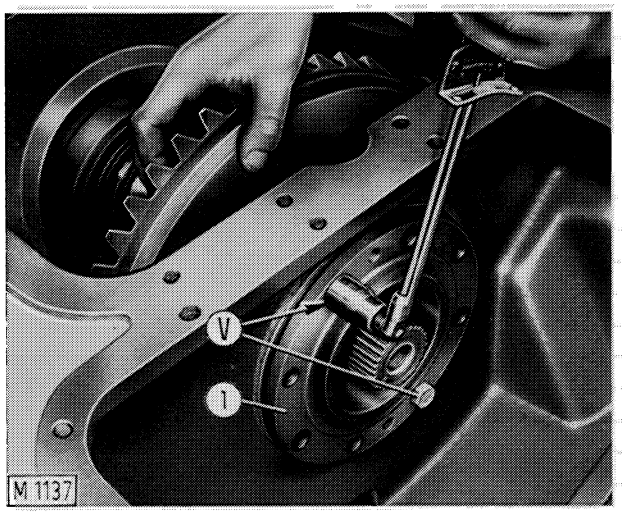

Fig. 9-10 - Tightening capscrews using torque wrench 75291269.
V. Capscrews - 1. Right carrier.

Measure distance (L) from end of pinion and machined flat on ring gear shaft, using gauge 75291529 (18 mm thick) and feeler gauge.

Theoretical shim thickness St. is given by
St = S1 - (L-18)

where:

18 = nominal value in mm of distance between end of bevel pinion and ring gear shaft register.

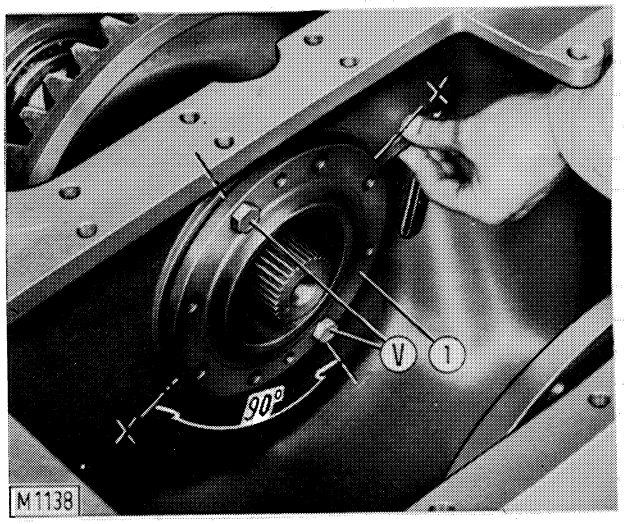

Fig. 9-11 - Measuring carrier gap (Sc, fig. 9-8).
V. Adjuster capscrews - X-X. Gap measuring axis - 1. Right carrier.

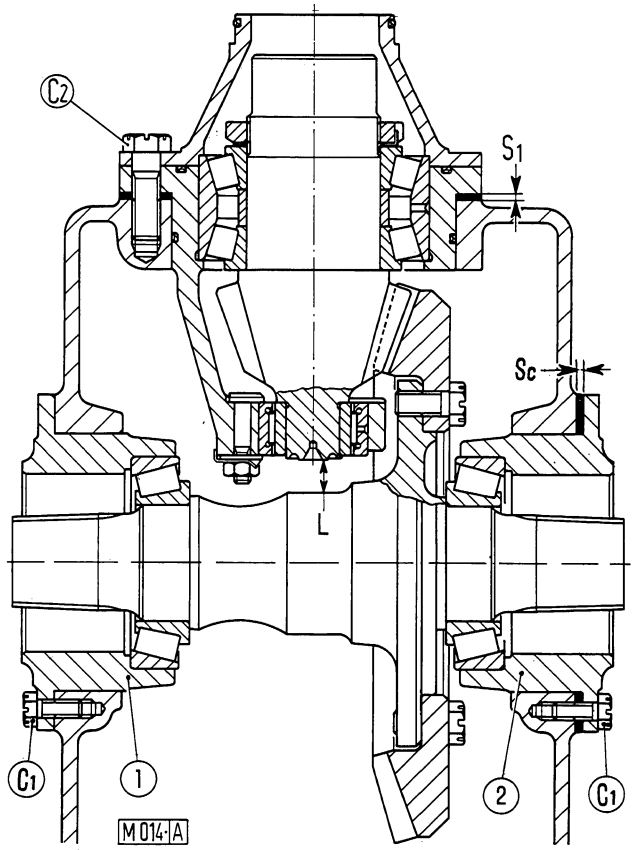

Fig. 9-12 - Adjusting bevel pinion position.
C1. Ring gear shaft carrier capscrews - C2. Bevel pinion carrier capscrews - L. Distance from end of pinion to ring gear shaft - S1. Provisional thickness of shim (3 mm approx) - Sc. Total ring gear bearing shim thickness - 1. Left carrier - 2. Right carrier.

Final thickness of shims (S, fig. 9-6) will be equal to theoretical thickness (St) if the correction dimension (Q) stamped on bevel pinion is 0.

If dimension (Q) is other than 0 (i.e. given in tenths of mm with + or - correction sign) thickness of shims (S, fig. 9-6)

(S, fig. 9-6) will be given by: $S = St \pm Q$

Example:

Thickness of shims inserted S1 = 3 mm.

Measured distance L = 18.80 mm.

Correction dimension stamped on pinion Q = + 0.3

Theoretical thickness of shims
St = S1 - (L-18) = 3 - (18.80-18) =
3 - 0.80 = 2.20 mm

Final thickness of shims
S = St ± Q = 2.20 + 0.3 = 2.50 mm.

Note - Where necessary, round off to the nearest 0.1 mm down.

9.3.3 BEVEL GEAR LASH AND ASSESSMENT OF TOTAL SHIM THICKNESS (Sc, fig. 9-8) DETERMINED IN PAR . 9.3.1, BETWEEN SHIM PACKS (Sd and Sc, fig. 9-6).

Apply handle 75293322 to axle casing as shown in fig. 9-13, and measure bevel gear lash (G) using a suitable dial gauge with stylus positioned at right angles on the end of a ring gear tooth.

Note - Repeat the measurement in two more places 120° apart and average the three readings arithmetically.

Normal bevel gear lash is 0.20 to 0.28 mm or 0.008 to 0.011 in. for the purpose of lash adjustment, assume that the fixed ratio between normal lash and the equivalent ring gear end displacement is 1 to 1.35.

In this case, the ring gear end displacement is equivalent to the thickness of shims (Ss, fig. 9-6) to be inserted between axle casing and left ring gear shaft carrier:
Thus:
Ss (G - 0.24) x 1.35

Thickness of shims Sd to be inserted between axle casing and right ring gear shaft carrier will be:

Sd = Sc - Ss

Example:

Lash G = 1.85 mm

Total thickness of shims previously determined Sc = 5.30 mm.

Thickness of shims for left carrier

Ss = (G - 0.24) x 1.35 = (1.85 - 0.24) x 1.35 = 1.61 x 1.35 = 2.17 mm

Thickness of shims for right carrier

Sd = Sc - Ss = 5.30 - 2.17 = 3.13 mm

Ss being rounded off to 2.20 mm and Sd to 3.20 mm

Note - Where necessary, round off to the nearest 0.05 mm up.

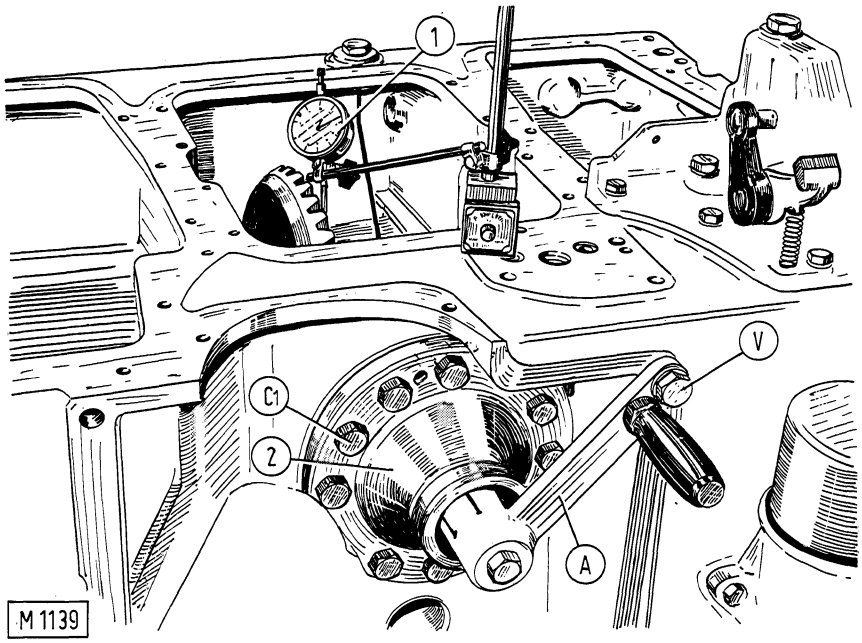

Fig. 9-13 - Checking bevel gear lash.
1. Handle 75293322 - C1. Bevel pinion carrier capscrews - V. Handle capscrew - 1. Dial gauge - 2. Bevel pinion carrier cover.

9.4 SPECIFICATION AND DATA

Type of gears	Spiral bevel	
Bevel gear ratio	3.308 to 1	(43/13)
Bevel gear lash	0.20 - 0.28 mm	(0.008-0.011 in)
Bevel pinion position adjustment	Split shims between pinion carrier and axle casing	
Shim thickness range (S, fig. 9-6)	0.20 mm, 0.50 mm and 1 mm (0.008 in, 0.020 in and 0.040 in)	
Ring gear taper roller bearings	Two	
Rotating torque equivalent to bearing preload	0.3 - 0.4 daNm	(2.2 to 3.0 ft. lb.)
Bearing preload and bevel gear lash adjustment	Split shims between ring gear carriers and axle casing	
Shim thickness range (Sd and Ss, fig. 9-8)	0.15-0.30-0.50-0.70 mm (0.006-0.012-0.020 and 0.028 in)	

9.5 TORQUE DATA

Description	Torque (°)	
	daNm	ft. lb.
Capscrew, ring gear shaft carrier (C1, fig. 9-6 and C1, fig. 9-9)	6	44
Self-locking screw, bevel pinion carrier to cover (C4, fig. 9-6 and C2, fig. 9-12)	24	177
Nut, bevel pinion bearing (C3, fig. 9-6)	6	44
Capscrew, axle casing covers (C2, fig. 9-1)	6	44
Capscrew, ring gear (C2, fig. 9-6)	18	133
Lock ring, bevel pinion bearing (C1, fig. 9-4)	98	723

(°) Lubricate with engine oil.

9.6 SERVICE TOOLS

Part No.	Description
75291221	Holder, ring gear
75291529	Gauge, bevel pinion position location
75291578	Puller, ring gear shaft hub (used also to check the ring gear rotating torque)
75291585	Screws, carrier forcing, two off, A, fig. 9-3
75291586	Pins, guide, pinion carrier, installation
75293210	Wrench, bevel pinion bearing lock ring, C, fig. 9-4
75293223	Holder, bevel pinion, A, fig. 9-4
75293322	Retainer, bevel pinion, A, fig. 9-13.

10. STEERING CLUTCHES

10.1 REMOVAL

Remove each steering clutch assembly as follows:

⚠ WARNING

Lift and handle all heavy parts with a lifting device of proper capacity. Be sure parts are supported by proper slings and hooks. Use lifting eyes if provided. Watch out for people in the vicinity.

Handle all parts with extreme care. Keep hands and fingers from between parts. Wear authorized protective equipment such as safety glasses, heavy gloves, safety shoes.

Take off operator's seat and fuel/hydraulic oil tank.

Drain axle oil.

Back off capscrews (C2, fig. 10-10) and take off axle casing side cover (1).

Unload brake band return springs (5, fig. 11-1) by hooking lever (6) onto pivot (7) using lever 75291215 (A).

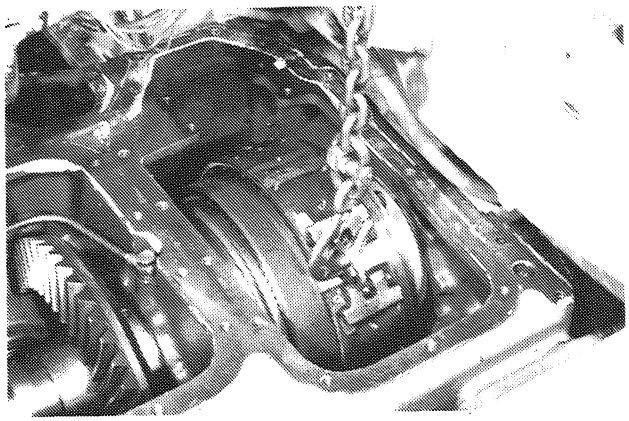

Fig. 10-1 - Removing steering clutch assembly.

Clutch pack capscrews (C1).

Lift and shift one track using a garage jack to turn clutch pack and leave the last two capscrews in outer drum (a, fig. 10-1).

⚠ WARNING

Guard against kinking chain or cables. Do not lift or pull through a kinked chain or cable. Always wear heavy gloves when handling chain or cable.

Hook chain 75291517 to brake bands, connect it to hoist, remove capscrews (C1, fig. 10-1) left in position, push outer drum inwards and withdraw clutch assembly (fig. 10-1).

⚠ WARNING

Steering clutch outer drum can become loose from the clutch assembly. Remove the clutch assembly hooked in upright position and lay it down, as soon as possible, on ground or bench.

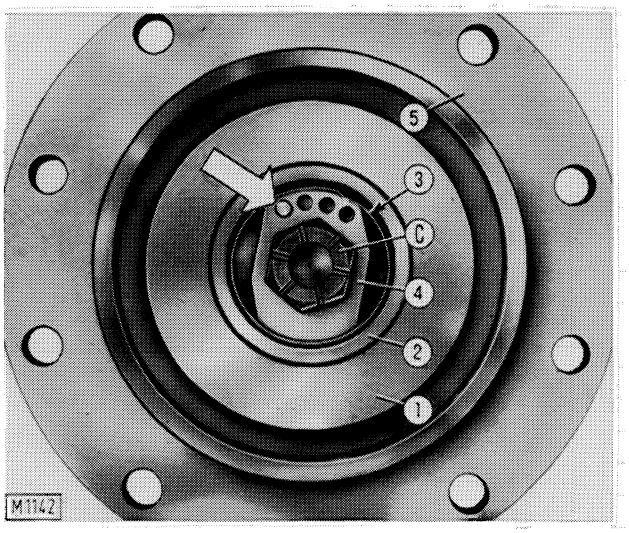

Fig. 10-2 Assembling power piston and guide
C. Hub capscrew - 1. Power piston - 2. Guide - 3. Retaining ring - 4. Lock plate - 5. Drive plate drum hub.

Note - Lock plate with retainer pin arrowed.

10.2 DISASSEMBLY

To dismantle power piston (1, fig. 10-2) and guide (2):

⚠ WARNING

Wear safety glasses with side shields or goggles when using compressed air for cleaning to reduce the danger of personal injury from flying particles. Limit pressure to 30 psi (2 bar) according to local or national requirements.

Apply a jet compressed air to the hydraulic oil line until piston falls out.

⚠ WARNING

Handle all parts with extreme care. Keep hands and fingers from between parts.

Remove retaining ring (3, fig. 10-2), withdraw lock plate (4), apply clamp 75291579 (A, fig. 10-3) over hub (1) and take off capscrew (C, fig. 10-2).

To withdraw hub (1, fig. 10-3) use clamp and puller 75291578 (B) screwing the pad onto ring gear shaft.

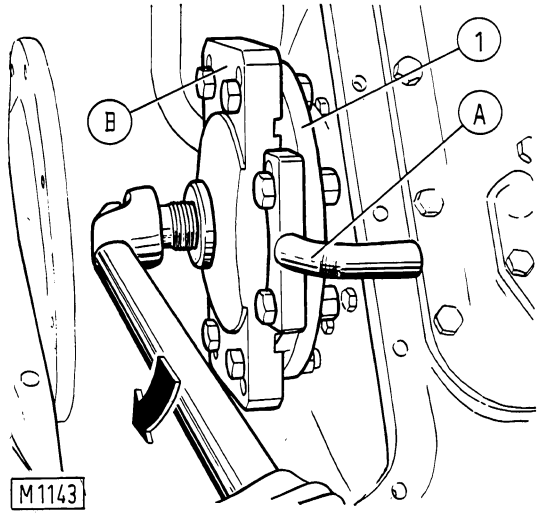

Fig. 10-3 - Withdrawing drive plate drum hub.

A. Clamp 75291579 - B. Puller 75291578 - 1. Hub.

Disassemble each clutch pack as follows:

Withdraw driven plate outer drum (8, fig. 10-7).

⚠ WARNING

Steering clutch assemblies have heavy springs compressed inside them. Always follow procedure recommended when assembling or disassembling these clutches.

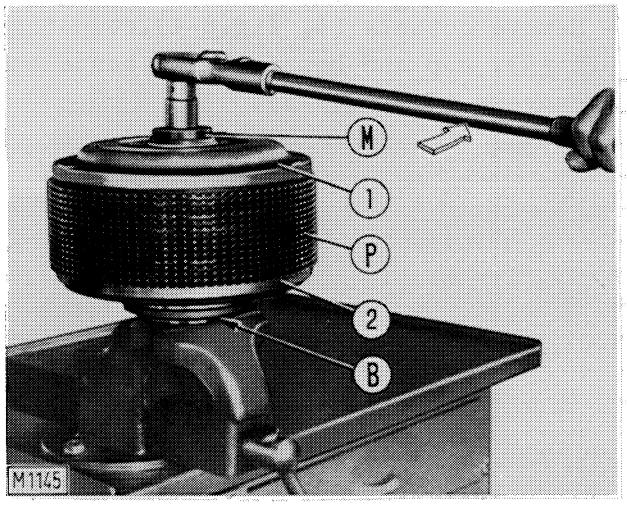

Fig. 10-4 - Disassembly of steering clutch pack.

B and M. Plate and sleeve of compressor 75295415 - P. Clutch pack - 1. Pressure plate - 2. Drive plate drum hub.

Clamp plate of compressor 75295415 as shown, fig. 10-4 in a suitable vise, place clutch pack on compressor, insert the sleeve and fully tighten tie bolt.

Remove studs (C2, fig. 10-5) and, subsequently, back off tie bolt to release spring load progressively (fig. 10-4).

10.3 INSPECTION

Check each clutch plate (1 and 2, fig. 10-5) for distortion, maximum run out being 0.4 mm or 0.016 in.

Maximum thickness differential between driven plates (2) over sintered faces should not exceed 0.05 mm or 0.002 in.

Moreover, sintered faces should not be affected by abnormal wear, usually due to contaminated oil, "dry" operation or pitting.

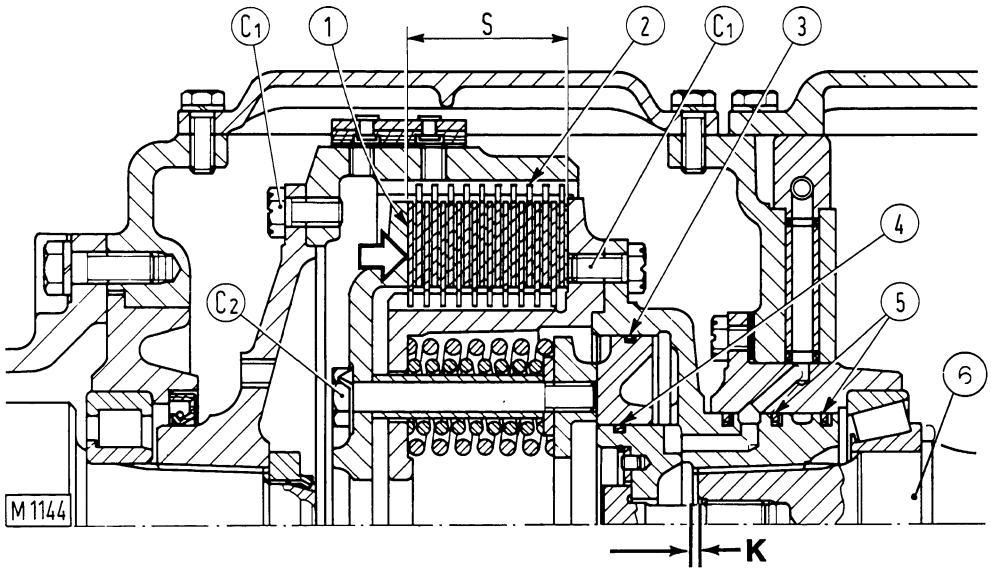

Fig. 10-5 - Cross section left steering clutch.

C1. Drum self-locking screws - C2. Spring studs - K=1-3 mm (0.04-0.12 in); nominal dimension for mating of drive plate drum hub on the bevel gear shaft - S = 70-71.5 mm (2.756-2.815 in), total shim pack thickness - 1. Drive plates - 2. Driven plates - 3, 4. O-ring - 5. Retaining ring - 6. Bevel gear shaft.

Note - Arrow points to side on which drive plates must be added to obtain dimension (S).

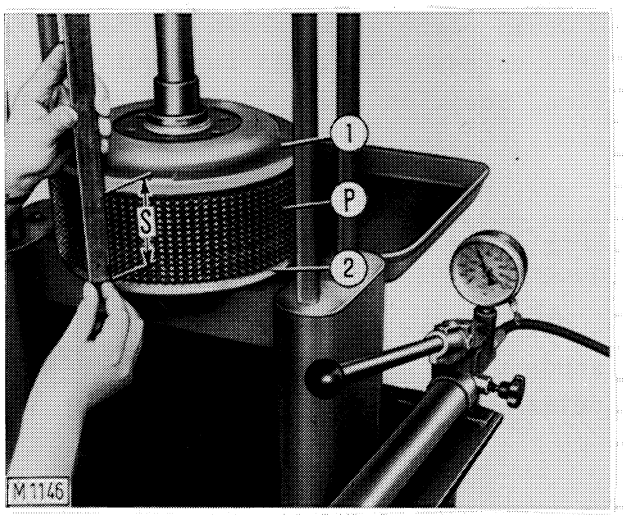

Fig. 10-6 - Checking total clutch pack thickness.
P. Clutch pack - S = 70-71.5 mm (2.756-2.815 in), total pack thickness - 1. Pressure plate - 2. Drive plate drum.

Note - Hydraulic press should apply a load of 294 - 392 daN (600 to 880 lb).

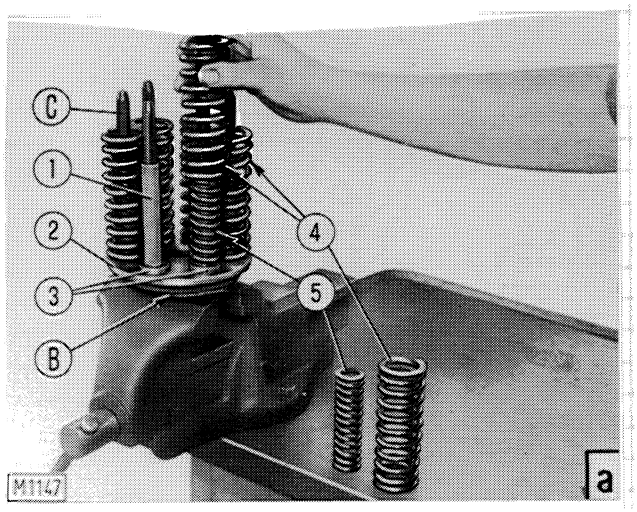

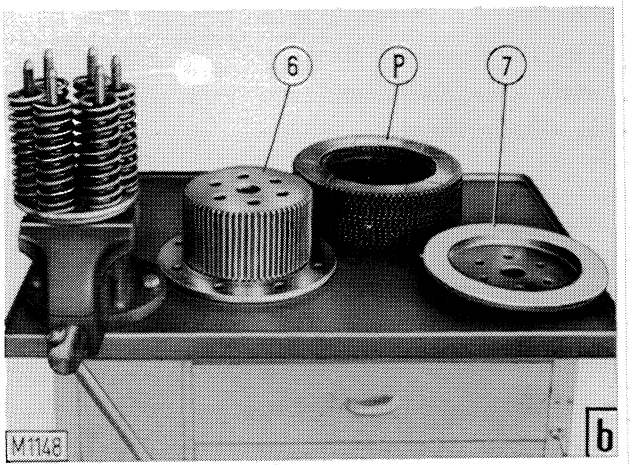

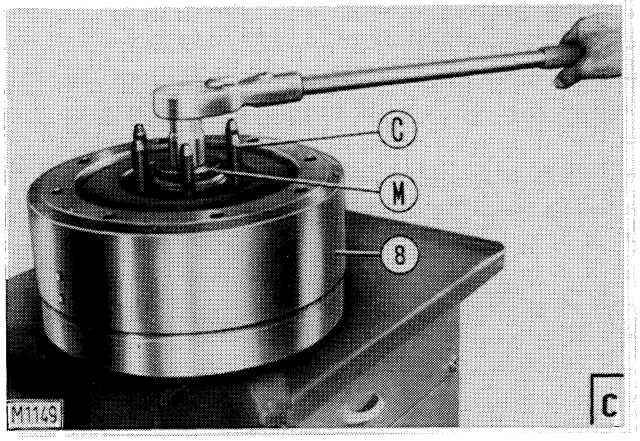

Fig. 10-7 - Assembling steering clutch.
a. Installing springs - b. Assembling clutch pack - c. Compressing springs for stud assembly - 8. C/M. Plate, studs and sleeve of compressor 75291535 - P. Clutch pack - 1. Spacer - 2. Stud plate - 3. Inner spring thrust washers - 4. Outer springs - 5. Inner springs - 6., 8. Drive plate drum - 7. Pressure plate.

⚠ WARNING

Handle all parts with extreme care. Keep hands and fingers from between parts. Wear authorized protective equipment such as safety glasses, heavy gloves, safety shoes.

Following plate inspection, rebuild each clutch pack (P, fig. 10-6) (10 driven plates and 10 drive plates) and install pressure plate (1) over drive plate drum (2) subsequently, check at the press that total thickness of shim pack (S) is 70 to 71.5 mm (2.756 to 2.815 in) upon applying a 294 to 392 daN load or 600 to 880 lb. To adjust, add one or more drive plates (1, fig. 10-5) on side arrowed.

10.3.1 STEERING CLUTCH CONSTRUCTION

Items	Qty
Steel drive plates (1, fig. 10-5)	10 (°)
Sintered facing driven plates (2, fig. 10-5)	10
Outer springs (4, fig. 10-7)	6
Inner springs (5, fig. 10-7)	6

(°) Increase as necessary to obtain dimension (S, fig. 10-5).

10.4 ASSEMBLY

Rebuild each clutch pack as follows:

Clamp plate a, as shown in fig. 10-7, of compressor 75295415 in a suitable vise, position stud plate (2) and fit studs (C).

Position thrust washers (3, fig. 10-7), spacers (1) inner springs (5) and outer springs (4).

Slide drive plate drum (6) over the studs until contact with outer springs (detail b) is established.

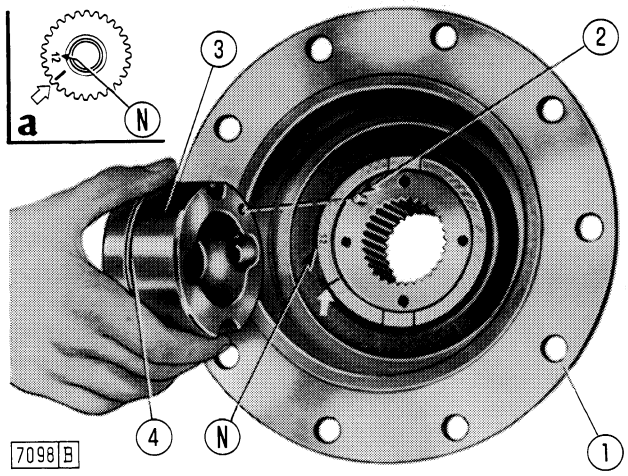

Fig. 10-8 - Positioning power piston guide and drive plate drum hub.

Note - Alignment reference marks arrowed.

a. Ring gear shaft end - N. Fit grade code - 1. Drive plate drum hub - 2. Guide positioning pin - 3. Guide - 4. O-ring.

Position clutch pack (P, fig. 10-7) and pressure plate (7) over drum.

Install drum (8) to line up driven plate teeth, position sleeve (M) and fully tighten tie bolt (detail C).

Substitute tool stud (C, fig. 10-7) with studs (C2, fig. 10-5) and tighten to the prescribed torque.

Install drive plate drum hub (1, fig. 10-8) using ring compressor 75293321 over sealing rings (5, fig. 10-5), lining up references (N) and alignment marks shown in fig. 10-8.

NOTE - If the bevel gear shaft or the hub is changed, the two parts must be pre-mated on the bench by means of a fixed press. The hub must be fitted to the shaft under a load of 14.7 daN (33 lbs) check that distance K (fig. 10-5) is 1-3 mm (0.04-0.12 in) after this operation.
Mark the respective positions of the two parts when mounted and disassemble.
Reassemble as described above. Refer to chapter 9.2 with regard to assembly of the bevel gear.

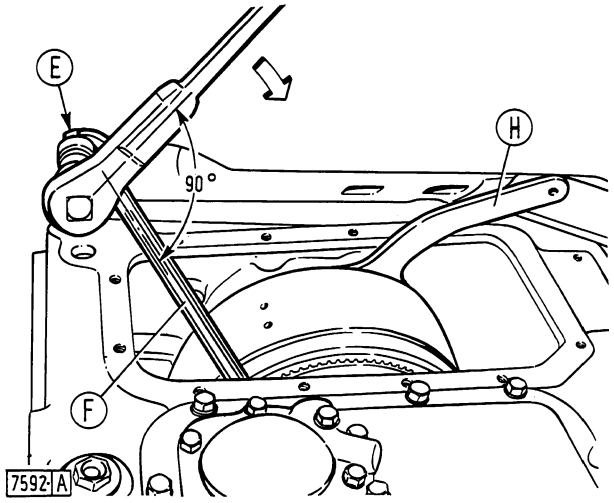

Fig. 10-9 - Tightening drum capscrews (C1, fig. 10-5). E. Adapter 75290229 - F. Wrench 75290166 - H. Drum hub clamp 75291536.

⚠ DANGER

Steering clutch assemblies have heavy springs compressed inside them. Always follow procedure recommended when assembling or disassembling these clutches.

Install power piston (1, fig. 10-2) with attached O-rings, position guide (2) with attached O-ring over positioning pin (2, fig. 10-8), tighten capscrew (C, fig. 10-2) using clamp 75291579, position lock plate (4) and apply retaining ring (3).

10.5 INSTALLATION

⚠ WARNING

Guard against kinking chain or cables. Always wear heavy gloves when handling chain or cable.

Apply chain 75291517 and secure to two threaded holes in outer drum (fig. 10-1), install clutches in axle casing. Lift and turn one track using a garage jack to turn clutch pack and tighten capscrews(C1, fig. 10-5) using wrench 75290166 (F, fig. 10-9) adapter 75290229 (E) and, if necessary, clamp 75291536 (H).

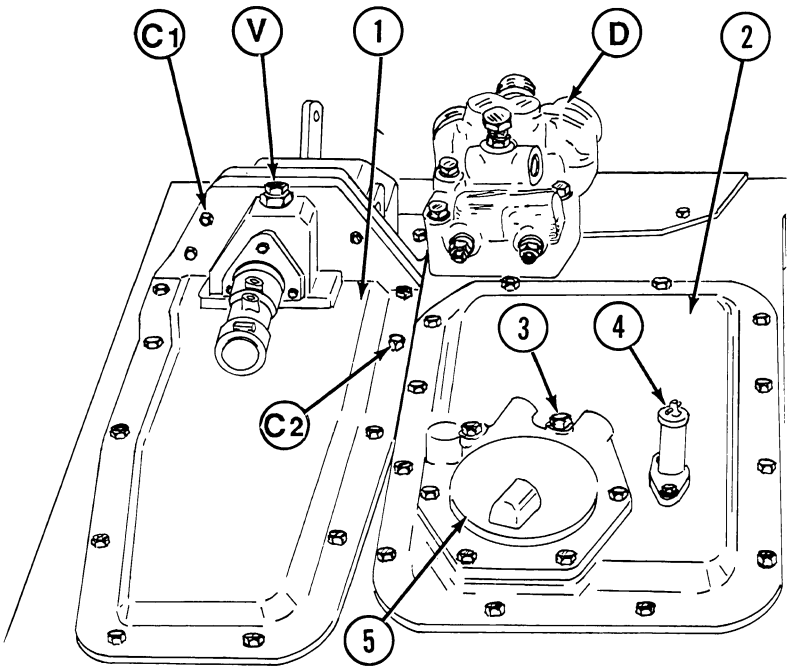

Fig. 10-10 - Steering clutch covers
C1. Brake cover capscrews - C2. Center and side cover capscrews - D. Steering clutch control valve - V. Brake clearance adjuster capscrews - 1. Steering clutch cover - 2. Bevel gear cover - 3. Return oil filter cap screws - 4. Oil filler tube and level dipstick - 5. Oil filter cover.

Install brake bands, as shown in para. 11-3, fit brake cover using capscrews (C1, fig. 10-10) and side cover (1), smearing the contact surfaces on brake cover and axle casing with jointing compound.

Adjust clearance between brake bands and steering clutch drums.

10.6 ADJUSTMENTS

10.6.1 BRAKE BAND CLEARANCE

See para. 11.4.1

10.6.2 STEERING CLUTCH LINKAGE ADJUSTMENT

Adjust steering clutch rods 6, fig. 10-11, as follows:

Control lever 2 should be engaged and links 1 resting on stops 3.

Adjust control rods 6 until clearance between levers 5 and stops on control valve is 0.5 mm or 0.02 in.

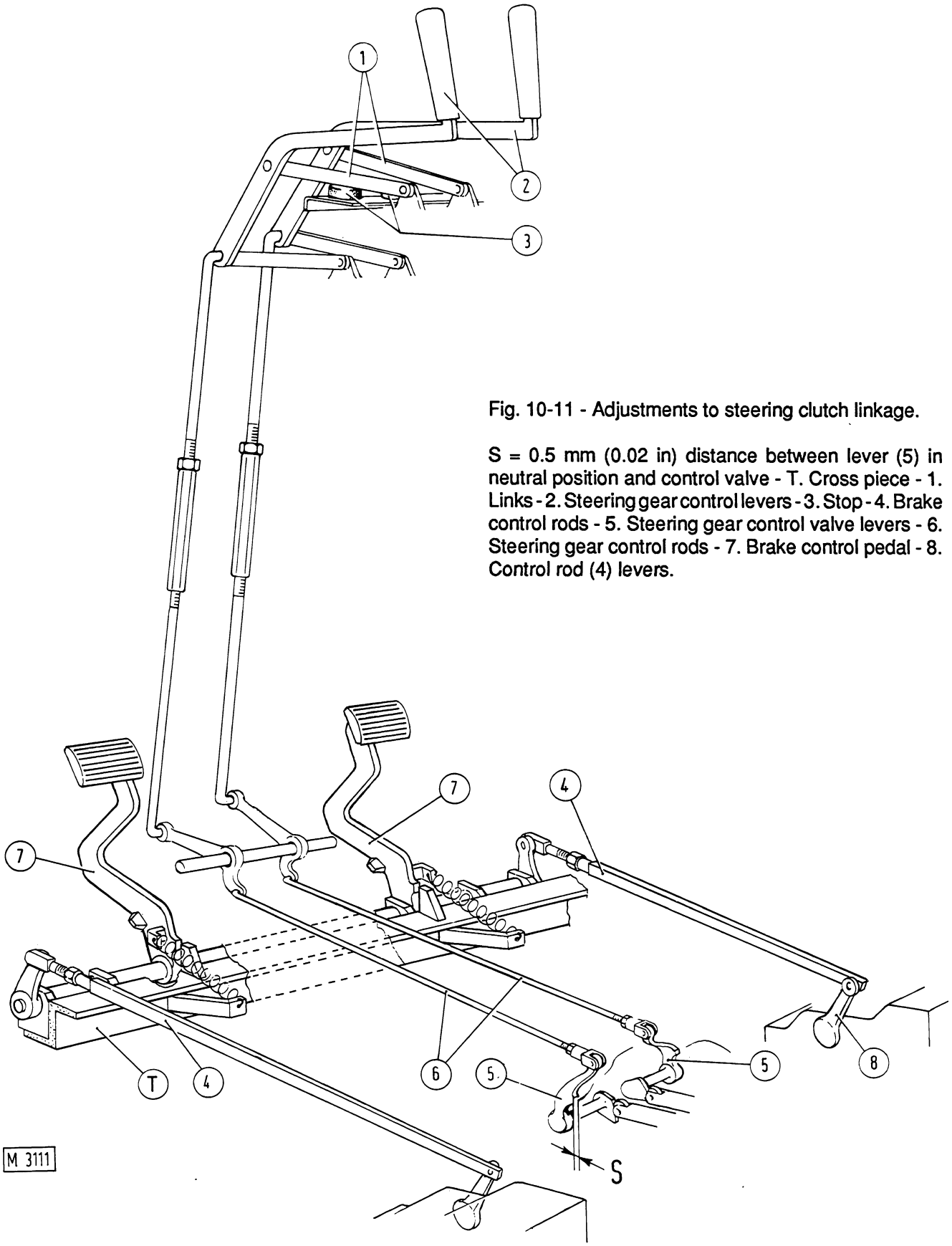

Fig. 10-11 - Adjustments to steering clutch linkage.

S = 0.5 mm (0.02 in) distance between lever (5) in neutral position and control valve - T. Cross piece - 1. Links - 2. Steering gear control levers - 3. Stop - 4. Brake control rods - 5. Steering gear control valve levers - 6. Steering gear control rods - 7. Brake control pedal - 8. Control rod (4) levers.

10.7 SPECIFICATION AND DATA

Type	Multiple plate, oil bath	
Operation	Hydraulic, two separate levers	
	mm	in
Steel drive plate thickness	2.42 to 2.58	0.0953 to 0.1016
Sintered-facing driven plates:		
Friction plate diameter:		
Outer	285.75	11.25
Inner	212.70	8.374
Sintered facing thickness (each side)	1.10	0.0433
Overall thickness	4.20 to 4.50	0.1653 to 0.1772
Maximum wear limit	3.2	0.1260
Total clutch pack thickness (S, fig. 10-6)	70 to 71.5	2.7560 to 2.8150
Power piston:		
Inside diameter	90.000 to 90.035	3.5433 to 3.5447
Outside diameter	169.517 to 169.557	6.6739 to 6.6755
Piston guide outside diameter	89.874 to 89.928	3.5383 to 3.5405
Drive plate drum hub bore diameter	170.000 to 170.040	6.6929 to 6.6945
Piston clearance in guide	0.072 to 0.161	0.0028 to 0.0063
Piston clearance in hub	0.443 to 0.523	0.0174 to 0.0206
Inner spring data:		
Outside diameter	34 ± 0.35	1.3386 ±0.0138
Free length	69.5	2.7362
Length under 228.1-252.1 daN or 512.8-566.7 lbs	53	2.0866
Outer spring data:		
Outside diameter	53±0.5	2.0866±0.0197
Free length (nominal)	84	3.3071
Length under 309.3-341.9 daN or 695.3-768.6 lbs	58	2.2835

10.8 TORQUE DATA

Description	Torque (°)	
	daNm	ft. lb.
Stud, steering clutch spring (C2, fig. 10-5)	12	88
Capscrew, piston guide (C, fig. 10-2)	60	442
Screw, self locking, clutch plate drum and hub (C1, fig. 10-1 and 10-5)	7	52
Capscrew, axle side cover (C2, fig. 10-10)	6	44

(°) Lubricate with engine oil.

10.9 SERVICE TOOLS

Part No.	Description
75290166	Wrench, 24 mm, clutch pack, F, fig. 10-9. (dia. 24 mm)
75290229	Adapter, 24 mm, E, fig. 10-9. (part of kit 75290229)
75291517	Chain, lifting, steering clutches removal-installation (fig. 10-1)
75291536	Clamp, H, fig. 10-9, clutch drum screw tightening.
75291578	Puller, B, fig. 10-3, drive and driven plate drums hub.
75291579	Clamp, A, fig. 10-3, clutch drum hub.
75293321	Compressor, ring, drum hub.
75295415	Compressor, clutch pack removal-installation (figs. 10-4 and 10-7).

11. BRAKES

11.1 Removal and disassembly.

11.1.1 Remove the fuel and hydraulic oil tank.

11.1.2 Disconnect the brake control rods (4) Fig. 11-2, from the brake levers.

11.1.3 Disconnect the hydraulic lines from the brake valves.

11.1.4 Remove the capscrews (C3) Fig. 11-1 attaching the brake linkage cover to the top of the final drive housing.

11.1.5 Drive out the pin (11) to separate the brake valve cover from the brake linkage. Remove the brake valve and cover assembly from the housing.

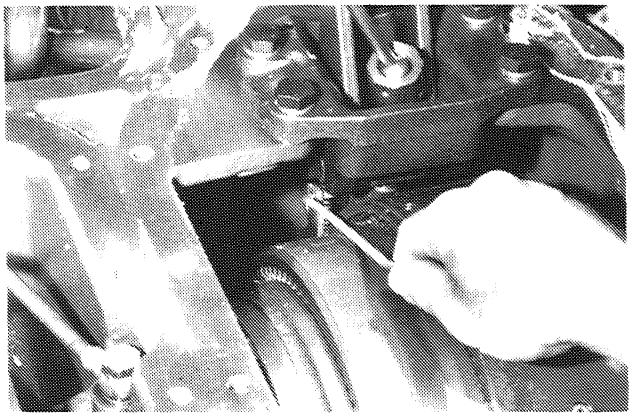

11.1.6 Reach in with the hook tool (75291215) and release the spring and lever.

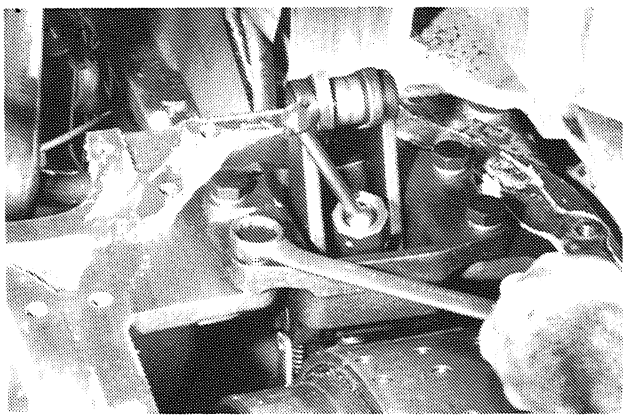

11.1.7 Remove the four capscrews on the control inner lever assembly and remove the brake linkage.

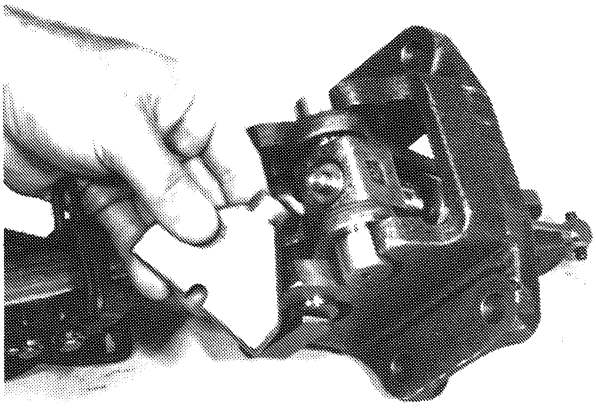

11.1.8 Remove the wedge from the support housing.

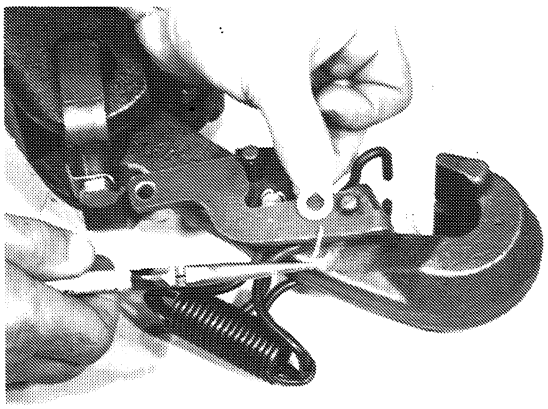

11.1.9 Remove the cotter pin and washer.

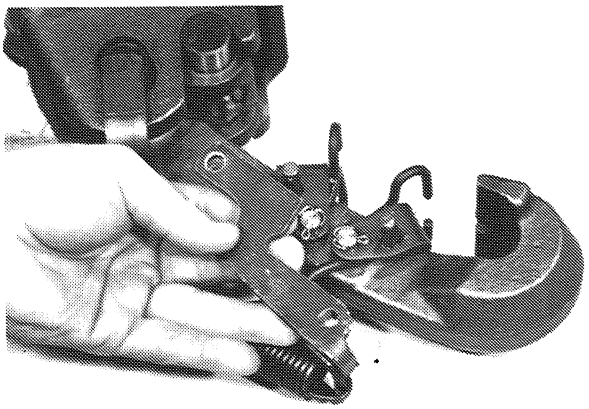

11.1.10 Remove the spring release lever.

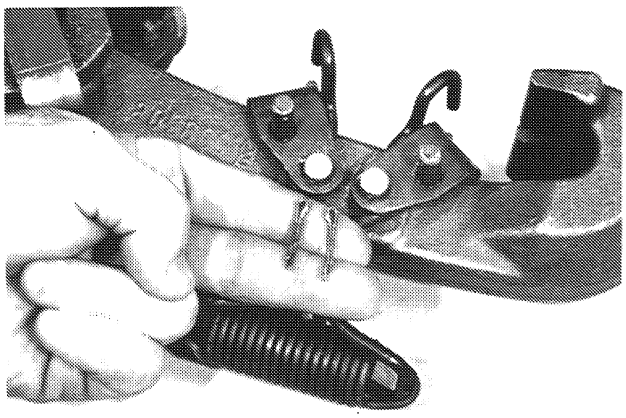

11.1.11 Remove the cotter pins from the pivot pins.

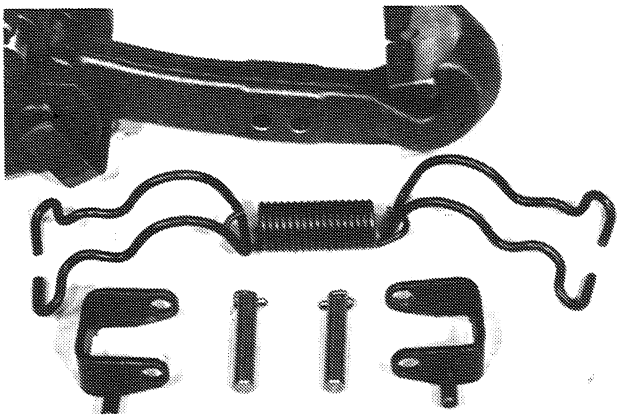

11.1.12 Remove the two pivot pins and disassemble the spring and fork assemblies.

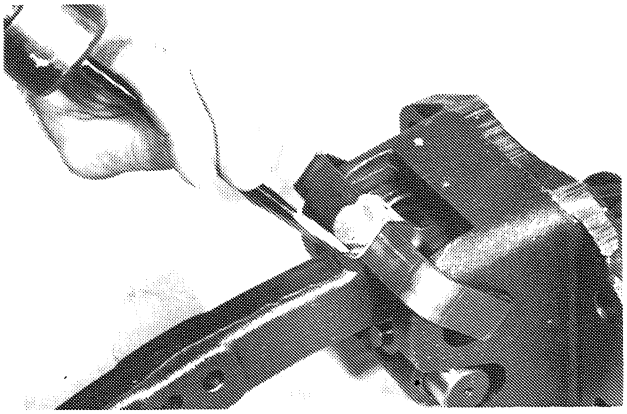

11.1.13 Unstake the lockplate and remove the capscrew from the retaining bracket. Remove the bracket.

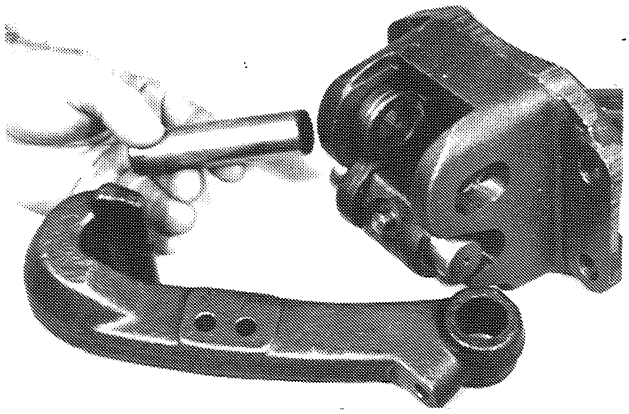

11.1.14 Remove the arm retaining pin.

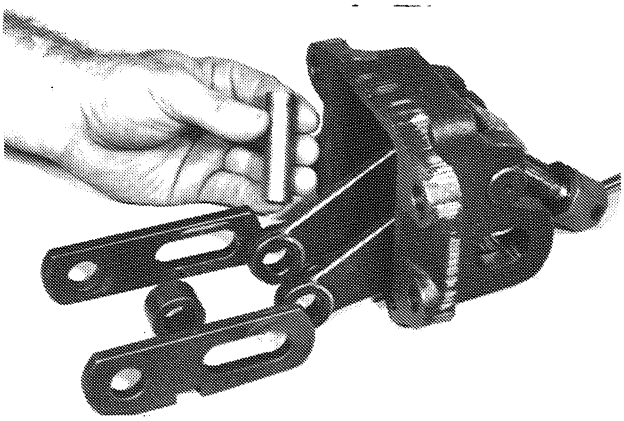

11.1.15 Remove the linkage pin, releasing bracket side plates and spacer.

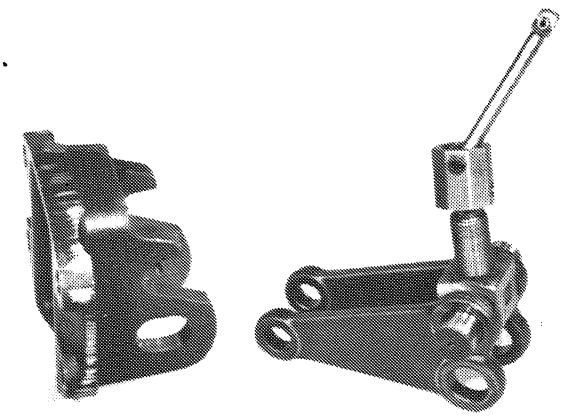

11.1.16 Remove adjusting bracket assembly from the housing.

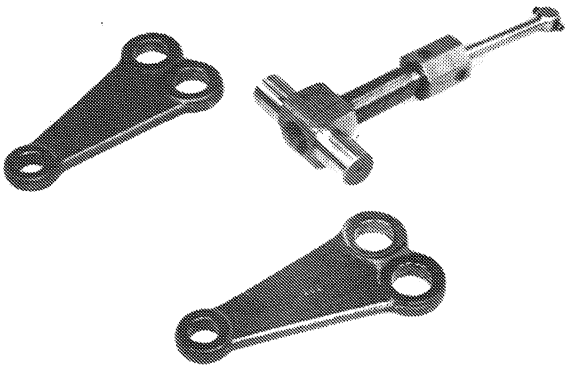

11.1.17 Remove the side brackets from the brake adjusting linkage.

11.2 Inspection and Assembly.

11.2.1 Inspect all parts for signs of wear due to scoring, pitting, scaling or scratches. Replace all snap rings and cotter pins. Lubricate all parts with clean hydraulic oil prior to reassembly.

11.2.2 Assemble and install all parts in reverse order of removal.

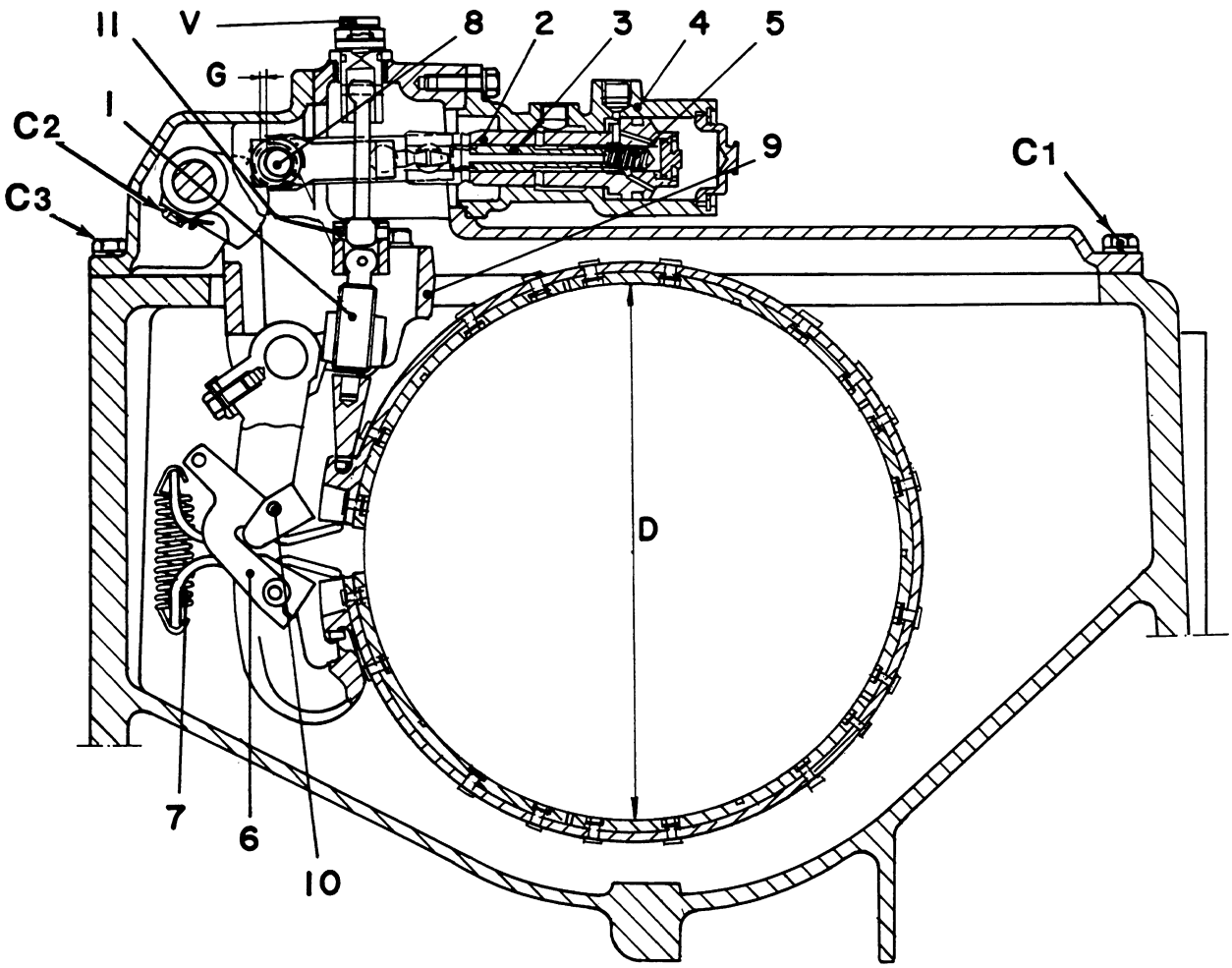

Fig. 11-1 - Brake cross section

C1 - Cover capscrews (2)
D= 340 MM (13.4 in) steering clutch outer drum diameter
V- External brake band adjustment screws

1 - Screw
2 - Piston brake power
3 - Distributor shaft
4 - Body brake power
5 - Spring
6 - Lever
7 - Spring
8 - Roller
9 - Support
10 - Pin
11 - Pin

11.3 ADJUSTMENT

11.3.1 BRAKE CLEARANCE

Tighten screws (V, fig. 11-1) to 7.8 daNm or 58 ft. lb. and back off through two turns referring to the mark stamped on screw head.

Check that after adjustments, the pedal free travel is about 60 mm or 2.36 in.

11.3.2 BRAKE LINKAGE

Adjust brake links (4, fig. 11-2) so that with cams contacting the cover, clearance Z between pedals 7 and stops 3 on cross shaft 2 will result 0,3-1 mm or 0.012 - 0.039 in.

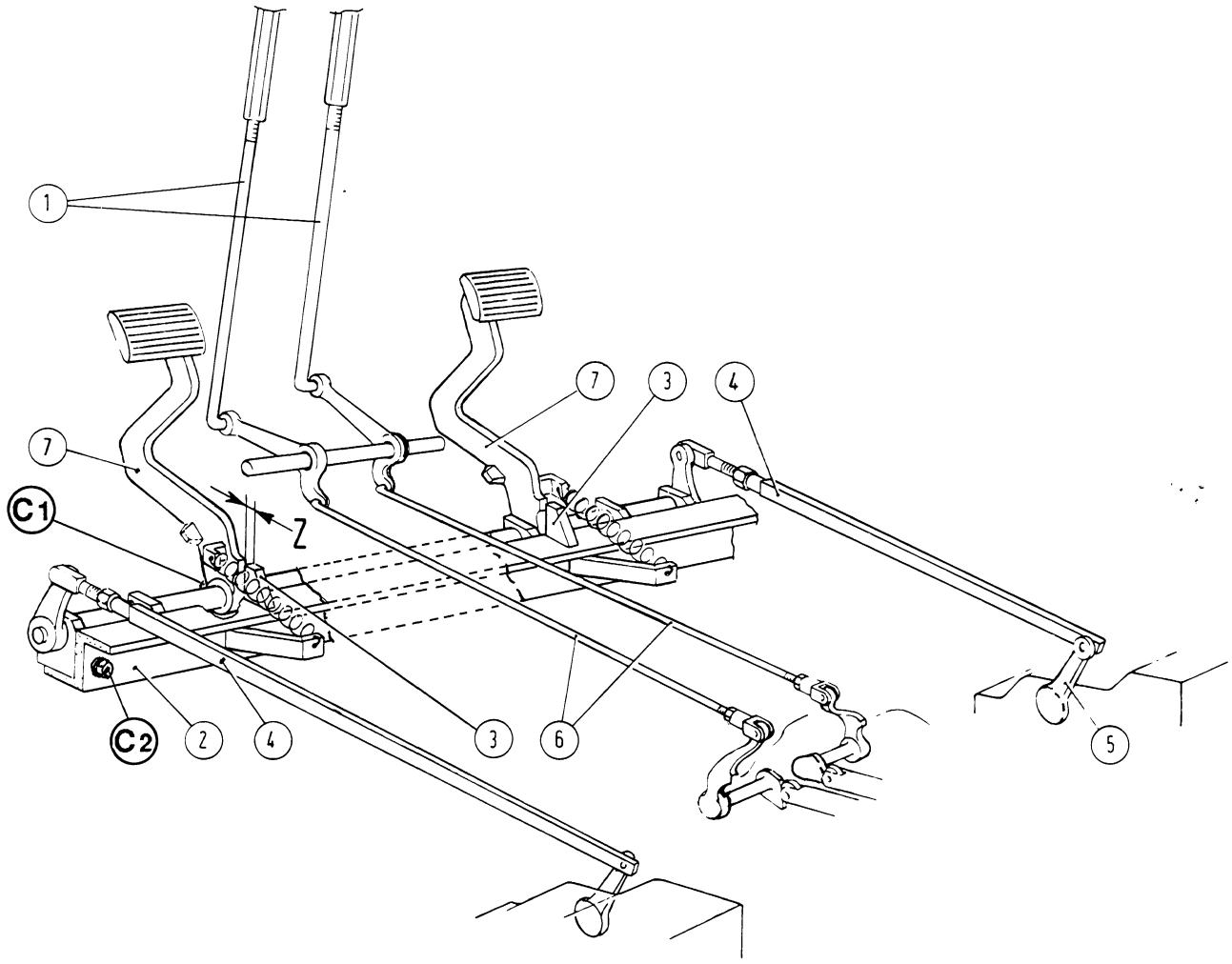

Fig. 11-2 Adjusting brake linkage.
Z = 0,3-1 mm or 0.012 - 0.039 in; clearance between pedal in rest position and stop 3 - 1. Steering clutch lever links - 2. Cross shaft - 3. Stops - 4. Brake links - 5. Links levers - 6. Steering clutch links - 7. Brake pedals.

11.4 SPECIFICATION AND DATA

Service brake	
Type	Band, oil bath
Operation	Mechanical, two separate pedals and locking hand levers.
No. of linings to each band	five
Lining fasteners	Rivets
Lining width by length	60 x 200 mm 2.36 x 7.89 in
Lining thickness	5.85 to 6.15 mm 0.23 to 0.34 in
Wear limit	3.5 mm 0.1378 in
Steering clutch drum outside diameter (D, fig. 11-1)	340 mm 13.4 in
Lining wrap round angle	345°
Pedal stroke when idle	60 mm 2.4 in
Parking brake	Acting through service brake, pedal controlled and held applied by locking lever.
Emergency brake function	Quick drive reversal through gear shift lever.

11.5 TORQUE DATA

Description	Torque	
	daNm	ft lb
Capscrew, brake cam (C2, fig. 11-1)	7.5	55
Capscrew, pedal inner idler lever (C1, fig. 11-2)	21	155
Capscrew, pedal support cross shaft (C2, fig. 11-2)	6	44
Capscrew, axle casing covers (C1, fig. 11-1)	6	44
Capscrew, brake cover (C3, fig. 11-1)	6	44

11.6 SERVICE TOOLS

Part No.	Description
75291215	Handle, brake spring removal and installation
75296077	Punch and anvil set, rivet upsetting, lining to band (2 off)

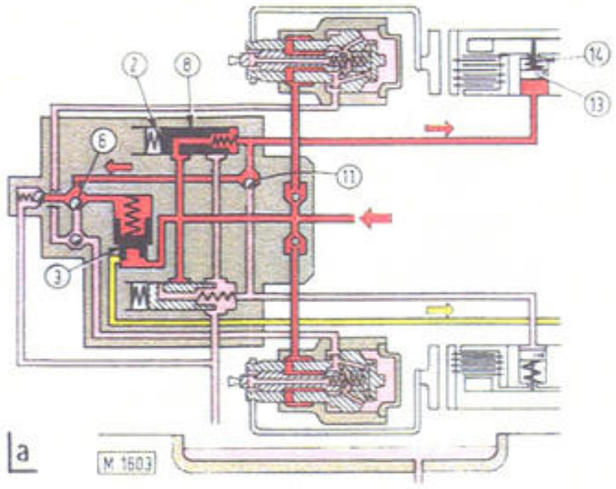

a. Right steering clutch disengaged

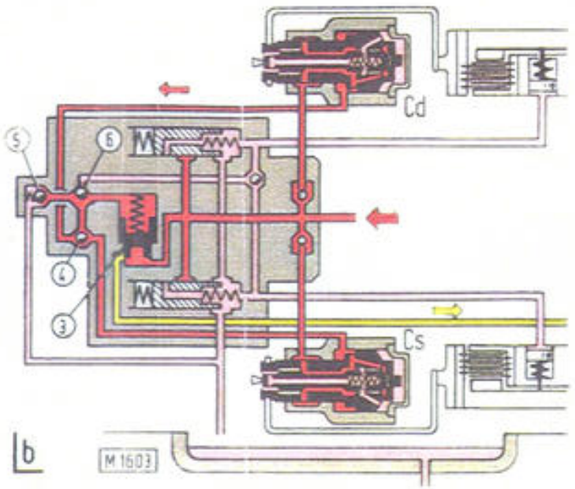

b. Brakes hydraulic c rcuit

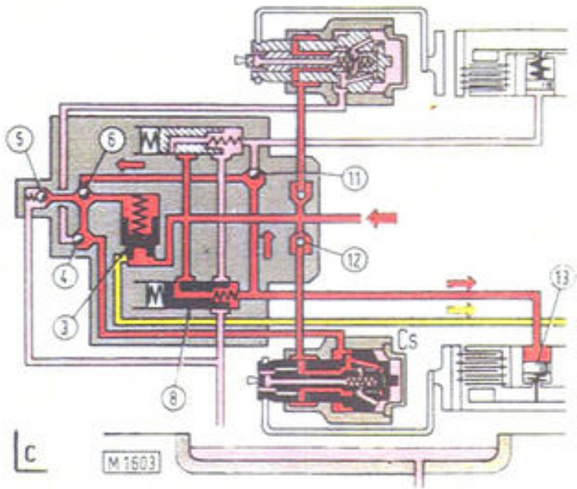

c. Brakes and left steering clutch hydraulic circuit

NOTE

The detailed drawing illustrates a transition stage when the pressure value has not yet reached the calibrated setting of the pressure regulating springs (**2**), i.e. 22.5-23.5 bar (327.14-341.36 psi). When the pressure in the clutch circuit reaches this value, valve (**8**) moves to and from between the inlet and outlet to stabilise the pressure.

Valves in operation

Oil under pressure

Oil under low pressure

Intake or discharge oil

Lubricating and cooling oil

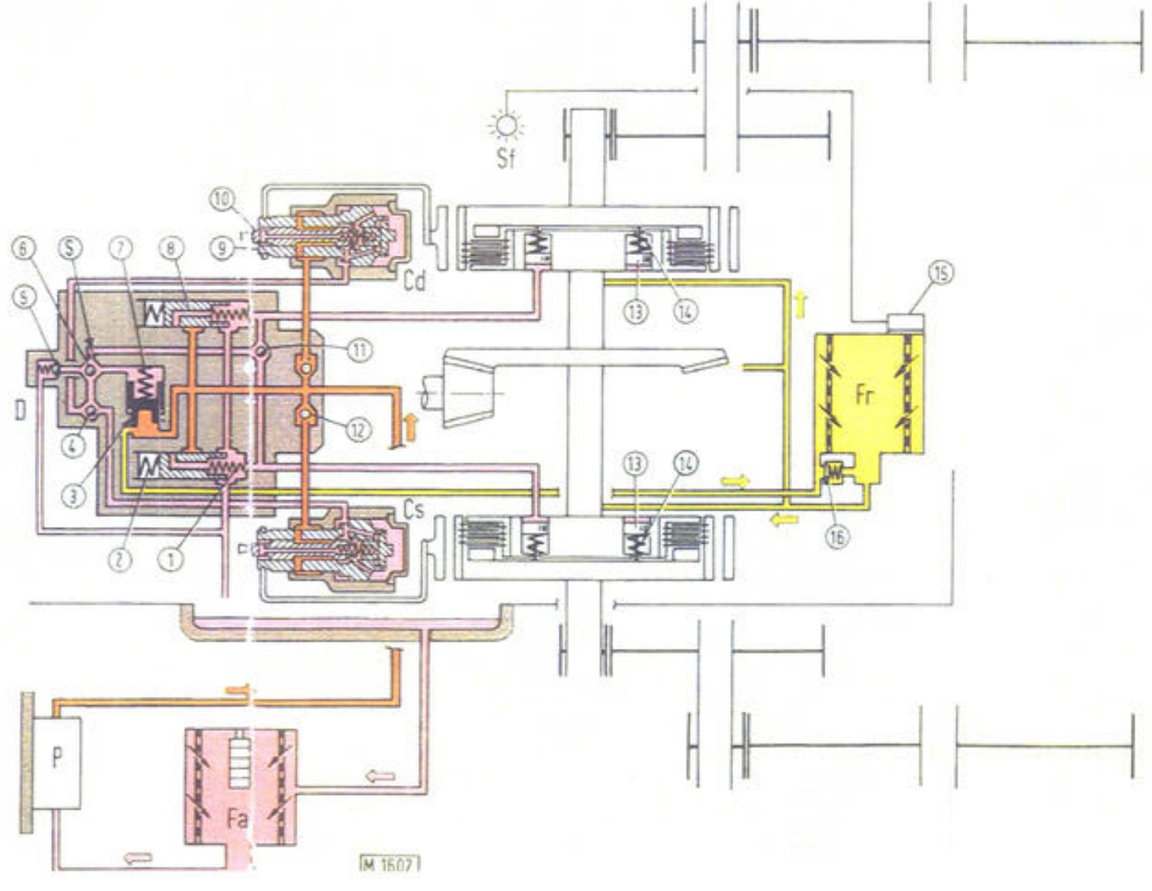

Fig. 12-1 Steering and Brake System Hydraulic Schematic

Cd. R.H. power brake cylinder. - **Cs.** L.H. power brake cylinder. - **D.** Control valve. - **Fa.** Pump intake filter. - **Fr.** Lube oil return line filter. - **P.** Hydraulic pump. - **S.** Restriction. - **Sf.** Clogged filter (Fr) telltale. - **1.** Valve (8) return springs. - **2.** Valve (8) pressure regulating springs. - **3.** Servovalve. - **4.** Brake circuit-to-circuit lock valve. - **5.** Pressure relief valve. - **6.** Brake circuits to clutches lock valve. - **7.** Spring for servovalve (3). - **8.** Clutch disengagement valve. - **9.** Power brake piston. - **10.** Power brake control valve spool. - **11, & 12.** Check valves. - **13.** Annular steering clutch disengagement plungers. - **14.** Steering clutch engagement springs. - **15.** Telltale (Sf) transmitter device. - **16.** Filter (Fr) safety bypass valve. - **17.** Valve (8) return springs

12. STEERING CLUTCH AND BRAKE HYDRAULIC SYSTEM

12.1 GENERAL DESCRIPTION

12.1.1 OIL SUPPLY AND LUBRICATION (fig. 12-1)

The whole force of the drive oil is thus directed against the smaller section of the servovalve (3). It overcomes the springs (7) and returns to the rear transmission housing via the filter (Fr), lubricating the steering clutches, brakes and bevel gear.

Hydraulic pump (P) draws oil from the rear transmission housing through filter (Fd), and sends it to control valve (D) and power brake cylinders (Cd, Cs).

When the steering clutches are engaged and the brakes are not applied, valves (8) and brake spools (10) are closed.

The pressure is stabilized by calibrating springs (2). When the pressure begins to get too high, these springs are compressed by valve (8), so that the inlet port is closed and the outlet port opened. In effect, valve (8) moves to and fro between the two fully open positions, and thus keeps the pressure steady.

12.1.2 Disengagement of one steering clutch (a, fig. 12-1)

Operation of the pedal (or hand lever) shifts valve (8) via springs (2).

The oil flows thorough the port thus uncovered, reaches the annular plunger (13), and at the same time passes through the lock valves (6 & 11) to exert pressure on the larger surface of the servovalve (3), so that it narrows the lube oil outlet port. The result is increased pressure in the circuit (red path), which enables plunger (13) to compress springs (14) and disengage the corresponding clutch stack.

The narrow section between lock valves (6 & 11) prevents fluctuations on the part of valve (8) from spreading to the servovalve (3), and thus rendering the pressure in the main circuit unstable.

When the pedal (or lever) is released, it automatically returns to the idle position. The effect of the pressure and the spring (17) makes valve (8) close the drive port, and connect the clutch circuit to the exhaust side. The pressure falls rapidly, and the clutch stack is re-engaged by springs (14).

12.1.3 DISENGAGEMENT OF BOTH CLUTCH STACKS

When both clutch pedals (or levers) are applied, the cycle described in 12.1.2 takes place in both circuits, while the ball of the lock valve (11) floats in the half way position.

The overall effect is a hunting movement between the control valve spools (10) of the pedal hubs, and the pistons (9) that is brought about by the oil at a pressure that continues to increase, and is proportional to the force required from the bands to get the braking action desired.

The movement of pistons (9) closes the drive ports if the pedal (or pedals) are not pushed fully down (partial braking).

12.1.4 POWER BRAKE SYSTEM (b, fig. 12-1).

When both brake pedals are applied together, a series of linages outside connected to the pedal assembly shifts the control valve plungers (10) forward, so as to close the exhaust ports and open the drive ports. The drive oil passes from the ports through the lock valves (6 & 4) to act on the larger section of the servovalve (3), forcing it to narrow the lube oil outlet port. The result is increased pressure in the circuit (red path), and pistons (8), which are directly connected to the brake band application levers, are shifted.

The movement of pistons (9) closes the drive ports if the pedal (or pedals) are not pushed fully down (partial braking).

The overall effect is a hunting movement between the control valve spools (10) of the pedal hubs, and the pistons (9) that is brought about by the oil at a pressure that continues to increase, and is proportional to the force required from the bands to get the braking action desired.

If the pedals (or pedal) are pushed right down (total braking) the outlet holes stay open all the time, and the maximum pressure in the brake circuit is governed by the pressure relief valve (5).

Due to the drops in load and the two different cross-sections of the servovalve (3), its upstream circuit pressure may be higher than the calibrated value of valve (5).

When braking is finished, the spring of the control pedals brings back the spools and pistons, and the drive oil returns to the transmission housing via the outlet ports opened by the backward travel of the spools.

NOTE - The groove in the center of the spools (10) serves to take off oil seeping inside the power brake and from the supply circuit.

12.1.5 APPLICATION OF ONE CLUTCH AND POWER ACTUATION OF THE CORRESPONDING BRAKE (C, fig. 12-1)

When one steering clutch is disengaged, the operating stage described in 12.1.2 will take place in the respective hydraulic circuit.

If the clutch is kept disengaged by means of the lever and the brake is applied, the previous stage is replaced by that described in para. 12.1.4.

The balls of the lock valves (6,4 & 11) will take up the positions shown in the detailed drawing (C).

The pressure in the brake circuit may be higher than that in the clutch circuit. The areas with different pressure are separated from each other by the effect of the lock valve (6), which takes up the position shown in the drawing, and the clutch disengagement valve, which, as already stated, moves to and fro between the drive and exhaust positions.

When a clutch is applied after brake, the check valve (12) moves into the position indicated in the drawing (C), so as to prevent the oil under pressure in the brake circuit from flowing into the clutch circuit to the detriment of the braking action already obtained.

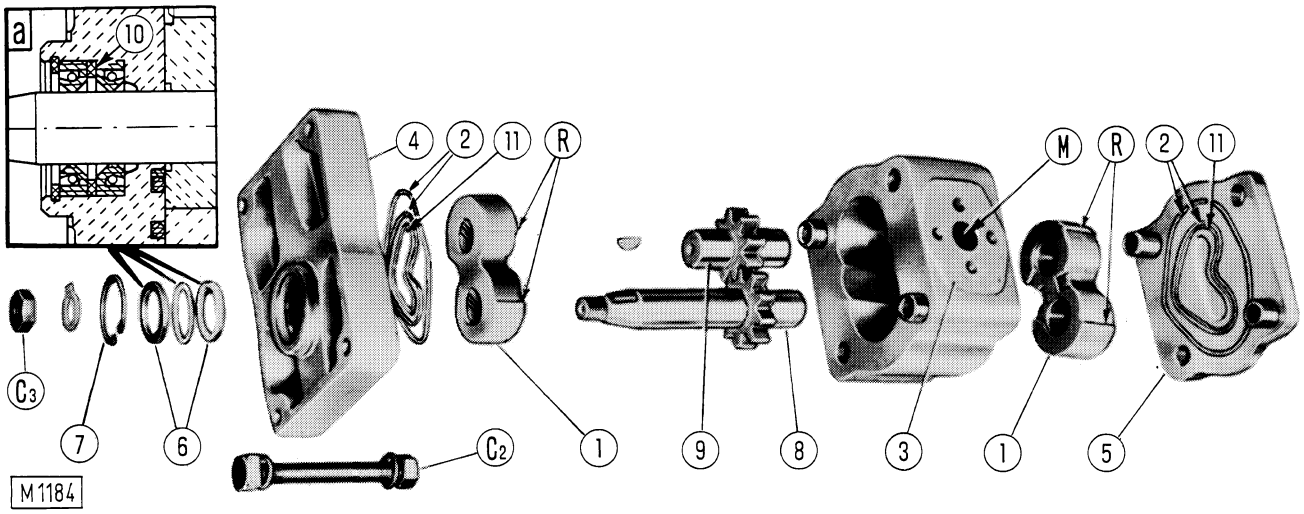

Fig. 12-2 - Exploded view of hydraulic pump.
a. Seal assembly detail - C2. Bolt and nut - C3. Drive coupling nut - M. Inlet port - R. Lube oil transfer fillets - 1. Shaft bearings - 2. O-rings - 3. Pump body - 4. Front cover - 5. Rear cover - 6. Drive shaft seals - 7. Retaining ring - 8. Drive gear shaft - 9. Driven gear shaft - 10. Spacer - 11. Anti-extrusion rings.

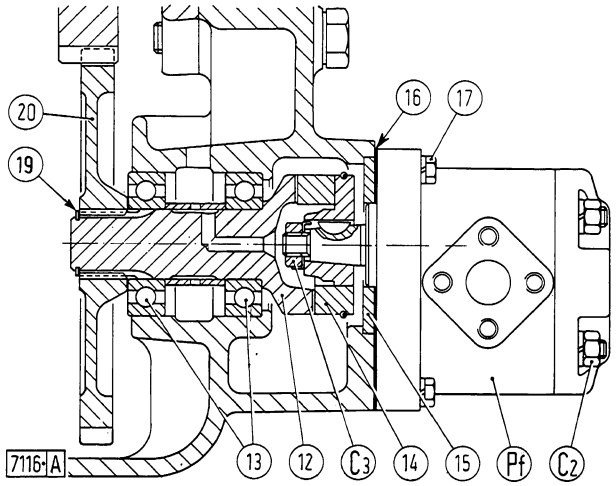

Fig. 12-3 Section through hydraulic pump drive.
C2. Pump bolt nuts - C3. Coupling nut - 12. Shaft - 13. Ball bearings - 14. Coupling - 15. Centralizer - 16. Seal - 17. Bolt - 19. Retaining ring - 20. Drive gear.

12.2 HYDRAULIC PUMP

The hydraulic pump does not require maintenance, inspection or adjustment.

Journals are lubricated by incoming oil through slots provided in the bearings (1, fig. 12-2). End float is controlled by oil pressure supplied from outlet (M) and acting on bearing faces in the areas surrounded by O-rings (2).

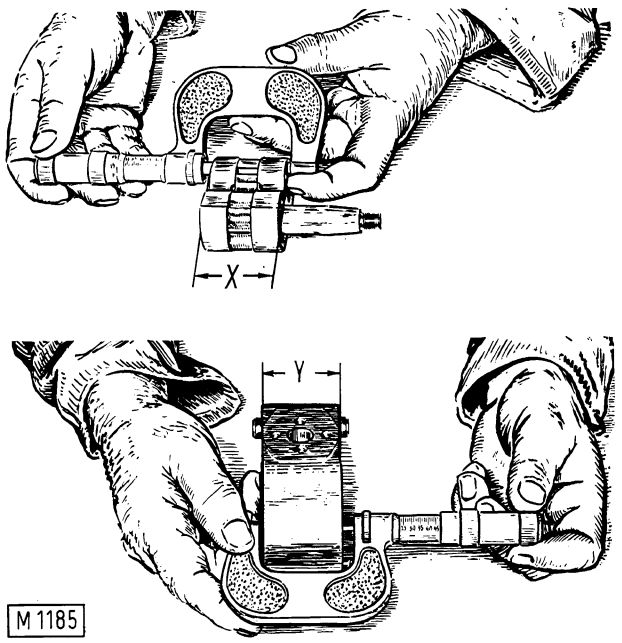

Fig. 12-4 - Checking gear and bearing end clearance relative to valve body.
Note - Dimension X to be less than Y by 0.1 to 0.2 in or 0.004 to 0.008 in.

⚠ WARNING

Handle all parts with extreme care. Keep hands and fingers from between parts. Wear authorized protective equipment such as safety glasses, heavy gloves, safety shoes.

Prior to removing drive shaft (12, fig. 12-3) and ball bearings (13), take off converter or main clutch assembly from machine and next the converter or main clutch from casing.

Prior to removing the pump, take off drive coupling (14, fig. 12-3) using a universal puller; subsequently, disassemble pump (fig. 12-2) removing nuts (C2) and marking the parts in order that they may be restored to their original position on assembly. Renew any defective parts as necessary.

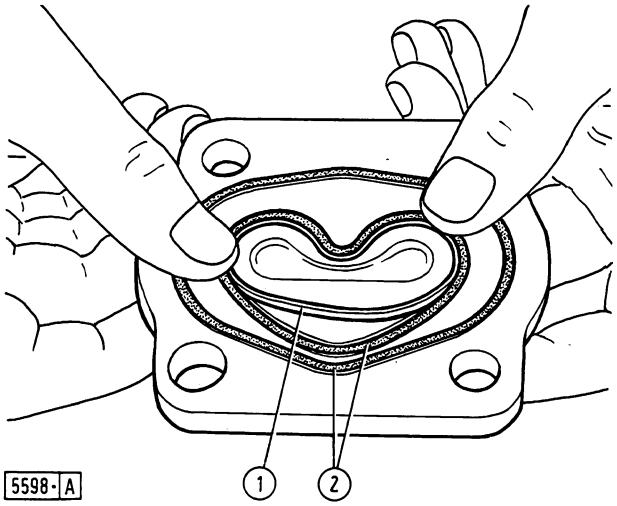

Fig. 12-5 - Positioning anti-extrusion ring in pump cover.
Note - Anti-extrusion ring to be positioned inside center O-ring.
1. Anti-extrusion ring - 2. O-ring.

Couple gears to the bearings and check both bearing side squareness and flatness using carbon black. Slight corrections may be made using paraffin-oil lubricated fine emery paper.

Check end float of gear and bearing assembly in pump body (fig. 12-4); the correct clearance should be 0.1 to 0.2 mm or 0.004 - 0.008 in.

Any surface dressing tending to restore the prescribed clearance should be carried out solely be means of paraffin oil lubricated fine emery paper, removing as little material as possible.

Liberally lubricate the parts to prevent seizure during initial running.

When refitting the pump, note the following points:

Position O-rings on covers and insert plastic anti-extrusion ring (1, fig. 12-5) on the inside of center O-ring.

Bearings should be positioned with the milled lube oil fillets (R, fig. 12-2) facing towards outlet (M) and with the lubricating recesses machined in the sides abutting the gears; moreover the bearings should be a light manual push fit in the pump body.

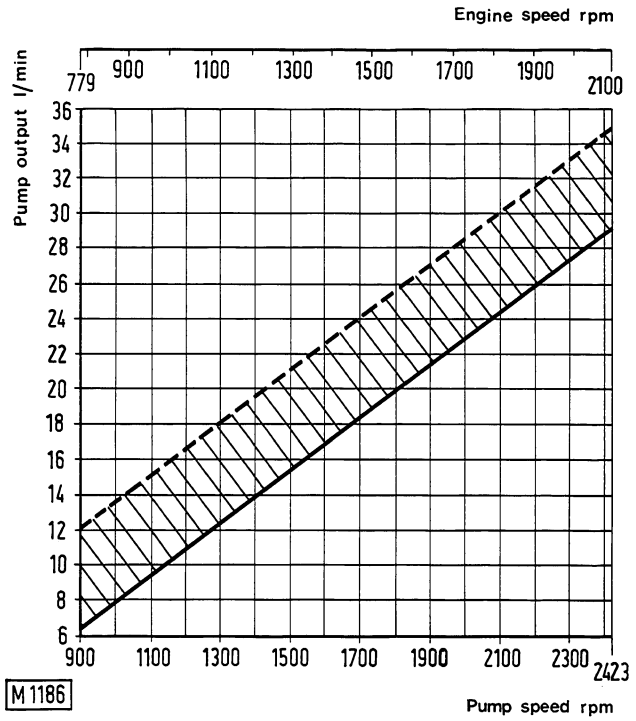

Fig. 12-6 - Steering clutch hydraulic pump performance chart.
Test pressure ..... (28.4 bar or 412 psi)
Oil temperature ..... 55°-65°C
Pump drive ratio ..... 1.154 to 1

12.2.1 PUMP PERFORMANCE TEST

WARNING

"DO NOT USE HANDS" to search for pressure leaks. Fluid escaping under pressure can penetrate the skin.

Install pump on trolley mounted electric motor 75291235 using drive coupling 75290385.

Place output tester 75295501 in position and connect to pump as follows:

On intake side with hose 75290445, adapter 75290540 and connector 75290330, on delivery side with hose 75290378 and connector 75290331.

WARNING

Keep hands and face away from the loosened line nuts while performing tests. Also, wear safety glasses with side shields or goggles.

Fill with hydraulic oil supplied with the test machine and perform the tests at the specified temperature and pressure ratings (fig. 12-6).

Compare output figures resulting from several tests at 720 and 1,445 motor rpm, at the prescribed temperature and pressure, with the values given in the chart of fig. 12-6.

In this connection, remember that:

Output ratings of new or reconditioned pumps should not be much lower than those represented by the dash line in the chart.

Output figures obtained from used pumps are to be considered acceptable if included in the shaded area of the chart. If near to, or lower than, the continuous line the pump should be over hauled or renewed.

12.3 OIL FILTERS

Oil filtering system includes the following:

Full-flow, tin coated steel wool cartridge pump inlet filter (Fa, fig. 12-7) (priming circuit, fig. 12-1).

Paper cartridge filter (Fr, fig. 12-8) branched off return line to the axle casing (lubrication and flushing circuit, fig. 12-1. A filter by-pass valve (19) is provided to permit oil circulation should the filter become restricted.

WARNING

Fluid under pressure; turn cap or cover slowly to relieve pressure before removing.

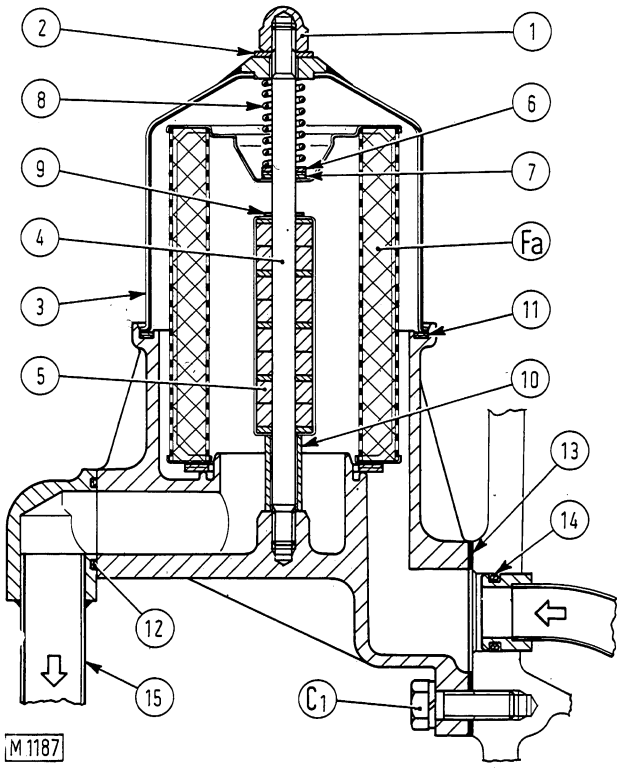

Fig. 12-7 - Section through pump inlet filter.
C1. - Capscrew - Fa. Steel wool filter element - 1. Cover nut - 2. Copper washer - 3. Cover - 4. Stud - 5. Magnetic rod - 6. Steel washer - 7. Rubber seal - 8. Retaining spring - 9. Retaining ring - 10. Spacer - 11, 12 and 14. O-rings - 13. Gasket - 15. Pump inlet piping.

In the course of overhaul clean inlet filter as follows:

⚠ WARNING

Never use gasoline solvent or other flammable fluids to clean element. Use authorized commercial, non-flammable, non-toxic solvents.

Wipe cover and body thoroughly.

Remove nut (1, fig. 12-7) and withdraw both cartridge (Fa) and magnetic rod (5).

Wash filter parts and body.

Renew any damaged seals and assemble filter as shown in fig. 12-7.

In the course of overhaul renew return filter cartridge as follows:

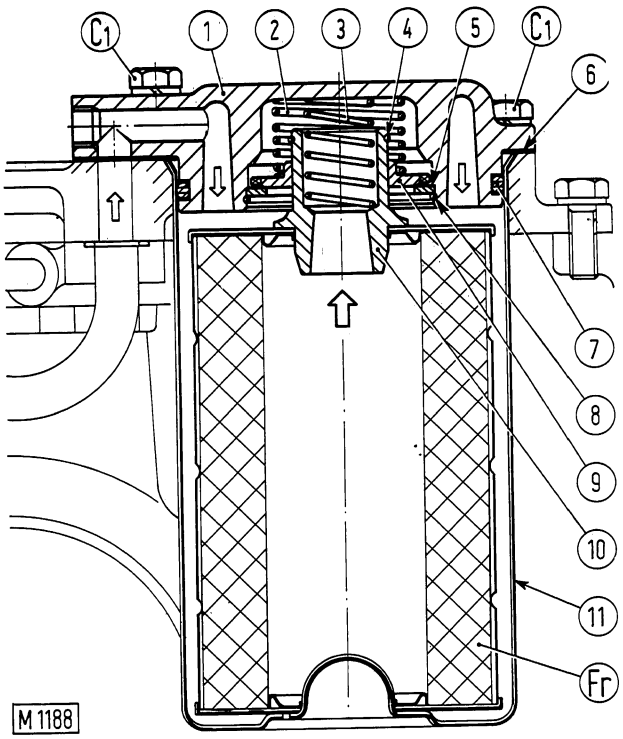

Fig. 12-8 - Section through oil return filter.
C1. Cover capscrews - Fr. Paper cartridge - 1. Cover - 2. Valve spring - 3. Retaining spring - 4., 8. Retaining rings - 5. Thrust washer - 6. Gasket - 9. By-pass valve - 10. Cartridge retainer - 11. Filter body.

Wipe cover and body thoroughly.

Back off capscrews (C1, fig. 12-8) and withdraw cover assembly (fig. 12-9).

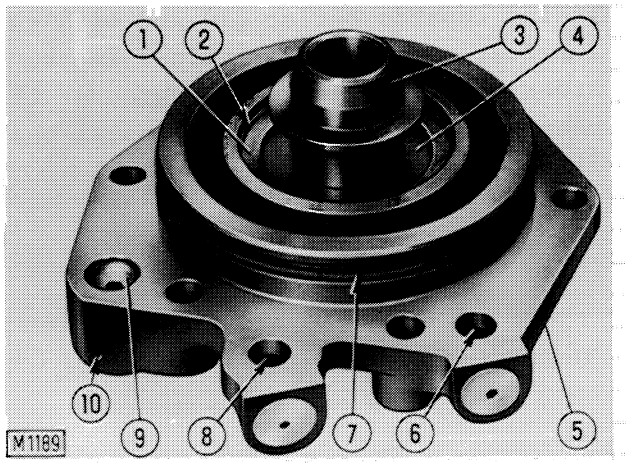

Fig. 12-9 - Oil return filter cover (5).
1. Thrust washer - 2. Retaining ring - 3. Cartridge retainer - 4. By-pass valve - 6. Outlet port - 7. O-ring - 8. Inlet port - 9. Vent - 10. Vent orifice.

Renew cartridge (Fr, fig. 12-8) and, if necessary, also the seals.

Clean the inside of body (11) and assemble as shown in fig. 12-8.

Ensure that vent orifice (10, fig. 12-9) and vent (9) are free from dirt or foreign particles.

12.4 STEERING CLUTCH AND BRAKE CONTROL VALVE

Separate the control valve into two subassemblies (fig. 12-10) and disassemble as follows:

Remove the retaining dowels (1, fig. 12-11) by undoing them with a 4x0.7 puller screw, and detach the outside levers (2, 3) from the cover.

If replacement is required, knock out the bushes (19, fig. 12-12) by means of a punch applied to the outside of the cover.

NOTE - The pressure relief valve can be taken off without removing the control valve by removing its inspection plug (33) and applying spanner 75292187 (a, fig. 12-10)

It should be remembered that, when spares are ordered:

Plungers (12, 17, fig. 12-12) and piston (11) for the brake and steering valves are supplied fitted to the control valve body.

Pressure relief valve (5) and control valve pressure adjustment springs (M) are supplied assembled and properly calibrated.

In addition, the control valve test equipment is necessary for adjustments to the pressure relief valve (a, fig. 12-10) by replacing separately supplied spares, or by adjusting its setting.

Lubricate parts well and reassemble the control valve, remembering:

To install bushings that are changed (1, fig. 12-13) to a depth of 7 mm (0.275 in) (H) with respect to the side surfaces of the cover, and rebore their I.D. to dimension (A).

To premount O-rings (2, fig. 12-12) on the shafts of the outside control levers, and then fit the complete levers into the cover.

NOTE - Make absolutely sure that the O-rings (2) are not first mounted on the cover before the outside levers are fitted.

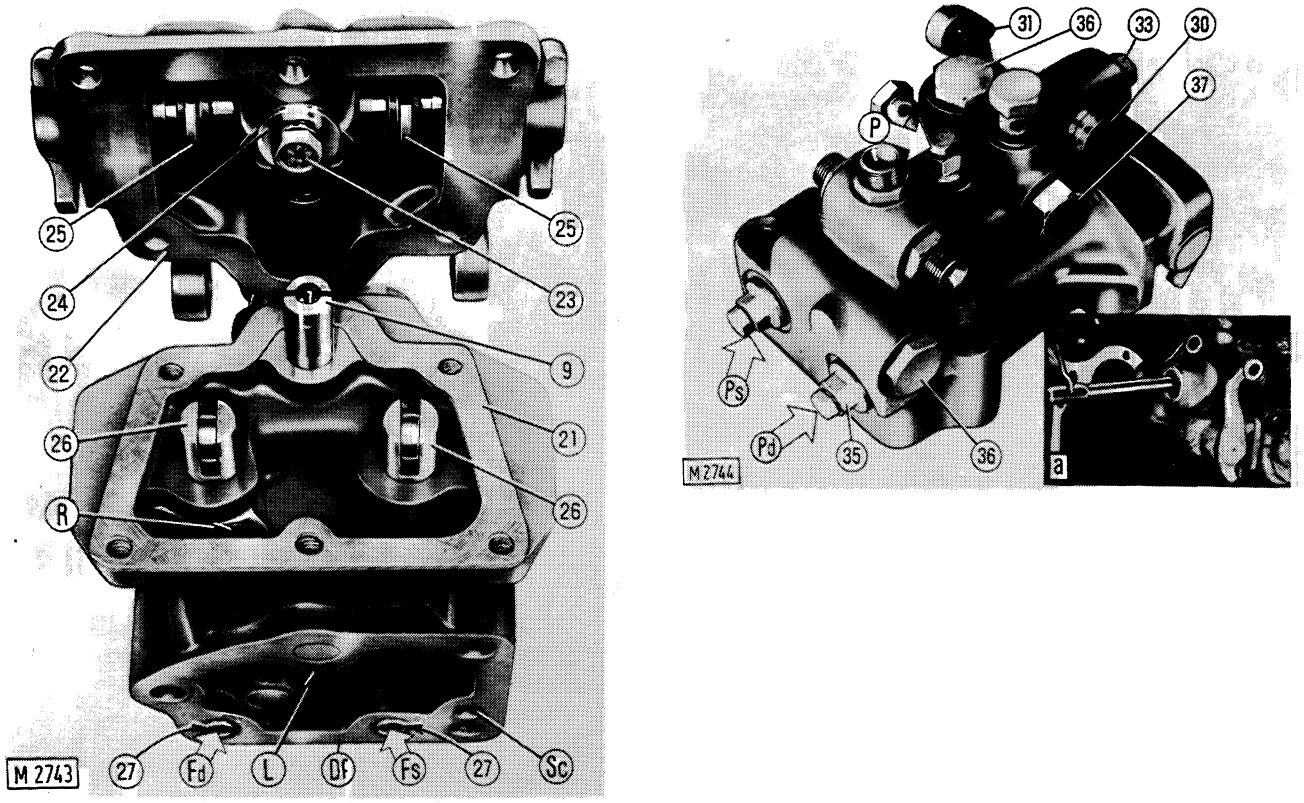

FIG. 12-10 - Steering clutch and brake control valve.
a. Detail showing the disassembly of the pressure relief valve (9) with the control valve still in place by means of spanner 75292187 - Df. Control valve body - Fd. and Fs. Right and left clutch drive oil ducts - L. Lubrication duct - P., Pd. and Ps. Right and left clutch upper duct pressure check points (8x1.25). R. Oil scavenge from cover duct, connected with exhaust port (Sc) - Sc. Exhaust port - 9. Pressure relief valve - 21. Gasket - 22. Cover - 23 & 24. Retaining screw and washer - 25. Cams - 26. Tappets - 27. O-rings - 30 & 31. R.H. and L.H. steering clutch outside control levers - 33. Pressure relief valve inspection plug - 35. Clutch control valve plugs - 36. Clutch and brake circuits lock valve plugs - 37. Brake-to-clutch circuits lock valve plug.

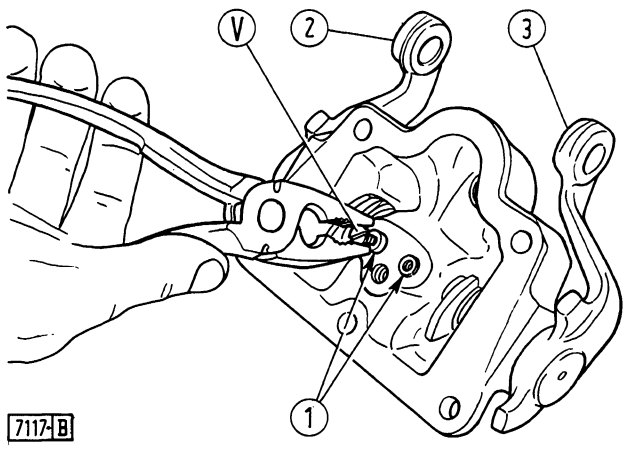

Fig. 12-11 - Removal of dowels (1) retaining the steering clutch outside lever (2, 3) shafts.
V. Screw 4x0.7.

Check the position of the plungers (12 & 17, fig. 12-12), the piston (11), the plug (13), and the complete springs (M).

Plug (3) for the brake-to-clutch circuits lock valve is different from plugs (22) because its oil ports are smaller, and its thicker hexagonal head makes it readily distinguishable.

Fit the O-rings (23) and install the control valve on the transmission housing.

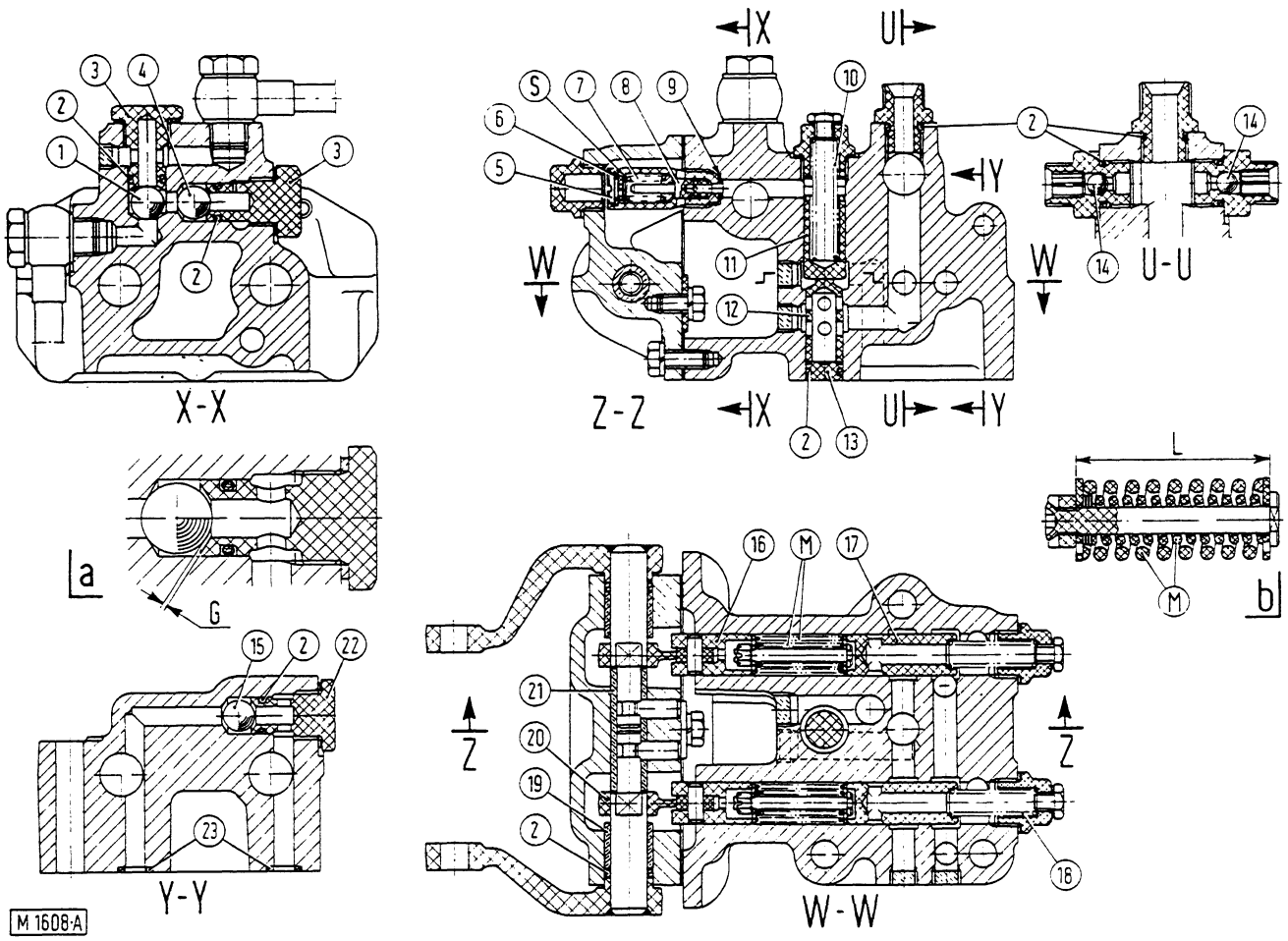

Fig. 12-12 - Longitudinal and cross section of steering clutch and brake control valve.
a. Detail showing lock valve - b. Detail of springs (M) - G. = 0.8-1 mm (0.031-0.040 in) play between lock valve balls and plugs - L = 40.9-41.1 mm (1.610-1.618 in) length of stability spring when first mounted - M. Complete steering clutch control valve pressure adjustment springs - S. Pressure relief valve (5) calibration shims - 1. Ball of brake-to circuits lock valve - 2. O-rings - 3. Plugs for brake-to-clutch-circuits lock balls - 4. Brake-to-clutch-circuits lock ball - 5. Brake pressure relief valve - 6., 7., 8., 9. Snap ring, spring, plunger and copper gasket for pressure relief valve (5). - 10. Spring for piston (11) - 11. Brake control valve piston - 12. Brake control valve plunger - 13. Brake control valve bottom plug - 14. Check valve - 15. Clutch circuits lock valve ball - 16. Tappet - 17. Clutch control valve plunger - 18. Plunger (17) return spring - 19. Lever shaft bushes - 20. Cam - 21. Spacer for lever shafts - 22. Plug - 32. O-ring.

12.4.1 BENCH TEST OF CONTROL VALVE

The procedures and equipment required for this test have not yet been established, and will be dealt with in a subsequent update.

12.5 POWER BRAKE CYLINDERS

Remove each cylinder from the unit as follows:

Detach the tie rod connected to the pedal assembly from the outside control lever.

Remove front cover (Fig. 11-1) and slide off the hinge pin so as to release the brake cylinder from the brake application linkage.

Undo the screws holding the brake cylinder to the rear cover and slide off the cylinder complete with its linkage.

Remove the linkage from the cylinder and disassemble the cylinder itself.

Take off plug (1, fig. 12-14) and withdraw piston (2).

Take off plug (6) and separate the spool (3), complete with plunger and springs, from the piston.

Lubricate and reassemble each cylinder in accordance with fig. 12-14 remembering to:

Check that none of the parts are scored or scratched.

Check that any damaged gaskets are discarded and replaced.

Check that the spool and piston slide freely in their respective seats on reassembly.

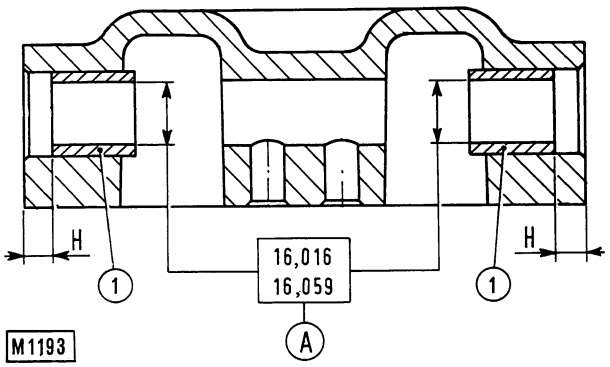

Fig. 12-13 - Assembly correct position of bushes (1) on control valve cover.

A. Distance to be obtained by grinding once the bushes are fitted - H. = 7 mm (0.275 in) - insert distance of bushes.

NOTE - Before refitting the rear cover (fig. 11-1), clean the mating surfaces of the rear transmission housing and cover, and smear them with a suitable sealing compound.

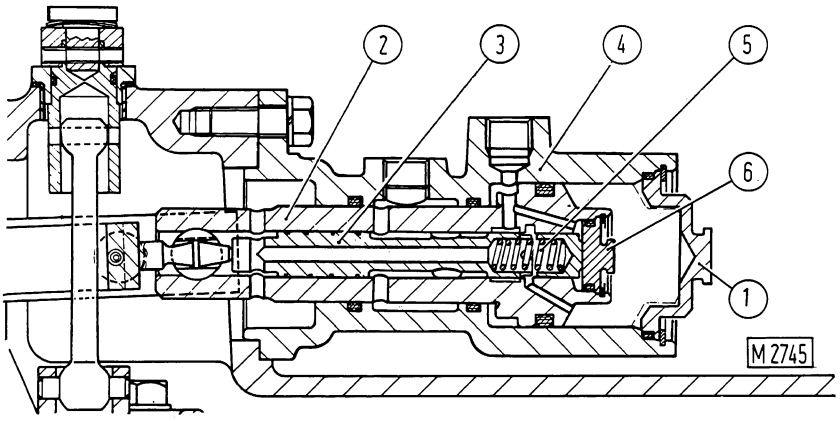

Fig. 12-14 - Longitudinal section of power brake cylinder.
1. Plug - 2. Piston - 3. Spool - 4. Body - 5. Spring - 6. Plug

12.6 TROUBLESHOOTING

⚠ DANGER

Do not use matches, lighters, or torches for a light source on the machine due to the presence of flammable fluids.

⚠ WARNING

No unauthorized person should be allowed to service or maintain this machine. Study the Operation and Maintenance Instruction Manual before starting, operating, maintaining, fueling, or servicing this machine.

Always disconnect the batteries before cleaning, repairing, or servicing the machine.

Never use gasoline, solvent or other flammable fluids to clean parts.

Do not run the engine of this machine in closed areas without proper ventilation to remove deadly exhaust gases.

Never attempt to operate machine or attachment except when seated in the operator's seat. Keep head, body, limbs, hands and feet inside the operator's compartment to reduce exposure to hazards outside the operator's compartment.

⚠ WARNING

Use only grounded auxiliary power source for heaters, chargers, pumps and similar equipment to reduce the hazard of electrical shock.

Never service or adjust the engine running except as called for in the Operation and Maintenance Instruction or Service Manuals to keep from being caught in moving parts or by a moving machine.

Before moving machine or attachments be sure exposed people in the area are clear of the machine. Walk completely around machine before mounting. Sound horn.

Keep people clear of attachments and tools while in raised position, to prevent possible injury.

Warn all people who may be servicing or working around machine before starting engine.

Use lifting eyes, if provided, for handling by lifting devices.

"DO NOT USE HANDS" to search for pressure leaks. Fluid escaping under pressure can penetrate the skin.

Place protection over air inlet openings before operating engine.

Wear safety glasses with side shields or goggles when using compressed air for cleaning to reduce the danger of personal injury from flying particles. Limit pressure to 30 psi (2 bar) according to local or national requirements.

FAULT	CAUSE	REMEDY
1. One clutch release incomplete slow.	Insufficient release pressure.	Check clutch valve pressure or connecting pressure gauge to pressure point (Pd or Ps, fig. 12-10). Renew springs (M, fig. 12-12) as necessary.
2. One clutch release only possible by operating other clutch also.	Interlock valve (11, fig. 12-1) stuck open.	Clean both valve and intake filter (Fa, fig. 12-7). Renew return filter cartridge (Fr, fig. 12-8) as necessary.
3. One clutch does not apply properly with control at rest.	Linkage out of adjustment.	Check linkage adjustment (see paragraph 10.6.2).
4. Both clutches inefficient.	a. Interlock valve (22, fig. 12-12) constraining ball (15).	Check clearance between plug (22, fig. 12-12) and ball (15). Correct clearance is 0.8 to 1 mm or 0.032 to 0.040 in. To adjust increase thickness of copper washers.
	b. Clogged filters.	Inspect and clean.
	c. Governor valve piston (11, fig. 12-12) stuck.	Restore piston efficiency.
	d. Governor valve spring (7, fig. 12-1) weakened.	Check spring rate and compare with data given on chapter 12.7.
	e. Low pump efficiency.	Overhaul or renew as necessary.
5. Drop in axle oil level accompanied by increase in transmission oil level.	Pump seals (6, fig. 12-2) inefficient.	Renew seals and top up.

12.7 SPECIFICATION AND DATA

Hydraulic pump	FIAT/Plessey, A 33X, gear	
Direction of rotation (drive shaft end)	Counter clockwise	
Pump drive ratio	1.154 to 1	
Maximum rated speed (2100 engine rpm)	2420 rpm	
Rated output	36.3 liter/min - 9.4 GPM	
	mm	in
Drive and driven gear journal diameter (8 and 9, fig. 12-2)	17.400-17.424	0.6850-0.6860
Bearing bore diameter	17.450-17.470	0.6870-0.6878
Gear journal running clearance in bearing	0.026-0.070	0.0010-0.0027
Maximum wear limit	0.220	0.0087
Bore diameter in pump body	37.270-37.294	1.4673-1.4683
Maximum wear limit in pump body suction side next to gears	0.1	0.0040
Driven gear tooth face width	24.191-24.216	0.9524-0.9534
Gear and bearing end play in pump body (fig. 12-4)	0.100-0.205	0.0040-0.0081
Oil filters		
On pump inlet (fig. 12-7)	Full flow, metal wool cartridge and magnetic rod.	
Metal mesh	100 micron	
On oil return to axle (fig. 12-8)	Full flow, paper cartridge with by-pass valve.	
Cartridge porosity	15 micron	
Return filter by-pass valve spring length (2, fig. 12-8) :		
Free (nominal)	81 mm	3.1889 in
Under load of 9-11 daN or (20.2-24.6 lb)	24 mm	0.9449 in
Control valve (fig12-12)		
Calibrated pressure for springs (M) for clutch disengagement valves (17)	23-24 bar	333.5-348.0 psi
Clutch disengagement valve return spring (18)		
Free length	52 mm	2.04 in
Under 3.8-4.1 daN (8.5-9.2 lb.) load	38 mm	1.53 in
Pressure relief valve (5) calibrated pressure setting	27-31 bar	391.5-449.5 psi
Pressure relief valve spring (7):		
Free length	23 mm	0.905 in
Under 11.8-13 daN (26.5-29.2 lb.)	17.5 mm	0.678 in
Thickness of pressure relief valve setting shims (S)	0.25-0.35 mm	0.0098-0.0137 in
Pressure variation for each shim added or removed	1.2 bar	17.4 psi
Diameter of steering clutch outside control lever shafts	9.978-10.0 mm	0.392-0.393 in
	15.973-16.0 mm	0.628-0.629 in

Diameter of seats for outside lever shafts:		
Inside spacer (21)	10.013-10.049 mm	0.3935-0.3949 in
I.D. of bushes (12) after ramming and finishing	16.016-16.059 mm	0.6305-0.6322 in
Clearance between outer lever shafts and their seats:		
Spacer	0.013 mm	0.0005 in
Bushes	0.016 mm	0.0006 in
O.D. of bushes (19, fig. 12-12)	20.76-20.80 mm	0.8173-0.8188 in
Diameter of seats for bushes on control valve cover	20.7-20.73 mm	0.8149-0.8161 in
Interference fit between bushes and their seats	0.03-0.1 mm	0.0012-0.039 in
Brake control valve piston spring (10):		
Free length	80 mm	3.14 in
Under load of 2.2-2.4 daN (4.9-5.4 lb)	45 mm	1.77 in

12.8 TORQUE DATA

Description	Torque (°)	
	daNm	ft. lb.
Capscrew, control valve body	10	73.7
Capscrew, suction filter to axle casing (C1, fig. 12-7)	10	73.7
Capscrew, spacer (23, fig. 12-10)	2.5	18.4
Capscrew, return oil filter cover	6	44

(°) Lubricate the engine oil.

12.9 SERVICE TOOLS

Part No.	Description
75290330	Connector
75290331	Connector
75290358	Capscrew, for connectors 75290330 and
75290359	Capscrew, for connectors 75290331
75290378	Tube
75290385	Coupling, drive
75290445	Tube
75290540	Adapter
75291235	Motor, electric, trolley mounted
75295501	Output tester

13. FINAL DRIVES AND SPROCKETS

13.1 REMOVAL

Remove the undercarriage as directed in section 14. Raise the machine at the rear to free the sprocket from the track.

To remove each final drive proceed as follows:

Drain the lube oil.

Remove the sprocket capscrews and lift off sprocket using a hoist and lift hook 75291582 (Fig. 13-1).

Back off the capscrews and remove the final drive housing bottom cover.

Secure tool 75295408 to the final drive housing (Fig. 13-2), back off screws C1, Fig. 13-1, and remove using the hoist.

Withdraw the idler gear using the lift hook 75292279 (Fig. 13-3).

To remove the drive gear shaft (1, Fig. 13-3), proceed as follows:

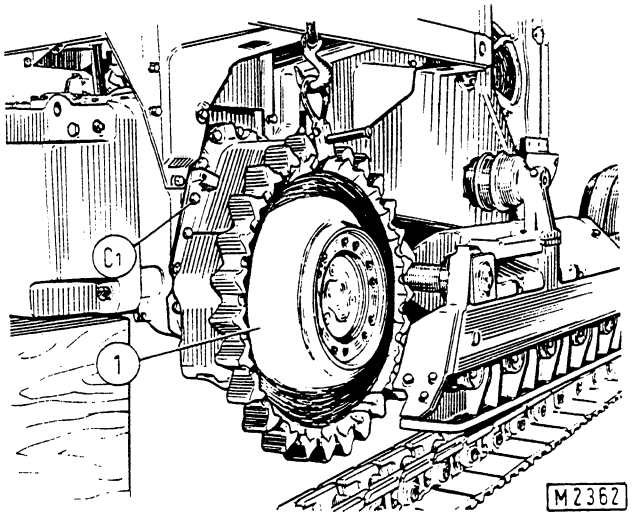

Fig. 13-1 - Disassembling (assembling) Sprocket (1) using lift hook 75291582.

C1. Final drive housing capscrews.

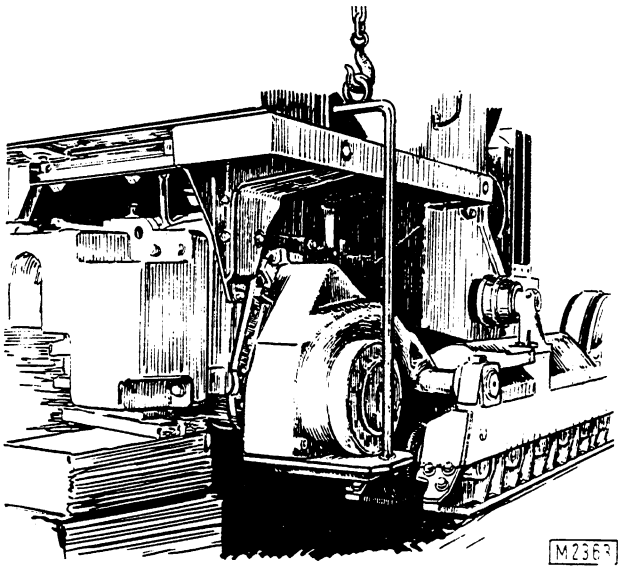

Fig. 13-2 - Removing (installing) final drive using tool 75295408.

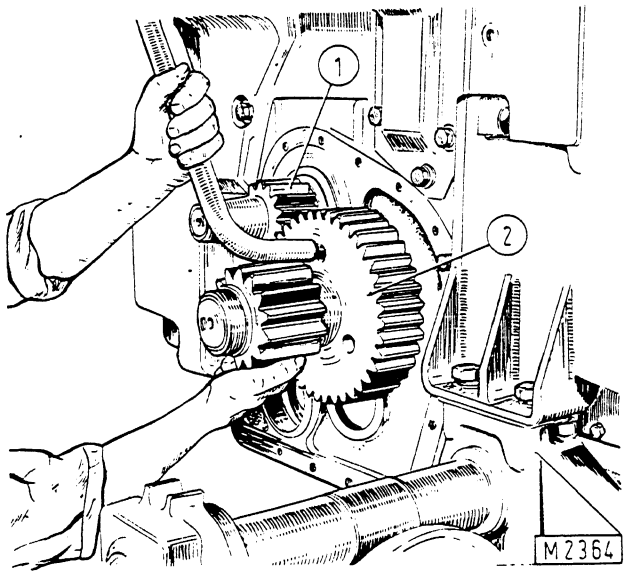

Fig. 13-3 - Disassembling (assembling) idler gear using lift hook 75292279.
1. Drive gear - 2. Idler gear.

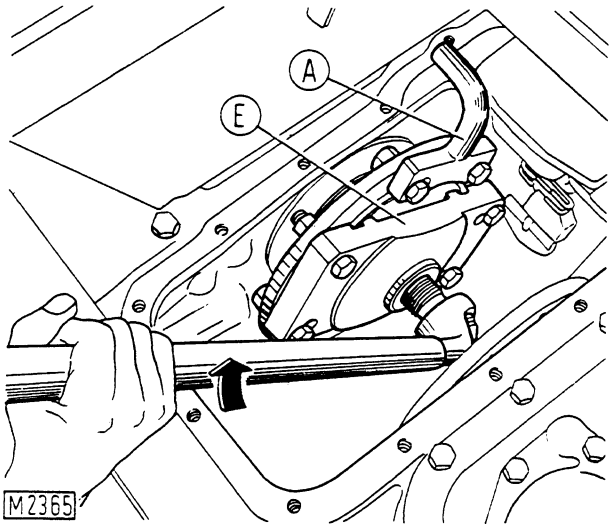

Fig. 13-4 - Withdrawing steering clutch drum hub from drive gear shaft.

A. Clamp 75291579 - E. Puller 75291578

Remove steering clutch pack (see section 10).

Remove nut (C5, Fig. 13-13), using clamp 75291579 (A, Fig. 13-4) to prevent steering clutch outer drum hub rotation.

Remove steering clutch drum hub using puller 75291578 (E, Fig. 13-4) and withdraw drive gear shaft.

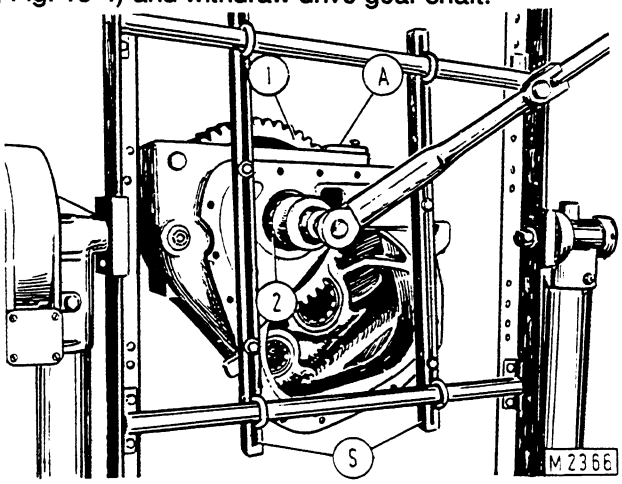

Fig. 13-5 - Backing off bearing nut on sprocket shaft.

A. Clamp 75293318 - 1. Driven gear

Note - Brackets S are temporary, they are to be replaced by clips 75295388.

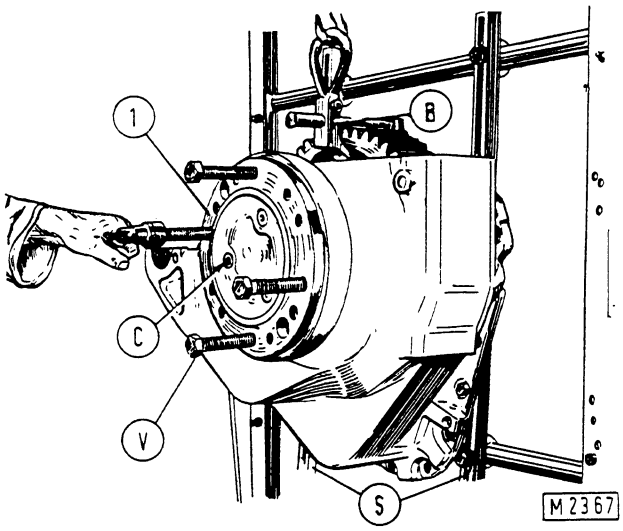

Fig. 13-6 - Withdrawing sprocket shaft (1) using puller screws 75295327

B. Hook 75291582 - C. Blanking plugs - V. Puller screws 75295327

Note - Brackets S are temporary and are to be replaced by clips 75295388.

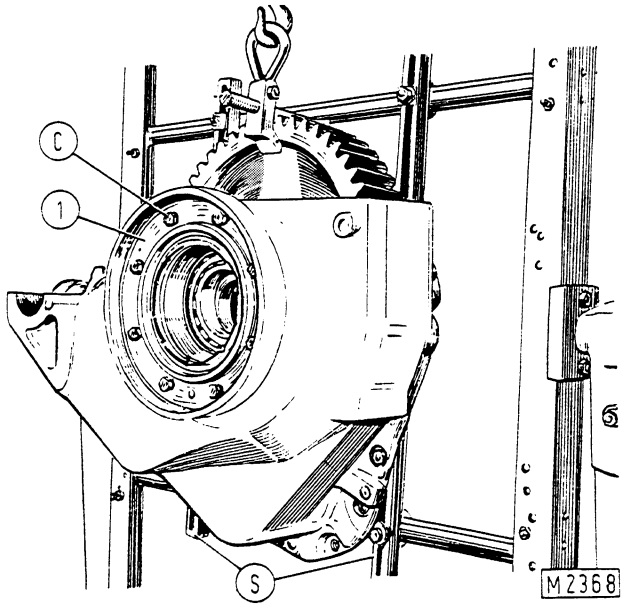

Fig. 13-7 - Disassembly (assembly) of driven gear by means of lift hook 75291582

C. Flange capscrews - 1. Flange

Note - Brackets S are temporary, they are to be replaced by three clips 75295388.

13.2 DISASSEMBLY

Position the final drive on revolving stand 75290086 by means of brackets 75295388 and proceed to disassemble as follows:

Prevent driven gear from rotating using clamp 75293318 (A, fig. 13-5) and back off the bearing retaining nut.

Withdraw bearing 2, fig. 13-5.

Using puller screws 75295327 (V, fig. 13-6) withdraw shaft 1, making sure to support the driven gear through lift hook 75291582 (B) and hoist.

Withdraw the driven gear (Fig. 13-7).

Back off capscrews C, Fig. 13-7, and remove flange 1.

When replacing idler and drive gear bearings, withdraw using a universal puller as shown in Fig. 13-8. Position the sprocket shaft in a vise (Fig. 13-9), remove the three plugs C, Fig. 13-6, and withdraw thrust plate 7, Fig. 13-10, and inner race of bearing 4 by means of puller screws 75295198 (A, fig. 13-9).

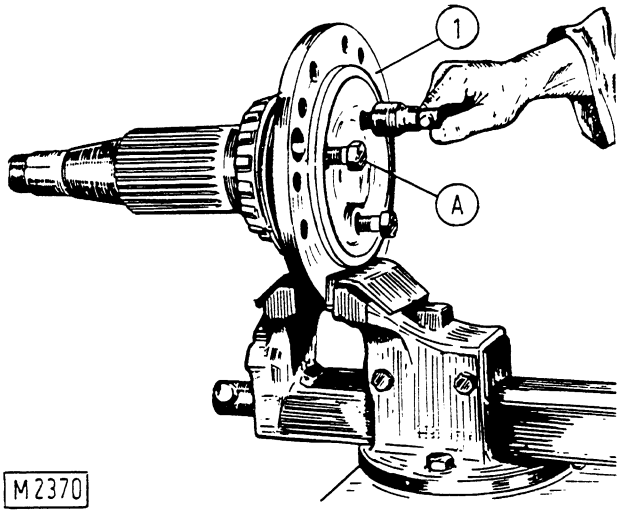

Fig. 13-9 - Withdrawing driven gear bearing through puller screws 75295198 (A).

1. Sprocket shaft

Remove floating ring seals 8, Fig. 13-10, and match them so as to avoid incorrect reassembly.

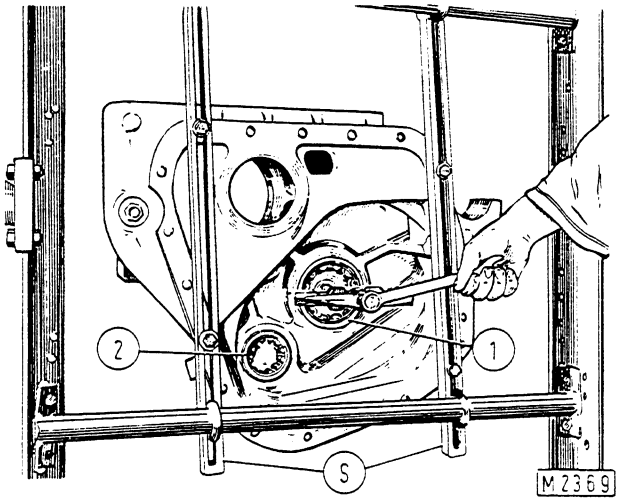

Fig. 13-8 - Disassembling idler gear bearing (1)
2. Drive gear bearing

Note - Brackets S are temporary, they are to be replaced by clips 75295388.

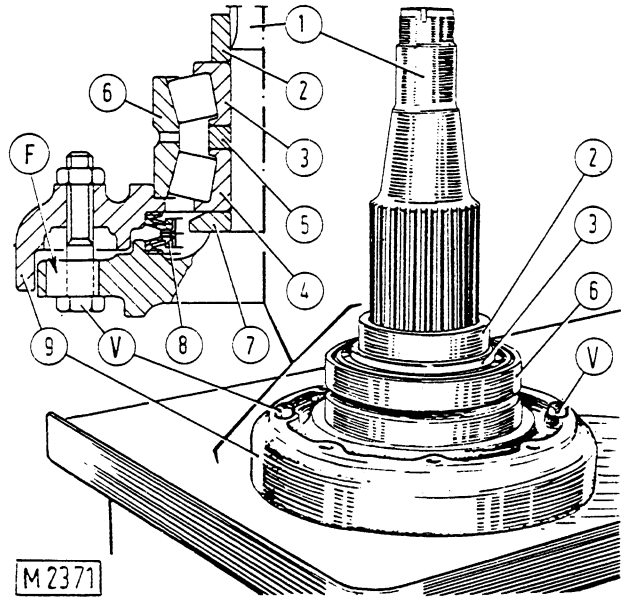

Fig. 13-10 - Assembling on bench sprocket shaft outer bearing.

F. Holes drilled in sprocket shaft for flange capscrews - V. Capscrews - 1. Sprocket shaft - 2. Spacer - 3/4. Sprocket outer bearing inner races - 5. Spacer - 6. Bearing outer race - 7. Thrust plate - 8. Floating ring seal - 9. Flange

13.3 SPROCKET INSPECTION

Check sprocket teeth for wear. New ring gear side rim thickness (S, fig. 13-12) is 18 to 20 mm (0.71 to 0.79 in). When worn to 11 mm (0.43 in) ring gear should be replaced. Ring gear should also be replaced when, though it is not completely worn, has lost the hardened layer on side surfaces of teeth.

13.4 ASSEMBLY

Position sprocket shaft on bench (fig. 13-10) and carry out the following operations:

Install floating ring seals 8 on shaft.

Install flange 9 on shaft and hand tighten two screws V with nut so as to pre-load and center seals 8.

Heat thrust plate 7 and bearing in oil at 80 to 90°C (176 to 194° F) and install on shaft.

Position spacer 2.

Place final drive housing on revolving stand 75290086.

Introduce driven gear into the transmission case supporting it with lift hook 75291582 (B, Fig. 13-6) and hoist.

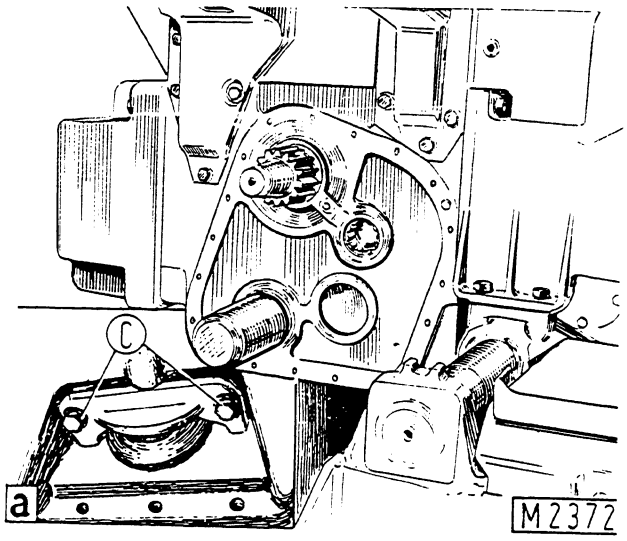

Fig. 13-11 - Disassembling sprocket shaft bearing outer race.

a. Detail of bearing outer race retention - C. Outer race capscrews.

Back off seal pre-load capscrews V, Fig. 13-10, and insert sprocket shaft with flange in final drive housing.

Position the driven gear.

Install spacer 15, Fig. 13-13, and bearing 13.

Position clamp 75293318 to prevent driven gear A, Fig. 13-5, rotating and tighten nut C7, fig. 13-13, to the prescribed torque using a torque wrench. Peen nut.

Torque flange 7, Fig. 13-13, through holes F, Fig. 13-10 drilled in sprocket shaft.

13.5 INSTALLATION

Install each final drive using tool 75295408 and hoist (Fig. 13-2). Tighten capscrews progressively and alternately up to the prescribed torque.

NOTE - Prior to installing the final drive housings and lower covers, clean and degrease with trielene mating surfaces A, Fig. 13-13. apply a coating of Loctite, plastic gasket.

Secure lower cover 14, fig. 13-13, bearing in mind the previous note.

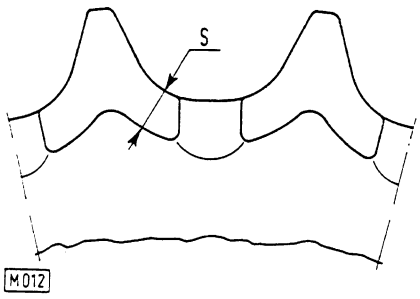

Fig. 13-12 - Detail of sprocket tooth form S = 18 to 20 mm (0.71 to 0.79 in) side rim thickness to be measured at the point shown.

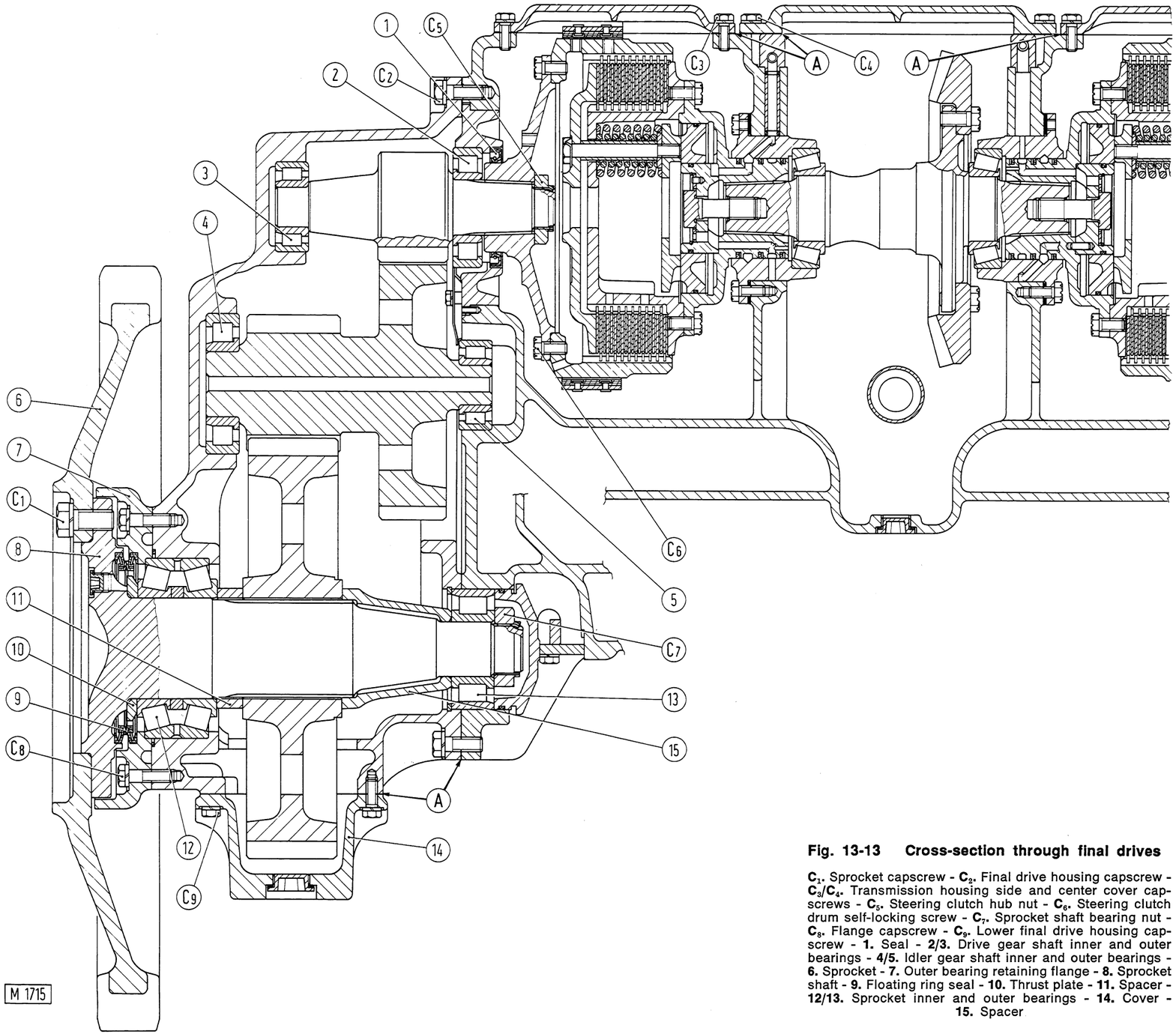

Fig. 13-13 Cross-section through final drives

C_1. Sprocket capscrew - C_2. Final drive housing capscrew - C_3/C_4. Transmission housing side and center cover capscrews - C_5. Steering clutch hub nut - C_6. Steering clutch drum self-locking screw - C_7. Sprocket shaft bearing nut - C_8. Flange capscrew - C_9. Lower final drive housing capscrew - **1.** Seal - **2/3.** Drive gear shaft inner and outer bearings - **4/5.** Idler gear shaft inner and outer bearings - **6.** Sprocket - **7.** Outer bearing retaining flange - **8.** Sprocket shaft - **9.** Floating ring seal - **10.** Thrust plate - **11.** Spacer - **12/13.** Sprocket inner and outer bearings - **14.** Cover - **15.** Spacer

Note: In areas (A), clean mating surfaces of final drive housing and covers; apply before assembly of parts the following sealing compound :
LOCTITE PLASTIC GASKET.

13.6 SPECIFICATION AND DATA

FINAL DRIVES		
Type of gears	Double reduction, spur	
Reduction ratio	9.949 to 1	
Overall reduction ratio (bevel drive and final drives)	32.908 to 1	
Drive/idler gear backlash	0.20 to 0.30 mm	0.008 to 0.012 in
Idler/driven gear backlash	0.25 to 0.35 mm	0.009 to 0.014 in
SPROCKETS		
Type	Bolted on split ring gear	
Number of teeth	27	
Pitch circle diameter	737 mm	29.02 in
Face width	61 to 62 mm	2.40 to 2.44 in
Side rim thickness (5, Fig. 13-12)	18 to 20 mm	0.71 to 0.79 in
Wear limit	11 mm	0.43 in
Sprocket shaft bearings	One double row taper roller and one cylindrical roller	

13.7 TORQUE DATA

Description	Torque (°)	
	daNm	ft. lb.
Capscrews, final drive housing lower cover (C9, fig. 13-13)	6.1	44.8
Capscrews, final drive housing to rear transmission case (C1, Fig. 13-1)	16.2	119.3
Nut, sprocket shaft bearing (C7, Fig. 13-13)	93	687
Capscrew, sprocket (C1, Fig. 13-13)	48	354
Nut, steering clutch drum hub (C5, Fig. 13-13)	104	766.7
Capscrew, bearing flange (C8, Fig. 13-13)	6.9	50.6

°Wet (engine oil)

13.8 SERVICE TOOLS

Part No.	Description
75291578	Puller, steering clutch drum hubs, E, fig. 13-4.
75291579	Clamp, steering clutch drum hubs, A, Fig. 13-4.
75291582	Lift hook, sprocket (fig. 13-1) and driven gear (fig. 13-6) disassembly - assembly.
75292279	Lift hook, idler gear disassembly - assembly (Fig. 13-3).
75293318	Clamp, final drive driven gear, A, fig. 13-5.
75295198	Puller screws, sprocket shaft bearing (fig. 13-9).
75295327	Puller screws, sprocket shaft V, fig. 13-6.
75295388	Set of brackets, final drive housing to revolving stand 75290090.
75295408	Tool, final drive housing lift (fig. 13-2).

14. UNDERCARRAIGE

14.1 TRACK CHAINS

14.1.1 TRACK CHAIN REMOVAL AND INSTALLATION

Block under the final drive housing and under the tractor main frame at the front of the machine so that the track assemblies are off the ground.



14.1.2. Loosen the tension on the track chain.

⚠ DANGER

Fluid under pressure. Do not loosen track tension by unscrewing overload relief valve. Do not remove the lube fitting located on top of the ball check assembly. Follow procedures recommended in the undercarriage service manual.

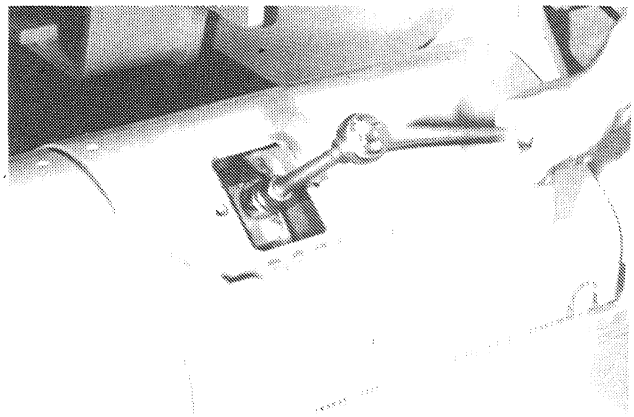

14.1.3 Position track chain so that the master link is on the rear side of the sprocket.

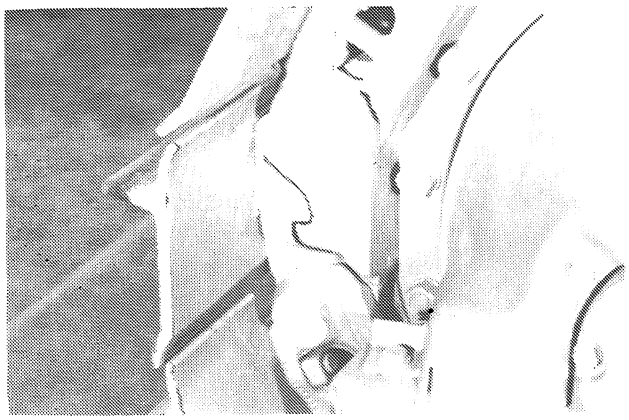

14.1.4 Block the chain assembly below the master link.

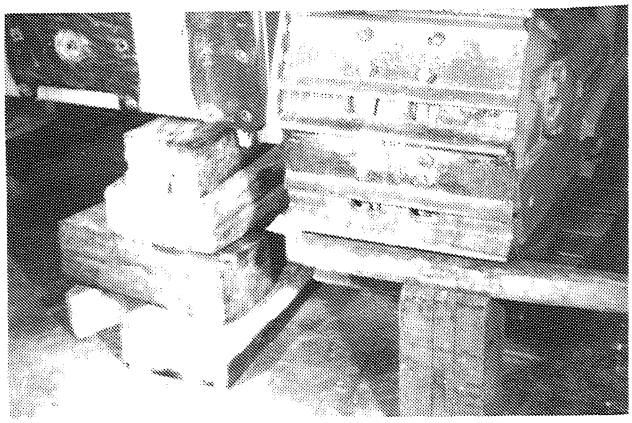



14.1.5 Remove the shoe from the master link.

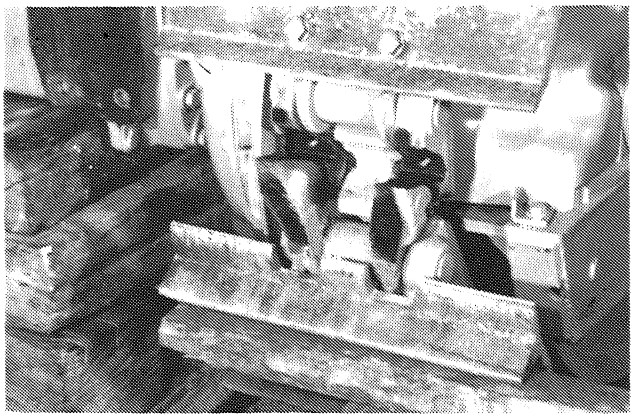

14.1.6 Pry the master link apart.

14.1.7 Using a suitable hoist and sling, remove track chain from under the machine.

⚠ WARNING

Lift and handle all heavy parts with a lifting device of proper capacity. Be sure parts are supported by proper slings and hooks. Use lifting eyes if provided. Watch out for people in the vicinity.

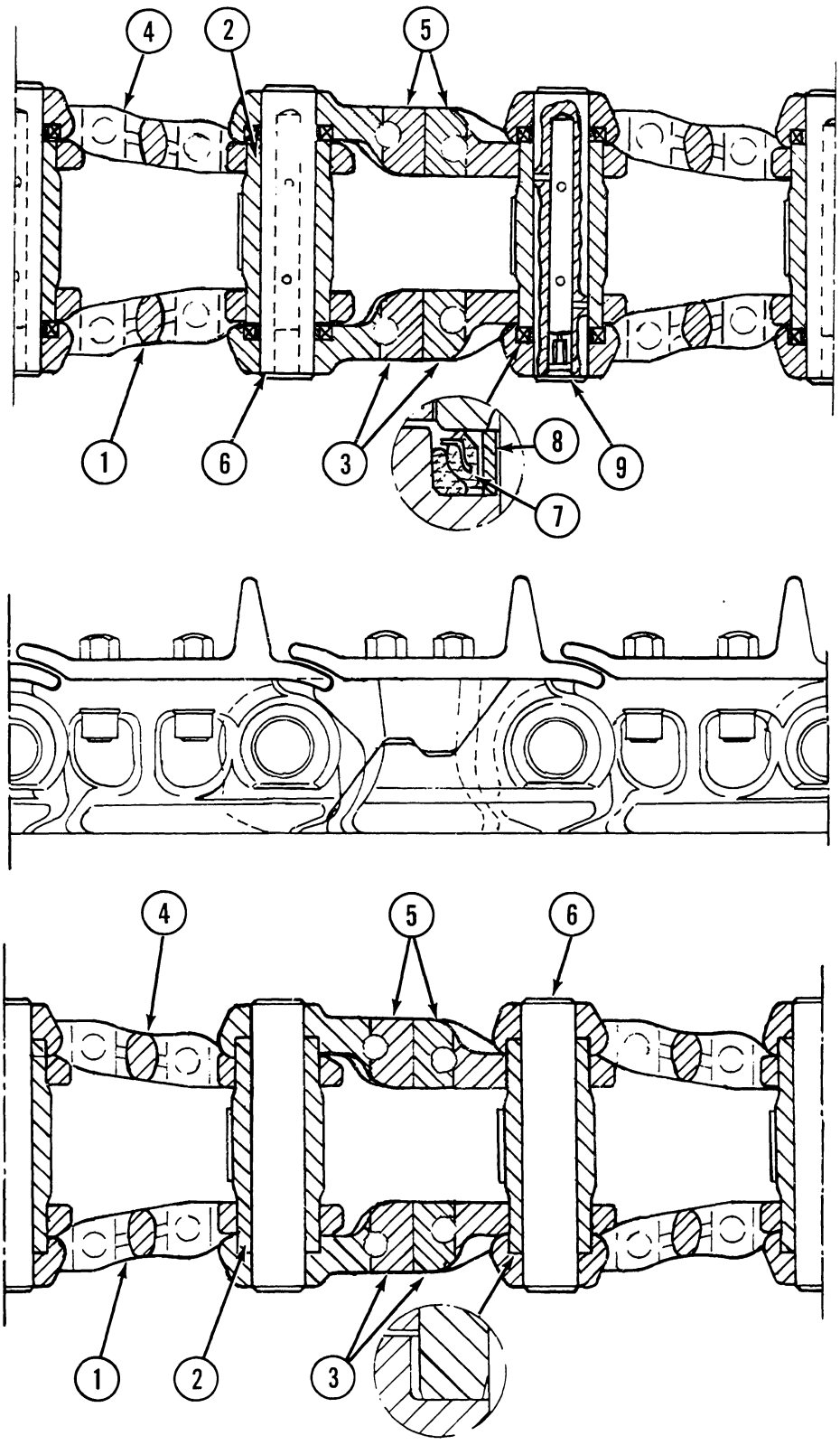

Fig. 14-1 TRACK CHAIN

1. Track link L.H.
2. Bushing
3. Track link L.H.
4. Track link R.H.
5. Track link R.H.
6. Track pin
7. Seal assembly
8. Spacer
9. Plug (rubber)

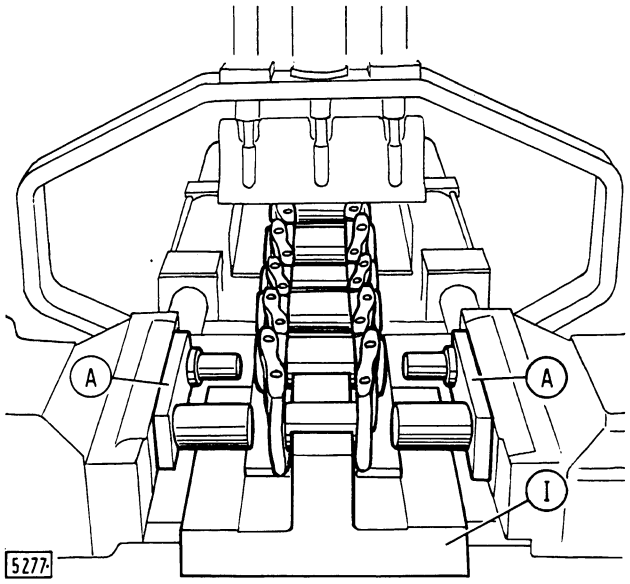

S1. Place the end of the track on anvil (1) and brackets (A) on press rams as shown.

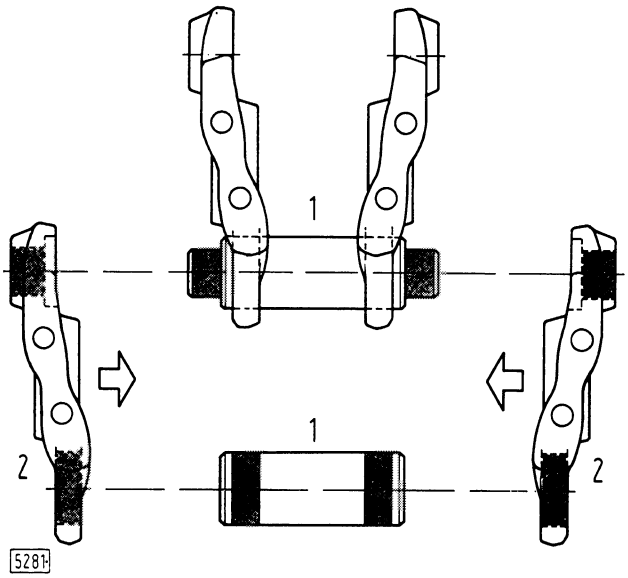

M1. Part positions and sequence of track chain assembly.

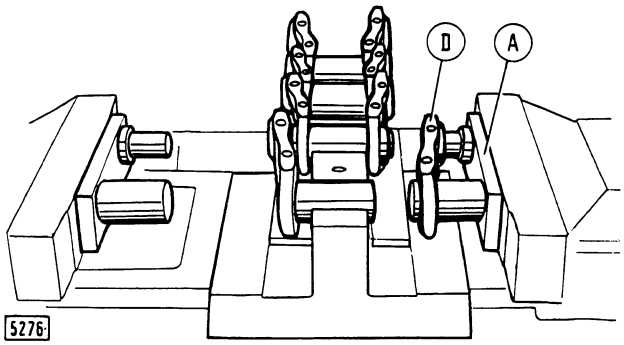

S2. Operate right-hand ram. Bracket (A) moves towards anvil, removes bushing and pin from right-hand link (D) and returns with link.

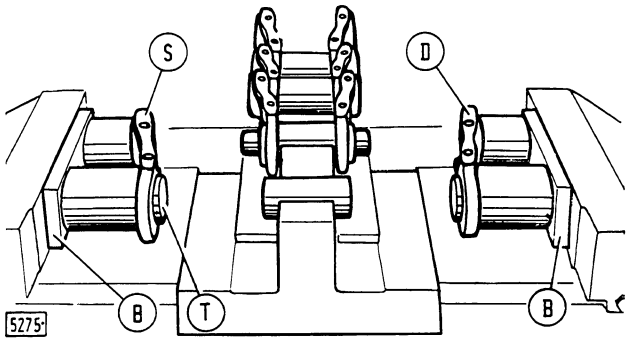

M2. Place links (D/S) over brackets (B) and pin and bushing on anvil.

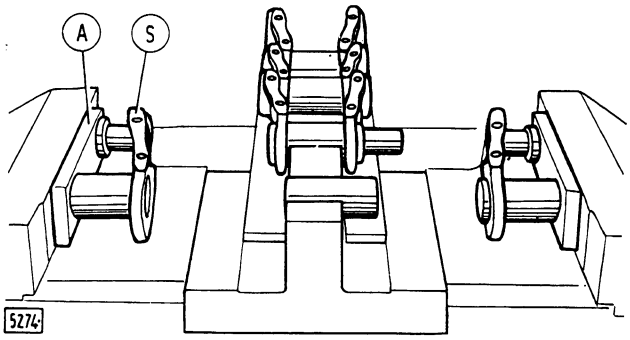

S3. Operate left-hand ram. Bracket (A) moves towards anvil, removes pin and bushing from left-hand link (S) and returns with link.

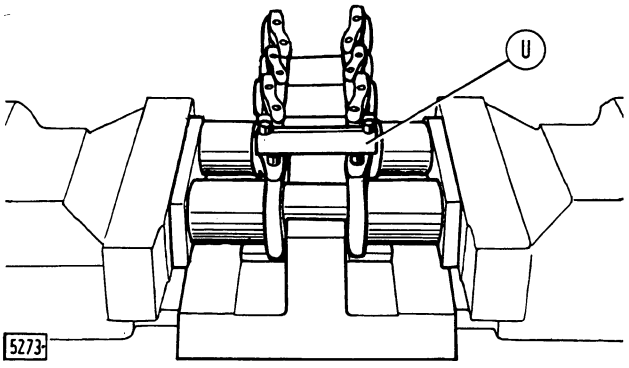

M3. Operate both rams. Brackets (B) move simultaneously towards anvil and perform reassembly in a single operation. Check link spacing using gauge U.

Fig. 14-2 - Disassembling (operations S1-S2-S3) and reassembling (operations M1-M2-M3) a track chain using double ram fixed hydraulic press 75292451.
A. Disassembling brackets 75293270 - B. Assembling brackets 75293271 - D. Right-hand links I. Anvil 75292454 - S. Left-hand links - T. Spacer 75292455 - U. Link spacing inspection gauge 75293257.

14.1.2 TRACK CHAIN DISASSEMBLY AND ASSEMBLY

To disassemble and assemble the track chains use the double-acting hydraulic ram 75292451 and associated tool kit as shown in fig. 14-2. These permit a pin, bushing and link to be disassembled or assembled at the same time, with considerable time saving.

14.1.3 TRACK CHAIN OVERHAUL

Track pin and bushing rotation

The different service conditions under which crawler tractors are used cause link pin and bushing services to wear unevenly at both the pin/bushing and bushing/front idler wheel interface. In most cases, where the machines are used to perform a repetitive work cycle, wear is localized in a certain part of the circumference of the two parts in question. To extend the life of both pins and bushings, it is possible to rotate them through 180°, bearing in mind the following:

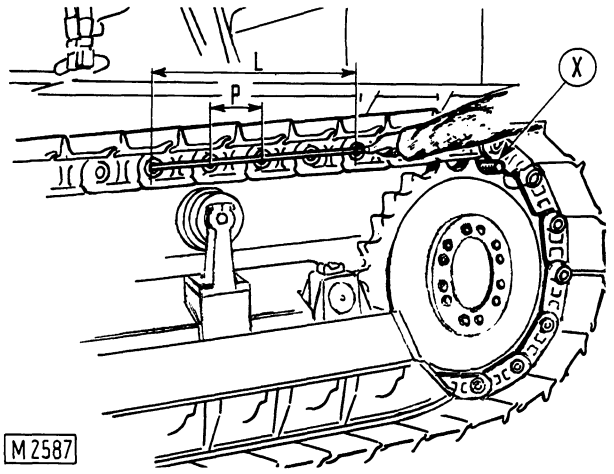

Fig. 14-4 - Measuring average link pitch for pin-to-bushing working clearance.

L. Length over 4 links - P. Pitch = L/4
X. Track tensioning pin.

Disassemble one track pin and locate position of worn areas on both bushings and pins with respect to length.

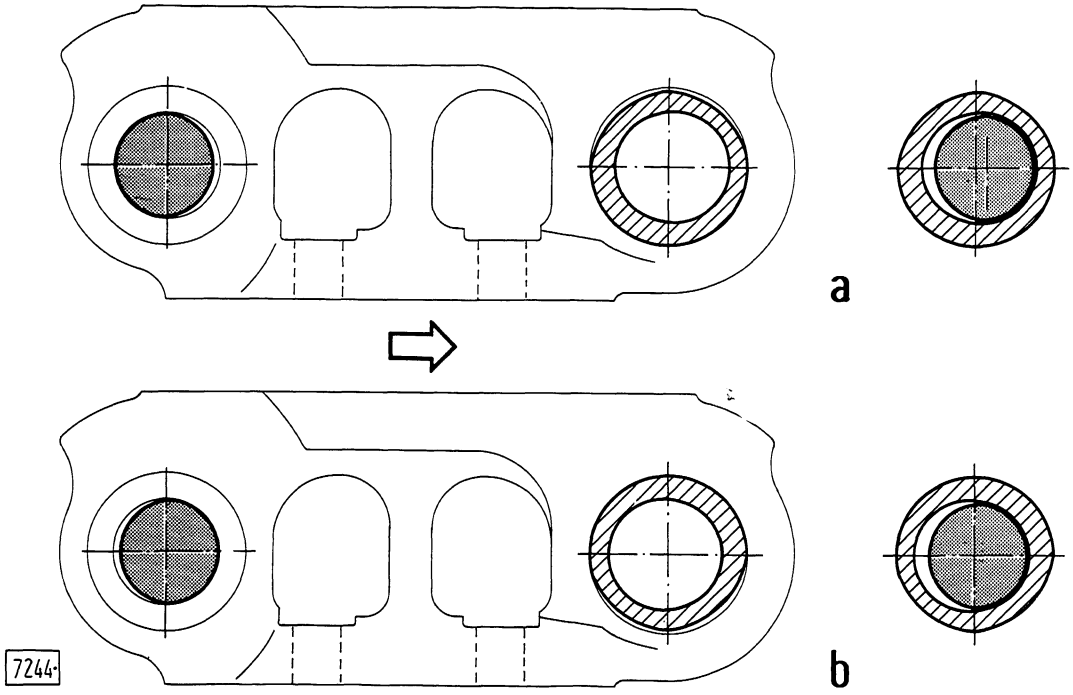

Fig. 14-3 - Track pin and bushing rotation
Note - The illustration represents a left-hand link and the arrow points to the direction of machine forward travel.
a. Pins and bushings before rotation - b. Pins and bushings rotated through 180°.

Detail a, Fig. 14-3, illustrates typical wear pattern..

Reassemble bushings and pins rotating them through 180° so that the worn areas are on opposite side to previous assembly position on links (detail b).

This operation may be worth while whenever following conditions exist:

Availability of fully equipped work shop including fixed type press permitting considerable time-saving.

Amount of wear detected is within prescribed limit.

Other parts of track are in good working order.

On completion of track chain reassembly, assess pin-to-bushing clearance by measuring average pitch (P, Fig. 14-4) as follows:

Stretch track inserting pin (X) in a front idler space width, then reverse machine until pin is in position shown in illustration.

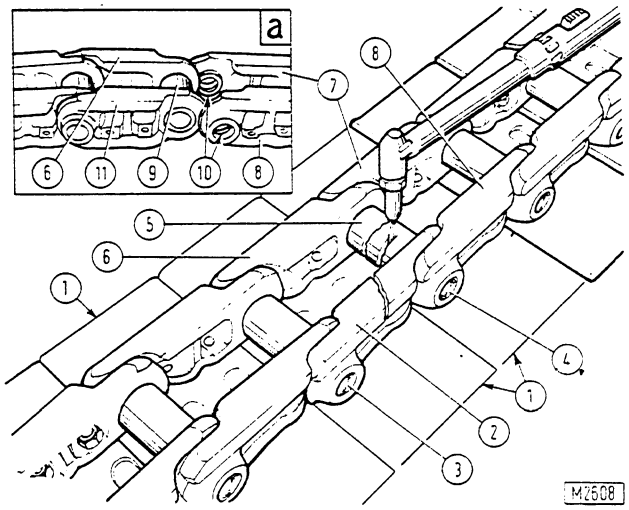

Fig. 14-5 - Replacing a damaged link.
a. Detail showing assembly of thrust rings (10) and track link connection - 1. Shoes to be removed - 2. Damaged link - 3/4. Link pins to be removed before using oxy-acetyline flame - 5. Bushing to be cut - 6/7/8. Links - 9. New coupling link bushing - 10. Coupling link bushing thrust rings - 11. New link.

Measure length (L) and divide by number of links included in section used to calculate length of average pitch (P).

During overhaul, assess pin and bushing wear directly (see Section 14.8).

Track link replacement

Any damaged track link not immediately adjacent to coupling link can be renewed without disassembling track chain in question. Removal procedure as follows:

Remove shoe (1, Fig. 14-5) attached to link (2) to be replaced and two adjacent shoes.

Withdraw damaged link pins using ram and tools as described in Sect. 14.1.1.

Using an oxy-acetyline flame, cut off center part of bushing (5) removing section 20 to 30 mm (.74 to 1.25 in) long.

Take off damaged link (2).

Withdraw link (6) and take out remaining part of bushing (5).

Assemble a link bushing (9) over new link (11) and fasten to track.

Reassemble second link (6) onto link bushing.

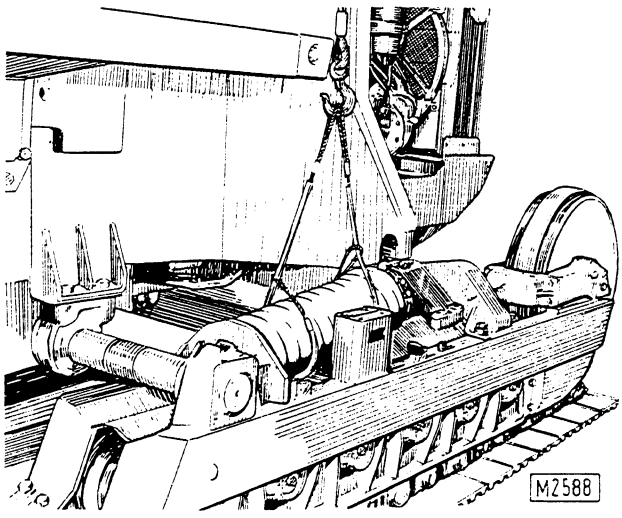

Fig. 14-6 - Removing-installing track release mechanism.

14.2 TRACK RELEASE MECHANISM

To remove the track release mechanism from the track carriage proceed as follows:

Disconnect and extend track chain.

Remove carrier roller assembly.

Take off track release spring guard.

Withdraw track idler from front until rod is clear from hydraulic cylinder chamber.

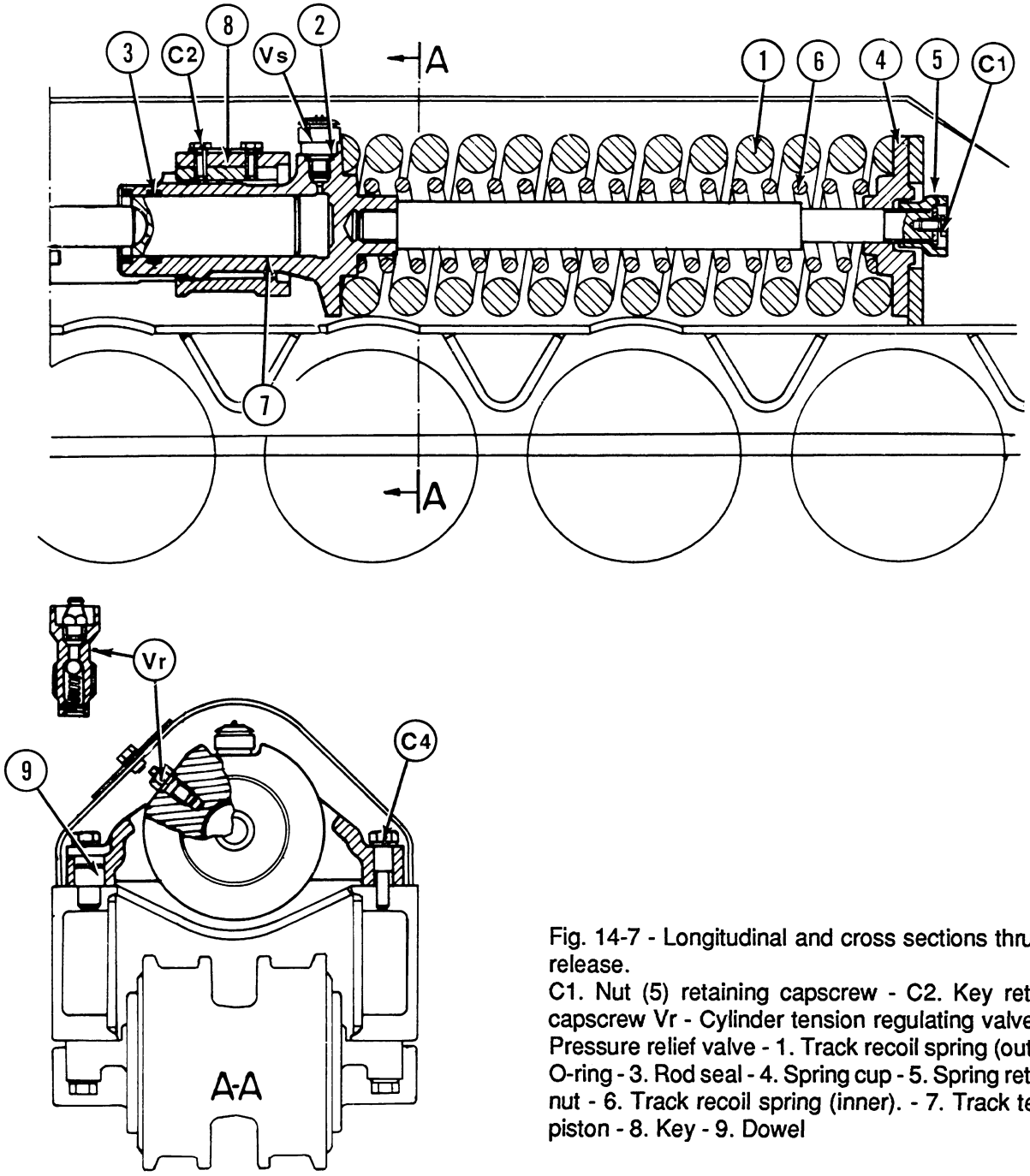

Fig. 14-7 - Longitudinal and cross sections thru track release.
C1. Nut (5) retaining capscrew - C2. Key retaining capscrew Vr - Cylinder tension regulating valve - Vs. Pressure relief valve - 1. Track recoil spring (outer) 2. O-ring - 3. Rod seal - 4. Spring cup - 5. Spring retaining nut - 6. Track recoil spring (inner). - 7. Track tension piston - 8. Key - 9. Dowel

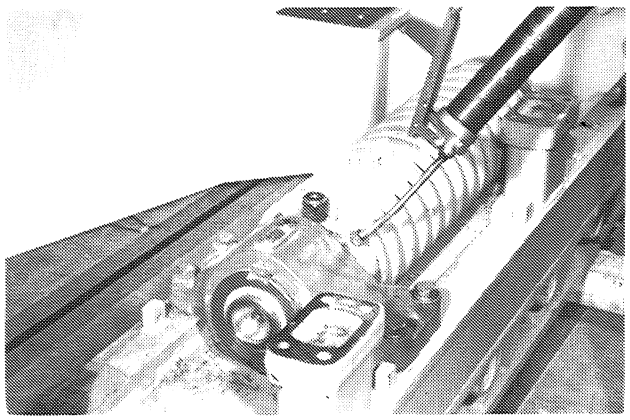

Fig. 14-8 - Removing track tension piston

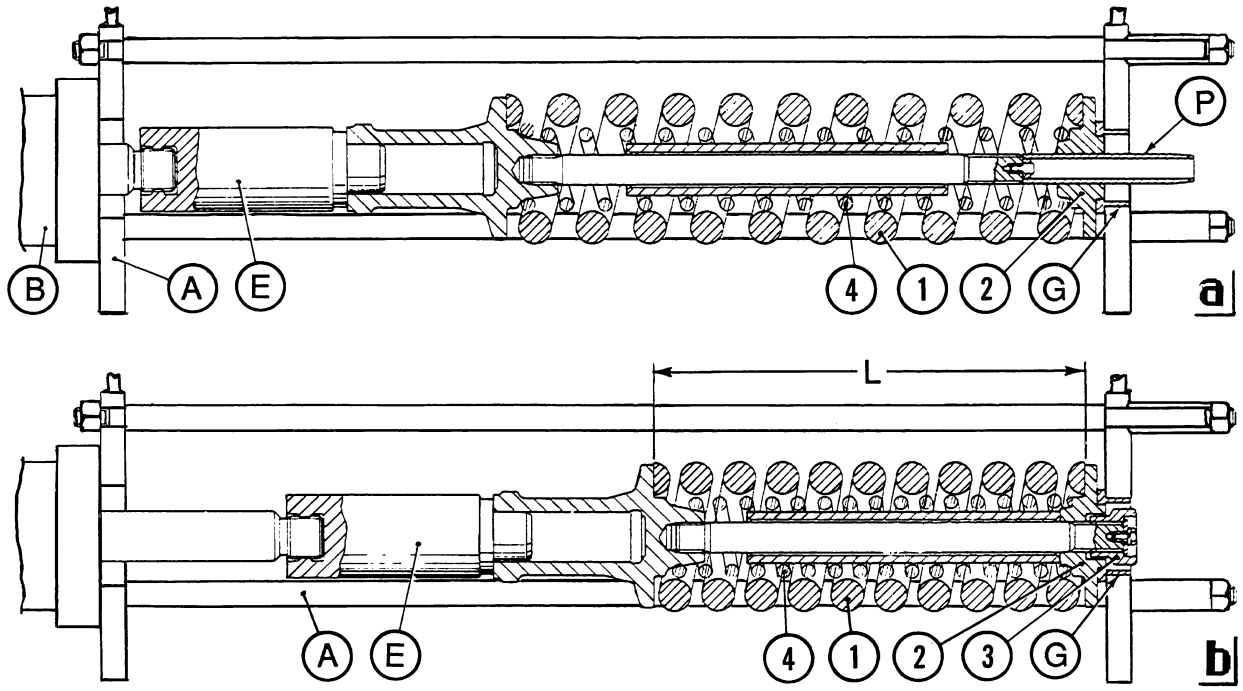

Fig. 14-9 - Disassembling-assembling track recoil spring using hydraulic ram 75300553. a. Extension (disassembly) or compression (assembly) stage. b. End of assembly or start of disassembly.
A. Track recoil spring remover 75295567 - B. Hydraulic ram 75300553 - E. Threaded fitting 75295723 - G. Adapter 75290588 - L = 545 mm (21.5 in) Spring installed length - P. Pilot pin 75293209 - 1. Track recoil spring (outer) -2. Spring cup - 3. Spring nut - 4. Track recoil spring (inner).

Remove capscrews (C4, Fig. 14-7) and withdraw assembly as shown in fig. 14-6.

To remove piston(Fig. 14-8), pump grease into the adjuster fitting.

Recoil spring disassembly and assembly require use of tool 75295567 (A) and hydraulic ram 75300553 as shown in Fig. 14-9.

Tighten threaded element 75295723 (E) on end of ram piston rod. Position spring cup adapter 75290588 (G) and operate ram to relieve nut (3) from the load of spring (1).

Remove nut and gradually reduce load on ram until spring is fully extended.

Use the same equipment to reassemble spring. Position pilot pin 75293209 (P) and operate ram until spring reaches installed length of L=545 mm (21.5 in). Remove pilot pin 75293209 (P), tighten nut (3), retighten capscrew (C1, Fig. 14-7) and withdraw ram.

Note - Smear rod end thread with anti-corrosion protective oil prior to tightening nut (5, Fig. 14-7).

When reassembling track release mechanism, bear in mind the following:

Carefully lubricate piston and cylinder with grease.

When reinstalling track release mechanism (Fig. 14-6) on a new track frame it is necessary to tighten screws (C4, fig. 14-7), ream frame holes for dowel (10) to 24.939 to 24.972 mm (0.9818 to 0.9832 in) using pilot bushing 75292763 for preliminary drilling with 24.5 mm (0.964 in) drill, and pilot bushing 75292764 for subsequent reaming with reamer 75291570. Finally, press fit dowels.

14.2.1 HYDRAULIC CYLINDER PRESSURE RELIEF VALVE ADJUSTMENT

Disassemble the valve (Vs, Fig. 14-7) and remove all traces of grease. Reassemble the valve and proceed as follows:

Clamp tester 75291573 (A, Fig. 14-10) in a vise, screw in valve (Vs) interposing appropriate O-ring.

Fill well (P) with solvent or spirit.

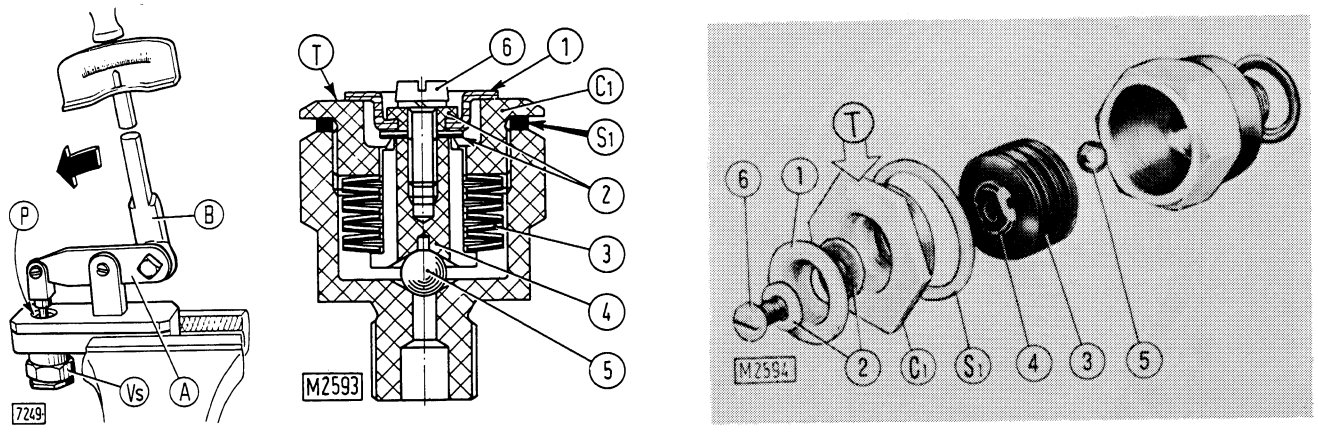

Fig. 14-10 - Track release hydraulic cylinder relief valve (Vs) adjustment and cross section.
A. Tester 75291573 - B. Torque wrench - C1. Valve cover - P. Solvent or spirit well - S1. Valve adjustment shims - T. Pressure setting stamp = 1078 to 1127 bar (15,645 to 16,356 psi) - 1. Rubber cup - 2. Steel washers - 3. Disc springs (BAUER type) - 4. Plunger - 5. Ball - 6. Rubber cup capscrew.

Operate torque wrench (B) bearing in mind that the valve should remain closed, and hence the level of the liquid in the well should not change, for a torque reading of 8.3 to 8.8 daNm (61.5 to 65.1 ft. lb.). The valve should open and well should drain at a torque of 8.8 to 9.3 daNm (65.1 to 68.7 ft. lb.) (equivalent to a valve setting of 1078 to 1127 bar, 15645 to 16356 psi).

Change shim thickness (S1) to obtain the prescribed setting.

Pack valve with pumpable lithium-calcium mineral grease which is resistant to water, high loads and temperatures to N.L.G.I.2 consistency.

14.2.2 TRACK CHAIN TENSION INSPECTION AND ADJUSTMENT

Track chain tension should be adjusted according to nature of ground on which machine is operated; normal track chain tension is adequate for dry, stony or rocky ground, whereas it is advisable to increase track chain camber when working on muddy ground, wet clay or wherever sand, gravel, snow or ice are present.

Proceed as follows:

Pry track chain, applying sufficient load to take up both slack and play of both sides.

Using a suitable straight edge, measure resulting camber (F, Fig. 14-11) which, under normal tension conditions should be 30 to 40 mm (1.18 to 1.57 in).

To increase track chain tension, pump grease in track tension cylinder thru regulating valve (V, Fig. 14-11).

To reduce track chain tension back off drain plug (1, Fig. 14-11) thru a few turns and drain some of grease from cylinder, if possible backing machine a few yards or inserting wood plank between sprocket teeth and track chain.

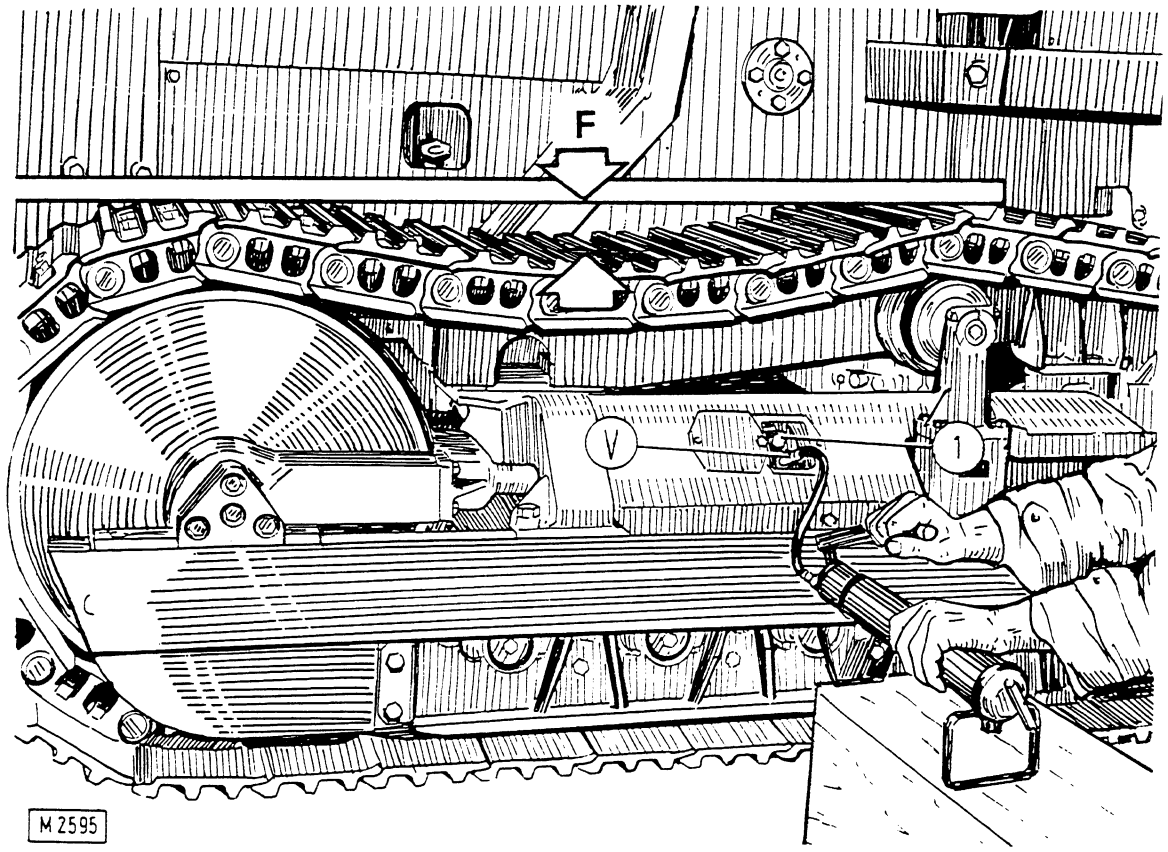

Fig. 14-11 - Checking track tension.
F = 30 to 40 mm (1.18 to 1.57 in) : Camber under normal tension - V. Regulating valve - 1. Drain plug.

Note - Before adjusting a new or overhauled track release mechanism, bleed as follows:

Slacken drain plug (1, Fig. 14-11).

Pump grease thru valve (V) until lubricant issues from plug (1).

Retighten plug and proceed with adjustment.

14.3 TRACK IDLERS

14.3.1 REMOVAL

To remove each track idler assembly it is sufficient to:

Uncouple the track chain and remove guide plates backing off screws (C2 fig. 14-12).

Back off capscrews (C3) and separate yoke from idler brackets.

Remove track idler assembly using scissor hook 75291426 (fig. 14-13).

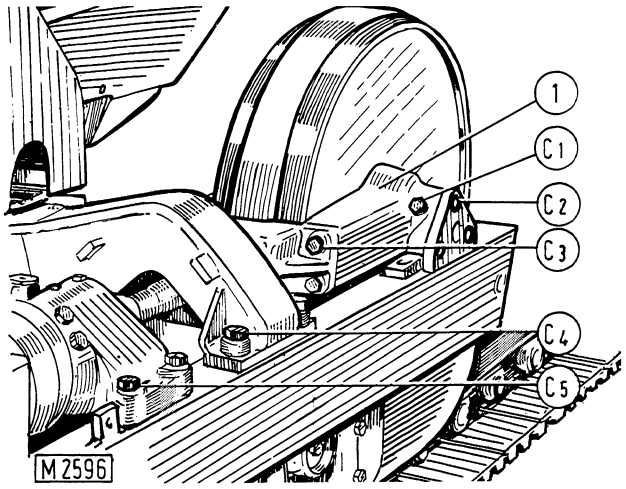

Fig. 14-12 - Disassembling track idler
C1. Shaft capscrew - C2. Guide plate capscrews - C3. Idler bracket capscrews - C4. Capscrews securing track frame to equalizing beam - C5. Track release mechanism capscrews - 1. Idler brackets.

14.3.2 DISASSEMBLY AND ASSEMBLY

Disassemble track idler as follows:

Withdraw the O-rings (11, Fig. 14-14).

Remove capscrews (C1) and press out carriers (4) acting on end of idler shaft (Fig. 14-15).

Keep floating ring seals (10, fig. 14-14) together to avoid incorrect reassembly.

Press out bushings (9) from their respective carriers using a suitable driver.

Reassemble the track idler bearing in mind the following:

Install the bushings on the carriers and a bushing carrier assembly proceeding as described in para 14.4.2 for the same track roller components.

Assemble idler shaft, install second bushing carrier and check that the shaft revolves freely.

Install floating ring seals (10, Fig. 14-14) taking the necessary precautions.

14.3.3 INSTALLATION AND ADJUSTMENT

Prior to securing the idler brackets and guide plates, proceed as follows:

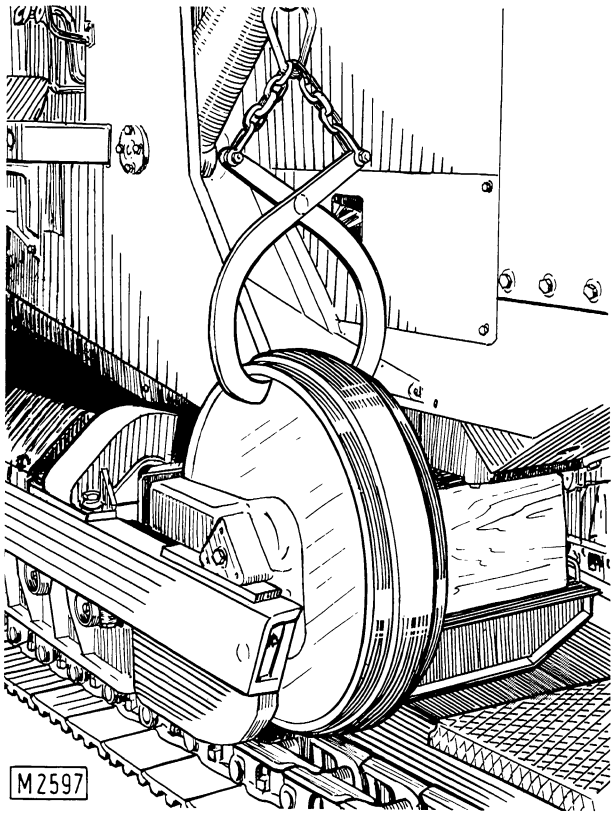

Fig. 14-13 - Track idler removal using scissor hook 7529146.

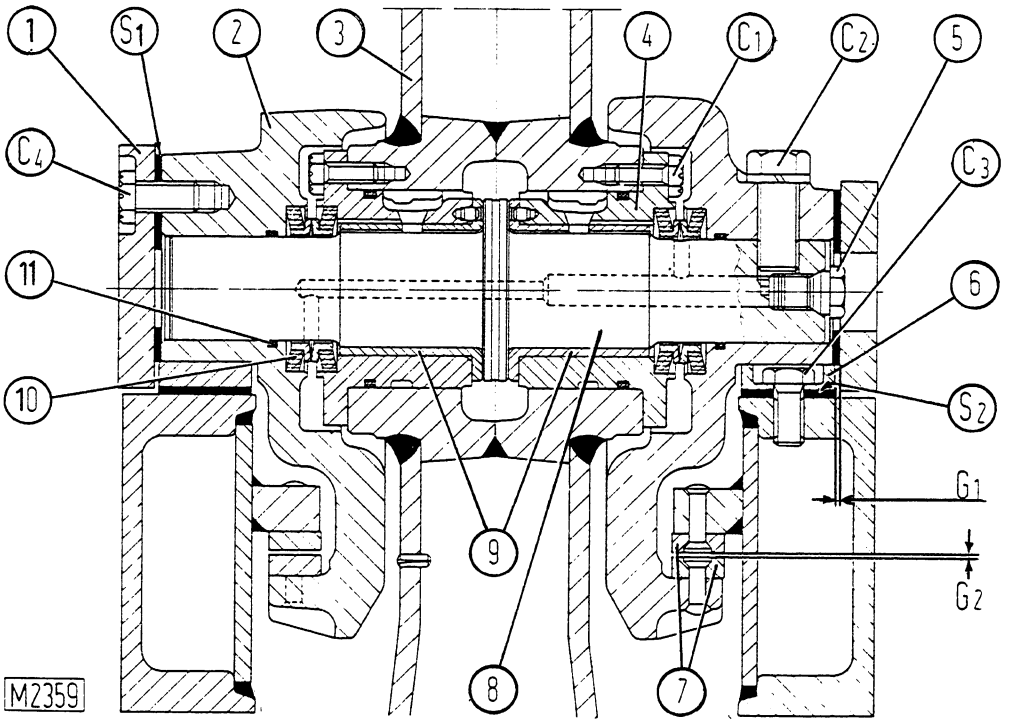

Fig. 14-14 - Section through track idler (new)
C1. Bushing carrier capscrews - C2. Shaft capscrews - C3. Slide bar capscrews - C4. Guide plate capscrews G1 = 0.5 to 1 mm (0.019 to 0.039 in) clearance between guide plate and slide bars - G2 = 0.5 to 1 mm (0.019 to 0.039 in) clearance between idler bracket to track frame wear strips - S1. Shims (G1) - S2. Shims (G2) - 1. Guide plate - 2. Idler brackets - 3. Track idler - 4. Bushing carriers - 5. Lube plug - 6. Slide bar - 7. Wear strips - 8. Shaft - 9. Bushings - 10. Floating ring seal - 11. O-ring.

Assess clearance (C2, fig. 14-14) using a feeler gauge and, if necessary, adjust to 0.5 to 1 mm (0.019 to 0.039 in), changing shim thickness (S2) by the same amount on both slide bars.

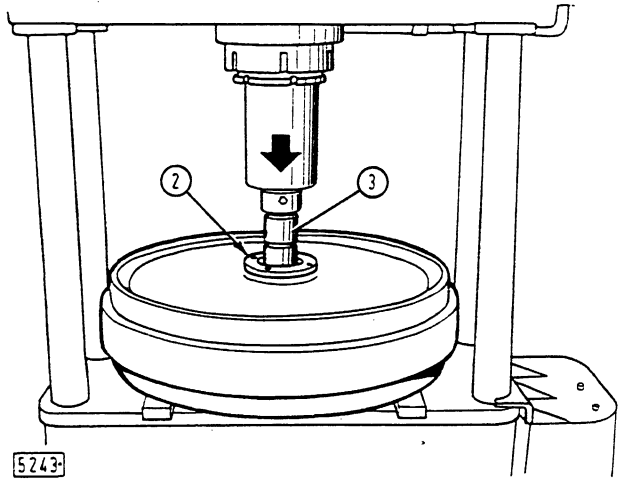

Fig. 14-15 - Withdrawing bushing carrier using a fixed type press.
2. Bushing carrier - 3. Shaft.

Assemble guide plates (1) dividing shims (S1) so that the track idler centerline is in alignment with track roller centerline, and clearance (G1) between plates and slide bars is 0.5 to 1 mm (0.019 to 0.039 in).

Lubricate track idler with correct grade of oil.

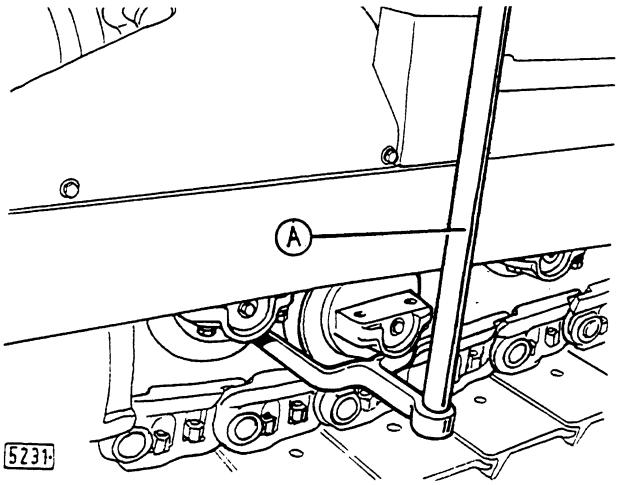

Fig. 14-16 - Removing/installing a roller using tool 75291667 (A)

14.4 TRACK ROLLERS

14.4.1 REMOVAL

Each track frame assembly incorporates six track rollers: two double-flange and four single-flange.

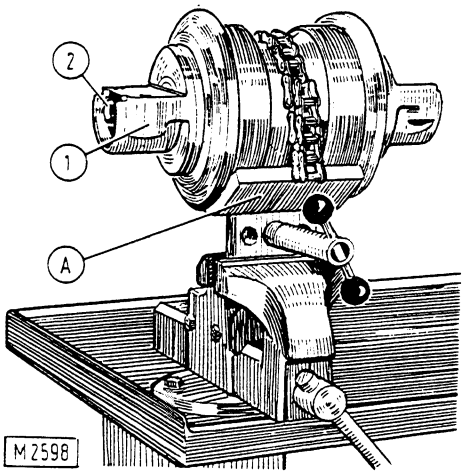

Fig. 14-17 - Overhauling a track roller A. Retainer 75291417 - 1. Roller support - 2. Lube plug.

If not all rollers need removing proceed as follows:

Fully slacken track chain in question.

Raise machine and apply required supports.

Remove guards and take off roller assembly using lift hook 75291667 (fig. 14-16).

14.4.2 DISASSEMBLY

To remove supports (1, Fig. 14-17), clamp each roller in a vise using tool 75291417 and proceed as follows:

Drain oil thru plug (8, Fig. 14-20).

If removal proves difficult use puller 75291427 as shown in fig. 14-18.

Remove floating ring seals (2, Fig. 14-20), keeping them together so as to avoid incorrect reassembly.

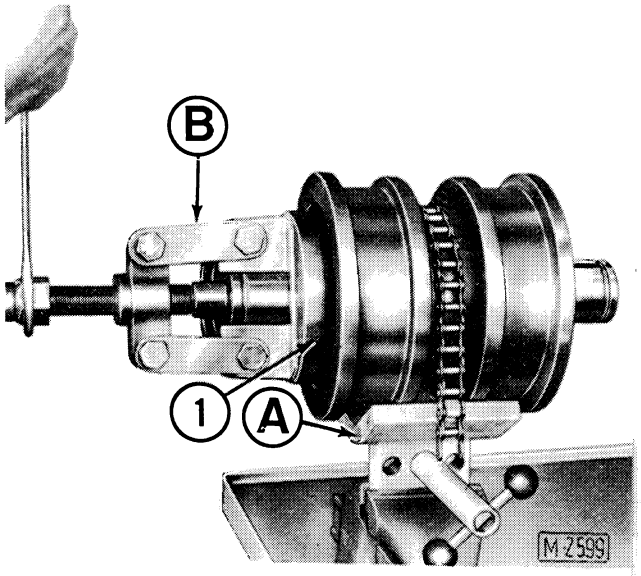

Fig. 14-18 - Disassembling roller support
B. Puller 75291427 - A. Roller retainer 75291417 - 1. Roller support

Withdraw O-rings (1, fig. 14-20).

Remove capscrews (C1) and withdraw bushing carrier assemblies using universal puller 75292904 on end of roller shaft as shown in Fig. 14-19.

Withdraw bushings (5, Fig. 14-20) from the carriers using a suitable driver.

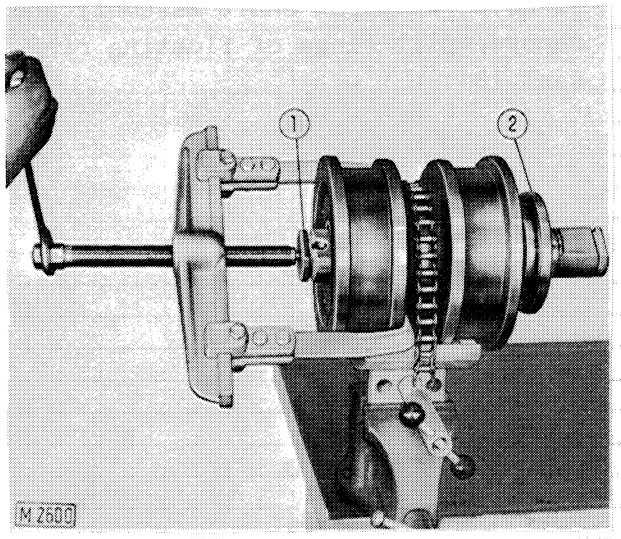

Fig. 14-19 Disassembling bushing carriers
1. Roller shaft - 2. Bushing carriers

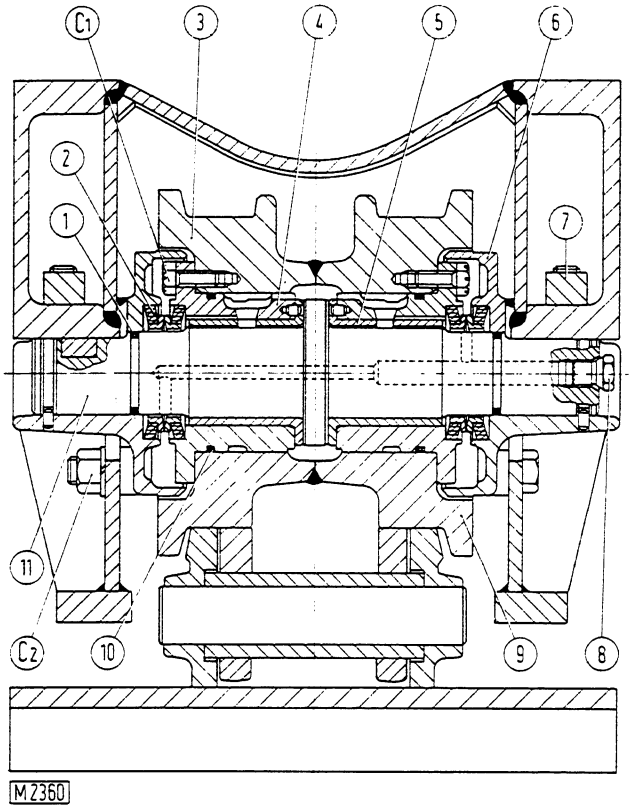

Fig. 14-20 - Section thru track roller
C1. Bushing carrier capscrew - C2. Track frame guard nuts - 1. O-ring - 2. Floating ring seal - 3. Double-flange roller - 4. Bushing carrier - 5. Bushings - 6. Roller support - 7. Lower guard and roller rail - 8. Lubrication plug - 9. single-flange roller - 10. O-ring - 11. Roller shaft.

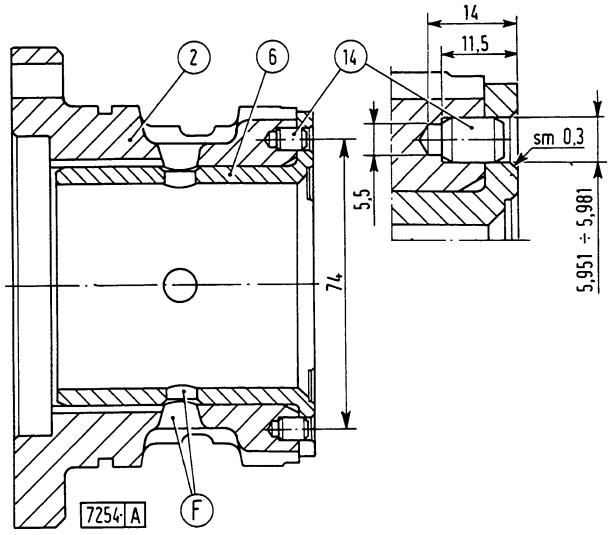

Fig. 14-21 - Holes dimensions for dowel pins in bushing carriers of track rollers and idlers.
F. Lube holes - 2. Bushing carrier - 6. Bushing - 14. Dowel pin.

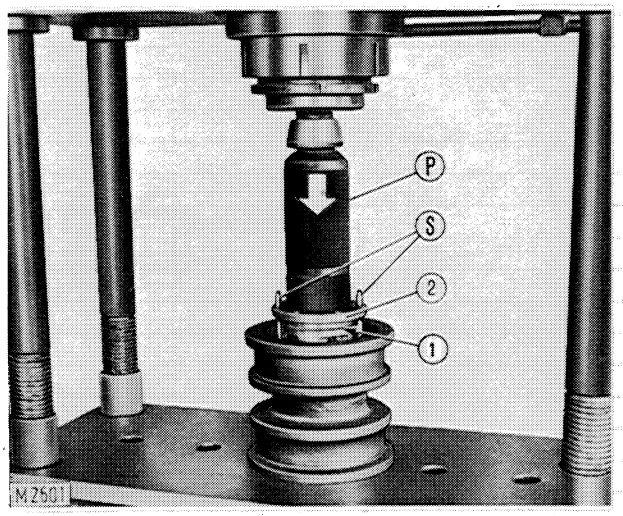

Fig. 14-22 - Installing bushing carrier
P. Driver - S. Guide pins 75291525 - 1. O-ring - 2. Bushing carrier.

14.4.3 ASSEMBLY

Withdraw dowels (14, Fig. 14-21) from the carriers or, if necessary, saw them flush.

Press new bushings in carriers positioning them so that, after installation, lubrication holes (F) are in alignment (max. misalignment 2.5 mm - 0.10 in).

Drill two new dowel holes to dimensions shown in Fig. 14-21.

Press dowels home ensuring that they do not protrude from bushing flange face.

Install first bushing carrier using a press (Fig. 14-22), using pilot pins 75291525 (S) to facilitate retaining screw hole alignment.

Assemble roller shaft, press home second bushing carrier assembly and ensure that shaft rotates freely. Install seals and press supports on shaft.

Re-fill roller with correct grade of oil.

14.5 CARRIER ROLLERS

Following removal, clamp each roller in a vise (Fig. 14-24) using tool 75291417 and disassemble as follows:

Back off capscrews (C1) and remove cover (9) and thrust plate (8, fig. 14-25). Withdraw shaft assembly and remove split rings of floating ring seal (3).

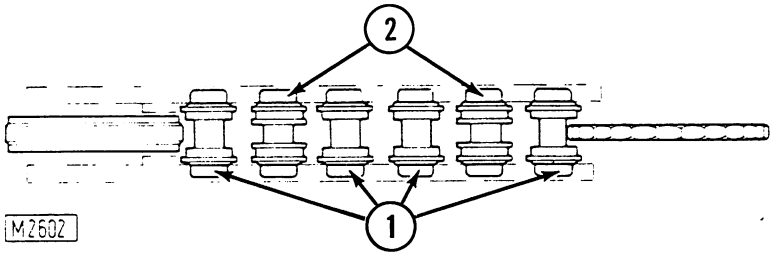

Fig. 14-23 - Track roller position on track frame
1. Single-flange rollers - 2. Double-flange rollers.

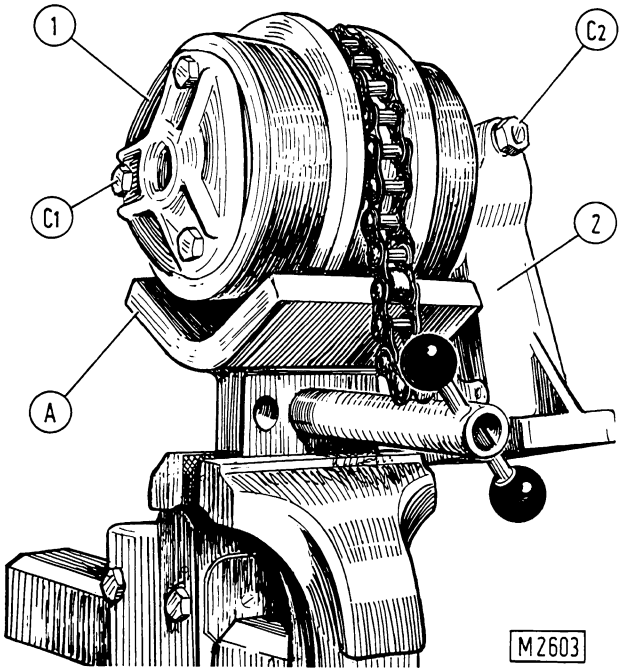

Fig. 14-24 - Overhauling track carrier roller
A. Roller retainer 75291417 - C1. Cover capscrew - C2. Roller shaft nut - 1. Cover - 2. Roller support.

Remove retaining bolt (C3) to separate support shaft.

In case of replacement, withdraw bushings (7) from roller using universal internal puller.

On reassembly, bear in mind the following:

Press the bushing (7) in the roller using a suitable driver.

Assemble the floating ring seal (3) taking the necessary precautions.

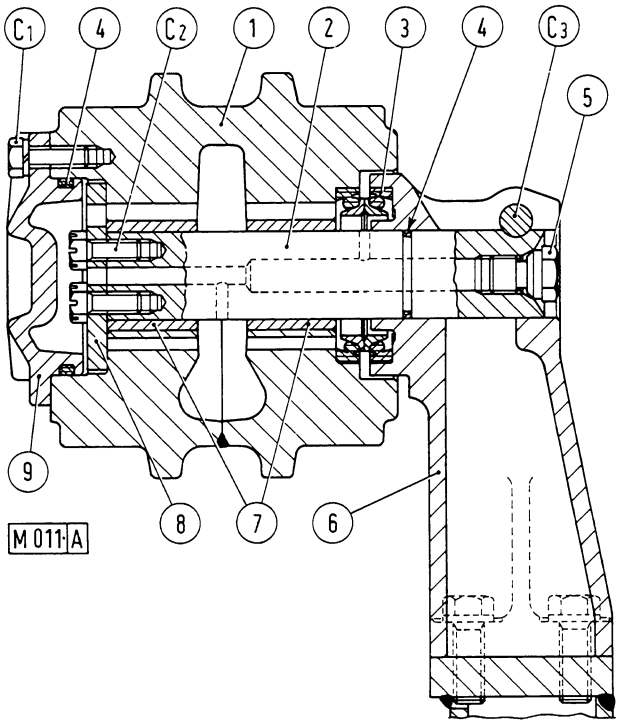

Fig. 14-25 - Section thru carrier roller
C1. Cover capscrews - C2. Thrust plate capscrews - C3. Roller shaft bolt - 1. Roller - 2. Roller shaft - 3. Floating ring seal - 4. O-ring - 5. Lubrication plug - 6. Roller support - 7. Shaft bushings - 8. Thrust plate - 9. Cover.

If the thrust plate contact face is badly worn, replace the plate.

14.6 LUBRICATION

On completion of overhaul, refill rollers and track idler with oil as follows:

Place the assembly in a horizontal position, that is in the same position as when installed on machine.

Back off lubrication plug (A, Fig. 14-26).

Fully tighten lubrication fitting (B), and pump oil until the fluid issuing from the slots is free from air bubbles.

Quickly unscrew the fitting and reassemble the plug.

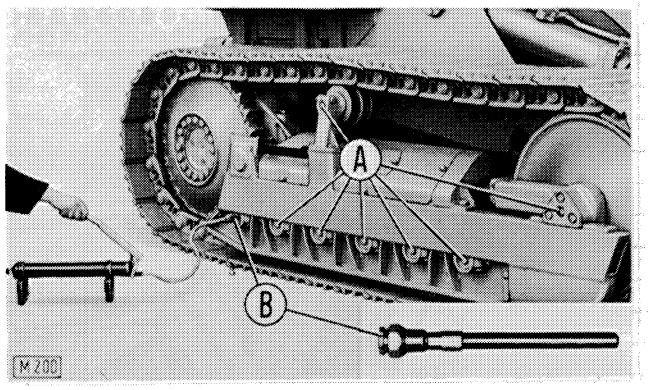

Fig. 14-26 - Refilling rollers and track idlers through fitting (B) and hand pump.

A. Lubrication plugs.

14.7 TRACK FRAMES

To remove each track frame, proceed as follows: Withdraw and extend track chain as described in para. 14.1.1.

Remove track carrier roller.

Remove capscrews (C1/C2, Fig. 14-27) securing frame to equalizing beam.

Remove capscrews (C3) securing track frame to machine frame.

Disconnect cap (2) connecting final drive housing to axle.

Raise machine sideways and move the track frame assembly forward (Fig. 14-28).

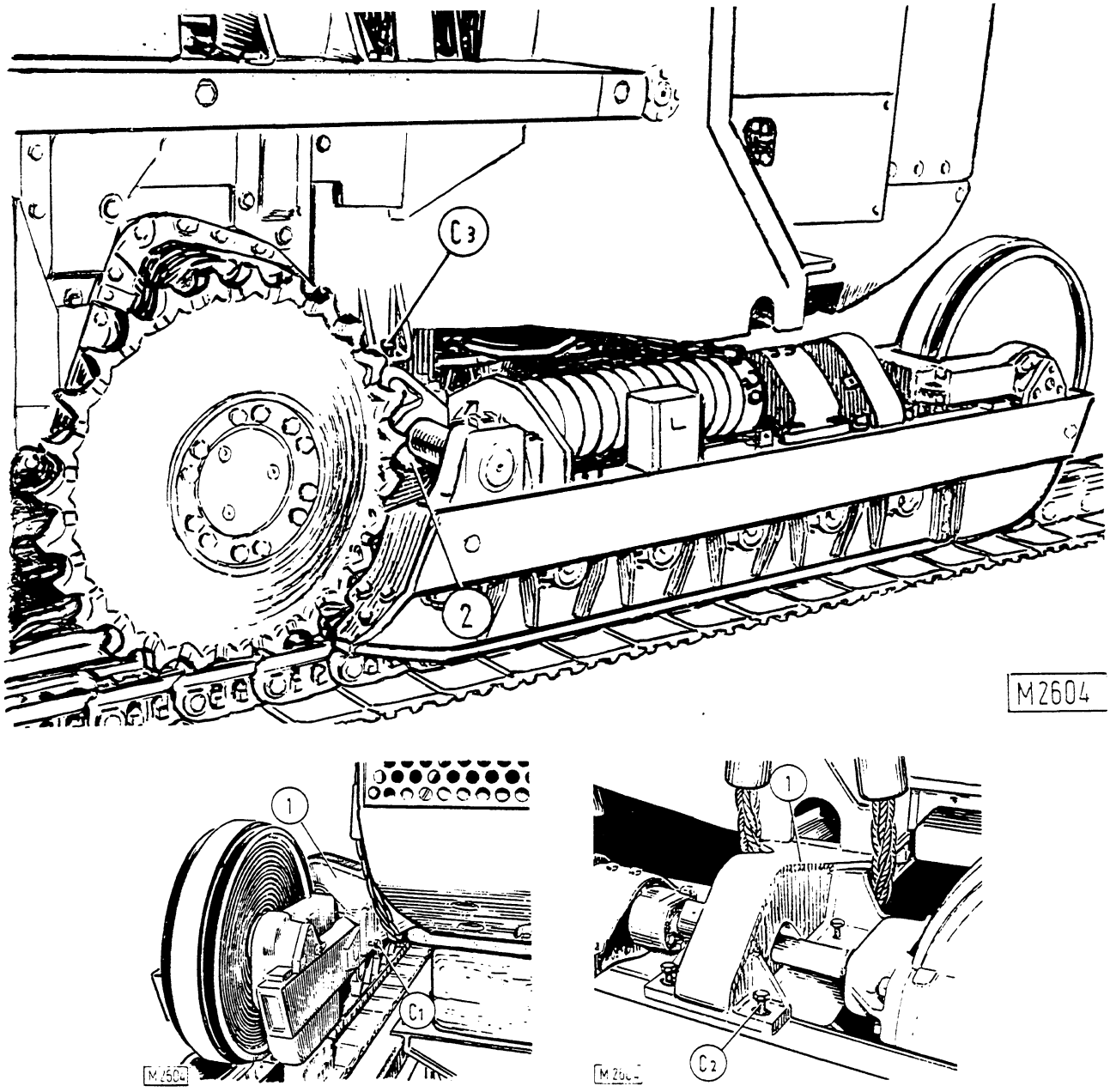

Fig. 14-27 - Disassembling a track frame assembly
C1/C2. Capscrews securing frame to equalizing beam - C3. Capscrew securing track frame to machine frame - 1. Equalizing beam - 2. Cap connecting final drive housing to axle.

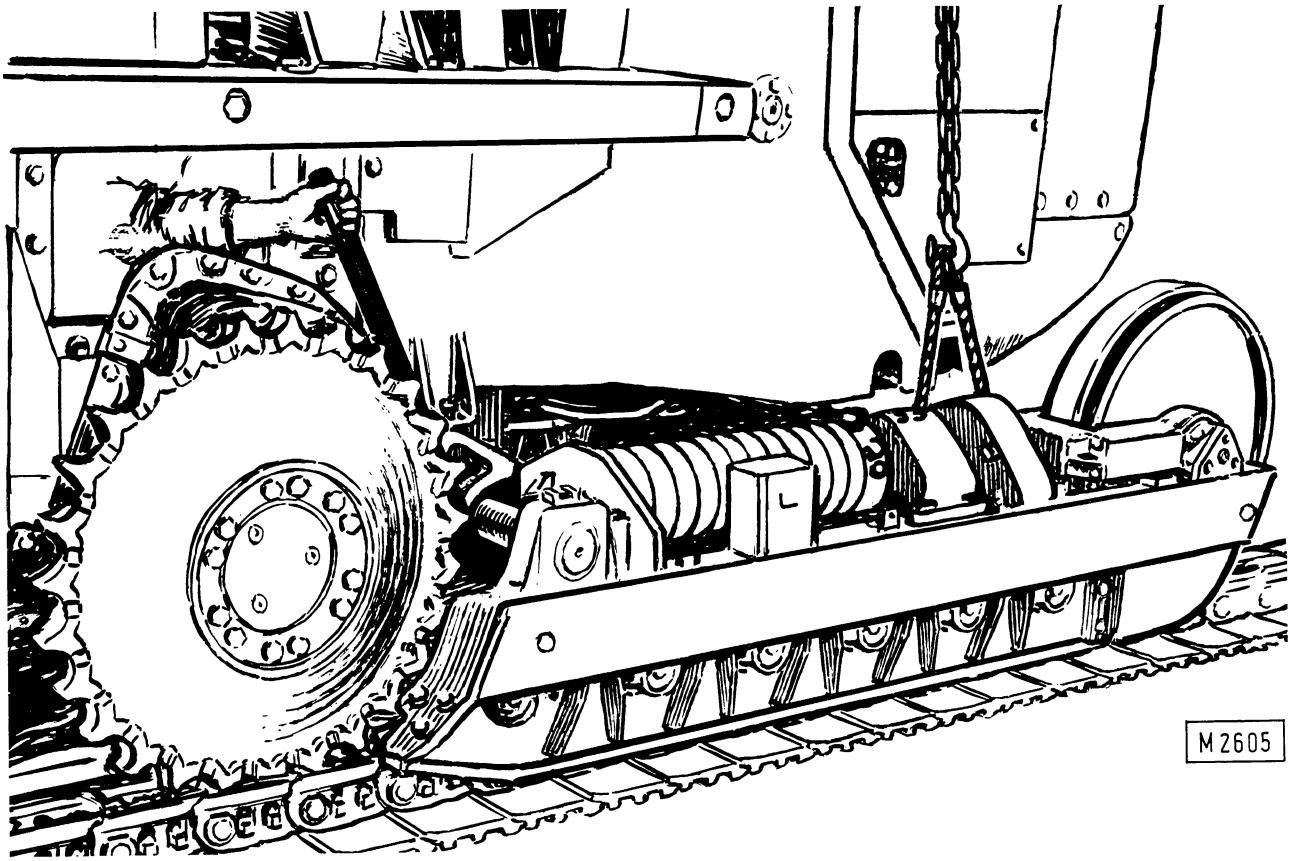

Fig. 14-28 - Removing a track frame assembly

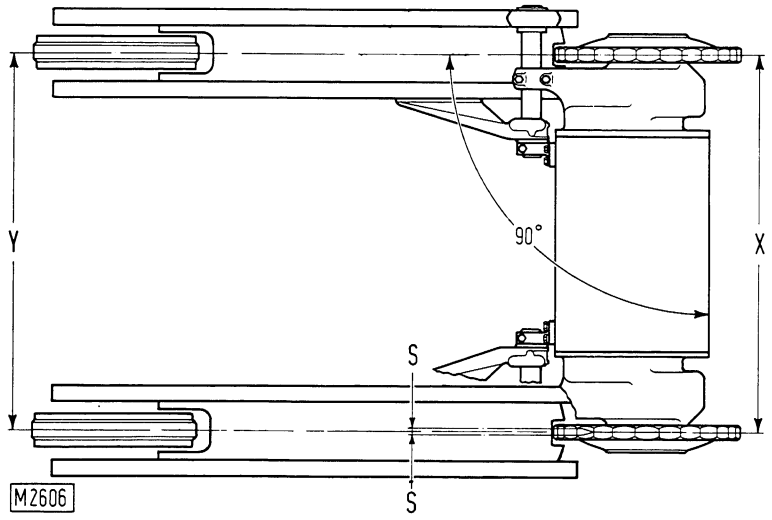

Fig. 14-29 - Track frame alignment details
Note - Max. permitted difference between X and Y is ± 9 mm (0.35 in).
S = 2 mm (0.08 in) max. permitted misalignment of sprocket relative to track roller of each frame.

14.8 SPECIFICATIONS

TRACK CHAINS		
Type	Link	
Composition of each chain:		
No. of shoes (per track)	40	
No. of right hand links (marked D)	39	
No. of left hand links (marked S)	39	
No. of master inks	2	
No. of track rollers (per track frame)	6	
No. of track carrier rollers (per track frame)	1	
Standard shoe width	450 mm	17.7 in
Optional shoe width	500-550 mm	19.7-21.7 in
Bushing housing diameter in link	52.680 to 52.760 mm	2.074 to 2.077 in
Bushing O.D.	52.920 to 53.040 mm	2.083 to 2.088 in
Bushing interference fit in link	0.16 to 0.36 mm	0.006 to 0.014 in
Pin housing diameter on link	34.760 to 34.840 mm	1.368 to 1.372 in
Pin diameter	35.000 to 35.100 mm	1.378 to 1.382 in
Pin interference fit in link housing	0.16 to 0.66 mm	0.006 to 0.026 in
Bushing I.D.	35.58 to 35.68 mm	1.401 to 1.405 in
Pin clearance in bushing	0.48 to 0.68 mm	0.019 to 0.027 in
TRACK RELEASE MECHANISM		
Type	Double spring	
Track tension adjustment	Hydraulic	
Hydraulic cylinder bore diameter	60.200 to 60.290 mm	2.370 to 2.374 in
Piston diameter	59.950 to 60.000 mm	2.360 to 2.362 in
Piston clearance in cylinder	0.200 to 0.340 mm	0.008 to 0.013 in
Pressure relief valve setting (Vs, Fig. 14-7)	1078 to 1127 bar	(15.631 to 16.342 psi)
Valve adjustment shim thickness (S1, Fig. 14-10)	0.1-0.2-0.5 mm	0.004-0.008-0.020 in
Inner recoil spring length		
Free	760 mm	29.9 in
Under load of 1211-1338 daN (2722-3008 lbs)	515 mm	20.3 in
Under load of 1510-1667 daN (3395-3747 lbs)	455 mm	17.9 in
Outer recoil spring length		
Free	661.5 mm	26.0 in
Under load of 7303-8072 daN (16418-18146 lbs)	545 mm	21.5 in
Under load of 11070-12223 daN (24886-27478 lbs)	485 mm	19.1 in
TRACK IDLER		
Bushing carrier O.D. (4, Fig. 14-14)	95.145 to 95.180 mm	3.7459 to 3.7472 in
Carrier housing diameter	95.000 to 95.035 mm	3.7402 to 3.7415 in
Interference fit	0.110 to 0.180 mm	0.0043 to 0.0071 in

Idler shaft (8) O.D. at bushings	54.970 to 55.000 mm	2.1642 to 2.1653 in
Bushing I.D. (9)	55.403 to 55.549 mm	2.1812 to 2.1869 in
Running clearance	0.403 to 0.579 mm	0.0158 to 0.0228 in
Bushing O.D. (9)	63.970 to 64.000 mm	2.5185 to 2.5197 in
Bushing carrier I.D. (4)	63.913 to 63.959 mm	2.5163 to 2.5181 in
Bushing interference fit	0.011 to 0.087 mm	0.0004 to 0.0034 in
Idler guide plate to side bar clearance adjusting shim (S1) thickness	0.5 mm	0.02 in
Idler bracket to track frame wear strips clearance adjusting shims (S2) thickness	0.5 mm	0.02 in
TRACK ROLLERS		
Type	Sealed for life lubrication, matched steel ring seal (long life)	
No. of track rollers per track		
Double flange	2	
Single flange	4	
Bushing carrier housing diameter	95.000 to 95.035 mm	3.7402 to 3.7415 in
Bushing carrier O.D. (4, Fig. 14-20)	95.145 to 95.180 mm	3.7459 to 3.7472 in
Interference fit	0.110 to 0.180 mm	0.0043 to 0.0071 in
Shaft (11) diameter at bushings	54.970 to 55.000 mm	2.1642 to 2.1653 in
Bushing I.D. (5)	55.403 to 55.549 mm	2.1812 to 2.1869 in
Bushing to shaft clearance	0.403 to 0.579 mm	0.0158 to 0.0228 in
Bushing O.D. (5)	63.970 to 64.000 mm	2.5185 to 2.5197 in
Bushing carrier I.D. (4)	63.913 to 63.959 mm	2.5163 to 2.5181 in
Bushing interference fit	0.011 to 0.087 mm	0.0004 to 0.0034 in
TRACK CARRIER ROLLERS		
Type	Sealed for life lubrication, matched steel ring seal (long life)	
No. of rollers per track	2	
Bushing I.d. (7, Fig. 14-25), installed, not reamed	40.085 to 40.180 mm	1.5781 to 1.5819 in
Shaft diameter (2) at bushings	39.975 to 40.000 mm	1.5738 to 1.5748 in
Bushing clearance	0.085 to 0.205 mm	0.0033 to 0.0081 in
Bushing housing diameter on roller (1)	49.900 to 49.940 mm	1.9646 to 1.9661 in
Bushing O.D. (7)	50.000 to 50.025 mm	1.9685 to 1.9695 in
Bushing interference fit	0.060 to 0.125 mm	0.0024 to 0.0049 in

14. 9 TIGHTENING TORQUE FIGURES

Description	Torque (°)	
	daNm	ft. lb.
Track chains		
Nuts, shoes	44	325.5
Track release mechanism		
Capscrew, spring retaining nut (C1, Fig. 14-7)	5.9	43.4
Capscrew, hydraulic cylinder support (C4, Fig. 14-7)	23.5	173.6
Capscrew, hydraulic cylinder key (C2, fig. 14-7)	5.9	43.4
Valve, regulating (Vr, Fig. 14-7)	13.8	101.3
Pressure relief valve, cylinder (Vs, Fig. 14-7)	13.8	101.3
Track idler		
Capscrews, slide bars (C3, Fig. 14-14)	17.7	130.2
Capscrews, idler brackets to track release yoke (C3, Fig. 14-12)	14.7	108.5
Capscrews, self-locking, guide plates to idler brackets (C2, Fig. 14-12)	17.7	130.2
Capscrews, idler shaft (C1, Fig. 14-12)	23.5(*)	173.6
Capscrews, bushing carriers (C1, Fig. 14-14)	7.8	57.9
Track rollers		
Capscrews, roller supports	23.5	173.6
Capscrews, bushing carriers (C1, Fig. 14-20)	7.8	57.9
Track carrier rollers		
Capscrew, roller cover (C1, Fig. 14-25)	5.9	43.4
Capscrew, self-locking, thrust plate (C2, Fig. 14-25)	5.9	43.4
Nut, roller shaft (C3, Fig. 14-25)	14.7	108.5
Capscrew, roller support	14.7	108.5
Track frames		
Capscrew, track frame upper guard	9.8	72.3
Capscrew, guards to track frame ends	22.1	162.7
Capscrews, lower guards	22.1	162.7
Nut, track frame lower guards	22.1	162.7
Capscrew, track frame lower guard	22.1	162.7

(°) Wet (engine oil)
(*) Tighten with a thin layer of sealing compound.

14.10 SERVICE TOOLS

Part no.	Description
75291414	Puller, idler brackets
75291426	Hook, scissor, idler removal (Fig. 14-13)
75291570	Reamer, recoil spring dowel housings (dia. = 25 mm)
75291573	Tester, hydraulic cylinder pressure relief valve setting (Fig. 14-10)
75292763	Bushing, pilot, recoil spring cylinder support dowel housings (dia. = 24.5 mm)
75292764	Bushing, pilot, cylinder support dowel housings (dia. = 25 mm)
Service tools for master pin removal - installation using hydraulic ram	
75291197	Stand, ram
75292914	Hook, adjustable, ram
75294946	Frame assy, master pin removal-installation
75295015	Ram, hydraulic, double-acting
75295027	Pump, hand, double-acting (for ram 75295015)
75295018	Pipes, double-acting hand pump (for ram 75295015)
75295627	Driver, master pin removal-installation
75295628	Pin, pilot
75295629	Plate, support
75295630	Pin, forcing
Service tools for track chain overhaul with a fixed or twin-piston hydraulic ram 75292451 (Fig. 14-2).	
75292454	Anvil, link disassembly-assembly (I, Fig. 14-2)
75292455	Spacer, bushing disassembly-assembly (T, Fig. 14-2)
75293257	Gauge, link distance (U, Fig. 14-2)
75293270	Bracket, link disassembly (A, Fig. 14-2)
75293271	Bracket link assembly (B, Fig. 14-2)
Service tools for recoil spring disassembly-assembly using a portable hydraulic ram.	
75290588	Adapter (G, Fig. 14-9)
75293209	Pin, pilot (P, Fig. 14-9)
75295567	Remover/replacer, spring (A, Fig. 14-9)
75295723	Fitting, threaded (E, Fig. 14-9)
75300553	Ram, portable hydraulic (B,Fig. 14-9)
Roller rebuild tools	
75291205	Puller, universal, internal (for removing bushings from rollers and track idlers).
75291208	
75291417	Stand, overhaul, track and carrier rollers (Figs. 14-18 and 14-24)
75291427	Puller, track roller supports (Fig. 14-18)
75291525	Pins, pilot, bushing carrier installation (Fig. 14-22)
75291667	Hook, track rollers (Fig. 14-16)
75292904	Puller, bushing carriers (Fig. 14-19)

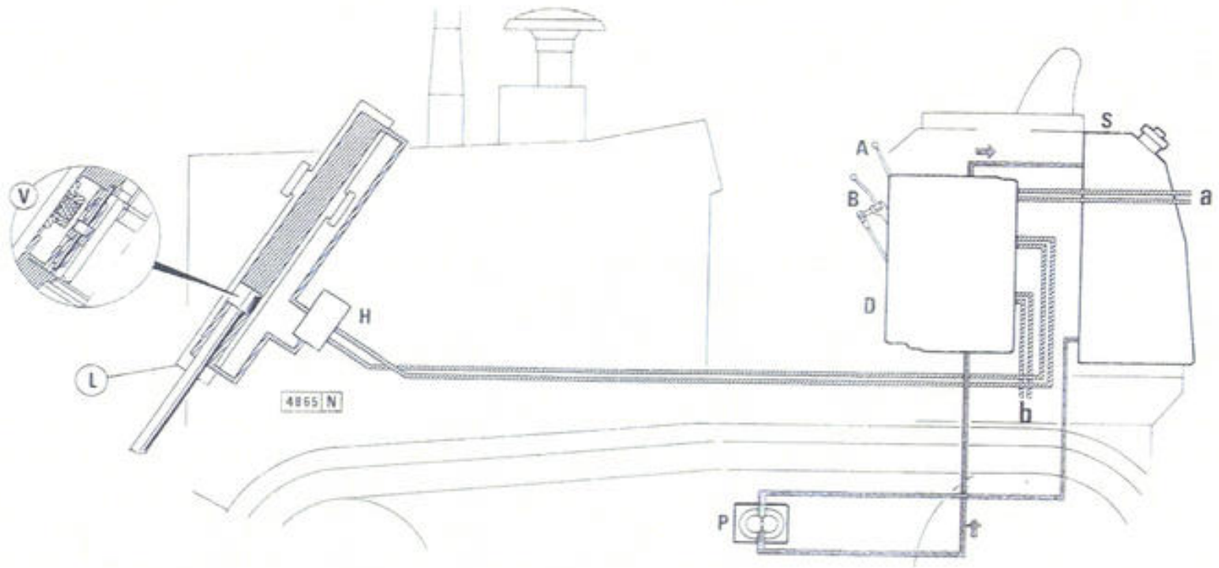

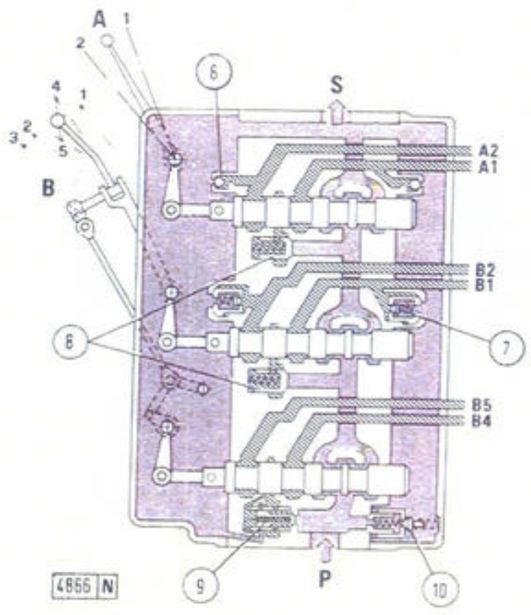

Fig. 15-1 Hydraulic System Schematic - Dozer
a. Lines to additional equipment - **b.** Line to tilt cylinder - **A.** Blade angle or additional rear equipment control lever - **B.** Raise/lower/float and tilt control single-lever - **D.** Hydraulic control valve - **H.** Quick-drop valves (see operationat details X and Y) - **L.** Raise/lower cylinders - **P.** Hydraulic pump - **V.** Piston travel end valve - **S.** Tank - **X & Y.** Stages of quick-drop valve operation - **1 & 2.** Lever (A) positions - **1, 2, 3, 4, & 5.** Single-lever positions - **6.** Make-up valve - **7.** Make-up and overload multiple valves - **8.** Check valves - **9.** Flow restrictor valve - **10.** Main relief valve - **11.** Ball check valve - **12.** Leak-off valve plunger - **13.** Leak-off valve piston - **14.** Spring - **15.** Restriction -

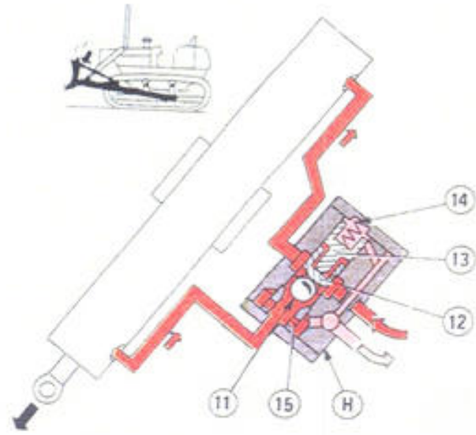

X. Moldboard quick drop with operations of quick drop valves (H)

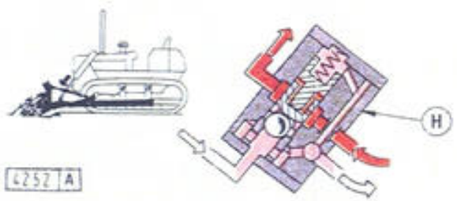

Y. Quick-drop valves (H) during moldboard slow dipping.

15. EQUIPMENT HYDRAULICS

15.1 HYDRAULIC SYSTEM DESCRIPTION AND OPERATION

The hydraulic system includes a gear pump (P, fig. 15-1) flange-mounted on transmission case, drawing oil from tank (S) whence it is directed to control valve (D) through a filter (6, fig. 15-2). The 3-spool control valve (D, fig. 15-1) is located on the right side of Operator's seat and is controlled by two levers:

B) (single-lever control) When shifted length-wise, it controls the central spool which may take several function positions: blade raise, lower, hold and float; when shifted crosswise it controls the tilt cylinder via the lower spool.

A) Through the upper spool it controls angling of the blade - All-Hydraulic Version - or other attachments, if any (assisted by a diverter valve on the All-Hydrau lic version).

When the main control valve levers (A) and (B, fig. 15-1) are in HOLD the oil arriving from pump (P) flows through control valve (D) and returns to tank (S) where it is again decontaminated by filter (5, fig. 15-2).

Filter (5) is fitted with a safety relief valve that opens when the excessively restricted filtering element causes abnormal pressure drops in the circuit; the purpose of the valve is to ensure full circulation in any case, by excluding partially or totally the element thus preventing its laceration.

When either control lever is shifted the associated spool (S) directs oil to the intended user circuit through check valve (8, fig. 15-1).

The pressure in the delivery circuit is proportional to the effort required and is limited by pilot-operated relief valve (10).

The piston of each cylinder (L, fig. 15-1) incorporates a valve (V) which at stroke end point allows intercommunication between the two cylinder chambers thus preventing the pistons from "overloading" the cylinder end plates and the consequent damages.

When lever (B, fig. 15-1) is pushed forward, beyond the blade LOWER position, the associated spool will shift into the position where the pump delivery circuit and the cylinder chambers will intercommunicate with the return line to tank.

Under this condition no pressure is built in the control circuits and the blade is free to weigh down (float).

The main control valve central spool (blade RAISE/LOWER) is fitted with two multiple valves (7, fig. 15-1) for make-up and overloads, providing the following functions:

Make-up during quick-drops, especially with engine at low RPM or stationary, when the cylinders need a higher flow rate than supplied by the pump, thereby generating a vacuum with consequent oil suction, through the valve, from return line to the tank.

Protection against accidental overloading in cylinders and lines when the associated spools are in HOLD.

The main control valve upper spool incorporates two make-up valves (6, fig. 15-1) having the same purpose as described above for quick drops.

⚠ WARNING

This symbol is your safety alert sign. It means ATTENTION! BECOME ALERT! YOUR SAFETY IS INVOLVED.

The lower spool is provided with a flow restrictor valve (9, fig. 15-1).

The purpose of this valve is to reduce the amount of oil flowing to the tilt cylinder chamber, thus allowing small and slow, hence accurate, movements.

15.1.1 QUICK-DROP VALVES

Quick-drop valves (H, fig. 15-1) in blade control cylinder lines cut in during blade LOWER to speed up the process.

When blade LOWER is activated (stage X, fig. 15-1) the oil delivered by the pump is directed to cylinder upper chambers while oil return is impeded by restriction (15). This restriction causes the pressure to rise sufficiently to overcome the action of spring (14) and shift plunger (12) thus permitting the flow of oil from the lower to the upper chamber through restrictor valve (11). Consequently, the cylinder upper chambers are supplied oil from the pump delivery circuit and practically all the oil discharged from the lower chamber - except the amount seeping through restriction orifice (15).

As the blade penetrates the ground (stage Y, fig. 15-1) the consequent increase of the pressure in the upper chamber causes valve (11) to close and interrupt the up-flow of oil from the lower chamber.

As the blade is lifted, the leak-off valve (12) keeps ball check valve (11) closed under the pressure of oil acting on the side of spring (14).

15.2 HYDRAULIC OIL TANK AND FILTERS

The hermetically sealed oil tank (fig. 15-2) is combined with the fuel tank and contains the filters located on pump outlet and oil return circuits.

⚠ WARNING

Study the Operation and Maintenance Instruction Manual before starting, operating, maintaining, fueling, or servicing this machine.

NOTE - For routine maintenance instructions on oil draining and refilling, cleaning of tank and suction filter (6, fig. 15.3), and replacement of return filter (5), consult the Operation and Maintenance Manuals supplied with each machine.

15.2.1 TANK REMOVAL

Proceed as follows:

Take off filler plugs (fuel and oil)

Drain tank (fuel and oil) by removing the plugs on underside of tank as illustrated in the Operation and Maintenance Instruction Manual.

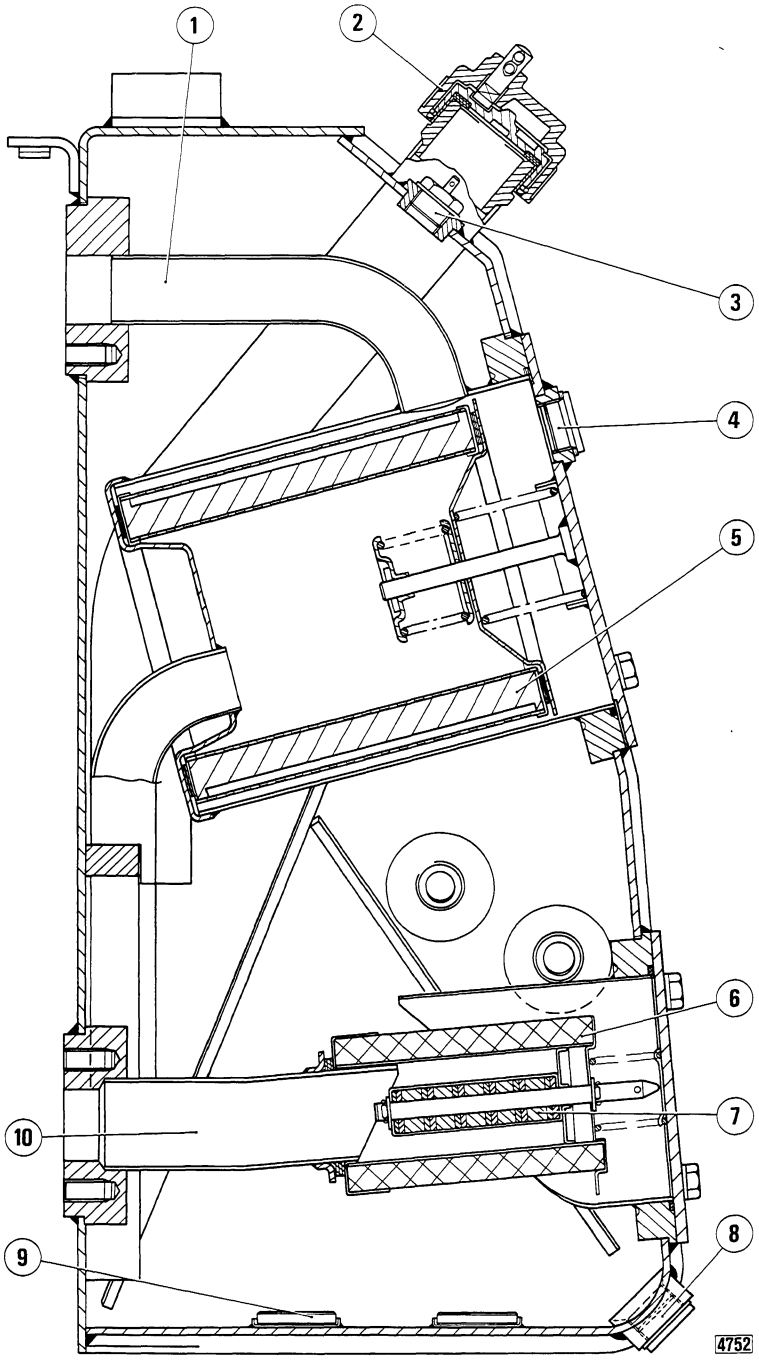

Fig. 15-2 - Section through hydraulic oil tank.
1. Oil return line - 2. Oil filter plug - 3. Vent valve - 4. Vent plug - 5. Return filter - 6. Suction filter - 7. Magnetic rod - 8. Oil drain plug - 9. Magnetic plates - 10. Oil suction pipe.

⚠ WARNING

To minimize dangers of fire and explosion, it is recommended that before any welding is done on a fuel tank, the tank be completely drained of fuel, fuel lines disconnected and the ends closed to protect them, and the tank be steam cleaned. All traces of fuel must be removed before welding is started. Flood the tank with carbon dioxide (CO_2) before and during welding. Caps must be removed and vents and other openings left open during welding.

⚠ DANGER

Fluid under pressure - Turn cap or cover slowly to relieve pressure before removing.

Remove the Operator's seat assembly (complete with base).
Disconnect battery ground lead.
Take off tank rear guard.
Disconnect rear work (flood) lamp leads.
Free main control valve inlet and outlet lines.
Disinsert the fuel delivery line.
Remove the tank-to-machine mounting screws.

⚠ WARNING

Guard against kinking chain or cables. Always wear heavy gloves when handling chain or cable.

Lift off the tank using threaded lift eyes 75295220 and sling chain 75292914 as shown in fig. 15-3.
Check for leakage by subjecting the tank to a 2 bar (30 psi) internal pressure.

15.2.2 FILTERS

Hydraulic oil is filtered by two separate full-flow filters located inside the hydraulic tank, namely:
Pump suction filter (6, fig. 15-2) provided with mag net rod filter (7) and metal element.
Pump return filter (5, fig. 15-2) provided with paper element and incorporating a by-pass valve for system restriction indicator sending unit.
Both filters are accessible after removing the associated covers on the tank.

⚠ WARNING

Never use gasoline or solvent or other flammable fluid to clean parts. Use authorized commercial, non-flammable, non-toxic solvents.

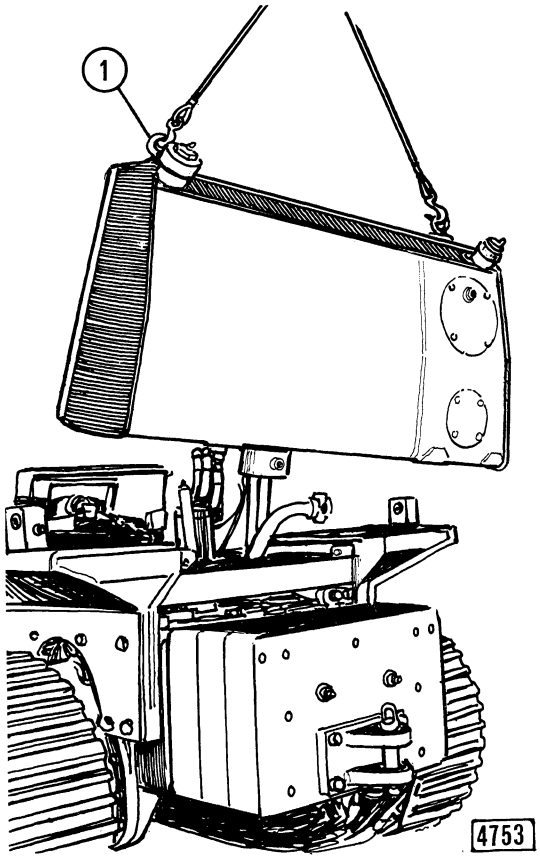

Fig. 15-3 - Removing hydraulic oil tank using chain sling 75292914.
1. Lift eyes 75295220.

15.3 HYDRAULIC PUMP

15.3.1 REMOVAL

For pump removal proceed as follows:
Drain the hydraulic oil tank.

⚠ DANGER

Fluid under pressure - turn cap or cover slowly to relieve pressure before removing. Study the Operation and Maintenance Instruction Manual.

Remove operator's footboards.
Disconnect tank suction line and delivery line to control valve.
Remove screws retaining hydraulic pump to con verter casing and lift off the pump.

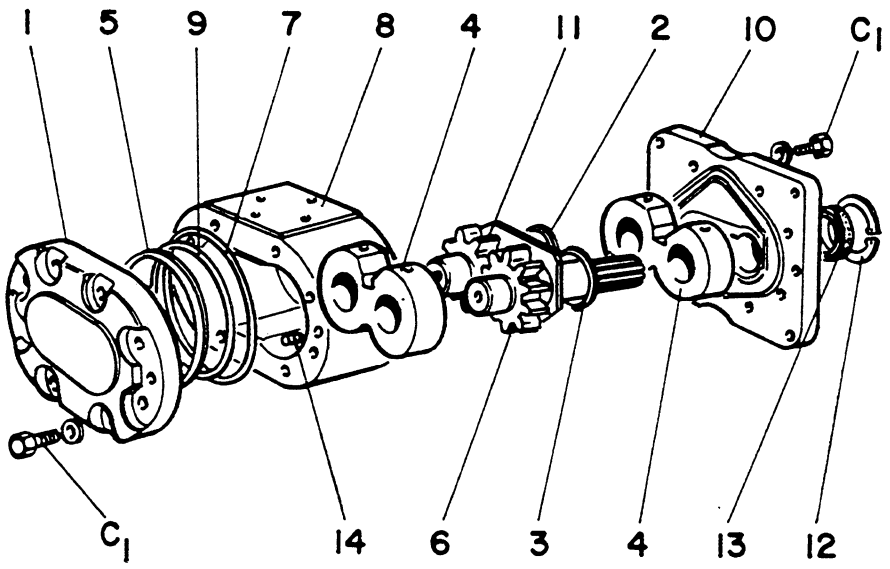

Fig. 15-4 - Hydraulic pump
C1. Cover screw - 1. Front cover - 2. O-ring - 3. Gasket - 4. Wear plates - 5. O-ring - 6. Drive shaft gear - 7. O-ring - 8. Pump body - 9. O-ring - 10. Rear cover - 11. Driven shaft gear - 12. Lockring - 13. Seal ring - 14. Locating pin

15.3.2 DISASSEMBLY AND SERVICE

Remove cover capscrews (C1, fig. 15-4), and mark the position of all internal parts so as to restore them to their original position on reassembly.

Assemble gears on their supports and check side face flatness and squareness, smearing faces in question with carbon black. Slight defects can be eliminated using extra fine emery cloth lubricated with paraffin wax.

Check gear end clearance in pump body (Fig. 15-7). The correct clearance is 0.20 to 0.25 mm (0.008 to 0.010 in).

Any pump body face dressing, with a view to restoring the prescribed end clearance, should be carried out using extra fine emery cloth lubricated with paraffin wax, removing as little material as possible.

In the event of replacement, reassemble bushings (1, Fig. 15-6) onto the gear supports, bearing in mind the following:

Position lubrication grooves (2) as shown in Fig. 15-6.

Bushing fitted depth (H) with respect to surface (5) should be 2 mm (0.08 in). Make sure that when installed, bushings do not protrude from opposite end and that lubricating holes (3) are not obstructed.

The bushings require no reaming when installed.

Ensure that lubricating holes (3) are absolutely clear.

Liberally lubricate all pump parts using hydraulic oil, then reassemble referring to Fig. 15-4 bearing in mind the following points:

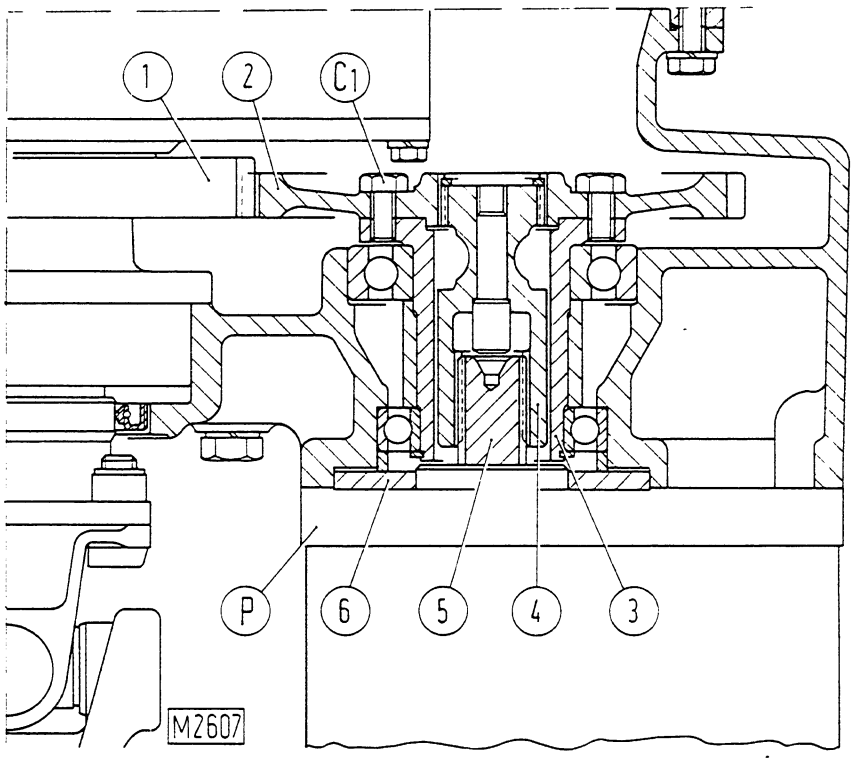

Fig. 15-5 - Section thru equipment hydraulic pump drive
C1. Gear retaining screws - 1. Drive gear attached to flywheel - 2. Driven gear - 3. Sleeve - 4. Splined pump drive shaft - 5. Pump drive shaft - 6. Centralizer.

The plastic ant-extrusion ring (1, Fig. 15-8) is to be inserted inside center seal (3).

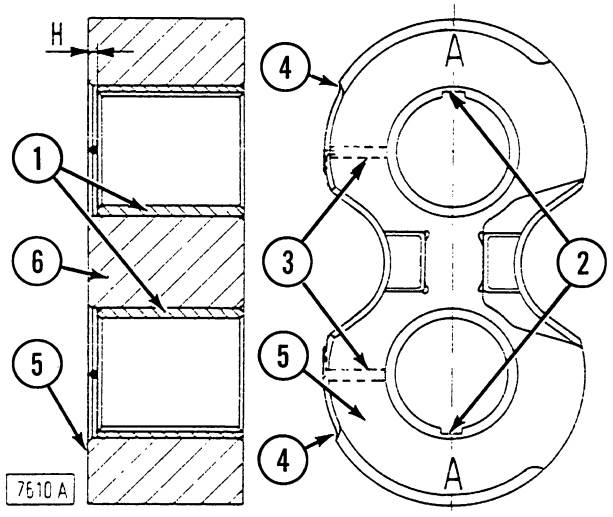

Fig. 15-6 - Pressing bushings into gear supports.
H = 2 mm (0.08 in) bushing depth below surface (5) - 1. Bushings - 3. Bushing lubrication ports - 4. Oil groove fillets - 5. Gear thrust shoulder - 6. Support - 2. bushing lubricating grooves.
Note - Max. angular offset between support centerline (A-A) and centerline of lubricating groove (2) not to exceed 2°.

The gear supports, which are to be installed by hand, should be positioned with fillets (4, Fig. 15-6) facing towards the outlet port and the faces provided with lubricating groove abutting the gears.

If, on completion of overhaul, the required level of performance is not obtained, take the pump to an authorized workshop provided with the special purpose equipment for carrying out a proper bench output test. When reinstalling pump on loader, fill inlet line and pump body with hydraulic oil, so as to facilitate pump priming and avoid risk of seizure during initial running.

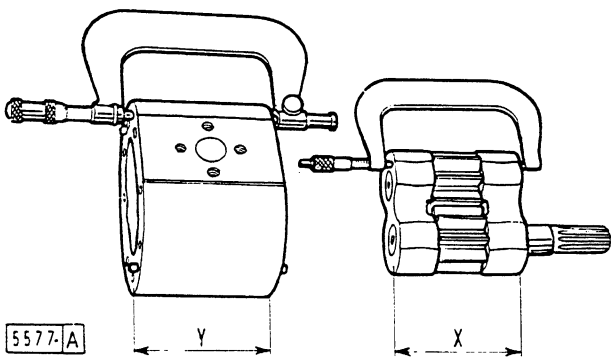

Fig. 15-7 - Checking gear end float.
Note: X to be smaller than Y by 0.20 to 0.25 mm (0.008 to 0.010 in).

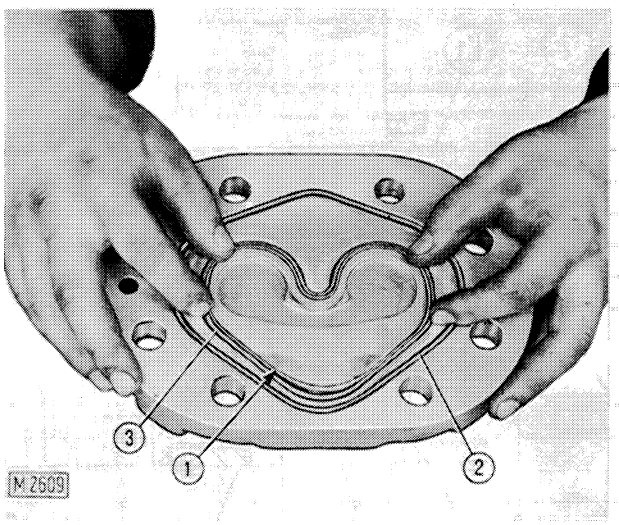

Fig. 15-8 - Assembling anti-extrusion ring (1) on pump cover inside center O-ring (3).
2. O-ring

15.3.3 OUTPUT TEST

Couple pump to drive motor and connect to output meter as shown in Fig. 15-9. Use hydraulic oil supplied with test machine, and perform output tests at prescribed temperature and pressure setting (Fig. 15-10)

.

Compare output figures obtained with values given in chart of fig. 15-10, bearing in mind the following points:

Output ratings of new or overhauled pumps should be fairly close to the ratings represented by dotted line.

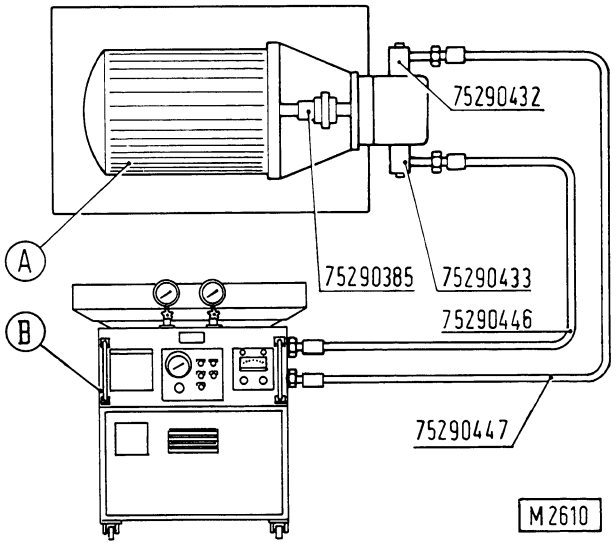

Fig. 15-9 - Pump output test
A. Electric motor with trolley 75291235 - B. Output tester 75295420.

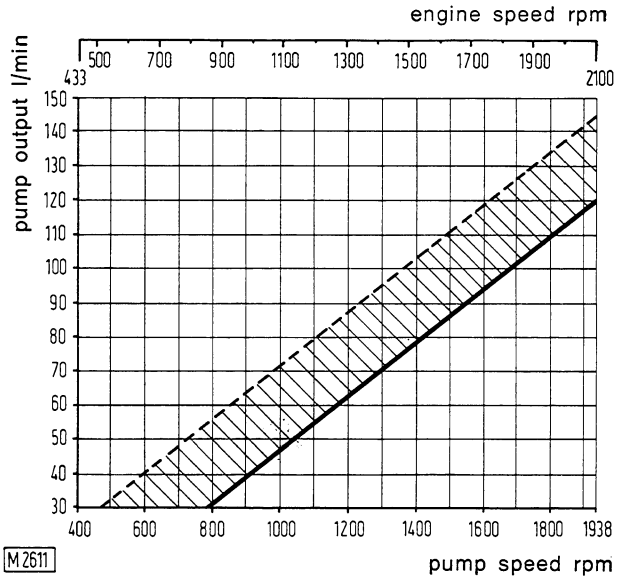

Fig. 15-10 - Pump speed/output chart
Test pressure ..... 154 bar (2233 psi)
Oil temperature ..... 55° to 65°C (131° to 144°F)
Pump drive ratio ..... 0.9231 to 1

Output figures for used pumps may be considered acceptable if included in shaded area of chart. If near to, or lower than, continuous line pump should be overhauled or replaced.

15.4 CONTROL VALVE

The 3-spool 1-piece control valve is located inside the right panel next to operator's seat. The three spools are controlled by only two levers, blade tilt and raise/lower functions are selected by moving lever (B, fig. 15-1) up-down and right-left. Fig. 15-20 shows the dual function lever linkage operation for longitudinal and transverse movements.

15.4.1 REMOVAL

For control valve removal proceed as follows:

⚠ DANGER

Fluid under pressure - turn cap or cover slowly to relieve pressure before removing.

Drain the tank as described in the Operation and Maintenance Instruction Manual.

Remove control valve guard.

Disconnect all lines from the control valve.

Remove screws retaining control valve to associated support and lift off the control valve.

15.4.2 DISASSEMBLY AND SERVICE

To disassemble the control valve proceed as follows: Remove spool levers.

Drain the control valve after removing both drain plugs.

Take off rear cover (3, fig. 15-12).

⚠ DANGER

Heavy springs compressed. Always follow recommended procedure when disassembling or assembling these parts.

Remove spool springs, applying tool 75297256 to the rear cover mounting holes as shown in fig. 15-13.

Remove spring cup screws (28, fig. 15-12).

Progressively release springs (2), remove tool (A, fig. 15-13) and springs with associated cups.

Remove front cover screws and take off front cover (21, fig. 15-12) with attached shafts, applying suitable reference marks to ensure correct positioning on assembly.

Remove cotters from lever pins and remove spools (A, B and C, fig. 15-12).

Inspect both spools and associated bores in control valve body for score marks, undue wear or distortion.

If excessive shaft working clearance is detected, scrap and replace shafts, noting that they are supplied together with the control valve body.

Remove overload valves from multiple valves (19 and 20, fig. 15-12) using tools 75290561 and 75290562 (fig. 15-14).

Should it be necessary to replace inefficient parts, note the following points:

Multiple valves and overload valves are supplied complete and suitably set.

Relief valve body is supplied together with the associated internal components.

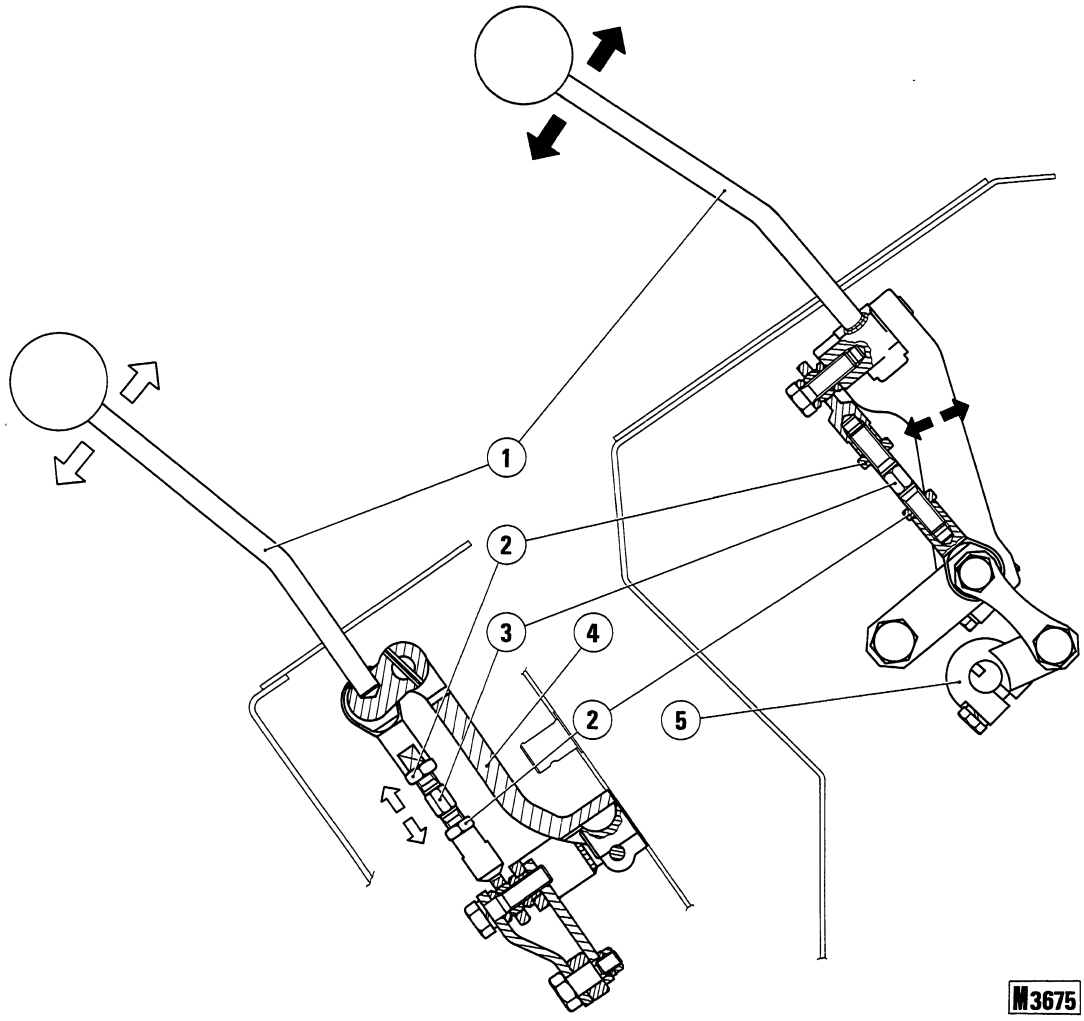

Fig. 15-11 - Sections through blade raise and tilt control.
1. Control lever - 2. Lock nut - 3. Raise threaded adjuster - 4. Tilt relay lever - 5. Lever.
Note - Black arrow shows raise/lower and float controls, white arrow shows tilt control.

15.4.3 REASSEMBLY

Assemble the control valve noting the following points: Install overload valves on make-up valves using the same tools as employed for disassembly (fig. 15-14).

Although identical, the three spools must not be interchanged, connect to the cover linkage and insert in control valve body, restoring the original position identified by the marks applied on disassembly.

Install spacers (24, fig. 15-12) on spool (A) and spool (B) only.

Install spool springs with interposed cups on each spool using tool 75297256 (A, fig. 15-13).

When seal (22, fig. 15-12) replacement becomes necessary, install the new seals ensuring that they are correctly positioned as shown and fully seated against their shoulders.

15.4.4 ON-MACHINE RELIEF VALVE CHECK AND ADJUSTMENT

⚠ WARNING

Do not run the engine of this machine in closed areas without proper ventilation to remove deadly exhaust gases.

Before moving machine or attachments be sure exposed people in the area are clear of the machine. Walk completely around machine before mounting. Sound horn.

Handle all parts with extreme care. Keep hands and fingers from between parts. Wear authorized protective equipment such as safety glasses, heavy gloves, safety shoes.

Observe all start up and shut down procedures and "WARNINGS" listed in the Operation and Maintenance Instruction Manual.

Operate the blade several times to warm up the hydraulic oil (80-90°C) and proceed as follows:

Connect 250 bar (3626 psi) pressure gauge of kit 75294000 to pressure check point (1, fig. 15-15).

Accelerate engine to full load speed and move blade raise control to full stroke causing the relief valve to crack off. System pressure should be 150 bar (2176 psi).

To adjust the setting, back off nut (2, fig. 15-15), and back off adjusting screw (1) to reduce or screw in to increase the setting.

15.5 BLADE RAISE/LOWER CYLINDERS

15.5.1 REMOVAL

⚠ WARNING

Handle all parts with extreme care. Keep hands and fingers from between parts.

For cylinder removal proceed as follows:

Disassemble the front end plate (3, fig. 15-16) using wrench 75297347 and take off piston rod (2) with piston (4).

15.5.2 INSPECTION OF COMPONENTS

Check all disassembled components as follows:

Inspect piston rod; and slight imperfections such as small dents, burrs or light wear may be remedied using extra-fine emery cloth. Ensure that the piston rod is free from distortion using a straightedge or by resting the rod on a surface plate. If the chromium plating appears to be worn or rust spots are detected, replace the rod without hesitation.

Check the cylinder bore. Slight imperfections may be remedied using extra-fine emery cloth. A scored or worn cylinder must be replaces without hesitation.

Check all seals for proper condition and efficiency (8-9-10, fig. 15-16).

Replace any parts found damaged.

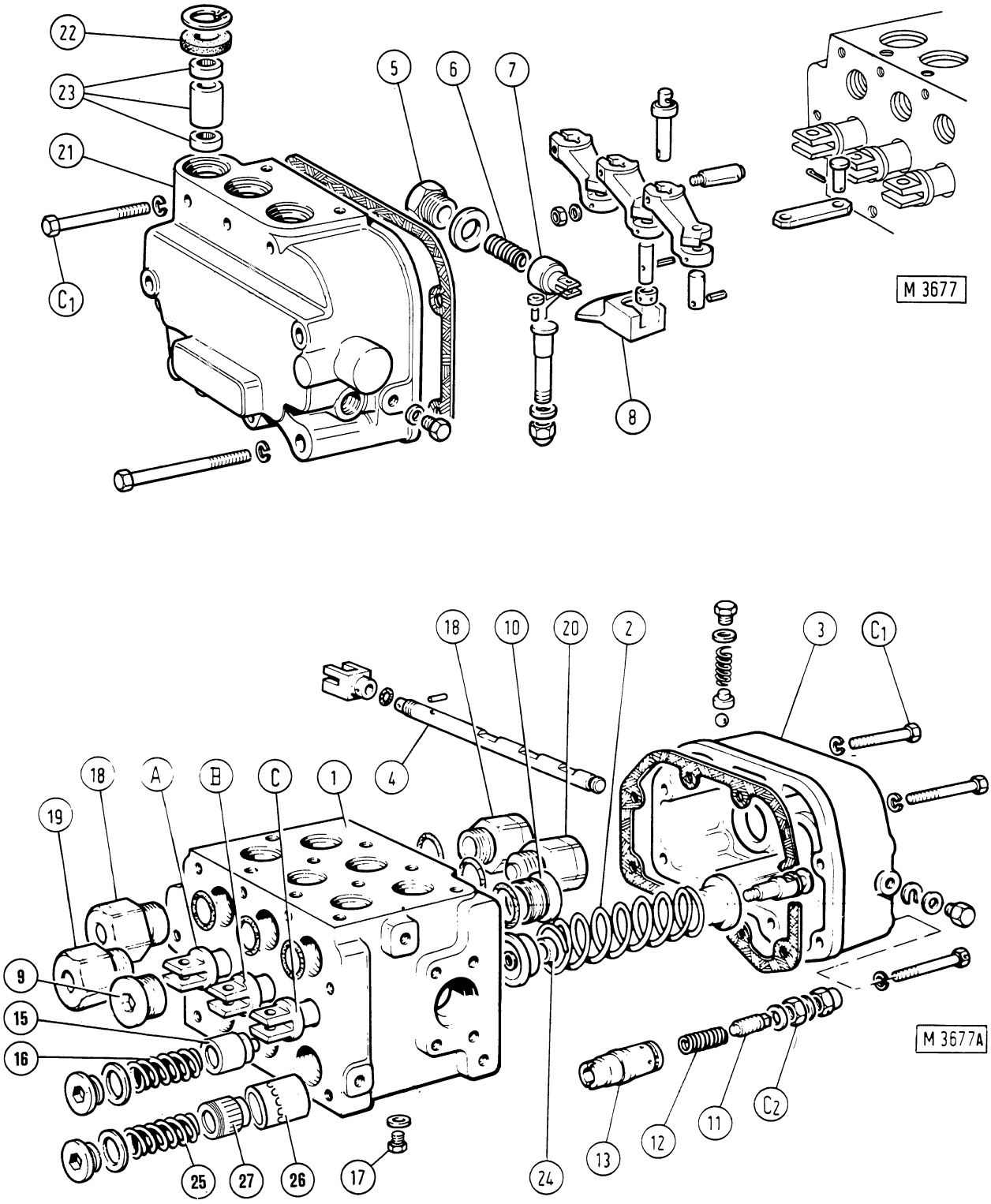

Fig. 15-12 - Equipment control valve section and components.
a. Make-up and overload (19-20) multiple valve section - A. Ripper or blade angle spool - B. Blade raise/lower spool - C. Tilt spool - C1. Cover screw - C2. Adjuster nut - 1. Control valve body - 2. Spool spring - 3. Rear cover - 4. Spool pin - 5. Plug - 6. Tappet spring - 7. Tappet - 8. Cam - 9. Plug - 10. Plug - 11. Relief valve adjuster screw - 12. Relief valve pilot plunger spring - 13. Relief valve - 14. Relief valve main plunger spring - 15. Check valve - 16. Spring - 17. Drain plug - 18. Make-up valve - 19-20. Make-up and overload valve - 21. Cover - 22. Seal - 23. Needle roller bearing - 24. Spacer - 25. Valve spring - 26. Flow regulating valve - 27. Valve (26) plunger - 28. Spring cup screws - S. Shims for multiple valve overload valve adjustment.

Study SAFETY RULES in the front of this manual thoroughly for the protection of machine and safety of personnel.

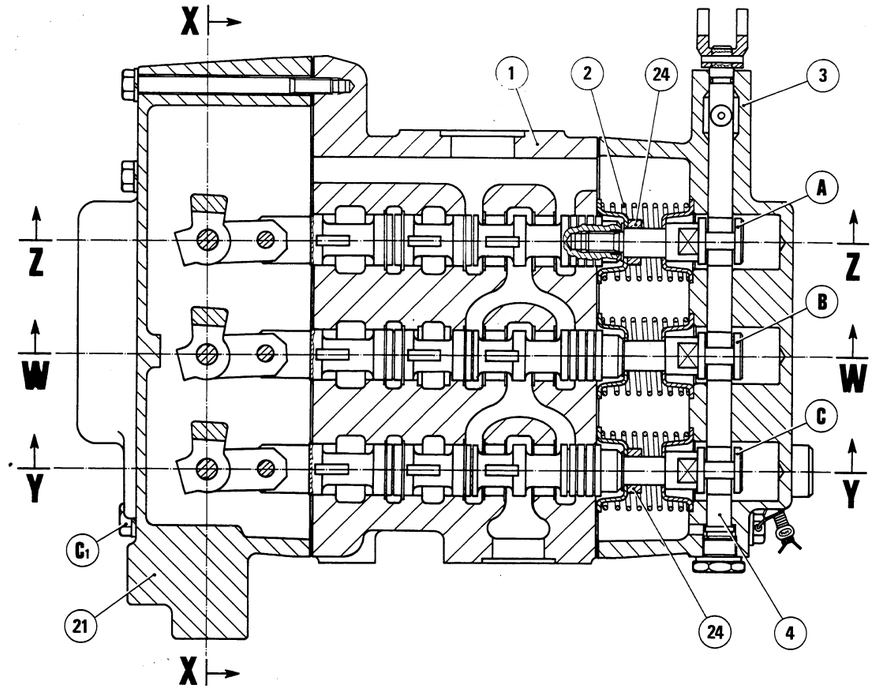
X
Z
W
Y
1
2
24
3
A
B
C
Z
W
Y
C1
21
24
4
X

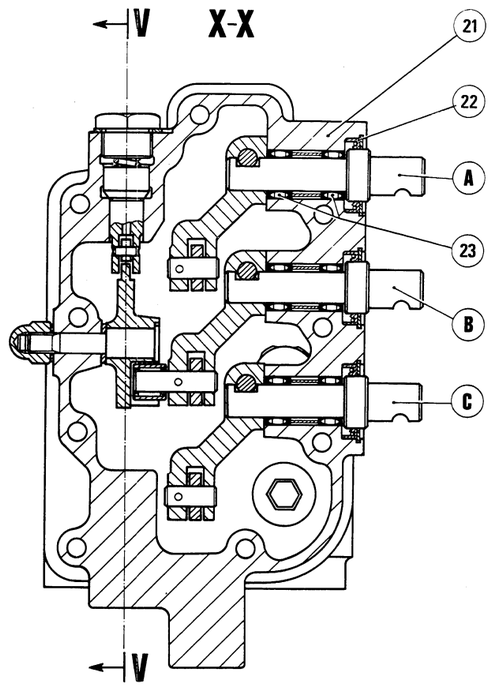
V
X-X
21
22
A
23
B
C
V

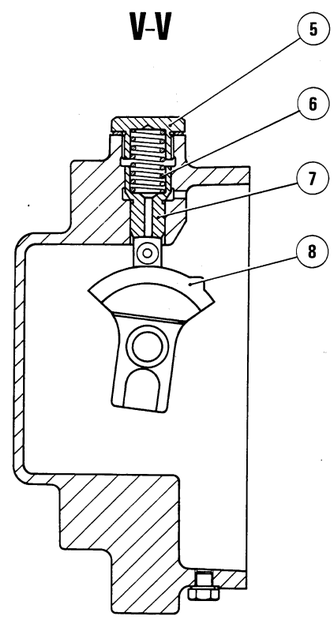
V-V
5
6
7
8

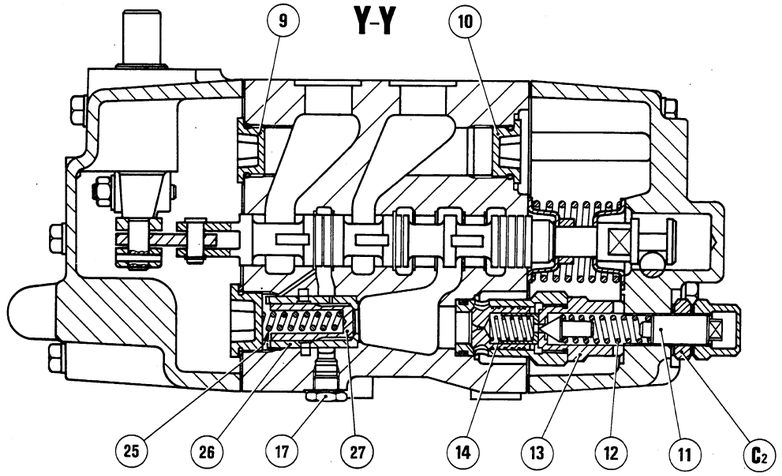
9
Y-Y
10
25
26
17
27
14
13
12
11
C2

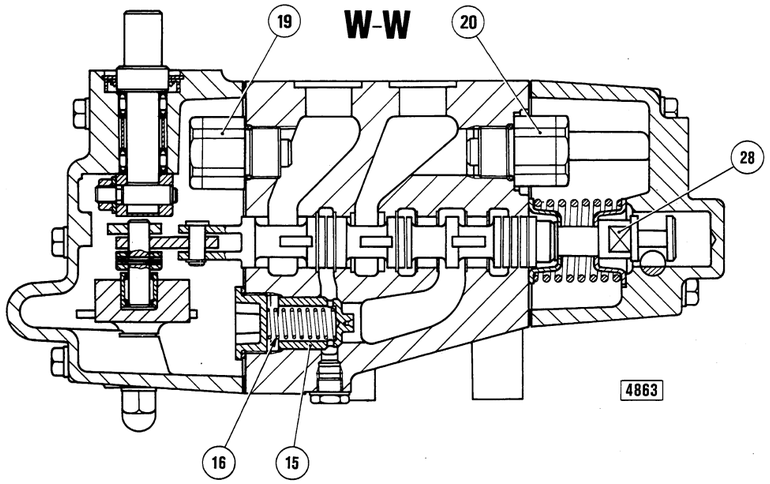
19
W-W
20
28
16
15
4863

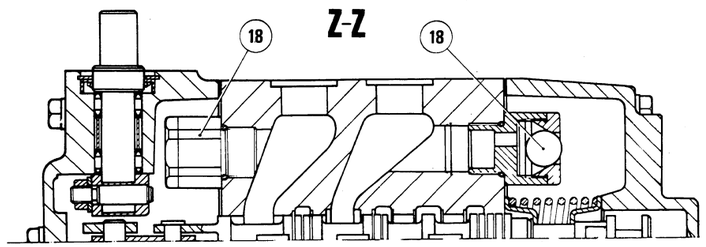
Z-Z
18
18

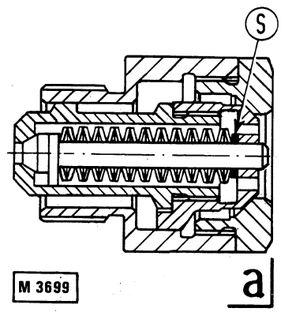
S
M 3699
a

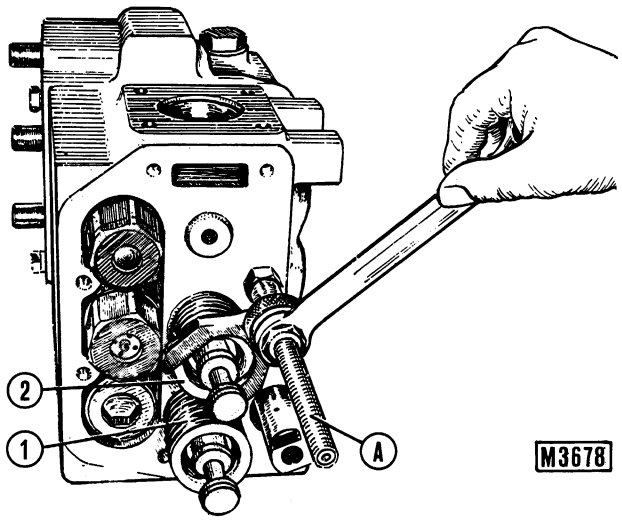

Fig. 15-13 - Removing spool springs.
A. Spring compressor 75297256 - 1. Spool spring - 2. Spring cup.

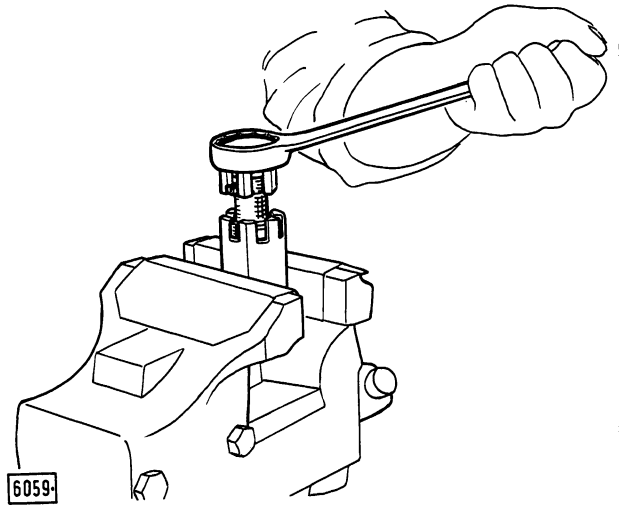

Fig. 15-14 - Removing (installing) overload valve from make-up valve using tools 75290561 and 75290562.

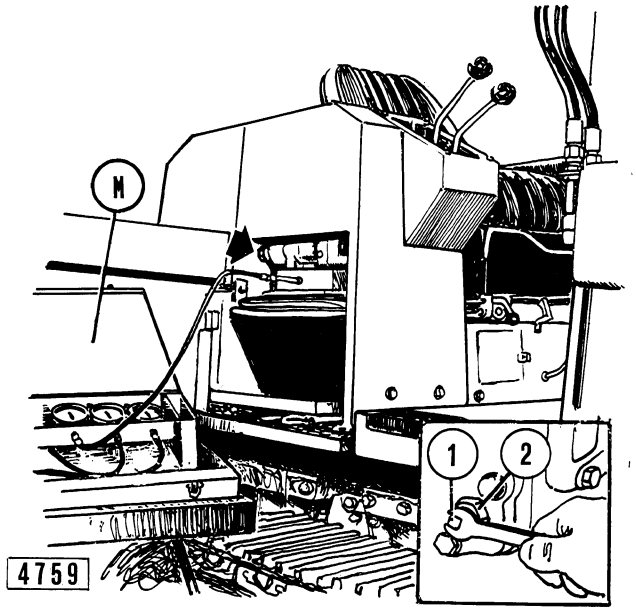

Fig. 15-15 - Adjusting the main relief valve (valve location arrowed).
M. Gauge kit 75294000 - 1. Adjusting screw - 2. Lock nut.
Note - Arrow shows the plug to be removed to reach the adjusting screw.

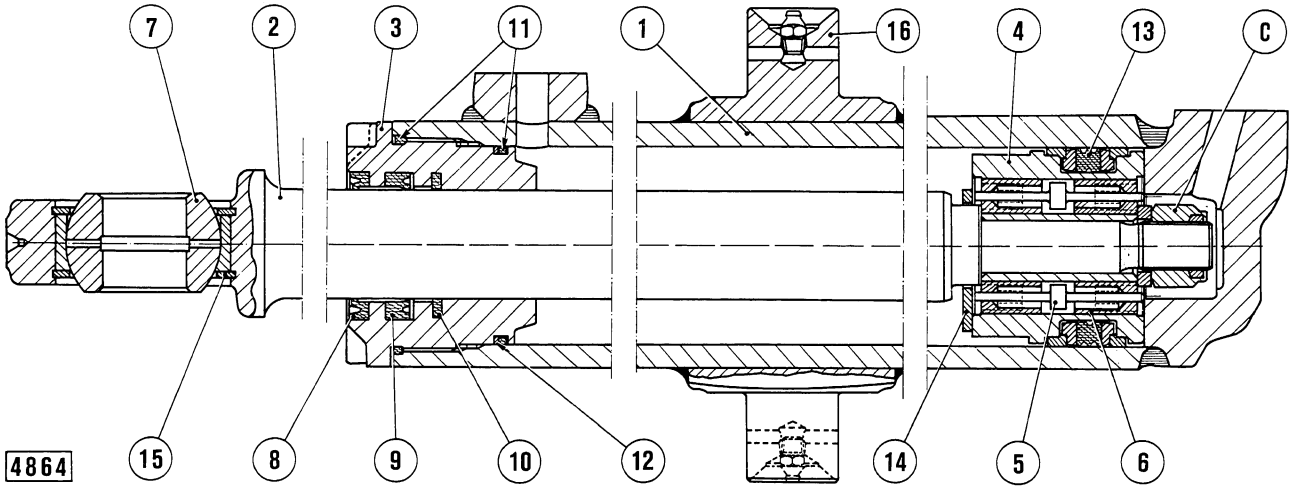

Fig. 15-16 - Longitudinal section through a blade control cylinder.
C. Piston nut - 1. Barrel - 2. Piston rod - 3. Threaded front end plate - 4. Piston - 5. End of travel valve - 6. Valve guide - 7. Balljoint - 8. Rod wiper - 9. U-cup seal - 10. Rod buffer ring - 11. O-ring - 12. Retaining ring - 13. Piston seal - 14. End of travel valve disc - 15. Retaining ring - 16. Cylinder articulation pivots.

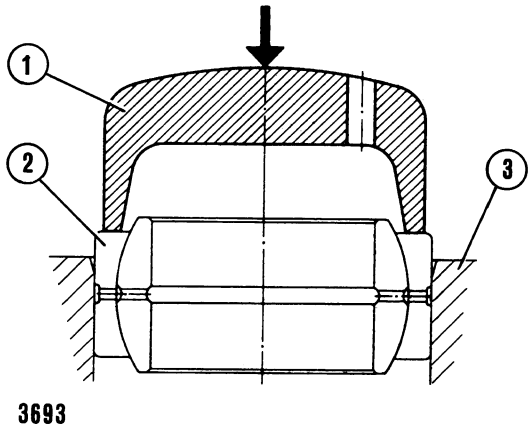

Fig. 15-17 - Ball joint assembly.
1. Installer - 2. Ball joint - 3. Socket.

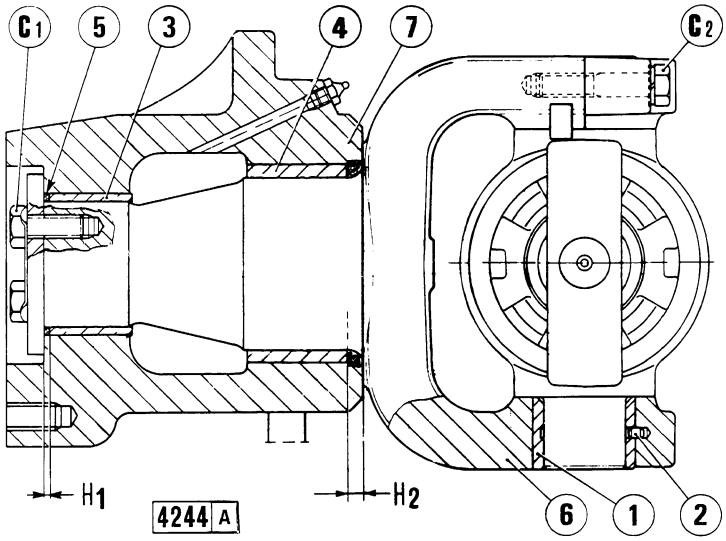

Fig. 15-18 - Section through a blade control cylinder support.
C1. Support yoke thrust plate screw - C. Yoke cap screws - H1. = 1.75 to 2 mm (0.070 to 0.080 in) of bushing (4) - H2 = 14 mm (0.56 in) recessing of bushing (4) - 1. Cylinder body pivot bushing - 2. Bushing grub screw - 3. and 4. Yoke articulation inner and outer bushings - 5. O-ring - 6. Yoke - 7. Cylinder support housing.

15.5.3 REASSEMBLY

⚠ WARNING

Read and heed all safety instruction carrying the signal words WARNINGS and DANGER.

Reassemble the cylinders by reversing the disassembly operations and minding the following:

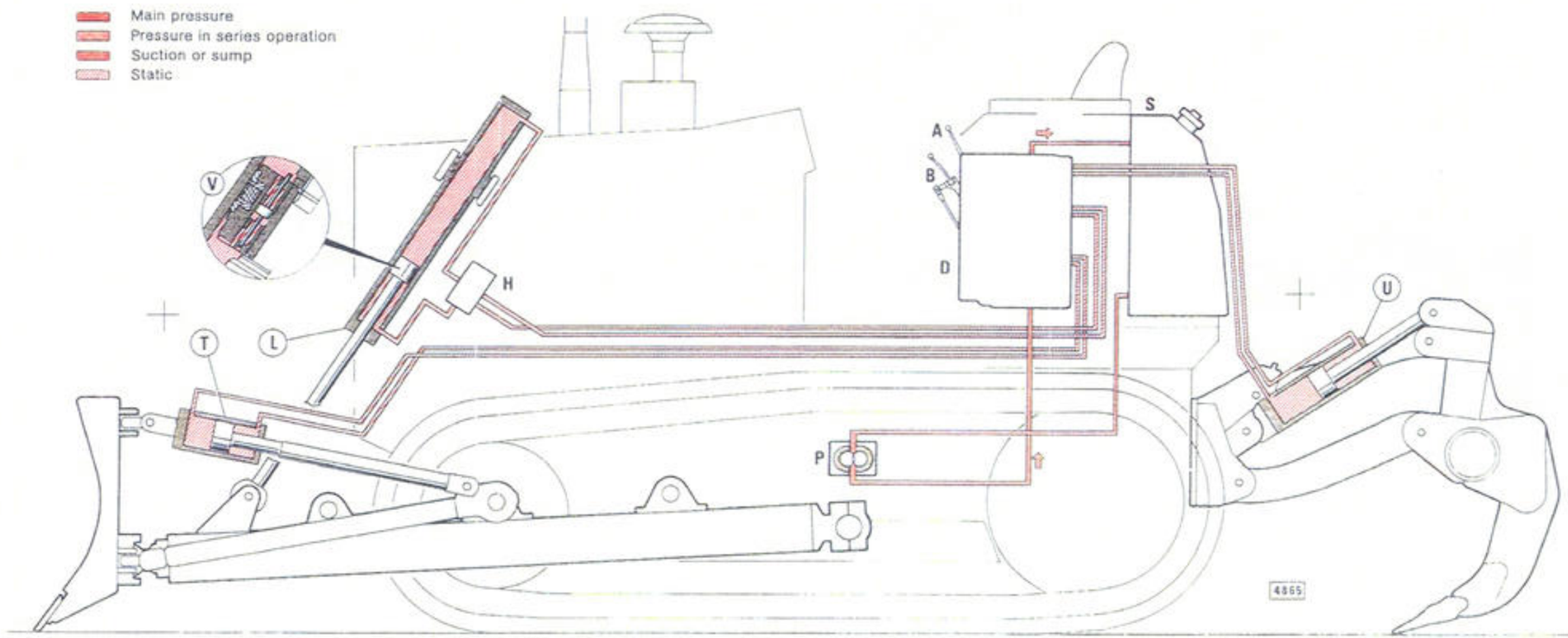

Fig. 15-19 Hydraulic System Schematic - Angledozer
A. Ripper control lever (optional) - **B.** Blade raise, float and tilt (optional) single control lever - **D.** Control valve - **H.** Quick-drop valve - **L.** Blade lift cylinders - **P.** Hydraulic pump - **S.** Hydraulic tank - **T.** Blade tilt cylinder (optional) - **U.** Ripper cylinder (optional) - **V.** Piston cushion valve - **1, 2, 3, 4 and 5.** Levers A and B positions (see chart) - **6.** Make-up valve - **7.** Overload and make-up valve - **8.** Check valves - **10.** Flow control valve - **10.** Pressure relief valve.

Lever position		Application
A	1	Ripper raise
	2	Ripper lower
B	1	Blade raise
	2	Blade lower
	3	Float
	4	Tilt right
	5	Tilt left

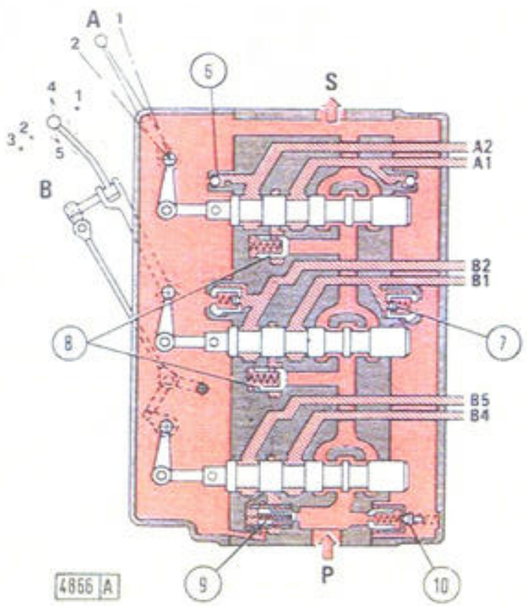

Control valve operation-neutral

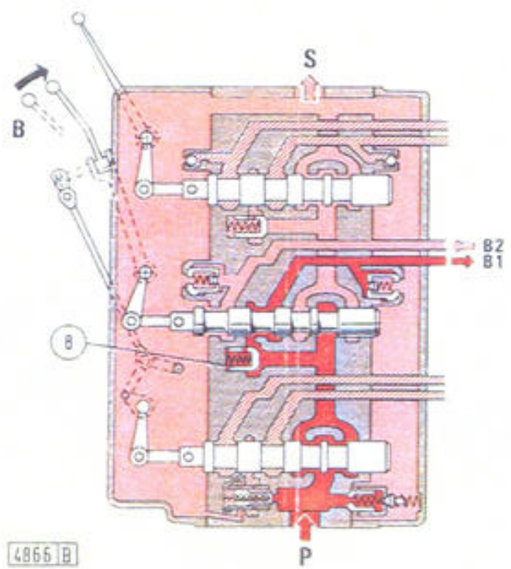

Blade raising

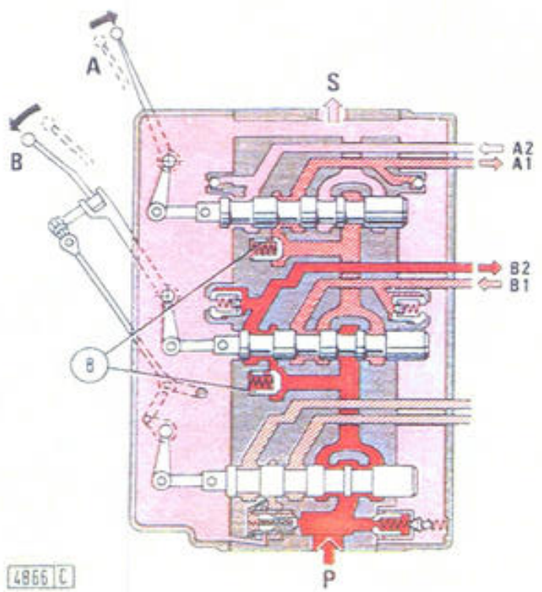

Blade lowering and ripper raising

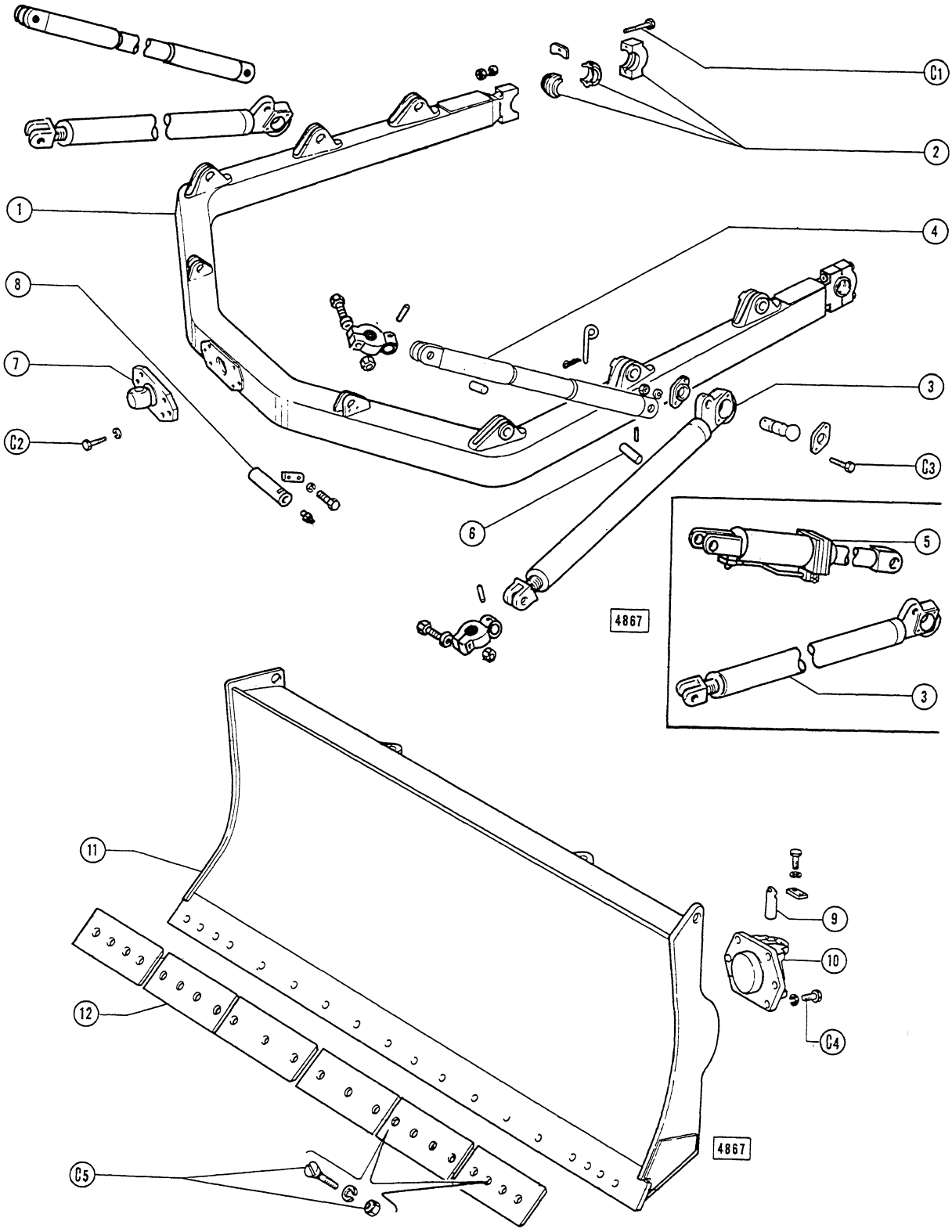

Fig. 15-20 - Angledozer equipment components
C1. C-frame (1) trunnion cap retaining screws - C2. Ball joint (7) screws - C3. Lower strut (3) rear swivel flange screw - C4. Ball joint seat screw - C5. Blade cutting edge (12) screws - 1. C-frame - 2. C-frame trunnion cap and bushings - 3. Blade lower strut - 4. Adjustable upper strut - blade pitch and tilt - 5. Hydraulic tilt cylinder (optional to replace adjustable strut (4) - 6. Upper struts (4) (or upper strut and tilt cylinder) rod pin - 7. Ball joint - 8. C-frame lift cylinder rod pin - 9. Ball joint (7) pin - 10. Ball joint seat - 11. Blade - 12. Cutting edges.
Note - The detailed view shows the optional hydraulic tilt cylinder (5) replacing one adjustable upper strut (4).

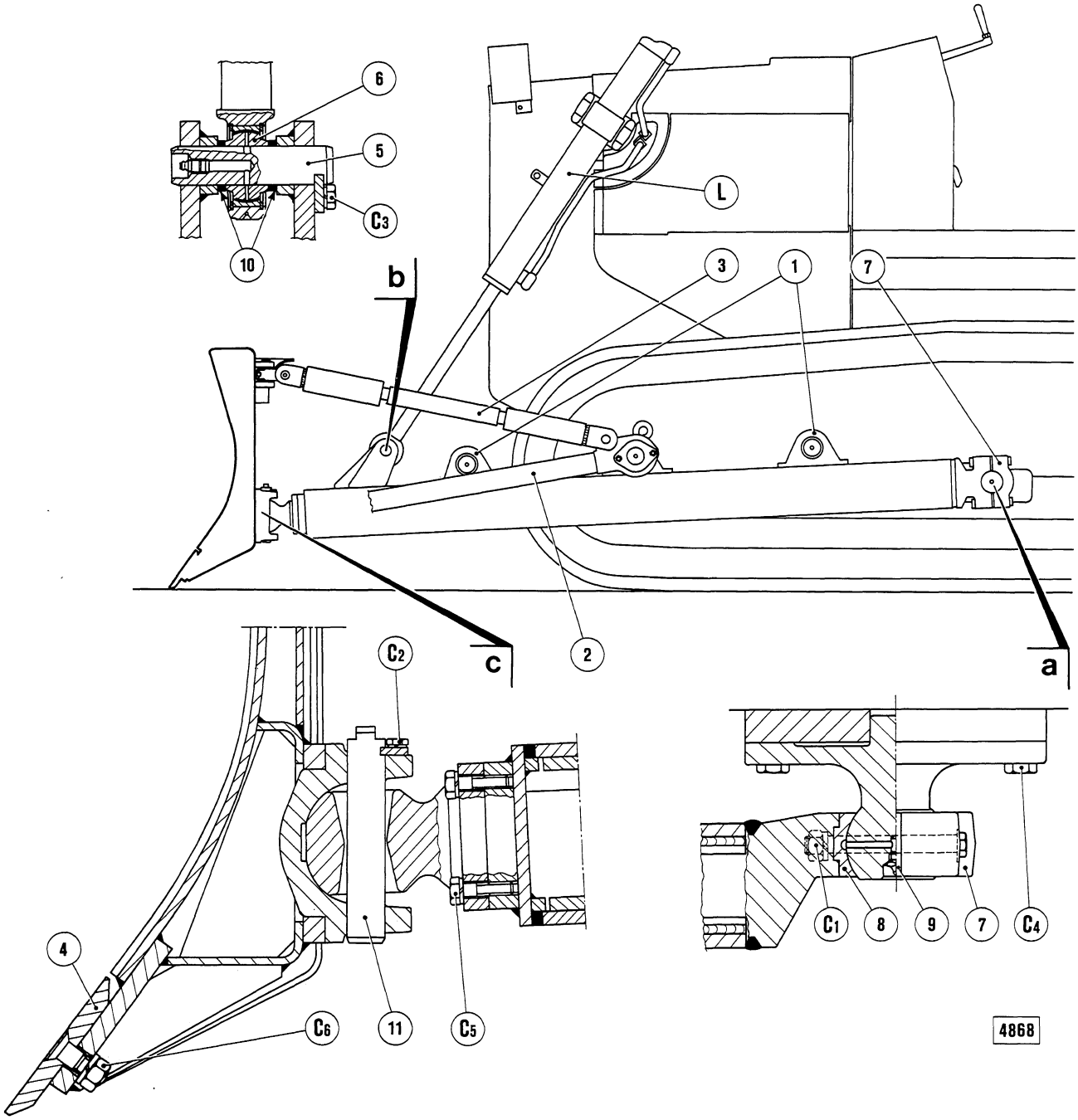

Fig. 15-21 - Angledozer C-frame and blade.
a. C-frame rear pivot - b. C-frame lift cylinder rod swivel - c. Blade main pivot - C1. C-frame cap screw nut - C2. Blade pivot pin lock screw - C3. Lift cylinder pivot pin (5) lockscrew - C4. C-frame trunnion screw - C5. Blade pivot screw - C6. Blade cutting edge screw nuts - L. Lift cylinders - 1. Lower strut (2) lugs - 2. Lower strut - 3. Adjustable upper strut-blade pitch and tilt - 4. Blade cutting edge center - 5 & 6. Lift cylinder rod pin and joint ball - 7 & 8. C-frame trunnion cap and bushings - 9. Bushing lock plates - 10. Thrust washers - 11. Blade central pivot pin.

Adequately lubricate all components as required. Install correctly all parts of the end of travel valve (5, fig. 15-16) in its housing in piston (4).

Tighten piston nut (C, fig. 15-16) to the required torque. Ascertain seals are arranged and located correctly.

Tighten front end plate (3, fig. 15-16) to the specified torque using wrench 75297347 (dynamometer wrench 75291278 plus extension 75292788).

Should it be replaced, fit the ball joint (7, fig. 15-16) in its socket following the instructions provided below.

15.5.4 BALL JOINT ASSEMBLY

For ball joint assembly use a hollow tube or specially designed installer (fig. 15-17). The use of hammer and punch is likely to damage the socket and the protruding working surfaces with subsequent joint malfunction or even failure.

On assembly, ensure that the split in the socket lies 90° relative to the cylinder centerline and lubricate the joint using approved grease.

15.6 ANGLEDOZER EQUIPMENT

The blade C-frame is rear-pivoted on track frames (detail a, fig. 15-21). It supports at front end the blade articulation ball-and-socket joint (detail C) and is provided with three anchor eyes on each side through which the blade may be set perpendicular to machine longitudinal centerline or angles 25° either right or left.

Other blade setting adjustments possible are blade cutter pitch angle and blade crosswise tilt, which are obtained through the sleeves of adjustable braces (3, fig. 15-21).

Blade cutting edge consists of two central heat-treated knives and of four heat-treated pressed steel end bits.

In case of wear, the central knives can be reversed or replaced; the end bits cannot be reversed and must be replaced.

⚠ WARNING

Do not work under or near unblocked or unsupported linkage, parts or machine.

To detach the C-frame and blade assembly from machine, proceed as follows:

With blade on ground, place two wooden blocks under frame push beams.

Remove blade cylinder piston, rod pivot pins (5, fig. 15-21).

Back out mounting nuts (C1).

⚠ DANGER

Lift and handle all heavy parts with a lifting device of proper capacity. Be sure parts are supported by proper slings and hooks. Use lifting eyes if provided. Watch out for people in the vicinity.

Remove C-frame rear trunnion caps and back up machine.

When reinstalling C-frame and beams remember that:

Length of braces (2, fig. 15-21) connecting frame to blade is adjustable to facilitate the introduction of rear trunnions in their sockets (1).

At end of installation pack all articulation pivots with grease.

15.6.1 ANGLEDOZER EQUIPMENT WITH HYDRAULIC BLADE TILT

This dozer equipment differs from the equipment shown in fig. 15-21 because of the presence of a hydraulic cylinder located in place of the left adjustable brace (see fig. 15-19).

This cylinder permits hydraulically controlled tilting of the blade crosswise. The associated hydraulic control system is shown in fig. 15-19. To disassemble the double-acting cylinder, proceed as follows:

Unscrew front end (3, fig. 15-22) using wrench 75297347.
Withdraw rod (2) complete with piston (4) and proceed with the checks described under item 15.5.2 covering blade raise/lower cylinders.

15.7 BULLDOZER EQUIPMENT

The push beams are pivoted at rear to track frames same as the frame on angledozers (detail d, fig. 15-21).

The blade is articulated at front end of push beams and is anchored to them through diagonal braces (2 and 3, fig. 15-25) and to adjustable brace (1) and hydraulic cylinder (T) through ball joints.

Blade cutting edge consists of two replaceable and reversible central knives and two replaceable end bits.

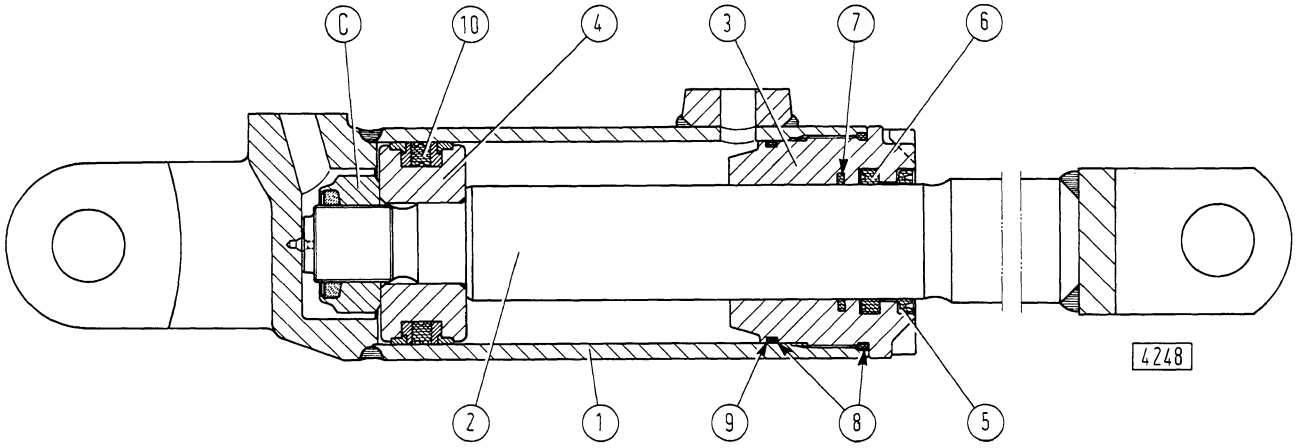

Fig. 15-22 - Longitudinal section through angledozer hydraulic tilt cylinder.
C. Piston nut - 1. Cylinder barrel - 2. Piston rod - 3. Front end plate - 4. Piston - 5. Rod wiper - 6. Rod U-cup seal - 7. Rod buffer ring - 8. O-ring - 9. Seal retainer ring - 10. Piston seal.

⚠ WARNING

Use proper tools to bring holes into alignment "DO NOT USE FINGERS OR HANDS".

NOTE - When reversing or replacing the cutting edge knives, and bits, check that mating surfaces are perfectly clean and smooth: if mounted on rough surfaces, the cutting edges may break when subjected to impact loads.

⚠ WARNING

Do not work under or near unblocked or unsupported linkage, parts or machine.

To disconnect the push beams and blade assembly from machine, proceed as follows:

With blade on ground place two wooden blocks under push beams (4, fig. 15-25).

Remove screws (C2) and remove blade cylinder piston rod pivot pins (5).

Remove mounting screws (C1, fig. 15-24).

Remove push beam rear trunnion caps (2) and back up machine.

Upon re-installing beams (4, fig. 15-25) and associated braces, remember that:

Ball joints (section d-f in fig. 15-25) for articulation f tilt cylinder (T) adjustable brace (1) at blade and for diagonal braces (2) and (3) must be adjusted using shims (S) so that the ball is free to move.

At end of installation, pack articulation joints with grease.

15.7.1 BULLDOZER BLADE TILT CYLINDER

⚠ DANGER

Fluid under pressure. Always lower hydraulic equipment to ground. Shut off engine, move control levers to each position several times, loosen and retighten hydraulic tank filler cap to relieve trapped pressure before loosening hydraulic connections.

Double-acting cylinder (T, fig. 15-25) controls blade crosswise tilt. To disassemble the cylinder:

First disconnect at blade articulation by removing screws (C3, fig. 15-25 - see detail f).

Remove screws fixing front end plate (C1).

Withdraw piston rod complete with front end plate.

Proceed with the checks on disassembled components as described under item 15.5.2.

Upon reassembly, lubricate all parts as required and remember the following:

Ensure proper arrangement and location of piston seal components (6, fig. 15-27) and rod seals (1) and (3).

Tighten nut (C2) and screws (C1) to values specified under "Torque Specifications".

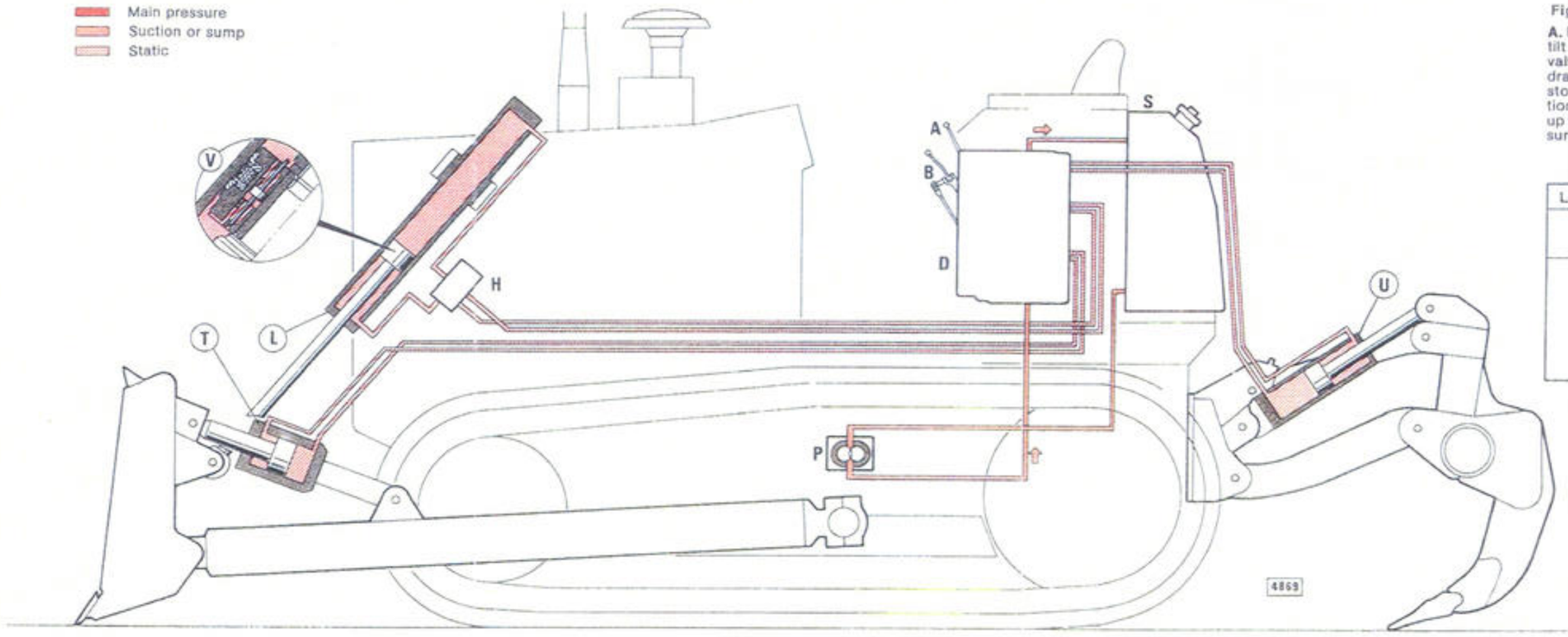

Fig. 15-23 Hydraulic System Schematic - Bulldozer

A. Ripper control lever (optional) - **B.** Blade raise, float and tilt single control lever - **D.** Control valve - **H.** Quick-drop valve - **L.** Blade lift cylinders - **P.** Hydraulic pump - **S.** Hydraulic tank - **T.** Blade tilt cylinder - **U.** Ripper cylinder - **V.** Piston cushion valves - **1, 2, 3, 4 and 5** Levers **A** and **B** positions (see chart) - **6.** Make-up valve - **7.** Overload and make-up valve - **8.** Check valves - **9.** Flow control valve - **10.** Pressure relief valve.

Lever position		Application
A	1	Ripper raise
	2	Ripper lower
B	1	Blade raise
	2	Blade lower
	3	Float
	4	Tilt right
	5	Tilt left

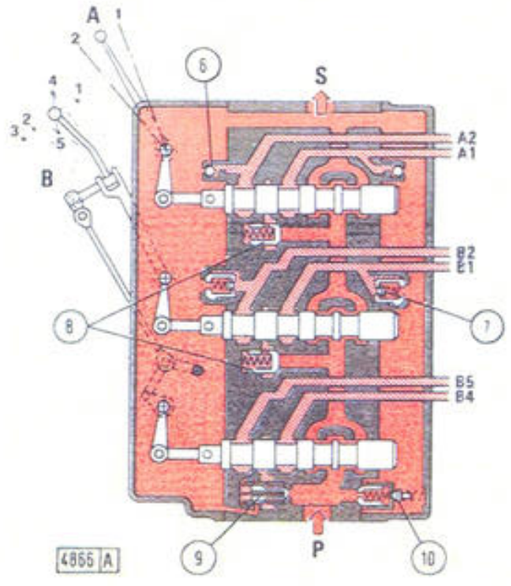

Control valve operation-neutral

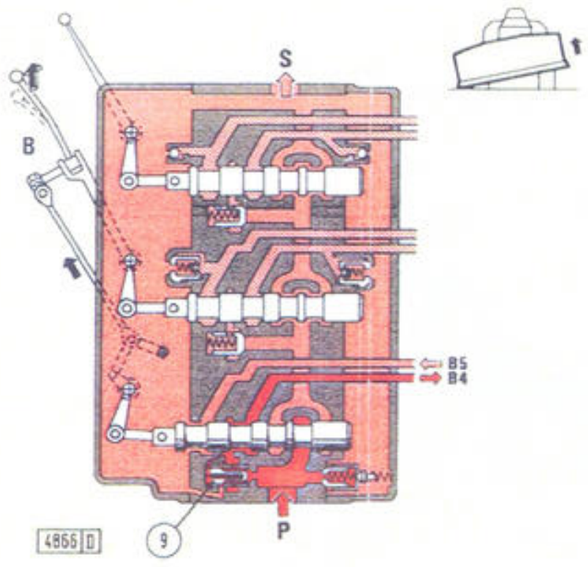

Blade right tilt

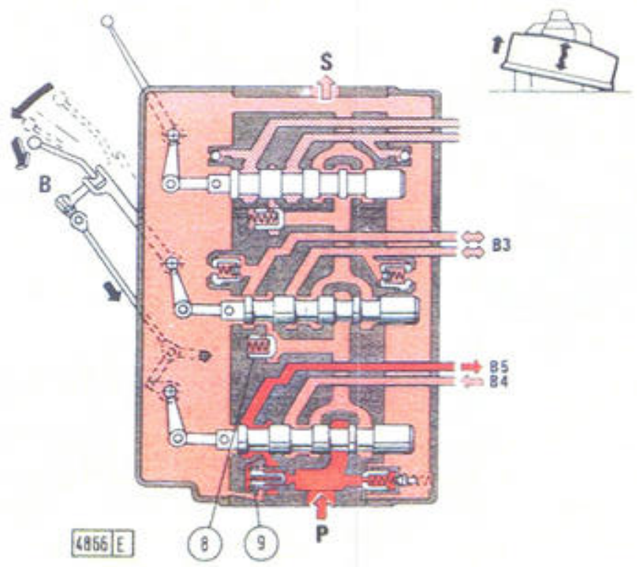

Blade floating with left tilt

15.8 ALL-HYDRAULIC EQUIPMENT

Located at outlet side of main control valve (D, 15-16 - see description under 15.4) namely, at upper spool end, is a diverter valve (E, fig. 15-26) having the purpose of diverting the oil flowing in this spool barrel and using it for blade angling or a fourth attachment.

With the lever of diverter (E, fig. 15-26) in position C the spool barrel communicates with blade angling control cylinders (G); with lever in position (R) oil will flow to the ripper control cylinder (U).

In the blade angle control cylinder circuit is inserted an overload valve (f, fig. 15-26) having the purpose of preventing that the high backflow pressure generated by the work loads at blade from discharging into the system lines and main control valve.

The blade is fixed at center to pusher frame through a ball joint (detail e, fig. 15-29).

The crosswise tilting of the blade is obtained by a hydraulic control cylinder (T, fig. 15-26), mounted transversally behind the moldboard. The cylinder piston is made integral with the pusher frame support (detail d, fig. 15-29) while the two ends of the socket are pivoted on the blade.

Filling of one of the two end chambers of the cylinder determines raising of the respective end of the moldboard thus causing rotation of the blade around the central ball joint (detail e, fig. 15-29) and consequent tilting.

Blade horizontal angling is controlled by two cylinders (G, fig. 15-26) laterally connecting the moldboard to the C-frame.

A parallel, cross-connected circuit supplies oil to the two cylinders so that when one rod extends the other retracts.

Blade cutting edge consists of two central heat treated steel knives and of four pressed heat treated steel end bits: all cutting edge components are replaceable.
In case of excessive wear, the central knives can be reversed.

NOTE - When reversing or replacing the cutting edge knives, and bits check that mating surfaces are perfectly clean and smooth: if mounted on rough surfaces, the cutting edges may break when subjected to impact loads.

15.8.1 DIVERTER VALVE

⚠ DANGER

Fluid under pressure - turn cap or cover slowly to relieve pressure before removing.

To remove diverter (E, fig. 15-26) from machine, proceed as follows:

Drain hydraulic control tank oil.

Remove valve sheet metal guard.

Remove overload valve (F, fig. 15-26) screws.

Move the loosened flange away from diverter and lift off this valve together with its control lever.

Disassemble the diverter valve as follows:

Remove plug (6, fig. 15-30) and take out the detent spring and ball.

Back out screw (7) and screws (C1).

Take out spool with attached lever and seal cover (1).

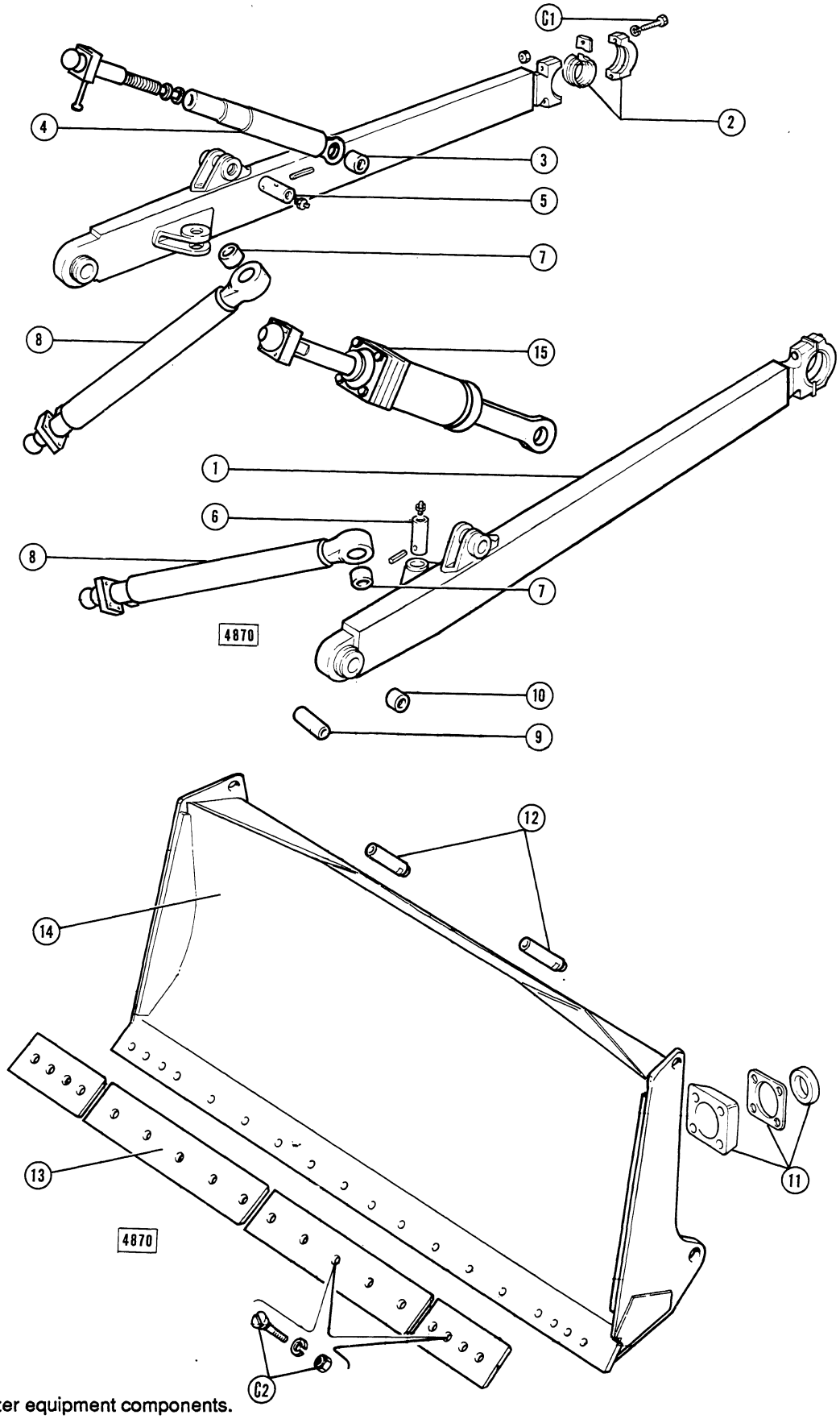

Fig. 15-24 - Bulldozer equipment components.
C1. Push beam (1) retaining screw - C2. Cutting edges screw and nut - 1. Push beam - 2. Trunnion bushing and cap - 3. Tilt brace (4) and cylinder (15) bushing - 4. Adjustable right brace-blade pitch and tilt - 5. Tilt brace and cylinder pivot pin - 6. Brace (8) pivot pin - 7. Brace (8) bushing - 8. Blade to beam diagonal brace - 9. Blade to beam pivot pin - 10. Bushing - 11. Ball joint seat - 12. Blade lift cylinder pivot pin - 13. Cutting edge - 14. Blade - 15. Tilt hydraulic cylinder.

Study SAFETY RULES in the front of this manual thoroughly for the protection of machine and safety of personnel.

Main pressure
Suction or pump
Static

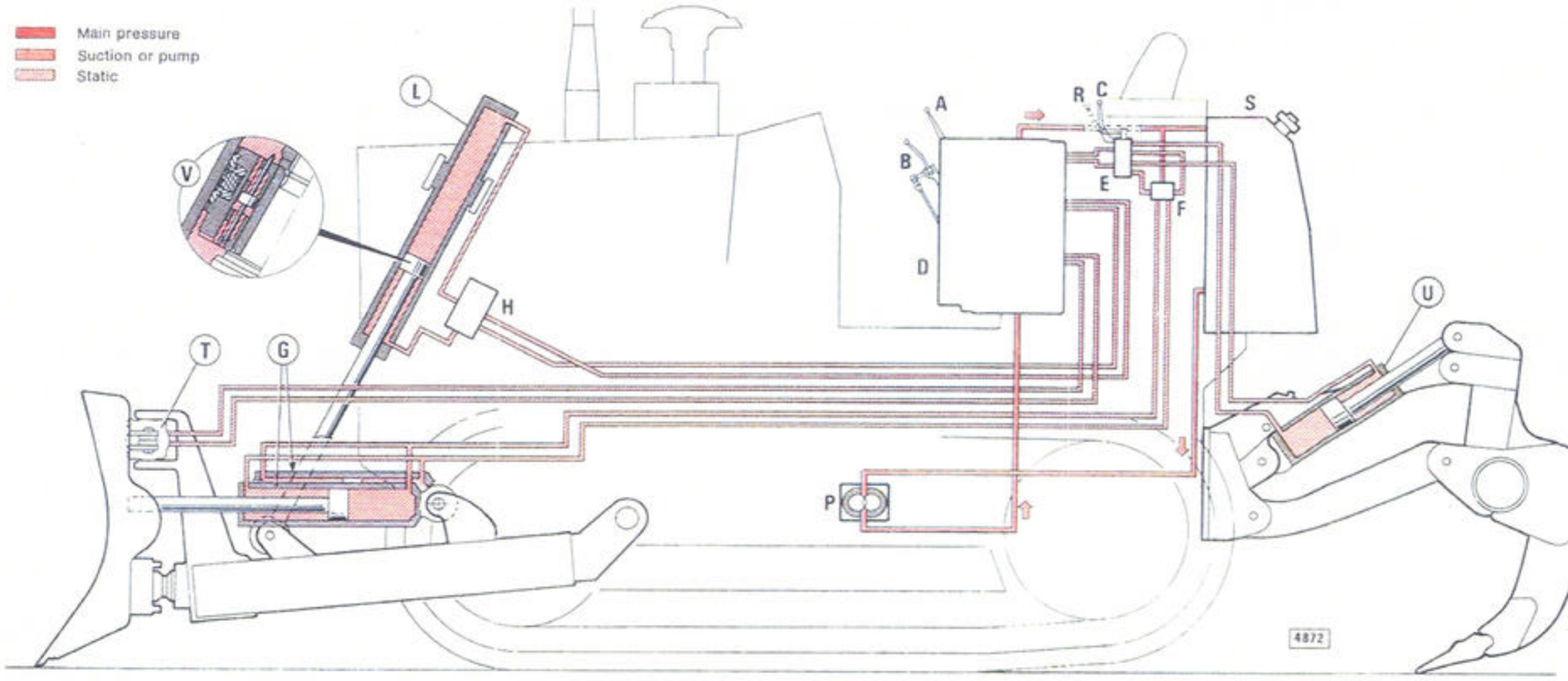

Lever position			Application
Control valve	Diverter valve		
A	1	C	Blade R.H. angle
		R	Ripper raise
	2	C	Blade L.H. angle
		R	Ripper lower
B	1	–	Blade raise
	2	–	Blade lower
	3	–	Float
	4	–	Blade R.H. tilt
	5	–	Blade L.H. tilt

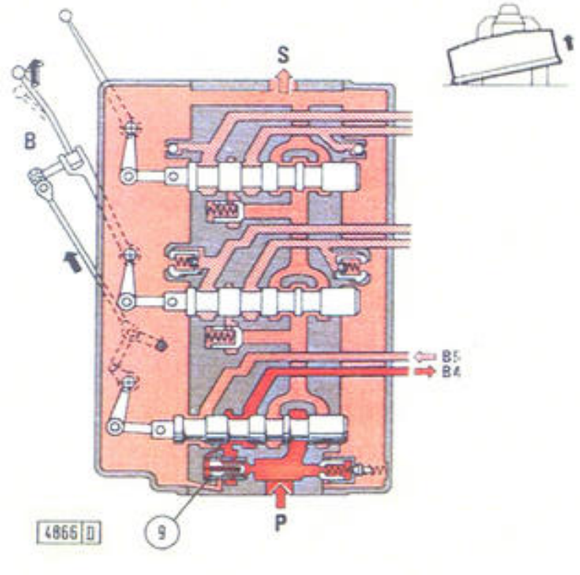

Control valve operation - Blade R.H. tilt

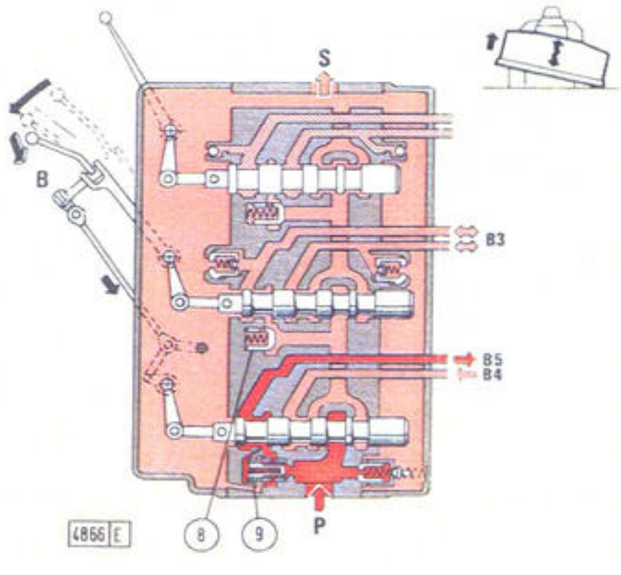

Blade L.H. tilt and float

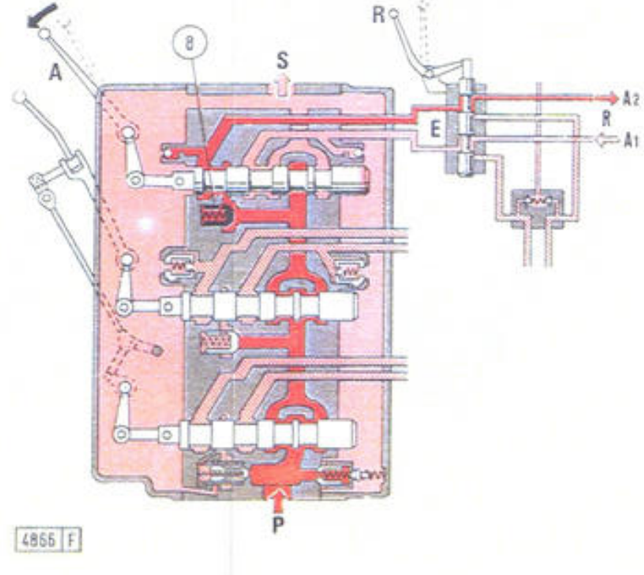

Ripper lower

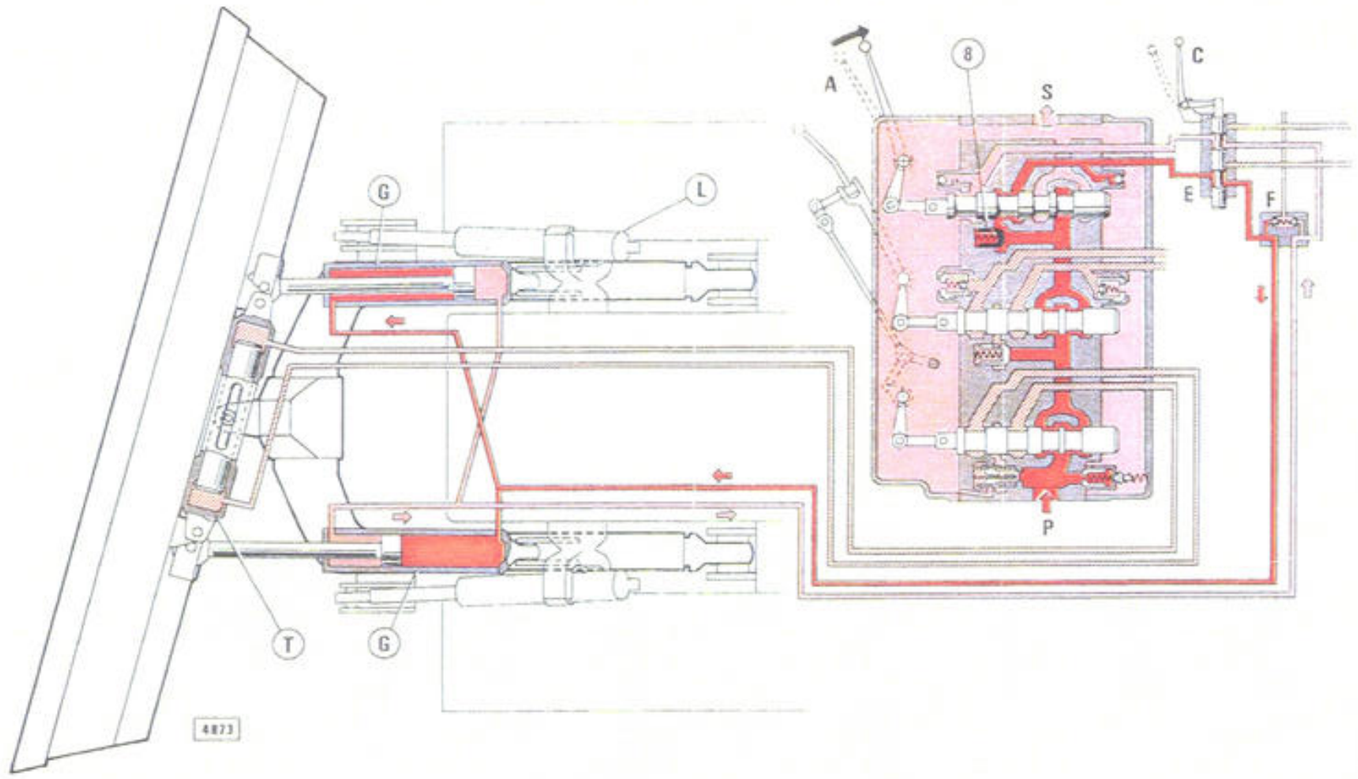

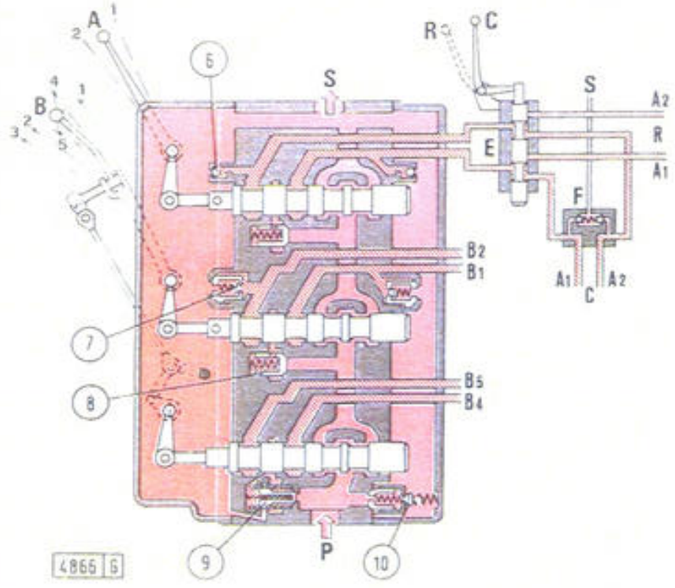

Neutral

Fig. 15-26 Hydraulic System Schematic - All-hydraulic Equipment

A. Ripper or blade angle control lever - **B.** Blade raise, float and tilt single control lever - **C.** Diverter valve (E) lever position to control blade angle - **E.** Diverter valve to control ripper or blade angle - **F.** Blade angle circuit overload valve - **G.** Blade angle cylinder - **H.** Quick drop valve - **L.** Pusher frame lift cylinder - **P.** Hydraulic pump - **R.** Diverter valve position to control ripper - **S.** Hydraulic oil tank - **T.** Tilt cylinder - **U.** Ripper cylinder - **V.** Piston cushion valves - **1, 2, 3, 4 and 5.** Levers A and B positions (see chart) - **6.** Make-up valve - **7.** Overload and make-up valve - **8.** Check valve - **9.** Flow control valve - **10.** Pressure relief valve.

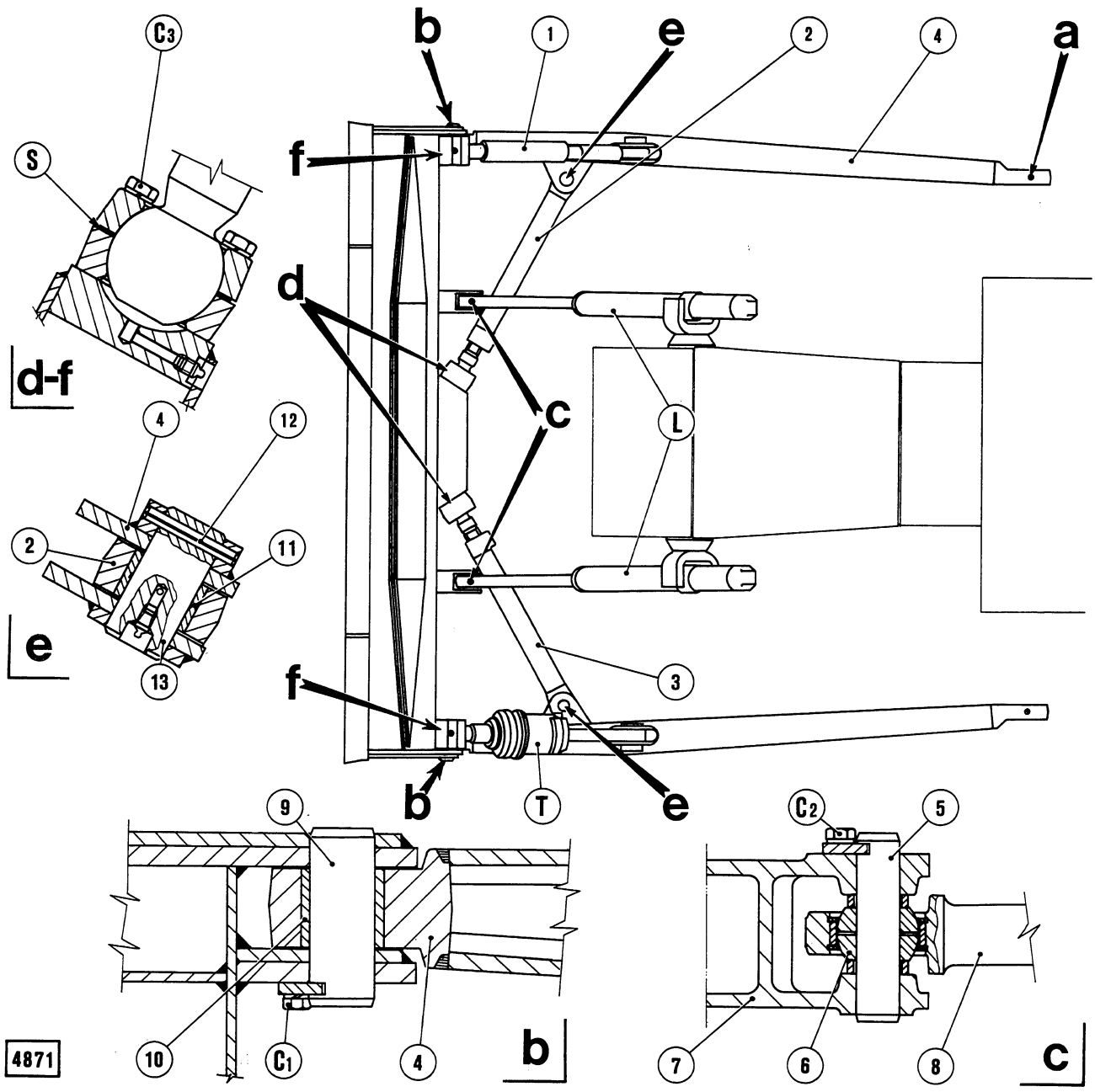

Fig. 15-25 - Bulldozer blade and push beams.
a. Push beam rear pivot (see detail a, fig. 15-18) - b. Push beam front pivot - c. blade lift cylinder rod pivot - d, e. diagonal braces (2 and 3) pivots - f. tilt cylinder (T) and brace (1) joints - C1. Pivot pin (9) lockscrew - C2. Pivot pin (5) lock screw - C3. Ball joints (d-f) screws - L. Lift cylinders - T. Tilt cylinder - S. Ball joint shims - 1. Tilt right brace - 2 and 3. Blade to beams diagonal braces - 4. Push beam - 5. Pivot pin - 6. Ball joint - 7. Blade - 8. Cylinder (L) rod - 9. Pivot pin - 10 and 11. Bushings - 12. Cotter pin - 13. Pivot pin.

Study SAFETY RULES in the front of this manual thoroughly for the protection of machine and safety of personnel.

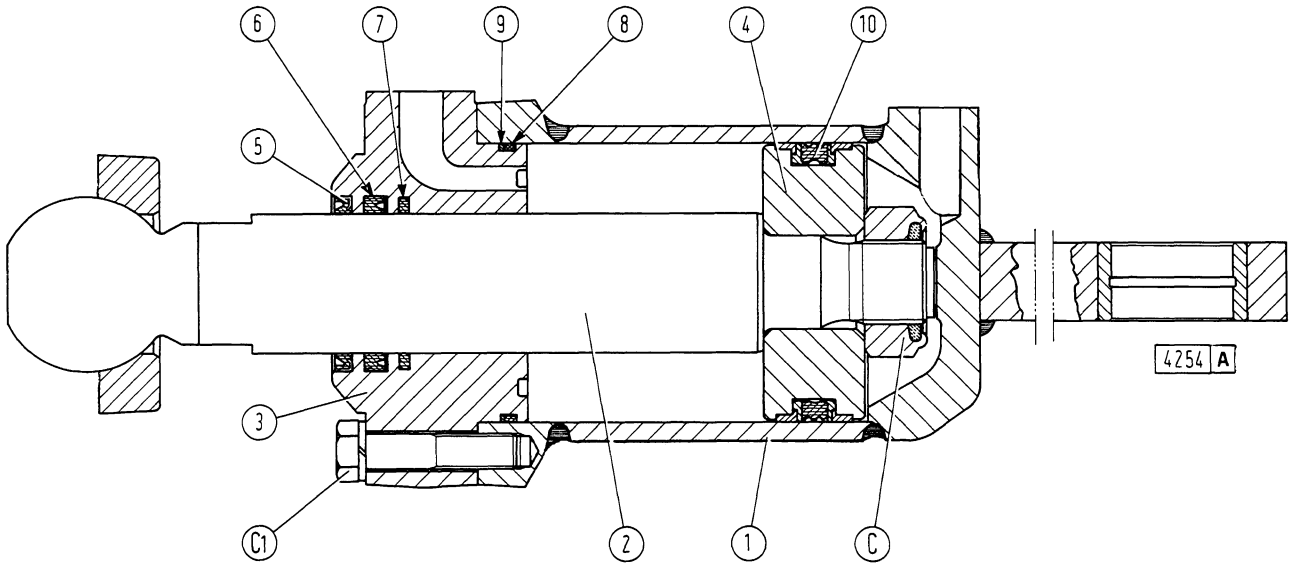

Fig. 15-27 - Longitudinal section through bulldoze tilt cylinder
C1. Front end plate screws - C2. Piston locknut - 1. Wiper seal - 2. Piston rod guide ring - 3. Rod seal - 4. O-ring - 5. Piston - 6. Piston seal - 7. Bushing - 8. Piston rod.

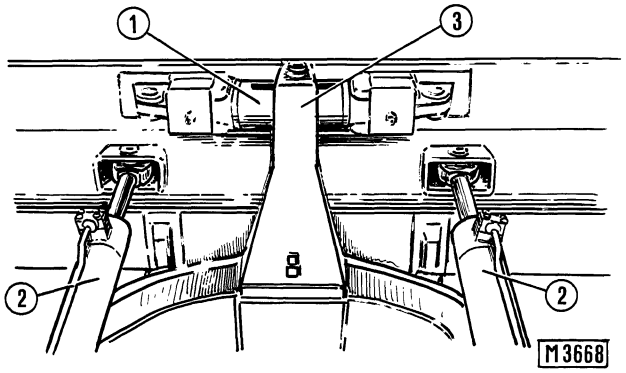

Fig. 15-28 - dozer blade back view.
1. Tilt cylinder - 2. Angle cylinders - 3. Tilt cylinder support.

Inspect diverter valve components as follows:

Ensure that seals (3 and 4, fig. 15-30) are in good condition.

Check that spool (27) slides freely in body (5); light scoring marks, if any, may be remedied by sanding with extra-fine abrasive paper.

WARNING

Never use gasoline solvent or other flammable fluids to clean element. Use authorized commercial, non-flammable, non-toxic solvents.

Check spool working clearance in body. Specified clearance is 0.020 to 0.030 mm (0.0008 to 0.0012 in). If these values do not check replace the parts which are available in matched pairs.

Diverter valve reassembly is a straight reversal of the disassembly sequence, ensuring that spool (2, fig. 15-30) is correctly positioned relative to stop screw (7).

15.8.2 BLADE ANGLING OVERLOAD VALVE

Disassemble by removing plug (T, fig. 15-31), then check that valve (1) and relevant housing are in good condition and that spring (2) meets requirements indicated under SPECIFICATIONS AND DATA.

15.8.3 PUSHER FRAME AND BLADE REMOVAL

Drain hydraulic oil tank as directed in the Operation and Maintenance Instruction Manual. Subsequently, proceed as follows:

Hook up the frame with attached blade as shown in fig. 15-32 using a suitable sling.

Disconnect blade tilt and angle cylinder lines.

Remove blade raise cylinder articulation pins (on frame side).

⚠ WARNING

Handle all parts with extreme care. Keep hands and fingers from between parts. Wear authorized protective equipment such as safety glasses, heavy gloves, safety shoes.

Use proper tools to bring holes into alignment. "DO NOT USE FINGERS OR HANDS".

Loosen screw (C1, fig. 15-34) retaining pin (1).

Using universal slide hammer puller 75297340 (with adapter 75297342) remove pin (1) from the inside of the machine as arrowed (fig. 15-34).

Remove the frame assembly forward (fig. 15-32) and take off all components.

PUSHER FRAME INSPECTION

Check bushings (4, fig. 15-29) for wear against the data given in the specifications and data table.

⚠ WARNING

Wear safety glasses with side shields or goggles when using compressed air for cleaning to reduce the danger of personal injury from flying particles. Limit pressure to 30 psi (2 bar) according to local or national requirements.

Check all welds for cracks or failure.

NOTE - Clean the areas to be welded and carry out the seam welds with extreme care.

BLADE REMOVAL

⚠ WARNING

Guard against kinking chain or cables. Do not lift or pull through a kinked chain or cable. Always wear heavy gloves when handling chain or cable.

For blade removal proceed as follows:

Hook up the ends of the blade using a suitable sling.

Remove blade tilt cylinder upper guard.

Remove two screws (C2, fig. 15-33) retaining cylinder hinge pin (6).

Remove hinge pins retaining blade to angle cylinders (piston rod end).

Take off hinge pin (16) retaining blade to pusher, after removing screws (C3).

Lift off and separate blade from pusher frame.

⚠ WARNING

Use proper tools to bring holes into alignment. "DO NOT USE FINGERS OR HANDS".

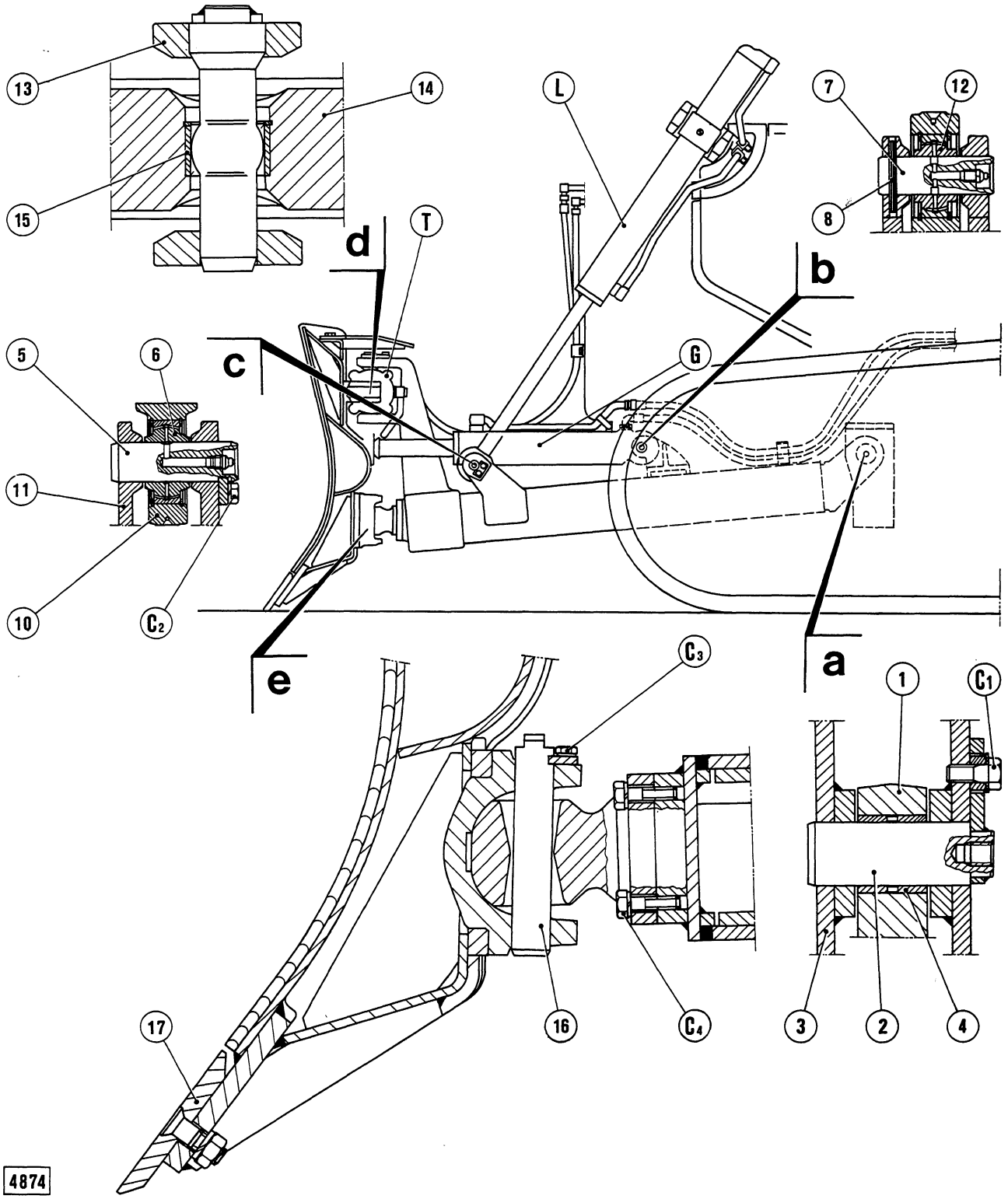

Fig. 15-29 - All-hydraulic equipment pusher frame and blade.
a. Pusher frame rear pivot - b. Angle cylinder pivot - c. Pusher frame lift cylinder rod pivot - d. Tilt cylinder central pivot - e. Pusher frame to blade ball point - C1. Pivot pin (2) lock screw - C2. Pivot pin (5) lock screw - C3. Pivot pin (16) lock screw - C4. Blade ball joint screw - G. Blade angle cylinders - L. Pusher frame lift cylinders - T. Blade tilt cylinder - 1. Pusher frame - 2. Pivot pin - 3. Main frame - 4. Bushing - 5. Pivot pin - 6. Ball joint - 7. Pivot pin - 8. Cotter pin - 10. Cylinder (L) rod - 11. Pusher frame - 12. Ball - 13. Tilt cylinder pivot pin - 14. Tilt cylinder rod - 15. Pivot pin (13) bushings - 16. Pivot pin - 17. Cutting edges.

Study SAFETY RULES in the front of this manual thoroughly for the protection of machine and safety of personnel.

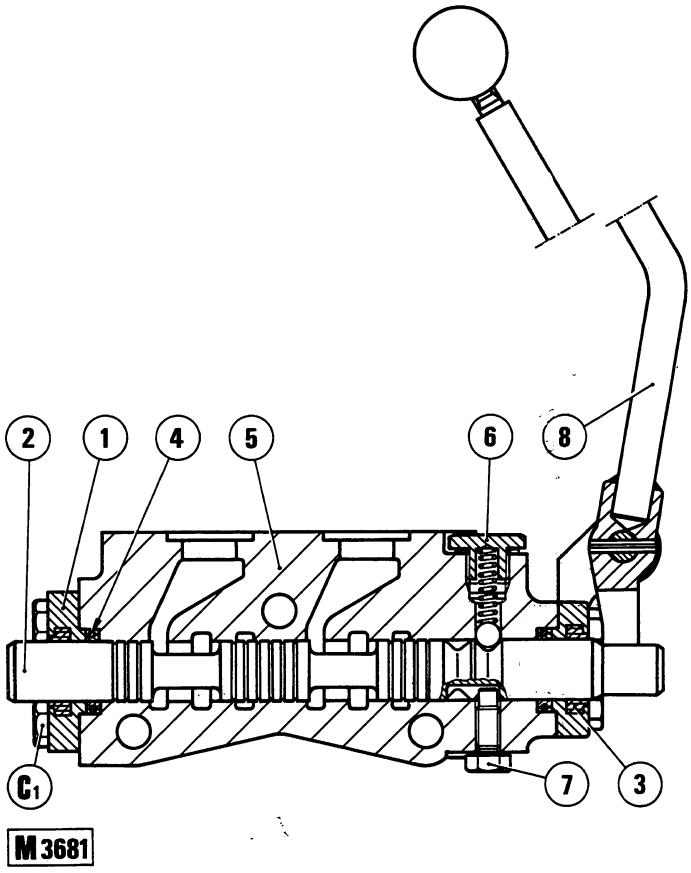

Fig. 15-30 - Longitudinal section through diverter valve.
C1. Cover screw - 1. Cover - 2. Spool - 3. Wiper seal - 4. Spool seal - 5. Main control valve body - 6. Spool positioning detent ball-and-spring seat plug - 7. Stop screw - 8. Control lever.

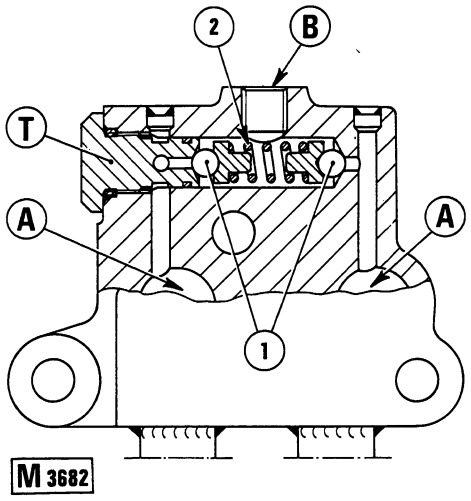

Fig. 15-31 - Section through blade angle circuit overload valve.
A. Blade angle cylinder chambers - B. Valve drain port - T. Valve seat plug - 1. Overload valve - 2. Valve spring.

15.8.4 BLADE TILT CYLINDER (FIG. 15-35)

Disassemble the cylinder, removing screws (C2) and end plates (9).

Take off piston rod (1) as shown in fig. 15-36.

Check all disassembled components as follows:

Inspect piston rod; any slight imperfections such as small dents, burrs or light wear may be remedied using extra-fine emery cloth.

Ensure that the piston rod is free from distortion using a straightedge or by resting the rod on a surface plate.

If the chromium plating appears to be worn or rust spots are detected, replace the rod without hesitation.

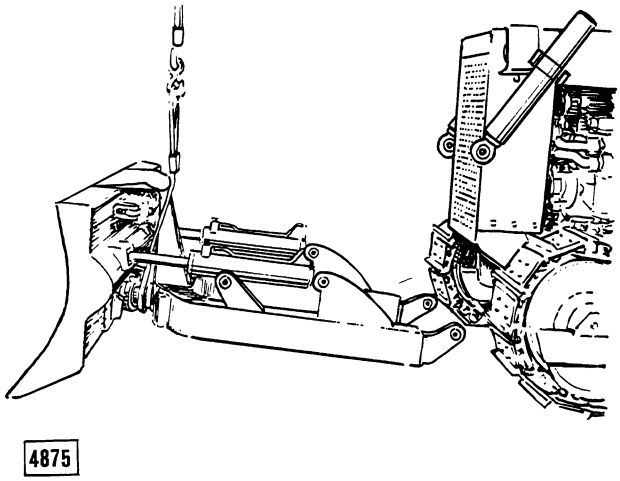

Fig. 15-32 - Removal of frame assembly from machine.

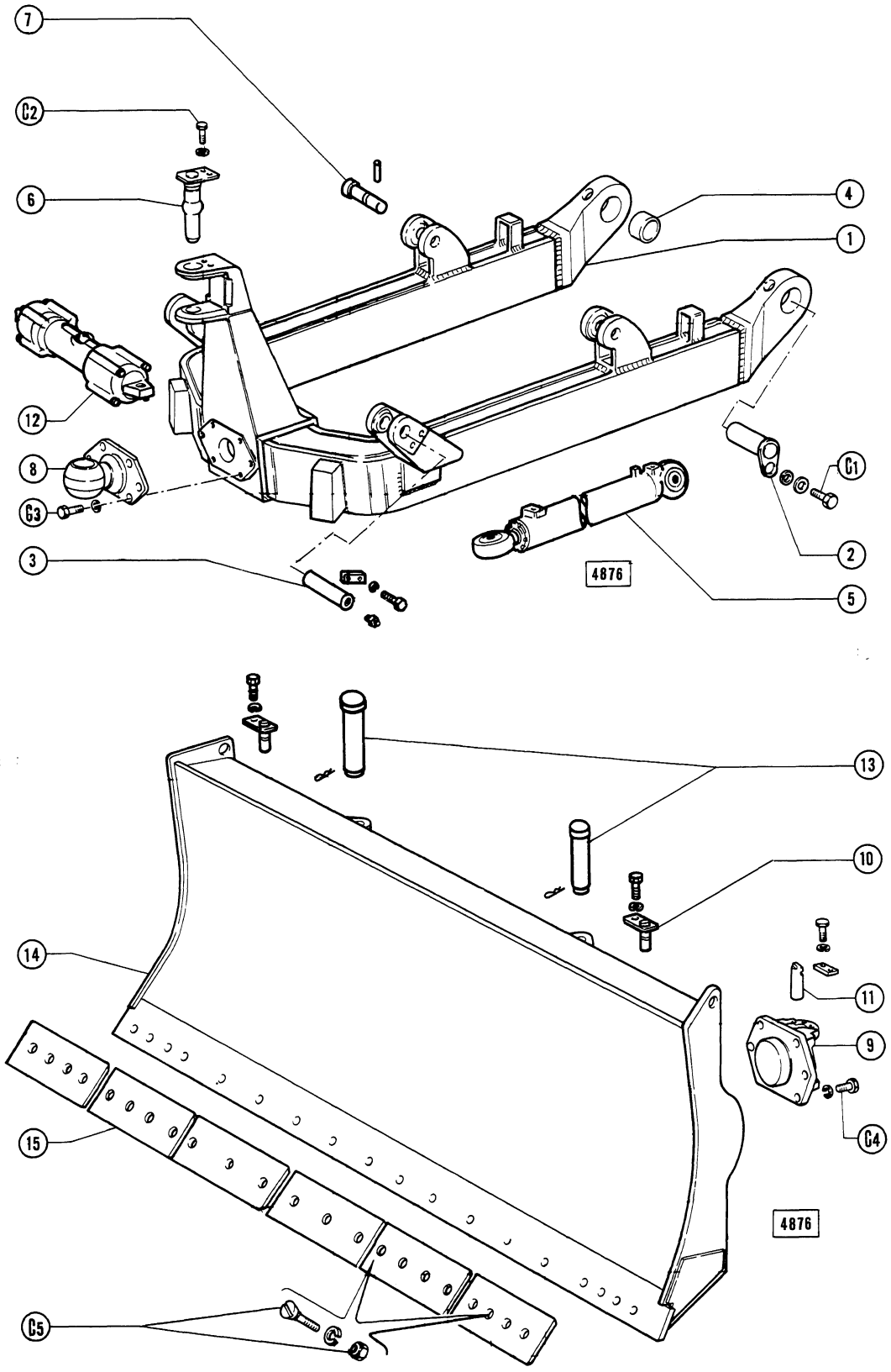

Fig. 15-33 - All-hydraulic equipment pusher frame and blade components.
C1. Pin (2) retaining screw - C2. Pin (6) retaining screw - C3. Ball joint screw - C4. Ball joint socket screw - C5. Cutting edge screw - 1. Pusher frame - 2. Pin - 3. Pusher frame lift cylinder pin - 4. Bushing - 5. Blade angle cylinders - 6. Blade tilt cylinder pin - 7. Blade angle cylinder pin - 8. Blade joint - 9. Ball joint socket - 10. Angle cylinder hinge pin - 11. Ball joint pin - 12. Blade tilt cylinder - 13. Tilt cylinder hinge pins - 14. Blade - 15. Cutting edges.

Study SAFETY RULES in the front of this manual thoroughly for the protection of machine and safety of personnel.

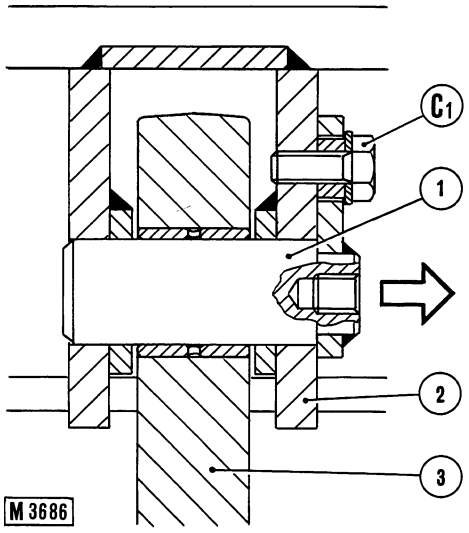

Fig. 15-34 - Removing pusher hinge pin.
C1. Pin screw - 1. Pin - 2. Dozer frame - 3. Frame

NOTE - Direction of pin removal arrowed (see text).

Check the cylinder bore. Slight imperfections may be remedied using extra-fine emery cloth. A scored or worn cylinder must be replaced without hesitation.

Check the condition of all seals and piston rod guides (11, fig. 15-35).

Replace any damaged components.

NOTE - If bushing (12, fig. 15-26) is found to be excessively worn, remove at the press using punch and bolster 75297295.

Install tilt cylinder as follows:

Assemble all seals on cylinder body (8, fig. 15-35).

Insert piston rod (2) in body (8), applying a light film of lubricant to the external surface.

NOTE - Take the utmost care to prevent damaging the two rod wipers (7).

Install the two end plates (9) with interposed O-rings (4).

Tighten screws (C2) to the specified torque (see torque data table).

⚠ WARNING

Handle all parts with extreme care. Keep hands and fingers from between parts. Wear authorized protective equipment such as safety glasses, heavy gloves, safety shoes.

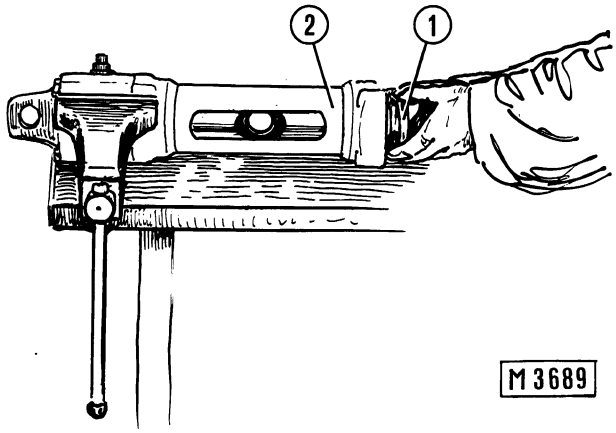

Fig. 15-36 - Removing piston rod from tilt cylinder.
1. Piston rod - 2. Cylinder.

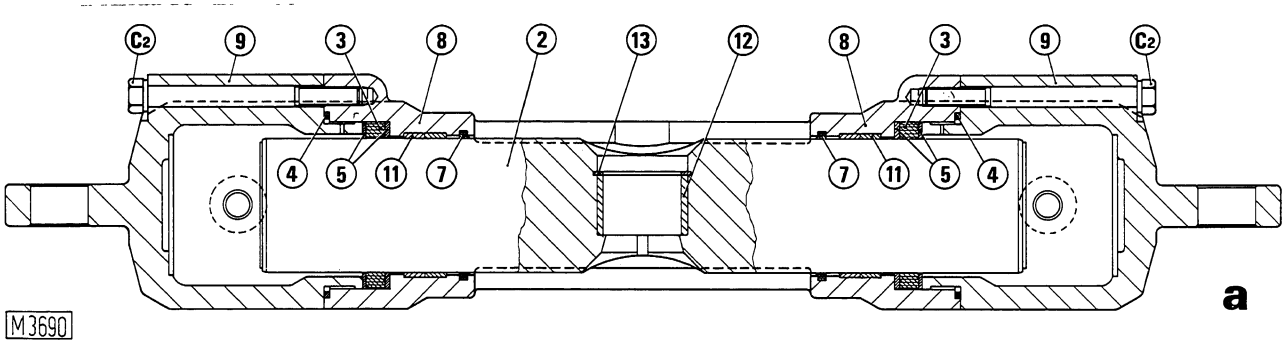

Fig. 15-35 - Longitudinal section through tilt cylinder.
C2. Screw - 2. Piston rod - 3. Seal - 4. O-ring - 5. Buffer ring - 7. Rod wiper - 8. Cylinder - 9. End plate - 11. Piston rod guide - 12. Bushing - 13. Retaining ring.

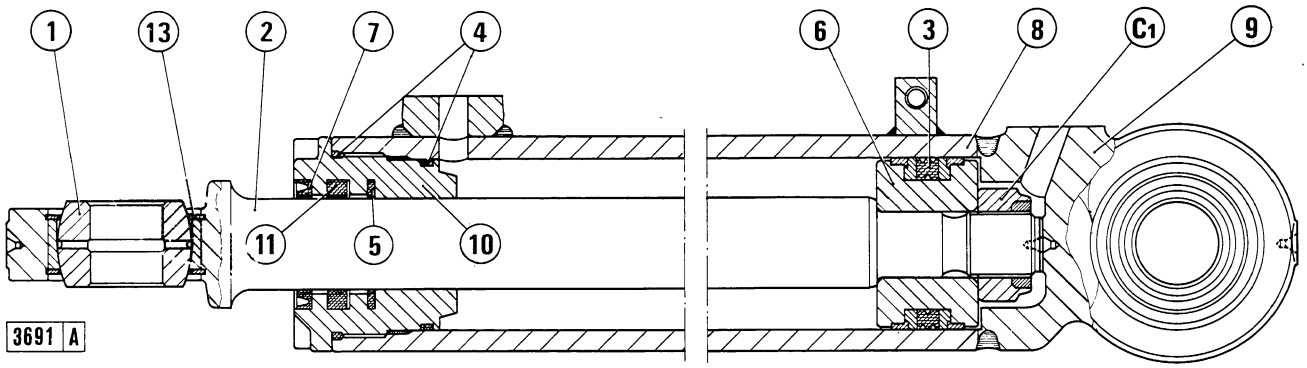

Fig. 15-37 - Longitudinal section through angle cylinder.
C1. Piston nut - 1. Ball joint - 2. Rod - 3. Seal - 4. O-ring - 5. Buffer ring - 6. Piston - 7. Rod wiper - 8. Cylinder - 9. End plate - 10. Front threaded end plate - 11. U-cup rod seal - 13. Retaining ring.

15.8.5 BLADE ANGLE CYLINDER

Disassemble the cylinder, removing front end plate (10, fig. 15-37) using wrench 75297348.

Take off piston rod (2, fig. 15-37) with attached piston (6) and inspect as directed for tilt cylinder (para 15.5.2).

⚠ WARNING

Handle all parts with extreme care. Keep hands and fingers from between parts. Wear authorized protective equipment such as safety glasses, heavy gloves, safety shoes.

Lift and handle all heavy parts with a lifting device of proper capacity. Be sure parts are supported by proper slings and hooks. Use lifting eyes if provided. Watch out for people in the vicinity.

Use proper tools to bring holes into alignment. "DO NOT USE FINGERS OR HANDS".

Install angle cylinder reversing the disassembly sequence and tightening threaded end plate to the specified torque (see torque data table).
In case of replacement install the new ball joint (1, fig. 15-37) into its seat following the instructions at para 15.5.4.

15.9. RIPPER

Ripper type PD9 consists mainly of the following:

Welded sheet metal support bolted to the back of rear drive housing and provided with ripper lock pin in raised position.

Double-acting hydraulic cylinder (fig. 15-36).

Welded sheet metal tool bar provided with mountings for three shanks.

15.9.1 RIPPER CYLINDER

For cylinder disassembly and inspection remove end plate (2, fig. 15-38) using wrench 75297348 and take off rod (1) with attached piston (4).

Inspect the disassembled components as directed in para 15.5.2.

⚠ WARNING

Before moving machine or attachments be sure exposed people in the area are clear of the machine. Walk completely around machine before mounting. Sound horn.

Reassemble reversing the disassembly sequence and tightening threaded end plate to the specified torque (see torque data table).

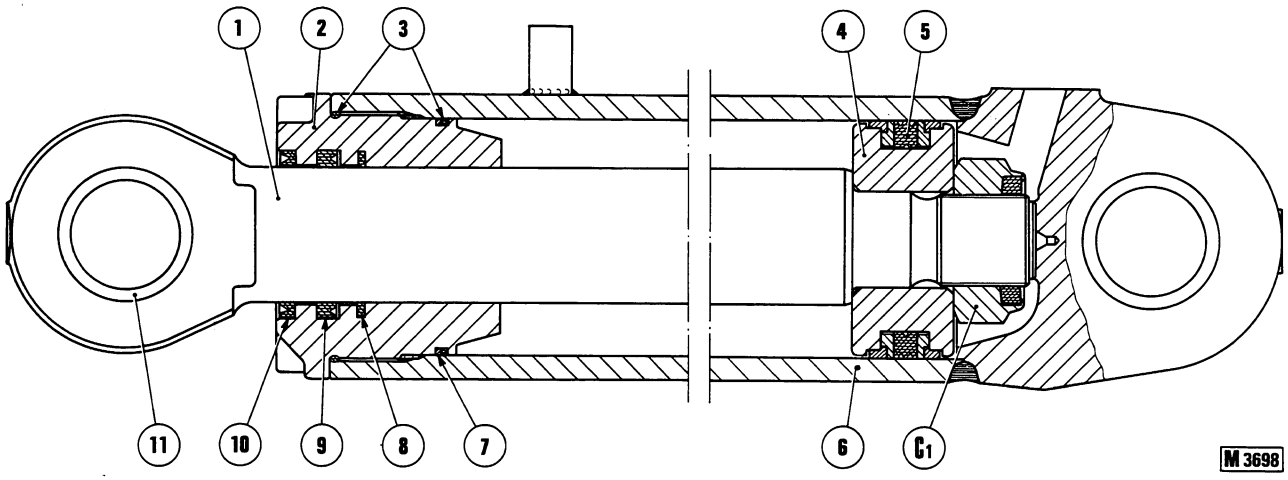

Fig. 15-38 - Section through ripper cylinder.
C1. Nut - 1. Piston rod - 2. Front end plate - 3. O-ring - 4. Piston - 5. Piston packing - 6. Cylinder body - 7. Anti-extrusion ring - 8. Buffer ring - 9. Piston rod seal - 10. Rod wiper - 11. Bushing.

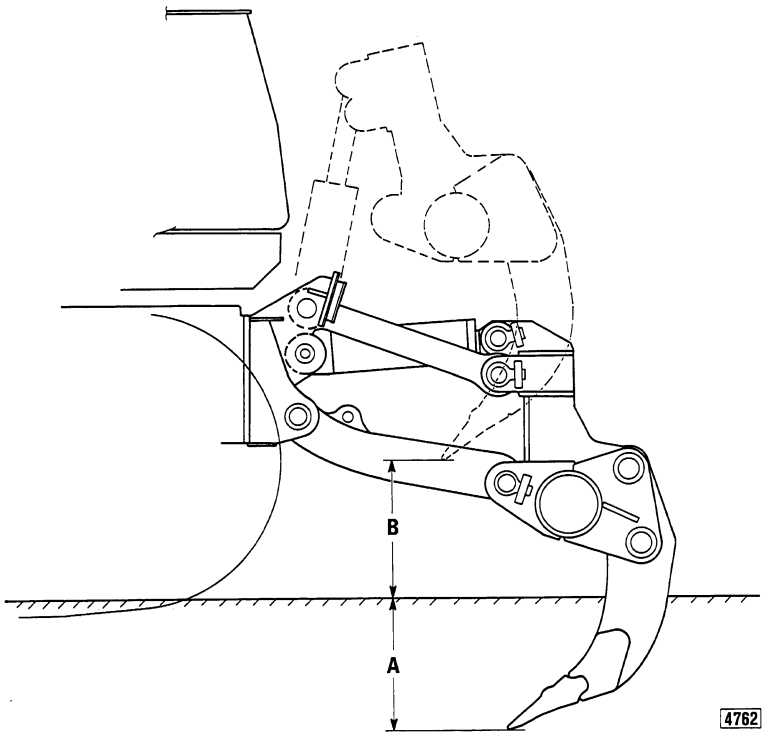

Fig. 15-39 - Ripper performance data.
A. Max. penetration 430 mm (17 in) - B. Max. clearance under raised tip 415 mm (16.3 in).

15.10 TROUBLE SHOOTING

⚠ DANGER

Do not use matches, lighters, or torches for a light source on the machine due to the presence of flammable fluids.

⚠ WARNING

No unauthorized person should be allowed to service or maintain this machine. Study the Operation and Maintenance Instruction Manual before starting, operating, maintaining, fueling, or servicing this machine.

Always disconnect the batteries before cleaning, repairing, or servicing the machine.

Never use gasoline, solvent or other flammable fluids to clean parts.

Do not run the engine of this machine in closed areas without proper ventilation to remove deadly exhaust gases.

Never attempt to operate machine or attachment except when seated in the operator's seat. Keep head, body, limbs, hands and feet inside the operator's compartment to reduce exposure to hazards outside the operator's compartment.

Use only grounded auxiliary power source for heaters, chargers, pumps and similar equipment to reduce the hazard of electrical shock.

Never service or adjust the engine running except as called for in the Operation and Maintenance Instruction or Service Manuals to keep from being caught in moving parts or by a moving machine.

Before moving machine or attachments be sure exposed people in the area are clear of the machine. Walk completely around machine before mounting. Sound horn.

Keep people clear of attachments and tools while in raised position, to prevent possible injury.

Warn all people who may be servicing or working around machine before starting engine.

Use lifting eyes, if provided, for handling by lifting devices.

"DO NOT USE HANDS" to search for pressure leaks. Fluid escaping under pressure can penetrate the skin.

Place protection over air inlet openings before operating engine.

Wear safety glasses with side shields or goggles when using compressed air for cleaning to reduce the danger of personal injury from flying particles. Limit pressure to 30 psi (2bar) according to local or national requirements.

TROUBLE	CAUSE	REMEDY
1. Pump noise after 15-30 min operation (depending on ambient temperature).	a. Insufficient tank oil level.	Top up and remedy any leakage.
	b. Inlet filter (6, Fig. 15-2) obstructed.	Inspect and clean filter.
	c. Pump suction line leakage.	Inspect and tighten clips and fittings.
	d. Unsuitable oil (too thick).	Replace with correct grade oil.
	e. Pump drive shaft seals defective.	Replace seals.

TROUBLE	CAUSE	REMEDY
2. Blade and ripper fail to raise.	a. Pump drive shaft failed.	Replace failed parts.
	b. Hydraulic pump inefficient.	Overhaul or replace as necessary.
	c. Control valve internal walls failed.	Replace control valve body.
	d. Relief valve stuck.	Remove any foreign particles and inspect filters.
3. Blade and ripper will not remain in selected position.	a. Excessive leakage past control valve body and spools.	Replace worn parts.
	b. Overload valve stuck open or set too low.	Clean valves and inspect filters. Check setting.
	c. Excessive leakage past pistons in cylinders.	Replace piston packing.
4. Slow and weak blade or ripper movement.	a. Engine underpowered.	Check engine in the various operating conditions (see Service Manual - Engine 8065, Print No. 73121213).
	b. Pump inlet filter clogged.	Inspect and wash filter.
	c. Relief valve set too low.	Reset valve.
	d. Hydraulic pump inefficient.	Overhaul or replace as necessary.
	e. Cracked control valve body.	Replace control valve body.
5. Blade and ripper raise erratically.	a. Low tank oil level.	Top up (see Operation and Maintenance Instruction Manual) and remedy any leakage.
	b. Pump inlet filter clogged.	Inspect and clean filter.
	c. Pump suction line leakage.	Inspect and tighten clips and fittings.
	d. Defective pump drive shaft seals.	Replace seals.

15.11 SPECIFICATIONS AND DATA

HYDRAULIC OIL TANK AND FILTERS		
Oil filters		
Inlet (6, fig. 15-2)	Metal, with magnetic rod	
Mesh	100 micron	
Return (5, fig. 15-2)	By-pass in case of clogging	
Mesh	20 micron	
HYDRAULIC PUMP		
Make: FIATALLIS (fig. 15-4)	A130X	
Rotation (as seen from drive shaft)	Clockwise	
Pump drive ratio	0.9231 to 1	
Rated output at 1000 rpm	60 liter/min	15.8 Gals
Output at max. rpm (2100 engine rpm)	114 liter/min	30 Gals
MAIN CONTROL VALVE	Three-spool, reciprocally neutralizing	
Type	DA 180/3-A	
	mm	in
Spool working clearance in body (after matching and super finishing)	0.010 to 0.025	0.0004 to 0.0010
Spool spring height (2, fig. 15-12)		
Free	93.5	3.7
Under 11.2 to 12.4 daN (25 to 28 lb)	42	1.6
Check valve spring data (16, fig. 15-12)		
O.D.	15	0.59
Free Height	45	1.8
Height under 0.5±0.02 daN (1.1±0.04 lb)	33	1.3
Spool float detent spring data (6, fig. 15-12)		
O.D.	14	0.55
Free height	43.5	1.7
Height under 9 to 10 daN (20 to 22.5 lb)	27.3	1.0

Relief valve		
Setting	150 bar	2176 psi
Main plunger spring data (14, fig. 15-12)	mm	in
O.D.	11.5	0.4
Free Height	43	1.7
Height under 1.86±0.09 daN (4±0.2 lb)	16	0.6
Pilot valve plunger spring data (12):		
O.D.	13.5	0.5
Free height	51	2
Height under 20.6±1 daN (46±2 lb)	42	1.6
Blade raise make-up and overload valve unit		
Overload valve setting (20, fig. 15-12)	170 bar	2466 psi
Cup spring shim (S) thickness range	0.2-0.5-1	0.008-0.020-0.040
Blade lower make-up and overload valve unit		
Overload valve setting (19, fig. 15-12)	170 bar	2466 psi
Cup spring shim (S) thickness range	0.2-0.5-1	0.008-0.020-0.040
Flow regulating valve (26, fig. 15-12)		
Valve spring (25) data:		
O.D.	10.5	0.4134
Nominal free height	39.5	1.5552
Height under 19 to 21 daN (42 to 47.2 lb)	33.5	1.3189
BLADE RAISE-LOWER CYLINDERS (FIG.15-16)		
Type	two, double-acting; each piston fitted with stroke-end valves	
	mm	in
Cylinder bore	80	3.1496
Piston stroke	845	33.27
Stroke end valve dia. (5, fig. 15-6)	4.00 to 4.05	0.1575 to 0.1594
Diameter of valve seats on guides	4.30 to 4.35	0.1693 to 0.1712

	mm	in
Valve-to-seat clearance	0.25 to 0.35	0.0098 to 0.0138
Cylinder I.D.	80.000-80.064	3.149-3.152
Piston O.D.	78.410-78.270	3.087-3.081
Piston to cylinder clearance	1.590-1.794	0.0626-0.0706
Cylinder head rod bore I.D.	45.190-45.250	1.779-1.781
Piston rod O.D.	44.960-45.000	1.770-1.772
Piston rod to cylinder head bore clearance	0.190-0.290	0.0075-0.0114
Piston rod head bore I.D.	71.970-72.000	2.833-2.835
Bearing O.D.	72.000-72.030	2.835-2.836
Bearing to bore interference fit	0.000-0.060	0.000-0.0024
Diameter of piston rod pivot pin (5, figs. 15-21/15-25/15-29)	34.961 to 35.000	1.3764 to 1.3779
I.D. of ball joint bearing (6, figs. 15-21/15-25/25-29)	35.002 to 35.018	1.3780 to 1.3786
Ball joint bearing-to-pin clearance	0.002 to 0.057	0.00008 to 0.00224
Diameter of cylinder body-to-support yoke pivot pins (16, fig. 15-16)	36.961 to 37.000	1.4551 to 1.4567
I.D. of cylinder support bushings (1, fig. 15-18)	37.050 to 37.112	1.4586 to 1.4611
Pin-to-bushing clearance	0.050 to 0.151	0.00196 to 0.00594
Diameter of cylinder support yoke shaft (6, fig. 15-18) measured at:		
Inner bushing (3)	64.970 to 65.000	2.5578 to 2.5590
Outer bushing (4)	89.965 to 90.000	3.5419 to 3.5433
I.D. of fitted and finished bushings:		
Inner bushing (3)	65.200 to 65.270	2.5669 to 2.5697
Outer bushing (4)	90.200 to 90.270	3.5512 to 3.5539
Shaft to bushing clearances:		
Inner bushing	0.200 to 0.300	0.00787 to 0.01181
Outer bushing	0.200 to 0.305	0.00787 to 0.01200

	mm	in
ANGLEDOZER EQUIPMENT		
Diameter of blade articulation pin (9, fig. 15-20)	34.961 to 35.000	1.3764 to 1.3779
Minor I.D. of ball joint (7)	38.500 to 39.500	1.5157 to 1.5551
Fit clearance	3.5 to 4.5	0.1378 to 0.1771
Angledozer blade control cylinder		
Type (fig. 15-22)	one, double acting	
Cylinder nominal bore and piston stroke	100x120	3.937x4.724
Cylinder I.D.	100.000-100.054	3.937-3.939
Piston O.D.	98.120-97.980	3.863-3.857
Piston to cylinder clearance	1.880-2.074	0.0740-0.0816
Cylinder head rod bore I.D.	56.190-56.250	2.212-2.214
Piston rod O.D.	56.000-55.960	2.205-2.203
Piston rod to cylinder head bore clearance	0.190-0.290	0.0075-0.0114
BULLDOZER EQUIPMENT		
Diameter of push beams front articulation pins (9, fig. 15-24)	49.961 to 50.000	1.9670 to 1.9685
I.D. of bushing (10)	50.190 to 50.270	1.9760 to 1.9791
Pin-to-bushing clearance	0.190 to 0.309	0.00748 to 0.01216
O.D. of bushings (10, fig. 15-24)	61.970 to 62.000	2.4397 to 2.4409
Diameter of bushing seats in push beams (1)	61.901 to 61.947	2.4370 to 2.4388
Bushing-to-seat press fit	0.023 to 0.099	0.00090 to 0.00389
Diameter of diagonal brace (8) articulation pin (6, fig. 15-24)	49.961 to 50.000	1.9670 to 1.9685
I.D. of inner bushing (7)	50.190 to 50.270	1.9760 to 1.9791
Pin-to-bushing clearance	0.190 to 0.309	0.00748 to 0.01216
O.D. of bushings (7, fig. 15-24)	61.970 to 62.000	2.4397 to 2.4409
Diameter of bushing seats in diagonal braces (8)	61.901 to 61.947	2.4370 to 2.4388
Bushing-to-seat press fit	0.023 to 0.099	0.00090 to 0.00389
Diameter of articulation pins (5, fig. 15-24) tilt cylinder (15) and right brace (4)	59.954 to 60.000	2.3604 to 2.3622

	mm	in
I.D. of bushing (3)	60.200 to 60.270	2.3701 to 2.3728
Pin-to-bushing clearance	0.200 to 0.306	0.00787 to 0.01205
Bulldozer blade tilt control cylinder		
Type (fig. 15-27)	one, double acting	
Cylinder nominal bore and piston stroke	140x126	5.5118 to 4.9606
O.D. of bushing	71.970 to 72.000	2.8335 to 2.8346
Diameter of bushing seat in cylinder barrel	71.895 to 71.941	2.8305 to 2.8323
Bushing-to-seat press fit	0.029 to 0.105	0.00114 to 0.00413
Cylinder I.D.	140.000-140.063	5.512-5.514
Piston O.D.	137.570-137.430	5.416-5.411
Piston to cylinder clearance	2.430-2.633	0.0957-0.1037
Cylinder head rod bore I.D.	80.060-80.106	3.152-3.154
Piston rod O.D.	80.000-79.960	3.150-3.148
Piston rod to cylinder head bore clearance	0.060-0.146	0.0024-0.0057
ALL-HYDRAULIC EQUIPMENT		
O.D. of pusher frame articulation trunnions pins (2, fig. 15-33)	59.954 to 60.000	2.3604 to 2.3622
I.D. of bushing (4, fig. 15-33)	60.190 to 60.270	2.3697 to 2.3701
Pin-to-bushing clearance	0.190 to 0.316	0.00748 to 0.01244
Diameter of bushing (4) seat on frame (1)	71.901 to 71.947	2.8307 to 2.8325
O.D. of bushing (4)	71.970 to 72.000	2.8335 to 2.8346
Bushing-to-seat press fit	0.023 to 0.099	0.00090 to 0.00389
O.D. of blade articulation trunnion pin (11, fig. 15-33)	34.961 to 35.000	1.3764 to 1.3779
I.D. of ball joint (8)	38.500 to 39.500	1.5157 to 1.5551
Fit clearance	3.5 to 4.5	0.1378 to 0.1772
Blade angling control cylinders		
Type (fig. 15-37)	two, double-acting	
Cylinder nominal bore and piston stroke	90x383	3.5433x15.0787

	mm	in
Diameter of pins (7 and 10, fig. 15-33) for cylinder (5) articulation	34.961 to 35.000	1.3764 to 1.3779
I.D. of ball joint bearing (1, fig. 15-37)	35.002 to 35.018	1.3780 to 1.3786
Ball joint bearing-to-pin clearance	0.002 to 0.057	0.00008 to 0.00224
Cylinder head rod bore I.D.	50.050-50.089	1.970-1.972
Piston rod O.D.	50.000-49.960	1.968-1.967
Piston rod to cylinder head bore clearance	0.050-0.129	0.0019-0.0051
Cylinder I.D.	90.000-90.054	3.543-3.545
Piston O.D.	88.380-88.240	3.479-3.474
Piston to cylinder clearance	1.620-1.814	0.0638-0.0714
Piston rod head bore I.D.	71.970-72.000	2.833-2.835
Bearing O.D.	72.000-72.030	2.835-2.836
Bearing to bore interference fit	0.000-0.060	0.000-0.0024
Piston rod head bore I.D.	71.970-72.000	2.833-2.835
Bearing O.D.	72.000-72.030	2.835-2.836
Bearing to bore interference fit	0.000-0.060	0.000-0.0024
Blade tilt control cylinder		
Type (fig. 15-35)	one, double-acting, frame coupled to rod (through slot) and to side of blade	
Cylinder nominal bore and piston stroke	105x74	4.1338x2.9134
O.D. of steel bushing (15, fig. 15-29)	71.970 to 72.000	2.8335 to 2.8346
Diameter of bushing (15) seat bore in piston rod	71.961 to 71.991	2.8331 to 2.8343
I.D. of steel bushing (15, fig. 15-29)	62.725 to 62.800	2.4695 to 2.4724
O.D. of pin (13) at major diameter	61.961 to 62.000	2.4394 to 2.4410
Cylinder I.D.	105.800-105.600	4.165-4.157
Piston O.D.	105.000-104.880	4.133-4.129
Piston to cylinder clearance	0.600-0.920	0.0236-0.0362

Diverter valve		
Type (fig.15-30)	Two-position, for blade angle or additional rear attachment (S)	
	mm	in
Clearance in valve (2) (ensured in production by appropriate matching of parts)	0.015 to 0.020	0.0006 to 0.0008
Spool detent ball spring height:		
Free	31.5	1.2
Under 4.5 to 5 daN (10 to 11 lb)	21	0.8
Blade angling control check valve		
Valve spring (2, fig. 15-31) data:		
Nominal free height	26.2	1.03
Height under 19 to 21 daN (42 to 47.2 lb)	23	0.90
RIPPER	Three-teeth, half round, interchangeable tip	
Type (fig. 15-39)	PD9	
Maximum working depth	430	17
Maximum working width	1620	63.7
Maximum tooth lifting height	415	16.3
Ripper cylinder		
Type (fig. 15-38)	one, double acting	
Bore	125	4.92
Stroke	362	14.3
I.D. of rear end plate and piston rod bushing (11, fig. 15-38)	60.200 to 60.270	2.3700 to 2.3728
Ripper cylinder articulation pin O.D. (rear end plate and piston rod side)	59.954 to 60.000	2.3604 to 2.3622
Fitted clearance	0.200 to 0.306	0.00787 to 0.01205
O.D. of rear end plate and piston rod bushing (11, fig. 15-38)	75.075 to 75.105	2.9557 to 2.9569
Bushing (11) housing bore diameter	75.000 to 75.046	2.9527 to 2.9546
Interference fit	0.029 to 0.105	0.00114 to 0.00413

Cylinder I.D.	125.000-125.063	4.921-4.924
Piston O.D.	123.030 -122.890	4.844-4.838
Piston to cylinder clearance	1.934-2.173	0.076-0.085
Cylinder head rod bore I.D.	70.220-70.270	2.764-2.766
Piston rod O.D.	70.000-69.960	2.756-2.754
Piston rod to cylinder head bore clearance	0.220-0.310	0.0087-0.0122

15.12 TORQUE SPECIFICATIONS

DESCRIPTION	TORQUE (*)	
	daNm	lb. ft.
CONTROL VALVE BLOCK		
Screw (C1, fig. 15-12), control valve cover	2	15
Plugs, make-up and overload valve (°)	12	88
Valves, make-up and overload (19 and 20, fig. 15-12)	10	74
Valves, make-up (18, fig. 15-12)	8	59
Plug, check valve (15, fig. 15-12)	2	15
Plug, flow regulating valve (26)	2	15
BLADE RAISE/LOWER CYLINDER		
Front end plate (3, fig. 15-16)	84	619
Piston nut (C)	29	214
Screws (C2, fig. 15-18) support yoke thrust plate	11	81
ANGLEDOZER EQUIPMENT		
Screw (C4, fig. 15-21), pusher frame articulation ball plate	39	287
Screw (C3), frame raise/lower cylinder rod articulation pin retainer plate	11	81
Screw (C5), frame/blade articulation ball joint	18	133
Screw (C2), ball joint pin retainer plate	7	52
Nut (C6), cutting edge	36.5	269
Nut, trunnion cap screw (C1)	23	170
Tilt cylinder front end plate (3, fig. 15-22)	125	922
Nut (C), tilt cylinder piston	137	1010

(*) Wet, engine oil (°) Serviced together with valve

DESCRIPTION	TORQUE (*)	
	daNm	lb. ft.
BULLDOZER EQUIPMENT		
Screw (C1, fig. 15-24), push beam articulation trunnion caps	23	170
Screw (C1, fig. 15-25), push beam to blade articulation pin retainer	11	81
Screw (C2), piston rod articulation pin retainer	11	81
Screw (C3), articulations on blade for tilt cylinder diagonal braces (2 and 3) lateral brace (1)	11	81
Screw (C1, fig. 15-27), tilt cylinder front end plate	37	273
Nut (C1), tilt cylinder piston	270	1990
ALL-HYDRAULIC EQUIPMENT		
Screw (C1, fig. 15-29), pusher frame to machine articulation trunnion	20	147.5
Screw (C2), frame raise/lower cylinder piston rod retainer	11	81
Screw (C3), ball joint pin retainer	7	52
Screw (C4), blade-to-pusher frame articulation ball joint	18	133
Screw (C2, fig. 15-35), tilt cylinder end plates	18	133
Front end plate (10, fig. 15-37), blade angling cylinder	166	1224
Nut (C1), blade angling cylinder piston	124	915
RIPPER		
End plate, front (2, fig. 15-38) cylinder	16	118
Nut (C1), cylinder piston	235	1733

(*) Wet, engine oil.

15.13 - SERVICE TOOLS

PART NO.	DESCRIPTION
75290561 75290562	Tools, removing-installing overload valves from make-up valves (fig. 15-14).
75294000	Pressure gauge kit (M, fig. 15-15)
75295220	Lift eyes, hydraulic oil and fuel tank (1, fig. 15-3)
75297256	Spool spring disassembly-assembly tool (A, fig. 15-13)
75297295	Tilt cylinder rod bushing (12, fig. 15-35) tool.
75297340	Universal slide hammer puller for pins (fig. 15-34).
75297342	Adapter to be used with puller 75297340.
75297346	Ripper front end plate wrench.
75297347	Cylinder front end plate wrench: blade control (fig. 15-16), angledozer tilt (fig. 15-22) and all hydraulic blade angle (fig. 15-37).