RUTHZIL TRATOR COMERCIAL DE PEÇAS LTDA 11 97083-6812 ROLANDO CITRANGULO AGOSTO 2001
https://truckmanualshub.com/

FG15H FG18H FG15S FG18S

Komatsu Forklift U.S.A., Inc
Attn: Technical Publications
14481 Lochridge Blvd., Bldg 2
Covington, Georgia 30014
U.S.A.

PROPOSAL FOR MANUAL REVISIONS/CORRECTIONS

	Date	
Originator	Individual's Name	
	Company Name	
	Department	
	Street Address	
	City, State & ZIP	
	Voice Phone	Fax Phone

Book description

Truck model & S/N

Problem location and description. Attach supporting photo, sketch or other material as necessary.
Book or Tech Bulletin No. _____
Section No. and/or Name _____
Page No. _____
Item No. (if parts book) _____
Item Description (if in parts book) _____
Note made in K-Link? _____ Name of Note _____ (attach copy)

Corrective Action and Date

Fax this completed form to: 770-385-4838

https://truckmanualshub.com/

This Page Intentionally Left Blank

RUTHZIL TRATOR COMERCIAL DE PEÇAS LTDA 11 97083-6812 ROLANDO CITRANGULO
https://truckmanualshub.com/

KOMATSU

PARTS BOOK

AX SERIES
FORKLIFT TRUCKS

Serial Numbers 600001A through 650000A
Serial Numbers 650001A and Up

FG **15H/18H-16**
15S/18S-16

CHASSIS / ENGINE / MAST

Revised: August 2001

https://truckmanualshub.com/

The information and specifications contained herein were accurate at the time of publication, but may change without notice for product improvements as required. Due to ongoing product improvements, your model may not exactly match assemblies depicted herein. Komatsu Forklift USA, Inc., its parent company and subsidiaries will not be held responsible for damages due to misuse or inappropriate use of its products.

Send comments, requests for information and other inquiries to:

Komatsu Forklift USA, Inc.
14481 Lochridge Blvd., Bldg. #2
Covington, Georgia 30014

Voice phone: 770-385-4815
Fax: 770-385-4838

© 2001, Komatsu Forklift USA, Inc. All rights reserved. No part of this document may be photo-copied or otherwise reproduced without prior express written consent of Komatsu Forklift USA, Inc.

https://truckmanualshub.com/

HOW TO USE THIS BOOK

This book provides the parts numbers and, where available, the illustrations for the various engine, chassis, mast, and other parts. Note that both the gasoline and LP engines (H20-II) are covered in this book.

NOTE: When ordering parts, please provide an accurate model number, serial number, engine serial number and the reading on the service meter (hour meter).

Machine Detail Codes -- The codes shown within parentheses in the Table of Contents, and in some figures, represent forklift truck models as follows:

DETAIL CODE	CHASSIS MODEL
5H	FG15H-16
8H	FG18H-16
5S	FG15S-16
8S	FG18S-16

In each case, the illustration immediately precedes the parts list for a part or assembly. The header at the top of the illustration page provides the following information:

- Figure number (abbreviated as “Fig. ” and followed by an alphanumeric number). Figure numbers are generally in sequence, but in certain instances they may not fall in sequence.
- Part or assembly name

The page number in the footer at the bottom of each page includes an alphabetic character and a number to aid in locating sections or pages. Thus page C-3 is page 3 in the third section of this parts book.

On the parts list page, the information box directly above the parts list displays the figure number and the list of models to which the parts list applies.

Each parts list page has five columns as follows:

Index	The item number of the part in the illustration and in the parts list. No index number for a part means that item has the same index number as the item immediately above it.
Part No.	The number to be used when ordering or identifying parts or assemblies. An asterisk (*) means that this item cannot be purchased separately, but must be ordered as part of the assembly to which it belongs.
Description	The name of the part, sometimes including numerical measurements. A dot in front of the description means this item is a part of the assembly immediately above with no dot in front of it. Two dots in front of the description means that the item is a part of the assembly immediately above with one dot in front of it. If a certain part is listed twice, the description will indicate which part to use on which truck or engine.
Qty	The number of parts required for an assembly. In the case of mast lift cylinders and tilt cylinders, the quantity is the number of items required per mast cylinder assembly and not for the entire truck. The letters “A/R” mean “as required”, as with lubricants.

https://truckmanualshub.com/

Serial No.

The truck or engine serial number used to qualify the use of certain parts. If a certain part is listed twice, different serial number ranges may be shown to indicate to indicate which part to use on which truck or engine. In the engine sections, no serial number listing means the part or assembly is used on all engines. Other parts or assemblies are assigned to specific engine serial number range.

Codes

The codes and part numbers specified in the “Part No.” and “Description” columns represent the following:

□	The part specified in the line above is applicable instead of this part.
⊡	This part is applicable instead of the part specified in the line immediately above.
◆	This part and the part specified in the line immediately above are interchangeable.
⊠	This part is not supplied anymore. The part specified in the above line is supplied instead.
■	The part specified in the “Description” column is applicable instead of this part if it is used as a set.
▼	This part is not supplied anymore. The part specified in the “Description” column is supplied instead as a set.
△	Part supplied as semi-finished. It must be reworked before use.
☆	Supplied as a set rather than singly.
★	Supplied as a set rather than singly. It is supplied singly by specific dealers only.
⊙	Part group. This part is not considered a supply part.
═══	The parts surrounded by this line are components of the part group specified above.
G-1, G-2	Part group numbers.
KIT	Kit components. Please refer to the service kit table for kit components.

https://truckmanualshub.com/

KOMATSU

AX SERIES INDEX

AX SERIES

AX SERIES INDEX

https://truckmanualshub.com/

https://truckmanualshub.com/

KOMATSU AX Series Fork Lift Truck

Table of Contents

	Assembly Name	Figure No.	Page
A0	**Engine-Related Parts**		
	Engine Unit and Powertrain-Related Parts (truck serial no. 600001A - 650000A)	A4110-01A0	A-2
	Engine Unit and Powertrain-Related Parts (truck serial no. 650000A and up)	A4110-01A0A	A-2A
	Engine Mounting Parts (Clutch Spec.)	A4120-01A0	A-4
	Engine Mounting Parts (Torque Converter Spec.)	A4120-01A1	A-6
	Engine Mounting Parts (FG15S, FG18S)	A4120-01A2	A-8
	Air Intake Connection (FG15H,FG18H)	A4140-01A0	A-10
	Air Intake Connection (FG15S, FG18S)	A4140-01A1	A-12
	Komtsu Engine Parts -- H20 II (LPG Conversion and Dual-Fuel) Includes table of contents, illustrations and parts listings		
BO	**Exhaust Parts**		
	Muffler and Exhaust Connection (FG15H, FG18H)	B4110-01A0	B-2
	Muffler and Exhaust Connection (FG15S, FG18S)	B4110-01A1	B-4
CO	**Cooling System**		
	Radiator (Clutch Spec. FG15H)	C4110-01A0	C-2
	Radiator (Torque Converter Spec.)	C4110-01A1	C-4
	Radiator Piping (FG15H, FG18H)	C4130-01A0	C-6
	Radiator Piping (FG15S, FG18S)	C4130-01A1	C-8
	Torque Converter Oil Cooler Piping	C4140-01A0	C-10
	Reservoir Tank (FG15H, FG18H)	C4160-01A0	C-12
	Reservoir Tank (FG15S, FG18S)	C4160-01A1	C-14
	Radiator Cover (FG15H, FG18H)	C4170-01A0	C-16

https://truckmanualshub.com/

DO **Fuel Tank and Related Parts**

Fuel System (FG15H, FG18H)	D4110-01A0	D-2
Fuel System (FG15S, FG18S)	D4110-01A1	D-4

FO **Power Train and Front Axle**

Drive Axle (Torque Converter Spec. - FG15H, FG18H)	F1430-01A0	F-2
Drive Axle (FG15S, FG18S)	F1430-01A1	F-4
Dry Clutch (FG15H, truck serial no. 600001A - 650000A)	F4160-01A0	F-6
Dry Clutch (FG15H, truck serial no. 650001A and up)	F4160-01A0A	F-6A
Torque Flow Transmission (with Torque Converter) (1/8)	F4160-21A0	F-8
Torque Flow Transmission (with Torque Converter) (2/8)	F4160-22A0	F-10
Torque Flow Transmission (with Torque Converter) (3/8)	F4160-23A0	F-12
Torque Flow Transmission (with Torque Converter) (4/8)	F4160-24A0	F-14
Torque Flaw Transmission (with Torque Converter) (5/18)	F4160-25A0	F-16
Torque Flow Transmission (with Torque Converter) (6/8)	F4160-26A0	F-18
Torque Flow Transmission (with Torque Converter) (7/8) (truck serial no. 600001A - 650000A)	F4160-27A0	F-20
Torque Flow Transmission (with Torque Converter) (7/8) (truck serial no. 650001A and up)	F4160-27A0A	F-20A
Torque Flow Transmission (with Torque Converter) (8/8)	F4160-28A0	F-22
Direct Drive Transmission (1/2) (FG15H, truck serial no. 600001A - 650000A)	F4160-31A0	F-24
Direct Drive Transmission (1/2) (FG15H, truck serial no. 650001A and up)	F4160-31A0A	F-24A
Direct Drive Transmission (2/2) (FG15H, truck serial no. 600001A - 650000A)	F4160-32A0	F-26
Direct Drive Transmission (2/2) (FG15H, truck serial no. 650001A and up)	F4160-32A0A	F-26A
Differential Gear and Hypoid Gear (5H)	F4160-51A0	F-28

HO **HO Steering System and Rear Axle**

Steering Axle (FG15H, FG18H)	H4110-01A0	H-2
Steering Axle (FG15S, FG18S)	H4110-01A1	H-4

JO	**Front and Rear Wheels**		
	Tires (FG15H, FG18H)		J-1
	Tires (FG15S, FG18S)		J-2
KO	Brake System		
	Wheel Brake (FG15H, FG18H)	K4110-01A0	K-2
	Wheel Brake (FG15S, FG18S)	K4110-01A1	K-4
	Parking Brake Lever (FG15H, FG18H)	K4120-01A0	K-6
	Parking Brake Lever (FG15S, FG18S)	K4120-01A1	K-8
	Brake Piping	K4130-01A0	K-10
	Brake Piping (Torque Converter Spec.)	K4130-01A1	K-12
LO	**Travel Control**		
	Steering Column (truck serial no. 600001A - 650000A)	L4110-01A0	L-2
	Steering Column (truck serial no. 650001A and up)	L4110-01A0A	L-2A
	Power Steering Valve	L4110-51A0	L-4
	Steering Wheel (truck serial no. 600001A - 650000A)	L4120-01A0	L-6
	Steering Wheel (truck serial no. 650001A and up)	L4120-01A0A	L-6A
	Transmission Shift Lever (Clutch Spec., FG15H)	L4140-01A0	L-8
	Transmission Shift Lever (Torque Converter Spec.)	L4140-11A0	L-10
	Brake and Clutch Pedal (Clutch Spec. 514)	L4150-01A0	L-12
	Brake and Inching Pedal (Torque Converter Spec.)	L4150-02A0	L-14
	Master Cylinder (Brake)(truck serial no. 600001A - 650000A)	L4150-51A0	L-16
	Master Cylinder (Brake)(truck serial no. 650001A and up)	L4150-51A0A	L-16A
	Master Cylinder (Clutch Spec., FG15H)	L4150-52A0	L-18
	Accelerator Pedal	L4160-01A0	L-20
MO	**Frame and Related Parts**		
	Frame (FG15H, FG18H)	M4110-01A0	M-2
	Frame (FG15S, FG18S)	M4110-01 A1	M-4
	Counter Weight (FG15H, FG18H)	M4120-01A0	M-6
	Counter Weight (FG15S, FG18S)	M4120-01A1	M-8
	Counter Weight Cap	M4150-01A0	M-10

https://truckmanualshub.com/

	Fuel Cap (FG15H, FG18H)	M4170-01A0	M-12
	Fuel Cap (FG15S, FG18S)	M4170-01A1	M-14
	Frame Cover (Yellow and Black)	M4180-01A0	M-16
PO	**Guard and Operator's Compartment**		
	Operator's Seat (truck serial no. 600001A - 650000A)	P4110-01A0	P-2
	Operator's Seat (truck serial no. 650001A and up)	P4110-01A0A	P-2A
	Dash Board (FG15H, FG18H; truck serial no. 600001A - 650000A)	P4120-01A0	P-4
	Dash Board (FG15S, FG18S; truck serial no. 650001A and up)	P4120-01A0A	P-4A
	Dash Board (FG15S, FG18S)	P4120-01A1	P-6
	Step and Side Cover (FG15H, FG18H)	P4140-01A0	P-8
	Step and Side Cover (FG15S,FG18S)	P4140-01A1	P-10
	Floor Mat (FG15H, FG18H)	P4150-01A0	P-12
	Floor Mat (FG15S, FG18S)	P4150-01A1	P-14
	Floor Plate (Clutch Spec. FG15H)	P4160-01A0	P-16
	Floor Plate (Torque Converter Spec. FG15H, FG18H)	P4160-01A1	P-18
	Floor Plate (FG15S, FG18S)	P4160-01A2	P-20
	Dashboard Cover (for 2-Spool or 3-Spool Control Valve-FG15H, FG18H; truck serial no. 600001A - 650000A)	P4170-01A0	P-22
	Dashboard Cover (for 2-Spool or 3-Spool Control Valve-FG15H, FG18H; truck serial no. 650001A and up)	P4170-01A0A	P-22A
	Dashboard Cover (for 4-Spool Control Valve-FG15S, FG18S; truck serial no. 600001A - 650000A)	P4170-01A1	P-24
	Dashboard Cover (for 4-Spool Control Valve-FG15S, FG18S; truck serial no. 650001A and up)	P4170-01A1A	P-24A
	Dashboard Cover (Fuse Box Blind Parts - Clutch Spec., FG15H)	P4170-11A0	P-26
	Dashboard Cover (Fuse Box Blind Parts - Torque Converter Spec., FG15H, FG18H)	P4170-11A1	P-28
	Bonnet (FG15H, FG18H)	P4180-01A0	P-30
	Bonnet (FG15S, FG18S)	P4180-01A1	P-32
	Sub Bonnet (FG15H, FG18H)	P4190-01A0	P-34
	Sub Bonnet (FG15S, FG18S)	P4190-01A1	P-36
	Head Guard (FG15H, FG18H; truck serial no. 600001A - 650000A)	P4210-01A0	P-38
	Head Guard (FG15H, FG18H; truck serial no. 650001A and up)	P4210-01A0A	P-38A

https://truckmanualshub.com/

Head Guard (FG15S, FG18S; truck serial no. 600001A - 650000A)	P4210-01A1	P-40
Head Guard (FG15S, FG18S; truck serial no. 650001A and up)	P4210-01A1A	P-40A
Lamp Guard	P4210-01A0	P-42
Monitor Panel	P4260-01A0	P-44
Head Guard Mounting Parts	P4280-01A0	P-46
Insulator (Bonnet and Step - FG15H, FG18H)	P4310-01A0	P-48
Insulator (Bonnet and Step - FG15S, FG18S)	P4310-01A1	P-50
Insulator (Floor and Sub Bonnet)	P4320-01A0	P-52

QO Electrical System

Electrical System (Dashboard Wiring) (truck serial no. 600001A - 650000A)	Q4110-01A0	Q-2
Electrical System (Dashboard Wiring) (truck serial no. 650001A and up)	Q4110-01A0A	Q-2A
Electrical System (Head Lamp FG15H, FG18H) (truck serial no. 600001A - 650000A)	Q4120-01A0	Q-4
Electrical System (Head Lamp FG15H, FG18H) (truck serial no. 650001A and up)	Q4120-01A0A	Q-4A
Electrical System (Head Lamp FG15S, FG18S)	Q4120-01A1	Q-6
Electrical System (Battery)	Q4130-01A0	Q-8
Electrical System (Back-Up Buzzer FG15H, FG18H)	Q4150-01A0	Q-10
Electrical System (Back-Up Buzzer FG15S, FG18H)	Q4150-01A1	Q-12
Electrical System (Engine Wiring - Clutch Spec., FG15H)	Q4210-01A0	Q-14
Electrical System (Engine Wiring - Torque Converter Spec. - FG15H, FG18H) (truck serial no. 600001A - 650000A)	Q4210-01A1	Q-16
Electrical System (Engine Wiring - Torque Converter Spec. - FG15H, FG18H) (truck serial no. 650001A and up)	Q4210-01A1A	Q-16A
Electrical System (Engine Wiring - FG15S, FG18S)	Q4210-01A2	Q-18
Electrical System (Fuel Sending Unit - FG15H, FG18H)	Q4220-01A0	Q-20
Electrical System (Fuel Sending Unit -FG15S, FG18S)	Q4220-01A1	Q-22
Electrical System (Combination Lamp) (truck serial no. 600001A - 650000A)	Q4230-01A0	Q-24
Electrical System (Combination Lamp) (truck serial no. 650001A and up)	Q4230-01A0A	Q-24A
Electrical System (Combination Switch Assembly - Torqflow Spec.) (truck serial no. 650001A and up)	Q4240-01A0	Q-26

	Electrical System (Combination Switch Assembly - Clutch-Type Trucks) (truck serial no. 650001A and up)	Q4250-01A0	Q-28
RO	**Hydraulic System**		
	Hydraulic Pump and Mounting Parts	R4110-01A0	R-2
	2 - Spool Control Valve and Mounting Parts (Clutch Spec., FG15H)	R4140-01A0	R-4
	3 - Spool Control Valve and Mounting Parts	R4140-01A1	R-6
	2 - Spool Control Valve Lever (Clutch Spec., FG15H)	R4150-01A0	R-8
	3 - Spool Control Valve Lever	R4150-01A1	R-10
	4 - Spool Control Valve Lever (truck serial no. 650001A and up)	R4150-01A2	R-10A
	Power Steering Cylinder (truck serial no. 600001A - 650000A)	R4180-01A0	R-12
	Power Steering Cylinder (truck serial no. 650001A and up)	R4180-01A0A	R-12A
	Tank Cover (FG15H, FG18H)	R4210-01A0	R-14
	Tank Cover (FG15S, FG18S)	R4210-01A1	R-16
	Hydraulic Piping (Pump To Control Valve)	R4220-01A0	R-18
	Hydraulic Piping (Tilt Cylinder Line; truck serial no. 600001A - 650000A)	R4230-01A0	R-20
	Hydraulic Piping (Tilt Cylinder Line; truck serial no. 650001A and up)	R4230-01A0A	R-20A
	Hydraulic Piping - Power Steering Line (1/2 - FG15H, FG18H)	R4240-01A0	R-22
	Hydraulic Piping - Power Steering Line (1/2 -FG15S, FG18S)	R4240-01A1	R-24
	Hydraulic Piping - Return Line	R4260-01A0	R-26
	Hydraulic Piping - Lift Cylinder Line	R4270-01A0	R-28
	Hydraulic Piping - Power Steering Line	R4310-01A0	R-30
	Hydraulic Piping - Control Valve Suction Tube	R4340-01A0	R-32
	Hydraulic Piping	R4350-01A0	R-34
	2-Spool Control Valve (truck serial no. 600001A and Up)	R4360-01A0	R-36
	3-Spool Control Valve (truck serial no. 600001A - 650000A)	R4370-01A0	R-40
	3-Spool Control Valve (truck serial no. 650001A and up)	R4370-01A0A	R-40A
	4-Spool Control Valve (truck serial no. 650001A and up)	R4380-01A0	R-44
	Tilt Cylinder (truck serial no. 600001A - 650000A)	R4400-01A0	R-48
	Tilt Cylinder (truck serial no. 650001A and up)	R4400-01A0A	R-48A
	2 to 3-Spool Hydraulic Control Valve Conversion Kit	R4500-01A0	R-50
	3 to 4-Spool Hydraulic Control Valve Conversion Kit	R4600-01A0	R-52

https://truckmanualshub.com/

2 to 4-Spool Hydraulic Control Valve Conversion Kit	R4700-01A0	R-54
3 to 4-Spool Hydraulic Control Valve Conversion Kit	R4800-01A0	R-56

SO Uprights and Related Parts

Forks and Fork Kits

Komatsu Internal Hose Kits ---- (30D Freeview - Single Function)

Komatsu 30D Full Free Lift, 3-Stage Mast (30D-MT-001)

Cascade 30D Limited Free Lift, 2-Stage Mast (30D-MS-001)

Cascade 35D and 40D High-Visibility World Mast, Full Free Lift, 2-Stage Mast

Cascade 30D Limited Free Lift, 2-Stage Mast (30D-MS-001)

Cascade 35D and 40D High-Visibility World Mast, Full Free Lift, 3-Stage Mast

Cascade 35D and 40D High-Visibility World Mast, Limited Free Lift, 2-Stage Mast

VO Marks and Plates

Marks and Plates (Gasoline) (truck serial no. 600001A - 650000A)	V4010-01A0	V-2
Marks and Plates (Gasoline) (truck serial no. 650001A and up)	V4010-01A0A	V-2A

https://truckmanualshub.com/

This Page Left Intentionally Blank

KOMATSU

https://truckmanualshub.com/

KOMATSU

Engine Related Parts

AX SERIES

Engine Related Parts

https://truckmanualshub.com/

エンジン ユニット オヨビ パワー トレン カンレン ブヒン

FIG.A4110-01A0 ENGINE UNIT AND POWER TRAIN RELATED PARTS

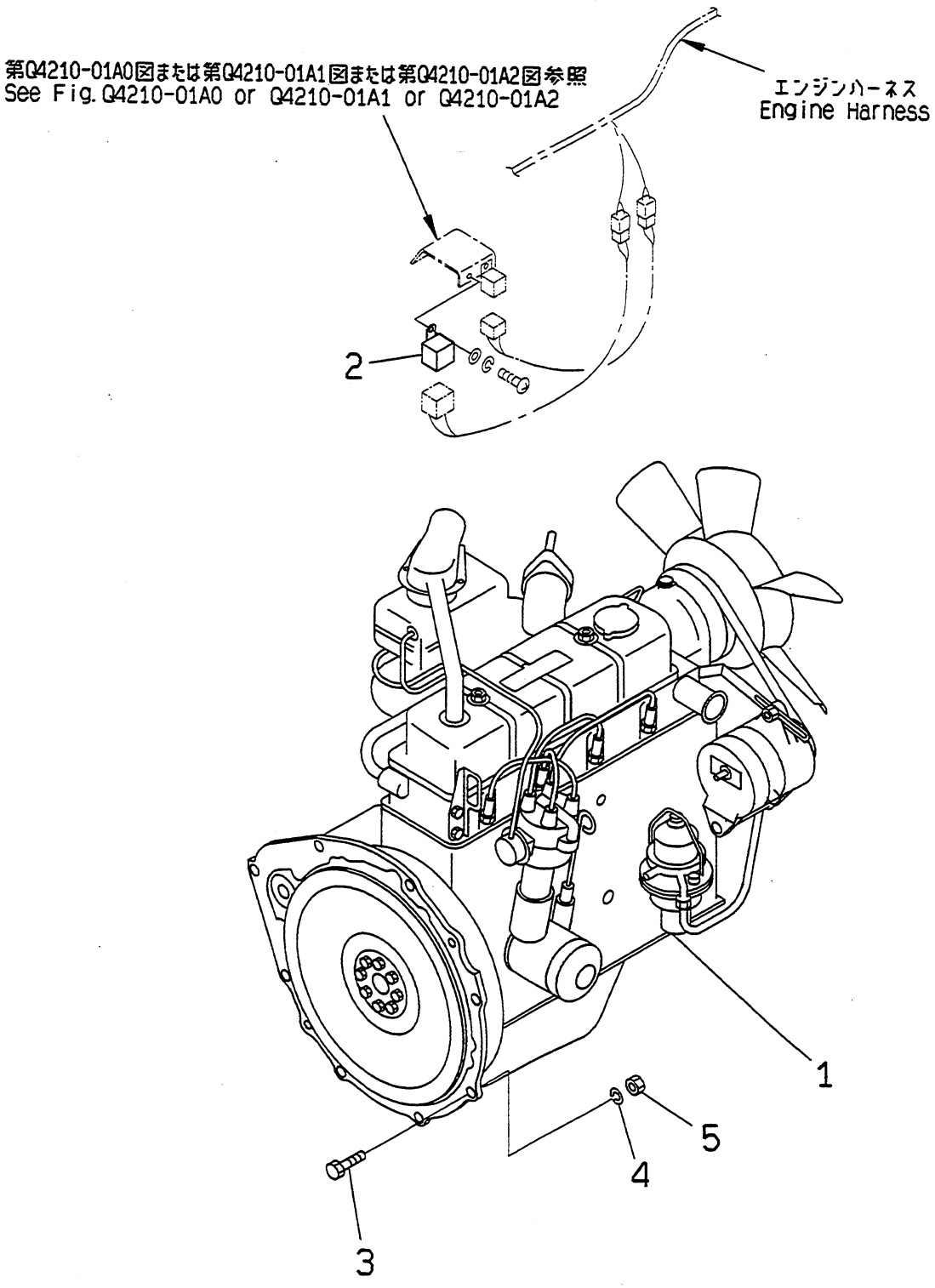

PUF1680

https://truckmanualshub.com/

FIG NO. : A4110-01A0

INDEX	PART NO.	DESCRIPTION	Q'TY	SERIAL NO.
1	37B-1DH-3110	ENGINE,H20.....	1	600001A - 650000A
2	3EB-01-34140	.RELAY,AUTO CHOKE.....	1	
3	01010-81045	BOLT.....	8	
4	01602-21030	WASHER,SPRING.....	8	
5	01580-11008	NUT.....	8	

https://truckmanualshub.com/

FIG. NO. : A4110-01A0A **ENGINE UNIT AND POWER TRAIN-RELATED PARTS**

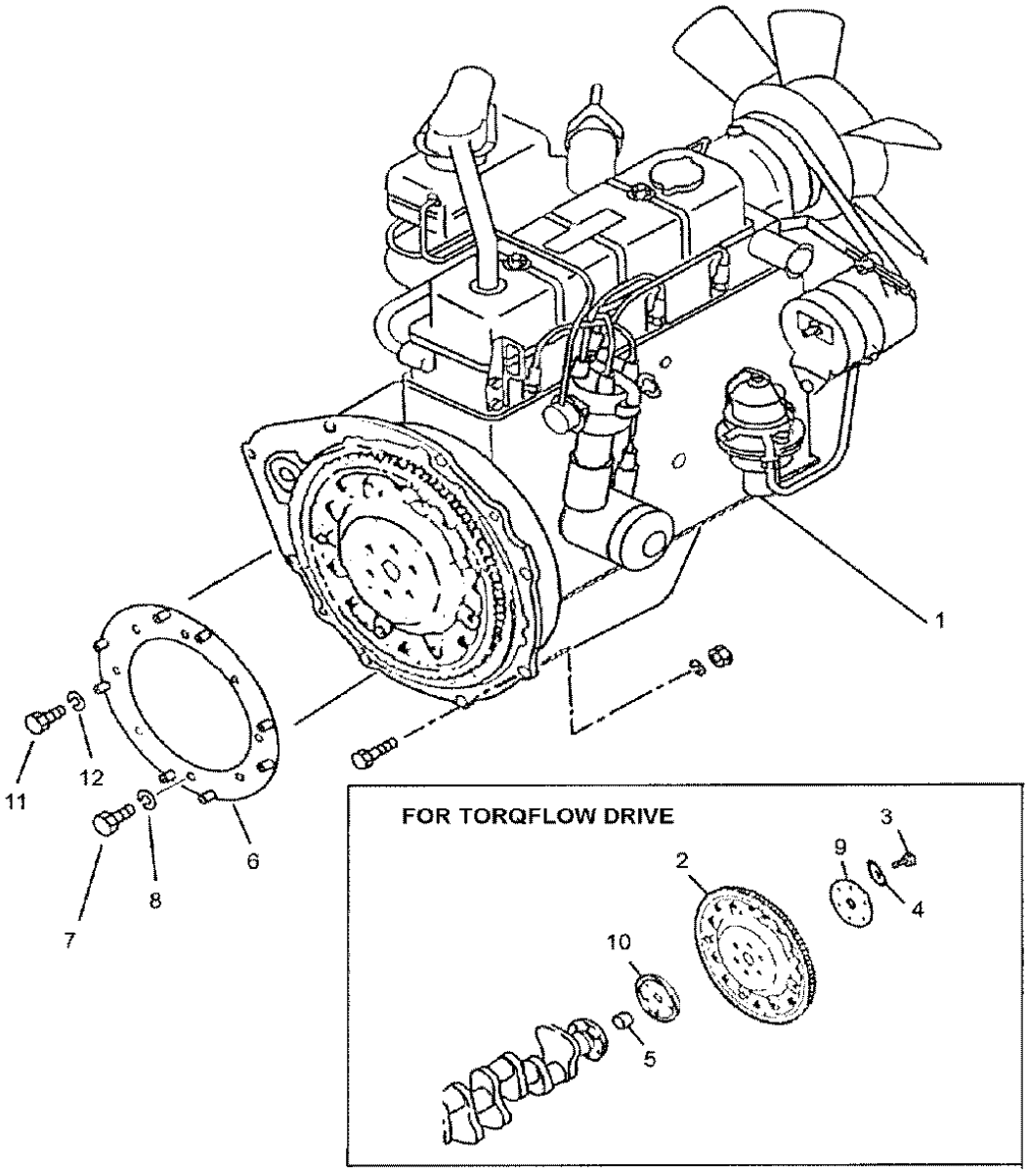

KFI12200001

https://truckmanualshub.com/

FIG. NO. : A4110-01A0A

FG15HT-16, FG18HG-16, FG15ST-16, FG18ST-16

INDEX	PART NO.	DESCRIPTION	Q'TY	SERIAL NO.
				650001A and Up
1	37B-1DH-3710	ENGINE, H20 (GAS)	1	
	37B-1DH-3820	ENGINE, H20 (LPG)	1	
	37B-1DH-3830	ENGINE, H20 (LPS)	1	
	37B-1DH-3850	ENGINE, H20 (GS)	1	
2	12331-50K01	FLYWHEEL, ALL TORQFLOW	1	
3	12315-58S00	BOLT, FLYWHEEL	6	
4	01643-51032	WASHER	6	
5	3EA-01-37180	BUSHING	1	
6	3EA-01-37190	ADAPTOR PLATE	1	
7	01050-51022	BOLT, ADAPTOR-TO-FLYWHEEL	8	
8	01643-51032	WASHER	8	
9	12333-A1000	PLATE, CONVERTER-SIDE, FLYWHEEL	1	
10	12330-E3000	PLATE, CRANKSHAFT-SIDE, FLYWHEEL	1	
11	01010-50816	BOLT	8	
12	01605-20825	WASHER	8	

https://truckmanualshub.com/

エンジン トリツケ ブヒン (クラッチ シヨウ)

FIG.A4120-01A0 ENGINE MOUNTING PARTS (CLUTCH SPEC.)

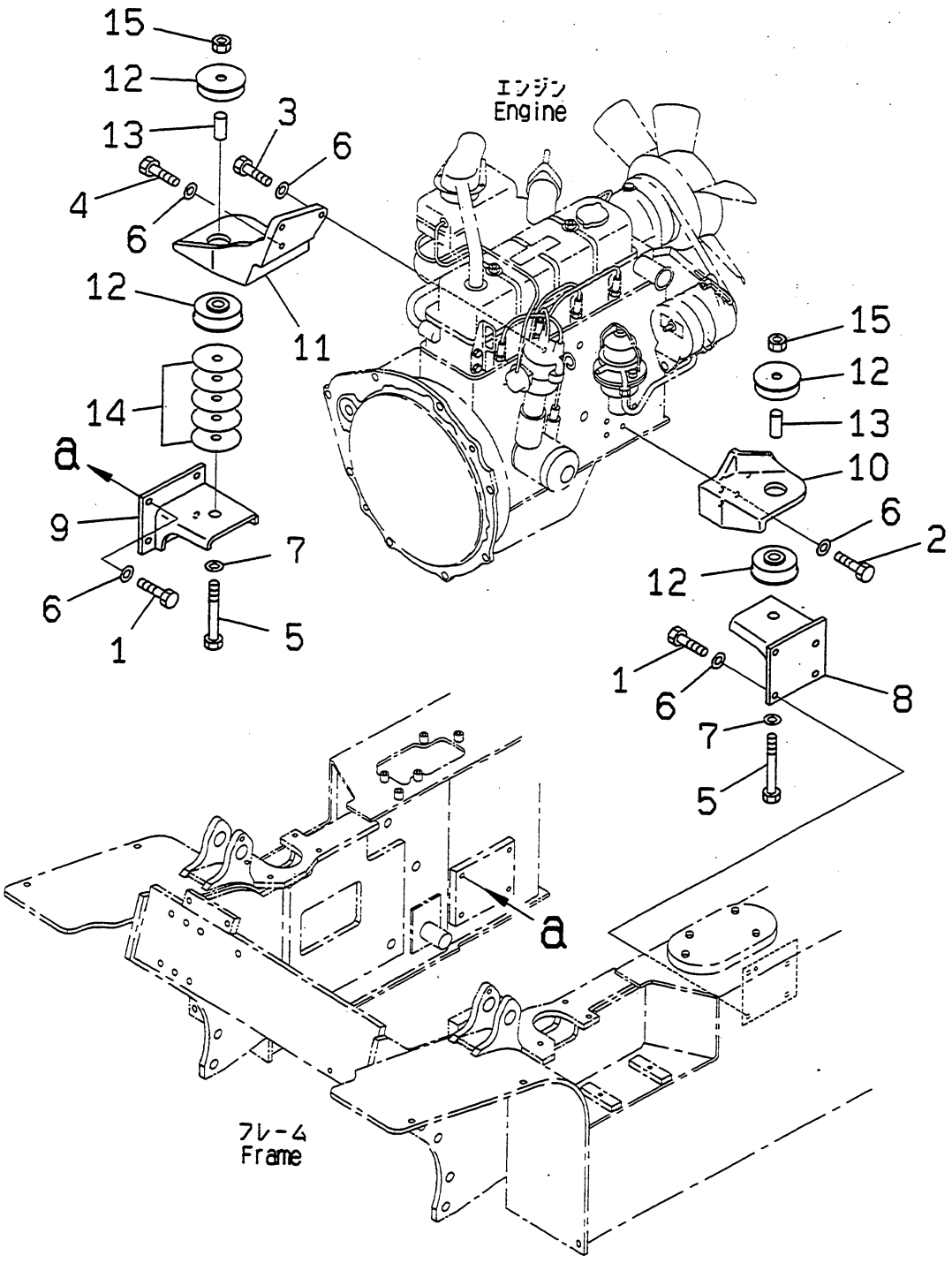

PUF1681

https://truckmanualshub.com/

FIG NO. : A4120-01A0

FG15H

INDEX	PART NO.	DESCRIPTION	Q'TY	SERIAL NO.
1	01010-81025	BOLT	8	600001A and Up
2	01010-81030	BOLT	4	
3	01010-81035	BOLT	2	
4	01010-81040	BOLT	1	
5	01010-81495	BOLT	2	
6	01643-31032	WASHER	15	
7	01643-31445	WASHER	2	
8	3EA-01-35210	BRACKET,L.H	1	
9	3EA-01-35220	BRACKET,R.H	1	
10	3EB-01-31510	BRACKET,L.H	1	
11	3EB-01-31520	BRACKET,R.H	1	
12	3EB-01-31540	RUBBER	4	
13	3EB-01-31550	COLLAR	2	
14	3EB-01-31560	SHIM, 1.0MM	5	
15	3EB-50-13180	U-NUT	2	

https://truckmanualshub.com/

エンジン トリツケ ブヒン (トルク コンバータ ショウ)

FIG.A4120-01A1 ENGINE MOUNTING PARTS (TORQUE CONVERTER SPEC.)

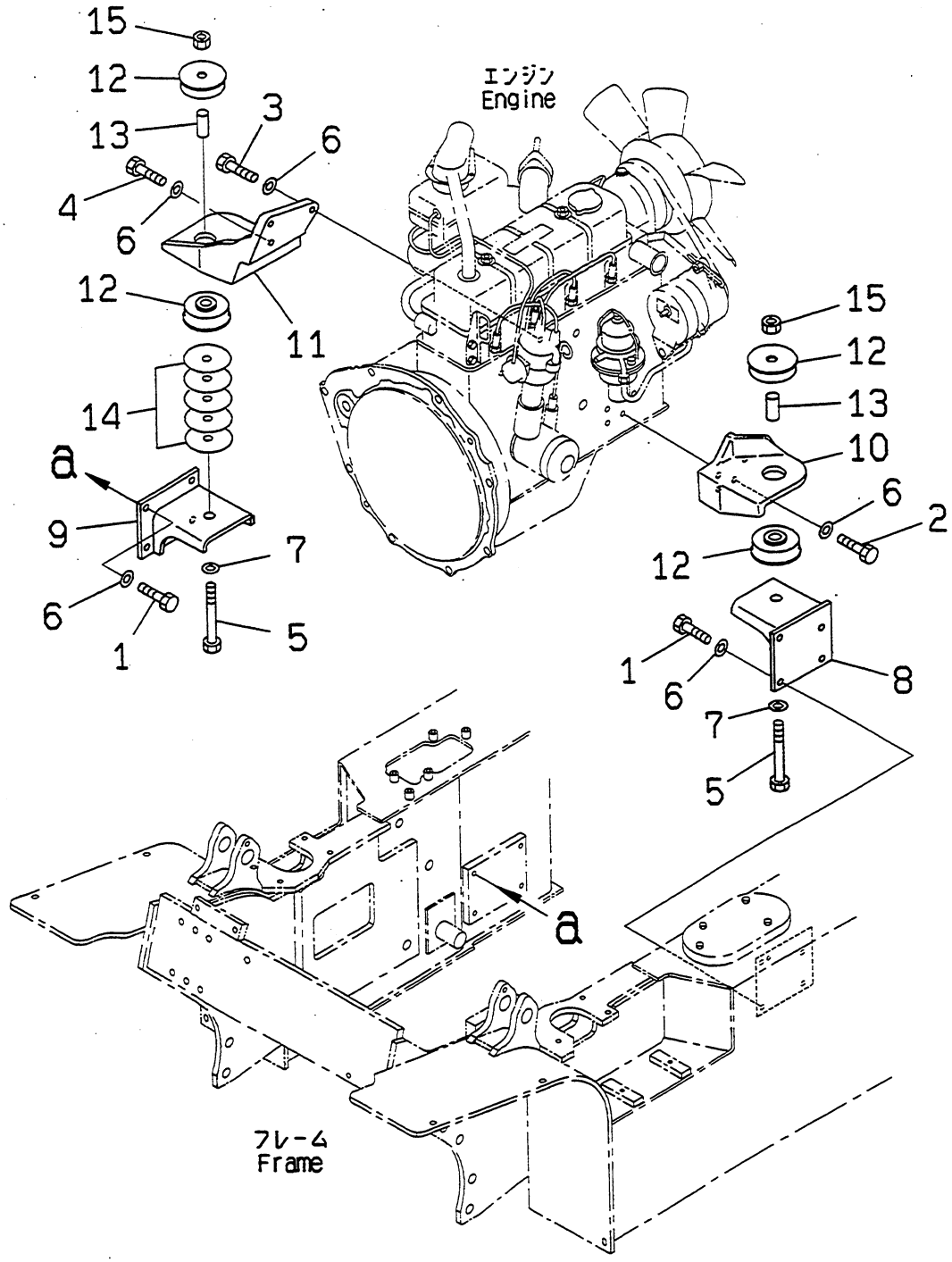

PUF1682

https://truckmanualshub.com/

FIG NO. : A4120-01A1

INDEX	PART NO.	DESCRIPTION	Q'TY	SERIAL NO.
1	01010-81025	BOLT	8	600001A and Up
2	01010-81030	BOLT	4	
3	01010-81035	BOLT	2	
4	01010-81040	BOLT	1	
5	01010-81495	BOLT	2	
6	01643-31032	WASHER	15	
7	01643-31445	WASHER	2	
8	3EA-01-31570	BRACKET,L.H	1	
9	3EA-01-31580	BRACKET,R.H	1	
10	3EB-01-31510	BRACKET,L.H	1	
11	3EB-01-31520	BRACKET,R.H	1	
12	3EB-01-31540	RUBBER	4	
13	3EB-01-31550	COLLAR	2	
14	3EB-01-31560	SHIM, 1.0MM	5	
15	3EB-50-13180	U-NUT	2	

https://truckmanualshub.com/

エンジン トリツケ ブヒン
FIG.A4120-01A2 ENGINE MOUNTING PARTS

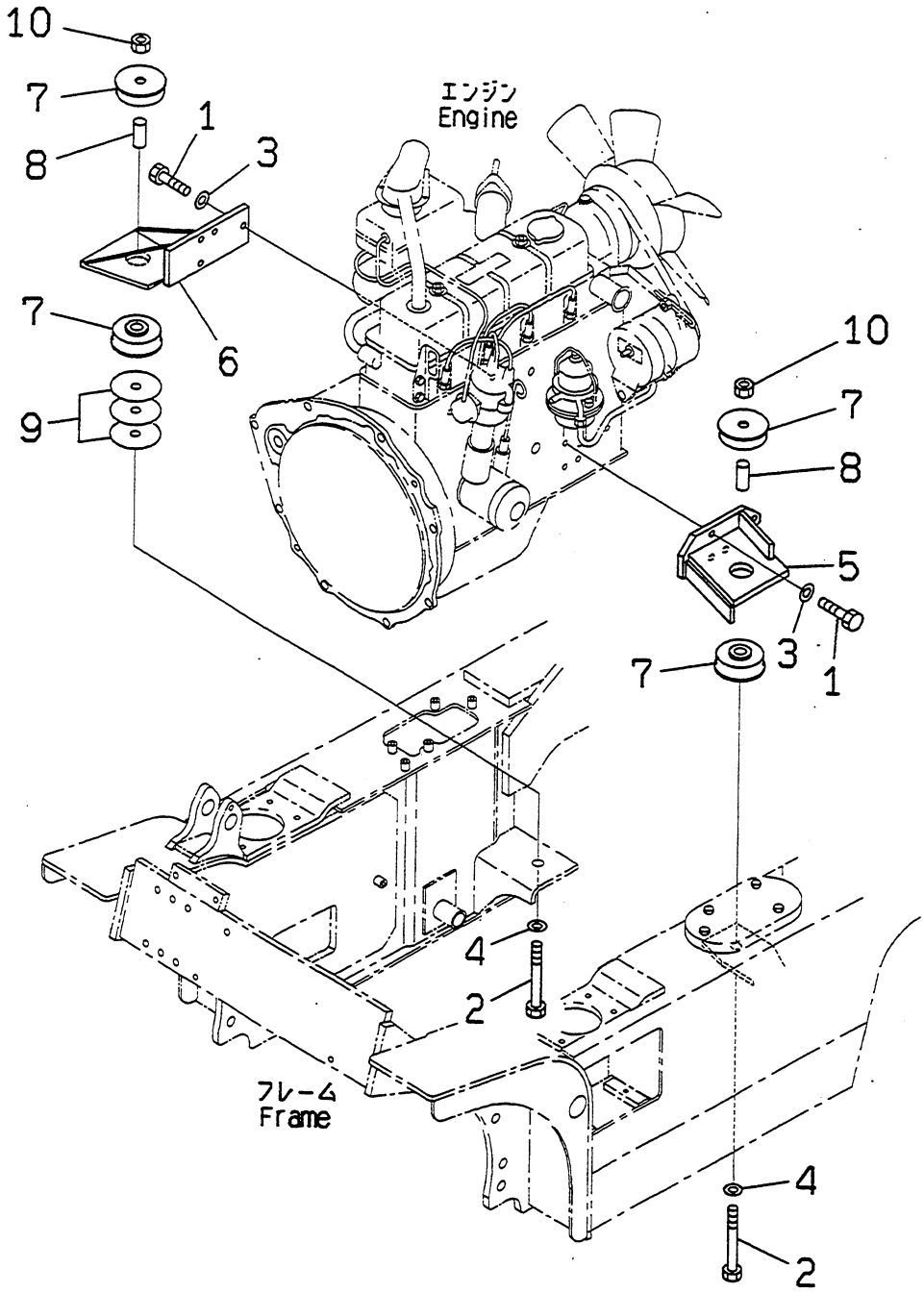

PUF1683

https://truckmanualshub.com/

INDEX	PART NO.	DESCRIPTION	Q'TY	SERIAL NO.
1	01010-81030	BOLT	8	600001A and Up
2	01010-81495	BOLT	2	
3	01643-31032	WASHER	8	
4	01643-31445	WASHER	2	
5	3EA-01-A5510	BRACKET,L.H	1	
6	3EA-01-A5521	BRACKET,R.H	1	
7	3EB-01-31540	RUBBER	4	
8	3EB-01-31550	COLLAR	2	
9	3EB-01-31560	SHIM, 1.0MM	5	
10	3EB-50-13180	U-NUT	2	

https://truckmanualshub.com/

エアー インテーク コネクション
FIG.A4140-01A0 AIR INTAKE CONNECTION

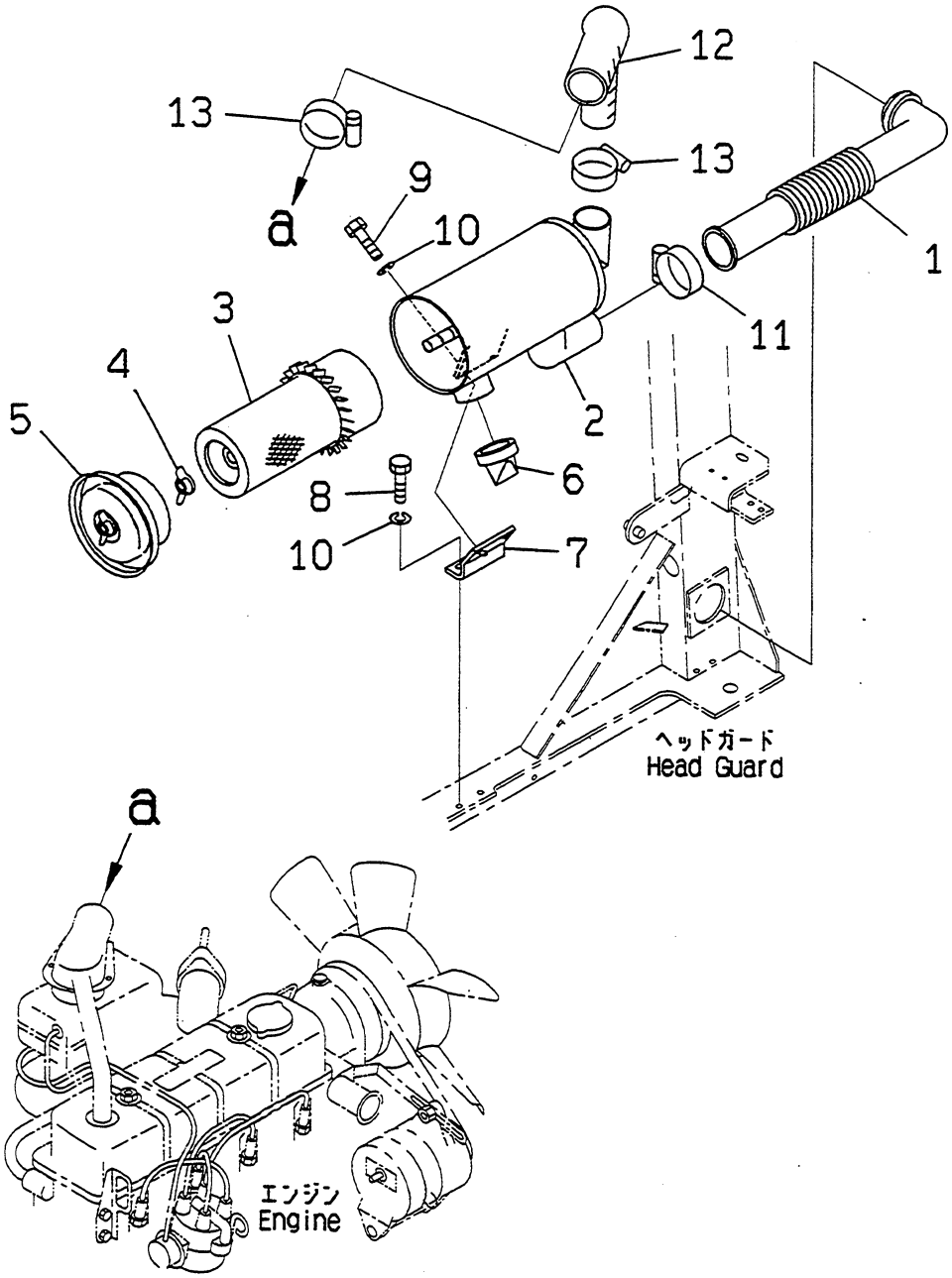

PUF1684

https://truckmanualshub.com/

FIG NO. : A4140-01A0

FG15H,FG18H

INDEX	PART NO.	DESCRIPTION	Q'TY	SERIAL NO.
1	3EB-01-25160	HOSE	1	600001A and Up
	3EB-01-A5310	CLEANER ASS'Y,AIR	1	
2	3EB-01-A5330	.BODY ASS'Y	1	
3	3EB-01-A5340	.ELEMENT ASS'Y	1	
4	3EB-01-A5420	.NUT ASS'Y	1	
5	3EB-01-A5430	.COVER ASS'Y	1	
6	3EB-01-A5440	.VALVE,VACUATOR	1	
7	3EB-01-35150	PLATE	1	
8	01010-80816	BOLT	2	
9	01010-80830	BOLT	2	
10	01602-20825	WASHER,SPRING	4	
11	07280-06429	CLAMP	1	
12	3EB-01-A5411	HOSE	1	
13	07281-00709	CLAMP	2	

https://truckmanualshub.com/

エアー インテーク コネクション
FIG.A4140-01A1 AIR INTAKE CONNECTION

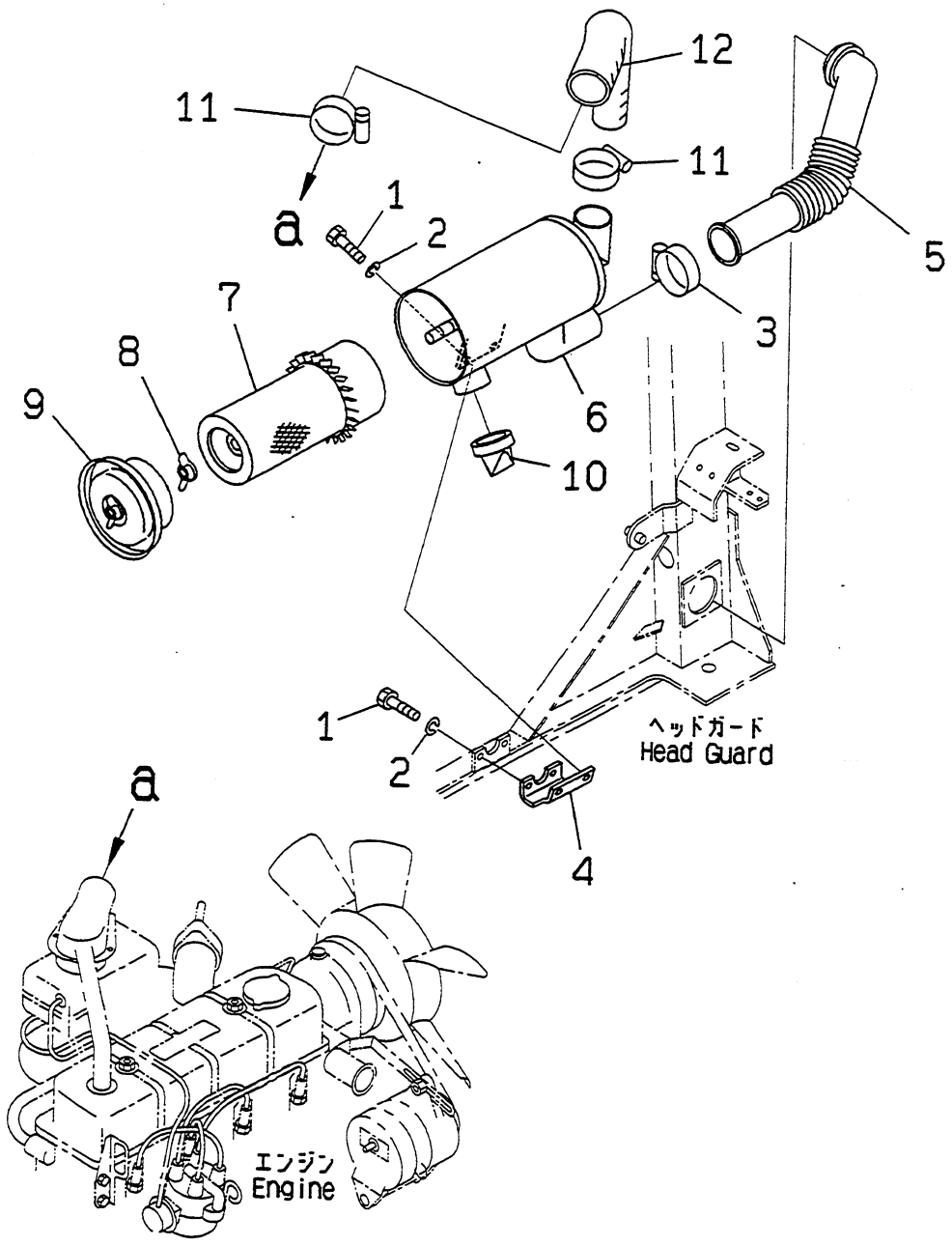

PUF1685

https://truckmanualshub.com/

INDEX	PART NO.	DESCRIPTION	Q'TY	SERIAL NO.
1	01010-80816	BOLT	4	600001A and Up
2	01602-20825	WASHER,SPRING	4	
3	07280-06429	CLAMP	1	
4	3EA-01-35110	BRACKET	1	
5	3EA-02-25240	HOSE	1	
	3EB-01-A5310	CLEANER ASS'Y,AIR	1	
6	3EB-01-A5330	.BODY ASS'Y	1	
7	3EB-01-A5340	.ELEMENT ASS'Y	1	
8	3EB-01-A5420	.NUT ASS'Y	1	
9	3EB-01-A5430	.COVER ASS'Y	1	
10	3EB-01-A5440	.VALVE,VACUATOR	1	
11	07281-00709	CLAMP	2	
12	3EA-01-A5410	HOSE	1	

https://truckmanualshub.com/

This Page Left Intentionally Blank

KOMATSU

https://truckmanualshub.com/

KOMATSU

Engine Parts
H20 II

LPG CONVERSION
LPG DUAL FUEL

AX SERIES

Engine Parts H20 II

https://truckmanualshub.com/

https://truckmanualshub.com/

H20

GASOLINE ENGINE

Engine Serial No. K40001X and up

APPLICABLE MACHINE MODELS

A-spec .....All countries except Japan and USA 輸出標準仕様
J-spec .....Japanese specification 日本国内仕様
C-spec .....USA

Engine Type Code	Machine Model	Spec.	仕様	Clutch type
H200	FG20/23/25/28/30-12 FG20S/25S-12 FG15H/18H-16	A, C & J-spec	STD	Dry clutch TORQFLOW drive
H202			STD	
H203			Large Capacity ALT.	
H204			Tropical Terrain	
H205			Cab Less (KFI)	
H20a			LPS (KFI)	
H206			Air Conditioner	
H207			UL/GS (KFI/KFE)	
H201		J-spec	STD	Wet clutch
H208			Large Capacity ALT.	
H209			Air Conditioner	

https://truckmanualshub.com/

https://truckmanualshub.com/

H20 II ENGINE
CONTENTS

CONTENTS		1
ENGINE	FIG. #	PAGE
CYLINDER BLOCK AND OIL PAN	H2001	A-2
CYLINDER HEAD ROCKER COVER	H2002	A-4
PISTON AND CRANKSHAFT	H2003	A-6
TIMING CHAIN	H2004	A-8
FRONT COVER	H2005	A-10
CAM SHAFT	H2006	A-12
INTAKE MANIFOLD	H2007	A-14
OIL PUMP	H2008	A-16
WATER PUMP	H2009	A-18
BLOWBY GAS VALVE	H2010	A-20
VACUUM CONTROL	H2012	A-22
CARBURATOR (GAS)	H2015	A-24
GOVERNOR	H2017	A-28
FUEL PUMP	H2018	A-30
AIR HORN	H2019	A-32
SPARK PLUG	H2020	A-34
DISTRIBUTOR	H2021	A-36
ATERNATOR MOUNTING	H2022	A-38
ALTERNATOR	H2025	A-40
STARTING MOTOR (MITSUBISHI)	H2027	A-42
STARTING MOTOR (WET TYPE)	H2028	A-44
STARTING MOTOR (REDUCTION TYPE)	H2029	A-46
AX LPG CONVERSION	LPG-1	A-48
AX DUAL FUEL	LPG-2	A-49
NUMERICAL INDEX FOR H20 II		A-52

https://truckmanualshub.com/

シリンダ ブロック オヨビ オイル パン
FIG.H2001 CYLINDER BLOCK AND OIL PAN

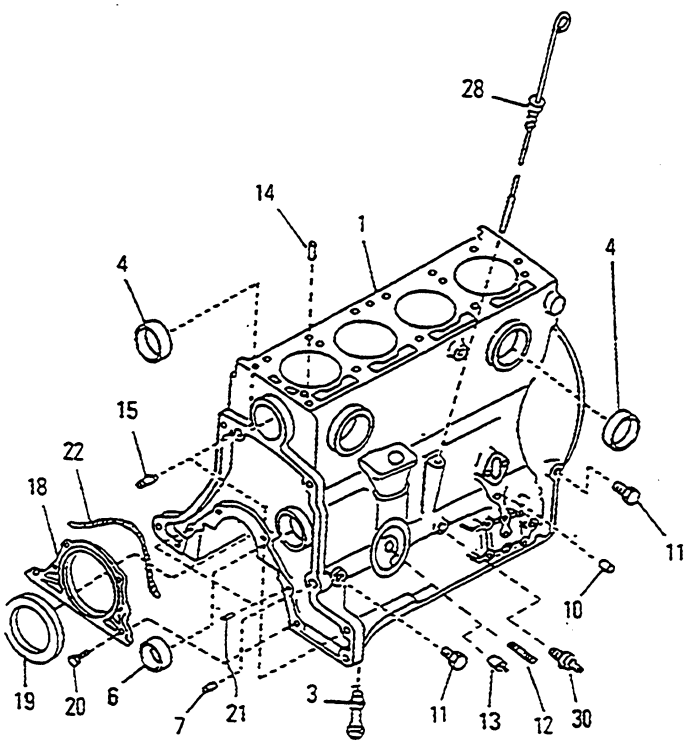

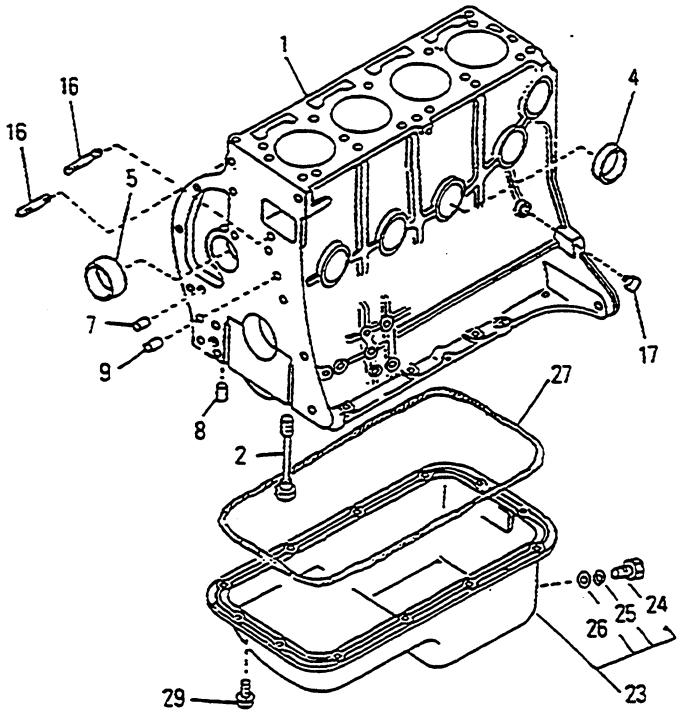

https://truckmanualshub.com/

FIG NO. : H2001

INDEX	PART NO.	DESCRIPTION	Q'TY	SERIAL NO.
1	11000-50K00	BLOCK ASS'Y,CYLINDER.....	1	K40001X-
2	12293-P0500	.BOLT.....	10	K40001X-
3	15075-50K01	.BUSHING.....	1	K40001X-
4	NJ00933-1351A	.PLUG.....	7	K40001X-
5	13002-71200	.BUSHING.....	1	K40001X-
6	11019-32201	.PLUG.....	1	K40001X-
7	11024-K0100	.PLUG.....	2	K40001X-
8	11024-78200	.PLUG.....	1	K40001X-
9	11046-73402	.PIN,DOWEL.....	2	K40001X-
10	11023-78200	.PLUG.....	1	K40001X-
11	NJ08931-3021A	.PLUG.....	2	K40001X-
12	15213-21001	.STUD.....	1	K40001X-
13	15241-D4200	.VALVE ASS'Y,RELIFE.....	1	K40001X-
14	11053-73400	PIN,DOWEL.....	2	K40001X-
15	30412-P5100	PIN,DOWEL.....	2	K40001X-
16	11392-50K00	STUD.....	2	K40001X-
17	11024-8501	PLUG,DRAIN.....	1	K40001X-
18	12297-50K00	RETAINER,OIL.....	1	K40001X-
19	12279-50K00	SEAL,OIL.....	1	K40001X-
20	NJ08120-8201E	BOLT.....	4	K40001X-
21	11046-73402	PIN,DOWEL.....	2	K40001X-
22	11121-38U00	GASKET.....	AR	K40001X-
23	11110-50K00	PAN ASS'Y,OIL.....	1	K40001X-
24	11128-69200	.PLUG,DRAIN.....	1	K40001X-
25	11026-61000	.WASHER.....	1	K40001X-
26	11119-61000	.SEAT.....	1	K40001X-
27	11121-38U00	GASKET.....	AR	K40001X-
28	11140-50K00	GAUGE ASS'Y,OIL LEVEL.....	1	K40001X-
29	NJ08120-61228	BOLT.....	12	K40001X-
30	25240-89911	SWITCH ASS'Y,OIL PRESSURE.....	1	K40001X-

https://truckmanualshub.com/

FIG.H2002 シリンダ ヘッド ロッカ カバー
CYLINDER HEAD ROCKER COVER

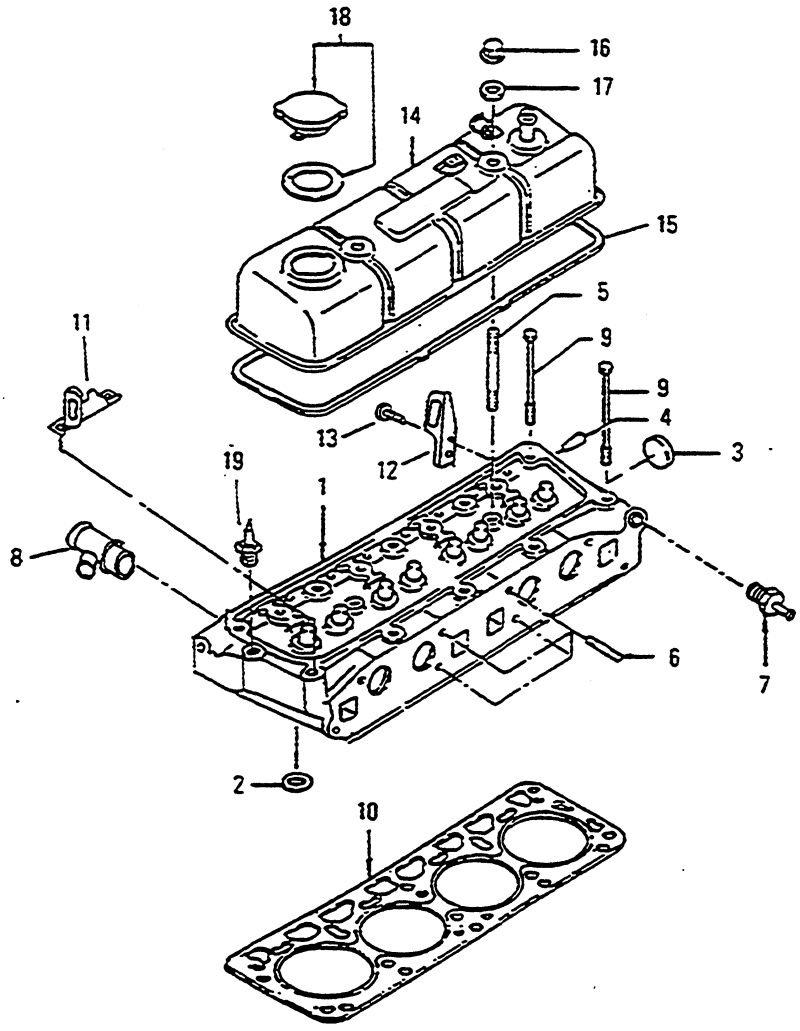

https://truckmanualshub.com/

FIG NO. : H2002

INDEX	PART NO.	DESCRIPTION	Q'TY	SERIAL NO.
1	11041-50K00	HEAD ASS'Y,CYLINDER.....	1	K40001X-
2	11099-01B01	.SEAT,VALVE.....	4	K40001X-
3	NJ00933-1351A	.PLUG.....	1	K40001X-
4	11065-30000	PLUG.....	2	K40001X-
5	11063-Y4400	STUD.....	2	K40001X-
6	NJ08223-83210	STUD.....	4	K40001X-
7	14049-76001	CONNECTOR,WATER.....	1	K40001X-
8	11060-50K00	OUTLET,WATER.....	1	K40001X-
9	11057-8B000	BOLT.....	10	K40001X-
10	11044-50K00	GASKET,CYLINDER HEAD.....	1	K40001X-
11	10005-50K01	SLINGER,FRONT.....	1	K40001X-
12	10005-1E400	SLINGER,REAR.....	1	K40001X-
13	NJ08121-0201E	BOLT.....	2	K40001X-
14	13264-50K00	COVER ASS'Y,VALVE.....	1	K40001X-
15	13270-E3400	GASKET.....	1	K40001X-
16	13274-B1101	NUT.....	2	K40001X-
17	13275-E0720	WASHER.....	2	K40001X-
18	15255-85500	CAP ASS'Y,OIL FILLER.....	1	K40001X-
19	25080-89903	GAUGE ASS'Y,WATER TEMPERATURE.....	1	K40001X-

https://truckmanualshub.com/

ピストン オヨビ クランクシャフト

FIG.H2003 PISTON AND CRANKSHAFT

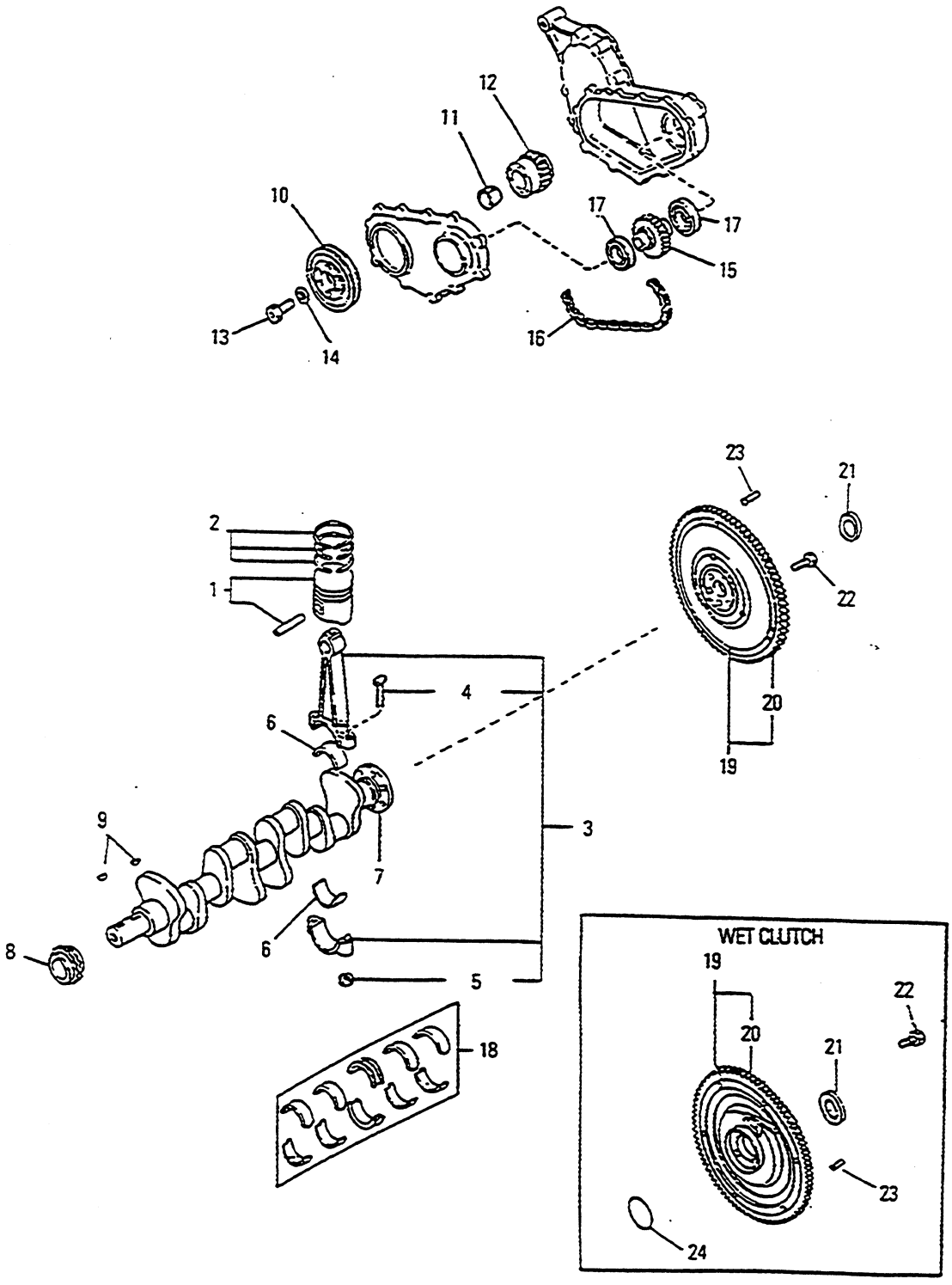

https://truckmanualshub.com/

FIG NO. : H2003

INDEX	PART NO.	DESCRIPTION	Q'TY	SERIAL NO.
1	12010-50K00	PISTON SET,STANDARD	4	K40001X-
	12010-50K70	PISTON SET.....(OS)	4	K40001X-
	12010-50K71	PISTON SET.....(OS)	4	K40001X-
	12010-50K72	PISTON SET.....(OS)	4	K40001X-
2	12033-50K00	RING SET,STANDARD	4	K40001X-
	12035-50K00	RING SET.....(OS)	4	K40001X-
	12036-50K00	RING SET.....(OS)	4	K40001X-
	12037-50K00	RING SET.....(OS)	4	K40001X-
3	12100-50K00	ROD ASS'Y,CONNECTING	4	K40001X-
4	12109-D0210	.BOLT	8	K40001X-
5	12112-H1000	.NUT	8	K40001X-
6	12111-D2800	BUSHING,STANDARD	8	K40001X-
	12112-D2800	BUSHING.....(US)	8	K40001X-
	12113-D2800	BUSHING.....(US)	8	K40001X-
	12114-D2800	BUSHING.....(US)	8	K40001X-
7	12200-50K00	CRANKSHAFT ASS'Y	8	K40001X-
8	13021-03G00	SPROCKET	1	K40001X-
9	NJ00926-51600	KEY	2	K40001X-
10	12303-50K00	PULLEY,CRANKSHAFT	1	K40001X-
11	12307-50K00	WEDGE,CRANK PULLEY	1	K40001X-
12	12351-50K00	SPROCKET	1	K40001X-
13	12309-29S00	BOLT	1	K40001X-
14	12308-W3400	WASHER	1	K40001X-
15	12353-50K00	SPROCKET	1	K40001X-
16	12352-00H00	CHAIN	1	K40001X-
17	12354-50K00	BEARING	2	K40001X-
18	12207-50K00	BEARING SET,STANDARD	1	K40001X-
	12208-50K00	BEARING SET.....(US)	1	K40001X-
	12209-50K00	BEARING SET.....(US)	1	K40001X-
	12210-50K00	BEARING SET.....(US)	1	K40001X-
	12211-50K00	BEARING SET.....(US)	1	K40001X-
	12212-50K00	BEARING SET.....(US)	1	K40001X-
19	12310-K9302	FLYWHEEL ASS'Y	1	K40001X-
20	12312-50K00	.GEAR,RING	1	K40001X-
21	32202-K9160	BEARING,PILOT	1	K40001X-
22	12315-58S00	BOLT	6	K40001X-
23	12313-10600	PIN	2	K40001X-

https://truckmanualshub.com/

FIG.H2004 タイミング チェーン
TIMING CHAIN

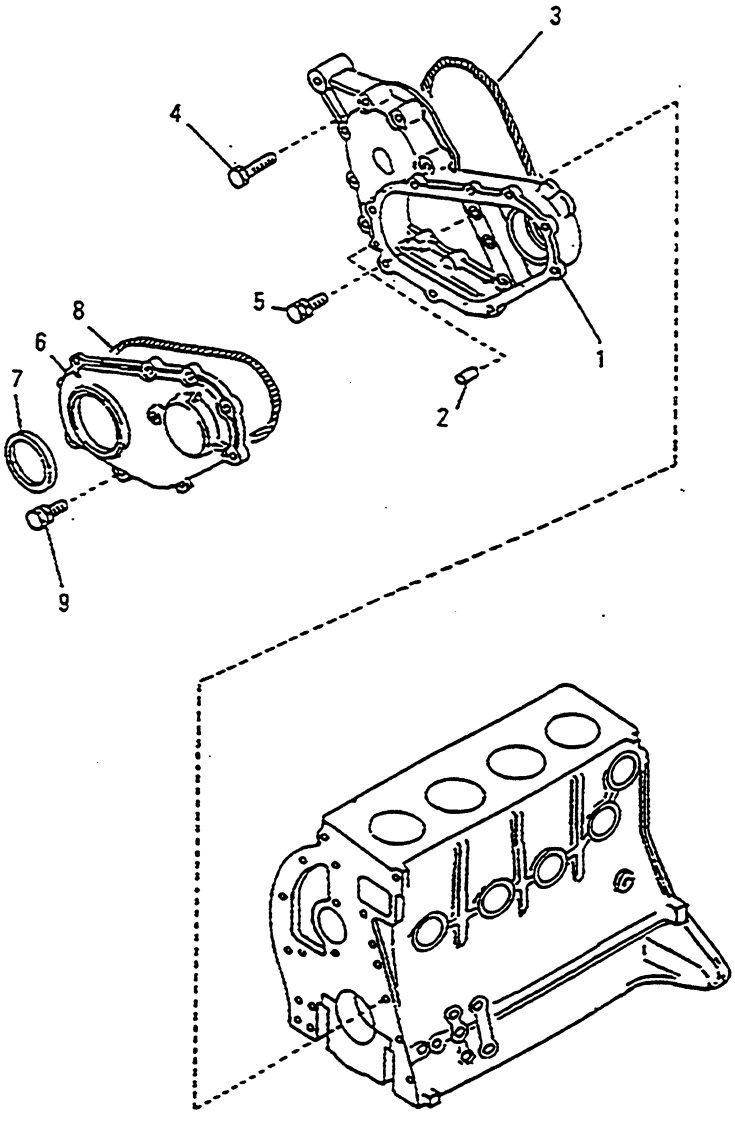

https://truckmanualshub.com/

FIG NO. : H2004

INDEX	PART NO.	DESCRIPTION	Q'TY	SERIAL NO.
1	13034-50K00	HOUSING,CHAIN.....	1	K40001X-
2	11046-73402	PIN,DOWEL.....	1	K40001X-
3	11121-38U00	GASKET.....	AR	K40001X-
4	NJ08120-8451E	BOLT.....	6	K40001X-
5	NJ08120-8251E	BOLT.....	1	K40001X-
6	13501-50K00	COVER,FRONT.....	1	K40001X-
7	13042-A3510	SEAL,OIL.....	1	K40001X-
8	11121-38U00	GASKET.....	AR	K40001X-
9	NJ08120-8251E	BOLT.....	9	K40001X-

https://truckmanualshub.com/

フロント カバー
FIG.E2005 FRONT COVER

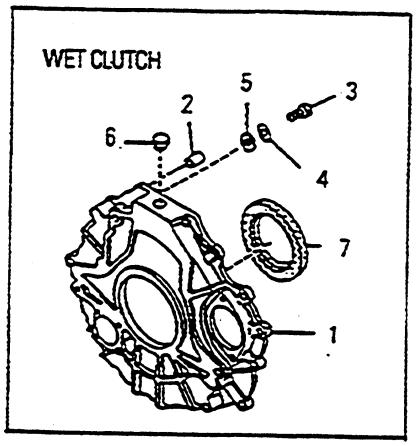

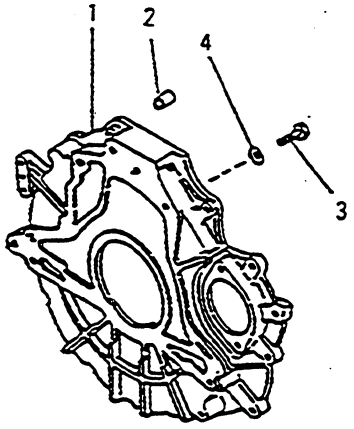

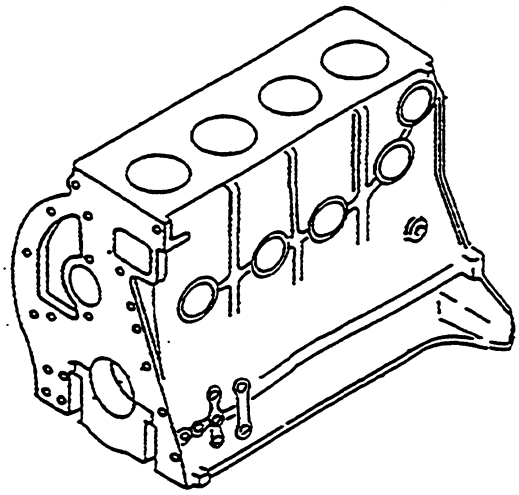

https://truckmanualshub.com/

FIG NO. : H2005

INDEX	PART NO.	DESCRIPTION	Q'TY	SERIAL NO.
1	12320-K9302	HOUSING,FLYWHEEL.....	1	K40001X-
2	30413-61700	PIN,DOWEL.....	2	K40001X-
3	NJ08171-0301A	BOLT.....	4	K40001X-
4	NJ08915-2401A	WASHER,SPRING.....	4	K40001X-

https://truckmanualshub.com/

FIG.H2006 カム シャフト
CAM SHAFT

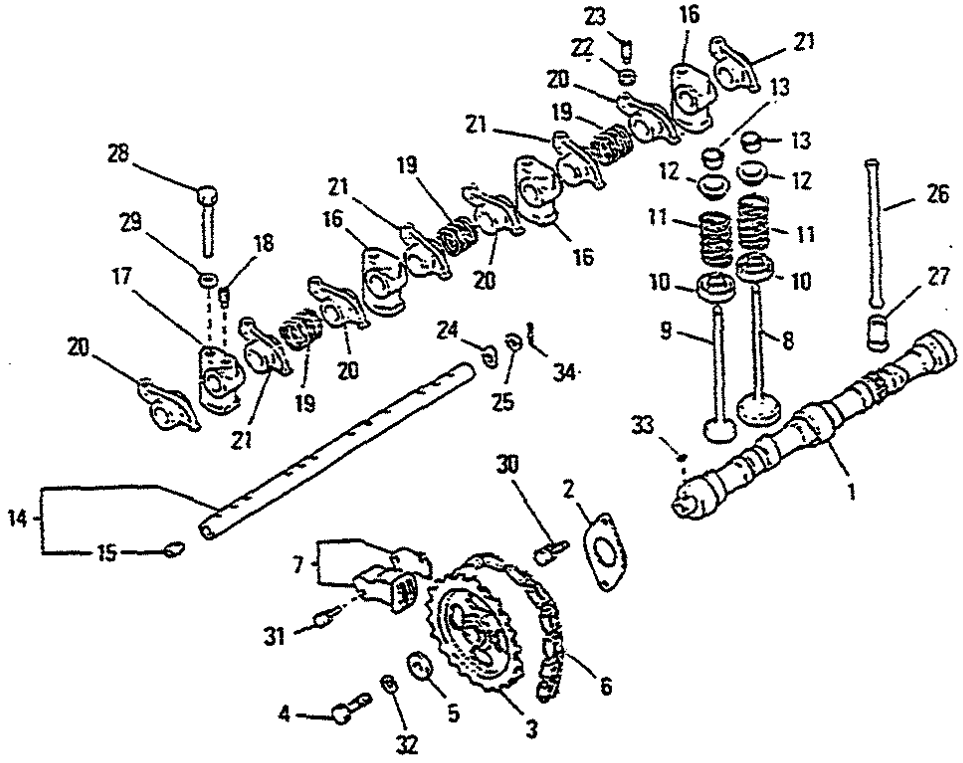

https://truckmanualshub.com/

FIG NO. : H2006

INDEX	PART NO.	DESCRIPTION	Q'TY	SERIAL NO.
1	13001-50K00	CAMSHAFT	1	K40001X-
2	13010-78201	PLATE	1	K40001X-
3	13024-50K00	SPROCKET	1	K40001X-
4	13012-78200	BOLT	1	K40001X-
5	13013-78200	WASHER	1	K40001X-
6	13028-50K00	CHAIN	1	K40001X-
7	13070-50K00	TENSION ASS'Y,CHAIN	1	K40001X-
8	13201-50K00	VALVE,INTAKE	4	K40001X-
9	13202-50K00	VALVE,EXHAUST	4	K40001X-
10	13207-2B500	SEAL,OIL	8	K40001X-
11	13203-50K00	SPRING,VALVE	8	K40001X-
12	13209-01B00	RETAINER,VALVE	8	K40001X-
13	13210-01M00	COLLET,VALVE	16	K40001X-
14	13252-32200	SHAFT,ROCKER	1	K40001X-
15	13254-58000	.PLUG	2	K40001X-
16	13222-78200	BRACKET	3	K40001X-
17	13223-78200	BRACKET	1	K40001X-
18	13226-78200	SCREW,SET	1	K40001X-
19	13256-58000	SPRING,ROCKER	3	K40001X-
20	13258-78201	ROCKER,VALVE	4	K40001X-
21	13259-78201	ROCKER,VALVE	4	K40001X-
22	13235-78200	NUT	8	K40001X-
23	13234-78200	SCREW	2	K40001X-
24	13289-58000	SPRING,ROCKER	2	K40001X-
25	13289-58000	SPRING,ROCKER	2	K40001X-
26	13238-12200	ROD,PUSH	8	K40001X-
27	13231-H1001	LIFTER,VALVE	8	K40001X-
28	13224-78200	BOLT	4	K40001X-
29	NJ08915-4401A	WASHER	4	K40001X-
30	NJ08120-61628	BOLT	2	K40001X-
31	NJ08120-63528	BOLT	2	K40001X-
32	NJ08915-1401A	WASHER	1	K40001X-
33	NJ00926-41610	KEY	1	K40001X-
34	NJ00921-22500	PIN	2	K40001X-

https://truckmanualshub.com/

FIG.H2007 インテーク マニホールド
INTAKE MANIFOLD

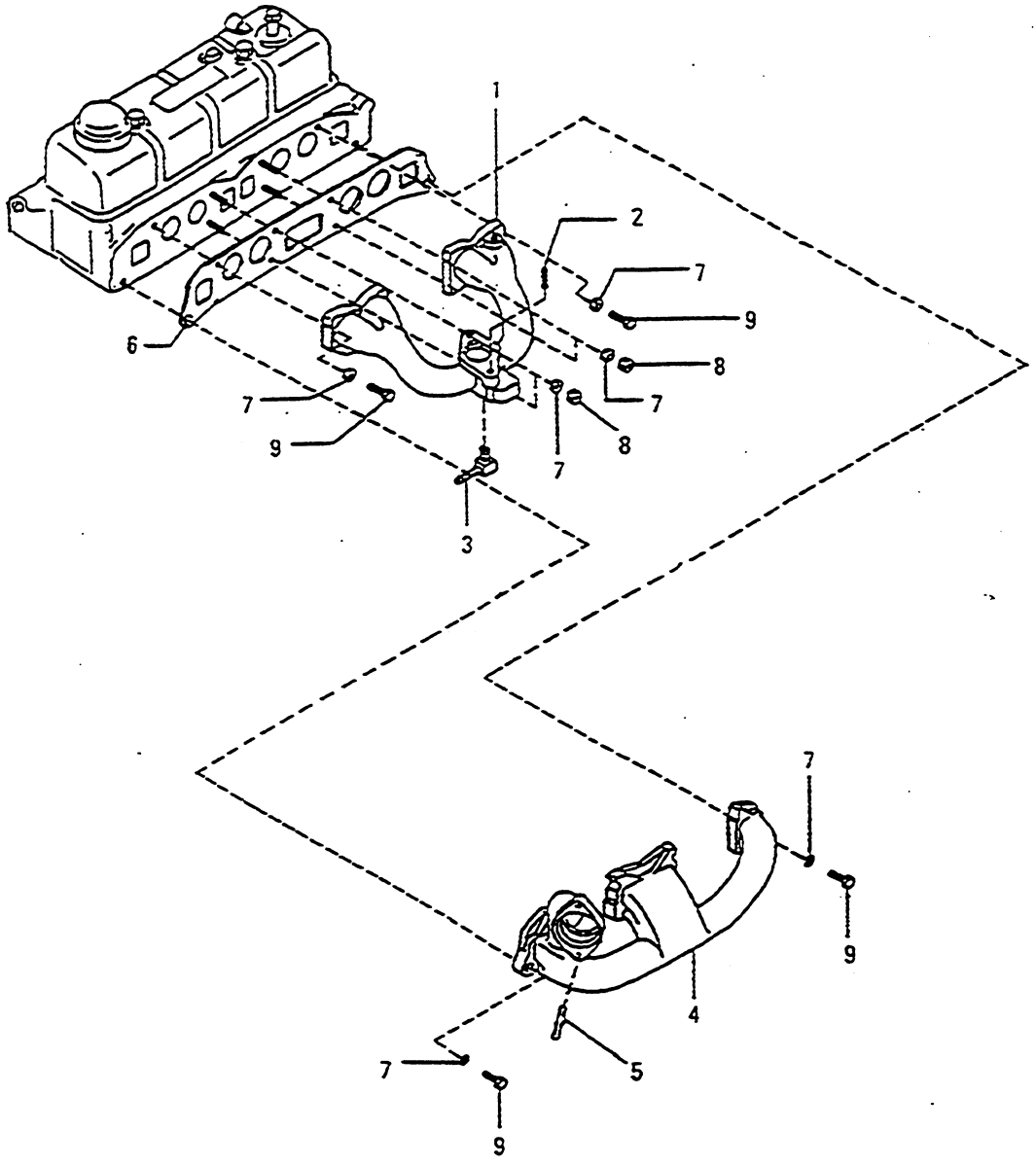

https://truckmanualshub.com/

FIG NO. : H2007

INDEX	PART NO.	DESCRIPTION	Q'TY	SERIAL NO.
1	14003-50K76	MANIFOLD,INTAKE.....	1	K40001X-
2	NJ08223-87510	STUD.....	2	K40001X-
3	14053-E0600	CONNECTOR,WATER.....	1	K40001X-
4	14004-L1101	MANIFOLD,EXHAUST.....	1	K40001X-
5	NJ08223-83010	STUD.....	2	K40001X-
6	14035-50K00	GASKET.....	1	K40001X-
7	14037-32200	YOKE.....	8	K40001X-
8	NJ08911-2081A	NUT.....	4	K40001X-
9	NJ08120-8351A	BOLT.....	4	K40001X-

https://truckmanualshub.com/

FIG.H2008 オイル ポンプ
OIL PUMP

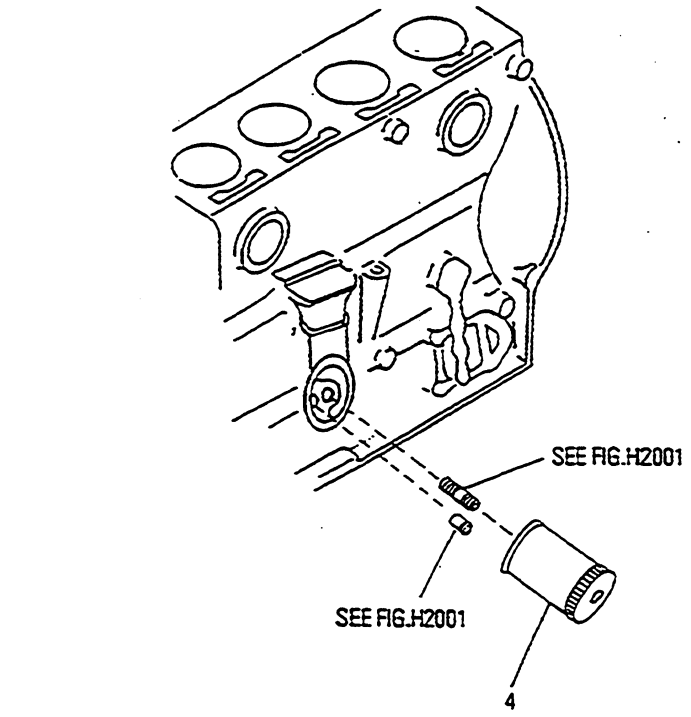

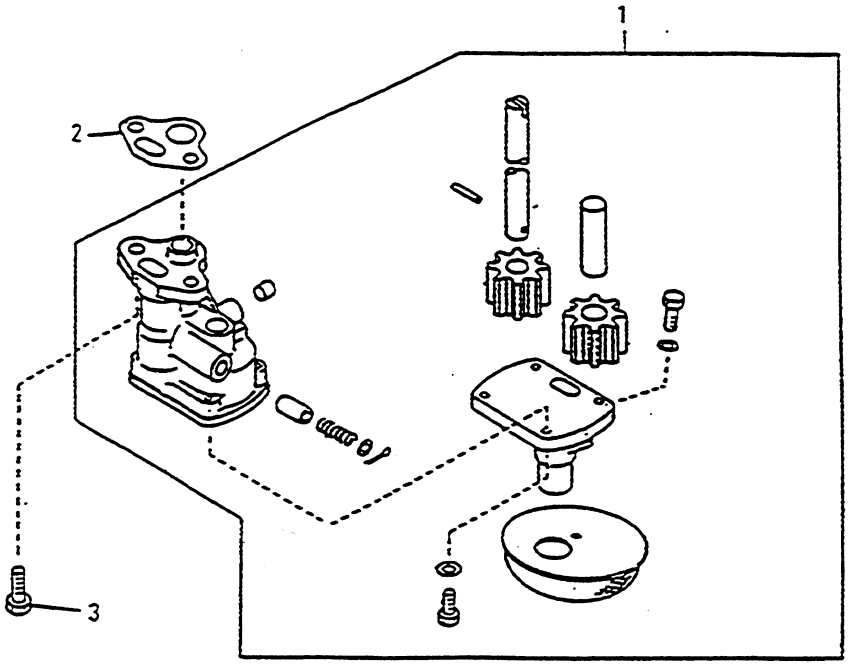

https://truckmanualshub.com/

FIG NO. : H2008

INDEX	PART NO.	DESCRIPTION	Q'TY	SERIAL NO.
1	15010-66202	PUMP ASS'Y,OIL.....	1	K40001X-
2	15066-78200	GASKET.....	1	K40001X-
3	NJ08120-8201E	BOLT.....	2	K40001X-
4	15208-01B02	FILTER ASS'Y,OIL.....	1	K40001X-

https://truckmanualshub.com/

ｳｫｰﾀ ﾎﾟﾝﾌﾟ
FIG.H2009 WATER PUMP

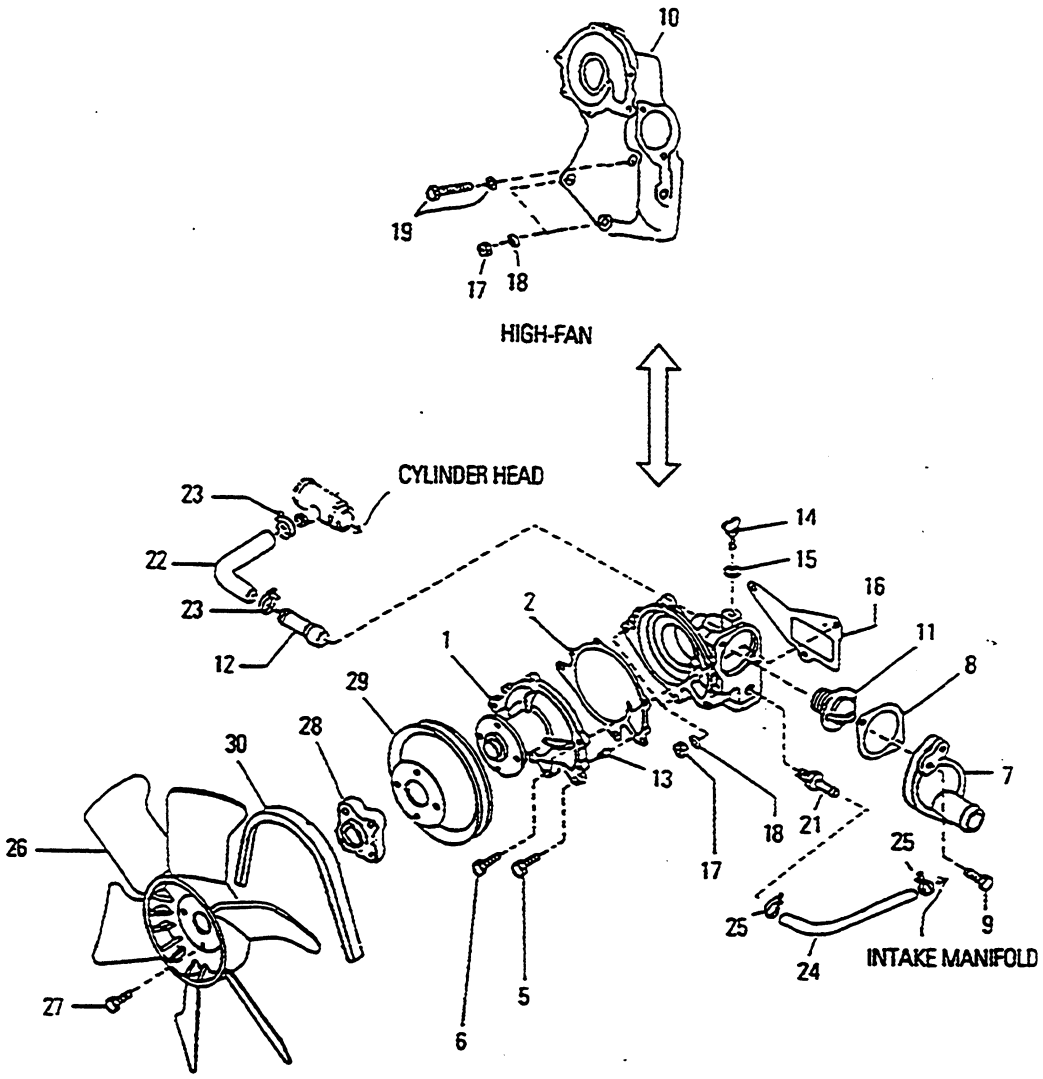

https://truckmanualshub.com/

FIG NO. : H2009

INDEX	PART NO.	DESCRIPTION	Q'TY	SERIAL NO.
1	21010-50K26	PUMP ASS'Y,WATER	1	K40001X-
2	21014-07N00	.GASKET	1	K40001X-
5	NJ08120-8201E	BOLT	2	K40001X-
6	NJ08120-62028	BOLT	3	K40001X-
7	11060-W7000	INLET,WATER	1	K40001X-
8	11062-07N00	GASKET	1	K40001X-
9	NJ08120-8301E	BOLT	2	K40001X-
10	11061-K9760	HOUSING,THERMOSTAT	1	K40001X-
11	21200-53J00	THERMOSTAT	1	K40001X-
12	14075-40F04	CONNECTOR,WATER	1	K40001X-
13	11046-73402	PIN,DOWEL	2	K40001X-
14	21480-R0100	COCK,DRAIN	1	K40001X-
15	21481-18000	PACKING	1	K40001X-
16	11072-50K01	GASKET	1	K40001X-
17	NJ08911-2081A	NUT	2	K40001X-
18	NJ08915-3381A	WASHER	2	K40001X-
19	21079-K9760	BOLT	1	K40001X-
21	14049-76001	CONNECTOR,WASHER	1	K40001X-
22	14080-50K00	HOSE,WATER	1	K40001X-
23	15-55-00261	CLAMP	2	K40001X-
24	14055-50K01	HOSE,WATER	1	K40001X-
25	NJ01555-00191	CLAMP	2	K40001X-
26	21060-50K00	FAN,COOLING	1	K40001X-
27	NJ08120-63028	BOLT	4	K40001X-
28	21064-T3470	SPACER,FAN	1	K40001X-
29	21051-87V00	PULLEY,FAN	1	K40001X-
30	11720-K4080	V-BELT,FAN	1	K40001X-

https://truckmanualshub.com/

ﾌﾞﾛｰﾊﾞｲ ｶﾞｽ ﾊﾞﾙﾌﾞ
FIG.H2010 BLOWBY GAS VALVE

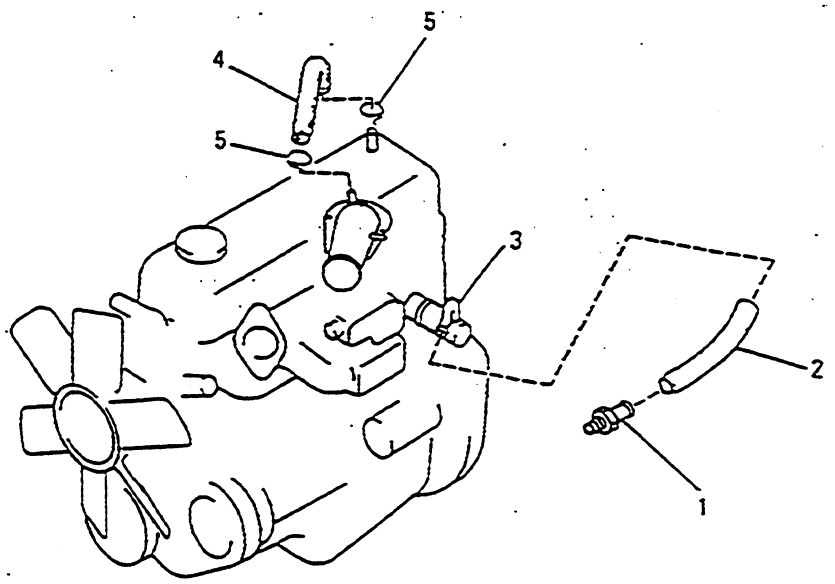

https://truckmanualshub.com/

FIG NO. : H2010

INDEX	PART NO.	DESCRIPTION	Q'TY	SERIAL NO.
1	11810-A3501	VALVE ASS'Y,CONTROL.....	1	K40001X-
2	11828-50K00	HOSE.....	1	K40001X-
3	11830-50K00	SEPARATOR.....	1	K40001X-
4	11826-50K00	HOSE.....	1	K40001X-
5	16439-10B00	CLAMP.....	2	K40001X-

https://truckmanualshub.com/

バキューム コントロール
FIG.H2012 VACUUM CONTROL

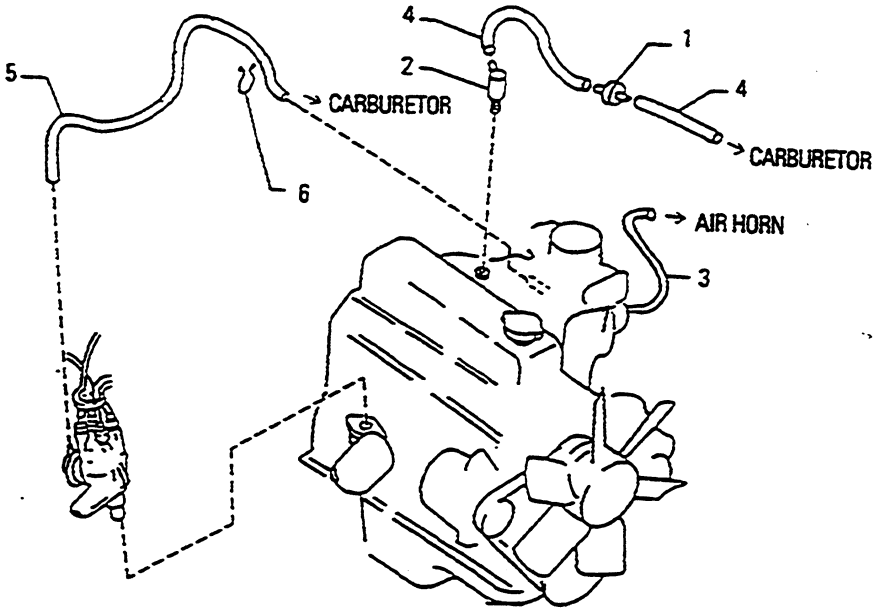

https://truckmanualshub.com/

FIG NO. : H2012

INDEX	PART NO.	DESCRIPTION	Q'TY	SERIAL NO.
1	14958-H9810	VALVE ASS'Y.....	1	K40001X-
2	14875-A2600	CONNECTOR.....	1	K40001X-
3	NJ02173-03020	HOSE.....	1	K40001X-
4	NJ02187-41401	HOSE.....	2	K40001X-
5	NJ02187-47201	HOSE.....	1	K40001X-
6	NJ01552-00321	CLAMP.....	2	K40001X-

https://truckmanualshub.com/

FIG.H2015 キャブレタ CARBURETOR

★ : CHAMBER ASSY-CHOKE (#2)

◆ : GASKET KIT (#52)

▲ : SCREW AND WASHER KIT (A) (#53)

● : SCREW AND WASHER KIT (B) (#54)

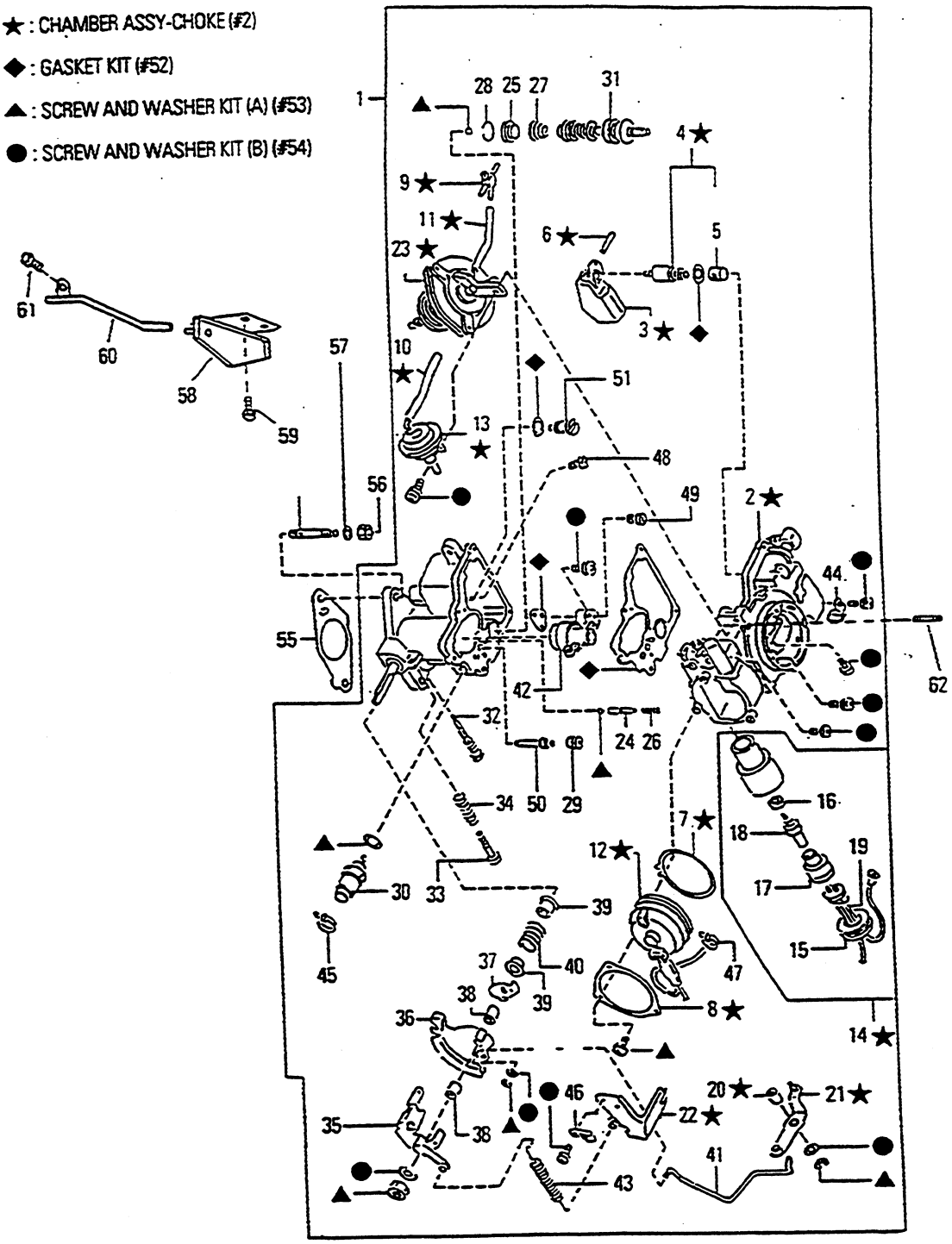

https://truckmanualshub.com/

FIG NO. : H2015

INDEX	PART NO.	DESCRIPTION	Q'TY	SERIAL NO.
1	16010-50K00	CARBURETOR ASS'Y	1	K40001X-
2	16266-50K00	.CHAMBER ASS'Y	1	K40001X-
3	16061-55K00	..FLOAT	1	K40001X-
4	16101-53L02	..VALVE,FLOAT	1	K40001X-
5	16098-D0100	...FILTER	1	K40001X-
6	16827-85G00	..PIN	1	K40001X-
7	16390-50Y00	..PLATE	1	K40001X-
8	16390-01M01	..PLATE	1	K40001X-
9	16267-55K00	..CONNECTOR,3 WAY	1	K40001X-
10	16520-50K00	..PIPE	1	K40001X-
11	16520-67G00	..PIPE	1	K40001X-
12	16389-55K00	..COVER	1	K40001X-
13	16199-55K00	..PISTON	1	K40001X-
14	16391-55K00	..ELEMENT KIT	1	K40001X-
15	16399-W7000	...NUT,LOCK	1	K40001X-
16	16392-W7000	...STOPPER	1	K40001X-
17	16394-W7000	...PTC	1	K40001X-
18	16393-50T00	...WAX,PUMP	1	K40001X-
19	16396-55K00	..HARNESS	1	K40001X-
20	16217-50K00	..COLLAR	1	K40001X-
21	16302-55K00	..LEVER,PUMP	1	K40001X-
22	16165-55K00	..BRACKET	1	K40001X-
23	16313-55K00	..CHAMBER ASS'Y	1	K40001X-
24	16071-01M00	.WEIGHT,PUMP	1	K40001X-
25	16245-11200	.STRAINER	1	K40001X-
26	16069-B8500	.SPRING	1	K40001X-
27	16148-50Y00	.SPRING,RETURN	1	K40001X-
28	16156-11200	.CLIP	1	K40001X-
29	16286-85G00	.PLUG	1	K40001X-
30	16196-55K00	.VALVE,SOLENOID	1	K40001X-
31	16151-D4000	.PISTON	1	K40001X-
32	16144-87A00	.SCREW	1	K40001X-
33	16144-55K00	.SCREW	1	K40001X-
34	16145-B8500	.SPRING,THROTTLE	1	K40001X-
35	16249-55K00	.LEVER	1	K40001X-
36	16134-55K00	.LEVER,THROTTLE	1	K40001X-
37	16365-55K00	.ARM	1	K40001X-
38	16217-55K00	.COLLAR	2	K40001X-
39	16116-55K00	.SLEEVE	2	K40001X-
40	16160-55K00	.SPRING,THROTTLE	1	K40001X-
41	16143-55K00	.ROD	1	K40001X-
42	16013-55K00	.VENTURI	1	K40001X-
43	16160-85G60	.SPRING,THROTTLE	1	K40001X-
44	16056-50K00	.CLAMP	1	K40001X-
45	16138-55K00	.CLAMP	1	K40001X-
46	16156-55K00	.CLAMP	1	K40001X-
47	16138-50K00	.CLAMP	1	K40001X-
48	16033-T8000	.JET,MAIN	1	K40001X-
49	16036-50K00	.BLEEDER,MAIN	1	K40001X-
50	16054-20J00	.JET,SLOW	1	K40001X-
51	16059-D0100	.JET,POWER	1	K40001X-
52	16455-55K00	.GASKET KIT	1	K40001X-
53	16465-55K00	.SCREW	1	K40001X-
54	16475-55K00	.SCREW	1	K40001X-
55	16174-50K00	INSULATOR	1	K40001X-
56	NJ08911-2081A	NUT	2	K40001X-
57	NJ08915-3381A	WASHER	2	K40001X-
58	14330-50K65	PLATE	1	K40001X-

https://truckmanualshub.com/

FIG NO. : H2015

INDEX	PART NO.	DESCRIPTION	Q'TY	SERIAL NO.
59	NJ08340-60810	SCREW.....	2	K40001X-
60	16318-50K67	TUBE,DRAIN.....	1	K40001X-
61	NJ08120-61228	BOLT.....	1	K40001X-
62	NJ08216-64510	STUD.....	2	K40001X-
63	16306-00H70	BRACKET.....	1	K40001X-
	11053-73400	PIN.....	1	K40001X-

https://truckmanualshub.com/

BLANK PAGE

https://truckmanualshub.com/

FIG.H2017 ｶﾞﾊﾞﾅ GOVERNOR

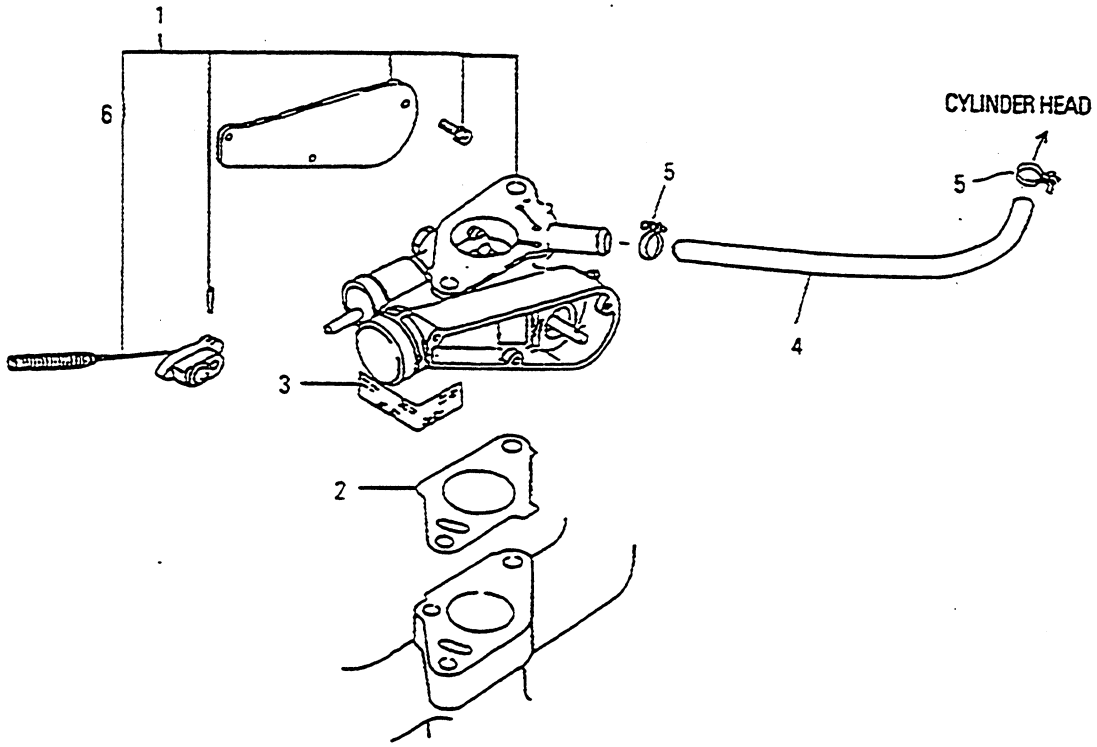

https://truckmanualshub.com/

FIG NO. : H2017

INDEX	PART NO.	DESCRIPTION	Q'TY	SERIAL NO.
1	19100-K9300	GOVERNOR ASS'Y.....	1	K40001X-
2	16174-50K00	INSULATOR.....	1	K40001X-
3	22235-U7400	SEAL.....	1	K40001X-
4	14056-50K00	HOSE,WATER.....	1	K40001X-
5	NJ01555-00191	CLAMP.....	2	K40001X-
6	19110-50K10	.WIRE ASS'Y (CAM BAND).....	1	K40001X-

https://truckmanualshub.com/

フュエル ポンプ
FIG.H2018 FUEL PUMP

POMP LESS

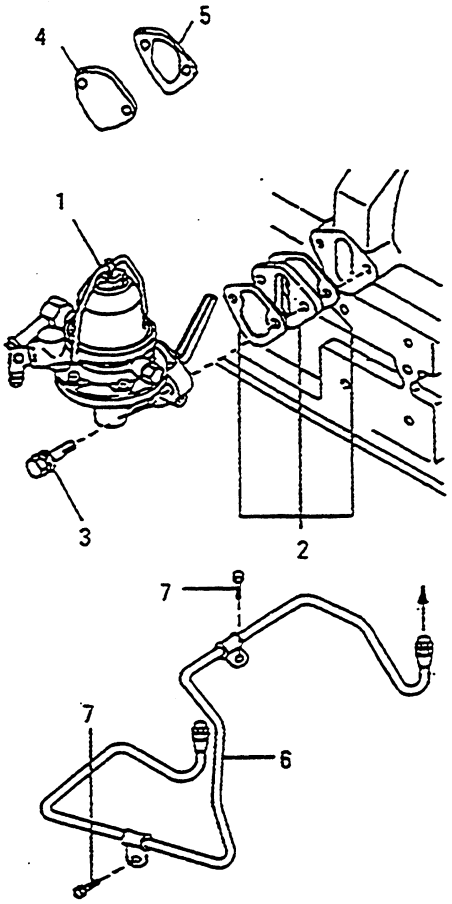

https://truckmanualshub.com/

FIG NO. : H2018

INDEX	PART NO.	DESCRIPTION	Q'TY	SERIAL NO.
1	17010-K9300	PUMP ASS'Y,FUEL.....	1	K40001X-
2	16420-85G00	SPACER.....	1	K40001X-
3	NJ08120-8201B	BOLT.....	2	K40001X-
4	16420-E0100	COVER.....	1	K40001X-
5	17099-85G00	GASKET.....	1	K40001X-
6	17522-K9300	TUBE ASS'Y.....	1	K40001X-
7	NJ08120-8161F	BOLT.....	2	K40001X-

https://truckmanualshub.com/

FIG.H2019 エアー ホーン
AIR HORN

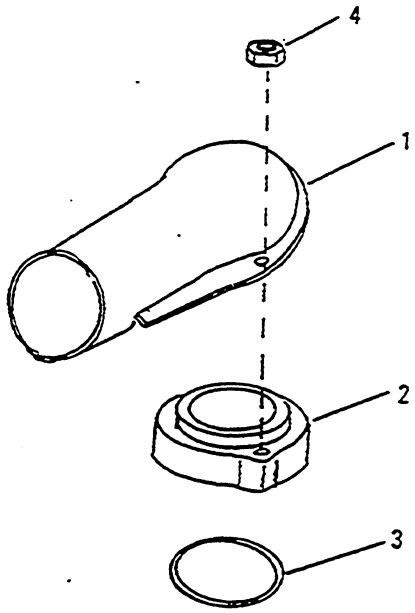

https://truckmanualshub.com/

FIG NO. : H2019

INDEX	PART NO.	DESCRIPTION	Q'TY	SERIAL NO.
1	16267-50K00	HORN ASS'Y,AIR.....	1	K40001X-
2	16578-50K00	SPACER.....	1	K40001X-
3	16569-50K10	SEAL.....	1	K40001X-
4	NJ08911-10637	NUT.....	2	K40001X-

https://truckmanualshub.com/

FIG.H2020 スパーク プラグ
SPARK PLUG

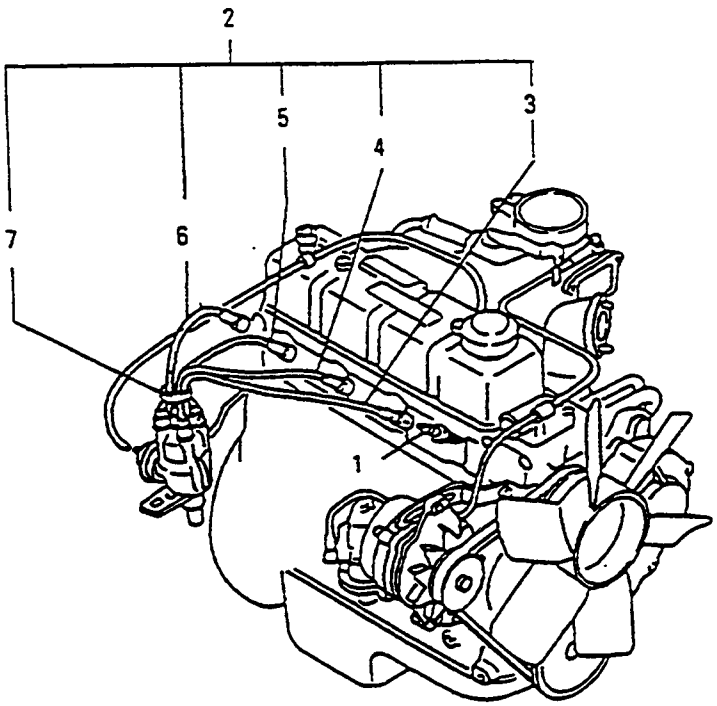

https://truckmanualshub.com/

FIG NO. : H2020

INDEX	PART NO.	DESCRIPTION	Q'TY	SERIAL NO.
1	22401-W8914	PLUG,SPARK.....	4	K40001X-
2	22450-50K50	CABLE ASS'Y.....	1	K40001X-
3	22451-66001	.CABLE.....	1	K40001X-
4	22452-66001	.CABLE.....	1	K40001X-
5	22453-66001	.CABLE.....	1	K40001X-
6	22454-80001	.CABLE.....	1	K40001X-
7	22431-10560	.CLAMP.....	1	K40001X-

https://truckmanualshub.com/

FIG.H2021 ﾃﾞｨｽﾄﾘﾋﾞｭｰﾀ DISTRIBUTOR

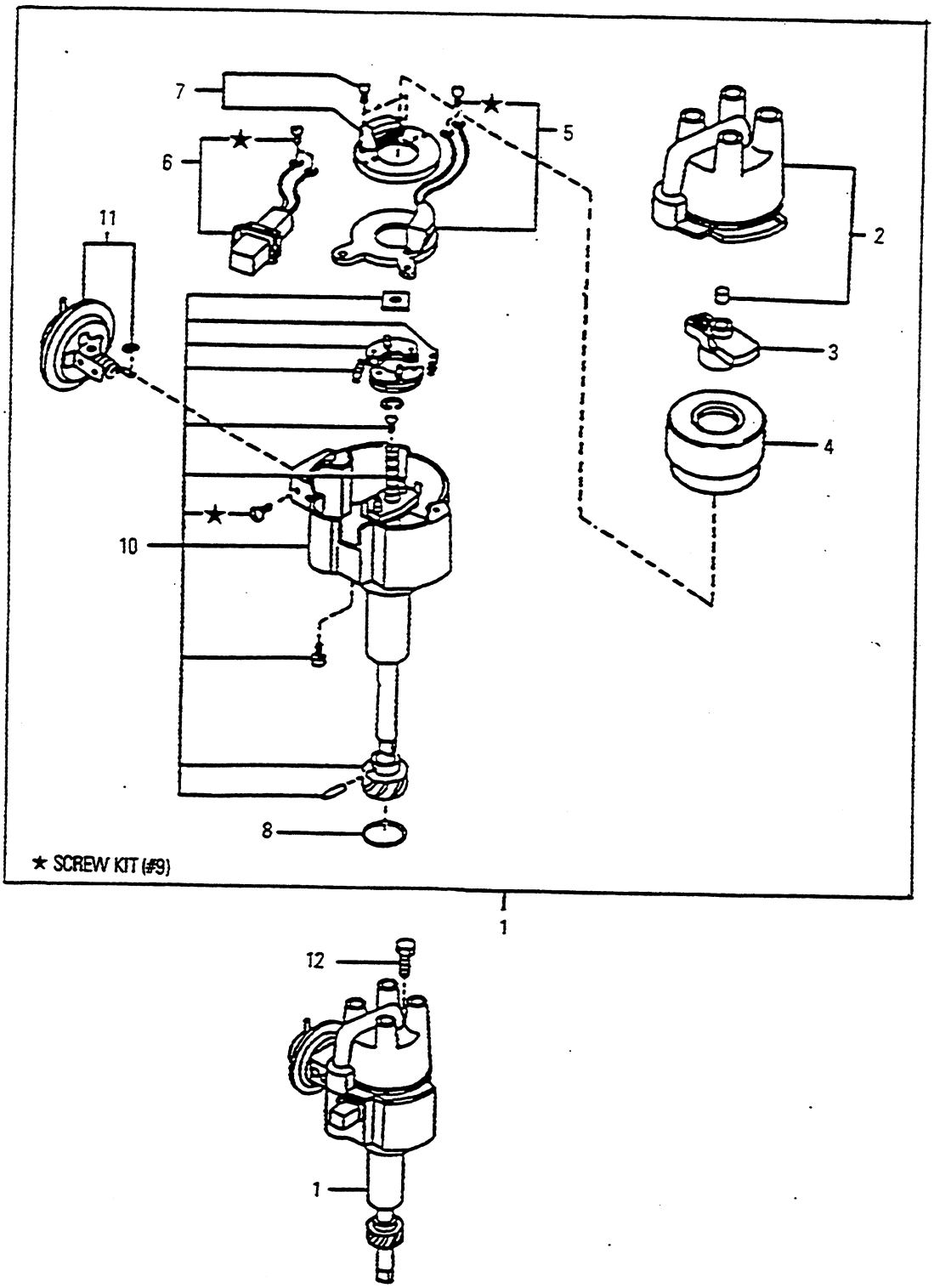

https://truckmanualshub.com/

FIG NO. : H2021

INDEX	PART NO.	DESCRIPTION	Q'TY	SERIAL NO.
1	22100-50K10	DISTRIBUTOR ASS'Y.....	1	K40001X-
2	22162-55K10	.CAP ASS'Y.....	1	K40001X-
3	22157-55K10	.ROTOR,HEAD.....	1	K40001X-
4	22125-50Y11	.COVER.....	1	K40001X-
5	22229-50Y10	.PICK-UP.....	1	K40001X-
6	22404-55K10	.CONNECTOR ASS'Y.....	1	K40001X-
7	22020-55K10	.IGNITION.....	1	K40001X-
8	22131-55K10	.SEAL.....	1	K40001X-
9	22750-M0110	.SCREW.....	1	K40001X-
10	22106-50K10	.HOUSING.....	1	K40001X-
11	22301-50K10	.CONTROL ASS'Y,VACUUM.....	1	K40001X-
12	NJ08360-2851D	BOLT.....	1	K40001X-

https://truckmanualshub.com/

FIG.H2022 オルタネータ マウンティング
ALTERNATOR MOUNTING

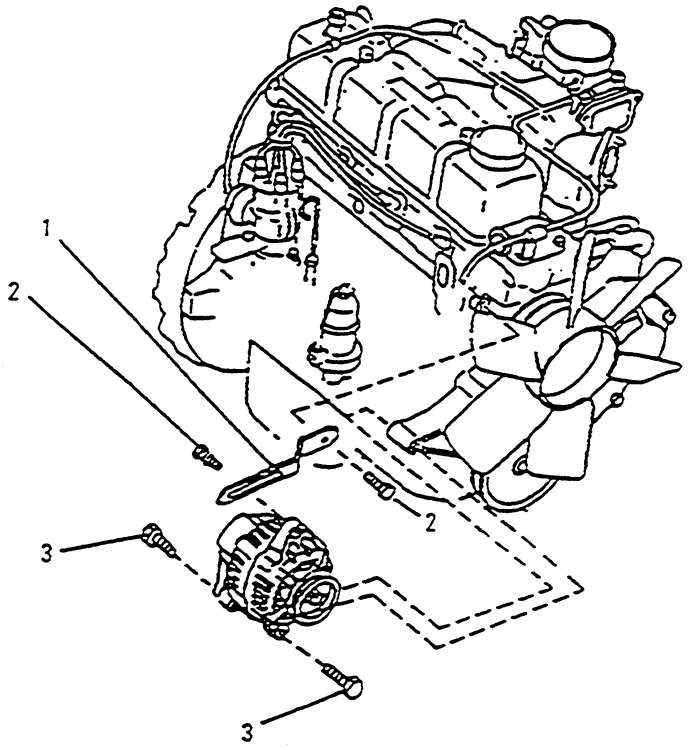

https://truckmanualshub.com/

FIG NO. : H2022

INDEX	PART NO.	DESCRIPTION	Q'TY	SERIAL NO.
1	11715-50K00	BAR.....	1	K40001X-
2	NJ08120-8201F	BOLT.....	2	K40001X-
3	NJ08120-8301F	BOLT.....	2	K40001X-

https://truckmanualshub.com/

FIG.H2025 オルタネータ ALTERNATOR

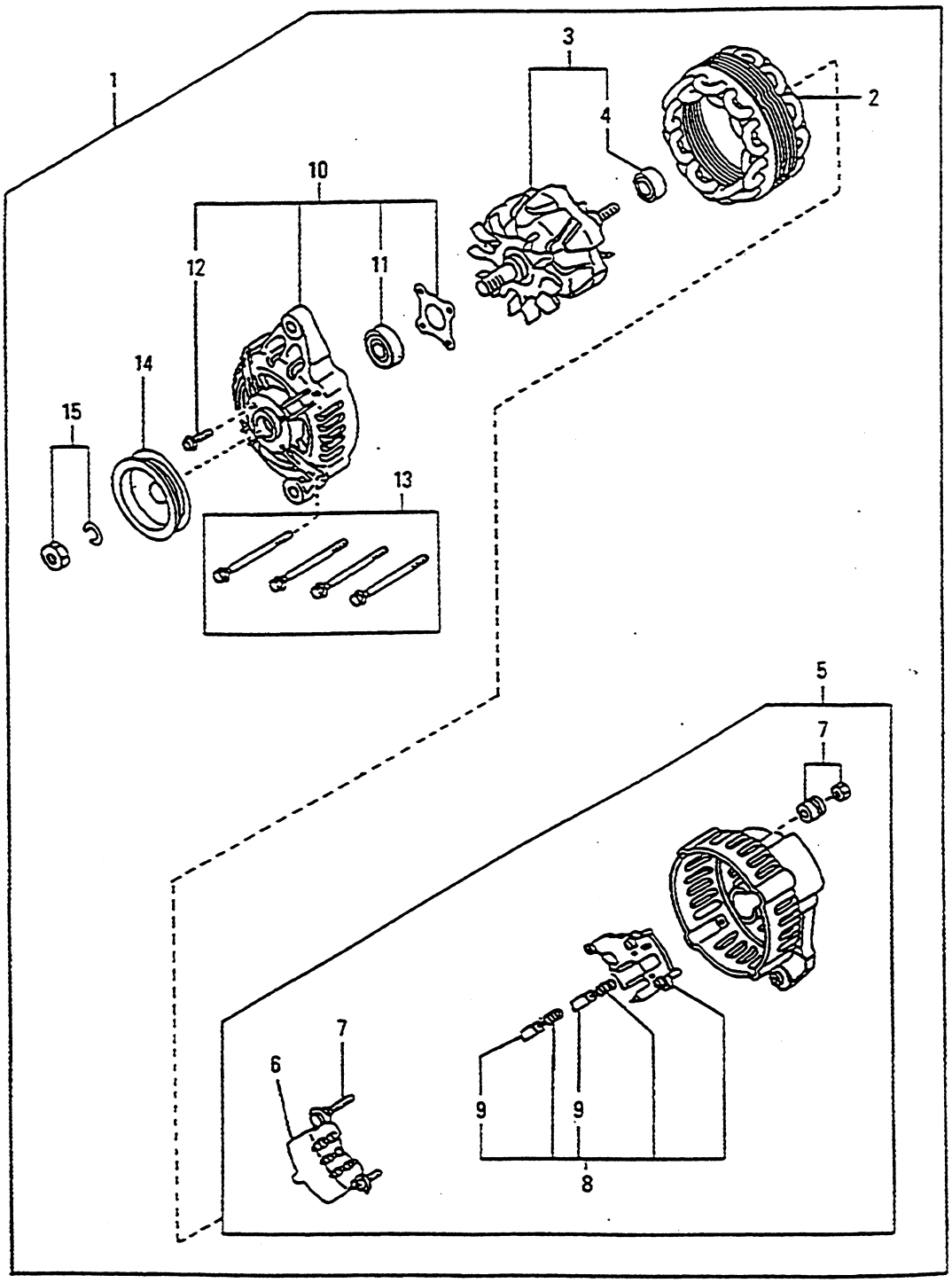

https://truckmanualshub.com/

FIG NO. : H2025

INDEX	PART NO.	DESCRIPTION	Q'TY	SERIAL NO.
1	23100-50K10	ALTERNATOR ASS'Y,(35A).....	1	K40001X-
	23100-50K15	ALTERNATOR ASS'Y,(50A).....	1	K40001X-
	23100-L2910	ALTERNATOR ASS'Y (20A, GS, LPS).....	1	K40001X-
2	23102-47N10	.STATOR ASS'Y.....	1	K40001X-
	23102-50K15	.STATOR ASS'Y,(50A).....	1	K40001X-
	23102-L2910	.STATOR ASS'Y,(20A).....	1	K40001X-
3	23108-47N10	.ROTOR ASS'Y.....	1	K40001X-
	23108-50K15	.ROTOR ASS'Y,(50A).....	1	K40001X-
	23108-L2910	.ROTOR ASS'Y,(20A).....	1	K40001X-
4	23120-30R10	..BEARING,BALL.....	1	K40001X-
5	23127-50K10	.COVER ASS'Y,REAR.....	1	K40001X-
	23127-50K15	.COVER ASS'Y,(50A).....	1	K40001X-
6	23124-50K10	..RECTIFIER ASS'Y.....	1	K40001X-
	23124-50K15	..RECTIFIER ASS'Y,(50A).....	1	K40001X-
7	23156-0B000	..NUT.....	1	K40001X-
8	23215-50K10	..REGULATOR ASS'Y.....	1	K40001X-
9	23142-0B000	...BRUSH.....	2	K40001X-
10	23118-47N10	.COVER ASS'Y,FRONT.....	1	K40001X-
11	23120-22J20	..BEARING,BALL.....	1	K40001X-
12	23115-47N10	..SCREW.....	1	K40001X-
13	23131-20P10	.BOLT.....	1	K40001X-
14	23150-47N10	.PULLEY ASS'Y.....	1	K40001X-
15	23165-0P610	.NUT.....	1	K40001X-

https://truckmanualshub.com/

FIG.H2027 スターテング モータ (ミツビシ)
STARTING MOTOR (MITSUBISHI)

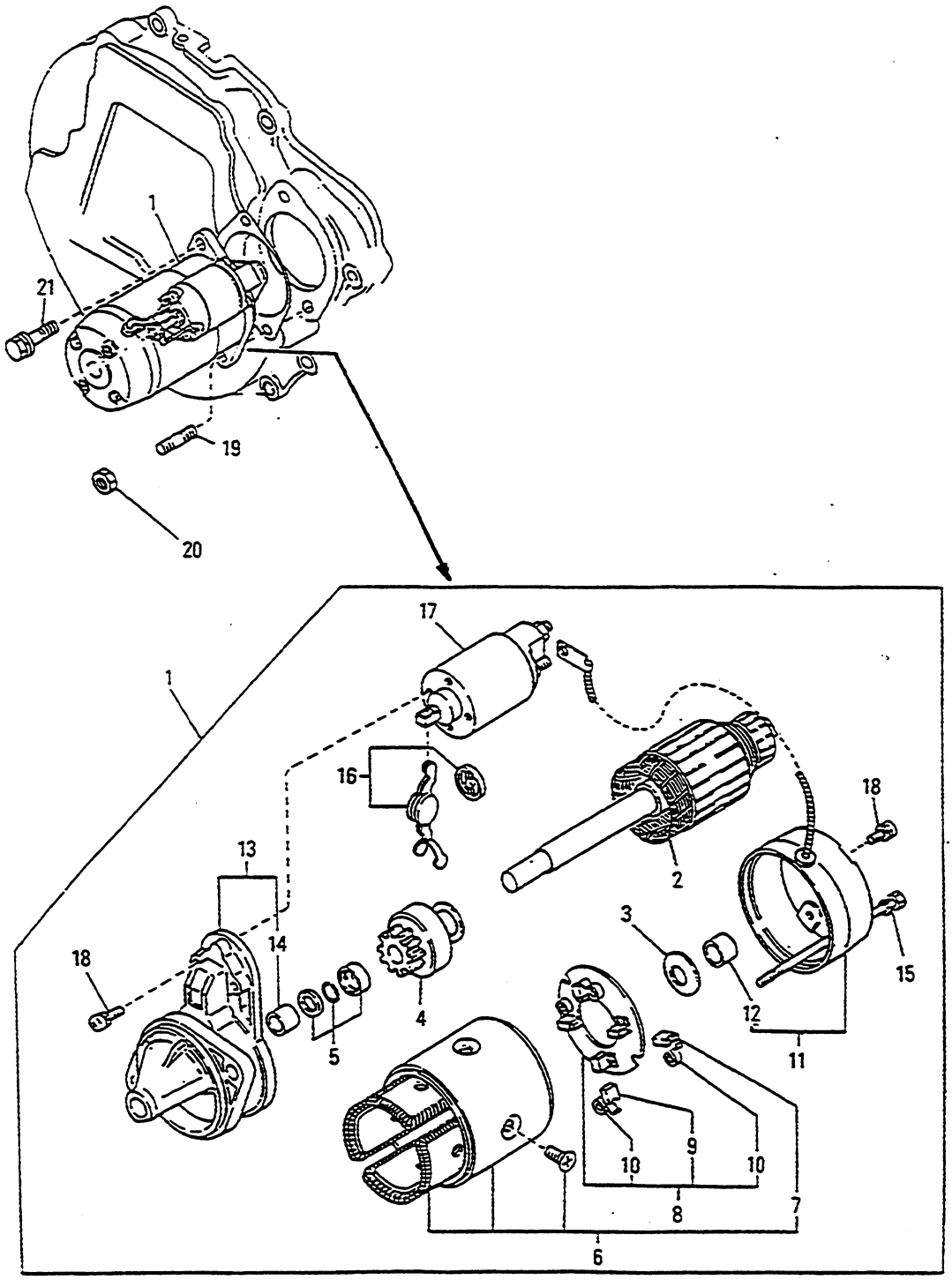

https://truckmanualshub.com/

FIG NO. : H2027

INDEX	PART NO.	DESCRIPTION	Q'TY	SERIAL NO.
1	23300-00H00	MOTOR ASS'Y,STARTER.....	1	K40001X-
2	23310-42L10	.ARMATURE ASS'Y.....	1	K40001X-
3	23460-M8011	.WASHER,THRUST.....	1	K40001X-
4	23354-42L10	.CLUTCH.....	1	K40001X-
5	23465-42L10	.STOPPER,PINION.....	1	K40001X-
6	23302-T5000	.YOKE.....	1	K40001X-
7	23380-M8310	..BRUSH.....	2	K40001X-
8	23378-M8011	.HOLDER ASS'Y,BRUSH.....	1	K40001X-
9	23380-M8311	..BRUSH.....	1	K40001X-
10	23333-M1510	..SPRING,BRUSH.....	3	K40001X-
11	23337-42L10	.COVER ASS'Y,REAR.....	1	K40001X-
12	23338-M8011	..METAL,REAR.....	1	K40001X-
13	23318-00H10	.CASE ASS'Y,GEAR.....	1	K40001X-
14	23319-M8011	..METAL.....	1	K40001X-
15	23340-M8010	.BOLT,THROUGH.....	2	K40001X-
16	23322-42L10	.LEVER,SHIFT.....	1	K40001X-
17	23343-00H10	.SWITCH ASS'Y,MAGNETIC.....	1	K40001X-
18	23480-M0110	.SCREW.....	1	K40001X-
19	NJ08227-02510	STUD.....	1	K40001X-
20	NJ08911-1401G	NUT.....	1	K40001X-
21	NJ08121-0351F	BOLT.....	1	K40001X-

https://truckmanualshub.com/

FIG.H2028 スターテング モータ (ウエット タイプ)
STARTING MOTOR (WET TYPE)

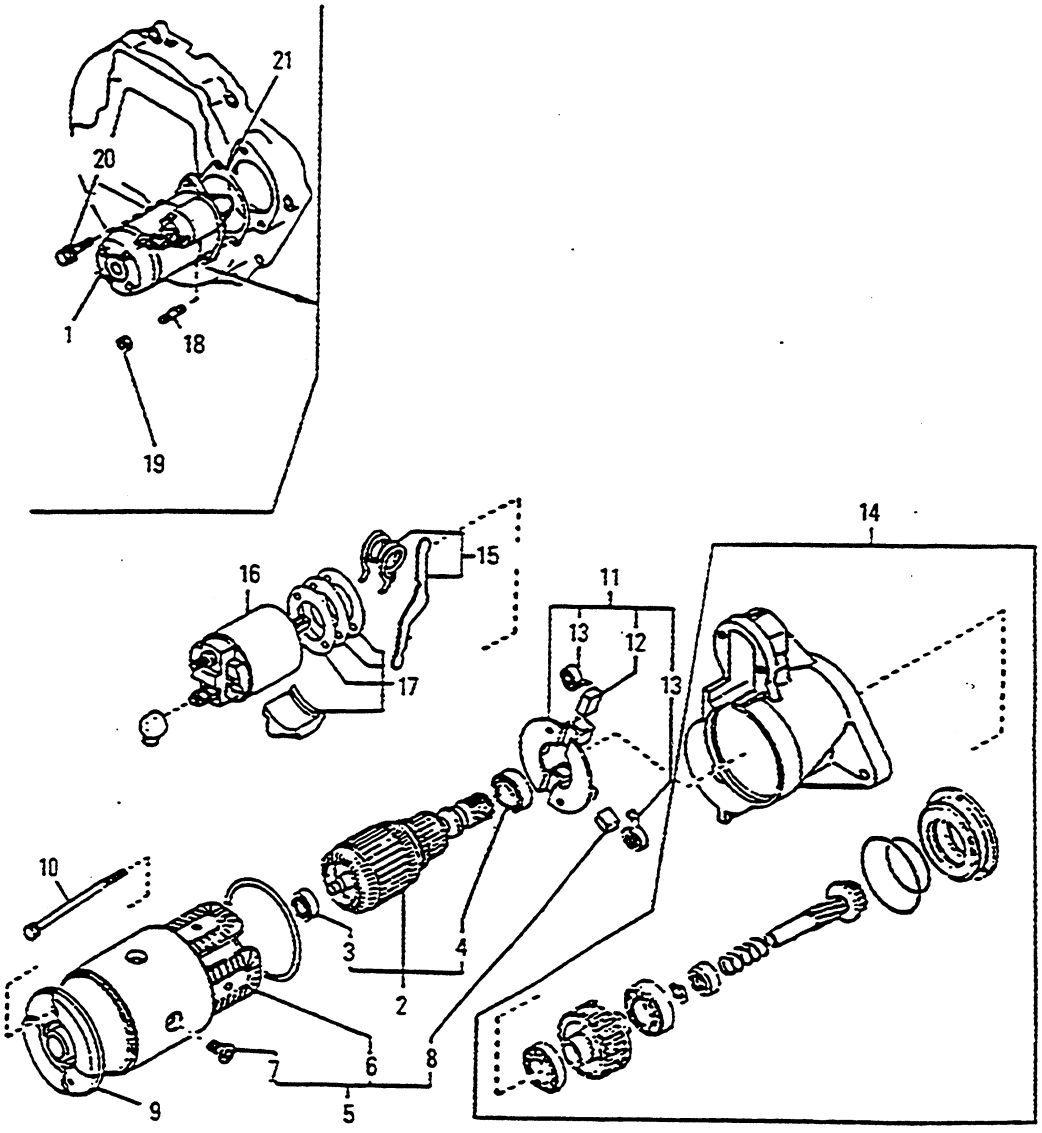

https://truckmanualshub.com/

FIG NO. : H2028

INDEX	PART NO.	DESCRIPTION	Q'TY	SERIAL NO.
1	23300-L1123	MOTOR ASS'Y,STARTER.....	1	K40001X-
2	23310-V5300	.ARMATURE ASS'Y.....	1	K40001X-
3	23319-M4900	..BEARING.....	1	K40001X-
4	23338-M4900	..BEARING.....	1	K40001X-
5	23302-L1122	.YOKE.....	1	K40001X-
6	23306-W1700	..COIL ASS'Y.....	1	K40001X-
7	23305-09500	..SCREW ASS'Y.....	4	K40001X-
8	23380-M4900	..BRUSH.....	1	K40001X-
9	23337-M4901	.COVER ASS'Y,REAR.....	1	K40001X-
10	23340-N5900	.BOLT,THROUGH.....	2	K40001X-
11	23378-05E00	.HOLDER ASS'Y,BRUSH.....	1	K40001X-
12	23379-M4900	..BRUSH.....	2	K40001X-
13	23333-M4901	..SPRING,BRUSH.....	4	K40001X-
14	23312-L1123	.CASE ASS'Y.....	1	K40001X-
15	23322-H9100	.LEVER,SHIFT.....	1	K40001X-
16	23343-L1122	.SWITCH ASS'Y,MAGNETIC.....	1	K40001X-
17	23470-D0300	.COVER.....	1	K40001X-
18	NJ08227-02510	STUD.....	1	K40001X-
19	NJ08911-1401G	NUT.....	1	K40001X-
20	NJ08121-0351F	BOLT.....	1	K40001X-
21	23399-L1123	GASKET.....	1	K40001X-

https://truckmanualshub.com/

スターテング モータ (リダクション タイプ)

FIG.H2029 STARTING MOTOR (REDUCTION TYPE)

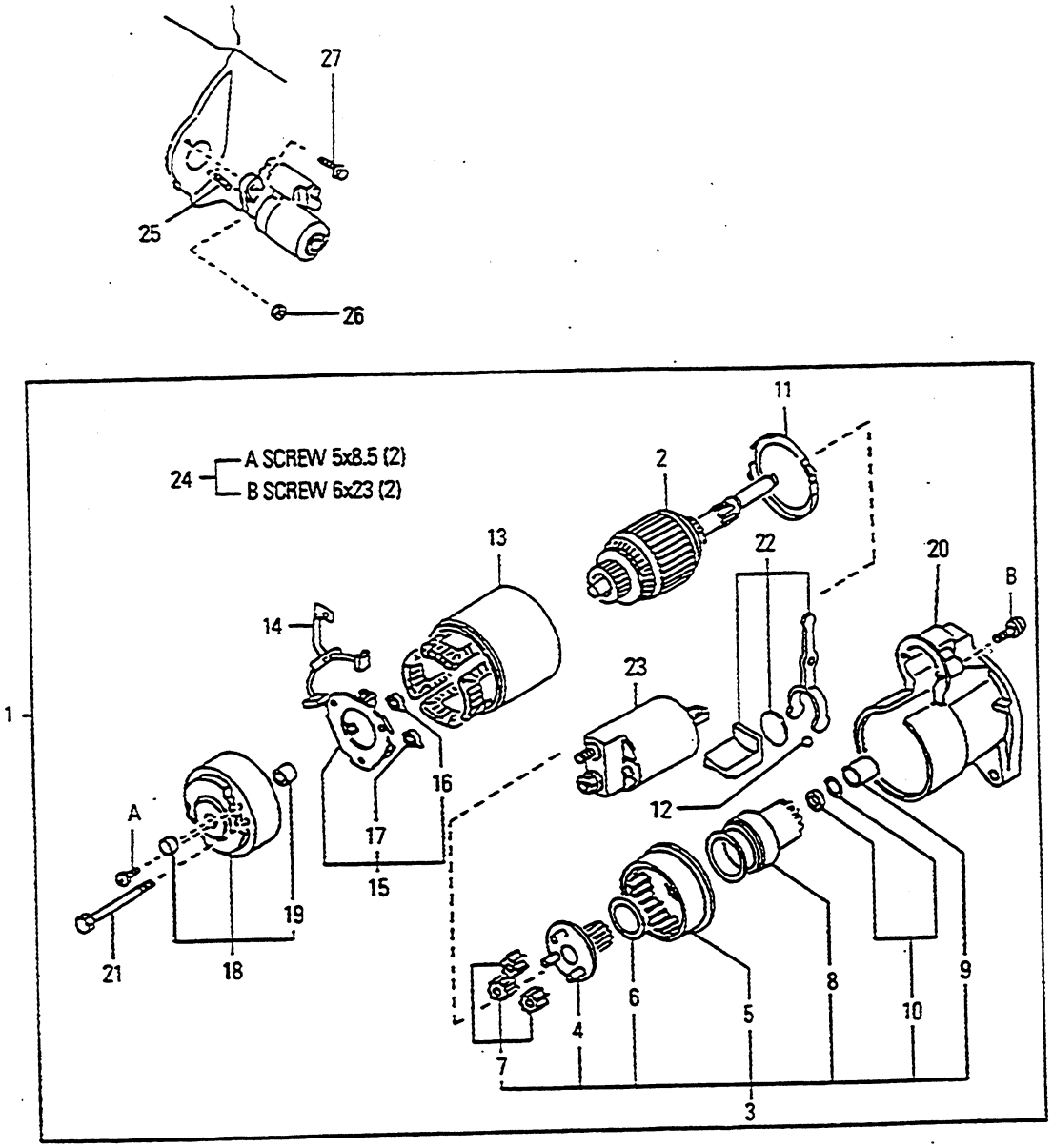

https://truckmanualshub.com/

FIG NO. : H2029

INDEX	PART NO.	DESCRIPTION	Q'TY	SERIAL NO.
1	23300-K9160	MOTOR ASS'Y,STARTER.....	1	K40001X-
2	23310-01N11	.ARMATURE ASS'Y.....	1	K40001X-
3	23312-K9160	.PINION ASS'Y.....	1	K40001X-
4	23312-W9811	..SHAFT,PINION.....	1	K40001X-
5	23360-K9160	..GEAR ASS'Y.....	1	K40001X-
6	23320-42L70	..WASHER,THRUST.....	1	K40001X-
7	23361-42L70	..GEAR.....	3	K40001X-
8	23354-K9160	..CLUTCH ASS'Y.....	1	K40001X-
9	23316-86G10	..CAP.....	1	K40001X-
10	23465-W9810	..STOPPER,PINION.....	1	K40001X-
11	23385-42L70	.PACKING.....	1	K40001X-
12	23325-42L70	.BALL.....	1	K40001X-
13	23302-77A10	.YOKE.....	1	K40001X-
14	23380-K9160	.BRUSH.....	1	K40001X-
15	23378-42L70	.HOLDER ASS'Y,BRUSH.....	1	K40001X-
16	23333-42L70	..SPRING,BRUSH.....	2	K40001X-
17	23333-42L71	..SPRING,BRUSH.....	2	K40001X-
18	23337-01N10	.COVER ASS'Y,REAR.....	1	K40001X-
19	23338-01N10	..METAL.....	1	K40001X-
20	23318-K9160	.CASE ASS'Y,GEAR.....	1	K40001X-
21	23340-20P10	.BOLT,THROUGH.....	2	K40001X-
22	23322-42L70	.LEVER,SHIFT.....	1	K40001X-
23	23343-00H11	.SWITCH ASS'Y,MAGNETIC.....	1	K40001X-
24	23480-M0110	.SCREW.....	1	K40001X-
25	NJ08227-02510	STUD.....	1	K40001X-
26	NJ08911-1401G	NUT.....	1	K40001X-
27	NJ08121-0351F	BOLT.....	1	K40001X-

https://truckmanualshub.com/

FIG. NO. : LPG-2

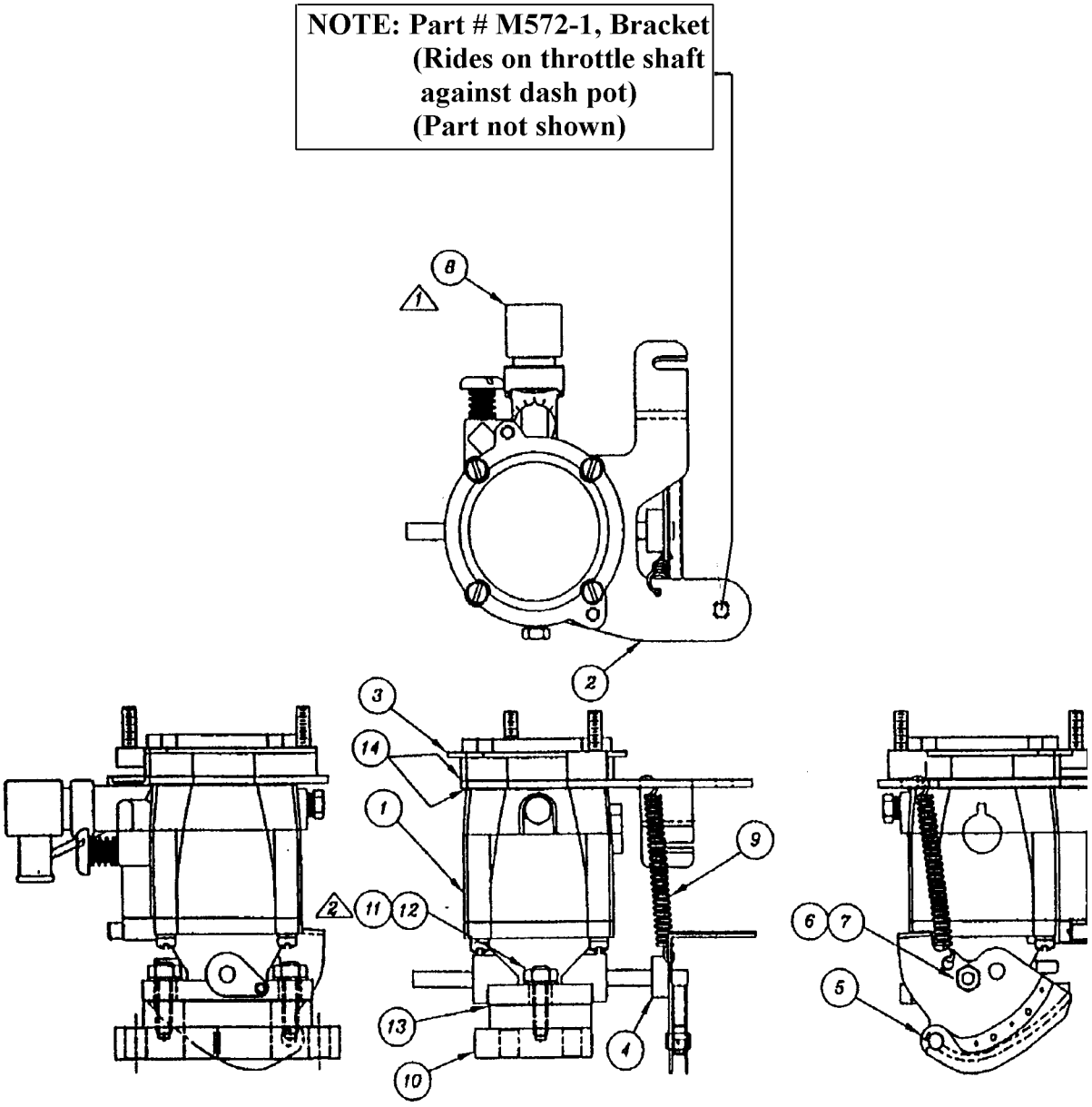

https://truckmanualshub.com/

FIG. NO. : LPG-2

ALL LPG MODELS

INDEX	PART NO.	DESCRIPTION	Q'TY	SERIAL NO.
				600001A and Up
	I173	ASSEMBLY, CARBURETOR	1	
1	I172	.SUBASSEMBLY, CARBURETOR	1	
2	M848	.BRACKET, MOUNTING	1	
3	M901	.CASTING, ADAPTER, AIR HORN	1	
4	M567	.THROTTLE LEVER ON CA55	1	
5	M849	.THROTTLE LEVER	1	
6	D237	.SCREW	1	
7	D228	.LOCKWASHER	1	
8	53EB	.HOSE FITTING, 5/8 IN.	1	
9	M482	.SPRING	1	
10	M902	.ADAPTER, MANIFOLD	1	
11	NHM8C	.NUT, M8 X 1.25 IN.	2	
12	D250	.LOCKWASHER, STAR-TYPE, 8 MM	2	
13	M354	.GASKET, CARB-TO-SPACER	1	
14	G1-101	.GASKET, CARB-TO-BRACKET	2	

https://truckmanualshub.com/

Fig No. LPG-1

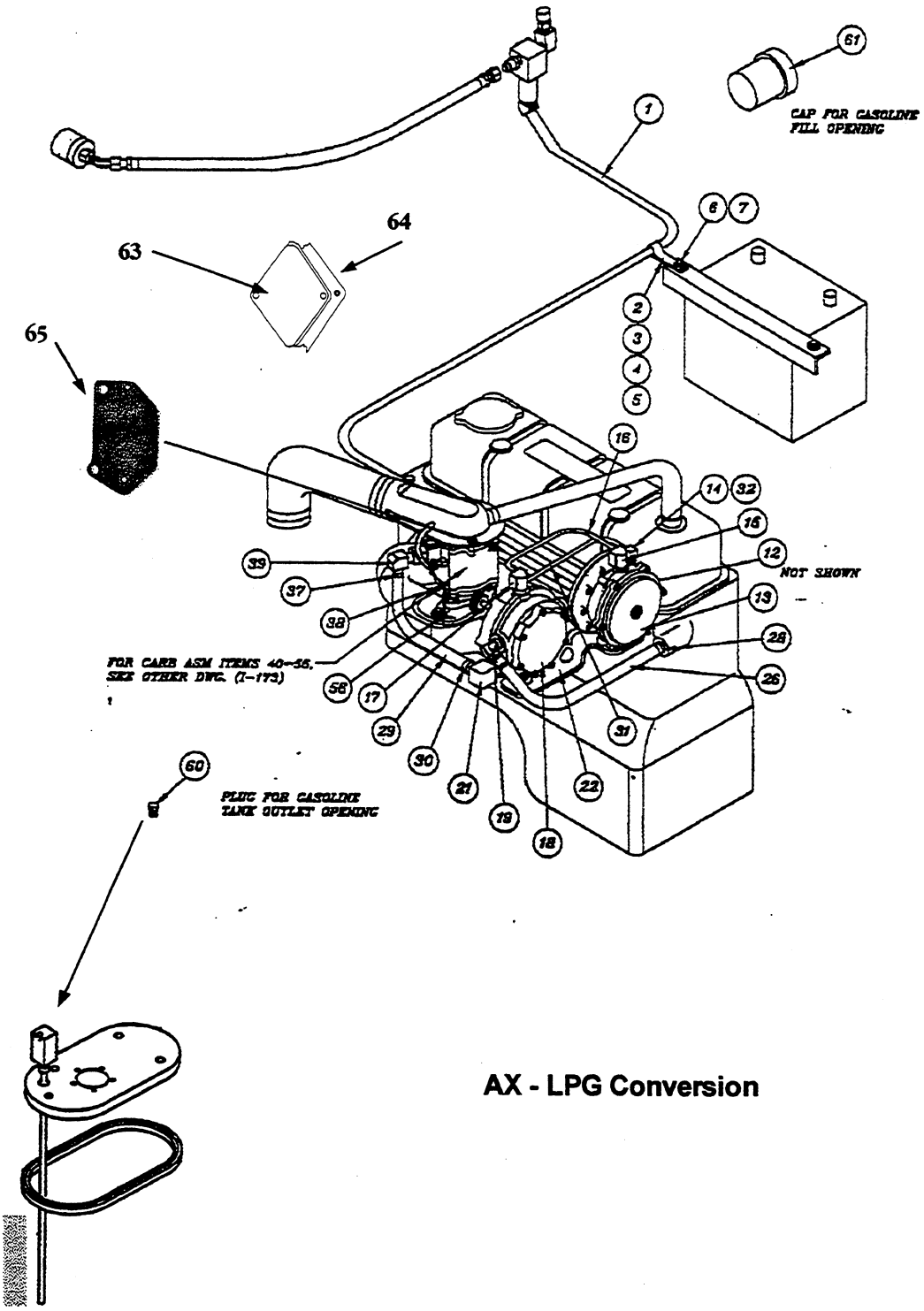

AX - LPG Conversion

https://truckmanualshub.com/

Item	Part Number	Description	Qty.
	3EA-05-A5410	LPG Conversion Kit	1
	3EA-05-A5610	Dual Fuel Conversion Kit	1
	3EA-05-F5100	LP Fuel Tank Bracket	2
	3EA-05-F5200	Dual Fuel Tank Bracket	2
1	H10-42W13	HOSE- AUX. Fuel-Bulkhead To Filter Block Inlet Fitting	1
2	CN204	Clamp-Fuel Hose Mounting to threaded fastener for Battery	1
3	BH1 / 4X3 / 4C	Bolt 1/4"-20 X 3/4	1
4	LS1/4	Lock Washer 1/4"	1
5	NH1/4	Nut !/4"	1
6	WF1/4F	Flat Washer 1/4"	2
7	NHM6C	Nut 6mm	1
8	CO111321	Clamp	1
9	BHMX20C	Bolt 8mm X 1.23 X 20mm	1
10	LS5/16	Lock Washer 5/16"	1
11	WF5/16F	Flat Washer 5/16"	1
12	48X6UL	Fitting 3/8" SAE Flare X 1/4 MPT Filter Block Inlet	1
13	VFF30-2C	Filter Block-LPG Filter-Vacuum Lock Off	1
14	F4-8	Fitting - 1/4" ID Hose X 1/8" MPT X 90 Filterlock Vacuum	1
15	402X6UL	Fitting 3/8" Inverted Flare X 1/4 MPTX90	1
16	T166	Tube Assembly - Converter To Filter Block	1
17	402X6UL	Fitting 3/8" Inverted Flare X 1/4 MPTX90	1
18	JB	Converter LPG Vaporizer/Regulator	1
19	49EEE - 2	Fitting 3/8" Flare	1
20	54X6X6	Fitting 3/8" SAE Flare X 1/2" MPT X 45	1
21	54EB	Fitting 5/8" ID Hose X MPT X 90	1
22	RB383	Bracket	1
23	BH1/4X5/8C	Bolt 1/4" - 20 X 5/8"	4
24	LS1/4	Lock Washer 1/4"	4
25	WF1/4F	Flat Washer 1/4"	4
27	H730-11W	Hose (Black)	1
28	U5	Clamp	1
29	H715-7	Hose (Dry Gas)	1
30	10H	Clamp	1
31	H703-13	Hose Vacuum	1
32	UM5007	Clamp	1

AX - Fig. LPG Conversion

https://truckmanualshub.com/

Item	Part Number	Description	Qty.
		Items 12 Through 32 Are Assembled	
33	BHM8X16C	Bolt 8mm X 1.25 X 16mm Converter Asm. Mounting To Engine Bracket	2
34	LS5/16	Lock Washer 5/16"	2
35	WF5/16F	Flat Washer 5/16"	4
36	US	Clamp - Return Water Hose To Water Pump Fitting	1
37	10H	Clamp - Dry Gas Hose To Mixer Inlet Fitting	1
38	UM5007	Clamp - Vacuum Hose To Mixer Air Valve Fitting	1
39	53EB	Fitting - 5/8" Hose X 3/8" MPT X 90	1
40	I172	LPG Carburetor- Sub Assembly	1
41	G1-101	Gasket - M901 Airhorn Adapter To LPG Carburetor	1
42	M901-1	Airhorn Adapter - LPG Carburetor	1
43	M958	Stud - 6mm X 1.25 X 20mm Air Bonnet Mounting To Airhorn Adapter	2
44	M848	Bracket - Throttle Cable	1
45	I173	LPG Carburetor Assembly	1
46	M567	Throtle Lever	1
47	M849	Bracket - Throttle ICable To Throtle Lever	1
48	M482	Spring - Throttle Return	1
49	D237	Screw - #8-12 x 1/4"	1
50	D228	Lock Washer - #8	1
51	G1-120	Gasket - Carburater To Manifold	1
52	M902-1	Manifold Adapter	1
53	M959	Stud - 8mm X 1.25 X20mm LPG Carb Mounting To Manifold Adaptor	2
55	LES5/16	Lock Washer - 5/16" External Star LPG Carb. Mounting To Manifold Adapter	2
56	M744	Gasket - M902 Adapter To Goveror & Governor To Intake Manifold	2
57	LES5/16	Lock Washer - 5/16" External Star - LPG Carb. Asm. To Intake Manifold	2
58	NHM8C	Nut- 8mm X 1.25 LPG Carburater Asmbley Mounting To Intake Manifold	2
59	M924	Rubber Cap - 3/8" ID - Cap For Governor Water Fitting	1
60	F252	Plug - 3/8" BSP - Gasoline Fuel Tank Outlet Opening	1
61	M152	Cap - Gasoline Tank Fill Opening	1
62	M175	Nylon Strap	3
63	M357	Plate - Fuel Pump Cover (KFI # 16420-E0100)	1
64	M524	Gasket Fuel Pump Cover (KFI # 17099-85G00)	1
65	RB386 or N5-0806 or 16306-6G000	Bracket, Relay (attaches to head)	1

AX - Fig. LPG Conversion

https://truckmanualshub.com/

This Page Left Intentionally Blank

KOMATSU

https://truckmanualshub.com/

KOMATSU

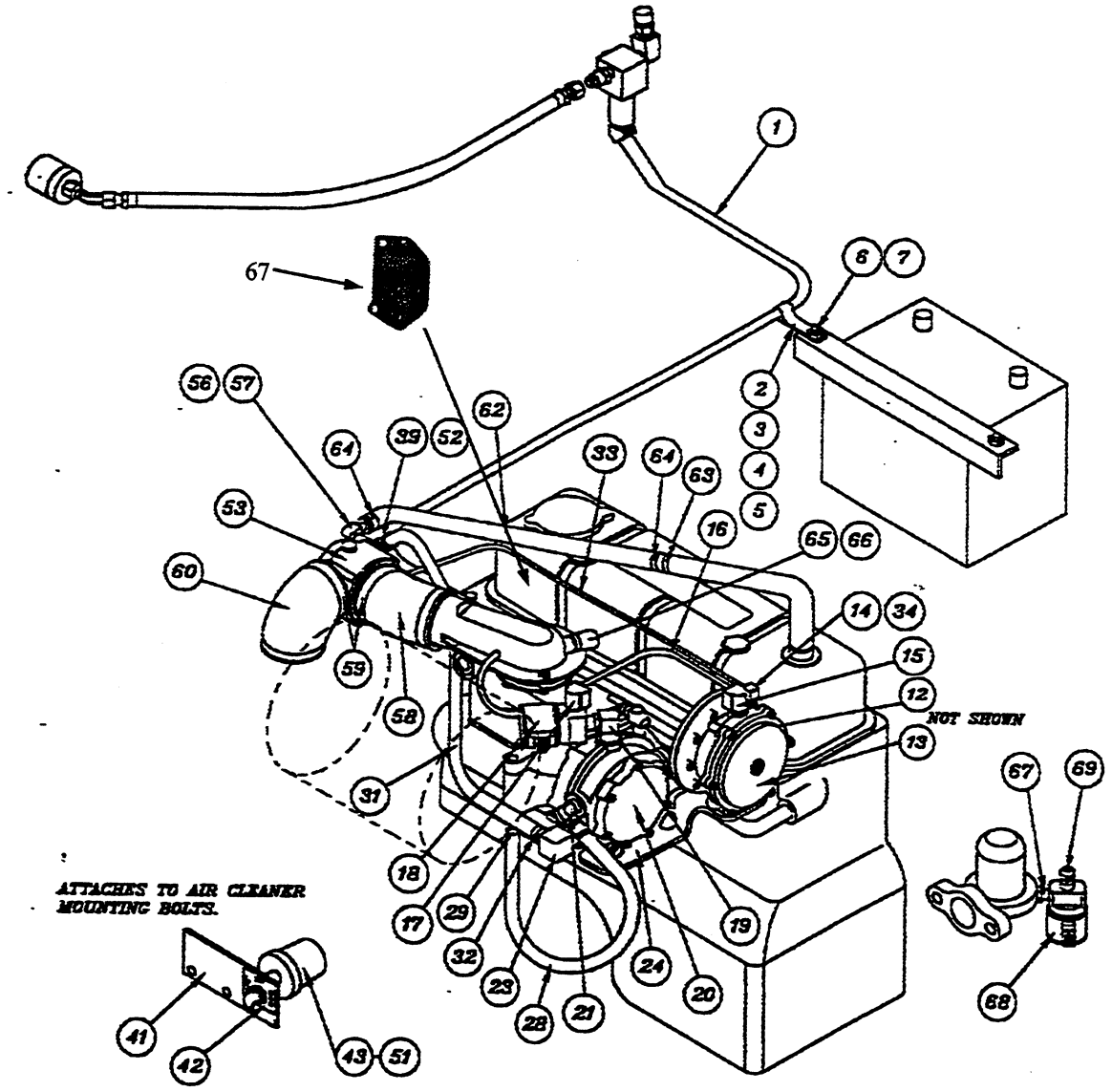

KOMATSU AX SERIES - DUAL FUEL SYSTEM

https://truckmanualshub.com/

Item	Part Number	Description	Qty.
	3EA-05-A5410	LPG Conversion Kit	1
	3EA-05-A5610	Dual Fuel Conversion Kit	1
	3EA-05-F5100	LP Fuel Tank Bracket	2
	3EA-05-F5200	Dual Fuel Tank Bracket	2
1	H110-42W13	HOES	1
2	CN204	CLAMP	1
3	BH1/44X3/4C	BOLT	1
4	LS1/4	LOCK WASHER	1
5	NH1/4C	NUT	1
6	WF1/4F	FLAT WASHER	2
7	NEM6C	NUT	1
8	COV111321	CLAMP	1
9	BHM8X20C	BOLT	1
10	LS5/16	LOCK WASHER	1
11	WF5/16	FLAT WASHER	1
12	54X6	FITTING	1
13	VFF30-2	FILTER LOCK	1
	RK-VFF30-2	FILTER ONLY	1
14	F4-8	FITTING	1
15	402X6UL	FITTING	1
16	T228	TUBE ASSEMBLY	1
17	402X6UL	FITTING	1
18	7007B-12V	SOLINOID VALVE - LPG	1
19	C3529X4	FITTING	1
20	JB	CONVERTER - LPG VAPORIZER/REGULATOR	1
21	49EEE-2	FITTING	1
22	54X6X6	FITTING	1
23	54EB	FITTING	1
24	RB383-1	BRACKET	1
25	BH1/4X5/8C	BOLT	4
26	LS1/4	FLAT WASHER	4
27	WF1/4F	FLAT WASHER	4
28	H730-14W	HOSE	1
29	US	CLAMP	1
30	H730-27	HOSE	1
31	M717	HOSE (13")	1

AX - Fig. DUAL FUEL

https://truckmanualshub.com/

Item	Part Number	Description	Qty.
33	H703-19	HOSE - VACUUM	1
34	UM507	CLAMP	1
35	BHM8X16C	BOLT	2
36	LS5/16	LOCK WASHER	2
37	WF5/16	FLAT WASHER	4
38	US	CLAMP	1
39	10H	CLAMP - DRY GAS	1
40	UM5007	CLAMP - VACUUM	1
41	M994	BRACKET	1
42	M339	NAME PLATE FUEL SELECTION	1
43	M328	SWITCH - FUEL SELECTION	1
44	16GAR	WIRE LEAD (RED)	1
45	M861-12"	PLASTIC LOOM	1
46	M465	3-WAY WIRE CONECTOR	1
47	16GA (12")	WIRE LEAD - YELLOW	1
48	M861	PLASTIC LOOM (12")	1
49	16GA G (50")	WIRE LEAD	1
50	M861 (50")	PLASTIC LOOM	1
51	M611	RUBBER BOOT - FUEL SELECTER SWITCH	1
52	53EB	FITTING	1
53	CA55-258	MIXER	1
55	F4-2	FITTING	1
56	3400X2W	FITTING	1
57	68HB-8-2	FITTING	1
58	2386575	HOSE	1
59	32H	CLAMP	1
60	M793	HOSE	1
61	*	USE EXISTING CLAMP	2
62	H714-12	HOSE	1
63	F250	FITTING	1
64	U8	FITTING - BARBED	1
65	M653	CAP - CRANKCASE VENT	1
66	10H	CLAMP	1
67	RB386 or N5-0806 or 16306-6G000	BRACKET, RELAY (ATTACHES TO HEAD)	1
68	7007B-12V	SOLENOID, SHUT-OFF	
69	48X4X4	FITTING	

AX - Fig. DUAL FUEL

KOMATSU Engine Shut Down System AX Series

12 VOLT SYSTEM

SEE DRAWING 50325 FOR HARNESS DETAILS

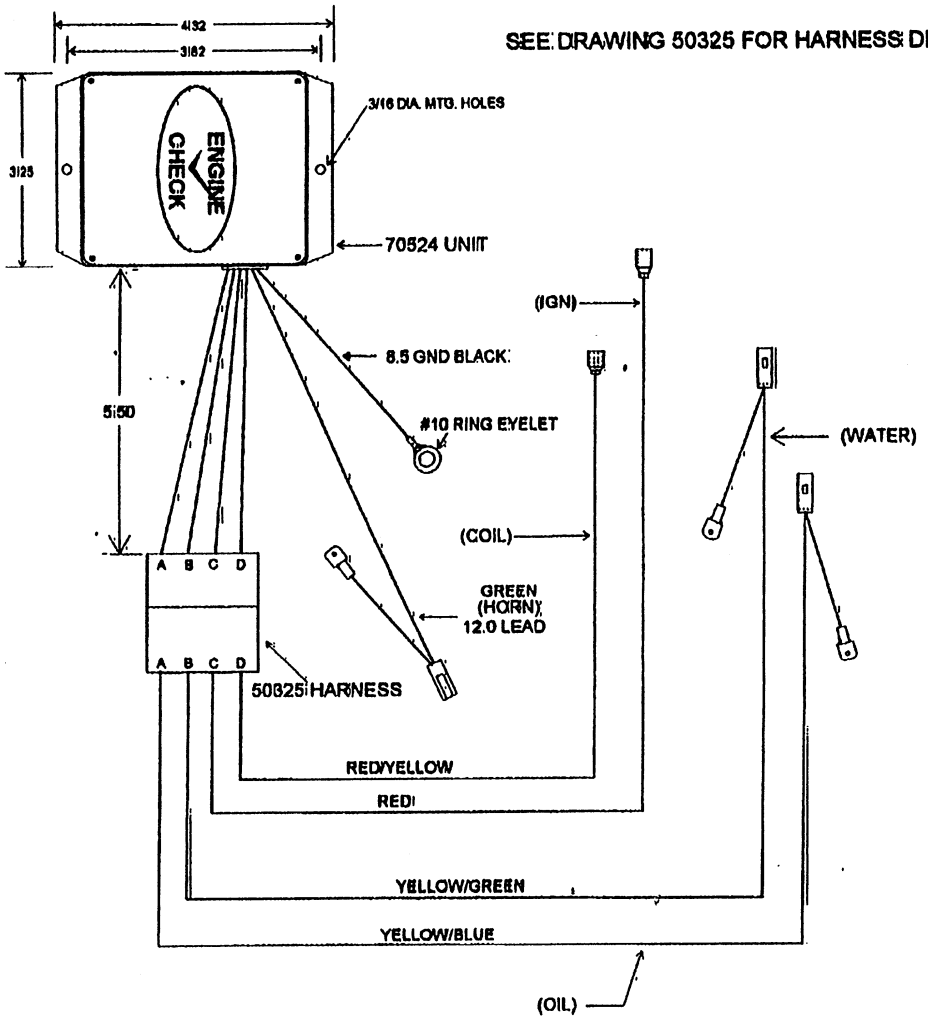

KOMATSU SYSTEM

COMPLETE ASSEMBLY

82063

PARTS INCLUDED

(1) 70524 UNIT
(1) 50325 HARNESS
(1) 30172 TERMINAL FEMALE
(1) 30173 TERMINAL MALE
(1) 30222 IMPORTANT LABEL
(1) FM149 INSTRUCTION SHEET

Note: This unit is exclusive to **Komatsu**.

The unit will plug into the stock wiring harness. There are space considerations for mounting under dash.

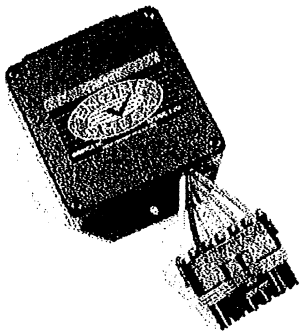

Kit # 82603

https://truckmanualshub.com/

https://truckmanualshub.com/

This Page Left Intentionally Blank

KOMATSU

https://truckmanualshub.com/

KOMATSU

Exhaust System Parts

AX SERIES

Exhaust System Parts

https://truckmanualshub.com/

マフラ オヨビ エキゾースト コネクション
FIG.B4110-01A0 MUFFLER AND EXHAUST CONNECTION

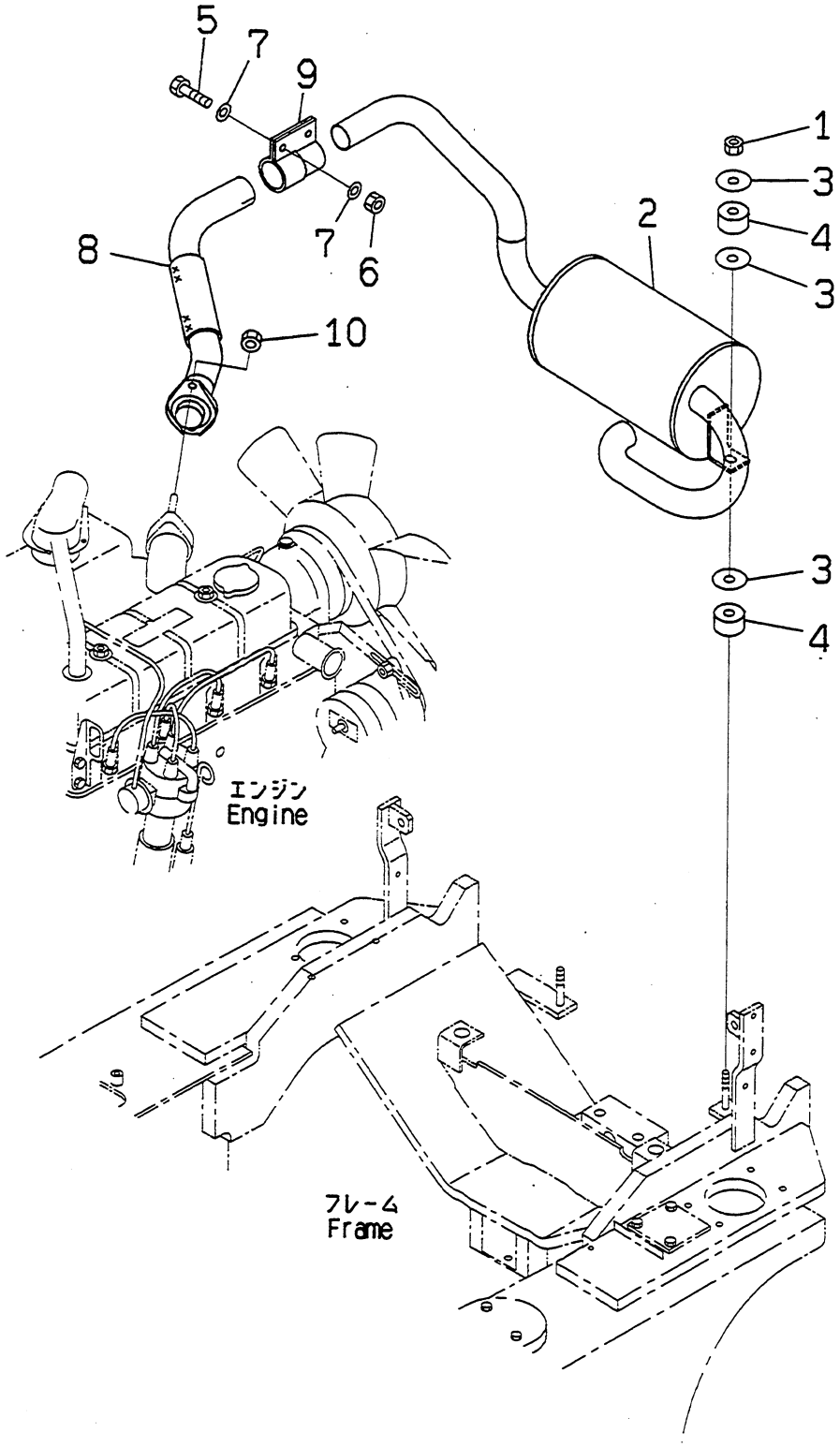

PUF1686

https://truckmanualshub.com/

FIG NO. : B4110-01A0

FG15H,FG18H

INDEX	PART NO.	DESCRIPTION	Q'TY	SERIAL NO.
1	01598-11011	NUT	2	600001A AND UP
2	3EA-03-A5110	MUFFLER	1	
3	3EA-51-11390	WASHER	6	
4	3EB-03-31140	RUBBER	4	
5	01010-81035	BOLT	2	
6	01580-11008	NUT	2	
7	01643-31032	WASHER	4	
8	3EA-03-A5120	PIPE	1	
9	3EA-03-37610	CLAMP ASS'Y	1	
10	NJ20650-37700	NUT	2	

https://truckmanualshub.com/

マフラ オヨビ エキゾースト コネクション
FIG.B4110-01A1 MUFFLER AND EXHAUST CONNECTION

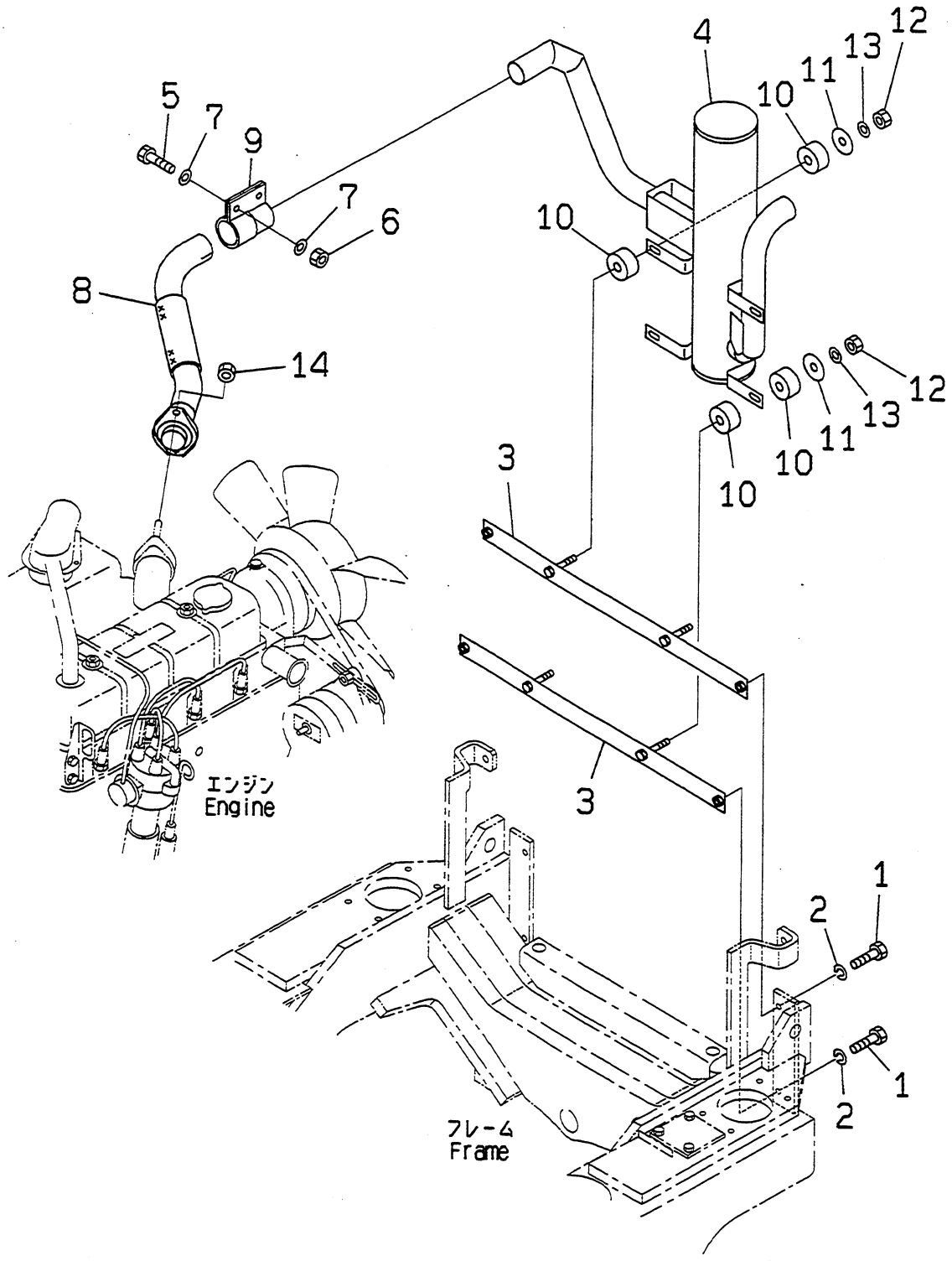

PUF1687

https://truckmanualshub.com/

FIG NO. : B4110-01A1

FG15S,FG18S

INDEX	PART NO.	DESCRIPTION	Q'TY	SERIAL NO.
1	01010-80825	BOLT	4	600001A AND UP
2	01602-20825	WASHER,SPRING	4	
3	3EA-03-A5820	BRACKET	2	
4	3EA-03-A5611	MUFFLER	1	
	3EA-03-A5661	MUFFLER, CATALYST (OPTIONAL)	1	
5	01010-81035	BOLT	2	
6	01580-11008	NUT	2	
7	01643-31032	WASHER	4	
8	3EA-03-A5710	PIPE	1	
9	3EA-03-37610	CLAMP ASS'Y	1	
10	360-03-11310	RUBBER	8	
11	304-60-31110	WASHER	4	
12	3EB-61-11260	NUT	4	
13	01642-21016	WASHER	4	
14	NJ20650-37700	NUT	2	

https://truckmanualshub.com/

This Page Left Intentionally Blank

KOMATSU

https://truckmanualshub.com/

KOMATSU

Cooling System Parts

AX SERIES

Cooling System Parts

https://truckmanualshub.com/

ラジエータ (クラッチ ショウ)
FIG.C4110-01A0 RADIATOR (CLUTCH SPEC.)

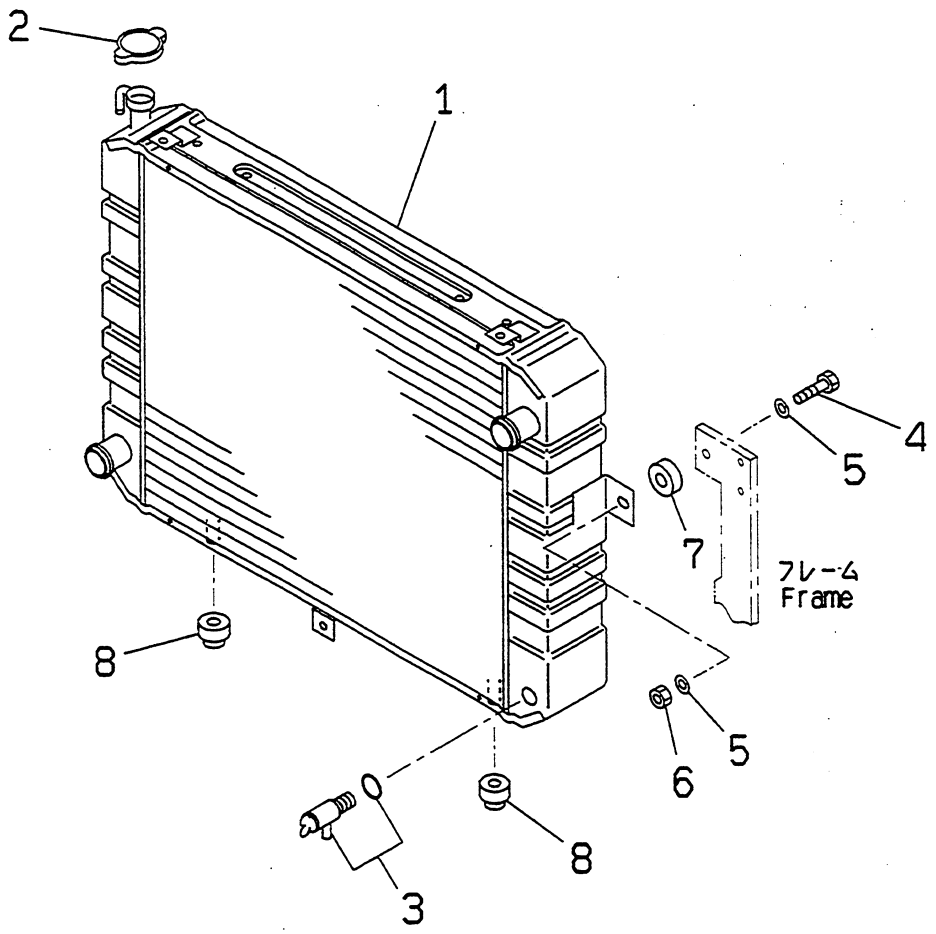

PAF1008

https://truckmanualshub.com/

FIG NO. : C4110-01A0

FG15H

INDEX	PART NO.	DESCRIPTION	Q'TY	SERIAL NO.
1	3EB-04-A5410	RADIATOR.....	1	600001A AND UP
2	CPC89C0175010	.CAP.....	1	
3	CPC1010055520	.VALVE.....	1	
4	01010-80835	BOLT.....	2	
5	01642-20810	WASHER.....	4	
6	01598-10809	NUT.....	2	
7	3EA-03-11120	RUBBER.....	2	
8	3EB-04-31160	RUBBER.....	2	

https://truckmanualshub.com/

ラジエータ (トルク コンバータ ショウ)
FIG.C4110-01A1 RADIATOR (TORQUE CONVERTER SPEC.)

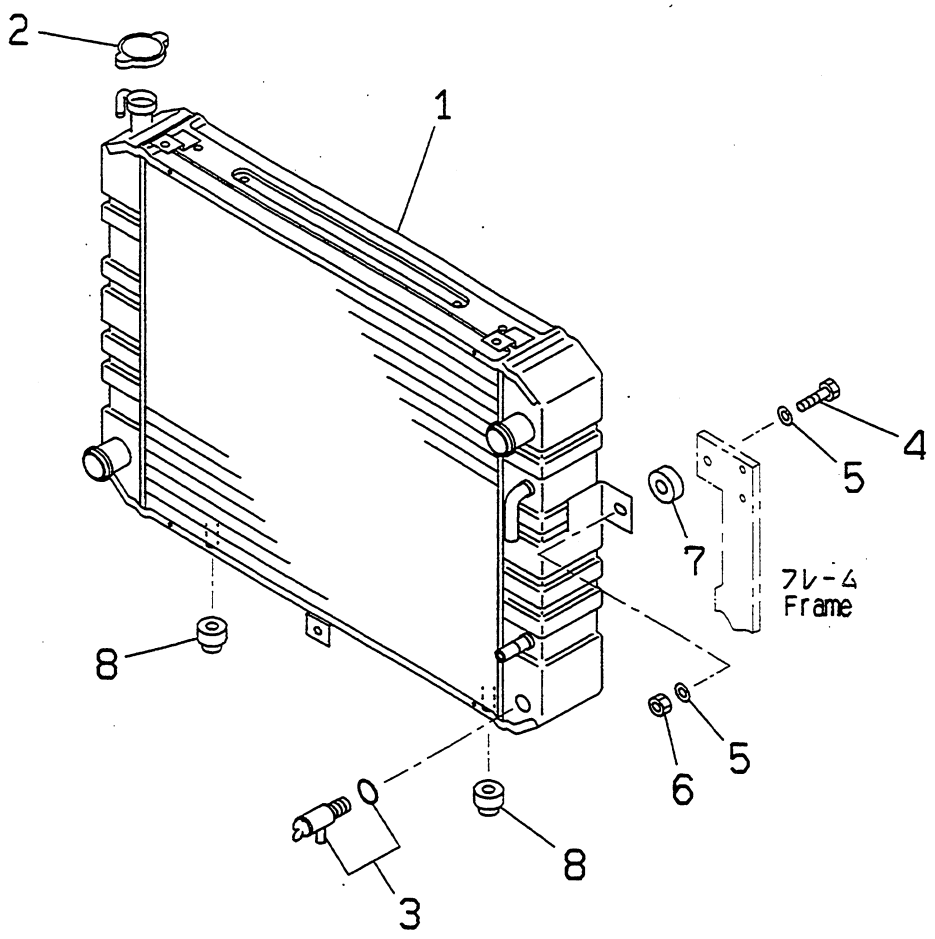

PAF1009

https://truckmanualshub.com/

FIG NO. : C4110-01A1

INDEX	PART NO.	DESCRIPTION	Q'TY	SERIAL NO.
1	3EB-04-A5111	RADIATOR.....	1	600001A AND UP
2	CPC89C0175010	.CAP.....	1	
3	CPC1010055520	.VALVE.....	1	
4	01010-80835	BOLT.....	2	
5	01642-20810	WASHER.....	4	
6	01598-10809	NUT.....	2	
7	3EA-03-11120	RUBBER.....	2	
8	3EB-04-31160	RUBBER.....	2	

https://truckmanualshub.com/

ﾗｼﾞｴｰﾀ ﾊﾟｲﾋﾟﾝｸﾞ
FIG.C4130-01A0 RADIATOR PIPING

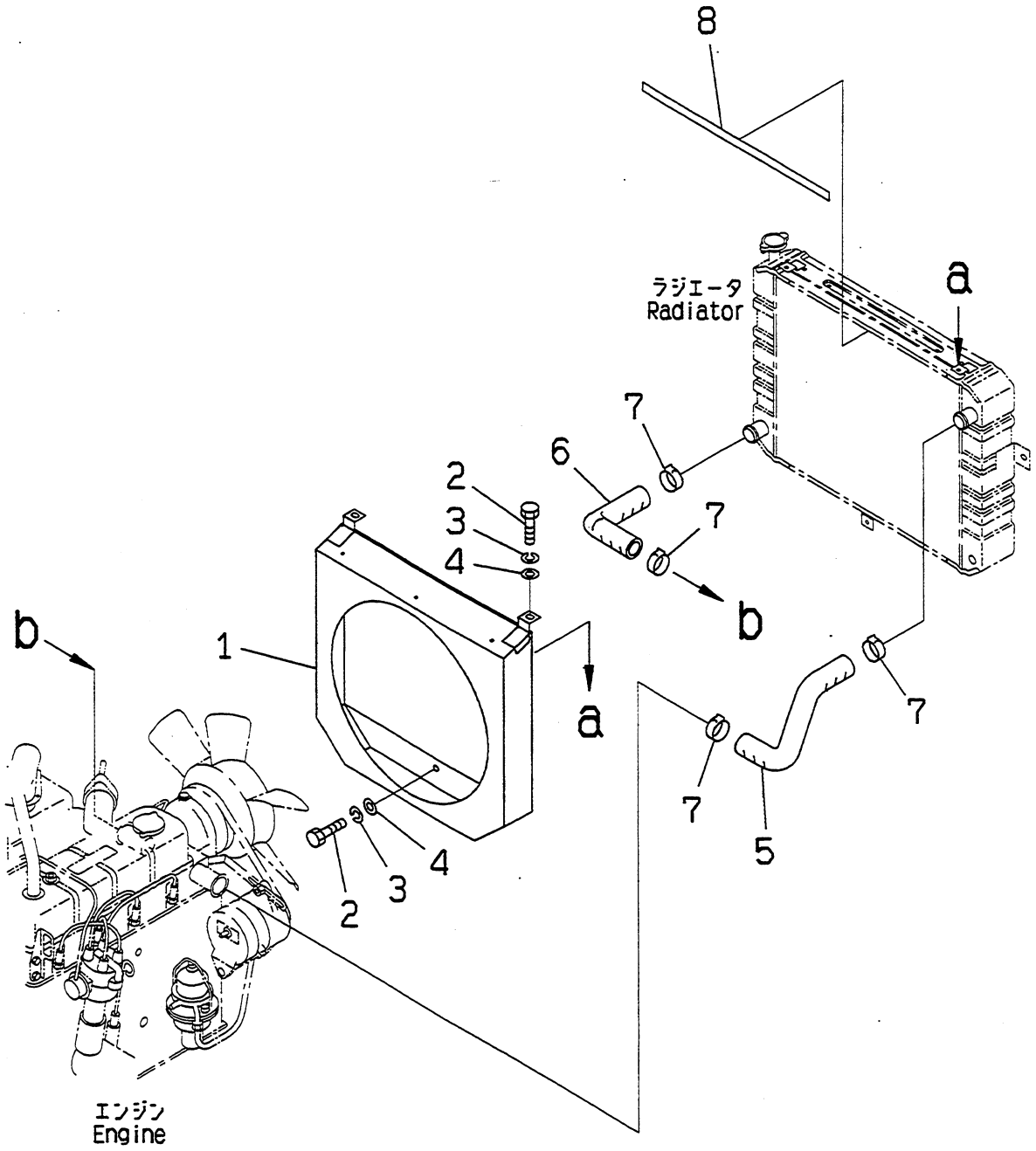

PUF1688

https://truckmanualshub.com/

FIG NO. : C4130-01A0

FG15H,FG18H

INDEX	PART NO.	DESCRIPTION	Q'TY	SERIAL NO.
1	3EB-04-39511	SHROUD	1	600001A AND UP
2	01010-80816	BOLT	3	
3	01602-20825	WASHER,SPRING	3	
4	01642-20810	WASHER	3	
5	3EB-04-A5132	HOSE	1	
6	3EB-04-A5122	HOSE	1	
7	37B-1FH-3020	CLAMP	4	
8	3EB-04-23250	RUBBER	1	

https://truckmanualshub.com/

ﾗｼﾞｴｰﾀ ﾊﾟｲﾋﾟﾝｸﾞ
FIG.C4130-01A1 RADIATOR PIPING

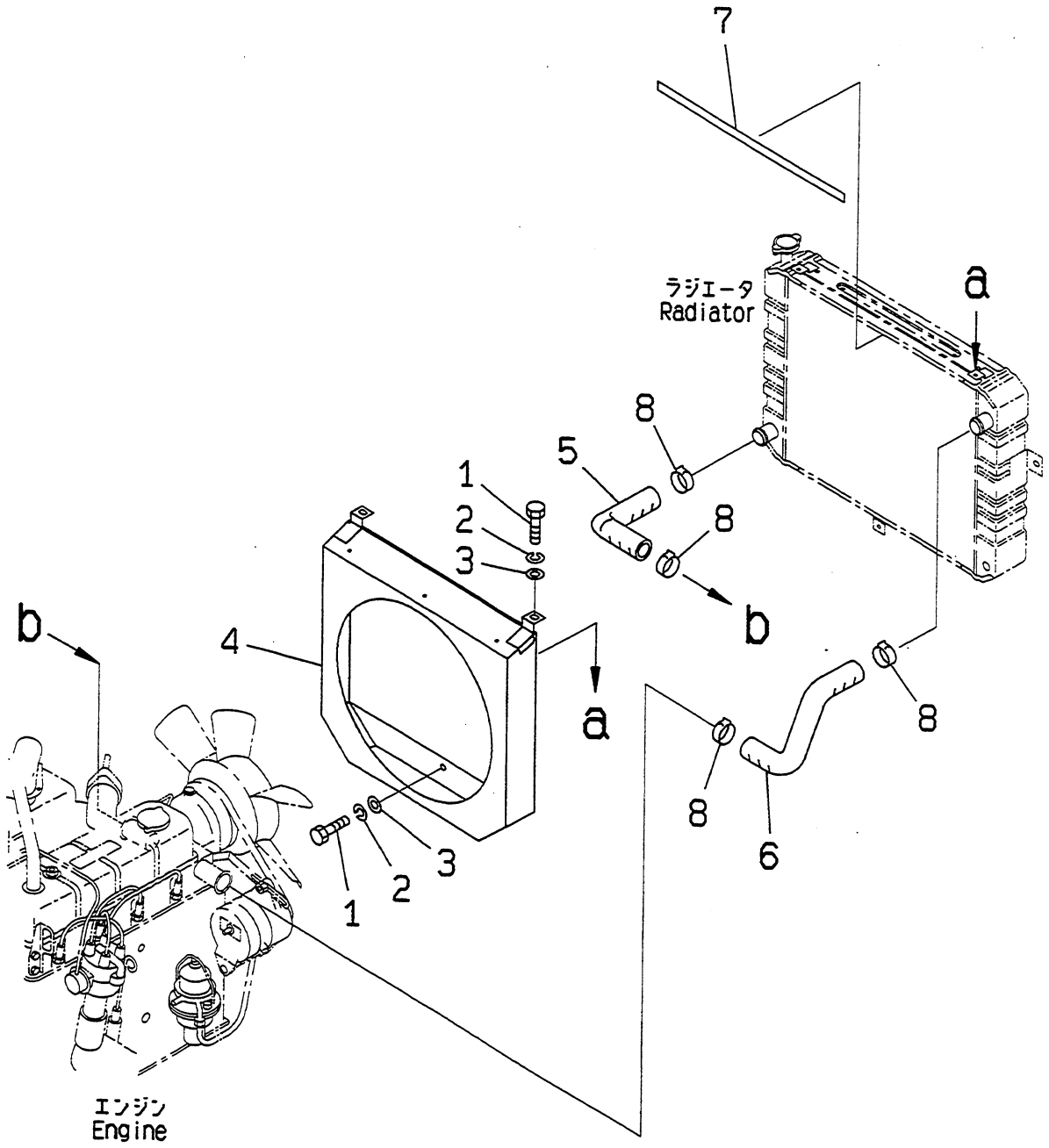

PUF1689

https://truckmanualshub.com/

INDEX	PART NO.	DESCRIPTION	Q'TY	SERIAL NO.
1	01010-80812	BOLT	3	600001A AND UP
2	01602-20825	WASHER,SPRING	3	
3	01642-20810	WASHER	3	
4	3EA-04-A5460	SHROUD	1	
5	3EB-04-A5122	HOSE	1	
6	3EB-04-A5132	HOSE	1	
7	3EB-04-23250	RUBBER	1	
8	37B-1FH-3020	CLAMP	4	

https://truckmanualshub.com/

トルク コンバータ オイル クーラ パイピング
FIG.C4140-01A0 TORQUE CONVERTER OIL COOLER PIPING

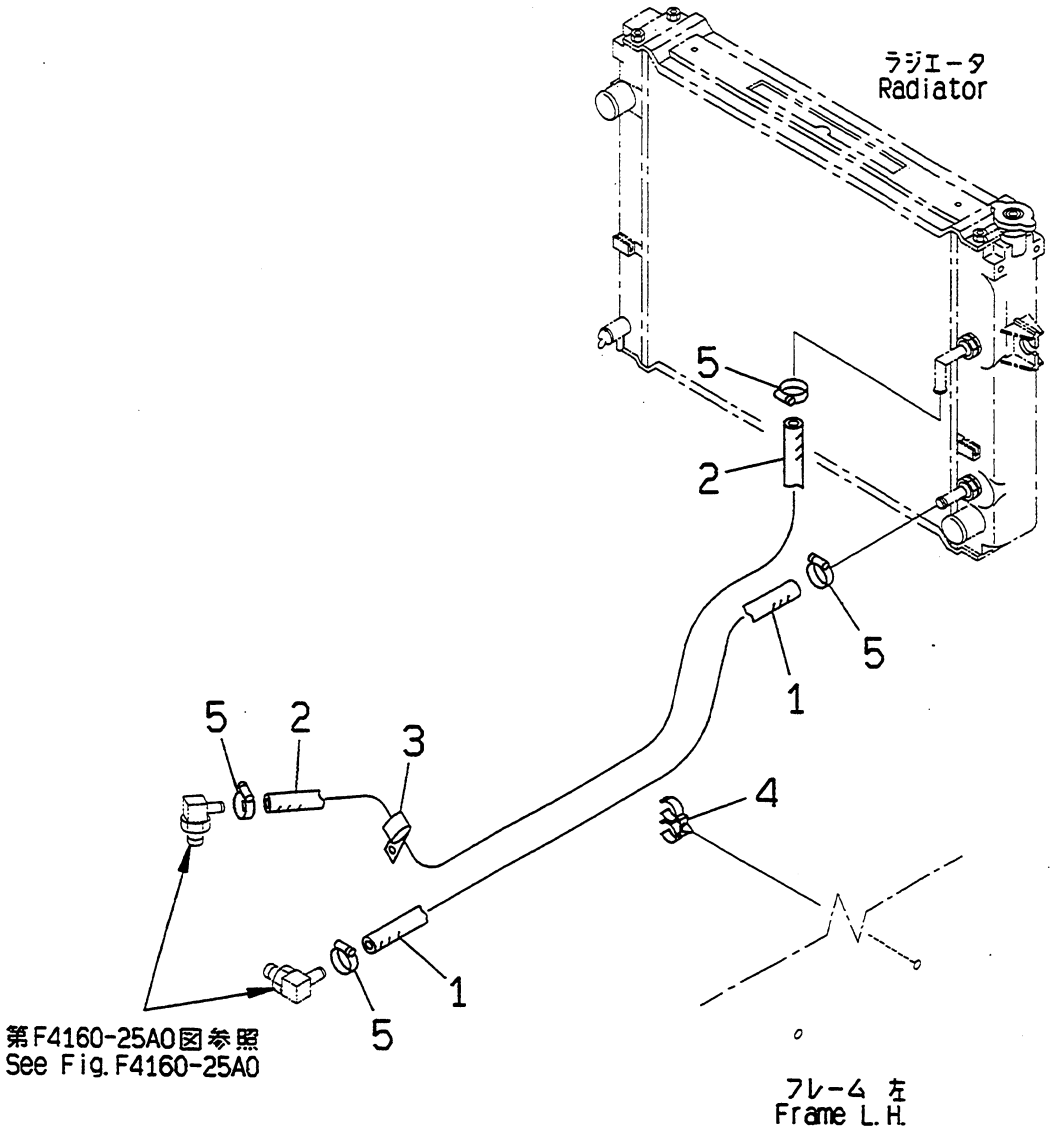

PUF1693

https://truckmanualshub.com/

FIG NO. : C4140-01A0

INDEX	PART NO.	DESCRIPTION	Q'TY	SERIAL NO.
1	3EB-04-A5841	HOSE.....	1	600001A AND UP
2	3EB-04-A5850	HOSE.....	1	
3	04434-52110	CLIP.....	1	
4	3EB-04-24190	CLAMP.....	1	
5	3EA-04-23220	CLAMP.....	4	

https://truckmanualshub.com/

リザーバ タンク
FIG.C4160-01A0 RESERVOIR TANK

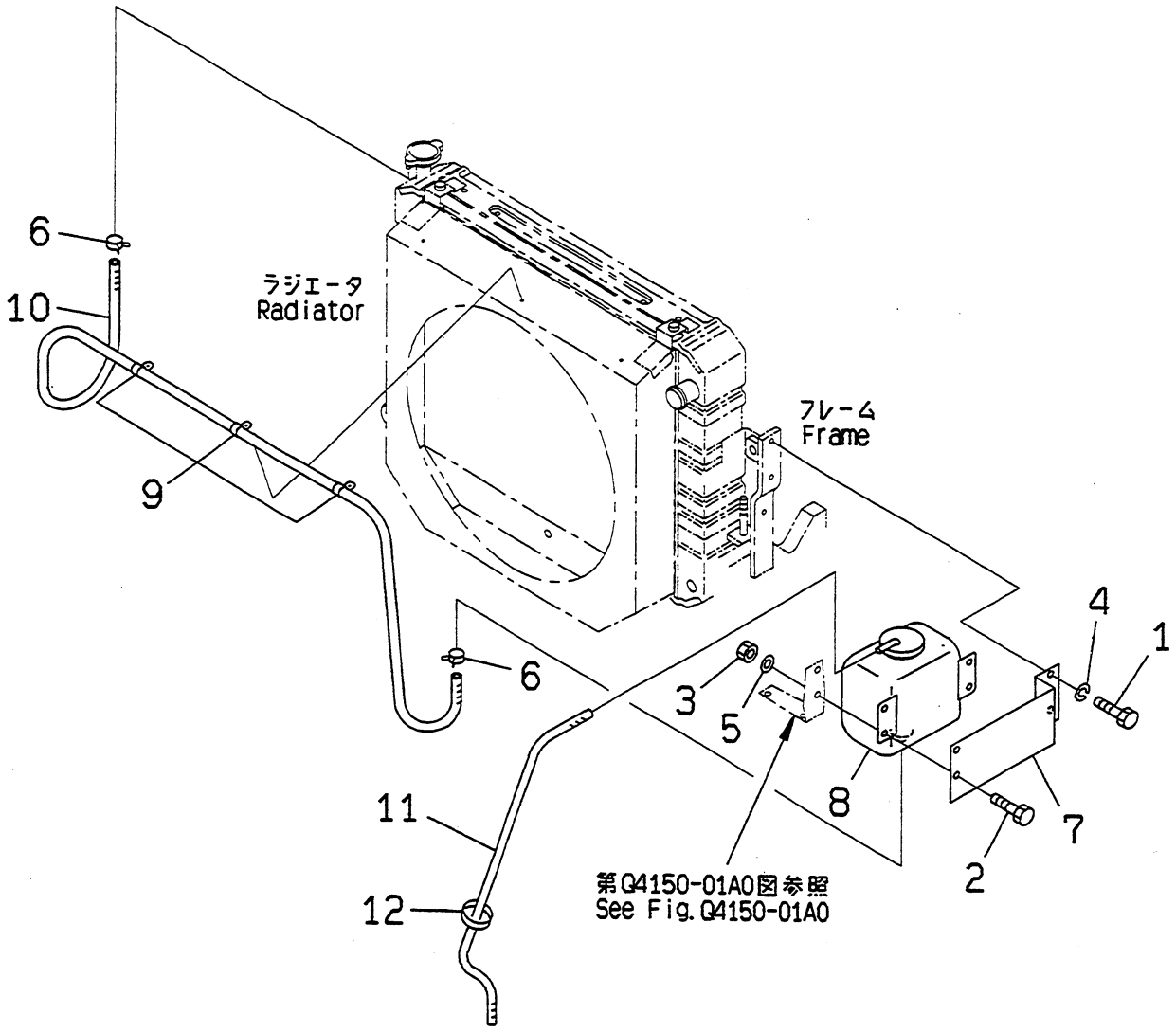

PUF1690

https://truckmanualshub.com/

FIG NO. : C4160-01A0

FG15H,FG18H

INDEX	PART NO.	DESCRIPTION	Q'TY	SERIAL NO.
1	01010-80816	BOLT	2	600001A AND UP
2	01010-80820	BOLT	2	
3	01580-10806	NUT	2	
4	01602-20825	WASHER,SPRING	2	
5	01641-20812	WASHER	2	
6	07285-00115	CLIP	2	
7	3EA-04-35110	BRACKET	1	
8	3EB-04-A5160	TANK ASS'Y,RESERVOIR	1	
	063405	.CAP	1	
9	3EB-04-25140	CLAMP	3	
10	37B-1AC-A130	HOSE	1	
11	37B-1AC-A200	HOSE	1	
12	37B-1AF-6010	BAND	1	

https://truckmanualshub.com/

リザーバ タンク
FIG.C4160-01A1 RESERVOIR TANK

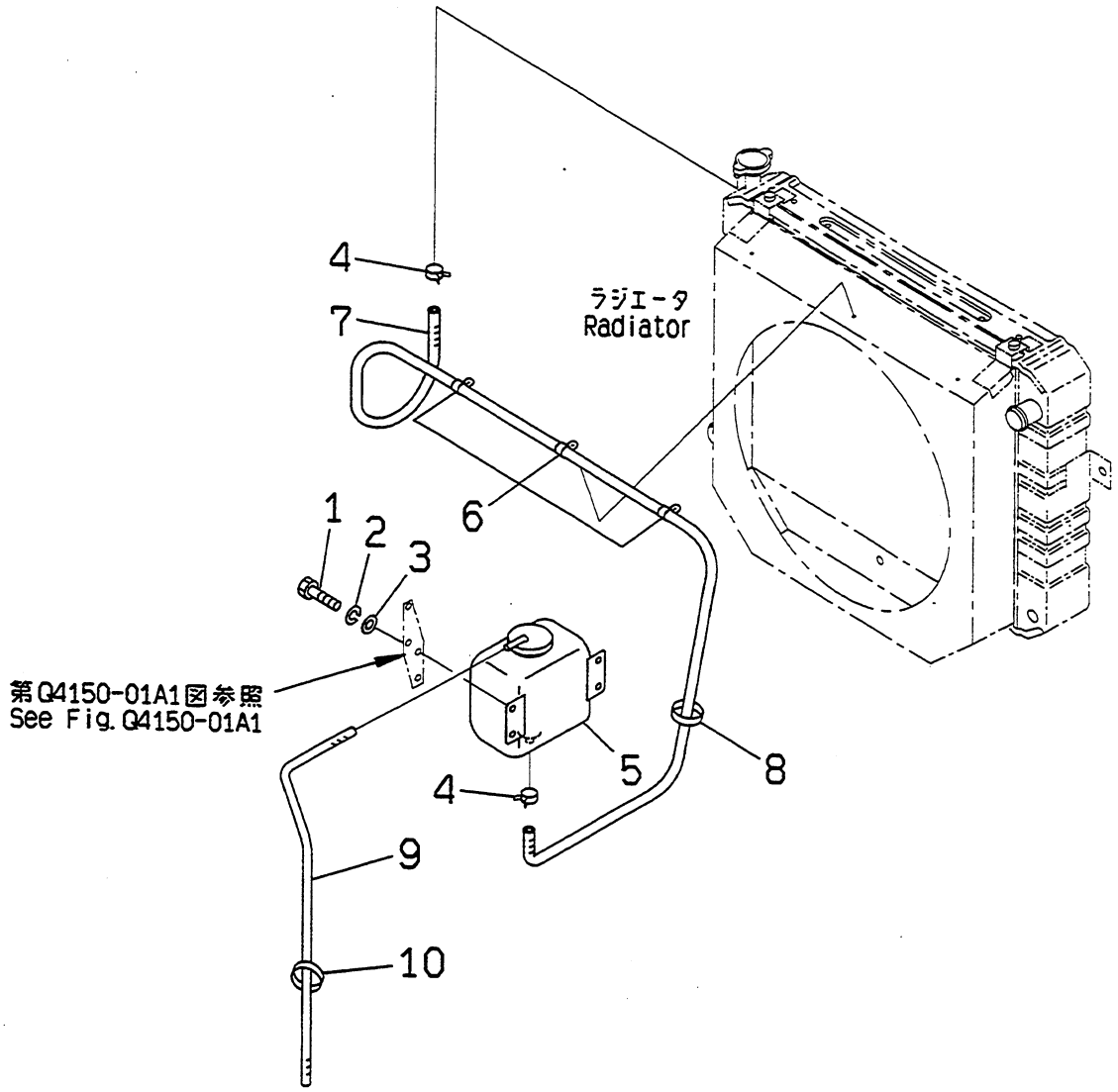

PUF1691

https://truckmanualshub.com/

FIG NO. : C4160-01A1

FG15S,FG18S

INDEX	PART NO.	DESCRIPTION	Q'TY	SERIAL NO.
1	01010-80816	BOLT	4	600001A AND UP
2	01602-20825	WASHER,SPRING	4	
3	01641-20812	WASHER	4	
4	07285-00115	CLIP	2	
5	3EB-04-A5160	TANK ASS'Y,RESERVOIR	1	
	063405	.CAP	1	
6	3EB-04-25140	CLAMP	3	
7	37B-1AC-A140	HOSE	1	
8	37B-1AE-6030	BAND	1	
9	37B-1AC-A200	HOSE	1	
10	37B-1AF-5010	BAND	1	

https://truckmanualshub.com/

ﾗｼﾞｴｰﾀ ｶﾊﾞｰ
FIG.C4170-01A0 RADIATOR COVER

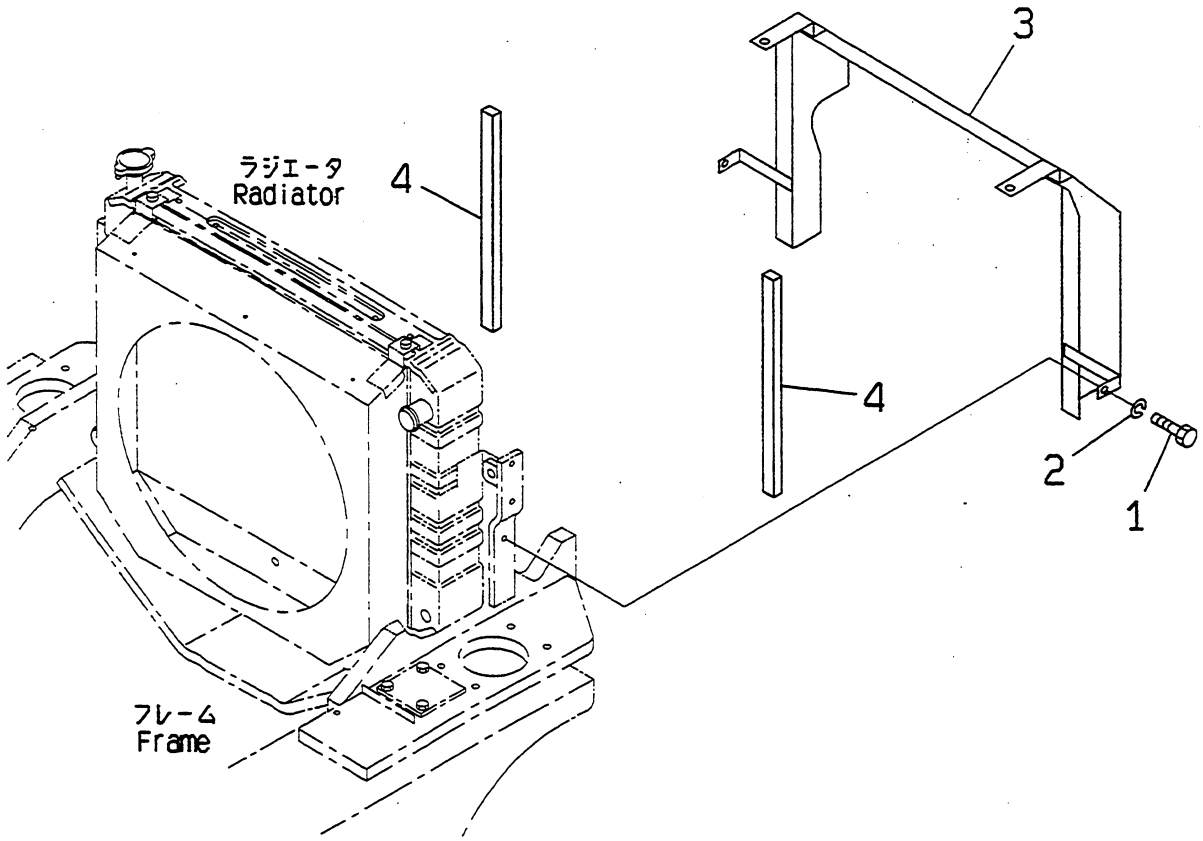

PUF1692

https://truckmanualshub.com/

FIG NO. : C4170-01A0

FG15H,FG18H

INDEX	PART NO.	DESCRIPTION	Q'TY	SERIAL NO.
1	01010-80816	BOLT.....	2	600001A AND UP
2	01602-20825	WASHER,SPRING.....	2	
3	3EA-04-A5560	COVER.....	1	
4	3EB-04-25551	SPONGE.....	2	

https://truckmanualshub.com/

This Page Left Intentionally Blank

KOMATSU

https://truckmanualshub.com/

KOMATSU

Fuel Tank And Related Parts

AX SERIES

Fuel Tank And Related Parts

https://truckmanualshub.com/

フェエル システム
FIG.D4110-01A0 FUEL SYSTEM

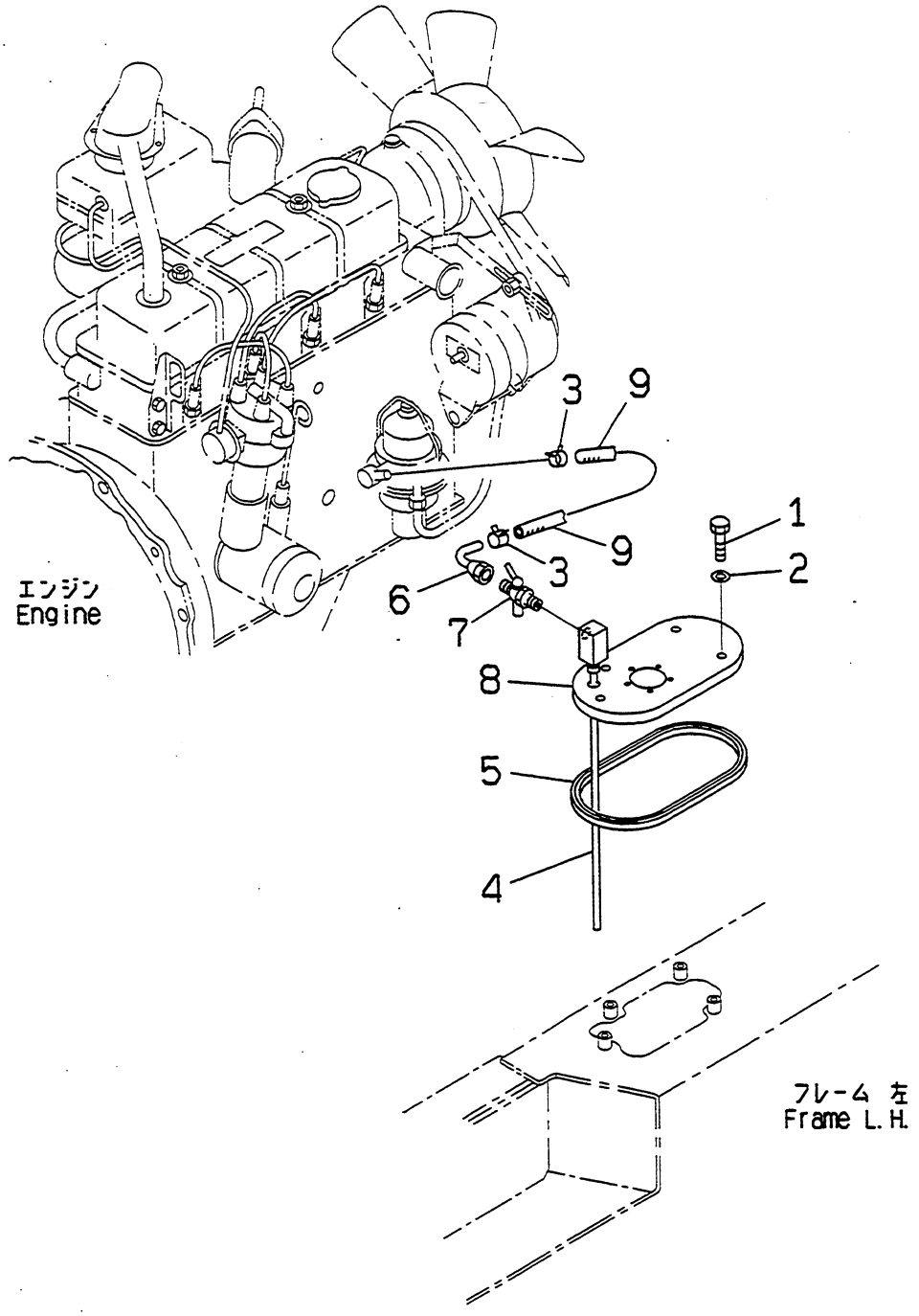

PUF1694

https://truckmanualshub.com/

FIG NO. : D4110-01A0

FG15H,FG18H

INDEX	PART NO.	DESCRIPTION	Q'TY	SERIAL NO.
1	01010-80816	BOLT	4	600001A AND UP
2	07005-00812	GASKET	4	
3	07285-00130	CLAMP	2	
4	3EA-05-35110	BLOCK	1	
5	3EB-05-21130	PACKING	1	
6	3EB-05-22210	PIPE	1	
7	34C-04-23340	COCK	1	
8	37B-1CT-3010	COVER	1	
9	37B-1FA-A020	HOSE	1	

https://truckmanualshub.com/

フュエル システム
FIG.D4110-01A1 FUEL SYSTEM

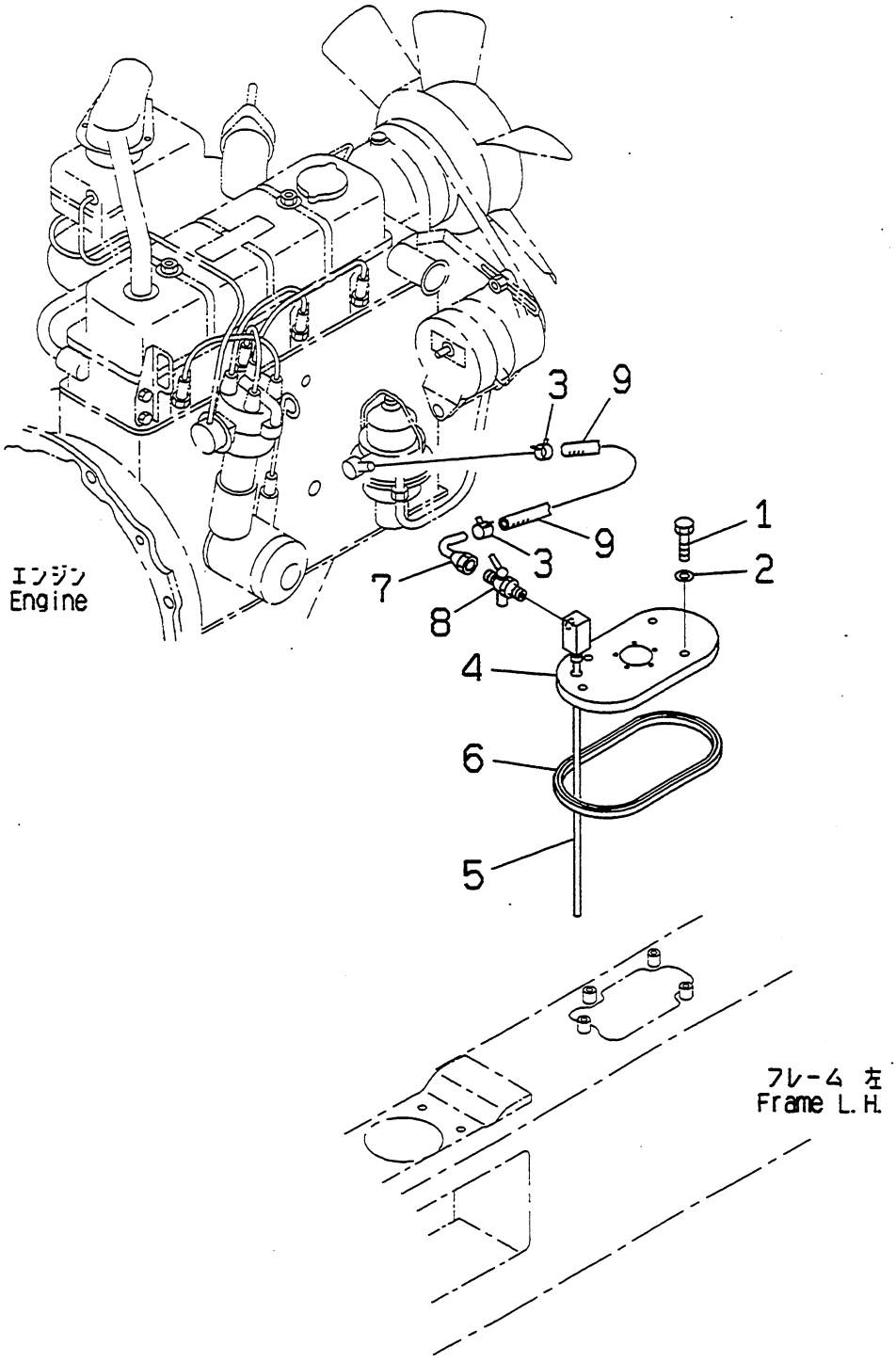

PUF1695

https://truckmanualshub.com/

FIG NO. : D4110-01A1

FG15S,FG18S

INDEX	PART NO.	DESCRIPTION	Q'TY	SERIAL NO.
1	01010-80816	BOLT	4	600001A AND UP
2	07005-00812	GASKET	4	
3	07285-00130	CLAMP	2	
4	3EA-05-A5310	COVER	1	
5	3EA-05-35510	BLOCK	1	
6	3EB-05-21130	PACKING	1	
7	3EB-05-22210	PIPE	1	
8	34C-04-23340	COCK	1	
9	37B-1FA-A020	HOSE	1	

https://truckmanualshub.com/

This Page Left Intentionally Blank

KOMATSU

https://truckmanualshub.com/

KOMATSU

Power Train And Front Axle Parts

AX SERIES

Power Train And Front Axle Parts

https://truckmanualshub.com/

ﾄﾞﾗｲﾌﾞ ｱｸｽﾙ (ﾄﾙｸ ｺﾝﾊﾞｰﾀ ｼﾖｳ)

FIG.F4130-01A0 DRIVE AXLE (TORQUE CONVERTER SPEC.)

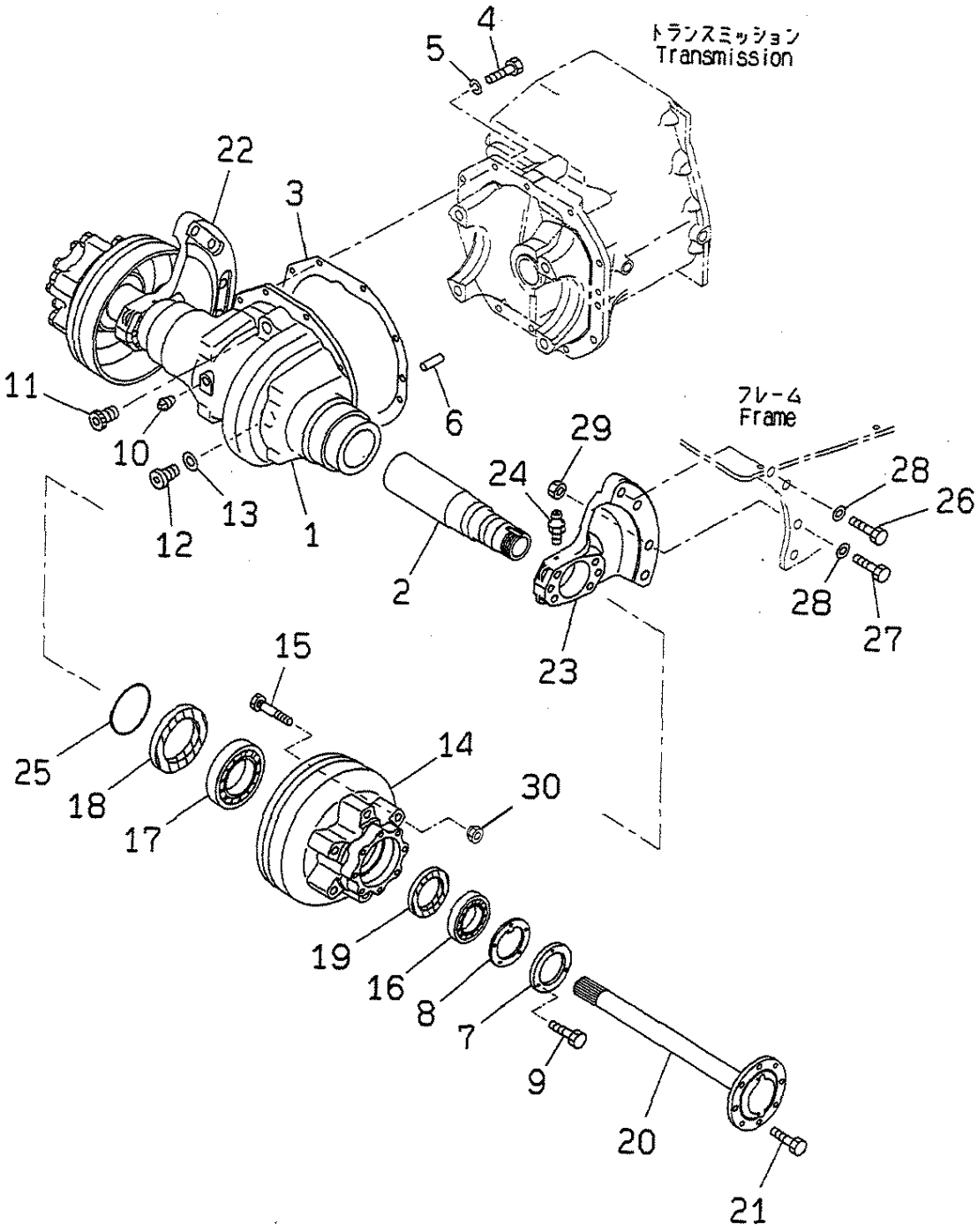

PAF0386

https://truckmanualshub.com/

FIG NO. : F4130-01A0

FG15H,FG18H

INDEX	PART NO.	DESCRIPTION	Q'TY	SERIAL NO.
	3EA-21-32111	HOUSING ASS'Y	1	600001A AND UP
1	☆	.HOUSING	1	
2	☆	.SHAFT	2	
3	3EA-21-32240	GASKET	1	
4	01010-81030	BOLT	9	
5	01602-21030	WASHER,SPRING	9	
6	04020-01228	PIN,DOWEL	2	
7	3EA-21-13140	NUT	2	
8	3EA-21-13151	PLATE	2	
9	01010-80612	BOLT	2	
10	07042-20312	PLUG	1	
11	3EB-21-15211	CAP	1	
12	34B-41-12910	PLUG	1	
13	34B-41-12920	GASKET	1	
14	3EA-21-29210	HUB	2	
15	3EA-21-14121	BOLT	12	
16	300-22-31370	BEARING	2	
17	06000-30212	BEARING	2	
18	3EA-21-14131	SEAL	2	
19	3EA-21-14140	SEAL	2	
20	3EA-21-32161	SHAFT	2	
21	01050-51025	BOLT	16	
22	3EA-21-32140	SUPPORT,R.H	1	
23	3EA-21-32150	SUPPORT,L.H	1	
24	07020-00001	FITTING,GREASE	2	
25	07000-02075	O-RING	2	
26	01010-81845	BOLT	1	
27	01010-81865	BOLT	7	
28	01643-31845	WASHER	8	
29	01580-11815	NUT	7	
30	300-22-31241	NUT	12	

https://truckmanualshub.com/

ﾄﾞﾗｲﾌﾞ ｱｸｽﾙ
FIG.F4130-01A1 DRIVE AXLE

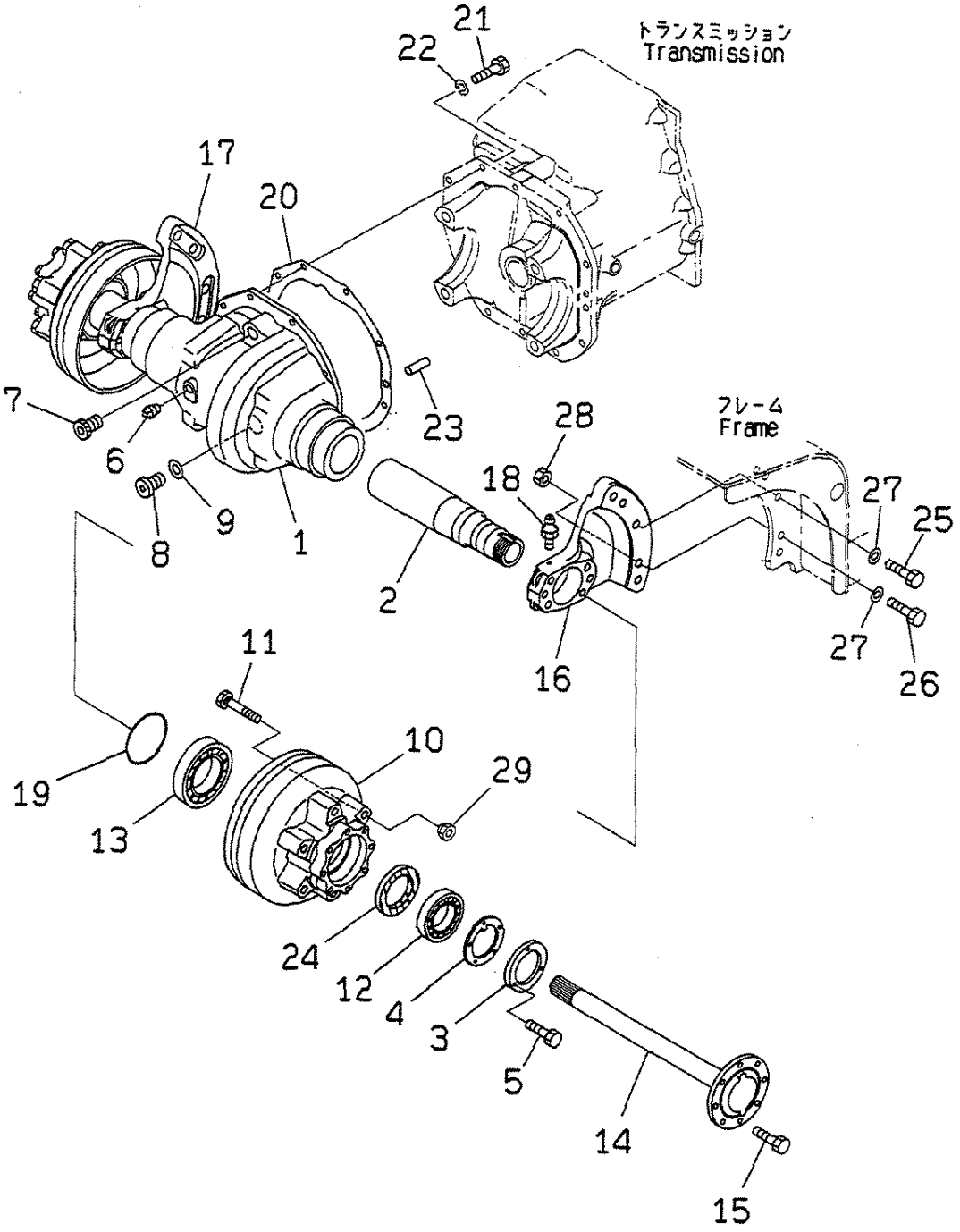

PUF1696

https://truckmanualshub.com/

FIG NO. : F4130-01A1

FG15S,FG18S

INDEX	PART NO.	DESCRIPTION	Q'TY	SERIAL NO.
	3EA-22-35110	HOUSING ASS'Y	1	600001A AND UP
1	☆	.HOUSING	1	
2	☆	.SHAFT	2	
3	3EA-22-11220	NUT	2	
4	3EA-22-11230	PLATE	2	
5	01010-80612	BOLT	2	
6	07042-20312	PLUG	1	
7	3EB-21-15211	CAP	1	
8	34B-41-12910	PLUG	1	
9	34B-41-12920	GASKET	1	
10	3EA-22-11133	HUB	2	
11	3EA-22-11141	BOLT	12	
12	06002-32012	BEARING	2	
13	3EA-22-11161	BEARING	2	
14	3EA-22-35140	SHAFT	2	
15	01050-51025	BOLT	16	
16	3EA-22-35230	SUPPORT,L.H	1	
17	3EA-22-35240	SUPPORT,R.H	1	
18	07020-00001	FITTING,GREASE	2	
19	07000-02075	O-RING	2	
20	3EA-21-32240	GASKET	1	
21	01010-81030	BOLT	11	
22	01602-21030	WASHER,SPRING	11	
23	04020-01228	PIN,DOWEL	2	
24	3EA-22-11210	SEAL	2	
25	01010-81845	BOLT	2	
26	01010-81865	BOLT	8	
27	01643-31845	WASHER	10	
28	01580-11815	NUT	8	
29	300-22-31241	NUT	12	

https://truckmanualshub.com/

トﾞライ クラッチ
FIG.F4160-01A0 DRY CLUTCH

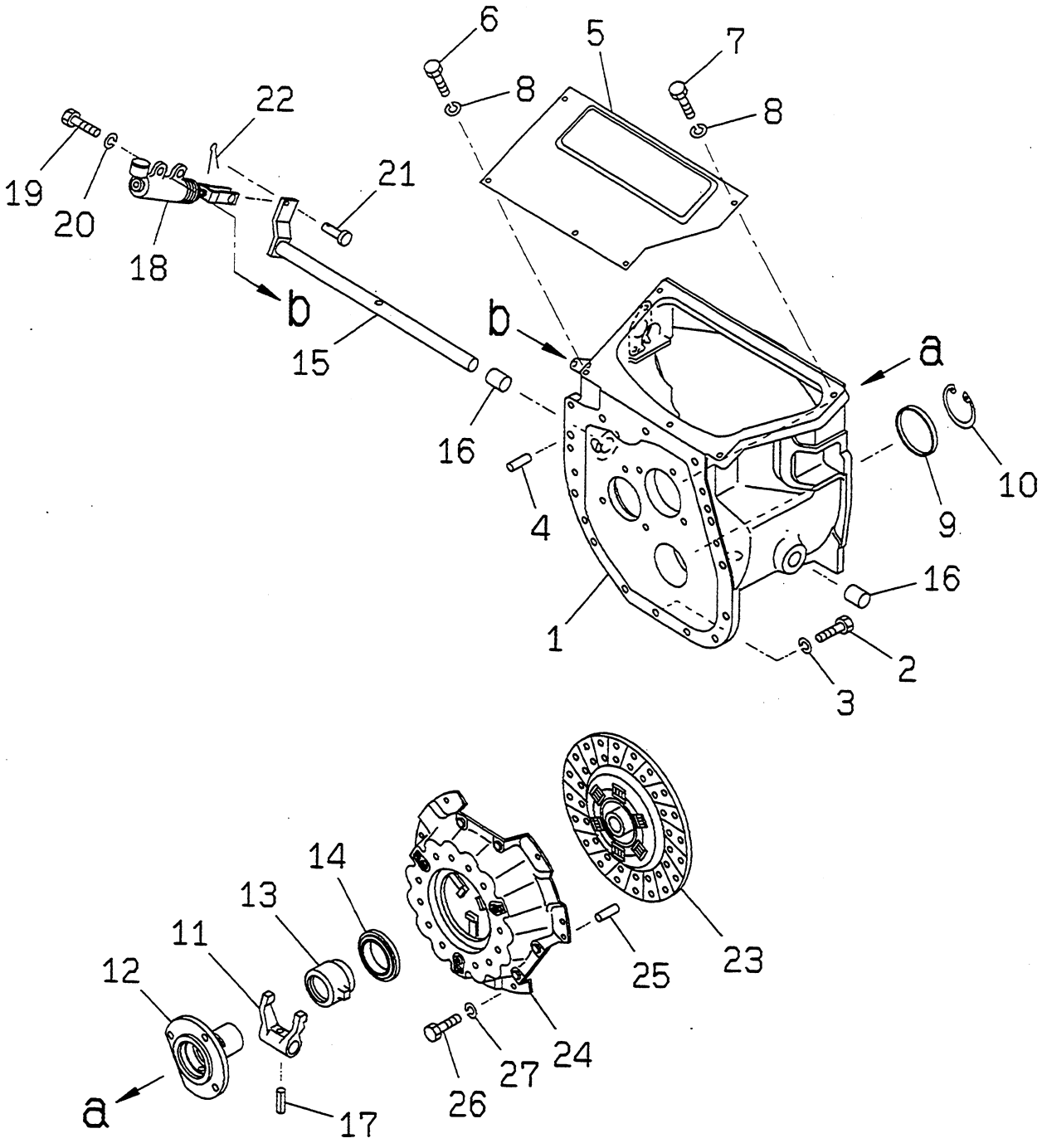

PAF0029

https://truckmanualshub.com/

FIG NO. : F4160-01A0

FG15H

INDEX	PART NO.	DESCRIPTION	Q'TY	SERIAL NO.
1	3EB-10-31110	CASE	1	600001A - 650000A
2	01010-81040	BOLT	14	
3	01602-21030	WASHER,SPRING	14	
4	04020-01228	PIN,DOWEL	2	
5	3EB-10-31150	COVER	1	
6	01010-80820	BOLT	2	
7	01010-80816	BOLT	3	
8	01602-20825	WASHER,SPRING	5	
9	3SB-15-11350	SEAL	1	
10	04065-08225	RING,SNAP	1	
11	3EB-10-11130	YOKE	1	
12	3EB-10-31130	FLANGE	1	
13	3EB-10-31120	SLEEVE	1	
14	3EB-10-31140	BEARING	1	
15	3EB-11-31160	LEVER	1	
16	3EB-10-31190	BUSHING	2	
17	04025-01032	PIN,SPRING	1	
18	(3EB-10-31170)	CYLINDER ASS'Y,CLUTCH RELEASE	1	
19	01010-80825	BOLT	2	
20	01602-20825	WASHER,SPRING	2	
21	04205-11028	PIN	1	
22	04050-13020	PIN,COTTER	1	
23	3EB-10-32320	DISC	1	
24	3EB-10-32310	PLATE,PRESSURE	1	
25	04020-00820	PIN,DOWEL	2	
26	01010-80818	BOLT	6	
27	01602-20825	WASHER,SPRING	6	

https://truckmanualshub.com/

FIG. NO. F4160-01A0A DRY CLUTCH

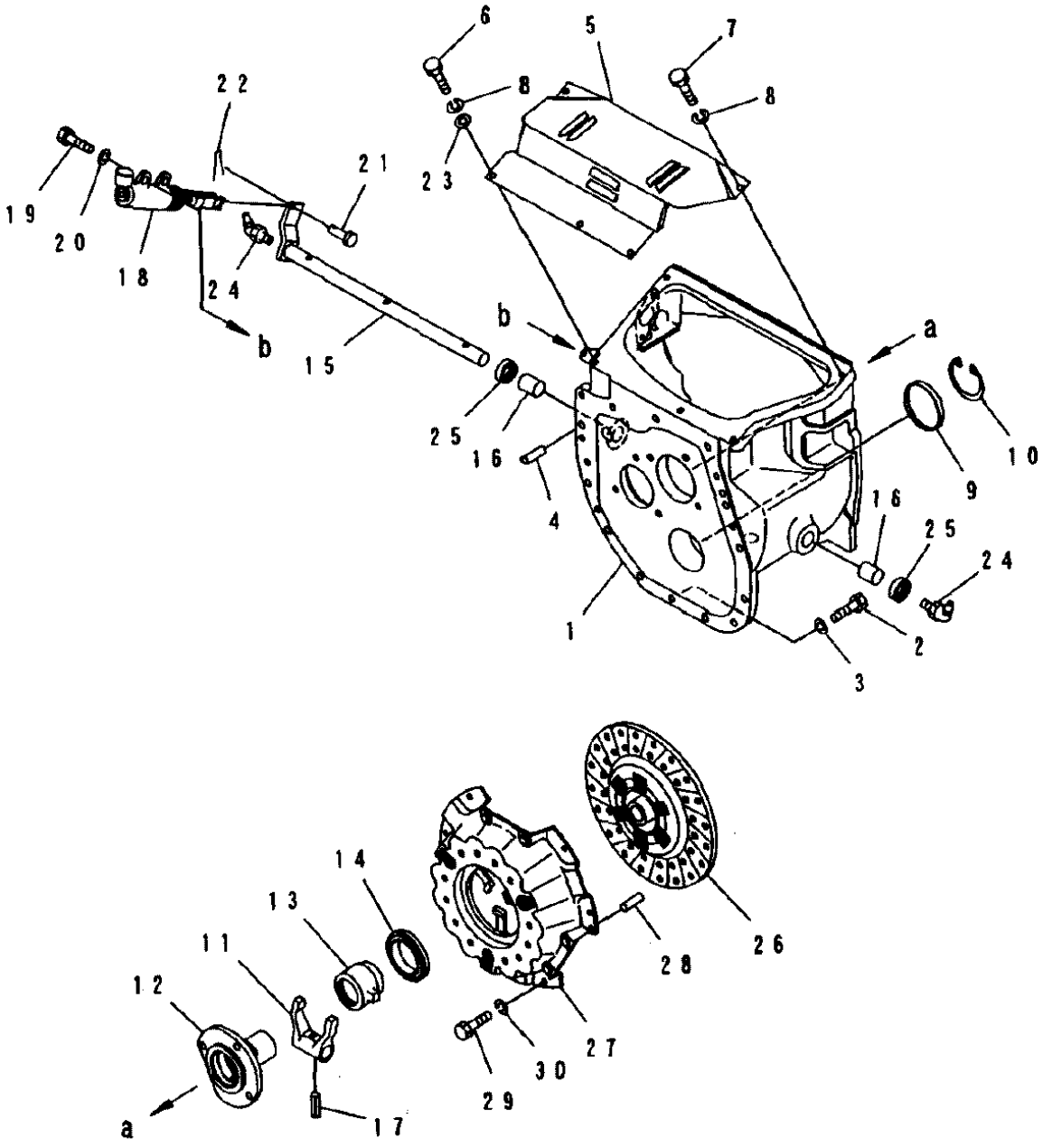

PJF4718

https://truckmanualshub.com/

FIG. NO. :F4160-01A0A

FG15H

INDEX	PART NO.	DESCRIPTION	Q'TY	SERIAL NO.
1	3EB-10-31210	CASE	1	650001A and Up
2	01010-81035	BOLT	14	
3	01602-21030	WASHER, SPRING	14	
4	04020-01228	PIN, DOWEL	2	
5	3EB-10-31850	COVER	1	
6	01010-80820	BOLT	2	
7	01010-80816	BOLT	3	
8	01602-20825	WASHER, SPRING	5	
9	3SB-15-11350	CAP	1	
10	04065-08225	RING, SNAP	1	
11	3EB-10-31180SA	YOKE	1	
12	3EB-10-31130	FLANCE	1	
13	3EB-10-31120	SLEEVE	1	
14	3EB-10-31140	BEARING	1	
15	3EB-10-31150	LEVER	1	
16	3EB-10-31191	BUSHING	2	
17	04025-01040	PIN, SPRING	1	
18	(3EB-10-31270)	CYLINDER ASS'Y, CLUTCH RELEASE	1	
19	01010-80825	BOLT	2	
20	01602-20825	WASHER, SPRING	2	
21	04205-11028	PIN	1	
22	04050-13020	PIN, COTTER	1	
23	01641-21016	WASHER	1	
24	07020-00675	FITTING	2	
25	07012-00025	SEAL	2	
26	3EB-10-32320	DISC	1	
27	3EB-10-32310	PLATE, PRESSURE	1	
28	04020-00820	PIN, DOWEL	2	
29	01010-80818	BOLT	6	
30	01602-20825	WASHER, SPRING	6	

https://truckmanualshub.com/

トルク フロー トランスミッション (トルク コンバータ ツキ) (1/8)

FIG.F4160-21A0 TORQUE FLOW TRANSMISSION (WITH TORQUE CONVERTER) (1/8)

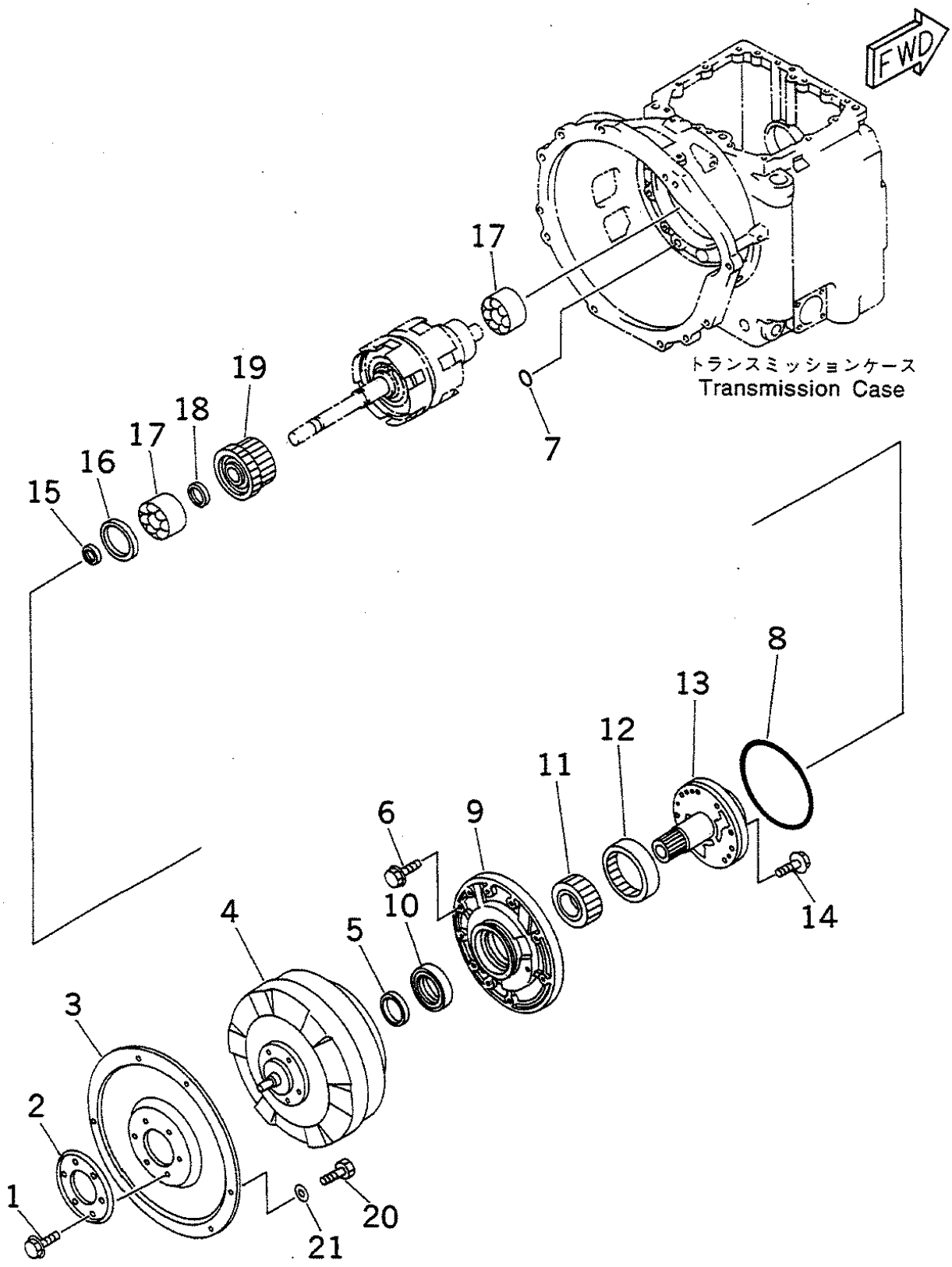

https://truckmanualshub.com/

FIG NO. : F4160-21A0

INDEX	PART NO.	DESCRIPTION	Q'TY	SERIAL NO.
	3EA-15-A5110	TRANSMISSION ASS'Y.....	1	600001A AND UP
		THIS ASSEMBLIES CONSIST OF ALL PARTS SHOWN IN FIGS.F4160-21A0 TO F4160-28A0.		
1	AS91621-61016	.BOLT.....	6	
2	AS32118-3600	.SPACER.....	1	
3	AS32111-3601	.PLATE,FLEXIBLE.....	1	
4	AS32020-3600	.CONVERTER ASS'Y,TORQUE.....	1	
5	AS55981-2302	.RING.....	1	
6	AS91611-40832	.BOLT.....	9	
7	AS55931-3410	.O-RING.....	4	
8	AS39311-5010	.O-RING.....	1	
	AS35310-3600	.STATOR ASS'Y.....	1	
9	AS35311-3600	..BODY.....	1	
10	AS55941-2500	..SEAL,OIL.....	1	
11	AS35302-2600	..GEAR.....	1	
12	AS35322-2600	..GEAR.....	1	
13	AS35370-2800	..SHAFT.....	1	
14	AS91611-40830	..BOLT.....	8	
15	AS55981-2810	.RING,SEAL.....	1	
16	AS33436-2800	.SHIM.....	AR	
	AS33436-2810	.SHIM.....	AR	
	AS33436-2820	.SHIM.....	AR	
	AS33436-2830	.SHIM.....	AR	
17	AS97103-06306	.BEARING.....	2	
18	AS35768-3411	.SPACER.....	1	
19	AS35708-B362	.GEAR,FORWARD.....	1	
20	01010-80816	BOLT.....	6	
21	01643-50823	WASHER.....	6	

https://truckmanualshub.com/

トルク フロー トランスミッション (トルク コンバータ ツキ) (2/8)

FIG.F4160-22A0 TORQUE FLOW TRANSMISSION (WITH TORQUE CONVERTER) (2/8)

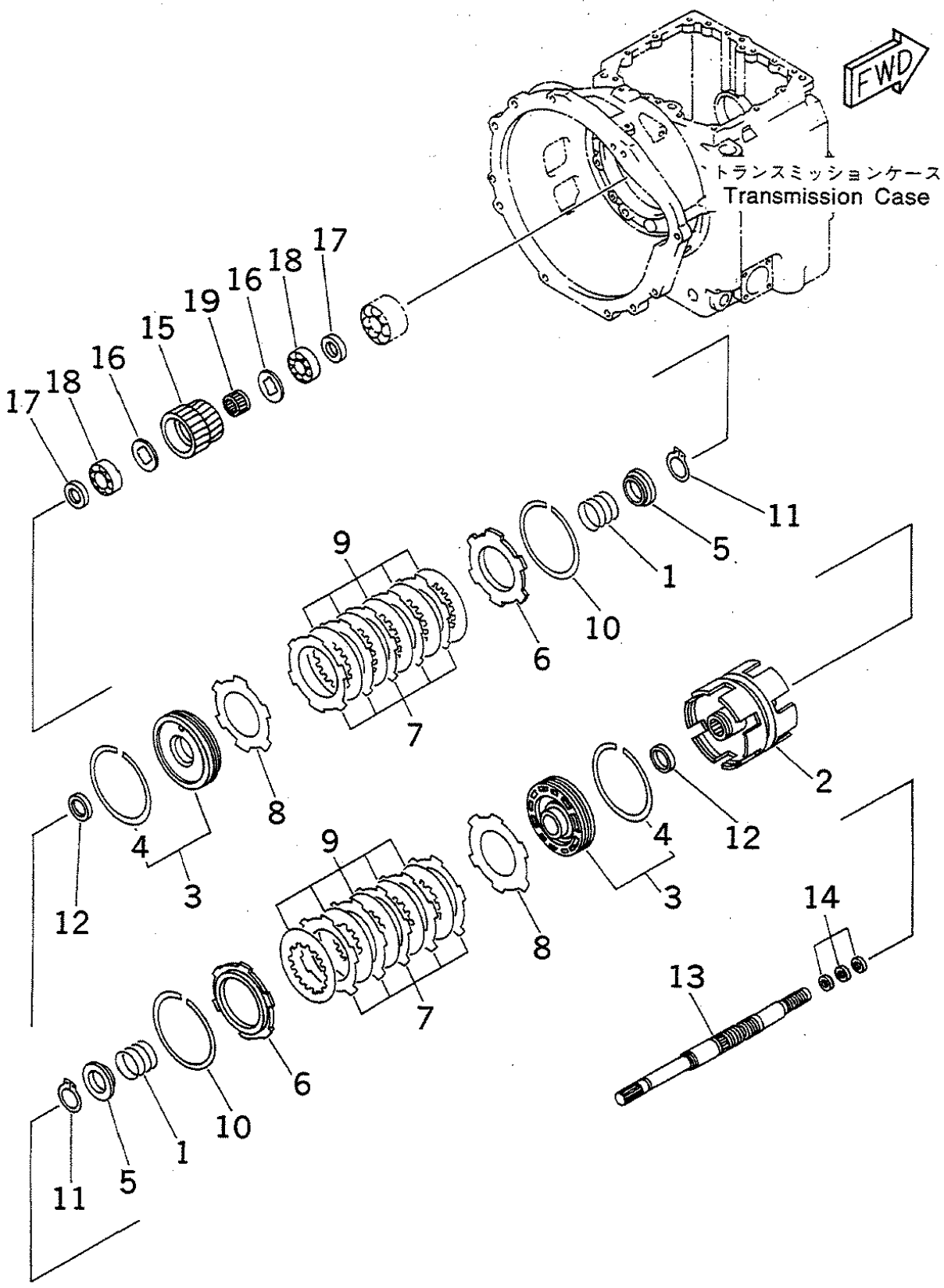

https://truckmanualshub.com/

FIG NO. : F4160-22A0

INDEX	PART NO.	DESCRIPTION	Q'TY	SERIAL NO.
	(3EA-15-A5110)	TRANSMISSION ASS'Y.....	1	600001A AND UP
		THIS ASSEMBLIES CONSIST OF ALL PARTS SHOWN IN FIGS.F4160-21A0 TO F4160-28A0.		
	AS35610-3410	.DRUM ASS'Y,CLUTCH.....	1	
1	AS30501-3400	..SPRING,RETURN.....	2	
2	AS35601-3400	..DRUM.....	1	
3	AS35602-3400	..PISTON.....	2	
4	AS55981-3420	...RING,SEAL.....	1	
5	AS35615-3400	..RETAINER.....	2	
6	AS35616-3420	..PLATE.....	AR	
	AS35616-3430	..PLATE.....	AR	
7	AS36533-3400	..PLATE.....	8	
8	AS35633-3410	..PLATE.....	2	
9	AS35634-3400	..DISC.....	8	
10	AS39759-3400	..RING,SNAP.....	2	
11	AS55925-2301	..RING,SNAP.....	2	
12	AS55981-3410	..RING,SEAL.....	2	
13	AS35706-B340	.SHAFT,MAIN.....	1	
14	AS55981-3400	.RING,SEAL.....	3	
15	AS35765-3620	.GEAR,REVERSE.....	1	
16	AS35789-3600	.BEARING,THRUST.....	2	
17	AS35789-3610	.BEARING,THRUST.....	2	
18	AS39374-3600	.BEARING,NEEDLE.....	2	
19	AS39376-3600	.BEARING,NEEDLE.....	1	

https://truckmanualshub.com/

トルク フロー トランスミッション (トルク コンバータ ツキ) (3/8)
FIG.F4160-23A0 TORQUE FLOW TRANSMISSION (WITH TORQUE CONVERTER) (3/8)

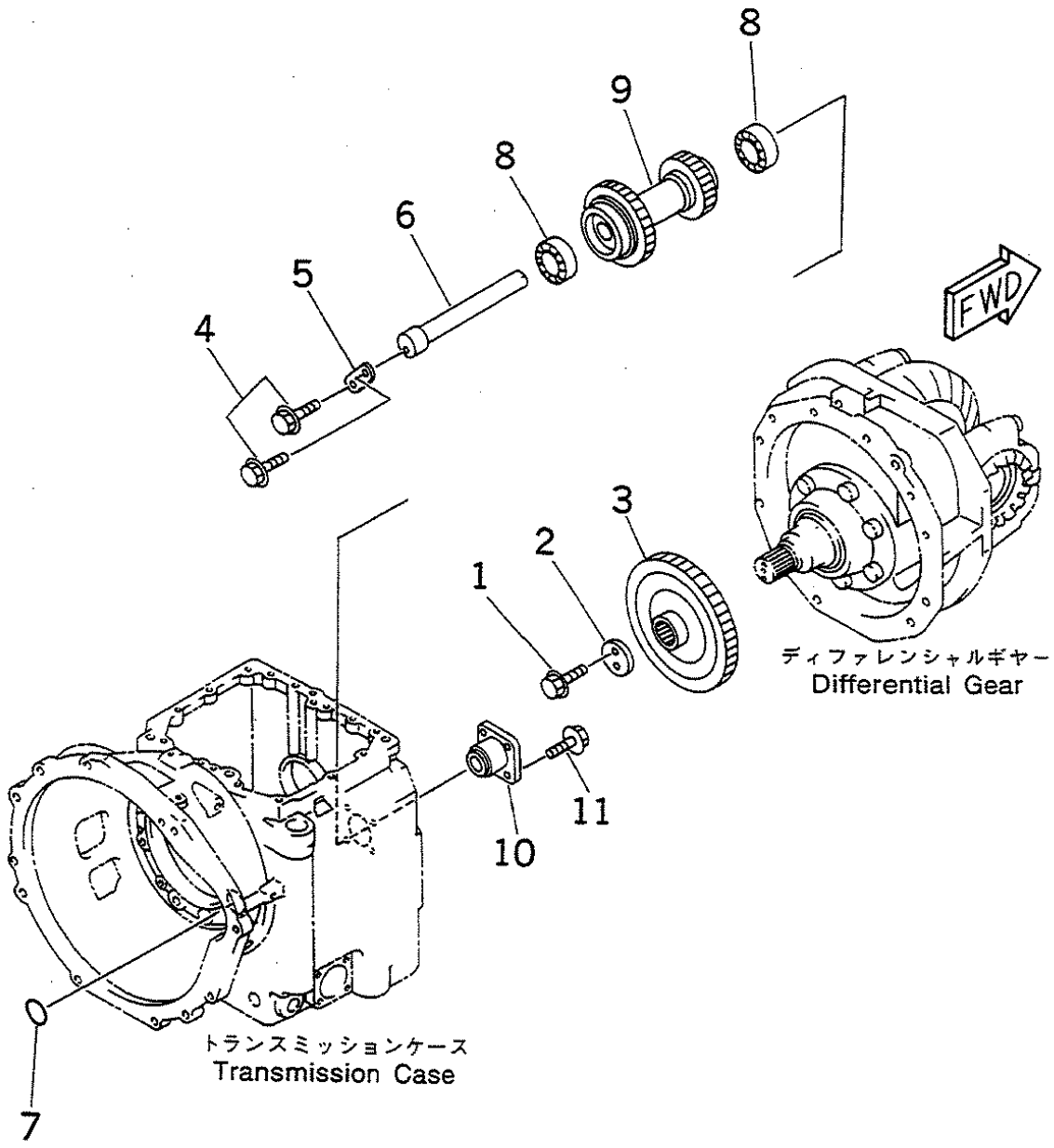

https://truckmanualshub.com/

FIG NO. : F4160-23A0

INDEX	PART NO.	DESCRIPTION	Q'TY	SERIAL NO.
	(3EA-15-A5110)	TRANSMISSION ASS'Y..... THIS ASSEMBLIES CONSIST OF ALL PARTS SHOWN IN FIGS.F4160-21A0 TO F4160-28A0.	1	600001A AND UP
1	AS91611-60830	.BOLT.....	2	
2	AS36726-3601	.PLATE,LOCK.....	1	
3	AS35773-3620	.GEAR.....	1	
4	AS91611-40816	.BOLT.....	2	
5	AS36726-3450	.PLATE,LOCK.....	1	
6	AS35778-3600	.SHAFT,COUNTER.....	1	
7	AS55931-3400	.O-RING.....	1	
8	AS39693-3410	.BEARING,BALL.....	2	
9	AS35777-3620	.GEAR, ALL AX (INDOOR/OUTDOOR).....	1	
10	AS35162-3600	.COVER.....	1	
11	AS91611-40822	.BOLT.....	4	

https://truckmanualshub.com/

トルク フロー トランスミッション (トルク コンバータ ツキ) (4/8)

FIG.F4160-24A0 TORQUE FLOW TRANSMISSION (WITH TORQUE CONVERTER) (4/8)

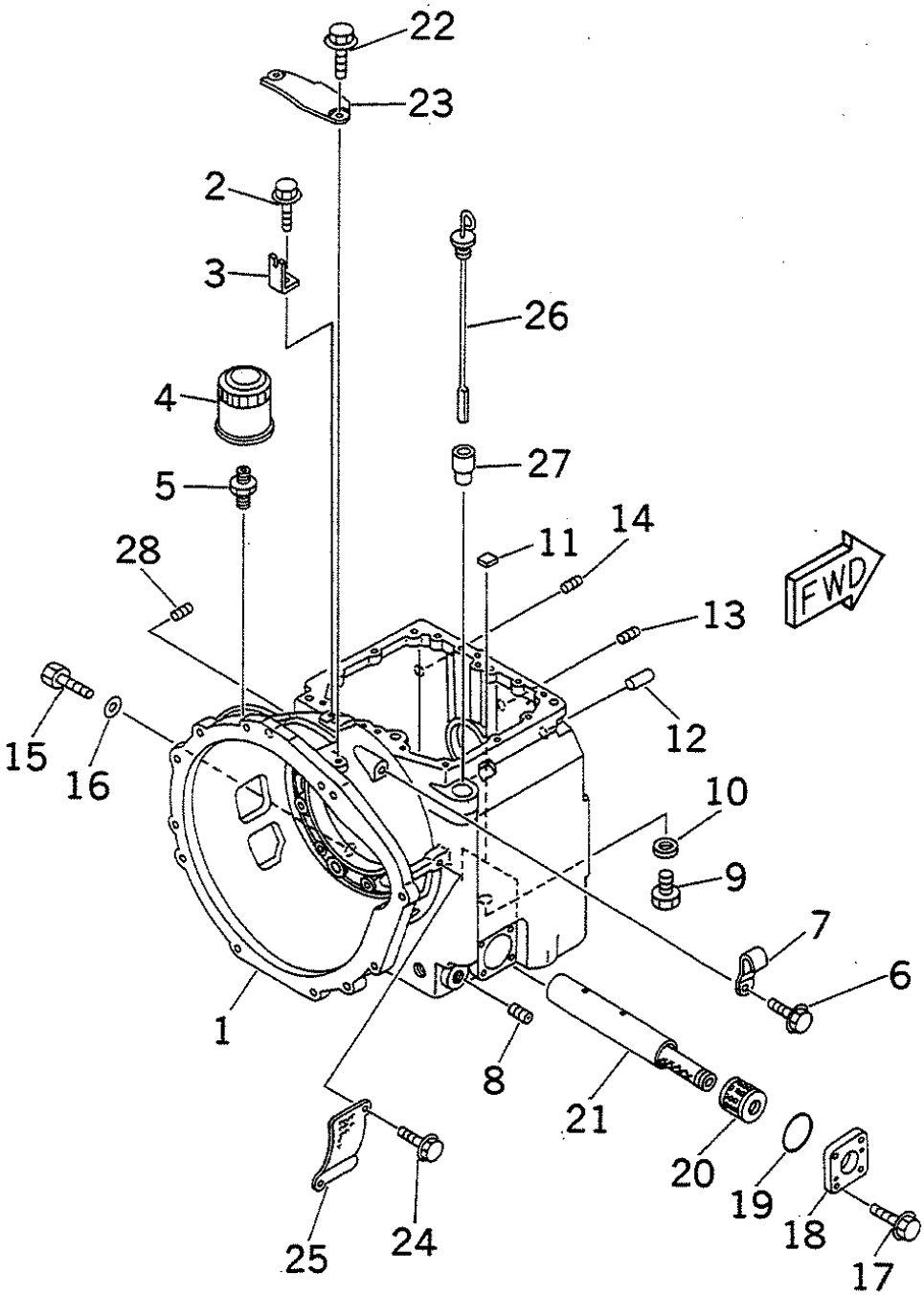

https://truckmanualshub.com/

FIG NO. : F4160-24A0

INDEX	PART NO.	DESCRIPTION	Q'TY	SERIAL NO.
	(3EA-15-A5110)	TRANSMISSION ASS'Y.....	1	600001A AND UP
		THIS ASSEMBLIES CONSIST OF ALL PARTS SHOWN IN FIGS.F4160-21A0 TO F4160-28A0.		
1	AS35141-B360	.CASE.....	1	
2	AS91611-40814	.BOLT.....	1	
3	AS33314-3600	.PLATE.....	1	
4	AS15000-2300	.FILTER ASS'Y,OIL.....	1	
5	AS35428-2300	.JOINT.....	1	
6	AS91619-61220	.BOLT.....	2	
7	AS35147-2300	.HANGER.....	2	
8	AS90344-54012	.PLUG.....	3	
9	AS90341-18057	.PLUG.....	1	
10	AS90430-18008	.GASKET.....	1	
11	AS35394-2300	.MAGNET,OIL FILTER.....	4	
12	AS90250-13042	.PIN,DOWEL.....	2	
13	AS90344-51014	.PLUG.....	5	
14	AS90344-53008	.PLUG.....	1	
15	AS90341-16010	.PLUG.....	1	
16	AS90201-16013	.WASHER.....	1	
17	AS91611-40618	.BOLT.....	4	
18	AS35162-3610	.COVER.....	1	
19	AS55931-3660	.O-RING.....	1	
20	AS35303-3601	.STRAINER,OIL.....	1	
21	AS35334-3600	.COVER.....	1	
22	AS91611-40818	.BOLT.....	2	
23	AS35116-3600	.COVER.....	1	
24	AS91611-40610	.BOLT.....	4	
25	AS35116-3610	.COVER.....	2	
26	AS35108-3600	.GAUGE,OIL LEVEL.....	1	
27	AS35133-2810	.HOLDER.....	1	
28	AS39380-3400	.PLUG.....	3	

https://truckmanualshub.com/

トルク フロー トランスミッション (トルク コンバータ ツキ) (5/8)
FIG.F4160-25A0 TORQUE FLOW TRANSMISSION (WITH TORQUE CONVERTER) (5/8)

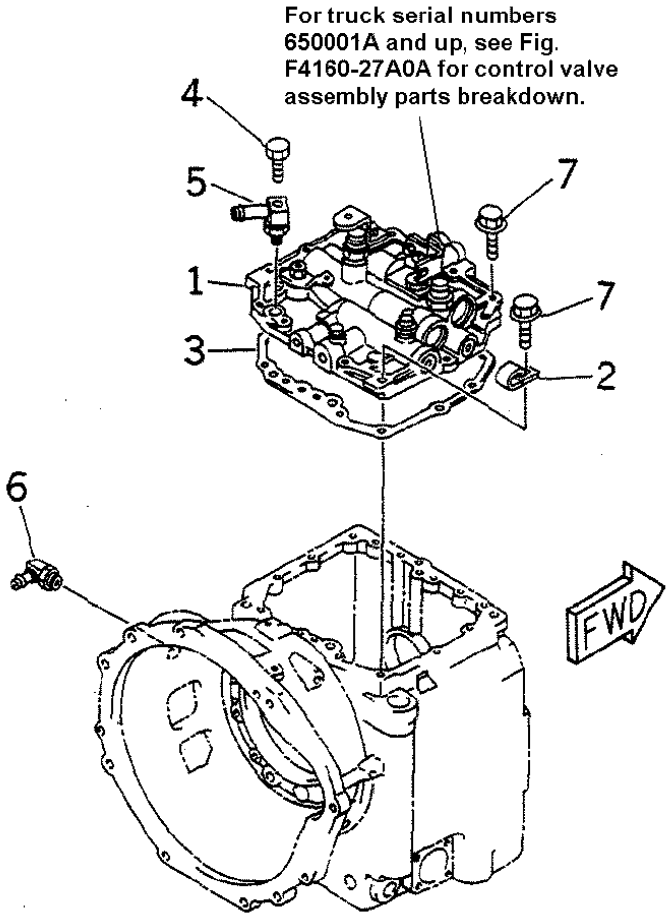

https://truckmanualshub.com/

FIG NO. : F4160-25A0

INDEX	PART NO.	DESCRIPTION	Q'TY	SERIAL NO.
	(3EA-15-A5110)	TRANSMISSION ASS'Y.....	1	600001A AND UP
		THIS ASSEMBLIES CONSIST OF ALL PARTS SHOWN IN FIGS.F4160-21A0 TO F4160-28A0.		
1	(AS33000-B362)	.VALVE ASS'Y,CONTROL.....	1	
2	AS33312-2800	.CLAMP.....	1	
3	AS35442-3400	.GASKET.....	1	
4	AS39382-3410	.PLUG.....	1	
5	AS39395-3400	.ELBOW.....	1	
6	AS39395-3410	.ELBOW.....	1	
7	AS91611-40832	.BOLT.....	14	

https://truckmanualshub.com/

トルク フロー トランスミッション (トルク コンバータ ツキ) (6/8)

FIG.F4160-26A0 TORQUE FLOW TRANSMISSION (WITH TORQUE CONVERTER) (6/8)

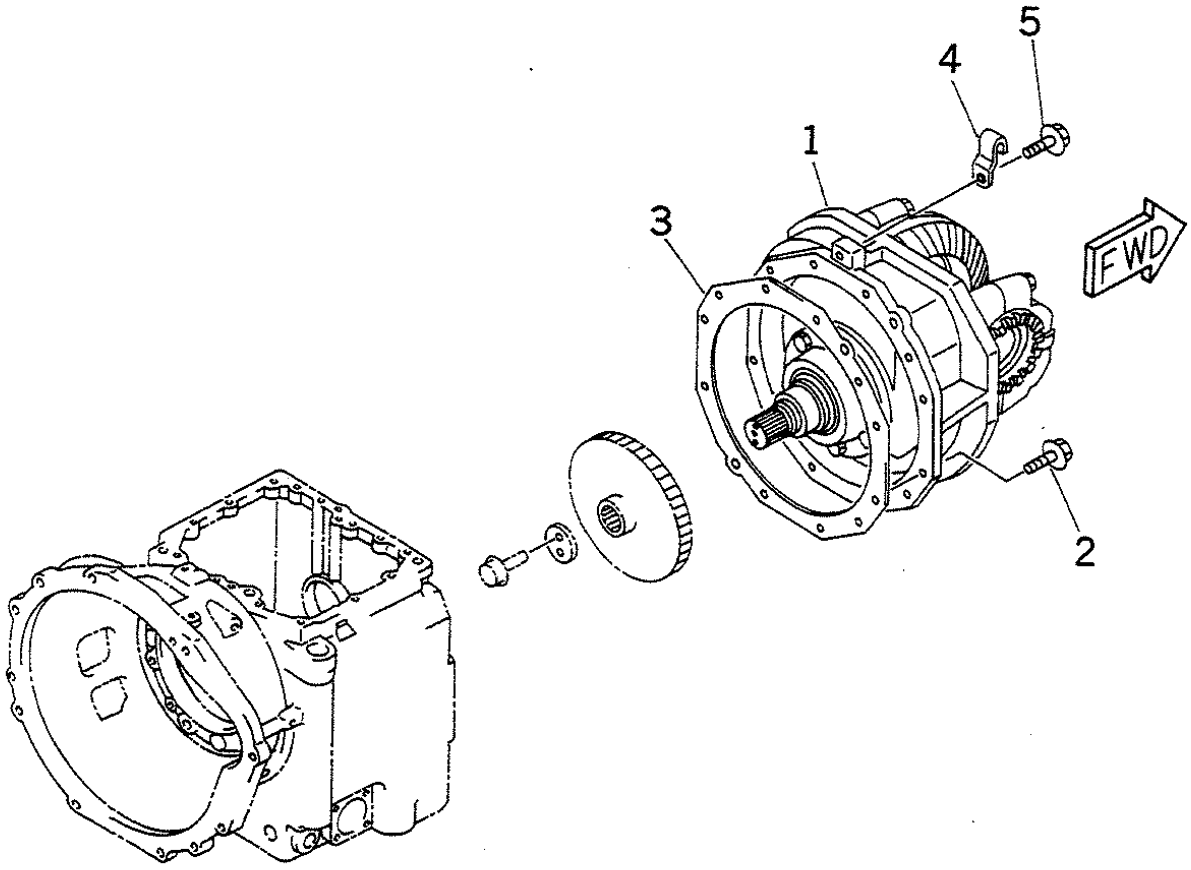

トランスミッションケース
Transmission Case

https://truckmanualshub.com/

FIG NO. : F4160-26A0

INDEX	PART NO.	DESCRIPTION	Q'TY	SERIAL NO.
	(3EA-15-A5110)	TRANSMISSION ASS'Y.....	1	600001A AND UP
		THIS ASSEMBLIES CONSIST OF ALL PARTS SHOWN IN FIGS.F4160-21A0 TO F4160-28A0.		
1	(AS34000-3610)	.DIFFERENTIAL ASS'Y.....	1	
2	AS91619-61235	.BOLT.....	12	
3	AS35144-3600	.GASKET.....	1	
4	AS35147-2300	.HANGER.....	1	
5	AS91619-61220	.BOLT.....	1	

https://truckmanualshub.com/

トルク フロー トランスミッション (トルク コンバータ ツキ) (7/8)

FIG.F4160-27A0 TORQUE FLOW TRANSMISSION (WITH TORQUE CONVERTER) (7/8)

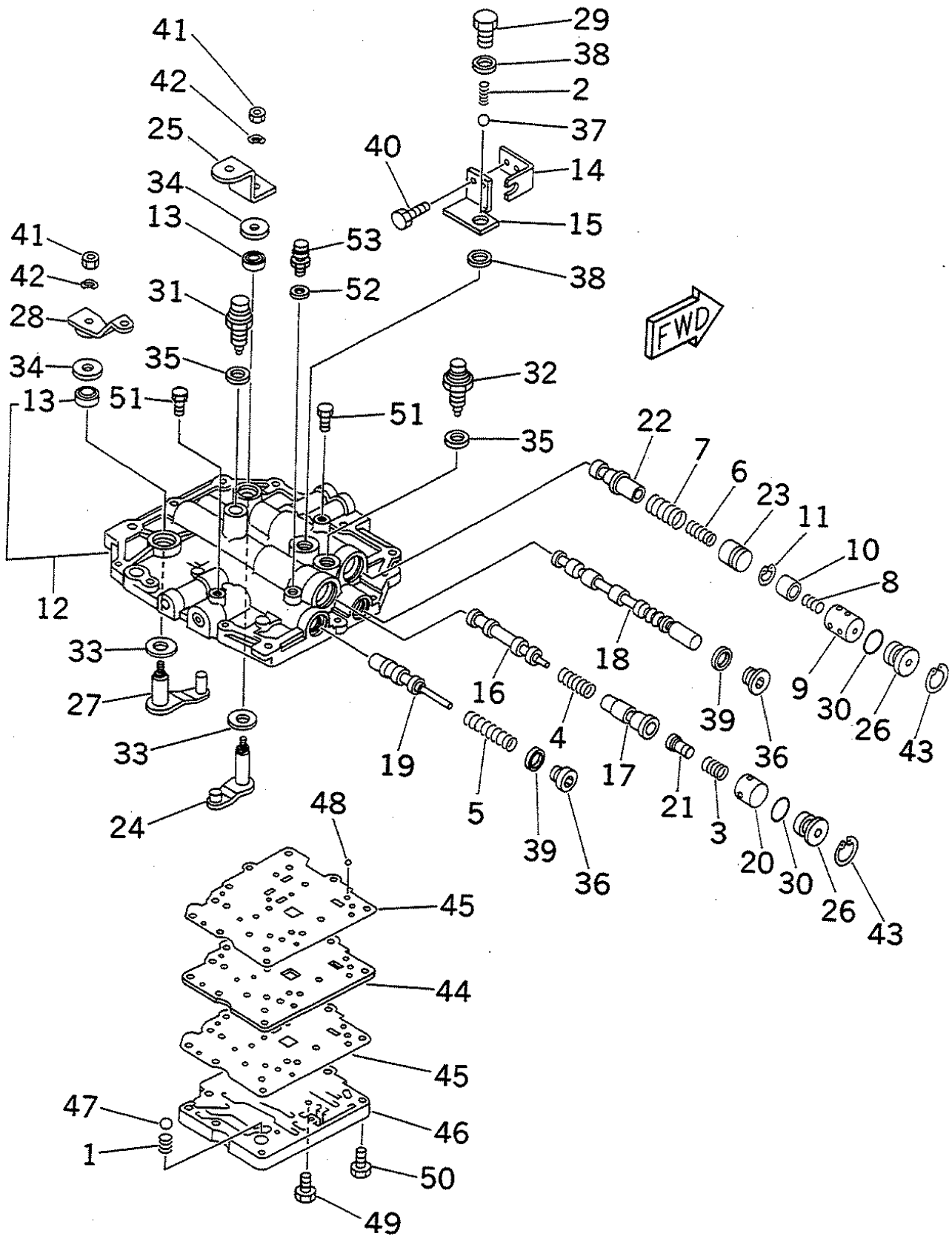

https://truckmanualshub.com/

FIG NO. : F4160-27A0

INDEX	PART NO.	DESCRIPTION	Q'TY	SERIAL NO.
	(3EA-15-A5110)	TRANSMISSION ASS'Y.....	1	600001A - 650000A
		THIS ASSEMBLIES CONSIST OF ALL PARTS SHOWN IN FIGS.F4160-21A0 TO F4160-28A0.		
	AS33000-B362	.VALVE ASS'Y,CONTROL.....	1	
1	AS30501-2840	..SPRING,SAFETY.....	1	
2	AS30501-2850	..SPRING,LEVER LOCK.....	1	
3	AS30501-3410	..SPRING,COMPRESSION.....	1	
4	AS30501-3420	..SPRING,RETURN.....	1	
5	AS30501-3430	..SPRING,REGULATOR.....	1	
6	AS30501-3450	..SPRING,MODULATION.....	1	
7	AS30501-3610	..SPRING,MODULATION.....	1	
	AS33101-3600	..BODY ASS'Y,VALVE.....	1	
8	AS30501-2590	...SPRING,VALVE.....	1	
9	AS35451-3400	...BODY.....	1	
10	AS35452-3600	...VALVE.....	1	
11	AS96151-01800	...RING,SNAP.....	1	
12	AS33201-3400	..COVER ASS'Y.....	1	
13	AS55941-2510	...SEAL,OIL.....	2	
14	AS33314-3620	..PLATE.....	1	
15	AS33314-3631	..PLATE.....	1	
16	AS35414-3400	..ROD,INCHING.....	1	
17	AS35417-3400	..VALVE.....	1	
18	AS35418-3400	..VALVE,SELECTOR.....	1	
19	AS35443-3600	..VALVE,REGULATOR.....	1	
20	AS35448-3400	..STOPPER.....	1	
21	AS35449-3400	..ROD.....	1	
22	AS35453-3601	..VALVE,MODULATION.....	1	
23	AS35454-2500	..PISTON.....	1	
24	AS35510-3401	..LEVER ASS'Y,SHIFT.....	1	
25	AS35511-3602	..LEVER.....	1	
26	AS35513-3400	..PLUG.....	2	
27	AS35520-3401	..LEVER ASS'Y,INCHING.....	1	
28	AS35521-3601	..LEVER.....	1	
29	AS39382-3602	..PLUG.....	1	
30	AS55931-3420	..O-RING.....	2	
31	AS84540-3400	..SWITCH,NEUTRAL.....	1	
32	AS84540-3600	..SWITCH,BACK LAMP.....	1	
33	AS89180-2500	..WASHER.....	2	
34	AS89180-2510	..WASHER.....	2	
35	AS90201-16013	..WASHER.....	2	
36	AS90341-20002	..PLUG.....	2	
37	AS90360-08009	..BALL.....	1	
38	AS90430-16242	..GASKET.....	2	
39	AS90430-20004	..GASKET.....	2	
40	AS91611-40612	..BOLT.....	2	
41	AS94130-60800	..NUT.....	2	
42	AS94531-00800	..WASHER,WAVE.....	2	
43	AS96151-03200	..RING,SNAP.....	2	
44	AS35422-3600	..PLATE.....	1	
45	AS35423-3600	..GASKET.....	2	
46	AS35432-3600	..COVER.....	1	
47	AS35477-8000	..VALVE,SAFETY.....	1	
48	AS39451-8000	..BALL.....	1	
49	AS91611-60625	..BOLT.....	5	
50	AS91611-60830	..BOLT.....	10	
51	AS89262-99001	..PLUG.....	2	
52	AS90430-10027	..GASKET.....	1	
53	AS90930-03019	..PLUG.....	1	

https://truckmanualshub.com/

FIG. NO. : F4160-27A0A TORQUE FLOW TRANSMISSION (WITH TORQUE CONVERTER) (7/8)

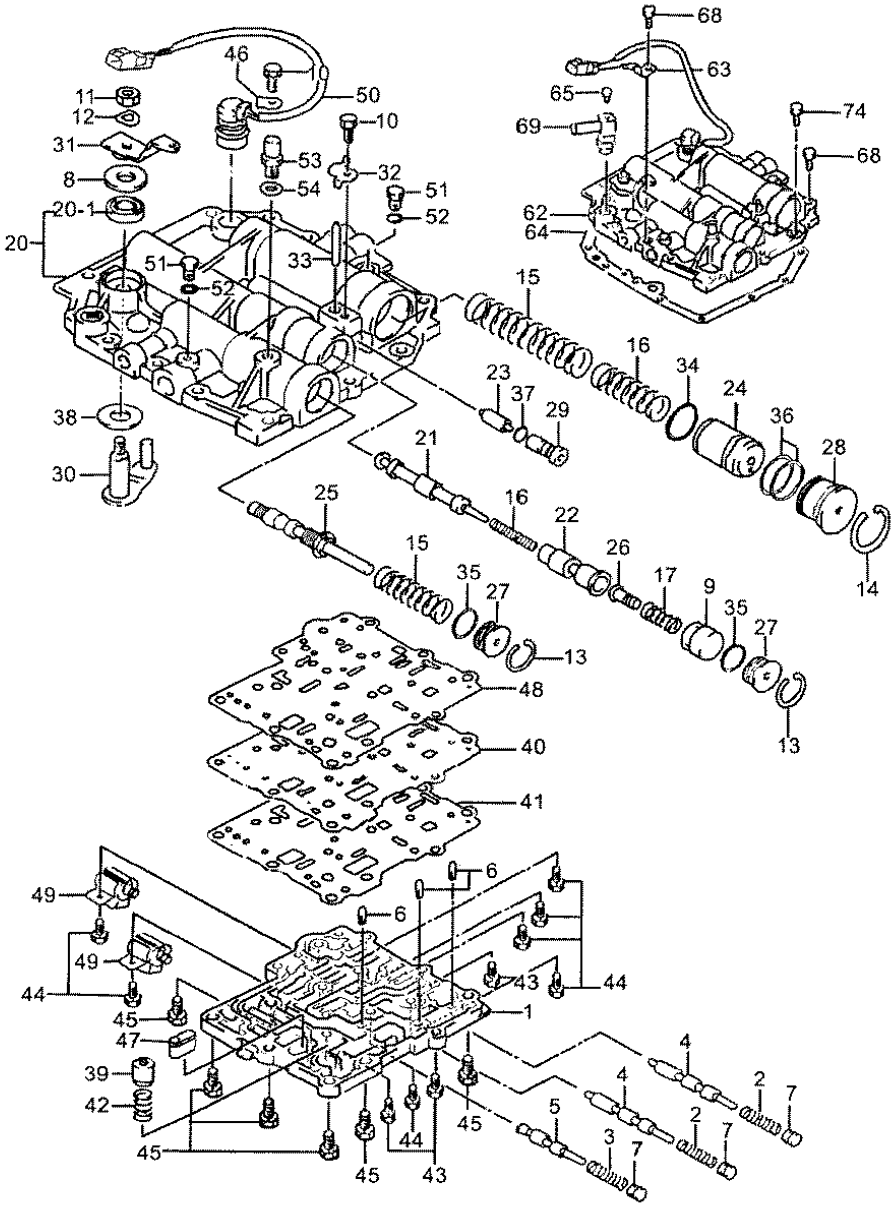

https://truckmanualshub.com/

FIG. NO. : F4160-27A0A

FG15S/18S-16, FG15H/18H-16

INDEX	PART NO.	DESCRIPTION	Q'TY	SERIAL NO.
	3EA-15-A5111	TRANSMISSION ASSEMBLY, COMPLETE	1	650001A AND UP
62	AS351030-13050	.VALVE ASSEMBLY, CONTROL	1	
1	AS351312-43010	..COVER, VALVE BODY PLATE	1	
2	AS30501-3720	..SPRING, SHIFT CHANGE	2	
3	AS30501-3730	..SPRING, SAFETY	1	
4	AS35418-3700	..VALVE, SHIFT CHANGE	2	
5	AS35477-3700	..VALVE, SAFETY	1	
6	AS39282-3700	..KEY, STRAIGHT	3	
7	AS39339-7081	..PLUG	3	
8	AS351136-13020	..WASHER	1	
9	AS351432-43010	..STOPPER, INCHING SPRING	1	
10	AS991411-60612	..BOLT, W/WASHER	2	
11	AS994111-60800	..NUT	1	
12	AS994511-00800	..WASHER, WAVE	1	
13	AS996132-03200	..RING, SNAP	2	
14	AS996132-04500	..RING, SNAP	1	
15	AS30501-2860	..SPRING, REGULATOR	1	
16	AS30501-3700	..SPRING, INCHING RETURN	1	
17	AS30501-3740	..SPRING, COMPRESSION	1	
18	AS30501-3750	..SPRING, COMPRESSION	1	
19	AS30501-3760	..SPRING, COMPRESSION	1	
20	AS33201-3700	..COVER SUB-ASS'Y,TRANS UPPER	1	
20-1	AS55941-2510	..SEAL, TYPE D, OIL	1	
21	AS35414-3700	..ROD, INCHING	1	
22	AS35417-3700	..VALVE, INCHING	1	
23	AS35421-3700	..VALVE, CHANGE	1	
24	AS35424-3700	..PISTON, ACCUMULATOR	1	
25	AS35443-2800	..VALVE, REGULATOR	1	
26	AS35449-3700	..ROD, SPRING STOPPER	1	
27	AS35513-3400	..PLUG, VALVE STOPPER	2	
28	AS35513-3720	..PLUG, VALVE STOPPER	1	
29	AS35513-3730	..PLUG, VALVE STOPPER	1	
30	AS35520-3401	..CAM LEVER SUB-ASS'Y, INCHING	1	
31	AS35521-3601	..LEVER, INCHING	1	
32	AS36726-3700	..PLATE, LOCK	1	
33	AS39250-3700	..PIN, STRAIGHT	1	
34	AS39312-3700	..O-RING	1	
35	AS55931-3420	..O-RING	2	
36	AS55931-3700	..O-RING	2	
37	AS55931-3720	..O-RING	1	
38	AS89180-2500	..WASHER, PLATE	1	
39	AS351342-43030	..VALVE, SAFETY	1	

https://truckmanualshub.com/

FIG. NO. : F4160-27A0A TORQUE FLOW TRANSMISSION (WITH TORQUE CONVERTER) (7/8)

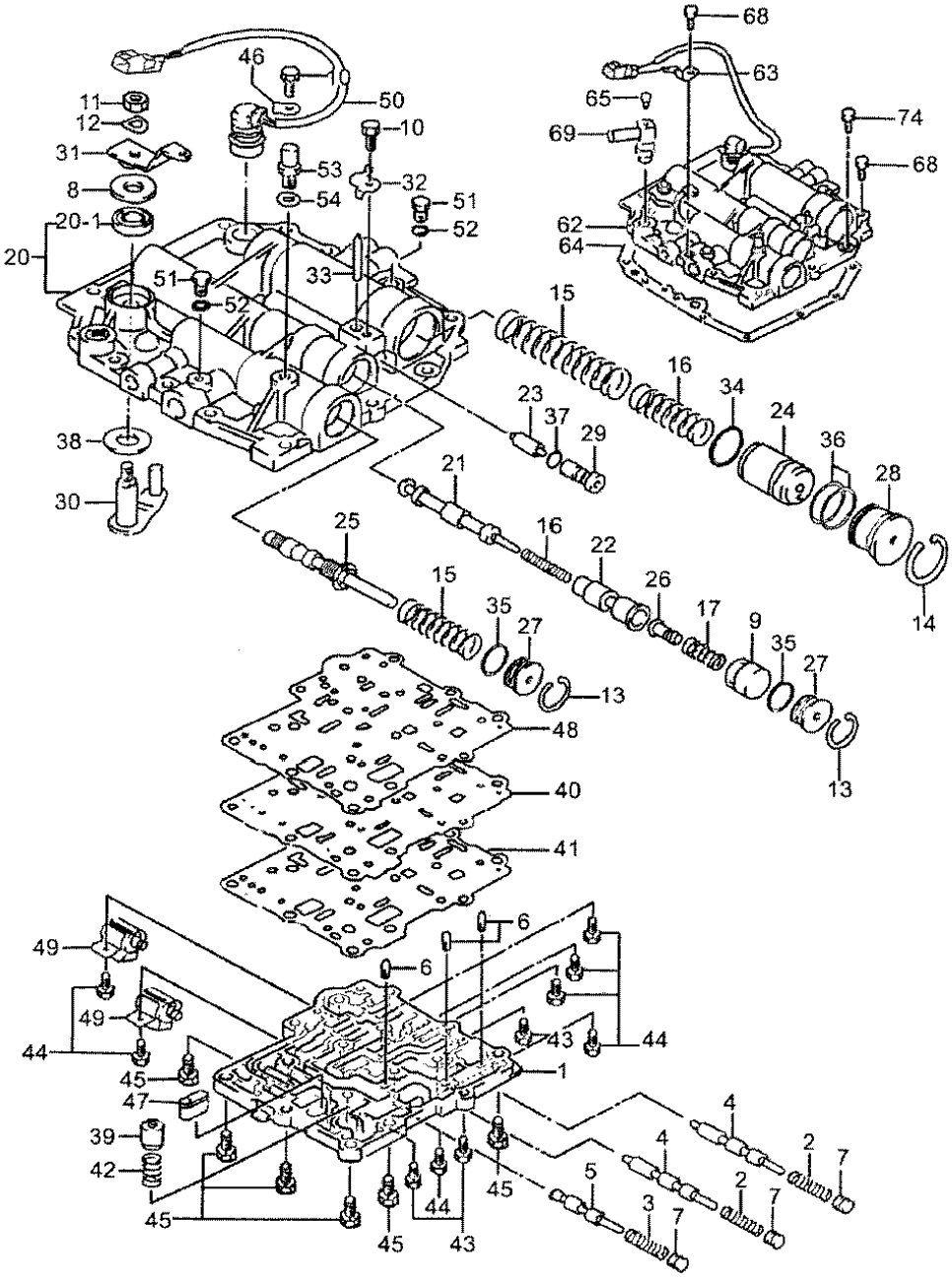

KFI1220002

https://truckmanualshub.com/

FIG. NO. : F4160-27A0A (Continued)

FG15S/18S-16, FG15H/18H-16

INDEX	PART NO.	DESCRIPTION	Q'TY	SERIAL NO.
				650001A AND UP
40	AS351451-43010	..PLATE, VALVE BODY	1	
41	AS351452-43030	..GASKET, VALVE BODY	1	
42	AS351791-10140	..SPRING, COMPRESSION	1	
43	AS991411-60625	..BOLT, W/WASHER	3	
44	AS991411-60640	..BOLT, W/WASHER	7	
45	AS991411-60828	..BOLT, W/WASHER	6	
46	AS33485-7010	..PLATE, SPEEDOMETER SLEEVE LOCK	1	
47	AS35330-5011	..STRAINER ASSEMBLY, OIL	1	
48	AS35423-3700	..GASKET, VALVE BODY	1	
49	AS83520-7420	..SOLENOID ASSEMBLY, TRANSMISSION	2	
50	AS83920-7240	..WIRE TO SOLENOID ASSEMBLY ..	1	
51	AS39382-1602	..PLUG, W/HEAD STRAIGHT SCREW	2	
52	AS39682-1610	..O-RING	2	
53	AS231174-10020	..PLUG, VACUUM	1	
54	AS90430-10027	..GASKET	1	
63	AS39468-3700	.BRACKET, CONNECTOR CLAMP	1	
64	AS35442-3400	.GASKET, UPPER COVER	1	
65	AS39382-3410	.PLUG, ELBOW	1	
66	AS39395-3400	.CONNECTOR, ELBOW	1	
68	AS991411-40832	.BOLT, W/WASHER	13	
74	AS91511-60830	.BOLT, FLANGE	1	

https://truckmanualshub.com/

トルク フロー トランスミッション (トルク コンバータ ツキ) (8/8)
FIG.F4160-28A0 TORQUE FLOW TRANSMISSION (WITH TORQUE CONVERTER) (8/8)

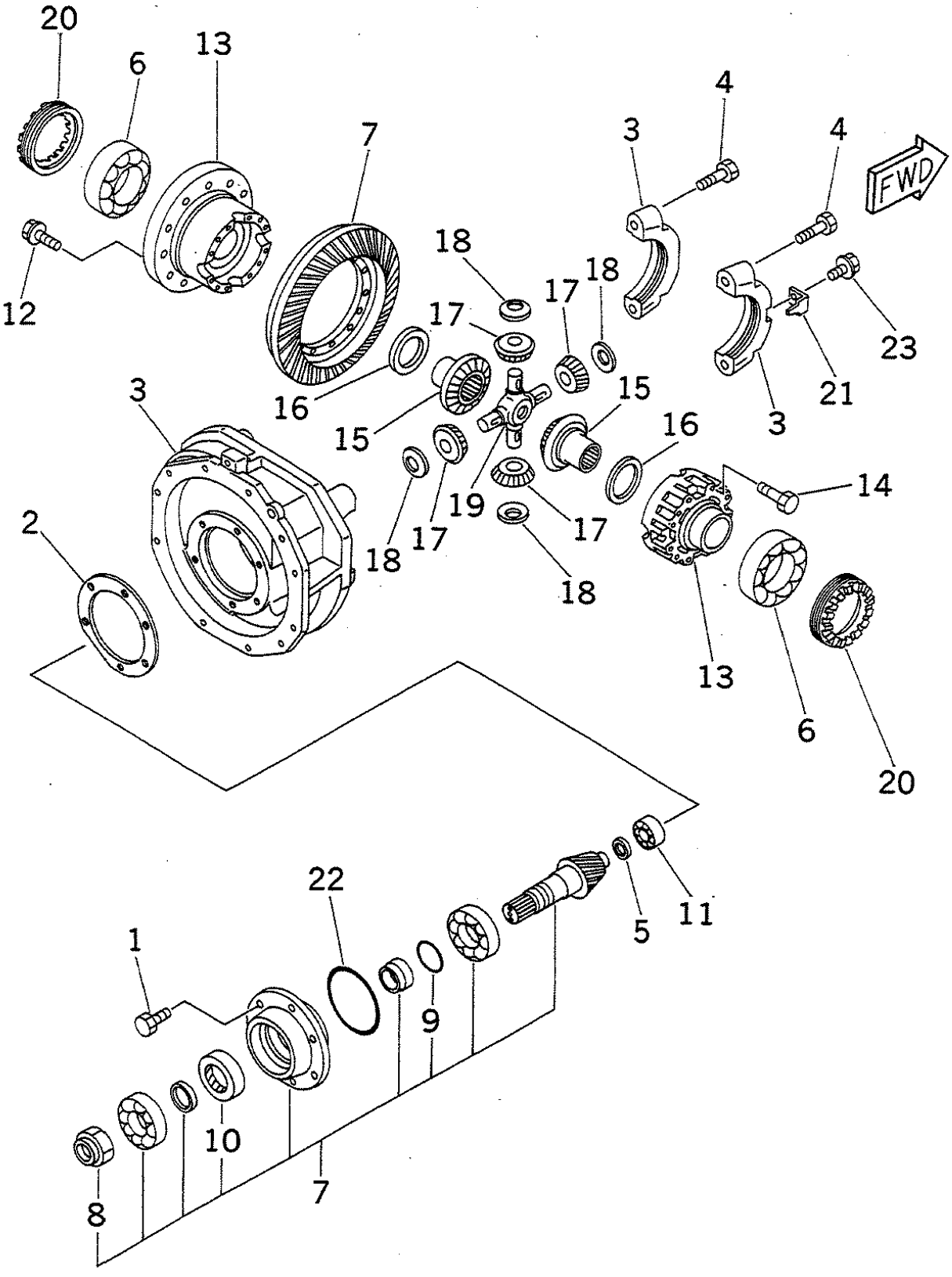

https://truckmanualshub.com/

FIG NO. : F4160-28A0

INDEX	PART NO.	DESCRIPTION	Q'TY	SERIAL NO.
	(3EA-15-A5110)	TRANSMISSION ASS'Y.....	1	600001A AND UP
		THIS ASSEMBLIES CONSIST OF ALL PARTS SHOWN IN FIGS.F4160-21A0 TO F4160-28A0.		
	AS34000-3610	.DIFFERENTIAL ASS'Y.....	1	
1	AS31111-3600	..BOLT.....	6	
2	AS04322-3600	..SHIM ASS'Y.....	2	
3	AS34104-3610	..CARRIER ASS'Y.....	1	
4	AS33114-3600	...BOLT.....	4	
5	AS04322-3601	..SHIM ASS'Y.....	5	
6	AS39366-3610	..BEARING.....	2	
7	AS41210-3620	..PINION ASS'Y.....	1	
8	AS33441-3600	...NUT.....	1	
9	AS55931-2313	...O-RING.....	1	
10	AS55942-2300	...SEAL,OIL.....	1	
11	AS41214-3600	..BEARING.....	1	
12	AS41231-3620	..BOLT.....	12	
	AS41310-3610	..CASE ASS'Y.....	1	
13	AS41301-3630	...CASE SUB ASS'Y.....	1	
14	AS41321-3600	...BOLT.....	8	
15	AS41331-3630	...GEAR.....	2	
16	AS41335-3610	...BUSHING.....	2	
17	AS41341-3630	...PINION.....	4	
18	AS41345-3610	...WASHER.....	4	
19	AS41351-3610	...SPIDER.....	1	
20	AS41361-3610	..NUT.....	2	
21	AS41363-3610	..LOCK.....	2	
22	AS55931-3640	..O-RING.....	1	
23	AS91611-40816	..BOLT.....	2	

https://truckmanualshub.com/

ﾀﾞｲﾚｸﾄ ﾄﾞﾗｲﾌﾞ ﾄﾗﾝｽﾐｯｼｮﾝ (1/2)

FIG.F4160-31A0 DIRECT DRIVE TRANSMISSION (1/2)

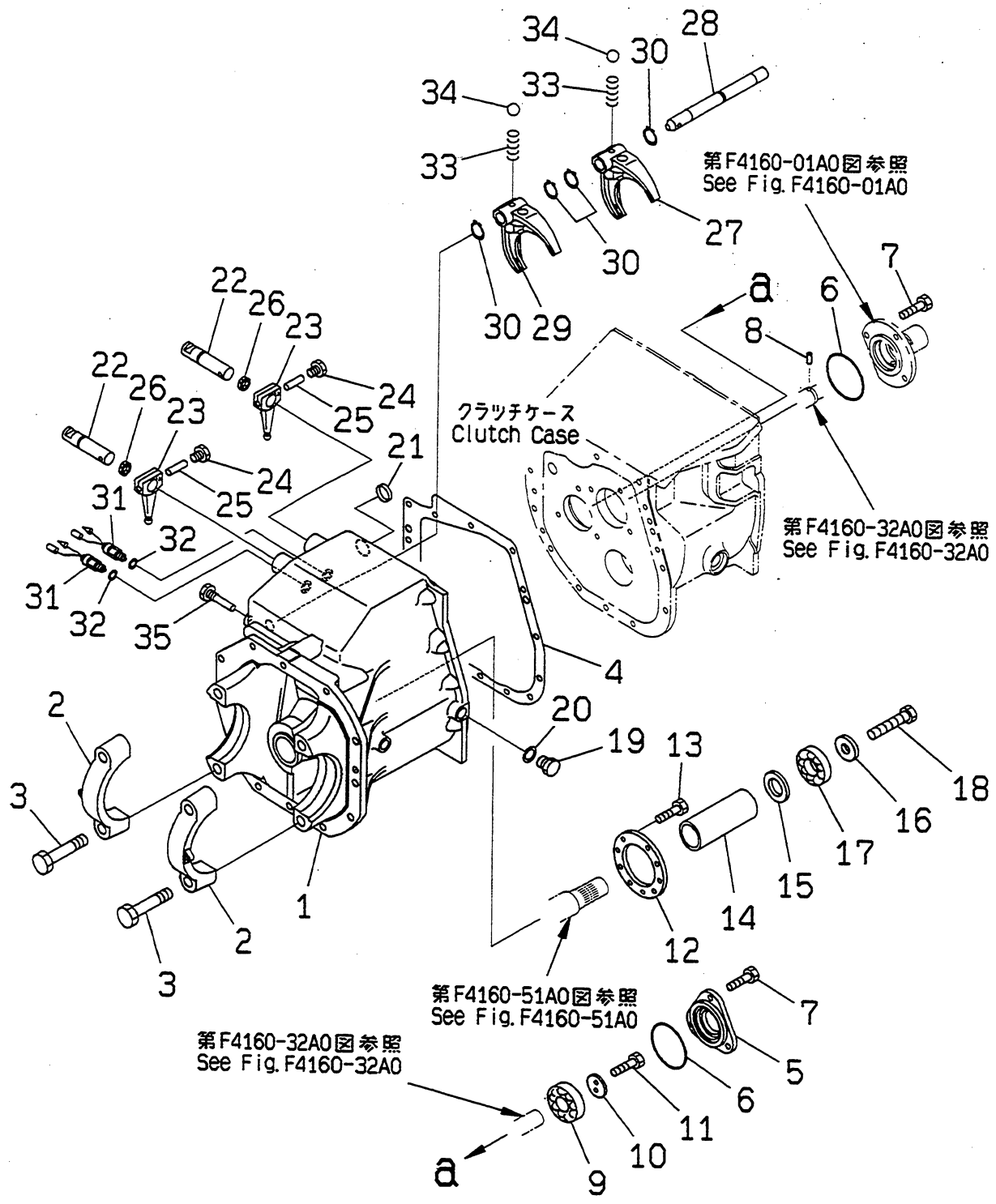

PUF1697

https://truckmanualshub.com/

FIG NO. : F4160-31A0

FG15H

INDEX	PART NO.	DESCRIPTION	Q'TY	SERIAL NO.
	3EA-14-31112	CASE ASS'Y	1	600001A - 650000A
1	☆	.CASE	1	
2	☆	.CAP	2	
3	3EA-21-12220	.BOLT	4	
4	3EB-14-31130	GASKET	1	
5	3EB-14-31190	CAGE	1	
6	07000-02085	O-RING	2	
7	01010-81025	BOLT	6	
8	3EA-14-11451	PIN	1	
9	06003-06306	BEARING	1	
10	3EB-15-21450	HOLDER	1	
11	01010-80820	BOLT	2	
12	3EA-14-31350	PLATE	1	
13	01010-80825	BOLT	9	
14	3EA-14-31360	SPACER	1	
15	3EB-14-31370	COLLAR	1	
16	3EB-14-31380	WASHER	1	
17	06000-06207	BEARING	1	
18	01050-81890	BOLT	1	
19	304-15-17180	PLUG	1	
20	07005-02216	GASKET	1	
21	3EB-14-11180	SEAL	1	
22	3EB-14-31431	SHAFT	2	
23	3EB-14-31141	LEVER	2	
24	3ED-15-41610	PLUG	2	
25	3EB-14-31490	PIN	2	
26	3EA-14-11390	SEAL	2	
27	3EB-14-31150	YOKE,FORWARD AND REVERSE	1	
28	3EB-14-31410	SHAFT	1	
29	3EB-14-31160	YOKE,HIGH AND LOW	1	
30	04064-02212	RING	4	
31	3EB-14-31420	SWITCH	2	
32	07005-01412	GASKET	2	
33	3EA-14-11460	SPRING	2	
34	04260-00952	BALL,STEEL	2	
35	3EA-14-11440	BOLT	1	

https://truckmanualshub.com/

ﾀﾞｲﾚｸﾄ ﾄﾞﾗｲﾌﾞ ﾄﾗﾝｽﾐｯｼｮﾝ (1/2)

FIG.F4160-31A0A DIRECT DRIVE TRANSMISSION (1/2)

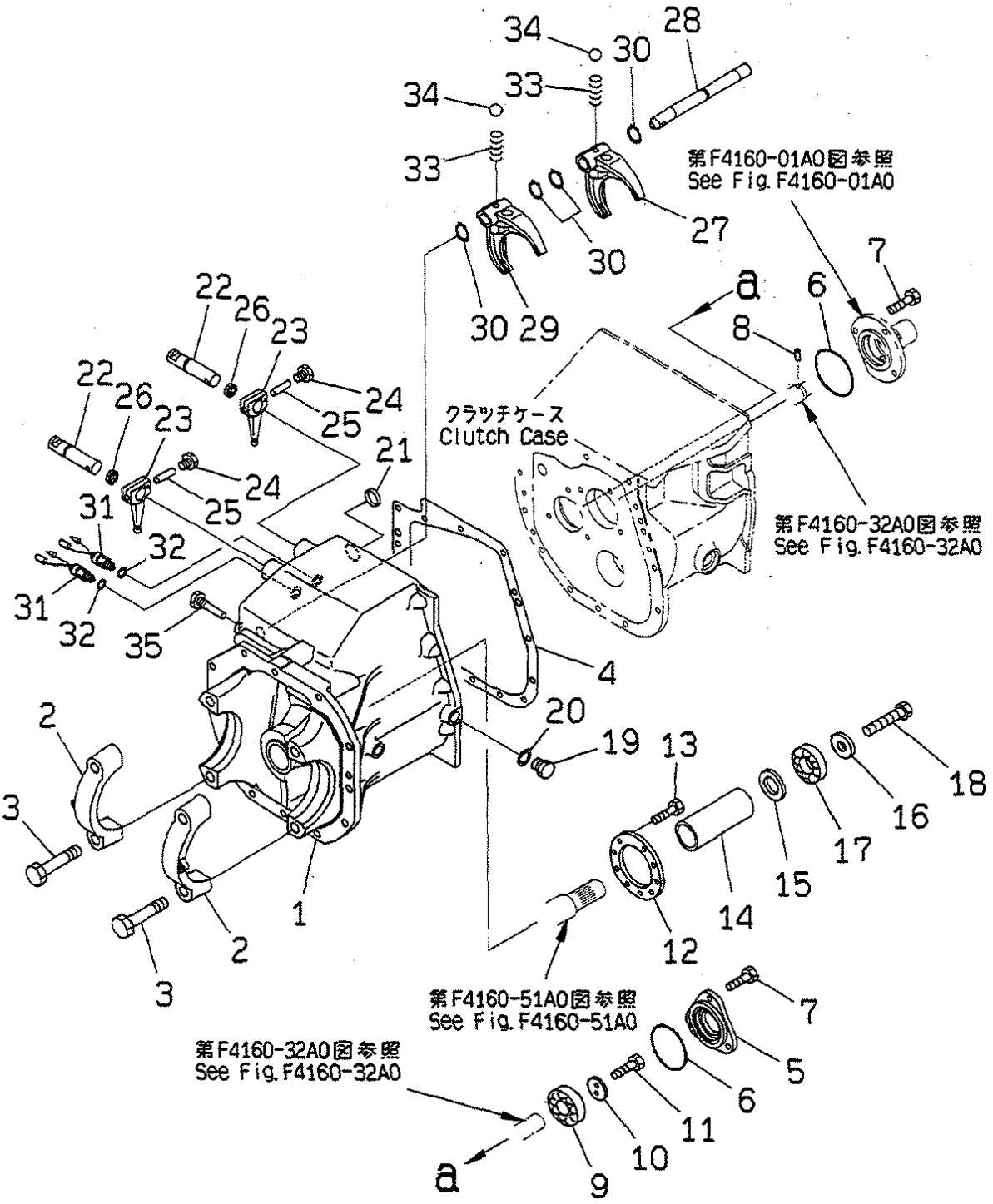

PUF1697

https://truckmanualshub.com/

FIG NO. : F4160-31A0A

FG15H

INDEX	PART NO.	DESCRIPTION	Q'TY	SERIAL NO.
	3EA-14-31113	CASE ASS'Y	1	650001A and Up
1	☆	.CASE	1	
2	☆	.CAP	2	
3	3EA-21-12220	.BOLT	4	
4	3EB-14-31130	GASKET	1	
5	3EB-14-31190	CAGE	1	
6	07000-02085	O-RING	2	
7	01010-81025	BOLT	6	
8	3EA-14-11452	PIN	1	
9	06003-06306	BEARING	1	
10	3EB-15-21450	HOLDER	1	
11	01010-80820	BOLT	2	
12	3EA-14-31350	PLATE	1	
13	01010-80825	BOLT	9	
14	3EA-14-31360	SPACER	1	
15	3EB-14-31370	COLLAR	1	
16	3EB-14-31380	WASHER	1	
17	06000-06207	BEARING	1	
18	01050-81890	BOLT	1	
19	304-15-17180	PLUG	1	
20	07005-02216	GASKET	1	
21	3EB-14-11180	SEAL	1	
22	3EB-14-31431	SHAFT	2	
23	3EB-14-31141	LEVER	2	
24	3ED-15-41610	PLUG	2	
25	3EB-14-31490	PIN	2	
26	3EA-14-11390	SEAL	2	
27	3EB-14-31151	YOKE,FORWARD AND REVERSE	1	
28	3EB-14-31411	SHAFT	1	
29	3EB-14-31160	YOKE,HIGH AND LOW	1	
30	04064-02212	RING	4	
31	3EB-14-31520	SWITCH	2	
32	07005-01612	GASKET	2	
33	3EA-14-11460	SPRING	2	
34	04260-00952	BALL,STEEL	2	
35	3EA-14-11440	BOLT	1	

https://truckmanualshub.com/

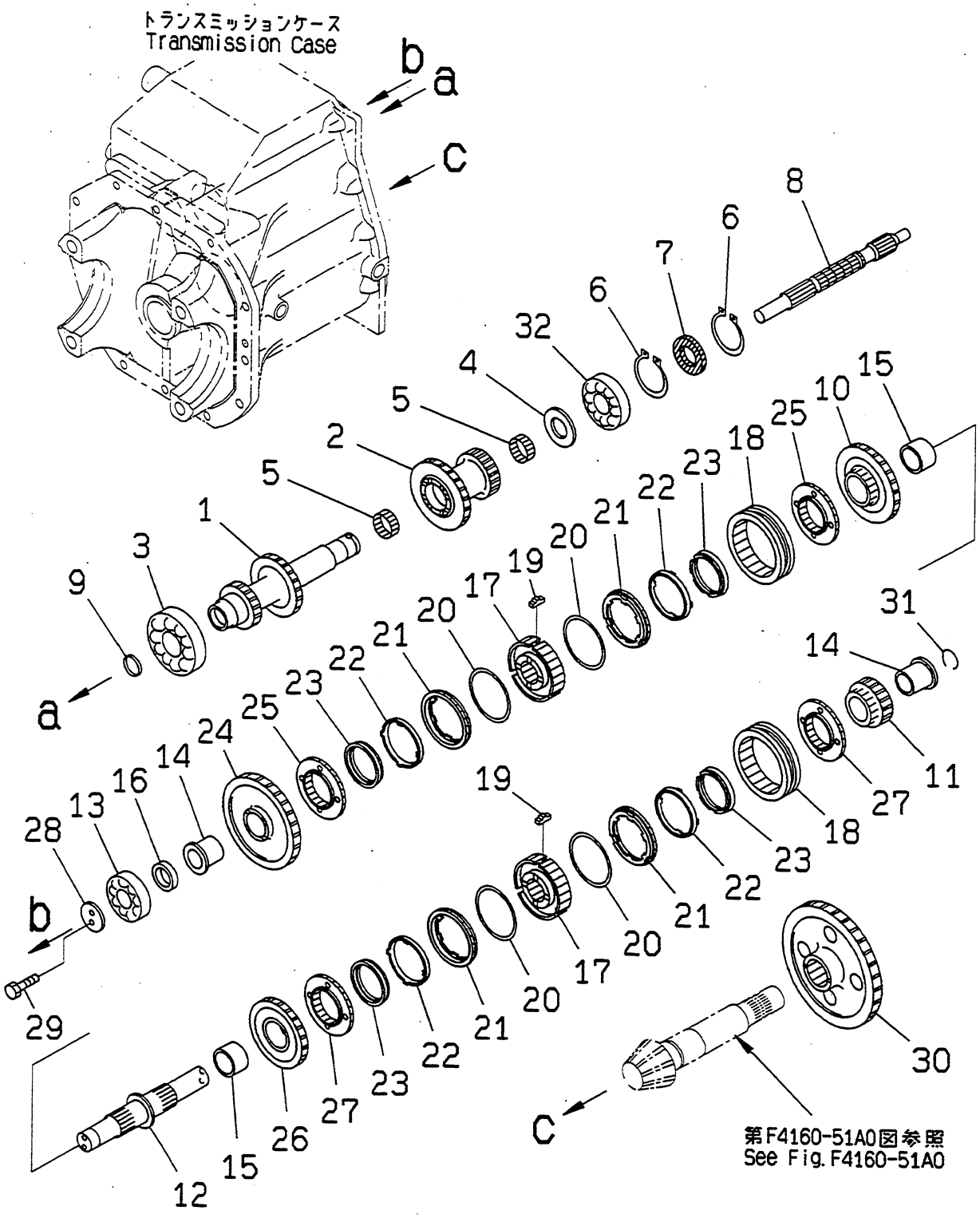

PUF1698

https://truckmanualshub.com/

FIG NO. : F4160-32A0

FG15H

INDEX	PART NO.	DESCRIPTION	Q'TY	SERIAL NO.
1	3EA-14-32210	SHAFT	1	600001A - 650000A
2	3EB-14-32330	GEAR, 19 TEETH	1	
3	06000-06208	BEARING	1	
4	3EA-14-21180	WASHER	1	
5	3EA-14-11191	BEARING	2	
6	04064-03215	RING,SNAP	2	
7	3EB-14-32590	SEAL	1	
8	3EB-14-32380	SHAFT	1	
9	3EB-14-11180	SEAL	1	
10	3EB-14-31220	GEAR, 31 TEETH	1	
11	3EB-14-32340	GEAR, 19 TEETH	1	
12	3EB-14-31230	SHAFT	1	
13	06000-06306	BEARING	1	
14	3EB-14-31240	BUSHING	2	
15	3EA-14-11240	BUSHING	2	
16	3EB-14-31250	COLLAR	1	
17	3EB-14-31280	GEAR, 36 TEETH	2	
18	3EB-14-31171	GEAR, 36 TEETH	2	
19	3EB-14-11820	INSERT	6	
20	3EA-14-11430	SPRING	4	
	3EB-14-31311	SYNCHRO ASS'Y	4	
21	3EB-14-31321	.RING	1	
22	3EB-14-31330	.CONE	1	
23	3EB-14-31340	.RING,INNER	1	
24	3EB-14-31210	GEAR, 42 TEETH	1	
25	3EB-14-31180	GEAR, 53 TEETH	2	
26	3EB-14-31220	GEAR, 31 TEETH	1	
27	3EB-14-31180	GEAR, 53 TEETH	2	
28	3EB-15-21450	HOLDER	1	
29	01010-80820	BOLT	2	
30	3EB-15-32240	GEAR, 58 TEETH	1	
31	3EB-16-21380	SPRING	1	
32	3EB-14-32580	BEARING	1	

https://truckmanualshub.com/

ダイレクト ドライブ トランスミッション (2/2)

FIG.F4160-32A0A DIRECT DRIVE TRANSMISSION (2/2)

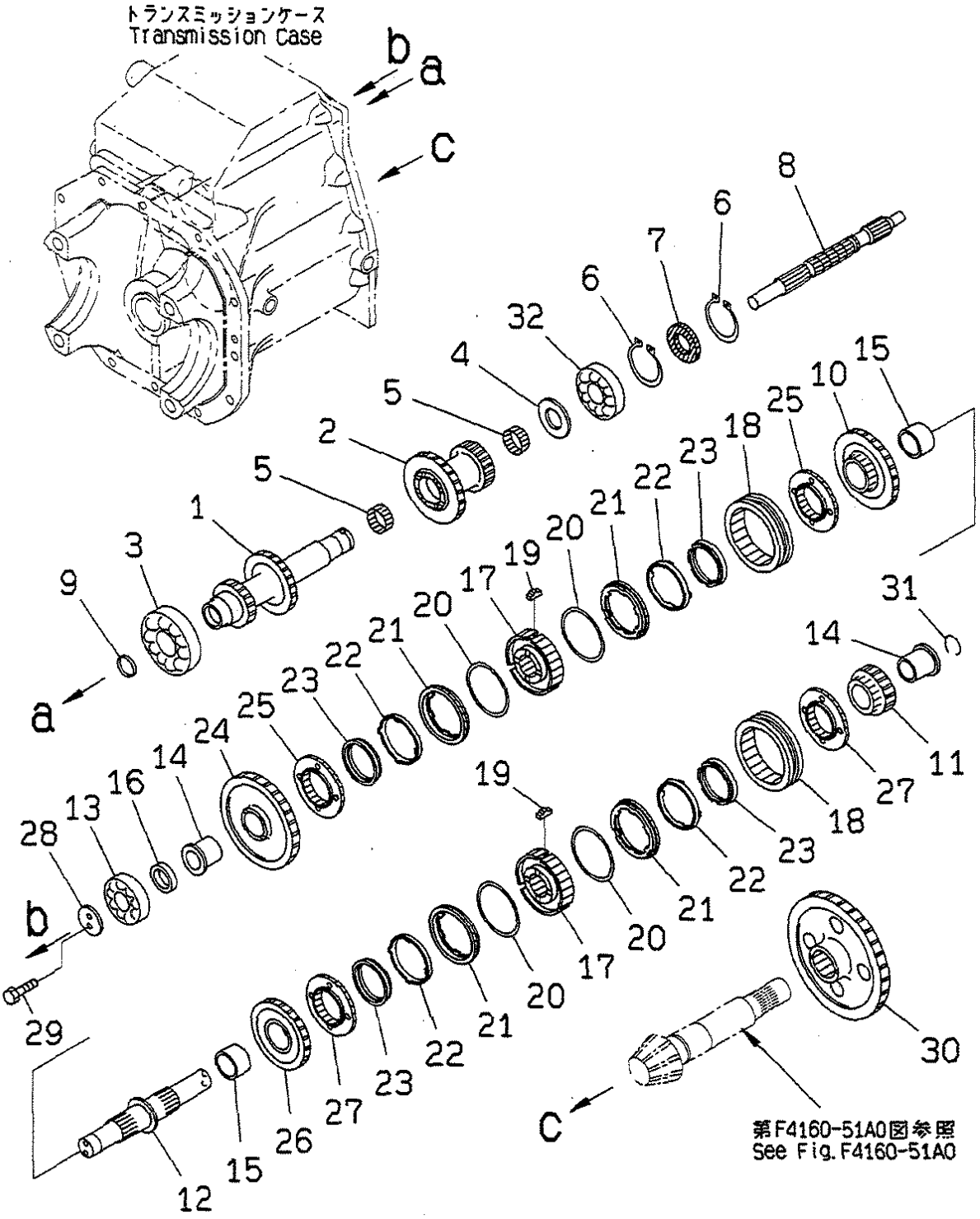

PUF1698

https://truckmanualshub.com/

FIG NO. : F4160-32A0A

FG15H

INDEX	PART NO.	DESCRIPTION	Q'TY	SERIAL NO.
1	3EA-14-32210	SHAFT	1	650001A and Up
2	3EB-14-32330	GEAR, 19 TEETH	1	
3	06000-06208	BEARING	1	
4	3EA-14-21180	WASHER	1	
5	3EA-14-11191	BEARING	2	
6	04064-03215	RING,SNAP	2	
7	3EB-14-32590	SEAL	1	
8	3EB-14-32380	SHAFT	1	
9	3EB-14-11180	SEAL	1	
10	3EB-14-31220	GEAR, 31 TEETH	1	
11	3EB-14-32340	GEAR, 19 TEETH	1	
12	3EB-14-31230	SHAFT	1	
13	06000-06306	BEARING	1	
14	3EB-14-31240	BUSHING	2	
15	3EA-14-11240	BUSHING	2	
16	3EB-14-31250	COLLAR	1	
17	3EB-14-31280	GEAR, 36 TEETH	2	
18	3EB-14-31172	GEAR, 36 TEETH	2	
19	3EB-14-11820	INSERT	6	
20	3EA-14-11430	SPRING	4	
	3EB-14-31311	SYNCHRO ASS'Y	4	
21	3EB-14-31321	.RING	1	
22	3EB-14-31330	.CONE	1	
23	3EB-14-31340	.RING,INNER	1	
24	3EB-14-31210	GEAR, 42 TEETH	1	
25	3EB-14-31180	GEAR, 53 TEETH	2	
26	3EB-14-31220	GEAR, 31 TEETH	1	
27	3EB-14-31180	GEAR, 53 TEETH	2	
28	3EB-15-21450	HOLDER	1	
29	01010-80820	BOLT	2	
30	3EB-15-32240	GEAR, 58 TEETH	1	
31	3EB-16-21380	SPRING	1	
32	3EB-14-32580	BEARING	1	

https://truckmanualshub.com/

デ゛ィファレンシャル ギ゛ヤー オヨビ゛ ハイポ゛イト゛ ギ゛ヤー
FIG.F4160-51A0 DIFFERENTIAL GEAR AND HYPOID GEAR-- CLUTCH TRUCKS ONLY

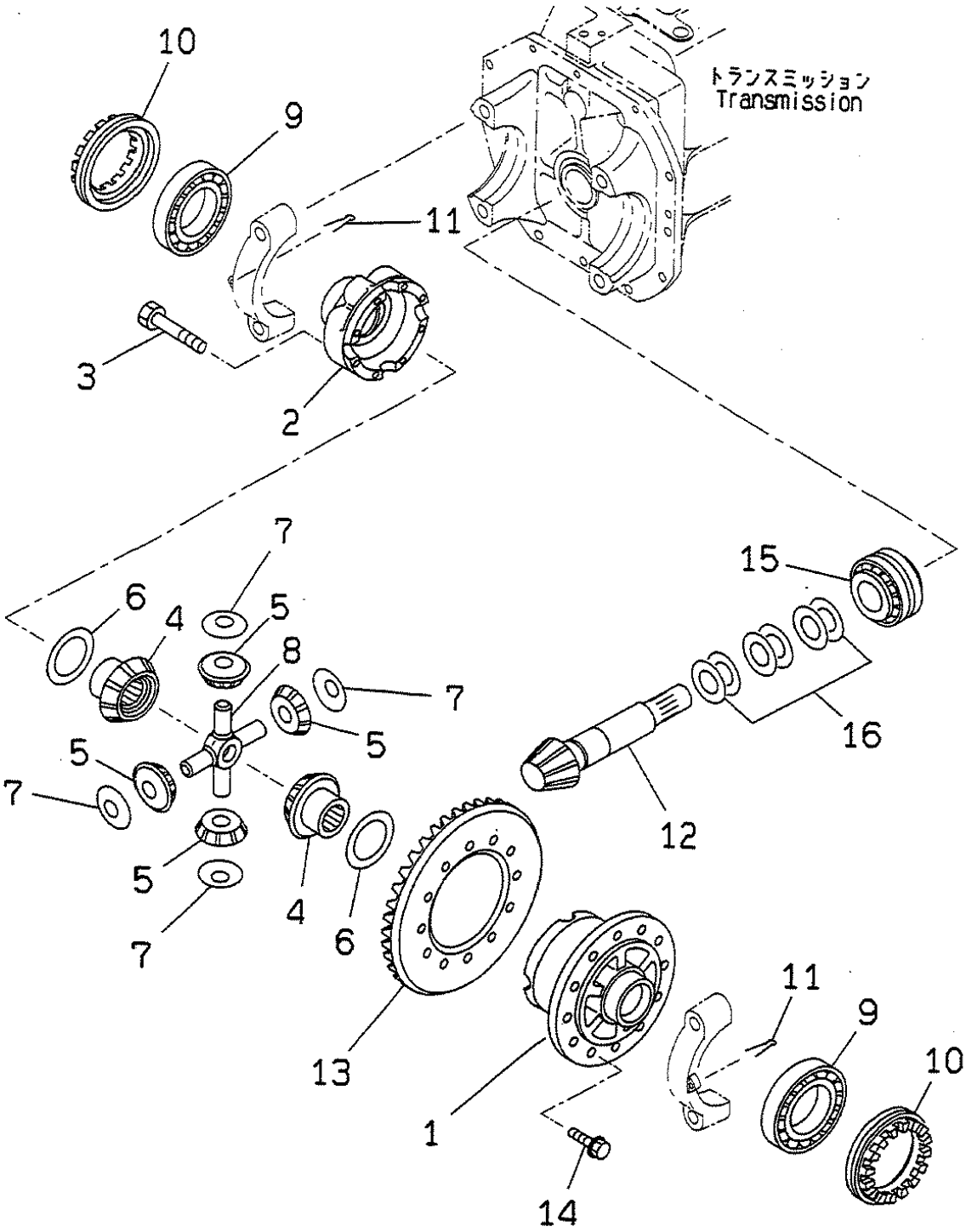

PAF0396

https://truckmanualshub.com/

FIG NO. : F4160-51A0

FG15H

INDEX	PART NO.	DESCRIPTION	Q'TY	SERIAL NO.
	3EA-21-00010	CASE SUB ASS'Y.....	1	600001A AND UP
1	☆	.CASE.....	1	
2	☆	.CASE.....	1	
3	01010-80865	.BOLT.....	8	
4	3EA-21-31140	GEAR.....	2	
5	300-22-31471	GEAR.....	4	
6	34A-21-11131	BUSHING.....	2	
7	34A-21-11141	BUSHING.....	4	
8	34A-21-11151	SPIDER.....	1	
9	300-22-31560	BEARING.....	2	
10	34A-21-11231	SCREW.....	2	
11	04050-16040	PIN.....	2	
	3EA-21-31310	SHAFT ASS'Y.....	1	
12	☆	.SHAFT.....	1	
13	☆	.GEAR.....	1	
14	3EA-21-11151	BOLT.....	12	
15	3EA-14-11320	BEARING.....	1	
16	3EA-21-00020	SHIM ASS'Y.....	1	

https://truckmanualshub.com/

This Page Left Intentionally Blank

KOMATSU

https://truckmanualshub.com/

KOMATSU

Steering System And Rear Axle

AX SERIES

Steering System And Rear Axle

https://truckmanualshub.com/

ステアリングアクスル
FIG.H4110-01A0 STEERING AXLE

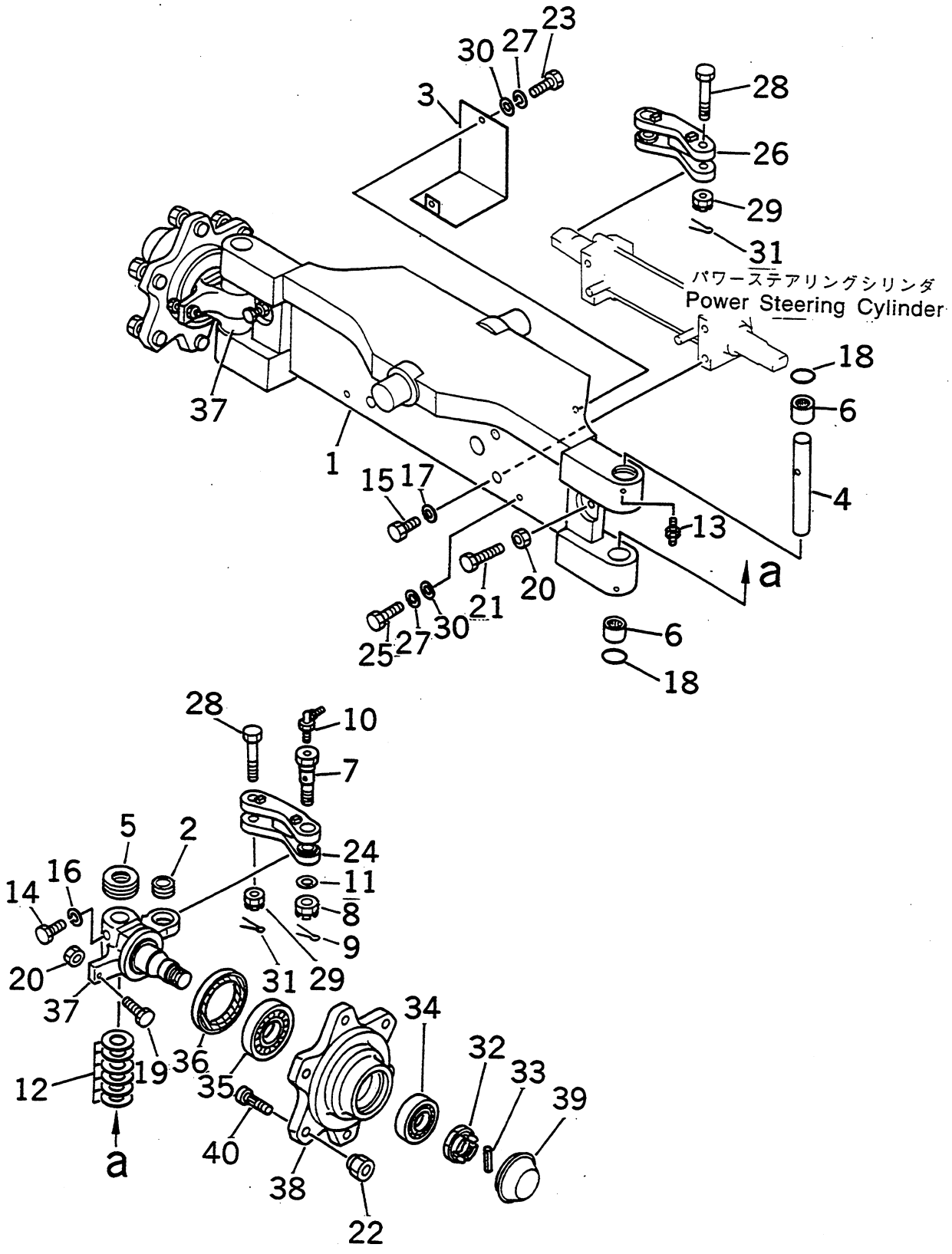

https://truckmanualshub.com/

FIG NO. : H4110-01A0

FG15H,FG18H

INDEX	PART NO.	DESCRIPTION	Q'TY	SERIAL NO.
1	3EA-24-A5110	AXLE,STEERING	1	600001A AND UP
2	3EB-24-A2580	BUSHING	2	
3	3EA-24-A2231	COVER	2	
4	3BA-25-25180	PIN	2	
5	300-27-11170	BEARING	2	
6	3BA-25-25190	BEARING	4	
7	3EB-24-35130	BOLT	2	
8	01593-31613	NUT	2	
9	04050-14025	PIN,COTTER	2	
10	07020-00900	FITTING,GREASE	2	
11	01640-21626	WASHER	2	
12	34A-24-11150	SHIM, 0.4MM	3	
	34A-24-11160	SHIM, 0.6MM	3	
13	07020-00001	FITTING,GREASE	4	
14	300-27-11221	BOLT	2	
15	01010-81650	BOLT	4	
16	01602-21030	WASHER,SPRING	2	
17	01643-31645	WASHER	4	
18	07046-13520	PLUG	4	
19	01016-51035	BOLT	2	
20	01580-11008	NUT	4	
21	01016-51045	BOLT	2	
22	358-27-11230	NUT	12	
23	01010-80820	BOLT	2	
24	3EA-24-35110	LINK,L.H	1	
25	01010-80830	BOLT	2	
26	3EA-24-35120	LINK,R.H	1	
27	01602-20825	WASHER	4	
28	3EB-24-35140	BOLT	2	
29	01593-31613	NUT	2	
30	01643-30823	WASHER	4	
31	04050-14025	PIN,COTTER	2	
	3EA-24-A2280	KNUCKLE ASS'Y,L.H	1	
	3EA-24-A2290	KNUCKLE ASS'Y,R.H	1	
32	01593-13018	.NUT	1	
33	04025-00650	.PIN,SPRING	1	
34	06000-30207	.BEARING	1	
35	06000-30209	.BEARING	1	
36	07011-00080	.SEAL,DUST	1	
37	3EA-24-A2240	.KNUCKLE,L.H	1	
	3EA-24-A2250	.KNUCKLE,R.H	1	
38	3EA-24-11210	.HUB	1	
39	3EB-24-11160	.CAP	1	
40	34A-24-11220	.BOLT	6	

https://truckmanualshub.com/

ステアリング アクスル
FIG.H4110-01A1 STEERING AXLE

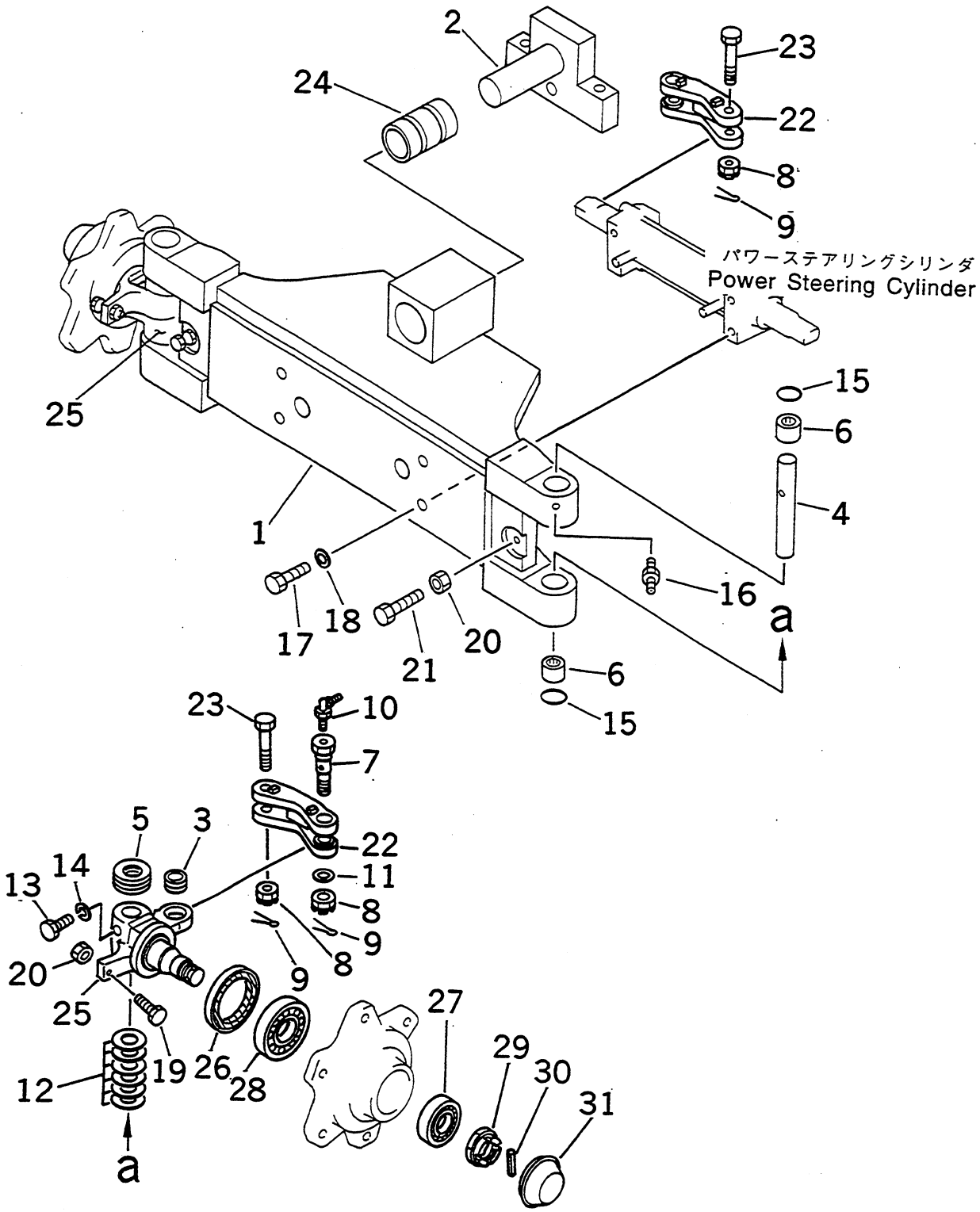

https://truckmanualshub.com/

FIG NO. : H4110-01A1

FG15S,FG18S

INDEX	PART NO.	DESCRIPTION	Q'TY	SERIAL NO.
1	3EA-25-A5110	AXLE,STEERING	1	600001A AND UP
2	3EA-42-21850	SUPPORT	1	
3	3EB-24-A2580	BUSHING	2	
4	3BA-25-25180	PIN	2	
5	300-27-11170	BEARING	2	
6	3BA-25-25190	BEARING	4	
7	3EB-24-35130	BOLT	2	
8	01593-31613	NUT	4	
9	04050-14025	PIN,COTTER	4	
10	07020-00900	FITTING,GREASE	2	
11	01640-21626	WASHER	2	
12	34A-24-11150	SHIM, 0.4MM	3	
	34A-24-11160	SHIM, 0.6MM	3	
13	300-27-11221	BOLT	2	
14	01602-21030	WASHER,SPRING	2	
15	07046-13520	PLUG	4	
16	07020-00001	FITTING,GREASE	4	
17	01010-81650	BOLT	4	
18	01643-31645	WASHER	4	
19	01016-51035	BOLT	2	
20	01580-11008	NUT	4	
21	01016-51045	BOLT	2	
22	3EA-25-35110	LINK,L.H	1	
	3EA-25-35120	LINK,R.H	1	
23	3EB-24-35140	BOLT	2	
24	3EA-25-11280	BUSHING	1	
25	3EA-24-A2240	KNUCKLE,L.H	1	
	3EA-24-A2250	KNUCKLE,R.H	1	
26	07011-00080	SEAL,DUST	2	
27	06000-30207	BEARING	2	
28	06000-30209	BEARING	2	
29	01593-13018	NUT	2	
30	04025-00650	PIN,SPRING	2	
31	3EB-24-11160	CAP	2	

https://truckmanualshub.com/

This Page Left Intentionally Blank

KOMATSU

https://truckmanualshub.com/

KOMATSU

Front And Rear Wheels

AX SERIES

Front And Rear Wheels

https://truckmanualshub.com/

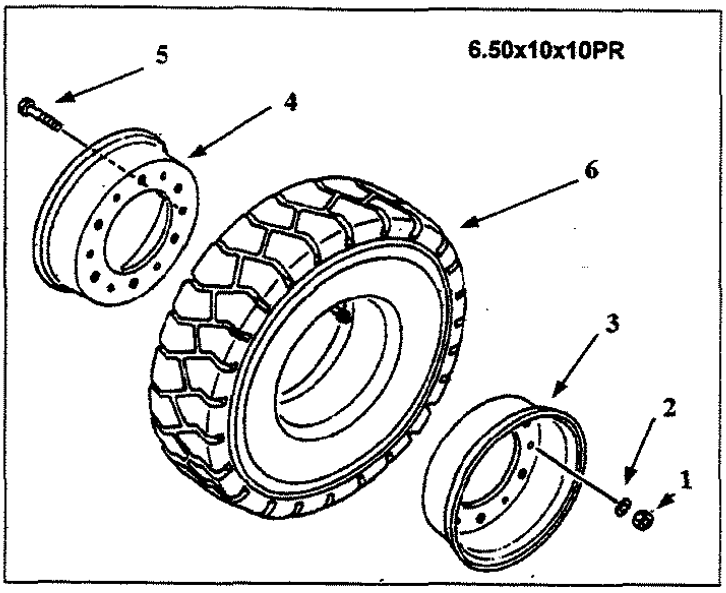

Drive Tire FG15H-16, FG18H-16

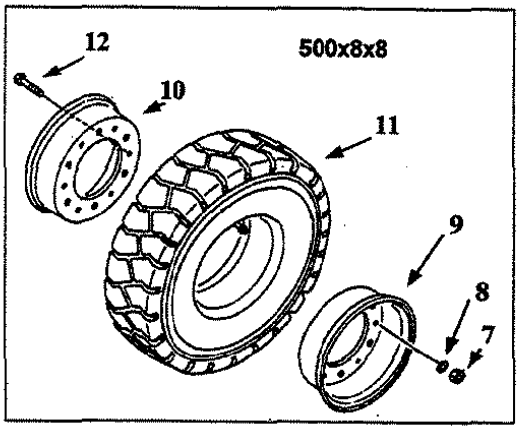

Steer Tire FG15H-16, FG18H-16

ITEM	PART No.	DESCRIPTION	QTY	SERIAL #
		Drive Tire		600001A AND UP
1	**01582-11210**	Nut	12	
2	**01602-21236**	Washer Spring	12	
	34A-27-00041	**Rim Assembly**	2	
3	*	Rim	1	
4	*	Rim	1	
5	**34A-27-18111**	Bolt	12	
6	**37A-1HA-A820**	Tire 6.5x10x10PR	2	
		Steer Tire		
7	**01582-11008**	Nut	12	
8	**01602-21030**	Washer. Spring	12	
	34A-28-00010	Rim Assembly	2	
9	*	Rim	1	
10	*	Rim	1	
11	**37A-1HA-A830**	Tire 500x 8x8	2	

https://truckmanualshub.com/

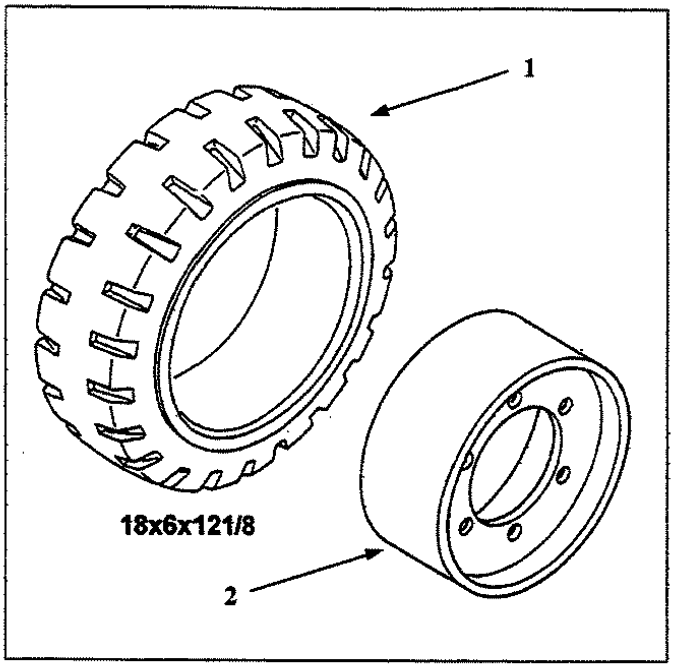

Drive Tire FG15S-16, FG18S-16

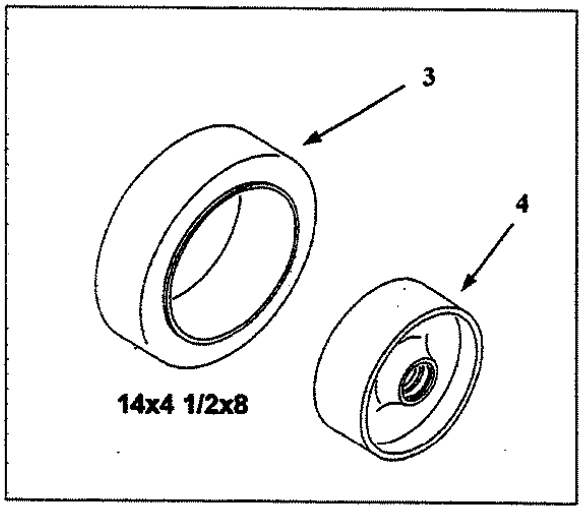

Steer Tire FG15S-16, FG18S-16

ITEM	PART No.	DESCRIPTION	QTY	SERIAL #
	3EA-27-A5500	DRIVE TIRE ASSEMBLY		600001A AND UP
1	37B-1NR-2170	. DRIVE TIRE, 18 x 6 x 12 1/8	1	
2	3EA-27-A5510	. RIM	1	
	3EA-28-A5500	STEERING TIRE ASSEMBLY		
3	37B-1NT-A010	. STEERING TIRE, 14 x 4 1/2 x 8	1	
4	3EA-25-A5310	. RIM	1	

https://truckmanualshub.com/

This Page Left Intentionally Blank

KOMATSU

https://truckmanualshub.com/

KOMATSU

Brake System

AX SERIES

Brake System

https://truckmanualshub.com/

ホイール ブレーキ
FIG.K4110-01A0 WHEEL BRAKE

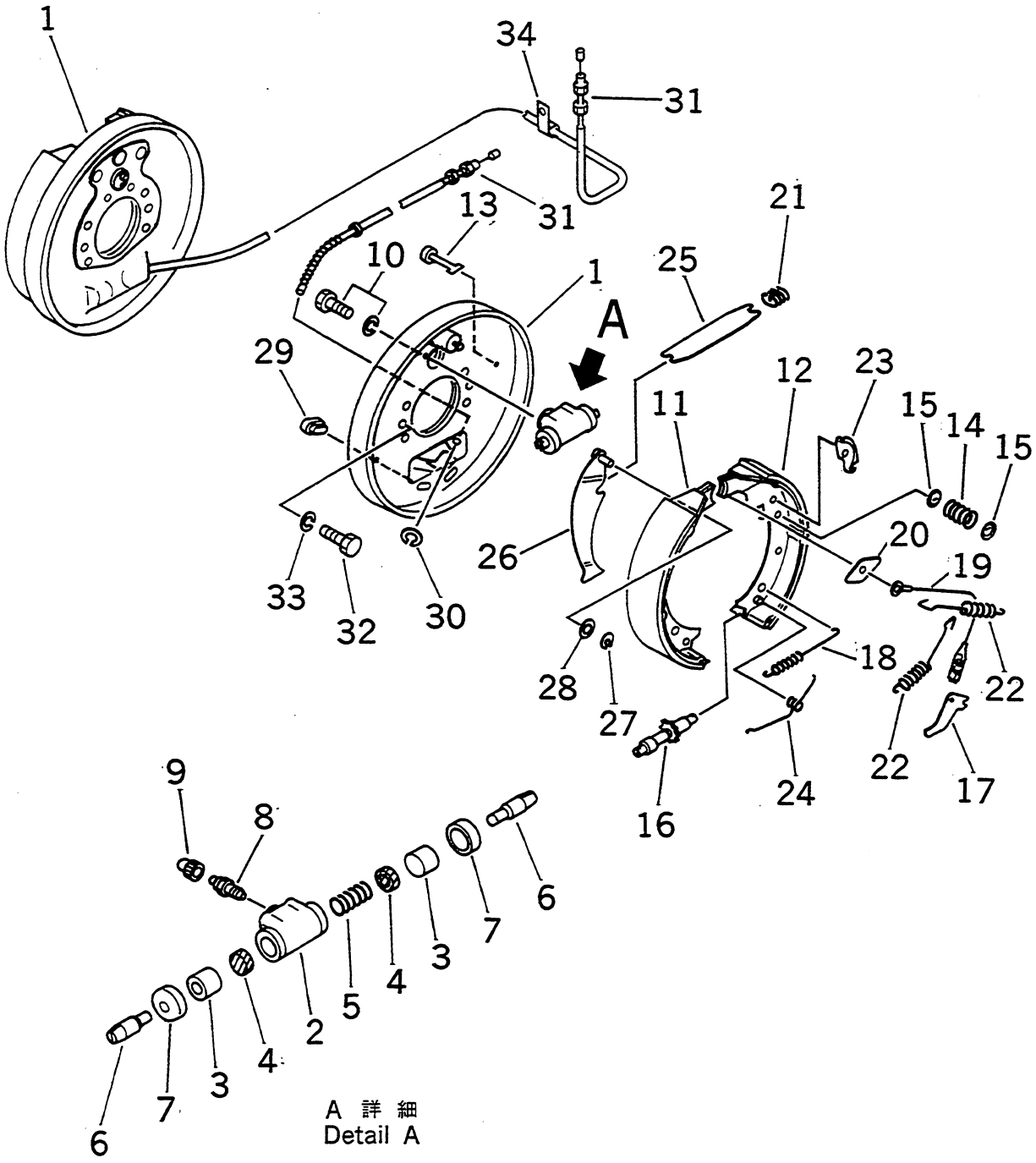

https://truckmanualshub.com/

FIG NO. : K4110-01A0

FG15H,FG18H

INDEX	PART NO.	DESCRIPTION	Q'TY	SERIAL NO.
	3EA-30-31110	BRAKE ASS'Y,L.H.....	1	600001A AND UP
	3EA-30-31120	BRAKE ASS'Y,R.H.....	1	
1	3EA-30-31130	.PLATE ASS'Y,L.H.....	1	
	3EA-30-31140	.PLATE ASS'Y,R.H.....	1	
	3EA-30-25111	.CYLINDER ASS'Y,WHEEL.....	1	
2	3EA-30-25121	..BODY.....	1	
3	☆	..PISTON.....	2	
4	☆	..CUP.....	2	
5	☆	..SPRING.....	1	
6	300-32-31250	..ROD.....	2	
7	☆	..BOOT.....	2	
8	34B-30-14550	.BREATHER.....	1	
9	34B-30-14560	.CAP.....	1	
10	325-32-21550	.BOLT,WITH WASHER.....	2	
11	3EA-30-31150	.SHOE ASS'Y.....	1	
12	3EA-30-31160	.SHOE ASS'Y,L.H.....	1	
	3EA-30-31170	.SHOE ASS'Y,R.H.....	1	
13	325-32-21570	.PIN.....	2	
14	34B-30-14420	.SPRING.....	2	
15	300-32-31780	.CUP.....	4	
16	3EA-30-11130	.ADJUSTER ASS'Y,L.H.....	1	
	3EA-30-11230	.ADJUSTER ASS'Y,R.H.....	1	
17	3EA-30-11320	.LEVER.....	1	
18	3EA-30-11340	.SPRING.....	1	
19	3EA-30-11330	.CABLE.....	1	
20	300-32-31620	.PLATE.....	1	
21	3EA-30-11360	.SPRING.....	1	
22	300-32-31760	.SPRING.....	2	
23	34B-30-14360	.GUIDE.....	1	
24	3EA-30-11150	.SPRING,L.H.....	1	
	3EA-30-11250	.SPRING,R.H.....	1	
25	300-32-31720	.STRUT.....	1	
26	325-32-21560	.LEVER ASS'Y,PARKING, L.H.....	1	
	325-32-22560	.LEVER ASS'Y,PARKING, R.H.....	1	
27	300-32-31750	.RETAINER.....	1	
28	300-32-31720	.STRUT.....	1	
29	310-32-21490	.COVER.....	2	
30	34B-30-14470	.RING.....	1	
31	3EA-30-31180	.CABLE ASS'Y,L.H.....	1	
	3EA-30-31190	.CABLE ASS'Y,R.H.....	1	
32	325-32-21920	BOLT.....	12	
33	01602-21442	WASHER,SPRING.....	12	
34	04434-51510	CLIP.....	1	

https://truckmanualshub.com/

ホィール ブレーキ
FIG.K4110-01A1 WHEEL BRAKE

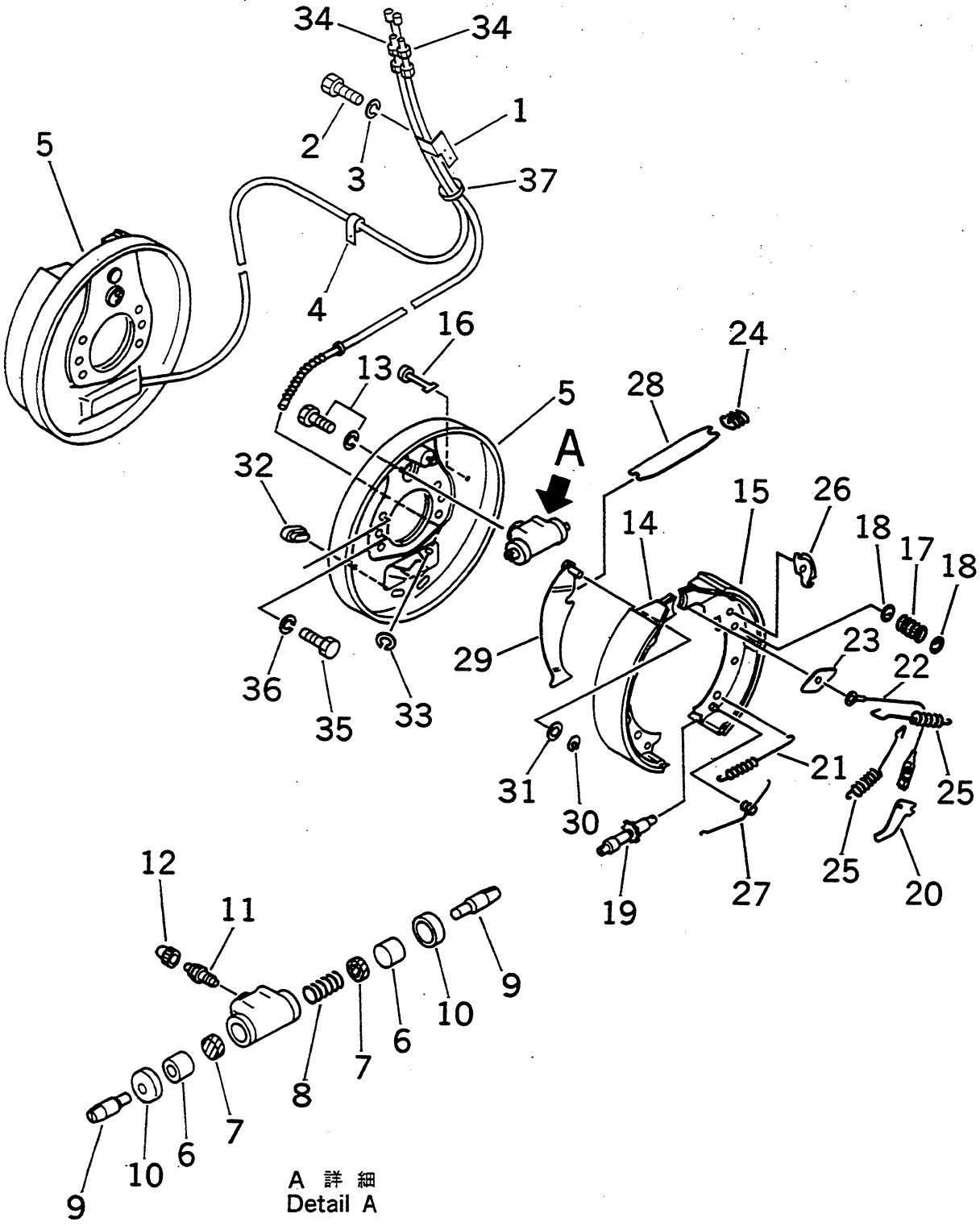

https://truckmanualshub.com/

FIG NO. : K4110-01A1

FG15S,FG18S

INDEX	PART NO.	DESCRIPTION	Q'TY	SERIAL NO.
1	3EA-30-35111	BRACKET	1	600001A AND UP
2	01010-80612	BOLT	2	
3	01602-20619	WASHER,SPRING	2	
4	08035-01510	CLIP	1	
	3EA-30-22100	BRAKE ASS'Y,L.H	1	
	3EA-30-22500	BRAKE ASS'Y,R.H	1	
5	3EA-30-11110	.PLATE ASS'Y,BACK, L.H	1	
	3EA-30-11210	.PLATE ASS'Y,BACK, R.H	1	
	34A-30-11401	.CYLINDER ASS'Y,WHEEL	1	
6	☆	..PISTON (K35)	2	
7	☆	..CUP (K35)	2	
8	☆	..SPRING (K35)	1	
9	300-32-31250	..ROD	2	
10	300-32-31260	..BOOT (K35)	2	
11	34B-30-14550	..BREATHER	1	
12	34B-30-14560	..CAP,BLEEDER	1	
13	325-32-21550	.BOLT,WITH WASHER	2	
14	3EA-30-11410	.LINING ASS'Y	1	
15	3EA-30-11420	.LINING ASS'Y,L.H	1	
	3EA-30-11430	.LINING ASS'Y,R.H	1	
16	325-32-21570	.PIN	2	
17	34B-30-14420	.SPRING	2	
18	300-32-31780	.CUP	4	
19	3EA-30-11130	.ADJUSTER ASS'Y,L.H	1	
	3EA-30-11230	.ADJUSTER ASS'Y,R.H	1	
20	3EA-30-11320	.LEVER,ADJUSTER	1	
21	3EA-30-11340	.SPRING	1	
22	3EA-30-11330	.CABLE	1	
23	300-32-31620	.PLATE	1	
24	3EA-30-11360	.SPRING	1	
25	300-32-31760	.SPRING	2	
26	300-32-31660	.CABLE GUIDE	1	
27	3EA-30-11150	.SPRING,L.H	1	
	3EA-30-11250	.SPRING,R.H	1	
28	300-32-31720	.STRUT	1	
29	325-32-21560	.LEVER ASS'Y,PARKING, L.H	1	
	325-32-22560	.LEVER ASS'Y,PARKING, R.H	1	
30	300-32-31750	.RETAINER	1	
31	300-32-31740	.WASHER,SPRING	1	
32	310-32-21490	.COVER	2	
33	300-32-31690	.RING,SNAP	1	
34	3EA-30-21140	.CABLE ASS'Y,L.H	1	
	3EA-30-21240	.CABLE ASS'Y,R.H	1	
35	325-32-21920	BOLT	12	
36	01602-21442	WASHER,SPRING	12	
37	37B-1AE-6010	BAND	1	
K35	3EA-30-00010	WHEEL CYLINDER KIT	2	

https://truckmanualshub.com/

パーキング ブレーキ レバー
FIG.K4120-01A0 PARKING BRAKE LEVER

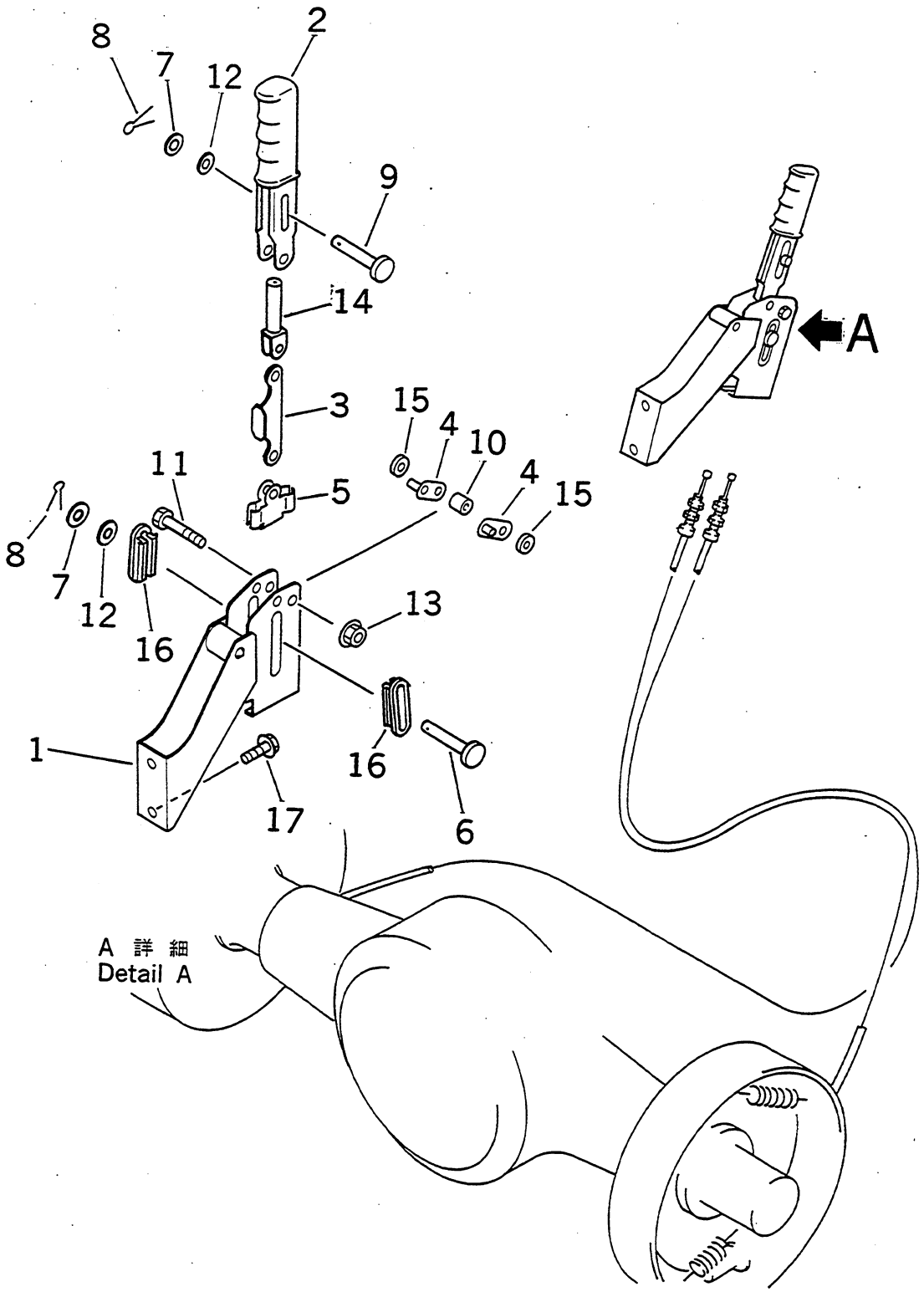

https://truckmanualshub.com/

FIG NO. : K4120-01A0

FG15H,FG18H

INDEX	PART NO.	DESCRIPTION	Q'TY	SERIAL NO.
	3EB-39-31510	LEVER ASS'Y,PARKING.....	1	600001A AND UP
1	3EB-39-31520	.BRACKET.....	1	
2	3EB-39-31530	.LEVER.....	1	
3	3EB-38-25630	.LINK.....	1	
4	0C31511-13100	.SHAFT ASS'Y.....	2	
5	3EB-38-25530	.BRACKET.....	1	
6	0C36027-04H01	.PIN.....	1	
7	3BA-39-31160	.WASHER.....	2	
8	3EB-38-15340	.PIN,COTTER.....	2	
9	3BA-39-31170	.PIN.....	1	
10	3EB-38-15230	.SPACER.....	1	
11	0C81-14045-1A	.BOLT.....	1	
12	0C1281-04500	.WASHER.....	2	
13	0C31510-14010	.NUT.....	1	
14	3BA-39-31180	.ROD ASS'Y.....	1	
15	0C25513-13010	.SPACER.....	2	
16	3BA-39-31220	.BUSHING.....	2	
17	01435-01020	BOLT.....	2	

https://truckmanualshub.com/

パーキング ブレーキ レバー
FIG.K4120-01A1 PARKING BRAKE LEVER

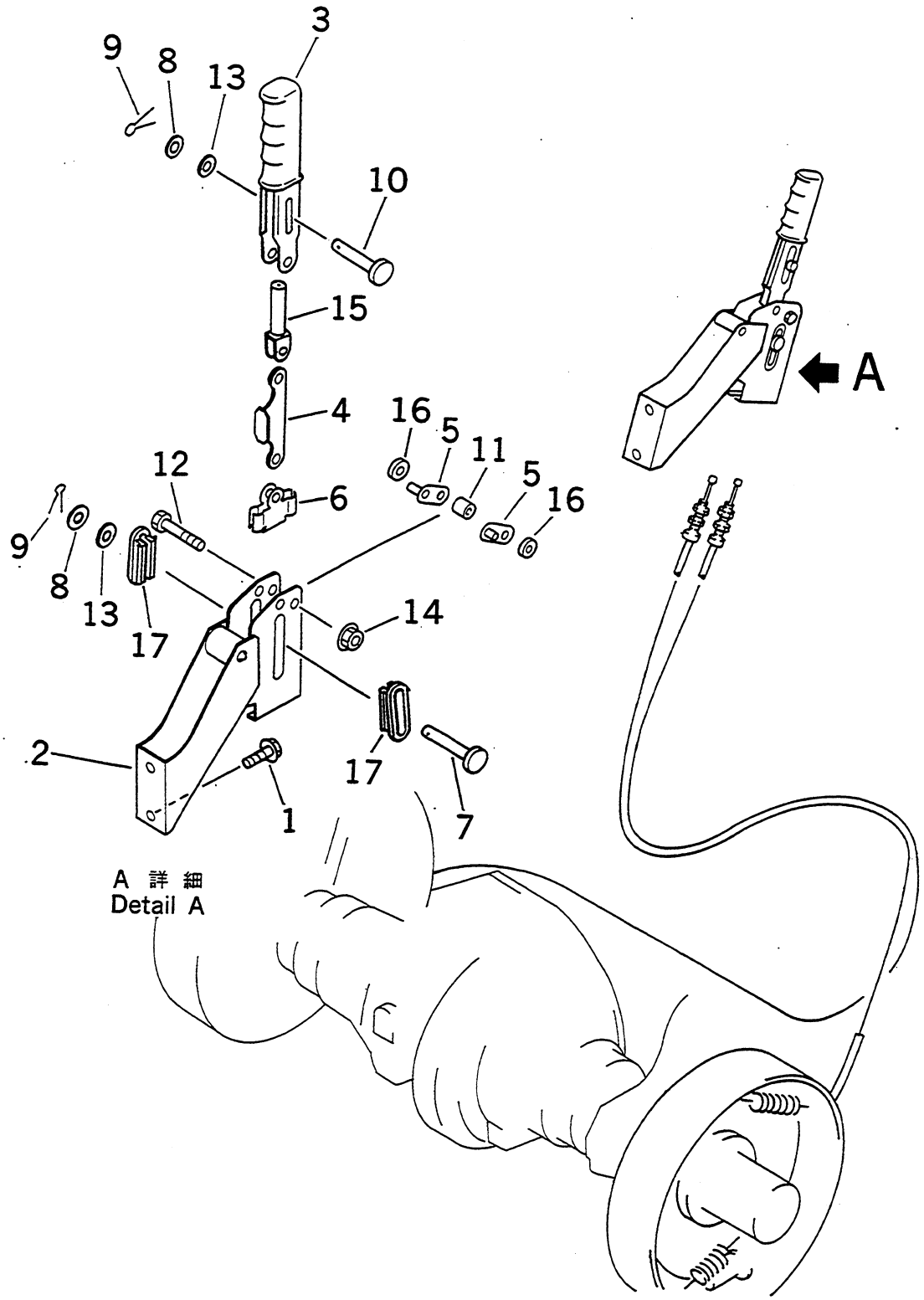

https://truckmanualshub.com/

FIG NO. : K4120-01A1

FG15S,FG18S

INDEX	PART NO.	DESCRIPTION	Q'TY	SERIAL NO.
1	01435-01020	BOLT.....	2	600001A AND UP
	3EA-39-35110	LEVER ASS'Y,PARKING.....	1	
2	OC35110-11000	.BRACKET.....	1	
3	3EB-39-31530	.LEVER.....	1	
4	3EB-38-25630	.LINK.....	1	
5	OC50101-13100	.SHAFT ASS'Y.....	2	
6	3EB-38-25530	.BRACKET.....	1	
7	3BA-39-31190	.BOLT.....	1	
8	OC1281-04500	.WASHER.....	2	
9	OC9-21118-2A	.PIN,COTTER.....	2	
10	3BA-39-31170	.PIN.....	1	
11	OC91251-13600	.SPACER.....	1	
12	OC81-14045-2A	.BOLT.....	1	
13	OC1281-04500	.WASHER.....	2	
14	OC50101-14010	.NUT.....	1	
15	3BA-39-31180	.ROD ASS'Y.....	1	
16	OC50101-13010	.SPACER.....	2	
17	3BA-39-31220	.BUSHING.....	2	

https://truckmanualshub.com/

ﾌﾞﾚｰｷ ﾊﾟｲﾋﾟﾝｸﾞ
FIG.K4130-01A0 BRAKE PIPING

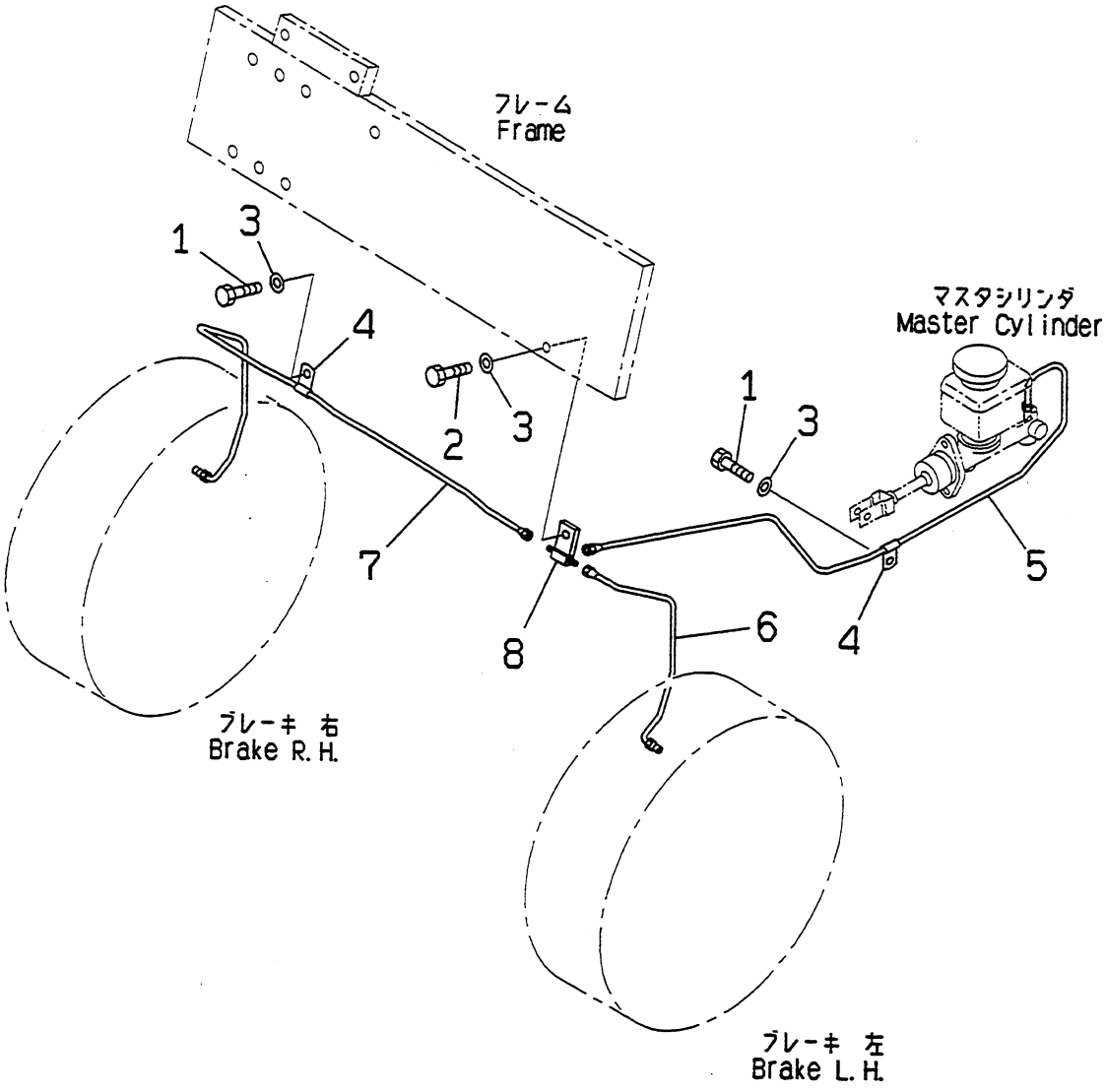

PUF1711

https://truckmanualshub.com/

FIG NO. : K4130-01A0

FG15H,FG18H

INDEX	PART NO.	DESCRIPTION	Q'TY	SERIAL NO.
1	01010-80816	BOLT	2	600001A AND UP
2	01010-80825	BOLT	1	
3	01641-20812	WASHER	3	
4	04434-50508	CLIP	2	
5	3EA-38-A5110	PIPE	1	
6	3EA-38-31120	PIPE	1	
7	3EA-38-31130	PIPE	1	
8	3EB-38-31140	TEE	1	

https://truckmanualshub.com/

ﾌﾞﾚｰｷ ﾊﾟｲﾋﾟﾝｸﾞ (ﾄﾙｸ ｺﾝﾊﾞｰﾀ ｼﾖｳ)
FIG.K4130-01A1 BRAKE PIPING (TORQUE CONVERTER SPEC.)

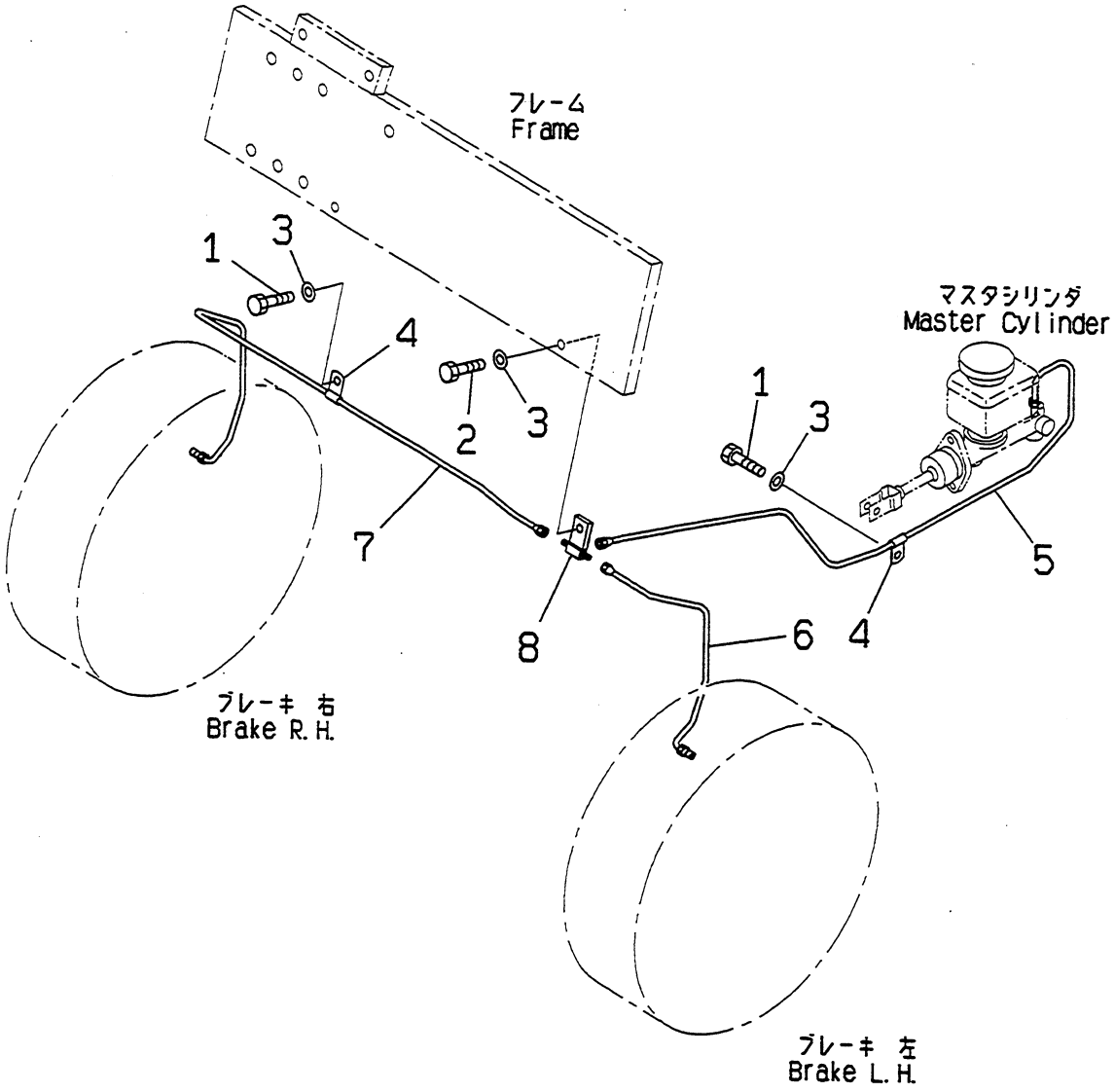

PUF1712

https://truckmanualshub.com/

FIG NO. : K4130-01A1

INDEX	PART NO.	DESCRIPTION	Q'TY	SERIAL NO.
1	01010-80816	BOLT	2	600001A AND UP
2	01010-80825	BOLT	1	
3	01641-20812	WASHER	3	
4	04434-50508	CLIP	2	
5	3EA-38-A5110	PIPE	1	
6	3EA-38-A5510	PIPE	1	
7	3EA-38-A5520	PIPE	1	
8	3EB-38-31140	TEE	1	

https://truckmanualshub.com/

This Page Left Intentionally Blank

KOMATSU

https://truckmanualshub.com/

KOMATSU

Travel Control

AX SERIES

Travel Control

https://truckmanualshub.com/

ステアリング コラム
FIG.L4110-01A0 STEERING COLUMN

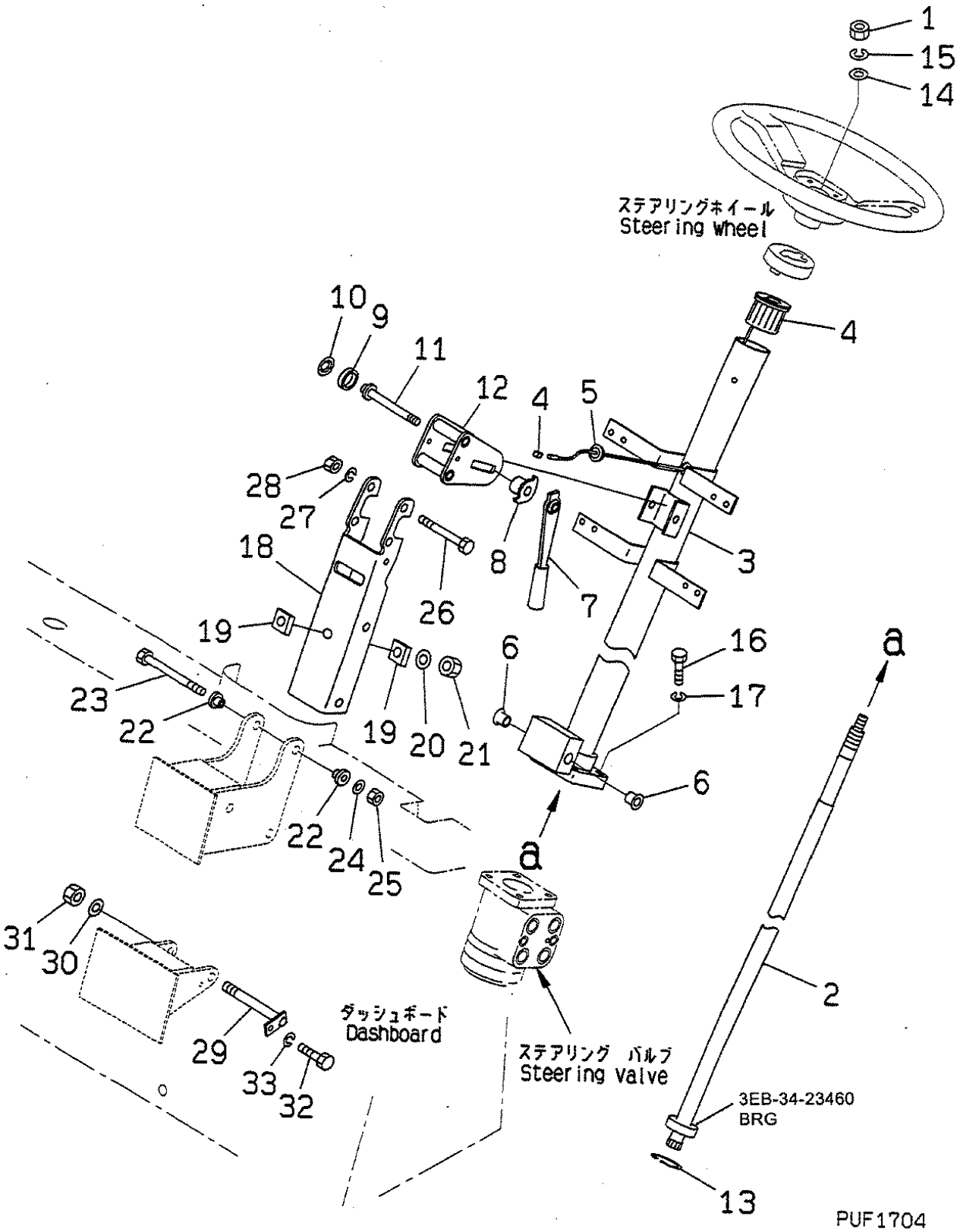

https://truckmanualshub.com/

FIG NO. : L4110-01A0

INDEX	PART NO.	DESCRIPTION	Q'TY	SERIAL NO.
1	34A-10-81150	NUT	1	600001A - 650000A
	3EB-34-35111	COLUMN ASS'Y,STEERING	1	
2	FK48820-KMF80	.SHAFT ASS'Y	1	
3	FK48860-KMF80	.TUBE ASS'Y	1	
4	FK48053-KMF50	..BUSHING	1	
5	FK48058-Z9000	..GROMMET	1	
6	FK34104-KMF20	..BUSHING	2	
7	FK48970-KMF70	.LEVER ASS'Y	1	
8	FK48971-KMF80	.STOPPER	1	
9	FK48969-50A00	.ADJUSTER	1	
10	FK48972-63100	.NUT	1	
11	FK48966-KMF31	.BOLT	1	
12	FK48960-KMF80	.CLAMP	1	
13	FK9-22242	.RING,SNAP	1	
14	01640-21223	WASHER	1	
15	01602-21236	WASHER,SPRING	1	
16	02010-70632	BOLT	4	
17	01602-20929	WASHER,SPRING	4	
18	3EB-34-35123	BRACKET	1	
19	34B-04-15220	RUBBER	2	
20	3EA-51-11390	WASHER	1	
21	3EB-61-11260	NUT	1	
22	3EB-34-22450	RUBBER	4	
23	01011-81010	BOLT	2	
24	01642-21016	WASHER	2	
25	3EB-61-11260	NUT	2	
26	01010-81085	BOLT	2	
27	01602-21030	WASHER,SPRING	2	
28	01580-11008	NUT	2	
29	37B-1HD-2020	SHAFT	1	
30	01641-21223	WASHER	1	
31	01599-01214	NUT	1	
32	01010-80610	BOLT	1	
33	01602-20619	WASHER,SPRING	1	

https://truckmanualshub.com/

FIG. NO. : L4110-01A0A **STEERING COLUMN**

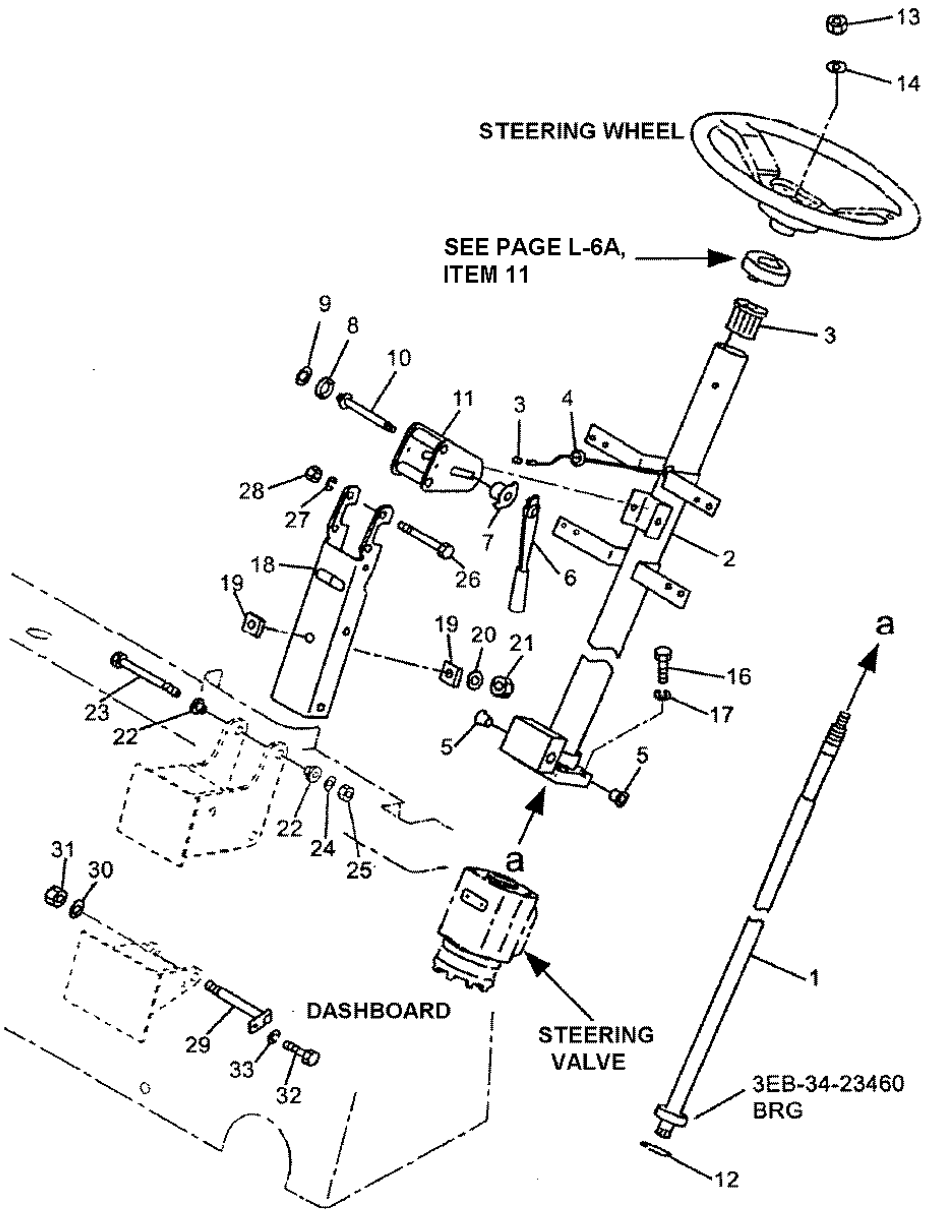

KFI12200003

https://truckmanualshub.com/

FIG. NO. : L4110-01A0A

FG15H/18H-16, FG15S/18S-16

INDEX	PART NO.	DESCRIPTION	Q'TY	SERIAL NO.
				650001A and Up
	3EB-34-35111	COLUMN ASSEMBLY, STEERING	1	
1	FK48820-KMF80	.SHAFT ASSEMBLY	1	
2	3EC-34-39110	STEERING COLUMN	1	
3	FK48053-KMF50	..BUSHING	1	
4	FK48058-Z9000	..GROMMET	1	
5	FK34104-KMF20	..BUSHING	2	
6	FK48970-KMF70	.LEVER ASSEMBLY	1	
7	FK48971-KMF80	.STOPPER	1	
8	FK48969-50A00	.ADJUSTER	1	
9	FK48972-63100	.NUT	1	
10	FK48966-KMF31	.BOLT	1	
11	FK48960-KMF80	.CLAMP	1	
12	FK9-22242	.RING, SNAP	1	
13	34A-10-81150	NUT	1	
14	01643-31232	WASHER	1	
15	NOT USED			
16	02010-70632	BOLT	4	
17	01602-20929	WASHER, SPRING	4	
18	3EB-34-35123	BRACKET	1	
19	34B-04-15220	RUBBER	2	
20	3EA-51-11390	WASHER	1	
21	3EB-61-11260	NUT	1	
22	3EB-34-22450	RUBBER	4	
23	01011-81010	BOLT	2	
24	01642-21016	WASHER	2	
25	3EB-61-11260	NUT	2	
26	01010-81085	BOLT	2	
27	01602-21030	WASHER	2	
28	01580-11008	NUT	2	
29	37B-1HD-2020	SHAFT	1	
30	01641-21223	WASHER	1	
31	01599-01214	NUT	1	
32	01010-80610	BOLT	1	
33	01602-20619	WASHER, SPRING	1	

https://truckmanualshub.com/

パワー ステアリング バルブ
FIG.L4110-51A0 POWER STEERING VALVE

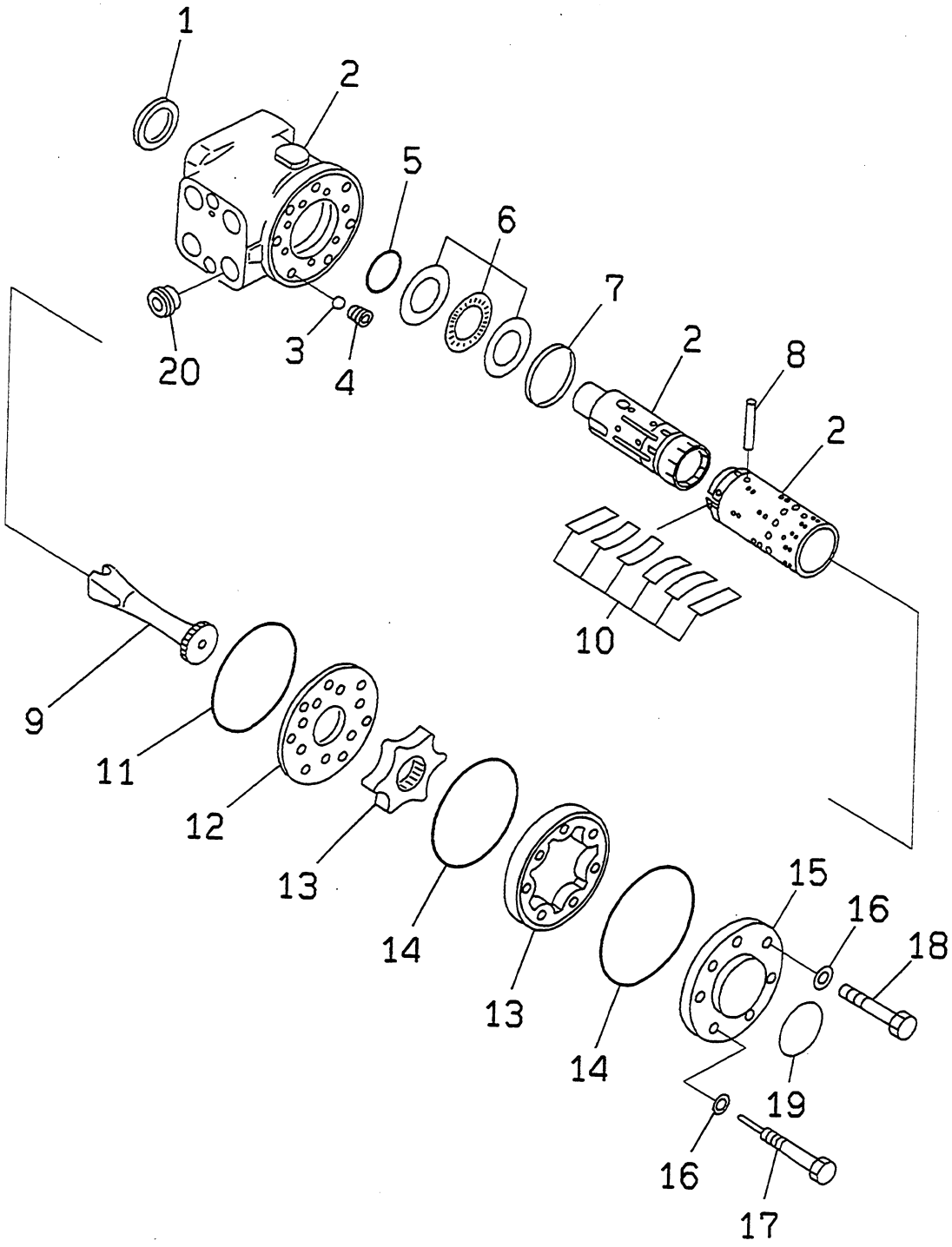

PUF1705

https://truckmanualshub.com/

FIG NO. : L4110-51A0

INDEX	PART NO.	DESCRIPTION	Q'TY	SERIAL NO.
	3EA-34-A5110	VALVE ASS'Y.....	1	600001A AND UP
1	DF633B9002	.RING,DUST SEAL.....	1	
2	☆	.HOUSING.....	1	
3	DF689X1031	.BALL.....	1	
4	DF150-0304	.BUSHING.....	1	
5	DF150N4014	.O-RING.....	1	
6	DF150-4262	.BEARING.....	1	
7	DF150-0310	.RING.....	1	
8	DF150-0305	.PIN,CROSS.....	1	
9	DF150-0844	.SHAFT,CARDAN.....	1	
10	DF150N4019	.SPRING.....	1	
11	DF633B1202	.O-RING.....	1	
12	DF150N0610	.PLATE,DISTRIBUTOR.....	1	
13	DF150-4168	.GEAR.....	1	
14	DF633B1173	.O-RING.....	2	
15	DF150-0328	.COVER,END.....	1	
16	DF684X2481	.WASHER.....	7	
17	DF150-0321	.BOLT,WITH PIN.....	1	
18	DF681X1578	.BOLT.....	6	
19	☆	.PLATE, NAME.....	1	
20	DF150N4092	.VALVE,CHECK.....	1	
KIT	DF150N4038	SEAL KIT.....	1	

https://truckmanualshub.com/

ステアリング ホイール
FIG.L4120-01A0 STEERING WHEEL

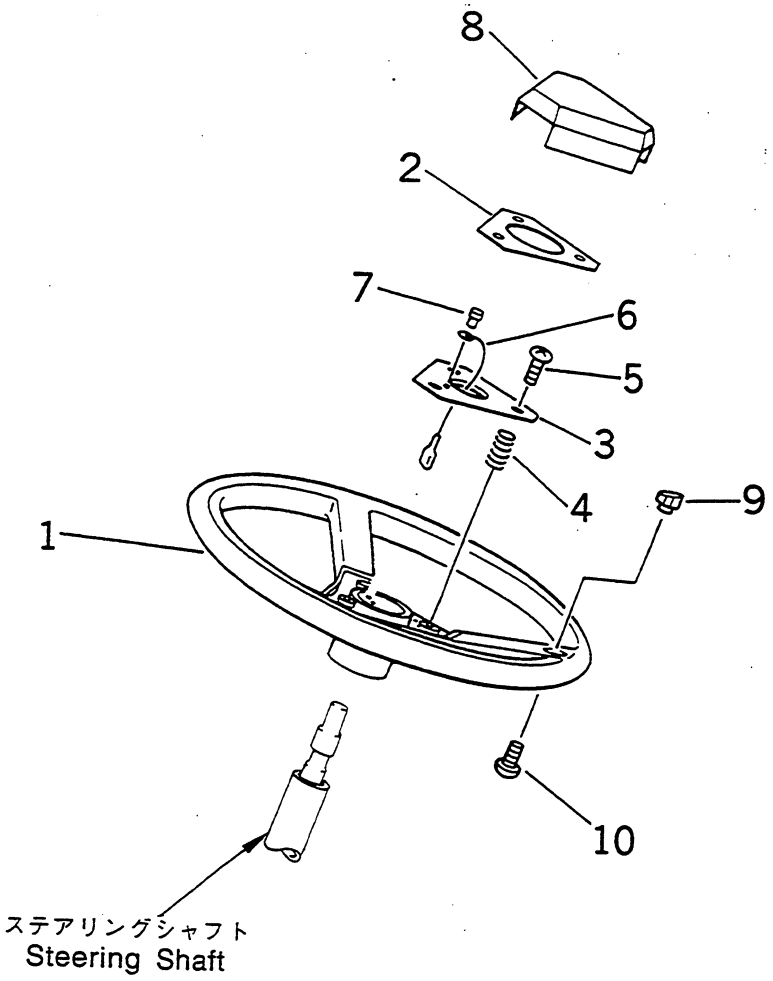

https://truckmanualshub.com/

FIG NO. : L4120-01A0

INDEX	PART NO.	DESCRIPTION	Q'TY	SERIAL NO.
	3EB-33-A5110	WHEEL ASS'Y,STEERING.....	1	600001A - 650000A
1	3EB-33-A5120	.WHEEL.....	1	
2	3EB-33-A5180	.PLATE.....	1	
3	3EB-33-A5170	.PLATE.....	1	
4	3EB-33-A5190	.SPRING.....	3	
5	01220-40412	.SCREW.....	3	
6	3EB-33-A5210	.CORD ASS'Y.....	1	
7	01220-40310	.SCREW.....	1	
8	3EB-33-A5230	.PAD,HORN.....	1	
9	3EB-33-A5220	.PLUG.....	1	
10	01220-40412	.SCREW.....	1	

https://truckmanualshub.com/

FIG. NO. : L4120-01A0A **STEERING WHEEL**

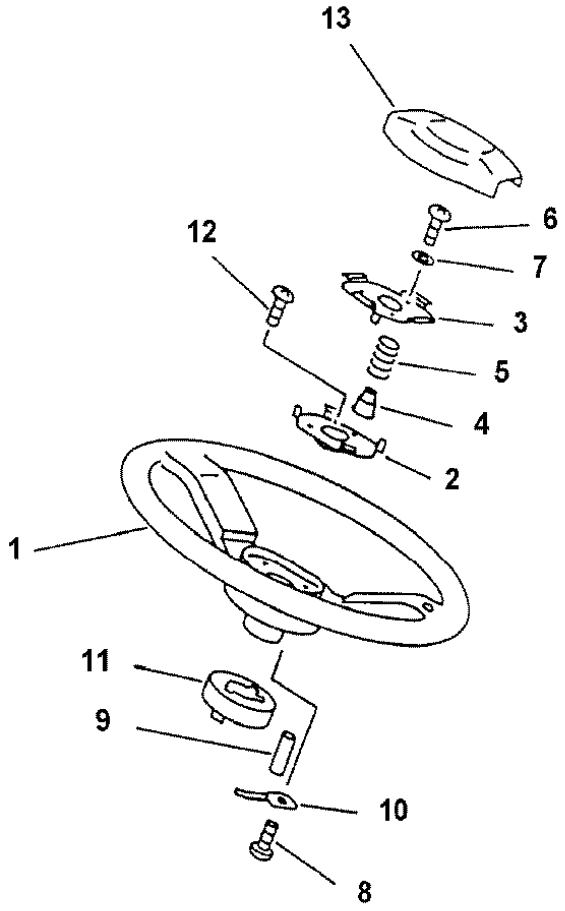

KFI010401

https://truckmanualshub.com/

FIG. NO. : L4120-01A0A

FG15H/18H-16, FG15S/18S-16

INDEX	PART NO.	DESCRIPTION	Q'TY	SERIAL NO.
				650001A and Up
	37B-1BA-3020	STEERING WHEEL ASSEMBLY	1	
	3EB-33-31120	.WHEEL ASSEMBLY	1	
1	3EB-33-31130	..WHEEL	1	
2	3EB-33-31140	..PLATE, CONTACT	1	
3	3EB-33-31150	..PLATE, CONTACT	1	
4	3EB-33-31160	..INSULATOR	3	
5	3EB-33-31170	..SPRING	3	
6	3EB-33-31180	..SCREW	3	
7	3EB-33-31190	..WASHER	3	
8	3EB-33-31210	..SCREW	4	
9	3EB-33-31220	..PLUNGER	1	
10	3EB-33-31230	..PLUNGER	1	
11	3EB-33-31240	..COVER	1	
12	3EB-33-31250	..SCREW	2	
13	3EB-33-31270	.HORN PAD	1	

https://truckmanualshub.com/

トランスミッション シフト レバー (クラッチ シヨウ)

FIG.L4140-01A0 TRANSMISSION SHIFT LEVER (CLUTCH SPEC.)

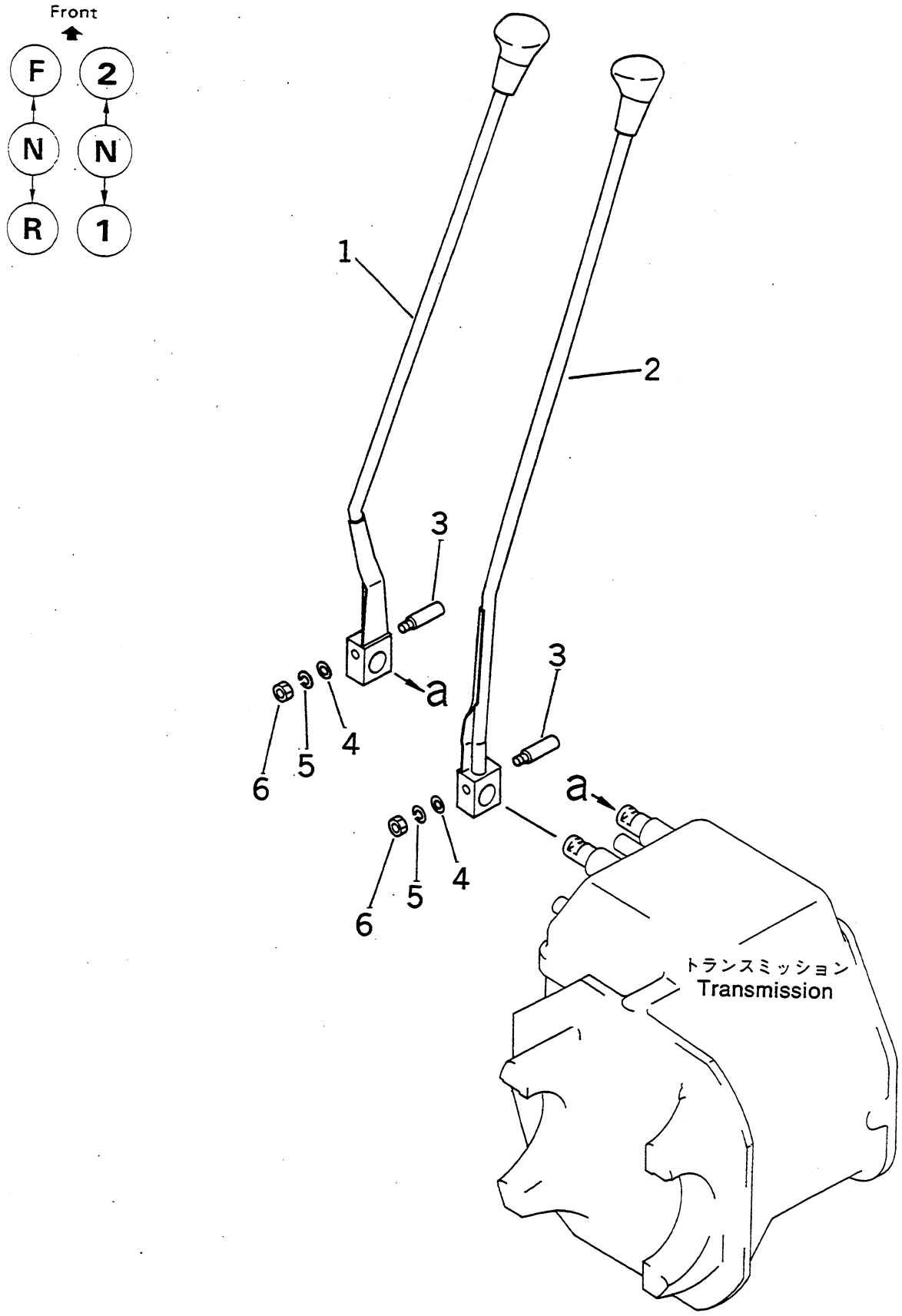

https://truckmanualshub.com/

FIG NO. : L4140-01A0

FG15H

INDEX	PART NO.	DESCRIPTION	Q'TY	SERIAL NO.
1	3EB-35-31130	LEVER ASS'Y,FORWARD AND REVERSE.....	1	600001A AND UP
	3EB-35-31140	.LEVER.....	1	
	3EB-35-21131	.KNOB.....	1	
2	3EB-35-31150	LEVER ASS'Y,SPEED SELECTOR.....	1	
	3EB-35-31160	.LEVER.....	1	
	3EB-35-21141	.KNOB.....	1	
3	3EB-35-11130	PIN.....	2	
4	01642-21016	WASHER.....	2	
5	01602-21030	WASHER,SPRING.....	2	
6	01580-11008	NUT.....	2	

https://truckmanualshub.com/

トランスミッション シフト レバー (トルク コンバータ ショウ)

FIG.L4140-11A0 TRANSMISSION SHIFT LEVER (TORQUE CONVERTER SPEC.)

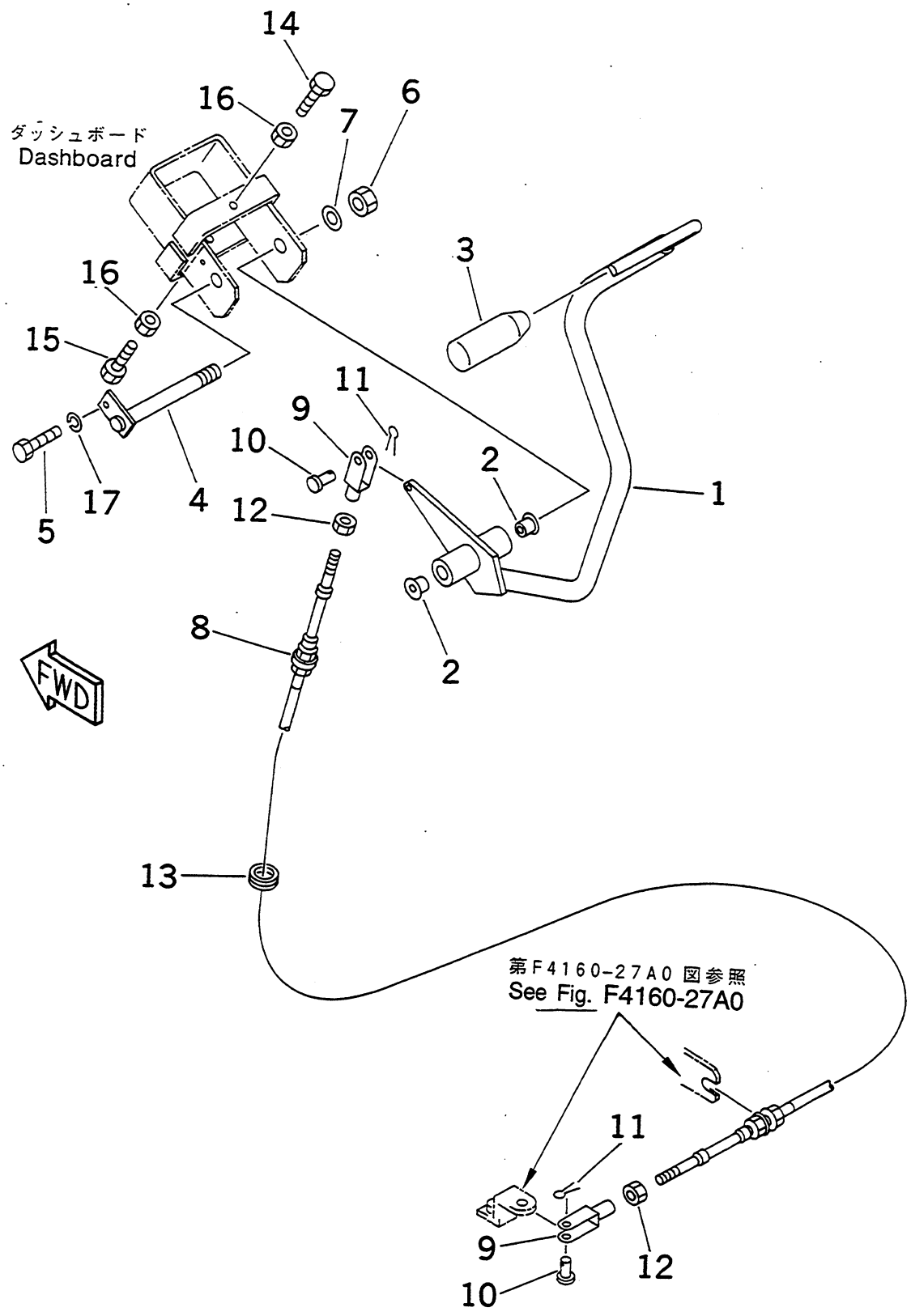

https://truckmanualshub.com/

FIG NO. : L4140-11A0

INDEX	PART NO.	DESCRIPTION	Q'TY	SERIAL NO.
1	3EB-35-35114	LEVER,(FOR PNEUMA).....	1	600001A AND UP
	3EA-35-35110	LEVER,(FOR CUSHION).....	1	
2	3MA-73-13180	.BUSHING.....	2	
3	3EB-35-35160	KNOB.....	1	
4	37B-1HD-2020	SHAFT.....	1	
5	01010-80612	BOLT.....	1	
6	01599-01214	NUT.....	1	
7	01643-51232	WASHER.....	1	
	3EB-35-A5311	CABLE ASS'Y.....	1	
8	3EB-35-A5321	.CABLE.....	1	
9	3EB-35-A5330	.YOKE.....	2	
10	3EB-35-A5340	.PIN.....	2	
11	3EB-35-A5350	.PIN,COTTER.....	2	
12	3EB-35-A5360	.NUT.....	2	
13	08037-02512	GROMMET.....	1	
14	01016-50830	BOLT.....	1	
15	01016-50840	BOLT.....	1	
16	01580-10806	NUT.....	2	
17	01602-20619	WASHER,SPRING.....	1	

https://truckmanualshub.com/

ﾌﾞﾚｰｷ ｵﾖﾋﾞ ｸﾗｯﾁ ﾍﾟﾀﾞﾙ (ｸﾗｯﾁ ｼﾖｳ)

FIG.L4150-01A0 BRAKE AND CLUTCH PEDAL (CLUTCH SPEC.)

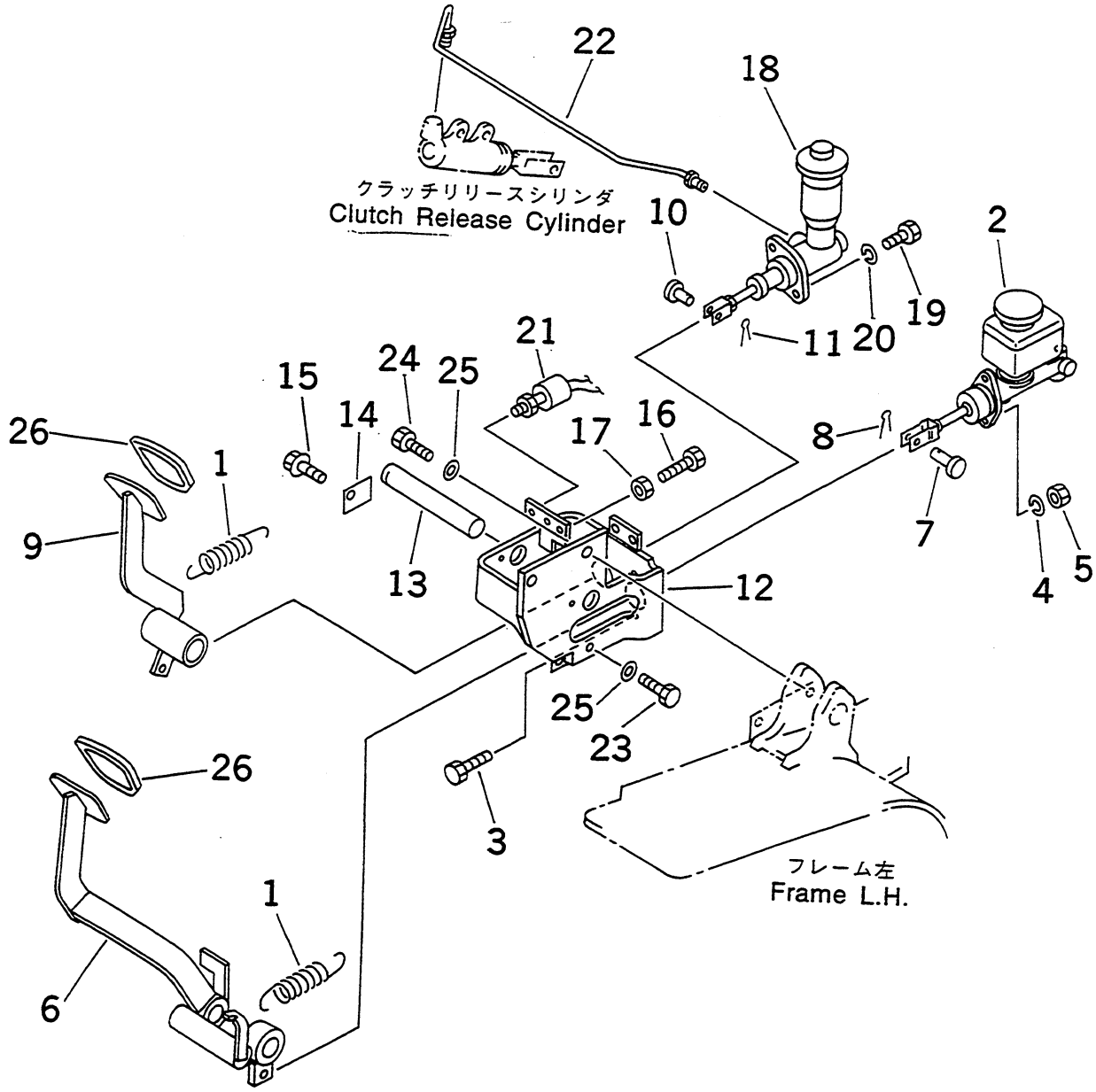

https://truckmanualshub.com/

INDEX	PART NO.	DESCRIPTION	Q'TY	SERIAL NO.
1	302-32-24080	SPRING	2	600001A AND UP
2	(3EB-36-31280)	CYLINDER ASS'Y	1	
3	01010-80830	BOLT	2	
4	01602-20825	WASHER,SPRING	2	
5	01580-10806	NUT	2	
6	3EB-36-31150	PEDAL,BRAKE	1	
	3EB-36-31120	.PLATE	1	
	3EA-36-22160	.BUSHING	2	
	3EB-36-22170	.SEAL	4	
7	04205-11028	PIN	1	
8	04050-13018	PIN,COTTER	1	
9	3EB-36-31170	PEDAL,INCHING	1	
	3EB-36-31120	.PLATE	1	
	3EA-36-22160	.BUSHING	2	
	3EB-36-22170	.SEAL	2	
10	04205-10825	PIN	1	
11	04050-12015	PIN,COTTER	1	
12	3EB-36-31191	BRACKET	1	
13	3EB-36-31270	SHAFT	1	
14	358-43-15180	STOPPER	1	
15	F1110-40612	BOLT	1	
16	01016-80830	BOLT	2	
17	01580-10806	NUT	2	
18	(3EC-36-11212)	CYLINDER ASS'Y	1	
19	01010-80820	BOLT	2	
20	01602-20825	WASHER,SPRING	2	
21	34B-55-15230	SWITCH	1	
22	3EB-36-31240	PIPE	1	
23	01010-81260	BOLT	1	
24	01010-81225	BOLT	2	
25	01643-31232	WASHER	3	
26	3EB-36-31130	COVER	2	

https://truckmanualshub.com/

ﾌﾞﾚｰｷ ｵﾖﾋﾞ ｲﾝﾁﾝｸﾞ ﾍﾟﾀﾞﾙ (ﾄﾙｸ ｺﾝﾊﾞｰﾀ ｼﾖｳ)

FIG.L4150-02A0 BRAKE AND INCHING PEDAL (TORQUE CONVERTER SPEC.)

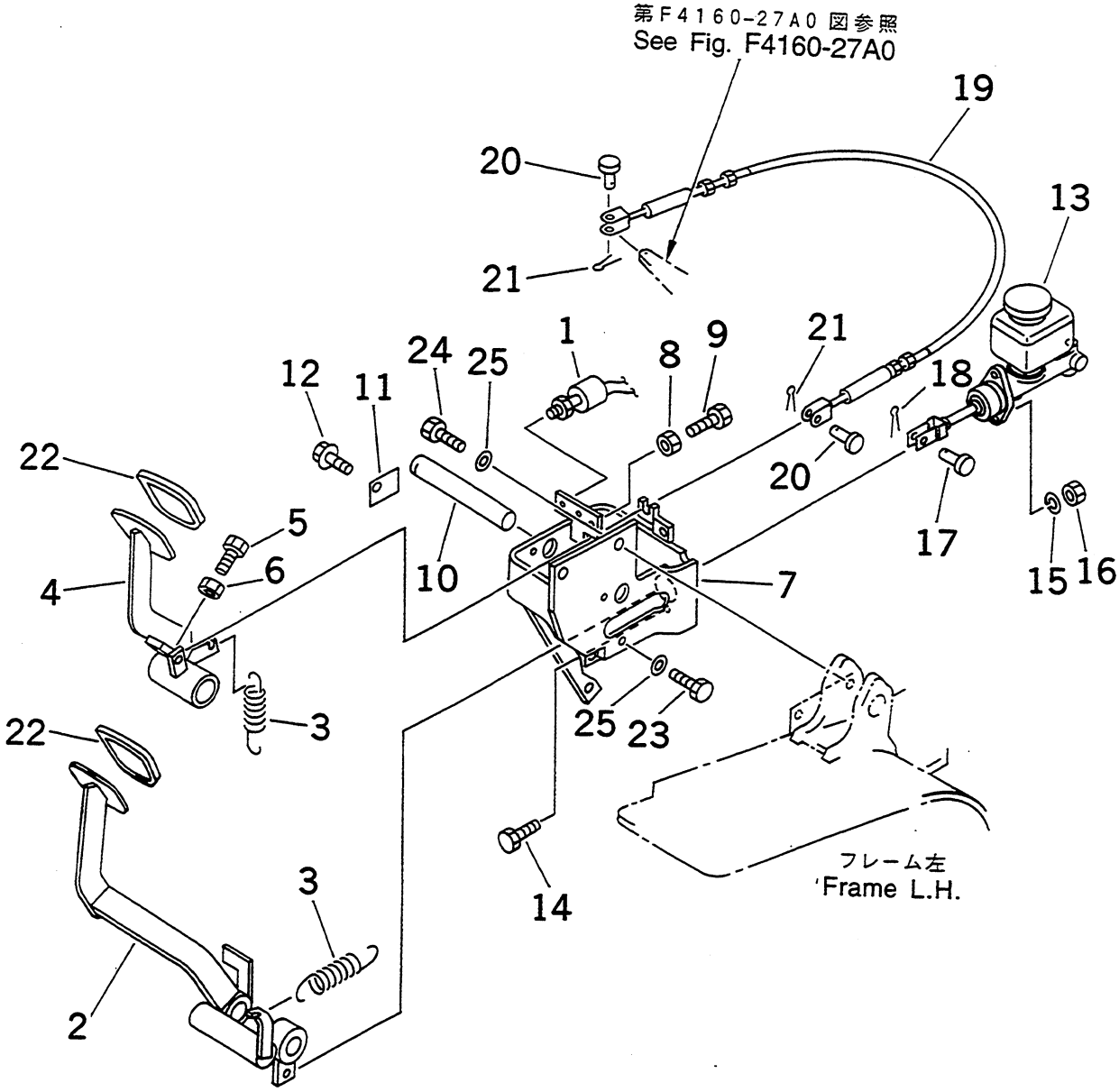

https://truckmanualshub.com/

FIG NO. : L4150-02A0

INDEX	PART NO.	DESCRIPTION	Q'TY	SERIAL NO.
1	34B-55-15230	SWITCH	1	600001A AND UP
2	3EB-36-31150	PEDAL,BRAKE	1	
	3EB-36-31120	.PLATE	1	
	3EA-36-22160	.BUSHING	2	
	3EB-36-22170	.SEAL	4	
3	302-32-24080	SPRING	2	
4	3EB-36-31370	PEDAL,INCHING	1	
	3EB-36-31120	.PLATE	1	
	3EA-36-22160	.BUSHING	2	
	3EB-36-22170	.SEAL	2	
5	01016-51040	BOLT	1	
6	01580-11008	NUT	1	
7	3EB-36-31391	BRACKET	1	
8	01580-10806	NUT	2	
9	01016-50830	BOLT	2	
10	3EB-36-31270	SHAFT	1	
11	358-43-15180	STOPPER	1	
12	01010-80612	BOLT	1	
13	(3EB-36-31280)	CYLINDER ASS'Y	1	
14	01010-80830	BOLT	2	
15	01602-20825	WASHER,SPRING	2	
16	01580-10806	NUT	2	
17	04205-11028	PIN	1	
18	04050-13018	PIN,COTTER	1	
19	3EB-36-35131	CABLE	1	
20	04205-10620	PIN	2	
21	04050-11610	PIN,COTTER	2	
22	3EB-36-31130	COVER	2	
23	01010-81260	BOLT	1	
24	01010-81225	BOLT	2	
25	01643-31232	WASHER	3	

https://truckmanualshub.com/

マスタ シリンダ (ブレーキ ヨウ)

FIG.L4150-51A0 MASTER CYLINDER (FOR BRAKE)

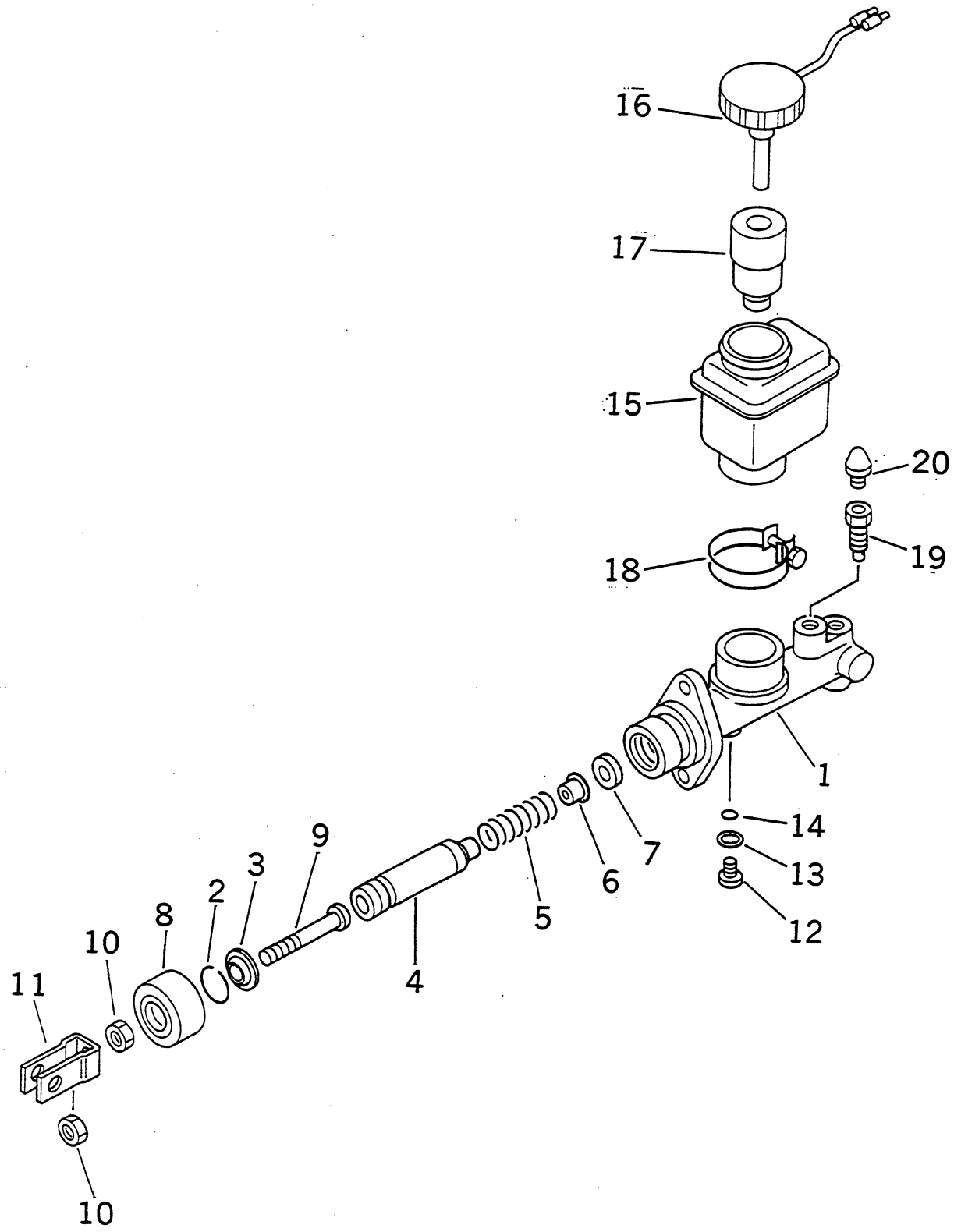

https://truckmanualshub.com/

FIG NO. : L4150-51A0

INDEX	PART NO.	DESCRIPTION	Q'TY	SERIAL NO.
	3EB-36-31280	CYLINDER ASS'Y.....	1	600001A - 650000A
1	MY022-8098-00	.CYLINDER.....	1	
2	MY322-0003-00	.WIRE.....	1	
3	MY331-0049-00	.PLATE.....	1	
4	MY101-8020-00	.PISTON ASS'Y.....	1	
5	MY151-8016-00	.SPRING.....	1	
6	MY171-0182-00	.VALVE.....	1	
7	MY174-0056-00	.SEAT.....	1	
8	MY301-0051-10	.BOOT.....	1	
9	MY372-7207-00	.ROD.....	1	
10	MY521-0807-00	.NUT.....	2	
11	MY373-7174-00	.YOKE.....	1	
12	MY361-0045-00	.PLUG.....	1	
13	MY351-0046-00	.GASKET.....	1	
14	MY591-0219-00	.O-RING.....	1	
15	MY382-1017-00	.RESERVOIR.....	1	
16	MY385-1020-00	.INDICATOR.....	1	
17	MY384-1005-00	.FILTER.....	1	
18	MY387-0048-00	.CLAMP.....	1	
19	MY365-0037-00	.BLEEDER.....	1	
20	MY311-0296-00	.CAP.....	1	

https://truckmanualshub.com/

FIG. NO. : L4150-51A0A MASTER CYLINDER (FOR BRAKE)

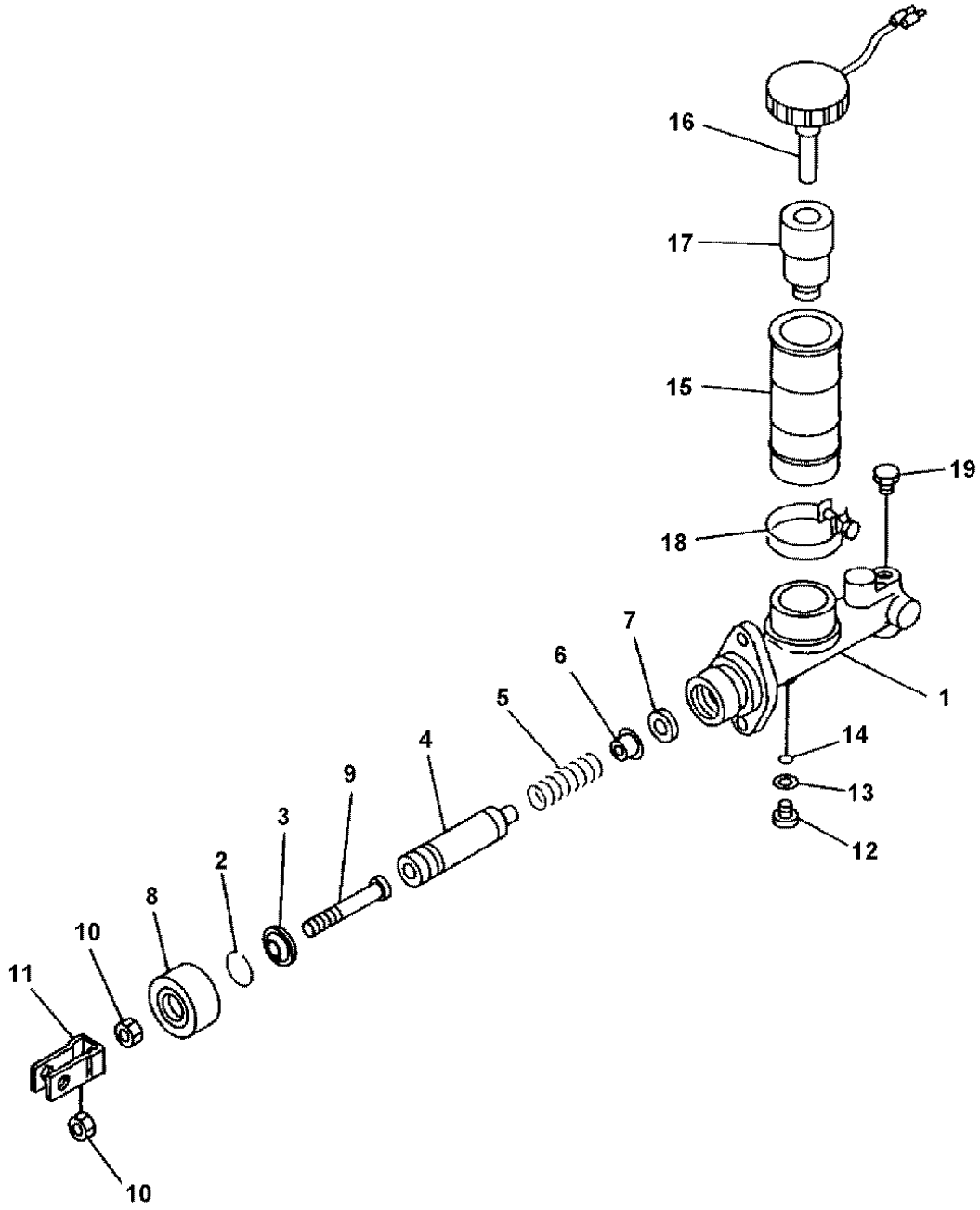

https://truckmanualshub.com/

FIG. NO. : L4150-51A0A

ALL MODELS EXCEPT CLUTCH-TYPE

INDEX	PART NO.	DESCRIPTION	Q'TY	SERIAL NO.
				650001A and Up
	3EB-36-31281	MASTER CYLINDER ASSEMBLY	1	
1	MY022-8098-01	.CYLINDER	1	
2	MY322-0003-00	.WIRE, STOP (KIT)	1	
3	MY331-0049-00	.PLATE, STOP	1	
4	MY101-8020-00	.PISTON ASSEMBLY	1	
5	MT151-8016-00	.SPRING	1	
6	MY171-0182-00	.VALVE (KIT)	1	
7	MY174-0056-00	.SEAT, VALVE (KIT)	1	
8	MY301-0051-10	.BOOT (KIT)	1	
9	MY372-7207-00	.ROD, PUSH	1	
10	MY521-0807-00	.NUT	2	
11	MY373-8034-00	.YOKE	1	
12	MY361-0045-00	.PLUG	1	
13	MY351-0046-00	.GASKET (KIT)	1	
14	MY591-0219-00	.O-RING (KIT)	1	
15	MY382-1000-00	.RESERVOIR	1	
16	MY385-1020-00	.INDICATOR	1	
17	MY384-1005-00	.FILTER	1	
18	MY387-0048-00	.CLAMP	1	
19	MY312-0115-00	.CAP	1	
KIT	MY212-8032-00	REPAIR KIT, BRAKE MASTER CYLINDER	1	

https://truckmanualshub.com/

マスタ シリンダ (クラッチ ヨウ)
FIG.L4150-52A0 MASTER CYLINDER (FOR CLUTCH)

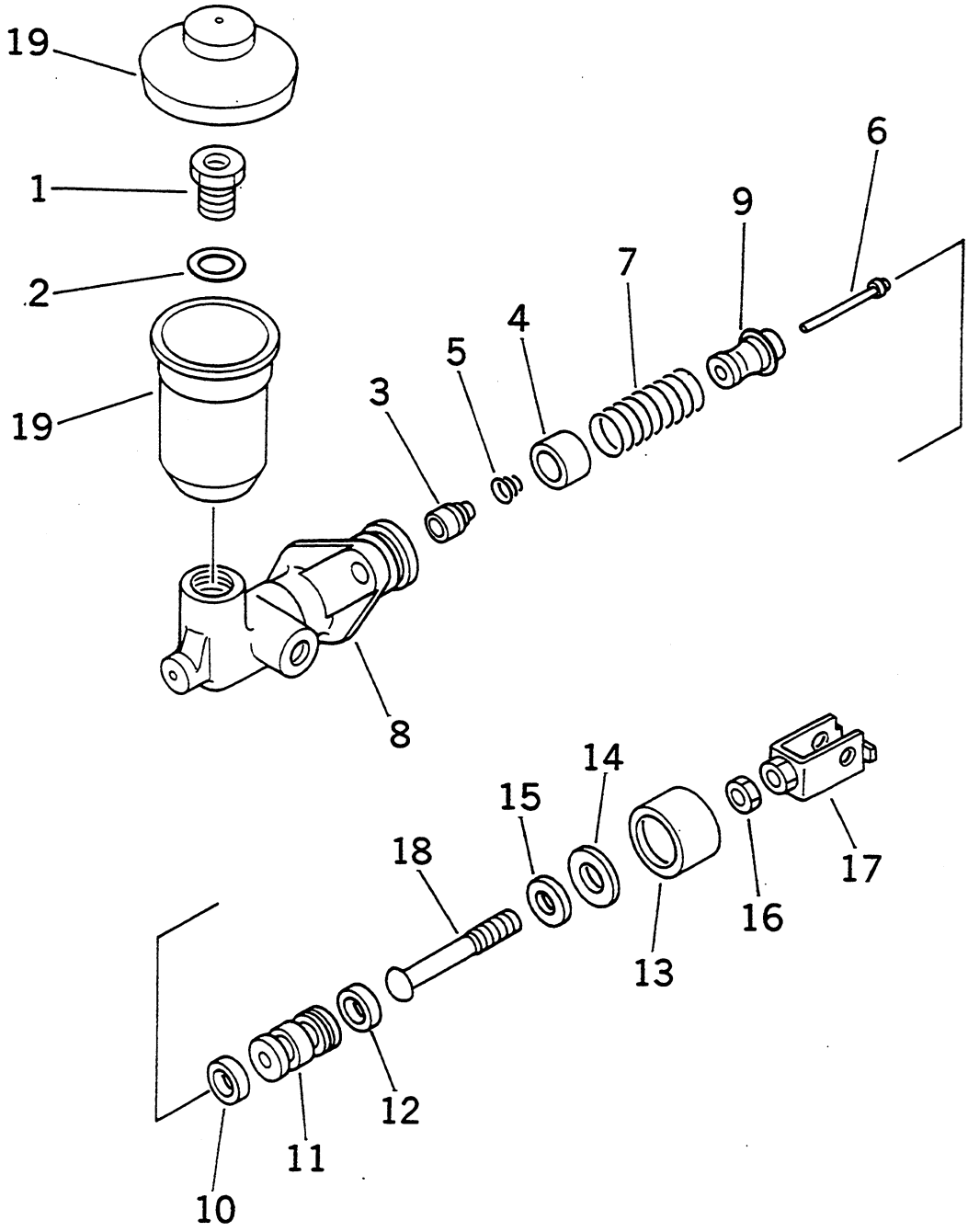

https://truckmanualshub.com/

FIG NO. : L4150-52A0

FG15H

INDEX	PART NO.	DESCRIPTION	Q'TY	SERIAL NO.
	3EC-36-11212	CYLINDER ASS'Y	1	600001A AND UP
1	3EC-36-11410	.BOLT	1	
2	3EC-36-11420	.WASHER	1	
3	☆	.VALVE	1	
4	☆	.CASE	1	
5	☆	.SPRING	1	
6	☆	.ROD	1	
7	☆	.SPRING	1	
8	☆	.BODY	1	
9	☆	.RETAINER	1	
10	☆	.CUP	1	
11	☆	.PISTON	1	
12	☆	.CUP	1	
13	3EC-36-11540	.BOOT	1	
14	3EC-36-11550	.PLATE	1	
15	3EC-36-11561	.RING	1	
16	3EC-36-11570	.NUT	1	
17	3EC-36-11580	.YOKE	1	
18	3EC-36-11590	.ROD	1	
19	3EC-36-11610	.RESERVOIR	1	

https://truckmanualshub.com/

アクセル ペダル
FIG.L4160-01A0 ACCELERATOR PEDAL

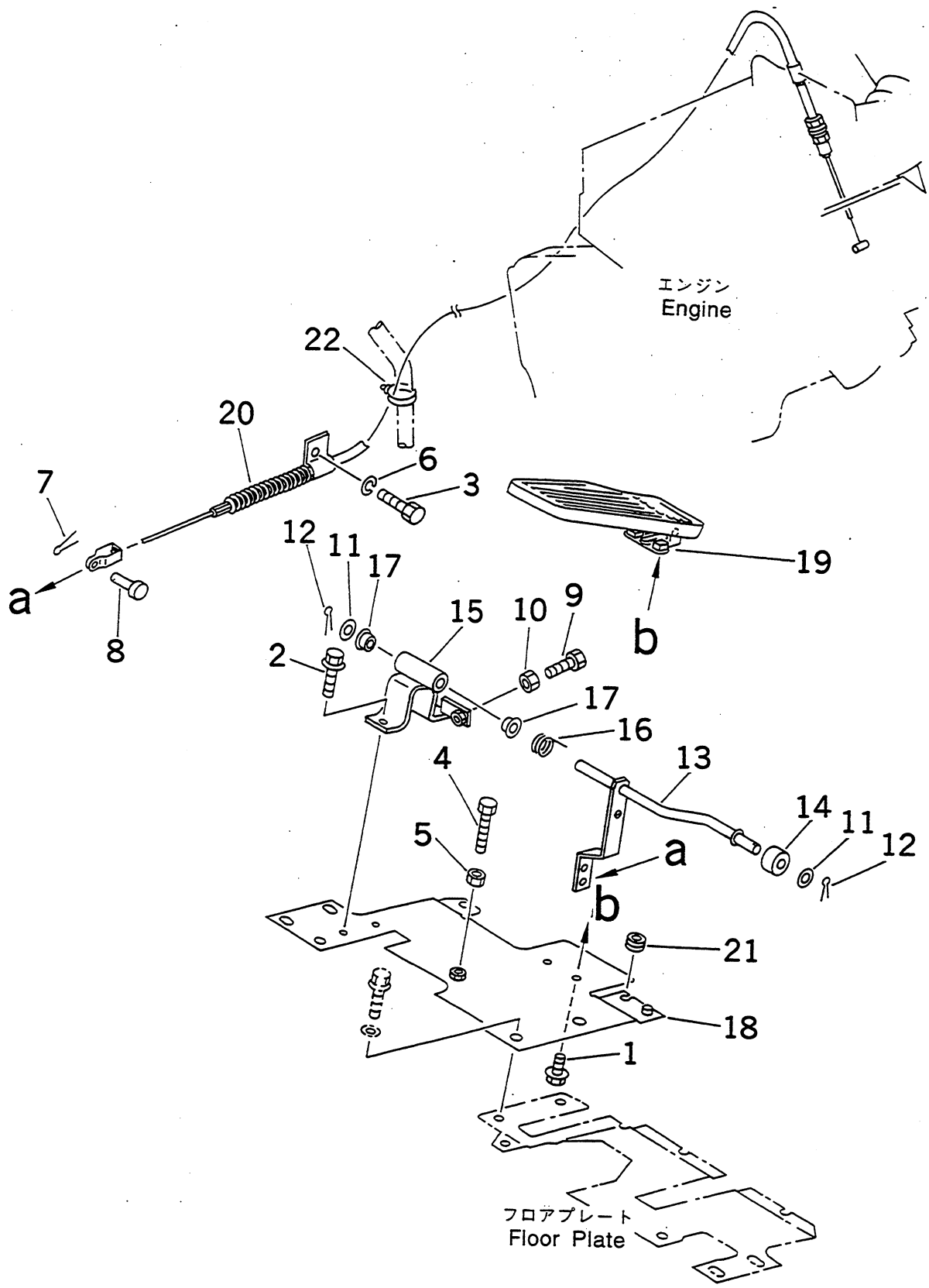

https://truckmanualshub.com/

FIG NO. : L4160-01A0

INDEX	PART NO.	DESCRIPTION	Q'TY	SERIAL NO.
1	F1110-40616	BOLT	2	600001A AND UP
2	F1110-40816	BOLT	2	
3	01010-80816	BOLT	1	
4	01016-50870	BOLT	1	
5	01580-10806	NUT	1	
6	01602-20825	WASHER,SPRING	1	
7	04050-11610	PIN,COTTER	1	
8	04205-10614	PIN	1	
9	01016-20625	BOLT	1	
10	01580-10605	NUT	1	
11	01641-21016	WASHER	2	
12	04050-13020	PIN,COTTER	2	
13	3EA-37-31150	LEVER	1	
14	3EB-37-31140	ROLLER	1	
15	3EB-37-31160	BRACKET	1	
16	3EB-37-31170	SPRING	1	
17	34C-39-17570	BUSHING	2	
18	3EA-50-33120	PLATE,FLOOR	1	
19	3EB-37-31120	PEDAL ASS'Y	1	
20	3EB-37-31180	CABLE	1	
21	3EB-50-33160	RUBBER	2	
22	37B-1AE-6010	BAND	1	

https://truckmanualshub.com/

This Page Left Intentionally Blank

KOMATSU

https://truckmanualshub.com/

KOMATSU

Frame Related Parts

AX SERIES

Frame Related Parts

https://truckmanualshub.com/

FIG. M4110-01A0 FRAME

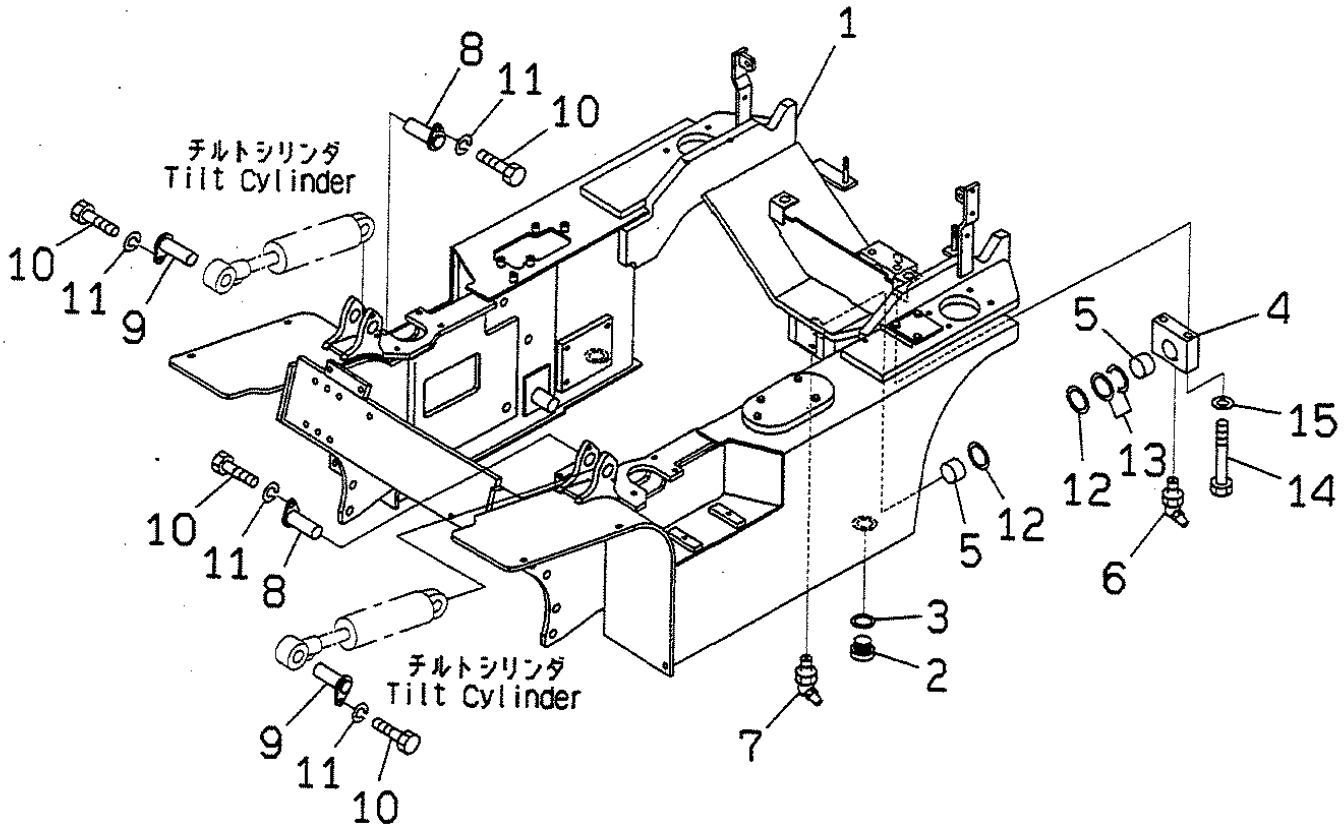

PUF1713

https://truckmanualshub.com/

FIG NO. : M4110-01A0

FG15H,FG18H

INDEX	PART NO.	DESCRIPTION	Q'TY	SERIAL NO.
	3EA-41-A5010	FRAME ASS'Y	1	600001A AND UP
1	☆	.FRAME	1	
2	3EB-41-31220	.PLUG	2	
3	34B-41-12920	.GASKET	2	
4	3EA-41-A5680	SUPPORT	1	
5	3EA-41-11870	BUSHING	2	
6	07020-00675	FITTING,GREASE	1	
7	07020-00675	FITTING,GREASE	1	
8	3EB-41-31860	PIN	2	
9	3EA-41-31880	PIN	2	
10	01010-81020	BOLT	4	
11	01602-21030	WASHER,SPRING	4	
12	3EA-41-22730	SHIM, 0.5MM	2	
13	3EA-41-22740	SHIM, 1.0MM	2	
14	01010-81640	BOLT	2	
15	01643-31645	WASHER	2	

https://truckmanualshub.com/

フレーム
FIG.M4110-01A1 FRAME

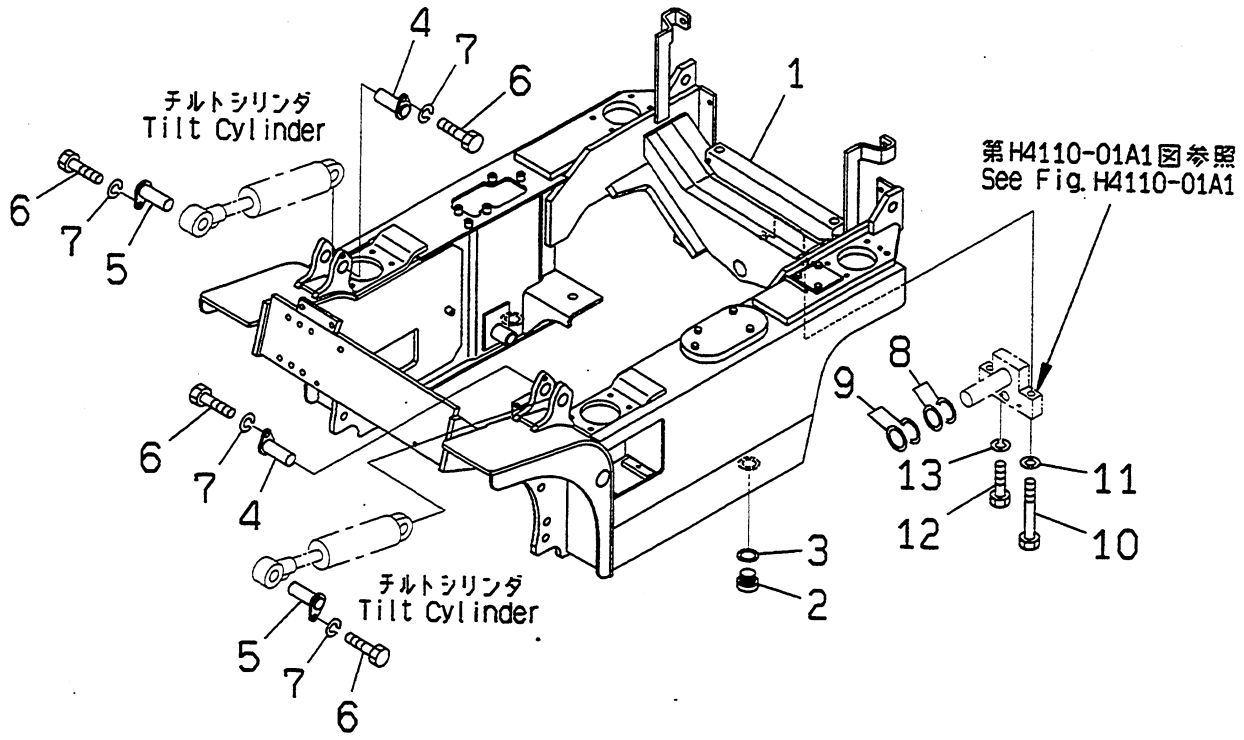

PUF1714

https://truckmanualshub.com/

FIG NO. : M4110-01A1

FG15S,FG18S

INDEX	PART NO.	DESCRIPTION	Q'TY	SERIAL NO.
	3EA-42-A5010	FRAME ASS'Y	1	600001A AND UP
1	☆	.FRAME	1	
2	3EB-41-31220	.PLUG	2	
3	34B-41-12920	.GASKET	2	
4	3EA-41-31860	PIN	2	
5	3EA-41-31880	PIN	2	
6	01010-81020	BOLT	4	
7	01602-21030	WASHER,SPRING	4	
8	3EA-42-11880	SHIM, 0.5MM	2	
9	3EA-42-11890	SHIM, 1.0MM	2	
10	01010-81690	BOLT	2	
11	01643-81645	WASHER	2	
12	01010-80816	BOLT	2	
13	01602-20825	WASHER,SPRING	2	

https://truckmanualshub.com/

カウンタ ウェイト
FIG.M4120-01A0 COUNTER WEIGHT

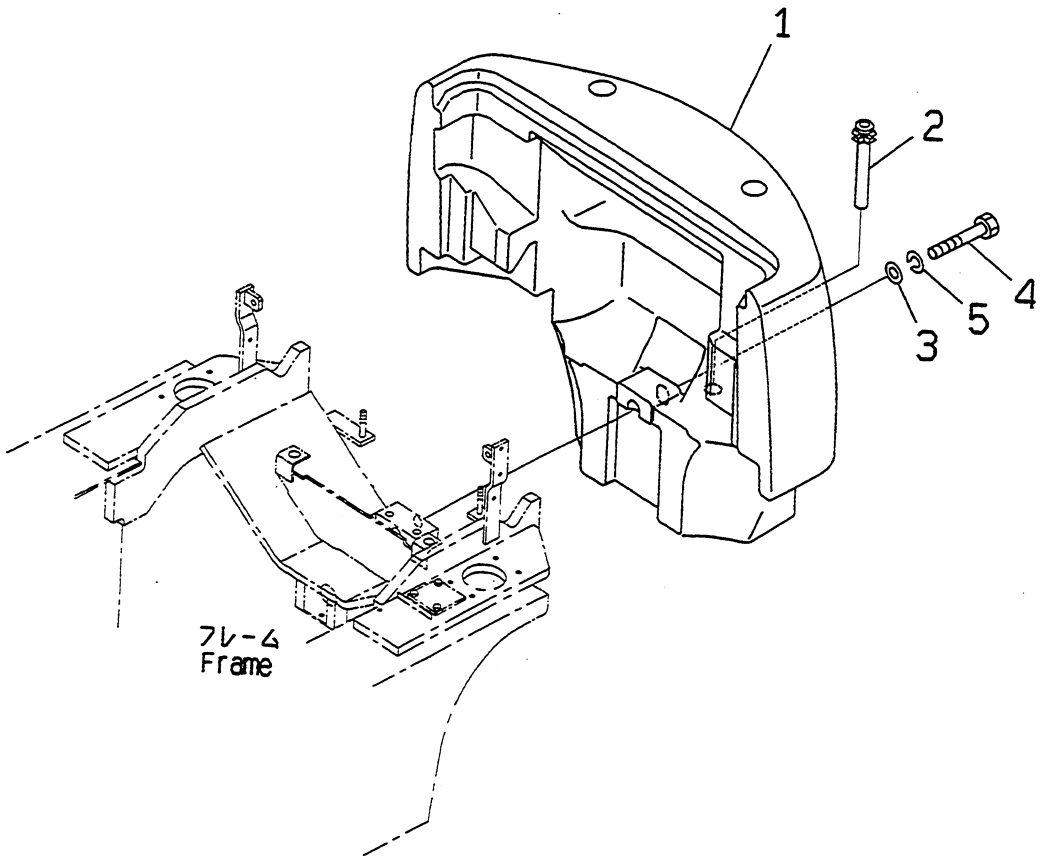

PUF1715

https://truckmanualshub.com/

FIG NO. : M4120-01A0

FG15H,FG18H

INDEX	PART NO.	DESCRIPTION	Q'TY	SERIAL NO.
1	3EA-43-A5210	WEIGHT,1.5 TON.....	1	600001A AND UP
	3EA-43-A5310	WEIGHT,1.8 TON.....	1	
2	3EA-43-21160	BAR.....	1	
3	3EP-41-11740	WASHER.....	1	
4	01011-82425	BOLT.....	1	
5	01602-22472	WASHER,SPRING.....	1	

https://truckmanualshub.com/

カウンタ ウェイト
FIG.M4120-01A1 COUNTER WEIGHT

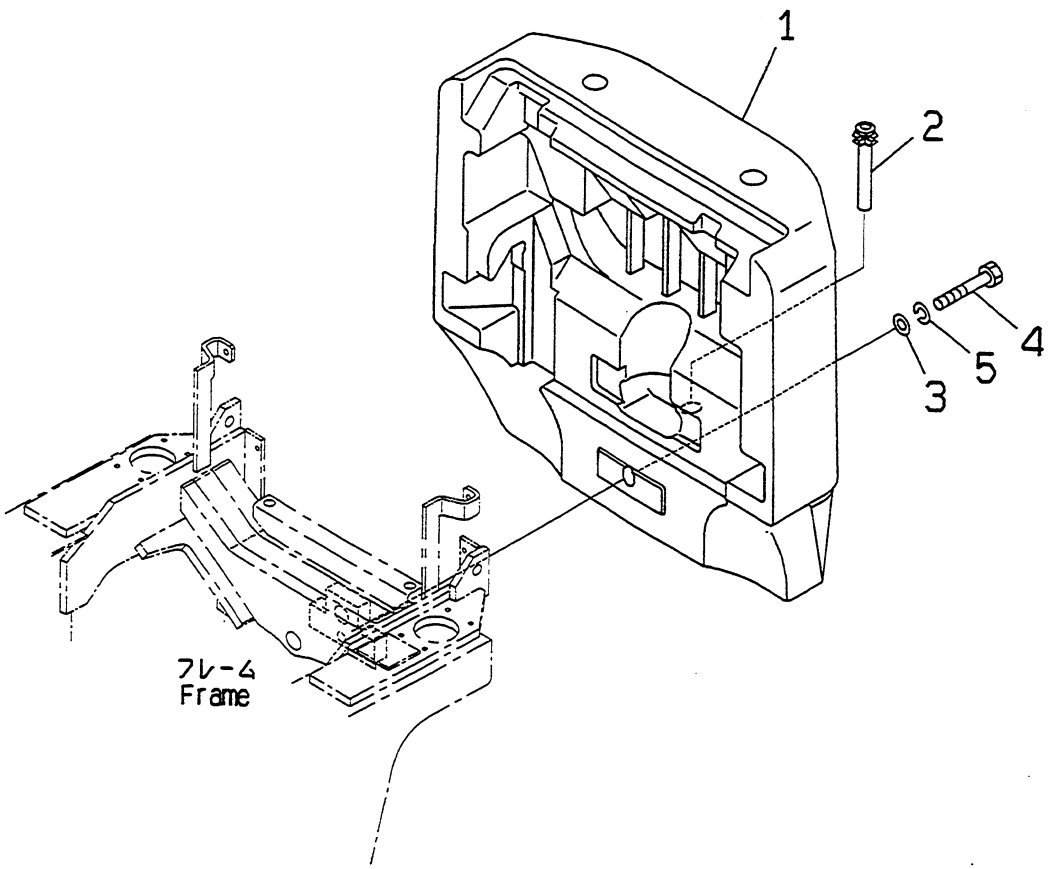

PUF1716

https://truckmanualshub.com/

FIG NO. : M4120-01A1

FG15S,FG18S

INDEX	PART NO.	DESCRIPTION	Q'TY	SERIAL NO.
1	3EA-43-A5510	WEIGHT,1.5 TON.....	1	600001A AND UP
	3EA-43-A5610	WEIGHT,1.8 TON.....	1	
2	3EA-43-21160	BAR.....	1	
3	3EP-41-11740	WASHER.....	1	
4	01011-82400	BOLT.....	1	
5	01602-22472	WASHER,SPRING.....	1	

https://truckmanualshub.com/

カウンタ ウェイト キャップ
FIG.M4150-01A0 COUNTER WEIGHT CAP

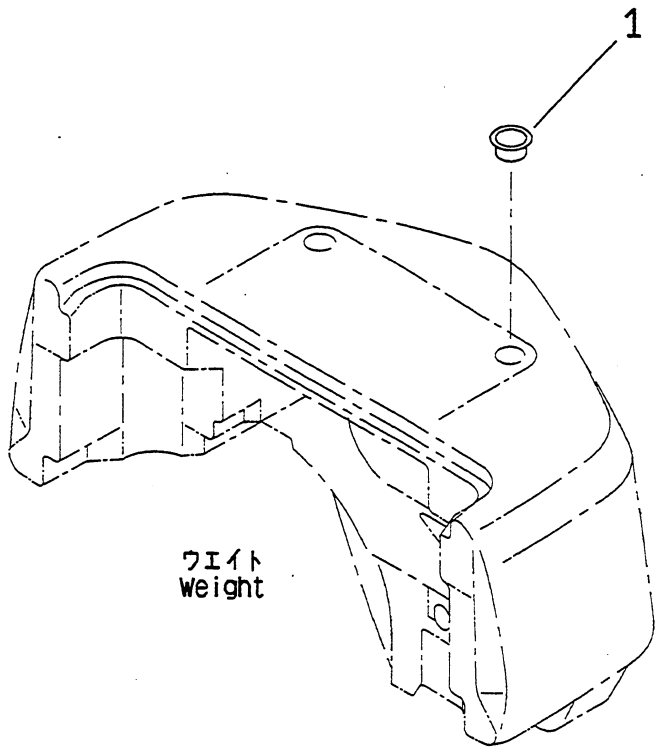

PAF0142

https://truckmanualshub.com/

FIG NO. : M4150-01A0

INDEX	PART NO.	DESCRIPTION	Q'TY	SERIAL NO.
1	3EB-43-31730	CAP.....	2	600001A AND UP

https://truckmanualshub.com/

フュエル キャップ
FIG.M4170-01A0 FUEL CAP

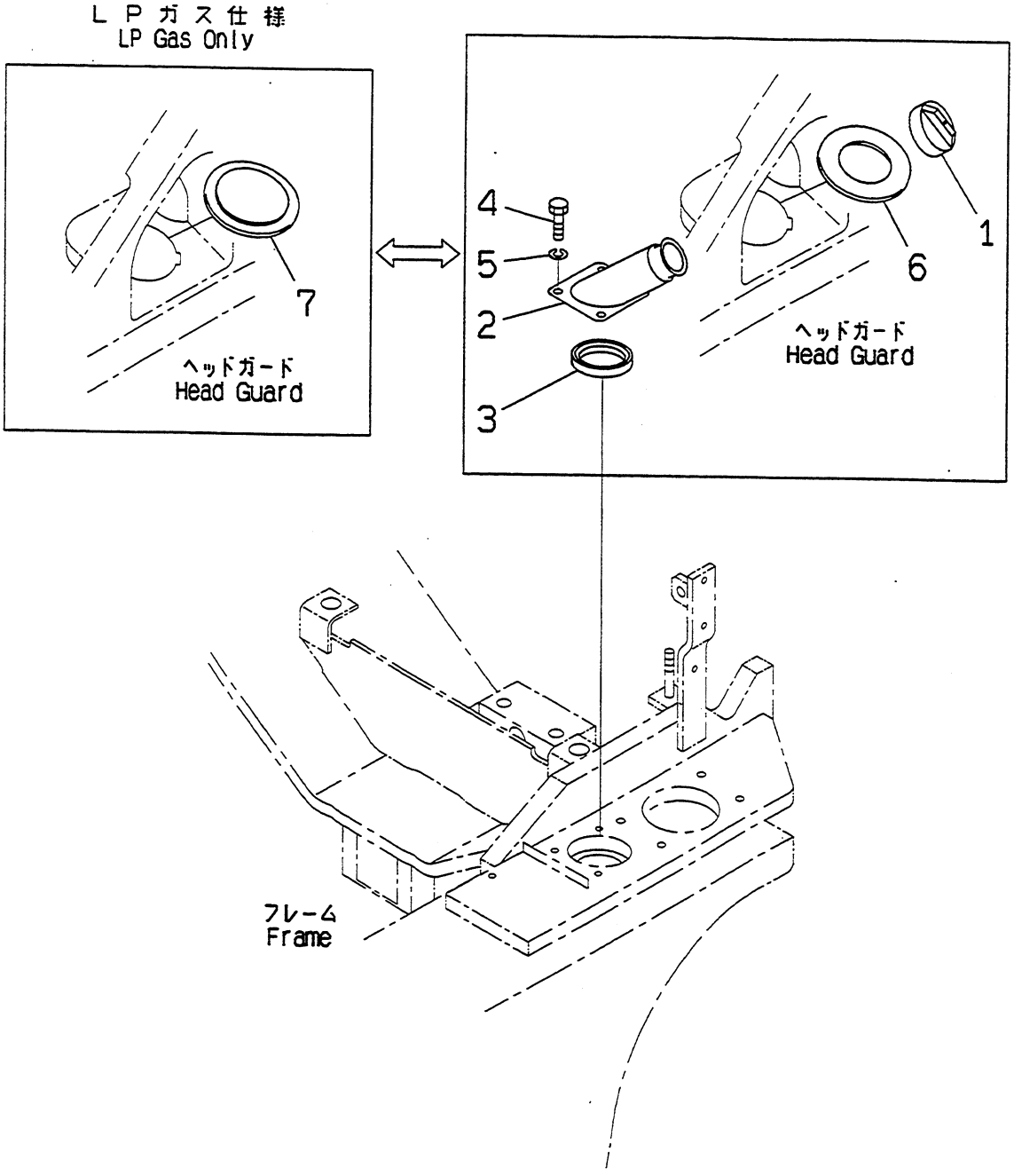

PUF1717

https://truckmanualshub.com/

FIG NO. : M4170-01A0

FG15H,FG18H

INDEX	PART NO.	DESCRIPTION	Q'TY	SERIAL NO.
1	3EB-41-31990	CAP.....	1	600001A AND UP
2	3EB-41-31421	PIPE.....	1	
3	3EA-42-35120	PACKING.....	1	
4	01010-80820	BOLT.....	3	
5	01602-20825	WASHER,SPRING.....	3	
6	3EB-51-31480	COVER.....	1	
7	3EB-41-36470	COVER,LPG ONLY.....	1	

https://truckmanualshub.com/

フュエル キャップ
FIG.M4170-01A1 FUEL CAP

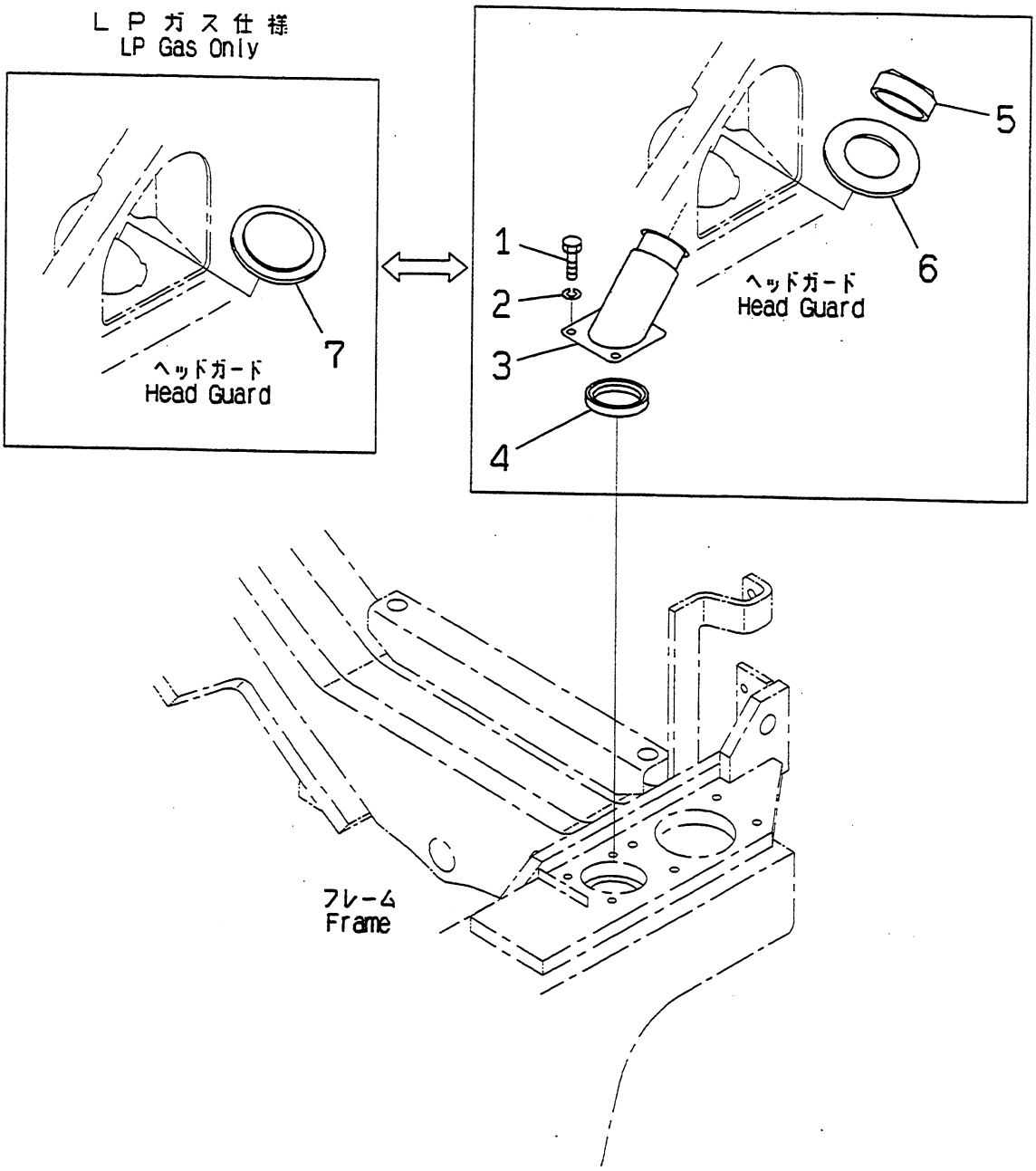

PUF1718

https://truckmanualshub.com/

FIG NO. : M4170-01A1

FG15S,FG18S

INDEX	PART NO.	DESCRIPTION	Q'TY	SERIAL NO.
1	01010-80820	BOLT	3	600001A AND UP
2	01602-20825	WASHER,SPRING	3	
3	3EA-42-35110	PIPE	1	
4	3EA-42-35120	PACKING	1	
5	3EB-41-31990	CAP	1	
6	3EB-51-31480	COVER	1	
7	3EB-41-36470	COVER,LPG ONLY	1	

https://truckmanualshub.com/

フレーム カバー (キ)
FIG.M4180-01A0 FRAME COVER (YELLOW)

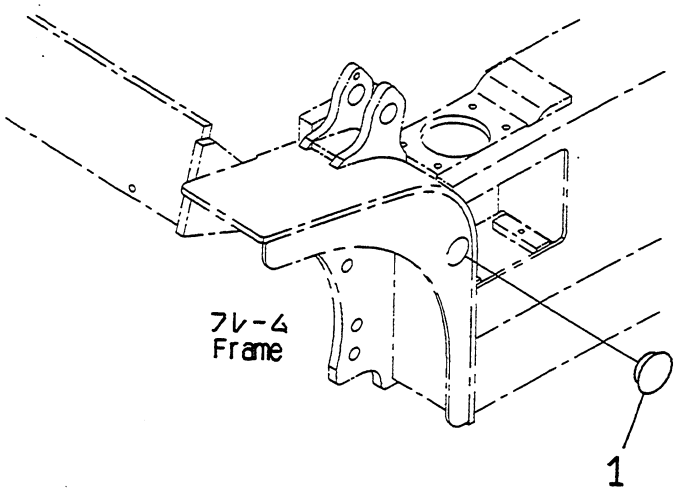

PUF1719

https://truckmanualshub.com/

FIG NO. : N4180-01A0

INDEX	PART NO.	DESCRIPTION	Q'TY	SERIAL NO.
1	3EA-42-35710	COVER...Yellow	1	600001A AND UP
1	3EA-52-21180	COVER...Black	1	

https://truckmanualshub.com/

This Page Left Intentionally Blank

KOMATSU

https://truckmanualshub.com/

KOMATSU

Overhead Guard And Operator's Compartment

AX SERIES

Guard And Operator's Compartment

https://truckmanualshub.com/

AX - STANDARD SEAT

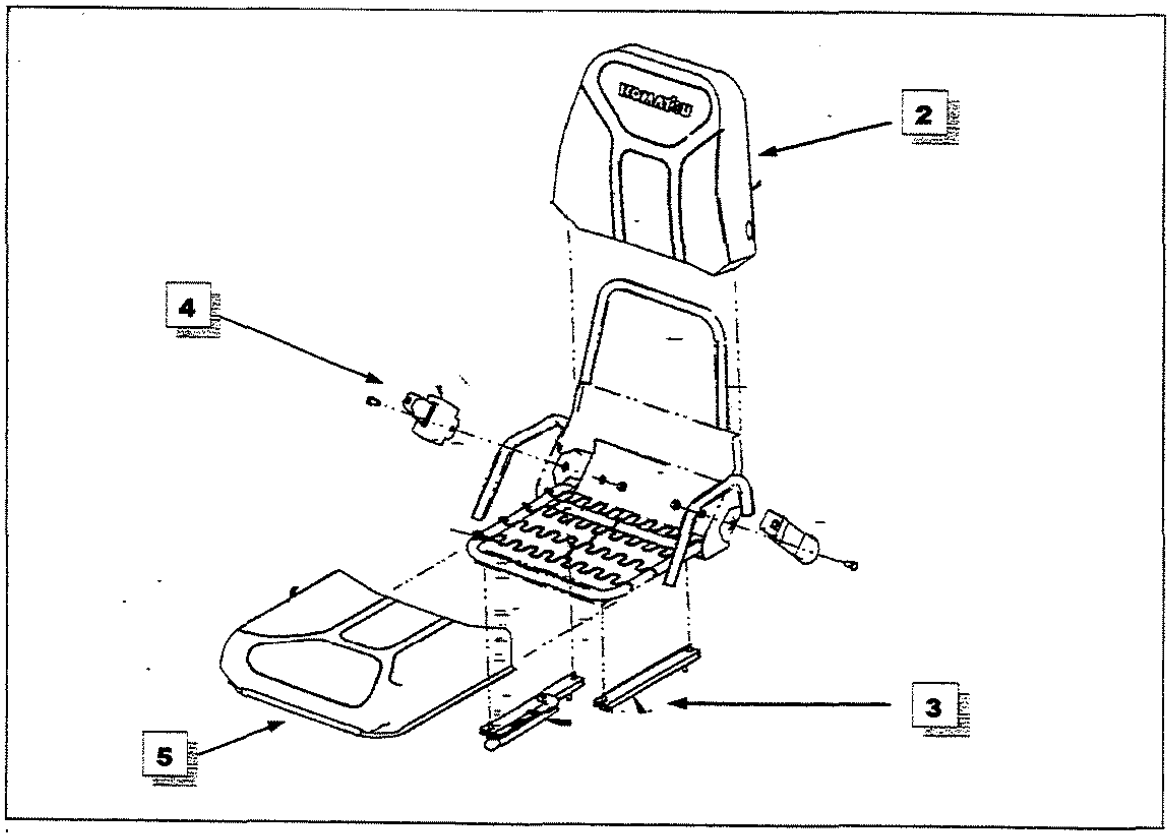

ITEM	PART NUMBER	DESCRIPTION	QTY.
1	**3EB-50-A5160**	SEAT ASSEMBLY	1
2	HO8005-2116E	BACK CUSHION KIT (KOMATSU LOGO)	1
3	**HO4845-016**	SLIDE RAIL KIT	1
4	**HOB3506**	SEAT BELT KIT	1
5	**HO8003-2113**	LOWER SEAT CUSHION KIT	1

https://truckmanualshub.com/

This Page Left Intentionally Blank

KOMATSU

https://truckmanualshub.com/

FIG. NO. : P4110-01A0A

AX - STANDARD SEAT

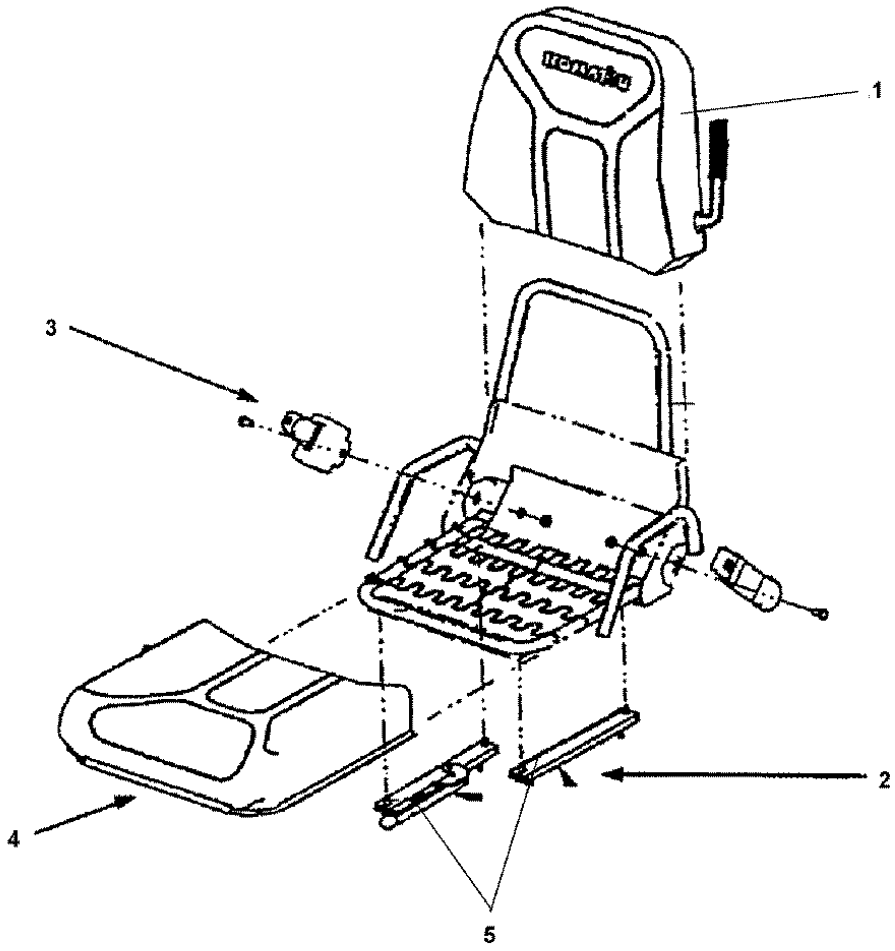

KFI0105104

https://truckmanualshub.com/

FIG. NO. : P4110-01A0A

FG15H/18H-16, FG15S/18S-16

INDEX	PART NO.	DESCRIPTION	Q'TY	SERIAL NO.
				650001A and Up
	3EB-50-A5181	SEAT ASSEMBLY	1	
1	3EB-50-A5180-2	BACK CUSHION	1	
2	*	RAIL (SEE ITEM 6)	1	
3	XP7153	SEAT BELT ASSEMBLY	1	
4	3EB-50-A5180-1	BOTTOM CUSHION	1	
5	3EB-50-A5190	ADJUSTER RAIL SET	1	
		NOTE: ADJUSTER RAIL HANDLE HAS BEEN CHANGED FOR EASE OF ADJUSTMENT AND TO ELIMINATE SCRAPING OF BONNET.		

https://truckmanualshub.com/

ﾀﾞｯｼｭﾎﾞｰﾄﾞ
FIG.P4120-01A0 DASHBOARD

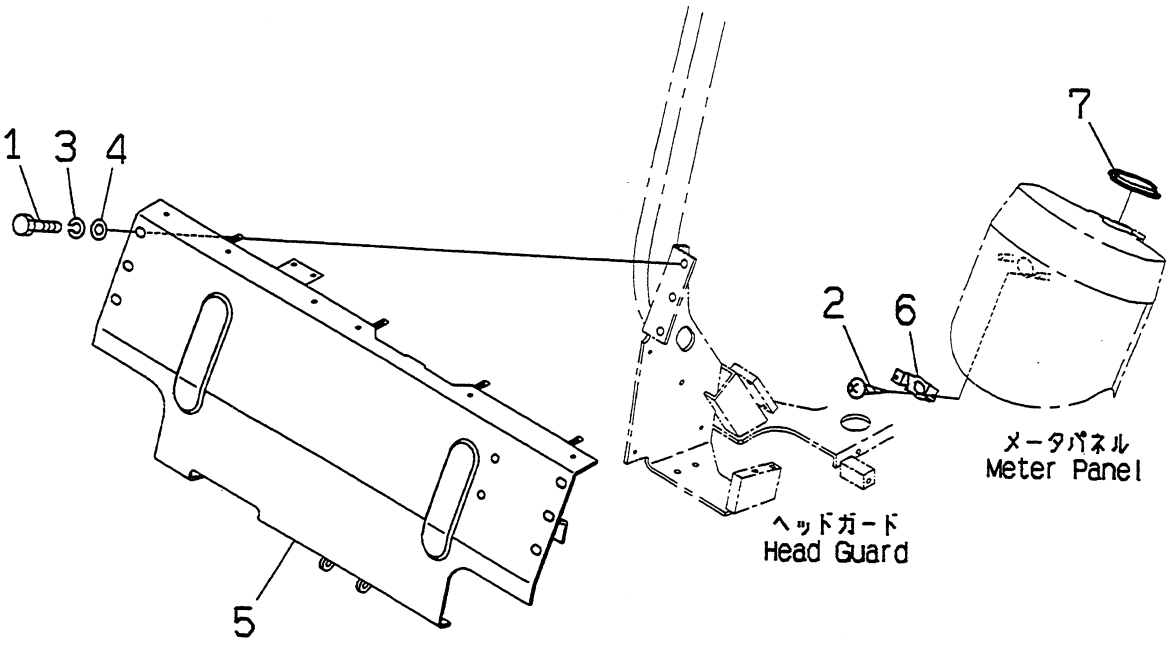

PUF1720

https://truckmanualshub.com/

FIG NO. : P4120-01A0

FG15H,FG18H

INDEX	PART NO.	DESCRIPTION	Q'TY	SERIAL NO.
1	01010-81025	BOLT	6	600001A - 650000A
2	01370-00410	SCREW	2	
3	01602-21030	WASHER,SPRING	6	
4	01643-31032	WASHER	6	
5	3EA-50-35110	BOARD,DASH	1	
6	3EB-50-35130	PLATE	1	
7	3EB-55-39160	COVER	1	

https://truckmanualshub.com/

FIG. NO. : P4120-01A0A **DASHBOARD**

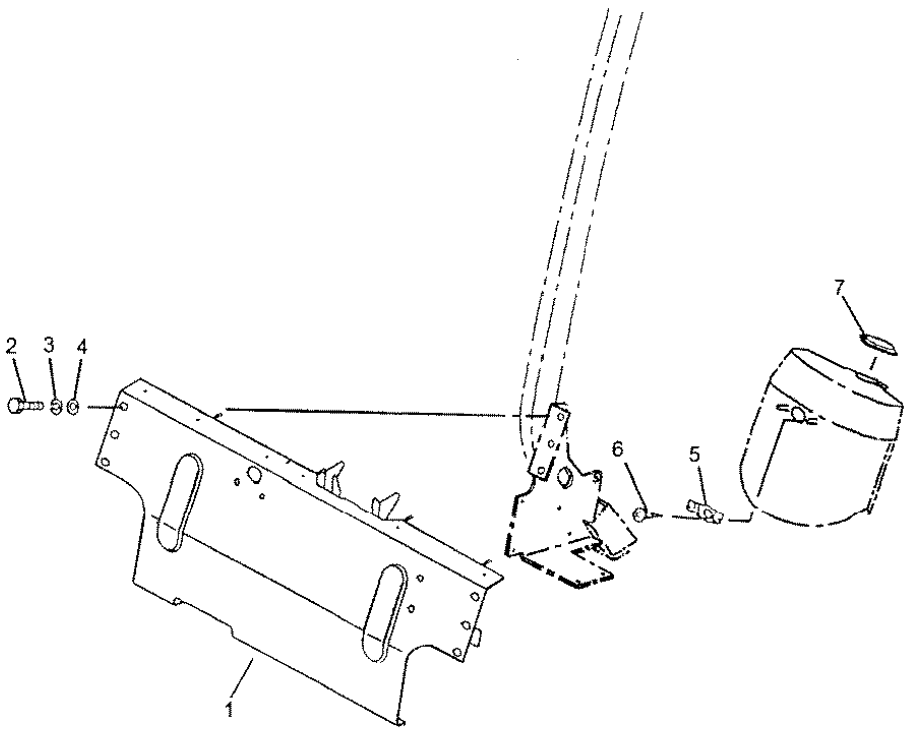

KFI12200007

https://truckmanualshub.com/

FIG. NO. : P4120-01A0A

FG15H-16, FG15S/18S-16

INDEX	PART NO.	DESCRIPTION	Q'TY	SERIAL NO.
				650001A and UP
1	3EA-50-35112	DASHBOARD (OUTDOOR)	1	
	3EA-50-A5612	DASHBOARD (INDOOR)	1	
2	01010-81025	BOLT	6	
3	01602-21030	WASHER, SPRING	6	
4	01643-31032	WASHER	1	
5	3EB-50-35130	PLATE	1	
6	01370-00410	SCREW	1	
7	3EB-55-39160	COVER	1	

https://truckmanualshub.com/

ﾀﾞｯｼｭﾎﾞｰﾄﾞ
FIG.P4120-01A1 DASHBOARD

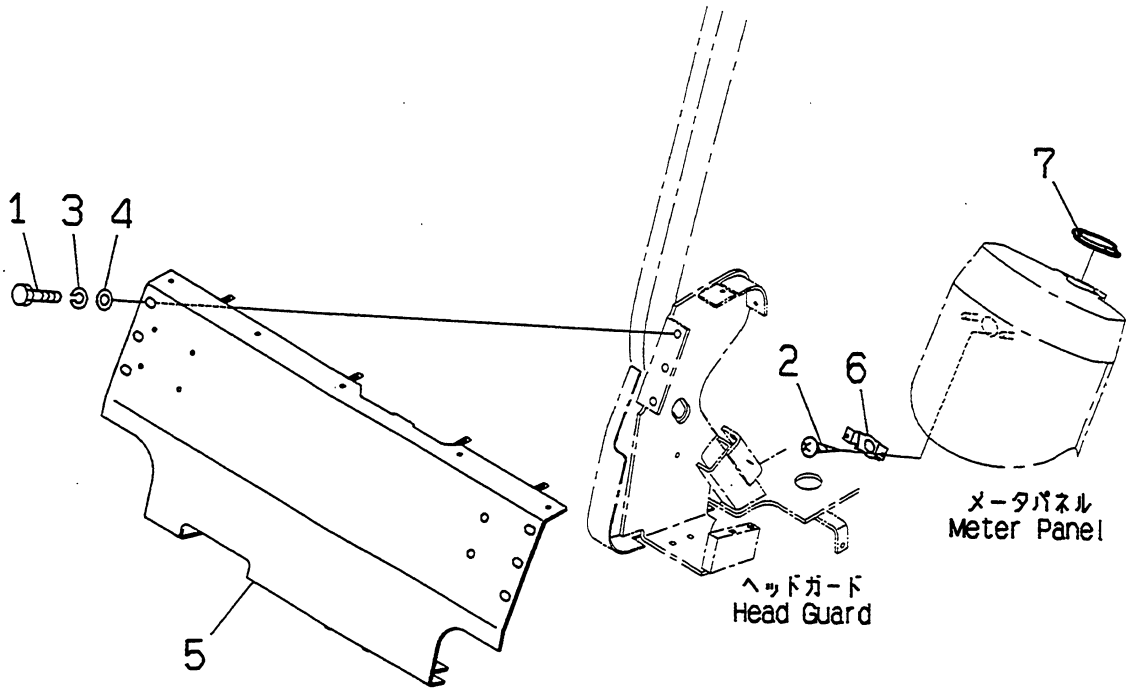

PUF1763

https://truckmanualshub.com/

FIG NO. : P4120-01A1

FG15S,FG18S

INDEX	PART NO.	DESCRIPTION	Q'TY	SERIAL NO.
1	01010-81025	BOLT	6	600001A AND UP
2	01370-00410	SCREW	2	
3	01602-21030	WASHER,SPRING	6	
4	01643-31032	WASHER	6	
5	3EA-50-A5610	BOARD,DASH	1	
6	3EB-50-35130	PLATE	1	
7	3EB-55-39160	COVER	1	

https://truckmanualshub.com/

ステップ オヨビ サイト カバー
FIG.P4140-01A0 STEP AND SIDE COVER

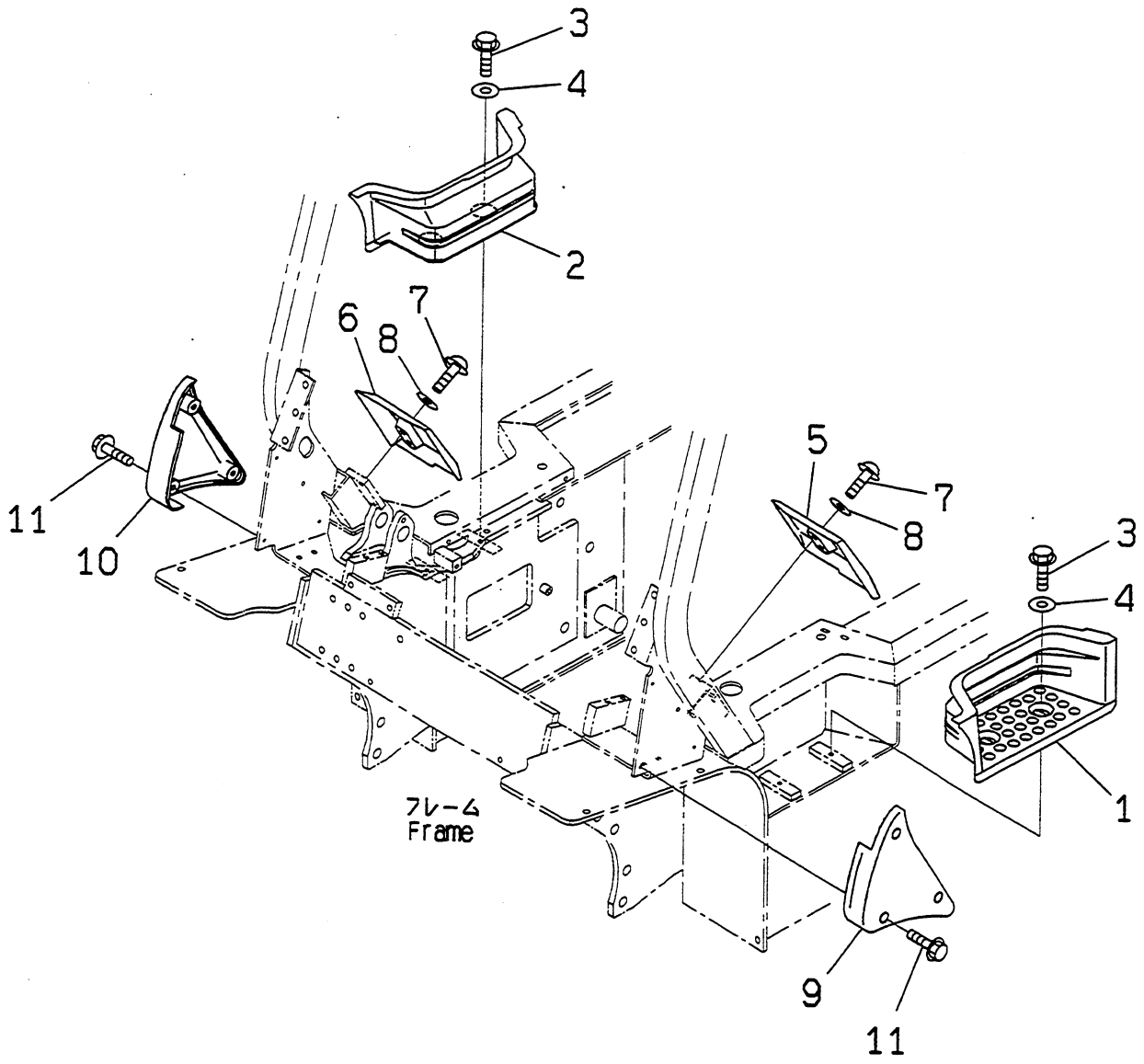

PUF1721

https://truckmanualshub.com/

FIG NO. : P4140-01A0

FG15H,FG18H

INDEX	PART NO.	DESCRIPTION	Q'TY	SERIAL NO.
1	3EA-50-32610	COVER,L.H.....	1	600001A AND UP
2	3EA-50-32620	COVER,R.H.....	1	
3	F1210-50816	BOLT.....	4	
4	3EA-50-32670	WASHER.....	4	
5	3EA-50-32630	COVER,L.H.....	1	
6	3EA-50-32640	COVER,R.H.....	1	
7	F1210-50816	BOLT.....	4	
8	3EA-50-32670	WASHER.....	4	
9	3EA-50-32650	COVER,L.H.....	1	
10	3EA-50-32660	COVER,R.H.....	1	
11	F1310-70616	BOLT.....	6	

https://truckmanualshub.com/

ステップ オヨビ サイト カバー
FIG.P4140-01A1 STEP AND SIDE COVER

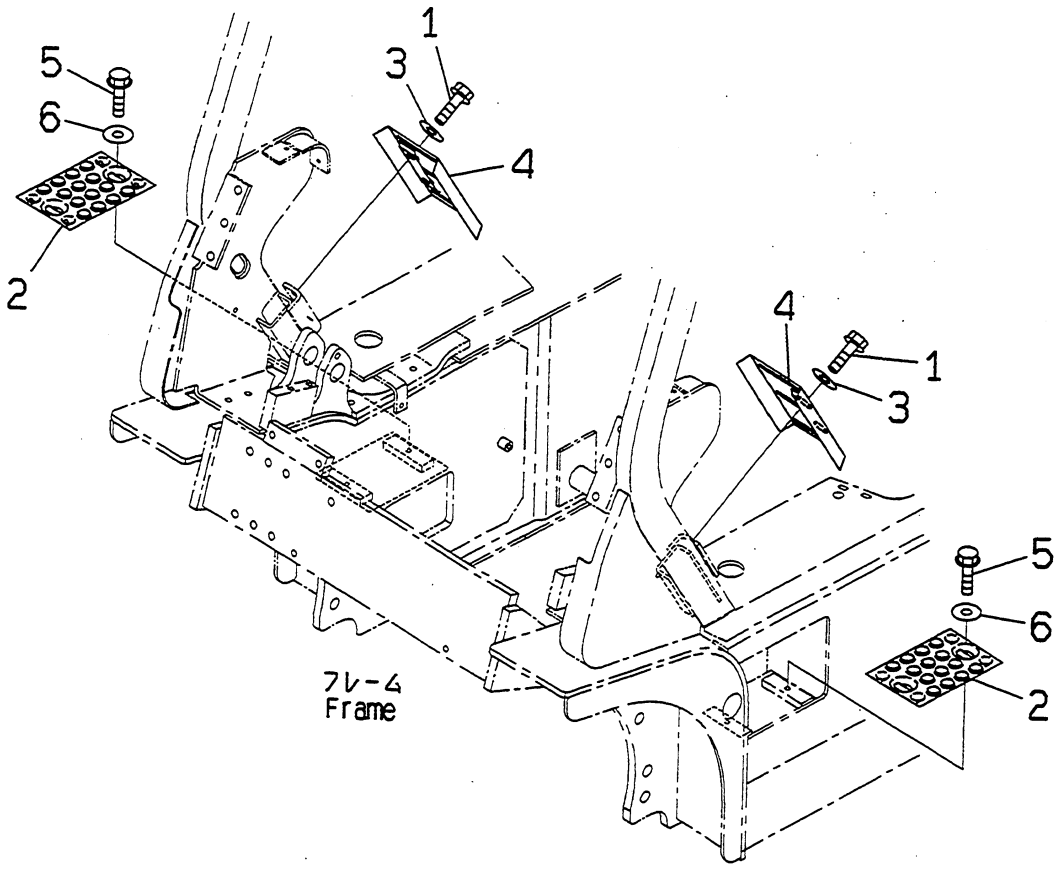

PUF1722

https://truckmanualshub.com/

FIG NO. : P4140-01A1

FG15S,FG18S

INDEX	PART NO.	DESCRIPTION	Q'TY	SERIAL NO.
1	F1210-50816	BOLT	4	600001A AND UP
2	3EA-50-A5760	COVER	2	
3	3EA-50-32670	WASHER	4	
4	3EA-50-35710	COVER	2	
5	F1210-50816	BOLT	4	
6	3EA-50-32670	WASHER	4	

https://truckmanualshub.com/

フロア マット
FIG.P4150-01A0 FLOOR MAT

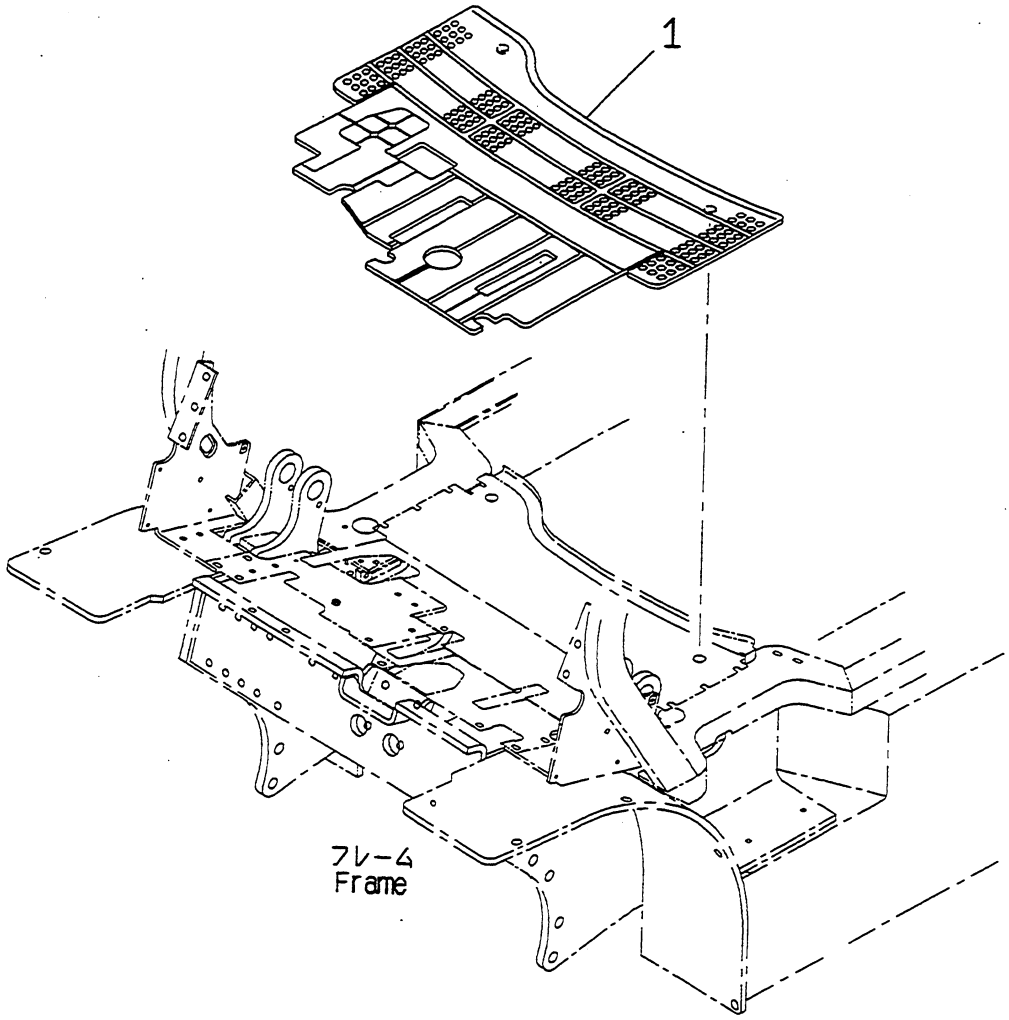

PAF0147

https://truckmanualshub.com/

FIG NO. : P4150-01A0

FG15H,FG18H

INDEX	PART NO.	DESCRIPTION	Q'TY	SERIAL NO.
1	3EB-50-33511	MAT,(CLUTCH SPEC.).....	1	600001A AND UP
	3EB-50-33611	MAT,(TORQUE CONVERTER SPEC.).....	1	

https://truckmanualshub.com/

フロア マット
FIG.P4150-01A1 FLOOR MAT

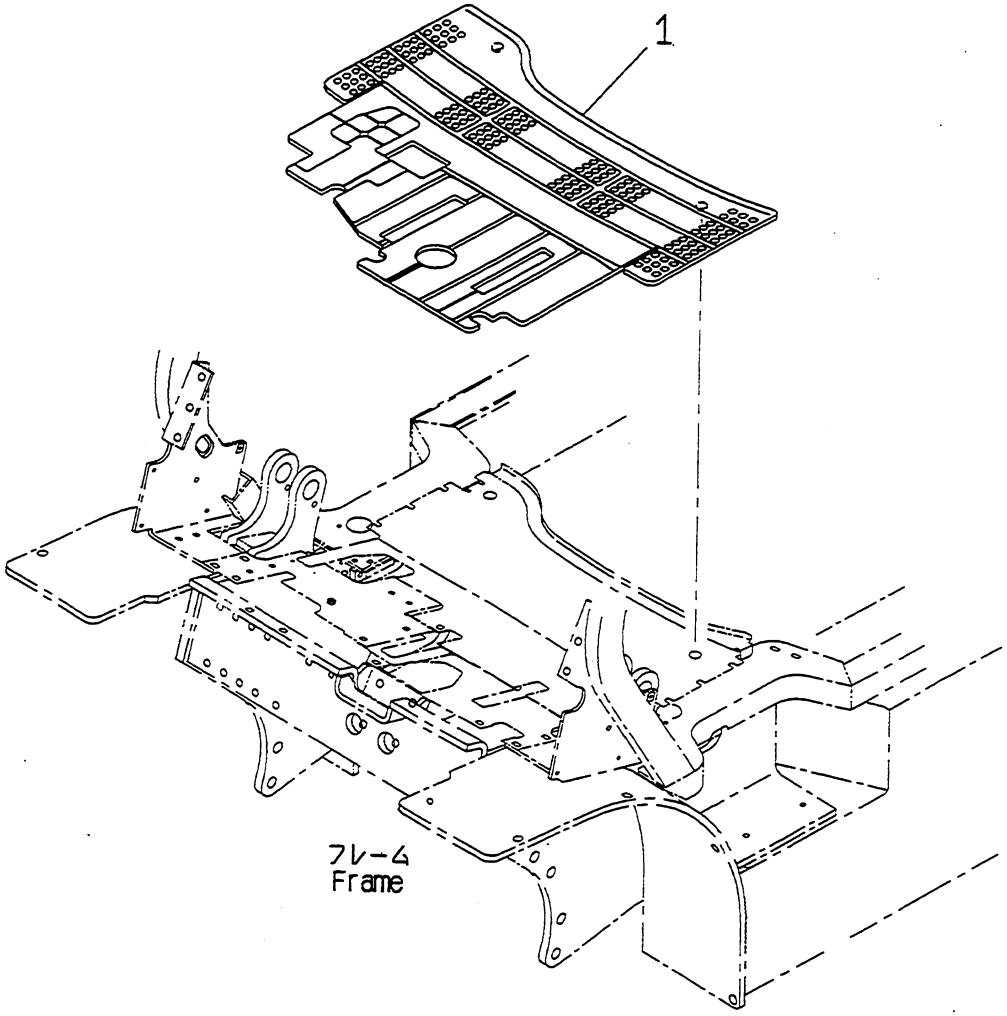

PAF0147

https://truckmanualshub.com/

INDEX	PART NO.	DESCRIPTION	Q'TY	SERIAL NO.
1	3EA-50-35610	MAT.....	1	600001A AND UP

https://truckmanualshub.com/

フロア プレート (クラッチ シヨウ)
FIG.P4160-01A0 FLOOR PLATE (CLUTCH SPEC.)

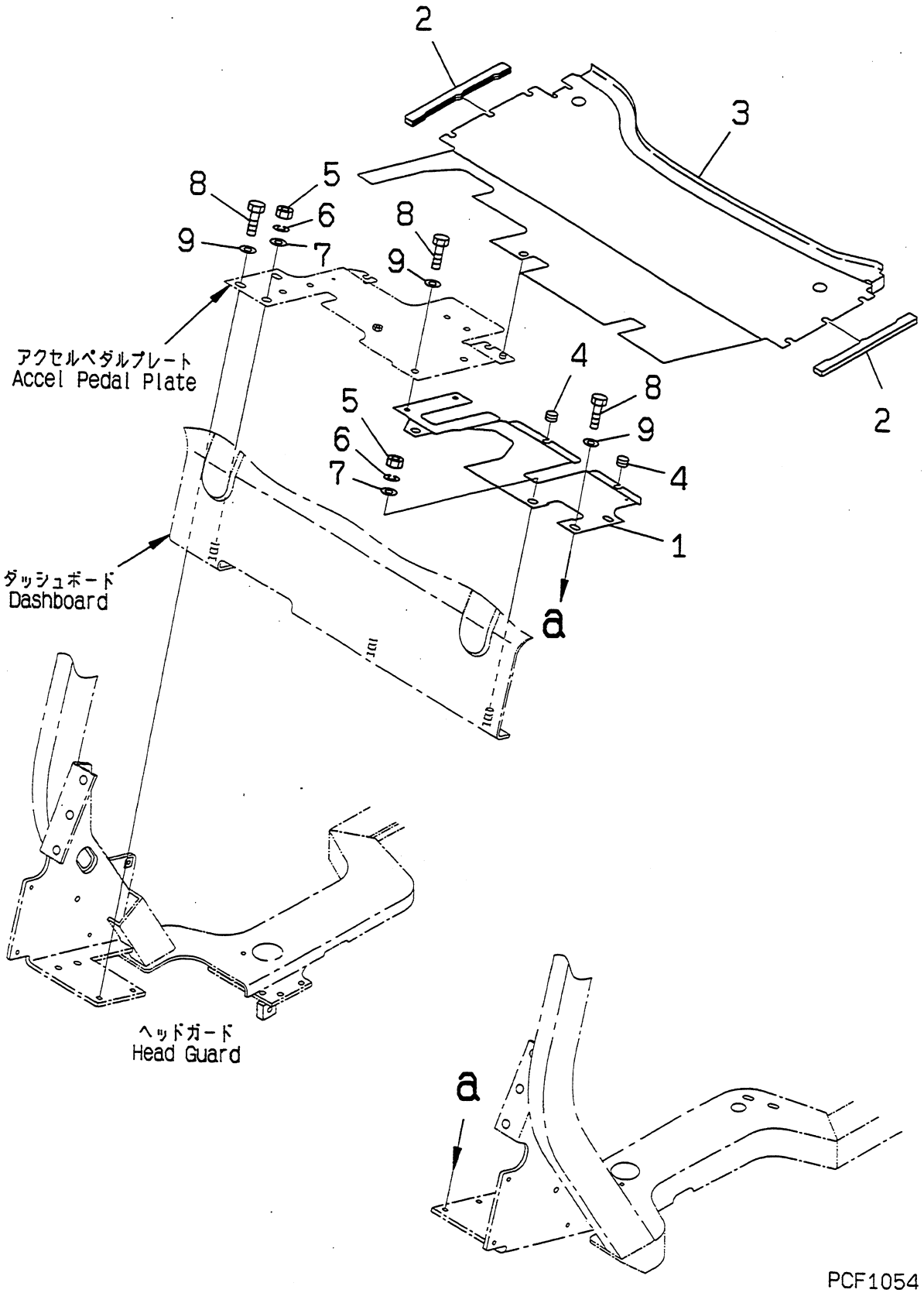

https://truckmanualshub.com/

INDEX	PART NO.	DESCRIPTION	Q'TY	SERIAL NO.
1	3EA-50-33110	PLATE,FLOOR	1	600001A AND UP
2	3EB-50-33150	RUBBER	2	
3	3EB-50-33131	PLATE,FLOOR	1	
4	3EB-50-33160	RUBBER	2	
5	01580-10806	NUT	3	
6	01602-20825	WASHER,SPRING	3	
7	34A-50-22140	WASHER	3	
8	F1110-50820	BOLT	6	
9	34A-50-22140	WASHER	6	

https://truckmanualshub.com/

フロア プレート (トルク コンバータ シヨウ)
FIG.P4160-01A1 FLOOR PLATE (TORQUE CONVERTER SPEC.)

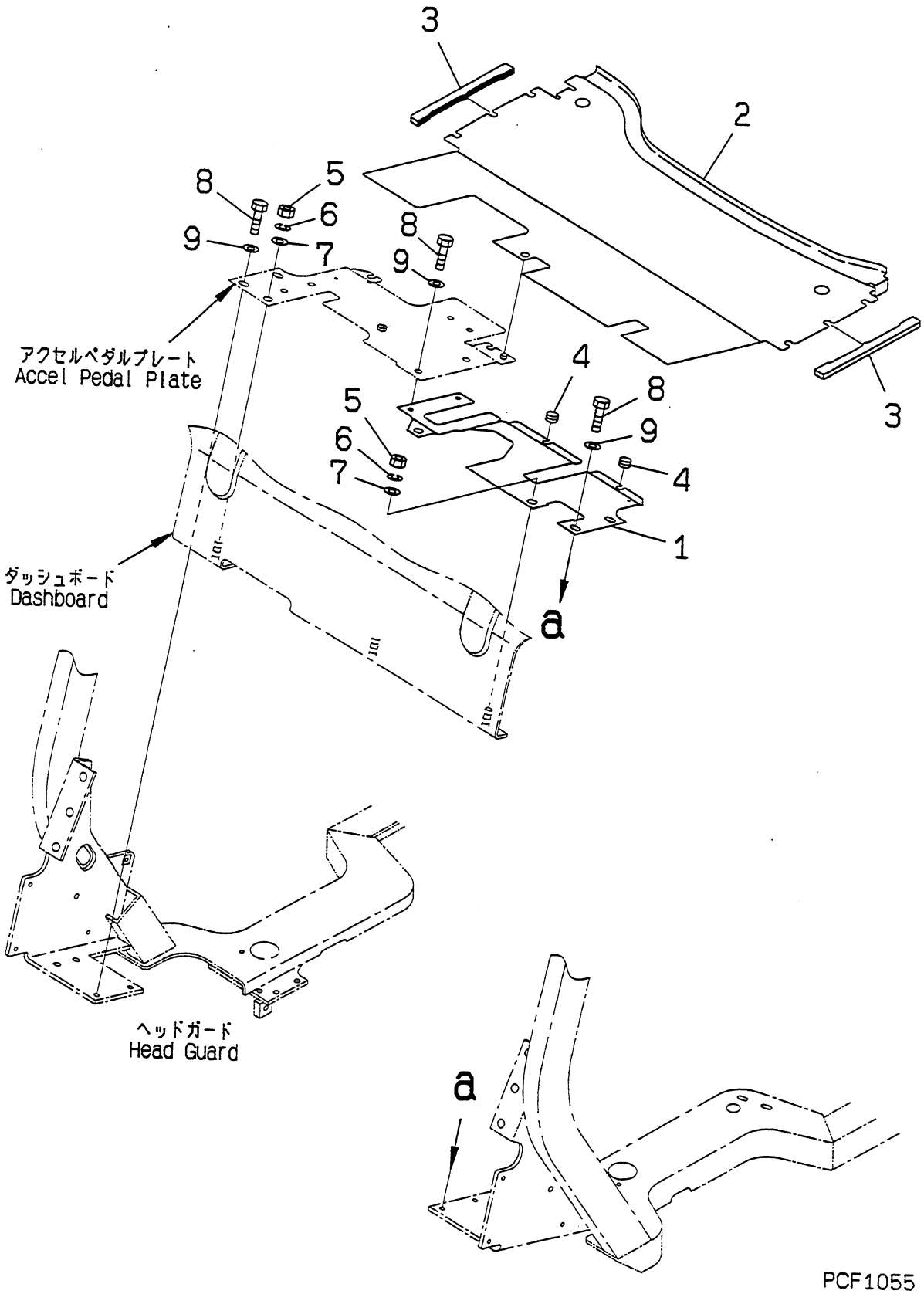

https://truckmanualshub.com/

FIG NO. : P4160-01A1

FG15H,FG18H

INDEX	PART NO.	DESCRIPTION	Q'TY	SERIAL NO.
1	3EA-50-33110	PLATE,FLOOR	1	600001A AND UP
2	3EB-50-33231	PLATE,FLOOR	1	
3	3EB-50-33150	RUBBER	2	
4	3EB-50-33160	RUBBER	2	
5	01580-10806	NUT	3	
6	01602-20825	WASHER,SPRING	3	
7	34A-50-22140	WASHER	3	
8	F1110-50820	BOLT	6	
9	34A-50-22140	WASHER	6	

https://truckmanualshub.com/

フロア プレート
FIG.P4160-01A2 FLOOR PLATE

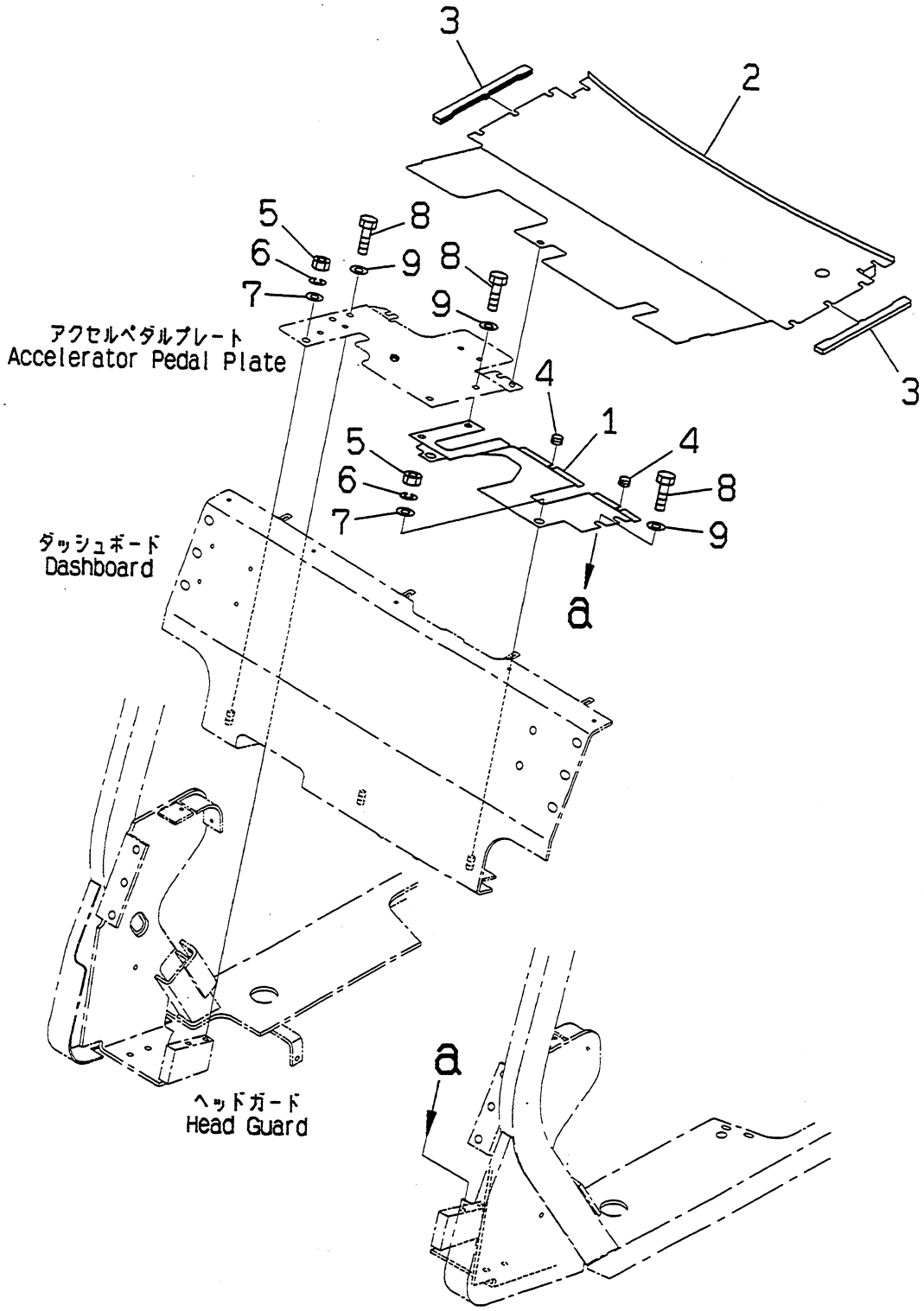

PUF1723

https://truckmanualshub.com/

FIG NO. : P4160-01A2

FG15S,FG18S

INDEX	PART NO.	DESCRIPTION	Q'TY	SERIAL NO.
1	3EA-50-33110	PLATE,FLOOR	1	600001A AND UP
2	3EA-50-A5810	PLATE,FLOOR	1	
3	3EB-50-33150	RUBBER	2	
4	3EB-50-33160	RUBBER	2	
5	01580-10806	NUT	3	
6	01602-20825	WASHER,SPRING	3	
7	34A-50-22140	WASHER	3	
8	F1110-50820	BOLT	6	
9	34A-50-22140	WASHER	6	

https://truckmanualshub.com/

ﾀﾞｯｼｭﾎﾞｰﾄﾞ ｶﾊﾞｰ (2 ﾚﾝ ﾏﾀﾊ 3 ﾚﾝ ｺﾝﾄﾛｰﾙ ﾊﾞﾙﾌﾞ ﾖｳ)

FIG.P4170-01A0 DASHBOARD COVER (FOR 2-SPOOL OR 3-SPOOL CONTROL VALVE)

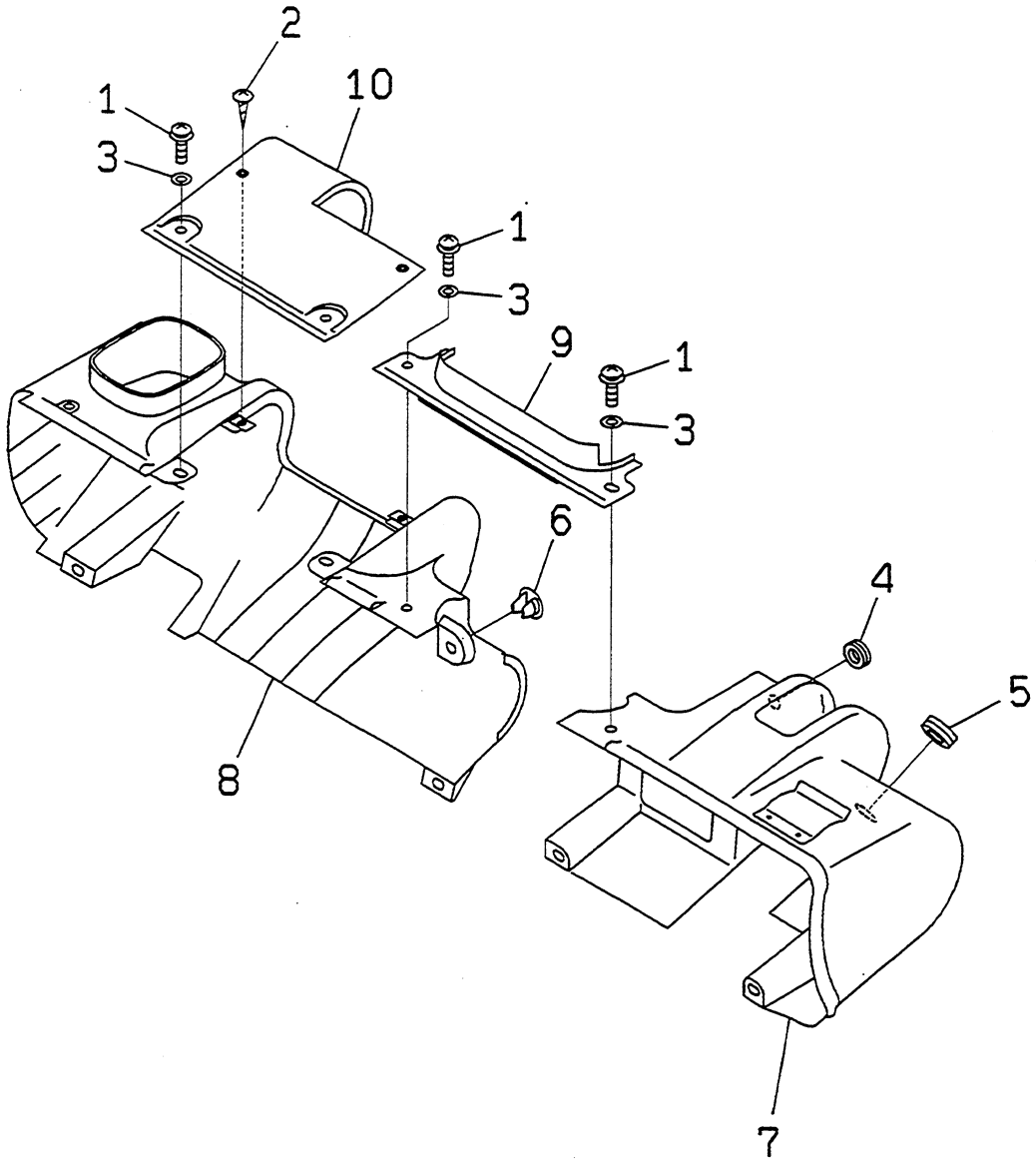

PUF1724

https://truckmanualshub.com/

FIG NO. : P4170-01A0

FG15H,FG18H

INDEX	PART NO.	DESCRIPTION	Q'TY	SERIAL NO.
1	F1310-70616	BOLT	10	600001A - 650000A
2	01370-40416	SCREW	3	
3	01642-40810	WASHER	10	
4	09415-00706	CAP	1	
5	09415-01610	CAP	1	
6	3EB-50-21150	CLIP	1	
7	3EB-50-32510	COVER,L.H	1	
8	3EB-50-32520	COVER,R.H	1	
9	3EB-50-35330	COVER	1	
10	3EB-50-32540	COVER	1	

https://truckmanualshub.com/

FIG. NO. : P4170-01A0A DASHBOARD COVER (FOR 2-SPOOL OR 3-SPOOL CONTROL VALVE)

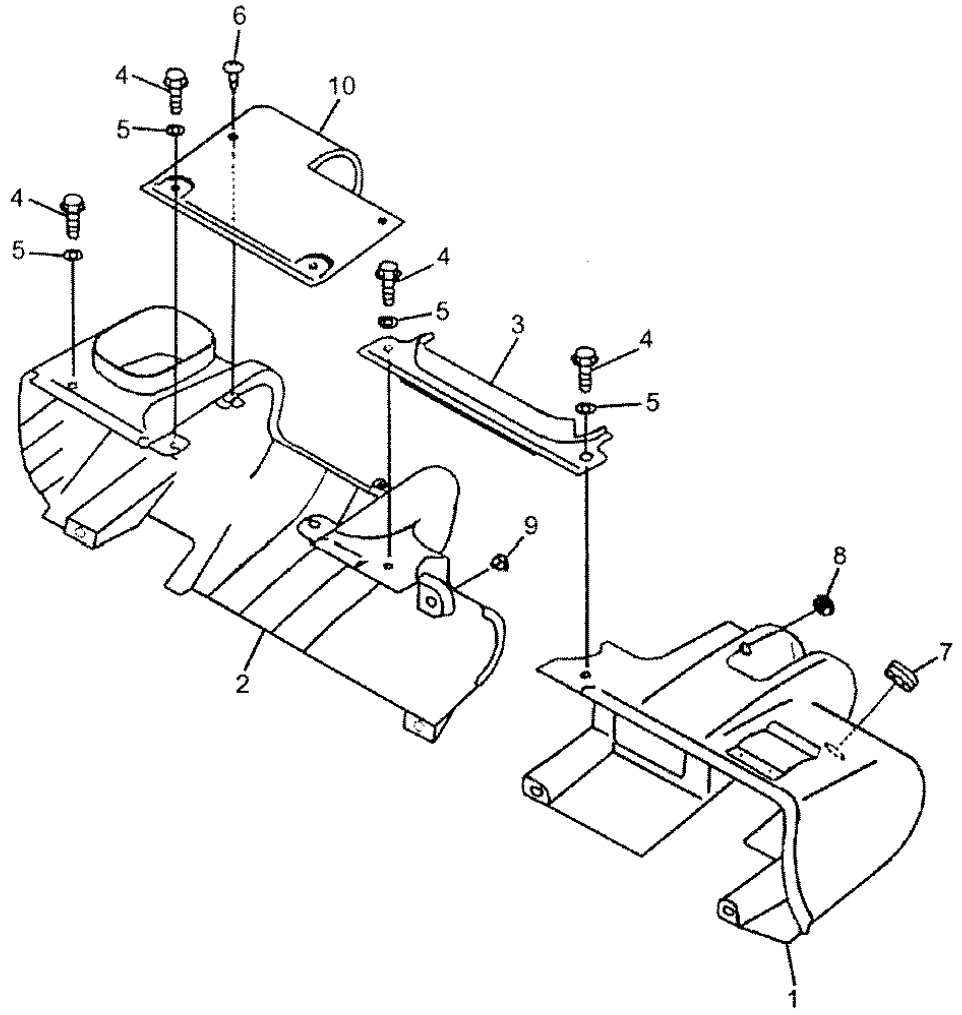

KFI12200009

https://truckmanualshub.com/

FIG. NO. : P4170-01A0A

FG15H/18H-16

INDEX	PART NO.	DESCRIPTION	Q'TY	SERIAL NO.
				650001A and Up
1	3EB-50-A5670YD	L.H. COVER	1	
2	3EB-50-A5660YD	R.H. COVER	1	
3	3EB-50-A5610	COVER	1	
4	F1310-70616	BOLT	10	
5	01642-40810	WASHER	10	
6	01370-40416	SCREW	3	
7	09415-01610	GROMMET	1	
8	09415-00706	GROMMET	1	
9	3EB-50-21150	CLIP	1	
10	3EB-50-A5680	COVER (2/3-WAY CONTROL VALVE) ...	1	
	3EB-50-A5690	COVER (4/5-WAY CONTROL VALVE) ...	1	

https://truckmanualshub.com/

ﾀﾞｯｼｭﾎﾞｰﾄﾞ ｶﾊﾞｰ (4 ﾚﾝ ﾏﾀﾊ 5 ﾚﾝ ｺﾝﾄﾛｰﾙ ﾊﾞﾙﾌﾞ ﾖｳ)

FIG.P4170-01A1 DASHBOARD COVER (FOR 4-SPOOL CONTROL VALVE)

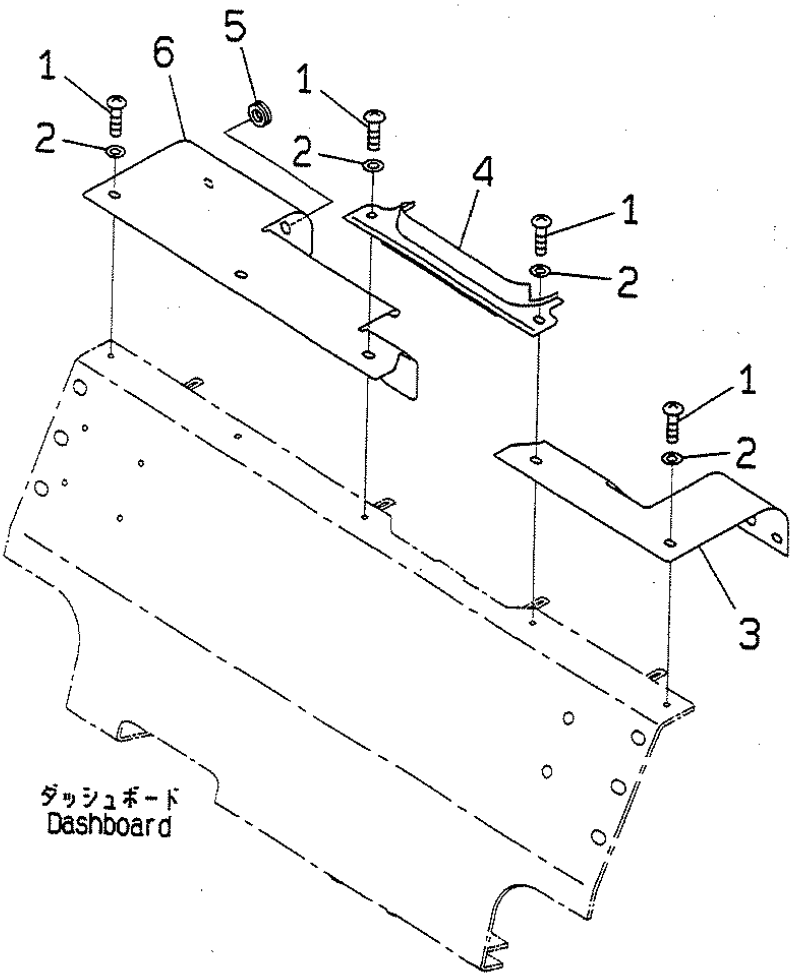

PUF1725

https://truckmanualshub.com/

FIG NO. : P4170-01A1

FG15S,FG18S

INDEX	PART NO.	DESCRIPTION	Q'TY	SERIAL NO.
1	01220-70616	SCREW	8	600001A - 650000A
2	01642-40608	WASHER	8	
3	3EA-50-A5711	COVER	1	
4	3EB-50-35330	COVER	1	
5	09415-00706	CAP	1	
6	3EA-50-A5730	PANEL	1	

https://truckmanualshub.com/

FIG. NO. : P4170-01A1A DASHBOARD COVER (FOR 4-SPOOL CONTROL VALVE)

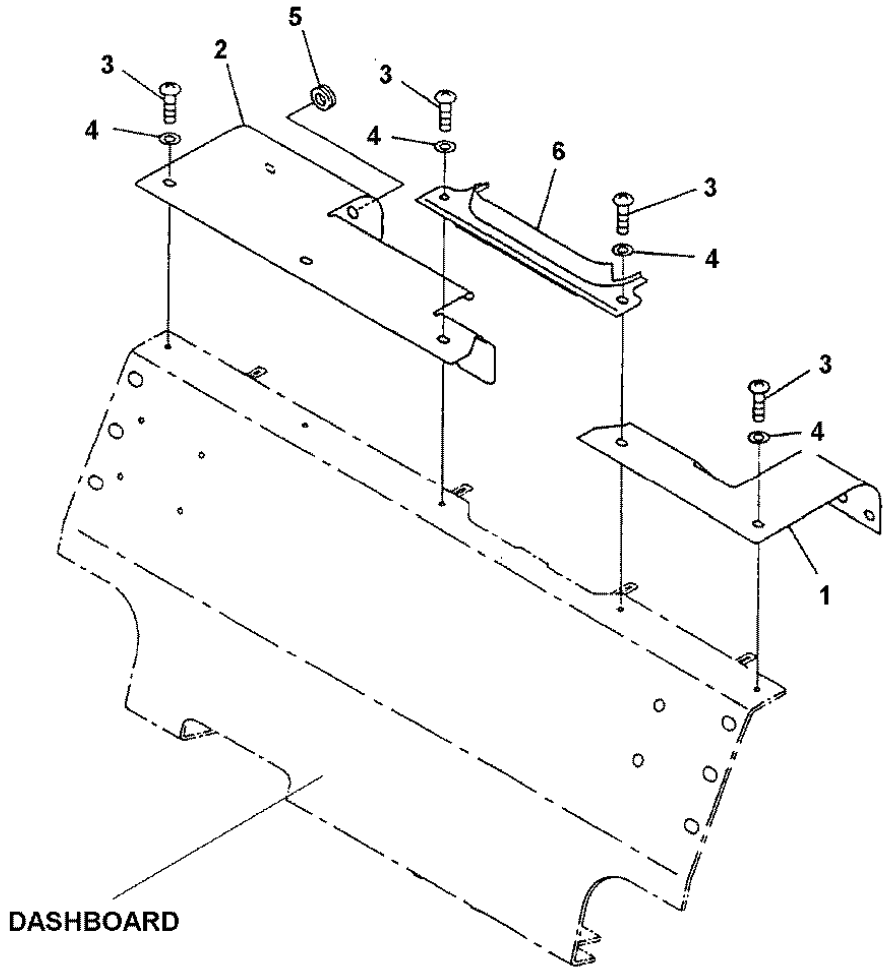

KFI010402

https://truckmanualshub.com/

FIG. NO. : P4170-01A1A

FG15S/18S-16

INDEX	PART NO.	DESCRIPTION	Q'TY	SERIAL NO.
				650001A and Up
1	3EA-50-A5712YD	L.H. PANEL	1	
2	3EA-50-A5730YD	R.H. PANEL	1	
3	01220-70616	SCREW	8	
4	01642-40608	WASHER	8	
5	09415-00706	GROMMET	1	
6	3EB-50-35330	COVER	1	

https://truckmanualshub.com/

ﾀﾞｯｼｭﾎﾞｰﾄﾞ ｶﾊﾞｰ (ﾋｭｰｽﾞ ﾎﾞｯｸｽ ﾒｸｼ ﾌﾞﾋﾝ) (ｸﾗｯﾁ ｼﾖｳ)

FIG.P4170-11A0 DASHBOARD COVER (FUSE BOX BLIND PARTS) (CLUTCH SPEC.)

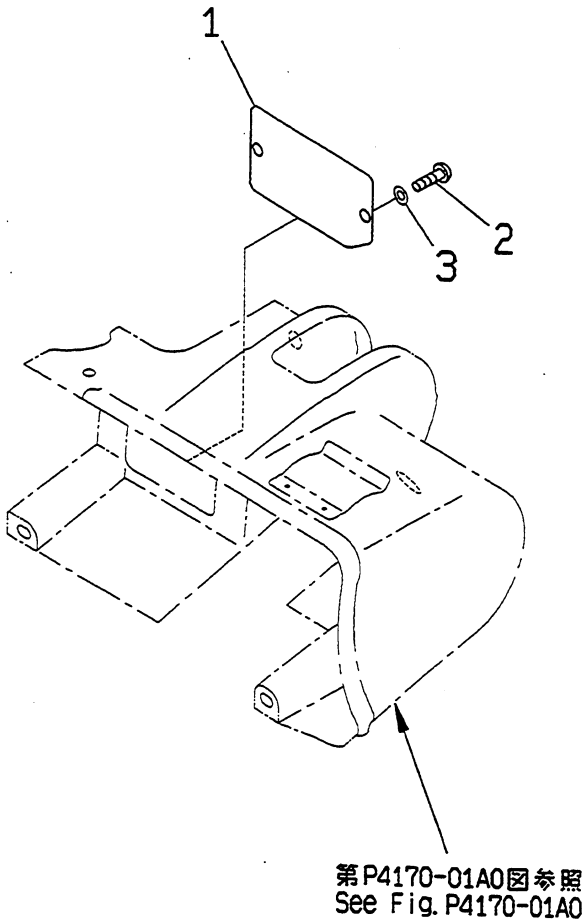

PUF1726

https://truckmanualshub.com/

FIG NO. : P4170-11A0

FG15H

INDEX	PART NO.	DESCRIPTION	Q'TY	SERIAL NO.
1	3EB-50-35350	COVER.....	1	600001A AND UP
2	01220-70616	SCREW.....	2	
3	01642-40608	WASHER.....	2	

https://truckmanualshub.com/

FIG.P4170-11A1 ﾀﾞｯｼｭﾎﾞｰﾄﾞ ｶﾊﾞｰ (ﾋｭｰｽﾞ ﾎﾞｯｸｽ ﾒｸｼﾞ ﾌﾞﾋﾝ) (ﾄﾙｸ ｺﾝﾊﾞｰﾀ ｼﾖｳ)
DASHBOARD COVER (FUSE BOX BLIND PARTS) (TORQUE CONVERTER SPEC.)

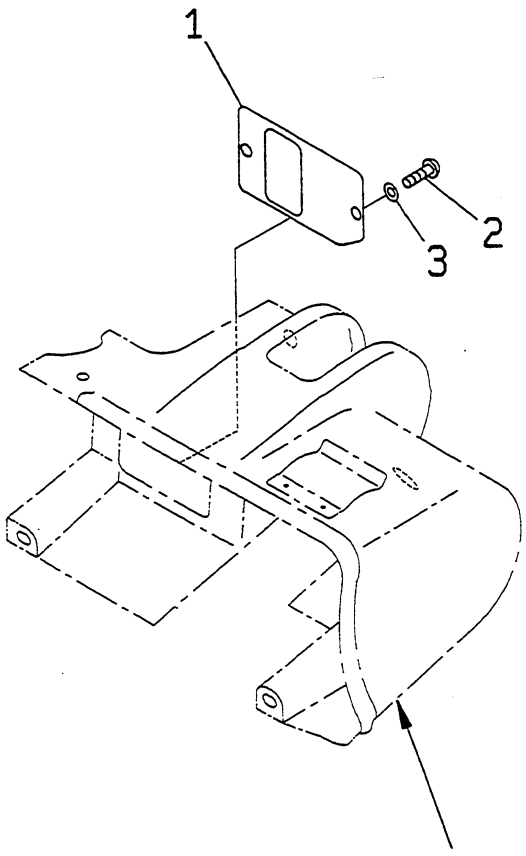

PUF1727

https://truckmanualshub.com/

INDEX	PART NO.	DESCRIPTION	Q'TY	SERIAL NO.
1	3EB-50-35360	COVER.....	1	600001A AND UP
2	01220-70616	SCREW.....	2	
3	01642-40608	WASHER.....	2	

https://truckmanualshub.com/

ボンネット
FIG.P4180-01A0 BONNET

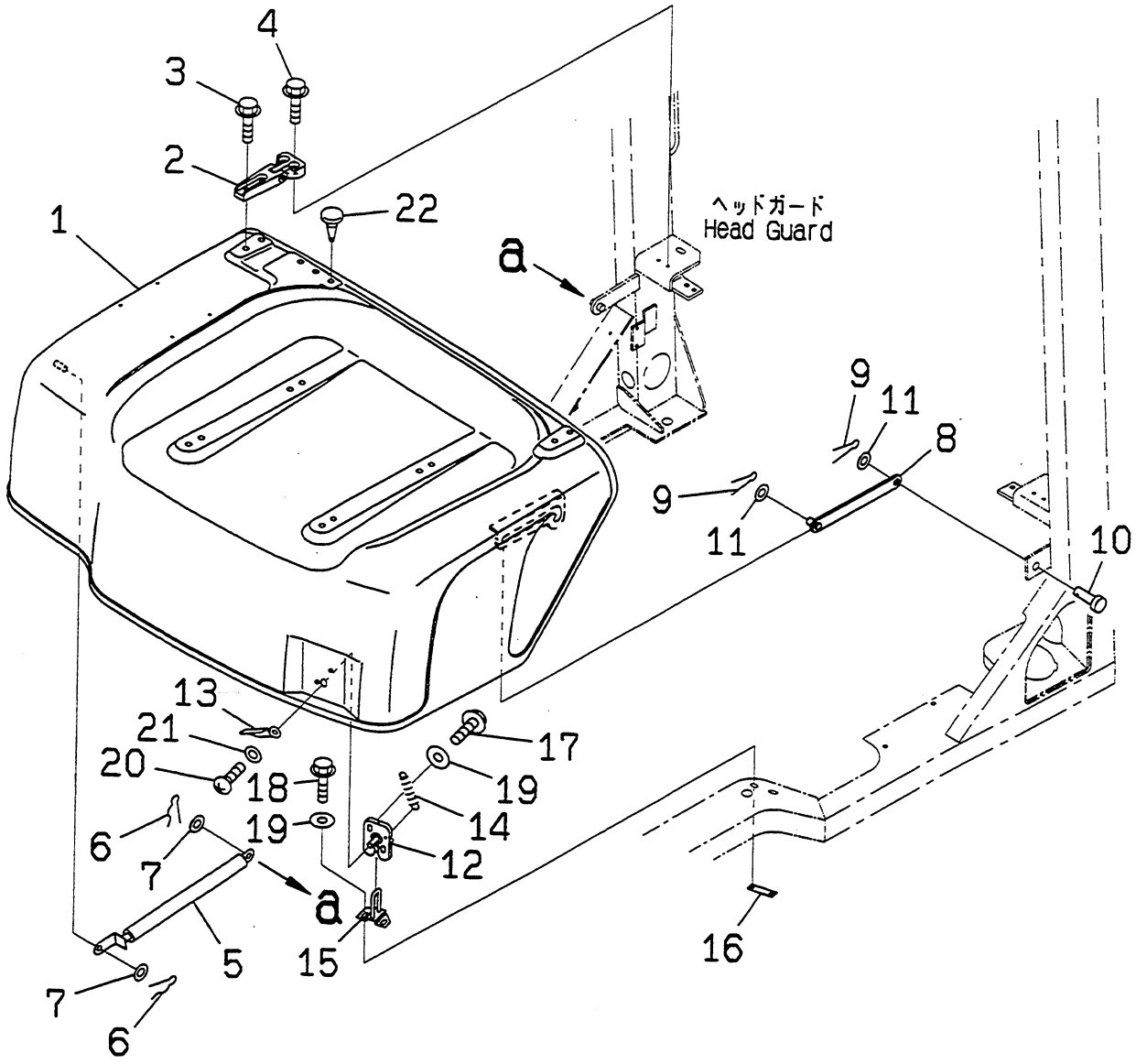

PCF1059

https://truckmanualshub.com/

FIG NO. : P4180-01A0

FG15H,FG18H

INDEX	PART NO.	DESCRIPTION	Q'TY	SERIAL NO.
1	3EB-50-31112	BONNET	1	600001A AND UP
2	3EB-50-31120	HINGE	2	
3	F1110-50625	BOLT	4	
4	F1110-50620	BOLT	4	
5	3EB-50-5111	STAY	1	
6	04052-01038	PIN,SNAP	2	
7	01641-21016	WASHER	2	
8	3EB-50-35120	PLATE	1	
9	04052-11253	PIN,COTTER	2	
10	04205-11228	PIN	1	
11	01641-21223	WASHER	2	
12	3EB-50-31252	LOCK ASS'Y	1	
13	3EB-50-31260	LEVER	1	
14	3EB-50-31280	SPRING	1	
15	3EB-50-31271	BRACKET	1	
16	3EB-50-31240	PLATE	1	
17	F1110-50612	BOLT	2	
18	F1110-50616	BOLT	2	
19	01642-20608	WASHER	4	
20	01023-60612	SCREW	1	
21	01642-20608	WASHER	1	
22	3EB-50-21150	CLIP	5	

https://truckmanualshub.com/

ボンネット
FIG.P4180-01A1 BONNET

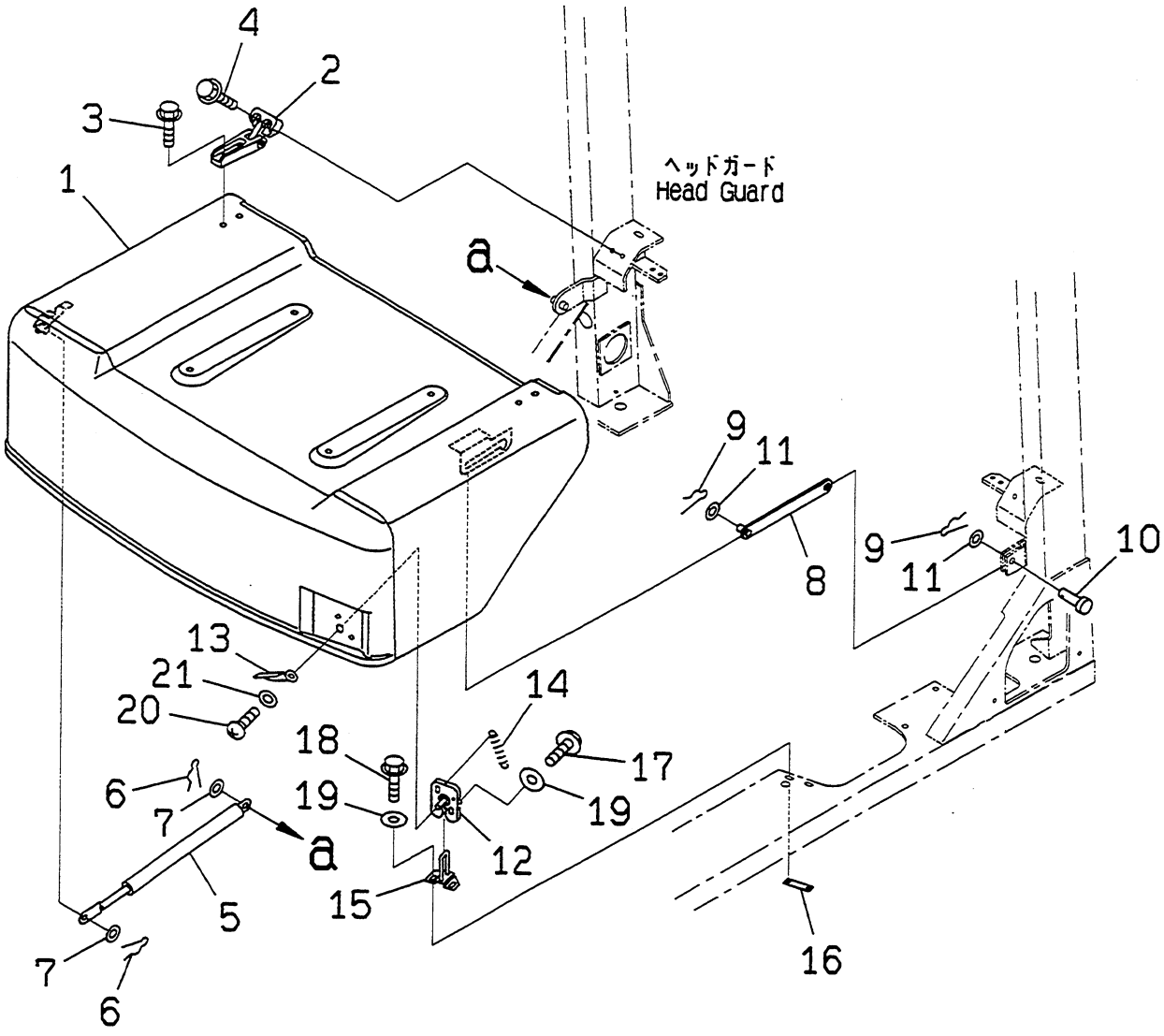

PUF1728

https://truckmanualshub.com/

FIG NO. : P4180-01A1

FG15S,FG18S

INDEX	PART NO.	DESCRIPTION	Q'TY	SERIAL NO.
1	3EA-50-A5550	BONNET	1	600001A AND UP
2	3EA-50-35210	HINGE	2	
3	F1110-50625	BOLT	4	
4	F1110-50620	BOLT	4	
5	3EB-50-A5111	STAY	1	
6	04052-01038	PIN,SNAP	2	
7	01641-21016	WASHER	2	
8	3EB-50-35120	PLATE	1	
9	04052-11253	PIN,COTTER	2	
10	04205-11228	PIN	1	
11	01641-21223	WASHER	2	
12	3EB-50-31252	LOCK ASS'Y	1	
13	3EB-50-31260	LEVER	1	
14	3EB-50-31280	SPRING	1	
15	3EB-50-31271	BRACKET	1	
16	3EB-50-31240	PLATE	1	
17	F1110-50612	BOLT	2	
18	F1110-50616	BOLT	2	
19	01642-20608	WASHER	4	
20	01023-60612	SCREW	1	
21	01642-20608	WASHER	1	

https://truckmanualshub.com/

サブ ボンネット
FIG.P4190-01A0 SUB BONNET

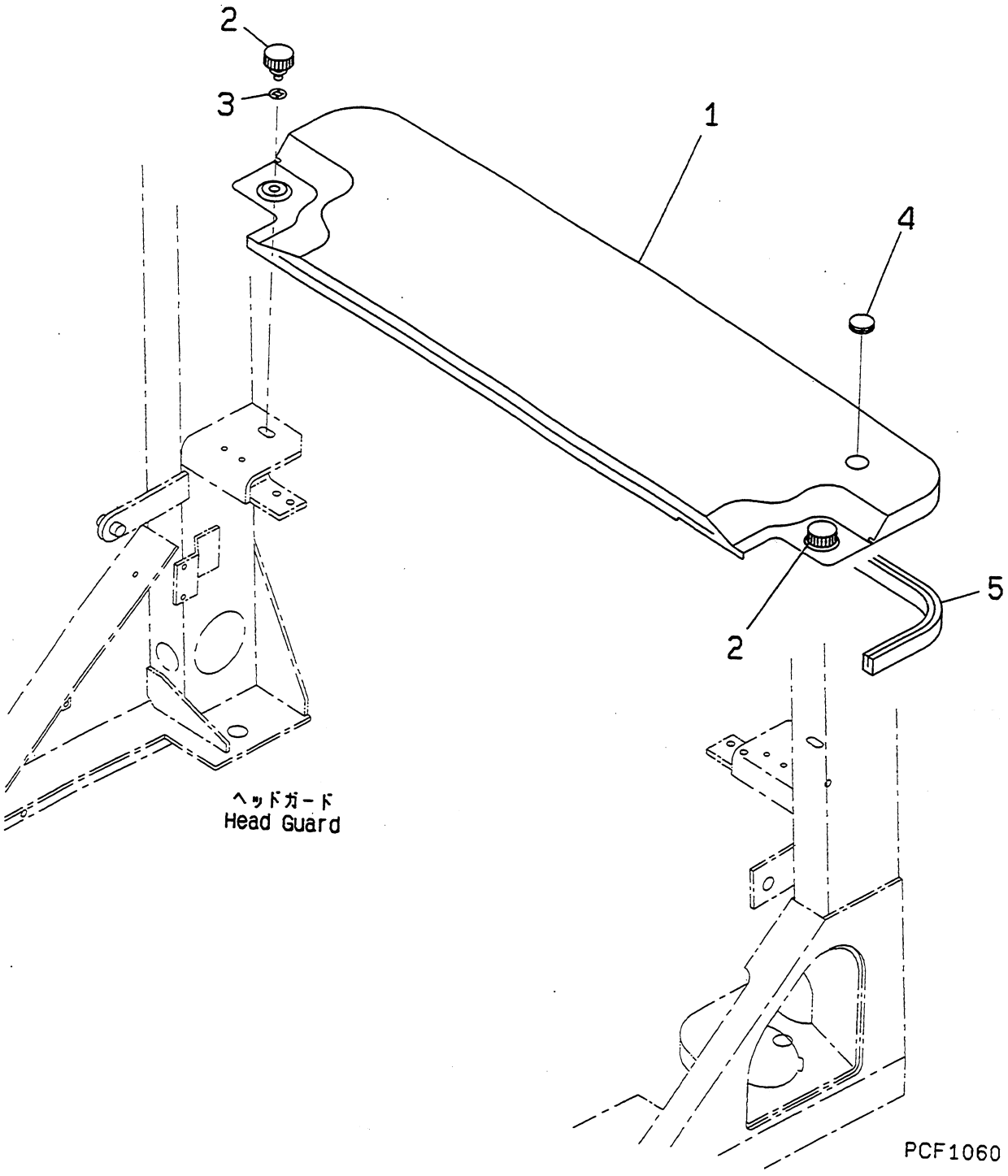

https://truckmanualshub.com/

FIG NO. : P4190-01A0

FG15H,FG18H

INDEX	PART NO.	DESCRIPTION	Q'TY	SERIAL NO.
1	3EB-50-35411	COVER.....	1	600001A AND UP
2	3EB-50-31420	KNOB.....	2	
3	3EB-50-31430	WASHER.....	2	
4	34A-55-24471	COVER.....	2	
5	37B-1CW-3030	SEAL.....	1	

https://truckmanualshub.com/

サブ ボンネット
FIG.P4190-01A1 SUB BONNET

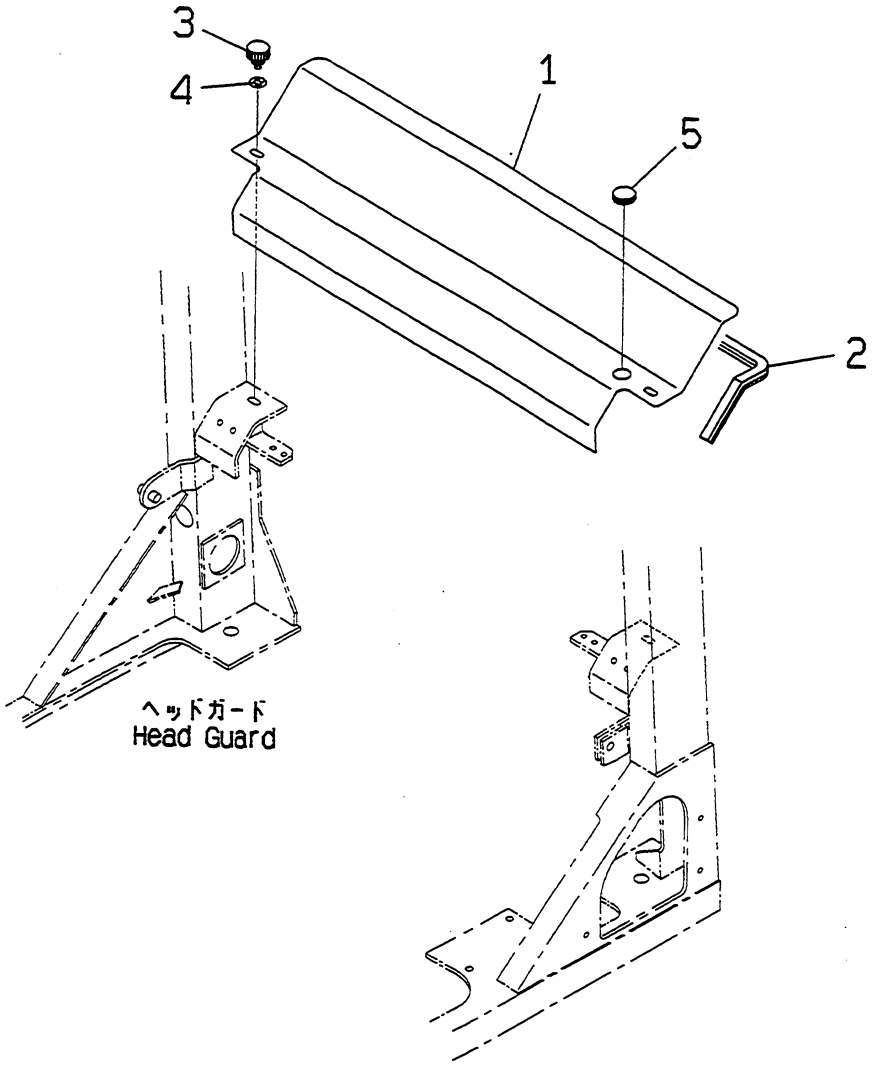

PUF1729

https://truckmanualshub.com/

FIG NO. : P4190-01A1

FG15S,FG18S

INDEX	PART NO.	DESCRIPTION	Q'TY	SERIAL NO.
1	3EA-50-A5360	COVER	1	600001A AND UP
2	3EA-52-35210	SEAL	1	
3	3EB-50-31420	KNOB	2	
4	3EB-50-31430	WASHER	2	
5	34A-55-24471	COVER	1	

https://truckmanualshub.com/

ﾍｯﾄﾞ ｶﾞｰﾄﾞ
FIG.P4210-01A0 HEAD GUARD

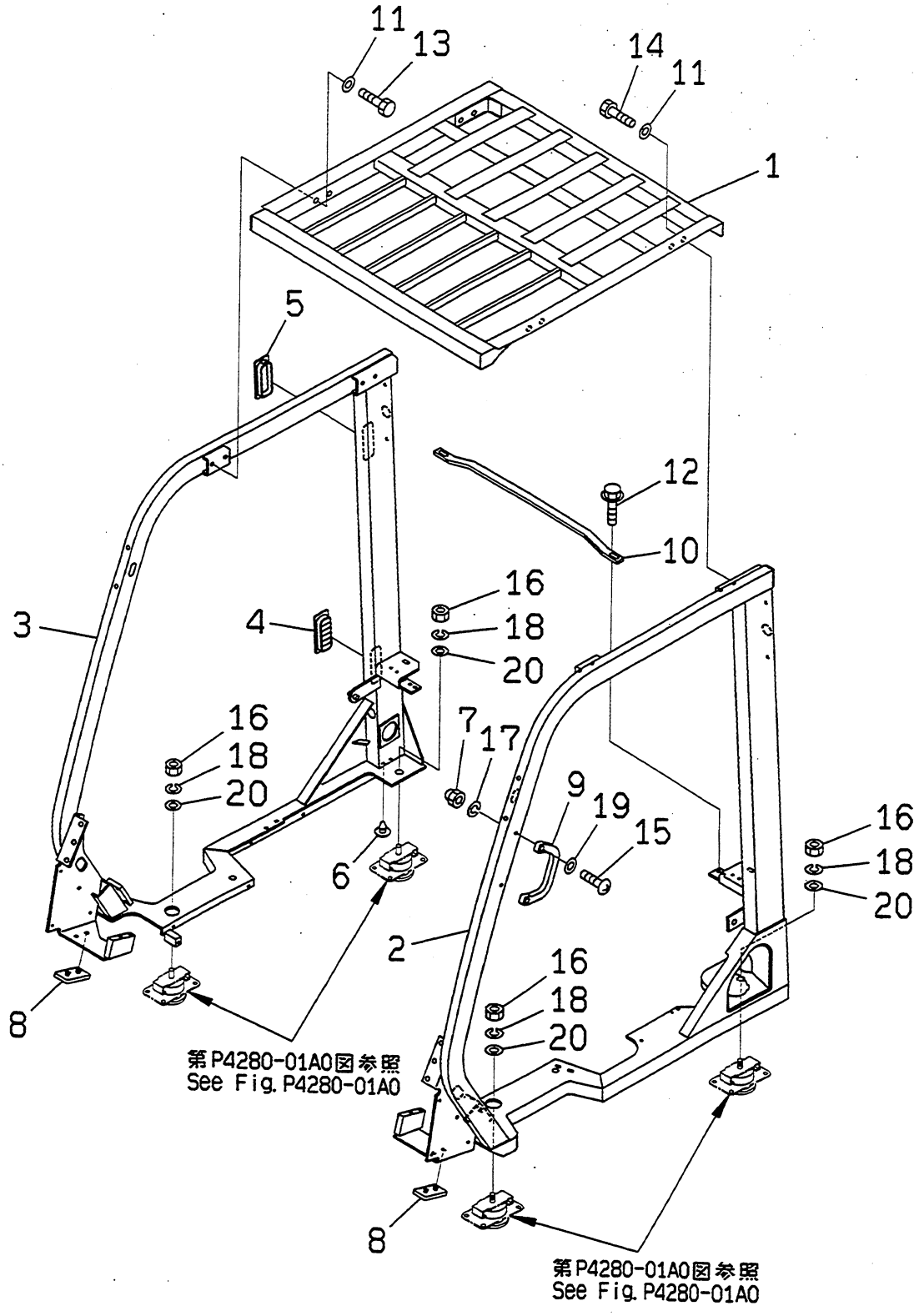

PUF1730

https://truckmanualshub.com/

FIG NO. : P4210-01A0

FG15H,FG18H

INDEX	PART NO.	DESCRIPTION	Q'TY	SERIAL NO.
1	3EB-51-A5111	GUARD	1	600001A - 650000A
2	3EA-51-A5120	STAY,L.H	1	
3	3EA-51-A5140	STAY,R.H	1	
4	3EB-01-31760	COVER	1	
5	3EB-01-25172	COVER	1	
6	3EB-50-21130	CLIP	2	
7	3EB-51-21380	NUT	2	
8	3EB-51-31270	RUBBER	2	
9	3EB-51-31390	GRIP	1	
10	3EB-51-31491	PLATE	1	
11	3EB-51-31740	WASHER	8	
12	F1210-80820	BOLT	4	
13	01010-81025	BOLT	4	
14	01010-81035	BOLT	4	
15	01220-70650	SCREW	2	
16	01583-11408	NUT	4	
17	01602-10619	WASHER,SPRING	2	
18	01602-21442	WASHER,SPRING	4	
19	01642-10608	WASHER	2	
20	01643-30823	WASHER	4	

https://truckmanualshub.com/

FIG. NO. : P4210-01A0A HEAD GUARD

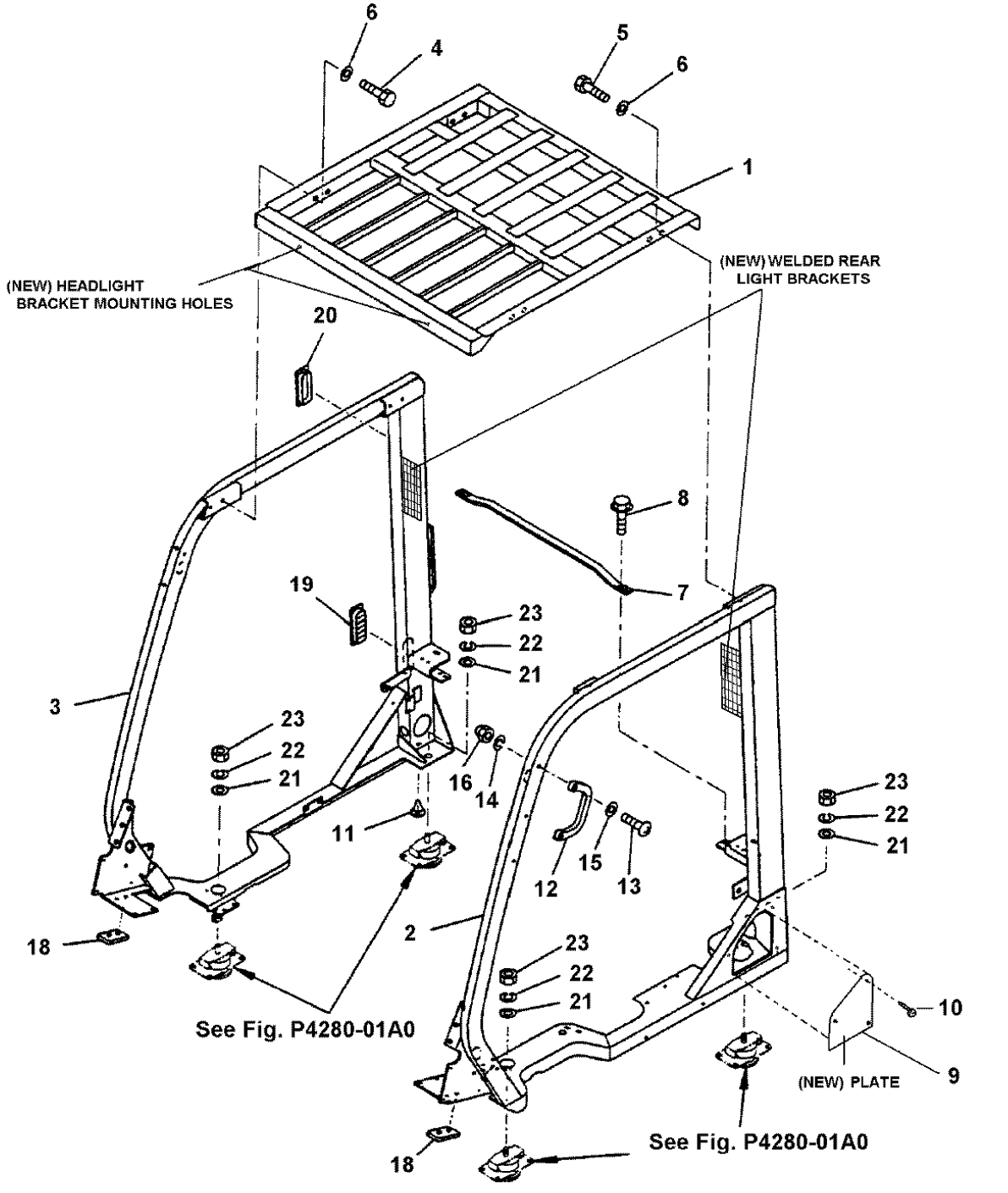

https://truckmanualshub.com/

FIG. NO. : P4210-01A0A

FG15H/18H-16 OVERHEAD GUARD (OUTDOOR)

INDEX	PART NO.	DESCRIPTION	Q'TY	SERIAL NO.
				650001A and Up
1	3EB-51-A5113	OVERHEAD GUARD	1	
2	3EA-51-A5121	STAY, L.H.	1	
3	3EA-51-A5142	STAY, R.H.	1	
4	01010-81225	BOLT	4	
5	01010-81235	BOLT	4	
6	01643-31232	WASHER	8	
7	3EB-51-31491	CROSS BAR	1	
8	F1210-80820	BOLT	4	
9	3EC-51-A5910	PLATE (ALL EXCEPT LPG UNITS)	1	
	3EC-51-39120YD	PLATE (LPG UNITS ONLY)	1	
10	01023-20616	SCREW	3	
11	3EB-50-21130	CLIP	2	
12	3EB-51-31390	GRIP	1	
13	01220-70650	SCREW	2	
14	01602-10619	WASHER, SPRING	2	
15	01642-40608	WASHER	2	
16	3EB-51-21380	NUT	2	
17	NOT USED			
18	3EB-51-31270	RUBBER	2	
19	3EB-01-25172	COVER	1	
20	3EB-01-31760	COVER	1	
21	01643-30823	WASHER	4	
22	01602-21442	WASHER, SPRING	4	
23	01583-11408	NUT	4	

https://truckmanualshub.com/

FIG.P4210-01A1 ヘッド ガード HEAD GUARD

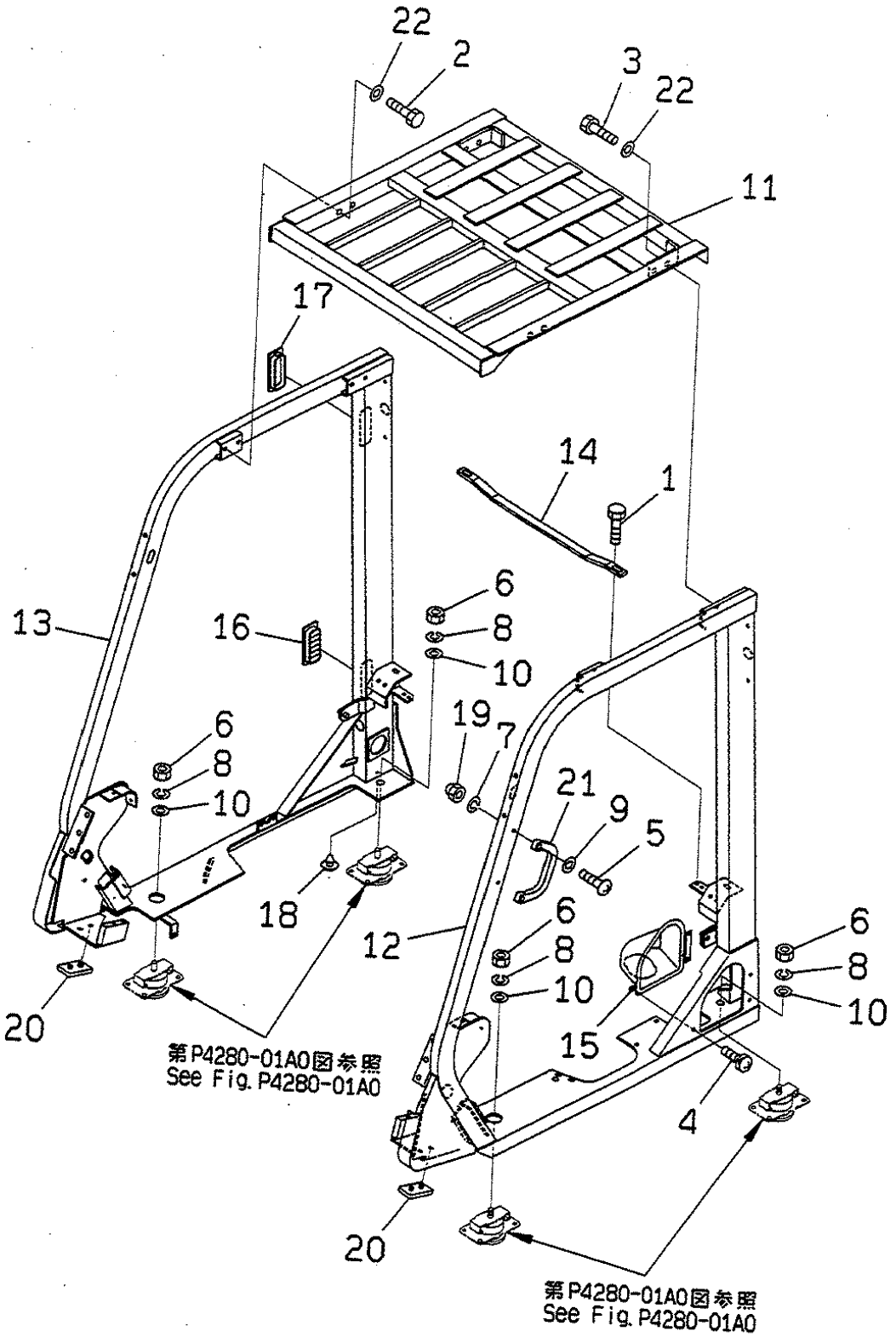

PUF1731

https://truckmanualshub.com/

FIG NO. : P4210-01A1

FG15S,FG18S

INDEX	PART NO.	DESCRIPTION	Q'TY	SERIAL NO.
1	F1210-80820	BOLT	4	600000A - 650000A
2	01010-81025	BOLT	4	
3	01010-81035	BOLT	4	
4	01023-20616	SCREW	3	
5	01220-70650	SCREW	2	
6	01583-11408	NUT	4	
7	01602-10619	WASHER,SPRING	2	
8	01602-21442	WASHER,SPRING	4	
9	01642-10608	WASHER	2	
10	01643-31445	WASHER	4	
11	3EA-51-A5210	GUARD	1	
12	3EA-51-A5220	STAY,L.H	1	
13	3EA-51-A5240	STAY,R.H	1	
14	3EA-51-35110	PLATE	1	
15	3EA-51-35120	COVER	1	
16	3EB-01-31760	COVER	1	
17	3EB-01-25172	COVER	1	
18	3EB-50-21130	CLIP	1	
19	3EB-51-21380	NUT	2	
20	3EB-51-31270	RUBBER	2	
21	3EB-51-31390	GRIP	1	
22	3EB-51-31740	WASHER	8	

https://truckmanualshub.com/

FIG. NO. : P4210-01A1A HEAD GUARD

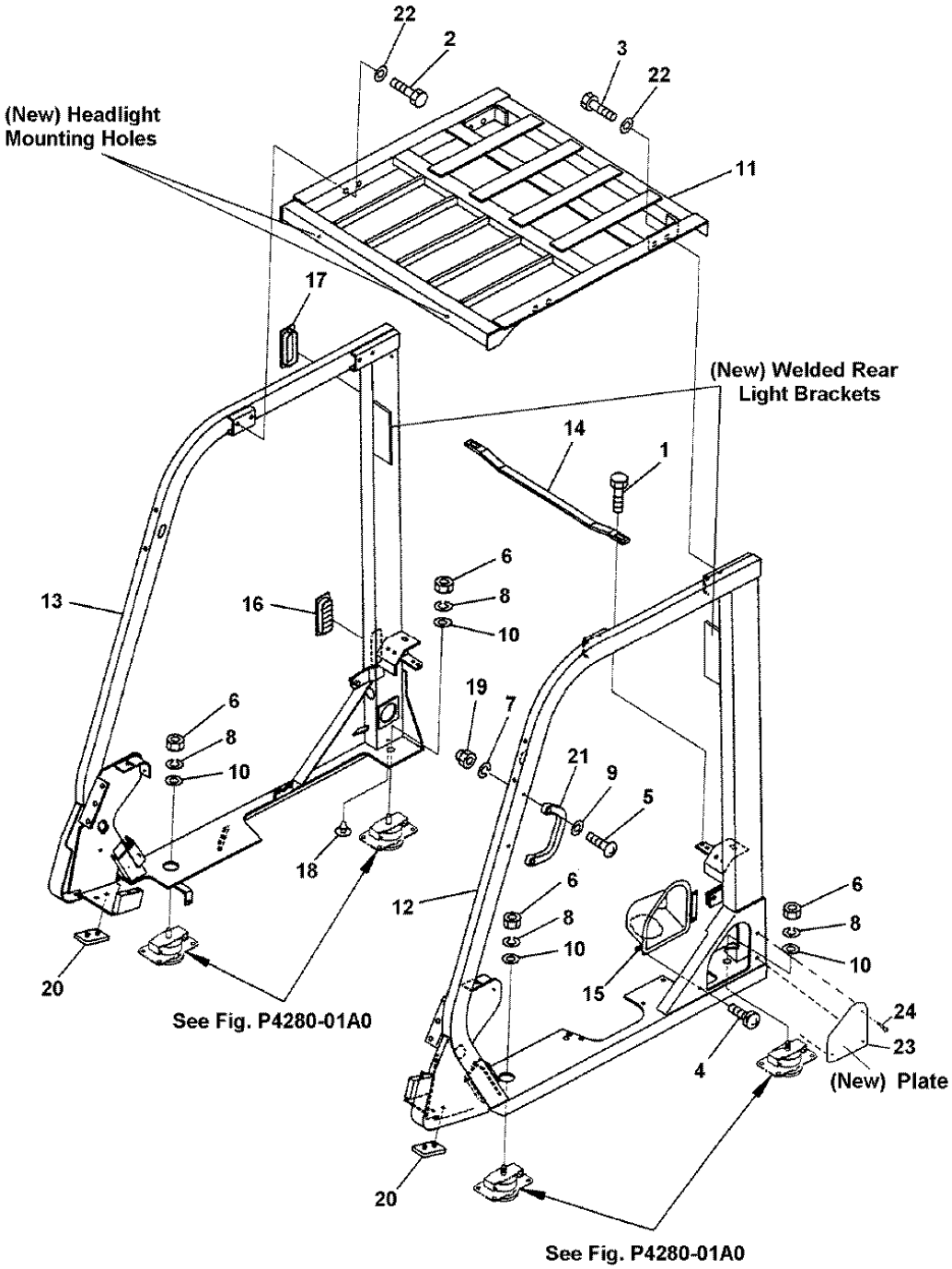

https://truckmanualshub.com/

FIG. NO. : P4210-01A1A

FG15S/18S-16 OVERHEAD GUARD

INDEX	PART NO.	DESCRIPTION	Q'TY	SERIAL NO.
				650001A and Up
1	F1210-80820	BOLT	4	
2	01010-81025	BOLT	4	
3	01010-81035	BOLT	4	
4	01023-20616	SCREW	3	
5	01220-70650	SCREW	2	
6	01583-11408	NUT	4	
7	01602-10619	WASHER, SPRING	2	
8	01602-21442	WASHER, SPRING	4	
9	01642-10608	WASHER	2	
10	01643-31445	WASHER	4	
11	3EA-51-A5212	OVERHEAD GUARD (INDOOR)	1	
12	3EA-51-A5222	STAY, L.H. (INDOOR)	1	
13	3EA-51-A5244	STAY, R.H. (INDOOR)	1	
14	3EA-51-35110SA	CROSS BAR	1	
15	3EA-51-35120	COVER	1	
16	3EB-01-31760	COVER	1	
17	3EB-01-25172	COVER	1	
18	3EB-50-21130	CLIP	1	
19	3EB-51-21380	NUT	2	
20	3EB-51-31270	RUBBER	2	
21	3EB-51-31390	GRIP	1	
22	3EB-51-31740	WASHER	8	
23	3EC-51-A5910	PLATE (ALL EXCEPT LPG UNITS)	1	
	3EC-51-39120YD	PLATE (LPG ONLY)	1	
24	01023-20616	SCREW	3	

https://truckmanualshub.com/

ﾗﾝﾌﾟ ｶﾞｰﾄﾞ
FIG.P4230-01A0 LAMP GUARD

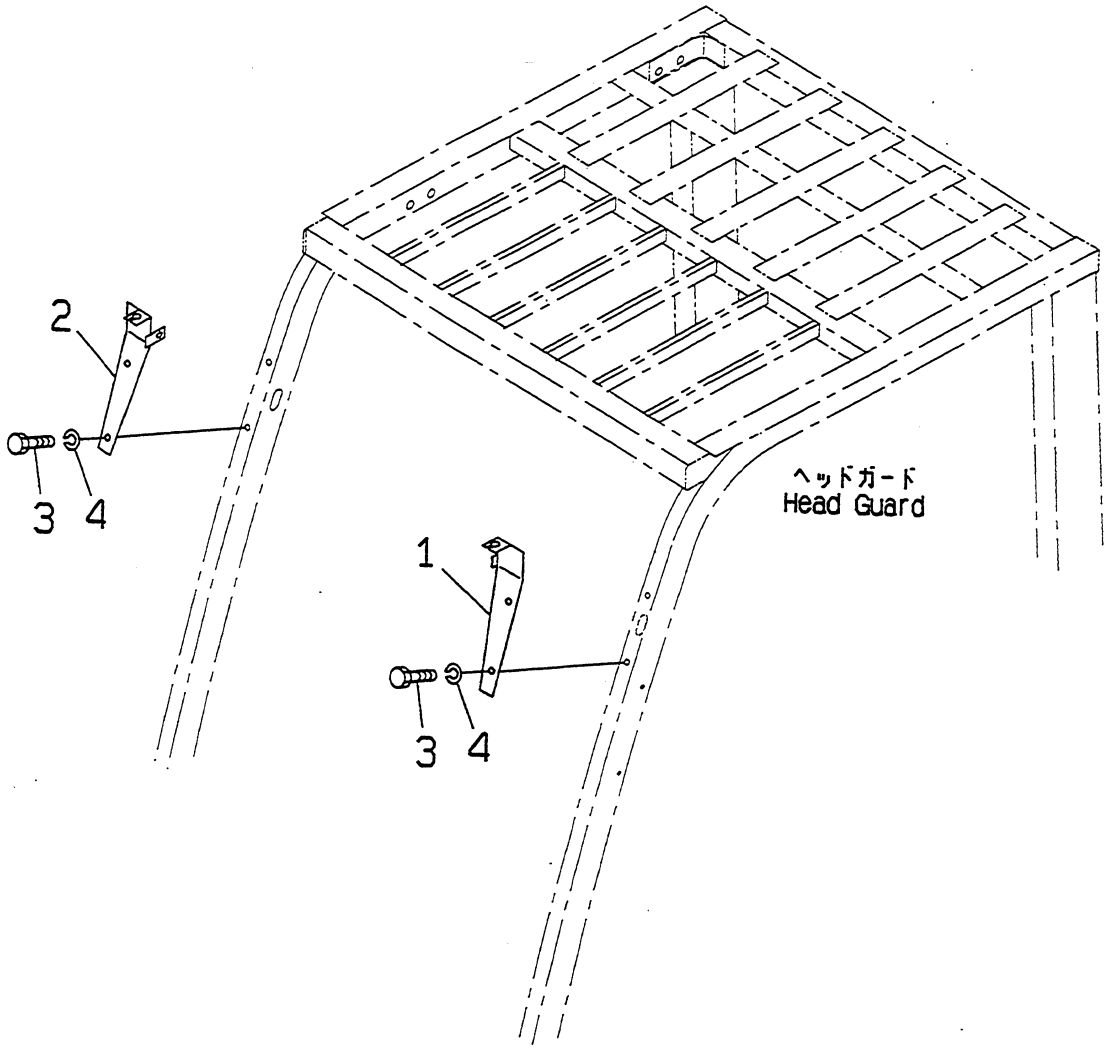

PUF1732

https://truckmanualshub.com/

FIG NO. : P4230-01A0

INDEX	PART NO.	DESCRIPTION	Q'TY	SERIAL NO.
1	3EB-51-35510	PROTECTOR,L.H.....	1	600001A AND UP
2	3EB-51-35520	PROTECTOR,R.H.....	1	
3	01010-80820	BOLT.....	4	
4	01602-20825	WASHER,SPRING.....	4	

https://truckmanualshub.com/

モニタ パネル
FIG.P4260-01A0 MONITOR PANEL

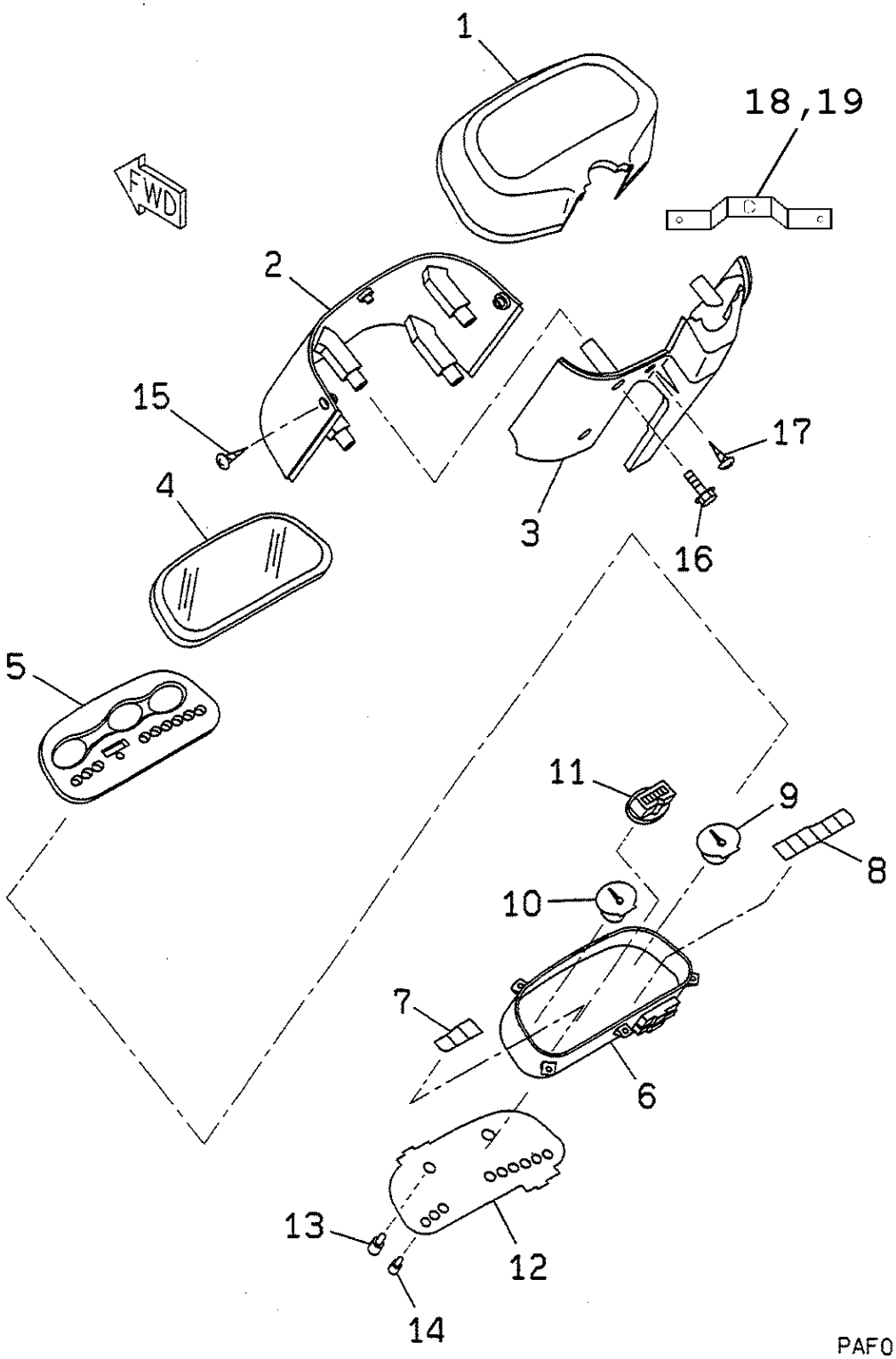

https://truckmanualshub.com/

FIG NO. : P4260-01A0

INDEX	PART NO.	DESCRIPTION	Q'TY	SERIAL NO.
	37B-1CP-3110	PANEL ASS'Y.....	1	600001A AND UP
1	YZ769100-729	.PANEL,MONITOR.....	1	
2	YZ769100-790	.COVER,UPPER.....	1	
3	YZ769203-320	.COVER,LOWER.....	1	
4	YZ769214-860	.GLASS.....	1	
5	YZ769217-370	.PLATE.....	1	
6	YZ769396-860	.CASE.....	1	
7	YZ769382-180	.LENS.....	1	
8	YZ769382-190	.LENS.....	1	
9	YZ54522-041	.GAUGE,FUEL.....	1	
10	YZ52622-051	.GAUGE,WATER TEMPERATURE.....	1	
11	YZ68322-031	.METER,HOUR.....	1	
12	YZ769870-952	.PLATE.....	1	
13	YZ769540-149	.BULB.....	2	
14	YZ769540-062	.BULB.....	3	
15	YZM4	.SCREW.....	3	
16	F1310-70616	BOLT.....	8	
17	01370-40416	SCREW.....	2	
18	3EB-50-35130	BRACKET, SWITCH, KEY (GAS ENGINE)	1	
	3EB-50-32140	BRACKET, SWITCH, KEY (DIESEL ENGINE)...	1	
19	01370-00410	SCREW.....	2	

https://truckmanualshub.com/

ﾍｯﾄﾞ ｶﾞｰﾄﾞ ﾄﾘﾂｹ ﾌﾞﾋﾝ
FIG.P4280-01A0 HEAD GUARD MOUNTING PARTS

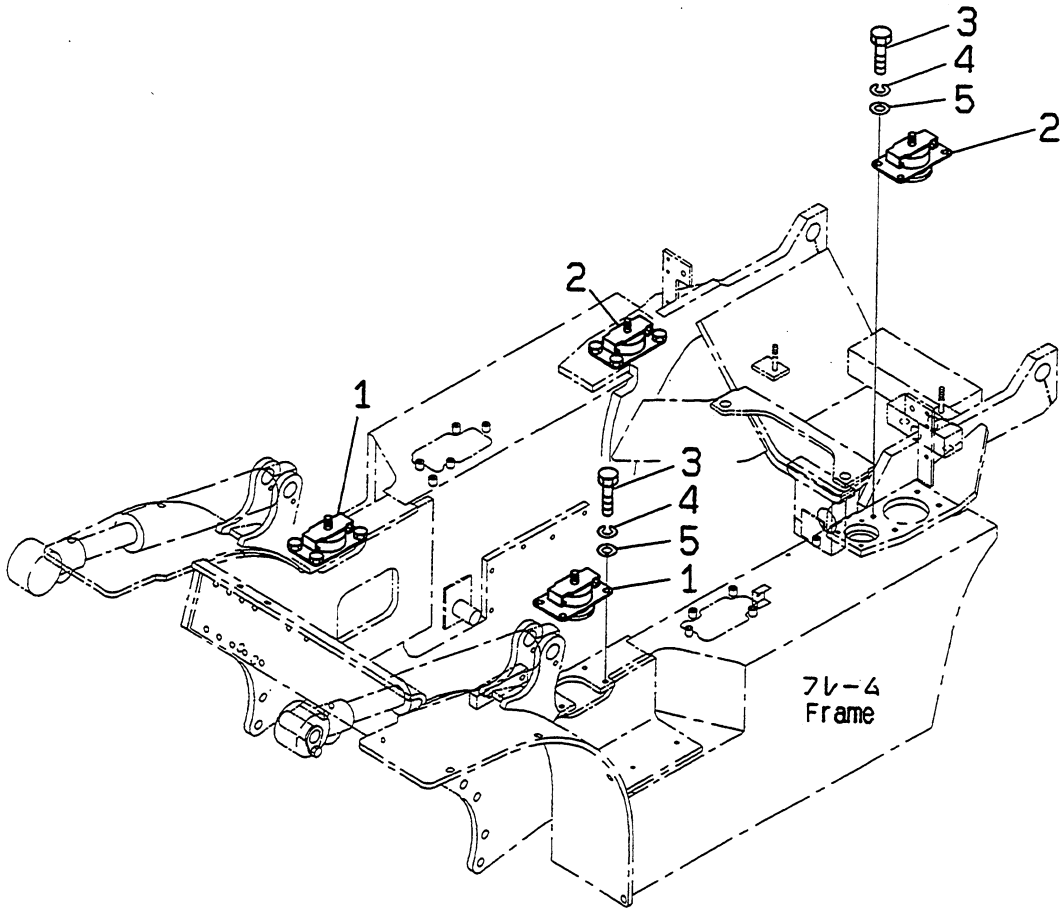

PCF1064

https://truckmanualshub.com/

FIG NO. : P4280-01A0

INDEX	PART NO.	DESCRIPTION	Q'TY	SERIAL NO.
1	3EB-51-32110	CUSHION,FRONT.....	2	600001A AND UP
2	3EB-51-32120	CUSHION,REAR.....	2	
3	01010-81020	BOLT.....	16	
4	01602-21030	WASHER,SPRING.....	16	
5	01640-21016	WASHER.....	16	

https://truckmanualshub.com/

インシュレータ (ボンネット オヨビ ステップ)
FIG.P4310-01A0 INSULATOR (BONNET AND STEP)

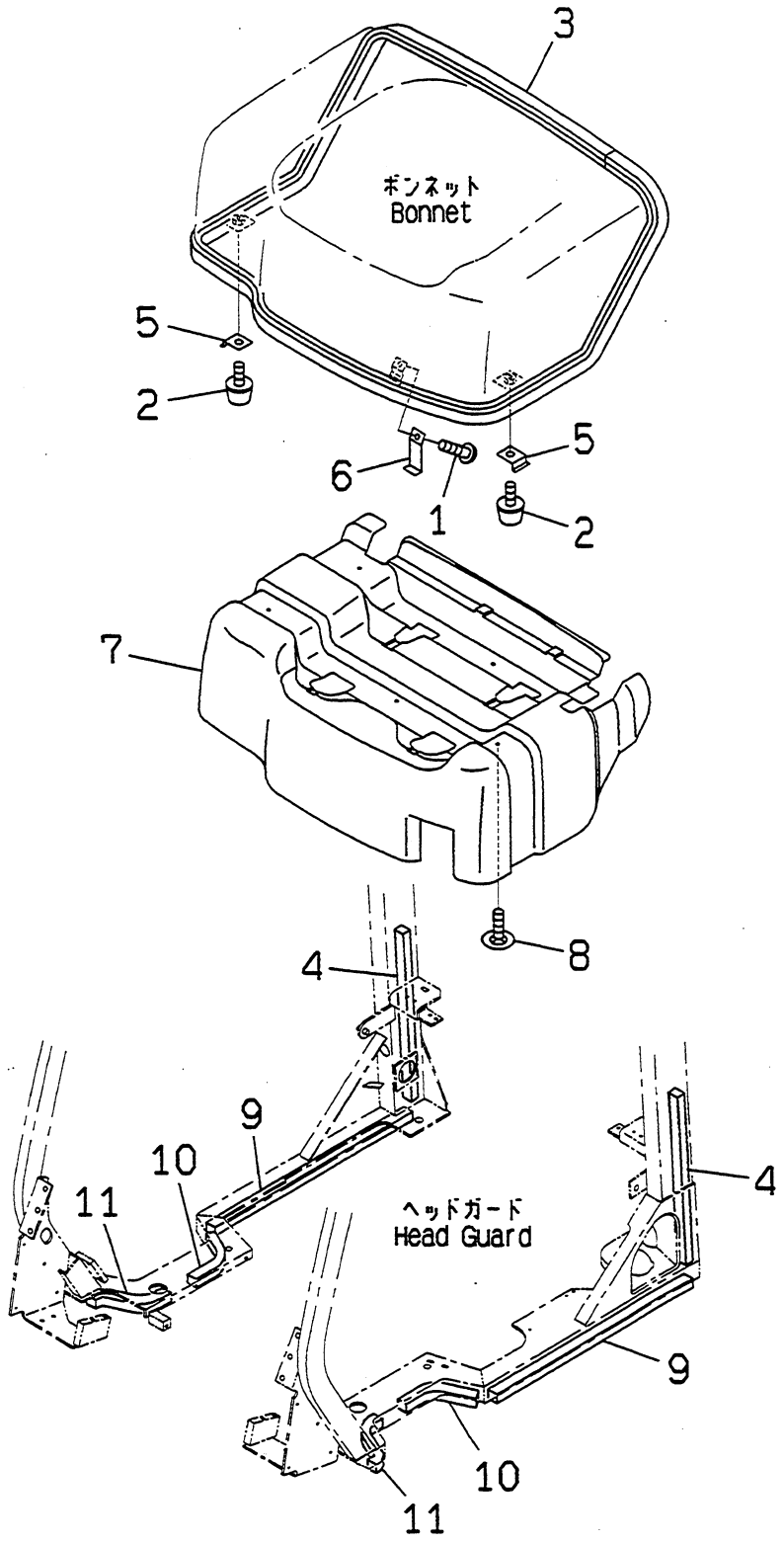

PUF1733

https://truckmanualshub.com/

FIG NO. : P4310-01A0

FG15H,FG18H

INDEX	PART NO.	DESCRIPTION	Q'TY	SERIAL NO.
1	01220-40608	SCREW	3	600001A AND UP
2	3EB-50-31130	CUSHION	2	
3	3EB-52-31510	SEAL	1	
4	3EB-52-31521	SPONGE	2	
5	3EB-52-31560	PLATE	2	
6	3EB-52-31570	PLATE	3	
7	3EB-52-35111	GLASS WOOL	1	
8	34B-50-12730	CLIP	6	
9	37C-1LA-3010	SPONGE	2	
10	37C-1LA-3020	SPONGE	2	
11	37C-1LA-3030	SPONGE	2	

https://truckmanualshub.com/

インシュレータ (ボンネット オヨビ ステップ)
FIG.P4310-01A1 INSULATOR (BONNET AND STEP)

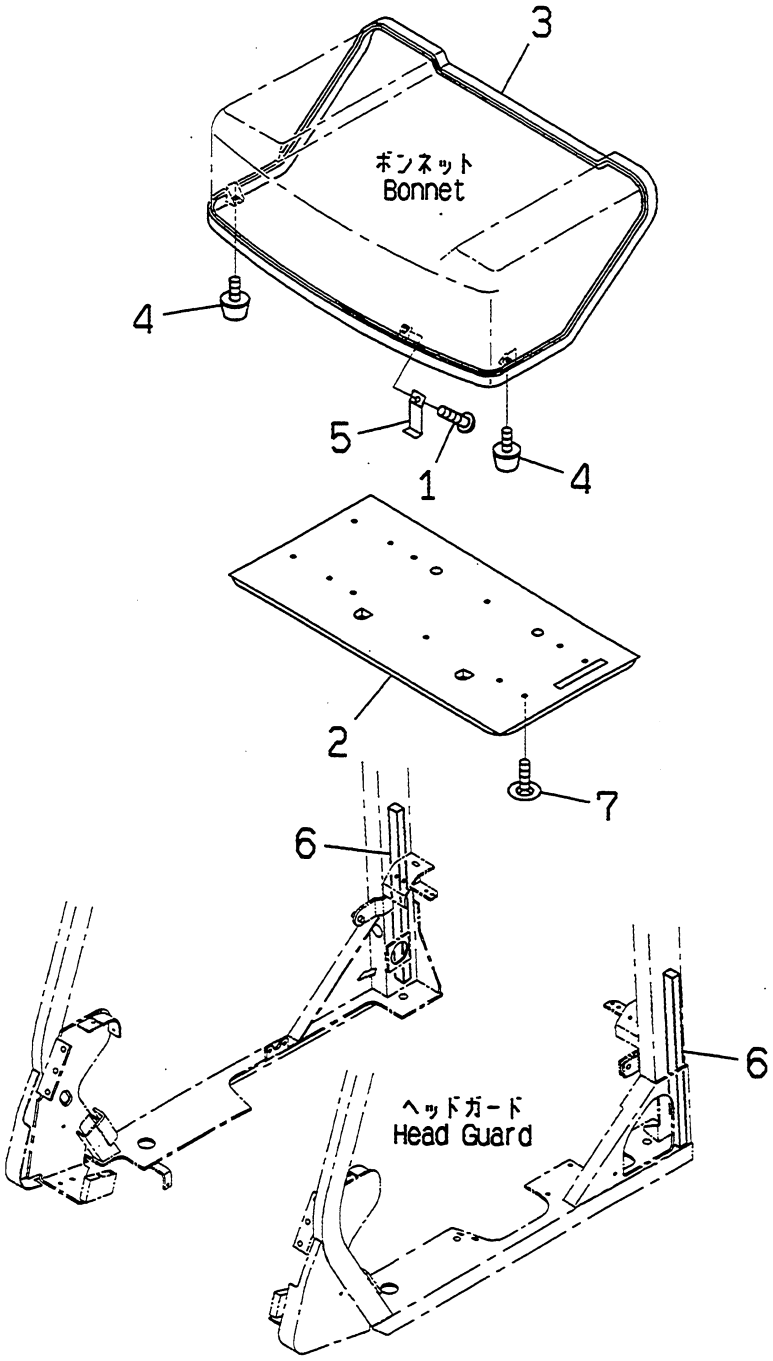

PUF1734

https://truckmanualshub.com/

FIG NO. : P4310-01A1

FG15S,FG18S

INDEX	PART NO.	DESCRIPTION	Q'TY	SERIAL NO.
1	01220-40608	SCREW	4	600001A AND UP
2	3EA-52-35110	GLASS WOOL	1	
3	3EA-52-35120	SEAL	1	
4	3EB-50-31130	CUSHION	2	
5	3EB-52-31570	PLATE	4	
6	3EB-52-35151	SPONGE	2	
7	34B-50-12730	CLIP	12	

https://truckmanualshub.com/

インシュレータ (フロア オヨビ サブ ボンネット)
FIG.P4320-01A0 INSULATOR (FLOOR AND SUB BONNET)

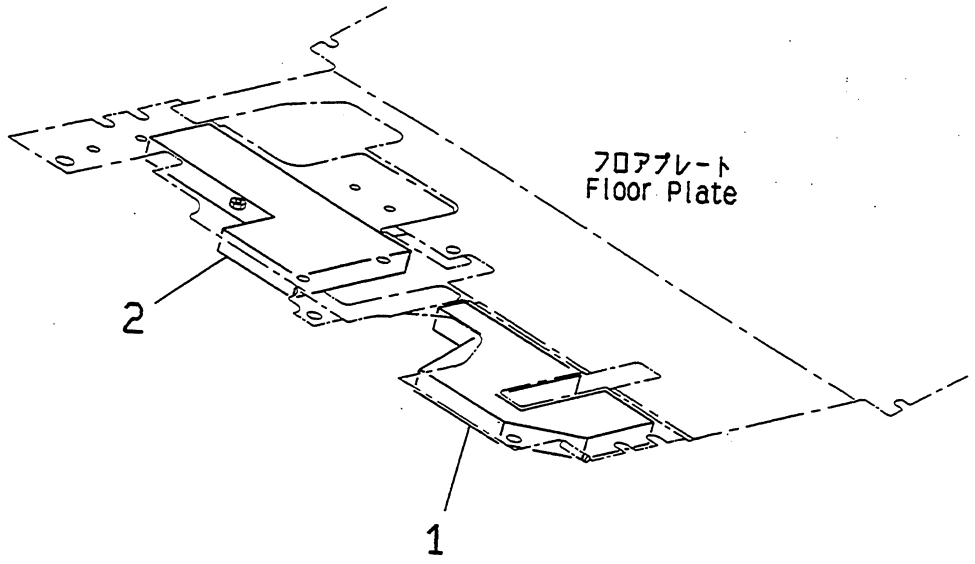

PUF1735

https://truckmanualshub.com/

FIG NO. : P4320-01A0

INDEX	PART NO.	DESCRIPTION	Q'TY	SERIAL NO.
1	3EB-52-31740	SPONGE.....	1	600001A AND UP
2	3EB-52-31750	SPONGE.....	1	

https://truckmanualshub.com/

This Page Left Intentionally Blank

KOMATSU

https://truckmanualshub.com/

KOMATSU

Electrical System

AX SERIES

Electrical System

https://truckmanualshub.com/

エレクトリカル システム (ダッシュボード ワイヤリング)
FIG.Q4110-01A0 ELECTRICAL SYSTEM (DASHBOARD WIRING)

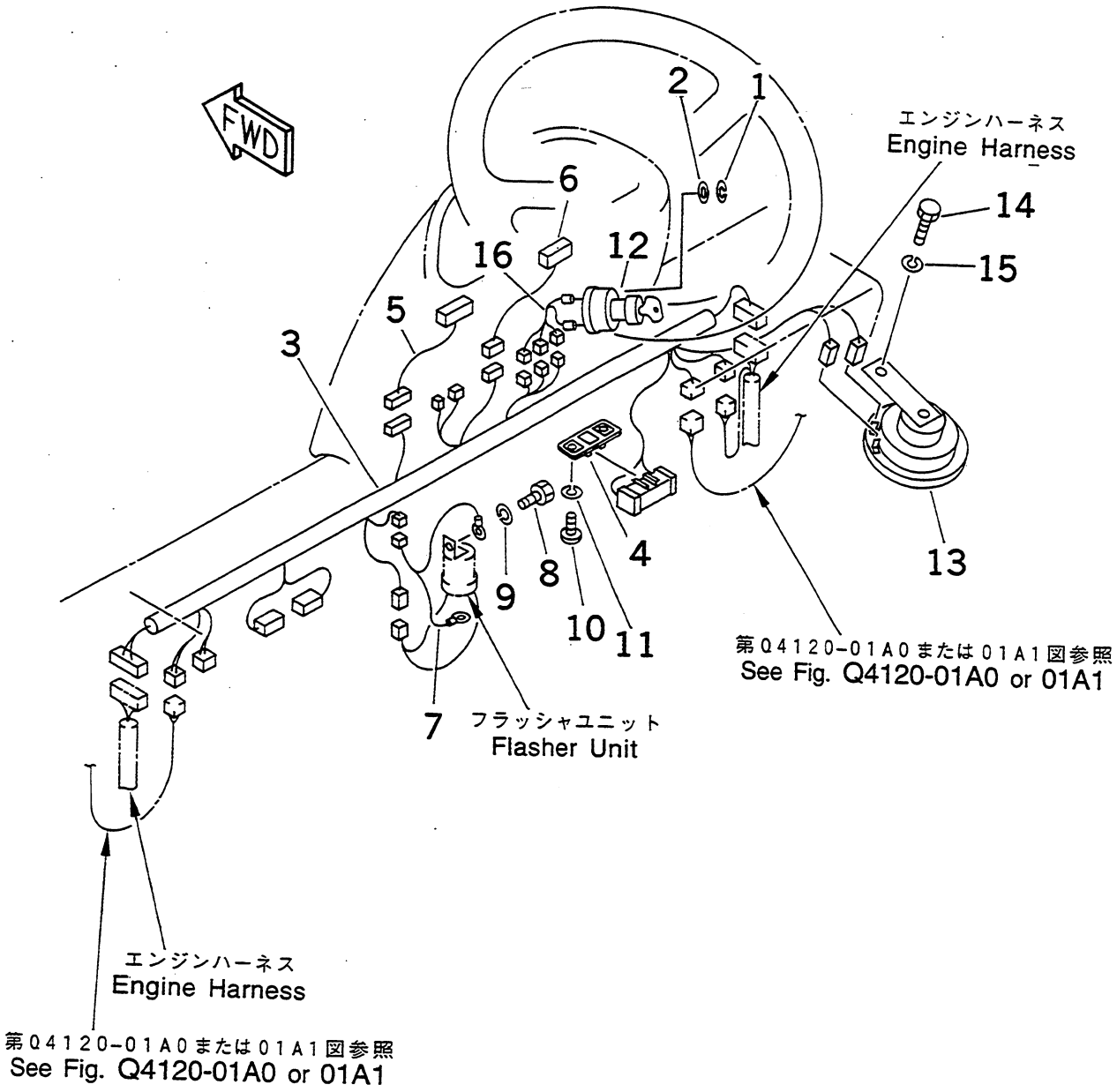

https://truckmanualshub.com/

FIG NO. : Q4110-01A0

INDEX	PART NO.	DESCRIPTION	Q'TY	SERIAL NO.
1	01601-20410	WASHER,SPRING	3	600001A - 650000A
2	01641-20405	WASHER	3	
3	3EA-55-A5110	HARNESS	1	
	3EB-55-21220	.BOX,FUSE	1	
	3EF-55-41490	.COVER	1	
	37B-1EJ-2010	.FUSE, 10A	4	
	37B-1EJ-2020	.FUSE, 15A	2	
	3EB-55-39290	.PLATE, NAME	1	
4	3EB-55-21250	BRACKET	1	
5	3EB-55-39131	WIRE	1	
6	3EB-55-39141	WIRE	1	
7	3EB-55-39121	WIRE	1	
8	01010-80610	BOLT	2	
9	01602-20619	WASHER,SPRING	2	
10	01220-40612	SCREW	2	
11	01642-20608	WASHER	2	
12	3EB-55-A3621	SWITCH ASS'Y,STARTER	1	
13	3EB-55-A5910	HORN ASS'Y	1	
14	01010-80816	BOLT	1	
15	01602-20825	WASHER,SPRING	1	
16	3EB-55-21840	HARNESS	1	
****	31-166-001	Key - Ignition		

https://truckmanualshub.com/

FIG. NO. : Q4110-01A0A ELECTRICAL SYSTEM (DASHBOARD WIRING)

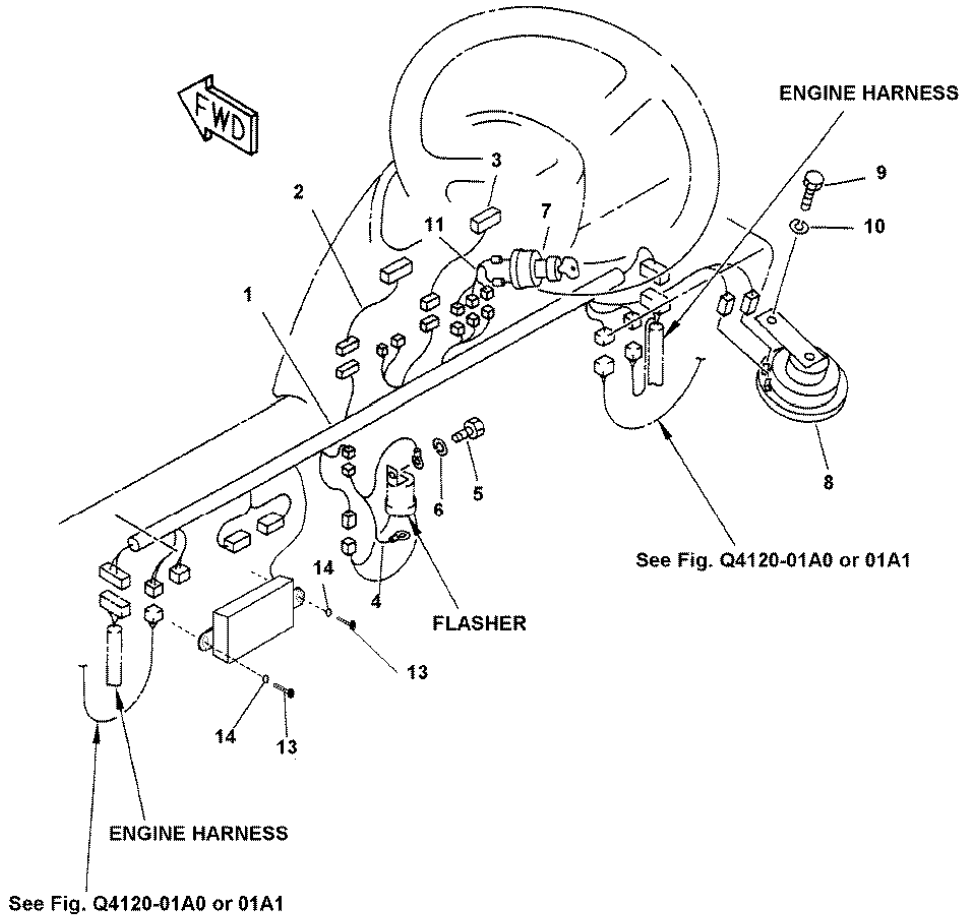

KFI010405

https://truckmanualshub.com/

FIG. NO. : Q4110-01A0A

FG15H/18H-16, FG15S/18S-16

INDEX	PART NO.	DESCRIPTION	Q'TY	SERIAL NO.
				650001A and Up
1	3EA-55-A5111	HARNESS (STD) (FG15S-16)	1	
	3EB-56-A5160	HARNESS (GS/DS) (FG18S-16, FG15H/18H-16)	1	
	*	.BOX, FUSE	1	
	*	.COVER	1	
	37B-1EJ-2010	.FUSE, 10 AMP	4	
	37B-1EJ-2020	.FUSE, 15 AMP	2	
	*	.PLATE, NAME	1	
2	3EB-55-39131	WIRE	1	
3	3EB-55-39141	WIRE	1	
4	3EB-55-39121	WIRE	1	
5	01010-80610	BOLT	2	
6	01602-20619	WASHER, SPRING	2	
7	3EB-55-A3621	SWITCH ASSEMBLY, STARTER	1	
	31-166-001	KEY, IGNITION	2	
8	3EB-55-A5910	HORN ASSEMBLY	1	
9	01010-80816	BOLT	1	
10	01602-20825	WASHER, SPRING	1	
11	3EB-55-21840	HARNESS, STARTER SWITCH	1	
12	NOT USED			
13	01220-70616	SCREW, FUSE PANEL-TO-DASH	2	
14	01642-40608	WASHER, FUSE PANEL-TO-DASH	2	

https://truckmanualshub.com/

エレクトリカル システム (ヘッド ランプ)
FIG.Q4120-01AO ELECTRICAL SYSTEM (HEAD LAMP)

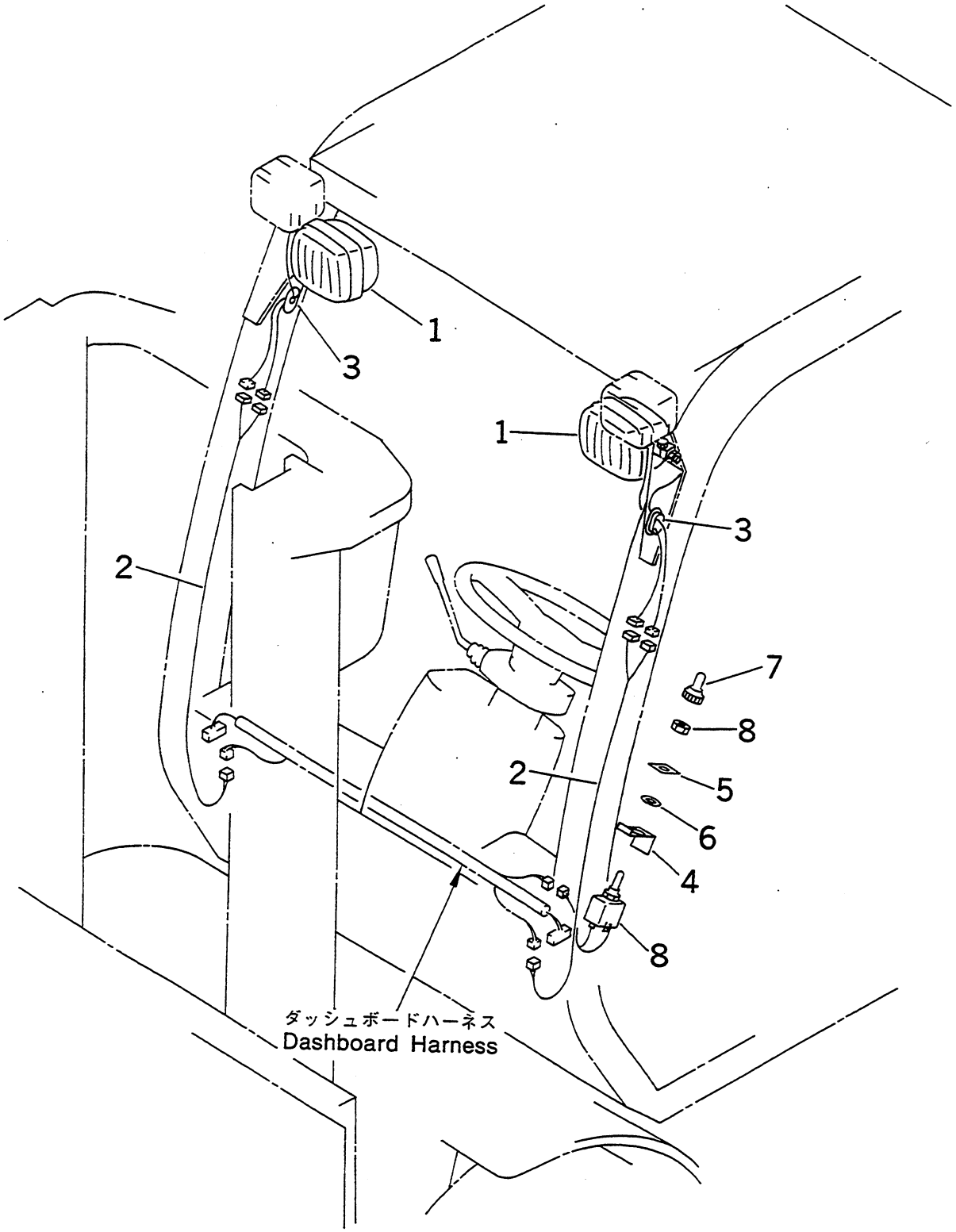

https://truckmanualshub.com/

FIG NO. : Q4120-01A0

FG15H,FG18H

INDEX	PART NO.	DESCRIPTION	Q'TY	SERIAL NO.
1	37B-1EA-3010	LAMP,HEAD.....	2	600001A - 650000A
	3EB-55-11220	.LENS.....	1	
	3EB-55-34120	.BULB, 55W.....	1	
2	3EB-55-39511	WIRE.....	2	
3	3EB-55-23370	COVER.....	2	
4	3EB-55-39410	PLATE.....	1	
5	3EB-55-39420	WASHER.....	1	
6	01641-21223	WASHER.....	1	
7	34B-57-23730	CAP.....	1	
8	3EB-55-39431	SWITCH,HEAD LAMP.....	1	
***	3EB-55-14120L	55 Watt Bulb		
******	3EB-55-34121	Heavy Duty Bulb - Refer TB7-046		

https://truckmanualshub.com/

FIG. NO. : Q4120-01A0A ELECTRICAL SYSTEM (HEAD LAMP)

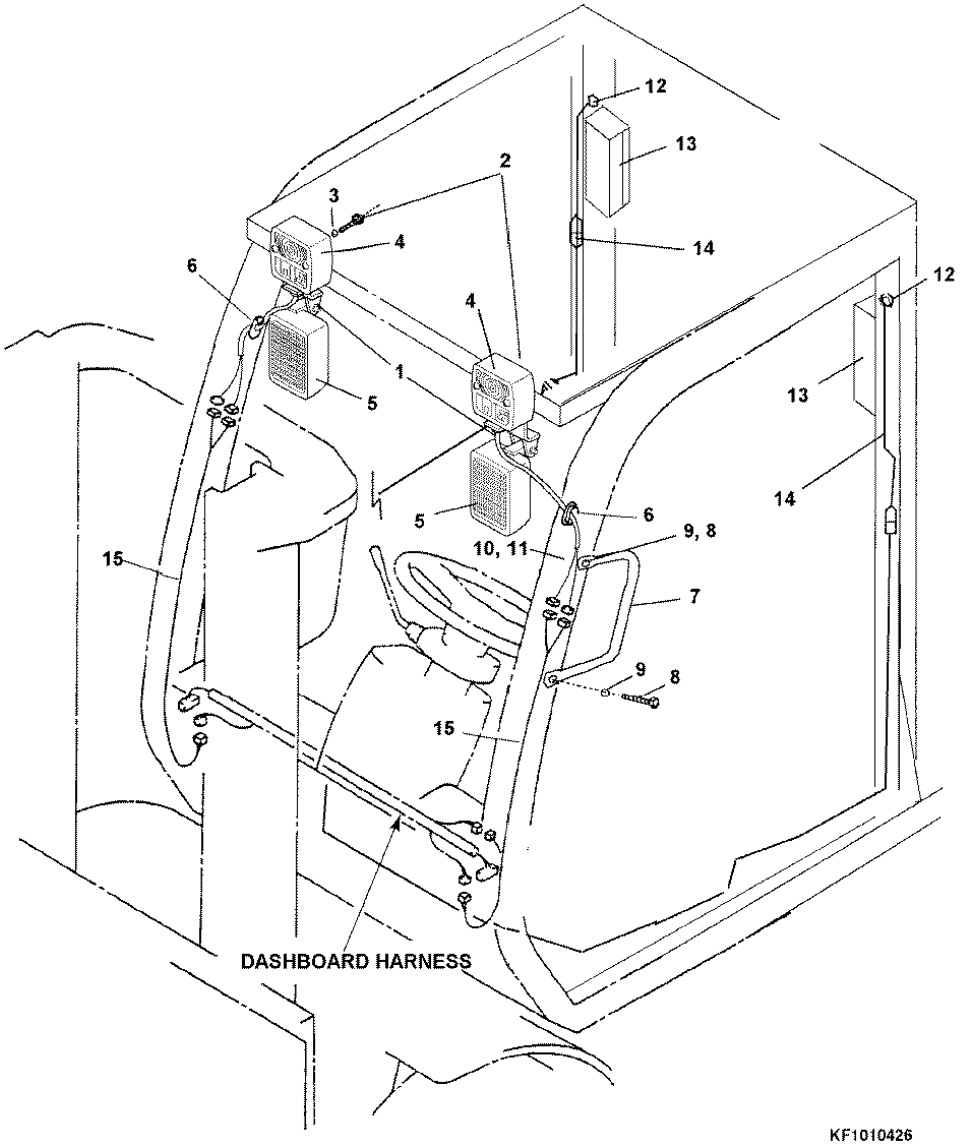

https://truckmanualshub.com/

FIG. NO. : Q4120-01A0A

FG15H/18H-16, FG15S/18S-16

INDEX	PART NO.	DESCRIPTION	Q'TY	SERIAL NO.
				650001A and Up
1	3EB-51-A5510	BRACKET	2	
2	01010-80820	BOLT	2	
3	01602-20825	WASHER	2	
4	37B-1EH-2010	FLASHER	2	
5	3EB-55-A5560	HEADLIGHT (STD)	2	
	3EB-55-F1851	HEADLIGHT (ROADWAY ONLY)	2	
6	3EB-55-23370	COVER	2	
7	3EB-51-31390	ASSIST GRIP	1	
8	01220-70650	BOLT	2	
9	01640-20610	WASHER	2	
10	01602-10619	WASHER	2	
11	3EB-51-21380	NUT	2	
12	08037-02512	GROMMET	2	
13	3EB-55-A5631	LIGHT, REAR COMBINATION	2	
14	3EB-55-A5641	HARNESS, REAR COMBINATION LIGHT .	2	
15	3EB-55-A5520	HARNESS, HEADLIGHT (STD)	2	
	3EB-55-A5710	HARNESS, HEADLIGHT (HOME DEPOT) .	2	
	3EB-55-F5160	HARNESS, HEADLIGHT (ROADWAY)	2	
		SEE FIGURE Q4230-01A0 (Pg. Q-25A) FOR REAR COMBINATION LAMP PARTS BREAKDOWN		

https://truckmanualshub.com/

エレクトリカル システム (ヘッド ランプ)
FIG.Q4120-01A1 ELECTRICAL SYSTEM (HEAD LAMP)

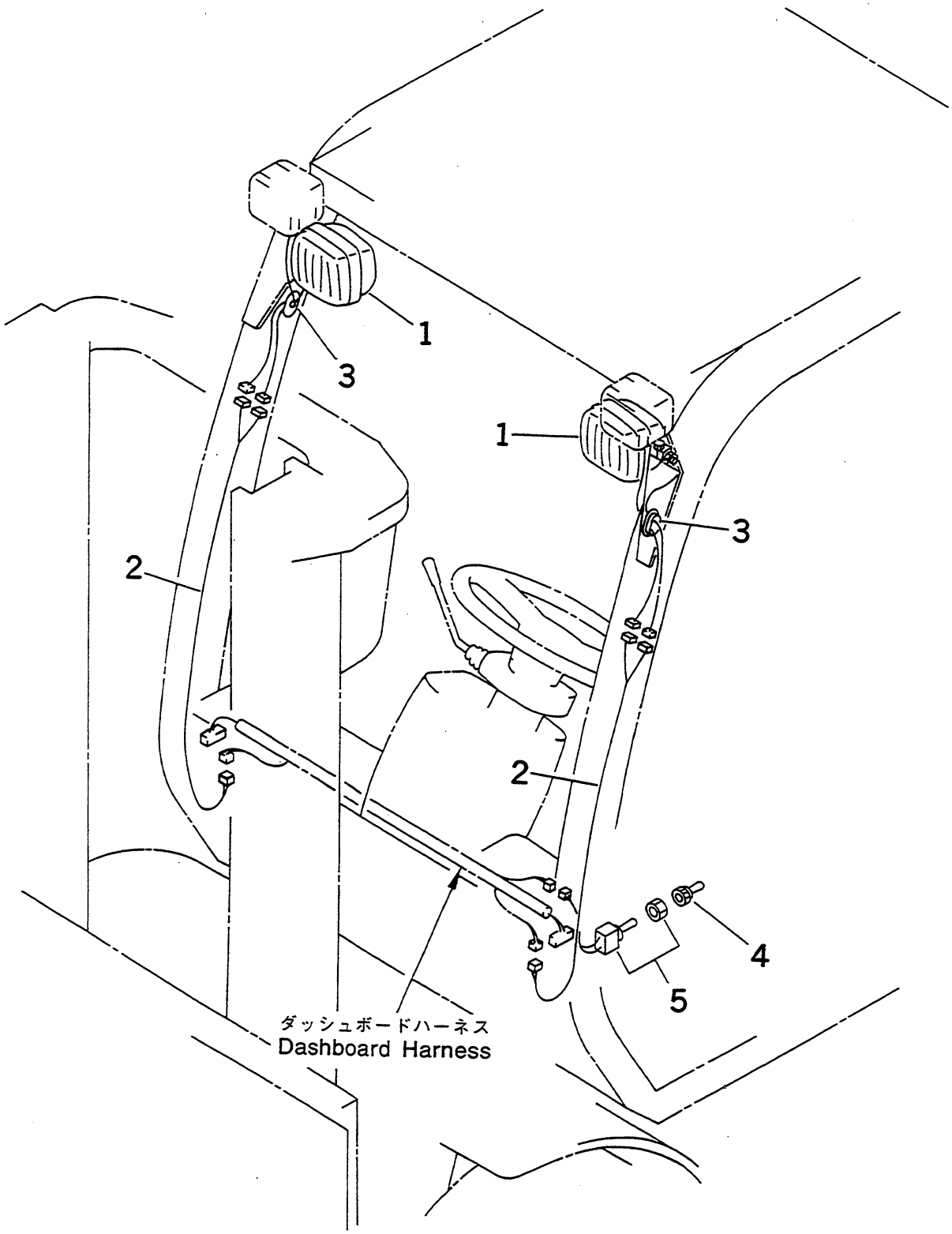

https://truckmanualshub.com/

INDEX	PART NO.	DESCRIPTION	Q'TY	SERIAL NO.
1	37B-1EA-3010	LAMP,HEAD.....	2	600001A AND UP
	3EB-55-11220	.LENS.....	1	
	3EB-55-34120	.BULB, 55W.....	1	
2	3EB-55-39511	WIRE.....	2	
3	3EB-55-23370	COVER.....	2	
4	34B-57-23730	CAP.....	1	
5	3EB-55-39431	SWITCH,HEAD LAMP.....	1	
***	3EB-55-141201	55 Watt Bulb		
*****	3EB-55-34121	Heavy Duty Bulb		
		Refer TB-046		

https://truckmanualshub.com/

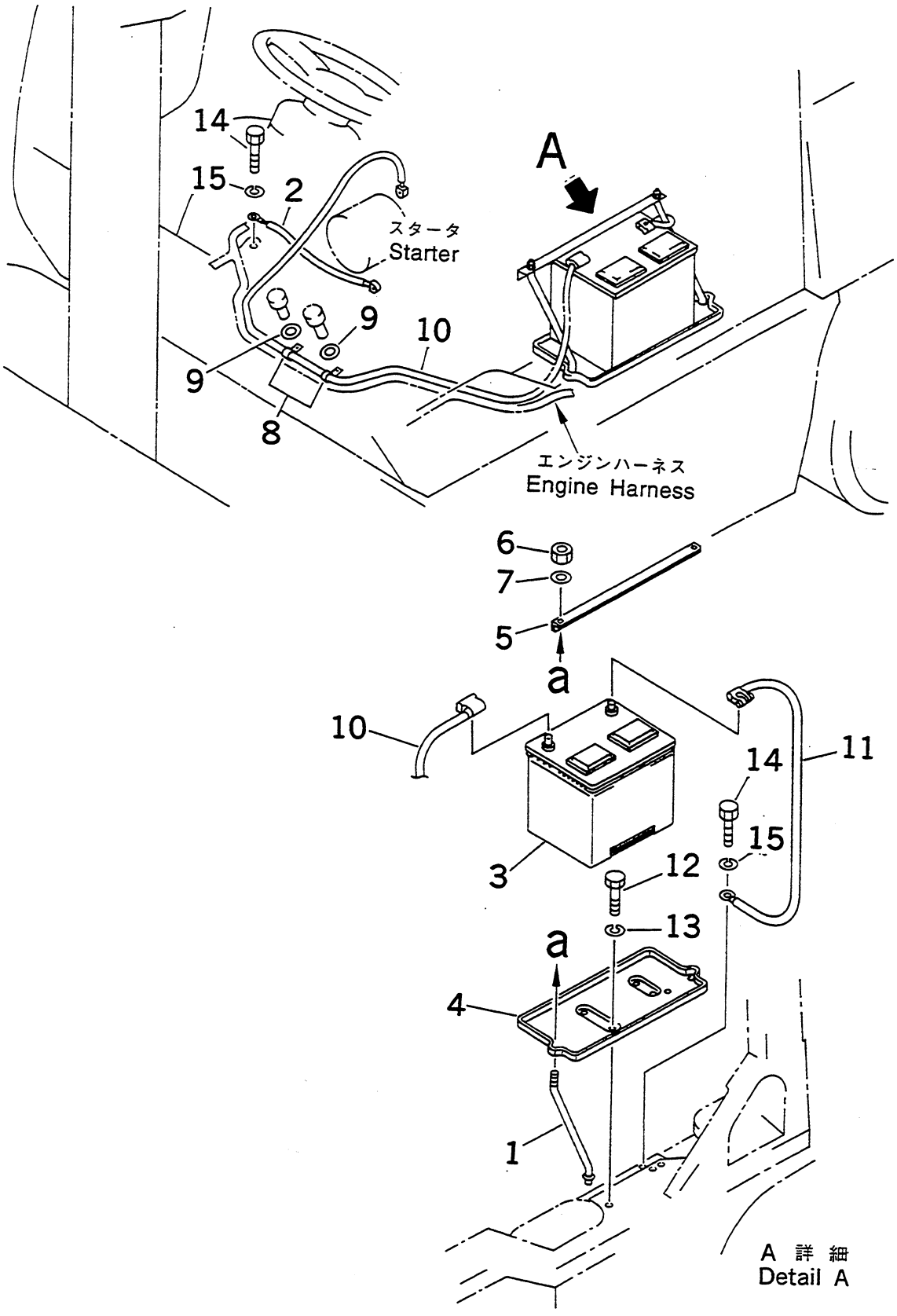

https://truckmanualshub.com/

FIG NO. : Q4130-01A0

INDEX	PART NO.	DESCRIPTION	Q'TY	SERIAL NO.
1	3EB-55-12140	CLAMP	2	600001A AND UP
2	3EB-55-24580	CABLE	1	
3	3EA-55-A1810	BATTERY	1	
4	3EB-55-33210	HOLDER,(FOR PNEUMA)	1	
	3EA-55-35510	HOLDER,(FOR CUSHION)	1	
5	3EB-55-33220	ANGLE	1	
6	01580-10605	NUT	2	
7	01641-20608	WASHER	2	
8	04434-51708	CLIP	2	
9	01642-20810	WASHER	2	
10	37A-1LH-2110	CABLE	1	
11	37A-1LK-2080	CABLE	1	
12	01010-80820	BOLT	2	
13	01602-20825	WASHER,SPRING	2	
14	01010-80816	BOLT	2	
15	01602-20825	WASHER,SPRING	2	

https://truckmanualshub.com/

エレクトリカル システム (バック アップ ブザー)
FIG.Q4150-01A0 ELECTRICAL SYSTEM (BACK-UP BUZZER)

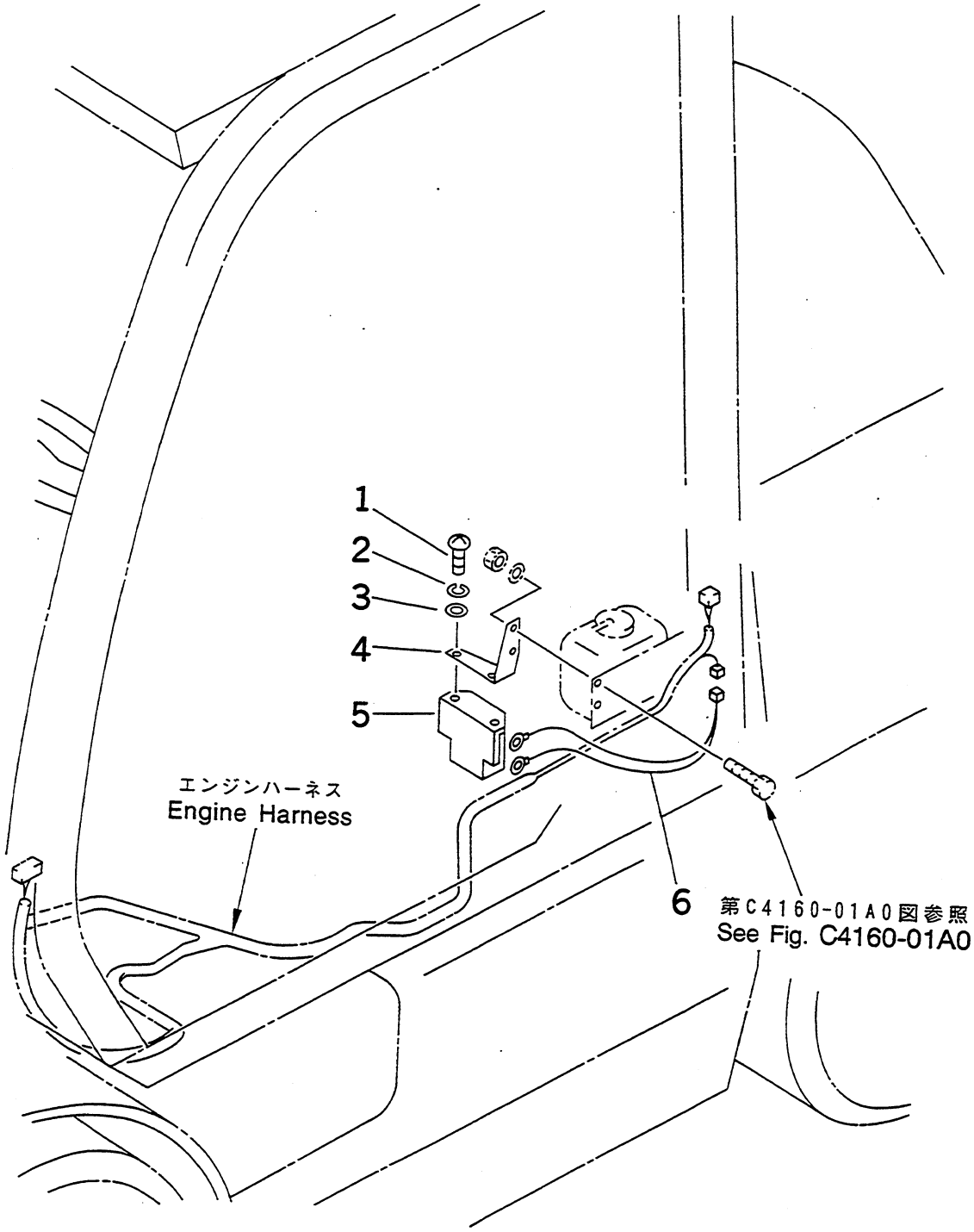

https://truckmanualshub.com/

FIG NO. : Q4150-01A0

FG15H,FG18H

INDEX	PART NO.	DESCRIPTION	Q'TY	SERIAL NO.
1	01220-40610	SCREW	2	600001A AND UP
2	01602-20619	WASHER,SPRING	2	
3	01642-20608	WASHER	2	
4	3EA-55-35150	BRACKET	1	
5	3EA-56-F2210	BUZZER	1	
6	3EB-55-39610	WIRE	1	

https://truckmanualshub.com/

エレクトリカル システム (バック アップ ブザー)
FIG.Q4150-01A1 ELECTRICAL SYSTEM (BACK-UP BUZZER)

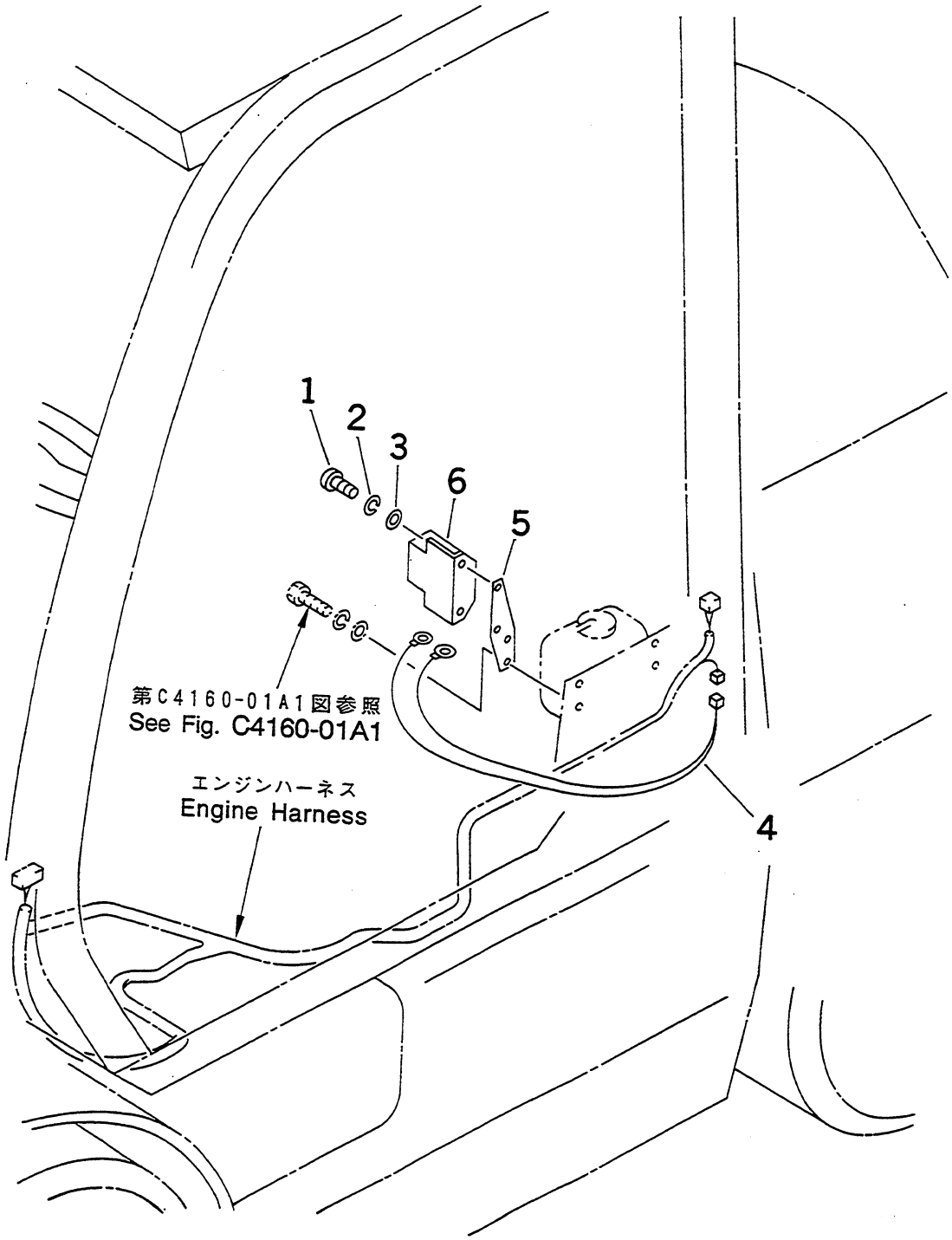

https://truckmanualshub.com/

FIG NO. : Q4150-01A1

FG15S,FG18S

INDEX	PART NO.	DESCRIPTION	Q'TY	SERIAL NO.
1	01220-40610	SCREW	2	600001A AND UP
2	01602-20619	WASHER,SPRING	2	
3	01642-20608	WASHER	2	
4	3EA-55-35160	WIRE	1	
5	3EA-55-35170	BRACKET	1	
6	3EA-56-F2210	BUZZER	1	

https://truckmanualshub.com/

エレクトリカル システム (エンジン ワイヤリング) (クラッチ シヨウ)
FIG.Q4210-01A0 ELECTRICAL SYSTEM (ENGINE WIRING) (CLUTCH SPEC.)

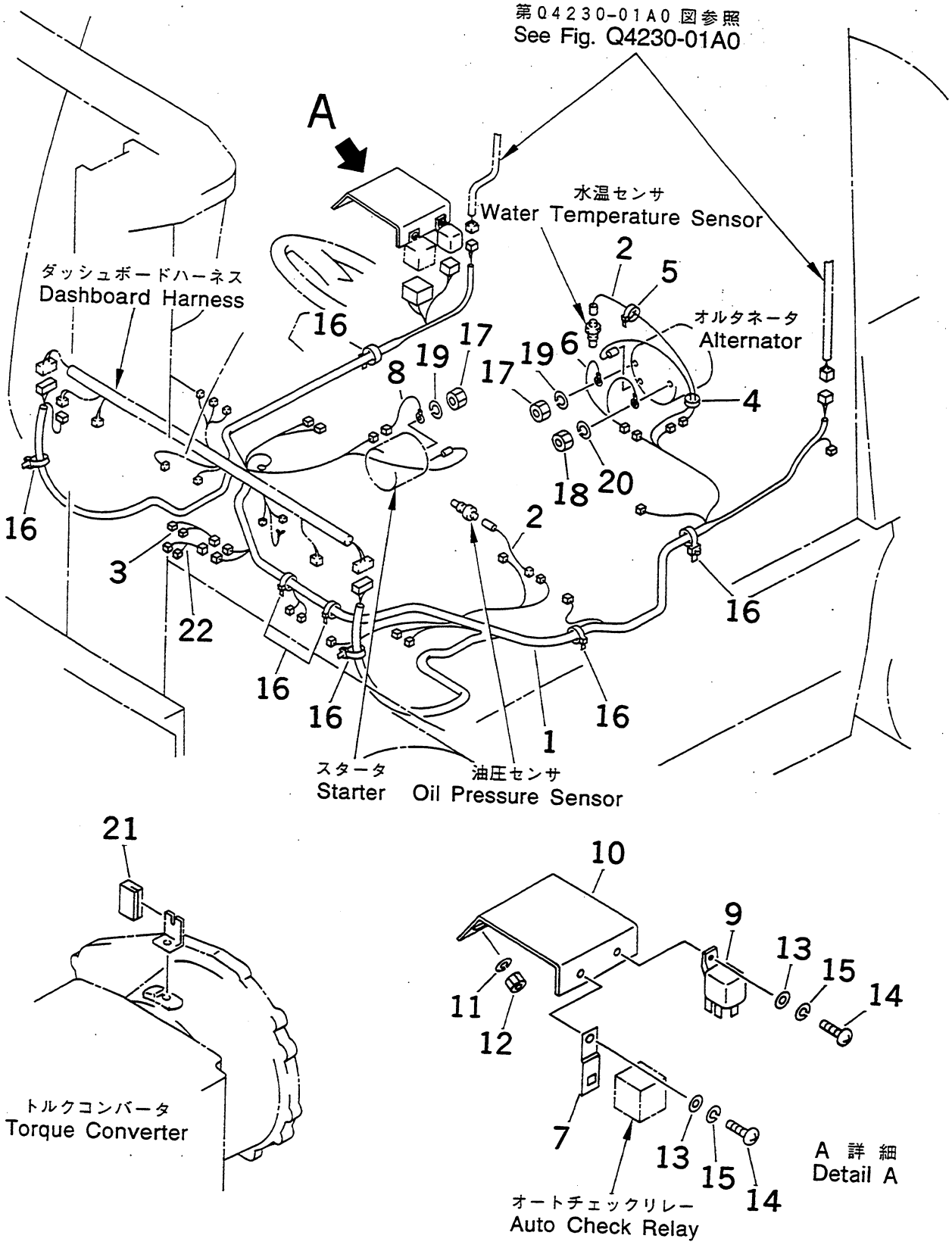

https://truckmanualshub.com/

FIG NO. : Q4210-01A0

FG15H

INDEX	PART NO.	DESCRIPTION	Q'TY	SERIAL NO.
1	3EA-55-A5210	HARNESS	1	600001A AND UP
2	3EB-55-39240	WIRE	2	
3	3EB-55-39580	WIRE	1	
4	37B-1AE-6010	BAND	6	
5	37B-1AE-6030	BAND	3	
6	3EB-55-39221	WIRE	1	
7	3EB-55-31260	PLATE	1	
8	3EB-55-22240	WIRE	1	
9	3EB-55-31270	RELAY	1	
10	3EB-55-39151	BRACKET	1	
11	01602-20825	WASHER,SPRING	2	
12	01580-10806	NUT	2	
13	01642-20508	WASHER	2	
14	01220-40516	SCREW	2	
15	01601-20513	WASHER,SPRING	2	
16	3EB-55-31490	CLIP	12	
17	01580-10806	NUT	2	
18	01580-10504	NUT	1	
19	01602-20825	WASHER,SPRING	2	
20	01601-20513	WASHER,SPRING	1	
21	37P-2BA-1060	WEATHER STRIP	1	
22	3EB-55-39590	WIRE	1	

https://truckmanualshub.com/

FIG.Q4210-01A1 エレクトリカル システム (エンジン ワイヤリング) (トルク コンバータ シヨウ)
ELECTRICAL SYSTEM (ENGINE WIRING) (TORQUE CONVERTER SPEC.)

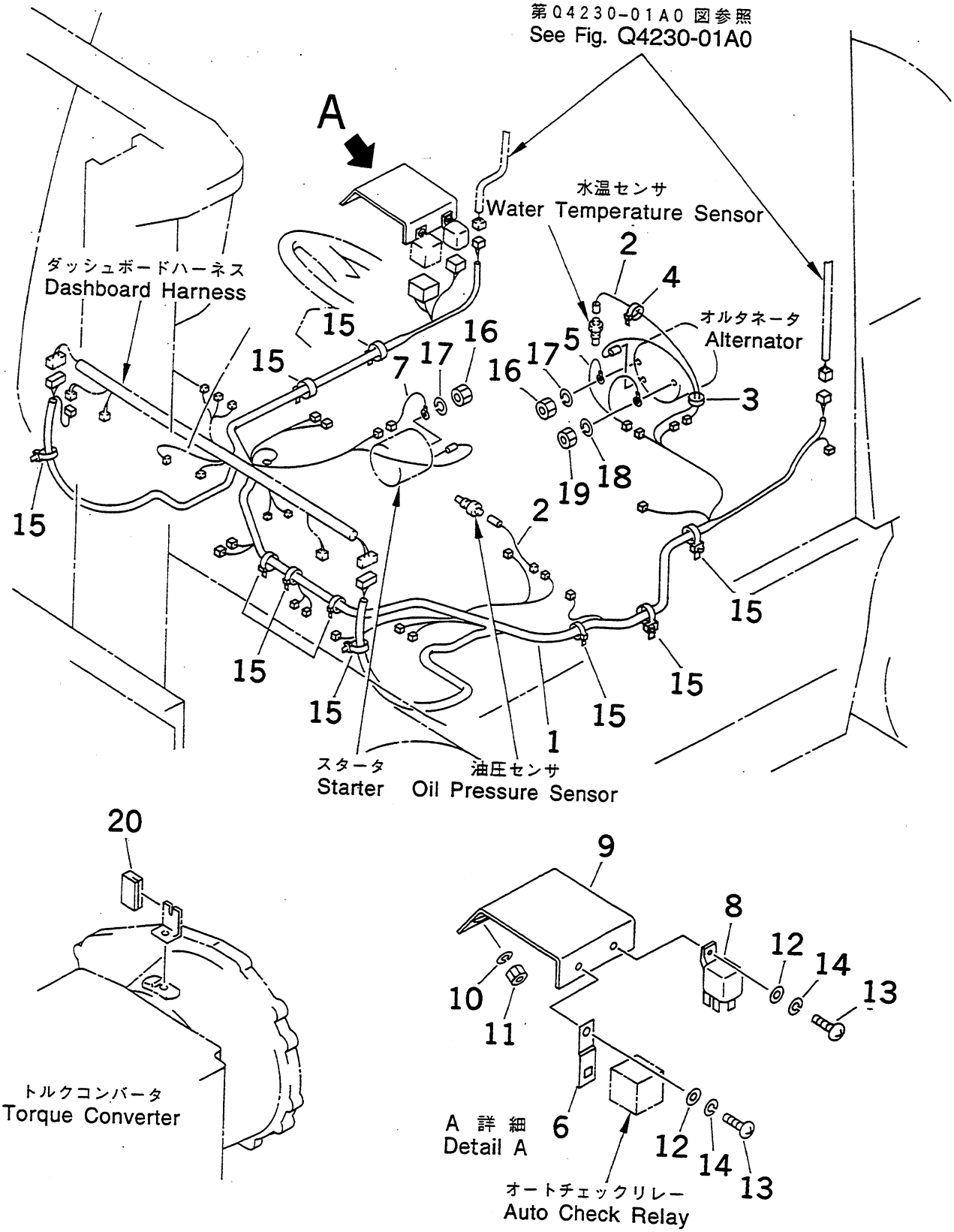

https://truckmanualshub.com/

FIG NO. : Q4210-01A1

FG15H,FG18H

INDEX	PART NO.	DESCRIPTION	Q'TY	SERIAL NO.
1	3EA-55-A5210	HARNESS	1	600001A - 650000A
2	3EB-55-39240	WIRE	2	
3	37B-1AE-6010	BAND	6	
4	37B-1AE-6030	BAND	3	
5	3EB-55-39221	WIRE	1	
6	3EB-55-31260	PLATE	1	
7	3EB-55-22240	WIRE	1	
8	3EB-55-31270	RELAY	1	
9	3EB-55-39151	BRACKET	1	
10	01602-20825	WASHER,SPRING	2	
11	01580-10806	NUT	2	
12	01642-20508	WASHER	2	
13	01220-40516	SCREW	2	
14	01601-20513	WASHER,SPRING	2	
15	3EB-55-31490	CLIP	12	
16	01580-10806	NUT	2	
17	01602-20825	WASHER,SPRING	2	
18	01601-20513	WASHER,SPRING	1	
19	01580-10504	NUT	1	
20	37P-2BA-1060	WEATHER STRIP	1	

https://truckmanualshub.com/

FIG. NO. : Q4210-01A1A ELECTRICAL SYSTEM (ENGINE WIRING -- TORQUE CONVERTER SPEC.)

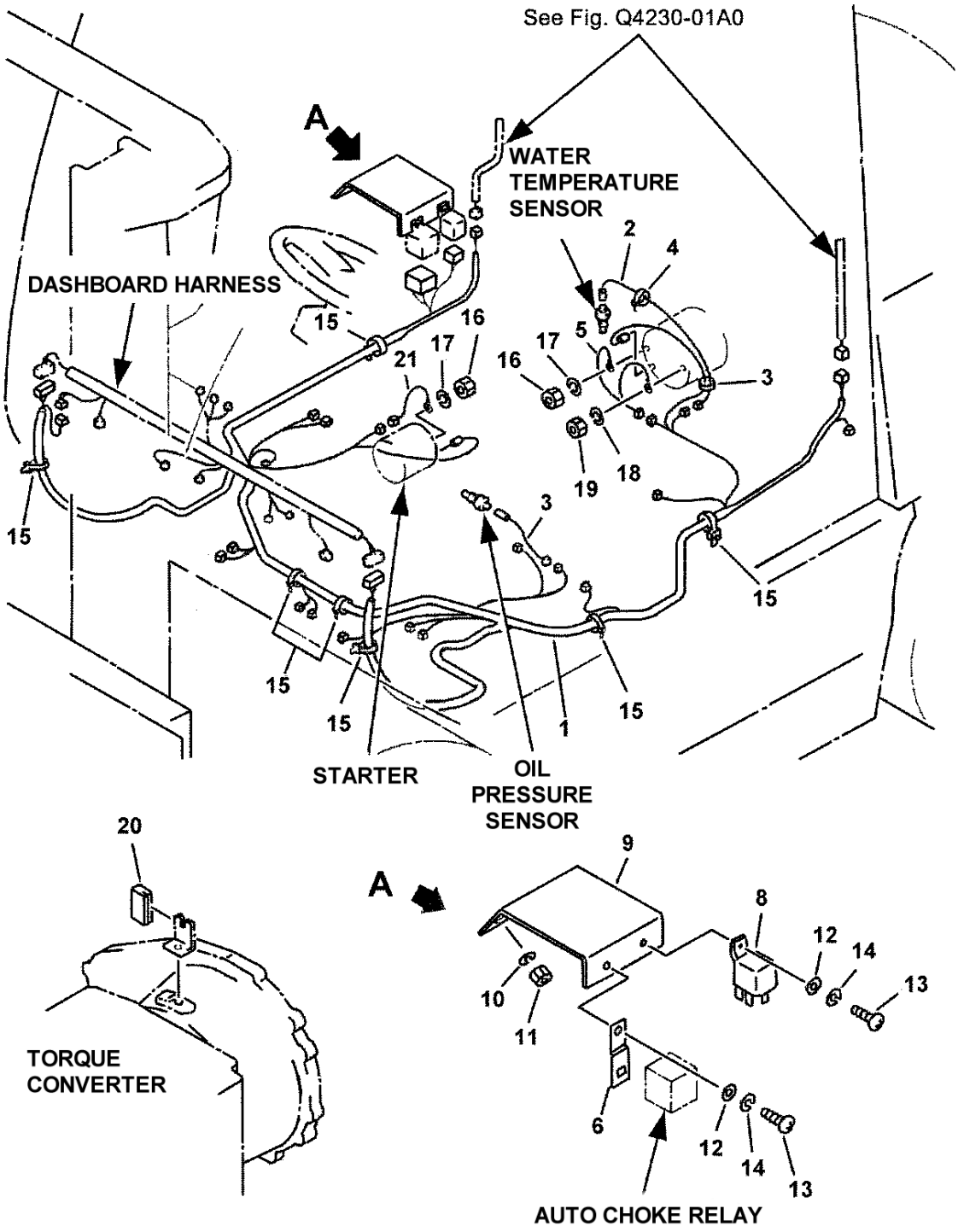

https://truckmanualshub.com/

FIG. NO. : Q4210-01A1A

FG15S/18S-16, FG15H/18H-16

INDEX	PART NO.	DESCRIPTION	Q'TY	SERIAL NO.
				650001A and Up
1	3EA-55-A5213	HARNESS, (STD)	1	
	3EB-56-A5310	HARNESS, (GS and LPS)	1	
2	3EB-55-39240	WIRE	2	
3	37B-1AE-6010	BAND	6	
4	37B-1AE-6030	BAND	3	
5	3EB-55-39221	WIRE	1	
6	3EB-55-31260	PLATE	1	
7	NOT USED	NOT USED	*	
8	3EB-55-31270	RELAY	1	
9	3EB-55-39151	BRACKET	1	
10	01602-20825	WASHER, SPRING	2	
11	01580-10806	NUT	2	
12	01642-20508	WASHER	2	
13	01220-40516	SCREW	2	
14	01601-20513	WASHER, SPRING	2	
15	3EB-55-31490	CLIP	8	
16	01580-10806	NUT	2	
17	01602-20825	WASHER, SPRING	2	
18	01601-20513	WASHER, SPRING	1	
19	01580-10504	NUT	1	
20	37P-2BA-1060	WEATHERSTRIP	1	
21	3EB-55-39570	WIRE (TORQFLOW)	1	
	3EB-55-39560	WIRE (CLUTCH-TYPE)	1	

https://truckmanualshub.com/

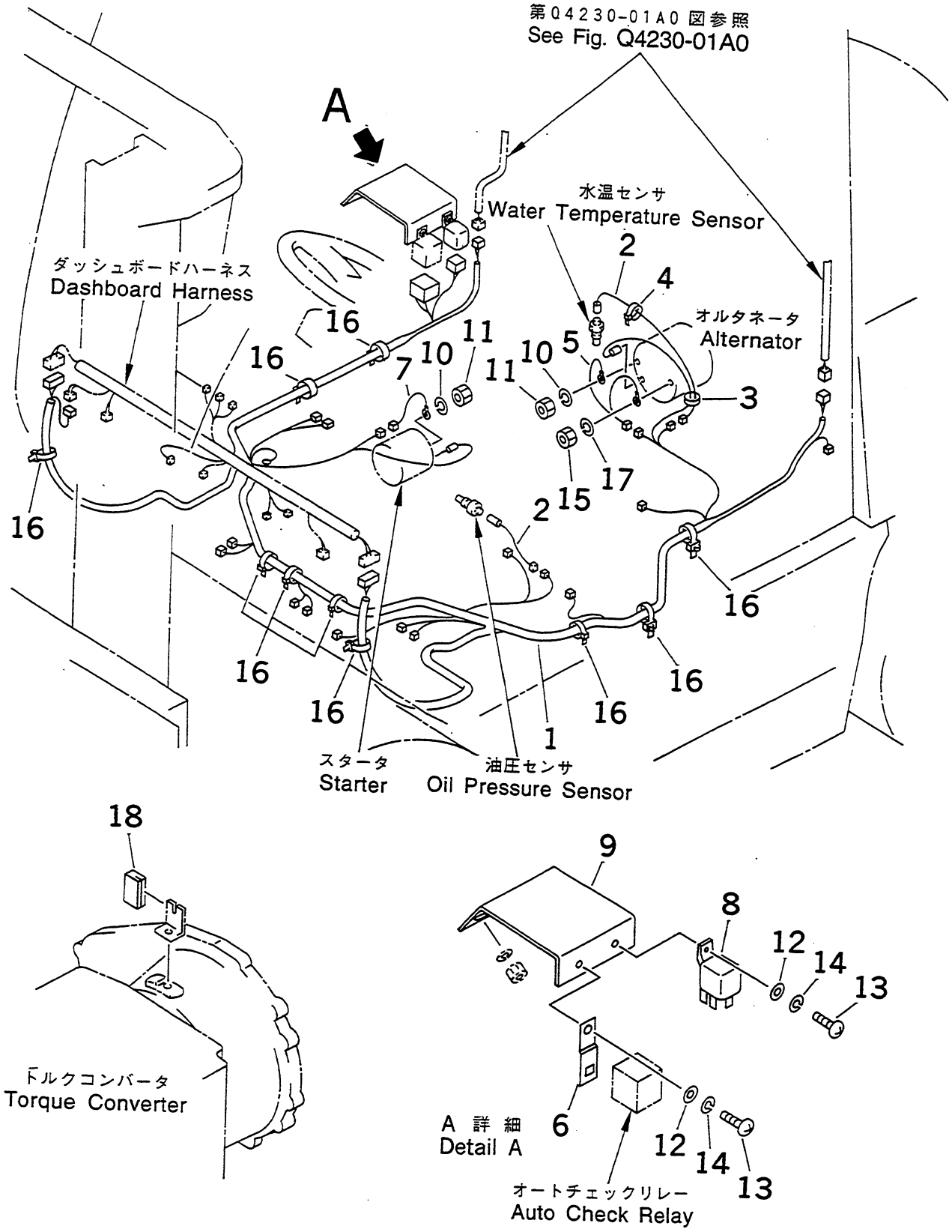

https://truckmanualshub.com/

FIG NO. : Q4210-01A2

FG15S,FG18S

INDEX	PART NO.	DESCRIPTION	Q'TY	SERIAL NO.
1	3EA-55-A5210	HARNESS	1	600001A AND UP
2	3EB-55-39240	WIRE	2	
3	37B-1AE-6010	BAND	6	
4	37B-1AE-6030	BAND	3	
5	3EB-55-39221	WIRE	1	
6	3EB-55-31260	PLATE	1	
7	3EB-55-22240	WIRE	1	
8	3EB-55-31270	RELAY	1	
9	3EA-55-35530	BRACKET	1	
10	01602-20825	WASHER,SPRING	2	
11	01580-10806	NUT	2	
12	01642-20508	WASHER	2	
13	01220-40516	SCREW	2	
14	01601-20513	WASHER,SPRING	2	
15	01580-10504	NUT	1	
16	3EB-55-31490	CLIP	10	
17	01601-20513	WASHER,SPRING	1	
18	37P-2BA-1060	WEATHER STRIP	1	

https://truckmanualshub.com/

エレクトリカル システム (フュエル センディング ユニット)
FIG.Q4220-01A0 ELECTRICAL SYSTEM (FUEL SENDING UNIT)

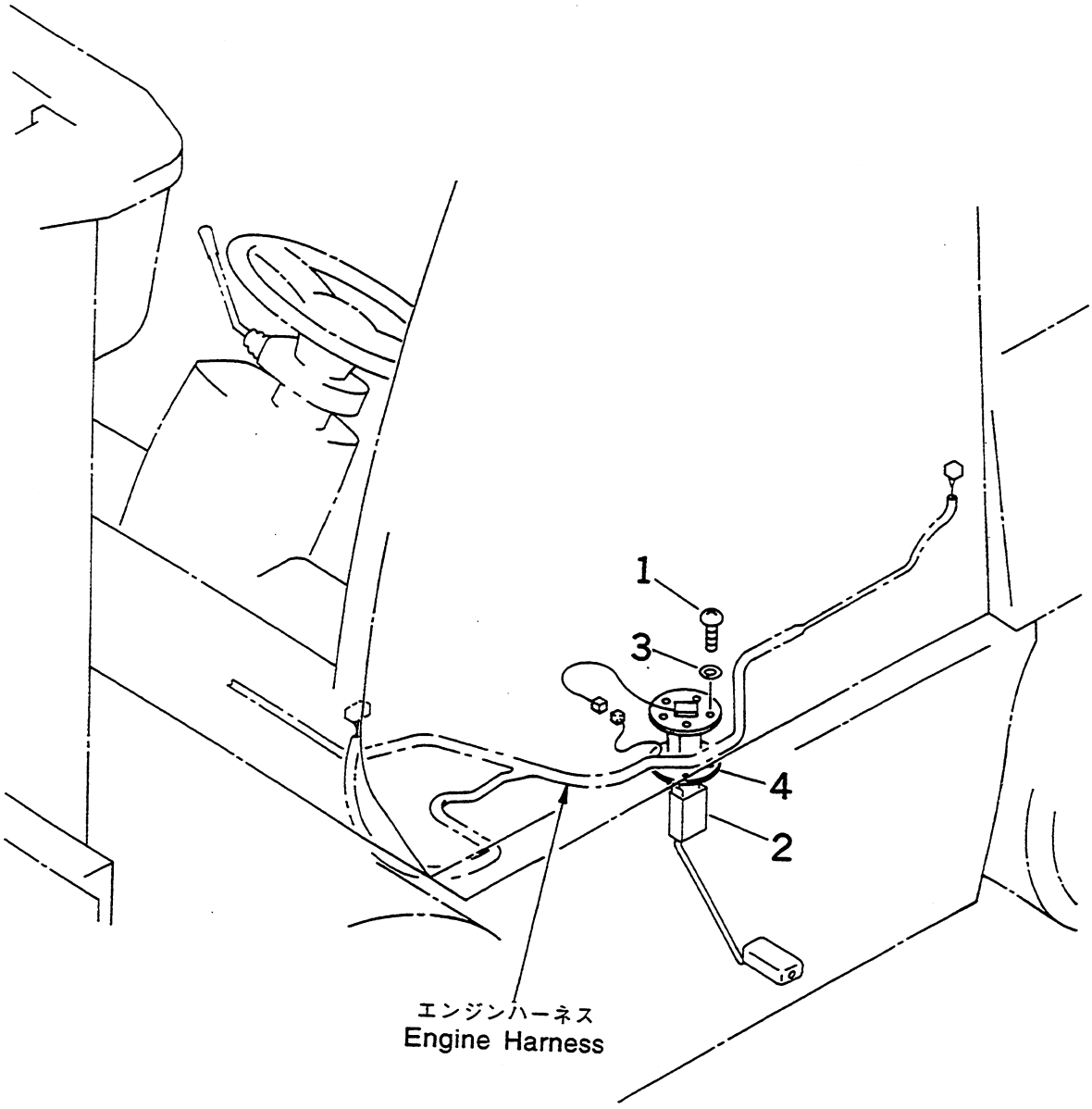

https://truckmanualshub.com/

INDEX	PART NO.	DESCRIPTION	Q'TY	SERIAL NO.
1	01220-40512	SCREW.....	5	600001A AND UP
2	3EA-55-33110	TANK UNIT,FUEL.....	1	
3	3SB-55-11380	GASKET.....	5	
4	324-06-11330	PACKING.....	1	

https://truckmanualshub.com/

エレクトリカル システム (フュエル センデ゛ィング゛ ユニット)
FIG.Q4220-01A1 ELECTRICAL SYSTEM (FUEL SENDING UNIT)

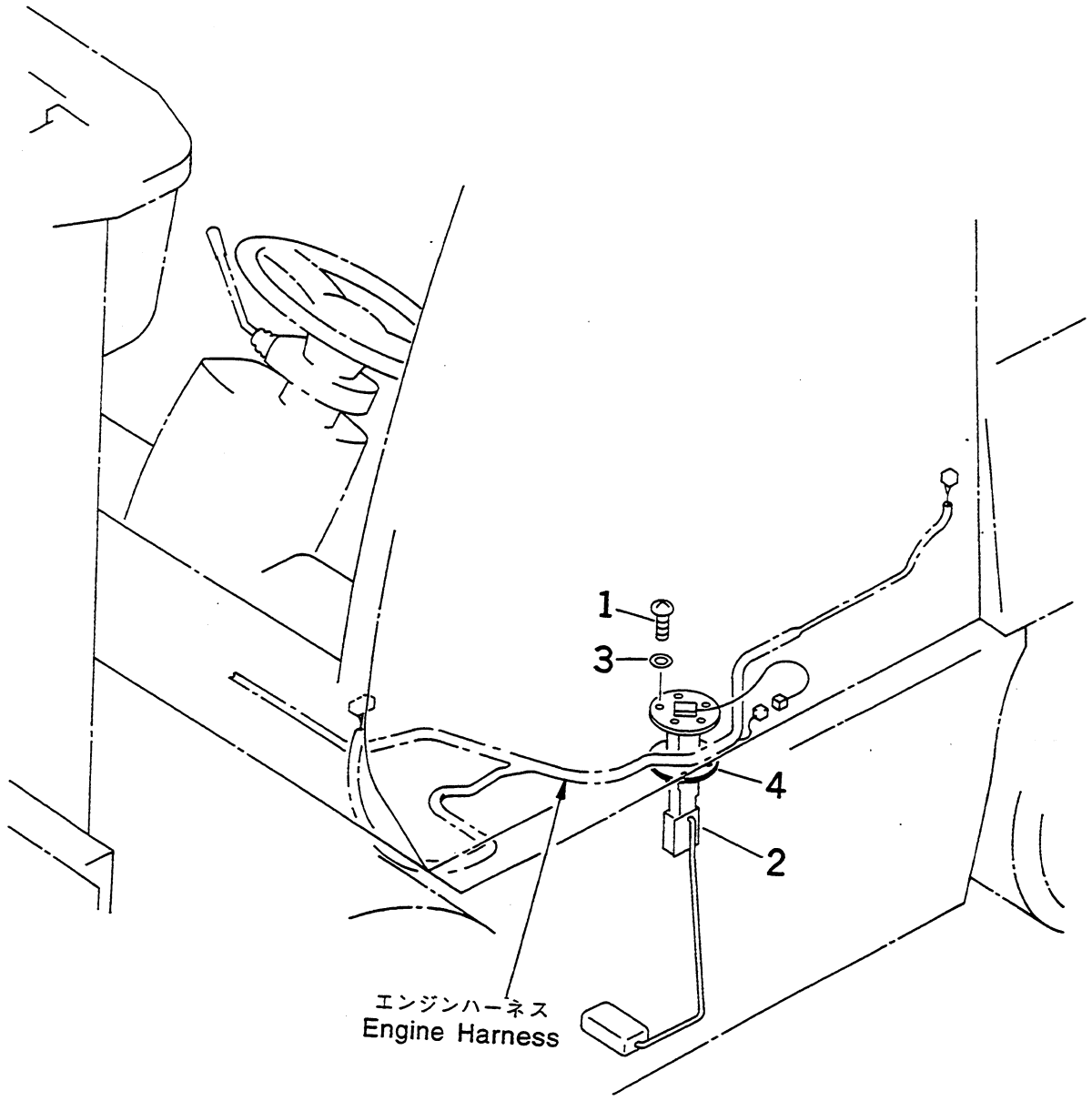

https://truckmanualshub.com/

FIG NO. : Q4220-01A1

FG15S,FG18S

INDEX	PART NO.	DESCRIPTION	Q'TY	SERIAL NO.
1	01220-40512	SCREW.....	5	600001A AND UP
2	3EA-55-23550	TANK UNIT,FUEL.....	1	
3	3SB-55-11380	GASKET.....	5	
4	324-06-11330	PACKING.....	1	

https://truckmanualshub.com/

エレクトリカル システム (コンビネーション ランプ)
FIG.Q4230-01A0 ELECTRICAL SYSTEM (COMBINATION LAMP)

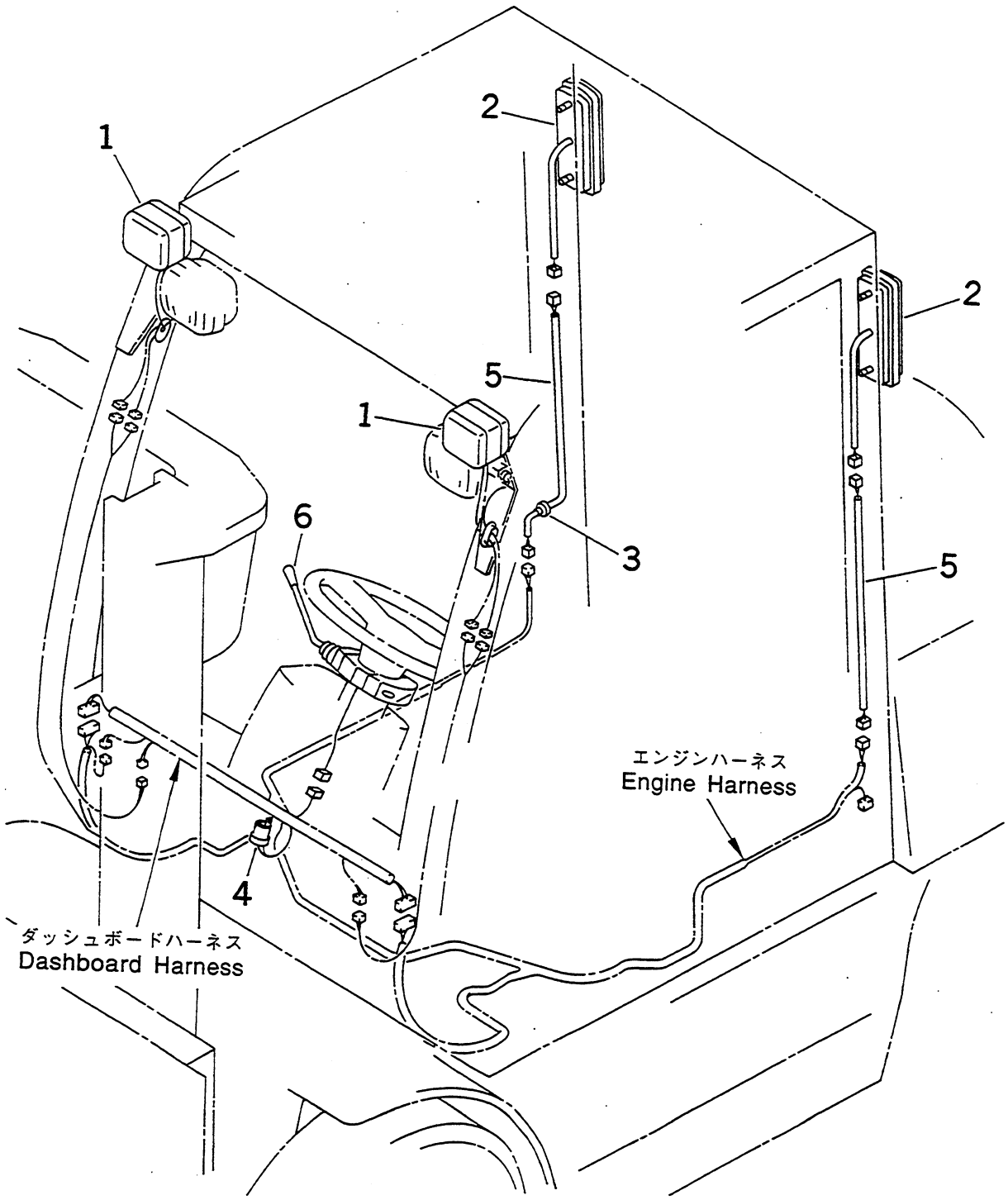

https://truckmanualshub.com/

FIG NO. : Q4230-01A0

INDEX	PART NO.	DESCRIPTION	Q'TY	SERIAL NO.
1	37B-1EH-2010	LAMP ASS'Y.....	2	600001A - 650000A
	08105-01220	.BULB, 23W.....	1	
	3EB-55-11290	.BULB, 8W.....	1	
	3EB-55-11240	.LENS.....	1	
	3EB-55-11250	.LENS.....	1	
2	37B-1EB-3010	LAMP ASS'Y.....	2	
	3EB-55-12322	.LENS.....	1	
	08104-11220	.BULB, 8W.....	1	
	08105-01220	.BULB, 23W.....	1	
	3EB-55-34310	.BULB, 27W.....	1	
3	3EB-55-34320	GROMMET.....	1	
4	3EB-55-23320	FLASHER.....	1	
5	3EB-55-39550	WIRE.....	2	
6	3BA-55-41910	SWITCH,TURN SIGNAL.....	1	

https://truckmanualshub.com/

FIG. NO. : Q4230-01A0A **ELECTRICAL SYSTEM (COMBINATION LAMP)**

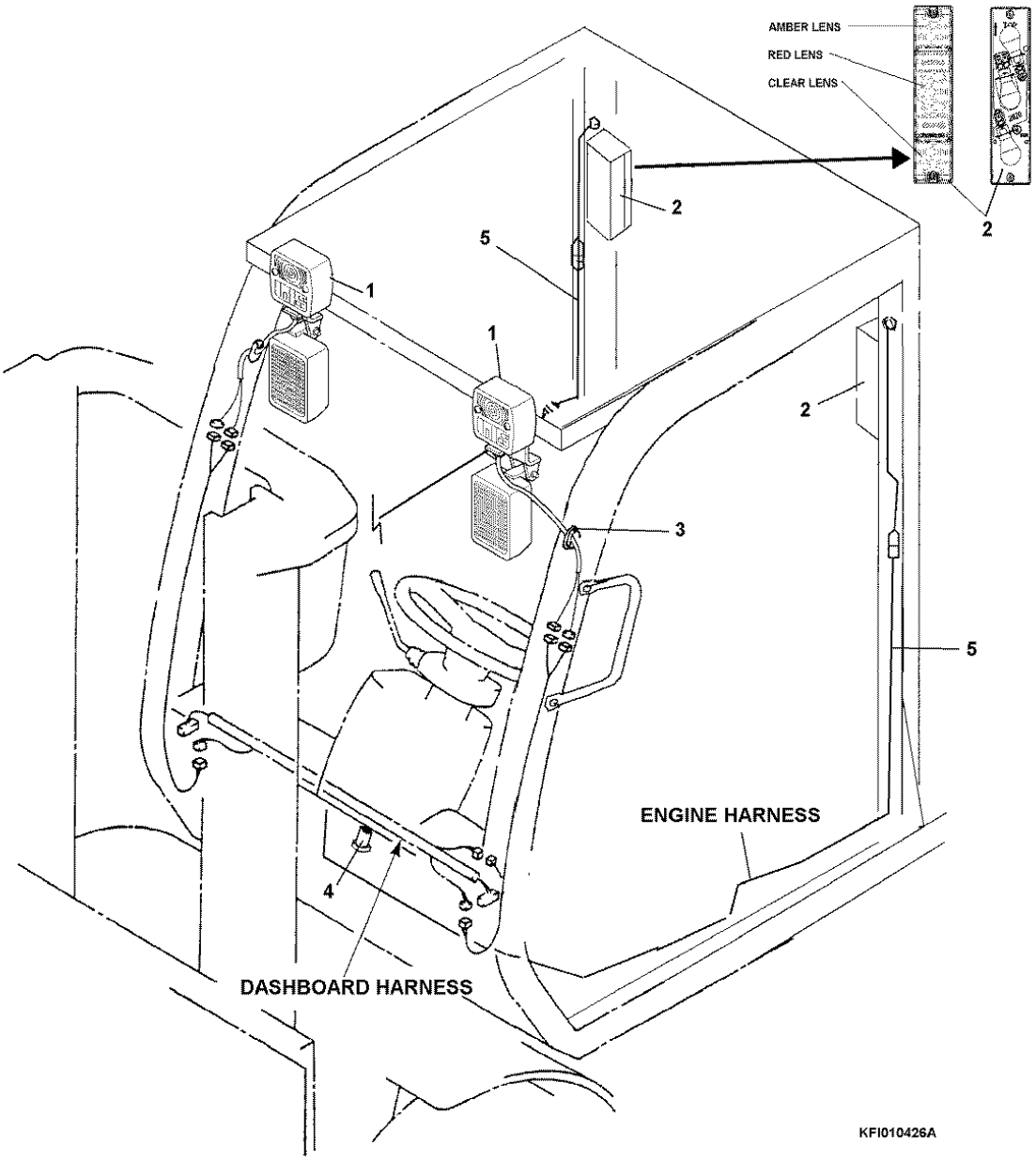

https://truckmanualshub.com/

FIG. NO. : Q4230-01A0A

FG15/18-16 (ALL)

INDEX	PART NO.	DESCRIPTION	Q'TY	SERIAL NO.
				650001A and Up
1	37B-EH-2010	LAMP ASSEMBLY, FLASHER	2	
	08105-01220	.BULB, 23W	1	
	3EB-55-11290	.BULB, 8W	1	
	3EB-55-11240	.LENS	1	
	3EB-55-11250	.LENS	1	
2	3EB-55-A5631	LAMP ASSEMBLY, REAR COMBINATION .	2	
	4429480	.LENS, AMBER	1	
	4431490	.LENS, RED	1	
	4429490	.LENS, CLEAR	1	
	GE1141	BULB (TOP AND BOTTOM)	2	
	GE1157	BULB (CENTER)	1	
3	3EB-55-34320	GROMMET	1	
4	3EB-55-23320	FLASHER	1	
5	3EB-55-39550	WIRE	2	

https://truckmanualshub.com/

FIG. NO. : Q4240-01A0

ELECTRICAL SYSTEM
(COMBINATION SWITCH -- TORQFLOW)

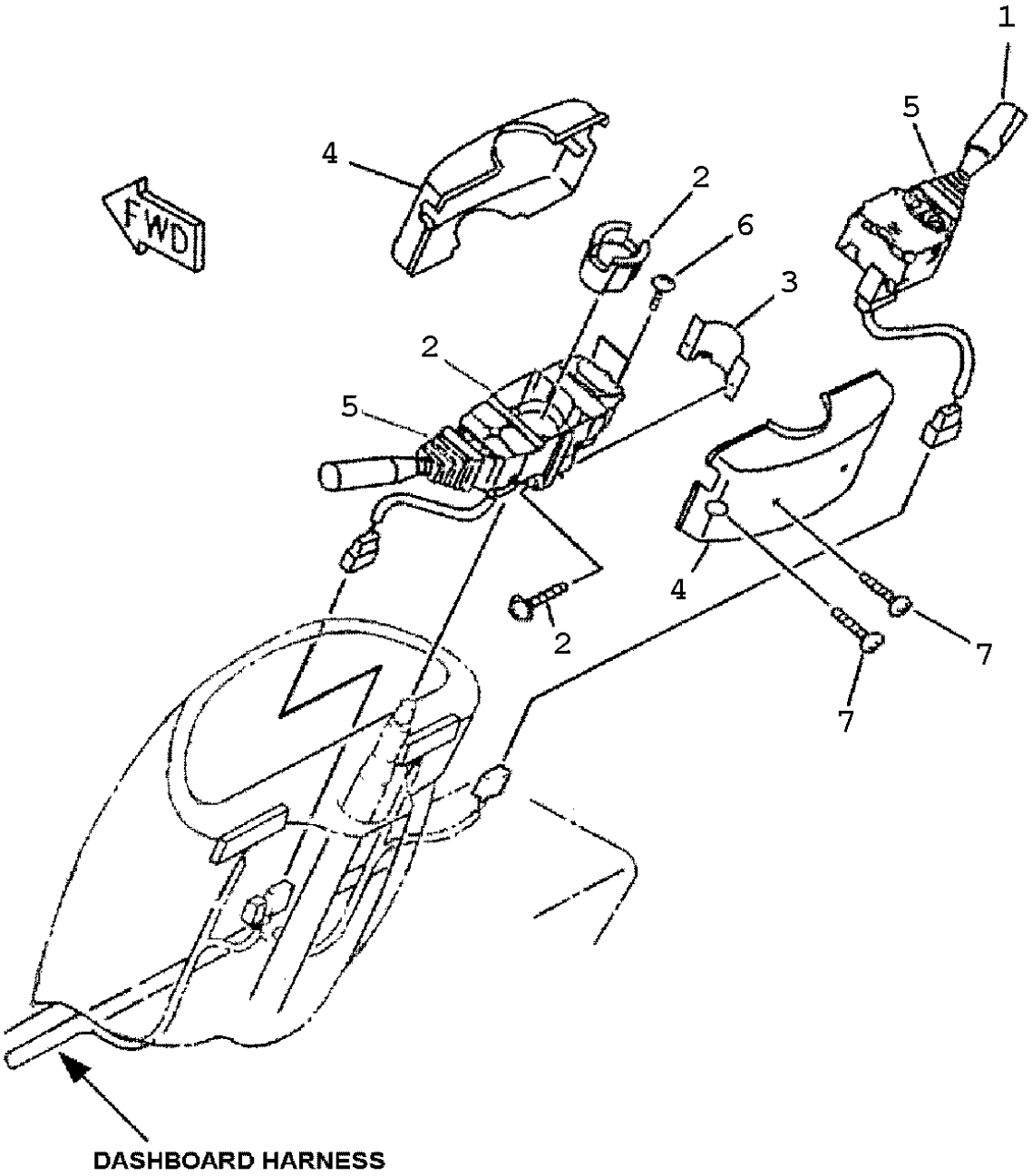

https://truckmanualshub.com/

FIG. NO. : Q4240-01A0

FG15HT/18HT-16, FG15ST/18ST-16 (TORQFLOW SPEC)

INDEX	PART NO.	DESCRIPTION	Q'TY	SERIAL NO.
				650001A and Up
	37C-1CS-3010	SWITCH, ASSEMBLY, COMBINATION ...	1	
1	OS35255-37C30	.SWITCH, COMBO LIGHT/TURN SIGNAL	1	
2	OS54000-37C30	.SWITCH, FORWARD/REVERSE	1	
3	3EC-55-36710	..CLAMP	1	
4	OS77350-37C30	.COVER	1	
5	OS83414-3EB32	.BOOT	2	
6	OS93901-32420	.SCREW	2	
7	01370-40416	SCREW	4	

https://truckmanualshub.com/

FIG. NO. : Q4250-01A0

ELECTRICAL SYSTEM
(COMBINATION SWITCH -- CLUTCH-TYPE TRUCKS)

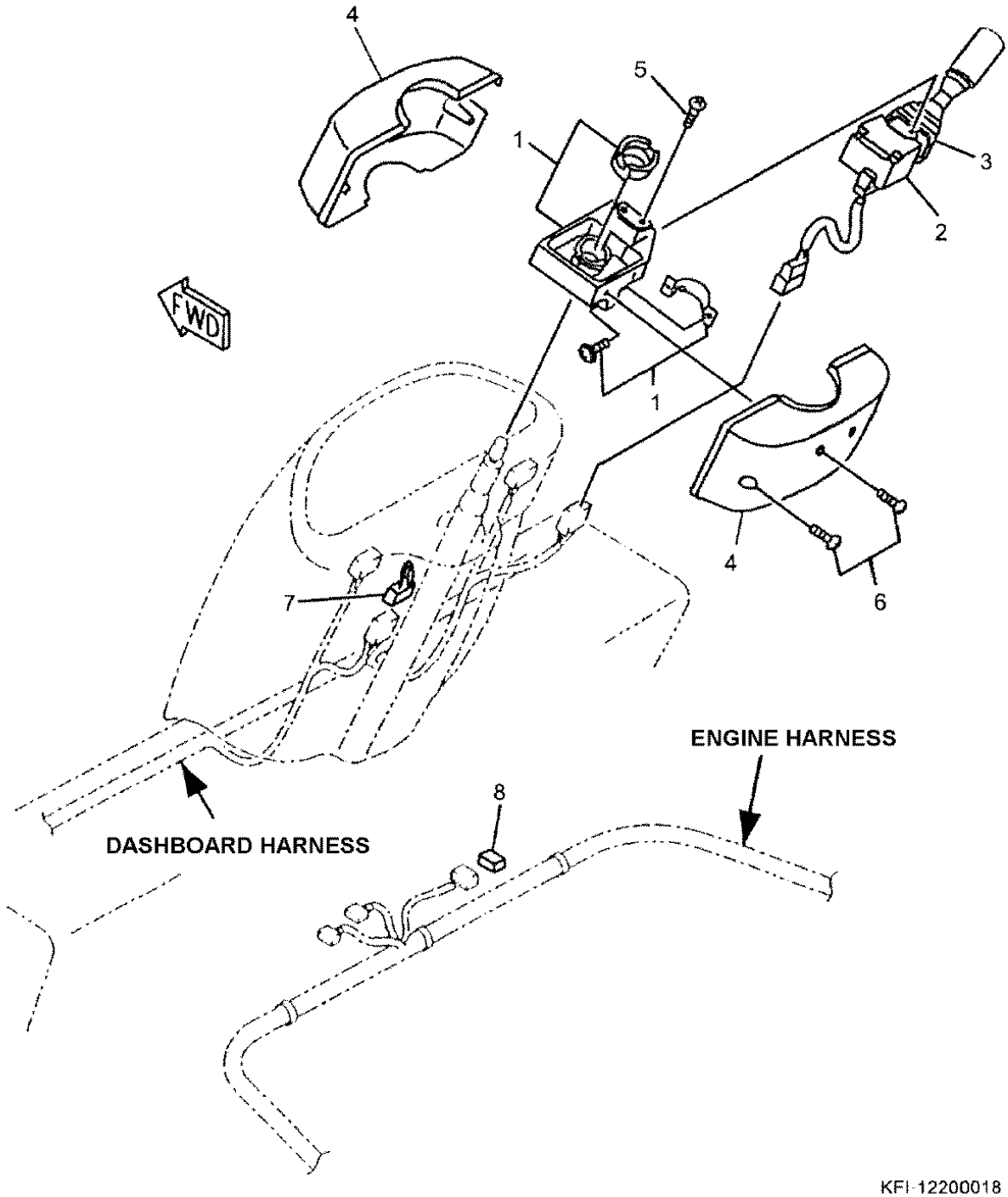

https://truckmanualshub.com/

FIG. NO. : Q4250-01A0

FG15C-16, FG15HC-16 (CLUTCH-TYPE TRUCKS ONLY)

INDEX	PART NO.	DESCRIPTION	Q'TY	SERIAL NO.
				650001A and Up
	3EB-55-32112	SWITCH ASSEMBLY, COMBINATION	1	
1	OS35251-3EB-32	.BODY	1	
2	OS35255-3EB-33	.SWITCH, TURN SIGNAL	1	
3	OS83414-3EB-32	.BOOT	1	
4	OS77350-3EB-32	.COVER	1	
5	OS93901-32420	.SCREW	2	
6	01370-40416	SCREW	4	
7	3EB-55-32180	WIRE	1	
8	3EB-55-32190	CONNECTOR	1	

https://truckmanualshub.com/

This Page Left Intentionally Blank

KOMATSU

https://truckmanualshub.com/

KOMATSU

Hydraulic System

AX SERIES

Hydraulic System

https://truckmanualshub.com/

ﾊｲﾄﾞﾛﾘｯｸ ﾎﾟﾝﾌﾟ ｵﾖﾋﾞ ﾄﾘﾂｹ ﾌﾞﾋﾝ

FIG.R4110-01A0 HYDRAULIC PUMP AND MOUNTING PARTS

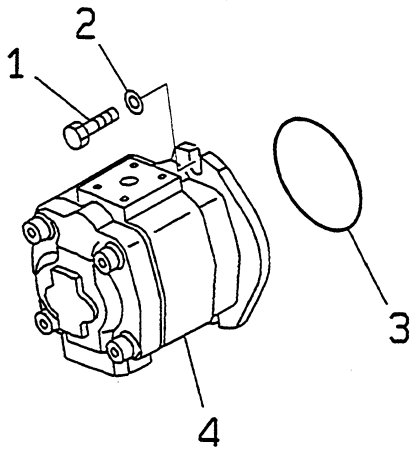

PUF1751

https://truckmanualshub.com/

FIG NO. : R4110-01A0

INDEX	PART NO.	DESCRIPTION	Q'TY	SERIAL NO.
1	01010-81030	BOLT.....	2	600001A AND UP
2	01643-31032	WASHER.....	2	
3	02892-03081	O-RING.....	1	
4	(3EA-60-A5110)	PUMP ASS'Y.....	1	

https://truckmanualshub.com/

2 レン コントロール バルブ オヨビ トリツケ ブヒン (クラッチ シヨウ)

FIG.R4140-01A0 2-SPOOL CONTROL VALVE AND MOUNTING PARTS (CLUTCH SPEC.)

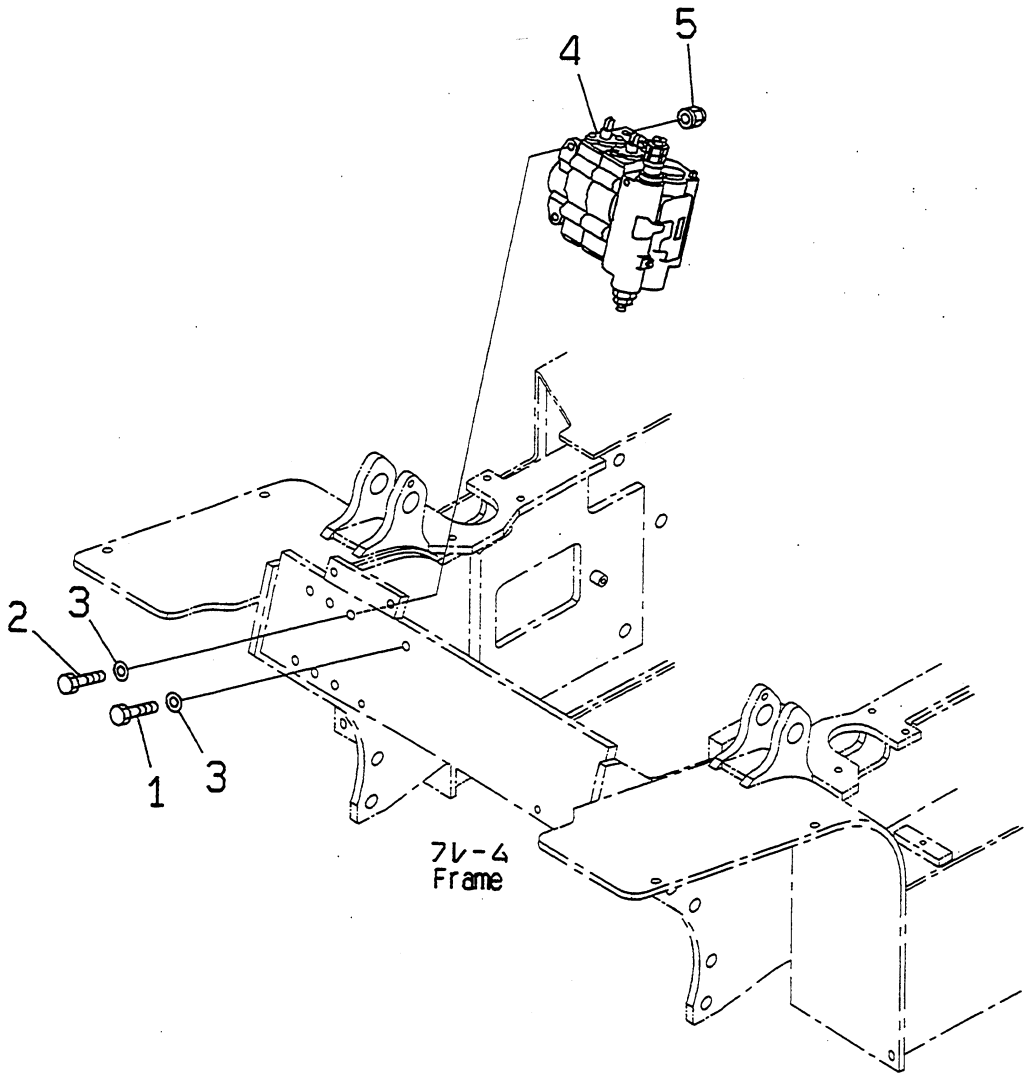

PUF1747

https://truckmanualshub.com/

FIG NO. : R4140-01A0

FG15H

INDEX	PART NO.	DESCRIPTION	Q'TY	SERIAL NO.
1	01010-81030	BOLT	1	600001A AND UP
2	01010-81045	BOLT	2	
3	01643-51032	WASHER	3	
4	(3EA-61-A2210)	VALVE ASS'Y	1	
5	3EB-61-11260	NUT	2	

https://truckmanualshub.com/

3 レン コントロール バルブ オヨビ トリツケ ブヒン
FIG.R4140-01A1 3-SPOOL CONTROL VALVE AND MOUNTING PARTS

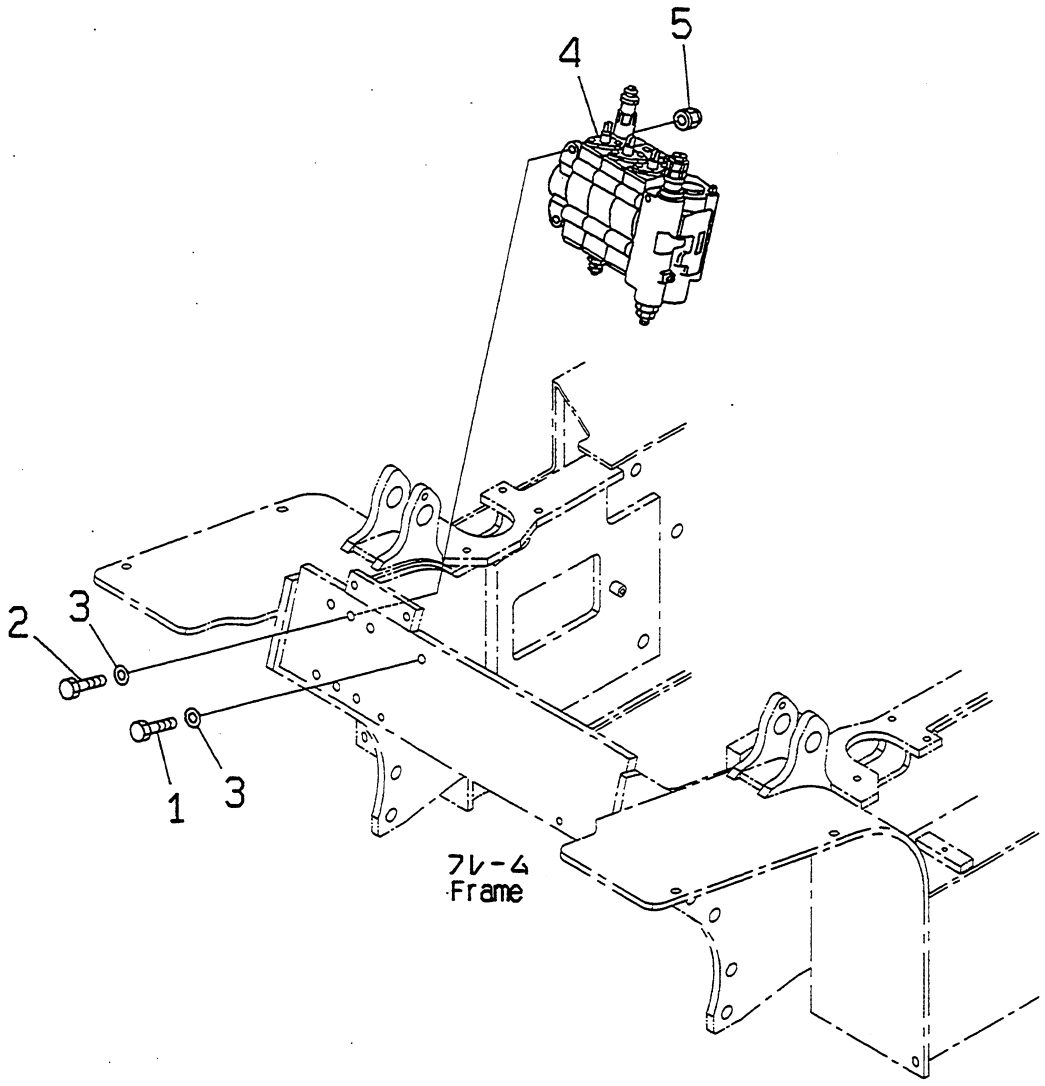

PUF1748

https://truckmanualshub.com/

FIG NO. : R4140-01A1

INDEX	PART NO.	DESCRIPTION	Q'TY	SERIAL NO.
1	01010-81030	BOLT	1	600001A AND UP
2	01010-81045	BOLT	2	
3	01643-51032	WASHER	3	
4	(3EA-61-A2310)	VALVE ASS'Y	1	
5	3EB-61-11260	NUT	2	

https://truckmanualshub.com/

2 レン コントロール バルブ レバー (クラッチ シヨウ)

FIG.R4150-01A0 2-SPOOL CONTROL VALVE LEVER (CLUTCH SPEC.)

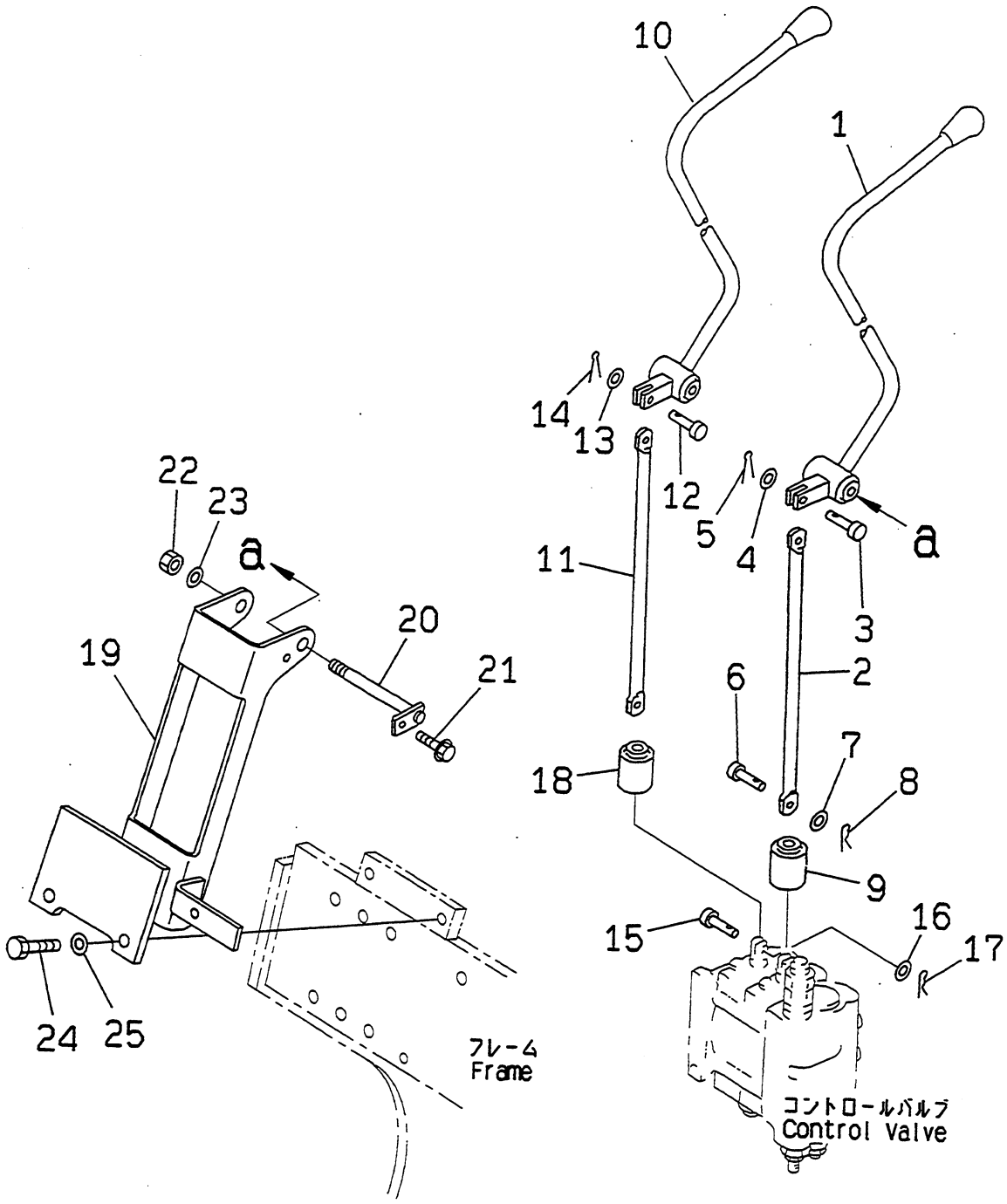

PUF1749

https://truckmanualshub.com/

FIG NO. : R4150-01A0

FG15H

INDEX	PART NO.	DESCRIPTION	Q'TY	SERIAL NO.
1	37B-1HB-3011	LEVER	1	600001A AND UP
	3EB-61-21241	.KNOB	1	
	3MA-73-13180	.BUSHING	2	
2	3EB-61-31250	LINK	1	
3	358-60-15250	PIN	1	
4	01641-20508	WASHER	1	
5	04050-11210	PIN,COTTER	1	
6	358-60-15250	PIN	1	
7	01641-20508	WASHER	1	
8	04052-00530	PIN,SNAP	1	
9	3EB-61-11180	BOOT	1	
10	37B-1HB-3021	LEVER	1	
	3EB-61-21251	.KNOB	1	
	3MA-73-13180	.BUSHING	2	
11	3EB-61-31250	LINK	1	
12	358-60-15250	PIN	1	
13	01641-20508	WASHER	1	
14	04050-11210	PIN,COTTER	1	
15	358-60-15250	PIN	1	
16	01641-20508	WASHER	1	
17	04052-00530	PIN,SNAP	1	
18	3EB-61-11180	BOOT	1	
19	3EA-61-31210	BRACKET	1	
20	37B-1HD-2020	SHAFT	1	
21	F1110-40612	BOLT	1	
22	01599-01214	NUT	1	
23	01643-51232	WASHER	1	
24	01010-81035	BOLT	2	
25	01643-31032	WASHER	2	

https://truckmanualshub.com/

3 レン コントロール バルブ レバー
FIG.R4150-01A1 3-SPOOL CONTROL VALVE LEVER

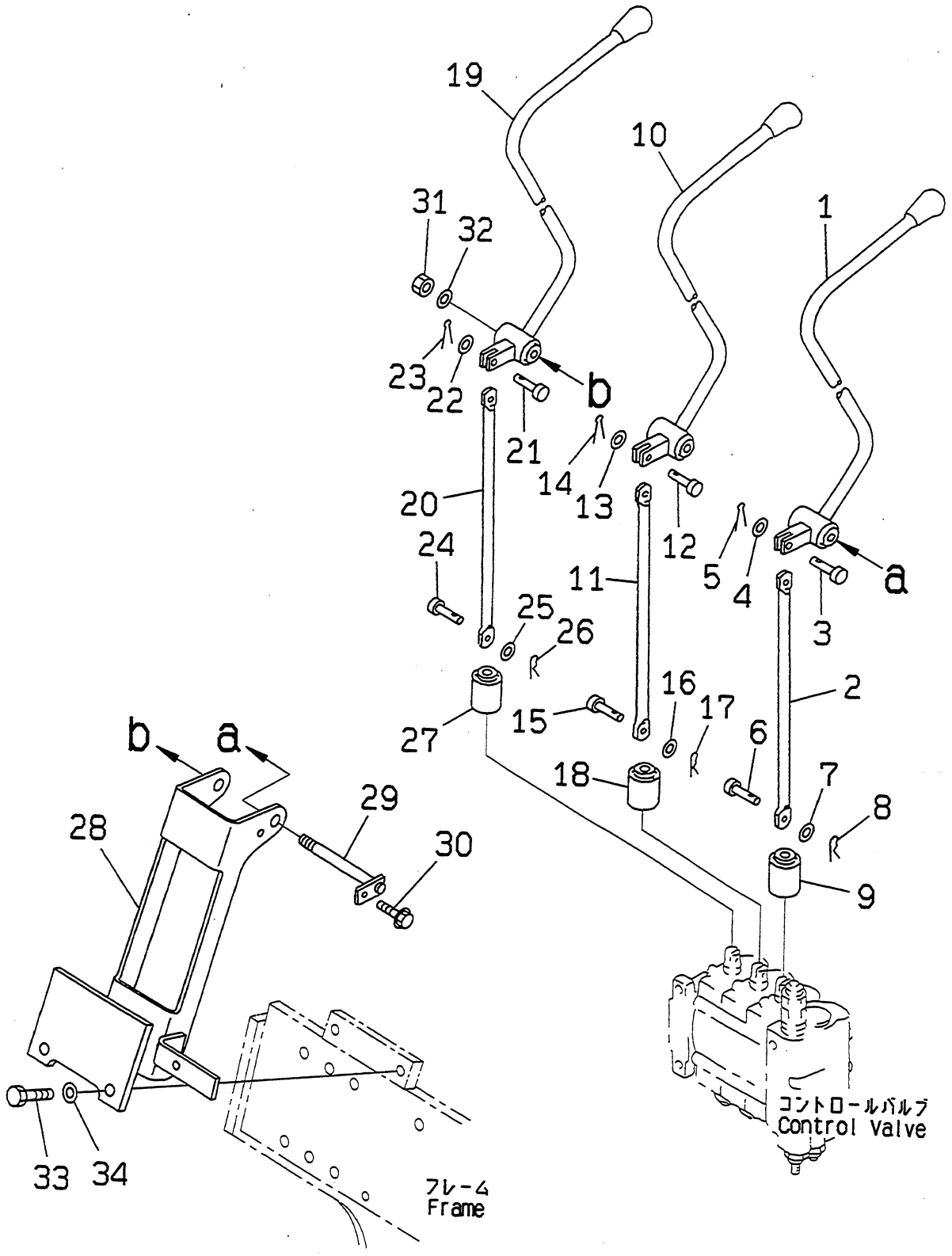

PUF1750

https://truckmanualshub.com/

FIG NO. : R4150-01A1

INDEX	PART NO.	DESCRIPTION	Q'TY	SERIAL NO.
1	37B-1HB-3011	LEVER	1	600001A AND UP
	3EB-61-21241	.KNOB	1	
	3MA-73-13180	.BUSHING	2	
2	3EB-61-31250	LINK	1	
3	358-60-15250	PIN	1	
4	01641-20508	WASHER	1	
5	04050-11210	PIN,COTTER	1	
6	358-60-15250	PIN	1	
7	01641-20508	WASHER	1	
8	04052-00530	PIN,SNAP	1	
9	3EB-61-11180	BOOT	1	
10	37B-1HB-3021	LEVER	1	
	3EB-61-21251	.KNOB	1	
	3MA-73-13180	.BUSHING	2	
11	3EB-61-31250	LINK	1	
12	358-60-15250	PIN	1	
13	01641-20508	WASHER	1	
14	04050-11210	PIN,COTTER	1	
15	358-60-15250	PIN	1	
16	01641-20508	WASHER	1	
17	04052-00530	PIN,SNAP	1	
18	3EB-61-11180	BOOT	1	
19	37B-1HB-3031	LEVER	1	
	3EB-61-21340	.KNOB	1	
	3MA-73-13180	.BUSHING	2	
20	3EB-61-31250	LINK	1	
21	358-60-15250	PIN	1	
22	01641-20508	WASHER	1	
23	04050-11210	PIN,COTTER	1	
24	358-60-15250	PIN	1	
25	01641-20508	WASHER	1	
26	04052-00530	PIN,SNAP	1	
27	3EB-61-11180	BOOT	1	
28	3EA-61-31210	BRACKET	1	
29	37B-1HD-2030	SHAFT	1	
30	F1110-40612	BOLT	1	
31	01599-01214	NUT	1	
32	01643-51232	WASHER	1	
33	01010-81035	BOLT	2	
34	01643-31032	WASHER	2	

https://truckmanualshub.com/

FIG. NO : R4150-01A2 4-SPOOL CONTROL VALVE LEVERS

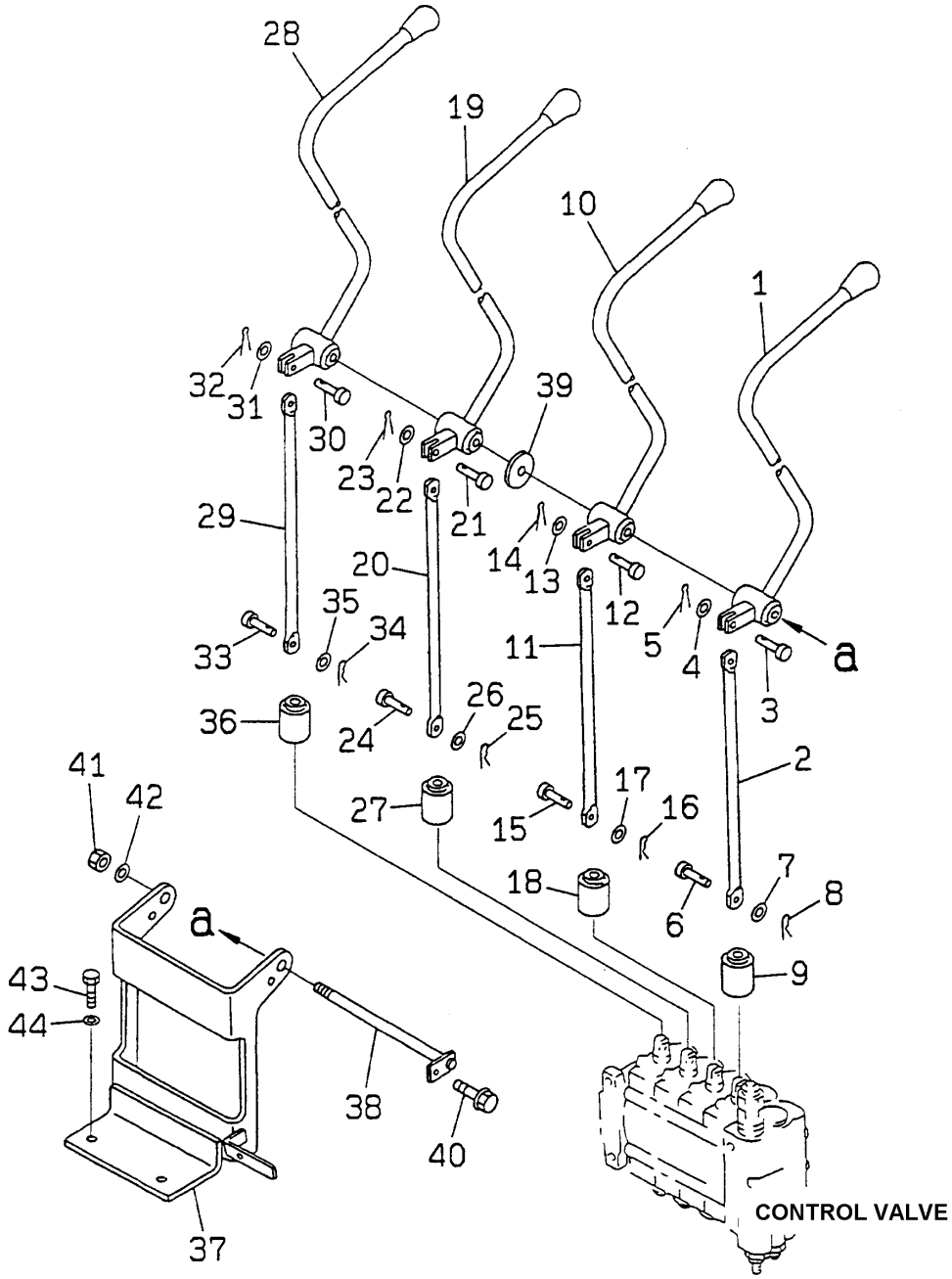

https://truckmanualshub.com/

FIG. NO. : R4150-01A2

FG15H/18H-16, FG15S/18S-16

INDEX	PART NO.	DESCRIPTION	Q'TY	SERIAL NO.
				650001A AND UP
1	37B-1HB-3013	LEVER ASSEMBLY, LIFT	1	
	3EB-61-21241	.KNOB	1	
	3MA-73-13180	.BUSHING	2	
2	3EB-61-31250	LINK	1	
3	368-50-15250	PIN	1	
4	01641-20508	WASHER	1	
5	04050-11210	PIN, COTTER	1	
6	358-60-15250	PIN	1	
7	01641-20508	WASHER	1	
8	04052-00530	PIN, SNAP	1	
9	3EB-61-11180	BOOT	1	
10	37B-1HB-3023	LEVER ASSEMBLY, TILT	1	
	3EB-61-21251	.KNOB	1	
	3MA-73-13180	.BUSHING	2	
11	3EB-61-31250	LINK	1	
12	358-60-15250	PIN	1	
13	01641-20508	WASHER	1	
14	04050-11210	PIN, COTTER	1	
15	368-60-15250	PIN	1	
16	04052-00530	PIN, SNAP	1	
17	01641-20508	WASHER	1	
18	3EB-61-11180	BOOT	1	
19	37B-1HB-3033	LEVER ASS'Y, THIRD FUNCTION ..	1	
	3EB-61-21340	.KNOB	1	
	3MA-73-13180	.BUSHING	2	
20	3EB-61-31250	LINK	1	
21	358-60-15250	PIN	1	
22	01641-20508	WASHER	1	
23	04050-11210	PIN, COTTER	1	
24	358-60-15250	PIN	1	
25	04052-00530	PIN, SNAP	1	
26	01641-20508	WASHER	1	
27	3EB-61-11180	BOOT	1	
28	37B-1HB-3043	LEVER ASS'Y, FOURTH FUNCTION .	1	
	3EB-61-21340	.KNOB	1	
	3MA-73-13180	.BUSHING	2	
29	3EB-61-31250	LINK	1	
30	358-60-15250	PIN	1	
31	01641-20508	WASHER	1	
32	04050-11210	PIN, COTTER	1	
33	358-60-15250	PIN	1	
34	04052-00530	PIN, SNAP	1	
35	01641-20508	WASHER	1	
36	3EB-61-11180	BOOT	1	
37	3EB-61-31410	BRACKET	1	
38	37B-1HD-2040	SHAFT	1	

https://truckmanualshub.com/

FIG. NO. : R4150-01A2 4-SPOOL CONTROL VALVE LEVERS

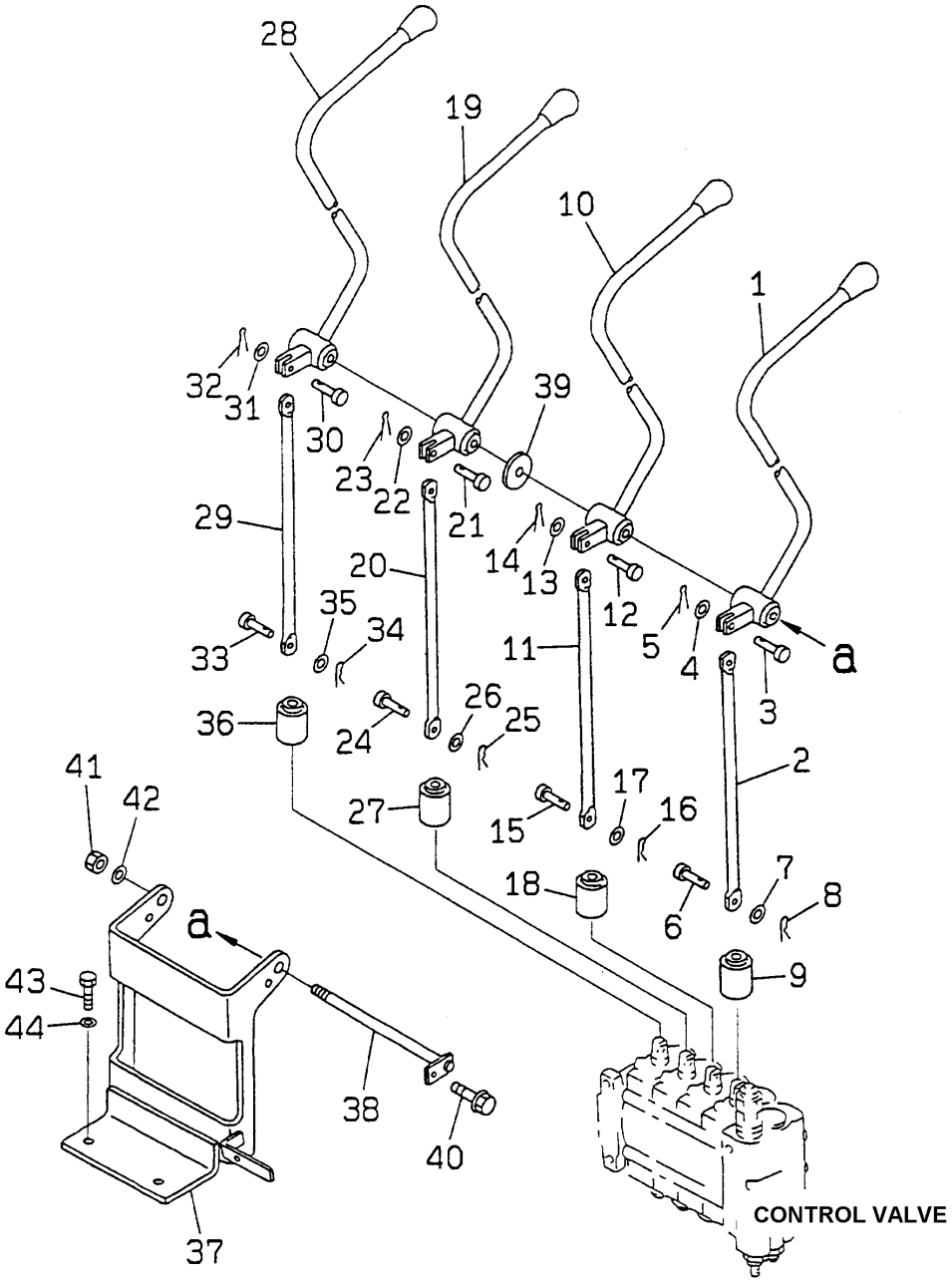

https://truckmanualshub.com/

FIG. NO. : R4150-01A2

FG15H/18H-16, FG15S/18S-16

INDEX	PART NO.	DESCRIPTION	Q'TY	SERIAL NO.
				650001A AND UP
39	304-50-31110	WASHER	1	
40	F1110-40612	BOLT	1	
41	01599-01214	NUT	1	
42	01643-51232	WASHER	1	
43	01010-81035	BOLT	2	
44	01643-51032	WASHER	2	
	45B-1FS-3081	DECAL, SIDE SHIFT KNOB	1	
	46A-5FM-1750	DECAL, FORK POSITIONER KNOB ..	1	
	45B-1CM-2581	DECAL, CARTON CLAMP KNOB	1	
	45B-1RF-6041	DECAL, ROTATOR KNOB	1	
		NOTE; **OLD AND NEW LEVERS ARE INTER-CHANGEABLE. NEW LEVERS ARE DESIGNED TO BE MORE ERGONOMIC.**		

https://truckmanualshub.com/

ﾊﾟﾜｰ ｽﾃｱﾘﾝｸﾞ ｼﾘﾝﾀﾞ
FIG.R4180-01A0 POWER STEERING CYLINDER

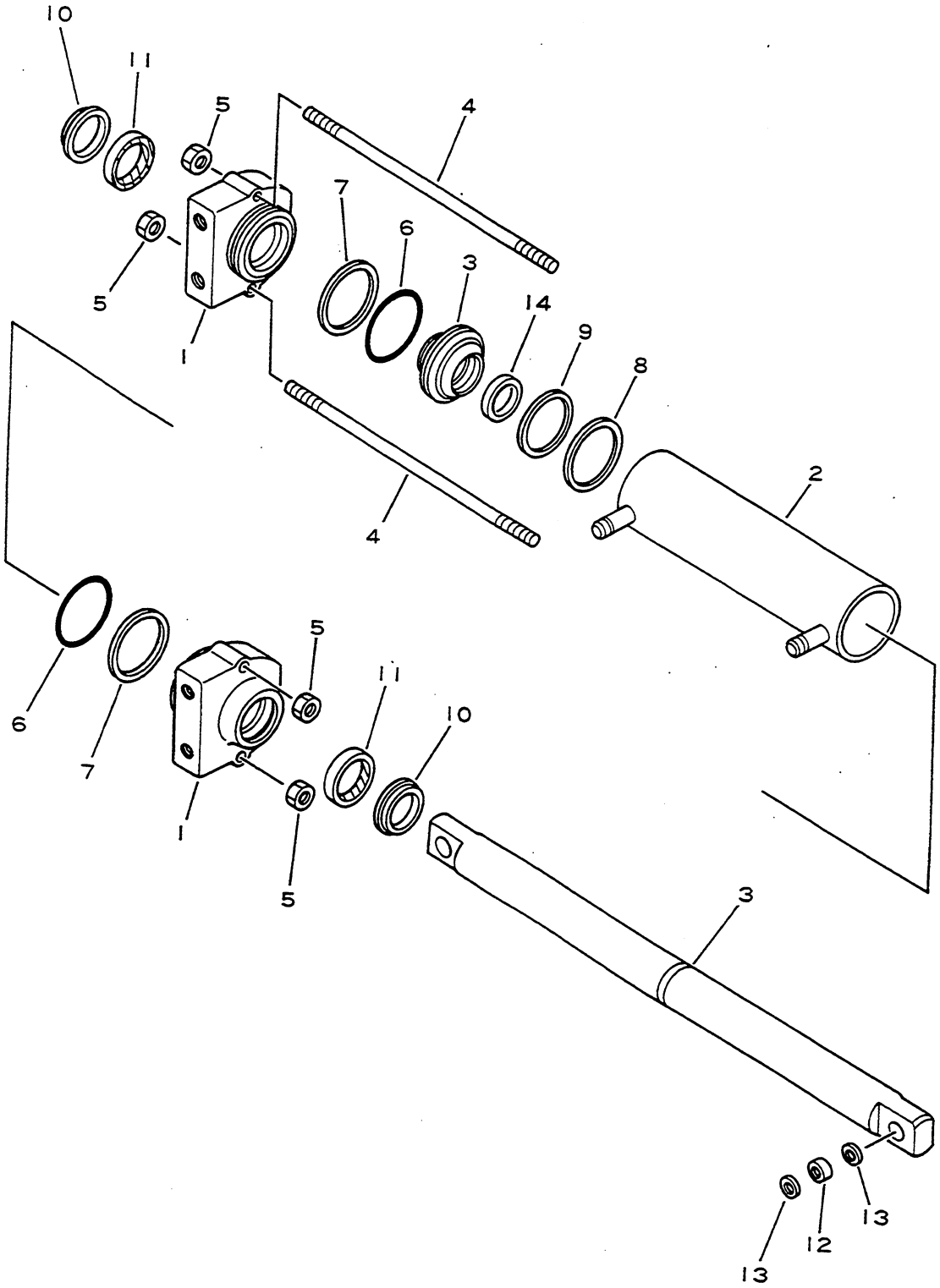

https://truckmanualshub.com/

FIG NO. : R4180-01A0

INDEX	PART NO.	DESCRIPTION	Q'TY	SERIAL NO.
	3EA-64-A2721	CYLINDER ASS'Y,STEERING.....	1	600001A - 650000A
1	SH688-50090	.HEAD,CYLINDER.....	2	
2	SH688-20040	.CYLINDER.....	1	
3	SH688-00003	.ROD,PISTON.....	1	
4	SH688-50093	.TIE ROD.....	2	
5	SH410-05020	.NUT,TIE ROD.....	4	
6	SH100-228	.SEAL.....	2	
7	SH134-001-228	.BACK-UP,SEAL.....	2	
8	SH185-301-0250	.PACKING,PISTON.....	1	
9	SH100-137	.EXPANDER,PISTON PACKING.....	1	
10	SH686-30220	.WIPER,ROD.....	2	
11	SH686-30251	.SEAL,ROD.....	2	
12	SH688-30003	.BUSHING.....	2	
13	SH688-30010	.SEAL,DUST.....	4	
14	SH100-126	.RING.....	1	
--	3EB-64-A2000	CYLINDER ASSEMBLY SEAL KIT	1	

https://truckmanualshub.com/

FIG. NO. : R4180-01A0A POWER STEERING CYLINDER

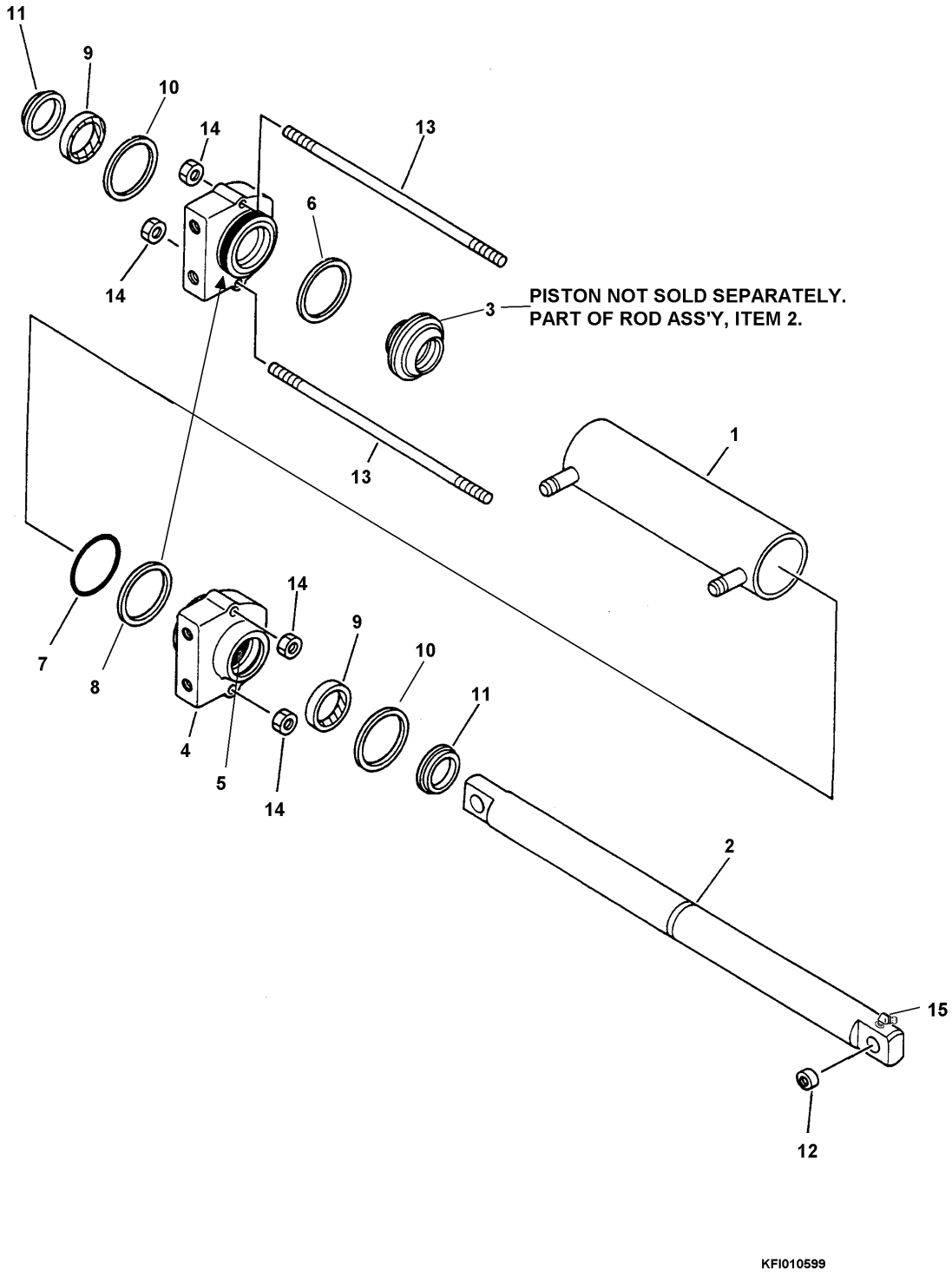

https://truckmanualshub.com/

FIG. NO. : R4180-01A0A

FG15H/18H-16, FG15S/18S-16

INDEX	PART NO.	DESCRIPTION	Q'TY	SERIAL NO.
				650001A AND UP
	3EA-64-A2722	CYLINDER, POWER STEERING		
1	ON43501-06565	.CYLINDER, TUBE	1	
2	ON43503-06565	.ROD	1	
3	*	..PISTON	1	
4	ON43561-06565A	.HEAD	2	
5	ON65516-10004	.BUSHING (KIT B)	2	
6	ON43556-06564	.PACKING (KIT A)	1	
7	ON96751-03060	.O-RING (KIT A)	2	
8	ON43567-06565	.BACKUP RING (KIT A)	2	
9	ON43562-06565	.PACKING (KIT A)	2	
10	ON43563-06565	.BACKUP RING (KIT A)	2	
11	ON65564-09046	.DUST SEAL (KIT A)	2	
12	ON43535-06565	.BUSHING	1	
13	ON43569-06565	.TIE ROD	1	
14	01580-11210	.NUT	4	
15	96456-00609	.GREASE FITTING	1	
KIT A	ON43001-06565	SEAL KIT	1	
KIT B	ON43002-06565	HEAD KIT	2	

https://truckmanualshub.com/

タンク カバー
FIG.R4210-01A0 TANK COVER

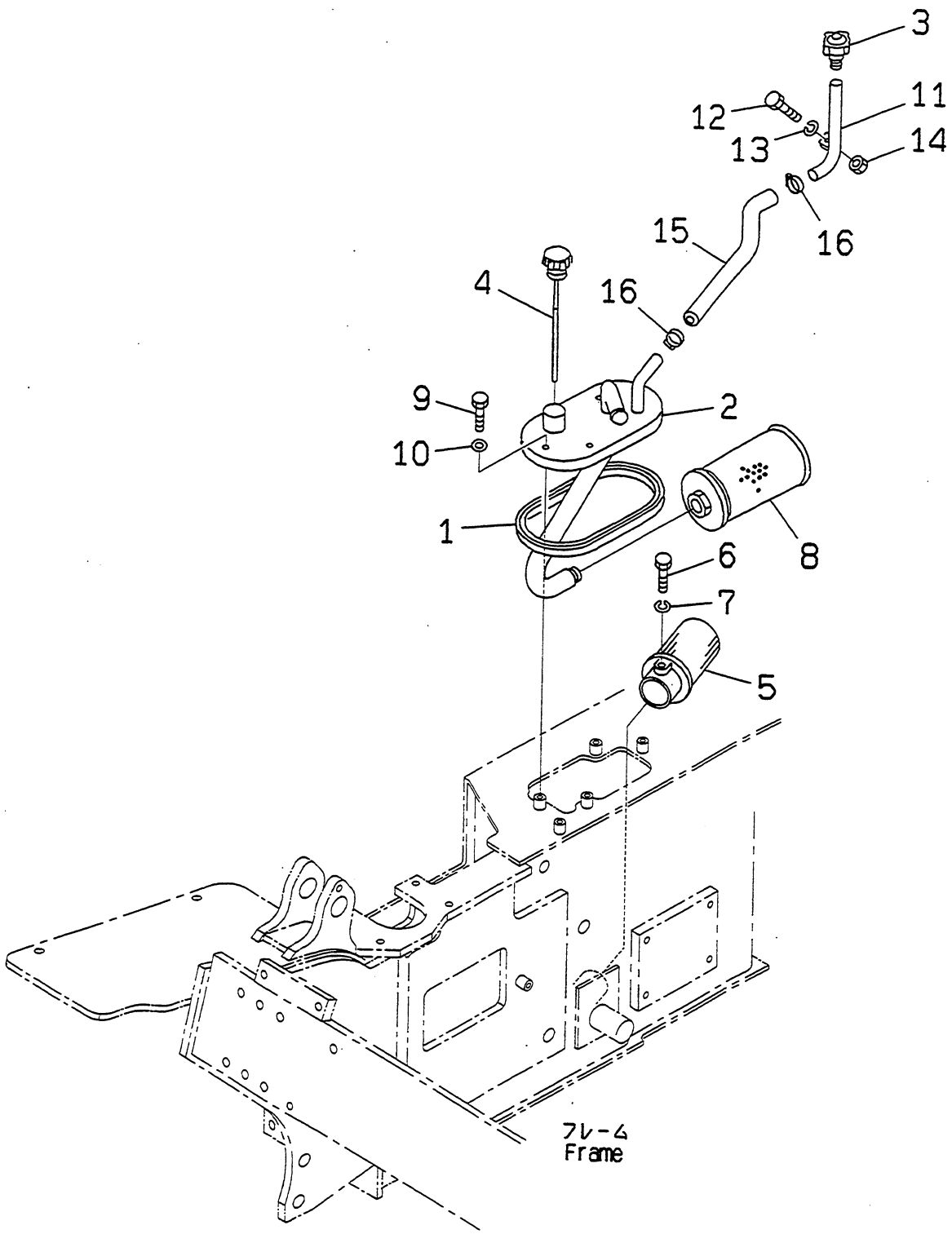

PUF1752

https://truckmanualshub.com/

FIG NO. : R4210-01A0

FG15H,FG18H

INDEX	PART NO.	DESCRIPTION	Q'TY	SERIAL NO.
1	3EB-05-21130	PACKING	1	600001A AND UP
2	3EB-66-35111	COVER	1	
3	3EB-66-33521	BREATHER	1	
4	3EB-66-33531	CAP	1	
5	34B-66-15180	STRAINER	1	
6	01010-80616	BOLT	1	
7	01602-20619	WASHER,SPRING	1	
8	3EB-66-A2320	FILTER ASS'Y	1	
9	01010-80816	BOLT	4	
10	07005-00812	GASKET	4	
11	3EB-66-33541	PIPE	1	
12	01016-50825	BOLT	1	
13	01602-20825	WASHER,SPRING	1	
14	01580-10806	NUT	1	
15	3EB-66-A5161	HOSE	1	
16	07280-02923	CLAMP	2	

https://truckmanualshub.com/

タンク カバー
FIG.R4210-01A1 TANK COVER

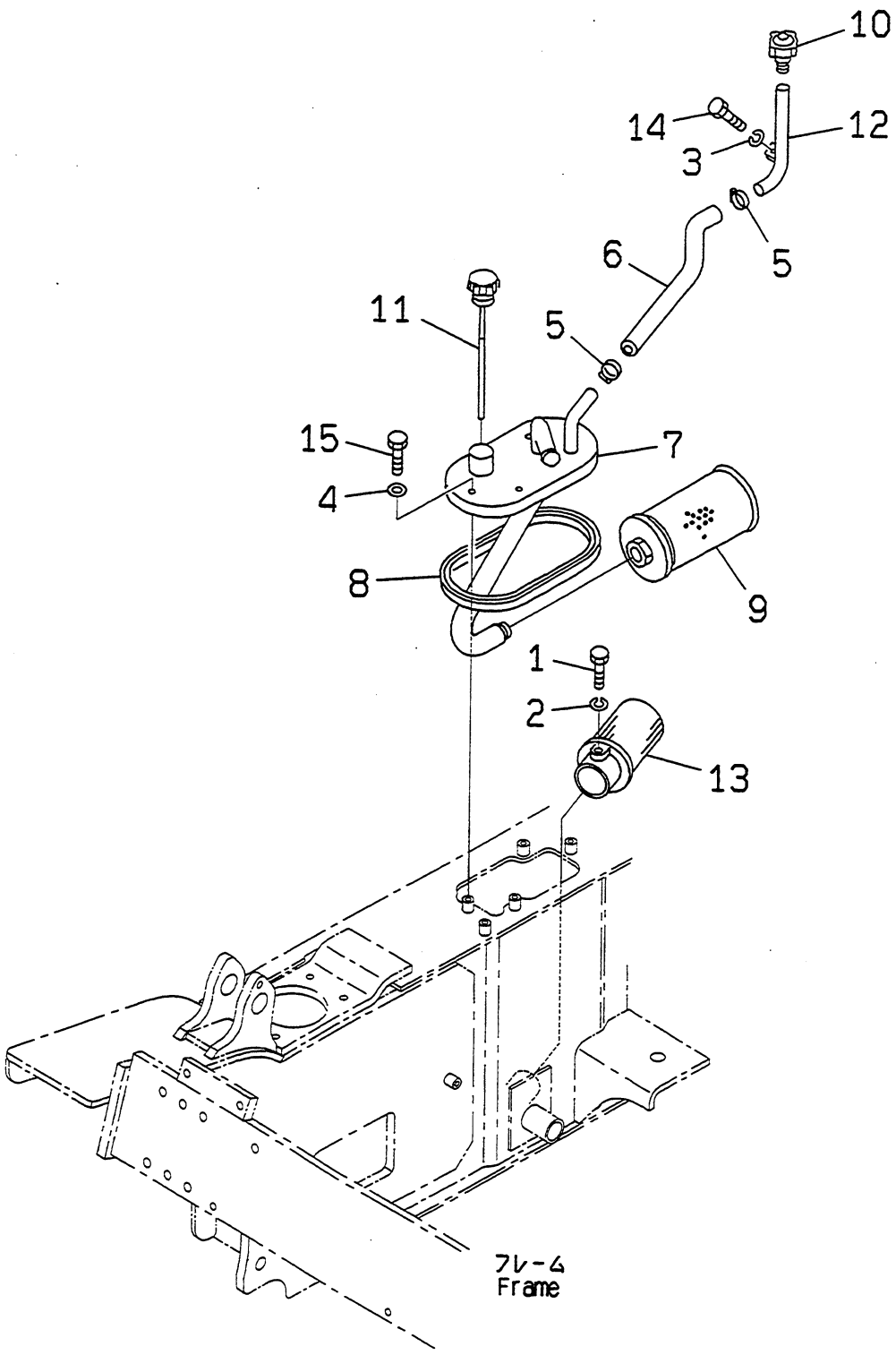

PUF1753

https://truckmanualshub.com/

FIG NO. : R4210-01A1

FG15S,FG18S

INDEX	PART NO.	DESCRIPTION	Q'TY	SERIAL NO.
1	01010-80616	BOLT	1	600001A AND UP
2	01602-20619	WASHER,SPRING	1	
3	01602-20825	WASHER,SPRING	1	
4	07005-00812	GASKET	4	
5	07280-02923	CLAMP	2	
6	3EA-66-A5210	HOSE	1	
7	3EA-66-35130	COVER	1	
8	3EB-05-21130	PACKING	1	
9	3EB-66-A2320	FILTER ASS'Y	1	
10	3EB-66-33521	BREATHER	1	
11	3EB-66-33531	CAP	1	
12	3EB-66-33541	PIPE	1	
13	34B-66-15180	STRAINER	1	
14	01010-80616	BOLT	1	
15	01010-80816	BOLT	4	

https://truckmanualshub.com/

ﾊｲﾄﾞﾛﾘｯｸ ﾊﾟｲﾋﾟﾝｸﾞ (ﾀﾝｸ ｶﾗ ｺﾝﾄﾛｰﾙ ﾊﾞﾙﾌﾞ)
FIG.R4220-01A0 HYDRAULIC PIPING (PUMP TO CONTROL VALVE)

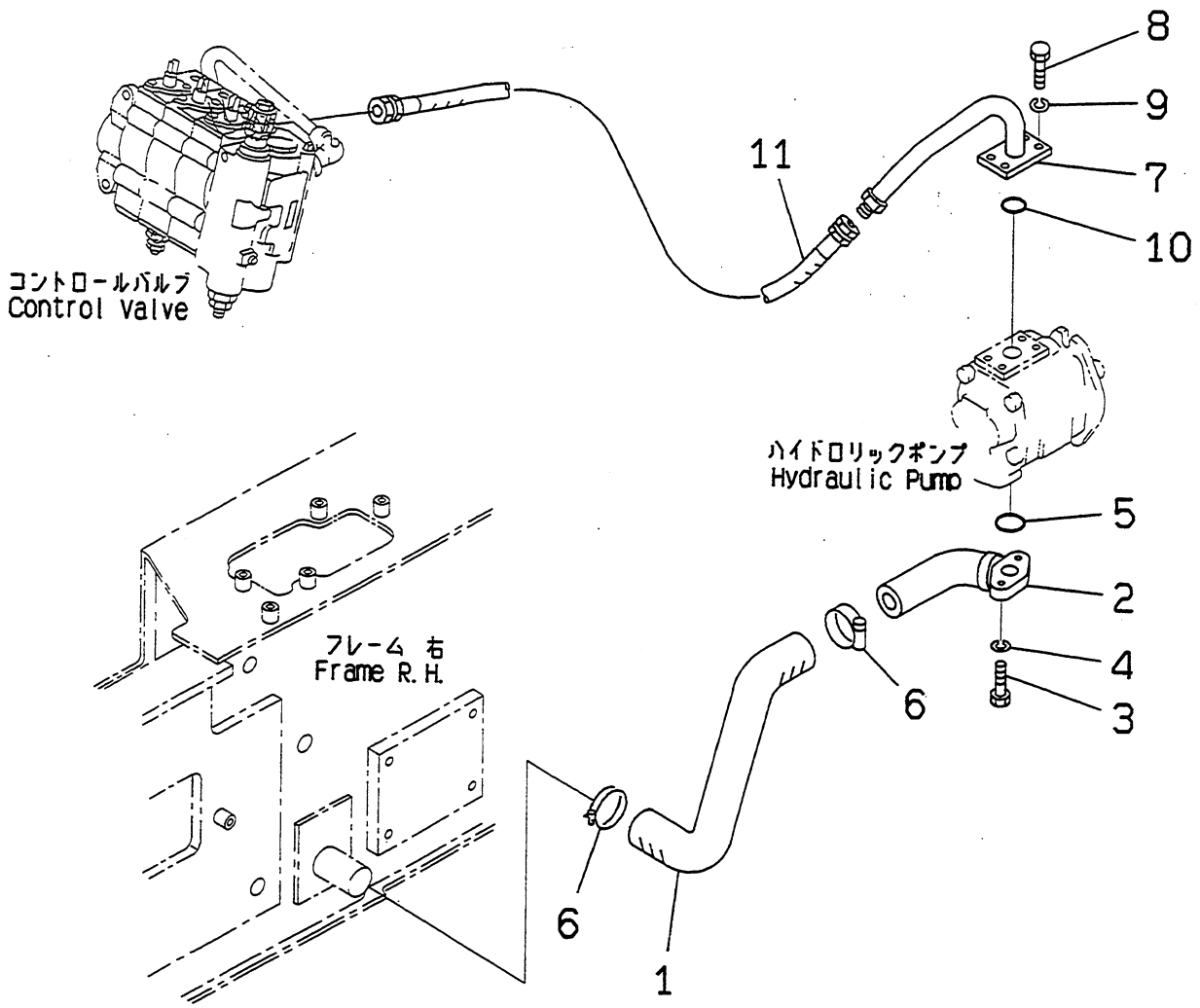

PUF1754

https://truckmanualshub.com/

FIG NO. : R4220-01A0

INDEX	PART NO.	DESCRIPTION	Q'TY	SERIAL NO.
1	3EB-66-A5340	HOSE	1	600001A AND UP
2	3EB-66-35150	PIPE	1	
3	02010-70632	BOLT	2	
4	01602-20929	WASHER,SPRING	2	
5	07000-03032	O-RING	1	
6	07280-04726	CLAMP	2	
7	3EB-66-35140	PIPE	1	
8	02010-70625	BOLT	4	
9	01602-20929	WASHER,SPRING	4	
10	07000-13028	O-RING	1	
11	37B-1FC-A040	HOSE	1	

https://truckmanualshub.com/

ﾊｲﾄﾞﾛﾘｯｸ ﾊﾟｲﾋﾟﾝｸﾞ (ﾁﾙﾄ ｼﾘﾝﾀﾞ ﾗｲﾝ)

FIG.R4230-01A0 HYDRAULIC PIPING (TILT CYLINDER LINE)

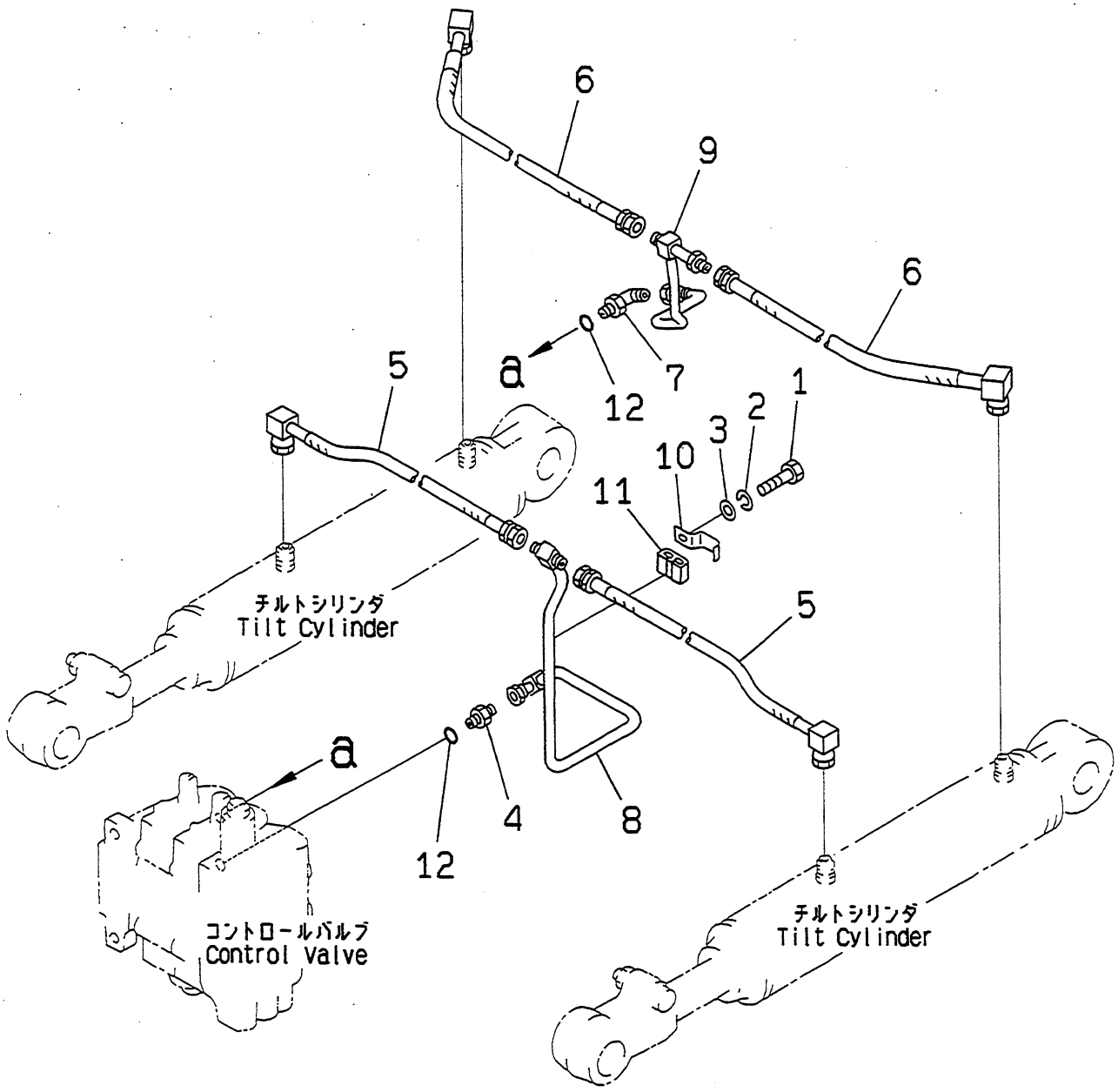

PUF1755

https://truckmanualshub.com/

FIG NO. : R4230-01A0

INDEX	PART NO.	DESCRIPTION	Q'TY	SERIAL NO.
1	01010-80814	BOLT	1	600001A - 650000A
2	01602-20825	WASHER,SPRING	1	
3	01641-20812	WASHER	1	
4	3BA-66-25180	NIPPLE	1	
5	3EA-66-A5130	HOSE	2	
6	3EA-66-A5140	HOSE	2	
7	3EB-66-11380	ELBOW	1	
8	3EB-66-33110	PIPE	1	
9	3EB-66-33150	PIPE	1	
10	3EB-66-33170	CLAMP	1	
11	3EB-66-33180	RUBBER	1	
12	540-62-13330	O-RING	2	

https://truckmanualshub.com/

FIG. NO. : R4230-01A0A HYDRAULIC PIPING (TILT CYLINDER LINE)

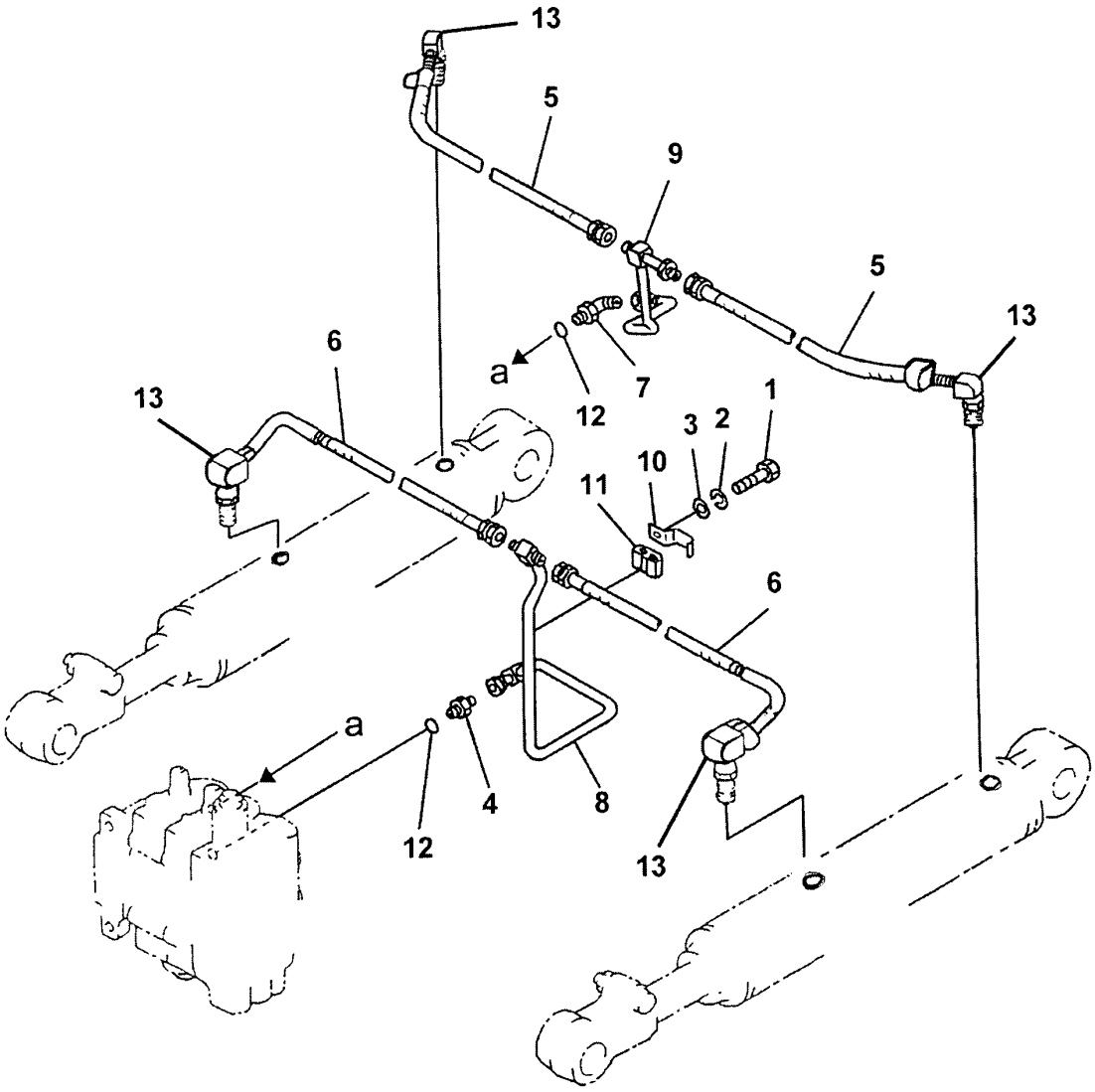

https://truckmanualshub.com/

FIG. NO. : R4230-01A0A

FG15H/18H-16, FG15S/18S-16

INDEX	PART NO.	DESCRIPTION	Q'TY	SERIAL NO.
				650001A AND UP
1	01010-80814	BOLT	1	
2	01602-20825	WASHER, SPRING	1	
3	01641-20812	WASHER	1	
4	3BA-66-25180	NIPPLE	1	
5	3EB-66-A5220	HOSE (ROD END OF CYL LH & RH) ...	2	
6	3EB-66-A5210	HOSE (FRAME END OF CYL LH & RH) .	2	
7	3EB-66-11380	ELBOW	1	
8	3EB-66-A5230	PIPE (ROD END OF CYL LH & RH) ...	1	
9	3EB-66-A5240	PIPE (FRAME END OF CYL LH & RH) .	1	
10	3EB-66-33170	CLAMP	1	
11	3EB-66-33180	RUBBER	1	
12	540-62-13330	O-RING	2	
13	PH4-6-C50L0	ELBOW FITTING (O-RING TYPE)	4	

https://truckmanualshub.com/

ﾊｲﾄﾞﾛﾘｯｸ ﾊﾟｲﾋﾟﾝｸﾞ (ﾊﾟﾜｰ ｽﾃｱﾘﾝｸﾞ ﾗｲﾝ) (1/2)
FIG.R4240-01A0 HYDRAULIC PIPING (POWER STEERING LINE) (1/2)

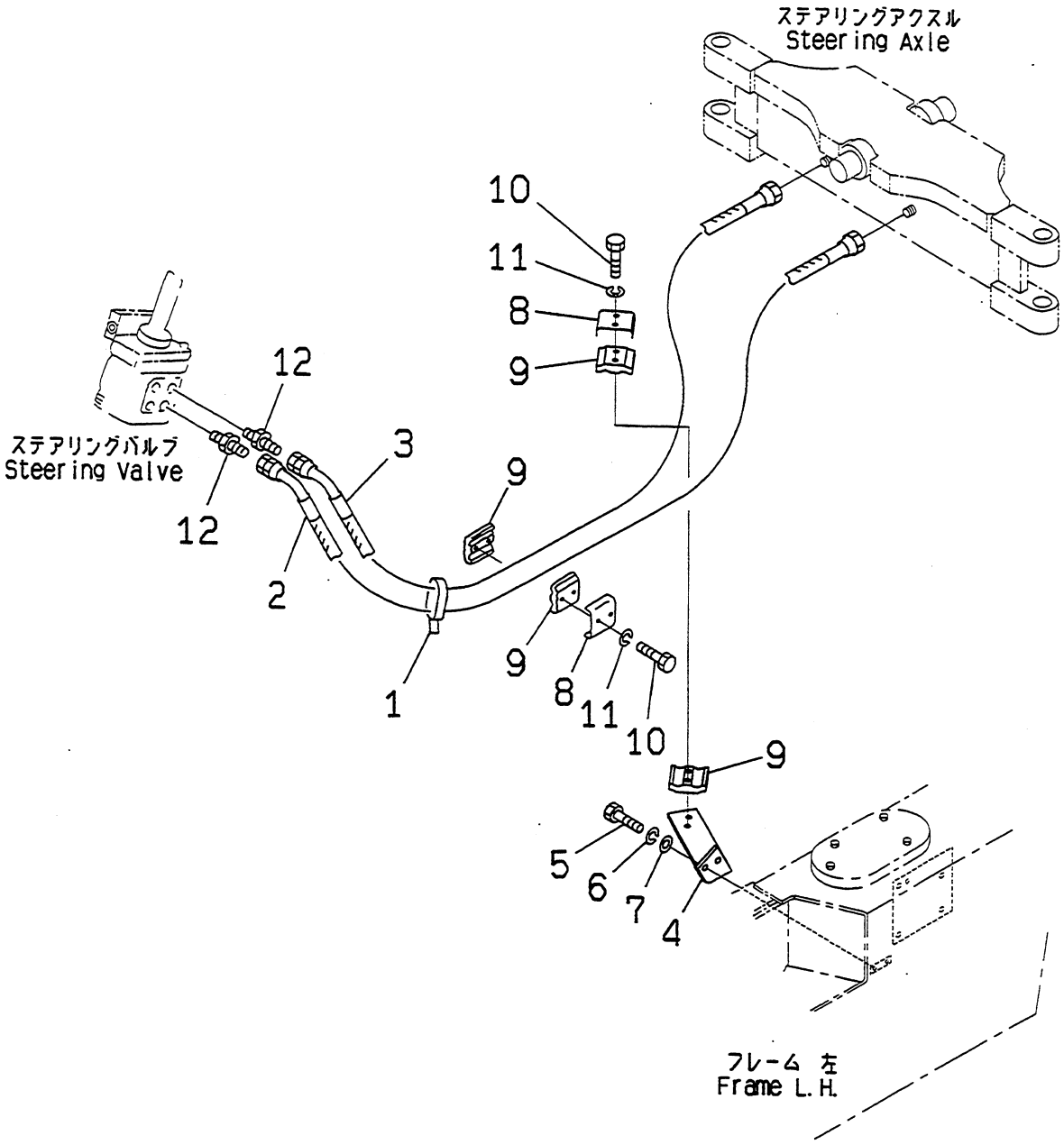

PUF1756

https://truckmanualshub.com/

FIG NO. : R4240-01A0

FG15H,FG18H

INDEX	PART NO.	DESCRIPTION	Q'TY	SERIAL NO.
1	37B-1AE-6010	BAND	1	600001A AND UP
2	37A-1FA-A240	HOSE	1	
3	37A-1FA-A250	HOSE	1	
4	3EA-66-A5620SA	BRACKET	1	
5	01010-80820	BOLT	2	
6	01602-20825	WASHER,SPRING	2	
7	01643-30823	WASHER	2	
8	3EB-66-25270	CLAMP	2	
9	3EB-66-25280	RUBBER	4	
10	01010-80840	BOLT	4	
11	01602-20825	WASHER,SPRING	4	
12	45B-AAX-2280	NIPPLE	2	

https://truckmanualshub.com/

ﾊｲﾄﾞﾛﾘｯｸ ﾊﾟｲﾋﾟﾝｸﾞ (ﾊﾟﾜｰ ｽﾃｱﾘﾝｸﾞ ﾗｲﾝ) (1/2)
FIG.R4240-01A1 HYDRAULIC PIPING (POWER STEERING LINE) (1/2)

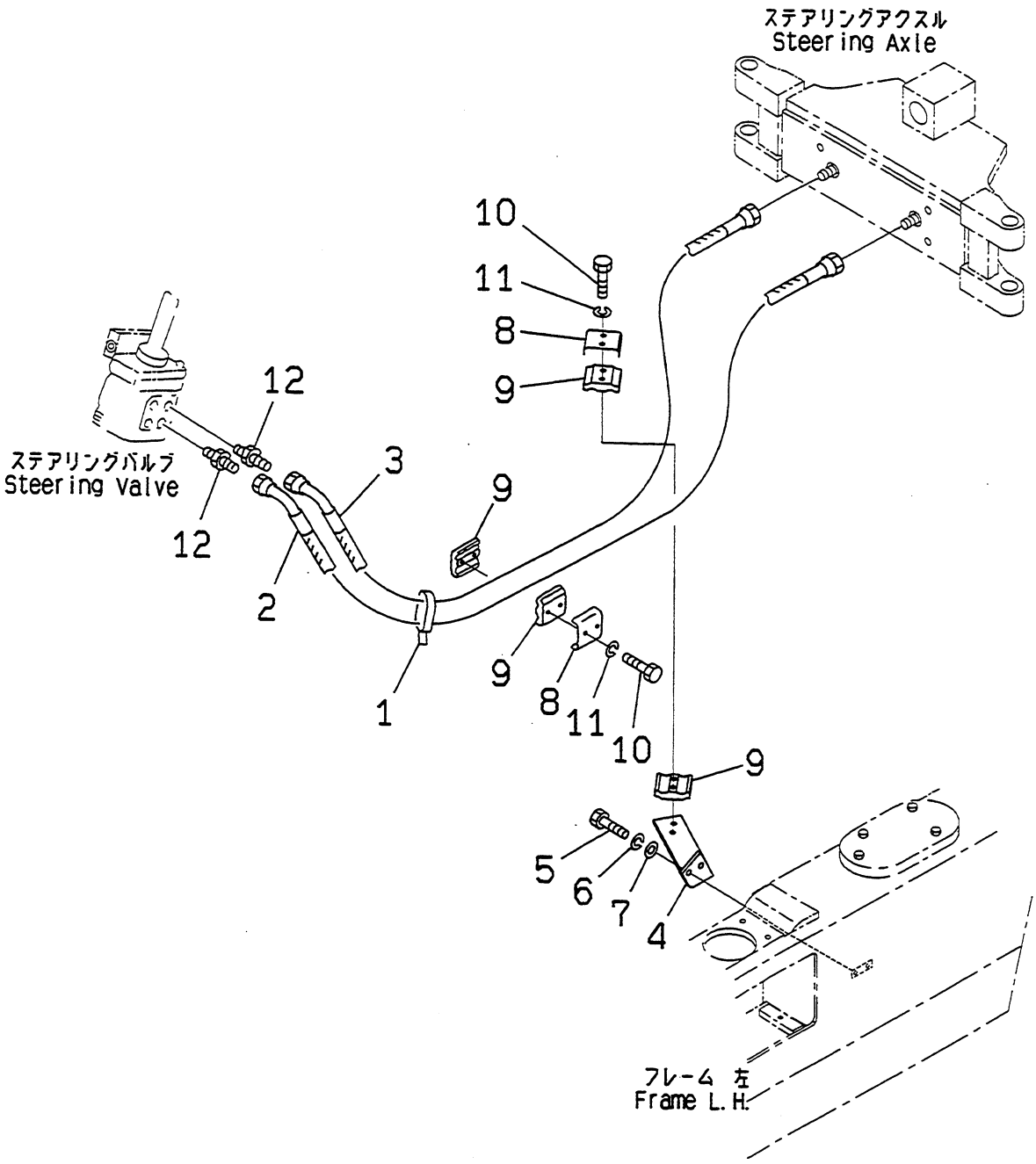

PUF1757

https://truckmanualshub.com/

FIG NO. : R4240-01A1

FG15S,FG18S

INDEX	PART NO.	DESCRIPTION	Q'TY	SERIAL NO.
1	37B-1AE-6010	BAND	1	600001A AND UP
2	37A-1FB-A241	HOSE, LEFT-HAND	1	
3	37A-1FA-A220	HOSE, RIGHT-HAND	1	
4	3EA-66-A5620SA	BRACKET	1	
5	01010-80820	BOLT	2	
6	01602-20825	WASHER,SPRING	2	
7	01643-30823	WASHER	2	
8	3EB-66-25270	CLAMP	2	
9	3EB-66-25280	RUBBER	4	
10	01010-80840	BOLT	4	
11	01602-20825	WASHER,SPRING	4	
12	45B-AAX-2280	NIPPLE	2	

https://truckmanualshub.com/

ﾊｲﾄﾞﾛﾘｯｸ ﾊﾟｲﾋﾟﾝｸﾞ (ﾘﾀｰﾝ ﾗｲﾝ)

FIG.R4260-01A0 HYDRAULIC PIPING (RETURN LINE)

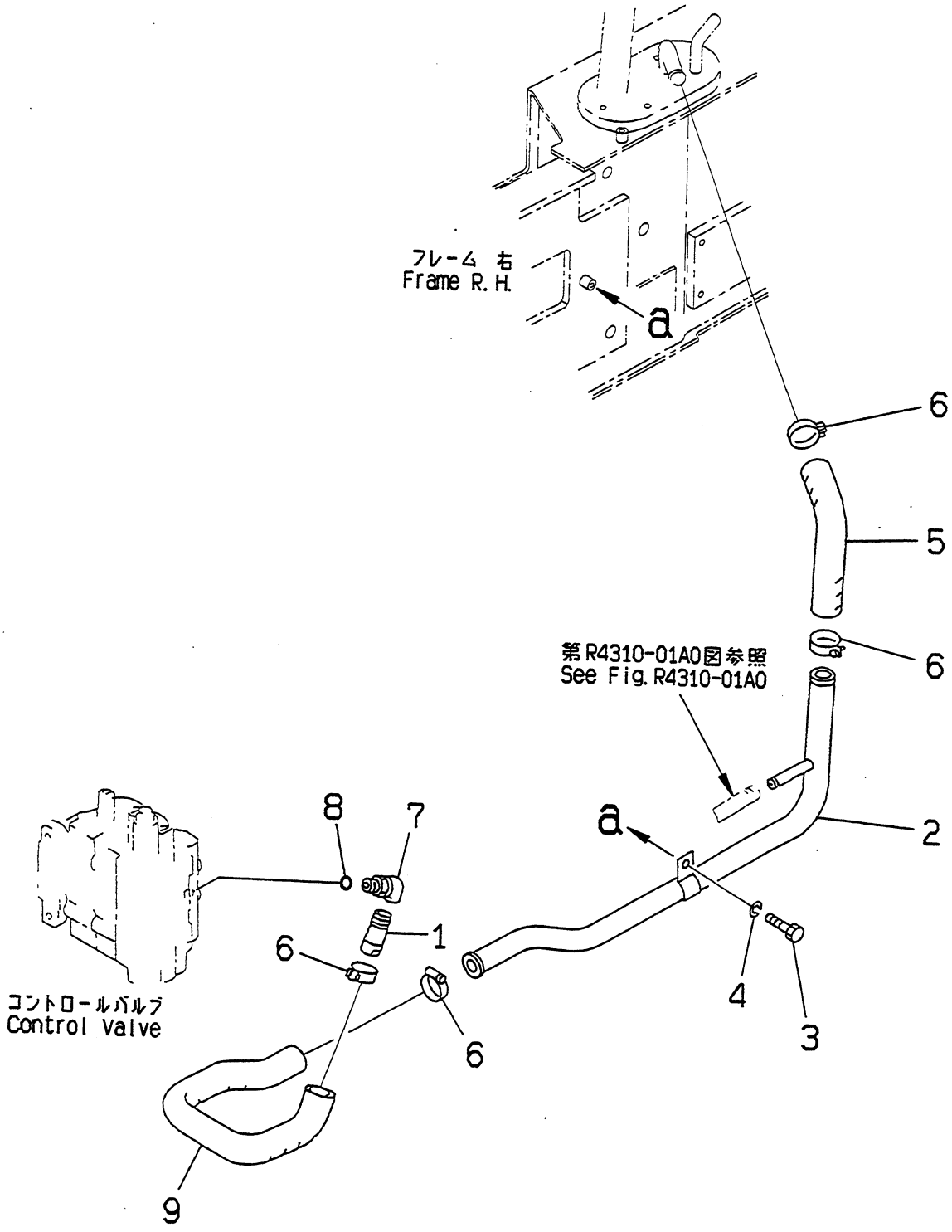

PUF1758

https://truckmanualshub.com/

FIG NO. : R4260-01A0

INDEX	PART NO.	DESCRIPTION	Q'TY	SERIAL NO.
1	3EB-66-21190	PIPE	1	600001A AND UP
2	3EB-66-35121	PIPE	1	
3	01010-80816	BOLT	1	
4	01602-20825	WASHER,SPRING	1	
5	3EB-66-35410	HOSE	1	
6	07280-03826	CLAMP	4	
7	3EB-66-21181	ELBOW	1	
8	540-62-12540	O-RING	1	
9	3EB-66-A5131	HOSE	1	

https://truckmanualshub.com/

ﾊｲﾄﾞﾛﾘｯｸ ﾊﾟｲﾋﾟﾝｸﾞ (ﾘﾌﾄ ｼﾘﾝﾀﾞ ﾗｲﾝ)

FIG.R4270-01A0 HYDRAULIC PIPING (LIFT CYLINDER LINE)

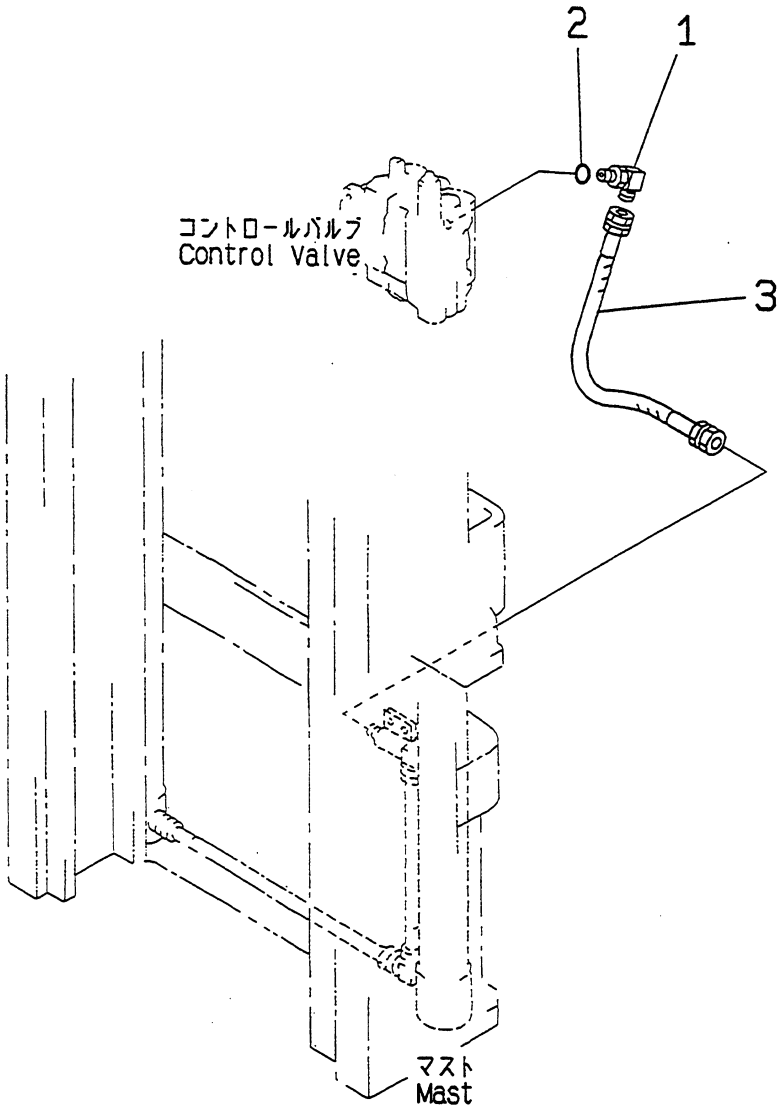

PSF1098

https://truckmanualshub.com/

FIG NO. : R4270-01A0

INDEX	PART NO.	DESCRIPTION	Q'TY	SERIAL NO.
1	45B-AAX-2940	ELBOW.....	1	600001A AND UP
2	540-62-13330	.O-RING.....	1	
3	45B-AAX-2911	HOSE.....	1	

https://truckmanualshub.com/

FIG.R4310-01A0 ﾊｲﾄﾞﾛﾘｯｸ ﾊﾟｲﾋﾟﾝｸﾞ (ﾊﾟﾜｰ ｽﾃｱﾘﾝｸﾞ ﾘﾀｰﾝ ﾗｲﾝ)
HYDRAULIC PIPING (POWER STEERING RETURN LINE)

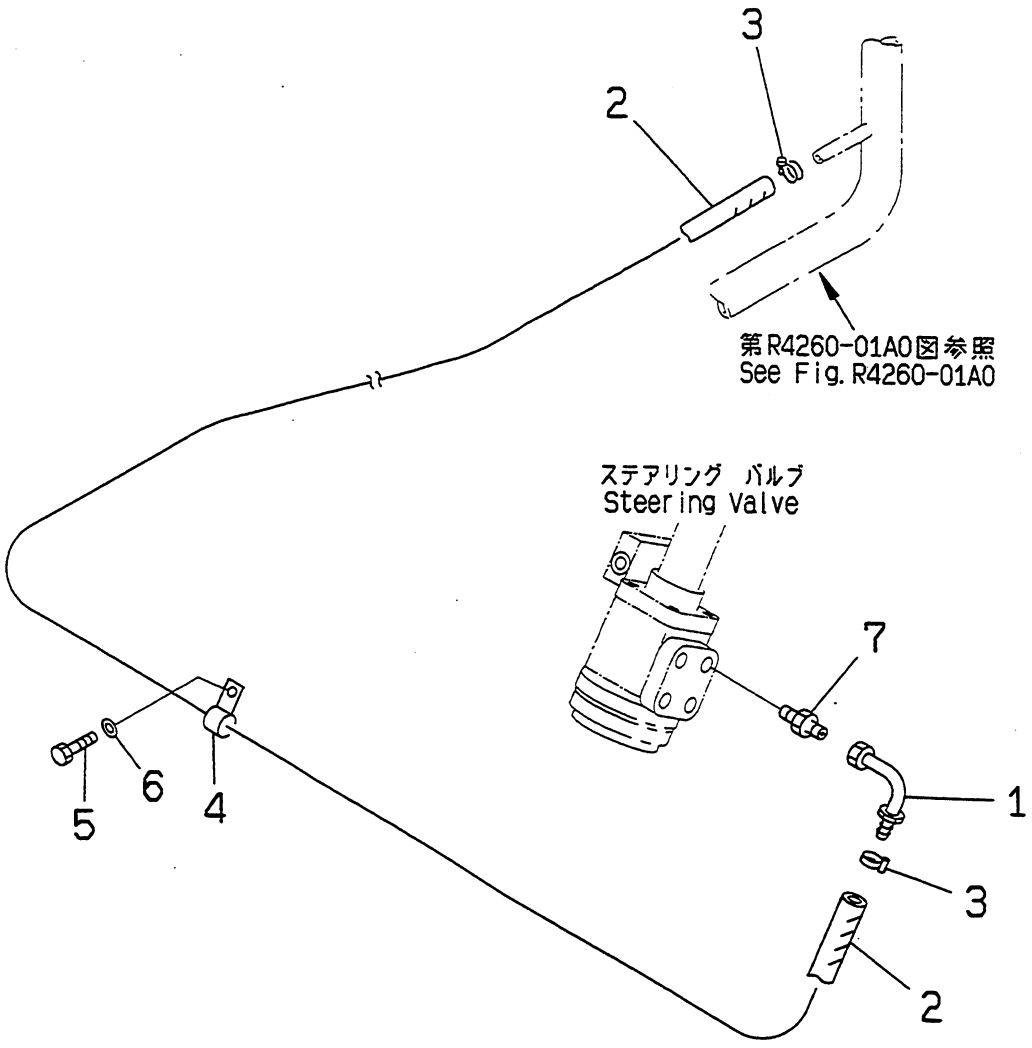

PSF1099

https://truckmanualshub.com/

FIG NO. : R4310-01A0

INDEX	PART NO.	DESCRIPTION	Q'TY	SERIAL NO.
1	3EB-66-A5910	PIPE.....	1	600001A AND UP
2	3EB-66-A5630	HOSE.....	1	
3	07280-01920	CLAMP.....	2	
4	325-62-21180	CLAMP.....	1	
5	01010-80825	BOLT.....	1	
6	01642-20810	WASHER.....	1	
7	45B-AAX-2280	NIPPLE.....	1	

https://truckmanualshub.com/

FIG.R4340-01A0 ﾊｲﾄﾞﾛﾘｯｸ ﾊﾟｲﾋﾟﾝｸﾞ (ｺﾝﾄﾛｰﾙ ﾊﾞﾙﾌﾞ ｻｸｼｮﾝ ﾁｭｰﾌﾞ)
HYDRAULIC PIPING (CONTROL VALVE SUCTION TUBE)

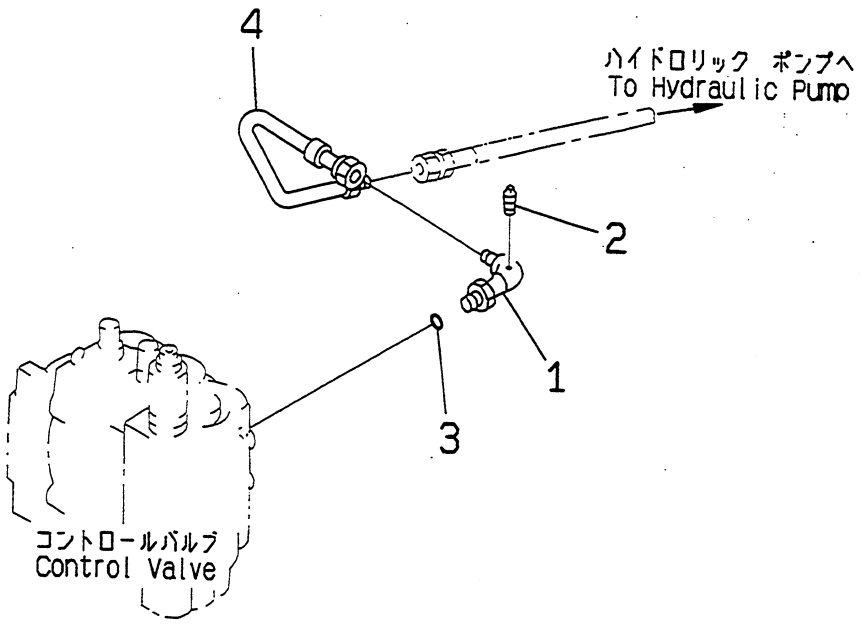

PSF1100

https://truckmanualshub.com/

FIG NO. : R4340-01A0

INDEX	PART NO.	DESCRIPTION	Q'TY	SERIAL NO.
1	3EB-66-21161	ELBOW.....	1	600001A AND UP
2	07042-20108	PLUG.....	1	
3	540-62-12540	O-RING.....	1	
4	3EB-66-35211	PIPE.....	1	

https://truckmanualshub.com/

FIG.R4350-01A0 ﾊｲﾄﾞﾛﾘｯｸ ﾊﾟｲﾋﾟﾝｸﾞ
HYDRAULIC PIPING

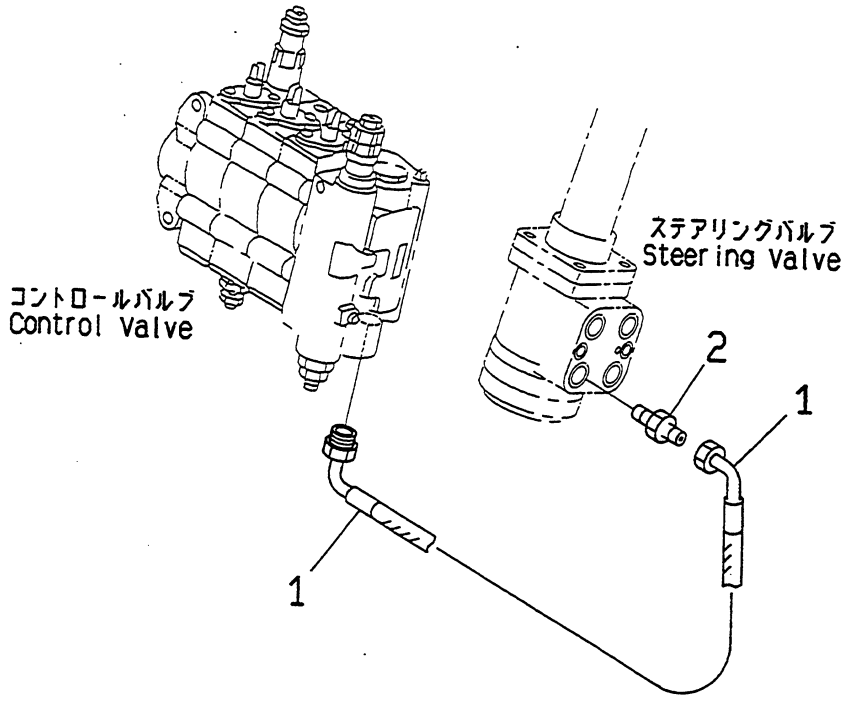

PUF1759

https://truckmanualshub.com/

FIG NO. : R4350-01A0

INDEX	PART NO.	DESCRIPTION	Q'TY	SERIAL NO.
1	3EA-66-A5810	HOSE.....	1	600001A AND UP
2	45B-AAX-2280	NIPPLE.....	1	

https://truckmanualshub.com/

FIG. R4360-01A0 2-SPOOL CONTROL VALVE

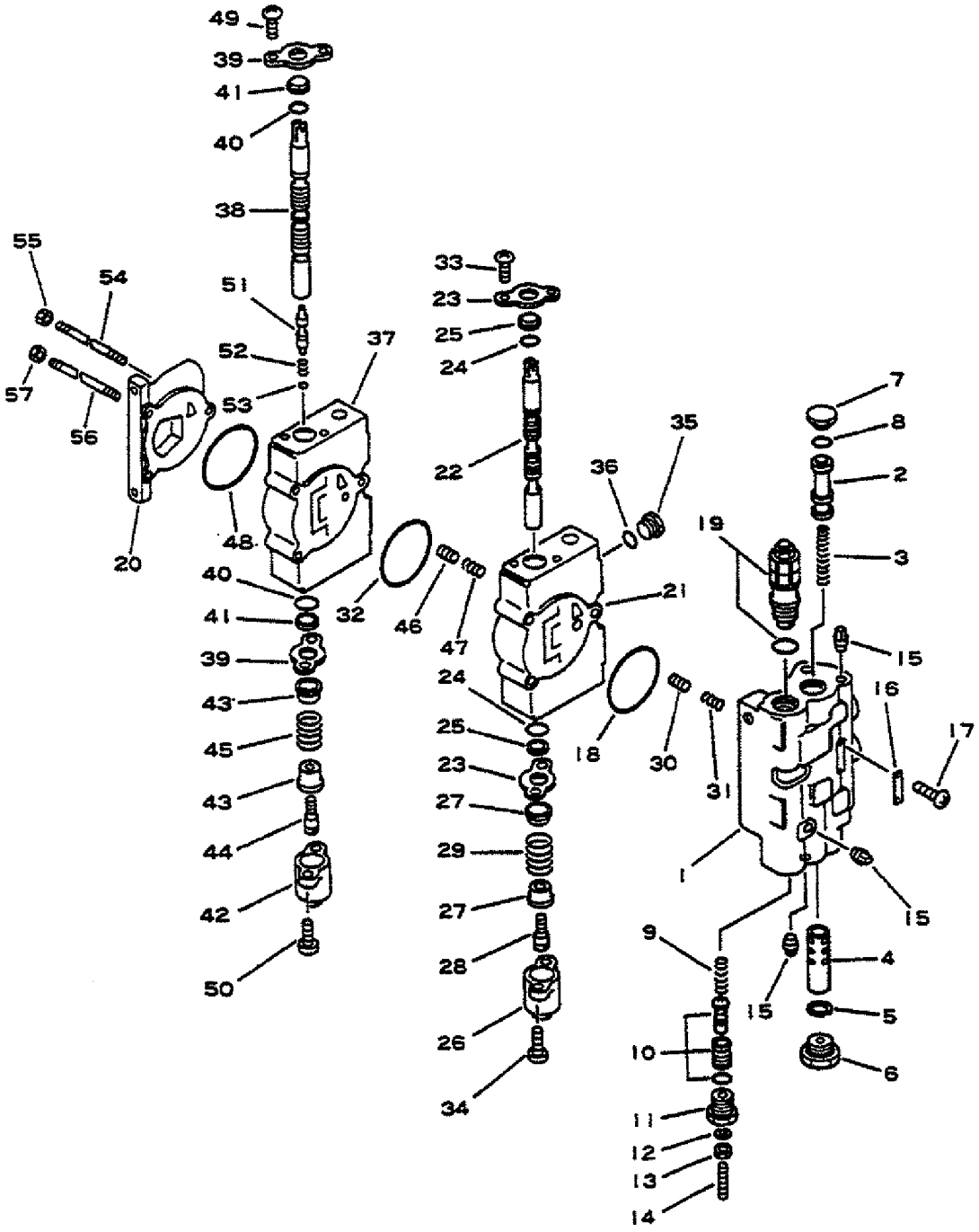

https://truckmanualshub.com/

FIG. NO. : R4360-01A0

INDEX	PART NO.	DESCRIPTION	Q'TY	SERIAL NO.
	3EA-61-A2210	2-SPOOL CONTROL VALVE ASS'Y	1	600001A AND UP
	HU5001P2	.SECTION ASS'Y, INLET	1	
1	*	..HOUSING	1	
2	*	..SPOOL	1	
3	HU4251	..SPRING	1	
4	*	..SLEEVE	1	
5	HU54269	..RING, SNAP	1	
6	HU54339	..CONNECTOR ASS'Y	1	
7	HU3389-1	..PLUG	1	
8	HU3383	..O-RING	1	
9	HU4255	..SPRING	1	
10	HU54298	..SLEEVE ASS'Y	1	
11	HU54720	..PLUG	1	
12	HU6957	..WASHER	1	
13	HU51875	..NUT	1	
14	HU54300	..SCREW, SET	1	
15	HU52345	..PLUG	3	
16	*	..PLATE, NAME	1	
17	*	..SCREW	2	
18	HU64	.O-RING	1	
19	HU50607	.VALVE ASS'Y, RELIEF	1	
20	HU5006A1	.HOUSING	1	
	HU5002A705	.VALVE ASS'Y, LIFT	1	
21	*	..HOUSING	1	
22	*	..SPOOL	1	
23	HU5012	..PLATE	2	
24	HU130	..O-RING	2	
25	HU5029	..WIPER	2	
26	HU5028	..CAP	1	
27	HU5013	..SEAT	2	
28	HU5015	..SCREW	1	
29	HU5014	..SPRING	1	
30	HU5011	..POPPET	1	
31	HU5064	..SPRING	1	
32	HU564	..O-RING	1	
33	HU3432	..SCREW	2	
34	HU5035	..BOLT	2	
35	HU3108	..PLUG	1	
36	HU3114	..O-RING	1	
	HU5002A757	.VALVE ASS'Y, TILT	1	
37	*	..HOUSING	1	
38	*	..SPOOL	1	
39	HU5012	..PLATE	2	
40	HU130	..O-RING	2	

https://truckmanualshub.com/

FIG. R4360-01A0 2-SPOOL CONTROL VALVE

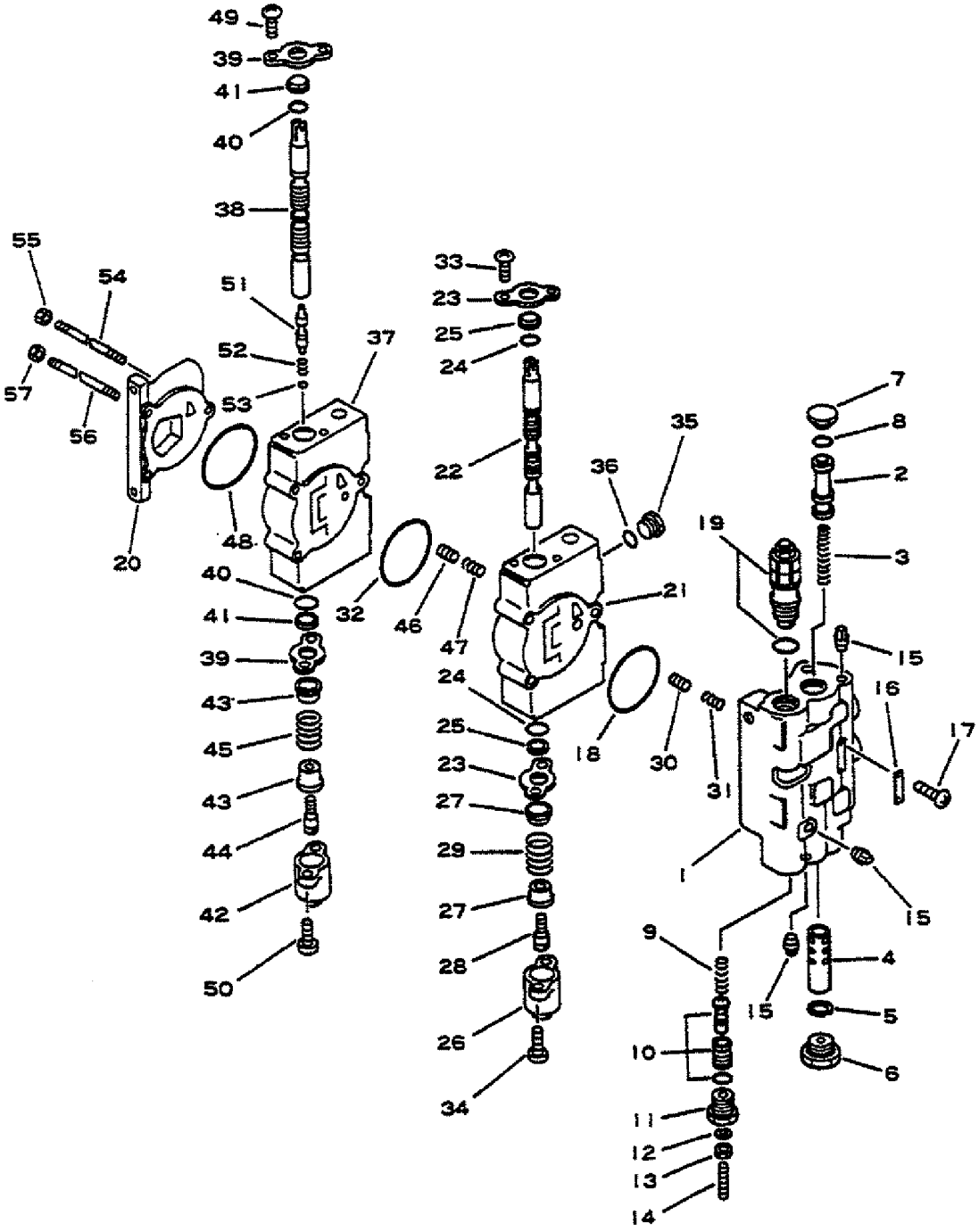

https://truckmanualshub.com/

FIG. NO. : R4360-01A0

INDEX	PART NO.	DESCRIPTION	Q'TY	SERIAL NO.
41	HU5029	..WIPER	2	600001A AND UP
42	HU5028	..CAP	1	
43	HU5013	..SEAT	2	
44	HU5015	..SCREW	1	
45	HU5014	..SPRING	1	
46	HU5011	..POPPET	1	
47	HU5064	..SPRING	1	
48	HU564	..O-RING	1	
49	HU3432	..SCREW	2	
50	HU5035	..BOLT	2	
51	*	..VALVE	1	
52	HU52270	..SPRING	1	
53	HU4623	..O-RING	1	
54	HU5089-66	.ROD	1	
55	HU1052	.NUT	1	
56	HU5069-04	.ROD	2	
57	HU1861	.NUT	2	

https://truckmanualshub.com/

FIG. R4370-01A0 3-SPOOL CONTROL VALVE

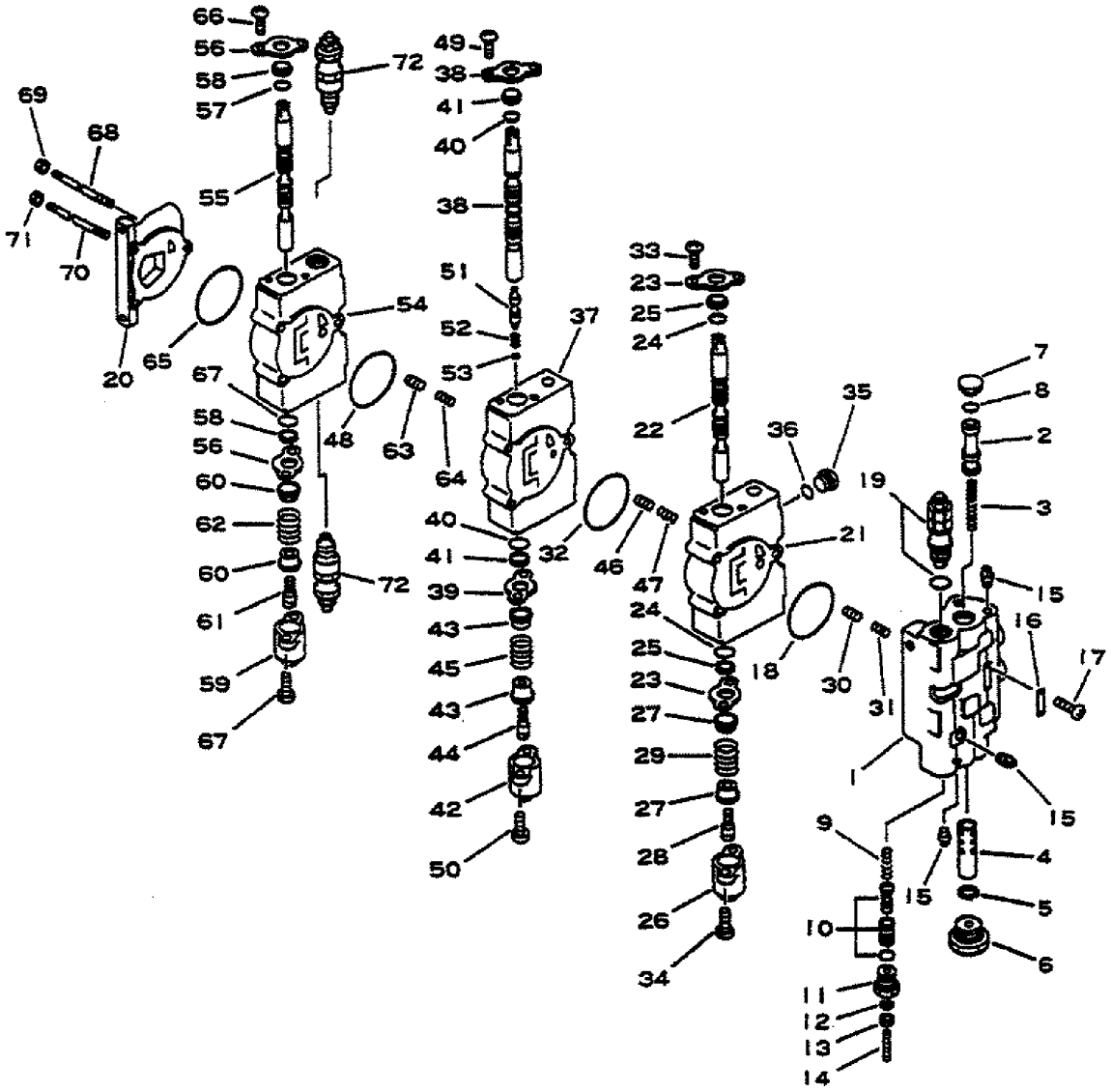

https://truckmanualshub.com/

FIG. NO. : R4370-01A0

INDEX	PART NO.	DESCRIPTION	Q'TY	SERIAL NO.
	3EA-61-A2310	3-SPOOL CONTROL VALVE ASS'Y	1	600001A-650000A
	HU5004F1	.SECTION ASS'Y, INLET	1	
1	*	..HOUSING	1	
2	*	..SPOOL	1	
3	HU4251	..SPRING	1	
4	*	..SLEEVE	1	
5	HU54269	..RING, SNAP	1	
6	HU54337	..CONNECTOR ASS'Y	1	
7	HU3389-1	..PLUG	1	
8	HU3383	..O-RING	1	
9	HU4255	..SPRING	1	
10	HU54298	..SLEEVE ASS'Y	1	
11	HU54720	..PLUG	1	
12	HU6957	..WASHER	1	
13	HU51875	..NUT	1	
14	HU54300	..SCREW, SET	1	
15	HU52345	..PLUG	3	
16	*	..PLATE, NAME	1	
17	*	..SCREW	2	
18	HU64	.O-RING	1	
19	HU50607	.VALVE ASS'Y, RELIEF	1	
20	HU5006A1	.HOUSING	1	
	HU5002A705	.VALVE ASS'Y, LIFT	1	
21	*	..HOUSING	1	
22	*	..SPOOL	1	
23	HU5012	..PLATE	2	
24	HU130	..O-RING	2	
25	HU5029	..WIPER	2	
26	HU5028	..CAP	1	
27	HU5013	..SEAT	2	
28	HU5015	..SCREW	1	
29	HU5014	..SPRING	1	
30	HU5011	..POPPET	1	
31	HU5064	..SPRING	1	
32	HU564	..O-RING	1	
33	HU3432	..SCREW	2	
34	HU5035	..BOLT	2	
35	HU3108	..PLUG	1	
36	HU3114	..O-RING	1	
	HU5002A757	.VALVE ASS'Y, TILT	1	
37	*	..HOUSING	1	
38	*	..SPOOL	1	
39	HU5012	..PLATE	2	
40	HU130	..O-RING	2	

https://truckmanualshub.com/

FIG. R4370-01A0 3-SPOOL CONTROL VALVE

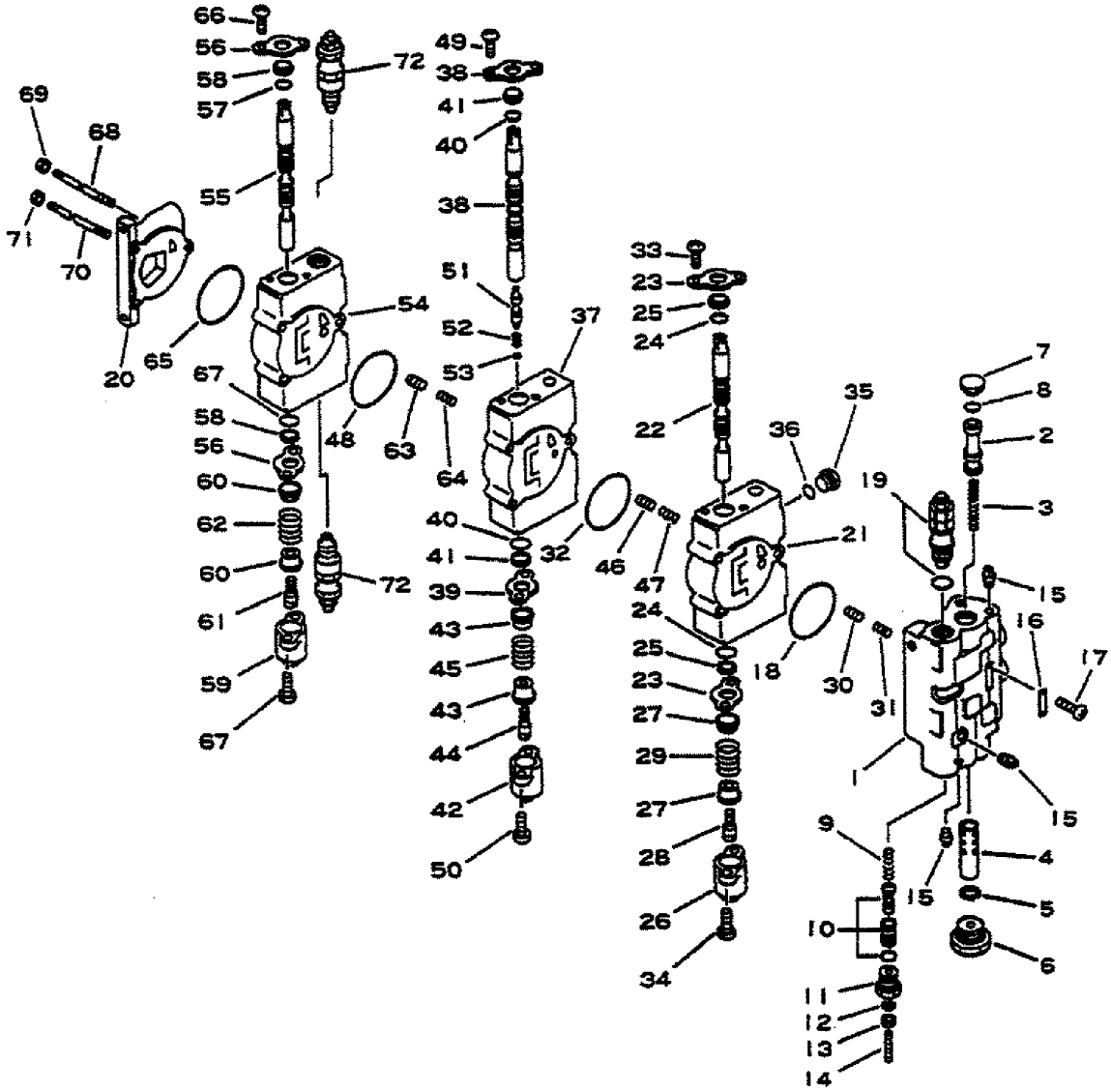

https://truckmanualshub.com/

FIG. NO. : R4370-01A0

INDEX	PART NO.	DESCRIPTION	Q'TY	SERIAL NO.
41	HU5029	..WIPER	2	600001A-650000A
42	HU5028	..CAP	1	
43	HU5013	..SEAT	2	
44	HU5015	..SCREW	1	
45	HU5014	..SPRING	1	
46	HU5011	..POPPET	1	
47	HU5064	..SPRING	1	
48	HU564	..O-RING	1	
49	HU3432	..SCREW	2	
50	HU5035	..BOLT	2	
51	*	..VALVE	1	
52	HU52270	..SPRING	1	
53	HU4623	..O-RING	1	
	HU5002V9	.VALVE ASS'Y, AUXILIARY	1	
54	*	..HOUSING	1	
55	*	..SPOOL	2	
56	HU5012	..PLATE	2	
57	HU130	..O-RING	2	
58	HU5029	..WIPER	2	
59	HU5028	..CAP	1	
60	HU5013	..SEAT	2	
61	HU5015	..SCREW	1	
62	HU5014	..SPRING	1	
63	HU5011	..POPPET	1	
64	HU5064	..SPRING	1	
65	HU564	..O-RING	1	
66	HU3432	..SCREW	2	
67	HU5035	..BOLT	2	
68	HU5089-22	.ROD	1	
69	HU1052	.NUT	1	
70	HU5069-33	.ROD	2	
71	HU1861	.NUT	2	
72	HU5060	.VALVE ASS'Y, RELIEF (WITH PORT RELIEF VALVE)	2	

https://truckmanualshub.com/

FIG. NO. : R4370-01A0A 3-SPOOL CONTROL VALVE

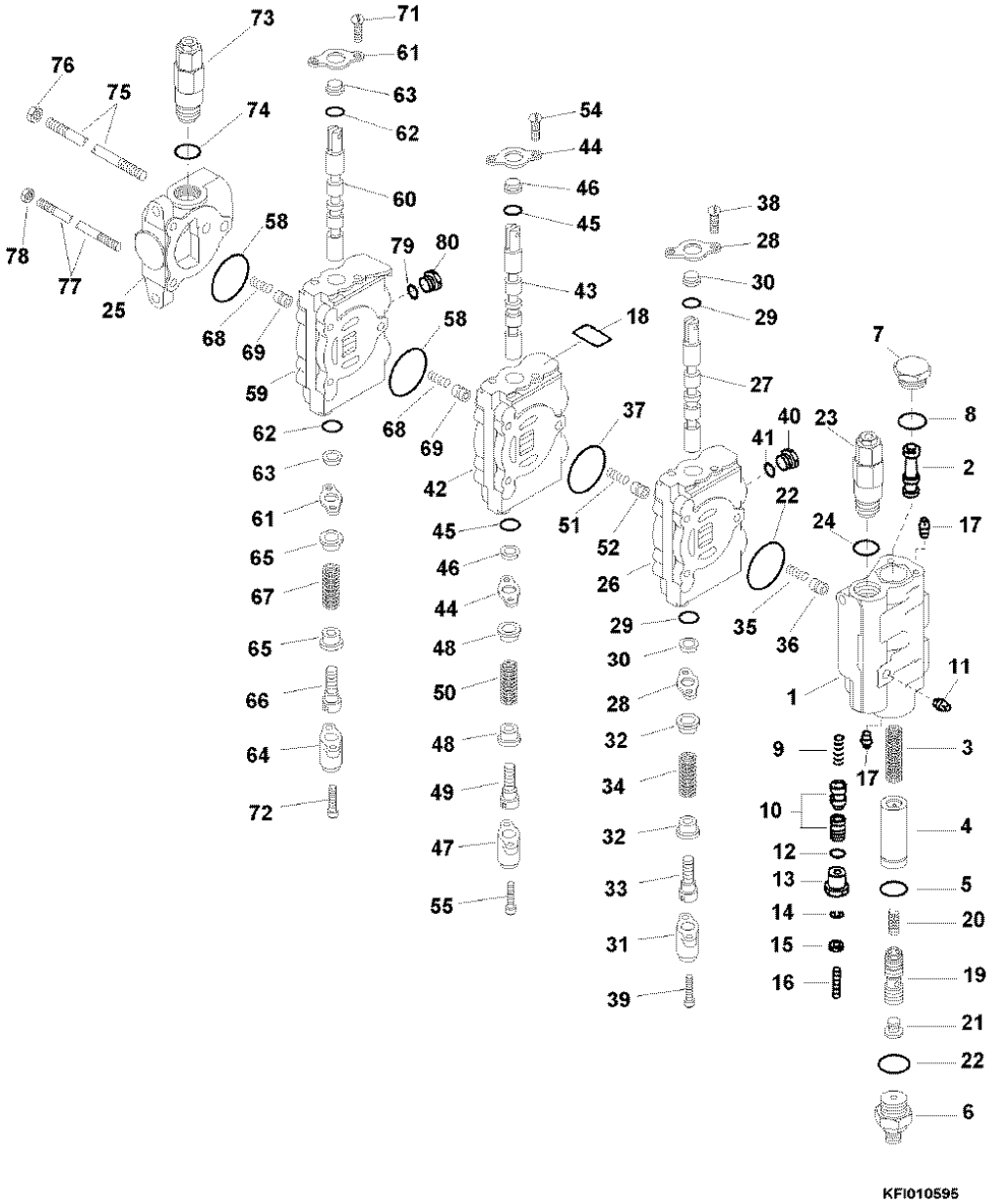

https://truckmanualshub.com/

FIG. NO. : R4370-01A0A

FG15H/18H-16, FG 15S/18S-16

INDEX	PART NO.	DESCRIPTION	Q'TY	SERIAL NO.
				650001A AND UP
	3EA-61-A5710	3-SPOOL VALVE ASSEMBLY	1	
	HU5001F2	.SECTION ASSEMBLY, INLET	1	
1	*	.HOUSING	1	
2	*	..SPOOL	1	
3	HU54251	..SPRING	1	
4	HU54261-1	..SLEEVE	1	
5	HU54269	..RING, SNAP	1	
6	HU54290	..VALVE, CHECK	1	
7	HU3389-1	..PLUG	1	
8	*	..O-RING (KIT)	2	
9	HU54255	..SPRING	1	
10	HU54298	..SLEEVE ASSEMBLY	1	
11	HU241B	..PLUG	1	
12	*	..O-RING (KIT)	1	
13	HU54270	..PLUG	1	
14	HU6957	..WASHER, LOCK	1	
15	HU51875	..NUT	1	
16	HU54300	..SCREW	1	
17	HU52345	..PLUG	3	
18	*	..PLATE, NAME	1	
19	HU54262	..PISTON	1	
20	HU54256	..SPRING	1	
21	HU54252-1	..PLUG	1	
22	*	..O-RING (KIT)	1	
23	HU56350-2525	.VALVE ASSEMBLY, MAIN RELIEF .	1	
24	HU53910	.O-RING	1	
25	HU5003-J1	.VALVE ASSEMBLY, OUTLET	1	
	HU5002A360	.VALVE ASSEMBLY, LIFT	1	
26	*	..HOUSING	1	
27	*	..SPOOL	1	
28	HU5012	..PLATE	2	
29	*	..O-RING (KIT)	2	
30	*	..WIPER (KIT)	2	
31	HU5028	..CAP	1	
32	HU5013	..SEAT	2	
33	HU5015	..SPOOL, END	1	
34	HU5014	..SPRING	1	
35	HU5011	..POPPET	1	
36	HU5064	..SPRING	1	
37	*	..O-RING (KIT)	1	
38	HU3432	..SCREW	2	
39	HU5035	..SCREW, CAP	2	
40	HU3108	..PLUG	1	
41	*	..O-RING (KIT)	1	
	HU5002-A757	.VALVE ASSEMBLY, TILT	1	
42	*	..HOUSING	1	

https://truckmanualshub.com/

FIG. NO. : R4370-01A0A 3-SPOOL CONTROL VALVE

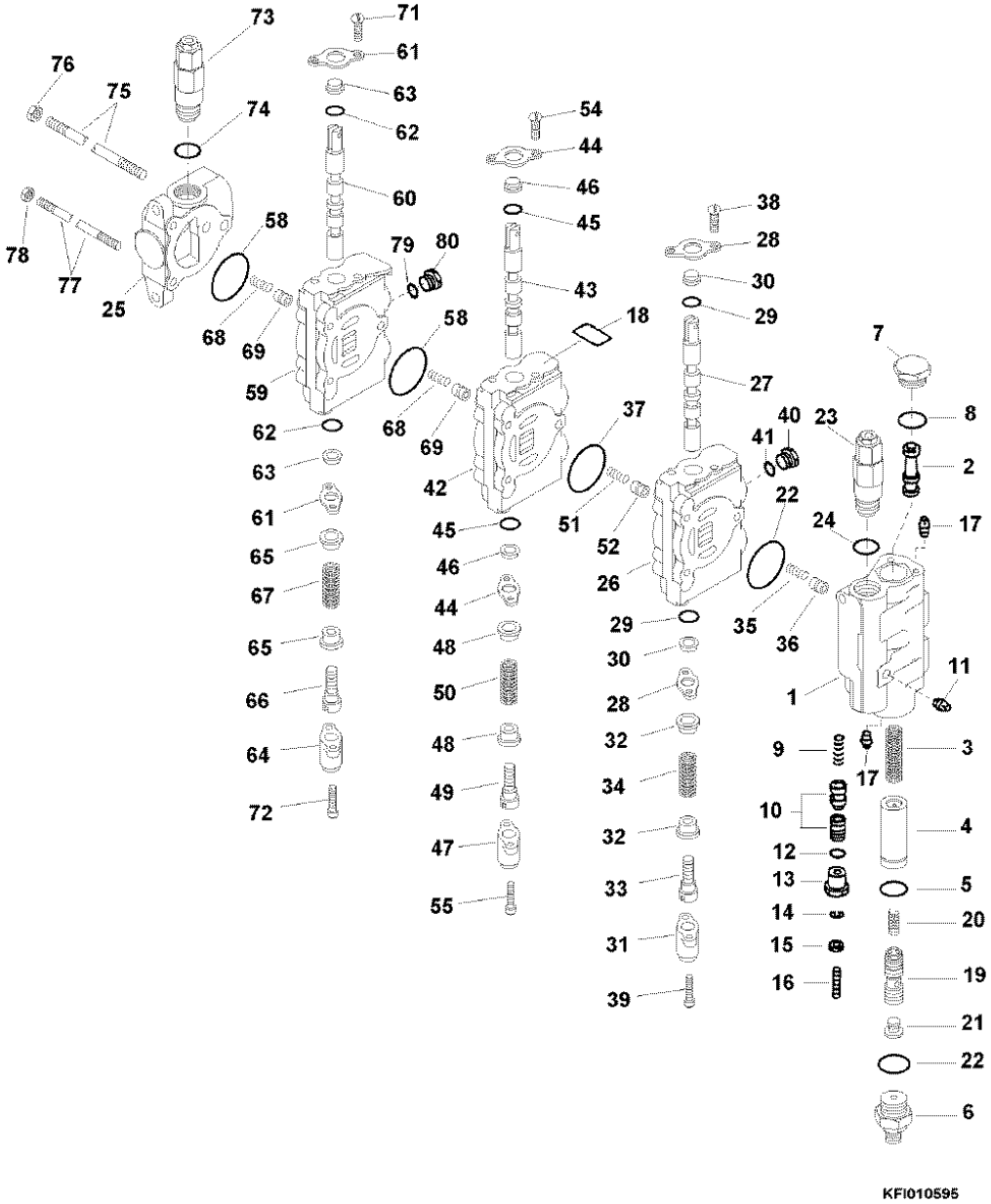

https://truckmanualshub.com/

FIG. NO. : R4370-01A0A

FG15H/18H-16, FG15S/18S-16

INDEX	PART NO.	DESCRIPTION	Q'TY	SERIAL NO.
				650001A AND UP
43	*	..SPOOL	1	
44	HU5012	..PLATE	2	
45	*	..O-RING (KIT)	2	
46	*	..WIPER (KIT)	2	
47	HU5028	..CAP	1	
48	HU5264	..SEAT	2	
49	HU51983	..SPOOL, END	1	
50	HU5014	..SPRING	1	
51	HU5011	..POPPET	1	
52	HU5064	..SPRING	1	
53	*	..O-RING (KIT)	1	
54	HU3432	..SCREW	2	
55	HU5035	..SCREW, CAP	2	
56	*	..VALVE	1	
57	HU52270	..SPRING	1	
58	*	..O-RING (KIT)	1	
	HU5002-V9	.VALVE ASSEMBLY, ATTACHMENT ..	1	
59	*	..HOUSING	1	
60	*	..SPOOL	1	
61	HU5012	..PLATE	2	
62	*	..O-RING (KIT)	2	
63	*	..WIPER (KIT)	2	
64	HU5028	..CAP	1	
65	HU5013	..SEAT	2	
66	HU5015	..SPOOL, END	1	
67	HU5014	..SPRING	1	
68	HU5011	..POPPET	1	
69	HU5064	..SPRING	1	
70	*	..O-RING (KIT)	1	
71	HU3432	..SCREW	2	
72	HU5035	..SCREW	2	
73	HU5060-P-2130	.VALVE ASS'Y, AUXILIARY RELIEF	1	
74	HU53910	.O-RING	1	
75	HU5089-22	.BOLT	1	
76	HU1052	.NUT	1	
77	HU5069-33	.BOLT	2	
78	HU1861	.NUT	2	
79	HU3108	.PLUG	2	
80	*	.O-RING (KIT)	2	
KIT	HU54620	SEAL KIT, 3 & 4 SPOOL VALVE	1	
		NOTE: **MAIN RELIEF VALVE: 2,525 PSI** **AUX. RELIEF VALVE: 2,130 PSI** **PRIORITY RELIEF: 1,100 PSI**		

https://truckmanualshub.com/

FIG. NO. : R4380-01A0 4-SPOOL CONTROL VALVE

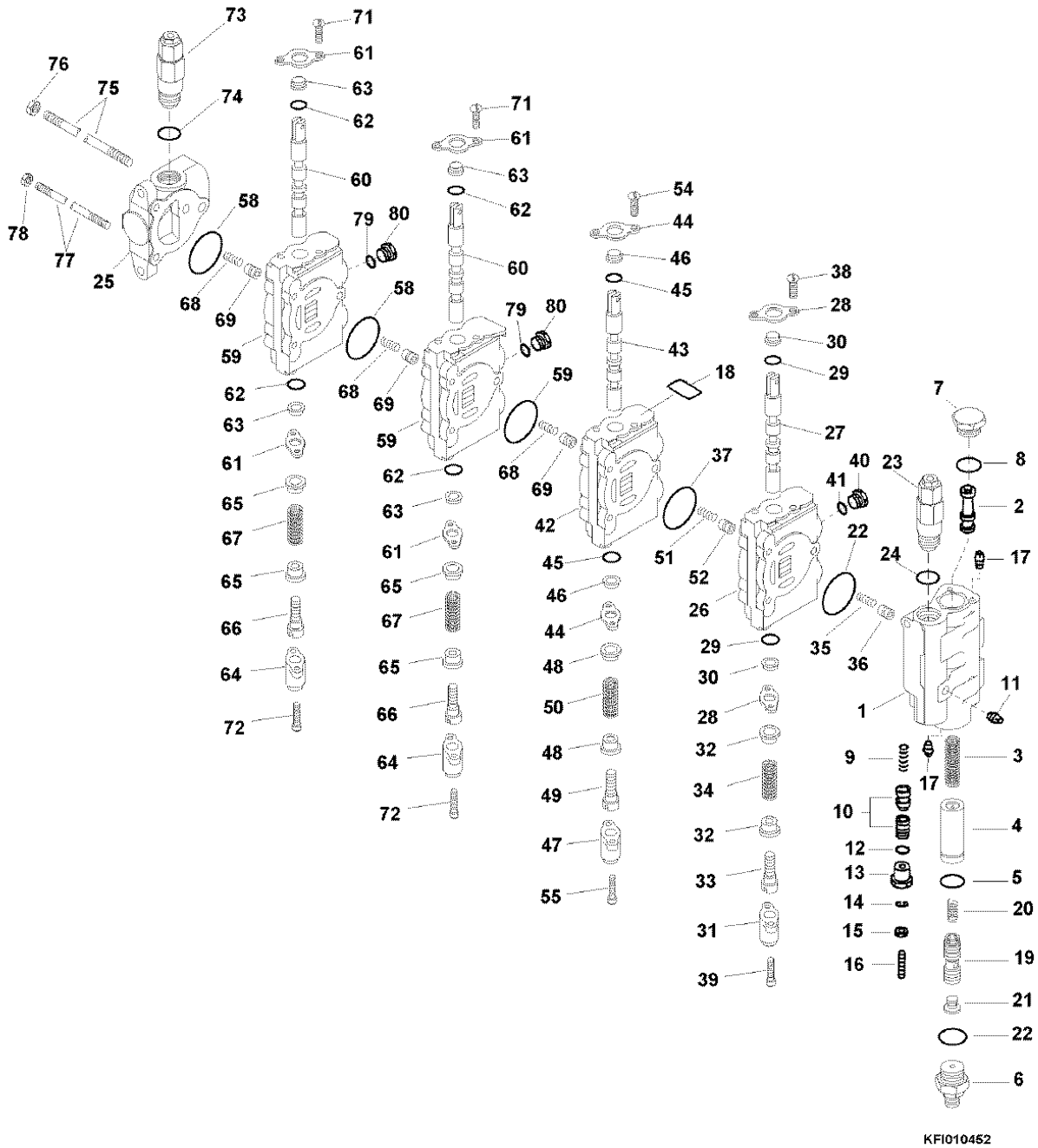

https://truckmanualshub.com/

FIG. NO. : R4380-01A0

FG15H/18H-16, FG15S/18S-16

INDEX	PART NO.	DESCRIPTION	Q'TY	SERIAL NO.
				650001A AND UP
	3EA-61-A5760	4-SPOOL VALVE ASSEMBLY	1	
	HU5001F2	.SECTION ASSEMBLY, INLET	1	
1	*	.HOUSING	1	
2	*	..SPOOL	1	
3	HU54251	..SPRING	1	
4	HU54261-1	..SLEEVE	1	
5	HU54269	..RING, SNAP	1	
6	HU54290	..VALVE, CHECK	1	
7	HU3389-1	..PLUG	1	
8	*	..O-RING (KIT)	2	
9	HU54255	..SPRING	1	
10	HU54298	..SLEEVE ASSEMBLY	1	
11	HU241B	..PLUG	1	
12	*	..O-RING (KIT)	1	
13	HU54270	..PLUG	1	
14	HU6957	..WASHER, LOCK	1	
15	HU51875	..NUT	1	
16	HU54300	..SCREW	1	
17	HU52345	..PLUG	3	
18	*	..PLATE, NAME	1	
19	HU54262	..PISTON	1	
20	HU54256	..SPRING	1	
21	HU54252-1	..PLUG	1	
22	*	..O-RING (KIT)	1	
23	HU56350-2525	.VALVE ASSEMBLY, MAIN RELIEF .	1	
24	HU53910	..O-RING	1	
25	HU5003-J1	.VALVE ASSEMBLY, OUTLET	1	
	HU5002A360	.VALVE ASSEMBLY, LIFT	1	
26	*	..HOUSING	1	
27	*	..SPOOL	1	
28	HU5012	..PLATE	2	
29	*	..O-RING (KIT)	2	
30	*	..WIPER (KIT)	2	
31	HU5028	..CAP	1	
32	HU5013	..SEAT	2	
33	HU5015	..SPOOL, END	1	
34	HU5014	..SPRING	1	
35	HU5011	..POPPET	1	
36	HU5064	..SPRING	1	
37	*	..O-RING (KIT)	1	
38	HU3432	..SCREW	2	
39	HU5035	..SCREW, CAP	2	
40	HU3108	..PLUG	1	
41	HU3114	..O-RING (KIT)	1	
	HU5002-A757	.VALVE ASSEMBLY, TILT	1	
42	*	..HOUSING	1	

https://truckmanualshub.com/

FIG. NO. : R4380-01A0 4-SPOOL CONTROL VALVE

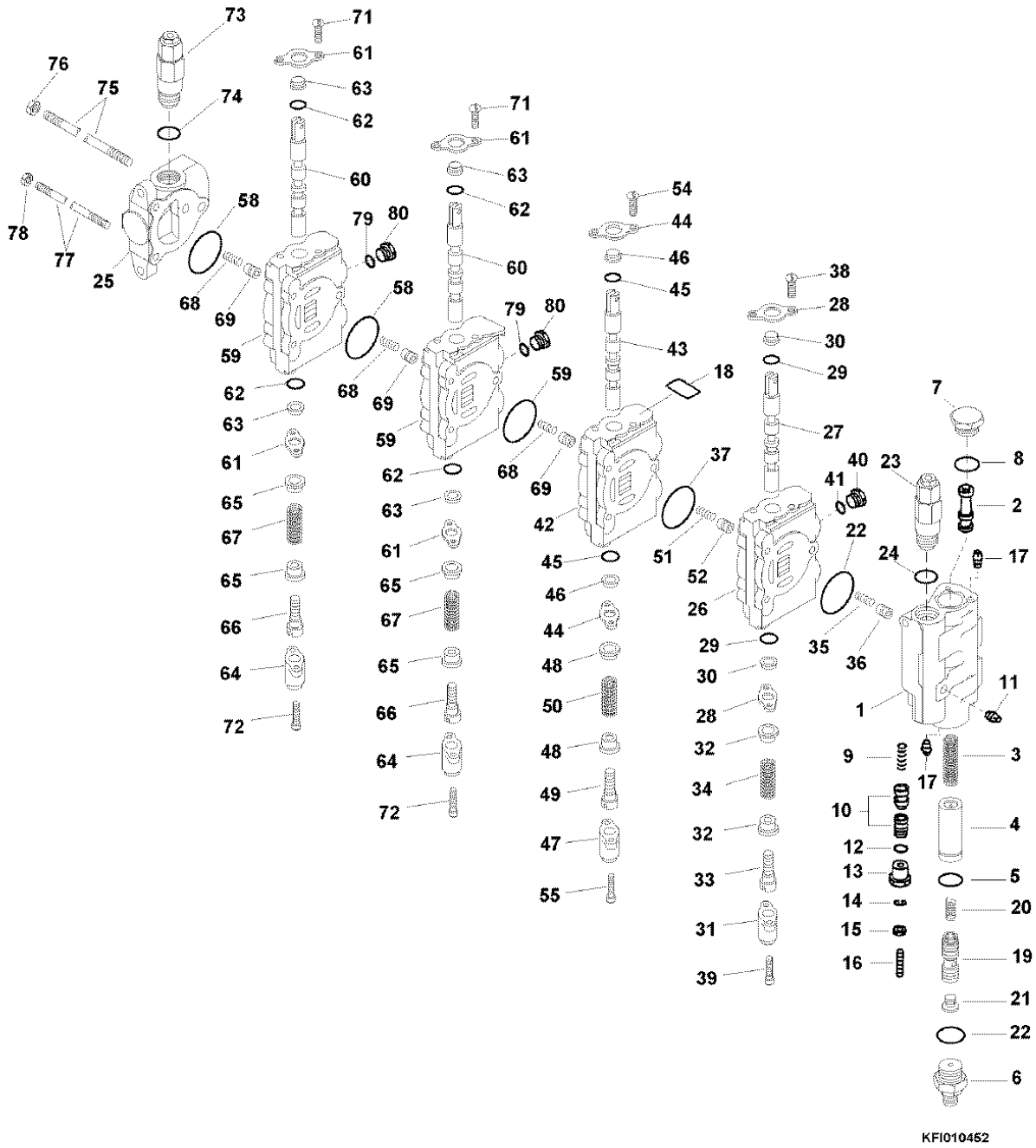

https://truckmanualshub.com/

FIG. NO. : R4380-01A0

FG15H/18H-16, FG15S/18S-16

INDEX	PART NO.	DESCRIPTION	Q'TY	SERIAL NO.
				650001A AND UP
43	*	..SPOOL	1	
44	HU5012	..PLATE	2	
45	*	..O-RING (KIT)	2	
46	*	..WIPER (KIT)	2	
47	HU5028	..CAP	1	
48	HU5264	..SEAT	2	
49	HU51983	..SPOOL, END	1	
50	HU5014	..SPRING	1	
51	HU5011	..POPPET	1	
52	HU5064	..SPRING	1	
53	*	..O-RING (KIT)	1	
54	HU3432	..SCREW	2	
55	HU5035	..SCREW, CAP	2	
56	*	..VALVE	1	
57	HU52270	..SPRING	1	
58	*	..O-RING (KIT)	1	
	HU5002-W4	.VALVE ASS'Y, ATTACHMENT (3RD)	1	
	HU5002-V5	.VALVE ASS'Y, ATTACHMENT (4TH)	1	
59	*	..HOUSING	1	
60	*	..SPOOL	2	
61	HU5012	..PLATE	2	
62	*	..O-RING (KIT)	2	
63	*	..WIPER (KIT)	1	
64	HU5028	..CAP	2	
65	HU5013	..SEAT	1	
66	HU5015	..SPOOL, END	1	
67	HU5014	..SPRING	1	
68	HU5011	..POPPET	1	
69	HU5064	..SPRING	1	
70	*	..O-RING (KIT)	2	
71	HU3432	..SCREW	2	
72	HU5035	..SCREW	1	
73	HU5060-P-2130	.VALVE ASS'Y, AUXILIARY RELIEF	1	
74	HU53910	.O-RING	1	
75	HU5089-25	.BOLT	1	
76	HU1052	.NUT	2	
77	HU5069-36	.BOLT	2	
78	HU1861	.NUT	2	
79	HU3108	.PLUG	2	
80	*	.O-RING (KIT)	1	
KIT	HU54620	SEAL KIT, 3 & 4 SPOOL VALVE ..	1	
		NOTE: **MAIN RELIEF VALVE: 2,525 PSI** **AUX. RELIEF VALVE: 2,130 PSI** **PRIORITY RELIEF: 1,100 PSI**		

https://truckmanualshub.com/

FIG. NO.: R4400-01A0 AX TILT CYLINDER

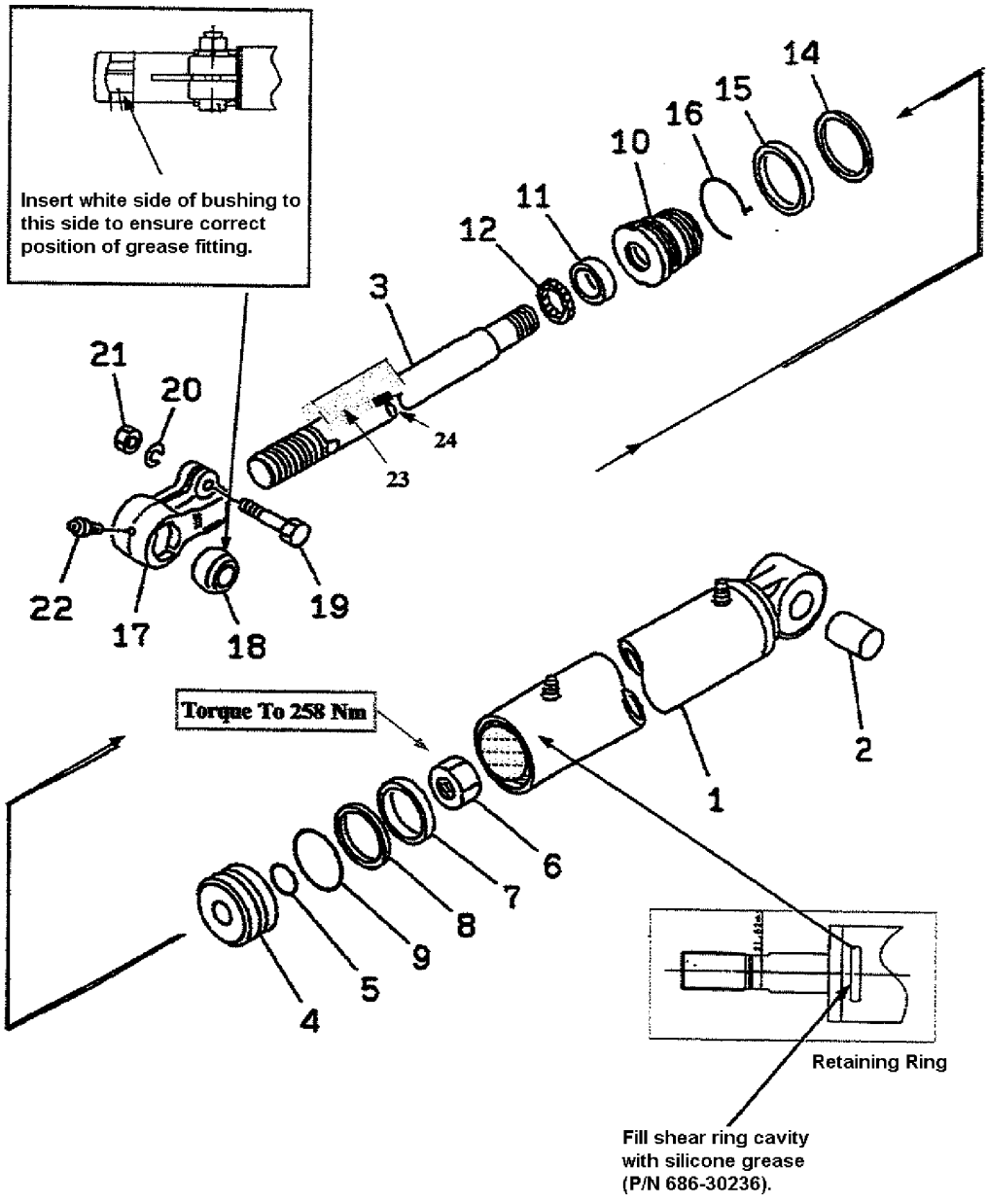

https://truckmanualshub.com/

FIG. NO. : R4400-01A0

INDEX	PART NO.	DESCRIPTION	Q'TY	SERIAL NO.
	37A-1JB-A3000	CYLINDER ASSEMBLY	1	600001A-650000A
1	37A-1JB-A310	.CYLINDER	1	
2	695-30023	.BUSHING, PIVOT	1	
3	SH688-50266	.ROD, PISTON	1	
4	695-54029	.PISTON	1	
5	100-210	.SEAL, PISTON ID	1	
6	410-07516	.NUT, PISTON	1	
7	575-302-050-06-025	.STRIP, BEARING, PISTON	1	
8	185-301-0250	.SEAL, PISTON	1	
9	(NOT USED)			
10	688-50217	.HEAD	1	
11	688-30034	.PACKING, ROD	1	
12	686-30235	.WIPER, ROD	1	
13	(NOT USED)			
14	100-228	.SEAL, TUBE	1	
15	134-001-228	.BACKUP, SEAL, TUBE	1	
16	688-50219	.RING, SHEAR	1	
17	3EA-64-A5110	.ROD END	1	
18	3EA-64-A5120	.BUSHING (SEE PICTURE FOR PROPER POSITIONING)	1	
19	01010-81255	.BOLT	1	
20	01602-21236	.WASHER, LOCK	1	
21	01580-11210	.NUT	1	
22	07020-00001	.FITTING, GREASE	1	
23	37A-1JE-A320	.SPACER, 3-STAGE UPRIGHT (TILT 6F x 6B)	1	
4	3EA-64-A1410	.O-RING (SPACER)	1	
--	3EA-64-5791	SEAL KIT	1	

https://truckmanualshub.com/

FIG. NO. : R4400-01A0A

AX TILT CYLINDER

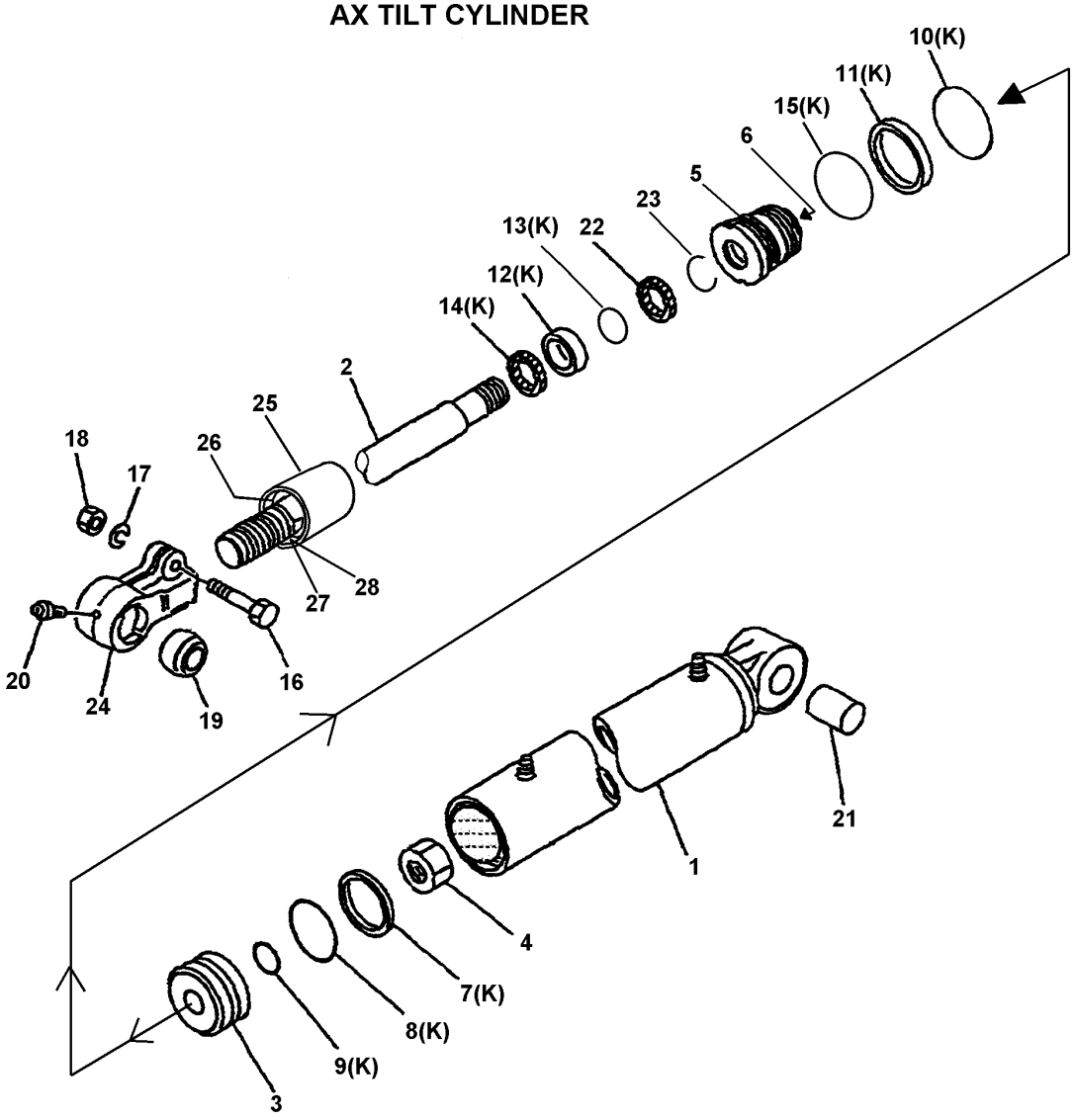

KFI010598

https://truckmanualshub.com/

FIG. NO. : R4400-01A0A

FG15H/18H-16, FG15S/18S-16

INDEX	PART NO.	DESCRIPTION	Q'TY	SERIAL NO.
	37A-1JA-A341	CYLINDER ASSEMBLY, 10/6	2	650001A AND UP
	37A-1JA-A331	CYLINDER ASSEMBLY, 10/5	2	
	37A-1JA-A311	CYLINDER ASSEMBLY, (INDOOR) 7/7 & (OUTDOOR) 6/8	2	
	37A-1JA-A321	CYLINDER ASSEMBLY, (INDOOR) 7/5 & (OUTDOOR) 6/6	2	
1	ON65502-06069	.CYLINDER, TUBE 10/6	1	
	ON65502-06069	.CYLINDER, TUBE (INDOOR) 10/5 ...	1	
	ON65501-06069	.CYLINDER, TUBE (INDOOR) 7/5 & (OUTDOOR) 6/6	1	
	ON65501-06069	.CYLINDER, TUBE (INDOOR) 7/7 & (OUTDOOR) 6/8	1	
2	ON65532-06069-A	.ROD, 10/6	1	
	ON65532-06069-A	.ROD, 10/5	1	
	ON65531-06069-A	.ROD, (INDOOR) 7/7 & (OUTDOOR) 6/8	1	
	ON65531-06069-A	.ROD, (INDOOR) 7/5 & (OUTDOOR) 6/6	1	
3	ON65551-06069	.PISTON	1	
4	01582-12016	.NUT	1	
5	ON65561-06069	.HEAD (KIT B)	1	
6	ON07177-02525	.BUSHING (KIT B)	1	
7	ON65556-06069	.PACKING (KIT A)	1	
8	ON65557-06069	.BACKUP RING (KIT A)	2	
9	ON96711-03020	.O-RING (KIT A)	1	
10	ON96751-03055	.O-RING (KIT A)	1	
11	ON65567-06069	.BACKUP RING (KIT A)	1	
12	3EA-64-24110	.PACKING (KIT A)	1	
13	ON65563-06069	.BACKUP RING (KIT A)	1	
14	ON65665-05003	.DUST SEAL (KIT A)	1	
15	ON96751-03060	.O-RING (KIT A)	1	
16	01010-81255	.BOLT	1	
17	01602-21236	.WASHER	1	
18	01580-11210	.NUT	1	
19	3EA-64-23160	.BUSHING	1	
20	07020-00001	.GREASE FITTING	1	
21	34A-64-12140	.BUSHING	1	
22	3EA-64-13180	.WASHER	1	
23	ON04065-04018	.SNAP RING	1	
24	3EA-64-23150	.YOKE	1	
25	*	.SPACER, (NOT USED ON 7/7 & 6/8)	1	
	37A-1JE-A322	.SPACER, (INDOOR)7/5, (OUTDOOR)6/6	1	
	37A-1JE-A332	.SPACER, (INDOOR) 10/5	1	
	*	.SPACER (NOT USED ON 10/6)	1	
26	ON65001-06069	.O-RING	1	
27	37B-1AP-1030	.SHIM, T=2	1	
28	37B-1AJ-9030	.SHIM, T=1	1	
KIT A	ON65001-06069	SEAL KIT	1	
KIT B	ON65002-06069	HEAD KIT	1	

https://truckmanualshub.com/

FIG. R4500-01A0 2 TO 3-SPOOL CONTROL VALVE CONVERSION KIT

(ILLUSTRATION NOT AVAILABLE)

https://truckmanualshub.com/

FIG. NO. : FIG. R4500-01A0

FG15/18-16

INDEX	PART NO.	DESCRIPTION	Q'TY	SERIAL NO.
	3EB-98-A31240	KIT, CONVERSION, CONTROL VALVE, 2 TO 3-SPOOL	1	600001A - 650000A
	HU5060	.RELIEF VALVE	2	
	HU5002-V9	.VALVE SECTION	1	
	37B-1HD-2030	.SHAFT	1	
	3EB-61-31250	.LINK	1	
	358-60-15250	.PIN	2	
	37B-1HB-3031	.LEVER	1	
	01641-20508	.WASHER	2	
	04050-11210	.CLIP	1	
	04052-00530	.CLIP	1	
	HU5089-22	.BOLT	1	
	HU5069-33	.BOLT	2	
	3EB-61-11180	.BOOT	1	
	3EB-61-A5110	.LINK	1	
	HU51790-2	.SERVICE KIT	1	

https://truckmanualshub.com/

FIG. R4600-01A0 3 TO 4-SPOOL CONTROL VALVE CONVERSION KIT

(ILLUSTRATION NOT AVAILABLE)

https://truckmanualshub.com/

FIG. NO. : FIG. R4600-01A0

FG15/18-16

INDEX	PART NO.	DESCRIPTION	Q'TY	SERIAL NO.
	3EB-98-A31270	KIT, CONVERSION, CONTROL VALVE, 3 TO 4-SPOOL	1	600001A - 650000A
	HU5060	.RELIEF VALVE	2	
	HU5002-V9	.VALVE SECTION	1	
	37B-1HD-2040	.SHAFT	1	
	3EB-61-31250	.LINK	1	
	358-60-15250	.PIN	2	
	37B-1HB-3041	.LEVER	1	
	01641-20508	.WASHER	2	
	04050-11210	.CLIP	1	
	04052-00530	.CLIP	1	
	HU5089-25	.BOLT	1	
	HU5069-36	.BOLT	2	
	3EB-61-11180	.BOOT	1	
	3EB-61-A5110	.LINK	1	
	3EB-61-31410	.BRACKET	1	
	3EB-50-32840	.COVER	1	
	HU51790-2	.SERVICE KIT	1	

https://truckmanualshub.com/

FIG. R4700-01A0 2 TO 4-SPOOL CONTROL VALVE CONVERSION KIT

(ILLUSTRATION NOT AVAILABLE)

https://truckmanualshub.com/

FIG. NO. : FIG. R4700-01A0

FG15/18-16

INDEX	PART NO.	DESCRIPTION	Q'TY	SERIAL NO.
	3EB-98-A31260	KIT, CONVERSION, CONTROL VALVE, 2 TO 4-SPOOL	1	600001A - 650000A
	HU5060	.RELIEF VALVE	4	
	HU5002-V9	.VALVE SECTION	2	
	37B-1HD-2040	.SHAFT	1	
	3EB-61-31250	.LINK	2	
	358-60-15250	.PIN	4	
	37B-1HB-3041	.LEVER	1	
	01641-20508	.WASHER	4	
	04050-11210	.CLIP	2	
	04052-00530	.CLIP	2	
	HU5089-25	.BOLT	1	
	HU5069-36	.BOLT	2	
	3EB-61-11180	.BOOT	2	
	3EB-61-A5110	.LINK	2	
	3EB-61-31410	.BRACKET	1	
	3EB-50-32840	.COVER	1	
	37B-1HB-3031	.LEVER	1	
	HU51790-2	.SERVICE KIT	2	

https://truckmanualshub.com/

FIG. R4800-01A0 3 TO 4-SPOOL CONTROL VALVE CONVERSION KIT

(ILLUSTRATION NOT AVAILABLE)

https://truckmanualshub.com/

FIG. NO. : FIG. R4800-01A0

FG15/18-16

INDEX	PART NO.	DESCRIPTION	Q'TY	SERIAL NO.
	3EB-98-A31271	KIT, CONVERSION, CONTROL VALVE, 3 TO 4-SPOOL	1	650001A AND UP
	HU5002-V5	.AUX VALVE	1	
	37B-1HD-2040	.SHAFT	1	
	3EB-61-21230	.LINK	1	
	358-60-15250	.PIN	2	
	37B-1HG-3041	.LEVER	1	
	HU5089-25	.BOLT	1	
	HU5069-36	.BOLT	2	
	3EB-61-11180	.BOOT	1	
	3EB-61-A5110	.LINK	1	
	3EA-61-31410YA	.BRACKET	1	
	3EB-50-5660YD	.COVER	1	
	3EB-50-A5690	.COVER	1	

https://truckmanualshub.com/

This Page Left Intentionally Blank

KOMATSU

https://truckmanualshub.com/

KOMATSU

Uprights And Related Parts

AX SERIES

Uprights And Related Parts

https://truckmanualshub.com/

KOMATSU

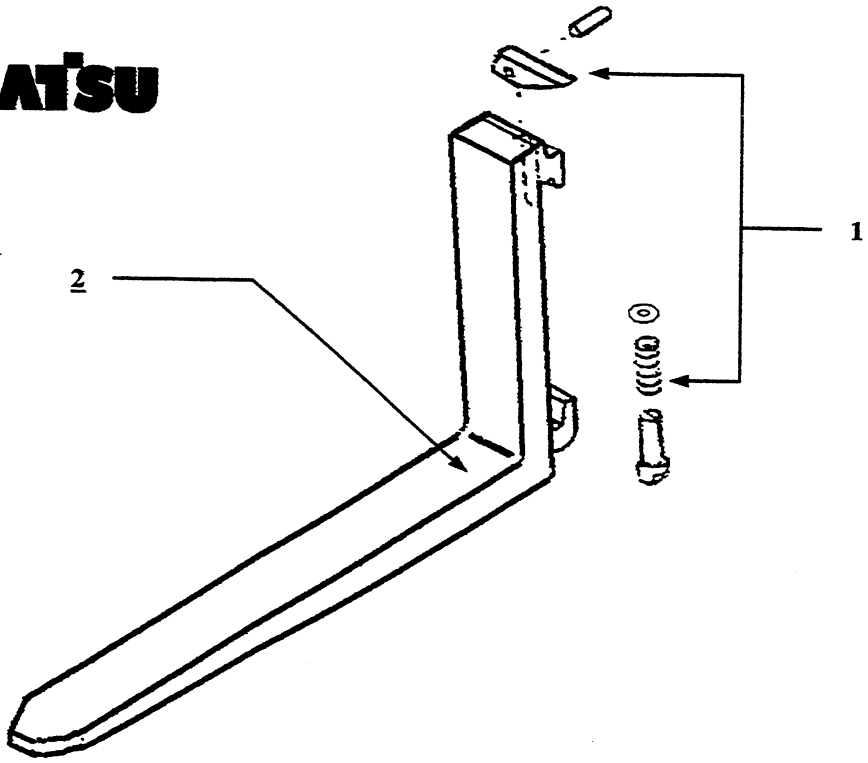

ITEM	PART NUMBER	DESCRIPTION	LENGTH	WEIGHT	QTY.
1	3EB-72-121LT	Fork kit			1
		Class 2 Standard Taper Pallet Fork			
2	KM41887/0915	1 1/4" X 4 " CLASS 2 STANDARD	36"	70 LB	1
2	KM41887/1065	1 1/4" X 4" CLASS 2 STANDARD	42"	77 LB	1
2	KM41887/1220	1 1/4" X 4" CLASS 2 STANDARD	48"	86 LB	1
2	KM41887/1370	1 1/4" X 4" CLASS 2 STANDARD	54"	95 LB	1
		Class 2 Fully Tapered And Polished Fork			1
2	KM43919/0915	1 1/4" X 4 CLASS 2 FTP	36"	66 LB	1
2	KM43919/1065	1 1/4" X 4 CLASS 2 FTP	42"	73 LB	1
2	KM43919/1220	1 1/4" X 4 CLASS 2 FTP	48"	77 LB	1
2	KM43919/1370	1 1/4" X 4 CLASS 2 FTP	82"	82 LB	1

Note: Part Number Is For One Fork Only.

Ask About Komatsu's Fork Program

https://truckmanualshub.com/

KOMATSU

KOMATSU Internal Hosing Kits

Internal Hosing Kit Identification

Komatsu AX Series Forklift Uprights are equipped with two possible internal hosing systems. These systems are not interchangeable. The systems are identified by the color of the hose sheaves. A **WHITE** sheave indicates a Komatsu hose kit. A **BLACK** hose sheave indicates a CASCADE hose kit.

https://truckmanualshub.com/

INTERNAL HOSE TAKE-UP KIT - SINGLE FUNCTION
30D FREEVIEW MAST - KOMATSU PART # 45A-AAX-5110

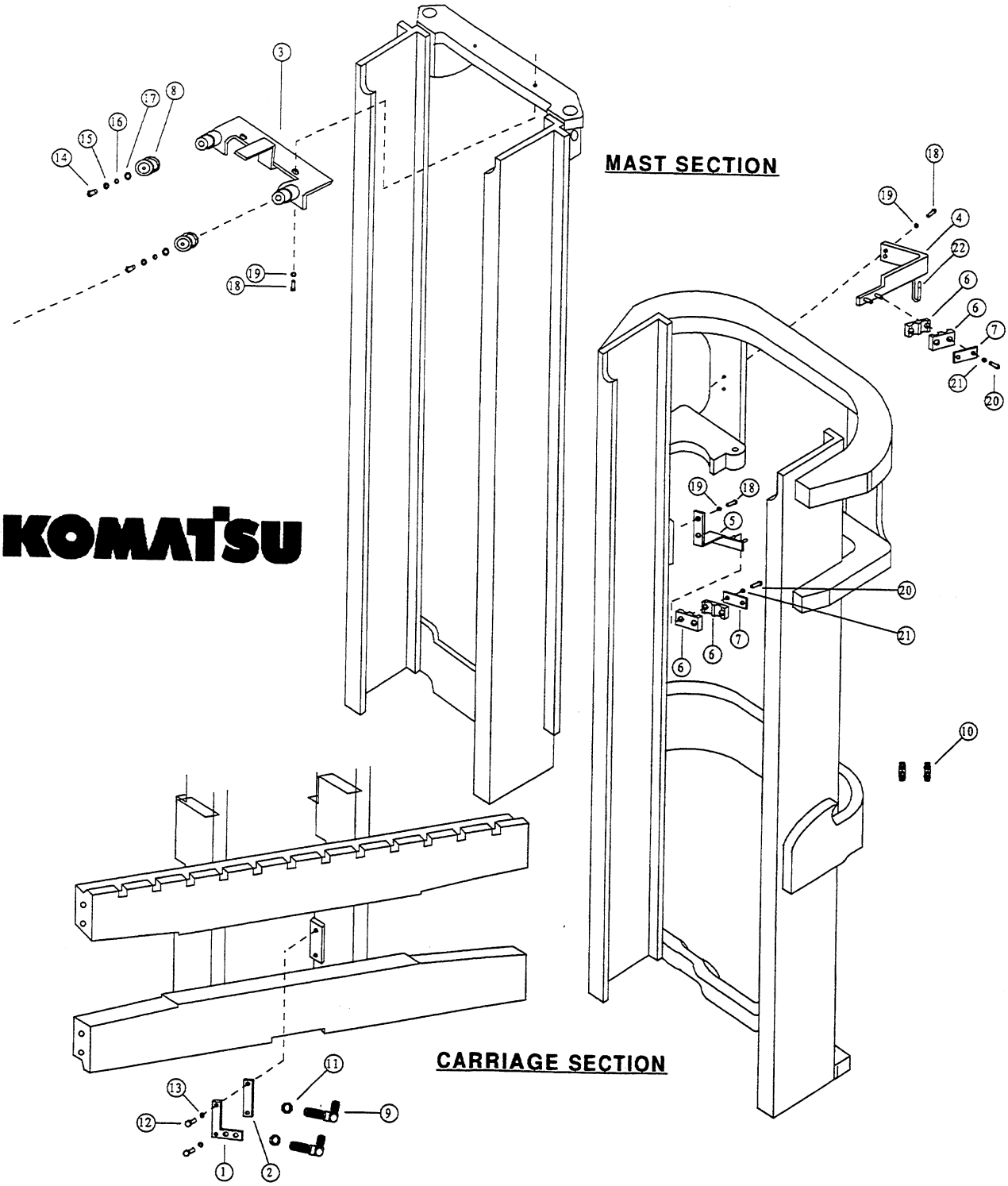

https://truckmanualshub.com/

INTERNAL HOSE TAKE-UP KIT - SINGLE FUNCTION
30D FREEVIEW MAST - KOMATSU PART # 45A-AAX-5110

PARTS LIST

ITEM NO.		PART NO.	DESCRIPTION	QTY.
1.		CJ303-02-0080	Carriage Bracket	1
2.		CJ313-00-0070	Carriage Bracket Spacer	1
3.	*	CJ310-02-0850	Dual Sheave Bracket	1
4.	*	CJ308-02-0860	Hose Grip Bracket	1
5.		CJ308-02-0250	Hose Grip Bracket	1
6.		CJ315-02-0180	2-Hose, Rubber Hose Grip	4
7.		CJ312-02-0190	Small Backplate	2
8.		CJ4002-05-0250	Sheave	2
9.		CJ802-06-0401	90° Bulk Head Fitting	2
10.		CJ803-06-0302	Straight Bulkhead Fitting	2
11.		CJ801-06-0004	Bulkhead Nut Fitting	2
12.		CJ109-08-04-1816	8mm x 30mm Hexhead Bolt	2
13.		CJ104-08-00-0017	8mm Lock Washer	2
14.		CJ109-10-06-1607	12mm x 20mm Hexhead Bolt	2
15.		CJ106-05-00-0006	1/2 External Star Lock Washer	2
16.		CJ103-05-00-0005	1/2 Flat Washer	2
17.		CJ115-05-00-0004	1/2 Shim Washer	2
18.		CJ109-09-05-1709	10mm x 25mm Hexhead Bolt	6
19.		CJ104-09-00-0008	10mm Lock Washer	6
20.		CJ109-01-04-0784	1/4 x 1 Hexhead Bolt	4
21.		CJ104-01-00-0002	1/4 Lock Washer	4
22.		CJ114-01-00-0700	1/4 Rubber Cap	1

* NEW PART FOR 30D KIT

KOMATSU

UPDATED 9-11-97 Komatsu Product Support

https://truckmanualshub.com/

INTERNAL HOSE TAKE-UP KIT - DUAL FUNCTION
30D FREEVIEW MAST - KOMATSU PART # 45A-AAX-5210

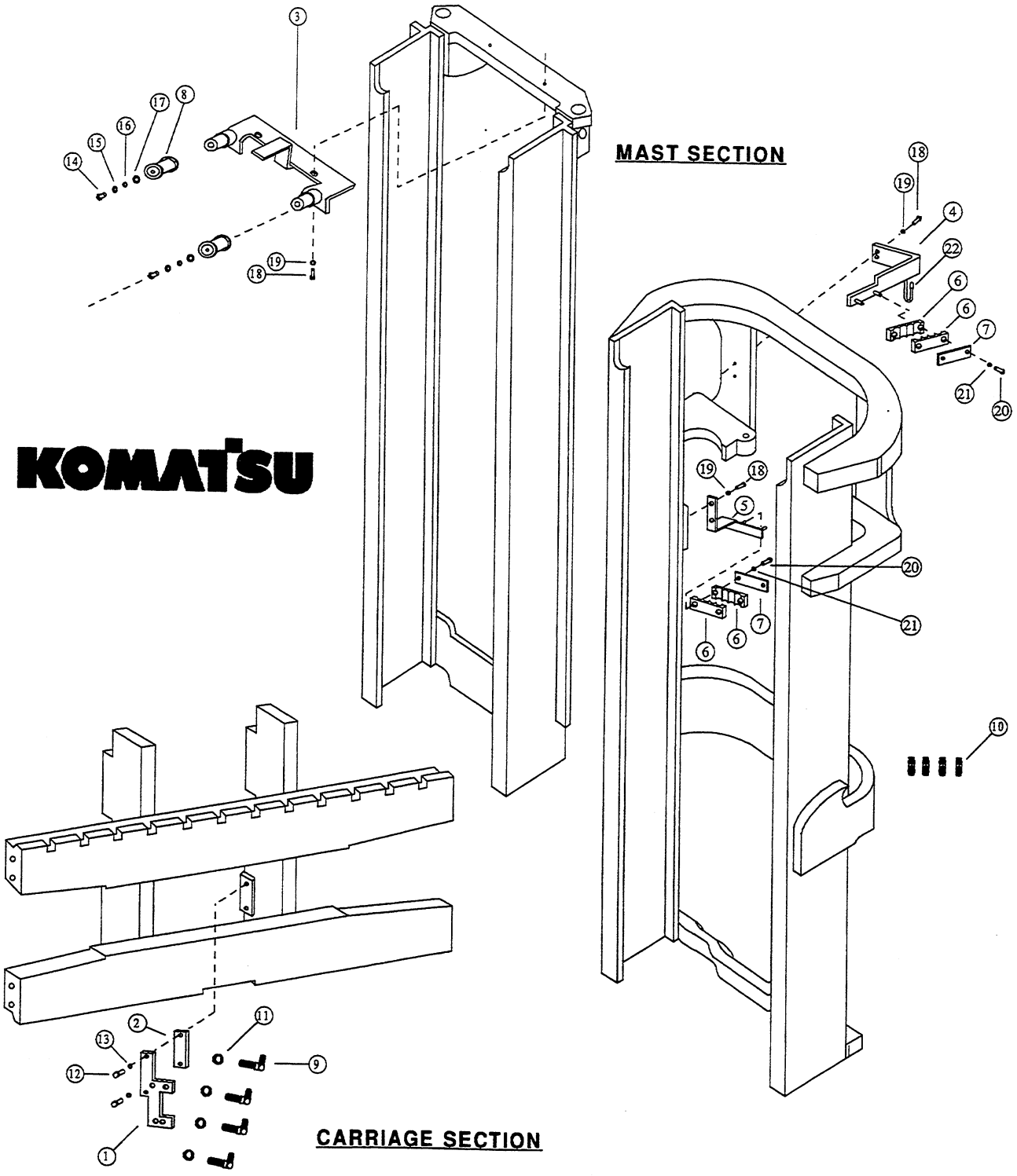

https://truckmanualshub.com/

INTERNAL HOSE TAKE-UP KIT - DUAL FUNCTION
30D FREEVIEW MAST - KOMATSU PART # 45A-AAX-5210

PARTS LIST

ITEM NO.		PART NO.	DESCRIPTION	QTY.
1.		CJ303-04-0220	Carriage Bracket	1
2.		CJ313-00-0070	Carriage Bracket Spacer	1
3.	*	CJ310-04-0840	Dual Sheave Bracket	1
4.	*	CJ308-04-0890	Hose Grip Bracket	1
5.		CJ308-04-0260	Hose Grip Bracket	1
6.		CJ315-04-0210	4 Hose, Rubber Hose Grip	4
7.		CJ312-04-0200	Large Backplate	2
8.		CJ4005-05-0260	Dual HoseSheave	2
9.		CJ802-06-0401	90° Bulk Head Fitting	4
10.		CJ803-06-0302	Straight Bulkhead Fitting	4
11.		CJ801-06-0004	Bulkhead Nut Fitting	4
12.		CJ109-08-04-1816	8mm x 30mm Hexhead Bolt	2
13.		CJ104-08-00-00170	8mm Lock Washer	2
14.		CJ109-10-06-1607	12mm x 20mm Hexhead Bolt	2
15.		CJ106-05-00-0006	1/2 External Star Lock Washer	2
16.		CJ103-05-00-0005	1/2 Flat Washer	2
17.		CJ115-05-00-0004	1/2 Shim Washer	2
18.		CJ109-09-05-1709	10mm x 25mm Hexhead Bolt	6
19.		CJ104-09-00-0008	10mm Lock Washer	6
20.		CJ109-01-04-0784	1/4 x 1 Hexhead Bolt	4
21.		CJ104-01-00-0002	1/4 Lock Washer	4
22.		CJ114-01-00-0700	Rubber Protector Cap	1

* NEW PART FOR 30D KIT

KOMATSU

Komatsu Product Support

https://truckmanualshub.com/

INTERNAL HOSE TAKE-UP KIT - SINGLE FUNCTION
30D TRIPLE STAGE MAST - KOMATSU PART # 45A-AAX-5310

KOMATSU

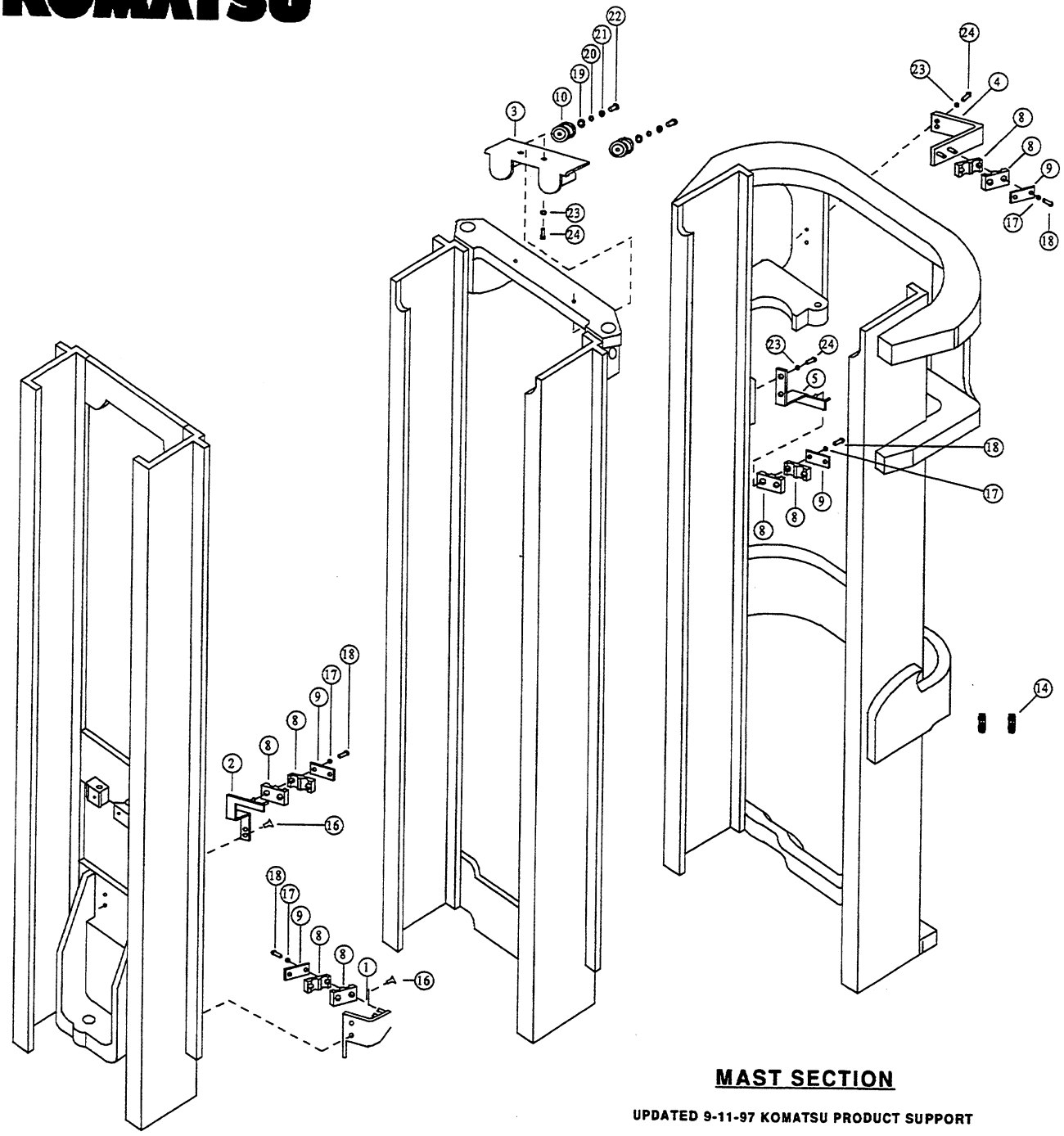

MAST SECTION

UPDATED 9-11-97 KOMATSU PRODUCT SUPPORT

https://truckmanualshub.com/

INTERNAL HOSE TAKE-UP KIT - SINGLE FUNCTION
30D TRIPLE STAGE MAST - KOMATSU PART # 45A-AAX-5310

KOMATSU

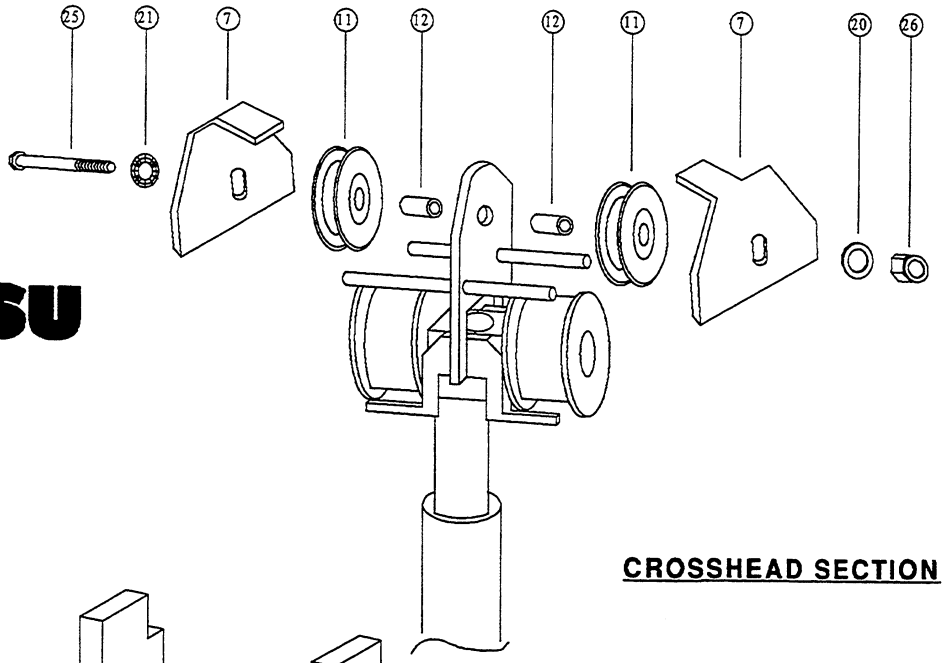

CROSSHEAD SECTION

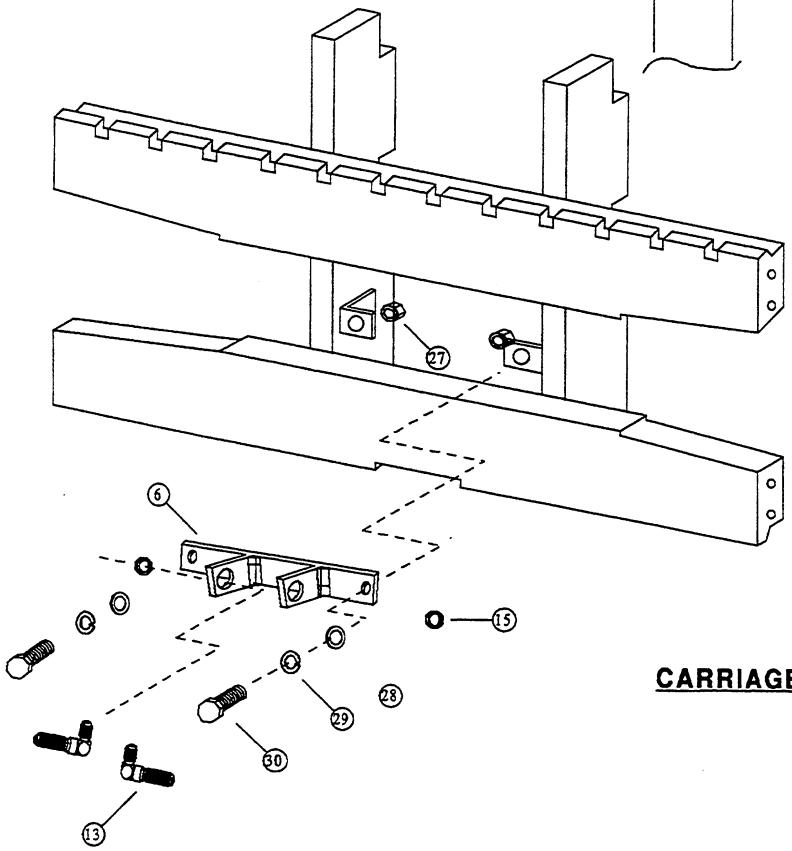

CARRIAGE SECTION

https://truckmanualshub.com/

INTERNAL HOSE TAKE-UP KIT - SINGLE FUNCTION
30D TRIPLE STAGE MAST - KOMATSU PART # 45A-AAX-5310

PARTS LIST

ITEM NO.	PART NO.	DESCRIPTION	QTY.
1.	* CJ308-02-0780	Hose Grip Bracket	1
2.	* CJ308-02-0790	Hose Grip Bracket	1
3.	* CJ310-02-0800	Dual Sheave Bracket	1
4.	* CJ308-02-0810	Hose Grip Bracket	1
5.	* CJ308-02-0820	Hose Grip Bracket	1
6.	* CJ303-02-0830	Carriage Bracket	1
7.	CJ302-02-0170	Hose Guard	2
8.	CJ315-02-0180	2 Hose, Rubber Hose Grip	8
9.	CJ312-02-0190	Small Backplate	4
10.	CJ4002-05-0250	Dual Hose Sheave	2
11.	CJ4001-09-0120	Single Hose Sheave	2
12.	CJ6002-01-030	Sleeve	2
13.	CJ802-06-0401	90° Bulkhead Fitting	2
14.	CJ805-06-0205	Straight Bulkhead Fitting	2
15.	CJ801-06-0004	Bulkhead Nut Fitting	2
16.	CJ112-09-05-1601	10mm x 20mm Flathead Screw	4
17.	CJ104-01-00-0002	1/4 Lock Washer	8
18.	CJ109-01-04-0784	1/4 x 1 Hexhead Bolt	8
19.	CJ115-05-00-0004	1/2 Shim Washer	2
20.	CJ103-05-00-0005	1/2 Flat Washer	4
21.	CJ106-05-00-0006	1/2 External Star Lock Washer	3
22.	CJ109-10-06-1607	12mm x 20mm Hexhead Bolt	2
23.	CJ104-09-00-0008	10 mm Lock Washer	6
24.	CJ109-09-05-1709	10mm x 25mm Hexhead Bolt	6
25.	CJ109-05-02-1310	1/2 x 3-1/2 Hexhead Bolt	1
26.	CJ108-05-02-0011	1/2 Ny-lock Nut	1
27.	CJ108-03-01-0012	3/8 Ny-lock Nut	2
28.	CJ103-03-00-0013	3/8 Flat Washer	2
29.	CJ104-03-00-0014	3/8 Lock Washer	2
30.	CJ109-03-01-0815	3/8 x 1-1/4 Hexhead Bolt	2

* NEW PART FOR 30D KIT

UPDATED 9-11-97 Komatsu Product Support

https://truckmanualshub.com/

INTERNAL HOSE TAKE-UP KIT - DUAL FUNCTION
30D TRIPLE STAGE MAST - KOMATSU PART # 45A-AAX-5410

KOMATSU

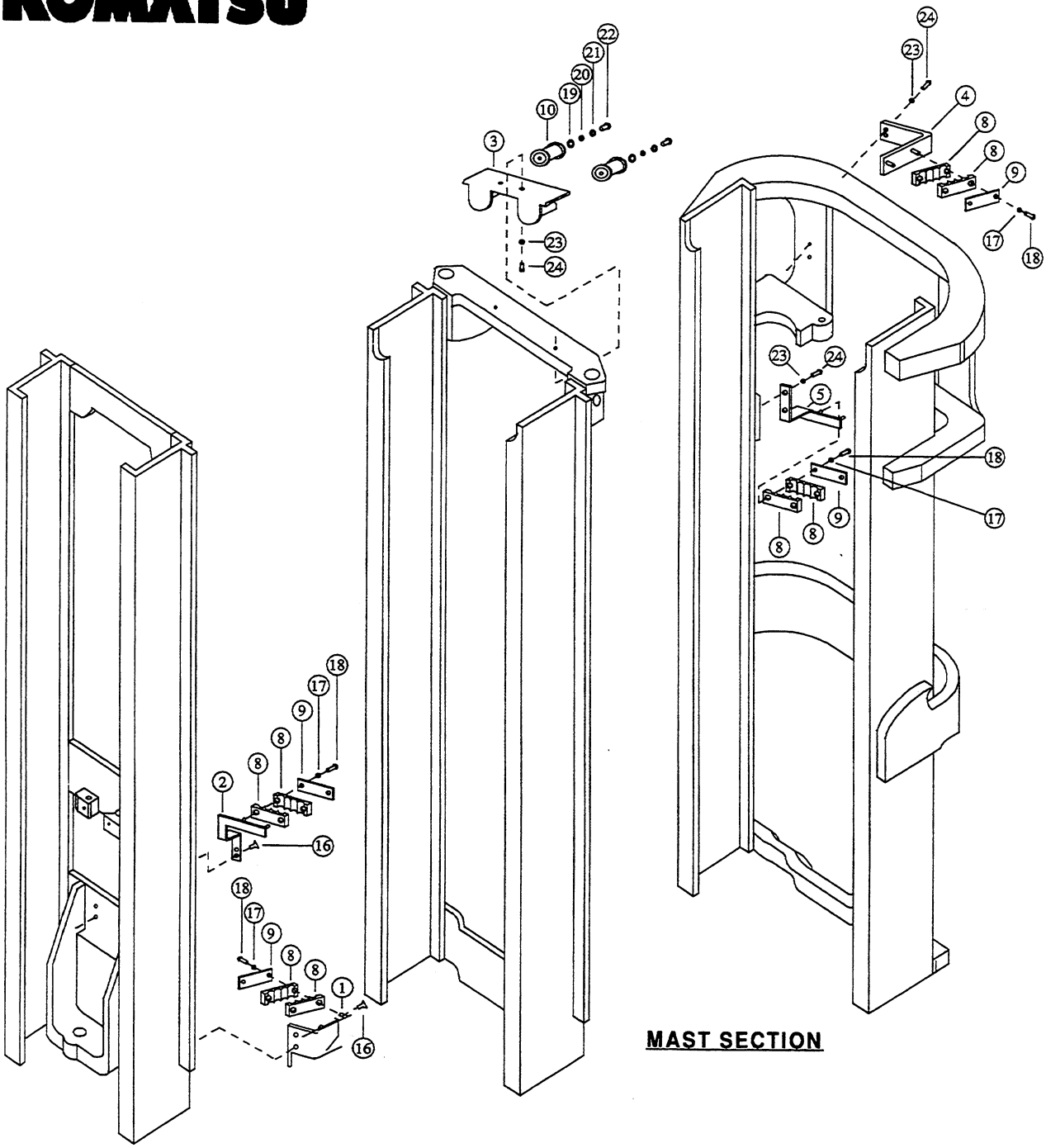

https://truckmanualshub.com/

INTERNAL HOSE TAKE-UP KIT - DUAL FUNCTION
30D TRIPLE STAGE MAST - KOMATSU PART # 45A-AAX-5410

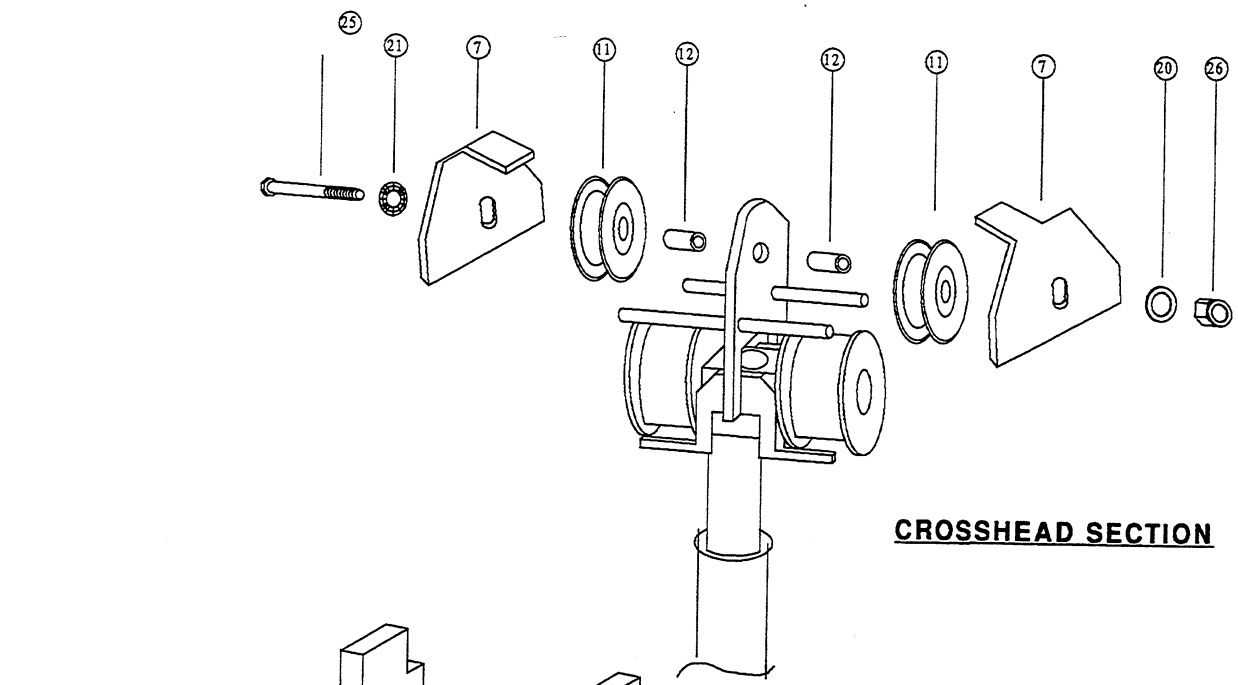

CROSSHEAD SECTION

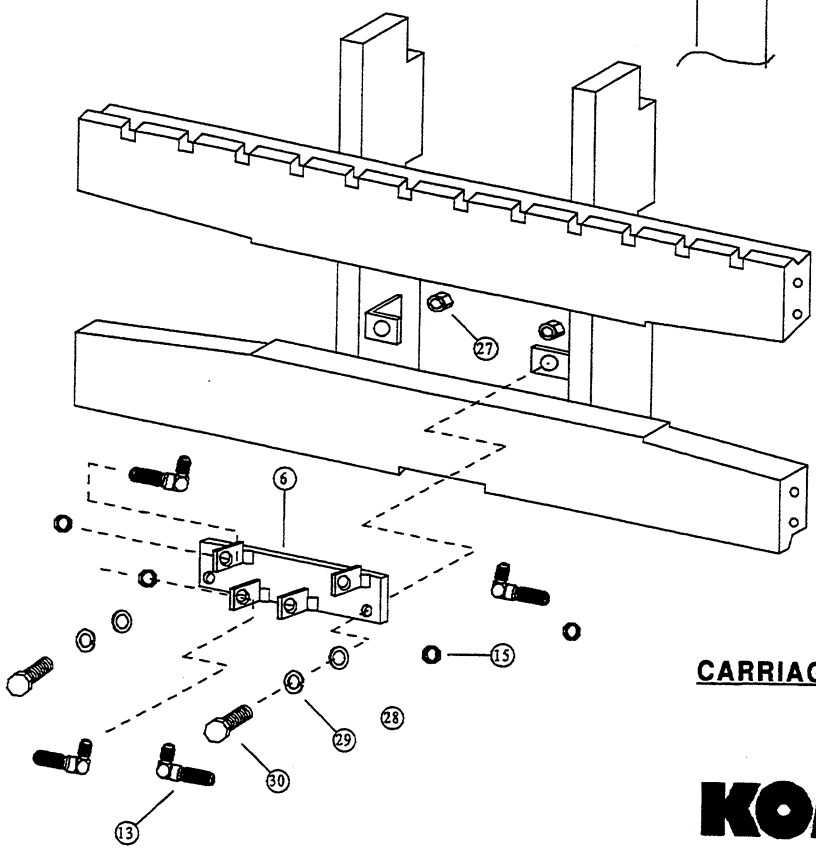

CARRIAGE SECTION

KOMATSU

https://truckmanualshub.com/

INTERNAL HOSE TAKE-UP KIT - DUAL FUNCTION
30D TRIPLE STAGE MAST - KOMATSU PART # 45A-AAX-5410
PARTS LIST

ITEM NO.	PART NO.	DESCRIPTION	QTY.
1.	* CJ308-04-0900	Hose Grip Bracket	1
2.	* CJ308-04-0910	Hose Grip Bracket	1
3.	* CJ310-04-0920	Dual Sheave Bracket	1
4.	* CJ308-04-0930	Hose Grip Bracket	1
5.	* CJ308-04-0940	Hose Grip Bracket	1
6.	* CJ303-04-0950	Carriage Bracket	1
7.	CJ302-02-0170	Hose Guard	2
8.	CJ315-04-0210	4 Hose, Rubber Hose Grip	8
9.	CJ312-04-0200	Large Backplate	4
10.	CJ4005-05-0260	Quad Hose Sheave	2
11.	CJ4002-09-0190	Dual Hose Sheave	2
12.	CJ6002-01-040	Sleeve	2
13.	CJ802-06-0401	90° Bulkhead Fitting	4
14.	CJ805-06-0205	Straight Bulkhead Fitting	4
15.	CJ801-06-0004	Bulkhead Nut Fitting	4
16.	CJ112-09-05-1601	10mm x 20mm Flathead Screw	4
17.	CJ104-01-00-0002	1/4 Lock Washer	8
18.	CJ109-01-04-0784	1/4 x 1 Hexhead Bolt	8
19.	CJ115-05-00-0004	1/2 Shim Washer	2
20.	CJ103-05-00-0005	1/2 Flat Washer	3
21.	CJ106-05-00-0006	1/2 External Star Lock Washer	3
22.	CJ109-10-06-1607	12mm x 20mm Hexhead Bolt	2
23.	CJ104-09-00-0008	10 mm Lock Washer	6
24.	CJ109-09-05-1709	10mm x 25mm Hexhead Bolt	6
25.	CJ109-05-02-1310	1/2 x 3-1/2 Hexhead Bolt	1
26.	CJ108-05-02-0011	1/2 Ny-lock Nut	1
27.	CJ108-03-01-0012	3/8 Ny-lock Nut	2
28.	CJ103-03-00-0013	3/8 Flat Washer	2
29.	CJ104-03-00-0014	3/8 Lock Washer	2
30.	CJ109-03-01-0815	3/8 x 1-1/4 Hexhead Bolt	2

* NEW PART FOR 30D KIT

https://truckmanualshub.com/

INTERNAL HOSE TAKE-UP KIT - SINGLE FUNCTION
35D TRIPLE STAGE MAST - 45A-AAX-3510

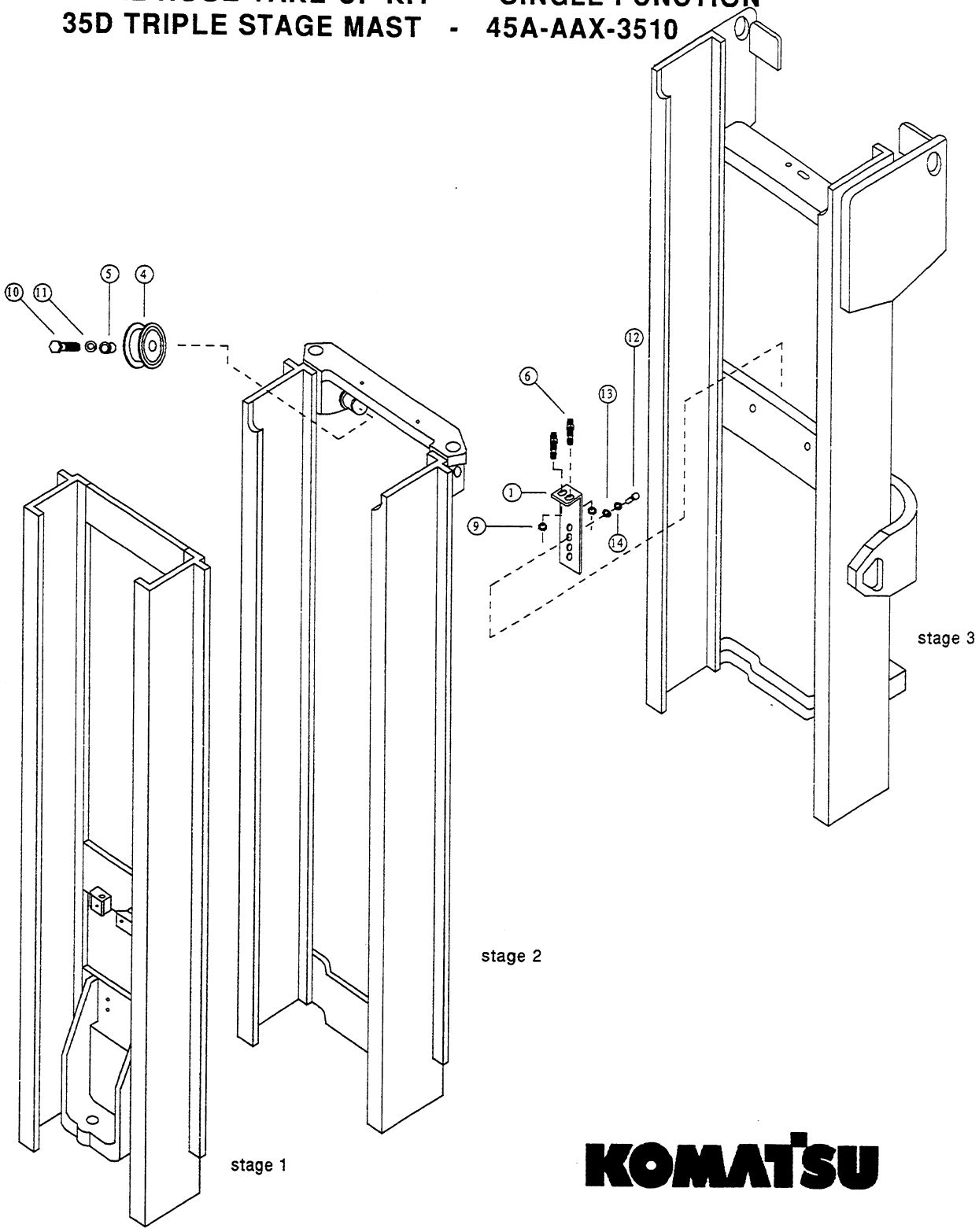

KOMATSU

https://truckmanualshub.com/

INTERNAL HOSE TAKE-UP KIT - SINGLE FUNCTION
35D TRIPLE STAGE MAST - 45A-AAX-3510

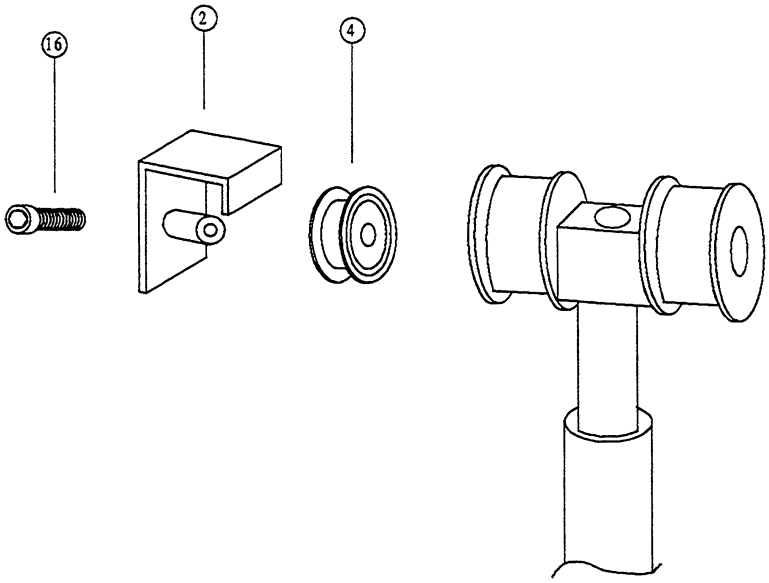

CROSSHEAD SECTION

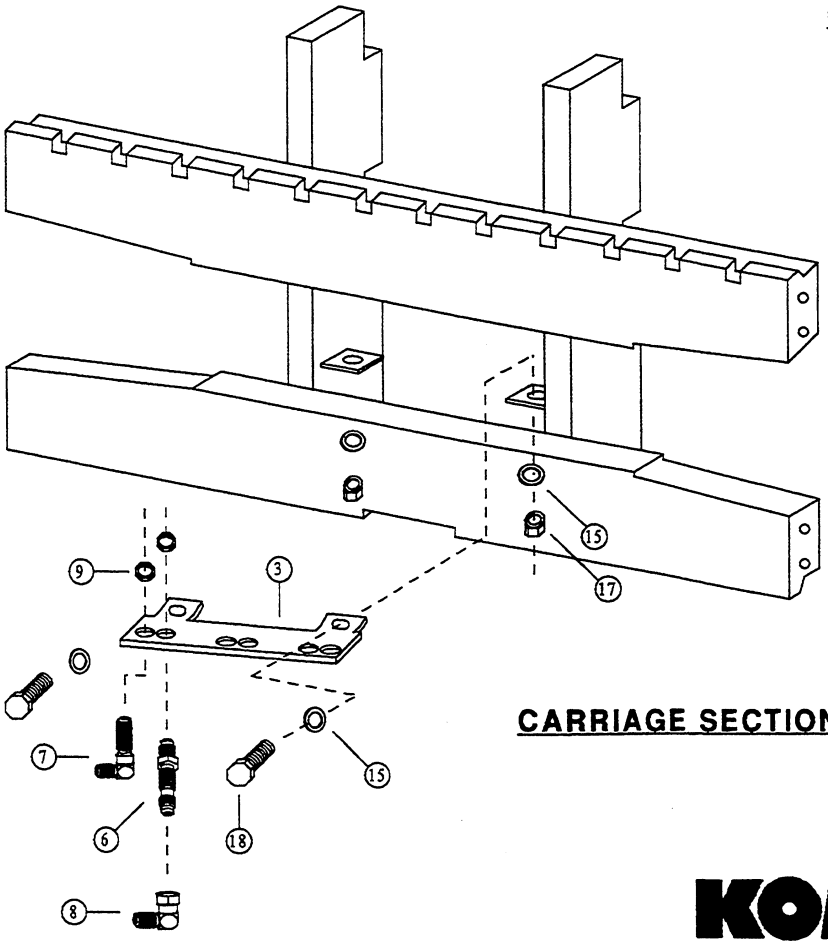

CARRIAGE SECTION

KOMATSU

https://truckmanualshub.com/

INTERNAL HOSE TAKE-UP KIT - SINGLE FUNCTION
35D TRIPLE STAGE MAST - 45A-AAX-3510

Use Two Kits For Dual Function

PARTS LIST

ITEM NO.	PART NO.	DESCRIPTION	QTY.
1.	CJ305-02-0380	Adjustable Bulkhead Bracket	1
2.	CJ302-02-0750	Hose Guard Bracket	1
3.	CJ303-00-0580	Carriage Bracket	1
4.	CJ4002-11-0130	Sheave	2
5.	CJ6102-03-270	Sleeve	1
6.	CJ805-06-0205	Straight Bulkhead Fitting	3
7.	CJ802-06-0401	90° Bulkhead Fitting	1
8.	CJ804-06-0103	90° Swivel Bulkhead Fitting	1
9.	CJ801-06-0004	Bulkhead Nut Fitting	4
10.	CJ109-10-04-2338	12mm x 60mm Hexhead Bolt	1
11.	CJ104-10-00-0077	12mm Lock Washer	1
12.	CJ109-09-05-1709	10mm x 25mm Hexhead Bolt	1
13.	CJ103-09-00-0078	10mm Flat Washer	1
14.	CJ104-09-00-0008	10mm Lock Washer	1
15.	CJ103-03-00-0013	3/8 Flat Washer	4
16.	CJ110-10-06-2135	12mm x 45mm Socket Head	1
17.	CJ108-03-01-0012	3/8 Ny-lock Nut	2
18.	CJ109-03-01-0815	3/8 x 1-1/4 Hexhead Bolt	2

KOMATSU

https://truckmanualshub.com/

INTERNAL HOSE TAKE-UP KIT - SINGLE FUNCTION
35D TRIPLE STAGE MAST - 45A-AAX-3311

High Vis

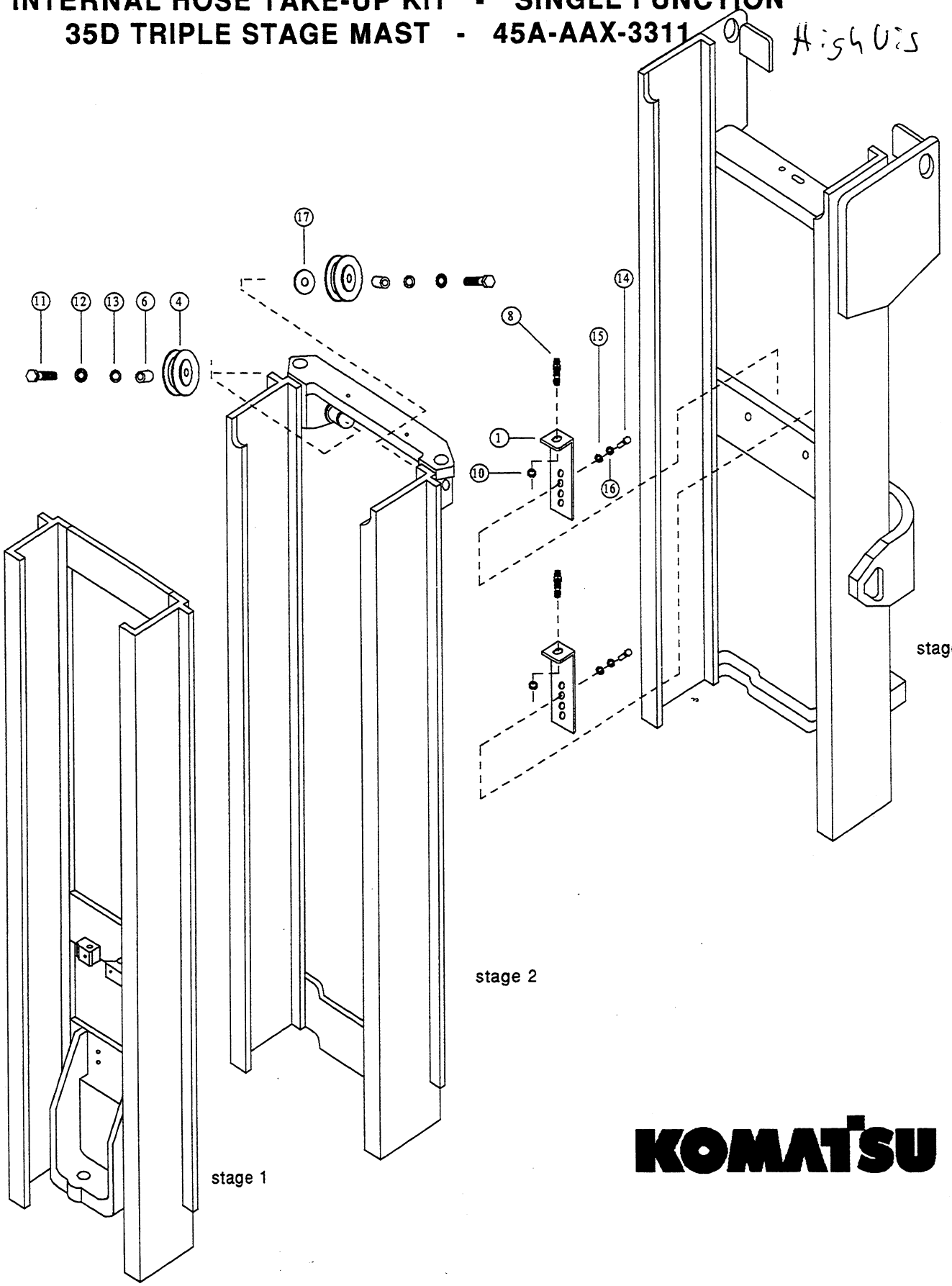

KOMATSU

https://truckmanualshub.com/

INTERNAL HOSE TAKE-UP KIT - SINGLE FUNCTION
35D TRIPLE STAGE MAST - 45A-AAX-3311

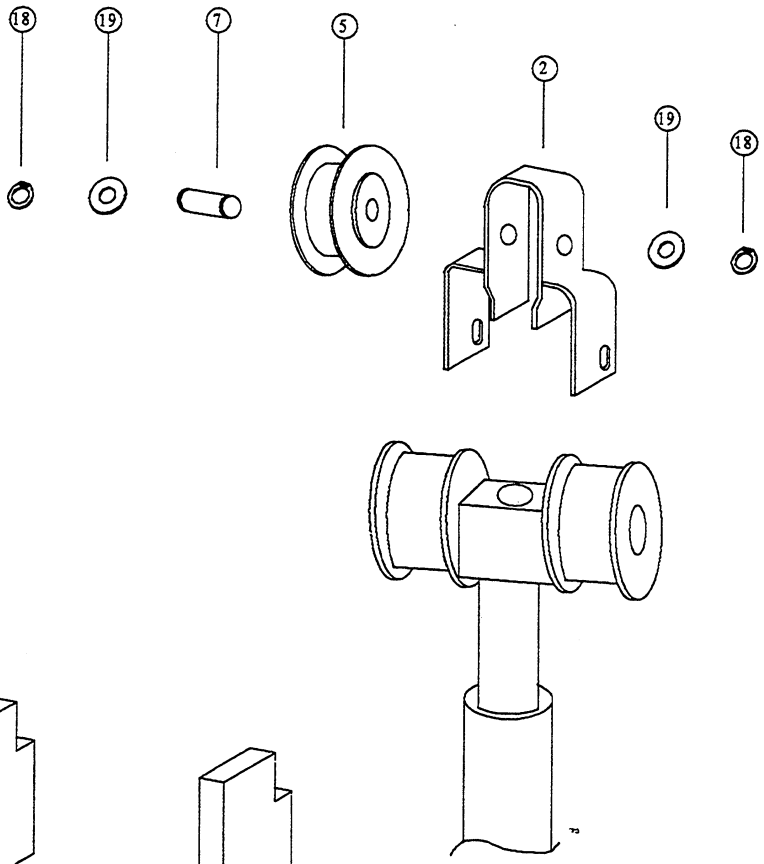

CROSSHEAD SECTION

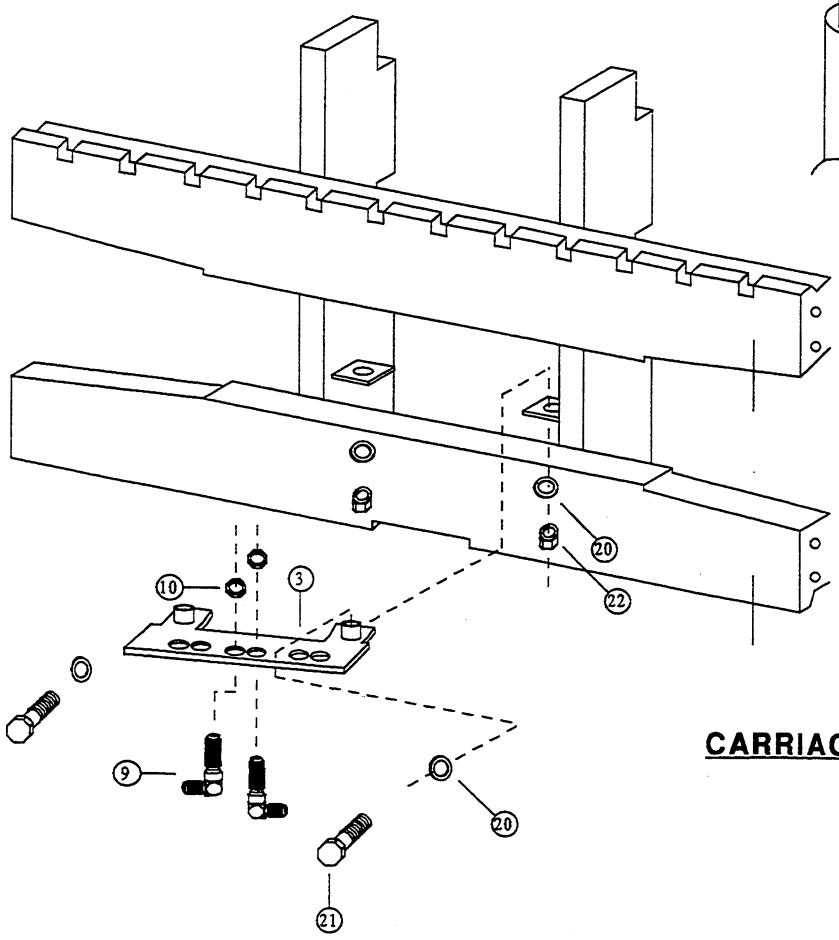

CARRIAGE SECTION

KOMATSU

https://truckmanualshub.com/

INTERNAL HOSE TAKE-UP KIT - SINGLE FUNCTION (HI-VIS)
35D TRIPLE STAGE MAST - 45A-AAX-3311

KOMATSU

PARTS LIST

ITEM NO.	PART NO.	DESCRIPTION	QTY.
1.	CJ305-01-0390	Adjustable Bulkhead Bracket	2
2.	CJ304-02-0340	Crosshead Bracket	1
3.	CJ303-00-0400	Carriage Bracket	1
4.	CJ4001-09-0010	Sheave	2
5.	CJ4002-07-0100	Sheave	1
6.	CJ6002-01-010	Sleeve	2
7.	CJ6401-01-160	Shaft	1
8.	CJ805-06-0205	Straight Bulkhead Fitting	2
9.	CJ802-06-0401	90° Bulkhead Fitting	2
10.	CJ801-06-0004	Bulkhead Nut Fitting	4
11.	CJ109-10-06-2119	12mm x 45mm Hexhead Bolt	2
12.	CJ106-05-00-0006	1/2 External Star Washer	2
13.	CJ103-05-00-0005	1/2 Flat Washer	2
14.	CJ109-09-05-1709	10mm x 25mm Hexhead Bolt	2
15.	CJ103-09-00-0078	10mm Flat Washer	2
16.	CJ104-09-00-0008	10mm Lock Washer	2
17.	CJ115-05-00-0004	1/2 Shim Washer	1
18.	CJ118-07-00-0066	3/4 Snap Ring	2
19.	CJ102-07-00-0056	3/4 Flat Washer	2
20.	CJ103-03-00-0013	3/8 Flat Washer	4
21.	CJ109-03-01-1132	3/8 x 2 Hexhead Bolt	2
22.	CJ108-03-01-0012	3/8 Nylock Nut	2

https://truckmanualshub.com/

INTERNAL HOSE TAKE-UP KIT - SINGLE FUNCTION
35D TRIPLE STAGE MAST - KOMATSU PART # 45B-AAX-3110

Double Parts For Dual Function Installation

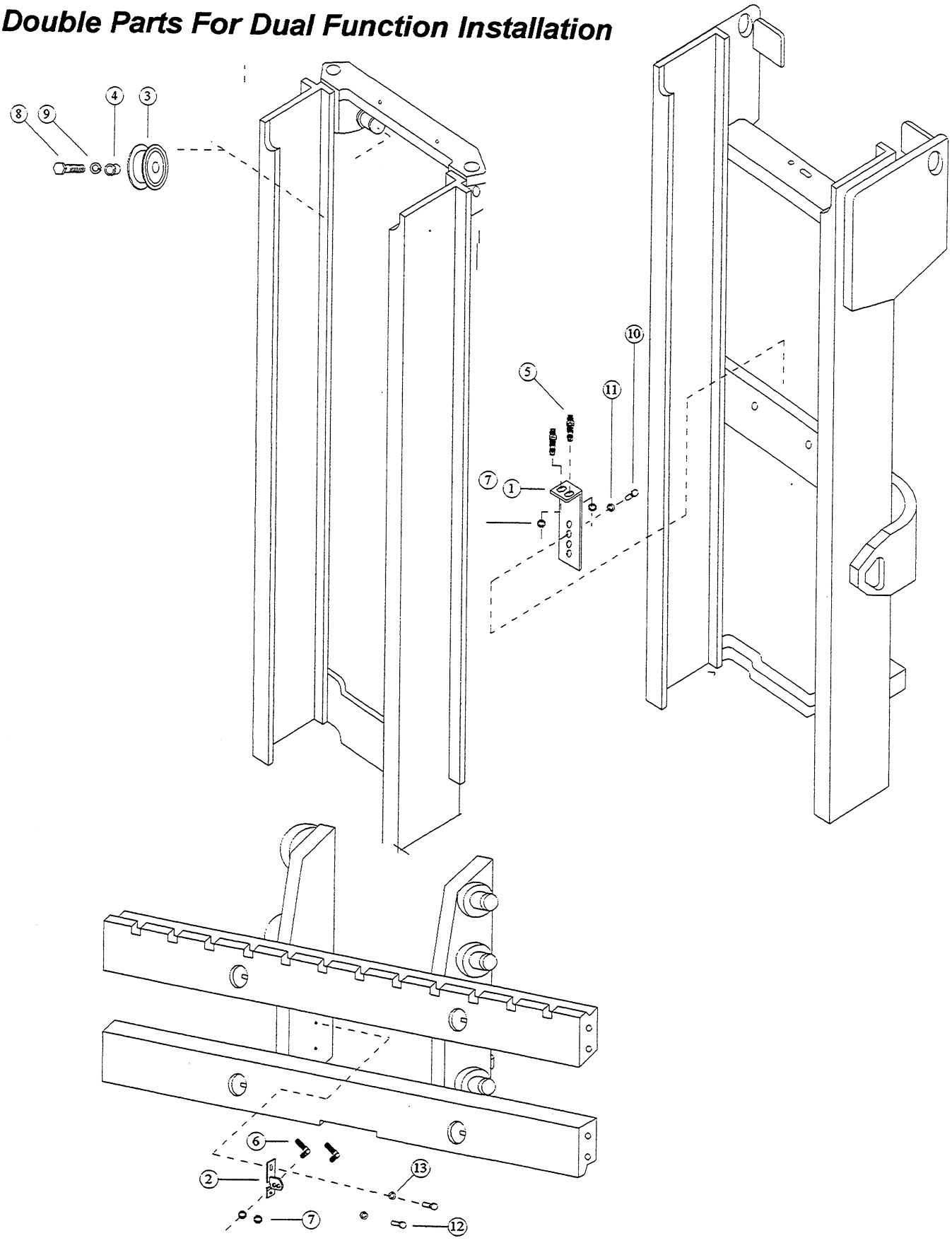

https://truckmanualshub.com/

INTERNAL HOSE TAKE-UP KIT - SINGLE FUNCTION
35D FREEVIEW MAST - KOMATSU PART # 45B-AAX-3110

Use Two Kits For Dual Function

PARTS LIST

ITEM NO.	PART NO.	DESCRIPTION	QTY.
1.	CJ305-02-0380	Adjustable Bulkhead Bracket	1
2.	CJ306-02-0680	Carriage Bracket	1
3.	CJ4002-11-0130	Sheave	1
4.	CJ6102-03-270	Sleeve	1
5.	CJ805-06-0205	Straight Bulkhead Fitting	2
6.	CJ802-06-0401	90° Bulkhead Fitting	2
7.	CJ801-06-0004	Bulkhead Nut Fitting	4
8.	CJ109-10-06-2321	12mm x 60mm Hexhead Bolt	1
9.	CJ104-10-00-0077	12mm Lock Washer	1
10.	CJ109-09-05-1709	10mm x 25mm Hexhead Bolt	1
11.	CJ104-09-00-0008	10mm Lock Washer	1
12.	CJ109-08-04-1618	8mm x 20mm Hexhead Bolt	2
13.	CJ104-08-00-0017	8mm Lock Washer	2

https://truckmanualshub.com/

This Page Left Intentionally Blank

KOMATSU

https://truckmanualshub.com/

KOMATSU

AX Series
Forklift Truck

PARTS MANUAL

30D Full Free Lift 3-Stage Mast

This manual contains standard production Product Identification Numbers

30D-MT-001 → 056

Special Engineered Options are not included.

KOMATSU

https://truckmanualshub.com/

About This Manual

Introduction

This manual shows the parts breakdown for 30D Mast product I.D. numbers. Locate the product I.D. number stamped on the upper left hand side of the outer upright channel. This number must be used when ordering replacement parts for this product.

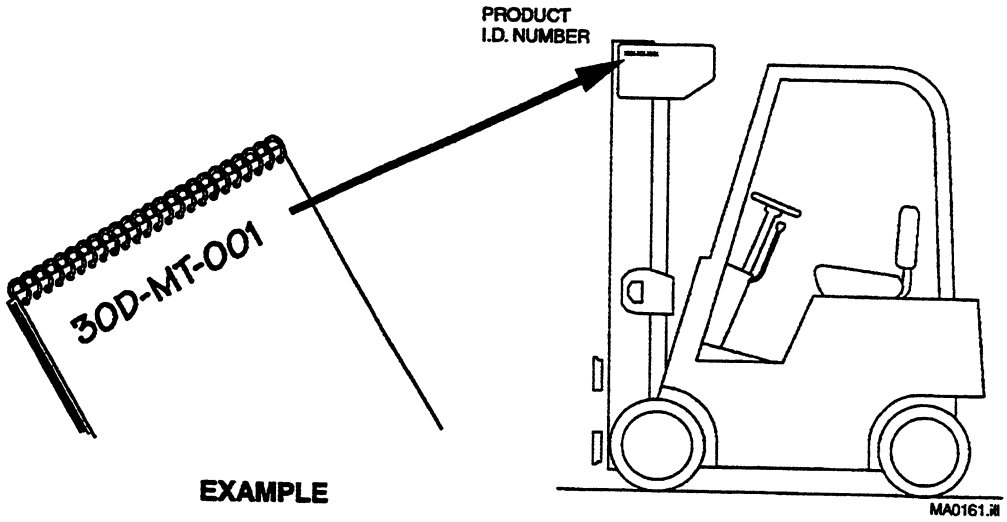

EXAMPLE

Ordering Parts

Customers – Cascade parts and service literature is available through authorized lift truck dealers. To place an order, contact the lift truck dealer of your choice.

Lift Truck Dealers – To order parts and service literature contact:

KOMATSU Forklift U.S.A., INC.
14481 Lochridge Boulevard
Building # 2
Covington, GA 30014
Phone (770) 385-4815

Index

Safety Decals and Publications	1	Hoist Chains	10
Cylinders	2	Internal Hose Reeving	11
Uprights	4	Backrest	13
Lowering Control Valve	7	Mast Installation Accessories	14
Carriages	8	Recommended Spare Parts List	20

WARNING: For safety of yourself and others, DO NOT install the parts shown in this manual unless you have thoroughly reviewed the appropriate Service Manual.

https://truckmanualshub.com/

Decals

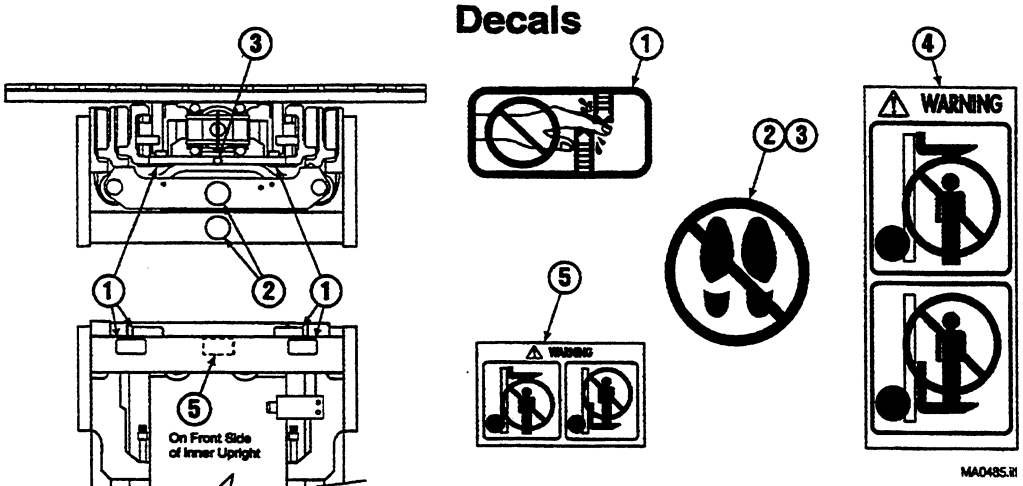

30D			
REF	QTY	PART NO.	DESCRIPTION
1	6	665595	No Hand Hold
2	2	679150	No Step
3	1	201195	No Step
4	1	669152	WARNING
5	1	210850	WARNING
6	1	200798	WARNING-Trapped Air

Publications

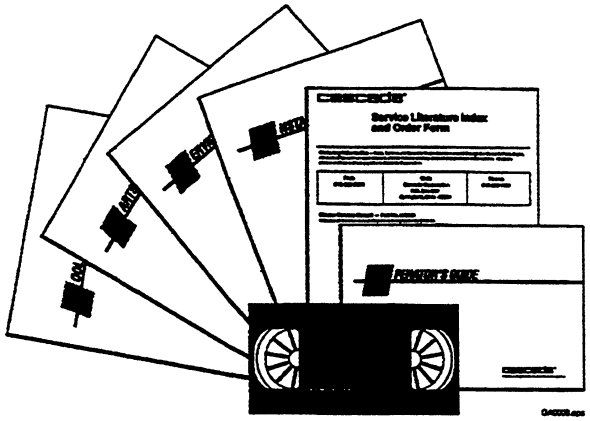

30D		
REF	PART NO.	DESCRIPTION
1	218489	Parts Manual
2	687250	Service Manual
3	679929	Tool Catalog
4	673964	Literature Index Order Form

https://truckmanualshub.com/

Main Lift Cylinder – 2600 PSI

30D

WARNING: Replacing the cylinder with a different part number cylinder may cause mast to malfunction.

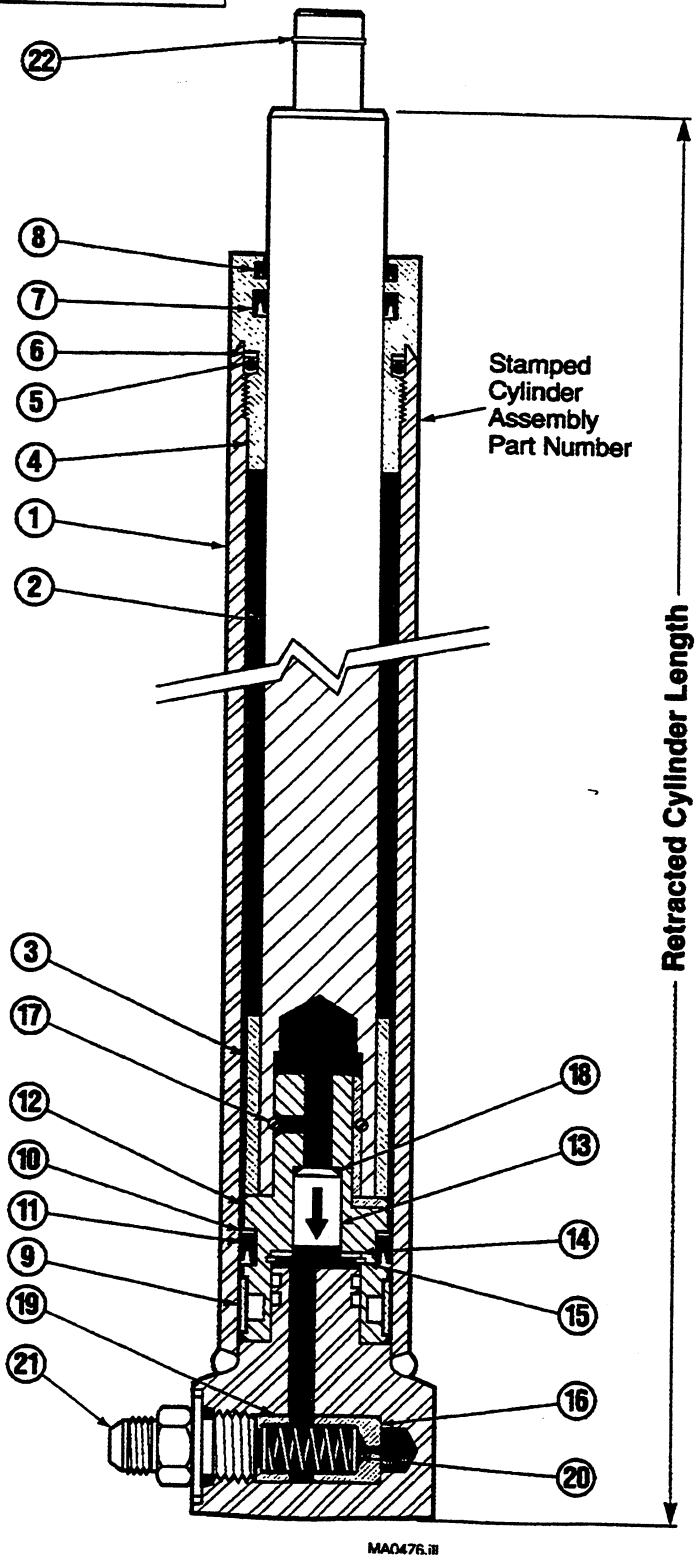

https://truckmanualshub.com/

Main Lift Cylinder – 2600 PSI
30D

Items that vary by mast height.

RETRACTED CHANNEL LENGTH (in.) ■	RETRACTED CYLINDER LENGTH (in.)	CYLINDER ASSEMBLY QTY 1	REF. NO 1 SHELL QTY 1	REF NO. 2 PLUNGER QTY 1	REF NO. 3 SPACER QTY 1
70	57.00	584503	4400-1411	4401-1386	–
74	63.25	584506	4400-1570	4401-1545	–
80	63.25	584511	4400-1722	4401-1697	–
84	73.26	584516	4400-1824	4401-1799	–
92	76.00	584523	4400-1868	4401-1945	–

■ Does not include underclearance.

Common items.

REF	QTY	PART NO.	DESCRIPTION	REF	QTY	PART NO.	DESCRIPTION
4	1	564921	Retainer	14	1	563785	Washer ●
5	1	581558	O-Ring ▲	15	1	3015	Retaining Ring ●
6	1	581559	Back-Up Ring ▲	16	1	562849	Fuse – Piston
7	1	564915	Seal ▲	17	1	211995	Pull-In Wire
8	1	564916	Wiper ▲	18	1	2702	O-Ring ▲ ●
9	1	211986	Wear Ring ▲	19	1	562848	Spring Guide
10	1	211992	Nylon Ring ▲	20	1	214034	Spring
11	1	213490	Seal ▲	21	1	626505	Fitting, 6-6 ★
12	1	564920	Piston	22	1	201770	Snap Ring ★
13	1	212042	Check Valve ●			212072	Cylinder Service Kit

▲ Included in Cylinder Service Kit 212072.
● Included in Check Valve Service Kit 212073.
★ Not included in Cylinder Assembly.
Reference: S-4398, S-4399.

https://truckmanualshub.com/

Free Lift Cylinder – 2600 PSI

30D

WARNING: Replacing the cylinder with a different part number cylinder may cause mast to malfunction.

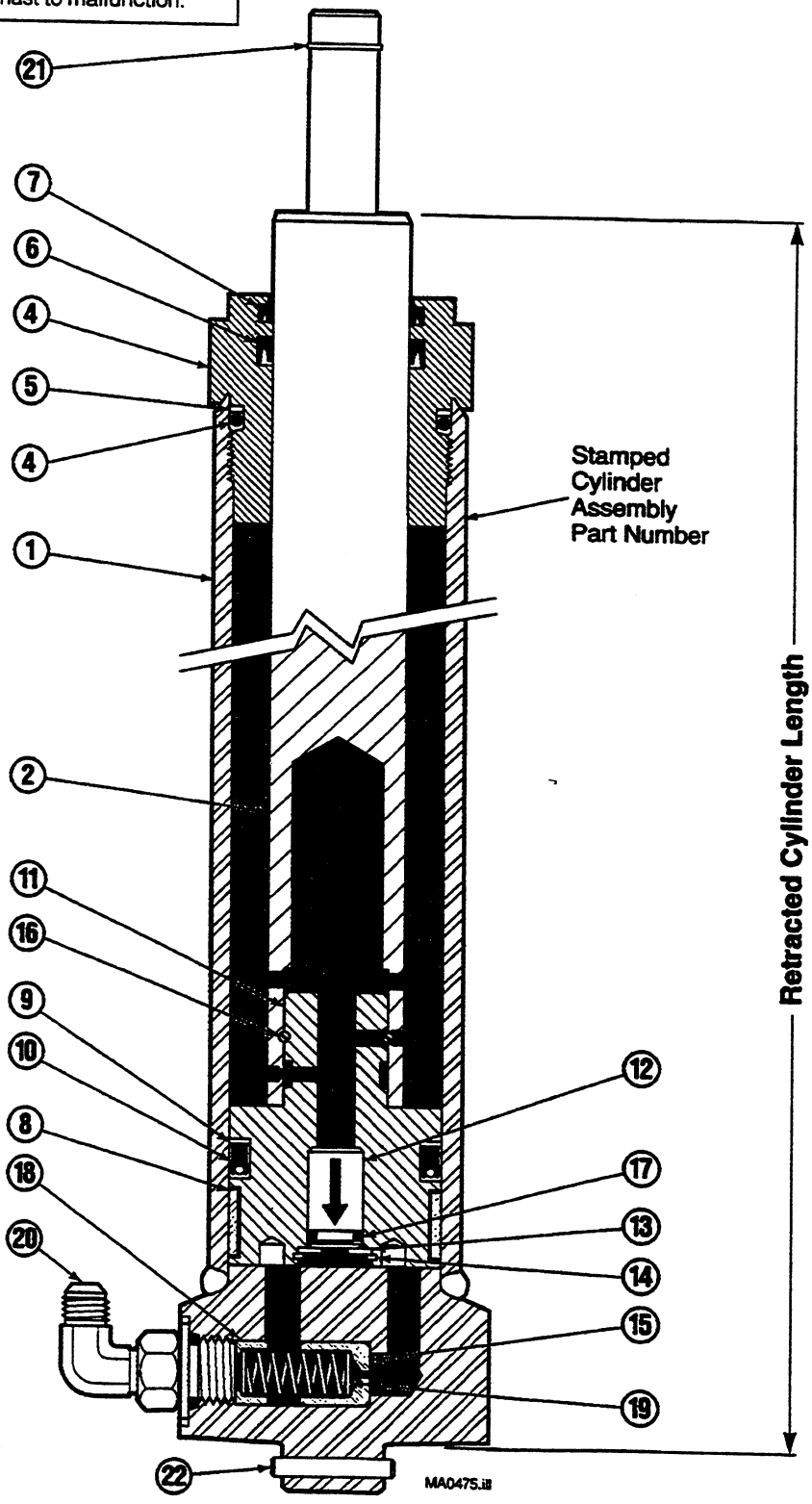

https://truckmanualshub.com/

Free Lift Cylinder – 2600 PSI
30D

Items that vary by mast height.

RETRACTED CHANNEL LENGTH (in.) ■	RETRACTED CYLINDER LENGTH (in.)	CYLINDER ASSEMBLY QTY 1	REF. NO 1 SHELL QTY 1	REF NO. 2 PLUNGER QTY 1
70	35.11	584482	4404-828	4405-859
74	37.10	584484	4404-878	4405-909
80	40.11	584488	4404-955	4405-986
84	42.10	584491	4404-1005	4405-1036
92	46.10	584495	4404-1107	4405-1138

■ Does not include underclearance.

Common items.

REF	QTY	PART NO.	DESCRIPTION	REF	QTY	PART NO.	DESCRIPTION
3	1	564924	Retainer	14	1	3015	Retaining Ring ●
4	1	559858	O-Ring ▲	15	1	563782	Fuse – Piston
5	1	559859	Back-Up Ring ▲	16	1	559962	Pull-In Wire
6	1	562837	Seal ▲	17	1	689937	O-Ring ▲ ●
7	1	561256	Wiper ▲	18	1	562848	Spring Guide
8	1	559864	Wear Ring ▲	19	1	565085	Spring
9	1	560066	Nylon Ring ▲	20	1	642649	Fitting, 8-10 ★
10	1	564918	Seal ▲	21	1	201770	Snap Ring ★
11	1	564923	Piston	22	1	769018	Roll Pin ★
12	1	626664	Check Valve ●			216691	Cylinder Service Kit
13	1	563785	Washer ●				

▲ Included in Cylinder Service Kit 216691.
● Included in Check Valve Service Kit 656920.
★ Not included in Cylinder Assembly.
Reference: S-4402, S-4403.

https://truckmanualshub.com/

Outer Upright
30D

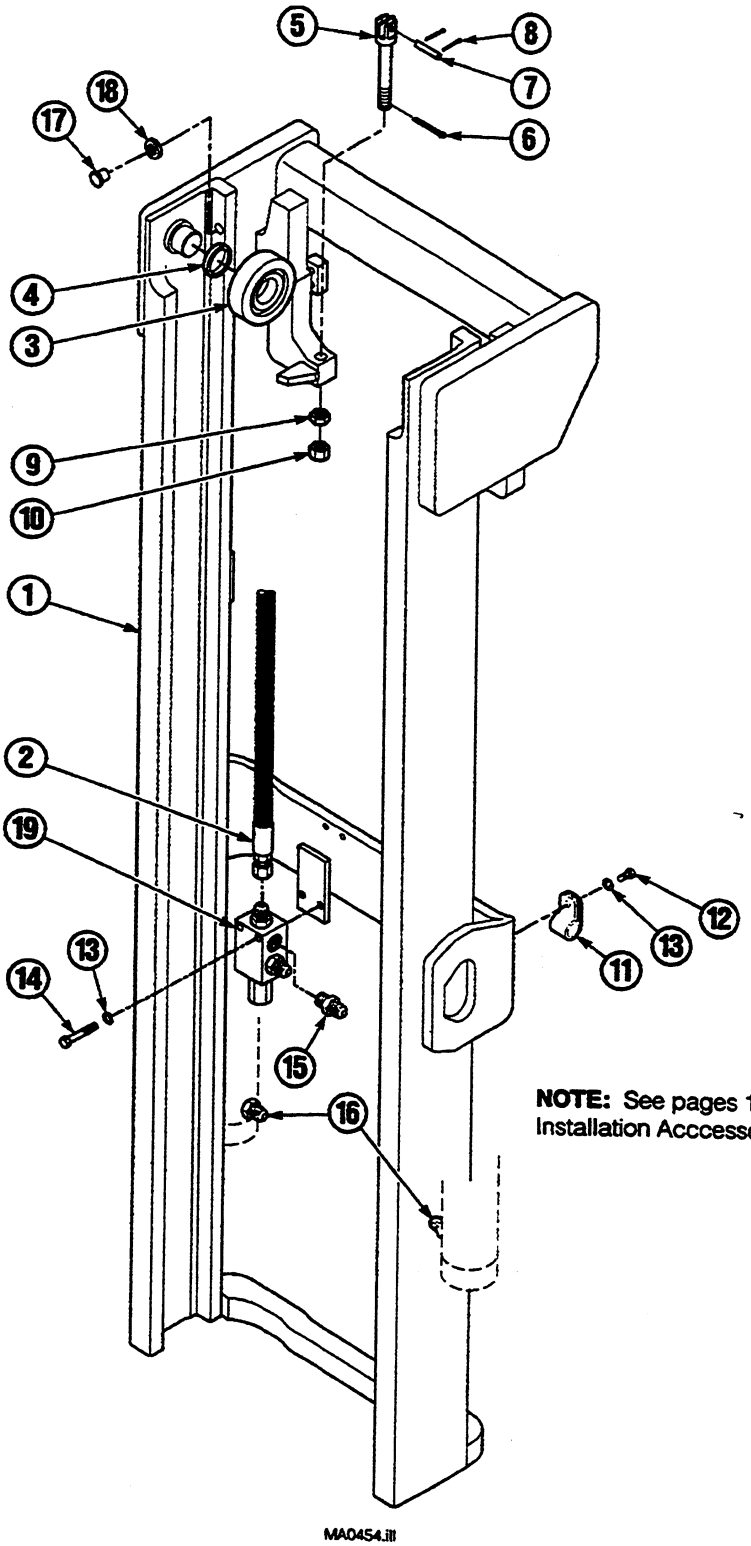

NOTE: See pages 14-19 for Mast Installation Acccessories.

https://truckmanualshub.com/

Outer Upright
30D

Items that vary by mast height.

REF	QTY	PART NO.	DESCRIPTION	REF	QTY	PART NO.	DESCRIPTION
1	1	■ 216233	Outer Upright – 70 in. ★	2	1	200138	Hose – 70 in. ★
1	1	■ 216095	Outer Upright – 74 in. ★	2	1	200169	Hose – 74 in. ★
1	1	■ 216097	Outer Upright – 80 in. ★	2	1	200181	Hose – 80 in. ★
1	1	■ 216098	Outer Upright – 84 in. ★	2	1	200136	Hose – 84 in. ★
1	1	■ 216102	Outer Upright – 92 in. ★	2	1	683572	Hose – 92 in. ★

Common items.

REF	QTY	PART NO.	DESCRIPTION
3	2	664206	Roller
4	●	631881	Shim, .03 in. (0,7 mm)
5	2	201432	Chain Anchor
6	2	6518	Cotter Pin
7	2	680460	Pin
8	4	6508	Cotter Pin
9	2	200007	Jam Nut, .625 NF GR 8
10	2	200006	Nut, .625 NF GR 8
11	1	210752	Clamp
12	1	200429	Capscrew, M10 x 20
13	3	681238	Lockwasher, M10
14	2	683823	Capscrew, M10 x 50
15	2	611288	Fitting, 6-6
16	2	626505	Fitting, 6-6
17	4	212588	Thrust Plug Service Kit
18	4	212250	Shim
19		▲	Lower Control Valve

● Quantity as required.

★ Retracted channel length (does not include underclearance).

■ These part numbers are for reference only. Mounting brackets are not included. To order an Outer Upright with mounting brackets, contact Cascade Parts Depot (888) 227-2233.
The mast serial number must be supplied.
When ordering an Upright, Service Kit 212588 should also be ordered.

▲ See page 7 for specific part numbers.

Reference: Common Parts Group 211068, S-4945, S-4890.

https://truckmanualshub.com/

Intermediate Upright

30D

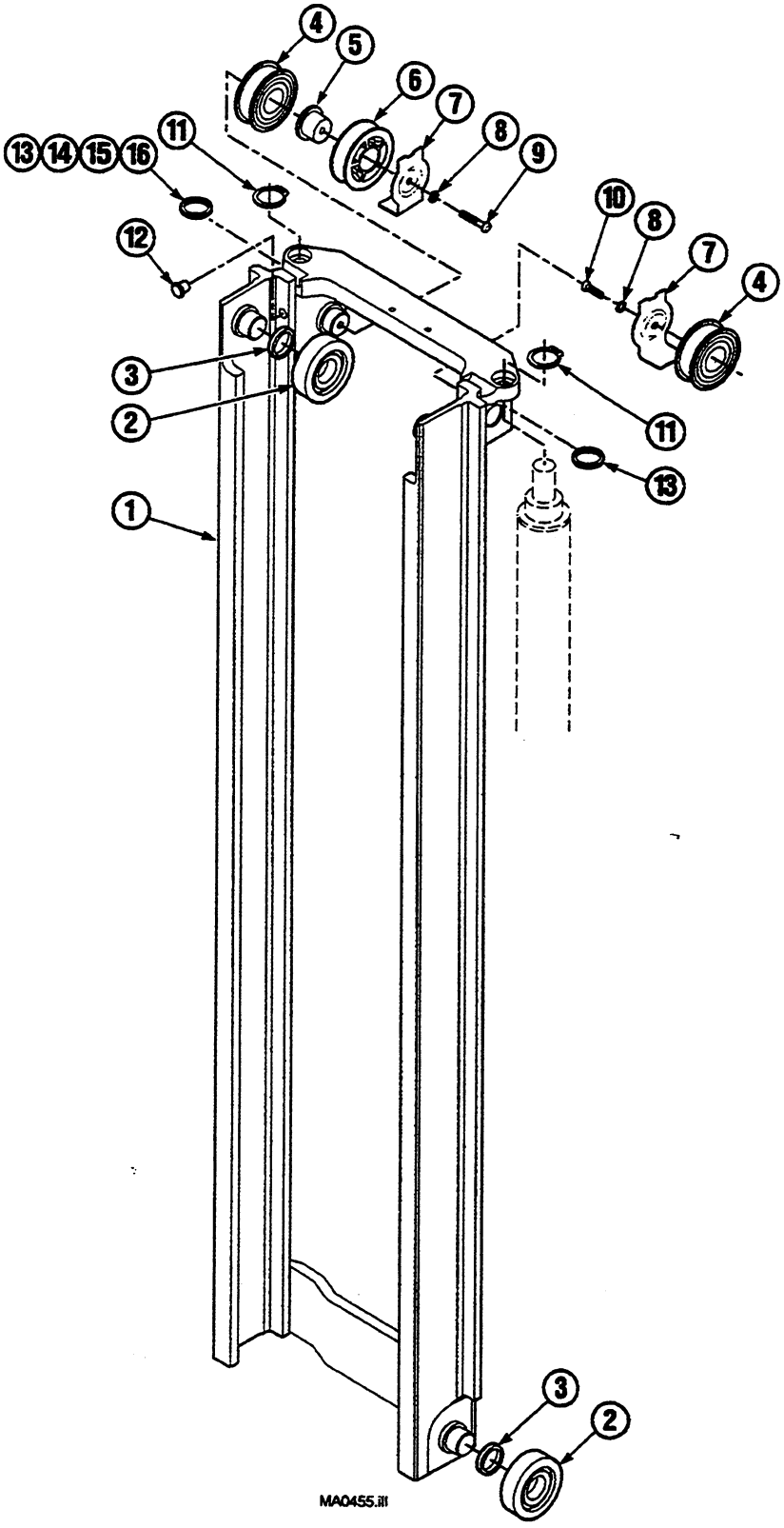

https://truckmanualshub.com/

Intermediate Upright
30D

Items that vary by mast height.

REF	QTY	PART NO.	DESCRIPTION
1	1	■ 211028	Intermediate Upright – 70 in. ★
1	1	■ 211029	Intermediate Upright – 74 in. ★
1	1	■ 211030	Intermediate Upright – 80 in. ★
1	1	■ 211031	Intermediate Upright – 84 in. ★
1	1	■ 211032	Intermediate Upright – 92 in. ★

Common items.

REF	QTY	PART NO.	DESCRIPTION
2	4	664206	Roller
3	●	631881	Shim, .03 in. (0,7 mm)
4	2	661550	Chain Sheave
5	1	210625	Stubshaft
6	1	683793	Hose Sheave
7	2	216052	Hose Guard
8	2	683822	Lockwasher, M12
9	1	210735	Capscrew, M12 x 55
10	1	210736	Capscrew, M12 x 25
11	2	210770	Snap Ring
12	1	212588	Thrust Plug Service Kit
13	●	213703	Shim, .01 in. (.25 mm)
14	●	213704	Shim, .03 in. (.8 mm)
15	●	213705	Shim, .06 in. (1.6 mm)
16	●	213706	Shim, .09 in. (2.4 mm)

● Quantity as required.

■ When ordering an Upright, Service Kit 212588 should also be ordered.

★ Retracted channel length (does not include underclearance).

Reference: Common Parts Group 211068, S-4945, S-4518.

https://truckmanualshub.com/

Inner Upright
30D

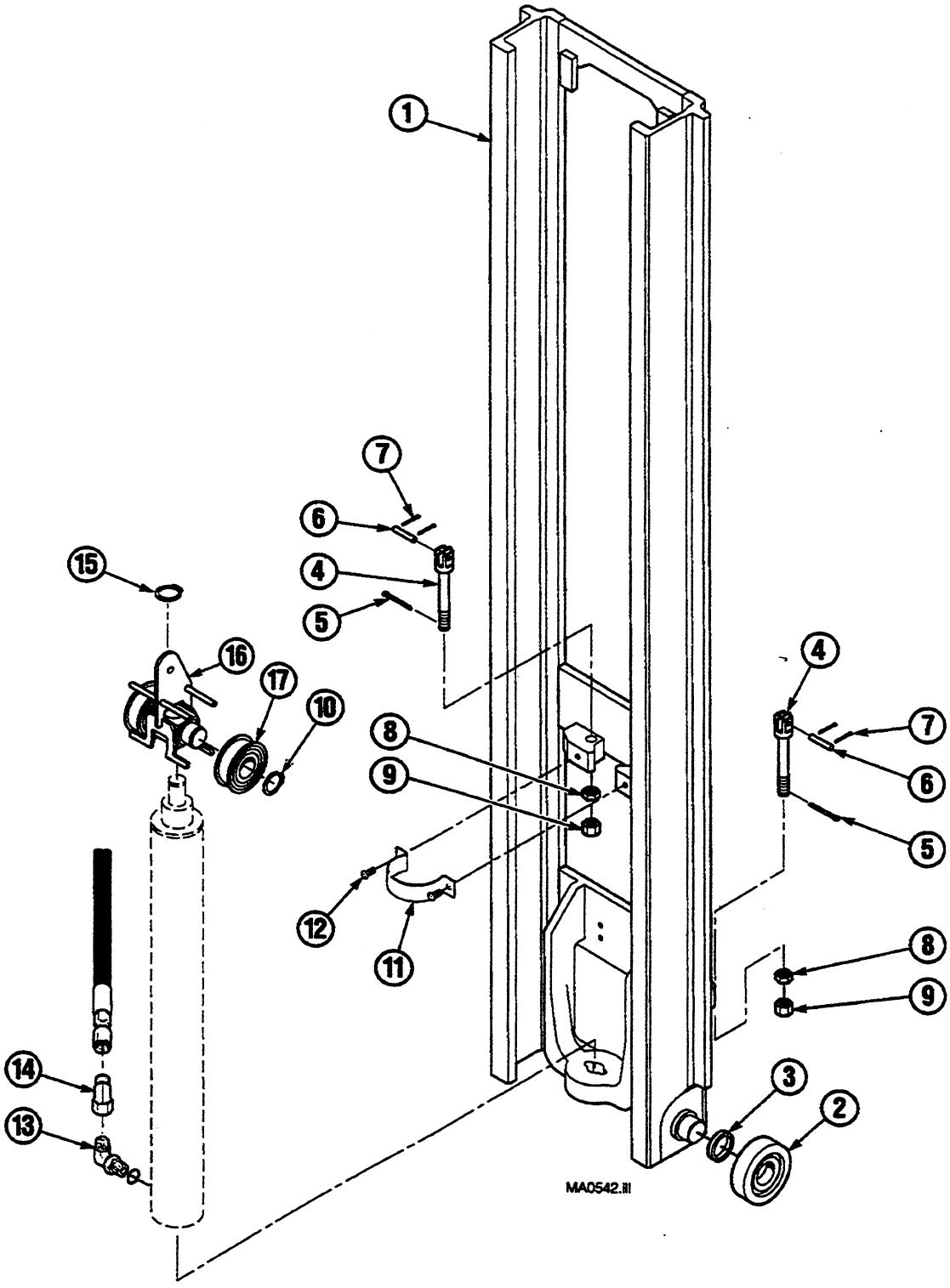

https://truckmanualshub.com/

Inner Upright
30D

Items that vary by mast height.

REF	QTY	PART NO.	DESCRIPTION
1	1	211033	Inner Upright – 70 in. ★
1	1	211034	Inner Upright – 74 in. ★
1	1	211035	Inner Upright – 80 in. ★
1	1	211036	Inner Upright – 84 in. ★
1	1	211037	Inner Upright – 92 in. ★

Common items.

REF	QTY	PART NO.	DESCRIPTION
2	2	664206	Roller
3	●	631881	Shim, .03 in. (0,7 mm)
4	4	678755	Chain Anchor
5	4	6518	Cotter Pin
6	4	680460	Pin
7	8	6508	Cotter Pin
8	2	200007	Jam Nut, .625 NF GR 8
9	2	200006	Nut, .625 NF GR 8
10	2	3140	Snap Ring
11	1	210893	Band
12	2	209742	Capscrew, M8 x 60
13	1	642649	Fitting, 8-10
14	1	605948	Fitting, 8-8
15	1	3133	Snap Ring
16	1	219712	Crosshead
17	2	661550	Chain Sheave

● Quantity as required.

★ Retracted channel length (does not include underclearance).

Reference: Common Parts Group 211068, S-4945, S-4519.

https://truckmanualshub.com/

Lowering Control Valve
2600 PSI System Pressure

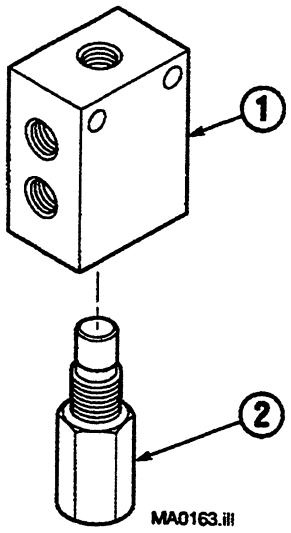

30D			
REF	QTY	PART NO.	DESCRIPTION
		214408	Lowering Control Valve – 11 GPM
		684319	Lowering Control Valve – 12 GPM
1	1	684152	Valve Body
2	1	214407	Valve Cartridge – 11 GPM ■
	1	684318	Valve Cartridge – 12 GPM ■

■ This part must not be substituted. Check part number on side of cartridge when replacing

Reference: Valve specified in Mounting Control Document.

https://truckmanualshub.com/

Carriage – 4 Roller

30D

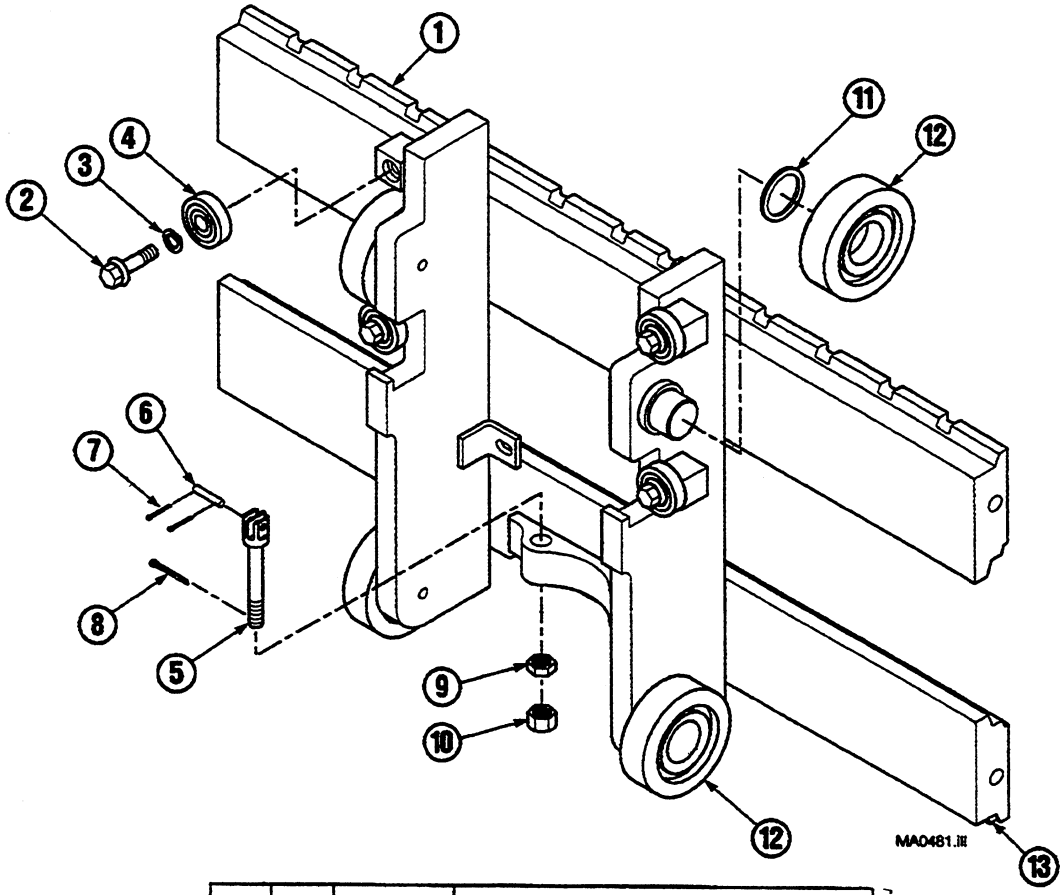

REF	QTY	PART NO.	DESCRIPTION
For masts mounted with 3 in. underclearance			
1	1	210880	Carriage, Class II – 31 in. (787 mm) wide
1	1	210881	Carriage, Class II – 37 in. (940 mm) wide
1	1	215822	Carriage, Class II – 41 in. (1041 mm) wide
For masts mounted with 5 in. underclearance			
1	1	210882	Carriage, Class II – 31 in. (787 mm) wide
1	1	210883	Carriage, Class II – 37 in. (940 mm) wide
1	1	215823	Carriage, Class II – 41 in. (1041 mm) wide
2	4	206174	Capscrew, M12x45 ▲
3	4	684660	Lockwasher, M12 ▲
4	4	683819	Roller ▲
5	2	678755	Chain Anchor ▲
6	2	680460	Chain Pin ▲
7	4	6508	Cotter Pin ▲
8	2	6518	Cotter Pin ▲
9	2	200007	Jam Nut, .625 NF GR 8 ▲
10	2	200006	Nut, .625 NF GR 8 ▲
11	■	631881	Shim, .03 in. (0,7 mm) ▲
12	4	664206	Roller ▲
13	1	219400	Fork Stop Kit

■ Quantity as required.

▲ Included in Service Kit 214954.

Reference: Common Parts Group 211068, S-4571, S-4572, S-4945.

https://truckmanualshub.com/

Carriage – 6 Roller

30D

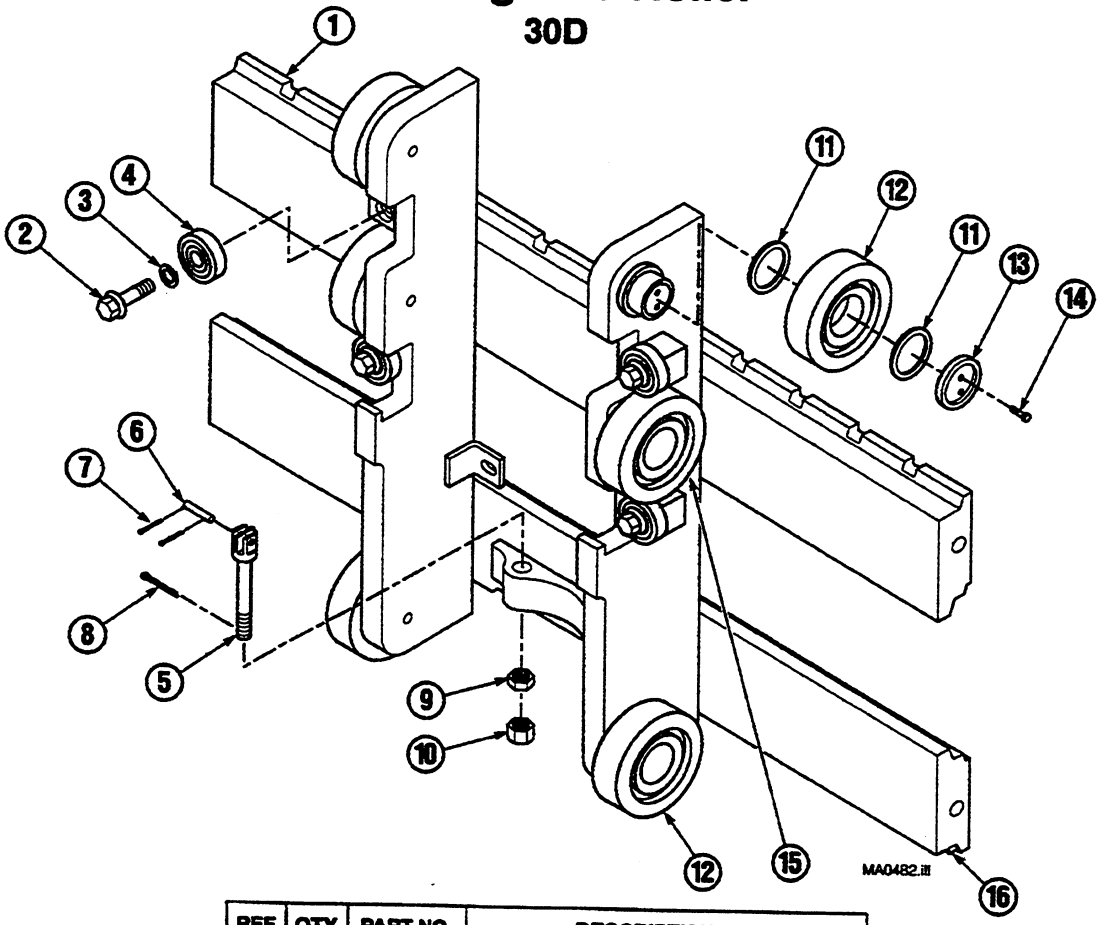

REF	QTY	PART NO.	DESCRIPTION
For masts mounted with 3 in. underclearance			
1	1	210884	Carriage, Class II – 31 in. (787 mm) wide
1	1	210885	Carriage, Class II – 37 in. (940 mm) wide
1	1	215820	Carriage, Class II – 41 in. (1041 mm) wide
For masts mounted with 5 in. underclearance			
1	1	210886	Carriage, Class II – 31 in. (787 mm) wide
1	1	210887	Carriage, Class II – 37 in. (940 mm) wide
1	1	215821	Carriage, Class II – 41 in. (1041 mm) wide
2	4	206174	Capscrew, M12x45 ▲
3	4	684660	Lockwasher, M12 ▲
4	4	683819	Roller ▲
5	2	678755	Chain Anchor ▲
6	2	680460	Chain Pin ▲
7	4	6508	Cotter Pin ▲
8	2	6518	Cotter Pin ▲
9	2	200007	Jam Nut, .625 NF GR 8 ▲
10	2	200006	Nut, .625 NF GR 8 ▲
11	■	631881	Shim, .03 in. (0,7 mm) ▲
12	4	664206	Roller ▲
13	2	658378	Retainer ▲
14	4	680218	Capscrew ▲
15	2	661549	Roller ▲
16	1	219400	Fork Stop Kit

■ Quantity as required.

▲ Included in Service Kit 214953.

Reference: Common Parts Group 211068, S-4573, S-4574, S-4945.

https://truckmanualshub.com/

Hoist Chains
30D

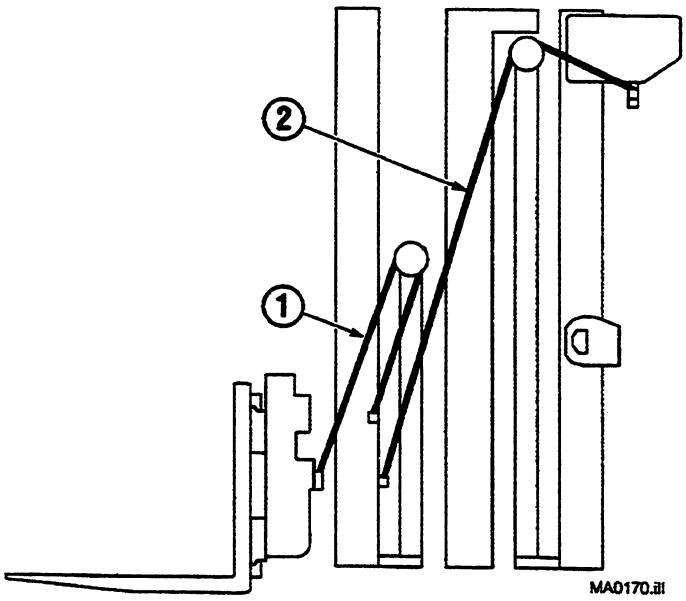

OVERALL RETRACTED CHANNEL LENGTH (in.) ■	QTY	FREE LIFT CHAIN – REF NO. 1		MAIN LIFT CHAIN – REF NO. 2	
		PART NO.	LENGTH in. (mm)	PART NO.	LENGTH in. (mm)
70	2	686926	49.37 (1254)	678752	63.11 (1603)
74	2	686929	53.11 (1349)	687011	66.88 (1699)
80	2	686932	59.37 (1508)	687013	73.11 (1857)
84	2	687752	63.11 (1603)	678763	76.88 (1953)
92	2	686929	53.11 (1349)	687019	85.62 (2175)

■ Does not include underclearance.

Reference: S-4945.

https://truckmanualshub.com/

Internal Hose Reeving – Single Function

30D

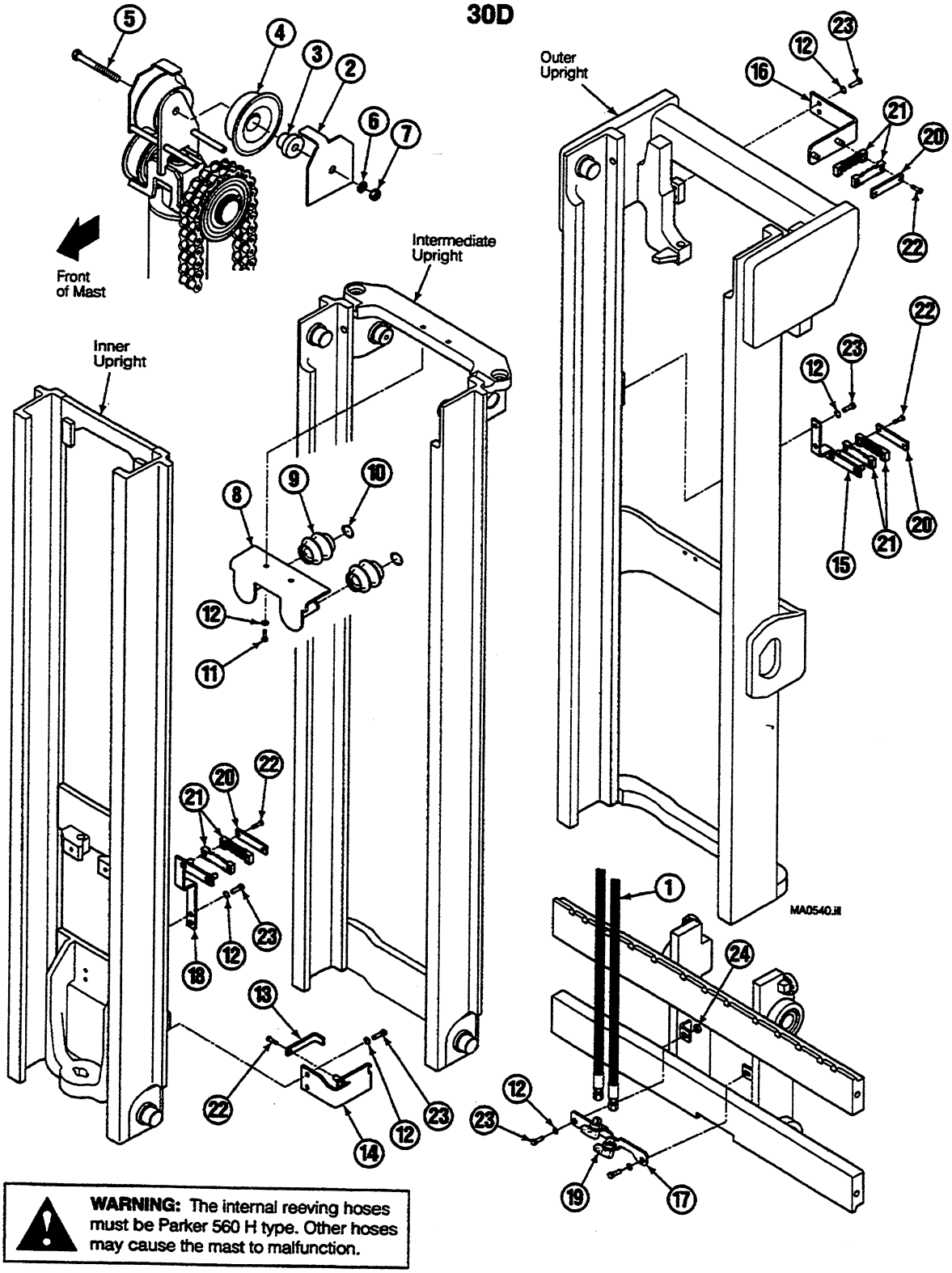

WARNING: The internal reeving hoses must be Parker 560 H type. Other hoses may cause the mast to malfunction.

https://truckmanualshub.com/

Internal Hose Reeving – Single Function
30D

Standard

Items that vary by mast height.

Retracted Channel Length (in.)■	Internal Reeving Group No.	Ref. No. 1 ▲ Hose Part No.
70	217089	216938
74	217091	216939
80	217096	213925
84	217100	213926
92	217107	213927

Cold Storage
(Required for 0°F and below)

Items that vary by mast height.

Retracted Channel Length (in.)■	Internal Reeving Group No.	Ref. No. 1 ▲ Hose Part No.
70	217177	217266
74	217179	217268
80	217184	217273
84	217188	217277
92	217195	217284

Common items.

REF	QTY	PART NO.	DESCRIPTION
1	2	▲	Hose
2	2	214938	Hose Guard
3	2	210173	Stubshaft
4	2	215558	Hose Sheave
5	1	768414	Capscrew, M12x1,75x65-8.8
6	1	683822	Lockwasher, M12
7	1	210166	Nut, M12
8	1	211045	Sheave Bracket
9	2	210667	Hose Sheave
10	2	688935	Snap Ring
11	2	200429	Capscrew, M10x1,5x20-10.9
12	12	681238	Lockwasher, M10
13	1	218021	Retainer Bar
14	1	218020	Lower Bracket
15	1	210654	Termination Bracket
16	1	211047	Upper Bracket
17	1	210913	Carriage Termination Bracket
18	1	219980	Lower Inner Bracket
19	2	2453	Fitting, 6-6
20	3	203407	Bar
21	6	206887	Insert
22	7	763169	Capscrew, M6x1x20-8.8
23	10	684649	Capscrew, M10x1,5x25-8.8
24	2	763023	Nut, M10

■ Does not include underclearance.

Reference: Common Parts Group 216899, S-4871, S-4873.

https://truckmanualshub.com/

Internal Hose Reeving – Double Function

30D

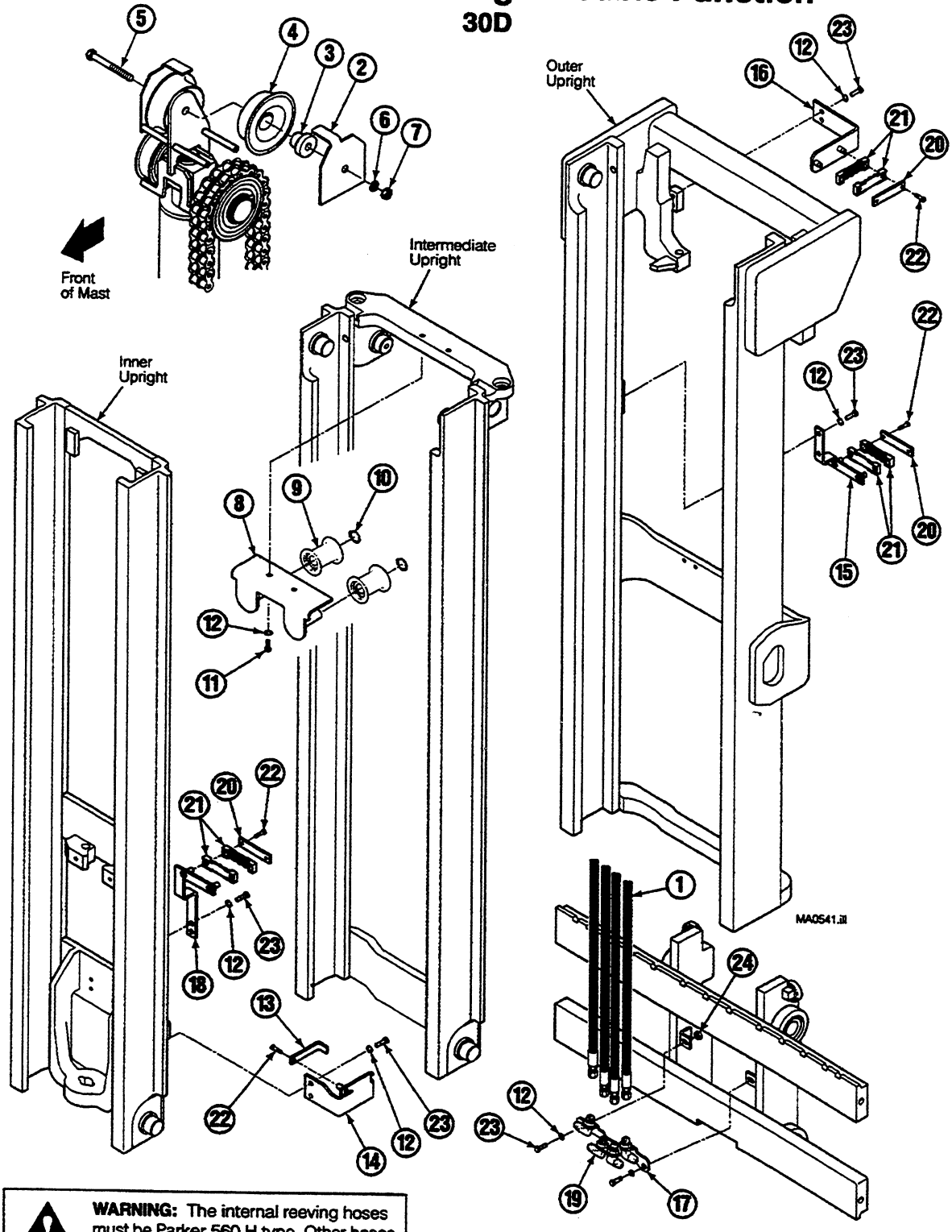

WARNING: The internal reeving hoses must be Parker 560 H type. Other hoses may cause the mast to malfunction.

https://truckmanualshub.com/

Internal Hose Reeving – Double Function
30D

Standard

Items that vary by mast height.

Retracted Channel Length (in.)■	Internal Reeving Group No.	Ref. No. 1 ▲ Hose Part No.
70	217030	216938
74	217032	216939
80	217037	213925
84	217041	213926
92	217048	213927

Cold Storage
(Required for 0°F and below)

Items that vary by mast height.

Retracted Channel Length (in.)■	Internal Reeving Group No.	Ref. No. 1 ▲ Hose Part No.
70	217208	217266
74	217210	217268
80	217215	217273
84	217219	217277
92	217226	217284

Common items.

REF	QTY	PART NO.	DESCRIPTION
1	2	▲	Hose
2	2	214938	Hose Guard
3	2	210216	Stubshaft
4	2	216911	Hose Sheave
5	1	684800	Capscrew, M12x1,75x100-8.8
6	1	683822	Lockwasher, M12
7	1	210166	Nut
8	1	211045	Sheave Bracket
9	2	210662	Hose Sheave
10	2	688935	Snap Ring
11	2	200429	Capscrew, M10x1,5x20-10.9
12	12	681238	Lockwasher, M10
13	1	218021	Retainer Bar
14	1	218020	Lower Bracket
15	1	210654	Termination Bracket
16	1	211047	Upper Bracket
17	1	219981	Carriage Termination Bracket
18	1	216907	Lower Inner Bracket
19	4	2453	Fitting, 6-6
20	3	203407	Bar
21	6	206887	Insert
22	7	763169	Capscrew, M6x1x20-8.8
23	10	684649	Capscrew, M10x1,5x25-8.8
24	2	763023	Nut, M10

■ Does not include underclearance.

Reference: Common Parts Group 216898, S-4875, S-4877.

https://truckmanualshub.com/

Load Backrest
30D

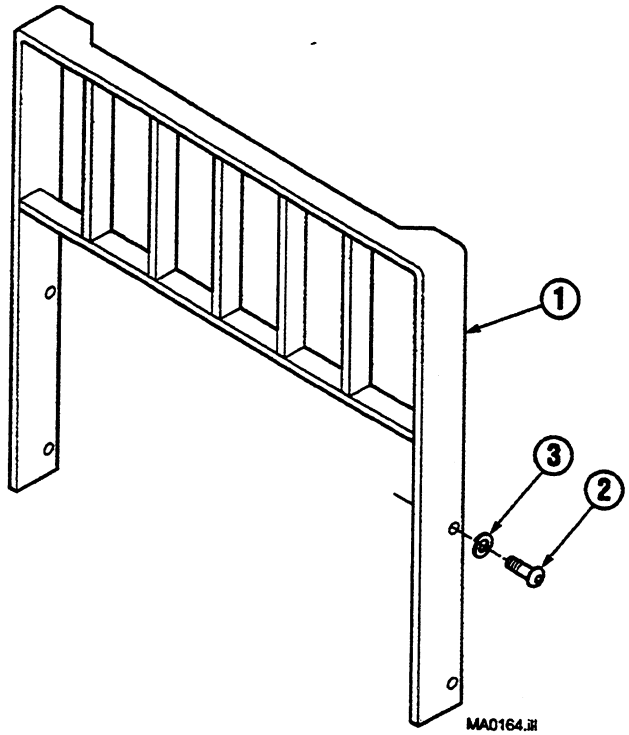

Class II Load Backrest			
REF	QTY	PART NO.	DESCRIPTION
1	1	209407	★ Backrest – 31x36 in. (789x876 mm)
	1	209233	★ Backrest – 31x48 in. (789x1181 mm)
	1	209408	★ Backrest – 31x60 in. (789x1486 mm)
	1	684772	★ Backrest – 37x36 in. (940x914 mm)
	1	684773	★ Backrest – 37x48 in. (940x1219 mm)
	1	684774	★ Backrest – 37x60 in. (940x1524 mm)
	1	684775	★ Backrest – 41x36 in. (1041x914 mm)
	1	684776	★ Backrest – 41x48 in. (1041x1219 mm)
	1	684777	★ Backrest – 41x60 in. (1041x1524 mm)
2	4	200173	Capscrew, M16x2.0x35-8.8
3	4	684586	Lockwasher, M16

★ Includes items 2 and 3. Width x height.
Reference: S-3370.

https://truckmanualshub.com/

Mast Installation Accessories

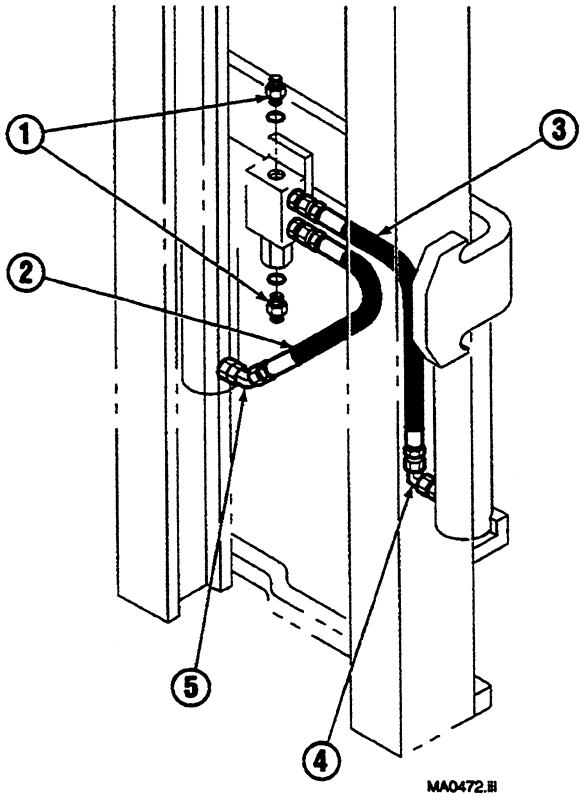

REF	QTY	PART NO.	DESCRIPTION
1	2	601377	Fitting, 8-8
2	1	603722	Hose
3	1	214065	Hose
4	1	2680	Fitting, 6-6
5	1	605230	Fitting, 6-6

Reference: Mounting Control Doc S-4567, S-4568, S-4569, S-4570.
Mounting Group 210962, 3, 4, 5, 6, 7.
Installation Kit 200352.
Hydraulic Group 214064.

https://truckmanualshub.com/

Mast Installation Accessories

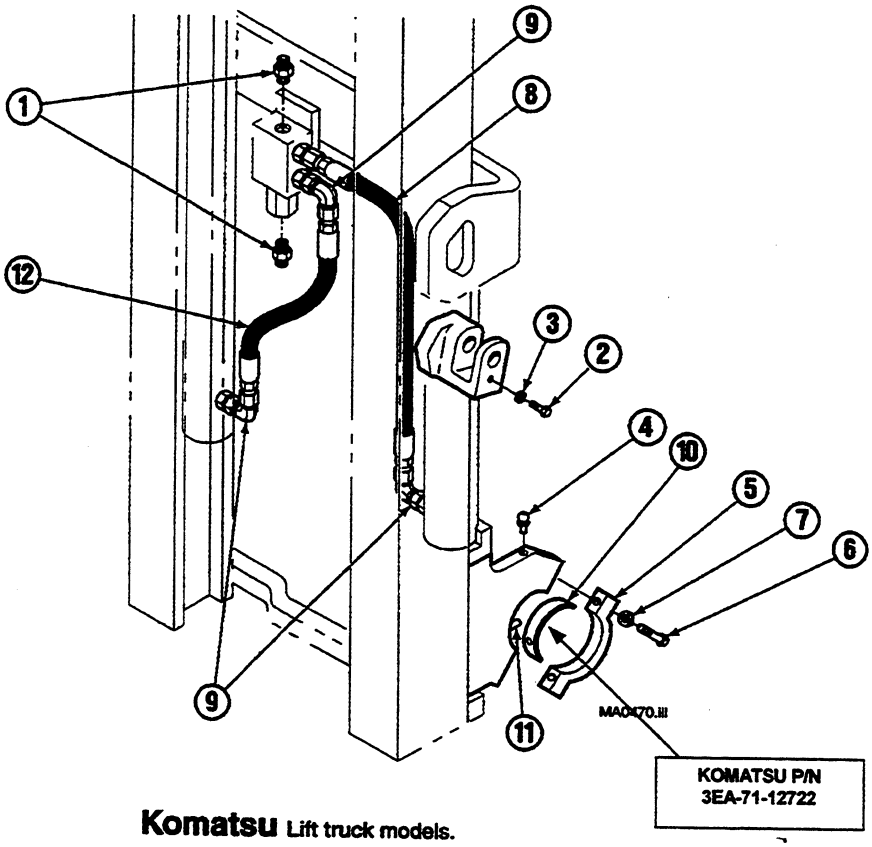

Komatsu Lift truck models.

FG 10-18 ST-15
FG 10-18 ST-16

REF	QTY	PART NO.	DESCRIPTION
1	2	601377	Fitting, 8-8
2	2	212632	Capscrew, M10
3	2	681238	Lockwasher, M10
4	2	7418	Grease Fitting
5	2	687324	Cap
6	4	212618	Capscrew, M14
7	4	688705	Lockwasher, M14
8	1	656033	Hose
9	3	2680	Fitting, 6-6
10	2	687362	Bushing ▲
11	4	688709	Pin ▲
12	1	631422	Hose

▲ Reference only. Source from lift truck manufacturer.

Reference: Mounting Control Doc S-4567.
Mounting Group 217708.
Installation Kit 200235.
Hydraulic Group 219013.

https://truckmanualshub.com/

Mast Installation Accessories

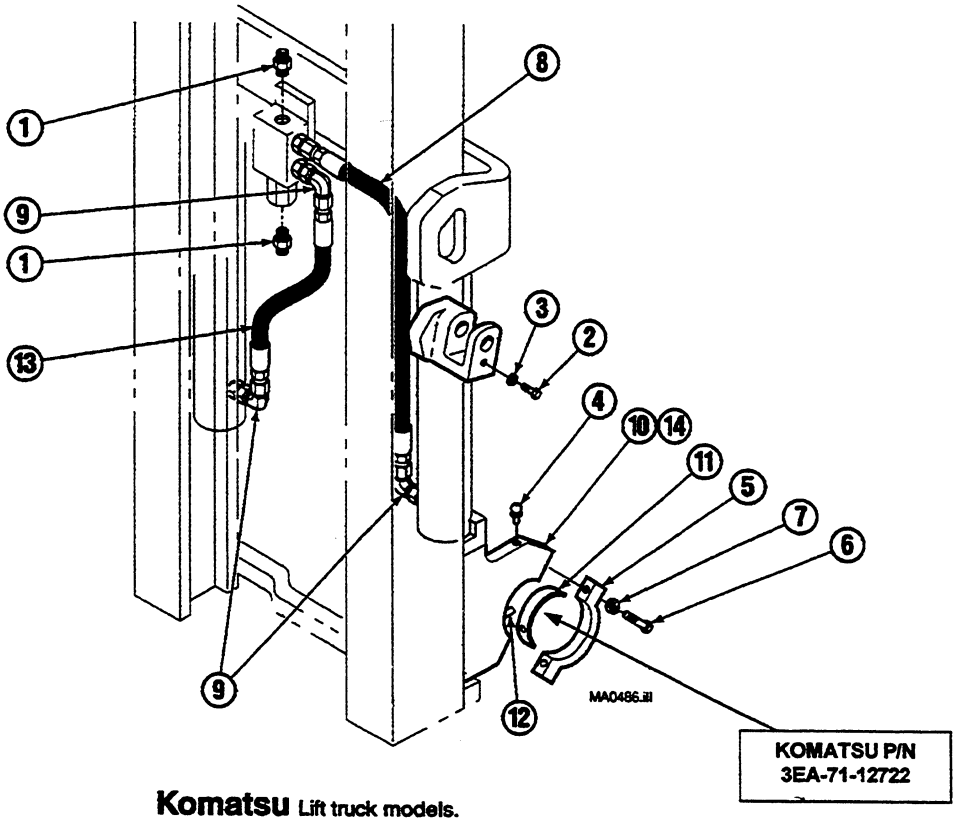

Komatsu Lift truck models.

FG 15-18 C, T, HC, HT-15
FG 15-18 C, T, HC, HT-16

FD 15-18 C, T, HC, HT-15
FD 15-18 C, T, HC, HT-16

REF	QTY	PART NO.	DESCRIPTION
1	2	601377	Fitting, 8-8
2	2	212632	Capscrew, M10
3	2	681238	Lockwasher, M10
4	2	7418	Grease Fitting
5	2	687324	Cap
6	4	212618	Capscrew, M14
7	4	688705	Lockwasher, M14
8	1	656033	Hose
9	3	2680	Fitting, 6-6
10	1	687347	Pivot Plate - LH
11	2	687362	Bushing ▲
12	4	688709	Pin ▲
13	1	631422	Hose
14	1	687348	Pivot Plate - RH

▲ Reference only. Source from lift truck manufacturer.

Reference: Mounting Control Doc S-4569.
Mounting Group 217710.
Installation Kit 200235.
Hydraulic Group 219013.

https://truckmanualshub.com/

Recommended Spare Parts List

30D Full Free Lift 3-Stage Mast				
PART NO.	DESCRIPTION	MASTS SERVICED		
		1-5	6-19	20-50
	MAIN LIFT CYLINDER			
■	Main Lift Cylinder Assembly	0	0	1
212072	Service Kit	2	4	8
212042	Check Valve (2600 PSI System Pressure)	2	4	8
2702	O-Ring (2600 PSI System Pressure)	2	4	8
201770	Snap Ring	2	4	8
213703	Washer, (.25 mm)	3	6	9
214034	Lowering Fuse Spring	2	4	8
	FREE LIFT CYLINDER			
■	Free Lift Cylinder Assembly	0	1	2
564926	Service Kit (2600 PSI System Pressure)	2	4	8
626664	Check Valve (2600 PSI System Pressure)	2	4	8
689937	O-Ring (2600 PSI System Pressure)	2	4	8
565085	Lowering Fuse Spring	2	4	8
	INTERNAL REEVING			
■	Hose RH and LH	2	4	8
■	Hose Sheave	1	2	4
2453	Fitting, 6-6	1	2	4
	UPRIGHTS			
■	Chain Pin	8	8	16
6508	Cotter Pin	16	32	64
■	Chain Anchor	1	2	4
200007	Jam Nut	4	4	4
200006	Nut	4	4	4
6518	Cotter Pin	8	16	32
631881	Shim, .03 in. (0,7 mm)	16	32	64
664206	Roller	12	24	48
212588	Thrust Plug Service Kit	2	4	8
	CROSSHEAD			
661550	Chain Sheave	4	8	16
3140	Snap Ring	2	4	8
	CARRIAGE AND CHAINS			
■	Free Lift Chains	2	4	8
683819	Carriage Side Thrust Roller	4	8	16
■	Main Lift Chains	2	4	8
664206	Carriage Roller	4	8	16
■	Chain Anchor	1	2	4
680460	Chain Pin	8	8	16
	LUBRICANT			
599474	13 oz Aerosol Can	1	3	5
	PAINT			
684271	12 oz Aerosol Can (black)	1	1	1

■ See specific parts page for part number.

https://truckmanualshub.com/

This Page Left Intentionally Blank

KOMATSU

https://truckmanualshub.com/

This Page Left Intentionally Blank

KOMATSU

https://truckmanualshub.com/

PARTS MANUAL

30D Limited Free Lift 2-Stage Mast

This manual contains standard production Product Identification Numbers

30D-MS-001 → 025

Special Engineered Options are not included.

Manual Number 218488

cascade®

Cascade is a Registered Trademark of Cascade Corporation

https://truckmanualshub.com/

About This Manual

Introduction

This manual shows the parts breakdown for 30D Mast product I.D. numbers. Locate the product I.D. number stamped on the upper left hand side of the outer upright channel. This number must be used when ordering replacement parts for this product.

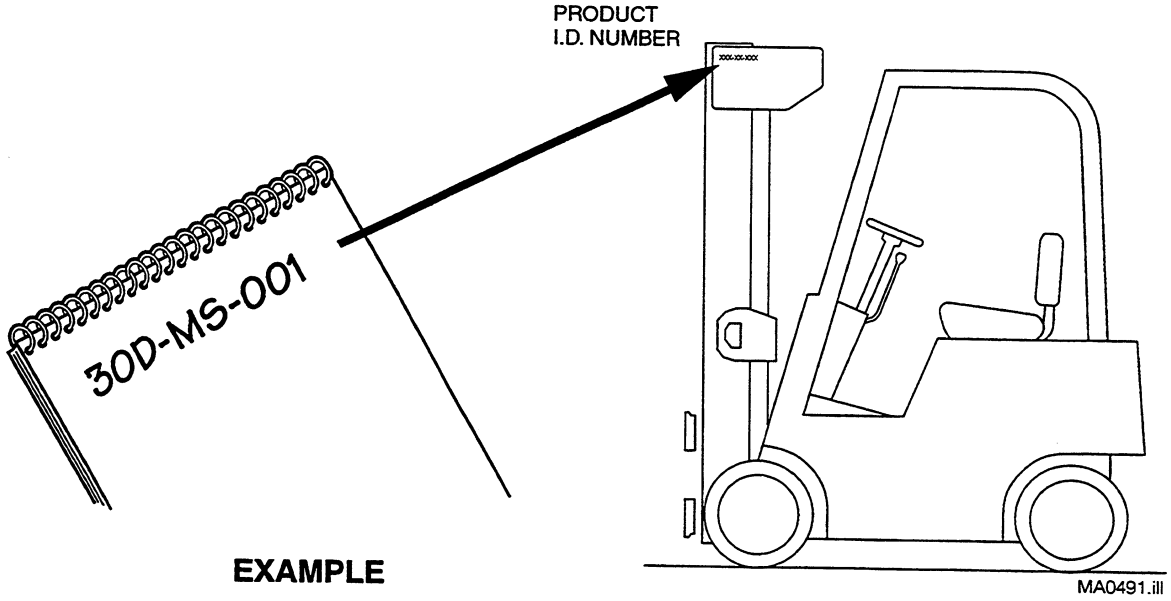

EXAMPLE

Ordering Parts

Customers – Cascade parts and service literature is available through authorized lift truck dealers. To place an order, contact the lift truck dealer of your choice.

Lift Truck Dealers – To order parts and service literature contact:

Cascade Parts Sales
2501 Sheridan Avenue
Springfield, OH 45505
Telephone: 888-CASCADE (227-2233)
FAX: 888-329-0234

Index

Safety Decals and Publications	1	Carriages	7
Cylinders	2	Internal Hose Reeving	9
Uprights	3	Backrest	11
Hoist Chains	5	Mast Installation Accessories	12
Lowering Control Valve	6	Recommended Spare Parts List	16

WARNING: For safety of yourself and others, DO NOT install the parts shown in this manual unless you have thoroughly reviewed the appropriate Service Manual.

https://truckmanualshub.com/

Decals

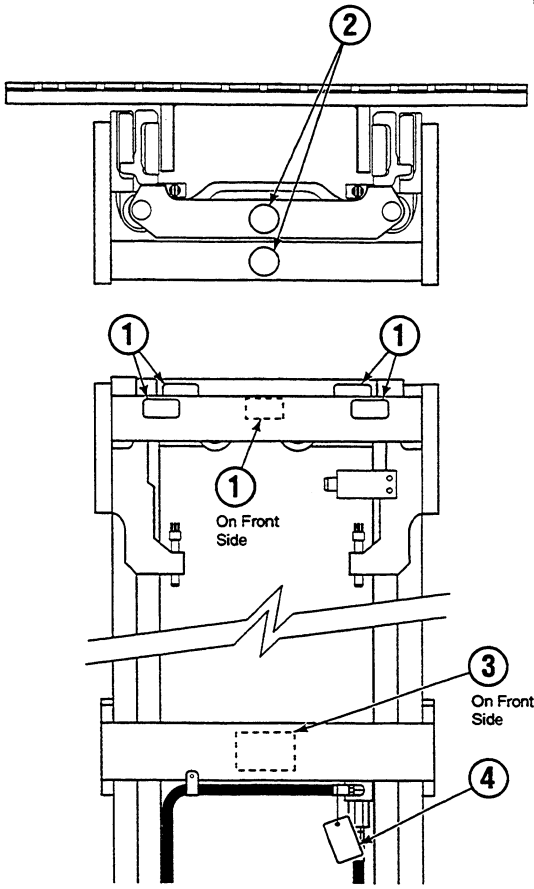

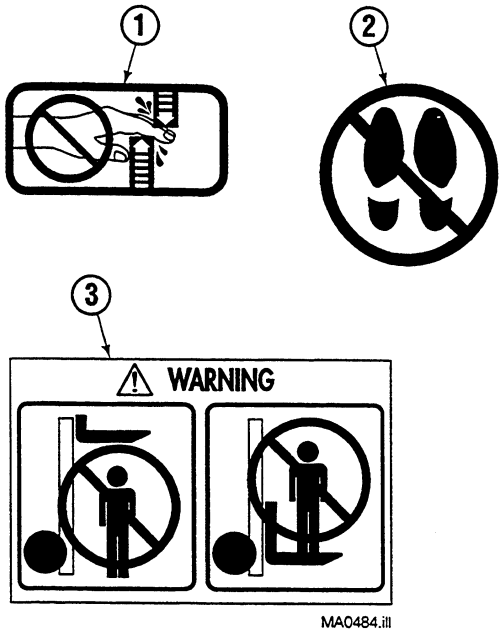

MA0484.ill

30D			
REF	QTY	PART NO.	DESCRIPTION
1	5	665595	No Hand Hold
2	2	679150	No Step
3	1	669152	WARNING
4	1	200798	WARNING-Trapped Air

Publications

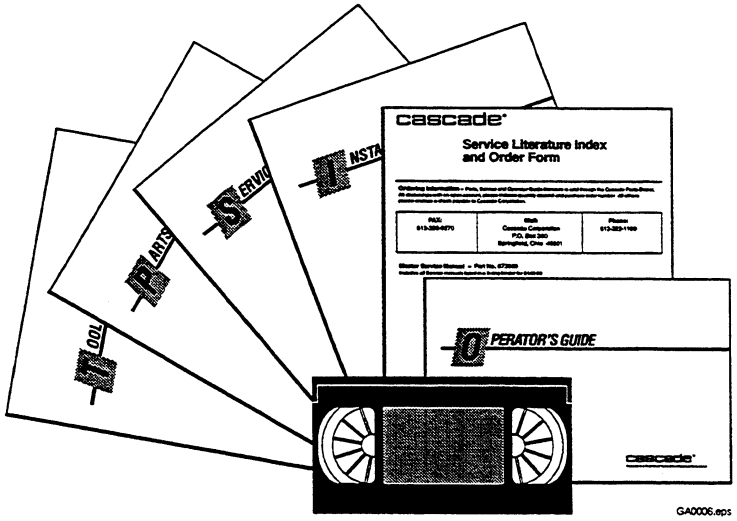

GA0006.eps

30D		
REF	PART NO.	DESCRIPTION
1	218488	Parts Manual
2	686482	Service Manual
3	679929	Tool Catalog
4	673964	Literature Index Order Form

https://truckmanualshub.com/

Main Lift Cylinder – 2600 PSI

30D

WARNING: Replacing the cylinder with a different part number cylinder may cause mast to malfunction.

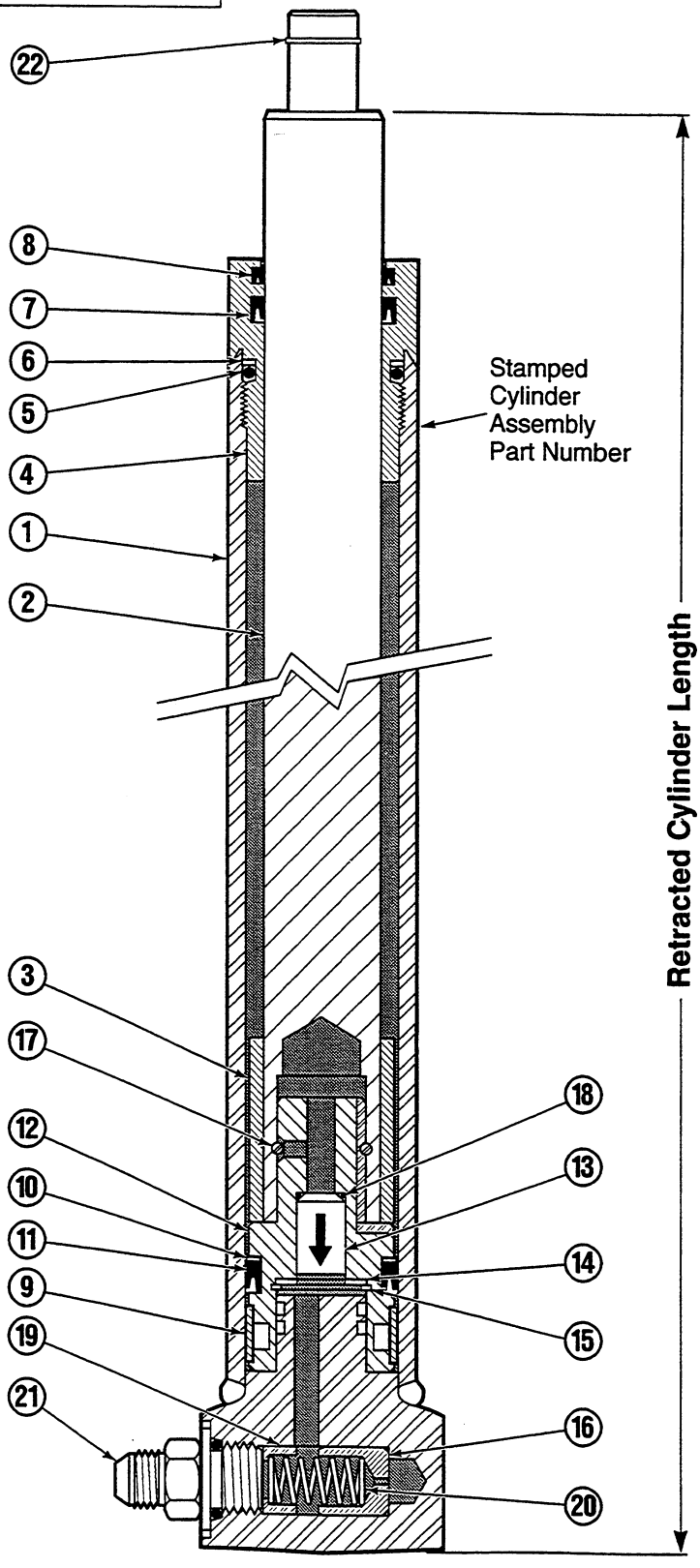

MA0476.ill

https://truckmanualshub.com/

Main Lift Cylinder – 2600 PSI

30D

Items that vary by mast height.

RETRACTED CHANNEL LENGTH (in.) ■	RETRACTED CYLINDER LENGTH (in.)	CYLINDER ASSEMBLY QTY 1	REF. NO 1 SHELL QTY 1	REF NO. 2 PLUNGER QTY 1	REF NO. 3 SPACER QTY 1
57	46.25	584500	4400-1138	4401-1113	–
69	58.25	584502	4400-1443	4401-1418	–
73	60.00	584505	4400-1487	4401-1462	–
74	63.25	584506	4400-1570	4401-1545	–
80	69.25	584511	4400-1722	4401-1697	–
89	78.25	584522	4400-1951	4401-1926	–
95	84.25	584524	4400-2103	4401-2078	–
101	87.99	584525	4400-1995	4401-2173	–

■ Does not include underclearance.

Common items.

REF	QTY	PART NO.	DESCRIPTION	REF	QTY	PART NO.	DESCRIPTION
4	1	564921	Retainer	14	1	563785	Washer ●
5	1	581558	O-Ring ▲	15	1	3015	Retaining Ring ●
6	1	581559	Back-Up Ring ▲	16	1	562849	Fuse – Piston
7	1	564915	Seal ▲	17	1	211995	Pull-In Wire
8	1	564916	Wiper ▲	18	1	2702	O-Ring ▲ ●
9	1	211986	Wear Ring ▲	19	1	562848	Spring Guide
10	1	211992	Nylon Ring ▲	20	1	214034	Spring
11	1	213490	Seal ▲	21	1	626505	Fitting, 6-6 ★
12	1	564920	Piston	22	1	201770	Snap Ring ★
13	1	212042	Check Valve ●			212072	Cylinder Service Kit

▲ Included in Cylinder Service Kit 212072.
● Included in Check Valve Service Kit 212073.
★ Not included in Cylinder Assembly.
Reference: S-4398, S-4399.

https://truckmanualshub.com/

Outer Upright
30D

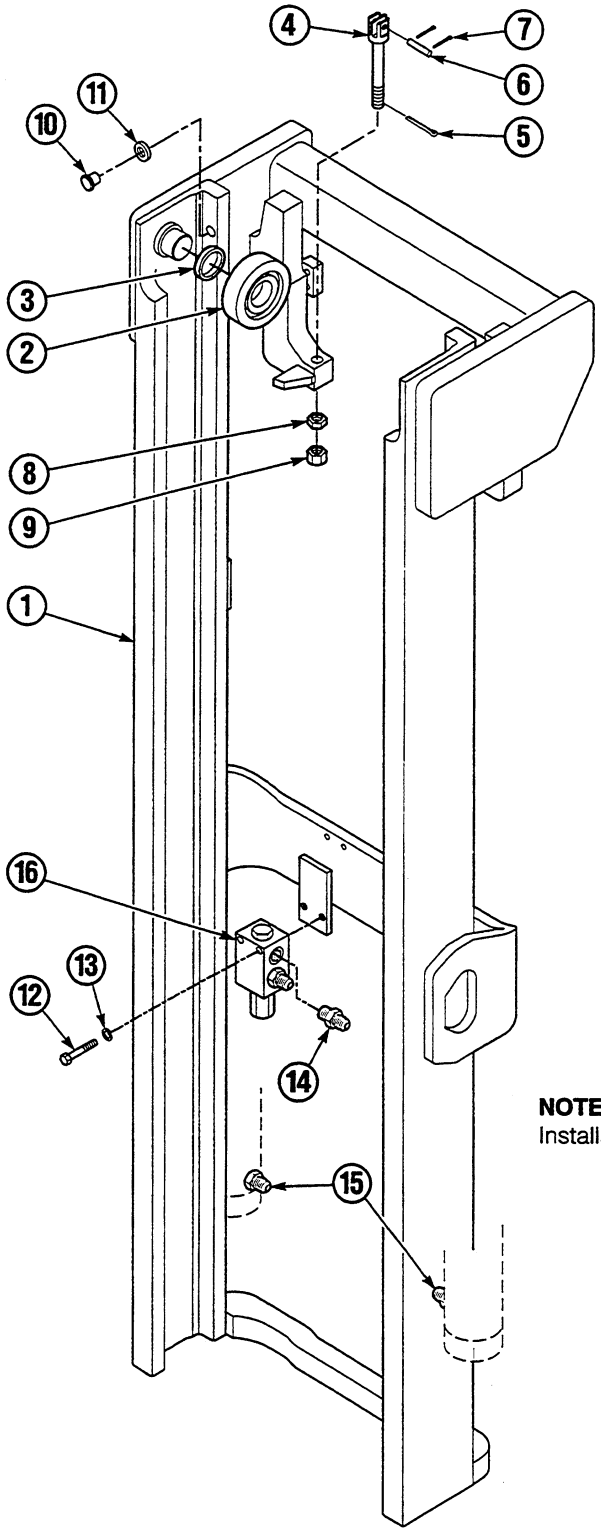

MA0457.ill

NOTE: See pages 12-15 for Mast Installation Acccessories.

https://truckmanualshub.com/

Outer Upright
30D

Items that vary by mast height.

REF	QTY	PART NO.	DESCRIPTION
1	1	■ 216841	Outer Upright – 57 in. ★
1	1	■ 216094	Outer Upright – 69 in. ★
1	1	■ 216234	Outer Upright – 73 in. ★
1	1	■ 216095	Outer Upright – 74 in. ★
1	1	■ 216097	Outer Upright – 80 in. ★
1	1	■ 216846	Outer Upright – 89 in. ★
1	1	■ 216105	Outer Upright – 95 in. ★
1	1	■ 216109	Outer Upright – 101 in. ★

Common items.

REF	QTY	PART NO.	DESCRIPTION
2	2	664206	Roller
3	●	631881	Shim, .03 in. (0,7 mm)
4	2	201432	Chain Anchor
5	2	6518	Cotter Pin
6	2	680460	Pin
7	4	6508	Cotter Pin
8	2	200007	Jam Nut, .625 NF GR 8
9	2	200006	Nut, .625 NF GR 8
10	2	212587	Thrust Plug Service Kit
11	2	212250	Shim
12	2	683823	Capscrew, M10 x 50
13	2	681238	Lockwasher, M10
14	2	611288	Fitting, 6-6
15	2	626505	Fitting, 6-6
16	1	▲	Lower Control Valve

● Quantity as required.

★ Retracted channel length (does not include underclearance).

■ These part numbers are for reference only. Mounting brackets are not included. To order an Outer Upright with mounting brackets, contact Cascade Parts Depot (888) 227-2233.

The mast serial number must be supplied.

When ordering an Upright, Service Kit 212587. should also be ordered.

▲ See page 6 for specific part numbers.

Reference: Common Parts Group 211071, S-4948, S-4890.

https://truckmanualshub.com/

Inner Upright
30D

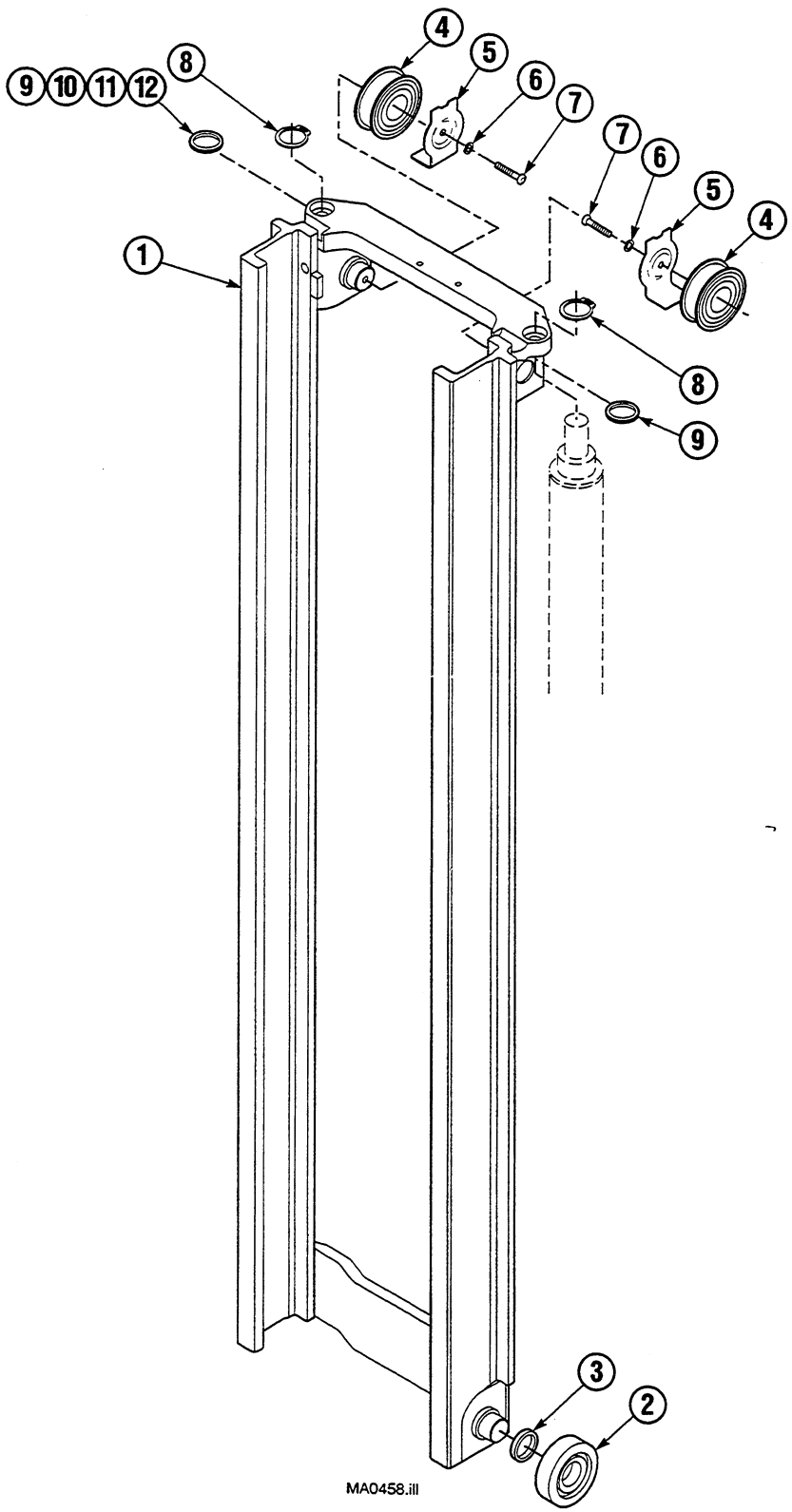

https://truckmanualshub.com/

Inner Upright
30D

Items that vary by mast height.

REF	QTY	PART NO.	DESCRIPTION
1	1	211012	Inner Upright – 57 in. ★
1	1	211013	Inner Upright – 69 in. ★
1	1	211014	Inner Upright – 73 in. ★
1	1	211015	Inner Upright – 74 in. ★
1	1	211016	Inner Upright – 80 in. ★
1	1	211017	Inner Upright – 89 in. ★
1	1	218125	Inner Upright – 95 in. ★
1	1	218128	Inner Upright – 101 in. ★

Common items.

REF	QTY	PART NO.	DESCRIPTION
2	2	664206	Roller
3	●	631881	Shim, .03 in. (0,7 mm)
4	2	661550	Chain Sheave
5	2	216052	Hose Guard
6	2	683822	Lockwasher, M12
7	2	210736	Capscrew, M12 x 25
8	2	210770	Snap Ring
9	●	213703	Shim, .01 in. (.25 mm)
10	●	213704	Shim, .03 in. (.8 mm)
11	●	213705	Shim, .06 in. (1.6 mm)
12	●	213706	Shim, .09 in. (1.4 mm)

● Quantity as required.

★ Retracted channel length (does not include underclearance).

Reference: Common Parts Group 211071, S-4515, S-4894.

https://truckmanualshub.com/

Hoist Chains
30D

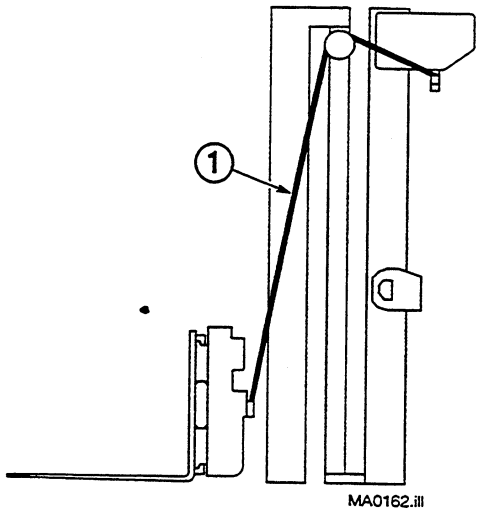

OVERALL RETRACTED CHANNEL LENGTH	QTY	MAIN LIFT CHAIN – REF NO. 1	
		PART NO.	LENGTH in. (mm)
57	2	686928	51.88 (1318)
69	2	678752	63.11 (1603)
73	2	676011	66.88 (1699)
74	2	687012	68.11 (1730)
80	2	687014	73.37 (1889)
89	2	678764	83.11 (2111)
95	2	678765	89.37 (2270)
101	2	200977	95.62 (2429)

Reference: S-4948.

https://truckmanualshub.com/

Lowering Control Valve
2600 PSI System Pressure

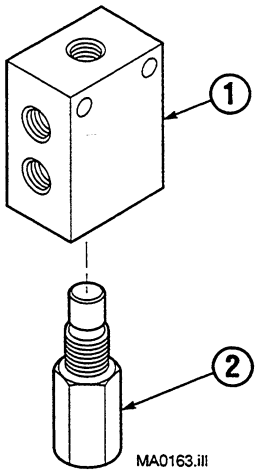

30D			
REF	QTY	PART NO.	DESCRIPTION
		214408	Lowering Control Valve – 11 GPM
		684319	Lowering Control Valve – 12 GPM
1	1	684152	Valve Body
2	1	214407	Valve Cartridge – 11 GPM ■
	1	684318	Valve Cartridge – 12 GPM ■

■ This part must not be substituted. Check part number on side of cartridge when replacing

Reference: Valve specified in Mounting Control Document.

https://truckmanualshub.com/

Carriage – 4 Roller

30D

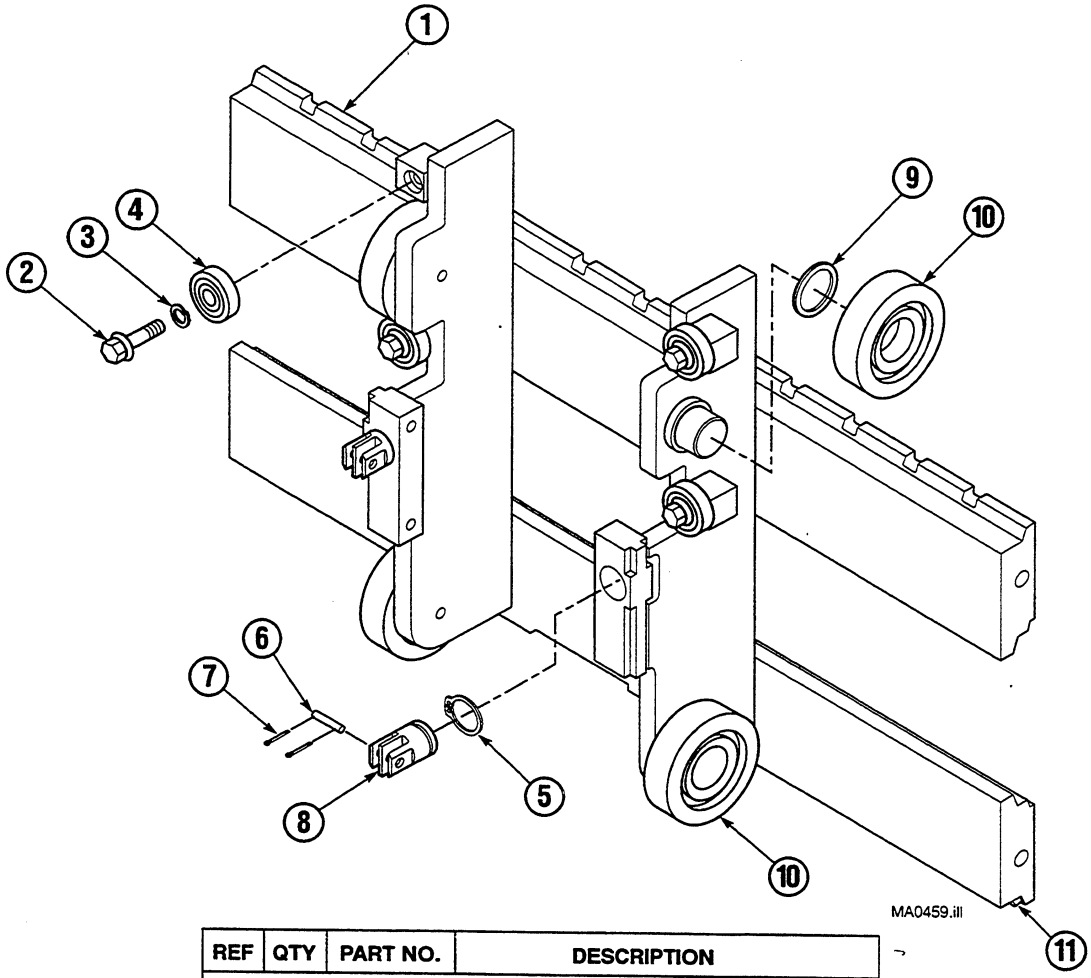

REF	QTY	PART NO.	DESCRIPTION
For masts mounted with 3 in. underclearance			
1	1	204839	Carriage, Class II – 31 in. (787 mm) wide
1	1	386227	Carriage, Class II – 35 in. (889 mm) wide
1	1	204840	Carriage, Class II – 37 in. (940 mm) wide
1	1	204841	Carriage, Class II – 41 in. (1041 mm) wide
For masts mounted with 5 in. underclearance			
1	1	204842	Carriage, Class II – 31 in. (787 mm) wide
1	1	204843	Carriage, Class II – 37 in. (940 mm) wide
1	1	204844	Carriage, Class II – 41 in. (1041 mm) wide
2	4	206174	Capscrew, M12x45 ▲
3	4	684660	Lockwasher, M12 ▲
4	4	683819	Roller ▲
5	2	3135	Snap Ring ▲
6	2	680460	Chain Pin ▲
7	4	6508	Cotter Pin ▲
8	2	678754	Chain Anchor ▲
9	■	631881	Shim, .03 in. (0,7 mm) ▲
10	4	664206	Roller ▲
11	1	219400	Fork Stop Kit

■ Quantity as required.

▲ Included in Service Kit 219224.

Reference: Common Parts Group 211071, S-4398, S-3803.

https://truckmanualshub.com/

Carriage – 6 Roller

30D

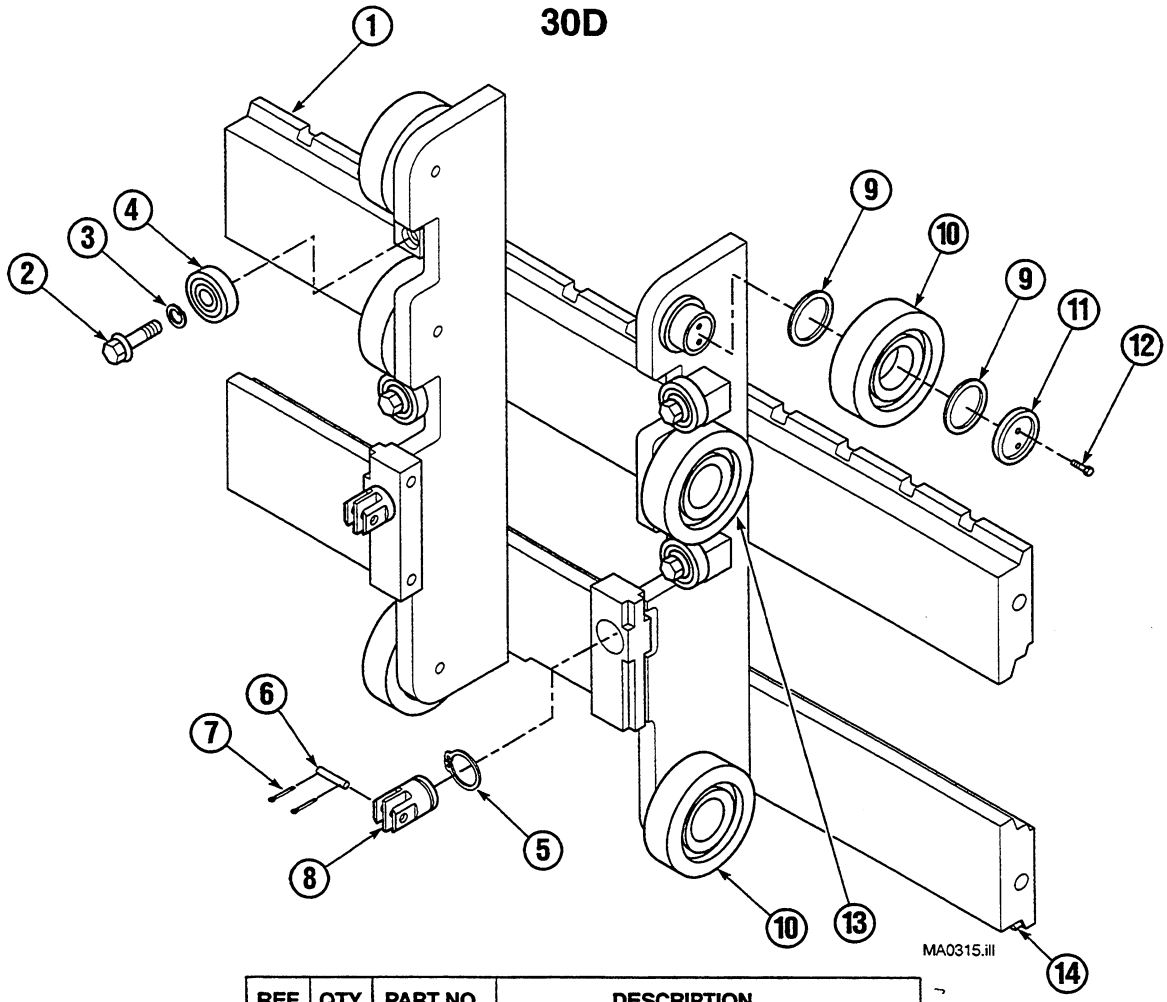

REF	QTY	PART NO.	DESCRIPTION
For masts mounted with 3 in. underclearance			
1	1	204845	Carriage, Class II – 31 in. (787 mm) wide
1	1	204846	Carriage, Class II – 37 in. (940 mm) wide
1	1	204847	Carriage, Class II – 41 in. (1041 mm) wide
1	1	696502	Carriage, Class II – 52 in. (1321 mm) wide
For masts mounted with 5 in. underclearance			
1	1	204848	Carriage, Class II – 31 in. (787 mm) wide
1	1	204849	Carriage, Class II – 37 in. (940 mm) wide
1	1	204850	Carriage, Class II – 41 in. (1041 mm) wide
2	4	206174	Capscrew, M12x45 ▲
3	4	684660	Lockwasher, M12 ▲
4	4	683819	Roller ▲
5	2	3135	Snap Ring ▲
6	2	680460	Chain Pin ▲
7	4	6508	Cotter Pin ▲
8	2	678754	Chain Anchor ▲
9	■	631881	Shim, .03 in. (0,7 mm) ▲
10	4	664206	Roller ▲
11	2	658378	Retainer ▲
12	4	680218	Capscrew ▲
13	2	661549	Roller ▲
14	1	219400	Fork Stop Kit

■ Quantity as required.

▲ Included in Service Kit 219225.

Reference: Common Parts Group 211071, S-4398, S-3804.

https://truckmanualshub.com/

Internal Hose Reeving – Single Function

30D

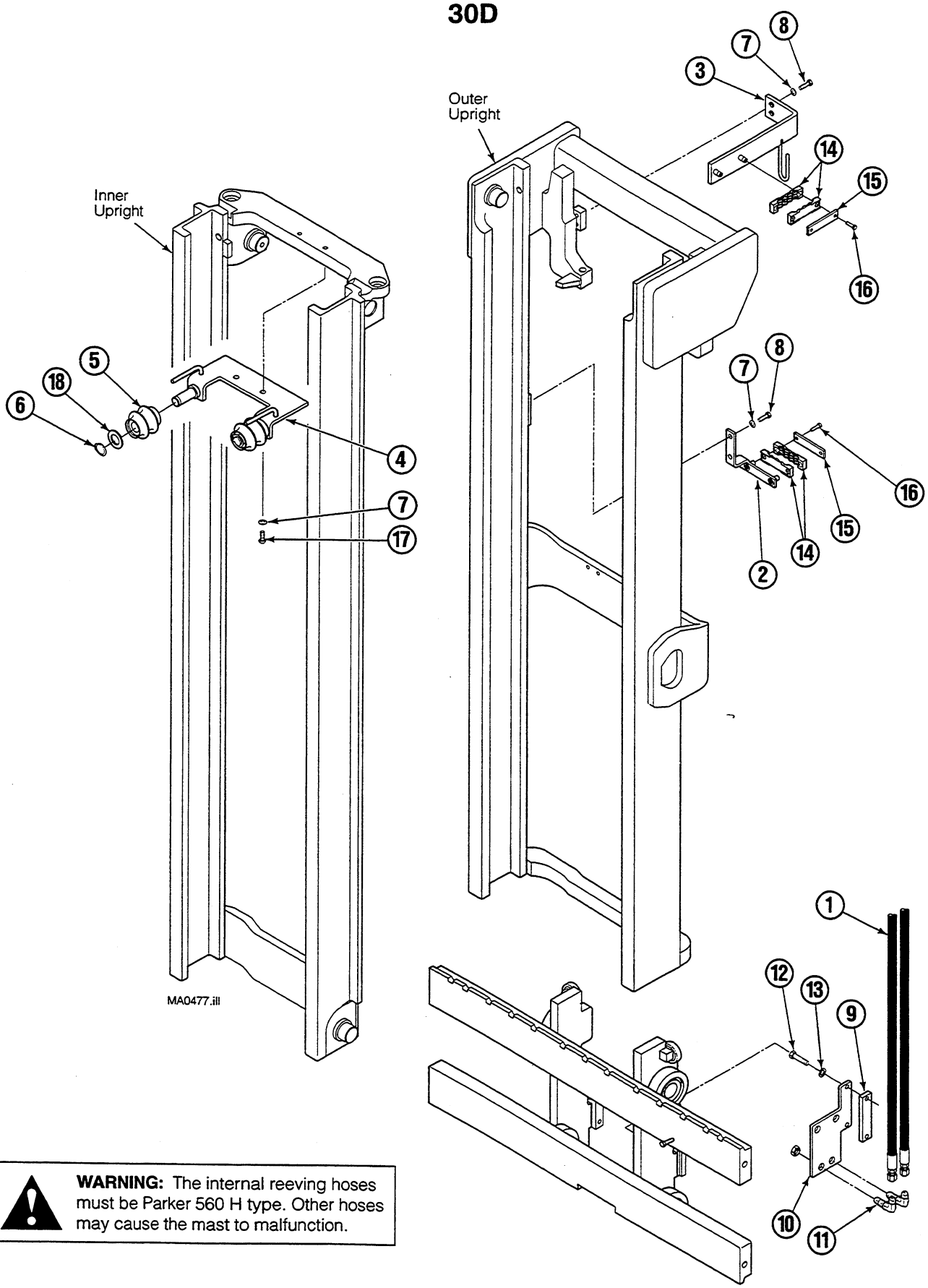

WARNING: The internal reeving hoses must be Parker 560 H type. Other hoses may cause the mast to malfunction.

https://truckmanualshub.com/

Internal Hose Reeving – Single Function
30D

Standard

Items that vary by mast height.

Retracted Channel Length (in.) ■	Internal Reeving Group No.	Ref. No. 1 ▲ Hose Part No.
57	217056	216912
69	217061	216916
73	217064	213920
74	217065	216918
80	217071	213921
89	217078	213922
95	217081	216931
101	217082	216932

Cold Storage
(Required for 0°F and below)

Items that vary by mast height.

Retracted Channel Length (in.) ■	Internal Reeving Group No.	Ref. No. 1 ▲ Hose Part No.
57	217116	217234
69	217121	217243
73	217124	217240
74	217125	217242
80	217131	217249
89	217138	217256
95	217141	217259
101	217142	217261

Common items.

REF	QTY	PART NO.	DESCRIPTION
1	2	▲	Hose
2	1	210654	Termination Bracket
3	1	216901	Upper Bracket
4	1	211049	Sheave Bracket
5	2	210677	Hose Sheave
6	2	688935	Snap Ring
7	6	681238	Lockwasher, M10
8	4	684649	Capscrew, M10x1,5x25-8.8
9	1	210739	Spacer
10	1	210738	Carriage Termination Bracket
11	2	2453	Fitting, 6-6
12	2	787372	Capscrew, M8x1,25x20-8.8
13	2	206315	Lockwasher, M8
14	4	206887	Insert
15	2	203407	Bar
16	4	763169	Capscrew, M6x1x20-8.8
17	2	200429	Capscrew, M10x20
18	2	205086	Washer

■ Does not include underclearance.

Reference: Common Parts Group 216897, S-4881, S-4883.

https://truckmanualshub.com/

Internal Hose Reeving – Double Function

30D

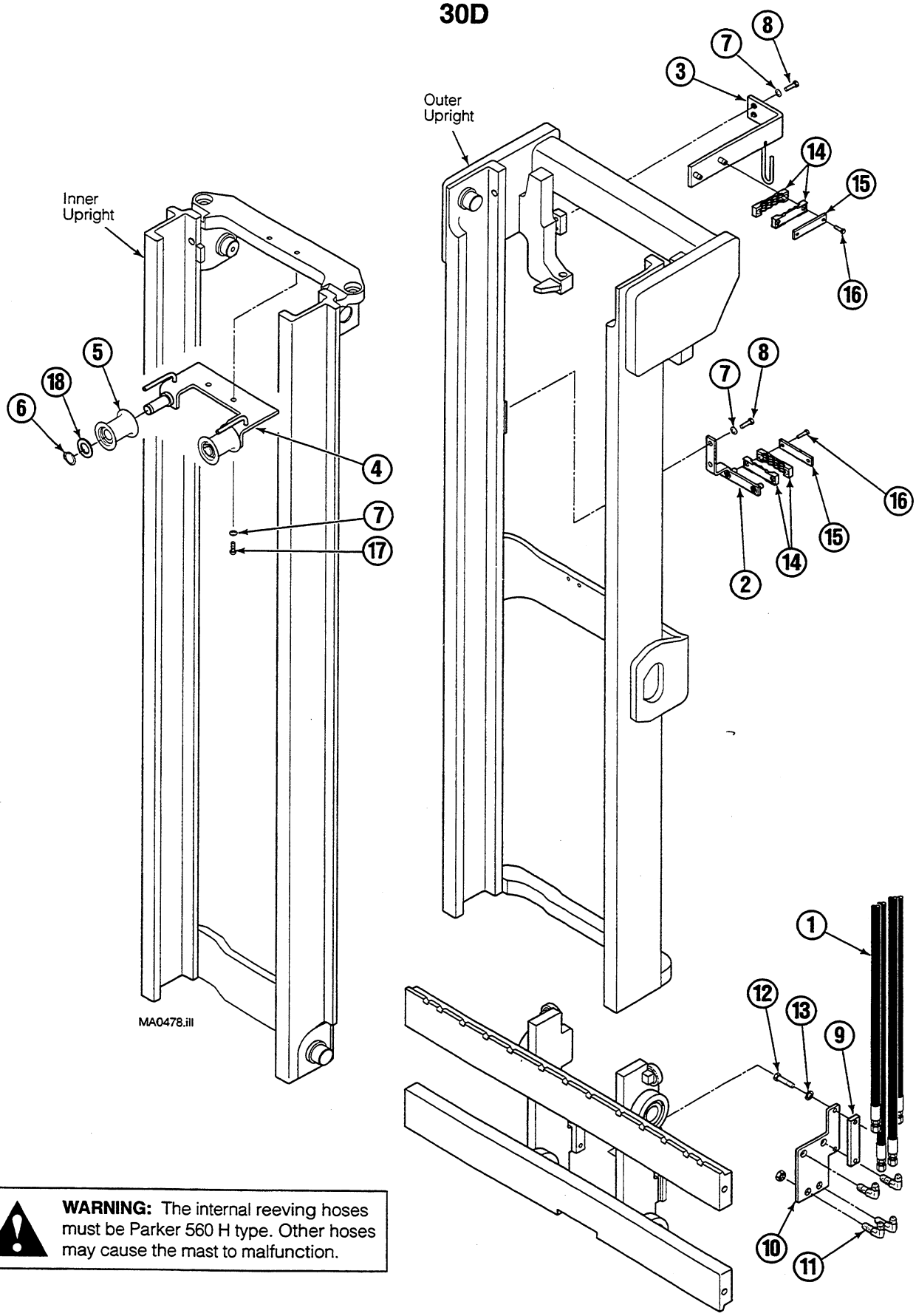

WARNING: The internal reeving hoses must be Parker 560 H type. Other hoses may cause the mast to malfunction.

https://truckmanualshub.com/

Internal Hose Reeving – Double Function
30D

Standard

Items that vary by mast height.

Retracted Channel Length (in.)■	Internal Reeving Group No.	Ref. No. 1 ▲ Hose Part No.
57	216960	216912
69	216965	216916
73	216968	213920
74	216969	216918
80	216975	213921
89	216982	213922
95	216985	216931
101	216986	216932

Cold Storage
(Required for 0°F and below)

Items that vary by mast height.

Retracted Channel Length (in.)■	Internal Reeving Group No.	Ref. No. 1 ▲ Hose Part No.
57	217144	217234
69	217149	217243
73	217152	217240
74	217153	217242
80	217159	217249
89	217166	217256
95	217169	217259
101	217170	217261

Common items.

REF	QTY	PART NO.	DESCRIPTION
1	2	▲	Hose
2	1	210654	Termination Bracket
3	1	216901	Upper Bracket
4	1	211049	Sheave Bracket
5	2	210662	Hose Sheave
6	2	688935	Snap Ring
7	6	681238	Lockwasher, M10
8	4	684649	Capscrew, M10x1,5x25-8.8
9	1	210739	Spacer
10	1	210738	Carriage Termination Bracket
11	2	2453	Fitting, 6-6
12	2	787372	Capscrew, M8x1,25x20-8.8
13	2	206315	Lockwasher, M8
14	4	206887	Insert
15	2	203407	Bar
16	4	763169	Capscrew, M6x1x20-8.8
17	2	200429	Capscrew, M10x20
18	2	205086	Washer

■ Does not include underclearance.

Reference: Common Parts Group 216896, S-4885, S-4887.

https://truckmanualshub.com/

Load Backrest

30D

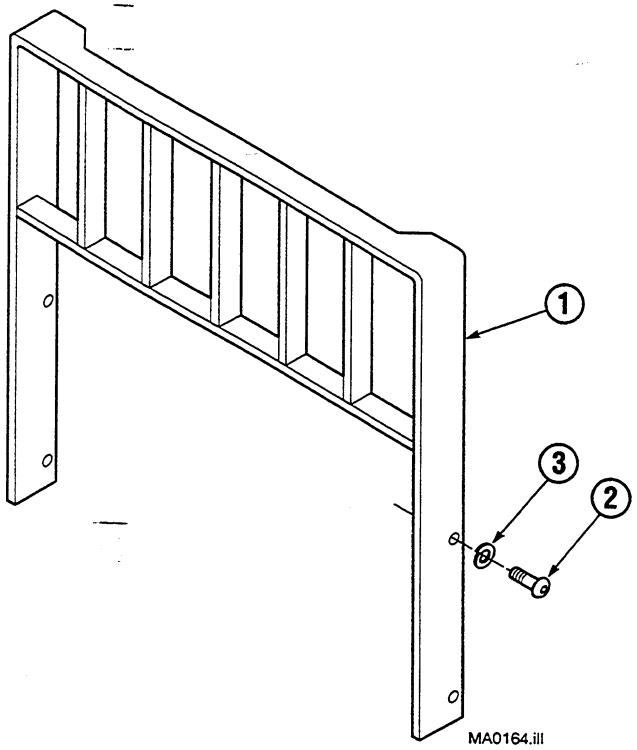

Class II Load Backrest			
REF	QTY	PART NO.	DESCRIPTION
1	1	209407	★ Backrest – 31x36 in. (789x876 mm)
	1	209233	★ Backrest – 31x48 in. (789x1181 mm)
	1	209408	★ Backrest – 31x60 in. (789x1486 mm)
	1	684772	★ Backrest – 37x36 in. (940x914 mm)
	1	684773	★ Backrest – 37x48 in. (940x1219 mm)
	1	684774	★ Backrest – 37x60 in. (940x1524 mm)
	1	684775	★ Backrest – 41x36 in. (1041x914 mm)
	1	684776	★ Backrest – 41x48 in. (1041x1219 mm)
	1	684777	★ Backrest – 41x60 in. (1041x1524 mm)
2	4	200173	Capscrew, M16x2.0x35-8.8
3	4	684586	Lockwasher, M16

★ Includes items 2 and 3. Width x height.

Reference: S-3370.

https://truckmanualshub.com/

Mast Installation Accessories

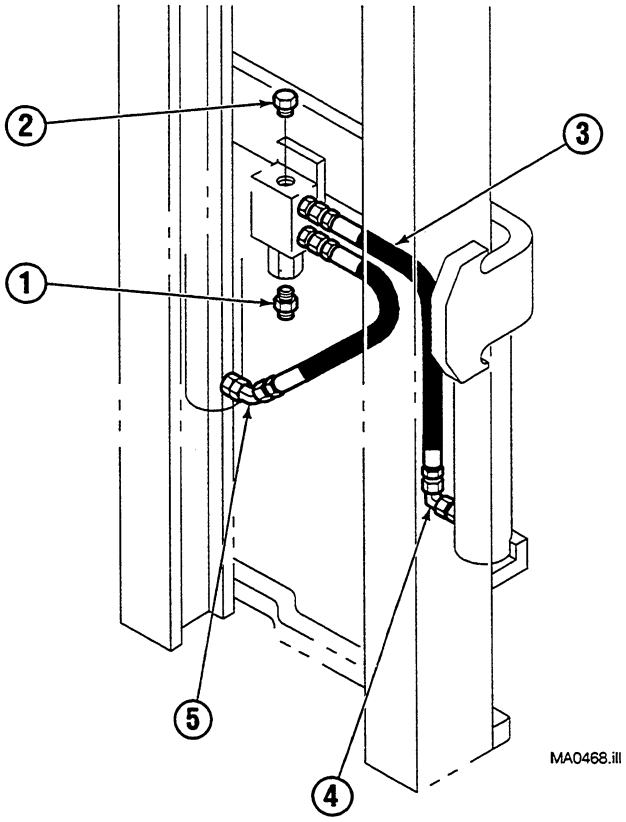

REF	QTY	PART NO.	DESCRIPTION
1	1	601377	Fitting, 8-8
2	1	601378	Fitting, 8
3	2	624216	Hose
4	1	2680	Fitting, 6-6
5	1	605230	Fitting, 6-6

Reference: Mounting Control Doc S-4577, S-4578.
Mounting Group 210956, 7, 8, 9, 60, 61.
Installation Kit 200352.
Hydraulic Group 200615.

https://truckmanualshub.com/

Mast Installation Accessories

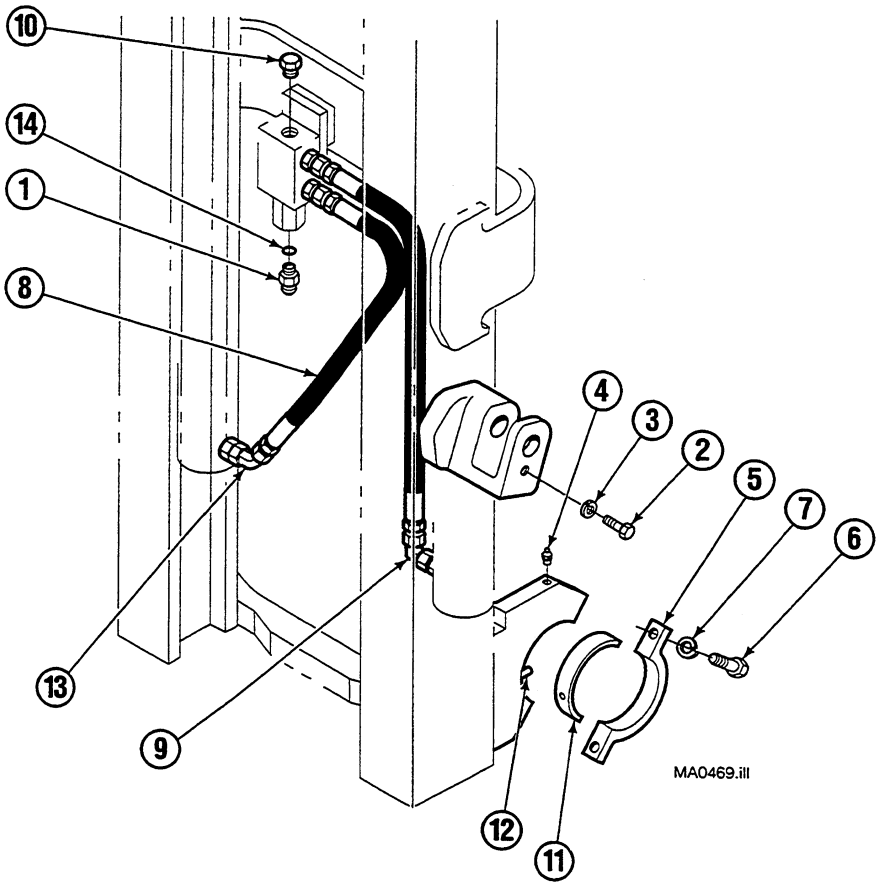

Komatsu Lift truck models.

FB 13 M-2
FB 18 M-2
FB 13 MU-1
FB 15 MU-1

REF	QTY	PART NO.	DESCRIPTION
1	1	684109	Fitting, M22
2	2	212632	Capscrew, M10
3	2	681238	Lockwasher, M10
4	2	7418	Grease Fitting
5	2	687324	Cap
6	4	212618	Capscrew, M14
7	4	688705	Lockwasher, M14
8	2	624216	Hose
9	1	2680	Fitting, 6-6
10	1	601378	Fitting, 8
11	2	687362	Bushing ▲
12	4	688709	Pin ▲
13	1	605230	Fitting, 6-6
14	1	2841	O-Ring

▲ Reference only. Source from lift truck manufacturer.

Reference: Mounting Control Doc S-4580.
Mounting Group 210891.
Installation Kit 787232.
Hydraulic Group 200615.

https://truckmanualshub.com/

Mast Installation Accessories

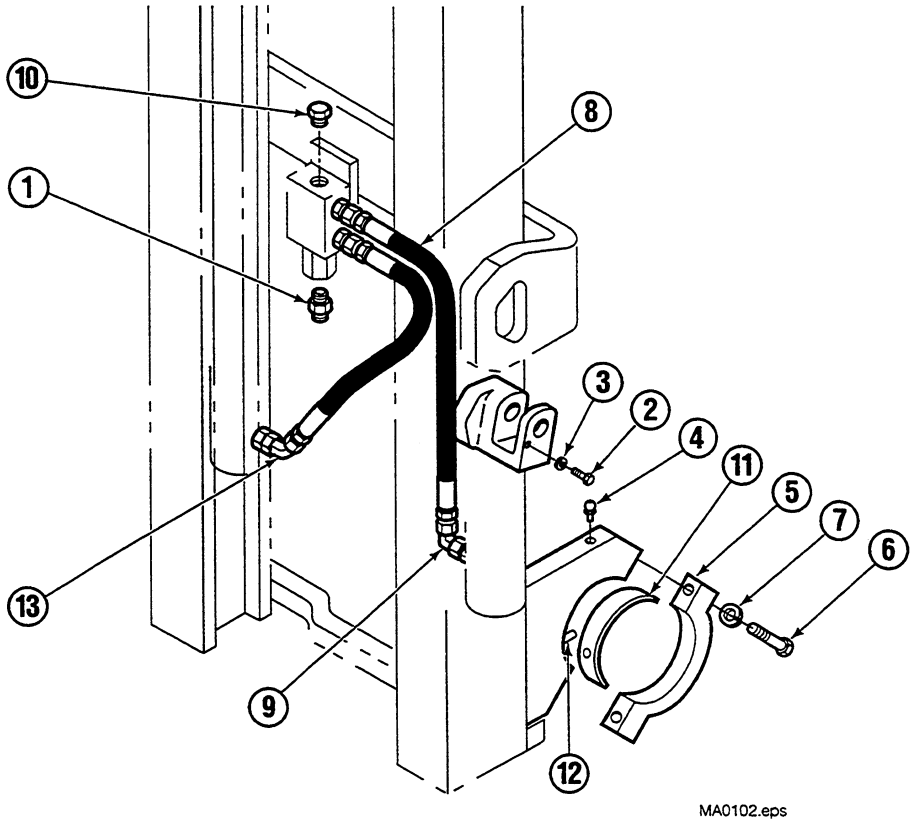

Komatsu Lift truck models.

FG 10-18 ST-15
FG 10-18 ST-16

REF	QTY	PART NO.	DESCRIPTION
1	1	601377	Fitting, 8-8
2	2	212632	Capscrew, M10
3	2	681238	Lockwasher, M10
4	2	7418	Grease Fitting
5	2	687324	Cap
6	4	212618	Capscrew, M14
7	4	688705	Lockwasher, M14
8	2	624216	Hose
9	1	2680	Fitting, 6-6
10	1	601378	Fitting, 8
11	2	687362	Bushing ▲
12	4	688709	Pin ▲
13	1	605230	Fitting, 6-6

▲ Reference only. Source from lift truck manufacturer.

Reference: Mounting Control Doc S-4577.
Mounting Group 210862.
Installation Kit 200235.
Hydraulic Group 200615.

https://truckmanualshub.com/

Mast Installation Accessories

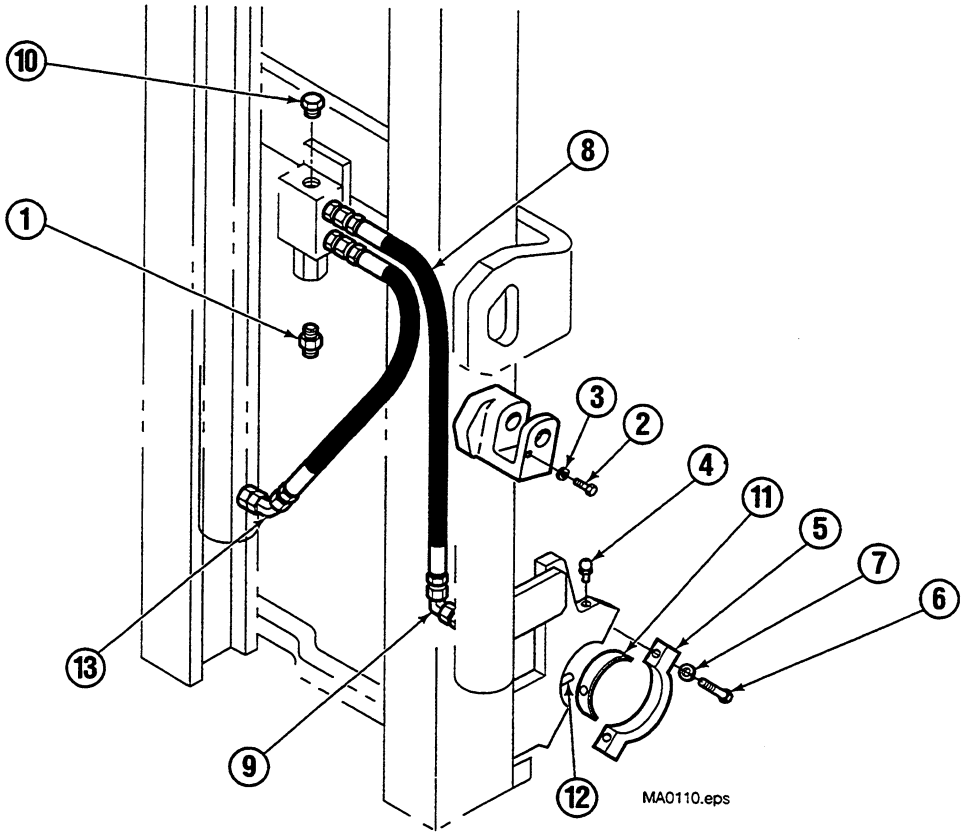

Komatsu Lift truck models.

FD15T-15,16	FD18T-15,16	FG15T-15,16	FG18T-15,16
FD15C-15,16	FD18C-15,16	FG15C-15,16	FG18C-15,16
FD15HT-15,16	FD18HT-15,16	FG15HT-15,16	FG18HT-15,16
FD15HC-15,16	FD18HC-15,16	FG15HC-15,16	FG18HC-15,16

REF	QTY	PART NO.	DESCRIPTION
1	1	601377	Fitting, 8-8
2	2	684594	Capscrew, M10x1.5x20-8.8
3	2	681238	Lockwasher, M10
4	2	7418	Grease Fitting
5	2	687324	Cap
6	4	688708	Capscrew, M14x2,0x50
7	4	688705	Lockwasher, M14
8	2	624216	Hose
9	1	2680	Fitting, 6-6
10	1	601378	Fitting, 8
11	2	687362	Bushing ▲
12	4	688709	Pin ▲
13	1	605230	Fitting, 6-6

▲ Reference only. Source from lift truck manufacturer.

Reference: Mounting Control Doc S-4578.
Mounting Group 210892.
Installation Kit 200235.
Hydraulic Group 200615.

https://truckmanualshub.com/

Recommended Spare Parts List

30D Limited Free Lift 2-Stage Mast				
PART NO.	DESCRIPTION	MASTS SERVICED		
		1-5	6-19	20-50
	MAIN LIFT CYLINDER			
■	Main Lift Cylinder Assembly	0	0	1
212072	Service Kit	2	4	8
212042	Check Valve (2600 PSI System Pressure)	2	4	8
2702	O-Ring (2600 PSI System Pressure)	2	4	8
201770	Snap Ring	2	4	8
213703	Washer, (.25 mm)	3	6	9
214034	Lowering Fuse Spring	2	4	8
	INTERNAL REEVING			
■	Hose RH and LH	2	4	8
2453	Fitting, 6-6	1	2	4
■	Hose Sheave	1	2	4
	UPRIGHTS			
■	Chain Pin	8	8	16
6508	Cotter Pin	8	16	32
■	Chain Anchor	1	2	4
200007	Jam Nut	2	1	2
200006	Nut	2	1	2
6518	Cotter Pin	4	8	16
631881	Shim, .03 in. (0,7 mm)	16	32	64
664206	Roller	12	24	48
212587	Thrust Plug Service Kit	2	4	8
	CARRIAGE AND CHAINS			
683819	Carriage Side Thrust Roller	4	8	16
■	Main Lift Chains	2	4	8
664206	Carriage Roller	4	8	16
■	Chain Anchor	1	2	4
680460	Chain Pin	8	8	16
	LUBRICANT			
599474	13 oz Aerosol Can	1	3	5
	PAINT			
684271	12 oz Aerosol Can (black)	1	1	1

■ See specific parts page for part number.

https://truckmanualshub.com/

This Page Left Intentionally Blank

KOMATSU

https://truckmanualshub.com/

Parts Manual

35D and 40D High-Visibility WORLD MAST®

Full Free Lift 2-Stage Mast

Product I.D. Numbers

35D-MD-001 → 35D-MD-372

40D-MD-001 → 40D-MD-098

Manual Number 200872 R-1

cascade®

Cascade is a Registered Trademark of Cascade Corporation

https://truckmanualshub.com/

About This Manual

Introduction

This manual shows the parts breakdown for specific 35D and 40D 2-Stage Full Free Lift WORLD MAST® product I.D. numbers. Locate the product I.D. number stamped on the upper left hand side of the outer upright channel. This number must be used when ordering replacement parts for this product.

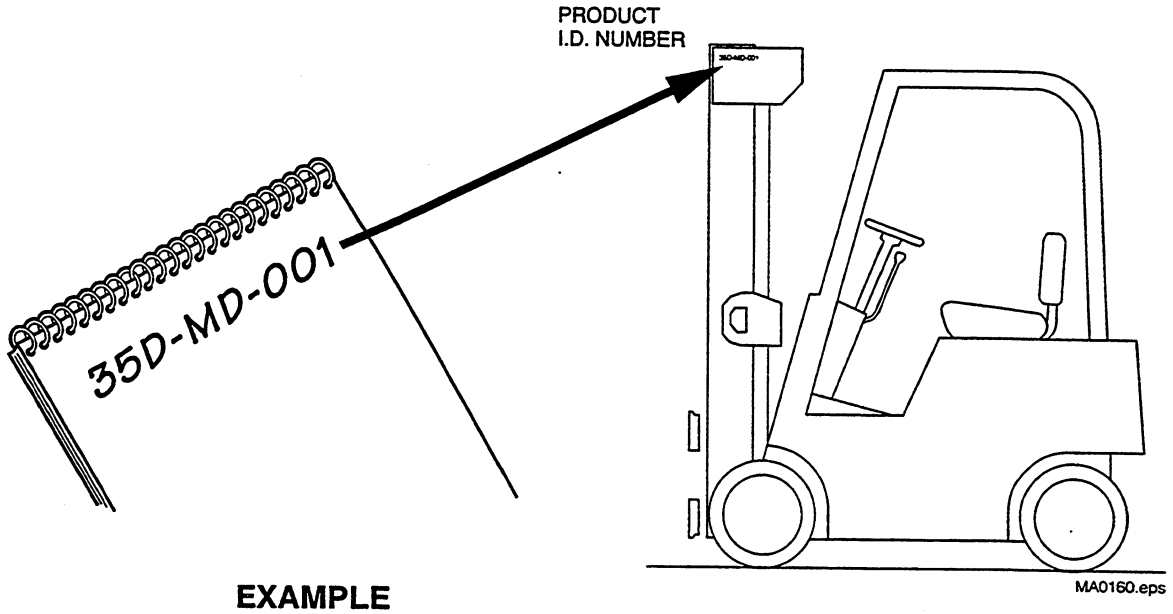

EXAMPLE

Ordering Parts

Customers – Cascade parts and service literature is available through authorized lift truck dealers. To place an order, contact the lift truck dealer of your choice.

Lift Truck Dealers – To order parts and service literature contact:

Cascade Parts Sales
2201 NE 201st
Troutdale, OR 97060
Telephone: 1-800-CAS-CADE
503-669-6300
FAX: 503-669-6338

Index

Safety Decals and Publications 1
Cylinders 2
Uprights 9
Carriages 14
Hoist Chains 16
Hydraulic Group 18
Lowering Control Valve 19
Backrest 20
Internal Hose Reeving 21
Mast Installation Accessories 24
Recommended Spare Parts List 51

https://truckmanualshub.com/

Safety Decals

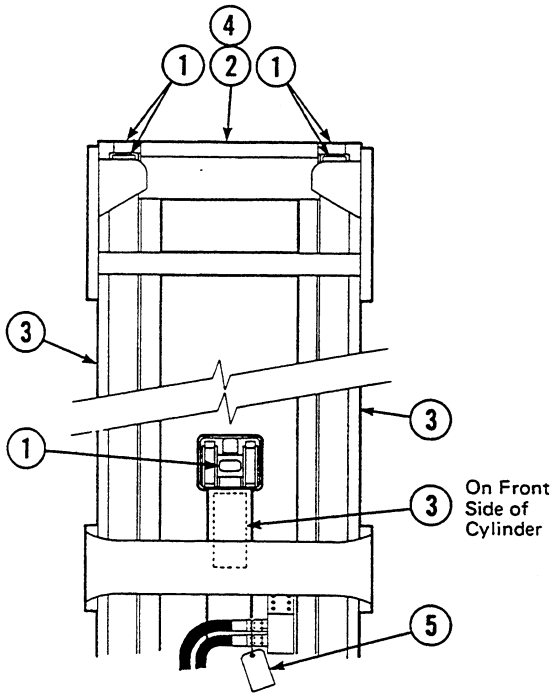

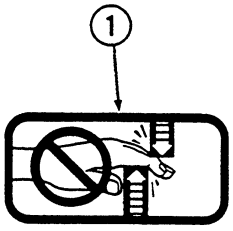



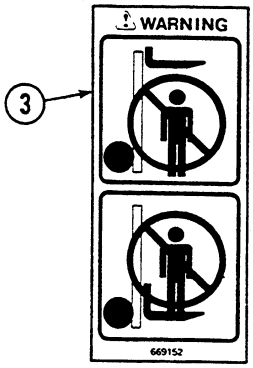

REF	QTY	PART NO.	DESCRIPTION
1	6	665595	No Hand Hold
2	3	679150	No Step
3	3	669152	WARNING
4	1	201195	No Step
5	1	200798	WARNING-Trapped Air

Publications

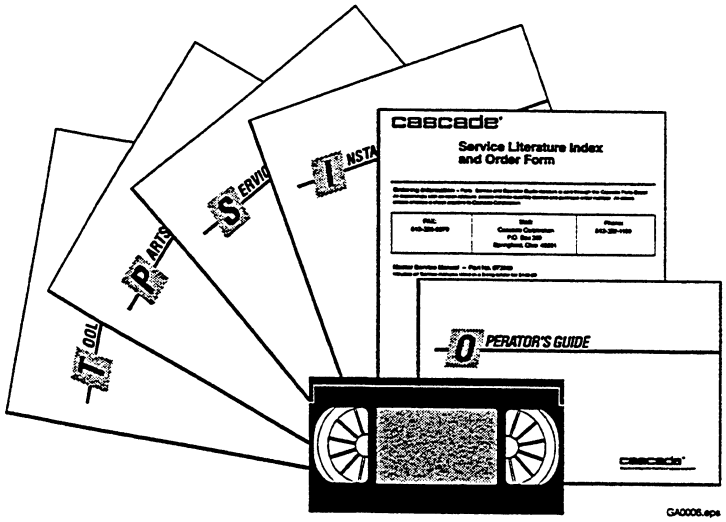

REF	PART NO.	DESCRIPTION
1	200872	Parts Manual
2	689225	Service Manual
3	679929	Tool Catalog
4	673964	Literature Index Order Form
5	201523	Parts Microfiche

https://truckmanualshub.com/

Main Lift Cylinder-2000 PSI

35D/40D

WARNING: Replacing the cylinder with a different part no. cylinder may cause the mast to malfunction.

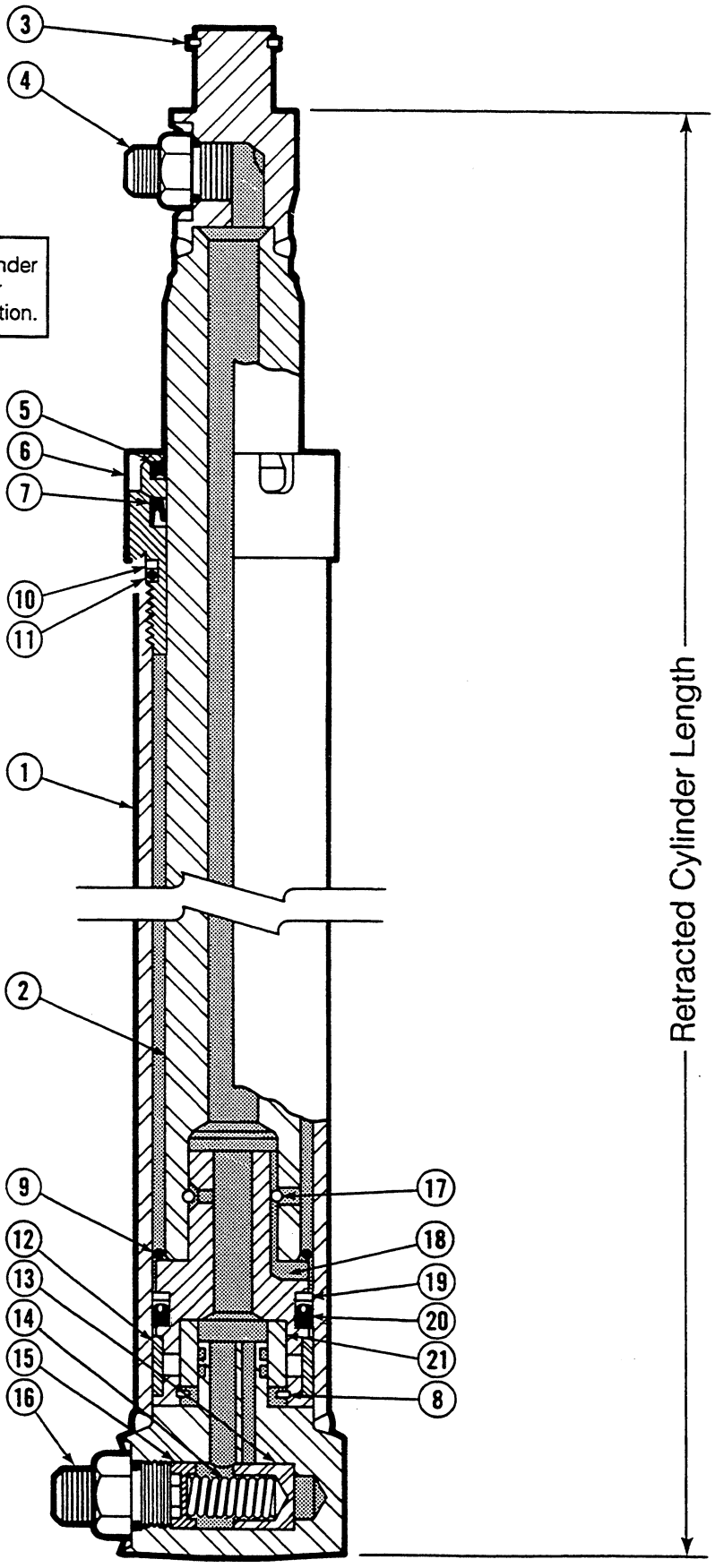

https://truckmanualshub.com/

Main Lift Cylinder-2000 PSI
35D/40D

Items that vary by mast height.

RETRACTED CHANNEL LENGTH (in.)	RETRACTED CYLINDER LENGTH (in.)	CYLINDER ASSEMBLY QTY 1	REF. NO. 1 SHELL QTY 1	REF. NO. 2 PLUNGER QTY 1
56	46.7	582211	5466-1066	5452-1095
57	47.7	582212	5466-1091	5452-1120
58	48.7	582213	5466-1117	5452-1146
59	49.7	582214	5466-1142	5452-1171
60	50.7	582215	5466-1167	5452-1196
61	51.7	582216	5466-1193	5452-1222
62	52.7	582217	5466-1218	5452-1247
63	53.7	582218	5466-1244	5452-1273
64	54.7	582219	5466-1269	5452-1298
65	55.7	582220	5466-1294	5452-1323
66	56.7	582221	5466-1320	5452-1349
67	57.7	582222	5466-1345	5452-1374
68	58.7	582223	5466-1371	5452-1400
69	59.7	582224	5466-1396	5452-1425
70	60.7	582225	5466-1421	5452-1450
71	61.7	582226	5466-1447	5452-1476
72	62.7	582227	5466-1472	5452-1501
73	63.7	582228	5466-1498	5452-1527
74	64.7	582229	5466-1523	5452-1552
75	65.7	582230	5466-1548	5452-1577
76	66.7	582231	5466-1574	5452-1603
77	67.7	582232	5466-1599	5452-1628
78	68.7	582233	5466-1625	5452-1654
79	69.7	582234	5466-1650	5452-1679
80	70.7	582235	5466-1675	5452-1704
81	71.7	582236	5466-1701	5452-1730
82	72.7	582237	5466-1726	5452-1755
83	73.7	582238	5466-1752	5452-1781
84	74.7	582239	5466-1777	5452-1806
85	75.7	582240	5466-1802	5452-1831
86	76.7	582241	5466-1828	5452-1857
87	77.7	582242	5466-1853	5452-1882
88	78.7	582243	5466-1879	5452-1908
89	79.7	582244	5466-1904	5452-1933
90	80.7	582245	5466-1929	5452-1958
91	81.7	582246	5466-1955	5452-1984
92	82.7	582247	5466-1980	5452-2009
93	83.7	582248	5466-2006	5452-2035
94	84.7	582249	5466-2031	5452-2060
95	85.7	582250	5466-2056	5452-2085
96	86.7	582251	5466-2082	5452-2111
97	87.7	582252	5466-2107	5452-2136
98	88.7	582253	5466-2133	5452-2162
99	89.7	582254	5466-2158	5452-2187
100	90.7	582255	5466-2183	5452-2212
101	91.7	582256	5466-2209	5452-2238

Common items.

REF	QTY	PART NO.	DESCRIPTION	REF	QTY	PART NO.	DESCRIPTION
3	1	3129	■ Snap Ring	13	1	564105	Piston, Lowering Fuse
4	1	601377	■ Fitting, 8-8	14	1	564106	Spring
5	1	561116	★ Plunger Wiper	15	1	562848	Spring Guide
6	1	562636	Retainer	16	1	626505	■ Fitting, 6-10
7	1	561265	★ Plunger Seal	17	1	559962	Pull-In Wire
8	1	7118	Retaining Ring	18	1	562562	Piston
9	1	563350	★ O-Ring	19	1	559870	★ Back-Up Ring
10	1	559866	★ Back-Up Ring	20	1	562953	★ Piston Seal
11	1	559865	★ O-Ring	21	1	562962	Cushion
12	1	560904	★ Wear Ring				

★ Included in Service Kit 561315. ■ Not included in Cylinder Assembly. Reference: S-6017, 6018

https://truckmanualshub.com/

Main Lift Cylinder-2600 PSI

35D/40D

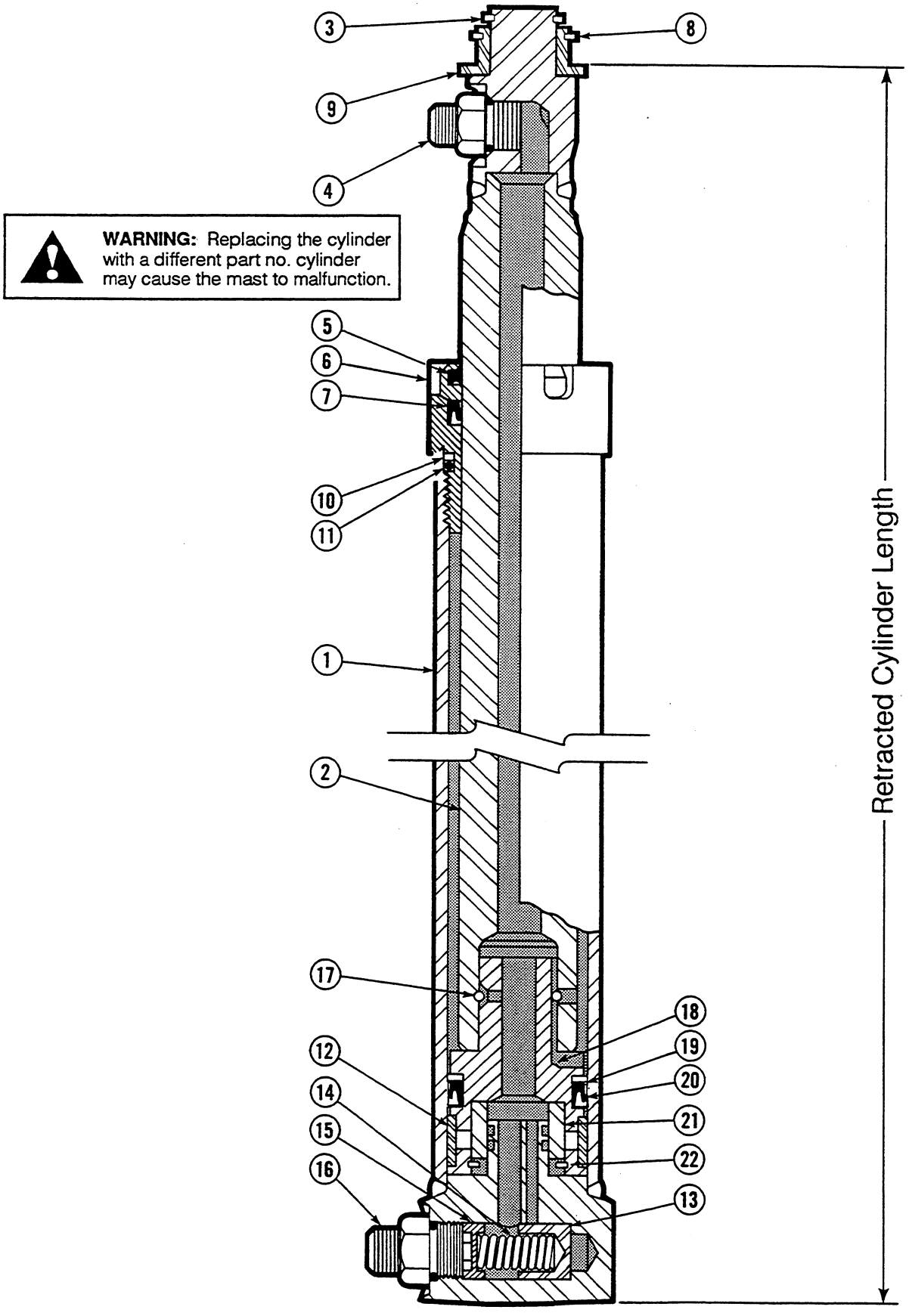

https://truckmanualshub.com/

Main Lift Cylinder-2600 PSI

35D/40D

Items that vary by mast height.

RETRACTED CHANNEL LENGTH (in.)	RETRACTED CYLINDER LENGTH (in.)	CYLINDER ASSEMBLY QTY 1	REF. NO. 1 SHELL QTY 1	REF. NO. 2 PLUNGER QTY 1
56	46.7	582354	5563-1066	5476-1090
57	47.7	582355	5563-1091	5476-1115
58	48.7	582356	5563-1117	5476-1141
59	49.7	582357	5563-1142	5476-1166
60	50.7	582358	5563-1167	5476-1191
61	51.7	582359	5563-1193	5476-1217
62	52.7	582360	5563-1218	5476-1242
63	53.7	582361	5563-1244	5476-1268
64	54.7	582362	5563-1269	5476-1293
65	55.7	582363	5563-1294	5476-1318
66	56.7	582364	5563-1320	5476-1344
67	57.7	582365	5563-1345	5476-1369
68	58.7	582366	5563-1371	5476-1395
69	59.7	582367	5563-1396	5476-1420
70	60.7	582368	5563-1421	5476-1445
71	61.7	582369	5563-1447	5476-1471
72	62.7	582370	5563-1472	5476-1496
73	63.7	582371	5563-1498	5476-1522
74	64.7	582372	5563-1523	5476-1547
75	65.7	582373	5563-1548	5476-1572
76	66.7	582374	5563-1574	5476-1598
77	67.7	582375	5563-1599	5476-1623
78	68.7	582376	5563-1625	5476-1649
79	69.7	582377	5563-1650	5476-1674
80	70.7	582378	5563-1675	5476-1699
81	71.7	582379	5563-1701	5476-1725
82	72.7	582380	5563-1726	5476-1750
83	73.7	582381	5563-1752	5476-1776
84	74.7	582382	5563-1777	5476-1801
85	75.7	582383	5563-1802	5476-1826
86	76.7	582384	5563-1828	5476-1852
87	77.7	582385	5563-1853	5476-1877
88	78.7	582386	5563-1879	5476-1903
89	79.7	582387	5563-1904	5476-1928
90	80.7	582388	5563-1929	5476-1953
91	81.7	582389	5563-1955	5476-1979
92	82.7	582390	5563-1980	5476-2004
93	83.7	582391	5563-2006	5476-2030
94	84.7	582392	5563-2031	5476-2055
95	85.7	582393	5563-2056	5476-2080
96	86.7	582394	5563-2082	5476-2106
97	87.7	582395	5563-2107	5476-2131
98	88.7	582396	5563-2133	5476-2157
99	89.7	582397	5563-2158	5476-2182
100	90.7	582398	5563-2183	5476-2207
101	91.7	582399	5563-2209	5476-2233

Common items.

REF	QTY	PART NO.	DESCRIPTION	REF	QTY	PART NO.	DESCRIPTION
3	1	3121	Snap Ring	13	1	564153	Piston, Lowering Fuse
4	1	601377	■ Fitting, 8-8	14	1	564106	Spring
5	1	561221	★ Plunger Wiper	15	1	562848	Spring Guide
6	1	562637	Retainer	16	1	626505	■ Fitting, 6-10
7	1	561301	★ Plunger Seal	17	1	561215	Pull-In Wire
8	1	3129	■ Snap Ring	18	1	561218	Piston
9	1	561228	Adapter	19	1	559870	★ Back-Up Ring
10	1	559866	★ Back-Up Ring	20	1	559869	★ Piston Seal
11	1	559865	★ O-Ring	21	1	563964	Cushion
12	1	560904	★ Wear Ring	22	1	3023	Snap Ring

★ Included in Service Kit 561936. ■ Not included in Cylinder Assembly. Reference: S-6023, 6024.

https://truckmanualshub.com/

Free Lift Cylinder-2000 PSI

35D/40D

WARNING: Replacing the cylinder with a different part no. cylinder may cause the mast to malfunction.

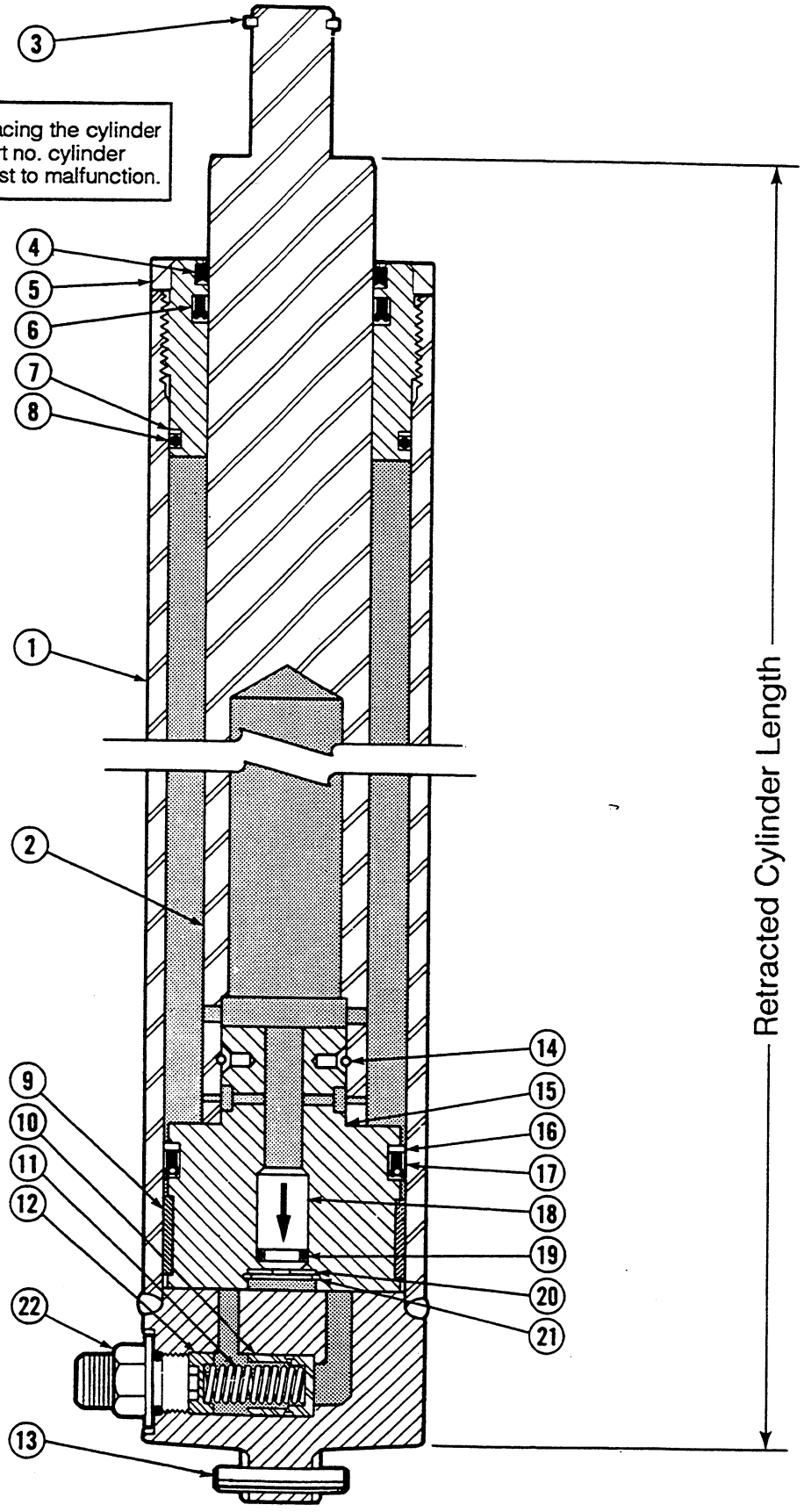

https://truckmanualshub.com/

Free Lift Cylinder-2000 PSI

35D/40D

Part numbers on this page are used with the following mast product I.D. numbers only:

35D-MD-001 thru 009
40D-MD-001 thru 005

Items that vary by mast height.

RETRACTED CHANNEL LENGTH (in.)	RETRACTED CYLINDER LENGTH (in.)	CYLINDER ASSEMBLY QTY 1	REF. NO. 1 SHELL QTY 1	REF. NO. 2 PLUNGER QTY 1
56	28.1	581900	5434-673	5445-674
57	28.6	580596	5434-685	5445-686
58	29.1	580598	5434-698	5445-699
59	29.6	580600	5434-711	5445-712
60	30.1	580602	5434-724	5445-725
61	30.6	580604	5434-736	5445-737
62	31.1	580606	5434-749	5445-750
63	31.6	580608	5434-762	5445-763
64	32.1	580610	5434-774	5445-775
65	32.6	580612	5434-787	5445-788
66	33.1	580614	5434-800	5445-801
67	33.6	580616	5434-812	5445-813
68	34.1	580618	5434-825	5445-826
69	34.6	580620	5434-838	5445-839
70	35.1	580622	5434-851	5445-852
71	35.6	580624	5434-863	5445-864
72	36.1	580626	5434-876	5445-877
73	36.6	580628	5434-889	5445-890
74	37.1	580630	5434-901	5445-902
75	37.6	580632	5434-914	5445-915
76	38.1	580634	5434-927	5445-928
77	38.6	580636	5434-939	5445-940
78	39.1	580638	5434-952	5445-953
79	39.6	580640	5434-965	5445-966
80	40.1	580642	5434-978	5445-979
81	40.6	580644	5434-990	5445-991
82	41.1	580646	5434-1003	5445-1004
83	41.6	580648	5434-1016	5445-1017
84	42.1	580650	5434-1028	5445-1029
85	42.6	580652	5434-1041	5445-1042
86	43.1	580654	5434-1054	5445-1055
87	43.6	580656	5434-1066	5445-1067
88	44.1	580658	5434-1079	5445-1080
89	44.6	580660	5434-1092	5445-1093
90	45.1	580662	5434-1105	5445-1106
91	45.6	580664	5434-1117	5445-1118
92	46.1	580666	5434-1130	5445-1131
93	46.6	580668	5434-1143	5445-1144
94	47.1	580670	5434-1155	5445-1156
95	47.6	580672	5434-1168	5445-1169
96	48.1	580674	5434-1181	5445-1182
97	48.6	580676	5434-1193	5445-1194
98	49.1	580678	5434-1206	5445-1207
99	49.6	580680	5434-1219	5445-1220
100	50.1	580682	5434-1232	5445-1233
101	50.6	580684	5434-1244	5445-1245

Common items.

REF	QTY	PART NO.	DESCRIPTION	REF	QTY	PART NO.	DESCRIPTION
3	1	3129	■ Snap Ring	13	1	769018	Roll Pin
4	1	599863	★ Plunger Wiper	14	1	559906	Pull-In Wire
5	1	559982	Retainer	15	1	559986	Piston
6	1	560022	★ Plunger Seal	16	1	559857	★ Back-Up Ring
7	1	559964	★ Back-Up Ring	17	1	559853	★ Piston Seal
8	1	559861	★ O-Ring	18	1	560717	Check Valve
9	1	559855	★ Wear Ring	19	1	557226	★ O-Ring
10	1	560470	Piston, Lowering Fuse	20	1	637635	Washer
11	1	560824	Spring	21	1	3015	Retaining Ring
12	1	560465	Spring Guide	22	1	611289	■ Fitting, 8-10

★ Included in Service Kit 560349. ■ Not included in Cylinder Assembly. Reference: S-6007, 6008.

https://truckmanualshub.com/

Free Lift Cylinder-2000 PSI

35D/40D

WARNING: Replacing the cylinder with a different part no. cylinder may cause the mast to malfunction.

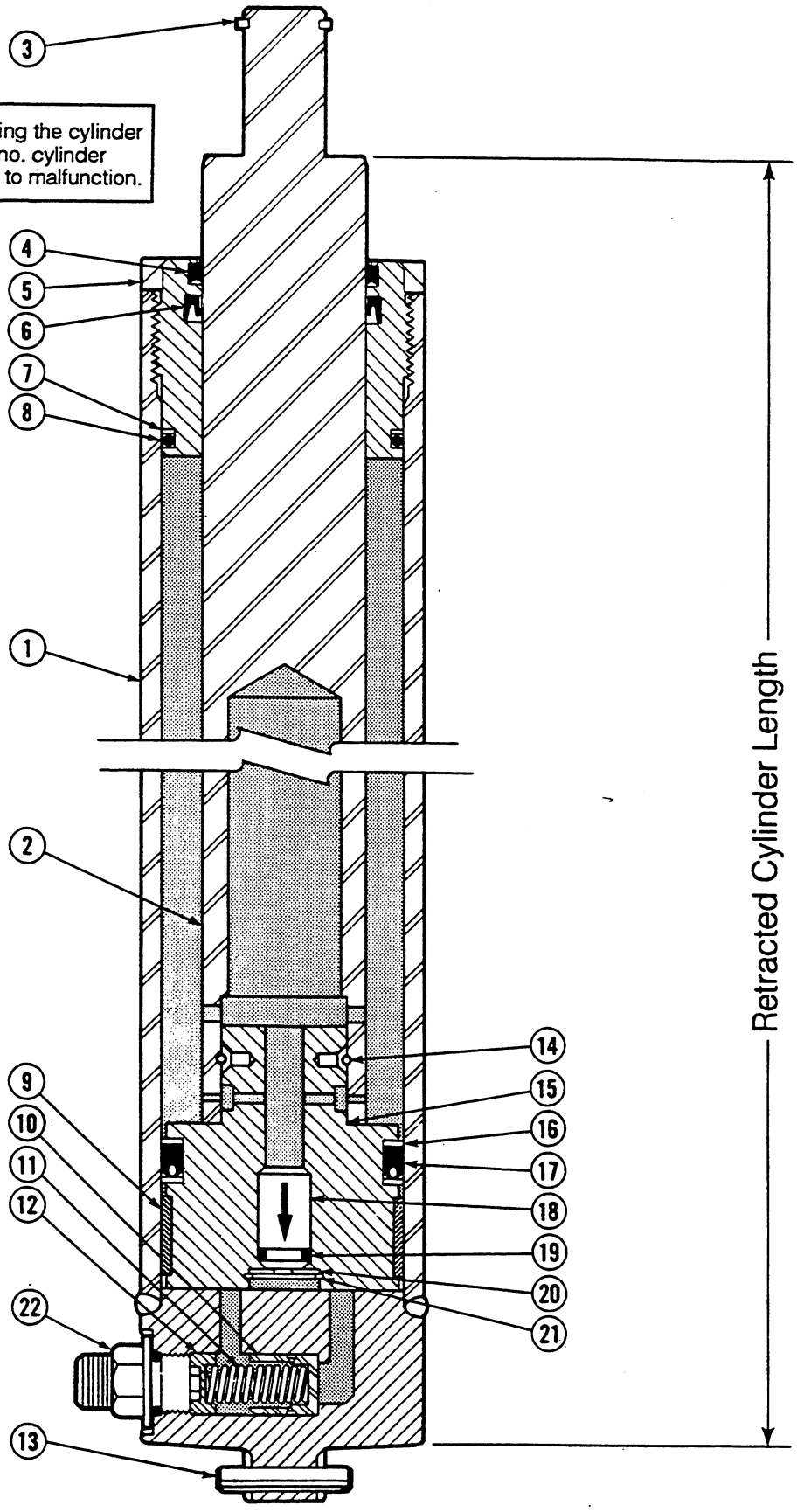

https://truckmanualshub.com/

Free Lift Cylinder-2000 PSI

35D/40D

Part numbers on this page are used with the following mast product I.D. numbers only:

35D-MD-010 thru 372
40D-MD-006 thru 098

Items that vary by mast height.

RETRACTED CHANNEL LENGTH (in.)	RETRACTED CYLINDER LENGTH (in.)	CYLINDER ASSEMBLY QTY 1	REF. NO. 1 SHELL QTY 1	REF. NO. 2 PLUNGER QTY 1
56	28.1	582643	5434-673	5509-674
57	28.6	582646	5434-685	5509-686
58	29.1	582648	5434-698	5509-699
59	29.6	582650	5434-711	5509-712
60	30.1	582652	5434-724	5509-725
61	30.6	582654	5434-736	5509-737
62	31.1	582656	5434-749	5509-750
63	31.6	582658	5434-762	5509-763
64	32.1	582660	5434-774	5509-775
65	32.6	582662	5434-787	5509-788
66	33.1	582664	5434-800	5509-801
67	33.6	582666	5434-812	5509-813
68	34.1	582668	5434-825	5509-826
69	34.6	582670	5434-838	5509-839
70	35.1	582672	5434-851	5509-852
71	35.6	582674	5434-863	5509-864
72	36.1	582676	5434-876	5509-877
73	36.6	582678	5434-889	5509-890
74	37.1	582680	5434-901	5509-902
75	37.6	582682	5434-914	5509-915
76	38.1	582684	5434-927	5509-928
77	38.6	582686	5434-939	5509-940
78	39.1	582688	5434-952	5509-953
79	39.6	582690	5434-965	5509-966
80	40.1	582692	5434-978	5509-979
81	40.6	582694	5434-990	5509-991
82	41.1	582696	5434-1003	5509-1004
83	41.6	582698	5434-1016	5509-1017
84	42.1	582700	5434-1028	5509-1029
85	42.6	582702	5434-1041	5509-1042
86	43.1	582704	5434-1054	5509-1055
87	43.6	582706	5434-1066	5509-1067
88	44.1	582708	5434-1079	5509-1080
89	44.6	582710	5434-1092	5509-1093
90	45.1	582712	5434-1105	5509-1106
91	45.6	582714	5434-1117	5509-1118
92	46.1	582716	5434-1130	5509-1131
93	46.6	582718	5434-1143	5509-1144
94	47.1	582720	5434-1155	5509-1156
95	47.6	582722	5434-1168	5509-1169
96	48.1	582724	5434-1181	5509-1182
97	48.6	582726	5434-1193	5509-1194
98	49.1	582728	5434-1206	5509-1207
99	49.6	582730	5434-1219	5509-1220
100	50.1	582732	5434-1232	5509-1233
101	50.6	582733	5434-1244	5509-1245

Common items.

REF	QTY	PART NO.	DESCRIPTION	REF	QTY	PART NO.	DESCRIPTION
3	1	3129	■ Snap Ring	13	1	769018	Roll Pin
4	1	599863	★ Plunger Wiper	14	1	559906	Pull-In Wire
5	1	559982	Retainer	15	1	562778	Piston
6	1	560022	★ Plunger Seal	16	2	559857	★ Back-Up Ring
7	1	559964	★ Back-Up Ring	17	1	559853	★ Piston Seal
8	1	559861	★ O-Ring	18	1	560717	Check Valve
9	1	559855	★ Wear Ring	19	1	689937	★ O-Ring
10	1	560470	Piston, Lowering Fuse	20	1	563785	Washer
11	1	564108	Spring	21	1	3015	Retaining Ring
12	1	564107	Spring Guide	22	1	611289	■ Fitting, 8-10

★ Included in Service Kit 560349. ■ Not included in Cylinder Assembly. Reference: S-6069, 6070.

https://truckmanualshub.com/

Free Lift Cylinder-2600 PSI

35D/40D

WARNING: Replacing the cylinder with a different part no. cylinder may cause the mast to malfunction.

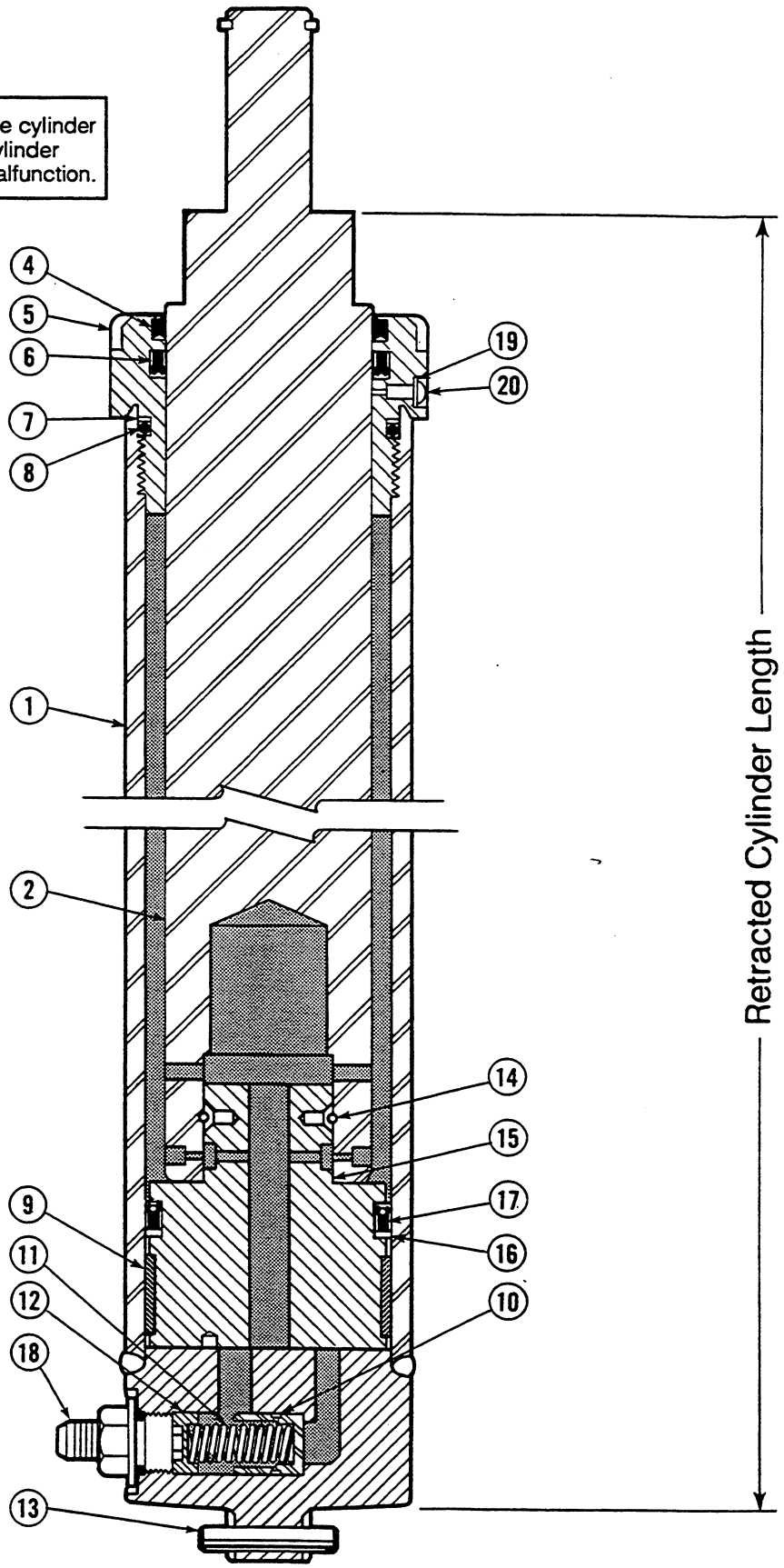

https://truckmanualshub.com/

Free Lift Cylinder-2600 PSI

35D/40D

Part numbers on this page are used with the following mast serial numbers only: 35D-MD-001 thru 009
40D-MD-001 thru 005

Items that vary by mast height.

RETRACTED CHANNEL LENGTH (in.)	RETRACTED CYLINDER LENGTH (in.)	CYLINDER ASSEMBLY QTY 1	REF. NO. 1 SHELL QTY 1	REF. NO. 2 PLUNGER QTY 1
56	28.1	581916	5473-640	5494-691
57	28.6	581917	5473-652	5494-703
58	29.1	581918	5473-665	5494-716
59	29.6	581919	5473-678	5494-729
60	30.1	581920	5473-691	5494-742
61	30.6	581921	5473-703	5494-754
62	31.1	581922	5473-716	5494-767
63	31.6	581923	5473-729	5494-780
64	32.1	581924	5473-741	5494-792
65	32.6	581925	5473-754	5494-805
66	33.1	581926	5473-767	5494-818
67	33.6	581927	5473-779	5494-830
68	34.1	581928	5473-792	5494-843
69	34.6	581929	5473-805	5494-856
70	35.1	581930	5473-818	5494-869
71	35.6	581931	5473-830	5494-881
72	36.1	581932	5473-843	5494-894
73	36.6	581933	5473-856	5494-907
74	37.1	581934	5473-868	5494-919
75	37.6	581935	5473-881	5494-932
76	38.1	581936	5473-894	5494-945
77	38.6	581937	5473-906	5494-957
78	39.1	581938	5473-919	5494-970
79	39.6	581939	5473-932	5494-983
80	40.1	581940	5473-945	5494-996
81	40.6	581941	5473-957	5494-1008
82	41.1	581942	5473-970	5494-1021
83	41.6	581943	5473-983	5494-1034
84	42.1	581944	5473-995	5494-1046
85	42.6	581945	5473-1008	5494-1059
86	43.1	581946	5473-1021	5494-1072
87	43.6	581947	5473-1033	5494-1084
88	44.1	581948	5473-1046	5494-1097
89	44.6	581949	5473-1059	5494-1110
90	45.1	581950	5473-1072	5494-1123
91	45.6	581951	5473-1084	5494-1135
92	46.1	581952	5473-1097	5494-1148
93	46.6	581953	5473-1110	5494-1161
94	47.1	581954	5473-1122	5494-1173
95	47.6	581955	5473-1135	5494-1186
96	48.1	581956	5473-1148	5494-1199
97	48.6	581957	5473-1160	5494-1211
98	49.1	581958	5473-1173	5494-1224
99	49.6	581959	5473-1186	5494-1237
100	50.1	581960	5473-1199	5494-1250
101	50.6	581961	5473-1211	5494-1262

Common items.

REF	QTY	PART NO.	DESCRIPTION	REF	QTY	PART NO.	DESCRIPTION
3	1	3129	■ Snap Ring	12	1	560465	Spring Guide
4	1	561211	★ Plunger Wiper	13	1	769018	Roll Pin
5	1	561212	Retainer	14	1	561219	Pull-In Wire
6	1	561208	★ Plunger Seal	15	1	561534	Piston
7	1	561209	★ Back-Up Ring	16	1	559857	★ Back-Up Ring
8	1	561210	★ O-Ring	17	1	559853	★ Piston Seal
9	1	561969	★ Wear Ring	18	1	611289	■ Fitting, 8-10
10	1	560470	Piston, Lowering Fuse	19	1	622729	★ Seal
11	1	560824	Spring	20	1	4850	Capscrew, .164x1/4NC-GR8

★ Included in Service Kit 561226. ■ Not included in Cylinder Assembly. Reference: S-6021, 6022.

https://truckmanualshub.com/

Free Lift Cylinder-2600 PSI

35D/40D

WARNING: Replacing the cylinder with a different part no. cylinder may cause the mast to malfunction.

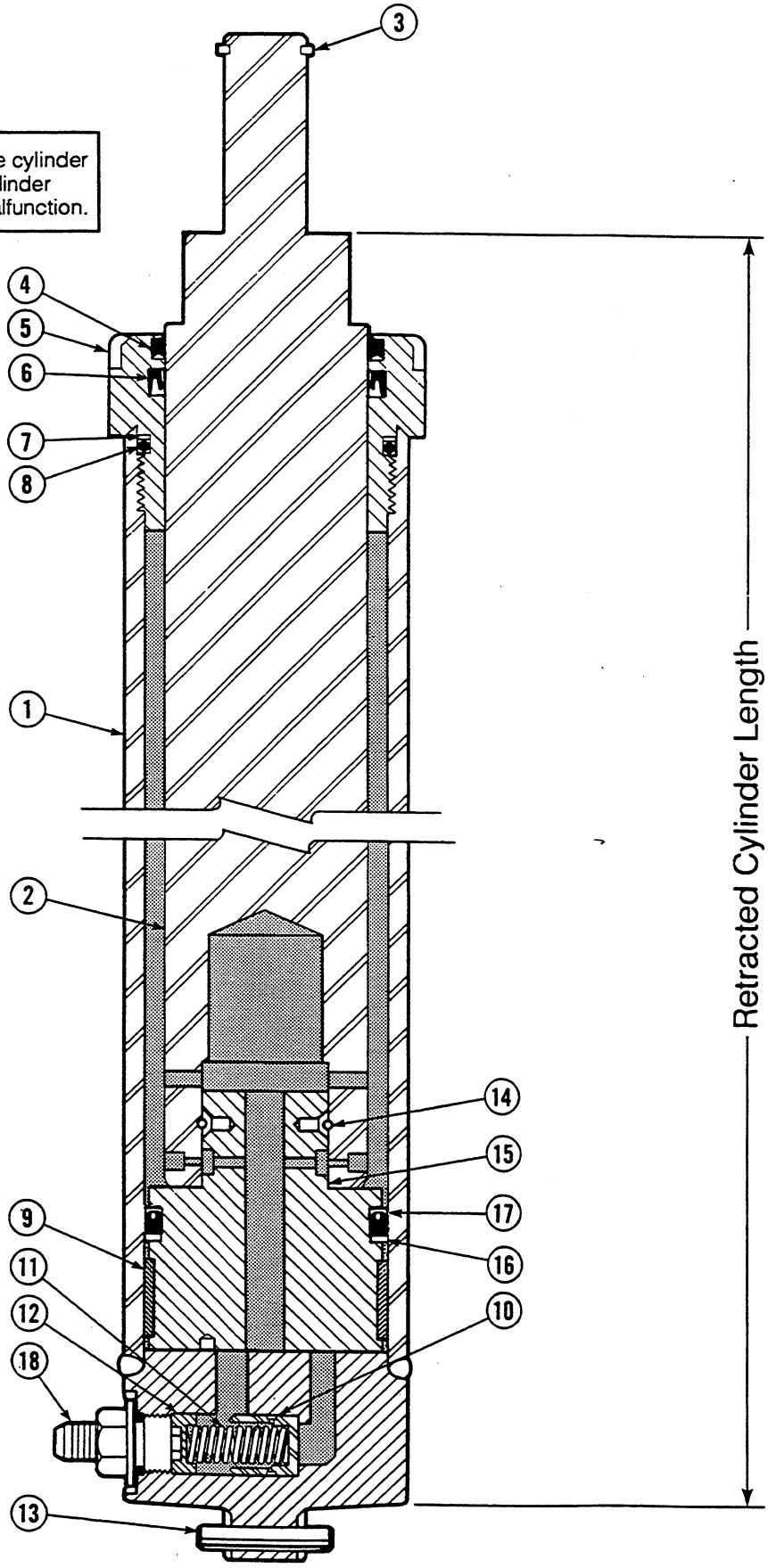

https://truckmanualshub.com/

Free Lift Cylinder-2600 PSI

35D/40D

Part numbers on this page are used with the following mast product I.D. numbers only:

35D-MD-010 thru 171
40D-MD-006 thru 046

Items that vary by mast height.

RETRACTED CHANNEL LENGTH (in.)	RETRACTED CYLINDER LENGTH (in.)	CYLINDER ASSEMBLY QTY 1	REF. NO. 1 SHELL QTY 1	REF. NO. 2 PLUNGER QTY 1
56	28.1	582918	5473-640	5510-691
57	28.6	582919	5473-652	5510-703
58	29.1	582920	5473-665	5510-716
59	29.6	582921	5473-678	5510-729
60	30.1	582922	5473-691	5510-742
61	30.6	582923	5473-703	5510-754
62	31.1	582924	5473-716	5510-767
63	31.6	582925	5473-729	5510-780
64	32.1	582926	5473-741	5510-792
65	32.6	582927	5473-754	5510-805
66	33.1	582928	5473-767	5510-818
67	33.6	582929	5473-779	5510-830
68	34.1	582930	5473-792	5510-843
69	34.6	582931	5473-805	5510-856
70	35.1	582932	5473-818	5510-869
71	35.6	582933	5473-830	5510-881
72	36.1	582934	5473-843	5510-894
73	36.6	582935	5473-856	5510-907
74	37.1	582936	5473-868	5510-919
75	37.6	582937	5473-881	5510-932
76	38.1	582938	5473-894	5510-945
77	38.6	582939	5473-906	5510-957
78	39.1	582940	5473-919	5510-970
79	39.6	582941	5473-932	5510-983
80	40.1	582942	5473-945	5510-996
81	40.6	582943	5473-957	5510-1008
82	41.1	582944	5473-970	5510-1021
83	41.6	582945	5473-983	5510-1034
84	42.1	582946	5473-995	5510-1046
85	42.6	582947	5473-1008	5510-1059
86	43.1	582948	5473-1021	5510-1072
87	43.6	582949	5473-1033	5510-1084
88	44.1	582950	5473-1046	5510-1097
89	44.6	582951	5473-1059	5510-1110
90	45.1	582952	5473-1072	5510-1123
91	45.6	582953	5473-1084	5510-1135
92	46.1	582954	5473-1097	5510-1148
93	46.6	582955	5473-1110	5510-1161
94	47.1	582956	5473-1122	5510-1173
95	47.6	582957	5473-1135	5510-1186
96	48.1	582958	5473-1148	5510-1199
97	48.6	582959	5473-1160	5510-1211
98	49.1	582960	5473-1173	5510-1224
99	49.6	582961	5473-1186	5510-1237
100	50.1	582962	5473-1199	5510-1250
101	50.6	582963	5473-1211	5510-1262

Common items.

REF	QTY	PART NO.	DESCRIPTION	REF	QTY	PART NO.	DESCRIPTION
3	1	3129	■ Snap Ring	11	1	560824	Spring
4	1	561211	★ Plunger Wiper	12	1	560465	Spring Guide
5	1	562635	Retainer	13	1	769018	Roll Pin
6	1	561208	★ Plunger Seal	14	1	561219	Pull-In Wire
7	1	561209	★ Back-Up Ring	15	1	561534	Piston
8	1	561210	★ O-Ring	16	1	559857	★ Back-Up Ring
9	1	561969	★ Wear Ring	17	1	559853	★ Piston Seal
10	1	560470	Piston, Lowering Fuse	18	1	611289	■ Fitting, 8-10

★ Included in Service Kit 563927. ■ Not included in Cylinder Assembly. Reference: S-6073, 6074.

https://truckmanualshub.com/

Free Lift Cylinder-2600 PSI

35D/40D

WARNING: Replacing the cylinder with a different part no. cylinder may cause the mast to malfunction.

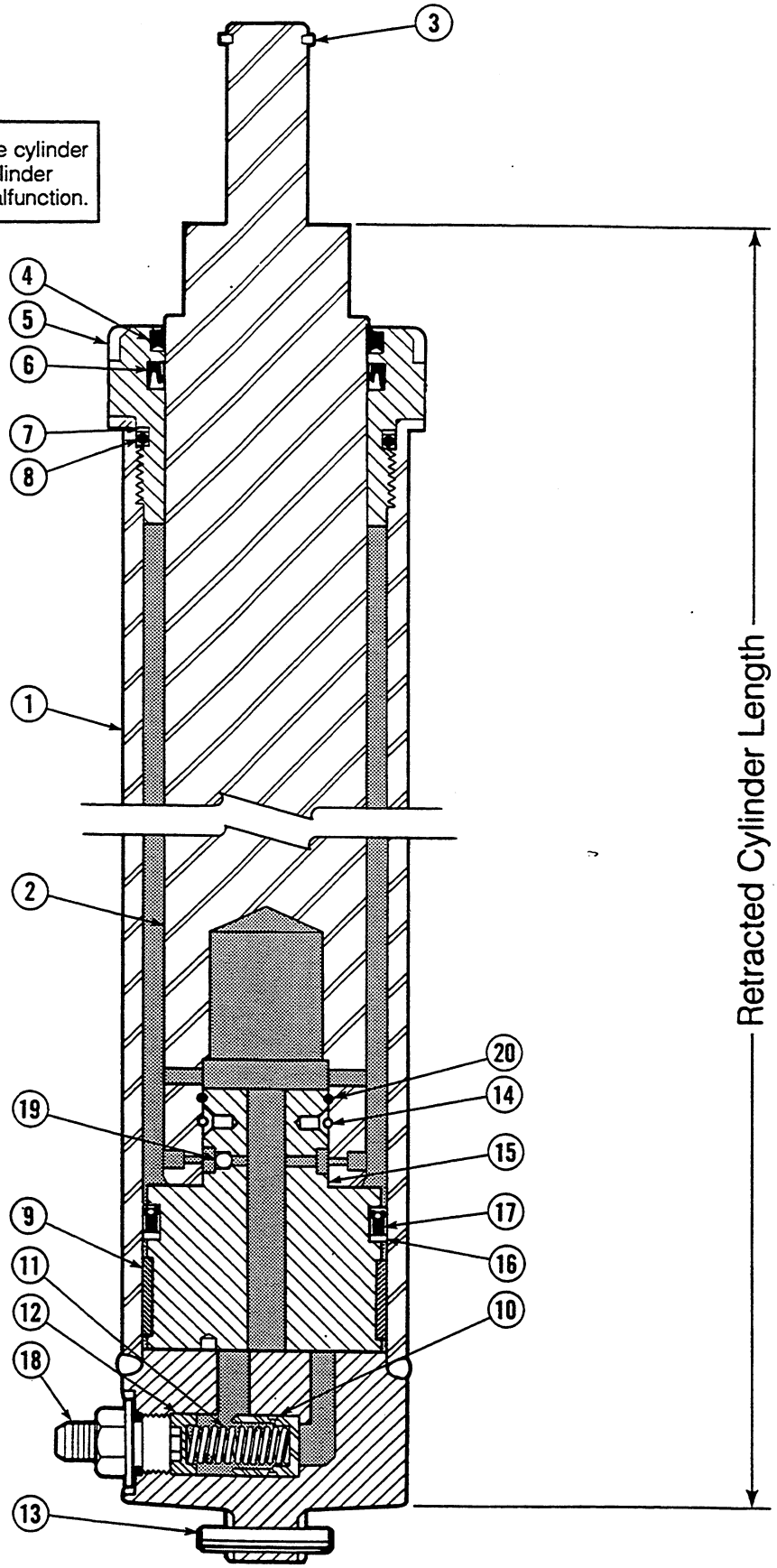

https://truckmanualshub.com/

Free Lift Cylinder-2600 PSI

35D/40D

Part numbers on this page are used with the following mast product I.D. numbers only:

35D-MD-172 thru 372
40D-MD-047 thru 098

Items that vary by mast height.

RETRACTED CHANNEL LENGTH (in.)	RETRACTED CYLINDER LENGTH (in.)	CYLINDER ASSEMBLY QTY 1	REF. NO. 1 SHELL QTY 1	REF. NO. 2 PLUNGER QTY 1
56	28.1	583841	5473-640	5562-691
57	28.6	583842	5473-652	5562-703
58	29.1	583843	5473-665	5562-716
59	29.6	583844	5473-678	5562-729
60	30.1	583845	5473-691	5562-742
61	30.6	583846	5473-703	5562-754
62	31.1	583847	5473-716	5562-767
63	31.6	583848	5473-729	5562-780
64	32.1	583849	5473-741	5562-792
65	32.6	583850	5473-754	5562-805
66	33.1	583851	5473-767	5562-818
67	33.6	583852	5473-779	5562-830
68	34.1	583853	5473-792	5562-843
69	34.6	583854	5473-805	5562-856
70	35.1	583855	5473-818	5562-869
71	35.6	583856	5473-830	5562-881
72	36.1	583857	5473-843	5562-894
73	36.6	583858	5473-856	5562-907
74	37.1	583859	5473-868	5562-919
75	37.6	583860	5473-881	5562-932
76	38.1	583861	5473-894	5562-945
77	38.6	583862	5473-906	5562-957
78	39.1	583863	5473-919	5562-970
79	39.6	583864	5473-932	5562-983
80	40.1	583865	5473-945	5562-996
81	40.6	583866	5473-957	5562-1008
82	41.1	583867	5473-970	5562-1021
83	41.6	583868	5473-983	5562-1034
84	42.1	583869	5473-995	5562-1046
85	42.6	583870	5473-1008	5562-1059
86	43.1	583871	5473-1021	5562-1072
87	43.6	583872	5473-1033	5562-1084
88	44.1	583873	5473-1046	5562-1097
89	44.6	583874	5473-1059	5562-1110
90	45.1	583875	5473-1072	5562-1123
91	45.6	583876	5473-1084	5562-1135
92	46.1	583877	5473-1097	5562-1148
93	46.6	583878	5473-1110	5562-1161
94	47.1	583879	5473-1122	5562-1173
95	47.6	583880	5473-1135	5562-1186
96	48.1	583881	5473-1148	5562-1199
97	48.6	583882	5473-1160	5562-1211
98	49.1	583883	5473-1173	5562-1224
99	49.6	583884	5473-1186	5562-1237
100	50.1	583885	5473-1199	5562-1250
101	50.6	583886	5473-1211	5562-1262

Common items.

REF	QTY	PART NO.	DESCRIPTION	REF	QTY	PART NO.	DESCRIPTION
3	1	3129	■ Snap Ring	12	1	560465	Spring Guide
4	1	561211	★ Plunger Wiper	13	1	769018	Roll Pin
5	1	562635	Retainer	14	1	561219	Pull-In Wire
6	1	561208	★ Plunger Seal	15	1	563922	Piston
7	1	561209	★ Back-Up Ring	16	1	559857	★ Back-Up Ring
8	1	561210	★ O-Ring	17	1	559853	★ Piston Seal
9	1	561969	★ Wear Ring	18	1	611289	■ Fitting, 8-10
10	1	560470	Piston, Lowering Fuse	19	1	7010	Ball Bearing
11	1	560824	Spring	20	1	2722	★ O-Ring

★ Included in Service Kit 563927. ■ Not included in Cylinder Assembly. Reference: S-6119, 6120.

https://truckmanualshub.com/

Outer Upright
35D/40D

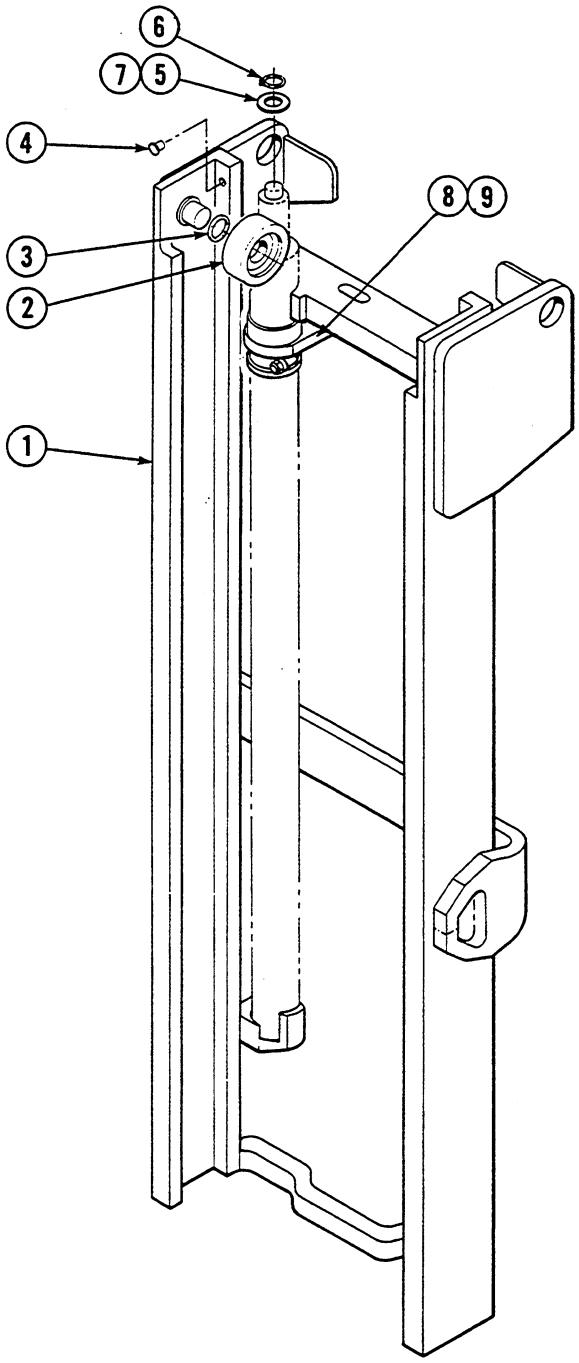

NOTE: See pages 24-50 for Mast Installation Accessories.

https://truckmanualshub.com/

Outer Upright
35D/40D

Part numbers on this page are used with the following mast product I.D. numbers only:
35D-MD-001 thru 171
40D-MD-001 thru 046

Items that vary by mast height.

REF	QTY	PART NO.	DESCRIPTION
1	1	■686686	Outer Upright - 56 in.★
1	1	■686687	Outer Upright - 57 in.★
1	1	■686688	Outer Upright - 58 in.★
1	1	■686689	Outer Upright - 59 in.★
1	1	■686690	Outer Upright - 60 in.★
1	1	■686691	Outer Upright - 61 in.★
1	1	■686692	Outer Upright - 62 in.★
1	1	■686693	Outer Upright - 63 in.★
1	1	■686694	Outer Upright - 64 in.★
1	1	■686695	Outer Upright - 65 in.★
1	1	■686696	Outer Upright - 66 in.★
1	1	■686697	Outer Upright - 67 in.★
1	1	■686698	Outer Upright - 68 in.★
1	1	■686699	Outer Upright - 69 in.★
1	1	■686700	Outer Upright - 70 in.★
1	1	■686701	Outer Upright - 71 in.★
1	1	■686702	Outer Upright - 72 in.★
1	1	■686703	Outer Upright - 73 in.★
1	1	■686704	Outer Upright - 74 in.★
1	1	■686705	Outer Upright - 75 in.★
1	1	■686706	Outer Upright - 76 in.★
1	1	■686707	Outer Upright - 77 in.★
1	1	■686708	Outer Upright - 78 in.★
1	1	■686709	Outer Upright - 79 in.★
1	1	■686710	Outer Upright - 80 in.★
1	1	■686711	Outer Upright - 81 in.★
1	1	■686712	Outer Upright - 82 in.★
1	1	■686713	Outer Upright - 83 in.★
1	1	■686714	Outer Upright - 84 in.★
1	1	■686715	Outer Upright - 85 in.★
1	1	■686716	Outer Upright - 86 in.★
1	1	■686717	Outer Upright - 87 in.★
1	1	■686718	Outer Upright - 88 in.★
1	1	■686719	Outer Upright - 89 in.★
1	1	■686720	Outer Upright - 90 in.★
1	1	■686721	Outer Upright - 91 in.★
1	1	■686722	Outer Upright - 92 in.★
1	1	■686723	Outer Upright - 93 in.★
1	1	■686724	Outer Upright - 94 in.★
1	1	■686725	Outer Upright - 95 in.★
1	1	■686726	Outer Upright - 96 in.★
1	1	■686727	Outer Upright - 97 in.★
1	1	■686728	Outer Upright - 98 in.★
1	1	■686729	Outer Upright - 99 in.★
1	1	■686730	Outer Upright - 100 in.★
1	1	■686731	Outer Upright - 101 in.★

Common items.

REF	QTY	PART NO.	DESCRIPTION
2	2	664206	Roller
3	●	631881	Shim, .030 in. (0,7 mm)
4	2	202386	Thrust Plug Service Kit
5	●	200525	Shim, .090 in. (2,2 mm)
6	2	3129	Snap Ring
7	●	200524	Shim, .060 in. (1,5 mm)
8	2	202396	Bumper
9	2	200785	Clamp

● Quantity as required.
★ Retracted channel length.
■ These part numbers are for reference only. Mounting brackets are not included. To order an Outer Upright with mounting brackets, contact the Cascade Parts Depot (503) 669-6300. The mast serial number must be supplied.
Reference: S-3480.

https://truckmanualshub.com/

Outer Upright
35D/40D

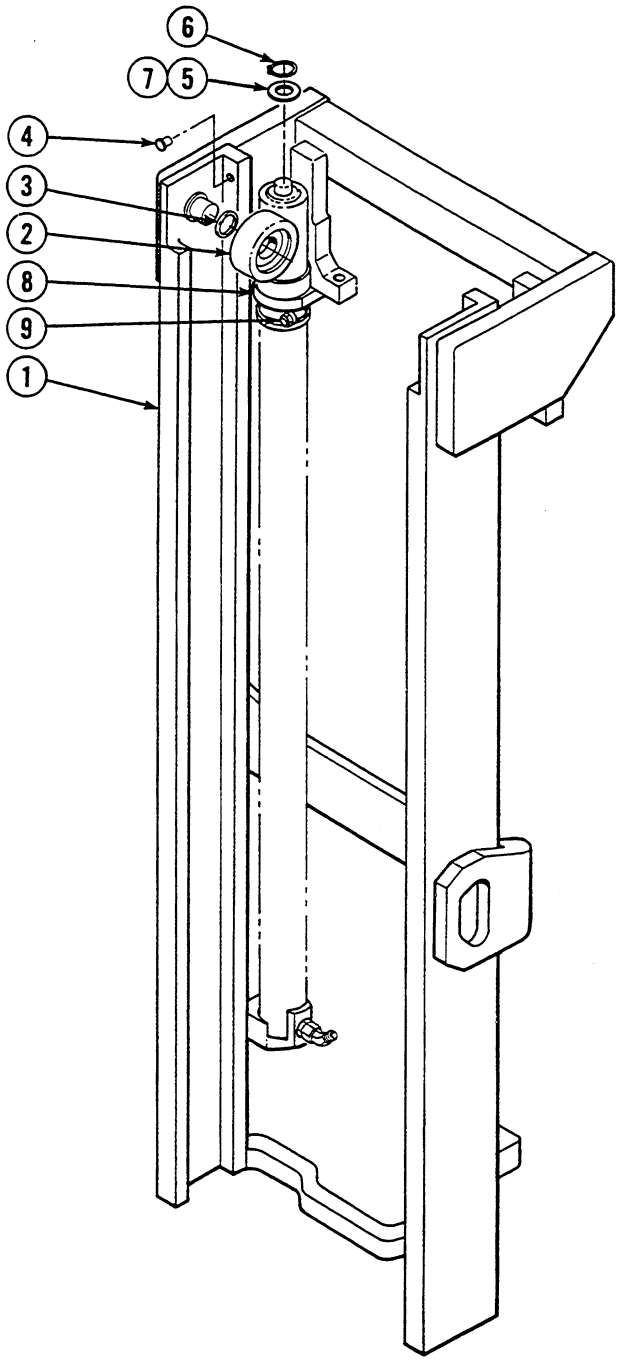

NOTE: See pages 24-50 for Mast Installation Accessories.

https://truckmanualshub.com/

Outer Upright
35D/40D

Part numbers on this page are used with the following mast product I.D. numbers only:
35D-MD-172 thru 372
40D-MD-047 thru 098

Items that vary by mast height.

REF	QTY	PART NO.	DESCRIPTION
1	1	■202853	Outer Upright - 56 in.★
1	1	■202854	Outer Upright - 57 in.★
1	1	■202855	Outer Upright - 58 in.★
1	1	■202856	Outer Upright - 59 in.★
1	1	■202857	Outer Upright - 60 in.★
1	1	■202858	Outer Upright - 61 in.★
1	1	■202859	Outer Upright - 62 in.★
1	1	■202860	Outer Upright - 63 in.★
1	1	■202861	Outer Upright - 64 in.★
1	1	■202862	Outer Upright - 65 in.★
1	1	■202863	Outer Upright - 66 in.★
1	1	■202864	Outer Upright - 67 in.★
1	1	■202865	Outer Upright - 68 in.★
1	1	■202866	Outer Upright - 69 in.★
1	1	■202867	Outer Upright - 70 in.★
1	1	■202868	Outer Upright - 71 in.★
1	1	■202869	Outer Upright - 72 in.★
1	1	■202870	Outer Upright - 73 in.★
1	1	■202871	Outer Upright - 74 in.★
1	1	■202872	Outer Upright - 75 in.★
1	1	■202873	Outer Upright - 76 in.★
1	1	■202874	Outer Upright - 77 in.★
1	1	■202875	Outer Upright - 78 in.★
1	1	■202876	Outer Upright - 79 in.★
1	1	■202877	Outer Upright - 80 in.★
1	1	■202878	Outer Upright - 81 in.★
1	1	■202879	Outer Upright - 82 in.★
1	1	■202880	Outer Upright - 83 in.★
1	1	■202881	Outer Upright - 84 in.★
1	1	■202882	Outer Upright - 85 in.★
1	1	■202883	Outer Upright - 86 in.★
1	1	■202884	Outer Upright - 87 in.★
1	1	■202885	Outer Upright - 88 in.★
1	1	■202886	Outer Upright - 89 in.★
1	1	■202887	Outer Upright - 90 in.★
1	1	■202888	Outer Upright - 91 in.★
1	1	■202889	Outer Upright - 92 in.★
1	1	■202890	Outer Upright - 93 in.★
1	1	■202891	Outer Upright - 94 in.★
1	1	■202892	Outer Upright - 95 in.★
1	1	■202893	Outer Upright - 96 in.★
1	1	■202894	Outer Upright - 97 in.★
1	1	■202895	Outer Upright - 98 in.★
1	1	■202896	Outer Upright - 99 in.★
1	1	■202897	Outer Upright - 100 in.★
1	1	■202898	Outer Upright - 101 in.★

Common items.

REF	QTY	PART NO.	DESCRIPTION
2	2	664206	Roller
3	●	631881	Shim, .030 in. (0,7 mm)
4	2	202386	Thrust Plug Service Kit
5	●	200525	Shim, .090 in. (2,2 mm)
6	2	3129	Snap Ring
7	●	200524	Shim, .060 in. (1,5 mm)
8	2	202396	Bumper
9	2	200785	Clamp

● Quantity as required.
★ Retracted channel length.
■ These part numbers are for reference only. Mounting brackets are not included. To order an Outer Upright with mounting brackets, contact the Cascade Parts Depot (503) 669-6300. The mast serial number must be supplied.
Reference: S-3791, 3794.

https://truckmanualshub.com/

Inner Upright
35D/40D

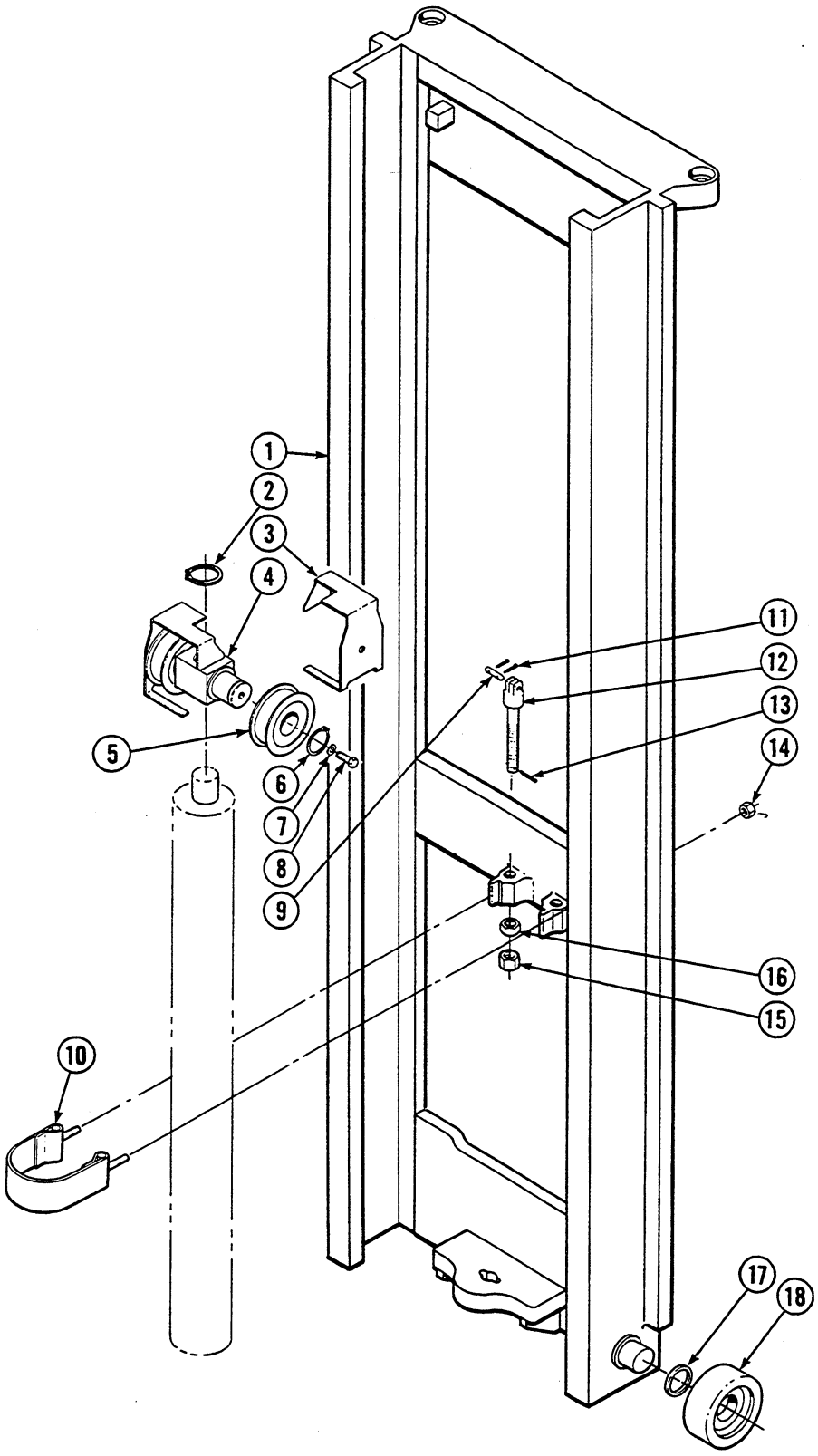

https://truckmanualshub.com/

Inner Upright
35D/40D

Part numbers on this page are used with the following mast product I.D. numbers only:
35D-MD-001 thru 009
40D-MD-001 thru 005

Items that vary by mast height.

REF	QTY	PART NO.	DESCRIPTION
1	1	687125	Inner Upright - 56 in.★
1	1	687126	Inner Upright - 57 in.★
1	1	687127	Inner Upright - 58 in.★
1	1	687128	Inner Upright - 59 in.★
1	1	687129	Inner Upright - 60 in.★
1	1	687130	Inner Upright - 61 in.★
1	1	687131	Inner Upright - 62 in.★
1	1	687132	Inner Upright - 63 in.★
1	1	687133	Inner Upright - 64 in.★
1	1	687134	Inner Upright - 65 in.★
1	1	687135	Inner Upright - 66 in.★
1	1	687136	Inner Upright - 67 in.★
1	1	687137	Inner Upright - 68 in.★
1	1	687138	Inner Upright - 69 in.★
1	1	687139	Inner Upright - 70 in.★
1	1	687140	Inner Upright - 71 in.★
1	1	687141	Inner Upright - 72 in.★
1	1	687142	Inner Upright - 73 in.★
1	1	687143	Inner Upright - 74 in.★
1	1	687144	Inner Upright - 75 in.★
1	1	687145	Inner Upright - 76 in.★
1	1	687146	Inner Upright - 77 in.★
1	1	687147	Inner Upright - 78 in.★
1	1	687148	Inner Upright - 79 in.★
1	1	687149	Inner Upright - 80 in.★
1	1	687150	Inner Upright - 81 in.★
1	1	687151	Inner Upright - 82 in.★
1	1	687152	Inner Upright - 83 in.★
1	1	687153	Inner Upright - 84 in.★
1	1	687154	Inner Upright - 85 in.★
1	1	687155	Inner Upright - 86 in.★
1	1	687156	Inner Upright - 87 in.★
1	1	687157	Inner Upright - 88 in.★
1	1	687158	Inner Upright - 89 in.★
1	1	687159	Inner Upright - 90 in.★
1	1	687160	Inner Upright - 91 in.★
1	1	687161	Inner Upright - 92 in.★
1	1	687162	Inner Upright - 93 in.★
1	1	687163	Inner Upright - 94 in.★
1	1	687164	Inner Upright - 95 in.★
1	1	687165	Inner Upright - 96 in.★
1	1	687166	Inner Upright - 97 in.★
1	1	687167	Inner Upright - 98 in.★
1	1	687168	Inner Upright - 99 in.★
1	1	687169	Inner Upright - 100 in.★
1	1	687170	Inner Upright - 101 in.★

Common items.

REF	QTY	PART NO.	DESCRIPTION	REF	QTY	PART NO.	DESCRIPTION
2	1	3129	Snap Ring	11	4	6508	Cotter Pin
3	2	684426	Chain Guard	12	2	678755	Chain Anchor–35D
4	1	684428	Crosshead	12	2	680240	Chain Anchor–40D
5	2	661550	Chain Sheave	13	2	6518	Cotter Pin
6	2	3140	Snap Ring	14	2	786881	Nut
7	2	683822	Lockwasher, M12	15	2	200006	Nut
8	2	683821	Capscrew, M12x1,75x20-8.8	16	2	200007	Jam Nut
9	2	678964	Chain Pin–35D	17	●	631881	Shim, .03 in. (0.7 mm)
9	2	680460	Chain Pin–40D	18	2	661549	Roller
10	1	684427	Band				

● Quantity as required.
★ Retracted channel length.
Reference: S-3480 R-3.

https://truckmanualshub.com/

Inner Upright
35D/40D

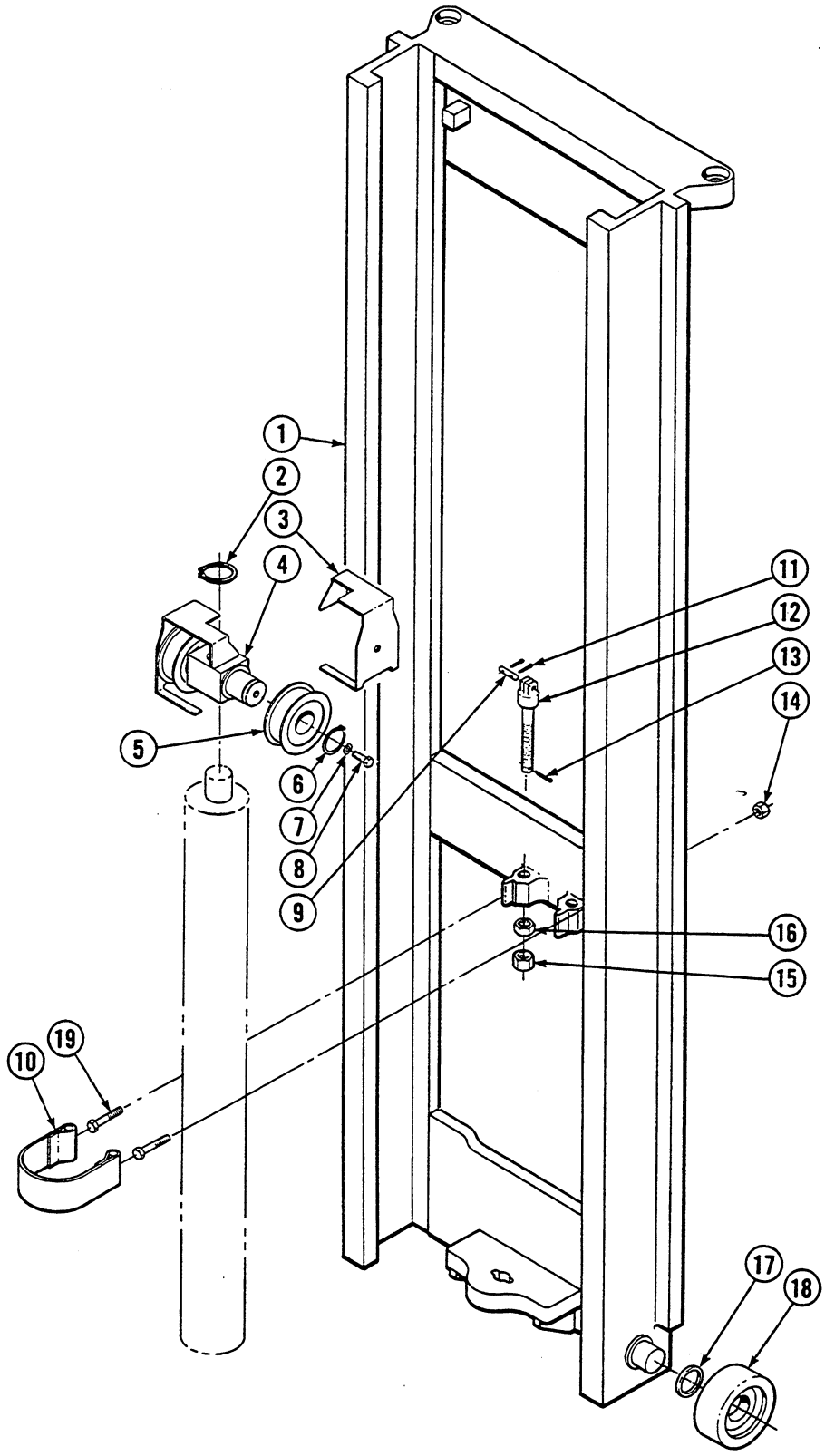

https://truckmanualshub.com/

Inner Upright
35D/40D

Part numbers on this page are used with the following mast product I.D. numbers only:
35D-MD-010 thru 171
40D-MD-006 thru 046

Items that vary by mast height.

REF	QTY	PART NO.	DESCRIPTION
1	1	687125	Inner Upright - 56 in.★
1	1	687126	Inner Upright - 57 in.★
1	1	687127	Inner Upright - 58 in.★
1	1	687128	Inner Upright - 59 in.★
1	1	687129	Inner Upright - 60 in.★
1	1	687130	Inner Upright - 61 in.★
1	1	687131	Inner Upright - 62 in.★
1	1	687132	Inner Upright - 63 in.★
1	1	687133	Inner Upright - 64 in.★
1	1	687134	Inner Upright - 65 in.★
1	1	687135	Inner Upright - 66 in.★
1	1	687136	Inner Upright - 67 in.★
1	1	687137	Inner Upright - 68 in.★
1	1	687138	Inner Upright - 69 in.★
1	1	687139	Inner Upright - 70 in.★
1	1	687140	Inner Upright - 71 in.★
1	1	687141	Inner Upright - 72 in.★
1	1	687142	Inner Upright - 73 in.★
1	1	687143	Inner Upright - 74 in.★
1	1	687144	Inner Upright - 75 in.★
1	1	687145	Inner Upright - 76 in.★
1	1	687146	Inner Upright - 77 in.★
1	1	687147	Inner Upright - 78 in.★
1	1	687148	Inner Upright - 79 in.★
1	1	687149	Inner Upright - 80 in.★
1	1	687150	Inner Upright - 81 in.★
1	1	687151	Inner Upright - 82 in.★
1	1	687152	Inner Upright - 83 in.★
1	1	687153	Inner Upright - 84 in.★
1	1	687154	Inner Upright - 85 in.★
1	1	687155	Inner Upright - 86 in.★
1	1	687156	Inner Upright - 87 in.★
1	1	687157	Inner Upright - 88 in.★
1	1	687158	Inner Upright - 89 in.★
1	1	687159	Inner Upright - 90 in.★
1	1	687160	Inner Upright - 91 in.★
1	1	687161	Inner Upright - 92 in.★
1	1	687162	Inner Upright - 93 in.★
1	1	687163	Inner Upright - 94 in.★
1	1	687164	Inner Upright - 95 in.★
1	1	687165	Inner Upright - 96 in.★
1	1	687166	Inner Upright - 97 in.★
1	1	687167	Inner Upright - 98 in.★
1	1	687168	Inner Upright - 99 in.★
1	1	687169	Inner Upright - 100 in.★
1	1	687170	Inner Upright - 101 in.★

Common items.

REF	QTY	PART NO.	DESCRIPTION	REF	QTY	PART NO.	DESCRIPTION
2	1	3133	Snap Ring	11	4	6508	Cotter Pin
3	2	684426	Chain Guard	12	2	678755	Chain Anchor–35D
4	1	200423	Crosshead	12	2	680240	Chain Anchor–40D
5	2	661550	Chain Sheave	13	2	6518	Cotter Pin
6	2	3140	Snap Ring	14	2	786881	Nut
7	2	683822	Lockwasher, M12	15	2	200006	Nut
8	2	683821	Capscrew, M12x1.75x20-8.8	16	2	200007	Jam Nut
9	2	678964	Chain Pin–35D	17	●	631881	Shim, .03 in. (0.7 mm)
9	2	680460	Chain Pin–40D	18	2	664206	Roller
10	1	200869	Band	19	2	200871	Capscrew, M8x1.25x90-8.8

● Quantity as required.
★ Retracted channel length.
Reference: S-3480 R-13.

https://truckmanualshub.com/

Inner Upright
35D/40D

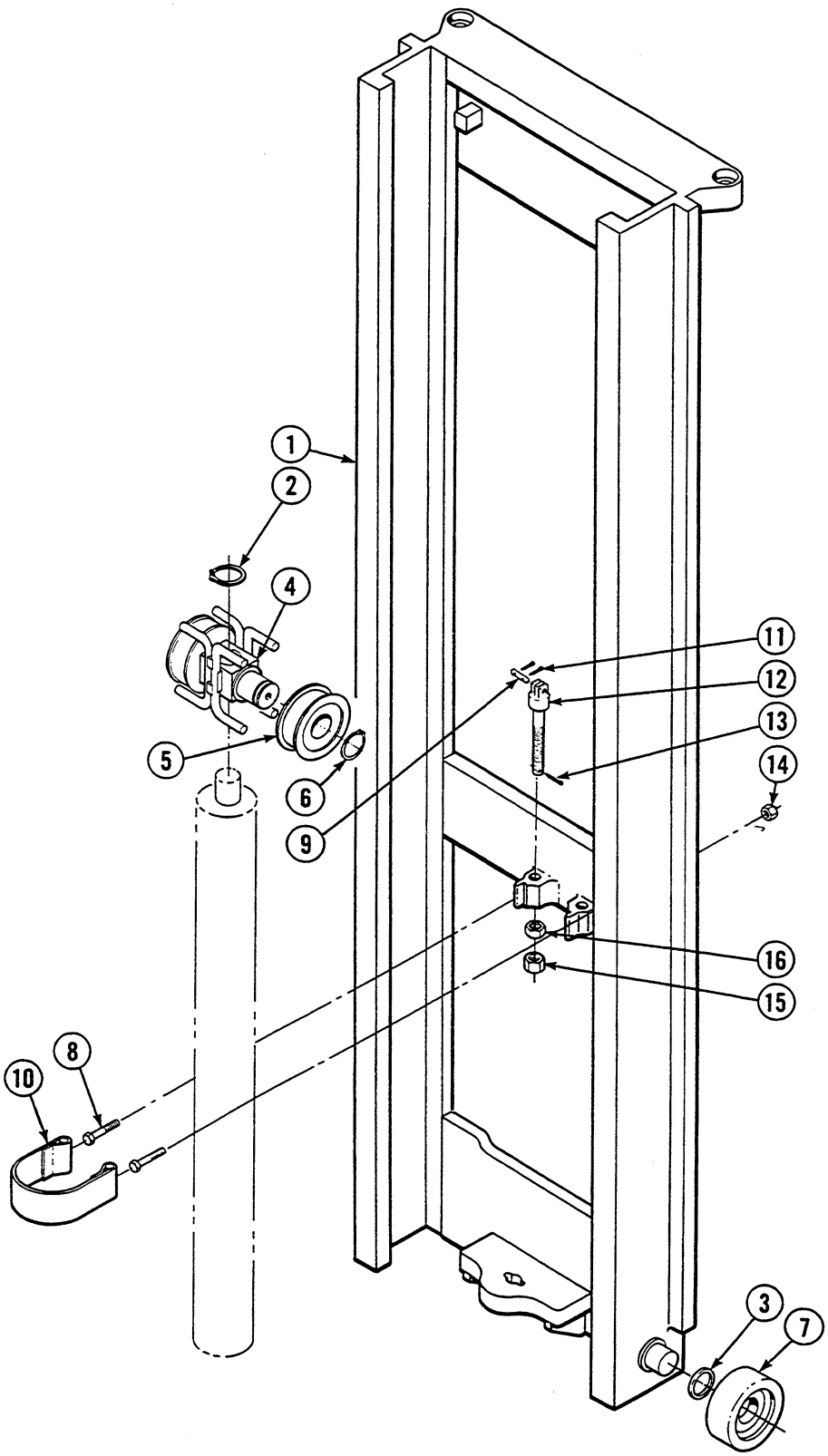

https://truckmanualshub.com/

Inner Upright
35D/40D

Part numbers on this page are used with the following mast product I.D. numbers only:
35D-MD-172 thru 372
40D-MD-047 thru 098

Items that vary by mast height.

REF	QTY	PART NO.	DESCRIPTION
1	1	687125	Inner Upright - 56 in.★
1	1	687126	Inner Upright - 57 in.★
1	1	687127	Inner Upright - 58 in.★
1	1	687128	Inner Upright - 59 in.★
1	1	687129	Inner Upright - 60 in.★
1	1	687130	Inner Upright - 61 in.★
1	1	687131	Inner Upright - 62 in.★
1	1	687132	Inner Upright - 63 in.★
1	1	687133	Inner Upright - 64 in.★
1	1	687134	Inner Upright - 65 in.★
1	1	687135	Inner Upright - 66 in.★
1	1	687136	Inner Upright - 67 in.★
1	1	687137	Inner Upright - 68 in.★
1	1	687138	Inner Upright - 69 in.★
1	1	687139	Inner Upright - 70 in.★
1	1	687140	Inner Upright - 71 in.★
1	1	687141	Inner Upright - 72 in.★
1	1	687142	Inner Upright - 73 in.★
1	1	687143	Inner Upright - 74 in.★
1	1	687144	Inner Upright - 75 in.★
1	1	687145	Inner Upright - 76 in.★
1	1	687146	Inner Upright - 77 in.★
1	1	687147	Inner Upright - 78 in.★
1	1	687148	Inner Upright - 79 in.★
1	1	687149	Inner Upright - 80 in.★
1	1	687150	Inner Upright - 81 in.★
1	1	687151	Inner Upright - 82 in.★
1	1	687152	Inner Upright - 83 in.★
1	1	687153	Inner Upright - 84 in.★
1	1	687154	Inner Upright - 85 in.★
1	1	687155	Inner Upright - 86 in.★
1	1	687156	Inner Upright - 87 in.★
1	1	687157	Inner Upright - 88 in.★
1	1	687158	Inner Upright - 89 in.★
1	1	687159	Inner Upright - 90 in.★
1	1	687160	Inner Upright - 91 in.★
1	1	687161	Inner Upright - 92 in.★
1	1	687162	Inner Upright - 93 in.★
1	1	687163	Inner Upright - 94 in.★
1	1	687164	Inner Upright - 95 in.★
1	1	687165	Inner Upright - 96 in.★
1	1	687166	Inner Upright - 97 in.★
1	1	687167	Inner Upright - 98 in.★
1	1	687168	Inner Upright - 99 in.★
1	1	687169	Inner Upright - 100 in.★
1	1	687170	Inner Upright - 101 in.★

Common items.

REF	QTY	PART NO.	DESCRIPTION	REF	QTY	PART NO.	DESCRIPTION
2	1	3133	Snap Ring	10	1	200869	Band
3	●	631881	Shim, .03 in. (0.7 mm)	11	4	6508	Cotter Pin
4	1	205208	Crosshead	12	2	678755	Chain Anchor–35D
5	2	661550	Chain Sheave	12	2	680240	Chain Anchor–40D
6	2	3140	Snap Ring	13	2	6518	Cotter Pin
7	2	664206	Roller	14	2	786881	Nut
8	2	768535	Capscrew, M8x1.25x90-8.8	15	2	200006	Nut
9	2	678964	Chain Pin–35D	16	2	200007	Jam Nut
9	2	680460	Chain Pin–40D				

● Quantity as required.
★ Retracted channel length.
Reference: S-3791, 3794.

https://truckmanualshub.com/

Carriage

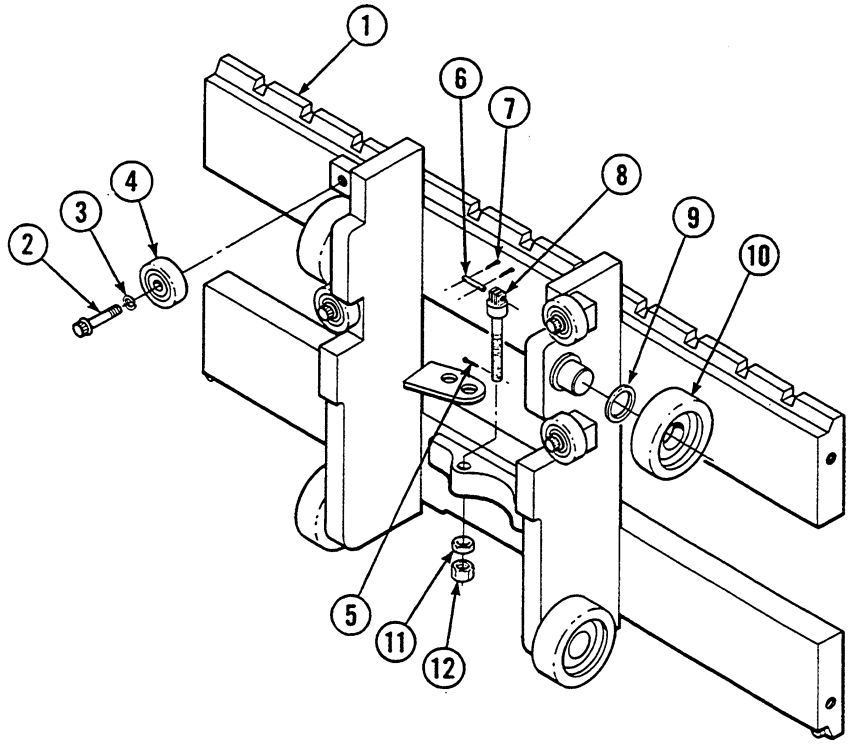

35D/40D			
REF	QTY	PART NO.	DESCRIPTION
For masts mounted with 3 in. underclearance			
1	1	688170	Carriage, Class II - 31 in. (787 mm) wide
1	1	688171	Carriage, Class II - 37 in. (940 mm) wide
1	1	688172	Carriage, Class II - 41 in. (1041 mm) wide
For masts mounted with 5 in. underclearance			
1	1	688173	Carriage, Class II - 31 in. (787 mm) wide
1	1	688174	Carriage, Class II - 37 in. (940 mm) wide
1	1	688175	Carriage, Class II - 41 in. (1041 mm) wide
2	4	684125	Capscrew, M12x1,75x45-12.9
3	4	684660	Lockwasher, M12
4	4	683819	Roller
5	2	6518	Cotter Pin
6	2	678964	Chain Pin–35D
6	2	680460	Chain Pin–40D
7	4	6508	Cotter Pin
8	2	678755	Chain Anchor–35D
8	2	680240	Chain Anchor–40D
9	■	631881	Shim, .03 in. (0,7 mm)
10	4	664206	Roller
11	2	200007	Jam Nut
12	2	200006	Nut

■ Quantity as required.
Reference: S-3637, 3791, 3794.

https://truckmanualshub.com/

Carriage
Heavy Duty

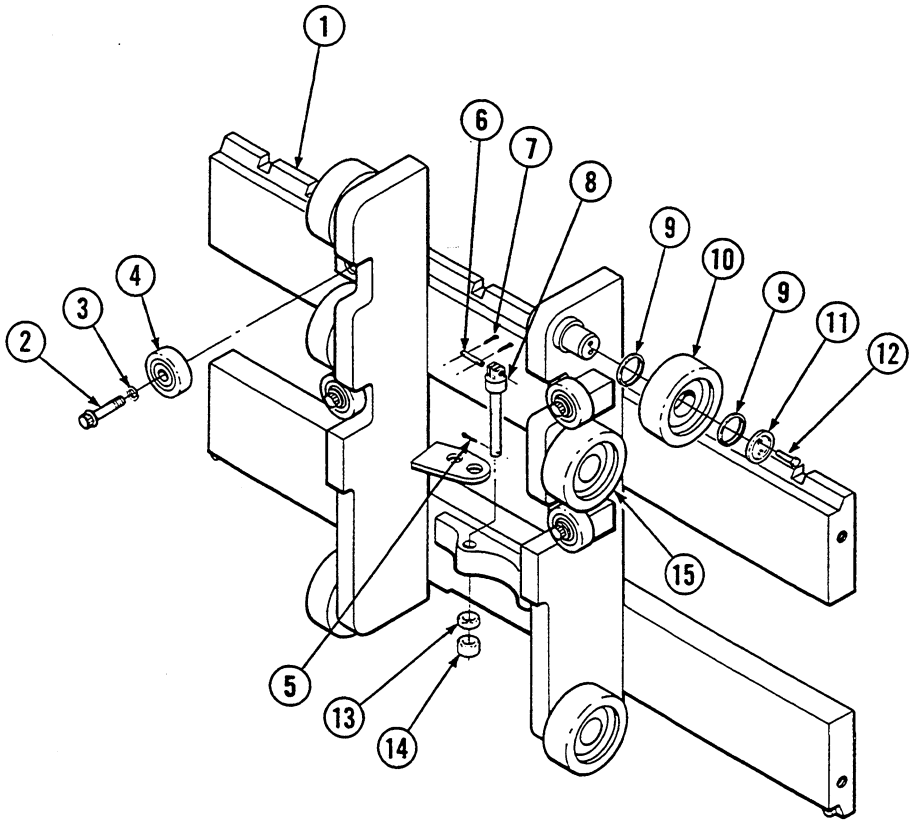

35D/40D			
REF	QTY	PART NO.	DESCRIPTION
For masts mounted with 3 in. underclearance			
1	1	200038	Carriage, Class II - 31 in. (787 mm) wide
1	1	200039	Carriage, Class II - 37 in. (940 mm) wide
1	1	200040	Carriage, Class II - 41 in. (1041 mm) wide
For masts mounted with 5 in. underclearance			
1	1	200041	Carriage, Class II - 31 in. (787 mm) wide
1	1	200042	Carriage, Class II - 37 in. (940 mm) wide
1	1	200043	Carriage, Class II - 41 in. (1041 mm) wide
2	4	684125	Capscrew, M12x1,75x45-12.9
3	4	684660	Lockwasher, M12
4	4	683819	Roller
5	2	6518	Cotter Pin
6	2	678964	Chain Pin–35D
6	2	680460	Chain Pin–40D
7	4	6508	Cotter Pin
8	2	678755	Chain Anchor–35D
8	2	680240	Chain Anchor–40D
9	■	631881	Shim, .03 in. (0,7 mm)
10	4	664206	Roller
11	2	658378	Retainer
12	4	680218	Capscrew, M3x0,5x12-8.8
13	2	200007	Jam Nut
14	2	200006	Nut
15	2	661549	Roller

■ Quantity as required.
Reference: S-3639, 3791, 3794.

https://truckmanualshub.com/

Hoist Chains

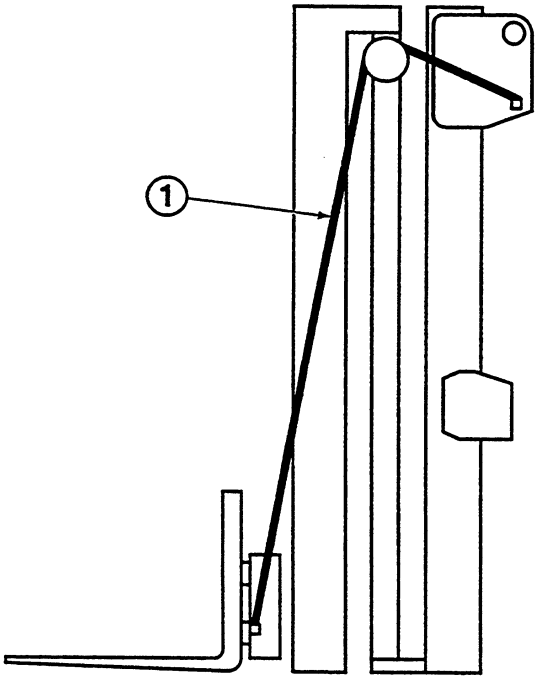

MA0111.eps

35D			
OVERALL RETRACTED CHANNEL LENGTH in.	REF NO. 1		
	QTY	CHAIN PART NO.	CHAIN LENGTH in. (mm)
56	2	686917	36.9 (937)
57	2	686917	36.9 (937)
58	2	686917	36.9 (937)
59	2	686918	38.1 (968)
60	2	686919	39.4 (1000)
61	2	686920	40.6 (1032)
62	2	686921	41.9 (1064)
63	2	686921	41.9 (1064)
64	2	686922	43.1 (1095)
65	2	686923	44.8 (1127)
66	2	678750	45.6 (1159)
67	2	686924	46.9 (1191)
68	2	686924	46.9 (1191)
69	2	686925	48.1 (1222)
70	2	686926	49.4 (1254)
71	2	686927	50.6 (1286)
72	2	686928	51.9 (1318)
73	2	686928	51.9 (1318)
74	2	686929	53.1 (1349)
75	2	686930	54.4 (1381)
76	2	687022	55.6 (1413)
77	2	678751	56.9 (1445)
78	2	678751	56.9 (1445)
79	2	686931	58.1 (1476)
80	2	686932	59.4 (1508)
81	2	688357	60.6 (1540)
82	2	687009	61.9 (1572)
83	2	687009	61.9 (1572)
84	2	678752	63.1 (1603)
85	2	687010	64.4 (1635)
86	2	678761	65.6 (1667)
87	2	687011	66.9 (1699)
88	2	687011	66.9 (1699)
89	2	687012	68.1 (1730)
90	2	647685	69.4 (1762)
91	2	678845	70.6 (1794)
92	2	678762	71.9 (1826)
93	2	686930	54.4 (1381)
94	2	687022	55.6 (1413)
95	2	678751	56.9 (1445)
96	2	678751	56.9 (1445)
97	2	686931	58.1 (1476)
98	2	686932	59.4 (1508)
99	2	686933	60.6 (1540)
100	2	687009	61.9 (1572)
101	2	687009	61.9 (1572)

Reference: S-3791.

https://truckmanualshub.com/

Hoist Chains

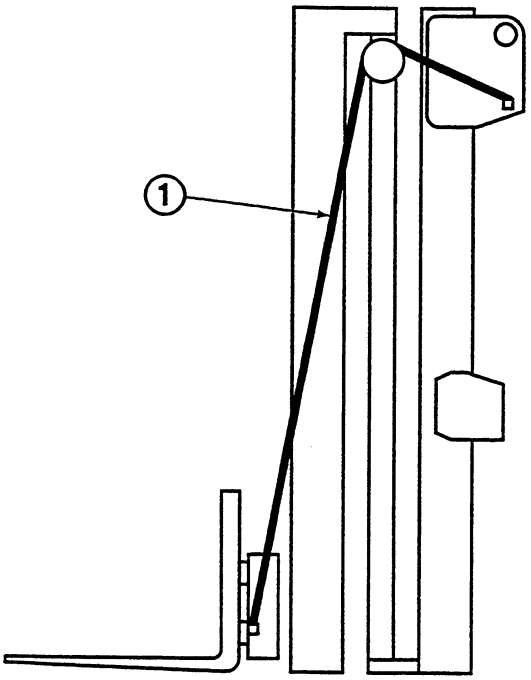

MA0111.eps

40D			
OVERALL RETRACTED CHANNEL LENGTH in.	REF NO. 1		
	QTY	CHAIN PART NO.	CHAIN LENGTH in. (mm)
56	2	686873	36.8 (937)
57	2	686873	36.8 (937)
58	2	686873	36.8 (937)
59	2	686874	38.1 (968)
60	2	686875	39.4 (1000)
61	2	686876	40.6 (1032)
62	2	686877	41.9 (1064)
62	2	686877	41.9 (1064)
64	2	686878	43.1 (1095)
65	2	686879	44.4 (1127)
66	2	680455	45.6 (1159)
67	2	686880	46.9 (1191)
68	2	686880	46.9 (1191)
69	2	686881	48.1 (1222)
70	2	686882	49.4 (1254)
71	2	686883	50.6 (1286)
72	2	686884	51.9 (1318)
73	2	686884	51.9 (1318)
74	2	686885	53.1 (1349)
75	2	686886	54.4 (1381)
76	2	687027	55.6 (1413)
77	2	681479	56.9 (1445)
78	2	681479	56.9 (1445)
79	2	686887	58.1 (1476)
80	2	686888	59.4 (1508)
81	2	686889	60.6 (1540)
82	2	686890	61.9 (1572)
83	2	686890	61.9 (1572)
84	2	681480	63.1 (1603)
85	2	686891	64.4 (1635)
86	2	686892	65.6 (1667)
87	2	686893	66.9 (1699)
88	2	686893	66.9 (1699)
89	2	686894	68.1 (1730)
90	2	680456	69.4 (1762)
91	2	686895	70.6 (1794)
92	2	686896	71.9 (1826)
93	2	686886	54.4 (1381)
94	2	687027	55.6 (1413)
95	2	681479	56.9 (1445)
96	2	681479	56.9 (1445)
97	2	686887	58.1 (1476)
98	2	686888	59.4 (1508)
99	2	686889	60.6 (1540)
100	2	686890	61.9 (1572)
101	2	686890	61.9 (1572)

Reference: S-3794.

https://truckmanualshub.com/

Hydraulic Group
35D/40D

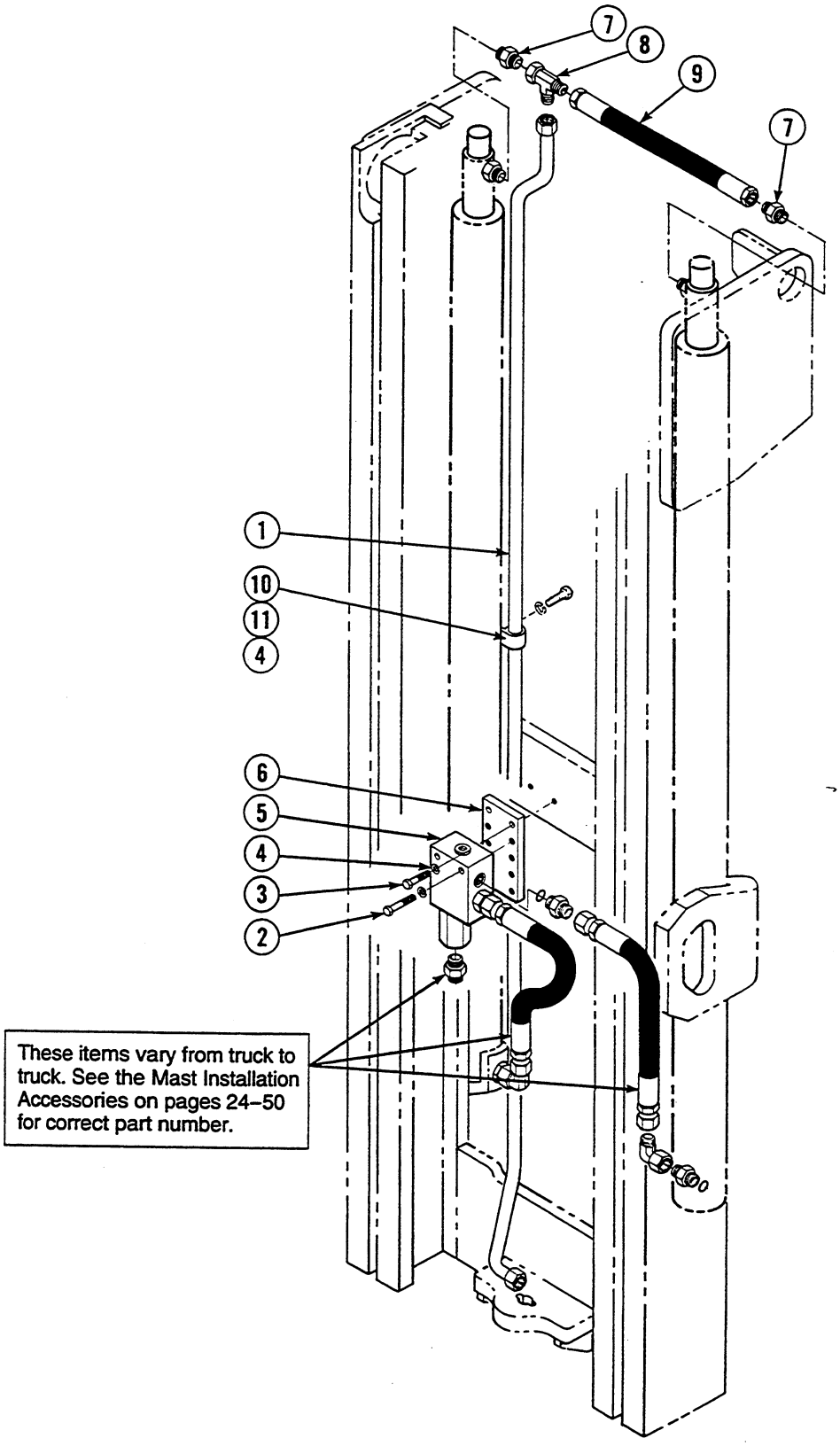

https://truckmanualshub.com/

Hydraulic Group
35D/40D

Items that vary by mast height.

REF	QTY	PART NO.	DESCRIPTION
1	1	687171	Tube - 56 in.★
1	1	687172	Tube - 57 in.★
1	1	687173	Tube - 58 in.★
1	1	687174	Tube - 59 in.★
1	1	687175	Tube - 60 in.★
1	1	687176	Tube - 61 in.★
1	1	687177	Tube - 62 in.★
1	1	687178	Tube - 63 in.★
1	1	687179	Tube - 64 in.★
1	1	687180	Tube - 65 in.★
1	1	687181	Tube - 66 in.★
1	1	687182	Tube - 67 in.★
1	1	687183	Tube - 68 in.★
1	1	687184	Tube - 69 in.★
1	1	687185	Tube - 70 in.★
1	1	687186	Tube - 71 in.★
1	1	687187	Tube - 72 in.★
1	1	687188	Tube - 73 in.★
1	1	687189	Tube - 74 in.★
1	1	687190	Tube - 75 in.★
1	1	687191	Tube - 76 in.★
1	1	687192	Tube - 77 in.★
1	1	687193	Tube - 78 in.★
1	1	687194	Tube - 79 in.★
1	1	687195	Tube - 80 in.★
1	1	687196	Tube - 81 in.★
1	1	687197	Tube - 82 in.★
1	1	687198	Tube - 83 in.★
1	1	687199	Tube - 84 in.★
1	1	687200	Tube - 85 in.★
1	1	687201	Tube - 86 in.★
1	1	687202	Tube - 87 in.★
1	1	687203	Tube - 88 in.★
1	1	687204	Tube - 89 in.★
1	1	687205	Tube - 90 in.★
1	1	687206	Tube - 91 in.★
1	1	687207	Tube - 92 in.★
1	1	687208	Tube - 93 in.★
1	1	688950	Tube - 94 in.★
1	1	688951	Tube - 95 in.★
1	1	688952	Tube - 96 in.★
1	1	688953	Tube - 97 in.★
1	1	688954	Tube - 98 in.★
1	1	688955	Tube - 99 in.★
1	1	688956	Tube - 100 in.★
1	1	688957	Tube - 101 in.★

Common items.

REF	QTY	PART NO.	DESCRIPTION
2	2	683823	Capscrew, M10x1.5x50-8.8
3	2	684649	Capscrew, M10x1.5x25-8.8
4	4	683826	Lockwasher, M10
5	1	■	Lowering Control Valve
6	1	683831	Bar
7	2	611288	Fitting, 6-8
8	1	611330	Fitting, 8-8
9	1	200417	Hose
10	1	689588	Clamp
11	1	200429	Capscrew, M10x1.5x20-10.9

★ Retracted channel length.
■ See page 19 for parts breakdown.
Reference: S-3480, 3791, 3794.

https://truckmanualshub.com/

Lowering Control Valve

2000 PSI System Pressure

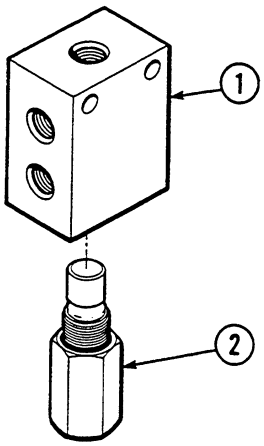

35D/40D			
REF	QTY	PART NO.	DESCRIPTION
		684812	Lowering Control Valve
1	1	684152	Valve Body
2	1	■ 684154	Valve Cartridge

■ This part must not be substituted. Check part number on side of cartridge when replacing.
Reference: Valve specified in Mounting Control Document.

2600 PSI System Pressure

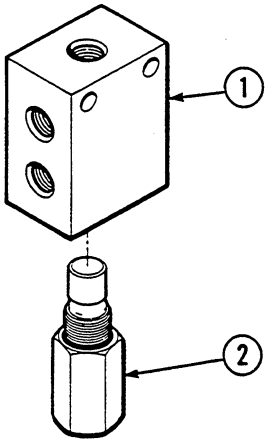

35D/40D			
REF	QTY	PART NO.	DESCRIPTION
		684810	Lowering Control Valve
1	1	684152	Valve Body
2	1	■ 684210	Valve Cartridge

■ This part must not be substituted. Check part number on side of cartridge when replacing.
Reference: Valve specified in Mounting Control Document.

https://truckmanualshub.com/

Load Backrest

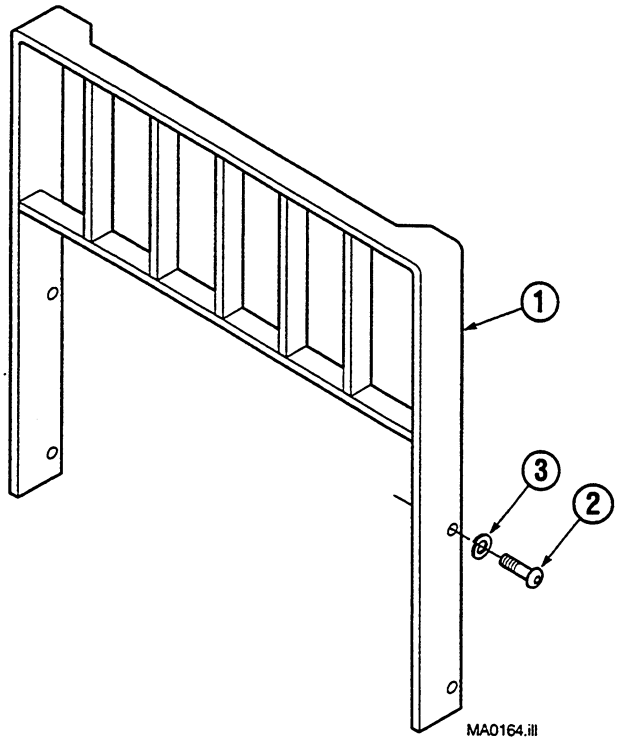

35D/40D			
REF	QTY	PART NO.	DESCRIPTION
1	1	209407	● Backrest–31x36 in. (787x914 mm)
1	1	209233	● Backrest–31x48 in. (787x1219 mm)
1	1	209408	● Backrest–31x60 in. (787x1524 mm)
1	1	684772	● Backrest–37x36 in. (940x914 mm)
1	1	684773	● Backrest–37x48 in. (940x1219 mm)
1	1	684774	● Backrest–37x60 in. (940x1524 mm)
1	1	684775	● Backrest–41x36 in. (1041x914 mm)
1	1	684776	● Backrest–41x48 in. (1041x1219 mm)
1	1	684777	● Backrest–41x60 in. (1041x1524 mm)
2	4	200173	Capscrew, M16x2.0x35-8.8
3	4	684586	Lockwasher, M16

● Includes items 2 and 3. Width x height.
Reference: S-3370.

https://truckmanualshub.com/

Internal Hose Reeving
35D/40D

WARNING: The internal reeving hoses must be Parker 560 H type hose. Other hoses may cause the mast to malfunction.

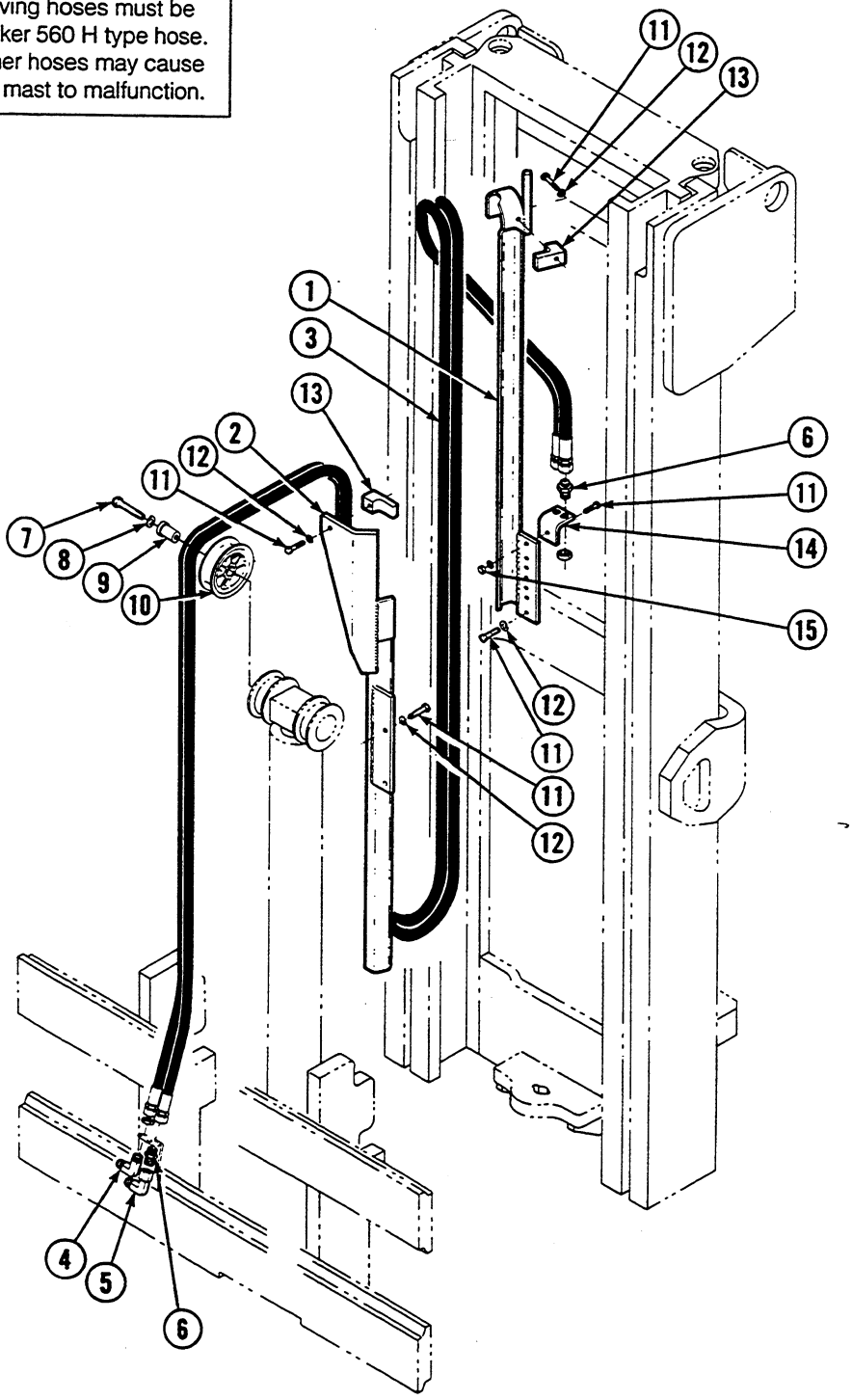

https://truckmanualshub.com/

Internal Hose Reeving
35D/40D

Part numbers on this page are used with the following mast product I.D. numbers only: 35D-MD-001 thru 171, 40D-MD-001 thru 046

Items that vary by mast height.

Outer Channel Length (inches)	L.H. Internal Reeving Group No.	R.H. Internal Reeving Group No.	Ref. No. 1		Ref No. 2		Ref. No. 3
			L.H. Upper Guide Part No.	R.H. Upper Guide Part No.	L.H. Lower Guide Part No.	R.H. Lower Guide Part No.	Hose Part No.
56-57	689074	689051	689128	689105	688970	688958	3550-2025
58-59	689075	689052	689129	689106	688970	688958	3550-2125
60-61	689076	689053	689130	689107	688971	688959	3550-2225
62-63	689077	689054	689131	689108	688971	688959	3550-2325
64-65	689078	689055	689132	689109	688972	688960	3550-2425
66-67	689079	689056	689133	689110	688972	688960	3550-2525
68-69	689080	689057	689134	689111	688973	688961	3550-2625
70-71	689081	689058	689135	689112	688973	688961	3550-2725
72-73	689082	689059	689136	689113	688974	688962	3550-2825
74-75	689083	689060	689137	689114	688974	688962	3550-2925
76-77	689084	689061	689138	689115	688975	688963	3550-3025
78-79	689085	689062	689139	689116	688975	688963	3550-3125
80-81	689086	689063	689140	689117	688976	688964	3550-3225
82-83	689087	689064	689141	689118	688976	688964	3550-3350
84-85	689088	689065	689142	689119	688977	688965	3550-3425
86-87	689089	689066	689143	689120	688977	688965	3550-3525
88-89	689090	689067	689144	689121	688978	688966	3550-3625
90-91	689091	689068	689145	689122	688978	688966	3550-3725
92-93	689092	689069	689146	689123	688979	688967	3550-3825
94-95	689093	689070	689147	689124	688979	688967	3550-3925
96-97	689094	689071	689148	689125	688980	688968	3550-4025
98-99	689095	689072	689149	689126	688980	688968	3550-4125
100-101	689096	689073	689150	689127	688981	688969	3550-4225

Common items.

REF	QTY	PART NO.	DESCRIPTION
4	1	2453	Fitting, 6-6
5	1	2680	Fitting, 6-6
6	3	2375	Fitting, 6-6
7	1	684650	Capscrew, M12x1.75x55-8.8
8	1	683822	Lockwasher, M12
9	1	684657	Shaft
10	1	677267	Hose Sheave
11	6	684649	Capscrew, M10x1.5x25-8.8
12	6	683826	Lockwasher, M10
13	2	688216	Clamp
14	1	683919	Bracket
15	1	763023	Nut, M10-8.8

NOTE: Quantities shown are for single internal reeving.
Reference: S-3519

https://truckmanualshub.com/

Internal Hose Reeving
35D/40D

WARNING: The internal reeving hoses must be Parker 560 H type hose. Other hoses may cause the mast to malfunction.

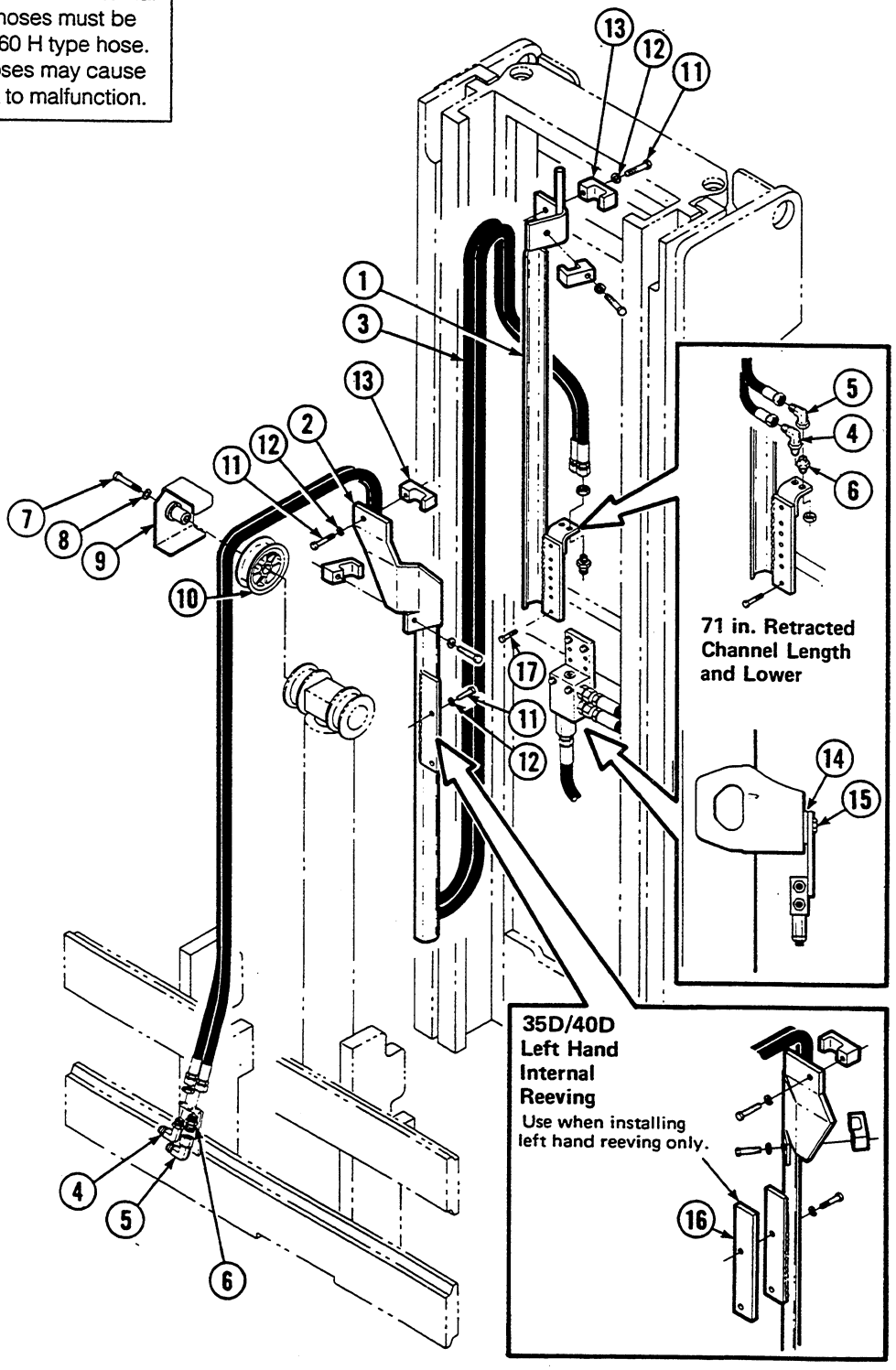

https://truckmanualshub.com/

Internal Hose Reeving
35D/40D

Part numbers on this page are used with the following mast product I.D. numbers only: 35D-MD-172 thru 372, 40D-MD-047 thru 098

Masts with 3 in. Underclearance

Items that vary by mast height.

Outer Channel Length (inches)	L.H. Internal Reeving Group No.	R.H. Internal Reeving Group No.	Ref. No. 1		Ref No. 2		Ref. No. 3
			L.H. Upper Guide Part No.	R.H. Upper Guide Part No.	L.H. Lower Guide Part No.	R.H. Lower Guide Part No.	Hose Part No.
56-57	206151	206135	206061	206077	688970	688958	3550-2103
58-60	206152	206136	206062	206078	688970	688958	3550-2153
61-63	206153	206137	206063	206079	688970	688958	3550-2253
64-66	206154	206138	206064	206080	688970	688958	3550-2379
67-69	206155	206139	206065	206081	688970	688958	3550-2502
70-72	206156	206140	206066	206082	688970	688958	3550-2602
73-75	206157	206141	206067	206083	688970	688958	3550-2828
76-78	206158	206142	206068	206084	688975	688963	3550-2945
79-81	206159	206143	206069	206085	688975	688963	3550-3100
82-84	206160	206144	206070	206086	688975	688963	3550-3250
85-87	206161	206145	206071	206087	688977	688965	3550-3430
88-90	206162	206146	206072	206088	688977	688965	3550-3580
91-92	206163	206147	206073	206089	688977	688965	3550-3725
93-95	206164	206148	206074	206090	688979	688967	3550-3848
96-98	206165	206149	206075	206091	688979	688967	3550-4025
99-101	206166	206150	206076	206092	688979	688967	3550-4147

Common items.

REF	QTY	PART NO	DESCRIPTION
4	■	2453	Fitting, 6-6
5	■	2680	Fitting, 6-6
6	■	2375	Fitting, 6-6
7	1	684650	Capscrew, M12x1.75x55-8.8
8	1	683822	Lockwasher, M12
9	1	206035	Guard
10	1	677267	Hose Sheave
11	6	684649	Capscrew, M10x1.5x25-8.8
12	7	683826	Lockwasher, M10
13	4	688216	Clamp
14	1	200787	Spacer
15	2	200788	Capscrew, M10x1.5x35-8.8
16	1	689100	Bar
17	1	200082	Capscrew, M10x1.5x25-10.9

■ Quantity as required.

NOTE: Quantities shown are for single internal reeving.

Reference: S-3519.

https://truckmanualshub.com/

Internal Hose Reeving
35D/40D

WARNING: The internal reeving hoses must be Parker 560 H type hose. Other hoses may cause the mast to malfunction.

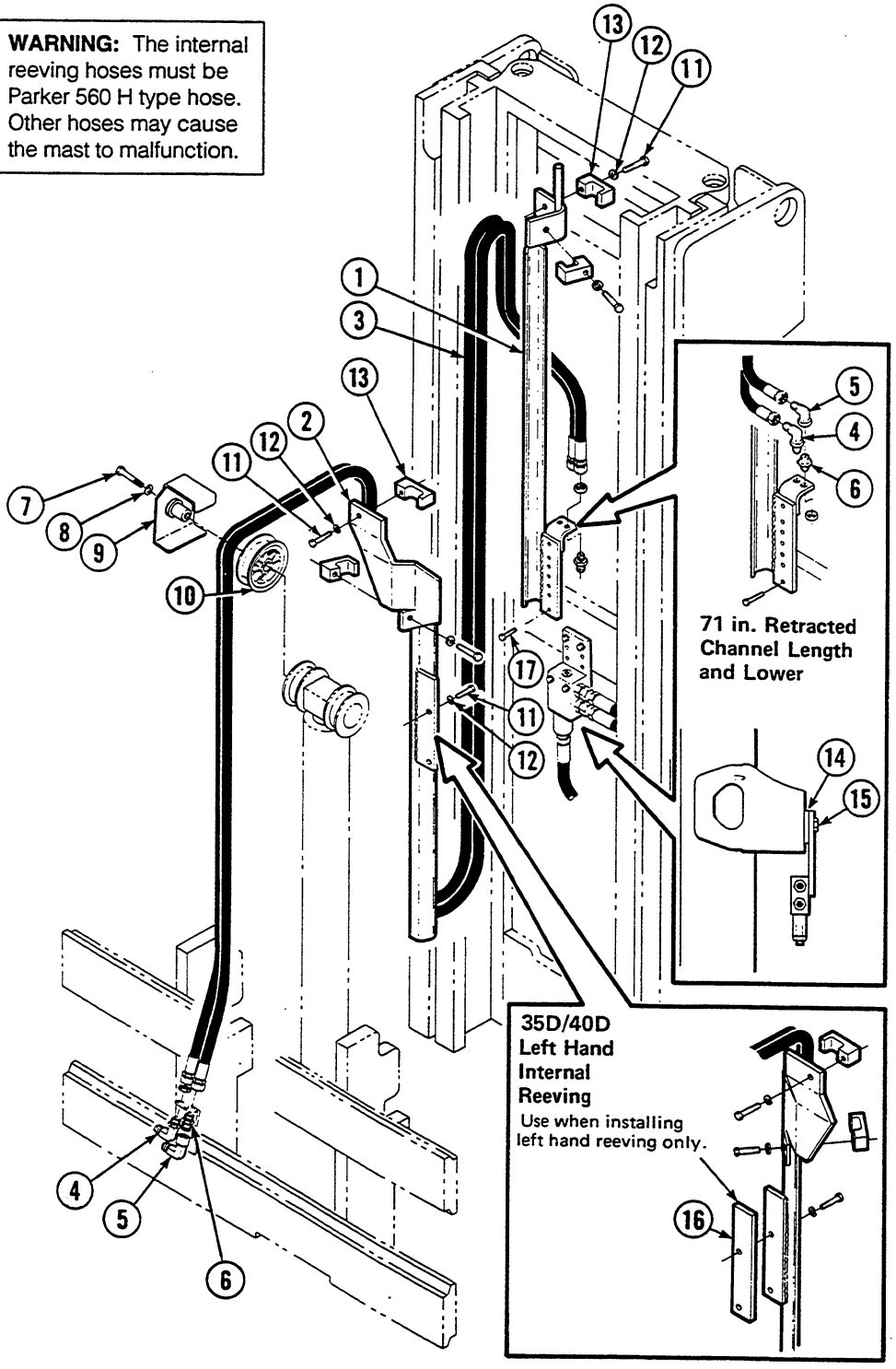

https://truckmanualshub.com/

Internal Hose Reeving
35D/40D

Part numbers on this page are used with the following mast product I.D. numbers only:

35D-MD-172 thru 372
40D-MD-047 thru 098

Masts with 5 in. Underclearance

Items that vary by mast height.

Outer Channel Length (inches)	L.H. Internal Reeving Group No.	R.H. Internal Reeving Group No.	Ref. No. 1		Ref No. 2		Ref. No. 3
			L.H. Upper Guide Part No.	R.H. Upper Guide Part No.	L.H. Lower Guide Part No.	R.H. Lower Guide Part No.	Hose Part No.
56-57	206231	206215	206061	206077	688970	688958	3550-2103
58-60	206232	206216	206062	206078	688970	688958	3550-2153
61-63	206233	206217	206063	206079	688970	688958	3550-2253
64-66	206234	206218	206064	206080	688970	688958	3550-2379
67-69	206235	206219	206065	206081	688970	688958	3550-2502
70-72	206236	206220	206066	206082	688970	688958	3550-2602
73-75	206237	206221	206067	206083	688970	688958	3550-2828
76-78	206238	206222	206068	206084	688975	688963	3550-2945
79-81	206239	206223	206069	206085	688975	688963	3550-3100
82-84	206240	206224	206070	206086	688975	688963	3550-3250
85-87	206241	206225	206071	206087	688977	688965	3550-3430
88-90	206242	206226	206072	206088	688977	688965	3550-3580
91-92	206243	206227	206073	206089	688977	688965	3550-3725
93-95	206244	206228	206074	206090	688979	688967	3550-3848
96-98	206245	206229	206075	206091	688979	688967	3550-4025
99-101	206246	206230	206076	206092	688979	688967	3550-4147

Common items.

REF	QTY	PART NO	DESCRIPTION
4	■	2453	Fitting, 6-6
5	■	2680	Fitting, 6-6
6	■	2375	Fitting, 6-6
7	1	684650	Capscrew, M12x1.75x55-8.8
8	1	683822	Lockwasher, M12
9	1	206035	Guard
10	1	677267	Hose Sheave
11	6	684649	Capscrew, M10x1.5x25-8.8
12	7	683826	Lockwasher, M10
13	4	688216	Clamp
14	1	200787	Spacer
15	2	200788	Capscrew, M10x1.5x35-8.8
16	1	689100	Bar
17	1	200082	Capscrew, M10x1.5x25-10.9

■ Quantity as required.

NOTE: Quantities shown are for single internal reeving.

Reference: S-3519.

https://truckmanualshub.com/

Mast Installation Accessories

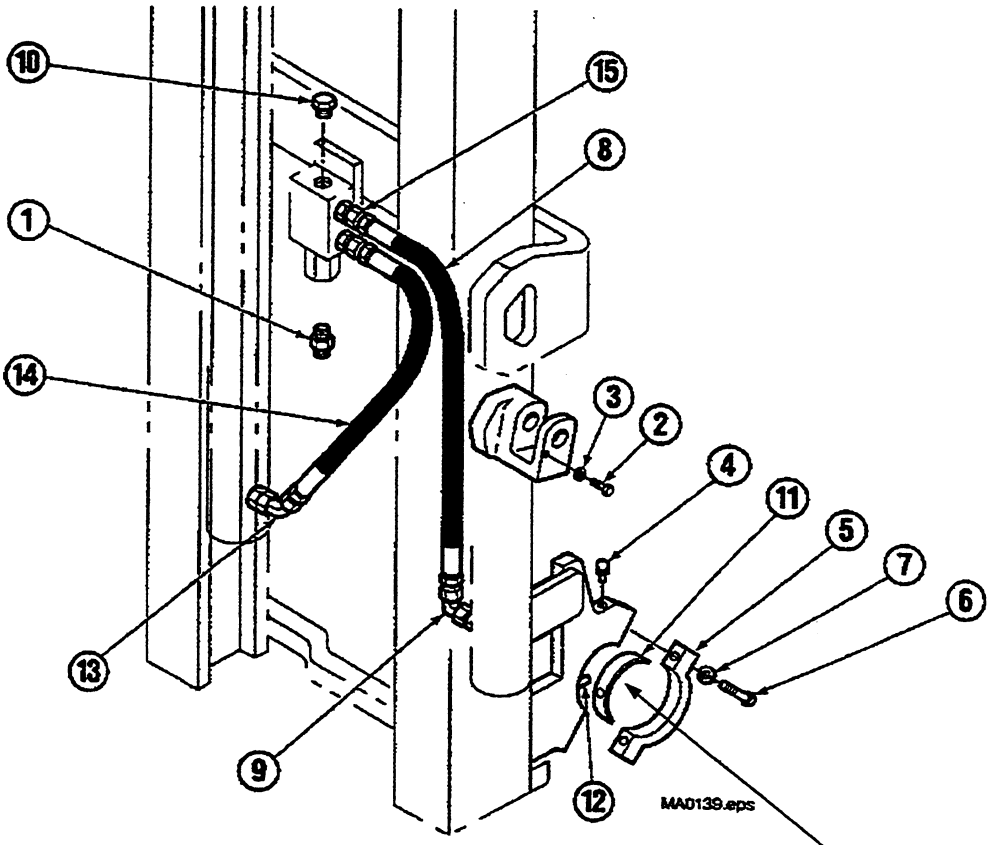

Komatsu Lift truck models.

FG18-16

REF	QTY	PART NO.	DESCRIPTION
1	1	601377	Fitting, 8-8
2	2	684594	Capscrew, M10x1.5x20-8.8
3	2	681238	Lockwasher, M10
4	2	7418	Grease Fitting
5	2	687324	Cap
6	4	688708	Capscrew, M14x2.0x50
7	4	688705	Lockwasher, M14
8	1	603875	Hose
9	1	2680	Fitting, 6-6
10	1	601378	Fitting, 8
11	2	• 687362	Bushing
12	4	688709	Pin
13	1	605230	Fitting, 6-6
14	1	656033	Hose
15	2	662187	Fitting, 8-6

• Reference only. Source from lift truck manufacturer.

Reference: Mounting Control Doc S-3536, 3538, 3540
Mounting Group 208952, 208953, 208954
Installation Kit 200235
Hydraulic Group 206892

https://truckmanualshub.com/

PARTS MANUAL

30D Limited Free Lift 2-Stage Mast

This manual contains standard production Product Identification Numbers

30D-MS-001 → 025

Special Engineered Options are not included.

Manual Number 218488

cascade®

Cascade is a Registered Trademark of Cascade Corporation

https://truckmanualshub.com/

About This Manual

Introduction

This manual shows the parts breakdown for 30D Mast product I.D. numbers. Locate the product I.D. number stamped on the upper left hand side of the outer upright channel. This number must be used when ordering replacement parts for this product.

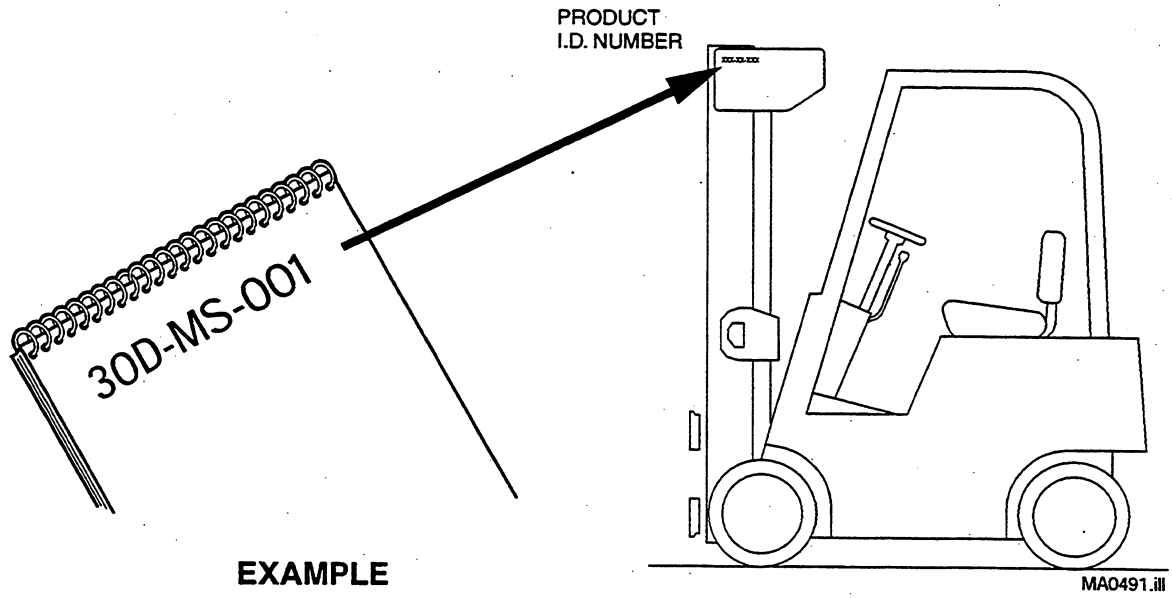

EXAMPLE

Ordering Parts

Customers – Cascade parts and service literature is available through authorized lift truck dealers. To place an order, contact the lift truck dealer of your choice.

Lift Truck Dealers – To order parts and service literature contact:

Cascade Parts Sales
2501 Sheridan Avenue
Springfield, OH 45505
Telephone: 888-CASCADE (227-2233)
FAX: 888-329-0234

Index

Safety Decals and Publications	1	Carriages	7
Cylinders	2	Internal Hose Reeving	9
Uprights	3	Backrest	11
Hoist Chains	5	Mast Installation Accessories	12
Lowering Control Valve	6	Recommended Spare Parts List	16

WARNING: For safety of yourself and others, DO NOT install the parts shown in this manual unless you have thoroughly reviewed the appropriate Service Manual.

https://truckmanualshub.com/

Decals

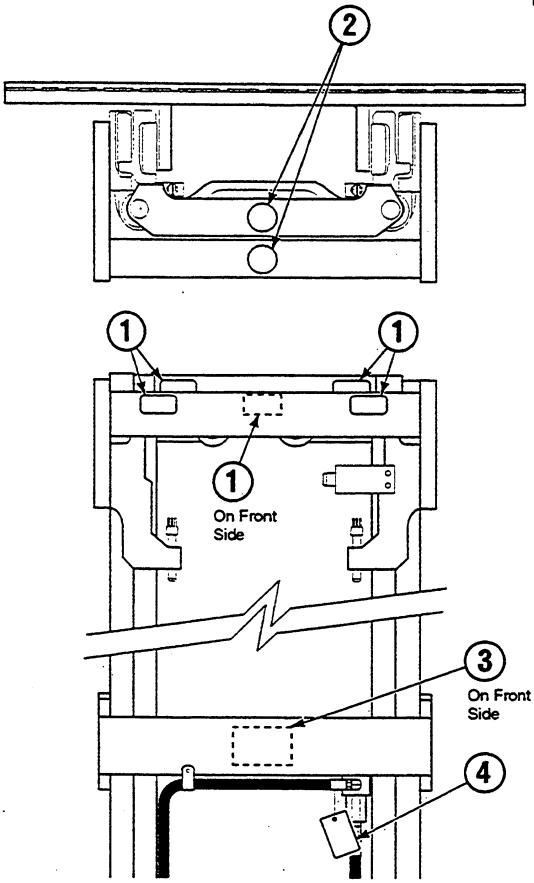

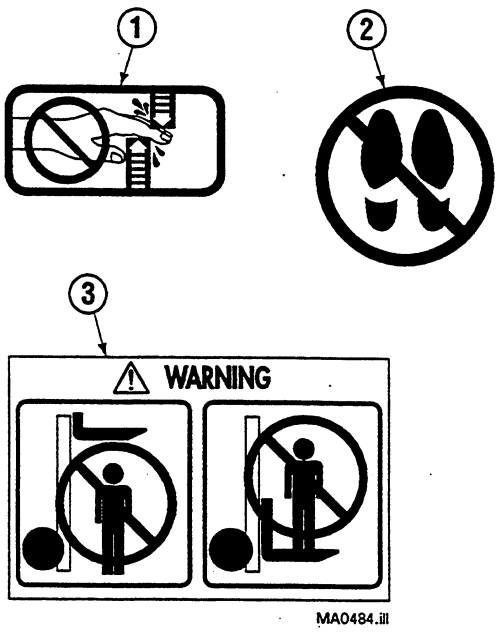

30D			
REF	QTY	PART NO.	DESCRIPTION
1	5	665595	No Hand Hold
2	2	679150	No Step
3	1	669152	WARNING
4	1	200798	WARNING-Trapped Air

Publications

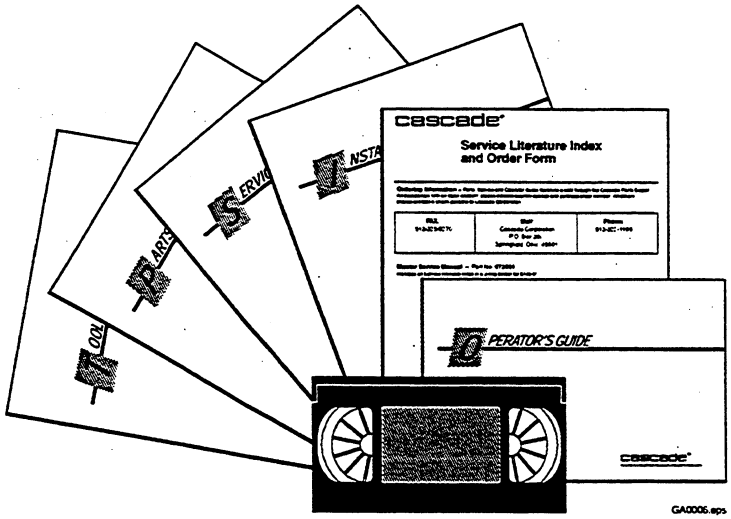

30D		
REF	PART NO.	DESCRIPTION
1	218488	Parts Manual
2	686482	Service Manual
3	679929	Tool Catalog
4	673964	Literature Index Order Form

https://truckmanualshub.com/

Main Lift Cylinder – 2600 PSI

30D

WARNING: Replacing the cylinder with a different part number cylinder may cause mast to malfunction.

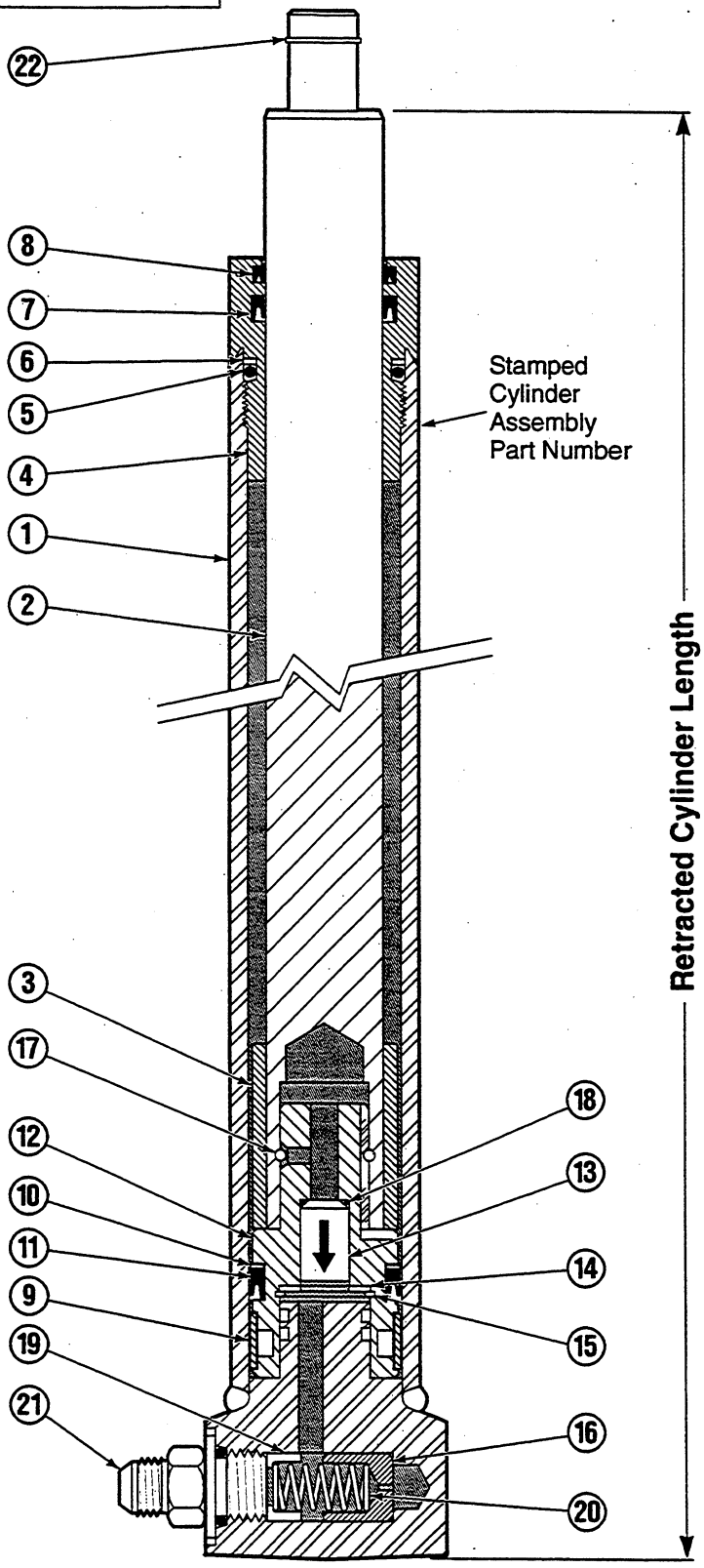

MA0476.ill

https://truckmanualshub.com/

Main Lift Cylinder – 2600 PSI

30D

Items that vary by mast height.

RETRACTED CHANNEL LENGTH (in.) ■	RETRACTED CYLINDER LENGTH (in.)	CYLINDER ASSEMBLY QTY 1	REF. NO 1 SHELL QTY 1	REF NO. 2 PLUNGER QTY 1	REF NO. 3 SPACER QTY 1
57	46.25	584500	4400-1138	4401-1113	–
69	58.25	584502	4400-1443	4401-1418	–
73	60.00	584505	4400-1487	4401-1462	–
74	63.25	584506	4400-1570	4401-1545	–
80	69.25	584511	4400-1722	4401-1697	–
89	78.25	584522	4400-1951	4401-1926	–
95	84.25	584524	4400-2103	4401-2078	–
101	87.99	584525	4400-1995	4401-2173	–

■ Does not include underclearance.

Common items.

REF	QTY	PART NO.	DESCRIPTION	REF	QTY	PART NO.	DESCRIPTION
4	1	564921	Retainer	14	1	563785	Washer ●
5	1	581558	O-Ring ▲	15	1	3015	Retaining Ring ●
6	1	581559	Back-Up Ring ▲	16	1	562849	Fuse – Piston
7	1	564915	Seal ▲	17	1	211995	Pull-In Wire
8	1	564916	Wiper ▲	18	1	2702	O-Ring ▲ ●
9	1	211986	Wear Ring ▲	19	1	562848	Spring Guide
10	1	211992	Nylon Ring ▲	20	1	214034	Spring
11	1	213490	Seal ▲	21	1	626505	Fitting, 6-6 ★
12	1	564920	Piston	22	1	201770	Snap Ring ★
13	1	212042	Check Valve ●			212072	Cylinder Service Kit

▲ Included in Cylinder Service Kit 212072.
● Included in Check Valve Service Kit 212073.
★ Not included in Cylinder Assembly.
Reference: S-4398, S-4399.

https://truckmanualshub.com/

Outer Upright

30D

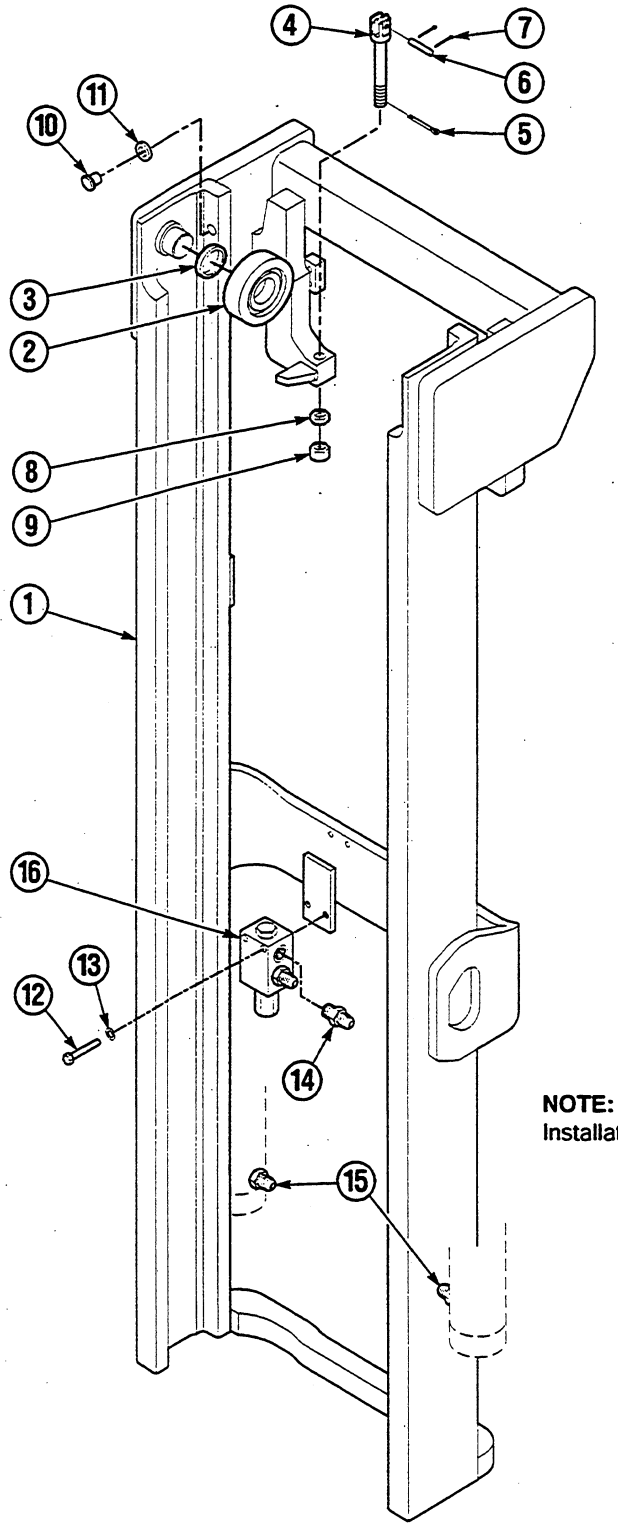

MA0457.ill

NOTE: See pages 12-15 for Mast Installation Acccessories.

https://truckmanualshub.com/

Outer Upright
30D

Items that vary by mast height.

REF	QTY	PART NO.	DESCRIPTION
1	1	■ 216841	Outer Upright – 57 in. ★
1	1	■ 216094	Outer Upright – 69 in. ★
1	1	■ 216234	Outer Upright – 73 in. ★
1	1	■ 216095	Outer Upright – 74 in. ★
1	1	■ 216097	Outer Upright – 80 in. ★
1	1	■ 216846	Outer Upright – 89 in. ★
1	1	■ 216105	Outer Upright – 95 in. ★
1	1	■ 216109	Outer Upright – 101 in. ★

Common items.

REF	QTY	PART NO.	DESCRIPTION
2	2	664206	Roller
3	●	631881	Shim, .03 in. (0,7 mm)
4	2	201432	Chain Anchor
5	2	6518	Cotter Pin
6	2	680460	Pin
7	4	6508	Cotter Pin
8	2	200007	Jam Nut, .625 NF GR 8
9	2	200006	Nut, .625 NF GR 8
10	2	212587	Thrust Plug Service Kit
11	2	212250	Shim
12	2	683823	Capscrew, M10 x 50
13	2	681238	Lockwasher, M10
14	2	611288	Fitting, 6-6
15	2	626505	Fitting, 6-6
16	1	▲	Lowering Control Valve

● Quantity as required.

★ Retracted channel length (does not include underclearance).

■ These part numbers are for reference only. Mounting brackets are not included. To order an Outer Upright with mounting brackets, contact Cascade Parts Depot (888) 227-2233.
The mast serial number must be supplied.
When ordering an Upright, Service Kit 212587. should also be ordered.

▲ See page 6 for specific part numbers.

Reference: Common Parts Group 211071, S-4948, S-4890.

https://truckmanualshub.com/

Inner Upright
30D

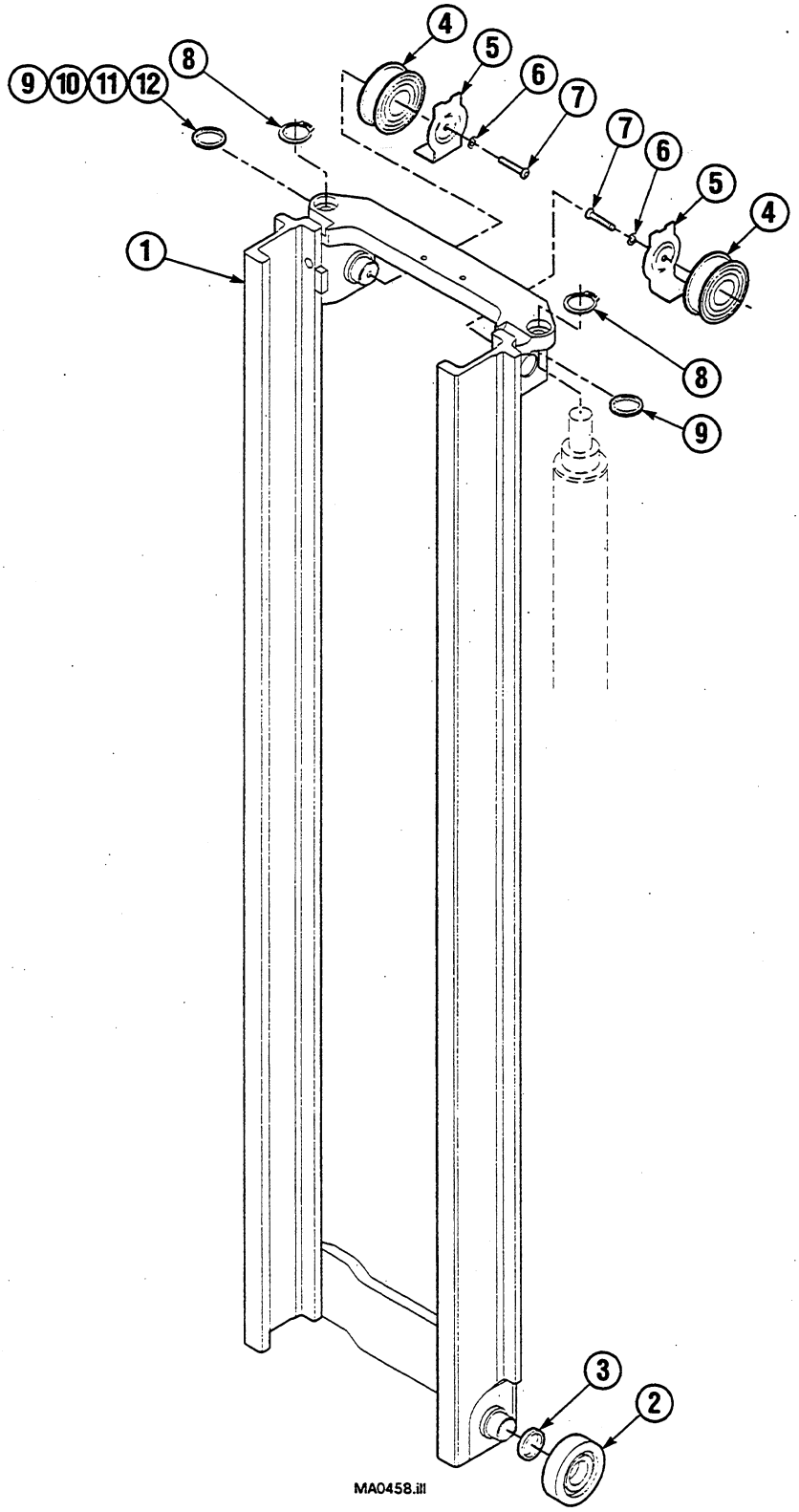

https://truckmanualshub.com/

Inner Upright
30D

Items that vary by mast height.

REF	QTY	PART NO.	DESCRIPTION
1	1	211012	Inner Upright – 57 in. ★
1	1	211013	Inner Upright – 69 in. ★
1	1	211014	Inner Upright – 73 in. ★
1	1	211015	Inner Upright – 74 in. ★
1	1	211016	Inner Upright – 80 in. ★
1	1	211017	Inner Upright – 89 in. ★
1	1	218125	Inner Upright – 95 in. ★
1	1	218128	Inner Upright – 101 in. ★

Common items.

REF	QTY	PART NO.	DESCRIPTION
2	2	664206	Roller
3	●	631881	Shim, .03 in. (0,7 mm)
4	2	661550	Chain Sheave
5	2	216052	Hose Guard
6	2	683822	Lockwasher, M12
7	2	210736	Capscrew, M12 x 25
8	2	210770	Snap Ring
9	●	213703	Shim, .01 in. (.25 mm)
10	●	213704	Shim, .03 in. (.8 mm)
11	●	213705	Shim, .06 in. (1.6 mm)
12	●	213706	Shim, .09 in. (1.4 mm)

● Quantity as required.

★ Retracted channel length (does not include underclearance).

Reference: Common Parts Group 211071, S-4515, S-4894.

https://truckmanualshub.com/

Hoist Chains
30D

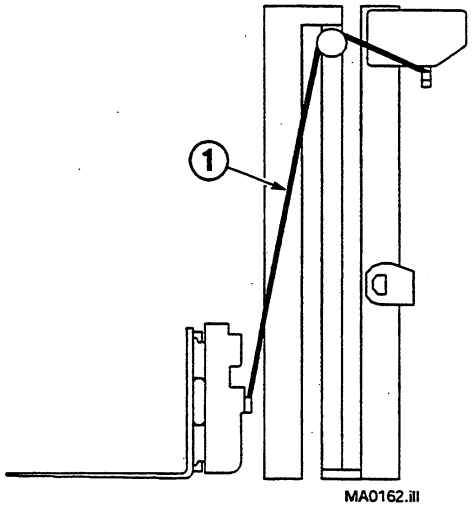

OVERALL RETRACTED CHANNEL LENGTH	QTY	MAIN LIFT CHAIN – REF NO. 1	
		PART NO.	LENGTH in. (mm)
57	2	686928	51.88 (1318)
69	2	678752	63.11 (1603)
73	2	676011	66.88 (1699)
74	2	687012	68.11 (1730)
80	2	687014	73.37 (1889)
89	2	678764	83.11 (2111)
95	2	678765	89.37 (2270)
101	2	200977	95.62 (2429)

Reference: S-4948.

https://truckmanualshub.com/

Lowering Control Valve
2600 PSI System Pressure

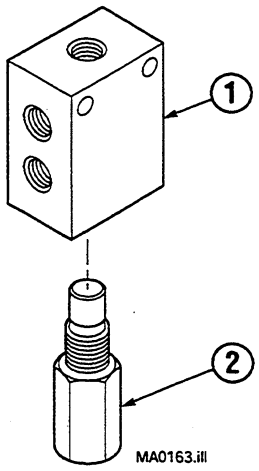

30D			
REF	QTY	PART NO.	DESCRIPTION
		214408	Lowering Control Valve – 11 GPM
		684319	Lowering Control Valve – 12 GPM
1	1	684152	Valve Body
2	1	214407	Valve Cartridge – 11 GPM ■
	1	684318	Valve Cartridge – 12 GPM ■

■ This part must not be substituted. Check part number on side of cartridge when replacing.

Reference: Valve specified in Mounting Control Document.

https://truckmanualshub.com/

Carriage – 4 Roller

30D

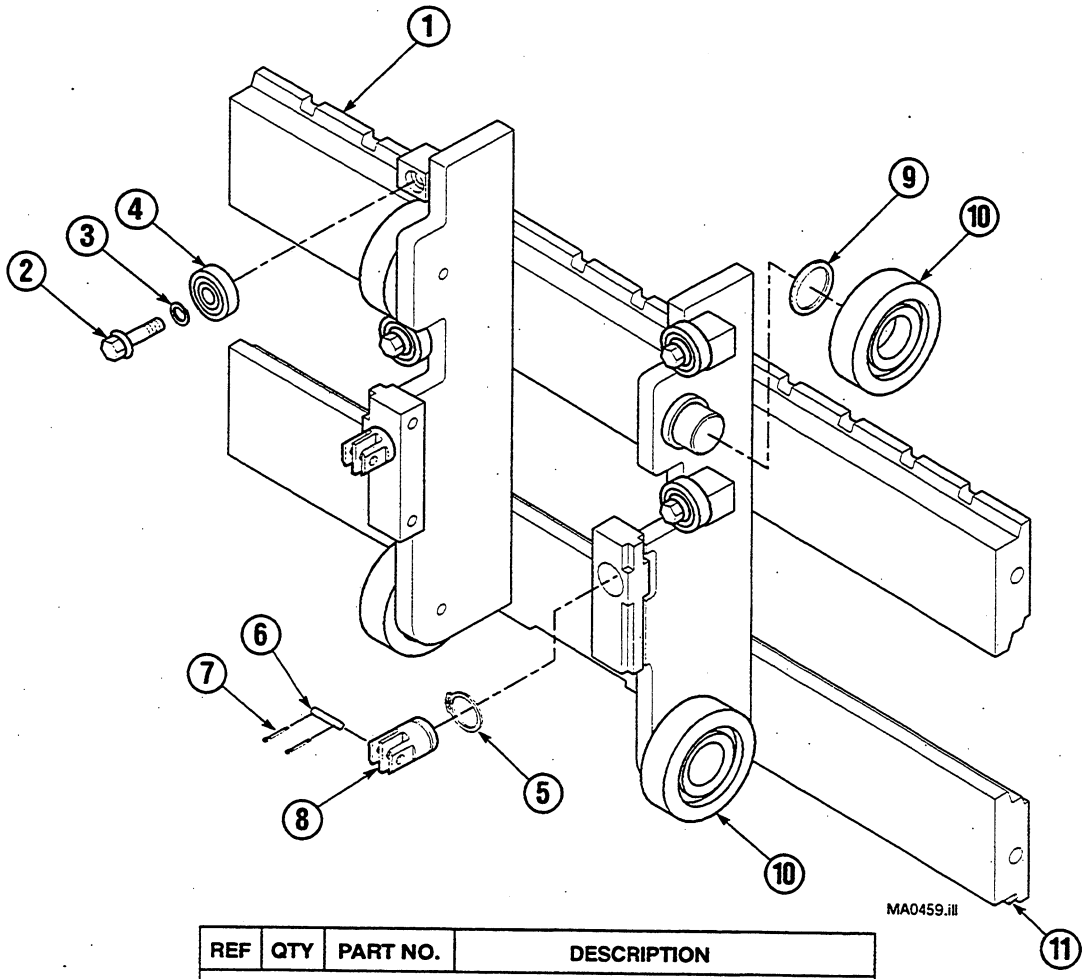

REF	QTY	PART NO.	DESCRIPTION
For masts mounted with 3 in. underclearance			
1	1	204839	Carriage, Class II – 31 in. (787 mm) wide
1	1	386227	Carriage, Class II – 35 in. (889 mm) wide
1	1	204840	Carriage, Class II – 37 in. (940 mm) wide
1	1	204841	Carriage, Class II – 41 in. (1041 mm) wide
For masts mounted with 5 in. underclearance			
1	1	204842	Carriage, Class II – 31 in. (787 mm) wide
1	1	204843	Carriage, Class II – 37 in. (940 mm) wide
1	1	204844	Carriage, Class II – 41 in. (1041 mm) wide
2	4	206174	Capscrew, M12x45 ▲
3	4	684660	Lockwasher, M12 ▲
4	4	683819	Roller ▲
5	2	3135	Snap Ring ▲
6	2	680460	Chain Pin ▲
7	4	6508	Cotter Pin ▲
8	2	678754	Chain Anchor ▲
9	■	631881	Shim, .03 in. (0,7 mm) ▲
10	4	664206	Roller ▲
11	1	219400	Fork Stop Kit

■ Quantity as required.

▲ Included in Service Kit 219224.

Reference: Common Parts Group 211071, S-4398, S-3803.

https://truckmanualshub.com/

Carriage – 6 Roller

30D

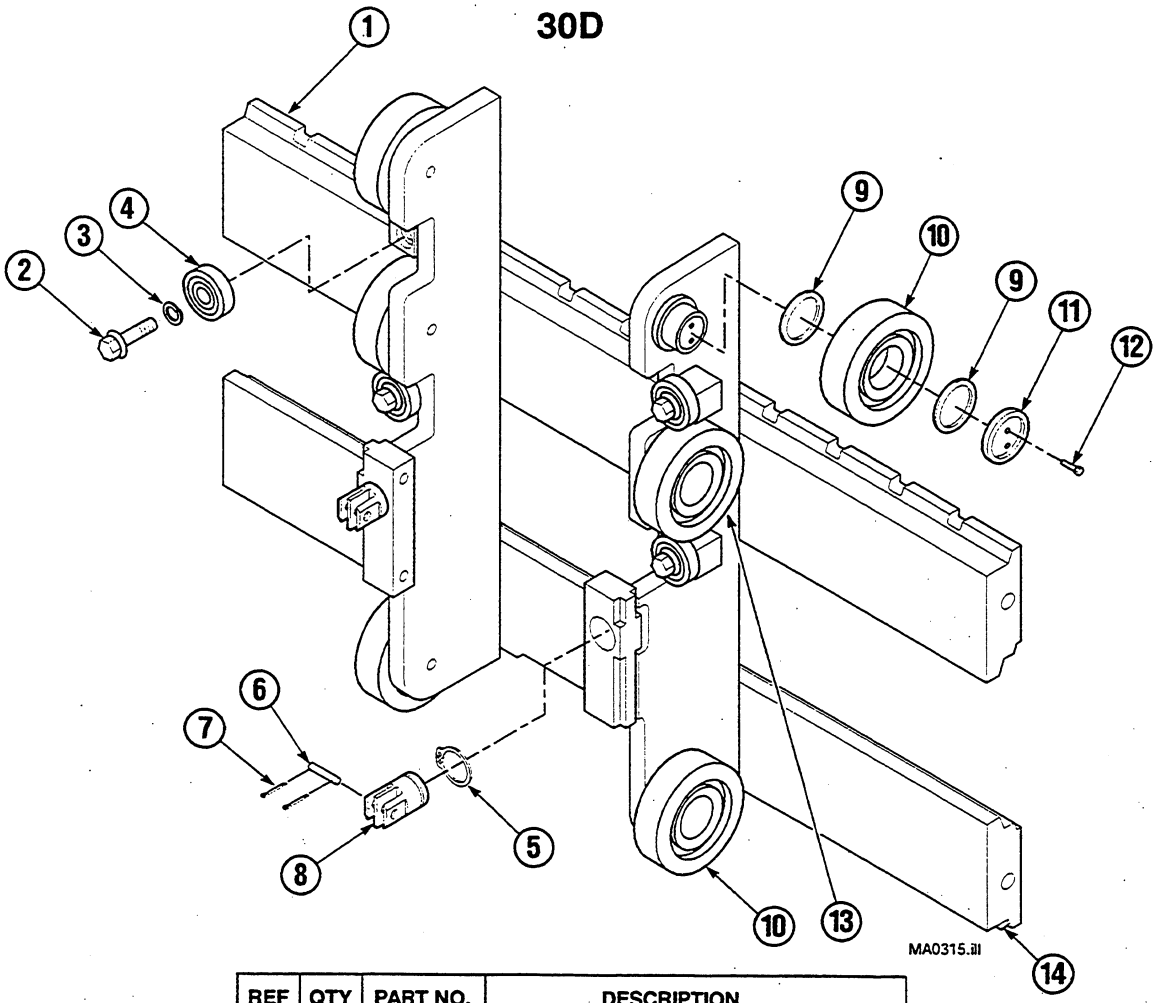

REF	QTY	PART NO.	DESCRIPTION
For masts mounted with 3 in. underclearance			
1	1	204845	Carriage, Class II – 31 in. (787 mm) wide
1	1	204846	Carriage, Class II – 37 in. (940 mm) wide
1	1	204847	Carriage, Class II – 41 in. (1041 mm) wide
1	1	696502	Carriage, Class II – 52 in. (1321 mm) wide
For masts mounted with 5 in. underclearance			
1	1	204848	Carriage, Class II – 31 in. (787 mm) wide
1	1	204849	Carriage, Class II – 37 in. (940 mm) wide
1	1	204850	Carriage, Class II – 41 in. (1041 mm) wide
2	4	206174	Capscrew, M12x45 ▲
3	4	684660	Lockwasher, M12 ▲
4	4	683819	Roller ▲
5	2	3135	Snap Ring ▲
6	2	680460	Chain Pin ▲
7	4	6508	Cotter Pin ▲
8	2	678754	Chain Anchor ▲
9	■	631881	Shim, .03 in. (0,7 mm) ▲
10	4	664206	Roller ▲
11	2	658378	Retainer ▲
12	4	680218	Capscrew ▲
13	2	661549	Roller ▲
14	1	219400	Fork Stop Kit

■ Quantity as required.

▲ Included in Service Kit 219225.

Reference: Common Parts Group 211071, S-4398, S-3804.

https://truckmanualshub.com/

Internal Hose Reeving – Single Function

30D

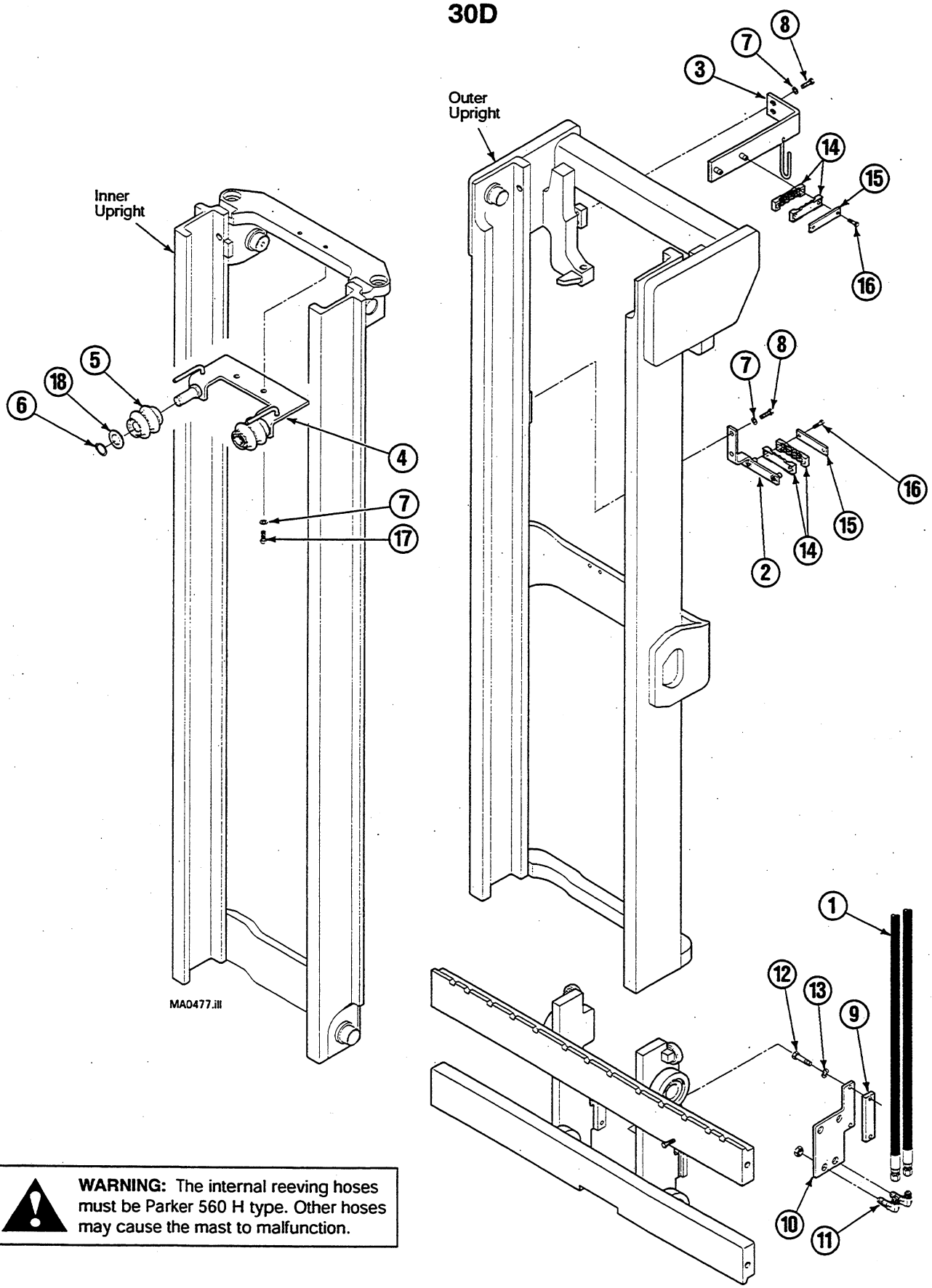

WARNING: The internal reeving hoses must be Parker 560 H type. Other hoses may cause the mast to malfunction.

https://truckmanualshub.com/

Internal Hose Reeving – Single Function
30D

Standard

Items that vary by mast height.

Retracted Channel Length (in.)■	Internal Reeving Group No.	Ref. No. 1 ▲ Hose Part No.
57	217056	216912
69	217061	216916
73	217064	213920
74	217065	216918
80	217071	213921
89	217078	213922
95	217081	216931
101	217082	216932

Cold Storage
(Required for 0°F and below)

Items that vary by mast height.

Retracted Channel Length (in.)■	Internal Reeving Group No.	Ref. No. 1 ▲ Hose Part No.
57	217116	217234
69	217121	217243
73	217124	217240
74	217125	217242
80	217131	217249
89	217138	217256
95	217141	217259
101	217142	217261

Common items.

REF	QTY	PART NO.	DESCRIPTION
1	2	▲	Hose
2	1	210654	Termination Bracket
3	1	216901	Upper Bracket
4	1	211049	Sheave Bracket
5	2	210677	Hose Sheave
6	2	688935	Snap Ring
7	6	681238	Lockwasher, M10
8	4	684649	Capscrew, M10x1,5x25-8.8
9	1	210739	Spacer
10	1	210738	Carriage Termination Bracket
11	2	2453	Fitting, 6-6
12	2	787372	Capscrew, M8x1,25x20-8.8
13	2	206315	Lockwasher, M8
14	4	206887	Insert
15	2	203407	Bar
16	4	763169	Capscrew, M6x1x20-8.8
17	2	200429	Capscrew, M10x20
18	2	205086	Washer

■ Does not include underclearance.

Reference: Common Parts Group 216897, S-4881, S-4883.

https://truckmanualshub.com/

Internal Hose Reeving – Double Function

30D

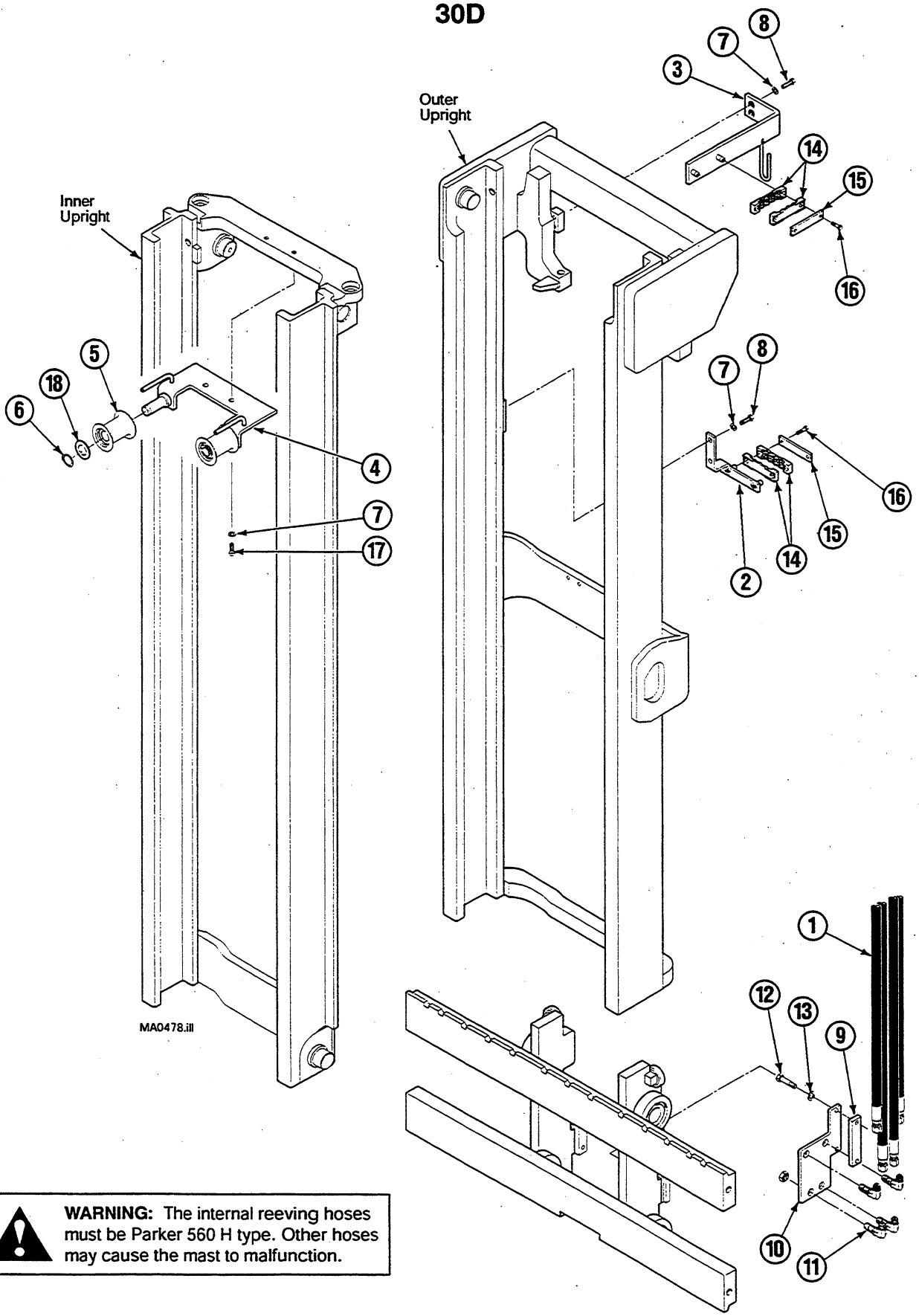

WARNING: The internal reeving hoses must be Parker 560 H type. Other hoses may cause the mast to malfunction.

https://truckmanualshub.com/

Internal Hose Reeving – Double Function
30D

Standard

Items that vary by mast height.

Retracted Channel Length (in.)■	Internal Reeving Group No.	Ref. No. 1 ▲ Hose Part No.
57	216960	216912
69	216965	216916
73	216968	213920
74	216969	216918
80	216975	213921
89	216982	213922
95	216985	216931
101	216986	216932

Cold Storage
(Required for 0°F and below)

Items that vary by mast height.

Retracted Channel Length (in.)■	Internal Reeving Group No.	Ref. No. 1 ▲ Hose Part No.
57	217144	217234
69	217149	217243
73	217152	217240
74	217153	217242
80	217159	217249
89	217166	217256
95	217169	217259
101	217170	217261

Common items.

REF	QTY	PART NO.	DESCRIPTION
1	2	▲	Hose
2	1	210654	Termination Bracket
3	1	216901	Upper Bracket
4	1	211049	Sheave Bracket
5	2	210662	Hose Sheave
6	2	688935	Snap Ring
7	6	681238	Lockwasher, M10
8	4	684649	Capscrew, M10x1,5x25-8.8
9	1	210739	Spacer
10	1	210738	Carriage Termination Bracket
11	2	2453	Fitting, 6-6
12	2	787372	Capscrew, M8x1,25x20-8.8
13	2	206315	Lockwasher, M8
14	4	206887	Insert
15	2	203407	Bar
16	4	763169	Capscrew, M6x1x20-8.8
17	2	200429	Capscrew, M10x20
18	2	205086	Washer

■ Does not include underclearance.

Reference: Common Parts Group 216896, S-4885, S-4887.

https://truckmanualshub.com/

Load Backrest

30D

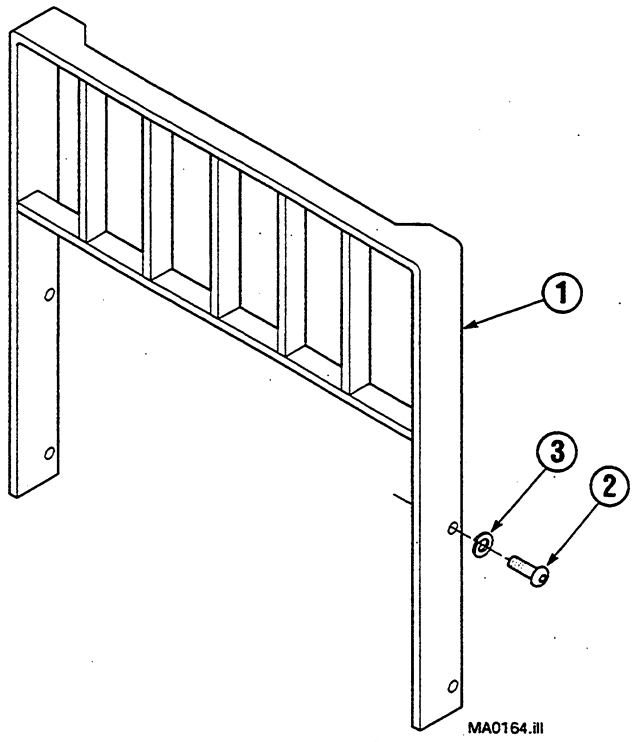

Class II Load Backrest			
REF	QTY	PART NO.	DESCRIPTION
1	1	209407	★ Backrest – 31x36 in. (789x876 mm)
	1	209233	★ Backrest – 31x48 in. (789x1181 mm)
	1	209408	★ Backrest – 31x60 in. (789x1486 mm)
	1	684772	★ Backrest – 37x36 in. (940x914 mm)
	1	684773	★ Backrest – 37x48 in. (940x1219 mm)
	1	684774	★ Backrest – 37x60 in. (940x1524 mm)
	1	684775	★ Backrest – 41x36 in. (1041x914 mm)
	1	684776	★ Backrest – 41x48 in. (1041x1219 mm)
	1	684777	★ Backrest – 41x60 in. (1041x1524 mm)
2	4	200173	Capscrew, M16x2,0x35-8.8
3	4	684586	Lockwasher, M16

★ Includes items 2 and 3. Width x height.

Reference: S-3370.

https://truckmanualshub.com/

Mast Installation Accessories

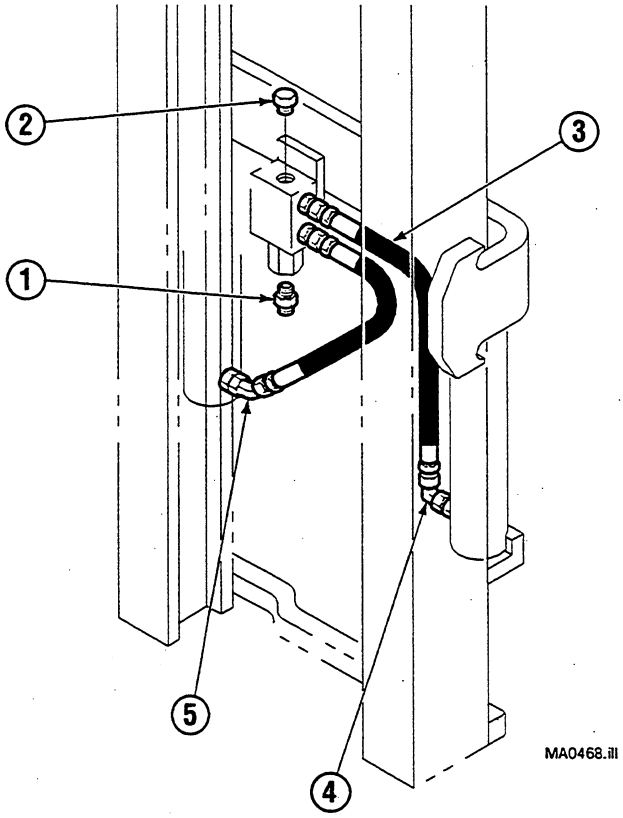

REF	QTY	PART NO.	DESCRIPTION
1	1	601377	Fitting, 8-8
2	1	601378	Fitting, 8
3	2	624216	Hose
4	1	2680	Fitting, 6-6
5	1	605230	Fitting, 6-6

Reference: Mounting Control Doc S-4577, S-4578.
Mounting Group 210956, 7, 8, 9, 60, 61.
Installation Kit 200352.
Hydraulic Group 200615.

https://truckmanualshub.com/

Mast Installation Accessories

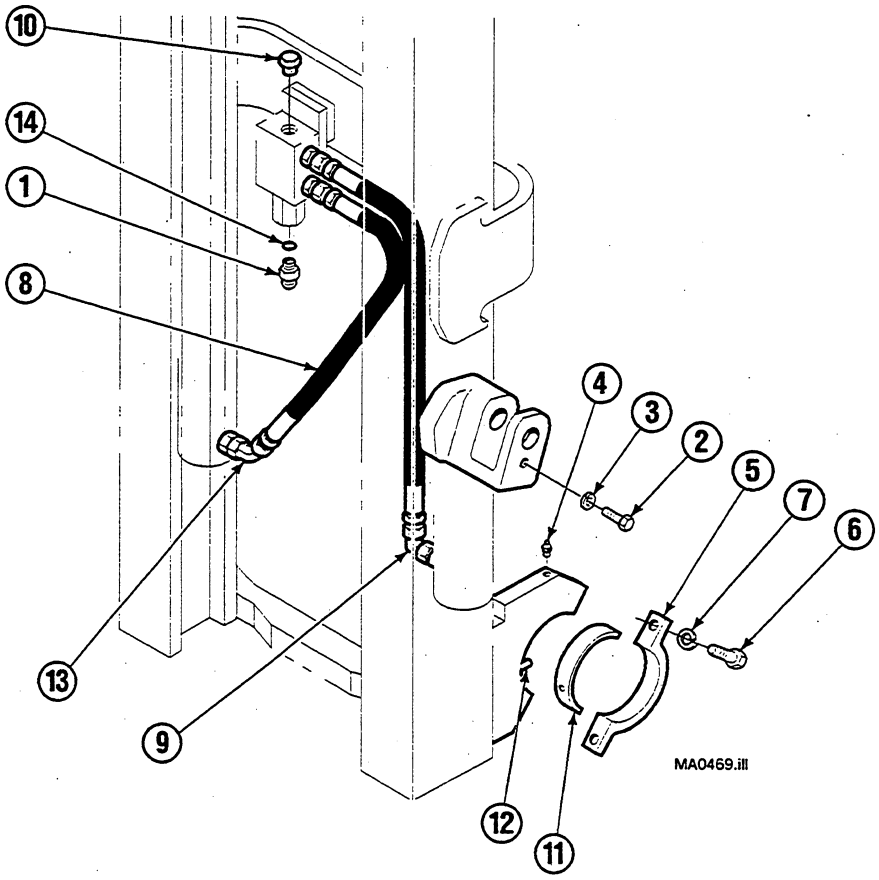

Komatsu Lift truck models.

FB 13 M-2
FB 18 M-2
FB 13 MU-1
FB 15 MU-1

REF	QTY	PART NO.	DESCRIPTION
1	1	684109	Fitting, M22
2	2	212632	Capscrew, M10
3	2	681238	Lockwasher, M10
4	2	7418	Grease Fitting
5	2	687324	Cap
6	4	212618	Capscrew, M14
7	4	688705	Lockwasher, M14
8	2	624216	Hose
9	1	2680	Fitting, 6-6
10	1	601378	Fitting, 8
11	2	687362	Bushing ▲
12	4	688709	Pin ▲
13	1	605230	Fitting, 6-6
14	1	2841	O-Ring

▲ Reference only. Source from lift truck manufacturer.

Reference: Mounting Control Doc S-4580.
Mounting Group 210891.
Installation Kit 787232.
Hydraulic Group 200615.

https://truckmanualshub.com/

Mast Installation Accessories

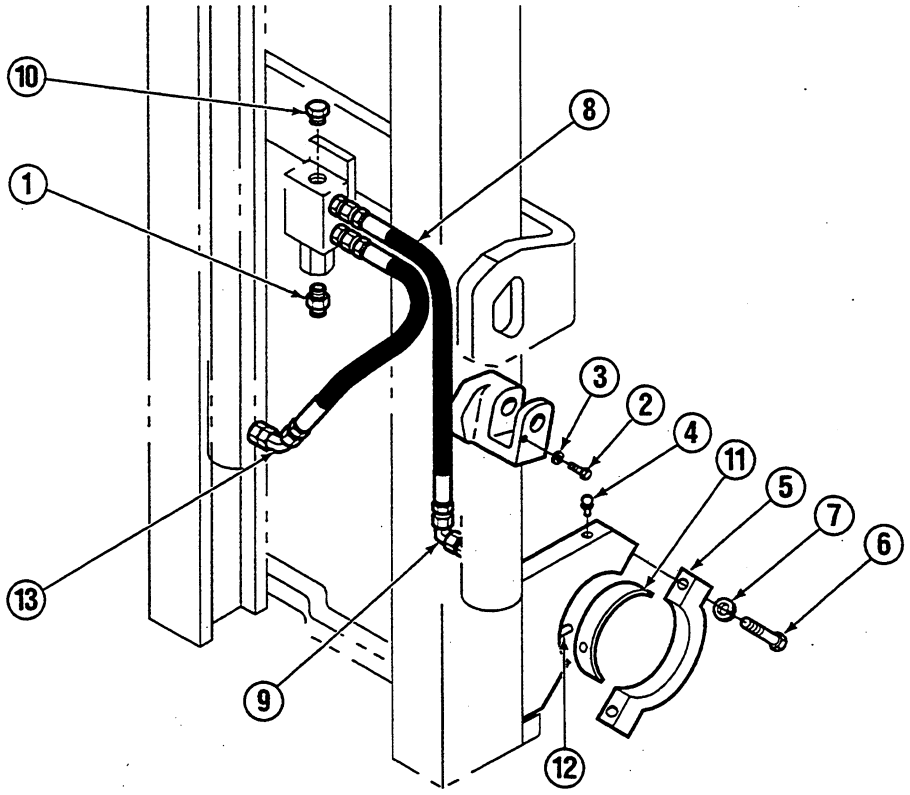

Komatsu Lift truck models.

FG 10-18 ST-15
FG 10-18 ST-16

REF	QTY	PART NO.	DESCRIPTION
1	1	601377	Fitting, 8-8
2	2	212632	Capscrew, M10
3	2	681238	Lockwasher, M10
4	2	7418	Grease Fitting
5	2	687324	Cap
6	4	212618	Capscrew, M14
7	4	688705	Lockwasher, M14
8	2	624216	Hose
9	1	2680	Fitting, 6-6
10	1	601378	Fitting, 8
11	2	687362	Bushing ▲
12	4	688709	Pin ▲
13	1	605230	Fitting, 6-6

▲ Reference only. Source from lift truck manufacturer.

Reference: Mounting Control Doc S-4577.
Mounting Group 210862.
Installation Kit 200235.
Hydraulic Group 200615.

https://truckmanualshub.com/

Mast Installation Accessories

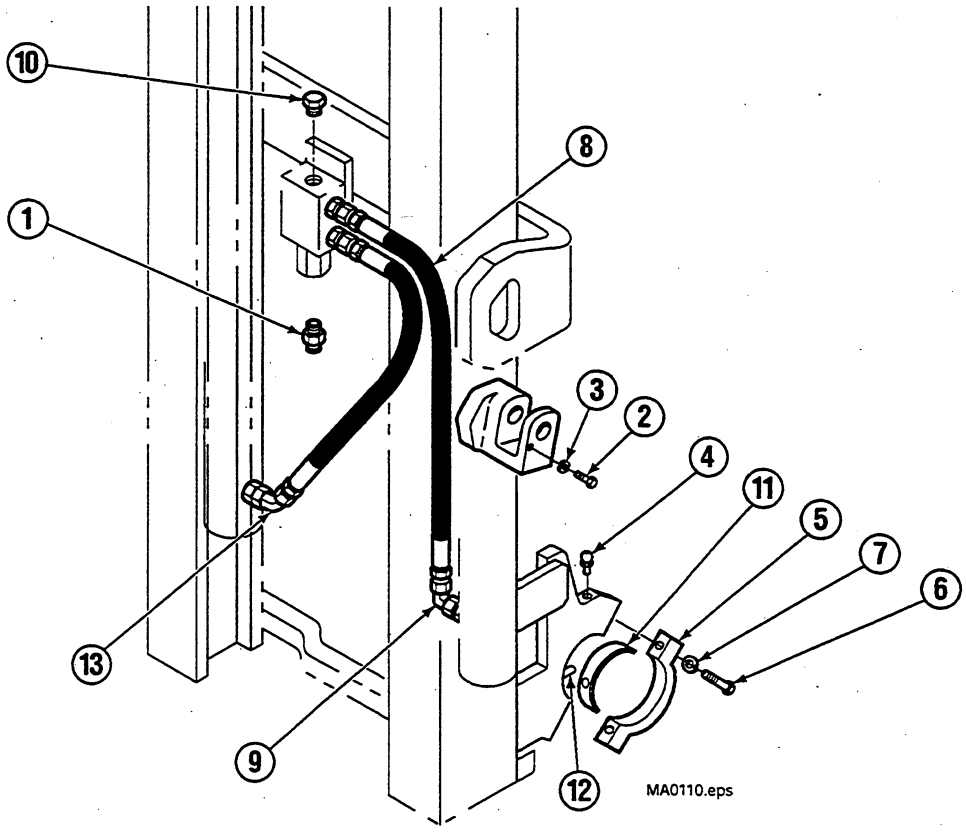

Komatsu Lift truck models.

FD15T-15,16	FD18T-15,16	FG15T-15,16	FG18T-15,16
FD15C-15,16	FD18C-15,16	FG15C-15,16	FG18C-15,16
FD15HT-15,16	FD18HT-15,16	FG15HT-15,16	FG18HT-15,16
FD15HC-15,16	FD18HC-15,16	FG15HC-15,16	FG18HC-15,16

REF	QTY	PART NO.	DESCRIPTION
1	1	601377	Fitting, 8-8
2	2	684594	Capscrew, M10x1.5x20-8.8
3	2	681238	Lockwasher, M10
4	2	7418	Grease Fitting
5	2	687324	Cap
6	4	688708	Capscrew, M14x2.0x50
7	4	688705	Lockwasher, M14
8	2	624216	Hose
9	1	2680	Fitting, 6-6
10	1	601378	Fitting, 8
11	2	687362	Bushing ▲
12	4	688709	Pin ▲
13	1	605230	Fitting, 6-6

▲ Reference only. Source from lift truck manufacturer.

Reference: Mounting Control Doc S-4578.
Mounting Group 210892.
Installation Kit 200235.
Hydraulic Group 200615.

https://truckmanualshub.com/

Recommended Spare Parts List

30D Limited Free Lift 2-Stage Mast				
PART NO.	DESCRIPTION	MASTS SERVICED		
		1-5	6-19	20-50
	MAIN LIFT CYLINDER			
■	Main Lift Cylinder Assembly	0	0	1
212072	Service Kit	2	4	8
212042	Check Valve (2600 PSI System Pressure)	2	4	8
2702	O-Ring (2600 PSI System Pressure)	2	4	8
201770	Snap Ring	2	4	8
213703	Washer, (.25 mm)	3	6	9
214034	Lowering Fuse Spring	2	4	8
	INTERNAL REEVING			
■	Hose RH and LH	2	4	8
2453	Fitting, 6-6	1	2	4
■	Hose Sheave	1	2	4
	UPRIGHTS			
■	Chain Pin	8	8	16
6508	Cotter Pin	8	16	32
■	Chain Anchor	1	2	4
200007	Jam Nut	2	1	2
200006	Nut	2	1	2
6518	Cotter Pin	4	8	16
631881	Shim, .03 in. (0,7 mm)	16	32	64
664206	Roller	12	24	48
212587	Thrust Plug Service Kit	2	4	8
	CARRIAGE AND CHAINS			
683819	Carriage Side Thrust Roller	4	8	16
■	Main Lift Chains	2	4	8
664206	Carriage Roller	4	8	16
■	Chain Anchor	1	2	4
680460	Chain Pin	8	8	16
	LUBRICANT			
599474	13 oz Aerosol Can	1	3	5
	PAINT			
684271	12 oz Aerosol Can (black)	1	1	1

■ See specific parts page for part number.

https://truckmanualshub.com/

This Page Left Intentionally Blank

KOMATSU

https://truckmanualshub.com/

Parts Manual

35D and 40D High-Visibility WORLD MAST®

Full Free Lift 3-Stage Mast

Product I.D. Numbers

35D-MT-001 → 35D-MT-678

40D-MT-001 → 40D-MT-133

Manual Number 689050 R-2

cascade®

Cascade is a Registered Trademark of Cascade Corporation

https://truckmanualshub.com/

About This Manual

Introduction

This manual shows the parts breakdown for specific 35D and 40D 3-Stage Full Free Lift WORLD MAST® product I.D. numbers. Locate the product I.D. number stamped on the upper left hand side of the outer upright channel. This number must be used when ordering replacement parts for this product.

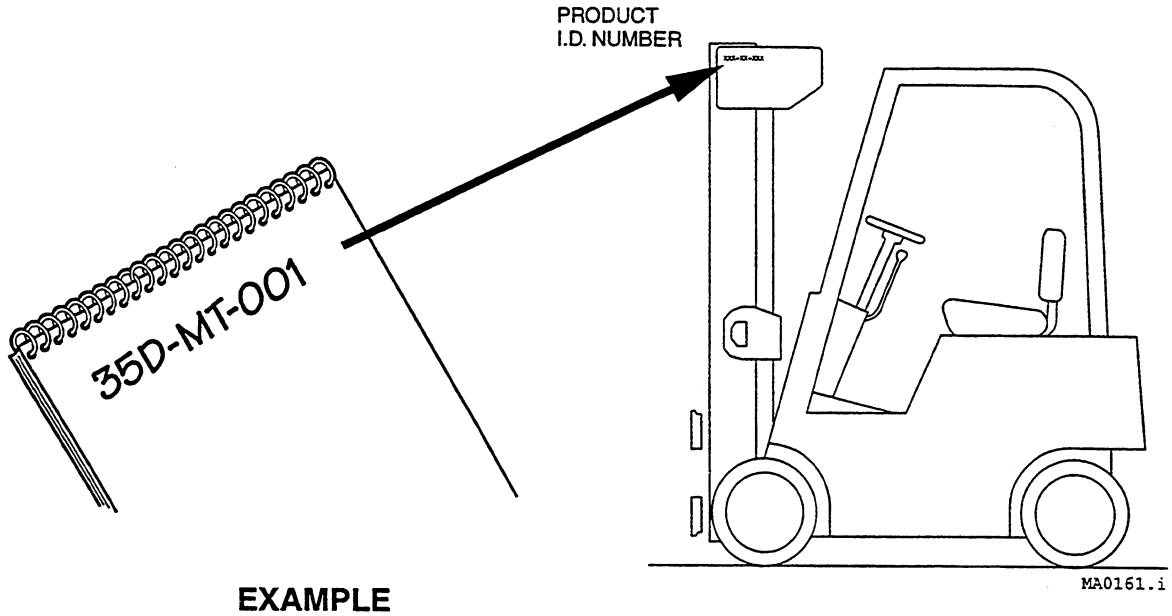

EXAMPLE

Ordering Parts

Customers – Cascade parts and service literature is available through authorized lift truck dealers. To place an order, contact the lift truck dealer of your choice.

Lift Truck Dealers – To order parts and service literature contact:

Cascade Parts Sales
2201 NE 201st
Troutdale, OR 97060
Telephone: 1-800-CAS-CADE
503-669-6300
FAX: 503-669-6338

Index

Safety Decals and Publications 1
Cylinders 2
Uprights 14
Carriages 22
Hoist Chains 26
Hydraulic Group 30
Lowering Control Valve 31
Backrest 32
Internal Hose Reeving 33
Mast Installation Accessories 39
Recommended Spare Parts List 60

https://truckmanualshub.com/

Safety Decals

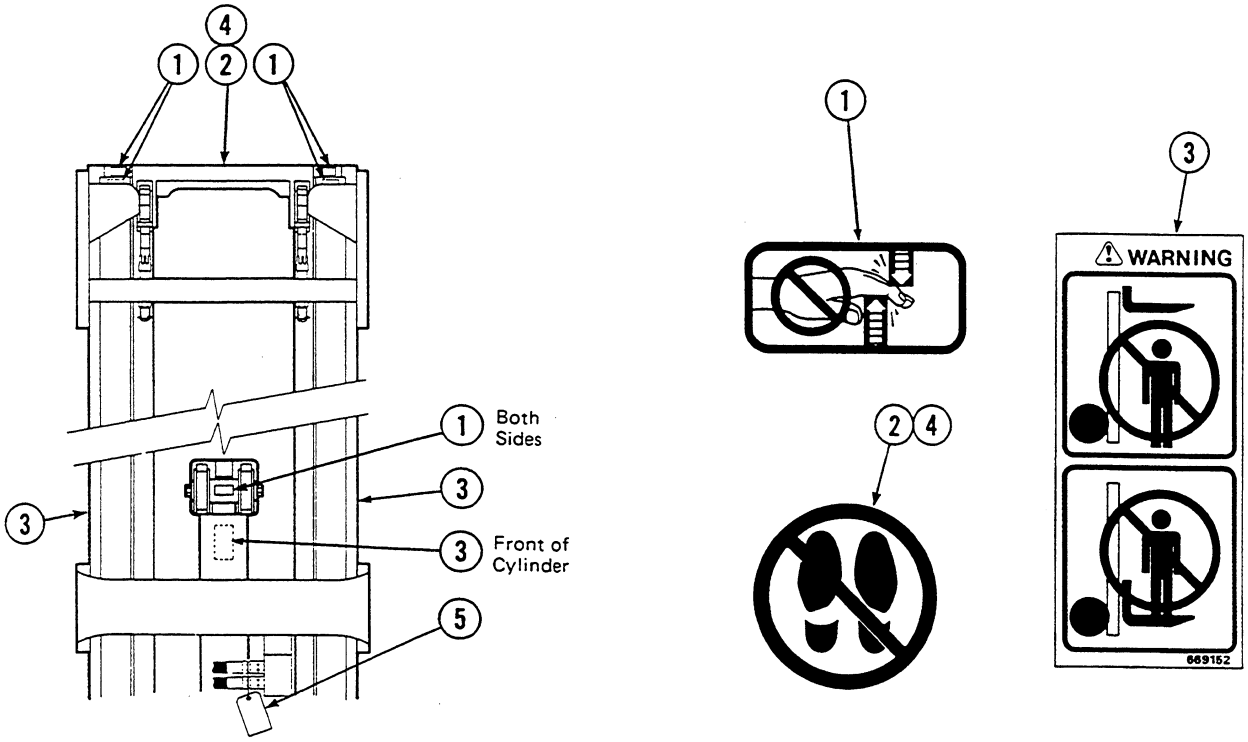

REF	QTY	PART NO.	DESCRIPTION
1	6	665595	No Hand Hold
2	3	679150	No Step
3	3	669152	WARNING
4	1	201195	No Step
5	1	200798	WARNING-Trapped Air

Publications

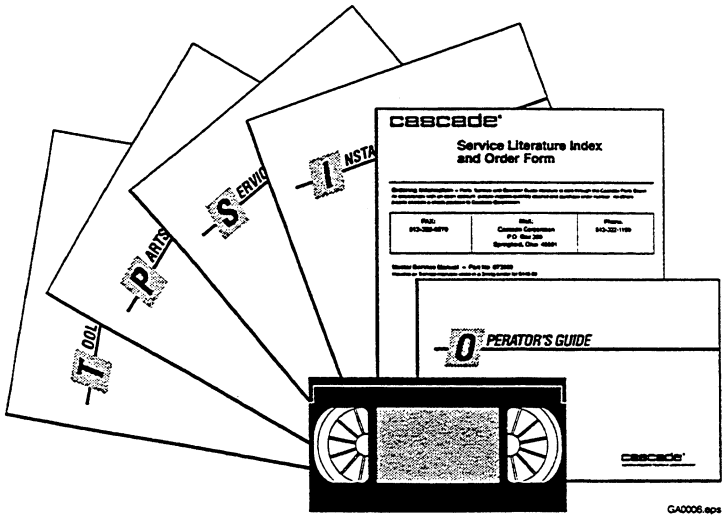

REF	PART NO.	DESCRIPTION
1	689050	Parts Manual
2	687250	Service Manual
3	679929	Tool Catalog
4	673964	Literature Index Order Form

https://truckmanualshub.com/

Main Lift Cylinder-2000 PSI

35D/40D

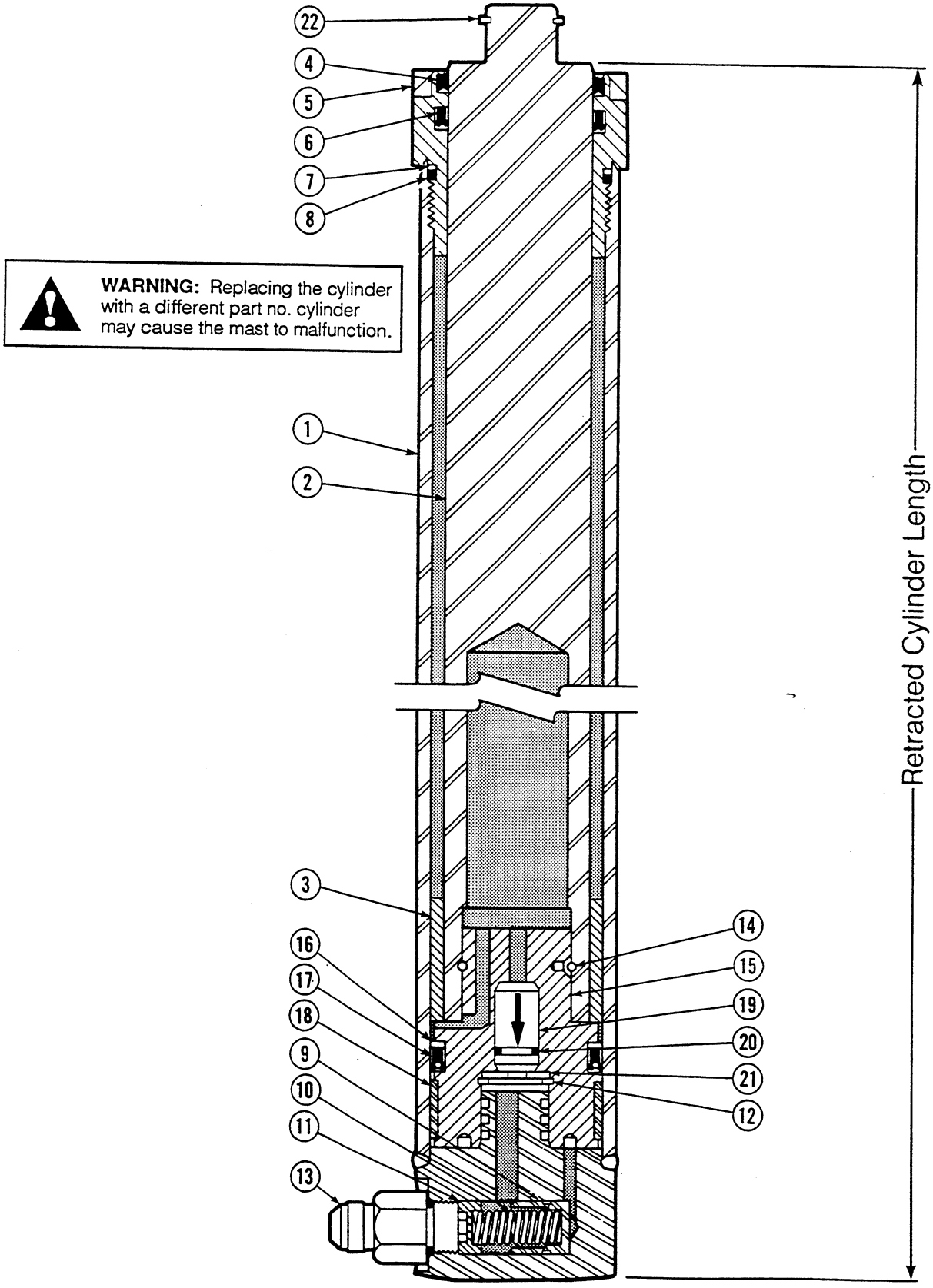

WARNING: Replacing the cylinder with a different part no. cylinder may cause the mast to malfunction.

https://truckmanualshub.com/

Main Lift Cylinder-2000 PSI

35D/40D

Items that vary by mast height.

RETRACTED CHANNEL LENGTH (in.)	RETRACTED CYLINDER LENGTH (in.)	CYLINDER ASSEMBLY QTY 1	REF. NO. 1 SHELL QTY 1	REF. NO. 2 PLUNGER QTY 1	REF. NO. 3 SPACER QTY 1
56	43.0	582055	5479-1059	5478-1025	—
57	44.0	582057	5479-1085	5478-1051	—
58	45.0	582059	5479-1110	5478-1076	—
59	46.0	582061	5479-1136	5478-1102	—
60	47.0	582063	5479-1161	5478-1127	—
61	48.0	582065	5479-1186	5478-1152	—
62	49.0	582067	5479-1212	5478-1178	—
63	50.0	582069	5479-1237	5478-1203	—
64	51.0	582071	5479-1263	5478-1229	—
65	52.0	582073	5479-1288	5478-1254	—
66	53.0	582075	5479-1313	5478-1279	—
67	54.0	582077	5479-1339	5478-1305	—
68	55.0	582079	5479-1364	5478-1330	—
69	56.0	582081	5479-1390	5478-1356	—
70	57.0	582083	5479-1415	5478-1381	—
71	58.0	582085	5479-1440	5478-1406	—
72	59.0	582087	5479-1466	5478-1432	—
73	60.0	582089	5479-1491	5478-1457	—
74	61.0	582091	5479-1517	5478-1483	—
75	62.0	582093	5479-1542	5478-1508	—
76	63.0	582095	5479-1567	5478-1533	—
77	64.0	582097	5479-1593	5478-1559	—
78	65.0	582099	5479-1618	5478-1584	—
79	66.0	582101	5479-1644	5478-1610	—
80	67.0	582103	5479-1669	5478-1635	—
81	68.0	582105	5479-1694	5478-1660	—
82	69.0	582107	5479-1720	5478-1686	—
83	70.0	582109	5479-1720	5478-1711	—
84	71.0	582111	5479-1745	5478-1737	—
85	72.0	582113	5479-1771	5478-1762	—
86	73.0	582115	5479-1771	5478-1787	—
87	74.0	582117	5479-1796	5478-1813	—
88	75.0	582119	5479-1821	5478-1838	—
89	76.0	582121	5479-1821	5478-1864	—
90	77.0	582123	5479-1847	5478-1889	—
91	78.0	582125	5479-1872	5478-1914	—
92	79.0	582989	5479-1897	5478-1940	5502-25
93	80.0	582990	5479-1923	5478-1965	5502-25
94	81.0	582991	5479-1948	5478-1991	5502-25
95	82.0	582992	5479-1948	5478-2016	5502-25
96	83.0	582993	5479-1973	5478-2041	5502-25
97	84.0	582994	5479-1973	5478-2067	5502-25
98	85.0	582995	5479-1999	5478-2092	5502-25
99	86.0	582996	5479-1999	5478-2118	5502-25
100	87.0	582997	5479-2024	5478-2143	5502-25
101	88.0	582998	5479-2049	5478-2168	5502-50

Common items.

REF	QTY	PART NO.	DESCRIPTION	REF	QTY	PART NO.	DESCRIPTION
4	1	561256	★ Plunger Wiper	14	1	559962	Pull-In Wire
5	1	562634	Retainer	15	1	561262	Piston
6	1	562837	★ Plunger Seal	16	1	559870	★ Back-Up Ring
7	1	559866	★ Back-Up Ring	17	1	563497	★ Piston Seal
8	1	559865	★ O-Ring	18	1	560904	★ Wear Ring
9	1	563782	Piston-Lowering Fuse	19	1	626664	Check Valve
10	1	562847	Spring	20	1	689937	★ O-Ring
11	1	562848	Spring Guide	21	1	563785	Washer
12	1	3015	Retaining Ring	22	1	3129	■ Snap Ring
13	1	626505	■ Fitting, 6-10				

★ Included in Service Kit 561307. ■ Not included in Cylinder Assembly. Reference: S-6077, 6078.

https://truckmanualshub.com/

Main Lift Cylinder-2000 PSI

35D/40D

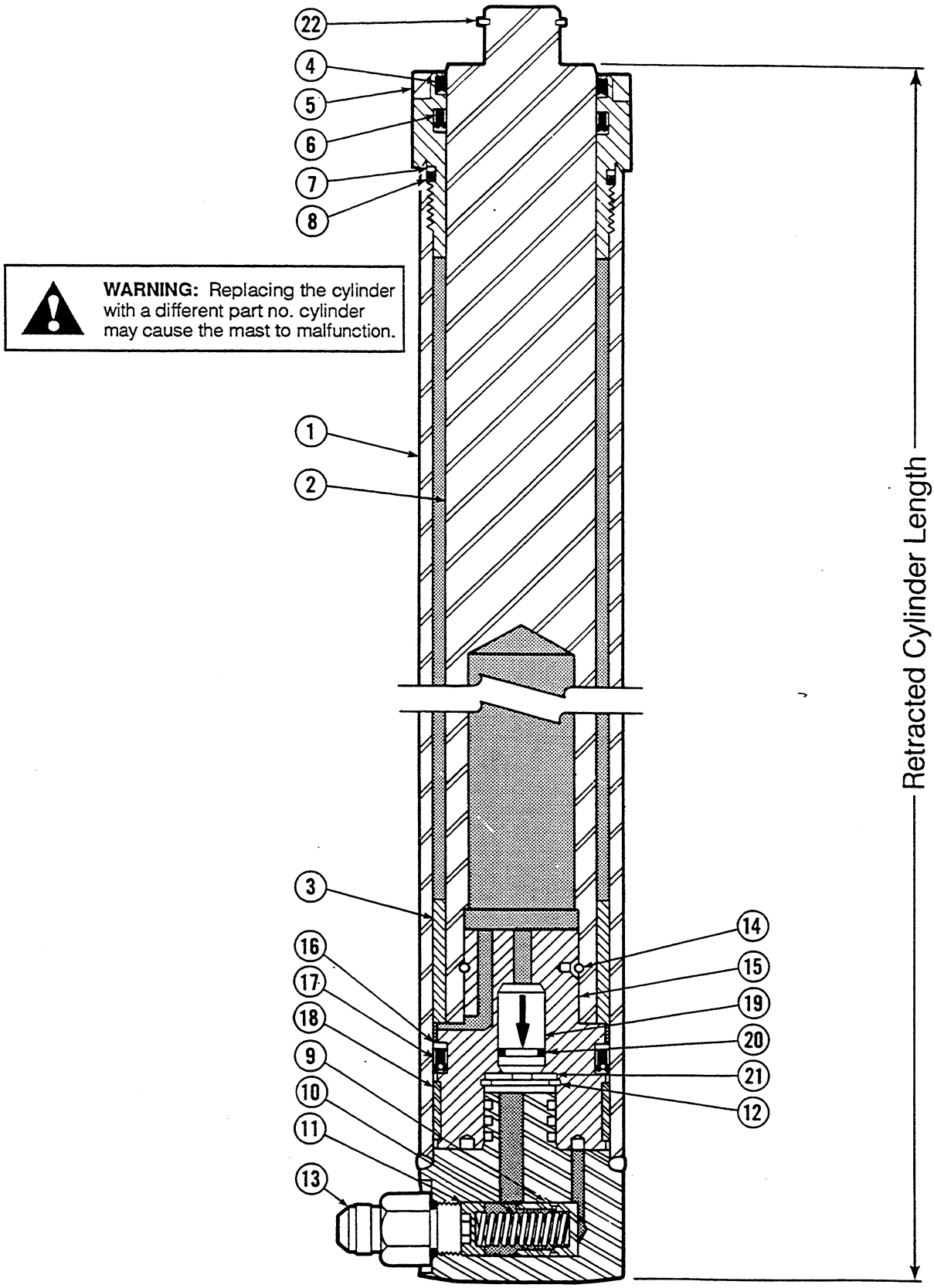

WARNING: Replacing the cylinder with a different part no. cylinder may cause the mast to malfunction.

https://truckmanualshub.com/

Main Lift Cylinder-2000 PSI
35D/40D

Items that vary by mast height.

RETRACTED CHANNEL LENGTH (in.)	RETRACTED CYLINDER LENGTH (in.)	CYLINDER ASSEMBLY QTY 1	REF. NO. 1 SHELL QTY 1	REF. NO. 2 PLUNGER QTY 1	REF. NO. 3 SPACER QTY 1
102	89.0	583135	5479-2150	5478-2193	5502-125
103	90.0	583267	5479-2150	5478-2218	5502-125
104	91.0	583269	5479-2175	5478-2244	5502-125
105	92.0	583271	5479-2175	5478-2269	5502-125
106	93.0	583273	5479-2200	5478-2295	5502-125
107	94.0	583287	5479-2589	5478-2556	5502-50
108	95.0	583276	5479-2226	5478-2345	5502-125
109	96.0	583278	5479-2276	5478-2371	5502-175
110	97.0	583280	5479-2301	5478-2396	5502-175
111	98.0	583282	5479-2301	5478-2422	5502-175
112	99.0	583284	5479-2327	5478-2447	5502-175
113	100.0	583286	5479-2327	5478-2472	5502-175
114	101.0	583288	5479-2327	5478-2498	5502-175
115	102.0	583289	5479-2352	5478-2523	5502-175
116	103.0	583291	5479-2377	5478-2549	5502-175
117	104.0	583293	5479-2403	5478-2574	5502-175
118	105.0	583138	5479-2428	5478-2599	5502-175

Common items.

REF	QTY	PART NO.	DESCRIPTION	REF	QTY	PART NO.	DESCRIPTION
4	1	561256	★ Plunger Wiper	14	1	559962	Pull-In Wire
5	1	562634	Retainer	15	1	561262	Piston
6	1	562837	★ Plunger Seal	16	1	559870	★ Back-Up Ring
7	1	559866	★ Back-Up Ring	17	1	563497	★ Piston Seal
8	1	559865	★ O-Ring	18	1	560904	★ Wear Ring
9	1	563782	Piston-Lowering Fuse	19	1	626664	Check Valve
10	1	562847	Spring	20	1	689937	★ O-Ring
11	1	562848	Spring Guide	21	1	563785	Washer
12	1	3015	Retaining Ring	22	1	3129	■ Snap Ring
13	1	626505	■ Fitting, 6-10				

★ Included in Service Kit 561307. ■ Not included in Cylinder Assembly. Reference: S-6077, 6078.

https://truckmanualshub.com/

Main Lift Cylinder-2600 PSI

35D/40D

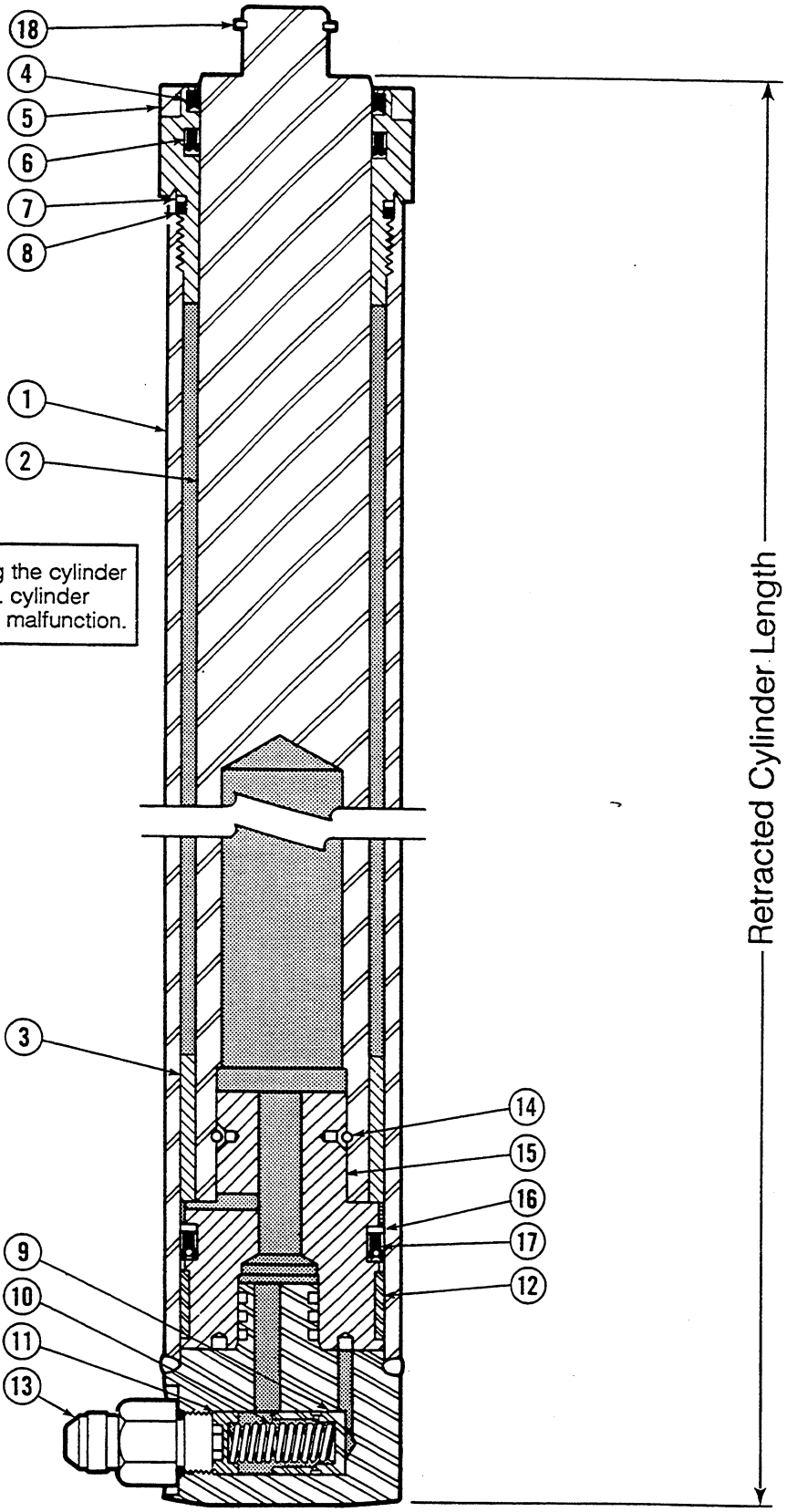

WARNING: Replacing the cylinder with a different part no. cylinder may cause the mast to malfunction.

https://truckmanualshub.com/

Main Lift Cylinder-2600 PSI

35D/40D

Items that vary by mast height.

RETRACTED CHANNEL LENGTH (in.)	RETRACTED CYLINDER LENGTH (in.)	CYLINDER ASSEMBLY QTY 1	REF. NO. 1 SHELL QTY 1	REF. NO. 2 PLUNGER QTY 1	REF. NO. 3 SPACER QTY 1
56	43.0	581963	5479-1059	5478-1025	—
57	44.0	581965	5479-1085	5478-1051	—
58	45.0	581967	5479-1110	5478-1076	—
59	46.0	581969	5479-1136	5478-1102	—
60	47.0	581971	5479-1161	5478-1127	—
61	48.0	581973	5479-1186	5478-1152	—
62	49.0	581975	5479-1212	5478-1178	—
63	50.0	581977	5479-1237	5478-1203	—
64	51.0	581979	5479-1263	5478-1229	—
65	52.0	581981	5479-1288	5478-1254	—
66	53.0	581983	5479-1313	5478-1279	—
67	54.0	581985	5479-1339	5478-1305	—
68	55.0	581987	5479-1364	5478-1330	—
69	56.0	581989	5479-1390	5478-1356	—
70	57.0	581991	5479-1415	5478-1381	—
71	58.0	581993	5479-1440	5478-1406	—
72	59.0	581995	5479-1466	5478-1432	—
73	60.0	581997	5479-1491	5478-1457	—
74	61.0	581999	5479-1517	5478-1483	—
75	62.0	582001	5479-1542	5478-1508	—
76	63.0	582003	5479-1567	5478-1533	—
77	64.0	582005	5479-1593	5478-1559	—
78	65.0	582007	5479-1618	5478-1584	—
79	66.0	582009	5479-1644	5478-1610	—
80	67.0	582011	5479-1669	5478-1635	—
81	68.0	582013	5479-1694	5478-1660	—
82	69.0	582015	5479-1720	5478-1686	—
83	70.0	582017	5479-1720	5478-1711	—
84	71.0	582019	5479-1745	5478-1737	—
85	72.0	582021	5479-1771	5478-1762	—
86	73.0	582023	5479-1771	5478-1787	—
87	74.0	582025	5479-1796	5478-1813	—
88	75.0	582027	5479-1821	5478-1838	—
89	76.0	582029	5479-1821	5478-1864	—
90	77.0	582031	5479-1847	5478-1889	—
91	78.0	582033	5479-1872	5478-1914	—
92	79.0	582979	5479-1897	5478-1940	5502-25
93	80.0	582980	5479-1923	5478-1965	5502-25
94	81.0	582981	5479-1948	5478-1991	5502-25
95	82.0	582982	5479-1948	5478-2016	5502-25
96	83.0	582983	5479-1973	5478-2041	5502-25
97	84.0	582984	5479-1973	5478-2067	5502-25
98	85.0	582985	5479-1999	5478-2092	5502-25
99	86.0	582986	5479-1999	5478-2118	5502-25
100	87.0	582987	5479-2024	5478-2143	5502-25

Common items.

REF	QTY	PART NO.	DESCRIPTION	REF	QTY	PART NO.	DESCRIPTION
4	1	561256	★ Plunger Wiper	12	1	560904	★ Wear Ring
5	1	562634	Retainer	13	1	626505	■ Fitting, 6-10
6	1	562837	★ Plunger Seal	14	1	559962	Pull-In Wire
7	1	559866	★ Back-Up Ring	15	1	561260	Piston
8	1	559865	★ O-Ring	16	1	559870	★ Back-Up Ring
9	1	562849	Piston-Lowering Fuse	17	1	563497	★ Piston Seal
10	1	562847	Spring	18	1	3129	■ Snap Ring
11	1	562848	Spring Guide				

★ Included in Service Kit 561305. ■ Not included in Cylinder Assembly. Reference: S-6075, 6076.

https://truckmanualshub.com/

Main Lift Cylinder-2600 PSI

35D/40D

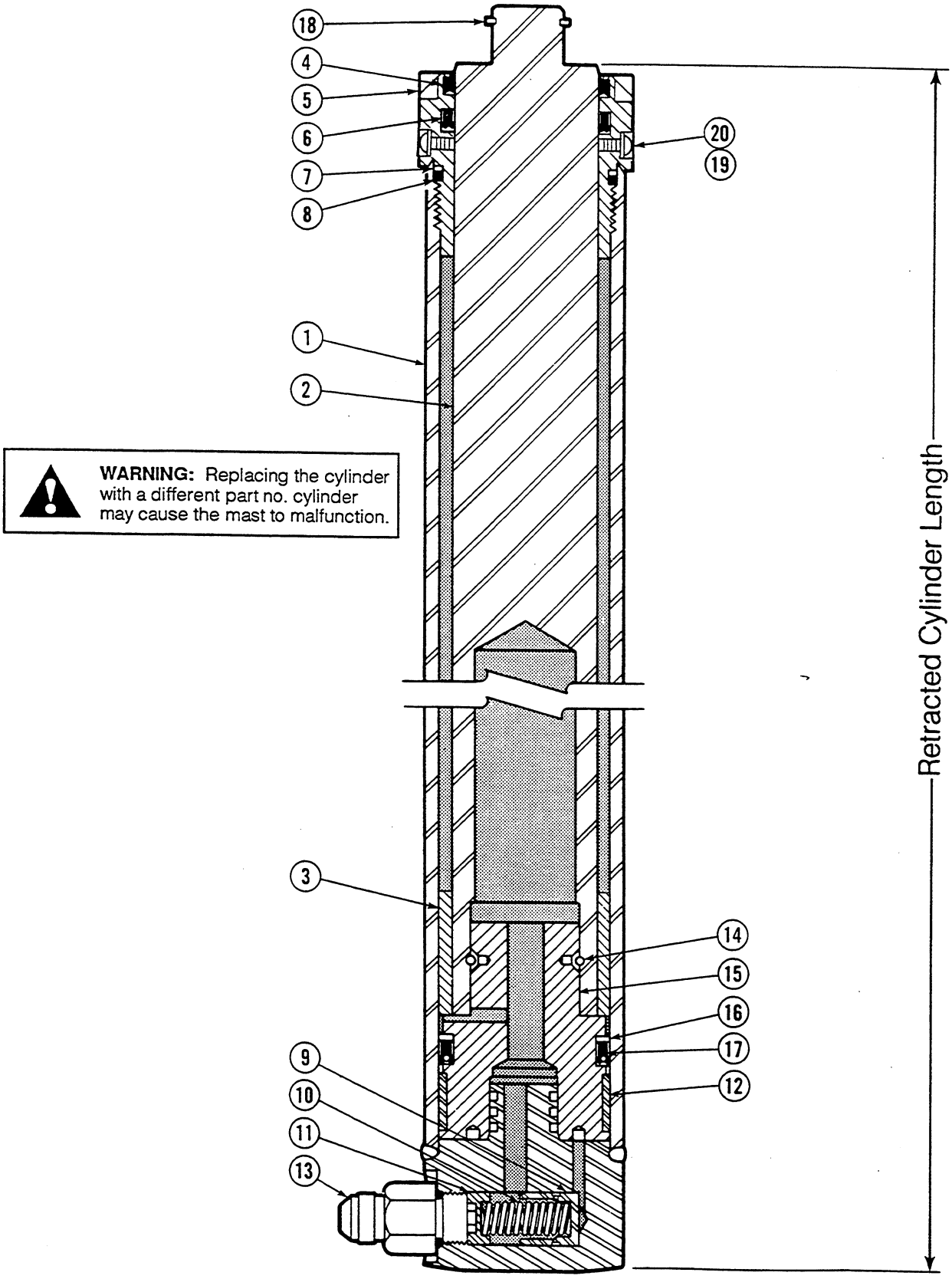

WARNING: Replacing the cylinder with a different part no. cylinder may cause the mast to malfunction.

https://truckmanualshub.com/

Main Lift Cylinder-2600 PSI

35D/40D

Items that vary by mast height.

RETRACTED CHANNEL LENGTH (in.)	RETRACTED CYLINDER LENGTH (in.)	CYLINDER ASSEMBLY QTY 1	REF. NO. 1 SHELL QTY 1	REF. NO. 2 PLUNGER QTY 1	REF. NO. 3 SPACER QTY 1
101	88.0	582988	5479-2049	5478-2168	5502-50
102	89.0	583131	5479-2150	5478-2193	5502-125
103	90.0	583229	5479-2150	5478-2218	5502-125
104	91.0	583231	5479-2175	5478-2244	5502-125
105	92.0	583233	5479-2175	5478-2269	5502-125
106	93.0	583235	5479-2200	5478-2295	5502-125
107	94.0	583237	5479-2200	5478-2320	5502-125
108	95.0	583238	5479-2226	5478-2345	5502-125
109	96.0	583240	5479-2276	5478-2371	5502-175
110	97.0	583242	5479-2301	5478-2396	5502-175
111	98.0	583244	5479-2301	5478-2422	5502-175
112	99.0	583246	5479-2327	5478-2447	5502-175
113	100.0	583248	5479-2327	5478-2472	5502-175
114	101.0	583250	5479-2327	5478-2498	5502-175
115	102.0	583251	5479-2352	5478-2523	5502-175
116	103.0	583253	5479-2377	5478-2549	5502-175
117	104.0	583255	5479-2403	5478-2574	5502-175
118	105.0	583134	5479-2428	5478-2599	5502-175

Common items.

REF	QTY	PART NO.	DESCRIPTION	REF	QTY	PART NO.	DESCRIPTION
4	1	561256	★ Plunger Wiper	13	1	626505	■ Fitting, 6-10
5	1	562632	Retainer	14	1	559962	Pull-In Wire
6	1	562837	★ Plunger Seal	15	1	561260	Piston
7	1	559866	★ Back-Up Ring	16	1	559870	★ Back-Up Ring
8	1	559865	★ O-Ring	17	1	563497	★ Piston Seal
9	1	562849	Piston-Lowering Fuse	18	1	3129	■ Snap Ring
10	1	562847	Spring	19	2	562573	Capscrew
11	1	562848	Spring Guide	20	2	607287	Seal
12	1	560904	★ Wear Ring				

★ Included in Service Kit 561305. ■ Not included in Cylinder Assembly. Reference: S-6103, 6104.

https://truckmanualshub.com/

Free Lift Cylinder-2000 PSI

35D/40D

WARNING: Replacing the cylinder with a different part no. cylinder may cause the mast to malfunction.

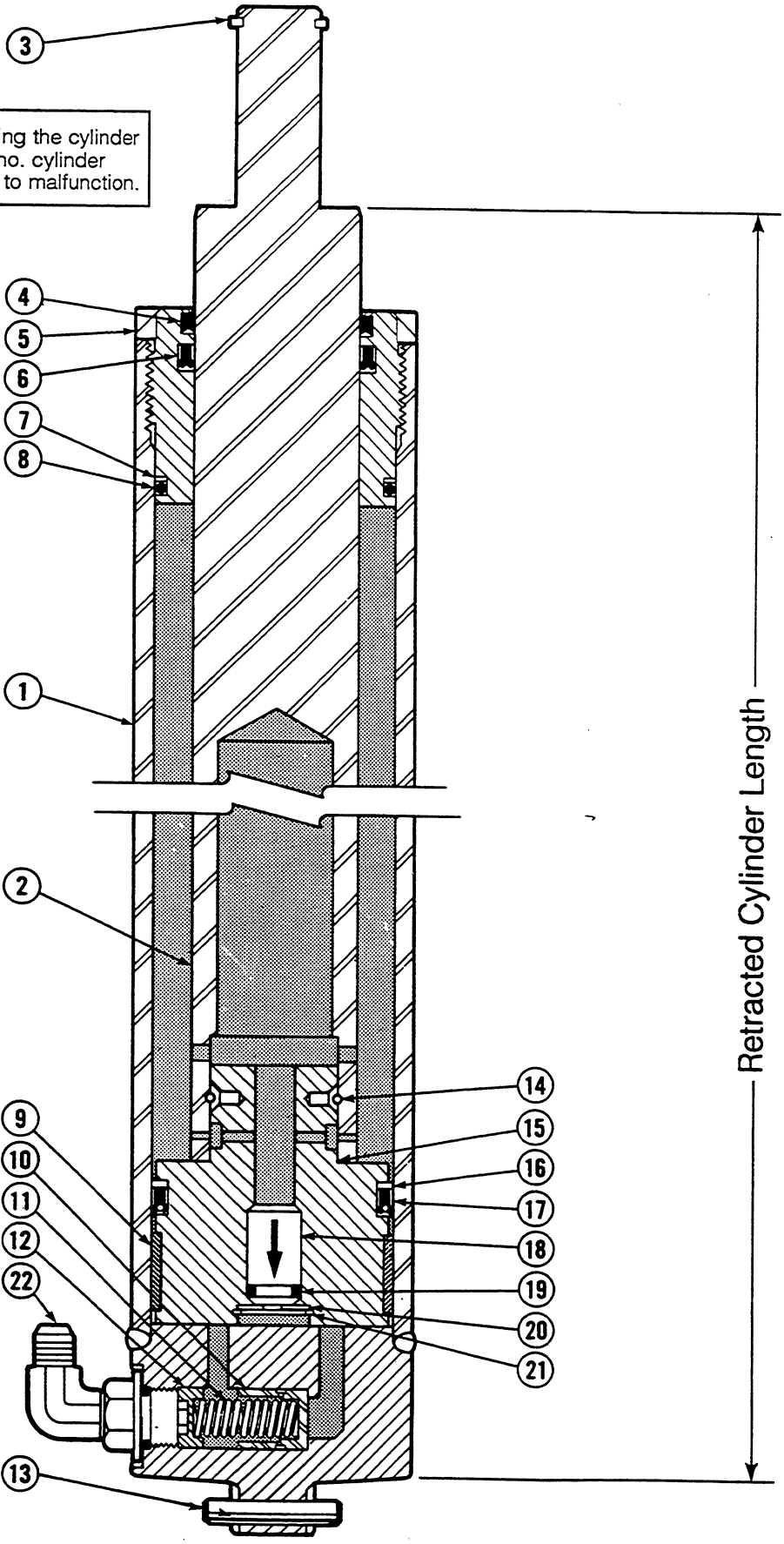

https://truckmanualshub.com/

Free Lift Cylinder-2000 PSI

35D/40D

Part numbers on this page are used with the following mast product I.D. numbers only:

35D-MT-001 thru 089
40D-MT-001 thru 008

Items that vary by mast height.

RETRACTED CHANNEL LENGTH (in.)	RETRACTED CYLINDER LENGTH (in.)	CYLINDER ASSEMBLY QTY 1	REF. NO. 1 SHELL QTY 1	REF. NO. 2 PLUNGER QTY 1
56	28.1	581900	5434-673	5445-674
57	28.6	580596	5434-685	5445-686
58	29.1	580598	5434-698	5445-699
59	29.6	580600	5434-711	5445-712
60	30.1	580602	5434-724	5445-725
61	30.6	580604	5434-736	5445-737
62	31.1	580606	5434-749	5445-750
63	31.6	580608	5434-762	5445-763
64	32.1	580610	5434-774	5445-775
65	32.6	580612	5434-787	5445-788
66	33.1	580614	5434-800	5445-801
67	33.6	580616	5434-812	5445-813
68	34.1	580618	5434-825	5445-826
69	34.6	580620	5434-838	5445-839
70	35.1	580622	5434-851	5445-852
71	35.6	580624	5434-863	5445-864
72	36.1	580626	5434-876	5445-877
73	36.6	580628	5434-889	5445-890
74	37.1	580630	5434-901	5445-902
75	37.6	580632	5434-914	5445-915
76	38.1	580634	5434-927	5445-928
77	38.6	580636	5434-939	5445-940
78	39.1	580638	5434-952	5445-953
79	39.6	580640	5434-965	5445-966
80	40.1	580642	5434-978	5445-979
81	40.6	580644	5434-990	5445-991
82	41.1	580646	5434-1003	5445-1004
83	41.6	580648	5434-1016	5445-1017
84	42.1	580650	5434-1028	5445-1029
85	42.6	580652	5434-1041	5445-1042
86	43.1	580654	5434-1054	5445-1055
87	43.6	580656	5434-1066	5445-1067
88	44.1	580658	5434-1079	5445-1080
89	44.6	580660	5434-1092	5445-1093
90	45.1	580662	5434-1105	5445-1106
91	45.6	580664	5434-1117	5445-1118
92	46.1	580666	5434-1130	5445-1131
93	46.6	580668	5434-1143	5445-1144
94	47.1	580670	5434-1155	5445-1156
95	47.6	580672	5434-1168	5445-1169
96	48.1	580674	5434-1181	5445-1182
97	48.6	580676	5434-1193	5445-1194
98	49.1	580678	5434-1206	5445-1207
99	49.6	580680	5434-1219	5445-1220
100	50.1	580682	5434-1232	5445-1233
101	50.6	580684	5434-1244	5445-1245

Common items.

REF	QTY	PART NO.	DESCRIPTION	REF	QTY	PART NO.	DESCRIPTION
3	1	3129	■ Snap Ring	13	1	769018	Roll Pin
4	1	599863	★ Plunger Wiper	14	1	559906	Pull-In Wire
5	1	559982	Retainer	15	1	559986	Piston
6	1	560022	★ Plunger Seal	16	1	559857	★ Back-Up Ring
7	1	559964	★ Back-Up Ring	17	1	559853	★ Piston Seal
8	1	559861	★ O-Ring	18	1	560717	Check Valve
9	1	559855	★ Wear Ring	19	1	557226	★ O-Ring
10	1	560470	Piston, Lowering Fuse	20	1	637635	Washer
11	1	560824	Spring	21	1	3015	Retaining Ring
12	1	560465	Spring Guide	22	1	642649	■ Fitting, 8-10

★ Included in Service Kit 560349. ■ Not included in Cylinder Assembly. Reference: S-6007, 6008.

https://truckmanualshub.com/

Free Lift Cylinder-2000 PSI

35D/40D

WARNING: Replacing the cylinder with a different part no. cylinder may cause the mast to malfunction.

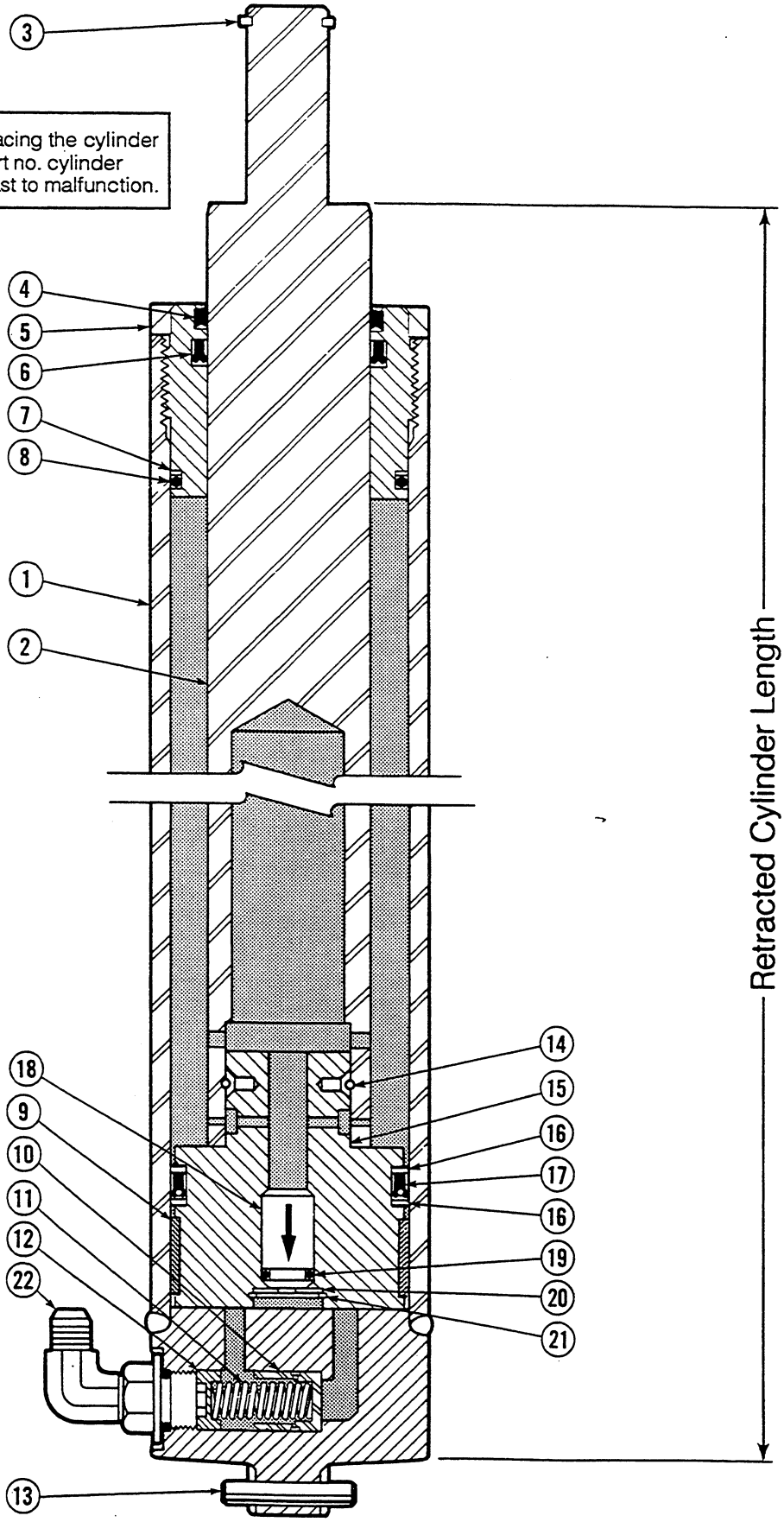

https://truckmanualshub.com/

Free Lift Cylinder-2000 PSI

35D/40D

Part numbers on this page are used with the following mast product I.D. numbers only:

35D-MT-090 thru 678
40D-MT-009 thru 133

Items that vary by mast height.

RETRACTED CHANNEL LENGTH (in.)	RETRACTED CYLINDER LENGTH (in.)	CYLINDER ASSEMBLY QTY 1	REF. NO. 1 SHELL QTY 1	REF. NO. 2 PLUNGER QTY 1
56	28.1	582643	5434-673	5509-674
57	28.6	582646	5434-685	5509-686
58	29.1	582648	5434-698	5509-699
59	29.6	582650	5434-711	5509-712
60	30.1	582652	5434-724	5509-725
61	30.6	582654	5434-736	5509-737
62	31.1	582656	5434-749	5509-750
63	31.6	582658	5434-762	5509-763
64	32.1	582660	5434-774	5509-775
65	32.6	582662	5434-787	5509-788
66	33.1	582664	5434-800	5509-801
67	33.6	582666	5434-812	5509-813
68	34.1	582668	5434-825	5509-826
69	34.6	582670	5434-838	5509-839
70	35.1	582672	5434-851	5509-852
71	35.6	582674	5434-863	5509-864
72	36.1	582676	5434-876	5509-877
73	36.6	582678	5434-889	5509-890
74	37.1	582680	5434-901	5509-902
75	37.6	582682	5434-914	5509-915
76	38.1	582684	5434-927	5509-928
77	38.6	582686	5434-939	5509-940
78	39.1	582688	5434-952	5509-953
79	39.6	582690	5434-965	5509-966
80	40.1	582692	5434-978	5509-979
81	40.6	582694	5434-990	5509-991
82	41.1	582696	5434-1003	5509-1004
83	41.6	582698	5434-1016	5509-1017
84	42.1	582700	5434-1028	5509-1029
85	42.6	582702	5434-1041	5509-1042
86	43.1	582704	5434-1054	5509-1055
87	43.6	582706	5434-1066	5509-1067
88	44.1	582708	5434-1079	5509-1080
89	44.6	582710	5434-1092	5509-1093
90	45.1	582712	5434-1105	5509-1106
91	45.6	582714	5434-1117	5509-1118
92	46.1	582716	5434-1130	5509-1131
93	46.6	582718	5434-1143	5509-1144
94	47.1	582720	5434-1155	5509-1156
95	47.6	582722	5434-1168	5509-1169
96	48.1	582724	5434-1181	5509-1182
97	48.6	582726	5434-1193	5509-1194
98	49.1	582728	5434-1206	5509-1207
99	49.6	582730	5434-1219	5509-1220
100	50.1	582732	5434-1232	5509-1233
101	50.6	582733	5434-1244	5509-1245

Common items.

REF	QTY	PART NO.	DESCRIPTION	REF	QTY	PART NO.	DESCRIPTION
3	1	3129	■ Snap Ring	13	1	769018	Roll Pin
4	1	599863	★ Plunger Wiper	14	1	559906	Pull-In Wire
5	1	559982	Retainer	15	1	562778	Piston
6	1	560022	★ Plunger Seal	16	1	559857	★ Back-Up Ring
7	1	559964	★ Back-Up Ring	17	1	559853	★ Piston Seal
8	1	559861	★ O-Ring	18	1	560717	Check Valve
9	1	559855	★ Wear Ring	19	1	689937	★ O-Ring
10	1	560470	Piston, Lowering Fuse	20	1	563785	Washer
11	1	564108	Spring	21	1	3015	Retaining Ring
12	1	564107	Spring Guide	22	1	642649	■ Fitting, 8-10

★ Included in Service Kit 560349. ■ Not included in Cylinder Assembly. Reference: S-6069, 6070.

https://truckmanualshub.com/

Free Lift Cylinder-2000 PSI

35D/40D

WARNING: Replacing the cylinder with a different part no. cylinder may cause the mast to malfunction.

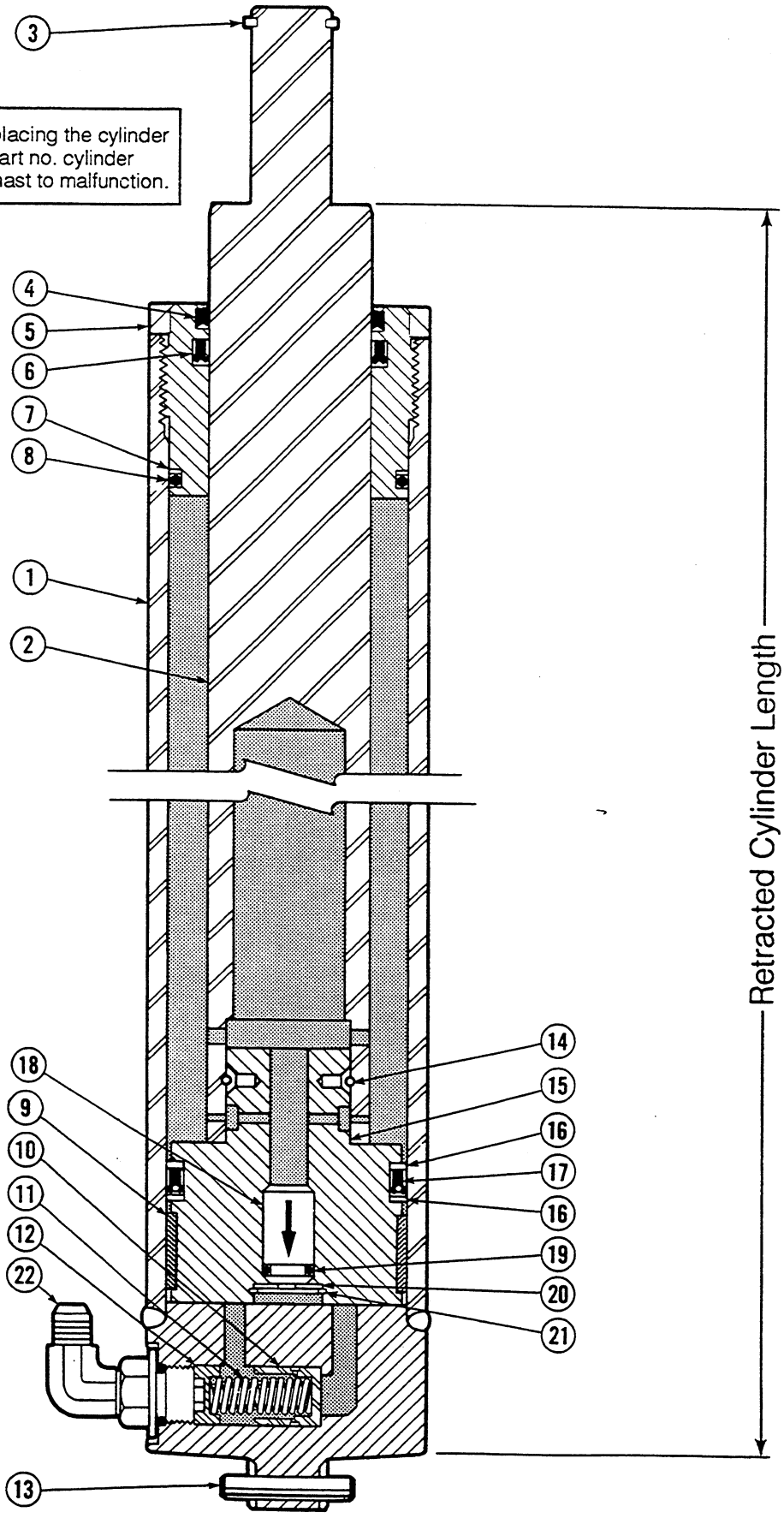

https://truckmanualshub.com/

Free Lift Cylinder-2000 PSI

35D/40D

Part numbers on this page are used with the following mast product I.D. numbers only: 35D-MT-090 thru 678, 40D-MT-009 thru 133

Items that vary by mast height.

RETRACTED CHANNEL LENGTH (in.)	RETRACTED CYLINDER LENGTH (in.)	CYLINDER ASSEMBLY QTY 1	REF. NO. 1 SHELL QTY 1	REF. NO. 2 PLUNGER QTY 1
102	51.1	582736	5434-1257	5509-1258
103	51.6	582738	5434-1270	5509-1271
104	52.1	582740	5434-1282	5509-1283
105	52.6	582742	5434-1295	5509-1296
106	53.1	582744	5434-1308	5509-1309
107	53.6	582746	5434-1320	5509-1321
108	54.1	582748	5434-1333	5509-1334
109	54.6	582750	5434-1346	5509-1347
110	55.1	582752	5434-1359	5509-1360
111	55.6	582754	5434-1371	5509-1372
112	56.1	582756	5434-1384	5509-1385
113	56.6	582758	5434-1397	5509-1398
114	57.1	582760	5434-1409	5509-1410
115	57.6	582762	5434-1422	5509-1423
116	58.1	582764	5434-1435	5509-1436
117	58.6	582766	5434-1447	5509-1448
118	59.1	582768	5434-1460	5509-1461

Common items.

REF	QTY	PART NO.	DESCRIPTION	REF	QTY	PART NO.	DESCRIPTION
3	1	3129	★ Snap Ring	13	1	769018	Roll Pin
4	1	599863	★ Plunger Wiper	14	1	559906	Pull-In Wire
5	1	559982	Retainer	15	1	562778	Piston
6	1	560022	★ Plunger Seal	16	1	559857	★ Back-Up Ring
7	1	559964	★ Back-Up Ring	17	1	559853	★ Piston Seal
8	1	559861	★ O-Ring	18	1	560717	Check Valve
9	1	559855	★ Wear Ring	19	1	689937	★ O-Ring
10	1	560470	Piston, Lowering Fuse	20	1	563785	Washer
11	1	564108	Spring	21	1	3015	Retaining Ring
12	1	564107	Spring Guide	22	1	642649	■ Fitting, 8-10

★ Included in Service Kit 560349. ■ Not included in Cylinder Assembly. Reference: S-6069, 6070.

https://truckmanualshub.com/

Free Lift Cylinder-2600 PSI

35D/40D

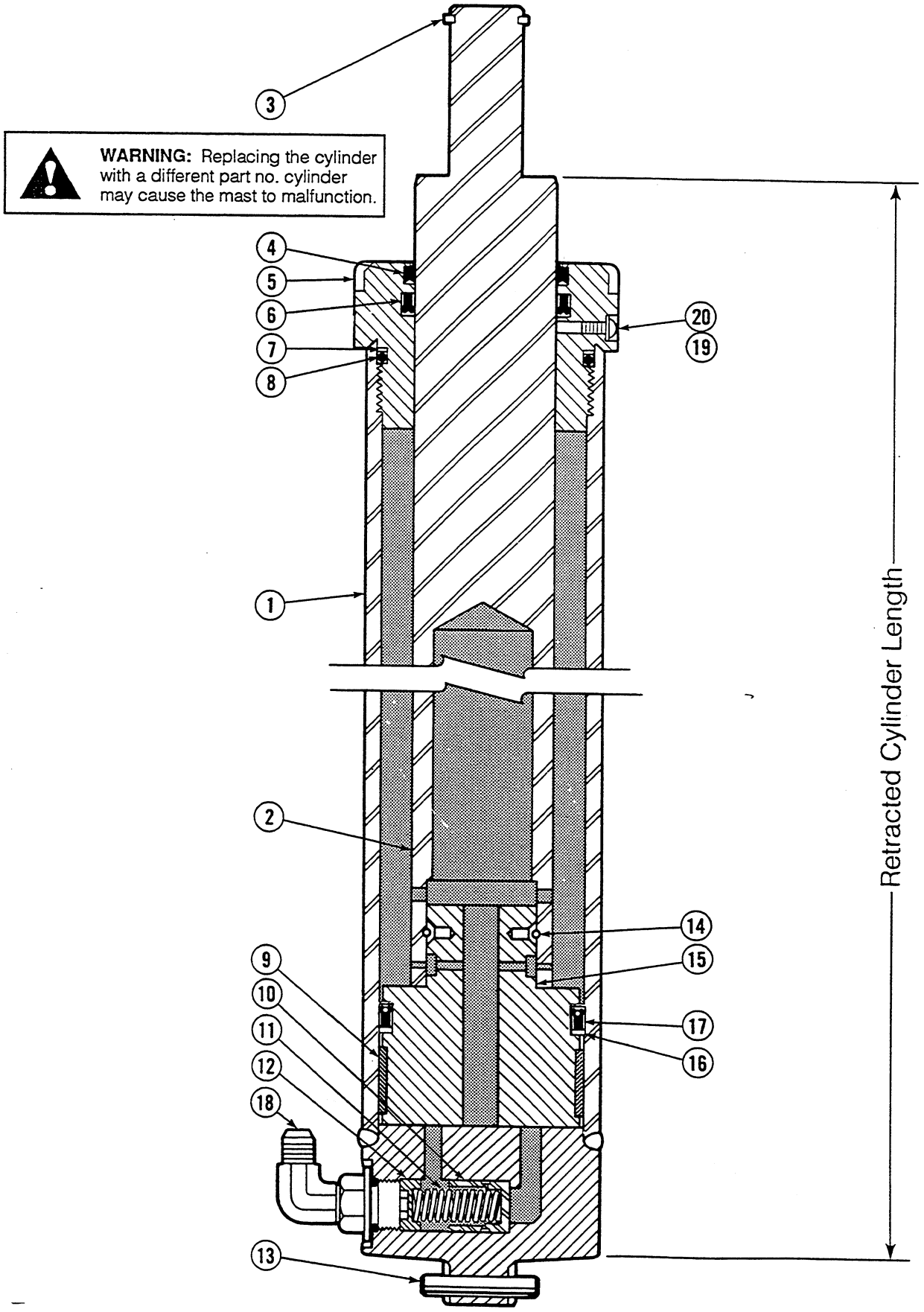

https://truckmanualshub.com/

Free Lift Cylinder-2600 PSI

35D/40D

Part numbers on this page are used with the following mast serial numbers only: 35D-MT-001 thru 089
40D-MT-001 thru 008

Items that vary by mast height.

RETRACTED CHANNEL LENGTH (in.)	RETRACTED CYLINDER LENGTH (in.)	CYLINDER ASSEMBLY QTY 1	REF. NO. 1 SHELL QTY 1	REF. NO. 2 PLUNGER QTY 1
56	28.1	581916	5473-640	5494-691
57	28.6	581917	5473-652	5494-703
58	29.1	581918	5473-665	5494-716
59	29.6	581919	5473-678	5494-729
60	30.1	581920	5473-691	5494-742
61	30.6	581921	5473-703	5494-754
62	31.1	581922	5473-716	5494-767
63	31.6	581923	5473-729	5494-780
64	32.1	581924	5473-741	5494-792
65	32.6	581925	5473-754	5494-805
66	33.1	581926	5473-767	5494-818
67	33.6	581927	5473-779	5494-830
68	34.1	581928	5473-792	5494-843
69	34.6	581929	5473-805	5494-856
70	35.1	581930	5473-818	5494-869
71	35.6	581931	5473-830	5494-881
72	36.1	581932	5473-843	5494-894
73	36.6	581933	5473-856	5494-907
74	37.1	581934	5473-868	5494-919
75	37.6	581935	5473-881	5494-932
76	38.1	581936	5473-894	5494-945
77	38.6	581937	5473-906	5494-957
78	39.1	581938	5473-919	5494-970
79	39.6	581939	5473-932	5494-983
80	40.1	581940	5473-945	5494-996
81	40.6	581941	5473-957	5494-1008
82	41.1	581942	5473-970	5494-1021
83	41.6	581943	5473-983	5494-1034
84	42.1	581944	5473-995	5494-1046
85	42.6	581945	5473-1008	5494-1059
86	43.1	581946	5473-1021	5494-1072
87	43.6	581947	5473-1033	5494-1084
88	44.1	581948	5473-1046	5494-1097
89	44.6	581949	5473-1059	5494-1110
90	45.1	581950	5473-1072	5494-1123
91	45.6	581951	5473-1084	5494-1135
92	46.1	581952	5473-1097	5494-1148
93	46.6	581953	5473-1110	5494-1161
94	47.1	581954	5473-1122	5494-1173
95	47.6	581955	5473-1135	5494-1186
96	48.1	581956	5473-1148	5494-1199
97	48.6	581957	5473-1160	5494-1211
98	49.1	581958	5473-1173	5494-1224
99	49.6	581959	5473-1186	5494-1237
100	50.1	581960	5473-1199	5494-1250
101	50.6	581961	5473-1211	5494-1262

Common items.

REF	QTY	PART NO.	DESCRIPTION	REF	QTY	PART NO.	DESCRIPTION
3	1	3129	■ Snap Ring	12	1	560465	Spring Guide
4	1	561211	★ Plunger Wiper	13	1	769018	Roll Pin
5	1	561212	Retainer	14	1	561219	Pull-In Wire
6	1	561208	★ Plunger Seal	15	1	561534	Piston
7	1	561209	★ Back-Up Ring	16	1	559857	★ Back-Up Ring
8	1	561210	★ O-Ring	17	1	559853	★ Piston Seal
9	1	561969	★ Wear Ring	18	1	642649	■ Fitting, 8-10
10	1	560470	Piston, Lowering Fuse	19	1	622729	★ Seal
11	1	560824	Spring	20	1	4850	Capscrew, .164x1/4NC-GR8

★ Included in Service Kit 561226. ■ Not included in Cylinder Assembly. Reference: S-6021, 6022.

https://truckmanualshub.com/

Free Lift Cylinder-2600 PSI

35D/40D

WARNING: Replacing the cylinder with a different part no. cylinder may cuase the mast to malfunction.

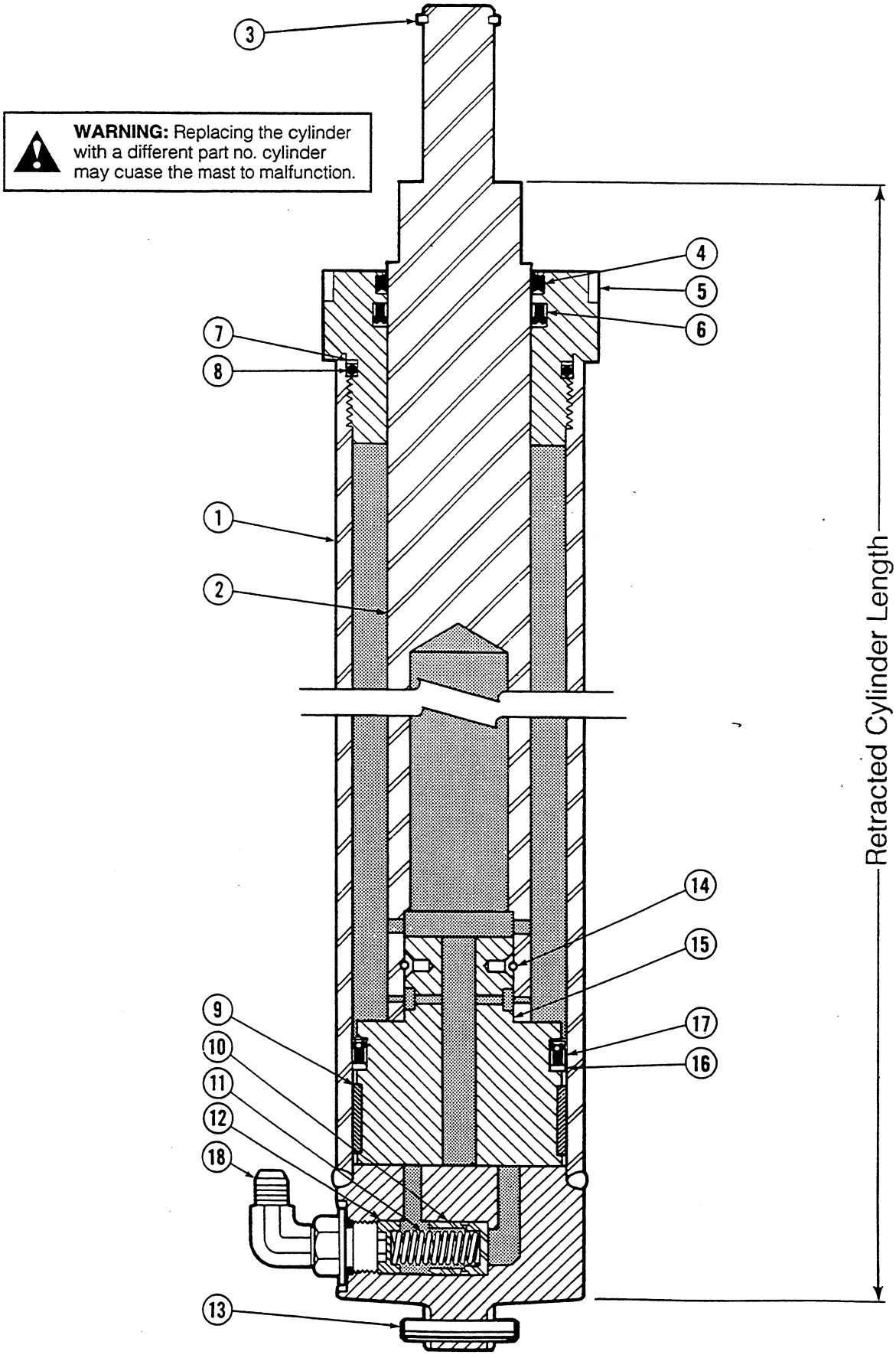

https://truckmanualshub.com/

Free Lift Cylinder-2600 PSI

35D/40D

Part numbers on this page are used with the following mast product I.D. numbers only:

35D-MT-090 thru 309
40D-MT-009 thru 041

Items that vary by mast height.

RETRACTED CHANNEL LENGTH (in.)	RETRACTED CYLINDER LENGTH (in.)	CYLINDER ASSEMBLY QTY 1	REF. NO. 1 SHELL QTY 1	REF. NO. 2 PLUNGER QTY 1
56	28.1	582918	5473-640	5510-691
57	28.6	582919	5473-652	5510-703
58	29.1	582920	5473-665	5510-716
59	29.6	582921	5473-678	5510-729
60	30.1	582922	5473-691	5510-742
61	30.6	582923	5473-703	5510-754
62	31.1	582924	5473-716	5510-767
63	31.6	582925	5473-729	5510-780
64	32.1	582926	5473-741	5510-792
65	32.6	582927	5473-754	5510-805
66	33.1	582928	5473-767	5510-818
67	33.6	582929	5473-779	5510-830
68	34.1	582930	5473-792	5510-843
69	34.6	582931	5473-805	5510-856
70	35.1	582932	5473-818	5510-869
71	35.6	582933	5473-830	5510-881
72	36.1	582934	5473-843	5510-894
73	36.6	582935	5473-856	5510-907
74	37.1	582936	5473-868	5510-919
75	37.6	582937	5473-881	5510-932
76	38.1	582938	5473-894	5510-945
77	38.6	582939	5473-906	5510-957
78	39.1	582940	5473-919	5510-970
79	39.6	582941	5473-932	5510-983
80	40.1	582942	5473-945	5510-996
81	40.6	582943	5473-957	5510-1008
82	41.1	582944	5473-970	5510-1021
83	41.6	582945	5473-983	5510-1034
84	42.1	582946	5473-995	5510-1046
85	42.6	582947	5473-1008	5510-1059
86	43.1	582948	5473-1021	5510-1072
87	43.6	582949	5473-1033	5510-1084
88	44.1	582950	5473-1046	5510-1097
89	44.6	582951	5473-1059	5510-1110
90	45.1	582952	5473-1072	5510-1123
91	45.6	582953	5473-1084	5510-1135
92	46.1	582954	5473-1097	5510-1148
93	46.6	582955	5473-1110	5510-1161
94	47.1	582956	5473-1122	5510-1173
95	47.6	582957	5473-1135	5510-1186
96	48.1	582958	5473-1148	5510-1199
97	48.6	582959	5473-1160	5510-1211
98	49.1	582960	5473-1173	5510-1224
99	49.6	582961	5473-1186	5510-1237
100	50.1	582962	5473-1199	5510-1250
101	50.6	582963	5473-1211	5510-1262

Common items.

REF	QTY	PART NO.	DESCRIPTION	REF	QTY	PART NO.	DESCRIPTION
3	1	3129	■ Snap Ring	11	1	560824	Spring
4	1	561211	★ Plunger Wiper	12	1	560465	Spring Guide
5	1	562635	Retainer	13	1	769018	Roll Pin
6	1	561208	★ Plunger Seal	14	1	561219	Pull-In Wire
7	1	561209	★ Back-Up Ring	15	1	561534	Piston
8	1	561210	★ O-Ring	16	1	559857	★ Back-Up Ring
9	1	561969	★ Wear Ring	17	1	559853	★ Piston Seal
10	1	560470	Piston, Lowering Fuse	18	1	642649	■ Fitting, 8-10

★ Included in Service Kit 563927. ■ Not included in Cylinder Assembly. Reference: S-6073, 6074.

https://truckmanualshub.com/

Free Lift Cylinder-2600 PSI

35D/40D

WARNING: Replacing the cylinder with a different part no. cylinder may cause the mast to malfunction.

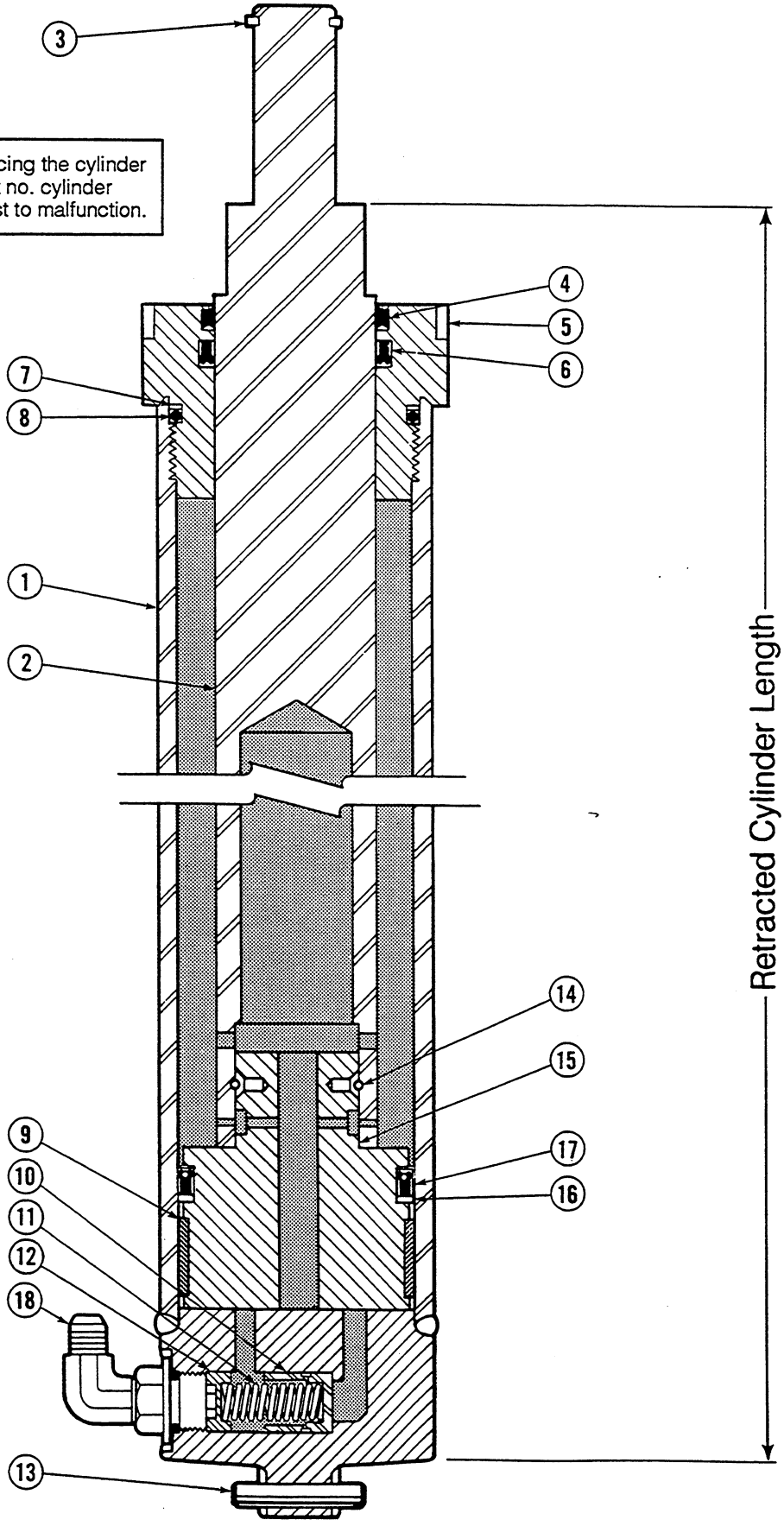

https://truckmanualshub.com/

Free Lift Cylinder-2600 PSI

35D/40D

Part numbers on this page are used with the following mast product I.D. numbers only:

35D-MT-090 thru 309
40D-MT-009 thru 041

Items that vary by mast height.

RETRACTED CHANNEL LENGTH (in.)	RETRACTED CYLINDER LENGTH (in.)	CYLINDER ASSEMBLY QTY 1	REF. NO. 1 SHELL QTY 1	REF. NO. 2 PLUNGER QTY 1
102	51.1	583183	5473-1224	5510-1275
103	51.6	583214	5473-1237	5510-1288
104	52.1	583215	5473-1249	5510-1300
105	52.6	583216	5473-1262	5510-1313
106	53.1	583217	5473-1275	5510-1326
107	53.6	583218	5473-1287	5510-1338
108	54.1	583219	5473-1300	5510-1351
109	54.6	583220	5473-1313	5510-1364
110	55.1	583221	5473-1326	5510-1377
111	55.6	583222	5473-1338	5510-1389
112	56.1	583223	5473-1351	5510-1402
113	56.6	583224	5473-1364	5510-1415
114	57.1	583225	5473-1376	5510-1427
115	57.6	583226	5473-1389	5510-1440
116	58.1	583227	5473-1402	5510-1453
117	58.6	583228	5473-1414	5510-1465
118	59.1	583184	5473-1427	5510-1478

Common items.

REF	QTY	PART NO.	DESCRIPTION	REF	QTY	PART NO.	DESCRIPTION
3	1	3129	■ Snap Ring	11	1	560824	Spring
4	1	561211	★ Plunger Wiper	12	1	560465	Spring Guide
5	1	562635	Retainer	13	1	769018	Roll Pin
6	1	561208	★ Plunger Seal	14	1	561219	Pull-In Wire
7	1	561209	★ Back-Up Ring	15	1	561534	Piston
8	1	561210	★ O-Ring	16	1	559857	★ Back-Up Ring
9	1	561969	★ Wear Ring	17	1	559853	★ Piston Seal
10	1	560470	Piston, Lowering Fuse	18	1	642649	■ Fitting, 8-10

★ Included in Service Kit 563927. ■ Not included in Cylinder Assembly. Reference: S-6073, 6074.

https://truckmanualshub.com/

Free Lift Cylinder-2600 PSI

35D/40D

WARNING: Replacing the cylinder with a different part no. cylinder may cause the mast to malfunction.

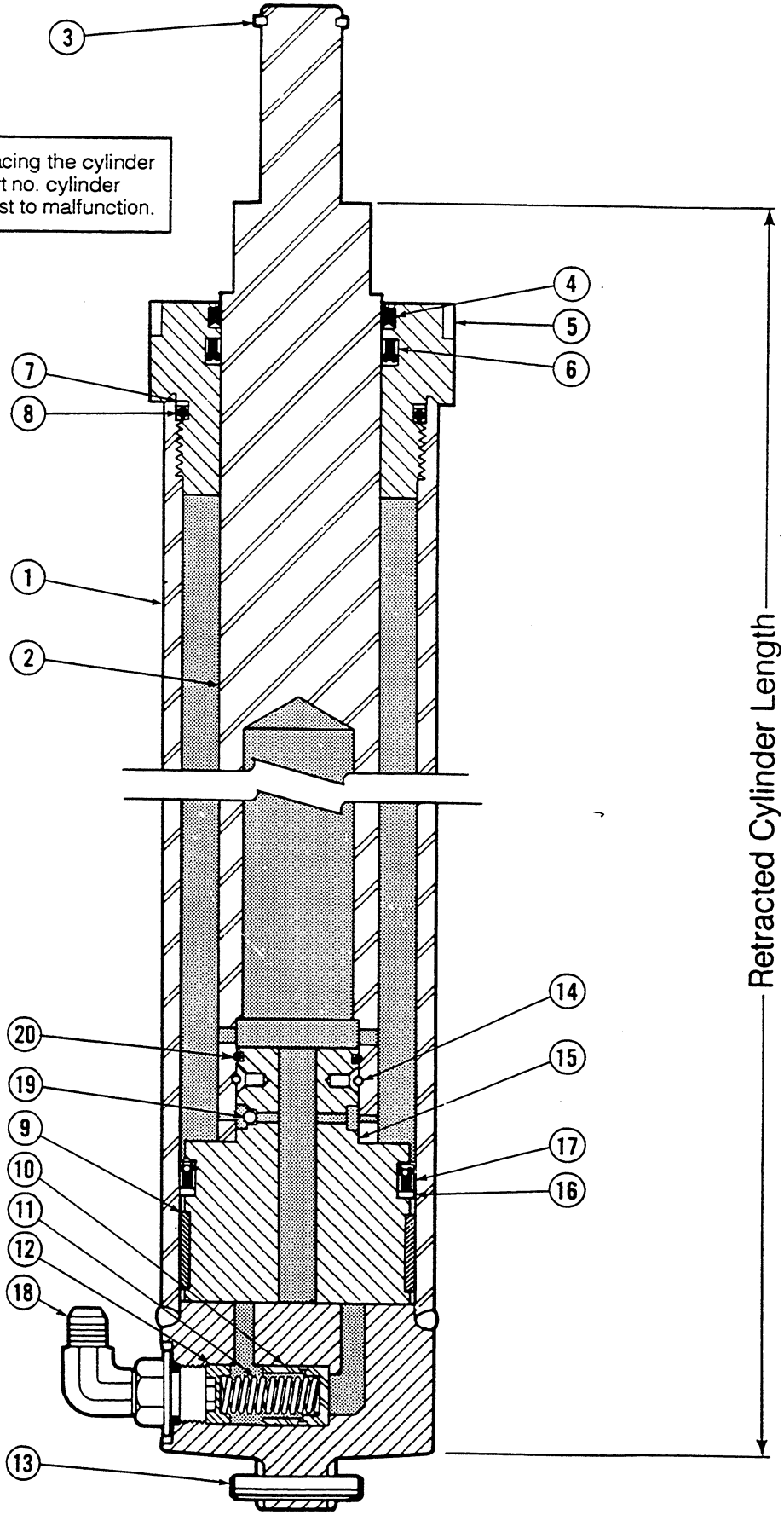

https://truckmanualshub.com/

Free Lift Cylinder-2600 PSI

35D/40D

Part numbers on this page are used with the following mast product I.D. numbers only:

35D-MT-310 thru 678
40D-MT-042 thru 133

Items that vary by mast height.

RETRACTED CHANNEL LENGTH (in.)	RETRACTED CYLINDER LENGTH (in.)	CYLINDER ASSEMBLY QTY 1	REF. NO. 1 SHELL QTY 1	REF. NO. 2 PLUNGER QTY 1
56	28.1	583841	5473-640	5562-691
57	28.6	583842	5473-652	5562-703
58	29.1	583843	5473-665	5562-716
59	29.6	583844	5473-678	5562-729
60	30.1	583845	5473-691	5562-742
61	30.6	583846	5473-703	5562-754
62	31.1	583847	5473-716	5562-767
63	31.6	583848	5473-729	5562-780
64	32.1	583849	5473-741	5562-792
65	32.6	583850	5473-754	5562-805
66	33.1	583851	5473-767	5562-818
67	33.6	583852	5473-779	5562-830
68	34.1	583853	5473-792	5562-843
69	34.6	583854	5473-805	5562-856
70	35.1	583855	5473-818	5562-869
71	35.6	583856	5473-830	5562-881
72	36.1	583857	5473-843	5562-894
73	36.6	583858	5473-856	5562-907
74	37.1	583859	5473-868	5562-919
75	37.6	583860	5473-881	5562-932
76	38.1	583861	5473-894	5562-945
77	38.6	583862	5473-906	5562-957
78	39.1	583863	5473-919	5562-970
79	39.6	583864	5473-932	5562-983
80	40.1	583865	5473-945	5562-996
81	40.6	583866	5473-957	5562-1008
82	41.1	583867	5473-970	5562-1021
83	41.6	583868	5473-983	5562-1034
84	42.1	583869	5473-995	5562-1046
85	42.6	583870	5473-1008	5562-1059
86	43.1	583871	5473-1021	5562-1072
87	43.6	583872	5473-1033	5562-1084
88	44.1	583873	5473-1046	5562-1097
89	44.6	583874	5473-1059	5562-1110
90	45.1	583875	5473-1072	5562-1123
91	45.6	583876	5473-1084	5562-1135
92	46.1	583877	5473-1097	5562-1148
93	46.6	583878	5473-1110	5562-1161
94	47.1	583879	5473-1122	5562-1173
95	47.6	583880	5473-1135	5562-1186
96	48.1	583881	5473-1148	5562-1199
97	48.6	583882	5473-1160	5562-1211
98	49.1	583883	5473-1173	5562-1224
99	49.6	583884	5473-1186	5562-1237
100	50.1	583885	5473-1199	5562-1250
101	50.6	583886	5473-1211	5562-1262

Common items.

REF	QTY	PART NO.	DESCRIPTION	REF	QTY	PART NO.	DESCRIPTION
3	1	3129	■ Snap Ring	12	1	560465	Spring Guide
4	1	561211	★ Plunger Wiper	13	1	769018	Roll Pin
5	1	562635	Retainer	14	1	561219	Pull-In Wire
6	1	561208	★ Plunger Seal	15	1	563922	Piston
7	1	561209	★ Back-Up Ring	16	1	559857	★ Back-Up Ring
8	1	561210	★ O-Ring	17	1	559853	★ Piston Seal
9	1	561969	★ Wear Ring	18	1	642649	■ Fitting, 8-10
10	1	560470	Piston, Lowering Fuse	19	1	7010	Ball Bearing
11	1	560824	Spring	20	1	2722	★ O-Ring

★ Included in Service Kit 563927. ■ Not included in Cylinder Assembly. Reference: S-6119, 6120.

https://truckmanualshub.com/

Free Lift Cylinder-2600 PSI

35D/40D

WARNING: Replacing the cylinder with a different part no. cylinder may cause the mast to malfunction.

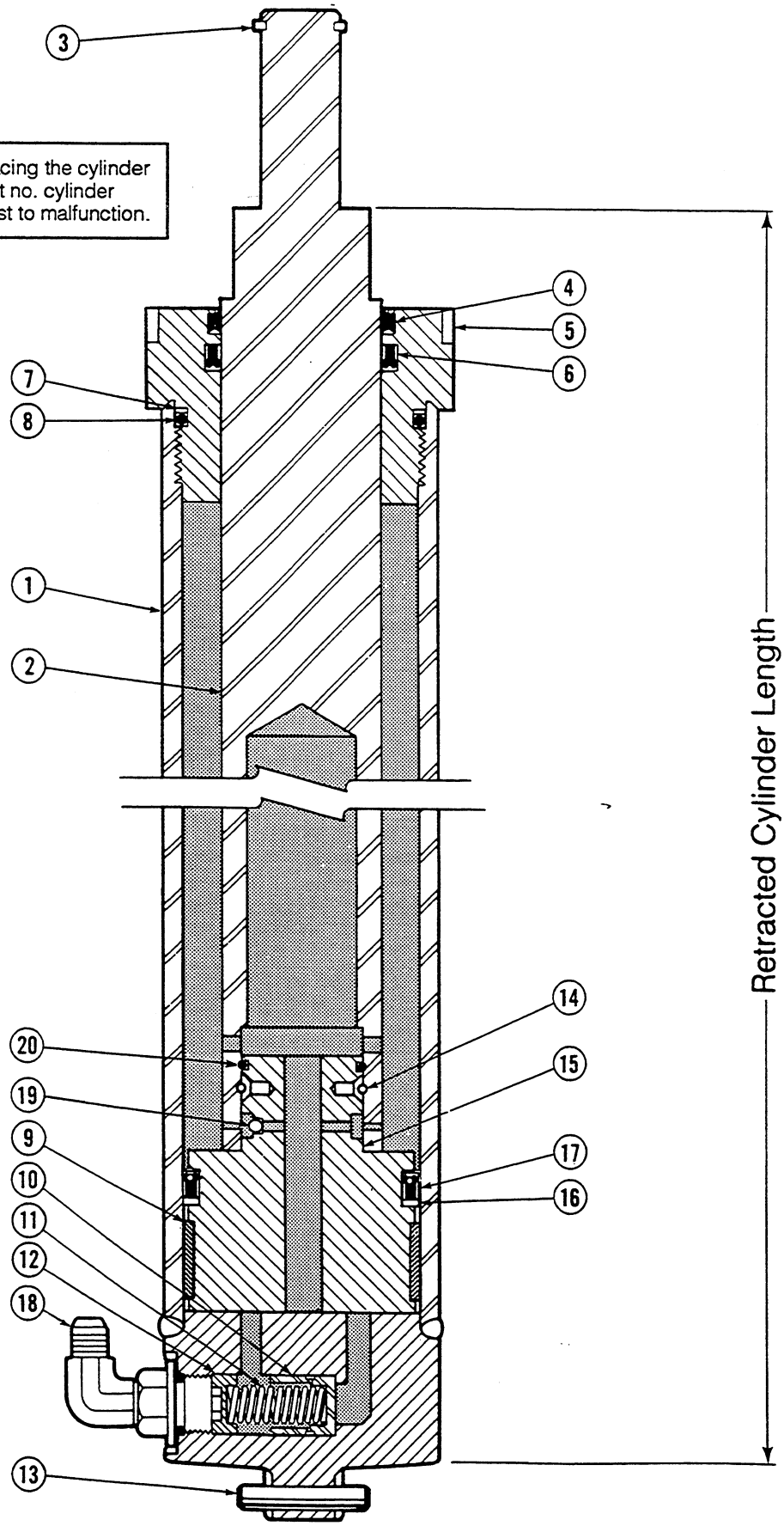

https://truckmanualshub.com/

Free Lift Cylinder-2600 PSI

35D/40D

Part numbers on this page are used with the following mast product I.D. numbers only:

35D-MT-310 thru 678
40D-MT-042 thru 133

Items that vary by mast height.

RETRACTED CHANNEL LENGTH (in.)	RETRACTED CYLINDER LENGTH (in.)	CYLINDER ASSEMBLY QTY 1	REF. NO. 1 SHELL QTY 1	REF. NO. 2 PLUNGER QTY 1
102	51.1	583887	5473-1224	5562-1275
103	51.6	583889	5473-1237	5562-1288
104	52.1	583890	5473-1249	5562-1300
105	52.6	583891	5473-1262	5562-1313
106	53.1	583892	5473-1275	5562-1326
107	53.6	583893	5473-1287	5562-1338
108	54.1	583894	5473-1300	5562-1351
109	54.6	583895	5473-1313	5562-1364
110	55.1	583896	5473-1326	5562-1377
111	55.6	583897	5473-1338	5562-1389
112	56.1	583898	5473-1351	5562-1402
113	56.6	583899	5473-1364	5562-1415
114	57.1	583900	5473-1376	5562-1427
115	57.6	583901	5473-1389	5562-1440
116	58.1	583902	5473-1402	5562-1453
117	58.6	583903	5473-1414	5562-1465
118	59.1	583888	5473-1427	5562-1478

Common items.

REF	QTY	PART NO.	DESCRIPTION	REF	QTY	PART NO.	DESCRIPTION
3	1	3129	■ Snap Ring	12	1	560465	Spring Guide
4	1	561211	★ Plunger Wiper	13	1	769018	Roll Pin
5	1	562635	Retainer	14	1	561219	Pull-In Wire
6	1	561208	★ Plunger Seal	15	1	563922	Piston
7	1	561209	★ Back-Up Ring	16	1	559857	★ Back-Up Ring
8	1	561210	★ O-Ring	17	1	559853	★ Piston Seal
9	1	561969	★ Wear Ring	18	1	642649	■ Fitting, 8-10
10	1	560470	Piston, Lowering Fuse	19	1	7010	Ball Bearing
11	1	560824	Spring	20	1	2722	★ O-Ring

★ Included in Service Kit 563927. ■ Not included in Cylinder Assembly. Reference: S-6119, 6120.

https://truckmanualshub.com/

Outer Upright
35D/40D

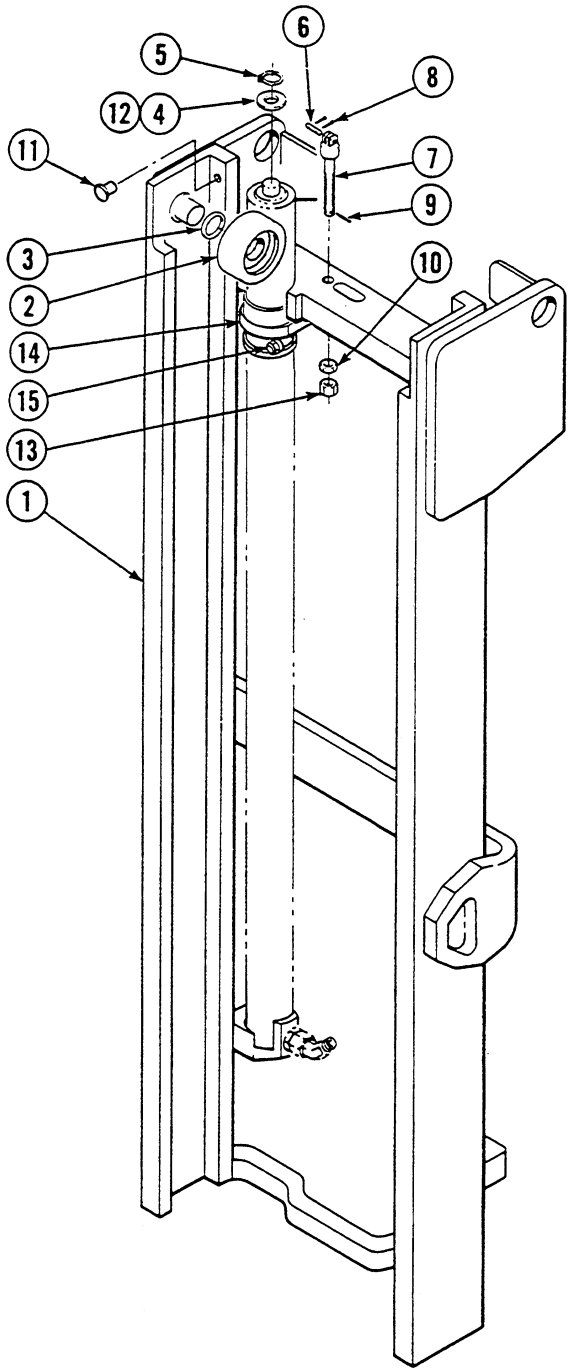

NOTE: See pages 39-59 for Mast Installation Accessories.

https://truckmanualshub.com/

Outer Upright
35D/40D

Part numbers on this page are used with the following mast product I.D. numbers only:

35D-MT-001 thru 319
40D-MT-001 thru 041

Items that vary by mast height.

REF	QTY	PART NO.	DESCRIPTION
1	1	■686686	Outer Upright - 56 in.★
1	1	■686687	Outer Upright - 57 in.★
1	1	■686688	Outer Upright - 58 in.★
1	1	■686689	Outer Upright - 59 in.★
1	1	■686690	Outer Upright - 60 in.★
1	1	■686691	Outer Upright - 61 in.★
1	1	■686692	Outer Upright - 62 in.★
1	1	■686693	Outer Upright - 63 in.★
1	1	■686694	Outer Upright - 64 in.★
1	1	■686695	Outer Upright - 65 in.★
1	1	■686696	Outer Upright - 66 in.★
1	1	■686697	Outer Upright - 67 in.★
1	1	■686698	Outer Upright - 68 in.★
1	1	■686699	Outer Upright - 69 in.★
1	1	■686700	Outer Upright - 70 in.★
1	1	■686701	Outer Upright - 71 in.★
1	1	■686702	Outer Upright - 72 in.★
1	1	■686703	Outer Upright - 73 in.★
1	1	■686704	Outer Upright - 74 in.★
1	1	■686705	Outer Upright - 75 in.★
1	1	■686706	Outer Upright - 76 in.★
1	1	■686707	Outer Upright - 77 in.★
1	1	■686708	Outer Upright - 78 in.★
1	1	■686709	Outer Upright - 79 in.★
1	1	■686710	Outer Upright - 80 in.★
1	1	■686711	Outer Upright - 81 in.★
1	1	■686712	Outer Upright - 82 in.★
1	1	■686713	Outer Upright - 83 in.★
1	1	■686714	Outer Upright - 84 in.★
1	1	■686715	Outer Upright - 85 in.★
1	1	■686716	Outer Upright - 86 in.★
1	1	■686717	Outer Upright - 87 in.★

Items that vary by mast height.

REF	QTY	PART NO.	DESCRIPTION
1	1	■686718	Outer Upright - 88 in.★
1	1	■686719	Outer Upright - 89 in.★
1	1	■686720	Outer Upright - 90 in.★
1	1	■686721	Outer Upright - 91 in.★
1	1	■686722	Outer Upright - 92 in.★
1	1	■686723	Outer Upright - 93 in.★
1	1	■686724	Outer Upright - 94 in.★
1	1	■686725	Outer Upright - 95 in.★
1	1	■686726	Outer Upright - 96 in.★
1	1	■686727	Outer Upright - 97 in.★
1	1	■686728	Outer Upright - 98 in.★
1	1	■686729	Outer Upright - 99 in.★
1	1	■686730	Outer Upright - 100 in.★
1	1	■686731	Outer Upright - 101 in.★
1	1	■200926	Outer Upright - 102 in.★
1	1	■200927	Outer Upright - 103 in.★
1	1	■200928	Outer Upright - 104 in.★
1	1	■200929	Outer Upright - 105 in.★
1	1	■200930	Outer Upright - 106 in.★
1	1	■200931	Outer Upright - 107 in.★
1	1	■200932	Outer Upright - 108 in.★
1	1	■200933	Outer Upright - 109 in.★
1	1	■200934	Outer Upright - 110 in.★
1	1	■200935	Outer Upright - 111 in.★
1	1	■200936	Outer Upright - 112 in.★
1	1	■200937	Outer Upright - 113 in.★
1	1	■200938	Outer Upright - 114 in.★
1	1	■200939	Outer Upright - 115 in.★
1	1	■200940	Outer Upright - 116 in.★
1	1	■200941	Outer Upright - 117 in.★
1	1	■200942	Outer Upright - 118 in.★

Common items.

REF	QTY	PART NO.	DESCRIPTION	REF	QTY	PART NO.	DESCRIPTION
2	2	664206	Roller	8	4	6508	Cotter Pin
3	●	631881	Shim, .03 in. (0,7 mm)	9	2	6518	Cotter Pin
4	3	200524	Shim, .06 in. (1,5 mm)	10	2	200007	Jam Nut
5	2	3129	Snap Ring	11	2	202387	Thrust Plug Service Kit
6	2	678964	Chain Pin–35D	12	1	200525	Shim, .09 in. (2,2 mm)
6	2	680460	Chain Pin–40D	13	2	200006	Nut
7	2	201432	Chain Anchor–35D	14	2	200784	Bumper
7	2	680240	Chain Anchor–40D	15	2	200785	Clamp

● Quantity as required.
★ Retracted channel length.
■ These part numbers are for reference only. Mounting brackets are not included. To order an Outer Upright with mounting brackets, contact the Cascade Parts Depot (503) 669-6300. The mast serial number must be supplied.
Reference: S-3472, 3474, 3792, 3794.

https://truckmanualshub.com/

Outer Upright
35D

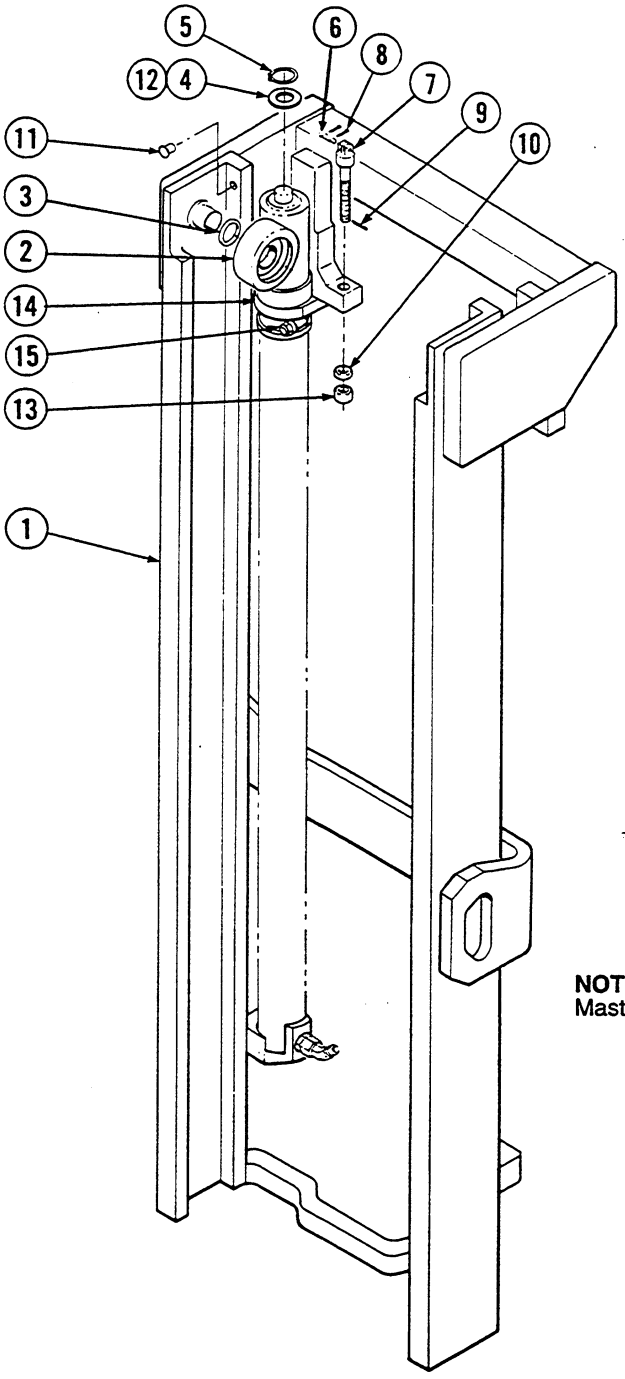

NOTE: See pages 39-59 for Mast Installation Accessories.

https://truckmanualshub.com/

Outer Upright
35D

Part numbers on this page are used with the following mast product I.D. numbers only: 35D-MT-320 thru 549

Items that vary by mast height.

REF	QTY	PART NO.	DESCRIPTION
1	1	■202853	Outer Upright - 56 in.★
1	1	■202854	Outer Upright - 57 in.★
1	1	■202855	Outer Upright - 58 in.★
1	1	■202856	Outer Upright - 59 in.★
1	1	■202857	Outer Upright - 60 in.★
1	1	■202858	Outer Upright - 61 in.★
1	1	■202859	Outer Upright - 62 in.★
1	1	■202860	Outer Upright - 63 in.★
1	1	■202861	Outer Upright - 64 in.★
1	1	■202862	Outer Upright - 65 in.★
1	1	■202863	Outer Upright - 66 in.★
1	1	■202864	Outer Upright - 67 in.★
1	1	■202865	Outer Upright - 68 in.★
1	1	■202866	Outer Upright - 69 in.★
1	1	■202867	Outer Upright - 70 in.★
1	1	■202868	Outer Upright - 71 in.★
1	1	■202869	Outer Upright - 72 in.★
1	1	■202870	Outer Upright - 73 in.★
1	1	■202871	Outer Upright - 74 in.★
1	1	■202872	Outer Upright - 75 in.★
1	1	■202873	Outer Upright - 76 in.★
1	1	■202874	Outer Upright - 77 in.★
1	1	■202875	Outer Upright - 78 in.★
1	1	■202876	Outer Upright - 79 in.★
1	1	■202877	Outer Upright - 80 in.★
1	1	■202878	Outer Upright - 81 in.★
1	1	■202879	Outer Upright - 82 in.★
1	1	■202880	Outer Upright - 83 in.★
1	1	■202881	Outer Upright - 84 in.★
1	1	■202882	Outer Upright - 85 in.★
1	1	■202883	Outer Upright - 86 in.★
1	1	■202884	Outer Upright - 87 in.★

Items that vary by mast height.

REF	QTY	PART NO.	DESCRIPTION
1	1	■202885	Outer Upright - 88 in.★
1	1	■202886	Outer Upright - 89 in.★
1	1	■202887	Outer Upright - 90 in.★
1	1	■202888	Outer Upright - 91 in.★
1	1	■202889	Outer Upright - 92 in.★
1	1	■202890	Outer Upright - 93 in.★
1	1	■202891	Outer Upright - 94 in.★
1	1	■202892	Outer Upright - 95 in.★
1	1	■202893	Outer Upright - 96 in.★
1	1	■202894	Outer Upright - 97 in.★
1	1	■202895	Outer Upright - 98 in.★
1	1	■202896	Outer Upright - 99 in.★
1	1	■202897	Outer Upright - 100 in.★
1	1	■202898	Outer Upright - 101 in.★
1	1	■200926	Outer Upright - 102 in.★
1	1	■200927	Outer Upright - 103 in.★
1	1	■200928	Outer Upright - 104 in.★
1	1	■200929	Outer Upright - 105 in.★
1	1	■200930	Outer Upright - 106 in.★
1	1	■200931	Outer Upright - 107 in.★
1	1	■200932	Outer Upright - 108 in.★
1	1	■200933	Outer Upright - 109 in.★
1	1	■200934	Outer Upright - 110 in.★
1	1	■200935	Outer Upright - 111 in.★
1	1	■200936	Outer Upright - 112 in.★
1	1	■200937	Outer Upright - 113 in.★
1	1	■200938	Outer Upright - 114 in.★
1	1	■200939	Outer Upright - 115 in.★
1	1	■200940	Outer Upright - 116 in.★
1	1	■200941	Outer Upright - 117 in.★
1	1	■200942	Outer Upright - 118 in.★

Common items.

REF	QTY	PART NO.	DESCRIPTION	REF	QTY	PART NO.	DESCRIPTION
2	2	664206	Roller	9	2	6518	Cotter Pin
3	●	631881	Shim, .03 in. (0,7 mm)	10	2	200007	Jam Nut
4	3	200524	Shim, .06 in. (1,5 mm)	11	2	202387	Thrust Plug Service Kit
5	2	3129	Snap Ring	12	1	200525	Shim, .09 in. (2,2 mm)
6	2	680460	Chain Pin	13	2	200006	Nut
7	2	201433	Chain Anchor	14	2	202396	Bumper
8	4	6508	Cotter Pin	15	2	200785	Clamp

● Quantity as required.
★ Retracted channel length.
■ These part numbers are for reference only. Mounting brackets are not included. To order an Outer Upright with mounting brackets, contact the Cascade Parts Depot (503) 669-6300. The mast serial number must be supplied.
Reference: S-3795.

https://truckmanualshub.com/

Outer Upright
35D/40D

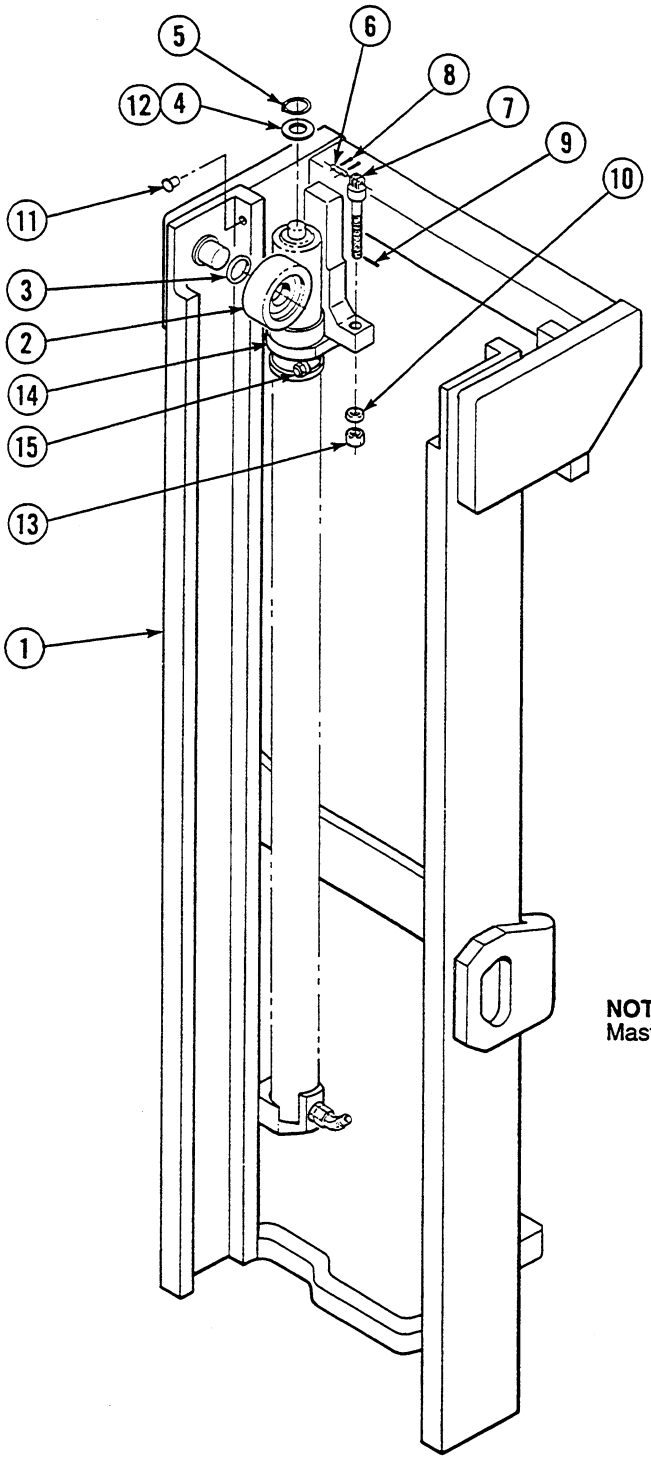

NOTE: See pages 39-59 for Mast Installation Accessories.

https://truckmanualshub.com/

Outer Upright

35D/40D

Part numbers on this page are used with the following mast product I.D. numbers only:

35D-MT-550 thru 678
40D-MT-042 thru 133

Items that vary by mast height.

REF	QTY	PART NO.	DESCRIPTION
1	1	■202853	Outer Upright - 56 in.★
1	1	■202854	Outer Upright - 57 in.★
1	1	■202855	Outer Upright - 58 in.★
1	1	■202856	Outer Upright - 59 in.★
1	1	■202857	Outer Upright - 60 in.★
1	1	■202858	Outer Upright - 61 in.★
1	1	■202859	Outer Upright - 62 in.★
1	1	■202860	Outer Upright - 63 in.★
1	1	■202861	Outer Upright - 64 in.★
1	1	■202862	Outer Upright - 65 in.★
1	1	■202863	Outer Upright - 66 in.★
1	1	■202864	Outer Upright - 67 in.★
1	1	■202865	Outer Upright - 68 in.★
1	1	■202866	Outer Upright - 69 in.★
1	1	■202867	Outer Upright - 70 in.★
1	1	■202868	Outer Upright - 71 in.★
1	1	■202869	Outer Upright - 72 in.★
1	1	■202870	Outer Upright - 73 in.★
1	1	■202871	Outer Upright - 74 in.★
1	1	■202872	Outer Upright - 75 in.★
1	1	■202873	Outer Upright - 76 in.★
1	1	■202874	Outer Upright - 77 in.★
1	1	■202875	Outer Upright - 78 in.★
1	1	■202876	Outer Upright - 79 in.★
1	1	■202877	Outer Upright - 80 in.★
1	1	■202878	Outer Upright - 81 in.★
1	1	■202879	Outer Upright - 82 in.★
1	1	■202880	Outer Upright - 83 in.★
1	1	■202881	Outer Upright - 84 in.★
1	1	■202882	Outer Upright - 85 in.★
1	1	■202883	Outer Upright - 86 in.★
1	1	■202884	Outer Upright - 87 in.★

Items that vary by mast height.

REF	QTY	PART NO.	DESCRIPTION
1	1	■202885	Outer Upright - 88 in.★
1	1	■202886	Outer Upright - 89 in.★
1	1	■202887	Outer Upright - 90 in.★
1	1	■202888	Outer Upright - 91 in.★
1	1	■202889	Outer Upright - 92 in.★
1	1	■202890	Outer Upright - 93 in.★
1	1	■202891	Outer Upright - 94 in.★
1	1	■202892	Outer Upright - 95 in.★
1	1	■202893	Outer Upright - 96 in.★
1	1	■202894	Outer Upright - 97 in.★
1	1	■202895	Outer Upright - 98 in.★
1	1	■202896	Outer Upright - 99 in.★
1	1	■202897	Outer Upright - 100 in.★
1	1	■202898	Outer Upright - 101 in.★
1	1	■200926	Outer Upright - 102 in.★
1	1	■200927	Outer Upright - 103 in.★
1	1	■200928	Outer Upright - 104 in.★
1	1	■200929	Outer Upright - 105 in.★
1	1	■200930	Outer Upright - 106 in.★
1	1	■200931	Outer Upright - 107 in.★
1	1	■200932	Outer Upright - 108 in.★
1	1	■200933	Outer Upright - 109 in.★
1	1	■200934	Outer Upright - 110 in.★
1	1	■200935	Outer Upright - 111 in.★
1	1	■200936	Outer Upright - 112 in.★
1	1	■200937	Outer Upright - 113 in.★
1	1	■200938	Outer Upright - 114 in.★
1	1	■200939	Outer Upright - 115 in.★
1	1	■200940	Outer Upright - 116 in.★
1	1	■200941	Outer Upright - 117 in.★
1	1	■200942	Outer Upright - 118 in.★

Common items.

REF	QTY	PART NO.	DESCRIPTION	REF	QTY	PART NO.	DESCRIPTION
2	2	664206	Roller	8	4	6508	Cotter Pin
3	●	631881	Shim, .03 in. (0,7 mm)	9	2	6518	Cotter Pin
4	3	200524	Shim, .06 in. (1,5 mm)	10	2	200007	Jam Nut
5	2	3129	Snap Ring	11	2	202387	Thrust Plug Service Kit
6	2	678964	Chain Pin–35D	12	1	200525	Shim, .09 in. (2,2 mm)–35D
6	2	680460	Chain Pin–40D	13	2	200006	Nut
7	2	678755	Chain Anchor–35D	14	2	202396	Bumper
7	2	201433	Chain Anchor–40D	15	2	200785	Clamp

● Quantity as required.
★ Retracted channel length.
■ These part numbers are for reference only. Mounting brackets are not included. To order an Outer Upright with mounting brackets, contact the Cascade Parts Depot (503) 669-6300. The mast serial number must be supplied.
Reference: S-3792, 3795, 4023, 4024.

https://truckmanualshub.com/

Intermediate Upright
35D/40D

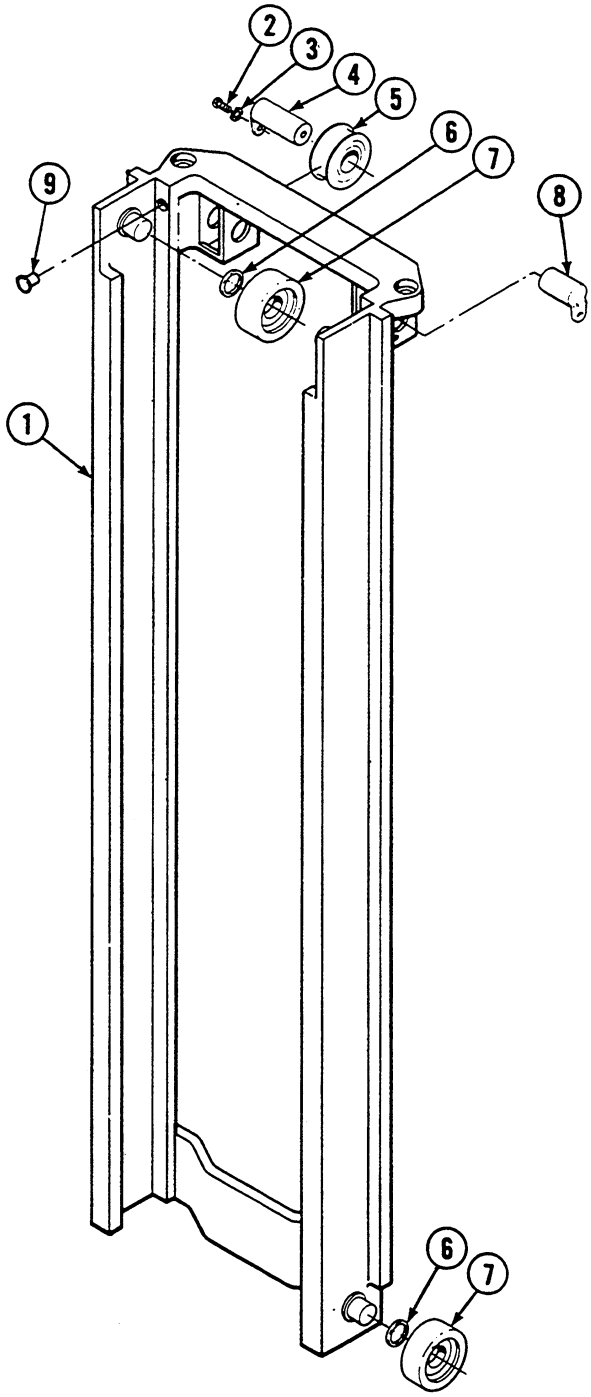

https://truckmanualshub.com/

Intermediate Upright
35D/40D

Items that vary by mast height.

REF	QTY	PART NO.	DESCRIPTION
1	1	686732	Intermed. Upright - 56 in.★
1	1	686733	Intermed. Upright - 57 in.★
1	1	686734	Intermed. Upright - 58 in.★
1	1	686735	Intermed. Upright - 59 in.★
1	1	686736	Intermed. Upright - 60 in.★
1	1	686737	Intermed. Upright - 61 in.★
1	1	686738	Intermed. Upright - 62 in.★
1	1	686739	Intermed. Upright - 63 in.★
1	1	686740	Intermed. Upright - 64 in.★
1	1	686741	Intermed. Upright - 65 in.★
1	1	686742	Intermed. Upright - 66 in.★
1	1	686743	Intermed. Upright - 67 in.★
1	1	686744	Intermed. Upright - 68 in.★
1	1	686745	Intermed. Upright - 69 in.★
1	1	686746	Intermed. Upright - 70 in.★
1	1	686747	Intermed. Upright - 71 in.★
1	1	686748	Intermed. Upright - 72 in.★
1	1	686749	Intermed. Upright - 73 in.★
1	1	686750	Intermed. Upright - 74 in.★
1	1	686751	Intermed. Upright - 75 in.★
1	1	686752	Intermed. Upright - 76 in.★
1	1	686753	Intermed. Upright - 77 in.★
1	1	686754	Intermed. Upright - 78 in.★
1	1	686755	Intermed. Upright - 79 in.★
1	1	686756	Intermed. Upright - 80 in.★
1	1	686757	Intermed. Upright - 81 in.★
1	1	686758	Intermed. Upright - 82 in.★
1	1	686759	Intermed. Upright - 83 in.★
1	1	686760	Intermed. Upright - 84 in.★
1	1	686761	Intermed. Upright - 85 in.★
1	1	686762	Intermed. Upright - 86 in.★
1	1	686763	Intermed. Upright - 87 in.★

Items that vary by mast height.

REF	QTY	PART NO.	DESCRIPTION
1	1	686764	Intermed. Upright - 88 in.★
1	1	686765	Intermed. Upright - 89 in.★
1	1	686766	Intermed. Upright - 90 in.★
1	1	686767	Intermed. Upright - 91 in.★
1	1	686768	Intermed. Upright - 92 in.★
1	1	686769	Intermed. Upright - 93 in.★
1	1	686770	Intermed. Upright - 94 in.★
1	1	686771	Intermed. Upright - 95 in.★
1	1	686772	Intermed. Upright - 96 in.★
1	1	686773	Intermed. Upright - 97 in.★
1	1	686774	Intermed. Upright - 98 in.★
1	1	686775	Intermed. Upright - 99 in.★
1	1	686776	Intermed. Upright - 100 in.★
1	1	686777	Intermed. Upright - 101 in.★
1	1	200943	Intermed. Upright - 102 in.★
1	1	200944	Intermed. Upright - 103 in.★
1	1	200945	Intermed. Upright - 104 in.★
1	1	200946	Intermed. Upright - 105 in.★
1	1	200947	Intermed. Upright - 106 in.★
1	1	200948	Intermed. Upright - 107 in.★
1	1	200949	Intermed. Upright - 108 in.★
1	1	200950	Intermed. Upright - 109 in.★
1	1	200951	Intermed. Upright - 110 in.★
1	1	200952	Intermed. Upright - 111 in.★
1	1	200953	Intermed. Upright - 112 in.★
1	1	200954	Intermed. Upright - 113 in.★
1	1	200955	Intermed. Upright - 114 in.★
1	1	200956	Intermed. Upright - 115 in.★
1	1	200957	Intermed. Upright - 116 in.★
1	1	200958	Intermed. Upright - 117 in.★
1	1	200959	Intermed. Upright - 118 in.★

Common items.

REF	QTY	PART NO.	DESCRIPTION
2	2	683820	Capscrew, M10x1.5x16-8.8
3	2	683826	Lockwasher, M10
4	1	684432	Pin
5	2	661550	Chain Sheave
6	●	631881	Shim, .03 in. (0.7 mm)
7	4	664206	Roller
8	1	684430	Pin
9	2	202387	Thrust Plug Service Kit

● Quantity as required.
★ Retracted channel length.
Reference: S-3472, 3474, 3792, 3795, 4023, 4024.

https://truckmanualshub.com/

Inner Upright
35D/40D

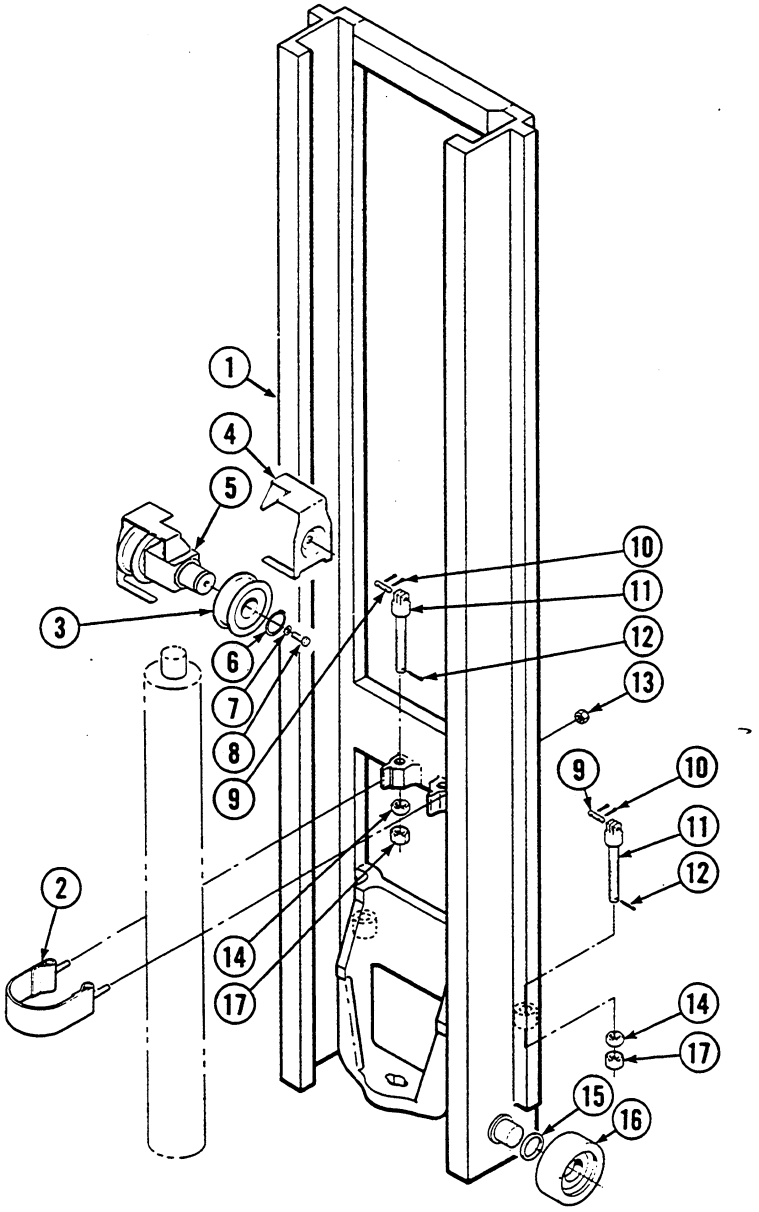

https://truckmanualshub.com/

Inner Upright

35D/40D

Part numbers on this page are used with the following mast product I.D. numbers only:

35D-MT-001 thru 089
40D-MT-001 thru 008

Items that vary by mast height.

REF	QTY	PART NO.	DESCRIPTION
1	1	686778	Inner Upright - 56 in.★
1	1	686779	Inner Upright - 57 in.★
1	1	686780	Inner Upright - 58 in.★
1	1	686781	Inner Upright - 59 in.★
1	1	686782	Inner Upright - 60 in.★
1	1	686783	Inner Upright - 61 in.★
1	1	686784	Inner Upright - 62 in.★
1	1	686785	Inner Upright - 63 in.★
1	1	686786	Inner Upright - 64 in.★
1	1	686787	Inner Upright - 65 in.★
1	1	686788	Inner Upright - 66 in.★
1	1	686789	Inner Upright - 67 in.★
1	1	686790	Inner Upright - 68 in.★
1	1	686791	Inner Upright - 69 in.★
1	1	686792	Inner Upright - 70 in.★
1	1	686793	Inner Upright - 71 in.★
1	1	686794	Inner Upright - 72 in.★
1	1	686795	Inner Upright - 73 in.★
1	1	686796	Inner Upright - 74 in.★
1	1	686797	Inner Upright - 75 in.★
1	1	686798	Inner Upright - 76 in.★
1	1	686799	Inner Upright - 77 in.★
1	1	686800	Inner Upright - 78 in.★
1	1	686801	Inner Upright - 79 in.★
1	1	686802	Inner Upright - 80 in.★
1	1	686803	Inner Upright - 81 in.★
1	1	686804	Inner Upright - 82 in.★
1	1	686805	Inner Upright - 83 in.★
1	1	686806	Inner Upright - 84 in.★
1	1	686807	Inner Upright - 85 in.★
1	1	686808	Inner Upright - 86 in.★
1	1	686809	Inner Upright - 87 in.★

Items that vary by mast height.

REF	QTY	PART NO.	DESCRIPTION
1	1	686810	Inner Upright - 88 in.★
1	1	686811	Inner Upright - 89 in.★
1	1	686812	Inner Upright - 90 in.★
1	1	686813	Inner Upright - 91 in.★
1	1	686814	Inner Upright - 92 in.★
1	1	686815	Inner Upright - 93 in.★
1	1	686816	Inner Upright - 94 in.★
1	1	686817	Inner Upright - 95 in.★
1	1	686818	Inner Upright - 96 in.★
1	1	686819	Inner Upright - 97 in.★
1	1	686820	Inner Upright - 98 in.★
1	1	686821	Inner Upright - 99 in.★
1	1	686822	Inner Upright - 100 in.★
1	1	686823	Inner Upright - 101 in.★
1	1	200960	Inner Upright - 102 in.★
1	1	200961	Inner Upright - 103 in.★
1	1	200962	Inner Upright - 104 in.★
1	1	200963	Inner Upright - 105 in.★
1	1	200964	Inner Upright - 106 in.★
1	1	200965	Inner Upright - 107 in.★
1	1	200966	Inner Upright - 108 in.★
1	1	200967	Inner Upright - 109 in.★
1	1	200968	Inner Upright - 110 in.★
1	1	200969	Inner Upright - 111 in.★
1	1	200970	Inner Upright - 112 in.★
1	1	200971	Inner Upright - 113 in.★
1	1	200972	Inner Upright - 114 in.★
1	1	200973	Inner Upright - 115 in.★
1	1	200974	Inner Upright - 116 in.★
1	1	200975	Inner Upright - 117 in.★
1	1	200976	Inner Upright - 118 in.★

Common items.

REF	QTY	PART NO.	DESCRIPTION	REF	QTY	PART NO.	DESCRIPTION
2	1	684427	Band	10	8	6508	Cotter Pin
3	2	661550	Chain Sheave	11	4	678755	Chain Anchor–35D
4	2	684426	Chain Guard	11	4	680240	Chain Anchor–40D
5	1	684428	Crosshead	12	2	6518	Cotter Pin
6	2	3140	Snap Ring	13	2	5875	Nut
7	2	683822	Lockwasher, M12	14	4	200007	Jam Nut
8	2	683821	Capscrew, M12x1.75x20-8.8	15	●	631881	Shim, .03 in. (0,7 mm)
9	4	678964	Chain Pin–35D	16	2	661549	Roller
9	4	680460	Chain Pin–40D	17	4	200006	Nut

● Quantity as required.
★ Retracted channel length.
Reference: S-3472.

https://truckmanualshub.com/

Inner Upright
35D/40D

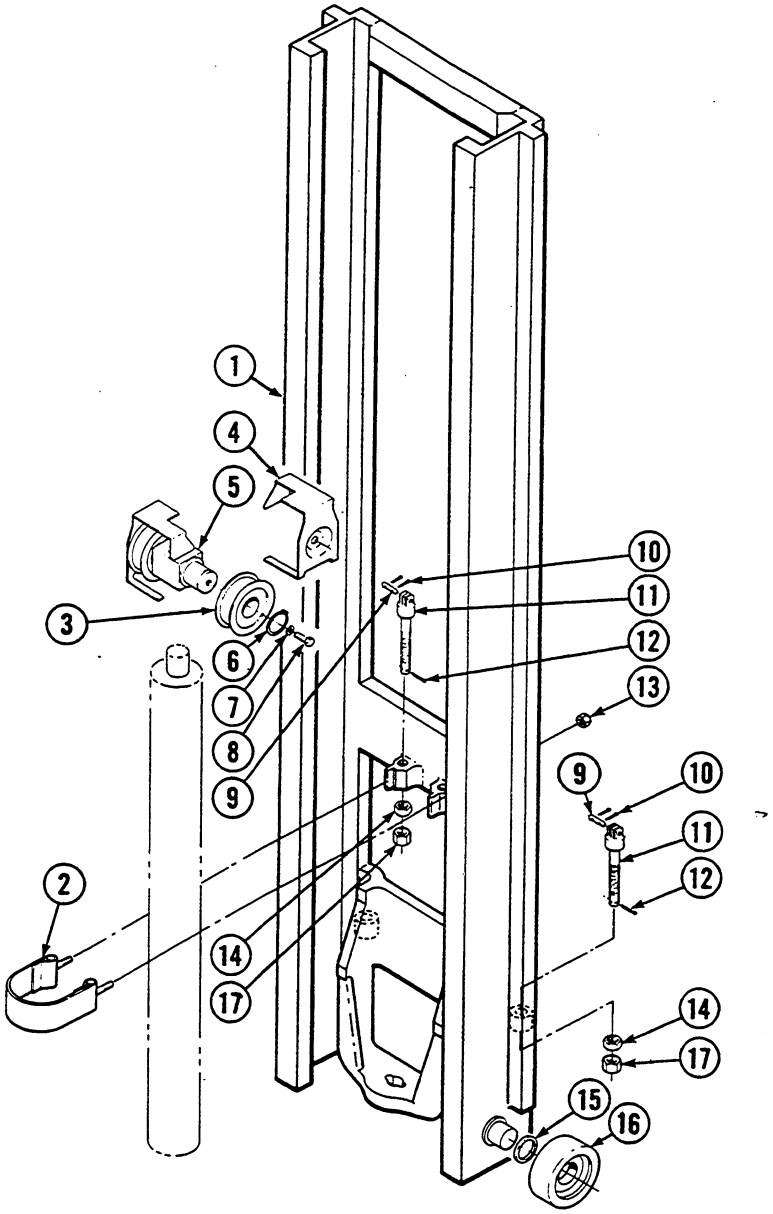

https://truckmanualshub.com/

Inner Upright
35D/40D

Part numbers on this page are used with the following mast product I.D. numbers only: 35D-MT-090 thru 309, 40D-MT-009 thru 041

Items that vary by mast height.

REF	QTY	PART NO.	DESCRIPTION
1	1	686778	Inner Upright - 56 in.★
1	1	686779	Inner Upright - 57 in.★
1	1	686780	Inner Upright - 58 in.★
1	1	686781	Inner Upright - 59 in.★
1	1	686782	Inner Upright - 60 in.★
1	1	686783	Inner Upright - 61 in.★
1	1	686784	Inner Upright - 62 in.★
1	1	686785	Inner Upright - 63 in.★
1	1	686786	Inner Upright - 64 in.★
1	1	686787	Inner Upright - 65 in.★
1	1	686788	Inner Upright - 66 in.★
1	1	686789	Inner Upright - 67 in.★
1	1	686790	Inner Upright - 68 in.★
1	1	686791	Inner Upright - 69 in.★
1	1	686792	Inner Upright - 70 in.★
1	1	686793	Inner Upright - 71 in.★
1	1	686794	Inner Upright - 72 in.★
1	1	686795	Inner Upright - 73 in.★
1	1	686796	Inner Upright - 74 in.★
1	1	686797	Inner Upright - 75 in.★
1	1	686798	Inner Upright - 76 in.★
1	1	686799	Inner Upright - 77 in.★
1	1	686800	Inner Upright - 78 in.★
1	1	686801	Inner Upright - 79 in.★
1	1	686802	Inner Upright - 80 in.★
1	1	686803	Inner Upright - 81 in.★
1	1	686804	Inner Upright - 82 in.★
1	1	686805	Inner Upright - 83 in.★
1	1	686806	Inner Upright - 84 in.★
1	1	686807	Inner Upright - 85 in.★
1	1	686808	Inner Upright - 86 in.★
1	1	686809	Inner Upright - 87 in.★

Items that vary by mast height.

REF	QTY	PART NO.	DESCRIPTION
1	1	686810	Inner Upright - 88 in.★
1	1	686811	Inner Upright - 89 in.★
1	1	686812	Inner Upright - 90 in.★
1	1	686813	Inner Upright - 91 in.★
1	1	686814	Inner Upright - 92 in.★
1	1	686815	Inner Upright - 93 in.★
1	1	686816	Inner Upright - 94 in.★
1	1	686817	Inner Upright - 95 in.★
1	1	686818	Inner Upright - 96 in.★
1	1	686819	Inner Upright - 97 in.★
1	1	686820	Inner Upright - 98 in.★
1	1	686821	Inner Upright - 99 in.★
1	1	686822	Inner Upright - 100 in.★
1	1	686823	Inner Upright - 101 in.★
1	1	200960	Inner Upright - 102 in.★
1	1	200961	Inner Upright - 103 in.★
1	1	200962	Inner Upright - 104 in.★
1	1	200963	Inner Upright - 105 in.★
1	1	200964	Inner Upright - 106 in.★
1	1	200965	Inner Upright - 107 in.★
1	1	200966	Inner Upright - 108 in.★
1	1	200967	Inner Upright - 109 in.★
1	1	200968	Inner Upright - 110 in.★
1	1	200969	Inner Upright - 111 in.★
1	1	200970	Inner Upright - 112 in.★
1	1	200971	Inner Upright - 113 in.★
1	1	200972	Inner Upright - 114 in.★
1	1	200973	Inner Upright - 115 in.★
1	1	200974	Inner Upright - 116 in.★
1	1	200975	Inner Upright - 117 in.★
1	1	200976	Inner Upright - 118 in.★

Common items.

REF	QTY	PART NO.	DESCRIPTION	REF	QTY	PART NO.	DESCRIPTION
2	1	684427	Band	10	8	6508	Cotter Pin
3	2	661550	Chain Sheave	11	4	678755	Chain Anchor–35D
4	2	684426	Chain Guard	11	4	680240	Chain Anchor–40D
5	1	200423	Crosshead	12	2	6518	Cotter Pin
6	2	3140	Snap Ring	13	2	5875	Nut
7	2	683822	Lockwasher, M12	14	4	200007	Jam Nut
8	2	683821	Capscrew, M12x1.75x20-8.8	15	●	631881	Shim, .03 in. (0,7 mm)
9	4	678964	Chain Pin–35D	16	2	664206	Roller
9	4	680460	Chain Pin–40D	17	4	200006	Nut

● Quantity as required.
★ Retracted channel length.
Reference: S-3472, 3474, 3792.

https://truckmanualshub.com/

Inner Upright
35D/40D

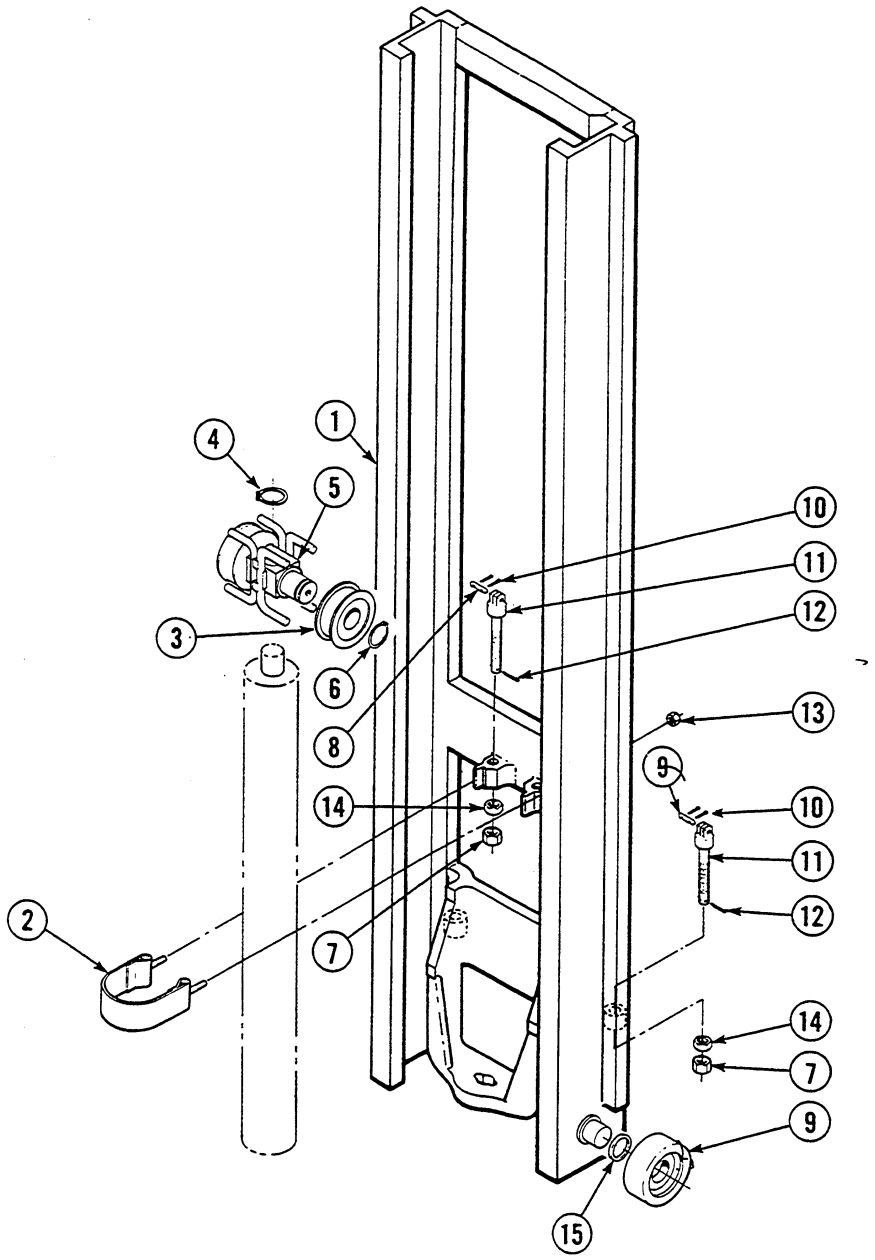

https://truckmanualshub.com/

Inner Upright
35D/40D

Part numbers on this page are used with the following mast product I.D. numbers only:

35D-MT-310 thru 549
40D-MT-042 thru 105

Items that vary by mast height.

REF	QTY	PART NO.	DESCRIPTION
1	1	686778	Inner Upright - 56 in.★
1	1	686779	Inner Upright - 57 in.★
1	1	686780	Inner Upright - 58 in.★
1	1	686781	Inner Upright - 59 in.★
1	1	686782	Inner Upright - 60 in.★
1	1	686783	Inner Upright - 61 in.★
1	1	686784	Inner Upright - 62 in.★
1	1	686785	Inner Upright - 63 in.★
1	1	686786	Inner Upright - 64 in.★
1	1	686787	Inner Upright - 65 in.★
1	1	686788	Inner Upright - 66 in.★
1	1	686789	Inner Upright - 67 in.★
1	1	686790	Inner Upright - 68 in.★
1	1	686791	Inner Upright - 69 in.★
1	1	686792	Inner Upright - 70 in.★
1	1	686793	Inner Upright - 71 in.★
1	1	686794	Inner Upright - 72 in.★
1	1	686795	Inner Upright - 73 in.★
1	1	686796	Inner Upright - 74 in.★
1	1	686797	Inner Upright - 75 in.★
1	1	686798	Inner Upright - 76 in.★
1	1	686799	Inner Upright - 77 in.★
1	1	686800	Inner Upright - 78 in.★
1	1	686801	Inner Upright - 79 in.★
1	1	686802	Inner Upright - 80 in.★
1	1	686803	Inner Upright - 81 in.★
1	1	686804	Inner Upright - 82 in.★
1	1	686805	Inner Upright - 83 in.★
1	1	686806	Inner Upright - 84 in.★
1	1	686807	Inner Upright - 85 in.★
1	1	686808	Inner Upright - 86 in.★
1	1	686809	Inner Upright - 87 in.★

Items that vary by mast height.

REF	QTY	PART NO.	DESCRIPTION
1	1	686810	Inner Upright - 88 in.★
1	1	686811	Inner Upright - 89 in.★
1	1	686812	Inner Upright - 90 in.★
1	1	686813	Inner Upright - 91 in.★
1	1	686814	Inner Upright - 92 in.★
1	1	686815	Inner Upright - 93 in.★
1	1	686816	Inner Upright - 94 in.★
1	1	686817	Inner Upright - 95 in.★
1	1	686818	Inner Upright - 96 in.★
1	1	686819	Inner Upright - 97 in.★
1	1	686820	Inner Upright - 98 in.★
1	1	686821	Inner Upright - 99 in.★
1	1	686822	Inner Upright - 100 in.★
1	1	686823	Inner Upright - 101 in.★
1	1	200960	Inner Upright - 102 in.★
1	1	200961	Inner Upright - 103 in.★
1	1	200962	Inner Upright - 104 in.★
1	1	200963	Inner Upright - 105 in.★
1	1	200964	Inner Upright - 106 in.★
1	1	200965	Inner Upright - 107 in.★
1	1	200966	Inner Upright - 108 in.★
1	1	200967	Inner Upright - 109 in.★
1	1	200968	Inner Upright - 110 in.★
1	1	200969	Inner Upright - 111 in.★
1	1	200970	Inner Upright - 112 in.★
1	1	200971	Inner Upright - 113 in.★
1	1	200972	Inner Upright - 114 in.★
1	1	200973	Inner Upright - 115 in.★
1	1	200974	Inner Upright - 116 in.★
1	1	200975	Inner Upright - 117 in.★
1	1	200976	Inner Upright - 118 in.★

Common items.

REF	QTY	PART NO.	DESCRIPTION	REF	QTY	PART NO.	DESCRIPTION
2	1	684427	Band	9	2	664206	Roller
3	2	661550	Chain Sheave	10	8	6508	Cotter Pin
4	1	3133	Snap Ring	11	4	678755	◆ Chain Anchor
5	1	205208	Crosshead	11	4	680240	■ Chain Anchor
6	2	3140	Snap Ring	12	2	6518	Cotter Pin
7	4	200006	Nut	13	2	5875	Nut
8	4	678964	◆ Chain Pin	14	4	200007	Jam Nut
8	4	680460	■ Chain Pin	15	●	631881	Shim, .03 in. (0,7 mm)

◆ Use for Product I.D. Numbers 35D-MT-310 thru 319 only.
■ Use for Product I.D. Numbers 35D-MT-320 thru 549 and 40D-MT 042 thru 105 only.
● Quantity as required.
★ Retracted channel length.
Reference: S-3792, 3795.

https://truckmanualshub.com/

Inner Upright
35D/40D

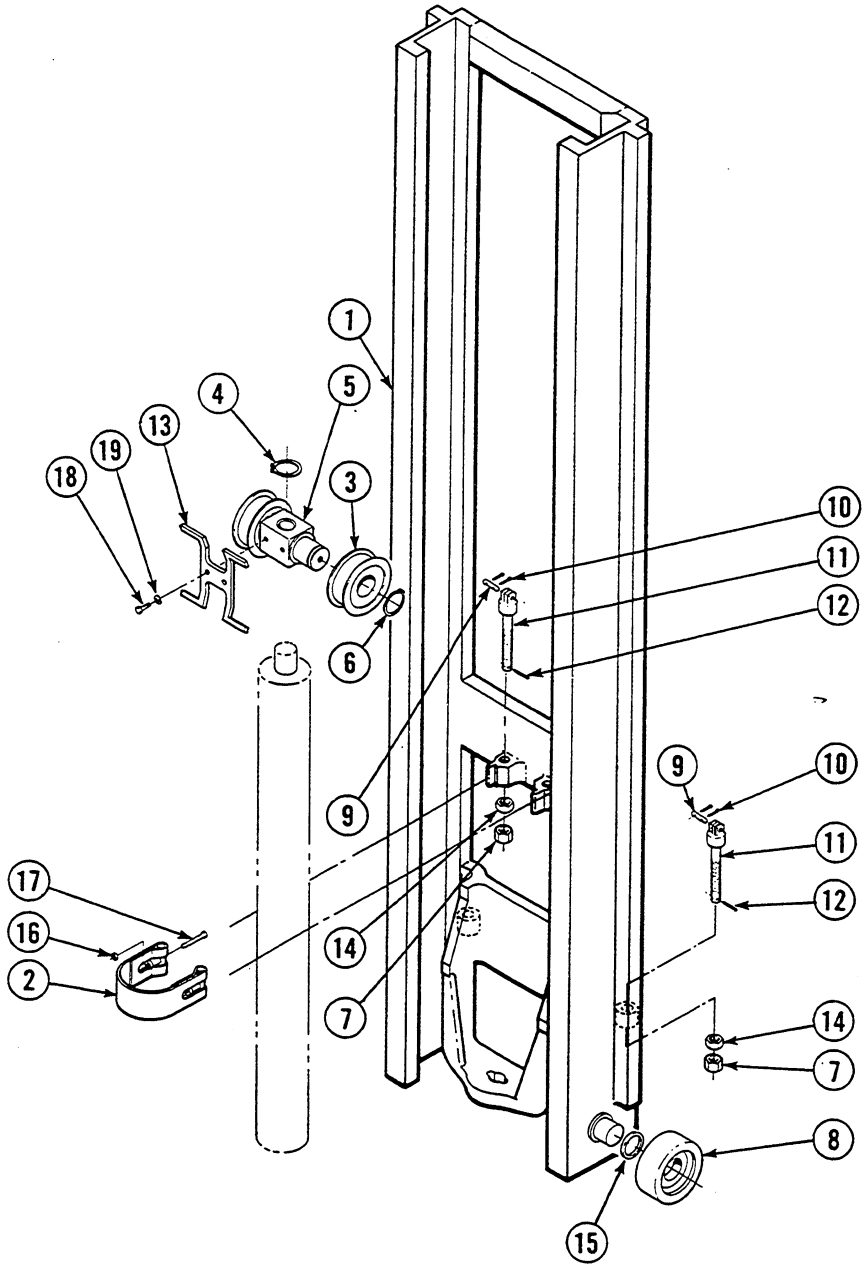

https://truckmanualshub.com/

Inner Upright
35D/40D

Part numbers on this page are used with the following mast product I.D. numbers only:
35D-MT-550 thru 678
40D-MT-106 thru 133

Items that vary by mast height.

REF	QTY	PART NO.	DESCRIPTION
1	1	686778	Inner Upright - 56 in.★
1	1	686779	Inner Upright - 57 in.★
1	1	686780	Inner Upright - 58 in.★
1	1	686781	Inner Upright - 59 in.★
1	1	686782	Inner Upright - 60 in.★
1	1	686783	Inner Upright - 61 in.★
1	1	686784	Inner Upright - 62 in.★
1	1	686785	Inner Upright - 63 in.★
1	1	686786	Inner Upright - 64 in.★
1	1	686787	Inner Upright - 65 in.★
1	1	686788	Inner Upright - 66 in.★
1	1	686789	Inner Upright - 67 in.★
1	1	686790	Inner Upright - 68 in.★
1	1	686791	Inner Upright - 69 in.★
1	1	686792	Inner Upright - 70 in.★
1	1	686793	Inner Upright - 71 in.★
1	1	686794	Inner Upright - 72 in.★
1	1	686795	Inner Upright - 73 in.★
1	1	686796	Inner Upright - 74 in.★
1	1	686797	Inner Upright - 75 in.★
1	1	686798	Inner Upright - 76 in.★
1	1	686799	Inner Upright - 77 in.★
1	1	686800	Inner Upright - 78 in.★
1	1	686801	Inner Upright - 79 in.★
1	1	686802	Inner Upright - 80 in.★
1	1	686803	Inner Upright - 81 in.★
1	1	686804	Inner Upright - 82 in.★
1	1	686805	Inner Upright - 83 in.★
1	1	686806	Inner Upright - 84 in.★
1	1	686807	Inner Upright - 85 in.★
1	1	686808	Inner Upright - 86 in.★
1	1	686809	Inner Upright - 87 in.★

Items that vary by mast height.

REF	QTY	PART NO.	DESCRIPTION
1	1	686810	Inner Upright - 88 in.★
1	1	686811	Inner Upright - 89 in.★
1	1	686812	Inner Upright - 90 in.★
1	1	686813	Inner Upright - 91 in.★
1	1	686814	Inner Upright - 92 in.★
1	1	686815	Inner Upright - 93 in.★
1	1	686816	Inner Upright - 94 in.★
1	1	686817	Inner Upright - 95 in.★
1	1	686818	Inner Upright - 96 in.★
1	1	686819	Inner Upright - 97 in.★
1	1	686820	Inner Upright - 98 in.★
1	1	686821	Inner Upright - 99 in.★
1	1	686822	Inner Upright - 100 in.★
1	1	686823	Inner Upright - 101 in.★
1	1	200960	Inner Upright - 102 in.★
1	1	200961	Inner Upright - 103 in.★
1	1	200962	Inner Upright - 104 in.★
1	1	200963	Inner Upright - 105 in.★
1	1	200964	Inner Upright - 106 in.★
1	1	200965	Inner Upright - 107 in.★
1	1	200966	Inner Upright - 108 in.★
1	1	200967	Inner Upright - 109 in.★
1	1	200968	Inner Upright - 110 in.★
1	1	200969	Inner Upright - 111 in.★
1	1	200970	Inner Upright - 112 in.★
1	1	200971	Inner Upright - 113 in.★
1	1	200972	Inner Upright - 114 in.★
1	1	200973	Inner Upright - 115 in.★
1	1	200974	Inner Upright - 116 in.★
1	1	200975	Inner Upright - 117 in.★
1	1	200976	Inner Upright - 118 in.★

Common items.

REF	QTY	PART NO.	DESCRIPTION	REF	QTY	PART NO.	DESCRIPTION
2	1	200869	Band	11	4	678755	Chain Anchor–35D
3	2	661550	Chain Sheave	11	4	680240	Chain Anchor–40D
4	1	3133	Snap Ring	12	2	6518	Cotter Pin
5	1	207476	Crosshead	13	2	208680	Guard
6	2	3140	Snap Ring	14	4	200007	Jam Nut
7	4	200006	Nut	15	●	631881	Shim, .03 in. (0,7 mm)
8	2	664206	Roller	16	2	786881	Locknut
9	4	678964	Chain Pin–35D	17	2	768535	Capscrew, M8x1,25x90-8.8
9	4	680460	Chain Pin–40D	18	4	206321	Capscrew, M6x1,0x16-8.8
10	8	6508	Cotter Pin	19	4	206323	Lockwasher, M6

● Quantity as required.
★ Retracted channel length.
Reference: S-4023, 4024.

https://truckmanualshub.com/

Carriage

35D/40D

Part numbers on this page are used with the following mast product I.D. numbers only:

35D-MT-001 thru 549
40D-MT-001 thru 103

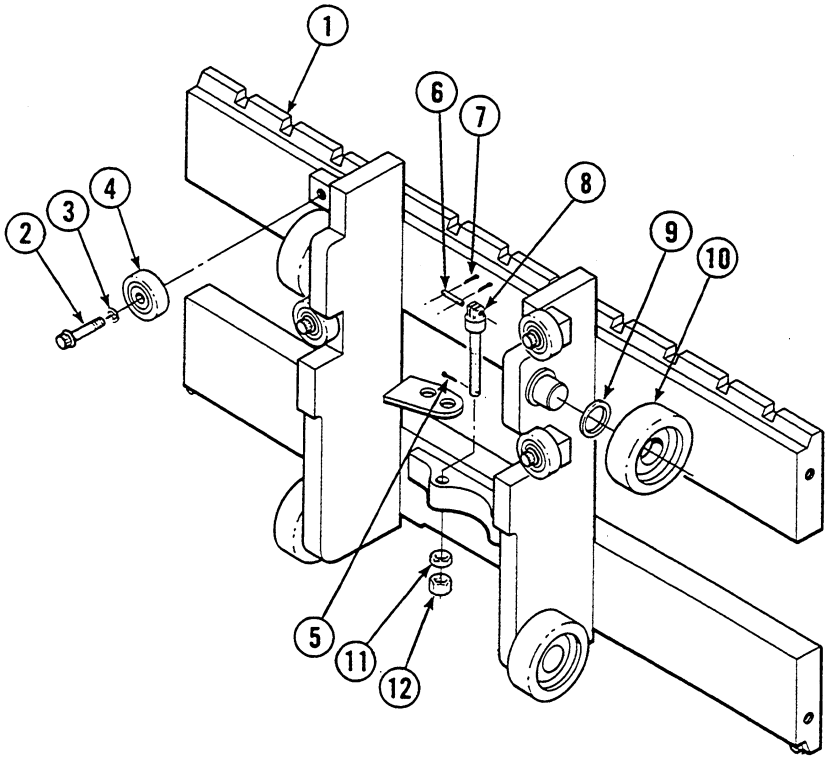

REF	QTY	PART NO.	DESCRIPTION
For masts mounted with 3 in. underclearance			
1	1	684405	Carriage, Class II - 31 in. (787 mm) wide
1	1	684406	Carriage, Class II - 37 in. (940 mm) wide
1	1	684407	Carriage, Class II - 41 in. (1041 mm) wide
For masts mounted with 5 in. underclearance			
1	1	684411	Carriage, Class II - 31 in. (787 mm) wide
1	1	684412	Carriage, Class II - 37 in. (940 mm) wide
1	1	684413	Carriage, Class II - 41 in. (1041 mm) wide
2	4	684125	Capscrew, M12x1,75x45-12.9
3	4	684660	Lockwasher, M12
4	4	683819	Roller
5	2	6518	Cotter Pin
6	2	678964	Chain Pin–35D
6	2	680460	Chain Pin–40D
7	4	6508	Cotter Pin
8	2	678755	Chain Anchor–35D
8	2	680240	Chain Anchor–40D
9	■	631881	Shim, .03 in. (0,7 mm)
10	4	664206	Roller
11	2	200007	Jam Nut
12	2	200006	Nut

■ Quantity as required.
Reference: S-3638.

https://truckmanualshub.com/

Carriage

35D/40D

Part numbers on this page are used with the following mast product I.D. numbers only:

35D-MT-550 thru 678
40D-MT-106 thru 133

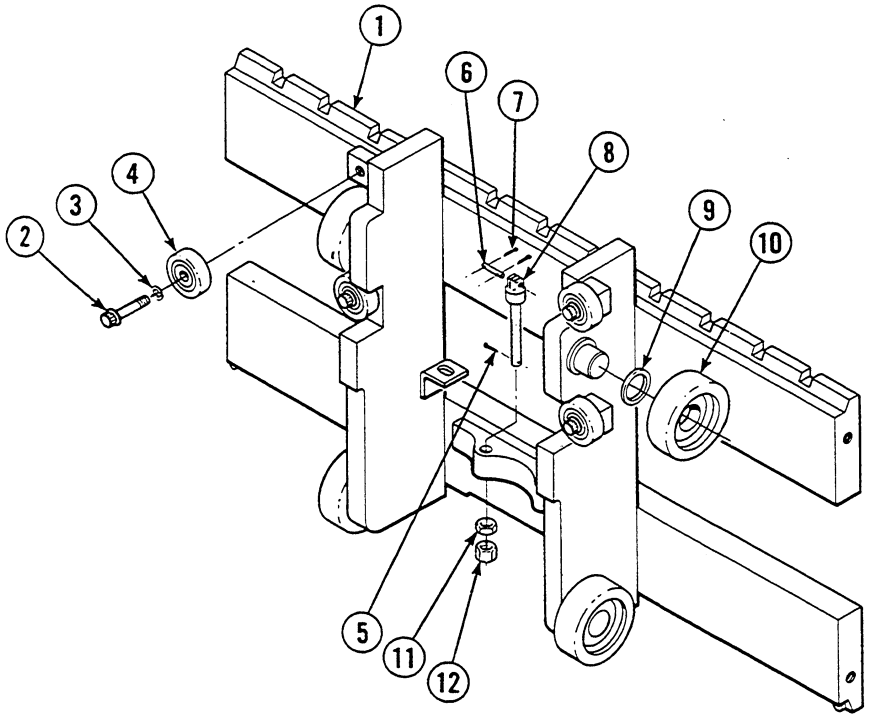

REF	QTY	PART NO.	DESCRIPTION
For masts mounted with 3 in. underclearance			
1	1	208706	Carriage, Class II - 31 in. (787 mm) wide
1	1	208707	Carriage, Class II - 37 in. (940 mm) wide
1	1	208708	Carriage, Class II - 41 in. (1041 mm) wide
For masts mounted with 5 in. underclearance			
1	1	208709	Carriage, Class II - 31 in. (787 mm) wide
1	1	208710	Carriage, Class II - 37 in. (940 mm) wide
1	1	208711	Carriage, Class II - 41 in. (1041 mm) wide
2	4	684125	Capscrew, M12x1,75x45-12.9
3	4	684660	Lockwasher, M12
4	4	683819	Roller
5	2	6518	Cotter Pin
6	2	678964	Chain Pin–35D
6	2	680460	Chain Pin–40D
7	4	6508	Cotter Pin
8	2	678755	Chain Anchor–35D
8	2	680240	Chain Anchor–40D
9	■	631881	Shim, .03 in. (0,7 mm)
10	4	664206	Roller
11	2	200007	Jam Nut
12	2	200006	Nut

■ Quantity as required.
Reference: S-4034.

https://truckmanualshub.com/

Carriage – Heavy Duty

35D/40D

Part numbers on this page are used with the following mast product I.D. numbers only:

35D-MT-001 thru 549
40D-MT-001 thru 105

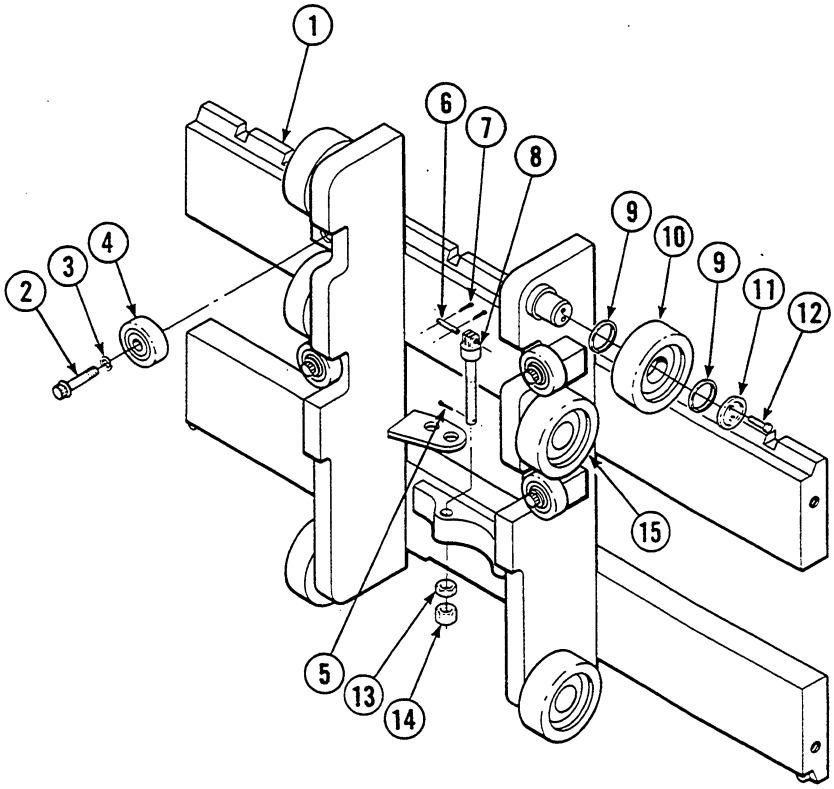

REF	QTY	PART NO.	DESCRIPTION
For masts mounted with 3 in. underclearance			
1	1	200029	Carriage, Class II - 37 in. (940 mm) wide
1	1	200030	Carriage, Class II - 41 in. (1041 mm) wide
1	1	200031	Carriage, Class II - 49 in. (1245 mm) wide
For masts mounted with 5 in. underclearance			
1	1	200035	Carriage, Class II - 37 in. (940 mm) wide
1	1	200036	Carriage, Class II - 41 in. (1041 mm) wide
1	1	200037	Carriage, Class II - 49 in. (1245 mm) wide
2	4	684125	Capscrew, M12x1,75x45-12.9
3	4	684660	Lockwasher, M12
4	4	683819	Roller
5	2	6518	Cotter Pin
6	2	678964	Chain Pin–35D
6	2	680460	Chain Pin–40D
7	4	6508	Cotter Pin
8	2	678755	Chain Anchor–35D
8	2	680240	Chain Anchor–40D
9	■	631881	Shim, .03 in. (0,7 mm)
10	4	664206	Roller
11	2	658378	Retainer
12	4	680218	Capscrew, M3x0,5x12-8.8
13	2	200007	Jam Nut
14	2	200006	Nut
15	2	661549	Roller

■ Quantity as required.
Reference: S-3640.

https://truckmanualshub.com/

Carriage – Heavy Duty

35D/40D

Part numbers on this page are used with the following mast product I.D. numbers only:

35D-MT-550 thru 678
40D-MT-106 thru 133

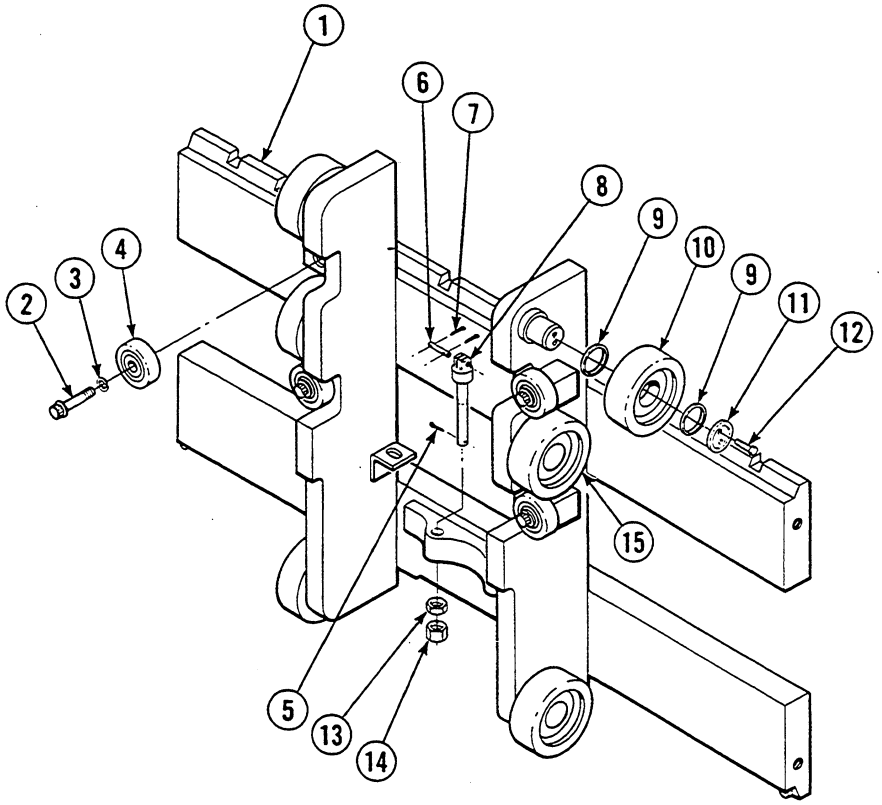

REF	QTY	PART NO.	DESCRIPTION
For masts mounted with 3 in. underclearance			
1	1	208712	Carriage, Class II - 37 in. (940 mm) wide
1	1	208713	Carriage, Class II - 41 in. (1041 mm) wide
1	1	208714	Carriage, Class II - 49 in. (1245 mm) wide
For masts mounted with 5 in. underclearance			
1	1	208715	Carriage, Class II - 37 in. (940 mm) wide
1	1	208716	Carriage, Class II - 41 in. (1041 mm) wide
1	1	208717	Carriage, Class II - 49 in. (1245 mm) wide
2	4	684125	Capscrew, M12x1,75x45-12.9
3	4	684660	Lockwasher, M12
4	4	683819	Roller
5	2	6518	Cotter Pin
6	2	678964	Chain Pin–35D
6	2	680460	Chain Pin–40D
7	4	6508	Cotter Pin
8	2	678755	Chain Anchor–35D
8	2	680240	Chain Anchor–40D
9	■	631881	Shim, .03 in. (0,7 mm)
10	4	664206	Roller
11	2	658378	Retainer
12	4	680218	Capscrew, M3x0,5x12-8.8
13	2	200007	Jam Nut
14	2	200006	Nut
15	2	661549	Roller

■ Quantity as required.
Reference: S-4035.

https://truckmanualshub.com/

Hoist Chains

Part numbers on this page are used with the following mast product I.D. numbers only: 35D-MT-001 thru 319, 35D-MT-550 thru 678

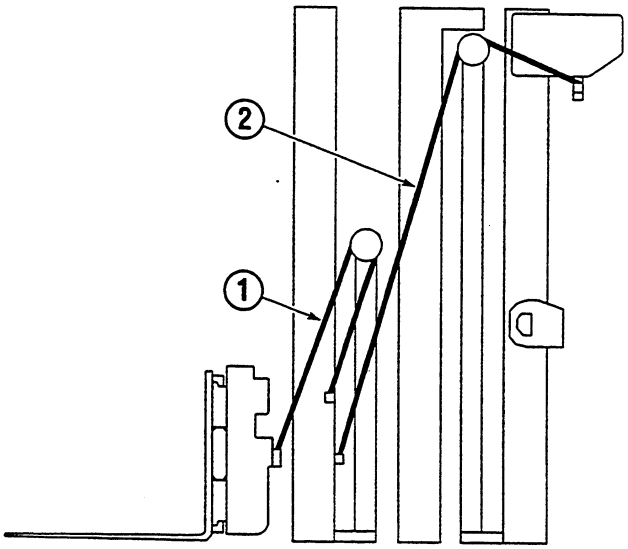

MA0170.ill

OVERALL RETRACTED CHANNEL LENGTH in.	QTY	FREE LIFT CHAIN–REF NO. 1		MAIN LIFT CHAIN–REF NO. 2	
		PART NO.	LENGTH in. (mm)	PART NO.	LENGTH in. (mm)
56	2	686916	35.63 (905)	686926	49.37 (1254)
57	2	686916	35.63 (905)	686926	49.37 (1254)
58	2	686917	36.88 (937)	686927	50.62 (1286)
59	2	686918	38.11 (968)	686928	51.88 (1318)
60	2	686919	39.37 (1000)	686929	53.11 (1349)
61	2	686920	40.62 (1032)	686930	54.37 (1381)
62	2	686920	40.62 (1032)	686930	54.37 (1381)
63	2	686921	41.88 (1064)	687022	55.62 (1413)
64	2	686922	43.11 (1095)	678751	56.88 (1445)
65	2	686923	44.37 (1127)	686931	58.11 (1476)
66	2	678750	45.62 (1159)	686932	59.37 (1508)
67	2	678750	45.62 (1159)	686932	59.37 (1508)
68	2	686924	46.88 (1191)	688357	60.62 (1540)
69	2	686925	48.11 (1222)	687009	61.88 (1572)
70	2	686926	49.37 (1254)	678752	63.11 (1603)
71	2	686927	50.62 (1286)	687010	64.37 (1635)
72	2	686927	50.62 (1286)	687010	64.37 (1635)
73	2	686928	51.88 (1318)	678761	65.62 (1667)
74	2	686929	53.11 (1349)	687011	66.88 (1699)
75	2	686930	54.37 (1381)	687012	68.11 (1730)
76	2	687022	55.62 (1413)	647685	69.37 (1762)
77	2	687022	55.62 (1413)	647685	69.37 (1762)
78	2	678751	56.88 (1445)	678845	70.62 (1794)
79	2	686931	58.11 (1476)	678762	71.88 (1826)
80	2	686932	59.37 (1508)	687013	73.11 (1857)
81	2	688357	60.63 (1540)	687014	74.37 (1889)
82	2	688357	60.63 (1540)	687014	74.37 (1889)
83	2	687009	61.88 (1572)	647686	75.62 (1921)
84	2	678752	63.11 (1603)	678763	76.88 (1953)
85	2	687010	64.37 (1635)	687015	78.11 (1984)
86	2	678761	65.62 (1667)	687016	79.37 (2016)
87	2	678761	65.62 (1667)	687016	79.37 (2016)

Reference: S-3472, 3792, 4023.

https://truckmanualshub.com/

Hoist Chains

Part numbers on this page are used with the following mast product I.D. numbers only: 35D-MT-001 thru 319, 35D-MT-550 thru 678

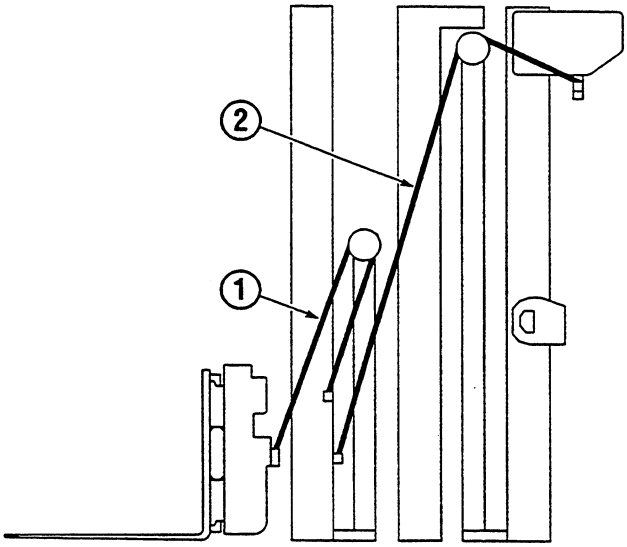

MA0170.ill

OVERALL RETRACTED CHANNEL LENGTH in.	QTY	FREE LIFT CHAIN–REF NO. 1		MAIN LIFT CHAIN–REF NO. 2	
		PART NO.	LENGTH in. (mm)	PART NO.	LENGTH in. (mm)
88	2	687011	66.88 (1699)	687017	80.62 (2048)
89	2	687012	68.11 (1730)	647687	81.88 (2080)
90	2	647685	69.37 (1762)	678764	83.11 (2111)
91	2	678845	70.62 (1794)	687018	84.37 (2143)
92	2	678845	70.62 (1794)	687018	84.37 (2143)
93	2	686929	53.11 (1349)	687019	85.62 (2175)
94	2	686930	54.37 (1381)	647688	86.88 (2207)
95	2	687022	55.62 (1413)	678846	88.11 (2238)
96	2	678751	56.88 (1445)	678765	89.37 (2270)
97	2	686931	58.11 (1476)	678765	89.37 (2270)
98	2	686931	58.11 (1476)	687020	90.62 (2302)
99	2	686932	59.37 (1508)	687021	91.88 (2334)
100	2	688357	60.63 (1540)	647689	93.11 (2365)
101	2	687009	61.88 (1572)	678766	94.37 (2397)
102	2	687009	61.88 (1572)	678766	94.37 (2397)
103	2	678752	63.11 (1603)	200977	95.62 (2429)
104	2	687010	64.37 (1635)	200978	96.88 (2461)
105	2	687010	64.37 (1635)	200979	98.11 (2492)
106	2	678761	65.62 (1667)	647690	99.37 (2524)
107	2	687011	66.88 (1699)	647690	99.37 (2524)
108	2	687012	68.11 (1730)	678767	100.62 (2556)
109	2	647685	69.37 (1762)	200980	101.88 (2588)
110	2	647685	69.37 (1762)	200981	103.11 (2619)
111	2	678845	70.62 (1794)	200982	104.37 (2651)
112	2	678762	71.88 (1826)	200982	104.37 (2651)
113	2	677013	73.11 (1857)	647691	105.62 (2683)
114	2	687014	74.37 (1889)	678768	106.88 (2715)
115	2	647686	75.62 (1921)	678769	108.11 (2746)
116	2	647686	75.62 (1921)	200983	109.37 (2778)
117	2	678763	76.88 (1953)	200983	109.37 (2778)
118	2	687015	78.14 (1985)	200984	110.62 (2810)

Reference: S-3472, 3792, 4023.

https://truckmanualshub.com/

Hoist Chains

Part numbers on this page are used with the following mast product I.D. numbers only:

35D-MT-320 thru 549
40D-MT-001 thru 133

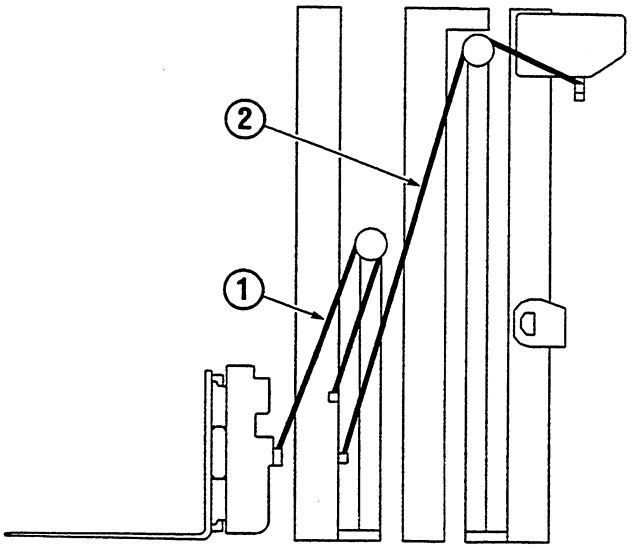

MA0170.ill

OVERALL RETRACTED CHANNEL LENGTH in.	QTY	FREE LIFT CHAIN–REF NO. 1		MAIN LIFT CHAIN–REF NO. 2	
		PART NO.	LENGTH in. (mm)	PART NO.	LENGTH in. (mm)
56	2	686872	35.63 (905)	686882	49.37 (1254)
57	2	686873	36.88 (937)	686882	49.37 (1254)
58	2	686873	36.88 (937)	686883	50.62 (1286)
59	2	686874	38.11 (968)	686884	51.88 (1318)
60	2	686875	39.37 (1000)	686885	53.11 (1349)
61	2	686876	40.62 (1032)	686886	54.37 (1381)
62	2	686876	40.62 (1032)	686886	54.37 (1381)
63	2	686877	41.88 (1064)	687027	55.62 (1413)
64	2	686878	43.11 (1095)	681479	56.88 (1445)
65	2	686879	44.37 (1127)	686887	58.11 (1476)
66	2	680455	45.62 (1159)	686888	59.37 (1508)
67	2	680455	45.62 (1159)	686888	59.37 (1508)
68	2	686880	46.88 (1191)	686889	60.62 (1540)
69	2	686881	48.11 (1222)	686890	61.88 (1572)
70	2	686882	49.37 (1254)	681480	63.11 (1603)
71	2	686883	50.62 (1286)	686891	64.37 (1635)
72	2	686883	50.62 (1286)	686891	64.37 (1635)
73	2	686884	51.88 (1318)	686892	65.62 (1667)
74	2	686885	53.11 (1349)	686893	66.88 (1699)
75	2	686886	54.37 (1381)	686894	68.11 (1730)
76	2	687027	55.62 (1413)	680456	69.37 (1762)
77	2	687027	55.62 (1413)	680456	69.37 (1762)
78	2	681479	56.88 (1445)	686895	70.62 (1794)
79	2	686887	58.11 (1476)	686896	71.88 (1826)
80	2	686888	59.37 (1508)	686897	73.11 (1857)
81	2	686889	60.62 (1540)	686898	74.37 (1889)
82	2	686889	60.62 (1540)	686898	74.37 (1889)
83	2	686890	61.88 (1572)	686899	75.62 (1921)
84	2	681480	63.11 (1603)	686900	76.88 (1953)
85	2	686891	64.37 (1635)	686901	78.11 (1984)
86	2	686892	65.32 (1667)	686902	79.37 (2016)
87	2	686892	65.32 (1667)	686902	79.37 (2016)

Reference: S-3474, 3795, 4024.

https://truckmanualshub.com/

Hoist Chains

Part numbers on this page are used with the following mast product I.D. numbers only: 35D-MT-320 thru 549, 40D-MT-001 thru 133

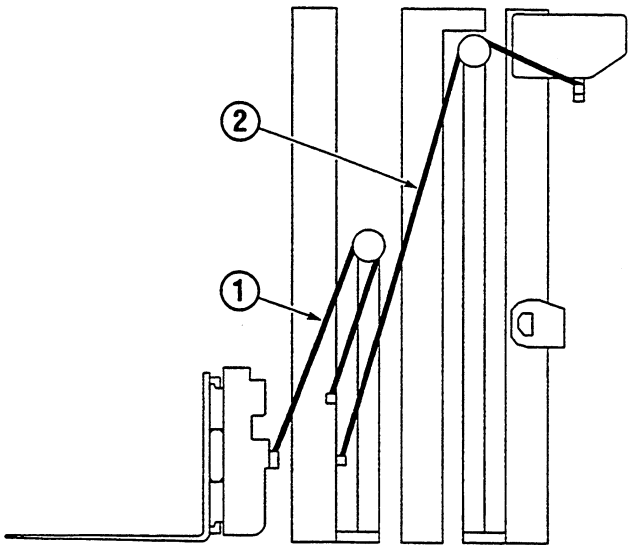

MA0170.ill

OVERALL RETRACTED CHANNEL LENGTH in.	QTY	FREE LIFT CHAIN–REF NO. 1		MAIN LIFT CHAIN–REF NO. 2	
		PART NO.	LENGTH in. (mm)	PART NO.	LENGTH in. (mm)
88	2	686893	66.88 (1699)	686903	80.62 (2048)
89	2	686894	68.11 (1730)	686904	81.88 (2080)
90	2	680456	69.37 (1762)	686905	83.11 (2111)
91	2	686895	70.62 (1794)	686906	84.37 (2143)
92	2	686895	70.62 (1794)	686906	84.37 (2143)
93	2	686886	54.37 (1381)	686907	85.62 (2175)
94	2	687027	55.62 (1413)	686908	86.88 (2207)
95	2	687027	55.62 (1413)	686909	88.11 (2238)
96	2	681479	56.88 (1445)	686910	89.37 (2270)
97	2	686887	58.11 (1476)	686910	89.37 (2270)
98	2	686888	59.37 (1508)	686911	90.62 (2302)
99	2	686889	60.63 (1540)	686912	91.88 (2334)
100	2	686889	60.63 (1540)	686913	93.11 (2365)
101	2	686890	61.88 (1572)	686914	94.37 (2397)
102	2	681480	63.11 (1603)	686914	94.37 (2397)
103	2	686891	64.37 (1635)	200876	95.62 (2429)
104	2	686892	65.62 (1667)	200985	96.88 (2461)
105	2	686892	65.62 (1667)	201013	98.11 (2492)
106	2	686893	66.88 (1699)	201014	100.07 (2542)
107	2	686894	68.11 (1730)	201014	100.07 (2542)
108	2	680456	69.37 (1762)	201015	100.62 (2556)
109	2	686895	70.62 (1794)	201016	101.88 (2588)
110	2	686895	70.62 (1794)	201017	103.11 (2619)
111	2	686896	71.88 (1826)	201018	104.37 (2651)
112	2	686897	73.11 (1857)	201018	104.37 (2651)
113	2	686898	74.37 (1889)	201019	105.62 (2683)
114	2	686899	75.62 (1921)	201020	106.88 (2715)
115	2	686899	75.62 (1921)	201021	108.11 (2746)
116	2	686900	76.88 (1953)	201022	109.37 (2778)
117	2	686901	78.14 (1985)	201022	109.37 (2778)
118	2	686902	79.37 (2016)	201023	110.62 (2810)

Reference: S-3474, 3795, 4024.

https://truckmanualshub.com/

Hydraulic Group
35D/40D

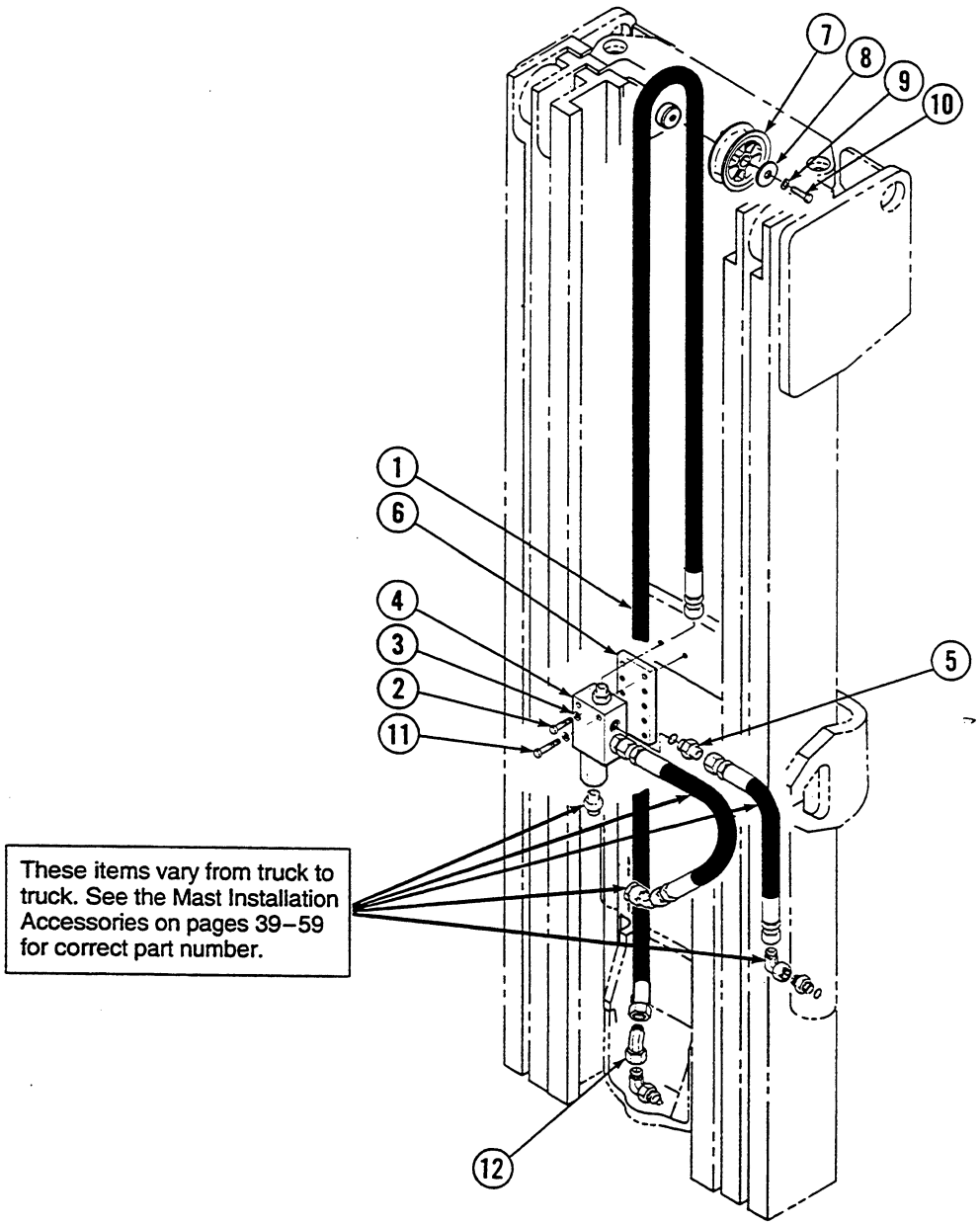

https://truckmanualshub.com/

Hydraulic Group
35D/40D

Items that vary by mast height.

REF	QTY	PART NO.	DESCRIPTION
1	1	200174	Hose - 56 in.★
1	1	200175	Hose - 57 in.★
1	1	200176	Hose - 58 in.★
1	1	200163	Hose - 59 in.★
1	1	200164	Hose - 60 in.★
1	1	200165	Hose - 61 in.★
1	1	683543	Hose - 62 in.★
1	1	683544	Hose - 63 in.★
1	1	683545	Hose - 64 in.★
1	1	683546	Hose - 65 in.★
1	1	683547	Hose - 66 in.★
1	1	683548	Hose - 67 in.★
1	1	683549	Hose - 68 in.★
1	1	200137	Hose - 69 in.★
1	1	200138	Hose - 70 in.★
1	1	200166	Hose - 71 in.★
1	1	200167	Hose - 72 in.★
1	1	200168	Hose - 73 in.★
1	1	200169	Hose - 74 in.★
1	1	200170	Hose - 75 in.★
1	1	200177	Hose - 76 in.★
1	1	200178	Hose - 77 in.★
1	1	200179	Hose - 78 in.★
1	1	200180	Hose - 79 in.★
1	1	200181	Hose - 80 in.★
1	1	200182	Hose - 81 in.★
1	1	200134	Hose - 82 in.★
1	1	200135	Hose - 83 in.★
1	1	200136	Hose - 84 in.★
1	1	683565	Hose - 85 in.★
1	1	683566	Hose - 86 in.★
1	1	683567	Hose - 87 in.★

Items that vary by mast height.

REF	QTY	PART NO.	DESCRIPTION
1	1	683568	Hose - 88 in.★
1	1	683569	Hose - 89 in.★
1	1	683570	Hose - 90 in.★
1	1	683571	Hose - 91 in.★
1	1	683572	Hose - 92 in.★
1	1	683573	Hose - 93 in.★
1	1	200114	Hose - 94 in.★
1	1	200115	Hose - 95 in.★
1	1	200142	Hose - 96 in.★
1	1	200143	Hose - 97 in.★
1	1	200144	Hose - 98 in.★
1	1	200145	Hose - 99 in.★
1	1	200146	Hose - 100 in.★
1	1	200147	Hose - 101 in.★
1	1	683581	Hose - 102 in.★
1	1	687023	Hose - 103 in.★
1	1	687024	Hose - 104 in.★
1	1	687025	Hose - 105 in.★
1	1	687026	Hose - 106 in.★
1	1	200117	Hose - 107 in.★
1	1	200118	Hose - 108 in.★
1	1	200119	Hose - 109 in.★
1	1	200120	Hose - 110 in.★
1	1	200121	Hose - 111 in.★
1	1	200122	Hose - 112 in.★
1	1	200123	Hose - 113 in.★
1	1	200124	Hose - 114 in.★
1	1	200125	Hose - 115 in.★
1	1	200161	Hose - 116 in.★
1	1	200126	Hose - 117 in.★
1	1	200128	Hose - 118 in.★

Common items.

REF	QTY	PART NO.	DESCRIPTION	REF	QTY	PART NO.	DESCRIPTION
2	2	684649	Capscrew, M10x1.5x25-8.8	8	1	683794	Cap
3	4	683826	Lockwasher, M10	9	1	683822	Lockwasher, M12
4	1	■	Lowering Control Valve	10	1	683821	Capscrew, M12x1.75x20-8.8
5	2	611288	Fitting, 6-8	11	2	683823	Capscrew, M10x1.5x50-8.8
6	3	683831	Bracket	12	2	605948	Fitting, 8-8
7	1	683793	Hose Sheave				

★ Retracted channel length.
■ See page 31 for specific part numbers.
Reference: S-3472, 3474, 3792, 3795, 4023, 4024.

https://truckmanualshub.com/

Lowering Control Valve

2000 PSI System Pressure

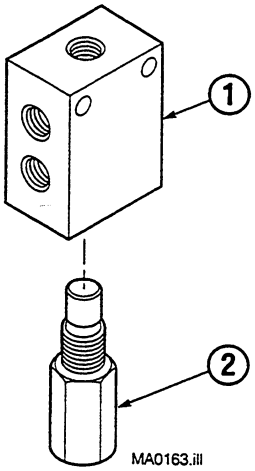

REF	QTY	PART NO.	DESCRIPTION
		200630	Lowering Control Valve–8 GPM
		684810	Lowering Control Valve–12 GPM
1	1	684152	Valve Body
2	1	■ 200629	Valve Cartridge–8 GPM
2	1	■ 684210	Valve Cartridge–12 GPM

■ This part must not be substituted. Check part number on side of cartridge when replacing.
Reference: Valve specified in Mounting Control Document.

2600 PSI System Pressure

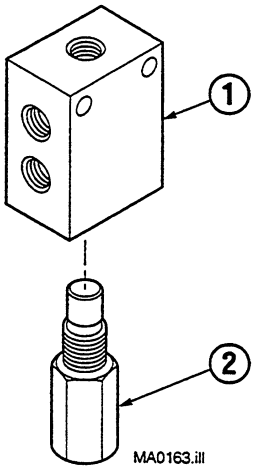

REF	QTY	PART NO.	DESCRIPTION
		684319	Lowering Control Valve–12 GPM
1	1	684152	Valve Body
2	1	■ 684318	Valve Cartridge–12 GPM

■ This part must not be substituted. Check part number on side of cartridge when replacing.
Reference: Valve specified in Mounting Control Document.

https://truckmanualshub.com/

Load Backrest

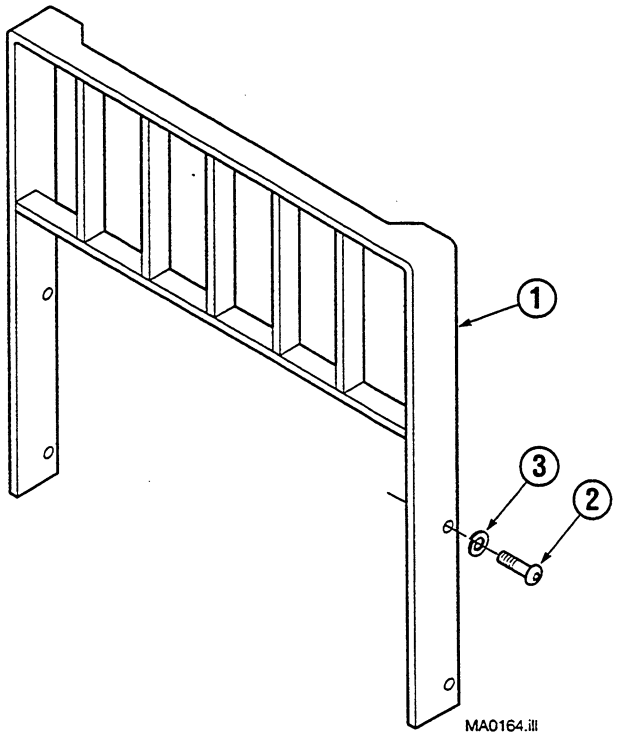

35D/40D			
REF	QTY	PART NO.	DESCRIPTION
1	1	209407	● Backrest–31x36 in. (787x914 mm)
1	1	209233	● Backrest–31x48 in. (787x1219 mm)
1	1	209408	● Backrest–31x60 in. (787x1524 mm)
1	1	684772	● Backrest–37x36 in. (940x914 mm)
1	1	684773	● Backrest–37x48 in. (940x1219 mm)
1	1	684774	● Backrest–37x60 in. (940x1524 mm)
1	1	684775	● Backrest–41x36 in. (1041x914 mm)
1	1	684776	● Backrest–41x48 in. (1041x1219 mm)
1	1	684777	● Backrest–41x60 in. (1041x1524 mm)
2	4	200173	Capscrew, M16x2.0x35-8.8
3	4	684586	Lockwasher, M16

● Includes items 2 and 3. Width x height.
Reference: S-3370.

https://truckmanualshub.com/

Internal Hose Reeving
35D/40D

WARNING: The internal reeving hoses must be Parker 560 H type hose. Other hoses may cause the mast to malfunction.

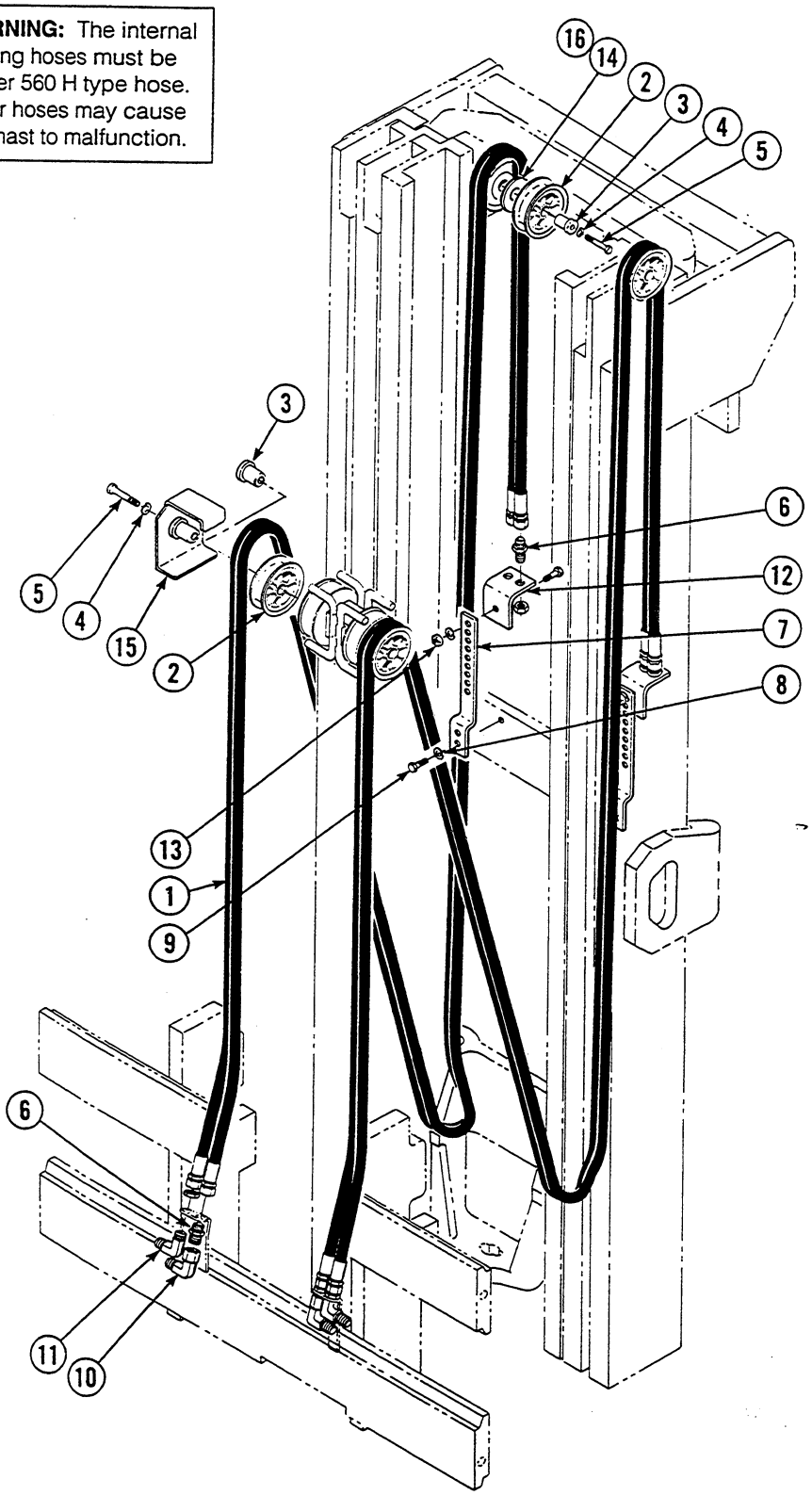

https://truckmanualshub.com/

Internal Hose Reeving
35D/40D

Part numbers on this page are used with the following mast serial numbers only: 35D-MT-001 thru 492, 40D-MT-001 thru 107

Items that vary by mast height.

Retracted Channel Length (in.)	3 in. Underclearance		5 in. Underclearance	
	Internal Reeving Group No.	Ref. No. 1 Hose Part No.	Internal Reeving Group No.	Ref. No. 1 Hose Part No.
56	688504	3550-2920	688505	3550-2980
57	688418	3550-3005	688506	3550-3055
58	688419	3550-3080	688507	3550-3130
59	688420	3550-3155	688508	3550-3205
60	688421	3550-3230	688509	3550-3280
61	688422	3550-3305	688510	3550-3355
62	688423	3550-3380	688511	3550-3430
63	688424	3550-3455	688512	3550-3505
64	688425	3550-3530	688513	3550-3580
65	688426	3550-3605	688514	3550-3655
66	688427	3550-3680	688515	3550-3730
67	688428	3550-3750	688516	3550-3800
68	688429	3550-3830	688517	3550-3875
69	688430	3550-3905	688518	3550-3950
70	688431	3550-3980	688519	3550-4025
71	688432	3550-4050	688520	3550-4100
72	688433	3550-4125	688521	3550-4175
73	688434	3550-4200	688522	3550-4250
74	688435	3550-4275	688523	3550-4325
75	688436	3550-4350	688524	3550-4400
76	688437	3550-4425	688525	3550-4475
77	688438	3550-4500	688526	3550-4550
78	688439	3550-4575	688527	3550-4625
79	688440	3550-4650	688528	3550-4700
80	688441	3550-4725	688529	3550-4775
81	688442	3550-4800	688530	3550-4850
82	688443	3550-4875	688531	3550-4925
83	688444	3550-4950	688532	3550-5000
84	688445	3550-5025	688533	3550-5075
85	688446	3550-5100	688534	3550-5150
86	688447	3550-5175	688535	3550-5225
87	688448	3550-5250	688536	3550-5300

Common items.

REF	QTY	PART NO.	DESCRIPTION	REF	QTY	PART NO.	DESCRIPTION
2	2	677267	Hose Sheave	10	2	2680	Fitting, 6-6
3	2	684657	Shaft	11	2	2453	Fitting, 6-6
4	2	683822	Lockwasher, M12	12	1	683919	Bracket
5	2	202407	Capscrew, M12x1.75x60-8.8	13	1	763023	Nut, M10x1.5
6	3	2375	Fitting, 6-6	14	1	683794	Spacer
7	1	684658	Bracket	15	1	206035	Hose Guard
8	2	683826	Lockwasher, M10	16	1	6205	Washer
9	2	684649	Capscrew, M10x1.5x25-8.8				

NOTE: Quantities shown are for single internal reeving.
Reference: S-3549.

https://truckmanualshub.com/

Internal Hose Reeving
35D/40D

WARNING: The internal reeving hoses must be Parker 560 H type hose. Other hoses may cause the mast to malfunction.

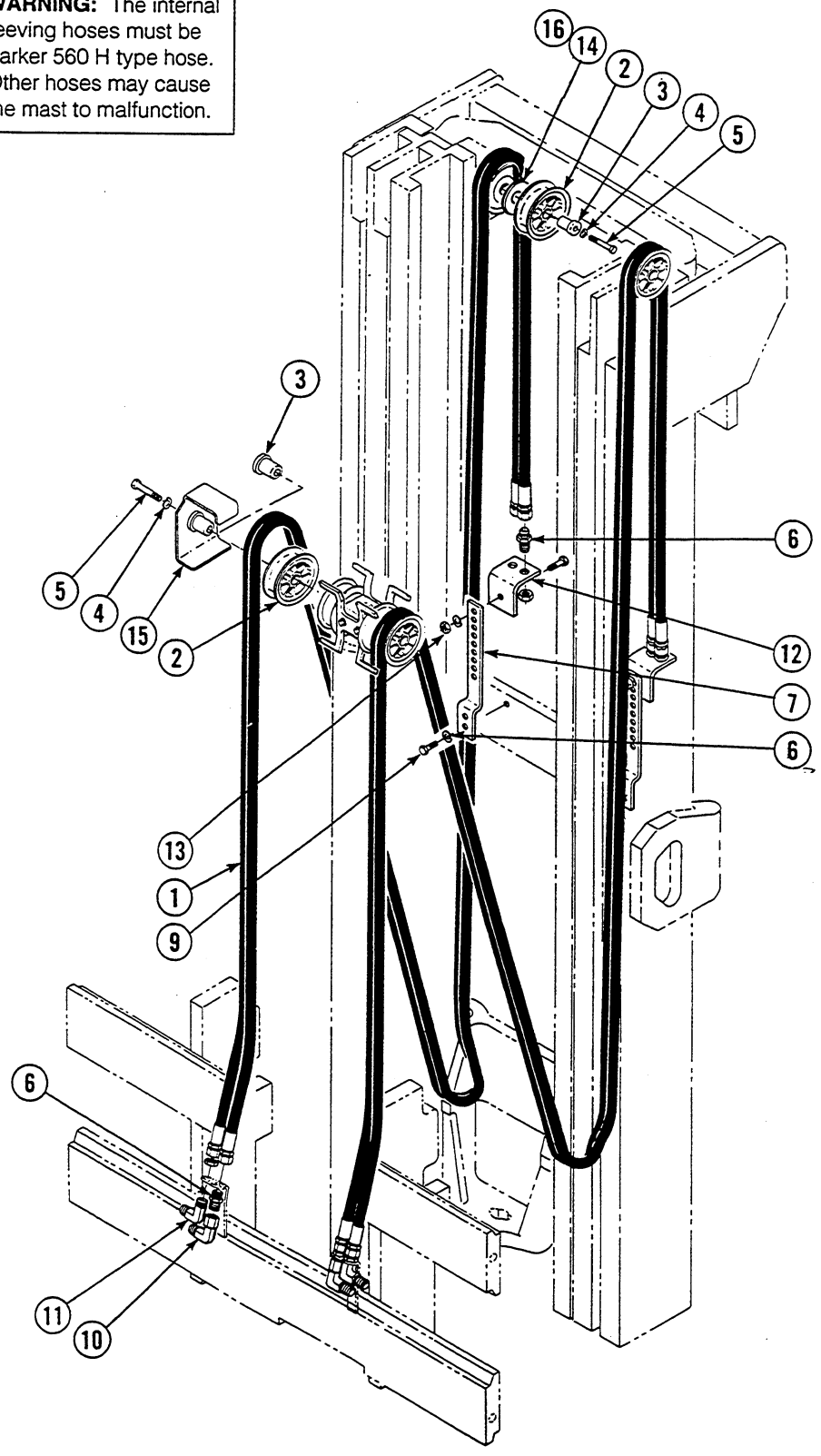

https://truckmanualshub.com/

Internal Hose Reeving

35D/40D

Part numbers on this page are used with the following mast serial numbers only: 35D-MT-001 thru 492, 40D-MT-001 thru 107

Items that vary by mast height.

Retracted Channel Length (in.)	3 in. Underclearance		5 in. Underclearance	
	Internal Reeving Group No.	Ref. No. 1 Hose Part No.	Internal Reeving Group No.	Ref. No. 1 Hose Part No.
88	688486	3550-5316	688487	3550-5366
89	688537	3550-5385	688489	3550-5440
90	688538	3550-5460	688490	3550-5515
91	688539	3550-5535	688491	3550-5590
92	688540	3550-5610	688492	3550-5665
93	688541	3550-5685	688493	3550-5739
94	688542	3550-5760	688494	3550-5814
95	688543	3550-5835	688495	3550-5889
96	688544	3550-5910	688496	3550-5964
97	688545	3550-5985	688497	3550-6039
98	688546	3550-6055	688498	3550-6113
99	688547	3550-6135	688499	3550-6188
100	688548	3550-6210	688500	3550-6263
101	688549	3550-6285	688501	3550-6338
102	688550	3550-6355	688502	3550-6412
103	688551	3550-6435	688503	3550-6487
104	688552	3550-6510	688572	3550-6562
105	688553	3550-6580	688573	3550-6637
106	688554	3550-6655	688574	3550-6712
107	688555	3550-6730	688575	3550-6786
108	688556	3550-6805	688576	3550-6861
109	688557	3550-6880	688577	3550-6936
110	688558	3550-6955	688578	3550-7011
111	688559	3550-7030	688579	3550-7085
112	688560	3550-7105	688580	3550-7160
113	688561	3550-7180	688581	3550-7235
114	688562	3550-7255	688582	3550-7310
115	688563	3550-7330	688583	3550-7385
116	688564	3550-7405	688584	3550-7459
117	688565	3550-7480	688585	3550-7534
118	688566	3550-7555	688586	3550-7609

Common items.

REF	QTY	PART NO	DESCRIPTION	REF	QTY	PART NO	DESCRIPTION
2	2	677267	Hose Sheave	10	2	2680	Fitting, 6-6
3	2	684657	Shaft	11	2	2453	Fitting, 6-6
4	2	683822	Lockwasher, M12	12	1	683919	Bracket
5	2	202407	Capscrew, M12x1,75x60-8.8	13	1	763023	Nut, M10x1,5
6	3	2375	Fitting, 6-6	14	1	683794	Spacer
7	1	684658	Bracket	15	1	206035	Hose Guard
8	2	683826	Lockwasher, M10	16	1	6205	Washer
9	2	684649	Capscrew, M10x1,5x25-8.8				

NOTE: Quantities shown are for single internal reeving.
Reference: S-3549.

https://truckmanualshub.com/

Internal Hose Reeving – Single Function

35D/40D

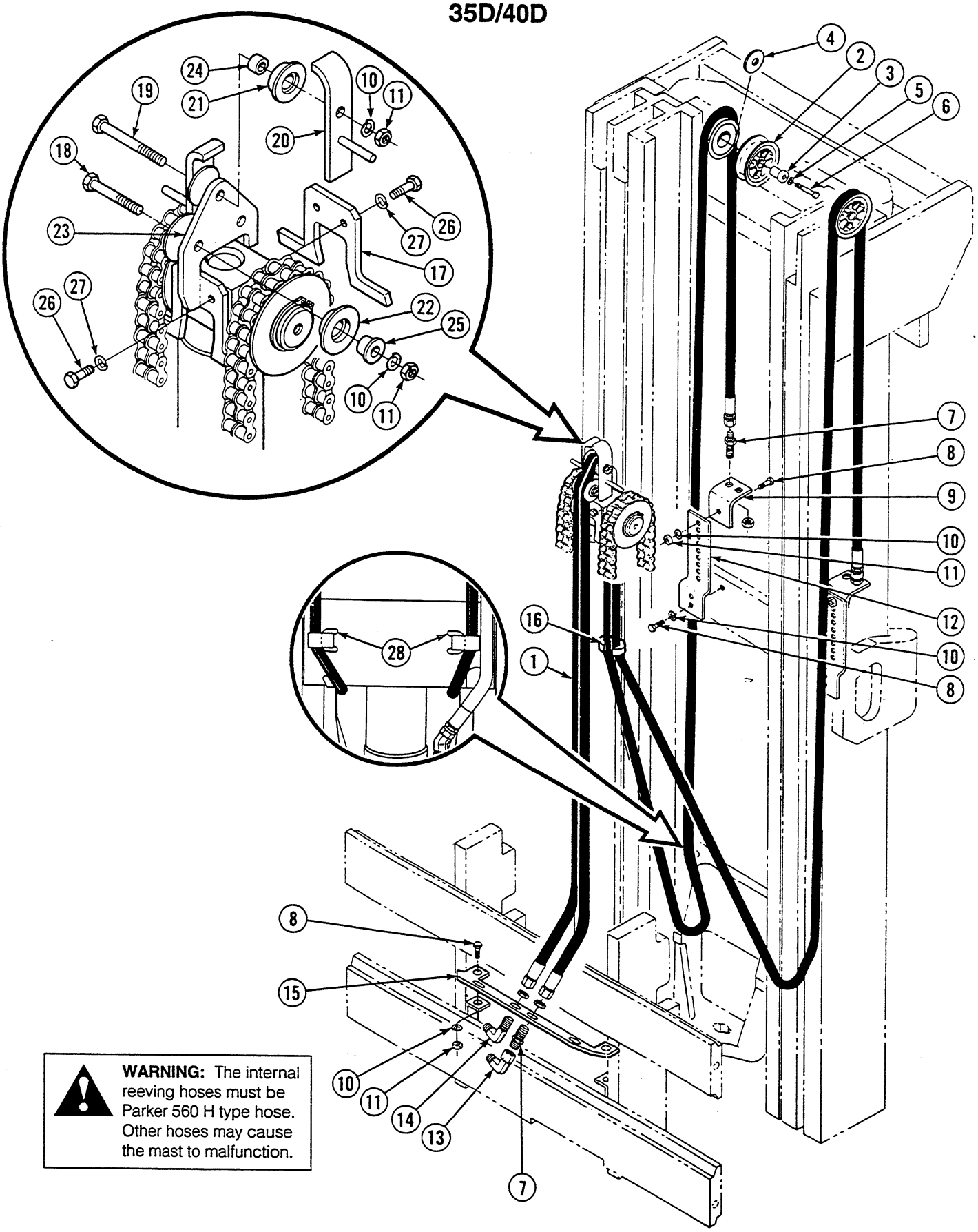

WARNING: The internal reeving hoses must be Parker 560 H type hose. Other hoses may cause the mast to malfunction.

https://truckmanualshub.com/

Internal Hose Reeving – Single Function
35D/40D

Part numbers on this page are used with the following mast serial numbers only: 35D-MT-493 thru 678, 40D-MT-108 thru 133

Items that vary by mast height.

Retracted Channel Length (in.)	3 in. Underclearance		5 in. Underclearance	
	Internal Reeving Group No.	Ref. No. 1 Hose Part No.	Internal Reeving Group No.	Ref. No. 1 Hose Part No.
56	207864	3550-3070	207865	3550-3130
57	207866	3550-3155	207867	3550-3205
58	207868	3550-3230	207869	3550-3280
59	207870	3550-3305	207871	3550-3355
60	207872	3550-3380	207873	3550-3430
61	207874	3550-3455	207875	3550-3505
62	207876	3550-3530	207877	3550-3580
63	207878	3550-3605	207879	3550-3655
64	207880	3550-3680	207881	3550-3730
65	207882	3550-3755	207883	3550-3805
66	207884	3550-3830	207885	3550-3880
67	207886	3550-3900	207887	3550-3950
68	207888	3550-3980	207889	3550-4025
69	207890	3550-4055	207891	3550-4100
70	207892	3550-4130	207893	3550-4175
71	207894	3550-4200	207895	3550-4250
72	207896	3550-4275	207897	3550-4325
73	207898	3550-4350	207899	3550-4400
74	207900	3550-4425	207901	3550-4475
75	207902	3550-4500	207903	3550-4550
76	207904	3550-4575	207905	3550-4625
77	207906	3550-4650	207907	3550-4700
78	207908	3550-4725	207909	3550-4775
79	207910	3550-4800	207911	3550-4850
80	207912	3550-4875	207913	3550-4925
81	207914	3550-4950	207915	3550-5000
82	207916	3550-5025	207917	3550-5075
83	207918	3550-5100	207919	3550-5150
84	207920	3550-5175	207921	3550-5225
85	207922	3550-5250	207923	3550-5300
86	207924	3550-5325	207925	3550-5375
87	207926	3550-5400	207927	3550-5450

Common items.

REF	QTY	PART NO.	DESCRIPTION	REF	QTY	PART NO.	DESCRIPTION
2	2	207484	Hose Sheave	16	1	673417	Segment
3	2	207493	Shaft	17	1	208679	Chain Guard
4	2	201669	Washer	18	2	208681	Capscrew, M10x1,5x45-8.8
5	2	683822	Lockwasher, M12	19	1	206320	Capscrew, M10x1,5x65-8.8
6	2	206174	Capscrew, M12x1,75x45-8.8	20	2	208720	Guard
7	3	2375	Fitting, 6-6	21	2	207490	Tire
8	6	684649	Capscrew, M10x1,5x25-8.8	22	4	207488	Tire
9	2	683919	Bracket	23	1	208678	Chair Guard
10	9	683826	Lockwasher, M10	24	2	208675	Shaft
11	7	787381	Nut, M10	25	4	207489	Shaft
12	2	684658	Bracket	26	4	206321	Capscrew, M6x1x16-8.8
13	1	2680	Fitting, 6-6	27	4	206323	Lockwasher, M6
14	1	2453	Fitting, 6-6	28	2	209203	Clip
15	1	207487	Bracket				

Reference: S-4006.

https://truckmanualshub.com/

Internal Hose Reeving – Single Function

35D/40D

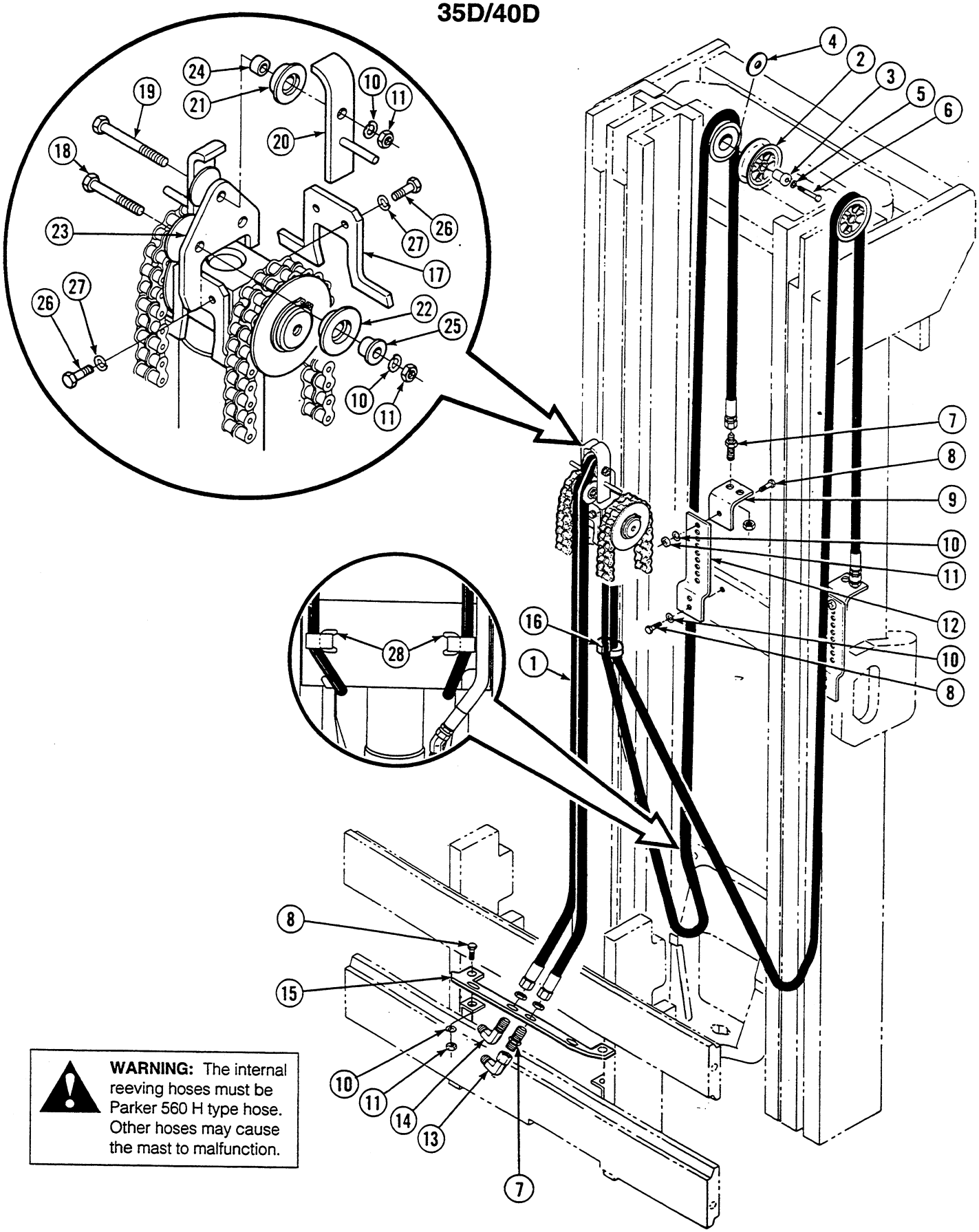

WARNING: The internal reeving hoses must be Parker 560 H type hose. Other hoses may cause the mast to malfunction.

https://truckmanualshub.com/

Internal Hose Reeving – Single Function
35D/40D

Part numbers on this page are used with the following mast serial numbers only: 35D-MT-493 thru 678, 40D-MT-108 thru 133

Items that vary by mast height.

Retracted Channel Length (in.)	3 in. Underclearance		5 in. Underclearance	
	Internal Reeving Group No.	Ref. No. 1 Hose Part No.	Internal Reeving Group No.	Ref. No. 1 Hose Part No.
88	207928	3550-5466	207929	3550-5516
89	207930	3550-5535	207931	3550-5590
90	207932	3550-5610	207933	3550-5665
91	207934	3550-5685	207935	3550-5740
92	207936	3550-5760	207937	3550-5815
93	207938	3550-5835	207939	3550-5889
94	207940	3550-5910	207941	3550-5964
95	207942	3550-5985	207943	3550-6039
96	207944	3550-6060	207945	3550-6114
97	207946	3550-6135	207947	3550-6189
98	207948	3550-6205	207949	3550-6263
99	207950	3550-6285	207951	3550-6338
100	207952	3550-6360	207953	3550-6413
101	207954	3550-6435	207955	3550-6488
102	207956	3550-6505	207957	3550-6562
103	207958	3550-6586	207959	3550-6637
104	207960	3550-6660	207961	3550-6712
105	207962	3550-6730	207963	3550-6787
106	207964	3550-6805	207965	3550-6862
107	207966	3550-6880	207967	3550-6936
108	207968	3550-6955	207968	3550-7011
109	207970	3550-7030	207971	3550-7086
110	207972	3550-7105	207973	3550-7161
111	207974	3550-7180	207975	3550-7235
112	207976	3550-7255	207977	3550-7310
113	207978	3550-7330	207979	3550-7385
114	207980	3550-7405	207981	3550-7460
115	207982	3550-7480	207983	3550-7535
116	207984	3550-7555	207985	3550-7609
117	207986	3550-7630	207987	3550-7684
118	207988	3550-7705	207989	3550-7759

Common items.

REF	QTY	PART NO	DESCRIPTION	REF	QTY	PART NO	DESCRIPTION
2	2	207484	Hose Sheave	16	1	673417	Segment
3	2	207493	Shaft	17	1	208679	Chain Guard
4	2	201669	Washer	18	2	208681	Capscrew, M10x1,5x45-8.8
5	2	683822	Lockwasher, M12	19	1	206320	Capscrew, M10x1,5x65-8.8
6	2	206174	Capscrew, M12x1,75x45-8.8	20	2	208720	Guard
7	3	2375	Fitting, 6-6	21	2	207490	Tire
8	6	684649	Capscrew, M10x1,5x25-8.8	22	4	207488	Tire
9	2	683919	Bracket	23	1	208678	Chair Guard
10	9	683826	Lockwasher, M10	24	2	208675	Shaft
11	7	787381	Nut, M10	25	4	207489	Shaft
12	2	684658	Bracket	26	4	206321	Capscrew, M6x1x16-8.8
13	1	2680	Fitting, 6-6	27	4	206323	Lockwasher, M6
14	1	2453	Fitting, 6-6	28	2	209203	Clip
15	1	207487	Bracket				

Reference: S-4006.

https://truckmanualshub.com/

Internal Hose Reeving – Double Function

35D/40D

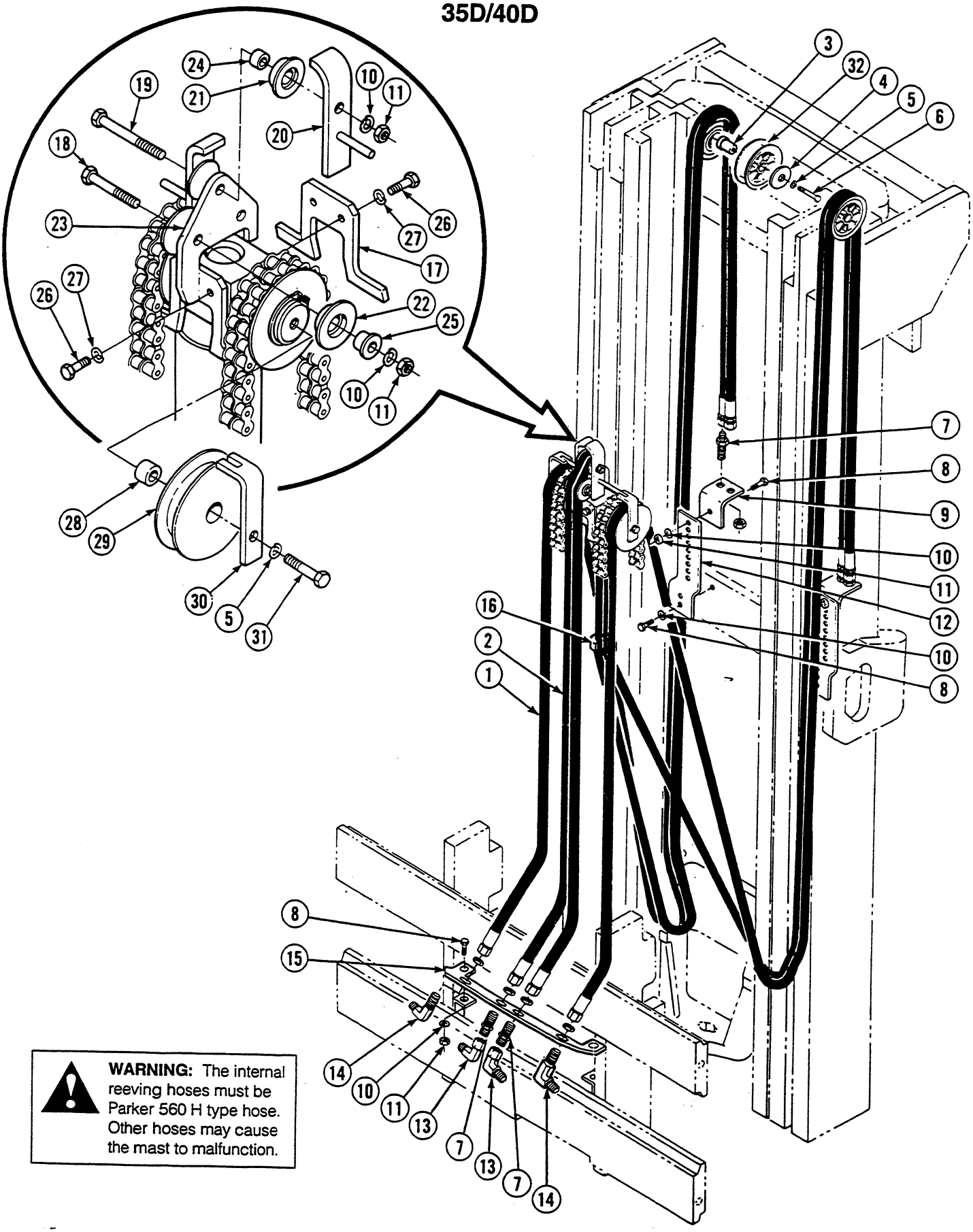

WARNING: The internal reeving hoses must be Parker 560 H type hose. Other hoses may cause the mast to malfunction.

https://truckmanualshub.com/

Internal Hose Reeving – Double Function
35D/40D

Part numbers on this page are used with the following mast serial numbers only: 35D-MT-493 thru 678, 40D-MT-108 thru 133

Items that vary by mast height.

Retracted Channel Length (in.)	3 in. Underclearance			5 in. Underclearance		
	Internal Reeving Group No.	Ref. No. 1 Hose Part No.	Ref. No. 2 Hose Part No.	Internal Reeving Group No.	Ref. No. 1 Hose Part No.	Ref. No. 2 Hose Part No.
56	208002	3550-3070	3550-2920	208003	3550-3130	3550-2980
57	208004	3550-3155	3550-3005	208005	3550-3205	3550-3055
58	208006	3550-3230	3550-3080	208007	3550-3280	3550-3130
59	208008	3550-3305	3550-3155	208009	3550-3355	3550-3205
60	208010	3550-3380	3550-3230	208011	3550-3430	3550-3280
61	208012	3550-3455	3550-3305	208013	3550-3505	3550-3355
62	208014	3550-3530	3550-3380	208015	3550-3580	3550-3430
63	208016	3550-3605	3550-3455	208017	3550-3655	3550-3505
64	208018	3550-3680	3550-3530	208019	3550-3730	3550-3580
65	208020	3550-3755	3550-3605	208021	3550-3805	3550-3655
66	208022	3550-3830	3550-3680	208023	3550-3880	3550-3730
67	208024	3550-3900	3550-3750	208025	3550-3950	3550-3800
68	208026	3550-3980	3550-3830	208027	3550-4025	3550-3875
69	208028	3550-4055	3550-3905	208029	3550-4100	3550-3950
70	208030	3550-4130	3550-3980	208031	3550-4175	3550-4025
71	208032	3550-4200	3550-4050	208033	3550-4250	3550-4100
72	208034	3550-4275	3550-4125	208035	3550-4325	3550-4175
73	208036	3550-4350	3550-4200	208037	3550-4400	3550-4250
74	208038	3550-4425	3550-4275	208039	3550-4475	3550-4325
75	208040	3550-4500	3550-4350	208041	3550-4550	3550-4400
76	208042	3550-4575	3550-4425	208043	3550-4625	3550-4475
77	208044	3550-4650	3550-4500	208045	3550-4700	3550-4550
78	208046	3550-4725	3550-4575	208047	3550-4775	3550-4625
79	208048	3550-4800	3550-4650	208049	3550-4850	3550-4700
80	208050	3550-4875	3550-4725	208051	3550-4925	3550-4775
81	208052	3550-4950	3550-4800	208053	3550-5000	3550-4850
82	208054	3550-5025	3550-4875	208055	3550-5075	3550-4925
83	208056	3550-5100	3550-4950	208057	3550-5150	3550-5000
84	208058	3550-5175	3550-5025	208059	3550-5225	3550-5075
85	208060	3550-5250	3550-5100	208061	3550-5300	3550-5150
86	208062	3550-5325	3550-5175	208063	3550-5375	3550-5225
87	208064	3550-5400	3550-5250	208065	3550-5450	3550-5300

Common items.

REF	QTY	PART NO.	DESCRIPTION	REF	QTY	PART NO.	DESCRIPTION
3	2	207493	Shaft	18	2	208681	Capscrew, M10x1.5x45-8.8
4	2	201669	Washer	19	1	206320	Capscrew, M10x1.5x65-8.8
5	2	683822	Lockwasher, M12	20	2	208720	Guard
6	2	206174	Capscrew, M12x1.75x45-10.9	21	2	207490	Tire
7	6	2375	Fitting, 6-6	22	4	207488	Tire
8	6	684649	Capscrew, M10x1.5x25-8.8	23	1	208678	Chair Guard
9	2	683919	Bracket	24	2	208675	Shaft
10	9	683826	Lockwasher, M10	25	4	207489	Shaft
11	7	787381	Nut, M10	26	4	206321	Capscrew, M6x1x16-8-8
12	2	684658	Bracket	27	4	206323	Lockwasher, M6
13	2	2680	Fitting, 6-6	28	2	207493	Shaft
14	2	2453	Fitting, 6-6	29	2	207484	Hose Sheave
15	1	207487	Bracket	30	2	208721	Hose Guard
16	1	673417	Segment	31	2	206174	Capscrew, M12x1.5x45-8.8
17	1	208679	Chain Guard	32	2	209623	Hose Sheave

Reference: S-4007.

https://truckmanualshub.com/

Internal Hose Reeving – Double Function

35D/40D

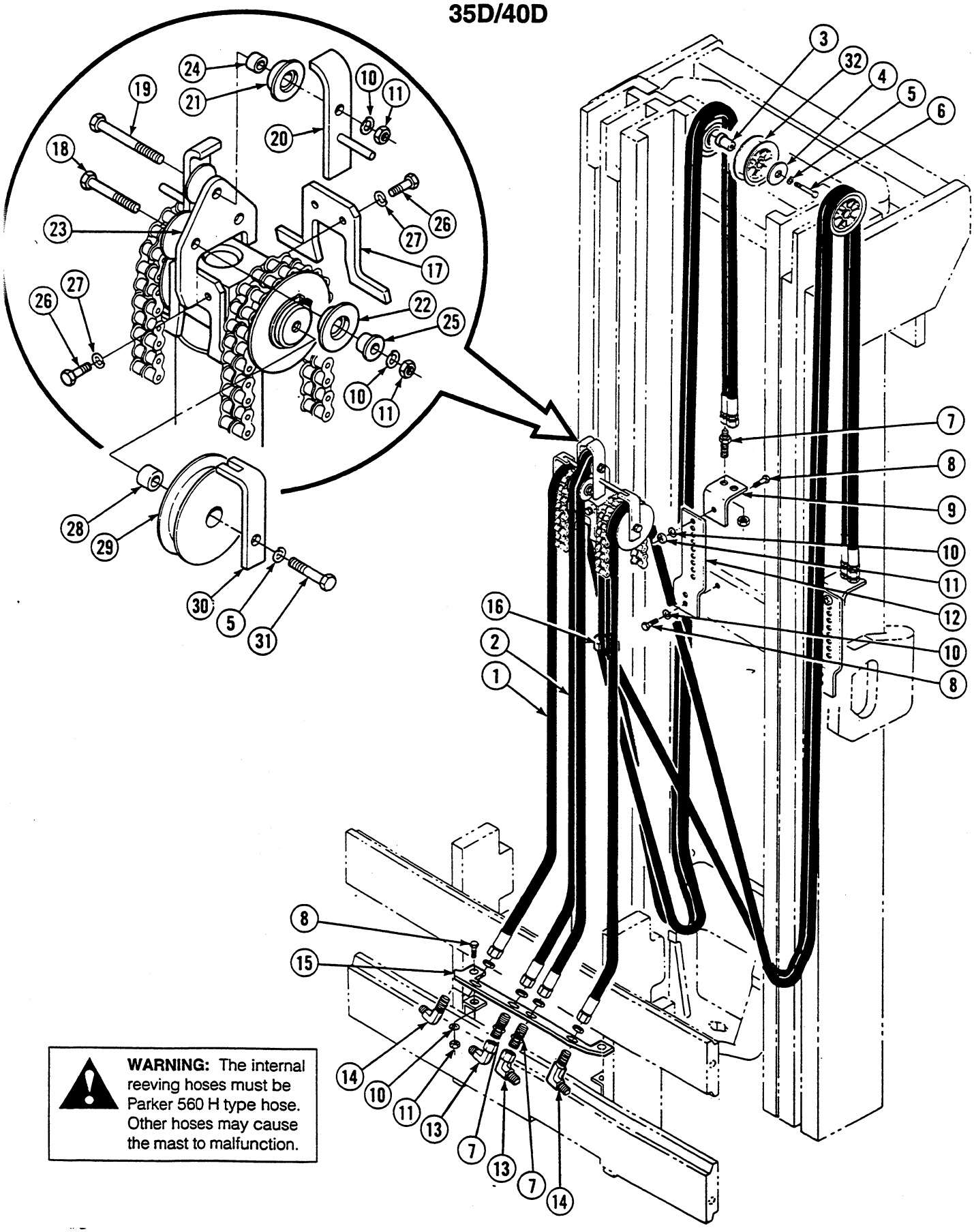

WARNING: The internal reeving hoses must be Parker 560 H type hose. Other hoses may cause the mast to malfunction.

https://truckmanualshub.com/

Internal Hose Reeving – Double Function

35D/40D

Part numbers on this page are used with the following mast serial numbers only:
35D-MT-493 thru 678
40D-MT-108 thru 133

Items that vary by mast height.

Retracted Channel Length (in.)	3 in. Underclearance			5 in. Underclearance		
	Internal Reeving Group No.	Ref. No. 1 Hose Part No.	Ref. No. 2 Hose Part No.	Internal Reeving Group No.	Ref. No. 1 Hose Part No.	Ref. No. 2 Hose Part No.
88	208066	3550-5466	3550-5316	208067	3550-5516	3550-5366
89	208068	3550-5535	3550-5335	208069	3550-5590	3550-5440
90	208070	3550-5610	3550-5460	208071	3550-5665	3550-5515
91	208072	3550-5685	3550-5535	208073	3550-5740	3550-5590
92	208074	3550-5760	3550-5610	208075	3550-5815	3550-5665
93	208076	3550-5835	3550-5685	208077	3550-5889	3550-5739
94	208078	3550-5910	3550-5760	208079	3550-5964	3550-5814
95	208080	3550-5985	3550-5835	208081	3550-6039	3550-5889
96	208082	3550-6060	3550-5910	208083	3550-6114	3550-5964
97	208084	3550-6135	3550-5935	208085	3550-6189	3550-6039
98	208086	3550-6205	3550-6055	208087	3550-6263	3550-6113
99	208088	3550-6285	3550-6135	208089	3550-6338	3550-6188
100	208090	3550-6360	3550-6210	208091	3550-6413	3550-6763
101	208092	3550-6435	3550-6285	208093	3550-6488	3550-6338
102	208094	3550-6505	3550-6355	208095	3550-6562	3550-6412
103	208096	3550-6585	3550-6435	208097	3550-6637	3550-6487
104	208098	3550-6660	3550-6510	208099	3550-6712	3550-6562
105	208100	3550-6730	3550-6580	208101	3550-6787	3550-6637
106	208102	3550-6805	3550-6655	208103	3550-6862	3550-6712
107	208104	3550-6880	3550-6730	208105	3550-6936	3550-6786
108	208106	3550-6955	3550-6805	208107	3550-7011	3550-6861
109	208108	3550-7030	3550-6880	208109	3550-7086	3550-6936
110	208110	3550-7105	3550-6955	208111	3550-7161	3550-7011
111	208112	3550-7180	3550-7030	208113	3550-7235	3550-7085
112	208114	3550-7255	3550-7105	208115	3550-7310	3550-7160
113	208116	3550-7330	3550-7180	208117	3550-7385	3550-7235
114	208118	3550-7405	3550-7255	208119	3550-7460	3550-7310
115	208120	3550-7480	3550-7330	208121	3550-7535	3550-7385
116	208122	3550-7555	3550-7405	208123	3550-7609	3550-7459
117	208124	3550-7630	3550-7480	208125	3550-7684	3550-7534
118	208126	3550-7705	3550-7555	208127	3550-7759	3550-7609

Common items.

REF	QTY	PART NO.	DESCRIPTION	REF	QTY	PART NO.	DESCRIPTION
3	2	207493	Shaft	18	2	208681	Capscrew, M10x1.5x45-8.8
4	2	201669	Washer	19	1	206320	Capscrew, M10x1.5x65-8.8
5	2	683822	Lockwasher, M12	20	2	208720	Guard
6	2	206174	Capscrew, M12x1.75x45-10.9	21	2	207490	Tire
7	6	2375	Fitting, 6-6	22	4	207488	Tire
8	6	684649	Capscrew, M10x1.5x25-8.8	23	1	208678	Chair Guard
9	2	683919	Bracket	24	2	208675	Shaft
10	9	683826	Lockwasher, M10	25	4	207489	Shaft
11	7	787381	Nut, M10	26	4	206321	Capscrew, M6x1x16-8-8
12	2	684658	Bracket	27	4	206323	Lockwasher, M6
13	2	2680	Fitting, 6-6	28	2	207493	Shaft
14	2	2453	Fitting, 6-6	29	2	207484	Hose Sheave
15	1	207487	Bracket	30	2	208721	Hose Guard
16	1	673417	Segment	31	2	206174	Capscrew, M12x1.5x45-8.8
17	1	208679	Chain Guard	32	2	209623	Hose Sheave

Reference: S-4007.

https://truckmanualshub.com/

Mast Installation Accessories

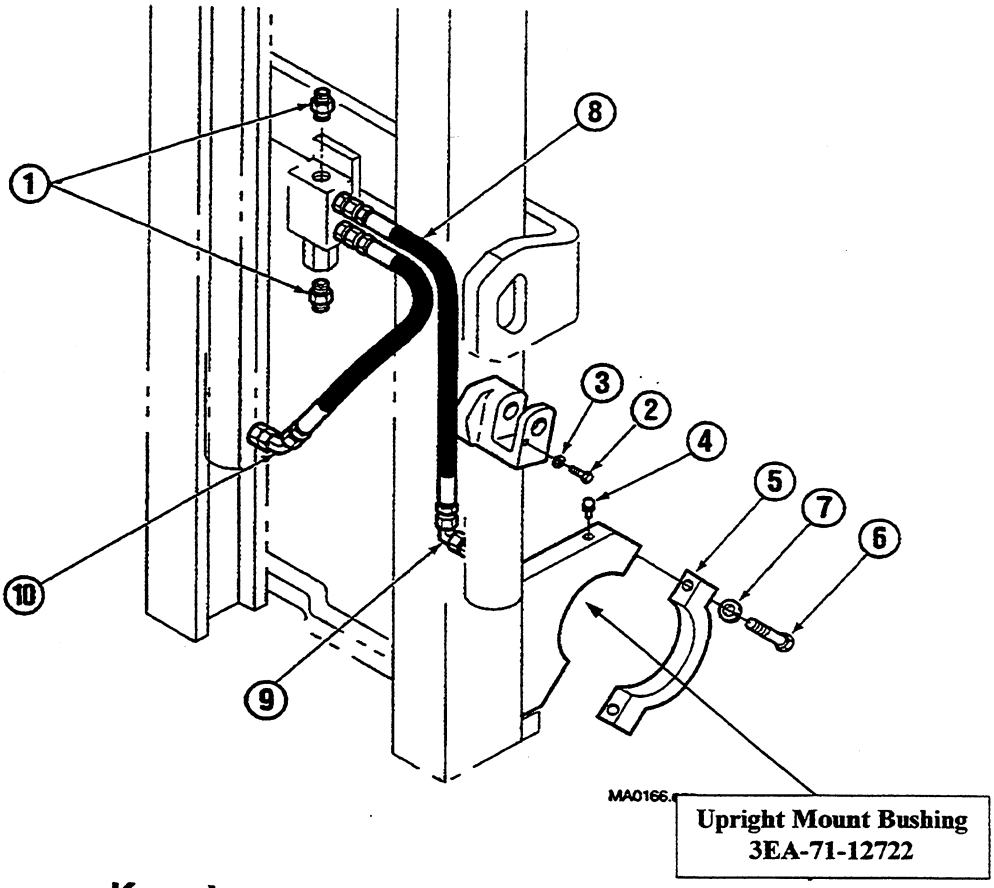

Komatsu Lift truck models.

FG18-16

REF	QTY	PART NO.	DESCRIPTION
1	2	601377	Fitting, 8-8
2	2	684594	Capscrew, M10x1.5x20-8.8
3	2	681238	Lockwasher, M10
4	2	7418	Grease Fitting
5	2	687324	Cap
6	4	688708	Capscrew M14x2.0x50
7	4	688705	Lockwasher, M14
8	2	603722	Hose
9	1	2680	Fitting, 6-6
10	1	605230	Fitting, 6-6

• Reference only. Source from lift truck manufacturer.

Reference: Mounting Control Doc S-3537, 3541
Mounting Group 208950
Installation Kit 200235
Hydraulic Group 200618

https://truckmanualshub.com/

Parts Manual

35D and 40D High-Visibility WORLD MAST®

Limited Free Lift 2-Stage Mast

Product I.D. Numbers

35D-MS-001 → 35D-MS-440

40D-MS-001 → 40D-MS-060

Manual Number 688388 R-2

cascade®

Cascade is a Registered Trademark of Cascade Corporation

https://truckmanualshub.com/

About This Manual

Introduction

This manual shows the parts breakdown for specific 35D and 40D 2-Stage Limited Free Lift WORLDMAST® product I.D. numbers. Locate the product I.D. number stamped on the upper left hand side of the outer upright channel. This number must be used when ordering replacement parts for this product.

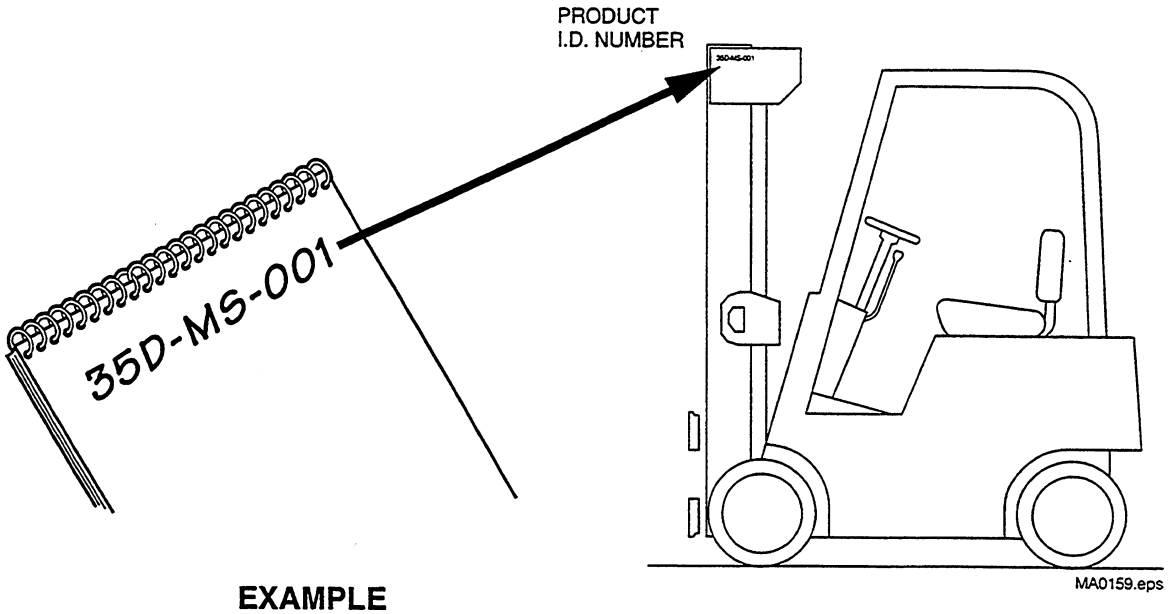

EXAMPLE

Ordering Parts

Customers – Cascade parts and service literature is available through authorized lift truck dealers. To place an order, contact the lift truck dealer of your choice.

Lift Truck Dealers – To order parts or service literature contact:

Cascade Parts Sales
2201 NE 201st
Troutdale, OR 97060
Telephone: 1-800-CAS-CADE
503-669-6300
FAX: 503-669-6338

Index

Safety Decals and Publications 1
Cylinders 2
Uprights 6
Carriages 9
Hoist Chains 13
Hydraulic Group 15
Lowering Control Valve 16
Internal Hose Reeving 17
Backrest 19
Mast Installation Accessories 20
Recommended Spare Parts List 47

https://truckmanualshub.com/

Safety Decals

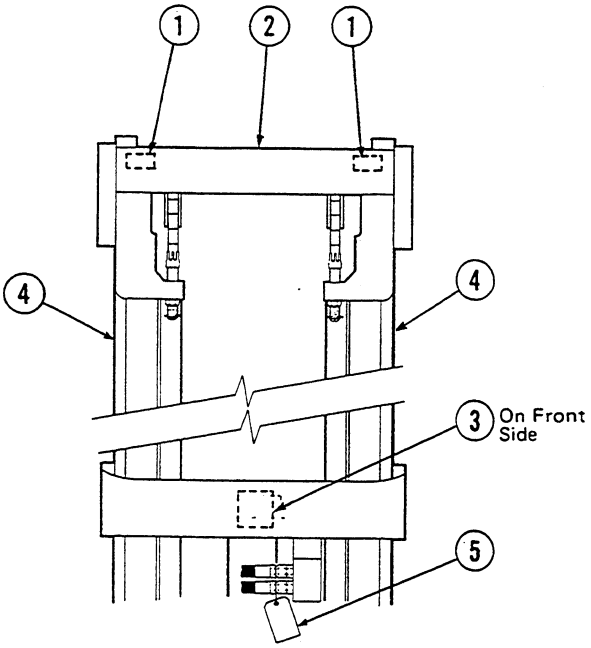

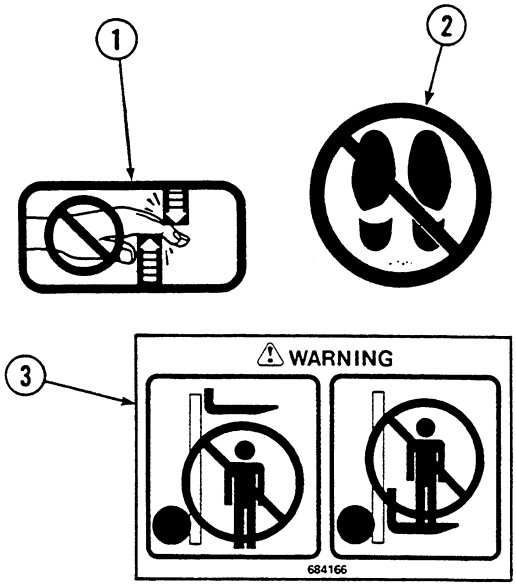

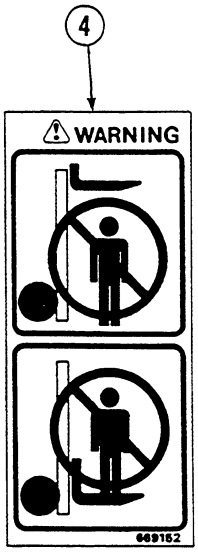

35D/40D			
REF	QTY	PART NO.	DESCRIPTION
1	4	665595	No Hand Hold
2	2	679150	No Step
3	1	684166	WARNING
4	2	669152	WARNING
5	1	200798	WARNING–Trapped Air

Publications

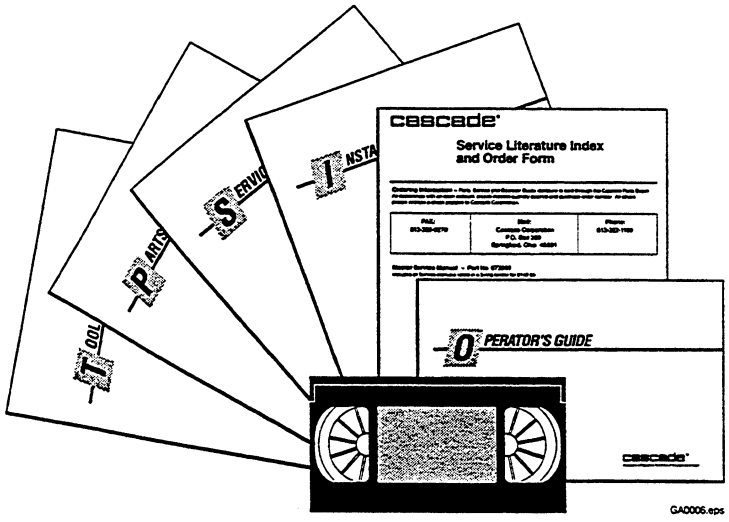

35D/40D	
PART NO.	DESCRIPTION
688388	Parts Manual
686482	Service Manual
679929	Tool Catalog
673964	Literature Index Order Form

https://truckmanualshub.com/

Main Lift Cylinder-2000 PSI

35D/40D

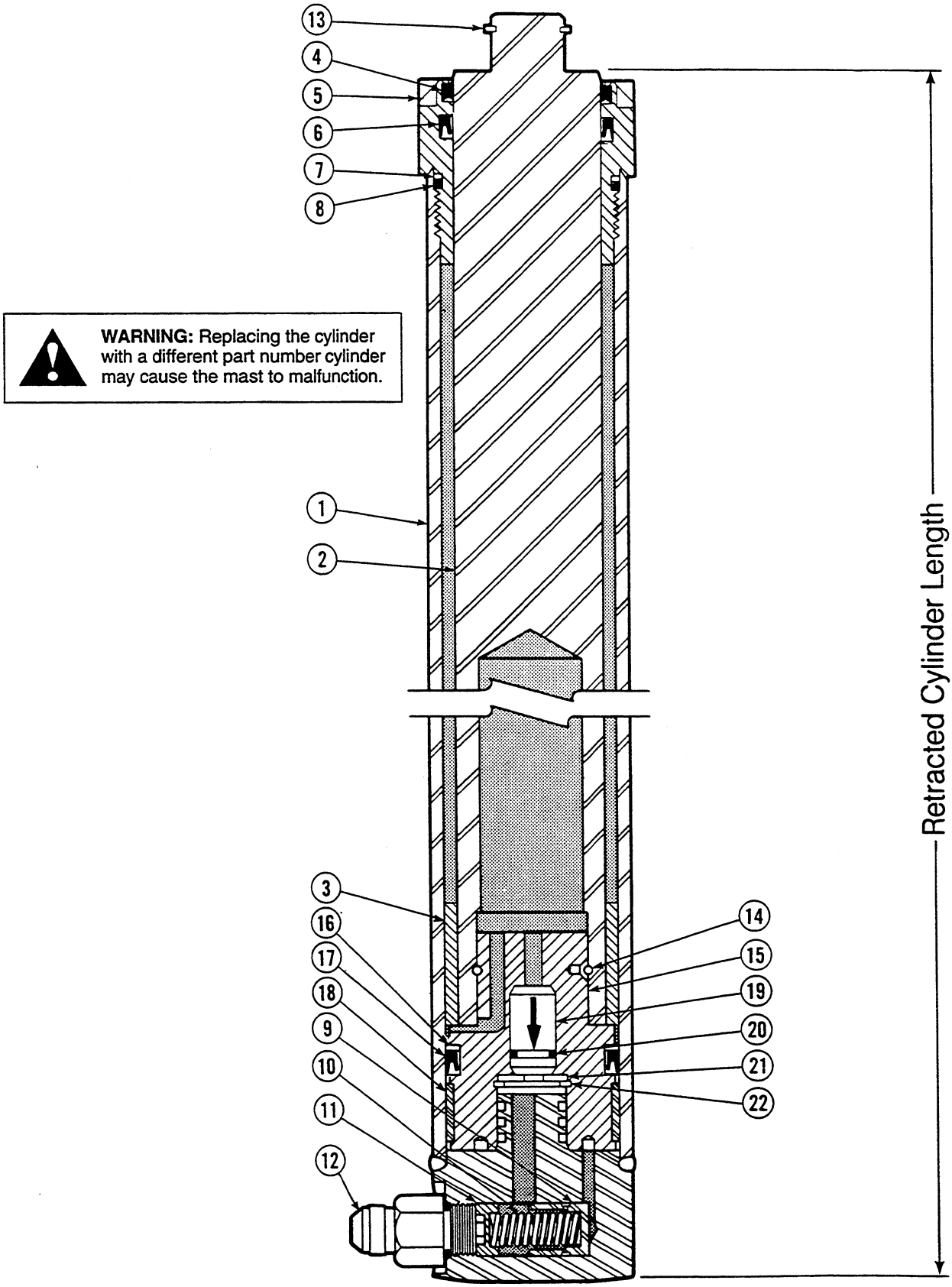

WARNING: Replacing the cylinder with a different part number cylinder may cause the mast to malfunction.

https://truckmanualshub.com/

Main Lift Cylinder-2000 PSI

35D/40D

Items that vary according to mast height.

Retracted Channel Length (in.)	Retracted Cylinder Length (in.)	Cylinder Assembly Qty 1	REF No. 1 Shell Qty 1	REF No. 2 Plunger Qty 1	REF No. 3 Spacer Qty 1
56	45.25	582054	5479-1117	5478-1083	—
57	46.25	582056	5479-1142	5478-1108	—
58	47.25	582058	5479-1167	5478-1133	—
59	48.25	582060	5479-1193	5478-1159	—
60	49.25	582062	5479-1218	5478-1184	—
61	50.25	582064	5479-1244	5478-1210	—
62	51.25	582066	5479-1269	5478-1235	—
63	52.25	582068	5479-1294	5478-1260	—
64	53.25	582070	5479-1320	5478-1286	—
65	54.25	582072	5479-1345	5478-1311	—
66	55.25	582074	5479-1371	5478-1337	—
67	56.25	582076	5479-1396	5478-1362	—
68	57.25	582078	5479-1421	5478-1387	—
69	58.25	582080	5479-1447	5478-1413	—
70	59.25	582082	5479-1472	5478-1438	—
71	60.25	582084	5479-1498	5478-1464	—
72	61.25	582086	5479-1523	5478-1489	—
73	62.25	582088	5479-1548	5478-1514	—
74	63.25	582090	5479-1574	5478-1540	—
75	64.25	582092	5479-1599	5478-1565	—
76	65.25	582094	5479-1625	5478-1591	—
77	66.25	582096	5479-1650	5478-1616	—
78	67.25	582098	5479-1675	5478-1641	—
79	68.25	582100	5479-1701	5478-1667	—
80	69.25	582102	5479-1726	5478-1692	—
81	70.25	582104	5479-1752	5478-1718	—
82	71.25	582106	5479-1777	5478-1743	—
83	72.25	582108	5479-1802	5478-1768	—
84	73.25	582110	5479-1828	5478-1794	—
85	74.25	582112	5479-1853	5478-1819	—
86	75.25	582114	5479-1879	5478-1845	—
87	76.25	582116	5479-1904	5478-1870	—
88	77.25	582118	5479-1929	5478-1895	—
89	78.25	582120	5479-1955	5478-1921	—
90	79.25	582122	5479-1980	5478-1946	—
91	80.25	582124	5479-2006	5478-1972	—
92	81.25	582126	5479-2031	5478-1997	—
93	82.25	582128	5479-2056	5478-2022	—
94	83.25	582130	5479-2082	5478-2048	—
95	84.25	582132	5479-2107	5478-2073	—
96	85.25	582134	5479-2133	5478-2099	—
97	86.25	582136	5479-2158	5478-2124	—
98	87.25	582138	5479-2183	5478-2149	—
99	88.25	582140	5479-2209	5478-2175	—
100	89.25	582142	5479-2234	5478-2200	—
101	90.25	582144	5479-2260	5478-2226	—

Common items.

REF	QTY	PART NO.	DESCRIPTION	REF	QTY	PART NO.	DESCRIPTION
★ 4	1	561256	Plunger Wiper	14	1	559962	Pull-In Wire
5	1	562634	Retainer	15	1	561262	Piston
★ 6	1	562837	Plunger Seal	★16	1	559870	Back-Up Ring
★ 7	1	559866	Back-Up Ring	★17	1	563497	Piston Seal
★ 8	1	559865	O-Ring	★18	1	560904	Wear Ring
9	1	563782	Piston-Lowering Fuse	19	1	560717	Check Valve
10	1	562847	Spring	★20	1	689937	O-Ring
11	1	562848	Spring Guide	21	1	563785	Washer
■12	1	626505	Fitting, 6-10	22	1	3015	Retaining Ring
■13	1	3129	Snap Ring				

■ Not included in Cylinder Assembly. Reference: S-6077, 6078

★ Included in Service Kit 561307.

https://truckmanualshub.com/

Main Lift Cylinder-2000 PSI

35D/40D

Items that vary according to mast height.

Retracted Channel Length (in.)	Retracted Cylinder Length (in.)	Cylinder Assembly Qty 1	REF No. 1 Shell Qty 1	REF No. 2 Plunger Qty 1	REF No. 3 Spacer Qty 1
103	92.25	583136	5479-2310	5478-2276	5502-25
104	93.25	583268	5479-2335	5478-2301	5502-25
105	94.25	583270	5479-2361	5478-2327	5502-25
106	95.25	583272	5479-2386	5478-2352	5502-25
107	96.25	583274	5479-2412	5478-2378	5502-25
109	98.25	583277	5479-2462	5478-2429	5502-50
110	99.25	583279	5479-2487	5478-2454	5502-50
111	100.25	583281	5479-2513	5478-2480	5502-50
112	101.25	583283	5479-2538	5478-2505	5502-50
113	102.25	583285	5479-2564	5478-2531	5502-50
114	103.25	583287	5479-2589	5478-2556	5502-50
116	105.25	583290	5479-2639	5478-2606	5502-75
117	106.25	583292	5479-2665	5478-2632	5502-75
118	107.25	583137	5479-2690	5478-2657	5502-75
119	108.25	583294	5479-2716	5478-2683	5502-75
120	109.25	583295	5479-2741	5478-2708	5502-75
121	110.25	583296	5479-2766	5478-2733	5502-75
123	112.25	583297	5479-2817	5478-2785	5502-100
124	113.25	583298	5479-2842	5478-2810	5502-100
125	114.25	583299	5479-2868	5478-2836	5502-100
126	115.25	583300	5479-2893	5478-2861	5502-100
127	116.25	583301	5479-2918	5478-2886	5502-100
128	117.25	583302	5479-2944	5478-2912	5502-100
130	119.25	583303	5479-2994	5478-2962	5502-125
131	120.25	583304	5479-3020	5478-2988	5502-125

Common items.

REF	QTY	PART NO.	DESCRIPTION	REF	QTY	PART NO.	DESCRIPTION
★ 4	1	561256	Plunger Wiper	14	1	559962	Pull-In Wire
5	1	562634	Retainer	15	1	561262	Piston
★ 6	1	562837	Plunger Seal	★16	1	559870	Back-Up Ring
★ 7	1	559866	Back-Up Ring	★17	1	563497	Piston Seal
★ 8	1	559865	O-Ring	★18	1	560904	Wear Ring
9	1	563782	Piston-Lowering Fuse	19	1	560717	Check Valve
10	1	562847	Spring	★20	1	689937	O-Ring
11	1	562848	Spring Guide	21	1	563785	Washer
■12	1	626505	Fitting, 6-10	22	1	3015	Retaining Ring
■13	1	3129	Snap Ring				

■ Not included in Cylinder Assembly. Reference: S-6077, 6078

★ Included in Service Kit 561307.

https://truckmanualshub.com/

Main Lift Cylinder-2000 PSI

35D/40D

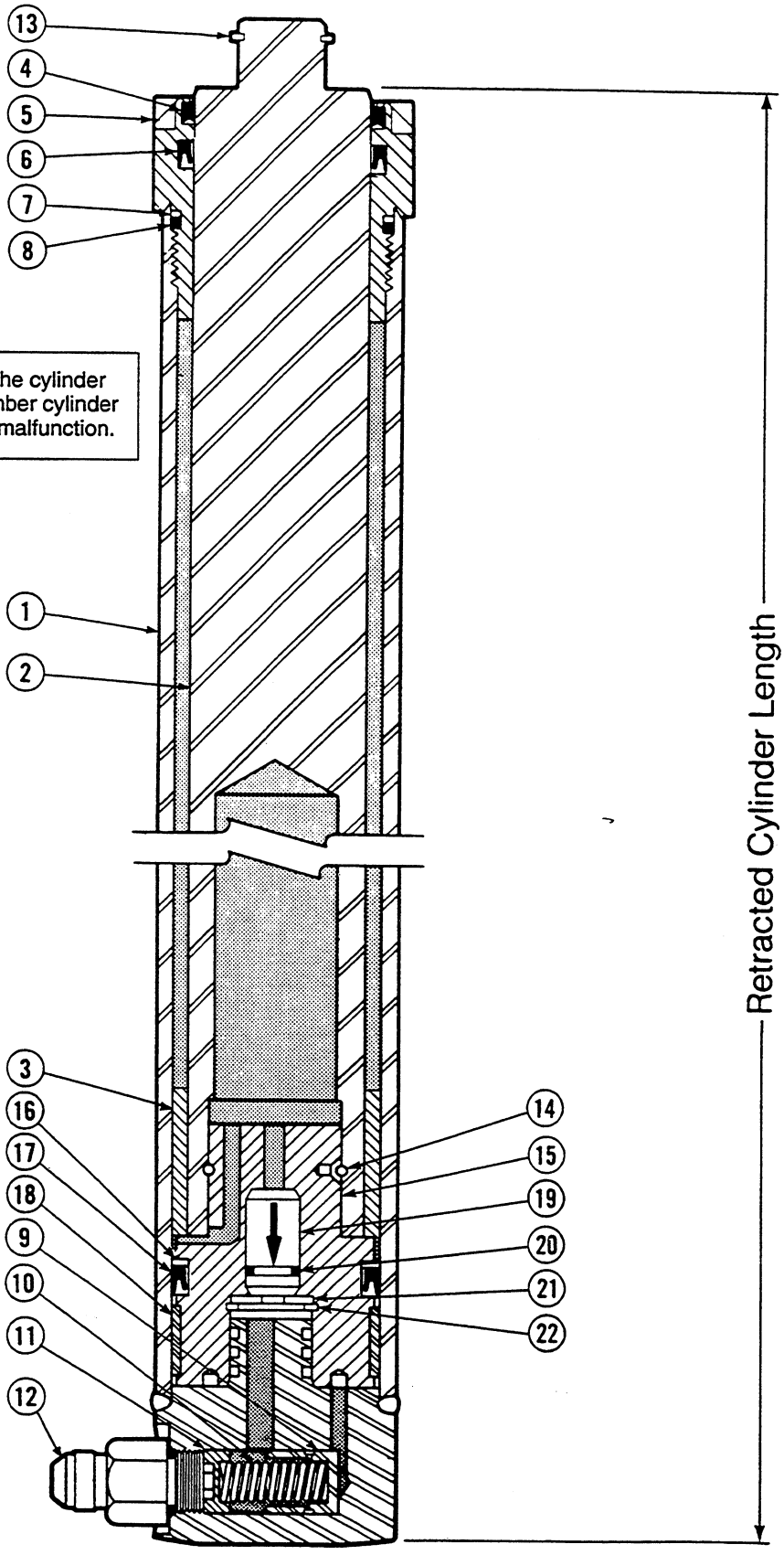

WARNING: Replacing the cylinder with a different part number cylinder may cause the mast to malfunction.

https://truckmanualshub.com/

Main Lift Cylinder-2600 PSI

35D/40D

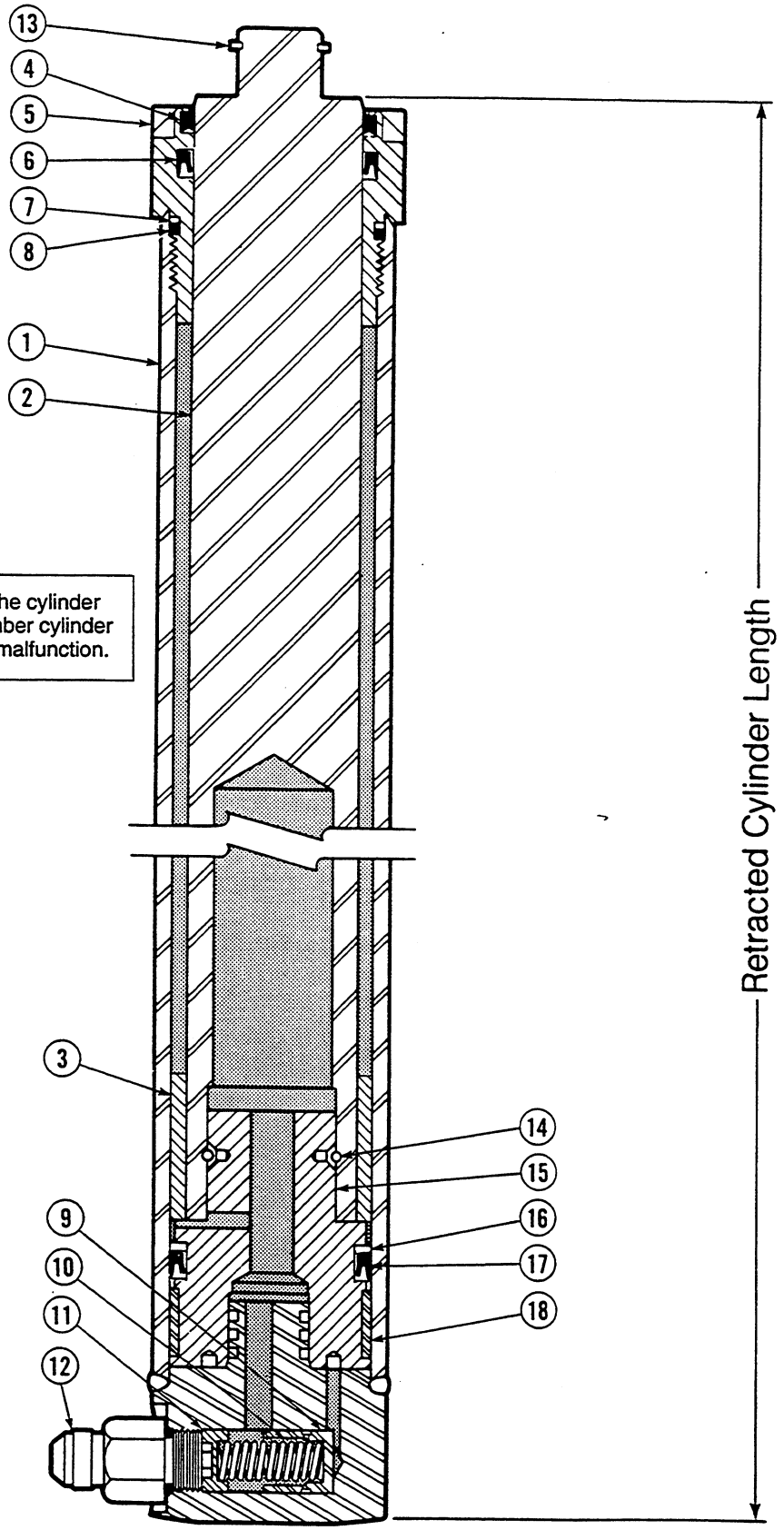

WARNING: Replacing the cylinder with a different part number cylinder may cause the mast to malfunction.

https://truckmanualshub.com/

Main Lift Cylinder-2600 PSI

35D/40D

Items that vary according to mast height.

Retracted Channel Length (in.)	Retracted Cylinder Length (in.)	Cylinder Assembly Qty 1	REF No. 1 Shell Qty 1	REF No. 2 Plunger Qty 1	REF No. 3 Spacer Qty 1
56	45.25	581962	5479-1117	5478-1083	—
57	46.25	581964	5479-1142	5478-1108	—
58	47.25	581966	5479-1167	5478-1133	—
59	48.25	581968	5479-1193	5478-1159	—
60	49.25	581970	5479-1218	5478-1184	—
61	50.25	581972	5479-1244	5478-1210	—
62	51.25	581974	5479-1269	5478-1235	—
63	52.25	581976	5479-1294	5478-1260	—
64	53.25	581978	5479-1320	5478-1286	—
65	54.25	581980	5479-1345	5478-1311	—
66	55.25	581982	5479-1371	5478-1337	—
67	56.25	581984	5479-1396	5478-1362	—
68	57.25	581986	5479-1421	5478-1387	—
69	58.25	581988	5479-1447	5478-1413	—
70	59.25	581990	5479-1472	5478-1438	—
71	60.25	581992	5479-1498	5478-1464	—
72	61.25	581994	5479-1523	5478-1489	—
73	62.25	581996	5479-1548	5478-1514	—
74	63.25	581998	5479-1574	5478-1540	—
75	64.25	582000	5479-1599	5478-1565	—
76	65.25	582002	5479-1625	5478-1591	—
77	66.25	582004	5479-1650	5478-1616	—
78	67.25	582006	5479-1675	5478-1641	—
79	68.25	582008	5479-1701	5478-1667	—
80	69.25	582010	5479-1726	5478-1692	—
81	70.25	582012	5479-1752	5478-1718	—
82	71.25	582014	5479-1777	5478-1743	—
83	72.25	582016	5479-1802	5478-1768	—
84	73.25	582018	5479-1828	5478-1794	—
85	74.25	582020	5479-1853	5478-1819	—
86	75.25	582022	5479-1879	5478-1845	—
87	76.25	582024	5479-1904	5478-1870	—
88	77.25	582026	5479-1929	5478-1895	—
89	78.25	582028	5479-1955	5478-1921	—
90	79.25	582030	5479-1980	5478-1946	—
91	80.25	582032	5479-2006	5478-1972	—
92	81.25	582034	5479-2031	5478-1997	—
93	82.25	582036	5479-2056	5478-2022	—
94	83.25	582038	5479-2082	5478-2048	—
95	84.25	582040	5479-2107	5478-2073	—
96	85.25	582042	5479-2133	5478-2099	—
97	86.25	582044	5479-2158	5478-2124	—
98	87.25	582046	5479-2183	5478-2149	—
99	88.25	582048	5479-2209	5478-2175	—
100	89.25	582050	5479-2234	5478-2200	—
101	90.25	582052	5479-2260	5478-2226	—

Common items.

REF	QTY	PART NO.	DESCRIPTION	REF	QTY	PART NO.	DESCRIPTION
★ 4	1	561256	Plunger Wiper	■12	2	626505	Fitting, 6-10
5	1	562634	Retainer	■13	2	3129	Snap Ring
★ 6	1	562837	Plunger Seal	14	1	559962	Pull-In Wire
★ 7	1	559866	Back-Up Ring	15	1	561260	Piston
★ 8	1	559865	O-Ring	★16	1	559870	Back-Up Ring
9	1	562849	Piston-Lowering Fuse	★17	1	563497	Piston Seal
10	1	562847	Spring	★18	1	560904	Wear Ring
11	1	562848	Spring Guide				

■ Not included in Cylinder Assembly. Reference: S-6075, 6076

★ Included in Service Kit 561305.

https://truckmanualshub.com/

Main Lift Cylinder-2600 PSI

35D/40D

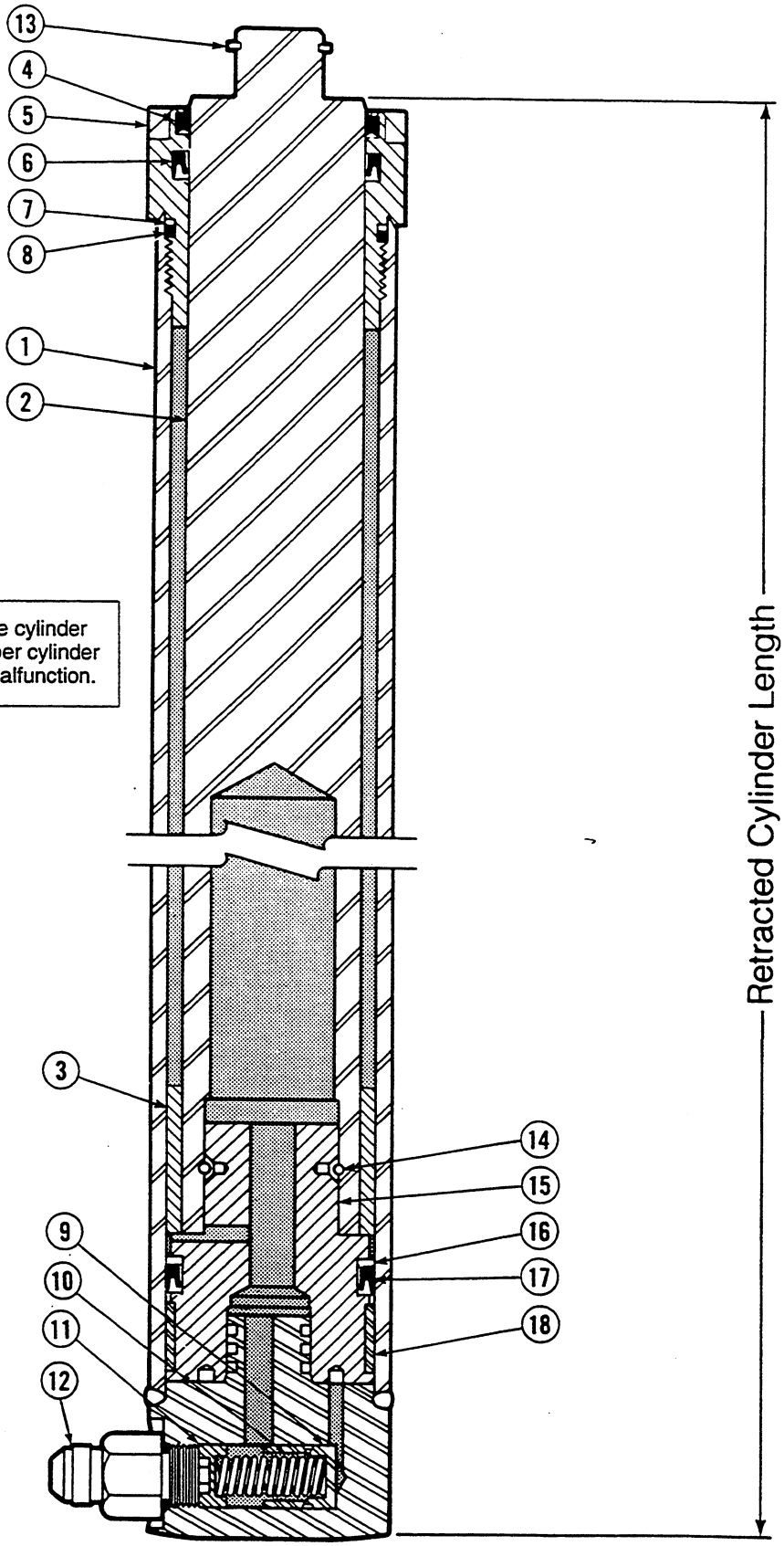

WARNING: Replacing the cylinder with a different part number cylinder may cause the mast to malfunction.

https://truckmanualshub.com/

Main Lift Cylinder-2600 PSI

35D/40D

Items that vary according to mast height.

Retracted Channel Length (in.)	Retracted Cylinder Length (in.)	Cylinder Assembly Qty 1	REF No. 1 Shell Qty 1	REF No. 2 Plunger Qty 1	REF No. 3 Spacer Qty 1
103	92.25	583132	5479-2310	5478-2276	5502-25
104	93.25	583230	5479-2335	5478-2301	5502-25
105	94.25	583232	5479-2361	5478-2327	5502-25
106	95.25	583234	5479-2386	5478-2352	5502-25
107	96.25	583236	5479-2412	5478-2378	5502-25
109	98.25	583239	5479-2462	5478-2429	5502-50
110	99.25	583241	5479-2487	5478-2454	5502-50
111	100.25	583243	5479-2513	5478-2480	5502-50
112	101.25	583245	5479-2538	5478-2505	5502-50
113	102.25	583247	5479-2564	5478-2531	5502-50
114	103.25	583249	5479-2589	5478-2556	5502-50
116	105.25	583252	5479-2639	5478-2606	5502-75
117	106.25	583254	5479-2665	5478-2632	5502-75
118	107.25	583133	5479-2690	5478-2657	5502-75
119	108.25	583256	5479-2716	5478-2683	5502-75
120	109.25	583257	5479-2741	5478-2708	5502-75
121	110.25	583258	5479-2766	5478-2733	5502-75
123	112.25	583259	5479-2817	5478-2785	5502-100
124	113.25	583260	5479-2842	5478-2810	5502-100
125	114.25	583261	5479-2868	5478-2836	5502-100
126	115.25	583262	5479-2893	5478-2861	5502-100
127	116.25	583263	5479-2918	5478-2886	5502-100
128	117.25	583264	5479-2944	5478-2912	5502-100
130	119.25	583265	5479-2994	5478-2962	5502-125
131	120.25	583266	5479-3020	5478-2988	5502-125

Common items.

REF	QTY	PART NO.	DESCRIPTION	REF	QTY	PART NO.	DESCRIPTION
★ 4	1	561256	Plunger Wiper	■12	2	626505	Fitting, 6-10
5	1	562634	Retainer	■13	2	3129	Snap Ring
★ 6	1	562837	Plunger Seal	14	1	559962	Pull-In Wire
★ 7	1	559866	Back-Up Ring	15	1	561260	Piston
★ 8	1	559865	O-Ring	★16	1	559870	Back-Up Ring
9	1	562849	Piston-Lowering Fuse	★17	1	563497	Piston Seal
10	1	562847	Spring	★18	1	560904	Wear Ring
11	1	562848	Spring Guide				

■ Not included in Cylinder Assembly. Reference: S-6075, 6076

★ Included in Service Kit 561305.

https://truckmanualshub.com/

Outer Upright
35D/40D

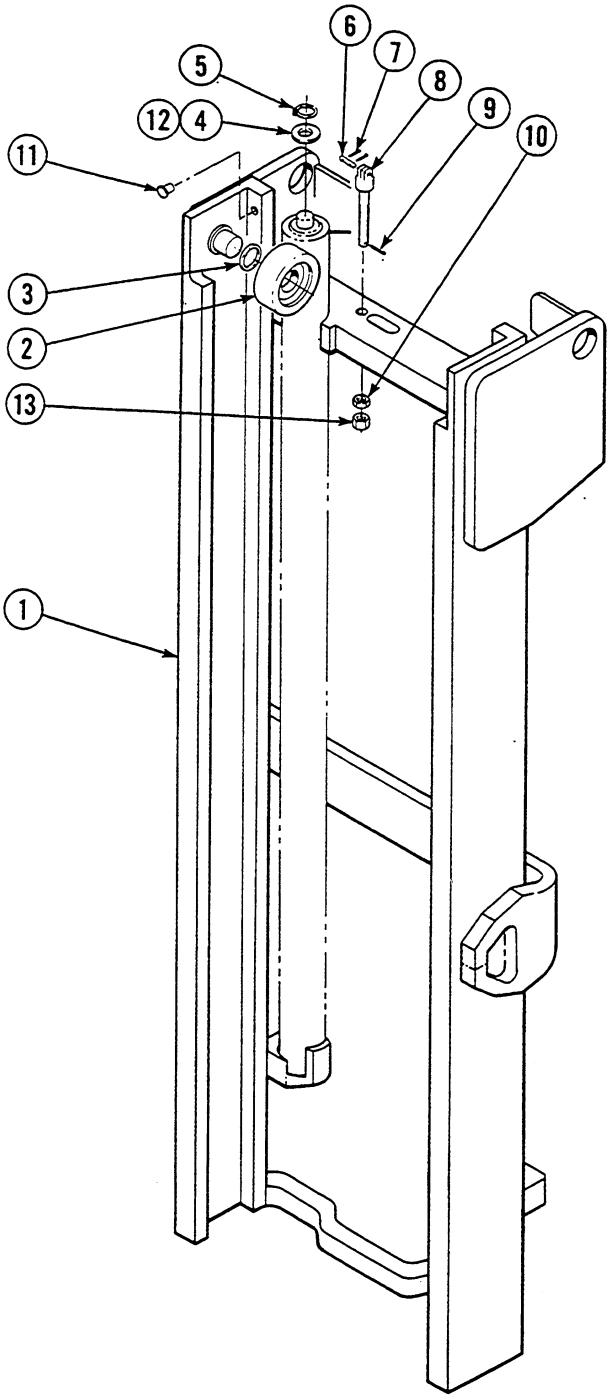

NOTE: See pages 20–46 for Mast Installation Accessories.

https://truckmanualshub.com/

Outer Upright
35D/40D

Items that vary according to mast height.

REF	QTY	PART NO	DESCRIPTION
1	1	■686686	Outer Upright–56 in.★
1	1	■686687	Outer Upright–57 in.★
1	1	■686688	Outer Upright–58 in.★
1	1	■686689	Outer Upright–59 in.★
1	1	■686690	Outer Upright–60 in.★
1	1	■686691	Outer Upright–61 in.★
1	1	■686592	Outer Upright–62 in.★
1	1	■686693	Outer Upright–63 in.★
1	1	■686694	Outer Upright–64 in.★
1	1	■686695	Outer Upright–65 in.★
1	1	■686696	Outer Upright–66 in.★
1	1	■686697	Outer Upright–67 in.★
1	1	■686698	Outer Upright–68 in.★
1	1	■686699	Outer Upright–69 in.★
1	1	■686700	Outer Upright–70 in.★
1	1	■686701	Outer Upright–71 in.★
1	1	■686702	Outer Upright–72 in.★
1	1	■686703	Outer Upright–73 in.★
1	1	■686704	Outer Upright–74 in.★
1	1	■686705	Outer Upright–75 in.★
1	1	■606706	Outer Upright–76 in.★
1	1	■686707	Outer Upright–77 in.★
1	1	■686708	Outer Upright–78 in.★
1	1	■686709	Outer Upright–79 in.★
1	1	■686710	Outer Upright–80 in.★
1	1	■686811	Outer Upright–81 in.★
1	1	■686712	Outer Upright–82 in.★
1	1	■686713	Outer Upright–83 in.★
1	1	■686714	Outer Upright–84 in.★
1	1	■686715	Outer Upright–85 in.★
1	1	■686716	Outer Upright–86 in.★
1	1	■686717	Outer Upright–87 in.★
1	1	■686718	Outer Upright–88 in.★
1	1	■686719	Outer Upright–89 in.★
1	1	■686720	Outer Upright–90 in.★
1	1	■686721	Outer Upright–91 in.★
1	1	■686722	Outer Upright–92 in.★
1	1	■686723	Outer Upright–93 in.★
1	1	■686724	Outer Upright–94 in.★
1	1	■686725	Outer Upright–95 in.★
1	1	■686726	Outer Upright–96 in.★
1	1	■686727	Outer Upright–97 in.★
1	1	■686728	Outer Upright–98 in.★
1	1	■686729	Outer Upright–99 in.★
1	1	■686730	Outer Upright–100 in.★
1	1	■686731	Outer Upright–101 in.★

Part numbers on this page are used with the following mast product I.D. numbers only:

35D-MS-001 through 138
40D-MS-001 through 015

Items that vary according to mast height.

REF	QTY	PART NO	DESCRIPTION
1	1	■200927	Outer Upright–103 in.★
1	1	■200928	Outer Upright–104 in.★
1	1	■200929	Outer Upright–105 in.★
1	1	■200930	Outer Upright–106 in.★
1	1	■200931	Outer Upright–107 in.★
1	1	■200933	Outer Upright–109 in.★
1	1	■200934	Outer Upright–110 in.★
1	1	■200935	Outer Upright–111 in.★
1	1	■200936	Outer Upright–112 in.★
1	1	■200937	Outer Upright–113 in.★
1	1	■200938	Outer Upright–114 in.★
1	1	■200940	Outer Upright–116 in.★
1	1	■200941	Outer Upright–117 in.★
1	1	■200942	Outer Upright–118 in.★
1	1	■201160	Outer Upright–119 in.★
1	1	■201161	Outer Upright–120 in.★
1	1	■201162	Outer Upright–121 in.★
1	1	■201163	Outer Upright–123 in.★
1	1	■201164	Outer Upright–124 in.★
1	1	■201165	Outer Upright–125 in.★
1	1	■201166	Outer Upright–126 in.★
1	1	■201167	Outer Upright–127 in.★
1	1	■201168	Outer Upright–128 in.★
1	1	■201169	Outer Upright–130 in.★
1	1	■201170	Outer Upright–131 in.★

Common items.

REF	QTY	PART NO.	DESCRIPTION	REF	QTY	PART NO.	DESCRIPTION
2	2	664206	Roller	8	2	201432	Chain Anchor–35D
3	◆	631881	Shim-.03 in. (0,7 mm)	8	2	201433	Chain Anchor–40D
4	3	200524	Shim-.06 in. (1,5 mm)	9	2	6518	Cotter Pin
5	2	3129	Snap Ring	10	2	200007	Jam Nut
6	2	678964	Chain Pin–35D	11	2	202386	Thrust Plug Service Kit
6	2	680460	Chain Pin–40D	12	◆	200525	Shim-.09 in. (2,2 mm)
7	4	6508	Cotter Pin	13	2	200006	Nut

★ Retracted channel length.

◆ Quantity as required.

■ These part numbers are for reference only. Mounting brackets are not included. To order an Outer Upright with mounting brackets, contact the Cascade Parts Depot (513) 322-1199. The mast serial number must be supplied.

Reference: S-3473 (35D), 3475 (40D)

https://truckmanualshub.com/

Outer Upright
35D/40D

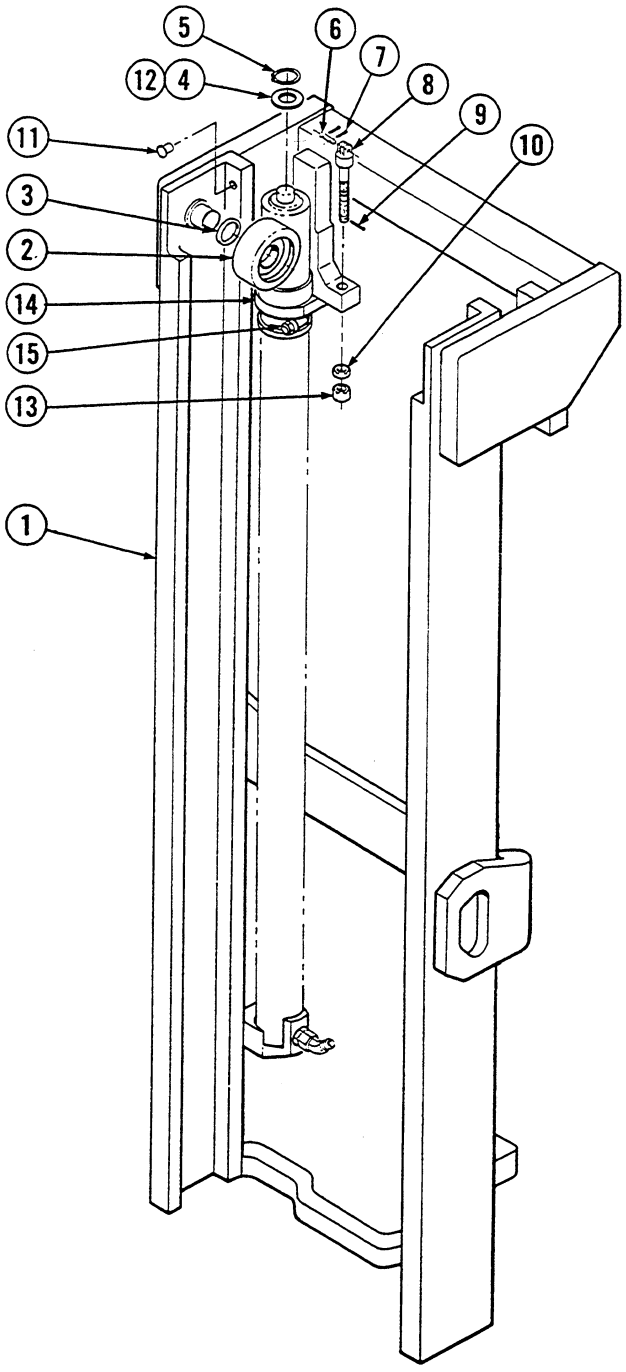

NOTE: See pages 20–46 for Mast Installation Accessories.

https://truckmanualshub.com/

Outer Upright
35D/40D

Items that vary according to mast height.

REF	QTY	PART NO	DESCRIPTION
1	1	■202853	Outer Upright–56 in.★
1	1	■202854	Outer Upright–57 in.★
1	1	■202855	Outer Upright–58 in.★
1	1	■202856	Outer Upright–59 in.★
1	1	■202857	Outer Upright–60 in.★
1	1	■202858	Outer Upright–61 in.★
1	1	■202859	Outer Upright–62 in.★
1	1	■202860	Outer Upright–63 in.★
1	1	■202861	Outer Upright–64 in.★
1	1	■202862	Outer Upright–65 in.★
1	1	■202863	Outer Upright–66 in.★
1	1	■202864	Outer Upright–67 in.★
1	1	■202865	Outer Upright–68 in.★
1	1	■202866	Outer Upright–69 in.★
1	1	■202867	Outer Upright–70 in.★
1	1	■202868	Outer Upright–71 in.★
1	1	■202869	Outer Upright–72 in.★
1	1	■202870	Outer Upright–73 in.★
1	1	■202871	Outer Upright–74 in.★
1	1	■202872	Outer Upright–75 in.★
1	1	■202873	Outer Upright–76 in.★
1	1	■202874	Outer Upright–77 in.★
1	1	■202875	Outer Upright–78 in.★
1	1	■202876	Outer Upright–79 in.★
1	1	■202877	Outer Upright–80 in.★
1	1	■202878	Outer Upright–81 in.★
1	1	■202879	Outer Upright–82 in.★
1	1	■202880	Outer Upright–83 in.★
1	1	■202881	Outer Upright–84 in.★
1	1	■202882	Outer Upright–85 in.★
1	1	■202883	Outer Upright–86 in.★
1	1	■202884	Outer Upright–87 in.★
1	1	■202885	Outer Upright–88 in.★
1	1	■202886	Outer Upright–89 in.★
1	1	■202887	Outer Upright–90 in.★
1	1	■202888	Outer Upright–91 in.★
1	1	■202889	Outer Upright–92 in.★
1	1	■202890	Outer Upright–93 in.★
1	1	■202891	Outer Upright–94 in.★
1	1	■202892	Outer Upright–95 in.★
1	1	■202893	Outer Upright–96 in.★
1	1	■202894	Outer Upright–97 in.★
1	1	■202895	Outer Upright–98 in.★
1	1	■202896	Outer Upright–99 in.★
1	1	■202897	Outer Upright–100 in.★
1	1	■202898	Outer Upright–101 in.★

Part numbers on this page are used with the following mast product I.D. numbers only:

35D-MS-139 through 440
40D-MS-016 through 060

Items that vary according to mast height.

REF	QTY	PART NO	DESCRIPTION
1	1	■202917	Outer Upright–103 in.★
1	1	■202918	Outer Upright–104 in.★
1	1	■202919	Outer Upright–105 in.★
1	1	■202920	Outer Upright–106 in.★
1	1	■202921	Outer Upright–107 in.★
1	1	■202923	Outer Upright–109 in.★
1	1	■202924	Outer Upright–110 in.★
1	1	■202925	Outer Upright–111 in.★
1	1	■202926	Outer Upright–112 in.★
1	1	■202927	Outer Upright–113 in.★
1	1	■202928	Outer Upright–114 in.★
1	1	■202930	Outer Upright–116 in.★
1	1	■202931	Outer Upright–117 in.★
1	1	■202932	Outer Upright–118 in.★
1	1	■202623	Outer Upright–119 in.★
1	1	■202624	Outer Upright–120 in.★
1	1	■202625	Outer Upright–121 in.★
1	1	■202626	Outer Upright–123 in.★
1	1	■202627	Outer Upright–124 in.★
1	1	■202628	Outer Upright–125 in.★
1	1	■202629	Outer Upright–126 in.★
1	1	■202630	Outer Upright–127 in.★
1	1	■202631	Outer Upright–128 in.★
1	1	■202632	Outer Upright–130 in.★
1	1	■202633	Outer Upright–131 in.★

Common items.

REF	QTY	PART NO.	DESCRIPTION	REF	QTY	PART NO.	DESCRIPTION
2	2	664206	Roller	8	2	201433	Chain Anchor–40D
3	◆	631881	Shim-.03 in. (0,7 mm)	9	2	6518	Cotter Pin
4	3	200524	Shim-.06 in. (1,5 mm)	10	2	200007	Jam Nut
5	2	3129	Snap Ring	11	2	202386	Thrust Plug Service Kit
6	2	678964	Chain Pin–35D	12	◆	200525	Shim-.09 in. (2,2 mm)
6	2	680460	Chain Pin–40D	13	2	200006	Nut
7	4	6508	Cotter Pin	14	2	202396	Bumper
8	2	201432	Chain Anchor–35D	15	2	201895	Clamp

★ Retracted channel length.

◆ Quantity as required.

■ These part numbers are for reference only. Mounting brackets are not included. To order an Outer Upright with mounting brackets, contact the Cascade Parts Depot (513) 322-1199. The mast serial number must be supplied.

Reference: S-3790 (35D), 3793 (40D)

https://truckmanualshub.com/

Inner Upright
35D/40D

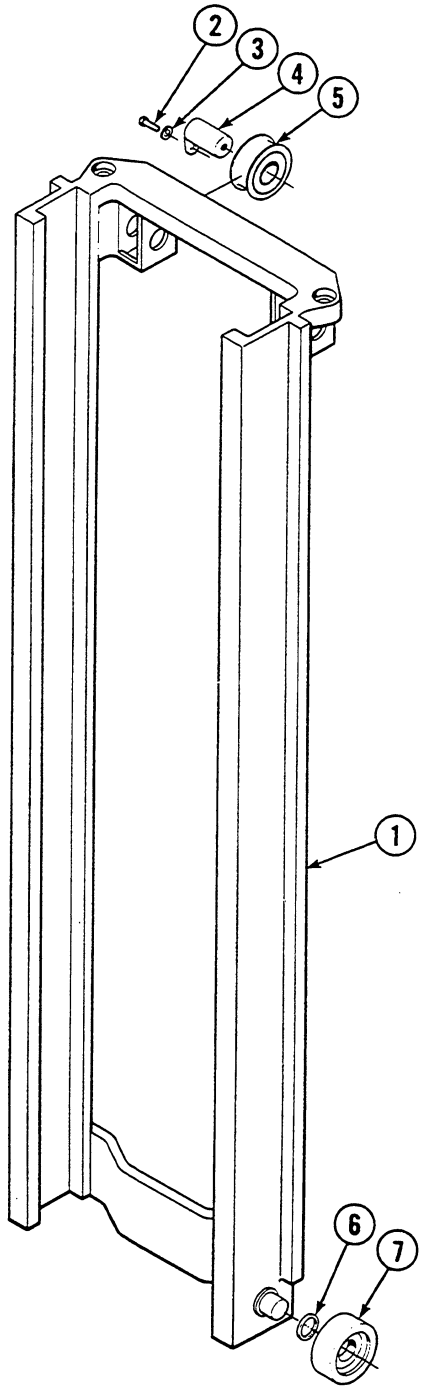

https://truckmanualshub.com/

Inner Upright
35D/40D

Items that vary according to mast height.

REF	QTY	PART NO	DESCRIPTION
1	1	686824	Inner Upright–56 in.★
1	1	686825	Inner Upright–57 in.★
1	1	686826	Inner Upright–58 in.★
1	1	686827	Inner Upright–59 in.★
1	1	686828	Inner Upright–60 in.★
1	1	686829	Inner Upright–61 in.★
1	1	686830	Inner Upright–62 in.★
1	1	686831	Inner Upright–63 in.★
1	1	686832	Inner Upright–64 in.★
1	1	686833	Inner Upright–65 in.★
1	1	686834	Inner Upright–66 in.★
1	1	686835	Inner Upright–67 in.★
1	1	686836	Inner Upright–68 in.★
1	1	686837	Inner Upright–69 in.★
1	1	686838	Inner Upright–70 in.★
1	1	686839	Inner Upright–71 in.★
1	1	686840	Inner Upright–72 in.★
1	1	686841	Inner Upright–73 in.★
1	1	686842	Inner Upright–74 in.★
1	1	686843	Inner Upright–75 in.★
1	1	686844	Inner Upright–76 in.★
1	1	686845	Inner Upright–77 in.★
1	1	686846	Inner Upright–78 in.★
1	1	686847	Inner Upright–79 in.★
1	1	686848	Inner Upright–80 in.★
1	1	686849	Inner Upright–81 in.★
1	1	686850	Inner Upright–82 in.★
1	1	686851	Inner Upright–83 in.★
1	1	686852	Inner Upright–84 in.★
1	1	686853	Inner Upright–85 in.★
1	1	686854	Inner Upright–86 in.★
1	1	686855	Inner Upright–87 in.★
1	1	686856	Inner Upright–88 in.★
1	1	686857	Inner Upright–89 in.★
1	1	686858	Inner Upright–90 in.★
1	1	686859	Inner Upright–91 in.★
1	1	686860	Inner Upright–92 in.★
1	1	686861	Inner Upright–93 in.★
1	1	686862	Inner Upright–94 in.★
1	1	686863	Inner Upright–95 in.★
1	1	686864	Inner Upright–96 in.★
1	1	686865	Inner Upright–97 in.★
1	1	686866	Inner Upright–98 in.★
1	1	686867	Inner Upright–99 in.★
1	1	686868	Inner Upright–100 in.★
1	1	686869	Inner Upright–101 in.★

Items that vary according to mast height.

REF	QTY	PART NO	DESCRIPTION
1	1	201135	Inner Upright–103 in.★
1	1	201136	Inner Upright–104 in.★
1	1	201137	Inner Upright–105 in.★
1	1	201138	Inner Upright–106 in.★
1	1	201139	Inner Upright–107 in.★
1	1	201140	Inner Upright–109 in.★
1	1	201141	Inner Upright–110 in.★
1	1	201142	Inner Upright–111 in.★
1	1	201143	Inner Upright–112 in.★
1	1	201144	Inner Upright–113 in.★
1	1	201145	Inner Upright–114 in.★
1	1	201146	Inner Upright–116 in.★
1	1	201147	Inner Upright–117 in.★
1	1	201148	Inner Upright–118 in.★
1	1	201149	Inner Upright–119 in.★
1	1	201150	Inner Upright–120 in.★
1	1	201151	Inner Upright–121 in.★
1	1	201152	Inner Upright–123 in.★
1	1	201153	Inner Upright–124 in.★
1	1	201154	Inner Upright–125 in.★
1	1	201155	Inner Upright–126 in.★
1	1	201156	Inner Upright–127 in.★
1	1	201157	Inner Upright–128 in.★
1	1	201158	Inner Upright–130 in.★
1	1	201159	Inner Upright–131 in.★

Common items.

REF	QTY	PART NO.	DESCRIPTION
2	2	683820	Capscrew, M10x1,5x16-8.8
3	2	683826	Lockwasher, M10
4	2	684430	Pin Assembly
5	2	661550	Chain Sheave
6	■	631881	Shim-.03 in. (0,7 mm)
7	4	664206	Roller

★ Retracted channel length.

■ Quantity as required.

Reference: S-3473, 3790 (35D)
S-3475, 3793 (40D)

https://truckmanualshub.com/

Carriage

Part numbers on this page are used with the following mast product I.D. numbers only:

35D-MS-001 through 138
40D-MS-001 through 015

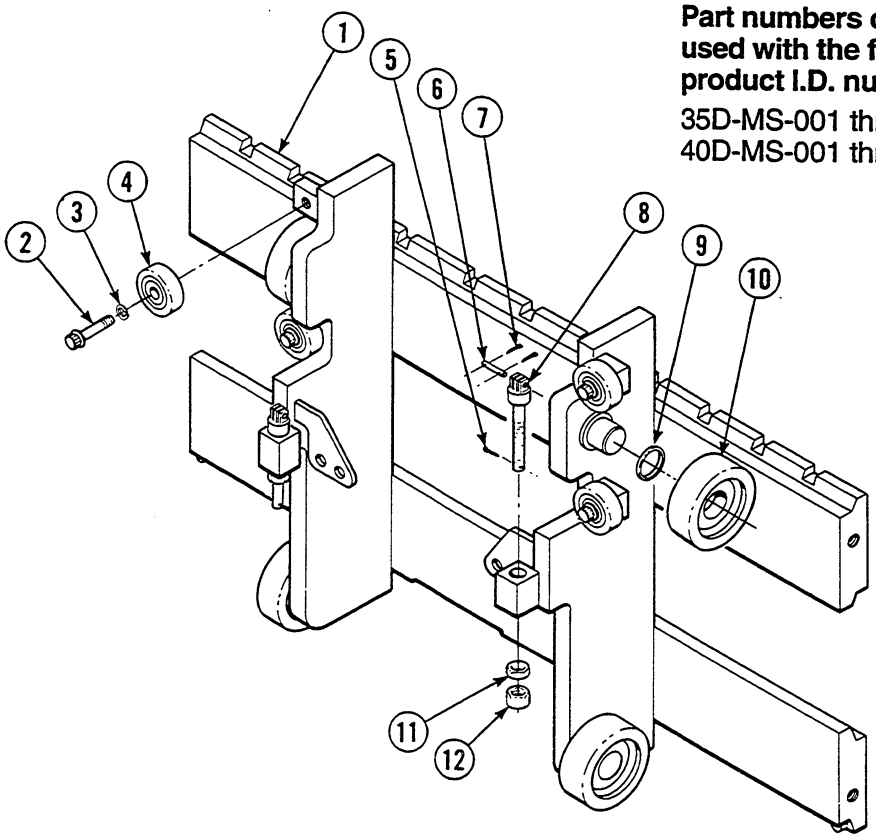

35D/40D			
REF	**QTY**	**PART NO.**	**DESCRIPTION**
For masts mounted with 3 inch underclearance.			
1	1	684402	Carriage, Class II–31 in. (787 mm) wide
	1	684403	Carriage, Class II–37 in. (940 mm) wide
	1	684404	Carriage, Class II–41 in. (1041 mm) wide
For masts mounted with 5 inch underclearance.			
1	1	684408	Carriage, Class II–31 in. (787 mm) wide
	1	684409	Carriage, Class II–37 in. (940 mm) wide
	1	684410	Carriage, Class II–41 in. (1041 mm) wide
2	4	684125	Capscrew, Ferryhead M12x1,75x45-12.9
3	4	684660	Lockwasher, M12
4	4	683819	Roller
5	2	6518	Cotter Pin
6	2	678964	Chain Pin–35D
6	2	680460	Chain Pin–40D
7	4	6508	Cotter Pin
8	2	687031	Chain Anchor–35D
8	2	687030	Chain Anchor–40D
9	*	631881	Shim-.03 in. (0,7 mm)
10	4	664206	Roller
11	2	200007	Jam Nut
12	2	200006	Nut

* Quantity as required.

Reference: S-3467, 3473 (35D), 3475 (40D)

https://truckmanualshub.com/

Carriage

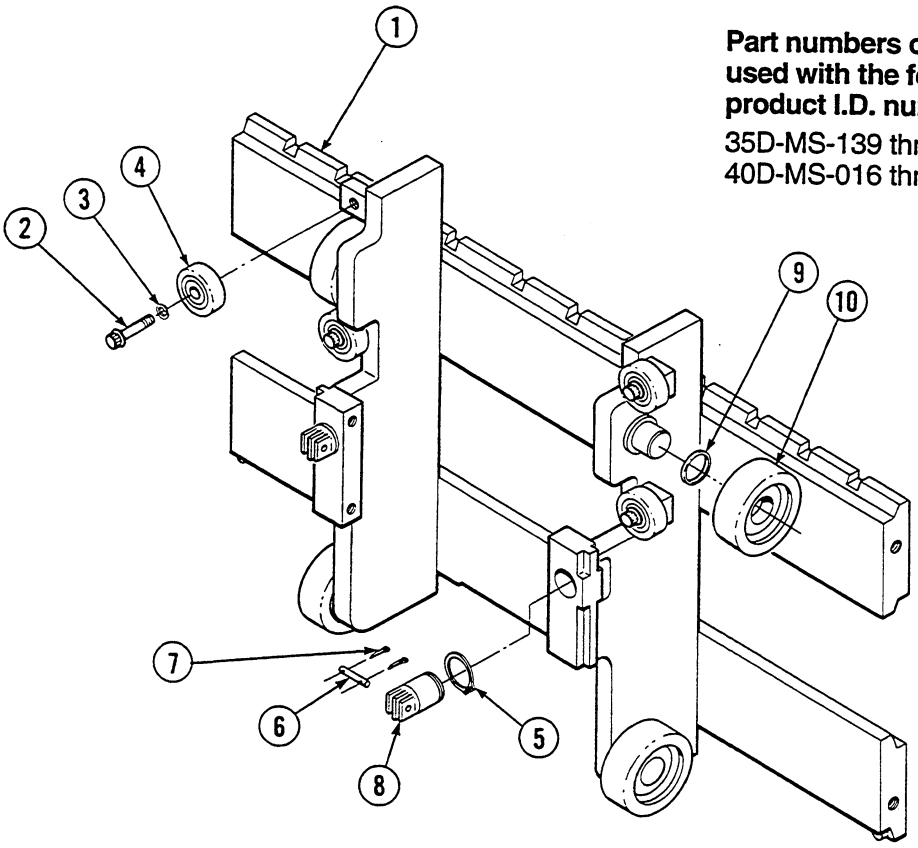

Part numbers on this page are used with the following mast product I.D. numbers only:

35D-MS-139 through 440
40D-MS-016 through 060

35D/40D			
REF	**QTY**	**PART NO.**	**DESCRIPTION**
For masts mounted with 3 inch underclearance.			
1	1	204839	Carriage, Class II–31 in. (787 mm) wide
	1	204840	Carriage, Class II–37 in. (940 mm) wide
	1	204841	Carriage, Class II–41 in. (1041 mm) wide
For masts mounted with 5 inch underclearance.			
1	1	204842	Carriage, Class II–31 in. (787 mm) wide
	1	204843	Carriage, Class II–37 in. (940 mm) wide
	1	204844	Carriage, Class II–41 in. (1041 mm) wide
2	4	684125	Capscrew, Ferryhead M12x1,75x45-12.9
3	4	684660	Lockwasher, M12
4	4	683819	Roller
5	2	3135	Snap Ring
6	2	678964	Chain Pin–35D
6	2	680460	Chain Pin–40D
7	4	6508	Cotter Pin
8	2	678754	Chain Anchor–35D
8	2	680241	Chain Anchor–40D
9	*	631881	Shim-.03 in. (0,7 mm)
10	4	664206	Roller

* Quantity as required.

Reference: S-3790 (35D), 3793 (40D), 3803

https://truckmanualshub.com/

Carriage
Heavy Duty

Part numbers on this page are used with the following mast product I.D. numbers only:

35D-MS-001 through 138
40D-MS-001 through 015

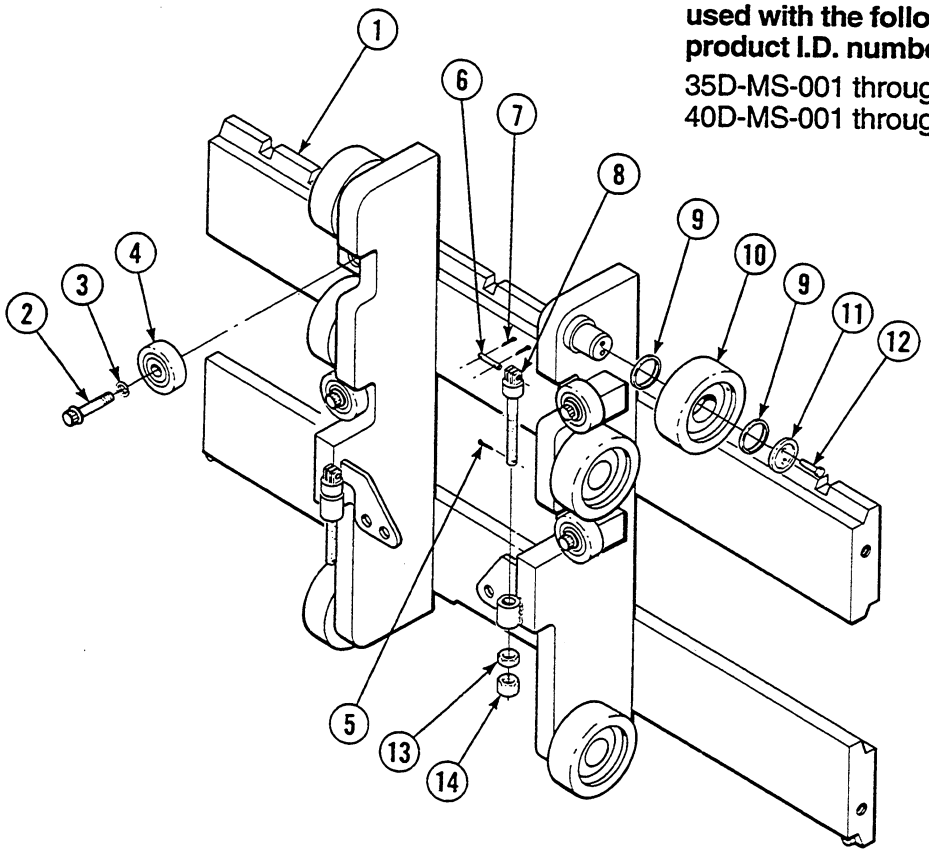

35D/40D			
REF	QTY	PART NO.	DESCRIPTION
For masts mounted with 3 inch underclearance.			
1	1	200026	Carriage, Class II–31 in. (787 mm) wide
	1	200027	Carriage, Class II–37 in. (940 mm) wide
	1	200028	Carriage, Class II–41 in. (1041 mm) wide
For masts mounted with 5 inch underclearance.			
1	1	200032	Carriage, Class II–31 in. (787 mm) wide
	1	200033	Carriage, Class II–37 in. (940 mm) wide
	1	200034	Carriage, Class II–41 in. (1041 mm) wide
2	4	684125	Capscrew, Ferryhead M12x1,75x45-12.9
3	4	684660	Lockwasher, M12
4	4	683819	Roller
5	2	6518	Cotter Pin
6	2	678964	Chain Pin–35D
6	2	680460	Chain Pin–40D
7	4	6508	Cotter Pin
8	2	687031	Chain Anchor–35D
8	2	687030	Chain Anchor–40D
9	*	631881	Shim-.03 in. (0,7 mm)
10	4	664206	Roller
11	2	658378	Retainer
12	4	680218	Capscrew, M3x0,5x12-8.8
13	2	200007	Jam Nut
14	2	200006	Nut

* Quantity as required.

Reference: S-3473 (35D), 3475 (40D), 3522

https://truckmanualshub.com/

Carriage
Heavy Duty

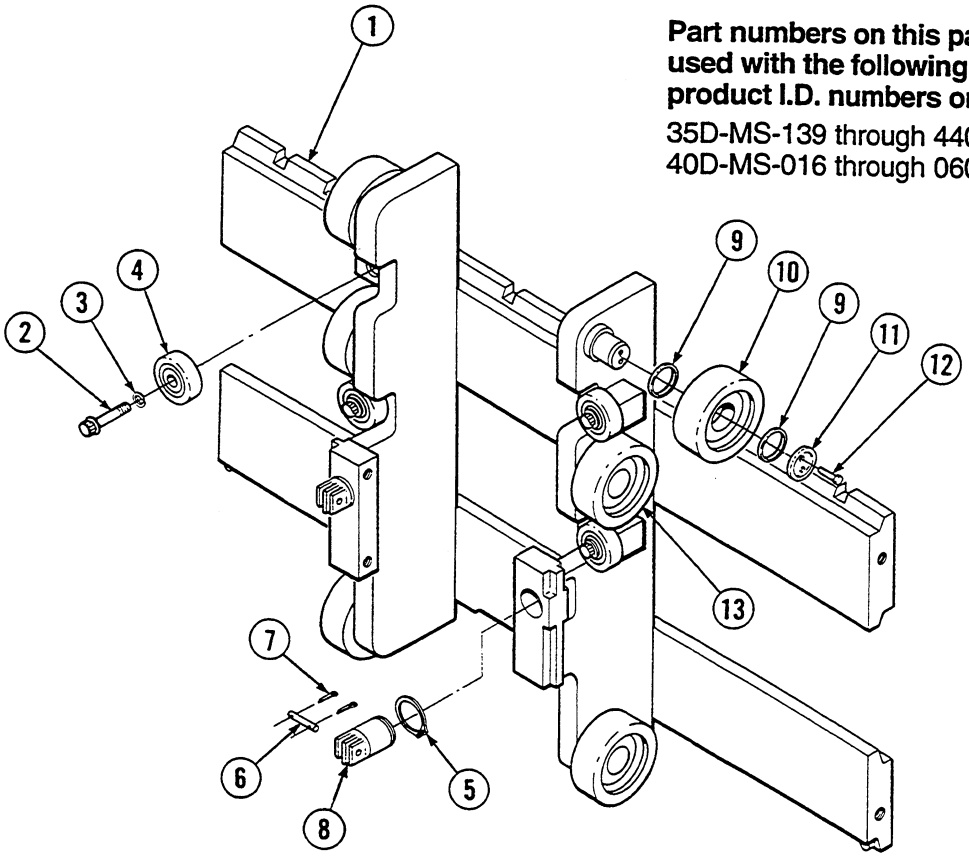

Part numbers on this page are used with the following mast product I.D. numbers only:

35D-MS-139 through 440
40D-MS-016 through 060

35D/40D			
REF	**QTY**	**PART NO.**	**DESCRIPTION**
For masts mounted with 3 inch underclearance.			
1	1	204845	Carriage, Class II–31 in. (787 mm) wide
	1	204846	Carriage, Class II–37 in. (940 mm) wide
	1	204847	Carriage, Class II–41 in. (1041 mm) wide
For masts mounted with 5 inch underclearance.			
1	1	204848	Carriage, Class II–31 in. (787 mm) wide
	1	204849	Carriage, Class II–37 in. (940 mm) wide
	1	204850	Carriage, Class II–41 in. (1041 mm) wide
2	4	684125	Capscrew, Ferryhead M12x1,75x45-12.9
3	4	684660	Lockwasher, M12
4	4	683819	Roller
5	2	3135	Snap Ring
6	2	678964	Chain Pin–35D
6	2	680460	Chain Pin–40D
7	4	6508	Cotter Pin
8	2	678754	Chain Anchor–35D
8	2	680241	Chain Anchor–40D
9	★	631881	Shim-.03 in. (0,7 mm)
10	4	664206	Roller
11	2	658378	Retainer
12	4	680218	Capscrew, M3x0,5x12-8.8
13	2	661549	Roller

★ Quantity as required.

Reference: S-3790 (35D), 3793 (40D), 3804

https://truckmanualshub.com/

Hoist Chains

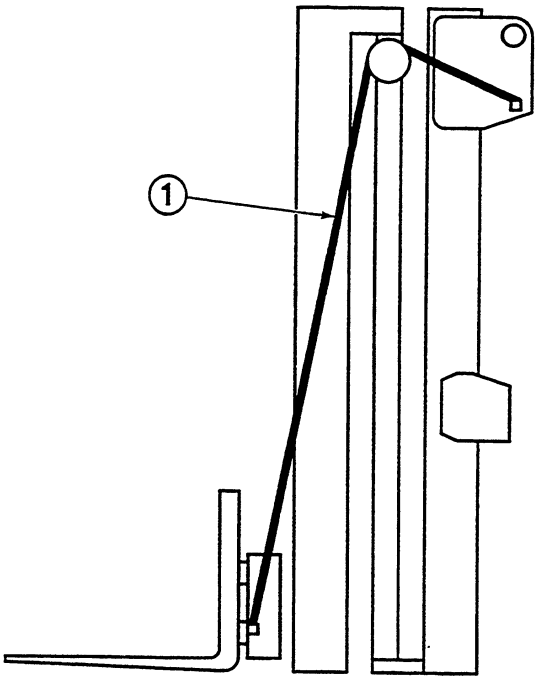

MA0111.eps

35D			
Overall Retracted Channel Lenght in.	REF No. 1		
	Qty	Hoist Chains	Chain Length in. (mm)
56	2	686927	50.62 (1286)
57	2	686928	51.88 (1318)
58	2	686928	51.88 (1318)
59	2	686929	53.11 (1349)
60	2	686930	54.37 (1381)
61	2	687022	55.62 (1413)
62	2	678751	56.88 (1445)
63	2	678751	56.88 (1445)
64	2	686931	58.11 (1476)
65	2	686932	59.37 (1508)
66	2	688357	60.62 (1540)
67	2	687009	61.88 (1572)
68	2	687009	61.88 (1572)
69	2	678752	63.11 (1603)
70	2	687010	64.37 (1635)
71	2	678761	65.62 (1667)
72	2	687011	66.88 (1699)
73	2	687011	66.88 (1699)
74	2	687012	68.11 (1730)
75	2	647685	69.37 (1762)
76	2	678845	70.62 (1794)
77	2	678762	71.88 (1826)
78	2	678762	71.88 (1826)
79	2	687013	73.11 (1857)
80	2	687014	74.37 (1889)
81	2	647686	75.62 (1921)
82	2	678763	76.88 (1953)
83	2	678763	76.88 (1953)
84	2	687015	78.11 (1984)
85	2	687016	79.37 (2016)
86	2	687017	80.62 (2048)
87	2	647687	81.88 (2080)
88	2	647687	81.88 (2080)
89	2	678764	83.11 (2111)
90	2	687018	84.37 (2143)
91	2	687019	85.62 (2175)
92	2	647688	86.88 (2207)
93	2	647688	86.88 (2207)
94	2	678846	88.11 (2238)
95	2	678765	89.37 (2270)
96	2	687020	90.62 (2302)
97	2	687021	91.88 (2334)
98	2	687021	91.88 (2334)
99	2	647689	93.11 (2365)
100	2	678766	94.37 (2397)
101	2	200977	95.62 (2429)

35D			
Overall Retracted Channel Lenght in.	REF No. 1		
	Qty	Hoist Chains	Chain Length in. (mm)
103	2	200978	96.88 (2461)
104	2	200979	98.11 (2492)
105	2	647690	99.37 (2524)
106	2	678767	100.62 (2556)
107	2	200980	101.88 (2588)
109	2	200981	103.11 (2619)
110	2	200982	104.37 (2651)
111	2	647691	105.62 (2683)
112	2	678768	106.88 (2715)
113	2	678768	106.88 (2715)
114	2	678769	108.12 (2746)
116	2	200984	110.62 (2810)
117	2	201171	111.88 (2842)
118	2	201171	111.88 (2842)
119	2	201172	113.11 (2873)
120	2	201173	114.37 (2905)
121	2	201394	115.62 (2937)
123	2	201174	116.88 (2969)
124	2	201175	118.11 (3000)
125	2	201176	119.37 (3032)
126	2	201177	120.62 (3064)
127	2	201178	121.88 (3096)
128	2	201178	121.88 (3096)
130	2	201180	124.37 (3159)
131	2	201407	125.63 (3191)

Reference: S-3790

https://truckmanualshub.com/

Hoist Chains

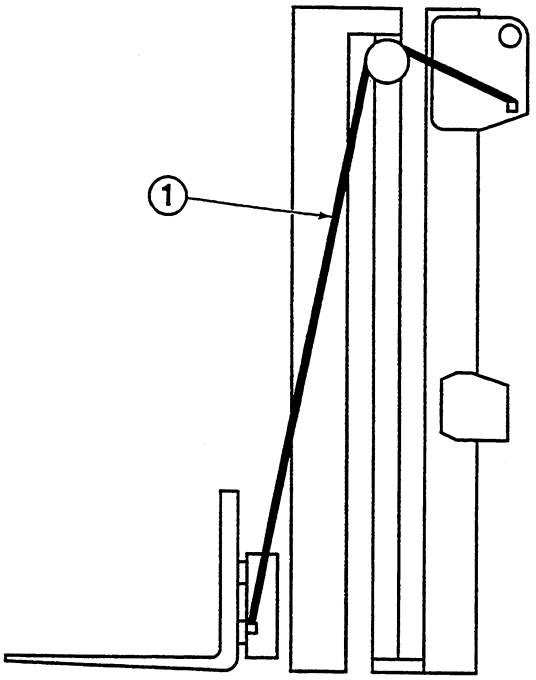

MA0111.eps

40D			
Overall Retracted Channel Lenght in.	REF No. 1		
	Qty	Hoist Chains	Chain Length in. (mm)
56	2	686883	50.62 (1286)
57	2	686884	51.88 (1318)
58	2	686884	51.88 (1318)
59	2	686885	53.11 (1349)
60	2	686886	54.37 (1381)
61	2	687027	55.62 (1413)
62	2	681479	56.88 (1445)
63	2	681479	56.88 (1445)
64	2	680887	58.11 (1476)
65	2	686888	59.37 (1508)
66	2	686889	60.62 (1540)
67	2	686890	61.88 (1572)
68	2	686890	61.88 (1572)
69	2	681480	63.11 (1603)
70	2	686891	64.37 (1635)
71	2	686892	65.62 (1667)
72	2	686893	66.88 (1699)
73	2	686893	66.88 (1699)
74	2	686894	68.11 (1730)
75	2	680456	69.37 (1762)
76	2	686895	70.62 (1794)
77	2	686896	71.88 (1826)
78	2	686896	71.88 (1826)
79	2	686897	73.11 (1857)
80	2	686898	74.37 (1889)
81	2	686899	75.62 (1921)
82	2	686900	76.88 (1953)
83	2	686900	76.88 (1953)
84	2	686901	78.11 (1984)
85	2	686902	79.37 (2016)
86	2	686903	80.62 (2048)
87	2	686904	81.88 (2080)
88	2	686904	81.88 (2080)
89	2	686905	83.11 (2111)
90	2	686906	84.37 (2143)
91	2	686907	85.62 (2175)
92	2	686908	86.88 (2207)
93	2	686908	86.88 (2207)
94	2	686909	88.11 (2238)
95	2	686910	89.37 (2270)
96	2	686911	90.62 (2302)
97	2	686912	91.88 (2334)
98	2	686912	91.88 (2334)
99	2	686913	93.11 (2365)
100	2	686914	94.37 (2397)
101	2	200876	95.62 (2429)

40D			
Overall Retracted Channel Lenght in.	REF No. 1		
	Qty	Hoist Chains	Chain Length in. (mm)
103	2	200985	96.88 (2461)
104	2	201013	98.11 (2492)
105	2	201014	99.37 (2524)
106	2	201015	100.62 (2556)
107	2	201016	101.88 (2588)
109	2	201017	103.11 (2619)
110	2	201018	104.37 (2651)
111	2	201019	105.62 (2683)
112	2	201020	106.88 (2715)
113	2	201020	106.88 (2715)
114	2	201021	108.11 (2746)
116	2	201023	110.62 (2810)
117	2	201181	111.88 (2842)
118	2	201181	111.88 (2842)
119	2	201182	113.11 (2873)
120	2	201183	114.37 (2905)
121	2	201409	115.63 (2937)
123	2	201184	116.88 (2969)
124	2	201185	118.11 (3000)
125	2	201186	119.37 (3032)
126	2	201187	120.62 (3064)
127	2	201188	121.88 (3096)
128	2	201188	121.88 (3096)
130	2	201190	124.37 (3159)
131	2	201408	125.63 (3191)

Reference: S-3793

https://truckmanualshub.com/

Hydraulic Group

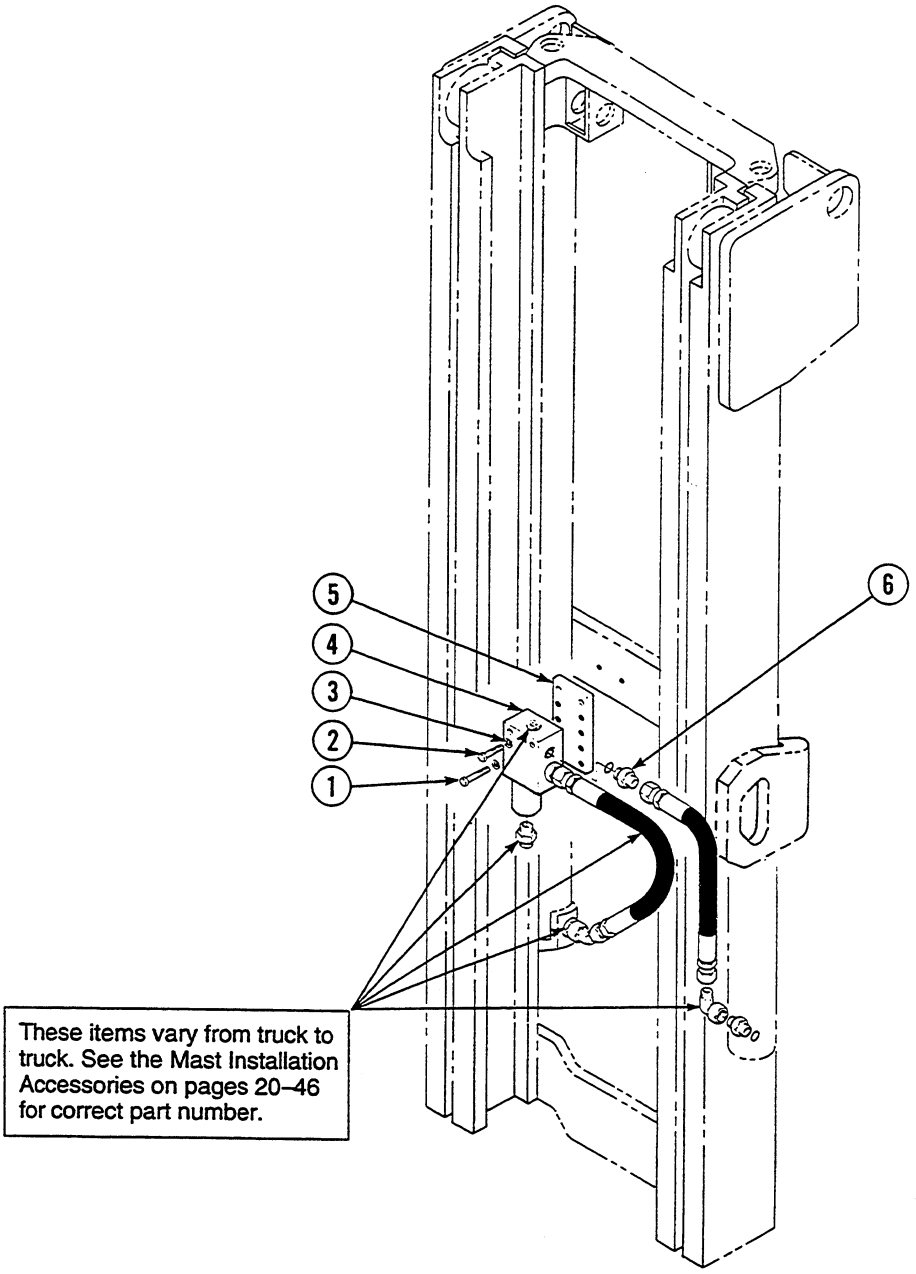

35D/40D			
REF	QTY	PART NO.	DESCRIPTION
1	2	683823	Capscrew, M10x50-8.8
2	2	684649	Capscrew, M10x25-8.8
3	4	683826	Lockwasher, M10
4	1	★	Lowering Control Valve
5	1	683831	Bar
6	2	611288	Fitting, 6-6

★ See page 18 for parts breakdown.
Reference: S-3473, 3790 (35D)
S-3475, 3793 (40D)

https://truckmanualshub.com/

Lowering Control Valve

2000 PSI System Pressure

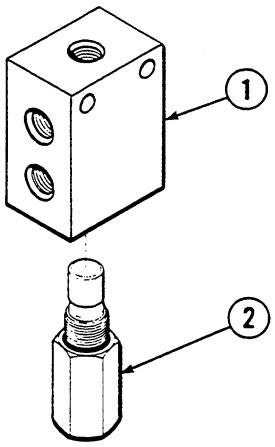

35D/40D			
REF	QTY	PART NO.	DESCRIPTION
		684812	Lowering Control Valve
1	1	684152	Valve Body
2	1	⋆ 684154	Valve Cartridge

⋆ This part must not be substituted. Check part number on the side of cartridge when replacing.

Reference: Specified in Mounting Control Document.

2600 PSI System Pressure

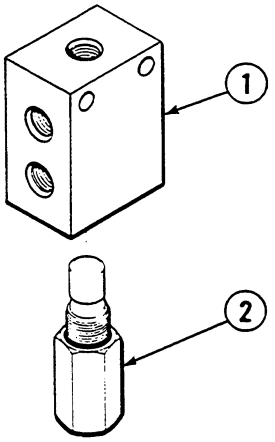

35D/40D			
REF	QTY	PART NO.	DESCRIPTION
		684810	Lowering Control Valve
1	1	684152	Valve Body
2	1	⋆ 684210	Valve Cartridge

⋆ This part must not be substituted. Check part number on the side of cartridge when replacing.

Reference: Specified in Mounting Control Document.

https://truckmanualshub.com/

Internal Hose Reeving
35D/40D

WARNING: The internal reeving hoses must be Parker 560 H type hose. Other hoses may cause the mast to malfunction.

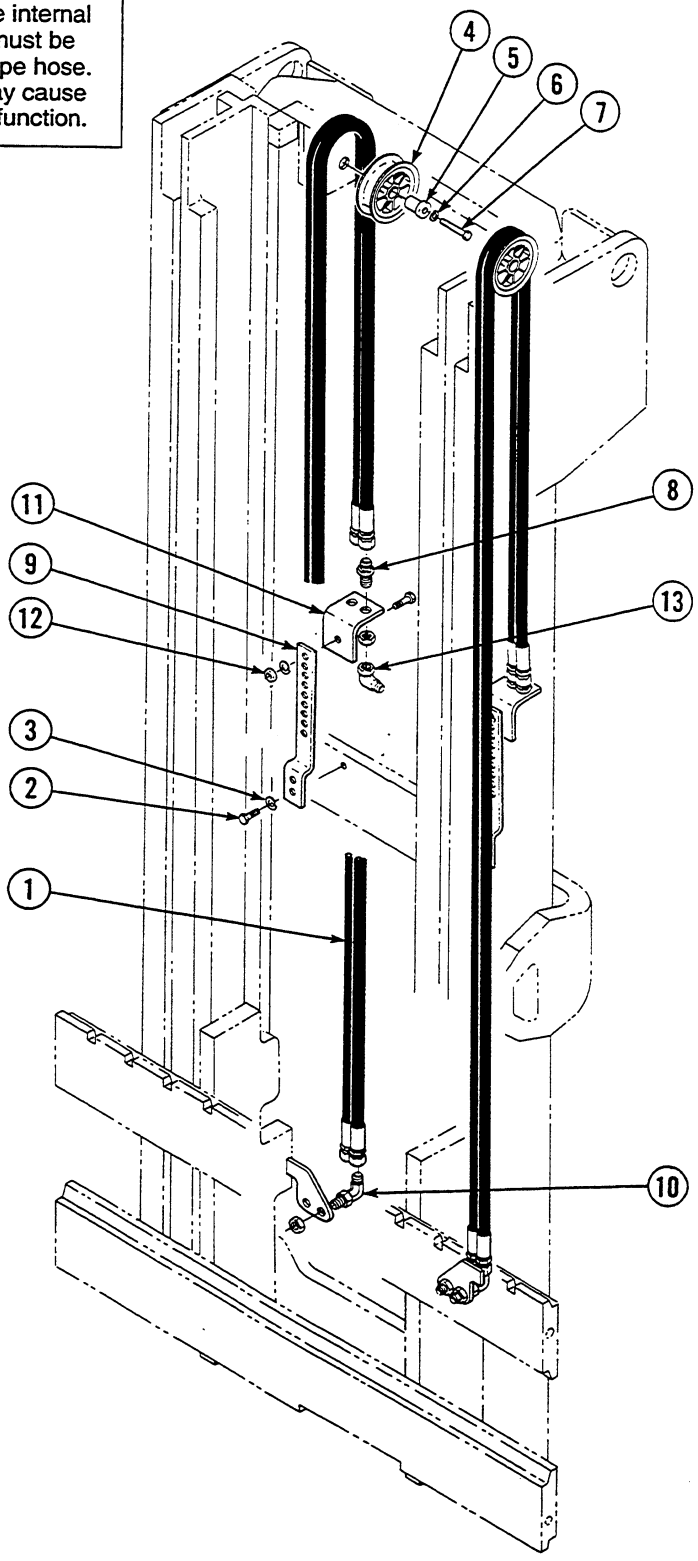

https://truckmanualshub.com/

Internal Hose Reeving
35D/40D

Items that vary according to mast height.

Retracted Channel Length (in.)	Internal Reeving Group No.	REF No. 1 Hose Part No.
56	688723	3550-1482
57	688724	3550-1531
58	688725	3550-1581
59	688726	3550-1631
60	688727	3550-1681
61	688728	3550-1731
62	688729	3550-1781
63	688730	3550-1831
64	688731	3550-1880
65	688732	3550-1930
66	688733	3550-1980
67	688734	3550-2030
68	688735	3550-2080
69	688736	3550-2130
70	688737	3550-2180
71	688738	3550-2229
72	688739	3550-2279
73	688740	3550-2329
74	688741	3550-2379
75	688742	3550-2429
76	688743	3550-2479
77	688744	3550-2529
78	688745	3550-2578
79	688746	3550-2628
80	688747	3550-2678
81	688748	3550-2728
82	688749	3550-2778
83	688750	3550-2828
84	688751	3550-2875
85	688752	3550-2920
86	688753	3550-2980
87	688754	3550-3027
88	688755	3550-3080
89	688756	3550-3130
90	688757	3550-3177
91	688758	3550-3230
92	688759	3550-3280
93	688760	3550-3326
94	688761	3550-3380
95	688762	3550-3430
96	688763	3550-3476
97	688764	3550-3530
98	688765	3550-3580
99	688766	3550-3626
100	688767	3550-3680
101	688768	3550-3730

Part numbers on this page are used with the following mast product I.D. numbers only:

35D-MS-001 through 138
40D-MS-001 through 015

Items that vary according to mast height.

Retracted Channel Length (in.)	Internal Reeving Group No.	REF No. 1 Hose Part No.
103	688770	3550-3830
104	688771	3550-3875
105	688772	3550-3925
106	688773	3550-3980
107	688774	3550-4025
109	688776	3550-4125
110	688777	3550-4175
111	688778	3550-4224
112	688779	3550-4275
113	688780	3550-4325
114	688781	3550-4373
116	688783	3550-4475
117	688784	3550-4523
118	688785	3550-4575
119	688786	3550-4625
120	688787	3550-4673
121	688788	3550-4725
123	688790	3550-4822
124	688791	3550-4875
125	688792	3550-4925
126	688793	3550-4972
127	688794	3550-5025
128	688795	3550-5075
130	688797	3550-5175
131	688798	3550-5225

Common items.

REF	QTY	PART NO.	DESCRIPTION	REF	QTY	PART NO.	DESCRIPTION
2	2	684649	Capscrew, M10x1,5x25-8.8	8	2	2375	Fitting, 6-6
3	2	683826	Lockwasher, M10	9	1	684658	Bracket
4	1	677267	Hose Sheave	10	3	2453	Fitting, 6-6
5	1	684657	Shaft	11	1	683919	Bracket
6	1	683822	Lockwasher, M12	12	1	763023	Nut, M10x25-8.8
7	1	684650	Capscrew, M12x1,75x55-8.8	13	1	2680	Fitting, 8-8

NOTE: Quantities shown are for single internal reeving.
Reference: S-3548

https://truckmanualshub.com/

Internal Hose Reeving
35D/40D

WARNING: The internal reeving hoses must be Parker 560 H type hose. Other hoses may cause the mast to malfunction.

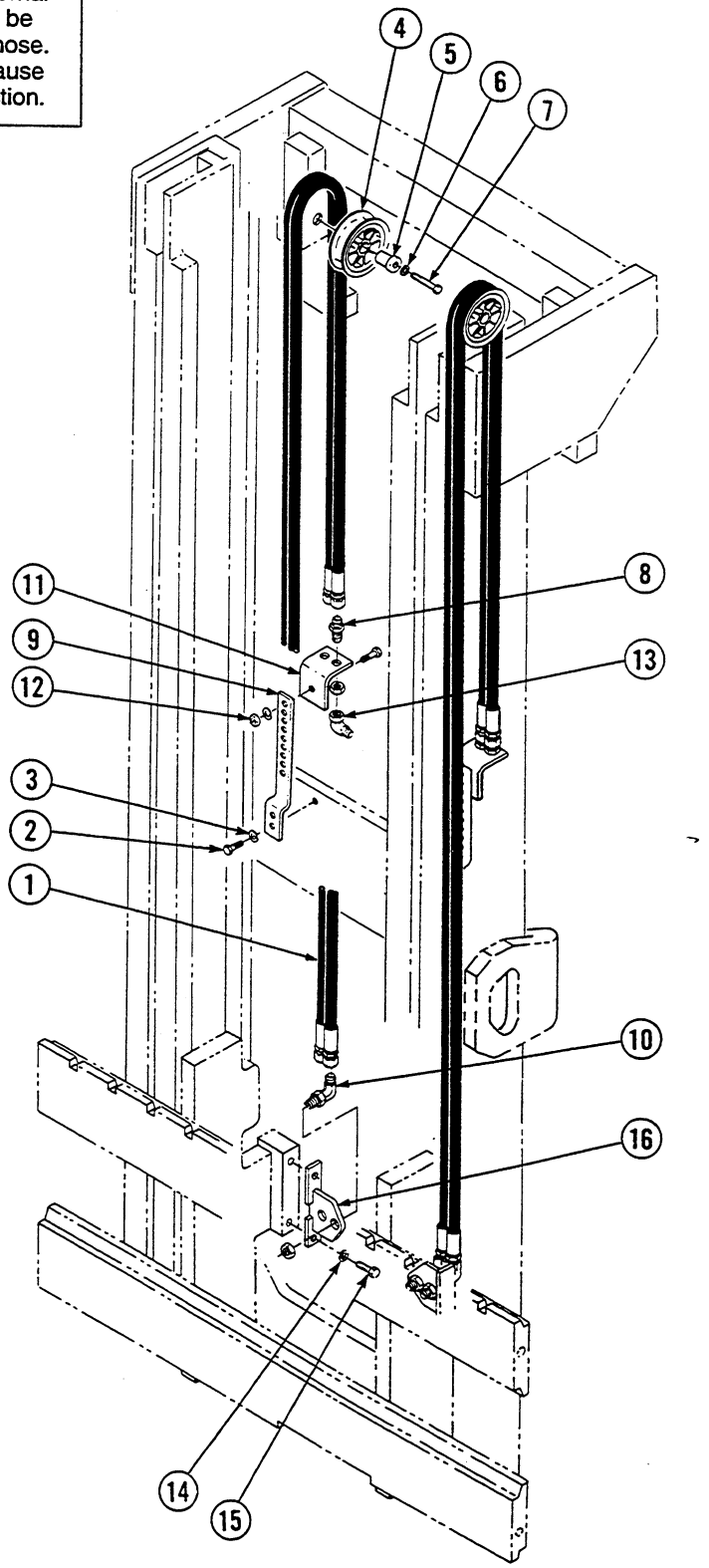

https://truckmanualshub.com/

Internal Hose Reeving
35D/40D

Items that vary according to mast height.

Retracted Channel Length (in.)	Internal Reeving Group No.	REF No. 1 Hose Part No.
56	688723	3550-1405
57	688724	3550-1455
58	688725	3550-1505
59	688726	3550-1555
60	688727	3550-1604
61	688728	3550-1654
62	688729	3550-1704
63	688730	3550-1754
64	688731	3550-1804
65	688732	3550-1854
66	688733	3550-1904
67	688734	3550-1953
68	688735	3550-2003
69	688736	3550-2053
70	688737	3550-2103
71	688738	3550-2153
72	688739	3550-2203
73	688740	3550-2253
74	688741	3550-2302
75	688742	3550-2352
76	688743	3550-2402
77	688744	3550-2452
78	688745	3550-2502
79	688746	3550-2552
80	688747	3550-2602
81	688748	3550-2651
82	688749	3550-2701
83	688750	3550-2751
84	688751	3550-2801
85	688752	3550-2851
86	688753	3550-2901
87	688754	3550-2945
88	688755	3550-3005
89	688756	3550-3055
90	688757	3550-3100
91	688758	3550-3155
92	688759	3550-3205
93	688760	3550-3250
94	688761	3550-3305
95	688762	3550-3355
96	688763	3550-3399
97	688764	3550-3455
98	688765	3550-3505
99	688766	3550-3549
100	688767	3550-3605
101	688768	3550-3655

Part numbers on this page are used with the following mast product I.D. numbers only:

35D-MS-139 through 440
40D-MS-016 through 060

Items that vary according to mast height.

Retracted Channel Length (in.)	Internal Reeving Group No.	REF No. 1 Hose Part No.
103	688770	3550-3750
104	688771	3550-3800
105	688772	3550-3848
106	688773	3550-3905
107	688774	3550-3950
109	688776	3550-4050
110	688777	3550-4100
111	688778	3550-4147
112	688779	3550-4200
113	688780	3550-4250
114	688781	3550-4297
116	688783	3550-4400
117	688784	3550-4446
118	688785	3550-4500
119	688786	3550-4550
120	688787	3550-4596
121	688788	3550-4650
123	688790	3550-4746
124	688791	3550-4800
125	688792	3550-4850
126	688793	3550-4895
127	688794	3550-4950
128	688795	3550-5000
130	688797	3550-5100
131	688798	3550-5250

Common items.

REF	QTY	PART NO.	DESCRIPTION	REF	QTY	PART NO.	DESCRIPTION
2	2	684649	Capscrew, M10x1,5x25-8.8	10	2	2453	Fitting, 6-6
3	2	683826	Lockwasher, M10	11	1	683919	Bracket
4	1	677267	Hose Sheave	12	1	763023	Nut, M10x25-8.8
5	1	684657	Shaft	13	1	2680	Fitting, 8-8
6	1	683822	Lockwasher, M12	14	2	206315	Lockwasher, M8
7	1	684650	Capscrew, M12x1,75x55-8.8	15	2	787372	Capscrew, M8x20-8.8
8	2	2375	Fitting, 6-6	16	1	206898	Bracket
9	1	684658	Bracket				

NOTE: Quantities shown are for single internal reeving.
Reference: S-3548

https://truckmanualshub.com/

Load Backrest

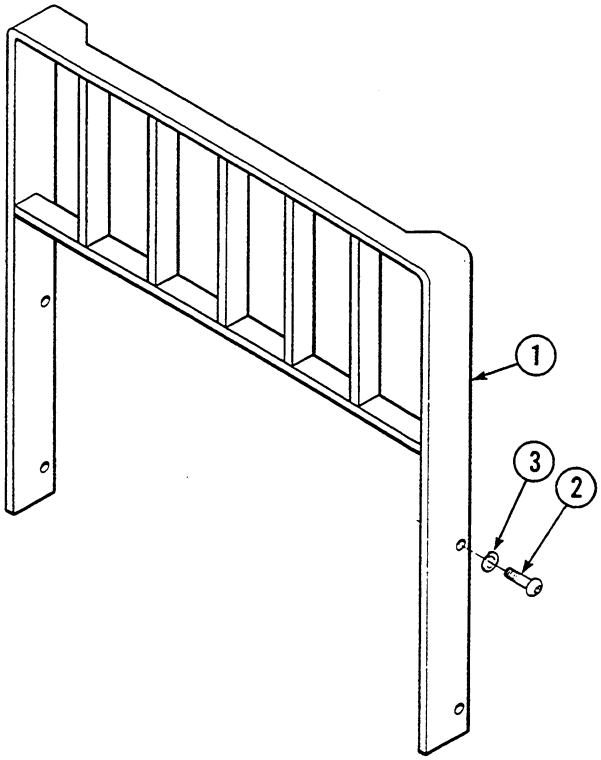

35D/40D			
REF	QTY	PART NO.	DESCRIPTION
1	1	209407	● Backrest–31x36 in. (787x914 mm)
1	1	209233	● Backrest–31x48 in. (787x1219 mm)
1	1	209408	● Backrest–31x60 in. (787x1524 mm)
1	1	684772	● Backrest–37x36 in. (940x914 mm)
1	1	684773	● Backrest–37x48 in. (940x1219 mm)
1	1	684774	● Backrest–37x60 in. (940x1524 mm)
1	1	684775	● Backrest–41x36 in. (1041x914 mm)
1	1	684776	● Backrest–41x48 in. (1041x1219 mm)
1	1	684777	● Backrest–41x60 in. (1041x1524 mm)
2	4	200173	Capscrew, M16x2.0x35-8.8
3	4	684586	Lockwasher, M16

● Includes items 2 and 3. Width x height.
Reference: S-3370.

https://truckmanualshub.com/

Mast Installation Accessories

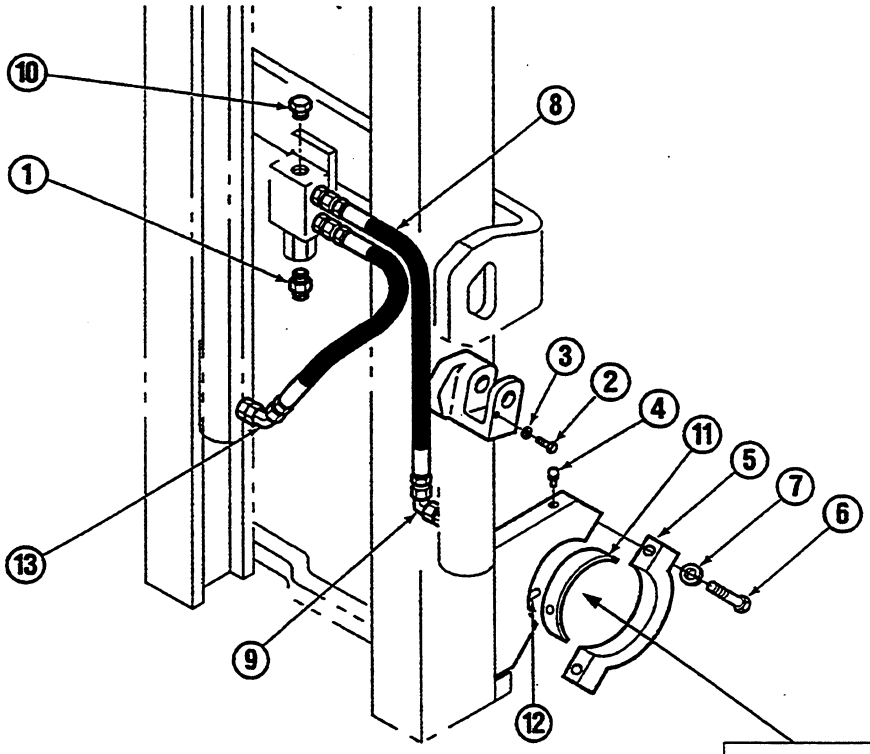

Komatsu Part Number
3EA-71-12722
Upright Bushing

Komatsu Lift truck models.

FG18-16

REF	QTY	PART NO.	DESCRIPTION
1	1	601377	Fitting, 8-8
2	2	684594	Capscrew, M10x1,5x20-8.8
3	2	681238	Lockwasher, M10
4	2	7418	Grease Fitting
5	2	687324	Cap
6	4	688708	Capscrew M14x2,0x50
7	4	688705	Lockwasher, M14
8	2	624216	Hose
9	1	2680	Fitting, 6-6
10	1	601378	Fitting, 8
11	2	● 687362	Bushing
12	4	● 688709	Pin
13	1	605230	Fitting, 6-6

● Reference only. Source from lift truck manufacturer.

Reference: Mounting Control Doc S-3536
Mounting Group 202068, 208951
Installation Kit 200235
Hydraulic Group 200615

https://truckmanualshub.com/

This Page Left Intentionally Blank

KOMATSU

https://truckmanualshub.com/

KOMATSU

Marks And Plates

AX SERIES

Marks And Plates

https://truckmanualshub.com/

マーク オヨビ プレート (ガソリン)

FIG.V4010-01A0 MARKS AND PLATES (GASOLINE)

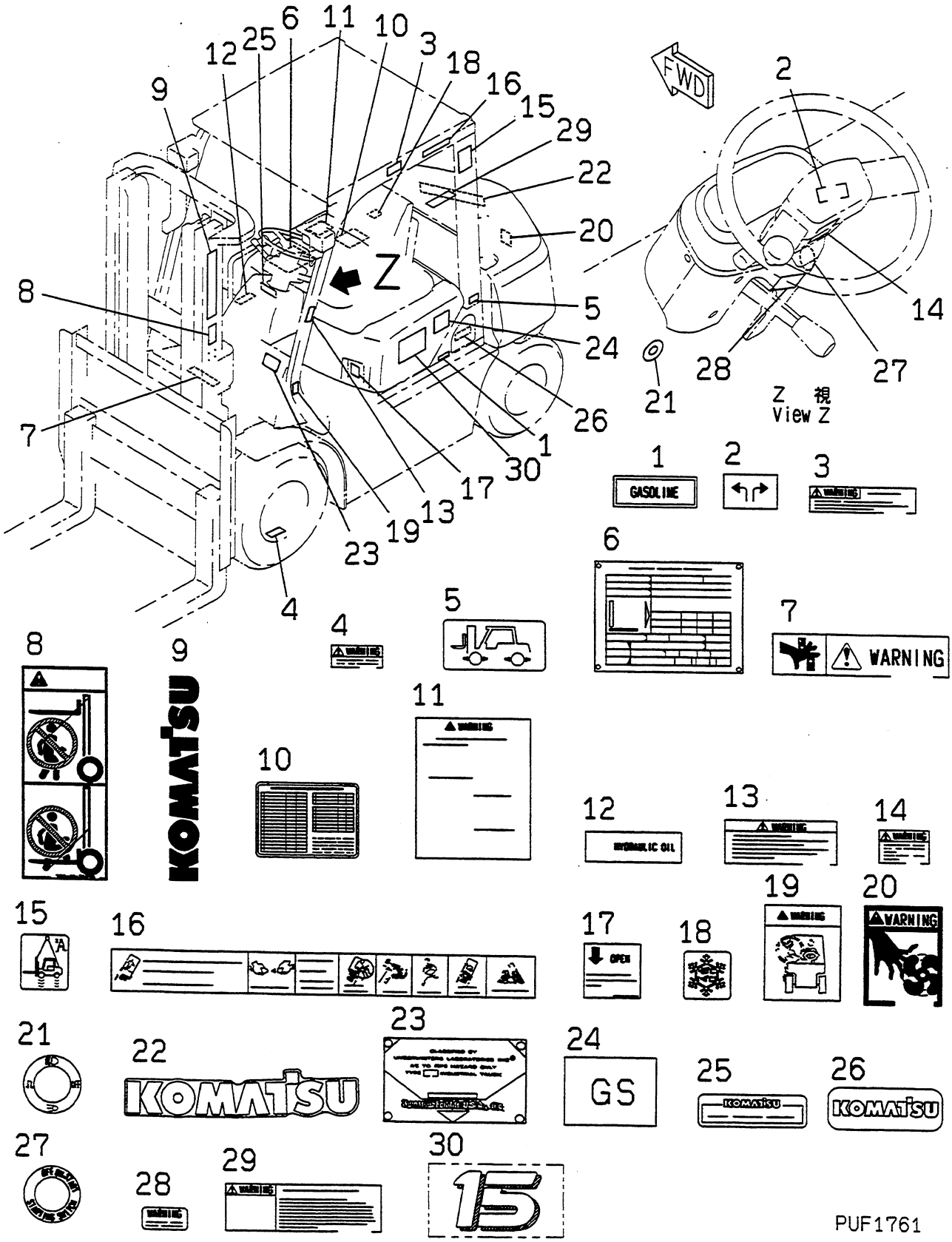

https://truckmanualshub.com/

FIG NO. : V4010-01A0

INDEX	PART NO.	DESCRIPTION	Q'TY	SERIAL NO.
1	37B-1QA-3010	PLATE, NAME,GASOLINE	1	600001A - 650000A
2	34B-96-35120	PLATE, NAME,TURN SIGNAL	1	
3	37B-1QT-A030	PLATE, SAFETY,HEAD GUARD	1	
4	3EB-96-A5970	PLATE, SAFETY,RIM	4	
5	37A-2BK-A020	PLATE, CAUTION,TIRE	1	
6	☆	PLATE, NAME,COMPANY NAME	1	
	01370-00508	SCREW	4	
7	3EB-96-A5940	PLATE, SAFETY,MAST	1	
8	3EB-96-A5920	PLATE, CAUTION,FORK	2	
9	37B-1QF-3020	PLATE, MARK,KOMATSU	2	
10	3EB-96-F5110	CHART,LUBRICATION	1	
11	3EB-96-A5990	PLATE, CAUTION,OPERATING	1	
12	37A-2BS-1011	PLATE, NAME,HYDRAULIC OIL	1	
13	3EB-96-A5820	PLATE, SAFETY,PARKING	1	
14	3EB-96-A5960	PLATE, SAFETY,BEFORE OPERATING	1	
15	3EB-96-25520	PLATE, MARK,LIFTING	1	
16	3EB-96-A5111	PLATE, SAFETY,TIP OVER	1	
17	3EB-96-35120	PLATE, NAME,BONNET OPEN	1	
18	37A-1AV-1010	PLATE, NAME,(-20°C)	1	
	37A-1AV-1030	PLATE, NAME,(-40°C)	1	
19	3EB-96-A5910	PLATE, SAFETY,RIDE TOGETHER	2	
20	3EB-96-A5930	PLATE, SAFETY,FAN	2	
21	3EB-96-35130	PLATE, NAME,LIGHT SWITCH	1	
22	37B-1QF-3040	PLATE, MARK,KOMATSU	1	
23	☆	PLATE, NAME,G	1	
	☆	PLATE, NAME,GS	1	
	☆	PLATE, NAME,DS	1	
	☆	PLATE, NAME,LP	1	
	☆	PLATE, NAME,LPS	1	
	☆	PLATE, NAME,D	1	
	☆	PLATE, NAME,G/LP	1	
	01370-00508	SCREW	4	
24	3EB-96-13210	PLATE, NAME,GS	1	
	3EB-96-13310	PLATE, NAME,DS	1	
	3EB-96-13410	PLATE, NAME,LPS	1	
25	3EB-96-A5510	PLATE, NAME	1	
26	3EB-96-A5520	PLATE, NAME,BATTERY	1	
27	34A-96-14710	PLATE, NAME,STARTER	1	
28	3EB-96-A2660	DECAL,STARTER	1	
29	3EB-96-A5950	PLATE, SAFETY,LPG	1	
30	37B-1QK-3030	MARK,1.5 TON	2	
	37B-1QK-3040	MARK,1.8 TON	2	

https://truckmanualshub.com/

FIG. NO. : V4010-01A0A MARKS AND PLATES (GASOLINE)

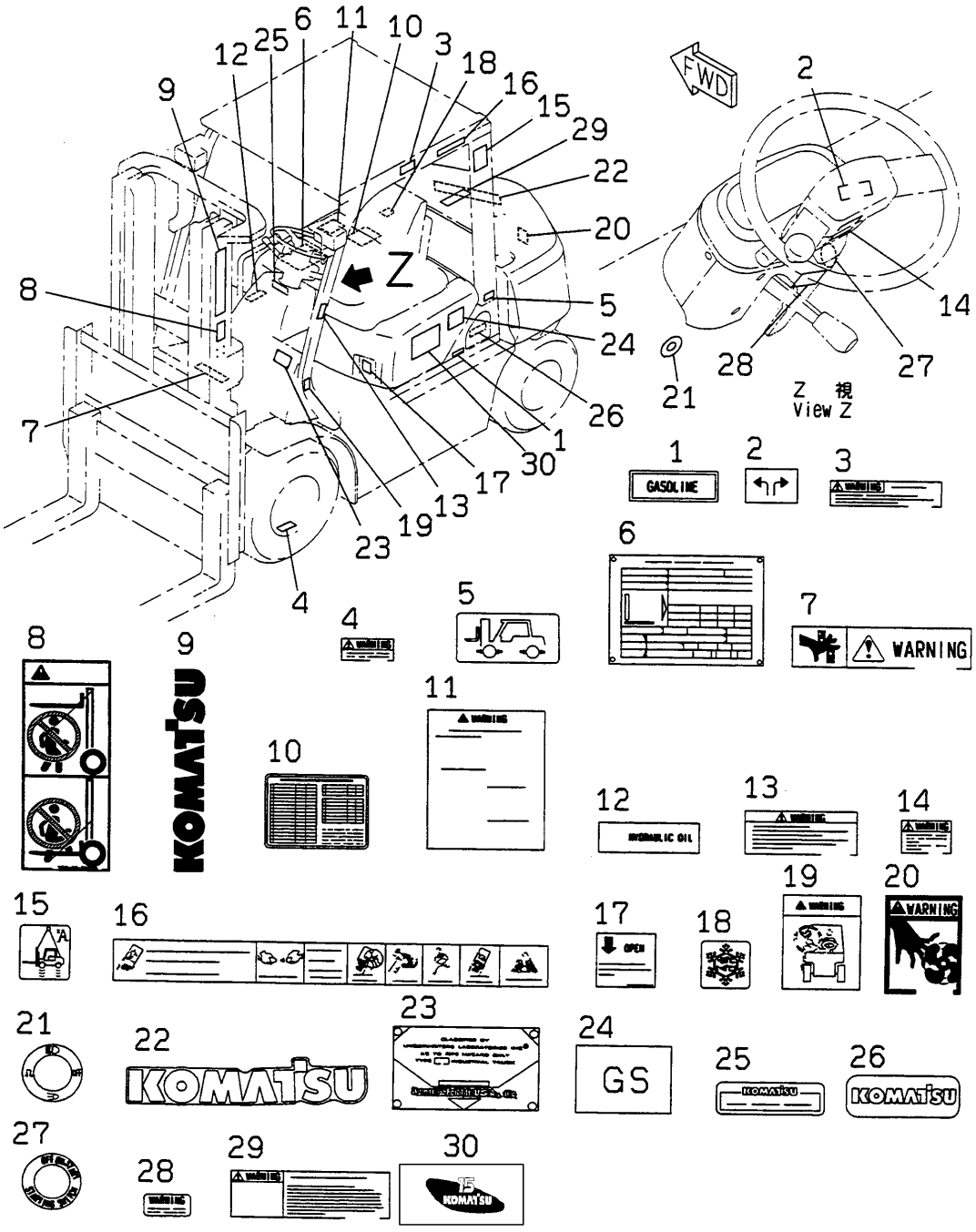

https://truckmanualshub.com/

FIG. NO. : V4010-01A0A

FG15H/18H-16, FG15S/18S-16

INDEX	PART NO.	DESCRIPTION	Q'TY	SERIAL NO.
				650001A AND UP
1	34B-1QA-3010	PLATE, NAME, GASOLINE	1	
2	37B-96-35120	PLATE, NAME, TURN SIGNAL	1	
3	37B-1QT-A030	PLATE, SAFETY, OVERHEAD GUARD ...	1	
4	3EB-96-A5970	PLATE, SAFETY, RIM	4	
5	37A-2BK-A020	PLATE, CAUTION, TIRE	1	
6	*	PLATE, NAME, COMPANY NAME	1	
	01370-00508	SCREW	4	
7	3EB-96-A5940	PLATE, SAFETY, MAST	1	
8	3EB-96-A5920	PLATE, CAUTION, FORK	2	
9	37B-1QF-3020	PLATE, MARK, KOMATSU	2	
10	3EB-96-F5110	CHART, LUBRICATION	1	
11	3EB-96-A5990	PLATE, CAUTION, OPERATING	1	
12	37A-2BS-1011	PLATE, NAME, HYDRAULIC OIL	1	
13	3EB-96-A5820	PLATE, SAFETY, PARKING	1	
14	3EB-96-A5960	PLATE, SAFETY, BEFORE OPERATING .	1	
15	3EB-96-25520	PLATE, MARK, LIFTING	1	
16	3EB-96-A5111	PLATE, SAFETY, TIP OVER	1	
17	3EB-96-35120	PLATE, NAME, BONNET OPEN	1	
18	37A-1AV-1010	PLATE, NAME, (-20°C)	1	
	37A-1AV-1030	PLATE, NAME, (-40°C)	1	
19	3EB-96-A5910	PLATE, SAFETY, RIDE TOGETHER	2	
20	3EB-96-A5930	PLATE, SAFETY, FAN	2	
21	3EB-96-35130	PLATE, NAME, LIGHT SWITCH	1	
22	37B-1QF-3040	PLATE, MARK, KOMATSU	1	
23	*	PLATE, NAME, UL	1	
	01370-00508	SCREW	4	
24	3EB-96-13210	PLATE, NAME, GS	1	
	3EB-96-13310	PLATE, NAME, DS	1	
	3EB-96-13410	PLATE, NAME, LPS	1	
25	3EB-96-A5510	PLATE, NAME	1	
26	3EB-96-A5520	PLATE, NAME, BATTERY	1	
27	34A-96-14710	PLATE, NAME, STARTER	1	
28	3EB-96-A2660	DECAL, STARTER	1	
29	3EB-96-A5950	PLATE, SAFETY, LPG	1	
30	37B-1QK-A030	PLATE, NAME, 1.5 TON, BONNET,LEFT	1	
	37B-1QK-A230	PLATE, NAME, 1.5 TON, BONNET,RIGHT	1	
	37B-1QK-A040	PLATE, NAME, 1.8 TON, BONNET,LEFT	1	
	37B-1QK-A240	PLATE, NAME, 1.8 TON, BONNET,RIGHT	1	

https://truckmanualshub.com/

This Page Left Intentionally Blank

KOMATSU

https://truckmanualshub.com/

https://truckmanualshub.com/

KOMATSU