RUTHZIL TRATOR COMERCIAL DE PEÇAS LTDA 11 97083-6812 ROLANDO CITRANGULO

Komatsu
FG20/25/30-11
FG20S/25S/30S-11

FG30G-11
FG30SG-11
FD25/30-11
FD25S-11

PEB11C1-05

PARTS BOOK

KOMATSU

FEVEREIRO 1993

FORKLIFT TRUCK

FG20 FG25 FG30 FG20S FG25S FG30S FG30G FG30SG FD25 FD30 FD25S-11

FG20/25/30-11
FG20S/25S/30S-11
FG30G-11
FG30SG-11
FD25/30-11
FD25S-11

KOMATSU FORKLIFT

1C128T-C9012

Recommended Spare Parts List

55D/60D 3-Stage Full Free Lift Mast

Part No. 55D	Part No. 60D	Description	WORLDMAST's Serviced 1-5	6-19	20-50
		MAIN LIFT CYLINDERS and HOSES			
■	■	Main Lift Cylinder Assembly	0	0	1
CC560351	CC560351	Service Kit(2600 PSI System Pressure)	2	4	8
CC3129	CC3129	Snap Ring	2	4	8
CC683797	CC683797	Shim	3	6	9
CC200380	CC200380	Hoses	1	2	4
■	■	Lowering Control Valve	0	1	2
		FREE LIFT CYLINDER and HOSE			
■	■	Free Lift Cylinder Assembly	0	1	2
CC560349	CC560349	Service Kit(2600 PSI System Pressure)	1	2	4
■	■	Hoses	0	1	2
CC683793	CC683793	Hose Sheave	2	4	8
		INTERNAL REEVING			
■	■	Hose R.H. and L.H.	2	4	8
CC2680	CC2680	Fitting,6-6	1	2	4
CC677267	CC677267	Hose Sheave	1	2	4
CC2453	CC2453	Fitting,6-6	1	2	4
CC2375	CC2375	Fitting,6-6	1	2	4
		UPRIGHTS			
CC678667	CC678667	Chain Pin	8	8	16
CC6508	CC6508	Cotter Pin	8	16	32
CC678661	CC680242	Chain Anchor	1	2	4
CC683816	CC683817	Chain Anchor	1	2	4
CC200006	CC200006	Nut	2	2	2
CC200007	CC200007	Jam Nut	2	2	2
CC6518	CC6518	Cotter Pin	4	8	16
CC631881	CC631881	Shim	16	32	64
CC662145	CC662145	Roller	12	24	48
CC660051	CC660051	Chain Sheave	4	8	16
CC3129	CC3129	Snap Ring	2	4	8
CC683798	CC683798	Thrust Plug	4	8	16
		CARRIAGE and CHAINS			
■	■	Free Lift Chains	2	4	8
CC683819	CC683819	Carriage Side Thrust Roller	4	8	16
■	■	Main Lift Chains	2	4	8
CC662145	CC662145	Carriage Roller	4	8	16
		LUBRICANT			
CC599474	CC599474	13 oz Aerosol Can	1	3	5
		PAINT			
CC678236	CC678236	12 oz Aerosol Can (black)	1	1	1

■See specific parts page for parts number.

PEB11C1-05

PARTS BOOK

FORKLIFT TRUCK

FG20/25/30-11
FG20S/25S/30S-11
FG30G-11
FG30SG-11
FD25/30-11
FD25S-11

SERIAL NUNBERS	
FG20/25/30	-450050A and up
FG20S/25S/30S	-400001A and up
FG30G	-490001A and up
FG30SG	-490002A and up
FD25/30	-430175A and up
FD25S	-480001A and up

Date of Issue : FEBRUARY 15, 1993

KOMATSU FORKLIFT CO.,LTD
No. 3-4,Akasaka 2-chome,Minato-ku,Tokyo

KFM専

INTRODUCTION

This Parts Book includes only parts for the chassis. For engine parts, see the Engine Parts Book. When ordering parts, please inform us also of the Serial No. (truck serial no.) of your truck.

APPLICATION MACHINE

For USA

2.0tons		2.5tons		3.0tons
FG20T-11		FG25T-11		FG30T-11
		FG25T2-11		
		FG25C-11		
FG20ST-11		FG25ST-11		FG30ST-11
		FG25SC-11		
				FG30GT-11
				FG30GT2-11
				FG30SGT-11
		FD25T-11		FD30T-11
		FD25ST-11		



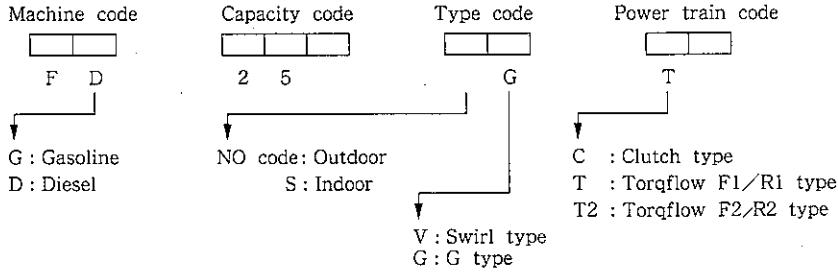

SERIAL NUMBER

FG20/25/30	– 450050A and up	(H20 NISSAN engine)
FG20S/25S/30S	– 400001A and up	(H20 NISSAN engine)
FG30G	– 490001A and up	(G1600 HERCULES engine)
FG30SG	– 490002A and up	(G1600 HERCULES engine)
FD25/30	– 430175A and up	(4D95S.W KOMATSU engine)
FD25S	– 480001A and up	(4D95S.W KOMATSU engine)

The parts book is written using the following methods which should be thoroughly understood.

ILLUSTRATION

FIG.3701A BRAKE SYSTEM

① ⑫

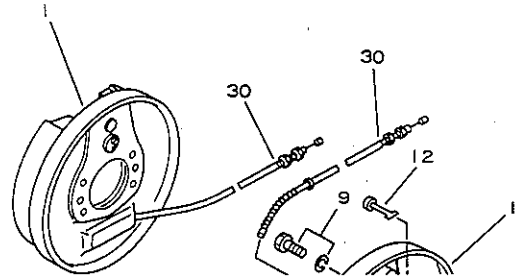

①Fig Numbers

PARTS LIST

① Fig & Index No.	② 索引番号	③ Part No.	④	⑤ Description	⑥	⑦ 個数 Q'ty	⑧	⑨ 適用 Application	⑩	⑪ 機種 Application	⑫ BRAKE SYSTEM
		3EB-30-23103		BRAKE ASS'Y (L.H)...		1		FG20	T	-C	450050A~
								FG25	C	-C	450050A~
		3EB-30-23203		BRAKE ASS'Y (R.H)...		1		FG25	T	-C	450050A~
								FG30	T	-C	450050A~
3701A-	1	3EB-30-11110		BACKING PLATE ASS'Y (L.H)		1		FG20S	T	-C	400001A~
								FG25S	C	-C	400001A~

②Index Numbers

③Part Numbers

☆...These parts are not available as individual parts. They are only supplied as part of an assembly.

④Code for components of assembly

Parts constituting an assembly have a (.) mark before the part name, and are listed below the name of the assembly. When the part constitutes a sub – assembly a (..) mark precedes the part name.

⑤Description

⑥Abbreviations

Abbreviations are given in brackets after the part name to indicate the category of special part.

H20	: Machines with H20 gasoline engine	3.0m	: Lifting height 3.0m
G1600	: Machines with G1600 gasoline engine	2.0T	: 2.0ton trucks
4D95S.W	: Machines with 4D95S.W diesel engine	D	: Diesel engine
C	: Dry clutch type machine	G	: Gasoline engine
T	: TORQFLOW type machine	OP	: Optional parts
L.H	: Left – hand side		
R.H	: Right – hand side		

⑦Quantity

The quantity of a part needed for one truck is listed. In the case of parts constituting an assembly, the quantity needed for one assembly is listed. And code "AR" denote the part (for instance shim) to be ordered as required.

APPLICATION

This indicates the model, specification and serial numbers of trucks to which the information on the page applies.

⑧Model

NO code : Outdoor type S : Indoor G : G Type

⑨Power train

T.....TORQFLOW DRIVE (including T2 : F2,but there is a separate page for T2 machines)

C.....DIRECT DRIVE

⑩Country code

C.....For USA

⑪Applicable models

This indicates the serial numbers of trucks on which the parts on the page are used.
450050A ~ ... Applies to all models from No.450050A (or the serial number given)

⑫Title
This indicates the name of the unit or the name of the main part.
The abbreviation given in brackets after the title indicates the category of the unit.

FHPS : Full Hydraulic Power Steering

CONTENTS

1.ENGINE RELATED PARTS AND ELECTRICAL SYSTEM	FIG.NO.
ENGINE MOUNTING PARTS (FOR 4D95S.W)	1001A
ENGINE MOUNTING PARTS (FOR H20)	1051
ENGINE MOUNTING PARTS (FOR G1600)	1071A
AIR CLEANER (FOR 4D95S.W)	1101A
AIR CLEANER (FOR H20)	1111
AIR CLEANER (FOR G1600)	1151
EXHAUST SYSTEM (FOR 4D95S.W)	1201A
EXHAUST SYSTEM (FOR H20)	1251A
EXHAUST SYSTEM (FOR G1600)	1271A
RADIATOR (FOR 4D95S.W)	1301A
RADIATOR (FOR H20)	1351
RADIATOR (FOR G1600)	1361
RADIATOR (FOR G1600,S)	1371
RADIATOR COVER	1391A
RADIATOR COVER (FOR G1600)	1392
RADIATOR COVER (FOR S)	1393A
RADIATOR COVER (FOR G1600,S)	1395
FUEL SYSTEM (FOR 4D95S.W)	1403A
FUEL SYSTEM (FOR H20)	1453
FUEL SYSTEM (FOR G1600)	1473
ELECTRICAL SYSTEM (FOR 4D95S.W)	1501A
ELECTRICAL SYSTEM (FOR 4D95S.W)	1502A
ELECTRICAL SYSTEM (FOR 4D95S.W)	1503A
ELECTRICAL SYSTEM (FOR H20,G1600)	1601B

C O N T E N T S

FIG.NO.

ELECTRICAL SYSTEM (FOR H20,G1600) 1602

ELECTRICAL SYSTEM (FOR H20) 1603A

ELECTRICAL SYSTEM (FOR G1600) 1605

2.CLUTCH,TORQUE CONVERTER AND TRANSMISSION

DRY CLUTCH 2001A

CLUTCH RELEASE CYLINDER 2041A

TORQUE CONVERTER 2101A

TORQUE CONVERTER (FOR G1600,T2-TYPE) 2121

DIRECT DRIVE TRANSMISSION (1/3) 2201A

DIRECT DRIVE TRANSMISSION (2/3) 2202

DIRECT DRIVE TRANSMISSION (3/3) 2203

TORQFLOW DRIVE TRANSMISSION (1/2) 2301A

TORQFLOW DRIVE TRANSMISSION (2/2) 2302

TORQFLOW DRIVE TRANSMISSION VALVE 2303

TORQFLOW DRIVE TRANSMISSION (FOR T2-TYPE) (1/3) 2401

TORQFLOW DRIVE TRANSMISSION (FOR T2-TYPE) (2/3) 2402A

TORQFLOW DRIVE TRANSMISSION (FOR T2-TYPE) (3/3) 2403

TORQFLOW DRIVE TRANSMISSION VALVE (FOR T2-TYPE) 2404

TRANSMISSION PIPING 2501

3.DIFFERENTIAL,AXLE AND WHEELS

DIFFERENTIAL GEAR 3101A

DRIVE AXLE 3201A

DRIVE AXLE (FOR S) 3211A

STEERING AXLE (FOR S) (1/2) 3311

FIG.NO.

STEERING AXLE (FOR S) (2/2) 3312

STEERING AXLE (FOR FHPS) 3351

STEERING AXLE (FOR FHPS,S) 3352

FRONT WHEEL 3401

FRONT WHEEL (FOR S) 3405

REAR WHEEL 3601

REAR WHEEL (FOR S) 3605

BRAKE SYSTEM 3701A

4.STEERING AND CONTROL SYSTEM

STEERING WHEEL 4001

STEERING COLUMN 4101

STEERING COLUMN (FOR FHPS) 4131

STEERING GEAR BOX 4151A

STEERING LINKAGE 4201

POWER STEERING VALVE (FOR FHPS) 4251A

TRANSMISSION SHIFT LEVER (FOR CLUTCH) 4301

TRANSMISSION SHIFT LEVER (FOR T1) (L.H) 4351

TRANSMISSION SHIFT LEVER (FOR FHPS,T1) (L.H) 4355A

TRANSMISSION SHIFT LEVER (FOR T2) (L.H) 4361

TRANSMISSION SHIFT LEVER (FOR FHPS,T2) (L.H) 4365

BRAKE AND CLUTCH PEDAL (DIRECT DRIVE) 4401A

BRAKE AND INCHING PEDAL (TORQUFLOW DRIVE) 4451

MASTER CYLINDER (FOR CLUTCH) 4501A

MASTER CYLINDER (FOR BRAKE) 4521

C O N T E N T S

FIG.NO.

ACCELERATOR PEDAL (FOR 4D95S.W) 4601A

ACCELERATOR PEDAL (FOR H20) 4651

ACCELERATOR PEDAL (FOR G1600) 4671

BRAKE PIPING 4701A

PARKING BRAKE LEVER 4801

5.FRAME AND BODY

FRAME 5001A

FRAME (FOR S) 5011A

OUTER PANEL 5101A

OUTER PANEL 5121A

OUTER PANEL (FOR INSULATOR) 5201A

OUTER PANEL (FOR INSULATOR,S) 5203A

OUTER PANEL (ENCLOSE) (FOR 4D95S.W) 5301

OPERATOR'S SEAT 5401

HEAD GUARD 5501A

HEAD GUARD (FOR S) 5503A

NAME PLATE (FOR D) 5701A

NAME PLATE (FOR G) 5751A

6.WORK EQUIPMENT AND IT'S CONTROL SYSTEM

HYDRAULIC PUMP (FOR 4D95S.W) 6001A

HYDRAULIC PUMP (FOR H20) 6031

HYDRAULIC PUMP (FOR G1600) 6041

CONTROL VALVE 6101A

2-SPOOL CONTROL VALVE LEVER 6201

FIG.NO.

3-SPOOL CONTROL VALVE LEVER.....6251A

TILT CYLINDER (6'/10',6'/12').....6331

POWER STEERING CYLINDER.....6361

POWER STEERING CYLINDER (FOR FHPS).....6365A

POWER STEERING PIPING (FOR FHPS).....6370A

HYDRAULIC PIPING (FOR 4D95S.W) (1/3).....6401A

HYDRAULIC PIPING (FOR 4D95S.W) (2/3).....6402A

HYDRAULIC PIPING (FOR 4D95S.W) (3/3).....6403A

HYDRAULIC PIPING (FOR H20,G1600) (1/4).....6501

HYDRAULIC PIPING (FOR H20,G1600) (2/4).....6502A

HYDRAULIC PIPING (FOR H20) (3/4).....6503

HYDRAULIC PIPING (FOR G1600) (3/4).....6504

HYDRAULIC PIPING (FOR H20,G1600) (4/4).....6505

K.KIT

KIT..... K

N.NUMERICAL INDEX

NUMERICAL INDEX..... N

7.CASCADE MAST (2-STAGE) (FOR C-SPEC)

SAFTY DECALS AND PUBLICATIONS.....7001

MAIN LIFT CYLINDER-2600PSI.....7002

MAIN LIFT CYLINDER-2600PSI.....7003

INTERNAL HOSE REEVING.....7004

INTERNAL HOSE REEVING.....7005

OUTER UPRIGHT.....7006

C O N T E N T S

FIG.NO.

OUTER UPRIGHT.....7007

INNER UPRIGHT.....7008

INNER UPRIGHT.....7009

CARRIAGE.....7010

CARRIAGE.....7011

CARRIAGE.....7012

CARRIAGE.....7013

HYDRAULIC GROUP.....7014

LOWERING CONTROL VALVE(2600PSI SYSTEM PRESSURE).....7015

HOIST CHAINS.....7016

HOIST CHAINS.....7017

HOIST CHAINS.....7018

HOIST CHAINS.....7019

LOAD BACKREST.....7020

MAST INSTALLATION ACCESSORIES.....7021

8.CASCADE MAST (3-STAGE) (FOR C-SPEC)

SAFTY DECALS AND PUBLICATIONS.....8001

MAIN LIFT CYLINDER-2600PSI.....8002

MAIN LIFT CYLINDER-2600PSI.....8003

MAIN LIFT CYLINDER-2600PSI.....8004

MAIN LIFT CYLINDER-2600PSI.....8005

FREE LIFT CYLINDER-2600PSI.....8006

FREE LIFT CYLINDER-2600PSI.....8007

FREE LIFT CYLINDER-2600PSI.....8008

FIG.NO.

FREE LIFT CYLINDER-2600PSI.....8009

INTERNAL HOSE REEVING.....8010

INTERNAL HOSE REEVING.....8011

OUTER UPRIGHT.....8012

OUTER UPRIGHT.....8013

INTERMEDIATE UPRIGHT.....8014

INTERMEDIATE UPRIGHT.....8015

INNER UPRIGHT.....8016

INNER UPRIGHT.....8017

CARRIAGE.....8018

CARRIAGE.....8019

CARRIAGE.....8020

CARRIAGE.....8021

HYDRAULIC GROUP.....8022

HYDRAULIC GROUP.....8023

LOWERING CONTROL VALVE(2600PSI SYSTEM PRESSURE).....8024

HOIST CHAINS.....8025

HOIST CHAINS.....8026

HOIST CHAINS.....8027

HOIST CHAINS.....8028

LOAD BACKREST.....8029

MAST INSTALLATION ACCESSORIES.....8030

MAST INSTALLATION ACCESSORIES.....8031

MAST INSTALLATION ACCESSORIES.....8032

ENGINE RELATED PARTS AND ELECTRICAL SYSTEM

FIG.1001A ENGINE MOUNTING PARTS (FOR 4D95S.W)

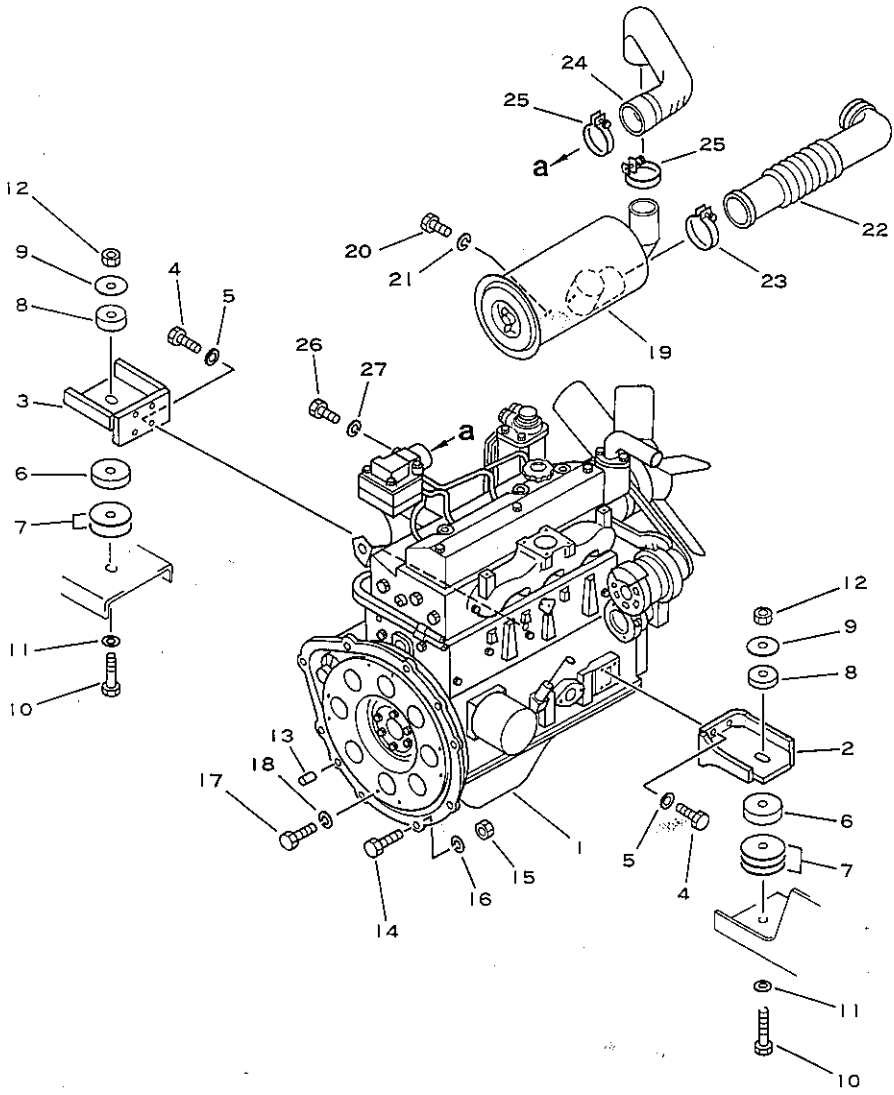

図および索引番号 Fig & Index No.	品番 Part No.	品名 Description	個数 Q'ty
1001A- 1	37B-1DE-2220	ENGINE ASS'Y.....	1
2	3EB-02-27311	BRACKET (L.H).....	1
3	3EB-02-14441	BRACKET (R.H).....	1
4	01010-51030	BOLT.....	8
5	01643-31032	WASHER.....	8
6	3EB-01-27130	RUBBER.....	2
7	304-01-31160	SHIM.....	3
8	3EB-01-27140	RUBBER.....	2
9	304-01-31150	PLATE.....	2
10	01010-51685	BOLT.....	2
11	01643-31645	WASHER.....	2
12	34B-01-15150	U-NUT.....	2
13	04020-01228	PIN,dowel.....	2
14	01010-51045	BOLT.....	7
15	01580-11008	NUT.....	7
16	01602-21030	WASHER,spring.....	7
17	01010-50816	BOLT.....	8
18	01602-20825	WASHER,spring.....	8
19	37B-1CB-2021	AIR CLEANER ASS'Y...	1
20	01010-50812	BOLT.....	2
21	01602-20825	WASHER,spring.....	2
22	3EB-01-25160	HOSE.....	1
23	07280-06429	CLAMP.....	1
24	3EB-02-26211	HOSE.....	1
25	07280-06429	CLAMP.....	2
26	01010-50635	BOLT.....	1
27	01602-20619	WASHER,spring.....	1

適用機種 Application
FD25 T -C 430175A~
FD30 T -C 430175A~
FD25S T -C 480001A~

FIG.1051 ENGINE MOUNTING PARTS (FOR H20)

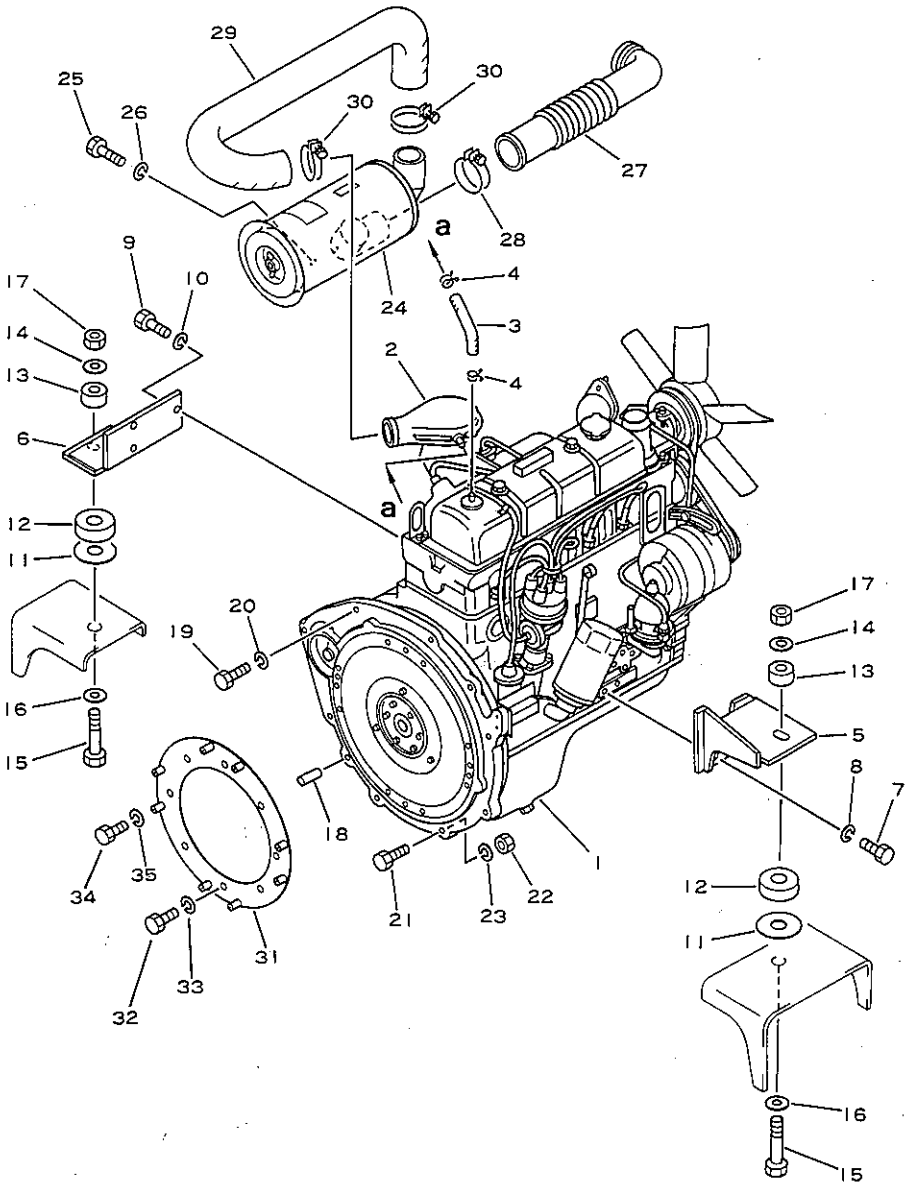

図および索引番号 Fig & Index No.	品番 Part No.	品名 Description	個数 Q'ty
1051 - 1	37B-1DB-2110	ENGINE ASS'Y (for C)	1
	37B-1DB-2120	ENGINE ASS'Y (for T)	1
2	16267-00H01	.AIR HORN ASS'Y.....	1
3	11826-00H01	.HOSE.....	1
4	16572-10801	.CLAMP.....	2
5	3EB-01-14210	BRACKET (L.H).....	1
6	3EB-01-27221	BRACKET (R.H).....	1
7	01010-51025	BOLT.....	4
8	01602-21030	WASHER,spring.....	4
9	01010-51025	BOLT.....	3
10	01602-21030	WASHER,spring.....	3
11	304-01-31160	SHIM.....	3
12	3EB-01-27130	RUBBER.....	2
13	3EB-01-27140	RUBBER.....	2
14	304-01-31150	PLATE.....	2
15	01010-51685	BOLT.....	2
16	01643-31645	WASHER.....	2
17	34B-01-15150	U-NUT.....	2
18	04020-01228	PIN,dowel.....	2
19	01010-51035	BOLT.....	1
20	01602-21030	WASHER,spring.....	1
21	01010-51045	BOLT.....	6
22	01580-11008	NUT.....	6
23	01602-21030	WASHER,spring.....	6
24	3EB-01-A2610	AIR CLEANER ASS'Y...	1
25	01010-50812	BOLT.....	2
26	01602-20825	WASHER,spring.....	2
27	3EB-01-25160	HOSE.....	1
28	07280-06429	CLAMP.....	1
29	3EB-01-26210	HOSE.....	1
30	07280-06429	CLAMP.....	2
31	3EB-01-24191	PLATE (for T).....	1
32	01050-51020	BOLT (for T).....	8
33	01602-21030	WASHER,spring (for T)	8
34	01010-50816	BOLT (for T).....	8

適用機種 Application
FG20 T -C 252001A~
FG25 C -C 252001A~
FG25 T -C 252001A~
FG30 T -C 450050A~
FG20S T -C 300001A~
FG25S C -C 300001A~
FG25S T -C 300001A~
FG30S T -C 400001A~

ENGINE MOUNTING PARTS (FOR H20)

図および索引番号 Fig & Index No.	品番 Part No.	品名 Description	個数 Q'ty	適用機種 Application
1051 -35	01602-20825	WASHER,spring (for T)	8	

FIG.1071A ENGINE MOUNTING PARTS (FOR G1600)

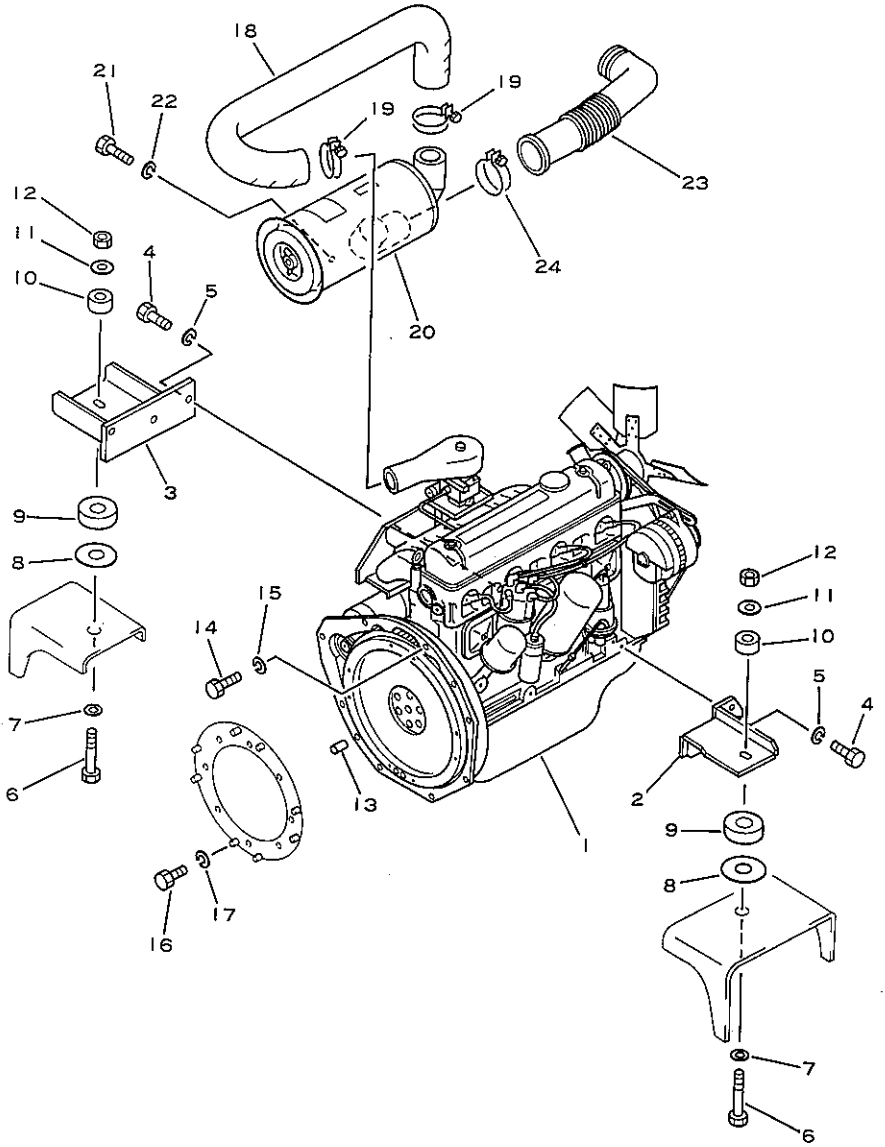

図および索引番号 Fig & Index No.	品番 Part No.	品名 Description	個数 Q'ty
1071A- 1	3EB-01-A2910	ENGINE ASS'Y.....	1
2	3EB-01-A2660	BRACKET (L.H).....	1
3	3EB-01-A2670	BRACKET (R.H).....	1
4	02010-20832	BOLT.....	6
5	01602-21338	WASHER,spring.....	6
6	01010-51685	BOLT.....	2
7	01643-31645	WASHER.....	2
8	304-01-31160	SHIM.....	3
9	3EB-01-27130	RUBBER.....	2
10	3EB-01-27140	RUBBER.....	2
11	304-01-31150	PLATE.....	2
12	34B-01-15150	NUT.....	2
13	04020-01228	PIN,dowel.....	2
14	01010-51035	BOLT.....	7
15	01602-21030	WASHER,spring.....	7
16	01010-50816	BOLT.....	8
17	01602-20825	WASHER,spring.....	8
18	3EB-01-A2861	HOSE.....	1
19	07280-06429	CLAMP.....	2
20	3EB-01-A2710	AIR CLEANER ASS'Y...	1
21	01010-50812	BOLT.....	2
22	01602-20825	WASHER,spring.....	2
23	3EB-01-25160	HOSE.....	1
24	07280-06429	CLAMP.....	1

適用機種 Application
FG30G T -C 490001A~
FG30SG T -C 490002A~

FIG.1101A AIR CLEANER (FOR 4D95S.W)

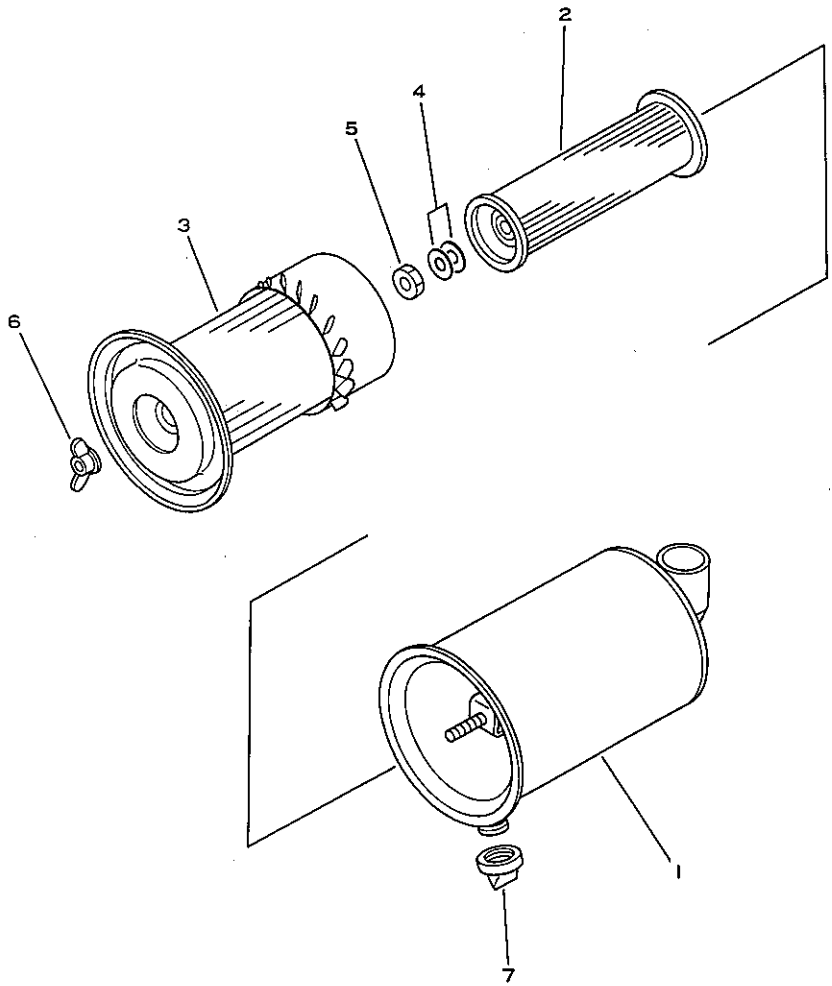

図および索引番号 Fig & Index No.	品番 Part No.	品名 Description	個数 Q'ty
	(37B-1CB-2021)	AIR CLEANER ASS'Y...	1
1101A- 1	3EB-02-25510	.BODY ASS'Y.....	1
2	3EB-02-25550	.ELEMENT,inner.....	1
3	3EC-01-11630	.ELEMENT,outer.....	1
4	3EB-02-25570	.GASKET.....	1
5	3EB-02-25560	.NUT.....	1
6	34B-02-31650	.WING NUT ASS'Y.....	1
7	3EA-01-17150	.VALVE.....	1

適用機種 Application
FD25 T -C 430175A~
FD30 T -C 430175A~
FD25S T -C 480001A~

FIG.1111 AIR CLEANER (FOR H20)

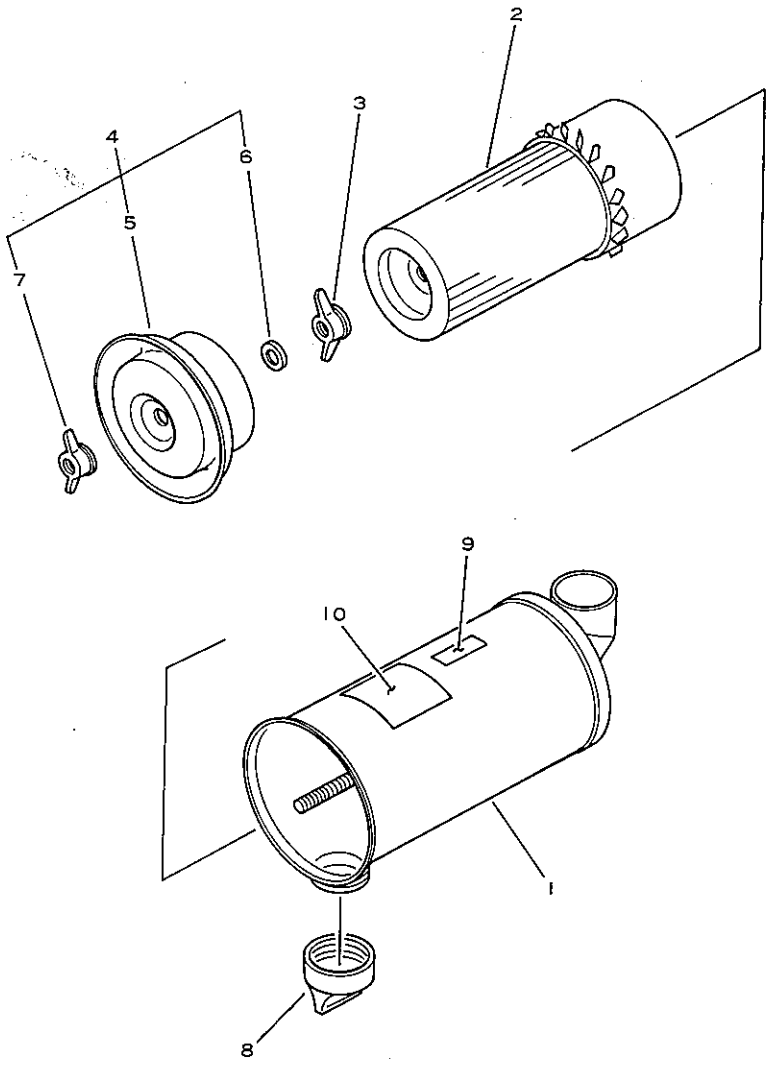

図および索引番号 Fig & Index No.	品番 Part No.	品名 Description	個数 Q'ty
	(3EB-01-A2610)	AIR CLEANER ASS'Y...	1
1111 - 1	DUP526624	.BODY.....	1
2	DUP122510	.ELEMENT ASS'Y.....	1
3	DUP101870	.NUT ASS'Y.....	1
* 4	DUP526942	.COVER ASS'Y.....	1
* 5	*	..COVER.....	1
* 6	*	..WASHER.....	1
* 7	*	..NUT.....	1
8	DUP522958	.VALVE.....	1
* 9	*	.MARKING.....	1
* 10	*	.MARKING.....	1

適用機種 Application			
FG20	T	-C	252001A~
FG25	C	-C	252001A~
FG25	T	-C	252001A~
FG30	T	-C	450050A~
FG20S	T	-C	300001A~
FG25S	C	-C	300001A~
FG25S	T	-C	300001A~
FG30S	T	-C	400001A~

FIG.1151 AIR CLEANER (FOR G1600)

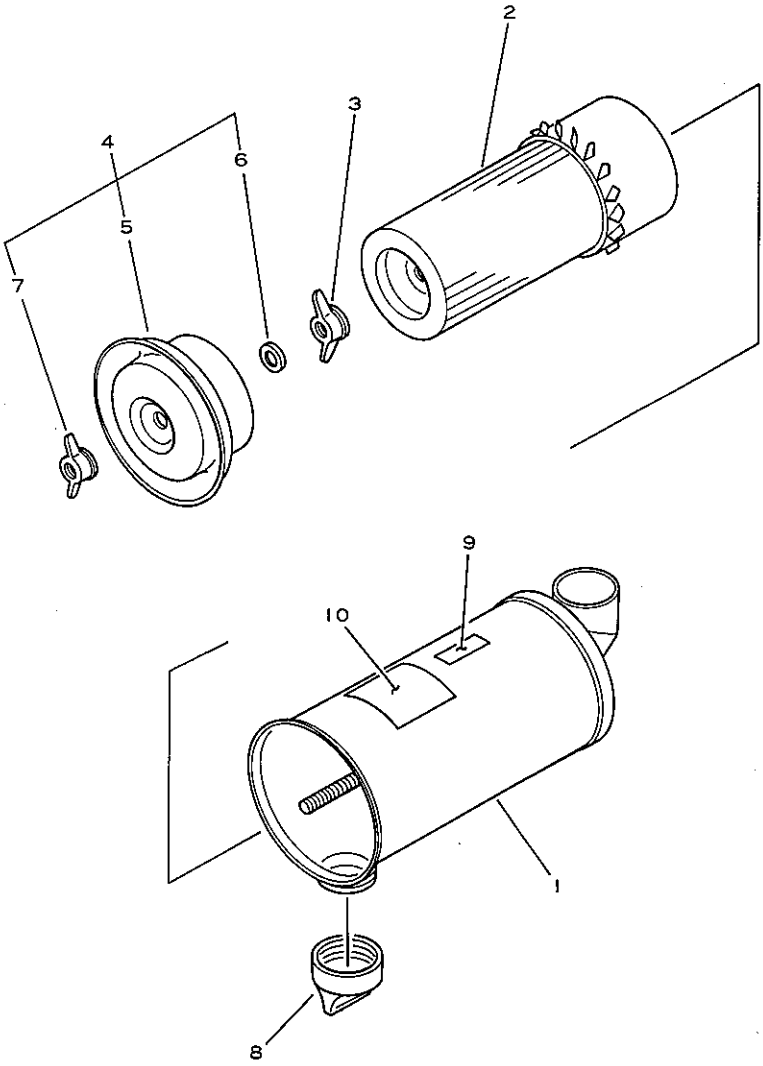

図および索引番号 Fig & Index No.	品番 Part No.	品名 Description	個数 Q'ty	適用機種 Application
	(3EB-01-A2710)	AIR CLEANER ASS'Y...	1	FG30G T -C 290222A~ FG30SG T -C 320003A~
1151 - 1	DUP526619	.BODY ASS'Y.....	1	
2	DUP122510	.ELEMENT ASS'Y.....	1	
3	DUP101870	.NUT ASS'Y.....	1	
* 4	DUP526942	.COVER ASS'Y.....	1	
* 5	*	..COVER.....	1	
* 6	*	..WASHER.....	1	
* 7	*	..NUT.....	1	
8	DUP522958	.VALVE.....	1	
* 9	*	.MARKING.....	1	
* 10	*	.MARKING.....	1	

FIG.1201A EXHAUST SYSTEM (FOR 4D95S.W)

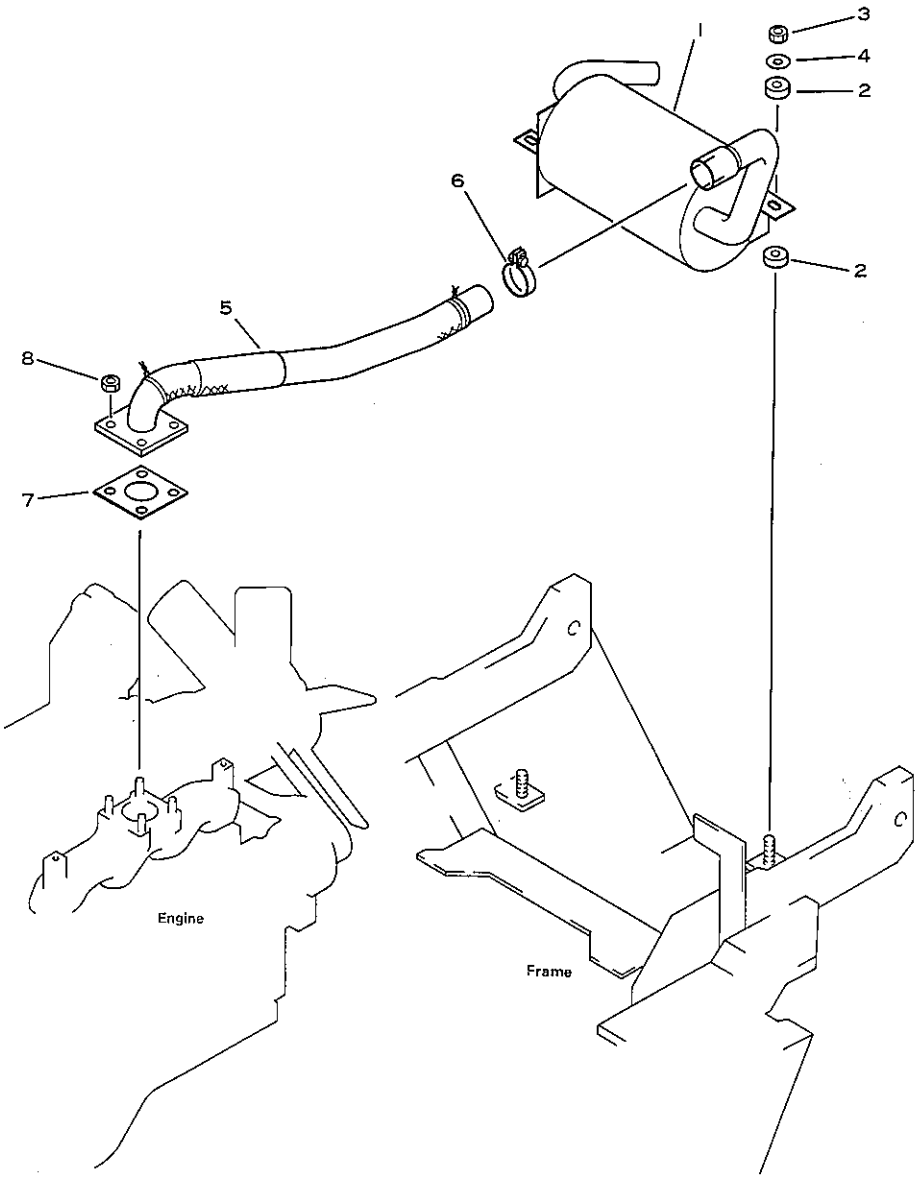

図および索引番号 Fig & Index No.	品番 Part No.	品名 Description	個数 Q'ty
1201A- 1	3EB-03-A2210	MUFFLER.....	1
	3EB-03-A2260	MUFFLER (for S).....	1
2	3EA-03-11120	RUBBER.....	4
3	01598-11011	NUT.....	2
4	3EA-51-11390	WASHER.....	2
5	3EB-03-22710	PIPE.....	1
6	3EB-03-22151	CLAMP SUB ASS'Y.....	1
	01010-50830	.BOLT.....	2
	01602-20825	.WASHER,spring.....	2
7	6130-12-5580	GASKET.....	1
8	6142-12-5850	NUT.....	4

適用機種 Application
FD25 T -C 430175A~
FD30 T -C 430175A~
FD25S T -C 480001A~

FIG.1251A EXHAUST SYSTEM (FOR H20)

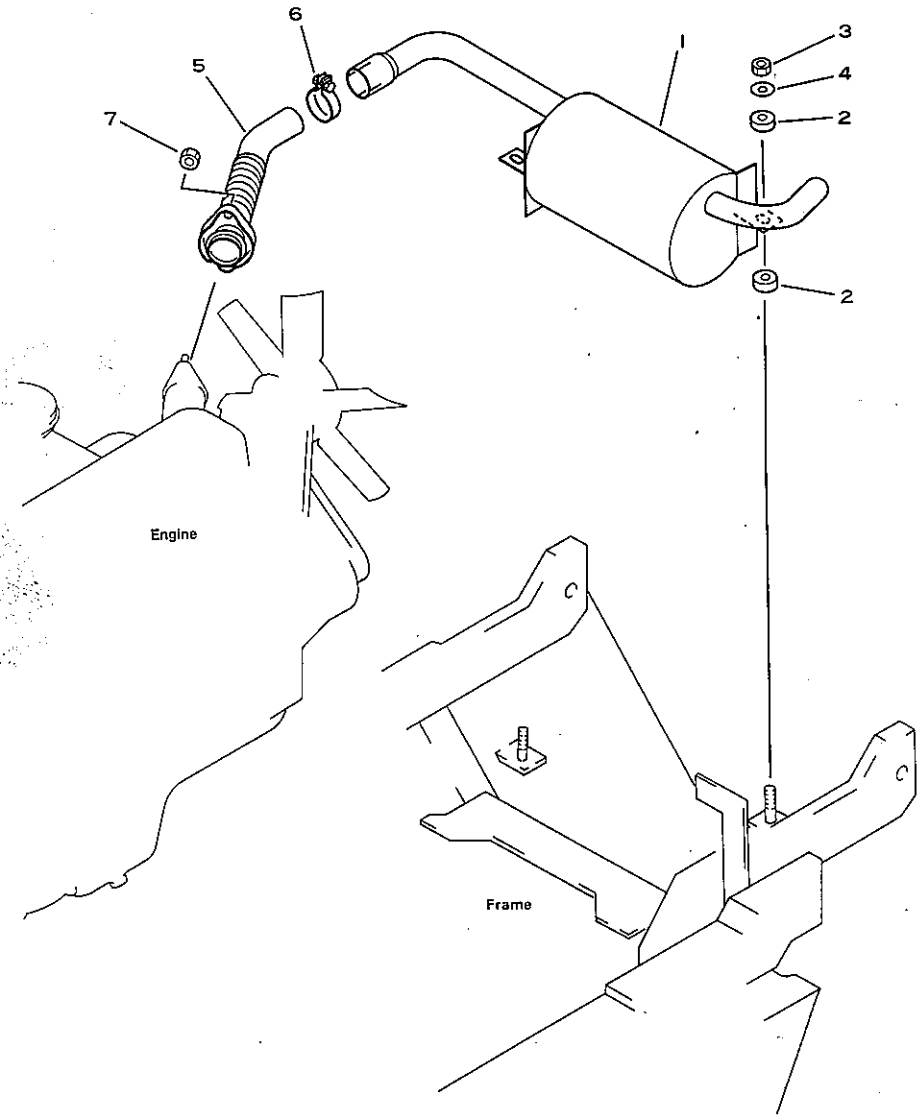

図および索引番号 Fig & Index No.	品番 Part No.	品名 Description	個数 Q'ty	適用機種 Application
1251A- 1	3EB-03-A2110	MUFFLER.....	1	FG20 T -C 450050A~ FG25 C -C 450050A~ FG25 T -C 450050A~ FG30 T -C 450050A~ FG20S T -C 400001A~ FG25S C -C 400001A~ FG25S T -C 400001A~ FG30S T -C 400001A~
	3EB-03-A2160	MUFFLER (for S).....	1	
	3EB-02-25220	.CATALYST.....(OP)	1	
2	3EA-03-11120	RUBBER.....	4	
3	01598-11011	NUT.....	2	
4	3EA-51-11390	WASHER.....	2	
5	3EB-03-22110	PIPE.....	1	
6	3EB-03-22151	CLAMP SUB ASS'Y.....	1	
	01010-50830	.BOLT.....	2	
	01602-20825	.WASHER,spring.....	2	
7	20650-37700	NUT.....	2	

FIG.1271A EXHAUST SYSTEM (FOR G1600)

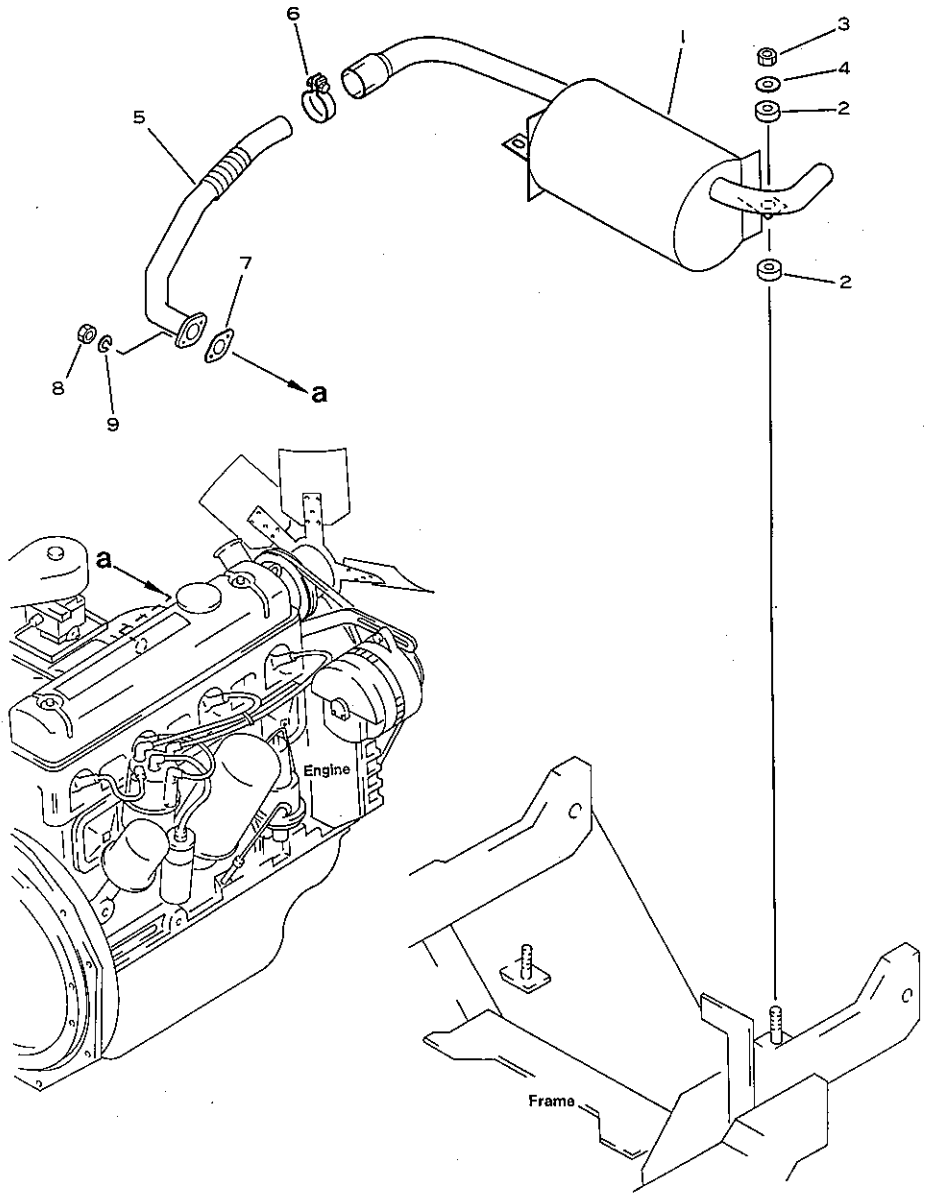

EXHAUST SYSTEM (FOR G1600)

図および索引番号 Fig. & Index No.	品番 Part No.	品名 Description	個数 Q'ty
1271A- 1	3EB-03-A2110	MUFFLER.....	1
	3EB-03-A2160	MUFFLER (for S).....	1
2	3EA-03-11120	RUBBER.....	2
3	01598-11011	NUT.....	2
4	34A-51-11390	WASHER.....	2
5	3EB-01-A2511	PIPE.....	1
6	3EB-03-22151	CLAMP SUB ASS'Y.....	1
	01010-50830	.BOLT.....	2
	01602-20825	.WASHER,spring.....	2
7	HE40-0011926	GASKET.....	1
8	HE1500-04222	NUT.....	2
9	HE13380-A	WASHER,spring.....	2

適用機種 Application

FG30G T -C 490001A~
FG30SG T -C 490002A~

FIG.1301A RADIATOR (FOR 4D95S.W)

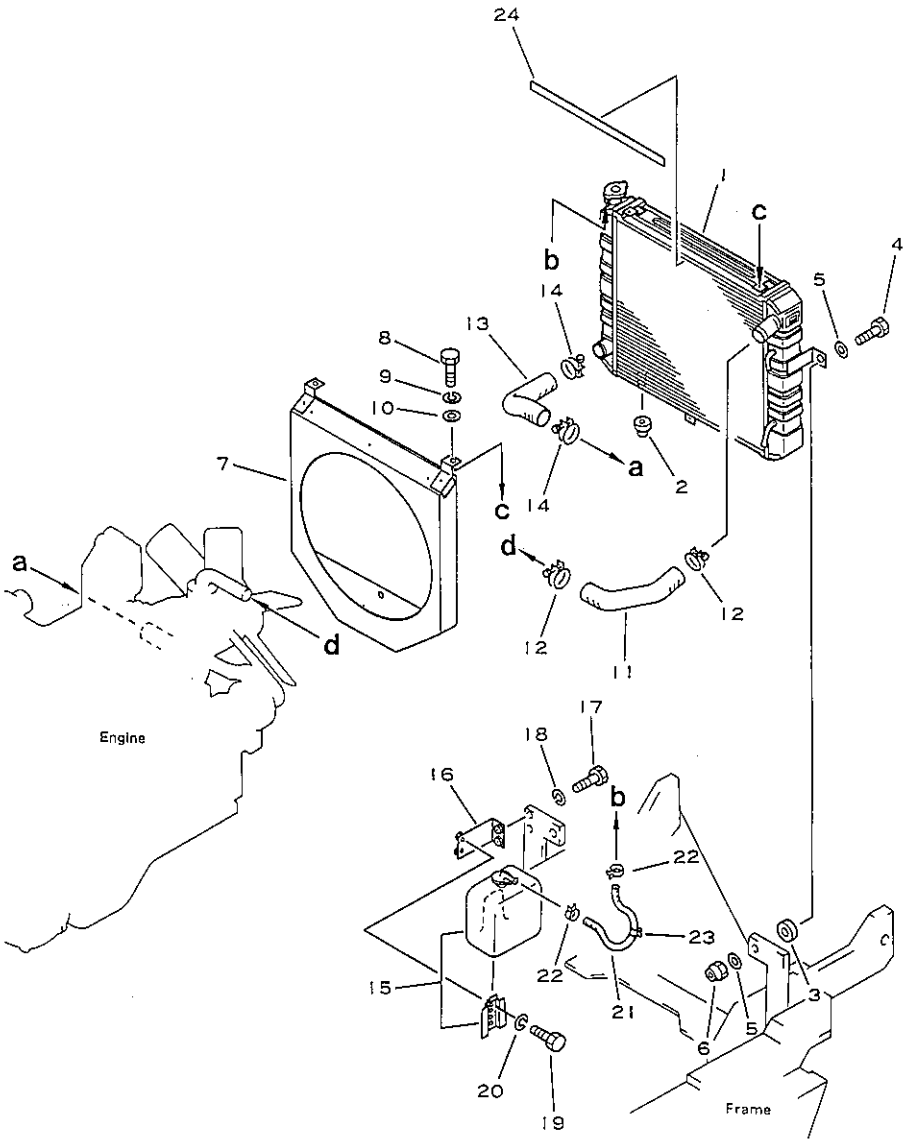

図および索引番号 Fig & Index No.	品番 Part No.	品名 Description	個数 Q'ty
1301A- 1	3EB-04-A2410	RADIATOR ASS'Y.....	1
	CPC89C0025010	.CAP.....	1
	CPC1010055520	.COCK,drain.....	1
2	3EC-04-12160	RUBBER.....	2
3	34B-04-15220	RUBBER.....	2
4	01010-50835	BOLT.....	2
5	01642-20810	WASHER.....	4
6	01598-10809	NUT.....	2
7	37B-1CR-2012	SHROUD.....	1
8	01010-50812	BOLT.....	3
9	01602-20825	WASHER,spring.....	3
10	01642-20810	WASHER.....	3
11	3EB-04-23730	HOSE.....	1
12	07280-04126	CLAMP.....	2
13	3EB-04-23720	HOSE.....	1
14	07280-04126	CLAMP.....	2
15	3EB-04-25160	RESERVOIR TANK ASS'Y	1
16	3EB-04-25131	BRACKET.....	1
17	01010-50820	BOLT.....	2
18	01602-20825	WASHER,spring.....	2
19	01010-50612	BOLT.....	2
20	01602-20619	WASHER,spring.....	2
21	46B-909-1410	HOSE.....	1
22	07285-00110	CLIP.....	2
23	3EB-04-25140	CLAMP.....	1
24	3EB-04-23250	RUBBER.....	1

適用機種 Application			
FD25	T	-C	430175A~
FD30	T	-C	430175A~
FD25S	T	-C	480001A~

FIG.1351 RADIATOR (FOR H20)

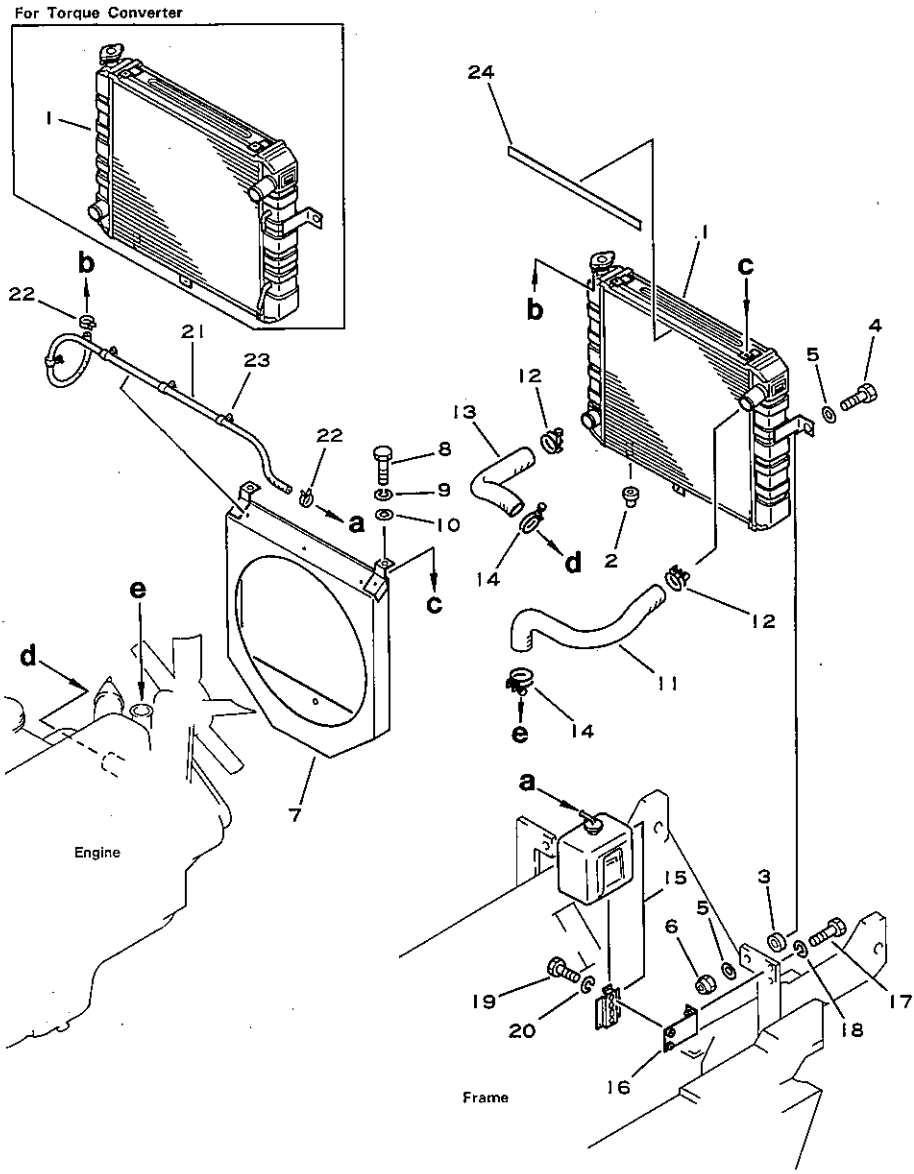

図および索引番号 Fig & Index No.	品番 Part No.	品名 Description	個数 Q'ty
* 1351 - 1	3EB-04-A2110	RADIATOR ASS'Y (for C)	1
*	3EB-04-A2160	RADIATOR ASS'Y (for T1)	1
*	3EB-04-A2210	PADIATOR ASS'Y (for T2)	1
	CPC89C0025010	.CAP.....	1
	CPC1010055520	.COCK,drain.....	1
2	3EC-04-12160	RUBBER.....	2
3	34B-04-15220	RUBBER.....	2
4	01010-50835	BOLT.....	2
5	01642-20810	WASHER.....	4
6	01598-10809	NUT.....	2
7	37B-1CR-2032	SHROUD.....	1
8	01010-50812	BOLT.....	3
9	01602-20825	WASHER,spring.....	3
10	01642-20810	WASHER.....	3
11	3EB-04-23230	HOSE.....	1
12	07280-04126	CLAMP.....	2
13	3EB-04-23220	HOSE.....	1
14	07280-04426	CLAMP.....	2
15	3EB-04-25160	RESERVOIR TANK ASS'Y	1
16	3EB-04-25131	BRACKET.....	1
17	01010-50820	BOLT.....	2
18	01602-20825	WASHER,spring.....	2
19	01010-50612	BOLT.....	2
20	01602-20619	WASHER,spring.....	2
21	37B-1AC-1030	HOSE.....	1
22	07285-00110	CLIP.....	2
23	3EB-04-25140	CLAMP.....	3
24	3EB-04-23250	RUBBER.....	1

適用機種 Application			
FG20	T	-C	252001A~
FG25	C	-C	252001A~
FG25	T	-C	252001A~
FG30	T	-C	450050A~
FG20S	T	-C	300001A~
FG25S	C	-C	300001A~
FG25S	T	-C	300001A~
FG30S	T	-C	400001A~

FIG.1361 RADIATOR (FOR G1600)

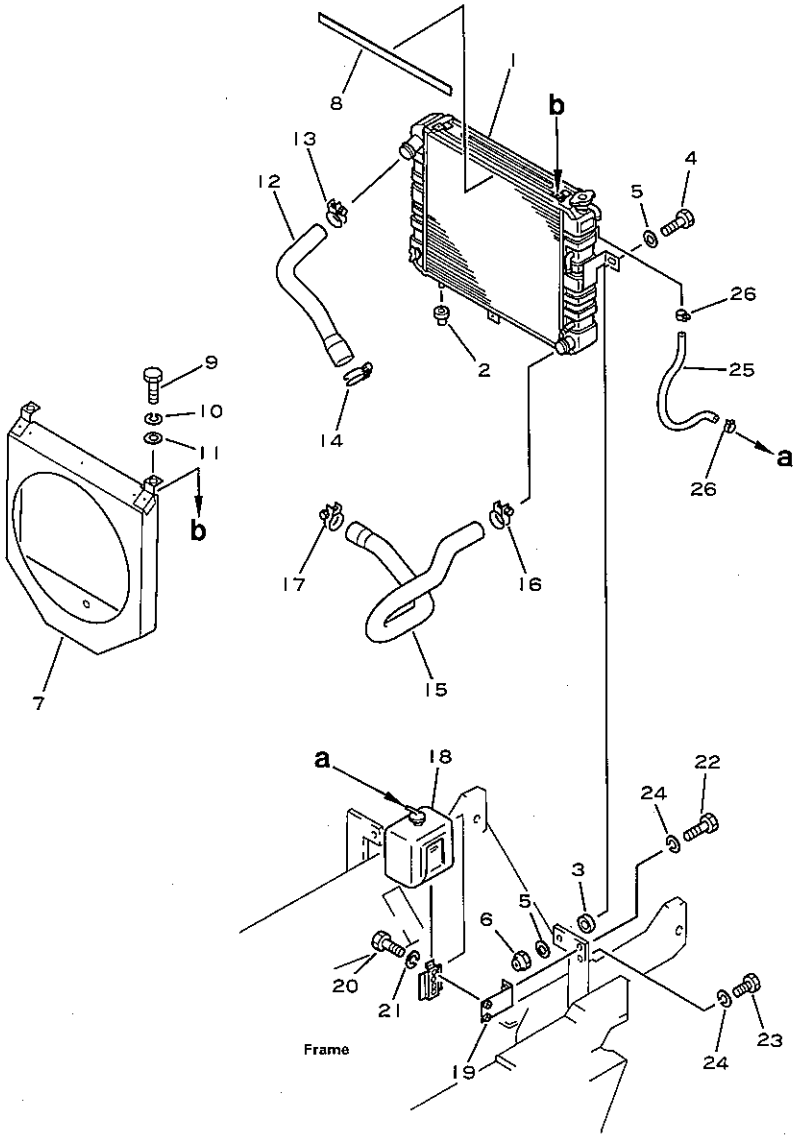

図および索引番号 Fig & Index No.	品番 Part No.	品名 Description	個数 Q'ty
1361 - 1	3EB-04-A2310	RADIATOR ASS'Y (for T1)	1
	3EB-04-A2510	RADIATOR ASS'Y (for T2)	1
	3EB-04-21130	.CAP.....	1
	34B-04-11240	.COCK,drain.....	1
	34B-04-11250	.PACKING.....	1
2	3EC-04-12160	RUBBER.....	2
3	34B-04-15220	RUBBER.....	2
4	01010-50835	BOLT.....	2
5	01642-20810	WASHER.....	4
6	01598-10809	NUT.....	2
7	3EB-04-A2360	SHROUD.....	1
8	3EB-04-23250	RUBBER.....	1
9	01010-50812	BOLT.....	3
10	01602-20825	WASHER,spring.....	3
11	01642-20810	WASHER.....	3
12	3EB-04-A2380	HOSE.....	1
13	07280-04426	CLAMP.....	1
14	07280-05026	CLAMP.....	1
15	3EB-04-A2370	HOSE.....	1
16	07280-04426	CLAMP.....	1
17	07281-00609	CLAMP.....	1
18	3EB-04-25160	RESERVOIR TANK ASS'Y	1
19	3EB-04-25131	BRACKET.....	1
20	01010-50612	BOLT.....	2
21	01602-20619	WASHER,spring.....	2
22	01010-50840	BOLT.....	1
23	01010-50820	BOLT.....	1
24	01602-20825	WASHER,spring.....	1
25	46B-909-1410	HOSE.....	1
26	07285-00110	CLIP.....	2

適用機種 Application
FG30G T -C 290222A~

FIG.1371 RADIATOR (FOR G1600,S)

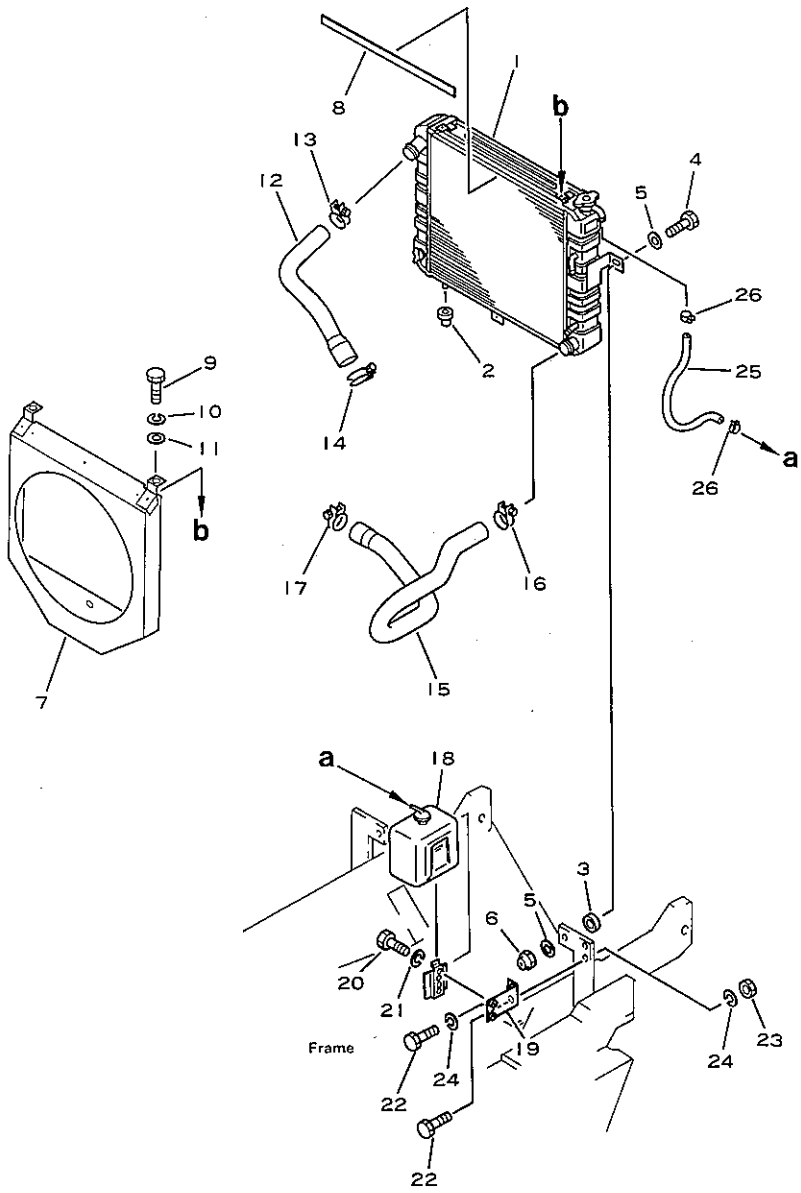

図および索引番号 Fig & Index No.	品番 Part No.	品名 Description	個数 Q'ty	適用機種 Application
1371 - 1	3EB-04-A2310	RADIATOR ASS'Y (for T1)	1	FG30SG T -C 320003A~
*	3EB-04-A2510	RADIATOR ASS'Y (for T2)	1	
	3EB-04-21130	.CAP.....	1	
	34B-04-11240	.COCK,drain.....	1	
	34B-04-11250	.PACKING.....	1	
2	3EC-04-12160	RUBBER.....	2	
3	34B-04-15220	RUBBER.....	2	
4	01010-50835	BOLT.....	2	
5	01642-20810	WASHER.....	4	
6	01598-10809	NUT.....	2	
7	3EB-04-A2360	SHROUD.....	1	
8	3EB-04-23250	RUBBER.....	1	
9	01010-50812	BOLT.....	3	
10	01602-20825	WASHER,spring.....	3	
11	01642-20816	WASHER.....	3	
12	3EB-04-A2380	HOSE.....	1	
13	07280-04426	CLAMP.....	1	
14	07280-05026	CLAMP.....	1	
15	3EB-04-A2370	HOSE.....	1	
16	07280-04426	CLAMP.....	1	
17	07281-00609	CLAMP.....	1	
18	3EB-04-25160	RESERVOIR TANK ASS'Y	1	
19	3EB-04-A2910	BRACKET.....	1	
20	01010-50612	BOLT.....	2	
21	01602-20619	WASHER,spring.....	2	
22	01010-50830	BOLT.....	2	
23	01580-10806	NUT.....	1	
24	01602-20825	WASHER,spring.....	2	
25	46B-909-1410	HOSE.....	1	
26	07285-00110	CLIP.....	2	

FIG.1391A RADIATOR COVER

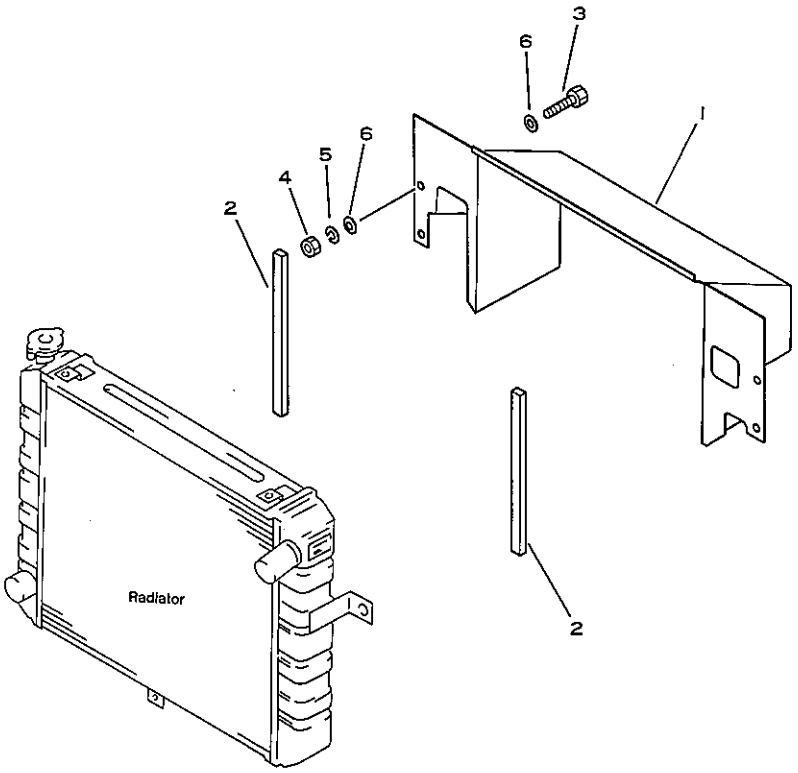

図および索引番号 Fig. & Index No.	品番 Part No.	品名 Description	個数 Q'ty
1391A- 1	3EB-04-25610	COVER (for 4D95S.W).	1
	3EB-04-23370	COVER (for H20).....	1
2	3EB-04-25551	SPONGE.....	2
3	01010-50825	BOLT.....	3
4	01580-10806	NUT.....	3
5	01602-20825	WASHER,spring.....	3
6	01641-20812	WASHER.....	6

適用機種 Application			
FG20	T	-C	450050A~
FG25	C	-C	450050A~
FG25	T	-C	450050A~
FG30	T	-C	450050A~
FD25	T	-C	430175A~
FD30	T	-C	430175A~

FIG.1392 RADIATOR COVER (FOR G1600)

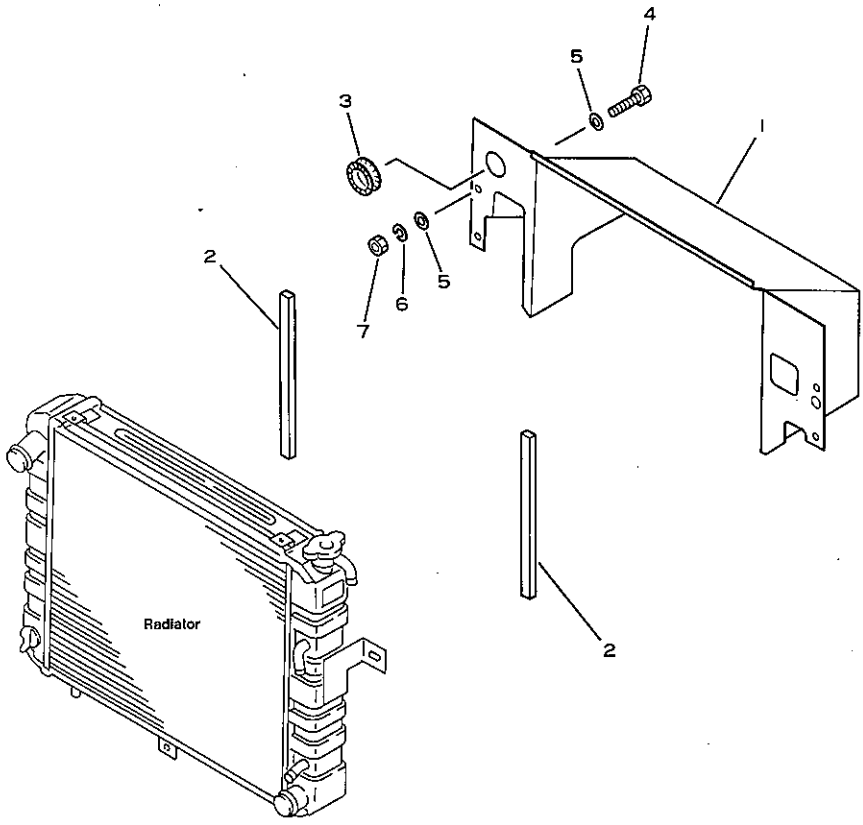

RADIATOR COVER (FOR G1600)

図および索引番号 Fig & Index No.	品番 Part No.	品名 Description	個数 Q'ty
1392 - 1	3EB-04-A2810	COVER.....	1
2	3EB-04-25551	SPOGE.....	1
3	3EB-05-23450	BUSHING.....	1
4	01010-50845	BOLT.....	3
5	01641-20812	WASHER.....	6
6	01602-20825	WASHER,spring.....	3
7	01580-10806	NUT.....	3

適用機種 Application
FG30G T -C 290222A~

FIG.1393A RADIATOR COVER (FOR S)

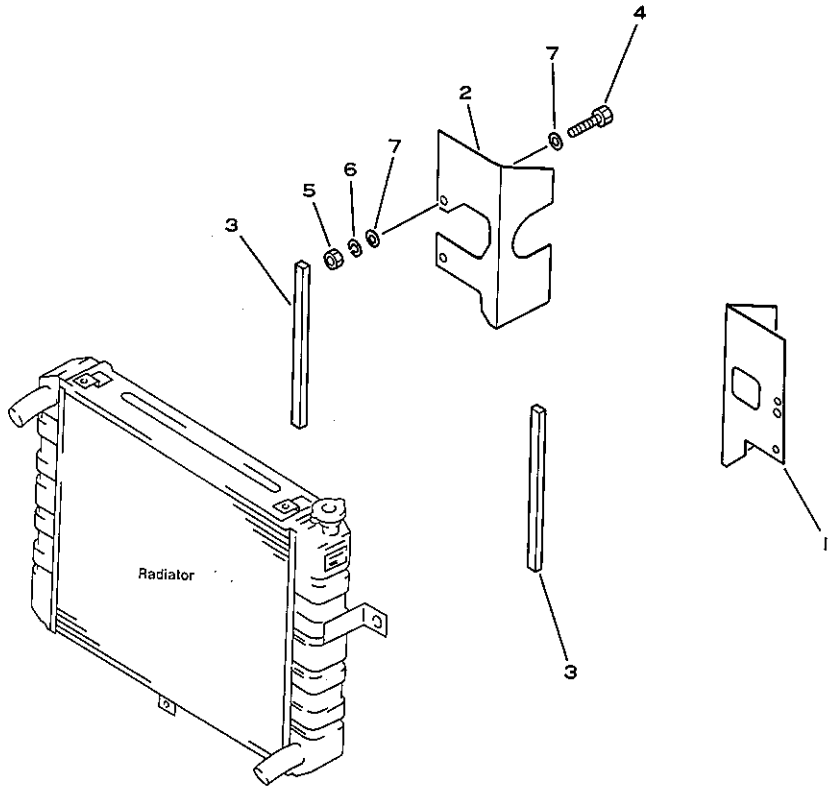

図および索引番号 Fig & Index No.	品番 Part No.	品名 Description	個数 Q'ty
1393A- 1	3EB-04-25730	COVER (L.H)(for H20)	1
	3EB-04-25830	COVER (L.H) (for 4D95S.W)	1
2	3EB-04-25740	COVER (R.H)(for H20)	1
	3EB-04-25840	COVER (R.H) (for 4D95S.W)	1
3	3EB-04-25551	SPONGE.....	2
4	01010-50825	BOLT.....	3
5	01580-10806	NUT.....	3
6	01602-20825	WASHER,spring.....	3
7	01641-20812	WASHER.....	3

適用機種 Application			
FG20S	T	-C	400001A~
FG25S	C	-C	400001A~
FG25S	T	-C	400001A~
FG30S	T	-C	400001A~
FD25	T	-C	480001A~

PIG.1395 RADIATOR COVER (FOR G1600,S)

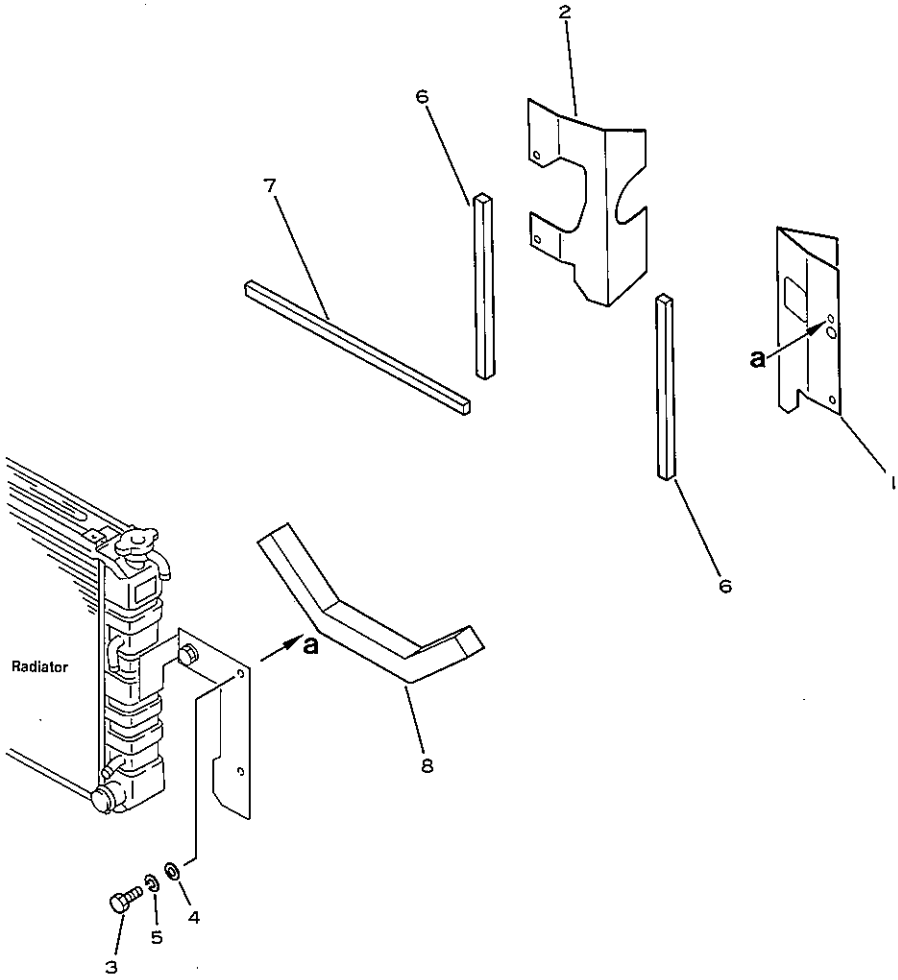

RADIATOR COVER (FOR G1600,S)

図および索引番号 Fig. & Index No.	品番 Part No.	品名 Description	個数 Q'ty	適用機種 Application
1395 - 1	3EB-04-A2860	COVER (L.H).....	1	FG30SG T -C 320003A~
2	3EB-04-A2870	COVER (R.H).....	1	
3	01010-50820	BOLT.....	3	
4	01641-20812	WASHER.....	3	
5	01602-20825	WASHER,spring.....	3	
6	3EB-04-25551	SPONGE.....	2	
7	3EB-04-A2880	SPONGE.....	1	
8	3EB-04-A2890	SPONGE.....	1	

FIG.1403A FUEL SYSTEM (FOR 4D95S.W)

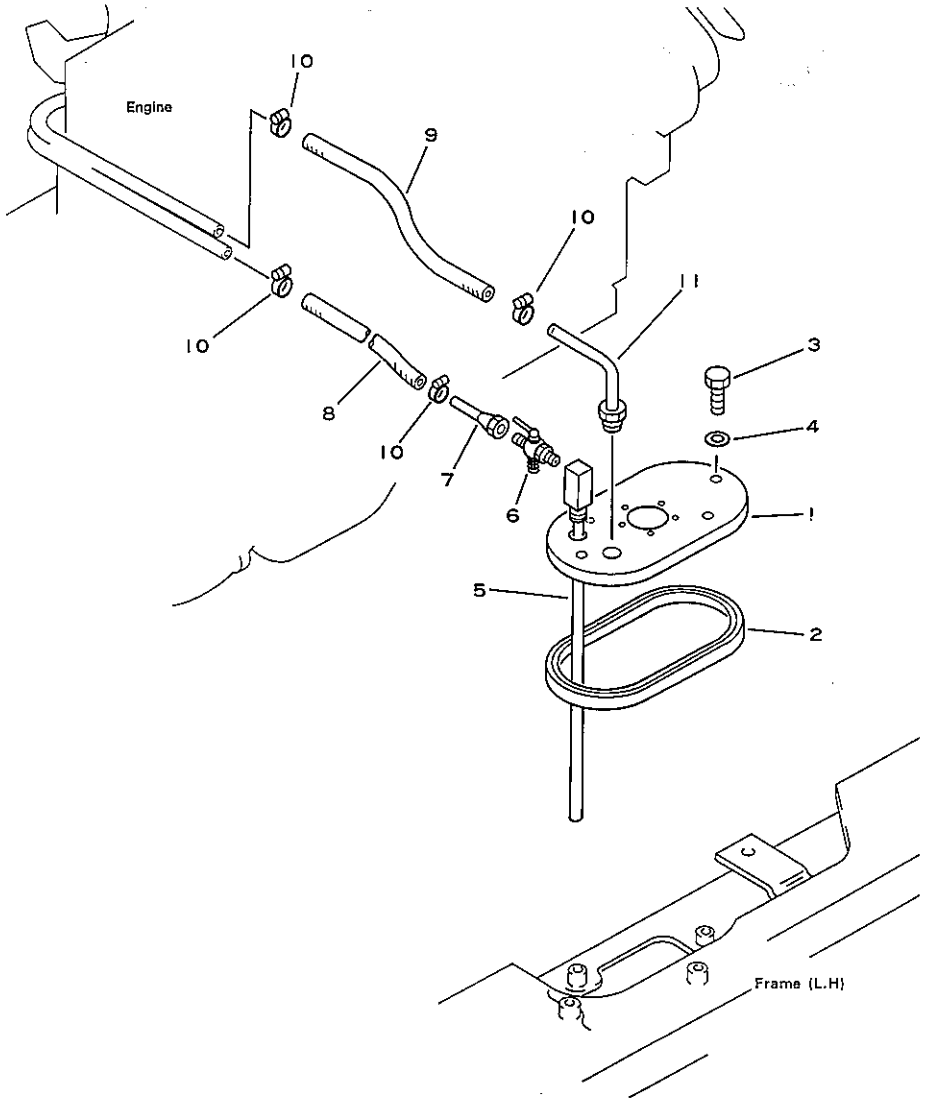

図および索引番号 Fig & Index No.	品番 Part No.	品名 Description	個数 Q'ty
1403A- 1	37B-1CT-2020	COVER.....	1
2	3EB-05-21130	PACKING.....	1
3	01010-50816	BOLT.....	4
4	07005-00812	WASHER,seal.....	4
5	3EB-05-22110	BLOCK.....	1
6	34C-05-23340	COCK.....	1
7	3EB-05-22310	PIPE.....	1
8	37B-1FA-1110	HOSE.....	1
9	37B-1FA-1230	HOSE.....	1
10	07285-00150	CLAMP.....	4
11	3EB-05-21632	PIPE.....	1

適用機種 Application			
FD25	T	-C	430175A~
FD30	T	-C	430175A~
FD25S	T	-C	480001A~

FIG.1453 FUEL SYSTEM (FOR H20)

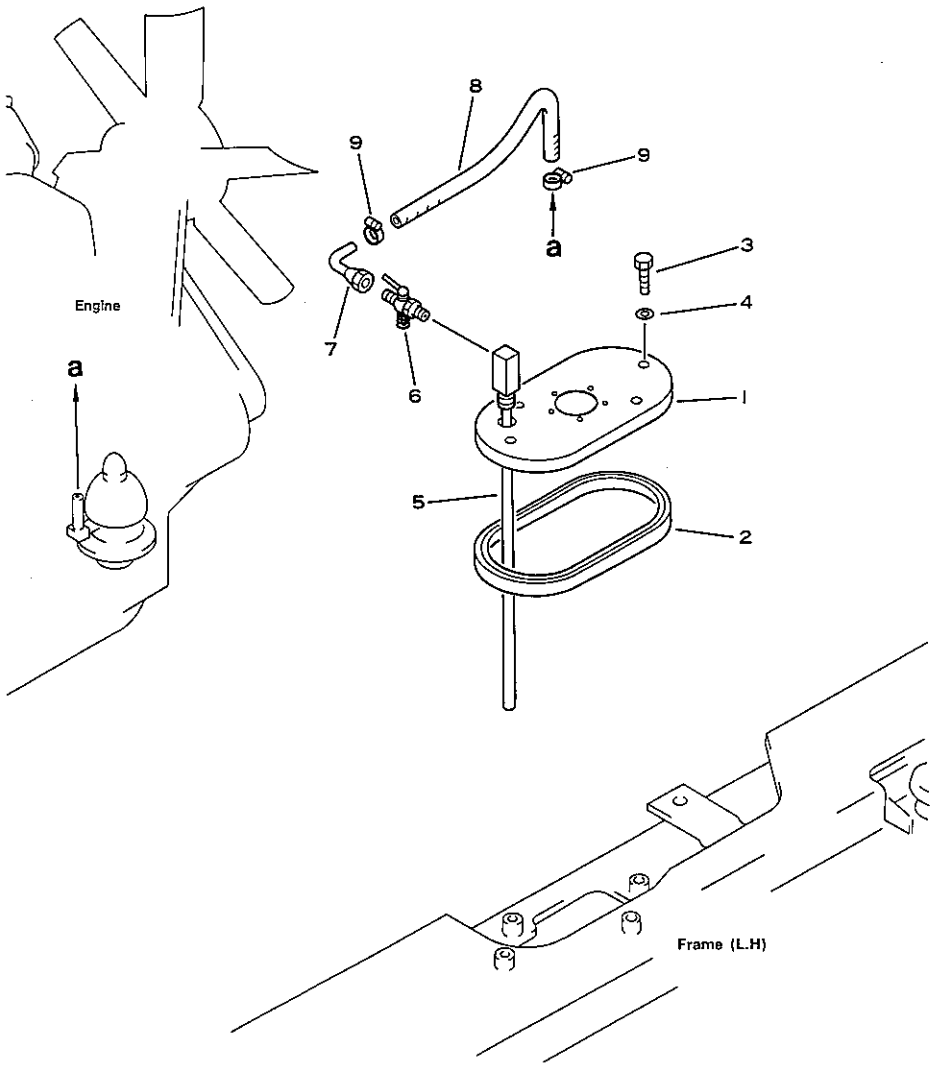

図および索引番号 Fig & Index No.	品番 Part No.	品名 Description	個数 Q'ty
1453 - 1	37B-1CT-2010	COVER.....	1
2	3EB-05-21130	PACKING.....	1
3	01010-50816	BOLT.....	4
4	07005-00812	WASHER,seal.....	4
5	3EB-05-22110	BLOCK.....	1
6	34C-04-23340	COCK.....	1
7	3EA-05-12140	PIPE.....	1
8	37B-1FA-1020	HOSE.....	1
9	07285-00125	CLAMP.....	2

適用機種 Application			
FG20	T	-C	252001A~
FG25	C	-C	252001A~
FG25	T	-C	252001A~
FG30	T	-C	450050A~
FG20S	T	-C	300001A~
FG25S	C	-C	300001A~
FG25S	T	-C	300001A~
FG30S	T	-C	400001A~

FIG.1473 FUEL SYSTEM (FOR G1600)

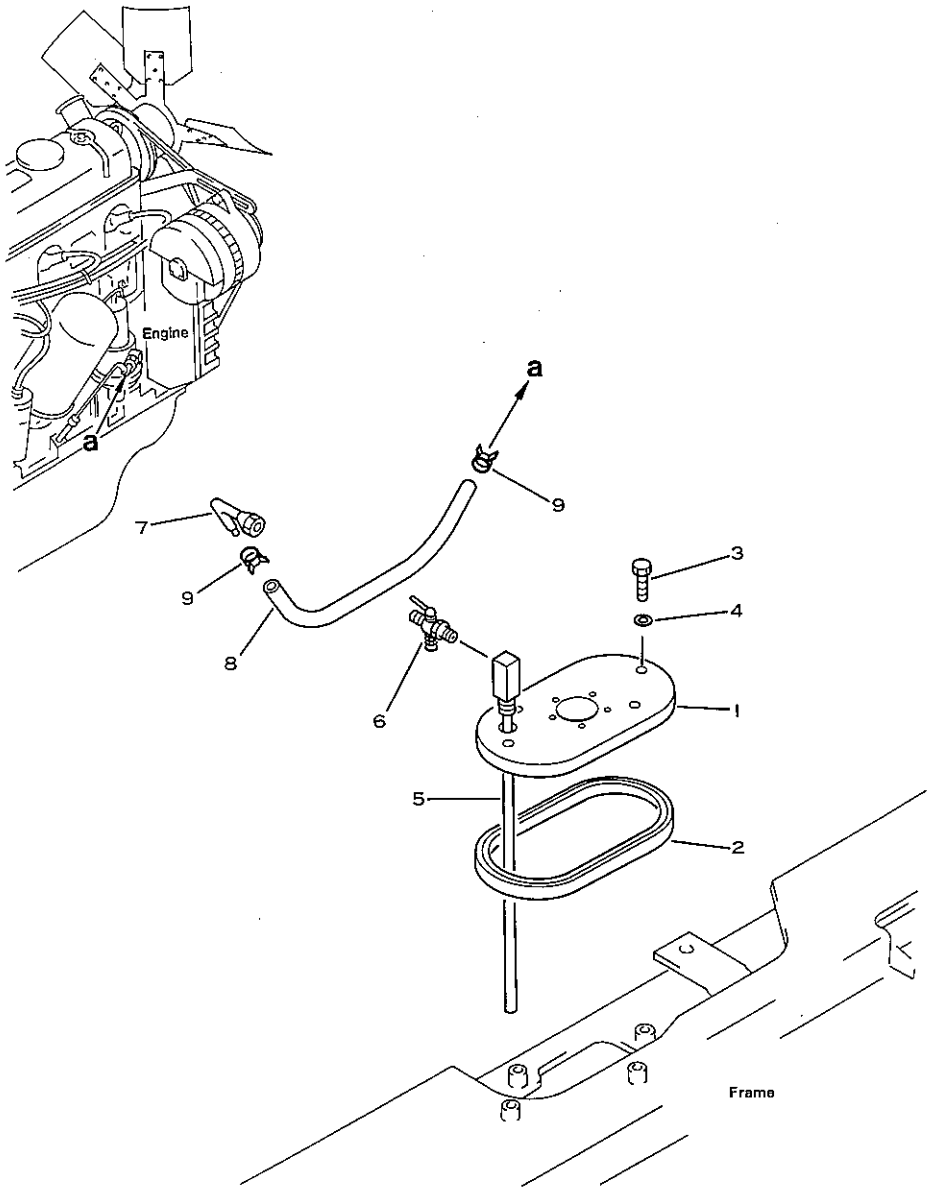

図および索引番号 Fig & Index No.	品番 Part No.	品名 Description	個数 Q'ty
1473 - 1	37B-1CT-2010	COVER.....	1
2	3EB-05-21130	PACKING.....	1
3	01010-50816	BOLT.....	4
4	07005-00812	WASHER,seal.....	4
5	3EB-05-22110	BLOCK.....	1
6	34C-04-23340	COCK.....	1
7	3EA-05-12140	PIPE.....	1
8	37B-1FA-1020	HOSE.....	1
9	07285-00125	CLAMP.....	2

適用機種 Application
FG30G T -C 290222A~
FG30SG T -C 320003A~

.FIG.1501A ELECTRICAL SYSTEM (FOR 4D95S.W)

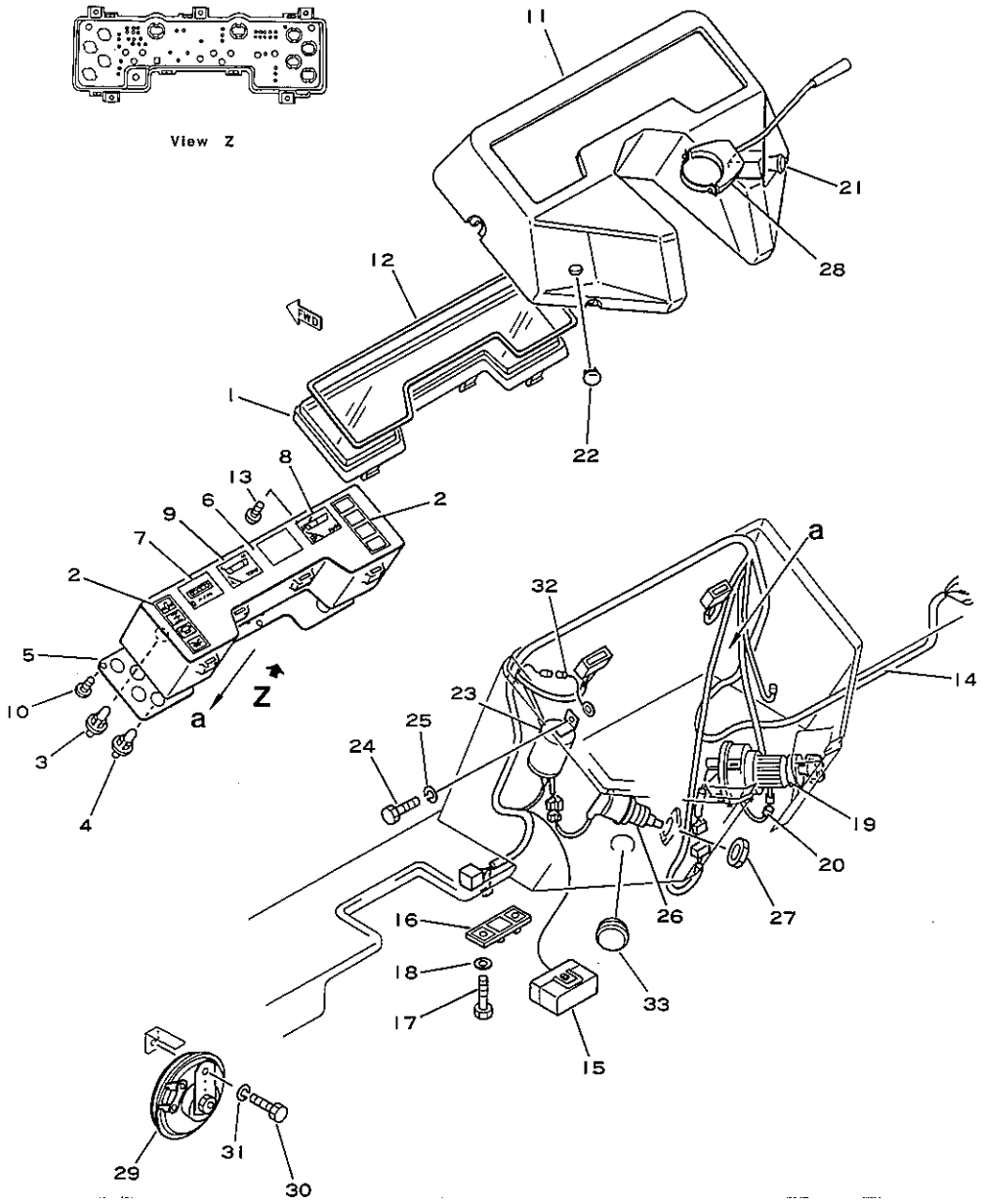

図および索引番号 Fig & Index No.	品番 Part No.	品名 Description	個数 Q'ty
	37B-1CP-2902	METER PANEL ASS'Y (with water temperature gauge)	1
	37B-1CP-2912	.PANEL ASS'Y (with water temperature gauge)	1
1501A- 1	3EB-50-23520	..PLATE.....	1
2	3EB-50-23530	..LENS KIT.....	1
3	3EB-50-23560	..BULB (12V,3.4W) (for HOUR,GAUGE)	2
4	3EB-50-23580	..BULB (12V,3.4W) (for SAFETY CHECKER)	4
5	3EB-50-23551	..PLATE ASS'Y.....	1
6	3EB-50-23940	..PLATE (with water temperature gauge)	1
7	3EB-50-23620	..METER,hour.....	1
8	3EB-50-23651	..GAUGE,fuel.....	1
9	3EB-50-23631	..GAUGE,water.....	1
10	3EB-50-23590	..SCREW.....	3
11	3EB-50-23510	.PANEL.....	1
12	3EB-50-23540	.PACKING.....	1
13	3EB-50-23570	.SCREW.....	5
14	3EB-55-21116	HARNESS,wiring.....	1
15	3EB-55-21211	.FUSE BOX ASS'Y.....	1
	37B-1EJ-2010	..FUSE (10A).....	5
	37B-1EJ-2020	..FUSE (15A).....	1
16	3EB-55-21250	BRACKET.....	1
17	01220-40612	BOLT.....	2
18	01642-20608	WASHER.....	2
19	3EB-55-21162	SWITCH,starting.....	1
	3EB-55-11580	.KEY.....	2
20	3EB-55-22690	WIRE.....	1
21	34C-55-12411	SWITCH,lighting.....	1
22	3EB-50-21150	CLIP.....	1
23	3EB-55-23320	FLASHER UNIT.....	1
24	01010-50610	BOLT.....	1
25	01602-20619	WASHER,spring.....	1
26	3EB-55-23210	SWITCH,back lamp(T1)	1
27	3EB-35-22760	NUT (T1).....	1

適用機種 Application
FD25 T -C 430175A~
FD30 T -C 430175A~
FD25S T -C 480001A~

ELECTRICAL SYSTEM (FOR 4D95S.W)

図および索引番号 Fig & Index No.	品番 Part No.	品名 Description	個数 Q'ty	適用機種 Application
1501A-28	3EB-55-11270	SWITCH,turn signal..	1	
29	3EB-55-23510	HORN.....	1	
30	01010-50816	BOLT.....	1	
31	01602-20825	WASHER,spring.....	1	
32	3EB-55-21120	WIRE,earth.....	1	
33	34A-55-24471	COVER.....	1	

FIG.1502A ELECTRICAL SYSTEM (FOR 4D95S.W)

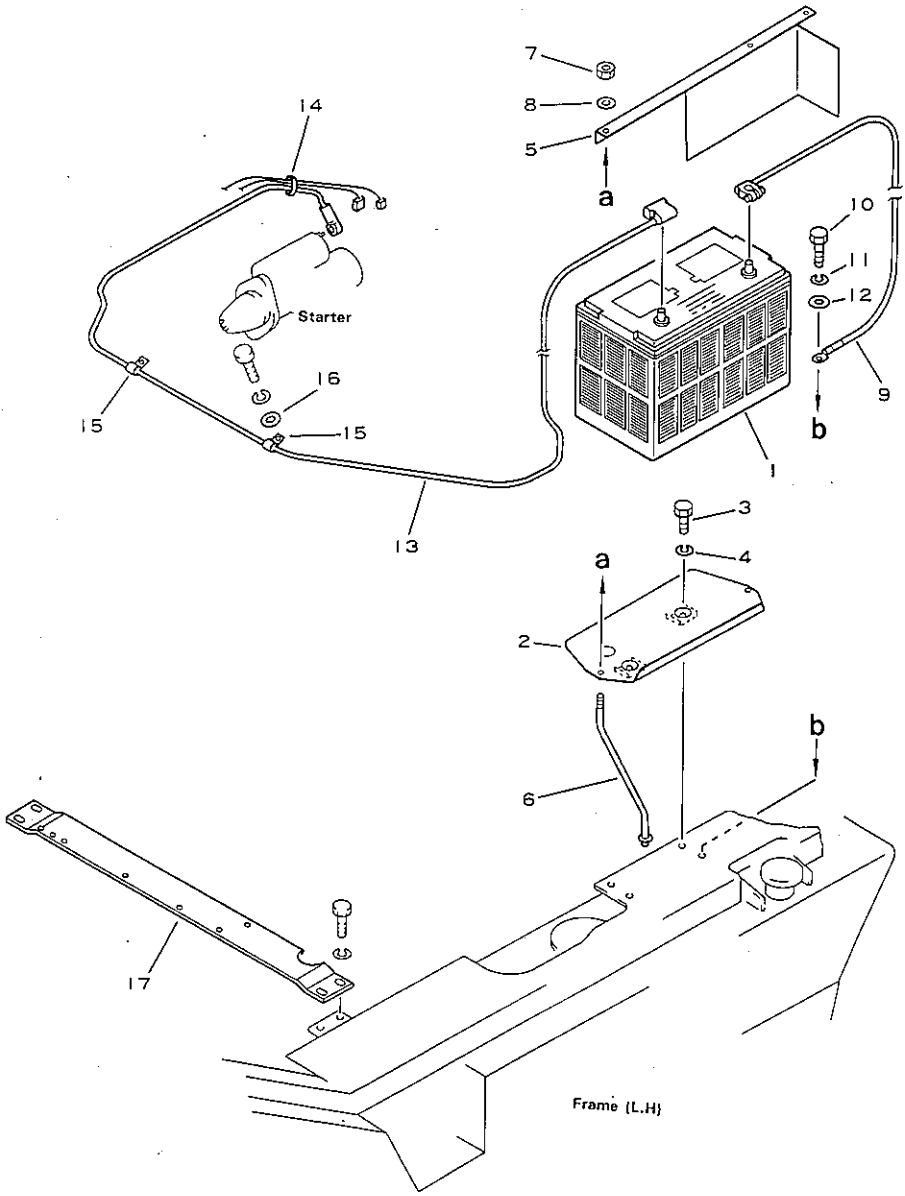

図および索引番号 Fig & Index No.	品番 Part No.	品名 Description	個数 Q'ty
1502A- 1	3EB-55-A2460	BATTERY.....	1
2	3EB-55-24522	HOLDER.....	1
3	01010-50820	BOLT.....	2
4	01602-20825	WASHER,spring.....	2
5	3EB-55-24532	ANGLE.....	1
6	34A-55-12380	CLAMP.....	2
7	01580-10605	NUT.....	2
8	01641-20608	WASHER.....	2
9	3EB-55-24560	CABLE.....	1
10	01010-50812	BOLT.....	1
11	01602-20825	WASHER,spring.....	1
12	01641-20812	WASHER.....	1
13	3EB-55-24750	CABLE.....	1
14	37B-1AE-6010	BAND.....	7
15	08036-01414	CLIP.....	2
16	01642-21016	WASHER.....	2
17	3EB-51-21181	BRACKET.....	1

適用機種 Application
FD25 T -C 430175A~
FD30 T -C 430175A~
FD25S T -C 480001A~

FIG.1503A ELECTRICAL SYSTEM (FOR 4D95S.W)

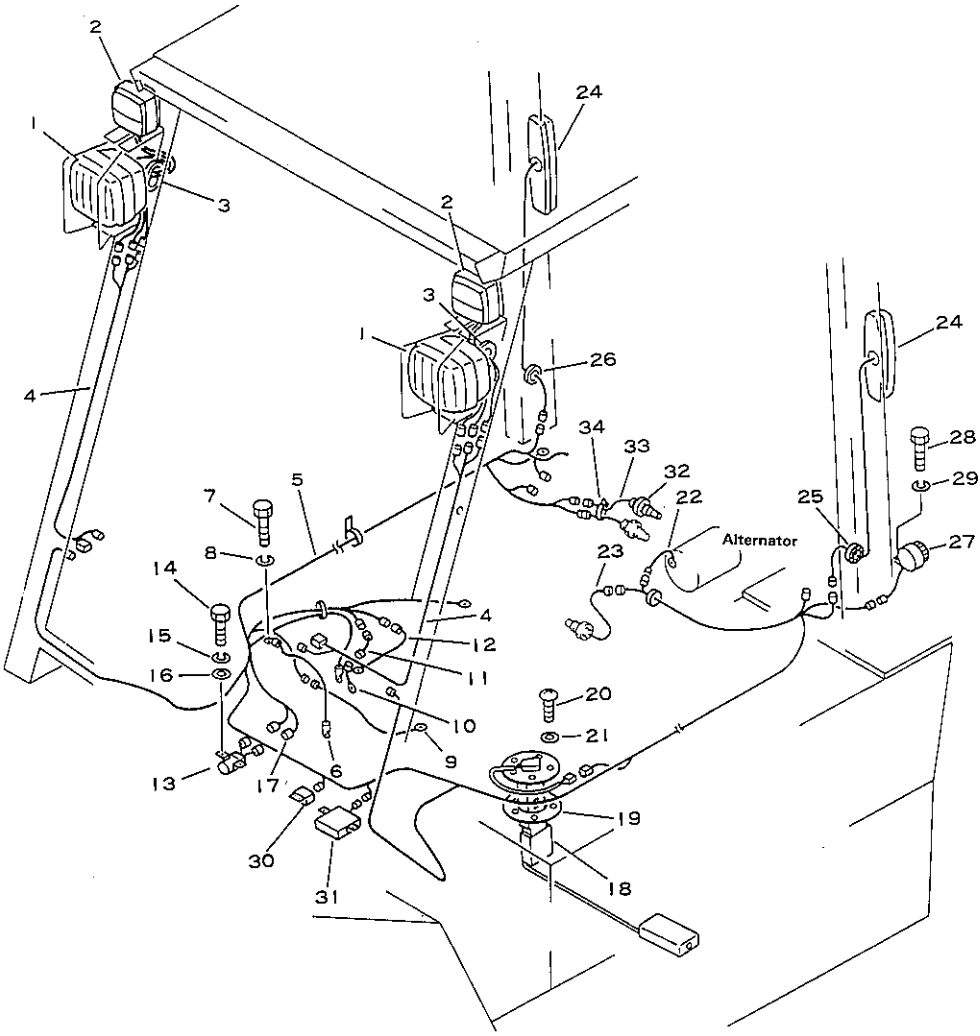

図および索引番号 Fig & Index No.	品番 Part No.	品名 Description	個数 Q'ty	適用機種 Application
1503A- 1	37B-1AE-1010	HEAD LAMP ASS'Y.....	2	FD25 T -C 430175A~ FD30 T -C 430175A~ FD25S T -C 480001A~
	3EB-55-11220	.LENS.....	1	
	08103-01235	.BULB (12V,35W).....	1	
2	37B-1EH-2010	WINKER LAMP ASS'Y...	2	
	08105-01220	.BULB (12V,23W).....	1	
	3EB-55-11290	.BULB.....	1	
	3EB-55-11240	.LENS,front.....	1	
	3EB-55-11250	.LENS,rear.....	1	
3	3EB-55-23370	GROMMET.....	2	
4	3EB-55-23421	WIRE.....	2	
5	3EB-55-25312	HARNESS,wiring.....	1	
6	3EB-55-24580	CABLE.....	1	
7	01010-50812	BOLT.....	1	
8	01602-20825	WASHER,spring.....	1	
9	3EB-55-22660	WIRE,glow.....	1	
10	3EB-55-22270	WIRE,fusible link...	1	
11	3EB-55-22790	WIRE.....	1	
12	3EB-55-22780	WIRE.....	1	
13	3EB-56-12920	RELAY,glow.....	1	
14	01010-50610	BOLT.....	5	
15	01602-20619	WASHER,spring.....	5	
16	01641-20812	WASHER.....	3	
17	3EB-55-22620	WIRE.....	1	
18	3EB-55-28112	TANK UNIT.....	1	
	3EB-55-28512	TANK UNIT (for S)...	1	
19	324-06-11330	PACKING.....	1	
20	01220-40512	SCREW.....	5	
21	3SB-55-11380	GASKET.....	5	
22	3EB-55-22670	WIRE.....	1	
23	3EB-55-22680	WIRE (oil pressure).	1	
	37A-1AE-1010	REAR COMBINATION LAMP ASS'Y	2	
24	3EB-55-12322	.LENS.....	1	
	08104-01220	.BULB (12V,23/8W)...	1	
	08105-01220	.BULB (12V,23W).....	1	
	08110-01210	.BULB (12V,10W).....	1	

ELECTRICAL SYSTEM (FOR 4D95S.W)

図および索引番号 Fig & Index No.	品番 Part No.	品名 Description	個数 Q'ty	適用機種 Application
1503A-25	08037-05016	GROMMET.....	1	
26	3EB-55-23340	GROMMET.....	1	
27	3EB-55-14110	BACK BUZZER.....(OP)	1	
28	01010-50610	BOLT.....(OP)	1	
29	01602-20619	WASHER,spring...(OP)	1	
30	600-311-9670	DITECTOR,sedimenter.	1	
31	600-815-7921	CONTROLLER,QGS-	1	
32	307-06-16340	SENDING UNIT, water temperature	1	
33	3EB-56-22110	WIRE.....	1	
34	37B-1AE-6030	BAND.....	2	

FIG.1601B ELECTRICAL SYSTEM (FOR H20,G1600)

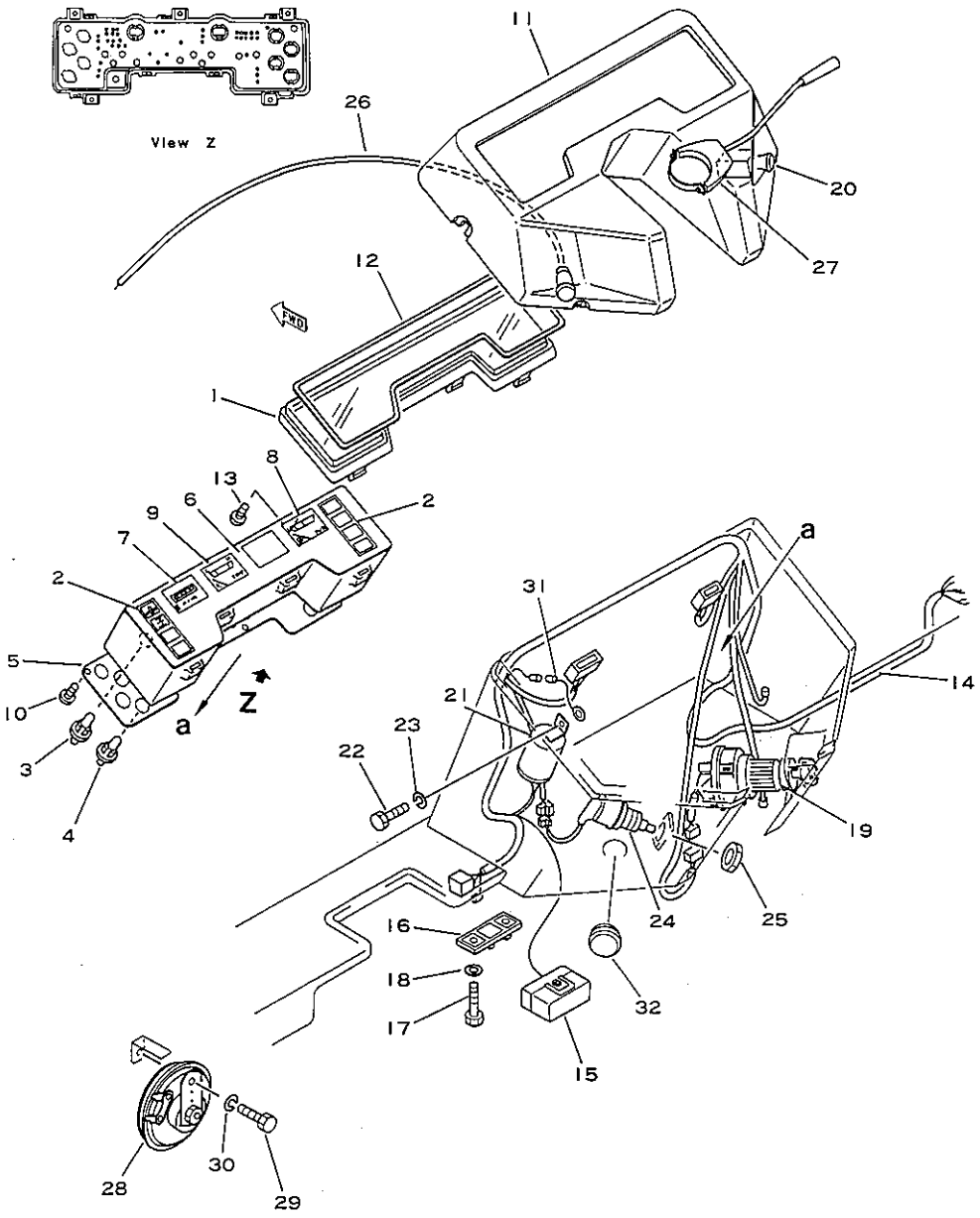

図および索引番号 Fig & Index No.	品番 Part No.	品名 Description	個数 Q'ty
	37B-1CP-2602	METER PANEL ASS'Y (with water temperature gauge)	1
	37B-1CP-2612	.PANEL ASS'Y (with water temperature gauge)	1
1601B- 1	3EB-50-23520	..PLATE.....	1
2	3EB-50-23530	..LENS KIT.....	1
3	3EB-50-23560	..BULB (12V,3.4W) (for HOUR,GAUGE)	2
4	3EB-50-23580	..BULB (12V,3.4W) (for SAFETY CHECKER)	3
5	3EB-50-23551	..PLATE ASS'Y.....	1
6	3EB-50-23940	..PLATE (with water temperature gauge)	1
7	3EB-50-23620	..METER,hour.....	1
8	3EB-50-23651	..GAUGE,fuel.....	1
9	3EB-50-23631	..GAUGE,water.....	1
10	3EB-50-23590	..SCREW.....	3
11	3EB-50-23510	.PANEL.....	1
12	3EB-50-23540	.PACKING.....	1
13	3EB-50-23570	.SCREW.....	5
14	3EB-55-21116	HARNESS,wiring.....	1
	3EB-55-21211	.FUSE BOX ASS'Y.....	1
15	37B-1EJ-2010	..FUSE (10A).....	5
	37B-1EJ-2020	..FUSE (15A).....	1
16	3EB-55-21250	BRACKET.....	1
17	01220-40612	BOLT.....	2
18	01642-20608	WASHER.....	2
	3EB-55-21162	SWITCH,starting.....	1
19	3EB-55-11580	.KEY.....	2
20	34C-55-12411	SWITCH,lighting.....	1
21	3EB-55-23320	FLASHER UNIT.....	1
22	01010-50610	BOLT.....	1
23	01602-20619	WASHER,spring.....	1
24	3EB-55-23210	SWITCH,back lamp(T1)	1
25	3EB-35-22760	NUT (T1).....	1
26	37B-1EC-2010	CABLE,choke (for H20)	1

適用機種 Application			
FG20	T	-C	450050A~
FG25	C	-C	450050A~
FG25	T	-C	450050A~
FG30	T	-C	450050A~
FG20S	T	-C	400001A~
FG25S	C	-C	400001A~
FG25S	T	-C	400001A~
FG30S	T	-C	400001A~
FG30G	T	-C	490001A~
FG30SG	T	-C	490002A~

ELECTRICAL SYSTEM (FOR H20,G1600)

図および索引番号 Fig & Index No.	品番 Part No.	品名 Description	個数 Q'ty	適用機種 Application
1601B-26	37B-1EC-2030	CABLE,choke (for G1600)	1	
27	3EB-55-11270	SWITCH,turn signal..	1	
28	3EB-55-23510	HORN.....	1	
29	01010-50816	BOLT.....	1	
30	01602-20825	WASHER,spring.....	1	
31	3EB-55-21120	WIRE,earth.....	1	
32	34A-55-24471	COVER.....	1	

FIG.1602 ELECTRICAL SYSTEM (FOR H20,G1600)

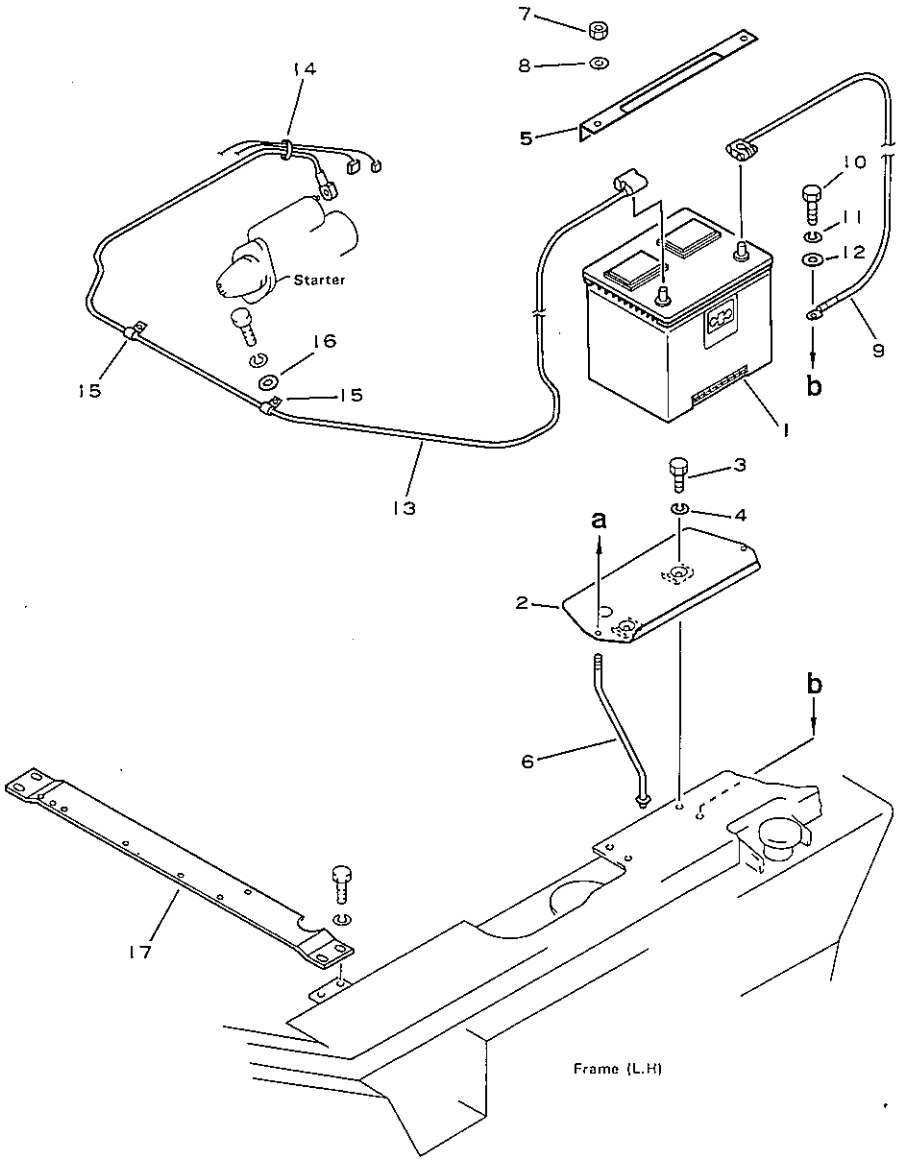

図および索引番号 Fig & Index No.	品番 Part No.	品名 Description	個数 Q'ty
1602 - 1	3EB-55-A1810	BATTERY.....	1
2	3EB-55-24221	HOLDER.....	1
3	01010-50820	BOLT.....	2
4	01602-20825	WASHER,spring.....	2
5	3EA-55-A1410	ANGLE.....	1
6	3EB-55-12140	CLAMP.....	2
7	01580-10605	NUT.....	2
8	01641-20608	WASHER.....	2
9	3EB-55-24160	CABLE.....	1
10	01010-50812	BOLT.....	1
11	01602-20825	WASHER,spring.....	1
12	01641-20812	WASHER.....	1
13	3EB-55-24150	CABLE.....	1
* 14	37B-1AE-6010	BAND.....	1
15	08036-01414	CLIP.....	2
16	01642-21016	WASHER.....	2
* 17	3EB-51-21141	BRACKET.....	1

適用機種 Application			
FG20	T	-C	252001A~
FG25	C	-C	252001A~
FG25	T	-C	252001A~
FG30	T	-C	450050A~
FG20S	T	-C	300001A~
FG25S	C	-C	300001A~
FG25S	T	-C	300001A~
FG30S	T	-C	400001A~
FG30G	T	-C	290222A~
FG30SG	T	-C	320003A~

FIG.1603A ELECTRICAL SYSTEM (FOR H20)

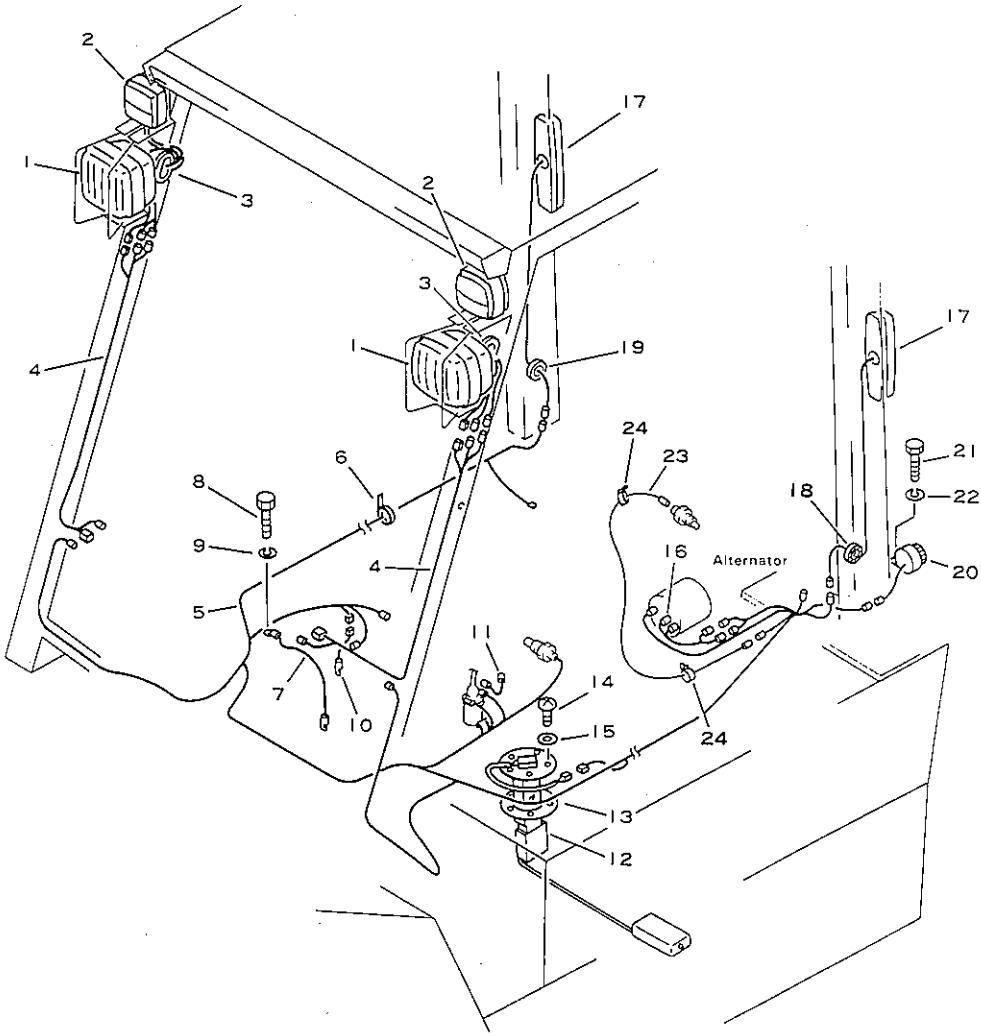

図および索引番号 Fig & Index No.	品番 Part No.	品名 Description	個数 Q'ty
1603A- 1	37B-1AE-1010	HEAD LAMP ASS'Y.....	2
	3EB-55-11220	.LENS.....	1
	08103-01235	.BULB (12V,35W).....	1
2	37B-1EH-2010	WINKER LAMP ASS'Y...	2
	08105-01220	.BULB (12V,23W).....	1
	3EB-55-11290	.BULB.....	1
	3EB-55-11240	.LENS,front.....	1
	3EB-55-11250	.LENS,rear.....	1
3	3EB-55-23370	GROMMET.....	2
4	3EB-55-23421	WIRE.....	2
5	3EB-55-25112	HARNESS,wiring.....	1
6	37B-1AE-6010	BAND.....	6
7	3EB-55-24580	CABLE.....	1
8	01010-50812	BOLT.....	1
9	01602-20825	WASHER,spring.....	1
10	3EB-55-22240	WIRE,fusible link...	1
11	304-06-34140	WIRE,distributor....	1
12	3EB-55-28112	TANK UNIT.....	1
	3EB-55-28512	TANK UNIT (for S)...	1
13	324-06-11330	PACKING.....	1
14	01220-40512	SCREW.....	5
15	3SB-55-11380	GASKET.....	5
16	3EB-55-22120	WIRE.....	1
	37A-1AE-1010	REAR COMBINATION LAMP ASS'Y	2
17	3EB-55-12322	.LENS.....	1
	08104-01220	.BULB (12V,23/8W)...	1
	08105-01220	.BULB (12V,23W).....	1
	08110-01210	.BULB (12V,10W).....	1
18	3EB-55-23350	GROMMET.....	1
19	3EB-55-23340	GROMMET.....	1
20	3EB-55-14110	BACK BUZZER.....	1
21	01010-50610	BOLT.....	1
22	01602-20619	WASHER,spring.....	1
23	3EB-56-22110	WIRE.....	1
24	37B-1AE-6030	TIEWRAP.....	2

適用機種 Application
FG20 T -C 450050A~
FG25 C -C 450050A~
FG25 T -C 450050A~
FG30 T -C 450050A~
FG20S T -C 400001A~
FG25S C -C 400001A~
FG25S T -C 400001A~
FG30S T -C 400001A~

FIG.1605 ELECTRICAL SYSTEM (FOR G1600)

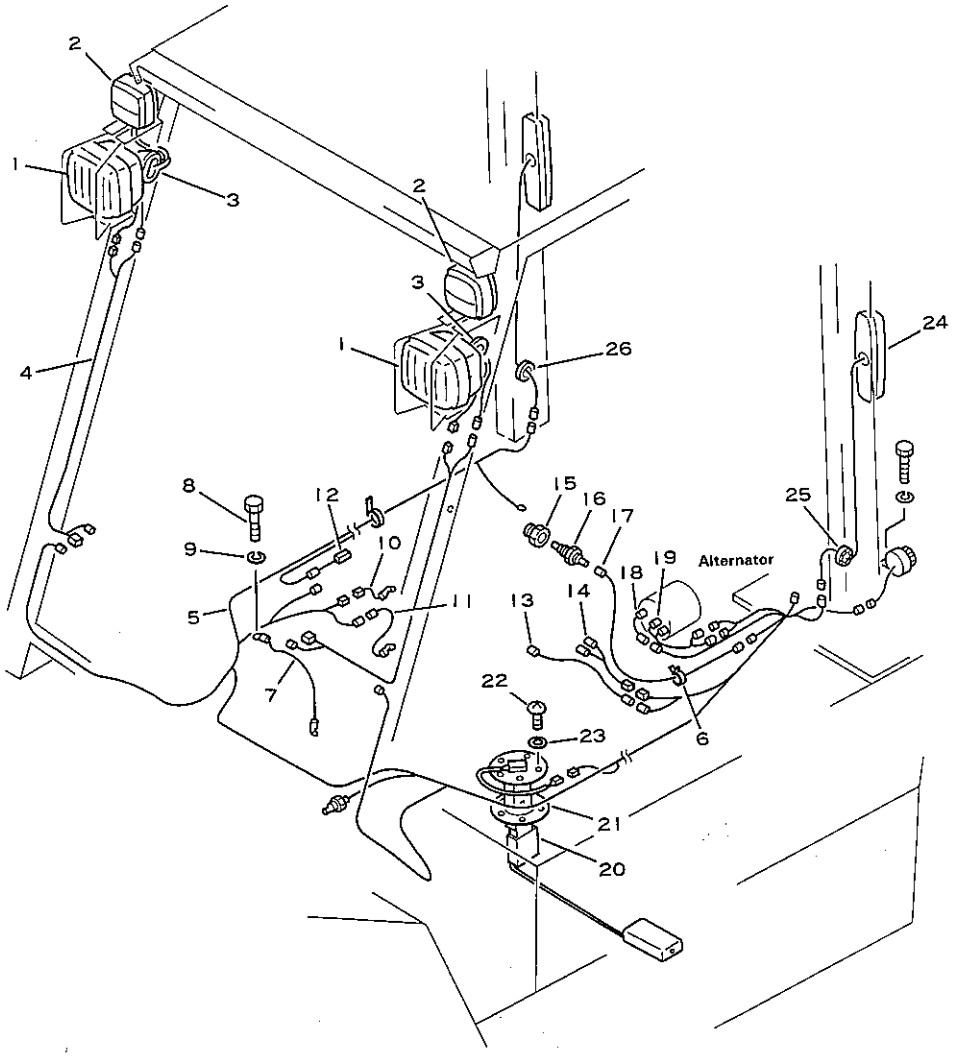

図および索引番号 Fig & Index No.	品番 Part No.	品名 Description	個数 Q'ty
1605 - 1	37B-1AE-1010	HEAD LAMP ASS'Y.....	2
	3EB-55-11220	.LENS.....	1
	08103-01235	.BULB (12V,35W).....	1
2	37B-1EH-2010	WINKER LAMP ASS'Y...	2
	08105-01220	.BULB (12V,23W).....	1
	3EB-55-11290	.BULB.....	1
	3EB-55-11240	.LENS,front.....	1
	3EB-55-11250	.LENS,rear.....	1
3	3EB-55-23370	GROMMET.....	2
4	3EB-55-23421	WIRE.....	2
5	3EB-55-A2510	HARNESS,wiring.....	1
6	37B-1AE-6030	BAND.....	1
7	3EB-55-24580	CABLE.....	1
8	01010-50812	BOLT.....	1
9	01602-20825	WASHER,spring.....	1
10	3EB-55-A2530	WIRE,fusible link...	1
11	3EB-55-A2550	WIRE.....	1
12	3EB-55-A2990	WIRE.....	1
13	3EB-55-A2550	WIRE,ignition coil..	1
14	3EB-55-A2570	WIRE,engine oil pressure switch	1
15	3EB-55-A2580	ADAPTER.....	1
16	307-06-16340	SEDING UNIT.....	1
17	3EB-56-22110	WIRE.....	1
18	3EB-55-A2570	WIRE.....	1
19	3EB-55-A2520	WIRE.....	1
20	3EB-55-28112	TANK UNIT.....	1
	3EB-55-28512	TANK UNIT (for S)...	1
21	324-06-11330	PACKING.....	1
22	01220-40512	SCREW.....	5
23	3SB-55-11380	GASKET.....	5
24	37A-1AE-1010	REAR COMBINATION LAMP ASS'Y	2
	3EB-55-12322	.LENS.....	1
	08104-01220	.BULB (12V,23W/8W)..	1
	08105-01220	.BULB (12V,23W).....	1

適用機種 Application
FG30G T -C 290222A~
FG30SG T -C 320003A~

ELECTRICAL SYSTEM (FOR G1600)

図および索引番号 Fig & Index No.	品番 Part No.	品名 Description	個数 Q'ty	適用機種 Application
	08110-01210	.BULB (12V,10W).....	1	
1605 -25	3EB-55-23350	GROMMET.....	1	
26	3EB-55-23340	GROMMET.....	1	

CLUTCH,TORQUE CONVERTOR AND TRANSMISSION

FIG.2001A DRY CLUTCH

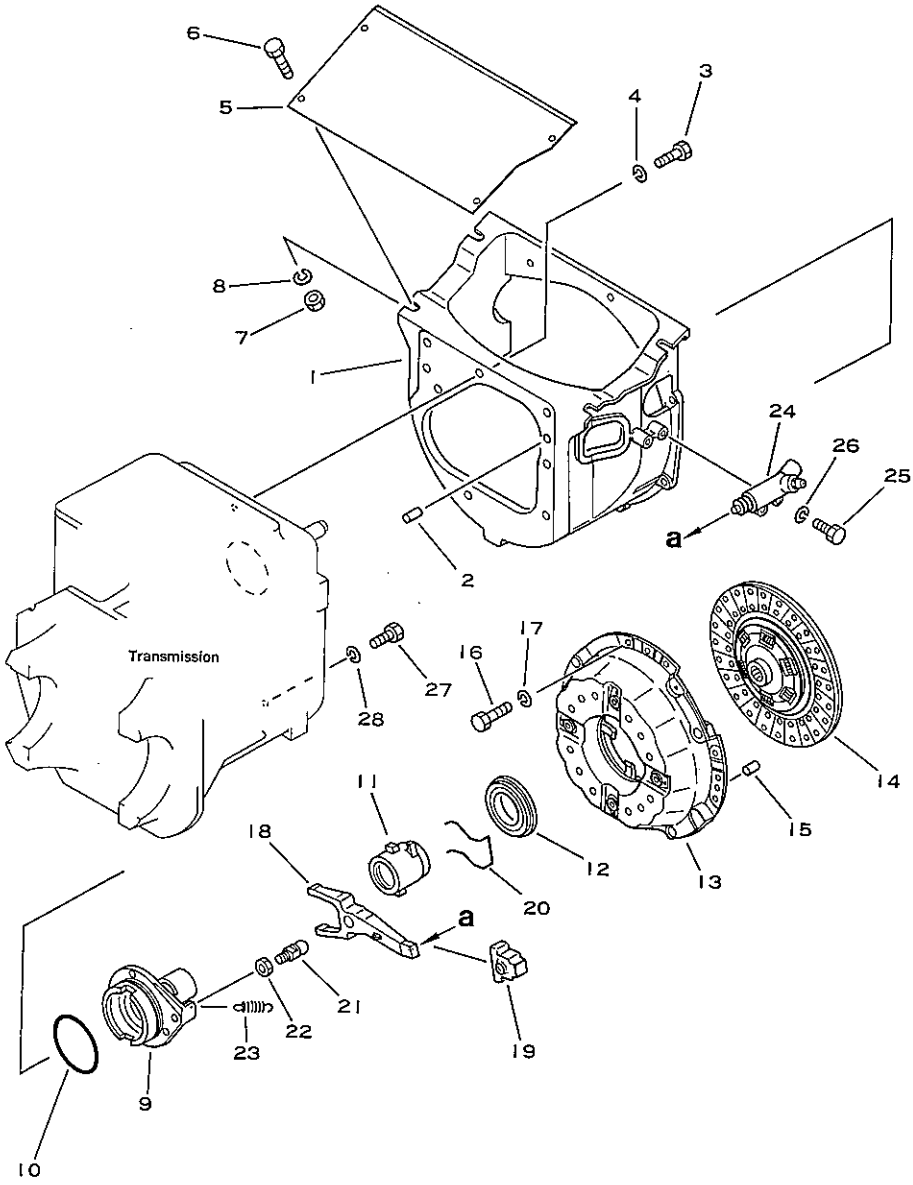

図索引番号 Fig & Index No.	品番 Part No.	品名 Description	個数 Q'ty
2001A- 1	3EB-10-21110	CASE.....	1
2	04020-01228	PIN.....	2
3	01010-51235	BOLT.....	7
4	01602-21236	WASHER,spring.....	7
5	3EB-10-21150	COVER.....	1
6	01010-51030	BOLT.....	4
7	01598-01011	NUT.....	4
8	01642-21016	WASHER,spring.....	4
9	3EB-10-21162	FLANGE.....	1
10	07000-02090	O-RING.....	1
	3EB-10-00010	SLEEVE ASS'Y.....	1
11	*	.SLEEVE.....	1
12	307-14-11750	.BEARING.....	1
13	3EB-10-21610	PRESSURE PLATE.....	1
14	3EB-10-11920	DISC (non asbestos).	1
15	04020-00616	PIN.....	2
16	01010-50818	BOLT.....	8
17	01602-20825	WASHER,spring.....	8
18	3EB-10-21130	YOKE.....	1
19	3EB-10-21140	COVER.....	1
20	3EB-10-21170	SPRING.....	1
21	3EA-10-11141	ROD END.....	1
22	01583-11408	NUT.....	1
23	3EB-10-11150	SPRING.....	1
24	3EB-10-21211	CLUTCH RELEASE CYLINDER ASS'Y	1
25	01010-50825	BOLT.....	2
26	01602-20825	WASHER,spring.....	2
27	01010-51220	BOLT.....	1
28	01602-21236	WASHER,spring.....	1

適用機種 Application			
FG25	C	-C	450050A~
FG25S	C	-C	400001A~

FIG.2041A CLUTCH RELEASE CYLINDER

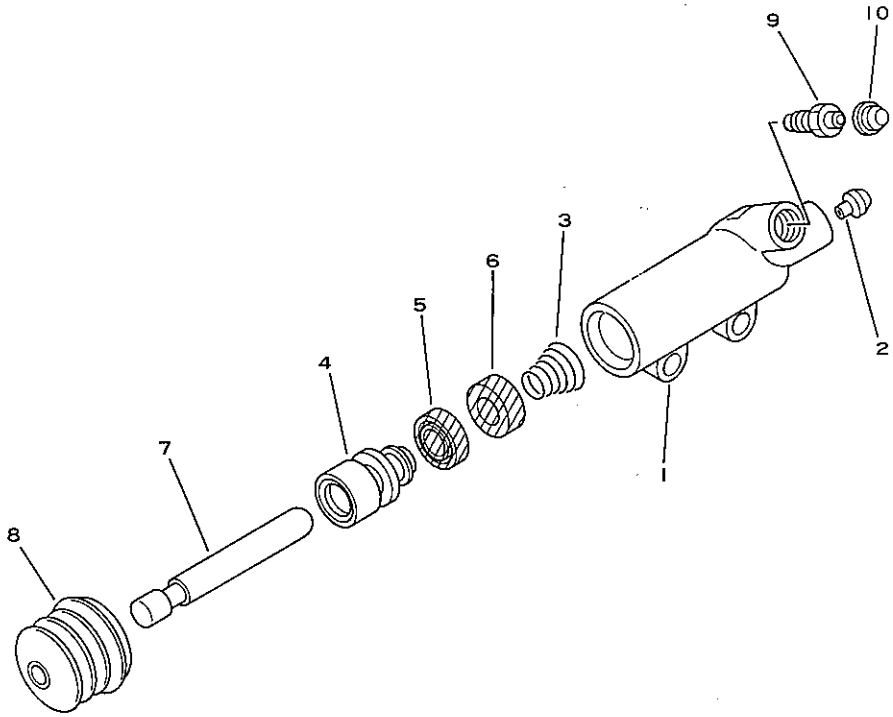

図および索引番号 Fig. & Index No.	品番 Part No.	品名 Description	個数 Q'ty
	(3EB-10-21211)	CLUTCH RELEASE CYLINDER ASS'Y	1
2041A- 1	*	.BODY.....	1
2	*	.SHEET.....	1
3	3EC-36-11660	.SPRING.....(K11A)	1
	3EC-36-00121	.PISTON SUB ASS'Y (K11A)	1
4	3EC-36-11681	..PISTON.....(K11A)	1
5	3EC-36-11691	..CUP.....(K11A)	1
6	3EC-36-11671	..CUP.....(K11A)	1
7	3EB-10-21230	.ROD.....	1
8	3EC-36-11720	.BOOT.....(K11A)	1
9	3EC-36-11630	.PLUG.....	1
10	3EC-36-11620	.CAP.....(K11A)	1
K11A	3EC-36-05021	CLUTCH RELEASE CYLINDER KIT	1

適用機種 Application			
FG25	C	-C	450050A~
FG25S	C	-C	400001A~

FIG.2101A TORQUE CONVERTER

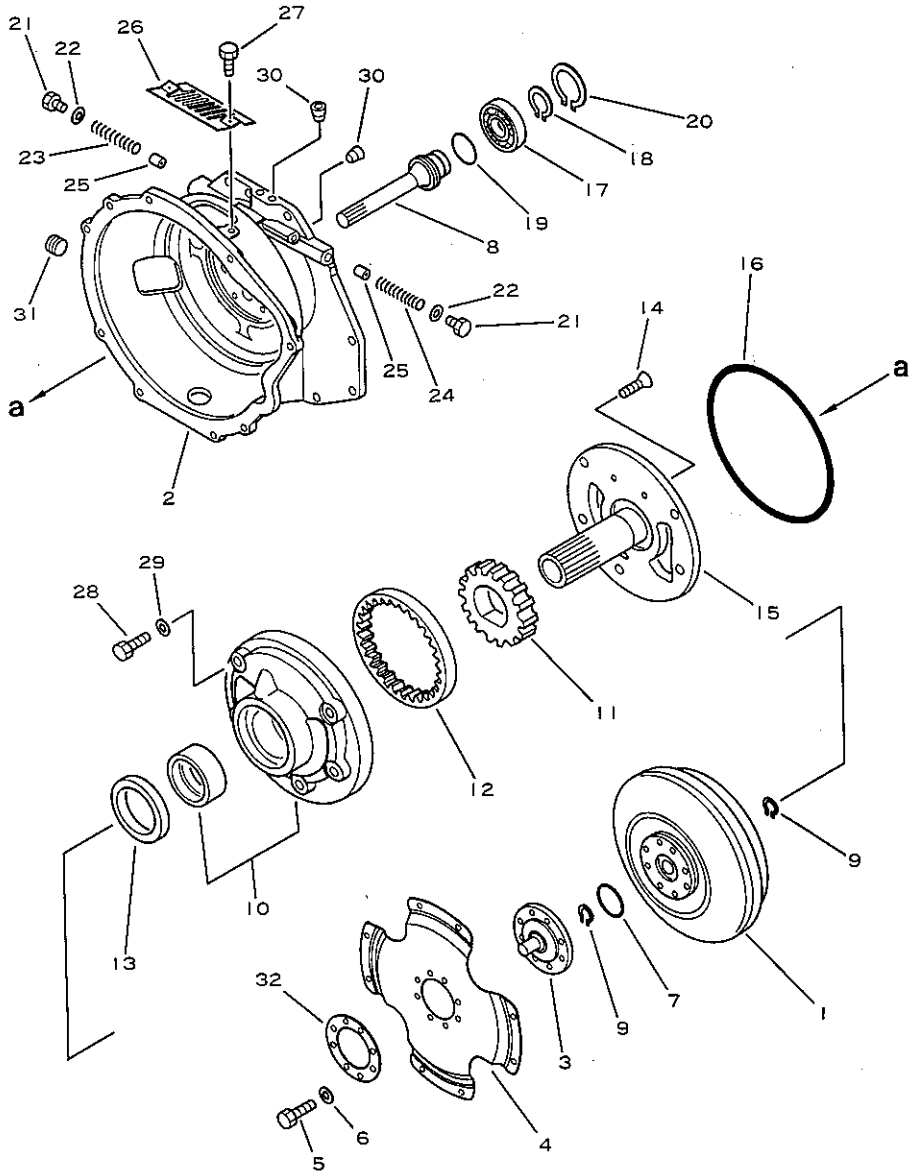

図および索引番号 Fig. & Index No.	品番 Part No.	品名 Description	個数 Q'ty
2101A- 1	3EB-13-22022	TORQUE CONVERTER ASS'Y	1
2	3EB-13-22312	HOUSING.....	1
3	3EB-13-22322	GUIDE,input.....	1
4	3EB-13-22332	PLATE,input.....	1
5	3EB-13-12340	BOLT.....	8
6	3EB-13-12350	WASHER.....	8
7	3EB-13-12360	O-RING.....(K22A)	1
8	3EB-13-22372	SHAFT,turbine.....	1
9	3EB-13-12380	RING,snap.....	2
	3EB-13-22042	GEAR PUMP ASS'Y.....	1
10	*	.CASE ASS'Y.....	1
11	*	.GEAR,drive.....	1
12	*	.GEAR,driven.....	1
13	3EB-13-22422	.SEAL,oil.....(K22A)	1
14	3EB-13-22432	.SCREW.....	1
15	3EB-13-22452	.SUPPORT,stator.....	1
16	3EB-13-22442	.O-RING.....	1
17	3EB-13-12610	BEARING,ball.....	1
18	3EB-13-12630	RING,snap.....	1
19	3EB-13-22632	RING,seal.....(K22A)	1
20	3EB-13-12620	RING,snap.....	1
21	3EB-13-12680	PLUG.....	2
22	3EB-13-12690	GASKET.....(K22A)	2
23	3EB-13-22652	SPRING,pressure.....	1
24	3EB-13-12720	SPRING,pressure.....	1
25	3EB-13-12730	PISTON.....	2
26	3EB-13-12770	COVER.....	1
27	3EB-13-12780	BOLT.....	2
28	3EB-13-22662	BOLT.....	5
29	3EB-13-22672	GASKET.....(K22A)	5
30	3EB-13-22722	PLUG.....	3
31	3EB-13-22732	PLUG.....	1
32	3EB-13-22742	WASHER.....	1
K22A	3EB-13-05081	TORQUE CONVERTER KIT	1

適用機種 Application		
FG20	T	-C 258785A~
FG25	T	-C 258785A~
FG30	T	-C 258785A~
FG20S	T	-C 400159A~
FG25S	T	-C 400159A~
FG30S	T	-C 400159A~
FG30G	T	-C 290222A~
FG30SG	T	-C 320003A~
FD20	T	-C 337001A~430174A
FD25	T	-C 349479A~
FD30	T	-C 349479A~
FD25S	T	-C 480003A~
FD20V	T	-C 337901A~430174A
FD25V	T	-C 337901A~430174A
FD30V	T	-C 337901A~430174A
FD20SV	T	-C 380001A~480000A
FD25SV	T	-C 380001A~480000A
FD30SV	T	-C 380001A~480000A

FIG.2121 TORQUE CONVERTER (FOR G1600,T2-TYPE)

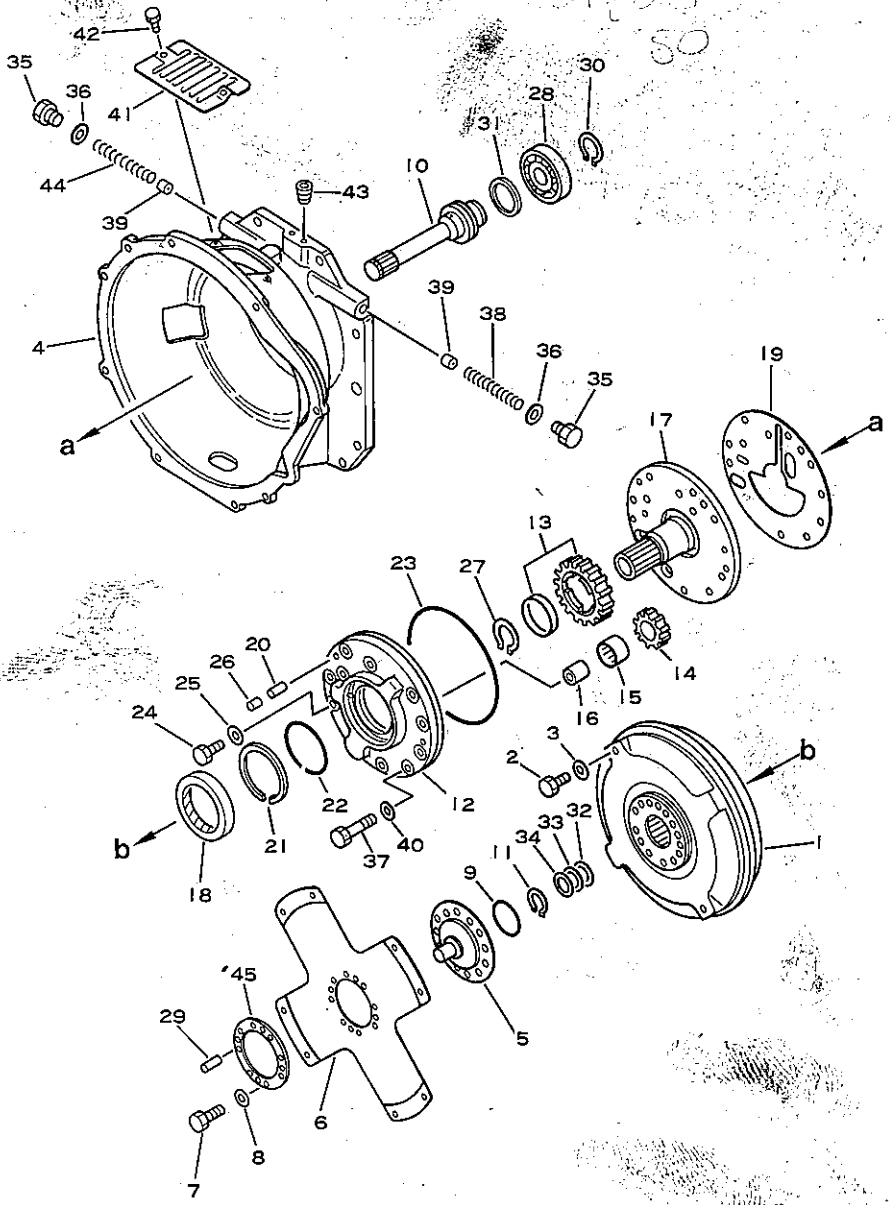

図および索引番号 Fig & Index No.	品番 Part No.	品名 Description	個数 Qty
	3EB-13-24101	TORQUE CONVERTER ASS'Y	1
	3EB-13-24020	.CONVERTER SUB ASS'Y	1
2121 - 1	☆	..CONVERTER.....	1
2	3EB-13-12220	..BOLT.....	2
3	3EB-13-12230	..WASHER,seal..(K22)	2
4	3EB-13-22310	.HOUSING.....	1
5	3EB-13-22320	.GUIDE,input.....	1
6	3EB-13-22330	.PLATE,input.....	1
7	3EB-13-12340	.BOLT.....	8
8	3EB-13-12350	.WASHER.....	8
9	3EB-13-12360	.O-RING.....(K22)	1
10	3EA-13-13120	.SHAFT,turbine.....	1
11	3EB-13-12380	.RING,snap.....	1
	3EB-13-24040	.GEAR PUMP ASS'Y....	1
12	☆	..GEAR,casing.....	1
13	☆	..GEAR,drive.....	1
14	☆	..GEAR,driven.....	1
15	3EB-13-12440	..BEARING,needle....	1
16	3EB-13-12450	..SHAFT.....	1
17	☆	..SUPPORT,stator....	1
18	3EB-13-12470	..SEAL,oil.....(K22)	1
19	3EB-13-22480	..GASKET.....(K22)	1
20	3EB-13-12810	..PIN.....	2
21	3EB-13-12490	..RING,seal....(K22)	1
22	3EB-13-12510	..RING,inner...(K22)	1
23	3EB-13-12520	..O-RING.....(K22)	1
24	3EB-13-12530	..BOLT.....	2
25	3EB-13-12740	..GASKET.....	2
26	3EB-13-12540	..PLUG.....	2
27	3EB-13-12550	..RING,snap.....	1
28	3EB-13-12610	.BEARING,ball.....	1
29	3EB-13-22810	.PIN.....	2
30	3EB-13-12630	.RING,snap.....	1
31	3EB-13-12640	.RING,piston...(K22)	1
32	3EB-13-12650	.SPACER (t=0.2mm)...	AR

適用機種 Application
FG30G T -C 290222A~

TORQUE CONVERTER (FOR G1600,T2-TYPE)

図および索引番号 Fig & Index No.	品番 Part No.	品名 Description	個数 Q'ty	適用機種 Application
2121 -33	3EB-13-12660	.SPACER (t=0.5mm)...	AR	
34	3EB-13-12670	.SPACER (t=1.0mm)...	AR	
35	3EB-13-12680	.PLUG.....	2	
36	3EB-13-12690	.GASKET.....(K22)	2	
37	3EB-13-12710	.BOLT.....	9	
38	3EB-13-12720	.SPRING,pressure....	1	
39	3EB-13-12730	.PISTON.....	2	
40	3EB-13-12740	.GASKET.....(K22)	9	
41	3EB-13-12770	.COVER.....	1	
42	3EB-13-12780	.BOLT.....	2	
43	3EB-13-12790	.PLUG.....	2	
44	3EB-13-12750	.SPRING,pressure....	1	
45	3EB-13-22830	.WASHER.....	1	
K22	3EB-13-05060	TORQUE CONVERTER KIT	1	

FIG.2201A DIRECT DRIVE TRANSMISSION (1/3)

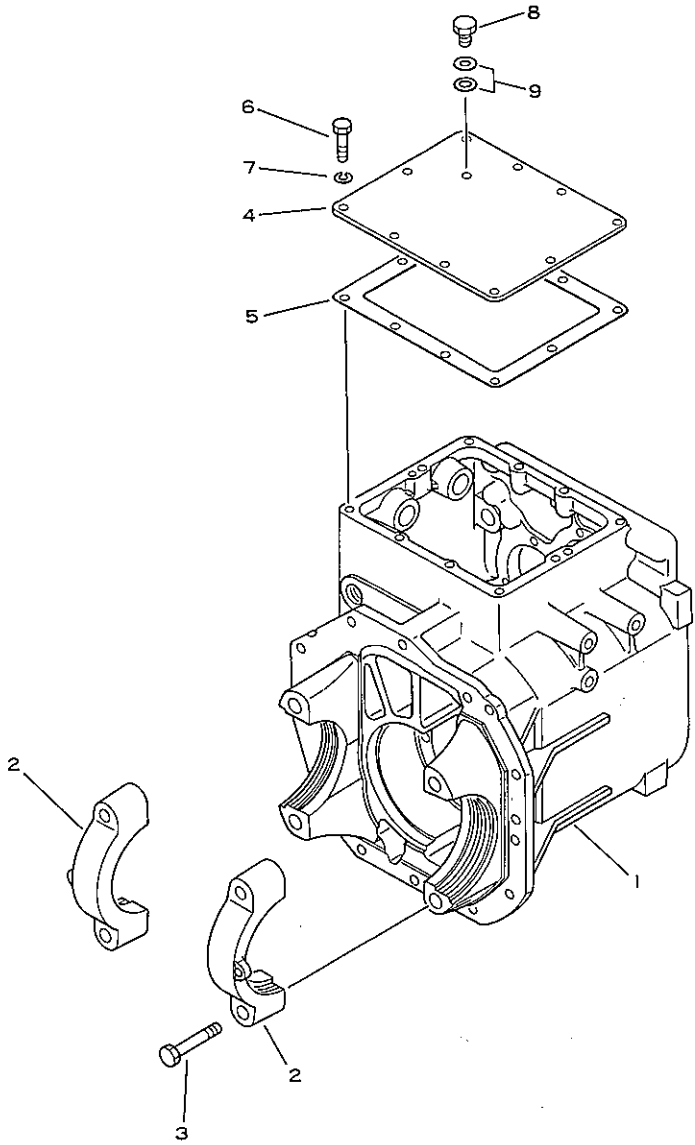

図および索引番号 Fig & Index No.	品番 Part No.	品名 Description	個数 Q'ty	適用機種 Application
	3EB-14-21014	CASE ASS'Y.....	1	FG25 C -C 450050A~ FG25S C -C 400001A~
2201A- 1	*	.CASE.....	1	
2	34B-21-12211	.CAP.....	2	
3	3EB-21-11190	.BOLT.....	4	
4	3EA-14-11122	COVER.....	1	
5	3EB-14-21260	GASKET.....(K23)	1	
6	01010-51020	BOLT.....	10	
7	01602-21030	WASHER,spring.....	10	
8	07040-11409	PLUG.....	1	
9	07005-01412	WASHER,seal....(K23)	2	
K23	3EB-14-05050	CLUTCH MISSION KIT..	1	

PIG.2202 DIRECT DRIVE TRANSMISSION (2/3)

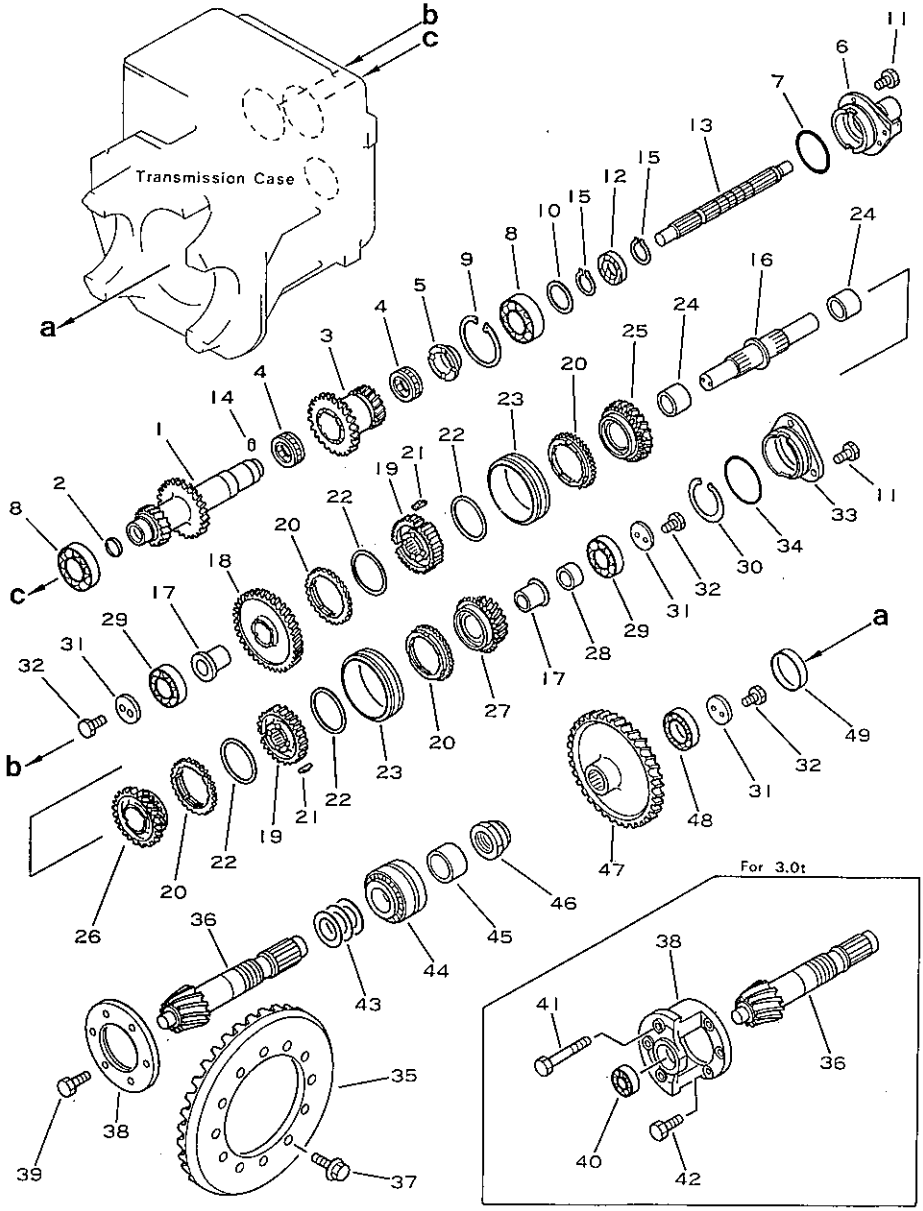

図および索引番号 Fig & Index No.	品番 Part No.	品名 Description	個数 Q'ty
2202 - 1	3EB-14-22111	SHAFT.....	1
2	3EB-14-11180	SEAL.....	1
3	3EB-14-22210	GEAR.....	1
4	3EB-14-21210	BEARING.....	2
5	3EB-14-21151	SPACER.....	1
6	(3EB-10-21162)	FLANGE.....	1
7	(07000-02090)	O-RING.....(K23)	1
8	06000-06208	BEARING.....	2
9	04065-08025	RING,snap.....	1
10	3EB-14-21250	SPACER.....	1
11	01010-51025	BOLT.....	6
12	3EB-14-21140	SEAL,oil.....(K23)	1
13	3EB-14-21270	SHAFT.....	1
14	3EA-14-11451	PIN.....	1
15	04064-04018	RING,snap.....	2
16	3EB-14-21131	SHAFT.....	1
17	3EA-14-11230	BUSHING.....	2
18	3EB-14-22120	GEAR.....	1
	3EB-14-00100	SYNCHRO ASS'Y.....	2
19	3EB-14-21220	.GEAR.....	1
20	3EB-14-21160	.RING,balk.....	2
21	3EB-14-11820	.INSERT.....	3
22	3EA-14-11430	.SPRING.....	2
23	3EA-14-11251	.GEAR.....	1
24	3EA-14-11240	BUSHING.....	2
25	3EB-14-22130	GEAR.....	1
26	3EB-14-22130	GEAR.....	1
27	3EB-14-22220	GEAR.....	1
	3EB-14-25220	GEAR (for S).....	1
28	3EB-14-21350	SPACER.....	1
29	06000-06306	BEARING.....	2
30	04065-07225	RING,snap.....	1
31	3EB-15-21450	HOLDER.....	3
32	01010-50820	BOLT.....	6
33	3EB-14-21121	CAGE.....	1

適用機種 Application

FG25 C -C 252001A~
FG25S C -C 300001A~
FD25 C -C 337001A~430174A
FD30 C -C 337001A~430174A

DIRECT DRIVE TRANSMISSION (2/3)

図および索引番号 Fig & Index No.	品番 Part No.	品名 Description	個数 Q'ty	適用機種 Application
2202 -34	07000-02085	O-RING.....(K23)	1	
	3EB-21-23042	BEVEL GEAR AND PINION SHAFT ASS'Y	1	
35	*	.GEAR,bevel.....	1	
36	*	.SHAFT,pinion.....	1	
37	3EB-21-11230	BOLT.....	12	
38	3EB-21-23120	PLATE (for 2.5t)....	1	
	3EB-21-24120	CAGE (for 3.0t).....	1	
39	01010-51230	BOLT (for 2.5t).....	6	
40	3EB-14-11451	BEARING (for 3.0t)..	1	
41	01011-51200	BOLT (for 3.0t).....	3	
42	01010-51230	BOLT (for 3.0t).....	3	
43	3EB-14-00050	SHIM ASS'Y.....	1	
	*	.SHIM (t=0.2mm).....	2	
	*	.SHIM (t=0.3mm).....	2	
	*	.SHIM (t=0.5mm).....	2	
44	3EB-14-21240	BEARING.....	1	
45	3EB-14-11640	SPACER.....	1	
46	3EB-14-21230	NUT.....	1	
47	3EB-14-22231	GEAR.....	1	
*	3EB-14-25231	GEAR (for S).....	1	
48	06000-06207	BEARING.....	1	
49	305-14-11220	SEAL.....(K23)	1	
K23	3EB-14-05050	CLUTCH MISSION KIT..	1	

FIG.2203 DIRECT DRIVE TRANSMISSION (3/3)

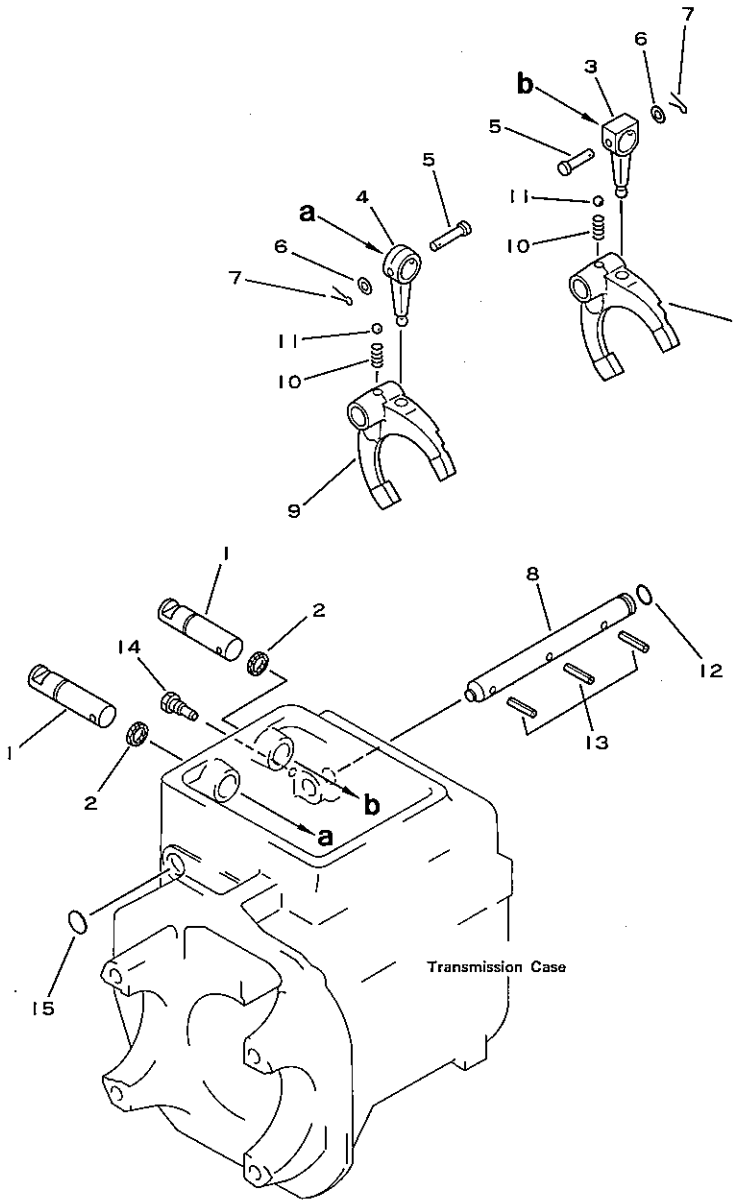

図および索引番号 Fig & Index No.	品番 Part No.	品名 Description	個数 Q'ty
2203 - 1	3EA-14-11371	SHAFT.....	2
2	3EA-14-11390	SEAL,oil.....	2
3	3EB-14-21330	LEVER.....	1
4	3EB-14-11510	LEVER.....	1
5	3EB-14-11480	PIN.....	2
6	01641-20812	WASHER.....	2
7	04050-12012	PIN,cotter.....	2
8	3EB-14-21310	SHAFT.....	1
9	3EB-14-21320	YOKE.....	2
10	3EA-14-11460	SPRING.....	2
11	04260-00952	BALL.....	2
12	07000-02018	O-RING.....(K23)	1
13	04025-00632	PIN,roll.....	3
14	3EA-14-11440	BOLT.....	1
15	07046-12520	PLUG.....(K23)	1
K23	3EB-14-05050	CLUTCH MISSION KIT..	1

適用機種 Application		
FG25	C	-C 252001A~
FG25S	C	-C 300001A~
FD25	C	-C 337001A~430174A
FD30	C	-C 337001A~430174A

FIG.2301A TORQFLOW DRIVE TRANSMISSION (1/2)

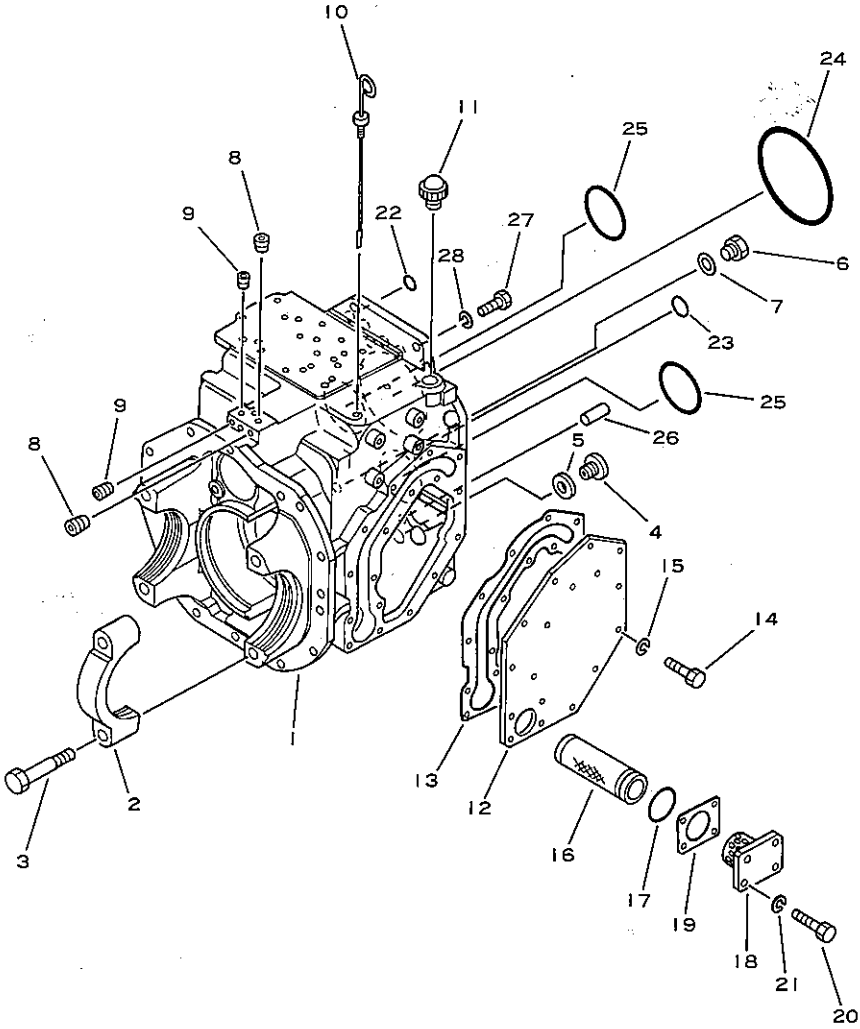

図および索引番号 Fig & Index No.	品番 Part No.	品名 Description	個数 Q'ty
	3EB-15-21011	CASE ASS'Y.....	1
2301A- 1	☆	.CASE.....	1
2	34B-21-12211	.CAP.....	2
3	3EB-21-11190	.BOLT.....	4
4	34B-41-12910	PLUG.....	1
5	34B-41-12920	GASKET.....	1
6	34A-15-11660	PLUG.....	1
7	07005-01612	WASHER,seal....(K24)	1
8	07043-70211	PLUG.....	2
9	07043-70108	PLUG.....	4
10	3EB-15-11150	GAUGE,oil level.....	1
11	3EB-21-15211	CAP.....	1
12	3EB-15-21120	PLATE.....	1
13	3EB-15-21130	GASKET.....(K24)	1
14	01010-50820	BOLT.....	13
15	01602-20825	WASHER,spring.....	13
	3EA-15-11600	FILTTER ASS'Y.....	1
16	3EA-15-11610	.FILTTER.....	1
17	07000-03038	.O-RING.....(K24)	1
18	3EA-15-11140	PLATE.....	1
19	3EA-15-11280	GASKET.....(K24)	1
20	01010-50830	BOLT.....	4
21	01602-20825	WASHER,spring.....	4
22	07000-72018	O-RING.....(K24)	6
23	07000-73025	O-RING.....(K24)	1
24	07000-02140	O-RING.....(K24)	1
25	07000-02080	O-RING.....(K24)	2
26	04020-01228	PIN.....	1
27	01010-51235	BOLT.....	11
28	01602-21236	WASHER,spring.....	11
K24	3EB-15-05050	TORQFLOW DRIVE TRANSMISSION KIT (F1/R1)	1

適用機種 Application

FG20	T	-C	450050A~
FG25	T	-C	450050A~
FG30	T	-C	450050A~
FG20S	T	-C	400001A~
FG25S	T	-C	400001A~
FG30S	T	-C	400001A~
FG30G	T	-C	490001A~
FG30SG	T	-C	490002A~
FD25	T	-C	430175A~
FD30	T	-C	430175A~
FD25S	T	-C	480001A~

FIG.2302 TORQFLOW DRIVE TRANSMISSION (2/2)

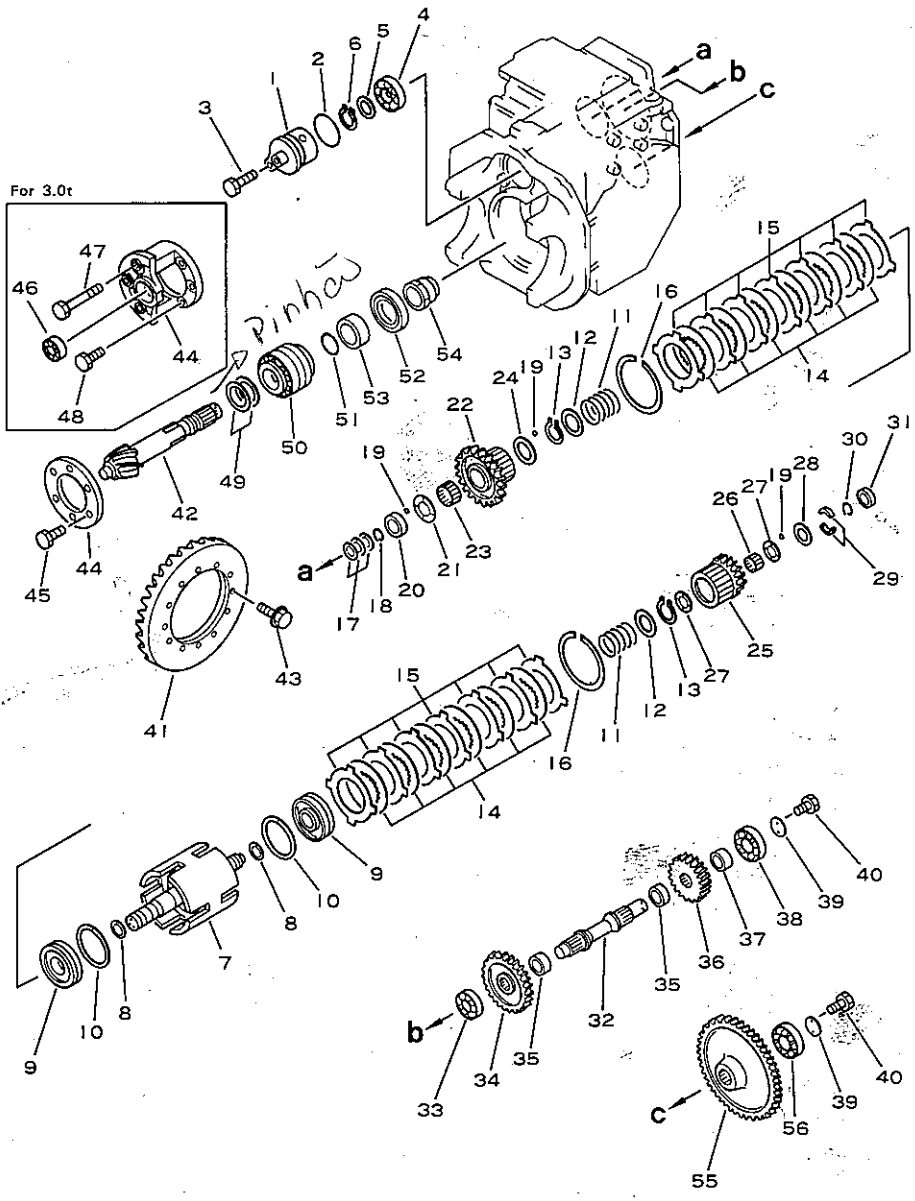

図および索引番号 Fig & Index No.	品番 Part No.	品名 Description	個数 Q'ty
2302 - 1	3EB-15-21400	RETAINER ASS'Y.....	1
2	3EB-15-21290	O-RING.....(K24)	1
3	01010-51230	BOLT.....	1
4	3EC-15-11430	BEARING.....	1
5	3EB-15-21390	SPACER.....	1
6	04064-03515	RING,snap.....	1
	3EB-15-21022	PACK SUB ASS'Y.....	1
7	3EB-15-21202	.SHAFT ASS'Y.....	1
8	3EB-15-21240	.SEAL.....(K24)	2
9	3EB-15-21230	.PISTON.....	2
10	3EA-15-11290	.SEAL.....(K24)	2
11	3EB-15-11250	.SPRING.....	2
12	3EB-15-21260	.WASHER.....	2
13	04064-04018	.RING,snap.....	2
14	3EA-15-11170	.DISC.....	12
15	3EA-15-11180	.PLATE.....	14
16	34B-15-11360	.RING.....	2
17	3EB-15-21380	SEAL.....(K24)	3
18	3EB-15-21490	SPRING.....	1
19	04260-00317	BALL.....	3
20	3EB-15-21482	SPACER.....	1
21	3EB-15-21340	WASHER.....	1
22	3EB-15-21310	GEAR.....	1
23	3EB-15-21320	BEARING.....	1
24	3EB-15-21360	SPACER.....	1
25	3EB-15-22310	GEAR.....	1
	3EB-15-25310	GEAR (for S).....	1
26	3EB-15-21330	BEARING.....	1
27	3EB-15-21350	WASHER.....	2
28	3EB-15-21370	SPACER.....	1
29	3EB-15-21540	SPACER.....	2
30	3EB-15-21490	SPRING.....	1
31	3EB-15-21550	SPACER.....	1
32	3EB-15-21431	SHAFT.....	1
33	06000-06206	BEARING.....	1

適用機種 Application		
FG20	T	-C 252001A~
FG25	T	-C 252001A~
FG30	T	-C 450050A~
FG20S	T	-C 300001A~
FG25S	T	-C 300001A~
FG30S	T	-C 400001A~
FG30G	T	-C 290222A~
FG30SG	T	-C 320003A~
FD20	T	-C 337001A~430174A
FD25	T	-C 337001A~
FD30	T	-C 337001A~
FD25S	T	-C 480001A~
FD20V	T	-C 337901A~430174A
FD25V	T	-C 337901A~430174A
FD30V	T	-C 337901A~430174A
FD20SV	T	-C 380001A~480000A
FD25SV	T	-C 380001A~480000A
FD30SV	T	-C 380001A~480000A

TORQFLOW DRIVE TRANSMISSION (2/2)

図および索引番号 Fig & Index No.	品番 Part No.	品名 Description	個数 Q'ty	適用機種 Application
2302 -34	3EB-15-21420	GEAR.....	1	
35	3EB-15-21460	SPACER.....	2	
36	3EB-15-22410	GEAR.....	1	
*	3EB-15-25410	GEAR (for S).....	1	
37	3EB-15-21440	SPACER.....	1	
38	06000-06306	BEARING.....	1	
39	3EB-15-21450	HOLDER.....	2	
40	01010-50820	BOLT.....	4	
	3EB-21-23042	BEVEL GEAR AND PINION SHAFT ASS'Y	1	
41	*	.GEAR,bevel.....	1	
42	*	.SHAFT,pinion.....	1	
43	3EB-21-11230	BOLT.....	12	
44	3EB-21-23120	PLATE (for 2.0t~2.5t)	1	
	3EB-21-24120	CAGE (for 3.0t)	1	
45	01010-51230	BOLT (for 2.0t~2.5t)	6	
46	3EB-14-11451	BEARING (for 3.0t)..	1	
47	01011-51200	BOLT (for 3.0t).....	3	
48	01010-51230	BOLT (for 3.0t).....	3	
49	3EB-14-00050	SHIM ASS'Y.....	1	
	*	.SHIM (t=0.2mm).....	2	
	*	.SHIM (t=0.3mm).....	2	
	*	.SHIM (t=0.5mm).....	2	
50	3EB-14-21240	BEARING.....	1	
51	3EB-15-18710	O-RING.....	1	
52	07013-10065	SEAL,oil.....(K24)	1	
53	3EB-15-21530	RACE.....	1	
54	3EB-14-21230	NUT.....	1	
55	3EB-15-22511	GEAR.....	1	
	3EB-15-25231	GEAR (for S).....	1	
56	06000-06207	BEARING.....	1	
K24	3EB-15-05050	TORQFLOW DRIVE TRANSMISSION KIT (F1/R1)	1	

FIG.2303 TORQFLOW DRIVE TRANSMISSION VALVE

Valvula

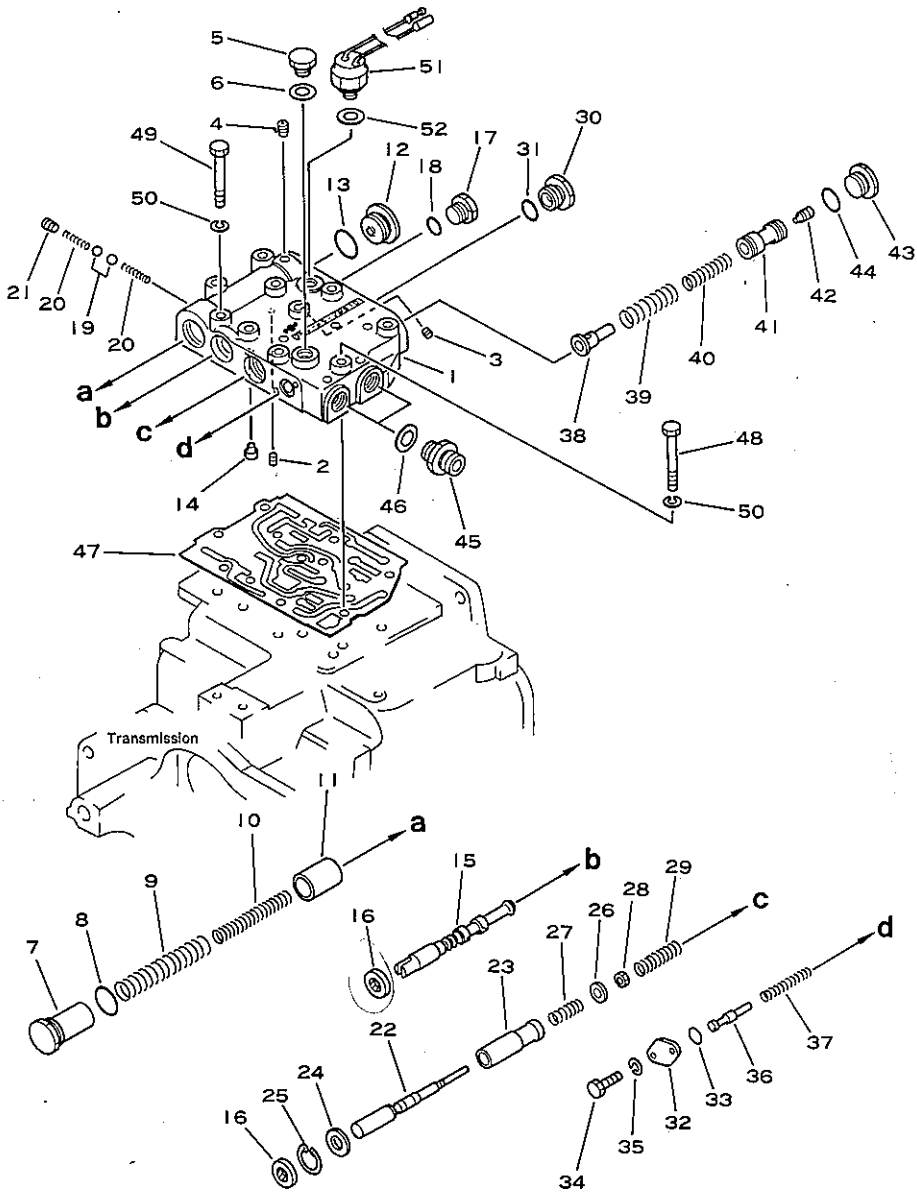

図番号 Fig & Index No.	品番 Part No.	品名 Description	個数 Q'ty
	3EB-15-28101	TRANSMISSION VALVE ASS'Y	1
2303 - 1	3EB-15-28511	.BODY.....	1
2	3EB-15-18350	.SCREW.....	1
3	3EB-15-28350	.SCREW.....	1
4	07043-70108	.PLUG.....	7
5	34A-15-11660	.PLUG.....	1
6	07005-01612	.WASHER,seal..(K26A)	1
7	3EB-15-28311	.STOPPER.....	1
8	07002-03034	.O-RING.....(K26A)	1
9	3EB-15-28371	.SPRING.....	1
10	3EB-15-28381	.SPRING.....	1
11	3EB-15-28320	.PISTON.....	1
12	3EB-15-18322	.PLUG.....	1
13	07002-03034	.O-RING.....(K26A)	1
14	3EB-15-18520	.STOPPER.....	1
15	3EB-15-28410	.SPOOL.....	1
16	711-04-16360	.SEAL,oil.....(K26A)	2
17	07040-11812	.PLUG.....	1
18	07002-01823	.O-RING.....(K26A)	1
19	04260-00793	.BALL.....	2
20	3EB-15-18450	.SPRING.....	2
21	07043-70108	.PLUG.....	1
22	3EB-15-28220	.SPOOL.....	1
23	3EB-15-28210	.VALVE.....	1
24	711-04-16350	.PLATE.....	1
25	04065-02812	.RING,snap.....	1
26	3EB-15-18230	.STOPPER.....	1
27	3EA-15-18260	.SPRING.....	1
28	01580-10605	.NUT.....	1
29	3EB-15-28270	.SPRING.....	1
30	3EB-15-28150	.PLUG.....	1
31	07002-02434	.O-RING.....(K26A)	1
32	3EB-15-18181	.PLATE.....	1
33	07000-72014	.O-RING.....(K26A)	1
34	01010-50616	.BOLT.....	2

適用機種 Application		
FG20	T	-C 252001A~
FG25	T	-C 252001A~
FG30	T	-C 450050A~
FG20S	T	-C 300001A~
FG25S	T	-C 300001A~
FG30S	T	-C 400001A~
FG30G	T	-C 290222A~
FG30SG	T	-C 320003A~
FD20	T	-C 337001A~430174A
FD25	T	-C 337001A~
FD30	T	-C 337001A~
FD25S	T	-C 480001A~
FD20V	T	-C 337901A~430174A
FD25V	T	-C 337901A~430174A
FD30V	T	-C 337901A~430174A
FD20SV	T	-C 380001A~480000A
FD25SV	T	-C 380001A~480000A
FD30SV	T	-C 380001A~480000A

TORQFLOW DRIVE TRANSMISSION VALVE

図および索引番号 Fig. & Index No.	品番 Part No.	品名 Description	個数 Q'ty
2303 -35	01602-20619	.WASHER,spring.....	2
36	3EB-15-18161	.VALVE.....	1
37	3EB-15-18171	.SPRING.....	1
38	3EB-15-28130	.STOPPER.....	1
39	3EB-15-18190	.SPRING.....	1
40	3EB-15-18120	.SPRING.....	1
41	3EB-15-28110	.VALVE.....	1
42	3EB-15-28140	.PISTON.....	1
43	3EB-15-18150	.PLUG.....	1
44	07002-02434	.O-RING.....	1
45	07211-51220	.NIPPLE.....	2
46	07005-02012	.WASHER,seal..(K26A)	2
47	3EB-15-28540	GASKET.....(K24)	1
48	01010-50865	BOLT.....	7
49	01010-50870	BOLT.....	3
50	01602-20825	WASHER,spring.....	10
51	3EB-55-21980	SWITCH,neutral.....	1
52	07005-01412	WASHER,seal(K24,26A)	1
K24	3EB-15-05050	TORQFLOW DRIVE TRANSMISSION KIT (F1/R1)	1
K26A	3EB-15-05151	TORQFLOW DRIVE TRANSMISSION VALVE KIT (F1/R1)	1

適用機種 Application



FIG.2401 TORQFLOW DRIVE TRANSMISSION (FOR T2-TYPE) (1/3)

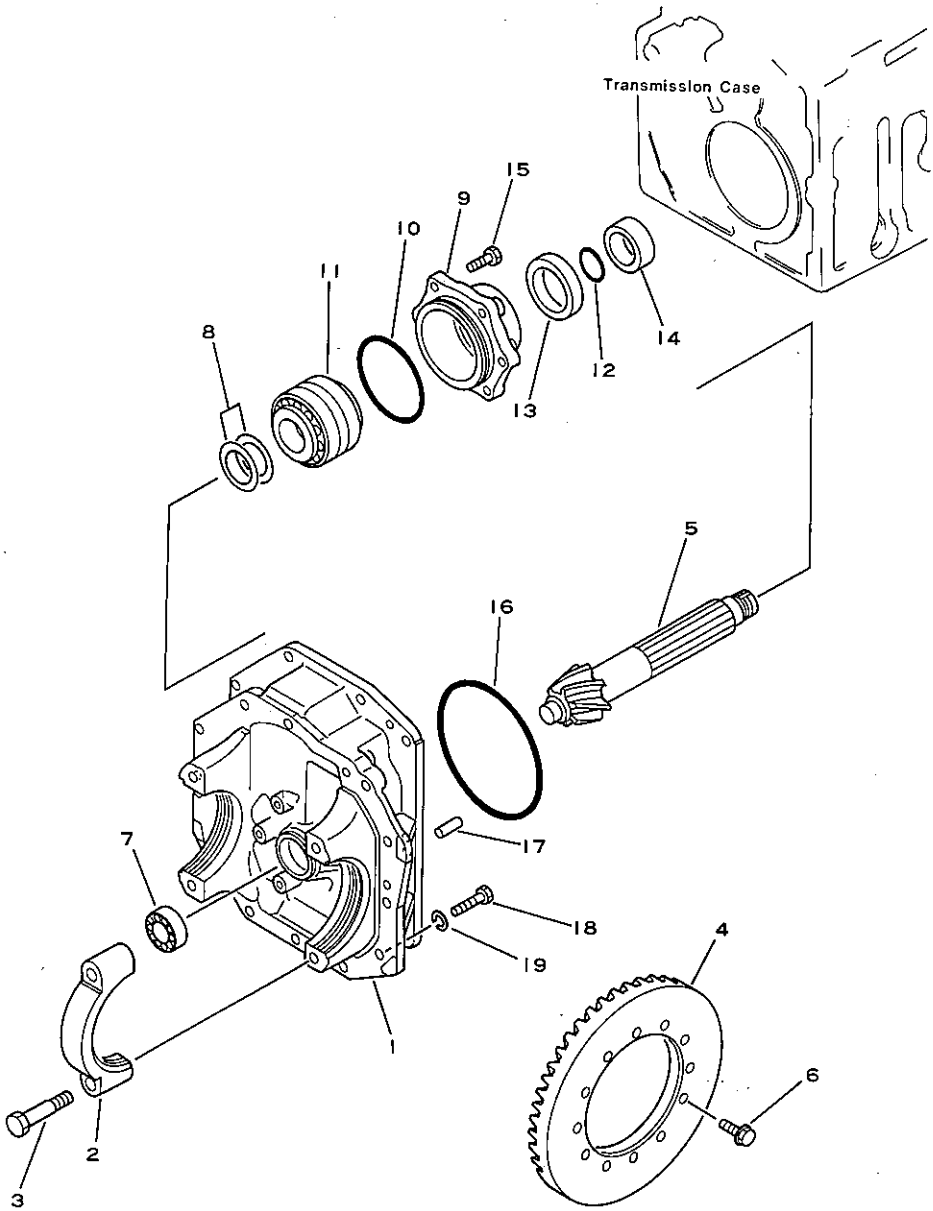

図および索引番号 Fig. & Index No.	品番 Part No.	品名 Description	個数 Q'ty
	3EB-21-22011	CARRIER ASS'Y.....	1
2401 - 1	*	.CARRIER.....	1
2	34B-21-12211	.CAP.....	2
3	3EB-21-11190	.BOLT.....	4
	3EB-21-22040	BEVEL GEAR AND PINION SHAFT ASS'Y	1
4	*	.GEAR,bevel.....	1
5	*	.SHAFT,pinion.....	1
6	3EB-21-11230	BOLT.....	12
7	3EB-14-11451	BEARING.....	1
8	3EB-14-00050	SHIM ASS'Y.....	1
	*	.SHIM (t=0.2mm).....	2
	*	.SHIM (t=0.3mm).....	2
	*	.SHIM (t=0.5mm).....	2
9	3EB-21-22120	CAGE.....	1
10	07000-02110	O-RING.....(K25)	1
11	3EB-14-21240	BEARING.....	1
12	3EB-15-18710	O-RING.....(K25)	1
13	07013-10060	SEAL,oil.....(K25)	1
14	3EB-21-22130	RACE.....	1
15	01010-51235	BOLT.....	6
16	07000-05175	O-RING.....(K25)	1
17	04020-01228	PIN,dowel.....	2
18	01010-51235	BOLT.....	9
19	01602-21236	WASHER,spring.....	9
K25	3EB-16-05010	TORQFLOW DRIVE TRANSMISSION KIT (F2/R2)	1

適用機種 Application		
FG20	T	-C 252001A~450049A
FG25	T	-C 252001A~
FG30G	T	-C 290222A~
FD20	T	-C 337001A~430174A
FD25	T	-C 337001A~430174A
FD30	T	-C 337001A~430174A

FIG.2402A TORQFLOW DRIVE TRANSMISSION (FOR T2-TYPE)(2/3)

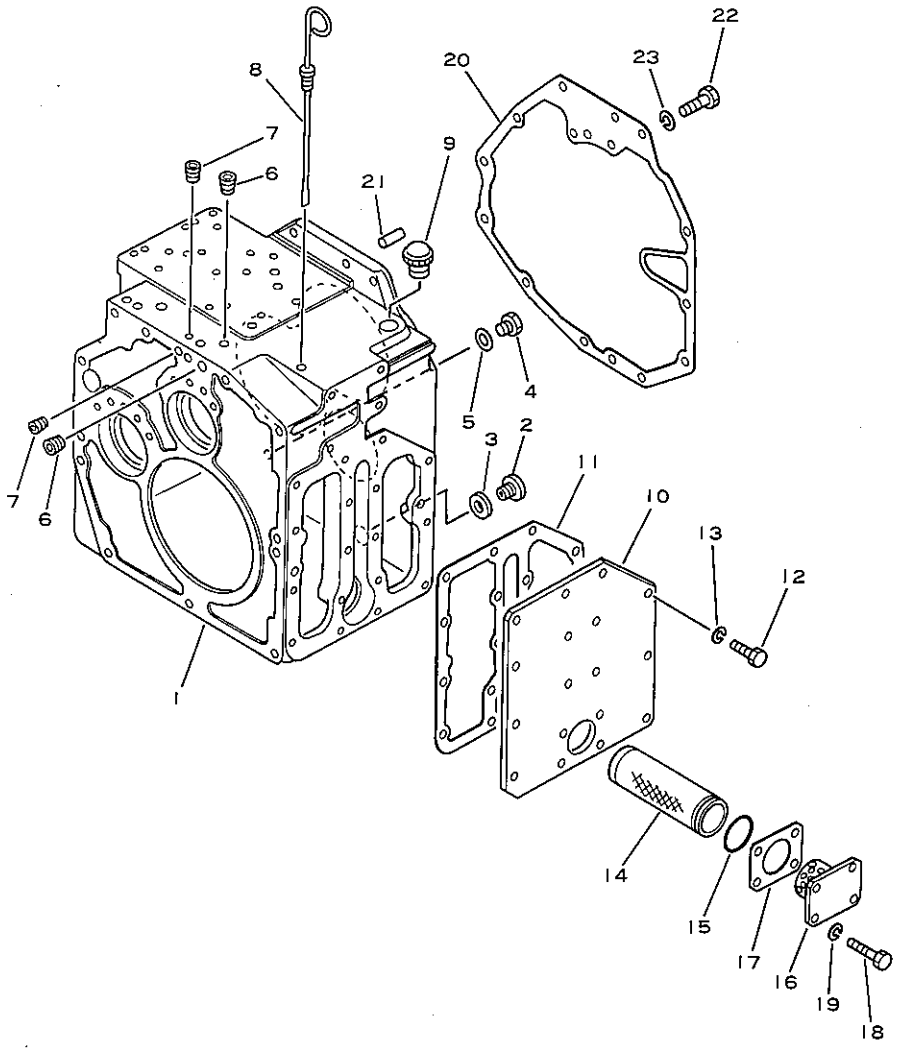

図および索引番号 Fig & Index No.	品番 Part No.	品名 Description	個数 Q'ty	適用機種 Application
2402A- 1	3EB-16-21111	CASE.....	1	FG25 T -C 450050A~ FG30G T -C 490001A~
2	34B-41-12910	PLUG.....	1	
3	34B-41-12920	GASKET.....	1	
4	34A-15-11660	PLUG.....	1	
5	07005-01612	WASHER,seal....(K25)	1	
6	07043-70211	PLUG.....	2	
7	07043-70108	PLUG.....	14	
8	3EB-15-11150	GAUGE,oil level.....	1	
9	3EB-21-15211	CAP.....	1	
10	3EB-16-21120	PLATE.....	1	
11	3EB-16-21130	GASKET.....(K25)	1	
12	01010-50820	BOLT.....	13	
13	01602-20825	WASHER,spring.....	13	
	3EA-15-11600	FILTER ASS'Y.....	1	
14	3EA-15-11610	.FILTER.....	1	
15	07000-03038	.O-RING.....(K25)	1	
16	3EA-15-11140	PLATE.....	1	
17	3EA-15-11280	GASKET.....(K25)	1	
18	01010-50830	BOLT.....	4	
19	01602-20825	WASHER,spring.....	4	
20	3EB-16-21180	GASKET.....(K25)	1	
21	04020-01228	PIN,dowel.....	2	
22	01010-51235	BOLT.....	11	
23	01602-21236	WASHER,spring.....	11	
K25	3EB-16-05010	TORQFLOW DRIVE TRANSMISSION KIT (F2/R2)	1	

FIG.2403 TORQFLOW DRIVE TRANSMISSION (FOR T2-TYPE) (3/3)

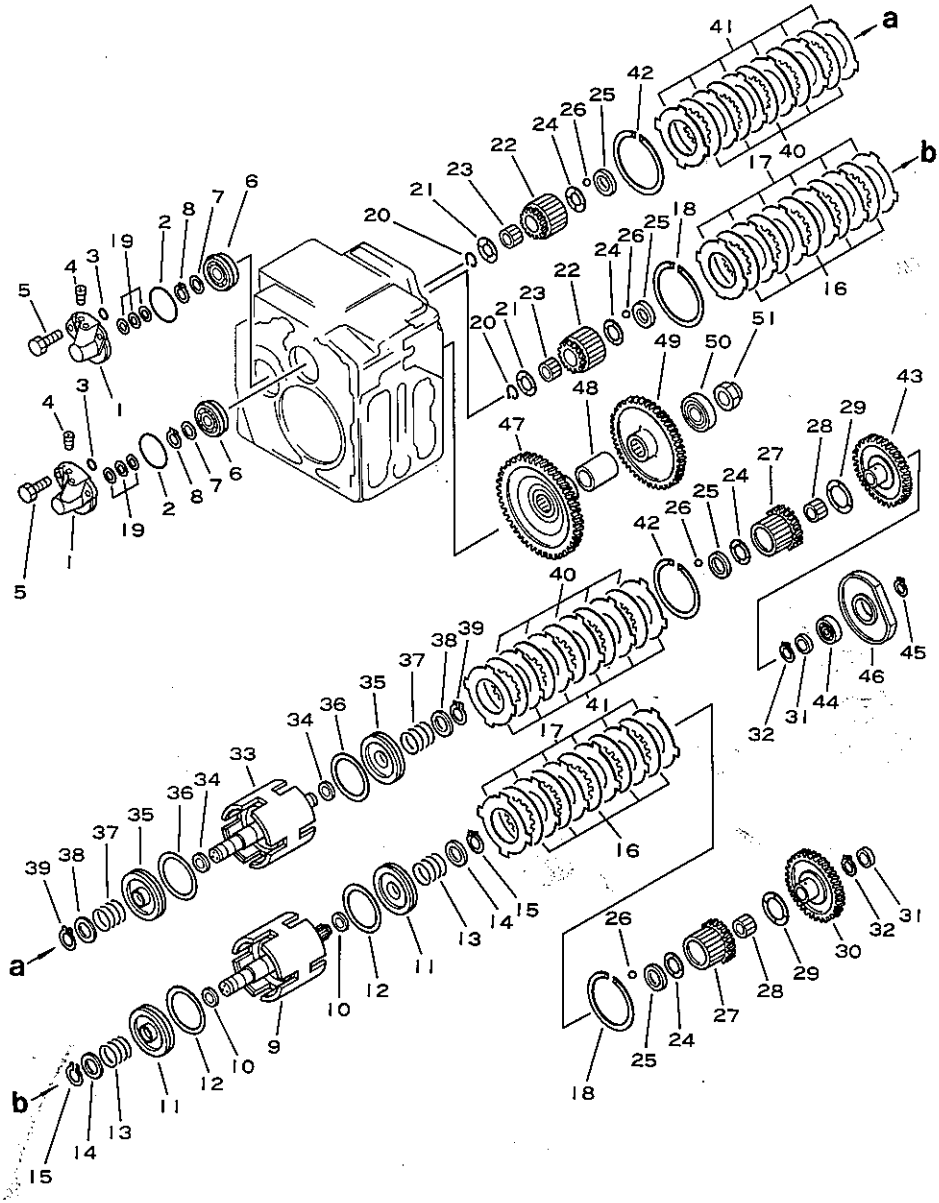

図および索引番号 Fig & Index No.	品番 Part No.	品名 Description	個数 Q'ty
2403 - 1	3EB-16-21370	RETAINER.....	2
2	07000-02075	O-RING.....(K25)	2
3	07000-72012	O-RING.....(K25)	6
4	07043-70108	PLUG.....	6
5	01010-50825	BOLT.....	4
6	06003-06306	BEARING.....	2
7	3EB-16-21390	SPACER.....	2
8	04064-03015	RING,snap.....	2
	3EB-16-21021	PACK SUB ASS'Y.....	1
9	3EB-16-21201	.SHAFT ASS'Y.....	1
10	3EB-16-21240	.SEAL.....(K25)	2
11	3EB-16-21230	.PISTON.....	2
12	3EA-15-11290	.SEAL.....(K25)	2
13	3EB-15-11250	.SPRING.....	2
14	3EB-15-11260	.WASHER.....	2
15	04064-03515	.RING,snap.....	2
16	3EB-16-21170	.DISC.....	10
17	3EA-15-11180	.PLATE.....	12
18	34B-15-11360	.RING.....	2
19	3SB-15-11272	SEAL.....(K25)	6
20	3EB-16-21380	SPRING.....	2
21	3EB-16-21270	WASHER.....	4
22	3EB-16-22320	GEAR.....	2
23	3EB-16-21260	BEARING.....	2
24	3EB-16-21250	WASHER.....	2
25	3EB-15-21482	SPACER.....	4
26	04260-00317	BALL.....	4
27	3EB-16-22310	GEAR.....	2
28	3EB-15-21320	BEARIN3.....	2
29	3EB-16-21280	WASHER.....	2
30	3EB-16-21420	GEAR.....	1
31	3EB-16-21450	SPACER.....	2
32	04066-00030	RING,snap.....	2
	3EB-16-21041	PACK SUB ASS'Y.....	1
33	3EB-16-21401	.SHAFT ASS'Y.....	1

適用機種 Application		
FG20	T	-C 252001A~450049A
FG25	T	-C 252001A~
FG30G	T	-C 290222A~
FD20	T	-C 337001A~430174A
FD25	T	-C 337001A~430174A
FD30	T	-C 337001A~430174A

TORQFLOW DRIVE TRANSMISSION (FOR T2-TYPE) (3/3)

図および索引番号 Fig & Index No.	品番 Part No.	品名 Description	個数 Q'ty	適用機種 Application
2403 -34	3EB-16-21240	.SEAL.....(K25)	2	
35	3EA-15-21230	.PISTON.....	2	
36	3EA-15-11290	.SEAL.....(K25)	2	
37	3EB-15-11250	.SPRING.....	2	
38	3EB-15-11260	.WASHER.....	2	
39	04064-03515	.RING,snap.....	2	
40	3EB-16-21170	.DISC.....	10	
41	3EA-15-11180	.PLATE.....	12	
42	34B-15-11360	.RING.....	2	
43	3EB-16-21430	GEAR.....	1	
44	06000-06205	BEARING.....	1	
45	04064-02512	RING,snap.....	1	
46	3EB-16-21150	CAGE.....	1	
47	3EB-16-22510	GEAR.....	1	
48	3EB-16-11450	SPACER.....	1	
49	3EB-16-22520	GEAR.....	1	
50	06000-06207	BEARING.....	1	
51	3BA-24-13210	NUT.....	1	
K25	3EB-16-05010	TORQFLOW DRIVE TRANSMISSION KIT (F2/R2)	1	

FIG.2404 TORQFLOW DRIVE TRANSMISSION VALVE (FOR T2-TYPE)

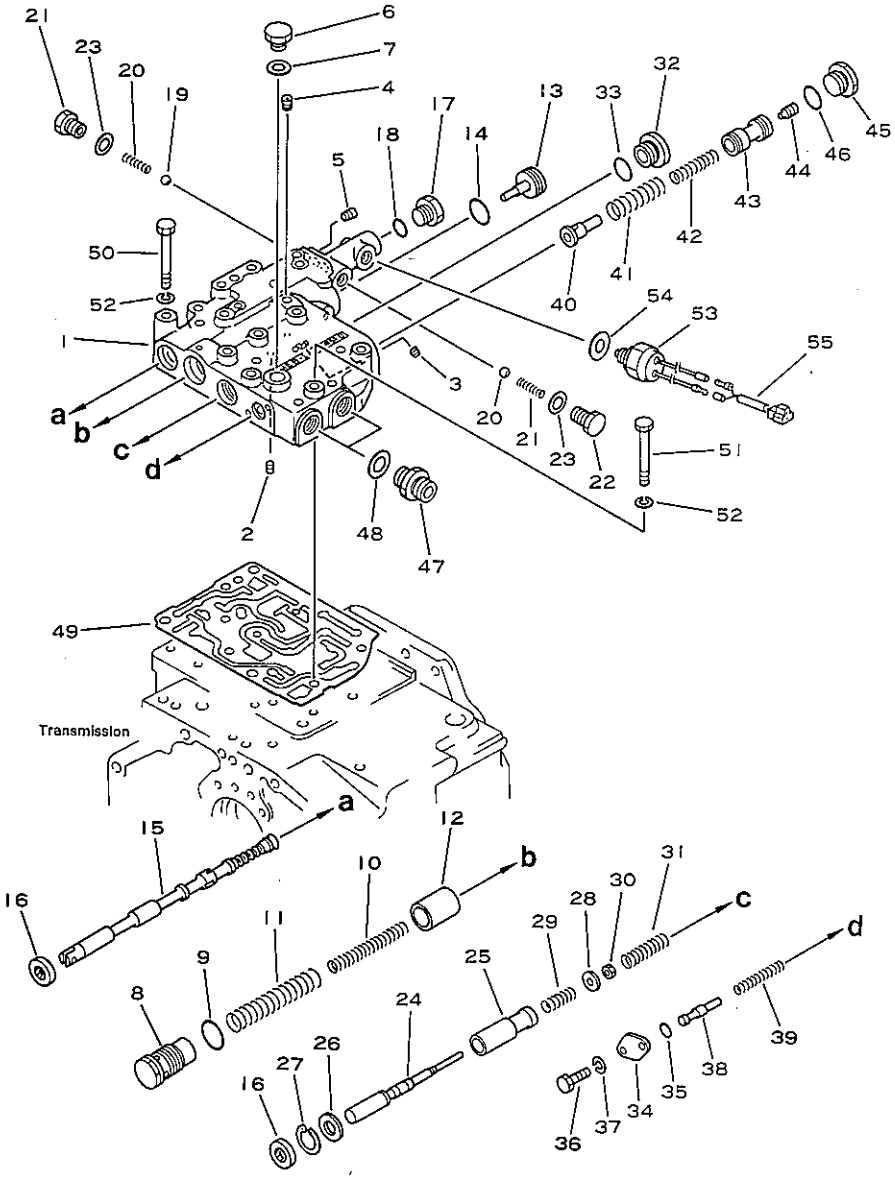

図および索引番号 Fig & Index No.	品番 Part No.	品名 Description	個数 Q'ty
	3EB-16-28101	TRANSMISSION CONTROL VALVE ASS'Y	1
2404 - 1	3EB-16-28511	.BODY.....	1
2	3EB-15-28350	.SCREW.....	1
3	3EB-15-18350	.SCREW.....	1
4	07043-70108	.PLUG.....	7
5	07043-70108	.PLUG.....	10
6	34A-15-11660	.PLUG.....	1
7	07005-01612	.WASHER,seal..(K27A)	1
8	3EB-15-28311	.STOPPER.....	1
9	07000-03034	.O-RING.....(K27A)	1
10	3EB-15-28381	.SPRING.....	1
11	3EB-15-28371	.SPRING.....	1
12	3EB-15-28320	.PISTON.....	1
13	3EB-16-28320	.PLUG.....	1
14	07002-03034	.O-RING.....(K27A)	1
15	3EB-16-28410	.SPOOL.....	1
16	711-04-16360	.SEAL,oil.....(K27A)	2
17	07040-11812	.PLUG.....	1
18	07002-01823	.O-RING.....(K27A)	1
19	04260-00793	.BALL.....	2
20	3EB-16-18440	.SPRING.....	2
21	3EB-16-18430	.SPRING CASE.....	1
22	3EB-16-28430	.SPRING CASE.....	1
23	07005-01412	.WASHER,seal..(K27A)	2
24	3EB-15-28220	.SPOOL.....	1
25	3EB-15-28210	.VALVE.....	1
26	711-04-16350	.PLATE.....	1
27	04065-02812	.RING,snap.....	1
28	3EB-15-18230	.STOPPER.....	1
29	3EA-15-18260	.SPRING.....	1
30	01580-10605	.NUT.....	1
31	3EB-15-28270	.SPRING.....	1
32	3EB-15-28150	.PLUG.....	1
33	07002-02434	.O-RING.....(K27A)	1
34	3EB-15-18181	.PLATE.....	1

適用機種 Application		
FG20	T	-C 252001A~450049A
FG25	T	-C 52001A~
FG30G	T	-C 290222A~
FD20	T	-C 337001A~430174A
FD25	T	-C 337001A~430174A
FD30	T	-C 337001A~430174A

TORQFLOW DRIVE TRANSMISSION VALVE (FOR T2-TYPE)

図および索引番号 Fig & Index No.	品番 Part No.	品名 Description	個数 Q'ty	適用機種 Application
2404 -35	07000-72014	.O-RING.....(K27A)	1	
36	01010-50616	.BOLT.....	2	
37	01602-20619	.WASHER,spring.....	2	
38	3EB-15-18161	.VALVE.....	1	
39	3EB-15-18171	.SPRING.....	1	
40	3EB-15-28130	.STOPPER.....	1	
41	3EB-15-18190	.SPRING.....	1	
42	3EA-15-19120	.SPRING.....	1	
43	3EB-15-28110	.VALVE.....	1	
44	3EB-15-28140	.PISTON.....	1	
45	3EB-15-18150	.PLUG.....	1	
46	07002-02434	.O-RING.....(K27A)	1	
47	07211-51220	.NIPPLE.....	2	
48	07005-02012	.WASHER,seal..(K27A)	2	
49	3EB-16-28540	GASKET.....(K25)	1	
50	01010-50870	BOLT.....	3	
51	01010-50865	BOLT.....	7	
52	01602-20825	WASHER,spring.....	10	
53	3EB-55-21980	SWITCH,back lamp....	2	
54	07005-01412	WASHER,seal....(K25)	2	
55	3EB-55-23220	WIRE (for back lamp switch)	1	
K25	3EB-16-05010	TORQFLOW DRIVE TRANSMISSION KIT (F2/R2)	1	
K27A	3EB-16-05021	TORQFLOW DRIVE TRANSMISSION VALVE KIT (F2/R2)	1	

FIG.2501 TRANSMISSION PIPING

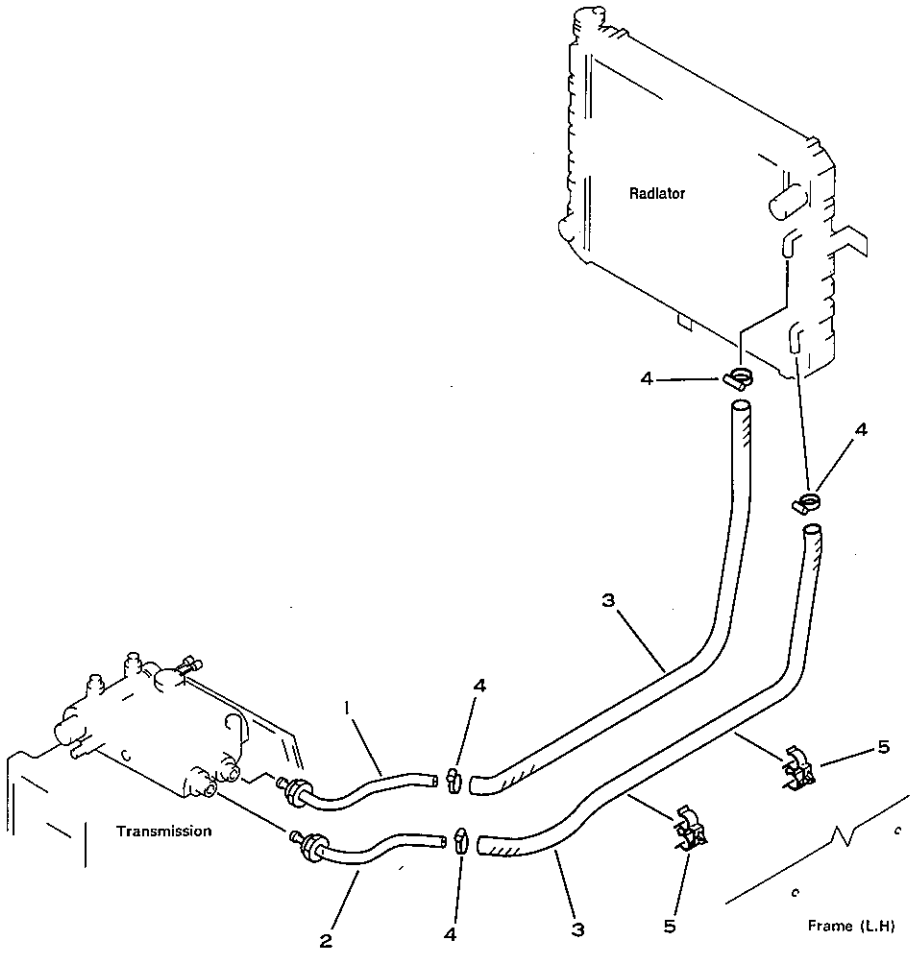

図および索引番号 Fig & Index No.	品番 Part No.	品名 Description	個数 Q'ty
2501 - 1	3EB-04-24110	PIPE.....	1
2	3EB-04-24120	PIPE.....	1
3	3EB-04-24131	HOSE.....	2
4	07280-02323	CLAMP.....	4
5	3EB-04-24190	CLAMP.....	2

適用機種 Application		
FG20	T	-C 252001A~
FG25	C	-C 252001A~
FG25	T	-C 252001A~
FG30	T	-C 450050A~
FG20S	T	-C 300001A~
FG25S	C	-C 300001A~
FG25S	T	-C 300001A~
FG30S	T	-C 400001A~
FG30G	T	-C 290222A~
FG30SG	T	-C 320003A~
FD20	T	-C 337001A~430174A
FD25	C	-C 337001A~430174A
FD25	T	-C 337001A~
FD30	C	-C 337001A~430174A
FD30	T	-C 337001A~
FD25S	T	-C 480001A~
FD20V	T	-C 337901A~430174A
FD25V	C	-C 337901A~430174A
FD25V	T	-C 337901A~430174A
FD30V	C	-C 337901A~430174A
FD30V	T	-C 337901A~430174A
FD20SV	T	-C 380001A~480000A
FD25SV	T	-C 380001A~480000A
FD30SV	T	-C 380001A~480000A

DIFERENTIAL, AXLE AND WHEELS

FIG.3101A DIFFERENTIAL GEAR

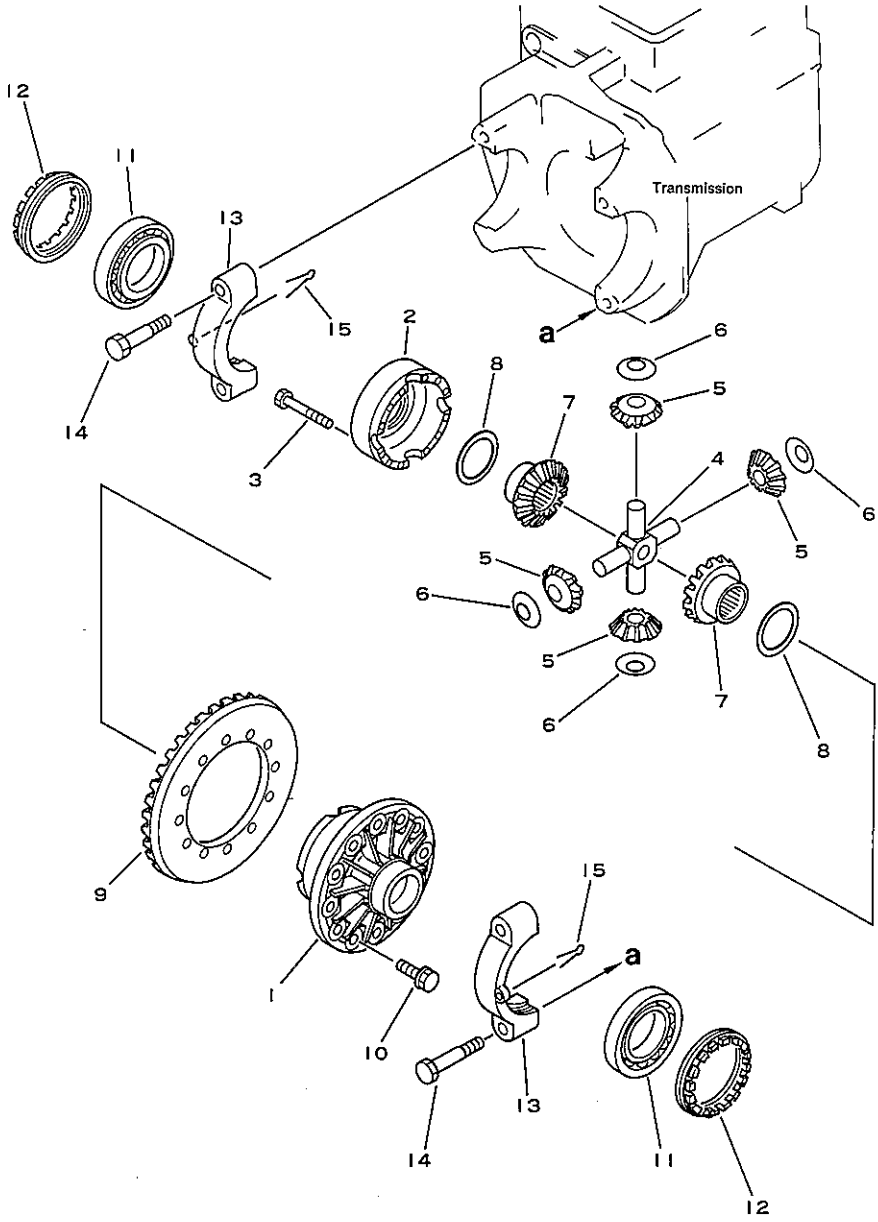

図および索引番号 Fig & Index No.	品番 Part No.	品名 Description	個数 Q'ty
	3EB-21-21010	DIFFERENTIAL GEAR SUB ASS'Y	1
	3EB-21-00020	.CASE ASS'Y.....	1
3101A- 1	★	..CASE.....	1
2	★	..CASE.....	1
3	01010-51070	..BOLT.....	12
4	3EB-21-11160	.SPIDER.....	1
5	3EB-21-11340	.GEAR.....	4
6	3EB-21-11370	.WASHER.....	4
7	3EB-21-21180	.GEAR.....	2
8	34B-21-12141	.BUSHING.....	2
9	(★)	GEAR,bevel.....	1
10	(3EB-21-11230)	BOLT.....	12
11	316-22-21250	BEARING.....	2
12	34B-21-12230	SCREW.....	2
13	(★)	CAP.....	2
14	(3EB-21-11190)	BOLT.....	2
15	04050-18050	PIN,cotter.....	2

適用機種 Application			
FG20	T	-C	450050A~
FG25	C	-C	450050A~
FG25	T	-C	450050A~
FG30	T	-C	450050A~
FG20S	T	-C	400001A~
FG25S	C	-C	400001A~
FG25S	T	-C	400001A~
FG30S	T	-C	400001A~
FG30G	T	-C	490001A~
FG30SG	T	-C	490002A~
FD25	T	-C	430175A~
FD30	T	-C	430175A~
FD25S	T	-C	480001A~

FIG.3201A DRIVE AXLE

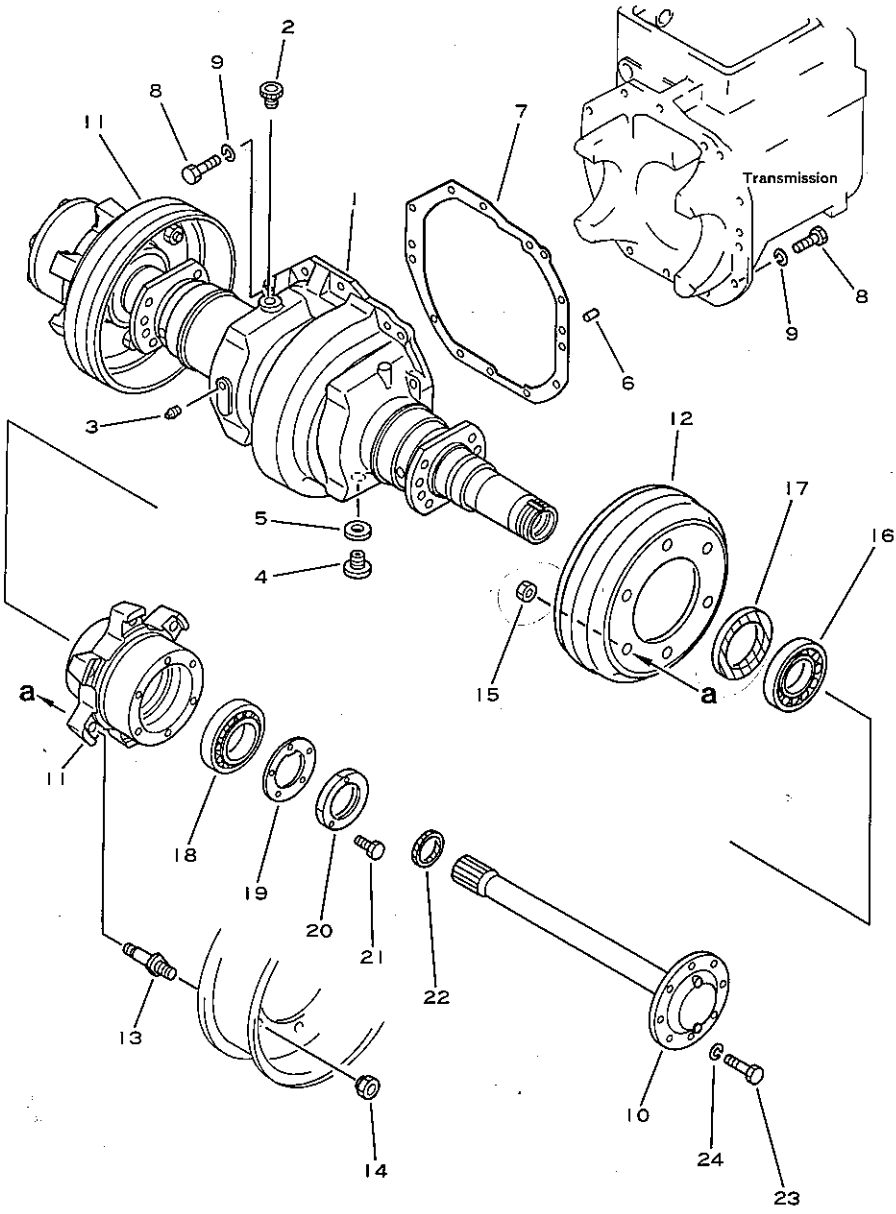

図および索引番号 Fig & Index No.	品番 Part No.	品名 Description	個数 Q'ty
3201A- 1	3EB-21-25102	HOUSING ASS'Y.....	1
2	3EB-21-15211	CAP.....	1
3	07042-20312	PLUG.....	1
4	34B-41-12910	PLUG.....	1
5	34B-41-12920	GASKET.....	1
6	04020-01228	PIN,dowel.....	2
7	3EB-21-25221	GASKET.....(K24)	1
8	01010-51235	BOLT.....	13
9	01602-21236	WASHER,spring.....	13
10	3EB-21-25160	SHAFT.....	2
11	3EB-21-25190	HUB.....	2
12	3EB-21-25130	DRUM,brake.....	2
13	3EB-21-25170	BOLT.....	12
14	34B-21-14151	NUT.....	12
15	01582-11815	NUT.....	12
16	316-22-21250	BEARING.....	2
17	3EB-21-15130	SEAL,oil.....(K31)	2
18	06002-30214	BEARING.....	2
19	3EB-21-25150	PLATE.....	2
20	3EB-21-25140	NUT.....	2
21	01010-50612	BOLT.....	2
22	3EB-21-15140	SEAL,oil.....(K31)	2
23	3EB-21-25180	BOLT.....	16
24	01602-21236	WASHER,spring.....	16
K24	3EB-15-05050	TORQFLOW DRIVE TRANSMISSION KIT (F1/R1)	1
K31	3EB-21-05050	FRONT HUB SEAL KIT..	2

適用機種 Application			
FG20	T	-C	450050A~
FG25	C	-C	450050A~
FG25	T	-C	450050A~
FG30	T	-C	450050A~
FG30G	T	-C	490001A~
FD25	T	-C	430175A~
FD30	T	-C	430175A~

FIG.3211A DRIVE AXLE (FOR S)

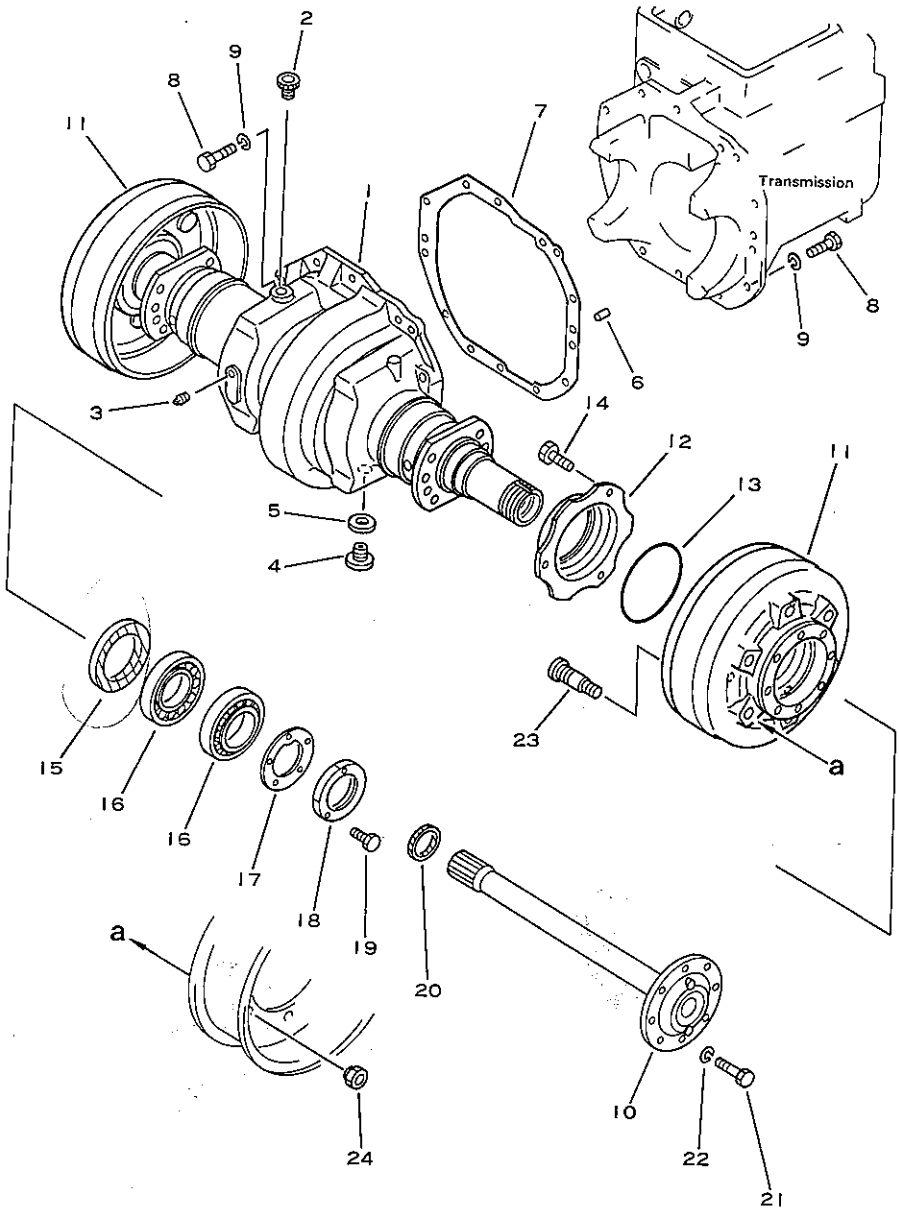

図および索引番号 Fig & Index No.	品番 Part No.	品名 Description	個数 Q'ty
3211A- 1	3EB-22-21101	HOUSING ASS'Y.....	1
2	3EB-21-15211	CAP.....	1
3	07042-20312	PLUG.....	1
4	34B-41-12910	PLUG.....	1
5	34B-41-12920	GASKET.....	1
6	04020-01228	PIN,dowel.....	2
7	3EB-21-25221	GASKET.....	1
8	01010-51235	BOLT.....	13
9	01602-21236	WASHER,spring.....	13
10	3EB-22-21140	SHAFT.....	2
11	3EB-22-21130	HUB.....	2
12	3EB-22-21150	CAGE.....	2
13	07000-02145	O-RING.....	2
14	01010-50816	BOLT.....	6
15	3EB-22-21160	SEAL,oil.....	2
16	06002-30214	BEARING.....	4
17	3EB-21-25150	PLATE.....	2
18	3EB-21-25140	NUT.....	2
19	01010-50612	BOLT.....	2
20	3EB-21-15140	SEAL,oil.....	2
21	3EB-21-25180	BOLT.....	16
22	01602-21236	WASHER,spring.....	16
23	3EB-22-21170	BOLT,serration.....	12
24	34B-21-14151	NUT.....	12

適用機種 Application			
FG20S	T	-C	400001A~
FG25S	C	-C	400001A~
FG25S	T	-C	400001A~
FG30S	T	-C	400001A~
FG30SG	T	-C	490002A~
FD25S	T	-C	480001A~

FIG.3311 STEERING AXLE (FOR S)(1/2)

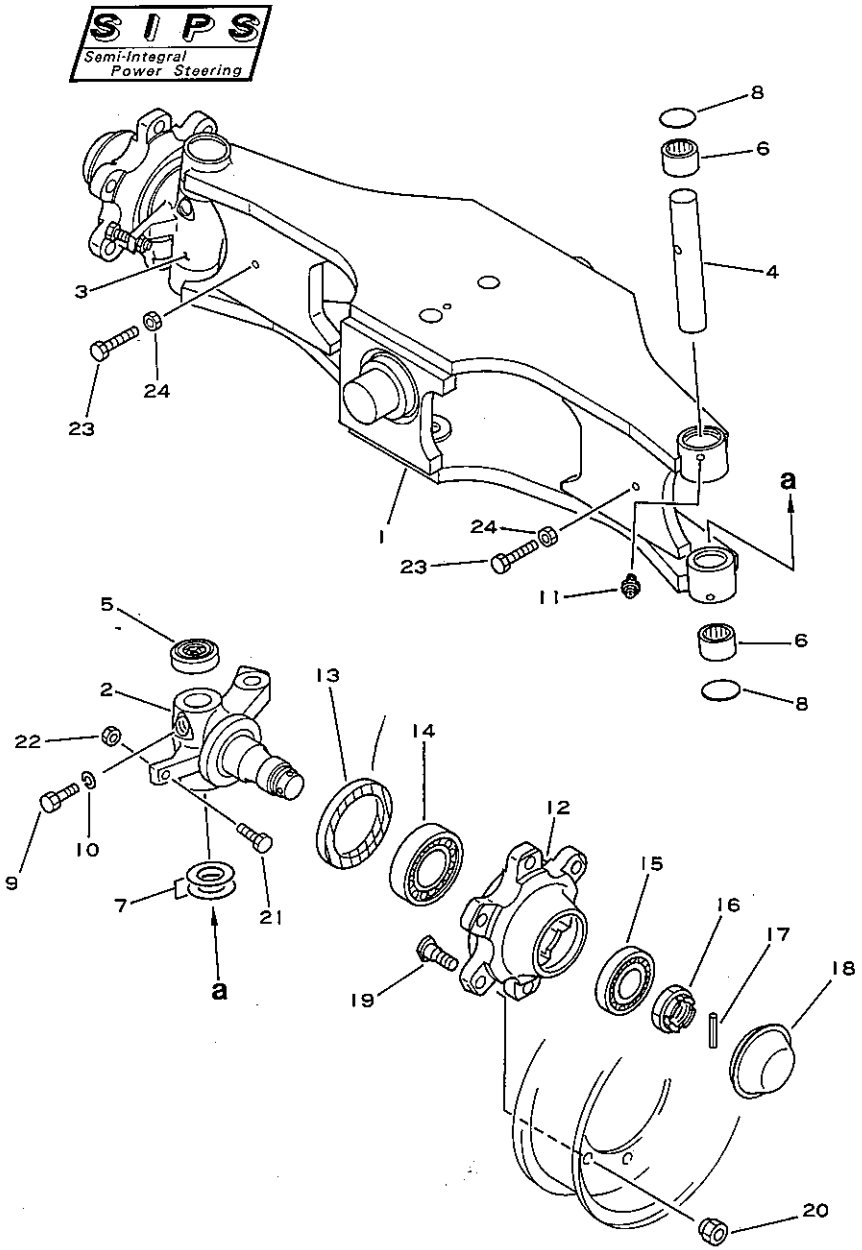

STEERING AXLE (FOR S) (1/2)

図および索引番号 Fig & Index No.	品番 Part No.	品名 Description	個数 Q'ty
3311 - 1	3EB-25-21110	AXLE,steering.....	1
2	3EB-24-21222	KNUCKLE (L.H).....	1
3	3EB-24-21232	KNUCKLE (R.H).....	1
4	34B-24-11141	PIN.....(K33)	2
5	360-27-13260	BEARING.....(K33)	2
6	360-27-11171	BEARING.....(K33)	4
7	360-27-11220	SHIM.....(K33)	6
8	07046-04020	PLUG.....(K33)	4
9	300-27-11221	SCREW.....	2
10	01602-21030	WASHER,spring.....	2
11	07020-00001	FITTING,grease.....	4
12	3EB-24-21210	HUB.....	2
13	07011-00080	SEAL,oil.....	2
14	06000-32209	BEARING.....	2
15	06000-30207	BEARING.....	2
16	01593-13018	NUT.....	2
17	04025-00650	PIN,roll.....	2
18	3EB-24-11160	CAP.....	2
19	34B-24-11221	SERRATION BOLT.....	12
20	300-22-31241	NUT,hub.....	12
21	01016-51035	BOLT.....	2
22	01580-11008	NUT.....	2
23	01016-51040	BOLT.....	2
24	01580-11008	NUT.....	2
K33	3EB-24-05060	KING PIN KIT.....	2

適用機種 Application		
FG20S	T	-C 300001A~400000A
FG25S	C	-C 300001A~400000A
FG25S	T	-C 300001A~
FG30SG	T	-C 320003A~490001A
FD20SV	T	-C 380001A~480000A
FD25SV	T	-C 380001A~480000A
FD30SV	T	-C 380001A~480000A

FIG.3312 STEERING AXLE (FOR S)(2/2)

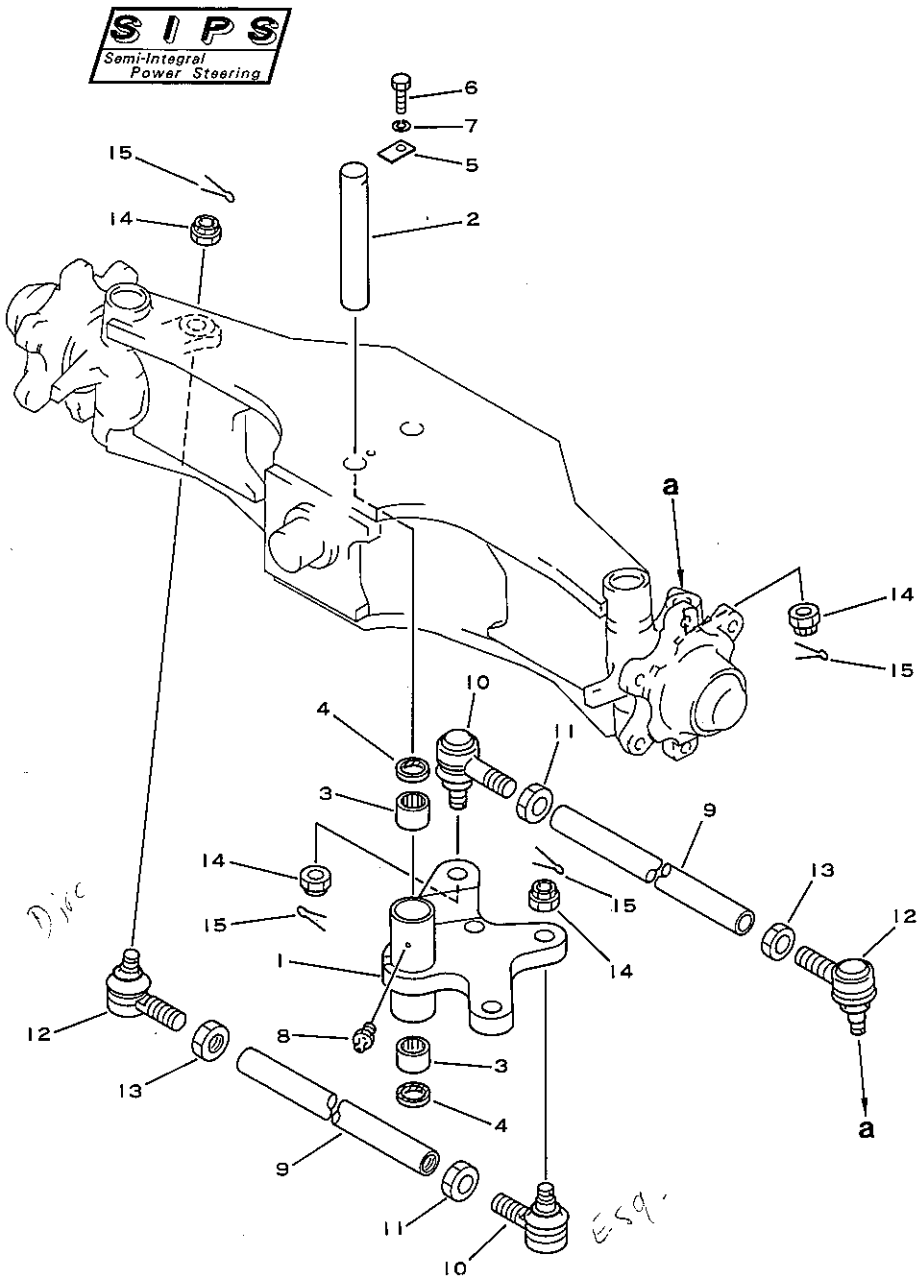

図および索引番号 Fig & Index No.	品番 Part No.	品名 Description	個数 Q'ty
3312 - 1	3EB-24-21241	BELL CRANK.....	1
2	34B-24-11321	PIN.....	1
3	360-27-11171	BEARING.....(K32)	2
4	34B-24-11350	SEAL.....(K32)	2
5	34B-24-11330	PLATE.....	1
6	01010-50820	BOLT.....	1
7	01602-20825	WASHER,spring.....	1
8	07020-00001	FITTING,grease.....	1
9	3EB-25-21250	TIE ROD.....	2
10	3EB-24-21310	BALL SOCKET ASS'Y...	2
11	3EB-24-21280	NUT.....	2
12	3EB-24-21410	BALL SOCKET ASS'Y...	2
13	3EB-24-21290	NUT.....	2
14	3EB-24-21270	NUT.....	4
15	04050-13025	PIN,cotter.....	4
K32	3EB-24-05050	CENTER PIN BEARING KIT	1

適用機種 Application		
FG20S	T	-C 300001A~400000A
FG25S	C	-C 300001A~400000A
FG25S	T	-C 300001A~
FG30SG	T	-C 320003A~490001A
FD20SV	T	-C 380001A~480000A
FD25SV	T	-C 380001A~480000A
FD30SV	T	-C 380001A~480000A

FIG.3351 STEERING AXLE (FOR FHPS)

FHPS
Full Hydraulic Power Steering

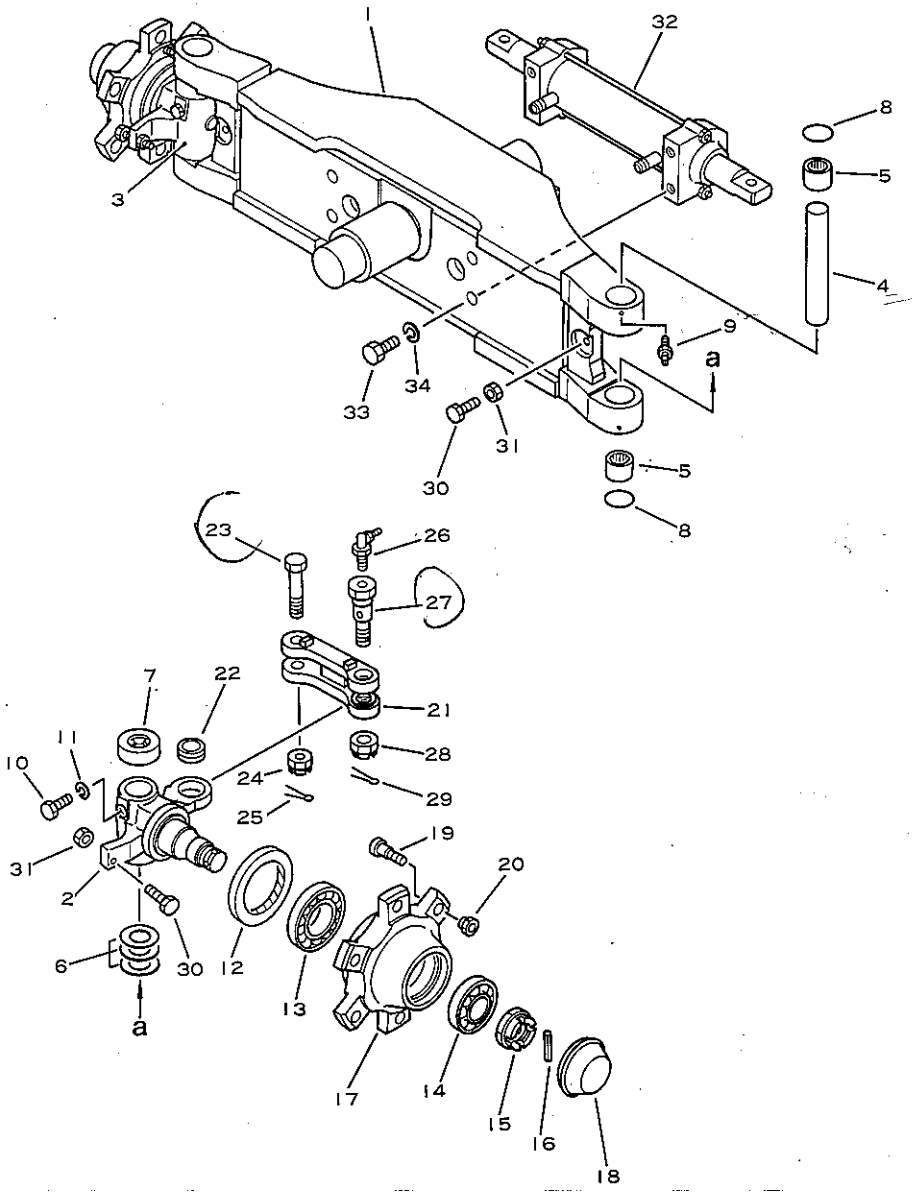

図および索引番号 Fig & Index No.	品番 Part No.	品名 Description	個数 Q'ty
3351 - 1	3EB-24-A2511	AXLE,steering.....	1
2	3EB-24-A2550	KNUCKLE (L.H).....	1
3	3EB-24-A2560	KNUCKLE (R.H).....	1
4	34B-24-11141	PIN.....	2
5	360-27-11171	BEARING.....	4
6	360-27-11220	SHIM.....	6
7	360-27-13260	BEARING.....	2
8	07046-04020	PLUG.....	4
9	07020-00001	FITTING.....	4
10	300-27-11221	BOLT.....	2
11	01602-21030	WASHER,spring.....	2
12	07011-00080	SEAL.....	2
13	06000-32209	BEARING.....	2
14	06000-30207	BEARING.....	2
15	01593-13018	NUT.....	2
16	04025-00650	PIN,cotter.....	2
17	3EB-24-21210	HUB.....	2
18	3EB-24-11160	CAP.....	2
19	34B-24-11221	BOLT, serration.....	12
20	300-22-31241	NUT,hwb.....	12
21	3EB-24-A2530	LINK (L.H).....	1
	3EB-24-A2540	LINK (R.H).....	1
22	3EB-24-A2580	BUSHING.....	2
23	3EB-24-21581	BOLT.....	2
24	01593-11411	NUT.....	2
25	04050-13022	PIN,cotter.....	2
26	07020-00900	FITTING.....	2
27	3EB-24-A2570	BOLT.....	2
28	01593-11813	NUT.....	2
29	04050-14028	PIN,cotter.....	2
30	01016-51045	BOLT.....	4
31	01580-11008	NUT.....	4
32	(3EB-64-A2210)	(POWER STEERING CYLINDER ASS'Y)	1
33	01010-51650	BOLT.....	4
34	01602-21648	WASHER,spring.....	4

適用機種 Application
FG20 T -C 252001A~
FG25 C -C 252001A~
FG25 T -C 252001A~
FG30 T -C 450050A~
FG30G T -C 290222A~
FD20 T -C 337001A~430174A
FD25 C -C 337001A~430174A
FD25 T -C 337001A~
FD30 C -C 337001A~430174A
FD30 T -C 337001A~
FD20V T -C 337901A~430174A
FD25V C -C 337901A~430174A
FD25V T -C 337901A~430174A
FD30V C -C 337901A~430174A
FD30V T -C 337901A~430174A

FIG.3352 STEERING AXLE (FOR FHPS,S)

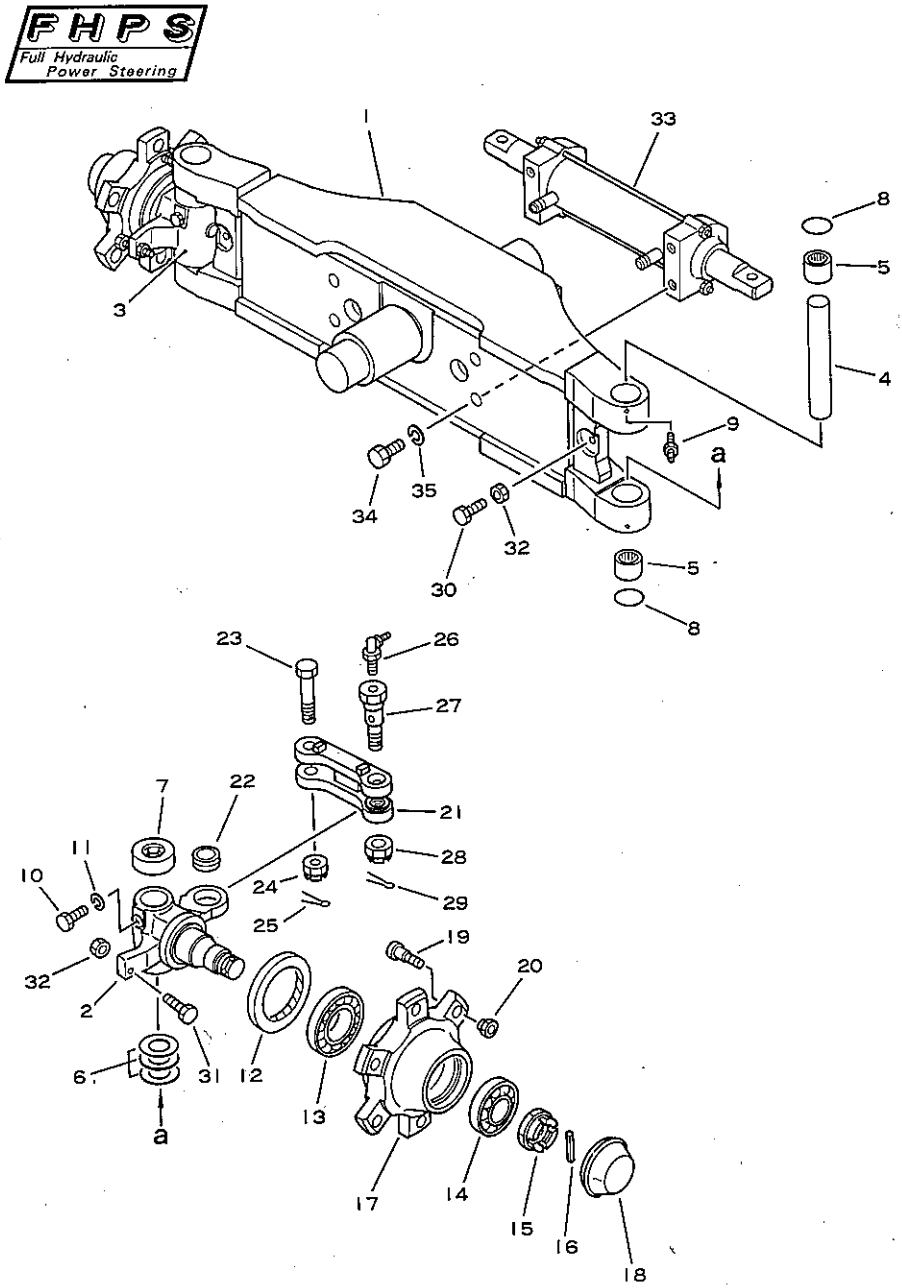

STEERING AXLE (FOR FHPS,S)

図および索引番号 Fig. & Index No.	品番 Part No.	品名 Description	個数 Q'ty
3352 - 1	3EB-25-A2511	AXLE,steering.....	1
2	3EB-24-A2550	KNUCKLE (L.H).....	1
3	3EB-24-A2560	KNUCKLE (R.H).....	1
4	34B-24-11141	PIN.....	2
5	360-27-11171	BEARING.....	4
6	360-27-11220	SHIM.....	6
7	360-27-13260	BEARING.....	2
8	07046-04020	PLUG.....	4
9	07020-00001	FITTING.....	4
10	300-27-11221	BOLT.....	2
11	01602-21030	WASHER,spring.....	2
12	07011-00080	SEAL.....	2
13	06000-32209	BEARING.....	2
14	06000-30207	BEARING.....	2
15	01593-13018	NUT.....	2
16	04025-00650	PIN,cotter.....	2
17	3EB-24-21210	HUB.....	2
18	3EB-24-11160	CAP.....	2
19	34B-24-11221	BOLT, serration.....	12
20	300-22-31241	BOLT,hwb.....	12
21	3EB-25-A2530	LINK (L.H).....	1
	3EB-25-A2540	LINK (R.H).....	1
22	3EB-24-A2580	BUSHING.....	2
23	3EB-24-21581	BOLT.....	2
24	01593-11411	NUT.....	2
25	04050-13022	PIN,cotter.....	2
26	07020-00900	FITTING.....	2
27	3EB-24-A2570	BOLT.....	2
28	01593-11813	NUT.....	2
29	04050-14028	PIN,cotter.....	2
30	01016-51045	BOLT.....	2
31	01016-51040	BOLT.....	2
32	01580-11008	NUT.....	4
33	(3EB-64-A2210)	(POWER STEERING CYLINDER ASS'Y)	1
34	01010-51650	BOLT.....	4

適用機種 Application		
FG20S	T	-C 300001A~
FG25S	C	-C 300001A~
FG25S	T	-C 300001A~
FG30S	T	-C 490001A~
FG30SG	T	-C 320003A~
FD25S	T	-C 480001A~
FD20SV	T	-C 380001A~480000A
FD25SV	T	-C 380001A~480000A
FD30SV	T	-C 380001A~480000A

STEERING AXLE (FOR FHPS,S)

図および索引番号 Fig & Index No.	品番 Part No.	品名 Description	個数 Q'ty	適用機種 Application
3352 -35	01602-21648	WASHER,spring.....	4	

FIG.3401 FRONT WHEEL

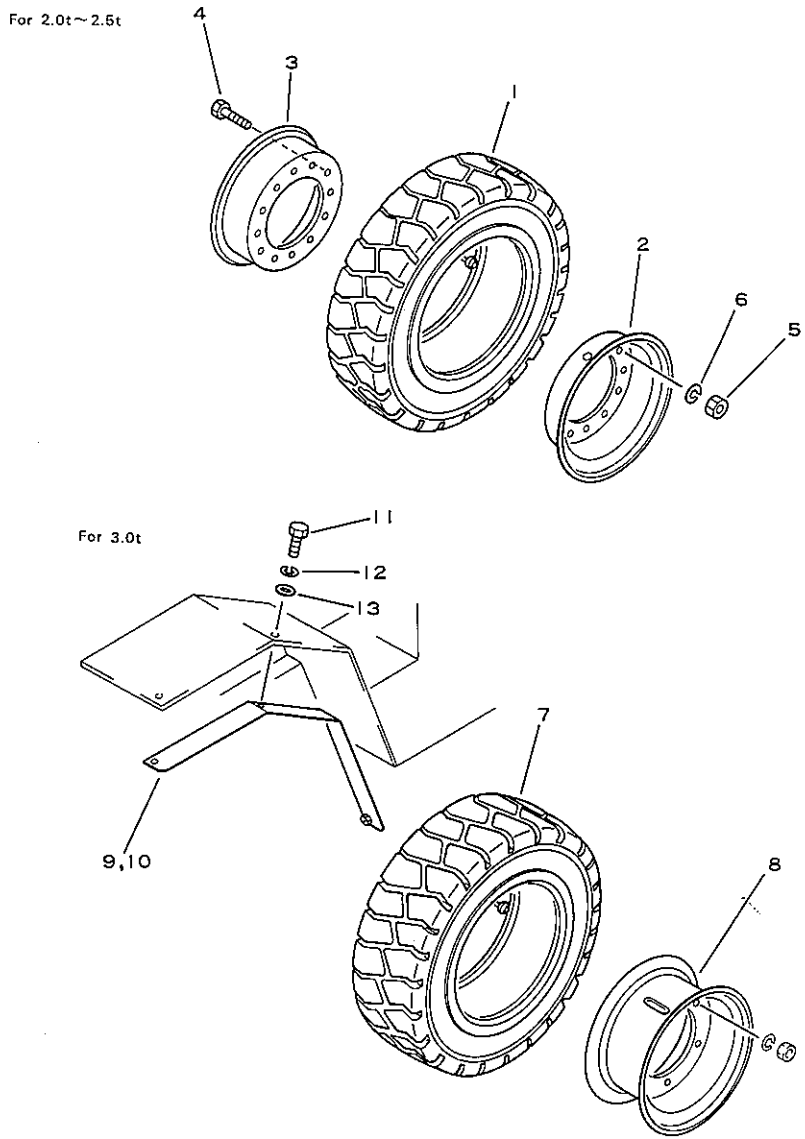

図および索引番号 Fig & Index No.	品番 Part No.	品名 Description	個数 Q'ty
		(for 2.0t~2.5t)	
*	37A-1HA-A040	TIRE ASS'Y (pnuematic tire)	2
* 3401 - 1	37A-1HA-A340	.TIRE (7.00-12-12PR)	1
*	37A-1HA-A640	.TUBE.....	1
	34B-27-00010	RIM ASS'Y.....	2
2	*	.RIM.....	1
3	*	.RIM.....	1
4	01010-51630	.BOLT.....	6
5	01580-11613	.NUT.....	6
6	01602-21648	.WASHER,spring.....	6
		(for 3.0t)	
7	37A-1HA-A050	TIRE ASS'Y (pneumatic tire)	2
*	37A-1HA-A350	.TIRE (8.15-15-16-PR(I))	1
	37A-1HA-A650	.TUBE.....	1
8	3EB-27-11520	RIM.....	2
9	3EB-27-21350	COVER (L.H).....	1
10	3EB-27-21360	COVER (R.H).....	1
11	01010-51035	BOLT.....	8
12	01602-21030	WASHER,spring.....	8
13	34A-50-22140	WASHER.....	8

適用機種 Application		
FG20	T	-C 252001A~
FG25	C	-C 252001A~
FG25	T	-C 252001A~
FG30	T	-C 450050A~
FG30G	T	-C 290222A~
FD20	T	-C 337001A~430174A
FD25	C	-C 337001A~430174A
FD25	T	-C 337001A~
FD30	C	-C 337001A~430174A
FD30	T	-C 337001A~
FD20V	T	-C 337901A~430174A
FD25V	C	-C 337901A~430174A
FD25V	T	-C 337901A~430174A
FD30V	C	-C 337901A~430174A
FD30V	T	-C 337901A~430174A

FIG.3405 FRONT WHEEL (FOR S)

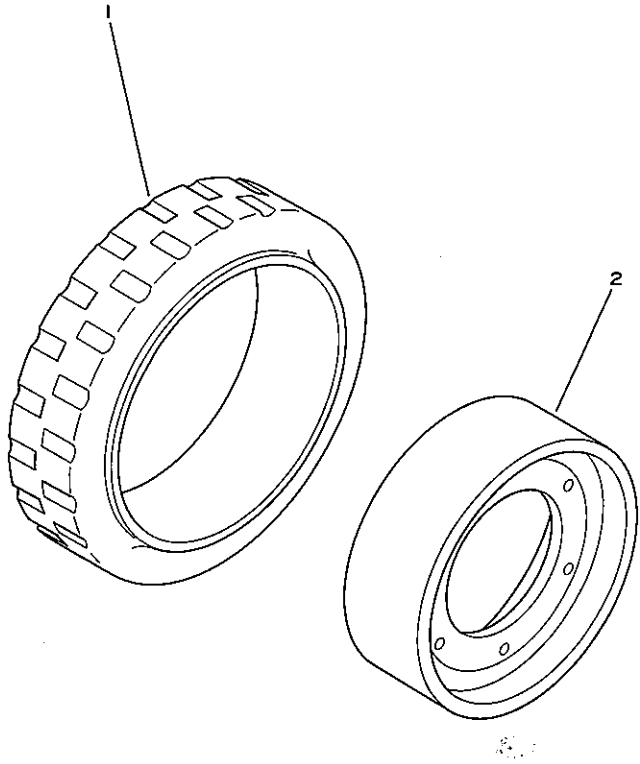

図および索引番号 Fig & Index No.	品番 Part No.	品名 Description	個数 Q'ty	適用機種 Application
	37B-1HB-1130	TIRE ASS'Y.....	2	FG20S T -C 300001A~ FG25S C -C 300001A~
	37B-1HB-1140	TIRE ASS'Y.....	2	FG25S T -C 300001A~ FG30S T -C 400001A~ FG30SG T -C 320003A~ FG25S T -C 480001A~ FD20SV T -C 380001A~480000A
3405 - 1	☆	.TIRE (21-7-15) (for 2.0t~2.5t)	1	FD25SV T -C 380001A~480000A FD30SV T -C 380001A~480000A
	☆	.TIRE (21-8-15) (for 3.0t)	1	
2	☆	.RIM.....	1	

FIG.3601 REAR WHEEL

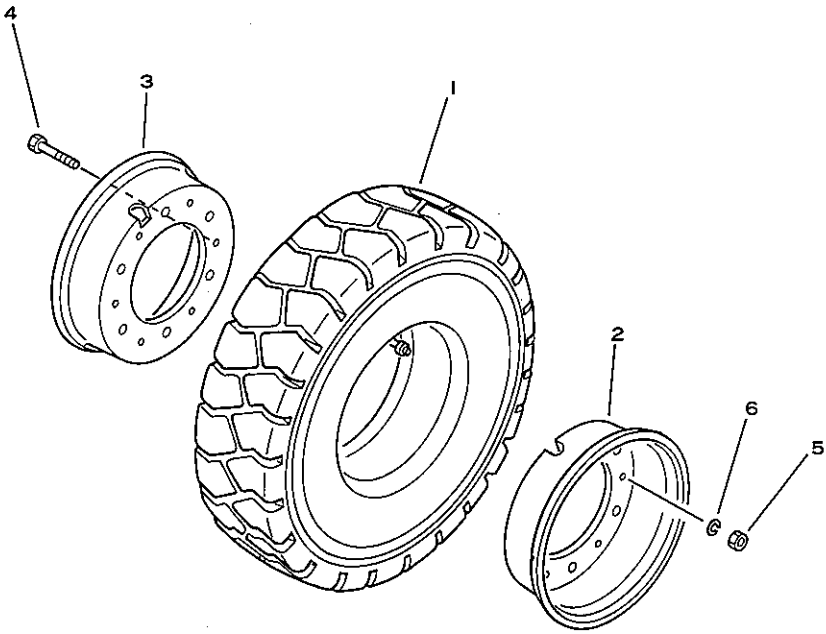

図および索引番号 Fig & Index No.	品番 Part No.	品名 Description	個数 Q'ty
3601 - 1	37A-1HA-A010	TIRE ASS'Y (pneumatic tire) (for 2.0t~2.5t)	2
	37A-1HA-A020	TIRE ASS'Y (pneumatic tire) (for 3.0t)	2
	37A-1HA-A310	.TIRE (6.00-9-10PR) (for 2.0t~2.5t)	1
	37A-1HA-A320	.TIRE (6.50-10-10PR) (for 3.0t)	1
	37A-1HA-A610	.TUBE(for 2.0t~2.5t)	1
	37A-1HA-A620	.TUBE (for 3.0t)....	1
	34A-27-00030	RIM ASS'Y (for 2.0t~2.5t)	2
	34A-27-00041	RIM ASS'Y (for 3.0t)	2
2	☆	.RIM.....	1
3	☆	.RIM.....	1
4	01050-81225	.BOLT(for 2.0t~2.5t)	6
	01050-81230	.BOLT (for 3.0t)....	6
5	01582-11210	.NUT.....	6
6	01602-21236	.WASHER,spring.....	6

適用機種 Application		
FG20	T	-C 252001A~
FG25	C	-C 252001A~
FG25	T	-C 252001A~
FG30	T	-C 450050A~
FG30G	T	-C 290222A~
FD20	T	-C 337001A~430174A
FD25	C	-C 337001A~430174A
FD25	T	-C 337001A~
FD30	C	-C 337001A~430174A
FD30	T	-C 337001A~
FD20V	T	-C 337901A~430174A
FD25V	C	-C 337901A~430174A
FD25V	T	-C 337901A~430174A
FD30V	C	-C 337901A~430174A
FD30V	T	-C 337901A~430174A

FIG.3701A BRAKE SYSTEM

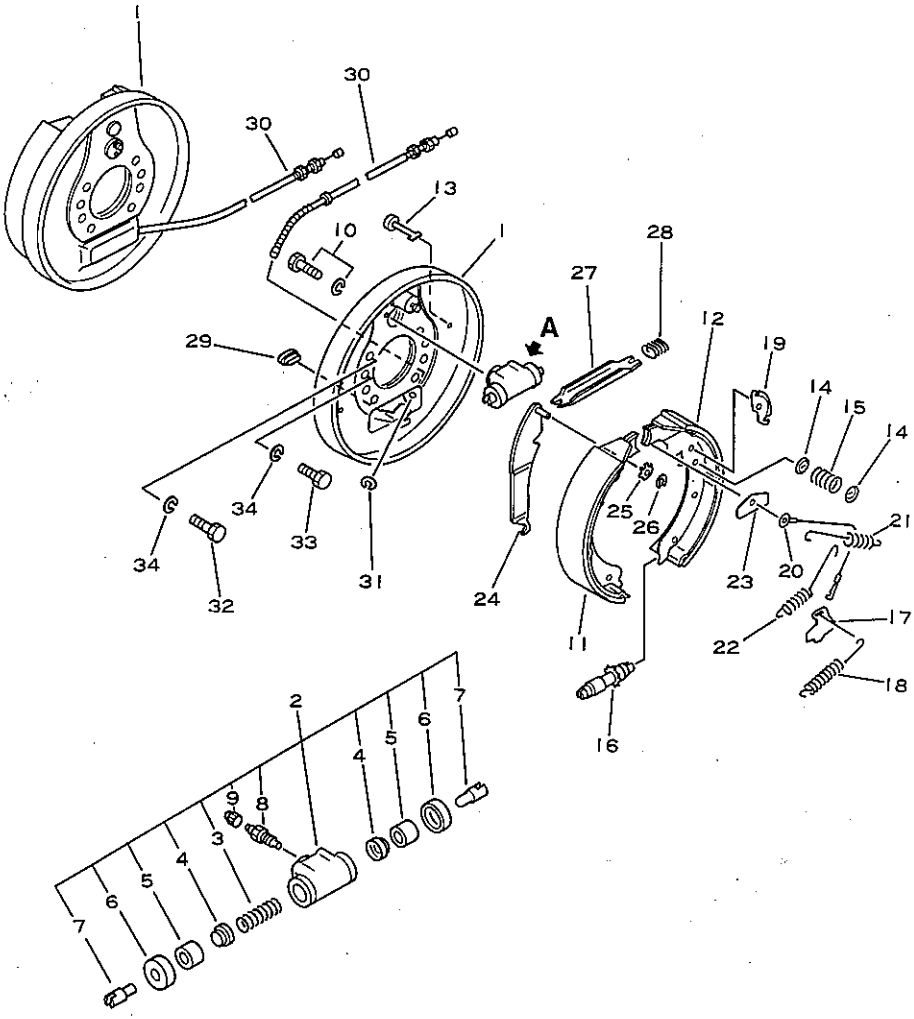

Detail A

図および索引番号 Fig & Index No.	品番 Part No.	品名 Description	個数 Q'ty
	3EB-30-23103	BRAKE ASS'Y (L.H)...	1
	3EB-30-23203	BRAKE ASS'Y (R.H)...	1
3701A- 1	3EB-30-11110	.BACKING PLATE ASS'Y (L.H)	1
	3EB-30-11210	.BACKING PLATE ASS'Y (R.H)	1
2	3EB-30-21310	.WHEEL CYLINDER ASS'Y	1
3	☆	..SPRING.....(K41)	1
4	☆	..CUP.....(K41)	2
5	☆	..PISTON.....(K41)	2
6	☆	..BOOT.....(K41)	2
7	34B-30-14570	..ROD,connecting....	2
8	34B-30-14550	.SCREW,bleeder.....	1
9	34B-30-14560	.CAP,bleeder.....	1
10	34B-30-14460	.BOLT AND WASHER....	2
11	3EB-30-23430	.SHOE AND LINING ASS'Y	1
12	3EB-30-23440	.SHOE AND LINING ASS'Y	1
13	34B-30-14430	.PIN.....	4
14	34B-30-14410	.CUP,shoe-hold.....	8
15	34B-30-14420	.SPRING.....	4
16	34B-30-14140	.ADJUSTER ASS'Y(L.H)	1
	34B-30-14240	.ADJUSTER ASS'Y(R.H)	1
17	34B-30-14150	.LEVER,adjuster(L.H)	1
	34B-30-14250	.LEVER,adjuster(R.H)	1
18	34B-30-14380	.SPRING.....	1
19	34B-30-14361	.CABLE GUIDE.....	1
20	34B-30-14371	.CABLE AND FITTING ASS'Y	1
21	3EB-30-11140	.SPRING (L.H).....	1
	34B-30-14351	.SPRING (R.H).....	1
22	3EB-30-11140	.SPRING (L.H).....	1
	3EB-30-14351	.SPRING (R.H).....	1
23	34B-30-14390	.PLATE,shoe-guide...	1
24	3EB-30-11120	.PARKING LEVER ASS'Y (L.H)	1

3EB-30-23001-R.

適用機種 Application			
FG20	T	-C	450050A~
FG25	C	-C	450050A~
FG25	T	-C	450050A~
FG30	T	-C	450050A~
FG20S	T	-C	400001A~
FG25S	C	-C	400001A~
FG25S	T	-C	400001A~
FG30S	T	-C	400001A~
FG30G	T	-C	490001A~
FG30SG	T	-C	490002A~
FD25	T	-C	430175A~
FD30	T	-C	430175A~
FD25S	T	-C	480001A~

BRAKE SYSTEM

図および索引番号 Fig & Index No.	品番 Part No.	品名 Description	個数 Q'ty	適用機種 Application
3701A-24	3EB-30-11220	.PARKING LEVER ASS'Y (R.H)	1	
25	34B-30-14440	.WASHER,spring.....	1	
26	34B-30-14450	.RETAINER.....	1	
27	34B-30-14160	.STRUT (L.H).....	1	
	34B-30-14260	.STRUT (R.H).....	1	
28	34B-30-14320	.SPRING.....	1	
29	34B-30-14480	.COVER.....	1	
30	3EB-30-11131	.CABLE ASS'Y (L.H)..	1	
	3EB-30-11231	.CABLE ASS'Y (R.H)..	1	
31	34B-30-14470	.RING,snap.....	1	
32	34B-30-14110	BOLT,reamer.....	4	
33	01010-81435	BOLT.....	12	
34	01602-21442	WASHER,spring.....	16	
K41	3EB-30-00010	WHEEL CYLINDER KIT..	2	

STEERING AND CONTROL SYSTEM

FIG.4001 STEERING WHEEL

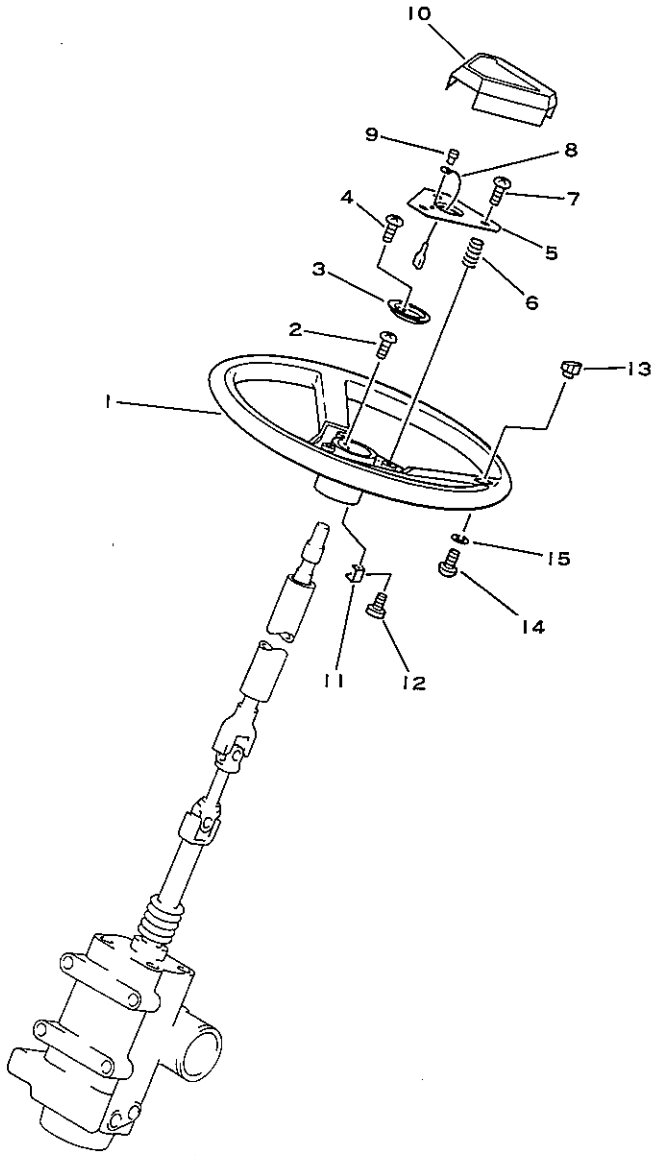

図および索引番号 Fig & Index No.	品番 Part No.	品名 Description	個数 Q'ty
	37B-1BA-2021	STEERING WHEEL ASS'Y	1
4001 - 1	3ED-33-41120	.STEERING WHEEL.....	1
2	3ED-33-41250	.SCREW.....	1
3	3ED-33-41130	.PLATE.....	1
4	3ED-33-41160	.SCREW.....	2
5	3ED-33-41140	.PLATE.....	1
6	3ED-33-41150	.SPRING.....	3
7	3ED-33-41170	.SCREW.....	2
8	3ED-33-41210	.CORD ASS'Y.....	1
9	3ED-33-41230	.SCREW.....	1
10	3EB-33-21121	.PAD,horn.....	1
11	3ED-33-41280	.SPRING,lead.....	1
12	3ED-33-41240	.SCREW.....	1
13	3ED-33-42120	.PLUG.....	1
14	3ED-33-42130	.SCREW.....	1
15	3ED-33-42140	.WASHER.....	1

適用機種 Application		
FG20	T	-C 252001A~
FG25	C	-C 252001A~
FG25	T	-C 252001A~
FG30	T	-C 450050A~
FG20S	T	-C 300001A~
FG25S	C	-C 300001A~
FG25S	T	-C 300001A~
FG30S	T	-C 400001A~
FG30G	T	-C 290222A~
FG30SG	T	-C 320003A~
FD20	T	-C 337001A~430174A
FD25	C	-C 337001A~430174A
FD25	T	-C 337001A~
FD30	C	-C 337001A~430174A
FD30	T	-C 337001A~
FD25S	T	-C 480001A~
FD20V	T	-C 337901A~430174A
FD25V	C	-C 337901A~430174A
FD25V	T	-C 337901A~430174A
FD30V	C	-C 337901A~430174A
FD30V	T	-C 337901A~430174A
FD20SV	T	-C 380001A~480000A
FD25SV	T	-C 380001A~480000A
FD30SV	T	-C 380001A~480000A

FIG.4101 STEERING COLUMN

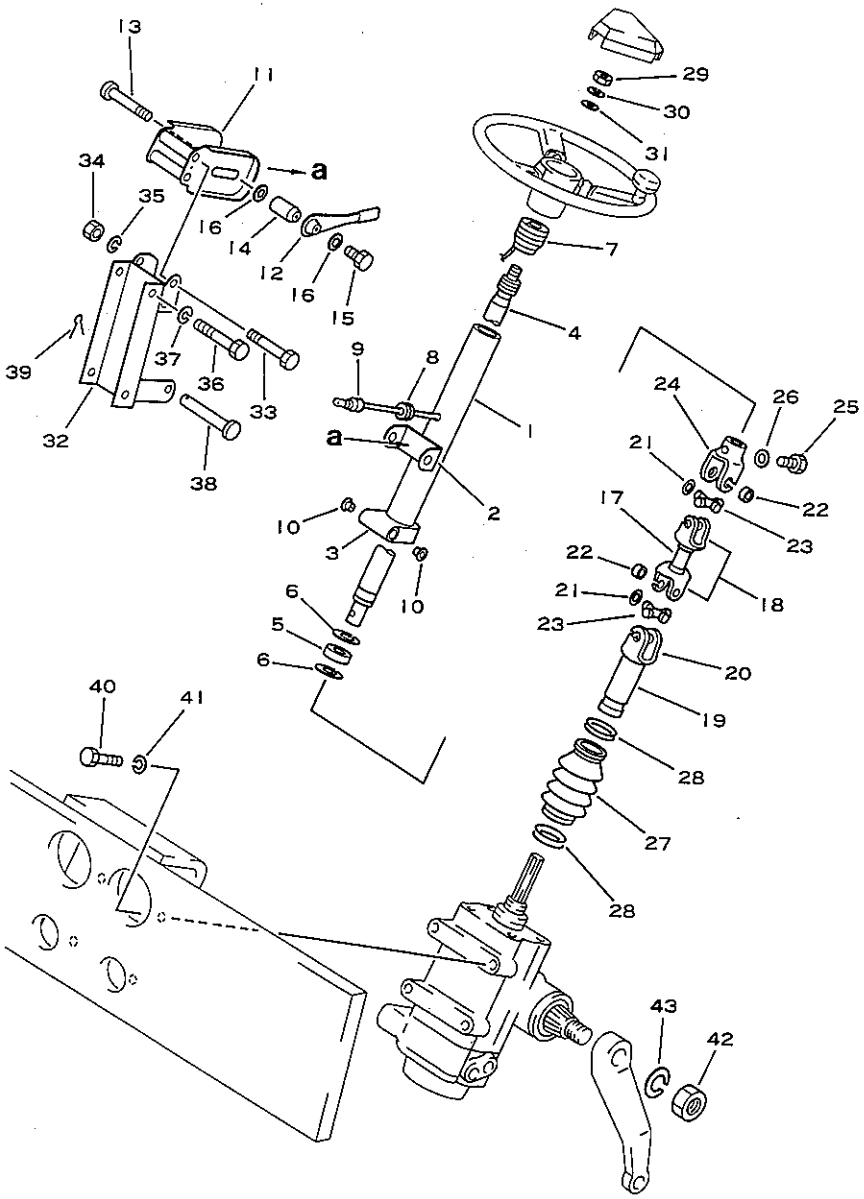

図および索引番号 Fig & Index No.	品番 Part No.	品名 Description	個数 Q'ty
	3EB-34-22212	SHAFT AND COLUMN ASS'Y	1
	3EB-34-22222	.SHAFT AND COLUMN SUB ASS'Y	1
	3EB-34-22230	..COLUMN ASS'Y.....	1
4101 - 1	☆	...COLUMN.....	1
2	☆	...BRACKET.....	1
3	☆	...SUPPORT.....	1
4	☆	..SHAFT.....	1
5	☆	..BEARING.....	1
6	3EB-34-22240	..RING,snap.....	2
7	3EB-34-22250	..BUSHING,column....	1
8	3EB-34-22260	..GROMMET.....	1
9	3EB-34-22270	..COVER.....	1
10	3EB-34-22280	..BUSHING.....	2
11	3EB-34-22290	..BRACKET.....	1
12	3EB-34-22310	..LEVER,adjusting...	1
13	3EB-34-22320	..BOLT,adjusting....	1
14	3EB-34-22330	..NUT,adjusting.....	1
15	3EB-34-22340	..BOLT,adjust lever.	1
16	3EB-34-22360	..WASHER.....	2
	3EB-34-22350	.UNIVERSAL JOINT ASS'Y	1
	3EB-34-22370	..SHAFT YOKE ASS'Y..	1
17	☆	...SHAFT.....	1
18	☆	...YOKE.....	2
	3EB-34-22380	..TUBE YOKE ASS'Y...	1
19	☆	...TUBE.....	1
20	☆	...YOKE.....	1
21	☆	..RING.....	8
22	☆	..BEARING,needle....	8
23	☆	..SPIDER.....	2
24	☆	..YOKE.....	1
25	3EB-34-22410	.BOLT.....	1
26	3EB-34-22390	.WASHER.....	1
27	3EB-34-22420	.BOOT.....	1
28	3EB-34-22480	.WIRE.....	2

適用機種 Application		
FG20	T	-C 252001A~450049A
FG25	C	-C 252001A~450049A
FG25	T	-C 252001A~450049A
FG20S	T	-C 300001A~400000A
FG25S	C	-C 300001A~400000A
FG25S	T	-C 300001A~
FG30G	T	-C 290222A~490000A
FG30SG	T	-C 320003A~490001A
FD20	T	-C 337001A~430174A
FD25	C	-C 337001A~430174A
FD25	T	-C 337001A~430174A
FD30	C	-C 337001A~430174A
FD30	T	-C 337001A~430174A
FD20V	T	-C 337901A~430174A
FD25V	C	-C 337901A~430174A
FD25V	T	-C 337901A~430174A
FD30V	C	-C 337901A~430174A
FD30V	T	-C 337901A~430174A
FD20SV	T	-C 380001A~480000A
FD25SV	T	-C 380001A~480000A
FD30SV	T	-C 380001A~480000A

STEERING COLUMN

図および索引番号 Fig & Index No.	品番 Part No.	品名 Description	個数 Q'ty	適用機種 Application
4101 -29	34A-10-81150	NUT.....	1	
30	01602-21236	WASHER,spring.....	1	
31	01640-21223	WASHER.....	1	
32	3EB-34-22433	BRACKET.....	1	
33	3EB-34-22970	BOLT.....	2	
34	01598-01011	NUT.....	2	
35	01602-21030	WASHER,spring.....	2	
36	01010-51025	BOLT.....	4	
37	01602-21030	WASHER,spring.....	4	
38	3EB-34-22440	PIN.....	1	
39	04050-13020	PIN,cotter.....	1	
40	304-41-31980	BOLT.....	4	
41	01602-21236	WASHER,spring.....	4	
42	01583-12414	NUT.....	1	
43	01602-22472	WASHER,spring.....	1	

FIG.4131 STEERING COLUMN (FOR FHPS)

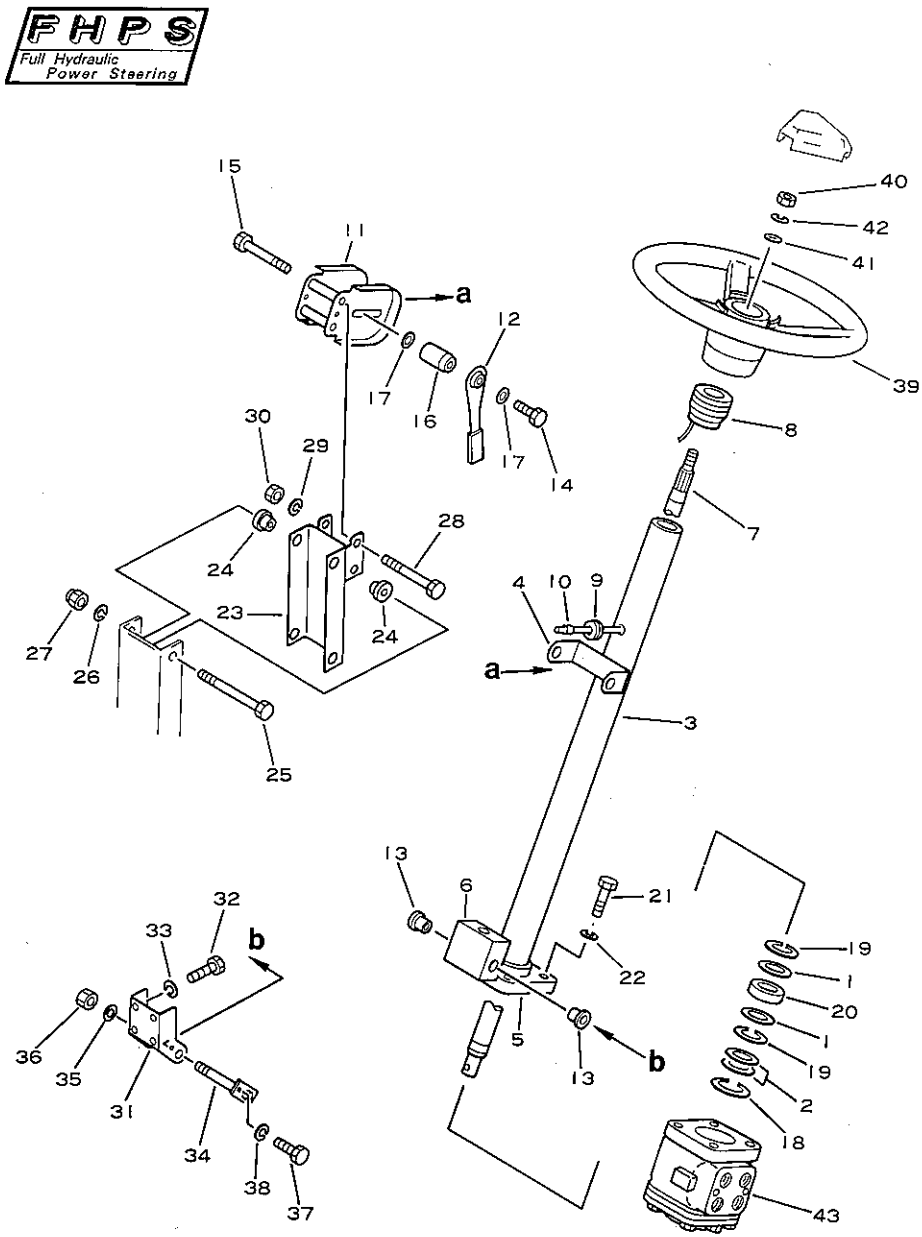

図および索引番号 Fig & Index No.	品番 Part No.	品名 Description	個数 Q'ty
	3EB-34-23410	SHAFT AND COLUMN ASS'Y	1
4131 - 1	3EB-34-23470	.SHIM ASS'Y.....	1
2	3EB-34-23580	.SHIM ASS'Y.....	1
	★	.COLUMN ASS'Y.....	1
3	★	..COLUMN.....	1
4	★	..BRACKET.....	1
5	★	..COVER.....	1
6	★	..BRACKET.....	1
7	3EB-34-23430	.SHAFT,steering.....	1
8	3EB-34-22250	.BUSHING,column.....	1
9	3EB-34-22260	.GROMMET.....	1
10	3EB-34-22270	.COVER.....	1
11	3EB-34-23440	.BRACKET.....	1
12	3EB-34-22310	.LEVER.....	1
13	3EB-34-22280	.BUSHING.....	2
14	3EB-34-22340	.BOLT.....	1
15	3EB-34-22320	.BOLT.....	1
16	3EB-34-22330	.BOLT.....	1
17	3EB-34-22360	.WASHER.....	1
18	3EB-34-23450	.RING,snap.....	1
19	3EB-34-22240	.RING,snap.....	1
20	3EB-34-23460	.BEARING.....	1
21	02010-70632	BOLT.....	4
22	01602-20929	WASHER,spring.....	4
23	3EB-34-23210	BRACKET.....	1
24	3EB-34-22450	RUBBER.....	4
25	01011-51015	BOLT.....	2
26	01602-21030	WASHER,spring.....	2
27	3EB-61-11260	NUT.....	2
28	01010-51080	BOLT.....	2
29	01602-21030	WASHER,spring.....	2
30	01580-11008	NUT.....	2
31	3EB-34-23221	BRACKET.....	1
32	01010-50818	BOLT.....	4
33	01602-20825	WASHER,spring.....	4

適用機種 Application		
FG20	T	-C 252001A~
FG25	C	-C 252001A~
FG25	T	-C 252001A~
FG30	T	-C 450050A~
FG20S	T	-C 300001A~
FG25S	C	-C 300001A~
FG25S	T	-C 300001A~
FG30S	T	-C 400001A~
FG30G	T	-C 290222A~
FG30SG	T	-C 320003A~
FD20	T	-C 337001A~430174A
FD25	C	-C 337001A~430174A
FD25	T	-C 337001A~
FD30	C	-C 337001A~430174A
FD30	T	-C 337001A~
FD25S	T	-C 480001A~
FD20V	T	-C 337901A~430174A
FD25V	C	-C 337901A~430174A
FD25V	T	-C 337901A~430174A
FD30V	C	-C 337901A~430174A
FD30V	T	-C 337901A~430174A
FD20SV	T	-C 380001A~480000A
FD25SV	T	-C 380001A~480000A
FD30SV	T	-C 380001A~480000A

STEERING COLUMN (FOR FHPS)

図および索引番号 Fig & Index No.	品番 Part No.	品名 Description	個数 Q'ty	適用機種 Application
4131 -34	37B-1HD-2020	SHAFT.....	1	
35	01641-21223	WASHER.....	1	
36	01599-01214	NUT.....	1	
37	01010-50610	BOLT.....	1	
38	01602-20619	WASHER,spring.....	1	
39	(37B-1BA-2021)	STEERING WHEEL ASS'Y	1	
40	34A-10-81150	NUT.....	1	
41	01640-21223	WASHER.....	1	
42	01602-21236	WASHER,spring.....	1	
43	(3EB-34-A2410)	POWER STEERING VALVE	1	

FIG.4151A STEERING GEAR BOX

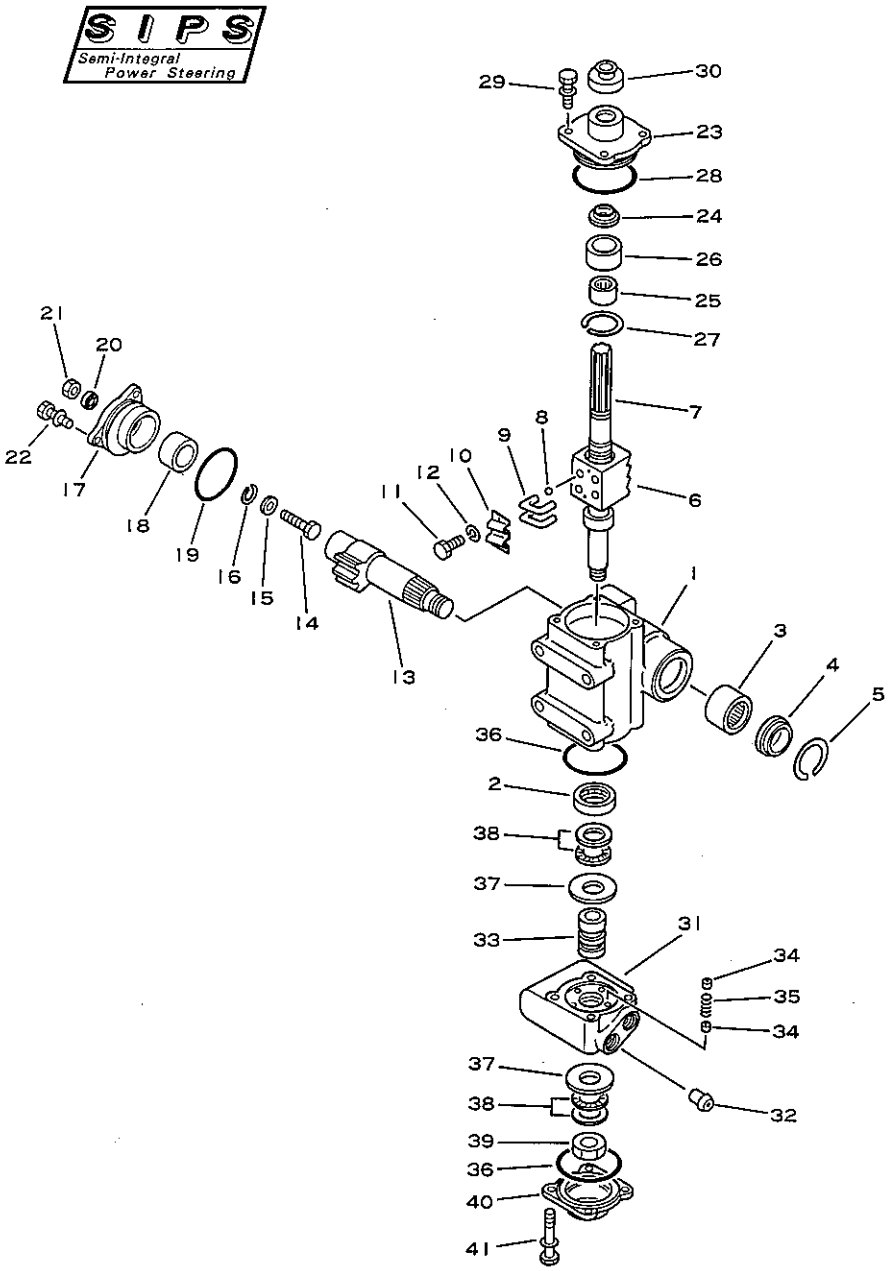

図および索引番号 Fig & Index No.	品番 Part No.	品名 Description	個数 Q'ty	適用機種 Application
	3EB-34-22512	POWER STEERING GEAR BOX ASS'Y	1	FG25S T -C 400001A~
	304-41-36101	.BODY ASS'Y.....	1	
4151A- 1	☆	..BODY.....	1	
2	304-41-36120	..BEARING,needle....	1	
3	304-41-36130	..BEARING,needle....	1	
4	304-41-36140	..SEAL,oil.....(K43)	1	
5	304-41-36150	..RING,snap....(K43)	1	
	3EB-34-22520	.BALL SCREW ASS'Y...	1	
6	☆	..BALL NUT.....	1	
7	☆	..SHAFT.....	1	
8	☆	..BALL.....	58	
9	☆	..TUBE,ball.....	4	
10	☆	..CLIP,tube.....	1	
11	☆	..BOLT.....	2	
12	☆	..WASHER,spring.....	2	
13	304-41-36310	.SHAFT,sector.....	1	
14	304-41-36320	.SCREW,adjusting....	1	
15	304-41-36331	.SHIM.....	1	
16	304-41-36370	.RING,snap.....	1	
	3EB-34-22530	.SIDE COVER ASS'Y...	1	
17	☆	..COVER,side.....	1	
18	☆	..BUSHING.....	1	
19	304-41-36431	.O-RING.....(K43)	1	
20	304-41-36440	.GASKET.....(K43)	1	
21	304-41-36450	.NUT.....	1	
22	304-41-36470	.BOLT,with washer...	3	
	3EB-34-22540	.END COVER ASS'Y....	1	
23	3EB-34-22550	..COVER,end.....	1	
24	34A-34-12610	..SEAL,oil.....(K43)	1	
25	304-41-36530	.BEARING,needle.....	1	
26	304-41-36540	.HOLDER.....	1	
27	304-41-36550	.RING,snap.....	1	
28	304-41-36560	.O-RING.....(K43)	1	
29	304-41-36470	.BOLT,with washer...	4	
30	3EB-34-22560	.COVER,dust....(K43)	1	

STEERING GEAR BOX

図および索引番号 Fig & Index No.	品番 Part No.	品名 Description	個数 Q'ty	適用機種 Application
	3EB-34-22570	.CONTROL VALVE ASS'Y	1	
	*	..SPOOL AND HOUSING ASS'Y	1	
4151A-31	*	...HOUSING,valve....	1	
32	*	...NIPPLE.....	4	
33	*	...SPOOL.....	1	
34	3BB-34-16650	..RETAINER,spring...	8	
35	3EB-34-22690	..SPRING.....	4	
36	304-41-36710	.O-RING.....(K43)	2	
37	304-41-36720	.PLATE.....	2	
38	304-41-36730	.BEARING,needle.....	2	
39	304-41-36740	.NUT.....(K43)	1	
40	304-41-36750	.COVER,rear.....	1	
41	304-41-36760	.BOLT,with washer...	4	
K43	3EB-34-05050	POWER STEERING GEAR BOX KIT	1	

FIG.4201 STEERING LINKAGE

SIPS
Semi-Integral
Power Steering

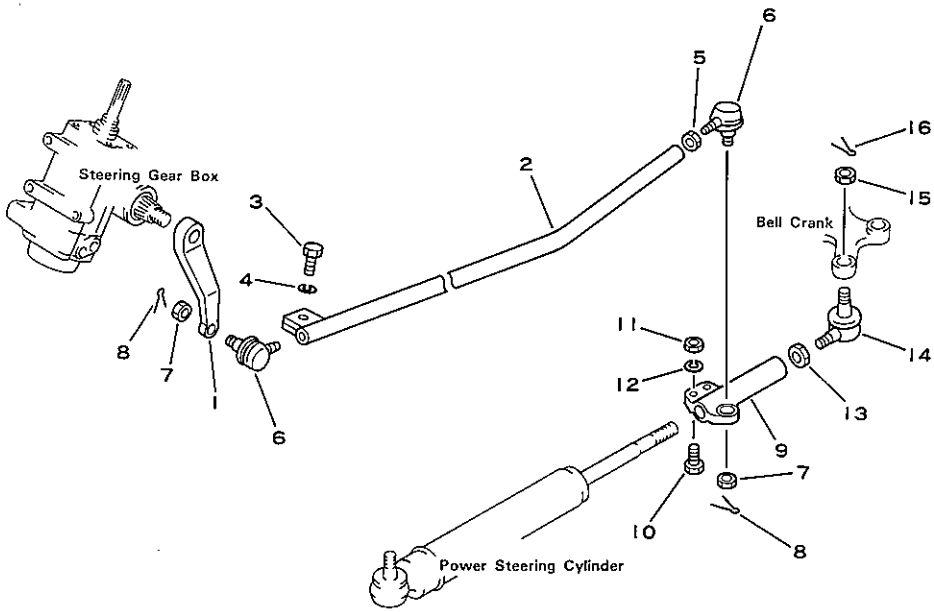

図および索引番号 Fig & Index No.	品番 Part No.	品名 Description	個数 Q'ty
4201 - 1	3EB-34-13110	ARM,pitman.....	1
2	3EB-34-24160	LINK.....	1
3	01010-51040	BOLT.....	1
4	01602-21030	WASHER,spring.....	1
5	01583-11610	NUT.....	1
6	304-41-31922	BALL SOCKET ASS'Y...	2
7	01593-11411	NUT.....	2
8	04050-13022	PIN,cotter.....	2
9	3EB-34-24120	JOINT.....	1
10	01010-51040	BOLT.....	2
11	01580-11008	NUT.....	2
12	01602-21030	WASHER,spring.....	2
13	3EB-24-21290	NUT.....	1
14	3EB-24-21410	BALL SOCKET ASS'Y...	1
15	3EB-24-21270	NUT.....	1
16	04050-13025	PIN,cotter.....	1

適用機種 Application		
FG20	T	-C 252001A~450049A
FG25	C	-C 252001A~450049A
FG25	T	-C 252001A~450049A
FG20S	T	-C 300001A~400000A
FG25S	C	-C 300001A~400000A
FG25S	T	-C 300001A~
FG30G	T	-C 290222A~490000A
FG30SG	T	-C 320003A~490001A
FD20	T	-C 337001A~430174A
FD25	C	-C 337001A~430174A
FD25	T	-C 337001A~430174A
FD30	C	-C 337001A~430174A
FD30	T	-C 337001A~430174A
FD20V	T	-C 337901A~430174A
FD25V	C	-C 337901A~430174A
FD25V	T	-C 337901A~430174A
FD30V	C	-C 337901A~430174A
FD30V	T	-C 337901A~430174A
FD20SV	T	-C 380001A~480000A
FD25SV	T	-C 380001A~480000A
FD30SV	T	-C 380001A~480000A

FIG.4251A POWER STEERING VALVE (FOR FHPS)

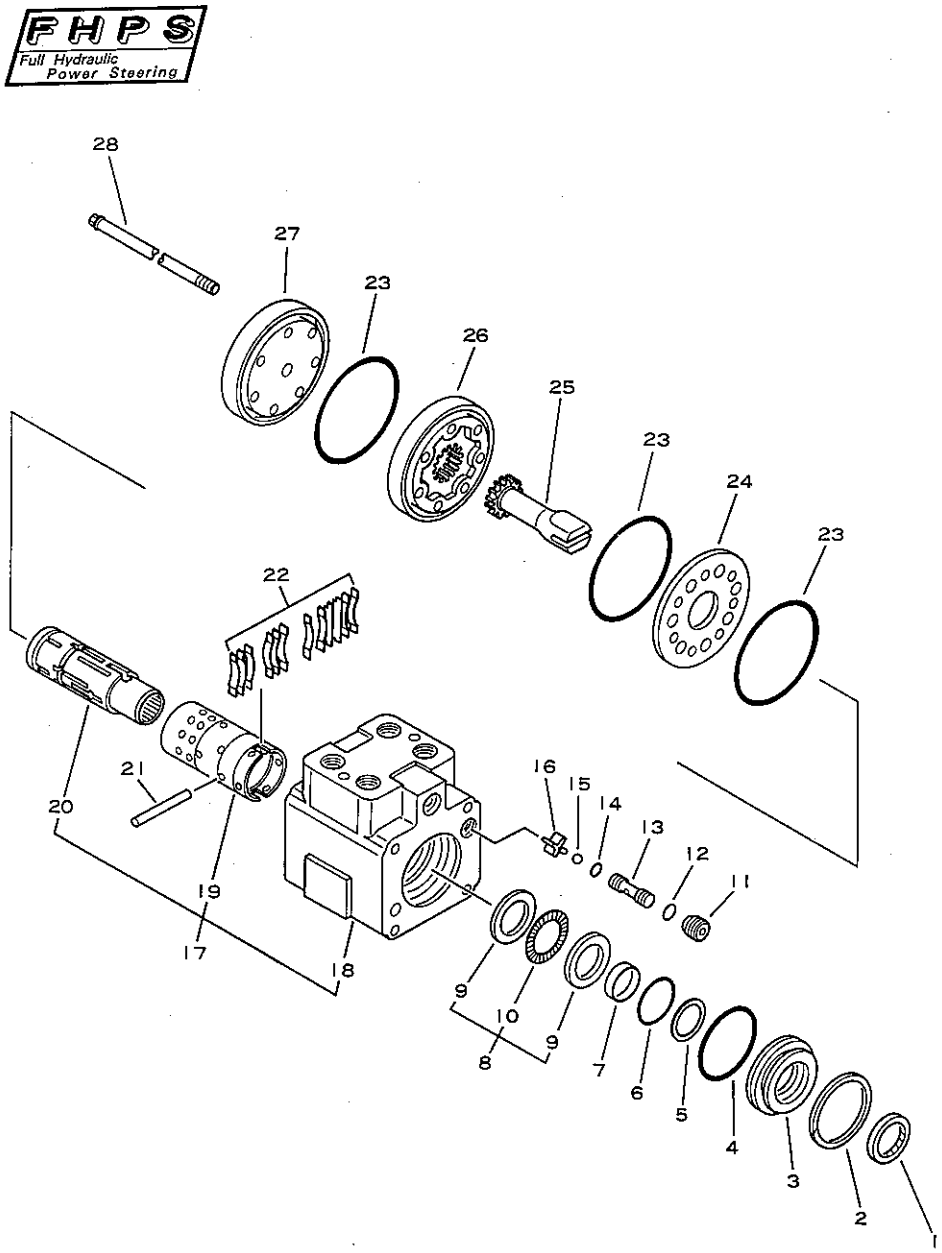

図および索引番号 Fig & Index No.	品番 Part No.	品名 Description	個数 Q'ty
	3EB-34-A2411	POWER STEERING VALVE ASS'Y	1
4251A- 1	☆	.SEAL,dust.....(K46)	1
2	EA14317	.RING,snap.....	1
3	EA8703	.RETAINER,front.....	1
4	☆	.O-RING.....(K46)	1
5	EA14400	.RING,back-up.....	1
6	☆	.O-RING.....(K46)	1
7	☆	.SEAL.....(K46)	1
8	EA64009	.NEEDLE BEARING KIT.	1
9	☆	..RACE,bearing.....	2
10	☆	..BEARING,needle....	1
11	EA14380	.SCREW,set.....	1
12	☆	.O-RING.....(K46)	1
13	EA8318	.SEAT,check ball....	1
14	☆	.O-RING.....(K46)	1
15	EA18001	.BALL,check.....	1
16	EA6862	.RETAINER,check ball	1
17	EA22828	.CONTROL PARTS ASS'Y	1
18	☆	..HOUSING.....	1
19	☆	..SLEEVE,control....	1
20	☆	..SPOOL,control.....	1
21	☆	..PIN.....	1
22	EA64450	..CENTERING SPRING KIT	1
23	☆	.SEAL.....(K46)	3
24	EA7970	.PLATE, spacer.....	1
25	EA5126	.DRIVE.....	1
26	EA8618-024	.GEROTOR ASS'Y.....	1
27	EA8438	.CAP,end.....	1
28	EA5389-009	.SCREW,cap.....	7
K46	EA64426	POWER STEERING VALVE SEAL KIT	1

適用機種 Application			
FG20	T	-C	254293A~
FG25	C	-C	254293A~
FG25	T	-C	254293A~
FG30	T	-C	450050A~
FG20S	T	-C	300355A~
FG25S	C	-C	300355A~
FG25S	T	-C	300355A~
FG30S	T	-C	400001A~
FG30G	T	-C	290303A~
FG30SG	T	-C	. ~
FD25	T	-C	340431A~
FD30	T	-C	340431A~
FD25S	T	-C	480001A~

FIG.4301 TRANSMISSION SHIFT LEVER (FOR CLUTCH)

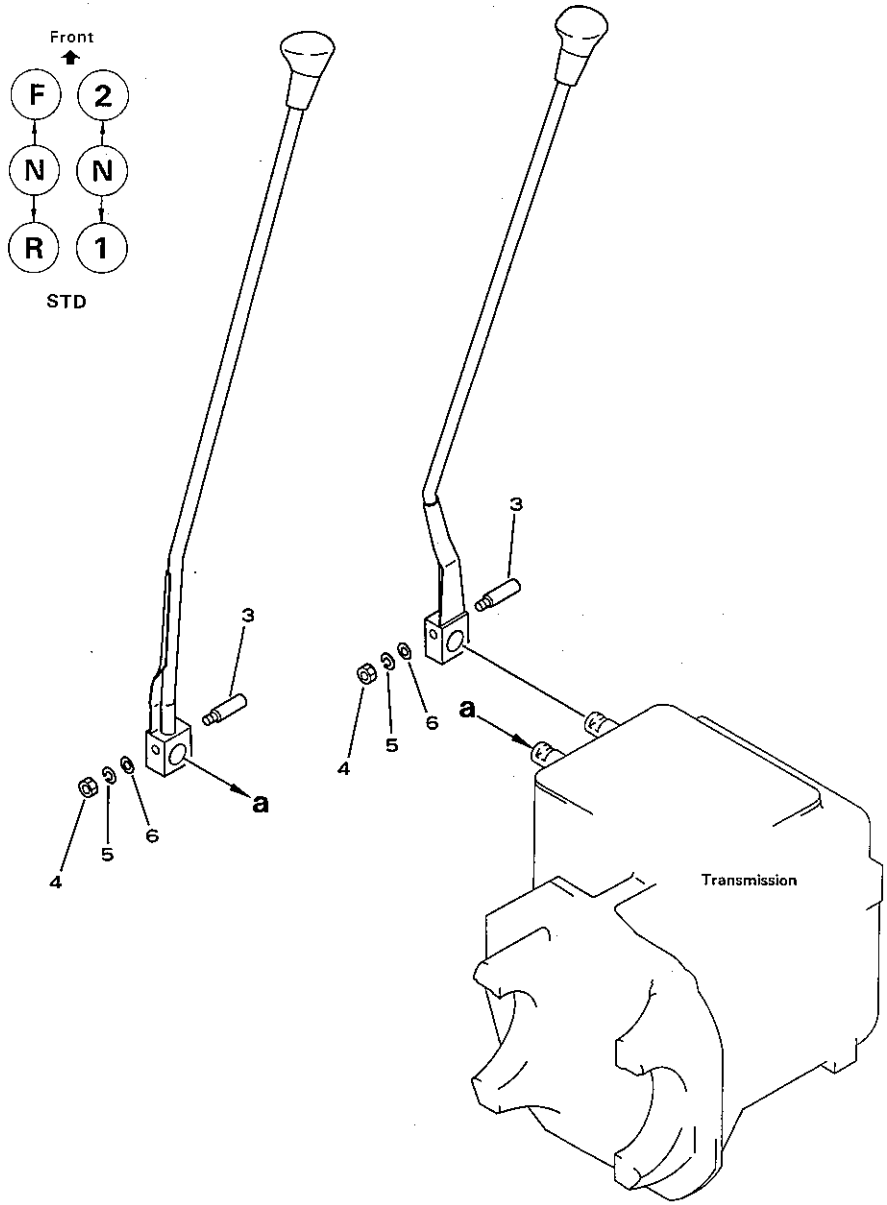

図および索引番号 Fig & Index No.	品番 Part No.	品名 Description	個数 Q'ty
4301 - 1	3EB-35-21110	LEVER (F,R).....	1
	3EB-35-21131	.KNOB (F,R).....	1
2	3EB-35-21120	LEVER (1,2).....	1
	3EB-35-21141	.KNOB (1,2).....	1
3	3EB-35-11130	PIN.....	2
4	01580-11008	NUT.....	2
5	01602-21030	WASHER,spring.....	2
6	01642-21016	WASHER.....	2

適用機種 Application		
FG25	C	-C 252745A~
FG25S	C	-C 300088A~
FD25	C	-C 337272A~430174A
FD30	C	-C 337272A~430174A

FIG.4351 TRANSMISSION SHIFT LEVER (FOR T1)(L.H)

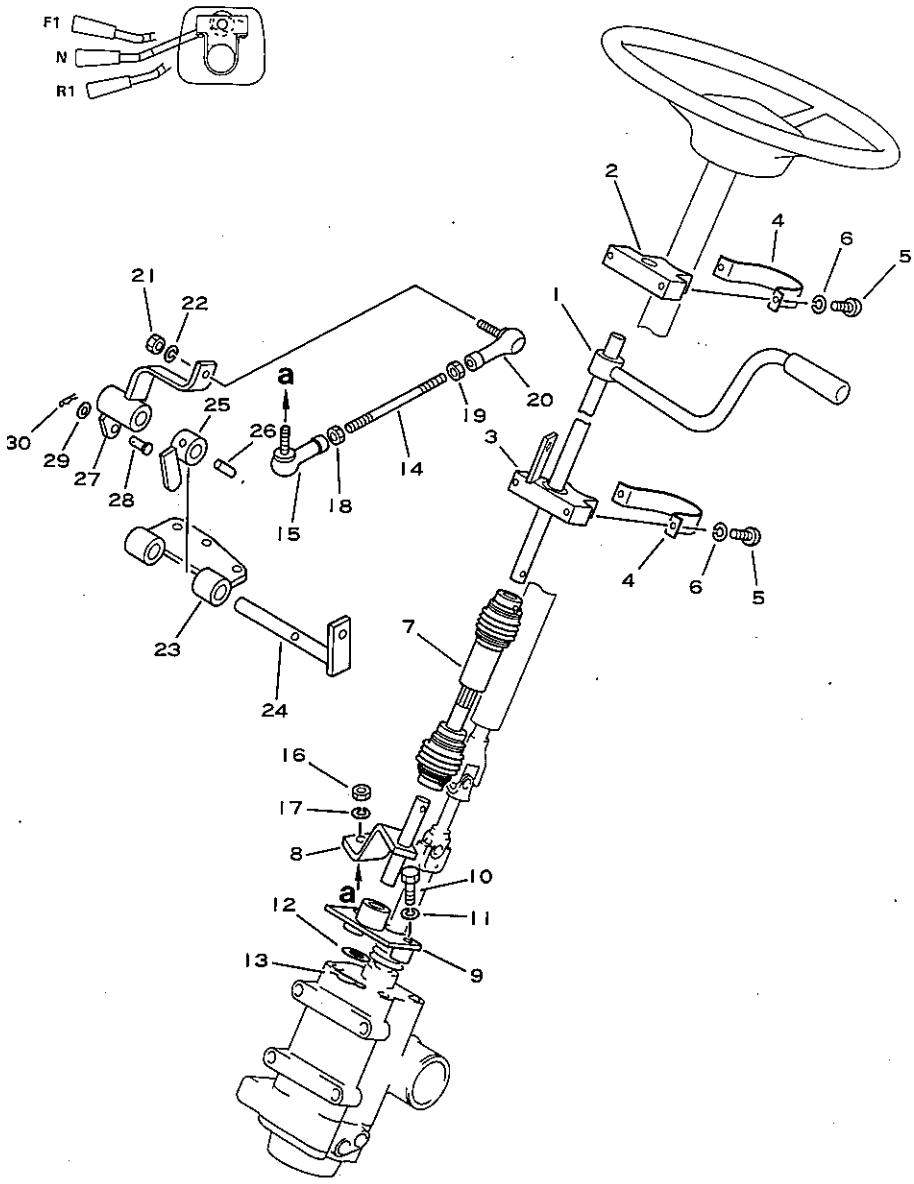

図および索引番号 Fig & Index No.	品番 Part No.	品名 Description	個数 Q'ty
4351 - 1	3EB-35-22212	LEVER.....	1
	3EB-35-22281	.KNOB.....	1
2	3EB-35-22120	BRACKET.....	1
	3EB-35-14120	.BUSHING.....	1
3	3EB-35-22181	BRACKET.....	1
	3EB-35-14120	.BUSHING.....	1
4	3EB-35-22110	CLAMP.....	2
5	01220-70616	SCREW.....	4
6	01602-20619	WASHER,spring.....	4
7	3EB-35-22150	JOINT.....	1
8	3EB-35-22720	LEVER.....	1
9	3EB-35-22220	BRACKET.....	1
	3EB-35-14120	.BUSHING.....	1
10	01050-51040	BOLT.....	2
11	01602-21030	WASHER,spring.....	2
12	01641-21423	WASHER.....	1
13	04052-01453	PIN,snap.....	1
	3EB-35-00011	ROD ASS'Y.....	1
14	3EB-35-23130	.ROD.....	1
15	3SB-39-11260	.ROD END.....	1
16	01580-10806	.NUT.....	1
17	01602-20825	.WASHER,spring.....	1
18	01580-10806	.NUT.....	1
19	01508-20805	.NUT.....	1
20	3SB-39-11250	.ROD END.....	1
21	01580-10806	.NUT.....	1
22	01602-20825	.WASHER,spring.....	1
23	3EB-35-22260	BRACKET.....	1
	09350-01420	.BUSHING.....	2
24	3EB-35-22582	LEVER.....	1
25	3EB-35-22590	LEVER.....	1
26	04025-00432	PIN,roll.....	1
27	3EB-35-22270	LEVER.....	1
	3EB-35-14120	.BUSHING.....	2
28	04205-10622	PIN.....	1

適用機種 Application		
FG20	T	-C 252001A~450049A
FG25	T	-C 252001A~450049A
FG20S	T	-C 300001A~400000A
FG25S	T	-C 300001A~
FG30G	T	-C 290222A~490000A
FG30SG	T	-C 320003A~490001A
FD20	T	-C 337001A~430174A
FD25	T	-C 337001A~430174A
FD30	T	-C 337001A~430174A
FD20V	T	-C 337901A~430174A
FD25V	T	-C 337901A~430174A
FD30V	T	-C 337901A~430174A
FD20SV	T	-C 380001A~480000A
FD25SV	T	-C 380001A~480000A
FD30SV	T	-C 380001A~480000A

TRANSMISSION SHIFT LEVER (FOR T1)(L.H)

図および索引番号 Fig & Index No.	品番 Part No.	品名 Description	個数 Q'ty	適用機種 Application
4351 -29	01641-20608	WASHER.....	1	
30	04052-00633	PIN,snap.....	1	

FIG.4355A TRANSMISSION SHIFT LEVER (FOR FHPS,T1)(L.H)

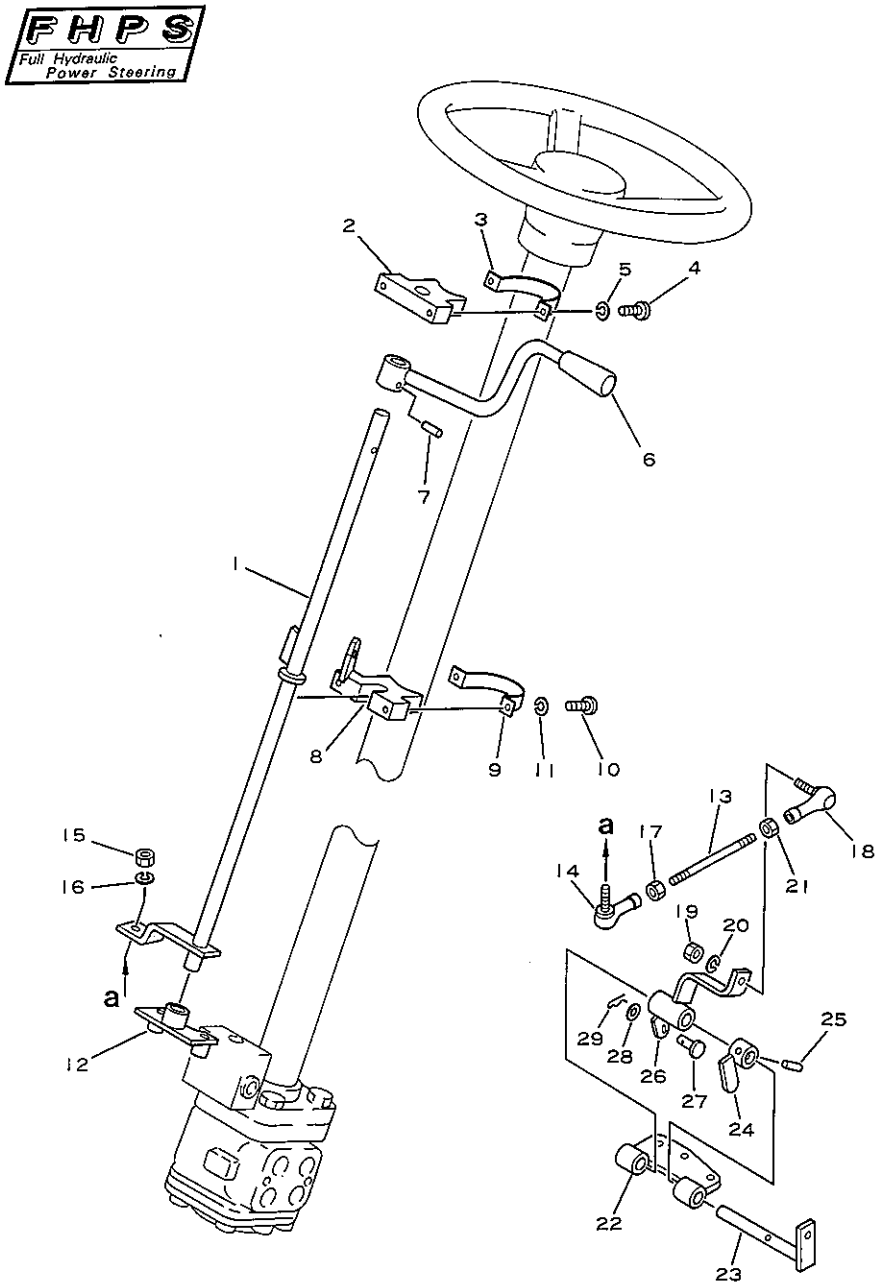

図および索引番号 Fig & Index No.	品番 Part No.	品名 Description	個数 Q'ty
4355A- 1	3EB-35-24120	LEVER.....	1
2	3EB-35-22120	BRACKET.....	1
	3EB-35-14120	.BUSHING.....	1
3	3EB-35-22110	CLAMP.....	1
4	01220-70616	SCREW.....	2
5	01602-20619	WASHER,spring.....	2
6	3EB-35-24141	LEVER.....	1
	3EB-35-22281	.KNOB.....	1
7	04025-00632	PIN,roll.....	1
8	3EB-35-24131	BRACKET.....	1
9	3EB-35-22110	CLAMP.....	1
10	01220-70616	SCREW.....	2
11	01602-20619	WASHER,spring.....	2
12	3EB-35-14120	BUSHING.....	1
13	3EB-35-23130	ROD.....	1
14	3SB-39-11260	ROD END.....	1
15	01580-10806	NUT.....	1
16	01602-20825	WASHER,spring.....	1
17	01580-10806	NUT.....	1
18	3SB-39-11250	ROD END.....	1
19	01580-10806	NUT.....	1
20	01602-20825	WASHER,spring.....	1
21	01508-20805	NUT.....	1
22	3EB-55-22260	BRACKET.....	1
	09350-01420	.BUSHING.....	2
23	3EB-35-22582	LEVER.....	1
24	3EB-35-22590	LEVER.....	1
25	04025-00432	PIN,roll.....	1
26	3EB-35-22270	LEVER.....	1
	3EB-35-14120	.BUSHING.....	2
27	04205-10622	PIN.....	1
28	01641-10622	WASHER.....	1
29	04052-00633	PIN,snap.....	1

適用機種 Application			
FG20	T	-C	450050A~
FG25	C	-C	450050A~
FG25	T	-C	450050A~
FG30	T	-C	450050A~
FG20S	T	-C	400001A~
FG25S	C	-C	400001A~
FG25S	T	-C	400001A~
FG30S	T	-C	400001A~
FG30G	T	-C	490001A~
FG30SG	T	-C	490002A~
FD25	T	-C	430175A~
FD30	T	-C	430175A~
FD25S	T	-C	480001A~

FIG.4361 TRANSMISSION SHIFT LEVER (FOR T2)(L.H)

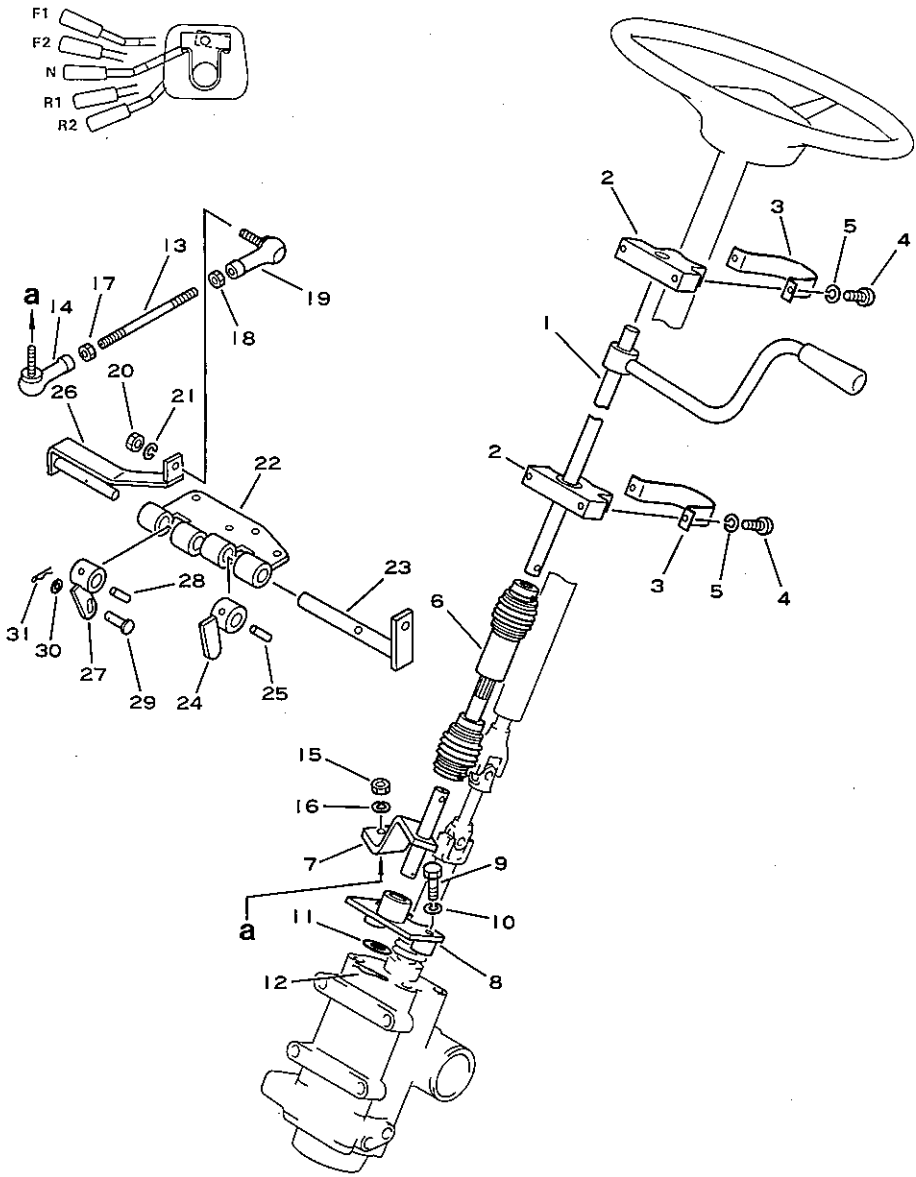

図および索引番号 Fig & Index No.	品番 Part No.	品名 Description	個数 Q'ty
4361 - 1	3EB-35-22212	LEVER.....	1
	3EB-35-22281	.KNOB.....	1
2	3EB-35-22120	BRACKET.....	2
	3EB-35-14120	.BUSHING.....	1
3	3EB-35-22110	CLAMP.....	2
4	01220-70616	SCREW.....	4
5	01602-20619	WASHER,spring.....	4
6	3EB-35-22150	JOINT.....	1
7	3EB-35-23120	LEVER.....	1
8	3EA-35-24120	BRACKET.....	1
	3EB-35-14120	.BUSHING.....	2
9	01050-51040	BOLT.....	2
10	01602-21030	WASHER,spring.....	2
11	01641-21423	WASHER.....	1
12	04052-01453	PIN,snap.....	1
	3EB-35-00021	ROD ASS'Y.....	1
13	3EB-35-23130	.ROD.....	1
14	3SB-39-11260	.ROD END.....	1
15	01580-10806	.NUT.....	1
16	01602-20825	.WASHER,spring.....	1
17	01580-10806	.NUT.....	1
18	01508-20805	.NUT.....	1
19	3SB-39-11250	.ROD END.....	1
20	01580-10806	.NUT.....	1
21	01602-20825	.WASHER,spring.....	1
22	3EB-35-24560	BRACKET.....	1
	09350-01420	.BUSHING.....	4
23	3EB-35-24581	LEVER.....	1
24	3EB-35-22590	LEVER.....	1
25	04025-00432	PIN,roll.....	1
26	3EB-35-24570	LEVER.....	1
27	3EB-35-24591	LEVER.....	1
28	04025-00532	PIN,roll.....	1
29	04205-10622	PIN.....	1
30	01641-20608	WASHER.....	1

適用機種 Application
FG20 T -C 252001A~450049A
FG25 T -C 252001A~
FG20S T -C 300001A~400000A
FG25S T -C 300001A~400000A
FG30G T -C 290222A~490000A

TRANSMISSION SHIFT LEVER (FOR T2)(L.H)

図および索引番号 Fig & Index No.	品番 Part No.	品名 Description	個数 Q'ty	適用機種 Application
4361 -31	04052-00633	PIN,snap.....	1	

FIG.4365 TRANSMISSION SHIFT LEVER (FOR FHPS,T2)(L.H)

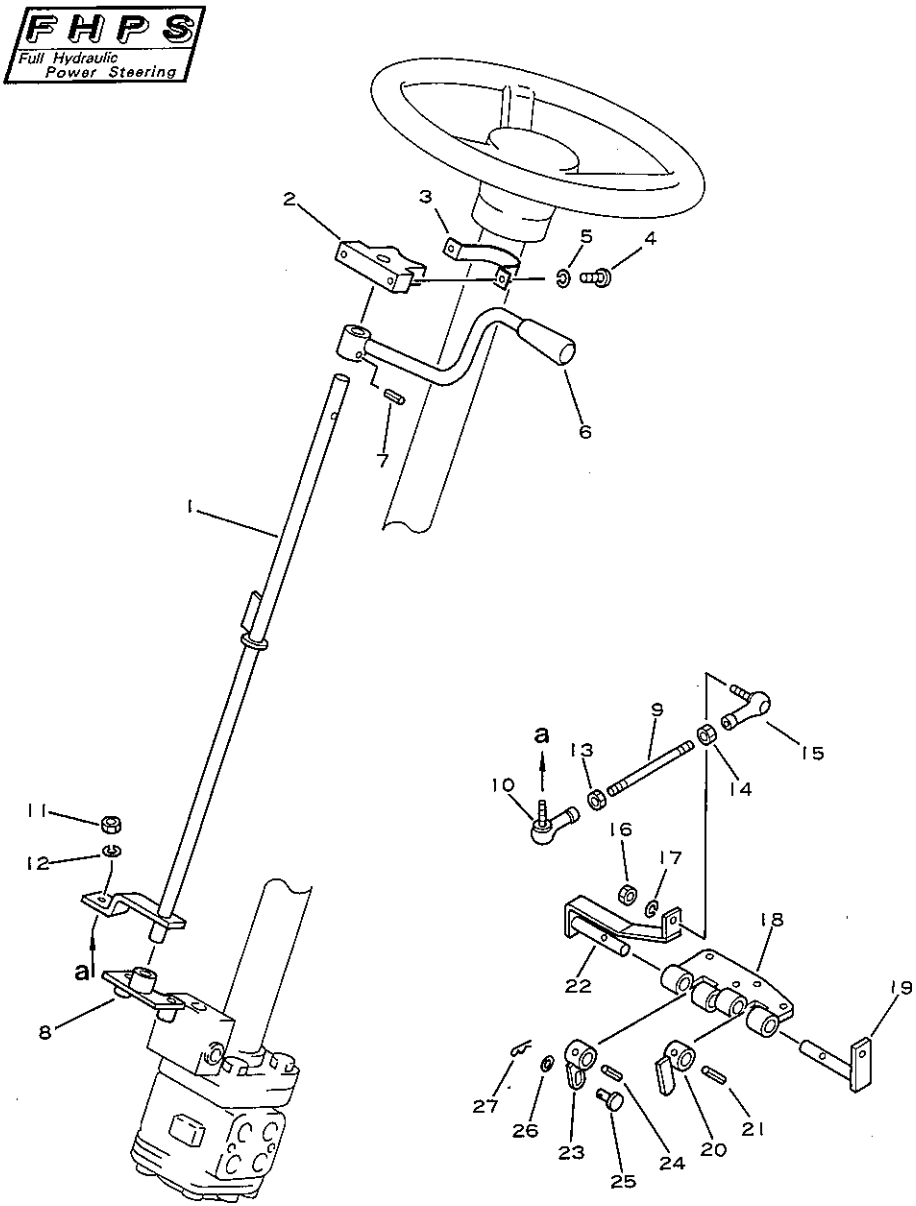

図および索引番号 Fig & Index No.	品番 Part No.	品名 Description	個数 Q'ty
4365 - 1	3EB-35-24120	LEVER.....	1
2	3EB-35-22120	BRACKET.....	1
	3EB-35-14120	.BUSHING.....	1
3	3EB-35-22110	CLAMP.....	1
4	01220-70616	SCREW.....	2
5	01602-20619	WASHER,spring.....	2
6	3EB-35-24140	LEVER.....	1
	3EB-35-22281	.KNOB.....	1
7	04025-00632	PIN,roll.....	1
8	3EB-35-14120	BUSHING.....	1
9	3EC-35-14310	ROD.....	1
10	3SB-39-11260	ROD END.....	1
11	01580-10806	NUT.....	1
12	01602-20825	WASHER,spring.....	1
13	01580-10806	NUT.....	1
14	01508-20805	NUT.....	1
15	3SB-39-11250	ROD END.....	1
16	01580-10806	NUT.....	1
17	01602-20825	WASHER,spring.....	1
18	3EB-35-24560	BRACKET.....	1
	09350-01420	.BUSHING.....	4
19	3EB-35-24581	LEVER.....	1
20	3EB-35-22590	LEVER.....	1
21	04025-00432	PIN,roll.....	1
22	3EB-35-24570	LEVER.....	1
23	3EB-35-24591	LEVER.....	1
24	04025-00532	PIN,roll.....	1
25	04205-10622	PIN.....	1
26	01641-20608	WASHER.....	1
27	04052-00633	PIN,snap.....	1

適用機種 Application
FG25 T -C 252001A~
FG30G T -C 290222A~
FD25 T -C 337001A~430174A
FD30 T -C 337001A~430174A

FIG.4401A BRAKE AND CLUTCH PEDAL (DIRECT DRIVE)

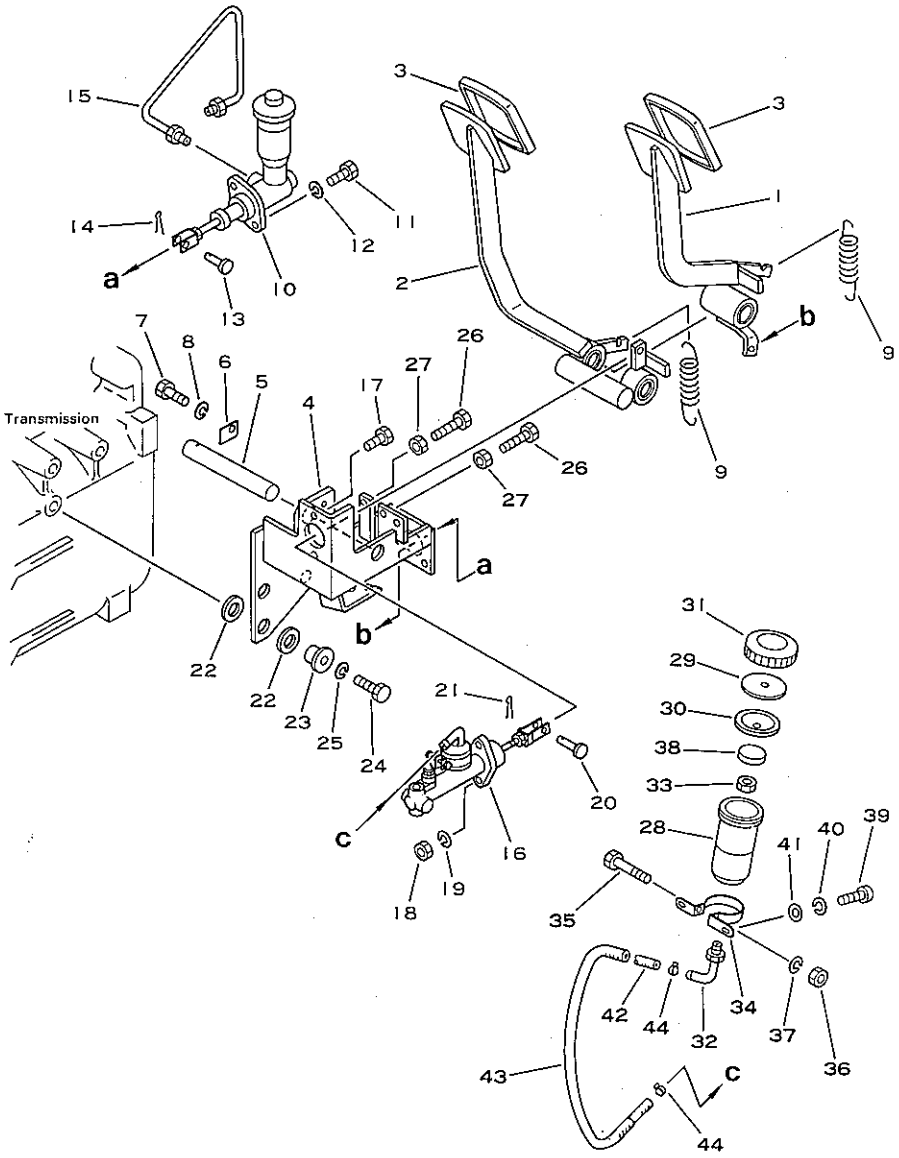

図および索引番号 Fig & Index No.	品番 Part No.	品名 Description	個数 Q'ty
4401A- 1	3EB-36-22120	PEDAL,clutch.....	1
	3EA-36-22160	.BUSHING.....	2
	3EB-36-22170	.SEAL.....	2
2	3EB-36-22110	PEDAL,brake.....	1
	3EA-36-22160	.BUSHING.....	2
	3EB-36-22170	.SEAL.....	4
3	3EB-36-12130	COVER.....	2
4	3EB-36-22131	BRACKET.....	1
5	3EB-36-22540	SHAFT.....	1
6	358-43-15180	STOPPER.....	1
7	01010-50610	BOLT.....	1
8	01602-20619	WASHER,spring.....	1
9	302-32-24080	SPRING.....	2
10	(3EC-36-11212)	MASTER CYLINDER ASS'Y (for CLUTCH)	1
11	01010-50820	BOLT.....	2
12	01602-20825	WASHER,spring.....	2
13	04205-10825	PIN.....	1
14	04050-12015	PIN,cotter.....	1
15	3EB-36-22150	PIPE.....	1
16	(3EB-36-22700)	MASTER CYLINDER ASS'Y (for BRAKE)	1
17	01010-50830	BOLT.....	2
18	01580-10806	NUT.....	2
19	01602-20825	WASHER,spring.....	2
20	04205-11028	PIN.....	1
21	04050-13018	PIN,cotter.....	1
22	3EB-36-22361	RUBBER.....	6
23	3EB-36-22380	COLLAR.....	3
24	01010-51240	BOLT.....	3
25	01602-21236	WASHER,spring.....	3
26	01016-50830	BOLT.....	2
27	01580-10806	NUT.....	2
	3EB-36-22850	RESERVOIR ASS'Y.....	1
28	34A-36-11510	.BODY.....	1
29	34A-36-11540	.PLATE.....	1

適用機種 Application
FG25 C -C 450050A~
FG25S C -C 400001A~

BRAKE AND CLUTCH PEDAL (DIRECT DRIVE)

図および索引番号 Fig & Index No.	品番 Part No.	品名 Description	個数 Q'ty	適用機種 Application
4401A-30	34A-36-11530	.BAFFLE.....	1	
31	304-43-33720	.CAP.....	1	
32	3EB-36-11410	.JOINT.....	1	
33	01583-11006	.NUT.....	1	
34	308-43-23175	.BAND.....	1	
35	01016-20540	.BOLT.....	1	
36	01580-10504	.NUT.....	1	
37	01601-20513	.WASHER,spring.....	1	
38	308-43-23185	FLOAT.....	1	
39	01220-40612	SCREW.....	2	
40	01602-20619	WASHER,spring.....	2	
41	01642-20608	WASHER.....	2	
42	3EB-36-12170	HOSE.....	1	
43	3EB-36-12180	HOSE.....	1	
44	364-43-13390	CLAMP.....	2	

FIG.4451 BRAKE AND INCHING PEDAL (TORQUFLOW DRIVE)

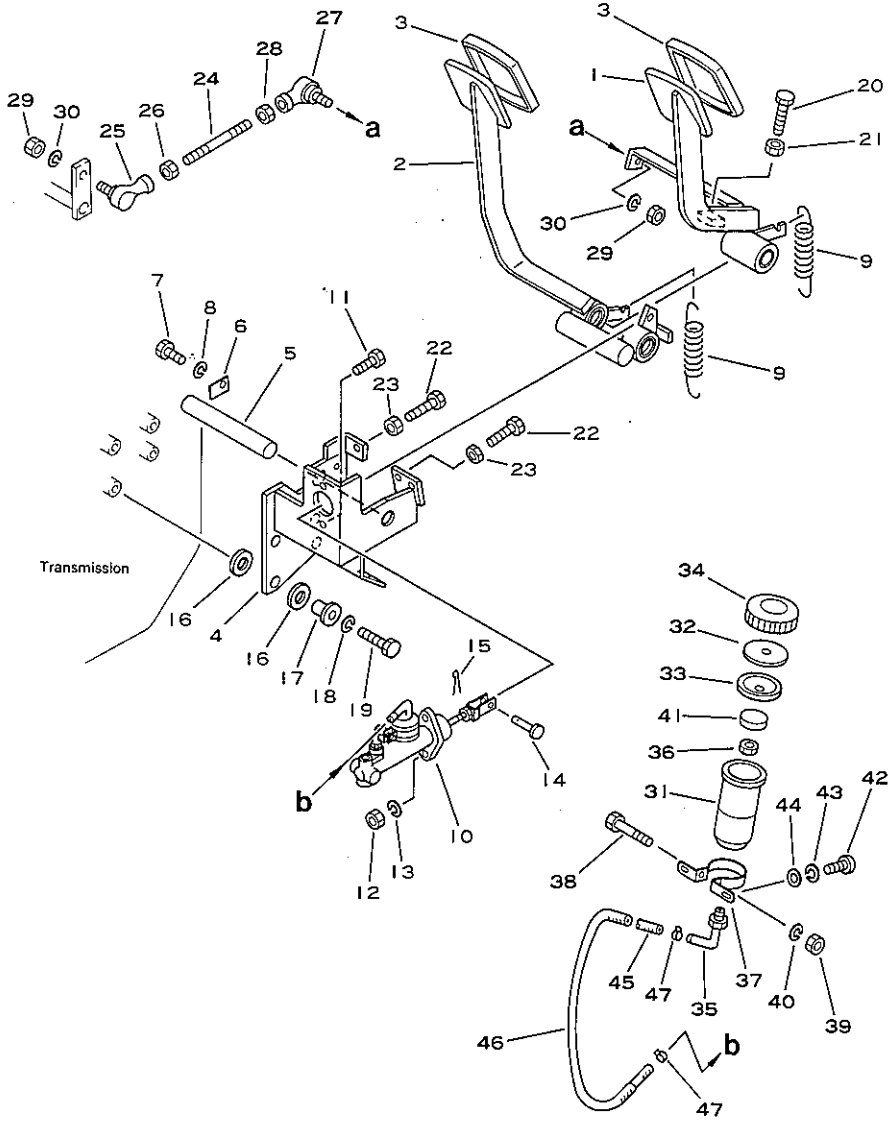

図および索引番号 Fig. & Index No.	品番 Part No.	品名 Description	個数 Q'ty
4451 - 1	3EB-36-22520	PEDAL,inching.....	1
	3EA-36-22160	.BUSHING.....	2
	3EB-36-22170	.SEAL.....	2
2	3EB-36-22510	PEDAL,brake.....	1
	3EA-36-22160	.BUSHING.....	2
	3EB-36-22170	.SEAL.....	4
3	3EB-36-12130	COVER.....	2
4	3EB-36-22531	BRACKET.....	1
5	3EB-36-22540	SHAFT.....	1
6	358-43-15180	STOPPER.....	1
7	01010-50610	BOLT.....	1
8	01602-20619	WASHER,spring.....	1
9	302-32-24080	SPRING.....	2
10	(3EB-36-22700)	MASTER CYLINDER ASS'Y (for BRAKE).	1
11	01010-50830	BOLT.....	2
12	01580-10806	NUT.....	2
13	01602-20825	WASHER,spring.....	2
14	04205-11028	PIN.....	1
15	04050-13018	PIN,cotter.....	1
16	3EB-36-22761	RUBBER.....	8
17	3EB-36-22781	COLLAR.....	4
18	01010-50830	BOLT.....	4
19	01602-20825	WASHER,spring.....	4
20	01016-51035	BOLT.....	1
21	01580-11008	NUT.....	1
22	01016-50825	BOLT.....	2
23	01580-10806	NUT.....	2
24	3EB-35-15550	ROD.....	1
25	3SB-39-11250	ROD END.....	1
26	01508-20805	NUT.....	1
27	3SB-39-11260	ROD END.....	1
28	01580-10806	NUT.....	1
29	01580-10806	NUT.....	2
30	01602-20825	WASHER,spring.....	2
——	3EB-36-22850	——RESERVOIR ASS'Y.....	1

適用機種 Application		
FG20	T	-C 252001A~
FG25	T	-C 252001A~
FG30	T	-C 450049A~
FG20S	T	-C 300001A~
FG25S	T	-C 300001A~
FG30S	T	-C 400000A~
FG30G	T	-C 290222A~
FG30SG	T	-C 320003A~
FD20	T	-C 337001A~430174A
FD25	T	-C 337001A~
FD30	T	-C 337001A~
FD25S	T	-C 480000A~
FD20V	T	-C 337901A~430174A
FD25V	T	-C 337901A~430174A
FD30V	T	-C 337901A~430174A
FD20SV	T	-C 380001A~430174A
FD25SV	T	-C 380001A~430174A
FD30SV	T	-C 380001A~430174A

BRAKE AND INCHING PEDAL (TORQUFLOW DRIVE)

図および索引番号 Fig & Index No.	品番 Part No.	品名 Description	個数 Q'ty	適用機種 Application
4451 -31	34A-36-11510	.BODY.....	1	
32	34A-36-11540	.PLATE.....	1	
33	34A-36-11530	.BAFFLE.....	1	
34	304-43-33720	.CAP.....	1	
35	3EB-36-11410	.JOINT.....	1	
36	01583-11006	.NUT.....	1	
37	308-43-23175	.BAND.....	1	
38	01016-20540	.BOLT.....	1	
39	01580-10504	.NUT.....	1	
40	01601-20513	.WASHER,spring.....	1	
41	308-43-23185	FLOAT.....	1	
42	01220-40612	SCREW.....	2	
43	01602-20619	WASHER,spring.....	2	
44	01642-20608	WASHER.....	2	
45	3EB-36-12170	HOSE.....	1	
46	3EB-36-12180	HOSE.....	1	
47	364-43-13390	CLAMP.....	2	

FIG.4501A MASTER CYLINDER (FOR CLUTCH)

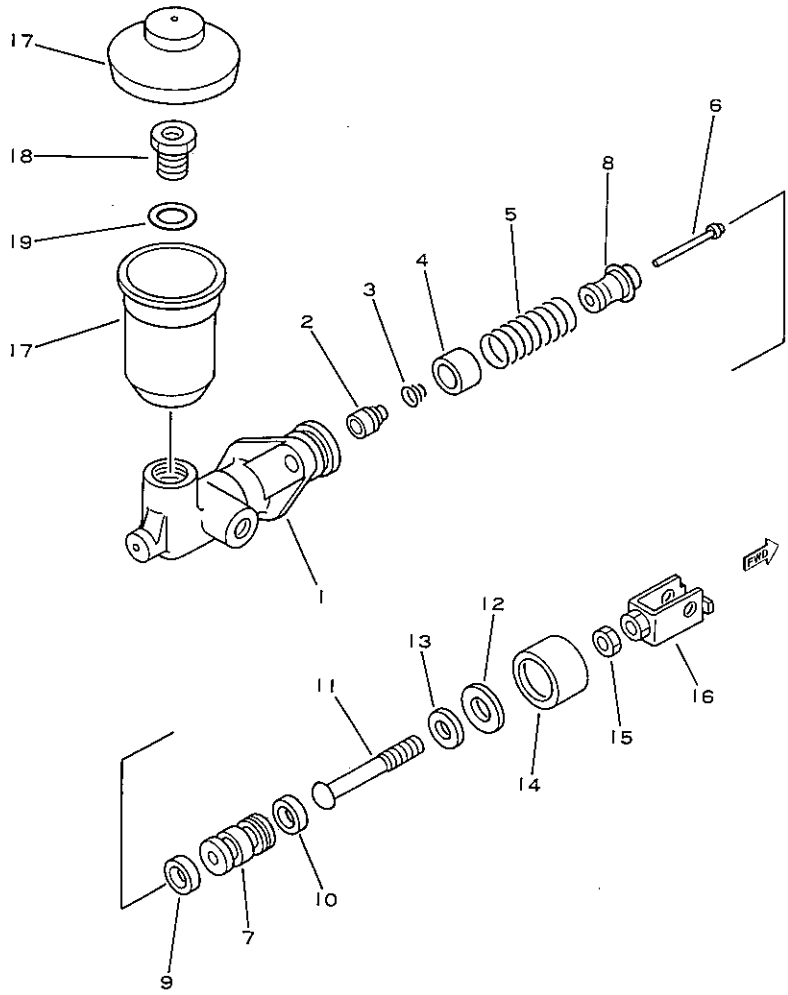

図および索引番号 Fig & Index No.	品番 Part No.	品名 Description	個数 Q'ty
	3EC-36-11212	MASTER CYLINDER ASS'Y (for CLUTCH)	1
4501A- 1	☆	.BODY.....	1
	3EC-36-00111	.PISTON SUB ASS'Y (K44A)	1
2	☆	..VALVE.....	1
3	☆	..SPRING.....	1
4	☆	..CASE.....	1
5	☆	..SPRING.....	1
6	☆	..ROD.....	1
7	☆	..PISTON.....	1
8	☆	..RETAINER.....	1
9	☆	..CUP.....	1
10	☆	..CUP.....	1
11	3EC-36-11590	.ROD.....	1
12	3EC-36-11550	.PLATE.....(K44A)	1
13	3EC-36-11561	.RING.....(K44A)	1
14	3EC-36-11540	.BOOT.....	1
15	3EC-36-11570	.NUT.....	1
16	3EC-36-11580	.CREVICE.....	1
17	3EC-36-11610	.RESERVOIR.....	1
18	3EC-36-11410	.BOLT.....	1
19	3EC-36-11420	.WASHER.....	1
K44A	3EC-36-05011	CLUTCH MASTER CYLINDER KIT	1

適用機種 Application
FG25 C -C 450050A~
FG25S C -C 400001A~

FIG.4521 MASTER CYLINDER (FOR BRAKE)

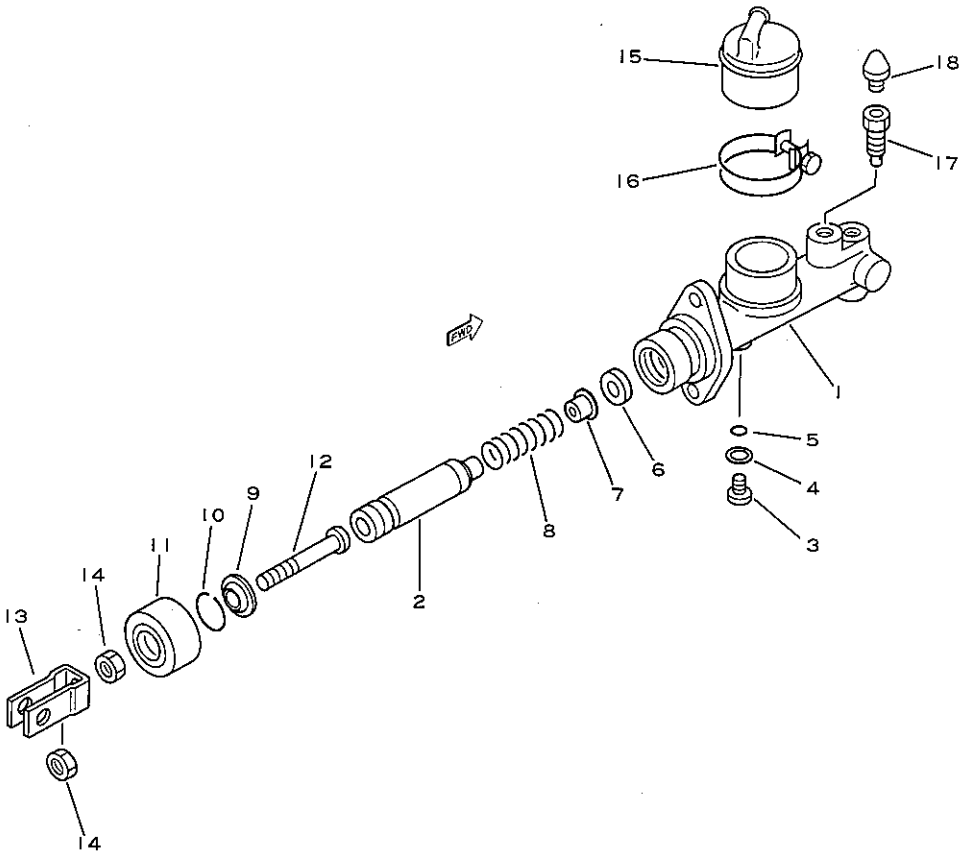

図および索引番号 Fig. & Index No.	品番 Part No.	品名 Description	個数 Q'ty
	3EB-36-22700	MASTER CYLINDER ASS'Y (for BRAKE)	1
4521 - 1	☆	.CYLINDER.....	1
2	3EB-36-11120	.PISTON ASS'Y..(K45)	1
3	307-43-13360	.PIN STOP.....	1
4	307-43-13380	.GASKET.....	1
5	307-43-13370	.O-RING.....	1
6	3EA-36-11220	.VALVE,seat....(K45)	1
7	3EA-36-11210	.VALVE,check...(K45)	1
8	3EA-36-11181	.SPRING.....(K45)	1
9	307-43-13420	.PLATE STOP.....	1
10	307-43-13430	.WIRE STOP.....(K45)	1
11	307-43-13440	.BOOT.....(K45)	1
12	307-43-33650	.PUSH ROD.....	1
13	3EB-36-22710	.YOKE.....	1
14	01580-10806	.NUT.....	2
15	3EB-36-11160	.COUPLING.....	1
16	07280-04126	.BAND ASS'Y.....	1
17	3EA-36-11330	.VALVE BLEEDER.....	1
18	306-32-11480	.CAP BLEEDER.....	1
K45	3EA-36-05010	BRAKE MASTER CYLINDER KIT	1

適用機種 Application		
FG20	T	-C 252001A~
FG25	C	-C 252001A~
FG25	T	-C 252001A~
FG30	T	-C 450050A~
FG20S	T	-C 300001A~
FG25S	C	-C 300001A~
FG25S	T	-C 300001A~
FG30S	T	-C 400001A~
FG30G	T	-C 290222A~
FG30SG	T	-C 320003A~
FD20	T	-C 337001A~430174A
FD25	C	-C 337001A~430174A
FD25	T	-C 337001A~
FD30	C	-C 337001A~430174A
FD30	T	-C 337001A~
FD25S	T	-C 480001A~
FD20V	T	-C 337901A~430174A
FD25V	C	-C 337901A~430174A
FD25V	T	-C 337901A~430174A
FD30V	C	-C 337901A~430174A
FD30V	T	-C 337901A~430174A
FD20SV	T	-C 380001A~430174A
FD25SV	T	-C 380001A~430174A
FD30SV	T	-C 380001A~430174A

FIG.4601A ACCELERATOR PEDAL (FOR 4D95S.W)

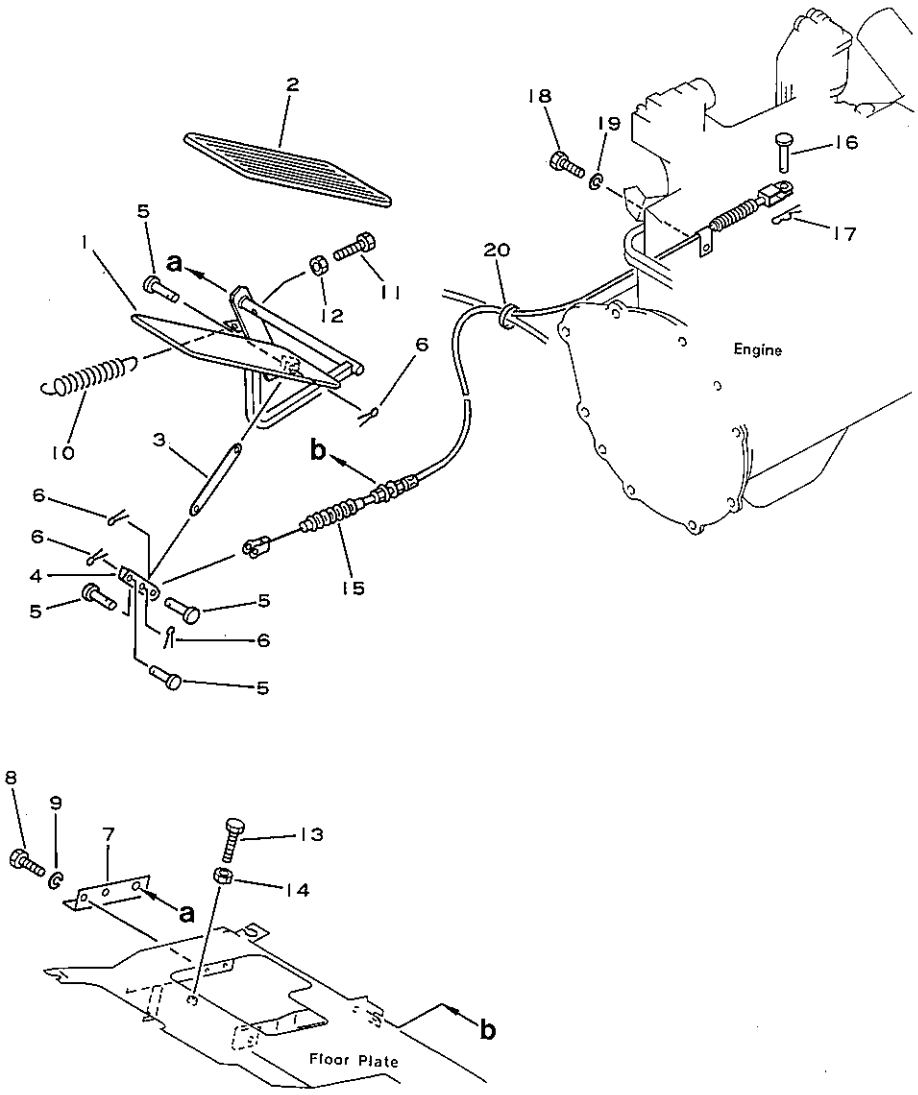

図および索引番号 Fig & Index No.	品番 Part No.	品名 Description	個数 Q'ty
4601A- 1	3EB-37-21111	PEDAL,accelerator...	1
2	3EB-37-11120	COVER.....	1
3	3EB-37-11140	PLATE.....	1
4	34A-37-11161	PLATE.....	1
5	04205-10618	PIN.....	4
6	04050-11610	PIN,cotter.....	4
7	3EB-37-21130	BRACKET.....	1
8	01010-50816	BOLT.....	2
9	01602-20825	WASHER,spring.....	2
10	304-43-31190	SPRING.....	1
11	01016-50830	BOLT.....	1
12	01580-10806	NUT.....	1
13	01016-50850	BOLT.....	1
14	01580-10806	NUT.....	1
15	3EB-37-13520	CABLE.....	1
16	04205-10618	PIN.....	1
17	04052-00633	PIN,snap.....	1
18	01010-50640	BOLT.....	1
19	01602-20619	WASHER,spring.....	1
20	37B-1AE-6010	TIEWRAP.....	1

適用機種 Application			
FD25	T	-C	430175A~
FD30	T	-C	430175A~
FD25S	T	-C	480001A~

FIG.4651 ACCELERATOR PEDAL (FOR H20)

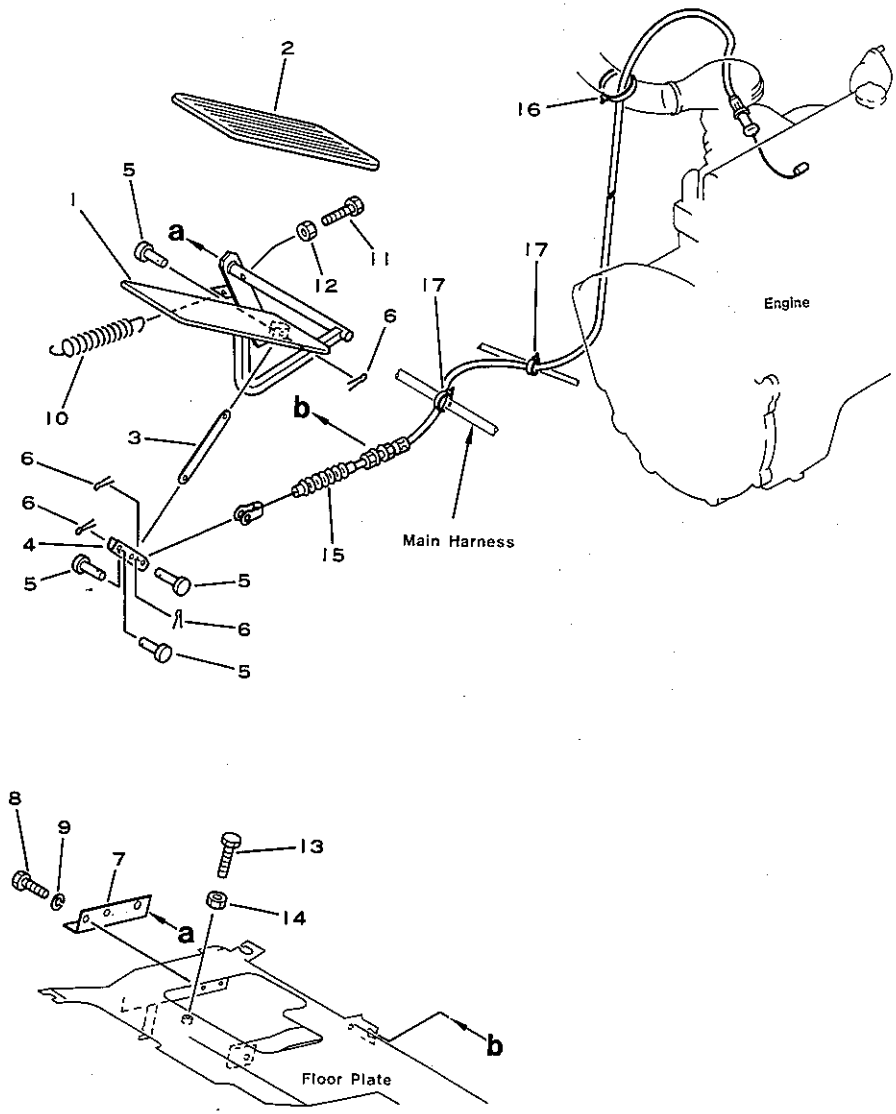

ACCELERATOR PEDAL (FOR H20)

図および索引番号 Fig & Index No.	品番 Part No.	品名 Description	個数 Q'ty
4651 - 1	3EB-37-21111	PEDAL,accelerator...	1
2	3EB-37-11120	COVER.....	1
3	3EB-37-11140	PLATE.....	1
4	34A-37-11161	PLATE.....	1
5	04205-10618	PIN.....	4
6	04050-11610	PIN,cotter.....	4
7	3EB-37-21130	BRACKET.....	1
8	01010-50816	BOLT.....	2
9	01602-20825	WASHER,spring.....	2
10	304-43-31190	SPRING.....	1
11	01016-50830	BOLT.....	1
12	01580-10806	NUT.....	1
13	01016-50850	BOLT.....	1
14	01580-10806	NUT.....	1
15	3EB-37-21120	CABLE.....	1
16	37B-1AE-6040	TIEWRAP.....	1
17	37B-1AE-6010	TIEWRAP.....	2

適用機種 Application			
FG20	T	-C	252001A~
FG25	C	-C	252001A~
FG25	T	-C	252001A~
FG30	T	-C	450050A~
FG20S	T	-C	300001A~
FG25S	C	-C	300001A~
FG25S	T	-C	300001A~
FG30S	T	-C	400001A~

FIG.4671 ACCELERATOR PEDAL (FOR G1600)

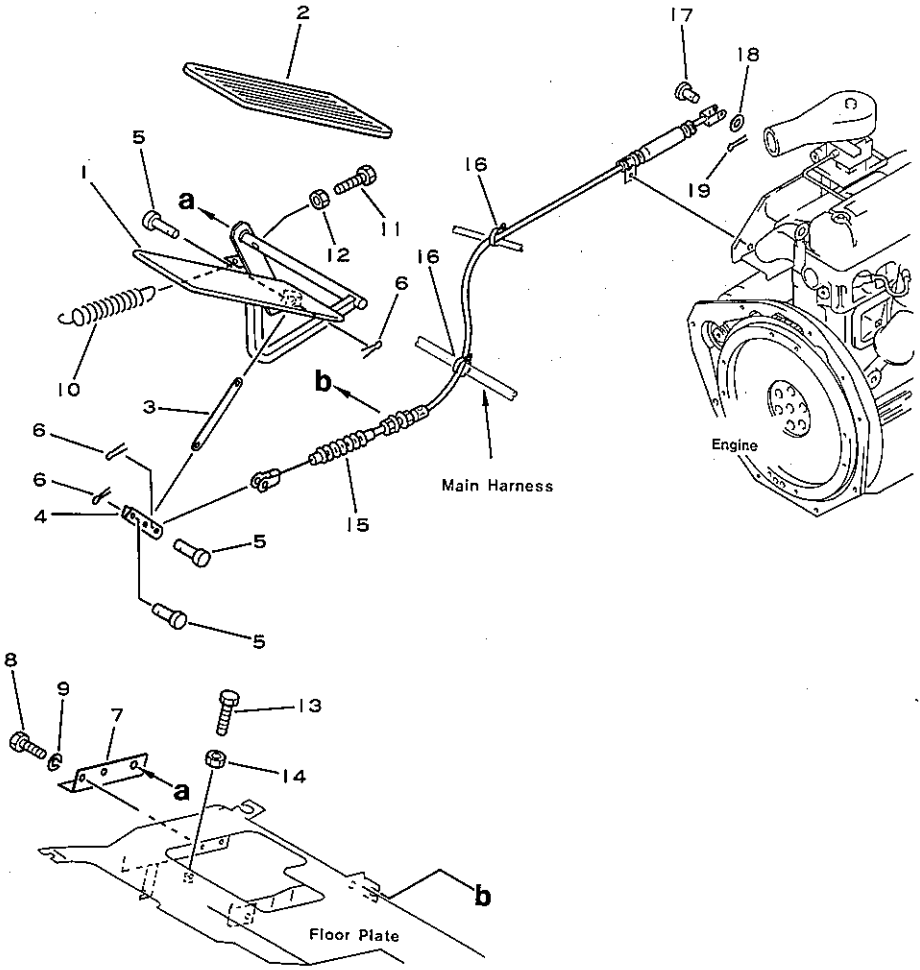

ACCELERATOR PEDAL (FOR G1600)

図および索引番号 Fig & Index No.	品番 Part No.	品名 Description	個数 Q'ty
4671 - 1	3EB-37-21111	PEDAL,accelerator...	1
2	3EB-37-11120	COVER.....	1
3	3EB-37-11140	PLATE.....	1
4	34A-37-11161	PLATE.....	1
5	04205-10618	PIN.....	3
6	04050-11610	PIN,cotter.....	3
7	3EB-37-21130	BRACKET.....	1
8	01010-50816	BOLT.....	2
9	01602-20825	WASHER,spring.....	2
10	304-43-31190	SPRING.....	1
11	01016-50830	BOLT.....	1
12	01580-10806	NUT.....	1
13	01016-50850	BOLT.....	1
14	01580-10806	NUT.....	1
15	3EB-37-A2610	CABLE.....	1
16	37B-1AE-6010	TIEWRAP.....	1
17	04205-10618	PIN.....	1
18	01641-20608	WASHER.....	1
19	04050-11610	PIN,cotter.....	1

適用機種 Application
FG30G T -C 290222A~
FG30SG T -C 320003A~

FIG.4701A BRAKE PIPING

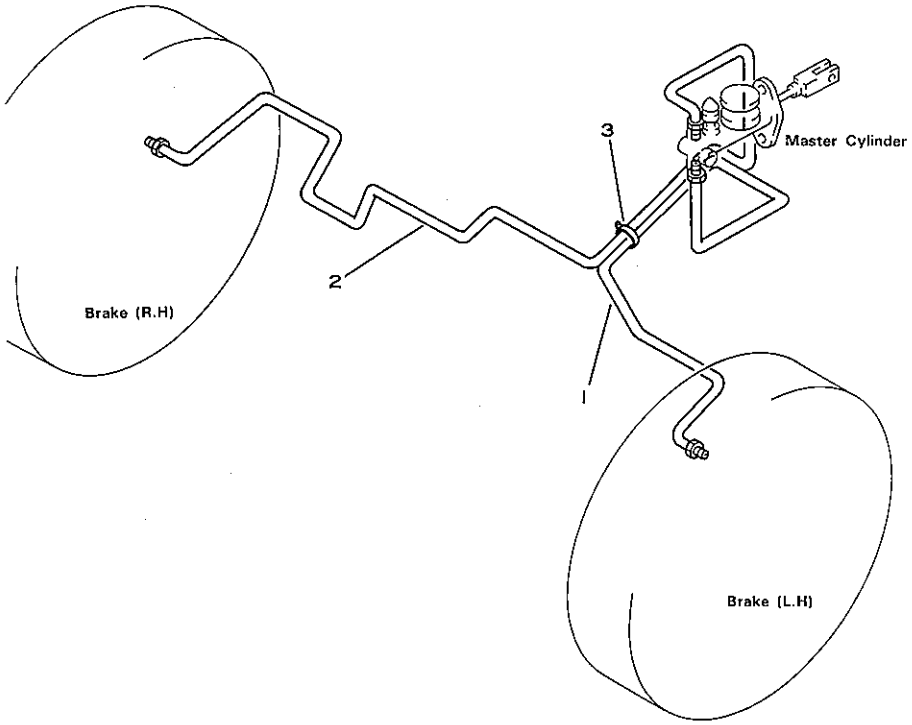

図および索引番号 Fig & Index No.	品番 Part No.	品名 Description	個数 Q'ty
4701A- 1	3EB-38-21122	PIPE.....	1
	3EB-38-21320	PIPE (for S).....	1
2	3EB-38-21111	PIPE.....	1
	3EB-38-21310	PIPE (for S).....	1
3	330-07-19920	TIEWRAP.....	1

適用機種 Application			
FG20	T	-C	450050A~
FG25	C	-C	450050A~
FG25	T	-C	450050A~
FG30	T	-C	450050A~
FG20S	T	-C	400001A~
FG25S	C	-C	400001A~
FG25S	T	-C	400001A~
FG30S	T	-C	400001A~
FG30G	T	-C	490001A~
FG30SG	T	-C	490002A~
FD25	T	-C	430175A~
FD30	T	-C	430175A~
FD25S	T	-C	480001A~

FIG.4801 PARKING BRAKE LEVER

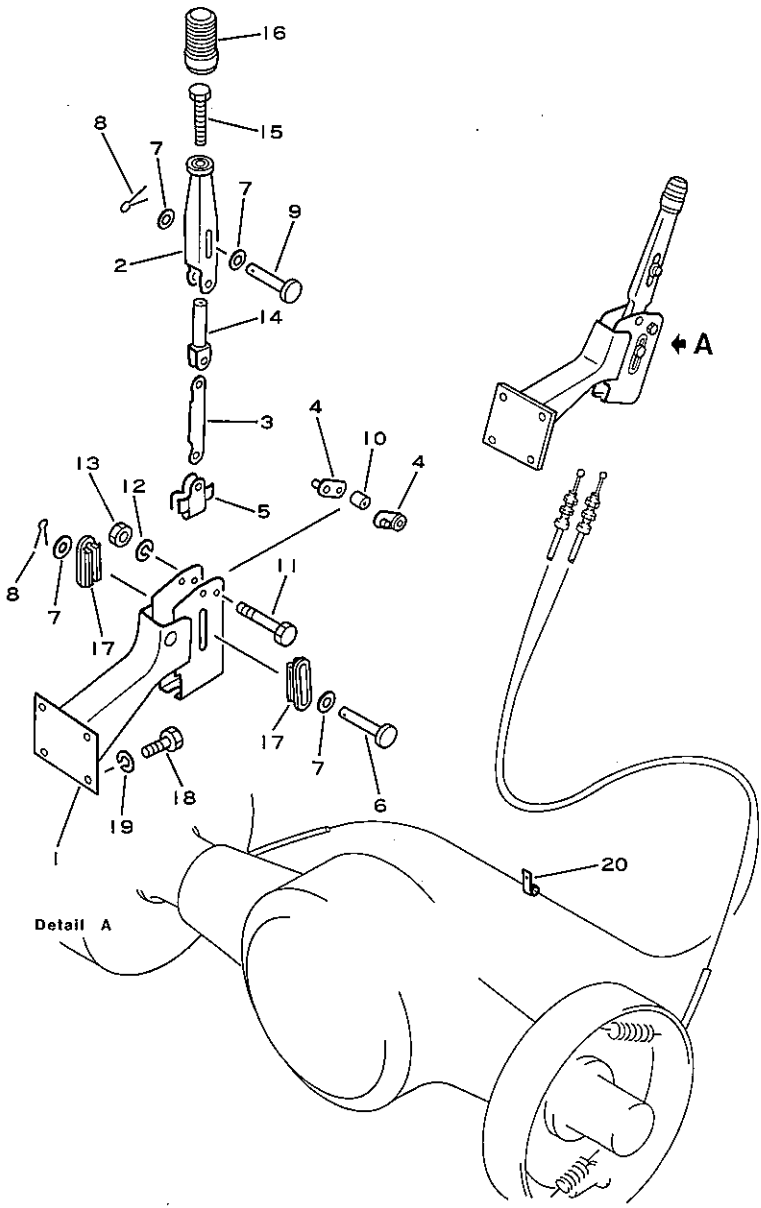

図および索引番号 Fig & Index No.	品番 Part No.	品名 Description	個数 Qty
	3EB-38-25512	PARKING BRAKE LEVER ASS'Y	1
4801 - 1	3EB-38-25610	.BRACKET ASS'Y.....	1
2	3EB-38-25620	.LEVER ASS'Y.....	1
3	3EB-38-25630	.LINK.....	1
4	3EB-38-15160	.SHAFT ASS'Y.....	2
5	3EB-38-15221	.BRACKET.....	1
6	3EB-38-25641	.PIN.....	1
7	3BA-39-31160	.WASHER.....	4
8	3EB-38-15340	.PIN.....	2
9	3BA-39-31170	.PIN.....	1
10	3EB-38-15230	.SPACER.....	1
11	3EB-38-15380	.BOLT.....	1
12	3EB-38-15220	.WASHER,spring.....	1
13	3EB-38-15260	.NUT.....	1
14	3BA-39-31180	.ROD.....	1
15	3BA-39-31190	.BOLT.....	1
16	3BA-39-31210	.GRIP.....	1
17	3BA-39-31220	.BUSHING.....	2
18	01010-50812	BOLT.....	3
19	01602-20825	WASHER,spring.....	3
20	08035-01514	CLIP.....	1

適用機種 Application		
FG20	T	-C 252001A~
FG25	C	-C 252001A~
FG25	T	-C 252001A~
FG30	T	-C 450050A~
FG20S	T	-C 300001A~
FG25S	C	-C 300001A~
FG25S	T	-C 300001A~
FG30S	T	-C 400001A~
FG30G	T	-C 290222A~
FG30SG	T	-C 320003A~
FD20	T	-C 337001A~430174A
FD25	C	-C 337001A~430174A
FD25	T	-C 337001A~
FD30	C	-C 337001A~430174A
FD30	T	-C 337001A~
FD25S	T	-C 480001A~
FD20V	T	-C 337901A~430174A
FD25V	C	-C 337901A~430174A
FD25V	T	-C 337901A~430174A
FD30V	C	-C 337901A~430174A
FD30V	T	-C 337901A~430174A
FD20SV	T	-C 380001A~480000A
FD25SV	T	-C 380001A~480000A
FD30SV	T	-C 380001A~480000A

FRAME AND BODY

FIG.5001A FRAME

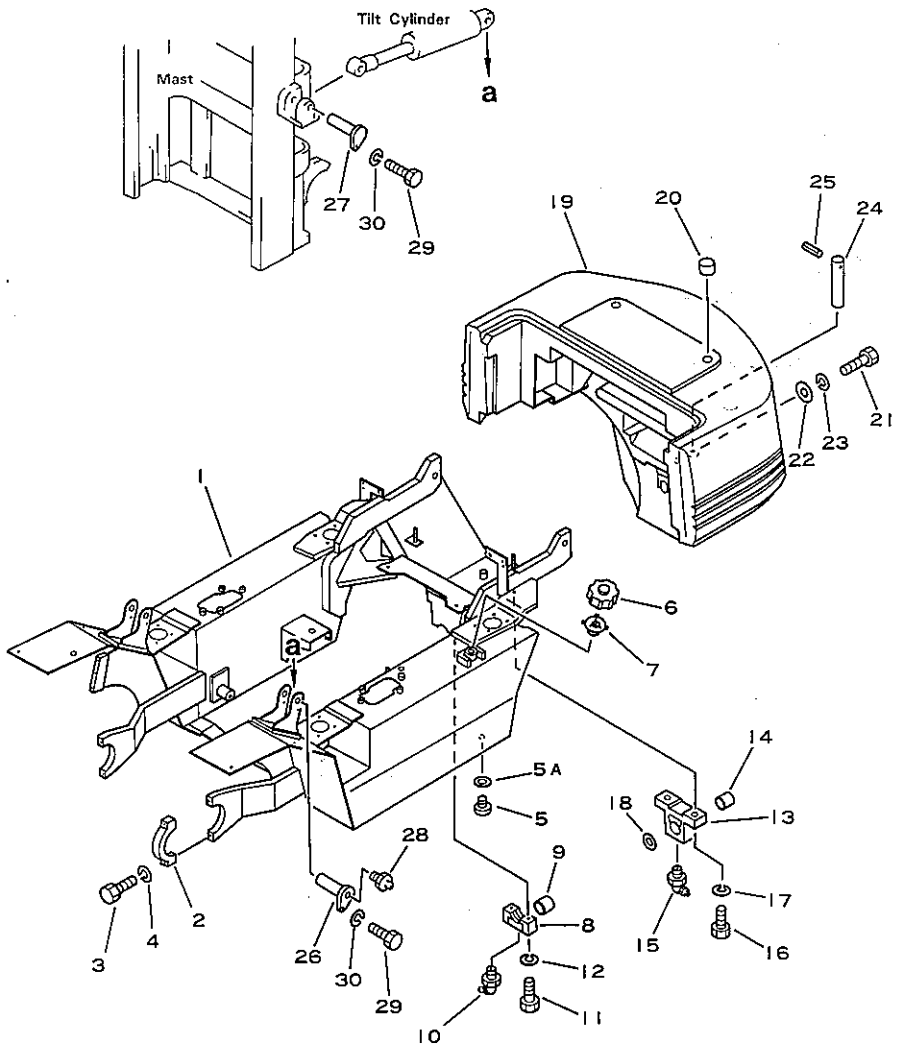

図および索引番号 Fig & Index No.	品番 Part No.	品名 Description	個数 Q'ty
5001A- 1	☆	FRAME ASS'Y (for H20)	1
	☆	FRAME ASS'Y (for 4D95S.W)	1
	☆	FRAME ASS'Y (for G1600)	1
2	3EB-41-11920	.CAP.....	2
3	01010-51475	.BOLT.....	4
4	01602-21442	.WASHER,spring.....	4
5	34B-41-12910	PLUG.....	2
5A	34B-41-12920	GASKET.....	2
	3EA-05-11160	CAP ASS'Y.....	1
6	3EA-05-11170	.CAP.....	1
7	3EA-05-11180	.BREATHER ASS'Y.....	1
	3EB-41-00021	CAP ASS'Y.....	1
8	☆	.CAP.....	1
9	34A-42-11411	.BUSHING.....	1
10	07020-00900	.FITTING,grease.....	1
11	01010-51665	BOLT.....	2
12	01602-21648	WASHER,spring.....	2
	3EB-41-00030	SUPPORT ASS'Y.....	1
13	☆	.SUPPORT.....	1
14	34A-42-11411	..BUSHING.....	1
15	07020-00675	.FITTING,grease.....	1
16	01010-52060	BOLT.....	2
17	01602-22060	WASHER,spring.....	2
18	304-27-31500	SHIM (t=0.5mm).....	1
	304-27-31510	SHIM (t=1.0mm).....	1
19	3EB-43-A2110	WEIGHT (for 2.0t)...	1
	3EB-43-A2210	WEIGHT (for 2.5t)...	1
	3EB-43-A2310	WEIGHT (for 3.0t)...	1
20	3EB-43-21120	CAP.....	2
21	01011-53030	BOLT.....	1
22	300-46-31321	WASHER.....	1
23	01601-23075	WASHER,spring.....	1
24	3EB-43-11120	BAR.....	1
25	04025-00650	PIN,roll.....	1

適用機種 Application			
FG20	T	-C	450050A~
FG25	C	-C	450050A~
FG25	T	-C	450050A~
FG30	T	-C	450050A~
FG30G	T	-C	490001A~
FD25	T	-C	430175A~
FD30	T	-C	430175A~

FRAME

図および索引番号 Fig & Index No.	品番 Part No.	品名 Description	個数 Q'ty	適用機種 Application
5001A-26	3BB-42-24740	PIN.....	2	
27	3EB-41-21860	PIN.....	2	
28	07020-00000	FITTING,grease.....	2	
29	01010-51025	BOLT.....	4	
30	01602-21030	WASHER,spring.....	4	

FIG.5011A FRAME (FOR S)

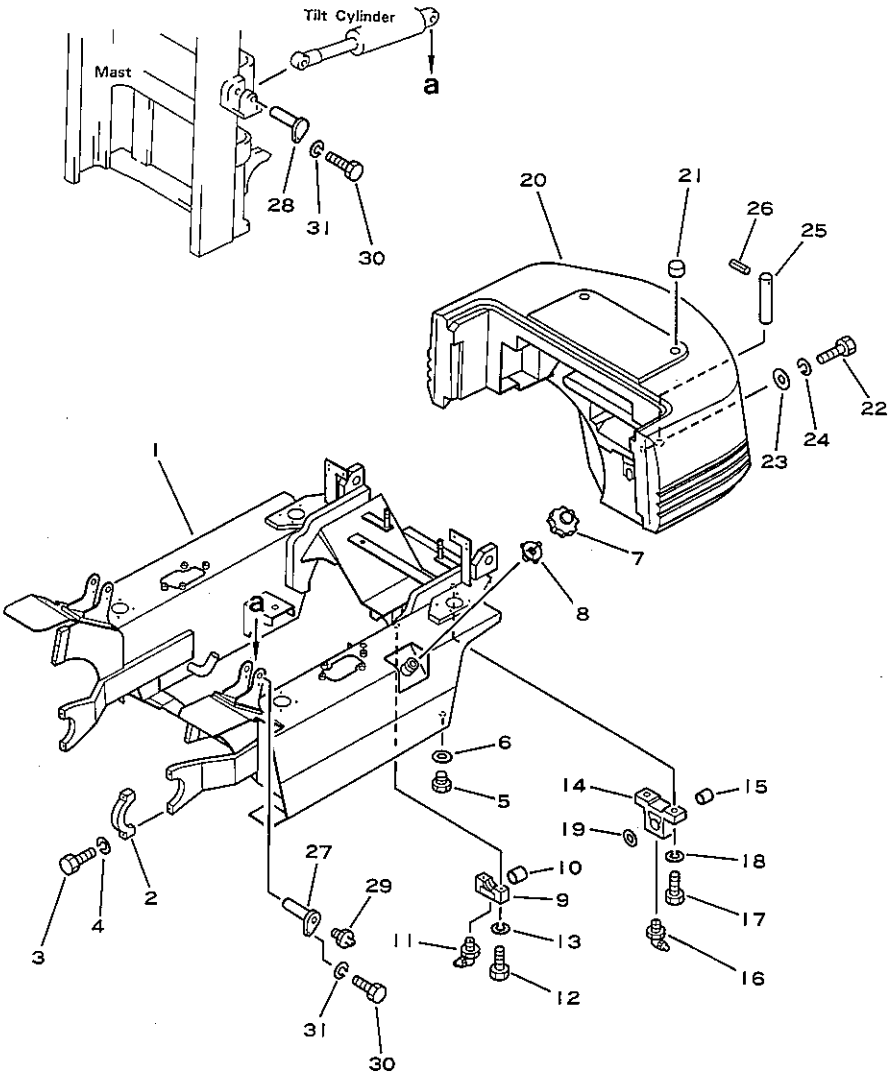

図および索引番号 Fig & Index No.	品番 Part No.	品名 Description	個数 Q'ty	適用機種 Application
5011A- 1	*	FRAME (for H20).....	1	FG20S T -C 400001A~ FG25S C -C 400001A~ FG25S T -C 400001A~ FG30S T -C 400001A~ FG30SG T -C 490002A~ FD25S T -C 480001A~
	*	FRAME (for 4D95S.W)..	1	
	*	FRANE (for G1600)...	1	
2	3EB-42-21920	.CAP.....	2	
3	01010-51470	.BOLT.....	4	
4	01602-21442	WASHER,spring.....	4	
5	34B-41-12910	PLAG.....	2	
6	34B-41-12920	GASKET.....	2	
	3EA-05-11160	FUEL CAP ASS'Y.....	1	
7	3EA-05-11170	.CAP.....	1	
8	3EA-05-11180	.BREATHER.....	1	
	3EB-41-00021	CAP ASS'Y.....	1	
9	*	.CAP.....	1	
10	34A-42-11411	.BUSHING.....	1	
11	07020-00900	.FITTING,grease.....	1	
12	01010-51665	BOLT.....	2	
13	01602-21648	WASHER,spring.....	2	
	3EB-41-00030	SUPPORT ASS'Y.....	1	
14	*	.SUPPORT.....	1	
15	34A-42-11411	.BUSHING.....	1	
16	07020-00675	.FITING,grease.....	1	
17	01010-52060	BOLT.....	2	
18	01602-22060	WASHER,spring.....	2	
19	304-27-31500	SHIM (t=0.5mm).....	1	
	304-27-31510	SHIM (t=1.0mm).....	1	
20	3EB-43-A2410	WEIGHT (for 2.0t)...	1	
	3EB-43-A2510	WEIGHT (for 2.5t)...	1	
	3EB-43-A2610	WEIGHT (for 3.0t)...	1	
	3EB-43-A2810	WEIGHT (for 3.0t,G1600)	1	
21	3EB-43-21120	CAP.....	2	
22	01011-53065	BOLT.....	1	
23	300-46-31321	WASHER.....	1	
24	01601-23075	WASHER,spring.....	1	
25	3EB-43-12130	BAR.....	1	
26	04025-00650	PIN,roll.....	1	

FRAME (FOR S)

図および索引番号 Fig & Index No.	品番 Part No.	品名 Description	個数 Q'ty	適用機種 Application
5011A-27	3BB-42-24740	PIN.....	2	
28	3EB-41-21860	PIN.....	2	
29	07020-00000	FITTING,grease.....	2	
30	01010-51025	BOLT.....	4	
31	01602-21030	WASHER,spring.....	4	

FIG.5101A OUTER PANEL

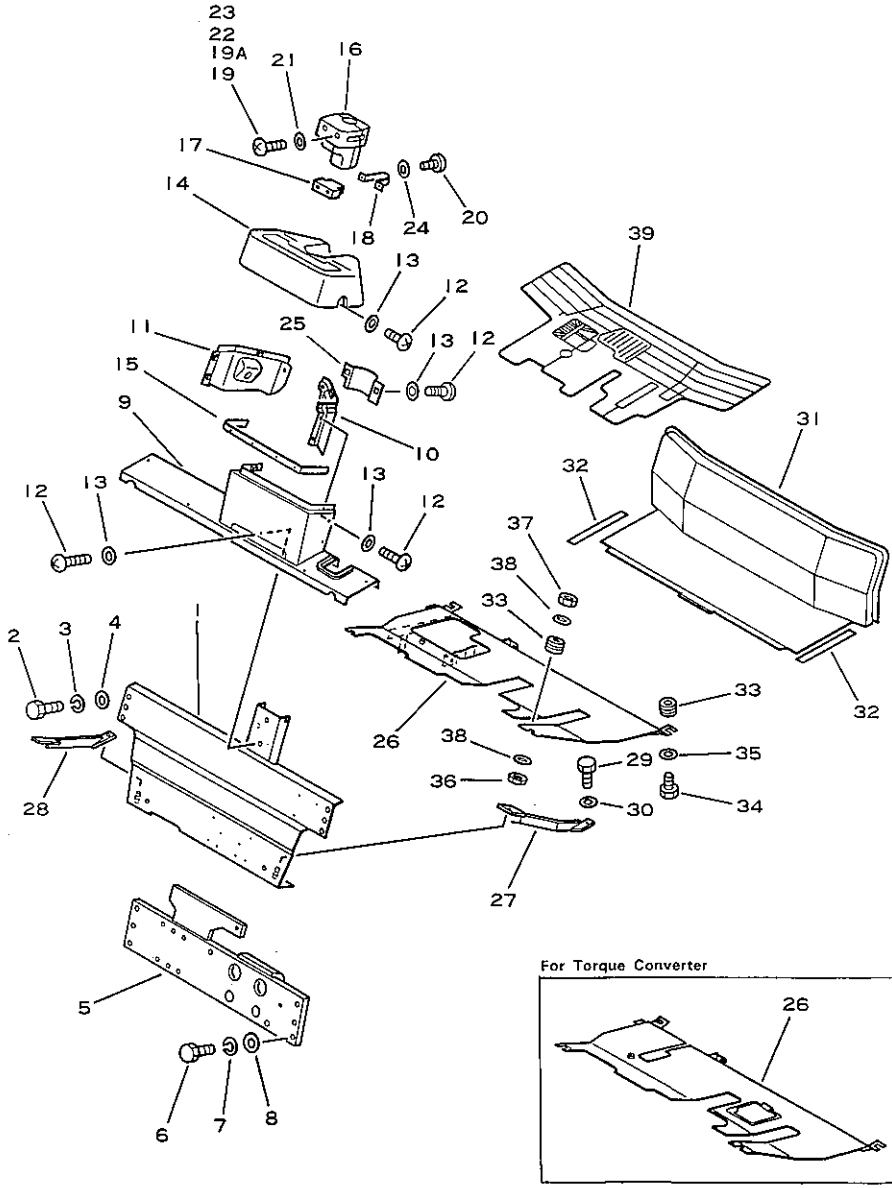

図および索引番号 Fig & Index No.	品番 Part No.	品名 Description	個数 Q'ty
5101A- 1	3EB-50-23211	DASHBOARD.....	1
2	01010-51030	BOLT.....	6
3	01602-21030	WASHER,spring.....	6
4	01643-31032	WASHER.....	6
5	3EB-50-25113	BRACKET.....	1
6	01010-51245	BOLT.....	6
7	01602-21236	WASHER,spring.....	6
8	3EB-50-25120	WASHER.....	6
9	3EB-50-23270	PANEL.....	1
10	3EB-50-23131	COVER (L.H).....	1
11	3EB-50-23121	COVER (R.H).....	1
12	01220-70616	SCREW.....	16
13	01642-40608	WASHER.....	16
14	37B-1CP-2801	METER PANEL ASS'Y (for D)	1
	37B-1CP-2902	METER PANEL ASS'Y (for D,with water temparature gauge)	1
	37B-1CP-2501	METER PANEL (for G).	1
	37B-1CP-2602	METER PANEL (for G,with water temparature gauge)	1
15	3EB-50-23141	RUBBER.....	1
16	37B-1CS-2010	COVER,column (for C)	1
	37B-1CS-2020	COVER,column (for L.H)	1
	37B-1CS-2030	COVER,column (for R.H)(OP)	1
	37B-1CS-2040	COVER,column (for T2,L.H)	1
17	3EB-35-22190	BRACKET (for C).....	1
18	3EB-35-22110	CLAMP (for C).....	1
19	01370-00612	SCREW (for C).....	2
19A	01370-00516	SCREW (for C).....	2
20	01370-00616	SCREW (for C).....	2
21	01642-20608	WASHER (for C).....	4
22	01220-40612	SCREW (for T).....	2
23	01370-00516	SCREW (for T).....	2
24	01642-20608	WASHER (for T).....	2

適用機種 Application			
FG20	T	-C	450050A~
FG25	C	-C	450050A~
FG25	T	-C	450050A~
FG30	T	-C	450050A~
FG20S	T	-C	400001A~
FG25S	C	-C	400001A~
FG25S	T	-C	400001A~
FG30S	T	-C	400001A~
FG30G	T	-C	490001A~
FG30SG	T	-C	490002A~
FD25	T	-C	430175A~
FD30	T	-C	430175A~
FD25S	T	-C	480001A~

OUTER PANEL

図および索引番号 Fig. & Index No.	品番 Part No.	品名 Description	個数 Q'ty	適用機種 Application
5101A-25	3EB-50-23171	PLATE.....	1	
26	3EB-50-22311	PLATE,floor (for C).	1	
	3EB-50-22511	PLATE,floor (for T).	1	
27	3EB-50-22210	STAY (L.H).....	1	
28	3EB-50-22220	STAY (R.H).....	1	
29	01010-50820	BOLT.....	2	
30	01642-21016	WASHER.....	2	
31	3EB-50-22111	PLATE,floor.....	1	
32	3EB-50-22230	RUBBER.....	2	
33	3EB-50-22240	GROMMET.....	4	
34	01010-50825	BOLT.....	2	
35	34A-50-22140	WASHER.....	2	
36	01580-10806	NUT.....	2	
37	01598-10809	NUT.....	2	
38	34A-50-22140	WASHER.....	4	
39	37B-1CF-2312	MAT,floor (for C)...	1	
	37B-1CF-2512	MAT,floor (for T)...	1	

FIG.5121A OUTER PANEL

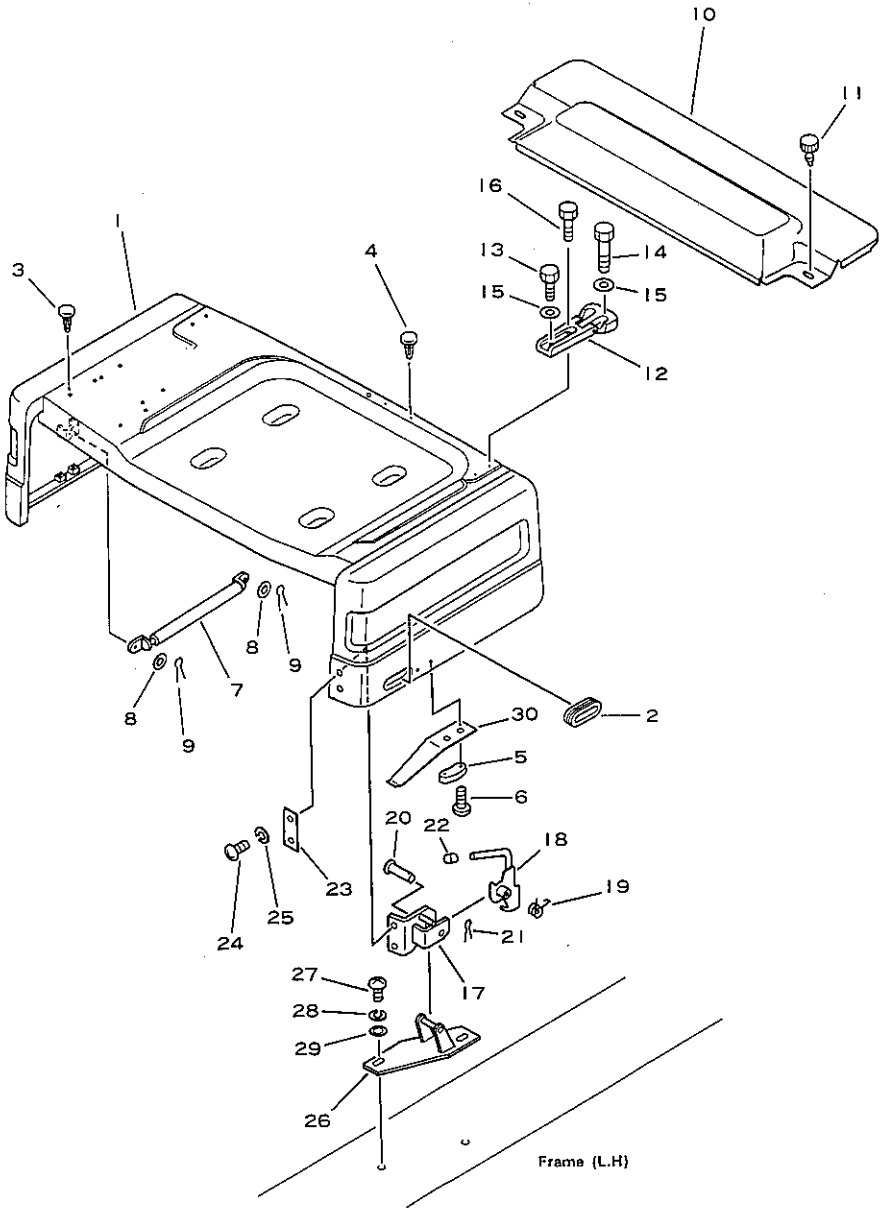

図および索引番号 Fig & Index No.	品番 Part No.	品名 Description	個数 Q'ty
5121A- 1	3EB-50-21911	BONNET.....	1
2	3EB-50-21171	COVER.....	1
3	3EB-50-21140	CLIP.....	8
4	3EB-50-21150	CLIP.....	6
5	3EB-50-11140	CUSHION.....	2
6	01220-40512	SCREW.....	4
7	3EA-50-11320	STAY DAMPER.....	1
8	01641-21016	WASHER.....	2
9	04052-01038	PIN,snap.....	2
10	3EB-05-23360	SUB BONNET (for G)..	1
	3EB-50-24110	SUB BONNET (for D)..	1
	3EB-50-24510	SUB BONNET (for S)..	1
11	3EB-50-24181	KNOB.....	2
12	3EB-50-21160	HINGE.....	2
13	01010-50620	BOLT.....	2
14	01010-50625	BOLT.....	4
15	01642-20608	WASHER.....	8
16	01010-50630	BOLT.....	2
17	3EB-50-A4820	BRACKET (L.H).....	1
	3EB-50-A4860	BRACKET (R.H).....	1
18	3EB-50-A4830	LEVER (L.H).....	1
	3EB-50-A4870	LEVER (R.H).....	1
19	3EB-50-A4840	SPRING (L.H).....	1
	3EB-50-A4880	SPRING (R.H).....	1
20	04205-10630	PIN.....	2
21	04050-11612	PIN,cotter.....	2
22	3EB-50-27670	CAP.....	2
23	3EA-50-17830	PLATE.....	2
24	01220-40516	SCREW.....	4
25	01601-20513	WASHER,spring.....	4
26	3EB-50-A4790	BRACKET (L.H).....	1
	3EB-50-A4890	BRACKET (R.H).....	1
27	01220-40616	SCREW.....	4
28	01602-20619	WASHER,spring.....	4
29	01643-30823	WASHER.....	4

適用機種 Application			
FG20	T	-C	450050A~
FG25	C	-C	450050A~
FG25	T	-C	450050A~
FG30	T	-C	450050A~
FG20S	T	-C	400001A~
FG25S	C	-C	400001A~
FG25S	T	-C	400001A~
FG30S	T	-C	400001A~
FG30G	T	-C	490001A~
FG30SG	T	-C	490002A~
FD25	T	-C	430175A~
FD30	T	-C	430175A~
FD25S	T	-C	480001A~

OUTER PANEL

図および索引番号 Fig & Index No.	品番 Part No.	品名 Description	個数 Q'ty	適用機種 Application
5121A-30	3EB-50-27660	PLATE.....	2	

FIG.5201A OUTER PANEL (FOR INSULATOR)

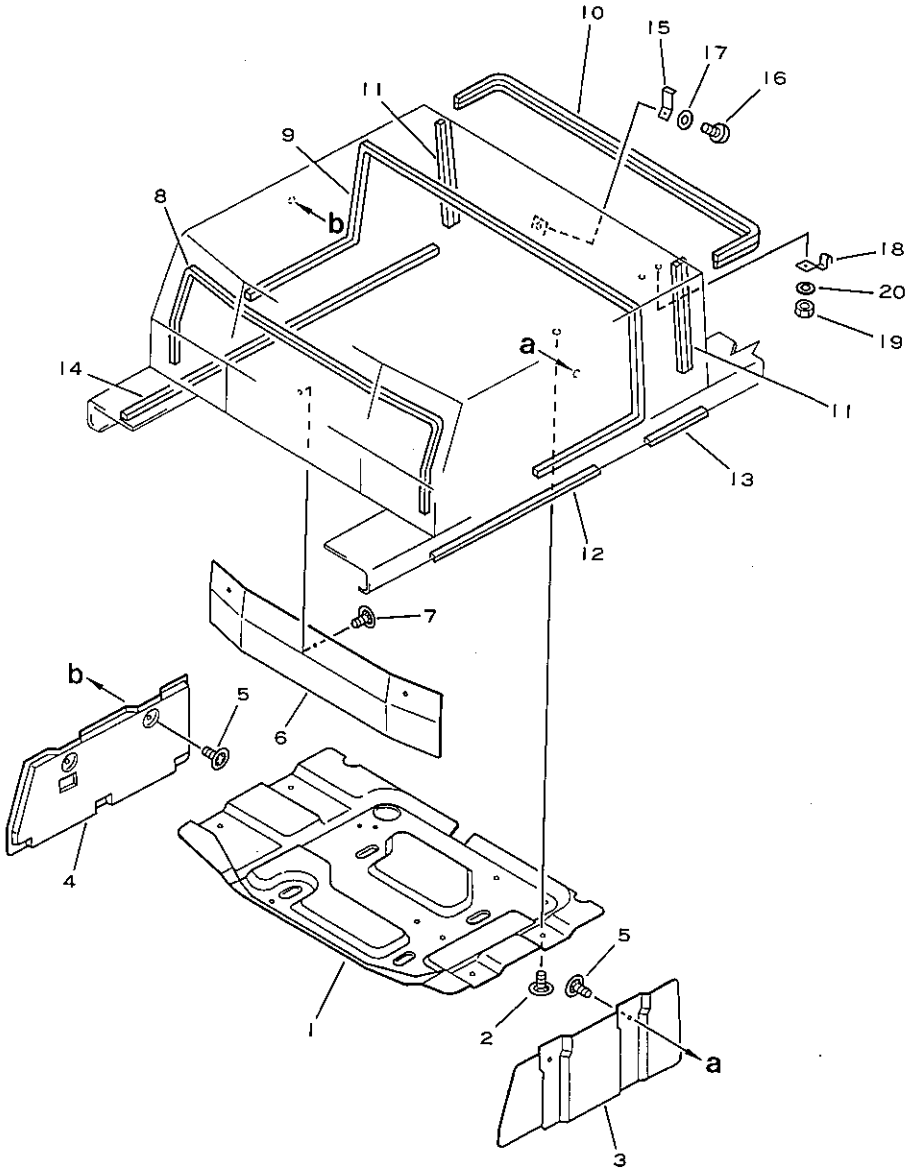

OUTER PANEL (FOR INSULATOR)

図および索引番号 Fig & Index No.	品番 Part No.	品名 Description	個数 Q'ty
5201A- 1	3EB-52-21112	GLASS WOOL.....	1
2	34B-50-12730	CLIP.....	9
3	3EB-52-21130	GLASS WOOL (L.H)....	1
4	3EB-52-21140	GLASS WOOL (R.H)....	1
5	34B-50-12730	CLIP (for G).....	4
6	3EB-52-21120	GLASS WOOL.....	1
7	34B-50-12730	CLIP.....	3
8	3EB-52-21221	RUBBER,seal.....	1
9	3EB-52-21231	RUBBER,seal.....	1
10	37B-1CW-2110	STRIP.....	1
11	37B-1CW-2130	STRIP.....	2
12	37B-1CV-2121	SPONGE.....	1
13	37B-1CV-2111	SPONGE.....	1
14	37B-1CV-2131	SPONGE.....	1
15	3EB-50-21190	PLATE.....	1
16	01220-40510	SCREW.....	1
17	01642-20608	WASHER.....	1
18	3EB-50-21180	PLATE.....	2
19	01580-10605	NUT.....	2
20	01642-20608	WASHER.....	2

適用機種 Application			
FG20	T	-C	450050A~
FG25	C	-C	450050A~
FG25	T	-C	450050A~
FG30	T	-C	450050A~
FG30G	T	-C	490001A~
FD25	T	-C	430175A~
FD30	T	-C	430175A~

FIG.5203A OUTER PANEL (FOR INSULATOR,S)

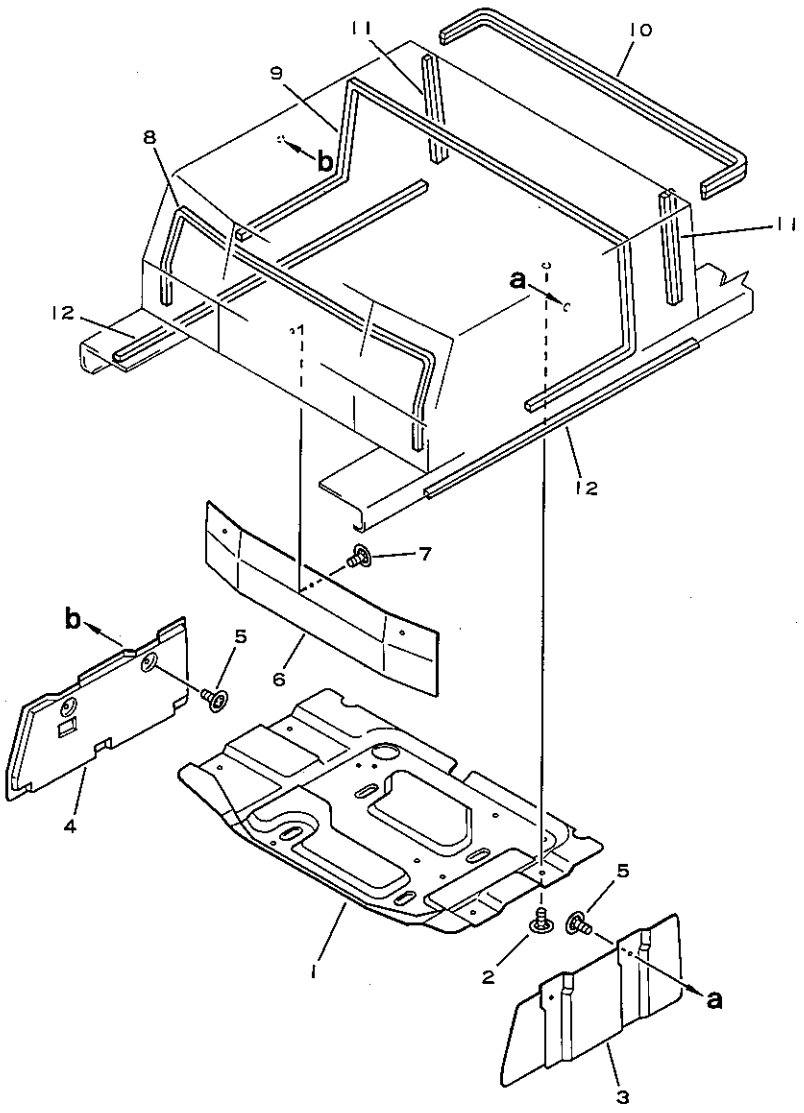

OUTER PANEL (FOR INSULATOR,S)

図および索引番号 Fig & Index No.	品番 Part No.	品名 Description	個数 Q'ty
5203A- 1	3EB-52-21112	GLASS WOOL.....	1
2	34B-50-12730	CLIP.....	9
3	3EB-52-21130	GLASS WOOL (L.H)....	1
4	3EB-52-21140	GLASS WOOL (R.H)....	1
5	34B-50-12730	CLIP (for G).....	4
6	3EB-52-21120	GLASS WOOL.....	1
7	34B-50-12730	CLIP.....	3
8	3EB-52-21221	RUBBER,seal.....	1
9	3EB-52-21231	RUBBER,seal.....	1
10	37B-1CW-2120	STRIP.....	1
11	37B-1CW-2130	STRIP.....	2
12	37B-1CV-2131	SPONGE.....	2

適用機種 Application
FG20S T -C 400001A~
FG25S C -C 400001A~
FG25S T -C 400001A~
FG30S T -C 400001A~
FG30SG T -C 490002A~
FD25S T -C 480001A~

FIG.5301 OUTER PANEL (ENCLOSE) (FOR 4D95S.W)

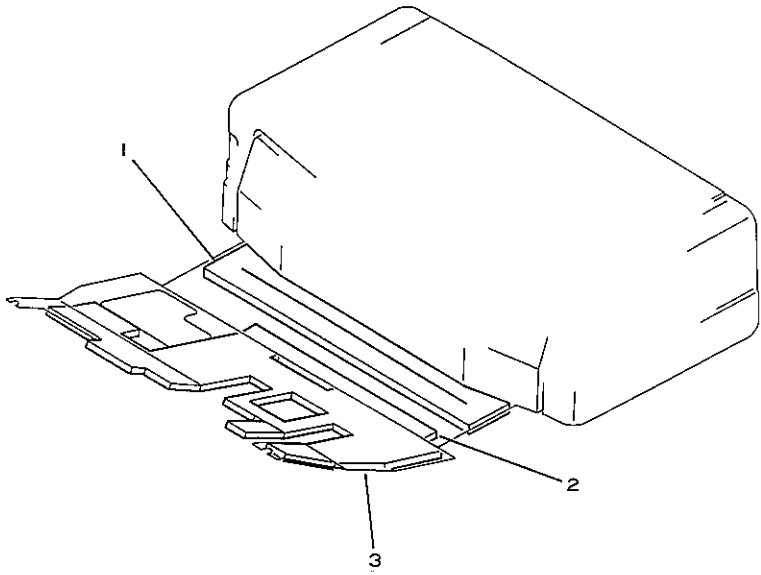

図および索引番号 Fig & Index No.	品番 Part No.	品名 Description	個数 Q'ty
5301 - 1	3EB-52-25210	SHEET.....	1
2	3EB-52-25230	SHEET.....	1
3	3EB-52-25240	SHEET.....	1

適用機種 Application			
FD25	T	-C	430175A~
FD30	T	-C	430175A~
FD25S	T	-C	480001A~

FIG.5401 OPERATOR'S SEAT

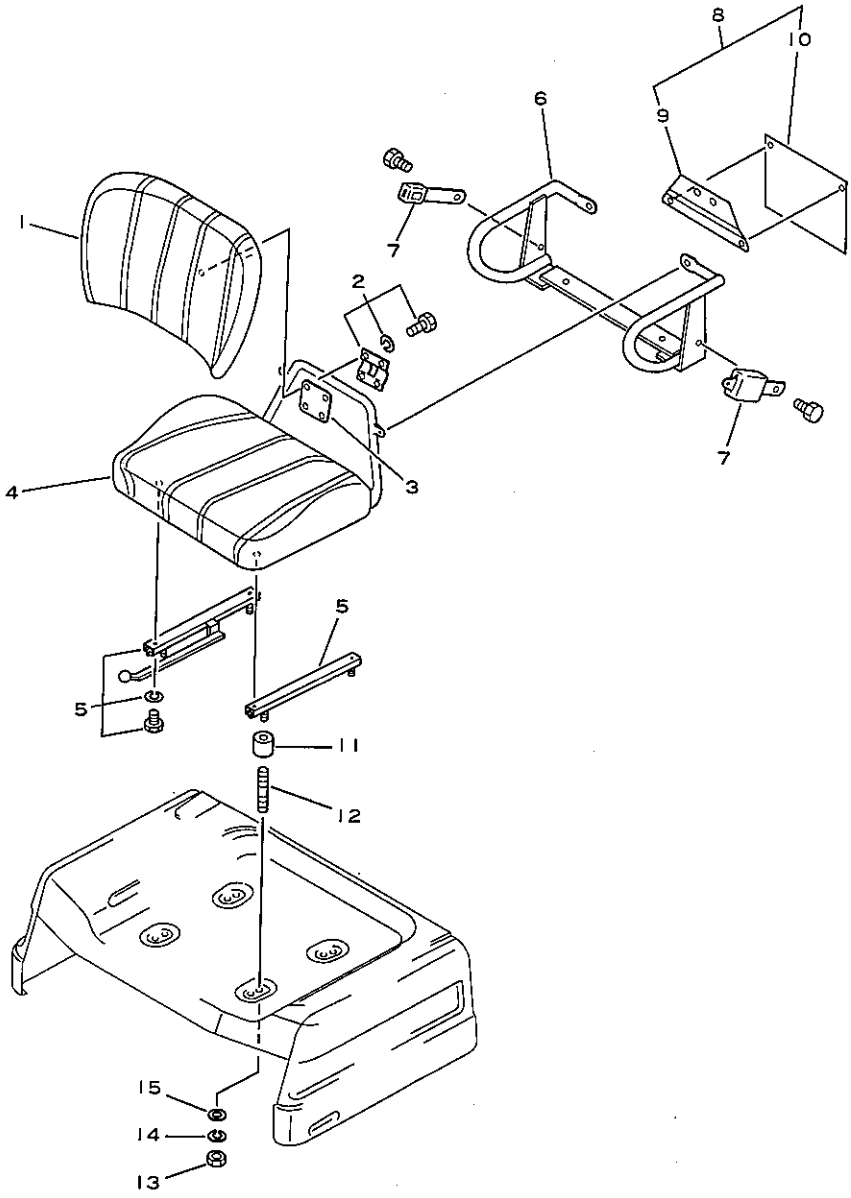

図および索引番号 Fig & Index No.	品番 Part No.	品名 Description	個数 Q'ty
	3EB-50-A2210	SEAT ASS'Y (safety).	1
* 5401 - 1	H03110-17	.BACK CUSHION ASS'Y.	1
* 2	H03110-18	.BACK MOUNTING KIT..	1
* 3	H03110-14	.BACK RUBBER MTG....	1
* 4	H03110-19	.SEAT CUSHION.....	1
* 5	H03110-16	.SLID RAIL KIT.....	1
* 6	H03110-20	.SIDE TUBE.....	1
* 7	H03110-21	.LAP SEAT BELT.....	1
* 8	H03110-47	.POUCH HANGER.....	1
* 9	☆	..MOUNTING BRACKET..	1
* 10	☆	..POUCH.....	1
11	3EA-50-21910	BOSS.....	4
12	01124-50816	BOLT,stud.....	4
13	01580-10806	NUT.....	4
14	01602-20825	WASHER,spring.....	4
15	01643-30823	WASHER.....	4

適用機種 Application		
FG20	T	-C 252001A~
FG25	C	-C 252001A~
FG25	T	-C 252001A~
FG30	T	-C 450050A~
FG20S	T	-C 300001A~
FG25S	C	-C 300001A~
FG25S	T	-C 300001A~
FG30S	T	-C 400001A~
FG30G	T	-C 290222A~
FG30SG	T	-C 320003A~
FD20	T	-C 337001A~430174A
FD25	C	-C 337001A~430174A
FD25	T	-C 337001A~
FD30	C	-C 337001A~430174A
FD30	T	-C 337001A~
FD25S	T	-C 480001A~
FD20V	T	-C 337901A~430174A
FD25V	C	-C 337901A~430174A
FD25V	T	-C 337901A~430174A
FD30V	C	-C 337901A~430174A
FD30V	T	-C 337901A~430174A
FD20SV	T	-C 380001A~480000A
FD25SV	T	-C 380001A~480000A
FD30SV	T	-C 380001A~480000A

FIG.5501A HEAD GUARD

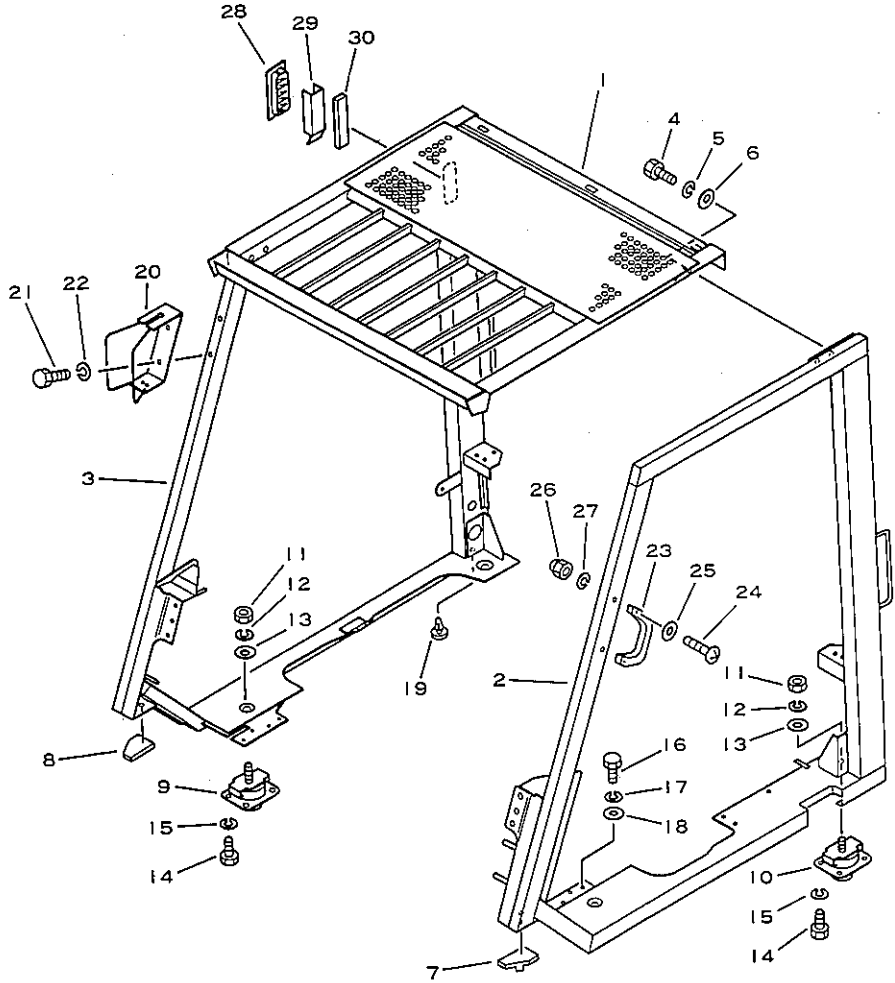

図および索引番号 Fig & Index No.	品番 Part No.	品名 Description	個数 Q'ty
5501A- 1	3EB-51-A2110	HEAD GUARD.....	1
2	3EB-51-A2121	STAY (L.H).....	1
3	3EB-51-A2161	STAY (R.H).....	1
4	01010-51025	BOLT.....	8
5	01602-21030	WASHER,spring.....	8
6	34A-50-22140	WASHER.....	8
7	3EB-51-21362	RUBBER (L.H).....	1
8	3EB-51-21392	RUBBER (R.H).....	1
9	3EB-51-21551	CUSHION,front.....	2
10	3EB-51-21521	CUSHION,rear.....	2
11	01583-11408	NUT.....	4
12	01602-21442	WASHER,spring.....	4
13	01643-31445	WASHER.....	4
14	01010-51020	BOLT.....	16
15	01602-21030	WASHER,spring.....	16
16	01010-50825	BOLT.....	4
17	01602-20825	WASHER,spring.....	4
18	34A-50-22140	WASHER.....	4
19	3EB-50-21130	CLIP.....	1
20	3EB-51-25240	PROTECTOR.....	2
21	01010-50820	BOLT.....	4
22	01602-20825	WASHER,spring.....	4
23	3EB-51-21150	ASSIST GRIP (L.H)...	1
24	01220-70660	SCREW.....	4
25	01642-10608	WASHER.....	2
26	3EB-51-21380	NUT.....	2
27	01602-10619	WASHER,spring.....	2
28	3EB-01-25171	COVER.....	1
29	3EA-02-26710	COVER (for 4D95S.W).	1
30	3EB-55-17250	RUBBER (for 4D95S.W).	1

適用機種 Application			
FG20	T	-C	450050A~
FG25	C	-C	450050A~
FG25	T	-C	450050A~
FG30	T	-C	450050A~
FG30G	T	-C	490001A~
FD25	T	-C	430175A~
FD30	T	-C	430175A~

FIG.5503A HEAD GUARD (FOR S)

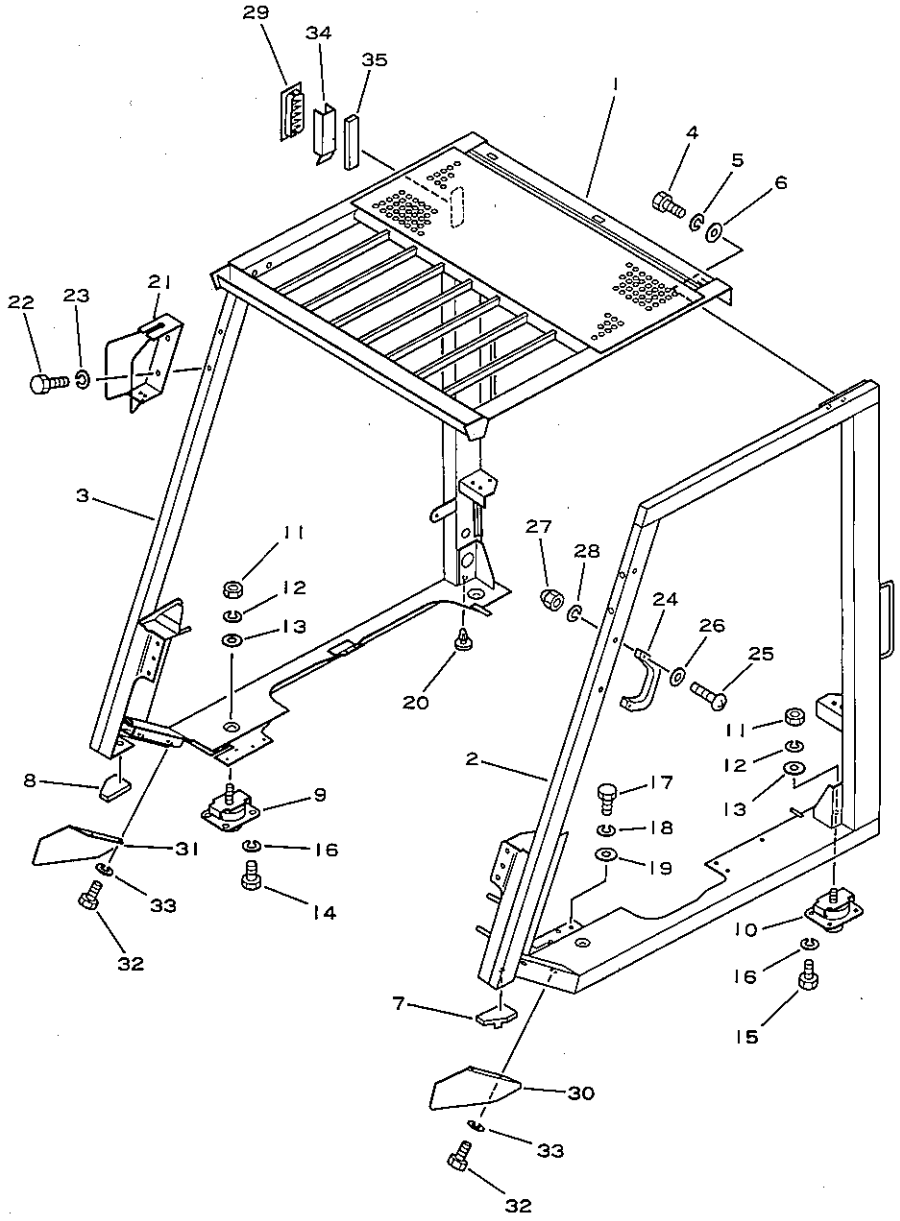

図および索引番号 Fig & Index No.	品番 Part No.	品名 Description	個数 Q'ty
5503A- 1	3EB-51-A2110	HEAD GUARD.....	1
2	3EB-51-A2421	STAY (L.H).....	1
3	3EB-51-A2161	STAY (R.H).....	1
4	01010-51025	BOLT.....	8
5	01630-21030	WASHER,spring.....	8
6	34A-50-22140	WASHER.....	8
7	3EB-51-21362	RUBBER (L.H).....	1
8	3EB-51-21392	RUBBER (R.H).....	1
9	3EB-51-21551	CUSHION (FRONT).....	2
10	3EB-51-21521	CUSHION (REAR).....	2
11	01583-11408	NUT.....	4
12	01602-21442	WASHER,spring.....	4
13	01643-31445	WASHER.....	4
14	01010-51020	BOLT.....	8
15	01010-51025	BOLT.....	8
16	01602-21030	WASHER,spring.....	16
17	01010-50825	BOLT.....	4
18	01602-20825	WASHER,spring.....	4
19	34A-50-22140	WASHER.....	4
20	3EB-50-21130	CLIP.....	1
21	3EB-51-25240	PROTECTOR.....	2
22	01010-50820	BOLT.....	4
23	01602-20825	WASHER,spring.....	4
24	3EB-51-21150	ASSIST GRIP.....	1
25	01220-70650	SCREW.....	2
26	01642-10608	WASHER.....	4
27	3EB-51-21380	NUT.....	2
28	01602-10619	WASHER,spring.....	2
29	3EB-01-25171	COVER.....	1
30	3EB-51-21471	COVER (L.H).....	1
31	3EB-51-21481	COVER (R.H).....	1
32	01010-50812	BOLT.....	4
33	01602-20825	WASHER,spring.....	4
34	3EA-02-26710	COVER (for 4D95S.W).	1
35	3EB-55-17250	RUBBER (for 4D95S.W)	1

適用機種 Application
FG20S T -C 400001A~
FG25S C -C 400001A~
FG25S T -C 400001A~
FG30S T -C 400001A~
FG30SG T -C 490002A~
FD25S T -C 480001A~

FIG.5701A NAME PLATE (FOR D)

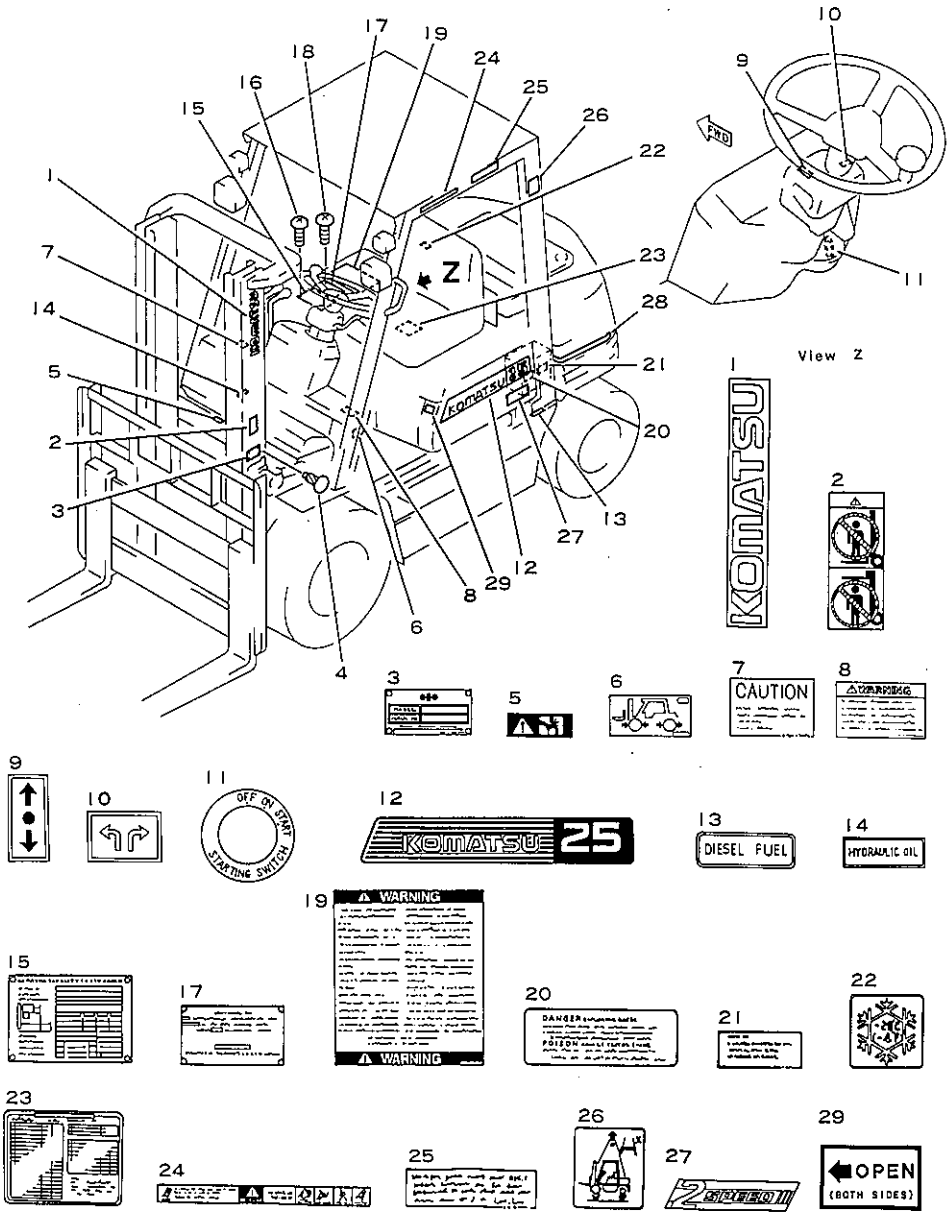

図および索引番号 Fig & Index No.	品番 Part No.	品名 Description	個数 Q'ty	適用機種 Application
5701A- 1	3EB-96-25140	MARK,komatsu.....	2	FD25 T -C 430175A~
2	3EB-96-25130	PLATE,caution.....	2	FD30 T -C 430175A~
3	☆	PLATE,name (limited supply)	1	FD25S T -C 480001A~
4	04418-13060	SCREW.....	4	
5	3EB-96-25120	PLATE,caution.....	1	
6	37A-2BK-2020	PLATE,caution.....	1	
7	09662-30060	PLATE,caution.....	1	
8	3EB-96-21210	PLATE,caution.....	1	
9	34B-96-35610	PLATE,caution (for T1)	1	
	3ED-96-11130	PLATE,caution (for T2)	1	
10	34B-96-35120	PLATE.....	1	
11	34A-96-14710	PLATE,name.....	1	
12	37B-1QK-2111	MARK (L.H)(for 2.0t)	1	
	37B-1QK-2151	MARK (R.H)(for 2.0t)	1	
	37B-1QK-2311	MARK (L.H)(for 2.5t)	1	
	37B-1QK-2351	MARK (R.H)(for 2.5t)	1	
	37B-1QK-2511	MARK (L.H)(for 3.0t)	1	
	37B-1QK-2551	MARK (R.H)(for 3.0t)	1	
13	364-968-1050	PLATE,name.....	1	
14	300-968-1110	PLATE,name.....	1	
15	☆	PLATE,name (limited supply)	1	
16	01370-00508	SCREW.....	4	
17	☆	PLATE,name (limited supply)	1	
18	01370-00508	SCREW.....	4	
19	34A-96-16811	PLATE,caution.....	1	
20	09664-30080	PLATE,caution.....	1	
21	09664-30067	PLATE,caution.....	1	
22	37A-1AV-1010	PLATE,name (-20°C)..	1	
	37A-1AV-1030	PLATE,name (-40°C)..	1	
23	3BA-96-21310	CHART,maintenance...	1	
24	3EA-96-11610	PLATE,caution.....	1	
25	37A-960-2030	PLATE.....	1	
26	3EB-96-25520	PLATE.....	1	

NAME PLATE (FOR D)

図および索引番号 Fig & Index No.	品番 Part No.	品名 Description	個数 Q'ty	適用機種 Application
5701A-27	3EB-96-27710	PLATE,mark (for T2).	2	
28	37B-1QL-2110	STRIPE (for 2.0t)...	1	
	37B-1QL-2120	STRIPE (for 2.5t)...	1	
	37B-1QL-2130	STRIPE (for 3.0t)...	1	
	37B-1QL-2140	STRIPE (for S,2.0t).	1	
	37B-1QL-2150	STRIPE (for S,2.5t).	1	
	37B-1QL-2160	STRIPE (for S,3.0t).	1	
29	3EB-96-25830	PLATE.....	1	

FIG.5751A NAME PLATE (FOR G)

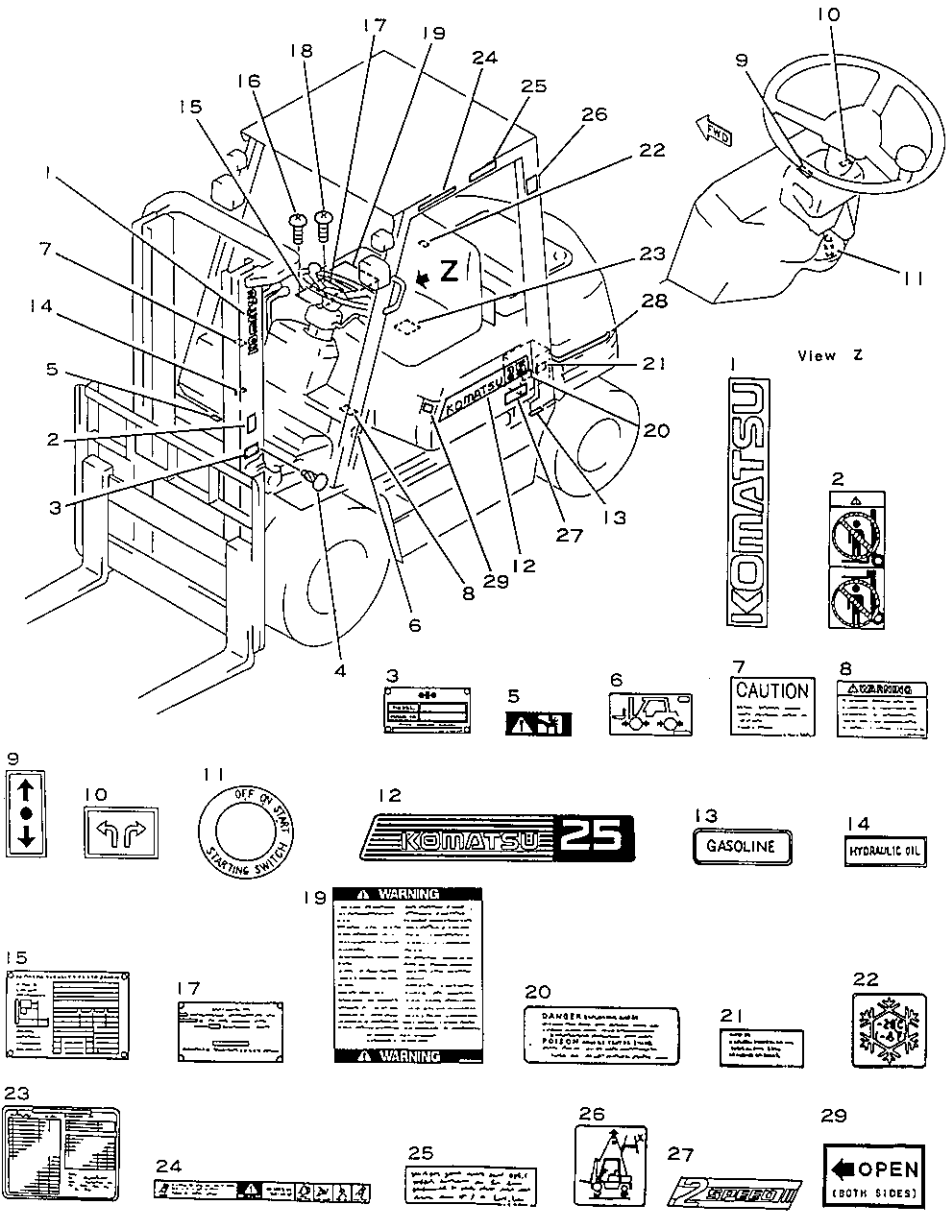

NAME PLATE (FOR G)

図および索引番号 Fig & Index No.	品番 Part No.	品名 Description	個数 Q'ty
5751A- 1	3EB-96-25140	MARK,komatsu.....	2
2	3EB-96-25130	PLATE,caution.....	2
3	*	PLATE,name (limited supply)	1
4	04418-13060	SCREW.....	4
5	3EB-96-25120	PLATE,caution.....	1
6	37A-2BK-2020	PLATE,caution.....	1
7	09662-30060	PLATE,caution.....	1
8	3EB-96-21210	PLATE,caution.....	1
9	34B-96-35610	PLATE,caution (for T1)	1
	3ED-96-11130	PLATE,caution (for T2)	1
10	34B-96-35120	PLATE.....	1
11	34A-96-14710	PLATE,name.....	1
12	37B-1QK-2111	MARK (L.H)(for 2.0t)	1
	37B-1QK-2151	MARK (R.H)(for 2.0t)	1
	37B-1QK-2311	MARK (L.H)(for 2.5t)	1
	37B-1QK-2351	MARK (R.H)(for 2.5t)	1
	37B-1QK-2511	MARK (L.H)(for 3.0t)	1
	37B-1QK-2551	MARK (R.H)(for 3.0t)	1
13	300-968-1120	PLATE,name.....	1
14	300-968-1110	PLATE,name.....	1
15	*	PLATE,name (limited supply)	1
16	01370-00508	SCREW.....	4
17	*	PLATE,name (limited supply)	1
18	01370-00508	SCREW.....	4
19	34A-96-16811	PLATE,caution.....	1
20	09664-30080	PLATE,caution.....	1
21	09664-30067	PLATE,caution.....	1
22	37A-1AV-1010	PLATE,name (-20°C)..	1
	37A-1AV-1030	PLATE,name (-40°C)..	1
23	3BA-96-21310	CHART,maintenance...	1
24	3EA-96-11610	PLATE,caution.....	1
25	37A-960-2030	PLATE.....	1
26	3EB-96-25520	PLATE.....	1

適用機種 Application			
FG20	T	-C	450050A~
FG25	C	-C	450050A~
FG25	T	-C	450050A~
FG30	T	-C	450050A~
FG20S	T	-C	400001A~
FG25S	C	-C	400001A~
FG25S	T	-C	400001A~
FG30S	T	-C	400001A~
FG30G	T	-C	490001A~
FG30SG	T	-C	490002A~

NAME PLATE (FOR G)

図および索引番号 Fig & Index No.	品番 Part No.	品名 Description	個数 Q'ty	適用機種 Application
5751A-27	3EB-96-27710	PLATE,mark (for T2).	2	
28	37B-1QL-2110	STRIPE (for 2.0t)...	1	
	37B-1QL-2120	STRIPE (for 2.5t)...	1	
	37B-1QL-2130	STRIPE (for 3.0t)...	1	
	37B-1QL-2140	STRIPE (for S,2.0t).	1	
	37B-1QL-2150	STRIPE (for S,2.5t).	1	
	37B-1QL-2160	STRIPE (for S,3.0t).	1	
29	3EB-96-25830	PLATE.....	1	

WORK EQUIPMENT AND IT'S CONTROL SYSTEM

FIG.6001A HYDRAULIC PUMP (FOR 4D95S.W)

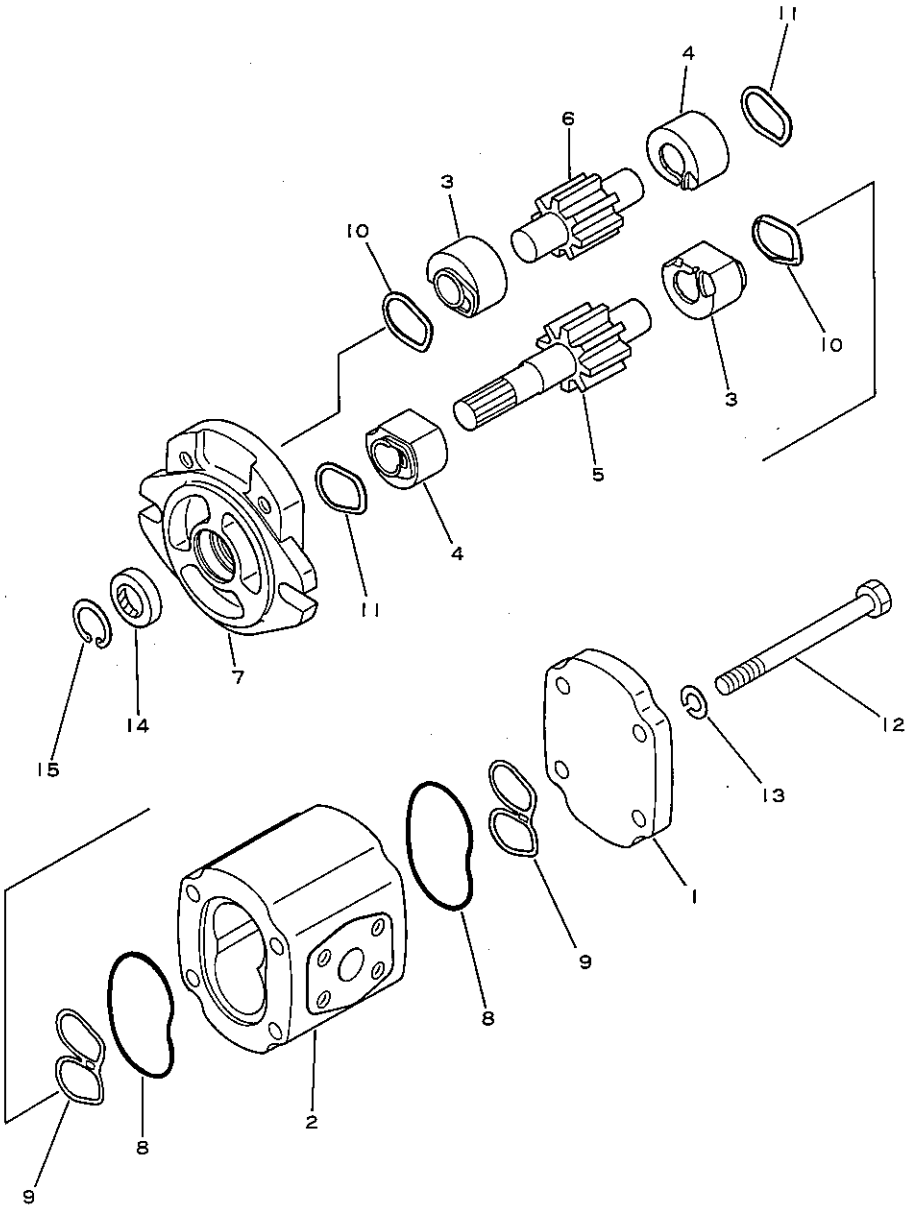

HYDRAULIC PUMP (FOR 4D95S.W)

図および索引番号 Fig & Index No.	品番 Part No.	品名 Description	個数 Q'ty
	3EB-60-12510	HYDRAULIC PUMP ASS'Y	1
6001A- 1	3EB-60-11120	.COVER.....	1
2	★	.BODY ASS'Y.....	1
	★	.BODY ASS'Y.....	1
3	★	..BUSHING ASS'Y.....	2
4	★	..BUSHING ASS'Y.....	2
5	★	..GEAR,drive.....	1
6	★	..GEAR,driven.....	1
7	3EB-60-11180	.FLANGE.....	1
8	3EB-60-11190	.SEAL.....(K61)	2
9	3EB-60-11220	.SEAL.....(K61)	2
10	3EB-60-11230	.RING (R.H)....(K61)	2
11	3EB-60-11240	.RING (L.H)....(K61)	2
12	3EB-60-11390	.BOLT.....	4
13	3EB-60-11260	.WASHER,spring.....	4
14	3EB-60-11270	.SEAL.....(K61)	1
15	3EB-60-11280	.RING.....(K61)	1
K61	3EB-60-21010	PUMP SEAL KIT.....	1

適用機種 Application			
FD25	T	-C	430175A~
FD30	T	-C	430175A~
FD25S	T	-C	480001A~

FIG.6031 HYDRAULIC PUMP (FOR H20)

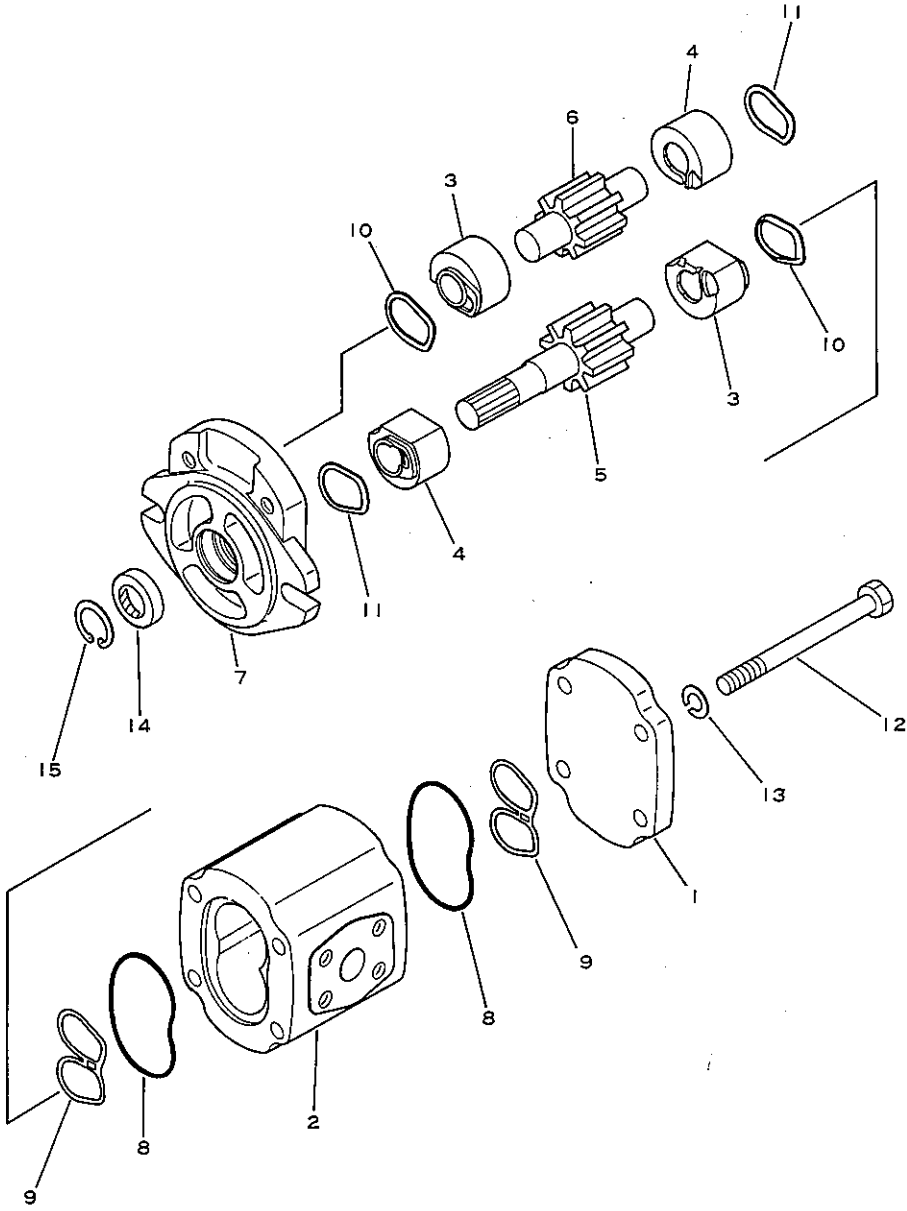

HYDRAULIC PUMP (FOR H20)

図および索引番号 Fig & Index No.	品番 Part No.	品名 Description	個数 Q'ty
	3EB-60-12210	HYDRAULIC PUMP ASS'Y	1
6031 - 1	3EB-60-11120	.COVER.....	1
2	☆	.BODY ASS'Y.....	1
	3EB-60-21410	.GEAR ASS'Y.....	1
3	☆	..BUSHING ASS'Y.....	2
4	☆	..BUSHING ASS'Y.....	2
5	☆	..GEAR,drive.....	1
6	☆	..GEAR,driven.....	1
7	3EB-60-11180	.FLANGE.....	1
8	3EB-60-11190	.SEAL.....(K61)	2
9	3EB-60-11220	.SEAL.....(K61)	2
10	3EB-60-11230	.RING (R.H)....(K61)	2
11	3EB-60-11240	.RING (L.H)....(K61)	2
12	3EB-60-11340	.BOLT.....	4
13	3EB-60-11260	.WASHER,spring.....	4
14	3EB-60-11270	.SEAL.....(K61)	1
15	3EB-60-11280	.RING.....(K61)	1
K61	3EB-60-21010	PUMP SEAL KIT.....	1

適用機種 Application			
FG20	T	-C	252001A~
FG25	C	-C	252001A~
FG25	T	-C	252001A~
FG30	T	-C	450050A~
FG20S	T	-C	300001A~
FG25S	C	-C	300001A~
FG25S	T	-C	300001A~
FG30S	T	-C	400001A~

FIG.6041 HYDRAULIC PUMP (FOR G1600)

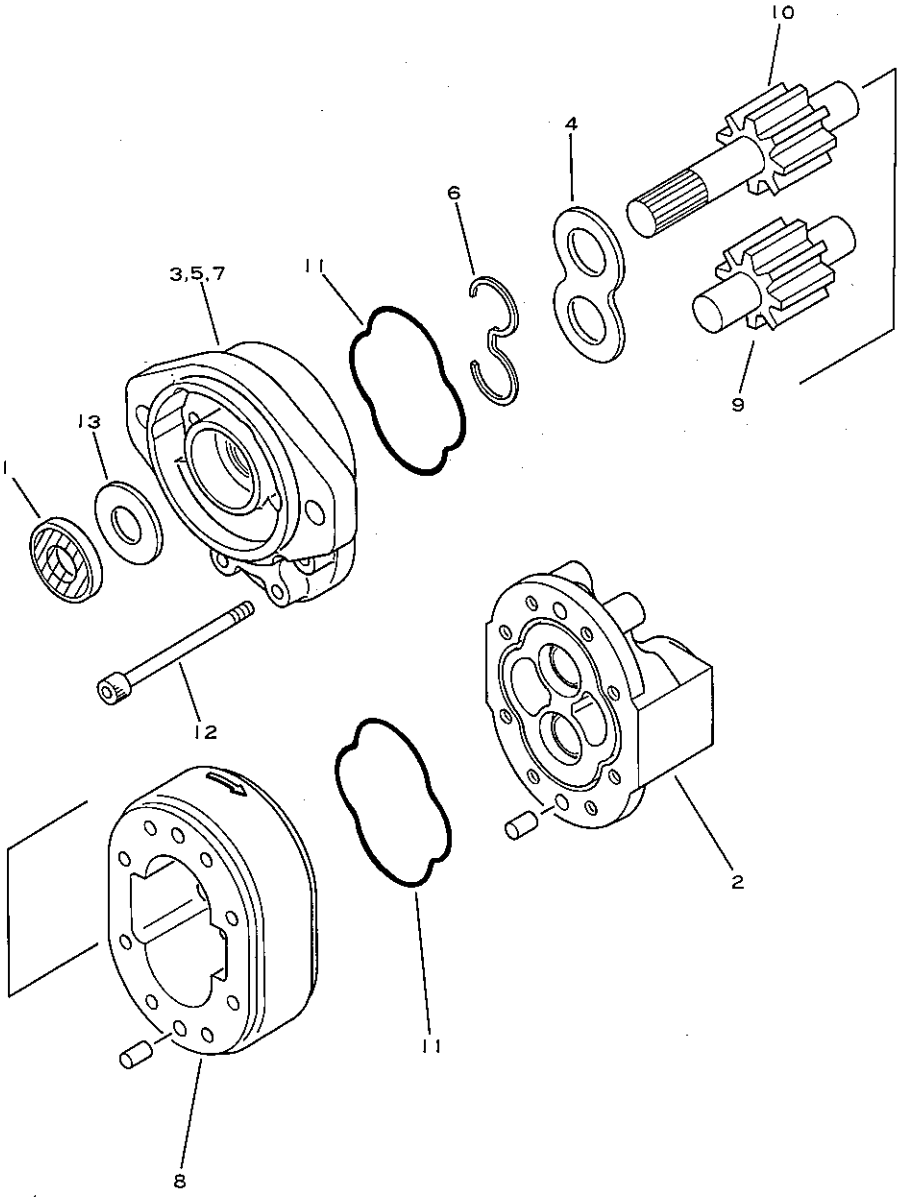

HYDRAULIC PUMP (FOR G1600)

図および索引番号 Fig & Index No.	品番 Part No.	品名 Description	個数 Q'ty	適用機種 Application
	37B-1KE-A270	HYDRAULIC PUMP ASS'Y	1	FG30G T -C 290222A~ FG30SG T -C 320003A~
6041 - 1	EA15147-281	.SEAL,shaft....(K63)	1	
2	EA25300-39	.BACK PLATE ASS'Y...	1	
3	EA25300-523	.FRONT PLATE ASS'Y..	1	
4	EA25300-600	.PLATE,wear....(K63)	1	
5	EA25300-601	.O-RING.....(K63)	1	
6	EA25300-647	.GASKET,back up(K63)	1	
7	EA25300-603	.SEAL,bearing..(K63)	1	
8	EA25307-254	.BODY ASS'Y.....	1	
9	EA25307-314	.IDLER GEAR ASS'Y...	1	
10	EA25307-318	.DRIVE GEAR ASS'Y...	1	
11	EA16007-513	.O-RING.....(K63)	2	
12	EA16119-530	.SCREW.....	8	
13	EA16048-27	.WASHER.....(K63)	1	
K63	EA25300-901	PUMP SEAL KIT.....	1	

FIG.6101A CONTROL VALVE

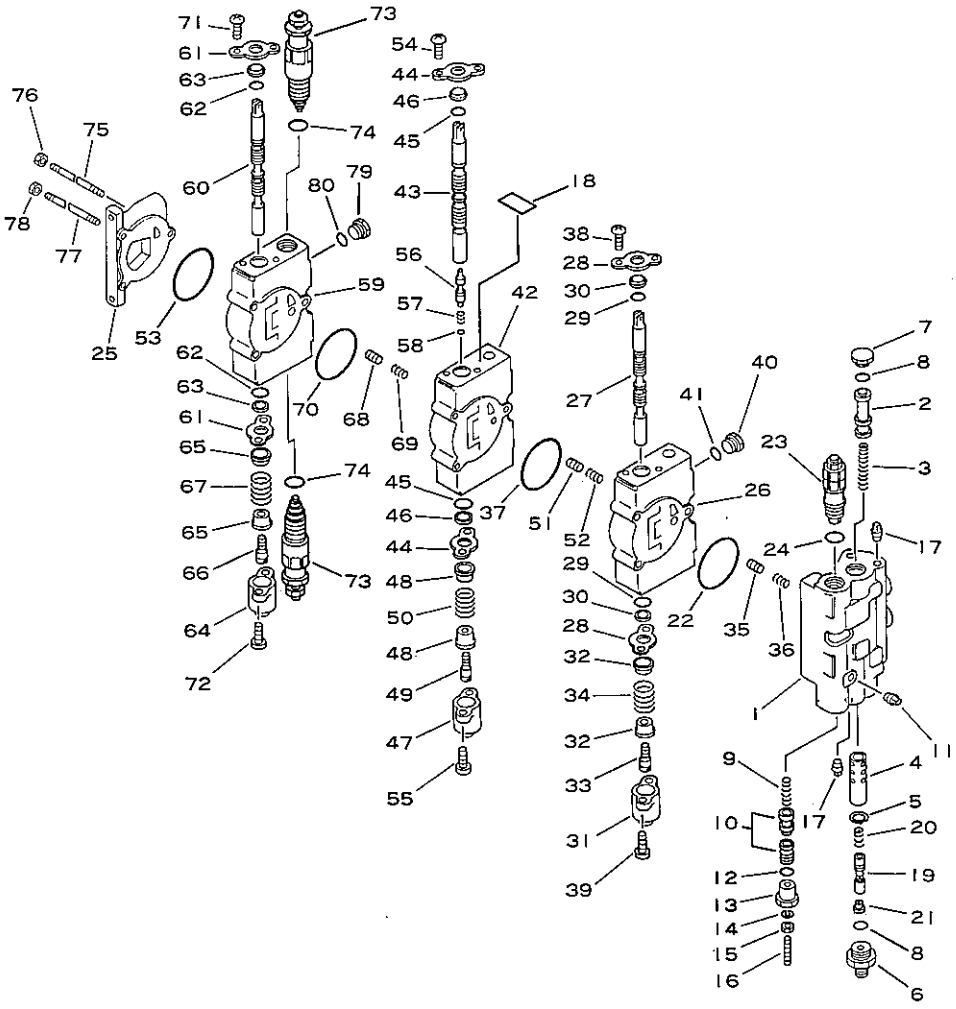

図および索引番号 Fig & Index No.	品番 Part No.	品名 Description	個数 Q'ty
	3EB-61-A2210	2-SPOOL CONTROL VALVE ASS'Y	1
	3EB-61-A2310	3-SPOOL CONTROL VALVE ASS'Y (for with port relief valve)	1
	HU5001F1	.INLET SECTION ASS'Y	1
6101A- 1	☆	..HOUSING.....	1
2	☆	..SPOOL.....	1
3	HU54251	..SPRING.....	1
4	HU54261-1	..SLEEVE.....	1
5	HU54269	..RING,snap.....	1
6	HU54290	..CHECK VALVE.....	1
7	HU3389-1	..PLUG.....	1
8	☆	..O-RING.....(K67)	2
9	HU54255	..SPRING.....	1
10	HU54298	..SLEEVE ASS'Y.....	1
11	HU241B	..PLUG.....	1
12	☆	..O-RING.....(K67)	1
13	HU54270	..PLUG.....	1
14	HU6957	..WASHER,lock.....	1
15	HU51875	..NUT.....	1
16	HU54300	..SCREW,set.....	1
17	HU52345	..PLUG.....	3
18	☆	..PLATE,name.....	1
19	HU54262	..PISTON.....	1
20	HU54256	..SPRING.....	1
21	HU54252-1	..PLUG,dampening....	1
22	☆	..O-RING.....(K67)	1
23	HU5060-T	.RELIEF VALVE ASS'Y.	1
24	☆	..O-RING.....(K68)	1
	HU5003-A1	.OUTLET SECTION ASS'Y	1
25	☆	..HOUSING.....	1
	HU5002-A360	.LIFT VALVE ASS'Y...	1
26	☆	..HOUSING.....	1
27	☆	..SPOOL.....	1
28	HU5012	..PLATE.....	2

適用機種 Application		
FG20	T	-C 257024A~
FG25	C	-C 257024A~
FG25	T	-C 257024A~
FG30	T	-C 450050A~
FG20S	T	-C 301609A~
FG25S	C	-C 301609A~
FG25S	T	-C 301609A~
FG30S	T	-C 290222A~
FG30G	T	-C 290647A~
FG30SG	T	-C 290619A~
FD20	T	-C 337001A~430174A
FD25	C	-C 337001A~430174A
FD25	T	-C 346150A~
FD30	C	-C 337001A~430174A
FD30	T	-C 346150A~
FD25S	T	-C 380190A~
FD20V	T	-C 337901A~430174A
FD25V	C	-C 337901A~430174A
FD25V	T	-C 337901A~430174A
FD30V	C	-C 337901A~430174A
FD30V	T	-C 337901A~430174A
FD20SV	T	-C 380001A~480000A
FD25SV	T	-C 380001A~480000A
FD30SV	T	-C 380001A~480000A

CONTROL VALVE

図および索引番号 Fig & Index No.	品番 Part No.	品名 Description	個数 Q'ty	適用機種 Application
6101A-29	☆	..O-RING.....(K67)	2	
30	☆	..WIPER.....(K67)	2	
31	HU5028	..CAP.....	1	
32	HU5013	..SEAT.....	2	
33	HU5015	..SPOOL END.....	1	
34	HU5014	..SPRING.....	1	
35	HU5011	..POPPET.....	1	
36	HU5064	..SPRING.....	1	
37	☆	..O-RING.....(K67)	1	
38	HU3432	..SCREW.....	2	
39	HU5035	..CAP SCREW.....	2	
40	HU3108	..PLUG.....	1	
41	☆	..O-RING.....(K67)	1	
	HU5002-A748	.TILT VALVE ASS'Y...	1	
42	☆	..HOUSING.....	1	
43	☆	..SPOOL.....	1	
44	HU5012	..PLATE.....	2	
45	☆	..O-RING.....(K67)	2	
46	☆	..WIPER.....(K67)	2	
47	HU5028	..CAP.....	1	
48	HU5264	..SEAT.....	2	
49	HU51983	..SPOOL END.....	1	
50	HU5014	..SPRING.....	1	
51	HU5011	..POPPET.....	1	
52	HU5064	..SPRING.....	1	
53	☆	..O-RING.....(K67)	1	
54	HU3432	..SCREW.....	2	
55	HU5035	..CAP SCREW.....	2	
56	☆	..VALVE.....	1	
57	HU52270	..SPRING.....	1	
58	☆	..O-RING.....(K67)	1	
	HU5002V9	.VALVE ASS'Y (for 3-spool control valve)	1	
59	☆	..HOUSING.....(3CV)	1	
60	☆	..SPOOL.....(3CV)	1	

図および索引番号 Fig & Index No.	品番 Part No.	品名 Description	個数 Q'ty	適用機種 Application
6101A-61	HU5012	..PLATE.....(3CV)	2	
62	☆	..O-RING..(3CV)(K67)	2	
63	☆	..WIPER...(3CV)(K67)	2	
64	HU5028	..CAP.....(3CV)	1	
65	HU5013	..SEAT.....(3CV)	2	
66	HU5015	..SPOOL END....(3CV)	1	
67	HU5014	..SPRING.....(3CV)	1	
68	HU5011	..POPPET.....(3CV)	1	
69	HU5064	..SPRING.....(3CV)	1	
70	☆	..O-RING..(3CV)(K67)	1	
71	HU3432	..SCREW.....(3CV)	2	
72	HU5035	..CAP SCREW....(3CV)	2	
73	HU5060	.RELIEF VALVE ASS'Y (for with port relief valve) (3CV)	2	
74	☆	..O-RING..(3CV)(K69)	1	
75	HU5089-66	.TIE ROD.....(2CV)	1	
	HU5089-22	.TIE ROD.....(3CV)	1	
76	HU1052	.NUT.....	1	
77	HU5069-44	.TIE ROD.....(2CV)	2	
	HU5069-33	.TIE ROD.....(3CV)	2	
78	HU1861	.NUT.....	2	
79	HU3108	.PLUG.....(3CV)	2	
80	☆	.O-RING...(3CV)(K67)	2	
K67	HU54622	CONTOL VALVE SEAL KIT	1	
K68	HU51790-5	2-SPOOL CONTROL VALVE SERVICE KIT	1	
K69	HU51790-2	3-SPOOL CONTROL VALVE SERVICE KIT	1	

FIG.6201 2-SPOOL CONTROL VALVE LEVER

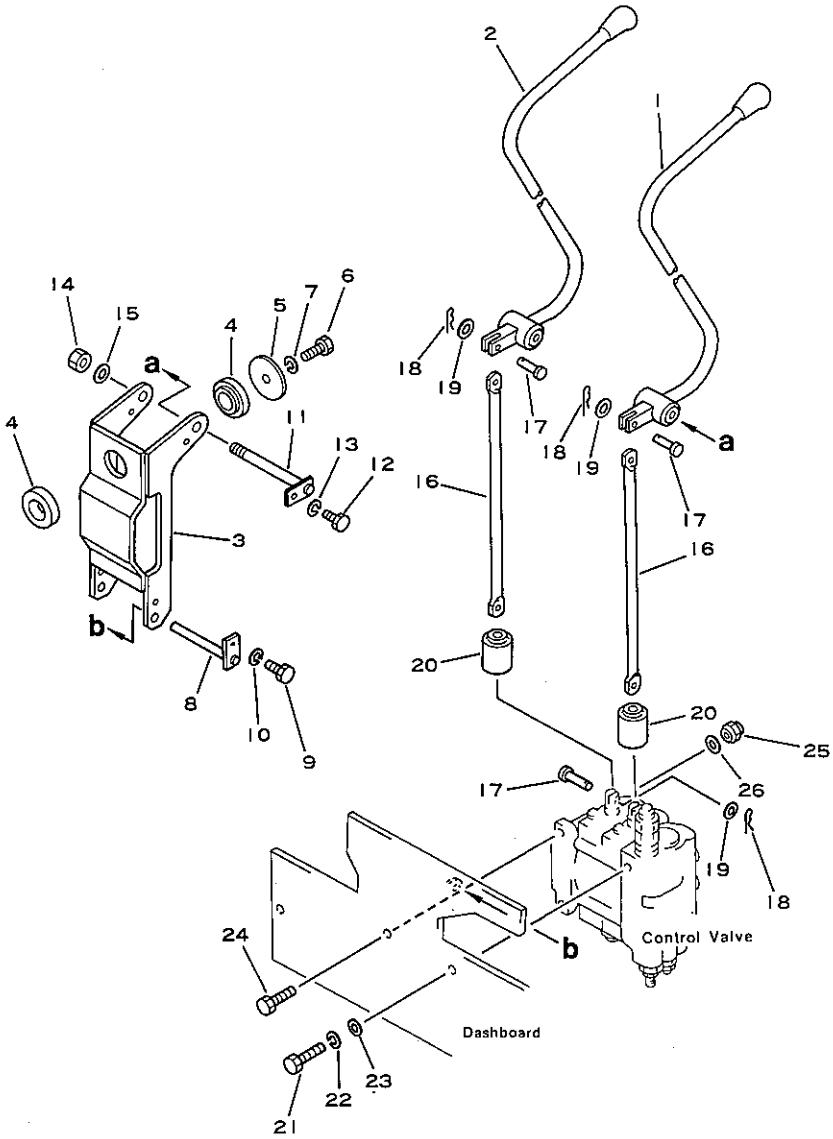

2-SPOOL CONTROL VALVE LEVER

図および索引番号 Fig & Index No.	品番 Part No.	品名 Description	個数 Q'ty
6201 - 1	37B-1HB-2012	LEVER (lift).....	1
	3EB-61-21241	.KNOB.....	1
	3MA-73-13180	.BUSHING.....	2
2	37B-1HB-2022	LEVER (tilt).....	1
	3EB-61-21251	.KNOB.....	1
	3MA-73-13180	.BUSHING.....	2
3	3EB-61-21212	BRACKET.....	1
4	3EB-61-21281	RUBBER.....	2
5	3EB-61-21290	WASHER.....	1
6	01010-50820	BOLT.....	1
7	01602-20825	WASHER,spring.....	1
8	3EB-61-21270	SHAFT.....	1
9	01010-50610	BOLT.....	1
10	01602-20619	WASHER,spring.....	1
11	37B-1HD-2020	SHAFT.....	1
12	01010-50610	BOLT.....	1
13	01602-20619	WASHER,spring.....	1
14	01599-01214	NUT.....	1
15	01641-21223	WASHER.....	1
16	3EB-61-21230	LINK.....	2
17	358-60-15250	PIN.....	4
18	04052-00530	PIN,snap.....	4
19	01641-20508	WASHER.....	4
20	3EB-61-11180	BOOT.....	2
21	01050-51030	BOLT.....	1
22	01602-21030	WASHER,spring.....	1
23	01641-21016	WASHER.....	1
24	01010-51045	BOLT.....	2
25	3EB-61-11260	NUT.....	2
26	01641-21016	WASHER.....	2

適用機種 Application
FG25 C -C 450050A~

FIG.6251A 3-SPOOL CONTROL VALVE LEVER

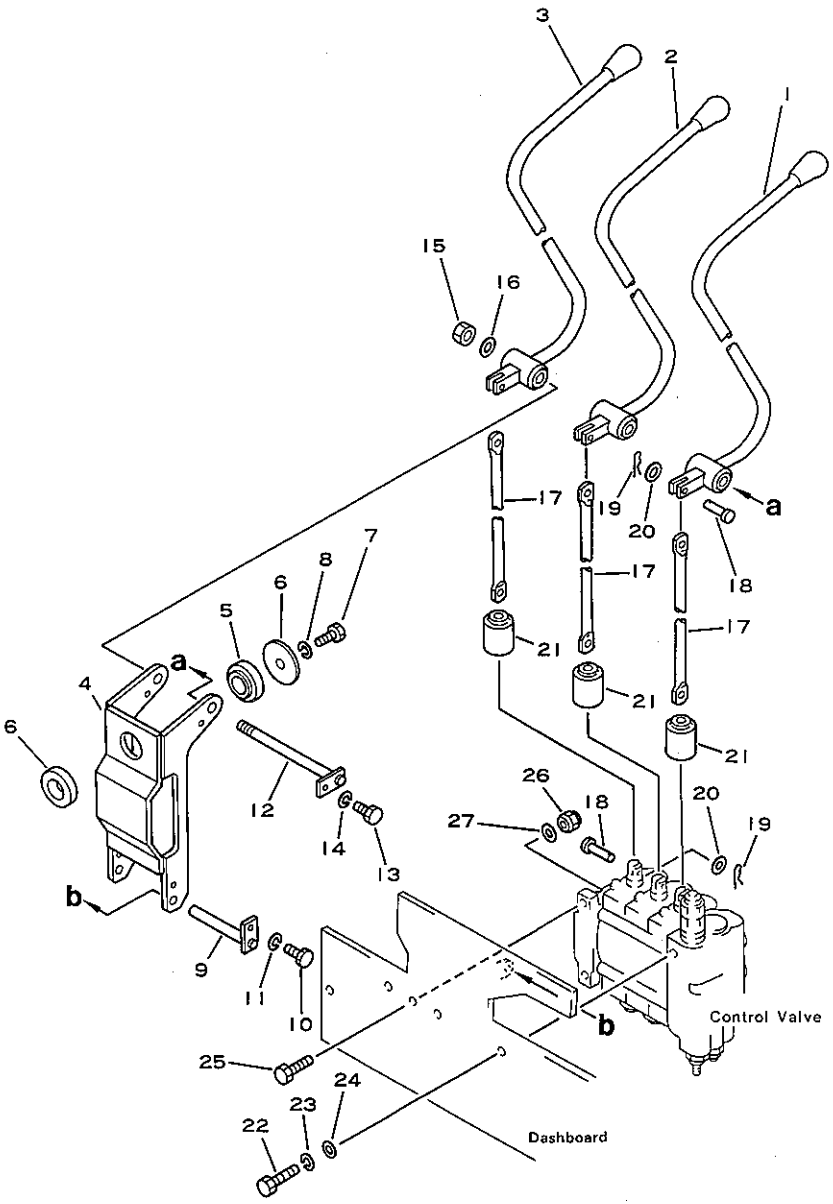

3-SPOOL CONTROL VALVE LEVER

図および索引番号 Fig & Index No.	品番 Part No.	品名 Description	個数 Q'ty
6251A- 1	37B-1HB-2012	LEVER (lift).....	1
	3EB-61-21241	.KNOB.....	1
	3MA-73-13180	.BUSHING.....	2
2	37B-1HB-2022	LEVER (tilt).....	1
	3EB-61-21251	.KNOB.....	1
	3MA-73-13180	.BUSHING.....	2
3	37B-1HB-2031	LEVER (attachment)..	1
	3EB-61-21340	.KNOB.....	1
	3MA-73-13180	.BUSHING.....	2
4	3EB-61-21212	BRACKET.....	1
5	3EB-61-21281	RUBBER.....	2
6	3EB-61-21290	WASHER.....	1
7	01010-50820	BOLT.....	1
8	01602-20825	WASHER.....	1
9	3EB-61-21270	SHAFT.....	1
10	01010-50610	BOLT.....	1
11	01602-20619	WASHER,spring.....	1
12	37B-1HD-2030	SHAFT.....	1
13	01010-50610	BOLT.....	1
14	01602-20619	WASHER,spring.....	1
15	01599-01214	NUT.....	1
16	01641-21223	WASHER.....	1
17	3EB-61-21230	LINK.....	3
18	358-60-15250	PIN.....	6
19	04052-00530	PIN,snap.....	6
20	01641-20508	WASHER.....	6
21	3EB-61-11180	BOOT.....	3
22	01050-51030	BOLT.....	1
23	01602-21030	WASHER,spring.....	1
24	01641-21016	WASHER.....	2
25	01010-51045	BOLT.....	2
26	3EB-61-11260	NUT.....	2
27	01641-21016	WASHER.....	1

適用機種 Application			
FG20	T	-C	450050A~
FG25	T	-C	450050A~
FG30	T	-C	450050A~
FG20S	T	-C	400001A~
FG25S	C	-C	400001A~
FG25S	T	-C	400001A~
FG30S	T	-C	400001A~
FG30G	T	-C	490001A~
FG30SG	T	-C	490002A~
FD25	T	-C	430175A~
FD30	T	-C	430175A~
FD25S	T	-C	480001A~

FIG.6331 TILT CYLINDER (6/10,6/12)

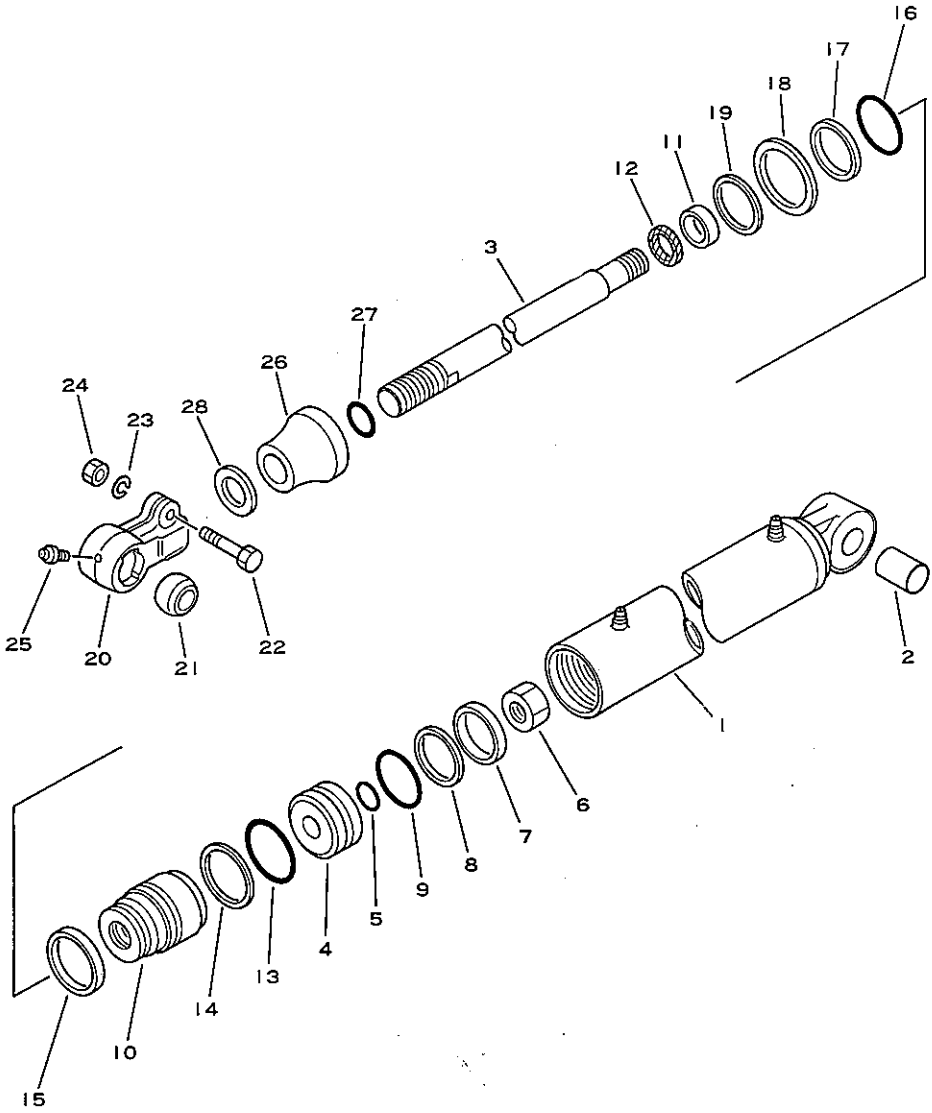

TILT CYLINDER (6/10',6/12')

図および索引番号 Fig & Index No.	品番 Part No.	品名 Description	個数 Q'ty
	37B-1JA-A210	TILT CYLINDER ASS'Y (6/12')	1
	37B-1JA-A230	TILE CYLINDER ASS'Y (6/10')	1
	37B-1JB-A210	.CYLINDER ASS'Y.....	1
* 6331 - 1	SH68820006	..CYLINDER.....	1
* 2	SH69530025	..BUSHING.....	1
* 3	SH69554203	..ROD,piston.....	1
* 4	SH69554204	..PISTON.....	1
* 5	☆	..SEAL.....(K64)	1
* 6	SH41008714	..NUT,lock.....	1
* 7	☆	..STRIP.....(K64)	1
* 8	☆	..SEAL.....(K64)	1
* 9	☆	..EXPANDER.....(K64)	1
* 10	SH69554200	..HEAD.....	1
* 11	☆	..SEAL.....(K64)	1
* 12	☆	..WIPER.....(K64)	1
* 13	☆	..SEAL.....(K64)	1
* 14	☆	..BACK UP SEAL.(K64)	1
* 15	SH69554205	..RING.....	1
* 16	☆	..SEAL.....(K64)	1
* 17	☆	..BACK UP SEAL.(K64)	1
* 18	SH69554206	..SPACER.....	1
* 19	SH3110250	..RING.....	1
20	3EB-64-22410	.HEAD,rod.....	1
21	3EB-64-22421	.BUSHING.....	1
22	01010-51455	.BOLT.....	1
23	01602-21442	.WASHER,spring.....	1
24	01580-11411	.NUT.....	1
25	07020-00001	.FITTING.....	1
26	37B-1JE-A220	.SPACER (6/10).....	1
* 27	☆	.O-RING (6/10).(K64)	1
28	37B-1AJ-9010	.SHIM (t=1.0mm) (6/10')	1
	37B-1AP-1010	.SHIM (t=2.0mm) (6/10')	1

適用機種 Application		
FG20	T	-C 252001A~
FG25	C	-C 252001A~
FG25	T	-C 252001A~
FG30	T	-C 450050A~
FG20S	T	-C 300001A~
FG25S	C	-C 300001A~
FG25S	T	-C 300001A~
FG30S	T	-C 400001A~
FG30G	T	-C 290222A~
FG30SG	T	-C 320003A~
FD20	T	-C 337001A~430174A
FD25	C	-C 337001A~430174A
FD25	T	-C 337001A~
FD30	C	-C 337001A~430174A
FD30	T	-C 337001A~
FD25S	T	-C 480001A~
FD20V	T	-C 337901A~430174A
FD25V	C	-C 337901A~430174A
FD25V	T	-C 337901A~430174A
FD30V	C	-C 337901A~430174A
FD30V	T	-C 337901A~430174A
FD20SV	T	-C 380001A~480000A
FD25SV	T	-C 380001A~480000A
FD30SV	T	-C 380001A~480000A

TILT CYLINDER (6/10',6/12)

図および索引番号 Fig & Index No.	品番 Part No.	品名 Description	個数 Q'ty	適用機種 Application
6331 -K64	SH695S003	TILT CYLINDER SEAL KIT	1	

FIG.6361 POWER STEERING CYLINDER

SIPS
Semi-Integral
Power Steering

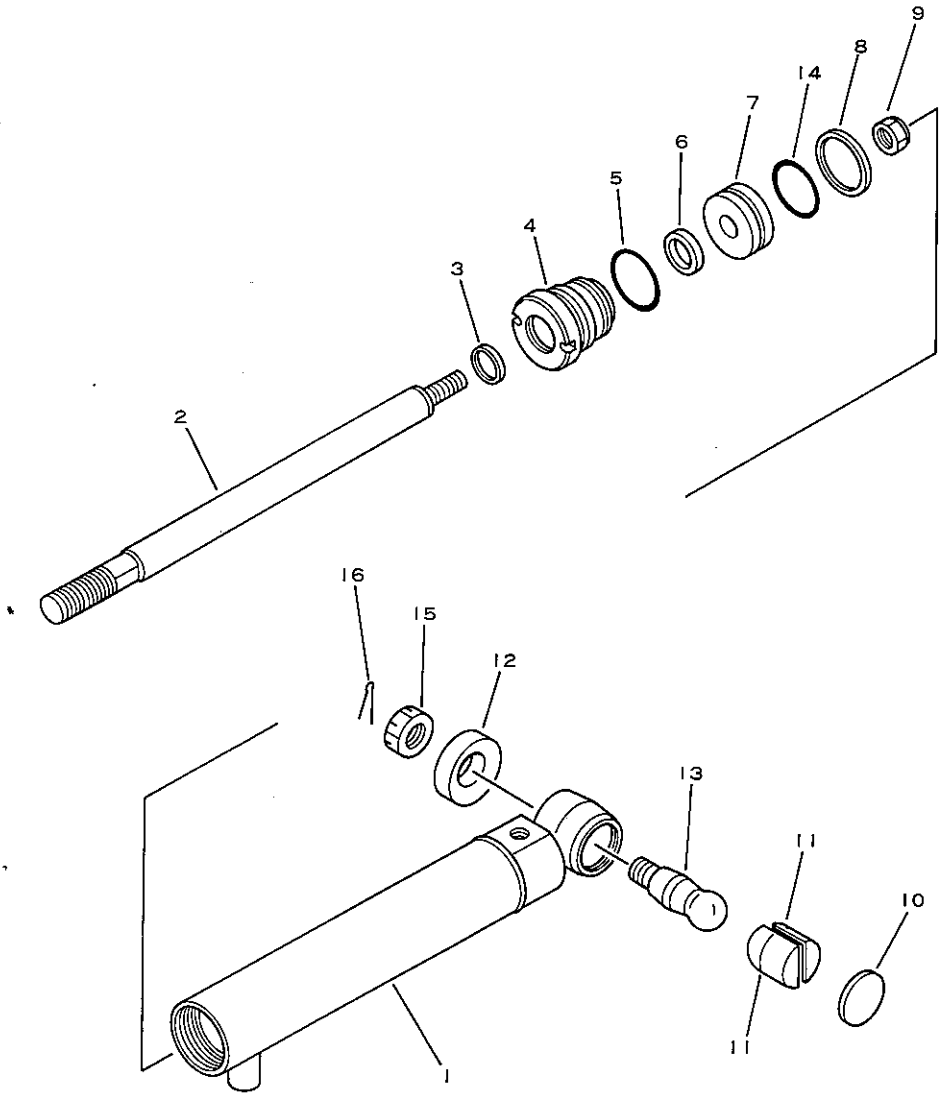

図および索引番号 Fig & Index No.	品番 Part No.	品名 Description	個数 Q'ty
	3EB-64-A2510	POWER STEERING CYLINDER ASS'Y	1
6361 - 1	3EB-64-A2520	.CYLINDER.....	1
2	3EB-64-A2530	.ROD,piston.....	1
3	3EB-64-A2540	.WIPER.....(K62)	1
4	3EB-64-A2550	.RETAINER.....	1
5	3EB-64-A2560	.O-RING.....(K62)	1
6	3EB-64-A2570	.SEAL.....(K62)	1
7	3EB-64-A2580	.PISTON.....	1
8	3EB-64-A2590	.RING,seal.....(K62)	1
9	3EB-64-A2610	.NUT.....	1
10	3EB-64-A2620	.COVER.....	1
11	3EB-64-A2630	.SLEEVE.....	1
12	3EB-64-A2640	.COVER,dust....(K62)	1
13	3EB-64-A2650	.STUD,ball.....	1
14	3EB-64-A2710	.O-RING.....(K62)	1
15	01593-12013	NUT.....	1
16	04050-14035	PIN,cotter.....	1
K62	3EB-64-A2720	SERVICE KIT.....	1

適用機種 Application		
FG20	T	-C 252001A~450049A
FG25	C	-C 252001A~450049A
FG25	T	-C 252001A~450049A
FG20S	T	-C 300001A~400000A
FG25S	C	-C 300001A~400000A
FG25S	T	-C 300001A~
FG30G	T	-C 290222A~490000A
FG30SG	T	-C 320003A~490001A
FD20	T	-C 337001A~430174A
FD25	C	-C 337001A~430174A
FD25	T	-C 337001A~430174A
FD30	C	-C 337001A~430174A
FD30	T	-C 337001A~430174A
FD20V	T	-C 337901A~430174A
FD25V	C	-C 337901A~430174A
FD25V	T	-C 337901A~430174A
FD30V	C	-C 337901A~430174A
FD30V	T	-C 337901A~430174A
FD20SV	T	-C 380001A~480000A
FD25SV	T	-C 380001A~480000A
FD30SV	T	-C 380001A~480000A

FIG.6365A POWER STEERING CYLINDER (FOR FHPS)



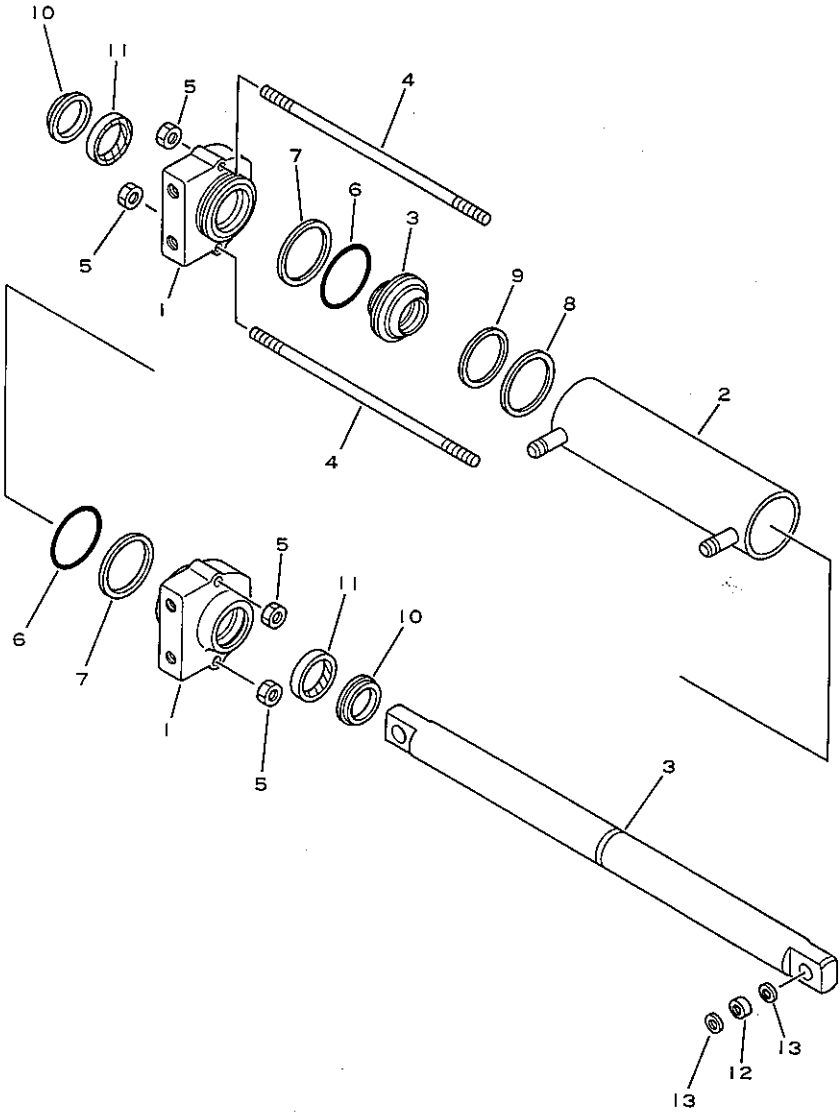

図および索引番号 Fig. & Index No.	品番 Part No.	品名 Description	個数 Q'ty
	3EB-64-A2210	POWER STEERING CYLINDER ASS'Y	1
6365A- 1	SH68850090	.HEAD,cylinder.....	2
2	SH68820012	.CYLINDER.....	1
3	SH68800002	.ROD,piston.....	1
4	SH68850025	.TIE ROD.....	2
5	SH41005020	.NUT,tierod.....	4
6	*	.SEAL,su.....(K65)	2
7	*	.BACK-UP,seal..(K65)	2
8	*	.PACKING,piston(K65)	1
9	*	.EXPANDER,piston parking (K65)	1
10	*	.WIPER,rod.....(K65)	2
11	*	.SEAL,rod.....(K65)	2
12	SH688-30003	.BUSHING.....	2
13	*	.SEAL,dust.....(K65)	4
K65	SH788250157	POWER STEERING CYLINDER SEAL KIT	1

適用機種 Application			
FG20	T	-C	254293A~
FG25	C	-C	254293A~
FG25	T	-C	254293A~
FG30	T	-C	450050A~
FG20S	T	-C	300355A~
FG25S	C	-C	300355A~
FG25S	T	-C	300355A~
FG30S	T	-C	400001A~
FG30G	T	-C	290303A~
FG30SG	T	-C	. ~
FD25	T	-C	340431A~
FD30	T	-C	340431A~
FD25S	T	-C	480001A~

FIG.6370A POWER STEERING PIPING (FOR FHPS)

FHPS
Full Hydraulic
Power Steering

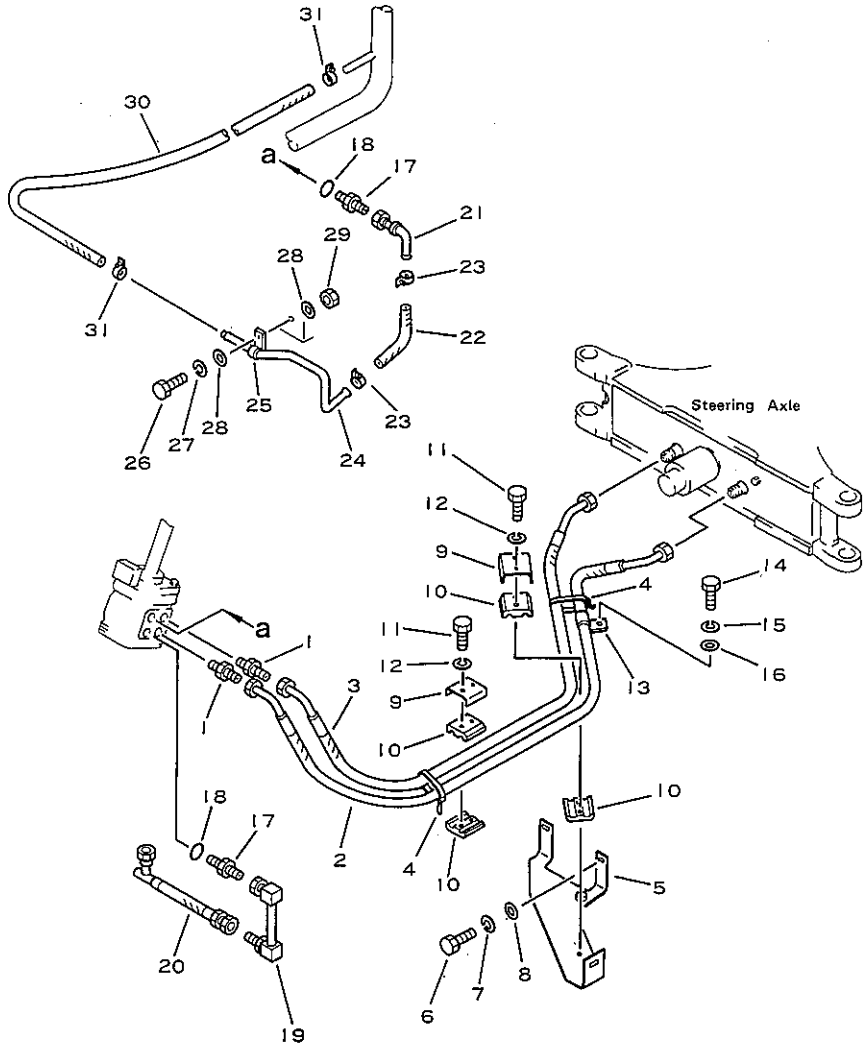

図および索引番号 Fig & Index No.	品番 Part No.	品名 Description	個数 Q'ty
6370A- 1	3EB-66-A2920	NIPPLE.....	2
2	37B-1FB-A230	HOSE.....	1
	37B-1FB-A210	HOSE (for S, H20,4D95S.W)	1
	37B-1FB-A220	HOSE (for S,G1600)..	1
3	37B-1FD-A230	HOSE.....	1
	37B-1FD-A210	HOSE (for S, H20,4D95S.W)	1
	37B-1FD-A220	HOSE (for S,G1600)..	1
4	37B-1AE-6010	BAND.....	2
5	3EB-66-A2910	COVER.....	1
	3EB-66-A2160	COVER (for S).....	1
6	01010-50820	BOLT.....	3
7	01602-20825	WASHER,spring.....	3
8	01643-31032	WASHER.....	3
9	3EB-66-25270	CLAMP.....	2
10	3EB-66-25280	RUBBER.....	4
11	01010-50840	BOLT.....	4
12	01602-20825	WASHER,spring.....	4
13	08036-01814	CLIP.....	1
14	01010-50812	BOLT.....	1
15	01602-20825	WASHER,spring.....	1
16	01642-20810	WASHER.....	1
17	3BA-66-25180	NIPPLE.....	2
18	540-62-13330	O-RING.....	2
19	3EB-66-25230	PIPE.....	1
20	37B-1PN-2010	HOSE.....	1
21	3EB-66-25250	PIPE.....	1
22	07260-20916	HOSE.....	1
23	07280-01920	CLAMP.....	1
24	3EB-66-25260	PIPE.....	1
25	3EB-66-25490	PIPE.....	1
26	01010-50830	BOLT.....	1
27	01602-20825	WASHER,spring.....	1
28	01642-20810	WASHER.....	2
29	01580-10806	NUT.....	1

適用機種 Application			
FG20	T	-C	450050A~
FG25	C	-C	450050A~
FG25	T	-C	450050A~
FG30	T	-C	450050A~
FG20S	T	-C	400001A~
FG25S	C	-C	400001A~
FG25S	T	-C	400001A~
FG30S	T	-C	400001A~
FG30G	T	-C	490001A~
FG30SG	T	-C	490002A~
FD25	T	-C	430175A~
FD30	T	-C	430175A~
FD25S	T	-C	480001A~

POWER STEERING PIPING (FOR FHPS)

図および索引番号 Fig & Index No.	品番 Part No.	品名 Description	個数 Q'ty	適用機種 Application
6370A-30	3EB-66-21170	HOSE.....	1	
	37A-502-6090	HOSE (for S).....	1	
31	07280-01920	CLAMP.....	2	

FIG.6401A HYDRAULIC PIPING (FOR 4D95S.W) (1/3)

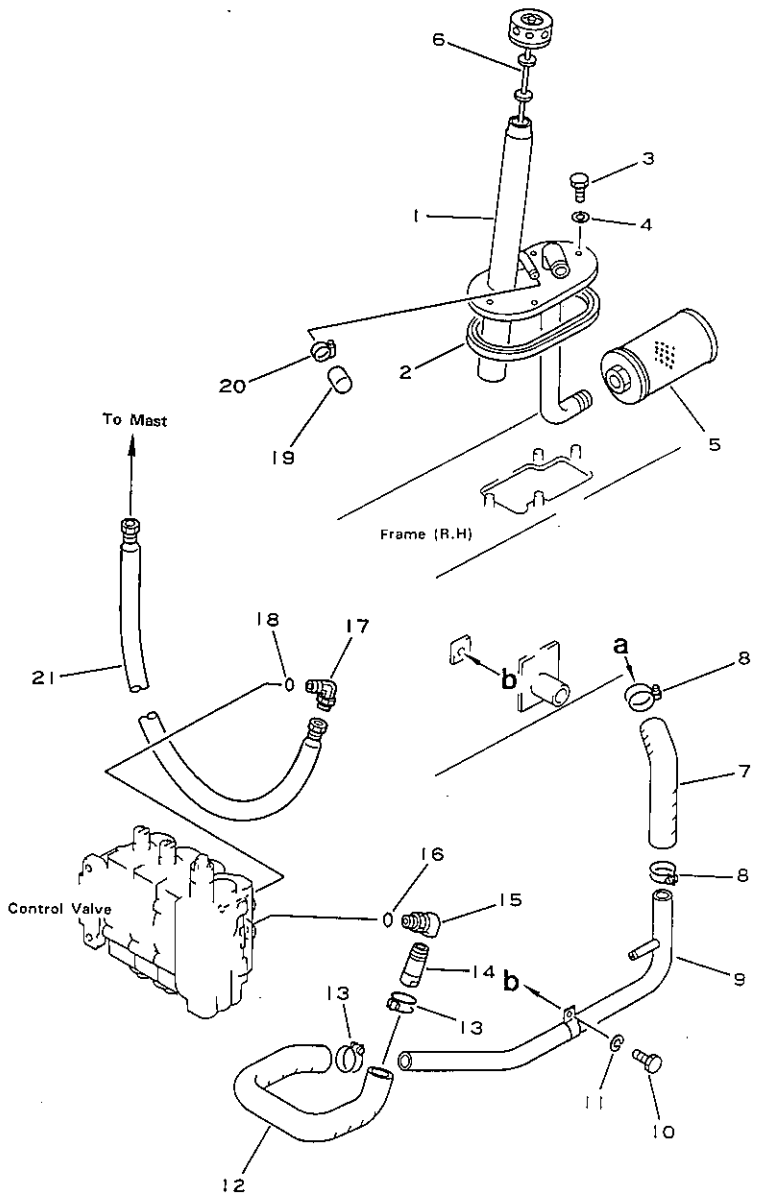

図および索引番号 Fig & Index No.	品番 Part No.	品名 Description	個数 Q'ty
6401A- 1	3EB-66-24111	COVER.....	1
	3EB-66-24210	COVER (for S).....	1
2	3EB-05-21130	PACKING.....	1
3	01010-50816	BOLT.....	4
4	07005-00812	WASHER,seal.....	4
5	3EB-66-11711	FILTER ASS'Y.....	1
6	3EB-66-24121	AIR BREATHER ASS'Y..	1
	3EB-66-19120	.BREATHER.....	1
	3EB-66-24150	.GAUGE.....	1
	300-62-31931	.NUT.....	1
	300-62-31941	.NUT.....	1
	3EB-66-24130	.PACKING.....	2
	3EB-66-24140	.NUT.....	2
7	3EB-66-21150	HOSE.....	1
8	07280-03826	CLAMP.....	2
9	3EB-66-28310	PIPE.....	1
10	01010-50816	BOLT.....	1
11	01602-20825	WASHER,spring.....	1
12	3EB-66-21120	HOSE.....	1
13	07280-03826	CLAMP.....	2
14	3EB-66-21190	PIPE.....	1
15	3EB-66-21181	ELBOW.....	1
16	540-62-12540	O-RING.....	1
17	45B-AAX-2940	ELBOW (with O-RING).	1
18	540-62-13330	O-RING.....	1
19	45B-AAX-2920	CAP.....	1
20	45B-AAX-2930	CLAMP.....	1
21	45B-AAX-2910	HOSE.....	1

適用機種 Application			
FD25	T	-C	430175A~
FD30	T	-C	430175A~
FD25S	T	-C	480001A~

FIG.6402A HYDRAULIC PIPING (FOR 4D95S.W) (2/3)

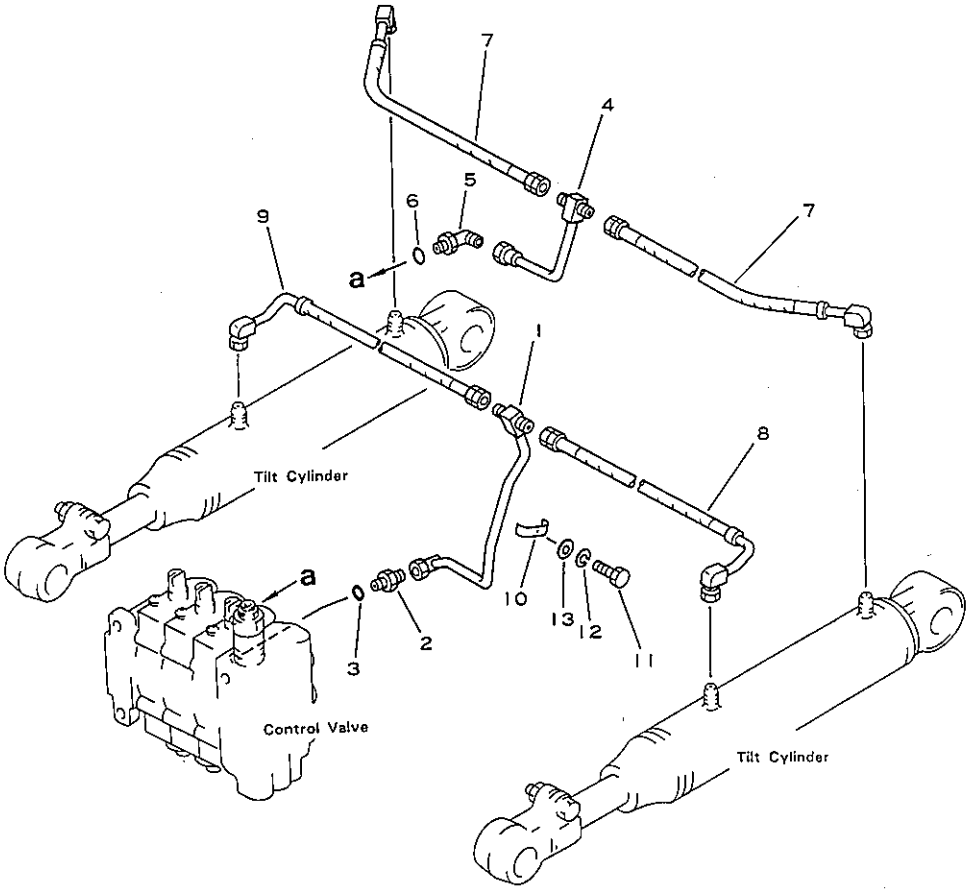

図および索引番号 Fig & Index No.	品番 Part No.	品名 Description	個数 Q'ty
6402A- 1	3EB-66-21442	PIPE.....	1
2	548-62-11340	NIPPLE.....	1
3	540-62-13330	O-RING.....	1
4	3EB-66-21452	PIPE.....	1
5	3EB-66-11380	ELBOW.....	1
6	540-62-13330	O-RING.....	1
7	37B-1PF-2010	HOSE (l=415mm).....	2
8	37B-1PE-2040	HOSE (l=360mm).....	1
9	37B-1PD-2040	HOSE (l=360mm).....	1
10	3EB-66-21460	CLIP.....	1
11	01010-50814	BOLT.....	1
12	01602-20825	WASHER,spring.....	1
13	3EA-50-12320	RUBBER.....	2

適用機種 Application
FD25 T -C 430175A~
FD30 T -C 430175A~
FD25S T -C 480001A~

FIG.6403A HYDRAULIC PIPING (FOR 4D95S.W) (3/3)

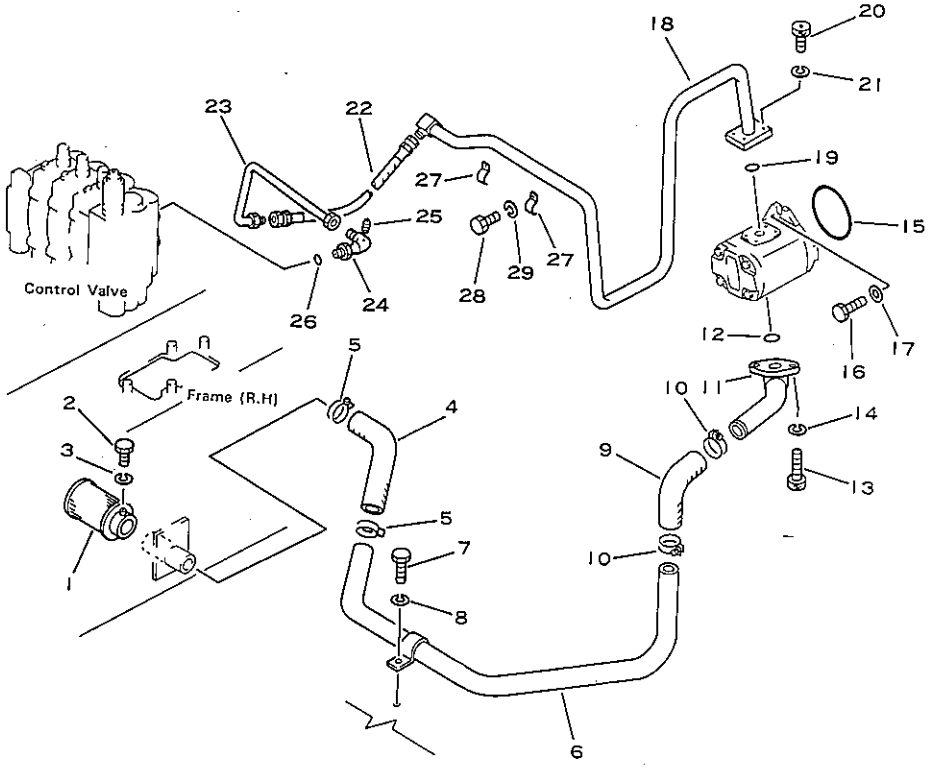

図および索引番号 Fig & Index No.	品番 Part No.	品名 Description	個数 Q'ty
6403A- 1	34B-66-15180	STRAINER.....	1
2	01010-50616	BOLT.....	1
3	01602-20619	WASHER,spring.....	1
4	3EB-66-22210	HOSE.....	1
	3EB-66-22830	HOSE (for S).....	1
5	07280-04726	CLAMP.....	2
6	3EB-66-22730	PIPE.....	1
	3EB-66-23211	PIPE (for S).....	1
7	01010-50820	BOLT.....	1
8	01602-20825	WASHER,spring.....	1
9	3EB-66-11580	HOSE.....	1
	3EB-66-22210	HOSE (for S).....	1
10	07280-04726	CLAMP.....	2
11	3EB-66-22780	PIPE.....	1
12	07000-03032	O-RING.....	1
13	02010-70632	BOLT.....	2
14	01602-20929	WASHER,spring.....	2
15	07000-02080	O-RING.....	1
16	37A-101-3010	BOLT.....	2
17	01643-31032	WASHER.....	2
18	3EB-66-22792	PIPE.....	1
	3EB-66-23410	PIPE.....	1
19	07000-13028	O-RING.....	1
20	02010-70632	BOLT.....	4
21	01602-20929	WASHER,spring.....	4
22	37B-1FC-2030	HOSE.....	1
23	3EB-66-21670	PIPE.....	1
24	3EB-66-21161	ELBOW.....	1
25	07042-20108	PLUG.....	1
26	540-62-12540	O-RING.....	1
27	3EB-66-12492	CLAMP.....	2
28	01010-51020	BOLT.....	2
29	01602-21030	WASHER,spring.....	2

適用機種 Application			
FD25	T	-C	430175A~
FD30	T	-C	430175A~
FD25S	T	-C	480001A~

FIG.6501 HYDRAULIC PIPING (FOR H20,G1600)(1/4)

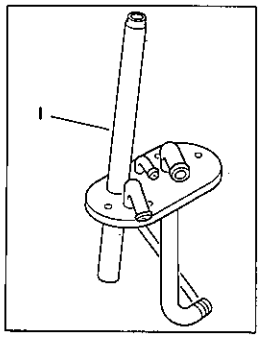

For G1600

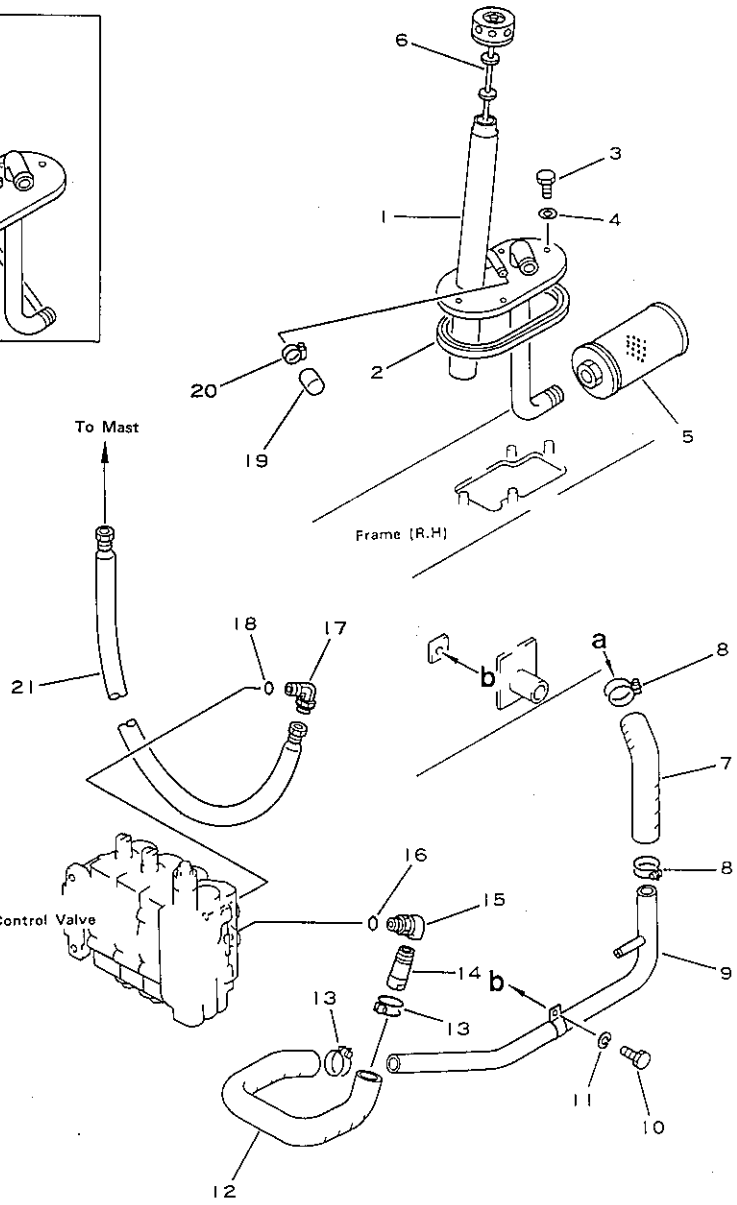

図番号 Fig & Index No.	品番 Part No.	品名 Description	個数 Q'ty
6501 - 1	3EB-66-24111	COVER (for H20).....	1
	3EB-66-24210	COVER (for G1600,S).	1
2	3EB-05-21130	PACKING.....	1
3	01010-50816	BOLT.....	4
4	07005-00812	WASHER,seal.....	4
5	3EB-66-11711	FILTER ASS'Y.....	1
6	3EB-66-24121	AIR BREATHER ASS'Y..	1
	3EB-66-19120	.BREATHER.....	1
	3EB-66-24150	.GAUGE.....	1
	300-62-31931	.NUT.....	1
	300-62-31941	.NUT.....	1
	3EB-66-24130	.PACKING.....	2
	3EB-66-24140	.NUT.....	2
7	3EB-66-21150	HOSE.....	1
	3EB-66-28120	HOSE (for S).....	1
8	07280-03826	CLAMP.....	2
9	3EB-66-28310	PIPE.....	1
	3EB-66-28110	PIPE (for S).....	1
10	01010-50816	BOLT.....	1
11	01602-20825	WASHER,spring.....	1
12	3EB-66-21120	HOSE.....	1
13	07280-03826	CLAMP.....	2
14	3EB-66-21190	PIPE.....	1
15	3EB-66-21181	ELBOW.....	1
16	540-62-12540	O-RING.....	1
17	45B-AAX-2940	ELBOW (with O-RING).	1
18	540-62-13330	O-RING.....	1
19	45B-AAX-2920	CAP.....	1
20	45B-AAX-2930	CLAMP.....	1
21	45B-AAX-2910	HOSE.....	1

適用機種 Application			
FG20	T	-C	252001A~
FG25	C	-C	252001A~
FG25	T	-C	252001A~
FG30	T	-C	450050A~
FG20S	T	-C	300001A~
FG25S	C	-C	300001A~
FG25S	T	-C	300001A~
FG30S	T	-C	400001A~
FG30G	T	-C	290222A~
FG30SG	T	-C	320003A~

FIG.6502A HYDRAULIC PIPING (FOR H20,G1600)(2/4)

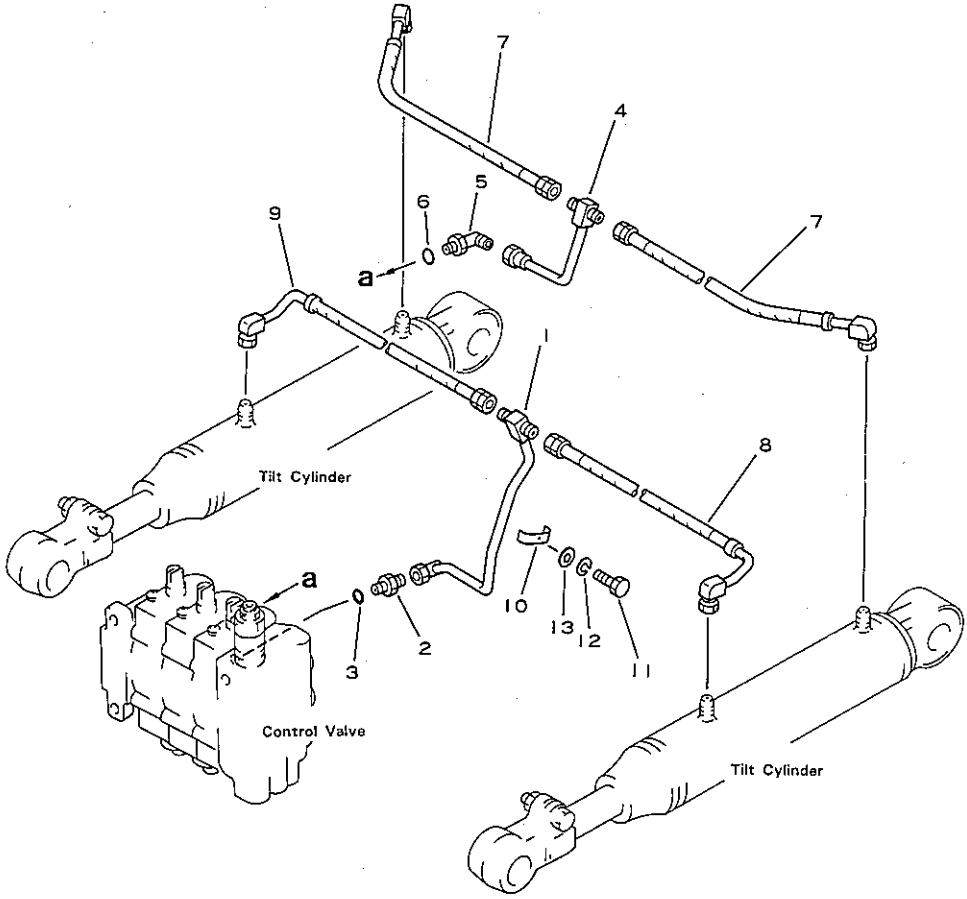

図および索引番号 Fig & Index No.	品番 Part No.	品名 Description	個数 Q'ty
6502A- 1	3EB-66-21442	PIPE.....	1
2	548-62-11340	NIPPLE.....	1
3	540-62-13330	O-RING.....	1
4	3EB-66-21452	PIPE.....	1
5	3EB-66-11380	ELBOW.....	1
6	540-62-13330	O-RING.....	1
7	37B-1PF-2010	HOSE (l=415mm).....	2
8	37B-1PE-2040	HOSE (l=360mm).....	1
9	37B-1PD-2040	HOSE (l=360mm).....	1
10	3EB-66-21460	CLIP.....	1
11	01010-50814	BOLT.....	1
12	01602-20825	WASHER,spring.....	1
13	3EA-50-12320	RUBBER.....	1

適用機種 Application			
FG20	T	-C	252683A~
FG25	C	-C	252683A~
FG25	T	-C	252683A~
FG30	T	-C	450050A~
FG20S	T	-C	300088A~
FG25S	C	-C	300088A~
FG25S	T	-C	300088A~
FG30S	T	-C	400001A~
FG30G	T	-C	290222A~
FG30SG	T	-C	320003A~

FIG.6503 HYDRADLIC PIPING (FOR H20) (3/4)

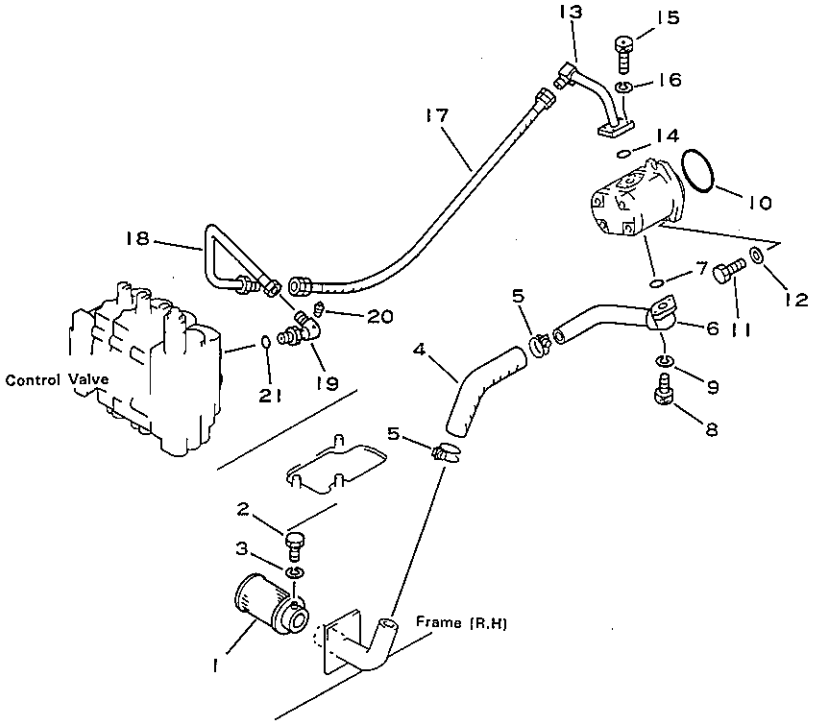

図および索引番号 Fig & Index No.	品番 Part No.	品名 Description	個数 Q'ty
6503 - 1	34B-66-15180	STRAINER.....	1
2	01010-50616	BOLT.....	1
3	01602-20619	WASHER,spring.....	1
4	3EB-66-22210	HOSE.....	1
	3EB-66-22610	HOSE (for S).....	1
5	07280-04726	CLAMP.....	2
6	3EB-66-22340	PIPE.....	1
7	07000-03032	O-RING.....	1
8	02010-70632	BOLT.....	2
9	01602-20929	WASHER,spring.....	2
10	02892-03081	O-RING.....	1
11	01010-51025	BOLT.....	2
12	01643-31032	WASHER.....	2
13	3EB-66-22160	PIPE.....	1
14	07000-13028	O-RING.....	1
15	02010-70632	BOLT.....	4
16	01602-20929	WASHER,spring.....	4
17	37B-1FC-2020	HOSE.....	1
18	3EB-66-21670	PIPE.....	1
19	3EB-66-21161	ELBOW.....	1
20	07042-20108	PLUG.....	1
21	540-62-12540	O-RING.....	1

適用機種 Application			
FG20	T	-C	252001A~
FG25	C	-C	252001A~
FG25	T	-C	252001A~
FG30	T	-C	450050A~
FG20S	T	-C	300001A~
FG25S	C	-C	300001A~
FG25S	T	-C	300001A~
FG30S	T	-C	400001A~

PIG.6504 HYDRAULIC PIPING (FOR G1600) (3/4)

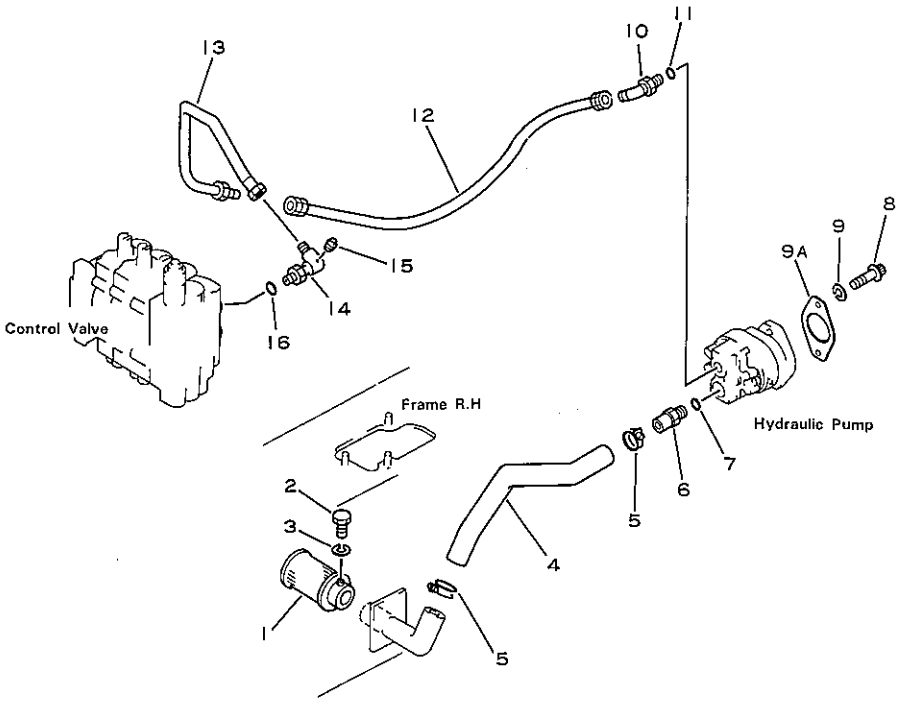

図および索引番号 Fig & Index No.	品番 Part No.	品名 Description	個数 Q'ty	適用機種 Application
6504 - 1	34B-66-15180	STRAINER.....	1	FG30G T -C 290222A~ FG30SG T -C 320003A~
2	01010-50616	BOLT.....	1	
3	01602-20619	WASHER,spring.....	1	
4	3EB-66-A2810	HOSE.....	1	
	3EB-66-A2860	HOSE.....	1	
5	07280-04726	CLAMP.....	2	
6	3EB-66-A2820	NIPPLE.....	1	
7	3BD-66-16230	O-RING.....	1	
8	3EB-60-A2310	BOLT.....	2	
9	01602-20929	WASHER,spring.....	2	
9A	34A-60-81120	GASKET.....	1	
10	3EB-66-A2830	ELBOW.....	1	
11	540-62-12540	O-RING.....	1	
12	37B-1FC-2020	HOSE.....	1	
13	3EB-66-21670	PIPE.....	1	
14	3EB-66-21161	ELBOW.....	1	
15	07042-20108	PLUG.....	1	
16	540-62-12540	O-RING.....	1	

FIG.6505 HYDRAULIC PIPING (FOR H20,G1600)(4/4)

SIPS
Semi-Integral Power Steering

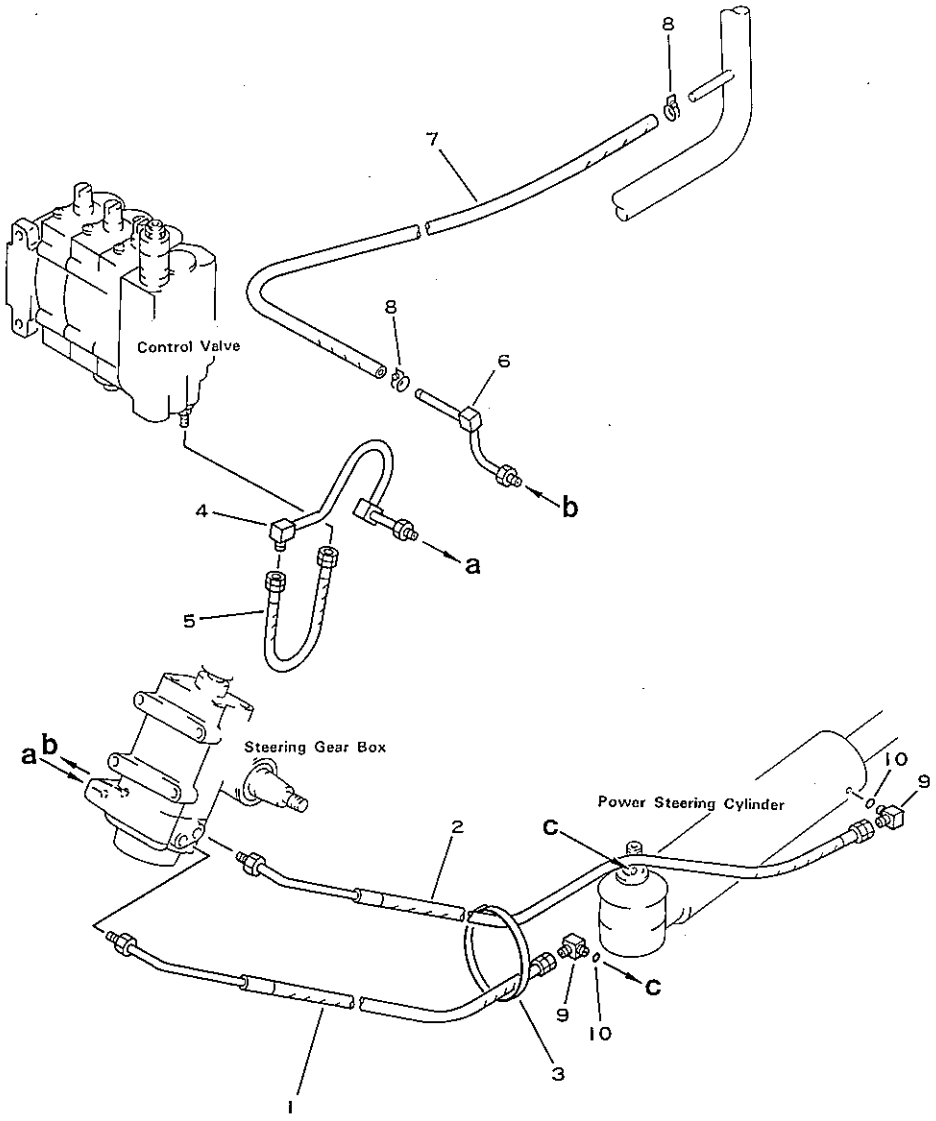

図および索引番号 Fig & Index No.	品番 Part No.	品名 Description	個数 Q'ty
6505 - 1	37B-1AG-2020	HOSE.....	1
	37B-1AG-2010	HOSE (for S).....	1
2	37B-1AG-2040	HOSE.....	1
	37B-1AG-2050	HOSE (for S).....	1
3	37B-1AE-6010	BAND.....	1
4	3EB-66-25110	PIPE.....	1
5	37B-1PK-2010	HOSE.....	1
6	3EB-66-25120	PIPE.....	1
7	3EB-66-21170	HOSE.....	1
	37A-502-6090	HOSE (for S).....	1
8	07280-01920	CLAMP.....	2
9	07235-10210	ELBOW.....	2
10	07002-11423	O-RING.....	2

適用機種 Application		
FG20	T	-C 252001A~450049A
FG25	C	-C 252001A~450049A
FG25	T	-C 252001A~450049A
FG20S	T	-C 300001A~400000A
FG25S	C	-C 300001A~400000A
FG25S	T	-C 300001A~
FG30G	T	-C 290222A~490000A
FG30SG	T	-C 320003A~490001A

KIT

FIG. K KIT

K11A	3EC-36-05021	CLUTCH RELEASE CYLINDER KIT	1
K22A	3EB-13-05081	TORQUE CONVERTER KIT	1
K23	3EB-14-05050	CLUTCH MISSION KIT..	1
K24	3EB-15-05050	TORQFLOW DRIVE TRANSMISSION KIT (F1/R1)	1
K25	3EB-16-05010	TORQFLOW DRIVE TRANSMISSION KIT (F2/R2)	1
K26	3EB-15-05151	TORQFLOW DRIVE TRANSMISSION VALVE (F1/R1)	1
K27A	3EB-16-05021	TORQFLOW DRIVE TRANSMISSION VALVE KIT(F2/R2)	1
K31	3EB-21-05050	FRONT HUB SEAL KIT..	2
K32	3EB-24-05050	CENTER PIN BEARING KIT	1
K33	3EB-24-05060	KING PIN KIT.....	2
K41	3EB-30-00010	WHEEL CYLINDER KIT..	2
K43	3EB-34-05050	POWER STEERING GEAR BOX KIT	1
K44A	3EC-36-05011	CLUTCH MASTER CYLINDER KIT	1
K45	3EA-36-05010	BRAKE MASTER CYLINDER KIT	1
K46	EA64426	POWER STEERING VALVE SEAL KIT	1
K61	3EB-60-21010	PUMP SEAL KIT.....	1
K62	3EB-64-A2720	SERVICE KIT.....	1
K63	EA25300-901	PUMP SEAL KIT.....	1
K64	SH6955003	TILT CYLINDER SEAL KIT	1
K65	SH788250157	POWER STEERING CYLINDER SEAL KIT	1
K67	HU54622	CONTOL VALVE SEAL KIT	1
K68	HU51790-5	2-SPOOL CONTROL VALVE SERVICE KIT	1
K69	HU51790-2	3-SPOOL CONTROL VALVE SERVICE KIT	1

NUMERICAL INDEX

品番 Part No.	図番号 Fig No.	索引番号 Index No.
01010-50610	1501A	24
01010-50610	1503A	14
01010-50610	1503A	28
01010-50610	1601B	22
01010-50610	1603A	21
01010-50610	4131	37
01010-50610	4401A	7
01010-50610	4451	7
01010-50610	6201	9
01010-50610	6201	12
01010-50610	6251A	10
01010-50610	6251A	13
01010-50612	1301A	19
01010-50612	1351	19
01010-50612	1361	20
01010-50612	1371	20
01010-50612	3201A	21
01010-50612	3211A	19
01010-50616	2303	34
01010-50616	2404	36
01010-50616	6403A	2
01010-50616	6503	2
01010-50616	6504	2
01010-50620	5121A	13
01010-50625	5121A	14
01010-50630	5121A	16
01010-50635	1001A	26
01010-50640	4601A	18
01010-50812	1001A	20
01010-50812	1051	25
01010-50812	1071A	21
01010-50812	1301A	8
01010-50812	1351	8
01010-50812	1361	9
01010-50812	1371	9
01010-50812	1502A	10
01010-50812	1503A	7
01010-50812	1602	10
01010-50812	1603A	8
01010-50812	1605	8
01010-50812	4801	18
01010-50812	5503A	32
01010-50812	6370A	14
01010-50814	6402A	11
01010-50814	6502A	11
01010-50816	1001A	17
01010-50816	1051	34
01010-50816	1071A	16
01010-50816	1403A	3
01010-50816	1453	3
01010-50816	1473	3
01010-50816	1501A	30
01010-50816	1601B	29
01010-50816	3211A	14
01010-50816	4601A	8
01010-50816	4651	8
01010-50816	4671	8
01010-50816	6401A	3
01010-50816	6401A	10
01010-50816	6501	3

品番 Part No.	図番号 Fig No.	索引番号 Index No.
01010-50816	6501	10
01010-50818	2001A	16
01010-50818	4131	32
01010-50820	1301A	17
01010-50820	1351	17
01010-50820	1361	23
01010-50820	1395	3
01010-50820	1502A	3
01010-50820	1602	3
01010-50820	2202	32
01010-50820	2301A	14
01010-50820	2302	40
01010-50820	2402A	12
01010-50820	3302	6
01010-50820	3312	6
01010-50820	4401A	11
01010-50820	5101A	29
01010-50820	5501A	21
01010-50820	5503A	22
01010-50820	6201	6
01010-50820	6251A	7
01010-50820	6370A	6
01010-50820	6403A	7
01010-50825	1391A	3
01010-50825	1393A	4
01010-50825	2001A	25
01010-50825	2403	5
01010-50825	5101A	34
01010-50825	5501A	16
01010-50825	5503A	17
01010-50830	1201A	6
01010-50830	1251A	6
01010-50830	1271A	6
01010-50830	1371	22
01010-50830	2301A	20
01010-50830	2402A	18
01010-50830	4401A	17
01010-50830	4451	11
01010-50830	4451	18
01010-50830	6370A	26
01010-50835	1301A	4
01010-50835	1351	4
01010-50835	1361	4
01010-50835	1371	4
01010-50840	1361	22
01010-50840	6370A	11
01010-50845	1392	4
01010-50865	2303	48
01010-50865	2404	51
01010-50870	2303	49
01010-50870	2404	50
01010-51020	2201A	6
01010-51020	5501A	14
01010-51020	5503A	14
01010-51020	6403A	28
01010-51025	1051	7
01010-51025	1051	9
01010-51025	2202	11
01010-51025	4101	36
01010-51025	5001A	29

品番 Part No.	図番号 Fig No.	索引番号 Index No.
01010-51025	5011A	30
01010-51025	5501A	4
01010-51025	5503A	4
01010-51025	5503A	15
01010-51025	6503	11
01010-51030	1001A	4
01010-51030	2001A	6
01010-51030	5101A	2
01010-51035	1051	19
01010-51035	1071A	14
01010-51035	3401	11
01010-51040	4201	3
01010-51040	4201	10
01010-51045	1001A	14
01010-51045	1051	21
01010-51045	6201	24
01010-51045	6251A	25
01010-51070	3101A	3
01010-51080	4131	28
01010-51220	2001A	27
01010-51230	2202	39
01010-51230	2202	42
01010-51230	2302	3
01010-51230	2302	45
01010-51230	2302	48
01010-51235	2001A	3
01010-51235	2301A	27
01010-51235	2401	15
01010-51235	2401	18
01010-51235	2402A	22
01010-51235	3201A	8
01010-51235	3211A	8
01010-51240	4401A	24
01010-51245	5101A	6
01010-51455	6331	22
01010-51470	5011A	3
01010-51475	5001A	3
01010-51630	3401	4
01010-51650	3351	33
01010-51650	3352	34
01010-51665	5001A	11
01010-51665	5011A	12
01010-51685	1001A	10
01010-51685	1051	15
01010-51685	1071A	6
01010-52060	5001A	16
01010-52060	5011A	17
01010-81435	3701A	33
01011-51015	4131	25
01011-51200	2202	41
01011-51200	2302	47
01011-53030	5001A	21
01011-53065	5011A	22
01016-20540	4401A	35
01016-20540	4451	38
01016-50825	4451	22
01016-50830	4401A	26
01016-50830	4601A	11
01016-50830	4651	11
01016-50830	4671	11

品番 Part No.	図番号 Fig No.	索引番号 Index No.
01016-50850	4601A	13
01016-50850	4651	13
01016-50850	4671	13
01016-51035	3301	21
01016-51035	3311	21
01016-51035	4451	20
01016-51040	3311	23
01016-51040	3352	31
01016-51045	3301	23
01016-51045	3351	30
01016-51045	3352	30
01050-51020	1051	32
01050-51030	6201	21
01050-51030	6251A	22
01050-51040	4351	10
01050-51040	4361	9
01050-81225	3601	4
01050-81230	3601	4
01124-50816	5401	12
01220-40510	5201A	16
01220-40512	1503A	20
01220-40512	1603A	14
01220-40512	1605	22
01220-40512	5121A	6
01220-40516	5121A	24
01220-40612	1501A	17
01220-40612	1601B	17
01220-40612	4401A	39
01220-40612	4451	42
01220-40612	5101A	22
01220-40616	5121A	27
01220-70616	4351	5
01220-70616	4355A	4
01220-70616	4355A	10
01220-70616	4361	4
01220-70616	4365	4
01220-70616	5101A	12
01220-70650	5503A	25
01220-70660	5501A	24
01370-00508	5701A	16
01370-00508	5701A	18
01370-00508	5751A	16
01370-00508	5751A	18
01370-00516	5101A	19A
01370-00516	5101A	23
01370-00612	5101A	19
01370-00616	5101A	20
01508-20805	4351	19
01508-20805	4355A	21
01508-20805	4361	18
01508-20805	4365	14
01508-20805	4451	26
01580-10504	4401A	36
01580-10504	4451	39
01580-10605	1502A	7
01580-10605	1602	7
01580-10605	2303	28
01580-10605	2404	30
01580-10605	5201A	19
01580-10806	1391A	4
01580-10806	1392	7
01580-10806	1393A	5
01580-10806	4351	16
01580-10806	4351	18
01580-10806	4351	21
01580-10806	4355A	15
01580-10806	4355A	17
01580-10806	4355A	19
01580-10806	4361	15
01580-10806	4361	17
01580-10806	4361	20
01580-10806	4365	11
01580-10806	4365	13
01580-10806	4365	16
01580-10806	4401A	18
01580-10806	4401A	27
01580-10806	4451	12
01580-10806	4451	23
01580-10806	4451	28
01580-10806	4451	29
01580-10806	4521	14
01580-10806	4601A	12
01580-10806	4601A	14
01580-10806	4651	12
01580-10806	4651	14
01580-10806	4671	12
01580-10806	4671	14
01580-10806	5101A	36
01580-10806	5401	13
01580-10806	6370A	29
01580-11008	1001A	15
01580-11008	1051	22
01580-11008	3301	22
01580-11008	3301	24
01580-11008	3311	22
01580-11008	3311	24
01580-11008	3351	31
01580-11008	3352	32
01580-11008	4131	30
01580-11008	4201	11
01580-11008	4301	4
01580-11008	4451	21
01580-11411	6331	24
01580-11613	3401	5
01582-11210	3601	5
01582-11815	3201A	15
01583-11006	4401A	33
01583-11006	4451	36
01583-11408	2001A	22
01583-11408	5501A	11
01583-11408	5503A	11
01583-11610	4201	5
01583-12414	4101	42
01580-10806	1371	23
01593-11411	3351	24
01593-11411	3352	24
01593-11411	4201	7
01593-11813	3351	28
01593-11813	3352	28
01593-12013	6361	15
01593-13018	3301	16
01593-13018	3311	16
01593-13018	3351	15
01593-13018	3352	15
01598-01011	2001A	7
01598-01011	4101	34
01598-10809	1301A	6
01598-10809	1351	6
01598-10809	1361	6
01598-10809	1371	6
01598-10809	5101A	37
01598-11011	1201A	3
01598-11011	1251A	3
01598-11011	1271A	3
01599-01214	4131	36
01599-01214	6201	14
01599-01214	6251A	15
01601-20513	4401A	37
01601-20513	4451	40
01601-20513	5121A	25
01601-23075	5001A	23
01601-23075	5011A	24
01602-10619	5501A	27
01602-10619	5503A	28
01602-20619	1001A	27
01602-20619	1301A	20
01602-20619	1351	20
01602-20619	1361	21
01602-20619	1371	21
01602-20619	1501A	25
01602-20619	1503A	15
01602-20619	1503A	29
01602-20619	1601B	23
01602-20619	1603A	22
01602-20619	2303	35
01602-20619	2404	37
01602-20619	4131	38
01602-20619	4351	6
01602-20619	4355A	5
01602-20619	4355A	11
01602-20619	4361	5
01602-20619	4365	5
01602-20619	4401A	8
01602-20619	4401A	40
01602-20619	4451	8
01602-20619	4451	43
01602-20619	4601A	19
01602-20619	5121A	28
01602-20619	6201	10
01602-20619	6201	13
01602-20619	6251A	11
01602-20619	6251A	14
01602-20619	6403A	3
01602-20619	6503	3
01602-20619	6504	3
01602-20825	1001A	18
01602-20825	1001A	21
01602-20825	1051	26
01602-20825	1051	35
01602-20825	1071A	17

品番 Part No.	図番号 Fig No.	索引番号 Index No.
01602-20825	1071A	22
01602-20825	1201A	6
01602-20825	1251A	6
01602-20825	1271A	6
01602-20825	1301A	9
01602-20825	1301A	18
01602-20825	1351	9
01602-20825	1351	18
01602-20825	1361	10
01602-20825	1361	24
01602-20825	1371	10
01602-20825	1371	24
01602-20825	1391A	5
01602-20825	1392	6
01602-20825	1393A	6
01602-20825	1395	5
01602-20825	1501A	31
01602-20825	1502A	4
01602-20825	1502A	11
01602-20825	1503A	8
01602-20825	1601B	30
01602-20825	1602	4
01602-20825	1602	11
01602-20825	1603A	9
01602-20825	1605	9
01602-20825	2001A	17
01602-20825	2001A	26
01602-20825	2301A	15
01602-20825	2301A	21
01602-20825	2303	50
01602-20825	2402A	13
01602-20825	2402A	19
01602-20825	2404	52
01602-20825	3302	7
01602-20825	3312	7
01602-20825	4131	33
01602-20825	4351	17
01602-20825	4351	22
01602-20825	4355A	16
01602-20825	4355A	20
01602-20825	4361	16
01602-20825	4361	21
01602-20825	4365	12
01602-20825	4365	17
01602-20825	4401A	12
01602-20825	4401A	19
01602-20825	4451	13
01602-20825	4451	19
01602-20825	4451	30
01602-20825	4601A	9
01602-20825	4651	9
01602-20825	4671	9
01602-20825	4801	19
01602-20825	5401	14
01602-20825	5501A	17
01602-20825	5501A	22
01602-20825	5503A	18
01602-20825	5503A	23
01602-20825	5503A	33
01602-20825	6201	7
01602-20825	6251A	8
01602-20825	6370A	7
01602-20825	6370A	12
01602-20825	6370A	15
01602-20825	6370A	27
01602-20825	6401A	11
01602-20825	6402A	12
01602-20825	6403A	8
01602-20825	6501	11
01602-20825	6502A	12
01602-20929	4131	22
01602-20929	6403A	14
01602-20929	6403A	21
01602-20929	6503	9
01602-20929	6503	16
01602-20929	6504	9
01602-21030	1001A	16
01602-21030	1051	8
01602-21030	1051	10
01602-21030	1051	20
01602-21030	1051	23
01602-21030	1051	33
01602-21030	1071A	15
01602-21030	2201A	7
01602-21030	3301	10
01602-21030	3311	10
01602-21030	3351	11
01602-21030	3352	11
01602-21030	3401	12
01602-21030	4101	35
01602-21030	4101	37
01602-21030	4131	26
01602-21030	4131	29
01602-21030	4201	4
01602-21030	4201	12
01602-21030	4301	5
01602-21030	4351	11
01602-21030	4361	10
01602-21030	5001A	30
01602-21030	5011A	31
01602-21030	5101A	3
01602-21030	5501A	5
01602-21030	5501A	15
01602-21030	5503A	16
01602-21030	6201	22
01602-21030	6251A	23
01602-21030	6403A	29
01602-21236	2001A	4
01602-21236	2001A	28
01602-21236	2301A	28
01602-21236	2401	19
01602-21236	2402A	23
01602-21236	3201A	9
01602-21236	3201A	24
01602-21236	3211A	9
01602-21236	3211A	22
01602-21236	3601	6
01602-21236	4101	30
01602-21236	4101	41
01602-21236	4131	42
01602-21236	4401A	25
01602-21236	5101A	7
01602-21338	1071A	5
01602-21442	3701A	34
01602-21442	5001A	4
01602-21442	5011A	4
01602-21442	5501A	12
01602-21442	5503A	12
01602-21442	6331	23
01602-21648	3351	34
01602-21648	3352	35
01602-21648	3401	6
01602-21648	5001A	12
01602-21648	5011A	13
01602-22060	5001A	17
01602-22060	5011A	18
01602-22472	4101	43
01630-21030	5503A	5
01640-21223	4101	31
01640-21223	4131	41
01641-10622	4355A	28
01641-20508	6201	19
01641-20508	6251A	20
01641-20608	1502A	8
01641-20608	1602	8
01641-20608	4351	29
01641-20608	4361	30
01641-20608	4365	26
01641-20608	4671	18
01641-20812	1391A	6
01641-20812	1392	5
01641-20812	1393A	7
01641-20812	1395	4
01641-20812	1502A	12
01641-20812	1503A	16
01641-20812	1602	12
01641-20812	2203	6
01641-21016	5121A	8
01641-21016	6201	23
01641-21016	6201	26
01641-21016	6251A	24
01641-21016	6251A	27
01641-21223	4131	35
01641-21223	6201	15
01641-21223	6251A	16
01641-21423	4351	12
01641-21423	4361	11
01642-10608	5501A	25
01642-10608	5503A	26
01642-20608	1501A	18
01642-20608	1601B	18
01642-20608	4401A	41
01642-20608	4451	44
01642-20608	5101A	21
01642-20608	5101A	24
01642-20608	5121A	15
01642-20608	5201A	17
01642-20608	5201A	20
01642-20810	1301A	5
01642-20810	1301A	10

品番 Part No.	図番号 Fig No.	索引番号 Index No.
01642-20810	1351	5
01642-20810	1351	10
01642-20810	1361	5
01642-20810	1361	11
01642-20810	1371	5
01642-20810	6370A	16
01642-20810	6370A	28
01642-20816	1371	11
01642-21016	1502A	16
01642-21016	1602	16
01642-21016	2001A	8
01642-21016	4301	6
01642-21016	5101A	30
01642-40608	5101A	13
01643-30823	5121A	29
01643-30823	5401	15
01643-31032	1001A	5
01643-31032	5101A	4
01643-31032	6370A	8
01643-31032	6403A	17
01643-31032	6503	12
01643-31445	5501A	13
01643-31445	5503A	13
01643-31645	1001A	11
01643-31645	1051	16
01643-31645	1071A	7
02010-20832	1071A	4
02010-70632	4131	21
02010-70632	6403A	13
02010-70632	6403A	20
02010-70632	6503	8
02010-70632	6503	15
02892-03081	6503	10
04020-00616	2001A	15
04020-01228	1001A	13
04020-01228	1051	18
04020-01228	1071A	13
04020-01228	2001A	2
04020-01228	2301A	26
04020-01228	2401	17
04020-01228	2402A	21
04020-01228	3201A	6
04020-01228	3211A	6
04025-00432	4351	26
04025-00432	4355A	25
04025-00432	4361	25
04025-00432	4365	21
04025-00532	4361	28
04025-00532	4365	24
04025-00632	2203	13
04025-00632	4355A	7
04025-00632	4365	7
04025-00650	3301	17
04025-00650	3311	17
04025-00650	3351	16
04025-00650	3352	16
04025-00650	5001A	25
04025-00650	5011A	26
04050-11610	4601A	6
04050-11610	4651	6
04050-11610	4671	6
04050-11610	4671	19
04050-11612	5121A	21
04050-12012	2203	7
04050-12015	4401A	14
04050-13018	4401A	21
04050-13018	4451	15
04050-13020	4101	39
04050-13022	3351	25
04050-13022	3352	25
04050-13022	4201	8
04050-13025	3302	15
04050-13025	3312	15
04050-13025	4201	16
04050-14028	3351	29
04050-14028	3352	29
04050-14035	6361	16
04050-18050	3101A	15
04052-00530	6201	18
04052-00530	6251A	19
04052-00633	4351	30
04052-00633	4355A	29
04052-00633	4361	31
04052-00633	4365	27
04052-00633	4601A	17
04052-01038	5121A	9
04052-01453	4351	13
04052-01453	4361	12
04064-02512	2403	45
04064-03015	2403	8
04064-03515	2302	6
04064-03515	2403	15
04064-03515	2403	39
04064-04018	2202	15
04064-04018	2302	13
04065-02812	2303	25
04065-02812	2404	27
04065-07225	2202	30
04065-08025	2202	9
04066-00030	2403	32
04205-10618	4601A	5
04205-10618	4601A	16
04205-10618	4651	5
04205-10618	4671	5
04205-10618	4671	17
04205-10622	4351	28
04205-10622	4355A	27
04205-10622	4361	29
04205-10622	4365	25
04205-10630	5121A	20
04205-10825	4401A	13
04205-11028	4401A	20
04205-11028	4451	14
04260-00317	2302	19
04260-00317	2403	26
04260-00793	2303	19
04260-00793	2404	19
04260-00952	2203	11
04418-13060	5701A	4
04418-13060	5751A	4
06000-06205	2403	44
06000-06206	2302	33
06000-06207	2202	48
06000-06207	2302	56
06000-06207	2403	50
06000-06208	2202	8
06000-06306	2202	29
06000-06306	2302	38
06000-30207	3301	15
06000-30207	3311	15
06000-30207	3351	14
06000-30207	3352	14
06000-32209	3301	14
06000-32209	3311	14
06000-32209	3351	13
06000-32209	3352	13
06002-30214	3201A	18
06002-30214	3211A	16
06003-06306	2403	6
07000-02018	2203	12
07000-02075	2403	2
07000-02080	2301A	25
07000-02080	6403A	15
07000-02085	2202	34
07000-02090	2001A	10
07000-02110	2401	10
07000-02140	2301A	24
07000-02145	3211A	13
07000-03032	6403A	12
07000-03032	6503	7
07000-03034	2404	9
07000-03038	2301A	17
07000-03038	2402A	15
07000-05175	2401	16
07000-13028	6403A	19
07000-13028	6503	14
07000-72012	2403	3
07000-72014	2303	33
07000-72014	2404	35
07000-72018	2301A	22
07000-73025	2301A	23
07002-01823	2303	18
07002-01823	2404	18
07002-02434	2303	31
07002-02434	2303	44
07002-02434	2404	33
07002-02434	2404	46
07002-03034	2303	8
07002-03034	2303	13
07002-03034	2404	14
07002-11423	6404	10
07005-00812	1403A	4
07005-00812	1453	4
07005-00812	1473	4
07005-00812	6401A	4
07005-00812	6501	4
07005-01412	2201A	9
07005-01412	2303	52
07005-01412	2404	23
07005-01412	2404	54

品番 Part No.	図番号 Fig No.	索引番号 Index No.
07005-01612	2301A	7
07005-01612	2303	6
07005-01612	2402A	5
07005-01612	2404	7
07005-02012	2303	46
07005-02012	2404	48
07011-00080	3301	13
07011-00080	3311	13
07011-00080	3351	12
07011-00080	3352	12
07013-10060	2401	13
07013-10065	2302	52
07020-00000	5001A	28
07020-00000	5011A	29
07020-00001	3301	11
07020-00001	3302	8
07020-00001	3311	11
07020-00001	3312	8
07020-00001	3351	9
07020-00001	3352	9
07020-00001	6331	25
07020-00675	5001A	15
07020-00675	5011A	16
07020-00900	3351	26
07020-00900	3352	26
07020-00900	5001A	10
07020-00900	5011A	11
07040-11409	2201A	8
07040-11812	2303	17
07040-11812	2404	17
07042-20108	6403A	25
07042-20108	6503	20
07042-20108	6504	15
07042-20312	3201A	3
07042-20312	3211A	3
07043-70108	2301A	9
07043-70108	2303	4
07043-70108	2303	21
07043-70108	2402A	7
07043-70108	2403	4
07043-70108	2404	4
07043-70108	2404	5
07043-70211	2301A	8
07043-70211	2402A	6
07046-04020	3301	8
07046-04020	3311	8
07046-04020	3351	8
07046-04020	3352	8
07046-12520	2203	15
07211-51220	2303	45
07211-51220	2404	47
07235-10210	6404	9
07235-10210	6505	9
07260-20916	6370A	22
07280-01920	6370A	23
07280-01920	6370A	31
07280-01920	6404	8
07280-01920	6505	8
07280-02323	2501	4
07280-03826	6401A	8
07280-03826	6401A	13
07280-03826	6501	8
07280-03826	6501	13
07280-04126	1301A	12
07280-04126	1301A	14
07280-04126	1351	12
07280-04126	4521	16
07280-04426	1351	14
07280-04426	1361	13
07280-04426	1361	16
07280-04426	1371	13
07280-04426	1371	16
07280-04726	6403A	5
07280-04726	6403A	10
07280-04726	6503	5
07280-04726	6504	5
07280-05026	1361	14
07280-05026	1371	14
07280-06429	1001A	23
07280-06429	1001A	25
07280-06429	1051	28
07280-06429	1051	30
07280-06429	1071A	19
07280-06429	1071A	24
07281-00609	1361	17
07281-00609	1371	17
07285-00110	1301A	22
07285-00110	1351	22
07285-00110	1361	26
07285-00110	1371	26
07285-00125	1453	9
07285-00125	1473	9
07285-00150	1403A	10
08035-01514	4801	20
08036-01414	1502A	15
08036-01414	1602	15
08036-01814	6370A	13
08037-05016	1503A	25
08103-01235	1503A	1
08103-01235	1603A	1
08103-01235	1605	1
08104-01220	1503A	24
08104-01220	1603A	17
08104-01220	1605	24
08105-01220	1503A	2
08105-01220	1503A	24
08105-01220	1603A	2
08105-01220	1603A	17
08105-01220	1605	2
08105-01220	1605	24
08110-01210	1503A	24
08110-01210	1603A	17
08110-01210	1605	24
09350-01420	4351	23
09350-01420	4355A	22
09350-01420	4361	22
09350-01420	4365	18
09662-30060	5701A	7
09662-30060	5751A	7
09664-30067	5701A	21
09664-30067	5751A	21
09664-30080	5701A	20
09664-30080	5751A	20
11826-00H01	1051	3
16267-00H01	1051	2
16572-10801	1051	4
20650-37700	1251A	7
300-22-31241	3301	20
300-22-31241	3311	20
300-22-31241	3351	20
300-22-31241	3352	20
300-27-11221	3301	9
300-27-11221	3311	9
300-27-11221	3351	10
300-27-11221	3352	10
300-46-31321	5001A	22
300-46-31321	5011A	23
300-62-31931	6401A	6
300-62-31931	6501	6
300-62-31941	6401A	6
300-62-31941	6501	6
300-968-1110	5701A	14
300-968-1110	5751A	14
300-968-1120	5751A	13
302-32-24080	4401A	9
302-32-24080	4451	9
304-01-31150	1001A	9
304-01-31150	1051	14
304-01-31150	1071A	11
304-01-31160	1001A	7
304-01-31160	1051	11
304-01-31160	1071A	8
304-06-34140	1603A	11
304-27-31500	5001A	18
304-27-31500	5011A	19
304-27-31510	5001A	18
304-27-31510	5011A	19
304-41-31922	4201	6
304-41-31980	4101	40
304-41-36101	4151A	1
304-41-36120	4151A	2
304-41-36130	4151A	3
304-41-36140	4151A	4
304-41-36150	4151A	5
304-41-36310	4151A	13
304-41-36320	4151A	14
304-41-36331	4151A	15
304-41-36370	4151A	16
304-41-36431	4151A	19
304-41-36440	4151A	20
304-41-36450	4151A	21
304-41-36470	4151A	22
304-41-36470	4151A	29
304-41-36530	4151A	25
304-41-36540	4151A	26
304-41-36550	4151A	27
304-41-36560	4151A	28
304-41-36710	4151A	36
304-41-36720	4151A	37
304-41-36730	4151A	38

品番 Part No.	図番号 Fig No.	索引番号 Index No.
304-41-36740	4151A	39
304-41-36750	4151A	40
304-41-36760	4151A	41
304-43-31190	4601A	10
304-43-31190	4651	10
304-43-31190	4671	10
304-43-33720	4401A	31
304-43-33720	4451	34
305-14-11220	2202	49
306-32-11480	4521	18
307-06-16340	1503A	32
307-06-16340	1605	16
307-14-11750	2001A	12
307-43-13360	4521	3
307-43-13370	4521	5
307-43-13380	4521	4
307-43-13420	4521	9
307-43-13430	4521	10
307-43-13440	4521	11
307-43-33650	4521	12
308-43-23175	4401A	34
308-43-23175	4451	37
308-43-23185	4401A	38
308-43-23185	4451	41
316-22-21250	3101A	11
316-22-21250	3201A	16
324-06-11330	1503A	19
324-06-11330	1603A	13
324-06-11330	1605	21
330-07-19920	4701A	3
34A-10-81150	4101	29
34A-10-81150	4131	40
34A-15-11660	2301A	6
34A-15-11660	2303	5
34A-15-11660	2402A	4
34A-15-11660	2404	6
34A-27-00030	3601	1
34A-27-00041	3601	1
34A-34-12610	4151A	24
34A-36-11510	4401A	28
34A-36-11510	4451	31
34A-36-11530	4401A	30
34A-36-11530	4451	33
34A-36-11540	4401A	29
34A-36-11540	4451	32
34A-37-11161	4601A	4
34A-37-11161	4651	4
34A-37-11161	4671	4
34A-42-11411	5001A	9
34A-42-11411	5001A	14
34A-42-11411	5011A	10
34A-42-11411	5011A	15
34A-50-22140	3401	13
34A-50-22140	5101A	35
34A-50-22140	5101A	38
34A-50-22140	5501A	6
34A-50-22140	5501A	18
34A-50-22140	5503A	6
34A-50-22140	5503A	19
34A-51-11390	1271A	4

品番 Part No.	図番号 Fig No.	索引番号 Index No.
34A-55-12380	1502A	6
34A-55-24471	1501A	33
34A-55-24471	1601B	32
34A-60-81120	6504	9A
34A-96-14710	5701A	11
34A-96-14710	5751A	11
34A-96-16811	5701A	19
34A-96-16811	5751A	19
34B-01-15150	1001A	12
34B-01-15150	1051	17
34B-01-15150	1071A	12
34B-02-31650	1101A	6
34B-04-11240	1361	1
34B-04-11240	1371	1
34B-04-11250	1361	1
34B-04-11250	1371	1
34B-04-15220	1301A	3
34B-04-15220	1351	3
34B-04-15220	1361	3
34B-04-15220	1371	3
34B-15-11360	2302	16
34B-15-11360	2403	18
34B-15-11360	2403	42
34B-21-12141	3101A	8
34B-21-12211	2201A	2
34B-21-12211	2301A	2
34B-21-12211	2401	2
34B-21-12230	3101A	12
34B-21-14151	3201A	14
34B-21-14151	3211A	24
34B-24-11141	3301	4
34B-24-11141	3311	4
34B-24-11141	3351	4
34B-24-11141	3352	4
34B-24-11221	3301	19
34B-24-11221	3311	19
34B-24-11221	3351	19
34B-24-11221	3352	19
34B-24-11321	3302	2
34B-24-11321	3312	2
34B-24-11330	3302	5
34B-24-11330	3312	5
34B-24-11350	3302	4
34B-24-11350	3312	4
34B-27-00010	3401	2
34B-30-14110	3701A	32
34B-30-14140	3701A	16
34B-30-14150	3701A	17
34B-30-14160	3701A	27
34B-30-14240	3701A	16
34B-30-14250	3701A	17
34B-30-14260	3701A	27
34B-30-14320	3701A	28
34B-30-14351	3701A	21
34B-30-14361	3701A	19
34B-30-14371	3701A	20
34B-30-14380	3701A	18
34B-30-14390	3701A	23
34B-30-14410	3701A	14
34B-30-14420	3701A	15

品番 Part No.	図番号 Fig No.	索引番号 Index No.
34B-30-14430	3701A	13
34B-30-14440	3701A	25
34B-30-14450	3701A	26
34B-30-14460	3701A	10
34B-30-14470	3701A	31
34B-30-14480	3701A	29
34B-30-14550	3701A	8
34B-30-14560	3701A	9
34B-30-14570	3701A	7
34B-41-12910	2301A	4
34B-41-12910	2402A	2
34B-41-12910	3201A	4
34B-41-12910	3211A	4
34B-41-12910	5001A	5
34B-41-12910	5011A	5
34B-41-12920	2301A	5
34B-41-12920	2402A	3
34B-41-12920	3201A	5
34B-41-12920	3211A	5
34B-41-12920	5001A	5A
34B-41-12920	5011A	6
34B-50-12730	5201A	2
34B-50-12730	5201A	5
34B-50-12730	5201A	7
34B-50-12730	5203A	2
34B-50-12730	5203A	5
34B-50-12730	5203A	7
34B-66-15180	6403A	1
34B-66-15180	6503	1
34B-66-15180	6504	1
34B-96-35120	5701A	10
34B-96-35120	5751A	10
34B-96-35610	5701A	9
34B-96-35610	5751A	9
34C-04-23340	1453	6
34C-04-23340	1473	6
34C-05-23340	1403A	6
34C-55-12411	1501A	21
34C-55-12411	1601B	20
358-43-15180	4401A	6
358-43-15180	4451	6
358-60-15180	6151	50
358-60-15210	6151	58
358-60-15220	6151	59
358-60-15250	6201	17
358-60-15250	6251A	18
360-27-11171	3301	6
360-27-11171	3302	3
360-27-11171	3311	6
360-27-11171	3312	3
360-27-11171	3351	5
360-27-11171	3352	5
360-27-11220	3301	7
360-27-11220	3311	7
360-27-11220	3351	6
360-27-11220	3352	6
360-27-13260	3301	5
360-27-13260	3311	5
360-27-13260	3351	7
360-27-13260	3352	7

品番 Part No.	図番号 Fig No.	索引番号 Index No.
364-43-13390	4401A	44
364-43-13390	4451	47
364-968-1050	5701A	13
37A-101-3010	6403A	16
37A-1AE-1010	1503A	24
37A-1AE-1010	1603A	17
37A-1AE-1010	1605	24
37A-1AV-1010	5701A	22
37A-1AV-1010	5751A	22
37A-1AV-1030	5701A	22
37A-1AV-1030	5751A	22
37A-1HA-A010	3601	1
37A-1HA-A020	3601	1
37A-1HA-A040	3401	1
37A-1HA-A050	3401	7
37A-1HA-A310	3601	1
37A-1HA-A320	3601	1
37A-1HA-A340	3401	1
37A-1HA-A350	3401	7
37A-1HA-A610	3601	1
37A-1HA-A620	3601	1
37A-1HA-A640	3401	1
37A-1HA-A650	3401	7
37A-2BK-2020	5701A	6
37A-2BK-2020	5751A	6
37A-502-6090	6370A	30
37A-502-6090	6505	7
37A-960-2030	5701A	25
37A-960-2030	5751A	25
37B-1AC-1030	1351	21
37B-1AE-1010	1503A	1
37B-1AE-1010	1603A	1
37B-1AE-1010	1605	1
37B-1AE-6010	1502A	14
37B-1AE-6010	1602	14
37B-1AE-6010	1603A	6
37B-1AE-6010	4601A	20
37B-1AE-6010	4651	17
37B-1AE-6010	4671	16
37B-1AE-6010	6370A	4
37B-1AE-6010	6404	3
37B-1AE-6010	6505	3
37B-1AE-6030	1503A	34
37B-1AE-6030	1603A	24
37B-1AE-6030	1605	6
37B-1AE-6040	4651	16
37B-1AG-2010	6404	1
37B-1AG-2010	6505	1
37B-1AG-2020	6404	1
37B-1AG-2020	6505	1
37B-1AG-2040	6404	2
37B-1AG-2040	6505	2
37B-1AG-2050	6404	2
37B-1AG-2050	6505	2
37B-1AJ-9010	6331	28
37B-1AP-1010	6331	28
37B-1BA-2021	4001	
37B-1CB-2021	1001A	19
37B-1CF-2312	5101A	39
37B-1CF-2512	5101A	39
37B-1CP-2501	5101A	14
37B-1CP-2602	1601B	
37B-1CP-2602	5101A	14
37B-1CP-2612	1601B	
37B-1CP-2801	5101A	14
37B-1CP-2902	1501A	
37B-1CP-2902	5101A	14
37B-1CP-2912	1501A	
37B-1CR-2012	1301A	7
37B-1CR-2032	1351	7
37B-1CS-2010	5101A	16
37B-1CS-2020	5101A	16
37B-1CS-2030	5101A	16
37B-1CS-2040	5101A	16
37B-1CT-2010	1453	1
37B-1CT-2010	1473	1
37B-1CT-2020	1403A	1
37B-1CV-2111	5201A	13
37B-1CV-2121	5201A	12
37B-1CV-2131	5201A	14
37B-1CV-2131	5203A	12
37B-1CW-2110	5201A	10
37B-1CW-2120	5203A	10
37B-1CW-2130	5201A	11
37B-1CW-2130	5203A	11
37B-1DB-2110	1051	1
37B-1DB-2120	1051	1
37B-1DE-2220	1001A	1
37B-1EC-2010	1601B	26
37B-1EC-2030	1601B	26
37B-1EH-2010	1503A	2
37B-1EH-2010	1603A	2
37B-1EH-2010	1605	2
37B-1EJ-2010	1501A	15
37B-1EJ-2010	1601B	15
37B-1EJ-2020	1501A	15
37B-1EJ-2020	1601B	15
37B-1FA-1020	1453	8
37B-1FA-1020	1473	8
37B-1FA-1110	1403A	8
37B-1FA-1230	1403A	9
37B-1FB-A210	6370A	2
37B-1FB-A220	6370A	2
37B-1FB-A230	6370A	2
37B-1FC-2020	6503	17
37B-1FC-2020	6504	12
37B-1FC-2030	6403A	22
37B-1FD-A210	6370A	3
37B-1FD-A220	6370A	3
37B-1FD-A230	6370A	3
37B-1HB-1130	3405	
37B-1HB-1140	3405	
37B-1HB-2012	6201	1
37B-1HB-2012	6251A	1
37B-1HB-2022	6201	2
37B-1HB-2022	6251A	2
37B-1HB-2031	6251A	3
37B-1HC-1030	3605	
37B-1HC-1120	3605	
37B-1HD-2020	4131	34
37B-1HD-2020	6201	11
37B-1HD-2030	6251A	12
37B-1JA-A210	6331	
37B-1JA-A230	6331	
37B-1JB-A210	6331	
37B-1JE-A220	6331	26
37B-1KE-A270	6041	1
37B-1PD-2040	6402A	9
37B-1PD-2040	6502A	9
37B-1PE-2040	6402A	8
37B-1PE-2040	6502A	8
37B-1PF-2010	6402A	7
37B-1PF-2010	6502A	7
37B-1PK-2010	6404	5
37B-1PK-2010	6505	5
37B-1PN-2010	6370A	20
37B-1QK-2111	5701A	12
37B-1QK-2111	5751A	12
37B-1QK-2151	5701A	12
37B-1QK-2151	5751A	12
37B-1QK-2311	5701A	12
37B-1QK-2311	5751A	12
37B-1QK-2351	5701A	12
37B-1QK-2351	5751A	12
37B-1QK-2511	5701A	12
37B-1QK-2511	5751A	12
37B-1QK-2551	5701A	12
37B-1QK-2551	5751A	12
37B-1QL-2110	5701A	28
37B-1QL-2110	5751A	28
37B-1QL-2120	5701A	28
37B-1QL-2120	5751A	28
37B-1QL-2130	5701A	28
37B-1QL-2130	5751A	28
37B-1QL-2140	5701A	28
37B-1QL-2140	5751A	28
37B-1QL-2150	5701A	28
37B-1QL-2150	5751A	28
37B-1QL-2160	5701A	28
37B-1QL-2160	5751A	28
3BA-24-13210	2403	51
3BA-39-31160	4801	7
3BA-39-31170	4801	9
3BA-39-31180	4801	14
3BA-39-31190	4801	15
3BA-39-31210	4801	16
3BA-39-31220	4801	17
3BA-66-25180	6370A	17
3BA-96-21310	5701A	23
3BA-96-21310	5751A	23
3BB-34-16650	4151A	34
3BB-42-24740	5001A	26
3BB-42-24740	5011A	27
3BD-66-16230	6504	7
3EA-01-17150	1101A	7
3EA-02-26710	5501A	29
3EA-02-26710	5503A	34
3EA-03-11120	1201A	2
3EA-03-11120	1251A	2
3EA-03-11120	1271A	2

品番 Part No.	図番号 Fig No.	索引番号 Index No.
3EA-05-11160	5001A	6
3EA-05-11160	5011A	6
3EA-05-11170	5001A	6
3EA-05-11170	5011A	7
3EA-05-11180	5001A	7
3EA-05-11180	5011A	8
3EA-05-12140	1453	7
3EA-05-12140	1473	7
3EA-10-11141	2001A	21
3EA-13-13120	2121	10
3EA-14-11122	2201A	4
3EA-14-11230	2202	17
3EA-14-11240	2202	24
3EA-14-11251	2202	23
3EA-14-11371	2203	1
3EA-14-11390	2203	2
3EA-14-11430	2202	22
3EA-14-11440	2203	14
3EA-14-11451	2202	14
3EA-14-11460	2203	10
3EA-15-11140	2301A	18
3EA-15-11140	2402A	16
3EA-15-11170	2302	14
3EA-15-11180	2302	15
3EA-15-11180	2403	17
3EA-15-11180	2403	41
3EA-15-11280	2301A	19
3EA-15-11280	2402A	17
3EA-15-11290	2302	10
3EA-15-11290	2403	12
3EA-15-11290	2403	36
3EA-15-11600	2301A	16
3EA-15-11600	2402A	14
3EA-15-11610	2301A	16
3EA-15-11610	2402A	14
3EA-15-18260	2303	27
3EA-15-18260	2404	29
3EA-15-19120	2404	42
3EA-15-21230	2403	35
3EA-35-24120	4361	8
3EA-36-05010	4521	K45
3EA-36-11181	4521	8
3EA-36-11210	4521	7
3EA-36-11220	4521	6
3EA-36-11330	4521	17
3EA-36-22160	4401A	1
3EA-36-22160	4401A	2
3EA-36-22160	4451	1
3EA-36-22160	4451	2
3EA-50-11320	5121A	7
3EA-50-12320	6402A	13
3EA-50-12320	6502A	13
3EA-50-17830	5121A	23
3EA-50-21910	5401	11
3EA-51-11390	1201A	4
3EA-51-11390	1251A	4
3EA-55-A1410	1602	5
3EA-61-12361	6151	17
3EA-61-12450	6151	8
3EA-61-12521	6151	60

品番 Part No.	図番号 Fig No.	索引番号 Index No.
3EA-61-12620	6151	24
3EA-96-11610	5701A	24
3EA-96-11610	5751A	24
3EB-01-14210	1051	5
3EB-01-24191	1051	31
3EB-01-25160	1001A	22
3EB-01-25160	1051	27
3EB-01-25160	1071A	23
3EB-01-25171	5501A	28
3EB-01-25171	5503A	29
3EB-01-26210	1051	29
3EB-01-27130	1001A	6
3EB-01-27130	1051	12
3EB-01-27130	1071A	9
3EB-01-27140	1001A	8
3EB-01-27140	1051	13
3EB-01-27140	1071A	10
3EB-01-27221	1051	6
3EB-01-A2511	1271A	5
3EB-01-A2610	1051	24
3EB-01-A2660	1071A	2
3EB-01-A2670	1071A	3
3EB-01-A2710	1071A	20
3EB-01-A2861	1071A	18
3EB-01-A2910	1071A	1
3EB-02-14441	1001A	3
3EB-02-25220	1251A	1
3EB-02-25510	1101A	1
3EB-02-25550	1101A	2
3EB-02-25560	1101A	5
3EB-02-25570	1101A	4
3EB-02-26211	1001A	24
3EB-02-27311	1001A	2
3EB-03-22110	1251A	5
3EB-03-22151	1201A	6
3EB-03-22151	1251A	6
3EB-03-22151	1271A	6
3EB-03-22710	1201A	5
3EB-03-A2110	1251A	1
3EB-03-A2110	1271A	1
3EB-03-A2160	1251A	1
3EB-03-A2160	1271A	1
3EB-03-A2210	1201A	1
3EB-03-A2260	1201A	1
3EB-04-21130	1361	1
3EB-04-21130	1371	1
3EB-04-23220	1351	13
3EB-04-23230	1351	11
3EB-04-23250	1301A	24
3EB-04-23250	1351	24
3EB-04-23250	1361	8
3EB-04-23250	1371	8
3EB-04-23370	1391A	1
3EB-04-23720	1301A	13
3EB-04-23730	1301A	11
3EB-04-24110	2501	1
3EB-04-24120	2501	2
3EB-04-24131	2501	3
3EB-04-24190	2501	5
3EB-04-25131	1301A	16

品番 Part No.	図番号 Fig No.	索引番号 Index No.
3EB-04-25131	1351	16
3EB-04-25131	1361	19
3EB-04-25140	1301A	23
3EB-04-25140	1351	23
3EB-04-25160	1301A	15
3EB-04-25160	1351	15
3EB-04-25160	1361	18
3EB-04-25160	1371	18
3EB-04-25551	1391A	2
3EB-04-25551	1392	2
3EB-04-25551	1393A	3
3EB-04-25551	1395	6
3EB-04-25610	1391A	1
3EB-04-25730	1393A	1
3EB-04-25740	1393A	2
3EB-04-25830	1393A	1
3EB-04-25840	1393A	2
3EB-04-A2110	1351	1
3EB-04-A2160	1351	1
3EB-04-A2210	1351	1
3EB-04-A2310	1361	1
3EB-04-A2310	1371	1
3EB-04-A2360	1361	7
3EB-04-A2360	1371	7
3EB-04-A2370	1361	15
3EB-04-A2370	1371	15
3EB-04-A2380	1361	12
3EB-04-A2380	1371	12
3EB-04-A2410	1301A	1
3EB-04-A2510	1361	1
3EB-04-A2510	1371	1
3EB-04-A2810	1392	1
3EB-04-A2860	1395	1
3EB-04-A2870	1395	2
3EB-04-A2880	1395	7
3EB-04-A2890	1395	8
3EB-04-A2910	1371	19
3EB-05-21130	1403A	2
3EB-05-21130	1453	2
3EB-05-21130	1473	2
3EB-05-21130	6401A	2
3EB-05-21130	6501	2
3EB-05-21632	1403A	11
3EB-05-22110	1403A	5
3EB-05-22110	1453	5
3EB-05-22110	1473	5
3EB-05-22310	1403A	7
3EB-05-23360	5121A	10
3EB-05-23450	1392	3
3EB-10-00010	2001A	11
3EB-10-11150	2001A	23
3EB-10-11920	2001A	14
3EB-10-21110	2001A	1
3EB-10-21130	2001A	18
3EB-10-21140	2001A	19
3EB-10-21150	2001A	5
3EB-10-21162	2001A	9
3EB-10-21170	2001A	20
3EB-10-21211	2001A	24
3EB-10-21230	2041A	7

品番 Part No.	図番号 Fig No.	索引番号 Index No.
3EB-10-21610	2001A	13
3EB-13-05060	2121	K22
3EB-13-05081	2101A	K22
3EB-13-12220	2121	2
3EB-13-12230	2121	3
3EB-13-12340	2101A	5
3EB-13-12340	2121	7
3EB-13-12350	2101A	6
3EB-13-12350	2121	8
3EB-13-12360	2101A	7
3EB-13-12360	2121	9
3EB-13-12380	2101A	9
3EB-13-12380	2121	11
3EB-13-12440	2121	15
3EB-13-12450	2121	16
3EB-13-12470	2121	18
3EB-13-12490	2121	21
3EB-13-12510	2121	22
3EB-13-12520	2121	23
3EB-13-12530	2121	24
3EB-13-12540	2121	26
3EB-13-12550	2121	27
3EB-13-12610	2101A	17
3EB-13-12610	2121	28
3EB-13-12620	2101A	20
3EB-13-12630	2101A	18
3EB-13-12630	2121	30
3EB-13-12640	2121	31
3EB-13-12650	2121	32
3EB-13-12660	2121	33
3EB-13-12670	2121	34
3EB-13-12680	2101A	21
3EB-13-12680	2121	35
3EB-13-12690	2101A	22
3EB-13-12690	2121	36
3EB-13-12710	2121	37
3EB-13-12720	2101A	24
3EB-13-12720	2121	38
3EB-13-12730	2101A	25
3EB-13-12730	2121	39
3EB-13-12740	2121	25
3EB-13-12740	2121	40
3EB-13-12750	2121	44
3EB-13-12770	2101A	26
3EB-13-12770	2121	41
3EB-13-12780	2101A	27
3EB-13-12780	2121	42
3EB-13-12790	2121	43
3EB-13-12810	2121	20
3EB-13-22022	2101A	1
3EB-13-22042	2101A	10
3EB-13-22310	2121	4
3EB-13-22312	2101A	2
3EB-13-22320	2121	5
3EB-13-22322	2101A	3
3EB-13-22330	2121	6
3EB-13-22332	2101A	4
3EB-13-22372	2101A	8
3EB-13-22422	2101A	13
3EB-13-22432	2101A	14
3EB-13-22442	2101A	16
3EB-13-22452	2101A	15
3EB-13-22480	2121	19
3EB-13-22632	2101A	19
3EB-13-22652	2101A	23
3EB-13-22662	2101A	28
3EB-13-22672	2101A	29
3EB-13-22722	2101A	30
3EB-13-22732	2101A	31
3EB-13-22742	2101A	32
3EB-13-22810	2121	29
3EB-13-22830	2121	45
3EB-13-24020	2121	1
3EB-13-24040	2121	12
3EB-13-24101	2121	1
3EB-14-00050	2202	43
3EB-14-00050	2302	49
3EB-14-00050	2401	8
3EB-14-00100	2202	19
3EB-14-05050	2201A	K23
3EB-14-05050	2202	K23
3EB-14-05050	2203	K23
3EB-14-11180	2202	2
3EB-14-11451	2202	40
3EB-14-11451	2302	46
3EB-14-11451	2401	7
3EB-14-11480	2203	5
3EB-14-11510	2203	4
3EB-14-11640	2202	45
3EB-14-11820	2202	21
3EB-14-21014	2201A	1
3EB-14-21121	2202	33
3EB-14-21131	2202	16
3EB-14-21140	2202	12
3EB-14-21151	2202	5
3EB-14-21160	2202	20
3EB-14-21210	2202	4
3EB-14-21220	2202	19
3EB-14-21230	2202	46
3EB-14-21230	2302	54
3EB-14-21240	2202	44
3EB-14-21240	2302	50
3EB-14-21240	2401	11
3EB-14-21250	2202	10
3EB-14-21260	2201A	5
3EB-14-21270	2202	13
3EB-14-21310	2203	8
3EB-14-21320	2203	9
3EB-14-21330	2203	3
3EB-14-21350	2202	28
3EB-14-22111	2202	1
3EB-14-22120	2202	18
3EB-14-22130	2202	25
3EB-14-22130	2202	26
3EB-14-22210	2202	3
3EB-14-22220	2202	27
3EB-14-22231	2202	47
3EB-14-25220	2202	27
3EB-14-25231	2202	47
3EB-15-05050	2301A	K24
3EB-15-05050	2302	K24
3EB-15-05050	2303	K24
3EB-15-05050	3201A	K24
3EB-15-05151	2303	K26
3EB-15-11150	2301A	10
3EB-15-11150	2402A	8
3EB-15-11250	2302	11
3EB-15-11250	2403	13
3EB-15-11250	2403	37
3EB-15-11260	2403	14
3EB-15-11260	2403	38
3EB-15-18120	2303	40
3EB-15-18150	2303	43
3EB-15-18150	2404	45
3EB-15-18161	2303	36
3EB-15-18161	2404	38
3EB-15-18171	2303	37
3EB-15-18171	2404	39
3EB-15-18181	2303	32
3EB-15-18181	2404	34
3EB-15-18190	2303	39
3EB-15-18190	2404	41
3EB-15-18230	2303	26
3EB-15-18230	2404	28
3EB-15-18322	2303	12
3EB-15-18350	2303	2
3EB-15-18350	2404	3
3EB-15-18450	2303	20
3EB-15-18520	2303	14
3EB-15-18710	2302	51
3EB-15-18710	2401	12
3EB-15-21011	2301A	1
3EB-15-21022	2302	7
3EB-15-21120	2301A	12
3EB-15-21130	2301A	13
3EB-15-21202	2302	7
3EB-15-21230	2302	9
3EB-15-21240	2302	8
3EB-15-21260	2302	12
3EB-15-21290	2302	2
3EB-15-21310	2302	22
3EB-15-21320	2302	23
3EB-15-21320	2403	28
3EB-15-21330	2302	26
3EB-15-21340	2302	21
3EB-15-21350	2302	27
3EB-15-21360	2302	24
3EB-15-21370	2302	28
3EB-15-21380	2302	17
3EB-15-21390	2302	5
3EB-15-21400	2302	1
3EB-15-21420	2302	34
3EB-15-21431	2302	32
3EB-15-21440	2302	37
3EB-15-21450	2202	31
3EB-15-21450	2302	39
3EB-15-21460	2302	35
3EB-15-21482	2302	20
3EB-15-21482	2403	25
3EB-15-21490	2302	18

品番 Part No.	図番号 Fig No.	索引番号 Index No.
3EB-15-21490	2302	30
3EB-15-21530	2302	53
3EB-15-21540	2302	29
3EB-15-21550	2302	31
3EB-15-22310	2302	25
3EB-15-22410	2302	36
3EB-15-22511	2302	55
3EB-15-25231	2302	55
3EB-15-25310	2302	25
3EB-15-25410	2302	36
3EB-15-28101	2303	1
3EB-15-28110	2303	41
3EB-15-28110	2404	43
3EB-15-28130	2303	38
3EB-15-28130	2404	40
3EB-15-28140	2303	42
3EB-15-28140	2404	44
3EB-15-28150	2303	30
3EB-15-28150	2404	32
3EB-15-28210	2303	23
3EB-15-28210	2404	25
3EB-15-28220	2303	22
3EB-15-28220	2404	24
3EB-15-28270	2303	29
3EB-15-28270	2404	31
3EB-15-28311	2303	7
3EB-15-28311	2404	8
3EB-15-28320	2303	11
3EB-15-28320	2404	12
3EB-15-28350	2303	3
3EB-15-28350	2404	2
3EB-15-28371	2303	9
3EB-15-28371	2404	11
3EB-15-28381	2303	10
3EB-15-28381	2404	10
3EB-15-28410	2303	15
3EB-15-28511	2303	1
3EB-15-28540	2303	47
3EB-16-05010	2401	K25
3EB-16-05010	2402A	K25
3EB-16-05010	2403	K25
3EB-16-05010	2404	K25
3EB-16-05021	2404	K27
3EB-16-11450	2403	48
3EB-16-18430	2404	21
3EB-16-18440	2404	20
3EB-16-21021	2403	9
3EB-16-21041	2403	33
3EB-16-21111	2402A	1
3EB-16-21120	2402A	10
3EB-16-21130	2402A	11
3EB-16-21150	2403	46
3EB-16-21170	2403	16
3EB-16-21170	2403	40
3EB-16-21180	2402A	20
3EB-16-21201	2403	9
3EB-16-21230	2403	11
3EB-16-21240	2403	10
3EB-16-21240	2403	34
3EB-16-21250	2403	24

品番 Part No.	図番号 Fig No.	索引番号 Index No.
3EB-16-21260	2403	23
3EB-16-21270	2403	21
3EB-16-21280	2403	29
3EB-16-21370	2403	1
3EB-16-21380	2403	20
3EB-16-21390	2403	7
3EB-16-21401	2403	33
3EB-16-21420	2403	30
3EB-16-21430	2403	43
3EB-16-21450	2403	31
3EB-16-22310	2403	27
3EB-16-22320	2403	22
3EB-16-22510	2403	47
3EB-16-22520	2403	49
3EB-16-28101	2404	1
3EB-16-28320	2404	13
3EB-16-28410	2404	15
3EB-16-28430	2404	22
3EB-16-28511	2404	1
3EB-16-28540	2404	49
3EB-21-00020	3101A	1
3EB-21-05050	3201A	K31
3EB-21-11160	3101A	4
3EB-21-11190	2201A	3
3EB-21-11190	2301A	3
3EB-21-11190	2401	3
3EB-21-11230	2202	37
3EB-21-11230	2302	43
3EB-21-11230	2401	6
3EB-21-11340	3101A	5
3EB-21-11370	3101A	6
3EB-21-15130	3201A	17
3EB-21-15140	3201A	22
3EB-21-15140	3211A	20
3EB-21-15211	2301A	11
3EB-21-15211	2402A	9
3EB-21-15211	3201A	2
3EB-21-15211	3211A	2
3EB-21-21010	3101A	1
3EB-21-21180	3101A	7
3EB-21-22011	2401	1
3EB-21-22040	2401	4
3EB-21-22120	2401	9
3EB-21-22130	2401	14
3EB-21-23042	2202	35
3EB-21-23042	2302	41
3EB-21-23120	2202	38
3EB-21-23120	2302	44
3EB-21-24120	2202	38
3EB-21-24120	2302	44
3EB-21-25102	3201A	1
3EB-21-25130	3201A	12
3EB-21-25140	3201A	20
3EB-21-25140	3211A	18
3EB-21-25150	3201A	19
3EB-21-25150	3211A	17
3EB-21-25160	3201A	10
3EB-21-25170	3201A	13
3EB-21-25180	3201A	23
3EB-21-25180	3211A	21

品番 Part No.	図番号 Fig No.	索引番号 Index No.
3EB-21-25190	3201A	11
3EB-21-25221	3201A	7
3EB-21-25221	3211A	7
3EB-22-21101	3211A	1
3EB-22-21130	3211A	11
3EB-22-21140	3211A	10
3EB-22-21150	3211A	12
3EB-22-21160	3211A	15
3EB-22-21170	3211A	23
3EB-24-05050	3302	K32
3EB-24-05050	3312	K32
3EB-24-05060	3301	K33
3EB-24-05060	3311	K33
3EB-24-11160	3301	18
3EB-24-11160	3311	18
3EB-24-11160	3351	18
3EB-24-11160	3352	18
3EB-24-21110	3301	1
3EB-24-21210	3301	12
3EB-24-21210	3311	12
3EB-24-21210	3351	17
3EB-24-21210	3352	17
3EB-24-21221	3301	2
3EB-24-21222	3301	2
3EB-24-21222	3311	2
3EB-24-21231	3301	3
3EB-24-21232	3301	3
3EB-24-21232	3311	3
3EB-24-21241	3302	1
3EB-24-21241	3312	1
3EB-24-21250	3302	9
3EB-24-21270	3302	14
3EB-24-21270	3312	14
3EB-24-21270	4201	15
3EB-24-21280	3302	11
3EB-24-21280	3312	11
3EB-24-21290	3302	13
3EB-24-21290	3312	13
3EB-24-21290	4201	13
3EB-24-21310	3302	10
3EB-24-21310	3312	10
3EB-24-21410	3302	12
3EB-24-21410	3312	12
3EB-24-21410	4201	14
3EB-24-21581	3351	23
3EB-24-21581	3352	23
3EB-24-A2511	3351	1
3EB-24-A2530	3351	21
3EB-24-A2540	3351	21
3EB-24-A2550	3351	2
3EB-24-A2550	3352	2
3EB-24-A2560	3351	3
3EB-24-A2560	3352	3
3EB-24-A2570	3351	27
3EB-24-A2570	3352	27
3EB-24-A2580	3351	22
3EB-24-A2580	3352	22
3EB-25-21110	3311	1
3EB-25-21250	3312	9
3EB-25-A2511	3352	1

品番 Part No.	図番号 Fig No.	索引番号 Index No.
3EB-25-A2530	3352	21
3EB-25-A2540	3352	21
3EB-27-11520	3401	8
3EB-27-21350	3401	9
3EB-27-21360	3401	10
3EB-30-00010	3701A	K41
3EB-30-11110	3701A	1
3EB-30-11120	3701A	24
3EB-30-11131	3701A	30
3EB-30-11140	3701A	21
3EB-30-11140	3701A	22
3EB-30-11210	3701A	1
3EB-30-11220	3701A	24
3EB-30-11231	3701A	30
3EB-30-14351	3701A	22
3EB-30-21310	3701A	2
3EB-30-23103	3701A	
3EB-30-23203	3701A	
3EB-30-23430	3701A	11
3EB-30-23440	3701A	12
3EB-33-21121	4001	10
3EB-34-05050	4151A	K43
3EB-34-13110	4201	1
3EB-34-22212	4101	1
3EB-34-22222	4101	1
3EB-34-22230	4101	1
3EB-34-22240	4101	6
3EB-34-22240	4131	19
3EB-34-22250	4101	7
3EB-34-22250	4131	8
3EB-34-22260	4101	8
3EB-34-22260	4131	9
3EB-34-22270	4101	9
3EB-34-22270	4131	10
3EB-34-22280	4101	10
3EB-34-22280	4131	13
3EB-34-22290	4101	11
3EB-34-22310	4101	12
3EB-34-22310	4131	12
3EB-34-22320	4101	13
3EB-34-22320	4131	15
3EB-34-22330	4101	14
3EB-34-22330	4131	16
3EB-34-22340	4101	15
3EB-34-22340	4131	14
3EB-34-22350	4101	17
3EB-34-22360	4101	16
3EB-34-22360	4131	17
3EB-34-22370	4101	17
3EB-34-22380	4101	19
3EB-34-22390	4101	26
3EB-34-22410	4101	25
3EB-34-22420	4101	27
3EB-34-22433	4101	32
3EB-34-22440	4101	38
3EB-34-22450	4131	24
3EB-34-22480	4101	28
3EB-34-22512	4151A	1
3EB-34-22520	4151A	6
3EB-34-22530	4151A	17
3EB-34-22540	4151A	23
3EB-34-22550	4151A	23
3EB-34-22560	4151A	30
3EB-34-22570	4151A	31
3EB-34-22690	4151A	35
3EB-34-22970	4101	33
3EB-34-23210	4131	23
3EB-34-23221	4131	31
3EB-34-23410	4131	1
3EB-34-23430	4131	7
3EB-34-23440	4131	11
3EB-34-23450	4131	18
3EB-34-23460	4131	20
3EB-34-23470	4131	1
3EB-34-23580	4131	2
3EB-34-24120	4201	9
3EB-34-24160	4201	2
3EB-34-A2411	4251A	
3EB-35-00011	4351	14
3EB-35-00021	4361	13
3EB-35-11130	4301	3
3EB-35-14120	4351	2
3EB-35-14120	4351	3
3EB-35-14120	4351	9
3EB-35-14120	4351	27
3EB-35-14120	4355A	2
3EB-35-14120	4355A	12
3EB-35-14120	4355A	26
3EB-35-14120	4361	2
3EB-35-14120	4361	8
3EB-35-14120	4365	2
3EB-35-14120	4365	8
3EB-35-15550	4451	24
3EB-35-21110	4301	1
3EB-35-21120	4301	2
3EB-35-21131	4301	1
3EB-35-21141	4301	2
3EB-35-22110	4351	4
3EB-35-22110	4355A	3
3EB-35-22110	4355A	9
3EB-35-22110	4361	3
3EB-35-22110	4365	3
3EB-35-22110	5101A	18
3EB-35-22120	4351	2
3EB-35-22120	4355A	2
3EB-35-22120	4361	2
3EB-35-22120	4365	2
3EB-35-22150	4351	7
3EB-35-22150	4361	6
3EB-35-22181	4351	3
3EB-35-22190	5101A	17
3EB-35-22212	4351	1
3EB-35-22212	4361	1
3EB-35-22220	4351	9
3EB-35-22260	4351	23
3EB-35-22270	4351	27
3EB-35-22270	4355A	26
3EB-35-22281	4351	1
3EB-35-22281	4355A	6
3EB-35-22281	4361	1
3EB-35-22281	4365	6
3EB-35-22582	4351	24
3EB-35-22582	4355A	23
3EB-35-22590	4351	25
3EB-35-22590	4355A	24
3EB-35-22590	4361	24
3EB-35-22590	4365	20
3EB-35-22720	4351	8
3EB-35-22760	1501A	27
3EB-35-22760	1601B	25
3EB-35-23120	4361	7
3EB-35-23130	4351	14
3EB-35-23130	4355A	13
3EB-35-23130	4361	13
3EB-35-24120	4355A	1
3EB-35-24120	4365	1
3EB-35-24131	4355A	8
3EB-35-24140	4365	6
3EB-35-24141	4355A	6
3EB-35-24560	4361	22
3EB-35-24560	4365	18
3EB-35-24570	4361	26
3EB-35-24570	4365	22
3EB-35-24581	4361	23
3EB-35-24581	4365	19
3EB-35-24591	4361	27
3EB-35-24591	4365	23
3EB-36-11120	4521	2
3EB-36-11160	4521	15
3EB-36-11410	4401A	32
3EB-36-11410	4451	35
3EB-36-12130	4401A	3
3EB-36-12130	4451	3
3EB-36-12170	4401A	42
3EB-36-12170	4451	45
3EB-36-12180	4401A	43
3EB-36-12180	4451	46
3EB-36-22110	4401A	2
3EB-36-22120	4401A	1
3EB-36-22131	4401A	4
3EB-36-22150	4401A	15
3EB-36-22170	4401A	1
3EB-36-22170	4401A	2
3EB-36-22170	4451	1
3EB-36-22170	4451	2
3EB-36-22361	4401A	22
3EB-36-22380	4401A	23
3EB-36-22510	4451	2
3EB-36-22520	4451	1
3EB-36-22531	4451	4
3EB-36-22540	4401A	5
3EB-36-22540	4451	5
3EB-36-22700	4521	1
3EB-36-22710	4521	13
3EB-36-22761	4451	16
3EB-36-22781	4451	17
3EB-36-22850	4401A	28
3EB-36-22850	4451	31
3EB-37-11120	4601A	2
3EB-37-11120	4651	2

品番 Part No.	図番号 Fig No.	索引番号 Index No.
3EB-37-11120	4671	2
3EB-37-11140	4601A	3
3EB-37-11140	4651	3
3EB-37-11140	4671	3
3EB-37-13520	4601A	15
3EB-37-21111	4601A	1
3EB-37-21111	4651	1
3EB-37-21111	4671	1
3EB-37-21120	4651	15
3EB-37-21130	4601A	7
3EB-37-21130	4651	7
3EB-37-21130	4671	7
3EB-37-A2610	4671	15
3EB-38-15160	4801	4
3EB-38-15220	4801	12
3EB-38-15221	4801	5
3EB-38-15230	4801	10
3EB-38-15260	4801	13
3EB-38-15340	4801	8
3EB-38-15380	4801	11
3EB-38-21111	4701A	2
3EB-38-21122	4701A	1
3EB-38-21310	4701A	2
3EB-38-21320	4701A	1
3EB-38-25512	4801	1
3EB-38-25610	4801	1
3EB-38-25620	4801	2
3EB-38-25630	4801	3
3EB-38-25641	4801	6
3EB-41-00021	5001A	8
3EB-41-00021	5011A	9
3EB-41-00030	5001A	13
3EB-41-00030	5011A	14
3EB-41-11920	5001A	2
3EB-41-21860	5001A	27
3EB-41-21860	5011A	28
3EB-42-21920	5011A	2
3EB-43-11120	5001A	24
3EB-43-12130	5011A	25
3EB-43-21120	5001A	20
3EB-43-21120	5011A	21
3EB-43-A2110	5001A	19
3EB-43-A2210	5001A	19
3EB-43-A2310	5001A	19
3EB-43-A2410	5011A	20
3EB-43-A2510	5011A	20
3EB-43-A2610	5011A	20
3EB-43-A2810	5011A	20
3EB-50-11140	5121A	5
3EB-50-21130	5501A	19
3EB-50-21130	5503A	20
3EB-50-21140	5121A	3
3EB-50-21150	1501A	22
3EB-50-21150	5121A	4
3EB-50-21160	5121A	12
3EB-50-21171	5121A	2
3EB-50-21180	5201A	18
3EB-50-21190	5201A	15
3EB-50-21911	5121A	1
3EB-50-22111	5101A	31

品番 Part No.	図番号 Fig No.	索引番号 Index No.
3EB-50-22210	5101A	27
3EB-50-22220	5101A	28
3EB-50-22230	5101A	32
3EB-50-22240	5101A	33
3EB-50-22311	5101A	26
3EB-50-22511	5101A	26
3EB-50-23121	5101A	11
3EB-50-23131	5101A	10
3EB-50-23141	5101A	15
3EB-50-23171	5101A	25
3EB-50-23211	5101A	1
3EB-50-23270	5101A	9
3EB-50-23510	1501A	11
3EB-50-23510	1601B	11
3EB-50-23520	1501A	1
3EB-50-23520	1601B	1
3EB-50-23530	1501A	2
3EB-50-23530	1601B	2
3EB-50-23540	1501A	12
3EB-50-23540	1601B	12
3EB-50-23551	1501A	5
3EB-50-23551	1601B	5
3EB-50-23560	1501A	3
3EB-50-23560	1601B	3
3EB-50-23570	1501A	13
3EB-50-23570	1601B	13
3EB-50-23580	1501A	4
3EB-50-23580	1601B	4
3EB-50-23590	1501A	10
3EB-50-23590	1601B	10
3EB-50-23620	1501A	7
3EB-50-23620	1601B	7
3EB-50-23631	1501A	9
3EB-50-23631	1601B	9
3EB-50-23651	1501A	8
3EB-50-23651	1601B	8
3EB-50-23940	1501A	6
3EB-50-23940	1601B	6
3EB-50-24110	5121A	10
3EB-50-24181	5121A	11
3EB-50-24510	5121A	10
3EB-50-25113	5101A	5
3EB-50-25120	5101A	8
3EB-50-27660	5121A	30
3EB-50-27670	5121A	22
3EB-50-A2210	5401	
3EB-50-A4790	5121A	26
3EB-50-A4820	5121A	17
3EB-50-A4830	5121A	18
3EB-50-A4840	5121A	19
3EB-50-A4860	5121A	17
3EB-50-A4870	5121A	18
3EB-50-A4880	5121A	19
3EB-50-A4890	5121A	26
3EB-51-21141	1602	17
3EB-51-21150	5501A	23
3EB-51-21150	5503A	24
3EB-51-21181	1502A	17
3EB-51-21362	5501A	7
3EB-51-21362	5503A	7

品番 Part No.	図番号 Fig No.	索引番号 Index No.
3EB-51-21380	5501A	26
3EB-51-21380	5503A	27
3EB-51-21392	5501A	8
3EB-51-21392	5503A	8
3EB-51-21471	5503A	30
3EB-51-21481	5503A	31
3EB-51-21521	5501A	10
3EB-51-21521	5503A	10
3EB-51-21551	5501A	9
3EB-51-21551	5503A	9
3EB-51-25240	5501A	20
3EB-51-25240	5503A	21
3EB-51-A2110	5501A	1
3EB-51-A2110	5503A	1
3EB-51-A2121	5501A	2
3EB-51-A2161	5501A	3
3EB-51-A2161	5503A	3
3EB-51-A2421	5503A	2
3EB-52-21112	5201A	1
3EB-52-21112	5203A	1
3EB-52-21120	5201A	6
3EB-52-21120	5203A	6
3EB-52-21130	5201A	3
3EB-52-21130	5203A	3
3EB-52-21140	5201A	4
3EB-52-21140	5203A	4
3EB-52-21221	5201A	8
3EB-52-21221	5203A	8
3EB-52-21231	5201A	9
3EB-52-21231	5203A	9
3EB-52-25210	5301	1
3EB-52-25230	5301	2
3EB-52-25240	5301	3
3EB-55-11220	1503A	1
3EB-55-11220	1603A	1
3EB-55-11220	1605	1
3EB-55-11240	1503A	2
3EB-55-11240	1603A	2
3EB-55-11240	1605	2
3EB-55-11250	1503A	2
3EB-55-11250	1603A	2
3EB-55-11250	1605	2
3EB-55-11270	1501A	28
3EB-55-11270	1601B	27
3EB-55-11290	1503A	2
3EB-55-11290	1603A	2
3EB-55-11290	1605	2
3EB-55-11580	1501A	19
3EB-55-11580	1601B	19
3EB-55-12140	1602	6
3EB-55-12322	1503A	24
3EB-55-12322	1603A	17
3EB-55-12322	1605	24
3EB-55-14110	1503A	27
3EB-55-14110	1603A	20
3EB-55-17250	5501A	30
3EB-55-17250	5503A	35
3EB-55-21116	1501A	14
3EB-55-21116	1601B	14
3EB-55-21120	1501A	32

品番 Part No.	図番号 Fig No.	索引番号 Index No.
3EB-55-21120	1601B	31
3EB-55-21162	1501A	19
3EB-55-21162	1601B	19
3EB-55-21211	1501A	15
3EB-55-21211	1601B	15
3EB-55-21250	1501A	16
3EB-55-21250	1601B	16
3EB-55-21980	2303	51
3EB-55-21980	2404	53
3EB-55-22120	1603A	16
3EB-55-22240	1603A	10
3EB-55-22260	4355A	22
3EB-55-22270	1503A	10
3EB-55-22620	1503A	17
3EB-55-22660	1503A	9
3EB-55-22670	1503A	22
3EB-55-22680	1503A	23
3EB-55-22690	1501A	20
3EB-55-22780	1503A	12
3EB-55-22790	1503A	11
3EB-55-23210	1501A	26
3EB-55-23210	1601B	24
3EB-55-23220	2404	55
3EB-55-23320	1501A	23
3EB-55-23320	1601B	21
3EB-55-23340	1503A	26
3EB-55-23340	1603A	19
3EB-55-23340	1605	26
3EB-55-23350	1603A	18
3EB-55-23350	1605	25
3EB-55-23370	1503A	3
3EB-55-23370	1603A	3
3EB-55-23370	1605	3
3EB-55-23421	1503A	4
3EB-55-23421	1603A	4
3EB-55-23421	1605	4
3EB-55-23510	1501A	29
3EB-55-23510	1601B	28
3EB-55-24150	1602	13
3EB-55-24160	1602	9
3EB-55-24221	1602	2
3EB-55-24522	1502A	2
3EB-55-24532	1502A	5
3EB-55-24560	1502A	9
3EB-55-24580	1503A	6
3EB-55-24580	1603A	7
3EB-55-24580	1605	7
3EB-55-24750	1502A	13
3EB-55-25112	1603A	5
3EB-55-25312	1503A	5
3EB-55-28112	1503A	18
3EB-55-28112	1603A	12
3EB-55-28112	1605	20
3EB-55-28512	1503A	18
3EB-55-28512	1603A	12
3EB-55-28512	1605	20
3EB-55-A1810	1602	1
3EB-55-A2460	1502A	1
3EB-55-A2510	1605	5
3EB-55-A2520	1605	19
3EB-55-A2530	1605	10
3EB-55-A2550	1605	11
3EB-55-A2550	1605	13
3EB-55-A2570	1605	14
3EB-55-A2570	1605	18
3EB-55-A2580	1605	15
3EB-55-A2990	1605	12
3EB-56-12920	1503A	13
3EB-56-22110	1503A	33
3EB-56-22110	1603A	23
3EB-56-22110	1605	17
3EB-60-11120	6001A	1
3EB-60-11120	6031	1
3EB-60-11180	6001A	7
3EB-60-11180	6031	7
3EB-60-11190	6001A	8
3EB-60-11190	6031	8
3EB-60-11220	6001A	9
3EB-60-11220	6031	9
3EB-60-11230	6001A	10
3EB-60-11230	6031	10
3EB-60-11240	6001A	11
3EB-60-11240	6031	11
3EB-60-11260	6001A	13
3EB-60-11260	6031	13
3EB-60-11270	6001A	14
3EB-60-11270	6031	14
3EB-60-11280	6001A	15
3EB-60-11280	6031	15
3EB-60-11340	6031	12
3EB-60-11390	6001A	12
3EB-60-12210	6031	1
3EB-60-12510	6001A	1
3EB-60-21010	6001A	K61
3EB-60-21010	6031	K61
3EB-60-21410	6031	3
3EB-60-A2310	6504	8
3EB-61-11180	6201	20
3EB-61-11180	6251A	21
3EB-61-11260	4131	27
3EB-61-11260	6201	25
3EB-61-11260	6251A	26
3EB-61-12190	6151	40
3EB-61-12190	6151	56
3EB-61-12190	6151	73
3EB-61-12610	6151	37
3EB-61-13320	6151	74
3EB-61-21212	6201	3
3EB-61-21212	6251A	4
3EB-61-21230	6201	16
3EB-61-21230	6251A	17
3EB-61-21241	6201	1
3EB-61-21241	6251A	1
3EB-61-21251	6201	2
3EB-61-21251	6251A	2
3EB-61-21270	6201	8
3EB-61-21270	6251A	9
3EB-61-21281	6201	4
3EB-61-21281	6251A	5
3EB-61-21290	6201	5
3EB-61-21290	6251A	6
3EB-61-21340	6251A	3
3EB-61-22230	6151	
3EB-61-22231	6151	
3EB-61-22240	6151	43
3EB-61-22270	6151	26
3EB-61-22312	6151	
3EB-61-22313	6151	
3EB-61-22710	6151	
3EB-61-22740	6151	3
3EB-61-22760	6151	5
3EB-61-22770	6151	6
3EB-61-22780	6151	7
3EB-61-22790	6151	9
3EB-61-22810	6151	10
3EB-61-22820	6151	11
3EB-61-22830	6151	12
3EB-61-22840	6151	13
3EB-61-22850	6151	14
3EB-61-22860	6151	15
3EB-61-22870	6151	16
3EB-61-22890	6151	21
3EB-61-22910	6151	22
3EB-61-22920	6151	74
3EB-61-24312	6151	
3EB-61-24313	6151	
3EB-61-A2210	6101A	
3EB-61-A2310	6101A	
3EB-64-22410	6331	20
3EB-64-22421	6331	21
3EB-64-A2210	6365A	
3EB-64-A2510	6361	
3EB-64-A2520	6361	1
3EB-64-A2530	6361	2
3EB-64-A2540	6361	3
3EB-64-A2550	6361	4
3EB-64-A2560	6361	5
3EB-64-A2570	6361	6
3EB-64-A2580	6361	7
3EB-64-A2590	6361	8
3EB-64-A2610	6361	9
3EB-64-A2620	6361	10
3EB-64-A2630	6361	11
3EB-64-A2640	6361	12
3EB-64-A2650	6361	13
3EB-64-A2710	6361	14
3EB-64-A2720	6361	K62
3EB-66-11380	6402A	5
3EB-66-11380	6502A	5
3EB-66-11580	6403A	9
3EB-66-11711	6401A	5
3EB-66-11711	6501	5
3EB-66-12492	6403A	27
3EB-66-19120	6401A	6
3EB-66-19120	6501	6
3EB-66-21120	6401A	12
3EB-66-21120	6501	12
3EB-66-21150	6401A	7
3EB-66-21150	6501	7
3EB-66-21161	6403A	24

品番 Part No.	図番号 Fig No.	索引番号 Index No.
3EB-66-21161	6503	19
3EB-66-21161	6504	14
3EB-66-21170	6370A	30
3EB-66-21170	6404	7
3EB-66-21170	6505	7
3EB-66-21181	6401A	15
3EB-66-21181	6501	15
3EB-66-21190	6401A	14
3EB-66-21190	6501	14
3EB-66-21442	6402A	1
3EB-66-21442	6502A	1
3EB-66-21452	6402A	4
3EB-66-21452	6502A	4
3EB-66-21460	6402A	10
3EB-66-21460	6502A	10
3EB-66-21670	6403A	23
3EB-66-21670	6503	18
3EB-66-21670	6504	13
3EB-66-22160	6503	13
3EB-66-22210	6403A	4
3EB-66-22210	6403A	9
3EB-66-22210	6503	4
3EB-66-22340	6503	6
3EB-66-22610	6503	4
3EB-66-22730	6403A	6
3EB-66-22780	6403A	11
3EB-66-22792	6403A	18
3EB-66-22830	6403A	4
3EB-66-23211	6403A	6
3EB-66-23410	6403A	18
3EB-66-24111	6401A	1
3EB-66-24111	6501	1
3EB-66-24121	6401A	6
3EB-66-24121	6501	6
3EB-66-24130	6401A	6
3EB-66-24130	6501	6
3EB-66-24140	6401A	6
3EB-66-24140	6501	6
3EB-66-24150	6401A	6
3EB-66-24150	6501	6
3EB-66-24210	6401A	1
3EB-66-24210	6501	1
3EB-66-25110	6404	4
3EB-66-25110	6505	4
3EB-66-25120	6404	6
3EB-66-25120	6505	6
3EB-66-25230	6370A	19
3EB-66-25250	6370A	21
3EB-66-25260	6370A	24
3EB-66-25270	6370A	9
3EB-66-25280	6370A	10
3EB-66-25490	6370A	25
3EB-66-28110	6501	9
3EB-66-28120	6501	7
3EB-66-28310	6401A	9
3EB-66-28310	6501	9
3EB-66-A2160	6370A	5
3EB-66-A2810	6504	4
3EB-66-A2820	6504	6
3EB-66-A2830	6504	10
3EB-66-A2860	6504	4
3EB-66-A2910	6370A	5
3EB-66-A2920	6370A	1
3EB-96-21210	5701A	8
3EB-96-21210	5751A	8
3EB-96-25120	5701A	5
3EB-96-25120	5751A	5
3EB-96-25130	5701A	2
3EB-96-25130	5751A	2
3EB-96-25140	5701A	1
3EB-96-25140	5751A	1
3EB-96-25520	5701A	26
3EB-96-25520	5751A	26
3EB-96-25830	5701A	29
3EB-96-25830	5751A	29
3EB-96-27710	5701A	27
3EB-96-27710	5751A	27
3EC-01-11630	1101A	3
3EC-04-12160	1301A	2
3EC-04-12160	1351	2
3EC-04-12160	1361	2
3EC-04-12160	1371	2
3EC-15-11430	2302	4
3EC-35-14310	4365	9
3EC-36-00111	4501A	2
3EC-36-00121	2041A	4
3EC-36-05011	4501A	K44
3EC-36-05021	2041A	K11
3EC-36-11212	4501A	1
3EC-36-11410	4501A	18
3EC-36-11420	4501A	19
3EC-36-11540	4501A	14
3EC-36-11550	4501A	12
3EC-36-11561	4501A	13
3EC-36-11570	4501A	15
3EC-36-11580	4501A	16
3EC-36-11590	4501A	11
3EC-36-11610	4501A	17
3EC-36-11620	2041A	10
3EC-36-11630	2041A	9
3EC-36-11660	2041A	3
3EC-36-11671	2041A	6
3EC-36-11681	2041A	4
3EC-36-11691	2041A	5
3EC-36-11720	2041A	8
3ED-33-41120	4001	1
3ED-33-41130	4001	3
3ED-33-41140	4001	5
3ED-33-41150	4001	6
3ED-33-41160	4001	4
3ED-33-41170	4001	7
3ED-33-41210	4001	8
3ED-33-41230	4001	9
3ED-33-41240	4001	12
3ED-33-41250	4001	2
3ED-33-41280	4001	11
3ED-33-42120	4001	13
3ED-33-42130	4001	14
3ED-33-42140	4001	15
3ED-96-11130	5701A	9
3ED-96-11130	5751A	9
3MA-73-13180	6201	1
3MA-73-13180	6201	2
3MA-73-13180	6251A	1
3MA-73-13180	6251A	2
3MA-73-13180	6251A	3
3SB-15-11272	2403	19
3SB-39-11250	4351	20
3SB-39-11250	4355A	18
3SB-39-11250	4361	19
3SB-39-11250	4365	15
3SB-39-11250	4451	25
3SB-39-11260	4351	15
3SB-39-11260	4355A	14
3SB-39-11260	4361	14
3SB-39-11260	4365	10
3SB-39-11260	4451	27
3SB-55-11380	1503A	21
3SB-55-11380	1603A	15
3SB-55-11380	1605	23
45B-AAX-2910	6401A	21
45B-AAX-2910	6501	21
45B-AAX-2920	6401A	19
45B-AAX-2920	6501	19
45B-AAX-2930	6401A	20
45B-AAX-2930	6501	20
45B-AAX-2940	6401A	17
45B-AAX-2940	6501	17
46B-909-1410	1301A	21
46B-909-1410	1361	25
46B-909-1410	1371	25
540-60-16130	6151	29
540-60-16130	6151	45
540-60-16130	6151	62
540-60-16150	6151	31
540-60-16150	6151	47
540-60-16150	6151	64
540-60-16160	6151	32
540-60-16160	6151	48
540-60-16160	6151	65
540-60-16170	6151	33
540-60-16170	6151	49
540-60-16170	6151	66
540-60-16180	6151	34
540-60-16180	6151	67
540-60-16190	6151	35
540-60-16190	6151	51
540-60-16190	6151	68
540-60-16210	6151	36
540-60-16210	6151	52
540-60-16210	6151	69
540-60-16220	6151	53
540-60-16220	6151	70
540-60-16230	6151	39
540-60-16230	6151	55
540-60-16230	6151	72
540-60-16450	6151	23
540-60-16450	6151	38
540-60-16450	6151	54
540-60-16450	6151	71

品番 Part No.	図番号 Fig No.	索引番号 Index No.
540-60-16470	6151	79
540-60-16490	6151	77
540-62-12540	6401A	16
540-62-12540	6403A	26
540-62-12540	6501	16
540-62-12540	6503	21
540-62-12540	6504	11
540-62-12540	6504	16
540-62-13330	6370A	18
540-62-13330	6401A	18
540-62-13330	6402A	3
540-62-13330	6402A	6
540-62-13330	6501	18
540-62-13330	6502A	3
540-62-13330	6502A	6
548-62-11340	6402A	2
548-62-11340	6502A	2
549-60-15130	6151	25
549-60-15130	6151	75
549-60-15140	6151	76
549-60-15150	6151	78
549-60-15220	6151	30
549-60-15220	6151	46
549-60-15220	6151	63
549-60-15240	6151	41
549-60-15250	6151	42
600-311-9670	1503A	30
600-815-7921	1503A	31
6130-12-5580	1201A	7
6142-12-5850	1201A	8
711-04-16350	2303	24
711-04-16350	2404	26
711-04-16360	2303	16
711-04-16360	2404	16
CPC1010055520	1301A	1
CPC1010055520	1351	1
CPC89C0025010	1301A	1
CPC89C0025010	1351	1
DUP101870	1111	3
DUP101870	1151	3
DUP122510	1111	2
DUP122510	1151	2
DUP522958	1111	8
DUP522958	1151	8
DUP526619	1151	1
DUP526624	1111	1
DUP526942	1111	4
DUP526942	1151	4
EA14317	4251A	2
EA14380	4251A	11
EA14400	4251A	5
EA15147-281	6041	1
EA16007-513	6041	11
EA16048-27	6041	13
EA16119-530	6041	12
EA18001	4251A	15

品番 Part No.	図番号 Fig No.	索引番号 Index No.
EA22828	4251A	17
EA25300-39	6041	2
EA25300-523	6041	3
EA25300-600	6041	4
EA25300-601	6041	5
EA25300-603	6041	7
EA25300-647	6041	6
EA25300-901	6041	K63
EA25307-254	6041	8
EA25307-314	6041	9
EA25307-318	6041	10
EA5126	4251A	25
EA5389-009	4251A	28
EA64009	4251A	8
EA64426	4251A	K46
EA64450	4251A	22
EA6862	4251A	16
EA7970	4251A	24
EA8318	4251A	13
EA8438	4251A	27
EA8618-024	4251A	26
EA8703	4251A	3
H03110-14	5401	3
H03110-16	5401	5
H03110-17	5401	1
H03110-18	5401	2
H03110-19	5401	4
H03110-20	5401	6
H03110-21	5401	7
H03110-47	5401	8
HE13380-A	1271A	9
HE1500-04222	1271A	8
HE40-0011926	1271A	7
HU1052	6101A	76
HU1861	6101A	78
HU241B	6101A	11
HU3108	6101A	40
HU3108	6101A	79
HU3389-1	6101A	7
HU3432	6101A	38
HU3432	6101A	54
HU3432	6101A	71
HU5001F1	6101A	
HU5002-A360	6101A	26
HU5002-A748	6101A	42
HU5002V9	6101A	59
HU5003-A1	6101A	25
HU5011	6101A	35
HU5011	6101A	51
HU5011	6101A	68
HU5012	6101A	28
HU5012	6101A	44
HU5012	6101A	61
HU5013	6101A	32
HU5013	6101A	65
HU5014	6101A	34

品番 Part No.	図番号 Fig No.	索引番号 Index No.
HU5014	6101A	50
HU5014	6101A	67
HU5015	6101A	33
HU5015	6101A	66
HU5028	6101A	31
HU5028	6101A	47
HU5028	6101A	64
HU5035	6101A	39
HU5035	6101A	55
HU5035	6101A	72
HU5060	6101A	73
HU5060-T	6101A	23
HU5064	6101A	36
HU5064	6101A	52
HU5064	6101A	69
HU5069-33	6101A	77
HU5069-44	6101A	77
HU5089-22	6101A	75
HU5089-66	6101A	75
HU51790-2	6101A	K69
HU51790-5	6101A	K68
HU51875	6101A	15
HU51983	6101A	49
HU52270	6101A	57
HU52345	6101A	17
HU5264	6101A	48
HU54251	6101A	3
HU54252-1	6101A	21
HU54255	6101A	9
HU54256	6101A	20
HU54261-1	6101A	4
HU54262	6101A	19
HU54269	6101A	5
HU54270	6101A	13
HU54290	6101A	6
HU54298	6101A	10
HU54300	6101A	16
HU54622	6101A	K67
HU6957	6101A	14
SH3110250	6331	19
SH41005020	6365A	5
SH41008714	6331	6
SH688-30003	6365A	12
SH68800002	6365A	3
SH68820006	6331	1
SH68820012	6365A	2
SH68850025	6365A	4
SH68850090	6365A	1
SH69530025	6331	2
SH69554200	6331	10
SH69554203	6331	3
SH69554204	6331	4
SH69554205	6331	15
SH69554206	6331	18
SH695S003	6331	K64
SH788250157	6365A	K65

CASCADE MAST (2-STAGE) (FOR C-SPEC)

Serial Number Index

Product I.D. No.	Overall Outer Channel Length	Main Lift Cylinder Page	Internal Hose Reeving Page	Outer Upright Page	Inner Upright Page	Carriage Page	Hoist Chain Page	Load Backrest Page
55D-MS-069	95 in	1	3	5	7	9	15	19
55D-MS-070	95 in	1	3	5	7	9	15	19
55D-MS-071	101 in	1	3	5	7	9	15	19
55D-MS-072	101 in	1	3	5	7	9	15	19
55D-MS-073	81 in	1	3	5	7	10	15	19
55D-MS-074	81 in	1	3	5	7	10	15	19
55D-MS-075	82 in	1	3	5	7	10	15	19
55D-MS-076	82 in	1	3	5	7	10	15	19
55D-MS-077	76 in	1	3	5	7	10	15	19
55D-MS-078	82 in	1	3	5	7	9	15	19
55D-MS-079	80 in	1	3	5	7	10	15	19
55D-MS-080	101 in	1	3	5	7	9	15	19
55D-MS-081	80 in	1	3	5	7	9	15	19
55D-MS-082	80 in	1	3	5	7	10	15	19
55D-MS-083	57 in	1	3	5	7	9	15	19
55D-MS-084	89 in	1	3	5	7	9	15	19
55D-MS-085	81 in	1	3	5	7	9	15	19
55D-MS-086	80 in	1	3	5	7	9	15	19
55D-MS-087	58 in	1	3	5	7	9	15	19
55D-MS-088	79 in	1	3	5	7	9	15	19
55D-MS-089	89 in	1	3	5	7	9	15	19
55D-MS-090	81 in	1	3	5	7	9	15	19
55D-MS-091	80 in	1	3	5	7	9	15	19
55D-MS-092	56 in	1	3	5	7	10	15	19
55D-MS-093	99 in	1	3	5	7	9	15	19
55D-MS-094	74 in	1	3	5	7	9	15	19
55D-MS-095	80 in	1	3	5	7	9	15	19
55D-MS-096	81 in	1	3	5	7	9	15	19
55D-MS-097	75 in	1	3	5	7	10	15	19
55D-MS-098	80 in	1	3	5	7	9	15	19
55D-MS-099	57 in	1	3	5	7	9	15	19
55D-MS-100	80 in	1	3	5	7	9	15	19
55D-MS-101	57 in	1	3	5	7	9	15	19
55D-MS-102	101 in	1	3	5	7	9	15	19
55D-MS-103	68 in	1	3	5	7	9	15	19
55D-MS-104	73 in	1	3	5	7	9	15	19
55D-MS-105	74 in	1	3	5	7	9	15	19
55D-MS-106	69 in	1	3	5	7	9	15	19
55D-MS-107	95 in	1	3	5	7	9	15	19
55D-MS-108	82 in	1	3	5	7	9	15	19
55D-MS-109	57 in	1	3	5	7	9	15	19
55D-MS-110	80 in	1	3	5	7	9	15	19
55D-MS-111	74 in	1	3	5	7	9	15	19
55D-MS-112	80 in	1	3	5	7	10	15	19
55D-MS-113	99 in	1	3	5	7	9	15	19
55D-MS-114	80 in	1	3	5	7	9	15	19
55D-MS-115	82 in	1	3	5	7	9	15	19
60D-MS-001	80 in	1	3	5	7	11	17	19
60D-MS-002	80 in	1	3	5	7	11	17	19
60D-MS-003	92 in	1	3	5	7	11	17	19
60D-MS-004	80 in	1	3	5	7	11	17	19
60D-MS-005	83 in	1	3	5	7	11	17	19
60D-MS-006	80 in	1	3	5	7	11	17	19
60D-MS-007	74 in	1	3	5	7	11	17	19
60D-MS-008	92 in	1	3	5	7	11	17	19
60D-MS-009	80 in	1	3	5	7	11	17	19
60D-MS-010	80 in	1	3	5	7	11	17	19
60D-MS-012	92 in	1	3	5	7	11	17	19
60D-MS-013	83 in	1	3	5	7	11	17	19
60D-MS-014	68 in	1	3	5	7	11	17	19
60D-MS-015	89 in	1	3	5	7	11	17	19

Serial Number Index

Product I.D. No.	Overall Outer Channel Length	Main Lift Cylinder Page	Internal Hose Reeving Page	Outer Upright Page	Inner Upright Page	Carriage Page	Hoist Chain Page	Load Backrest Page
60D-MS-016	95 in	1	3	5	7	11	17	19
60D-MS-017	95 in	1	3	5	7	11	17	19
60D-MS-018	80 in	1	3	5	7	11	17	19
60D-MS-019	80 in	1	3	5	7	11	17	19
60D-MS-020	89 in	1	3	5	7	11	17	19
60D-MS-021	80 in	1	3	5	7	11	17	19
60D-MS-022	80 in	1	3	5	7	11	17	19
60D-MS-023	95 in	1	3	5	7	11	17	19
60D-MS-024	75 in	1	3	5	7	11	17	19
60D-MS-025	75 in	1	3	5	7	11	17	19
60D-MS-026	95 in	1	3	5	7	11	17	19
60D-MS-027	95 in	1	3	5	7	11	17	19
60D-MS-028	101 in	1	3	5	7	11	17	19
60D-MS-029	101 in	1	3	5	7	11	17	19
60D-MS-030	89 in	1	3	5	7	11	17	19
60D-MS-031	80 in	1	3	5	7	12	17	19
60D-MS-032	80 in	1	3	5	7	11	17	19
60D-MS-033	80 in	1	3	5	7	11	17	19

Recommended Spare Parts List

55D/60D 2-Stage Limited Free Lift Mast

Part No. 55D	Part No. 60D	Description	WORLDMAST's Serviced 1-5	6-19	20-50
		MAIN LIFT CYLINDER and HOSES			
■	■	Main Lift Cylinder Assembly	0	0	1
■	■	Cylinder Service Kit	2	4	8
CC7332	CC7332	Snap Ring	2	4	8
CC683797	CC683797	Shim	3	6	9
CC684300	CC684300	Hoses	1	2	4
■	■	Lowering Control Valve	0	1	2
		INTERNAL REEVING			
■	■	Hose L.H. and R.H	2	4	8
CC677267	CC677267	Hose Sheave	1	2	4
CC2453	CC2453	Fitting, 6-6	1	2	4
CC2375	CC2375	Fitting, 6-6	1	2	4
		UPRIGHTS			
CC678667	CC684305	Chain Pin	8	8	16
CC6508	CC6508	Cotter Pin	8	16	32
CC678661	CC680242	Chain Anchor	1	2	4
CC687419	CC687745	Chain Anchor	1	2	4
CC668031	CC668031	Nut	2	1	2
CC6518	CC6518	Cotter Pin	4	8	16
CC631881	CC631881	Shim	16	32	64
CC660050	CC660050	Roller	4	8	16
CC660051	CC660051	Chain Sheave	2	4	8
CC683798	CC683798	Thrust Plug	2	4	8
		CARRIAGE			
■	■	Hoist Chain	2	4	8
CC683819	CC683819	Carriage Side Thrust Roller	4	8	16
CC660050	CC660050	Carriage Roller	4	8	16
		LUBRICANT			
CC599474	CC599474	13 oz Aerosol Can	1	3	5
		PAINT			
CC678236	CC678236	12 oz Aerosol Can (black)	1	1	1

■ See specific parts page for part number.

Fig. 7001 Safety Decals and Publications

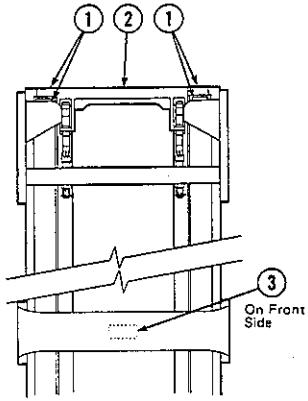

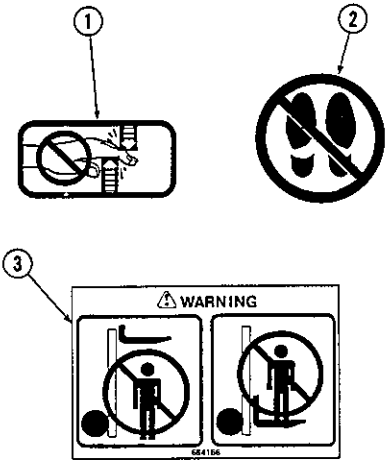

55D/60D

REF	QTY	PART NO	DESCRIPTION
1	4	CC665595	No Hand Hold
2	2	CC679150	No Step
3	1	CC684166	Warning

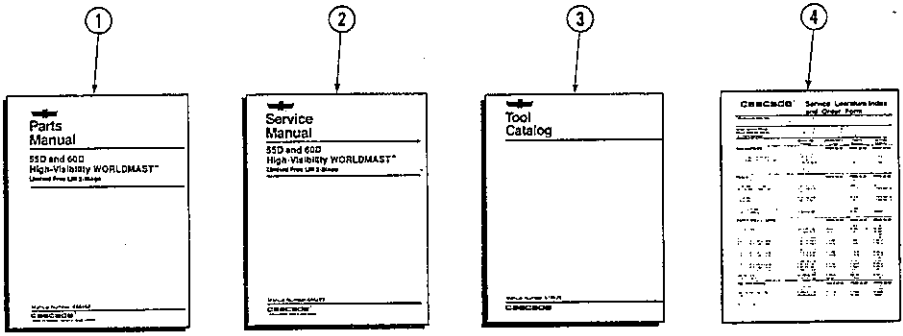

55D/60D

REF	PART NO	DESCRIPTION
1	CC686462	Parts Manual
2	CC686482	Service Manual
3	CC679929	Tool Catalog
4	CC673964	Literature Index Order Form

Fig. 7002 Main Lift Cylinder-2600 PSI

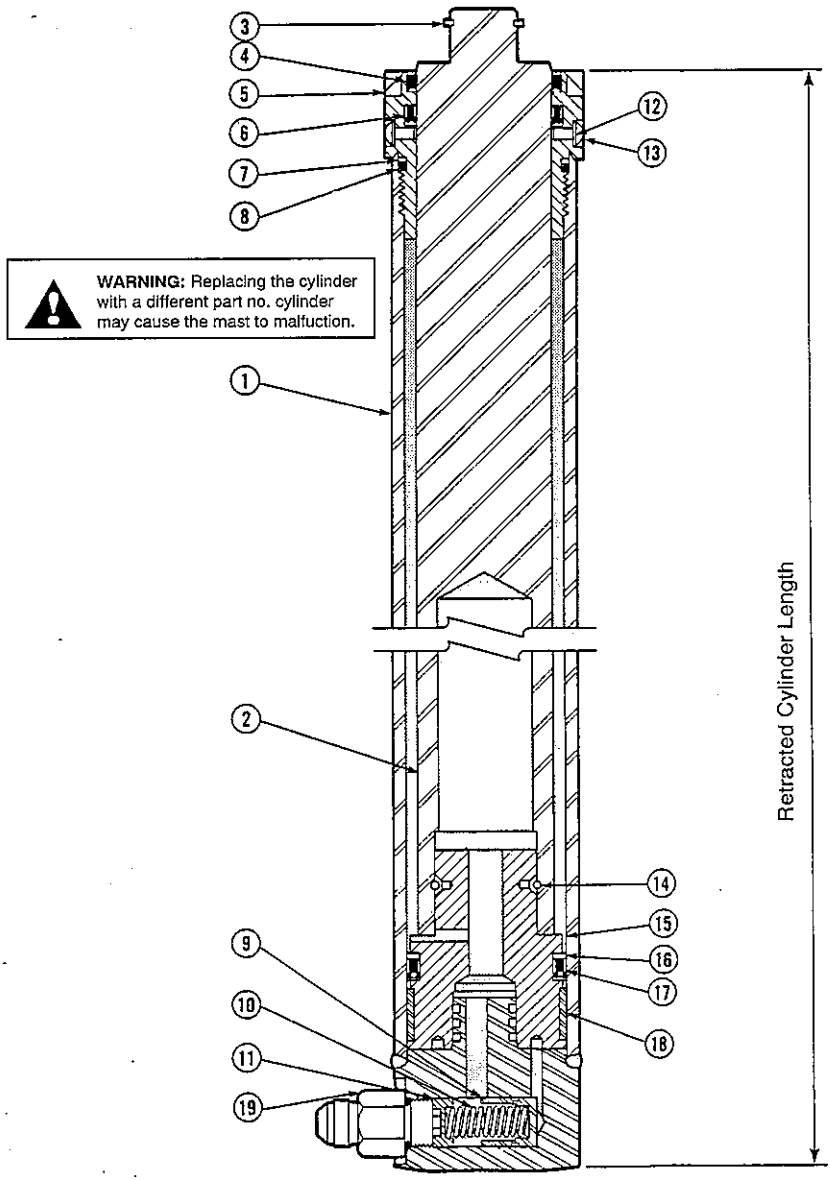

Main Lift Cylinder-2600 PSI

55D/60D
Items that vary according to mast height.

Retracted Cahnnel Length (In).	Retracted Cylinder Length (in).	Cylinder Assembly Qty 1	REF.NO.1 Shell Qty 1	REF.NO.2 Plunger Qty 1
56	45.25	CC580834	CC5432-1117	CC5444-1083
57	46.25	CC580694	CC5432-1142	CC5444-1108
58	47.25	CC580697	CC5432-1167	CC5444-1133
59	48.25	CC580700	CC5432-1193	CC5444-1159
60	49.25	CC580703	CC5432-1218	CC5444-1184
66	50.25	CC580706	CC5432-1244	CC5444-1210
62	51.25	CC580709	CC5432-1269	CC5444-1235
63	52.25	CC580712	CC5432-1294	CC5444-1260
64	53.25	CC580715	CC5432-1320	CC5444-1286
65	54.25	CC580718	CC5432-1345	CC5444-1311
66	55.25	CC580721	CC5432-1371	CC5444-1337
67	56.25	CC580724	CC5432-1396	CC5444-1362
68	57.25	CC580727	CC5432-1421	CC5444-1387
69	58.25	CC580730	CC5432-1447	CC5444-1413
70	59.25	CC580733	CC5432-1472	CC5444-1438
71	60.25	CC580736	CC5432-1498	CC5444-1464
72	61.25	CC580739	CC5432-1523	CC5444-1489
73	62.25	CC580742	CC5432-1548	CC5444-1514
74	63.25	CC580745	CC5432-1574	CC5444-1540
75	64.25	CC580748	CC5432-1599	CC5444-1565
76	65.25	CC580751	CC5432-1625	CC5444-1591
77	66.25	CC580754	CC5432-1650	CC5444-1616
78	67.25	CC580757	CC5432-1675	CC5444-1641
79	68.25	CC580761	CC5432-1701	CC5444-1667
80	69.25	CC580765	CC5432-1726	CC5444-1692
81	70.25	CC580769	CC5432-1752	CC5444-1718
82	71.25	CC580773	CC5432-1777	CC5444-1743
83	72.25	CC580777	CC5432-1802	CC5444-1768
84	73.25	CC580781	CC5432-1828	CC5444-1794
85	74.25	CC580785	CC5432-1853	CC5444-1819
86	75.25	CC580786	CC5432-1879	CC5444-1845
87	76.25	CC580787	CC5432-1904	CC5444-1870
88	77.25	CC580788	CC5432-1929	CC5444-1895
89	78.25	CC580790	CC5432-1955	CC5444-1921
90	79.25	CC580792	CC5432-1980	CC5444-1946
91	80.25	CC580795	CC5432-2006	CC5444-1972
92	81.25	CC580798	CC5432-2031	CC5444-1997
93	82.25	CC580801	CC5432-2056	CC5444-2022
94	83.25	CC580804	CC5432-2082	CC5444-2048
95	84.25	CC580807	CC5432-2107	CC5444-2073
96	85.25	CC580810	CC5432-2133	CC5444-2099
97	86.25	CC580813	CC5432-2158	CC5444-2124
98	87.25	CC580816	CC5432-2183	CC5444-2149
99	88.25	CC580819	CC5432-2209	CC5444-2175
100	89.25	CC580820	CC5432-2234	CC5444-2200
101	90.25	CC580821	CC5432-2260	CC5444-2226

Common items.

REF	QTY	PART NO	DESCRIPTION	REF	QTY	PART NO	DESCRIPTION
3	1	CC559924	★Snap Ring	12	1	CC622729	★Seal
4	1	CC559863	★Plunger Wiper	13	1	CC4850	Capscrew, 164x1/4NC-GR8
5	1	CC558522	Retainer	14	1	CC559906	Pull-In wire
6	1	CC560022	★Plunger Seal	15	1	CC560462	Piston
7	1	CC559859	★Back-Up Ring	16	1	CC560066	★Back-Up Ring
8	1	CC559858	★O-Ring	17	1	CC559851	★Piston Seal
9	1	CC560467	Piston-Lowering Fuse	18	1	CC559864	★Wear Ring
10	1	CC560824	Spring	19	1	CC684036	■Fitting, 8-10
11	1	CC560465	Spring Guide				

■ Not included in Cylinder Assembly. ★ Included in Service Kit 560351

Fig. 7003 Main Lift Cylinder-2600 PSI

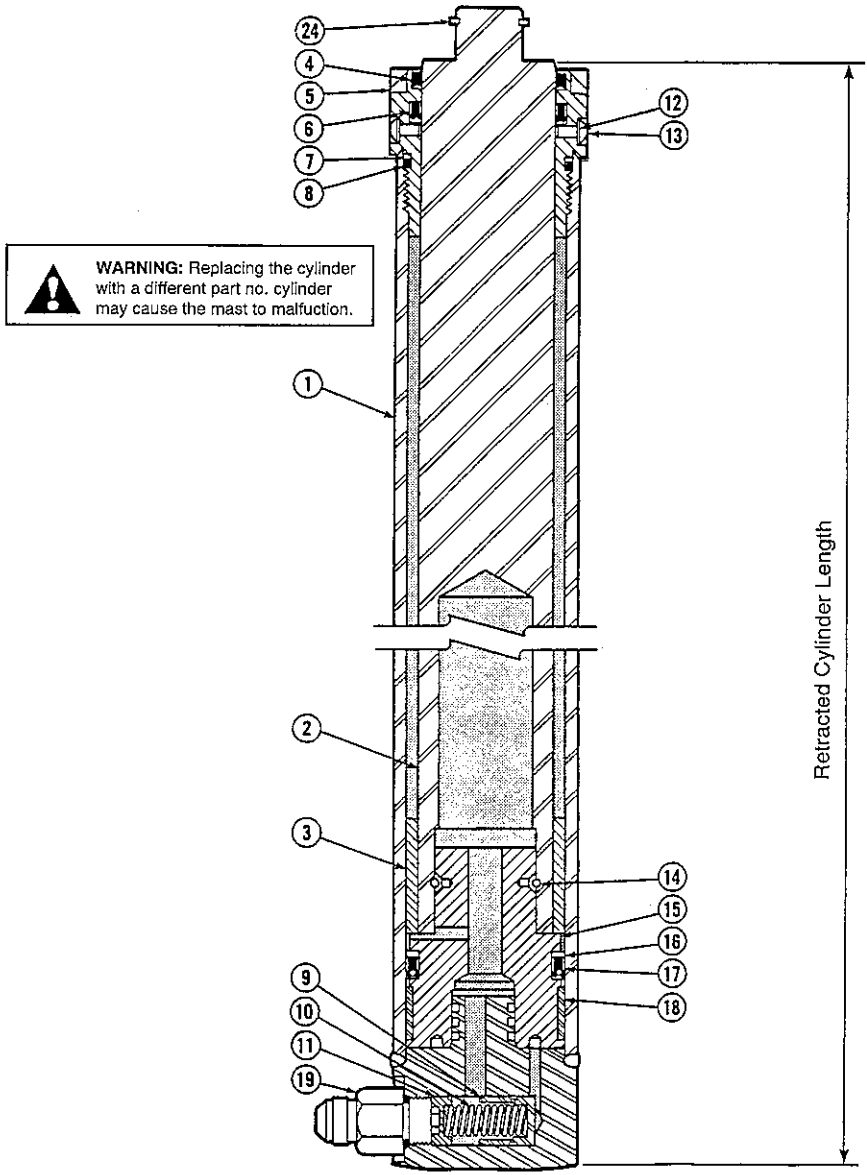

Main Lift Cylinder-2600 PSI

55D/60D

Items that vary according to mast height.

Retracted Cahnnel Length (In).	Retracted Cylinder Length (In).	Cylinder Assembly Qty 1 REF.NO.1	Shell Qty 1	REF.NO.2 Plunger Qty 1	REF.NO.3 Spacer Qty 1
103	92.25	CC581297	CC5432-2335	CC5444-2276	CC561561
104	93.25	CC581300	CC5432-2360	CC5444-2301	CC561561
105	94.25	CC581303	CC5432-2386	CC5444-2327	CC561561
106	95.25	CC581306	CC5432-2411	CC5444-2352	CC561561
107	96.25	CC581309	CC5432-2437	CC5444-2378	CC561561
109	98.25	CC581316	CC5432-2514	CC5444-2429	CC561562
110	99.25	CC581319	CC5432-2539	CC5444-2454	CC561562
111	100.25	CC581322	CC5432-2565	CC5444-2480	CC561562
112	101.25	CC581313	CC5432-2590	CC5444-2505	CC561562
113	102.25	CC581327	CC5432-2616	CC5444-2531	CC561562
114	103.25	CC581330	CC5432-2641	CC5444-2556	CC561562
116	105.25	CC581336	CC5432-2716	CC5444-2606	CC561563
117	106.25	CC581339	CC5432-2742	CC5444-2632	CC561563
118	107.25	CC581342	CC5432-2767	CC5444-2657	CC561563
119	108.25	CC581345	CC5432-2793	CC5444-2683	CC561563
120	109.25	CC581348	CC5432-2818	CC5444-2708	CC561563
121	110.25	CC581351	CC5432-2843	CC5444-2733	CC561563
123	112.25	CC581357	CC5432-2921	CC5444-2785	CC561564
124	113.25	CC581360	CC5432-2946	CC5444-2810	CC561564
125	114.25	CC581361	CC5432-2972	CC5444-2836	CC561564
126	115.25	CC581362	CC5432-2997	CC5444-2861	CC561564
127	116.25	CC581363	CC5432-3022	CC5444-2886	CC561564
128	117.25	CC581364	CC5432-3048	CC5444-2912	CC561564
130	119.25	CC581367	CC5432-3123	CC5444-2962	CC561565
131	120.25	CC581368	CC5432-3149	CC5444-2988	CC561565
132	121.25	CC581369	CC5432-3174	CC5444-3013	CC561565
133	122.25	CC581370	CC5432-3199	CC5444-3038	CC561565
134	123.25	CC581371	CC5432-3225	CC5444-3064	CC561565
135	124.25	CC581372	CC5432-3250	CC5444-3089	CC561565

Common items.

REF	QTY	PART NO	DESCRIPTION
4	1	CC558522	★Plunger Wiper
5	1	CC558522	Retainer
6	1	CC560022	★Plunger Seal
7	1	CC559859	★Back-Up Ring
8	1	CC559858	★O-Ring
9	1	CC560467	Piston-Lowering Fuse
10	1	CC560824	Spring
11	2	CC560465	Spring Guide
12	2	CC622729	★Seal
13	1	CC4850	Capscrew, 164x1/4NC-GR8
14	1	CC559906	Pull-In wire
15	1	CC560462	Piston
16	1	CC560066	★Back-Up Ring
17	1	CC559851	★Piston Seal
18	1	CC559864	★Wear Ring
19	1	CC684036	■ Fitting, 8-10
20	1	CC559924	■ Fitting, 8-10

■ Not included in Cylinder Assembly.
★ Included in Service Kit 560351

Fig. 7004 Internal Hose Reeving

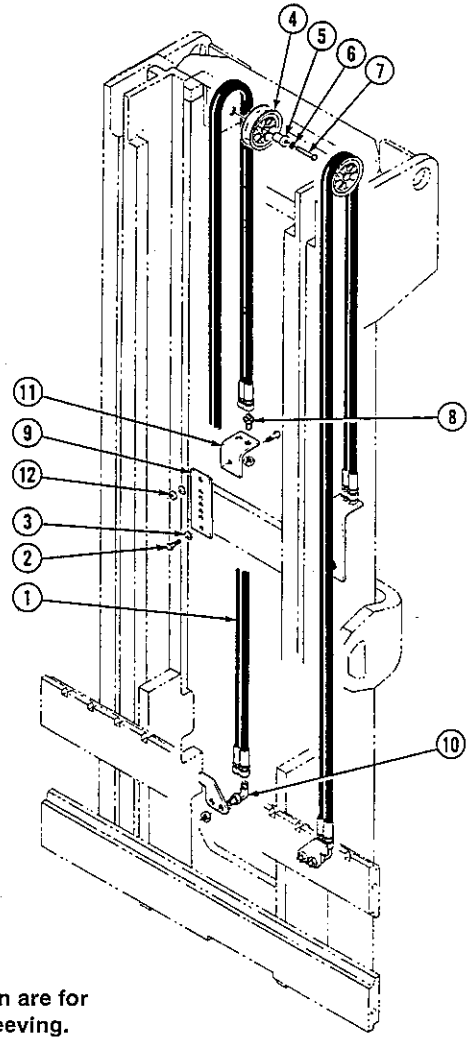

Quantities shown are for single internal reeving.

Internal Hose Reeving

55D/60D

Items that vary according to mast helght.

Retracted Channel Length (In.)	Internal Reeving Group No.	Ref. No.1 Hose Part No.
56	CC688591	CC3550-1405
57	CC688592	CC3550-1455
58	CC688593	CC3550-1505
59	CC688594	CC3550-1555
60	CC688595	CC3550-1604
61	CC688596	CC3550-1654
62	CC688597	CC3550-1704
63	CC688598	CC3550-1754
64	CC688599	CC3550-1804
65	CC688600	CC3550-1854
66	CC688601	CC3550-1904
67	CC688602	CC3550-1953
68	CC688603	CC3550-2003
69	CC688604	CC3550-2053
70	CC688605	CC3550-2103
71	CC688606	CC3550-2153
72	CC688607	CC3550-2203
73	CC688608	CC3550-2253
74	CC688609	CC3550-2302
75	CC688610	CC3550-2352
76	CC688611	CC3550-2402
77	CC688612	CC3550-2452
78	CC688613	CC3550-2502
79	CC688614	CC3550-2552
80	CC688615	CC3550-2602
81	CC688616	CC3550-2651
82	CC688617	CC3550-2701
83	CC688618	CC3550-2751
84	CC688619	CC3550-2801
85	CC688620	CC3550-2851
86	CC688621	CC3550-2901
87	CC688622	CC3550-2945
88	CC688623	CC3550-3005
89	CC688624	CC3550-3055
90	CC688625	CC3550-3100
91	CC688626	CC3550-3155
92	CC688627	CC3550-3205
93	CC688628	CC8550-3250
94	CC688629	CC3550-3305
95	CC688630	CC3550-3355
96	CC688631	CC3550-3399
97	CC688632	CC3550-3455
98	CC688633	CC3550-3505
99	CC688634	CC3550-3549
100	CC688635	CC3550-3605
101	CC688636	CC3550-3655

WARNING: The internal reeving hoses must be Parker 560 H type hose. Other hoses may cause the mast to malfunction.

Common items.

REF	QTY	PART NO	DESCRIPTION	REF	QTY	PART NO	DESCRIPTION
2	2	CC684649	Capscrew, M10×1.5×25-8.8	8	2	CC2375	Fitting, 6-6
3	2	CC683826	Lockwasher,M 10	9	1	CC684658	Bracket
4	1	CC677267	Hose Sheave	10	2	CC2453	Fitting, 6-6
5	1	CC684657	Shaft	11	1	CC683919	Bracket
6	1	CC683822	Lockwasher, M12	12	1	CC763023	Nut, M10
7	1	CC684650	Capscrew, M12×1.75×55-8.8				

Fig. 7005 Internal Hose Reeving

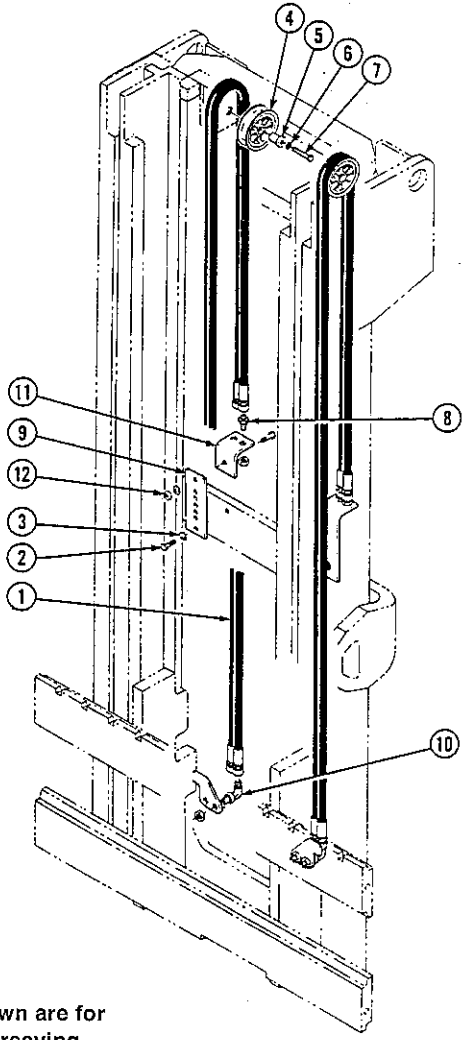

Quantities shown are for single internal reeving.

Internal Hose Reeving

55D/60D

Items that vary according to mast height.

Retracted Channel Length (In.)	Internal Reeving Group No.	Ref. No.1 Hose Part No.
103	CC688638	CC3550-1405
104	CC688639	CC3550-1455
105	CC688640	CC3550-1505
106	CC688641	CC3550-1555
107	CC688642	CC3550-1604
109	CC688644	CC3550-1654
110	CC688645	CC3550-1704
111	CC688646	CC3550-1754
112	CC688647	CC3550-1804
113	CC688648	CC3550-1854
114	CC688649	CC3550-1904
116	CC688651	CC3550-1953
117	CC688652	CC3550-2003
118	CC688653	CC3550-2053
119	CC688654	CC3550-2103
120	CC688655	CC3550-2153
121	CC688656	CC3550-2203
123	CC688658	CC3550-2253
124	CC688659	CC3550-2302
125	CC688660	CC3550-2352
126	CC688661	CC3550-2402
127	CC688662	CC3550-2452
128	CC688663	CC3550-2502
130	CC688665	CC3550-2552
131	CC688666	CC3550-2602
132	CC688667	CC3550-2651
133	CC688668	CC3550-2701
134	CC688669	CC3550-2751
135	CC688670	CC3550-2801

WARNING: The Internal feeving hoses must be Parker 560 H type hose. Other hoses may cause the mast to malfunction.

Common items.

REF	QTY	PART NO	DESCRIPTION	REF	QTY	PART NO	DESCRIPTION
2	2	CC684649	Capscrew, M10×1.5×25-8.8	8	2	CC2375	Fitting, 6-6
3	2	CC683826	Lockwasher, M10	9	1	CC684658	Bracket
4	1	CC677267	Hose Sheave	10	2	CC2453	Fitting, 6-6
5	1	CC684657	Shaft	11	1	CC683919	Bracket
6	1	CC683822	Lockwasher, M12	12	1	CC763023	Nut, M10
7	1	CC684650	Capscrew, M12×1.75×55-8.8				

Fig. 7006 Outer Upright

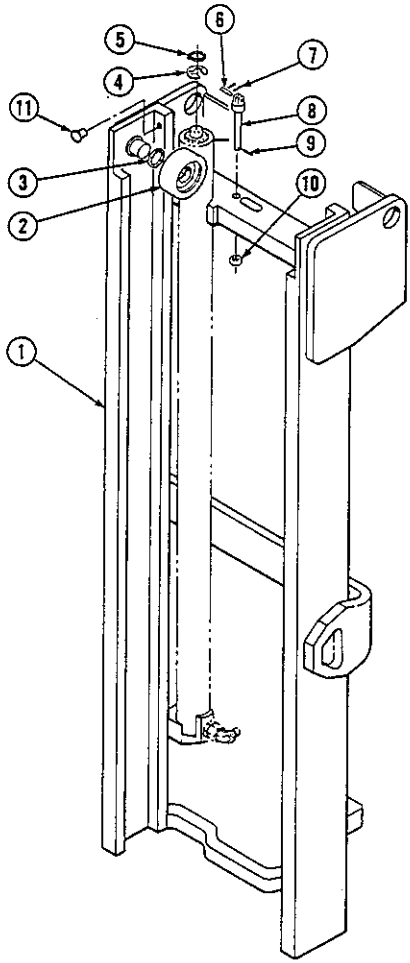

NOTE: See page 22-32 for Mast Installation Accessories.

Outer Upright

55D/60D

Items that vary according to mast height.

REF	QTY	PART NO	DESCRIPTION
1	1	■ CC684129	Outer Upright - 56 in. ★
1	1	■ CC683402	Outer Upright - 57 in. ★
1	1	■ CC683403	Outer Upright - 58 in. ★
1	1	■ CC683404	Outer Upright - 59 in. ★
1	1	■ CC683405	Outer Upright - 60 in. ★
1	1	■ CC683406	Outer Upright - 61 in. ★
1	1	■ CC683407	Outer Upright - 62 in. ★
1	1	■ CC683408	Outer Upright - 63 in. ★
1	1	■ CC683409	Outer Upright - 64 in. ★
1	1	■ CC683410	Outer Upright - 65 in. ★
1	1	■ CC683411	Outer Upright - 66 in. ★
1	1	■ CC683412	Outer Upright - 67 in. ★
1	1	■ CC683413	Outer Upright - 68 in. ★
1	1	■ CC683414	Outer Upright - 69 in. ★
1	1	■ CC683415	Outer Upright - 70 in. ★
1	1	■ CC683416	Outer Upright - 71 in. ★
1	1	■ CC683417	Outer Upright - 72 in. ★
1	1	■ CC683418	Outer Upright - 73 in. ★
1	1	■ CC683419	Outer Upright - 74 in. ★
1	1	■ CC683420	Outer Upright - 75 in. ★
1	1	■ CC683421	Outer Upright - 76 in. ★
1	1	■ CC683422	Outer Upright - 77 in. ★
1	1	■ CC683423	Outer Upright - 78 in. ★
1	1	■ CC683424	Outer Upright - 79 in. ★
1	1	■ CC683425	Outer Upright - 80 in. ★
1	1	■ CC683426	Outer Upright - 81 in. ★
1	1	■ CC683427	Outer Upright - 82 in. ★
1	1	■ CC683428	Outer Upright - 83 in. ★
1	1	■ CC683429	Outer Upright - 84 in. ★
1	1	■ CC683430	Outer Upright - 85 in. ★
1	1	■ CC683431	Outer Upright - 86 in. ★
1	1	■ CC683432	Outer Upright - 87 in. ★
1	1	■ CC683433	Outer Upright - 88 in. ★
1	1	■ CC683434	Outer Upright - 89 in. ★
1	1	■ CC683435	Outer Upright - 90 in. ★
1	1	■ CC683436	Outer Upright - 91 in. ★
1	1	■ CC683437	Outer Upright - 92 in. ★
1	1	■ CC683438	Outer Upright - 93 in. ★
1	1	■ CC683439	Outer Upright - 94 in. ★
1	1	■ CC683440	Outer Upright - 95 in. ★
1	1	■ CC683441	Outer Upright - 96 in. ★
1	1	■ CC683442	Outer Upright - 97 in. ★
1	1	■ CC683443	Outer Upright - 98 in. ★
1	1	■ CC683444	Outer Upright - 99 in. ★
1	1	■ CC683445	Outer Upright - 100 in. ★

Common items.

REF	QTY	PART NO	DESCRIPTION	REF	QTY	PART NO	DESCRIPTION
2	2	CC660050	Roller	7	2	CC6508	Cotter Pin
3	◆	CC631881	Shim	8	2	CC678661	Chain Anchor-55D
4	2	CC683797	Shim	8	2	CC680242	Chain Anchor-60D
5	2	CC7332	Snap Ring	9	2	CC6518	Cotter Pin
6	2	CC678667	Chain Pin-55D	10	2	CC668031	Nut
6	2	CC684305	Chain Pin-60D	11	2	CC683798	Thrust Plug

★ Retracted channel length.

◆ Quantity as required.

■ These part numbers are for reference only. Mounting brackets are not included. To order an Outer Upright with mounting brackets contact the Cascade Parts Depot (513)322-1199. The mast serial number must be supplied.

Fig. 7007 Outer Upright

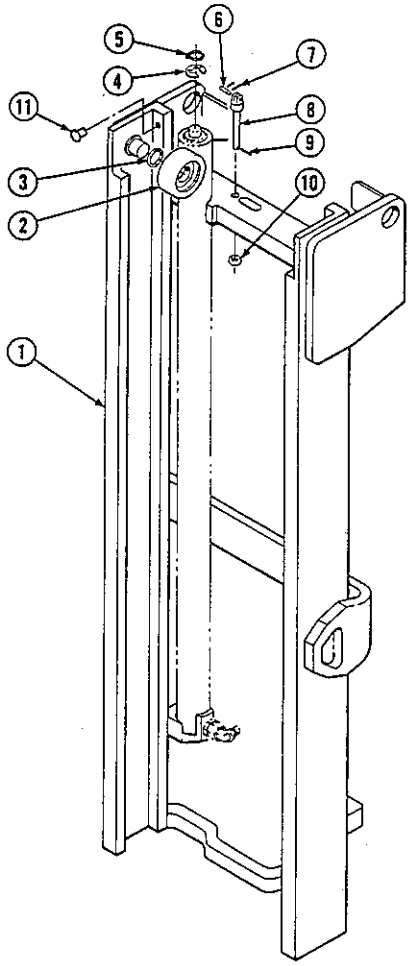

NOTE: See page 22-32 for Mast installation Accessories.

Outer Upright

55D/60D

Items that vary according to mast height.

REF	QTY		PART NO	DESCRIPTION	
1	1	■	CC688078	Outer Upright - 103in.	★
1	1	■	CC688079	Outer Upright - 104in.	★
1	1	■	CC688080	Outer Upright - 105in.	★
1	1	■	CC688081	Outer Upright - 106in.	★
1	1	■	CC688082	Outer Upright - 107in.	★
1	1	■	CC688083	Outer Upright - 109in.	★
1	1	■	CC688084	Outer Upright - 110in.	★
1	1	■	CC688085	Outer Upright - 111in.	★
1	1	■	CC688086	Outer Upright - 112in.	★
1	1	■	CC688087	Outer Upright - 113in.	★
1	1	■	CC688088	Outer Upright - 114in.	★
1	1	■	CC688089	Outer Upright - 116in.	★
1	1	■	CC688090	Outer Upright - 117in.	★
1	1	■	CC688091	Outer Upright - 118in.	★
1	1	■	CC688092	Outer Upright - 119in.	★
1	1	■	CC688093	Outer Upright - 120in.	★
1	1	■	CC688094	Outer Upright - 121in.	★
1	1	■	CC688095	Outer Upright - 123in.	★
1	1	■	CC688096	Outer Upright - 124in.	★
1	1	■	CC688097	Outer Upright - 125in.	★
1	1	■	CC688098	Outer Upright - 126in.	★
1	1	■	CC688099	Outer Upright - 127in.	★
1	1	■	CC688100	Outer Upright - 128in.	★
1	1	■	CC688101	Outer Upright - 130in.	★
1	1	■	CC688102	Outer Upright - 131in.	★
1	1	■	CC688103	Outer Upright - 132in.	★
1	1	■	CC688104	Outer Upright - 133in.	★
1	1	■	CC688105	Outer Upright - 134in.	★
1	1	■	CC688106	Outer Upright - 135in.	★

Common items.

REF	QTY	PART NO	DESCRIPTION	REF	QTY	PART NO	DESCRIPTION
2	2	CC660050	Roller	7	2	CC6508	Cotter Pin
3	◆	CC631881	Shim	8	2	CC678661	Chain Anchor-55D
4	2	CC683797	Shim	8	2	CC680242	Chain Anchor-60D
5	2	CC7332	Shap Ring	9	2	CC6518	Cotter Pin
6	2	CC678667	Chain Pin-55D	10	2	CC668031	Nut
6	2	CC684305	Chain Pin-60D	11	2	CC683798	Thrust Plug

★ Retracted channel length.
◆ Quantity as required.
■ These part numbers are for reference only, Mounting brackets are not included. To order an Outer Upight with mounting brackets contact the Cascade Parts Depot (513)322-1199. The mast serial number must be supplied.

Fig. 7008 Inner Upright

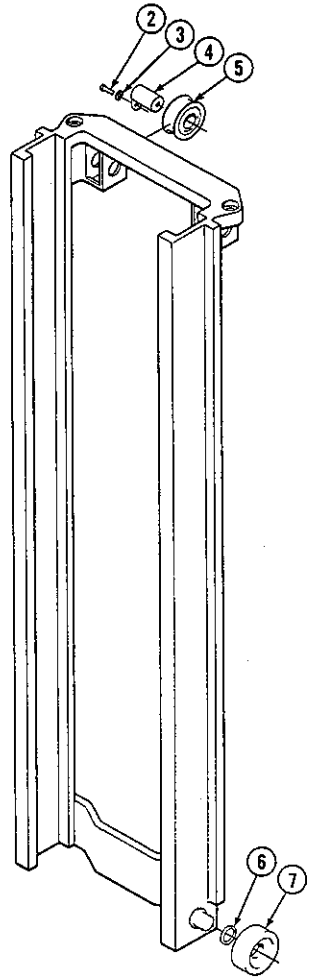

Inner Upright

55D/60D

REF	QTY	PART NO	DESCRIPTION
1	1	CC684143	Inner Upright - 56 in. ★
1	1	CC683672	Inner Upright - 57 in. ★
1	1	CC683673	Inner Upright - 58 in. ★
1	1	CC683674	Inner Upright - 59 in. ★
1	1	CC683675	Inner Upright - 60 in. ★
1	1	CC683676	Inner Upright - 61 in. ★
1	1	CC683677	Inner Upright - 62 in. ★
1	1	CC683678	Inner Upright - 63 in. ★
1	1	CC683679	Inner Upright - 64 in. ★
1	1	CC683680	Inner Upright - 65 in. ★
1	1	CC683681	Inner Upright - 66 in. ★
1	1	CC683682	Inner Upright - 67 in. ★
1	1	CC683683	Inner Upright - 68 in. ★
1	1	CC683684	Inner Upright - 69 in. ★
1	1	CC683685	Inner Upright - 70 in. ★
1	1	CC683686	Inner Upright - 71 in. ★
1	1	CC683687	Inner Upright - 72 in. ★
1	1	CC683688	Inner Upright - 73 in. ★
1	1	CC683689	Inner Upright - 74 in. ★
1	1	CC683690	Inner Upright - 75 in. ★
1	1	CC683691	Inner Upright - 76 in. ★
1	1	CC683692	Inner Upright - 77 in. ★
1	1	CC683693	Inner Upright - 78 in. ★
1	1	CC683694	Inner Upright - 79 in. ★
1	1	CC683695	Inner Upright - 80 in. ★
1	1	CC683696	Inner Upright - 81 in. ★
1	1	CC683697	Inner Upright - 82 in. ★
1	1	CC683698	Inner Upright - 83 in. ★
1	1	CC683699	Inner Upright - 84 in. ★
1	1	CC683700	Inner Upright - 85 in. ★
1	1	CC683701	Inner Upright - 86 in. ★
1	1	CC683702	Inner Upright - 87 in. ★
1	1	CC683703	Inner Upright - 88 in. ★
1	1	CC683704	Inner Upright - 89 in. ★
1	1	CC683705	Inner Upright - 90 in. ★
1	1	CC683706	Inner Upright - 91 in. ★
1	1	CC683707	Inner Upright - 92 in. ★
1	1	CC683708	Inner Upright - 93 in. ★
1	1	CC683709	Inner Upright - 94 in. ★
1	1	CC683710	Inner Upright - 95 in. ★
1	1	CC683711	Inner Upright - 96 in. ★
1	1	CC683712	Inner Upright - 76 in. ★
1	1	CC683713	Inner Upright - 98 in. ★
1	1	CC683714	Inner Upright - 99 in. ★
1	1	CC683715	Inner Upright - 100in. ★
1	1	CC683716	Inner Upright - 101in. ★
2	2	CC683820	Capscrew, M10×1.5×16;8.8
3	2	CC683826	Lockwasher, M10
4	2	CC683802	Pin Assembly
5	2	CC660051	Chain Sheave
6	■	CC631881	Shim
7	4	CC660050	Roller

★ Retracted channel length.
■ Quantity as required.

Fig. 7009 Inner Upright

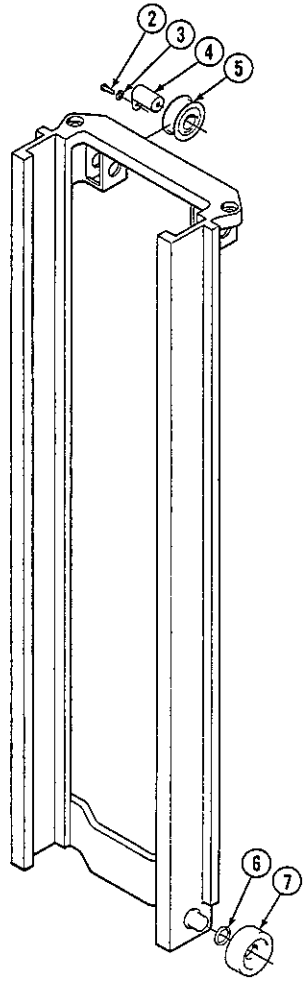

Inner Upright

55D/60D

REF	QTY	PART NO	DESCRIPTION
1	1	CC688107	Inner Upright - 103in. ★
1	1	CC688108	Inner Upright - 104in. ★
1	1	CC688109	Inner Upright - 105in. ★
1	1	CC688110	Inner Upright - 106in. ★
1	1	CC688111	Inner Upright - 107in. ★
1	1	CC688112	Inner Upright - 109in. ★
1	1	CC688113	Inner Upright - 110in. ★
1	1	CC688114	Inner Upright - 111in. ★
1	1	CC688115	Inner Upright - 112in. ★
1	1	CC688116	Inner Upright - 113in. ★
1	1	CC688117	Inner Upright - 114in. ★
1	1	CC688118	Inner Upright - 116in. ★
1	1	CC688119	Inner Upright - 117in. ★
1	1	CC688120	Inner Upright - 118in. ★
1	1	CC688121	Inner Upright - 119in. ★
1	1	CC688122	Inner Upright - 120in. ★
1	1	CC688123	Inner Upright - 121in. ★
1	1	CC688124	Inner Upright - 123in. ★
1	1	CC688125	Inner Upright - 124in. ★
1	1	CC688126	Inner Upright - 125in. ★
1	1	CC688127	Inner Upright - 126in. ★
1	1	CC688128	Inner Upright - 127in. ★
1	1	CC688129	Inner Upright - 128in. ★
1	1	CC688130	Inner Upright - 130in. ★
1	1	CC688131	Inner Upright - 131in. ★
1	1	CC688132	Inner Upright - 132in. ★
1	1	CC688133	Inner Upright - 133in. ★
1	1	CC688134	Inner Upright - 134in. ★
1	1	CC688135	Inner Upright - 135in. ★
2	2	CC683820	Capscrew, M10×1.5×16-8.8
3	2	CC683826	Lockwasher, M10
4	2	CC683802	Pin Assembly
5	2	CC660051	Chain Sheave
6	■	CC631881	Shim
7	2	CC660050	Roller

★ Retracted channel length.
■ Quantity as required.

Fig. 7010 Carriage

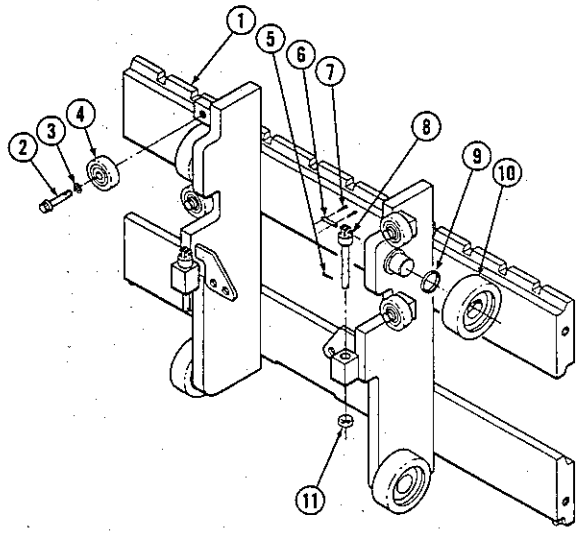

55D

REF	QTY	PART NO	DESCRIPTION
For masts mounted with 3 inch underclearance.			
1	1	CC683860	Carriage, Class II -37in. (940mm) wide
1	1	CC683861	Carriage, Class II -41in. (1041mm) wide
1	1	CC684323	Carriage, Class II -49in. (1245mm) wide
1	1	CC684324	Carriage, Class II -61in. (1549mm) wide
For masts mounted with 5 inch underclearance.			
1	1	CC683864	Carriage, Class II -37in. (940mm) wide
1	1	CC683865	Carriage, Class II -41in. (1041mm) wide
1	1	CC683866	Carriage, Class II -49in. (1245mm) wide
1	1	CC683867	Carriage, Class II -61in. (1549mm) wide
2	4	CC684125	Capscrew, Ferryhead M12×1.75×45-12.9
3	4	CC684660	Lockwasher, M12
4	4	CC683819	Roller
5	2	CC6518	Cotter Pin
6	2	CC678667	Chain Pin
7	4	CC6508	Cotter Pin
8	2	CC687419	Chain Anchor
9	★	CC631881	Shim
10	4	CC660050	Roller
11	2	CC668031	Nut

★ Quantity as required.

Fig. 7011 Carriage

Heavy Duty

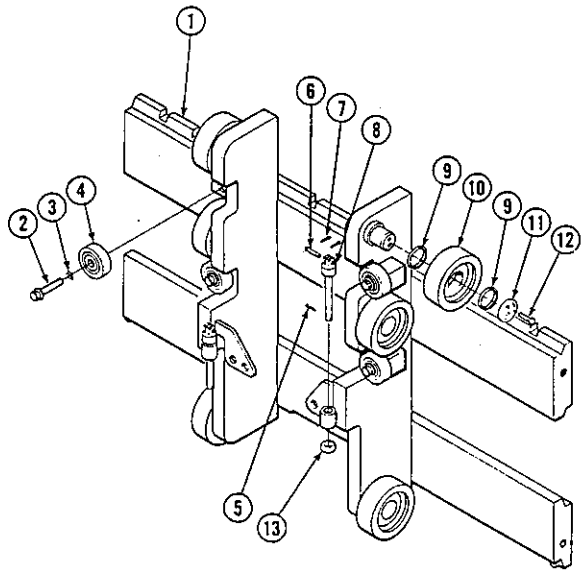

55D

REF	QTY	PART NO	DESCRIPTION
For masts mounted with 3 inch underclearance.			
1	1	CC683860	Carriage, Class II-37in. (940mm) wide
1	1	CC683861	Carriage, Class II-41in. (1041mm) wide
1	1	CC684323	Carriage, Class II-49in. (1245mm) wide
1	1	CC684324	Carriage, Class II-61in. (1549mm) wide
For masts mounted with 5 inch underclearance.			
1	1	CC683864	Carriage, Class II-37in. (940mm) wide
1	1	CC683865	Carriage, Class II-41in. (1041mm) wide
1	1	CC683866	Carriage, Class II-49in. (1245mm) wide
1	1	CC683867	Carriage, Class II-61in. (1549mm) wide
2	4	CC684125	Capscrew,Ferryhead M12×1.75×45-12.9
3	4	CC684660	Lockwasher, M12
4	4	CC683819	Roller
5	2	CC6518	Cotter Pin
6	2	CC678667	Chain Pin
7	4	CC6508	Cotter Pin
8	2	CC687419	Chain Anchor
9	★	CC631881	Shim
10	4	CC660050	Roller
11	2	CC658378	Retainer
12	4	CC680218	Capscrew, M3×0.5×12-8.8
13	2	CC668031	Nut

★ Quantity as required.

Fig. 7012 Carriage

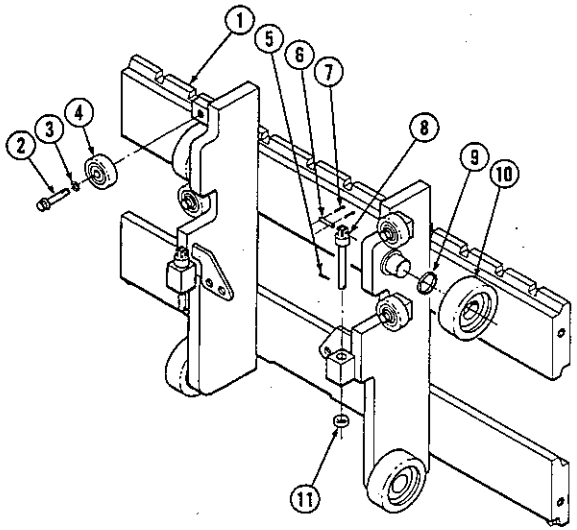

60D

REF	QTY	PART NO	DESCRIPTION
For masts mounted with 3 inch underclearance.			
1	1	CC683862	Carriage, Class III-37in. (940mm) wide
1	1	CC686863	Carriage, Class III-41in. (1041mm) wide
1	1	CC684325	Carriage, Class III-49in. (1245mm) wide
1	1	CC684326	Carriage, Class III-61in. (1549mm) wide
For masts mounted with 5 inch underclearance.			
1	1	CC683868	Carriage, Class III-37in. (940mm) wide
1	1	CC683869	Carriage, Class III-41in. (1041mm) wide
1	1	CC683870	Carriage, Class III-49in. (1245mm) wide
1	1	CC683871	Carriage, Class III-61in. (1549mm) wide
2	4	CC684125	Capscrew, Ferryhead M12×1.75×45-12.9
3	4	CC684660	Lockwasher, M12
4	4	CC683819	Roller
5	2	CC6518	Cotter Pin
6	2	CC684305	Chain Pin
7	4	CC6508	Cotter Pin
8	2	CC687755	Chain Anchor
9	★	CC631881	Shim
10	4	CC660050	Roller
11	2	CC668031	Nut

★ Quantity as required.

Fig. 7013 Carriage

Heavy Duty

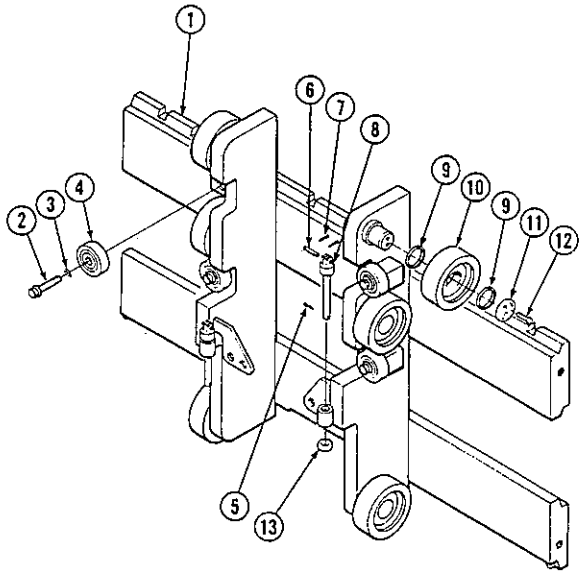

60D

REF	QTY	PART NO	DESCRIPTION
For masts mounted with 3 inch underclearance.			
1	1	CC684179	Carriage, Class III-37in. (940mm) wide
1	1	CC684180	Carriage, Class III-41in. (1041mm) wide
1	1	CC684339	Carriage, Class III-49in. (1245mm) wide
1	1	CC684340	Carriage, Class III-61in. (1549mm) wide
For masts mounted with 5 inch underclearance.			
1	1	CC684185	Carriage, Class III-37in. (940mm) wide
1	1	CC684186	Carriage, Class III-41in. (1041mm) wide
1	1	CC684187	Carriage, Class III-49in. (1245mm) wide
1	1	CC684188	Carriage, Class III-61in. (1549mm) wide
2	4	CC684125	Capscrew, Ferryhead M12×1.75×45-12.9
3	4	CC684660	Lockwasher,M12
4	4	CC683819	Roller
5	2	CC6518	Cotter Pin
6	2	CC684305	Chain Pin
7	4	CC6508	Cotter Pin
8	2	CC687755	Chain Anchor
9	★	CC631881	Shim
10	4	CC660050	Roller
11	2	CC658378	Retainer
12	4	CC680218	Capscrew, M3×0.5×12-8.8
13	2	CC68031	Nut

★ Quantity as required.

Fig. 7014 Hydraulic Group

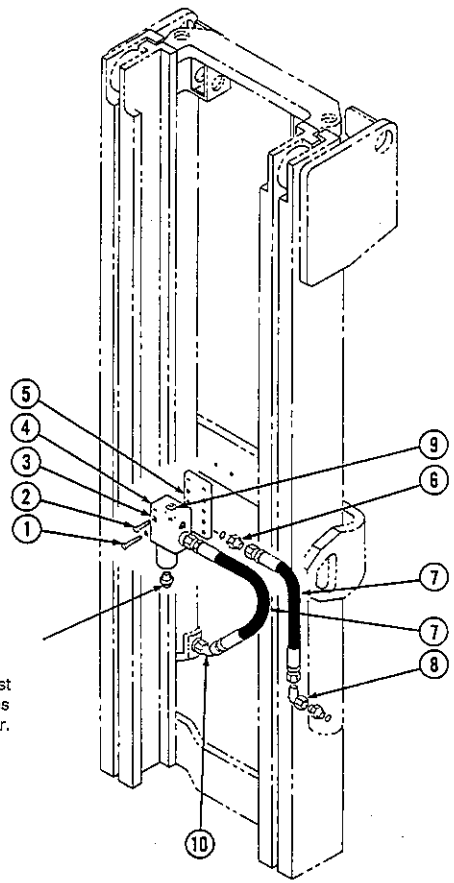

This fitting varies from truck to truck. See Mast Installation Accessaries for correct part number.

55D/60D

REF	QTY	PART NO	DESCRIPTION
1	2	CC683823	Capscrew, M10×50-8.8
2	2	CC684649	Capscrew, M10×25-8.8
3	4	CC683826	Lockwasher, M10
4	1	★	Lowering Control Valve
5	1	CC683831	Bar
6	2	CC601377	Fitting, 8-8
7	2	CC684300	Hose
8	1	CC605761	Fitting, 8-8
9	2	CC602580	Fitting, 8
10	1	CC605948	Fitting, 8-8

★ See page 16 for parts breakdown.

Fig. 7015 Lowering Control Valve

2600 PSI System Pressure

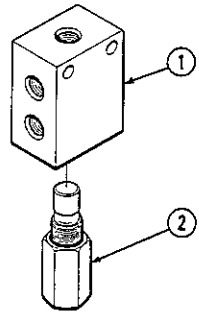

55D/60D

REF	QTY	PART NO	DESCRIPTION
		CC684812	Lowering Control Valve
1	1	CC684152	Valve Body
2	1	★CC684210	Valve Cartridge

★ This part must not be substituted. Check part number on the side of cartridge when replacing.

Fig. 7016 Hoist Chains

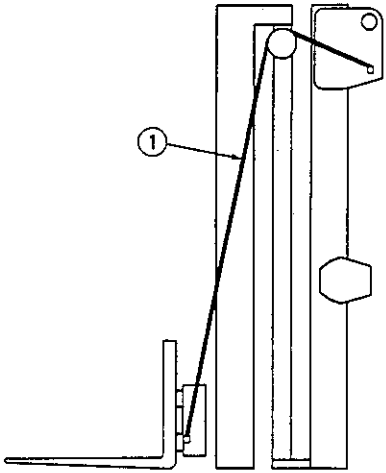

55D

Overall Retracted Channel Length In.	Qty.	Ref.No.1 Hoist Chains	Chain Length In.(mim)
56	2	CC683893	48.75(1238)
57	2	CC678655	50.25(1276)
58	2	CC683762	51.75(1314)
59	2	CC683762	51.75(1314)
60	2	CC683763	53.25(1353)
61	2	CC683764	54.75(1391)
62	2	CC683764	54.75(1391)
63	2	CC678656	56.25(1429)
64	2	CC683765	57.75(1467)
65	2	CC683765	57.75(1467)
66	2	CC683766	59.25(1505)
67	2	CC683767	60.75(1543)
68	2	CC683767	60.75(1543)
69	2	CC678657	62.25(1581)
70	2	CC683768	63.75(1619)
71	2	CC683768	63.75(1619)
72	2	CC683769	65.25(1734)
73	2	CC683770	66.75(1695)
74	2	CC683770	66.75(1695)
75	2	CC683658	68.25(1734)
76	2	CC683771	69.75(1772)
77	2	CC683771	69.75(1772)
78	2	CC683772	71.25(1810)
79	2	CC683773	72.75(1848)
80	2	CC683773	72.75(1848)
81	2	CC683774	75.75(1886)
82	2	CC683775	75.75(1924)
83	2	CC683775	75.75(1924)
84	2	CC683776	77.25(1962)
85	2	CC683777	78.75(2000)
86	2	CC683777	78.75(2000)
87	2	CC683659	80.25(2038)
88	2	CC683778	81.75(2076)
89	2	CC688778	81.75(2076)
90	2	CC683779	83.25(2115)
91	2	CC683780	84.75(2153)
92	2	CC683780	83.25(2115)
93	2	CC683781	86.25(2191)
94	2	CC683782	87.75(2229)
95	2	CC683782	87.75(2229)
96	2	CC683782	89.25(2267)
97	2	CC683784	90.75(2305)
98	2	CC683784	90.75(2305)
99	2	CC683785	92.25(2343)
100	2	CC683786	93.75(2381)
101	2	CC683786	93.75(2381)

Fig. 7017 Hoist Chains

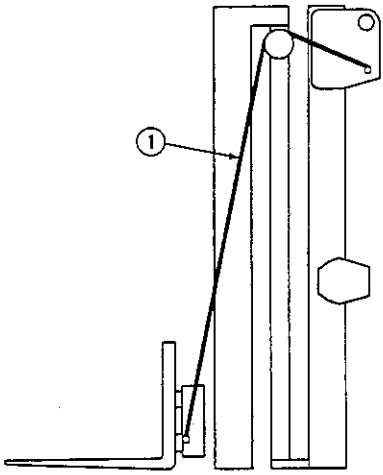

55D

Overall Retracted Channel Length In.	Qty.	Ref.No.1 Hoist Chains	Chain Length In.(mm)
103	2	CC683788	96.75(2457)
104	2	CC683788	96.75(2457)
105	2	CC688136	98.25(2496)
106	2	CC688137	99.75(2543)
107	2	CC688137	99.75(2543)
109	2	CC688139	102.75(2610)
110	2	CC688139	102.75(2610)
111	2	CC688140	104.25(2648)
112	2	CC688141	105.75(2686)
113	2	CC688141	105.75(2686)
114	2	CC688142	107.25(2724)
116	2	CC688143	108.75(2762)
117	2	CC688144	110.25(2800)
118	2	CC688145	111.75(2838)
119	2	CC688145	111.75(2838)
120	2	CC688146	113.25(2877)
121	2	CC688147	114.75(2915)
123	2	CC688148	116.25(2953)
124	2	CC688148	117.75(2991)
125	2	CC688148	117.75(2991)
126	2	CC688149	119.25(3029)
127	2	CC688150	120.75(3067)
128	2	CC688150	120.75(3067)
130	2	CC688152	123.75(3143)
131	2	CC688152	123.75(3143)
132	2	CC688153	125.25(3181)
133	2	CC688154	126.75(3219)
134	2	CC688154	126.75(3219)
135	2	CC688155	128.25(3258)

Fig. 7018 Hoist Chains

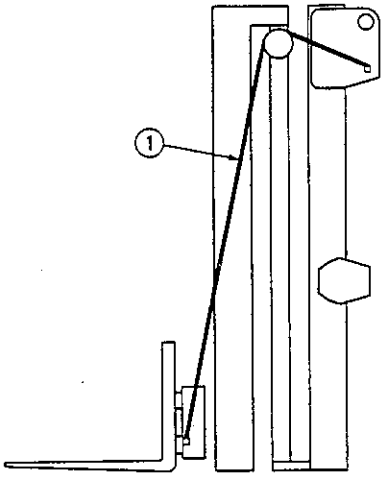

60D

Overall Retracted Channel Length In.	Qty.	Ref.No.1 Hoist Chains	Chain Length In.(mm)
56	2	CC683961	48.75(1238)
57	2	CC681428	50.25(1276)
58	2	CC683976	51.75(1314)
59	2	CC683976	51.75(1314)
60	2	CC683977	53.25(1353)
61	2	CC683978	54.75(1391)
62	2	CC673978	54.75(1391)
63	2	CC683979	56.25(1429)
64	2	CC681429	57.75(1467)
65	2	CC681429	57.75(1467)
66	2	CC683980	59.25(1505)
67	2	CC683981	60.75(1543)
68	2	CC688981	60.75(1543)
69	2	CC683982	62.25(1581)
70	2	CC681430	63.75(1619)
71	2	CC681430	63.75(1619)
72	2	CC6878770	65.25(1734)
73	2	CC683984	66.75(1695)
74	2	CC683984	66.75(1695)
75	2	CC683985	69.25(1734)
76	2	CC680459	69.75(1772)
77	2	CC680459	69.75(1772)
78	2	CC678771	71.25(1810)
79	2	CC683987	72.75(1848)
80	2	CC683987	72.75(1848)
81	2	CC683988	74.25(1886)
82	2	CC678796	75.75(1924)
83	2	CC678796	75.75(1924)
84	2	CC683990	77.25(1962)
85	2	CC678797	78.75(2000)
86	2	CC678797	78.75(2000)
87	2	CC683992	80.25(2037)
88	2	CC681431	81.75(2076)
89	2	CC681431	81.75(2076)
90	2	CC683993	83.25(2115)
91	2	CC683994	84.75(2153)
92	2	CC683994	83.25(2153)
93	2	CC683995	86.25(2191)
94	2	CC678800	87.75(2229)
95	2	CC678800	87.75(2229)
96	2	CC678775	89.25(2267)
97	2	CC683998	90.75(2305)
98	2	CC683998	90.75(2305)
99	2	CC683999	92.25(2343)
100	2	CC684000	93.75(2381)
101	2	CC684000	93.75(2381)

Fig. 7019 Hoist Chains

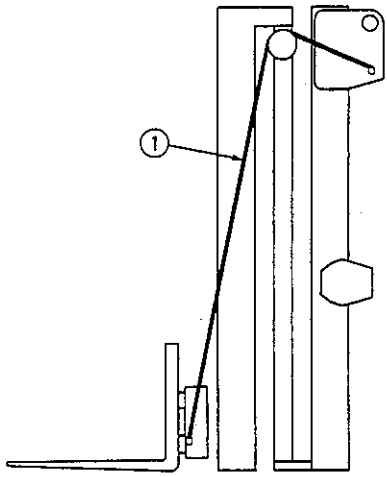

60D

Overall Retracted Channel Length In.	Qty.	Ref.No.1 Hoist Chains	Chain Length In.(mim)
103	2	CC678837	96.75(2457)
104	2	CC67837	96.75(2457)
105	2	CC678777	98.25(2496)
106	2	CC688157	99.75(2543)
107	2	CC688157	99.75(2543)
109	2	CC678838	102.75(2610)
110	2	CC678838	102.75(2610)
111	2	CC678781	104.25(2648)
112	2	CC688158	105.75(2686)
113	2	CC688158	105.75(2686)
114	2	CC688159	107.25(2724)
116	2	CC683962	108.75(2762)
117	2	CC678839	110.25(2800)
118	2	CC678779	111.75(2838)
119	2	CC678779	111.75(2838)
120	2	CC683983	113.25(2877)
121	2	CC678840	114.75(2915)
123	2	CC678783	116.25(2953)
124	2	CC683986	117.75(2991)
125	2	CC683986	117.75(2991)
126	2	CC678841	119.25(3029)
127	2	CC678785	120.75(3067)
128	2	CC678785	120.75(3067)
130	2	CC633989	123.75(3143)
131	2	CC633989	123.75(3143)
132	2	CC678842	125.25(3181)
133	2	CC678787	126.75(3219)
134	2	CC678787	126.75(3219)
135	2	CC683991	128.25(3258)

Fig. 7020 Load Backrest

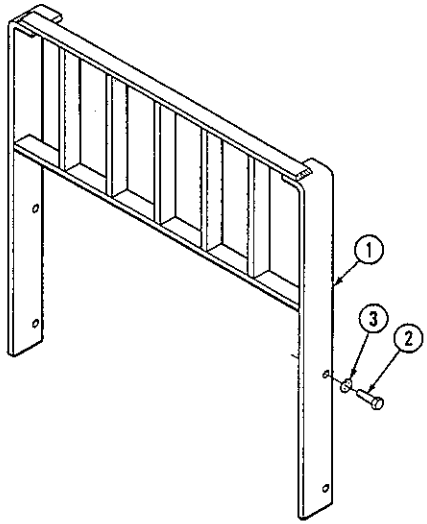

55D/60D

REF	QTY	PART NO	DESCRIPTION
55D Class II Load Backrests			
1	1	CC684772	Backrest 37×36 in. ★
1	1	CC684773	Backrest 37×48 in. ★
1	1	CC684774	Backrest 37×60 in. ★
1	1	CC684775	Backrest 41×36 in. ★
1	1	CC684776	Backrest 41×48 in. ★
1	1	CC684777	Backrest 41×60 in. ★
1	1	CC684778	Backrest 49×36 in. ★
1	1	CC684779	Backrest 49×48 in. ★
1	1	CC684780	Backrest 49×60 in. ★
1	1	CC684781	Backrest 61×36 in. ★
1	1	CC684782	Backrest 61×48 in. ★
1	1	CC684783	Backrest 61×60 in. ★

REF	QTY	PART NO	DESCRIPTION
60D Class III Load Backrests			
1	1	CC684784	Backrest 37×36 in. ★
1	1	CC684785	Backrest 37×48 in. ★
1	1	CC684786	Backrest 37×60 in. ★
1	1	CC684787	Backrest 41×36 in. ★
1	1	CC684788	Backrest 41×48 in. ★
1	1	CC684789	Backrest 41×60 in. ★
1	1	CC684790	Backrest 49×36 in. ★
1	1	CC684791	Backrest 49×48 in. ★
1	1	CC684792	Backrest 49×60 in. ★
1	1	CC684793	Backrest 61×36 in. ★
1	1	CC684794	Backrest 61×48 in. ★
1	1	CC684795	Backrest 61×60 in. ★
2	4	CC684633	Capscrew,M16×2.0×50-8.8
3	4	CC684586	Lockwasher, M16

★ Includes items 2 and 3. Width ×Height.

Fig. 7021 Mast Installation Accessories

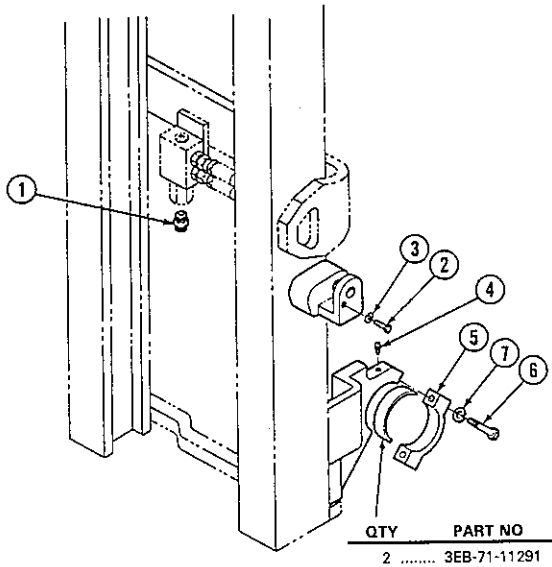

QTY	PART NO	DESCRIPTION
2	3EB-71-11291	Bushing

Komatsu Lift truck models.

FB 20SH-3	FD 25ST-11	FG 20SC-5	FG 25ST2-11
FB 25SH-3	FD 25T-10	FG 20SC-11	FG 25T-8
FB 30S-3	FD 25T-11	FG 20ST-4	FG 25T-11
FD 20C-10	FD 25T2-10	FG 20ST-11	FG 25T2-8
FD 20C-11	FD 25T2-11	FG 20ST2-4	FG 25T2-11
FD 20SC-5	FD 30C-10	FG 20ST2-11	FG 30C-8
FD 20SC-11	FD 30C-11	FG 20T-8	FG 30C-11
FD 20ST-5	FD 30SC-5	FG 20T-11	FG 30SC-4
FD 20ST-11	FD 30SC-11	FG 20T2-8	FG 30SC-11
FD 20T-10	FD 30ST-5	FG 20T2-11	FG 30ST-4
FD 20T-11	FD 30ST-11	FG 25C-8	FG 30ST-11
FD 20T2-10	FD 30T-10	FG 25C-11	FG 30ST2-4
FD 20T2-11	FD 30T-11	FG 25SC-4	FG 30ST2-11
FD 25C-10	FD 30T2-10	FG 25SC-11	FG 30ST8
FD 25C-11	FD 30T2-11	FG 25ST-4	FG 30T-11
FD 25SC-5	FG 20C-8	FG 25ST-11	FG 30T2-8
FD 25SC-11	FG 20C-11	FG 25ST2-4	FG 30T2-11
FD 25ST-5	FG 20SC-4		

REF	QTY	PART NO	DESCRIPTION
1	1	CC601377	Fitting, 8-8
2	2	CC684594	Capscrew, M10×1.5×20-8.8
3	2	CC681238	Lockwasher, M10
4	2	CC7418	Grease Fitting
5	2	CC692714	Cap
6	4	CC684604	Capscrew, M16×2.0×80-8.8
7	4	CC684586	Lockwasher, M16

CASCADE MAST(3-STAGE)
(FOR C-SPEC)

About This Manual

Introduction

This manual shows the parts breakdown for specific 3-Stage Full Free Lift WORLDMAST ™ product I.D. numbers. Locate the product I.D. number stamped on the upper left hand side of the outer upright channel.
The product I.D. number must match one of the numbers shown in the product I.D. number index for this manual to be correct.

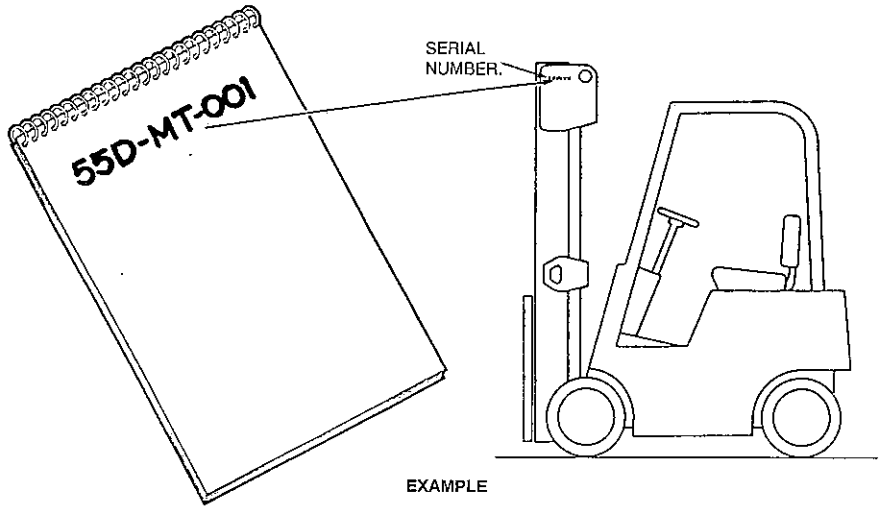

EXAMPLE

Ordering Parts

Customers- Cascade parts, and service literature and are available through authorized lift truck dealers.
To order, contact the lift truck dealer of your choice.

Lift Truck Dealers- To order parts, service literature or videos contact.

Serial Number Index

Product I.D. No.	Overall Outer Channel Length	Main Lift & Free Lift Cylinder Page	Internal Hose Reeving Page	Outer Upright Page	Inter-mediate Upright Page	Inner Upright Page	Carriage Page	Hoist Chain Page	Load Backrest Page
55D-MT-001	80 in	1,5	9	11	13	15	17	24	28
55D-MT-002	80 in	1,5	9	11	13	15	17	24	28
55D-MT-004	80 in	1,5	9	11	13	15	17	24	28
55D-MT-005	80 in	1,5	9	11	13	15	17	24	28
55D-MT-006	80 in	1,5	9	11	13	15	17	24	28
55D-MT-007	80 in	1,5	9	11	13	15	17	24	28
55D-MT-008	74 in	1,5	9	11	13	15	17	24	28
55D-MT-009	69 in	1,5	9	11	13	15	17	24	28
55D-MT-010	83 in	1,5	9	11	13	15	17	24	28
55D-MT-011	92 in	1,5	9	11	13	15	17	24	28
55D-MT-012	101 in	1,5	9	11	13	15	17	24	28
55D-MT-013	74 in	1,5	9	11	13	15	17	24	28
55D-MT-014	80 in	1,5	9	11	13	15	17	24	28
55D-MT-015	80 in	1,5	9	11	13	15	17	24	28
55D-MT-018	83 in	1,5	9	11	13	15	17	24	28
55D-MT-019	80 in	1,5	9	11	13	15	17	24	28
55D-MT-020	80 in	1,5	9	11	13	15	17	24	28
55D-MT-021	80 in	1,5	9	11	13	15	17	24	28
55D-MT-022	75 in	1,5	9	11	13	15	17	24	28
55D-MT-023	74 in	1,5	9	11	13	15	17	24	28
55D-MT-024	80 in	1,5	9	11	13	15	17	24	28
55D-MT-025	80 in	1,5	9	11	13	15	17	24	28
55D-MT-026	74 in	1,5	9	11	13	15	17	24	28
55D-MT-027	74 in	1,5	9	11	13	15	17	24	28
55D-MT-028	80 in	1,5	9	11	13	15	17	24	28
55D-MT-029	83 in	1,5	9	11	13	15	17	24	28
55D-MT-030	83 in	1,5	9	11	13	15	17	24	28
55D-MT-031	101 in	1,5	9	11	13	15	17	24	28
55D-MT-032	83 in	1,5	9	11	13	15	18	24	28
55D-MT-033	92 in	1,5	9	11	13	15	17	24	28
55D-MT-034	76 in	1,5	9	11	13	15	17	24	28
55D-MT-035	80 in	1,5	9	11	13	15	17	24	28
55D-MT-036	74 in	1,5	9	11	13	15	17	24	28
55D-MT-037	80 in	1,5	9	11	13	15	17	24	28
55D-MT-038	68 in	1,5	9	11	13	15	17	24	28
55D-MT-039	80 in	1,5	9	11	13	15	17	24	28
55D-MT-040	80 in	1,5	9	11	13	15	17	24	28
55D-MT-042	80 in	1,5	9	11	13	15	17	24	28
55D-MT-043	80 in	1,5	9	11	13	15	17	24	28
55D-MT-044	80 in	1,5	9	11	13	15	17	24	28
55D-MT-045	88 in	1,5	9	11	13	15	18	24	28
55D-MT-046	88 in	1,5	9	11	13	15	18	24	28
55D-MT-047	80 in	1,5	9	11	13	15	17	24	28
55D-MT-048	80 in	1,5	9	11	13	15	17	24	28
55D-MT-049	80 in	1,5	9	11	13	15	17	24	28
55D-MT-050	80 in	1,5	9	11	13	15	17	24	28
55D-MT-051	80 in	1,5	9	11	13	15	17	24	28
55D-MT-052	80 in	1,5	9	11	13	15	17	24	28
55D-MT-053	80 in	1,5	9	11	13	15	18	24	28
55D-MT-054	80 in	1,5	9	11	13	15	18	24	28
55D-MT-055	80 in	1,5	9	11	13	15	18	24	28
55D-MT-056	80 in	1,5	9	11	13	15	18	24	28
55D-MT-057	101 in	1,5	9	11	13	15	18	24	28
55D-MT-058	80 in	1,5	9	11	13	15	17	24	28
55D-MT-059	88 in	1,5	9	11	13	15	18	24	28
55D-MT-060	80 in	1,5	9	11	13	15	17	24	28
55D-MT-061	80 in	1,5	9	11	13	15	17	24	28
55D-MT-062	83 in	1,5	9	11	13	15	17	24	28
55D-MT-063	68 in	1,5	9	11	13	15	18	24	28
55D-MT-064	73 in	1,5	9	11	13	15	18	24	28
55D-MT-065	90 in	1,5	9	11	13	15	17	24	28
55D-MT-066	80 in	1,5	9	11	13	15	17	24	28

Serial Number Index

Product I.D. No.	Overall Outer Channel Length	Main Lift & Free Lift Cylinder Page	Internal Hose Reeving Page	Outer Upright Page	Inter-mediate Upright Page	Inner Upright Page	Carriage Page	Hoist Chain Page	Load Backrest Page
55D-MT-067	80 in	1,5	9	11	13	15	17	24	28
55D-MT-068	76 in	1,5	9	11	13	15	18	24	28
55D-MT-069	70 in	1,5	9	11	13	15	17	24	28
55D-MT-070	83 in	1,5	9	11	13	15	17	24	28
55D-MT-071	92 in	1,5	9	11	13	15	17	24	28
55D-MT-072	80 in	1,5	9	11	13	15	17	24	28
55D-MT-073	74 in	1,5	9	11	13	15	18	24	28
55D-MT-074	74 in	1,5	9	11	13	15	18	24	28
55D-MT-075	74 in	1,5	9	11	13	15	18	24	28
55D-MT-076	68 in	1,5	9	11	13	15	18	24	28
55D-MT-077	80 in	1,5	9	11	13	15	18	24	28
55D-MT-078	79 in	1,5	9	11	13	15	17	24	28
55D-MT-079	79 in	1,5	9	11	13	15	17	24	28
55D-MT-080	84 in	1,5	9	11	13	15	17	24	28
55D-MT-081	79 in	1,5	9	11	13	15	17	24	28
55D-MT-082	80 in	1,5	9	11	13	15	17	24	28
55D-MT-083	80 in	1,5	9	11	13	15	18	24	28
55D-MT-084	81 in	1,5	9	11	13	15	18	24	28
55D-MT-085	80 in	1,5	9	11	13	15	18	24	28
55D-MT-086	80 in	1,5	9	11	13	15	17	24	28
55D-MT-087	80 in	1,5	9	11	13	15	18	24	28
55D-MT-088	80 in	1,5	9	11	13	15	17	24	28
55D-MT-089	101 in	1,5	9	11	13	15	17	24	28
55D-MT-090	97 in	1,5	9	11	13	15	17	24	28
55D-MT-091	80 in	1,5	9	11	13	15	17	24	28
55D-MT-092	75 in	1,5	9	11	13	15	17	24	28
55D-MT-093	75 in	1,5	9	11	13	15	17	24	28
55D-MT-094	101 in	1,5	9	11	13	15	17	24	28
55D-MT-095	101 in	1,5	9	11	13	15	17	24	28
55D-MT-096	79 in	1,5	9	11	13	15	18	24	28
55D-MT-097	79 in	1,5	9	11	13	15	18	24	28
55D-MT-098	81 in	1,5	9	11	13	15	17	24	28
55D-MT-099	82 in	1,5	9	11	13	15	17	24	28
55D-MT-100	80 in	1,5	9	11	13	15	17	24	28
55D-MT-101	80 in	1,5	9	11	13	15	18	24	28
55D-MT-102	80 in	1,5	9	11	13	15	17	24	28
55D-MT-103	83 in	1,5	9	11	13	15	17	24	28
55D-MT-104	83 in	1,5	9	11	13	15	17	24	28
55D-MT-105	90 in	1,5	9	11	13	15	17	24	28
55D-MT-106	90 in	1,5	9	11	13	15	17	24	28
55D-MT-107	85 in	1,5	9	11	13	15	17	24	28
55D-MT-108	80 in	1,5	9	11	13	15	17	24	28
55D-MT-110	80 in	1,5	9	11	13	15	18	24	28
55D-MT-111	80 in	1,5	9	11	13	15	17	24	28
55D-MT-112	74 in	1,5	9	11	13	15	17	24	28
55D-MT-113	89 in	1,5	9	11	13	15	17	24	28
55D-MT-114	89 in	1,5	9	11	13	15	17	24	28
55D-MT-115	80 in	1,5	9	11	13	15	18	24	28
55D-MT-116	74 in	1,5	9	11	13	15	17	24	28
55D-MT-117	80 in	1,5	9	11	13	15	17	24	28
55D-MT-118	93 in	1,5	9	11	13	15	17	24	28
55D-MT-119	80 in	1,5	9	11	13	15	17	24	28
55D-MT-120	76 in	1,5	9	11	13	15	17	24	28
55D-MT-121	101 in	1,5	9	11	13	15	18	24	28
55D-MT-122	83 in	1,5	9	11	13	15	18	24	28
55D-MT-123	83 in	1,5	9	11	13	15	18	24	28
55D-MT-124	80 in	1,5	9	11	13	15	17	24	28
55D-MT-125	101 in	1,5	9	11	13	15	17	24	28
55D-MT-126	74 in	1,5	9	11	13	15	17	24	28
55D-MT-127	83 in	1,5	9	11	13	15	17	24	28
55D-MT-128	80 in	1,5	9	11	13	15	17	24	28
55D-MT-129	80 in	1,5	9	11	13	15	17	24	28

Serial Number Index

Product I.D. No.	Overall Outer Channel Length	Main Lift & Free Lift Cylinder Page	Internal Hose Reeving Page	Outer Upright Page	Inter-mediate Upright Page	Inner Upright Page	Carriage Page	Hoist Chain Page	Load Backrest Page
55D-MT-130	90 in	1,5	9	11	13	15	18	24	28
55D-MT-131	83 in	1,5	9	11	13	15	17	24	28
55D-MT-132	84 in	1,5	9	11	13	15	17	24	28
55D-MT-133	92 in	1,5	9	11	13	15	17	24	28
55D-MT-134	73 in	1,5	9	11	13	15	17	24	28
55D-MT-135	80 in	1,5	9	11	13	15	18	24	28
55D-MT-136	80 in	1,5	9	11	13	15	18	24	28
55D-MT-137	80 in	1,5	9	11	13	15	18	24	28
55D-MT-138	80 in	1,5	9	11	13	15	18	24	28
55D-MT-139	67 in	1,5	9	11	13	15	18	24	28
55D-MT-140	68 in	1,5	9	11	13	15	18	24	28
55D-MT-141	80 in	1,5	9	11	13	15	17	24	28
55D-MT-142	69 in	1,5	9	11	13	15	18	24	28
55D-MT-143	66 in	1,5	9	11	13	15	18	24	28
55D-MT-144	83 in	1,5	9	11	13	15	18	24	28
55D-MT-145	80 in	1,5	9	11	13	15	17	24	28
55D-MT-146	79 in	1,5	9	11	13	15	18	24	28
55D-MT-147	74 in	1,5	9	11	13	15	17	24	28
55D-MT-148	84 in	1,5	9	11	13	15	17	24	28
55D-MT-149	78 in	1,5	9	11	13	15	18	24	28
55D-MT-150	80 in	1,5	9	11	13	15	18	24	28
55D-MT-151	69 in	1,5	9	11	13	15	18	24	28
55D-MT-152	69 in	1,5	9	11	13	15	18	24	28
55D-MT-153	78 in	1,5	9	11	13	15	17	24	28
55D-MT-154	80 in	1,5	9	11	13	15	17	24	28
55D-MT-155	79 in	1,5	9	11	13	15	18	24	28
55D-MT-156	92 in	1,5	9	11	13	15	17	24	28
55D-MT-157	74 in	1,5	9	11	13	15	18	24	28
55D-MT-158	74 in	1,5	9	11	13	15	18	24	28
55D-MT-159	84 in	1,5	9	11	13	15	17	24	28
55D-MT-160	86 in	1,5	9	11	13	15	17	24	28
55D-MT-161	89 in	1,5	9	11	13	15	17	24	28
55D-MT-162	80 in	1,5	9	11	13	15	17	24	28
55D-MT-163	83 in	1,5	9	11	13	15	17	24	28
55D-MT-164	101 in	1,5	9	11	13	15	17	24	28
55D-MT-165	87 in	1,5	9	11	13	15	17	24	28
55D-MT-166	80 in	1,5	9	11	13	15	18	24	28
55D-MT-167	80 in	1,5	9	11	13	15	18	24	28
55D-MT-168	73 in	1,5	9	11	13	15	18	24	28
55D-MT-169	74 in	1,5	9	11	13	15	18	24	28
55D-MT-170	78 in	1,5	9	11	13	15	18	24	28
55D-MT-171	81 in	1,5	9	11	13	15	18	24	28
55D-MT-174	92 in	1,5	9	11	13	15	18	24	28
55D-MT-177	75 in	1,5	9	11	13	15	18	24	28
55D-MT-178	76 in	1,5	9	11	13	15	18	24	28
55D-MT-179	76 in	1,5	9	11	13	15	18	24	28
55D-MT-180	75 in	1,5	9	11	13	15	18	24	28
55D-MT-181	75 in	1,5	9	11	13	15	18	24	28
55D-MT-182	76 in	1,5	9	11	13	15	18	24	28
55D-MT-183	57 in	1,5	9	11	13	15	17	24	28
55D-MT-184	74 in	1,5	9	11	13	15	18	24	28
55D-MT-185	80 in	1,5	9	11	13	15	18	24	28
55D-MT-187	88 in	1,5	9	11	13	15	18	24	28
55D-MT-188	88 in	1,5	9	11	13	15	17	24	28
55D-MT-189	92 in	1,5	9	11	13	15	18	24	28
55D-MT-190	92 in	1,5	9	11	13	15	18	24	28
55D-MT-191	80 in	1,5	9	11	13	15	18	24	28
55D-MT-193	87 in	1,5	9	11	13	15	17	24	28
55D-MT-194	86 in	1,5	9	11	13	15	17	24	28
55D-MT-195	68 in	1,5	9	11	13	15	17	24	28
55D-MT-196	101 in	1,5	9	11	13	15	18	24	28
55D-MT-197	92 in	1,5	9	11	13	15	17	24	28

Serial Number Index

Product I.D. No.	Overall Outer Channel Length	Main Lift & Free Lift Cylinder Page	Internal Hose Reeving Page	Outer Upright Page	Inter-mediate Upright Page	Inner Upright Page	Carriage Page	Hoist Chain Page	Load Backrest Page
55D-MT-198	101 in	1,5	9	11	13	15	17	24	28
55D-MT-199	80 in	1,5	9	11	13	15	18	24	28
55D-MT-200	101 in	1,5	9	11	13	15	18	24	28
55D-MT-201	68 in	1,5	9	11	13	15	17	24	28
55D-MT-202	75 in	1,5	9	11	13	15	17	24	28
55D-MT-203	76 in	1,5	9	11	13	15	17	24	28
55D-MT-204	76 in	1,5	9	11	13	15	17	24	28
55D-MT-205	89 in	1,5	9	11	13	15	18	24	28
55D-MT-206	90 in	1,5	9	11	13	15	18	24	28
55D-MT-208	74 in	1,5	9	11	13	15	18	24	28
55D-MT-209	75 in	1,5	9	11	13	15	18	24	28
55D-MT-210	106 in	2,6	10	12	14	16	18	25	28
55D-MT-211	101 in	1,5	9	11	13	15	17	24	28
55D-MT-212	80 in	1,5	9	11	13	15	17	24	28
55D-MT-214	96 in	1,5	9	11	13	15	17	24	28
55D-MT-217	79 in	1,5	9	11	13	15	18	24	28
55D-MT-218	80 in	1,5	9	11	13	15	17	24	28
55D-MT-219	92 in	1,5	9	11	13	15	18	24	28
55D-MT-220	84 in	1,5	9	11	13	15	18	24	28
55D-MT-221	74 in	1,5	9	11	13	15	18	24	28
55D-MT-222	80 in	1,5	9	11	13	15	17	24	28
55D-MT-223	101 in	1,5	9	11	13	15	17	24	28
55D-MT-224	80 in	1,5	9	11	13	15	17	24	28
55D-MT-225	80 in	1,5	9	11	13	15	17	24	28
55D-MT-226	80 in	1,5	9	11	13	15	17	24	28
55D-MT-227	84 in	1,5	9	11	13	15	17	24	28
55D-MT-228	124 in	2,6	10	12	14	16	18	25	28
55D-MT-229	124 in	2,6	10	12	14	16	18	25	28
55D-MT-230	74 in	1,5	9	11	13	15	17	24	28
55D-MT-231	84 in	1,5	9	11	13	15	17	24	28
55D-MT-232	80 in	1,5	9	11	13	15	17	24	28
55D-MT-233	83 in	1,5	9	11	13	15	17	24	28
55D-MT-236	80 in	1,5	9	11	13	15	17	24	28
55D-MT-237	101 in	1,5	9	11	13	15	17	24	28
55D-MT-238	80 in	1,5	9	11	13	15	17	24	28
55D-MT-240	80 in	1,5	9	11	13	15	17	24	28
55D-MT-241	83 in	1,5	9	11	13	15	17	24	28
55D-MT-242	89 in	1,5	9	11	13	15	17	24	28
55D-MT-243	73 in	1,5	9	11	13	15	17	24	28
55D-MT-244	99 in	1,5	9	11	13	15	17	24	28
55D-MT-245	101 in	1,5	9	11	13	15	17	24	28
55D-MT-246	68 in	1,5	9	11	13	15	18	24	28
55D-MT-247	88 in	1,5	9	11	13	15	17	24	28
55D-MT-248	80 in	1,5	9	11	13	15	17	24	28
55D-MT-249	83 in	1,5	9	11	13	15	18	24	28
55D-MT-250	78 in	1,5	9	11	13	15	17	24	28
55D-MT-251	96 in	1,5	9	11	13	15	18	24	28
55D-MT-252	80 in	1,5	9	11	13	15	17	24	28
55D-MT-253	80 in	1,5	9	11	13	15	17	24	28
55D-MT-254	80 in	1,5	9	11	13	15	17	24	28
55D-MT-255	80 in	1,5	9	11	13	15	17	24	28
55D-MT-256	78 in	1,5	9	11	13	15	17	24	28
55D-MT-257	74 in	1,5	9	11	13	15	17	24	28
55D-MT-258	87 in	1,5	9	11	13	15	17	24	28
55D-MT-259	78 in	1,5	9	11	13	15	17	24	28
55D-MT-260	101 in	1,5	9	11	13	15	18	24	28
55D-MT-262	80 in	1,5	9	11	13	15	17	24	28
55D-MT-263	84 in	1,5	9	11	13	15	17	24	28
55D-MT-264	80 in	1,5	9	11	13	15	18	24	28
55D-MT-265	101 in	1,5	9	11	13	15	17	24	28
55D-MT-266	76 in	1,5	9	11	13	15	17	24	28
55D-MT-267	74 in	1,5	9	11	13	15	17	24	28

Serial Number Index

Product I.D. No.	Overall Outer Channel Length	Main Lift & Free Lift Cylinder Page	Internal Hose Reeving Page	Outer Upright Page	Inter-mediate Upright Page	Inner Upright Page	Carriage Page	Hoist Chain Page	Load Backrest Page
55D-MT-268	80 in	1,5	9	11	13	15	17	24	28
55D-MT-269	101 in	1,5	9	11	13	15	17	24	28
55D-MT-270	68 in	1,5	9	11	13	15	17	24	28
55D-MT-271	101 in	1,5	9	11	13	15	17	24	28
55D-MT-272	108 in	2,6	10	12	14	16	17	25	28
55D-MT-273	80 in	1,5	9	11	13	15	17	24	28
55D-MT-274	68 in	1,5	9	11	13	15	17	24	28
55D-MT-275	101 in	1,5	9	11	13	15	17	24	28
55D-MT-276	80 in	1,5	9	11	13	15	18	24	28
55D-MT-278	80 in	1,5	9	11	13	15	17	24	28
55D-MT-279	94 in	1,5	9	11	13	15	17	24	28
55D-MT-280	78 in	1,5	9	11	13	15	17	24	28
55D-MT-281	73 in	1,5	9	11	13	15	17	24	28
55D-MT-282	66 in	1,5	9	11	13	15	17	24	28
55D-MT-283	80 in	1,5	9	11	13	15	17	24	28
55D-MT-284	84 in	1,5	9	11	13	15	17	24	28
55D-MT-285	84 in	1,5	9	11	13	15	17	24	28
55D-MT-286	83 in	1,5	9	11	13	15	17	24	28
55D-MT-287	92 in	1,5	9	11	13	15	17	24	28
55D-MT-288	60 in	1,5	9	11	13	15	18	24	28
55D-MT-289	84 in	1,5	9	11	13	15	17	24	28
55D-MT-290	80 in	1,5	9	11	13	15	17	24	28
55D-MT-291	89 in	1,5	9	11	13	15	17	24	28
55D-MT-292	90 in	1,5	9	11	13	15	17	24	28
55D-MT-293	119 in	2,6	10	12	14	16	17	25	28
55D-MT-294	69 in	1,5	9	11	13	15	17	24	28
55D-MT-295	80 in	1,5	9	11	13	15	17	24	28
55D-MT-296	89 in	1,5	9	11	13	15	17	24	28
55D-MT-297	80 in	1,5	9	11	13	15	17	24	28
55D-MT-298	60 in	1,5	10	12	14	16	18	25	28
55D-MT-299	80 in	1,5	10	12	14	16	18	25	28
55D-MT-300	78 in	1,5	9	11	13	15	17	24	28
55D-MT-301	92 in	1,5	9	11	13	15	17	24	28
55D-MT-302	80 in	1,5	9	11	13	15	17	24	28
55D-MT-303	80 in	1,5	9	11	13	15	17	24	28
55D-MT-304	92 in	1,5	9	11	13	15	17	24	28
55D-MT-305	80 in	1,5	9	11	13	15	17	24	28
55D-MT-306	68 in	1,5	9	11	13	15	17	24	28
55D-MT-307	56 in	1,5	9	11	13	15	17	24	28
55D-MT-308	56 in	1,5	9	11	13	15	17	24	28
55D-MT-309	92 in	1,5	9	11	13	15	17	24	28
55D-MT-310	80 in	1,5	9	11	13	15	18	24	28
55D-MT-311	80 in	1,5	9	11	13	15	17	24	28
60D-MT-001	80 in	3,7	9	11	13	15	19	26	28
60D-MT-002	80 in	3,7	9	11	13	15	19	26	28
60D-MT-003	68 in	3,7	9	11	13	15	19	26	28
60D-MT-004	74 in	3,7	9	11	13	15	19	26	28
60D-MT-005	74 in	3,7	9	11	13	15	19	26	28
60D-MT-006	80 in	3,7	9	11	13	15	19	26	28
60D-MT-007	80 in	3,7	9	11	13	15	19	26	28
60D-MT-008	80 in	3,7	9	11	13	15	19	26	28
60D-MT-009	92 in	3,7	9	11	13	15	19	26	28
60D-MT-010	74 in	3,7	9	11	13	15	19	26	28
60D-MT-011	80 in	3,7	9	11	13	15	19	26	28
60D-MT-013	74 in	3,7	9	11	13	15	19	26	28
60D-MT-014	85 in	3,7	9	11	13	15	19	26	28
60D-MT-015	74 in	3,7	9	11	13	15	19	26	28
60D-MT-016	80 in	3,7	9	11	13	15	19	26	28
60D-MT-017	83 in	3,7	9	11	13	15	20	26	28
60D-MT-018	101 in	3,7	9	11	13	15	20	26	28

Serial Number Index

Product I.D. No.	Overall Outer Channel Length	Main Lift & Free Lift Cylinder Page	Internal Hose Reeving Page	Outer Upright Page	Inter-mediate Upright Page	Inner Upright Page	Carriage Page	Hoist Chain Page	Load Backrest Page
60D-MT-019	80 in	3,7	9	11	13	15	19	26	28
60D-MT-020	80 in	3,7	9	11	13	15	19	26	28
60D-MT-021	74 in	3,7	9	11	13	15	19	26	28
60D-MT-022	81 in	3,7	9	11	13	15	20	26	28
60D-MT-023	80 in	3,7	9	11	13	15	19	26	28
60D-MT-024	83 in	3,7	9	11	13	15	19	26	28
60D-MT-025	92 in	3,7	9	11	13	15	19	26	28
60D-MT-026	80 in	3,7	9	11	13	15	20	26	28
60D-MT-027	74 in	3,7	9	11	13	15	19	26	28
60D-MT-028	74 in	3,7	9	11	13	15	20	26	28
60D-MT-029	75 in	3,7	9	11	13	15	19	26	28
60D-MT-030	75 in	3,7	9	11	13	15	19	26	28
60D-MT-031	101 in	3,7	9	11	13	15	19	26	28
60D-MT-032	101 in	3,7	9	11	13	15	19	26	28
60D-MT-033	92 in	3,7	9	11	13	15	19	26	28
60D-MT-034	92 in	3,7	9	11	13	15	19	26	28
60D-MT-035	81 in	3,7	9	11	13	15	20	26	28
60D-MT-036	82 in	3,7	9	11	13	15	20	26	28
60D-MT-037	82 in	3,7	9	11	13	15	19	26	28
60D-MT-038	82 in	3,7	9	11	13	15	20	26	28
60D-MT-039	92 in	3,7	9	11	13	15	19	26	28
60D-MT-040	82 in	3,7	9	11	13	15	20	26	28
60D-MT-042	80 in	3,7	9	11	13	15	19	26	28
60D-MT-043	109 in	4,8	10	12	14	16	19	26	28
60D-MT-044	83 in	3,7	9	11	13	15	19	26	28
60D-MT-045	81 in	3,7	9	11	13	15	19	26	28
60D-MT-046	89 in	3,7	9	11	13	15	19	26	28
60D-MT-047	101 in	3,7	9	11	13	15	20	26	28
60D-MT-048	86 in	3,7	9	11	13	15	19	26	28
60D-MT-049	101 in	3,7	9	11	13	15	20	26	28
60D-MT-050	89 in	3,7	9	11	13	15	20	26	28
60D-MT-052	80 in	3,7	9	11	13	15	20	26	28
60D-MT-053	80 in	3,7	9	11	13	15	19	26	28
60D-MT-054	82 in	3,7	9	11	13	15	20	26	28
60D-MT-055	106 in	4,8	10	12	14	16	19	26	28
60D-MT-056	89 in	3,7	9	11	13	15	19	26	28
60D-MT-057	74 in	3,7	9	11	13	15	20	26	28
60D-MT-058	98 in	3,7	9	11	13	15	20	26	28
60D-MT-059	98 in	3,7	9	11	13	15	20	26	28
60D-MT-060	72 in	3,7	9	11	13	15	20	26	28
60D-MT-061	74 in	3,7	9	11	13	15	20	26	28
60D-MT-062	80 in	3,7	9	11	13	15	20	26	28
60D-MT-063	86 in	3,7	9	11	13	15	20	26	28
60D-MT-064	68 in	3,7	9	11	13	15	20	26	28
60D-MT-065	102 in	4,8	10	12	14	16	20	27	28
60D-MT-066	93 in	3,7	9	11	13	15	20	26	28
60D-MT-067	93 in	3,7	9	11	13	15	20	26	28
60D-MT-068	94 in	3,7	9	11	13	15	20	26	28
60D-MT-069	74 in	3,7	9	11	13	15	20	26	28
60D-MT-070	74 in	3,7	9	11	13	15	20	26	28
60D-MT-071	80 in	3,7	9	11	13	15	20	26	28
60D-MT-072	74 in	3,7	9	11	13	15	20	26	28
60D-MT-073	74 in	3,7	9	11	13	15	19	26	28
60D-MT-074	67 in	3,7	9	11	13	15	19	26	28
60D-MT-075	74 in	3,7	9	11	13	15	19	26	28
60D-MT-076	74 in	3,7	9	11	13	15	19	26	28
60D-MT-077	81 in	3,7	9	11	13	15	19	26	28
60D-MT-078	81 in	3,7	9	11	13	15	19	26	28
60D-MT-079	101 in	3,7	9	11	13	15	20	26	28
60D-MT-080	75 in	3,7	9	11	13	15	19	26	28
60D-MT-081	73 in	3,7	9	11	13	15	19	26	28
60D-MT-082	73 in	3,7	9	11	13	15	19	26	28

Serial Number Index

Product I.D. No.	Overall Outer Channel Length	Main Lift & Free Lift Cylinder Page	Internal Hose Reeving Page	Outer Upright Page	Inter-mediate Upright Page	Inner Upright Page	Carriage Page	Hoist Chain Page	Load Backrest Page
60D-MT-083	80 in	3,7	9	11	13	15	19	26	28
60D-MT-084	90 in	3,7	9	11	13	15	19	26	28
60D-MT-085	69 in	3,7	9	11	13	15	19	26	28
60D-MT-086	92 in	3,7	9	11	13	15	19	26	28
60D-MT-087	80 in	3,7	9	11	13	15	19	26	28
60D-MT-088	88 in	3,7	9	11	13	15	19	26	28
60D-MT-089	88 in	3,7	9	11	13	15	19	26	28
60D-MT-090	75 in	3,7	9	11	13	15	20	26	28
60D-MT-091	79 in	3,7	9	11	13	15	20	26	28
60D-MT-092	80 in	3,7	9	11	13	15	20	26	28
60D-MT-093	94 in	3,7	9	11	13	15	20	26	28
60D-MT-094	81 in	3,7	9	11	13	15	20	26	28
60D-MT-095	81 in	3,7	9	11	13	15	20	26	28
60D-MT-096	80 in	3,7	9	11	13	15	20	26	28
60D-MT-097	94 in	3,7	9	11	13	15	19	26	28
60D-MT-099	94 in	3,7	9	11	13	15	20	26	28
60D-MT-100	83 in	3,7	9	11	13	15	19	26	28
60D-MT-101	83 in	3,7	9	11	13	15	19	26	28
60D-MT-102	83 in	3,7	9	11	13	15	19	26	28
60D-MT-103	83 in	3,7	9	11	13	15	19	26	28
60D-MT-104	80 in	3,7	9	11	13	15	20	26	28
60D-MT-105	80 in	3,7	9	11	13	15	19	26	28
60D-MT-106	74 in	3,7	9	11	13	15	19	26	28
60D-MT-107	80 in	3,7	9	11	13	15	19	26	28
60D-MT-108	80 in	3,7	9	11	13	15	20	26	28
60D-MT-109	102 in	4,8	10	12	14	16	20	27	28
60D-MT-110	102 in	4,8	10	12	14	16	20	27	28
60D-MT-111	80 in	3,7	9	11	13	15	19	26	28
60D-MT-112	83 in	3,7	9	11	13	15	19	26	28
60D-MT-113	94 in	3,7	9	11	13	15	19	26	28
60D-MT-114	86 in	3,7	9	11	13	15	19	26	28
60D-MT-115	83 in	3,7	9	11	13	15	19	26	28
60D-MT-116	83 in	3,7	9	11	13	15	19	26	28
60D-MT-117	94 in	3,7	9	11	13	15	19	26	28
60D-MT-118	81 in	3,7	9	11	13	15	20	26	28
60D-MT-119	82 in	3,7	9	11	13	15	19	26	28
60D-MT-120	82 in	3,7	9	11	13	15	19	26	28
60D-MT-121	108 in	3,7	10	12	14	16	20	27	28
60D-MT-122	80 in	3,7	9	11	13	15	19	26	28
60D-MT-123	80 in	3,7	9	11	13	15	19	26	28
60D-MT-124	81 in	3,7	9	11	13	15	19	26	28
60D-MT-125	100 in	3,7	9	11	13	15	20	26	28
60D-MT-126	102 in	3,7	9	11	13	15	20	26	28
60D-MT-127	109 in	3,7	9	11	13	15	19	26	28
60D-MT-128	74 in	3,7	9	11	13	15	20	26	28
60D-MT-129	80 in	3,7	9	11	13	15	20	26	28
60D-MT-130	80 in	3,7	9	11	13	15	19	26	28
60D-MT-131	80 in	3,7	9	11	13	15	19	26	28
60D-MT-132	75 in	3,7	9	11	13	15	19	26	28
60D-MT-133	73 in	3,7	9	11	13	15	19	26	28
60D-MT-134	71 in	3,7	9	11	13	15	19	26	28
60D-MT-135	80 in	3,7	9	11	13	15	19	26	28
60D-MT-136	69 in	3,7	9	11	13	15	19	26	28
60D-MT-137	80 in	3,7	9	11	13	15	19	26	28
60D-MT-138	81 in	3,7	9	11	13	15	19	26	28
60D-MT-140	68 in	3,7	9	11	13	15	19	26	28
60D-MT-141	80 in	3,7	9	11	13	15	19	26	28
60D-MT-142	92 in	3,7	9	11	13	15	19	26	28
60D-MT-143	69 in	3,7	9	11	13	15	19	26	28
60D-MT-144	92 in	3,7	9	11	13	15	19	26	28
60D-MT-145	92 in	3,7	9	11	13	15	20	26	28
60D-MT-146	83 in	3,7	9	11	13	15	19	26	28

Serial Number Index

Product I.D. No.	Overall Outer Channel Length	Main Lift & Free Lift Cylinder Page	Internal Hose Reeving Page	Outer Upright Page	Inter-mediate Upright Page	Inner Upright Page	Carriage Page	Hoist Chain Page	Load Backrest Page
60D-MT-147	83 in	3,7	9	11	13	15	19	26	28
60D-MT-148	82 in	3,7	9	11	13	15	19	26	28
60D-MT-149	92 in	3,7	9	11	13	15	20	26	28
60D-MT-150	92 in	3,7	9	11	13	15	20	26	28
60D-MT-151	94 in	3,7	9	11	13	15	19	26	28
60D-MT-152	76 in	3,7	9	11	13	15	19	26	28
60D-MT-153	80 in	3,7	9	11	13	15	19	26	28
60D-MT-154	80 in	3,7	9	11	13	15	19	26	28
60D-MT-155	80 in	3,7	9	11	13	15	20	26	28
60D-MT-156	82 in	3,7	9	11	13	15	19	26	28
60D-MT-157	101 in	3,7	9	11	13	15	19	26	28
60D-MT-158	75 in	3,7	9	11	13	15	19	26	28
60D-MT-159	80 in	3,7	9	11	13	15	19	26	28
60D-MT-160	90 in	3,7	9	11	13	15	19	26	28
60D-MT-162	94 in	3,7	9	11	13	15	19	26	28
60D-MT-163	94 in	3,7	9	11	13	15	19	26	28
60D-MT-164	94 in	3,7	9	11	13	15	19	26	28
60D-MT-165	104 in	3,7	10	12	14	16	19	27	28
60D-MT-166	79 in	3,7	9	11	13	15	19	26	28

Fig. 8001 Safety Decals and Publications

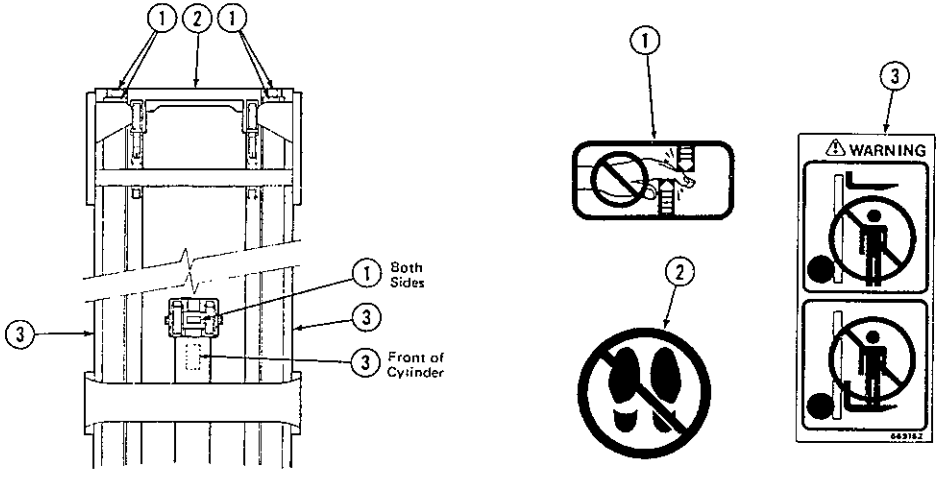

55D/60D

REF	QTY	PART NO	DESCRIPTION
1	4	CC665595	No Hand Hold
2	2	CC679150	No Step
3	1	CC669152	Warning

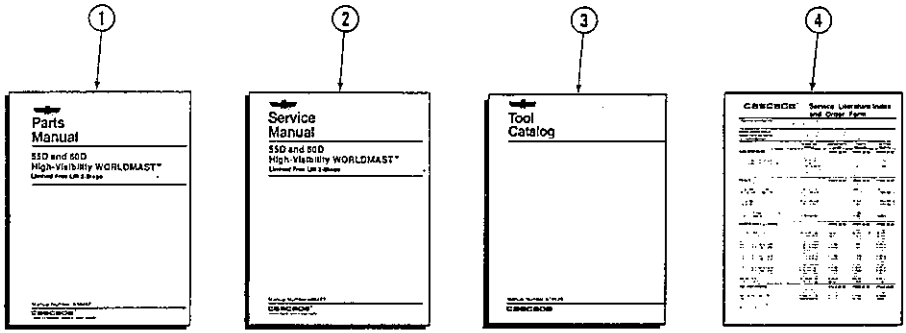

55D/60D

REF	PART NO	DESCRIPTION
1	CC686463	Parts Manual
2	CC687250	Service Manual
3	CC679929	Tool Catalog
4	CC673964	Literature Index Order Form

Fig. 8002 Main Lift Cylinder-2600 PSI

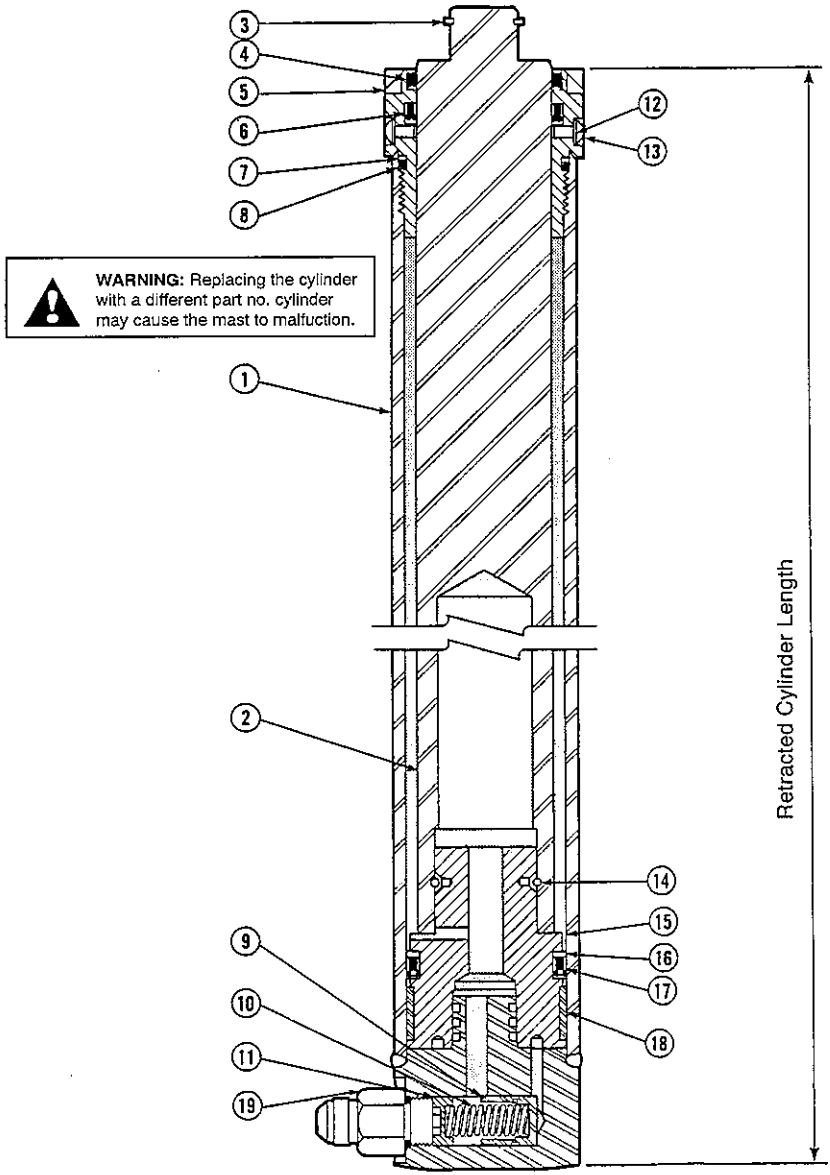

Main Lift Cylinder-2600 PSI

55D

Items that vary according to mast height.

Retracted Cahnnel Length (in.)	Retracted Cylinder Length (in.)	Cylinder Assembly Qty 1	REF.NO.1 Shell Qty 1	REF.NO.2 Plunger Qty 1
56	43.0	CC581837	CC5432-1059	CC5444-1025
57	44.0	CC580689	CC5432-1085	CC5444-1051
58	45.0	CC580691	CC5432-1110	CC5444-1076
59	46.0	CC580693	CC5432-1136	CC5444-1102
60	47.0	CC580696	CC5432-1161	CC5444-1127
61	48.0	CC580699	CC5432-1186	CC5444-1152
62	49.0	CC580702	CC5432-1212	CC5444-1178
63	50.0	CC580705	CC5432-1237	CC5444-1203
64	51.0	CC580708	CC5432-1263	CC5444-1229
65	52.0	CC580711	CC5432-1288	CC5444-1254
66	53.0	CC580714	CC5432-1313	CC5444-1279
67	54.0	CC580717	CC5432-1339	CC5444-1305
68	55.0	CC580720	CC5432-1364	CC5444-1330
69	56.0	CC580723	CC5432-1390	CC5444-1356
70	57.0	CC580726	CC5432-1415	CC5444-1381
71	58.0	CC580729	CC5432-1440	CC5444-1406
72	59.0	CC580732	CC5432-1466	CC5444-1432
73	60.0	CC580735	CC5432-1491	CC5444-1457
74	61.0	CC580738	CC5432-1517	CC5444-1483
75	62.0	CC580741	CC5432-1542	CC5444-1508
76	63.0	CC580744	CC5432-1567	CC5444-1533
77	64.0	CC580747	CC5432-1593	CC5444-1559
78	65.0	CC580750	CC5432-1618	CC5444-1584
79	66.0	CC580753	CC5432-1644	CC5444-1610
80	67.0	CC580756	CC5432-1669	CC5444-1635
81	68.0	CC580760	CC5432-1694	CC5444-1660
82	69.0	CC580763	CC5432-1720	CC5444-1686
83	70.0	CC580764	CC5432-1720	CC5444-1711
84	71.0	CC580768	CC5432-1745	CC5444-1737
85	72.0	CC580771	CC5432-1771	CC5444-1762
86	73.0	CC580772	CC5432-1771	CC5444-1787
87	74.0	CC580776	CC5432-1796	CC5444-1813
88	75.0	CC580779	CC5432-1821	CC5444-1838
89	76.0	CC580780	CC5432-1821	CC5444-1864
90	77.0	CC580784	CC5432-1847	CC5444-1889
91	78.0	CC580789	CC5432-1872	CC5444-1914
92	79.0	CC580791	CC5432-1872	CC5444-1940
93	80.0	CC580794	CC5432-1898	CC5444-1965
94	81.0	CC580797	CC5432-1923	CC5444-1991
95	82.0	CC580800	CC5432-1923	CC5444-2016
96	83.0	CC580803	CC5432-1948	CC5444-2041
97	84.0	CC580806	CC5432-1948	CC5444-2067
98	85.0	CC580809	CC5432-1974	CC5444-2092
99	86.0	CC580812	CC5432-1974	CC5444-2118
100	87.0	CC580815	CC5432-1999	CC5444-2143
101	88.0	CC580818	CC5432-1999	CC5444-2168

Common items.

REF	QTY	PART NO	DESCRIPTION
3	1	CC3129	★Snap Ring
4	1	CC559863	★Plunger Wiper
5	1	CC558522	Retainer
6	1	CC560022	★Plunger Seal
7	1	CC559859	★Back-Up Ring
8	1	CC559858	★O-Ring
9	1	CC562427	Piston-Lowering Fuse
10	1	CC562425	Spring
11	1	CC562426	Spring Guide
12	1	CC622729	★Seal
13	1	CC4850	Capscrew, 164x1/4NC-GR8
14	1	CC559906	Pull-In wire
15	1	CC560462	Piston
16	1	CC560066	★Back-Up Ring
17	1	CC559851	★Piston Seal
18	1	CC559864	★Wear Ring
19	1	CC684036	■Fitting, 8-10

■ Not included in Cylinder Assembly. ★ Included in Service Kit 560351.

Fig. 8003 Main Lift Cylinder-2600 PSI

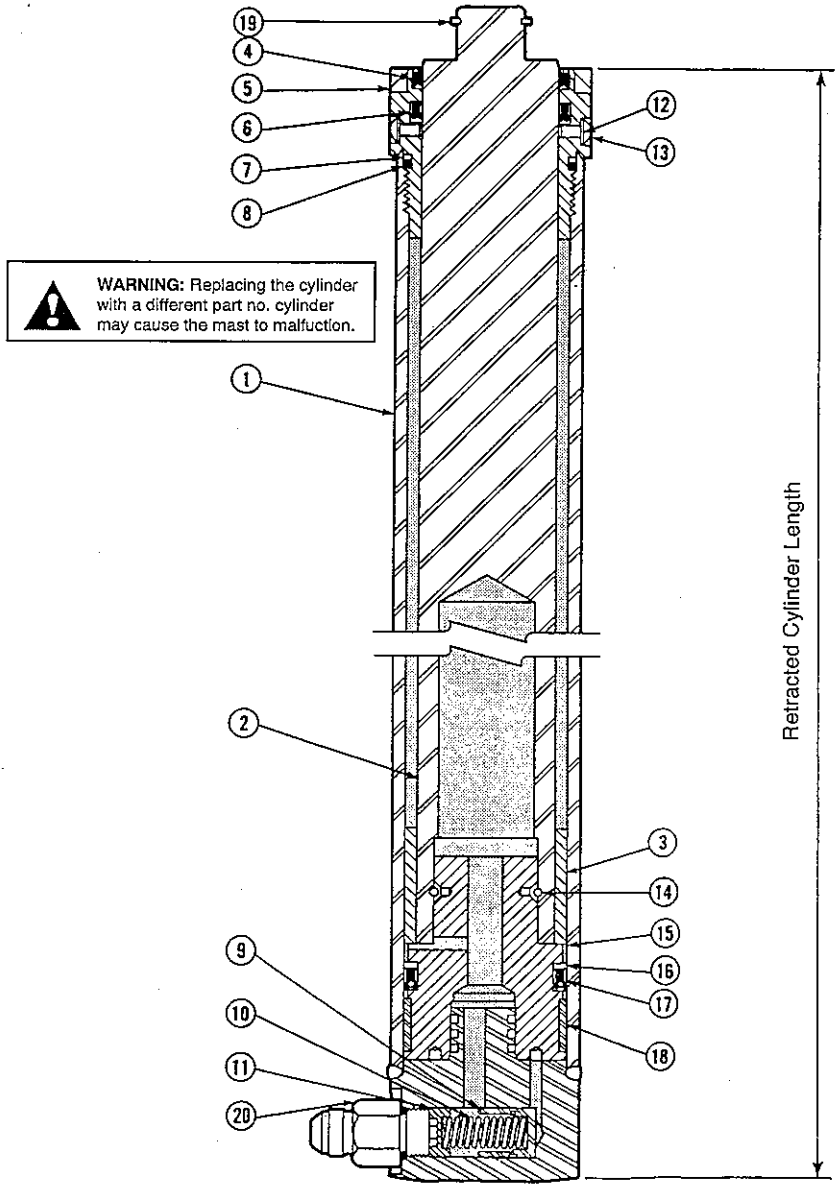

Main Lift Cylinder-2600 PSI

55D

Items that vary according to mast height.

Retracted Cahnnel Length (In.)	Retracted Cylinder Length (In.)	Cylinder Assembly Qty 1	REF.NO.1 Shell Qty 1	REF.NO.2 Plunger Qty 1	REF.NO.3 Spacer Qty 1
102	89.00	CC581262	CC5432-2152	CC5444-2193	CC561565
103	90.00	CC581263	CC5432-2152	CC5444-2218	CC561565
104	91.00	CC581266	CC5432-2177	CC5444-2244	CC561565
105	92.00	CC581267	CC5432-2177	CC5444-2269	CC561565
106	93.00	CC581270	CC5432-2202	CC5444-2295	CC561565
107	94.00	CC581271	CC5432-2202	CC5444-2320	CC561565
108	95.00	CC581274	CC5432-2228	CC5444-2345	CC561565
109	96.00	CC581275	CC5432-2280	CC5444-2371	CC561567
110	97.00	CC581278	CC5432-2305	CC5444-2396	CC561567
111	98.00	CC581279	CC5432-2305	CC5444-2422	CC561567
112	99.00	CC581280	CC5432-2331	CC5444-2447	CC561567
113	100.00	CC581282	CC5432-2331	CC5444-2472	CC561567
114	101.00	CC581283	CC5432-2331	CC5444-2498	CC561567
115	102.00	CC581285	CC5432-2356	CC5444-2523	CC561567
116	103.00	CC581287	CC5432-2381	CC5444-2549	CC561567
117	104.00	CC581289	CC5432-2407	CC5444-2574	CC561567
118	105.00	CC581291	CC5432-2432	CC5444-2599	CC561567
119	106.00	CC581293	CC5432-2458	CC5444-2625	CC561567
120	107.00	CC581296	CC5432-2483	CC5444-2650	CC561567
121	108.00	CC581299	CC5432-2508	CC5444-2676	CC561567
122	109.00	CC581302	CC5432-2534	CC5444-2701	CC561567
123	110.00	CC581305	CC5432-2559	CC5444-2726	CC561567
124	111.00	CC581308	CC5432-2585	CC5444-2752	CC561567

Common items.

REF	QTY	PART NO	DESCRIPTION
4	1	CC559863	★Plunger Wiper
5	1	CC558522	Retainer
6	1	CC560022	★Plunger Seal
7	1	CC559859	★Back-Up Ring
8	1	CC559858	★O-Ring
9	1	CC562427	Piston-Lowering Fuse
10	1	CC562425	Spring
11	1	CC562426	Spring Guide
12	2	CC622729	★Seal
13	1	CC4850	Capscrew, 164x1/4NC-GR8
14	1	CC559906	Pull-In wire
15	1	CC560462	Piston
16	1	CC560066	★Back-Up Ring
17	1	CC559851	★Piston Seal
18	1	CC559864	★Wear Ring
19	1	CC3129	Snap Ring
20	1	CC684036	Fitting, 8-10

■ Not included in Cylinder Assembly.
★ Included in Service Kit 560351.

Fig. 8004 Main Lift Cylinder-2600 PSI

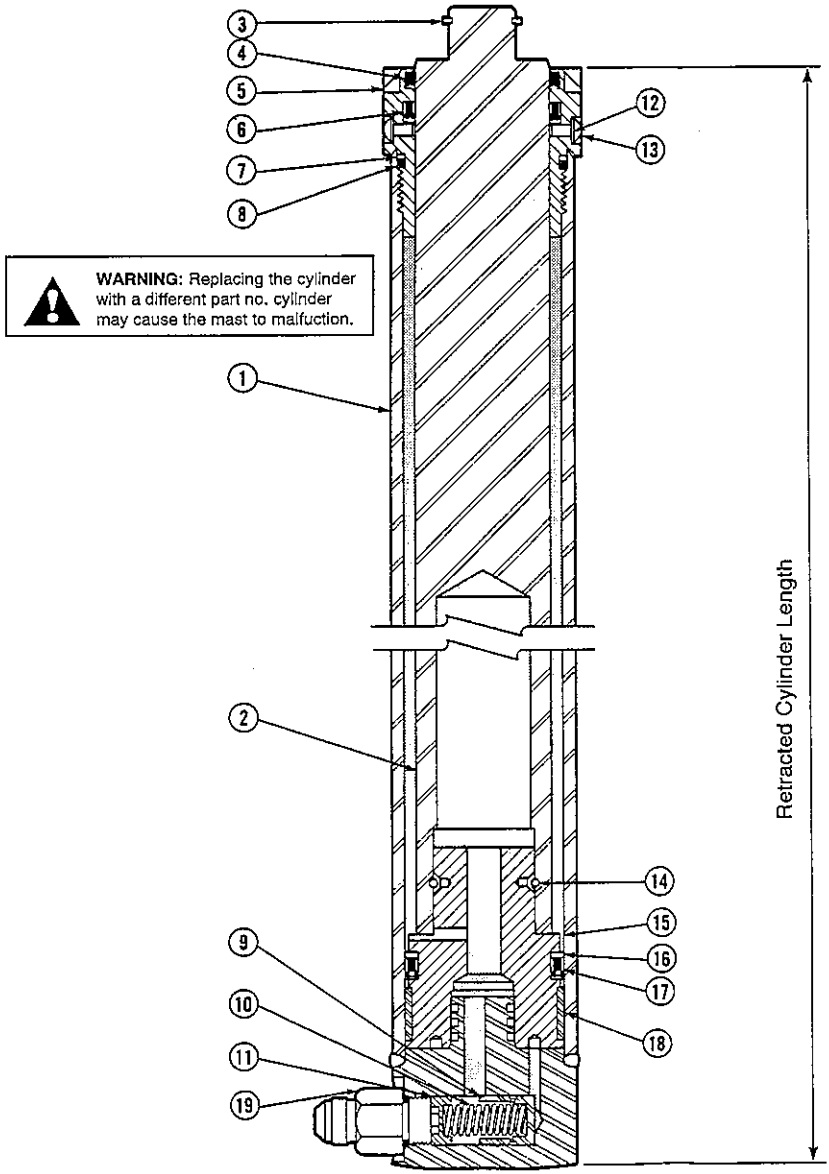

Main Lift Cylinder-2600 PSI

60D

Items that vary according to mast height.

Retracted Cahnnel Length (in.)	Retracted Cylinder Length (in.)	Cylinder Assembly Qty 1	REF.NO.1 Shell Qty 1	REF.NO.2 Plunger Qty 1
56	43.0	CC581838	CC5432-1015	CC5444-1025
57	44.0	CC580687	CC5432-1041	CC5444-1051
58	45.0	CC580688	CC5432-1066	CC5444-1076
59	46.0	CC580690	CC5432-1092	CC5444-1102
60	47.0	CC580692	CC5432-1117	CC5444-1127
61	48.0	CC580695	CC5432-1142	CC5444-1152
62	49.0	CC580698	CC5432-1167	CC5444-1178
63	50.0	CC580701	CC5432-1193	CC5444-1203
64	51.0	CC580704	CC5432-1218	CC5444-1229
65	52.0	CC580707	CC5432-1244	CC5444-1254
66	53.0	CC580710	CC5432-1269	CC5444-1279
67	54.0	CC580713	CC5432-1294	CC5444-1305
68	55.0	CC580716	CC5432-1320	CC5444-1330
69	56.0	CC580719	CC5432-1345	CC5444-1356
70	57.0	CC580722	CC5432-1371	CC5444-1381
71	58.0	CC580725	CC5432-1396	CC5444-1406
72	59.0	CC580728	CC5432-1421	CC5444-1432
73	60.0	CC580731	CC5432-1447	CC5444-1457
74	61.0	CC580734	CC5432-1550	CC5444-1483
75	62.0	CC580737	CC5432-1498	CC5444-1508
76	63.0	CC580740	CC5432-1523	CC5444-1533
77	64.0	CC580743	CC5432-1548	CC5444-1559
78	65.0	CC580746	CC5432-1574	CC5444-1584
79	66.0	CC580749	CC5432-1599	CC5444-1610
80	67.0	CC580752	CC5432-1625	CC5444-1635
81	68.0	CC580755	CC5432-1650	CC5444-1660
82	69.0	CC580758	CC5432-1675	CC5444-1686
83	70.0	CC580759	CC5432-1675	CC5444-1711
84	71.0	CC580762	CC5432-1701	CC5444-1737
85	72.0	CC580766	CC5432-1726	CC5444-1762
86	73.0	CC580767	CC5432-1726	CC5444-1787
87	74.0	CC580770	CC5432-1752	CC5444-1813
88	75.0	CC580774	CC5432-1777	CC5444-1838
89	76.0	CC580775	CC5432-1777	CC5444-1864
90	77.0	CC580778	CC5432-1802	CC5444-1889
91	78.0	CC580782	CC5432-1828	CC5444-1914
92	79.0	CC580783	CC5432-1828	CC5444-1940
93	80.0	CC580793	CC5432-1853	CC5444-1965
94	81.0	CC580796	CC5432-1879	CC5444-1991
95	82.0	CC580799	CC5432-1879	CC5444-2016
96	83.0	CC580802	CC5432-1904	CC5444-2041
97	84.0	CC580805	CC5432-1904	CC5444-2067
98	85.0	CC580808	CC5432-1929	CC5444-2092
99	86.0	CC580811	CC5432-1929	CC5444-2118
100	87.0	CC580814	CC5432-1955	CC5444-2143
101	88.0	CC580817	CC5432-1955	CC5444-2168

Common items.

REF	QTY	PART NO	DESCRIPTION	REF	QTY	PART NO	DESCRIPTION
3	1	CC3129	★Snap Ring	12	1	CC622729	★Seal
4	1	CC559863	★Plunger Wiper	13	1	CC4850	Capscrew, 164x1/4NC-GR8
5	1	CC558522	Retainer	14	1	CC559906	Pull-In wire
6	1	CC560022	★Plunger Seal	15	1	CC560462	Piston
7	1	CC559859	★Back-Up Ring	16	1	CC560066	★Back-Up Ring
8	1	CC559858	★O-Ring	17	1	CC559851	★Piston Seal
9	1	CC562427	Piston-Lowering Fuse	18	1	CC559864	★Wear Ring
10	1	CC562425	Spring	19	1	CC684036	■Fitting, 8-10
11	1	CC562426	Spring Guide				

■ Not included in Cylinder Assembly. ★ Included in Service Kit 560351.

Fig. 8005 Main Lift Cylinder-2600 PSI

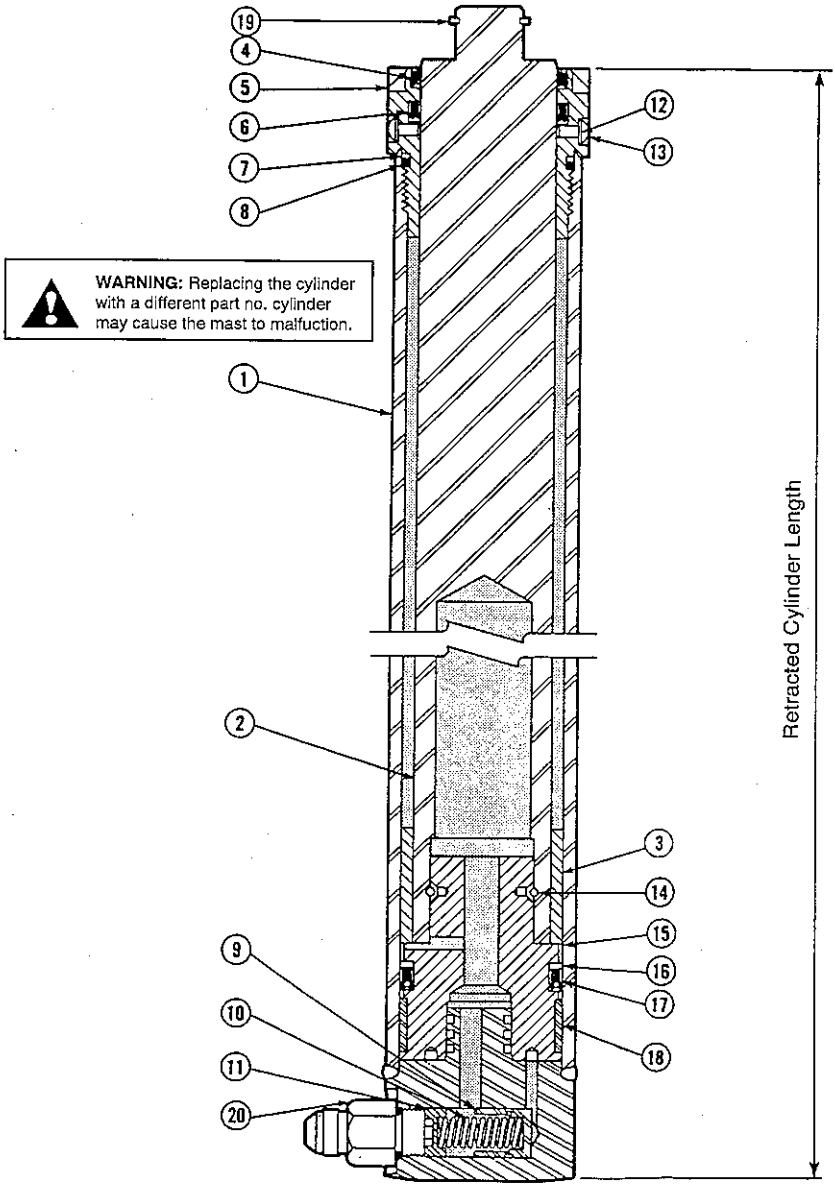

Main Lift Cylinder-2600 PSI

60D

Items that vary according to mast height.

Retracted Cahnnel Length (In).	Retracted Cylinder Length (In).	Cylinder Assembly Qty 1	REF.NO.1 Shell Qty 1	REF.NO.2 Plunger Qty 1	REF.NO.3 Spacer Qty 1
102	89.00	CC581258	CC5432-2107	CC5444-2193	CC561565
103	90.00	CC581259	CC5432-2107	CC5444-2218	CC561565
104	91.00	CC581260	CC5432-2133	CC5444-2244	CC561565
105	92.00	CC581261	CC5432-2133	CC5444-2269	CC561565
106	93.00	CC581264	CC5432-2158	CC5444-2295	CC561565
107	94.00	CC581265	CC5432-2158	CC5444-2320	CC561565
108	95.00	CC581268	CC5432-2183	CC5444-2345	CC561565
109	96.00	CC581269	CC5432-2235	CC5444-2371	CC561567
110	97.00	CC581272	CC5432-2261	CC5444-2396	CC561567
111	98.00	CC581273	CC5432-2261	CC5444-2422	CC561567
112	99.00	CC581276	CC5432-2286	CC5444-2447	CC561567
113	100.00	CC581277	CC5432-2286	CC5444-2472	CC561567
114	101.00	CC581283	CC5432-2331	CC5444-2498	CC561567
115	102.00	CC581285	CC5432-2356	CC5444-2523	CC561567
116	103.00	CC581287	CC5432-2381	CC5444-2549	CC561567
117	104.00	CC581289	CC5432-2407	CC5444-2574	CC561567
118	105.00	CC581291	CC5432-2432	CC5444-2599	CC561567
119	106.00	CC581293	CC5432-2458	CC5444-2625	CC561567
120	107.00	CC581296	CC5432-2483	CC5444-2650	CC561567
121	108.00	CC581299	CC5432-2508	CC5444-2676	CC561567
122	109.00	CC581302	CC5432-3534	CC5444-2701	CC561567
123	110.00	CC581305	CC5432-2559	CC5444-2726	CC561567
124	111.00	CC581308	CC5432-2585	CC5444-2752	CC561567

Common items.

REF	QTY	PART NO	DESCRIPTION
4	1	CC559863	★Plunger Wiper
5	1	CC558522	Retainer
6	1	CC560022	★Plunger Seal
7	1	CC559859	★Back-Up Ring
8	1	CC559858	★O-Ring
9	1	CC562427	Piston-Lowering Fuse
10	1	CC562425	Spring
11	1	CC562426	Spring Guide
12	2	CC622729	★Seal
13	1	CC4850	Capscrew, 164x1/4NC-GR8
14	1	CC559906	Pull-In wire
15	1	CC560462	Piston
16	1	CC560066	★Back-Up Ring
17	1	CC559851	★Piston Seal
18	1	CC559864	★Wear Ring
19	1	CC3129	Snap Ring
20	1	CC684036	■ Fitting, 8-10

■ Not included in Cylinder Assembly.
★ Included in Service Kit 560351.

Fig. 8006 Free Lift Cylinder-2600 PSI

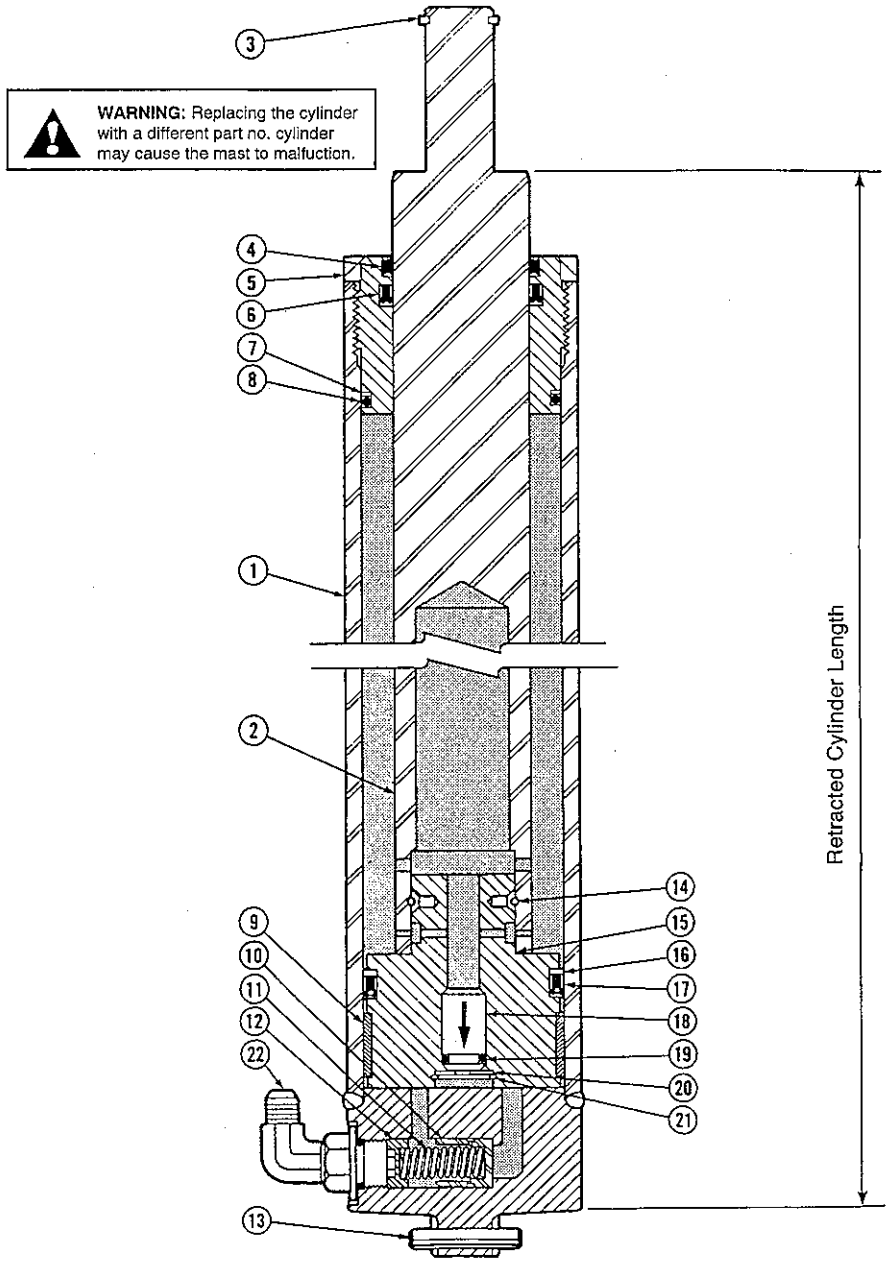

Free Lift Cylinder-2600 PSI

55D

Items that vary according to mast height.

Retracted Cahnnel Length (in.)	Retracted Cylinder Length (in.)	Cylinder Assembly Qty 1	REF.NO.1 Shell Qty 1	REF.NO.2 Plunger Qty 1
56	28.1	CC581900	CC5434-673	CC5445-674
57	28.6	CC580596	CC5434-685	CC5445-686
58	29.1	CC580598	CC5434-698	CC5445-699
59	29.6	CC580600	CC5434-711	CC5445-712
60	30.1	CC580602	CC5434-724	CC5445-725
61	30.6	CC580604	CC5434-736	CC5445-737
62	31.1	CC580606	CC5434-749	CC5445-750
63	31.6	CC580608	CC5434-762	CC5445-763
64	32.1	CC580610	CC5434-774	CC5445-775
65	32.6	CC580612	CC5434-787	CC5445-788
66	33.1	CC580614	CC5434-800	CC5445-801
67	33.6	CC580616	CC5434-812	CC5445-813
68	34.1	CC580618	CC5434-825	CC5445-826
69	34.6	CC580620	CC5434-838	CC5445-839
70	35.1	CC580622	CC5434-851	CC5445-852
71	35.6	CC580624	CC5434-863	CC5445-864
72	36.1	CC580626	CC5434-876	CC5445-877
73	36.6	CC580628	CC5434-889	CC5445-890
74	37.1	CC580630	CC5434-901	CC5445-902
75	37.6	CC580632	CC5434-914	CC5445-915
76	38.1	CC580634	CC5434-927	CC5445-928
77	38.6	CC580636	CC5434-939	CC5445-940
78	39.1	CC580638	CC5434-952	CC5445-953
79	39.6	CC580640	CC5434-965	CC5445-966
80	40.1	CC580642	CC5434-978	CC5445-979
81	40.6	CC580644	CC5434-990	CC5445-991
82	41.1	CC580646	CC5434-1003	CC5445-1004
83	41.6	CC580648	CC5434-1016	CC5445-1017
84	42.1	CC580650	CC5434-1028	CC5445-1029
85	42.6	CC580652	CC5434-1041	CC5445-1042
86	43.1	CC580654	CC5434-1054	CC5445-1055
87	43.6	CC580656	CC5434-1066	CC5445-1067
88	44.1	CC580658	CC5434-1079	CC5445-1080
89	44.6	CC580660	CC5434-1092	CC5445-1093
90	45.1	CC580662	CC5434-1105	CC5445-1106
91	45.6	CC580664	CC5434-1117	CC5445-1118
92	46.1	CC580666	CC5434-1130	CC5445-1131
93	46.6	CC580668	CC5434-1143	CC5445-1144
94	47.1	CC580670	CC5434-1155	CC5445-1156
95	47.6	CC580672	CC5434-1168	CC5445-1169
96	48.1	CC580674	CC5434-1181	CC5445-1182
97	48.6	CC580676	CC5434-1193	CC5445-1194
98	49.1	CC580678	CC5434-1206	CC5445-1207
99	49.6	CC580680	CC5434-1219	CC5445-1220
100	50.1	CC580682	CC5434-1232	CC5445-1233
101	50.6	CC581684	CC5434-1244	CC5445-1245

Common items.

REF	QTY	PART NO	DESCRIPTION	REF	QTY	PART NO	DESCRIPTION
3	1	CC3129	★Snap Ring	13	1	CC769018	Roll Pin
4	1	CC559863	★Plunger Wiper	14	1	CC559905	Pull-In Wire
5	1	CC559982	Retainer	15	1	CC559986	Piston
6	1	CC560022	★Plunger Seal	16	1	CC559857	★Back-Up Ring
7	1	CC559964	★Back-Up Ring	17	1	CC559853	★Piston Seal
8	1	CC559861	★O-Ring	18	1	CC560717	Check Valve
9	1	CC559855	★Wear Ring	19	1	CC557226	★O-Ring
10	1	CC560470	Piston,Lowering-Fuse	20	1	CC637635	Washer
11	1	CC560824	Spring	21	1	CC3015	Retaining Ring
12	1	CC560465	Spring Guide	22	1	CC642649	■Fitting, 8-10

★ Included in Service Kit 560349.
■ Not included in Cylinder Assembly.

Fig. 8007 Free Lift Cylinder-2600 PSI

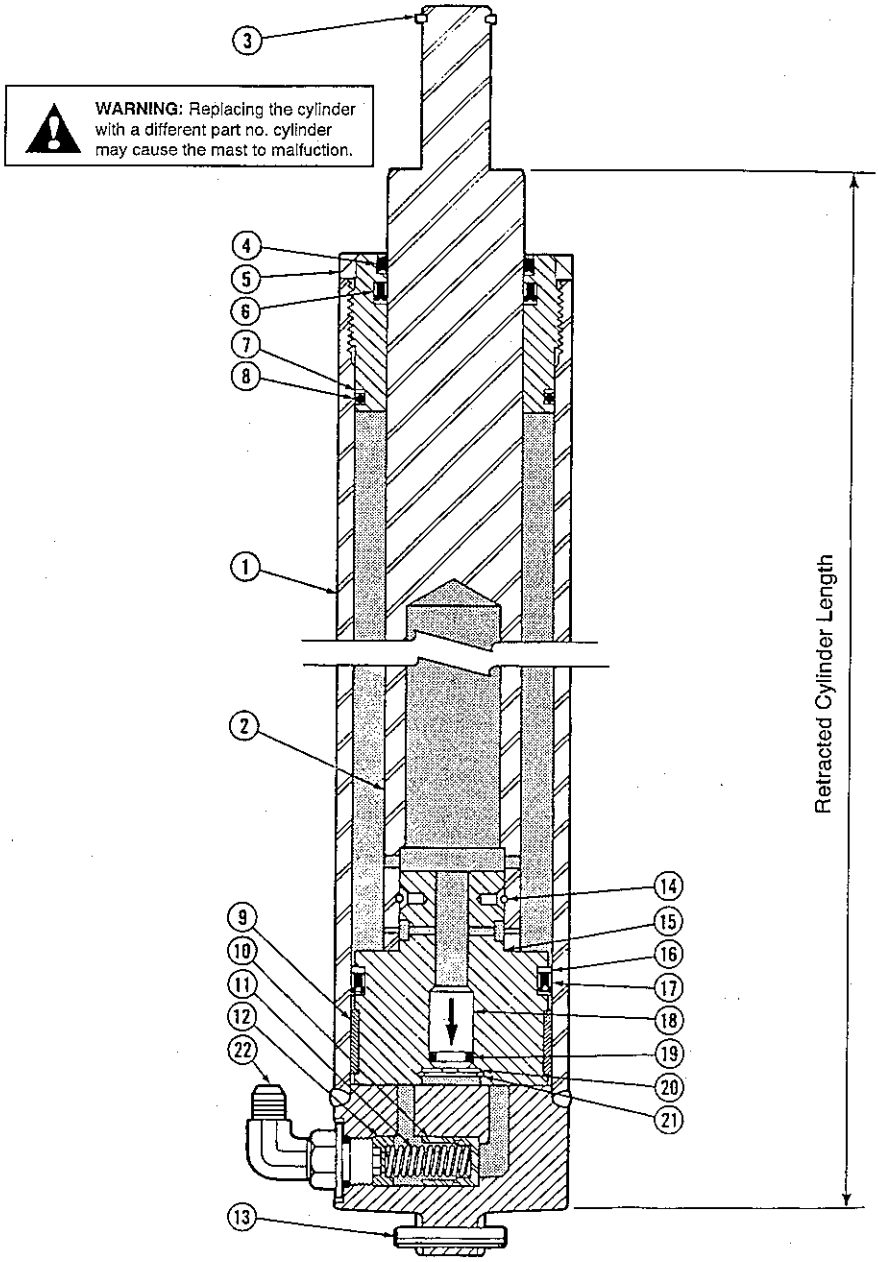

Free Lift Cylinder-2600 PSI

55D

Items that vary according to mast height.

Retracted Cahnnel Length (in.)	Retracted Cylinder Length (in.)	Cylinder Assembly Qty 1	REF.NO.1 Shell Qty 1	REF.NO.2 Plunger Qty 1
102	51.1	CC581110	CC5434-1257	CC5445-1258
103	51.6	CC581112	CC5434-1270	CC5445-1271
104	52.1	CC581114	CC5434-1282	CC5445-1283
105	52.6	CC581116	CC5434-1295	CC5445-1296
106	53.1	CC581118	CC5434-1308	CC5445-1309
107	53.6	CC581120	CC5434-1320	CC5445-1321
108	54.1	CC581122	CC5434-1333	CC5445-1334
109	54.6	CC581124	CC5434-1346	CC5445-1347
110	55.1	CC581126	CC5434-1359	CC5445-1360
111	55.6	CC581128	CC5434-1371	CC5445-1372
112	56.1	CC581130	CC5434-1384	CC5445-1385
113	56.6	CC581132	CC5434-1397	CC5445-1398
114	57.1	CC581134	CC5434-1409	CC5445-1410
115	57.6	CC581136	CC5434-1422	CC5445-1423
116	58.1	CC581138	CC5434-1435	CC5445-1436
117	58.6	CC581140	CC5434-1447	CC5445-1448
118	59.1	CC581142	CC5434-1460	CC5445-1461
119	59.6	CC581144	CC5434-1473	CC5445-1474
120	60.1	CC581146	CC5434-1486	CC5445-1487
121	60.6	CC581148	CC5434-1498	CC5445-1499
122	61.1	CC581150	CC5434-1511	CC5445-1512
123	61.6	CC581151	CC5434-1524	CC5445-1525
124	62.1	CC581085	CC5434-1536	CC5445-1537

Common Items.

REF	QTY	PART NO	DESCRIPTION	REF	QTY	PART NO	DESCRIPTION
3	1	CC3129	★Snap Ring	13	1	CC769018	Roll Pin
4	1	CC559863	★Plunger Wiper	14	1	CC559906	Pull-In Wire
5	1	CC559982	Retainer	15	1	CC559986	Piston
6	1	CC560022	★Plunger Seal	16	1	CC559857	★Back-Up Ring
7	1	CC559964	★Back-Up Ring	17	1	CC559853	★Piston Seal
8	1	CC559861	★O-Ring	18	1	CC560717	Check Valve
9	1	CC559855	★Wear Ring	19	1	CC557226	★O-Ring
10	1	CC560470	Piston,Lowering-Fuse	20	1	CC637635	Washer
11	1	CC560824	Spring	21	1	CC3015	Retaining Ring
12	1	CC560465	Spring Guide	22	1	CC642649	■Fitting, 8-10

★ Included in Service Kit 560349.
■ Not included in Cylinder Assembly.

Fig. 8008 Free Lift Cylinder-2600 PSI

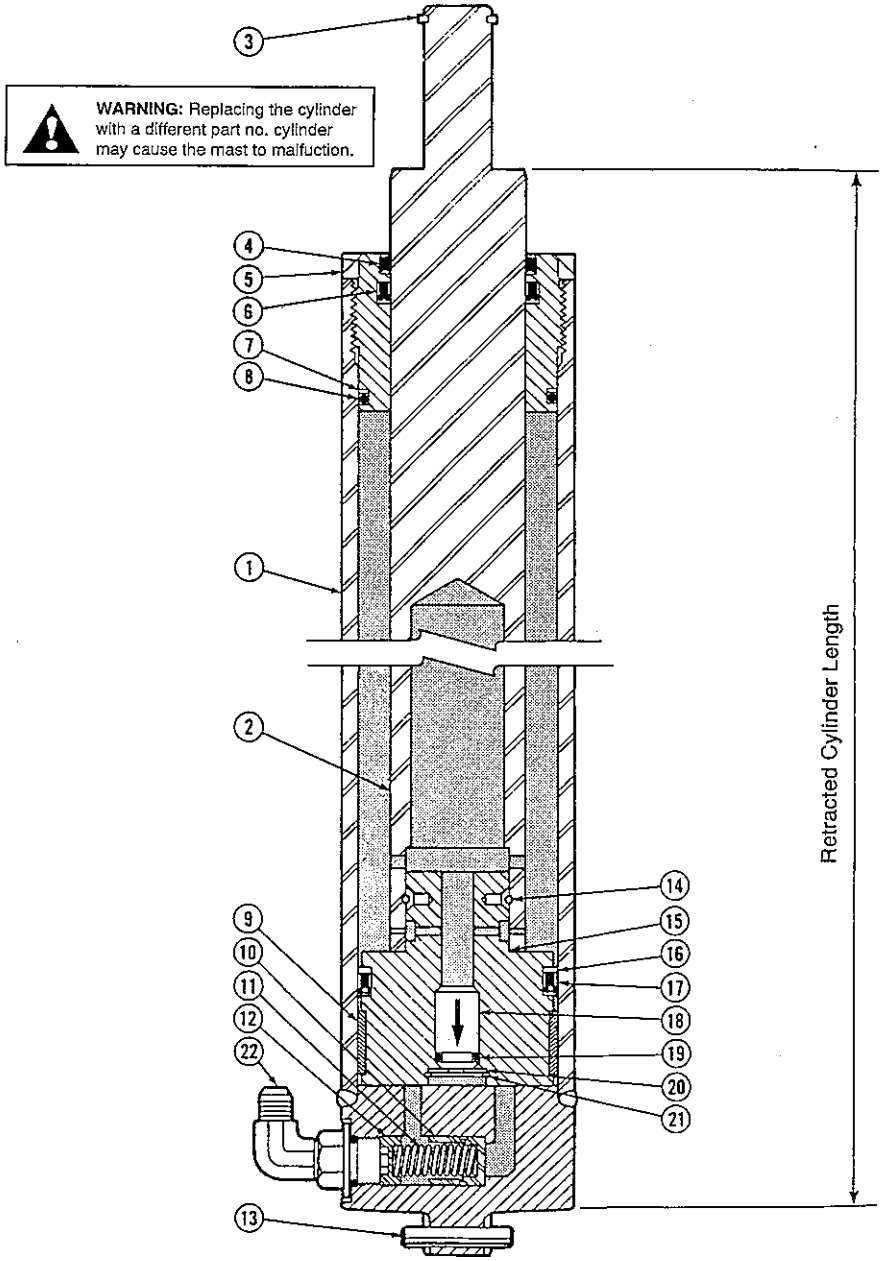

Free Lift Cylinder-2600 PSI

60D

Items that vary according to mast height.

Retracted Cahnnel Length (In.)	Retracted Cylinder Length (In.)	Cylinder Assembly Qty 1	REF.NO.1 Shell Qty 1	REF.NO.2 Plunger Qty 1
56	28.1	CC581901	CC5434-654	CC5445-674
57	28.6	CC580595	CC5434-666	CC5445-686
58	29.1	CC580597	CC5434-679	CC5445-699
59	29.6	CC580599	CC5434-692	CC5445-712
60	30.1	CC580601	CC5434-704	CC5445-725
61	30.6	CC580603	CC5434-717	CC5445-737
62	31.1	CC580605	CC5434-730	CC5445-750
63	31.6	CC580607	CC5434-743	CC5445-763
64	32.1	CC580609	CC5434-755	CC5445-775
65	32.6	CC580611	CC5434-768	CC5445-788
66	33.1	CC580613	CC5434-781	CC5445-801
67	33.6	CC580615	CC5434-793	CC5445-813
68	34.1	CC580617	CC5434-806	CC5445-826
69	34.6	CC580619	CC5434-819	CC5445-839
70	35.1	CC580621	CC5434-831	CC5445-852
71	35.6	CC580623	CC5434-844	CC5445-864
72	36.1	CC580625	CC5434-857	CC5445-877
73	36.6	CC580627	CC5434-870	CC5445-890
74	37.1	CC580629	CC5434-882	CC5445-902
75	37.6	CC580631	CC5434-895	CC5445-915
76	38.1	CC580633	CC5434-908	CC5445-928
77	38.6	CC580635	CC5434-920	CC5445-940
78	39.1	CC580637	CC5434-933	CC5445-953
79	39.6	CC580639	CC5434-946	CC5445-966
80	40.1	CC580641	CC5434-958	CC5445-979
81	40.6	CC580643	CC5434-971	CC5445-991
82	41.1	CC580645	CC5434-984	CC5445-1004
83	41.6	CC580647	CC5434-997	CC5445-1017
84	42.1	CC580649	CC5434-1009	CC5445-1029
85	42.6	CC580651	CC5434-1022	CC5445-1042
86	43.1	CC580653	CC5434-1035	CC5445-1055
87	43.6	CC580655	CC5434-1047	CC5445-1067
88	44.1	CC580657	CC5434-1060	CC5445-1080
89	44.6	CC580659	CC5434-1073	CC5445-1093
90	45.1	CC580661	CC5434-1085	CC5445-1106
91	45.6	CC580663	CC5434-1098	CC5445-1118
92	46.1	CC580665	CC5434-1111	CC5445-1131
93	46.6	CC580667	CC5434-1124	CC5445-1144
94	47.1	CC580669	CC5434-1136	CC5445-1156
95	47.6	CC580671	CC5434-1149	CC5445-1169
96	48.1	CC580673	CC5434-1162	CC5445-1182
97	48.6	CC580675	CC5434-1174	CC5445-1194
98	49.1	CC580677	CC5434-1187	CC5445-1207
99	49.6	CC580679	CC5434-1200	CC5445-1220
100	50.1	CC580681	CC5434-1212	CC5445-1233
101	50.6	CC581683	CC5434-1225	CC5445-1245

Common Items.

REF	QTY	PART NO	DESCRIPTION	REF	QTY	PART NO	DESCRIPTION
3	1	CC3129	★Snap Ring	13	1	CC769018	Roll Pin
4	1	CC559863	★Plunger Wiper	14	1	CC559906	Pull-In Wire
5	1	CC559982	Retainer	15	1	CC559986	Piston
6	1	CC560022	★Plunger Seal	16	1	CC559857	★Back-Up Ring
7	1	CC559964	★Back-Up Ring	17	1	CC559853	★Piston Seal
8	1	CC559861	★O-Ring	18	1	CC560717	Check Valve
9	1	CC559855	★Wear Ring	19	1	CC557226	★O-Ring
10	1	CC560470	Piston,Lowering-Fuse	20	1	CC637635	Washer
11	1	CC560824	Spring	21	1	CC3015	Retaining Ring
12	1	CC560465	Spring Guide	22	1	CC642649	■Fitting, 8-10

★ Included in Service Kit 560349.
■ Not included in Cylinder Assembly.

Fig. 8009 Free Lift Cylinder-2600 PSI

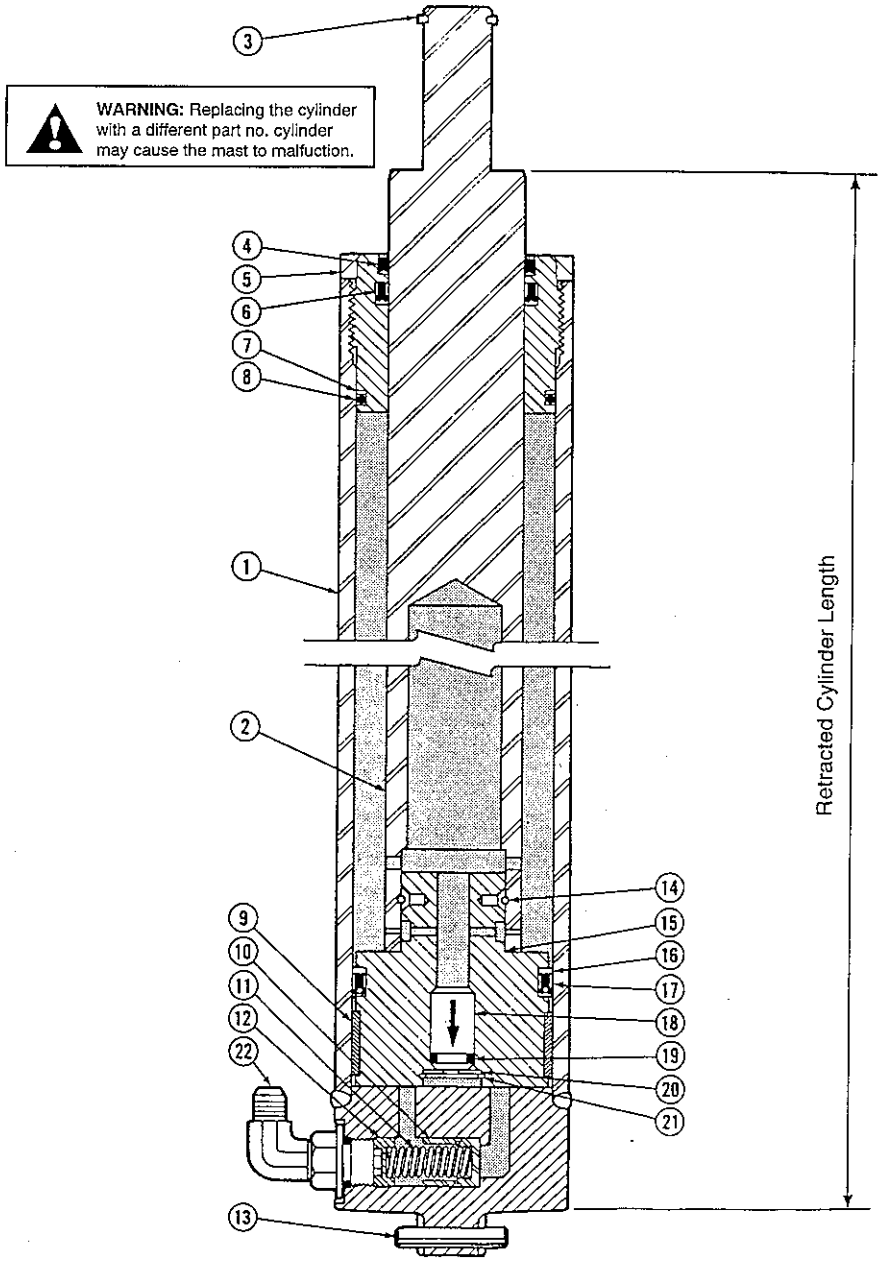

Free Lift Cylinder-2600 PSI

60D

Items that vary according to mast height.

Retracted Cahnnel Length (in.)	Retracted Cylinder Length (in.)	Cylinder Assembly Qty 1	REF.NO.1 Shell Qty 1	REF.NO.2 Plunger Qty 1
102	51.1	CC581108	CC5434-1238	CC5445-1258
103	51.6	CC581109	CC5434-1251	CC5445-1271
104	52.1	CC581111	CC5434-1263	CC5445-1283
105	52.6	CC581113	CC5434-1276	CC5445-1296
106	53.1	CC581115	CC5434-1289	CC5445-1309
107	53.6	CC581117	CC5434-1301	CC5445-1321
108	54.1	CC581119	CC5434-1314	CC5445-1334
109	54.6	CC581121	CC5434-1327	CC5445-1347
110	55.1	CC581123	CC5434-1339	CC5445-1360
111	55.6	CC581125	CC5434-1352	CC5445-1372
112	56.1	CC581127	CC5434-1365	CC5445-1385
113	56.6	CC581129	CC5434-1378	CC5445-1398
114	57.1	CC581131	CC5434-1390	CC5445-1410
115	57.6	CC581133	CC5434-1403	CC5445-1423
116	58.1	CC581135	CC5434-1416	CC5445-1436
117	58.6	CC581137	CC5434-1428	CC5445-1448
118	59.1	CC581139	CC5434-1441	CC5445-1461
119	59.6	CC581141	CC5434-1454	CC5445-1474
120	60.1	CC581143	CC5434-1466	CC5445-1487
121	60.6	CC581145	CC5434-1479	CC5445-1499
122	61.1	CC581147	CC5434-1492	CC5445-1512
123	61.6	CC581149	CC5434-1505	CC5445-1525
124	62.1	CC581084	CC5434-1517	CC5445-1537

Common items.

REF	QTY	PART NO	DESCRIPTION	REF	QTY	PART NO	DESCRIPTION
3	1	CC3129	★Snap Ring	13	1	CC769018	Roll Pin
4	1	CC559863	★Plunger Wiper	14	1	CC559906	Pull-In Wire
5	1	CC559982	Retainer	15	1	CC559986	Piston
6	1	CC560022	★Plunger Seal	16	1	CC559857	★Back-Up Ring
7	1	CC559964	★Back-Up Ring	17	1	CC559853	★Piston Seal
8	1	CC559861	★O-Ring	18	1	CC560717	Check Valve
9	1	CC559855	★Wear Ring	19	1	CC557226	★O-Ring
10	1	CC560470	Piston,Lowering-Fuse	20	1	CC637635	Washer
11	1	CC560824	Spring	21	1	CC3015	Retaining Ring
12	1	CC560465	Spring Guide	22	1	CC642649	■Fitting, 8-10

★ Included in Service Kit 560349.
■ Not included in Cylinder Assembly.

Fig. 8010 Internal Hose Reeving

WARNING: The internal reeving hoses must be Parker 560 H type hose. Other hoses may cause the mast to malfunction.

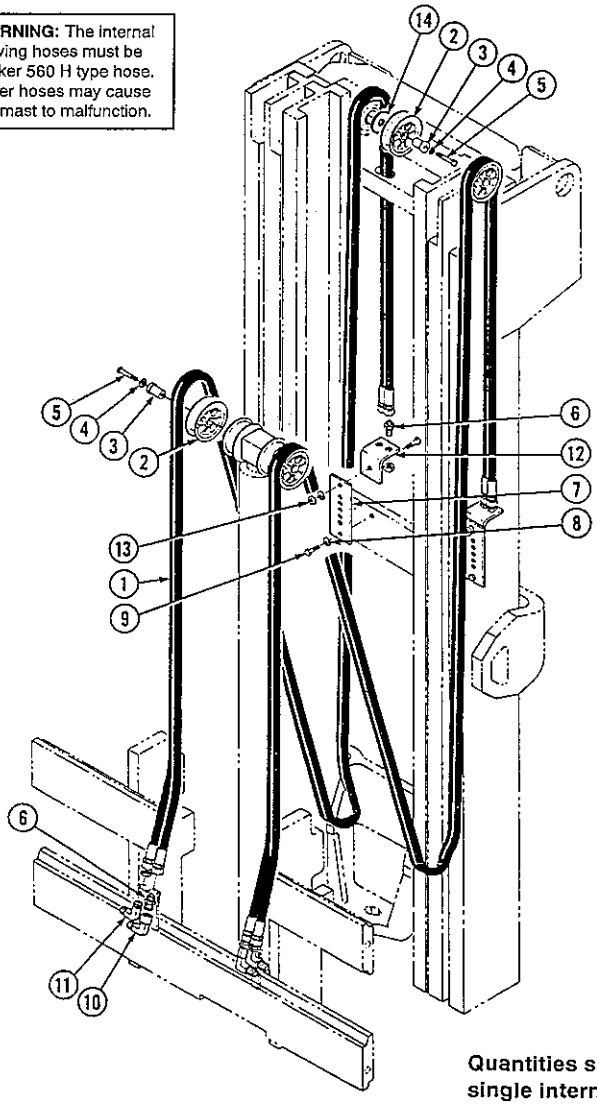

Quantities shown are for single internal reeving.

Internal Hose Reeving

55D/60D

Items that vary according to mast height.

Retracted Channel Length (In.)	3 In. Underclearance Internal Reeving Group No.	3 In. Underclearance Ref. No.1 Hose Part No.	5 In. Underclearance Internal Reeving Group No.	5 In. Underclearance Ref. No.1 Hose Part No.
56	CC688416	CC3550-2875	CC688504	CC3550-2920
57	CC688417	CC3550-2945	CC688505	CC3550-2980
58	CC688418	CC3550-3005	CC688506	CC3550-2920
59	CC688419	CC3550-3080	CC688507	CC3550-2980
60	CC688420	CC3550-3155	CC688508	CC3550-3055
61	CC688421	CC3550-3230	CC688509	CC3550-3130
62	CC688422	CC3550-3305	CC688510	CC3550-3205
63	CC688423	CC3550-3380	CC688511	CC3550-3280
64	CC688424	CC3550-3455	CC688512	CC3550-3355
65	CC688425	CC3550-3530	CC688513	CC3550-3430
66	CC688426	CC3550-3605	CC688514	CC3550-3505
67	CC688427	CC3550-3680	CC688515	CC3550-3580
68	CC688428	CC3550-3750	CC688516	CC3550-3655
69	CC688429	CC3550-3830	CC688517	CC3550-3730
70	CC688430	CC3550-3905	CC688518	CC3550-3800
71	CC688431	CC3550-3980	CC688519	CC3550-3875
72	CC688432	CC3550-4050	CC688520	CC3550-3950
73	CC688433	CC3550-4125	CC688521	CC3550-4025
74	CC688434	CC3550-4200	CC688522	CC3550-4100
75	CC688435	CC3550-4275	CC688523	CC3550-4175
76	CC688436	CC3550-4350	CC688524	CC3550-4250
77	CC688437	CC3550-4425	CC688525	CC3550-4325
78	CC688438	CC3550-4500	CC688526	CC3550-4400
79	CC688439	CC3550-4575	CC688527	CC3550-4475
80	CC688440	CC3550-4650	CC688528	CC3550-4550
81	CC688441	CC3550-4725	CC688529	CC3550-4625
82	CC688442	CC3550-4800	CC688530	CC3550-4700
83	CC688443	CC3550-4875	CC688531	CC3550-4775
84	CC688444	CC3550-4950	CC688532	CC3550-4850
85	CC688445	CC3550-5025	CC688533	CC3550-4925
86	CC688446	CC3550-5100	CC688534	CC3550-5000
87	CC688447	CC3550-5175	CC688535	CC3550-5075
88	CC688448	CC3550-5250	CC688536	CC3550-5150
89	CC688449	CC3550-5340	CC688537	CC3550-5225
90	CC688450	CC3550-5407	CC688538	CC3550-5300
91	CC688451	CC3550-5482	CC688539	CC3550-5385
92	CC688452	CC3550-5557	CC688540	CC3550-5460
93	CC688453	CC3550-5632	CC688541	CC3550-5535
94	CC688454	CC3550-5706	CC688542	CC3550-5610
95	CC688455	CC3550-5781	CC688543	CC3550-5685
96	CC688456	CC3550-5856	CC688544	CC3550-5760
97	CC688457	CC3550-5931	CC688545	CC3550-5835
98	CC688458	CC3550-6006	CC688546	CC3550-5910
99	CC688459	CC3550-6080	CC688547	CC3550-5985
100	CC688460	CC3550-6155	CC688548	CC3550-6055
101	CC688461	CC3550-6230	CC688549	CC3550-6135

Common items.

REF	QTY	PART NO	DESCRIPTION
2	2	CC677267	Hose Sheave
3	2	CC684657	Shaft
4	2	CC683822	Lockwasher, M12
5	2	CC684650	Capscrew, M12×1.75×55-8.8
6	3	CC2375	Fitting, 6-6
7	1	CC684658	Bracket
8	2	CC683826	Lockwasher,M10
9	2	CC684649	Capscrew,M10×1.5×25-8.8
10	2	CC2680	Fitting, 6-6
11	2	CC2453	Fitting, 6-6
12	1	CC683919	Bracket
13	1	CC763023	Nut, M10×1.5
14	1	CC683794	Spacer

Fig. 8011 Internal Hose Reeving

WARNING: The internal reeving hoses must be Parker 560 H type hose. Other hoses may cause the mast to malfunction.

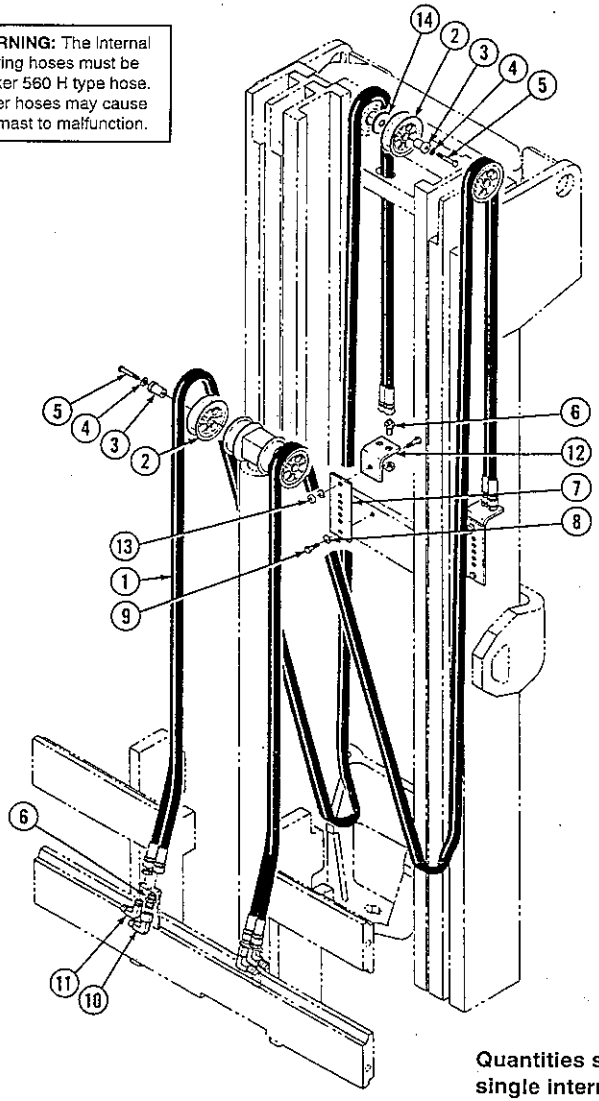

Quantities shown are for single internal reeving.

Internal Hose Reeving

55D/60D

Items that vary according to mast height.

Retracted Channel Length (in.)	3 in. Underclearance Internal Reeving Group No.	3 in. Underclearance Ref. No.1 Hose Part No.	5 in. Underclearance Internal Reeving Group No.	5 in. Underclearance Ref. No.1 Hose Part No.
102	CC688462	CC3550-6305	CC688550	CC3550-6355
103	CC688463	CC3550-6379	CC688551	CC3550-6435
104	CC688464	CC3550-6454	CC688552	CC3550-6510
105	CC688465	CC3550-6529	CC688553	CC3550-6580
106	CC688466	CC3550-6604	CC688554	CC3550-6655
107	CC688467	CC3550-6679	CC688555	CC3550-6730
108	CC688468	CC3550-6753	CC688556	CC3550-6805
109	CC688469	CC3550-6828	CC688557	CC3550-6880
110	CC688470	CC3550-6903	CC688558	CC3550-6955
111	CC688471	CC3550-6978	CC688559	CC3550-6030
112	CC688472	CC3550-7053	CC688560	CC3550-7105
113	CC688473	CC3550-7127	CC688561	CC3550-7180
114	CC688474	CC3550-7202	CC688562	CC3550-7255
115	CC688475	CC3550-7277	CC688563	CC3550-7330
116	CC688476	CC3550-7352	CC688564	CC3550-7405
117	CC688477	CC3550-7426	CC688565	CC3550-7480
118	CC688478	CC3550-7501	CC688566	CC3550-7555
119	CC688479	CC3550-7576	CC688567	CC3550-7630
120	CC688480	CC3550-7651	CC688568	CC3550-7705
121	CC688481	CC3550-7726	CC688569	CC3550-7780
122	CC688482	CC3550-7800	CC688570	CC3550-7855
123	CC688483	CC3550-7875	CC688571	CC3550-7930
124	CC688484	CC3550-7950	CC688485	CC3550-8005

Common items.

REF	QTY	PART NO	DESCRIPTION
2	2	CC677267	Hose Sheave
3	2	CC684657	Shaft
4	2	CC683822	Lockwasher, M12
5	2	CC684650	Capscrew, M12×1.75×55-8.8
6	3	CC2375	Fitting, 6-6
7	1	CC684658	Bracket
8	2	CC683826	Lockwasher,M10
9	2	CC684649	Capscrew,M10×1.5×25-8.8
10	2	CC2680	Fitting, 6-6
11	2	CC2453	Fitting, 6-6
12	1	CC683919	Bracket
13	1	CC763023	Nut, M10×1.5
14	1	CC683794	Spacer

Fig. 8012 Outer Upright

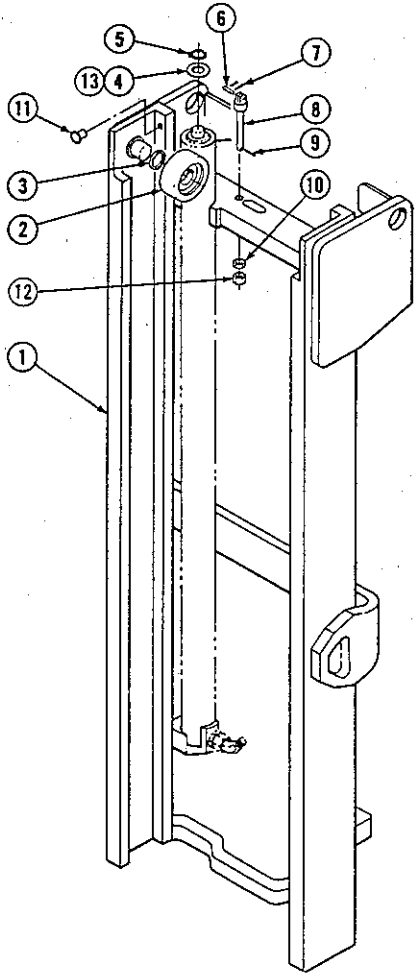

NOTE: See page 29-31 for Mast Installation Accessories.

Outer Upright

55D/60D

Items that vary according to mast height.

REF	QTY		PART NO	DESCRIPTION	
1	1	■	CC684129	Outer Upright - 56 in.	★
1	1	■	CC683402	Outer Upright - 57 in.	★
1	1	■	CC683403	Outer Upright - 58 in.	★
1	1	■	CC683404	Outer Upright - 59 in.	★
1	1	■	CC683405	Outer Upright - 60 in.	★
1	1	■	CC683406	Outer Upright - 61 in.	★
1	1	■	CC683407	Outer Upright - 62 in.	★
1	1	■	CC683408	Outer Upright - 63 in.	★
1	1	■	CC683409	Outer Upright - 64 in.	★
1	1	■	CC683410	Outer Upright - 65 in.	★
1	1	■	CC683411	Outer Upright - 66 in.	★
1	1	■	CC683412	Outer Upright - 67 in.	★
1	1	■	CC683413	Outer Upright - 68 in.	★
1	1	■	CC683414	Outer Upright - 69 in.	★
1	1	■	CC683415	Outer Upright - 70 in.	★
1	1	■	CC683416	Outer Upright - 71 in.	★
1	1	■	CC683417	Outer Upright - 72 in.	★
1	1	■	CC683418	Outer Upright - 73 in.	★
1	1	■	CC683419	Outer Upright - 74 in.	★
1	1	■	CC683420	Outer Upright - 75 in.	★
1	1	■	CC683421	Outer Upright - 76 in.	★
1	1	■	CC683422	Outer Upright - 77 in.	★
1	1	■	CC683423	Outer Upright - 78 in.	★
1	1	■	CC683424	Outer Upright - 79 in.	★
1	1	■	CC683425	Outer Upright - 80 in.	★
1	1	■	CC683426	Outer Upright - 81 in.	★
1	1	■	CC683427	Outer Upright - 82 in.	★
1	1	■	CC683428	Outer Upright - 83 in.	★
1	1	■	CC683429	Outer Upright - 84 in.	★
1	1	■	CC683430	Outer Upright - 85 in.	★
1	1	■	CC683431	Outer Upright - 86 in.	★
1	1	■	CC683432	Outer Upright - 87 in.	★
1	1	■	CC683433	Outer Upright - 88 in.	★
1	1	■	CC683434	Outer Upright - 89 in.	★
1	1	■	CC683435	Outer Upright - 90 in.	★
1	1	■	CC683436	Outer Upright - 91 in.	★
1	1	■	CC683437	Outer Upright - 92 in.	★
1	1	■	CC683438	Outer Upright - 93 in.	★
1	1	■	CC683439	Outer Upright - 94 in.	★
1	1	■	CC683440	Outer Upright - 95 in.	★
1	1	■	CC683441	Outer Upright - 96 in.	★
1	1	■	CC683442	Outer Upright - 97 in.	★
1	1	■	CC683443	Outer Upright - 98 in.	★
1	1	■	CC683444	Outer Upright - 99 in.	★
1	1	■	CC683445	Outer Upright - 100 in.	★
1	1	■	CC683446	Outer Upright - 101 in.	★

Common items.

REF	QTY		PART NO	DESCRIPTION	REF	QTY		PART NO	DESCRIPTION
2	2		CC662145	Roller	8	2		CC680242	Chain Anchor-60D
3	◆		CC631881	Shim-.06in.	9	2		CC6518	Cotter Pin
4	2		CC200524	Shim	10	2		CC200007	Jam Nut
5	2		CC3129	Snap Ring	11	2		CC683798	Thrust Plug
6	2		CC678667	Chain Pin	12	2		CC200525	Nut
7	4		CC6508	Cotter Pin	13	◆		CC200525	Shim-.08in
8	2		CC678661	Chain Anchor-55D					

★ Retracted channel length.
◆ Quantity as required.
■ These part numbers are for reference only. Mounting brackets are not included. To order an Outer Upright with mounting brackets contact the Cascade Parts Depot (513)322-1199. The mast serial number must be supplied.

Fig. 8013 Outer Upright

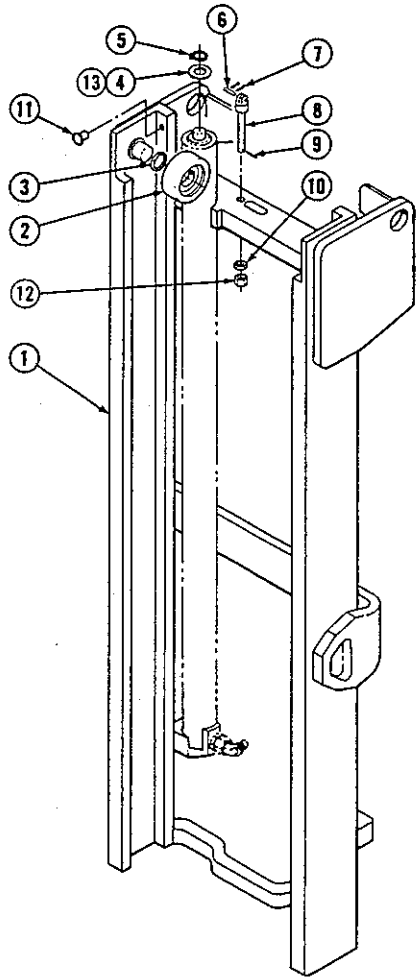

NOTE: See page 29-31 for Mast installation Accessories.

Outer Upright

55D/60D

Items that vary according to mast height.

REF	QTY	PART NO	DESCRIPTION
1	1	■ CC687874	Outer Upright - 102in. ★
1	1	■ CC688078	Outer Upright - 103in. ★
1	1	■ CC688079	Outer Upright - 104in. ★
1	1	■ CC688080	Outer Upright - 105in. ★
1	1	■ CC688081	Outer Upright - 106in. ★
1	1	■ CC688082	Outer Upright - 107in. ★
1	1	■ CC687875	Outer Upright - 108in. ★
1	1	■ CC688083	Outer Upright - 109in. ★
1	1	■ CC688084	Outer Upright - 110in. ★
1	1	■ CC688085	Outer Upright - 111in. ★
1	1	■ CC688086	Outer Upright - 112in. ★
1	1	■ CC688087	Outer Upright - 113in. ★
1	1	■ CC688088	Outer Upright - 114in. ★
1	1	■ CC687876	Outer Upright - 115in. ★
1	1	■ CC688089	Outer Upright - 116in. ★
1	1	■ CC688090	Outer Upright - 117in. ★
1	1	■ CC688091	Outer Upright - 118in. ★
1	1	■ CC688092	Outer Upright - 119in. ★
1	1	■ CC688093	Outer Upright - 120in. ★
1	1	■ CC688094	Outer Upright - 121in. ★
1	1	■ CC687877	Outer Upright - 122in. ★
1	1	■ CC688095	Outer Upright - 123in. ★
1	1	■ CC688096	Outer Upright - 124in. ★

Common items.

REF	QTY	PART NO	DESCRIPTION
2	2	CC662145	Roller
3	◆	CC631881	Shim
4	◆	CC200524	Shim-.06in
5	2	CC3129	Shap Ring
6	2	CC678667	Chain Pin
7	4	CC6508	Cotter Pin
8	2	CC678661	Chain Anchor-55D
8	2	CC680242	Chain Anchor-60D
9	2	CC6518	Cotter Pin
10	2	CC200007	Jam Nut
12	2	CC200006	Nut
13	◆	CC200525	Shim-.08in

★ Retracted channel length.
◆ Quantity as required.
■ These part numbers are for reference only, Mounting brackets are not included. To order an Outer Upight with mounting brackets contact the Cascade Parts Depot (513)322-1199. The mast serial number must be supplied.

Fig. 8014 Intermediate Upright

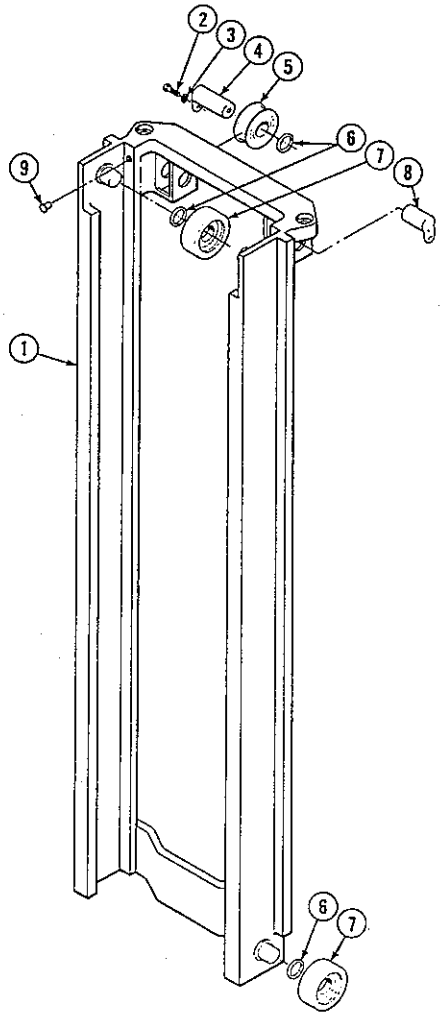

Intermediate Upright

55D/60D

Items that vary according to mast height.

REF	QTY	PART NO	DESCRIPTION
1	1	CC684130	Intermed. Upright - 56 in. ★
1	1	CC683447	Intermed. Upright - 57 in. ★
1	1	CC683448	Intermed. Upright - 58 in. ★
1	1	CC683449	Intermed. Upright - 59 in. ★
1	1	CC683450	Intermed. Upright - 60 in. ★
1	1	CC683451	Intermed. Upright - 61 in. ★
1	1	CC683452	Intermed. Upright - 62 in. ★
1	1	CC683453	Intermed. Upright - 63 in. ★
1	1	CC683454	Intermed. Upright - 64 in. ★
1	1	CC683455	Intermed. Upright - 65 in. ★
1	1	CC683456	Intermed. Upright - 66 in. ★
1	1	CC683457	Intermed. Upright - 67 in. ★
1	1	CC683458	Intermed. Upright - 68 in. ★
1	1	CC683459	Intermed. Upright - 69 in. ★
1	1	CC683460	Intermed. Upright - 70 in. ★
1	1	CC683461	Intermed. Upright - 71 in. ★
1	1	CC683462	Intermed. Upright - 72 in. ★
1	1	CC683463	Intermed. Upright - 73 in. ★
1	1	CC683464	Intermed. Upright - 74 in. ★
1	1	CC683465	Intermed. Upright - 75 in. ★
1	1	CC683466	Intermed. Upright - 76 in. ★
1	1	CC683467	Intermed. Upright - 77 in. ★
1	1	CC683468	Intermed. Upright - 78 in. ★
1	1	CC683469	Intermed. Upright - 79 in. ★
1	1	CC683470	Intermed. Upright - 80 in. ★
1	1	CC683471	Intermed. Upright - 81 in. ★
1	1	CC683472	Intermed. Upright - 82 in. ★
1	1	CC683473	Intermed. Upright - 83 in. ★
1	1	CC683474	Intermed. Upright - 84 in. ★
1	1	CC683475	Intermed. Upright - 85 in. ★
1	1	CC683476	Intermed. Upright - 86 in. ★
1	1	CC683477	Intermed. Upright - 87 in. ★
1	1	CC683478	Intermed. Upright - 88 in. ★
1	1	CC683479	Intermed. Upright - 89 in. ★
1	1	CC683480	Intermed. Upright - 90 in. ★
1	1	CC683481	Intermed. Upright - 91 in. ★
1	1	CC683482	Intermed. Upright - 92 in. ★
1	1	CC683483	Intermed. Upright - 93 in. ★
1	1	CC683484	Intermed. Upright - 94 in. ★
1	1	CC683485	Intermed. Upright - 95 in. ★
1	1	CC683486	Intermed. Upright - 96 in. ★
1	1	CC683487	Intermed. Upright - 97 in. ★
1	1	CC683488	Intermed. Upright - 98 in. ★
1	1	CC683489	Intermed. Upright - 99 in. ★
1	1	CC683490	Intermed. Upright - 100in. ★
1	1	CC683491	Intermed. Upright - 101in. ★

Common items.

REF	QTY	PART NO	DESCRIPTION
2	2	CC683820	Capscrew, M10×1.5×16-8.8
3	2	CC683826	Lockwasher, M10
4	1	CC683799	Pin
5	2	CC660051	Chain Sheave
6	■	CC631881	Shim
7	4	CC662145	Roller
8	1	CC683802	Pin
9	2	CC683798	Thrust Plug

★ Retracted channel length.
■ Quantity as required.

Fig. 8015 Intermediate Upright

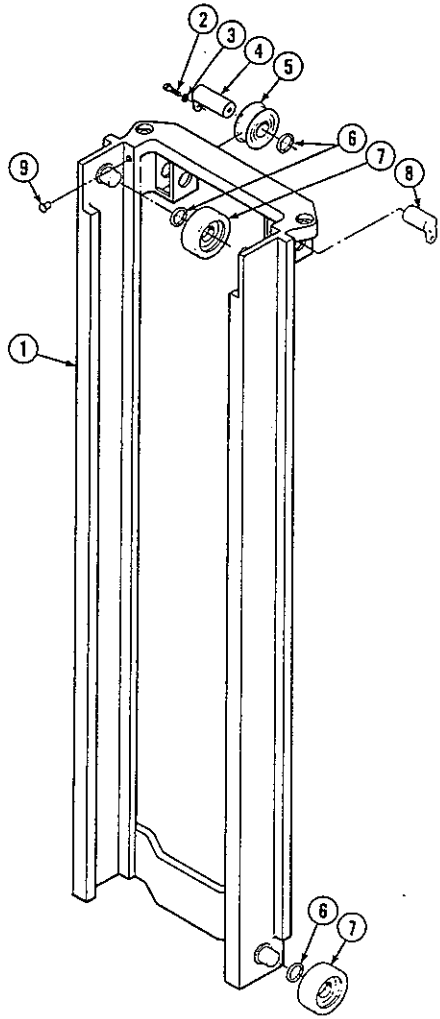

Intermediate Upright

55D/60D

Items that vary according to mast height.

REF	QTY	PART NO	DESCRIPTION	
1	1	CC687878	Intermed. Upright - 102in.	★
1	1	CC687879	Intermed. Upright - 103in.	★
1	1	CC687880	Intermed. Upright - 104in.	★
1	1	CC687881	Intermed. Upright - 105in.	★
1	1	CC687882	Intermed. Upright - 106in.	★
1	1	CC687883	Intermed. Upright - 107in.	★
1	1	CC687884	Intermed. Upright - 108in.	★
1	1	CC687885	Intermed. Upright - 109in.	★
1	1	CC687886	Intermed. Upright - 110in.	★
1	1	CC687887	Intermed. Upright - 111in.	★
1	1	CC687888	Intermed. Upright - 112in.	★
1	1	CC687889	Intermed. Upright - 113in.	★
1	1	CC687890	Intermed. Upright - 114in.	★
1	1	CC687891	Intermed. Upright - 115in.	★
1	1	CC687892	Intermed. Upright - 116in.	★
1	1	CC687893	Intermed. Upright - 117in.	★
1	1	CC687894	Intermed. Upright - 118in.	★
1	1	CC687895	Intermed. Upright - 119in.	★
1	1	CC687896	Intermed. Upright - 120in.	★
1	1	CC687897	Intermed. Upright - 121in.	★
1	1	CC687898	Intermed. Upright - 122in.	★
1	1	CC687899	Intermed. Upright - 123in.	★
1	1	CC687900	Intermed. Upright - 124in.	★

Common Items.

REF	QTY	PART NO	DESCRIPTION
2	2	CC683820	Capscrew, M10×1.5×16-8.8
3	2	CC683826	Lockwasher, M10
4	1	CC683799	Pin
5	2	CC660051	Chain Sheave
6	■	CC631861	Shim
7	4	CC662145	Roller
8	1	CC683802	Pin
9	2	CC683798	Thrust Plug

★ Retracted channel length.
■ Quantity as required.

Fig. 8016 Inner Upright

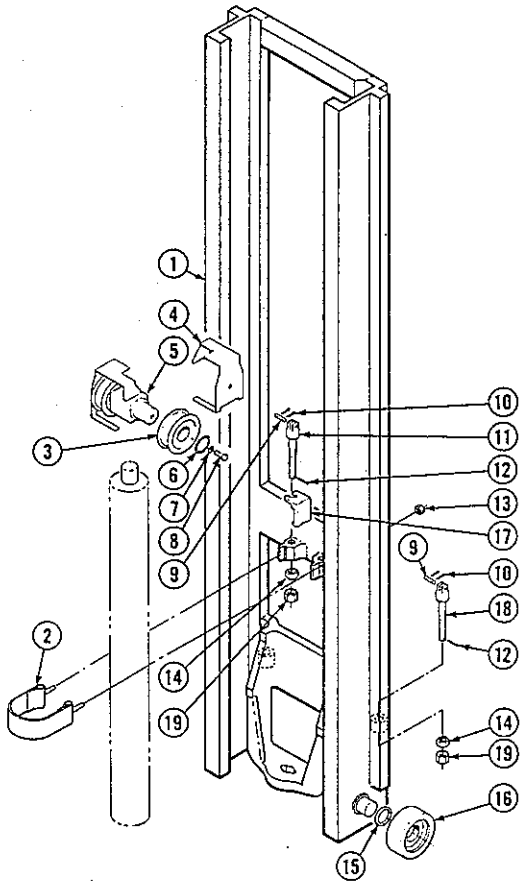

Inner Upright

55D/60D

Items that vary according to mast height.

REF	QTY	PART NO	DESCRIPTION
1	1	CC684131	Inner Upright - 56 in. ★
1	1	CC683492	Inner Upright - 57 in. ★
1	1	CC683493	Inner Upright - 58 in. ★
1	1	CC683494	Inner Upright - 59 in. ★
1	1	CC683495	Inner Upright - 60 in. ★
1	1	CC683496	Inner Upright - 61 in. ★
1	1	CC683497	Inner Upright - 62 in. ★
1	1	CC683498	Inner Upright - 63 in. ★
1	1	CC683499	Inner Upright - 64 in. ★
1	1	CC683500	Inner Upright - 65 in. ★
1	1	CC683501	Inner Upright - 66 in. ★
1	1	CC683502	Inner Upright - 67 in. ★
1	1	CC683503	Inner Upright - 68 in. ★
1	1	CC683504	Inner Upright - 69 in. ★
1	1	CC683505	Inner Upright - 70 in. ★
1	1	CC683506	Inner Upright - 71 in. ★
1	1	CC683507	Inner Upright - 72 in. ★
1	1	CC683508	Inner Upright - 73 in. ★
1	1	CC683509	Inner Upright - 74 in. ★
1	1	CC683510	Inner Upright - 75 in. ★
1	1	CC683511	Inner Upright - 76 in. ★
1	1	CC683512	Inner Upright - 77 in. ★
1	1	CC683513	Inner Upright - 78 in. ★
1	1	CC683514	Inner Upright - 79 in. ★
1	1	CC683515	Inner Upright - 80 in. ★
1	1	CC683516	Inner Upright - 81 in. ★
1	1	CC683517	Inner Upright - 82 in. ★
1	1	CC683518	Inner Upright - 83 in. ★
1	1	CC683519	Inner Upright - 84 in. ★
1	1	CC683520	Inner Upright - 85 in. ★
1	1	CC683521	Inner Upright - 86 in. ★
1	1	CC683522	Inner Upright - 87 in. ★
1	1	CC683523	Inner Upright - 88 in. ★
1	1	CC683524	Inner Upright - 89 in. ★
1	1	CC683525	Inner Upright - 90 in. ★
1	1	CC683526	Inner Upright - 91 in. ★
1	1	CC683527	Inner Upright - 92 in. ★
1	1	CC683528	Inner Upright - 93 in. ★
1	1	CC683529	Inner Upright - 94 in. ★
1	1	CC683530	Inner Upright - 95 in. ★
1	1	CC683531	Inner Upright - 96 in. ★
1	1	CC683532	Inner Upright - 97 in. ★
1	1	CC683533	Inner Upright - 98 in. ★
1	1	CC683534	Inner Upright - 99 in. ★
1	1	CC683535	Inner Upright - 100in. ★
1	1	CC683536	Inner Upright - 101in. ★

Common items.

REF	QTY	PART NO	DESCRIPTION
2	1	CC683801	Band
3	2	CC660051	Chain Sheave
4	2	CC683796	Chain Guard
5	1	CC683795	Crosshead
6	2	CC3140	Snap Ring
7	2	CC683822	Lockwasher, M12
8	2	CC683821	Capscrew, M12×1.75×20-8.8
9	4	CC678667	Chain Pin
10	8	CC6508	Cotter Pin
11	2	CC678661	Chain Anchor-55D
11	2	CC680242	Chain Anchor-60D
12	4	CC6518	Cotter Pin
13	2	CC5875	Nut
14	4	CC200007	Jam Nut
15	■	CC631881	Shim
16	2	CC662145	Roller
17	2	CC683832	Insert
18	2	CC683816	Chain Anchor-55D
18	2	CC683817	Chain Anchor-60D
19	4	CC200006	Nut

★ Retracted channel length.
■ Quantity as required.

Fig. 8017 Inner Upright

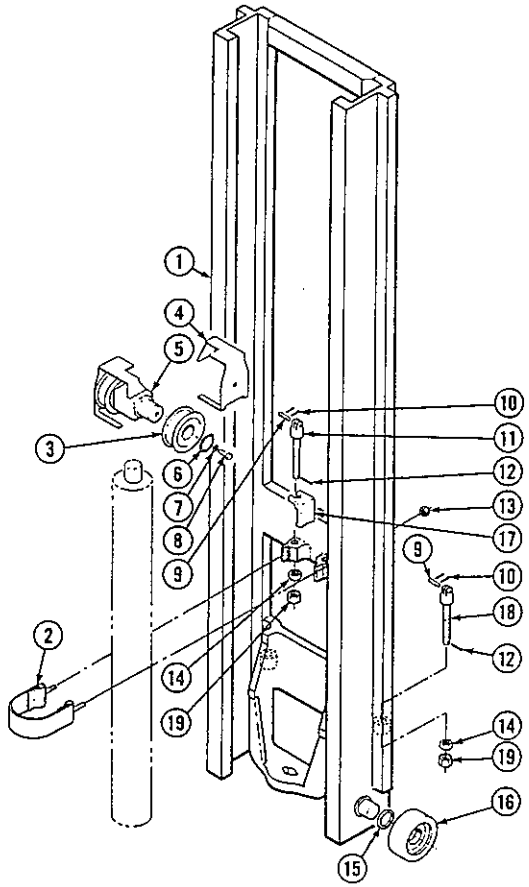

Inner Upright

55D/60D

Items that vary according to mast height.

REF	QTY	PART NO	DESCRIPTION
1	1	CC687901	Inner Upright - 102in. ★
1	1	CC687902	Inner Upright - 103in. ★
1	1	CC687903	Inner Upright - 104in. ★
1	1	CC687904	Inner Upright - 105in. ★
1	1	CC687905	Inner Upright - 106in. ★
1	1	CC687906	Inner Upright - 107in. ★
1	1	CC687907	Inner Upright - 108in. ★
1	1	CC687908	Inner Upright - 109in. ★
1	1	CC687909	Inner Upright - 110in. ★
1	1	CC687910	Inner Upright - 111in. ★
1	1	CC687911	Inner Upright - 112in. ★
1	1	CC687912	Inner Upright - 113in. ★
1	1	CC687913	Inner Upright - 114in. ★
1	1	CC687931	Inner Upright - 115in. ★
1	1	CC687932	Inner Upright - 116in. ★
1	1	CC687933	Inner Upright - 117in. ★
1	1	CC687934	Inner Upright - 118in. ★
1	1	CC687935	Inner Upright - 119in. ★
1	1	CC687936	Inner Upright - 120in. ★
1	1	CC687937	Inner Upright - 121in. ★
1	1	CC687938	Inner Upright - 122in. ★
1	1	CC687939	Inner Upright - 123in. ★
1	1	CC687940	Inner Upright - 124in. ★

Common items.

REF	QTY	PART NO	DESCRIPTION
2	1	CC683801	Band
3	2	CC680051	Chain Sheave
4	2	CC683796	Chain Guard
5	1	CC683795	Crosshead
6	2	CC3140	Snap Ring
7	2	CC683822	Lockwasher, M12
8	2	CC683821	Capscrew, M12×1.75×20-8.8
9	4	CC678667	Chain Pin
10	8	CC6508	Cotter Pin
11	2	CC678661	Chain Anchor-55D
11	2	CC680242	Chain Anchor-60D
12	4	CC6518	Cotter Pin
13	2	CC5875	Nut
14	4	CC200007	Jam Nut
15	■	CC631881	Shim
16	2	CC662145	Roller
17	2	CC683832	Insert
18	2	CC683816	Chain Anchor-55D
18	2	CC683817	Chain Anchor-60D
19	4	CC200006	Nut

★ Retracted channel length.
■ Quantity as required.

Fig. 8018 Carriage

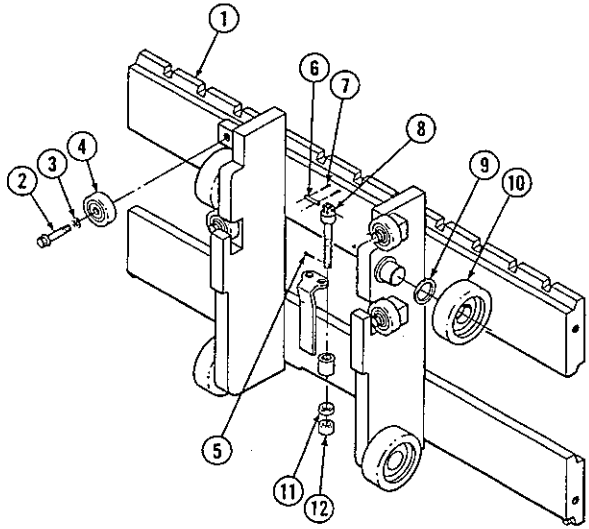

55D

REF	QTY	PART NO	DESCRIPTION
For masts mounted with 3 inch underclearance.			
1	1	CC683872	Carriage, Class II -37in. (940mm) wide
1	1	CC686873	Carriage, Class II -41in. (1041mm) wide
1	1	CC684327	Carriage, Class II -49in. (1245mm) wide
1	1	CC684328	Carriage, Class II -61in. (1549mm) wide
For masts mounted with 5 inch underclearance.			
1	1	CC683876	Carriage, Class II -37in. (940mm) wide
1	1	CC683877	Carriage, Class II -41in. (1041mm) wide
1	1	CC683878	Carriage, Class II -49in. (1245mm) wide
1	1	CC683879	Carriage, Class II -61in. (1549mm) wide
2	4	CC684125	Capscrew, Ferryhead M12×1.75×45-12.9
3	4	CC684660	Lockwasher, M12
4	4	CC683819	Roller
5	2	CC6518	Cotter Pin
6	2	CC678667	Chain Pin
7	4	CC6508	Cotter Pin
8	2	CC683816	Chain Anchor
9	★	CC631881	Shim
10	4	CC662145	Roller
11	2	CC200007	Jam Nut
12	2	CC200006	Nut

★ Quantity as required.

Fig. 8019 Carriage

Heavy Duty

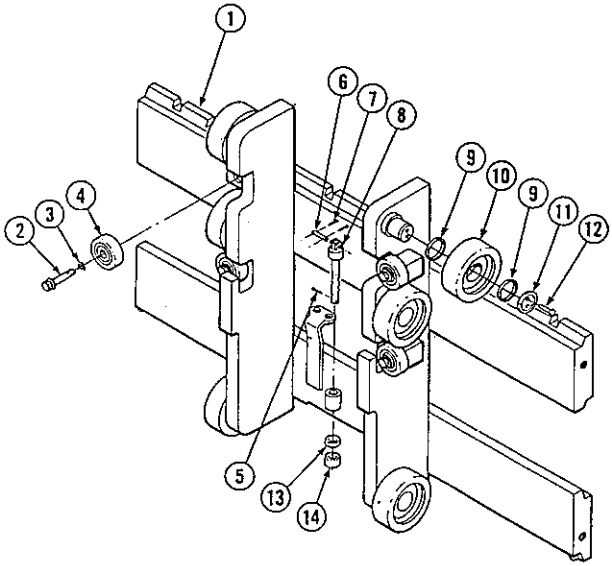

55D

REF	QTY	PART NO	DESCRIPTION
For masts mounted with 3 inch underclearance.			
1	1	CC684189	Carriage, Class II-37in. (940mm) wide
1	1	CC684190	Carriage, Class II-41in. (1041mm) wide
1	1	CC684341	Carriage, Class II-49in. (1245mm) wide
1	1	CC684342	Carriage, Class II-61in. (1549mm) wide
For masts mounted with 5 inch underclearance.			
1	1	CC684193	Carriage, Class II-37in. (940mm) wide
1	1	CC684194	Carriage, Class II-41in. (1041mm) wide
1	1	CC684195	Carriage, Class II-49in. (1245mm) wide
1	1	CC684196	Carriage, Class II-61in. (1549mm) wide
2	4	CC684125	Capscrew,Ferryhead M12×1.75×45-12.9
3	4	CC684660	Lockwasher, M12
4	4	CC683819	Roller
5	2	CC6518	Cotter Pin
6	2	CC678667	Chain Pin
7	4	CC6508	Cotter Pin
8	2	CC683816	Chain Anchor
9	★	CC631881	Shim
10	6	CC662145	Roller
11	2	CC658378	Retainer
12	4	CC680218	Capscrew, M3×0.5×12-8.8
13	2	CC200007	Jam Nut
14	2	CC200006	Nut

★ Quantity as required.

Fig. 8020 Carriage

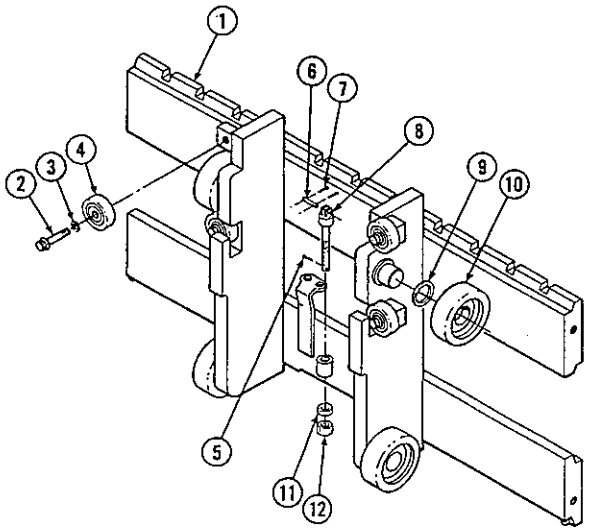

60D

REF	QTY	PART NO	DESCRIPTION
For masts mounted with 3 inch underclearance.			
1	1	CC683874	Carriage, Class III-37in. (940mm) wide
1	1	CC683875	Carriage, Class III-41in. (1041mm) wide
1	1	CC684329	Carriage, Class III-49in. (1245mm) wide
1	1	CC684330	Carriage, Class III-61in. (1549mm) wide
For masts mounted with 5 inch underclearance.			
1	1	CC683880	Carriage, Class III-37in. (940mm) wide
1	1	CC683881	Carriage, Class III-41in. (1041mm) wide
1	1	CC683882	Carriage, Class III-49in. (1245mm) wide
1	1	CC683883	Carriage, Class III-61in. (1549mm) wide
2	4	CC684125	Capscrew, Ferryhead M12×1.75×45-12.9
3	4	CC684660	Lockwasher, M12
4	4	CC683819	Roller
5	2	CC6518	Cotter Pin
6	2	CC678667	Chain Pin
7	4	CC6508	Cotter Pin
8	2	CC683817	Chain Anchor
9	★	CC631881	Shim
10	4	CC662145	Roller
11	2	CC200007	Jam Nut
12	2	CC200006	Nut

★ Quantity as required.

Fig. 8021 Carriage

Heavy Duty

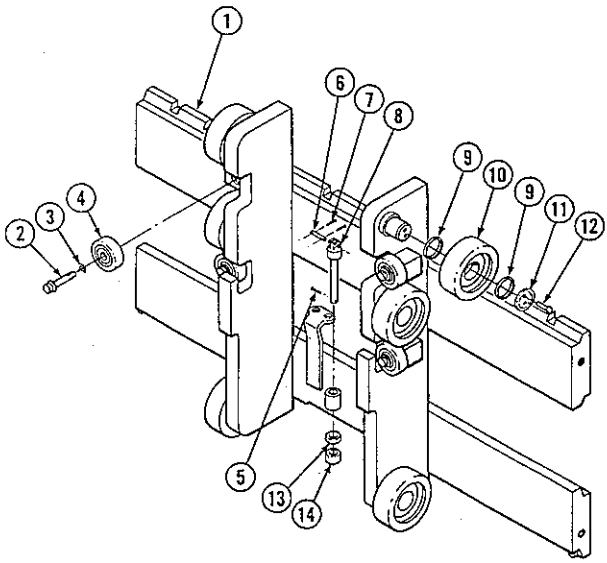

60D

REF	QTY	PART NO	DESCRIPTION
For masts mounted with 3 inch underclearance.			
1	1	CC684191	Carriage, Class III-37in. (940mm) wide
1	1	CC684192	Carriage, Class III-41in. (1041mm) wide
1	1	CC684343	Carriage, Class III-49in. (1245mm) wide
1	1	CC684344	Carriage, Class III-61in. (1549mm) wide
For masts mounted with 5 inch underclearance.			
1	1	CC684197	Carriage, Class III-37in. (940mm) wide
1	1	CC684198	Carriage, Class III-41in. (1041mm) wide
1	1	CC684199	Carriage, Class III-49in. (1245mm) wide
1	1	CC684200	Carriage, Class III-61in. (1549mm) wide
2	4	CC684125	Capscrew, Ferryhead M12×1.75×45-12.9
3	4	CC684660	Lockwasher,M12
4	4	CC683819	Roller
5	2	CC6518	Cotter Pin
6	2	CC678667	Chain Pin
7	4	CC6508	Cotter Pin
8	2	CC683817	Chain Anchor
9	★	CC631881	Shim
10	6	CC662145	Roller
11	2	CC658378	Retainer
12	4	CC680218	Capscrew, M3×0.5×12-8.8
13	2	CC200007	Jam Nut
14	2	CC200006	Nut

★ Quantity as required.

Fig. 8022 Hydraulic Group

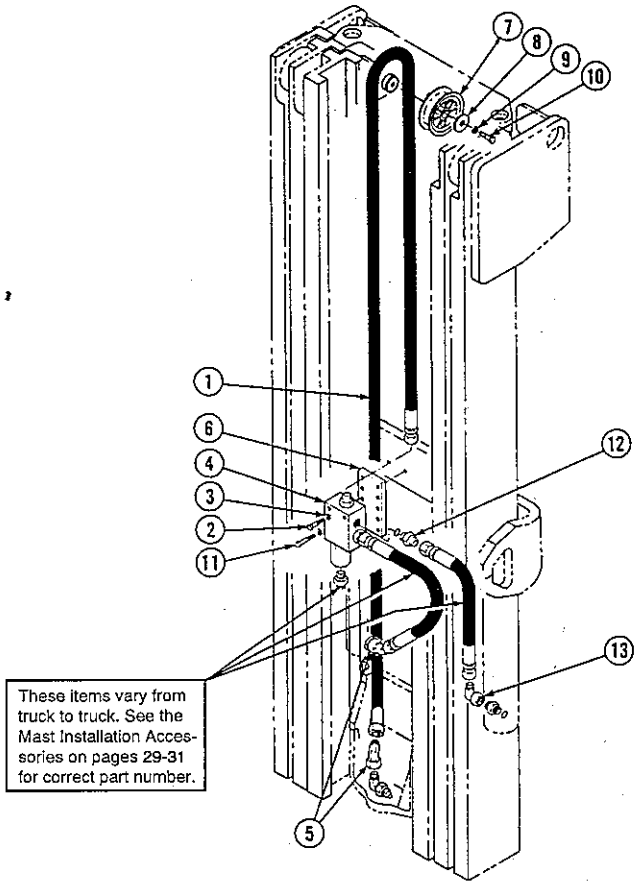

Hydraulic Group

55D/60D

Items that vary according to mast height.

REF	QTY	PART NO	DESCRIPTION
1	1	CC683537	Hose - 56 in. ★
1	1	CC200089	Hose - 57 in. ★
1	1	CC200090	Hose - 58 in. ★
1	1	CC200091	Hose - 59 in. ★
1	1	CC200092	Hose - 60 in. ★
1	1	CC200093	Hose - 61 in. ★
1	1	CC200094	Hose - 62 in. ★
1	1	CC200095	Hose - 63 in. ★
1	1	CC200096	Hose - 64 in. ★
1	1	CC200097	Hose - 65 in. ★
1	1	CC200098	Hose - 66 in. ★
1	1	CC200099	Hose - 67 in. ★
1	1	CC200100	Hose - 68 in. ★
1	1	CC200101	Hose - 69 in. ★
1	1	CC200102	Hose - 70 in. ★
1	1	CC200103	Hose - 71 in. ★
1	1	CC200104	Hose - 72 in. ★
1	1	CC683553	Hose - 73 in. ★
1	1	CC683554	Hose - 74 in. ★
1	1	CC683555	Hose - 75 in. ★
1	1	CC683556	Hose - 76 in. ★
1	1	CC683557	Hose - 77 in. ★
1	1	CC683558	Hose - 78 in. ★
1	1	CC683559	Hose - 79 in. ★
1	1	CC683560	Hose - 80 in. ★
1	1	CC683561	Hose - 81 in. ★
1	1	CC683562	Hose - 82 in. ★
1	1	CC683563	Hose - 83 in. ★
1	1	CC683564	Hose - 84 in. ★
1	1	CC200105	Hose - 85 in. ★
1	1	CC200106	Hose - 86 in. ★
1	1	CC200107	Hose - 87 in. ★
1	1	CC200108	Hose - 88 in. ★
1	1	CC200109	Hose - 89 in. ★
1	1	CC200110	Hose - 90 in. ★
1	1	CC200111	Hose - 91 in. ★
1	1	CC200112	Hose - 92 in. ★
1	1	CC200113	Hose - 93 in. ★
1	1	CC200114	Hose - 94 in. ★
1	1	CC200115	Hose - 95 in. ★
1	1	CC200116	Hose - 96 in. ★
1	1	CC683576	Hose - 97 in. ★
1	1	CC683577	Hose - 98 in. ★
1	1	CC683578	Hose - 99 in. ★
1	1	CC683579	Hose - 100in. ★
1	1	CC683580	Hose - 101in. ★

Common items.

REF	QTY	PART NO	DESCRIPTION
2	2	CC684649	Capscrew, M10×1.5×25-8.8
3	4	CC683826	Lockwasher, M10
4	1	■	Lowering Control Valve
5	2	CC605948	Fitting, 8-8
6	1	CC683831	Bracket
7	1	CC683793	Hose Sheave
8	1	CC683794	Cap
9	1	CC683822	Lockwasher, M12
10	1	CC683821	Capscrew,M12×1.75×20-8.8
11	2	CC683823	Capscrew,M10×1.5×50-8.8
12	2	CC601377	Fitting, 8-8
13	1	CC605761	Fitting, 8-8

★ Retracted channel length.

■ See page 23 for specific part numbers.

Fig. 8023 Hydraulic Group

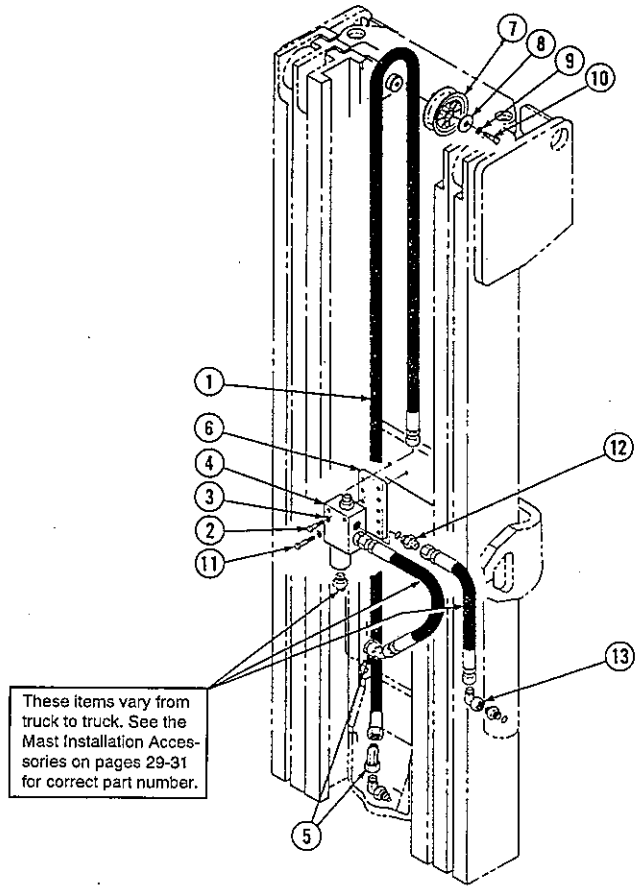

Hydraulic Group

55D/60D

Items that vary according to mast height.

REF	QTY	PART NO	DESCRIPTION
1	1	CC683581	Hose - 102in. ★
1	1	CC687023	Hose - 103in. ★
1	1	CC687024	Hose - 104in. ★
1	1	CC687025	Hose - 105in. ★
1	1	CC687026	Hose - 106in. ★
1	1	CC200117	Hose - 107in. ★
1	1	CC200118	Hose - 108in. ★
1	1	CC200119	Hose - 109in. ★
1	1	CC200120	Hose - 110in. ★
1	1	CC200121	Hose - 111in. ★
1	1	CC200122	Hose - 112in. ★
1	1	CC200123	Hose - 113in. ★
1	1	CC200124	Hose - 114in. ★
1	1	CC200125	Hose - 115in. ★
1	1	CC200161	Hose - 116in. ★
1	1	CC200126	Hose - 117in. ★
1	1	CC200127	Hose - 118in. ★
1	1	CC200128	Hose - 119in. ★
1	1	CC200129	Hose - 120in. ★
1	1	CC200130	Hose - 121in. ★
1	1	CC200131	Hose - 122in. ★
1	1	CC200132	Hose - 123in. ★
1	1	CC200133	Hose - 124in. ★

Common items.

REF	QTY	PART NO	DESCRIPTION
2	2	CC684649	Capscrew, M10×1.5×25-8.8
3	4	CC683826	Lockwasher, M10
4	1	■	Lowering Control Valve
5	2	CC605948	Fitting, 8-8
6	1	CC683831	Bracket
7	1	CC683793	Hose Sheave
8	1	CC683794	Cap
9	1	CC683822	Lockwasher, M12
10	1	CC683821	Capscrew,M12×1.75×20-8.8
11	2	CC683823	Capscrew,M10×1.5×50-8.8
12	2	CC601377	Fitting, 8-8
13	1	CC605761	Fitting, 8-8

★ Retracted channel length.

■ See page 23 for specific part numbers.

Fig. 8024 Lowering Control Valve

2600 PSI System Pressure

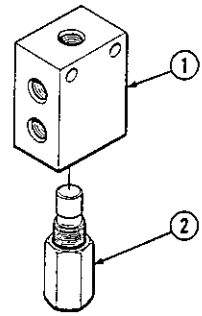

55D/60D

REF	QTY	PART NO	DESCRIPTION
		CC684810	Lowering Control Valve
1	1	CC684152	Valve Body
2	1	★CC684210	Valve Cartridge

★ This part must not be substituted. Check part number on the side of cartridge when replacing.

Fig. 8025 Hoist Chains

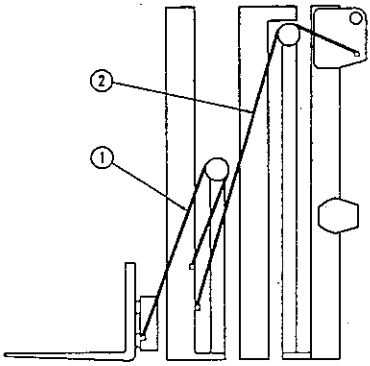

55D

Overall Retracted Channel Length In.	Ref.No.1 Qty.	Free Lift Chains	Chain Length In.(mm)	Ref.No.2 Main Lift Chains	Chain Length In.(mm)
56	2	CC683885	36.75(933)	CC683762	51.75(1314)
57	2	CC683886	38.25(972)	CC683762	51.75(1314)
58	2	CC683886	38.25(972)	CC683763	53.25(1353)
59	2	CC683887	39.75(1010)	CC683764	54.75(1391)
60	2	CC683888	41.25(1048)	CC683764	54.75(1391)
61	2	CC683888	41.25(1048)	CC678656	56.25(1429)
62	2	CC683889	42.75(1086)	CC683765	57.75(1467)
63	2	CC678654	44.25(1124)	CC683765	57.75(1467)
64	2	CC678654	44.25(1124)	CC683766	59.25(1505)
65	2	CC683891	45.75(1162)	CC683767	60.75(1543)
66	2	CC683892	47.25(1200)	CC683767	60.75(1543)
67	2	CC683892	47.25(1200)	CC678657	62.25(1581)
68	2	CC683893	48.75(1238)	CC683768	63.75(1619)
69	2	CC678655	50.25(1276)	CC683768	63.75(1619)
70	2	CC678655	50.25(1276)	CC683769	65.25(1657)
71	2	CC683762	51.75(1314)	CC683770	66.75(1695)
72	2	CC683763	53.25(1353)	CC683770	66.75(1695)
73	2	CC683763	53.25(1353)	CC678658	68.25(1734)
74	2	CC683764	54.75(1391)	CC683771	69.75(1772)
75	2	CC678656	56.25(1429)	CC683771	69.75(1772)
76	2	CC678656	56.25(1429)	CC683772	71.25(1810)
77	2	CC683765	57.75(1467)	CC683773	72.75(1848)
78	2	CC683766	59.25(1505)	CC683773	72.75(1848)
79	2	CC683766	59.25(1505)	CC683774	74.25(1886)
80	2	CC683767	60.75(1543)	CC683775	75.75(1924)
81	2	CC678657	62.25(1581)	CC683775	75.75(1924)
82	2	CC678657	62.25(1581)	CC683776	77.25(1962)
83	2	CC683768	63.75(1619)	CC683777	78.75(2000)
84	2	CC683769	65.25(1657)	CC683777	78.75(2000)
85	2	CC683769	65.25(1697)	CC678659	80.25(2038)
86	2	CC683770	67.75(1695)	CC683778	81.75(2076)
87	2	CC678658	68.25(1734)	CC683778	81.75(2076)
88	2	CC678658	68.25(1734)	CC683779	83.25(2115)
89	2	CC683771	69.75(1772)	CC683780	84.75(2153)
90	2	CC683772	71.25(1810)	CC683780	84.75(2153)
91	2	CC683772	71.25(1810)	CC683781	86.25(2191)
92	2	CC683773	72.75(1848)	CC683782	87.75(2229)
93	2	CC683763	53.25(1353)	CC683782	87.75(2229)
94	2	CC683764	54.75(1391)	CC683783	89.25(2267)
95	2	CC678656	56.25(1429)	CC683784	90.75(2305)
96	2	CC678656	56.25(1429)	CC683784	90.75(2305)
97	2	CC683765	57.75(1467)	CC683785	92.25(2343)
98	2	CC683766	59.25(1505)	CC683786	93.75(2381)
99	2	CC683766	59.25(1505)	CC683786	93.75(2381)
100	2	CC683767	60.75(1543)	CC683787	95.25(2419)
101	2	CC678657	62.25(1581)	CC683788	96.75(2457)

Fig. 8026 Hoist Chains

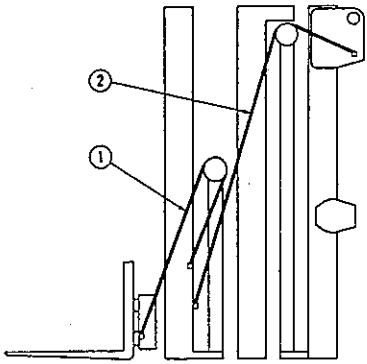

55D

Overall Retracted Channel Length in.	Ref.No.1 Qty.	Free Lift Chains	Chain Length in.(mm)	Ref.No.2 Main Lift Chains	Chain Length in.(mm)
102	2	CC678657	62.25(1581)	CC683788	96.75(2457)
103	2	CC683768	63.75(1619)	CC688136	98.25(2496)
104	2	CC683769	65.25(1657)	CC688137	99.75(2534)
105	2	CC683769	65.25(1657)	CC688137	99.75(2534)
106	2	CC683770	66.75(1695)	CC200088	101.25(2572)
107	2	CC678658	68.25(1734)	CC688139	102.75(2610)
108	2	CC678658	68.25(1734)	CC688139	102.75(2610)
109	2	CC683771	69.75(1772)	CC688140	104.25(2648)
110	2	CC683772	71.25(1810)	CC688141	105.75(2686)
111	2	CC683772	71.25(1810)	CC688141	105.75(2686)
112	2	CC683773	72.75(1848)	CC688142	107.25(2724)
113	2	CC683774	74.25(1886)	CC688143	108.75(2762)
114	2	CC683774	74.25(1886)	CC688143	108.75(2762)
115	2	CC683775	75.75(1924)	CC688144	110.25(2800)
116	2	CC683776	77.25(1962)	CC688145	111.75(2838)
117	2	CC683776	77.25(1962)	CC688145	111.75(2838)
118	2	CC683777	78.75(2000)	CC688146	113.25(2877)
119	2	CC678659	80.25(2038)	CC688147	114.75(2915)
120	2	CC678659	80.25(2038)	CC688147	114.75(2915)
121	2	CC683778	81.75(2076)	CC688176	116.25(2953)
122	2	CC683779	83.25(2115)	CC688148	117.75(2991)
123	2	CC683779	83.25(2115)	CC688148	117.75(2991)
124	2	CC683780	84.75(2153)	CC688149	119.25(3029)

Fig. 8027 Hoist Chains

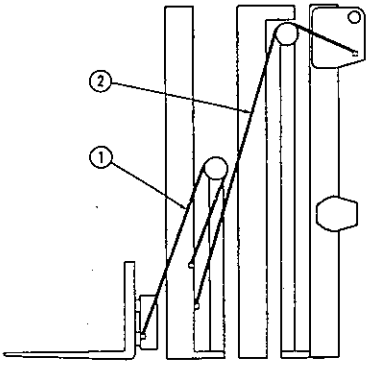

60D

Overall Retracted Channel Length In.	Qty.	Ref.No.1 Free Lift Chains	Ref.No.1 Chain Length In.(mm)	Ref.No.2 Main Lift Chains	Ref.No.2 Chain Length In.(mm)
56	2	CC683953	36.75(933)	CC683976	51.75(1314)
57	2	CC683954	38.25(972)	CC683976	51.75(1314)
58	2	CC683954	38.25(972)	CC683977	53.25(1353)
59	2	CC683955	39.75(1010)	CC683978	54.75(1391)
60	2	CC683956	41.25(1048)	CC683978	54.75(1391)
61	2	CC683956	41.25(1048)	CC683979	56.25(1429)
62	2	CC683957	42.75(1086)	CC681429	57.75(1467)
63	2	CC680458	44.25(1124)	CC681429	57.75(1467)
64	2	CC680458	44.25(1124)	CC683980	59.25(1505)
65	2	CC683959	45.75(1162)	CC683981	60.75(1543)
66	2	CC683960	47.25(1200)	CC683981	60.75(1543)
67	2	CC683960	47.25(1200)	CC683982	62.25(1581)
68	2	CC683961	48.75(1238)	CC681430	63.75(1619)
69	2	CC681428	50.25(1276)	CC681430	63.75(1619)
70	2	CC681428	50.25(1276)	CC678770	65.25(1657)
71	2	CC683976	51.75(1314)	CC683984	66.75(1695)
72	2	CC683977	53.25(1353)	CC683984	66.75(1695)
73	2	CC683977	53.25(1353)	CC683985	68.25(1734)
74	2	CC683978	54.75(1391)	CC680459	69.75(1772)
75	2	CC683979	56.25(1429)	CC680459	69.75(1772)
76	2	CC683979	56.25(1429)	CC678771	71.25(1810)
77	2	CC681429	57.75(1467)	CC683987	72.75(1848)
78	2	CC683980	59.25(1505)	CC683987	72.75(1848)
79	2	CC683980	59.25(1505)	CC683988	74.25(1886)
80	2	CC683981	60.75(1543)	CC678796	75.75(1924)
81	2	CC683982	62.25(1581)	CC678796	75.75(1924)
82	2	CC683982	62.25(1581)	CC683990	77.25(1962)
83	2	CC681430	63.75(1619)	CC678797	78.75(2000)
84	2	CC678770	65.25(1657)	CC678797	78.75(2000)
85	2	CC678770	65.25(1697)	CC683992	80.25(2038)
86	2	CC683984	66.75(1695)	CC681431	81.75(2076)
87	2	CC683985	68.25(1734)	CC681431	81.75(2076)
88	2	CC683985	68.25(1734)	CC683993	83.25(2115)
89	2	CC680459	69.75(1772)	CC683994	84.75(2153)
90	2	CC678771	71.25(1810)	CC683994	84.75(2153)
91	2	CC678771	71.25(1810)	CC683995	86.25(2191)
92	2	CC683987	72.75(1848)	CC678800	87.75(2229)
93	2	CC683977	53.25(1353)	CC678800	87.75(2229)
94	2	CC683978	54.75(1391)	CC678775	89.25(2267)
95	2	CC683979	56.25(1429)	CC683998	90.75(2305)
96	2	CC683979	56.25(1429)	CC683998	90.75(2305)
97	2	CC681429	57.75(1467)	CC683999	92.25(2343)
98	2	CC683980	59.25(1505)	CC684000	93.75(2381)
99	2	CC683980	59.25(1505)	CC684000	93.75(2381)
100	2	CC683981	60.75(1543)	CC684001	95.25(2419)
101	2	CC683982	62.25(1581)	CC678837	96.75(2457)

Fig. 8028 Hoist Chains

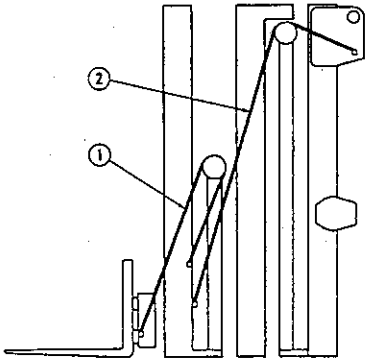

60D

Overall Retracted Channel Length In.	Ref.No.1 Qty.	Free Lift Chains	Chain Length In.(mm)	Ref.No.2 Main Lift Chains	Chain Length In.(mm)
102	2	CC683982	62.25(1581)	CC678837	96.75(2457)
103	2	CC681430	63.75(1619)	CC678777	98.25(2496)
104	2	CC678770	65.25(1657)	CC688157	99.75(2534)
105	2	CC678770	65.25(1657)	CC688157	99.75(2534)
106	2	CC683984	66.75(1695)	CC683958	101.25(2572)
107	2	CC683985	68.25(1734)	CC678838	102.75(2610)
108	2	CC683985	68.25(1734)	CC678838	102.75(2610)
109	2	CC680459	69.75(1772)	CC678781	104.25(2648)
110	2	CC678771	71.25(1810)	CC688158	105.75(2686)
111	2	CC678771	71.25(1810)	CC688158	105.75(2686)
112	2	CC683987	72.75(1848)	CC688159	107.25(2724)
113	2	CC683988	74.25(1886)	CC683962	108.75(2762)
114	2	CC683988	74.25(1886)	CC683962	108.75(2762)
115	2	CC678796	75.75(1924)	CC678839	110.25(2800)
116	2	CC683990	77.25(1962)	CC678779	111.75(2838)
117	2	CC683990	77.25(1962)	CC678779	111.75(2838)
118	2	CC678797	78.75(2000)	CC683983	113.25(2877)
119	2	CC683992	80.25(2038)	CC678840	114.75(2915)
120	2	CC683992	80.25(2038)	CC678840	114.75(2915)
121	2	CC681431	81.75(2076)	CC678783	116.25(2953)
122	2	CC683993	83.25(2115)	CC683986	117.75(2991)
123	2	CC683993	83.25(2115)	CC683986	117.75(2991)
124	2	CC683994	84.75(2153)	CC678841	119.25(3029)

Fig. 8029 Load Backrest

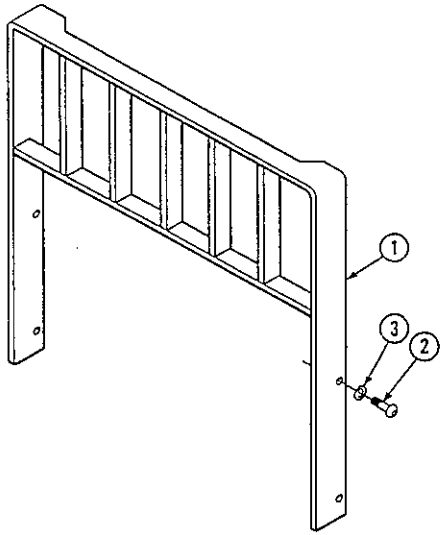

55D/60D

REF	QTY	PART NO	DESCRIPTION
			55D Class II Load Backrests
1	1	CC684772	Backrest 37×36 in. ★
1	1	CC684773	Backrest 37×48 in. ★
1	1	CC684774	Backrest 37×60 in. ★
1	1	CC684775	Backrest 41×36 in. ★
1	1	CC684776	Backrest 41×48 in. ★
1	1	CC684777	Backrest 41×60 in. ★
1	1	CC684778	Backrest 49×36 in. ★
1	1	CC684779	Backrest 49×48 in. ★
1	1	CC684780	Backrest 49×60 in. ★
1	1	CC684781	Backrest 61×36 in. ★
1	1	CC684782	Backrest 61×48 in. ★
1	1	CC684783	Backrest 61×60 in. ★

REF	QTY	PART NO	DESCRIPTION
			60D Class III Load Backrests
1	1	CC684784	Backrest 37×36 in. ★
1	1	CC684785	Backrest 37×48 in. ★
1	1	CC684786	Backrest 37×60 in. ★
1	1	CC684787	Backrest 41×36 in. ★
1	1	CC684788	Backrest 41×48 in. ★
1	1	CC684789	Backrest 41×60 in. ★
1	1	CC684790	Backrest 49×36 in. ★
1	1	CC684791	Backrest 49×48 in. ★
1	1	CC684792	Backrest 49×60 in. ★
1	1	CC684793	Backrest 61×36 in. ★
1	1	CC684794	Backrest 61×48 in. ★
1	1	CC684795	Backrest 61×60 in. ★
2	4	CC200173	Capscrew,M16×35-8.8
3	4	CC684586	Lockwasher, M16

★ Includes items 2 and 3. Width ×Height.

Fig. 8030 Mast Installation Accessories

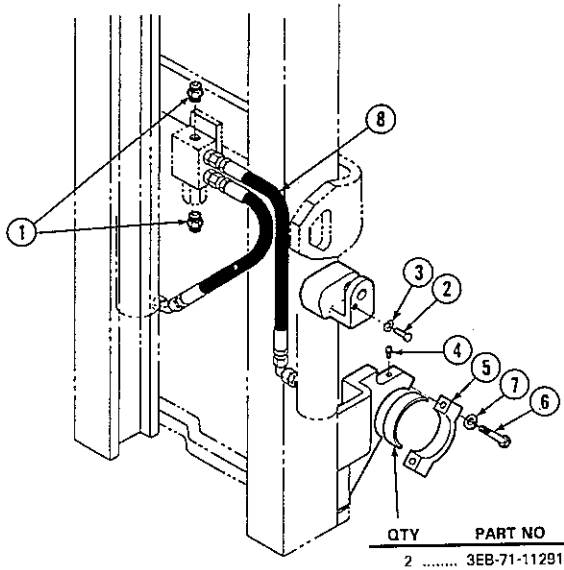

QTY	PART NO	DESCRIPTION
2	3EB-71-11291	Bushing

Komatsu Lift truck models.

FD 20SC-11	FD 30SC-11	FG 20ST2-11	FG 30SC-11
FD 20ST-11	FD 30ST-11	FG 25SC-11	FG 30ST-11
FD 25SC-11	FG 20SC-11	FG 25ST-11	FG 30T2-11
FD 25ST-11	FD 20ST-11	FG 25ST2-11	

REF	QTY	PART NO	DESCRIPTION
1	2	CC601377	Fitting, 8-8
2	2	CC684594	Capscrew, M10×1.5×20-8.8
3	2	CC681238	Lockwasher, M10
4	2	CC7418	Grease Fitting
5	2	CC697338	Cap
6	4	CC684604	Capscrew, M16×2.0×80-8.8
7	4	CC684586	Lockwasher, M16
8	2	CC200380	Hose

Fig. 8031 Mast Installation Accessories

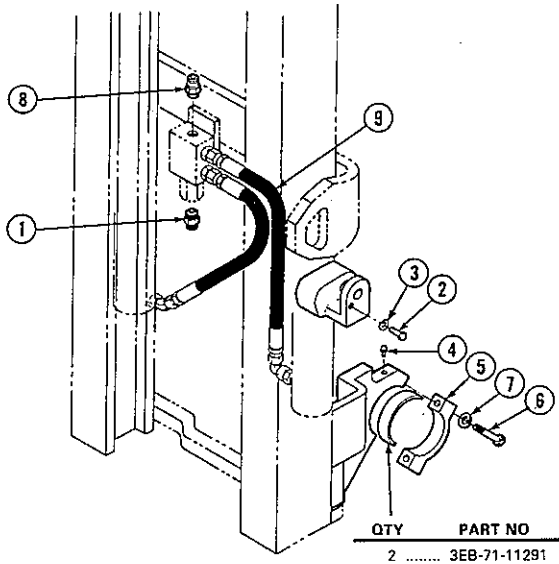

QTY	PART NO	DESCRIPTION
2	3EB-71-11291	Bushing

Komatsu Lift truck models.

FD 20ST11	FD 30ST-11	FG 25SC-11	FG 30SC-11
FD 25SC-11	FG 20SC-11	FG 25ST-11	FG 30ST-11
FD 25ST-11	FG 20ST-11	FG 25ST2-11	FG 30T2-11
FD 30SC-11	FD 20ST2-11		

REF	QTY	PART NO	DESCRIPTION
1	1	CC601377	Fitting, 8-8
2	2	CC684594	Capscrew, M10×1.5×20-8.8
3	2	CC681238	Lockwasher, M10
4	2	CC7418	Grease Fitting
5	2	CC687338	Cap
6	4	CC684604	Capscrew, M16×2.0×80-8.8
7	4	CC684586	Lockwasher, M16
8	1	CC611295	Fitting, 8-8
9	2	CC200380	Hose

Fig. 8032 Mast Installation Accessories

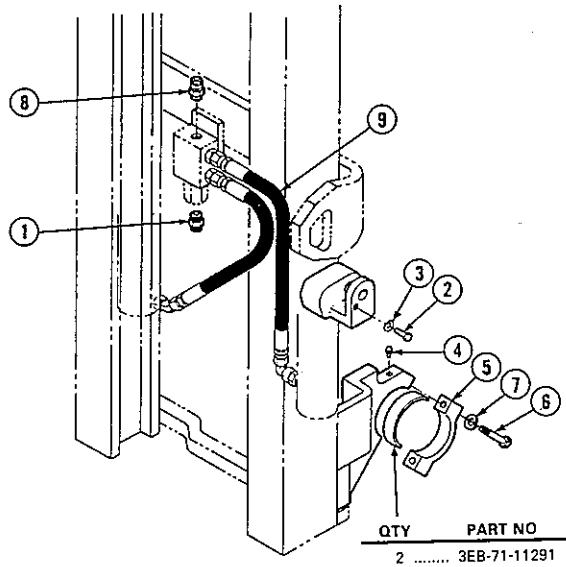

QTY	PART NO	DESCRIPTION
2	3EB-71-11291	Bushing

Komatsu Lift truck models.

FB 20SH-3	FD 25T-10	FG 20ST-4	FG 25T-8
FB 25SH-3	FD 25T-11	FG 20ST2-4	FG 25T-11
FB 20SH-4	FD 25T2-10	FG 20T-8	FG 25T2-8
FB 25SH-4	FD 25T2-11	FG 20T-11	FG 25T2-11
FB 30SH-4	FD 30SC-5	FG 20T2-8	FG 30SC-4
FB 30S-3	FD 20T-11	FG 20T2-11	FG 30ST-4
FD 20C-10	FD 20T2-10	FG 25C-8	FG 30ST2-4
FD 20C-11	FD 20T2-11	FG 25C-11	FG 25SC-4
FD 20SC-5	FD 25C-10	FD 30ST-5	FG 25ST-4
FD 20SC-11	FD 25C-11	FG 20C-8	FG 25ST2-4
FD 20ST-5	FD 25SC-5	FG 20C-11	
FD 20T-10	FD 25ST-5	FG 20SC-4	

REF	QTY	PART NO	DESCRIPTION
1	1	CC601377	Fitting, 8-8
2	2	CC684594	Capscrew, M10×1.5×20-8.8
3	2	CC681238	Lockwasher, M10
4	2	CC7418	Grease Fitting
5	2	CC692714	Cap
6	4	CC684604	Capscrew, M16×2.0×80-8.8
7	4	CC684586	Lockwasher, M16
8	1	CC611295	Fitting, 8-8
9	2	CC200380	Hose