RUTHZIL TRATOR COMERCIAL DE PEÇAS LTDA 11 97083-6812 ROLANDO CITRANGULO

FG 70 R/70 A
FG 75 R/75 A

SERIES B

Catálogo de peças de reposição - Parts catalog

ATENÇÃO	Leia atentamente o Manual de Operação e Manutenção antes de colocar a máquina em funcionamento, ou efetuar qualquer tipo de intervenção na máquina.
WARNING	Study the Operation and Maintenance Instruction Manual through before starting, operating, maintaining, fueling or servicing this machine

JULHO 1991

É proibida a reprodução do texto e das figuras.

Text and figures of this catalog may not be reproduced.

FIATALLIS LATINO AMERICANA S.A. - "TECNOLOGIA GANHANDO TERRENO" - PUBLICAÇÕES TÉCNICAS

1st Issue - 1ª Edizione - 1ere Edition - 1. Ausgabe - 1ª Edicion - 1ª Edição - VII/1991 FA 75314772

001

ADVERTÉNCIA

Este tipo de encadernação, a base de cola é feita para permitir a introdução de folhas para atualização. Para este fim, basta remover a folha a ser substituída retirando-a de cima para baixo. Inserir as novas atualizações nos respectivos lugares e recompor o livro utilizando a pasta nº 8320414 disponível nos concessionários.

ADVERTENCIA

El tipo de encuadernación a base de cola adoptado en esta publicación facilita , cuando sea preciso, la sustitución de las hojas de revisión. Para ello despegue con la mano las hojas que han de sustituirse, tirando de ellas de arriba abajo, y siguiendo la línea de encolado. Luego inserte las hojas nuevas en la posición que corresponde y reúna la publicación mediante una carpeta de anillos, que puede usted encargar a su concesionario de zona dando el número de catálogo 8320414.

NOTICE

The type of bindin with glue used for this book, allows, if required, to easily insert supplement sheets. For this purpose, it is sufficient to remove the sheet to be replaced, by pulling them across, from top to bottom, along the bond line. Next insert the nev sheets in the appropriate position and reassemble book using the binder form 8320414 available at your local Dealer.

AVVERTENZA

Il tipo de rilegatura a colla adottato per questa pubblicazione consente, in caso di necessità, il facile inserimento dei fogli di supplemento. A tale scopo, sufficiente distaccare manualmente i fogli da sostituire, tirandoli trasversalmente dall'alto verso il basso lungo la linea di incollaggio. Inserire quindi i fogli nuovi nelle rispettive posizioni e ricomporre la pubblicazione mediante raccoglitore ad anelli, ottenibile con il nº di ordinazione 8320414 dal Vostro Concessionario di Zona.

AVERTISSEMENT

Le type de reliure par collage adapté pour cette publication permet, au besoin, le facile des feuilles de supplément. A cet effet, il suffit de détacher à la main les feuilles à remplacer, en les tirant de travers d'en haut en bas, le long de la ligne de collage. Caler alors les nouvelles feuilles aux emplacements respectifs et refaire la publication par le classeur à baguee qui peut être demandé au Concessionnaire de votre zone avec le nº de commande 832041[illegible].

ZUR BEACHTUNG

Die fur diese Veroffentlichung angewandte Ruckenleimung zum Heften der zusammengelegten Bogen soll das Einfugen von Ergänzungsblättern erleichtern. Die auszutauschenden Blätter konnen durch Ziehen von oben nach unten leicht entfernt werden. Nach dem Einfugen der neuen Blätter empfiehlt es sich die Veröffentlichung in eine Mappe mit Heftringen einzulegen, die Sie von Ihrem Werkshändler unter der Bestellnr 8320414 beziehen können.

EVITE OS ACIDENTES

A maior parte dos acidentes que ocorrem nas indústrias, nas fazendas, em casa ou nas estradas, são causadas pela imprudência e falta de observação das normas e regras de segurança.
Por esta razão A MAIOR PARTE DOS ACIDENTES PODEM SER EVITADOS, basta prever as possíveis causas e atuar com a necessária cautela e prudência. Para qualquer tipo de máquina, por melhor que seja projetada e construída, não é possível excluir a hipótese de possíveis acidentes, sem inconvenientes de algumas de suas características básicas, acesso e um funcionamento melhor.
Um operador cuidadoso e cauteloso é a maior garantia contra os acidentes. A observância cuidadosa de somente uma norma de segurança já é bastante importante para evitar muitos desastres graves.
Esta norma é:
Nunca tente limpar, engraxar ou dar manutenção com a máquina em funcionamento.

AVISO

Antes de fazer qualquer operação de manutenção, regulagem ou reparos sobre máquinas dotadas de implementos hidráulicos, mecânicos ou com cabos (exemplo: pá-carregadeira, trator, scraper, etc.) é necessário que os implementos estejam abaixados e apoiados sobre o solo. Na eventual necessidade de acesso em alguma parte da máquina que seja preciso levantar o implemento, é indispensável apoia-lo bem firme e com meios adequados e estáveis, que não sejam aqueles previstos para seu acionamento.

EVITE LOS ACCIDENTES

La mayoría de los accidentes que se verifican durante las faenas son imputables a la infracción de sencillas normas de seguridad o de elementales precauciones. Por esta razón, en la mayoría de los casos pueden prevenirse enterándose de sus posibles causas y adoptando previamente oportunas y prudentes medidas cautelativas.
Por bién proyectada o construida que se presente cualquier tipo de máquina no puede prescindirse en absoluto de posibles accidentes, sin trastornar algunas de sus características basicas para ganar acceso a un funcionamento mejor.
Un operador cuidadoso y prudente representa la mejor póliza de seguros contra los accidentes. El concienzudo cumplimento de tan sólo una elemental norma de seguridad sería de suyo suficiente para evitar muchas graves desgracias. Esta norma es:
Nunca trate de limpiar, engrasar, reportar ni reparar la máquina mientras funciona. Deténgala.

AVISO

Antes de emprender cualquier operación de manutención, reglaje o reparación de máquinas equipadas con útiles accionados mecánica o hidráulicamente, o con cables (ejemplo: palas cargadoras, abatrochas, traíllas, etc.) es preciso apoyar el útil en el suelo.
Suponiendo que para tener acceso a alguna parte de la máquina sea preciso levantar el útil, es indispensable sujetarlo bien firme y con medios estables, que no sean aquellos previstos para su accionamiento.

AVOID ACCIDENTS

Most accidents, whether they occur in industry, on the farm, at home or on the highway, are caused by the failure of some individual to follow simple and fundamental safety rules or precautions. For this reason MOST ACCIDENTS CAN BE PREVENTED by recognizing this real cause and doing something about it before the accident occurs.
Regardless of the care used in the design and construction of any type of equipment there are many conditions that cannot be completely safeguarded against without interfering with reasonable accessibility and efficient operation.
A careful operator is the best insurance against an accident. The complete observance of one simple rule would prevent many thousand serious injuries each year.
That rule is:
Never attempt to clean, oil or adjust a machine while it is in motion.

WARNING

On machines having hydraulically, mechanically, and/or cable controlled equipment (such as shovels, loaders, dozers, scrapers, etc.) be certain the equipment is lowered to the ground before servicing, adjusting and/or repairing. If it is necessary to have the hydraulically, mechanically and/or cable controlled equipment partially or fully raised to gain access to certain items, be sure the equipment is suitably supported by means other than the hydraulic lift cylinders, cable and/or mechanical devices used for controlling the equipment.

cou

EVITARE GLI INDICENTI

La maggior parte degli incidenti ed infortuni che si verificano negli stabilimenti, nelle aziende agricole, in casa o sulle strade, sono causati dalla mancata osservanza di qualche semplice e fondamentale regola di prudenza e di sicurezza. Per questa ragione NELLA MAGGIORANZA DEI CASI ESSI POSSONO ESSERE EVITATI: basta prevederne le possibili cause ed agire di conseguenza con la necessaria cautela e prudenza.
Con qualsiasi tipo di macchina, per quanto ben progettata e costruita, non é possibile escludere in assoluto ogni eventualità di incidente senza interferire negativamente su alcune caratteristiche essenziali per una ragionevole accessibilità e per un funzionamento efficiente.
Un operatore attento e prudente la migliore garanzia contro gli incidenti. L'osservanza scrupolosa di una sola ed elementare norma di sicurezza sarebbe già sufficiente ad evitare molti infortuni gravi. Questa norma é:
Non eseguire mai alcun intervento di pulizia, lubrificazione o manutenzione con la macchina in movimento.

ATTENZIONE

Prima di eseguire qualsiasi operazione di manutenzione, regolazione o riparazioni su macchine dotate di attrezzature comandate idraulicamente, meccanicamente o mediante funi (ad esempio pale caricatrici, apripista, ruspe, ecc) occorre accertarsi che l'attrezzatura sia abbassata ed appoggiata al suolo. Se per poter accedere a qualche parte della macchina occorre che l'attrezzatura resti in posizione sollevata, questa dovrà essere opportunamente sopportata servendosi di mezzi che non siano quelli previsti per il comando.

EVITEZ LES ACCIDENTS

La plupart des accidents qui se produisent dans les exploitations industrielles ou agricoles, à la maison ou sur la route, sont dus à l'inobservation de règles de sécurité ou de précautions simples et élémentaires. C'est pourquoi la plupart des accidents peuvent être évités si on en connait la cause réele et si les mesures nécessaires sont prises avant qu'ils ne se produisent. Quelque soit le soin apporté à l'étude et à la construction de n'importe quel type d'équipement, il existe un certain nombre de risques contre lesquels il est impossible de se prémunir sans compromettre l'accessibilité et le bon fonctionnement des organes. Un conducteur prudent constitue la meilleure assurance contre les accidents. L'observation stricte d'une règle simple et unique permettrait d'éviter des milliers d'accidents graves chaque année. Cette règle est la suivante: Ne jamais tenter de nettoyer, graisser ou régler une machine en marche.

ATTENTION

Avant de procéder à l'entretien, au réglage ou à la réparation d'engins, tels que pelles, chargeuses, bouteurs, scrapers, etc, munis d'équipements à commande hydraulique, mécanique ou par câbles, assurez-vous que ces équipements ont été descendus jusqu'au sol. Si, pour procéder à l'entretien, au réglage ou à la réparation des engins, il est nécessaire de lever partiellement ou entièrement les équipements à commande hydraulique, mécanique ou par câbles pour pouvoir accéder a certains organes, assurez-vous que ces équipements sont convenablement supportés par d'autres moyens que les cylindres de levage hydraulique, les câbles ou les dispositifs mécaniques utilisés pour leur commande.

UNFALLVERHUTUNG

Die meisten Unfälle sind darauf zurückfuhren , dass einfache und grundlegende Sicherheitsvorschriften oder Vorsichtsmassregeln nicht beachtet werden Dies gilt gleichermassen fur Unfalle in der Industrie, in der Landwirtschaft im Haushalt und im Strassenverkehr. Aus diesem Grund KONNEN DIE MEISTEN UNFÄLLE VERHUTET WERDEN, sofern man die möglichen Ursachen kennt un die erforderliche Voricht ubt.
Auch bei durchdachter Konstruktion un sorgfaltiger Herstellung einer Maschine ist es kaum moglich das Zustandekommen eines Unfalles absolut zu vermeiden, ohne dabei manche unentbehrliche Maschinmenmerkmale hinsichtlich Zuganglichkeit und Leistungsfahigkeit zuviel zu beeintrachtigen.
Vorsicht ist der beste Unfallschutz. Bereits die Einhaltung einer einfachen Sicherheitsvorschrift kann einer Vielzahl schwerer Unfalle vermeiden lassen.
Diese Vorschrift lautet:
Wartungsarbeiten (Reinigung, Schmierung, Instandhaltung) durfen nicht warend des Maschinenbetriebs durchgefuhrt werden.

ACHTUNG

Vor allen Wartungs und Instandsetzungsarbeiten an Maschinen mit hydraulisch, mechanisch oder durch Seilzug gesteueten Arbeitsgeraten (z.B. Schaufellader, Planierschilder, Flachbaggergerate usw) sind diese auf den Boden abzusetzen. Sind die betreffenden Teile nur bei hochgestellen Arbeitseinrichtungen zuganglich, so sind diese standsicher zu unterbauen; hierzu reichen die Steuervorrichtungen des jewe'ling Arbeitsgerats nicht aus.

USE OF THE CATALOG

To locate the separate parts correctly, proceed as follows:
a) Consult **the version list** on page 11 to find the code number of the version involved: see following for 1 (6)
b) Consult the illustrations and the associated **spare parts lists** as directed below in 1 and 2.

1. Illustrations (see example on page 6)
Illustrations show t e spare parts of each subgroup. The spare parts illustrated are identified by **reference number** (ITEM) This number may be replaced by other indications, fo example:
E3.06: part shown onl in subgroup **E3.06**
Moreover ,each illust ation shows:
- **Subgroup number (1)**- **Sheet number (2)** used when one subgroup covers several sheets, and - **updating indication (3)**, for example: Suffix 06, to print no. **604.01.046**, indicates that subgroup modification is shown in updating of the catalog dated 23-2-81. When code (3), is missing, no changes were introduced.
Updating publication description, if any (4): subgroup title (5) - version code(6) whith reference to previous point (a).
In lack of said codes, the illustration applies to all model versions covere by the catalog.
- **Indication of part kit (7)**, with associated part numbers and part kit symbol. (See page 9 for kit composition).

2. Spare parts list (See example on page 2/1)
They list the spare parts of each subgroup contained in the corresponding illustrations. The following is shown for each parts.
(9) ITEM: **number associating the part shown with the respective "part number"**
(8) PART NUMBER: **spare part order number.**
(10) Q.TY: **total quantity of the part.** The quantity may be replaced by the following indications:
L = Supplied by length, **K** = kit to be ordered in the desired quantity.
(11) TRANS. CODE: **For retrieval of the French, German, Spanish translations** of the part name (consult the basic part names in the last section of catalog;page A1).

(12) DESCRIPTION / DENOMINAZIONE: **Description of the part in English and Italian.** In case of modification, the part name is completed by the EFFECTIVENESS INDICATION and DIRECTION FOR REPLACEMENT effectiveness example:
Up to frame no. 004652 **(13)**: installed on machines with frame nos. up to 004652.
From frames no. 004653 **(14)**: installed on machine with frame nrs. from 004653.
Examples of direction for replacement:
4606783 = 79021573 **(15)**: on exhaustion of stocks of part 4606783 fit part 79021573.
4606787 = 79021574 + 79021576 **(16)**: on exhaustion of stocks of part 4606787 fit part 79021574 plus 79021576.
4606792 = 79021576 - 4606794 **(17)**: on exhaustion of stocks of part 4606792 fit 79021576 and discard 4606794.
If no directions for replacement are given under effectiveness indication, this means that the old and new parts are not interchangeable and, hence, the former must be supplied as spare.
Other useful indications may be provided **(18)** under DESCRIPTION DENOMINAZIONE after sign - (for Fren , German, Spanish equivalents see editional list heading the basic part name list page A0). Terms RIGTH/DESTRO and LEFT/ SINISTRO refer to the direction of machine forward travel.
Should the word WRONG appear next to a part name without the corresponding CORRECT on the line immediately below it means that the associated part was erroneously included at an earlier stage.
(19) Reference symbol for trading the illustration on the fiche and model.
(20) Subgroup, illustration number (when the subgroup includes more than one illustration), page number (when the listing for one illustration takes more than one page).
(21) Optional equipament code: This number indicates that parts listed and marked (*) belong to that given **equipament.** If on the contrary the code appears on the illustration only, it means that all parts of the subgroup belong to the special equipment in question .
(22) Standard part dimensional data.

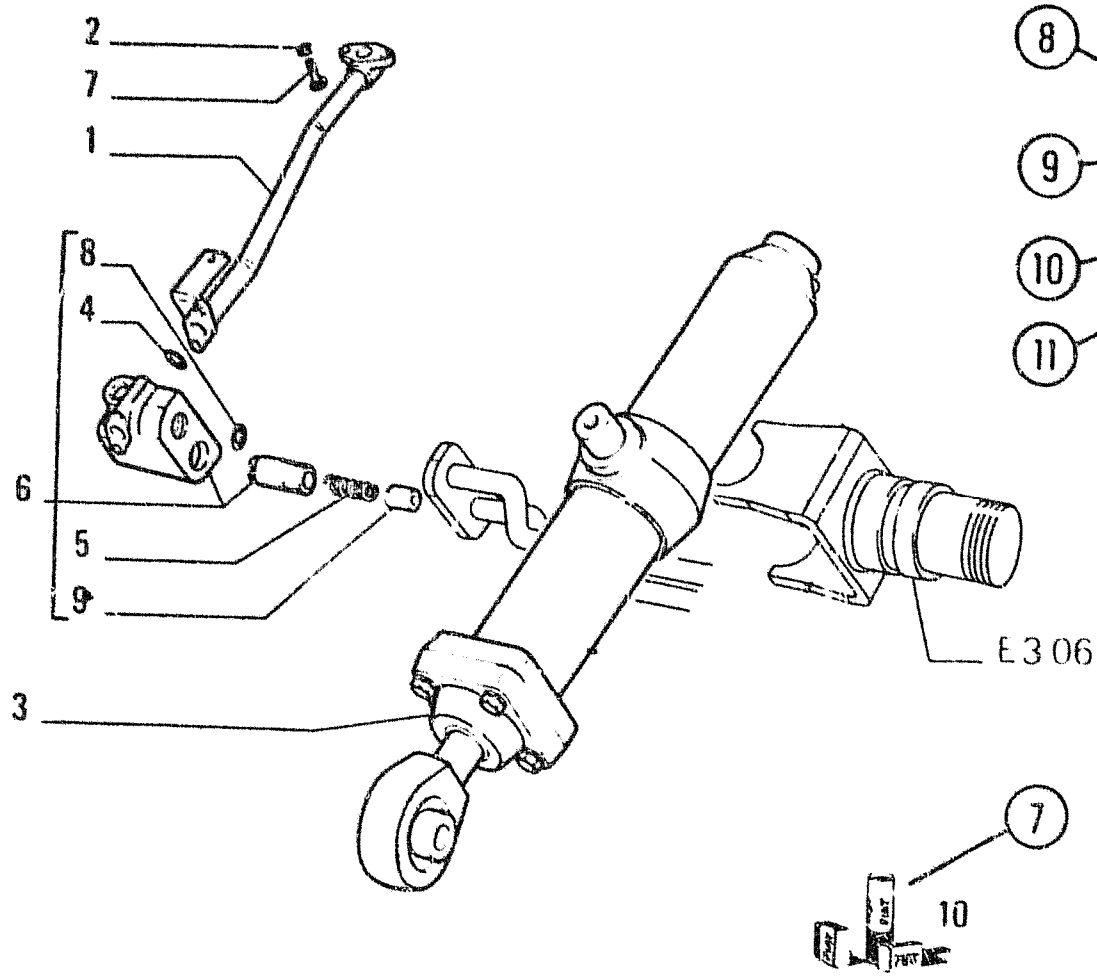

1-H2 FIATALLIS 7D — E3.02 TAV. 1 PAG. 1

ITEM	PART NUMBER	QTY	TRANS CODE	DESCRIPTION	DESCRIZIONE
1	4318965	1	193T	PIPE - RIGHT	TUBO - DESTRO
	4513436	1	193T	PIPE - RIGHT (*)	TUBO - DESTRO (*)
	4606783	1	193T	PIPE - LEFT	TUBO - SINISTRO
			53F	PRIOR TO S/N 004652	FINO AL TELAIO 004652
				4606783 = 79021573	4606783 = 79021573
	79021573	1	193T	PIPE - LEFT	TUBO - SINISTRO
			4D	S/N 004653 AND UP	DAL TELAIO 004653
2	12638601	2	131R	WASHER 10×18	ROSETTA 10×18
3	4606786	1	164C	CYLINDER - RIGHT ASSEMBLY	CILINDRO - DESTRO COMPLETO
				SEE SGR E3 32	VEDERE SGR. E3.32
	4606787	1	164C	CYLINDER - LEFT ASSEMBLY	CILINDRO - SINISTRO COMPLETO
				SEE SGR E3 32	VEDERE SGR E3.32
			53F	PRIOR TO S/N 004652	FINO AL TELAIO 004652
				4606787 = 79021574 + 79021576	4606787 = 79021574 + 79021576
	79021574	1	164C	CYLINDER - LEFT ASSEMBLY	CILINDRO - SINISTRO COMPLETO
			4D	S/N 004653 AND UP	DAL TELAIO 004653
4	4606788	1	55A	SEAL - WRONG	ANELLO DI TENUTA - ERRATA
	4606789	1	55A	SEAL - CORRECT	ANELLO DI TENUTA - CORRIGE
5	4606790	1	100M	SPRING	MOLLA
6	4606791	1	10V	VALVE - RIGHT ASSEMBLY	VALVOLA - DESTRO COMPLETO
	4606792	1	10V	VALVE - LEFT ASSEMBLY	VALVOLA - SINISTRO COMPLETO
			53F	PRIOR TO S/N 004652	FINO AL TELAIO 004652
				4606792 = 79021576 - 4606794	4606792 = 79021576 - 4606794
	79021576	1	10V	VALVE - LEFT ASSEMBLY	VALVOLA - SINISTRO COMPLETO
			4D	S/N 004653 AND UP	DAL TELAIO 004653
7	11307021	2	40V	SCREW 10×1,25×40	VITE 10×1,25×40
8	14453381	1	55A	SEAL 1,78×15,60	ANELLO DI TENUTA 1,78×15,60
9	4606795	1	50T	PLUG	TAPPO
10	79021577	K	1K	KIT SEE PAGE 9	CORREDO VEDERE PAGINA 9
(*)			469P	FOR OPTIONAL 30.1070.06.1	PER VARIANTE 30.1070.06.1

Optional
Variante 30.1070.06.1

01 - 02 HYDRAULIC SYSTEM - IMPIANTO IDRAULICO - SYSTEME HYDRAULIQUE - HYDRAULIKANLAGE - SISTEMA HIDRÁULICO — E3.02 — 1

N.T.R. 61 — 23/2/1981
604.01.046.06

008

MODO DE USAR O CATÁLOGO

Para pedir corretamente as peças de reposição é necessário:
a) Consulte a lista de versões, pág. 11, para identificar no seu caso o código numérico de versão que lhe interessa (veja o parágrafo 1, item 7).

b) Consulte as figuras e as respectivas listas de peças, conforme é explicada nos parágrafos 1 e 2.

1 - FIGURAS (veja o exemplo, pág. 8)
Representam as peças de reposição de cada subgrupo em que se divide a máquina.
As peças de reposição representadas se designam mediante um número de referência (ITEM), o qual pode ser substituído por outras indicações. Exemplo: E3.06, peça ilustrada unicamente no SGR. E3.06.
O código do subgrupo **1** e o número do quadro **2**: Quando o mesmo subgrupo compreende em mais de uma figura.
Número do ITE (Informatico Técnico) data da emissão **3** - Número de cadastro de cada ITE **4**. Ao constar os itens 3, 4 na respectiva folha do catálogo, indica que este quadro houve modificações através do ITE 3.
Existem ITE's com apenas informações por escrito não alterando a figura. Neste caso anotar as informações contidas no ITE, o número e a data na respectiva folha do catálogo.
Denominação do subgrupo **5** , o código de versão **6**, com referência ao item (a) dito anteriormente, entende-se que a figura é aplicável a todas versões do modelo que trata o catálogo.
A indicação de existência de kits de reposição **7**, com respectivos números apresentados no próprio quadro ou na página 9 a respectiva composição.
O sentido da seta no qual está indicada na figura, refere-se o sentido de marcha (FRENTE) da máquina, tomando como ponto de referência o posto do operador (ASSENTO), sentado ao volante 9 o mesmo ocorre com os termos DIREITO e ESQUERDO, empregados na lista de peças do catálogo.

2 - LISTA DAS PEÇAS DE REPOSIÇÃO (veja o exemplo, pág. 8)
Nelas se dispõem as peças de reposição de cada subgrupo representadas nas figuras correspondentes, indicando para cada peça:
8 ITEM: é o número de cada peça representada, que é acompanhada do número da peça para reposição
9 PEÇA: Número de cada peça de reposição do catálogo.
10 QTD : Número total de peças representadas na figura com a quantidade específica para cada modelo de máquina. Este número pode ser substituído pelas seguintes indicações: * = pedaços de medida ou quantidade necessária; k= quantidade necessária para a reparação.
11 TRADUÇÃO: Código para buscar a tradução para o inglês, francês, alemão, e espanhol da denominação (consulte a lista de denominações GLOSSÁRIO no final do catálogo).
12 DENOMINAÇÃO/DESCRIPTION: Denominação da peça em português e inglês. No caso de modificações, a denominação vem acompanhada pela indicação de sua aplicação ou pelas normas de reposição.
Exemplo de indicação de aplicação na modificação:
- Até o chassi nº 004652 **13**: Utilizada nas máquinas com chassi até o nº 004652.
- A partir do chassi nº 004653 **14**: Utilizada nas máquinas a partir do chassi nº 004653.
Exemplo de normas de reposição:
4606783 = 79021573 **15**: Ao esgotar o estoque da peça 4606783, use a peça 79021573.
4606787 = 79021574 + 79021576 **16**: Ao esgotar o estoque da peça 4606787 use a peça 79021574 mais a peça 79021576.
4606792 = 79021576 - 4606794 **17**: Ao esgotar o estoque da peça 4606792 use a peça 79021576 eliminando a peça 4606794.
Supondo que a indicação de utilização não acompanhe normas de reposição, significa que a reposição da peça ante-modificação , deve ser mantida, por não ser intercambiável com a peça pós-modificação.
Outras indicações úteis **18** podem ser acrescidas na coluna DENOMINAÇÃO/DESCRIPTION (a tradução destas palavras ao italiano, francês, alemão e espanhol, estão na lista de palavras suplementares que precede a lista de denominações).
As palavras DIREITO/RIGHT e ESQUERDO/LEFT se referem ao sentido de marcha da máquina.
Supondo que numa denominação acompanhada a palavra onde se lê ERRADO/WRONG e na linha seguinte não aparece a correspondente lela-se CORRETO/CORRECT , significa que a peça sobra por erro.
20 Subgrupo, número da figura (quadro), número da página. **19** Modelo da máquina. **21** Número de código do opcional: Indica que as peças com a marcação (*) pertencem ao opcional indicado.
Se o código aparece na figura, significa que todas as peças deste subgrupo pertencem a este opcional.
22 Dimensões de peças normalizadas.

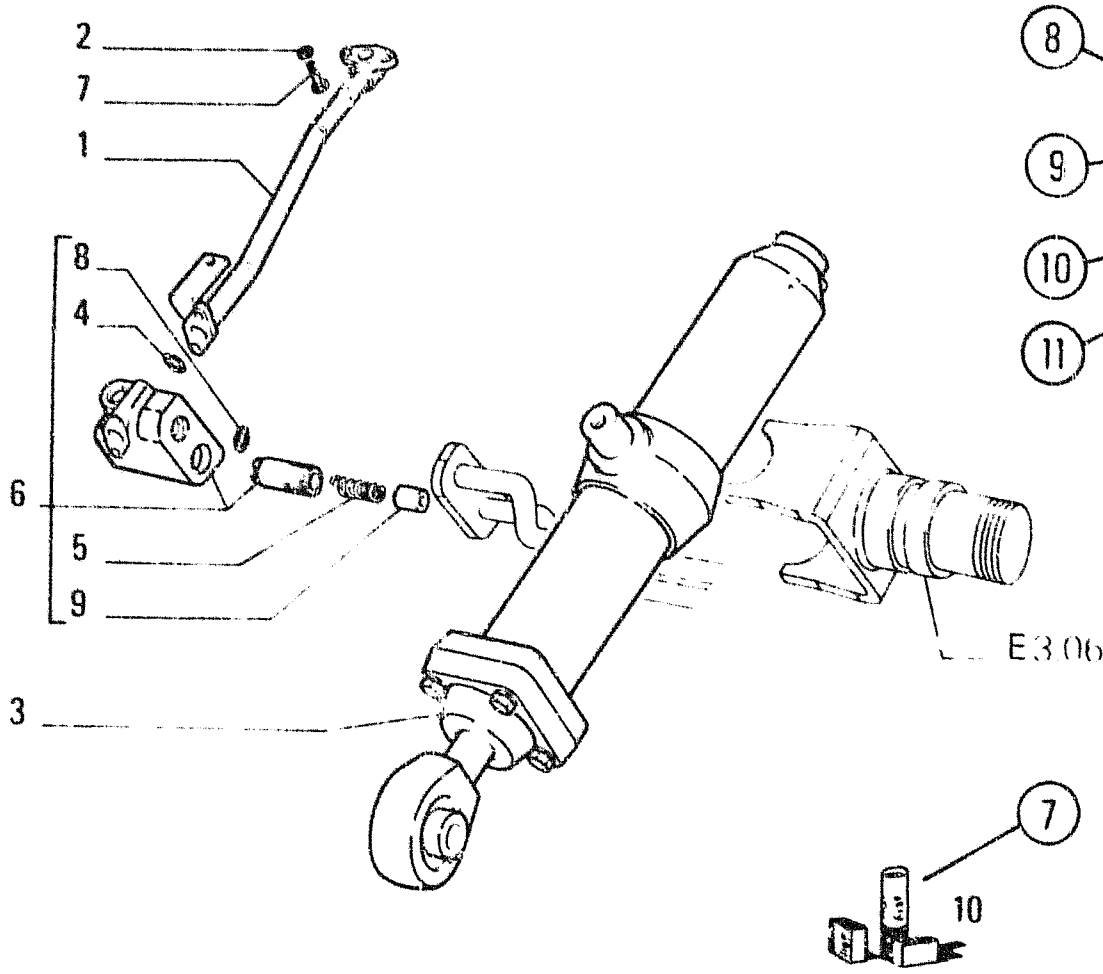

Optional
Variante 30 1070.06 1

1-N2 FIATALLIS FD20 — E3.02 TAV. 1 PAG. 1

ITEM	PART NUMBER	QTY	TRANS CODE	DESCRIPTION	DESCRIZIONE
1	4318965	1	193T	PIPE - RIGHT	TUBO - DESTRO
	4513436	1	193T	PIPE - RIGHT (*)	TUBO - DESTRO (*)
	4606783	1	193T	PIPE - LEFT	TUBO - SINISTRO
			53F	PRIOR TO S/N 004652	FINO AL TELAIO 004642
				4606783 = 79021573	4606783 = 79021573
	79021573	1	193T	PIPE - LEFT	TUBO - SINISTRO
			4D	S/N 004653 AND UP	DAL TELAIO 004653
2	12638601	2	131R	WASHER 10×18	ROSETTA 10×18
3	4606786	1	164C	CYLINDER - RIGHT ASSEMBLY	CILINDRO - DESTRO COMPLETO
				SEE SGR E3 32	VEDERE SGR E3 32
	4606787	1	164C	CYLINDER - LEFT ASSEMBLY	CILINDRO - SINISTRO COMPLETO
				SEE SGR E3 32	VEDERE SGR E3 32
			53F	PRIOR TO S/N 004652	FINO AL TELAIO 004652
				4606787 = 79021574 + 79021576	4606787 = 79021574 + 79021576
	79021574	1	164C	CYLINDER - LEFT ASSEMBLY	CILINDRO - SINISTRO COMPLETO
			4D	S/N 004653 AND UP	DAL TELAIO 004653
4	4606788	1	55A	SEAL - WRONG	ANELLO DI TENUTA - ERRATA
	4606789	1	55A	SEAL - CORRECT	ANELLO DI TENUTA - CORRIGE
5	4606790	1	100M	SPRING	MOLLA
6	4606791	1	10V	VALVE - RIGHT ASSEMBLY	VALVOLA - DESTRO COMPLETO
	4606792	1	10V	VALVE - LEFT ASSEMBLY	VALVOLA - SINISTRO COMPLETO
			53F	PRIOR TO S/N 004652	FINO AL TELAIO 004652
				4606792 = 79021576 - 4606794	4606792 = 79021576 - 4606794
	79021576	1	10V	VALVE - LEFT ASSEMBLY	VALVOLA - SINISTRO COMPLETO
			4D	S/N 004653 AN UP	DAL TELAIO 004653
7	11307021	2	40V	SCREW 10×1,25×40	VITE 10×1,25×40
8	14453381	1	55A	SEAL 1,78×15,60	ANELLO DI TENUTA 1,78×15,60
9	4606795	1	50T	PLUG	TAPPO
10	79021577	K	1K	KIT SEE PAGE 9	CORREDO VEDERE PAGINA 9
(*)			469P	FOR OPTIONAL 30.1070.06.1	PER VARIANTE 30.1070.06.1

01 - 02 — HYDRAULIC SYSTEM - IMPIANTO IDRAULICO - SYSTEME HYDRAULIQUE - HYDRAULIKANLAGE - SISTEMA HIDRÁULICO — E3.02 — 1

N.T.R. 63 — 23/7/1981

604.01.046.06

NOTICE

The rigth reserved to change the construction or material of any parts where it seems desirable to do so without incurring the obligation of installing such changes on units already delivered.
Additional publications pertaining to this model and to all other FIATALLIS produts are available through FIATALLIS dealers. Publications are generally available in several languages.

INSTRUCTIONS FOR ORDERING PARTS

At the time this parts catalog was published the listed part numbers were current. It is our policy to constantly improve our machines and therefore, part numbers and design may change.
When ordering parts, verify part numbers through yours dealer's microfiche and master numerical index which are up to date with all the latest part numbers.

ORDER PARTS FROM THE DEALER COVERING THE LOCAL TERRITORY

Orders for spare parts must include the following data (See page 11)

- Model, Serial Number, Engine Model, Engine serial number, marked on engine block.
- Specify the part (shown on Spare Parts Catalog list), possibly completed by it description.

If parts refer to an assembly which has a model or serial number, also include this information.

- Give post office address, town, county and state where parts are to be shipped.
- Also specify whether material is to be shipped by freight, express or parcel post.
- Confirm all telephone or telegraph orders in writing.

Parts can only be returned to/through the dealer from whom the parts were purchased and must have prior written authorization. Each return will be treated individually.
Unless claims for shortages or error are made immediately upon receipt of goods, they will not be considered.
When broken goods are received, a full description of the damage should me made by the carrier agent on the fregth bill.
FIATALLIS responsability is limited, and ceases upon completion of sale conditions provided for each delivery.

ATENÇÃO

A FIATALLIS reserva o direito de modificar a construção ou o material de qualquer peça, se julgar necessário, mas sem obrigar-se a aplicar tais modificações às unidades já em serviço.

COMO FAZER OS PEDIDOS

Os números de peça do catálogo inclusas nesta publicação estão em dia até a data de saída deste da FIATALLIS. Nossa política consiste no intento de melhorar constantemente nossa máquinas, e portanto, os números de peças do catálogo às vezes, podem não ser efetivos. No momento de pedir as peças de reposição, verifique os números de peças do catálogo com seu Concessionário, o qual dispõe de microfichas e da lista de peças geral atualizada.

FAÇA OS PEDIDOS AO CONCESSIONÁRIO DE SUA REGIÃO

Os pedidos de peças de reposição, devem conter os seguintes dados (veja pág. 11):

- Modelo da máquina, nº de série do chassi, modelo do motor, nº de série do motor.
- Indicar o nº da peça pedida - tal qual ilustrada na lista de peças - possivelmente acompanhada da denominação correspondente.

Se as peças pertencem a um conjunto que possue seu próprio número de modelo ou de série, indique este dado.

- No endereço indique o código de endereçamento postal, a cidade, o estado, e a nação para que possa remeter as peças pedidas.
- Indique a modalidade de expedição do material: marítimo, terrestre, aérea ou via correio.

Eventuais devoluções de peças poderão efetuar-se somente por intermédio do Concessionário do qual as peças foram compradas, e **deverão ser previamente autorizadas por escrito**. Cada devolução será analisada conforme cada caso.
As reclamações por faltas ou defeitos não serão levadas em conta, a não ser que venham efetuadas imediatamente após o recebimento do material.
No caso de receber material que sofreu danos, uma descrição completa do dano deve ser feita pelo agente transportador no documento de expedição.
A responsabilidade da FIATALLIS é limitada e cessa ao cumprir-se as condições previstas para cada aquisição.

IDENTIFICATION AND VERSION LIST - IDENTIFICAÇÃO E LISTA DE VERSÕES

MODELS MODELOS	ENGINEERING CODE DENOMINAÇÃO TÉCNICA	MODEL SERIAL NUMBER NÚMERO DE SÉRIE DO MOTOR		ENGINE MODEL MODELO DO MOTOR	NUMERICAL CODE CÓDIGO NUMÉRICO
		PRODUCT CODE CÓDIGO DO PRODUTO	UNIT Nº Nº CHASSI		
FG 70 R		86 Y	01001	CUMMINS 6C 8.3	
FG 70 A		87 M	01001	CUMMINS 6C 8.3	
FG 75 R		70 L	01001	CUMMINS 6C 8.3	
FG 75 A		69 A	01001	CUMMINS 6C 8.3	



Machine serial number location (Right)
Posiç. do nº de série da máquina (Direita)

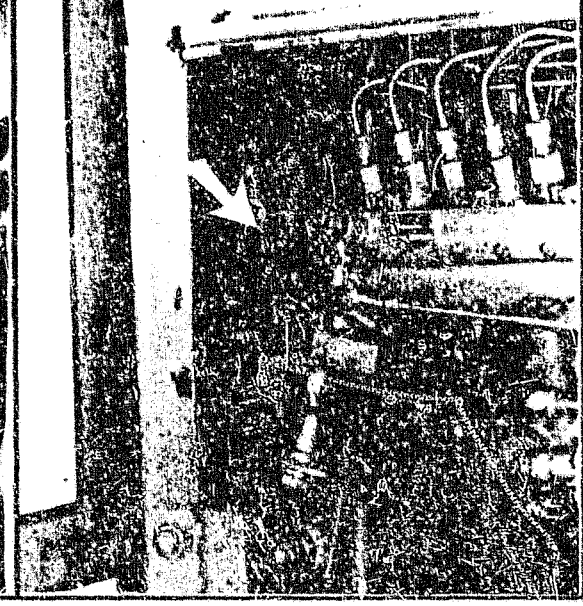

Engine serial number location
Posição do nº de série do motor

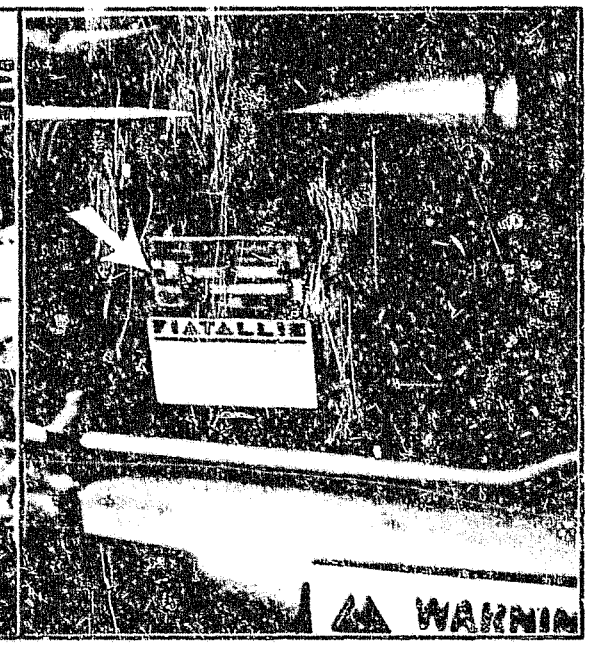

Machine serial number location (Articulated)
Posiç. do nº de série da máquina (Articulada)

RECORD YOUR SERIAL NUMBER BELOW

ANOTE AQUI OS NÚMEROS DE SÉRIE

MACHINE SERIAL NUMBER
NÚMERO DA MÁQUINA

ENGINE SERIAL NUMBER
NÚMERO DO MOTOR

DESCRIPTION	SBGRP	TAV	GRID
1 - 2 SPEED CLUTCH FG75	B201/1	15	1L-9
3 - 4 SPEED & REVERSE CLUTCH FG75	B201/1	14	1L-8
5 - 6 SPEED & HIGH FWD CLUTCH FG75	B201/1	16	1L-10
ADAPTER, TRANS HOUSING FG75	B201/1	1	1I-11
AIR CLEANER	A222	1	1F-7
AIR FILTER	A223	2	1F-8
AIR PRE-CLEANER	A222	1	1F-7
ALTERNATOR	F200	1	2E-2
BELT	F200	1	2E-2
COMPONENTS	F603	1	2F-10
ARTICULATION CYLINDER	D101	7	1P-2
CYLINDER	E332	8	2D-13
JOINT (BOTTOM)	D101	5	1O-16
JOINT (TOP)	D101	6	1O-17
SWITCH	F401	19	2F-7
VALVE	E331	2	2C-14
BACK UP ALARM FG70	F401	8	2E-8
BACK UP ALARM FG75	F401/1	8	2E-9
BATTERIES FG70	F401	11	2E-12
BATTERIES FG70 FG75	F401	7	2E-6
BATTERIES FG75	F401	14	2E-16
CABLES FG70	F401	11	2E-12
CABLES FG70 FG75	F401	7	2E-6
CABLES FG75	F401	14	2E-16
BATTERY BOX	L130	1	2G-17
BELT, ALTERNATOR	F200	1	2E-2
BELTS, FAN	A409	1	1G-17
BLADE LIFT VALVE	E331	5	2C-17
BRAKE CALIPER	C118	1	1O-6
DISC	D316	1	1P-14
FLUID HIGH PRESSURE LINES LT.	C101	4	1N-16
FLUID HIGH PRESSURE LINES RT.	C101	3	1N-15
FLUID RESERVOIR	C101	2	1N-14
FLUID RESERVOIR COMPONENTS	C108	1	1O-3
MASTER CYINDER	C108	2	1O-4
MASTER CYLINDER LINES	C101	5	1N-17
PEDAL	C101	1	1N-13
POWER BOOSTER	C108	3	1O-5
PUMP COMPONENTS	D213	1	1P-13
CAB	L103	1	2F-15
DOOR	L104	2	2G-2
FAN ASSEMBLY	L104	9	2G-10
FANS	L104	8	2G-9
FLOOR MAT	L104	1	2F-16
HEATER FITTINGS	L104	11	2G-12
HEATER	L104	10	2G-11
LIGHTING	L104	5	2G-6
ROOF LINER	L104	4	2G-5
CAB SEALS	L104	3	2G-4
WIRING	L104	7	2G-8
CABLES ELECTRICAL FG70	F401	10	2E-11
CABLES ELECTRICAL FG75	F401	15	2F-2
CANOPY	L104/1	1	2G-13
CANOPY LINER	L104/1	2	2G-14
CIRCLE	E310	2	2B-15
SHIFT CYLINDER	E332	5	2D-11
SHIFT VALVE	E331	3	2C-15
TURN GEAR BOX COMPONENTS	E310	4	2B-16
TURN GEAR BOX	E310	2	2B-15
TURN MOTOR COMPONENTS	E310	5	2C-2
TURN MOTOR	E310	2	2B-15
CLUTCH , 3 - 4 SPEED & REVERSE FG75	B201/1	14	1L-8
HIGH SPEED FG70	B201	9	1H-17
LOW SPEED FG70	B201	8	1H-16
REVERSE & 3 - 4 SPEED FG75	B201/1	14	1L-8
SECOND SPEED FG70	B201	7	1H-15
THIRD SPEED FG70	B201	6	1H-14
5 - 6 SPEED & HIGH FWD FG75	B201/1	16	1L-10
FORWARDFG70	B201	7	1H-15
HIGH FWD & 5 - 6 SPEED FG75	B201/1	16	1L-10
LOW FORWARD FG75	B201/1	12	1L-6
REVERSE FG70	B201	6	1H-14
CONTROL VALVE TRANSMISSION FG70	B201	18	1I-10
CONVERTER FG70	B201	3	1H-11
COMPONENTS FG75	B201/1	7	1I-17
FLEX PLATES FG75	B201/1	6	1I-16
GEAR FG70	B201	4	1H-12
GEAR FG75	B201/1	9	1L-3
GEAR FG75	B201/1	10	1L-4
GEAR FG75	B201/1	11	1L-5
HOUSING FG70	B201	2	1H-10
HOUSING FG75	B201/1	3	1I-13
SHAFTS FG75	B201/1	5	1I-15
COOLANT PUMP	A403	1	1G-16
FILTER	A402	1	1G-15
CYLINDER ARTICULATION	E332	8	2D-13
CIRCLE SHIFT	E332	5	2D-11
MOLDBOARD LIFT	E332	6	2D-12
MOLDBOARD PITCH	E332	2	2D-8
MOLDBOARD SIDE SHIFT	E332	3	2D-9
RIPPER	E332/1	2	2D-15
SADDLE LOCK PIN	E332	4	2D-10
SCARIFIER	E332/1	1	2D-14
STEERING	D212	1	1P-12
WHEEL LEAN	E332	1	2D-7
ARTICULATION	D101	7	1P-2
DECALS (ARTICULATED)	L125	2	2G-16
DECALS (RIGID)	L125	1	2G-15
DIFFERENTIAL ASSEMBLY	B403	4	1N-10
DIFFERENTIAL COMPONENTS	B403	5	1N-11
DRIVE SHAFT	B301	1	1M-15
DRIVE SHAFT COMPONENTS	B316	1	1M-16
ELECTRICAL CABLE SWITCH PANEL	F401	2	2E-4
CABLES BATT. FG70 FG75	F401	7	2E-6
CABLES BATTERIES FG70	F401	11	2E-12
CABLES BATTERIES FG75	F401	14	2E-16
CABLES FG70	F401	10	2E-11
CABLES FG75	F401	15	2F-2
FUSES	F401	3	2E-5
SWITCH PANEL	F401	1	2E-3
SWITCH PANEL	F401	1	2E-3
ELECTRONIC DATA MONITOR	F401	12	2E-14
ELEMENT IMPLEMENT OIL	E328	1	2C-10
TRANS. OIL FG70	B201	11	1I-3
TRANS. OIL FG75	B217	1	1M-14
AIR	A223	2	1F-8
ENGINE OIL	A303	1	1G-12
FUEL	A226	1	1F-12
END CAP VALVE	E331	7	2D-3
END CAP VALVE	E331	9	2D-4
ENGINE	A000	1	1E-2
BLOCK	A101	1	1E-5
BLOCK PLUGS	A101	2	1E-6
CAMSHAFT	A107	1	1E-16
CAMSHAFT DRIVE	A106	1	1E-15
CONNECTING RODS	A105	1	1E-14
COOLANT THERMOSTAT	A402	1	1G-15
CRANKSHAFT	A103	1	1E-11
CYLINDER SLEEVES	A105	1	1E-14
DAMPER	A104	1	1E-13
EXHAUST MANIFOLD	A254	1	1G-7
EXHAUST VALVE	A107	1	1E-16
FLYWHEEL	A103	1	1E-11
FLYWHEEL HOUSING	A102	2	1E-10
FRONT COVER	A102	1	1E-9
FUEL PUMP DRIVE	A106	1	1E-15
HEAD	A101	3	1E-7
INTAKE VALVE	A107	1	1E-16
LIFTING BRACKET	A101	4	1E-8
MAIN BEARING	A103	2	1E-12
MAIN BEARING CAPS	A101	1	1E-5
MOUNTS FG70	A002	1	1E-3
MOUNTS FG75	A002/1	1	1E-4
OIL DIPSTICK	A301	2	1G-10
OIL FILL PLUG	A301	2	1G-10
OIL FILTER	A303	1	1G-12
OIL HEAT EXCHANGER	A303	1	1G-12
OIL PAN	A102	1	1E-9
OIL PUMP	A302	1	1G-11

Sbgrp #	Tav	Grid
A000	1	1E- 2
A002	1	1E- 3
A002/1	1	1E- 4
A101	1	1E- 5
A101	2	1E- 6
A101	3	1E- 7
A101	4	1E- 8
A102	1	1E- 9
A102	2	1E- 10
A103	1	1E- 11
A103	2	1E- 12
A104	1	1E- 13
A105	1	1E- 14
A106	1	1E- 15
A107	1	1E- 16
A201	1	1E- 17
A201	2	1F-2
A221	1	1F-3
A221	2	1F-4
A221	3	1F-5
A221	4	1F-6
A222	1	1F-7
A223	2	1F-8
A224	1	1F-9
A224	1	1F-10
A225	1	1F-11
A226	1	1F-12
A227	1	1F-13
A228	1	1G-2
A235	1	1G-5
A235	2	1G-6
A254	1	1G-7
A256	1	1G-8
A301	1	1G-9
A301	2	1G-10
A302	1	1G-11
A303	1	1G-12
A401	1	1G-13
A401	2	1G-14
A402	1	1G-15
A403	1	1G-16
A409	1	1G-17
A409	2	1H-2
A409/1	2	1H-3
A409/1	3	1H-4
A409/1	4	1H-5
B200	1	1H-6
B200/1	1	1H-7
B201	1	1H-8
B201	2	1H-10
B201	3	1H-11
B201	4	1H-12
B201	5	1H-13
B201	6	1H-14
B201	7	1H-15
B201	8	1H-16
B201	9	1H-17
B201	10	1I-2
B201	11	1I-3
B201	12	1I-4
B201	13	1I-5
B201	14	1I-6
B201	15	1I-7
B201	16	1I-8
B201	18	1I-10
B201/1	1	1I-11
B201/1	2	1I-12
B201/1	3	1I-13
B201/1	4	1I-14
B201/1	5	1I-15
B201/1	6	1I-16
B201/1	7	1I-17
B201/1	8	1L-2
B201/1	9	1L-3
B201/1	10	1L-4
B201/1	11	1L-5
B201/1	12	1L-6
B201/1	13	1L-7
B201/1	14	1L-8
B201/1	15	1L-9
B201/1	16	1L-10
B201/1	17	1L-11
B201/1	18	1L-12
B201/1	19	1L-13
B201/1	20	1L-14
B201/1	21	1L-15
B201/1	22	1L-16
B201/1	23	1L-17
B201/1	24	1M-2
B201/1	24	1M-2
B201/1	25	1M-3
B201/1	26	1M-4
B206	1	1M-5
B206	2	1M-6
B206	3	1M-7
B206/1	1	1M-8
B206/1	2	1M-9
B207	1	1M-10
B207	2	1M-12
B207/1	2	1M-13
B217	1	1M-14
B301	1	1M-15
B316	1	1M-16
B401	1	1N-2
B401	3	1N-4
B403	1	1N-6
B403	2	1N-7
B403	3	1N-8
B403	4	1N-10
B403	5	1N-11
B403	6	1N-12
C101	1	1N-13
C101	2	1N-14
C101	3	1N-15
C101	4	1N-16
C101	5	1N-17
C101	6	1O-2
C108	1	1O-3
C108	2	1O-4
C108	3	1O-5
C118	1	1O-6
C135	1	1O-7
C135	2	1O-8
C135/1	2	1O-9
D101	1	1O-10
D101	2	1O-11
D101	3	1O-13
D101	4	1O-14
D101	5	1O-16
D101	6	1O-17
D101	7	1P-2
D201	1	1P-3
D201	2	1P-5
D201	3	1P-7
D201	4	1P-8
D202	1	1P-10
D212	1	1P-12
D213	1	1P-13
D316	1	1P-14
D316	2	1P-15
D333	1	1P-16
E302	1	1Q-2
E302	2	1Q-4
E302	3	1Q-6
E302	4	1Q-7
E302	5	1Q-8
E302	6	1Q-9
E302	7	1Q-10
E302	8	1Q-11
E302	12	2A-2
E302	13	2A-3
E302	14	2A-5
E302	15	2A-6
E302	16	2A-7
E302	17	2A-8
E302	18	2A-9
E302	19	2A-10
E302	20	2A-11
E302	23	2A-12
E302	24	2A-13
E302	25	2A-14
E302	26	2A-15
E302	27	2A-17
E302	28	2B-2
E302	29	2B-3
E302	30	2B-4
E302	31	2B-5
E302	32	2B-6
E302	32	2B-7
E302/1	1	2B-8
E302/1	2	2B-9
E302/1	3	2B-10
E302/1	32	2B-12
E310	1	2B-13
E310	2	2B-15
E310	4	2B-16
E310	5	2C-2
E310/1	1	2C-3
E310/1	2	2C-4
E313	1	2C-5
E313	2	2C-7
E313	3	2C-8
E313	4	2C-9
E328	1	2C-10
E329	1	2C-12
E331	1	2C-13
E331	2	2C-14
E331	3	2C-15
E331	4	2C-16
E331	5	2C-17
E331	6	2D-2
E331	7	2D-3
E331	9	2D-4
E331	10	2D-5
E331	11	2D-6
E332	1	2D-7
E332	2	2D-8
E332	3	2D-9
E332	4	2D-10
E332	5	2D-11
E332	6	2D-12
E332	8	2D-13
E332/1	1	2D-14
E332/1	2	2D-15
F200	1	2E- 2
F401	1	2E- 3
F401	2	2E- 4
F401	3	2E- 5
F401	7	2E- 6
F401	8	2E- 8
F401/1	8	2E- 9
F401	9	2E- 10
F401	10	2E- 11
F401	11	2E- 12
F401	12	2E- 14
F401	13	2E- 15
F401	14	2E- 16
F401	15	2F-2
F401	15	2F-2
F401	16	2F-4
F401	17	2F-5
F401	18	2F-6
F401	19	2F-7
F405	2	2F-8
F405	3	2F-9
F603	1	2F-10
F608	1	2F-11
L101	1	2F-13
L101	2	2F-14
L103	1	2F-15
L104	1	2F-16
L104	2	2G-2
L104	3	2G-4
L104	4	2G-5
L104	5	2G-6
L104	6	2G-7
L104	7	2G-8
L104	8	2G-9
L104	9	2G-10
L104	10	2G-11
L104	11	2G-12
L104/1	1	2G-13
L104/1	2	2G-14
L125	1	2G-15
L125	2	2G-16
L130	1	2G-17
L604	1	2H-2
L604	2	2H-3

DESCRIPTION	SBGRP	TAV	GRID
ENGINE PISTONS	A105	1	1E-14
ROCKER ASSEMBLY	A107	1	1E-16
ROD BEARINGS	A105	1	1E-14
SIDE PLATES	L101	2	2F-14
SLEEVES	A105	1	1E-14
SUMP	A102	1	1E-9
EXHAUST PIPE	A256	1	1G-8
FAN	A409	1	1G-17
BELTS	A409	1	1G-17
DRIVE FG70	A409	2	1H-2
DRIVE FG75	A409/1	2	1H-3
DRIVE FG75	A409/1	4	1H-5
IDLER FG75	A409/1	3	1H-4
FIATALLIS TO CUMMINS CROSS REF NUMBERS			2M-2
FILTER IMPLEMENT OIL	E328	1	2C-10
FILTER, AIR	A223	2	1F-8
FILTER, COOLANT	A402	1	1G-15
FILTER, ENGINE OIL	A303	1	1G-12
FILTER, FUEL	A226	1	1F-12
FILTER, TRANS OIL FG70	B201	11	1I-3
FILTER, TRANS. OIL FG75	B217	1	1M-14
FORWARD CLUTCH FG70	B201	7	1H-15
FRAME (NOT ARTICULATED)	D101	1	1O-10
FRONT (ARTICUALTED)	D101	3	1O-13
REAR (ARTICUALTED)	D101	4	1O-14
FRONT AXLE FRAME	B401	1	1N-2
FRONT AXLE WHEEL END	B401	3	1N-4
FUEL FILTER	A226	1	1F-12
INJECTION PUMP	A224	1	1F-9
INJECTION PUMP COMPONENTS	A227	1	1F-13
LINES, HIGH PRESSURE	A224	1	1F-10
LINES, LOW PRESSURE	A201	2	1F-2
NOZZLE	A235	2	1G-6
NOZZLE HOLDER	A235	1	1G-5
PUMP GOVERNOR COMPONENTS	A228	1	1G-2
SEDIMENT BOWL	A225	1	1F-11
TANK	A201	1	1E-17
THROTTLE CONTROL	A221	1	1F-3
THROTTLE CONTROL LEVER	A221	4	1F-6
THROTTLE LINKAGE FG70	A221	2	1F-4
THROTTLE LINKAGE FG75	A221	3	1F-5
TRANSFER PUMP	A224	1	1F-9
FUSES ELECTRICAL	F401	3	2E-5
GOVERNOR, FUEL PUMP COMPONENTS	A228	1	1G-2
GOVERNOR, GROUND SPEED FG70	A221	2	1F-4
GROUND SPEED GOVERNOR FG70	A221	2	1F-4
HEAT EXCHANGER, ENGINE OIL	A303	1	1G-12
HIGH FWD & 5 - 6 SPEED CLUTCH FG75	B201/1	16	1L-10
HIGH SPEED CLUTCH FG70	B201	9	1H-17
HOOD	L101	1	2F-13
HORN	F401	18	2F-6
HOURMETER	F401	3	2E-5
IMPLEMENT CONTROL VALVE SHIELD	D101	2	1O-11
CONTROLVALVE LEVERS	D201	3	1P-7
CONTROLVALVE LEVERS	D201	4	1P-8
IMPLEMENT CONTROLVALVE LINKAGE	D201	2	1P-5
OIL FILTER	E328	1	2C-10
OIL RESERVOIR	E328	1	2C-10
PUMP, COMPONENTS	E329	1	2C-12
INDICATOR, CLOGGED AIR FILTER	A222	1	1F-7
INJECTION PUMP COMPONENTS	A227	1	1F-13
INSTRUMENT PANEL	F401	12	2E-14
LATERAL SHIFT VALVE	E331	2	2C-14
LIGHTS	F401	9	2E-10
BRAKE COMPONENTS	F405	2	2F-8
TURN SIGNAL COMPONENTS	F405	3	2F-9
TURN SIGNAL	F401	13	2E-15
LOCK VALVE	E302	32	2B-7
LOW FORWARD CLUTCH FG75	B201/1	12	1L-6
LOW SPEED CLUTCH FG70	B201	8	1H-16
LUBRICATION SYSTEM	A301	1	1G-9
MAIN RELIEF VALVE, LEFT	E331	10	2D-5
MAIN RELIEF VALVE, RIGHT	E331	11	2D-6
MODULATING VALVE TRANS FG70	B201	18	1I-10
COMPONENTS	E313	1	2C-5
COMPONENTS	E313	2	2C-7
COMPONENTS	E313	3	2C-8
DRAWBAR	E310	2	2B-15
LIFT CYLINDER	E332	6	2D-12
PITCH CYLINDER	E332	2	2D-8
PITCH VALVE	E331	2	2C-14
SHIELD	E313	4	2C-9
SIDE SHIFT CYLINDER	E332	3	2D-9
MONITORING SENSORS	F401	16	2F-4
MONITORING SENSORS	F401	17	2F-5
MUFFLER	A256	1	1G-8
OPERATOR CONSOLE	D201	1	1P-3
PLATFORM	D101	2	1O-11
SEAT BELT	L604	2	2H-3
SEAT	L604	1	2H-2
OUTPUT FLANGE NUT FG70	B201	14	1I-6
OUTPUT SHAFT FG70	B201	10	1I-2
PARKING BRAKE LEVER	C135	1	1O-7
BRAKE LINKAGE FG70	C135	2	1O-8
PARKING BRAKE LINKAGE FG75	C135/1	2	1O-9
BRAKE FG70	B201	12	1I-4
BRAKE FG75	B201/1	2	1I-12
PIPING CIRCLE SHIFT (ARTICULATED)	E302	5	1Q-8
CIRCLE SHIFT (RIGID)	E302	4	1Q-7
MOLDBOARD LIFT (ARTICULATED)	E302	13	2A-3
MOLDBOARD LIFT (RIGID)	E302	12	2A-2
SADDLE LOCK PIN (ARTICULATED)	E302	17	2A-6
SADDLE LOCK PIN (RIGID)	E302	16	2A-7
ARTICULATION	E302	26	2A-15
ARTICULATION	E302	24	2A-13
BRAKE PUMP FG70	E302	32	2B-6
PIPING BRAKE PUMP FG70	E302/1	32	2B-12
CIRCLE TURN (ARTICULATED)	E302	15	2A-6
CIRCLE TURN (RIGID)	E302	14	2A-5
CONTROL VALVE (ARTICULATED)	E302	3	1Q-6
CONTROL VALVE (RIGID)	E302	2	1Q-4
FRONT ATTACHMENT (ARTIC'D)	E302	30	2B-4
FRONT ATTACHMENT (RIGID)	E302	29	2B-3
FRONT ATTACHMENT FG70	E302	31	2B-5
FRONT WHEEL LEAN (ARTIC'D)	E302	7	1Q-10
FRONT WHEEL LEAN (RIGID)	E302	6	1Q-9
FRONT WHEEL LEAN	E302	8	1Q-11
IMPLEMENT PUMP FG70	E302	32	2B-6
IMPLEMENT PUMP FG70	E302/1	32	2B-12
PUMP, BRAKE FG70	E302	32	2B-6
PUMP, BRAKE FG70	E302/1	32	2B-12
PUMP, IMPLEMENT FG70	E302	32	2B-6
PUMP, IMPLEMENT FG70	E302/1	32	2B-12
PUMP, STEERING FG70	E302	32	2B-6
PUMP, STEERING FG70	E302/1	32	2B-12
REAR FRAME	E302	1	1Q-2
RIPPER CYLINDER	E302/1	2	2B-9
RIPPER	E302/1	3	2B-10
SCARIFIER	E302/1	1	2B-8
SIDE SHIFT & PITCH (ARTIC'D)	E302	19	2A-10
SIDE SHIFT & PITCH (RIGID)	E302	18	2A-9
SIDE SHIFT & PITCH	E302	20	2A-11
STEERING (ARTICULATED)	E302	27	2A-17
STEERING (ARTICULATED)	E302	26	2B-2
STEERING (RIGID)	E302	25	2A-14
STEERING PUMP FG70	E302	32	2B-6
PIPING, STEERING PUMP FG70	E302/1	32	2B-12
PUMP, BRAKE COMPONENTS	D213	1	1P-13
COOLANT	A403	1	1G-16
ENGINE OIL	A302	1	1G-11
FUEL INJECTION	A224	1	1F-9
FUEL INJECTION COMPONENTS	A227	1	1F-13
FUEL TRANSFER	A224	1	1F-9
IMPLEMENT COMPONENTS	E329	1	2C-12
STEERING COMPONENTS	D213	1	1P-13

DESCRIPTION	SBGRP	TAV	GRID
PIPING TRANSMISSION FG70	B201	15	1I-7
RADIATOR	A401	2	1G-14
GRID	A401	2	1G-14
PIPING	A401	1	1G-13
WRAP AROUND	L101	1	2F-13
REAR AXLE BEVEL GEAR	B403	3	1N-8
AXLE BULL GEAR	B403	1	1N-6
AXLE DRIVE SHAFTS	B403	3	1N-8
AXLE EXTENSION HOUSING	B403	3	1N-8
AXLE PINION GEAR	B403	2	1N-7
AXLE SUPPORT	B403	6	1N-12
AXLE WHEEL ENDS	D316	1	1P-14
RESERVCIR, IMPLEMENT OIL	E328	1	2C-10
REVERSE & 3 - 4 SPEED CLUTCH FG75	B201/1	14	1L-8
REVERSE CLUTCH FG70	B201	6	1H-14
REVERSE IDLER ASSEMBLY FG75	B201/1	13	1L-7
RIPPER	E310/1	2	2C-4
CYLINDER	E332/1	2	2D-15
VALVE	E331	3	2C-15
ROTARY DISTRIBUTOR COMPONENTS	E331	1	2C-13
ROTARY DISTRIBUTOR	E302	23	2A-12
SADDLE	E310	1	2B-13
LOCK PIN CYLINDER	E332	4	2D-10
SADDLE LOCK VALVE	E331	4	2C-16
SCARIFIER	E310/1	1	2C-3
CYLINDER	E332/1	1	2D-14
VALVE	E331	6	2D-2
SEAT	L604	1	2H-2
SEAT BELT	L604	2	2H-3
SECOND SPEED CLUTCH FG70	B201	7	1H-15
SENSORS, MONITORING	F401	16	2F-4
SENSORS, MONITORING	F401	17	2F-5
STARTER COMPONENTS	F608	1	2F-11
STARTER MOTOR	F200	1	2E-2
STEERING CONTROL VALVE	D202	1	1P-10
CYLINDER	D212	1	1P-12
PUMP COMPONENTS	D213	1	1P-13
WHEEL	D201	1	1P-3
SWITCH ARTICULATION	F401	19	2F-7
PANEL ELECTRICAL CABLE	F401	2	2E-4
PANEL ELECTRICAL	F401	1	2E-3
TANDEM	D333	1	1P-16
TANK, IMPLEMENT OIL	E328	1	2C-10
THERMOSTAT,ENGINE COOLANT	A402	1	1G-15
THIRD SPEED CLUTCH FG70	B201	6	1H-14
THROTTLE CONTROL	A221	1	1F-3
CONTROL LEVER	A221	4	1F-6
LINKAGE FG70	A221	2	1F-4
THROTTLE LINKAGE FG75	A221	3	1F-5
TIRES & WHEELS	D316	2	1P-15
TRANSMISSION FG70	B200	1	1H-6
TRANSMISSION FG70	B200/1	1	1H-7
CASE & TUBING FG70	B201	1	1H-8
CONTROL FG75	B207/1	2	1M-13
CONTROL LEVER FG70	B207	2	1M-12
CONTROL LINKAGE FG70	B207	1	1M-10
CONTROL VALVE FG70	B201	18	1I-10
CONTROL VALVE FG75	B201/1	20	1L-14
CONTROL VALVE FG75	B201/1	21	1L-15
CONTROL VALVE FG75	B201/1	22	1L-16
CONTROL VALVE FG75	B201/1	23	1L-17
DECLUTCH VALVE	C101	6	1C-2
GEARING FG70	B201	5	1H-13
GEARING FG75	B201/1	8	1L-2
GUARD	D101	2	1C-11
HEAT EXCHANGER FG7	B206/1	1	1M-8
HEAT EXCHANGER FG70	B206	3	1M-7
HOUSING FG75	B201/1	4	1I-14
IDLER SHAFT FG75	B201/1	17	1L-11
MODUALTING VALVE FG75	B201/1	24	1M-2
MODULATING VALVE FG70	B201	18	1I-10
OIL FILTER FG70	B201	11	1I-3
OIL FILTER FG75	B217	1	1M-14
OIL FILTER LINES FG75	B206	1	1M-5
OIL DIPSTICK FG70	B206	2	1M-6
OIL DIPSTICK FG75	B206/1	2	1M-9
OUTPUT FLANGE FG70	B201	13	1I-5
OUTPUT SHAFT FG70	B201	10	1I-2
OUTPUT SHAFT FG75	B201/1	18	1L-12
PUMP FG70	B201	15	1I-7
PUMP MOUNT FG75	B201/1	19	1L-13
REGULATING VALVE FG70	B201	16	1I-8
REGULATING VALVE FG75	B201/1	25	1M-3
REGULATING VALVE FG75	B201/1	26	1M-4
TURN SIGNAL	F401	13	2E-15
VALVE ARTICULATION	E331	2	2C-14
BLADE LIFT	E331	5	2C-17
CIRCLE SHIFT	E331	3	2C-15
END CAP	E331	7	2D-3
END CAP	E331	9	2D-4
LATERAL SHIFT	E331	2	2C-14
MAIN RELIEF , LEFT	E331	10	2D-5
MAIN RELIEF , RIGHT	E331	11	2D-6
MOLDBOARD PITCH	E331	2	2C-14
RIPPER	E331	3	2C-15
SADDLE LOCK	E331	4	2C-16
SCARIFIER	E331	6	2D-2
STEERING CONTROL VALVE	D202	1	1P-10
VALVE TRANS CONTROL FG75	B201/1	22	1L-16
TRANS CONTROL FG75	B201/1	23	1L-17
TRANS MODULATING FG70	B201	18	1I-10
TRANS MODUALTING FG75	B201/1	24	1M-2
TRANS REGULATING FG75	B201/1	25	1M-3
TRANS REGULATING FG75	B201/1	26	1M-4
TRANSMISSION CONTROL FG70	B201	18	1I-10
WHEEL LEAN	E331	2	2C-14
WHEEL LEAN CYLINDER	E332	1	2D-7
WHEEL LEAN VALVE	E331	2	2C-14
WHEELS & TIRES	D316	2	1P-15
WINDOW WIPERS	L104	6	2G-7
WIPERS WINDOW	L104	6	2G-7

Sbgrp #	Tav	Grid
A000	1	1E- 2
A002	1	1E- 3
A002/1	1	1E- 4
A101	1	1E- 5
A101	2	1E- 6
A101	3	1E- 7
A101	4	1E- 8
A102	1	1E- 9
A102	2	1E- 10
A103	1	1E- 11
A103	2	1E- 12
A104	1	1E- 13
A105	1	1E- 14
A106	1	1E- 15
A107	1	1E- 16
A201	1	1E- 17
A201	2	1F-2
A221	1	1F-3
A221	2	1F-4
A221	3	1F-5
A221	4	1F-6
A222	1	1F-7
A223	2	1F-8
A224	1	1F-9
A224	1	1F-10
A225	1	1F-11
A226	1	1F-12
A227	1	1F-13
A228	1	1G-2
A235	1	1G-5
A235	2	1G-6
A254	1	1G-7
A256	1	1G-8
A301	1	1G-9
A301	2	1G-10
A302	1	1G-11
A303	1	1G-12
A401	1	1G-13
A401	2	1G-14
A402	1	1G-15
A403	1	1G-16
A409	1	1G-17
A409	2	1H-2
A409/1	2	1H-3
A409/1	3	1H-4
A409/1	4	1H-5
B200	1	1H-6
B200/1	1	1H-7
B201	1	1H-8
B201	2	1H-10
B201	3	1H-11
B201	4	1H-12
B201	5	1H-13
B201	6	1H-14
B201	7	1H-15
B201	8	1H-16
B201	9	1H-17
B201	10	1I-2
B201	11	1I-3
B201	12	1I-4
B201	13	1I-5
B201	14	1I-6
B201	15	1I-7
B201	16	1I-8
B201	18	1I-10
B201/1	1	1I-11
B201/1	2	1I-12
B201/1	3	1I-13
B201/1	4	1I-14
B201/1	5	1I-15
B201/1	6	1I-16
B201/1	7	1I-17
B201/1	8	1L-2
B201/1	9	1L-3
B201/1	10	1L-4
B201/1	11	1L-5
B201/1	12	1L-6
B201/1	13	1L-7
B201/1	14	1L-8
B201/1	15	1L-9
B201/1	16	1L-10
B201/1	17	1L-11
B201/1	18	1L-12
B201/1	19	1L-13
B201/1	20	1L-14
B201/1	21	1L-15
B201/1	22	1L-16
B201/1	23	1L-17
B201/1	24	1M-2
B201/1	24	1M-2
B201/1	25	1M-3
B201/1	26	1M-4
B206	1	1M-5
B206	2	1M-6
B206	3	1M-7
B206/1	1	1M-8
B206/1	2	1M-9
B207	1	1M-10
B207	2	1M-12
B207/1	2	1M-13
B217	1	1M-14
B301	1	1M-15
B316	1	1M-16
B401	1	1N-2
B401	3	1N-4
B403	1	1N-6
B403	2	1N-7
B403	3	1N-8
B403	4	1N-10
B403	5	1N-11
B403	6	1N-12
C101	1	1N-13
C101	2	1N-14
C101	3	1N-15
C101	4	1N-16
C101	5	1N-17
C101	6	1O-2
C103	1	1O-3
C108	2	1O-4
C108	3	1O-5
C118	1	1O-6
C135	1	1O-7
C135	2	1O-8
C135/1	2	1O-9
D101	1	1O-10
D101	2	1O-11
D101	3	1O-13
D101	4	1O-14
D101	5	1O-16
D101	6	1O-17
D101	7	1P-2
D201	1	1P-3
D201	2	1P-5
D201	3	1P-7
D201	4	1P-8
D202	1	1P-10
D212	1	1P-12
D213	1	1P-13
D316	1	1P-14
D316	2	1P-15
D333	1	1P-16
E302	1	1Q-2
E302	2	1Q-4
E302	3	1Q-6
E302	4	1Q-7
E302	5	1Q-8
E302	6	1Q-9
E302	7	1Q-10
E302	8	1Q-11
E302	12	2A-2
E302	13	2A-3
E302	14	2A-5
E302	15	2A-6
E302	16	2A-7
E302	17	2A-8
E302	18	2A-9
E302	19	2A-10
E302	20	2A-11
E302	23	2A-12
E302	24	2A-13
E302	25	2A-14
E302	26	2A-15
E302	27	2A-17
E302	28	2B-2
E302	29	2B-3
E302	30	2B-4
E302	31	2B-5
E302	32	2B-6
E302	33	2B-7
E302/1	1	2B-8
E302/1	2	2B-9
E302/1	3	2B-10
E302/1	32	2B-12
E310	1	2B-13
E310	2	2B-15
E310	4	2B-16
E310	5	2C-2
E310/1	1	2C-3
E310/1	2	2C-4
E313	1	2C-5
E313	2	2C-7
E313	3	2C-8
E313	4	2C-9
E328	1	2C-10
E329	1	2C-12
E331	1	2C-13
E331	2	2C-14
E331	3	2C-15
E331	4	2C-16
E331	5	2C-17
E331	6	2D-2
E331	7	2D-3
E331	9	2D-4
E331	10	2D-5
E331	11	2D-6
E332	1	2D-7
E332	2	2D-8
E332	3	2D-9
E332	4	2D-10
E332	5	2D-11
E332	6	2D-12
E332	8	2D-13
E332/1	1	2D-14
E332/1	2	2D-15
F200	1	2E- 2
F401	1	2E- 3
F401	2	2E- 4
F401	3	2E- 5
F401	7	2E- 6
F401	8	2E- 8
F401/1	8	2E- 9
F401	9	2E- 10
F401	10	2E- 11
F401	11	2E- 12
F401	12	2E- 14
F401	13	2E- 15
F401	14	2E- 16
F401	15	2F-2
F401	15	2F-2
F401	16	2F-4
F401	17	2F-5
F401	18	2F-6
F401	19	2F-7
F405	2	2F-8
F405	3	2F-9
F603	1	2F-10
F608	1	2F-11
L101	1	2F-13
L101	2	2F-14
L103	1	2F-15
L104	1	2F-16
L104	2	2G-2
L104	3	2G-4
L104	4	2G-5
L104	5	2G-6
L104	6	2G-7
L104	7	2G-8
L104	8	2G-9
L104	9	2G-10
L104	10	2G-11
L104	11	2G-12
L104/1	1	2G-13
L104/1	2	2G-14
L125	1	2G-15
L125	2	2G-16
L130	1	2G-17
L604	1	2H-2
L604	2	2H-3

ITEM	PEÇA N.	SGR.	QUAD.	PAG	GRID	*	ITEM	PEÇA N.	SGR.	QUAD.	PAG.	GRID	*	ITEM	PEÇA N.	SGR.	QUAD.	PAG.	GRID
6	591685	A2.25	1	1		*	11	8291561	E3.32	6	1		*	11	10444631	B2.07/1	2	1	
6	591685	A2.26	2	1		*	10	8291904	E3.32/1	2	1		*	62	10516470	A2.27	1	3	
7	705737	A2.24	1	1		*	5	8297073	E3.32	3	1		*	6	10516470	A2.28	1	1	
1	705737	A2.25	1	1		*	4	8297073	E3.32	5	1		*	60	10516470	A2.28	1	2	
1	705737	A2.26	2	1		*	6	8297074	E3.32	3	1		*	85	10516470	A2.28	1	3	
6	746152	A2.24	1	1		*	3	8297074	E3.32	5	1		*	67	10516671	A2.28	1	2	
2	746152	A2.25	1	1		*	8	8297075	E3.32	5	1		*	76	10516671	A2.28	1	3	
2	746152	A2.26	2	1		*	8	8297075	E3.32	6	1		*	5	10517073	A0.02	1	1	
4	766903	A2.25	1	1		*	11	8297294	E3.32	8	1		*	5	10517073	A0.02	2	1	
4	766903	A2.26	2	1		*	14	8297295	E3.32	3	1		*	5	10517073	A0.02/1	1	1	
7	4955094	A0.02	1	1		*	6	8297295	E3.32	8	1		*	10	10517073	A1.06	1	1	
7	4955094	A0.02	2	1		*	12	8297296	E3.32	8	1		*	3	10517073	B2.06	2	1	
7	4955094	A0.02/1	1	1		*	12	8298615	E3.32	5	1		*	15	10517171	A2.27	1	1	
22	4955502	D1.01	3	1		*	12	8298615	E3.32	6	1		*	12	10519701	A2.01	1	1	
15	4971843	A2.01	2	1		*	2	8299524	E3.32/1	2	1		*	6	10519701	F6.03	1	1	
23	8268534	D1.01	3	1		*	6	8299526	E3.32/1	2	1		*	6	10520421	E3.10	3	1	
11	8270126	E3.02/1	2	1		*	9	8299528	E3.32/1	2	1		*	2	10571671	A2.01	1	1	
7	8281325	E3.32	3	1		*	7	8299529	E3.02/1	2	1		*	27	10571871	A2.21	3	1	
8	8281325	E3.32	8	1		*	20	8299560	E3.10/1	2	1		*	36	10571871	A2.21	2	1	
15	8282867	E3.10/1	2	1		*	5	8320234	A2.25	1	1		*	14	10571971	E3.02/1	2	1	
14	8282869	E3.10/1	2	1		*	5	8320234	A2.26	2	1		*	2	10730301	L6.04	1	1	
16	8282870	E3.10/1	2	1		*	3	8320238	A2.25	1	1		*	14	10902131	A2.21	3	1	
7	8286948	E3.32/1	2	1		*	3	8320238	A2.26	2	1		*	18	10902131	A2.21	2	1	
13	8287759	E3.32/1	2	1		*	7	9007836	A2.28	1	1		*	3	10902434	L1.04	6	1	
4	8288335	E3.32/1	2	1		*	61	9007836	A2.28	1	2		*	26	10902631	A2.21	3	1	
12	8288726	E3.32/1	2	1		*	14	9923751	A2.27	1	1		*	35	10902631	A2.21	2	1	
3	8288748	E3.32/1	2	1		*	86	9923751	A2.28	1	3		*	5	10977534	F4.01	3	1	
14	8288749	E3.32/1	2	1		*	1	10005010	C1.35/1	2	1		*	2	11054690	F4.01	3	1	
10	8288822	E3.32	8	1		*	25	10033411	C1.35	2	1		*	2	11054790	F4.01	3	1	
4	8288832	E3.32	3	1		*	11	10259960	A1.02	1	1		*	2	11055090	F4.01	3	1	
5	8288832	E3.32	5	1		*	11	10265060	F4.01	17	1		*	1	11061076	E3.32	8	1	
8	8290223	E3.32/1	2	1		*	15	10272956	F4.01	17	1		*	11	11061675	E3.32/1	2	1	
8	8291506	E3.32	3	1		*	14	10278660	C1.01	3	1		*	24	11106031	A2.21	2	1	
5	8291506	E3.32	0	1		*	8	10278660	C1.01	4	1		*	25	11106231	A2.21	3	1	
11	8291561	E3.32	5	1		*	65	10379011	A2.28	1	2		*	5	11106231	L6.04	2	1	

FIATALLIS - FG 70R 70A 75R 75A

INDICE NUMÉRICO *** NUMERICAL INDEX

ITEM	PECA N.	SGR.	QUAD.	PAG.	GRID	*	ITEM	PECA N.	SGR.	QUAD.	PAG.	GRID	*	ITEM	PECA N.	SGR.	QUAD.	PAG.	GRID
1	11106431	A2.21	3	1		*	1	13407211	E3.32/1	2	1		*	35	15896211	A2.28	1	1	
33	11106431	A2.21	2	1		*	19	14199510	E3.10/1	2	1		*	72	15896211	A2.28	1	3	
10	11106431	A2.56	1	1		*	8	14254231	E3.10/1	2	1		*	20	15896221	A2.21	3	1	
6	11106431	E3.02	32	1		*	9	14257931	D3.16	1	1		*	21	15896221	A2.21	2	1	
20	11106431	E3.02/1	32	1		*	5	14258530	E3.32/1	2	1		*	6	15896421	F4.01	3	1	
3	11106631	B2.00	1	1		*	15	14453080	C1.01	5	1		*	5	15989331	E3.10	3	1	
3	11106631	B2.00/1	1	1		*	5	14457180	B2.01/1	4	1		*	10	15997331	A0.02	1	1	
2	11112131	B2.06	2	1		*	6	14457180	B2.01/1	19	1		*	10	15997331	A0.02	2	1	
24	11112231	F4.01	17	1		*	3	14457380	B2.01	15	1		*	10	15997331	A0.02/1	1	1	
14	11112321	A0.02	1	1		*	9	14457380	B2.01	18	1		*	1	16043631	L6.04	1	1	
14	11112321	A0.02	2	1		*	11	14458160	E3.02	32	1		*	4	16100821	L6.04	1	1	
14	11112321	A0.02/1	1	1		*	5	14458680	E3.02	32	1		*	5	26794880	F6.03	1	1	
6	11112321	A2.56	1	1		*	12	14458680	E3.02/1	32	1		*	13	28042480	B2.01	6	1	
20	11112331	F4.01	11	1		*	6	14463280	B2.01	11	1		*	19	28042480	B2.01/1	16	1	
24	11112331	F4.01	14	1		*	13	14463280	E3.02/1	2	1		*	31	28042490	B2.01	6	1	
9	11113731	A1.06	1	1		*	12	14464380	E3.32	3	1		*	19	28969370	B2.01/1	12	1	
12	11195371	B2.07/1	2	1		*	13	14465180	E3.32	3	1		*	26	70012767	B4.01	3	1	
5	11227721	B4.01	3	1		*	7	14465180	E3.32	8	1		*	6	70012767	D3.16	1	1	
6	11390531	A0.02	1	1		*	2	14465480	E3.32	3	1		*	5	70023176	F4.01	8	1	
6	11390531	A0.02	2	1		*	9	14465480	E3.32	5	1		*	2	70023176	F4.01	12	1	
6	11390531	A0.02/1	1	1		*	9	14465480	E3.32	6	1		*	5	70023176	F4.01/1	8	1	
9	12164121	A0.02	1	1		*	14	14465480	E3.32	8	1		*	19	70023633	E3.13	1	1	
9	12164121	A0.02	2	1		*	7	14465780	E3.32	5	1		*	14	70023633	E3.28	1	1	
9	12164121	A0.02/1	1	1		*	7	14465780	E3.32	6	1		*	21	70035250	B4.03	2	1	
7	12164321	E3.10	3	1		*	15	14466480	E3.32/1	2	1		*	8	70035285	C1.35	2	1	
9	12164321	E3.13	5	1		*	18	14467680	F6.08	1	1		*	29	70035285	C1.35/1	2	1	
24	12164711	L1.04	2	1		*	3	14470880	B2.01	13	1		*	30	70035285	C1.35/1	2	1	
18	12179490	A2.01	2	1		*	2	14470880	B2.01	14	1		*	7	70042641	A2.01	1	1	
11	12179490	F4.01	16	1		*	4	14496307	F4.01	3	1		*	28	70042877	D3.33	1	1	
6	12575721	B4.01	3	1		*	62	14496401	A2.28	1	2		*	4	70042982	B2.01	6	1	
12	12646921	A2.56	1	1		*	10	15540431	E3.02/1	2	1		*	22	70043024	F3.02	1	1	
11	13272111	A2.01	1	1		*	7	15540431	E3.10/1	2	1		*	16	70049993	C1.01	1	1	
1	13276201	A2.01	1	1		*	15	15540921	E3.02/1	2	1		*	3	70050292	E3.31	1	1	
9	13407211	E3.02/1	2	1		*	18	15861721	E3.10/1	2	1		*	7	70050748	A2.01	2	1	
6	13407211	E3.10/1	2	1		*	61	15896211	A2.27	1	3		*	1	70050748	B4.03	2	1	

FIATALLIS - FG 70R 70A 75R 75A

INDICE NUMÉRICO *** NUMERICAL INDEX

ITEM	PECA N.	SGR.	QUAD.	PAG.	GRID	*	ITEM	PECA N.	SGR.	QUAD.	PAG.	GRID	*	ITEM	PECA N.	SGR.	QUAD.	PAG.	GRID
22	70051193	C1.01	1	1		*	2	70097577	D3.16	2	1		*	7	70602663	E3.13	1	1	
27	70051997	D3.33	1	1		*	2	70097578	D3.16	2	1		*	4	70604160	D1.01	1	1	
10	70052519	B4.03	3	1		*	6	70099351	E3.13	2	1		*	7	70604481	D3.33	1	1	
18	70053986	E3.13	1	1		*	9	70099352	E3.13	2	1		*	14	70604482	D3.33	1	1	
17	70053992	E3.13	1	1		*	6	70099353	E3.13	2	1		*	3	70604493	D1.01	1	1	
27	70053994	E3.10	3	1		*	1	70103714	F4.01	5	1		*	21	70604769	C1.01	3	1	
30	70053994	E3.10	2	1		*	1	70103714	F4.01	10	1		*	2	70604769	C1.01	4	1	
2	70054889	B4.01	1	1		*	2	70103714	F4.01	15	1		*	26	70604982	B4.03	3	1	
14	70054889	E3.13	5	1		*	10	70108771	A4.09	2	1		*	33	70605085	D4.03	3	2	
3	70059946	B2.01/1	13	1		*	10	70108771	A4.09/1	2	1		*	2	70605507	D3.33	1	1	
4	70060670	D3.16	1	1		*	9	70108771	E3.02/1	32	1		*	45	70605508	D3.33	1	2	
15	70062035	C1.01	3	1		*	6	70196765	C1.01	6	1		*	44	70605578	D3.33	1	2	
24	70062035	C1.01	4	1		*	35	70196765	D2.01	4	1		*	12	70605665	E3.13	1	1	
28	70062160	E3.10/1	2	1		*	28	70196765	E3.02	4	1		*	3	70605918	D3.16	1	1	
10	70062160	E3.10/1	1	1		*	16	70196765	E3.02	8	1		*	4	70606899	B2.01	10	1	
33	70065042	B4.03	3	2		*	16	70196765	E3.02	9	1		*	3	70606899	B2.01/1	18	1	
7	70065935	F4.01	9	1		*	5	70196765	F4.01	19	1		*	30	70607617	E3.10	1	1	
25	70066751	B4.03	3	1		*	13	70196765	F4.01	11	1		*	5	70617127	E3.13	2	1	
17	70076572	F4.01	11	1		*	10	70196765	F4.01	13	1		*	37	70617932	D2.01	2	2	
21	70076572	F4.01	14	1		*	13	70196765	F4.01	14	1		*	19	70617932	D2.01	3	1	
4	70078810	C1.35	2	1		*	3	70196765	F4.01	18	1		*	19	70617932	D2.01	4	1	
5	70078810	C1.35/1	2	1		*	26	70196765	F4.01	17	1		*	8	70617932	E3.02/1	3	1	
9	70078908	C1.35	1	1		*	6	70197810	A2.22	1	1		*	15	70619261	L1.01	1	1	
14	70079507	E3.13	1	1		*	21	70198097	A2.22	1	1		*	34	70620170	D3.33	1	2	
31	70081334	E3.13	1	2		*	47	70198775	E3.02	1	2		*	33	70620479	E3.10	1	1	
2	70082174	E3.13	5	1		*	8	70200314	B4.03	2	1		*	32	70620920	E3.10	1	1	
16	70082175	E3.10/1	1	1		*	7	70252471	D2.01	1	1		*	1	70621429	F4.01	9	1	
5	70082875	D2.01	2	1		*	8	70600078	B4.03	2	1		*	39	70621602	E3.02	13	2	
27	70087751	B2.07	1	1		*	5	70600236	D1.01	1	1		*	15	70621602	E3.02	DZ	1	
3	70089894	L1.04	11	1		*	22	70600675	C1.01	3	1		*	15	70621602	E3.02	12	1	
13	70091855	L1.04	2	1		*	10	70600675	C1.01	4	1		*	20	70622102	D2.01	2	1	
8	70094334	F4.01	5	1		*	13	70601966	E3.13	5	1		*	34	70622212	E3.10	4	2	
8	70094334	F4.01	10	1		*	2	70602179	A4.09	3	1		*	14	70623355	E3.02	27	1	
9	70094334	F4.01	15	1		*	2	70602179	A4.09/1	3	1		*	13	70623355	E3.02	26	1	
1	70096481	D3.16	2	1		*	2	70602258	D1.01	1	1		*	20	70623355	E3.02	25	1	

FIATALLIS - FG 70R 70A 75R 75A

INDICE NUMÉRICO *** NUMERICAL INDEX

ITEM	PEÇA N.	SGR.	QUAD.	PAG.	GRID	*	ITEM	PEÇA N.	SGR.	QUAD.	PAG.	GRID	*	ITEM	PEÇA N.	SGR.	QUAD.	PAG.	GRID
5	70623355	E3.02	13	1		*	4	70636732	A2.21	3	1		*	3	70659095	A2.22	1	1	
21	70623355	E3.02	DZ	1		*	5	70638732	A2.21	2	1		*	23	70659547	E3.02	16	1	
15	70623355	E3.02	3	1		*	11	70638732	C1.01	1	1		*	19	70659547	E3.02	17	1	
22	70623355	E3.02	5	1		*	36	70639313	F4.01	11	2		*	21	70662676	E3.13	1	1	
1	70623355	E3.02	6	1		*	16	70639313	F4.01	14	1		*	13	70663928	F4.01	13	1	
8	70623355	E3.02	7	1		*	12	70639314	F4.01	11	1		*	22	70665726	E3.28	1	1	
33	70623355	E3.02	2	1		*	12	70639314	F4.01	14	1		*	23	70665767	E3.28	1	1	
3	70623355	E3.02	8	1		*	9	70639314	F4.01	18	1		*	16	70666422	E3.28	1	1	
3	70623355	E3.02	9	1		*	16	70640677	C1.01	3	1		*	21	70666634	E3.28	1	1	
17	70623355	E3.02	28	1		*	13	70640677	C1.01	4	1		*	26	70666654	E3.28	1	1	
3	70623355	E3.02	19	1		*	15	70641027	E3.28	1	1		*	20	70667252	B4.03	2	1	
21	70623355	E3.02	12	1		*	38	70642536	E3.02/1	3	2		*	33	70668028	B4.01	3	1	
16	70623355	E3.02	31	1		*	3	70643293	E3.13	2	1		*	18	70668028	B4.01	1	1	
7	70623355	E3.02	1	1		*	2	70644917	E3.13	2	1		*	12	70670186	B4.03	2	1	
35	70623355	E3.02/1	3	1		*	3	70646379	E3.13	3	1		*	8	70670189	B4.03	6	1	
2	70628736	C1.35	2	1		*	3	70646380	E3.13	3	1		*	9	70670615	C1.35	2	1	
3	70628736	C1.35/1	2	1		*	4	70646763	E3.02	17B	1		*	9	70670615	C1.35/1	2	1	
13	70629156	B4.03	2	1		*	8	70647108	E3.28	1	1		*	24	70671325	E3.28	1	1	
12	70630753	A2.22	1	1		*	9	70647122	E3.28	1	1		*	17	70671696	F4.01	10	1	
4	70630753	A2.56	1	1		*	7	70647151	E3.28	1	1		*	9	70671696	F4.01	13	1	
10	70630753	C1.01	3	1		*	23	70648427	F4.01	15	1		*	30	70671696	F4.01	15	1	
14	70630753	C1.01	4	1		*	8	70651322	E3.02	32	1		*	6	70671763	F4.01	8	1	
11	70630753	F4.01	11	1		*	8	70651322	E3.02/1	32	1		*	6	70671763	F4.01/1	8	1	
11	70630753	F4.01	14	1		*	24	70653820	D3.33	1	1		*	29	70673051	B4.01	1	1	
6	70630753	L6.04	2	1		*	21	70653821	D3.33	1	1		*	33	70673189	B4.03	3	2	
41	70631119	D3.33	1	2		*	4	70653828	B4.03	3	1		*	8	70673190	B4.03	2	1	
27	70631769	A2.22	1	1		*	35	70653828	D3.33	1	2		*	10	70673457	E3.10	3	1	
27	70632655	B4.03	2	1		*	2	70653837	B4.03	3	1		*	3	70673457	E3.10	2	1	
15	70634037	E3.10	4	1		*	31	70653846	D3.33	1	1		*	26	70673856	B2.01	1	1	
32	70634161	D3.33	1	2		*	10	70654453	E3.02	17B	1		*	8	70673856	B2.01/1	11	1	
22	70634237	E3.13	1	1		*	2	70658265	E3.31	1	1		*	22	70673860	B2.01/1	4	1	
30	70634395	D3.33	1	2		*	7	70658592	E3.02	23	1		*	13	70673875	B2.01	9	1	
7	70634440	B4.03	3	1		*	4	70658594	E3.31	1	1		*	50	70673889	B2.01	1	1	
8	70634519	B4.03	3	1		*	13	70658598	E3.02	17B	1		*	23	70673889	B2.01/1	4	1	
2	70636413	C1.01	6	1		*	17	70658759	A2.22	1	1		*	10	70673891	B2.01/1	3	1	

FIATALLIS - FG 70R 70A 75R 75A

INDICE NUMERICO *** NUMERICAL INDEX

ITEM	PECA N.	SGR.	QUAD.	PAG.	GRID	*	ITEM	PECA N.	SGR.	QUAD.	PAG.	GRID	*	ITEM	PECA N.	SGR.	QUAD.	PAG.	GRID
25	70673903	B2.01	1	1		*	4	70677006	B2.06	3	1		*	3	70677006	E3.02	28	1	
10	70673909	B2.01	15	1		*	30	70677006	B4.01	1	1		*	17	70677006	E3.02	18	1	
28	70673948	B2.01	18	1		*	10	70677006	C1.35	1	1		*	2	70677006	E3.02	19	1	
13	70673949	B2.01	18	1		*	16	70677006	C1.35	2	1		*	15	70677006	E3.02	19	1	
29	70673951	B2.01	18	1		*	16	70677006	C1.35/1	2	1		*	3	70677006	E3.02	12	1	
4	70673956	B2.01	5	1		*	2	70677006	D1.01	3	1		*	10	70677006	E3.02	31	1	
9	70673957	B2.01	9	1		*	13	70677006	D1.01	3	1		*	8	70677006	E3.02	1	1	
1	70673958	B2.01	5	1		*	3	70677006	D1.01	2	1		*	17	70677006	E3.02/1	32	1	
52	70673965	B2.01	1	2		*	28	70677006	D1.01	2	1		*	36	70677006	E3.02/1	3	2	
30	70673966	B2.01	1	1		*	2	70677006	D1.01	4	1		*	15	70677006	E3.02/1	1	1	
29	70673967	B2.01	1	1		*	19	70677006	D1.01	4	1		*	2	70677006	E3.28	1	1	
30	70673970	B2.01	9	1		*	35	70677006	D2.01	2	2		*	8	70677006	F4.01	16	1	
32	70673996	B2.01	9	1		*	3	70677006	E3.02	21	1		*	5	70677006	L1.01	1	1	
31	70674000	B2.01	9	1		*	1	70677006	E3.02	15	1		*	31	70677006	L1.04	2	2	
30	70677004	A2.21	1	1		*	1	70677006	E3.02	14	1		*	11	70677006	L1.04	3	1	
9	70677004	A4.09	3	1		*	11	70677006	E3.02	20	1		*	18	70677006	L1.04	3	1	
9	70677004	A4.09/1	3	1		*	2	70677006	E3.02	27	1		*	7	70677006	L1.04	7	1	
29	70677004	C1.01	3	1		*	13	70677006	E3.02	27	1		*	6	70677006	L1.04/1	2	1	
11	70677004	C1.35	2	1		*	32	70677006	E3.02	26	1		*	3	70677006	L1.04/1	1	1	
12	70677004	C1.35/1	2	1		*	12	70677006	E3.02	25	1		*	8	70677006	L1.30	1	1	
15	70677004	E3.02	24	1		*	2	70677006	E3.02	16	1		*	24	70677007	C1.35/1	2	1	
33	70677004	L1.04	2	2		*	5	70677006	E3.02	17	1		*	5	70677008	A2.01	1	1	
21	70677004	L1.04	4	1		*	3	70677006	E3.02	22	1		*	14	70677008	A4.09	4	1	
2	70677004	L1.04/1	2	1		*	14	70677006	E3.02	3	1		*	14	70677008	A4.09/1	4	1	
15	70677005	D1.01	3	1		*	9	70677006	E3.02	4	1		*	10	70677008	C1.01	1	1	
8	70677005	D1.01	1	1		*	16	70677006	E3.02	4	1		*	6	70677008	C1.35	1	1	
7	70677005	E3.02/1	3	1		*	1	70677006	E3.02	5	1		*	16	70677008	D1.01	2	1	
7	70677005	L6.04	1	1		*	5	70677006	E3.02	5	1		*	30	70677008	D1.01	2	1	
9	70677006	A2.01	2	1		*	5	70677006	E3.02	6	1		*	22	70677008	D1.01	4	1	
4	70677006	A2.06/1	1	1		*	7	70677006	E3.02	7	1		*	35	70677008	D1.01	4	1	
15	70677006	A2.21	1	1		*	4	70677006	E3.02	2	1		*	6	70677008	E3.02	15	1	
30	70677006	A2.21	2	1		*	39	70677006	E3.02	2	2		*	7	70677008	E3.02	14	1	
16	70677006	A2.22	1	1		*	2	70677006	E3.02	8	1		*	10	70677008	L1.01	1	1	
8	70677006	A4.01	1	1		*	2	70677006	E3.02	9	1		*	19	70677008	L1.04	4	1	
1	70677006	B2.06	1	1		*	8	70677006	E3.02	24	1		*	10	70677008	L6.04	1	1	

FIATALLIS - FG 70R 70A 75R 75A INDICE NUMÉRICO *** NUMERICAL INDEX

ITEM	PEÇA N.	SGR.	QUAD.	PAG.	GRID	*	ITEM	PEÇA N.	SGR.	QUAD.	PAG.	GRID	*	ITEM	PEÇA N.	SGR.	QUAD.	PAG.	GRID
27	70677010	L1.01	1	1		*	6	70686384	A2.21	1	1		*	4	70900808	A4.09/1	2	1	
25	70677012	B4.01	3	1		*	3	70686384	A2.21	3	1		*	11	70900808	A4.09/1	4	1	
22	70677012	D1.01	2	1		*	3	70686384	A2.21	2	1		*	26	70900808	E3.10	1	1	
28	70677012	D1.01	4	1		*	35	70686384	B2.07	1	1		*	27	70900808	E3.13	1	1	
7	70677012	D3.16	1	1		*	36	70687145	C1.01	1	1		*	6	70900813	E3.13	1	1	
8	70677012	E3.02/1	1	1		*	10	70687145	C1.01	2	1		*	7	70900816	A4.01	2	1	
14	70677012	L1.04	3	1		*	21	70687145	E3.02	1	1		*	5	70900818	F4.01	9	1	
5	70677012	L1.04/1	1	1		*	5	70687675	E3.13	1	1		*	28	70900822	E3.10	1	1	
27	70677256	E3.10/1	2	1		*	5	70687676	E3.13	1	1		*	30	70900822	E3.13	1	2	
23	70677256	E3.10/1	1	1		*	2	70688590	B4.03	6	1		*	6	70900942	E3.02	23	1	
35	70677828	B4.03	3	2		*	12	70689717	E3.02/1	1	1		*	23	70900970	B2.07	2	1	
19	70678072	E3.10/1	1	1		*	11	70689718	E3.02/1	1	1		*	4	70901344	B4.01	1	1	
12	70678984	E3.28	1	1		*	5	70691224	B2.01/1	2	1		*	42	70901345	B4.01	1	2	
34	70680153	B2.07	1	1		*	1	70691358	B2.01/1	2	1		*	4	70901345	E3.13	5	1	
28	70680509	E3.10	3	1		*	6	70691359	B2.01/1	2	1		*	15	70901348	B4.01	3	1	
17	70680631	D3.33	1	1		*	4	70692661	B2.01/1	2	1		*	2	70901348	D3.16	1	1	
26	70681245	D3.33	1	1		*	2	70694922	A4.09/1	4	1		*	21	70901421	E3.10	3	1	
8	70683277	A2.01	1	1		*	2	70694992	A4.09	4	1		*	31	70901421	E3.10	2	1	
32	70683837	B4.01	1	1		*	13	70695523	E3.02	20	1		*	20	70901467	A2.22	1	1	
15	70683837	E3.13	5	1		*	16	70695523	E3.02	16	1		*	5	70901467	F4.01	17	1	
24	70683838	B4.01	1	1		*	22	70695523	E3.02	17	1		*	16	70901470	A4.09	2	1	
1	70683865	E3.02	17B	1		*	2	70699376	F4.01	13	1		*	22	70901651	D3.33	1	1	
28	70683870	E3.13	1	1		*	55	70734535	B2.01	1	2		*	12	70901652	E3.10	4	1	
28	70683926	B4.03	3	1		*	23	70734538	B2.01	1	1		*	23	70901666	B4.01	3	1	
24	70683928	B4.03	2	1		*	14	70774505	B2.01	15	1		*	7	70901666	B4.03	2	1	
8	70684051	E3.02	17C	1		*	49	70800385	B2.01	1	2		*	16	70901666	B4.03	3	1	
12	70684813	D3.33	1	1		*	21	70900365	F4.01	13	1		*	15	70901666	L1.04	4	1	
12	70684814	D3.33	1	1		*	5	70900368	F4.05	3	1		*	21	70901666	L1.04/1	2	1	
12	70684815	D3.33	1	1		*	3	70900801	D2.01	2	1		*	8	70901702	C1.01	3	1	
18	70684816	D3.33	1	1		*	23	70900802	B2.07	1	1		*	17	70901702	C1.01	5	1	
14	70684817	B4.01	3	1		*	15	70900805	C1.01	1	1		*	7	70901702	C1.01	6	1	
26	70684817	B4.03	2	1		*	3	70900805	D1.01	7	1		*	15	70901763	A4.09	2	1	
16	70684817	D3.33	1	1		*	4	70900806	A4.09	1	1		*	34	70901763	C1.01	3	1	
25	70684820	D3.33	1	1		*	4	70900808	A4.09	2	1		*	25	70901763	C1.01	4	1	
14	70686158	A2.22	1	1		*	11	70900808	A4.09	4	1		*	15	70901763	C1.01	6	1	

FIATALLIS - FG 70R 70A 75R 75A

INDICE NUMÉRICO *** NUMERICAL INDEX

ITEM	PEÇA N.	SGR.	QUAD.	PAG.	GRID	*	ITEM	PEÇA N.	SGR.	QUAD.	PAG.	GRID	*	ITEM	PEÇA N.	SGR.	QUAD.	PAG.	GRID
12	70901825	C1.01	6	1		*	17	70910153	B2.01	9	1		*	6	70910287	E3.02	13	1	
8	70901828	F4.01	17	1		*	10	70910153	B2.01	10	1		*	17	70910287	E3.02	DZ	1	
2	70901828	L1.04	10	1		*	5	70910153	B2.01/1	17	1		*	10	70910287	E3.02	24	1	
23	70901834	F4.01	16	1		*	12	70910153	B2.01/1	18	1		*	17	70910287	E3.02	12	1	
1	70901835	L1.04	11	1		*	16	70910179	E3.10	1	1		*	6	70910287	E3.02/1	3	1	
28	70901838	C1.01	1	1		*	18	70910200	L1.04/1	1	1		*	31	70910287	E3.10	1	1	
5	70901838	E3.10	4	1		*	12	70910231	A4.09	4	1		*	36	70910287	E3.28	1	2	
19	70902071	B4.03	3	1		*	12	70910231	A4.09/1	4	1		*	8	70910287	E3.31	1	1	
5	70904001	A2.21	4	1		*	38	70910231	B4.01	3	2		*	4	70910287	F4.01	13	1	
9	70904001	B2.07	2	1		*	38	70910243	L1.04	2	2		*	4	70910287	F4.01	18	1	
28	70904002	B4.01	3	1		*	32	70910251	A2.21	1	1		*	5	70910329	B2.01/1	6	1	
21	70904002	C1.35	2	1		*	18	70910251	F4.01	16	1		*	23	70910334	A2.22	1	1	
23	70904002	C1.35/1	2	1		*	6	70910251	F4.01	17	1		*	22	70910335	B2.07	1	1	
33	70904002	D2.01	3	1		*	15	70910267	L1.04	2	1		*	27	70910510	A2.21	1	1	
38	70904002	D2.01	4	2		*	20	70910284	F4.01	16	1		*	6	70910510	C1.01	1	1	
23	70904007	C1.01	1	1		*	9	70910284	F4.01	17	1		*	19	70910543	C1.01	3	1	
22	70904203	F4.01	15	1		*	8	70910285	A4.01	2	1		*	12	70910543	C1.01	4	1	
3	70904204	L1.64	9	1		*	9	70910287	A2.01	1	1		*	3	70910919	L6.04	2	1	
8	70904208	D1.01	3	1		*	11	70910287	B2.01	1	1		*	9	70910986	B2.01	11	1	
13	70904224	E3.20	1	1		*	4	70910287	B2.01	12	1		*	5	70910986	B2.01/1	3	1	
8	70905358	B2.07	2	1		*	23	70910287	B2.01	18	1		*	4	70910986	B2.01/1	19	1	
5	70905362	E3.31	1	1		*	25	70910287	B2.01/1	4	1		*	6	70911024	E3.02	22	1	
8	70905561	B2.01	1	1		*	4	70910287	B2.01/1	6	1		*	21	70911024	E3.02	26	1	
34	70905561	B2.01	1	1		*	5	70910287	B2.01/1	9	1		*	7	70911024	E3.02	25	1	
15	70905561	B2.01/1	3	1		*	8	70910287	B2.01/1	20	1		*	6	70911024	E3.02	8	1	
24	70906907	A2.22	1	1		*	6	70910287	B2.01/1	21	1		*	6	70911024	E3.02	9	1	
6	70906961	B2.01	2	1		*	5	70910287	B2.01/1	25	1		*	18	70911024	E3.02	18	1	
4	70906985	F4.05	2	1		*	21	70910287	B4.01	3	1		*	3	70911024	F4.01	8	1	
33	70907059	D3.33	1	2		*	34	70910287	D2.01	2	1		*	20	70911024	F4.01	5	1	
6	70907722	B2.07/1	2	1		*	9	70910287	D2.01	3	1		*	21	70911024	F4.01	10	1	
10	70907722	L6.04	2	1		*	8	70910287	D2.01	4	1		*	28	70911024	F4.01	11	1	
16	70907659	A2.01	1	1		*	6	70910287	D3.33	1	1		*	32	70911024	F4.01	14	1	
2	70909055	L1.04	8	1		*	12	70910287	E3.02	17B	1		*	14	70911024	F4.01	15	1	
7	70910024	C1.01	1	1		*	17	70910287	E3.02	16	1		*	35	70911024	F4.01	15	1	
2	70910149	L1.04	11	1		*	23	70910287	E3.02	17	1		*	3	70911024	F4.01	17	1	

FIATALLIS - FG 70R 70A 75R 75A

INDICE NUMÉRICO *** NUMERICAL INDEX

ITEM	PEÇA N.	SGR.	QUAD.	PAG.	GRID	*	ITEM	PEÇA N.	SGR.	QUAD.	PAG.	GRID	*	ITEM	PEÇA N.	SGR.	QUAD.	PAG.	GRID
2	70911024	F4.01/1	8	1		*	9	70911028	A2.21	2	1		*	16	70911049	E3.13	1	1	
7	70911024	L1.01	2	1		*	4	70911028	B2.06	2	1		*	40	70911051	B4.01	3	2	
22	70911024	L1.01	1	1		*	16	70911028	B4.03	2	1		*	3	70911061	B4.01	1	1	
10	70911024	L1.04	2	1		*	1	70911028	C1.01	1	1		*	15	70911061	E3.10/1	1	1	
23	70911024	L1.04	3	1		*	2	70911028	D1.01	6	1		*	5	70911061	E3.13	5	1	
10	70911024	L1.04	4	1		*	10	70911028	D1.01	5	1		*	10	70911069	E3.13	1	1	
6	70911024	L1.04/1	1	1		*	13	70911028	D2.01	2	1		*	21	70911076	B4.03	3	1	
5	70911025	E3.02/1	3	1		*	2	70911028	E3.02	17B	1		*	9	70911098	E3.02/1	3	1	
15	70911025	F4.01	18	1		*	29	70911028	E3.10/1	2	1		*	56	70911114	B2.01	1	2	
8	70911025	L6.04	1	1		*	23	70911029	D2.01	1	1		*	22	70911114	E3.02	26	1	
12	70911026	A2.06/1	1	1		*	7	70911029	E3.13	2	1		*	18	70911114	F4.01	17	1	
19	70911026	A2.21	1	1		*	7	70911029	E3.13	2	1		*	11	70911114	L6.04	2	1	
31	70911026	A2.21	2	1		*	1	70911029	E3.13	3	1		*	11	70911115	C1.18	1	1	
7	70911026	A2.22	1	1		*	26	70911030	B4.01	1	1		*	5	70911115	E3.02	23	1	
8	70911026	A2.56	1	1		*	1	70911030	B4.03	6	1		*	5	70911174	A4.09	2	1	
12	70911026	B2.06	3	1		*	11	70911030	E3.10	4	1		*	8	70911174	A4.09	4	1	
33	70911026	D2.01	2	1		*	20	70911032	L1.04/1	1	1		*	5	70911174	A4.09/1	2	1	
31	70911026	E3.02	26	1		*	14	70911034	B4.03	2	1		*	8	70911174	A4.09/1	4	1	
8	70911026	E3.02	13	1		*	32	70911034	C1.01	1	1		*	27	70911174	E3.10	1	1	
13	70911026	E3.02	DZ	1		*	9	70911034	C1.01	2	1		*	11	70911174	E3.13	1	1	
16	70911026	E3.02	4	1		*	20	70911034	E3.02	1	1		*	29	70911174	E3.13	1	1	
10	70911026	E3.02	5	1		*	6	70911035	F4.01	9	1		*	10	70911279	E3.02/1	1	1	
1	70911026	E3.02	2	1		*	18	70911037	D2.01	2	1		*	15	70911327	L6.04	2	1	
13	70911026	E3.02	12	1		*	20	70911040	A2.21	1	1		*	14	70911331	B2.01	10	1	
6	70911026	E3.02	31	1		*	2	70911040	A2.21	2	1		*	3	70911414	A2.01	1	1	
6	70911026	E3.02/1	2	1		*	25	70911040	B2.07	1	1		*	14	70911689	E3.10/1	1	1	
10	70911026	F4.01	16	1		*	3	70911041	C1.35	2	1		*	6	70912201	F4.05	2	1	
8	70911026	F4.01	18	1		*	4	70911041	C1.35/1	2	1		*	41	70912235	D2.01	1	2	
13	70911026	L1.04	3	1		*	12	70911041	L1.04	2	1		*	3	70912298	F4.05	3	1	
16	70911026	L1.04	3	1		*	3	70911043	F4.01	9	1		*	17	70912299	E3.10/1	1	1	
18	70911026	L1.04	4	1		*	36	70911048	D2.01	2	2		*	3	70912299	E3.13	5	1	
27	70911026	L1.04/1	2	1		*	4	70911048	D2.01	3	1		*	13	70912441	A4.09	2	1	
17	70911026	L1.04/1	1	1		*	4	70911048	D2.01	4	1		*	13	70912441	A4.09/1	2	1	
9	70911028	A2.21	1	1		*	18	70911049	C1.01	3	1		*	17	70912441	B4.03	2	1	
9	70911028	A2.21	3	1		*	11	70911049	C1.01	4	1		*	30	70912441	B4.03	3	2	

FIATALLIS - FG 70R 70A 75R 75A

INDICE NUMÉRICO *** NUMERICAL INDEX

ITEM	PEÇA N.	SGR.	QUAD.	PAG.	GRID	*	ITEM	PEÇA N.	SGR.	QUAD.	PAG.	GRID	*	ITEM	PEÇA N.	SGR.	QUAD.	PAG.	GRID
2	70912441	C1.01	1	1		*	31	70914465	B4.01	3	1		*	11	70915815	C1.01	2	1	
3	70912441	D1.01	6	1		*	5	70914465	B4.01	1	1		*	6	70915815	E3.02	26	1	
11	70912441	D1.01	5	1		*	36	70914465	B4.03	3	2		*	3	70915815	E3.02	3	1	
9	70912441	D3.33	1	1		*	7	70914465	D1.01	3	1		*	16	70915815	E3.02	1	1	
3	70912441	E3.02	17B	1		*	6	70914465	D1.01	7	1		*	6	70915972	A2.21	3	1	
3	70912441	E3.02	23	1		*	40	70914465	D3.33	1	2		*	7	70915972	A2.21	2	1	
53	70912441	E3.02	1	2		*	34	70914465	E3.10	1	1		*	35	70915972	D1.01	2	1	
41	70912441	E3.10	1	2		*	24	70914465	E3.10/1	1	1		*	26	70915972	D1.01	4	1	
22	70912441	E3.10	4	1		*	9	70914465	E3.13	1	1		*	13	70915978	E3.13	1	1	
4	70912441	F4.01	9	1		*	23	70914646	C1.01	4	1		*	5	70916001	A2.21	1	1	
9	70912497	E3.10	3	1		*	13	70914646	C1.01	2	1		*	9	70916081	L1.04	4	1	
5	70912497	E3.10	2	1		*	8	70914646	C1.01	6	1		*	7	70916170	B4.03	4	1	
29	70912725	D3.33	1	1		*	40	70914678	B2.01	1	2		*	21	70916170	D1.01	2	1	
24	70912768	B2.01	1	1		*	5	70914678	B2.01	4	1		*	29	70916170	D1.01	4	1	
23	70912768	D3.33	1	1		*	8	70914678	B2.01	11	1		*	2	70916170	L1.04	3	1	
16	70912772	L6.04	2	1		*	5	70914678	B2.01	16	1		*	14	70916170	L1.04/1	1	1	
25	70912942	D2.01	1	1		*	21	70914678	B2.01/1	3	1		*	9	70916171	E3.02	17B	1	
9	70912942	E3.10	1	1		*	16	70914678	B2.01/1	4	1		*	60	70916197	B2.01	1	2	
18	70912942	E3.10	1	1		*	18	70914678	B2.01/1	15	1		*	22	70916197	B2.01/1	3	1	
12	70912942	E3.10	3	1		*	1	70914678	B2.01/1	19	1		*	15	70916381	B2.01/1	7	1	
7	70912942	E3.10	2	1		*	5	70914678	F4.05	2	1		*	6	70916395	B2.01	4	1	
25	70912942	E3.13	1	1		*	4	70914678	F4.05	3	1		*	8	70916590	A2.21	1	1	
8	70912942	E3.13	2	1		*	4	70914678	L6.04	2	1		*	2	70916590	A2.21	3	1	
2	70912942	E3.13	3	1		*	27	70914726	B4.01	1	1		*	22	70916590	A2.21	3	1	
12	70913177	C1.01	1	1		*	44	70914726	E3.10	1	2		*	12	70916590	A2.21	2	1	
14	70913342	B2.06	2	1		*	4	70914728	B4.03	6	1		*	17	70916619	A4.09	4	1	
18	70913544	B2.01	3	1		*	9	70914730	B4.03	6	1		*	17	70916619	A4.09/1	4	1	
40	70913546	D2.01	1	2		*	30	70915276	B4.01	3	1		*	4	70916619	E3.10	4	1	
27	70913704	C1.01	1	1		*	1	70915276	E3.02/1	1	1		*	5	70916634	C1.01	5	1	
4	70913704	C1.01	2	1		*	23	70915276	E3.13	1	1		*	9	70916896	B4.01	3	1	
4	70913704	C1.01	6	1		*	21	70915634	D2.01	2	1		*	29	70916950	C1.01	1	1	
10	70913820	B4.03	6	1		*	19	70915714	D2.01	2	1		*	12	70916965	A2.01	2	1	
22	70913830	B4.01	1	1		*	2	70915797	D2.01	2	1		*	21	70916965	D1.01	3	1	
2	70914105	A2.21	4	1		*	31	70915815	C1.01	3	1		*	9	70916965	F4.01	16	1	
29	70914105	B2.07	2	1		*	35	70915815	C1.01	1	1		*	3	70916991	A2.21	1	1	

FIATALLIS - FG 70R 70A 75R 75A

INDICE NUMÉRICO *** NUMERICAL INDEX

ITEM	PECA N.	SGR.	QUAD.	PAG.	GRID	*	ITEM	PECA N.	SGR.	QUAD.	PAG.	GRID	*	ITEM	PECA N.	SGR.	QUAD.	PAG.	GRID
1	70917409	A4.09	2	1		*	6	709 .9342	E3.02	2	1		*	6	70920583	E3.02	17B	1	
9	70917409	A4.09	4	1		*	28	70919342	E3.02	1	1		*	52	70920583	E3.02	1	2	
1	70917409	A4.09/1	2	1		*	13	70919464	A2.06/1	1	1		*	40	70920583	E3.10	1	2	
9	70917409	A4.09/1	4	1		*	13	70919464	B2.06	3	1		*	9	70920583	L6.04	1	1	
6	70917418	C1.01	2	1		*	11	70919624	E3.02	3	1		*	24	70920585	A2.21	1	1	
21	70917452	F4.01	15	1		*	5	70919624	E3.02	2	1		*	38	70920585	B4.01	1	2	
29	70917458	F4.01	10	1		*	26	70919624	E3.02	1	1		*	31	70920585	B4.03	3	2	
19	70917458	F4.01	13	1		*	10	70919625	A2.06/1	1	1		*	11	70920585	D1.01	6	1	
41	70917458	F4.01	15	2		*	9	70919625	B2.06	3	1		*	15	70920585	D1.01	5	1	
6	70917593	C1.01	3	1		*	26	70919788	E3.02	4	1		*	7	70920585	E3.10	1	1	
14	70917593	C1.01	6	1		*	14	70919788	E3.02	5	1		*	22	70920585	L1.04	3	1	
17	70917666	C1.01	1	1		*	51	70919840	B2.01	1	2		*	27	70920690	E3.02	4	1	
6	70917737	L1.30	1	1		*	6	70919840	B2.01	15	1		*	13	70920690	E3.02	5	1	
8	70917793	E3.10/1	1	1		*	34	70920105	D1.01	2	1		*	5	70920806	B4.03	2	1	
11	70917793	E3.13	5	1		*	25	70920105	D1.01	4	1		*	11	70920807	C1.01	5	1	
3	70918185	B3.16	1	1		*	3	70920329	C1.01	5	1		*	8	70920995	C1.35	1	1	
13	70918308	A2.22	1	1		*	16	70920329	E3.02	19	1		*	3	70920995	E3.02	13	1	
16	70918308	L1.01	1	1		*	35	70920329	L1.04	2	2		*	14	70920995	E3.02	31	1	
1	70918448	C1.35	2	1		*	14	70920416	E3.10	4	1		*	18	70920995	E3.02	1	1	
2	70918448	C1.35/1	2	1		*	34	70920416	E3.28	1	1		*	38	70920996	E3.02	13	2	
8	70918853	E3.13	1	1		*	18	70920574	B4.03	2	1		*	19	70920996	E3.02	DZ	1	
35	70919062	E3.02	2	1		*	10	70920574	D3.33	1	1		*	10	70920996	E3.02	4	1	
14	70919066	E3.02/1	3	1		*	21	70920574	E3.10	4	1		*	19	70920996	E3.02	5	1	
15	70919087	E3.02	16	1		*	5	70920582	B2.01	2	1		*	19	70920996	E3.02	12	1	
1	70919087	E3.02	17	1		*	47	70920582	D3.33	1	2		*	19	70920996	E3.02	31	1	
5	70919134	A4.02	1	1		*	18	70920582	E3.02/1	32	1		*	55	70920996	E3.02	1	2	
9	70919134	B2.01	16	1		*	11	70920582	L1.01	1	1		*	3	70920996	E3.02/1	2	1	
17	70919134	B2.01	18	1		*	20	70920582	L1.04	4	1		*	14	70920996	L1.01	1	1	
18	70919134	C1.01	5	1		*	11	70920582	L6.04	1	1		*	6	70921013	E3.02	16	1	
15	70919135	B4.03	2	1		*	19	70920583	B4.03	2	1		*	22	70921013	E3.02	3	1	
36	70919135	E3.02	26	2		*	15	70920583	D1.01	2	1		*	15	70921068	B4.03	3	1	
25	70919171	A2.22	1	1		*	20	70920583	D1.01	2	1		*	13	70921076	A2.01	2	1	
32	70919271	E3.28	1	1		*	31	70920583	D1.01	4	1		*	32	70921076	A2.21	2	1	
8	70919272	E3.02	2	1		*	34	70920583	D1.01	4	1		*	15	70921076	A2.22	1	1	
33	70919312	B2.07	1	1		*	12	70920583	D2.01	2	1		*	9	70921076	B2.01/1	9	1	

027

FIATALLIS - FG 70R 70A 75R 75A

INDICE NUMÉRICO *** NUMERICAL INDEX

ITEM	PEÇA N.	SGR.	QUAD.	PAG.	GRID	*	ITEM	PEÇA N.	SGR.	QUAD.	PAG.	GRID	*	ITEM	PEÇA N.	SGR.	QUAD.	PAG.	GRID
2	70921076	B2.06	1	1		*	12	70921175	A2.21	1	1		*	1	70921279	E3.02	7	1	
6	70921076	B4.01	1	1		*	6	70921175	B2.06	2	1		*	12	70921279	E3.02	2	1	
10	70921076	C1.18	1	1		*	12	70921175	L1.01	1	1		*	12	70921279	E3.02	18	1	
9	70921076	D2.01	3	1		*	3	70921203	B2.06	1	1		*	8	70921279	E3.02	19	1	
9	70921076	D2.01	4	1		*	15	70921203	E3.02	15	1		*	25	70921279	E3.02	19	1	
10	70921076	E3.02	20	1		*	13	70921203	E3.02	14	1		*	11	70921279	E3.02	12	1	
12	70921076	E3.02	27	1		*	11	70921205	E3.02	21	1		*	4	70921279	E3.02	30	1	
5	70921076	E3.02	26	1		*	24	70921205	E3.02	15	1		*	2	70921279	E3.02	29	1	
21	70921076	E3.02	25	1		*	22	70921205	E3.02	14	1		*	1	70921279	E3.02/1	3	1	
25	70921076	E3.02	16	1		*	19	70921205	E3.02	20	1		*	5	70921297	E3.02	27	1	
25	70921076	E3.02	17	1		*	4	70921205	E3.02	26	1		*	11	70921297	E3.02	28	1	
2	70921076	E3.02	DZ	1		*	31	70921205	E3.02	13	1		*	14	70921298	D2.01	1	1	
2	70921076	E3.02	3	1		*	6	70921205	E3.02	19	1		*	15	70921347	E3.02	21	1	
6	70921076	E3.02	5	1		*	23	70921205	E3.02	19	1		*	8	70921349	C1.01	5	1	
4	70921076	E3.02	6	1		*	2	70921205	E3.02	30	1		*	7	70921349	E3.02	27	1	
6	70921076	E3.02	7	1		*	4	70921206	B2.06	1	1		*	42	70921349	E3.02	26	2	
40	70921076	E3.02	2	2		*	16	70921206	E3.02	15	1		*	3	70921349	E3.02	25	1	
1	70921076	E3.02	8	1		*	14	70921206	E3.02	14	1		*	4	70921349	E3.02	16	1	
1	70921076	E3.02	9	1		*	23	70921206	E3.02	2	1		*	11	70921349	E3.02	16	1	
9	70921076	E3.02	24	1		*	6	70921217	B2.06	1	1		*	8	70921349	E3.02	17	1	
2	70921076	E3.02	28	1		*	10	70921217	E3.02	3	1		*	28	70921349	E3.02	17	1	
1	70921076	E3.02	19	1		*	43	70921217	E3.02	2	2		*	20	70921349	E3.02	13	1	
2	70921076	E3.02	12	1		*	33	70921217	E3.02	1	1		*	9	70921349	E3.02	DZ	1	
9	70921076	E3.02	1	1		*	13	70921279	D2.01	1	1		*	3	70921349	E3.02	4	1	
12	70921076	E3.02	32	1		*	17	70921279	E3.02	21	1		*	3	70921349	E3.02	5	1	
16	70921076	E3.02/1	32	1		*	5	70921279	E3.02	22	1		*	29	70921349	E3.02	5	1	
2	70921076	E3.10	4	1		*	1	70921279	E3.02	26	1		*	3	70921349	E3.02	6	1	
50	70921118	E3.02	1	2		*	9	70921279	E3.02	17	1		*	16	70921349	E3.02	2	1	
9	70921122	D1.01	3	1		*	18	70921279	E3.02	13	1		*	11	70921349	E3.02	8	1	
13	70921173	E3.02	3	1		*	29	70921279	E3.02	13	1		*	11	70921349	E3.02	9	1	
17	70921174	E3.10	1	1		*	11	70921279	E3.02	DZ	1		*	20	70921349	E3.02	24	1	
13	70921174	E3.10	3	1		*	1	70921279	E3.02	4	1		*	9	70921349	E3.02	28	1	
8	70921174	E3.10	2	1		*	24	70921279	E3.02	5	1		*	15	70921349	E3.02	18	1	
26	70921174	L1.01	1	1		*	31	70921279	E3.02	5	1		*	9	70921349	E3.02	12	1	
4	70921175	A2.01	1	1		*	10	70921279	E3.02	6	1		*	4	70921349	E3.02	31	1	

FIATALLIS - FG 70R 70A 75R 75A

INDICE NUMÉRICO *** NUMERICAL INDEX

ITEM	PECA N.	SGR.	QUAD.	PAG.	GRID	*	ITEM	PECA N.	SGR.	QUAD.	PAG.	GRID	*	ITEM	PECA N.	SGR.	QUAD.	PAG.	GRID
60	70921349	E3.02	1	2		*	26	70921409	E3.02	5	1		*	8	70921565	L1.04	3	1	
14	70921349	E3.02	32	1		*	2	70921409	E3.02	6	1		*	2	70921565	L1.04/1	1	1	
14	70921349	E3.02/1	32	1		*	13	70921409	E3.02	2	1		*	5	70921566	B2.07	1	1	
2	70921349	E3.02/1	2	1		*	18	70921409	E3.02	8	1		*	9	70921567	D1.01	6	1	
4	70921349	E3.02/1	3	1		*	18	70921409	E3.02	9	1		*	13	70921567	D1.01	5	1	
3	70921349	E3.02/1	1	1		*	22	70921409	E3.02	28	1		*	43	70921569	B2.01	1	2	
10	70921374	E3.10	2	1		*	14	70921409	E3.02	18	1		*	17	70921573	E3.02	2	1	
6	70921376	F4.01	1	1		*	10	70921409	E3.02	12	1		*	40	70921573	E3.02	1	2	
16	70921383	A2.21	4	1		*	24	70921409	E3.02	12	1		*	26	70921597	E3.13	1	1	
7	70921402	E3.02	21	1		*	3	70921409	E3.02	31	1		*	9	70921598	C1.01	1	1	
7	70921402	E3.02	22	1		*	3	70921409	E3.02	29	1		*	26	70921598	E3.10/1	2	1	
25	70921402	E3.02	26	1		*	41	70921409	E3.02	1	2		*	8	70921682	B2.06	2	1	
15	70921402	E3.02	25	1		*	1	70921409	E3.02/1	2	1		*	29	70921885	E3.02	26	1	
19	70921402	E3.02	13	1		*	30	70921409	E3.02/1	3	1		*	2	70921885	E3.02	7	1	
1	70921402	E3.02	DZ	1		*	4	70921442	L1.04	2	1		*	9	70921885	E3.02	18	1	
8	70921402	E3.02	4	1		*	12	70921467	E3.02	3	1		*	20	70921885	E3.02	18	1	
2	70921402	E3.02	5	1		*	29	70921467	E3.02	2	1		*	3	70921910	A2.01	2	1	
44	70921402	E3.02	2	2		*	27	70921467	E3.28	1	1		*	4	70921910	C1.35	1	1	
10	70921402	E3.02	8	1		*	8	70921472	E3.02	21	1		*	4	70921911	L1.04	10	1	
10	70921402	E3.02	9	1		*	26	70921476	D2.01	1	1		*	1	70921912	E3.02	32	1	
2	70921402	E3.02	24	1		*	13	70921535	E3.10	1	1		*	1	70921912	E3.02/1	32	1	
1	70921402	E3.02	12	1		*	15	70921556	A4.09	4	1		*	1	70921913	A2.06/1	1	1	
1	70921402	E3.02	31	1		*	15	70921556	A4.09/1	4	1		*	2	70921913	A4.01	1	1	
11	70921402	E3.02	1	1		*	18	70921556	B2.07	1	1		*	1	70921913	B2.06	3	1	
13	70921402	E3.02/1	32	1		*	14	70921556	B2.07/1	2	1		*	7	70921914	A2.06/1	1	1	
2	70921402	E3.02/1	1	1		*	5	70921556	C1.35	1	1		*	10	70921914	A4.01	1	1	
28	70921403	D2.01	1	1		*	39	70921556	D1.01	4	2		*	7	70921914	B2.06	3	1	
15	70921409	D2.01	1	1		*	9	70921556	L1.01	1	1		*	28	70922065	E3.10	4	1	
4	70921409	E3.02	22	1		*	22	70921565	R4.01	3	1		*	36	70922181	E3.02	2	2	
37	70921409	E3.02	26	2		*	12	70921565	D2.01	3	1		*	9	70922195	B2.06	2	1	
2	70921409	E3.02	25	1		*	12	70921565	D2.01	4	1		*	23	70922200	A2.01	2	1	
17	70921409	E3.02	13	1		*	35	70921565	E3.02	26	1		*	28	70922262	C1.35/1	2	1	
10	70921409	E3.02	DZ	1		*	22	70921565	E3.02	4	1		*	11	70922262	E3.02	17B	1	
24	70921409	E3.02	DZ	1		*	18	70921565	E3.02	5	1		*	15	70922262	E3.02	4	1	
2	70921409	E3.02	4	1		*	19	70921565	E3.02	1	1		*	34	70922262	E3.02	5	1	

FIATALLIS - FG 70R 70A 75R 75A

INDICE NUMÉRICO *** NUMERICAL INDEX

ITEM	PEÇA N.	SGR.	QUAD.	PAG.	GRID	*	ITEM	PEÇA N.	SGR.	QUAD.	PAG.	GRID	*	ITEM	PEÇA N.	SGR.	QUAD.	PAG.	GRID
11	70922262	E3.02	24	1		*	10	70922300	F4.01	14	1		*	16	70922660	F4.01	11	1	
19	70922271	B4.01	3	1		*	2	70922300	L1.01	2	1		*	20	70922660	F4.01	14	1	
14	70922287	A2.21	1	1		*	31	70922300	L1.01	1	1		*	39	70922704	L1.04	2	2	
9	70922287	A2.22	1	1		*	2	70922300	L1.04	2	1		*	4	70922708	L1.04	5	1	
19	70922287	C1.01	1	1		*	32	70922300	L1.04	2	2		*	25	70922708	L1.04/1	2	1	
9	70922287	D2.01	2	1		*	5	70922300	L1.04	7	1		*	29	70922714	A2.21	1	1	
2	70922287	E3.02	15	1		*	12	70922300	L1.04/1	2	1		*	33	70922714	A2.21	1	1	
2	70922287	E3.02	14	1		*	7	70922300	L1.04/1	2	1		*	37	70922714	L1.04	2	2	
1	70922287	E3.02	16	1		*	22	70922374	B2.01	18	1		*	12	70922743	A0.02	1	1	
4	70922287	E3.02	17	1		*	19	70922374	B2.01/1	3	1		*	12	70922743	A0.02	2	1	
14	70922287	E3.02	DZ	1		*	5	70922374	B2.01/1	26	1		*	12	70922743	A0.02/1	1	1	
13	70922287	E3.02	28	1		*	6	70922457	E3.02	27	1		*	2	70922743	E3.10	3	1	
14	70922287	E3.02	12	1		*	5	70922457	E3.02	16	1		*	9	70922744	E3.10	4	1	
17	70922300	A2.01	2	1		*	12	70922457	E3.02	16	1		*	10	70922763	A2.01	1	1	
1	70922300	A4.01	2	1		*	15	70922457	E3.02	17	1		*	8	70922763	A2.01	2	1	
37	70922300	B2.07	1	2		*	10	70922457	E3.02	28	1		*	5	70922763	A2.06/1	1	1	
9	70922300	C1.01	3	1		*	7	70922475	E3.02/1	1	1		*	9	70922763	A4.01	1	1	
15	70922300	C1.01	4	1		*	21	70922507	E3.02	4	1		*	5	70922763	B2.06	3	1	
11	70922300	D1.01	2	1		*	12	70922507	E3.02	5	1		*	31	70922763	B4.01	1	1	
6	70922300	D1.01	4	1		*	19	70922507	E3.02	24	1		*	18	70922763	C1.35	2	1	
8	70922300	D1.01	4	1		*	1	70922507	E3.02	1	1		*	18	70922763	C1.35/1	2	1	
3	70922300	E3.02	27	1		*	13	70922507	E3.02	32	1		*	12	70922763	D1.01	3	1	
1	70922300	E3.02	25	1		*	18	70922508	E3.10	3	1		*	1	70922763	D1.01	2	1	
15	70922300	E3.02	13	1		*	19	70922508	E3.10	2	1		*	29	70922763	D1.01	2	1	
31	70922300	E3.02	DZ	1		*	27	70922510	D1.01	2	1		*	1	70922763	D1.01	4	1	
11	70922300	E3.02	4	1		*	21	70922510	D1.01	4	1		*	20	70922763	D1.01	4	1	
41	70922300	E3.02	2	2		*	23	70922510	E3.10/1	2	1		*	5	70922763	D3.33	1	1	
19	70922300	E3.02	18	1		*	25	70922510	F4.01	16	1		*	2	70922763	E3.02	21	1	
14	70922300	E3.02	19	1		*	10	70922526	B4.03	2	1		*	41	70922763	E3.02	26	2	
31	70922300	E3.02	12	1		*	23	70922544	B4.01	1	1		*	13	70922763	E3.02	4	1	
12	70922300	E3.02	31	1		*	23	70922544	D1.01	2	1		*	23	70922763	E3.02	5	1	
17	70922300	E3.02	1	1		*	27	70922544	D1.01	4	1		*	35	70922763	E3.02	1	2	
20	70922300	E3.10	4	1		*	7	70922544	L1.04	3	1		*	37	70922763	E3.02/1	3	2	
10	70922300	F4.01	11	1		*	4	70922544	L1.04/1	1	1		*	14	70922763	E3.02/1	1	1	
3	70922300	F4.01	13	1		*	17	70922577	B4.01	3	1		*	35	70922763	E3.28	1	1	

FIATALLIS - FG 70R 70A 75R 75A INDICE NUMÉRICO *** NUMERICAL INDEX

ITEM	PEÇA N.	SGR.	QUAD.	PAG.	GRID	*	ITEM	PEÇA N.	SGR.	QUAD.	PAG.	GRID	*	ITEM	PEÇA N.	SGR.	QUAD.	PAG.	GRID
9	70922763	E3.31	1	1		*	1	70923358	A2.21	4	1		*	25	70924618	C1.35/1	2	1	
12	70922763	F4.01	16	1		*	20	70923358	B2.07	2	1		*	32	70924842	B2.07	1	1	
35	70922763	F4.01	11	2		*	4	70923510	F4.01	19	1		*	24	70924843	B2.01	18	1	
15	70922763	F4.01	14	1		*	51	70923578	E3.02	1	2		*	3	70924843	E3.02	2	1	
5	70922763	F4.01	18	1		*	1	70923578	F4.01	16	1		*	6	70924864	A2.01	1	1	
4	70922763	L1.01	1	1		*	6	70923579	E3.28	1	1		*	5	70924864	E3.02	15	1	
8	70922763	L1.04	2	1		*	30	70923590	E3.10	4	1		*	6	70924864	E3.02	14	1	
7	70922763	L1.04	5	1		*	29	70923594	E3.28	1	1		*	6	70925018	C1.01	5	1	
24	70922763	L1.04/1	2	1		*	12	70923717	E3.02	21	1		*	3	70925053	L1.04	10	1	
9	70922789	B4.03	4	1		*	18	70923717	E3.02	20	1		*	6	70925257	E3.31	1	1	
7	70922792	C1.01	5	1		*	21	70923737	E3.02	31	1		*	3	70925381	B4.03	6	1	
44	70922792	E3.02	1	2		*	45	70923737	E3.02	1	2		*	15	70925415	E3.10	2	1	
10	70922803	F4.01	1	1		*	1	70923737	E3.28	1	1		*	13	70925427	E3.10/1	1	1	
4	70922843	D2.01	1	1		*	19	70923817	E3.10	4	1		*	15	70925431	E3.10	1	1	
26	70922849	E3.02	2	1		*	20	70923824	B4.01	3	1		*	8	70925457	E3.10	4	1	
7	70922851	B2.01/1	2	1		*	11	70923843	B2.01	10	1		*	23	70925482	B4.03	3	1	
14	70922911	L1.04	2	1		*	6	70923856	B2.17	1	1		*	1	70925483	L1.04	3	1	
1	70922911	L1.04	4	1		*	8	70923875	B2.01/1	24	1		*	6	70925615	L1.04	7	1	
1	70922911	L1.04/1	2	1		*	25	70923950	E3.28	1	1		*	1	70925617	L1.04	7	1	
38	70922913	E3.02	26	2		*	18	70923951	E3.28	1	1		*	11	70925618	A2.21	1	1	
4	70922913	E3.02	25	1		*	12	70923975	B2.01/1	22	1		*	2	70925632	B2.16	1	1	
2	70922925	C1.01	2	1		*	23	70924080	C1.35	2	1		*	3	70925655	L1.04	8	1	
12	70922925	F4.01	18	1		*	14	70924114	E3.32	2	1		*	12	70925755	C1.01	5	1	
30	70922928	F4.01	10	1		*	17	70924146	E3.28	1	1		*	16	70925755	F4.01	17	1	
18	70922928	F4.01	13	1		*	9	70924158	E3.32	4	1		*	31	70925834	E3.02	1	1	
40	70922928	F4.01	15	2		*	14	70924277	L1.04	4	1		*	16	70925835	A2.06/1	1	1	
38	70922935	E3.02	1	2		*	20	70924277	L1.04/1	2	1		*	16	70925835	B2.06	3	1	
23	70922981	E3.02	15	1		*	1	70924290	B2.01/1	23	1		*	15	70925881	A4.01	1	1	
23	70922981	E3.02	14	1		*	21	70924290	B2.01/1	22	1		*	3	70925957	B4.03	2	1	
45	70923137	E3.10	1	2		*	3	70924296	E3.02	30	1		*	14	70926000	B2.01	6	1	
16	70923157	C1.01	5	1		*	19	70924403	D2.01	1	1		*	2	70926000	B2.01	7	1	
24	70923157	E3.02	24	1		*	28	70924403	E3.02	26	1		*	20	70926000	B2.01	7	1	
17	70923174	A2.06/1	1	1		*	4	70924403	E3.02	7	1		*	6	70926000	B2.01	8	1	
15	70923174	B2.06	3	1		*	8	70924403	E3.02	18	1		*	7	70926000	B2.01/1	12	1	
38	70923276	E3.10	1	2		*	5	70924403	E3.02	19	1		*	4	70926000	B2.01/1	14	1	

FIATALLIS - FG 70R 70A 75R 75A

INDICE NUMÉRICO *** NUMERICAL INDEX

ITEM	PEÇA N.	SGR.	QUAD.	PAG.	GRID	*	ITEM	PEÇA N.	SGR.	QUAD.	PAG.	GRID	*	ITEM	PEÇA N.	SGR.	QUAD.	PAG.	GRID
5	70926000	B2.01/1	15	1		*	3	70927173	E3.28	1	1		*	54	70927312	E3.02	1	2	
18	70926000	B2.01/1	16	1		*	19	70927173	L1.04	3	1		*	12	70927343	E3.32/1	1	1	
9	70926037	C1.01	6	1		*	7	70927173	L1.30	1	1		*	7	70927353	A2.21	3	1	
24	70926049	A2.01	2	1		*	20	70927174	D1.01	3	1		*	4	70927353	A2.21	2	1	
22	70926190	C1.35	2	1		*	59	70927201	E3.02	1	2		*	18	70927361	E3.02	16	1	
28	70926191	F4.01	17	1		*	22	70927202	D2.01	4	1		*	24	70927361	E3.02	17	1	
13	70926517	L1.04/1	2	1		*	2	70927202	F4.01	19	1		*	14	70927373	D1.01	3	1	
7	70926574	B2.01	3	1		*	1	70927212	C1.18	1	1		*	7	70927373	D1.01	1	1	
7	70926622	E3.31	1	1		*	20	70927212	D2.01	3	1		*	26	70927378	D1.01	2	1	
2	70926629	E3.32/1	1	1		*	20	70927212	D2.01	4	1		*	15	70927381	D2.01	2	1	
25	70926706	E3.02	1	1		*	25	70927212	E3.02/1	3	1		*	27	70927381	D2.01	1	1	
5	70926719	L1.04	2	1		*	14	70927218	A2.06/1	1	1		*	10	70927381	D3.16	1	1	
16	70926768	E3.02	26	1		*	14	70927218	B2.06	3	1		*	13	70927382	A0.02	1	1	
5	70926785	E3.10/1	2	1		*	12	70927219	A4.01	1	1		*	13	70927382	A0.02	2	1	
20	70926785	E3.10/1	1	1		*	18	70927219	D1.01	2	1		*	13	70927382	A0.02/1	1	1	
21	70926788	B2.01	1	1		*	17	70927219	D1.01	4	1		*	57	70927390	E3.02	1	2	
30	70926788	B2.01/1	4	1		*	38	70927225	D2.01	2	2		*	1	70927400	C1.01	3	1	
4	70926917	L1.04	7	1		*	26	70927225	E3.02	15	1		*	14	70927400	E3.02	8	1	
34	70926957	B4.01	3	1		*	24	70927225	E3.02	14	1		*	14	70927400	E3.02	9	1	
18	70927063	E3.02	15	1		*	1	70927242	E3.32/1	1	1		*	15	70927400	E3.02	1	1	
1	70927155	E3.02	27	1		*	13	70927261	E3.02	21	1		*	13	70927400	F4.01	5	1	
4	70927155	E3.02	28	1		*	12	70927261	E3.02	17	1		*	13	70927400	F4.01	10	1	
8	70927155	E3.02	31	1		*	35	70927261	E3.02	13	1		*	16	70927400	F4.01	15	1	
46	70927155	E3.02	1	2		*	33	70927261	E3.02	5	1		*	11	70927400	F4.01	18	1	
14	70927155	F4.01	16	1		*	13	70927261	E3.02	7	1		*	7	70927400	L6.04	2	1	
38	70927157	D1.01	2	2		*	26	70927261	E3.02	19	1		*	1	70927401	F4.01	8	1	
37	70927157	D1.01	4	2		*	10	70927261	E3.02	30	1		*	4	70927401	F4.01/1	8	1	
14	70927172	A4.09	2	1		*	11	70927264	B2.06	2	1		*	9	70927475	B4.03	3	1	
14	70927172	A4.09/1	2	1		*	8	70927275	A0.02	1	1		*	9	70927484	E3.02	31	1	
4	70927172	E3.02	23	1		*	8	70927275	A0.02	2	1		*	15	70927484	F4.01	13	1	
4	70927173	A2.22	1	1		*	8	70927275	A0.02/1	1	1		*	9	70927541	B2.07	1	1	
3	70927173	A2.56	1	1		*	29	70927282	B2.07	1	1		*	2	70927541	B2.07/1	2	1	
2	70927173	A4.09	1	1		*	11	70927310	E3.02	25	1		*	28	70927541	C1.01	3	1	
1	70927173	D1.01	3	1		*	4	70927310	E3.02	3	1		*	12	70927541	C1.35	2	1	
12	70927173	E3.02	26	1		*	13	70927310	E3.02	1	1		*	13	70927541	C1.35/1	2	1	

FIATALLIS - FG 70R 70A 75R 75A

INDICE NUMÉRICO *** NUMERICAL INDEX

ITEM	PEÇA N.	SGR.	QUAD.	PAG.	GRID	*	ITEM	PEÇA N.	SGR.	QUAD.	PAG.	GRID	*	ITEM	PEÇA N.	SGR.	QUAD.	PAG.	GRID
14	70927541	E3.02	24	1		*	11	70927733	A4.09/1	3	1		*	5	70928190	E3.02	18	1	
17	70927541	F4.01	5	1		*	11	70927737	A4.09	2	1		*	12	70928190	E3.02	19	1	
18	70927541	F4.01	10	1		*	11	70927737	A4.09/1	2	1		*	2	70928190	F4.01	9	1	
18	70927541	F4.01	11	1		*	30	70927763	D3.33	1	1		*	19	70928190	F4.01	5	1	
12	70927541	F4.01	13	1		*	42	70928010	E3.02	2	2		*	20	70928190	F4.01	10	1	
22	70927541	F4.01	14	1		*	36	70928010	E3.02	1	2		*	19	70928190	F4.01	11	1	
18	70927541	F4.01	15	1		*	26	70928136	B2.07	2	1		*	3	70928190	F4.01	12	1	
24	70927541	F4.01	15	1		*	3	70928138	A2.21	4	1		*	20	70928190	F4.01	13	1	
1	70927541	F4.01	17	1		*	19	70928138	F4.01	17	1		*	23	70928190	F4.01	14	1	
6	70927541	L1.01	2	1		*	4	70928138	L1.04	9	1		*	13	70928190	F4.01	15	1	
1	70927541	L1.01	1	1		*	6	70928175	B4.03	6	1		*	37	70928190	F4.01	15	2	
34	70927541	L1.04	2	2		*	13	70928178	A4.01	1	1		*	2	70928190	F4.01	17	1	
25	70927541	L1.04	3	1		*	19	70928178	B2.07	1	1		*	3	70928190	F4.01/1	8	1	
8	70927541	L1.04/1	1	1		*	15	70928178	B2.07/1	2	1		*	7	70928243	E3.02	13	1	
39	70927556	D1.01	2	2		*	11	70928178	B4.03	3	1		*	22	70928243	E3.02	DZ	1	
21	70927571	E3.02	13	1		*	8	70928178	E3.10	1	1		*	22	70928243	E3.02	12	1	
25	70927571	E3.02	DZ	1		*	21	70928178	F4.01	11	1		*	35	70928312	B4.01	3	1	
4	70927571	E3.02	4	1		*	25	70928178	F4.01	14	1		*	17	70928358	B4.03	3	1	
38	70927571	E3.02	2	2		*	7	70928182	A2.21	4	1		*	4	70928370	E3.10/1	2	1	
25	70927571	E3.02	12	1		*	9	70928182	A4.01	2	1		*	15	70928410	E3.13	1	1	
20	70927575	B2.01	3	1		*	10	70928182	A4.09	3	1		*	6	70928439	A4.01	1	1	
62	70927583	B2.01	1	2		*	10	70928182	A4.09/1	3	1		*	14	70928452	E3.10	1	1	
20	70927597	E3.28	1	1		*	1	70928182	D2.01	1	1		*	16	70928452	L1.04/1	1	1	
14	70927603	D2.01	2	1		*	19	70928182	F4.01	15	1		*	7	70928460	B2.06	2	1	
11	70927619	E3.10/1	1	1		*	8	70928188	D1.01	6	1		*	19	70928460	E3.02/1	32	1	
9	70927662	E3.10	2	1		*	12	70928188	D1.01	5	1		*	17	70928460	E3.10	3	1	
5	70927694	E3.32	2	1		*	8	70928190	B2.07	1	1		*	18	70928460	E3.10	2	1	
5	70927699	A4.09	3	1		*	3	70928190	B2.07/1	2	1		*	11	70928497	E3.28	1	1	
5	70927699	A4.09/1	3	1		*	2	70928190	C1.01	5	1		*	16	70928528	B2.01	9	1	
8	70927699	E3.32	4	1		*	10	70928190	C1.01	6	1		*	9	70928528	B2.01	10	1	
37	70927700	B4.01	3	2		*	2	70928190	D2.01	1	1		*	11	70928528	B2.01/1	18	1	
3	70927709	A4.09	4	1		*	20	70928190	E3.02	26	1		*	30	70928654	C1.01	3	1	
3	70927709	A4.09/1	4	1		*	8	70928190	E3.02	25	1		*	34	70928654	C1.01	1	1	
42	70927714	D3.33	1	2		*	13	70928190	E3.02	8	1		*	34	70928656	F4.01	11	2	
11	70927733	A4.09	3	1		*	13	70928190	E3.02	9	1		*	14	70928656	F4.01	14	1	

FIATALLIS - FG 70R 70A 75R 75A

INDICE NUMÉRICO *** NUMERICAL INDEX

ITEM	PEÇA N.	SGR.	QUAD.	PAG.	GRID	*	ITEM	PEÇA N.	SGR.	QUAD.	PAG.	GRID	*	ITEM	PEÇA N.	SGR.	QUAD.	PAG.	GRID
6	70928713	B2.01	3	1		*	23	70929156	E3.02	4	1		*	7	70929662	C1.01	2	1	
26	70928730	L1.04	4	1		*	9	70929156	E3.02	5	1		*	17	70929662	D2.01	1	1	
63	70928747	B2.01	1	2		*	17	70929156	E3.02	5	1		*	16	70929662	F4.01	18	1	
13	70928798	D2.01	3	1		*	5	70929156	E3.02	31	1		*	12	70929702	F4.01	5	1	
13	70928798	D2.01	4	1		*	5	70929156	E3.02/1	2	1		*	12	70929702	F4.01	10	1	
18	70928798	E3.02/1	3	1		*	19	70929156	E3.02/1	3	1		*	15	70929702	F4.01	15	1	
37	70928798	E3.28	1	2		*	24	70929156	E3.02/1	3	1		*	1	70929702	F4.01	18	1	
5	70928844	E3.02	17B	1		*	3	70929156	E3.10	4	1		*	31	70929703	F4.01	11	1	
8	70928844	L1.01	1	1		*	14	70929156	F4.01	5	1		*	35	70929703	F4.01	14	2	
9	70928851	E3.02/1	1	1		*	14	70929156	F4.01	10	1		*	26	70929704	E3.10	3	1	
2	70928851	E3.32	8	1		*	16	70929156	F4.01	13	1		*	29	70929704	E3.10	2	1	
36	70928914	E3.10	4	2		*	17	70929156	F4.01	15	1		*	5	70929722	L1.04	9	1	
3	70928914	E3.10	3	1		*	34	70929156	F4.01	15	1		*	22	70929744	B2.06	3	1	
16	70928914	E3.10	2	1		*	10	70929156	F4.01	18	1		*	14	70929745	E3.02	1	1	
16	70928923	F4.01	16	1		*	13	70929156	F4.01	18	1		*	10	70929748	E3.02	21	1	
12	70928923	F4.01	17	1		*	30	70929156	L1.01	1	1		*	3	70929771	C1.35	1	1	
26	70928956	L1.04	2	1		*	1	70929156	L1.04	2	1		*	1	70929808	A2.22	1	1	
30	70929002	B2.07	2	1		*	8	70929166	B2.01/1	9	1		*	3	70929855	B2.01	10	1	
4	70929002	F4.01	12	1		*	9	70929166	B2.01/1	10	1		*	5	70929971	B4.03	6	1	
28	70929024	A2.21	1	1		*	16	70929217	B2.01	1	1		*	9	70929977	L1.04	5	1	
2	70929083	E3.13	1	1		*	2	70929217	B2.01	11	1		*	11	70930238	E3.02	19	1	
20	70929092	E3.10	3	1		*	7	70929217	B2.01/1	4	1		*	16	70930278	E3.10	3	1	
28	70929092	E3.10	2	1		*	10	70929258	E3.02/1	32	1		*	20	70930278	E3.10	2	1	
5	70929155	C1.01	1	1		*	12	70929276	E3.10/1	1	1		*	24	70930364	E3.13	1	1	
2	70929156	A4.01	2	1		*	7	70929279	F4.01	5	1		*	5	70930370	A2.22	1	1	
3	70929156	A4.09	1	1		*	7	70929279	F4.01	10	1		*	11	70930370	A2.56	1	1	
38	70929156	B2.07	1	2		*	8	70929279	F4.01	15	1		*	2	70930370	B2.00	1	1	
7	70929156	B4.01	1	1		*	3	70929316	A4.09	2	1		*	2	70930370	B2.00/1	1	1	
20	70929156	C1.01	1	1		*	7	70929316	A4.09	4	1		*	6	70930370	C1.35	2	1	
7	70929156	C1.35/1	2	1		*	3	70929316	A4.09/1	2	1		*	23	70930370	E3.02	1	1	
6	70929156	D2.01	2	1		*	7	70929316	A4.09/1	4	1		*	7	70930370	E3.02	32	1	
10	70929156	D2.01	2	1		*	1	70929344	E3.02	24	1		*	21	70930370	E3.02/1	32	1	
18	70929156	D2.01	3	1		*	17	70929412	F4.01	18	1		*	15	70930423	B4.01	1	1	
18	70929156	D2.01	4	1		*	11	70929419	A2.22	1	1		*	4	70930790	A2.21	4	1	
19	70929156	E3.02	4	1		*	4	70929662	B2.07	1	1		*	13	70930790	C1.01	6	1	

FIATALLIS - FG 70R 70A 75R 75A INDICE NUMÉRICO *** NUMERICAL INDEX

ITEM	PEÇA N.	SGR.	QUAD.	PAG.	GRID	*	ITEM	PEÇA N.	SGR.	QUAD.	PAG.	GRID	*	ITEM	PEÇA N.	SGR.	QUAD.	PAG.	GRID
1	70930790	E3.02	22	1		*	10	70934150	C1.01	5	1		*	5	71004797	B2.01/1	11	1	
19	70930790	E3.02	8	1		*	23	70934150	E3.02	26	1		*	4	71004797	B2.01/1	10	1	
19	70930790	E3.02	9	1		*	18	70934176	B2.01	9	1		*	10	71004799	B2.01	3	1	
18	70930804	D2.01	1	1		*	2	70934706	F4.05	3	1		*	21	71004802	B2.01	3	1	
2	70930804	E3.02	18	1		*	32	70934710	D2.01	3	1		*	8	71004807	B2.01	3	1	
37	70930850	B4.01	1	2		*	37	70934710	D2.01	4	2		*	4	71004810	B2.01	3	1	
1	70930860	L1.04	5	1		*	21	70935012	F4.01	5	1		*	10	71004816	B2.01	1	1	
23	70930871	E3.02/1	3	1		*	23	70935012	F4.01	10	1		*	58	71004819	B2.01	1	2	
33	70931206	E3.02	26	1		*	25	70935012	F4.01	15	1		*	15	71004820	B2.01	1	1	
4	70931206	E3.02	18	1		*	10	70935117	E3.28	1	1		*	31	71004820	B2.01	1	1	
4	70931240	E3.02	32	1		*	12	70935471	B2.07	2	1		*	6	71004820	B2.01/1	4	1	
11	70931240	E3.02/1	32	1		*	28	70935698	B2.01	1	1		*	32	71004822	B2.01	1	1	
21	70931523	C1.35/1	2	1		*	15	70935700	B2.01	3	1		*	18	71004822	B2.01/1	3	1	
22	70931855	B2.07	2	1		*	22	70935805	E3.02	2	1		*	3	71004828	B2.01	1	1	
4	70931930	E3.13	2	1		*	7	70950240	A2.56	1	1		*	5	71004830	B2.01	1	1	
5	70931936	E3.13	3	1		*	4	70977006	E3.02	13	1		*	6	71004831	B2.01	1	1	
10	70932227	E3.13	5	1		*	2	70977008	F4.01	9	1		*	9	71004832	B2.01	1	1	
4	70932589	E3.13	3	1		*	19	70980615	D3.33	1	1		*	61	71004833	B2.01	1	2	
12	70932619	C1.01	2	1		*	62	70991206	E3.02	1	2		*	18	71004836	B2.01	1	1	
18	70932661	B2.01	10	1		*	10	71004339	C1.35	2	1		*	20	71004837	B2.01	1	1	
21	70932661	B2.01/1	18	1		*	11	71004339	C1.35/1	2	1		*	19	71004838	B2.01	1	1	
20	70932825	C1.35	2	1		*	4	71004753	B2.01	4	1		*	20	71004838	B2.01/1	3	1	
20	70932825	C1.35/1	2	1		*	2	71004755	B2.01	4	1		*	17	71004838	B2.01/1	4	1	
3	70932830	B2.01	11	1		*	1	71004756	B2.01	4	1		*	17	71004839	B2.01	1	1	
18	70932867	B4.01	3	1		*	5	71004761	B2.01	11	1		*	1	71004845	B2.01/1	3	1	
20	70932871	B2.07	1	1		*	7	71004761	E3.02/1	32	1		*	53	71004848	B2.01	1	2	
13	70933037	A4.09	4	1		*	3	71004773	B2.01	2	1		*	8	71004848	B2.01/1	3	1	
13	70933037	A4.09/1	4	1		*	9	71004775	B2.01	2	1		*	54	71004849	B2.01	1	2	
33	70933178	E3.13	1	2		*	2	71004778	B2.01	2	1		*	9	71004849	B2.01/1	3	1	
7	70933227	E3.10/1	1	1		*	8	71004787	B2.01	2	1		*	57	71004852	B2.01	1	2	
16	70933498	E3.02/1	2	1		*	15	71004787	B2.01/1	5	1		*	22	71004855	B2.01	1	1	
61	70933503	E3.02	1	2		*	7	71004788	B2.01	2	1		*	16	71004866	B2.01	10	1	
5	70933756	B2.07/1	2	1		*	13	71004789	B2.01	2	1		*	11	71004867	B2.01	6	1	
2	70933756	E3.02	22	1		*	16	71004790	B2.01	18	1		*	14	71004867	B2.01	7	1	
9	70933798	E3.32	2	1		*	16	71004795	B2.01	3	1		*	2	71004867	B2.01	8	1	

FIATALLIS - FG 70R 70A 75R 75A

INDICE NUMÉRICO *** NUMERICAL INDEX

ITEM	PEÇA N.	SGR.	QUAD.	PAG.	GRID	*	ITEM	PEÇA N.	SGR.	QUAD.	PAG.	GRID	*	ITEM	PEÇA N.	SGR.	QUAD.	PAG.	GRID
25	71004867	B2.01	9	1		*	5	71004927	B2.01/1	16	1		*	11	71004984	B2.01/1	17	1	
20	71004868	B2.01	6	1		*	2	71004930	B2.01	6	1		*	3	71004985	B2.01	9	1	
24	71004868	B2.01	7	1		*	1	71004932	B2.01	6	1		*	10	71004985	B2.01/1	17	1	
1	71004868	B2 01	8	1		*	4	71004932	B2.01	7	1		*	8	71004987	B2.01/1	17	1	
24	71004868	B2.01	9	1		*	8	71004932	B2.01	8	1		*	7	71004988	B2.01/1	17	1	
9	71004870	B2.01	6	1		*	26	71004932	B2.01	9	1		*	13	71004989	B2.01	10	1	
12	71004870	B2.01	7	1		*	18	71004934	B2.01	6	1		*	23	71004997	B2.01/1	15	1	
14	71004870	B2.01	8	1		*	21	71004934	B2.01	7	1		*	6	71005107	B2.01	10	1	
23	71004870	B2.01	9	1		*	29	71004934	B2.01	9	1		*	5	71005107	B2.01/1	18	1	
7	71004872	B2.01	6	1		*	17	71004935	B2.01	6	1		*	6	71005108	B2.01	10	1	
17	71004872	B2.01	7	1		*	22	71004935	B2.01	7	1		*	5	71005108	B2.01/1	18	1	
26	71004872	B2.01	7	1		*	4	71004935	B2.01	8	1		*	6	71005109	B2.01	10	1	
17	71004872	B2.01	8	1		*	28	71004935	B2.01	9	1		*	5	71005109	B2.01/1	18	1	
21	71004872	B2.01	9	1		*	29	71004937	B2.01	6	1		*	6	71005110	B2.01	10	1	
19	71004873	B2.01	6	1		*	30	71004937	B2.01	6	1		*	5	71005110	B2.01/1	18	1	
19	71004873	B2.01	7	1		*	26	71004939	B2.01	6	1		*	7	71005111	B2.01	10	1	
15	71004873	B2.01	8	1		*	27	71004958	B2.01	6	1		*	6	71005111	B2.01/1	18	1	
11	71004873	B2.01	9	1		*	11	71004961	B2.01	7	1		*	2	71005113	B2.01	13	1	
19	71004876	B2.01	8	1		*	11	71004961	B2.01/1	14	1		*	4	71005113	B2.01	14	1	
11	71004879	B2.01	18	1		*	8	71004961	B2.01/1	16	1		*	10	71005113	B2.01/1	18	1	
12	71004880	B2.01	18	1		*	8	71004962	B2.01	7	1		*	22	71005113	B2.01/1	18	1	
8	71004895	B2.01	18	1		*	8	71004962	B2.01/1	14	1		*	1	71005114	B2.01	13	1	
5	71004901	B2.01	15	1		*	12	71004963	B2.01	8	1		*	3	71005114	B2.01	14	1	
4	71004902	B2.01	15	1		*	12	71004965	B2.01	9	1		*	9	71005114	B2.01/1	18	1	
9	71004904	B2.01	15	1		*	15	71004965	B2.01	9	1		*	23	71005114	B2.01/1	18	1	
12	71004907	B2.01	11	1		*	16	71004969	B2.01	6	1		*	1	71005116	B2.01	14	1	
11	71004908	B2.01	11	1		*	23	71004969	B2.01	7	1		*	6	71005116	B3.16	1	1	
12	71004911	B2.01	15	1		*	27	71004969	B2.01	9	1		*	8	71005117	B2.01	10	1	
1	71004913	B2.01	16	1		*	24	71004973	B2.01	6	1		*	7	71005117	B2.01/1	18	1	
5	71004926	B2.01	6	1		*	25	71004976	B2.01/1	15	1		*	10	71005121	B2.01	9	1	
9	71004926	B2.01	7	1		*	24	71004979	B2.01	8	1		*	19	71005536	B2.01	3	1	
9	71004926	B2.01/1	14	1		*	28	71004983	B2.01	8	1		*	21	71005843	B2.01	6	1	
6	71004926	B2.01/1	16	1		*	4	71004983	B2.01	9	1		*	28	71005843	B2.01	7	1	
6	71004927	B2.01	6	1		*	4	71004983	B2.01/1	17	1		*	20	71005843	B2.01	9	1	
7	71004927	B2.01	7	1		*	5	71004984	B2.01	9	1		*	11	71008468	B2.01	3	1	

FIATALLIS - FG 70R 70A 75R 75A

INDICE NUMÉRICO *** NUMERICAL INDEX

ITEM	PECA N.	SGR.	QUAD.	PAG.	GRID	*	ITEM	PECA N.	SGR.	QUAD.	PAG.	GRID	*	ITEM	PECA N.	SGR.	QUAD.	PAG.	GRID
2	71008476	B2.01	15	1		*	4	73063363	E3.32	4	1		*	5	73069450	B2.01	18	1	
1	71008477	B2.01	11	1		*	14	73064517	E3.32	4	1		*	20	73069451	B2.01	18	1	
13	71008477	B2.01	15	1		*	5	73064715	B4.03	5	1		*	8	73069458	L1.01	2	1	
7	71008573	B2.01	15	1		*	4	73064716	B4.03	5	1		*	19	73069458	L1.01	1	1	
8	71008597	B2.01	15	1		*	3	73064717	B4.03	5	1		*	24	73069458	L1.04	3	1	
28	71008989	B2.01	6	1		*	2	73064718	B4.03	5	1		*	7	73069458	L1.04/1	1	1	
3	71008990	B2.01	6	1		*	39	73065116	B4.01	3	2		*	25	73070190	A2.21	1	1	
3	71008990	B2.01/1	16	1		*	2	73065286	E3.32	4	1		*	18	73070190	A2.21	3	1	
2	71008991	B2.01	5	1		*	7	73066756	B2.01	11	1		*	19	73070190	A2.21	2	1	
11	71009063	B2.01	8	1		*	13	73066766	B2.01	1	1		*	16	73070190	L1.04	2	1	
10	71009064	B2.01	8	1		*	11	73066786	B2.01	15	1		*	6	73070372	E3.32	4	1	
2	71009065	B2.01/1	5	1		*	3	73066788	B2.01	16	1		*	9	73071349	L1.04	3	1	
7	71009067	B2.01	8	1		*	4	73066789	B2.01	16	1		*	15	73071349	L1.04/1	1	1	
9	71009068	B2.01	8	1		*	10	73066793	B2.01	18	1		*	7	73071510	B2.01	18	1	
56	73019345	E3.02	1	2		*	6	73066794	B2.01	18	1		*	5	73071749	L1.04	10	1	
18	73021062	B4.03	3	1		*	25	73066796	B2.01	18	1		*	4	73071839	B2.01	18	1	
5	73024120	D3.16	2	1		*	6	73067421	E3.02/1	1	1		*	17	73072024	F4.01	13	1	
17	73026172	A4.01	1	1		*	5	73067518	E3.32/1	1	1		*	16	73072025	F4.01	5	1	
4	73031151	A4.01	1	1		*	14	73067546	E3.32/1	1	1		*	16	73072025	F4.01	10	1	
31	73034129	D1.01	2	1		*	13	73067547	E3.32/1	1	1		*	7	73072025	F4.01	13	1	
23	73034129	D1.01	4	1		*	3	73067551	E3.32/1	1	1		*	28	73072025	F4.01	15	1	
7	73039643	F4.05	2	1		*	4	73067593	E3.32/1	1	1		*	7	73072026	F4.01	1	1	
6	73052008	F4.05	3	1		*	7	73067915	E3.32/1	1	1		*	11	73072027	F4.01	5	1	
9	73052486	L1.04/1	2	1		*	8	73068123	C1.18	1	1		*	11	73072027	F4.01	10	1	
6	73053637	E3.32/1	1	1		*	6	73068124	C1.18	1	1		*	6	73072027	F4.01	13	1	
3	73055116	E3.32	4	1		*	7	73068125	C1.18	1	1		*	12	73072027	F4.01	15	1	
8	73055413	E3.32/1	1	1		*	22	73068227	A2.21	1	1		*	9	73072028	F4.01	5	1	
10	73055430	E3.32/1	1	1		*	1	73069196	F4.05	2	1		*	9	73072028	F4.01	10	1	
11	73055431	E3.32/1	1	1		*	32	73069238	F4.01	11	1		*	11	73072028	F4.01	15	1	
15	73055447	E3.32/1	1	1		*	19	73069238	F4.01	14	1		*	8	73072029	F4.01	13	1	
9	73057960	F4.01	1	1		*	2	73069239	F4.05	2	1		*	2	73072041	F4.01	1	1	
13	73058666	E3.32	4	1		*	8	73069240	F4.05	2	1		*	3	73072341	L1.01	2	1	
11	73058667	E3.32	4	1		*	3	73069241	F4.05	2	1		*	18	73072341	L1.01	1	1	
12	73058668	E3.32	4	1		*	7	73069310	D1.01	6	1		*	18	73072566	F4.01	5	1	
7	73063066	E3.32	4	1		*	7	73069310	D1.01	5	1		*	19	73072566	F4.01	10	1	

FIATALLIS - FG 70R 70A 75R 75A

INDICE NUMÉRICO *** NUMERICAL INDEX

ITEM	PEÇA N.	SGR.	QUAD.	PAG.	GRID	*	ITEM	PEÇA N.	SGR.	QUAD.	PAG.	GRID	*	ITEM	PEÇA N.	SGR.	QUAD.	PAG.	GRID
27	73072566	F4.01	11	1		*	9	73110563	C1.18	1	1		*	18	73118051	B2.01/1	4	1	
31	73072566	F4.01	14	1		*	4	73110564	C1.18	1	1		*	4	73118057	B2.01/1	5	1	
20	73072566	F4.01	15	1		*	12	73110565	C1.18	1	1		*	1	73118058	B2.01/1	5	1	
22	73072566	F4.01	17	1		*	13	73110566	C1.18	1	1		*	3	73118059	B2.01/1	5	1	
14	73072895	D1.01	5	1		*	5	73111046	C1.18	1	1		*	6	73118062	B2.01/1	5	1	
9	73073210	E3.32/1	1	1		*	26	73111288	A2.22	1	1		*	11	73118062	B2.01/1	12	1	
10	73073273	E3.32	4	1		*	16	73111435	B2.07	1	1		*	12	73118064	B2.01	2	1	
1	73073459	F4.01	1	1		*	10	73111596	A2.21	4	1		*	13	73118064	B2.01/1	5	1	
2	73073934	L1.04	9	1		*	4	73111596	B2.07	2	1		*	14	73118067	B2.01/1	7	1	
10	73074170	D1.01	6	1		*	6	73111597	A2.21	4	1		*	2	73118068	B2.01/1	7	1	
9	73074359	D1.01	5	1		*	24	73111597	B2.07	2	1		*	11	73118080	B2.01/1	9	1	
8	73074360	D1.01	5	1		*	5	73111893	C1.01	6	1		*	15	73118086	B2.01/1	14	1	
4	73074995	B2.01	2	1		*	33	73112915	D2.01	4	1		*	14	73118086	B2.01/1	15	1	
5	73075753	F4.01	1	1		*	10	73112915	F4.01	5	1		*	21	73118086	B2.01/1	16	1	
4	73075836	F4.01	1	1		*	10	73112915	F4.01	10	1		*	14	73118087	B2.01/1	12	1	
2	73075858	L6.04	2	1		*	10	73112915	F4.01	15	1		*	14	73118087	B2.01/1	14	1	
21	73077381	L1.04/1	1	1		*	6	73113184	F4.01	18	1		*	13	73118087	B2.01/1	15	1	
17	73107497	F4.01	17	1		*	19	73113213	F4.01	16	1		*	22	73118087	B2.01/1	16	1	
21	73107644	B2.01	8	1		*	7	73113214	F4.01	17	1		*	1	73118088	B2.01/1	12	1	
2	73107726	A2.06/1	1	1		*	15	73113247	B2.07	1	1		*	1	73118088	B2.01/1	14	1	
2	73107726	B2.06	3	1		*	16	73116330	A4.01	1	1		*	9	73118088	B2.01/1	16	1	
6	73108389	L1.04	5	1		*	12	73116959	B2.01/1	9	1		*	18	73118089	B2.01/1	12	1	
12	73108440	L6.04	2	1		*	22	73117176	F4.01	5	1		*	12	73118089	B2.01/1	14	1	
13	73108441	L6.04	2	1		*	24	73117176	F4.01	10	1		*	16	73118089	B2.01/1	15	1	
14	73109117	L6.04	2	1		*	25	73117176	F4.01	11	1		*	15	73118089	B2.01/1	16	1	
2	73109855	B2.01	10	1		*	29	73117176	F4.01	14	1		*	4	73118090	B2.01/1	12	1	
6	73109856	B2.01	9	1		*	32	73117176	F4.01	15	1		*	21	73118090	B2.01/1	14	1	
30	73109872	B2.01	8	1		*	3	73117265	A4.09	3	1		*	14	73118090	B2.01/1	16	1	
8	73109873	B2.01	9	1		*	18	73117265	A4.09	4	1		*	3	73118092	B2.01/1	12	1	
26	73109875	B2.01	8	1		*	3	73117265	A4.09/1	3	1		*	20	73118092	B2.01/1	14	1	
24	73109875	B2.01/1	15	1		*	18	73117265	A4.09/1	4	1		*	3	73118092	B2.01/1	15	1	
24	73110555	F4.01	16	1		*	2	73117686	A2.22	1	1		*	11	73118092	B2.01/1	16	1	
1	73110555	F4.01	11	1		*	1	73117687	A2.56	1	1		*	5	73118093	B2.01/1	12	1	
1	73110555	F4.01	14	1		*	23	73117875	B2.01/1	22	1		*	2	73118093	B2.01/1	14	1	
2	73110558	C1.18	1	1		*	19	73118048	B2.01/1	4	1		*	12	73118093	B2.01/1	16	1	

FIATALLIS - FG 70R 70A 75R 75A

INDICE NUMÉRICO *** NUMERICAL INDEX

ITEM	PEÇA N.	SGR.	QUAD.	PAG.	GRID	*	ITEM	PEÇA N.	SGR.	QUAD.	PAG.	GRID	*	ITEM	PEÇA N.	SGR.	QUAD.	PAG.	GRID
20	73118095	B2.01/1	12	1		*	9	73121530	F4.01	8	1		*	31	73124630	E3.28	1	1	
8	73118097	B2.01/1	12	1		*	4	73121561	E3.02	15	1		*	30	73124631	E3.28	1	1	
9	73118098	B2.01/1	12	1		*	3	73121561	E3.02	14	1		*	5	73124652	E3.28	1	1	
11	73118105	B2.01/1	4	1		*	11	73121563	E3.02	15	1		*	4	73124657	E3.28	1	1	
13	73118106	B2.01/1	14	1		*	11	73121563	E3.02	14	1		*	10	73124671	B4.01	1	1	
20	73118106	B2.01/1	16	1		*	2	73121707	A2.56	1	1		*	16	73124672	B4.01	1	1	
26	73118107	B2.01/1	14	1		*	8	73121710	A2.22	1	1		*	9	73124678	B4.01	1	1	
28	73118107	B2.01/1	16	1		*	31	73121782	A2.21	1	1		*	14	73124679	B4.01	1	1	
25	73118108	B2.01/1	14	1		*	10	73121925	D2.01	3	1		*	11	73124680	B4.01	1	1	
27	73118108	B2.01/1	16	1		*	10	73121925	D2.01	4	1		*	8	73124681	B4.01	1	1	
26	73118111	B2.01/1	16	1		*	21	73122862	D2.01	1	1		*	8	73124682	B4.01	1	1	
1	73118112	B2.01/1	16	1		*	39	73123080	D3.33	1	2		*	8	73124683	B4.01	1	1	
4	73118118	B2.01/1	22	1		*	7	73123921	B2.07	2	1		*	11	73124684	B4.01	3	1	
2	73118118	B2.01/1	23	1		*	6	73123926	B2.07	2	1		*	13	73124691	B4.01	3	1	
22	73118119	B2.01/1	22	1		*	21	73123927	B2.07	2	1		*	16	73124693	B4.01	3	1	
4	73118122	B2.01/1	20	1		*	11	73124468	E3.10	1	1		*	10	73124696	B4.01	3	1	
7	73118126	B2.01	17	1		*	10	73124471	E3.10	1	1		*	29	73124697	B4.01	3	1	
10	73118126	B2.01/1	24	1		*	36	73124473	E3.10	1	2		*	23	73124830	B4.03	2	1	
2	73118126	B2.01/1	26	1		*	46	73124475	E3.10	1	2		*	32	73124840	B4.03	3	2	
1	73118133	B2.01/1	15	1		*	6	73124476	E3.10	1	1		*	33	73124844	F4.01	11	1	
11	73118134	B2.01/1	15	1		*	12	73124480	E3.10	1	1		*	36	73124844	F4.01	14	2	
2	73118135	B2.01/1	11	1		*	4	73124482	C1.01	3	1		*	31	73124983	E3.10	4	2	
6	73118138	B2.01/1	15	1		*	4	73124486	C1.01	4	1		*	33	73124983	E3.10	4	2	
25	73118150	B2.01/1	18	1		*	17	73124515	B4.01	1	1		*	2	73125067	B4.03	2	1	
7	73118167	B2.01/1	19	1		*	13	73124516	B4.01	1	1		*	20	73125098	D3.33	1	1	
3	73118175	B2.01/1	6	1		*	33	73124519	B4.01	1	1		*	36	73125187	D3.33	1	2	
2	73118176	B2.01/1	16	1		*	19	73124520	B4.01	1	1		*	37	73125188	D3.33	1	2	
15	73118236	B2.01/1	15	1		*	12	73124522	B4.01	1	1		*	43	73125190	D3.33	1	2	
10	73118262	B2.01/1	9	1		*	23	73124551	E3.10	1	1		*	6	73125238	D3.16	2	1	
4	73118320	B2.01/1	11	1		*	24	73124552	E3.10	1	1		*	7	73125239	D3.16	2	1	
2	73118320	B2.01/1	10	1		*	4	73124555	E3.10	1	1		*	4	73125240	D3.16	2	1	
7	73118329	B2.01/1	24	1		*	1	73124573	E3.32	4	1		*	3	73125241	D3.16	2	1	
1	73118329	B2.01/1	26	1		*	39	73124575	E3.10	1	2		*	4	73125303	C1.01	1	1	
18	73121005	A2.22	1	1		*	1	73124577	E3.32	4	1		*	13	73125364	L1.01	1	1	
16	73121505	D2.01	2	1		*	42	73124588	E3.10	1	2		*	7	73125367	L1.01	1	1	

FIATALLIS - FG 70R 70A 75R 75A

INDICE NUMÉRICO *** NUMERICAL INDEX

ITEM	PEÇA N.	SGR.	QUAD.	PAG.	GRID	*	ITEM	PEÇA N.	SGR.	QUAD.	PAG.	GRID	*	ITEM	PEÇA N.	SGR.	QUAD.	PAG.	GRID
35	73125379	D2.01	1	1		*	27	73125522	E3.10	2	1		*	24	73125851	D2.01	1	1	
37	73125400	E3.10	1	2		*	11	73125524	E3.10	3	1		*	25	73125852	D2.01	3	1	
29	73125403	E3.10	1	1		*	6	73125524	E3.10	2	1		*	27	73125852	E3.02/1	3	1	
35	73125404	E3.10	1	1		*	4	73125531	E3.10	2	1		*	19	73125853	E3.28	1	1	
5	73125405	E3.10	1	1		*	8	73125534	E3.10	3	1		*	1	73125855	E3.02	23	1	
20	73125406	E3.10	1	1		*	2	73125534	E3.10	2	1		*	34	73125860	B4.03	3	2	
21	73125407	E3.10	1	1		*	5	73125649	E3.02	29	1		*	13	73125864	E3.02	15	1	
22	73125408	E3.10	1	1		*	15	73125650	E3.02	31	1		*	19	73125864	E3.02	14	1	
29	73125480	E3.10	3	1		*	4	73125652	E3.02	29	1		*	24	73125866	E3.02	16	1	
22	73125480	E3.10	2	1		*	17	73125653	E3.02	31	1		*	26	73125866	E3.02	17	1	
30	73125481	E3.10	3	1		*	6	73125664	E3.02	6	1		*	13	73125874	D3.33	1	1	
23	73125481	E3.10	2	1		*	7	73125665	E3.02	6	1		*	16	73125876	E3.02	25	1	
23	73125482	E3.10	3	1		*	18	73125667	E3.02	14	1		*	20	73125876	E3.02	3	1	
13	73125482	E3.10	2	1		*	17	73125669	E3.02	14	1		*	3	73125891	F4.01	1	1	
24	73125483	E3.10	3	1		*	12	73125675	E3.02	20	1		*	1	73125891	F4.01	15	1	
14	73125483	E3.10	2	1		*	1	73125677	E3.02	20	1		*	25	73125907	E3.10/1	2	1	
25	73125488	E3.10	2	1		*	21	73125712	B4.01	1	1		*	22	73125907	E3.10/1	1	1	
25	73125493	E3.10	4	1		*	20	73125713	B4.01	1	1		*	40	73125916	B2.07	1	2	
24	73125494	E3.10	4	1		*	24	73125714	B4.01	3	1		*	24	73125917	B2.07	1	1	
26	73125494	E3.10	4	1		*	12	73125714	D3.16	1	1		*	36	73125919	B2.07	1	2	
1	73125496	E3.10	4	1		*	25	73125722	B4.01	1	1		*	31	73125921	B2.07	1	1	
29	73125497	E3.10	4	1		*	36	73125724	B4.01	3	2		*	30	73125926	B2.07	1	1	
29	73125498	E3.10	4	1		*	32	73125725	B4.01	3	1		*	9	73125932	D1.01	2	1	
29	73125499	E3.10	4	1		*	28	73125726	B4.01	1	1		*	14	73125932	D1.01	4	1	
23	73125500	E3.10	4	1		*	8	73125777	D2.01	1	1		*	17	73125933	D1.01	2	1	
16	73125501	E3.10	4	1		*	16	73125808	E3.02	18	1		*	16	73125933	D1.01	4	1	
10	73125509	E3.10	4	1		*	13	73125808	E3.02	19	1		*	19	73125935	D1.01	2	1	
7	73125511	E3.10	4	1		*	4	73125816	L1.30	1	1		*	15	73125935	D1.01	4	1	
35	73125513	E3.10	4	2		*	1	73125817	L1.30	1	1		*	26	73125952	D2.01	4	1	
25	73125517	E3.10	3	1		*	2	73125821	L1.30	1	1		*	27	73126111	F4.01	10	1	
26	73125517	E3.10	2	1		*	3	73125835	L1.30	1	1		*	29	73126111	F4.01	15	1	
6	73125519	E3.10	4	1		*	16	73125849	A2.21	1	1		*	18	73126111	F4.01	18	1	
6	73125520	E3.10	4	1		*	11	73125849	A2.21	3	1		*	22	73126127	E3.02	16	1	
6	73125521	E3.10	4	1		*	11	73125849	A2.21	2	1		*	18	73126127	E3.02	17	1	
22	73125522	E3.10	3	1		*	27	73125851	D2.01	2	1		*	21	73126129	E3.02	16	1	

FIATALLIS - FG 70R 70A 75R 75A

INDICE NUMÉRICO *** NUMERICAL INDEX

ITEM	PECA N.	SGR.	QUAD.	PAG.	GRID	*	ITEM	PECA N.	SGR.	QUAD.	PAG.	GRID	*	ITEM	PECA N.	SGR.	QUAD.	PAG.	GRID
17	73126129	E3.02	17	1		*	31	73126330	E3.10	3	1		*	12	73126571	E3.02	14	1	
10	73126130	E3.02	16	1		*	24	73126330	E3.10	2	1		*	11	73126593	E3.32	2	1	
6	73126130	E3.02	17	1		*	9	73126543	E3.02	20	1		*	2	73126595	E3.32	2	1	
1	73126156	A4.09	1	1		*	8	73126544	E3.02	20	1		*	3	73126597	E3.32	2	1	
4	73126160	F4.01	5	1		*	6	73126545	E3.02	20	1		*	15	73126599	E3.32	2	1	
4	73126160	F4.01	10	1		*	7	73126546	E3.02	20	1		*	7	73126600	E3.32	2	1	
5	73126160	F4.01	15	1		*	5	73126548	E3.02	20	1		*	12	73126601	E3.32	2	1	
7	73126176	D2.01	2	1		*	3	73126549	E3.02	20	1		*	10	73126602	E3.32	2	1	
43	73126181	D2.01	1	2		*	4	73126550	E3.02	20	1		*	13	73126603	E3.32	2	1	
8	73126184	D2.01	2	1		*	2	73126551	E3.02	20	1		*	8	73126605	E3.32	2	1	
42	73126185	D2.01	1	2		*	4	73126553	E3.02	9	1		*	1	73126609	E3.32	2	1	
38	73126186	D2.01	1	2		*	7	73126554	E3.02	8	1		*	7	73126610	E3.02	17B	1	
36	73126187	D2.01	1	2		*	7	73126554	E3.02	9	1		*	6	73126611	E3.32	2	1	
33	73126191	D2.01	1	1		*	5	73126555	E3.02	9	1		*	4	73126612	E3.32	2	1	
34	73126192	D2.01	1	1		*	8	73126556	E3.02	8	1		*	14	73126796	F4.01	11	1	
10	73126193	D2.01	1	1		*	8	73126556	E3.02	9	1		*	17	73126796	F4.01	14	1	
10	73126205	E3.02/1	3	1		*	15	73126557	E3.02	8	1		*	22	73126797	F4.01	11	1	
16	73126209	D2.01	1	1		*	15	73126557	E3.02	9	1		*	26	73126797	F4.01	14	1	
22	73126213	D2.01	3	1		*	17	73126558	E3.02	8	1		*	9	73126798	A4.09	2	1	
23	73126213	D2.01	4	1		*	17	73126558	E3.02	9	1		*	9	73126798	A4.09/1	2	1	
6	73126245	E3.10/1	1	1		*	11	73126559	E3.02	27	1		*	3	73126909	F4.01	11	1	
16	73126245	E3.13	5	1		*	10	73126560	E3.02	27	1		*	3	73126909	F4.01	14	1	
21	73126250	E3.10/1	1	1		*	17	73126561	E3.02	27	1		*	24	73127106	E3.02	13	1	
4	73126258	E3.02/1	1	1		*	9	73126562	E3.02	27	1		*	4	73127106	E3.02	DZ	1	
18	73126263	E3.10/1	1	1		*	12	73126564	E3.02	8	1		*	4	73127106	E3.02	12	1	
9	73126264	E3.10/1	1	1		*	12	73126564	E3.02	9	1		*	37	73127107	E3.02	13	2	
58	73126265	E3.02	1	2		*	8	73126565	E3.02	15	1		*	18	73127107	E3.02	DZ	1	
5	73126265	E3.02/1	1	1		*	5	73126565	E3.02	14	1		*	18	73127107	E3.02	12	1	
13	73126267	E3.02/1	1	1		*	10	73126566	E3.02	15	1		*	1	73127108	E3.10	1	1	
16	73126270	E3.02/1	1	1		*	9	73126566	E3.02	14	1		*	12	73127110	E3.02	DZ	1	
20	73126279	E3.02	4	1		*	3	73126567	E3.02	15	1		*	12	73127110	E3.02	12	1	
11	73126279	E3.02	5	1		*	4	73126567	E3.02	14	1		*	13	73127111	E3.02	16	1	
2	73126311	A0.02	1	1		*	9	73126568	E3.02	15	1		*	3	73127111	E3.02	17	1	
2	73126311	A0.02	2	1		*	10	73126568	E3.02	14	1		*	14	73127112	E3.02	16	1	
2	73126311	A0.02/1	1	1		*	12	73126571	E3.02	15	1		*	2	73127112	E3.02	17	1	

FIATALLIS - FG 70R 70A 75R 75A INDICE NUMÉRICO *** NUMERICAL INDEX

ITEM	PEÇA N.	SGR.	QUAD.	PAG.	GRID	*	ITEM	PEÇA N.	SGR.	QUAD.	PAG.	GRID	*	ITEM	PEÇA N.	SGR.	QUAD.	PAG.	GRID
19	73127113	E3.02	16	1		*	12	73127637	E3.02/1	2	1		*	2	73129171	E3.02/1	32	1	
20	73127113	E3.02	17	1		*	7	73127638	E3.02	15	1		*	14	73129486	B4.03	3	1	
20	73127114	E3.02	16	1		*	8	73127638	E3.02	14	1		*	14	73129543	B2.17	1	1	
21	73127114	E3.02	17	1		*	14	73127641	E3.02	13	1		*	1	73129587	E3.13	1	1	
22	73127131	B4.03	2	1		*	30	73127641	E3.02	DZ	1		*	16	73129638	E3.02	20	1	
18	73127176	A2.21	1	1		*	7	73127641	E3.02	4	1		*	14	73129639	E3.02	20	1	
4	73127179	A2.21	1	1		*	30	73127641	E3.02	12	1		*	15	73129640	E3.02	20	1	
1	73127180	A2.21	1	1		*	2	73127641	E3.02	31	1		*	17	73129641	E3.02	20	1	
17	73127181	A2.21	1	1		*	22	73127756	B4.03	3	1		*	25	73129701	B4.03	2	1	
5	73127234	A2.21	3	1		*	22	73127757	B4.03	3	1		*	15	73129958	C1.35	2	1	
6	73127234	A2.21	2	1		*	22	73127758	B4.03	3	1		*	15	73129958	C1.35/1	2	1	
1	73127351	E3.31	1	1		*	2	73127763	E3.10/1	1	1		*	17	73129961	E3.10	4	1	
14	73127352	E3.02	21	1		*	3	73127764	E3.10/1	1	1		*	18	73130013	E3.10	4	1	
9	73127353	E3.02	21	1		*	25	73127781	D1.01	2	1		*	14	73130017	E3.10	3	1	
1	73127354	E3.02	17	1		*	4	73127954	B4.03	2	1		*	1	73130017	E3.10	2	1	
5	73127355	E3.02	21	1		*	23	73128103	F4.01	5	1		*	16	73130105	E3.02	13	1	
16	73127356	E3.02	21	1		*	25	73128103	F4.01	10	1		*	20	73130105	E3.02	DZ	1	
6	73127357	E3.02	21	1		*	33	73128103	F4.01	15	1		*	12	73130105	E3.02	4	1	
2	73127359	E3.02	23	1		*	2	73128216	F4.01	11	1		*	25	73130105	E3.02	5	1	
4	73127364	E3.02	21	1		*	2	73128216	F4.01	14	1		*	20	73130105	E3.02	12	1	
20	73127626	E3.02	8	1		*	2	73128452	A2.21	1	1		*	4	73130105	E3.02/1	2	1	
20	73127626	E3.02	9	1		*	8	73128604	F4.01	8	1		*	25	73130116	E3.02	4	1	
14	73127628	E3.02	15	1		*	12	73128609	A2.21	4	1		*	15	73130116	E3.02	5	1	
21	73127628	E3.02	14	1		*	25	73128614	B2.07	2	1		*	19	73130333	E3.10	1	1	
7	73127628	E3.02	26	1		*	28	73128615	B2.07	2	1		*	14	73130543	F4.01	18	1	
7	73127628	E3.02	24	1		*	13	73128616	A2.21	4	1		*	14	73130954	B2.01	9	1	
36	73127629	E3.02	13	2		*	15	73128618	A2.21	4	1		*	27	73130955	B2.01	8	1	
16	73127629	E3.02	DZ	1		*	27	73128618	B2.07	2	1		*	13	73130969	E3.10	4	1	
24	73127629	E3.02	4	1		*	43	73128634	E3.02	1	2		*	2	73130973	B2.01	9	1	
16	73127629	E3.02	5	1		*	25	73129164	B2.01	6	1		*	9	73130973	B2.01/1	17	1	
16	73127629	E3.02	12	1		*	15	73129164	B2.01	7	1		*	1	73130975	B2.01	9	1	
1	73127633	C1.01	5	1		*	15	73129165	B2.01	6	1		*	35	73130991	B2.01	1	2	
22	73127637	E3.02	13	1		*	18	73129165	B2.01	7	1		*	1	73131019	B2.07	2	1	
23	73127637	E3.02	DZ	1		*	19	73129166	B2.01	9	1		*	10	73131019	B2.07	2	1	
23	73127637	E3.02	12	1		*	2	73129171	E3.02	32	1		*	17	73131024	B2.07	2	1	

FIATALLIS - FG 70R 70A 75R 75A

INDICE NUMÉRICO *** NUMERICAL INDEX

ITEM	PEÇA N.	SGR.	QUAD.	PAG.	GRID	*	ITEM	PEÇA N.	SGR.	QUAD.	PAG.	GRID	*	ITEM	PEÇA N.	SGR.	QUAD.	PAG.	GRID
2	73131026	B2.07	2	1		*	3	73132145	B2.17	1	1		*	12	73134357	B4.03	3	1	
13	73131027	B2.07	2	1		*	12	73132147	B2.17	1	1		*	27	73134431	C1.01	3	1	
18	73131028	B2.07	2	1		*	9	73132148	B2.17	1	1		*	15	73134476	D2.01	3	1	
9	73131029	A2.21	4	1		*	10	73132149	B2.17	1	1		*	15	73134476	D2.01	4	1	
19	73131029	B2.07	2	1		*	11	73132150	B2.17	1	1		*	29	73134477	D2.01	3	1	
27	73131598	B2.01	1	1		*	1	73132151	B2.17	1	1		*	31	73134477	D2.01	4	1	
44	73131677	B2.01	1	2		*	2	73132152	B2.17	1	1		*	16	73134477	E3.02/1	3	1	
22	73131677	B2.01	8	1		*	8	73132153	B2.17	1	1		*	26	73134478	D2.01	3	1	
7	73131677	B2.01	16	1		*	5	73132154	B2.17	1	1		*	27	73134478	D2.01	4	1	
5	73131677	B2.01	17	1		*	7	73132155	B2.17	1	1		*	16	73134480	D2.01	3	1	
13	73131677	B2.01/1	3	1		*	5	73132641	D3.16	1	1		*	16	73134480	D2.01	4	1	
13	73131677	B2.01/1	4	1		*	11	73132653	B2.07	2	1		*	14	73134481	D2.01	3	1	
18	73131677	B2.01/1	22	1		*	5	73132780	E3.10/1	1	1		*	14	73134481	D2.01	4	1	
6	73131677	B2.01/1	23	1		*	4	73132781	E3.10/1	1	1		*	30	73134482	D2.01	3	1	
23	73131679	B2.01	6	1		*	1	73132784	B2.01	2	1		*	32	73134482	D2.01	4	1	
10	73131680	B2.01	6	1		*	1	73132794	E3.10/1	1	1		*	28	73134483	D2.01	3	1	
13	73131680	B2.01	7	1		*	6	73132898	E3.13	5	1		*	30	73134483	D2.01	4	1	
12	73131681	B2.01	6	1		*	7	73132918	E3.13	5	1		*	14	73134510	E3.02	4	1	
1	73131681	B2.01	7	1		*	8	73132919	E3.13	5	1		*	35	73134510	E3.02	5	1	
27	73131682	B2.01	7	1		*	1	73132920	E3.13	5	1		*	8	73134511	E3.02	5	1	
7	73131683	B2.01	9	1		*	10	73132932	B2.01/1	5	1		*	17	73134550	E3.02	4	1	
27	73131689	B2.01	18	1		*	9	73132932	B2.01/1	15	1		*	5	73134819	B3.16	1	1	
3	73131690	B2.01	18	1		*	2	73132933	B2.01	3	1		*	4	73134821	B3.16	1	1	
1	73131691	B2.01	18	1		*	4	731329`5	B2.17	1	1		*	7	73135018	E3.02	5	1	
3	73131692	B2.01	17	1		*	1	73133298	B4.03	3	1		*	12	73135111	B4.01	3	1	
9	73131698	B2.01	3	1		*	12	73133579	E3.10	2	1		*	40	73135173	B4.01	1	2	
14	73131699	B2.0	3	1		*	4	73134218	E3.02	27	1		*	41	73135174	B4.01	1	2	
1	73131701	B2.01	3	1		*	7	73134218	E3.02	28	1		*	26	73135219	E3.02	DZ	1	
17	73131702	B2.01	3	1		*	8	73134219	E3.02	27	1		*	26	73135219	E3.02	12	1	
5	73131704	B2.01	3	1		*	8	73134219	E3.02	28	1		*	27	73135221	E3.02	DZ	1	
12	73131739	B2.01	3	1		*	12	73134312	E3.13	5	1		*	27	73135221	E3.02	12	1	
13	73131740	B2.01	3	1		*	5	73134352	B4.03	3	1		*	28	73135223	E3.02	DZ	1	
2	73131791	E3.10	1	1		*	5	73134353	B4.03	3	1		*	28	73135223	E3.02	12	1	
4	73131968	F4.01	8	1		*	5	73134354	B4.03	3	1		*	29	73135225	E3.02	DZ	1	
1	73131968	F4.01/1	8	1		*	6	73134355	B4.03	3	1		*	29	73135225	E3.02	12	1	

FIATALLIS - FG 70R 70A 75R 75A

INDICE NUMÉRICO *** NUMERICAL INDEX

ITEM	PEÇA N.	SGR.	QUAD.	PAG.	GRID	*	ITEM	PEÇA N.	SGR.	QUAD.	PAG.	GRID	*	ITEM	PEÇA N.	SGR.	QUAD.	PAG.	GRID
13	73136247	D1.01	2	1		*	8	73148458	A4.09/1	3	1		*	27	73148957	B4.03	3	1	
33	73136247	D1.01	4	1		*	10	73148465	A4.09	4	1		*	12	73148971	L6.04	1	1	
6	73136547	D2.01	1	1		*	5	73148466	A4.09	4	1		*	6	73148972	L6.04	1	1	
22	73136629	A2.06/1	1	1		*	5	73148466	A4.09/1	4	1		*	7	73149087	B4.03	6	1	
21	73136629	B2.06	3	1		*	4	73148467	A4.09	4	1		*	6	73149111	A2.01	2	1	
21	73136636	A2.06/1	1	1		*	4	73148467	A4.09/1	4	1		*	22	73149112	A2.01	2	1	
20	73136636	B2.06	3	1		*	6	73148469	A4.09	4	1		*	25	73149132	A2.01	2	1	
22	73139080	F4.01	16	1		*	6	73148469	A4.09/1	4	1		*	15	73149136	A2.01	1	1	
26	73139080	F4.01	15	1		*	16	73148471	A4.09	4	1		*	1	73149202	B4.03	5	1	
16	73140088	E3.32	2	1		*	16	73148471	A4.09/1	4	1		*	3	73149442	D2.01	1	1	
2	73140103	B4.03	4	1		*	7	73148486	A4.09	2	1		*	4	73149575	E3.02	24	1	
1	73142385	L1.04	6	1		*	7	73148486	A4.09/1	2	1		*	3	73149577	E3.02	24	1	
5	73144216	L1.04	6	1		*	12	73148488	A4.09/1	2	1		*	1	73149800	L1.03	1	1	
6	73144217	L1.04	6	1		*	8	73148491	A4.09	2	1		*	2	73149801	L1.04	1	1	
7	73144218	L1.04	6	1		*	8	73148491	A4.09/1	2	1		*	19	73149802	L1.04	2	1	
8	73144798	A2.21	4	1		*	2	73148492	A4.09	2	1		*	19	73149803	L1.04	2	1	
12	73144833	F4.01	1	1		*	2	73148492	A4.09/1	2	1		*	23	73149835	E3.02	24	1	
3	73145398	B4.03	3	1		*	6	73148494	A4.09	2	1		*	21	73149837	E3.02	24	1	
1	73146062	L6.04	2	1		*	6	73148494	A4.09/1	2	1		*	7	73149997	E3.02	3	1	
14	73146518	A2.21	4	1		*	7	73148503	A4.09	1	1		*	11	73150115	L1.04	2	1	
11	73146522	A2.21	4	1		*	5	73148534	A4.09	1	1		*	1	73150128	F4.05	3	1	
3	73146522	F4.01	2	1		*	7	73148544	A4.01	1	1		*	23	73150135	L1.04	2	1	
4	73147227	F4.01	2	1		*	1	73148577	B3.01	1	1		*	18	73150140	L1.04	2	1	
8	73148118	E3.02	22	1		*	1	73148577	B3.16	1	1		*	14	73150257	A4.01	1	1	
24	73148118	E3.02	26	1		*	21	73148661	L1.01	1	1		*	25	73150259	L1.04	4	1	
9	73148118	E3.02	8	1		*	20	73148827	B4.03	3	1		*	26	73150259	L1.04/1	2	1	
9	73148118	E3.02	9	1		*	1	73148829	B4.03	1	1		*	3	73150566	L1.04	3	1	
28	73148266	E3.28	1	1		*	8	73148831	B4.03	4	1		*	12	73150566	L1.04/1	1	1	
33	73148327	E3.28	1	1		*	6	73148832	B4.03	4	1		*	49	73150569	E3.02	1	2	
7	73148455	A4.09/1	3	1		*	4	73148833	B4.03	4	1		*	5	73150595	L1.04	3	1	
6	73148456	A4.09	3	1		*	1	73148834	B4.03	4	1		*	13	73150595	L1.04/1	1	1	
6	73148456	A4.09/1	3	1		*	5	73148883	B4.03	4	1		*	4	73150596	L1.04	3	1	
4	73148457	A4.09	3	1		*	12	73148888	E3.02/1	3	1		*	10	73150596	L1.04/1	1	1	
4	73148457	A4.09/1	3	1		*	13	73148889	E3.02/1	3	1		*	6	73150597	L1.04	3	1	
8	73148458	A4.09	3	1		*	24	73148897	E3.02	1	1		*	11	73150597	L1.04/1	1	1	

FIATALLIS - FG 70R 70A 75R 75A INDICE NUMÉRICO *** NUMERICAL INDEX

ITEM	PEÇA N.	SGR.	QUAD.	PAG.	GRID	*	ITEM	PEÇA N.	SGR.	QUAD.	PAG.	GRID	*	ITEM	PEÇA N.	SGR.	QUAD.	PAG.	GRID
15	73150598	L1.04	3	1		*	15	73151001	L1.04/1	2	1		*	21	73152125	A2.21	1	1	
6	73150602	B2.07	1	1		*	23	73151002	L1.04	4	1		*	19	73152129	A2.21	3	1	
1	73150602	B2.07/1	2	1		*	19	73151002	L1.04/1	2	1		*	20	73152129	A2.21	2	1	
21	73150608	L1.04	2	1		*	7	73151017	L1.04	4	1		*	5	73152169	F4.01	5	1	
29	73150609	L1.04	2	2		*	10	73151017	L1.04/1	2	1		*	5	73152169	F4.01	10	1	
8	73150610	L1.04	1	1		*	7	73151018	L1.04	4	1		*	6	73152169	F4.01	15	1	
1	73150611	L1.04	1	1		*	11	73151018	L1.04/1	2	1		*	15	73152180	F4.01	11	1	
4	73150616	L1.04	1	1		*	5	73151024	L1.04	4	1		*	18	73152180	F4.01	14	1	
28	73150617	L1.04	2	2		*	5	73151024	L1.04/1	2	1		*	6	73152211	F4.01	16	1	
9	73150618	L1.04	1	1		*	24	73151080	L1.04	4	1		*	7	73152215	F4.01	16	1	
3	73150619	L1.04	1	1		*	17	73151080	L1.04/1	2	1		*	3	73152221	F4.01	16	1	
20	73150620	L1.04	2	1		*	3	73151154	D3.33	1	1		*	32	73152267	D1.01	2	1	
11	73150625	F4.01	1	1		*	7	73151195	C1.35	2	1		*	10	73152282	B2.07	1	1	
8	73150630	F4.01	1	1		*	8	73151195	C1.35/1	2	1		*	7	73152282	B2.07/1	2	1	
33	73150728	D1.01	2	1		*	1	73151200	C1.35	1	1		*	29	73152396	L1.01	1	1	
30	73150728	D1.01	4	1		*	10	73151203	C1.35/1	2	1		*	13	73152449	F4.01	17	1	
7	73150729	D1.01	2	1		*	5	73151209	C1.35	2	1		*	1	73152555	L1.04/1	1	1	
9	73150729	D1.01	4	1		*	6	73151209	C1.35/1	2	1		*	19	73152557	L1.04/1	1	1	
14	73150743	D1.01	2	1		*	6	73151215	L1.04	4	1		*	20	73152606	E3.02	31	1	
32	73150743	D1.01	4	1		*	8	73151215	L1.04/1	2	1		*	2	73152661	L1.04	4	1	
1	73150754	L1.04	8	1		*	11	73151219	L1.04	4	1		*	3	73152661	L1.04/1	2	1	
6	73150779	L1.04	10	1		*	12	73151220	L1.04	4	1		*	23	73152766	F4.01	11	1	
26	73150784	C1.35/1	2	1		*	7	73151372	L1.04	1	1		*	27	73152766	F4.01	14	1	
14	73150789	C1.35/1	2	1		*	6	73151373	L1.04	1	1		*	30	73152816	D2.01	1	1	
22	73150790	C1.35/1	2	1		*	10	73151501	A2.22	1	1		*	2	73152825	L1.01	1	1	
19	73150793	C1.35/1	2	1		*	9	73151503	A2.56	1	1		*	5	73152909	L1.04	1	1	
27	73150807	C1.35/1	2	1		*	5	73151582	L1.04	5	1		*	7	73152940	B2.07	1	1	
17	73150815	C1.35/1	2	1		*	5	73151746	A2.56	1	1		*	5	73153047	L1.30	1	1	
48	73150856	E3.02	1	2		*	17	73151815	L1.04	2	1		*	4	73153049	F4.01	11	1	
3	73150909	L1.04	4	1		*	15	73151891	E3.02/1	3	1		*	4	73153049	F4.01	14	1	
4	73150909	L1.04/1	2	1		*	25	73152011	L1.01	1	1		*	8	73153050	F4.01	11	1	
16	73150910	L1.04	4	1		*	7	73152112	A2.21	1	1		*	8	73153050	F4.01	14	1	
23	73150910	L1.04/1	2	1		*	23	73152114	A2.21	1	1		*	7	73153062	C1.35	1	1	
2	73150997	L1.04	5	1		*	10	73152115	A2.21	1	1		*	15	73153094	F4.01	5	1	
5	73151001	L1.04	4	1		*	13	73152117	A2.21	1	1		*	15	73153094	F4.01	10	1	

FIATALLIS - FG 70R 70A 75R 75A

INDICE NUMÉRICO *** NUMERICAL INDEX

ITEM	PEÇA N.	SGR.	QUAD.	PAG.	GRID	*	ITEM	PEÇA N.	SGR.	QUAD.	PAG.	GRID	*	ITEM	PEÇA N.	SGR.	QUAD.	PAG.	GRID
27	73153094	F4.01	15	1		*	22	73153730	D2.01	1	1		*	2	73153948	L1.04	7	1	
4	73153159	L1.04	6	1		*	1	73153747	D2.01	2	1		*	39	73153949	F4.01	15	2	
2	73153160	L1.04	6	1		*	1	73153747	D2.01	3	1		*	9	73153951	F4.01	11	1	
4	73153166	L1.04	4	1		*	1	73153747	D2.01	4	1		*	9	73153951	F4.01	14	1	
16	73153166	L1.04/1	2	1		*	17	73153747	E3.02/1	3	1		*	21	73153952	F4.01	16	1	
27	73153170	L1.04	2	1		*	2	73153752	D2.01	3	1		*	3	73153953	L1.04	7	1	
27	73153171	L1.04	2	1		*	2	73153752	D2.01	4	1		*	30	73153954	F4.01	11	1	
22	73153179	L1.04	2	1		*	28	73153752	E3.02/1	3	1		*	14	73153954	F4.01	13	1	
22	73153180	L1.04	2	1		*	31	73153754	D2.01	3	1		*	33	73153954	F4.01	14	1	
30	73153196	L1.04	2	2		*	36	73153754	D2.01	4	2		*	15	73153955	F4.01	16	1	
3	73153197	L1.04	2	1		*	23	73153755	D2.01	3	1		*	25	73153955	F4.01	17	1	
6	73153205	L1.04	2	1		*	24	73153755	D2.01	4	1		*	22	73153956	F4.01	13	1	
7	73153220	L1.04	2	1		*	20	73153755	E3.02/1	3	1		*	2	73153956	F4.01	18	1	
7	73153221	L1.04	2	1		*	11	73153759	D2.01	3	1		*	24	73153958	F4.01	11	1	
24	73153265	D1.01	4	1		*	11	73153759	D2.01	4	1		*	28	73153958	F4.01	14	1	
36	73153266	D1.01	4	2		*	6	73153760	D2.01	3	1		*	21	73153965	F4.01	17	1	
6	73153267	D1.01	2	1		*	6	73153760	D2.01	4	1		*	1	73153966	F4.01	2	1	
19	73153276	F4.01	16	1		*	40	73153774	D2.01	2	2		*	24	73153966	F4.01	5	1	
18	73153447	D1.01	3	1		*	21	73153774	E3.02/1	3	1		*	26	73153966	F4.01	10	1	
5	73153450	A2.01	2	1		*	21	73153775	D2.01	3	1		*	3	73153966	F4.01	15	1	
11	73153451	A2.01	2	1		*	21	73153775	D2.01	4	1		*	2	73153967	F4.01	2	1	
10	73153453	A2.01	2	1		*	37	73153776	D2.01	1	2		*	3	73153967	F4.01	5	1	
21	73153454	A2.01	2	1		*	36	73153795	L1.04	2	2		*	3	73153967	F4.01	10	1	
1	73153455	A2.01	2	1		*	4	73153814	A2.01	2	1		*	4	73153967	F4.01	15	1	
36	73153514	B4.01	1	2		*	8	73153815	A2.24	1	1		*	27	73154075	E3.02	15	1	
39	73153515	B4.01	1	2		*	19	73153845	E3.10	3	1		*	20	73154075	E3.02	14	1	
13	73153598	B2.07	1	1		*	21	73153845	E3.10	2	1		*	25	73154077	E3.02	15	1	
17	73153598	B2.07/1	2	1		*	34	73153853	D2.01	4	1		*	25	73154077	E3.02	14	1	
11	73153599	B2.07	1	1		*	28	73153854	D2.01	4	1		*	27	73154127	F4.01	17	1	
9	73153599	B2.07/1	2	1		*	12	73153860	D1.01	2	1		*	14	73154134	F4.01	17	1	
10	73153600	B2.07/1	2	1		*	10	73153860	D1.01	4	1		*	4	73154331	L1.01	2	1	
14	73153601	B2.07	1	1		*	17	73153871	D2.01	2	1		*	23	73154362	L1.01	1	1	
16	73153601	B2.07/1	2	1		*	23	73153873	D2.01	2	1		*	1	73154364	L1.01	2	1	
8	73153727	C1.01	1	1		*	5	73153947	F4.01	13	1		*	5	73154366	L1.01	2	1	
3	73153729	C1.01	1	1		*	11	73153947	F4.01	13	1		*	1	73154376	F4.01	13	1	

FIATALLIS - FG 70R 70A 75R 75A INDICE NUMÉRICO *** NUMERICAL INDEX

ITEM	PEÇA N.	SGR.	QUAD.	PAG.	GRID	*	ITEM	PEÇA N.	SGR.	QUAD.	PAG.	GRID	*	ITEM	PEÇA N.	SGR.	QUAD.	PAG.	GRID
5	73154520	D2.01	3	1		*	1	73155751	L1.04	10	1		*	7	73158793	A4.09	3	1	
5	73154520	D2.01	4	1		*	20	73155816	L1.01	1	1		*	1	73158794	A4.09	3	1	
26	73154520	E3.02/1	3	1		*	37	73155819	D1.01	2	2		*	3	73158796	E3.02	32	1	
7	73154521	D2.01	3	1		*	38	73155819	D1.01	4	2		*	3	73158796	E3.02/1	32	1	
7	73154521	D2.01	4	1		*	5	73155825	A4.01	1	1		*	9	73158797	E3.02	32	1	
34	73154522	D2.01	3	1		*	8	73155831	B2.06	3	1		*	1	73158800	B2.00	1	1	
39	73154522	D2.01	4	2		*	9	73155834	A2.06/1	1	1		*	10	73158842	E3.02	32	1	
25	73154544	C1.01	1	1		*	10	73155834	B2.06	3	1		*	7	73158843	B2.06	1	1	
33	73154545	C1.01	1	1		*	8	73155931	A2.06/1	1	1		*	5	73158844	B2.06	1	1	
1	73154546	C1.01	2	1		*	3	73156874	E3.10	1	1		*	26	73158845	E3.02	3	1	
4	73154652	E3.13	1	1		*	10	73157021	A2.21	3	1		*	15	73158845	E3.02	2	1	
3	73154653	E3.13	1	1		*	12	73157022	A2.21	3	1		*	29	73158847	A4.02	1	1	
4	73154690	L1.04	8	1		*	24	73157023	A2.21	3	1		*	16	73158935	A2.21	2	1	
17	73154691	L1.04	4	1		*	26	73157023	A2.21	2	1		*	29	73158936	A2.21	2	1	
1	73154696	L1.04	9	1		*	16	73157026	A2.21	3	1		*	5	73158994	B2.06	2	1	
34	73154750	E3.02	26	1		*	34	73157026	A2.21	2	1		*	27	73159000	A2.21	2	1	
3	73154750	E3.02	18	1		*	13	73157027	A2.21	3	1		*	28	73159001	A2.21	2	1	
7	73154750	E3.02	19	1		*	21	73157029	A2.21	3	1		*	14	73159002	A2.21	2	1	
21	73154904	L1.04	3	1		*	1	73157029	A2.21	2	1		*	15	73159003	A2.21	2	1	
17	73154909	L1.04	3	1		*	15	73157032	A2.21	3	1		*	13	73159006	A2.21	2	1	
12	73154910	L1.04	3	1		*	17	73157032	A2.21	2	1		*	7	73159008	F4.01	8	1	
9	73154910	L1.04/1	1	1		*	7	73158311	E3.02	31	1		*	10	73159009	A2.21	2	1	
10	73154912	L1.04	3	1		*	11	73158312	E3.02	31	1		*	39	73159010	B2.07	1	2	
11	73154919	D2.01	2	1		*	13	73158313	E3.02	31	1		*	24	73159014	C1.35	2	1	
22	73154920	D2.01	2	1		*	18	73158314	E3.02	31	1		*	28	73159017	B2.07	1	1	
20	73154927	L1.04	3	1		*	11	73158325	A0.02	1	1		*	26	73159018	B2.07	1	1	
8	73154934	L1.04	4	1		*	11	73158325	A0.02	2	1		*	23	73159019	A2.21	2	1	
29	73155019	B2.01	6	1		*	19	73158769	A2.06/1	1	1		*	13	73159021	C1.35	2	1	
1	73155025	B2.00/1	1	1		*	18	73158769	B2.06	3	1		*	19	73159022	C1.35	2	1	
22	73155026	L1.04	4	1		*	11	73158771	A4.01	1	1		*	17	73159023	C1.35	2	1	
2	73155026	L1.04/1	2	1		*	1	73158774	B3.01	1	1		*	14	73159024	C1.35	2	1	
4	73155084	D3.33	1	1		*	1	73158774	B3.16	1	1		*	21	73159025	F4.01	16	1	
30	73155198	L1.04/1	2	1		*	1	73158775	B2.06	2	1		*	29	73159026	F4.01	11	1	
14	73155199	L1.04/1	2	1		*	10	73158777	B2.06	2	1		*	28	73159027	F4.01	10	1	
12	73155213	A4.09	2	1		*	1	73158790	A4.09	4	1		*	38	73159027	F4.01	15	2	

FIATALLIS - FG 70R 70A 75R 75A

INDICE NUMÉRICO *** NUMERICAL INDEX

ITEM	PEÇA N.	SGR.	QUAD.	PAG.	GRID	*	ITEM	PEÇA N.	SGR.	QUAD.	PAG.	GRID	*	ITEM	PEÇA N.	SGR.	QUAD.	PAG.	GRID
2	73159028	F4.01	5	1		*	29	74052780	B2.01/1	4	1		*	34	75203202	D2.02	1	1	
2	73159028	F4.01	10	1		*	14	74052780	B2.01/1	9	1		*	6	75203354	D2.02	1	1	
31	73159050	B2.07	2	1		*	7	74052870	B2.01	1	1		*	14	75203355	D2.02	1	1	
1	73159050	B2.07	1	1		*	15	74055100	B2.01	18	1		*	15	75203356	D2.02	1	1	
21	73159051	B2.07	1	1		*	19	74055100	B2.01	18	1		*	20	75203357	D2.02	1	1	
12	73159089	B2.07	1	1		*	63	74060150	A2.27	1	3		*	22	75203358	D2.02	1	1	
3	73159092	B2.07	1	1		*	36	74060151	A2.27	1	2		*	24	75203359	D2.02	1	1	
17	73159093	B2.07	1	1		*	1	75201391	D3.16	1	1		*	27	75203360	D2.02	1	1	
3	73159096	C1.01	6	1		*	16	75201624	A2.01	2	1		*	35	75203433	D2.02	1	1	
11	73159097	C1.01	6	1		*	1	75203170	D2.02	1	1		*	36	75203434	D2.02	1	2	
2	73159099	B2.07	1	1		*	2	75203171	D2.02	1	1		*	38	75203440	D2.02	1	2	
1	73159101	C1.01	6	1		*	3	75203172	D2.02	1	1		*	55	75204074	A2.27	1	2	
1	73159104	A0.00	1	1		*	4	75203173	D2.02	1	1		*	55	75204076	A2.27	1	2	
3	73159412	D2.01	3	1		*	5	75203174	D2.02	1	1		*	55	75204077	A2.27	1	2	
3	73159412	D2.01	4	1		*	7	75203176	D2.02	1	1		*	55	75204078	A2.27	1	2	
17	73159415	D2.01	3	1		*	8	75203177	D2.02	1	1		*	55	75204079	A2.27	1	2	
17	73159415	D2.01	4	1		*	9	75203178	D2.02	1	1		*	55	75204080	A2.27	1	2	
3	73159463	B2.07	2	1		*	10	75203179	D2.02	1	1		*	55	75204081	A2.27	1	2	
5	73159464	B2.07	2	1		*	11	75203180	D2.02	1	1		*	55	75204082	A2.27	1	2	
14	73159465	B2.07	2	1		*	12	75203181	D2.02	1	1		*	33	75204083	A2.27	1	2	
15	73159466	B2.07	2	1		*	13	75203182	D2.02	1	1		*	9	75204095	A2.27	1	1	
16	73159467	B2.07	2	1		*	16	75203185	D2.02	1	1		*	53	75204095	A2.27	1	2	
23	73159542	A2.21	3	1		*	17	75203186	D2.02	1	1		*	32	75204097	A2.27	1	2	
25	73159542	A2.21	2	1		*	18	75203187	D2.02	1	1		*	60	75204100	A2.27	1	3	
4	73159603	B3.16	1	1		*	19	75203188	D2.02	1	1		*	10	75204103	A2.27	1	1	
27	73159744	D2.01	3	1		*	21	75203190	D2.02	1	1		*	52	75204103	A2.27	1	2	
29	73159744	D2.01	4	1		*	23	75203190	D2.02	1	1		*	5	75204108	A2.27	1	1	
4	73160061	E3.02/1	32	1		*	25	75203193	D2.02	1	1		*	30	75204109	A2.27	1	2	
15	73160062	E3.02/1	32	1		*	26	75203194	D2.02	1	1		*	38	75204110	A2.27	1	2	
5	73160063	E3.02/1	32	1		*	28	75203196	D2.02	1	1		*	3	75204112	A2.27	1	1	
6	73160099	F4.01	12	1		*	29	75203197	D2.02	1	1		*	44	75204113	A2.27	1	2	
19	74021600	A2.22	1	1		*	30	75203198	D2.02	1	1		*	4	75204118	A2.27	1	1	
41	74043971	B2.01	1	2		*	31	75203199	D2.02	1	1		*	31	75204120	A2.27	1	2	
33	74052780	B2.01	1	1		*	32	75203200	D2.02	1	1		*	66	75204126	A2.28	1	2	
17	74052780	B2.01/1	3	1		*	33	75203201	D2.02	1	1		*	25	75204131	A2.27	1	1	

FIATALLIS - FG 70R 70A 75R 75A

INDICE NUMÉRICO *** NUMERICAL INDEX

ITEM	PECA N.	SGR.	QUAD.	PAG.	GRID	*	ITEM	PECA N.	SGR.	QUAD.	PAG.	GRID	*	ITEM	PECA N.	SGR.	QUAD.	PAG.	GRID
29	75204132	A2.27	1	1		*	45	75204396	A2.27	1	2		*	24	75204511	A2.28	1	1	
64	75204133	A2.27	1	3		*	31	75204397	A2.27	1	2		*	2	75204562	F6.08	1	1	
3	75204135	A2.28	1	1		*	56	75204399	A2.27	1	3		*	3	75204563	F6.08	1	1	
12	75204143	A2.28	1	1		*	21	75204400	A2.27	1	1		*	16	75204564	F6.08	1	1	
13	75204144	A2.28	1	1		*	20	75204401	A2.27	1	1		*	6	75204565	F6.08	1	1	
41	75204145	A2.28	1	2		*	20	75204402	A2.27	1	1		*	28	75204566	F6.08	1	1	
74	75204147	A2.28	1	3		*	20	75204403	A2.27	1	1		*	6	75204899	F2.00	1	1	
47	75204150	A2.28	1	2		*	20	75204404	A2.27	1	1		*	48	75204938	B2.01	1	2	
48	75204151	A2.28	1	2		*	20	75204405	A2.27	1	1		*	47	75204939	B2.01	1	2	
39	75204157	A2.28	1	2		*	20	75204406	A2.27	1	1		*	26	75204945	B2.01	18	1	
28	75204159	A2.28	1	1		*	20	75204407	A2.27	1	1		*	5	75204954	F2.00	1	1	
31	75204160	A2.28	1	1		*	13	75204409	A2.27	1	1		*	17	75204956	A2.28	1	1	
42	75204165	A2.28	1	2		*	26	75204410	A2.27	1	1		*	21	75204956	A2.28	1	1	
70	75204166	A2.28	1	2		*	28	75204411	A2.27	1	1		*	6	75204958	B2.01/1	20	1	
8	75204167	A2.28	1	1		*	27	75204412	A2.27	1	1		*	7	75204959	B2.01/1	20	1	
14	75204205	F6.08	1	1		*	23	75204416	A2.27	1	1		*	1	75204963	B2.01/1	20	1	
68	75204230	A2.28	1	2		*	22	75204417	A2.27	1	1		*	2	75204971	A1.04	1	1	
64	75204233	A2.28	1	2		*	24	75204418	A2.27	1	1		*	3	75204980	A4.02	1	1	
9	75204242	F6.03	1	1		*	17	75204419	A2.27	1	1		*	21	75204983	A4.02	1	1	
41	75204298	A2.27	1	2		*	51	75204422	A2.27	1	2		*	22	75204984	A4.02	1	1	
1	75204306	E3.31	8	1		*	1	75204423	A2.27	1	1		*	10	75204991	A1.02	1	1	
1	75204306	E3.31	4	1		*	20	75204450	F6.03	1	1		*	4	75204994	F2.00	1	1	
5	75204306	E3.31	5	1		*	1	75204451	F6.03	1	1		*	88	75205241	A2.28	1	3	
1	75204306	E3.31	10	1		*	19	75204491	A2.27	1	1		*	18	75205242	A2.28	1	1	
3	75204306	E3.31	11	1		*	54	75204492	A2.27	1	2		*	15	75205244	A2.28	1	1	
24	75204312	E3.02	3	1		*	18	75204493	A2.27	1	1		*	16	75205245	A2.28	1	1	
25	75204324	E3.02	3	1		*	16	75204494	A2.27	1	1		*	89	75205246	A2.28	1	3	
14	75204364	A2.28	1	1		*	43	75204502	A2.28	1	2		*	9	75205247	A2.28	1	1	
33	75204364	A2.28	1	1		*	2	75204503	A2.28	1	1		*	34	75205248	A2.28	1	1	
46	75204367	A2.28	1	2		*	5	75204504	A2.28	1	1		*	49	75205249	A2.28	1	2	
73	75204368	A2.28	1	3		*	25	75204505	A2.28	1	1		*	91	75205250	A2.28	1	3	
11	75204370	A2.28	1	1		*	1	75204506	A2.28	1	1		*	69	75205252	A2.28	1	2	
20	75204375	A2.28	1	1		*	26	75204507	A2.28	1	1		*	30	75205256	A2.28	1	1	
19	75204376	A2.28	1	1		*	4	75204509	A2.28	1	1		*	32	75205258	A2.28	1	1	
40	75204379	A2.28	1	2		*	23	75204510	A2.28	1	1		*	10	75205259	A2.28	1	1	

FIATALLIS - FG 70R 70A 75R 75A

INDICE NUMÉRICO *** NUMERICAL INDEX

ITEM	PEÇA N.	SGR.	QUAD.	PAG.	GRID	*	ITEM	PEÇA N.	SGR.	QUAD.	PAG.	GRID	*	ITEM	PEÇA N.	SGR.	QUAD.	PAG.	GRID
24	75205288	F6.08	1	1		*	10	75205470	B2 01/1	4	1		*	20	75206126	B2.01/1	15	1	
24	75205289	F6.08	1	1		*	1	75205471	B2.01/1	22	1		*	4	75206127	B2.01	1	1	
59	75205292	A2.28	1	2		*	2	75205472	B2.01/1	21	1		*	21	75206127	B2.01/1	15	1	
71	75205293	A2.28	1	2		*	5	75205473	B2.01/1	14	1		*	8	75206131	B2.01/1	18	1	
25	75205317	B2.01	8	1		*	4	75205475	B2.01/1	16	1		*	24	75206131	B2.01/1	18	1	
38	75205318	B2.01	1	2		*	6	75205477	B2.01/1	22	1		*	5	75206141	B2.01	12	1	
6	75205417	B2.01/1	11	1		*	7	75205480	B2.01/1	22	1		*	3	75206142	B2.01	12	1	
8	75205418	B2.01/1	21	1		*	8	75205481	B2.01/1	15	1		*	15	75206145	B2.01	12	1	
6	75205419	B2.01/1	9	1		*	21	75205484	B2.01/1	7	1		*	1	75206146	B2.01	12	1	
6	75205423	B2.01/1	13	1		*	3	75205490	B2.01/1	11	1		*	14	75206147	B2.01	12	1	
15	75205425	B2.01/1	4	1		*	10	75205496	B2.01/1	12	1		*	13	75206148	B2.01	12	1	
8	75205426	B2.01/1	7	1		*	2	75205497	B2.01/1	8	1		*	8	75206149	B2.01/1	5	1	
6	75205430	B2.01/1	10	1		*	27	75205499	B2.01/1	4	1		*	9	75206149	B2.01/1	8	1	
5	75205431	B2.01	7	1		*	5	75205956	B2.01/1	10	1		*	22	75206149	B2.01/1	14	1	
10	75205431	B2.01/1	15	1		*	13	75205968	B2.01	8	1		*	25	75206149	B2.01/1	16	1	
3	75205434	B2.01/1	17	1		*	5	75205971	B2.01	5	1		*	11	75206152	B2.01	12	1	
7	75205435	B2.01/1	11	1		*	2	75205977	B2.01	17	1		*	12	75206153	B2.01	12	1	
3	75205435	B2.01/1	10	1		*	21	75205981	B2.01	18	1		*	10	75206155	B2.01	12	1	
24	75205436	B2.01/1	14	1		*	16	75205985	B2.01	12	1		*	3	75206155	B2.01/1	1	1	
3	75205438	B2.01/1	9	1		*	26	75205993	B2.01/1	4	1		*	5	75206155	B2.01/1	1	1	
4	75205439	B2.01/1	9	1		*	22	75205995	B2.01/1	15	1		*	8	75206156	B2.01	12	1	
7	75205440	B2.01/1	10	1		*	16	75205996	B2.01/1	7	1		*	3	75206310	B2.01	4	1	
8	75205441	B2.01/1	10	1		*	20	75205997	B2.01/1	7	1		*	4	75206311	B2.01	11	1	
1	75205442	B2.01/1	11	1		*	8	75205998	B2.01/1	19	1		*	9	75206314	B2.01/1	7	1	
15	75205443	B2.01/1	9	1		*	19	75205999	B2.01/1	7	1		*	42	75206320	B2.01	1	2	
12	75205454	B2.01/1	5	1		*	11	75206058	B2.01	2	1		*	46	75206320	B2.01	1	2	
16	75205458	B2.01/1	3	1		*	10	75206059	B2.01	2	1		*	37	75206322	B2.01	1	2	
3	75205463	B2.01/1	21	1		*	6	75206093	E3.02/1	32	1		*	20	75206329	B2.01	8	1	
11	75205465	B2.01/1	5	1		*	36	75206094	B2.01	1	2		*	7	75206329	B2.01/1	7	1	
6	75205467	B2.01/1	12	1		*	2	75206094	B2.01/1	3	1		*	15	75206364	B2.01	10	1	
3	75205467	B2.01/1	14	1		*	39	75206105	B2.01	1	2		*	12	75206366	B2.01	10	1	
12	75205467	B2.01/1	15	1		*	11	75206105	B2.01/1	3	1		*	1	75206368	B2.01	15	1	
13	75205467	B2.01/1	16	1		*	3	75206110	B2.01/1	3	1		*	6	75206370	B2.01	16	1	
7	75205468	B2.01/1	15	1		*	20	75206110	B2.01/1	4	1		*	4	75206372	B2.01	13	1	
9	75205469	B2.01/1	4	1		*	1	75206120	B2.01/1	9	1		*	23	75206402	B2.01	8	1	

FIATALLIS - FG 70R 70A 75R 75A INDICE NUMÉRICO *** NUMERICAL INDEX

ITEM	PEÇA N.	SGR.	QUAD.	PAG.	GRID	*	ITEM	PEÇA N.	SGR.	QUAD.	PAG.	GRID	*	ITEM	PEÇA N.	SGR.	QUAD.	PAG.	GRID
1	75206420	B2.01/1	17	1		*	17	75206645	B2.01/1	12	1		*	6	75206723	E3.10	5	1	
2	75206470	B2.01	1	1		*	18	75206645	B2.01/1	14	1		*	7	75206724	E3.10	5	1	
12	75206479	B2.01/1	11	1		*	16	75206645	B2.01/1	16	1		*	8	75206725	E3.10	5	1	
14	75206489	B2.01/1	11	1		*	15	75206646	B2.01/1	12	1		*	9	75206726	E3.10	5	1	
1	75206489	B2.01/1	10	1		*	17	75206646	B2.01/1	14	1		*	9	75206727	E3.10	5	1	
3	75206536	B2.01	8	1		*	17	75206646	B2.01/1	16	1		*	10	75206728	E3.10	5	1	
5	75206537	B2.01	8	1		*	6	75206649	B2.01/1	3	1		*	11	75206729	E3.10	5	1	
2	75206599	B2.01/1	9	1		*	2	75206651	B2.01/1	13	1		*	12	75206730	E3.10	5	1	
10	75206601	B2.01/1	10	1		*	6	75206654	B2.01/1	8	1		*	13	75206731	E3.10	5	1	
11	75206602	B2.01/1	11	1		*	2	75206656	B2.01/1	17	1		*	14	75206732	E3.10	5	1	
13	75206603	B2.01/1	11	1		*	7	75206657	B2.01/1	8	1		*	15	75206733	E3.10	5	1	
6	75206608	B2.01/1	14	1		*	1	75206659	B2.01/1	8	1		*	16	75206734	E3.10	5	1	
14	75206612	B2.01/1	3	1		*	13	75206660	B2.01/1	7	1		*	17	75206735	E3.10	5	1	
2	75206618	B2.01/1	12	1		*	12	75206661	B2.01/1	7	1		*	18	75206736	E3.10	5	1	
16	75206618	B2.01/1	12	1		*	3	75206670	B2.01/1	8	1		*	26	75206804	A1.01	1	1	
19	75206618	B2.01/1	14	1		*	6	75206674	B2.01/1	17	1		*	6	75206808	A3.01	1	1	
2	75206618	B2.01/1	15	1		*	17	75206675	B2.01/1	15	1		*	9	75206809	A3.01	1	1	
10	75206618	B2.01/1	16	1		*	4	75206676	B2.01/1	18	1		*	7	75206811	A1.01	3	1	
4	75206619	B2.01/1	15	1		*	5	75206677	B2.01/1	7	1		*	11	75206812	A3.01	1	1	
19	75206620	B2.01/1	15	1		*	21	75206689	B2.01/1	4	1		*	3	75206813	A1.02	2	1	
14	75206621	B2.01/1	5	1		*	18	75206694	B2.01/1	18	1		*	14	75206814	F2.00	1	1	
17	75206622	B2.01/1	7	1		*	1	75206695	B2.01/1	13	1		*	9	75206816	F2.00	1	1	
11	75206624	B2.01/1	7	1		*	10	75206696	B2.01/1	11	1		*	1	75206818	F2.00	1	1	
1	75206625	B2.01/1	7	1		*	5	75206697	B2.01	10	1		*	1	75206819	A1.04	1	1	
18	75206626	B2.01/1	7	1		*	17	75206699	B2.01	10	1		*	6	75206821	A1.05	1	1	
4	75206633	B2.01/1	7	1		*	4	75206699	B2.01/1	18	1		*	18	75206822	F2.00	1	1	
12	75206635	F2.00	1	1		*	20	75206699	B2.01/1	18	1		*	22	75206824	A2.24	2	1	
3	75206636	F2.00	1	1		*	9	75206701	B2.01/1	11	1		*	3	75206825	A2.26	1	1	
8	75206637	F2.00	1	1		*	1	75206704	B2.01/1	21	1		*	1	75206828	A2.54	1	1	
10	75206638	F2.00	1	1		*	22	75206715	B2.01/1	7	1		*	3	75206830	A3.01	2	1	
13	75206640	F2.00	1	1		*	1	75206718	E3.10	5	1		*	4	75206832	A3.01	1	1	
19	75206641	B2.01/1	22	1		*	2	75206719	E3.10	5	1		*	9	75206833	A1.01	3	1	
7	75206641	B2.01/1	23	1		*	3	75206720	E3.10	5	1		*	8	75206834	A1.01	3	1	
8	75206642	B2.01/1	22	1		*	4	75206721	E3.10	5	1		*	24	75206836	A1.02	1	1	
12	75206644	B2.01/1	12	1		*	5	75206722	E3.10	5	1		*	5	75206842	A1.02	2	1	

FIATALLIS - FG 70R 70A 75R 75A

INDICE NUMÉRICO *** NUMERICAL INDEX

ITEM	PEÇA N.	SGR.	QUAD.	PAG.	GRID	*	ITEM	PEÇA N.	SGR.	QUAD.	PAG.	GRID	*	ITEM	PEÇA N.	SGR.	QUAD.	PAG.	GRID
25	75206843	A1.02	1	1		*	21	75206993	F6.08	1	1		*	2	75207760	F6.03	1	1	
3	75206845	A1.02	1	1		*	19	75206994	F6.08	1	1		*	27	75207761	F6.08	1	1	
9	75206846	A1.02	2	1		*	26	75206995	F6.08	1	1		*	50	75207830	A2.27	1	2	
20	75206848	A4.02	1	1		*	17	75206997	F6.08	1	1		*	58	75207834	A2.27	1	3	
3	75206849	A1.05	1	1		*	4	75206998	F6.08	1	1		*	57	75207835	A2.27	1	3	
1	75206850	A1.05	1	1		*	5	75206999	F6.08	1	1		*	1	75207849	A2.35	2	1	
8	75206857	A1.02	1	1		*	15	75207425	F6.08	1	1		*	1	75207850	A2.35	2	1	
10	75206861	A1.05	1	1		*	11	75207426	F6.08	1	1		*	1	75207851	A2.35	2	1	
10	75206862	A1.05	1	1		*	1	75207427	F6.08	1	1		*	1	75207852	A2.35	2	1	
10	75206863	A1.05	1	1		*	23	75207428	F6.08	1	1		*	1	75207853	A2.35	2	1	
10	75206864	A1.05	1	1		*	37	75207429	F6.08	1	2		*	1	75207854	A2.35	2	1	
2	75206873	A2.35	1	1		*	13	75207430	F6.08	1	1		*	1	75207855	A2.35	2	1	
1	75206874	A2.24	1	1		*	12	75207431	F6.08	1	1		*	1	75207856	A2.35	2	1	
2	75206875	A1.01	3	1		*	31	75207432	F6.08	1	1		*	1	75207857	A2.35	2	1	
17	75206877	A1.02	2	1		*	33	75207433	F6.08	1	1		*	1	75207858	A2.35	2	1	
4	75206879	A2.54	1	1		*	30	75207434	F6.08	1	1		*	1	75207859	A2.35	2	1	
26	75206882	A2.24	2	1		*	29	75207435	F6.08	1	1		*	1	75207860	A2.35	2	1	
27	75206883	A2.24	2	1		*	8	75207436	F6.08	1	1		*	1	75207861	A2.35	2	1	
6	75206943	A2.24	2	1		*	32	75207437	F6.08	1	1		*	1	75207862	A2.35	2	1	
5	75206944	A2.24	2	1		*	22	75207625	F6.03	1	1		*	1	75207863	A2.35	2	1	
4	75206945	A2.24	2	1		*	14	75207631	F6.03	1	1		*	1	75207864	A2.35	2	1	
7	75206946	A2.24	2	1		*	8	75207745	F6.03	1	1		*	1	75207865	A2.35	2	1	
8	75206947	A2.24	2	1		*	4	75207746	F6.03	1	1		*	1	75207866	A2.35	2	1	
9	75206948	A2.24	2	1		*	13	75207748	F6.03	1	1		*	1	75207867	A2.35	2	1	
28	75206954	A2.24	2	1		*	17	75207749	F6.03	1	1		*	1	75207868	A2.35	2	1	
21	75206957	F6.03	1	1		*	16	75207750	F6.03	1	1		*	1	75207869	A2.35	2	1	
25	75206966	F6.08	1	1		*	15	75207751	F6.03	1	1		*	1	75207870	A2.35	2	1	
10	75206984	F6.08	1	1		*	18	75207752	F6.03	1	1		*	1	75207871	A2.35	2	1	
7	75206985	F6.08	1	1		*	12	75207753	F6.03	1	1		*	1	75207872	A2.35	2	1	
36	75206986	F6.08	1	2		*	7	75207754	F6.03	1	1		*	1	75207873	A2.35	2	1	
22	75206987	F6.08	1	1		*	19	75207755	F6.03	1	1		*	1	75207874	A2.35	2	1	
9	75206988	F6.08	1	1		*	11	75207756	F6.03	1	1		*	1	75207875	A2.35	2	1	
34	75206990	F6.08	1	1		*	23	75207757	F6.03	1	1		*	1	75207876	A2.35	2	1	
35	75206991	F6.08	1	2		*	10	75207758	F6.03	1	1		*	1	75207877	A2.35	2	1	
20	75206992	F6.08	1	1		*	3	75207759	F6.03	1	1		*	1	75207878	A2.35	2	1	

FIATALLIS - FG 70R 70A 75R 75A

INDICE NUMÉRICO *** NUMERICAL INDEX

ITEM	PEÇA N.	SGR.	QUAD.	PAG.	GRID	*	ITEM	PEÇA N.	SGR.	QUAD.	PAG.	GRID	*	ITEM	PEÇA N.	SGR.	QUAD.	PAG.	GRID
2	75207879	A2.35	2	1		*	56	75207985	A2.28	1	2		*	21	75208129	A1.01	1	1	
3	75207880	A2.35	2	1		*	63	75207986	A2.28	1	2		*	1	75208130	A1.01	3	1	
4	75207881	A2.35	2	1		*	27	75207987	A2.28	1	1		*	22	75208131	A1.01	1	1	
5	75207882	A2.35	2	1		*	87	75207988	A2.28	1	3		*	5	75208135	A1.01	1	1	
37	75207914	D2.02	1	2		*	78	75207989	A2.28	1	3		*	9	75208135	A1.02	1	1	
41	75207945	D2.02	1	2		*	80	75207990	A2.28	1	3		*	14	75208140	A1.01	1	1	
39	75207946	D2.02	1	2		*	81	75207991	A2.28	1	3		*	4	75208142	A3.03	1	1	
40	75207947	D2.02	1	2		*	55	75207992	A2.28	1	2		*	8	75208146	A1.01	1	1	
37	75207955	A2.27	1	2		*	29	75207993	A2.28	1	1		*	5	75208153	A1.02	1	1	
47	75207956	A2.27	1	2		*	37	75207994	A2.28	1	2		*	16	75208153	A4.02	1	1	
2	75207959	A2.27	1	1		*	22	75207995	A2.28	1	1		*	7	75208155	A1.02	1	1	
34	75207960	A2.27	1	2		*	82	75207996	A2.28	1	3		*	23	75208157	A1.01	1	1	
40	75207961	A2.27	1	2		*	82	75207997	A2.28	1	3		*	30	75208157	A1.02	1	1	
39	75207962	A2.27	1	2		*	77	75207998	A2.28	1	3		*	24	75208158	A1.01	1	1	
35	75207963	A2.27	1	2		*	75	75207999	A2.28	1	3		*	31	75208158	A1.02	1	1	
6	75207964	A2.27	1	1		*	1	75208078	A1.03	2	1		*	12	75208160	A1.02	1	1	
11	75207965	A2.27	1	1		*	1	75208079	A1.03	2	1		*	14	75208162	A1.02	1	1	
59	75207967	A2.27	1	3		*	1	75208080	A1.03	2	1		*	15	75208163	A1.02	1	1	
48	75207968	A2.27	1	2		*	1	75208081	A1.03	2	1		*	16	75208164	A1.02	1	1	
12	75207969	A2.27	1	1		*	7	75208087	A1.05	1	1		*	17	75208165	A1.02	1	1	
7	75207970	A2.27	1	1		*	10	75208088	A1.05	1	1		*	18	75208166	A1.02	1	1	
42	75207971	A2.27	1	2		*	28	75208101	A1.01	1	1		*	19	75208167	A1.02	1	1	
84	75207972	A2.28	1	3		*	32	75208102	A1.02	1	1		*	20	75208168	A1.02	1	1	
38	75207974	A2.28	1	2		*	13	75208109	A1.02	2	1		*	23	75208168	A1.02	1	1	
50	75207975	A2.28	1	2		*	7	75208110	A1.02	2	1		*	26	75208174	A1.02	1	1	
36	75207976	A2.28	1	1		*	2	75208112	A1.05	1	1		*	9	75208174	A3.03	1	1	
53	75207977	A2.28	1	2		*	17	75208113	A1.01	1	1		*	28	75208176	A1.02	1	1	
51	75207978	A2.28	1	2		*	4	75208114	A1.05	1	1		*	29	75208177	A1.02	1	1	
21	75207979	A1.02	1	1		*	5	75208115	A1.05	1	1		*	1	75208178	A1.02	2	1	
52	75207979	A2.28	1	2		*	9	75208118	A1.01	1	1		*	2	75208179	A1.02	2	1	
54	75207980	A2.28	1	2		*	10	75208119	A1.01	1	1		*	6	75208183	A1.02	2	1	
90	75207981	A2.28	1	3		*	11	75208120	A1.01	1	1		*	8	75208185	A1.02	2	1	
57	75207982	A2.28	1	2		*	18	75208126	A1.01	1	1		*	11	75208188	A1.02	2	1	
58	75207983	A2.28	1	2		*	19	75208127	A1.01	1	1		*	12	75208189	A1.02	2	1	
44	75207984	A2.28	1	2		*	20	75208128	A1.01	1	1		*	15	75208192	A1.02	2	1	

FIATALLIS - FG 70R 70A 75R 75A

INDICE NUMÉRICO *** NUMERICAL INDEX

ITEM	PEÇA N.	SGR.	QUAD.	PAG.	GRID	*	ITEM	PEÇA N.	SGR.	QUAD.	PAG.	GRID	*	ITEM	PEÇA N.	SGR.	QUAD.	PAG.	GRID
4	75208196	A1.02	2	1		*	19	75208310	A3.03	1	1		*	17	75208388	F2.00	1	1	
12	75208202	A1.05	1	1		*	13	75208316	A3.03	1	1		*	3	75208389	A4.03	1	1	
8	75208204	A1.05	1	1		*	3	75208319	A3.03	1	1		*	10	75208900	A1.02	2	1	
9	75208205	A1.05	1	1		*	5	75208323	A3.03	1	1		*	3	75208924	A2.24	2	1	
11	75208206	A1.05	1	1		*	3	75208325	A1.01	4	1		*	1	75208924	A2.35	1	1	
1	75208207	A1.01	1	1		*	2	75208326	A1.01	4	1		*	6	75208926	A2.35	1	1	
2	75208208	A1.01	1	1		*	14	75208331	A4.02	1	1		*	4	75208928	A2.35	1	1	
3	75208209	A1.01	1	1		*	2	75208335	A4.02	1	1		*	3	75208929	A2.35	1	1	
4	75208210	A1.01	1	1		*	8	75208347	A3.01	1	1		*	5	75208930	A2.35	1	1	
12	75208211	A1.01	1	1		*	1	75208348	A1.06	1	1		*	13	75208931	A2.24	2	1	
27	75208211	A1.01	1	1		*	4	75208349	A1.06	1	1		*	21	75208932	A2.24	2	1	
25	75208212	A1.01	1	1		*	5	75208352	A1.06	1	1		*	10	75208933	A2.24	2	1	
3	75208214	A1.01	3	1		*	6	75208353	A1.06	1	1		*	12	75208935	A2.24	2	1	
4	75208215	A1.01	3	1		*	13	75208354	A1.06	1	1		*	14	75208944	A2.24	2	1	
5	75208216	A1.01	3	1		*	12	75208355	A1.06	1	1		*	15	75208945	A2.24	2	1	
6	75208217	A1.01	3	1		*	6	75208356	A1.03	1	1		*	17	75208947	A2.24	2	1	
16	75208258	F2.00	1	1		*	8	75208356	A1.06	1	1		*	18	75208948	A2.24	2	1	
15	75208259	F2.00	1	1		*	11	75208360	A1.06	1	1		*	20	75208949	A2.24	2	1	
1	75208267	A2.26	1	1		*	1	75208361	A1.03	2	1		*	19	75208952	A2.24	2	1	
2	75208268	A2.26	1	1		*	1	75208362	A1.03	1	1		*	23	75208953	A2.24	2	1	
4	75208270	A2.26	1	1		*	2	75208363	A1.03	1	1		*	15	75209587	E3.32	8	1	
5	75208271	A2.26	1	1		*	3	75208364	A1.03	1	1		*	7	75210608	F4.01	10	1	
6	75208272	A2.26	1	1		*	4	75208365	A1.03	1	1		*	2	75211328	F4.01	11	1	
7	75208273	A2.26	1	1		*	2	75208368	A2.24	1	1		*	2	75211328	F4.01	14	1	
8	75208274	A2.26	1	1		*	3	75208369	A2.24	1	1		*	17	75212747	E3.02	26	1	
2	75208287	A2.54	1	1		*	4	75208370	A2.24	1	1		*	13	75213410	C1.01	3	1	
3	75208288	A2.54	1	1		*	5	75208371	A2.24	1	1		*	6	75213410	C1.01	4	1	
5	75208292	A3.01	1	1		*	1	75208372	A3.01	2	1		*	12	75213416	C1.01	3	1	
14	75208294	A1.02	2	1		*	2	75208373	A3.01	2	1		*	9	75213416	C1.01	4	1	
1	75208299	A3.01	1	1		*	4	75208375	A3.01	2	1		*	12	75213499	B4.03	3	1	
7	75208301	A3.01	1	1		*	6	75208380	A1.02	1	1		*	24	75213501	B4.03	3	1	
10	75208304	A3.01	1	1		*	7	75208381	F2.00	1	1		*	3	75213542	E3.32	8	1	
12	75208306	A3.01	1	1		*	2	75208384	A3.02	1	1		*	3	75213543	E3.32	8	1	
2	75208307	A3.01	1	1		*	11	75208384	F2.00	1	1		*	21	75213668	C1.01	1	1	
3	75208308	A3.01	1	1		*	2	75208388	F2.00	1	1		*	4	75213760	D1.01	5	1	

FIATALLIS - FG 70R 70A 75R 75A INDICE NUMÉRICO *** NUMERICAL INDEX

ITEM	PEÇA N.	SGR.	QUAD.	PAG.	GRID	*	ITEM	PEÇA N.	SGR.	QUAD.	PAG.	GRID	*	ITEM	PEÇA N.	SGR.	QUAD.	PAG.	GRID
6	75213761	D1.01	6	1		*	22	75214470	E3.02	24	1		*	10	75215944	E3.02	25	1	
1	75213765	D1.01	7	1		*	18	75214472	E3.02	24	1		*	11	75216099	E3.02	2	1	
2	75213766	D1.01	7	1		*	6	75214474	E3.02	24	1		*	5	75216135	D2.01	1	1	
4	75213767	D1.01	7	1		*	25	75214492	E3.02	28	1		*	9	75216160	F4.01	12	1	
9	75213768	E3.32	8	1		*	12	75214496	E3.02	24	1		*	7	75216234	E3.02	2	1	
3	75213769	D1.01	5	1		*	25	75214499	E3.02	24	1		*	29	75216234	E3.02	1	1	
5	75213774	D1.01	7	1		*	13	75214501	E3.02	24	1		*	39	75216237	E3.02	1	2	
2	75213776	D1.01	5	1		*	14	75214504	E3.02	28	1		*	17	75216418	E3.02/1	2	1	
5	75213779	D1.01	7	1		*	13	75214658	C1.01	1	1		*	31	75216432	E3.02/1	3	1	
5	75213782	D1.01	5	1		*	4	75214678	B2.01/1	3	1		*	17	75216444	E3.10/1	2	1	
4	75213783	D1.01	6	1		*	12	75214731	E3.02	13	1		*	22	75216474	E3.10/1	2	1	
13	75213805	B4.03	3	1		*	16	75214740	E3.02	17	1		*	21	75216485	E3.10/1	2	1	
1	75213817	D1.01	6	1		*	27	75214741	E3.02	17	1		*	10	75216487	E3.10/1	2	1	
1	75213817	D1.01	5	1		*	10	75214747	E3.02	13	1		*	11	75216489	E3.10/1	2	1	
26	75213914	C1.01	1	1		*	6	75214776	E3.02	28	1		*	1	75216494	E3.10/1	2	1	
5	75213914	C1.01	2	1		*	5	75214777	E3.02	28	1		*	13	75216509	E3.10/1	2	1	
12	75213943	E3.02	28	1		*	11	75214782	E3.02	17	1		*	30	75216510	E3.10/1	2	1	
21	75213945	E3.02	28	1		*	20	75214790	E3.02	5	1		*	24	75216511	E3.10/1	2	1	
24	75214021	E3.02	28	1		*	21	75214791	E3.02	5	1		*	9	75216512	E3.10/1	2	1	
23	75214022	E3.02	28	1		*	17	75214833	E3.02	19	1		*	12	75216513	E3.10/1	2	1	
3	75214052	B4.03	4	1		*	6	75214883	E3.02	30	1		*	2	75216516	E3.10/1	2	1	
13	75214203	B2.17	1	1		*	7	75214885	E3.02	30	1		*	3	75216517	E3.10/1	2	1	
34	75214261	E3.02	13	1		*	16	75214893	E3.02	24	1		*	1	75217221	I4.01	19	1	
32	75214261	E3.02	5	1		*	6	75214968	D1.01	5	1		*	3	75217320	E3.02	22	1	
5	75214261	E3.02	7	1		*	5	75214969	D1.01	6	1		*	3	75217549	L6.04	1	1	
5	75214262	E3.02	30	1		*	6	75214977	D1.01	3	1		*	3	75217750	F4.01	19	1	
3	75214294	E3.02	20	1		*	19	75214978	D1.01	3	1		*	1	75218524	A0.02	2	1	
5	75214296	E3.02	20	1		*	22	75215381	A2.22	1	1		*	1	75218524	A0.02	1	1	
4	75214298	E3.02	20	1		*	15	75215786	E3.10	3	1		*	1	75218524	A0.02/1	1	1	
2	75214300	E3.02	20	1		*	1	75215790	E3.10	3	1		*	4	75218528	A0.02	1	1	
4	75214303	E3.02	8	1		*	17	75215790	E3.10	2	1		*	4	75218528	A0.02	2	1	
5	75214305	E3.02	8	1		*	27	75215791	E3.10	4	1		*	4	75218528	A0.02/1	1	1	
15	75214352	E3.02	28	1		*	32	75215793	E3.10	4	2		*	1	75218567	A1.01	4	1	
1	75214354	E3.02	28	1		*	39	75215943	E3.02	26	2		*	3	75218568	A0.02	1	1	
5	75214468	E3.02	24	1		*	9	75215943	E3.02	25	1		*	3	75218568	A0.02	2	1	

FIATALLIS - FG 70R 70A 75R 75A

INDICE NUMÉRICO *** NUMERICAL INDEX

ITEM	PEÇA N.	SGR.	QUAD.	PAG.	GRID	*	ITEM	PEÇA N.	SGR.	QUAD.	PAG.	GRID	*	ITEM	PEÇA N.	SGR.	QUAD.	PAG.	GRID
3	75218560	A0.02/1	1	1		*	2	75220799	C1.35	1	1		*	24	75221557	C1.01	3	1	
3	75218748	E3.32	3	1		*	32	75220868	E3.13	1	2		*	17	75221558	C1.01	4	1	
6	75218915	B4.03	2	1		*	9	75220869	E3.32	3	1		*	3	75221559	C1.01	4	1	
11	75218931	B4.03	2	1		*	1	75220872	E3.32	3	1		*	17	75221560	C1.01	3	1	
9	75218932	B4.03	2	1		*	11	75220877	E3.32	3	1		*	39	75221602	D2.01	2	2	
11	75218940	D3.16	1	1		*	15	75220878	E3.32	3	1		*	22	75221602	E3.02/1	3	1	
3	75219307	A4.01	2	1		*	2	75220924	E3.32	5	1		*	32	75221672	D2.01	1	1	
3	75219488	B4.01	3	1		*	13	75220934	E3.32	8	1		*	39	75221673	D2.01	1	2	
20	75219870	E3.13	1	1		*	2	75220988	A2.01	2	1		*	31	75221676	D2.01	1	1	
20	75219871	E3.13	1	1		*	14	75221058	A2.01	2	1		*	17	75221717	D1.01	3	1	
1	75220005	E3.02	30	1		*	8	75221197	E3.02	30	1		*	9	75221717	D1.01	1	1	
2	75220006	D1.01	2	1		*	35	75221258	B4.01	1	1		*	16	75221723	D1.01	3	1	
3	75220010	D1.01	3	1		*	34	75221259	B4.01	1	1		*	6	75221723	D1.01	1	1	
18	75220011	D1.01	4	1		*	8	75221272	B4.01	3	1		*	11	75221727	D1.01	3	1	
5	75220012	D1.01	4	1		*	2	75221276	B4.01	3	1		*	10	75221727	D1.01	1	1	
3	75220013	D1.01	4	1		*	7	75221277	B4.01	3	1		*	5	75221728	D1.01	3	1	
5	75220014	D1.01	2	1		*	4	75221287	D2.01	2	1		*	4	75221734	B4.01	3	1	
4	75220020	D1.01	3	1		*	17	75221308	A2.21	3	1		*	1	75221735	B4.01	3	1	
4	75220025	D1.01	2	1		*	22	75221308	A2.21	2	1		*	6	75221770	A2.06/1	1	1	
4	75220025	D1.01	4	1		*	11	75221396	E3.10	2	1		*	6	75221770	B2.06	3	1	
10	75220026	D1.01	3	1		*	8	75221401	L1.04	5	1		*	8	75221774	D3.16	1	1	
1	75220416	F4.01	3	1		*	28	75221401	L1.04/1	2	1		*	23	75221775	F4.01	17	1	
20	75220499	A2.01	2	1		*	19	75221462	F2.00	1	1		*	17	75221776	F4.01	16	1	
19	75220500	A2.01	2	1		*	14	75221528	C1.01	1	1		*	13	75221777	F4.01	16	1	
1	75220689	B4.01	1	1		*	18	75221529	C1.01	1	1		*	4	75221779	F4.01	16	1	
13	75220700	E3.32	5	1		*	24	75221536	C1.01	1	1		*	1	75221781	E3.13	2	1	
25	75220709	E3.10	1	1		*	13	75221540	C1.01	5	1		*	1	75221782	E3.13	2	1	
6	75220710	E3.32	5	1		*	19	75221540	E3.02	25	1		*	17	75221783	E3.02	24	1	
1	75220713	E3.32	5	1		*	14	75221541	C1.01	5	1		*	2	75221812	C1.01	3	1	
43	75220788	E3.10	1	2		*	6	75221544	L1.01	1	1		*	5	75221814	C1.01	3	1	
6	75220789	E3.32	6	1		*	3	75221547	C1.01	2	1		*	7	75221816	C1.01	3	1	
2	75220792	E3.32	6	1		*	8	75221548	C1.01	2	1		*	22	75221818	C1.01	4	1	
1	75220793	E3.32	6	1		*	31	75221551	C1.01	1	1		*	21	75221820	C1.01	4	1	
13	75220797	E3.32	6	1		*	30	75221552	C1.01	1	1		*	20	75221821	C1.01	3	1	
27	75220798	B4.01	3	1		*	3	75221555	C1.01	3	1		*	1	75221822	C1.01	4	1	

FIATALLIS - FG 70R 70A 75R 75A INDICE NUMÉRICO *** NUMERICAL INDEX

ITEM	PEÇA N.	SGR.	QUAD.	PAG.	GRID	*	ITEM	PEÇA N.	SGR.	QUAD.	PAG.	GRID	*	ITEM	PEÇA N.	SGR.	QUAD.	PAG.	GRID
11	75221828	C1.01	3	1		*	2	75222859	E3.02	26	1		*	13	75236381	D1.01	4	1	
5	75221828	C1.01	4	1		*	10	75222859	E3.02	17	1		*	16	75236405	E3.02	32	1	
24	75221840	L1.01	1	1		*	32	75222859	E3.02	13	1		*	22	75236405	E3.02/1	32	1	
23	75221846	C1.01	3	1		*	30	75222859	E3.02	5	1		*	15	75236406	E3.02	32	1	
18	75221846	C1.01	4	1		*	24	75222859	E3.02	19	1		*	23	75236406	E3.02/1	32	1	
33	75221847	C1.01	3	1		*	2	75222859	E3.02/1	3	1		*	1	75236450	E3.02	29	1	
7	75221847	C1.01	4	1		*	44	75222860	D2.01	1	2		*	6	75236452	E3.02	29	1	
32	75221848	C1.01	3	1		*	34	75222882	E3.02	1	1		*	9	75236454	E3.02	6	1	
16	75221849	C1.01	4	1		*	17	75223102	E3.02	15	1		*	8	75236456	E3.02	6	1	
28	75221853	L1.01	1	1		*	33	75223103	E3.02	13	1		*	7	75236458	E3.02	16	1	
25	75221867	C1.01	3	1		*	21	75223104	E3.02	19	1		*	5	75236460	E3.02	16	1	
20	75221867	C1.01	4	1		*	17	75235148	F4.01	10	1		*	7	75236462	E3.02	DZ	1	
26	75221868	C1.01	3	1		*	30	75235148	F4.01	15	1		*	7	75236462	E3.02	12	1	
19	75221868	C1.01	4	1		*	3	75235174	A2.06/1	1	1		*	8	75236464	E3.02	DZ	1	
3	75221946	C1.08	1	1		*	3	75235174	B2.06	3	1		*	8	75236464	E3.02	12	1	
5	75221947	C1.08	1	1		*	1	75235194	A4.01	1	1		*	18	75236488	E3.02	2	1	
14	75221960	A2.01	1	1		*	20	75235217	A2.06/1	1	1		*	25	75236489	E3.02	2	1	
8	75221971	D1.01	2	1		*	19	75235217	B2.06	3	1		*	16	75236501	E3.02	14	1	
24	75221973	D1.01	2	1		*	1	75235492	D1.01	1	1		*	15	75236515	E3.02	14	1	
26	75222095	A2.21	1	1		*	2	75235523	F4.01	11	1		*	10	75236520	E3.02	18	1	
8	75222095	A2.21	3	1		*	2	75235523	F4.01	14	1		*	21	75236522	E3.02	16	1	
8	75222095	A2.21	2	1		*	12	75235631	D1.01	4	1		*	29	75236524	F4.01	17	1	
11	75222182	D3.33	1	1		*	13	75236190	A2.01	1	1		*	13	75236525	E3.02	18	1	
36	75222276	D1.01	2	2		*	1	75236196	D3.33	1	1		*	11	75236528	E3.02	18	1	
7	75222276	D1.01	4	1		*	24	75236323	D2.01	2	1		*	6	75236533	E3.02	DZ	1	
15	75222296	D3.33	1	1		*	11	75236324	E3.02/1	3	1		*	6	75236533	E3.02	12	1	
9	75222439	C1.01	5	1		*	25	75236326	D2.01	2	1		*	5	75236547	E3.02	DZ	1	
11	75222448	D1.01	4	1		*	26	75236328	D2.01	2	1		*	5	75236547	E3.02	12	1	
24	75222471	D1.01	3	1		*	32	75236330	D2.01	2	1		*	6	75236549	E3.02	4	1	
46	75222543	D3.33	1	2		*	43	75236332	D2.01	2	2		*	5	75236553	E3.02	4	1	
8	75222544	D3.33	1	1		*	29	75236334	D2.01	2	1		*	6	75236559	E3.02	18	1	
4	75222547	E3.10	3	1		*	42	75236336	D2.01	2	2		*	7	75236569	E3.02	18	1	
6	75222599	F4.01	5	1		*	41	75236338	D2.01	2	2		*	9	75236631	E3.02	16	1	
6	75222599	F4.01	10	1		*	31	75236375	D2.01	2	1		*	8	75236641	E3.02	16	1	
7	75222599	F4.01	15	1		*	10	75236381	D1.01	2	1		*	1	75236643	E3.02	18	1	

FIATALLIS - FG 70R 70A 75R 75A INDICE NUMéRICO *** NUMERICAL INDEX

ITEM	PEÇA N.	SGR.	QUAD.	PAG.	GRID	*	ITEM	PEÇA N.	SGR.	QUAD.	PAG.	GRID	*	ITEM	PEÇA N.	SGR.	QUAD.	PAG.	GRID
6	75236649	E3.02	25	1		*	27	75236894	E3.02	2	1		*	29	75237122	B4.03	3	2	
5	75236651	E3.02	25	1		*	9	75236896	E3.02	2	1		*	29	75237124	B4.03	3	2	
16	75236658	E3.02	27	1		*	19	75236898	E3.02	2	1		*	8	75237125	E3.02	26	1	
15	75236662	E3.02	27	1		*	14	75236900	E3.02	2	1		*	5	75237127	E3.02	3	1	
22	75236665	L1.04/1	2	1		*	10	75236907	E3.02	1	1		*	40	75237130	E3.02	26	2	
13	75236667	E3.02	25	1		*	21	75236912	E3.02	2	1		*	12	75237168	E3.02	7	1	
14	75236669	E3.02	25	1		*	24	75236916	E3.02	2	1		*	11	75237170	E3.02	7	1	
30	75236678	D2.01	2	1		*	22	75236940	E3.02	25	1		*	27	75237176	E3.02	19	1	
42	75236729	E3.02	1	2		*	21	75236940	E3.02	3	1		*	4	75237178	E3.02	19	1	
30	75236733	E3.02	1	1		*	34	75236949	E3.02	2	1		*	1	75237188	E3.02	13	1	
37	75236739	L1.01	1	1		*	8	75237005	E3.02	3	1		*	2	75237190	E3.02	13	1	
20	75236740	E3.02	2	1		*	9	75237007	E3.02	3	1		*	10	75237192	E3.02	7	1	
32	75236743	E3.02	1	1		*	1	75237010	E3.02	3	1		*	9	75237194	E3.02	7	1	
27	75236744	E3.02	1	1		*	19	75237017	E3.02	3	1		*	9	75237196	E3.02	19	1	
12	75236745	E3.02	1	1		*	16	75237019	E3.02	3	1		*	10	75237198	E3.02	19	1	
37	75236749	E3.02	1	2		*	16	75237021	E3.02	3	1		*	29	75237203	E3.02	19	1	
3	75236791	A4.01	1	1		*	17	75237029	E3.02	3	1		*	28	75237205	E3.02	19	1	
10	75236791	A4.01	2	1		*	11	75237044	A4.01	2	1		*	20	75237230	E3.02	15	1	
5	75236819	E3.02	1	1		*	11	75237090	E3.02	26	1		*	14	75237233	E3.02	17	1	
6	75236826	E3.02	1	1		*	10	75237092	E3.02	26	1		*	13	75237237	E3.02	17	1	
18	75236836	E3.02	25	1		*	6	75237094	E3.02	3	1		*	9	75237243	E3.02	13	1	
2	75236838	E3.02	2	1		*	14	75237096	E3.02	26	1		*	11	75237245	E3.02	13	1	
37	75236839	E3.02	2	2		*	15	75237098	E3.02	26	1		*	20	75237248	E3.02	19	1	
17	75236840	E3.02	25	1		*	3	75237101	E3.02	26	1		*	19	75237250	E3.02	19	1	
3	75236843	E3.02	1	1		*	30	75237101	E3.02	13	1		*	27	75237252	E3.02	13	1	
4	75236845	A4.01	2	1		*	28	75237101	E3.02	5	1		*	28	75237254	E3.02	13	1	
4	75236848	E3.02	1	1		*	22	75237101	E3.02	19	1		*	19	75237263	E3.02	15	1	
2	75236850	E3.02	1	1		*	3	75237101	E3.02/1	3	1		*	3	75237265	E3.02	7	1	
2	75236850	E3.02	1	1		*	7	75237102	E3.02	17	1		*	27	75237271	E3.02	5	1	
31	75236873	E3.02	2	1		*	30	75237107	E3.02	26	1		*	4	75237273	E3.02	5	1	
32	75236875	E3.02	2	1		*	19	75237109	E3.02	26	1		*	21	75237275	E3.02	15	1	
10	75236879	E3.02	2	1		*	18	75237111	E3.02	26	1		*	22	75237284	E3.02	15	1	
28	75236888	E3.02	2	1		*	26	75237114	E3.02	26	1		*	16	75237303	E3.02	28	1	
30	75236890	E3.02	2	1		*	27	75237117	E3.02	26	1		*	18	75237305	E3.02	28	1	
5	75236893	E3.32	4	1		*	9	75237119	E3.02	26	1		*	20	75237312	E3.02	28	1	

FIATALLIS - FG 70R 70A 75R 75A INDICE NUMÉRICO *** NUMERICAL INDEX

ITEM	PEÇA N.	SGR.	QUAD.	PAG.	GRID	*	ITEM	PEÇA N.	SGR.	QUAD.	PAG.	GRID	*	ITEM	PEÇA N.	SGR.	QUAD.	PAG.	GRID
19	75237314	E3.02	28	1		*	13	75237905	B2.07/1	2	1		*	22	75285234	B2.01	6	1	
6	75237319	A4.01	2	1		*	34	75237909	F4.01	14	2		*	25	75285234	B2.01	7	1	
26	75237322	E3.02	13	1		*	12	75237984	B2.06	2	1		*	18	75285234	B2.01	8	1	
12	75237323	A4.01	2	1		*	31	75238057	F4.01	15	1		*	22	75285234	B2.01	9	1	
25	75237326	E3.02	13	1		*	7	75238158	F4.01	12	1		*	5	75285333	A1.03	1	1	
9	75237337	E3.02	30	1		*	5	75238178	L6.04	1	1		*	7	75285532	A1.06	1	1	
22	75237351	F4.01	10	1		*	5	75238182	F4.01	12	1		*	14	75285581	B2.01	1	1	
36	75237352	F4.01	15	2		*	10	75238187	F4.01	12	1		*	23	75285599	E3.02	3	1	
23	75237371	E3.02	13	1		*	8	75238188	F4.01	12	1		*	8	75285625	B2.01/1	4	1	
18	75237513	E3.02	19	1		*	15	75238305	A2.06/1	1	1		*	6	75285625	B2.01/1	24	1	
13	75237515	E3.02	13	1		*	26	75238339	F4.01	11	1		*	16	75285645	B2.01	8	1	
9	75237524	D2.01	1	1		*	30	75238339	F4.01	14	1		*	2	75285668	B3.29	1	1	
11	75237611	D2.01	1	1		*	4	75238358	B2.07/1	2	1		*	2	75285668	D2.13	1	1	
12	75237612	D2.01	1	1		*	4	75238361	C1.01	5	1		*	2	75285668	D3.29	1	1	
20	75237616	D2.01	1	1		*	32	75238491	E3.02/1	3	1		*	3	75285669	B3.29	1	1	
16	75237664	D1.01	5	1		*	34	75238492	E3.02/1	3	1		*	3	75285669	D2.13	1	1	
12	75237665	D1.01	6	1		*	33	75238493	E3.02/1	3	1		*	3	75285669	D3.29	1	1	
1	75237695	A4.09/1	4	1		*	40	75238494	E3.02/1	3	2		*	7	75285670	B3.29	1	1	
10	75237697	A4.09/1	4	1		*	39	75238495	E3.02/1	3	2		*	7	75285670	D2.13	1	1	
1	75237702	A4.09/1	3	1		*	13	75238803	L1.04	4	1		*	7	75285670	D3.29	1	1	
2	75237719	F4.01	11	1		*	83	75285002	A2.28	1	3		*	20	75285671	B3.29	1	1	
2	75237719	F4.01	14	1		*	92	75285003	A2.28	1	3		*	20	75285671	D2.13	1	1	
3	75237726	L1.01	1	1		*	3	75285006	B2.01	3	1		*	20	75285671	D3.29	1	1	
18	75237754	A2.06/1	1	1		*	59	75285013	B2.01	1	2		*	14	75285672	B3.29	1	1	
17	75237754	B2.06	3	1		*	6	75285014	B2.01	7	1		*	14	75285672	D2.13	1	1	
11	75237755	A2.06/1	1	1		*	8	75285025	B2.01	17	1		*	14	75285672	D3.29	1	1	
11	75237755	B2.06	3	1		*	14	75285031	B2.01	18	1		*	17	75285673	B3.29	1	1	
13	75237787	B2.06	2	1		*	2	75285040	B2.01	12	1		*	17	75285673	D2.13	1	1	
28	75237851	D2.01	2	1		*	3	75285169	C1.18	1	1		*	17	75285673	D3.29	1	1	
24	75237867	D2.01	3	1		*	46	75285205	A2.27	1	2		*	15	75285674	B3.29	1	1	
25	75237867	D2.01	4	1		*	43	75285206	A2.27	1	2		*	15	75285674	D2.13	1	1	
29	75237867	E3.02/1	3	1		*	8	75285207	A2.27	1	1		*	15	75285674	D3.29	1	1	
11	75237873	A0.02/1	1	1		*	18	75285211	A3.03	1	1		*	18	75285675	B3.29	1	1	
11	75237874	A0.02/1	1	1		*	7	75285213	A2.35	2	1		*	18	75285675	D2.13	1	1	
8	75237891	B2.07/1	2	1		*	6	75285214	A2.35	2	1		*	18	75285675	D3.29	1	1	

FIATALLIS - FG 70R 70A 75R 75A

INDICE NUMÉRICO *** NUMERICAL INDEX

ITEM	PEÇA N.	SGR.	QUAD.	PAG.	GRID	*	ITEM	PEÇA N.	SGR.	QUAD.	PAG.	GRID	*	ITEM	PEÇA N.	SGR.	QUAD.	PAG.	GRID
13	75285676	B3.29	1	1		*	23	75285690	D2.13	1	1		*	6	75285706	E3.31	2	1	
13	75285676	D2.13	1	1		*	23	75285690	D3.29	1	1		*	4	75285706	E3.31	3	1	
13	75285676	D3.29	1	1		*	6	75285692	B3.29	1	1		*	4	75285706	E3.31	4	1	
9	75285678	B3.29	1	1		*	6	75285692	D2.13	1	1		*	4	75285706	E3.31	5	1	
9	75285678	D2.13	1	1		*	6	75285692	D3.29	1	1		*	5	75285707	E3.31	6	1	
9	75285678	D3.29	1	1		*	5	75285693	B3.29	1	1		*	5	75285707	E3.31	2	1	
28	75285680	B3.29	1	1		*	5	75285693	D2.13	1	1		*	5	75285707	E3.31	3	1	
28	75285680	D2.13	1	1		*	5	75285693	D3.29	1	1		*	2	75285708	E3.31	4	1	
28	75285680	D3.29	1	1		*	1	75285695	B3.29	1	1		*	7	75285709	E3.31	6	1	
28	75285681	B3.29	1	1		*	1	75285695	D2.13	1	1		*	7	75285709	E3.31	2	1	
28	75285681	D2.13	1	1		*	1	75285695	D3.29	1	1		*	7	75285709	E3.31	3	1	
28	75285681	D3.29	1	1		*	21	75285696	D2.13	1	1		*	16	75285709	E3.31	4	1	
19	75285683	B3.29	1	1		*	11	75285697	D2.13	1	1		*	9	75285709	E3.31	5	1	
19	75285683	D2.13	1	1		*	25	75285698	B3.29	1	1		*	4	75285710	E3.31	8	1	
19	75285683	D3.29	1	1		*	25	75285698	D2.13	1	1		*	8	75285710	E3.31	6	1	
8	75285684	B3.29	1	1		*	25	75285698	D3 29	1	1		*	8	75285710	E3.31	2	1	
8	75285684	D2.13	1	1		*	12	75285699	D2.13	1	1		*	8	75285710	E3.31	3	1	
8	75285684	D3.29	1	1		*	27	75285700	D2.13	1	1		*	11	75285710	E3.31	4	1	
24	75285685	B3.29	1	1		*	1	75285703	E3.31	6	1		*	10	75285710	E3.31	5	1	
24	75285685	D2.13	1	1		*	1	75285703	E3.31	2	1		*	4	75285710	E3.31	10	1	
24	75285685	D3.29	1	1		*	1	75285703	E3.31	3	1		*	6	75285710	E3.31	11	1	
16	75285686	B3.29	1	1		*	7	75285703	E3.31	4	1		*	6	75285711	E3.31	8	1	
16	75285686	D2.13	1	1		*	1	75285703	E3.31	5	1		*	9	75285711	E3.31	6	1	
16	75285686	D3.29	1	1		*	2	75285704	E3.31	6	1		*	9	75285711	E3.31	2	1	
10	75285687	B3.29	1	1		*	2	75285704	E3.31	2	1		*	9	75285711	E3.31	3	1	
10	75285687	D2.13	1	1		*	2	75285704	E3.31	3	1		*	12	75285711	E3.31	4	1	
10	75285687	D3.29	1	1		*	6	75285704	E3.31	4	1		*	11	75285711	E3.31	5	1	
22	75285688	B3.29	1	1		*	2	75285704	E3.31	5	1		*	6	75285711	E3.31	10	1	
22	75285688	D2.13	1	1		*	3	75285705	E3.31	6	1		*	4	75285711	E3.31	11	1	
22	75285688	D3.29	1	1		*	3	75285705	E3.31	2	1		*	5	75285712	E3.31	8	1	
4	75285689	B3.29	1	1		*	3	75285705	E3.31	3	1		*	10	75285712	E3.31	6	1	
4	75285689	D2.13	1	1		*	5	75285705	E3.31	4	1		*	10	75285712	E3.31	2	1	
26	75285689	D2.13	1	1		*	3	75285705	E3.31	5	1		*	10	75285712	E3.31	3	1	
4	75285689	D3.29	1	1		*	4	75285706	E3.31	6	1		*	13	75285712	E3.31	4	1	
23	75285690	B3.29	1	1		*	4	75285706	E3.31	2	1		*	12	75285712	E3.31	5	1	

FIATALLIS - FG 70R 70A 75R 75A

INDICE NUMÉRICO *** NUMERICAL INDEX

ITEM	PEÇA N.	SGR.	QUAD.	PAG.	GRID	*	ITEM	PEÇA N.	SGR.	QUAD.	PAG.	GRID	*	ITEM	PEÇA N.	SGR.	QUAD.	PAG.	GRID
5	75285712	E3.31	10	1		*	27	75285727	D3.29	1	1		*	10	75285765	B2.01/1	7	1	
5	75285712	E3.31	11	1		*	21	75285728	B3.29	1	1		*	4	75285766	B2.01/1	8	1	
11	75285713	E3.31	6	1		*	21	75285728	D3.29	1	1		*	5	75285767	B2.01/1	8	1	
11	75285713	E3.31	2	1		*	11	75285729	B3.29	1	1		*	8	75285768	B2.01/1	8	1	
11	75285713	E3.31	3	1		*	11	75285729	D3.29	1	1		*	7	75285769	B2.01/1	9	1	
14	75285713	E3.31	4	1		*	1	75285730	E3.31	7	1		*	13	75285770	B2.01/1	9	1	
13	75285713	E3.31	5	1		*	2	75285731	E3.31	8	1		*	13	75285771	B2.01/1	12	1	
12	75285714	E3.31	6	1		*	2	75285731	E3.31	10	1		*	10	75285772	B2.01/1	14	1	
12	75285714	E3.31	2	1		*	3	75285732	E3.31	8	1		*	7	75285772	B2.01/1	16	1	
12	75285714	E3.31	3	1		*	3	75285732	E3.31	10	1		*	16	75285773	B2.01/1	14	1	
15	75285714	E3.31	4	1		*	1	75285732	E3.31	11	1		*	23	75285774	B2.01/1	14	1	
14	75285714	E3.31	5	1		*	3	75285734	E3.31	4	1		*	23	75285774	B2.01/1	16	1	
13	75285715	E3.31	6	1		*	7	75285734	E3.31	5	1		*	7	75285775	B2.01/1	14	1	
13	75285715	E3.31	2	1		*	8	75285735	E3.31	5	1		*	7	75285776	B2.01/1	14	1	
13	75285715	E3.31	3	1		*	2	75285737	E3.31	8	1		*	7	75285777	B2.01/1	14	1	
10	75285715	E3.31	4	1		*	2	75285737	E3.31	11	1		*	7	75285778	B2.01/1	14	1	
10	75285715	E3.31	5	1		*	12	75285749	B2.01/1	3	1		*	7	75285779	B2.01/1	14	1	
14	75285716	E3.31	6	1		*	7	75285750	B2.01/1	3	1		*	1	75285780	E3.31	9	1	
14	75285716	E3.31	2	1		*	4	75285751	B2.01/1	4	1		*	2	75285781	B2.01/1	19	1	
14	75285716	E3.31	3	1		*	12	75285752	B2.01	1	1		*	2	75285781	E3.31	9	1	
9	75285716	E3.31	4	1		*	3	75285752	B2.01/1	4	1		*	2	75285788	B2.01/1	18	1	
16	75285716	E3.31	5	1		*	24	75285752	B2.01/1	4	1		*	1	75285789	B2.01/1	18	1	
15	75285717	E3.31	6	1		*	14	75285753	B2.01/1	4	1		*	19	75285790	B2.01/1	18	1	
15	75285717	E3.31	2	1		*	28	75285754	B2.01/1	4	1		*	17	75285791	B2.01/1	18	1	
15	75285717	E3.31	3	1		*	12	75285755	B2.01/1	4	1		*	13	75285792	B2.01/1	18	1	
8	75285717	E3.31	4	1		*	2	75285756	B2.01/1	4	1		*	15	75285793	B2.01/1	18	1	
17	75285717	E3.31	5	1		*	1	75285757	B2.01/1	4	1		*	16	75285794	B2.01/1	18	1	
6	75285719	E3.31	6	1		*	9	75285758	B2.01/1	5	1		*	9	75285795	B2.01/1	19	1	
6	75285719	E3.31	3	1		*	1	75285759	B2.01/1	6	1		*	5	75285796	B2.01/1	19	1	
6	75285719	E3.31	5	1		*	24	75285759	B2.01/1	16	1		*	3	75285798	B2.01/1	19	1	
26	75285725	B3.29	1	1		*	2	75285760	B2.01/1	6	1		*	5	75285799	B2.01/1	20	1	
26	75285725	D3.29	1	1		*	7	75285761	B2.01/1	5	1		*	2	75285801	B2.01/1	20	1	
12	75285726	B3.29	1	1		*	5	75285762	B2.01/1	5	1		*	5	75285801	B2.01/1	24	1	
12	75285726	D3 29	1	1		*	3	75285763	B2.01/1	7	1		*	5	75285802	B2.01/1	21	1	
27	75285727	B3.29	1	1		*	6	75285764	B2.01/1	7	1		*	5	75285802	B2.01/1	23	1	

FIATALLIS - FG 70R 70A 75R 75A

INDICE NUMéRICO *** NUMERICAL INDEX

ITEM	PECA N.	SGR.	QUAD.	PAG.	GRID	*	ITEM	PECA N.	SGR.	QUAD.	PAG.	GRID	*	ITEM	PECA N.	SGR.	QUAD.	PAG.	GRID
4	75285803	B2.01/1	21	1		*	10	75285837	B2.01	7	1		*	34	75285885	C1.08	3	1	
2	75285804	B2.01/1	22	1		*	3	75285838	B2.01	7	1		*	36	75285886	C1.08	3	2	
3	75285805	B2.01/1	22	1		*	16	75285839	B2.01	7	1		*	20	75285887	C1.08	3	1	
4	75285805	B2.01/1	23	1		*	1	75285840	B2.01	10	1		*	24	75285888	C1.08	3	1	
13	75285806	B2.01/1	22	1		*	10	75285841	B2.01	11	1		*	22	75285889	C1.08	3	1	
16	75285807	B2.01/1	22	1		*	2	75285841	B2.01	16	1		*	21	75285890	C1.08	3	1	
17	75285808	B2.01/1	22	1		*	9	75285842	B2.01	17	1		*	23	75285891	C1.08	3	1	
5	75285809	B2.01/1	22	1		*	9	75285843	B2.01	12	1		*	25	75285892	C1.08	3	1	
20	75285810	B2.01/1	22	1		*	8	75285844	B2.01	16	1		*	17	75285893	C1.08	3	1	
9	75285811	B2.01/1	22	1		*	18	75285845	B2.01	18	1		*	16	75285894	C1.08	3	1	
10	75285812	B2.01/1	22	1		*	2	75285846	B2.01	18	1		*	19	75285895	C1.08	3	1	
3	75285812	B2.01/1	23	1		*	1	75285847	B2.01	17	1		*	15	75285896	C1.08	3	1	
4	75285814	B2.01/1	24	1		*	4	75285848	B2.01	17	1		*	14	75285897	C1.08	3	1	
7	75285814	B2.01/1	26	1		*	6	75285849	B2.01	17	1		*	13	75285898	C1.08	3	1	
3	75285815	B2.01/1	24	1		*	2	75285863	C1.08	1	1		*	18	75285899	C1.08	3	1	
2	75285816	B2.01/1	24	1		*	1	75285864	C1.08	1	1		*	12	75285900	C1.08	3	1	
1	75285817	B2.01/1	24	1		*	7	75285865	C1.08	1	1		*	11	75285901	C1.08	3	1	
9	75285818	B2.01/1	24	1		*	8	75285866	C1.08	1	1		*	10	75285902	C1.08	3	1	
8	75285818	B2.01/1	26	1		*	6	75285867	C1.08	1	1		*	9	75285903	C1.08	3	1	
11	75285819	B2.01/1	24	1		*	4	75285868	C1.08	1	1		*	8	75285904	C1.08	3	1	
6	75285820	B2.01/1	25	1		*	33	75285870	C1.08	3	1		*	7	75285905	C1.08	3	1	
4	75285820	B2.01/1	26	1		*	32	75285871	C1.08	3	1		*	5	75285906	C1.08	3	1	
1	75285821	B2.01/1	25	1		*	31	75285872	C1.08	3	1		*	4	75285907	C1.08	3	1	
2	75285822	B2.01/1	25	1		*	46	75285873	C1.08	3	2		*	3	75285908	C1.08	3	1	
3	75285823	B2.01/1	25	1		*	45	75285874	C1.08	3	2		*	2	75285909	C1.08	3	1	
4	75285824	B2.01/1	25	1		*	40	75285875	C1.08	3	2		*	1	75285910	C1.08	3	1	
3	75285825	B2.01/1	26	1		*	41	75285876	C1.08	3	2		*	6	75285911	C1.08	3	1	
6	75285826	B2.01/1	26	1		*	42	75285877	C1.08	3	2		*	26	75285912	C1.08	3	1	
9	75285827	B2.01/1	26	1		*	27	75285878	C1.08	3	1		*	6	75285913	C1.08	2	1	
10	75285828	B2.01/1	26	1		*	28	75285879	C1.08	3	1		*	7	75285914	C1.08	2	1	
11	75285829	B2.01/1	26	1		*	29	75285880	C1.08	3	1		*	5	75285915	C1.08	2	1	
1	75285833	B2.01	1	1		*	30	75285881	C1.08	3	1		*	4	75285916	C1.08	2	1	
45	75285834	B2.01	1	2		*	43	75285882	C1.08	3	2		*	2	75285917	C1.08	2	1	
3	75285835	B2.01	5	1		*	44	75285883	C1.08	3	2		*	1	75285918	C1.08	2	1	
8	75285836	B2.01	6	1		*	35	75285884	C1.08	3	1		*	3	75285919	C1.08	2	1	

002

FIATALLIS - FG 70R 70A 75R 75A INDICE NUMÉRICO *** NUMERICAL INDEX

ITEM	PEÇA N.	SGR.	QUAD.	PAG.	GRID	*	ITEM	PEÇA N.	SGR.	QUAD.	PAG.	GRID	*	ITEM	PEÇA N.	SGR.	QUAD.	PAG.	GRID
9	75285920	C1.08	2	1		*	1	75286092	L1.25	2	1		*	21	75286173	A3.03	1	1	
8	75285921	C1.08	2	1		*	2	75286093	L1.25	1	1		*	2	75286174	A3.03	1	1	
14	75285922	C1.08	2	1		*	2	75286094	L1.25	2	1		*	28	75286175	A4.02	1	1	
15	75285923	C1.08	2	1		*	13	75286100	A1.02	1	1		*	0	75286176	A4.02	1	1	
13	75285924	C1.08	2	1		*	1	75286101	A1.02	1	1		*	4	75286177	A4.02	1	1	
12	75285925	C1.08	2	1		*	2	75286102	B2.01/1	2	1		*	6	75286178	A4.02	1	1	
11	75285926	C1.08	2	1		*	3	75286103	B2.01/1	2	1		*	10	75286179	A4.02	1	1	
10	75285927	C1.08	2	1		*	4	75286110	A1.02	1	1		*	15	75286180	A4.02	1	1	
37	75285928	C1.08	3	2		*	5	75286111	A3.01	2	1		*	1	75286181	A4.02	1	1	
39	75285929	C1.08	3	2		*	6	75286112	B2.01	12	1		*	2	75286182	A1.02	1	1	
38	75285930	C1.08	3	2		*	7	75286113	B2.01	12	1		*	6	75286250	A1.01	1	1	
2	75285985	B2.01/1	1	1		*	29	75286116	A2.24	2	1		*	7	75286307	A1.01	1	1	
1	75285986	B2.01/1	1	1		*	16	75286117	A2.24	2	1		*	13	75286308	A1.01	1	1	
4	75285987	B2.01/1	1	1		*	1	75286118	A2.24	2	1		*	15	75286309	A1.01	1	1	
6	75285987	B2.01/1	1	1		*	24	75286120	A4.02	1	1		*	16	75286310	A1.01	1	1	
3	75285988	B2.01/1	20	1		*	1	75286121	A4.03	1	1		*	26	75286319	A4.02	1	1	
6	75285999	A3.03	1	1		*	24	75286122	A2.24	2	1		*	25	75286320	A4.02	1	1	
8	75286000	A3.03	1	1		*	7	75286156	A4.02	1	1		*	12	75286321	A4.02	1	1	
1	75286062	L1.25	1	1		*	17	75286156	A4.02	1	1		*	11	75286322	A4.02	1	1	
1	75286063	L1.25	2	1		*	18	75286157	A4.02	1	1		*	9	75286324	A4.02	1	1	
2	75286064	L1.25	1	1		*	19	75286158	A4.02	1	1		*	27	75286325	A4.02	1	1	
2	75286065	L1.25	2	1		*	23	75286159	A4.02	1	1		*	8	76002504	E3.02/1	2	1	
5	75286072	A4.01	2	1		*	1	75286160	A3.02	1	1		*	25	76010146	L1.04	2	1	
18	75286073	A1.02	2	1		*	27	75286161	A1.02	1	1		*	6	76019517	A4.09	1	1	
16	75286074	A1.02	2	1		*	20	75286162	A3.03	1	1		*	5	79021957	E3.32	6	1	
19	75286075	A1.02	2	1		*	11	75286163	A3.03	1	1		*	4	79021958	E3.32	6	1	
2	75286076	A4.03	1	1		*	10	75286164	A3.03	1	1		*	3	79021959	E3.32	6	1	
13	75286077	A4.02	1	1		*	14	75286165	A3.03	1	1		*	4	79030247	B2.01/1	13	1	
22	75286078	A1.02	1	1		*	22	75286166	A3.03	1	1		*	5	79030261	B2.01/1	13	1	
2	75286082	A2.24	2	1		*	1	75286167	A3.03	1	1		*	10	79038228	E3.32	5	1	
25	75286083	A2.24	2	1		*	12	75286168	A3.03	1	1		*	10	79038228	E3.32	6	1	
11	75286084	A2.24	2	1		*	7	75286169	A3.03	1	1		*	49	79038472	A2.27	1	2	
2	75286085	A1.06	1	1		*	16	75286170	A3.03	1	1		*	10	79038730	E3.32	3	1	
3	75286086	A1.06	1	1		*	17	75286171	A3.03	1	1		*	4	79038730	E3.32	8	1	
1	75286091	L1.25	1	1		*	15	75286172	A3.03	1	1		*	79	79046212	A2.28	1	3	

FIATALLIS - FG 70R 70A 75R 75A

INDICE NUMERICO *** NUMERICAL INDEX

ITEM	PEZA N.	SGR.	QUAD.	PAG.	GRID	*	ITEM	PEZA N.	SGR.	QUAD.	PAG.	GRID	*	ITEM	PEZA N.	SGR.	QUAD.	PAG.	GRID
59	79046272	A2.28	1	2		*							*						
45	79046274	A2.28	1	2		*							*						
11	79053442	B2.01/1	22	1		*							*						
14	79053464	B2.01/1	22	1		*							*						
15	79053466	B2.01/1	22	1		*							*						
7	79059932	B2.01/1	21	1		*							*						
3	79067876	L1.04	5	1		*							*						
18	79067876	L1.04/1	2	1		*							*						
5	79073031	F4.01	11	1		*							*						
5	79073031	F4.01	14	1		*							*						
7	79073032	F4.01	11	1		*							*						
7	79073032	F4.01	14	1		*							*						
6	79073033	F4.01	11	1		*							*						
6	79073033	F4.01	14	1		*							*						
9	79073033	L6.04	2	1		*							*						
9	79073382	L1.04	2	1		*							*						
8	79074140	L6.04	2	1		*							*						
3	79078595	F4.01	3	1		*							*						
2	79094756	F4.01	16	1		*							*						
1	79096376	F4.01	12	1		*							*						
20	79102052	F4.01	17	1		*							*						
5	79102087	F4.01	16	1		*							*						
10	79102088	F4.01	17	1		*							*						
4	79102142	F4.01	17	1		*							*						
4	79102142	F4.01	17	1		*							*						
4	79102142	F4.01	17	1		*							*						
4	79102142	F4.01	17	1		*							*						
4	79102142	F4.01	17	1		*							*						
4	79102142	F4.01	17	1		*							*						
4	79102142	F4.01	17	1		*							*						
4	79102142	F4.01	17	1		*							*						
4	79102142	F4.01	17	1		*							*						
4	79102142	F4.01	17	1		*							*						
4	79102142	F4.01	17	1		*							*						
4	79102142	F4.01	17	1		*							*						

"FILTER CARE KIT"
MODEL: FG70 SERIES B

250 HOUR KIT P/N 75120357

QUANTITY	PART NUMBER	DESCRIPTION
75285999	1	LUBE OIL FILTER
08320238	1	FUEL STRAINER KIT
75208159	1	OIL DRAIN GASKET

500 HOUR FILTER KIT P/N 75128358

75285999	1	LUBE OIL FILTER
08320238	1	FUEL STRAINER KIT
75208159	1	OIL DRAIN GASKET
70923594	1	HYDRAULIC STRAINER O-RING
70923951	1	HYDRAULIC FILTER O-RING
70924146	2	HYDRAULIC FILTER O-RING
75208272	1	FUEL FILTER
75206848	1	COOLANT FILTER
73125853	1	HYDRAULIC FILTER
71004922	1	TRANSMISSION FILTER KIT
75208274	1	FUEL FILTER

1000 HOUR FILTER KIT P/N 75128361

75285999	1	LUBE OIL FILTER
08320238	1	FUEL STRAINER KIT
75208159	1	OIL DRAIN GASKET
70923594	1	HYDRAULIC STRAINER O-RING
70923951	1	HYDRAULIC FILTER O-RING
70924146	2	HYDRAULIC FILTER O-RING
75208272	1	FUEL FILTER
75206848	1	COOLANT FILTER
73125853	1	HYDRAULIC FILTER
71004922	1	TRANSMISSION FILTER KIT
75208274	1	FUEL FILTER
79043778	1	OUTER AIR CLEANER ELEMENT
79043779	1	INNER AIR CLEANER ELEMENT
71004848	1	TRANSMISSION STRAINER GASKET

"FILTER CARE KIT"
MODEL: FG75 SERIES B

250 HOUR KIT P/N 75120357

QUANTITY	PART NUMBER	DESCRIPTION
75285999	1	LUBE OIL FILTER
08320238	1	FUEL STRAINER KIT
75208159	1	OIL DRAIN GASKET

500 HOUR FILTER KIT P/N 75128359

75285999	1	LUBE OIL FILTER
08320238	1	FUEL STRAINER KIT
75208159	1	OIL DRAIN GASKET
70923594	1	HYDRAULIC STRAINER O-RING
70923951	1	HYDRAULIC FILTER O-RING
70924146	2	HYDRAULIC FILTER O-RING
75208272	1	FUEL FILTER
75206848	1	COOLANT FILTER
73125853	1	HYDRAULIC FILTER
73132155	1	TRANSMISSION FILTER KIT
75208274	1	FUEL FILTER

1000 HOUR FILTER KIT P/N 75128362

75285999	1	LUBE OIL FILTER
08320238	1	FUEL STRAINER KIT
75208159	1	OIL DRAIN GASKET
70923594	1	HYDRAULIC STRAINER O-RING
70923951	1	HYDRAULIC FILTER O-RING
70924146	2	HYDRAULIC FILTER O-RING
75208272	1	FUEL FILTER
75206848	1	COOLANT FILTER
73125853	1	HYDRAULIC FILTER
73132155	1	TRANSMISSION FILTER KIT
75208274	1	FUEL FILTER
79043778	1	OUTER AIR CLEANER ELEMENT
79043779	1	INNER AIR CLEANER ELEMENT
71004848	1	TRANSMISSION STRAINER GASKET

DESCRIPTION	SBGRP	TAV	GRID
1 - 2 SPEED CLUTCH FG75	B201/1	15	1L-9
3 - 4 SPEED & REVERSE CLUTCH FG75	B201/1	14	1L-8
5 - 6 SPEED & HIGH FWD CLUTCH FG75	B201/1	16	1L-10
ADAPTER, TRANS HOUSING FG75	B201/1	1	1I-11
AIR CLEANER	A222	1	1F-7
AIR FILTER	A223	2	1F-8
AIR PRE-CLEANER	A222	1	1F-7
ALTERNATOR	F200	1	2E-2
BELT	F200	1	2E-2
COMPONENTS	F603	1	2F-10
ARTICULATION CYLINDER	D101	7	1P-2
CYLINDER	E332	8	2D-13
JOINT (BOTTOM)	D101	5	1O-16
JOINT (TOP)	D101	6	1O-17
SWITCH	F401	19	2F-7
VALVE	E331	2	2C-14
BACK UP ALARM FG70	F401	8	2E-8
BACK UP ALARM FG75	F401/1	8	2E-9
BATTERIES FG70	F401	11	2E-12
BATTERIES FG70 FG75	F401	7	2E-6
BATTERIES FG75	F401	14	2E-16
CABLES FG70	F401	11	2E-12
CABLES FG70 FG75	F401	7	2E-6
CABLES FG75	F401	14	2E-16
BATTERY BOX	L130	1	2G-17
BELT, ALTERNATOR	F200	1	2E-2
BELTS, FAN	A409	1	1G-17
BLADE LIFT VALVE	F331	5	2C-17
BRAKE CALIPER	C118	1	1O-6
DISC	D316	1	1P-14
FLUID HIGH PRESSURE LINES LT.	C101	4	1N-16
FLUID HIGH PRESSURE LINES RT.	C101	3	1N-15
FLUID RESERVOIR	C101	2	1N-14
FLUID RESERVOIR COMPONENTS	C108	1	1O-3
MASTER CYINDER	C108	2	1O-4
MASTER CYLINDER LINES	C101	5	1N-17
PEDAL	C101	1	1N-13
POWER BOOSTER	C108	3	1O-5
PUMP COMPONENTS	D213	1	1P-13
CAB	L103	1	2F-15
DOOR	L104	2	2G-2
FAN ASSEMBLY	L104	9	2G-10
FANS	L104	8	2G-9
FLOOR MAT	L104	1	2F-16
HEATER FITTINGS	L104	11	2G-12
HEATER	L104	10	2G-11
LIGHTING	L104	5	2G-6
ROOF LINER	L104	4	2G-5
CAB SEALS	L104	3	2G-4
WIRING	L104	7	2G-8
CABLES ELECTRICAL FG70	F401	10	2E-11
CABLES ELECTRICAL FG75	F401	15	2F-2
CANOPY	L104/1	1	2G-13
CANOPY LINER	L104/1	2	2G-14
CIRCLE	E310	2	2B-15
SHIFT CYLINDER	E332	5	2D-11
SHIFT VALVE	E331	3	2C-15
TURN GEAR BOX COMPONENTS	E310	4	2B-16
TURN GEAR BOX	E310	2	2B-15
TURN MOTOR COMPONENTS	E310	5	2C-2
TURN MOTOR	E310	2	2B-15
CLUTCH , 3 - 4 SPEED & REVERSE FG75	B201/1	14	1L-8
HIGH SPEED FG70	B201	9	1H-17
LOW SPEED FG70	B201	8	1H-16
REVERSE & 3 - 4 SPEED FG75	B201/1	14	1L-8
SECOND SPEED FG70	B201	7	1H-15
THIRD SPEED FG70	B201	6	1H-14
5 - 6 SPEED & HIGH FWD FG75	B201/1	16	1L-10
FORWARDFG70	B201	7	1H-15
HIGH FWD & 5 - 6 SPEED FG75	B201/1	16	1L-10
LOW FORWARD FG75	B201/1	12	1L-6
REVERSE FG70	B201	6	1H-14
CONTROL VALVE TRANSMISSION FG70	B201	18	1I-10
CONVERTER FG70	B201	3	1H-11
COMPONENTS FG75	B201/1	7	1I-17
FLEX PLATES FG75	B201/1	6	1I-16
GEAR FG70	B201	4	1H-12
GEAR FG75	B201/1	9	1L-3
GEAR FG75	B201/1	10	1L-4
GEAR FG75	B201/1	11	1L-5
HOUSING FG70	B201	2	1H-10
HOUSING FG75	B201/1	3	1I-13
SHAFTS FG75	B201/1	5	1I-15
COOLANT PUMP	A403	1	1G-16
FILTER	A402	1	1G-15
CYLINDER ARTICULATION	E332	8	2D-13
CIRCLE SHIFT	E332	5	2D-11
MOLDBOARD LIFT	E332	6	2D-12
MOLDBOARD PITCH	E332	2	2D-8
MOLDBOARD SIDE SHIFT	E332	3	2D-9
RIPPER	E332/1	2	2D-15
SADDLE LOCK PIN	E332	4	2D-10
SCARIFIER	E332/1	1	2D-14
STEERING	D212	1	1P-12
WHEEL LEAN	E332	1	2D-7
ARTICULATION	D101	7	1P-2
DECALS (ARTICULATED)	L125	2	2G-16
DECALS (RIGID)	L125	1	2G-15
DIFFERENTIAL ASSEMBLY	B403	4	1N-10
DIFFERENTIAL COMPONENTS	B403	5	1N-11
DRIVE SHAFT	B301	1	1M-15
DRIVE SHAFT COMPONENTS	B316	1	1M-16
ELECTRICAL CABLE SWITCH PANEL	F401	2	2E-4
CABLES BATT. FG70 FG75	F401	7	2E-6
CABLES BATTERIES FG70	F401	11	2E-12
CABLES BATTERIES FG75	F401	14	2E-16
CABLES FG70	F401	10	2E-11
CABLES FG75	F401	15	2F-2
FUSES	F401	3	2E-5
SWITCH PANEL	F401	1	2E-3
SWITCH PANEL	F401	1	2E-3
ELECTRONIC DATA MONITOR	F401	12	2E-14
ELEMENT IMPLEMENT OIL	E328	1	2C-10
TRANS. OIL FG70	B201	11	1I-3
TRANS. OIL FG75	B217	1	1M-14
AIR	A223	2	1F-8
ENGINE OIL	A303	1	1G-12
FUEL	A226	1	1F-12
END CAP VALVE	E331	7	2D-3
END CAP VALVE	E331	9	2D-4
ENGINE	A000	1	1E-2
BLOCK	A101	1	1E-5
BLOCK PLUGS	A101	2	1E-6
CAMSHAFT	A107	1	1E-16
CAMSHAFT DRIVE	A106	1	1E-15
CONNECTING RODS	A105	1	1E-14
COOLANT THERMOSTAT	A402	1	1G-15
CRANKSHAFT	A103	1	1E-11
CYLINDER SLEEVES	A105	1	1E-14
DAMPER	A104	1	1E-13
EXHAUST MANIFOLD	A254	1	1G-7
EXHAUST VALVE	A107	1	1E-16
FLYWHEEL	A103	1	1E-11
FLYWHEEL HOUSING	A102	2	1E-10
FRONT COVER	A102	1	1E-9
FUEL PUMP DRIVE	A106	1	1E-15
HEAD	A101	3	1E-7
INTAKE VALVE	A107	1	1E-16
LIFTING BRACKET	A101	4	1E-8
MAIN BEARING	A103	2	1E-12
MAIN BEARING CAPS	A101	1	1E-5
MOUNTS FG70	A002	1	1E-3
MOUNTS FG75	A002/1	1	1E-4
OIL DIPSTICK	A301	2	1G-10
OIL FILL PLUG	A301	2	1G-10
OIL FILTER	A303	1	1G-12
OIL HEAT EXCHANGER	A303	1	1G-12
OIL PAN	A102	1	1E-9
OIL PUMP	A302	1	1G-11

FIATALLIS

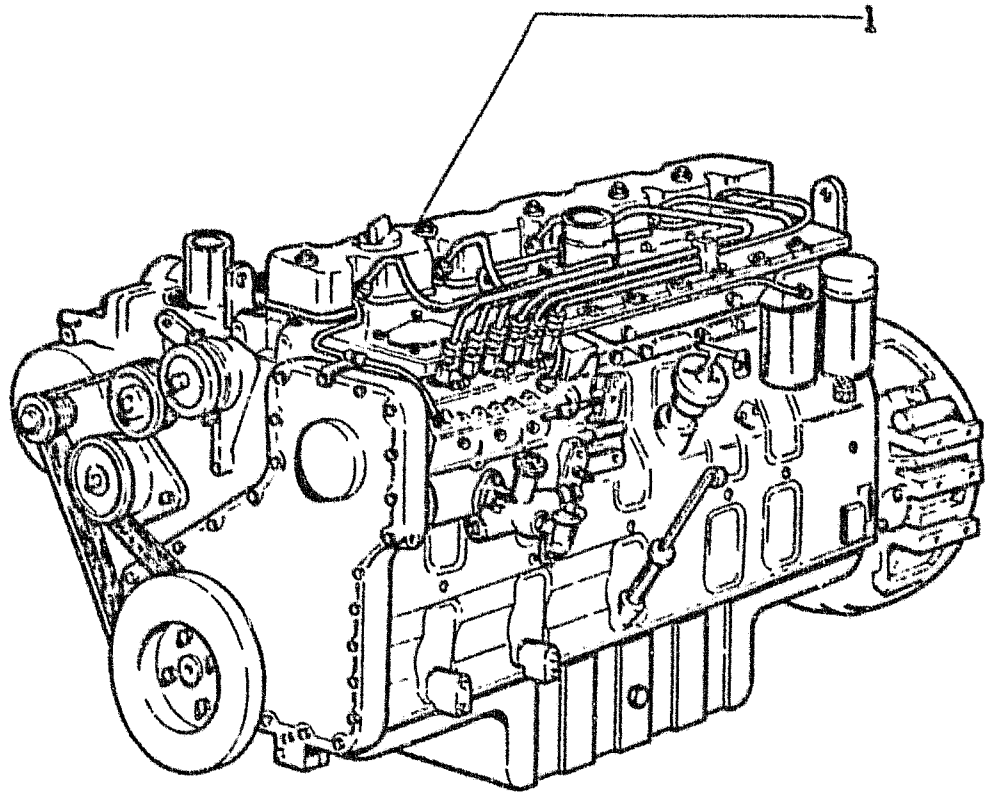

FIATALLIS FG 70R 70A 75R 75A A0.00 **QUADRO 1 PAG. 1**

ITEM	PEÇA Nº	QTDE	COD.	DESCRIPTION	DESCRIÇÃO
1	73159104	1	130M	ENGINE (1)	MOTOR
	73152436	1	130M	ENGINE (2)	MOTOR

(1) FOR FG70 FG70A
(2)FOR FG75 FG75A

	ENGINE MOTOR	A0.00	1

FIATALLIS

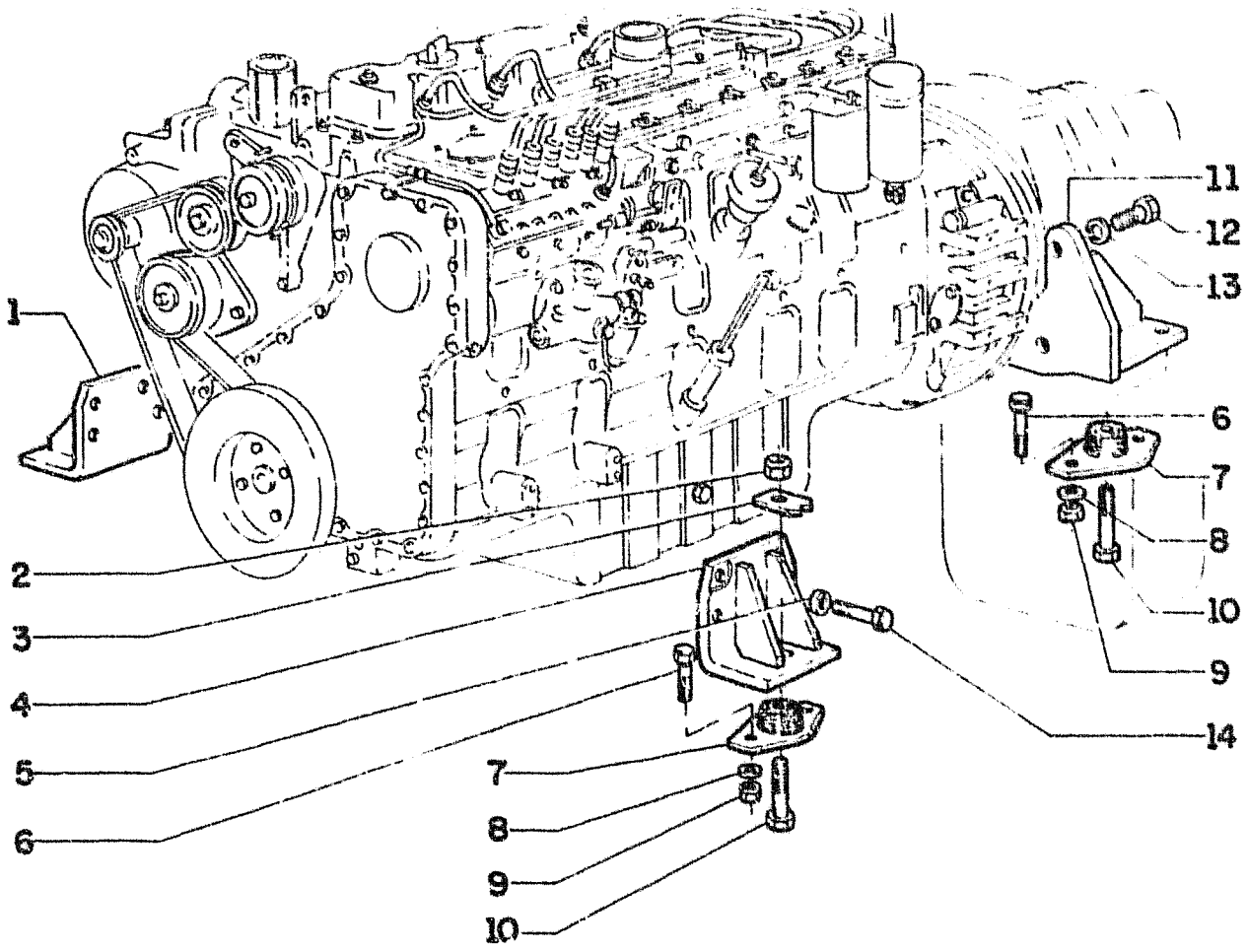

FIATALLIS FG 70R 70A A0.02 **QUADRO** 1 **PAG.** 1

ITEM	PEÇA Nº	QTDE	COD.	DESCRIPTION	DESCRIÇÃO
1	75218524	1	300S	SUPPORT	SUPORTE
2	73126311	4	010D	NUT	PORCA
3	75218568	4	113P	LOCKPLATE	PLACA TRAVAM.
4	75218528	1	300S	SUPPORT	SUPORTE
5	10517073	8	170R	LOCKWASHER	ARRUELA PRESS
6	11390531	8	040V	SCREW	PARAFUSO
7	4955094	4	345C	CUSHION	COXIM
8	70927275	8	131R	WASHER	ARRUELA
9	12164121	8	010D	NUT	PORCA
10	15997331	4	040V	SCREW	PARAFUSO
11	73158325	1	300S	SUPPORT	SUPORTE
12	70922743	4	040V	SCREW	PARAFUSO
13	70927382	4	131R	WASHER	ARRUELA
14	11112321	8	040V	SCREW	PARAFUSO

ENGINE MOUNTS
SUPORTES DO MOTOR

A0.02 | 1

068

FIATALLIS

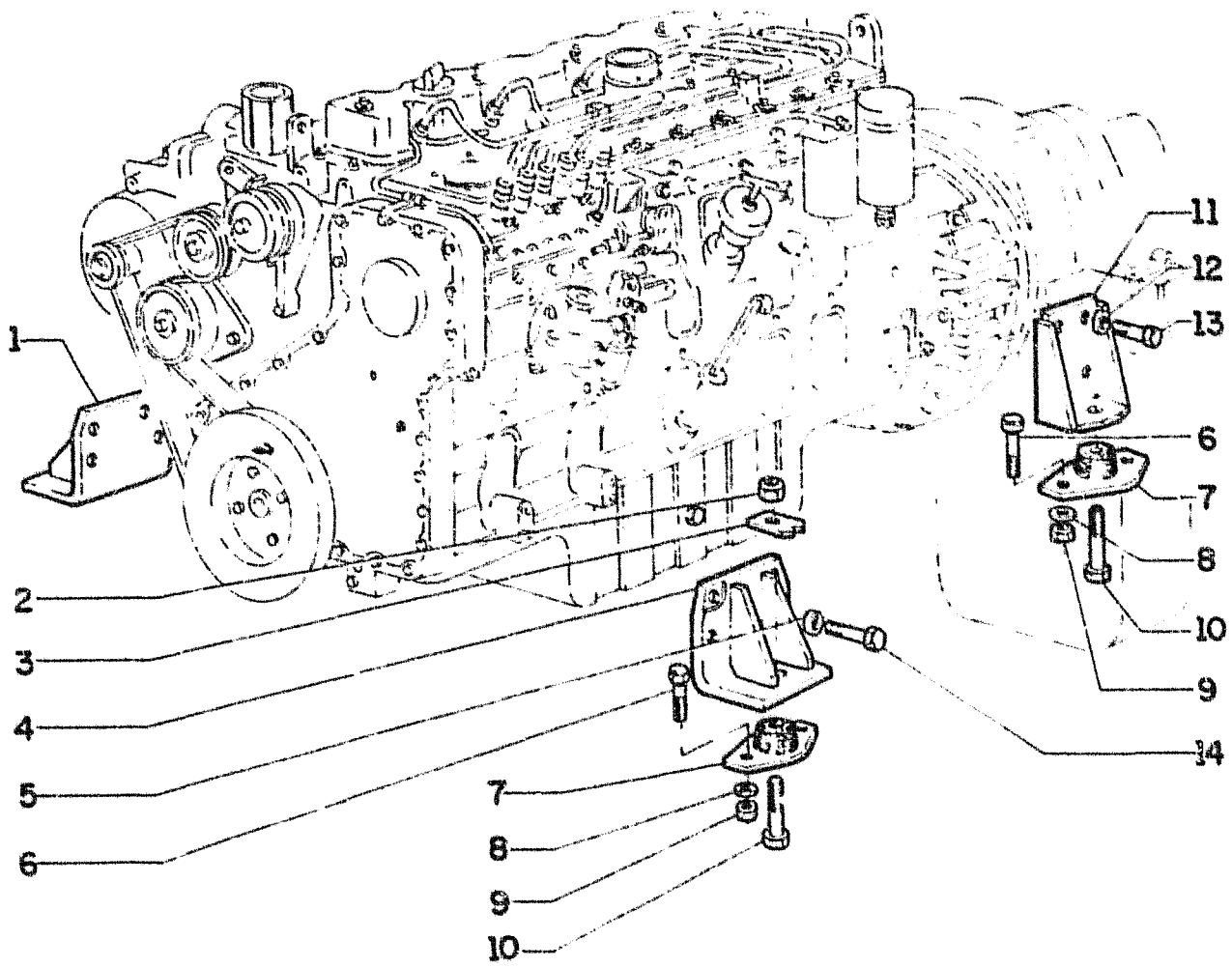

FIATALLIS FG 75R 75A A0.02/1 **QUADRO** 1 **PAG.** 1

ITEM	PEÇA Nº	QTDE	COD.	DESCRIPTION	DESCRIÇÃO
1	75218524	1	300S	SUPPORT	SUPORTE
2	73126311	4	010D	NUT	PORCA
3	75218568	4	113P	LOCKPLATE	PLACA TRAVAM.
4	75218528	1	300S	SUPPORT	SUPORTE
5	10517073	8	170R	LOCKWASHER	ARRUELA PRESS
6	11390531	8	040V	SCREW	PARAFUSO
7	4955094	4	345C	CUSHION	COXIM
8	70927275	8	131R	WASHER	ARRUELA
9	12164121	8	010D	NUT	PORCA
10	15997331	4	040V	SCREW	PARAFUSO
11	75237873	1	300S	SUPPORT RIGHT	SUPORTE DIR
	75237874	1	300S	SUPPORT LEFT	SUPORTE ESQU
12	70922743	8	040V	SCREW	PARAFUSO
13	70927382	8	131R	WASHER	ARRUELA
14	11112321	8	040V	SCREW	PARAFUSO

ENGINE MOUNTS
SUPORTES DO MOTOR

A0.02/1 | 1

FIATALLIS

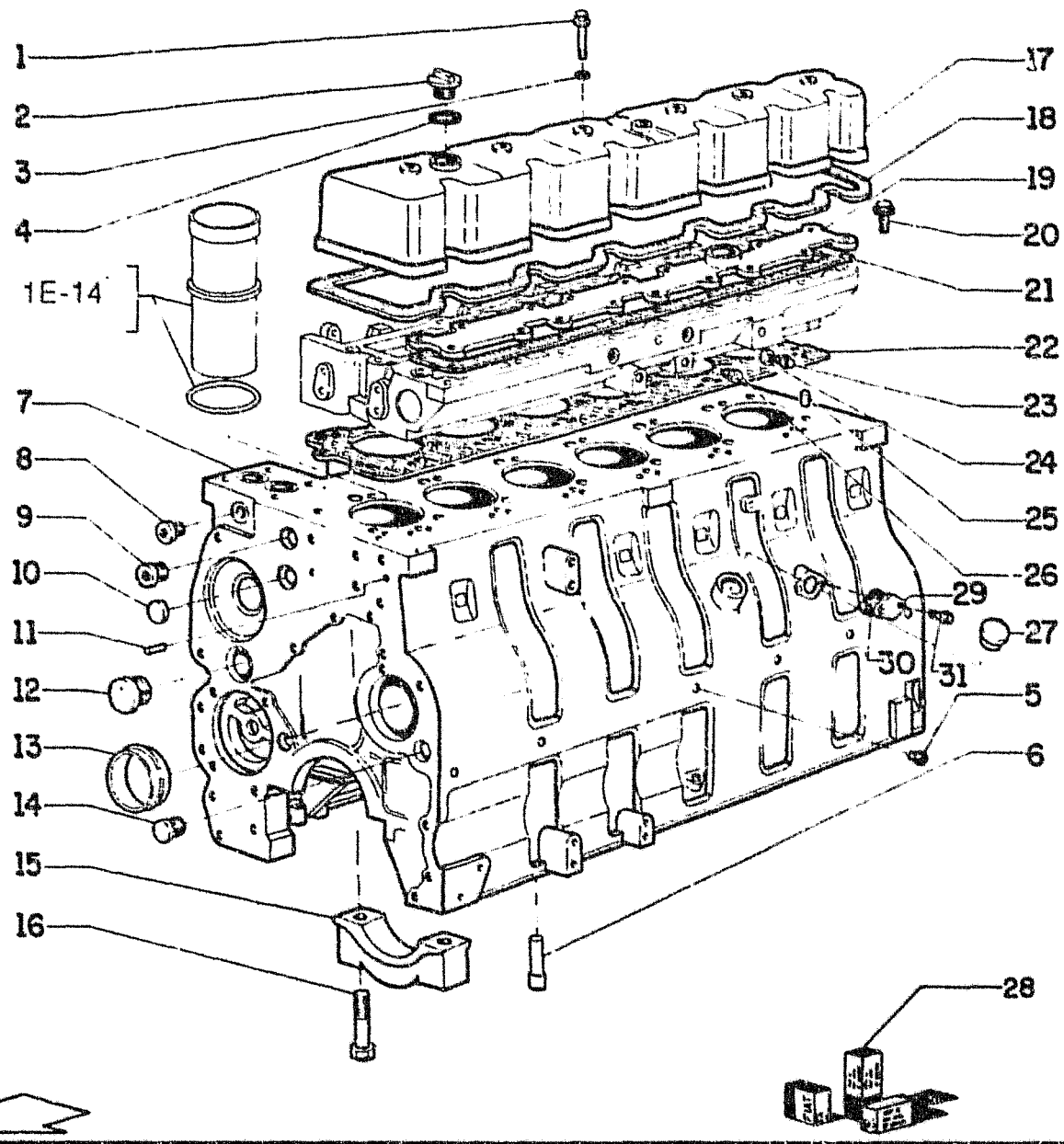

FIATALLIS FG 70R 70A 75R 75A — A1.01 **QUADRO** 1 **PAG.** 1

ITEM	PEÇA Nº	QTDE	COD.	DESCRIPTION	DESCRIÇÃO
1	75208207	6	040V	SCREW	PARAFUSO
2	75208208	1	265C	COVER	TAMPA
3	75208209	6	055A	SEAL RING	ANEL DE VEDAÇ
4	75208210	1	055A	SEAL RING	ANEL DE VEDAÇ
5	75208135	6	050T	PLUG	BUJÃO
6	75286250	6	406S	NOZZLE	NEBULIZADOR
7	75286307	1	020B	CRANKCASE	BLOCO DO MOTOR
8	75208146	4	050T	PLUG	BUJÃO
9	75208118	1	050T	PLUG	BUJÃO
10	75208119	1	050T	PLUG	BUJÃO
11	75208120	2	080P	PIN	PINO
12	75208211	1	050T	PLUG	BUJÃO
13	75286308	1	095B	BUSHING	BUCHA
14	75208140	4	050T	PLUG	BUJÃO
15	75286309	7	079L	REST	MANCAL
16	75286310	14	040V	SCREW	PARAFUSO
17	75208113	1	265C	COVER	TAMPA
18	75208126	1	120G	GASKET	JUNTA
19	75208127	1	265C	COVER	TAMPA
20	75208128	18	040V	SCREW	PARAFUSO
21	75208129	1	120G	GASKET	JUNTA
22	75208131	1	120G	GASKET	JUNTA
23	75208157	2	050T	PLUG	BUJÃO
24	75208158	2	055A	SEAL RING	ANEL DE VEDAÇ
25	75208212	4	095B	BUSHING	BUCHA
26	75206804	2	050T	PLUG	BUJÃO
27	75208211	1	050T	PLUG	BUJÃO
28	75208101	1	002K	KIT SEAL UPPER	KIT
29	75286124	1	265C	COVER	TAMPA
30	75285747	1	120G	GASKET	JUNTA
31	75208153	2	040V	SCREW	PARAFUSO

CRANKCASE & CYLINDER HEAD
BLOCO DO MOTOR E CABEÇOTE

A1.01 | 1

008

FIATALLIS

FIATALLIS FG 70R 70A 75R 75A A1.01 **QUADRO 2** **PAG. 1**

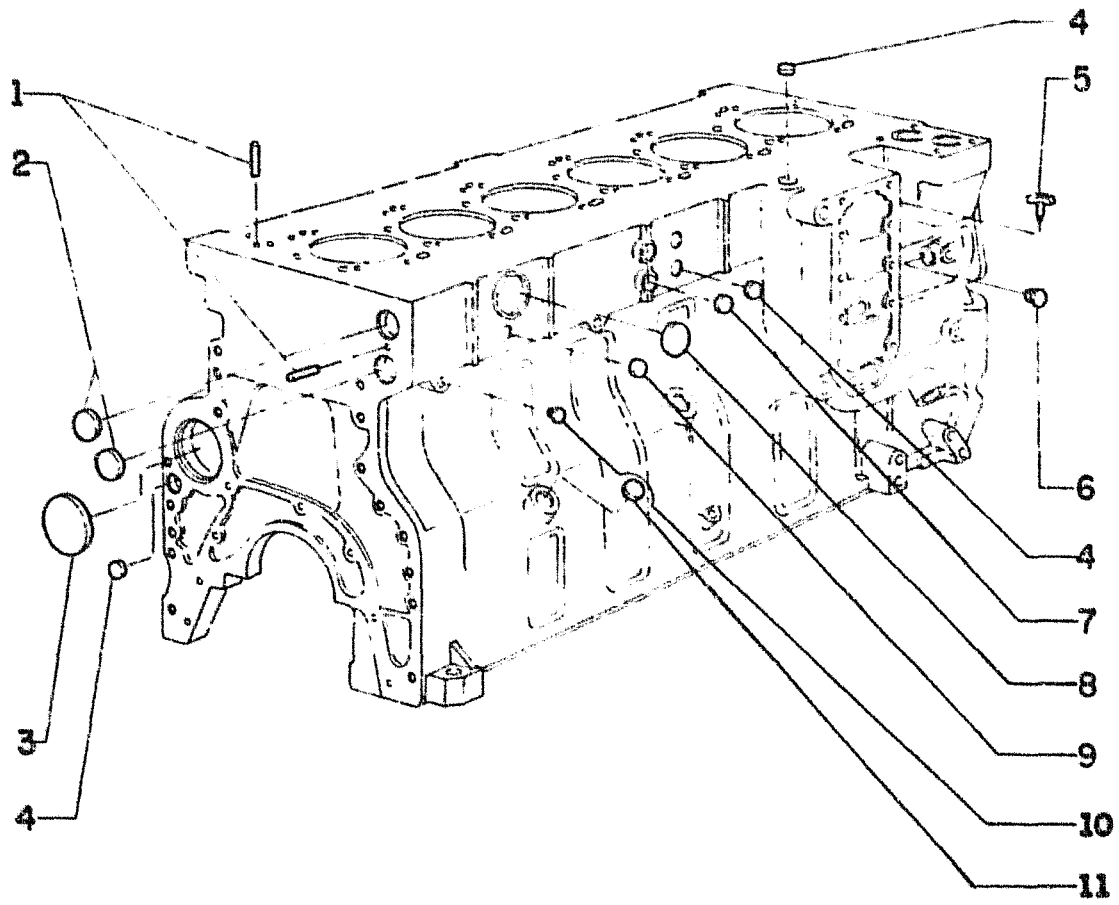

ITEM	PEÇA Nº	QTDE	COD.	DESCRIPTION	DESCRIÇÃO
1	75208212	4	095B	BUSHING	BUCHA
2	75208218	2	050T	PLUG	BUJÃO
3	75208122	1	050T	PLUG	BUJÃO
4	75208140	4	050T	PLUG	BUJÃO
5	75206805	1	150R	COCK	REGISTRO
6	75206807	1	050T	PLUG	BUJÃO
7	75206804	2	050T	PLUG	BUJÃO
8	75208144	1	050T	PLUG	BUJÃO
9	75206876	4	050T	PLUG	BUJÃO
10	75206804	2	050T	PLUG	BUJÃO
11	75208211	2	050T	PLUG	BUJÃO

PLUG PIN BLOCK
TAMPOES E PINOS DO BLOCO

A1.01 | 2

SA FIATALLIS

FIATALLIS FG 70R 70A 75R 75A A1.01 QUADRO 3 PAG. 1

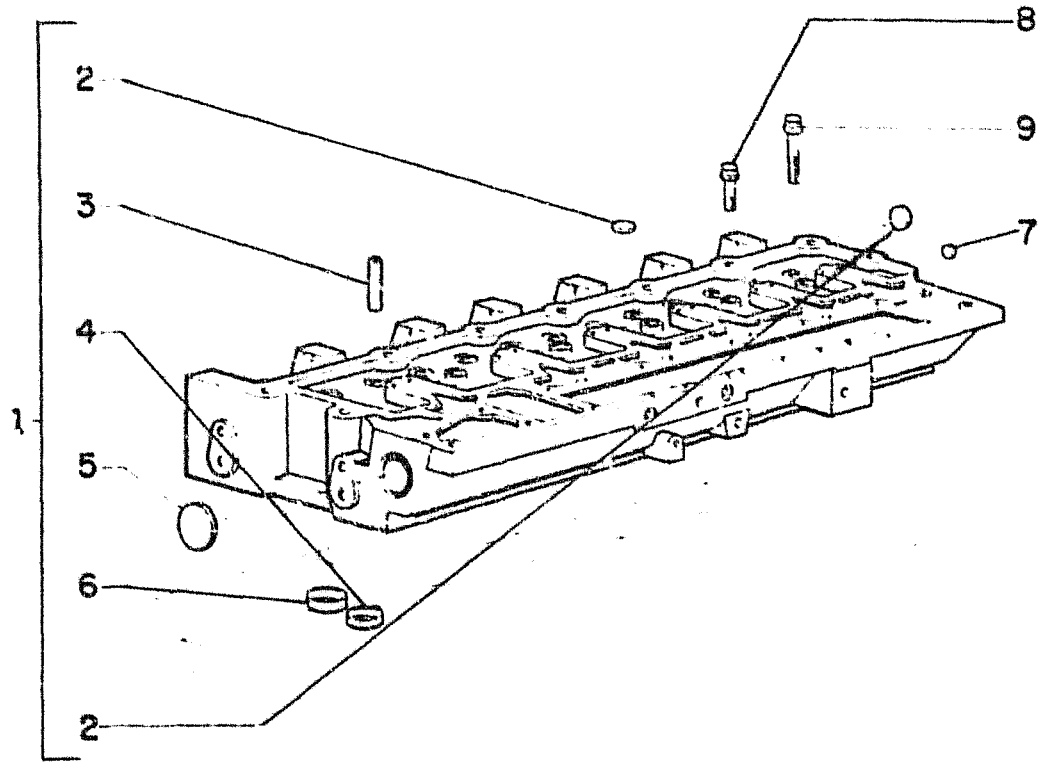

ITEM	PEÇA Nº	QTDE	COD.	DESCRIPTION	DESCRIÇÃO
1	75208130	1	113T	CYLINDER HEAD	CAB.DO CILINDRO
2	75206875	5	050T	PLUG	BUJÃO
3	75208214	12	145G	GUIDE	GUIA
4	75208215	6	069S	SEAT	SEDE
5	75208216	2	050T	PLUG	BUJÃO
6	75208217	6	069S	SEAT	SEDE
7	75206811	1	050T	PLUG	BUJÃO
8	75206834	12	040V	SCREW	PARAFUSO
9	75206833	14	040V	SCREW	PARAFUSO

CYLINDER HEAD
CABEÇOTE DO CILINDRO

A1.01 | 3

070

FIATALLIS

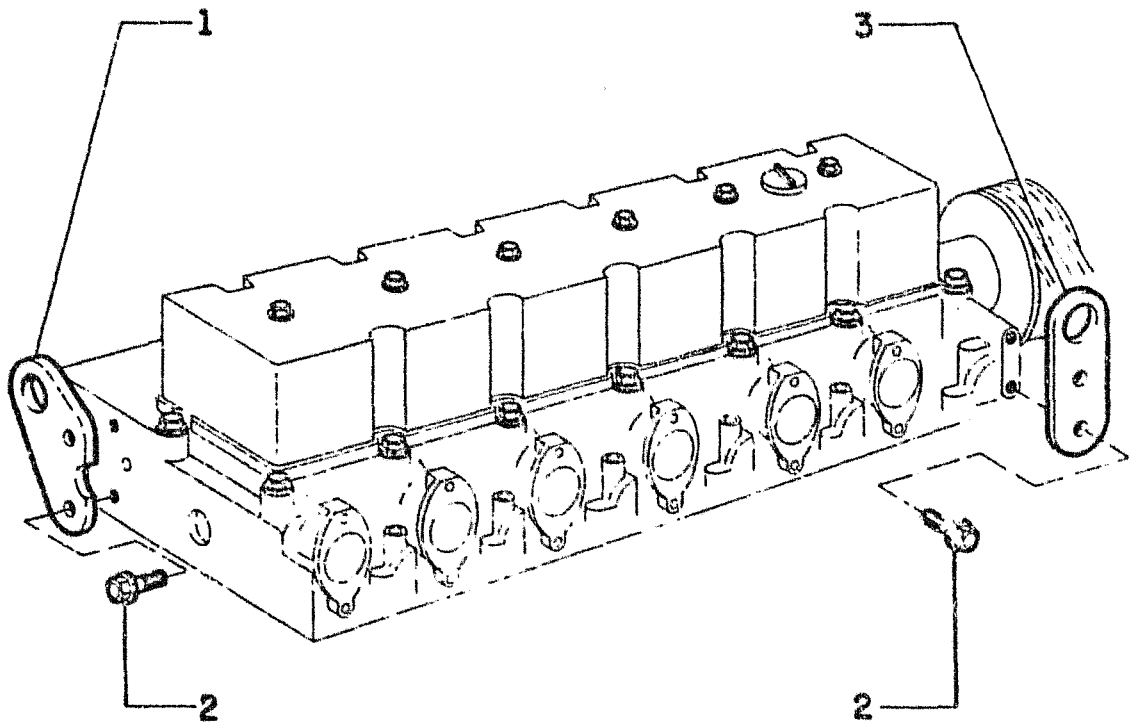

FIATALLIS FG 70R 70A 75R 75A A1.01 **QUADRO 4 PAG. 1**

ITEM	PEÇA Nº	QTDE	COD.	DESCRIPTION	DESCRIÇÃO
1	75218567	1	020M	HANDLE	ALÇA
2	75208326	4	040V	SCREW	PARAFUSO
3	75208325	1	300S	SUPPORT	SUPORTE

BRACKET LIFTING
SUPORTE DE LEVANTAMENTO

A1.01 | 4

071

FIATALLIS

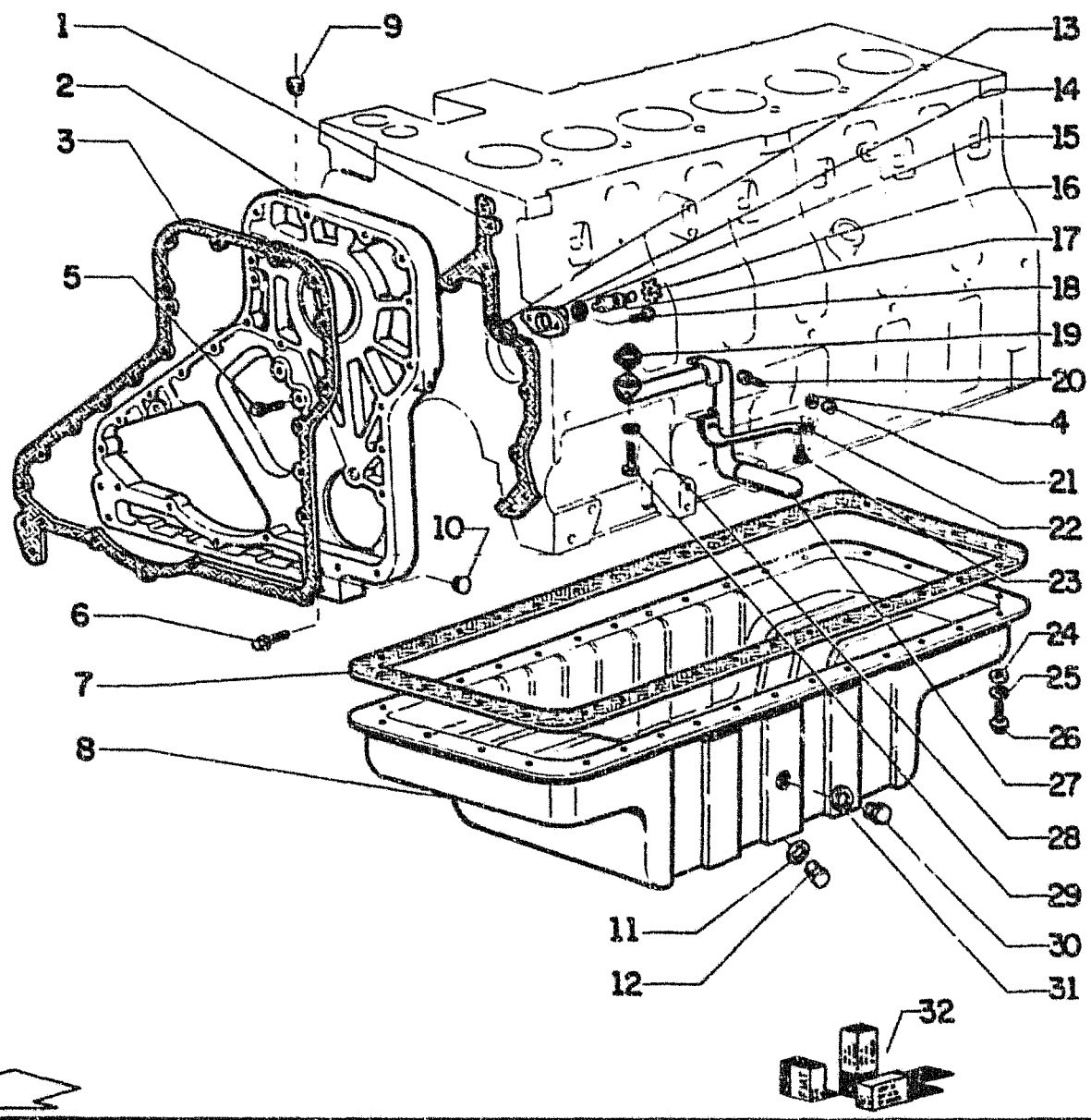

FIATALLIS FG 70R 70A 75R 75A A1.02 **QUADRO 1** **PAG. 1**

ITEM	PEÇA Nº	QTDE	COD.	DESCRIPTION	DESCRIÇÃO
1	75286101	1	120G	GASKET	JUNTA
2	75286182	1	035S	CASE	CARCAÇA
3	75206845	1	120G	GASKET	JUNTA
4	75286110	1	131R	WASHER	ARRUELA
5	75208153	5	040V	SCREW	PARAFUSO
6	75203380	4	040V	SCREW	PARAFUSO
7	75208155	1	120G	GASKET	JUNTA
8	75206857	1	275C	SUMP	CARTER
9	75208135	3	050T	PLUG	BUJÃO
10	75204991	1	050T	PLUG	BUJÃO
11	10259960	1	131R	WASHER	ARRUELA
12	75208160	1	050T	PLUG	BUJÃO
13	75286100	1	123G	SEAL ASSY	RETENTOR
14	75208162	1	035S	CASE	CARCAÇA
15	75208163	1	055A	SEAL RING	ANEL DE VEDAÇ
16	75208164	1	045A	RING	ANEL
17	75208165	1	080P	PIN	PINO
18	75208166	2	040V	SCREW	PARAFUSO
19	75208167	1	120G	GASKET	JUNTA
20	75208168	1	040V	SCREW	PARAFUSO
21	75207979	1	010D	NUT	PORCA
22	75286078	1	300S	SUPPORT	SUPORTE
23	75208168	1	040V	SCREW	PARAFUSO
24	75206836	32	131R	WASHER	ARRUELA
25	75206843	32	170R	LOCKWASHER	ARRUELA PRESS
26	75208174	32	040V	SCREW	PARAFUSO
27	75286161	1	193T	TUBE	TUBO
28	75208176	2	075D	SPACER	ESPAÇADOR
29	75208177	2	040V	SCREW	PARAFUSO
30	75208157	1	050T	PLUG	BUJÃO
31	75208158	1	055A	SEAL RING	ANEL DE VEDAÇ
32	75208102	K	002K	KIT SEAL LOWER	KIT

OIL SUMP AND CRANKCASE COVERS
CARTER E TAMPA DO BLOCO

A1.02 | 1

072

FIATALLIS

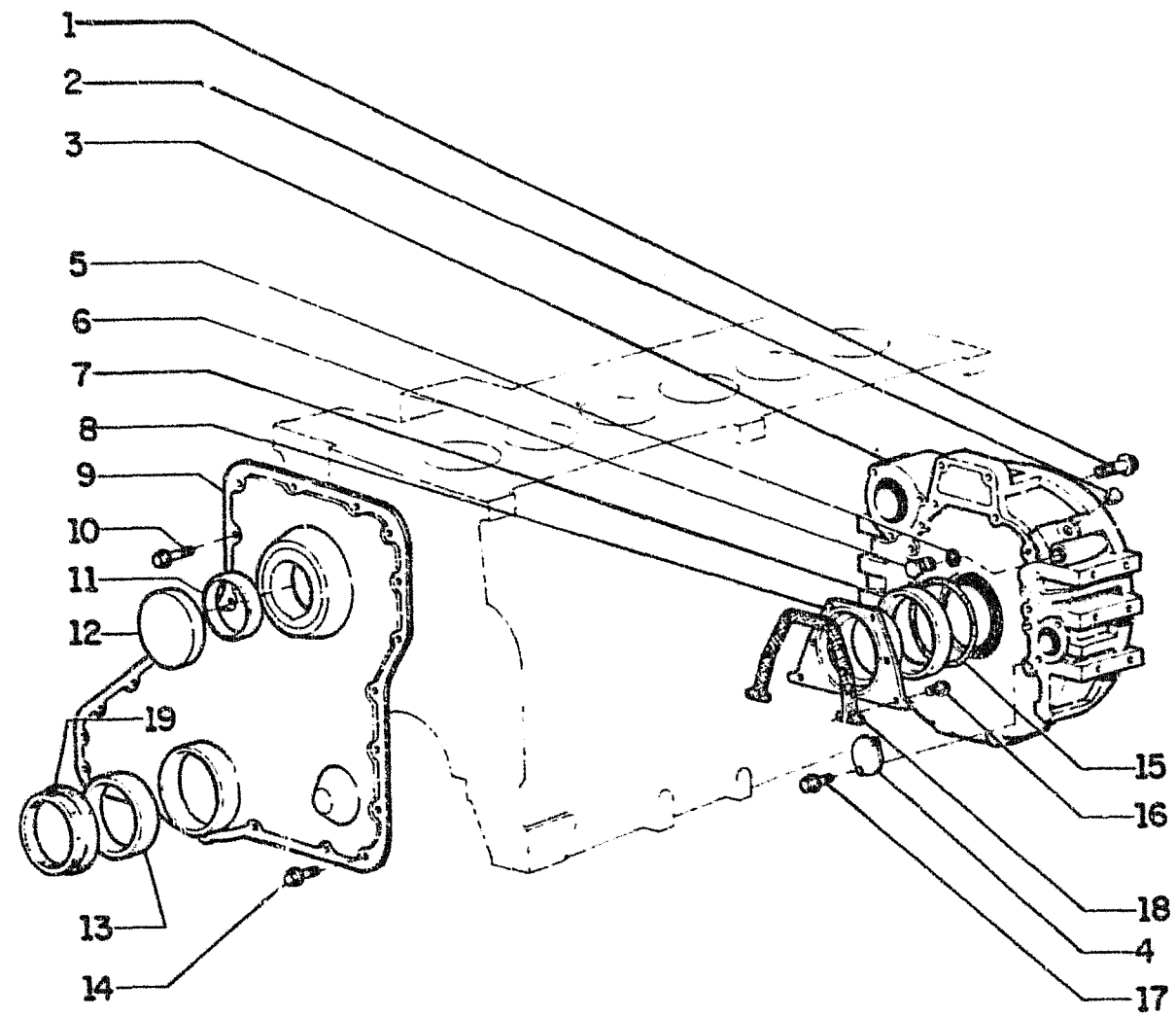

FIATALLIS FG 70R 70A 75R 75A A1.02 **QUADRO** 2 **PAG.** 1

ITEM	PEÇA Nº	QTDE	COD.	DESCRIPTION	DESCRIÇÃO
1	75208178	12	040V	SCREW	PARAFUSO
2	75208179	1	050T	PLUG	BUJÃO
3	75206813	1	035S	CASE	CARCAÇA
4	75208196	1	265C	COVER	TAMPA
5	75206842	1	158G	O'RING	O'RING
6	75208183	1	050T	PLUG	BUJÃO
7	75208110	1	122G	SEAL	RETENTOR
8	75208185	1	265C	COVER	TAMPA
9	75206846	1	265C	COVER	TAMPA
10	75208900	6	040V	SCREW	PARAFUSO
11	75208188	1	055A	SEAL RING	ANEL DE VEDAÇÃO
12	75208189	1	265C	COVER	TAMPA
13	75208109	1	122G	SEAL	RETENTOR
14	75208294	17	040V	SCREW	PARAFUSO
15	75208192	1	158G	O'RING	O'RING
16	75286074	8	040V	SCREW	PARAFUSO
17	75206877	2	040V	SCREW	PARAFUSO
18	75208195	1	123G	SEAL ASSY	RETENTOR
19	75286075	1	070R	GUARD	PROTEÇÃO

OIL SUMP AND CRANKCASE
CARCAÇA VOLANTE E TAMPA DO BLOCO

A1.02 | 2

073

FIATALLIS

FIATALLIS FG 70R 70A 75R 75A A1.03 QUADRO 1 PAG. 1

ITEM	PEÇA Nº	QTDE	COD.	DESCRIPTION	DESCRIÇÃO
1	75208362	8	040V	SCREW	PARAFUSO
2	75208363	8	131R	WASHER	ARRUELA
3	75208364	1	048V	FLYWHEEL	VOLANTE
4	75208365	1	312C	RACK	CREMALHEIRA
5	75285333	1	018A	CRANKSHAFT	VIRABREQUIM
6	75208356	1	080P	PIN	PINO

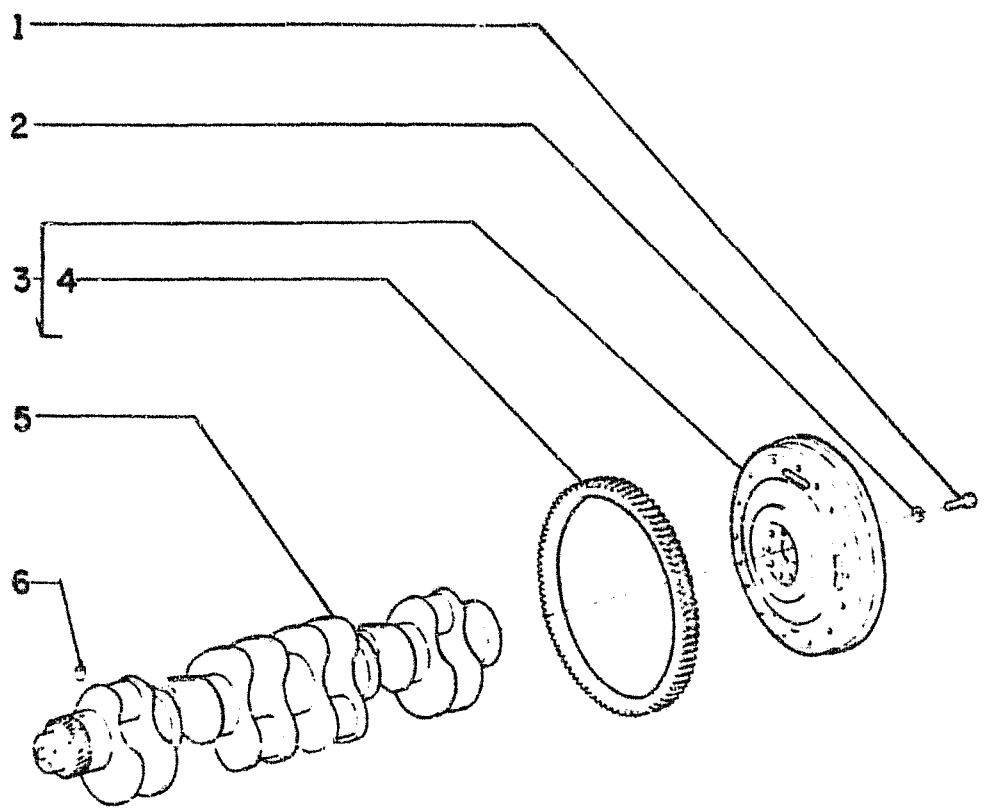

CRANKSHAFT AND FLYWHEEL
VIRABREQUIM E VOLANTE DO MOTOR

A1.03 | 1

FIATALLIS

FIATALLIS FG 70R 70A 75R 75A A1.03 QUADRO 2 PAG. 1

ITEM	PEÇA Nº	QTDE	COD.	DESCRIPTION	DESCRIÇÃO
1	75208361	1	002K	KIT std	KIT
1	75208078	1	002K	KIT 0.25mm	KIT
1	75208079	1	002K	KIT 0.50mm	KIT
1	75208080	1	002K	KIT 0.75mm	KIT
1	75208081	1	002K	KIT 1.00mm	KIT

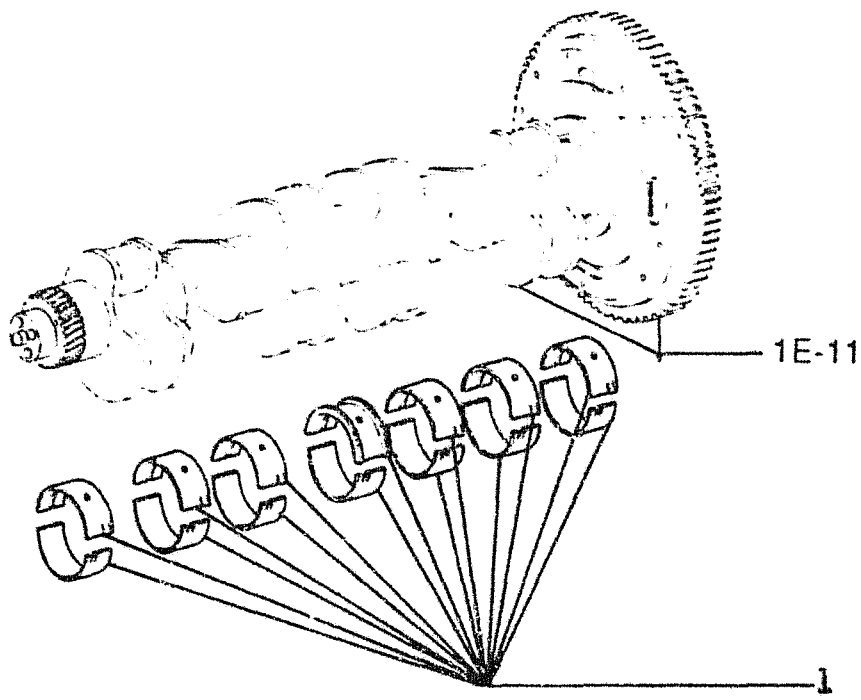

CRANKSHAFT AND FLYWHEEL
VIRABREQUIM E VOLANTE DO MOTOR

A1.03 | 2

FIATALLIS

FIATALLIS FG 70R 70A 75R 75A A1.04 QUADRO 1 PAG. 1

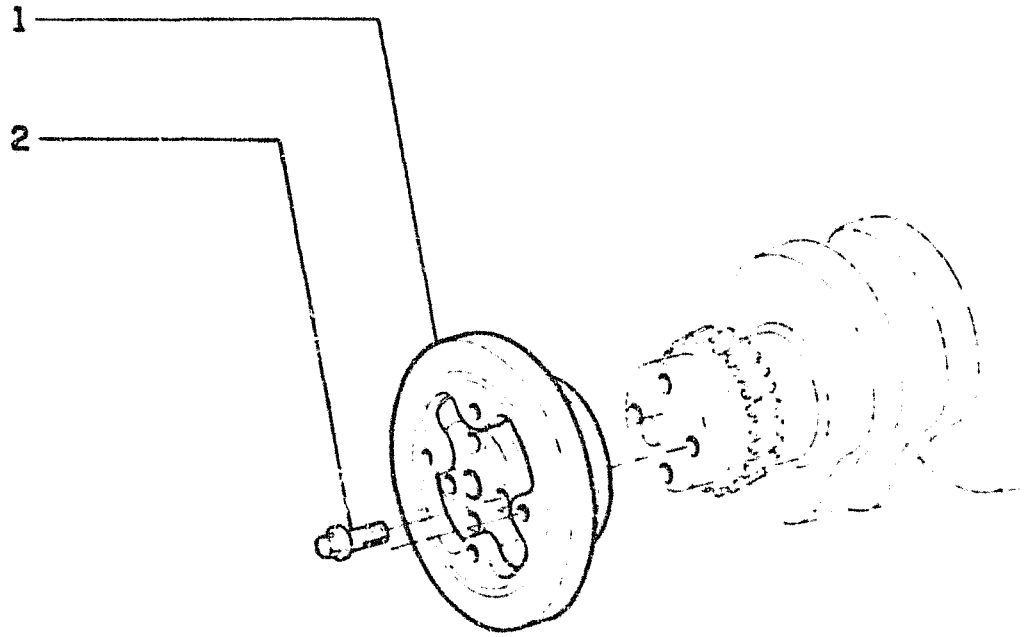

ITEM	PEÇA Nº	QTDE	COD.	DESCRIPTION	DESCRIÇÃO
1	75206819	1	164S	DAMPER	AMORTECEDOR DE
2	75204971	4	040V	SCREW	PARAFUSO

DAMPER
ANTIVIBRADOR

A1.04 | 1

076

FIATALLIS

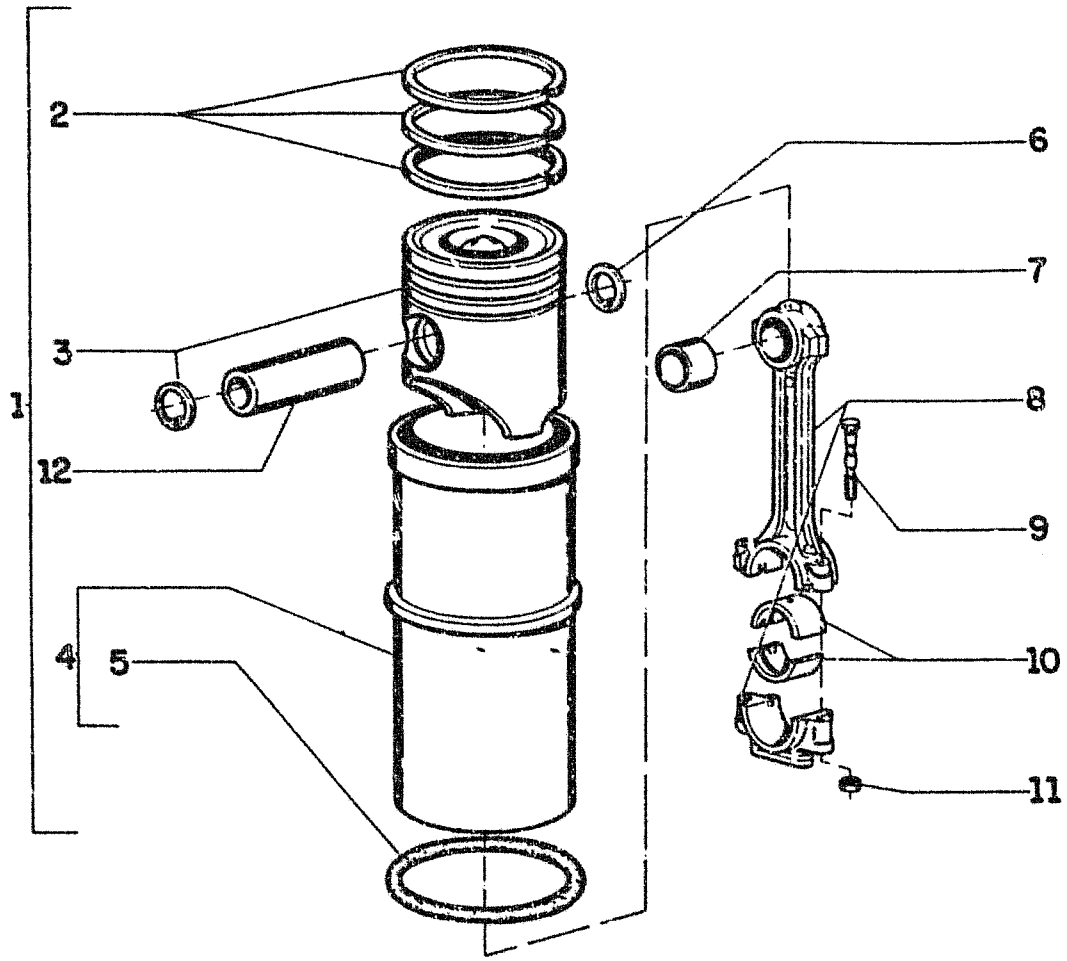

FIATALLIS FG 70R 70A 75R 75A A1.05 QUADRO 1 PAG. 1

ITEM	PEÇA Nº	QTDE	COD.	DESCRIPTION	DESCRIÇÃO
1	75206850	1	002K	KIT	KIT
2	75208112	6	045A	RING	ANEL
3	75206849	6	132P	PISTON	PISTÃO
4	75208114	6	053C	TUBE	CAMISA CILIND
5	75208115	6	055A	SEAL RING	ANEL DE VEDAÇ
6	75206821	12	053C	TUBE	CAMISA CILIND
7	75208087	6	095B	BUSHING	BUCHA
8	75208204	6	050B	LINK	BIELA
9	75208205	12	040V	SCREW	PARAFUSO
10	75208088	12	096S	HALF BUSHING	SEMI-BUC std
	75206861	12	096S	HALF BUSHING	SEMI-BUC .25mm
	75206862	12	096S	HALF BUSHING	SEMI-BUC .51mm
	75206863	12	096S	HALF BUSHING	SEMI-BUC .76mm
	75206864	12	096S	HALF BUSHING	SEMI-BUC 102mm
11	75208206	12	010D	NUT	PORCA
12	75208202	6	080P	PIN	PINO

CONNECTING RODS AND PISTONS
PISTÕES E BIELAS

A1.05 | 1

FIATALLIS

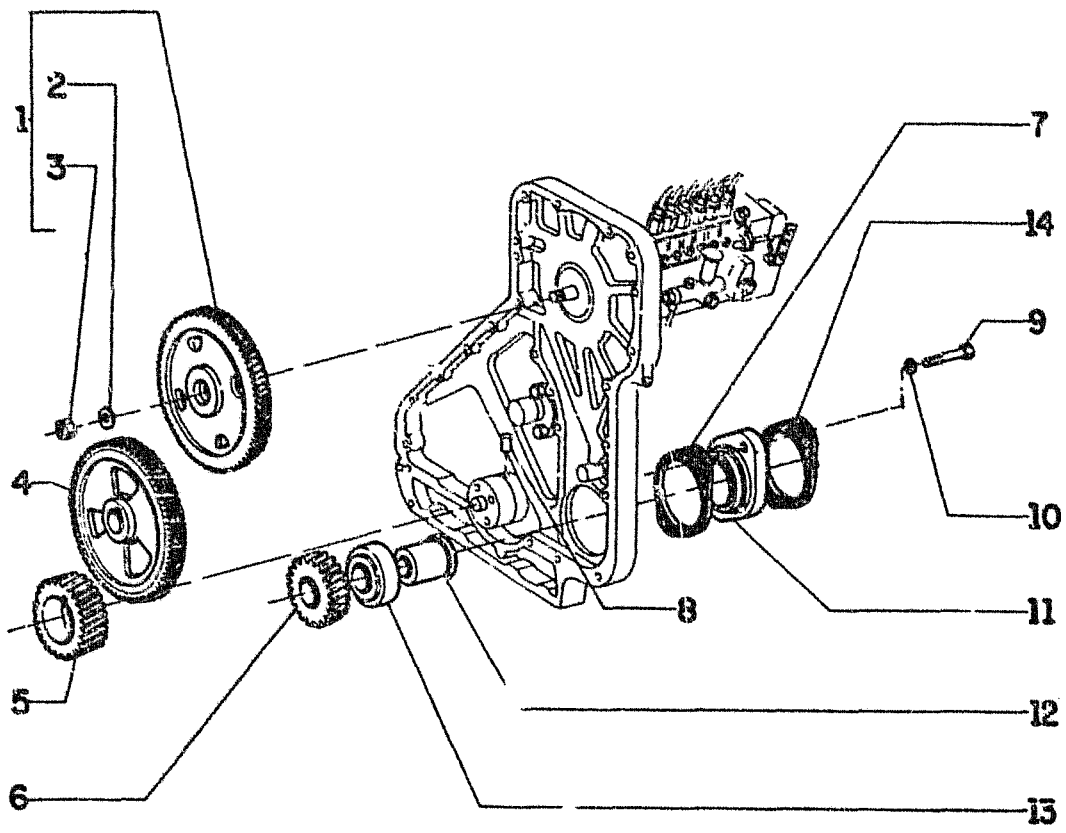

FIATALLIS FG 70R 70A 75R 75A A1.06 **QUADRO** 1 **PAG.** 1

ITEM	PEÇA Nº	QTDE	COD.	DESCRIPTION	DESCRIÇÃO
1	75208348	1	050I	GEAR	ENGRENAGEM
2	75286085	1	131R	WASHER	ARRUELA
3	75286086	1	010D	NUT	PORCA
4	75208349	1	050I	GEAR	ENGRENAGEM
5	75208352	1	050I	GEAR	ENGRENAGEM
6	75208353	1	050I	GEAR	ENGRENAGEM
7	75285744	2	120G	GASKET	JUNTA
8	75208356	1	080P	PIN	PINO
9	11112631	2	040V	SCREW	PARAFUSO
10	10517073	2	170R	LOCKWASHER	ARRUELA PRESS
11	75286304	1	075D	SPACER	ESPAÇADOR
12	75286305	1	016A	SHAFT	EIXO
13	75208354	1	341C	BEARING	ROLAMENTO
14	75286306	1	120G	GASKET	JUNTA

CAMSHAFT DRIVE
COMANDO DO DISTRIBUIDOR

A1.06 | 1

078

FIATALLIS

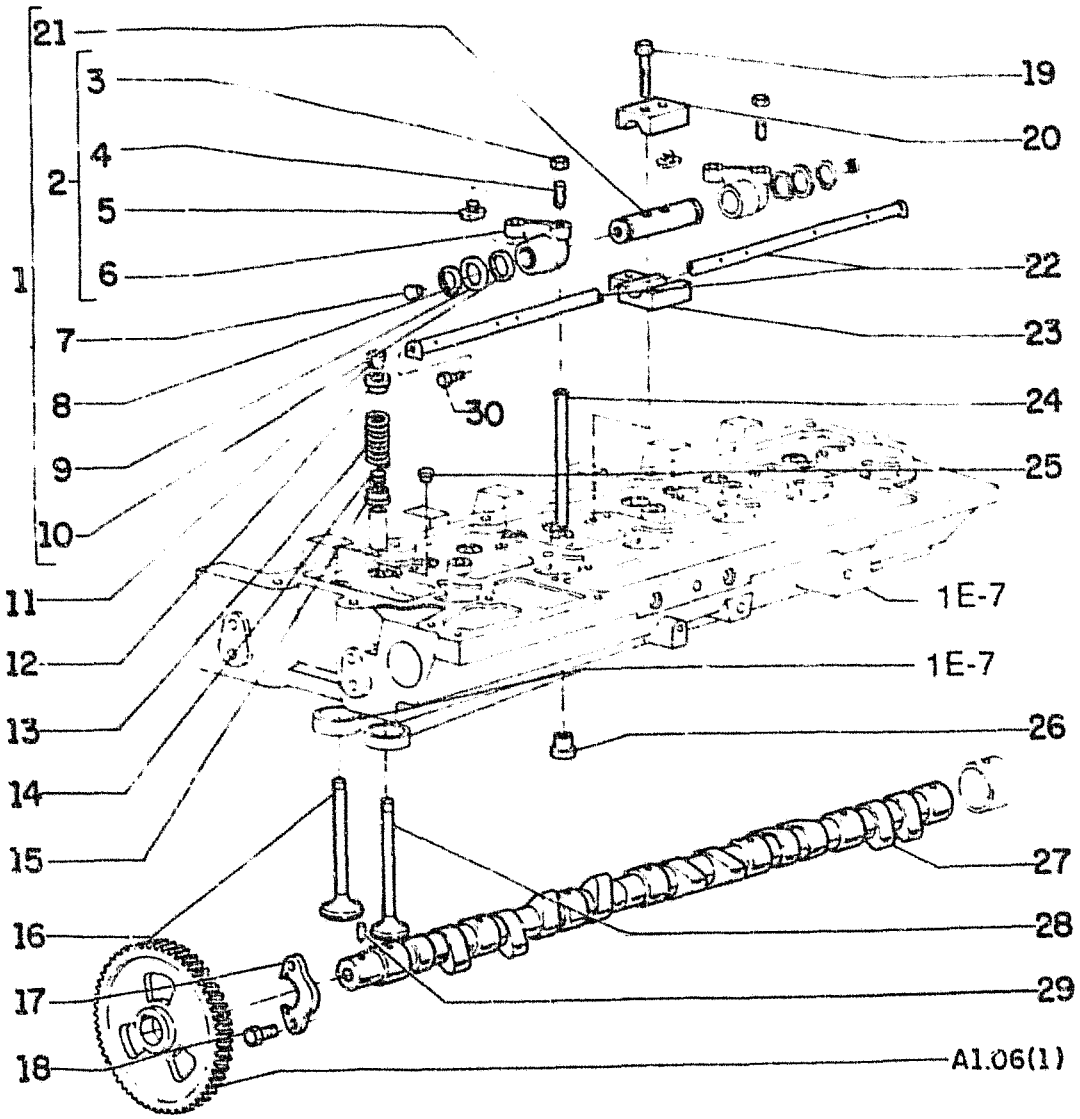

FIATALLIS FG 70R 70A 75R 75A A1.07 QUADRO 1 PAG. 1					
ITEM	PEÇA Nº	QTDE	COD.	DESCRIPTION	DESCRIÇÃO
1	75208222	6	055B	ROCKER	BALANCIM
2	75208223	6	055B	ROCKER	BALANCIM
3	75286105	12	010D	NUT	PORCA
4	75209225	12	040V	SCREW	PARAFUSO
5	75208227	2	054T	FILLER CAP	BUJÃO DE ENCHIM
6	75208226	2	055B	ROCKER	BALANCIM
7	75286106	12	050T	PLUG	BUJÃO
8	75206820	12	187A	SNAP RING	ANEL ELÁSTICO
9	75208228	12	131R	WASHER	ARRUELA
10	75208229	12	131R	WASHER	ARRUELA
11	75208232	24	050N	PAWL	TRAVA
12	75208233	12	060S	CUP	PRATO
13	75208234	12	100M	SPRING	MOLA
14	75208235	12	133S	SENSOR	SENSOR
15	75208236	12	060S	CUP	PRATO
16	75208239	6	111V	INTAKE VALVE	VALVULA DE ASPI
17	75286115	1	300S	SUPPORT	SUPORTE
18	75286076	2	040V	SCREW	PARAFUSO
19	75208244	12	040V	SCREW	PARAFUSO
20	75208245	6	300S	SUPPORT	SUPORTE
21	75208231	6	017A	CAMSHAFT	EIXO COM.VÁLV.
22	75208246	1	193T	TUBE	TUBO
23	75208247	6	300S	SUPPORT	SUPORTE
24	75208249	12	090A	ROD	HASTE
25	75208248	6	133S	SENSOR	SENSOR
26	75208237	12	240P	TAPPET	PINO ARTICULADO
27	75208240	1	017A	CAMSHAFT	EIXO COM.VÁLV.
28	75208238	6	112V	EXHAUST VALVE	VALVULA DE DESC
29	75208241	1	080P	PIN	PINO
30	75286107	12	040V	SCREW	PARAFUSO

VALVE GEAR
DISTRIBUIÇÃO

A1.07 | 1

FIATALLIS

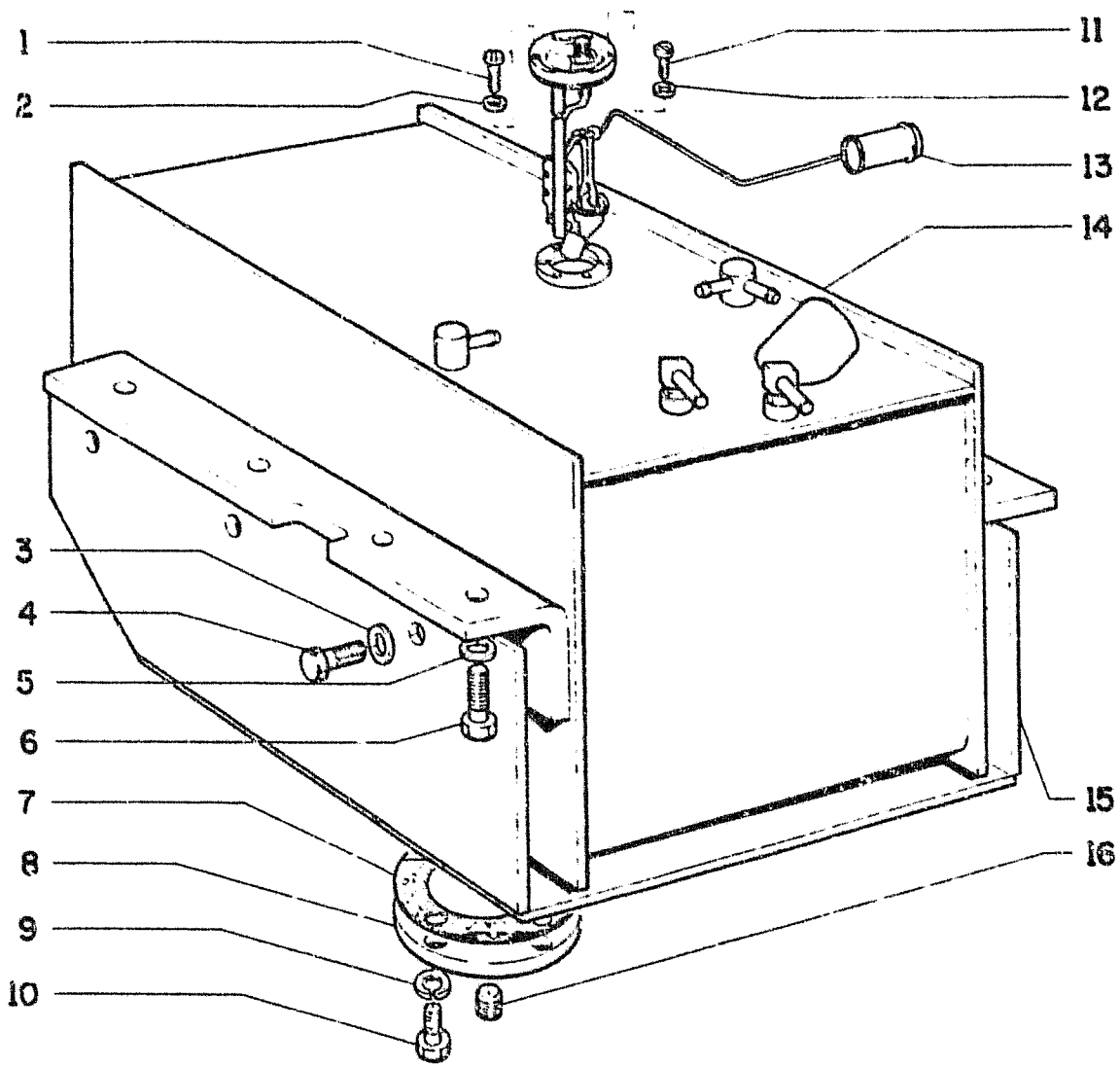

FIATALLIS FG 70R 70A 75R 75A A2.01 **QUADRO 1 PAG. 1**

ITEM	PEÇA Nº	QTDE	COD.	DESCRIPTION	DESCRIÇÃO
1	13276201	1	040V	SCREW	PARAFUSO
2	10571671	1	131R	WASHER	ARRUELA
3	70911414	8	131R	WASHER	ARRUELA
4	70921175	8	040V	SCREW	PARAFUSO
5	70677008	8	131R	WASHER	ARRUELA
6	70924864	8	040V	SCREW	PARAFUSO
7	70042641	1	120G	GASKET	JUNTA
8	70683277	1	265C	COVER	TAMPA
9	70910287	4	170R	LOCKWASHER	ARRUELA PRESS
10	70922763	4	040V	SCREW	PARAFUSO
11	13272111	5	040V	SCREW	PARAFUSO
12	10519201	5	131R	WASHER	ARRUELA
13	75236190	1	I091	FUEL LEVEL SENSOR	INDICADOR NIVEL
14	75221960	1	114S	FUEL TANK	RESERVATORIO
15	73149136	1	0045	FUEL TANK GUAR	PROTEÇÃO. RESER
16	70907859	1	056T	DRAIN PLUG	BUJÃO DE DRENO

FUEL TANK
RESERVATÓRIO DE COMBUSTÍVEL

A2.01 | 1

079

DESCRIPTION	SBGRP	TAV	GRID
ENGINE PISTONS	A105	1	1E-14
ROCKER ASSEMBLY	A107	1	1E-16
ROD BEARINGS	A105	1	1E-14
SIDE PLATES	L101	2	2F-14
SLEEVES	A105	1	1E-14
SUMP	A102	1	1E-9
EXHAUST PIPE	A256	1	1G-8
FAN	A409	1	1G-17
BELTS	A409	1	1G-17
DRIVE FG70	A409	2	1H-2
DRIVE FG75	A409/1	2	1H-3
DRIVE FG75	A409/1	4	1H-5
IDLER FG75	A409/1	3	1H-4
FIATALLIS TO CUMMINS CROSS REF NUMBERS			2M-2
FILTER IMPLEMENT OIL	E328	1	2C-10
FILTER, AIR	A223	2	1F-8
FILTER, COOLANT	A402	1	1G-15
FILTER, ENGINE OIL	A303	1	1G-12
FILTER, FUEL	A226	1	1F-12
FILTER, TRANS OIL FG70	B201	11	1I-3
FILTER, TRANS. OIL FG75	B217	1	1M-14
FORWARD CLUTCH FG70	B201	7	1H-15
FRAME (NOT ARTICULATED)	D101	1	1O-10
FRONT (ARTICUALTED)	D101	3	1O-13
REAR (ARTICUALTED)	D101	4	1O-14
FRONT AXLE FRAME	B401	1	1N-2
FRONT AXLE WHEEL END	B401	3	1N-4
FUEL FILTER	A226	1	1F-12
INJECTION PUMP	A224	1	1F-9
INJECTION PUMP COMPONENTS	A227	1	1F-13
LINES, HIGH PRESSURE	A224	1	1F-10
LINES, LOW PRESSURE	A201	2	1F-2
NOZZLE	A235	2	1G-6
NOZZLE HOLDER	A235	1	1G-5
PUMP GOVERNOR COMPONENTS	A228	1	1G-2
SEDIMENT BOWL	A225	1	1F-11
TANK	A201	1	1E-17
THROTTLE CONTROL	A221	1	1F-3
THROTTLE CONTROL LEVER	A221	4	1F-6
THROTTLE LINKAGE FG70	A221	2	1F-4
THROTTLE LINKAGE FG75	A221	3	1F-5
TRANSFER PUMP	A224	1	1F-9
FUSES ELECTRICAL	F401	3	2E-5
GOVERNOR, FUEL PUMP COMPONENTS	A228	1	1G-2
GOVERNOR, GROUND SPEED FG70	A221	2	1F-4
GROUND SPEED GOVERNOR FG70	A221	2	1F-4
HEAT EXCHANGER, ENGINE OIL	A303	1	1G-12
HIGH FWD & 5 - 6 SPEED CLUTCH FG75	B201/1	16	1L-10
HIGH SPEED CLUTCH FG70	B201	9	1H-17
HOOD	L101	1	2F-13
HORN	F401	18	2F-6
HOURMETER	F401	3	2E-5
IMPLEMENT CONTROL VALVE SHIELD	D101	2	1O-11
CONTROLVALVE LEVERS	D201	3	1P-7
CONTROLVALVE LEVERS	D201	4	1P-8
IMPLEMENT CONTROLVALVE LINKAGE	D201	2	1P-5
OIL FILTER	E328	1	2C-10
OIL RESERVOIR	E328	1	2C-10
PUMP, COMPONENTS	E329	1	2C-12
INDICATOR, CLOGGED AIR FILTER	A222	1	1F-7
INJECTION PUMP COMPONENTS	A227	1	1F-13
INSTRUMENT PANEL	F401	12	2E-14
LATERAL SHIFT VALVE	E331	2	2C-14
LIGHTS	F401	9	2E-10
BRAKE COMPONENTS	F405	2	2F-8
TURN SIGNAL COMPONENTS	F405	3	2F-9
TURN SIGNAL	F401	13	2E-15
LOCK VALVE	E302	32	2B-7
LOW FORWARD CLUTCH FG75	B201/1	12	1L-6
LOW SPEED CLUTCH FG70	B201	8	1H-16
LUBRICATION SYSTEM	A301	1	1G-9
MAIN RELIEF VALVE, LEFT	E331	10	2D-5
MAIN RELIEF VALVE, RIGHT	E331	11	2D-6
MODULATING VALVE TRANS FG70	B201	18	1I-10
COMPONENTS	E313	1	2C-5
COMPONENTS	E313	2	2C-7
COMPONENTS	E313	3	2C-8
DRAWBAR	E310	2	2B-15
LIFT CYLINDER	E332	6	2D-12
PITCH CYLINDER	E332	2	2D-8
PITCH VALVE	E331	2	2C-14
SHIELD	E313	4	2C-9
SIDE SHIFT CYLINDER	E332	3	2D-9
MONITORING SENSORS	F401	16	2F-4
MONITORING SENSORS	F401	17	2F-5
MUFFLER	A256	1	1G-8
OPERATOR CONSOLE	D201	1	1P-3
PLATFORM	D101	2	1O-11
SEAT BELT	L604	2	2H-3
SEAT	L604	1	2H-2
OUTPUT FLANGE NUT FG70	B201	14	1I-6
OUTPUT SHAFT FG70	B201	10	1I-2
PARKING BRAKE LEVER	C135	1	1O-7
BRAKE LINKAGE FG70	C135	2	1O-8
PARKING BRAKE LINKAGE FG75	C135/1	2	1O-9
BRAKE FG70	B201	12	1I-4
BRAKE FG75	B201/1	2	1I-12
PIPING CIRCLE SHIFT (ARTICULATED)	E302	5	1Q-8
CIRCLE SHIFT (RIGID)	E302	4	1Q-7
MOLDBOARD LIFT (ARTICULATED)	E302	13	2A-3
MOLDBOARD LIFT (RIGID)	E302	12	2A-2
SADDLE LOCK PIN (ARTICULATED)	E302	17	2A-8
SADDLE LOCK PIN (RIGID)	E302	16	2A-7
ARTICULATION	E302	26	2A-15
ARTICULATION	E302	24	2A-13
BRAKE PUMP FG70	E302	32	2B-6
PIPING BRAKE PUMP FG70	E302/1	32	2B-12
CIRCLE TURN (ARTICULATED)	E302	15	2A-6
CIRCLE TURN (RIGID)	E302	14	2A-5
CONTROL VALVE (ARTICULATED)	E302	3	1Q-6
CONTROL VALVE (RIGID)	E302	2	1Q-4
FRONT ATTACHMENT (ARTIC'D)	E302	30	2B-4
FRONT ATTACHMENT (RIGID)	E302	29	2B-3
FRONT ATTACHMENT FG70	E302	31	2B-5
FRONT WHEEL LEAN (ARTIC'D)	E302	7	1Q-10
FRONT WHEEL LEAN (RIGID)	E302	6	1Q-9
FRONT WHEEL LEAN	E302	8	1Q-11
IMPLEMENT PUMP FG70	E302	32	2B-6
IMPLEMENT PUMP FG70	E302/1	32	2B-12
PUMP, BRAKE FG70	E302	32	2B-6
PUMP, BRAKE FG70	E302/1	32	2B-12
PUMP, IMPLEMENT FG70	E302	32	2B-6
PUMP, IMPLEMENT FG70	E302/1	32	2B-12
PUMP, STERING FG70	E302	32	2B-6
PUMP, STERING FG70	E302/1	32	2B-12
REAR FRAME	E302	1	1Q-2
RIPPER CYLINDER	E302/1	2	2B-9
RIPPER	E302/1	3	2B-10
SCARIFIER	E302/1	1	2B-8
SIDE SHIFT & PITCH (ARTIC'D)	E302	19	2A-10
SIDE SHIFT & PITCH (RIGID)	E302	18	2A-9
SIDE SHIFT & PITCH	E302	20	2A-11
STEERING (ARTICULATED)	E302	27	2A-17
STEERING (ARTICULATED)	E302	28	2B-2
STEERING (RIGID)	E302	25	2A-14
STEERING PUMP FG70	E302	32	2B-6
PIPING, STEERING PUMP FG70	E302/1	32	2B-12
PUMP, BRAKE COMPONENTS	D213	1	1P-13
COOLANT	A403	1	1G-16
ENGINE OIL	A302	1	1G-11
FUEL INJECTION	A224	1	1F-9
FUEL INJECTION COMPONENTS	A227	1	1F-13
FUEL TRANSFER	A224	1	1F-9
IMPLEMENT COMPONENTS	E329	1	2C-12
STEERING COMPONENTS	D213	1	1P-13

FIATALLIS

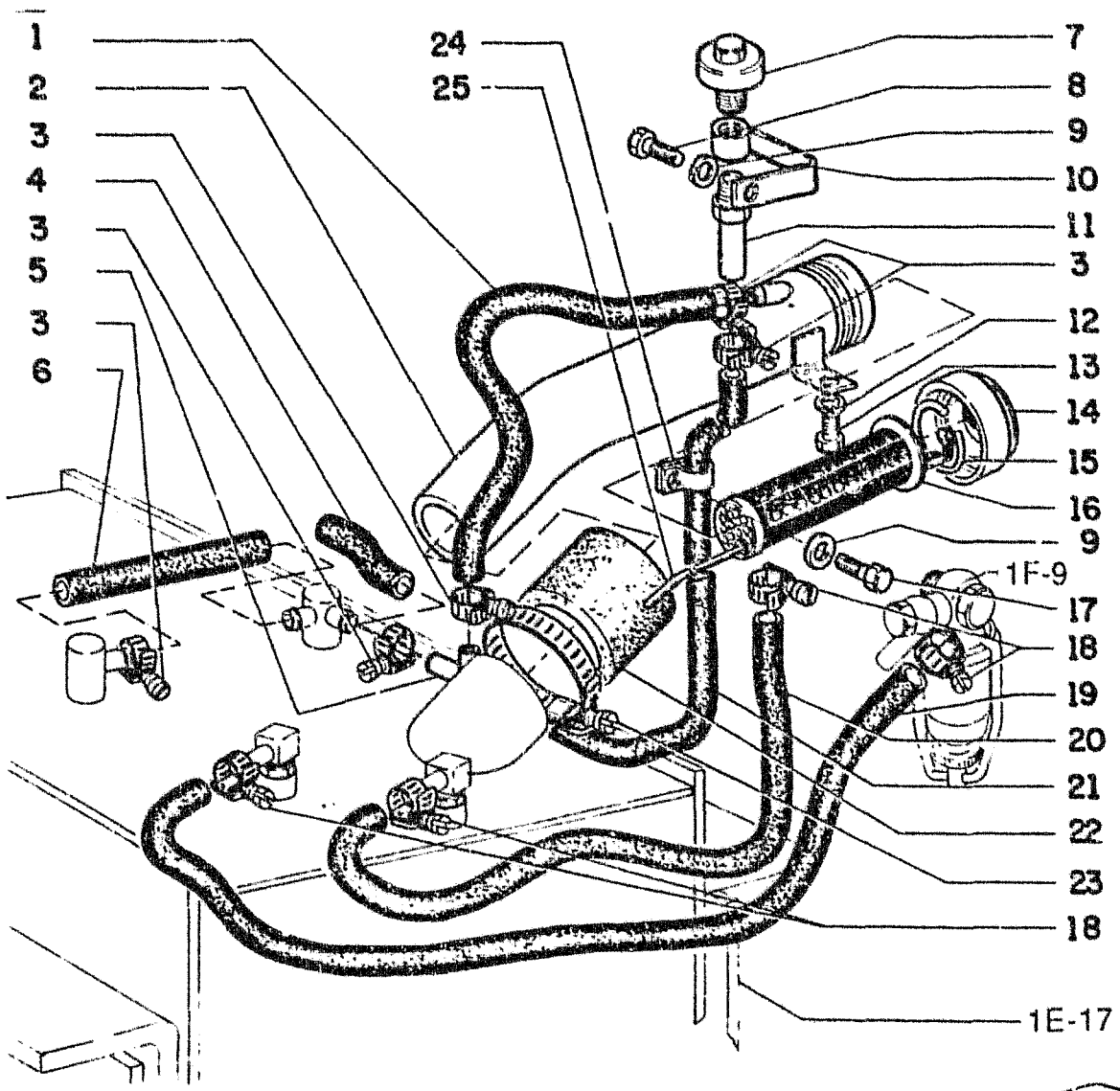

FIATALLIS FG 70R 70A 75R 75A A2.01 **QUADRO 2** **PAG. 1**

ITEM	PEÇA Nº	QTDE	COD.	DESCRIPTION	DESCRIÇÃO
1	73153455	1	285T	HOSE	MANGUEIRA
2	75220988	1	193T	TUBE	TUBO
3	70921910	16	031F	CLAMP	ABRAÇADEIRA
4	73153814	1	285T	HOSE	MANGUEIRA
5	73153450	1	020R	FITTING	CONEXÃO
6	73149111	1	285T	HOSE	MANGUEIRA
7	70050748	1	145S	BREATHER	RESPIRO
8	70922763	1	040V	SCREW	PARAFUSO
9	70677006	2	131R	WASHER	ARRUELA
10	73153453	1	300S	SUPPORT	SUPORTE
11	73153451	1	193T	TUBE	TUBO
12	70916965	2	170R	LOCKWASHER	ARRUELA PRESS
13	70921076	2	040V	SCREW	PARAFUSO
14	75221058	1	265C	COVER	TAMPA
15	4971843	1	187A	SNAP RING	ANEL ELÁSTICO
16	75201624	1	064F	FUEL FILTER	FILTRO COMBUST
17	70922300	1	040V	SCREW	PARAFUSO
18	12179490	8	031F	CLAMP	ABRAÇADEIRA
19	75220500	1	285T	HOSE	MANGUEIRA
20	75220499	1	285T	HOSE	MANGUEIRA
21	73153454	1	285T	HOSE	MANGUEIRA
22	73149112	1	285T	HOSE	MANGUEIRA
23	70922200	4	031F	CLAMP	ABRAÇADEIRA
24	70926049	1	031F	CLAMP	ABRAÇADEIRA
25	73149132	1	091A	DIPSTICK	HASTE DE NIVEL

FUEL LINES
TUBULAÇÕES DE COMBUSTÍVEL

A2.01 | 2

FIATALLIS

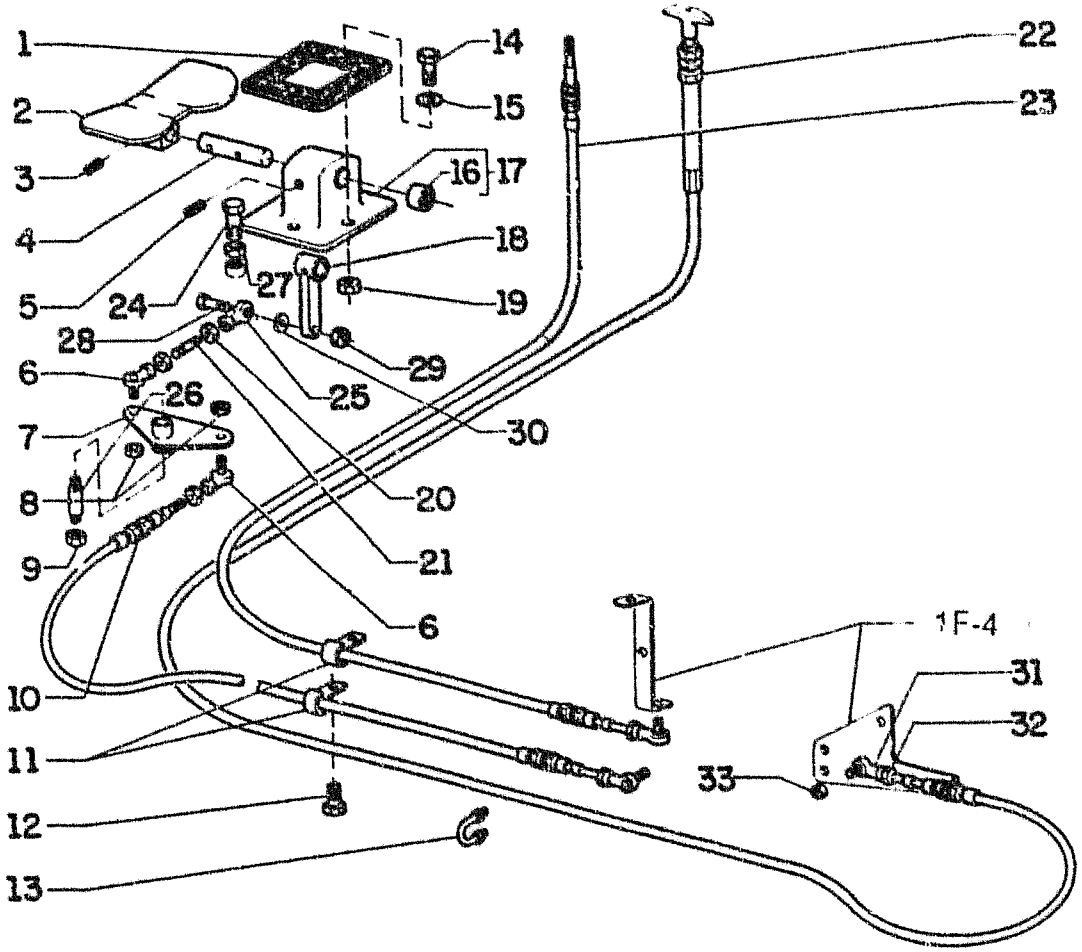

FIATALLIS FG 70R 70A 75R 75A A2.21 **QUADRO** 1 **PAG.** 1

ITEM	PEÇA Nº	QTDE	COD.	DESCRIPTION	DESCRIÇÃO
1	73127180	1	120G	GASKET	JUNTA
2	73128452	1	060P	PEDAL	PEDAL
3	70916991	1	200S	PIN	PINO
4	73127179	1	016A	SHAFT	EIXO
5	70916001	1	200S	PIN	PINO
6	70686384	4	061E	END	EXTREMIDADE
7	73152112	1	063R	BELL CRANCK	ALAVANCA ANGULA
8	70916590	6	010D	NUT	PORCA
9	70911028	1	010D	NUT	PORCA
10	73152115	1	105F	ROPE	CABO
11	70925618	3	031F	CLAMP	ABRAÇADEIRA
12	70921175	1	040V	SCREW	PARAFUSO
13	73152117	2	031F	CLAMP	ABRAÇADE1RA
14	70922287	4	040V	SCREW	PARAFUSO
15	70677006	7	131R	WASHER	ARRUELA
16	73125849	2	341C	BEARING	ROLAMENTO
17	73127181	1	300S	SUPPORT	SUPORTE
18	73127176	1	045L	LEVER	ALAVANCA
19	70911026	4	010D	NUT	PORCA
20	70911040	5	010D	NUT	PORCA
21	73152125	1	142T	TIEROD	TIRANTE
22	73068227	1	105F	ROPE	CABO
23	73152114	1	105F	ROPE	CABO
24	70920585	2	040V	SCREW	PARAFUSO
25	73070190	1	061E	END	EXTREMIDADE
26	75222095	1	016A	SHAFT	EIXO
27	70910510	2	010D	NUT	PORCA
28	70929024	1	040V	SCREW	PARAFUSO
29	70922714	1	010D	NUT	PORCA
30	70677004	1	131R	WASHER	ARRUELA
31	73121782	1	070G	BALL JOINT	JUNTA ESFÉRICA
32	70910251	1	010D	NUT	PORCA
33	70922714	1	010D	NUT	PORCA

THROTTLE CONTROL
CONTROLE DO ACELERADOR

A2.21 | 1

081

FIATALLIS

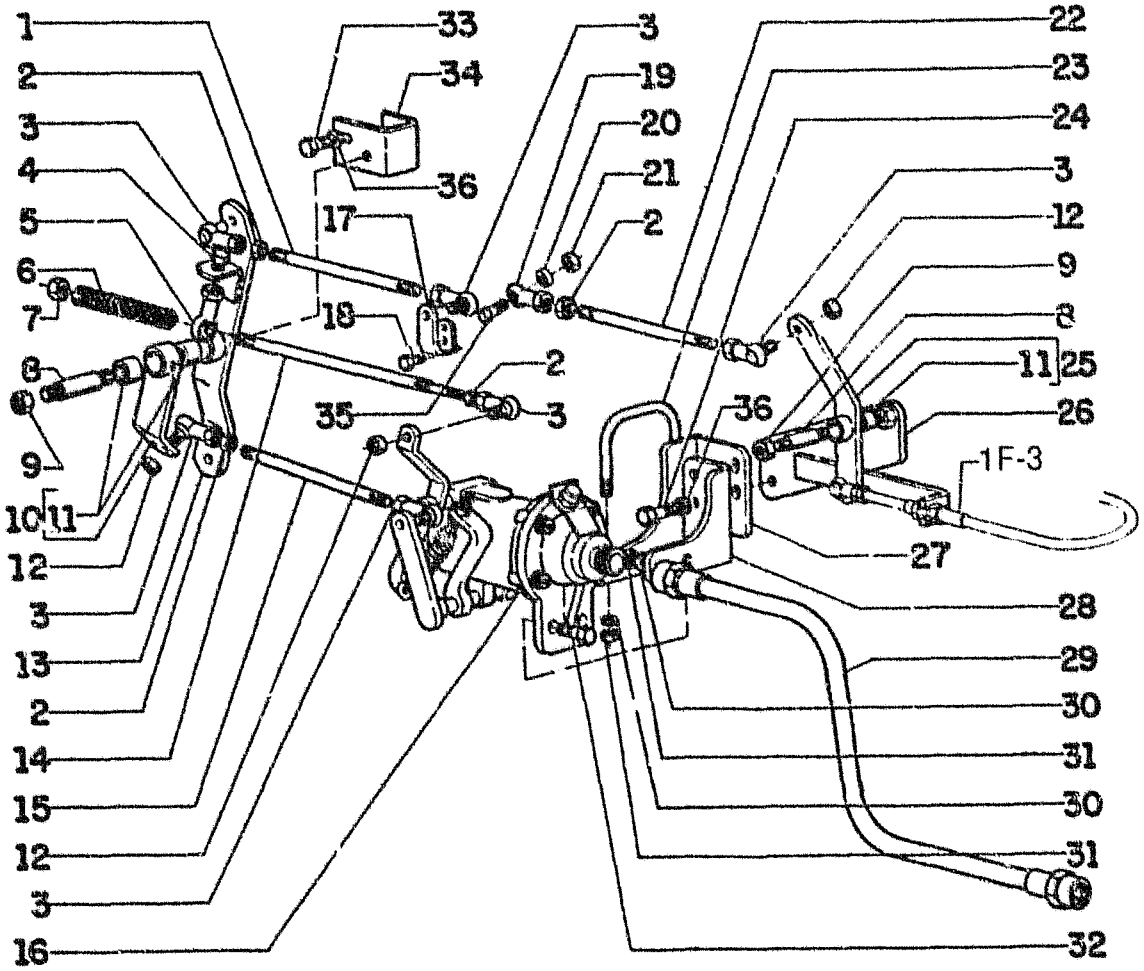

FIATALLIS FG 70R 70A — QUADRO 2 — PAG. 1

ITEM	PEÇA Nº	QTDE	COD.	DESCRIPTION	DESCRIÇÃO
1	73157029	1	142T	TIEROD	TIRANTE
2	70911040	6	010D	NUT	PORCA
3	70686384	6	061E	END	EXTREMIDADE
4	70927353	1	040V	SCREW	PARAFUSO
5	70638732	1	061E	END	EXTREMIDADE
6	73127234	2	100M	SPRING	MOLA
7	70915972	2	010D	NUT	PORCA
8	75222095	2	016A	SHAFT	EIXO
9	70911028	2	010D	NUT	PORCA
10	73159009	1	045L	LEVER	ALAVANCA
11	73125849	3	341C	BEARING	ROLAMENTO
12	70916590	6	010D	NUT	PORCA
13	73159006	1	045L	LEVER	ALAVANCA
14	73159002	1	142T	TIEROD	TIRANTE
15	73159003	1	142T	TIEROD	TIRANTE
16	73158935	1	175R	GOVERNOR	REGULADOR
17	73157032	1	045L	LEVER	ALAVANCA
18	10902131	2	040V	SCREW	PARAFUSO
19	73070190	1	061E	END	EXTREMIDADE
20	73152129	1	075D	SPACER	ESPAÇADOR
21	15896221	1	010D	NUT	PORCA
22	75221308	1	142T	TIEROD	TIRANTE
23	73159019	1	031F	CLAMP	ABRAÇADEIRA
24	11106031	2	040V	SCREW	PARAFUSO
25	73159542	1	045L	LEVER	ALAVANCA
26	73157023	1	300S	SUPPORT	SUPORTE
27	73159000	1	300S	SUPPORT	SUPORTE
28	73159001	1	300S	SUPPORT	SUPORTE
29	73158936	1	105F	ROPE	CABO
30	70677006	4	131R	WASHER	ARRUELA
31	70911026	4	010D	NUT	PORCA
32	70921076	2	040V	SCREW	PARAFUSO
33	11106431	1	040V	SCREW	PARAFUSO
34	73157026	1	105P	PLATE	CHAPA
35	10902631	1	040V	SCREW	PARAFUSO
36	10571871	3	170R	LOCKWASHER	ARRUELA PRESS

THROTTLE CONTROL LINKAGE
CONTROLE DO ACELERADOR

A2.21 | 2

062

FIATALLIS

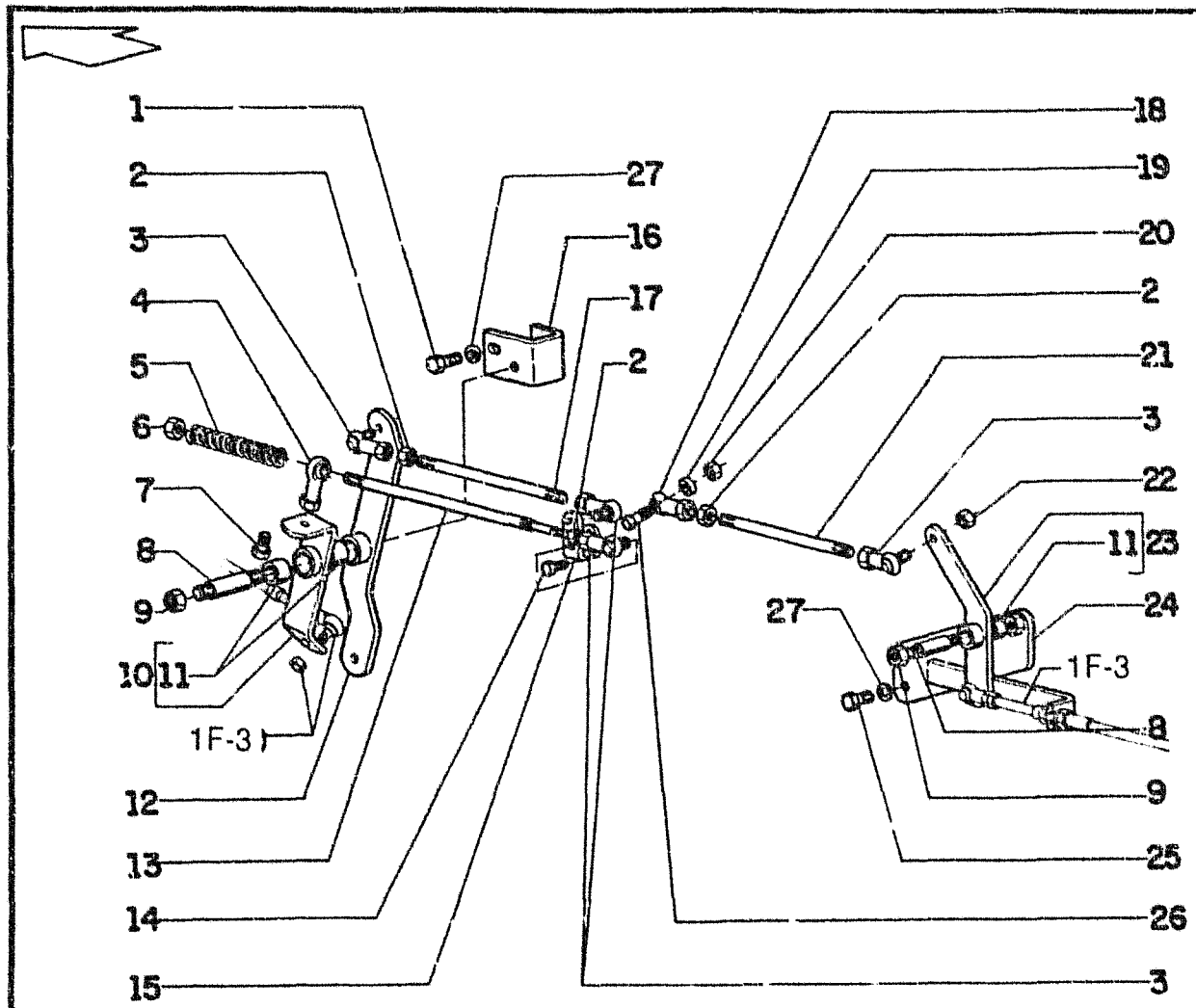

FIATALLIS FG 75R 75A A2.21 **QUADRO** 3 **PAG.** 1

ITEM	PEÇA Nº	QTDE	COD.	DESCRIPTION	DESCRIÇÃO
1	11106431	1	040V	SCREW	PARAFUSO
2	70916590	5	010D	NUT	PORCA
3	70686384	4	061E	END	EXTREMIDADE
4	70638732	1	061E	END	EXTREMIDADE
5	73127234	2	100M	SPRING	MOLA
6	70915972	2	010D	NUT	PORCA
7	70927353	1	040V	SCREW	PARAFUSO
8	75222095	2	016A	SHAFT	EIXO
9	70911028	2	010D	NUT	PORCA
10	73157021	1	045L	LEVER	ALAVANCA
11	73125849	4	341C	BEARING	ROLAMENTO
12	73157022	1	045L	LEVER	ALAVANCA
13	73157027	1	142T	TIEROD	TIRANTE
14	10902131	2	040V	SCREW	PARAFUSO
15	73157032	1	045L	LEVER	ALAVANCA
16	73157026	1	105P	PLATE	CHAPA
17	75221308	1	142T	TIEROD	TIRANTE
18	73070190	1	061E	END	EXTREMIDADE
19	73152129	1	075D	SPACER	ESPAÇADOR
20	15896221	1	010D	NUT	PORCA
21	73157029	1	142T	TIEROD	TIRANTE
22	70916590	4	010D	NUT	PORCA
23	73159542	1	045L	LEVER	ALAVANCA
24	73157023	1	300S	SUPPORT	SUPORTE
25	11106231	2	040V	SCREW	PARAFUSO
26	10902631	1	040V	SCREW	PARAFUSO
27	10571871	2	170R	LOCKWASHER	ARRUELA PRESS

THROTTLE CONTROL LINKAGE
CONTROLE DO ACELERADOR

A2.21 | 3

083

FIATALLIS

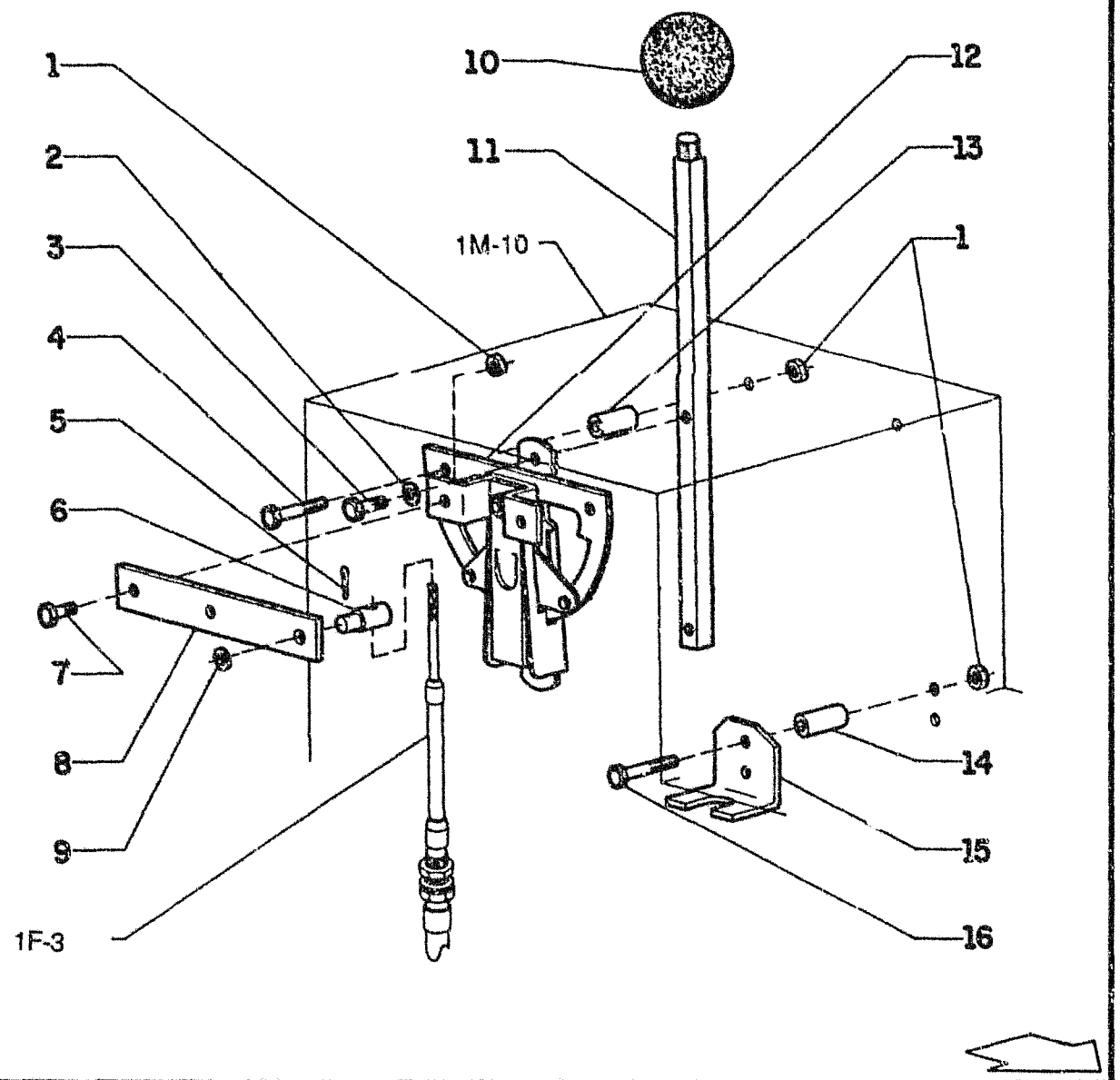

FIATALLIS FG 70R 70A 75R 75A A2.21 **QUADRO** 4 **PAG.** 1

ITEM	PEÇA Nº	QTDE	COD.	DESCRIPTION	DESCRIÇÃO
1	70923358	6	010D	NUT	PORCA
2	70914105	2	131R	WASHER	ARRUELA
3	70928138	2	040V	SCREW	PARAFUSO
4	70930790	2	040V	SCREW	PARAFUSO
5	70904001	1	270C	COTTER PIN	CONTRA PINO
6	73111597	1	165S	ARTICULATION	ARTICULAÇÃO
7	70928182	2	040V	SCREW	PARAFUSO
8	73144798	1	045L	LEVER	ALAVANCA
9	73131029	1	131R	WASHER	ARRUELA
10	73111596	1	150P	KNOB	MANOPLA
11		1	045L	LEVER	ALAVANCA
12	73128609	1	045L	LEVER	ALAVANCA
13	73128616	2	075D	SPACER	ESPAÇADOR
14	70689633	2	075D	SPACER	ESPAÇADOR
15	73128618	1	300S	SUPPORT	SUPORTE
16	70921383	2	040V	SCREW	PARAFUSO

THROTTLE CONTROL LEVER (73146534)
ALAVANCA DE CONTROLE DO ACELERADOR

A2.21 | 4

FG70 FG70A

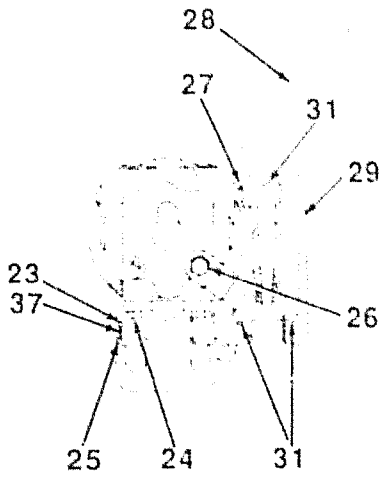

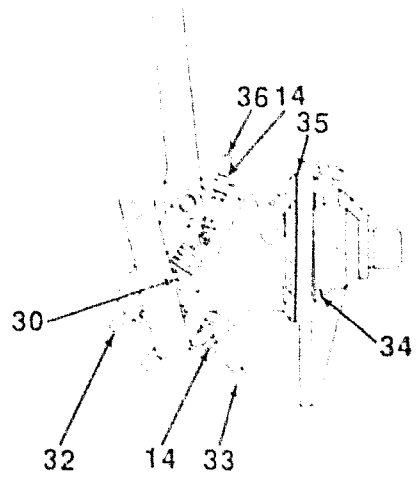

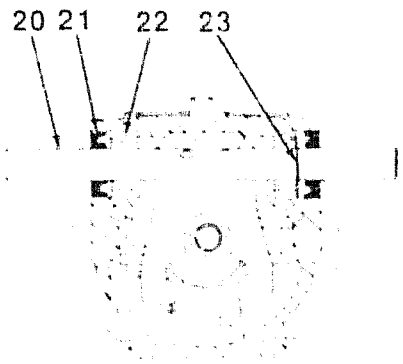

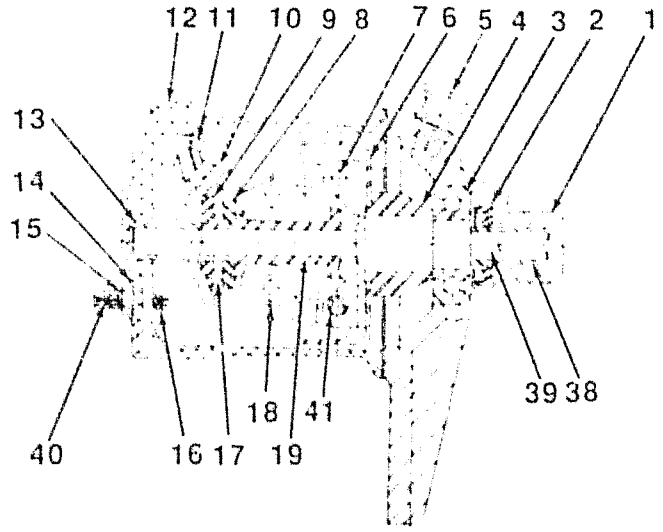

ITEM	PART NO.	QTY	COD	DESCRIPTION	DESRICAO
1	————	1	70F	FLANGE	
2	73160633	1	122G	OIL SEAL	
3	73127856	1	340C	BEARING	
4	————	1	75D	STOP HUB	
5	————	1	113S	OIL CUP	
6	73160629	1	16A	SHAFT & SPIDER ASSY	
7	73127851	4	80P	PIN	
8	73160621	1	23R	THRUST WASHER	
9	73160622	1	23R	THRUST WASHER	
10	74041829	2	40V	SCREW	
11	73127848	1	86F	YOKE	
12	————	1	35S	BODY	
13	73127861	1	95B	BUSHING	
14	70910267	3	10D	NUT	
15	73127863	1	131R	WASHER	
16	————	1	100M	BUMPER SPRING	
17	73160620	1	340C	THRUST BEARING	
18	73127844	1	67M	WEIGHT ASSY	
19	70934984	4	56A	SNAP RING	
20	73160634	1	16A	ROCKER SHAFT	
21	73127862	2	123G	OIL SEAL	
22	73127857	2	340C	BEARING	
23	70927524	3	56A	SNAP RING	
24	————	2	40V	SCREW	
25	73160635	1	16A	SPEED CHANGE SHAFT	
26	————	1	50T	PLUG	
27	70916168	1	80P	ROLL PIN	
28	73160636	1	45L	LEVER	
29	73160637	1	45L	LEVER	
30	73160638	1	100M	SPRING	
31	70918872	3	80P	ROLL PIN	
32	————	1	225S	BRACKET	
33	73127858	2	40V	SCREW	
34	73127860	1	123G	GASKET	

GOVERNOR ASSEMBLY

A221	5
ADDED 1/92	

FG70 FG70A

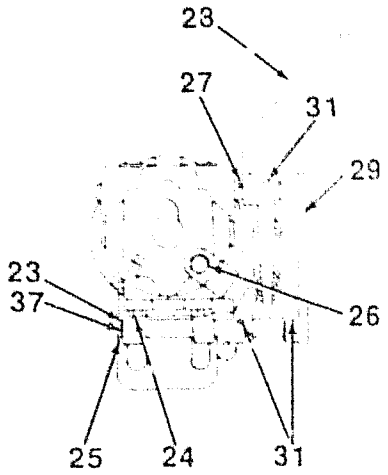

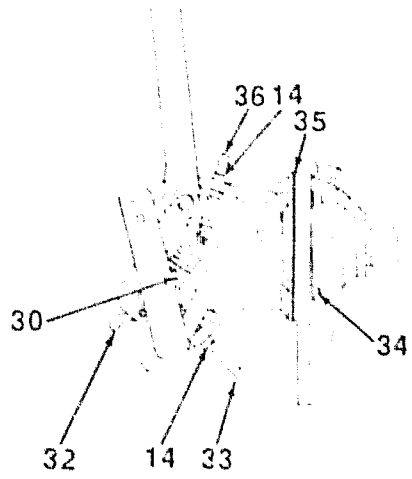

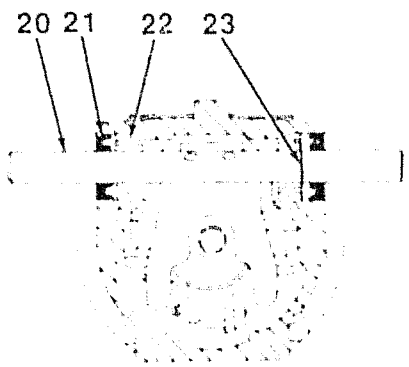

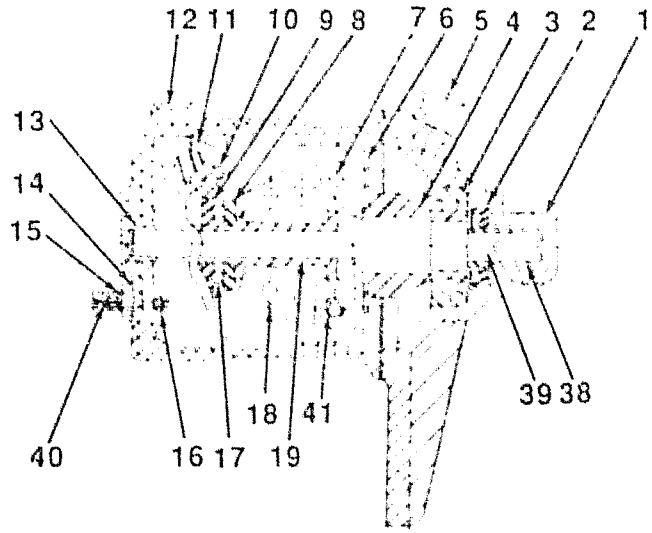

ITEM	PART NO.	QTY	COD	DESCRIPTION	DESRICAO
35	73127859	1	123G	GASKET	
36	73127847	1	40V	SCREW	
37	————	1	132R	WASHER	
38	73160639	1	95B	BUSHING	
39	73160640	1	16A	DRIVE SHAFT	
40	73152104	1	40V	BUMPER SCREW	
41	73160619	1	59C	THRUST SLEEVE0	

GOVERNOR ASSEMBLY

A221	5
ADDED 1/92	

FIATALLIS

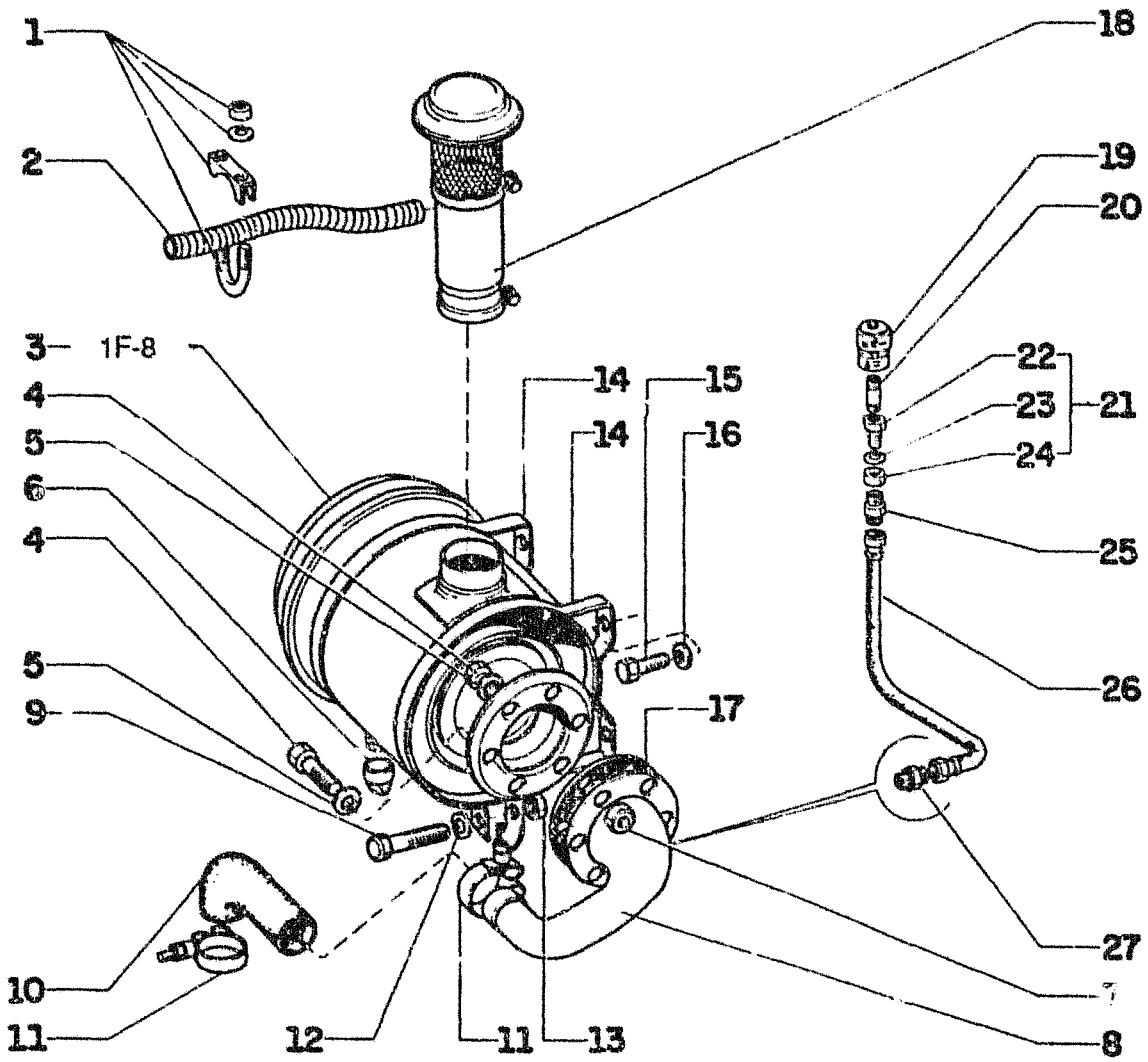

FIATALLIS FG 70R 70A 75R 75A A2.22 **QUADRO 1 PAG. 1**

ITEM	PEÇA Nº	QTDE	COD.	DESCRIPTION	DESCRIÇÃO
1	70929808	2	031F	CLAMP	ABRAÇADEIRA
2	73117686	1	193T	TUBE	TUBO
3	70659095	1	066F	AIR CLEANER	FILTRO DE AR
4	70927173	6	040V	SCREW	PARAFUSO
5	70930370	6	131R	WASHER	ARRUELA
6	70197810	1	010V	VALVE	VÁLVULA
7	70911026	6	010D	NUT	PORCA
8	73121710	1	085G	ELBOW	COTOVELO
9	70922287	2	040V	SCREW	PARAFUSO
10	73151551	1	285T	HOSE	MANGUEIRA
11	70929419	2	031F	CLAMP	ABRAÇADEIRA
12	70630753	2	131R	WASHER	ARRUELA
13	70918308	2	010D	NUT	PORCA
14	70686158	2	031F	CLAMP	ABRAÇADEIRA
15	70921076	2	040V	SCREW	PARAFUSO
16	70677006	2	131R	WASHER	ARRUELA
17	70658759	1	120G	GASKET	JUNTA
18	73121005	1	201P	PRECLEANER	PRÉ-FILTRO
19	74021600	1	035I	INDICATOR	INDICADOR
20	70901467	1	020R	FITTING	CONEXÃO
21	70198097	1	020R	FITTING	CONEXÃO
22	75215381	1	040V	SCREW	PARAFUSO
23	70910334	1	131R	WASHER	ARRUELA
24	70906907	1	010D	NUT	PORCA
25	70919171	1	020R	FITTING	CONEXÃO
26	73111288	1	192T	HOSE ASSY	MANGUEIRA
27	70631769	1	020R	FITTING	CONEXÃO

AIR CLEANER AND PIPPING
FILTRO DE AR E TUBULAÇOES

A2.22 | 1

085

FIATALLIS

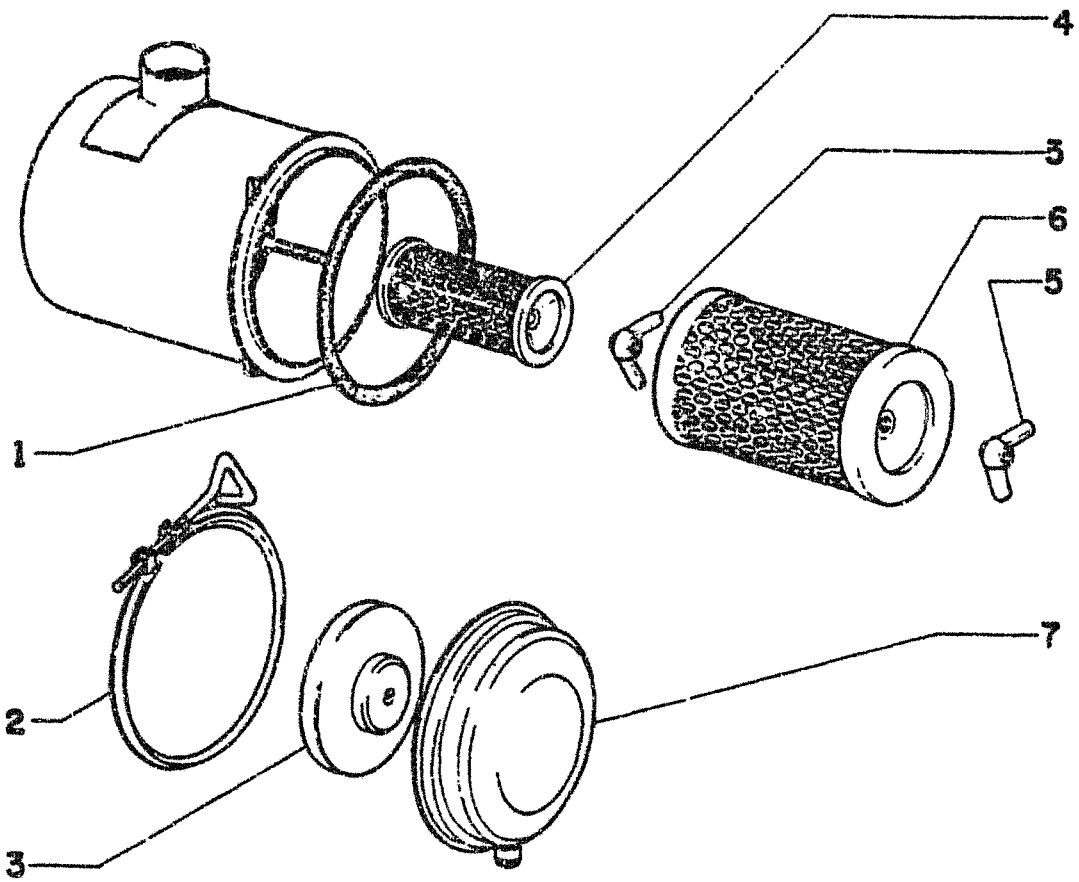

FIATALLIS FG 70R 70A 75R 75A	A2.23	QUADRO 1	PAG. 1

ITEM	PEÇA Nº	QTDE	COD.	DESCRIPTION	DESCRIÇÃO
1	70622895	1	055A	SEAL RING	ANEL DE VEDAÇÃO
2	70622897	1	031F	CLAMP	ABRAÇADEIRA
3	70652257	1	090C	REFLECTOR	REFLETOR
4	70662609	1	020E	FILTERING ELEM.	ELEM. FILTRANTE
5	70664343	2	010D	NUT	PORCA
6	70664733	1	020E	FILTERING ELEM.	ELEM. FILTRANTE
7	70662258	1	060S	CUP	PRATO

AIR CLEANER
FILTRO DE AR

A2.23 | 1

FIATALLIS

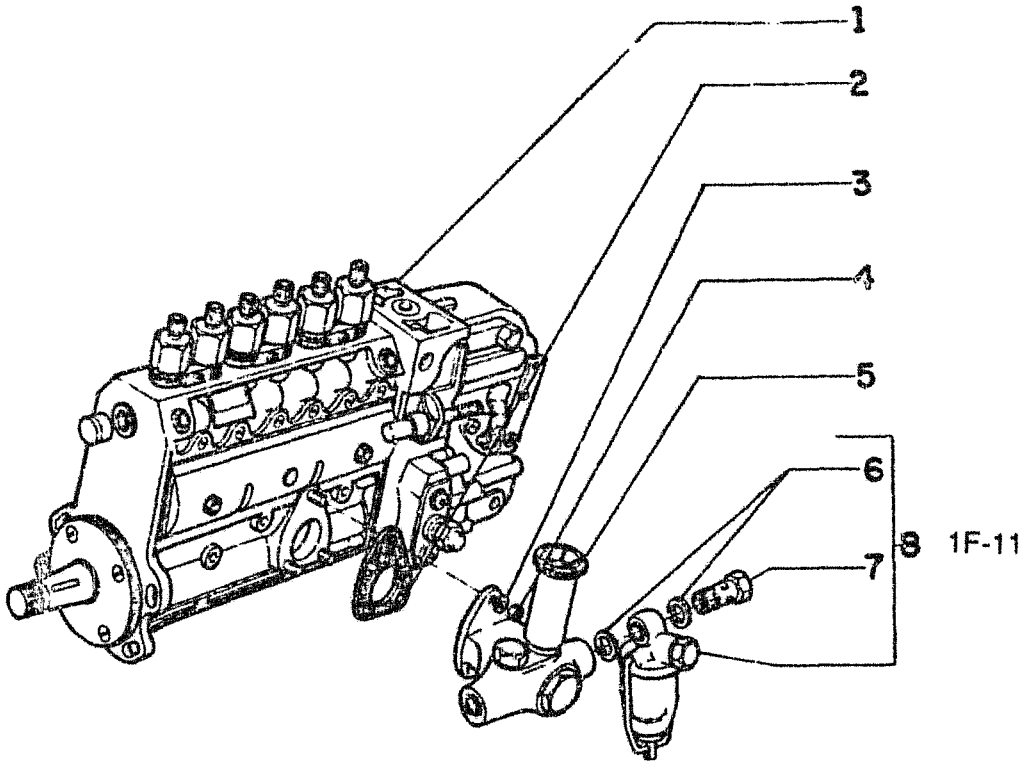

FIATALLIS FG 70R 70A 75R 75A A2.24 QUADRO 1 PAG. 1					
ITEM	PEÇA Nº	QTDE	COD.	DESCRIPTION	DESCRIÇÃO
1	75206874	1	155P	PUMP	BOMBA
2	75208368	1	120G	GASKET	JUNTA
3	75208369	3	170R	LOCKWASHER	ARRUELA PRESS
4	75208370	3	010D	NUT	PORCA
5	75208371	1	155P	PUMP	BOMBA
6	746152	2	055A	SEAL RING	ANEL DE VEDAÇ
7	705737	1	020R	FITTING	CONEXÃO
8	73153815	1	065F	FILTER	FILTRO

FUEL INJECTION SYSTEM
SISTEMA DE INJEÇÃO DE COMBUSTÍVEL

A2.24 | 1

FIATALLIS

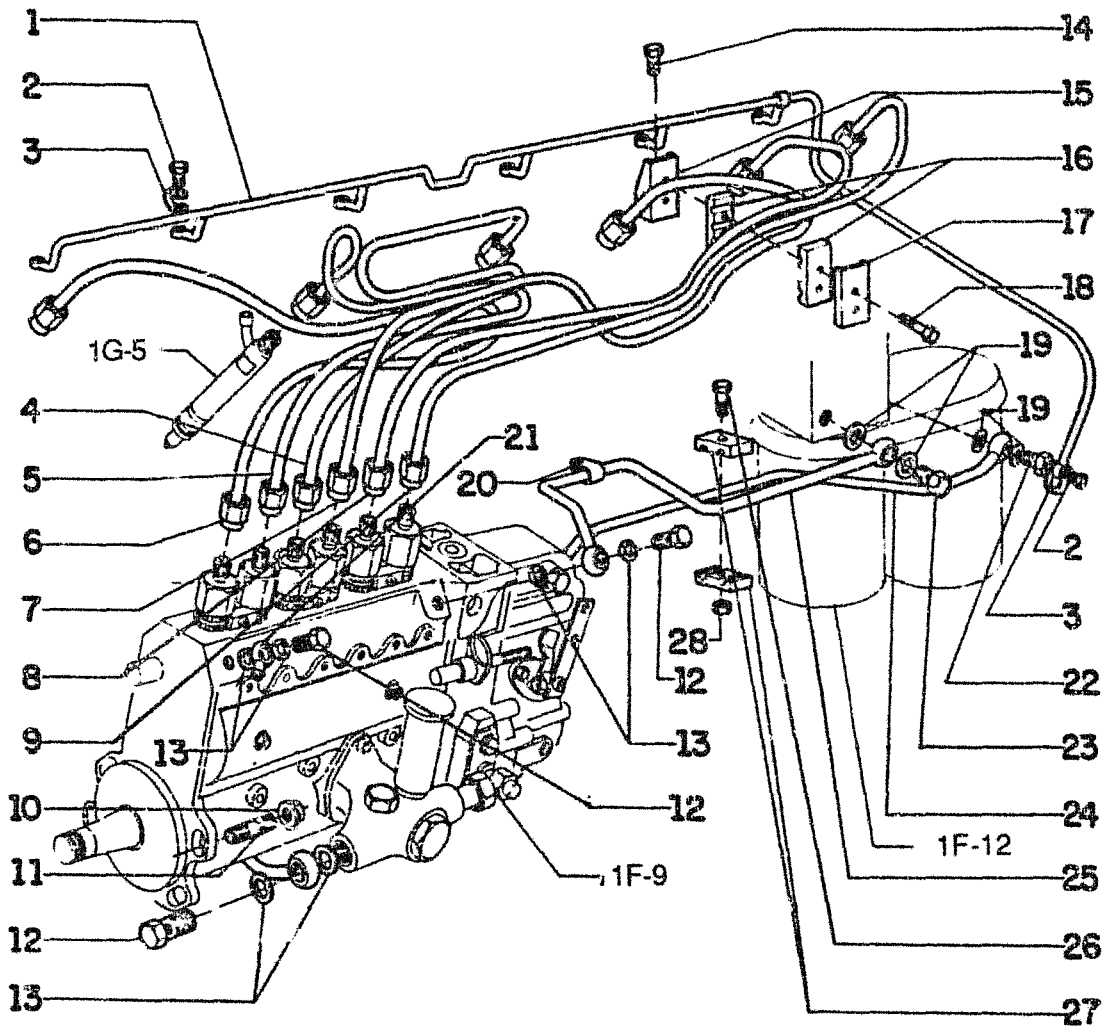

FIATALLIS FG 70R 70A 75R 75A — A2.24 **QUADRO** 2 **PAG.** 1

ITEM	PEÇA Nº	QTDE	COD.	DESCRIPTION	DESCRIÇÃO
1	75286118	1	193T	TUBE	TUBO
2	75286082	7	020R	FITTING	CONEXÃO
3	75208924	7	131R	WASHER	ARRUELA
4	75206945	1	193T	TUBE	TUBO
5	75206944	1	193T	TUBE	TUBO
6	75206943	1	193T	TUBE	TUBO
7	75206946	1	193T	TUBE	TUBO
8	75206947	1	193T	TUBE	TUBO
9	75206948	1	193T	TUBE	TUBO
10	75208933	4	010D	NUT	PORCA
11	75286084	4	210P	STUD	PRISIONEIRO
12	75208935	3	020R	FITTING	CONEXÃO
13	75208931	6	131R	WASHER	ARRUELA
14	75208944	4	040V	SCREW	PARAFUSO
15	75208945	2	300S	SUPPORT	SUPORTE
16	75286117	4	345C	CUSHION	COXIM
17	75208947	2	300S	SUPPORT	SUPORTE
18	75208948	4	040V	SCREW	PARAFUSO
19	75208952	4	131R	WASHER	ARRUELA
20	75208949	2	031F	CLAMP	ABRAÇADEIRA
21	75208932	1	020R	FITTING	CONEXÃO
22	75206824	1	020R	FITTING	CONEXÃO
23	75208953	1	020R	FITTING	CONEXÃO
24	75286122	1	193T	TUBE	TUBO
25	75286083	1	193T	TUBE	TUBO
26	75206882	1	040V	SCREW	PARAFUSO
27	75206883	2	031F	CLAMP	ABRAÇADEIRA
28	75206954	1	010D	NUT	PORCA
29	75286116	4	131R	WASHER	ARRUELA

FUEL INJECTION SYSTEM
SISTEMA DE INJEÇÃO DE COMBUSTÍVEL

A2.24 | 2

FIATALLIS

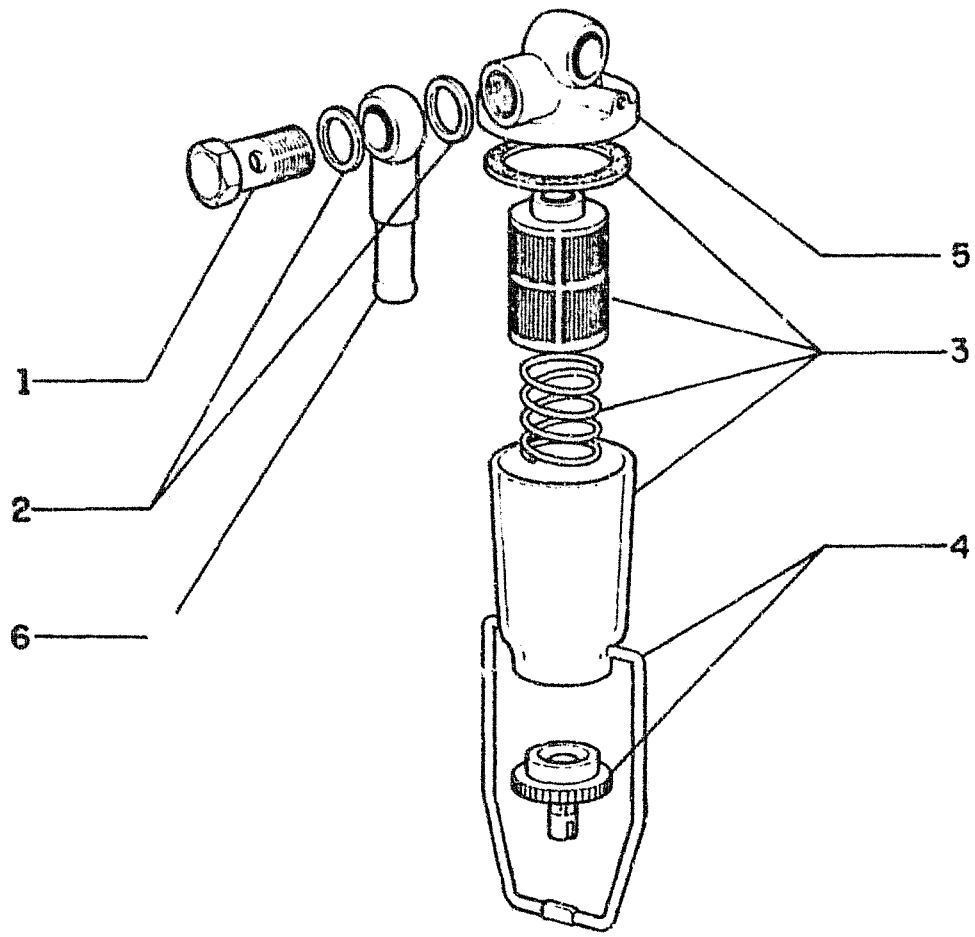

FIATALLIS FG 70R 70A 75R 75A A2.25 **QUADRO** 1 **PAG.** 1

ITEM	PEÇA Nº	QTDE	COD.	DESCRIPTION	DESCRIÇÃO
1	705737	1	020R	FITTING	CONEXÃO
2	746152	2	055A	SEAL RING	ANEL DE VEDAÇ
3	8320238	1	002K	KIT	KIT
4	766903	1	002K	KIT	KIT
5	8320234	1	265C	COVER	TAMPA
6	591685	1	020R	FITTING	CONEXÃO

FUEL SEDIMENT BOWL
FILTRO DE SEDIMENTO

A2.25 | 1

069

FIATALLIS

FIATALLIS FG 70R 70A 75R 75A A2.26 QUADRO 1 PAG. 1

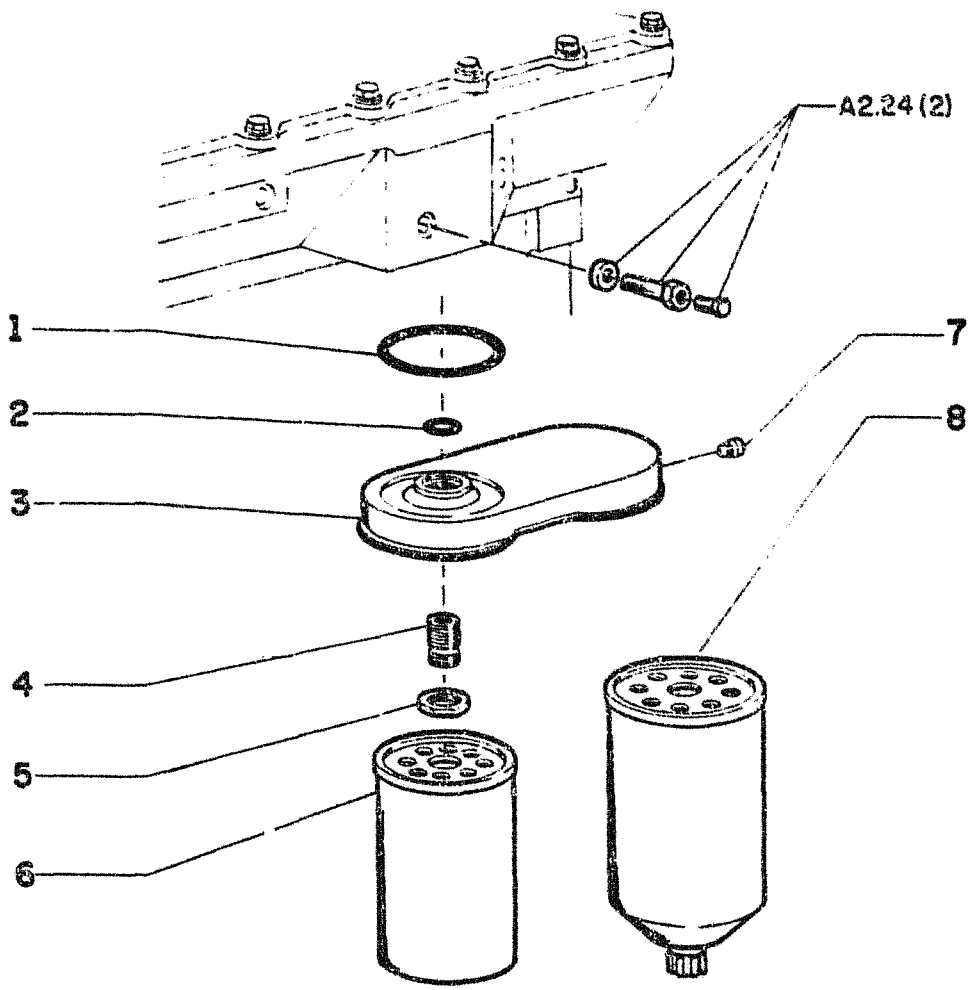

ITEM	PEÇA Nº	QTDE	COD.	DESCRIPTION	DESCRIÇÃO
1	75208267	1	158G	O'RING	O'RING
2	75208268	1	158G	O'RING	O'RING
3	75206825	1	113T	CYLINDER HEAD	CAB.DO CILIND
4	75208270	1	020R	FITTING	CONEXÃO
5	75208271	1	010D	NUT	PORCA
6	75208272	1	020E	FILTERING ELEM.	ELEM. FILTRAN
7	75208273	1	050T	PLUG	BUJÃO
8	75208274	1	020E	FILTERING ELEM.	ELEM. FILTRAN

FUEL FILTER
FILTRO DE COMBUSTIVEL

A2.26 | 1

FIATALLIS

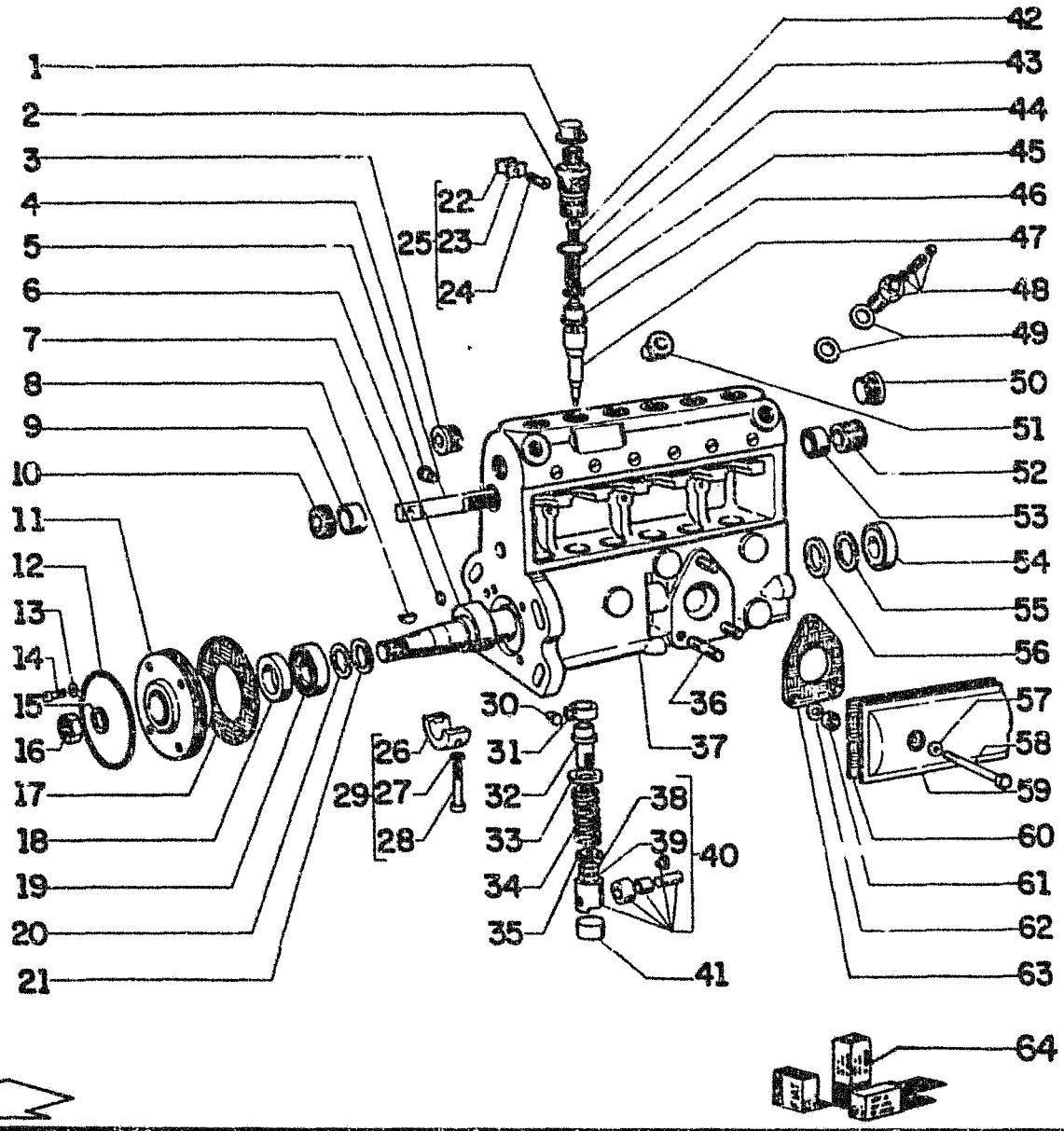

FIATALLIS FG 70R 70A 75R 75A A2.27 **QUADRO 1 PAG. 1**

ITEM	PEÇA Nº	QTDE	COD.	DESCRIPTION	DESCRIÇÃO
1	75204423	6	020C	CAP	CALOTA
2	75207959	6	020R	FITTING	CONEXÃO
3	75204112	1	050T	PLUG	BUJÃO
4	75204118	1	017A	CAMSHAFT	EIXO COM.VÁLV
5	75204108	1	040V	SCREW	PARAFUSO
6	75207964	1	016A	SHAFT	EIXO
7	75207970	1	158G	O'RING	O'RING
8	75285207	1	060L	KEY	CHAVETA
9	75204095	1	045A	RING	ANEL
10	75204103	1	095B	BUSHING	BUCHA
11	75207965	1	265C	COVER	TAMPA
12	75207969	1	158G	O'RING	O'RING
13	75204409	4	170R	LOCKWASHER	ARRUELA PRESS
14	9923751	4	040V	SCREW	PARAFUSO
15	10517171	1	170R	LOCKWASHER	ARRUELA PRESS
16	75204494	1	010D	NUT	PORCA
17	75204419	1	123G	SEAL ASSY	RETENTOR
18	75204493	1	122G	SEAL	RETENTOR
19	75204491	1	341C	BEARING	ROLAMENTO
20	75204401	*	131R	WASHER 0.10	ARRUELA
	75204402	*	131R	WASHER 0.12	ARRUELA
	75204403	*	131R	WASHER 0.14	ARRUELA
	75204404	*	131R	WASHER 0.16	ARRUELA
	75204405	*	131R	WASHER 0.18	ARRUELA
	75204406	*	131R	WASHER 0.30	ARRUELA
	75204407	*	131R	WASHER 0.50	ARRUELA
21	75204400	1	131R	WASHER	ARRUELA
22	75204417	3	031F	CLAMP	ABRAÇADEIRA
23	75204416	3	031F	CLAMP	ABRAÇADEIRA
24	75204418	3	040V	SCREW	PARAFUSO
25	75204131	3	031F	CLAMP	ABRAÇADEIRA
26	75204410	1	103S	HALF BEARING	SEMI-ROLAMENTO
27	75204412	1	055A	SEAL RING	ANEL DE VEDAÇ
28	75204411	1	040V	SCREW	PARAFUSO
29	75204132	1	103S	HALF BEARING	SEMI-ROLAMENTO

* USAR QUANT. NECESSÁRIA
AS REQUIRED

	INJECTION PUMP BOMBA INJETORA	A2.27	1

001

FIATALLIS

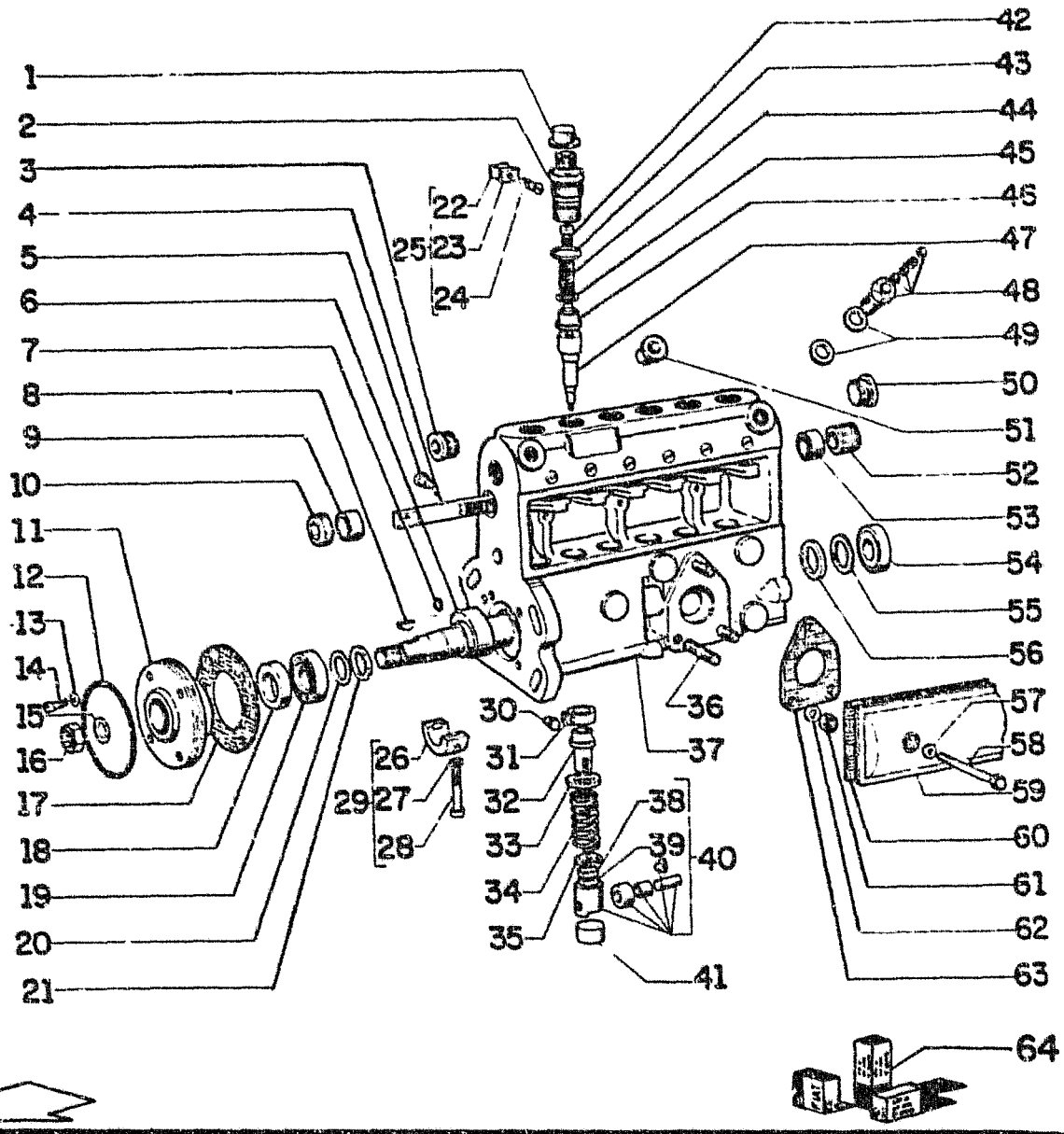

FIATALLIS FG 70R 70A 75R 75A A2.27 **QUADRO 1 PAG. 2**

ITEN	PEÇA Nº	QTDE	COD.	DESCRIPTION	DESCRIÇÃO
30	75204109	6	040V	SCREW	PARAFUSO
31	75204120	*	135S	TOOTHED SECTOR	SETOR DENTADO
31	75204397	*	135S	TOOTHED SECTOR	SETOR DENTADO
32	75204097	6	169R	REGULATOR	REGULADOR
33	75204083	6	060S	CUP	PRATO
34	75207960	6	100M	SPRING	MOLA
35	75207963	6	069S	SEAT	SEDE
36	74060151	3	210P	STUD	PRISIONEIRO
37	75207955	1	035S	CASE	CARCAÇA
38	75204110	6	040V	SCREW	PARAFUSO
39	75207962	6	010D	NUT	PORCA
40	75207961	6	240P	TAPPET	PINO ARTICULADO
41	75204298	6	020C	CAP	CALOTA
42	75207971	6	010V	VALVE	VÁLVULA
43	75285206	6	158G	O'RING	O'RING
44	75204113	6	100M	SPRING	MOLA
45	75204396	6	055A	SEAL RING	ANEL DE VEDAÇÃO
46	75285205	6	010V	VALVE	VÁLVULA
47	75207956	6	130P	PLUNGER	PISTAO
48	75207968	1	010V	VALVE	VÁLVULA
49	79038472	2	045A	RING	ANEL
50	75207830	1	050T	PLUG	BUJÃO
51	75204422	1	020C	CAP	CALOTA
52	75204103	1	095B	BUSHING	BUCHA
53	75204095	1	045A	RING	ANEL
54	75204492	1	341C	BEARING	ROLAMENTO
55	75204076	*	131R	WASHER 0.10	ARRUELA
	75204077	*	131R	WASHER 0.12	ARRUELA
	75204078	*	131R	WASHER 0.14	ARRUELA
	75204079	*	131R	WASHER 0.16	ARRUELA
	75204080	*	131R	WASHER 0.19	ARRUELA
	75204074	*	131R	WASHER 0.30	ARRUELA
	75204081	*	131R	WASHER 0.50	ARRUELA
	75204082	*	131R	WASHER 1.00	ARRUELA

*** USAR QUANT. NECESSÁRIA**
AS REQUIRED

INJECTION PUMP
BOMBA INJETORA

A2.27 | 1

002

FIATALLIS

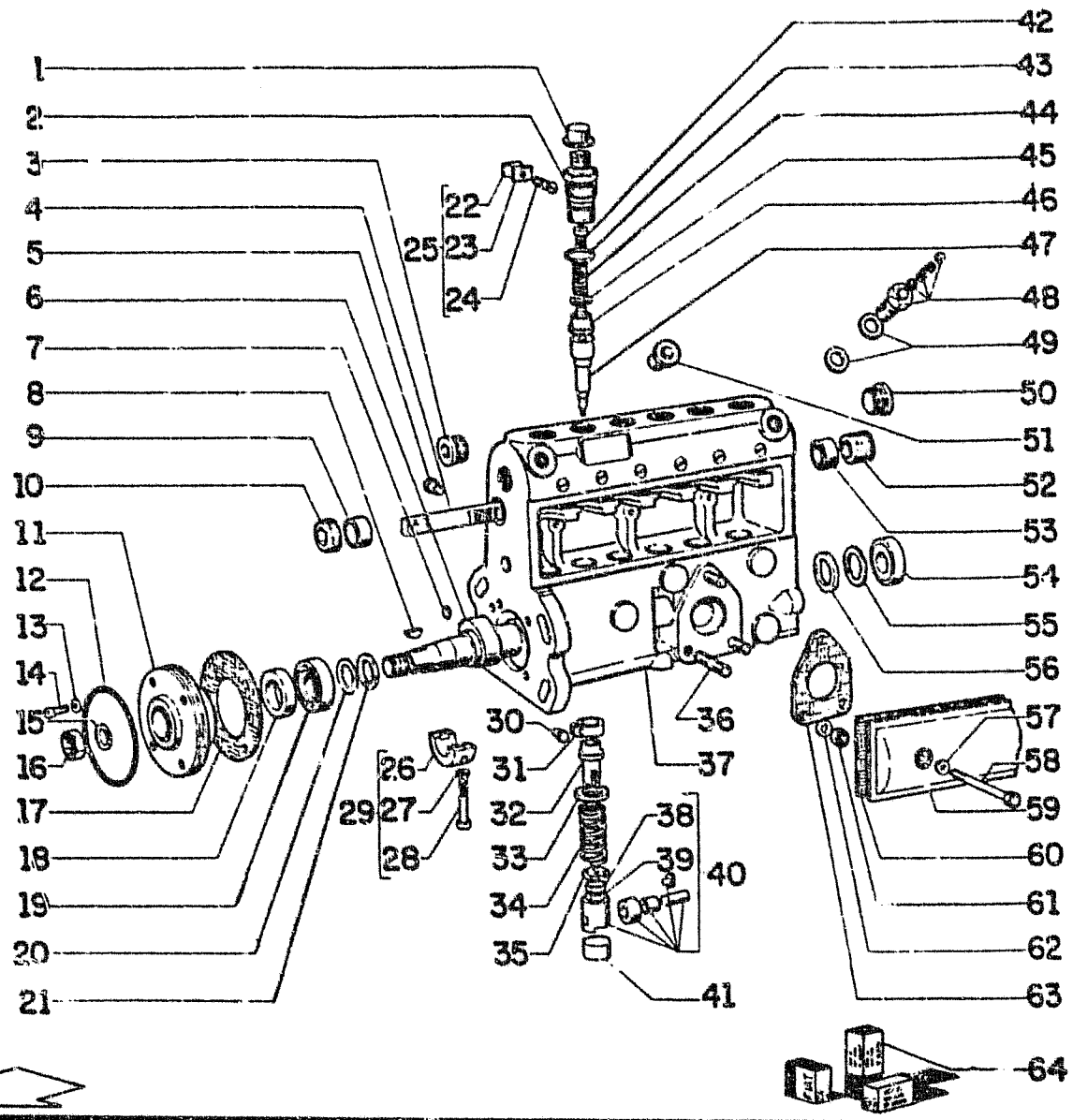

FIATALLIS FG 70A 75R 75A A2.27 QUADRO 1 PAG. 3

ITEM	PEÇA Nº	QNDE	COD.	DESCRIPTION	DESCRIÇÃO
56	75204399	1	045A	RING	ANEL
57	75207835	2	055A	SEAL RING	ANEL DE VEDAÇ
58	75207834	2	040V	SCREW	PARAFUSO
59	75207967	1	265C	COVER	TAMPA
60	75204100	1	123G	SEAL ASSY	RETENTOR
61	15896211	3	010D	NUT	PORCA
62	10516470	3	170R	LOCKWASHER	ARRUELA PRESS
63	74060150	1	120G	GASKET	JUNTA
64	75204133	K	002K	KIT INCLUDES 13,14,45,57	KIT

* USAR QUANT. NECESSÁRIA
AS REQUIRED

INJECTION PUMP
BOMBA INJETORA

A2.27 | 1

093

DESCRIPTION	SBGRP	TAV	GRID
PIPING TRANSMISSION FG70	B201	15	1I-7
RADIATOR	A401	2	1G-14
GRID	A401	2	1G-14
PIPING	A401	1	1G-13
WRAP AROUND	L101	1	2F-13
REAR AXLE BEVEL GEAR	B403	3	1N-8
AXLE BULL GEAR	B403	1	1N-6
AXLE DRIVE SHAFTS	B403	3	1N-8
AXLE EXTENSION HOUSING	B403	3	1N-8
AXLE PINION GEAR	B403	2	1N-7
AXLE SUPPORT	B403	6	1N-12
AXLE WHEEL ENDS	D316	1	1P-14
RESERVOIR, IMPLEMENT OIL	E328	1	2C-10
REVERSE & 3 - 4 SPEED CLUTCH FG75	B201/1	14	1L-8
REVERSE CLUTCH FG70	B201	6	1H-14
REVERSE IDLER ASSEMBLY FG75	B201/1	13	1L-7
RIPPER	E310/1	2	2C-4
CYLINDER	E332/1	2	2D-15
VALVE	E331	3	2C-15
ROTARY DISTRIBUTOR COMPONENTS	E331	1	2C-13
ROTARY DISTRIBUTOR	E302	23	2A-12
SADDLE	E310	1	2B-13
LOCK PIN CYLINDER	E332	4	2D-10
SADDLE LOCK VALVE	E331	4	2C-16
SCARIFIER	E310/1	1	2C-3
CYLINDER	E332/1	1	2D-14
VALVE	E331	6	2D-2
SEAT	L604	1	2H-2
SEAT BELT	L604	2	2H-3
SECOND SPEED CLUTCH FG70	B201	7	1H-15
SENSORS, MONITORING	F401	16	2F-4
SENSORS, MONITORING	F401	17	2F-5
STARTER COMPONENTS	F608	1	2F-11
STARTER MOTOR	F200	1	2E-2
STEERING CONTROL VALVE	D202	1	1P-10
CYLINDER	D212	1	1P-12
PUMP COMPONENTS	D213	1	1P-13
WHEEL	D201	1	1P-3
SWITCH ARTICULATION	F401	19	2F-7
PANEL ELECTRICAL CABLE	F401	2	2E-4
PANEL ELECTRICAL	F401	1	2E-3
TANDEM	D333	1	1P-16
TANK, IMPLEMENT OIL	E328	1	2C-10
THERMOSTAT,ENGINE COOLANT	A402	1	1G-15
THIRD SPEED CLUTCH FG70	B201	6	1H-14
THROTTLE CONTROL	A221	1	1F-3
CONTROL LEVER	A221	4	1F-6
LINKAGE FG70	A221	2	1F-4
THROTTLE LINKAGE FG75	A221	3	1F-5
TIRES & WHEELS	D316	2	1P-15
TRANSMISSION FG70	B200	1	1H-6
TRANSMISSION FG70	B200/1	1	1H-7
CASE & TUBING FG70	B201	1	1H-8
CONTROL FG75	B207/1	2	1M-13
CONTROL LEVER FG70	B207	2	1M-12
CONTROL LINKAGE FG70	B207	1	1M-10
CONTROL VALVE FG70	B201	18	1I-10
CONTROL VALVE FG75	B201/1	20	1L-14
CONTROL VALVE FG75	B201/1	21	1L-15
CONTROL VALVE FG75	B201/1	22	1L-16
CONTROL VALVE FG75	B201/1	23	1L-17
DECLUTCH VALVE	C101	6	1O-2
GEARING FG70	B201	5	1H-13
GEARING FG75	B201/1	8	1L-2
GUARD	D101	2	1O-11
HEAT EXCHANGER FG7	B206/1	1	1M-8
HEAT EXCHANGER FG70	B206	3	1M-7
HOUSING FG75	B201/1	4	1I-14
IDLER SHAFT FG75	B201/1	17	1L-11
MODUALTING VALVE FG75	B201/1	24	1M-2
MODULATING VALVE FG70	B201	18	1I-10
OIL FILTER FG70	B201	11	1I-3
OIL FILTER FG75	B217	1	1M-14
OIL FILTER LINES FG75	B206	1	1M-5
OIL DIPSTICK FG70	B206	2	1M-6
OIL DIPSTICK FG75	B206/1	2	1M-9
OUTPUT FLANGE FG70	B201	13	1I-5
OUTPUT SHAFT FG70	B201	10	1I-2
OUTPUT SHAFT FG75	B201/1	18	1L-12
PUMP FG70	B201	15	1I-7
PUMP MOUNT FG75	B201/1	19	1L-13
REGULATING VALVE FG70	B201	16	1I-8
REGULATING VALVE FG75	B201/1	25	1M-3
REGULATING VALVE FG75	B201/1	26	1M-4
TURN SIGNAL	F401	13	2E-15
VALVE ARTICULATION	E331	2	2C-14
BLADE LIFT	E331	5	2C-17
CIRCLE SHIFT	E331	3	2C-15
END CAP	E331	7	2D-3
END CAP	E331	9	2D-4
LATERAL SHIFT	E331	8	2C-14
MAIN RELIEF , LEFT	E331	10	2D-5
MAIN RELIEF , RIGHT	E331	11	2D-6
MOLDBOARD PITCH	E331	2	2C-14
RIPPER	E331	3	2C-15
SADDLE LOCK	E331	4	2C-16
SCARIFIER	E331	6	2D-2
STEERING CONTROL VALVE	D202	1	1P-10
VALVE TRANS CONTROL FG75	B201/1	22	1L-16
TRANS CONTROL FG75	B201/1	23	1L-17
TRANS MODULATING FG70	B201	18	1I-10
TRANS MODUALTING FG75	B201/1	24	1M-2
TRANS REGULATING FG75	B201/1	25	1M-3
TRANS REGULATING FG75	B201/1	26	1M-4
TRANSMISSION CONTROL FG70	B201	18	1I-10
WHEEL LEAN	E331	2	2C-14
WHEEL LEAN CYLINDER	E332	1	2D-7
WHEEL LEAN VALVE	E331	2	2C-14
WHEELS & TIRES	D316	2	1P-15
WINDOW WIPERS	L104	6	2G-7
WIPERS WINDOW	L104	6	2G-7

FIATALLIS

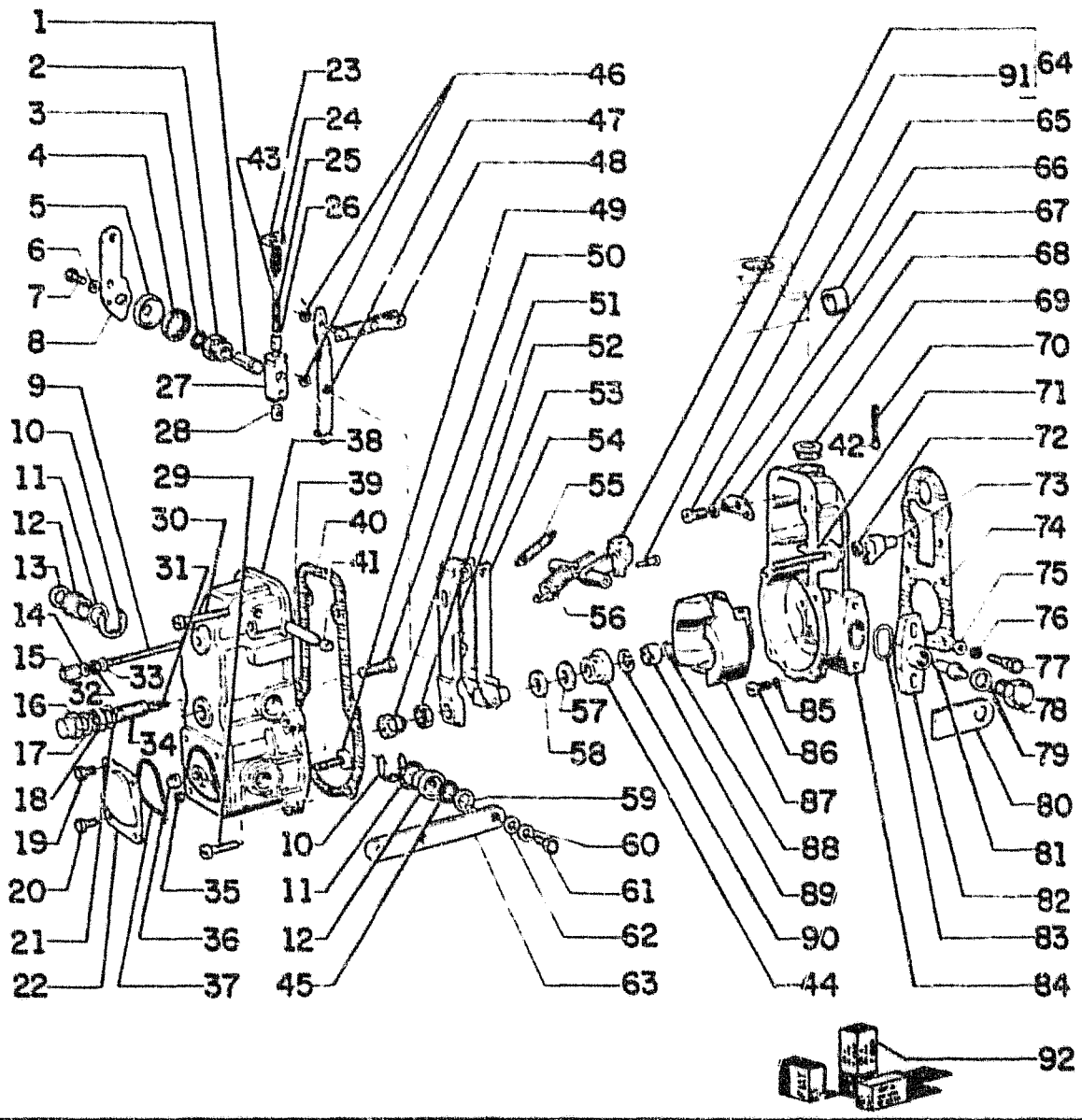

FIATALLIS FG 70R 70A 75R 75A A2.28 **QUADRO** 1 **PAG.** 1

ITEM	PEÇA Nº	QTDE	COD.	DESCRIPTION	DESCRIÇÃO
1	75204506	1	080P	PIN	PINO
2	75204503	1	095B	BUSHING	BUCHA
3	75204135	1	158G	O'RING	O'RING
4	75204509	1	100M	SPRING	MOLA
5	75204504	1	100C	RETAINER	ENCOSTO
6	10516470	1	170R	LOCKWASHER	ARRUELA PRESS
7	9007836	1	040V	SCREW	PARAFUSO
8	75204167	1	045L	LEVER	ALAVANCA
9	75205247	1	080P	PIN	PINO
10	75205259	2	187A	SNAP RING	ANEL ELÁSTICO
11	75204370	2	055A	SEAL RING	ANEL DE VEDAÇ
12	75204143	2	095B	BUSHING	BUCHA
13	75204144	1	070R	GUARD	PROTEÇÃO
14	75204364	1	055A	SEAL RING	ANEL DE VEDAÇ
15	75205244	1	010D	NUT	PORCA
16	75205245	1	010D	NUT	PORCA
17	75204956	1	055A	SEAL RING	ANEL DE VEDAÇ
18	75205242	1	010D	NUT	PORCA
19	75204376	2	040V	SCREW	PARAFUSO
20	75204375	2	040V	SCREW	PARAFUSO
21	75204956	1	055A	SEAL RING	ANEL DE VEDAÇ
22	75207995	1	265C	COVER	TAMPA
23	75204510	1	300S	SUPPORT	SUPORTE
24	75204511	1	100M	SPRING	MOLA
25	75204505	1	100M	SPRING	MOLA
26	75204507	1	100C	RETAINER	ENCOSTO
27	75207987	1	300S	SUPPORT	SUPORTE
28	75204159	1	045P	PAD	GUIA
29	75207993	4	040V	SCREW	PARAFUSO
30	75205256	2	040V	SCREW	PARAFUSO
31	75204160	1	100M	SPRING	MOLA
32	75205258	1	010D	NUT	PORCA
33	75204364	1	055A	SEAL RING	ANEL DE VEDAÇ
34	75205248	1	040V	SCREW	PARAFUSO
35	15896211	1	010D	NUT	PORCA
36	75207976	1	010D	NUT	PORCA

SPEED GOVERNOR
REGULADOR DE VELOCIDADE

A2.28 | 1

024

FIATALLIS

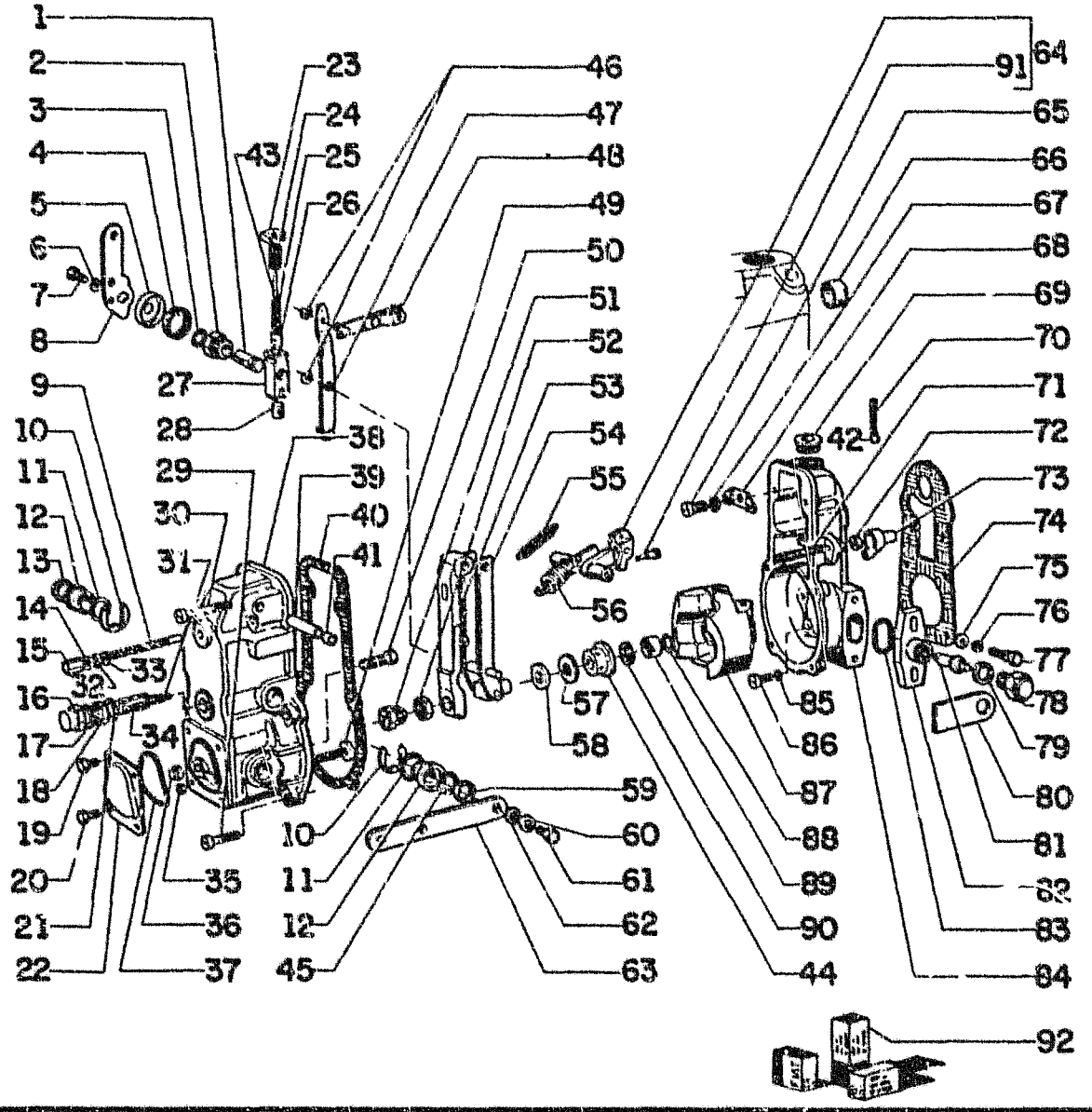

FIATALLIS FG 70R 70A 75R 75A A2.28 QUADRO 1 PAG. 2

ITEM	PEÇA Nº	QTDE	COD.	DESCRIPTION	DESCRIÇÃO
37	75207994	1	045A	RING	ANEL
38	75207974	1	265C	COVER	TAMPA
39	75204157	1	016A	SHAFT	EIXO
40	75204379	1	123G	SEAL ASSY	RETENTOR
41	75204145	1	020C	CAP	CALOTA
42	75204165	2	127P	LEAD SEAL	LACRE
43	75204502	1	100M	SPRING	MOLA
44	75207984	1	158G	O'RING	O'RING
45	79046274	1	055A	SEAL RING	ANEL DE VEDAÇ
46	75204367	2	187A	SNAP RING	ANEL ELÁSTICO
47	75204150	1	045L	LEVER	ALAVANCA
48	75204151	1	300S	SUPPORT	SUPORTE
49	75205249	1	040V	SCREW	PARAFUSO
50	75207975	1	040V	SCREW	PARAFUSO
51	75207978	1	100C	RETAINER	ENCOSTO
52	75207979	1	010D	NUT	PORCA
53	75207977	1	045L	LEVER	ALAVANCA
54	75207980	1	045L	LEVER	ALAVANCA
55	75207992	1	100M	SPRING	MOLA
56	75207985	1	100M	SPRING	MOLA
57	75207982	1	341C	BEARING	ROLAMENTO
58	75207983	1	131R	WASHER	ARRUELA
59	75205292	*	131R	WASHER 0.5 mm	ARRUELA
	79046272	*	131R	WASHER 1.0 mm	ARRUELA
60	10516470	1	170R	LOCKWASHER	ARRUELA PRESS
61	9007836	1	040V	SCREW	PARAFUSO
62	14496401	1	131R	WASHER	ARRUELA
63	75207986	1	045L	LEVER	ALAVANCA
64	75204233	1	045L	LEVER	ALAVANCA
65	10379011	1	040V	SCREW	PARAFUSO
66	75204126	1	020C	CAP	CALOTA
67	10516671	1	170R	LOCKWASHER	ARRUELA PRESS
68	75204230	1	120P	PLATE	PRATO
69	75205252	1	050T	PLUG	BUJÃO
70	75204166	2	060C	WIRE TERMINAL	TERMINAL DO FIO
71	75205293	1	080P	PIN	PINO

SPEED GOVERNOR
REGULADOR DE VELOCIDADE

A2.28 | 1

FIATALLIS

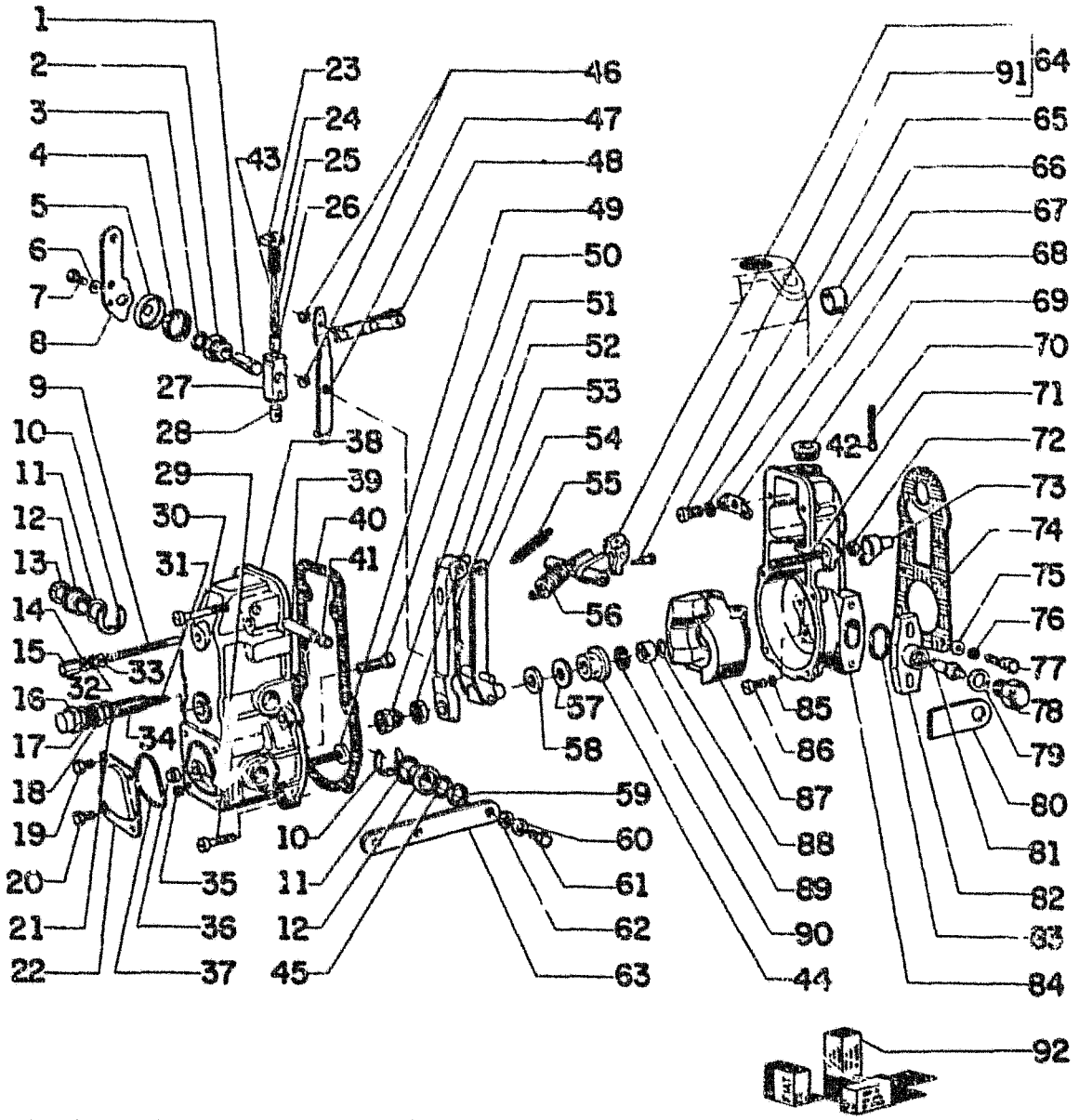

FIATALLIS	FG 70R 70A 75R 75A	A2.28	QUADRO 1	PAG. 3

ITEM	PEÇA Nº	QTDE	COD.	DESCRIPTION	DESCRIÇÃO
72	15896211	1	010D	NUT	PORCA
73	75204368	1	020C	CAP	CALOTA
74	75204147	1	123G	SEAL ASSY	RETENTOR
75	75207999	2	131R	WASHER	ARRUELA
76	10516671	2	170R	LOCKWASHER	ARRUELA PRESS
77	75207998	2	040V	SCREW	PARAFUSO
78	75207989	1	050T	PLUG	BUJÃO
79	79046212	1	055A	SEAL RING	ANEL DE VEDAÇ
80	75207990	1	113P	LOCKPLATE	PLACA TRAVAM.
81	75207991	1	080P	PIN	PINO
82	75207996	*	070F	FLANGE 13.2 mm	FLANGE
82	75207997	*	070F	FLANGE 13.5 mm	FLANGE
83	75285002	1	158G	O'RING	O'RING
84	75207972	1	035S	CASE	CARCAÇA
85	10516470	6	170R	LOCKWASHER	ARRUELA PRESS
86	9923751	6	040V	SCREW	PARAFUSO
87	75207988	1	067M	FLYWEIGHT	MASSA DE COMP
88	75205241	1	170R	LOCKWASHER	ARRUELA PRESS
89	75205246	1	010D	NUT	PORCA
90	75207981	1	170R	LOCKWASHER	ARRUELA PRESS
91	75205250	1	040V	SCREW	PARAFUSO
92	75285003	K	002K	KIT INCLUDES 11,20,21, 37,40,42,60,62,70,85	KIT

* USAR QUANT. NECESSÁRIA
AS REQUIRED

	SPEED GOVERNOR REGULADOR DE VELOCIDADE	A2.28	1

099

FIATALLIS

FIATALLIS FG 70R 70A 75R 75A A2.35 QUADRO 1 PAG. 1

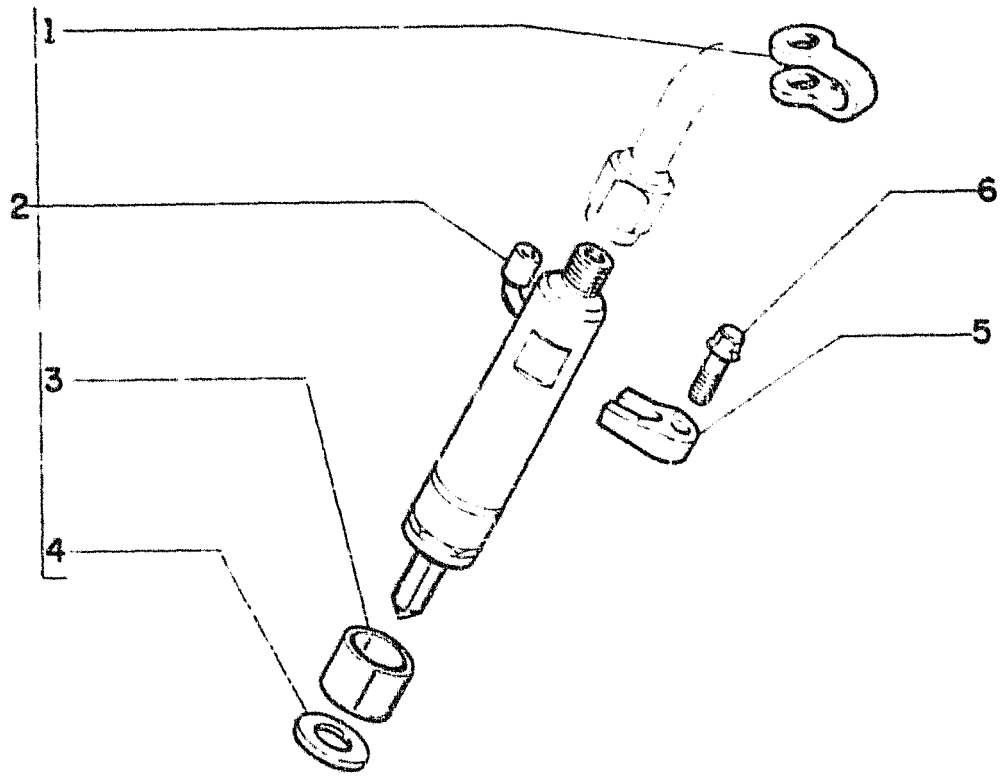

ITEM	PEÇA Nº	QTDE	COD.	DESCRIPTION	DESCRIÇÃO
1	75208924	6	131R	WASHER	ARRUELA
2	75206873	6	406S	NOZZLE	NEBULIZADOR
3	75208929	6	122G	SEAL	RETENTOR
4	75208928	6	131R	WASHER	ARRUELA
5	75208930	6	300S	SUPPORT	SUPORTE
6	75208926	6	040V	SCREW	PARAFUSO

NOZZLE HOLDER
PORTA BICO INJETOR

A2.35 | 1

087

FIATALLIS

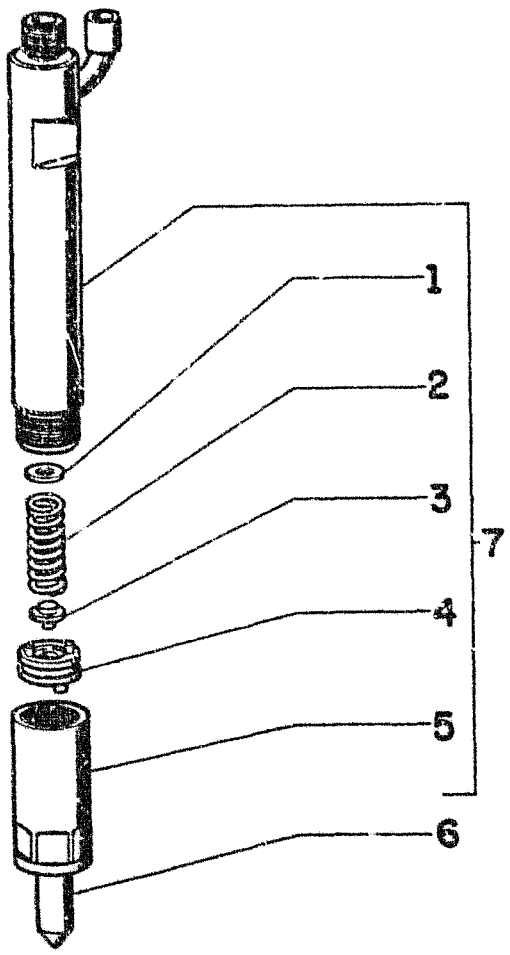

FIATALLIS FG 70R 70A 75R 75A A2.35 **QUADRO 2 PAG. 1**

ITEM	PEÇA Nº	QTDE	COD.	DESCRIPTION	DESCRIÇÃO
1	75207849	*	131R	WASHER 1.00	ARRUELA
1	75207850	*	131R	WASHER 1.04	ARRUELA
1	75207851	*	131R	WASHER 1.08	ARRUELA
1	75207852	*	131R	WASHER 1.10	ARRUELA
1	75207853	*	131R	WASHER 1.14	ARRUELA
1	75207854	*	131R	WASHER 1.18	ARRUELA
1	75207855	*	131R	WASHER 1.20	ARRUELA
1	75207856	*	131R	WASHER 1.24	ARRUELA
1	75207857	*	131R	WASHER 1.28	ARRUELA
1	75207858	*	131R	WASHER 1.30	ARRUELA
1	75207859	*	131R	WASHER 1.34	ARRUELA
1	75207860	*	131R	WASHER 1.38	ARRUELA
1	75207861	*	131R	WASHER 1.40	ARRUELA
1	75207863	*	131R	WASHER 1.44	ARRUELA
1	75207863	*	131R	WASHER 1.48	ARRUELA
1	75207864	*	131R	WASHER 1.50	ARRUELA
1	75207865	*	131R	WASHER 1.54	ARRUELA
1	75207866	*	131R	WASHER 1.58	ARRUELA
1	75207867	*	131R	WASHER 1.60	ARRUELA
1	75207868	*	131R	WASHER 1.65	ARRUELA
1	75207869	*	131R	WASHER 1.68	ARRUELA
1	75207870	*	131R	WASHER 1.70	ARRUELA
1	75207871	*	131R	WASHER 1.74	ARRUELA
1	75207872	*	131R	WASHER 1.78	ARRUELA
1	75207873	*	131R	WASHER 1.80	ARRUELA
1	75207874	*	131R	WASHER 1.84	ARRUELA
1	75207875	*	131R	WASHER 1.88	ARRUELA
1	75207876	*	131R	WASHER 1.90	ARRUELA
1	75207877	*	131R	WASHER 1.94	ARRUELA
1	75207878	*	131R	WASHER 1.98	ARRUELA
2	75207879	6	100M	SPRING	MOLA
3	75207880	6	090A	ROD	HASTE
4	75207881	6	060P	PEDAL	PEDAL
5	75207882	6	010D	NUT	PORCA
6	75285214	6	148P	NOZZLE	PULVERIZADOR
7	75285213	6	195P	NOZZLE HOLDER	PORTA-PULVERIZ.

* USAR QUANT. NECESSÁRIA AS REQUIRED

NOZZLE HOLDER
PORTA BICO INJETOR

A2.35 | 2

FIATALLIS

FIATALLIS FG 70R 70A 75R 75A A2.54 QUADRO 1 PAG. 1

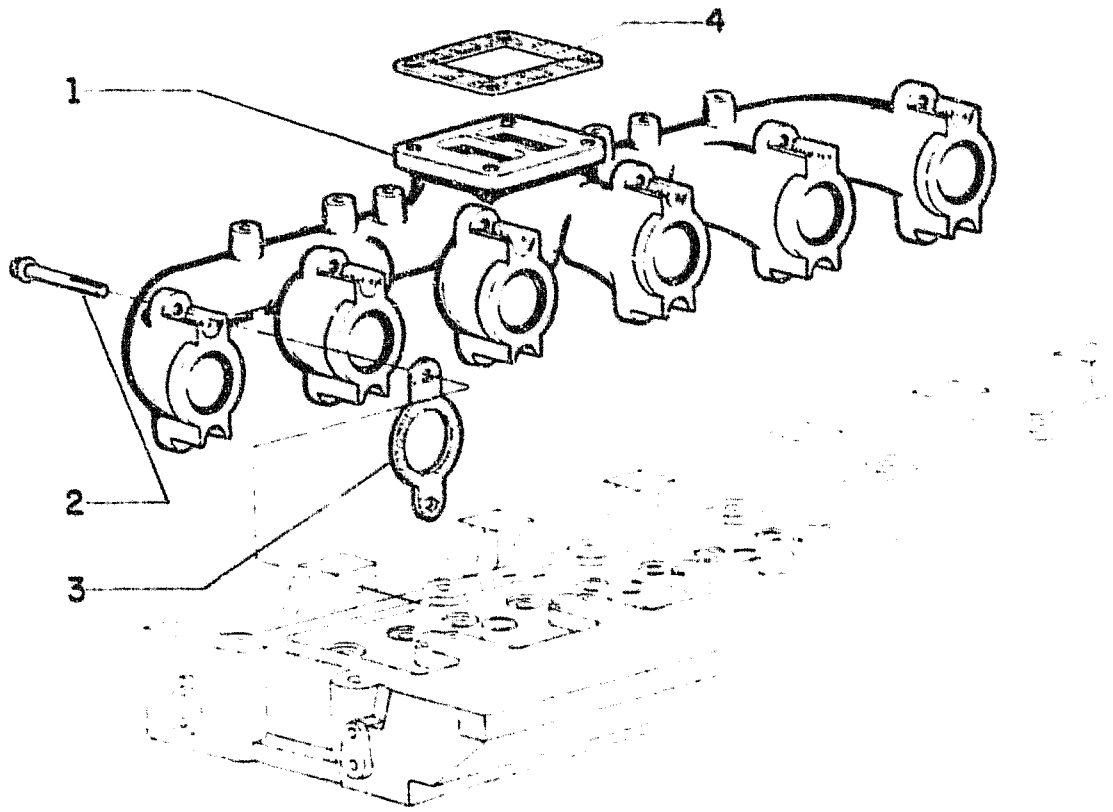

ITEM	PEÇA Nº	QTDE	COD.	DESCRIPTION	DESCRIÇÃO
1	75206828	1	230C	EXHAUST MANIF.	COLETOR ESCAPE
2	75208287	12	040V	SCREW	PARAFUSO
3	75208288	6	123G	SEAL ASSY	RETENTOR
4	75206879	1	123G	SEAL ASSY	RETENTOR

EXHAUST MANIFOLDS
COLETOR DE ESCAPE

A2.54 | 1

000

FIATALLIS

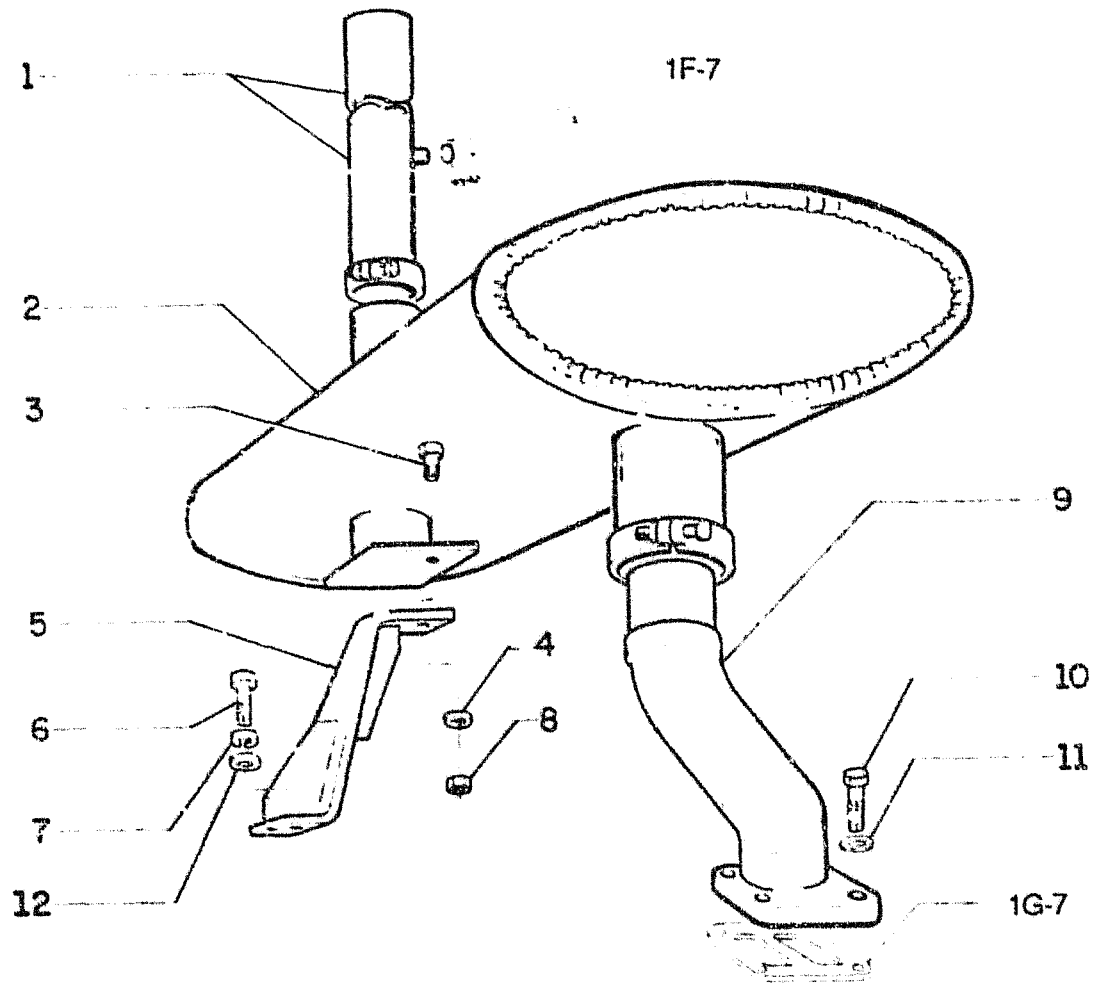

FIATALLIS FG 70R 70A 75R 75A A2.56 QUADRO 1 PAG. 1

ITEM	PEÇA Nº	QTDE	COD.	DESCRIPTION	DESCRIÇÃO
1	73117687	1	193T	TUBE	TUBO
2	73121707	1	160S	MUFFLER	SILENCIOSO
3	70927173	1	040V	SCREW	PARAFUSO
4	70630753	2	131R	WASHER	ARRUELA
5	73151746	1	300S	SUPPORT	SUPORTE
6	11112321	2	040V	SCREW	PARAFUSO
7	70950240	2	170R	LOCKWASHER	ARRUELA PRESS
8	70911026	1	010D	NUT	PORCA
9	73151553	1	085G	ELBOW	COTOVELO
10	11106431	4	040V	SCREW	PARAFUSO
11	70930370	4	131R	WASHER	ARRUELA
12	12646921	2	131R	WASHER	ARRUELA

MUFFLER & EXHAUST PIPE
SILENCIOSO E ESCAPAMENTO

A2.56 | 1

FIATALLIS

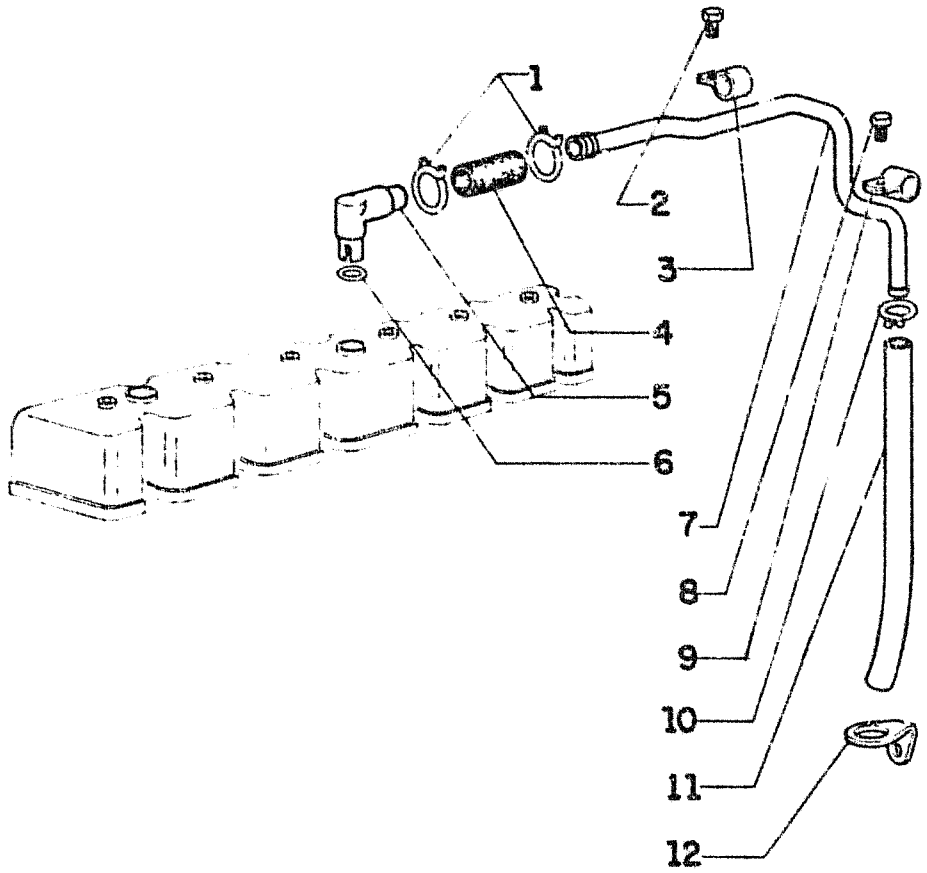

FIATALLIS FG 70R 70A 75R 75A A3.01 **QUADRO** 1 **PAG.** 1

ITEM	PEÇA Nº	QTDE	COD.	DESCRIPTION	DESCRIÇÃO
1	75208299	2	031F	CLAMP	ABRAÇADEIRA
2	75208307	1	040V	SCREW	PARAFUSO
3	75208308	1	031F	CLAMP	ABRAÇADEIRA
4	75206832	1	192T	HOSE ASSY	MANGUEIRA
5	75208292	1	020R	FITTING	CONEXÃO
6	75206808	1	158G	O'RING	O'RING
7	75208301	1	193T	TUBE	TUBO
8	75208347	1	040V	SCREW	PARAFUSO
9	75206809	1	031F	CLAMP	ABRAÇADEIRA
10	75208304	1	031F	CLAMP	ABRAÇADEIRA
11	75206812	1	192T	HOSE ASSY	MANGUEIRA
12	75208306	1	031F	CLAMP	ABRAÇADEIRA

LUBRICATION SYSTEM
SISTEMA DE LUBRIFICAÇÃO

A3.01 | 1

FIATALLIS

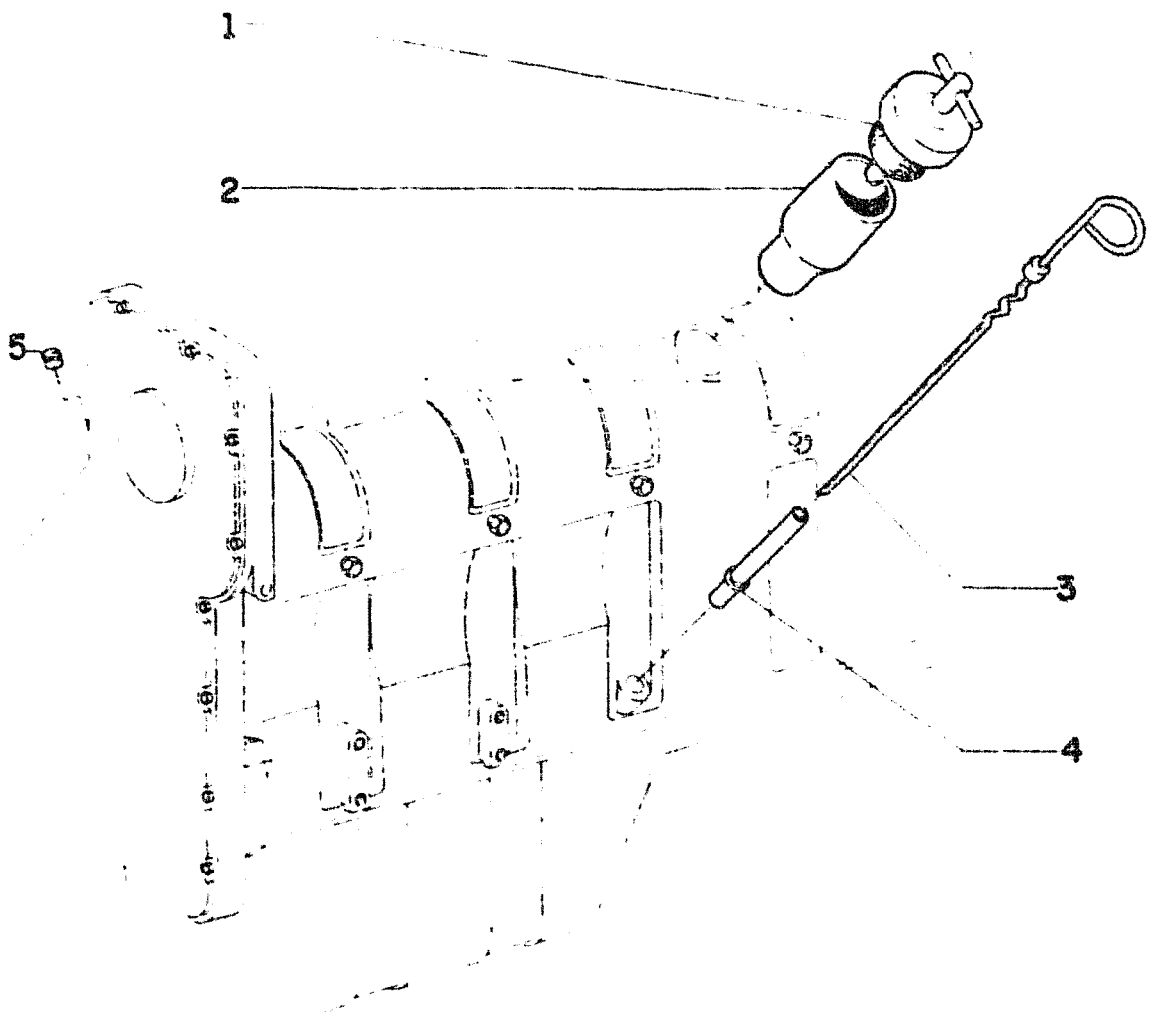

FIATALLIS FG 70R 70A 75R 75A A3.01 **QUADRO** 2 **PAG.** 1

ITEM	PEÇA Nº	QTDE	COD.	DESCRIPTION	DESCRIÇÃO
1	75208372	1	265C	COVER	TAMPA
2	75208373	1	090B	FILLER PLUG	BOCAL ENCHIM.
3	75206630	1	091A	DIPSTICK	HASTE DE NIVEL
4	75208375	1	193T	TUBE	TUBO
5	75286111	1	050T	PLUG	BUJÃO

OIL FILL LOCATION GAUGE OIL LEVEL
BOCAL ENCHIMENTO ÓLEO E VARETA DE NÍVEL

A3.01 | 2

FIATALLIS

FIATALLIS FG 70R 70A 75R 75A A3.02 QUADRO 1 PAG. 1

ITEM	PEÇA Nº	QTDE	COD.	DESCRIPTION	DESCRIÇÃO
1	75286160	1	155P	PUMP	BOMBA
2	75208384	4	040V	SCREW	PARAFUSO

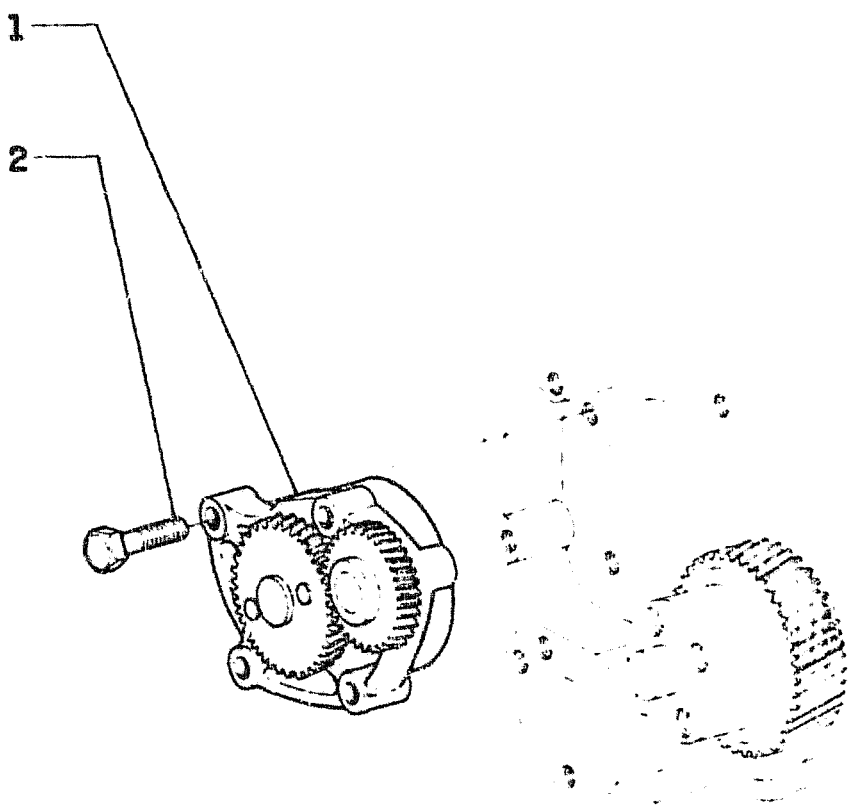

OIL PUMP
BOMBA DE OLEO

A3.02 | 1

FIATALLIS

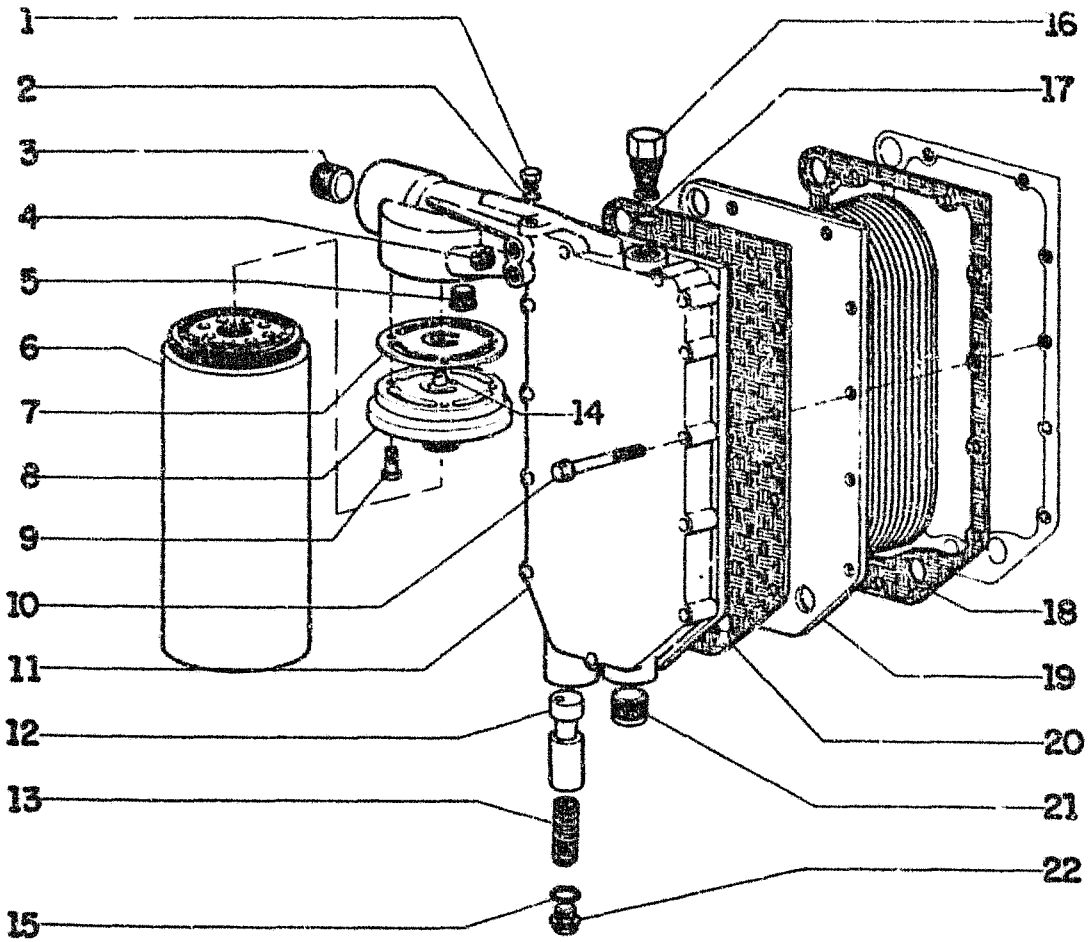

FIATALLIS FG 70R 70A 75R 75A A3.03 **QUADRO** 1 **PAG.** 1

ITEM	PEÇA Nº	QTDE	COD.	DESCRIPTION	DESCRIÇÃO
1	75286167	1	050T	PLUG	BUJÃO
2	75286174	1	158G	O'RING	O'RING
3	75208320	1	050T	PLUG	BUJÃO
4	75286339	1	050T	PLUG	BUJÃO
5	75208323	1	010V	VALVE	VÁLVULA
6	75285999	1	065F	FILTER	FILTRO
7	75286169	1	120G	GASKET	JUNTA
8	75286000	1	119T	HEAD	CABEÇA
9	75208174	4	040V	SCREW	PARAFUSO
10	75286164	11	040V	SCREW	PARAFUSO
11	75286163	1	265C	COVER	TAMPA
12	75286168	1	010V	VALVE	VÁLVULA
13	75208316	1	100M	SPRING	MOLA
14	75286165	1	131R	WASHER	ARRUELA
15	75286172	1	158G	O'RING	O'RING
16	75286351	1	096T	THERMOSTAT	TERMOSTATO
17	75286171	1	158G	O'RING	O'RING
18	75285211	1	123G	SEAL ASSY	RETENTOR
19	75208310	1	035S	HEAT EXCHANGER	TROCADOR CALOR
20	75286162	1	123G	SEAL ASSY	RETENTOR
21	75286173	1	050T	PLUG	BUJÃO
22	75286352	1	050T	PLUG	BUJÃO

OIL FILTER & HEAT EXCHANGER
FILTRO DE ÓLEO E TROCADOR DE CALOR

A3.03 | 1

FIATALLIS

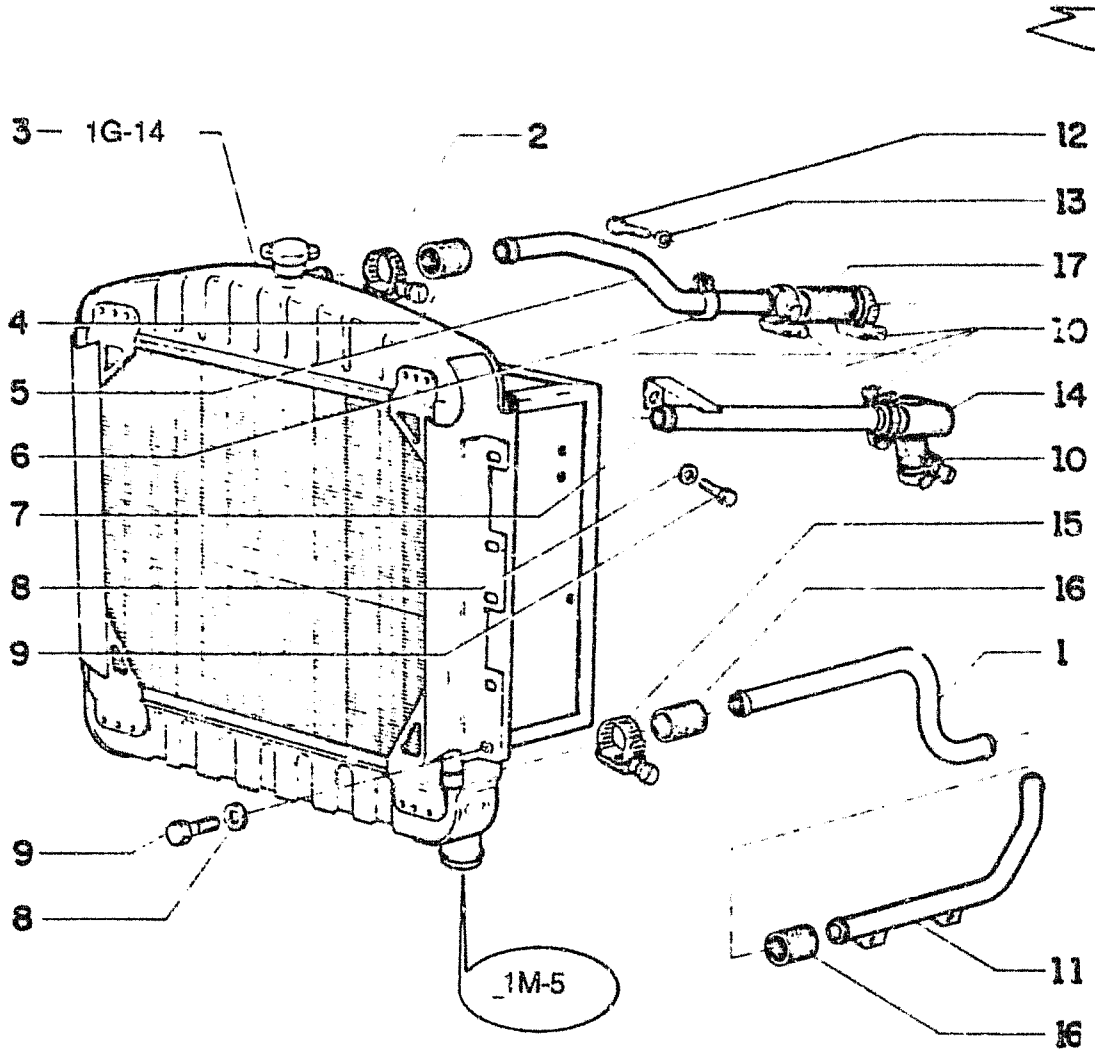

FIATALLIS FG 70R 70A 75R 75A A4.01 **QUADRO 1** **PAG. 1**

ITEM	PEÇA Nº	QTDE	COD.	DESCRIPTION	DESCRIÇÃO
1	75235194	1	193T	TUBE	TUBO
2	70921913	2	031F	CLAMP	ABRAÇADEIRA
3	75236791	1	167R	WATER RADIATOR	RADIADOR D'ÁG
4	73031151	1	192T	HOSE ASSY	MANGUEIRA
5	73155825	1	193T	TUBE	TUBO
6	70928439	1	031F	CLAMP	ABRAÇADEIRA
7	73148544	1	193T	TUBE	TUBO
8	70677006	11	131R	WASHER	ARRUELA
9	70922763	11	040V	SCREW	PARAFUSO
10	70921914	4	031F	CLAMP	ABRAÇADEIRA
11	73158771	1	193T	TUBE	TUBO
12	70927219	1	040V	SCREW	PARAFUSO
13	70928178	1	131R	WASHER	ARRUELA
14	73150257	1	285T	HOSE	MANGUEIRA
15	70925881	4	031F	CLAMP	ABRAÇADEIRA
16	73116330	2	285T	HOSE	MANGUEIRA
17	73026172	1	285T	HOSE	MANGUEIRA

RADIATOR & PIPING
RADIADOR E TUBULAÇÕES

A4.01 | 1

FIATALLIS

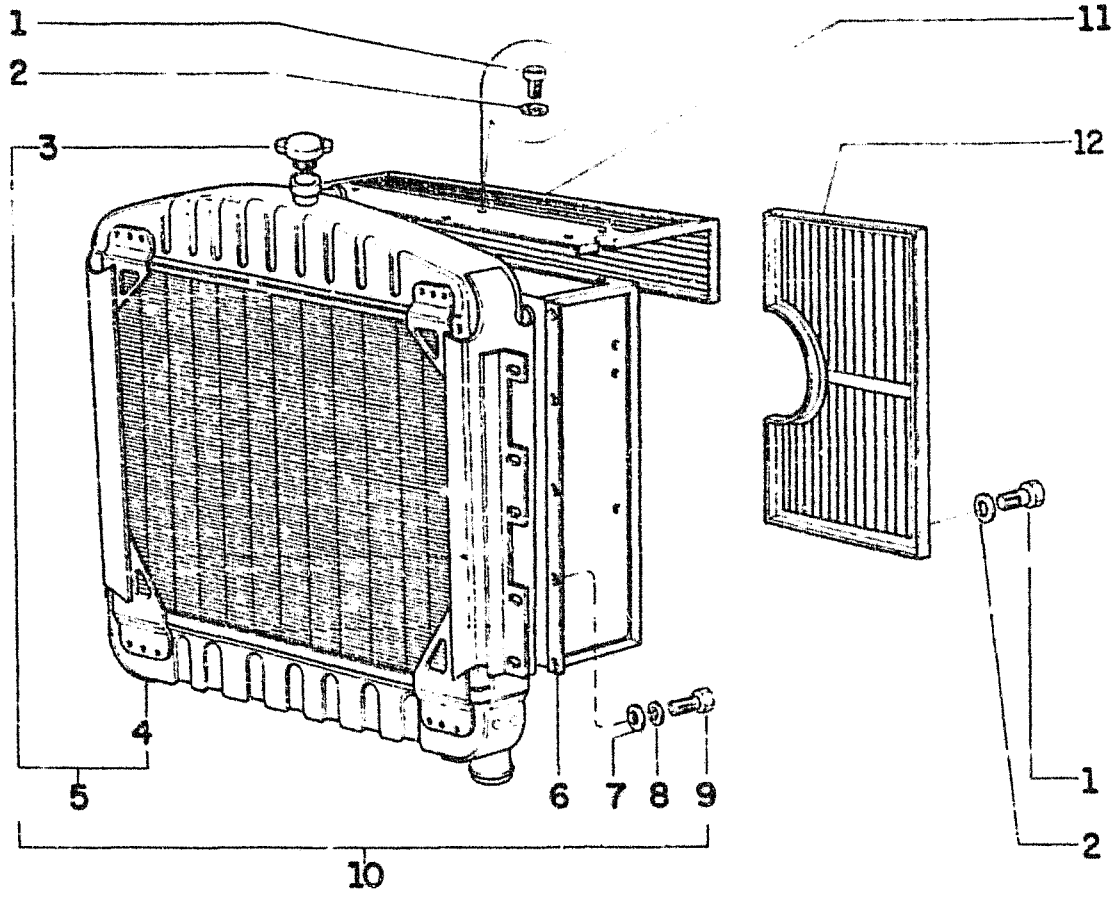

FIATALLIS FG 70R 70A 75R 75A A4.01 **QUADRO 2 PAG. 1**

ITEM	PEÇA Nº	QTDE	COD.	DESCRIPTION	DESCRIÇÃO
1	70922300	14	040V	SCREW	PARAFUSO
2	70929156	14	131R	WASHER	ARRUELA
3	75219307	1	265C	COVER	TAMPA
4	75236845	1	025R	RADIATOR	RADIADOR
5	75286072	1	025R	RADIATOR	RADIADOR
6	75237319	1	020D	DEFLECTOR	DEFLETOR
7	70900816	10	131R	WASHER	ARRUELA
8	70910285	10	170R	LOCKWASHER	ARRUELA PRESSÃO
9	70928182	10	040V	SCREW	PARAFUSO
10	75236791	1	167R	WATER RADIATOR	RADIADOR D'ÁGUA
11	75237044	1	300S	SUPPORT	SUPORTE
12	75237323	2	101G	GRID	GRADE

	RADIATOR RADIADOR	A4.01	2

FIATALLIS

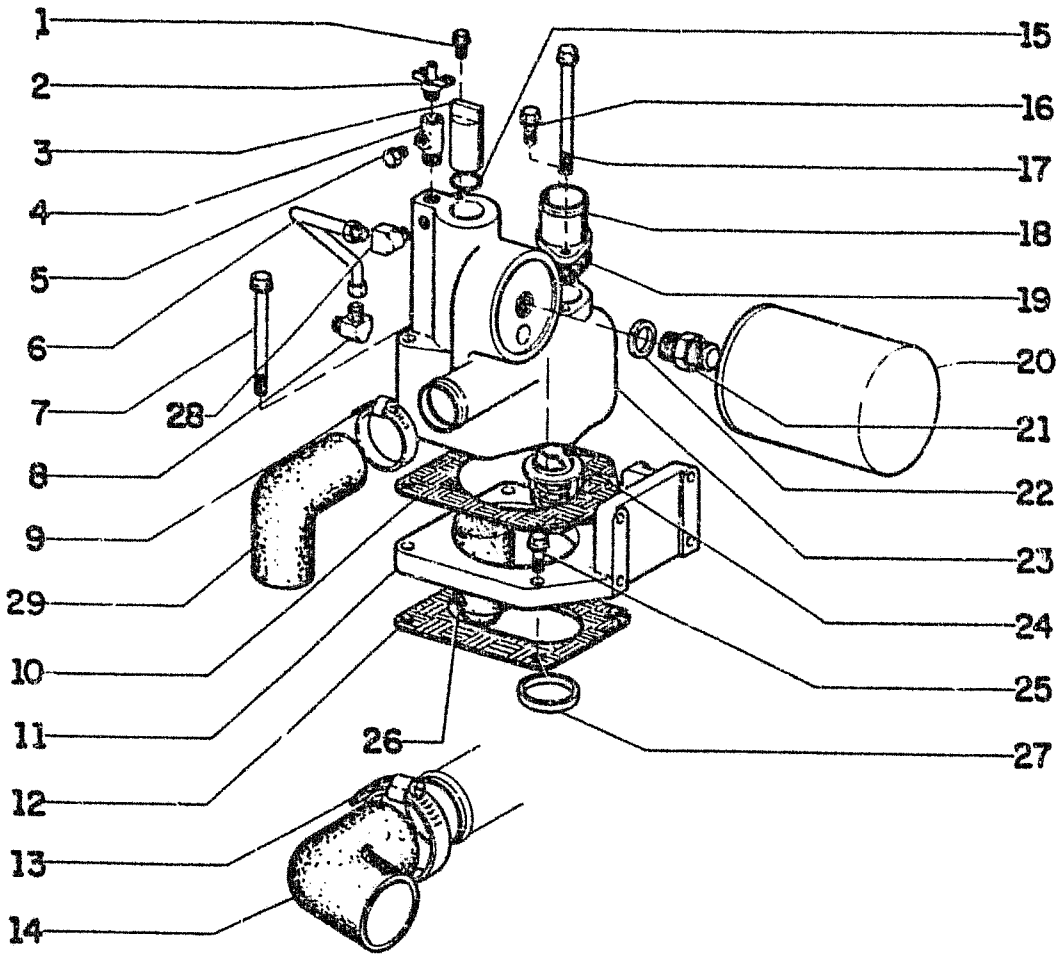

FIATALLIS FG 70R 70A 75R 75A A4.02 **QUADRO** 1 **PAG.** 1

ITEM	PEÇA Nº	QTDE	COD.	DESCRIPTION	DESCRIÇÃO
1	75286181	1	040V	SCREW	PARAFUSO
2	75208335	1	150R	COCK	REGISTRO
3	75204980	1	080P	PIN	PINO
4	75286177	1	020R	FITTING	CONEXÃO
5	70919134	1	080P	PIN	PINO
6	75286178	1	193T	TUBE	TUBO
7	75286156	1	040V	SCREW	PARAFUSO
8	75286176	1	085G	ELBOW	COTOVELO
9	75286324	1	031F	CLAMP	ABRAÇADEIRA
10	75286179	1	120G	GASKET	JUNTA
11	75286322	1	300S	SUPPORT	SUPORTE
12	75286321	1	120G	GASKET	JUNTA
13	75286077	1	031F	CLAMP	ABRAÇADEIRA
14	75208331	1	192T	HOSE ASSY	MANGUEIRA
15	75286180	1	158G	O'RING	O'RING
16	75208153	1	040V	SCREW	PARAFUSO
17	75286156	1	040V	SCREW	PARAFUSO
18	75286157	1	193T	TUBE	TUBO
19	75286158	1	120G	GASKET	JUNTA
20	75206848	1	084C	FILTER ELEMENT	ELEM. FILTRANTE
21	75204983	1	075B	CONNECTOR	CONECTOR
22	75204984	1	170R	LOCKWASHER	ARRUELA PRESSÃO
23	75286159	1	035S	CASE	CARCAÇA
24	75286120	1	096T	THERMOSTAT	TERMOSTATO
25	75286320	2	040V	SCREW	PARAFUSO
26	75286319	1	026T	BLOCK	TAMPÃO
27	75286325	1	045A	RING	ANEL
28	75286175	1	085G	ELBOW	COTOVELO
29	73158847	1	085G	ELBOW	COTOVELO

WATER PUMP & LINES
BOMBA D'ÁGUA E TUBULAÇÕES

A4.02 | 1

FIATALLIS

FIATALLIS FG 70R 70A 75R 75A A4.03 **QUADRO** 1 **PAG.** 1

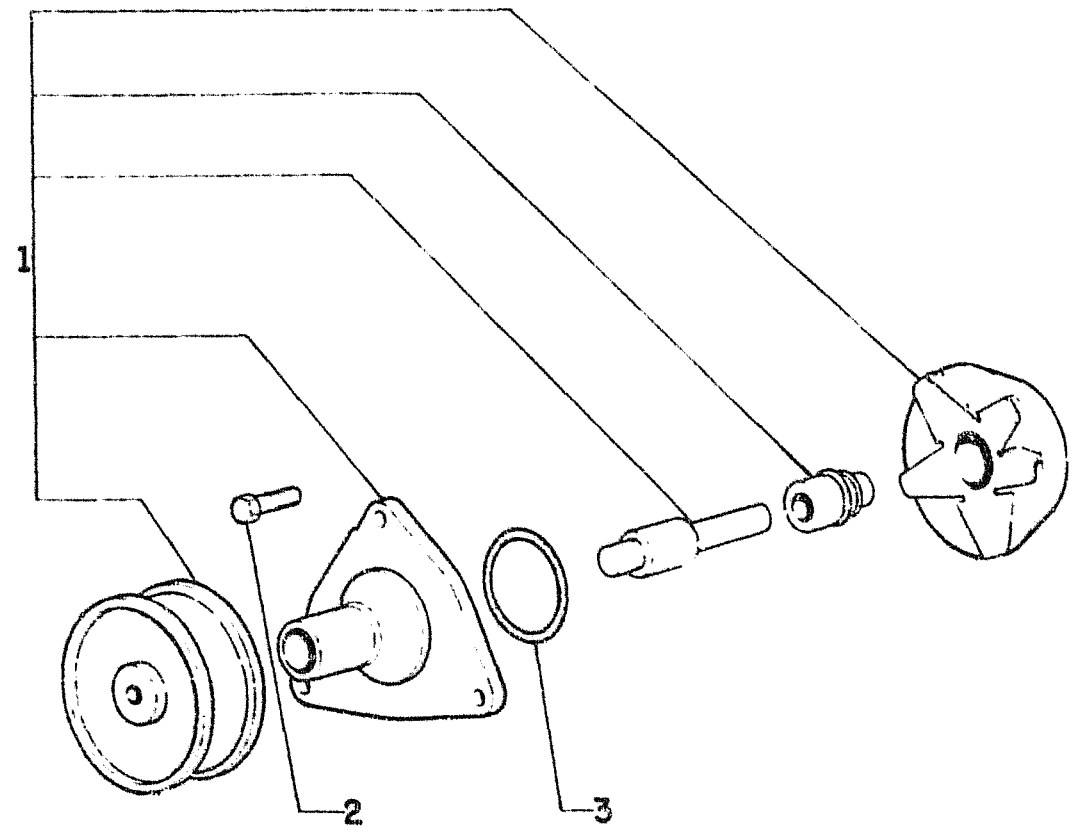

ITEM	PEÇA Nº	QTDE	COD.	DESCRIPTION	DESCRIÇÃO
1	75286121	1	P152	WATER PUMP	BOMBA D'ÁGUA
2	75286076	3	040V	SCREW	PARAFUSO
3	75208389	1	158G	O'RING	O'RING

	WATER PUMP BOMBA D'AGUA	A4.03	1

.06

FG70 FG70A

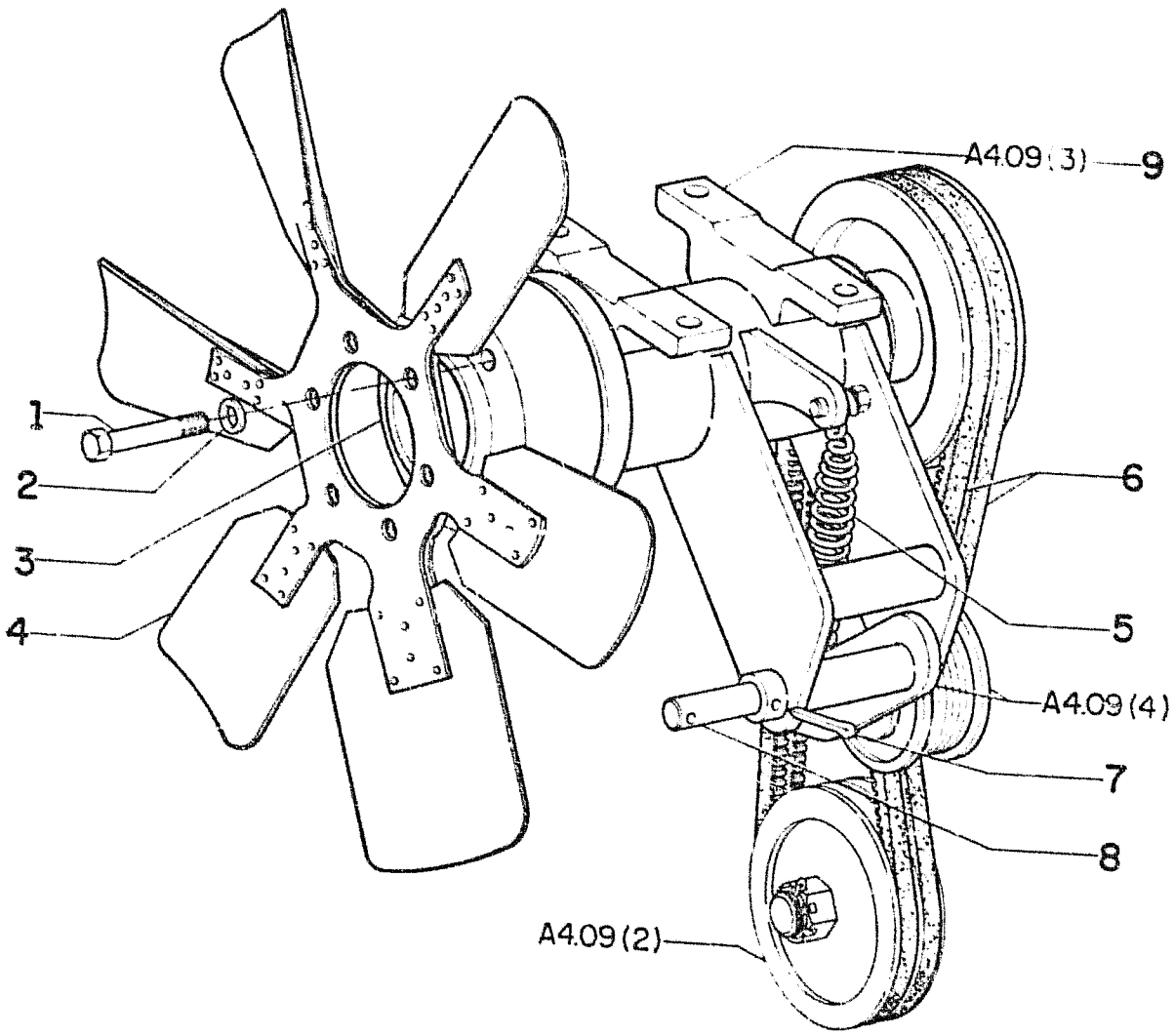

ITEM	PART NO.	QTY	COD	DESCRIPTION	DESRICAO
1	70924842	6	040V	SCREW	PARAFUSO
2	70929156	6	131K	LOCKWASHER	ARRUELA
3	75238375	1	075D	SPACER	ESPACADOR
4	73126156	1	030V	FAN ASSY	CONJ. VENTILAD.
5	76019517	1	100M	SPRING	MOLA
6	73159031	1	173C	BELT SET	JOGO CORREIA
7	70900808	1	270C	COTTER PIN	CONTRA PINO
8	73148534	1	016A	SHAFT	EIXO
9	73158791	1		FAN DRIVE ASSY	CONJ. PROPULSAR

FAN AND FAN DRIVE
VENTILADOR E POPULSOR

A409 | **1**

DESCRIPTION	SBGRP	TAV	GRID
1 - 2 SPEED CLUTCH FG75	B201/1	15	1L-9
3 - 4 SPEED & REVERSE CLUTCH FG75	B201/1	14	1L-8
5 - 6 SPEED & HIGH FWD CLUTCH FG75	B201/1	16	1L-10
ADAPTER, TRANS HOUSING FG75	B201/1	1	1I-11
AIR CLEANER	A222	1	1F-7
AIR FILTER	A223	2	1F-8
AIR PRE-CLEANER	A222	1	1F-7
ALTERNATOR	F200	1	2E-2
BELT	F200	1	2E-2
COMPONENTS	F603	1	2F-10
ARTICULATION CYLINDER	D101	7	1P-2
CYLINDER	E332	6	2D-13
JOINT (BOTTOM)	D101	5	1O-16
JOINT (TOP)	D101	6	1O-17
SWITCH	F401	19	2F-7
VALVE	E331	2	2C-14
BACK UP ALARM FG70	[illegible]01	8	2E-8
BACK UP ALARM FG75	F401/1	8	2E-9
BATTERIES FG70	F401	11	2E-12
BATTERIES FG70 FG75	F401	7	2E-6
BATTERIES FG75	F401	14	2E-16
CABLES FG70	F401	11	2E-12
CABLES FG70 FG75	F401	7	2E-6
CABLES FG75	F401	14	2E-16
BATTERY BOX	L130	1	2G-17
BELT, ALTERNATOR	F200	1	2E-2
BELTS, FAN	A409	1	1G-17
BLADE LIFT VALVE	E331	5	2C-17
BRAKE CALIPER	C118	1	1O-6
DISC	D316	1	1P-14
FLUID HIGH PRESSURE LINES LT.	C101	4	1N-16
FLUID HIGH PRESSURE LINES RT.	C101	3	1N-15
FLUID RESERVOIR	C101	2	1N-14
FLUID RESERVOIR COMPONENTS	C108	1	1O-3
MASTER CYINDER	C108	2	1O-4
MASTER CYLINDER LINES	C101	5	1N-17
PEDAL	C101	1	1N-13
POWER BOOSTER	C108	3	1O-5
PUMP COMPONENTS	D213	1	1P-13
CAB	L103	1	2F-15
DOOR	L104	2	2G-2
FAN ASSEMBLY	L104	9	2G-10
FANS	L104	8	2G-9
FLOOR MAT	L104	1	2F-16
HEATER FITTINGS	L104	11	2G-12
HEATER	L104	10	2G-11
LIGHTING	L104	5	2G-6
ROOF LINER	L104	4	2G-5

DESCRIPTION	SBGRP	TAV	GRID
CAB SEALS	L104	3	2G-4
WIRING	L104	7	2G-8
CABLES ELECTRICAL FG70	F401	10	2E-11
CABLES ELECTRICAL FG75	F401	15	2F-2
CANOPY	L104/1	1	2G-13
CANOPY LINER	L104/1	2	2G-14
CIRCLE	E310	2	2B-15
SHIFT CYLINDER	E332	5	2D-11
SHIFT VALVE	E331	3	2C-15
TURN GEAR BOX COMPONENTS	E310	4	2B-16
TURN GEAR BOX	E310	2	2B-15
TURN MOTOR COMPONENTS	E310	5	2C-2
TURN MOTOR	E310	2	2B-15
CLUTCH, 3 - 4 SPEED & REVERSE FG75	B201/1	14	1L-8
HIGH SPEED FG70	B201	9	1H-17
LOW SPEED FG70	B201	8	1H-16
REVERSE & 3 - 4 SPEED FG75	B201/1	14	1L-3
SECOND SPEED FG70	B201	7	1H-15
THIRD SPEED FG70	B201	6	1H-14
5 - 6 SPEED & HIGH FWD FG75	B201/1	16	1L-10
FORWARDFG70	B201	7	1H-15
HIGH FWD & 5 - 6 SPEED FG75	B201/1	16	1L-10
LOW FORWARD FG75	B201/1	12	1L-6
REVERSE FG70	B201	6	1H-14
CONTROL VALVE TRANSMISSION FG70	B201	18	1I-10
CONVERTER FG70	B201	3	1H-11
COMPONENTS FG75	B201/1	7	1I-17
FLEX PLATES FG75	B201/1	6	1I-16
GEAR FG70	B201	4	1H-12
GEAR FG75	B201/1	9	1L-3
GEAR FG75	B201/1	10	1L-4
GEAR FG75	B201/1	11	1L-5
HOUSING FG70	B201	2	1H-10
HOUSING FG75	B201/1	3	1I-13
SHAFTS FG75	B201/1	5	1I-15
COOLANT PUMP	A403	1	1G-16
FILTER	A402	1	1G-15
CYLINDER ARTICULATION	E332	8	2D-13
CIRCLE SHIFT	E332	5	2D-11
MOLDBOARD LIFT	E332	6	2D-12
MOLDBOARD PITCH	E332	2	2D-8
MOLDBOARD SIDE SHIFT	E332	3	2D-9
RIPPER	E332/1	2	2D-15
SADDLE LOCK PIN	E332	4	2D-10
SCARIFIER	E332/1	1	2D-14
STEERING	D212	1	1P-12
WHEEL LEAN	E332	1	2D-7
ARTICULATION	D101	7	1P-2
DECALS (ARTICULATED)	L125	2	2G-16
DECALS (RIGID)	L125	1	2G-15
DIFFERENTIAL ASSEMBLY	B403	4	1N-10

DESCRIPTION	SBGRP	TAV	GRID
DIFFERENTIAL COMPONENTS	B403	5	1N-11
DRIVE SHAFT	B301	1	1M-15
DRIVE SHAFT COMPONENTS	B316	1	1M-16
ELECTRICAL CABLE SWITCH PANEL	F401	2	2E-4
CABLES BATT. FG70 FG75	F401	7	2E-6
CABLES BATTERIES FG70	F401	11	2E-12
CABLES BATTERIES FG75	F401	14	2E-16
CABLES FG70	F401	10	2E-11
CABLES FG75	F401	15	2F-2
FUSES	F401	3	2E-5
SWITCH PANEL	F401	1	2E-3
SWITCH PANEL	F401	1	2E-3
ELECTRONIC DATA MONITOR	F401	12	2E-14
ELEMENT IMPLEMENT OIL	E328	1	2C-10
TRANS. OIL FG70	B201	11	1I-3
TRANS. OIL FG75	B217	1	1M-14
AIR	A223	2	1F-8
ENGINE OIL	A303	1	1G-12
FUEL	A226	1	1F-12
END CAP VALVE	E331	7	2D-3
END CAP VALVE	E331	9	2D-4
ENGINE	A000	1	1E-2
BLOCK	A101	1	1E-5
BLOCK PLUGS	A101	2	1E-6
CAMSHAFT	A107	1	1E-16
CAMSHAFT DRIVE	A106	1	1E-15
CONNECTING RODS	A105	1	1E-14
COOLANT THERMOSTAT	A402	1	1G-15
CRANKSHAFT	A103	1	1E-11
CYLINDER SLEEVES	A105	1	1E-14
DAMPER	A104	1	1E-13
EXHAUST MANIFOLD	A254	1	1G-7
EXHAUST VALVE	A107	1	1E-16
FLYWHEEL	A103	1	1E-11
FLYWHEEL HOUSING	A102	2	1E-10
FRONT COVER	A102	1	1E-9
FUEL PUMP DRIVE	A106	1	1E-15
HEAD	A101	3	1E-7
INTAKE VALVE	A107	1	1E-16
LIFTING BRACKET	A101	4	1E-8
MAIN BEARING	A103	2	1F-12
MAIN BEARING CAPS	A101	1	1E-5
MOUNTS FG70	A002	1	1E-3
MOUNTS FG75	A002/1	1	1E-4
OIL DIPSTICK	A301	2	1G-10
OIL FILL PLUG	A301	2	1G-10
OIL FILTER	A303	1	1G-12
OIL HEAT EXCHANGER	A303	1	1G-12
OIL PAN	A102	1	1E-9
OIL PUMP	A302	1	1G-11

FG70 FG70A

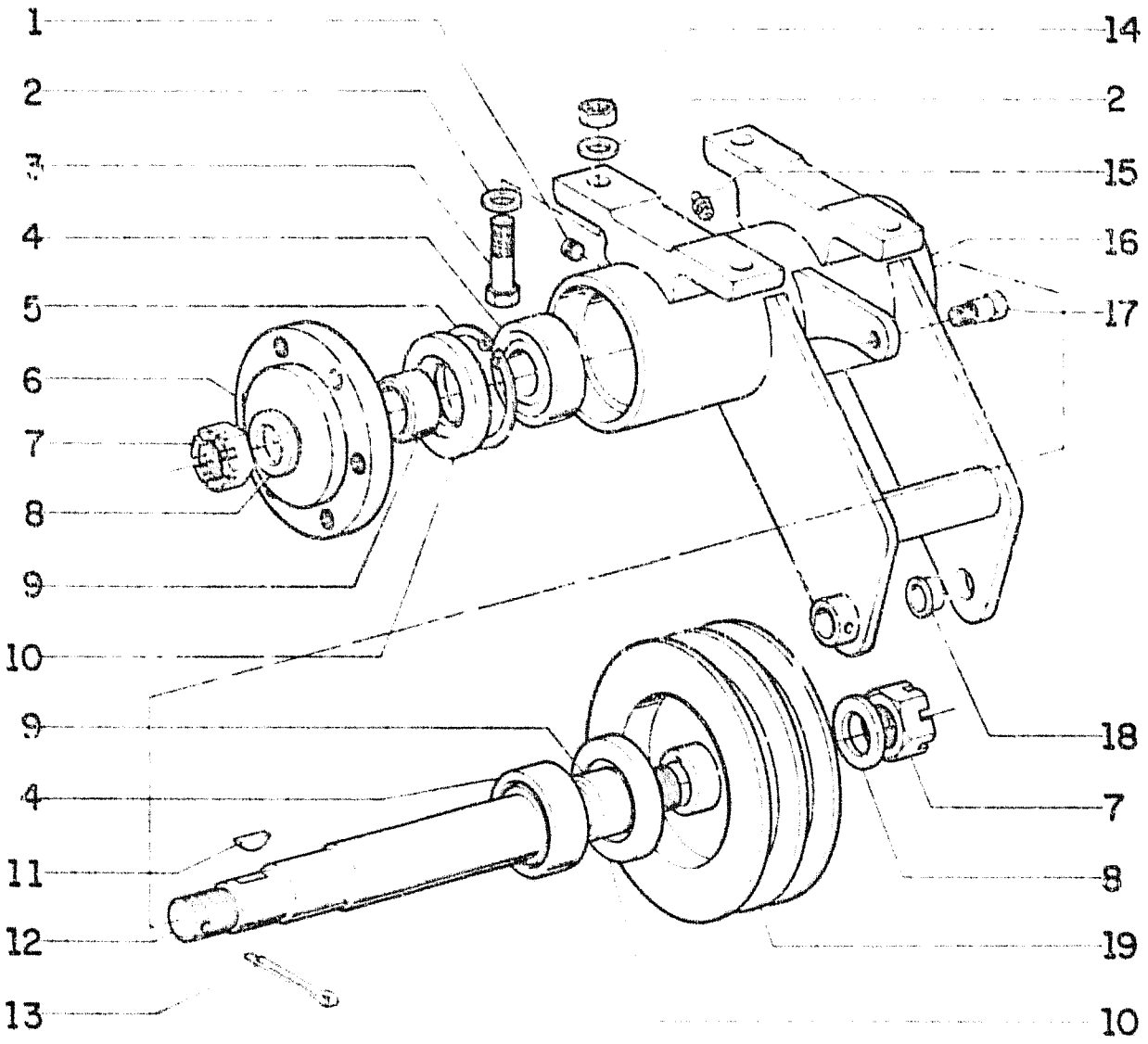

ITEM	PART NO.	QTY	COD	DESCRIPTION	DESRICAO
1	70910231	1	50T	PLUG	TAMPAO
2	70677008	8	131R	LOCKWASHER	ARRUELA
3	70921556	4	040V	SCREW	PARAFUSO
4	70694992	2	341C	BEARING	ROLAMENTO
5	70927709	1	187A	RETAINING RING	ANEL TRAVA
6	73148469	1	135M	HUB	CUBO
7	70911174	2	010D	NUT	PORIA
8	70929316	2	131R	WASHER	ARRUELA
9	73148466	2	030M	SLEEVE	LUVA
10	73148467	2	122G	SEAL	RETENTOR
11	70917409	2	060L	KEY	CHAVETA
12	73148465	1	016A	SHAFT	EIXO
13	70900806	2	270C	COTTER PIN	CONTRA PINO
14	70933037	4	010D	NUT	PORIA
15	70916619	1	060T	GREASE FITTING	PINO GRAXEIRO
16	73158790	1	300S	BRACKET	SUPPORTE
17	70602179	1	040V	SHOULDER BOLT	PARAFUSO
18	73117265	1	095B	BUSHING	BUCHA
19	73148471	1	230P	PULLEY	POLIA

FAN DRIVE ASSEMBLY 73158791
CONJUNTO PROPULSAR

A409	3

FG70 FG70A

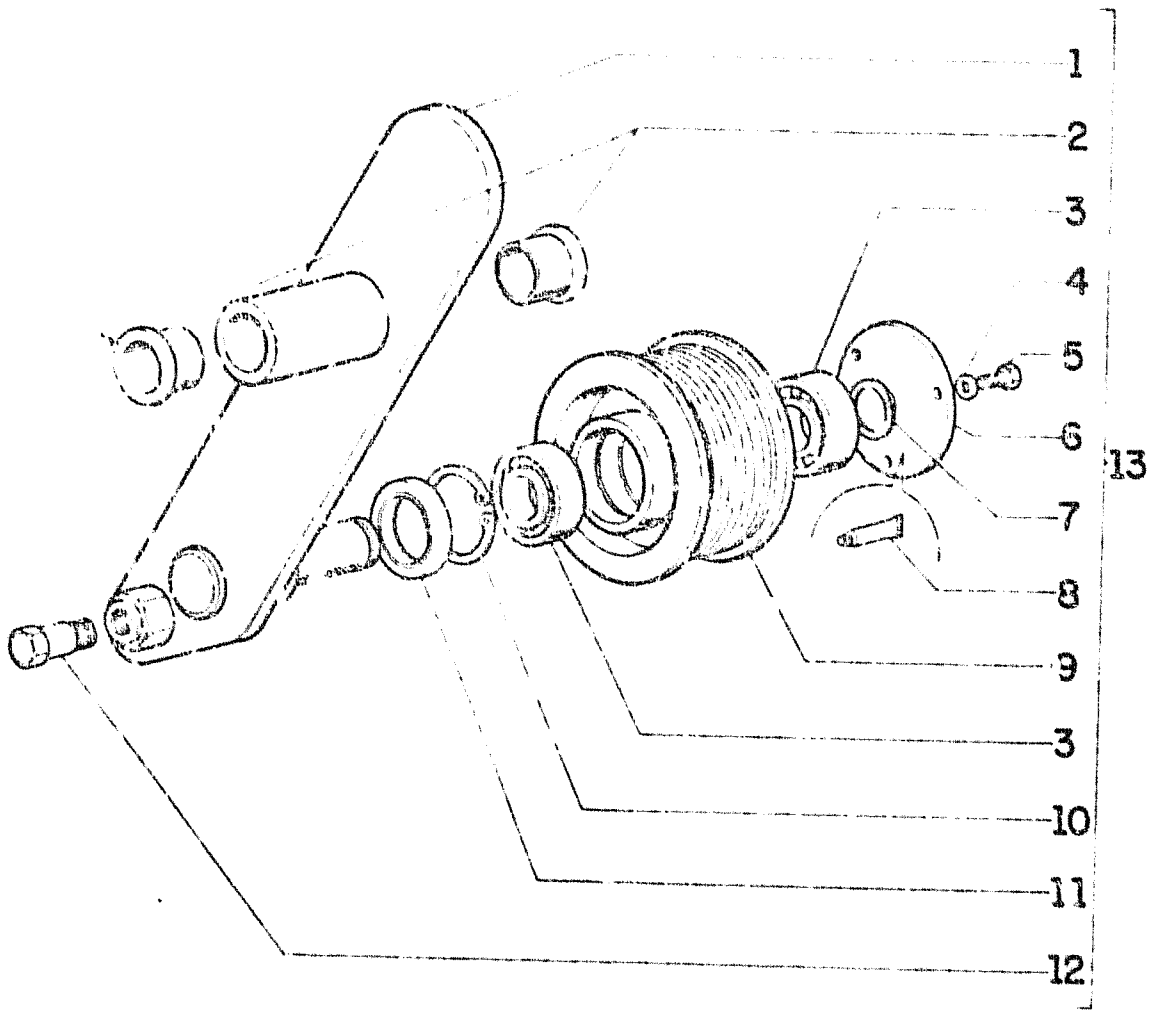

ITEM	PART NO.	QTY	COD	DESCRIPTION	DESRICAO
1	73158794	1	300S	BRACKET	SUPORTE
2	73117265	2	341C	BEARING	ROLAMENTO
3	73148546	2	341C	BEARING	ROLAMENTO
4	70677004	3	131R	WASHER	ARRUELA
5	70928182	3	040V	SCREW	PARAFUSO
6	73148458	1	265C	COVER	TAMPA
7	70927733	1	187A	RETAINING RING	ANEL TRAVA
8	70930984		141M	SEALANT	VEDANTE
9	73158793	1	230P	PULLEY	POLIA
10	70927699	1	187A	RETAINING RING	ANEL TRAVA
11	73148457	1	122G	SEAL	RETENTOR
12	70602179	1	040V	SCREW	PARAFUSO
13	73158790	1	087T	IDLER ASSY	CONJ. ESTICADOR

IDLER ASSEMBLY
CONJUNTO DO ESTICADOR

A409 | 4

FIATALLIS

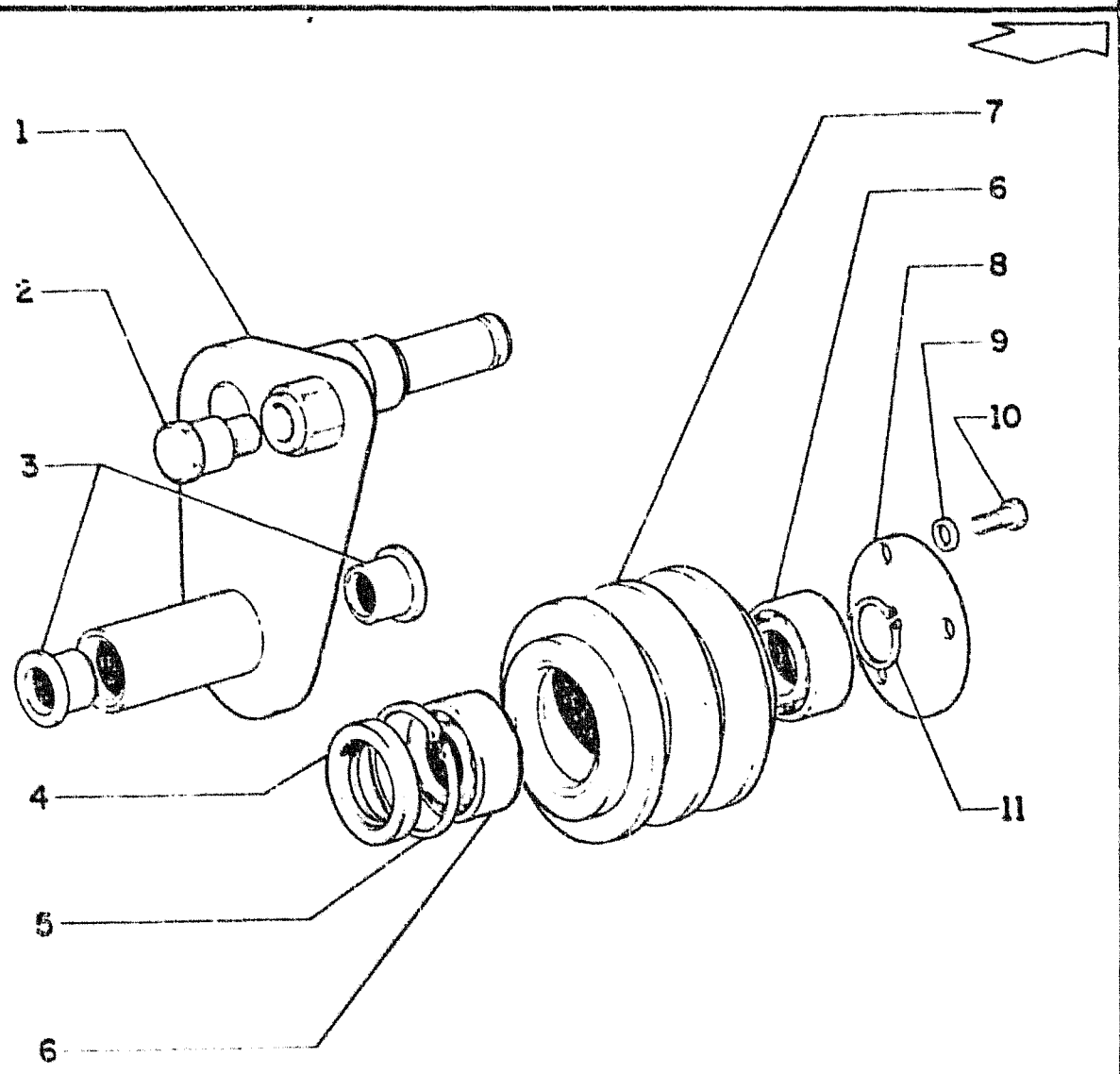

FIATALLIS FG 75R 75A A4.09/1 **QUADRO** 3 **PAG.** 1

ITEM	PEÇA Nº	QTDE	COD.	DESCRIPTION	DESCRIÇÃO
1	75237702	1	300S	SUPPORT	SUPORTE
2	70602179	1	040V	SCREW	PARAFUSO
3	73117265	2	095B	BUSHING	BUCHA
4	73148457	1	122G	SEAL	RETENTOR
5	70927699	1	187A	SNAP RING	ANEL ELÁSTICO
6	73148456	2	341C	BEARING	ROLAMENTO
7	73148455	1	230P	PULLEY	POLIA
8	73148458	1	265C	COVER	TAMPA
9	70677004	3	131R	WASHER	ARRUELA
10	70928182	3	040V	SCREW	PARAFUSO
11	70927733	1	187A	SNAP RING	ANEL ELÁSTICO

IDLER ASSEMBLY
CONJUNTO DO ESTICADOR

A4.09/1 | 3

FIATALLIS

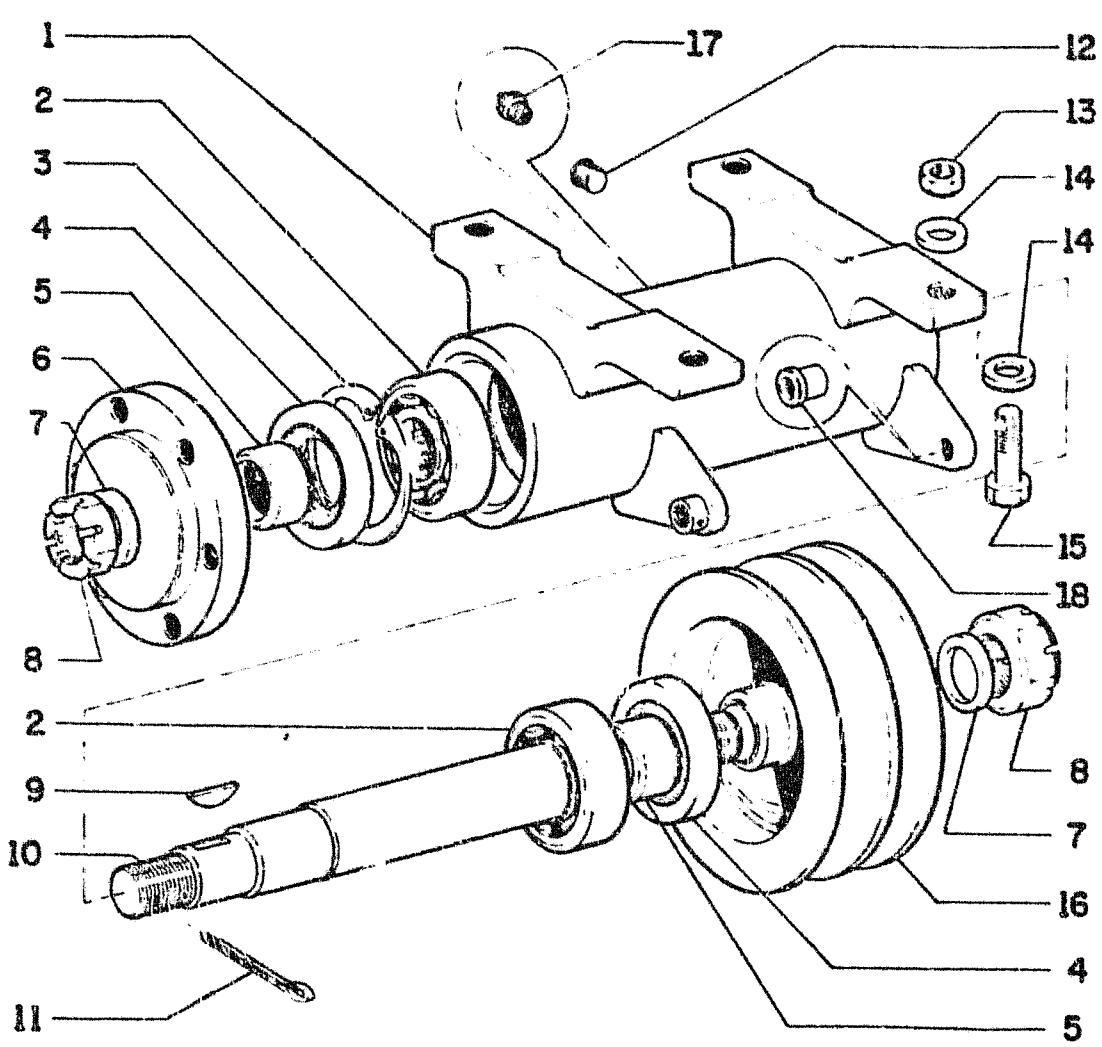

FIATALLIS FG 75R 75A A4.09/1 **QUADRO** 4 **PAG.** 1

ITEM	PEÇA Nº	QTDE	COD.	DESCRIPTION	DESCRIÇÃO
1	75237695	1	300S	SUPPORT	SUPORTE
2	70694922	2	341C	BEARING	ROLAMENTO
3	70927709	1	187A	SNAP RING	ANEL ELÁSTICO
4	73148467	2	122G	SEAL	RETENTOR
5	73148466	2	030M	SLEEVE	LUVA
6	73148469	1	135N	HUB	CUBO
7	70929316	2	131R	WASHER	ARRUELA
8	70911174	2	010D	NUT	PORCA
9	70917409	2	060L	KEY	CHAVETA
10	75237697	1	016A	SHAFT	EIXO
11	70900808	2	270C	COTTER PIN	CONTRA PINO
12	70910231	1	050T	PLUG	BUJÃO
13	70933037	4	010D	NUT	PORCA
14	70677008	8	131R	WASHER	ARRUELA
15	70921556	4	040V	SCREW	PARAFUSO
16	73148471	1	230P	PULLEY	POLIA
17	70916619	1	060I	GREASE FITTING	PINO GRAXEIRO
18	73117265	1	095B	BUSHING	BUCHA

FAN DRIVE ASSEMBLY
CONJUNTO PROPULSOR

A4.09/1 | 4

FIATALLIS

FIATALLIS FG 70R 70A B2.00 **QUADRO** 1 **PAG.** 1

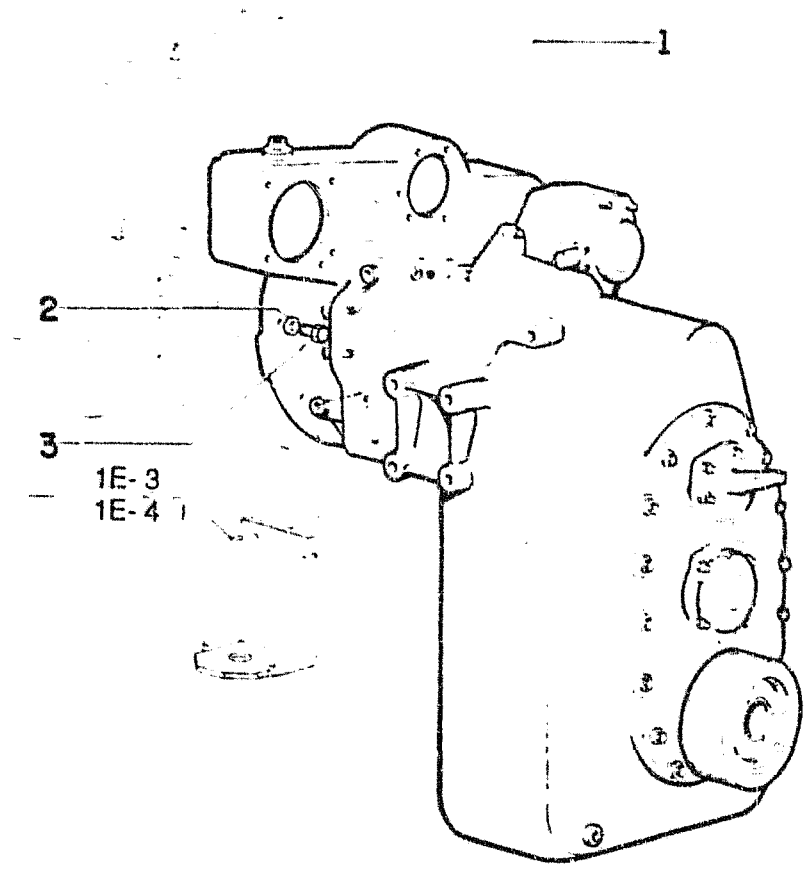

ITEM	PEÇA Nº	QTDE	COD.	DESCRIPTION	DESCRIÇÃO
1	73158800	1	030C	TRANSMISSION	CÂMBIO VELOC.
2	70930370	12	131R	WASHER	ARRUELA
3	11106631	12	040V	SCREW	PARAFUSO

TRANSMISSION
TRANSMISSÃO

B2.00 | 1

FIATALLIS

FIATALLIS FG 75R 75A B2.00/1 **QUADRO** 1 **PAG.** 1

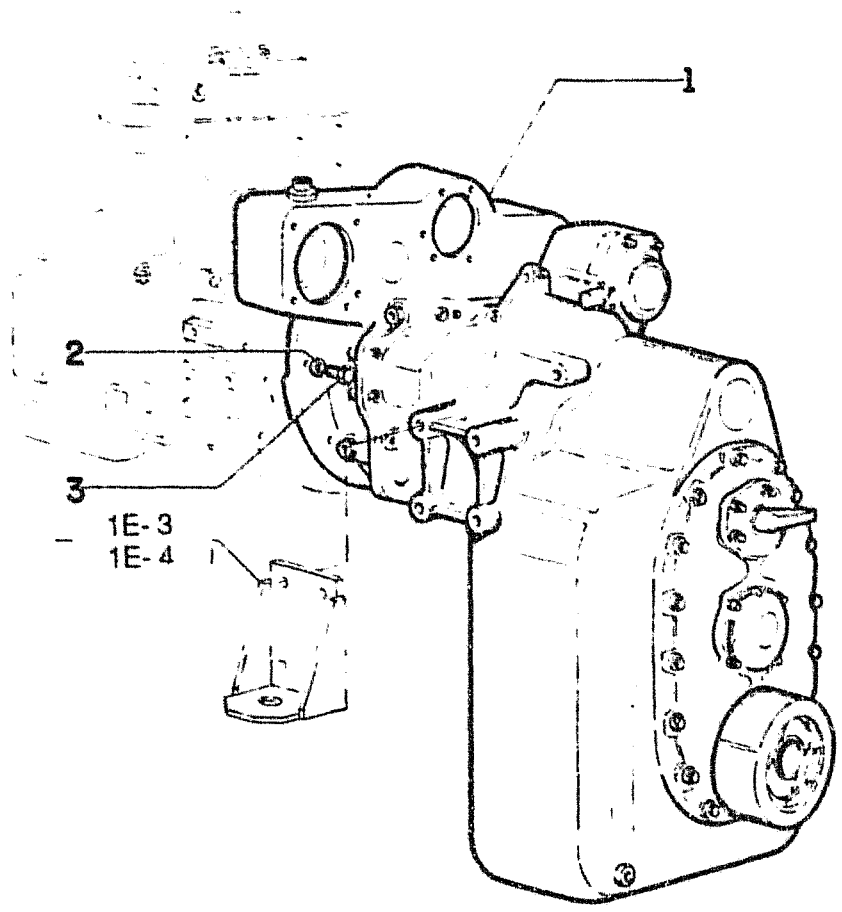

ITEM	PEÇA Nº	QTDE	COD.	DESCRIPTION	DESCRIÇÃO
1	73155025	1	030C	TRANSMISSION	CÂMBIO VELOC.
2	70930370	12	131R	WASHER	ARRUELA
3	11106631	12	040V	SCREW	PARAFUSO

FIATALLIS

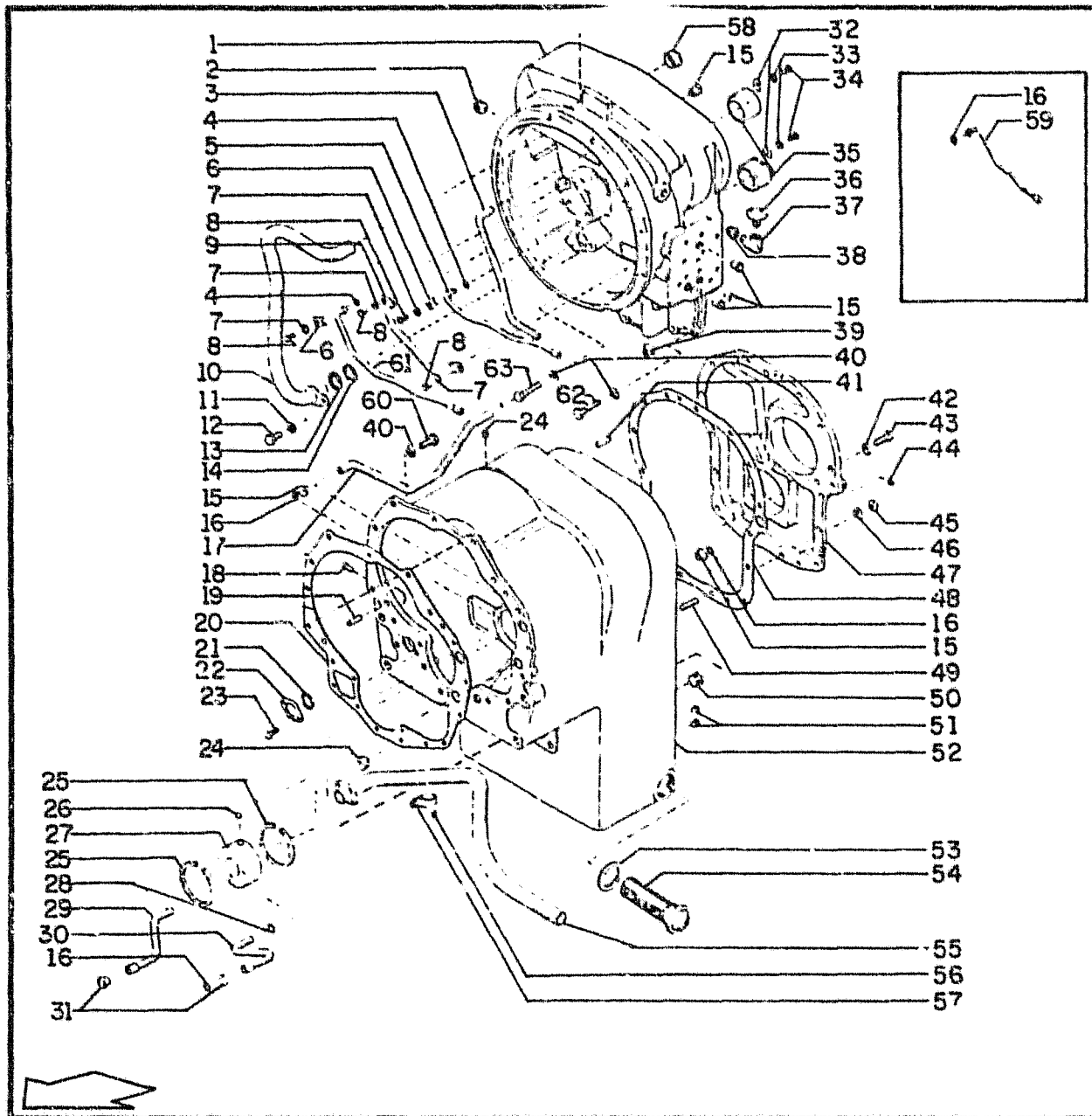

FIATALLIS FG 70R 70A B2.01 **QUADRO** 1 **PAG.** 1

ITEM	PEÇA Nº	QTDE	COD.	DESCRIPTION	DESCRIÇÃO
1	75285833	1	035S	CASE	CARCAÇA
2	75206470	1	050T	PLUG	BUJÃO
3	71004828	1	193T	TUBE	TUBO
4	75206127	1	055A	SEAL RING	ANEL DE VEDAÇ
5	71004830	1	193T	TUBE	TUBO
6	71004831	1	031F	CLAMP	ABRAÇADEIRA
7	74052870	1	170R	LOCKWASHER	ARRUELA PRESS
8	70905561	1	040V	SCREW	PARAFUSO
9	71004832	1	193T	TUBE	TUBO
10	71004816	1	193T	TUBE	TUBO
11	70910287	1	170R	LOCKWASHER	ARRUELA PRESS
12	75285752	1	040V	SCREW	PARAFUSO
13	73066766	1	055A	SEAL RING	ANEL DE VEDAÇ
14	75285581	1	055A	SEAL RING	ANEL DE VEDAÇ
15	71004820	1	030M	SLEEVE	LUVA
16	70929217	1	045A	RING	ANEL
17	71004839	1	193T	TUBE	TUBO
18	71004836	1	055R	RIVET	REBITE
19	71004838	1	080P	PIN	PINO
20	71004837	1	120G	GASKET	JUNTA
21	70926788	1	158G	O'RING	O'RING
22	71004855	1	120G	GASKET	JUNTA
23	70734538	2	040V	SCREW	PARAFUSO
24	70912768	2	050T	PLUG	BUJÃO
25	70673903	1	055A	SEAL RING	ANEL DE VEDAÇ
26	70673856	1	140S	BALL	ESFERA
27	73131598	1	083D	CONTROL VALVE	DISTRIBUIDOR
28	70935698	1	055A	SEAL RING	ANEL DE VEDAÇ
29	70673967	1	193T	TUBE	TUBO
30	70673966	1	193T	TUBE	TUBO
31	71004820	1	030M	SLEEVE	LUVA
32	71004822	2	050N	PAWL	TRAVA
33	74052780	2	170R	LOCKWASHER	ARRUELA PRESS
34	70905561	2	040V	SCREW	PARAFUSO

TRANSMISSION
TRANSMISSÃO

B2.01 | 1

FIATALLIS

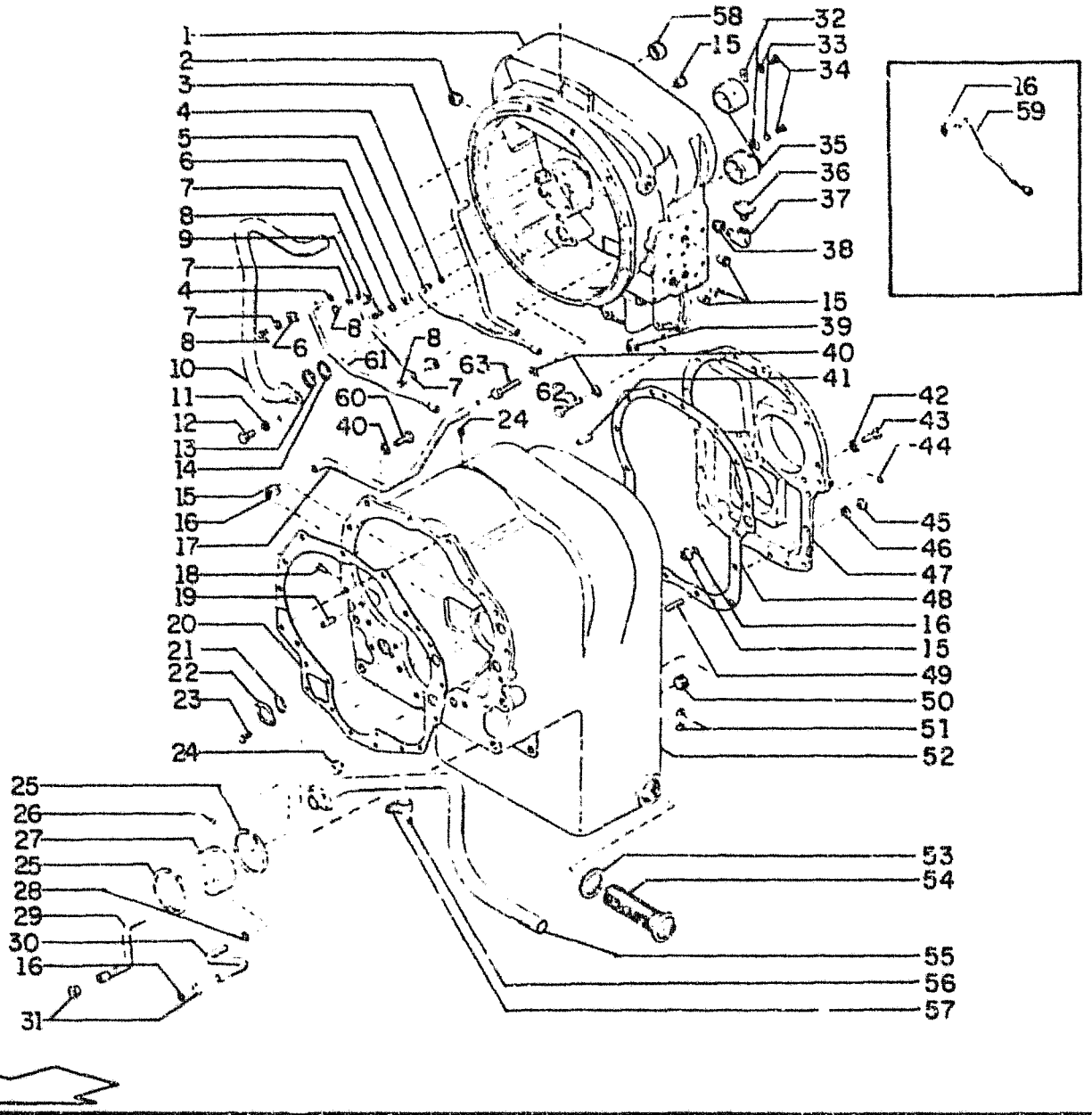

FIATALLIS FG 70R 70A B2.01 **QUADRO** 1 **PAG.** 2

ITEM	PEÇA Nº	QTDE	COD.	DESCRIPTION	DESCRIÇÃO
35	73130991	2	030M	SLEEVE	LUVA
36	75206094	1	145S	BREATHER	RESPIRO
37	75206322	1	085G	ELBOW	COTOVELO
38	75205318	1	095B	BUSHING	BUCHA
39	75206105	1	050T	PLUG	BUJÃO
40	70914678	4	170R	LOCKWASHER	ARRUELA PRESSÃO
41	74043971	2	200S	PIN	PINO
42	75206320	21	170R	LOCKWASHER	ARRUELA PRESSÃO
43	70921569	21	040V	SCREW	PARAFUSO
44	73131677	1	050T	PLUG	BUJÃO
45	75285834	2	010D	NUT	PORCA
46	75206320	2	170R	LOCKWASHER	ARRUELA PRESSÃO
47	75204939	1	265C	COVER	TAMPA
48	75204938	1	120G	GASKET	JUNTA
49	70800385	2	210P	STUD	PRISIONEIRO
50	70673889	1	050T	PLUG	BUJÃO
51	70919840	2	050T	PLUG	BUJÃO
52	70673965	1	035S	CASE	CARCAÇA
53	71004848	1	120G	GASKET	JUNTA
54	71004849	1	065F	FILTER	FILTRO
55	70734535	1	193T	TUBE	TUBO
56	70911114	1	131R	WASHER	ARRUELA
57	71004852	1	089G	CLIP	GRAMPO
58	71004819	1	030M	SLEEVE	LUVA
59	75285013	1	193T	TUBE	TUBO
60	70916197	10	040V	SCREW	PARAFUSO
61	71004833	1	193T	TUBE	TUBO
62	70927583	4	040V	SCREW	PARAFUSO
63	70928747	4	040V	SCREW	PARAFUSO

TRANSMISSION
TRANSMISSÃO

B2.01 | 1

FIATALLIS

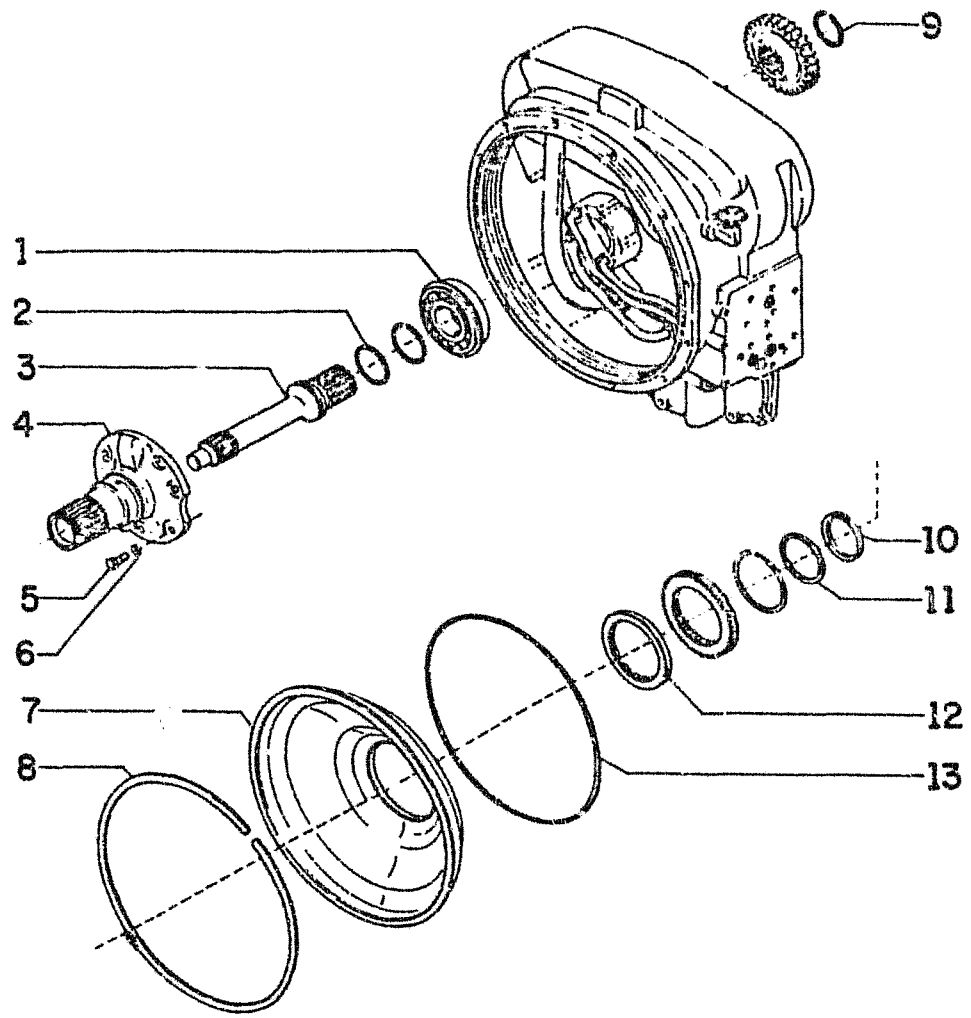

FIATALLIS FG 70R 70A B2.01 **QUADRO** 2 **PAG.** 1

ITEM	PEÇA Nº	QTDE	COD.	DESCRIPTION	DESCRIÇÃO
1	73132784	1	341C	BEARING	ROLAMENTO
2	71004778	1	158G	O'RING	O'RING
3	71004773	1	016A	SHAFT	EIXO
4	73074995	1	300S	SUPPORT	SUPORTE
5	70920582	6	040V	SCREW	PARAFUSO
6	70906961	6	170R	LOCKWASHER	ARRUELA PRESSÃO
7	71004788	1	020D	DEFLECTOR	DEFLETOR
8	71004787	1	055A	SEAL RING	ANEL DE VEDAÇÃO
9	71004775	1	055A	SEAL RING	ANEL DE VEDAÇÃO
10	75206059	1	100M	SPRING	MOLA
11	75206058	1	055A	SEAL RING	ANEL DE VEDAÇÃO
12	73118064	1	055A	SEAL RING	ANEL DE VEDAÇÃO
13	71004789	1	158G	O'RING	O'RING

TRANSMISSION
TRANSMISSÃO

B2.01 | 2

FIATALLIS

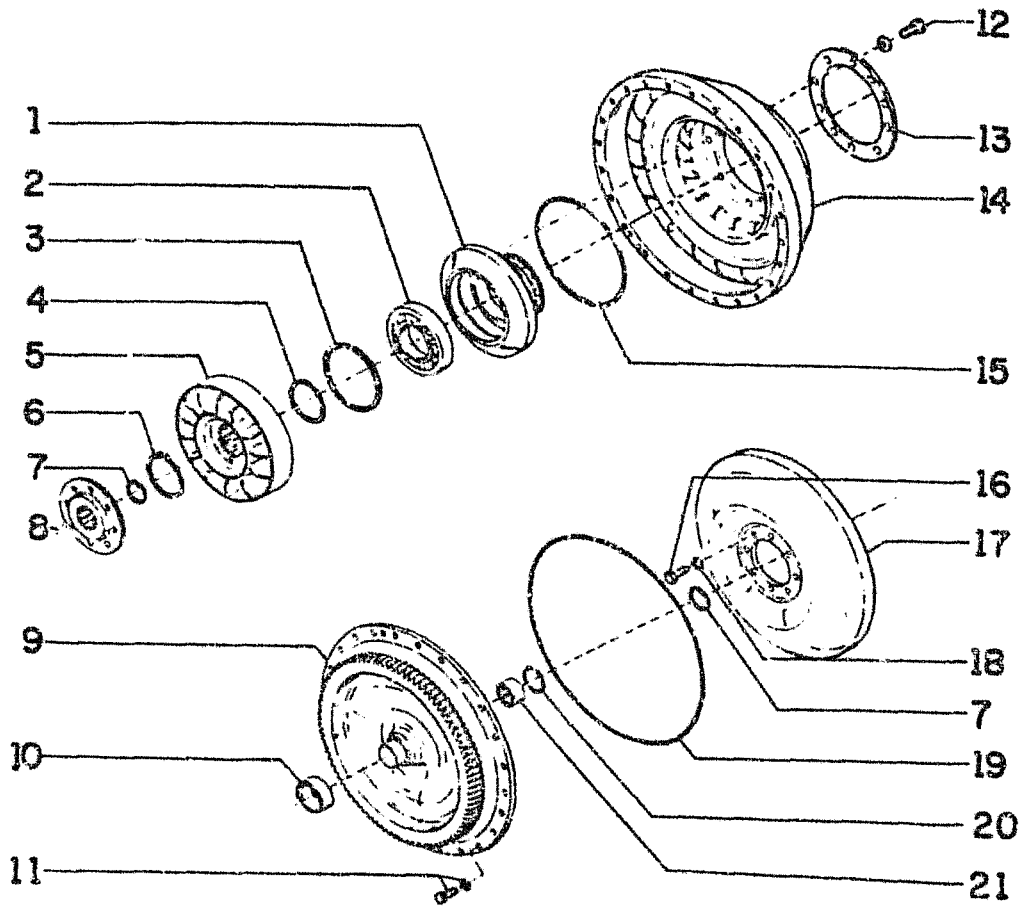

FIATALLIS FG 70R 70A B2.01 **QUADRO** 3 **PAG.** 1

ITEM	PEÇA Nº	QTDE	COD.	DESCRIPTION	DESCRIÇÃO
1	73131701	1	135M	HUB	CUBO
2	73132933	1	341C	BEARING	ROLAMENTO
3	75285006	1	187A	SNAP RING	ANEL ELÁSTICO
4	71004810	1	055A	SEAL RING	ANEL DE VEDAÇÃO
5	73131704	1	271S	STATOR	ESTATOR
6	70928713	1	187A	SNAP RING	ANEL ELÁSTICO
7	70926574	1	187A	SNAP RING	ANEL ELÁSTICO
8	71004807	1	135M	HUB	CUBO
9	73131698	1	265C	COVER	TAMPA
10	71004799	1	030M	SLEEVE	LUVA
11	71008468	24	040V	SCREW	PARAFUSO
12	73131739	12	040V	SCREW	PARAFUSO
13	73131740	1	045A	RING	ANEL
14	73131699	1	060G	IMPELLER	ROTOR
15	70935700	1	158G	O'RING	O'RING
16	71004795	8	040V	SCREW	PARAFUSO
17	73131702	1	209T	TURBINE	TURBINA
18	70913544	8	055A	SEAL RING	ANEL DE VEDAÇÃO
19	71005536	1	055A	SEAL RING	ANEL DE VEDAÇÃO
20	70927575	1	187A	SNAP RING	ANEL ELÁSTICO
21	71004802	1	341C	BEARING	ROLAMENTO

FIATALLIS

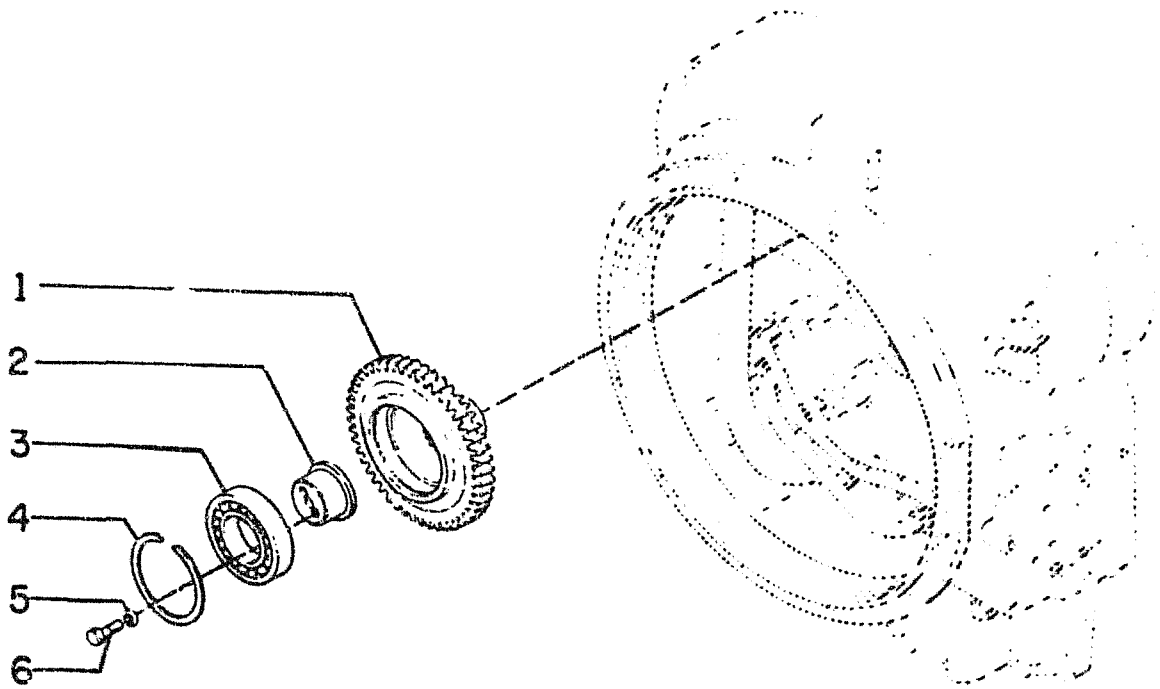

FIATALLIS FG 70R 70A B2.01 **QUADRO** 4 **PAG.** 1

ITEM	PEÇA Nº	QTDE	COD.	DESCRIPTION	DESCRIÇÃO
1	71004756	3	050I	GEAR	ENGRENAGEM
2	71004755	3	300S	SUPPORT	SUPORTE
3	75206310	3	341C	BEARING	ROLAMENTO
4	71004753	3	187A	SNAP RING	ANEL ELÁSTICO
5	70914678	6	170R	LOCKWASHER	ARRUELA PRESSÃO
6	70916395	6	040V	SCREW	PARAFUSO

FIATALLIS

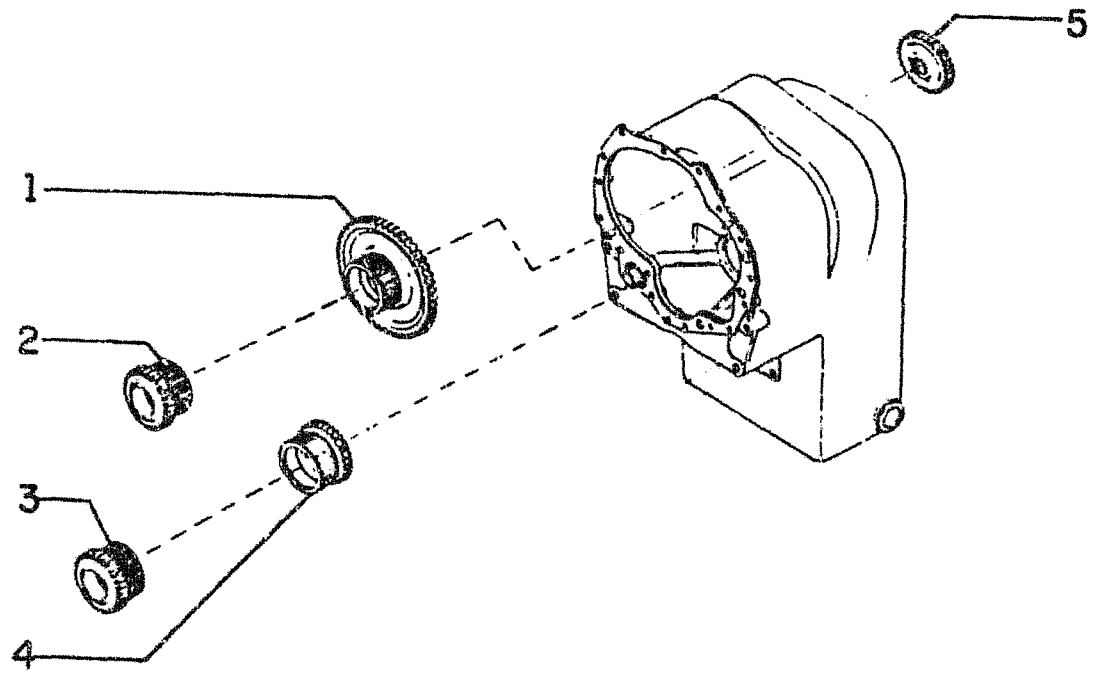

FIATALLIS FG 70R 70A B2.01 **QUADRO** 5 **PAG.** 1

ITEM	PEÇA Nº	QTDE	COD.	DESCRIPTION	DESCRIÇÃO
1	70673958	1	050I	GEAR	ENGRENAGEM
2	71008991	1	050I	GEAR	ENGRENAGEM
3	75285835	1	050I	GEAR	ENGRENAGEM
4	70673956	1	050I	GEAR	ENGRENAGEM
5	75205971	1	050I	GEAR	ENGRENAGEM

FIATALLIS

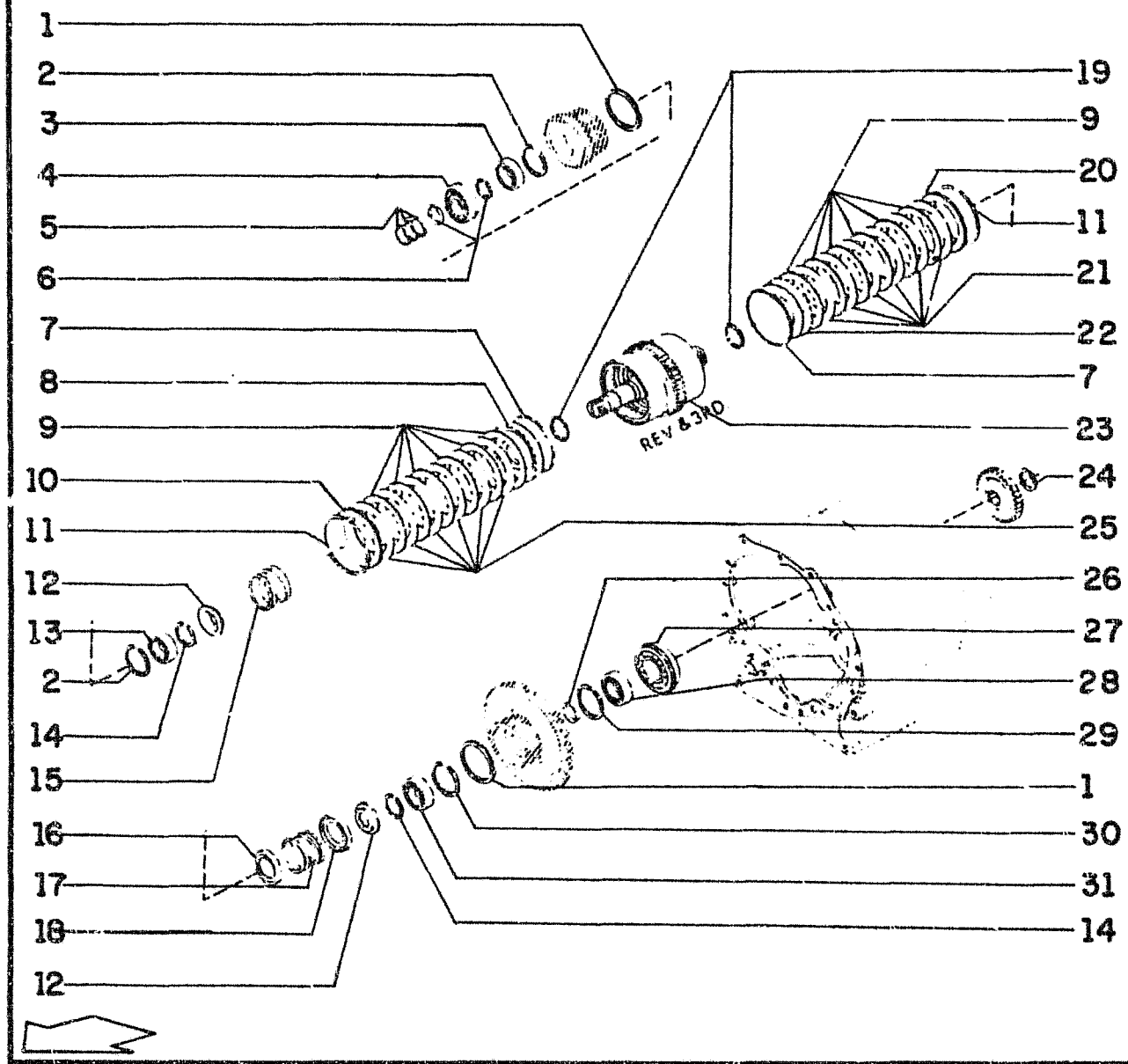

FIATALLIS FG 70R 70A B2.01 **QUADRO** 6 **PAG.** 1

ITEM	PEÇA Nº	QTDE	COD.	DESCRIPTION	DESCRIÇÃO
1	71004932	2	055A	SEAL RING	ANEL DE VEDAÇ.
2	71004930	2	187A	SNAP RING	ANEL ELÁSTICO
3	71008990	1	341C	BEARING	ROLAMENTO
4	70042982	1	341C	BEARING	ROLAMENTO
5	71004926	3	045A	RING	ANEL
6	71004927	2	045A	RING	ANEL
7	71004872	2	122G	SEAL	RETENTOR
8	75285836	1	130P	PLUNGER	PISTAO
9	71004870	12	060D	DISC	DISCO
10	73131680	1	060D	DISC	DISCO
11	71004867	1	187A	SNAP RING	ANEL ELÁSTICO
12	73131681	2	122G	SEAL	RETENTOR
13	28042480	1	341C	BEARING	ROLAMENTO
14	70926000	2	187A	SNAP RING	ANEL ELÁSTICO
15	73129165	7	100M	SPRING	MOLA
16	71004969	1	100C	RETAINER	ENCOSTO
17	71004935	1	100M	SPRING	MOLA
18	71004934	1	100C	RETAINER	ENCOSTO
19	71004873	2	122G	SEAL	RETENTOR
20	71004868	1	060D	DISC	DISCO
21	71005843	6	060D	DISC	DISCO
22	75285234	1	130P	PLUNGER	PISTAO
23	73131679	1	016A	SHAFT	EIXO
24	71004973	1	122G	SEAL	RETENTOR
25	73129164	6	060D	DISC	DISCO
26	71004939	1	075D	SPACER	ESPAÇADOR
27	71004958	1	341C	BEARING	ROLAMENTO
28	71008989	1	341C	BEARING	ROLAMENTO
29	71004937	1	187A	SNAP RING	ANEL ELÁSTICO
30	71004937	1	187A	SNAP RING	ANEL ELÁSTICO
31	28042490	1	341C	BEARING	ROLAMENTO

FIATALLIS

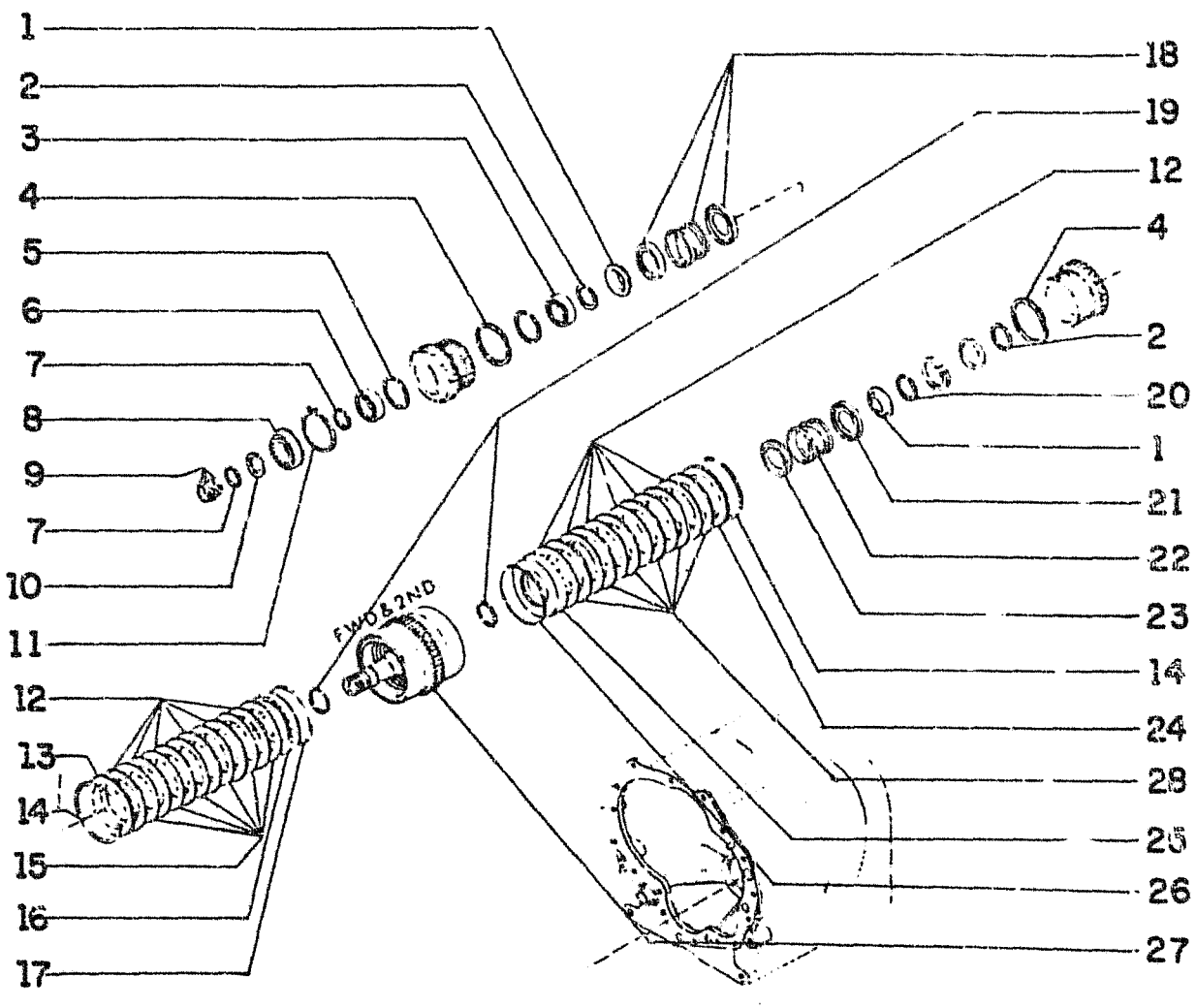

FIATALLIS FG 70R 70A B2.01 QUADRO 7 PAG. 1

ITEM	PEÇA Nº	QTDE	COD.	DESCRIPTION	DESCRIÇÃO
1	73131681	1	075D	SPACER	ESPAÇADOR
2	70926000	1	187A	SNAP RING	ANEL ELÁSTICO
3	75285838	1	341C	BEARING	ROLAMENTO
4	71004932	2	055A	SEAL RING	ANEL DE VEDAÇ
5	75205431	1	045A	RING	ANEL
6	75285014	1	341C	BEARING	ROLAMENTO
7	71004927	2	045A	RING	ANEL
8	71004962	1	341C	BEARING	ROLAMENTO
9	71004926	3	045A	RING	ANEL
10	75285837	1	075D	SPACER	ESPAÇADOR
11	71004961	1	045A	RING	ANEL
12	71004870	12	060D	DISC	DISCO
13	73131680	1	060D	DISC	DISCO
14	71004867	2	187A	SNAP RING	ANEL ELÁSTICO
15	73129164	6	060D	DISC	DISCO
16	75285839	1	130P	PLUNGER	PISTAO
17	71004873	1	122G	SEAL	RETENTOR
18	73129165	7	100M	SPRING	MOLA
19	71004873	2	122G	SEAL	RETENTOR
20	70926000	1	187A	SNAP RING	ANEL ELÁSTICO
21	71004934	1	100C	RETAINER	ENCOSTO
22	71004935	1	100M	SPRING	MOLA
23	71004969	1	100C	RETAINER	ENCOSTO
24	71004868	1	060D	DISC	DISCO
25	75285234	1	130P	PLUNGER	PISTAO
26	71004872	1	122G	SEAL	RETENTOR
27	73131682	1	A191	PROPELLER SHAFT	EIXO CARDAN
28	71005843	6	060D	DISC	DISCO

TRANSMISSION
TRANSMISSÃO

B2.01 | 7

FIATALLIS

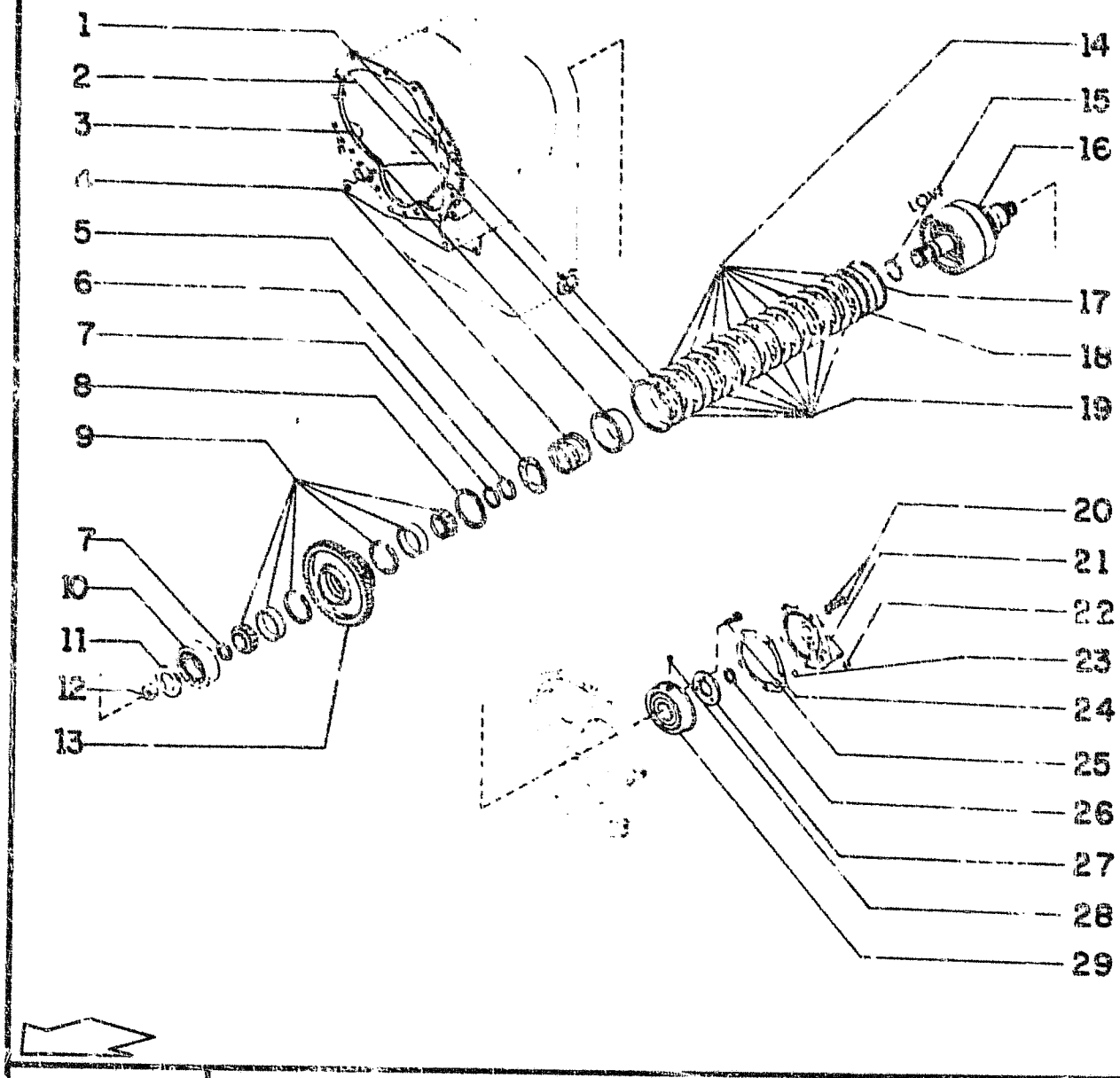

FIATALLIS FG 70R 70A B2.01 **QUADRO** 8 **PAG.** 1

ITEM	PEÇA Nº	QTDE	COD.	DESCRIPTION	DESCRIÇÃO
1	71004868	1	060D	DISC	DISCO
2	71004867	1	187A	SNAP RING	ANEL ELÁSTICO
3	75206536	1	100C	RETAINER	ENCOSTO
4	71004935	1	100M	SPRING	MOLA
5	75206537	1	122G	SEAL	RETENTOR
6	70926000	1	187A	SNAP RING	ANEL ELÁSTICO
7	71009057	1	187A	SNAP RING	ANEL ELÁSTICO
8	71004932	1	055A	SEAL RING	ANEL DE VEDAÇ
9	71009068	1	341C	BEARING	ROLAMENTO
10	71009064	1	341C	BEARING	ROLAMENTO
11	71009063	1	131R	WASHER	ARRUELA
12	71004963	1	341C	BEARING	ROLAMENTO
13	75205968	1	050I	GEAR	ENGRENAGEM
14	71004870	9	060D	DISC	DISCO
15	71004873	1	122G	SEAL	RETENTOR
16	75285645	1	016A	SHAFT	EIXO
17	71004872	1	122G	SEAL	RETENTOR
18	75285234	1	130P	PLUNGER	PISTAO
19	71004876	9	060D	DISC	DISCO
20	75206329	5	040V	SCREW	PARAFUSO
21	73107644	1	265C	COVER	TAMPA
22	73131677	1	050T	PLUG	BUJÃO
23	75206402	1	158G	O'RING	O'RING
24	71004979	1	120G	GASKET	JUNTA
25	75205317	3	040V	SCREW	PARAFUSO
26	73109875	1	045A	RING	ANEL
27	73130955	1	045A	RING	ANEL
28	71004983	1	140S	BALL	ESFERA
29	73155019	1	341C	BEARING	ROLAMENTO
30	73109872	1	122G	SEAL	RETENTOR

TRANSMISSION
TRANSMISSÃO

B2.01 | 8

FIATALLIS

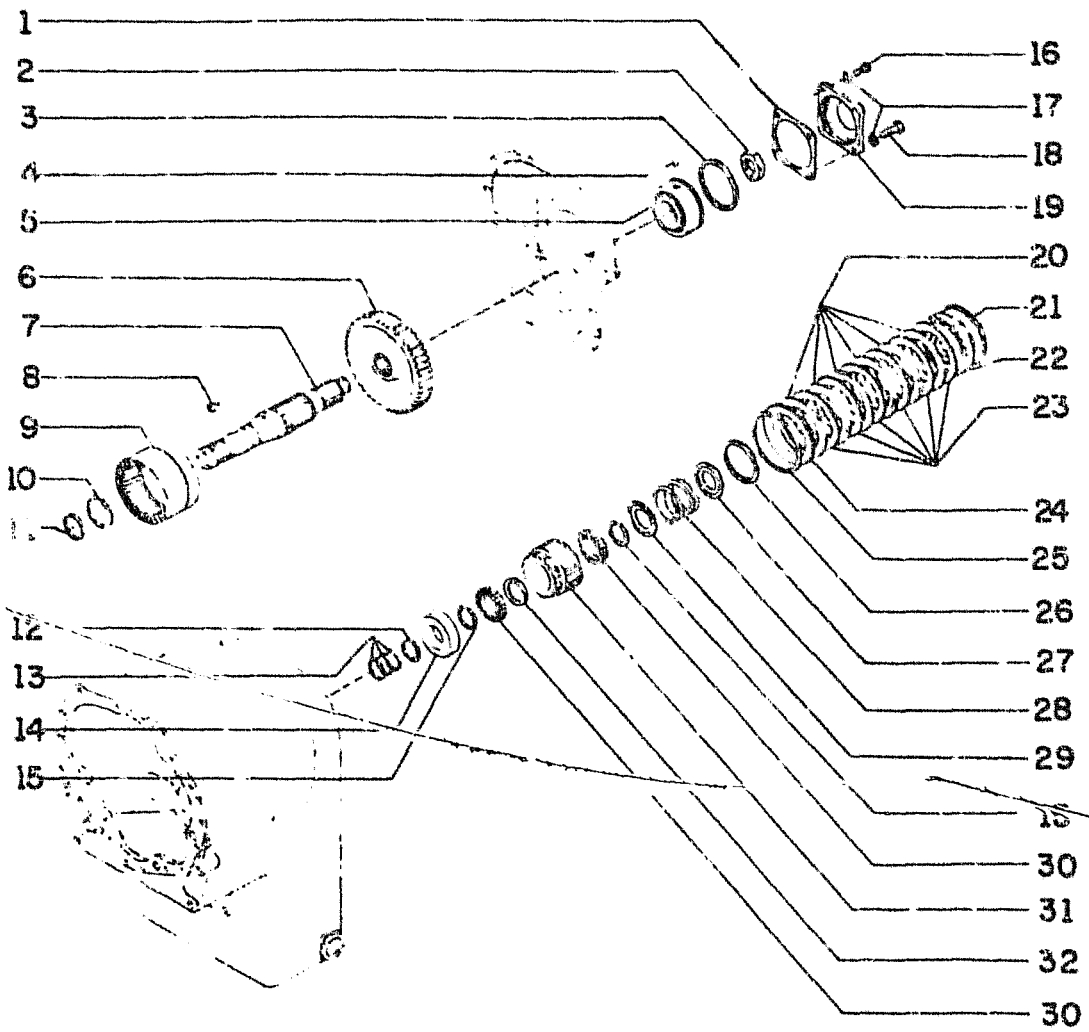

FIATALLIS FG 70R 70A B2.01 **QUADRO** 9 **PAG.** 1

ITEM	PEÇA Nº	QTDE	COD.	DESCRIPTION	DESCRIÇÃO
1	73130975	1	120G	GASKET	JUNTA
2	73130973	1	010D	NUT	PORCA
3	71004985	1	045A	RING	ANEL
4	71004983	1	140S	BALL	ESFERA
5	71004984	1	341C	BEARING	ROLAMENTO
6	73109856	1	050I	GEAR	ENGRENAGEM
7	73131683	1	016A	SHAFT	EIXO
8	73109873	1	060L	KEY	CHAVETA
9	70673957	1	135M	HUB	CUBO
10	71005121	1	187A	SNAP RING	ANEL ELÁSTICO
11	71004873	1	122G	SEAL	RETENTOR
12	71004965	1	187A	SNAP RING	ANEL ELÁSTICO
13	70673875	3	122G	SEAL	RETENTOR
14	73130954	1	341C	BEARING	ROLAMENTO
15	71004965	2	187A	SNAP RING	ANEL ELÁSTICO
16	70928528	3	040V	SCREW	PARAFUSO
17	70910153	3	131R	WASHER	ARRUELA
18	70934176	1	040V	SCREW	PARAFUSO
19	73129166	1	265C	COVER	TAMPA
20	71005843	6	060D	DISC	DISCO
21	71004872	1	122G	SEAL	RETENTOR
22	75285234	1	130P	PLUNGER	PISTAO
23	71004870	6	060D	DISC	DISCO
24	71004868	1	060D	DISC	DISCO
25	71004867	1	187A	SNAP RING	ANEL ELÁSTICO
26	71004932	1	055A	SEAL RING	ANEL DE VEDAÇ.
27	71004969	1	100C	RETAINER	ENCOSTO
28	71004935	1	100M	SPRING	MOLA
29	71004934	1	100C	RETAINER	ENCOSTO
30	70673970	2	341C	BEARING	ROLAMENTO
31	70674000	1	050I	GEAR	ENGRENAGEM
32	70673996	1	075D	SPACER	ESPAÇADOR

DESCRIPTION	SBGRP	TAV	GRID
ENGINE PISTONS	A105	1	1E-14
ROCKER ASSEMBLY	A107	1	1E-16
ROD BEARINGS	A105	1	1E-14
SIDE PLATES	L101	2	2F-14
SLEEVES	A105	1	1E-14
SUMP	A102	1	1E-9
EXHAUST PIPE	A256	1	1G-8
FAN	A409	1	1G-17
BELTS	A409	1	1G-17
DRIVE FG70	A409	2	1H-2
DRIVE FG75	A409/1	2	1H-3
DRIVE FG75	A409/1	4	1H-5
IDLER FG75	A409/1	3	1H-4
FIATALLIS TO CUMMINS CROSS REF NUMBERS			2M-2
FILTER IMPLEMENT OIL	E328	1	2C-10
FILTER, AIR	A223	2	1F-8
FILTER, COOLANT	A402	1	1G-15
FILTER, ENGINE OIL	A303	1	1G-12
FILTER, FUEL	A226	1	1F-12
FILTER, TRANS OIL FG70	B201	11	1I-3
FILTER, TRANS. OIL FG75	B217	1	1M-14
FORWARD CLUTCH FG70	B201	7	1H-15
FRAME (NOT ARTICULATED)	D101	1	1O-10
FRONT (ARTICUALTED)	D101	3	1O-13
REAR (ARTICUALTED)	D101	4	1O-14
FRONT AXLE FRAME	B401	1	1N-2
FRONT AXLE WHEEL END	B401	3	1N-4
FUEL FILTER	A226	1	1F-12
INJECTION PUMP	A224	1	1F-9
INJECTION PUMP COMPONENTS	A227	1	1F-13
LINES, HIGH PRESSURE	A224	1	1F-10
LINES, LOW PRESSURE	A201	2	1F-2
NOZZLE	A235	2	1G-6
NOZZLE HOLDER	A235	1	1G-5
PUMP GOVERNOR COMPONENTS	A228	1	1G-2
SEDIMENT BOWL	A225	1	1F-11
TANK	A201	1	1E-17
THROTTLE CONTROL	A221	1	1F-3
THROTTLE CONTROL LEVER	A221	4	1F-6
THROTTLE LINKAGE FG70	A221	2	1F-4
THROTTLE LINKAGE FG75	A221	3	1F-5
TRANSFER PUMP	A224	1	1F-9
FUSES ELECTRICAL	F401	3	2E-5
GOVERNOR, FUEL PUMP COMPONENTS	A228	1	1F-2
GOVERNOR, GROUND SPEED FG70	A221	2	1F-4
GROUND SPEED GOVERNOR FG70	A221	2	1F-4
HEAT EXCHANGER, ENGINE OIL	A303	1	1G-12
HIGH FWD & 5 - 6 SPEED CLUTCH FG75	B201/1	16	1L-10
HIGH SPEED CLUTCH FG70	B201	9	1H-17
HOOD	L101	1	2F-13
HORN	F401	18	2F-6
HOURMETER	F401	3	2E-5
IMPLEMENT CONTROL VALVE SHIELD	D101	2	1O-11
CONTROLVALVE LEVERS	D201	3	1P-7
CONTROLVALVE LEVERS	D201	4	1P-8
IMPLEMENT CONTROLVALVE LINKAGE	D201	2	1P-5
OIL FILTER	E328	1	2C-10
OIL RESERVOIR	E328	1	2C-10
PUMP, COMPONENTS	E329	1	2C-12
INDICATOR, CLOGGED AIR FILTER	A222	1	1F-7
INJECTION PUMP COMPONENTS	A227	1	1F-13
INSTRUMENT PANEL	F401	12	2E-14
LATERAL SHIFT VALVE	E331	2	2C-14
LIGHTS	F401	9	2E-10
BRAKE COMPONENTS	F405	2	2F-8
TURN SIGNAL COMPONENTS	F405	3	2F-9
TURN SIGNAL	F401	13	2E-15
LOCK VALVE	E302	32	2B-7
LOW FORWARD CLUTCH FG75	B201/1	12	1L-6
LOW SPEED CLUTCH FG70	B201	8	1H-16
LUBRICATION SYSTEM	A301	1	1G-9
MAIN RELIEF VALVE, LEFT	E331	10	2D-5
MAIN RELIEF VALVE, RIGHT	E331	11	2D-6
MODULATING VALVE TRANS FG70	B201	18	1I-10
COMPONENTS	E313	1	2C-5
COMPONENTS	E313	2	2C-7
COMPONENTS	E313	3	2C-8
DRAWBAR	E310	2	2B-15
LIFT CYLINDER	E332	6	2D-12
PITCH CYLINDER	E332	2	2D-8
PITCH VALVE	E331	2	2C-14
SHIELD	E313	4	2C-9
SIDE SHIFT CYLINDER	E332	3	2D-9
MONITORING SENSORS	F401	16	2F-4
MONITORING SENSORS	F401	17	2F-5
MUFFLER	A256	1	1G-8
OPERATOR CONSOLE	D201	1	1P-3
PLATFORM	D101	2	1O-11
SEAT BELT	L604	2	2H-3
SEAT	L604	1	2H-2
OUTPUT FLANGE NUT FG70	B201	14	1I-6
OUTPUT SHAFT FG70	B201	10	1I-2
PARKING BRAKE LEVER	C135	1	1O-7
BRAKE LINKAGE FG70	C135	2	1O-8
PARKING BRAKE LINKAGE FG75	C135/1	2	1O-9
BRAKE FG70	B201	12	1I-4
BRAKE FG75	B201/1	2	1I-12
PIPING CIRCLE SHIFT (ARTICULATED)	E302	5	1Q-8
CIRCLE SHIFT (RIGID)	E302	4	1Q-7
MOLDBOARD LIFT (ARTICULATED)	E302	13	2A-3
MOLDBOARD LIFT (RIGID)	E302	12	2A-2
SADDLE LOCK PIN (ARTICULATED)	E302	17	2A-8
SADDLE LOCK PIN (RIGID)	E302	16	2A-7
ARTICULATION	E302	26	2A-15
ARTICULATION	E302	24	2A-13
BRAKE PUMP FG70	E302	32	2B-6
PIPING BRAKE PUMP FG70	E302/1	32	2B-12
CIRCLE TURN (ARTICULATED)	E302	15	2A-6
CIRCLE TURN (RIGID)	E302	14	2A-5
CONTROL VALVE (ARTICULATED)	E302	3	1Q-6
CONTROL VALVE (RIGID)	E302	2	1Q-4
FRONT ATTACHMENT (ARTIC'D)	E302	30	2B-4
FRONT ATTACHMENT (RIGID)	E302	29	2B-3
FRONT ATTACHMENT FG70	E302	31	2B-5
FRONT WHEEL LEAN (ARTIC'D)	E302	7	1Q-10
FRONT WHEEL LEAN (RIGID)	E302	6	1Q-9
FRONT WHEEL LEAN	E302	8	1Q-11
IMPLEMENT PUMP FG70	E302	32	2B-6
IMPLEMENT PUMP FG70	E302/1	32	2B-12
PUMP, BRAKE FG70	E302	32	2B-6
PUMP, BRAKE FG70	E302/1	32	2B-12
PUMP, IMPLEMENT FG70	E302	32	2B-6
PUMP, IMPLEMENT FG70	E302/1	32	2B-12
PUMP, STERING FG70	E302	32	2B-6
PUMP, STERING FG70	E302/1	32	2B-12
REAR FRAME	E302	1	1Q-2
RIPPER CYLINDER	E302/1	2	2B-9
RIPPER	E302/1	3	2B-10
SCARIFIER	E302/1	1	2B-8
SIDE SHIFT & PITCH (ARTIC'D)	E302	19	2A-10
SIDE SHIFT & PITCH (RIGID)	E302	18	2A-9
SIDE SHIFT & PITCH	E302	20	2A-11
STEERING (ARTICULATED)	E302	27	2A-17
STEERING (ARTICULATED)	E302	28	2B-2
STEERING (RIGID)	E302	25	2A-14
STEERING PUMP FG70	E302	32	2B-6
PIPING, STEERING PUMP FG70	E302/1	32	2B-12
PUMP, BRAKE COMPONENTS	D213	1	1P-13
COOLANT	A403	1	1G-16
ENGINE OIL	A302	1	1G-11
FUEL INJECTION	A224	1	1F-9
FUEL INJECTION COMPONENTS	A227	1	1F-13
FUEL TRANSFER	A224	1	1F-9
IMPLEMENT COMPONENTS	E329	1	2C-12
STEERING COMPONENTS	D213	1	1P-13

FIATALLIS

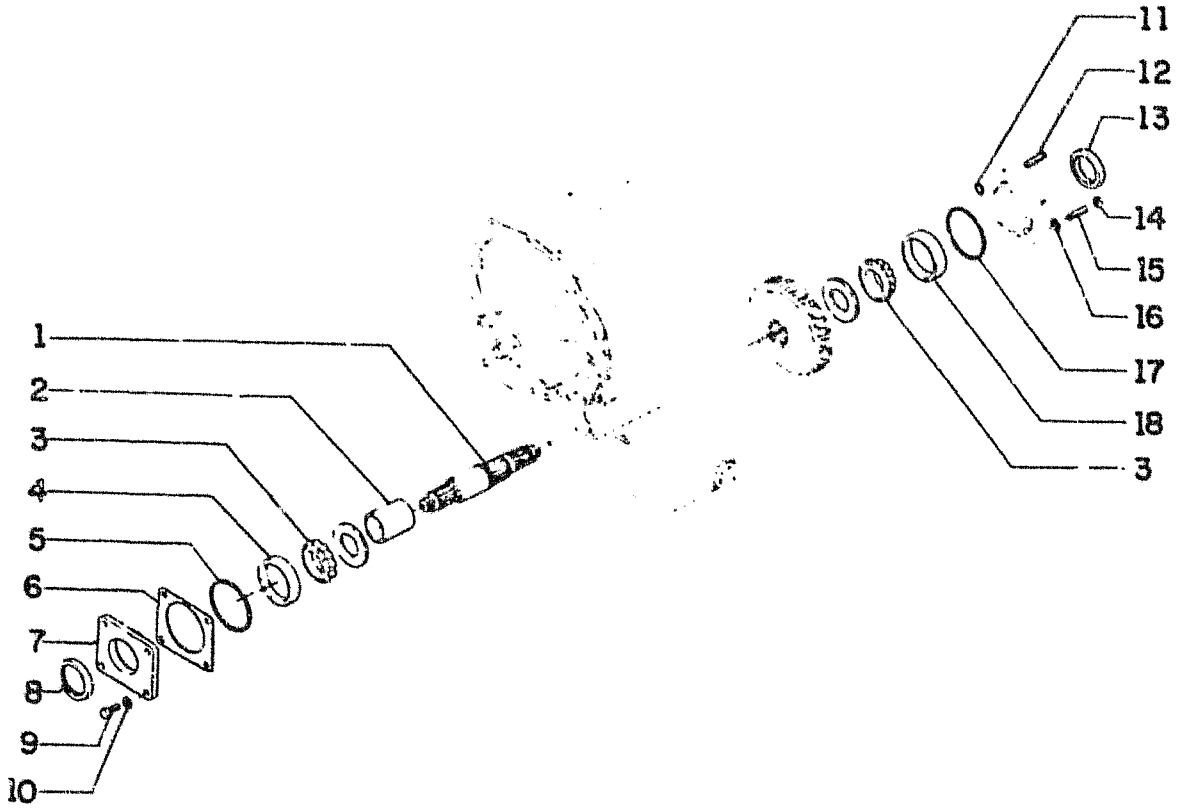

FIATALLIS FG 70R 70A B2.01 **QUADRO** 10 **PAG.** 1

ITEM	PEÇA Nº	QTDE	COD.	DESCRIPTION	DESCRIÇÃO
1	75285840	1	016A	SHAFT	EIXO
2	73109855	1	075D	SPACER	ESPAÇADOR
3	70929855	2	341C	BEARING	ROLAMENTO
4	70606899	1	341C	BEARING	ROLAMENTO
5	75206697	1	158G	O'RING	O'RING
6	71005108	1	198S	SHIM	CALÇO
	71005107	1	198S	SHIM	CALÇO
	71005110	1	198S	SHIM	CALÇO
	71005109	1	198S	SHIM	CALÇO
7	71005111	1	265C	COVER	TAMPA
8	71005117	1	045A	RING	ANEL
9	70928528	4	040V	SCREW	PARAFUSO
10	70910153	4	131R	WASHER	ARRUELA
11	70923849	1	158G	O'RING	O'RING
12	75206366	1	210P	STUD	PRISIONEIRO
13	71004989	1	122G	SEAL	RETENTOR
14	70911331	4	010D	NUT	PORCA
15	75206364	3	210P	STUD	PRISIONEIRO
16	71004866	4	131R	WASHER	ARRUELA
17	75206699	1	045A	RING	ANEL
18	70932661	1	341C	BEARING	ROLAMENTO

FIATALLIS

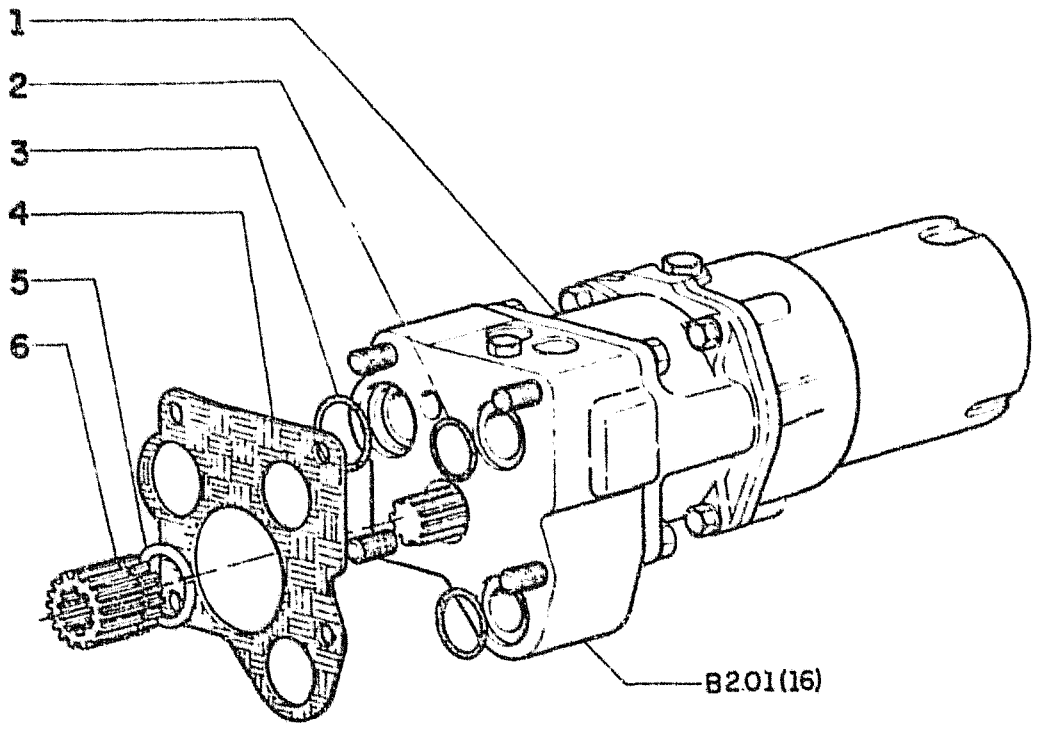

FIATALLIS FG 70R 70A B2.01 **QUADRO** 11 **PAG.** 1

ITEM	PEÇA Nº	QTDE	COD.	DESCRIPTION	DESCRIÇÃO
1	75285035	1	155P	PUMP	BOMBA
2	70929217	1	158G	O'RING	O'RING
3	70932830	1	158G	O'RING	O'RING
4	75206311	1	120G	GASKET	JUNTA
5	71004761	1	187A	SNAP RING	ANEL ELÁSTICO
6	73066756	1	030M	SLEEVE	LUVA

PUMP & FILTER ASS'Y
BOMBA COMPLETA COM FILTRO

B2.01 | 11

FIATALLIS

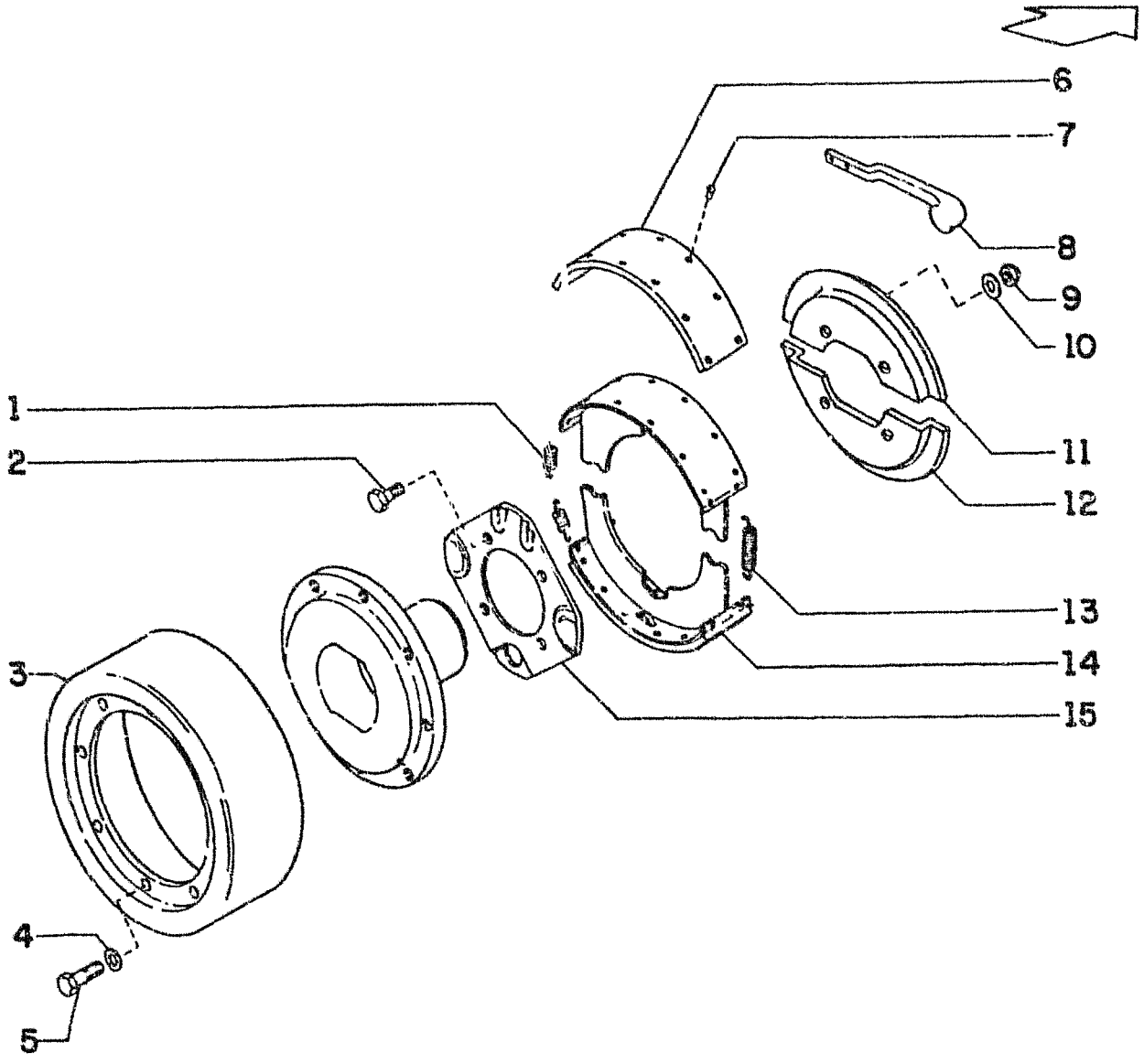

FIATALLIS FG 70R 70A B2.01 **QUADRO** 12 **PAG.** 1

ITEM	PEÇA Nº	QTDE	COD.	DESCRIPTION	DESCRIÇÃO
1	75206146	2	100M	SPRING	MOLA
2	75285040	4	040V	SCREW	PARAFUSO
3	75206142	1	020T	DRUM	TAMBOR
4	70910287	8	170R	LOCKWASHER	ARRUELA PRESSÃO
5	75206141	8	040V	SCREW	PARAFUSO
6	75286112	2	024N	BRAKE BAND	LONA DE FREIO
7	75286113	24	055R	RIVET	REBITE
8	75206156	1	045L	LEVER	ALAVANCA
9	75285843	4	010D	NUT	PORCA
10	75206155	4	170R	LOCKWASHER	ARRUELA PRESSÃO
11	75206152	1	070R	GUARD	PROTEÇÃO
12	75206153	1	070R	GUARD	PROTEÇÃO
13	75206148	1	100M	SPRING	MOLA
14	75206147	2	025G	BRAKE SHOE	SAPATA DE FREIO
15	75206145	1	060S	CUP	PRATO
16	75205985	1	093F	BRAKE(included 1,8,13,14,15)	FREIO(inclui 1, 8,13,14,15)

FIATALLIS

FIATALLIS FG 70R 70A B2.01 **QUADRO** 13 **PAG.** 1

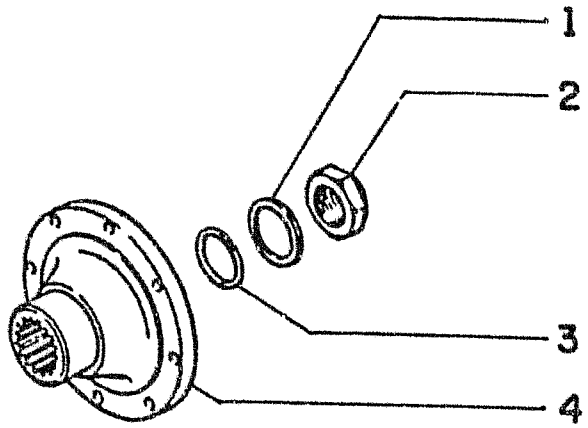

ITEM	PEÇA Nº	QTDE	COD.	DESCRIPTION	DESCRIÇÃO
1	71005114	1	131R	WASHER	ARRUELA
2	71005113	1	010D	NUT	PORCA
3	14470880	1	158G	O'RING	O'RING
4	75206372	1	070F	FLANGE	FLANGE

FIATALLIS

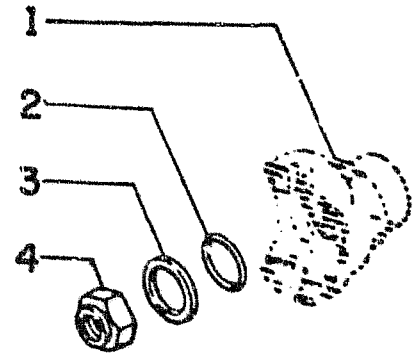

FIATALLIS FG 70R 70A B2.01 **QUADRO** 14 **PAG.** 1

ITEM	PEÇA Nº	QTDE	COD.	DESCRIPTION	DESCRIÇÃO
1	71005116	1	070F	FLANGE	FLANGE
2	14470880	1	158G	O'RING	O'RING
3	71005114	1	131R	WASHER	ARRUELA
4	71005113	1	010D	NUT	PORCA

FIATALLIS

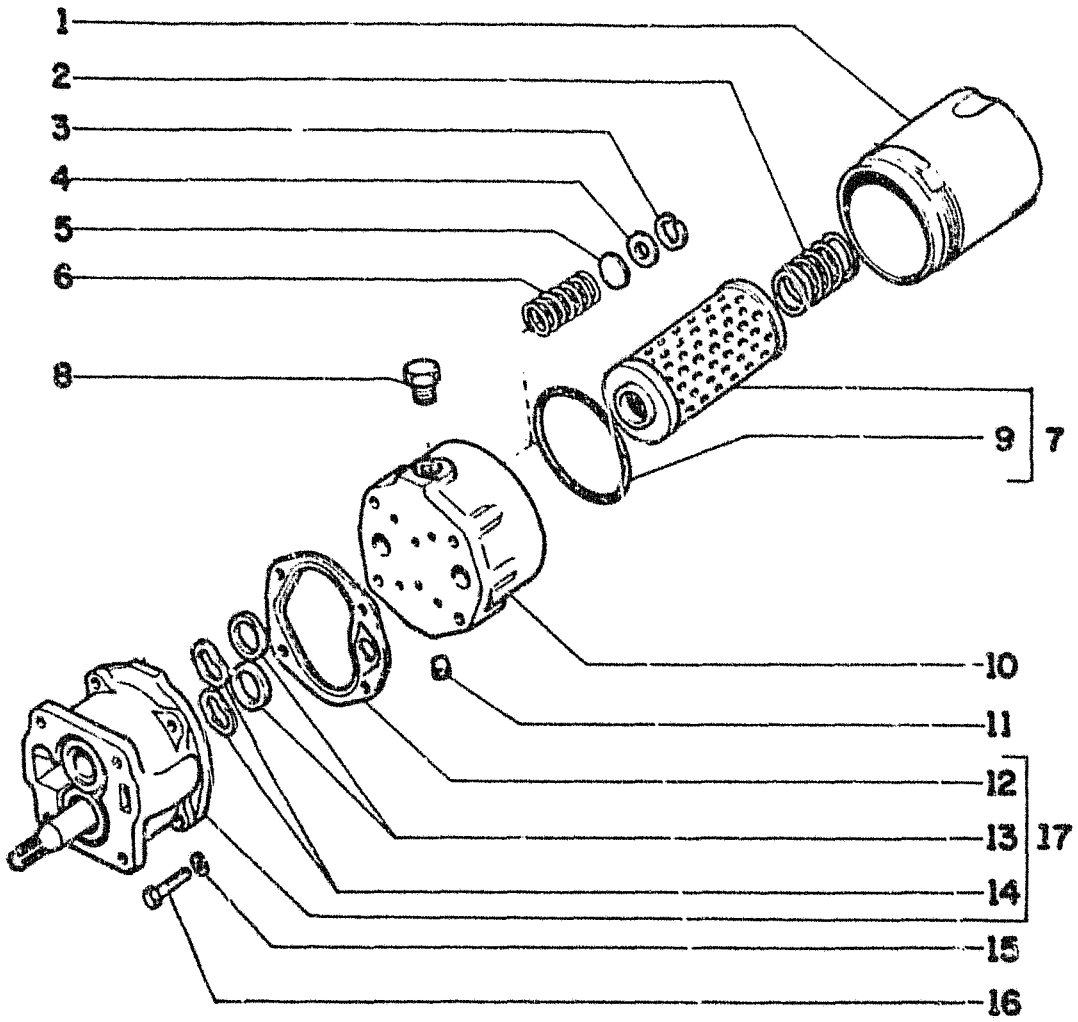

FIATALLIS FG 70R 70A B2.01 **QUADRO** 15 **PAG.** 1

ITEM	PEÇA Nº	QTDE	COD.	DESCRIPTION	DESCRIÇÃO
1	71004924	1	300C	BODY	CORPO
2	71004923	1	100M	SPRING	MOLA
3	75205371	1	187A	SNAP RING	ANEL ELÁSTICO
4	71004919	1	080S	SEAT	ASSENTO
5	71004918	1	060D	DISC	DISCO
6	71004917	1	100M	SPRING	MOLA
7	71004922	1	020E	FILTERING ELEM.	ELEM. FILTRANTE
8	70919843	1	050T	PLUG	BUJÃO
9	14466180	1	158G	O'RING	O'RING
10	73066790	1	300C	BODY	CORPO
11	73066791	1	050T	PLUG	BUJÃO
12	71004913	1	120G	GASKET	JUNTA
13	73066789	2	122G	SEAL	RETENTOR
14	73066788	2	100M	SPRING	MOLA
15	70914678	4	170R	LOCKWASHER	ARRUELA PRESSÃO
16	75206370	4	040V	SCREW	PARAFUSO
17	75285034	1	155P	PUMP	BOMBA

TRANSMISSION PUMP & FILTER
BOMBA E FILTRO DA TRANSMISSÃO

B2.01 | 15

FIATALLIS

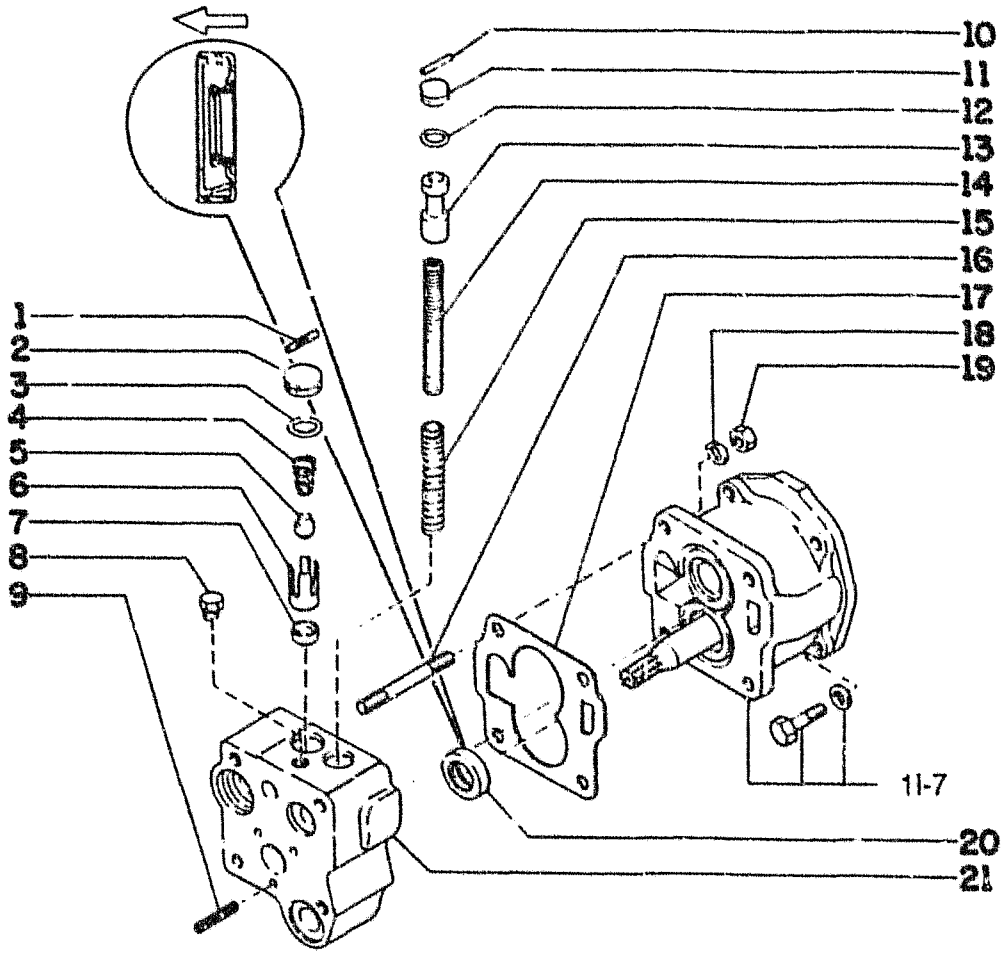

FIATALLIS FG 70R 70A B2.01 **QUADRO** 16 **PAG.** 1

ITEM	PEÇA Nº	QTDE	COD.	DESCRIPTION	DESCRIÇÃO
1	75206368	1	202S	SPRING PIN	PINO ELÁSTICO
2	71008476	1	100C	RETAINER	ENCOSTO
3	79051110	1	158G	O'RING	O'RING
4	71004902	1	100M	SPRING	MOLA
5	71004901	1	130P	PLUNGER	PISTAO
6	71008573	1	075D	SPACER	ESPAÇADOR
7	71008597	1	069S	SEAT	SEDE
8	70919840	1	050T	PLUG	BUJÃO
9	70734505	3	202S	SPRING PIN	PINO ELÁSTICO
10	75206358	1	202S	SPRING PIN	PINO ELÁSTICO
11	70673894	1	039P	BULKHEAD	ANTEPARO
12	70933875	1	045A	RING	ANEL
13	71004904	1	130P	PLUNGER	PISTAO
14	70673909	1	100M	SPRING	MOLA
15	73066786	1	100M	SPRING	MOLA
16	71004907	4	210P	STUD	PRISIONEIRO
17	71004908	1	120G	GASKET	JUNTA
18	70914678	4	170R	LOCKWASHER	ARRUELA PRESSÃO
19	70910986	4	010D	NUT	PORCA
20	71004911	1	122G	SEAL	RETENTOR
21	71008477	1	010V	VALVE *	VÁLVULA *

* includes items 1-15

* inclui itens 1-15

TRANSMISSION PUMP & FILTER
BOMBA E FILTRO DA TRANSMISSÃO

B2.01 | 16

FIATALLIS

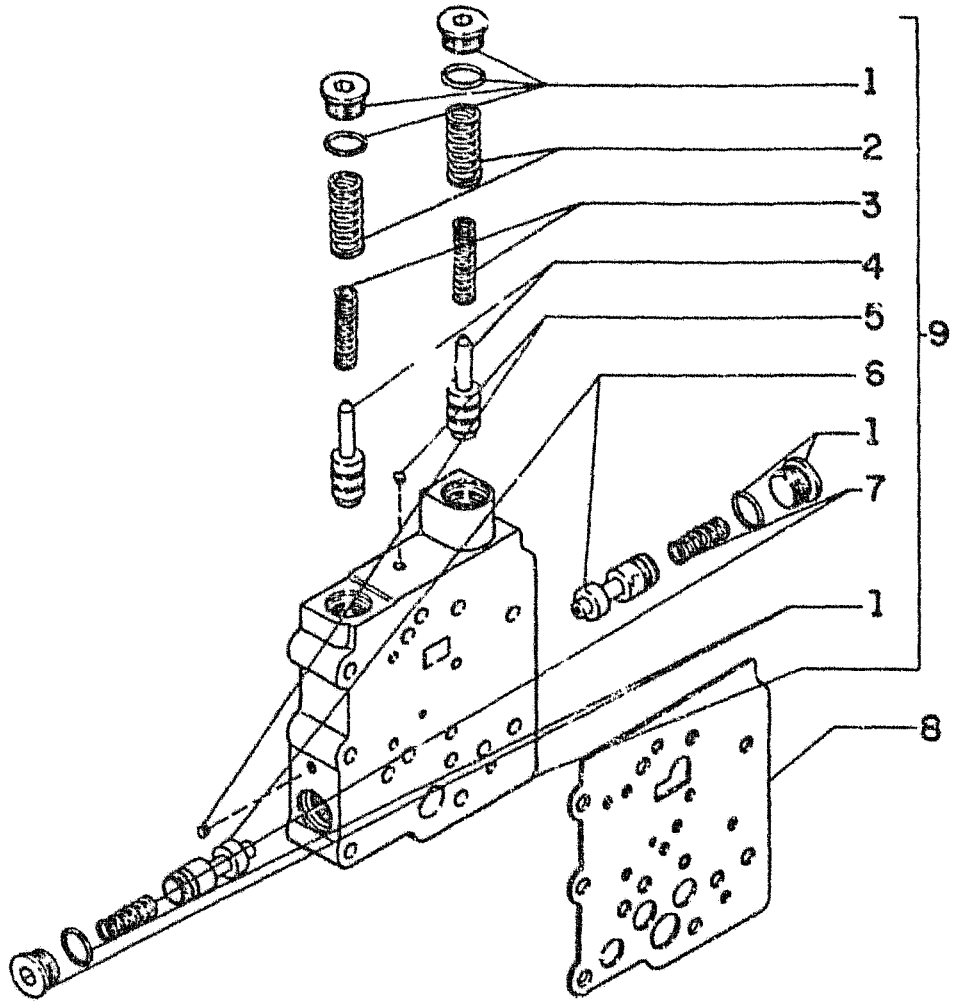

FIATALLIS FG 70R 70A B2.01 **QUADRO** 17 **PAG.** 1

ITEM	PEÇA Nº	QTDE	COD.	DESCRIPTION	DESCRIÇÃO
1	75285847	2	026T	BLOCK	TAMPÃO
2	75205977	2	100M	SPRING	MOLA
3	73131692	2	100M	SPRING	MOLA
4	75285848	2	010V	VALVE	VÁLVULA
5	73131677	2	050T	PLUG	BUJÃO
6	75285849	2	010V	VALVE	VÁLVULA
7	73118126	2	100M	SPRING	MOLA
8	75285025	1	120G	GASKET	JUNTA
9	75285842	1	100M	SPRING	MOLA

TRANSMISSION
TRANSMISSÃO

B2.01 | 17

FIATALLIS

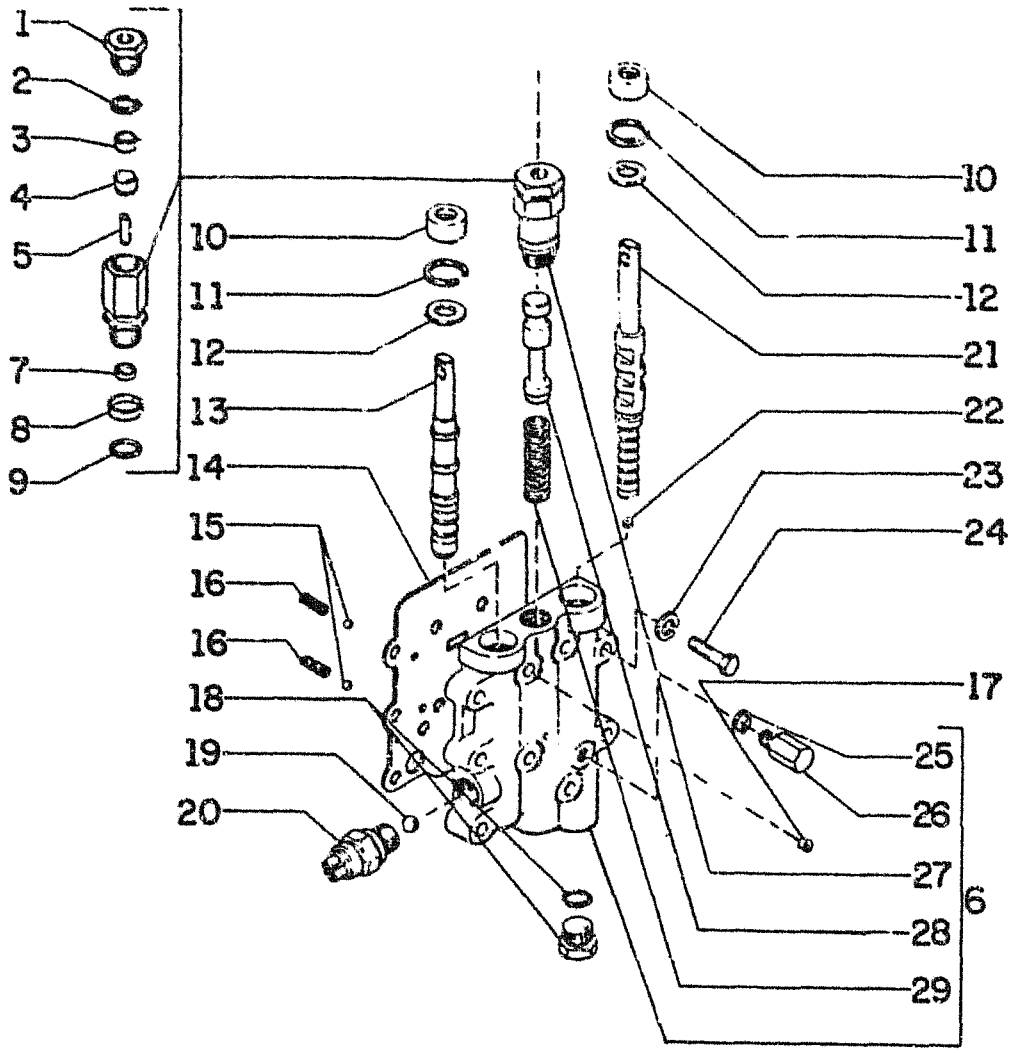

FIATALLIS FG 70R 70A B2.01 **QUADRO** 18 **PAG.** 1

ITEM	PEÇA Nº	QTDE	COD.	DESCRIPTION	DESCRIÇÃO
1	73131691	1	050T	PLUG	BUJÃO
2	75285846	1	158G	O'RING	O'RING
3	73131690	1	075D	SPACER	ESPAÇADOR
4	73071839	1	130P	PLUNGER	PISTÃO
5	73069450	1	080P	PIN	PINO
6	73066794	1	235S	PISTON	ÊMBOLO
7	73071510	1	122G	SEAL	RETENTOR
8	71004895	1	122G	SEAL	RETENTOR
9	14457380	1	158G	O'RING	O'RING
10	73066793	2	122G	SEAL	RETENTOR
11	71004879	2	187A	SNAP RING	ANEL ELÁSTICO
12	71004880	2	131R	WASHER	ARRUELA
13	70673949	1	394C	CONTROL VALVE	VIA DISTRIB.
14	75285031	1	120G	GASKET	JUNTA
15	74055100	2	140S	BALL	ESFERA
16	71004790	2	100M	SPRING	MOLA
17	70919134	1	080P	PIN	PINO
18	75285845	1	050T	PLUG	BUJÃO
19	74055100	1	140S	BALL	ESFERA
20	73069451	1	075I	NEUTRAL START SWITCH	INTERRUPTOR
21	75205981	1	394C	CONTROL VALVE	VIA DISTRIB.
22	70922374	1	050T	PLUG	BUJÃO
23	70910287	4	170R	LOCKWASHER	ARRUELA PRESS
24	70924843	4	040V	SCREW	PARAFUSO
25	73066796	1	045A	RING	ANEL
26	75204945	1	050T	PLUG	BUJÃO
27	73131689	1	050T	PLUG	BUJÃO
28	70673948	1	394C	CONTROL VALVE	VIA DISTRIB.
29	70673951	1	100M	SPRING	MOLA

TRANSMISSION
TRANSMISSÃO

B2.01 | 18

FIATALLIS

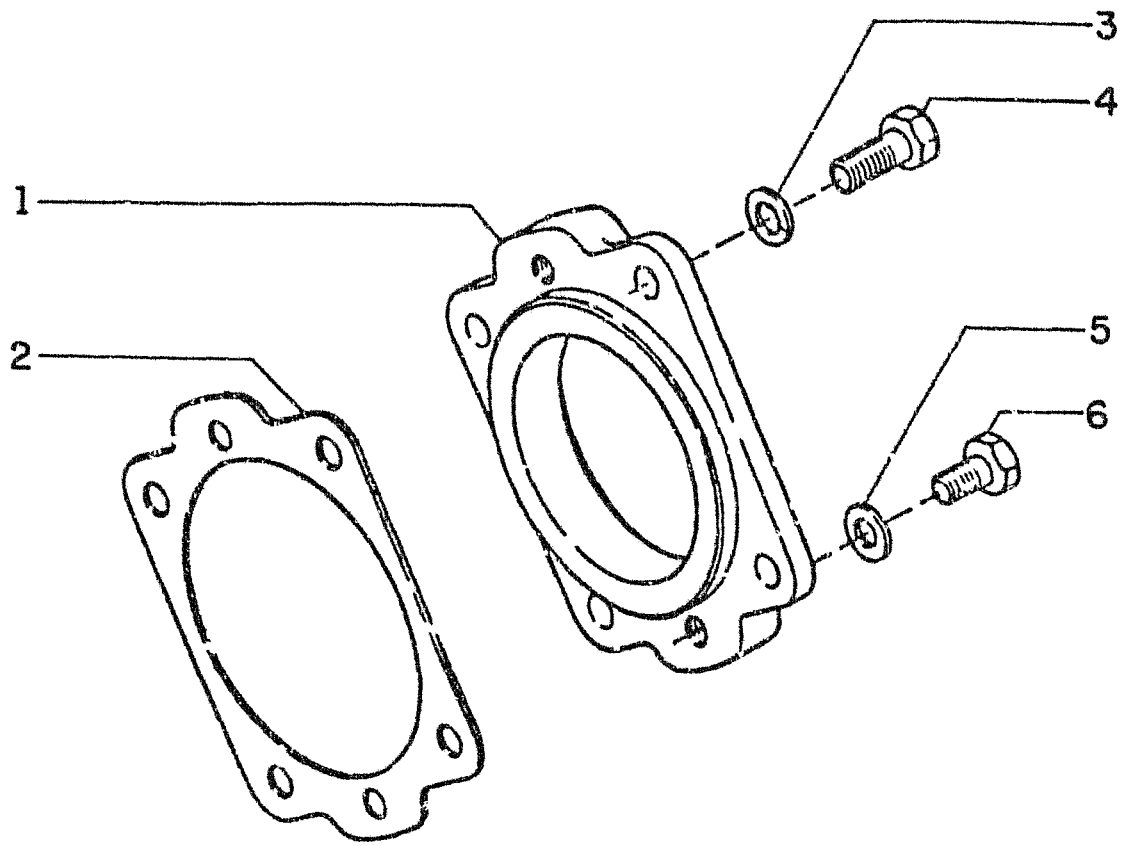

FIATALLIS FG 75R 75A B2.01/1 **QUADRO** 1 **PAG.** 1

ITEM	PEÇA Nº	QTDE	COD.	DESCRIPTION	DESCRIÇÃO
1	75285986	1	075D	SPACER	ESPAÇADOR
2	75285985	1	120G	GASKET	JUNTA
3	75206155	2	170R	LOCKWASHER	ARRUELA PRESS
4	75285987	2	040V	SCREW	PARAFUSO
5	75206155	2	170R	LOCKWASHER	ARRUELA PRESS
6	75285987	2	040V	SCREW	PARAFUSO

FIATALLIS

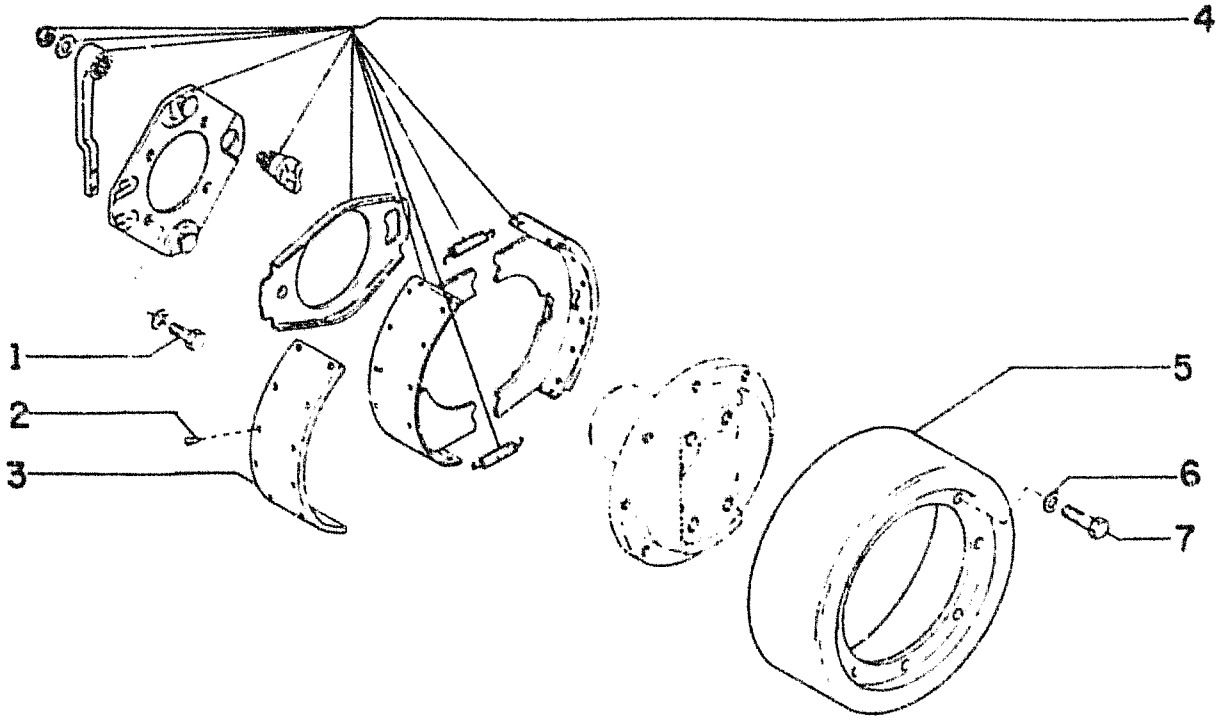

FIATALLIS FG 75R 75A B2.01/1 **QUADRO** 2 **PAG.** 1

ITEM	PEÇA Nº	QTDE	COD.	DESCRIPTION	DESCRIÇÃO
1	70691358	4	040V	SCREW	PARAFUSO
2	75286102	12	055R	RIVET	REBITE
3	75286103	2	024N	BRAKE BAND	LONA DE FREIO
4	70692661	1	093F	BRAKE	FREIO
5	70691224	1	020T	DRUM	TAMBOR
6	70691359	8	170R	LOCKWASHER	ARRUELA PRESS
7	70922851	8	040V	SCREW	PARAFUSO

FIATALLIS

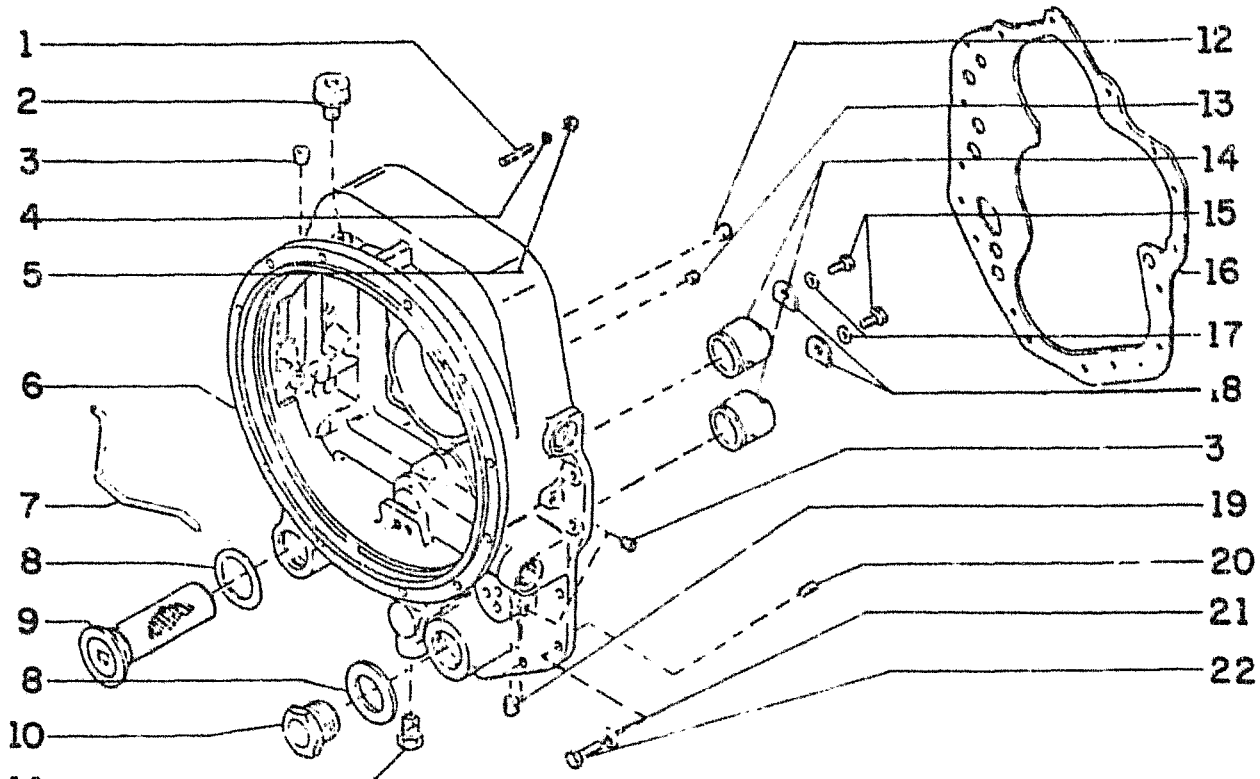

FIATALLIS FG 75R 75A B2.01/1 **QUADRO** 3 **PAG.** 1

ITEM	PEÇA Nº	QTDE	COD.	DESCRIPTION	DESCRIÇAO
1	71004845	1	210P	STUD	PRISIONEIRO
2	75206094	1	145S	BREATHER	RESPIRO
3	75206110	1	050T	PLUG	BUJÃO
4	75214678	1	170R	LOCKWASHER	ARRUELA PRESS
5	70910986	1	010D	NUT	PORCA
6	75206649	1	035S	CASE	CARCAÇA
7	75285750	1	193T	TUBE	TUBO
8	71004848	1	120G	GASKET	JUNTA
9	71004849	1	065F	FILTER	FILTRO
10	70673891	1	050T	PLUG	BUJÃO
11	75206105	2	050T	PLUG	BUJÃO
12	75285749	1	050T	PLUG	BUJÃO
13	73131677	2	050T	PLUG	BUJÃO
14	75206612	1	030M	SLEEVE	LUVA
15	70905561	1	040V	SCREW	PARAFUSO
16	75205458	1	120G	GASKET	JUNTA
17	74052780	1	170R	LOCKWASHER	ARRUELA PRESS
18	71004822	1	050N	PAWL	TRAVA
19	70922374	2	050T	PLUG	BUJÃO
20	71004838	1	080P	PIN	PINO
21	70914678	16	170R	LOCKWASHER	ARRUELA PRESS
22	70916197	16	040V	SCREW	PARAFUSO

TRANSMISSION
TRANSMISSÃO

B2.01/1 | 3

FIATALLIS

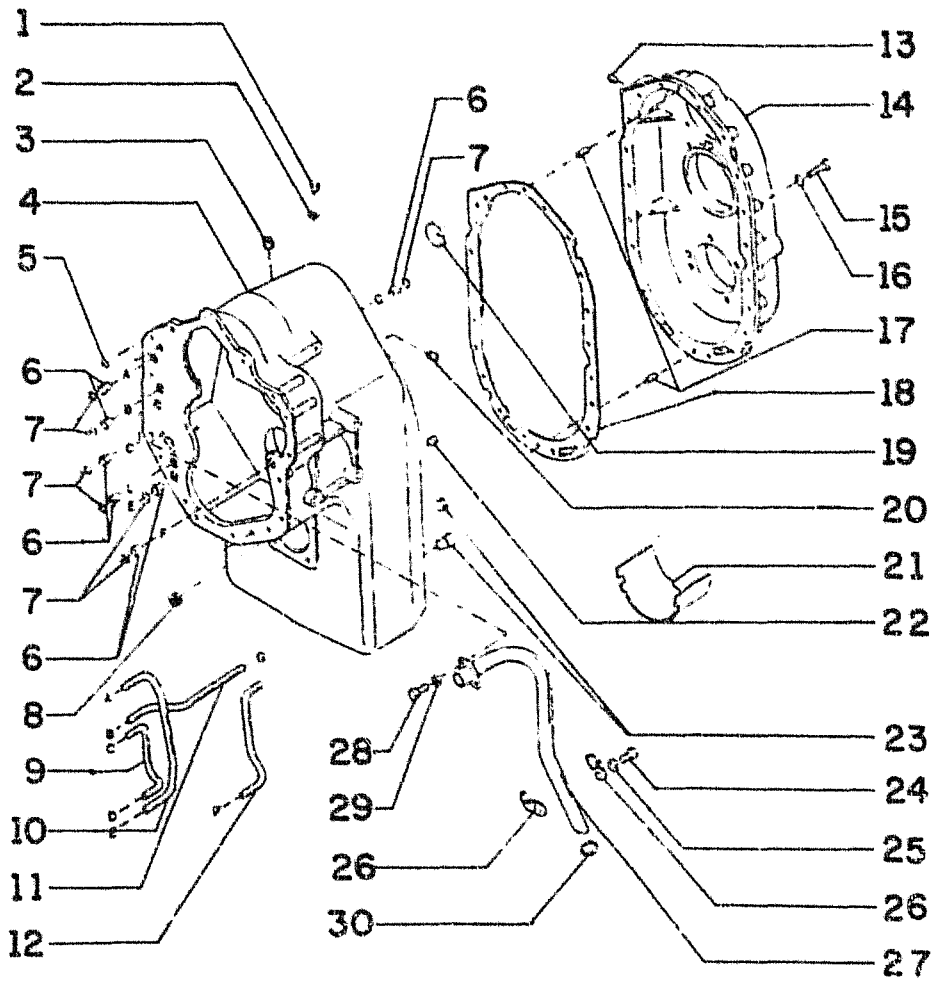

FIATALLIS FG 75R 75A B2.01/1 **QUADRO** 4 **PAG.** 1

ITEM	PEÇA Nº	QTDE	COD.	DESCRIPTION	DESCRIÇÃO
1	75285757	1	050T	PLUG	BUJÃO
2	75285756	1	131R	WASHER	ARRUELA
3	75285752	1	040V	SCREW	PARAFUSO
4	75285751	1	035S	CASE	CARCAÇA
5	14457180	1	045A	RING	ANEL
6	71004820	1	030M	SLEEVE	LUVA
7	70929217	1	045A	RING	ANEL
8	75285625	1	050T	PLUG	BUJÃO
9	75205469	1	193T	TUBE	TUBO
10	75205470	1	193T	TUBE	TUBO
11	73118105	1	193T	TUBE	TUBO
12	75285755	1	193T	TUBE	TUBO
13	73131677	1	050T	PLUG	BUJÃO
14	75285753	1	265C	COVER	TAMPA
15	75205425	20	040V	SCREW	PARAFUSO
16	70914678	20	170R	LOCKWASHER	ARRUELA PRESS
17	71004838	1	080P	PIN	PINO
18	73118051	1	120G	GASKET	JUNTA
19	73118048	1	050T	PLUG	BUJÃO
20	75206110	1	050T	PLUG	BUJÃO
21	75206689	1	020D	DEFLECTOR	DEFLETOR
22	70673860	1	050T	PLUG	BUJÃO
23	70673889	1	050T	PLUG	BUJÃO
24	75285752	1	040V	SCREW	PARAFUSO
25	70910287	1	170R	LOCKWASHER	ARRUELA PRESS
26	75205993	1	031F	CLAMP	ABRAÇADEIRA
27	75205499	1	193T	TUBE	TUBO
28	75285754	2	040V	SCREW	PARAFUSO
29	74052780	2	170R	LOCKWASHER	ARRUELA PRESS
30	70926788	1	158G	O'RING	O'RING

FIATALLIS

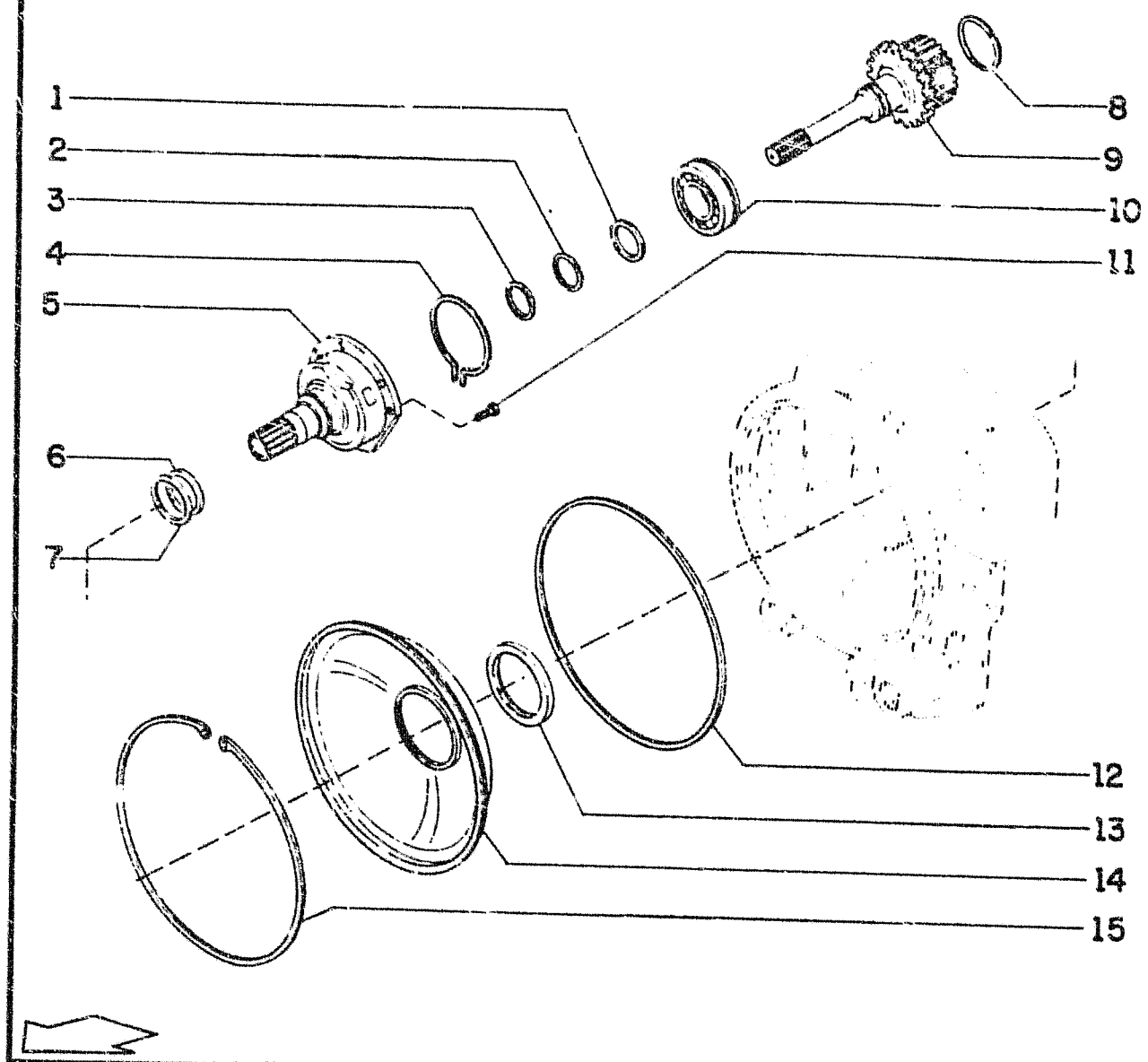

FIATALLIS FG 75R 75A B2.01/1 **QUADRO** 5 **PAG.** 1

ITEM	PEÇA Nº	QTDE	COD.	DESCRIPTION	DESCRIÇÃO
1	73118058	1	131R	WASHER	ARRUELA
2	71009065	1	055A	SEAL RING	ANEL DE VEDAÇ
3	73118059	1	055A	SEAL RING	ANEL DE VEDAÇ
4	73118057	1	055A	SEAL RING	ANEL DE VEDAÇ
5	75285762	1	300S	SUPPORT	SUPORTE
6	73118062	1	045A	RING	ANEL
7	75285761	1	055A	SEAL RING	ANEL DE VEDAÇ
8	75206149	1	122G	SEAL	RETENTOR
9	75285758	1	016A	SHAFT	EIXO
10	73132932	1	341C	BEARING	ROLAMENTO
11	75205465	1	040V	SCREW	PARAFUSO
12	75205454	1	055A	SEAL RING	ANEL DE VEDAÇ
13	73118064	1	055A	SEAL RING	ANEL DE VEDAÇ
14	75206621	1	020D	DEFLECTOR	DEFLETOR
15	71004787	1	055A	SEAL RING	ANEL DE VEDAÇ

TRANSMISSION
TRANSMISSÃO

B2.01/1 | 5

FIATALLIS

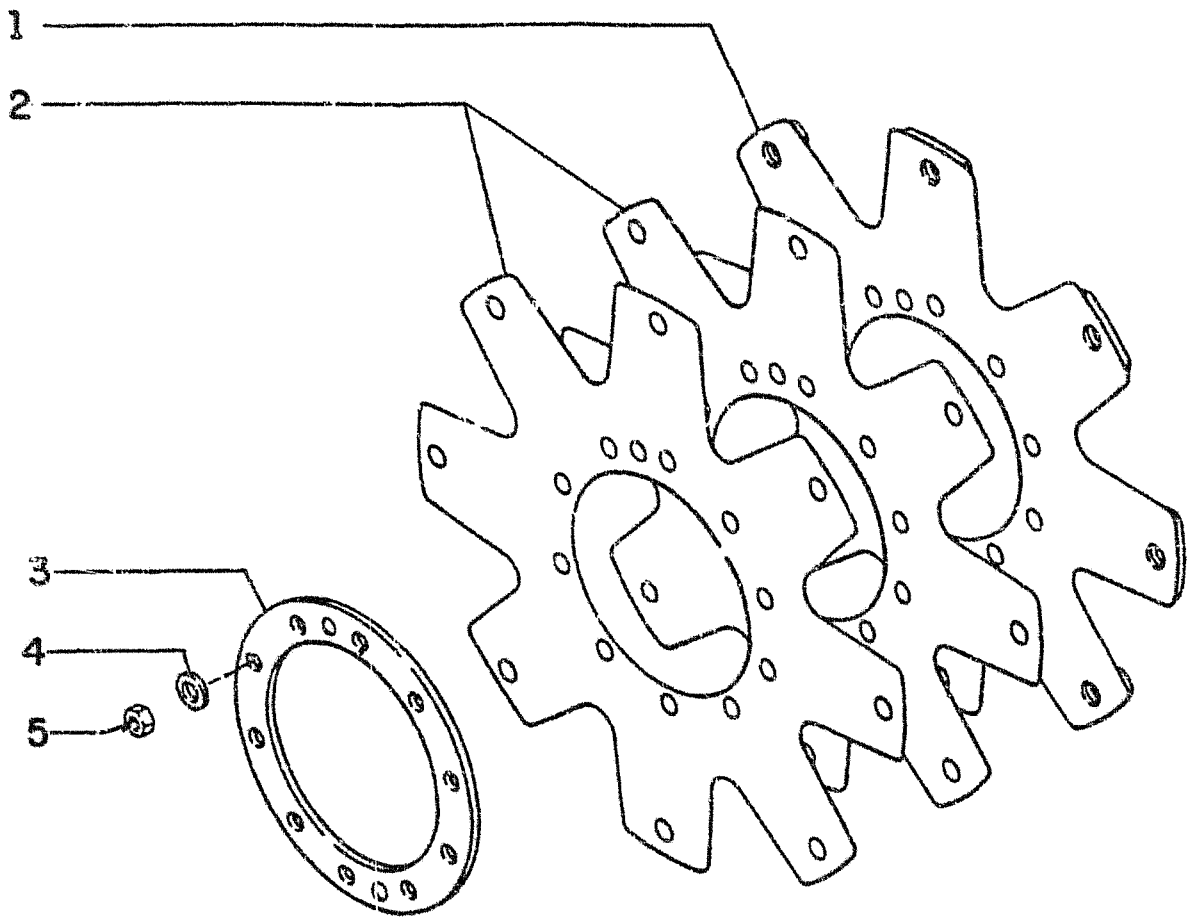

FIATALLIS FG 75R 75A B2.01/1 **QUADRO** 6 **PAG.** 1

ITEM	PEÇA Nº	QTDE	COD.	DESCRIPTION	DESCRIÇÃO
1	75285759	1	110P	PLATE	PLACA
2	75285760	3	110P	PLATE	PLACA
3	73118175	1	060D	DISC	DISCO
4	70910287	10	170R	LOCKWASHER	ARRUELA PRESS
5	70910329	10	010D	NUT	PORCA

FIATALLIS

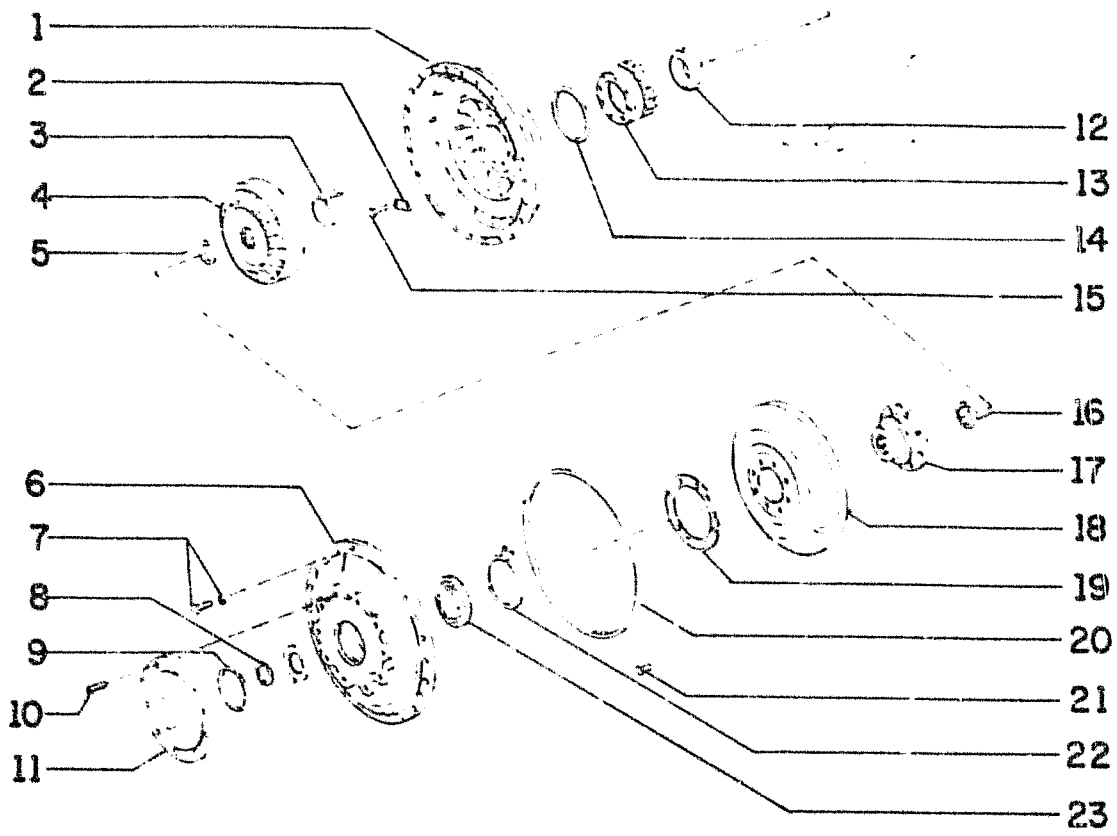

FIATALLIS FG 75R 75A B2.01/1 **QUADRO** 7 **PAG.** 1

ITEM	PEÇA Nº	QTDE	COD.	DESCRIPTION	DESCRIÇÃO
1	75206625	1	060G	IMPELLER	ROTOR
2	73118068	1	050N	PAWL	TRAVA
3	75285763	1	075D	SPACER	ESPAÇADOR
4	75206633	1	271S	STATOR	ESTATOR
5	75206677	1	045A	RING	ANEL
6	75285764	1	265C	COVER	TAMPA
7	75206329	1	040V	SCREW	PARAFUSO
8	75205426	2	045A	RING	ANEL
9	75206314	1	045A	RING	ANEL
10	75285765	1	210P	STUD	PRISIONEIRO
11	75206624	1	265C	COVER	TAMPA
12	75206661	1	341C	BEARING	ROLAMENTO
13	75206660	1	135M	HUB	CUBO
14	73118067	1	045A	RING	ANEL
15	70916381	1	040V	SCREW	PARAFUSO
16	75205996	1	341C	BEARING	ROLAMENTO
17	75206622	1	135M	HUB	CUBO
18	75206626	1	209T	TURBINE	TURBINA
19	75205999	1	045A	RING	ANEL
20	75205997	1	045A	RING	ANEL
21	75205484	1	040V	SCREW	PARAFUSO
22	75206715	1	055A	SEAL RING	ANEL DE VEDAÇ

TRANSMISSION
TRANSMISSÃO

B2.01/1 | 7

DESCRIPTION	SBGRP	TAV	GRID
PIPING TRANSMISSION FG70	B201	15	1I-7
RADIATOR	A401	2	1G-14
GRID	A401	2	1G-14
PIPING	A401	1	1G-13
WRAP AROUND	L101	1	2F-13
REAR AXLE BEVEL GEAR	B403	3	1N-8
AXLE BULL GEAR	B403	1	1N-6
AXLE DRIVE SHAFTS	B403	3	1N-8
AXLE EXTENSION HOUSING	B403	3	1N-8
AXLE PINION GEAR	B403	2	1N-7
AXLE SUPPORT	B403	6	1N-12
AXLE WHEEL ENDS	D316	1	1P-14
RESERVOIR, IMPLEMENT OIL	E328	1	2C-10
REVERSE & 3 - 4 SPEED CLUTCH FG75	B201/1	14	1L-8
REVERSE CLUTCH FG70	B201	6	1H-14
REVERSE IDLER ASSEMBLY FG75	B201/1	13	1L-7
RIPPER	E310/1	2	2C-4
CYLINDER	E332/1	2	2D-15
VALVE	E331	3	2C-15
ROTARY DISTRIBUTOR COMPONENTS	E331	1	2C-13
ROTARY DISTRIBUTOR	E302	23	2A-12
SADDLE	E310	1	2B-13
LOCK PIN CYLINDER	E332	4	2D-10
SADDLE LOCK VALVE	E331	4	2C-16
SCARIFIER	E310/1	1	2C-3
CYLINDER	E332/1	1	2D-14
VALVE	E331	6	2D-2
SEAT	L604	1	2H-2
SEAT BELT	L604	2	2H-3
SECOND SPEED CLUTCH FG70	B201	7	1H-15
SENSORS, MONITORING	F401	16	2F-4
SENSORS, MONITORING	F401	17	2F-5
STARTER COMPONENTS	F608	1	2F-11
STARTER MOTOR	F200	1	2E-2
STEERING CONTROL VALVE	D202	1	1P-10
CYLINDER	D212	1	1P-12
PUMP COMPONENTS	D213	1	1P-13
WHEEL	D201	1	1P-3
SWITCH ARTICULATION	F401	19	2F-7
PANEL ELECTRICAL CABLE	F401	2	2E-4
PANEL ELECTRICAL	F401	1	2E-3
TANDEM	D333	1	1P-16
TANK, IMPLEMENT OIL	E328	1	2C-10
THERMOSTAT,ENGINE COOLANT	A402	1	1G-15
THIRD SPEED CLUTCH FG70	B201	6	1H-14
THROTTLE CONTROL	A221	1	1F-3
CONTROL LEVER	A221	4	1F-6
LINKAGE FG70	A221	2	1F-4
THROTTLE LINKAGE FG75	A221	3	1F-5
TIRES & WHEELS	D316	2	1P-15
TRANSMISSION FG70	B200	1	1H-6
TRANSMISSION FG70	B200/1	1	1H-7
CASE & TUBING FG70	B201	1	1H-8
CONTROL FG75	B207/1	2	1M-13
CONTROL LEVER FG70	B207	2	1M-12
CONTROL LINKAGE FG70	B207	1	1M-10
CONTROL VALVE FG70	B201	18	1I-10
CONTROL VALVE FG75	B201/1	20	1L-14
CONTROL VALVE FG75	B201/1	21	1L-15
CONTROL VALVE FG75	B201/1	22	1L-16
CONTROL VALVE FG75	B201/1	23	1L-17
DECLUTCH VALVE	C101	6	1O-2
GEARING FG70	B201	5	1H-13
GEARING FG75	B201/1	8	1L-2
GUARD	D101	2	1O-11
HEAT EXCHANGER FG7	B206/1	1	1M-8
HEAT EXCHANGER FG70	B206	3	1M-7
HOUSING FG75	B201/1	4	1L-14
IDLER SHAFT FG75	B201/1	17	1L-11
MODUALTING VALVE FG75	B201/1	24	1M-2
MODULATING VALVE FG70	B201	18	1I-10
OIL FILTER FG70	B201	11	1I-3
OIL FILTER FG75	B217	1	1M-14
OIL FILTER LINES FG75	B206	1	1M-5
OIL DIPSTICK FG70	B206	2	1M-6
OIL DIPSTICK FG75	B206/1	2	1M-9
OUTPUT FLANGE FG70	B201	13	1I-5
OUTPUT SHAFT FG70	B201	10	1I-2
OUTPUT SHAFT FG75	B201/1	18	1L-12
PUMP FG70	B201	15	1I-7
PUMP MOUNT FG75	B201/1	19	1L-13
REGULATING VALVE FG70	B201	16	1I-8
REGULATING VALVE FG75	B201/1	25	1M-3
REGULATING VALVE FG75	B201/1	26	1M-4
TURN SIGNAL	F401	13	2E-15
VALVE ARTICULATION	E331	2	2C-14
BLADE LIFT	E331	5	2C-17
CIRCLE SHIFT	E331	3	2C-15
END CAP	E331	7	2D-3
END CAP	E331	9	2D-4
LATERAL SHIFT	E331	2	2C-14
MAIN RELIEF , LEFT	E331	10	2D-5
MAIN RELIEF , RIGHT	E331	11	2D-6
MOLDBOARD PITCH	E331	2	2C-14
RIPPER	E331	3	2C-15
SADDLE LOCK	E331	4	2C-16
SCARIFIER	E331	6	2D-2
STEERING CONTROL VALVE	D202	1	1P-10
VALVE TRANS CONTROL FG75	B201/1	22	1L-16
TRANS CONTROL FG75	B201/1	23	1L-17
TRANS MODULATING FG70	B201	18	1I-10
TRANS MODUALTING FG75	B201/1	24	1M-2
TRANS REGULATING FG75	B201/1	25	1M-3
TRANS REGULATING FG75	B201/1	26	1M-4
TRANSMISSION CONTROL FG70	B201	18	1I-10
WHEEL LEAN	E331	2	2C-14
WHEEL LEAN CYLINDER	E332	1	2D-7
WHEEL LEAN VALVE	E331	2	2C-14
WHEELS & TIRES	D316	2	1P-15
WINDOW WIPERS	L104	6	2G-7
WIPERS WINDOW	L104	6	2G-7

FIATALLIS

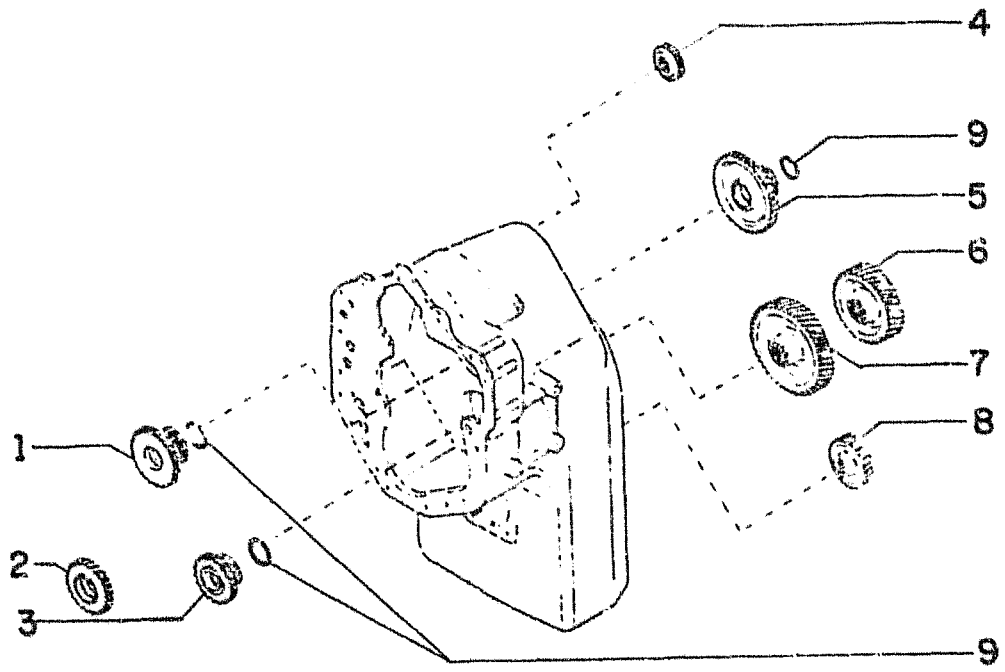

FIATALLIS FG 75R 75A B2.01/1 **QUADRO** 8 **PAG.** 1

ITEM	PEÇA Nº	QTDE	COD.	DESCRIPTION	DESCRIÇÃO
1	75206659	1	050I	GEAR	ENGRENAGEM
2	75205497	1	050I	GEAR	ENGRENAGEM
3	75206670	1	050I	GEAR	ENGRENAGEM
4	75285766	1	050I	GEAR	ENGRENAGEM
5	75285767	1	050I	GEAR	ENGRENAGEM
6	75206654	1	050I	GEAR	ENGRENAGEM
7	75206657	1	050I	GEAR	ENGRENAGEM
8	75285768	1	050I	GEAR	ENGRENAGEM
9	75206149	1	122G	SEAL	RETENTOR

FIATALLIS

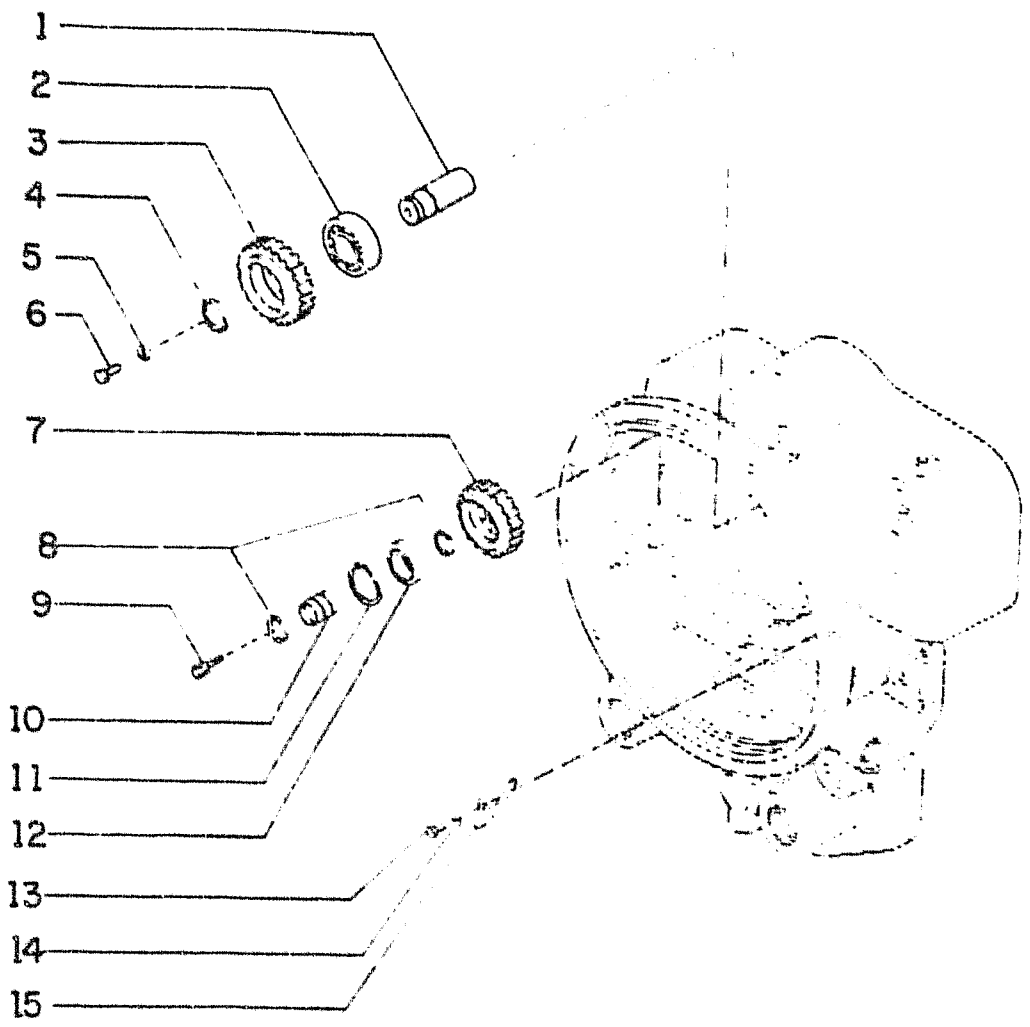

FIATALLIS FG 75R 75A B2.01/1 **QUADRO** 9 **PAG.** 1

ITEM	PEÇA Nº	QTDE	COD.	DESCRIPTION	DESCRIÇÃO
1	75206120	1	085A	AXLE	EIXO
2	75206599	1	341C	BEARING	ROLAMENTO
3	75205438	1	050I	GEAR	ENGRENAGEM
4	75205439	1	131R	WASHER	ARRUELA
5	70910287	2	170R	LOCKWASHER	ARRUELA PRESS
6	75205419	2	040V	SCREW	PARAFUSO
7	75285769	1	050I	GEAR	ENGRENAGEM
8	70929166	1	045A	RING	ANEL
9	70921076	1	040V	SCREW	PARAFUSO
10	73118262	1	300S	SUPPORT	SUPORTE
11	73118080	1	055A	SEAL RING	ANEL DE VEDAÇ
12	73116959	1	341C	BEARING	ROLAMENTO
13	75285770	1	040V	SCREW	PARAFUSO
14	74052780	1	170R	LOCKWASHER	ARRUELA PRESS
15	75205443	1	193T	TUBE	TUBO

FIATALLIS

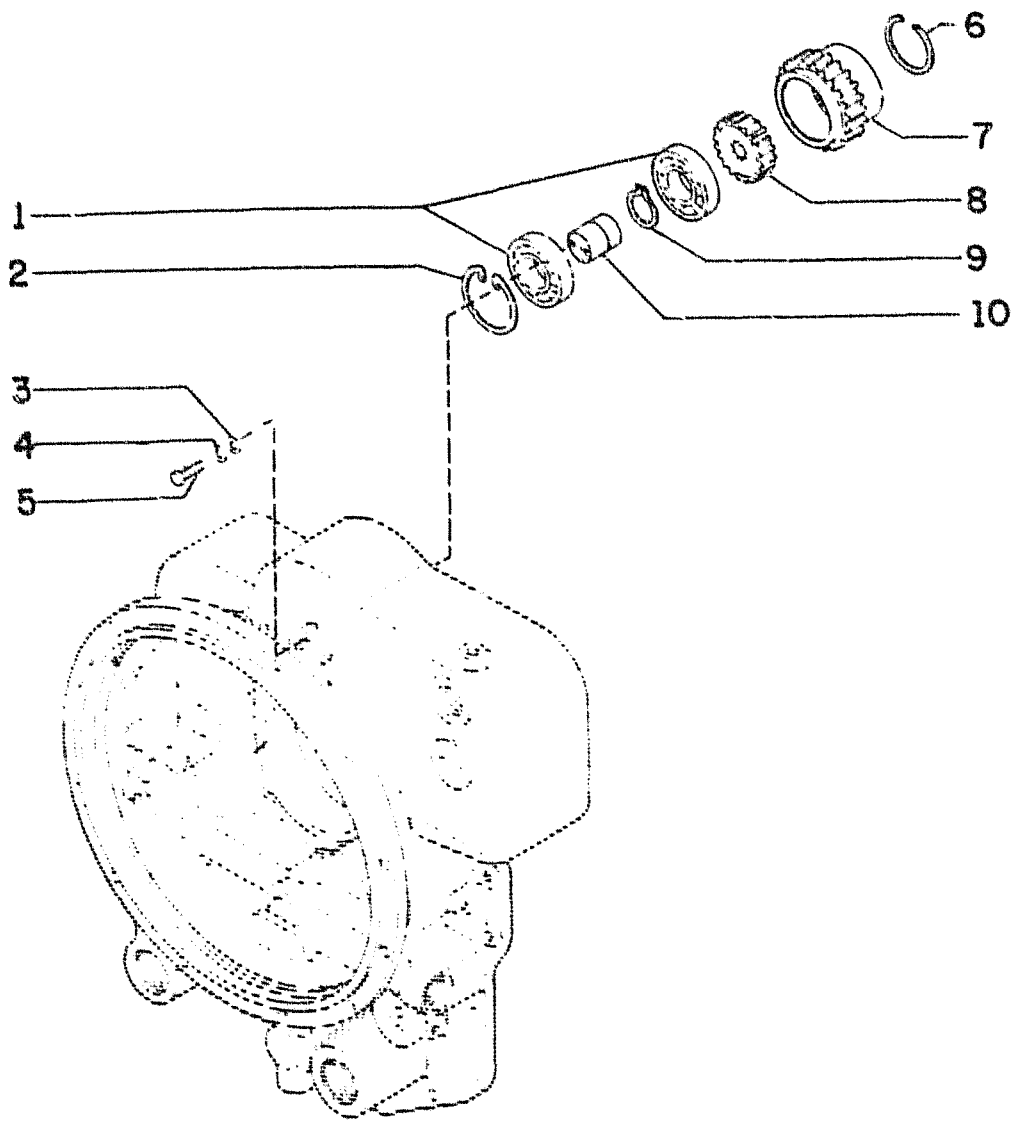

FIATALLIS FG 75R 75A B2.01/1 **QUADRO** 10 **PAG.** 1

ITEM	PEÇA Nº	QTDE	COD.	DESCRIPTION	DESCRIÇÃO
1	75206489	2	341C	BEARING	ROLAMENTO
2	73118320	1	055A	SEAL RING	ANEL DE VEDAÇ
3	75205435	2	131R	WASHER	ARRUELA
4	71004797	2	131R	WASHER	ARRUELA
5	75205956	2	040V	SCREW	PARAFUSO
6	75205430	1	055A	SEAL RING	ANEL DE VEDAÇ
7	75205440	1	050I	GEAR	ENGRENAGEM
8	75205441	1	050I	GEAR	ENGRENAGEM
9	70929166	1	045A	RING	ANEL
10	75206601	1	300S	SUPPORT	SUPORTE

FIATALLIS

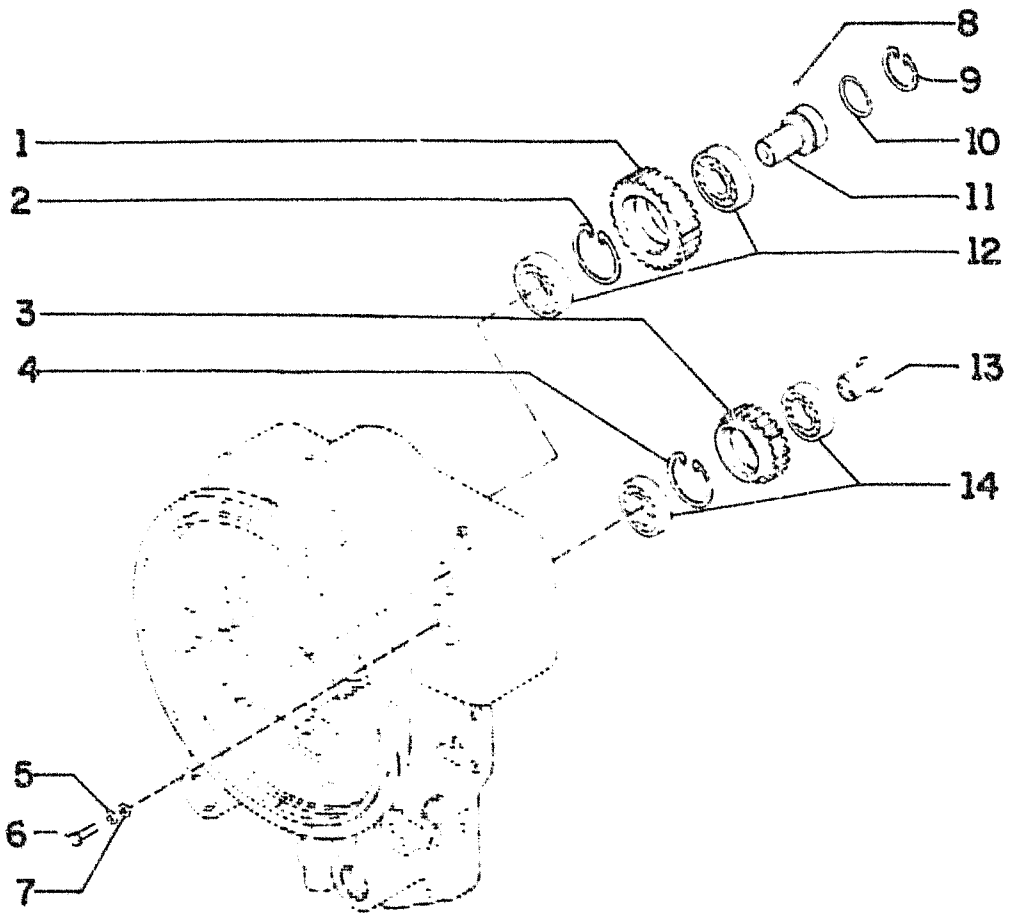

FIATALLIS FG 75R 75A B2.01/1 **QUADRO** 11 **PAG.** 1

ITEM	PEÇA Nº	QTDE	COD.	DESCRIPTION	DESCRIÇÃO
1	75205442	1	050I	GEAR	ENGRENAGEM
2	73118135	1	187A	SNAP RING	ANEL ELÁSTICO
3	75205490	1	050I	GEAR	ENGRENAGEM
4	73118320	1	055A	SEAL RING	ANEL DE VEDAÇ
5	71004797	1	131R	WASHER	ARRUELA
6	75205417	1	040V	SCREW	PARAFUSO
7	75205435	1	131R	WASHER	ARRUELA
8	70673856	1	140S	BALL	ESFERA
9	75206701	1	045A	RING	ANEL
10	75206696	1	158G	O'RING	O'RING
11	75206602	1	016A	SHAFT	EIXO
12	75206479	2	341C	BEARING	ROLAMENTO
13	75206603	1	300S	SUPPORT	SUPORTE
	75206489	2	341C	BEARING	ROLAMENTO

FIATALLIS

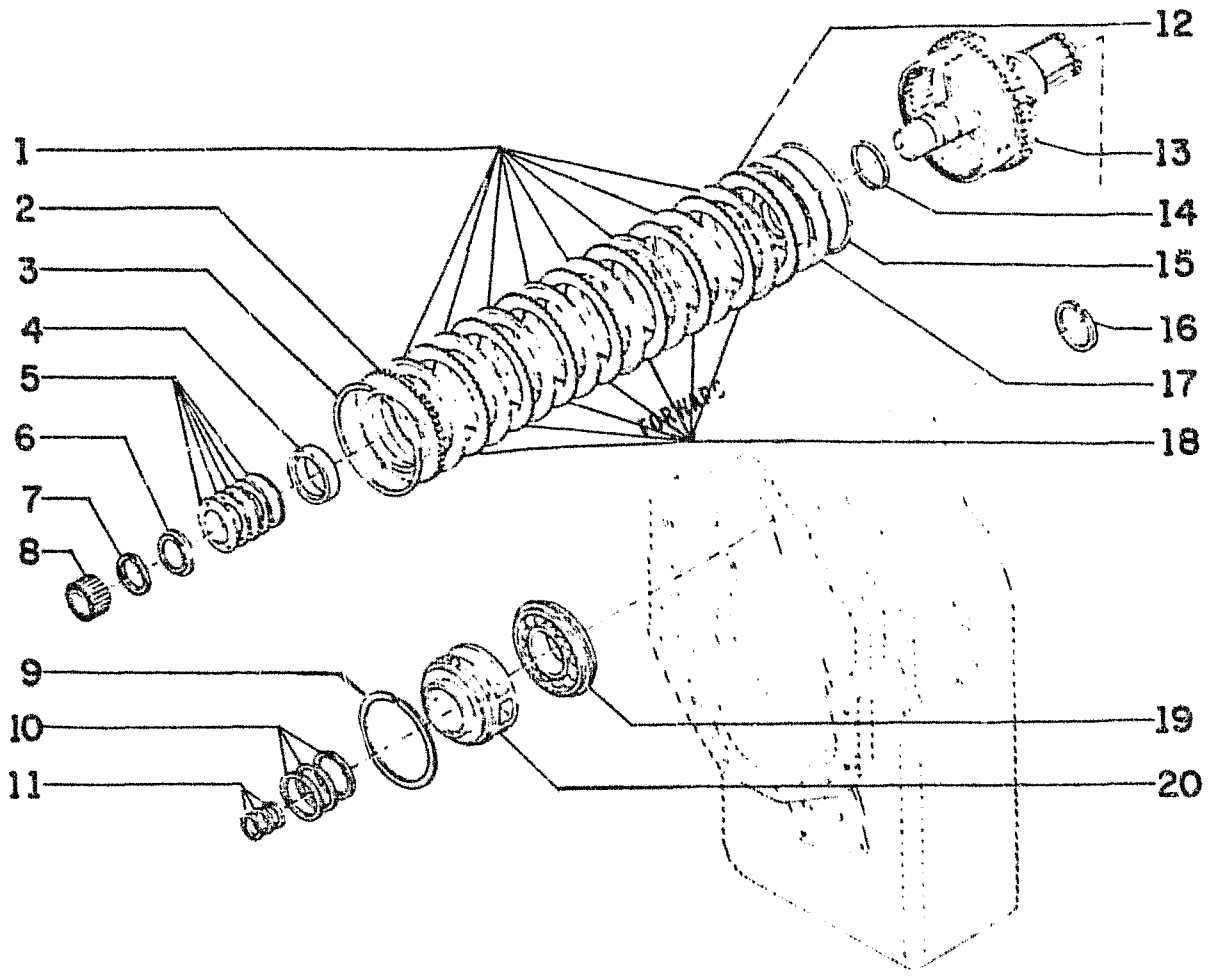

LOW FORWARD

FIATALLIS FG 75R 75A B2.01/1 **QUADRO** 12 **PAG.** 1

ITEM	PEÇA Nº	QTDE	COD.	DESCRIPTION	DESCRIÇÃO
1	73118088	12	060D	DISC	DISCO
2	75206618	1	060D	DISC	DISCO
3	73118092	1	045A	RING	ANEL
4	73118090	1	075D	SPACER	ESPAÇADOR
5	73118093	7	131R	WASHER	ARRUELA
6	75205467	1	122G	SEAL	RETENTOR
7	70926000	1	187A	SNAP RING	ANEL ELÁSTICO
8	73118097	1	341C	BEARING	ROLAMENTO
9	73118098	1	122G	SEAL	RETENTOR
10	75205496	3	045A	RING	ANEL
11	73118062	3	045A	RING	ANEL
12	75206644	1	060D	DISC	DISCO
13	75285771	1	016A	SHAFT	EIXO
14	73118087	1	045A	RING	ANEL
15	75206646	1	055A	SEAL RING	ANEL DE VEDAÇ
16	75206618	1	060D	DISC	DISCO
17	75206645	1	235S	PISTON	ÊMBOLO
18	73118089	11	060D	DISC	DISCO
19	28969370	1	341C	BEARING	ROLAMENTO
20	73118095	1	030M	SLEEVE	LUVA

FIATALLIS

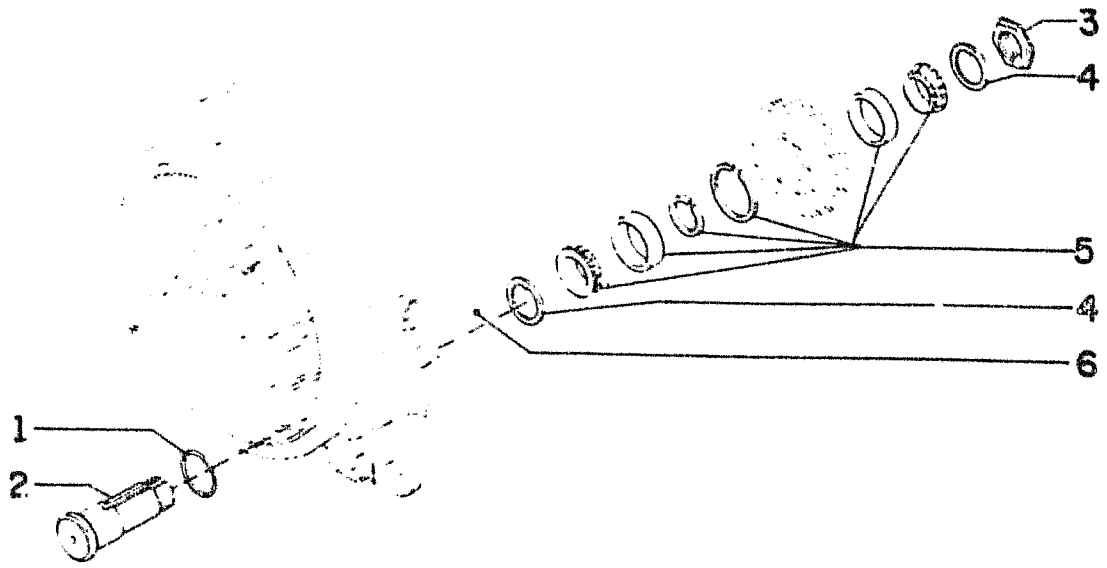

FIATALLIS FG 75R 75A B2.01/1 **QUADRO** 13 **PAG.** 1

ITEM	PEÇA Nº	QTDE	COD.	DESCRIPTION	DESCRIÇÃO
1	75206695	2	158G	O'RING	O'RING
2	75206651	2	016A	SHAFT	EIXO
3	70059946	2	010D	NUT	PORCA
4	79030247	2	045A	RING	ANEL
5	79030261	2	341C	BEARING	ROLAMENTO
6	75205423	2	340S	BALL	ESFERA

FIATALLIS

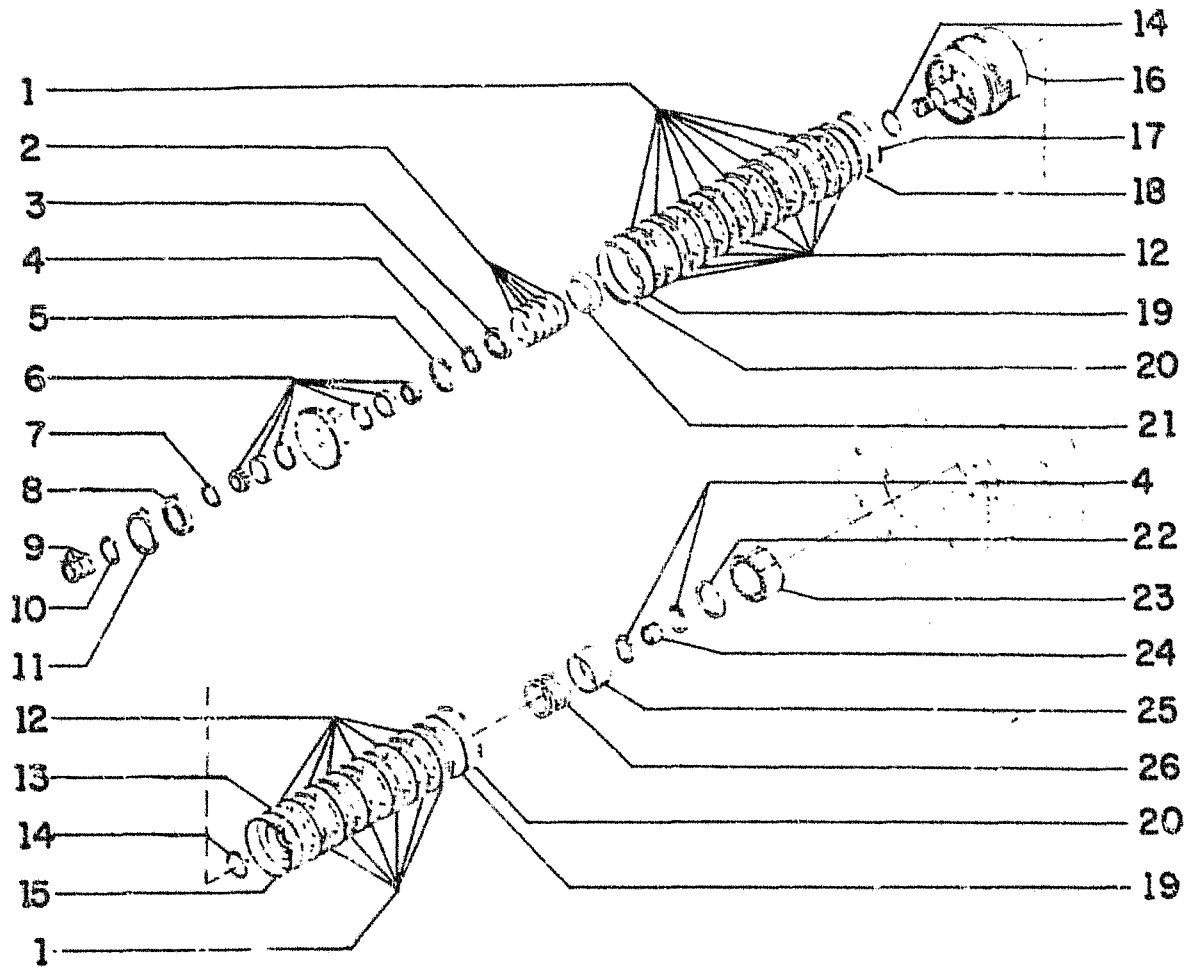

REVERSE 3RD 4TH

FIATALLIS FG 75R 75A B2.01/1 **QUADRO** 14 **PAG.** 1

ITEM	PEÇA Nº	QTDE	COD.	DESCRIPTION	DESCRIÇÃO
1	73118088	12	060D	DISC	DISCO
2	73118093	7	131R	WASHER	ARRUELA
3	75205467	2	122G	SEAL	RETENTOR
4	70926000	3	187A	SNAP RING	ANEL ELÁSTICO
5	75205473	1	045A	RING	ANEL
6	75206608	1	341C	BEARING	ROLAMENTO
7	75285775	1	045A	RING	ANEL
	75285776	1	045A	RING	ANEL
	75285777	1	045A	RING	ANEL
	75285778	1	045A	RING	ANEL
	75285779	1	045A	RING	ANEL
8	71004962	1	341C	BEARING	ROLAMENTO
9	71004926	3	045A	RING	ANEL
10	75285772	1	045A	RING	ANEL
11	71004961	1	045A	RING	ANEL
12	73118089	11	060D	DISC	DISCO
13	73118106	1	060D	DISC	DISCO
14	73118087	1	045A	RING	ANEL
15	73118086	1	122G	SEAL	RETENTOR
16	75285773	1	027D	DIVERTER VALVE	VÁLVULA DESVIO
17	75206646	1	055A	SEAL RING	ANEL DE VEDAÇÃO
18	75206645	1	235S	PISTON	ÊMBOLO
19	75206618	1	060D	DISC	DISCO
20	73118092	1	045A	RING	ANEL
21	73118090	1	075D	SPACER	ESPAÇADOR
22	75206149	1	122G	SEAL	RETENTOR
23	75285774	1	135M	HUB	CUBO
24	75205436	1	341C	BEARING	ROLAMENTO
25	73118108	1	122G	SEAL	RETENTOR
26	73118107	1	100M	SPRING	MOLA

TRANSMISSION
TRANSMISSÃO

B2.01/1 | 14

FIATALLIS

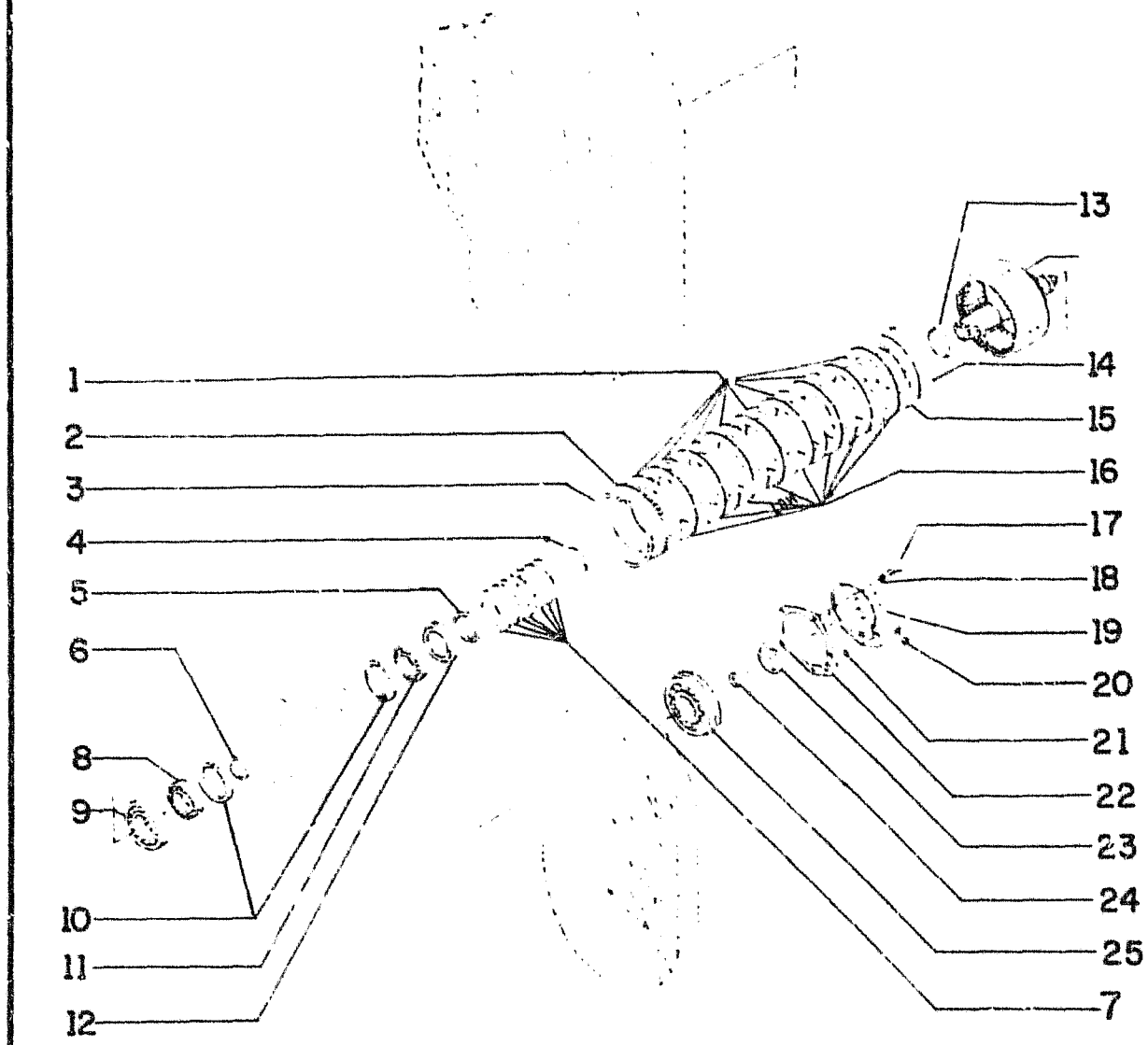

1ST 2ND

FIATALLIS FG 75R 75A B2.01/1 **QUADRO** 15 **PAG.** 1

ITEM	PEÇA Nº	QTDE	COD.	DESCRIPTION	DESCRIÇÃO
1	73118133	10	060D	DISC	DISCO
2	75206618	1	060D	DISC	DISCO
3	73118092	1	045A	RING	ANEL
4	75206619	1	075D	SPACER	ESPAÇADOR
5	70926000	1	187A	SNAP RING	ANEL ELÁST
6	73118138	1	075D	SPACER	ESPAÇADOR
7	75205460	1	100M	SPRING	MOLA
8	75205481	1	341C	BEARING	ROLAMENTO
9	73132932	1	341C	BEARING	ROLAMENTO
10	75205431	2	045A	RING	ANEL
11	73118134	1	341C	BEARING	ROLAMENTO
12	75205467	1	122G	SEAL	RETENTOR
13	73118087	1	045A	RING	ANEL
14	73118086	1	122G	SEAL	RETENTOR
15	73118236	1	132P	PISTON	PISTÃO
16	73118089	10	060D	DISC	DISCO
17	75206675	4	040V	SCREW	PARAFUSO
18	70914678	4	170R	LOCKWASHER	ARRUELA PRESS
19	75206620	1	265C	COVER	TAMPA
20	75206126	1	050T	PLUG	BUJÃO
21	75206127	1	055A	SEAL RING	ANEL DE VEDAÇ.
22	75205995	1	120G	GASKET	JUNTA
23	71004997	1	045A	RING	ANEL
24	73109875	1	045A	RING	ANEL
25	71004976	1	341C	BEARING	ROLAMENTO

TRANSMISSION
TRANSMISSÃO

B2.01/1 | 15

FIATALLIS

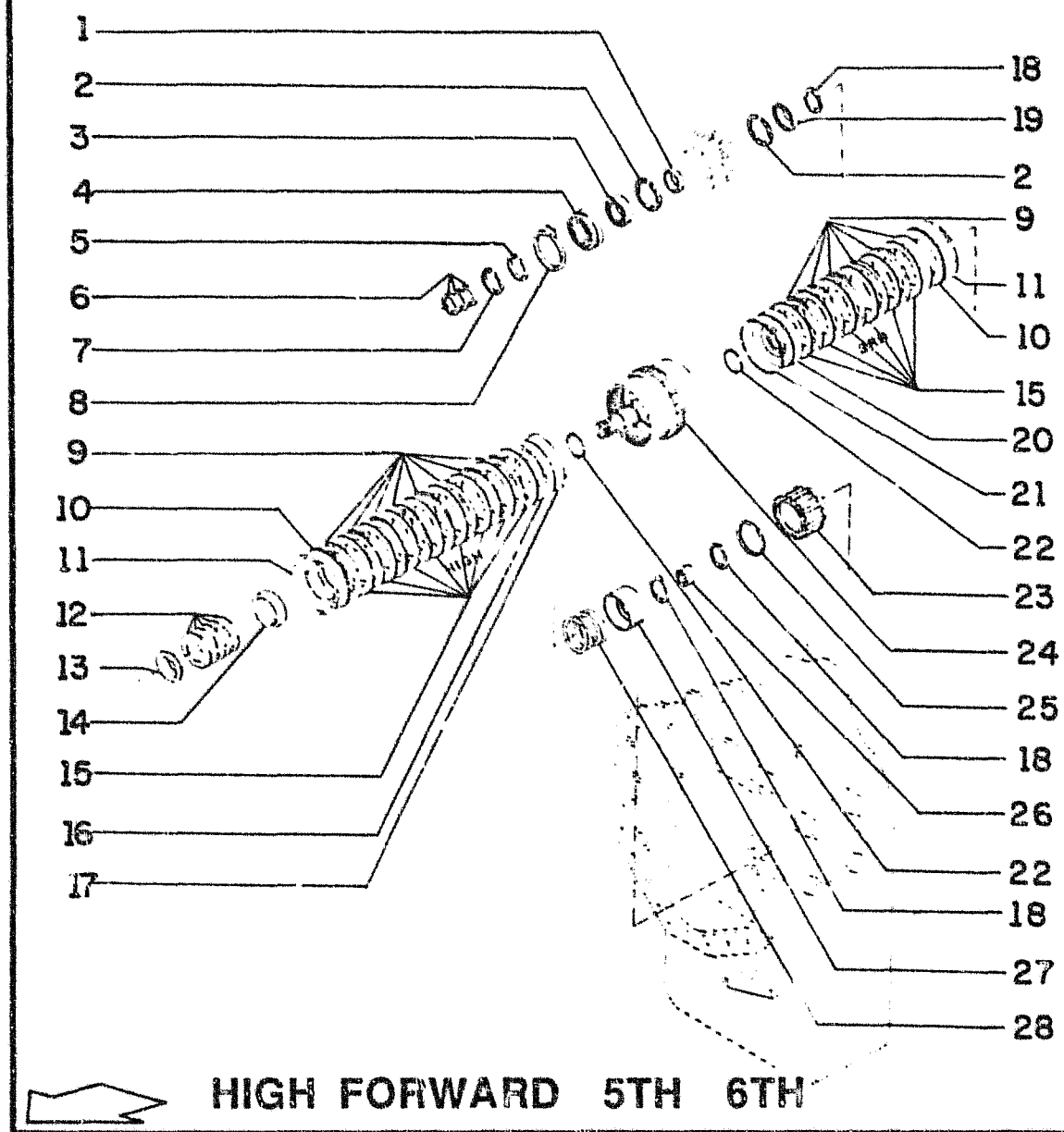

HIGH FORWARD 5TH 6TH

FIATALLIS FG 75R 75A B2.01/1 **QUADRO** 16 **PAG.** 1

ITEM	PEÇA Nº	QTDE	COD.	DESCRIPTION	DESCRIÇÃO
1	73118112	1	075D	SPACER	ESPAÇADOR
2	73118176	1	122G	SEAL	RETENTOR
3	71008990	1	341C	BEARING	ROLAMENTO
4	75205475	1	341C	BEARING	ROLAMENTO
5	71004927	1	045A	RING	ANEL
6	71004926	3	045A	RING	ANEL
7	75285772	1	045A	RING	ANEL
8	71004961	1	045A	RING	ANEL
9	73118088	12	060D	DISC	DISCO
10	75206618	1	060D	DISC	DISCO
11	73118092	1	045A	RING	ANEL
12	73118093	1	131R	WASHER	ARRUELA
13	75205467	1	122G	SEAL	RETENTOR
14	73118090	1	075D	SPACER	ESPAÇADOR
15	73118089	11	060D	DISC	DISCO
16	75206645	1	235S	PISTON	ÊMBOLO
17	75206646	1	055A	SEAL RING	ANEL DE VEDAÇ
18	70926000	1	187A	SNAP RING	ANEL ELÁSTICO
19	28042480	1	341C	BEARING	ROLAMENTO
20	73118106	1	060D	DISC	DISCO
21	73118086	1	122G	SEAL	RETENTOR
22	73118087	2	045A	RING	ANEL
23	75285774	1	135M	HUB	CUBO
24	75285787	10	16A	SHAFT	EIXO
25	75206149	1	122G	SEAL	RETENTOR
26	73118111	1	341C	BEARING	ROLAMENTO
27	73118108	1	122G	SEAL	RETENTOR
28	73118107	1	100M	SPRING	MOLA

TRANSMISSION
TRANSMISSÃO

B2.01/1 | 16

FIATALLIS

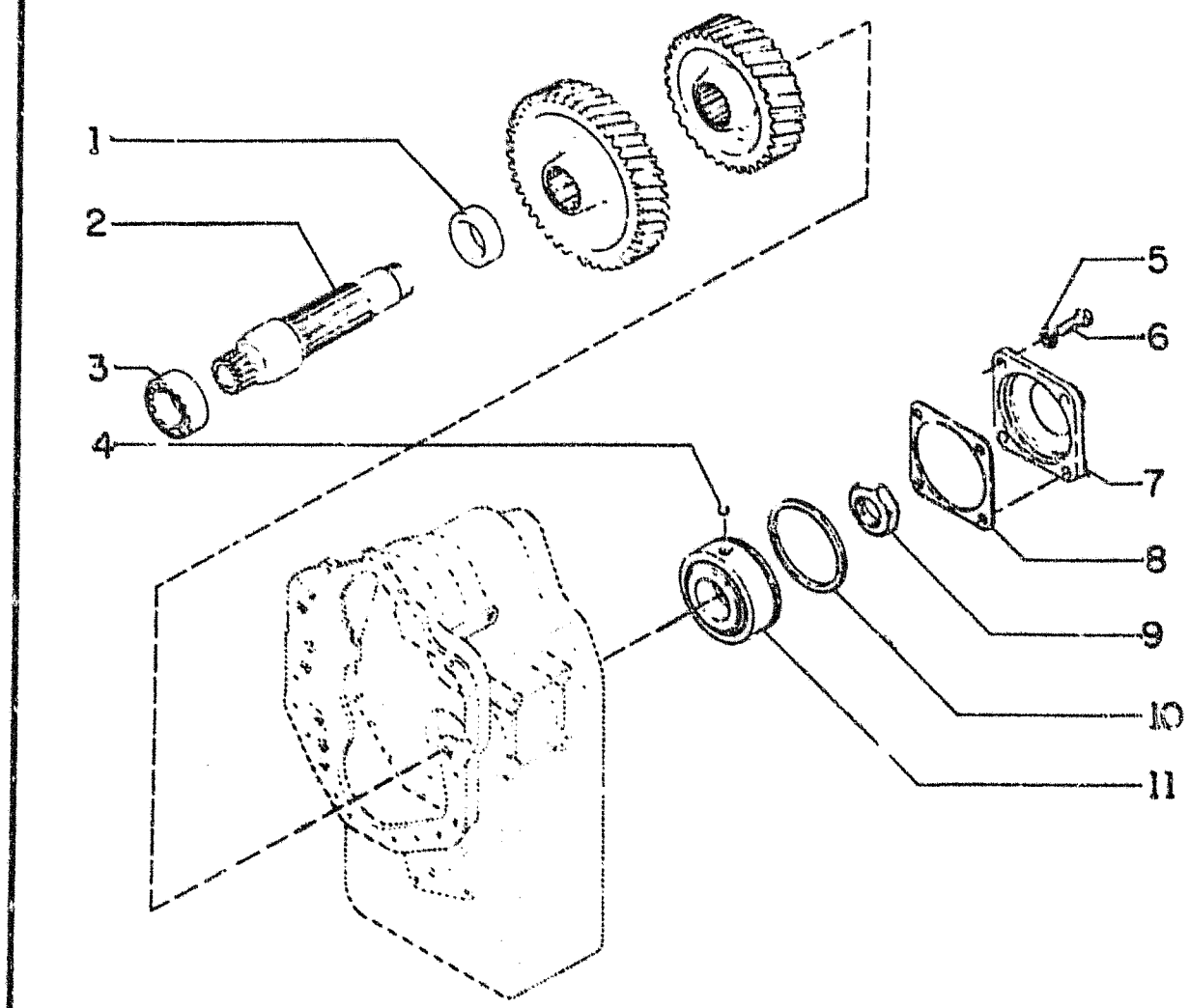

FIATALLIS FG 75R 75A B2.01/1 **QUADRO** 17 **PAG.** 1

ITEM	PEÇA Nº	QTDE	COD.	DESCRIPTION	DESCRIÇÃO
1	75206420	1	075D	SPACER	ESPAÇADOR
2	75206656	1	085A	AXLE	EIXO
3	75205434	1	341C	BEARING	ROLAMENTO
4	71004983	1	140S	BALL	ESFERA
5	70910153	4	131R	WASHER	ARRUELA
6	75206674	4	016A	SHAFT	EIXO
7	71004988	1	265C	COVER	TAMPA
8	71004987	1	120G	GASKET	JUNTA
9	73130973	1	010D	NUT	PORCA
10	71004985	1	045A	RING	ANEL
11	71004984	1	341C	BEARING	ROLAMENTO

FIATALLIS

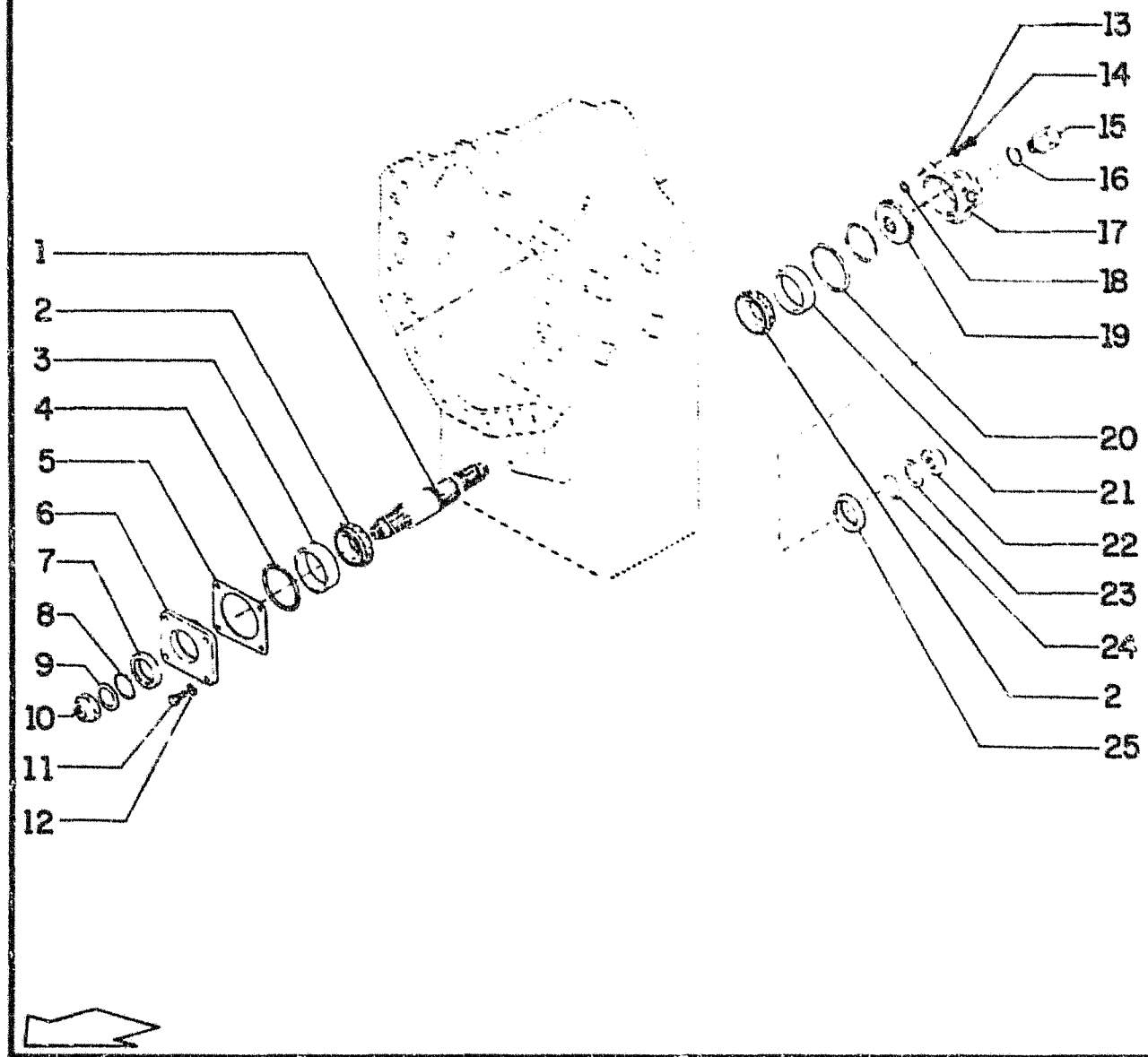

FIATALLIS FG 75R 75A B2.01/1 **QUADRO** 18 **PAG.** 1

ITEM	PEÇA Nº	QTDE	COD.	DESCRIPTION	DESCRIÇÃO
1	75285789	1	016A	SHAFT	EIXO
2	75285788	2	341C	BEARING	ROLAMENTO
3	70606899	1	341C	BEARING	ROLAMENTO
4	75206699	1	045A	RING	ANEL
5	71005107	1	198S	SHIM	CALÇO
	71005108	1	198S	SHIM	CALÇO
	71005109	1	198S	SHIM	CALÇO
	71005110	1	198S	SHIM	CALÇO
6	71005111	1	265C	COVER	TAMPA
7	71005117	1	045A	RING	ANEL
8	75206131	1	055A	SEAL RING	ANEL DE VEDAÇ
9	71005114	1	131R	WASHER	ARRUELA
10	71005113	1	010D	NUT	PORCA
11	70928528	4	040V	SCREW	PARAFUSO
12	70910153	4	131R	WASHER	ARRUELA
13	75285792	4	170R	LOCKWASHER	ARRUELA PRESS.
14	75206676	4	040V	SCREW	PARAFUSO
15	75285830	1	050T	PLUG	BUJÃO
16	75285794	1	131R	WASHER	ARRUELA
17	75285791	1	265C	COVER	TAMPA
18	75206694	1	055A	SEAL RING	ANEL DE VEDAÇ
19	75285790	1	050I	GEAR	ENGRENAGEM
20	75206699	1	045A	RING	ANEL
21	70932661	1	341C	BEARING	ROLAMENTO
22	71005113	1	010D	NUT	PORCA
23	71005114	1	131R	WASHER	ARRUELA
24	75206131	1	055A	SEAL RING	ANEL DE VEDAÇ
25	73118150	1	040V	SCREW	PARAFUSO

TRANSMISSION
TRANSMISSÃO

B2.01/1 | 18

FIATALLIS

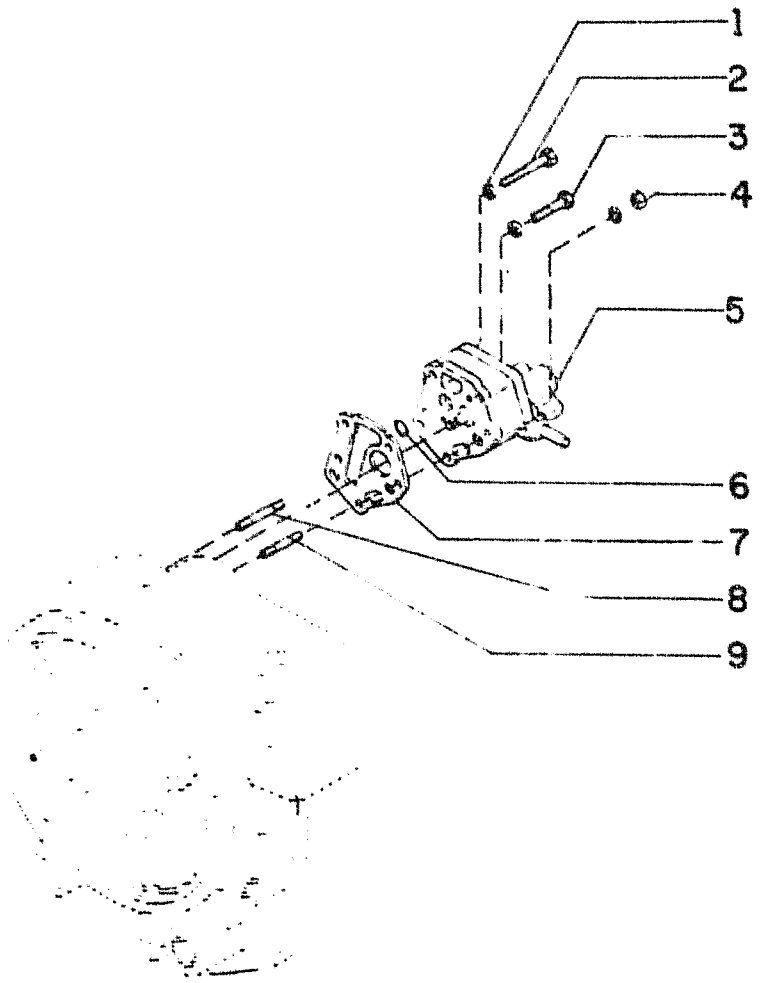

FIATALLIS FG 75R 75A B2.01/1 **QUADRO** 19 **PAG.** 1

ITEM	PEÇA Nº	QTDE	COD.	DLSCRIPTION	DESCRIÇÃO
1	70914678	5	170R	LOCKWASHER	ARRUELA PRESS
2	75285797	1	040V	SCREW	PARAFUSO
3	75285798	2	040V	SCREW	PARAFUSO
4	70910986	2	010D	NUT	PORCA
5	75285796	1	155P	PUMP	BOMBA
6	14457180	1	045A	RING	ANEL
7	73118167	1	045A	RING	ANEL
8	75205998	1	210P	STUD	PRISIONEIRO
9	75285795	1	210P	STUD	PRISIONEIRO

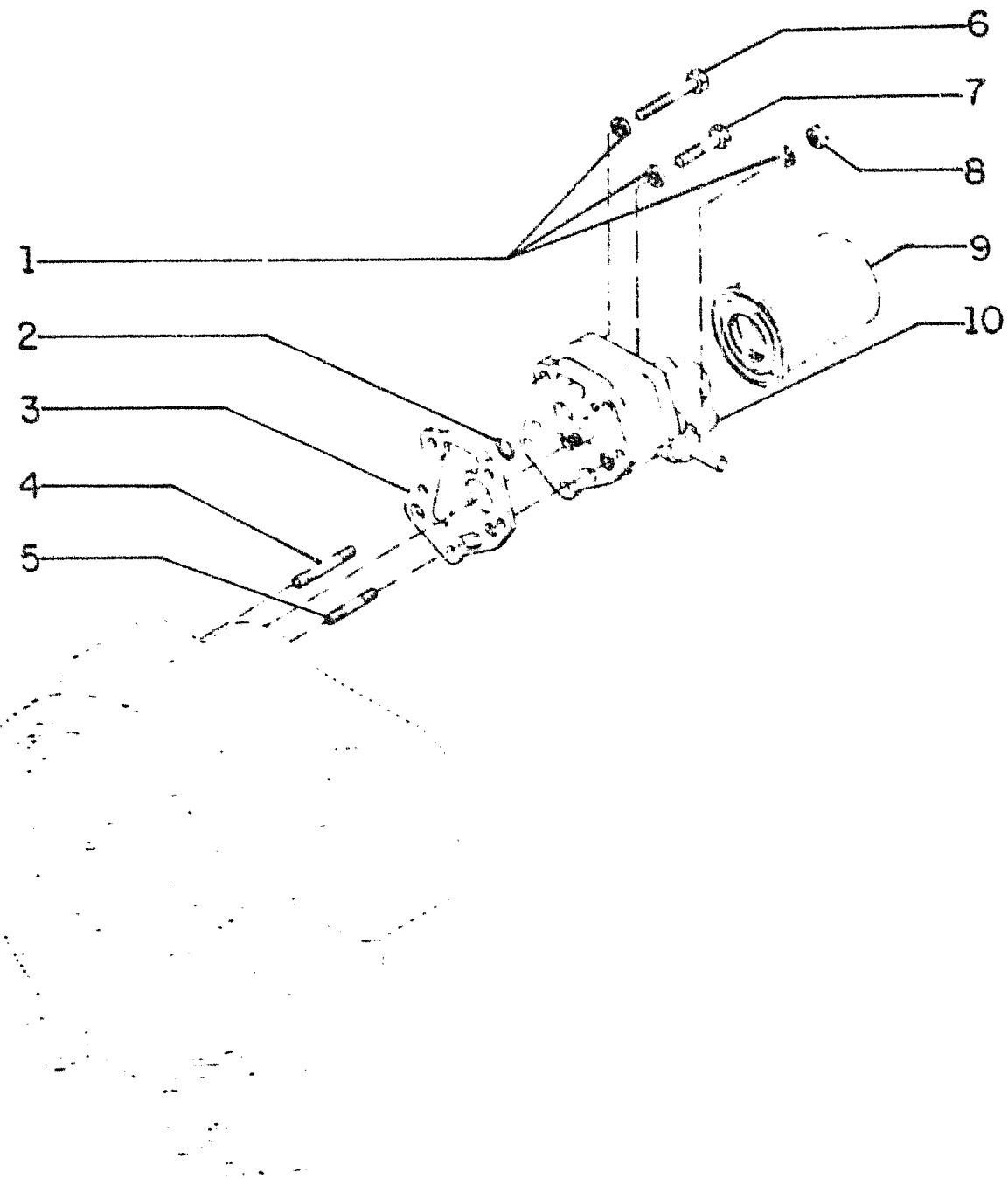

FG75R FG75A

ITEM	PART NO.	QTY	COD	DESCRIPTION	DESRICAO
1	75206320	5	170R	LOCKWASHER	ARRUELA PRES
2	14457180	1	045A	RING	ANEL
3	73118167	1	045A	RING	ANEL
4	75205998	1	210P	STUD	PRISIONEIRO
5	75285795	1	210P	STUD	PRISIONEIRO
6	75285797	1	040V	SCREW	PARAFUSO
7	75285798	2	040V	SCREW	PARAFUSO
8	70910986	2	010D	NUT	PORCA
9	75286525	1	065F	FILTER	FILTRO
10	75286524	1	498P	PUMP	BOMBA

FG75A - FROM SERIAL NUMBER 05
FG75R - FROM SERIAL NUMBER 102

TRANSMISSION PUMP & FILTER
BOMBA E FILTRO DO TRANSMISSAO

B201/1 | **19A**

ADDED 7/92

FIATALLIS

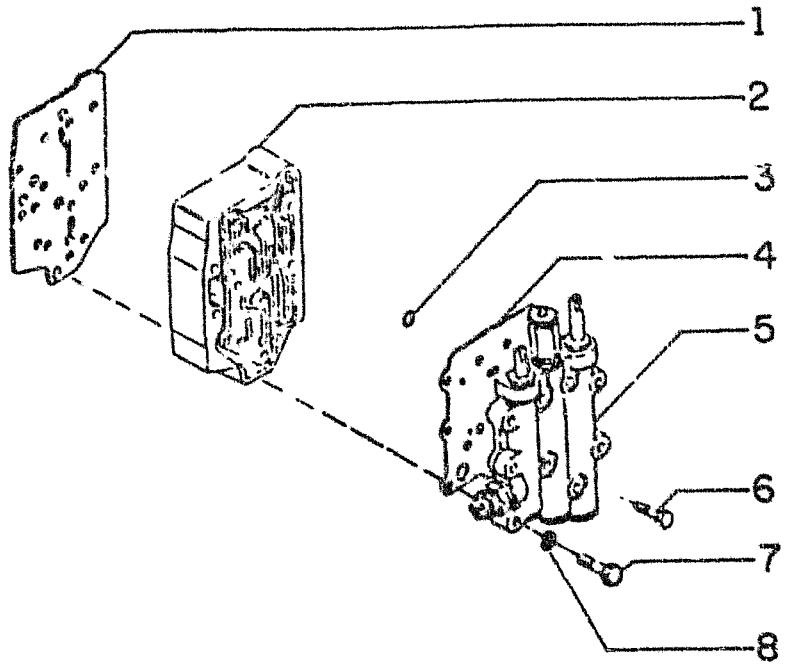

FIATALLIS FG 75R 75A B2.01/1 **QUADRO** 20 **PAG.** 1

ITEM	PEÇA Nº	QTDE	COD.	DESCRIPTION	DESCRIÇÃO
1	75204963	1	123G	SEAL ASSY	RETENTOR
2	75285801	1	010V	VALVE	VÁLVULA
3	75285988	1	045A	RING	ANEL
4	73118122	1	123G	SEAL ASSY	RETENTOR
5	75285799	1	083D	CONTROL VALVE	DISTRIBUIDOR
6	75204958	4	040V	SCREW	PARAFUSO
7	75204959	5	040V	SCREW	PARAFUSO
8	70910287	9	170R	LOCKWASHER	ARRUELA PRESS

FIATALLIS

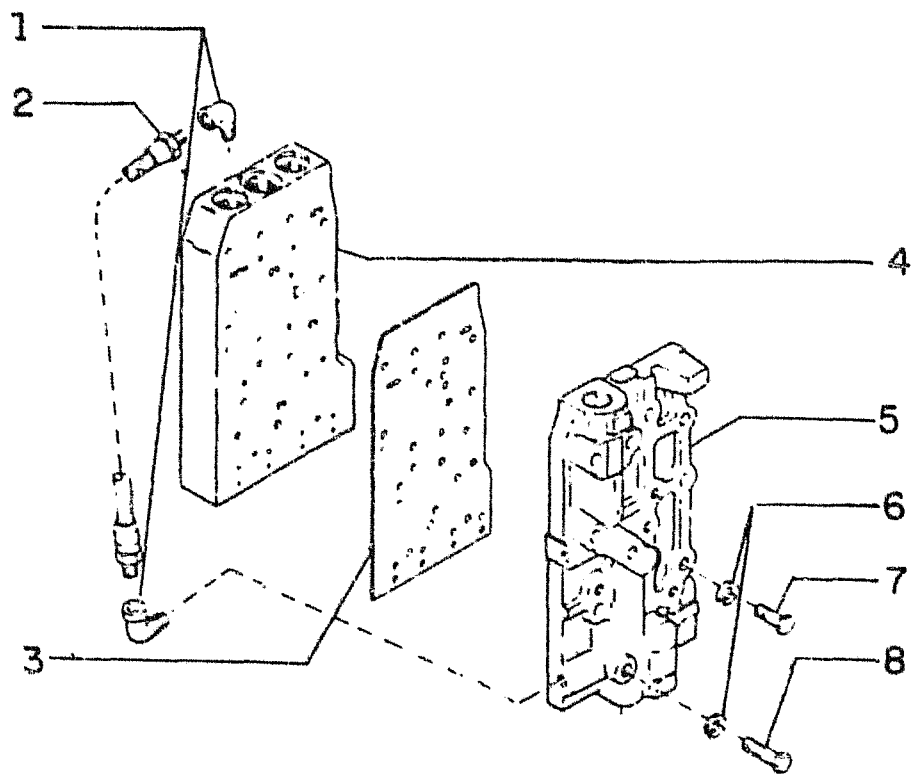

FIATALLIS FG 75R 75A B2.01/1 **QUADRO** 21 **PAG.** 1

ITEM	PEÇA Nº	QTDE	COD.	DESCRIPTION	DESCRIÇÃO
1	75206704	2	085G	ELBOW	COTOVELO
2	75205472	1	193T	TUBE	TUBO
3	75205463	1	123G	SEAL ASSY	RETENTOR
4	75285803	1	010V	VALVE	VÁLVULA
5	75285802	1	010V	VALVE	VÁLVULA
6	70910287	2	170R	LOCKWASHER	ARRUELA PRESS
7	79059932	2	040V	SCREW	PARAFUSO
8	75205418	1	040V	SCREW	PARAFUSO

TRANSMISSION
TRANSMISSÃO

B2.01/1 | 21

FIATALLIS

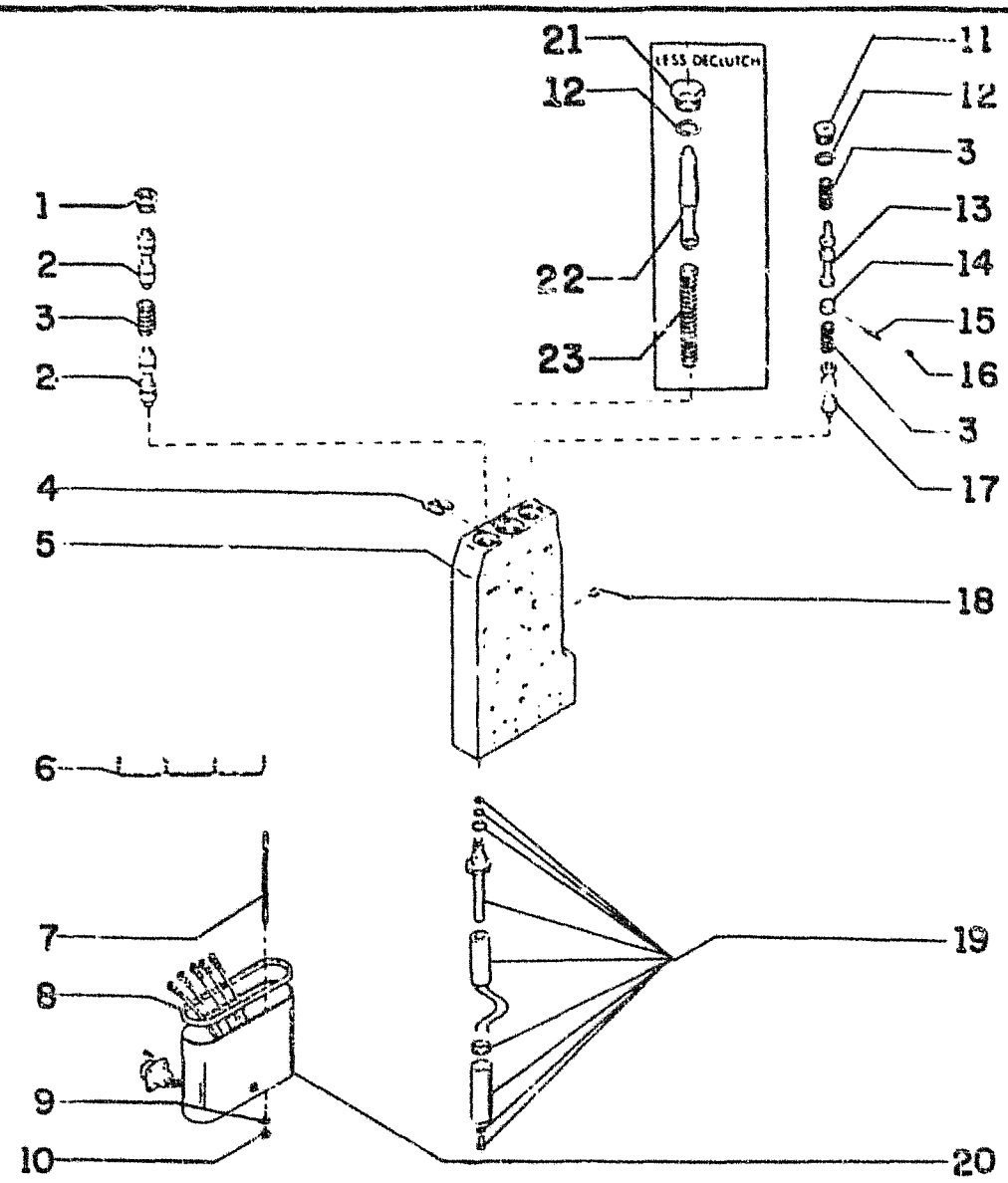

FIATALLIS FG 75R 75A B2.01/1 **QUADRO** 22 **PAG.** 1

ITEM	PEÇA Nº	QTDE	COD.	DESCRIPTION	DESCRIÇÃO
1	75205471	1	040V	SCREW	PARAFUSO
2	75285804	1	016A	SHAFT	EIXO
3	75285805	1	100M	SPRING	MOLA
4	73118118	1	045F	CLIP	PRESILHA
5	75285809	1	010V	VALVE	VÁLVULA
6	75205477	1	111C	CABLE	CABO ELETRICO
7	75205480	2	210P	STUD	PRISIONEIRO
8	75206642	1	122G	SEAL	RETENTOR
9	75285811	2	170R	LOCKWASHER	ARRUELA PRESS
10	75285812	2	010D	NUT	PORCA
11	79053442	1	050T	PLUG	BUJÃO
12	70923975	1	045A	RING	ANEL
13	75285806	1	016A	SHAFT	EIXO
14	79053464	1	045F	CLIP	PRESILHA
15	79053466	1	080P	PIN	PINO
16	75285807	1	080P	PIN	PINO
17	75285808	1	016A	SHAFT	EIXO
18	73131677	2	050T	PLUG	BUJÃO
19	75206641	1	010V	VALVE	VÁLVULA
20	75285810	1	265C	COVER	TAMPA
21	70924290	1	050T	PLUG	BUJÃO
22	73118119	1	016A	SHAFT	EIXO
23	73117875	1	100M	SPRING	MOLA

TRANSMISSION
TRANSMISSÃO

B2.01/1 | 22

DESCRIPTION	SBGRP	TAV	GRID
1 - 2 SPEED CLUTCH FG75	B201/1	15	1L-9
3 - 4 SPEED & REVERSE CLUTCH FG75	B201/1	14	1L-8
5 - 6 SPEED & HIGH FWD CLUTCH FG75	B201/1	16	1L-10
ADAPTER, TRANS HOUSING FG75	B201/1	1	1I-11
AIR CLEANER	A222	1	1F-7
AIR FILTER	A223	2	1F-8
AIR PRE-CLEANER	A222	1	1F-7
ALTERNATOR	F200	1	2E-2
BELT	F200	1	2E-2
COMPONENTS	F603	1	2F-10
ARTICULATION CYLINDER	D101	7	1P-2
CYLINDER	E332	8	2D-13
JOINT (BOTTOM)	D101	5	1O-16
JOINT (TOP)	D101	6	1O-17
SWITCH	F401	19	2F-7
VALVE	E331	2	2C-14
BACK UP ALARM FG70	F401	8	2E-8
BACK UP ALARM FG75	F401/1	8	2E-9
BATTERIES FG70	F401	11	2E-12
BATTERIES FG70 FG75	F401	7	2E-6
BATTERIES FG75	F401	14	2E-16
CABLES FG70	F401	11	2E-12
CABLES FG70 FG75	F401	7	2E-6
CABLES FG75	F401	14	2E-16
BATTERY BOX	L130	1	2G-17
BELT, ALTERNATOR	F200	1	2E-2
BELTS, FAN	A409	1	1G-17
BLADE LIFT VALVE	E331	5	2C-17
BRAKE CALIPER	C116	1	1O-6
DISC	D316	1	1P-14
FLUID HIGH PRESSURE LINES LT.	C101	4	1N-16
FLUID HIGH PRESSURE LINES RT.	C101	3	1N-15
FLUID RESERVOIR	C101	2	1N-14
FLUID RESERVOIR COMPONENTS	C108	1	1O-3
MASTER CYLINDER	C108	2	1O-4
MASTER CYLINDER LINES	C101	5	1N-17
PEDAL	C101	1	1N-13
POWER BOOSTER	C108	3	1O-5
PUMP COMPONENTS	D213	1	1P-13
CAB	L103	1	2F-15
DOOR	L104	2	2G-2
FAN ASSEMBLY	L104	9	2G-10
FANS	L104	8	2G-9
FLOOR MAT	L104	1	2F-16
HEATER FITTINGS	L104	11	2G-12
HEATER	L104	10	2G-11
LIGHTING	L104	5	2G-6
ROOF LINER	L104	4	2G-5
CAB SEALS	L104	3	2G-4
WIRING	L104	7	2G-8
CABLES ELECTRICAL FG70	F401	10	2E-11
CABLES ELECTRICAL FG75	F401	15	2F-2
CANOPY	L104/1	1	2G-13
CANOPY LINER	L104/1	2	2G-14
CIRCLE	E310	2	2B-15
SHIFT CYLINDER	E332	5	2D-11
SHIFT VALVE	E331	3	2C-15
TURN GEAR BOX COMPONENTS	E310	4	2B-16
TURN GEAR BOX	E310	2	2B-15
TURN MOTOR COMPONENTS	E310	5	2C-2
TURN MOTOR	E310	2	2B-15
CLUTCH , 3 - 4 SPEED & REVERSE FG75	B201/1	14	1L-8
HIGH SPEED FG70	B201	9	1H-17
LOW SPEED FG70	B201	8	1H-16
REVERSE & 3 - 4 SPEED FG75	B201/1	14	1L-8
SECOND SPEED FG70	B201	7	1H-15
THIRD SPEED FG70	B201	6	1H-14
5 - 6 SPEED & HIGH FWD FG75	B201/1	16	1L-10
FORWARDFG70	B201	7	1H-15
HIGH FWD & 5 - 6 SPEED FG75	B201/1	16	1L-10
LOW FORWARD FG75	B201/1	12	1L-6
REVERSE FG70	B201	6	1H-14
CONTROL VALVE TRANSMISSION FG70	B201	18	1I-10
CONVERTER FG70	B201	3	1H-11
COMPONENTS FG75	B201/1	7	1I-17
FLEX PLATES FG75	B201/1	6	1I-16
GEAR FG70	B201	4	1H-12
GEAR FG75	B201/1	9	1L-3
GEAR FG75	B201/1	10	1L-4
GEAR FG75	B201/1	11	1L-5
HOUSING FG70	B201	2	1H-10
HOUSING FG75	B201/1	3	1I-13
SHAFTS FG75	B201/1	5	1I-15
COOLANT PUMP	A403	1	1G-16
FILTER	A402	1	1G-15
CYLINDER ARTICULATION	E332	8	2D-13
CIRCLE SHIFT	E332	5	2D-11
MOLDBOARD LIFT	E332	6	2D-12
MOLDBOARD PITCH	E332	2	2D-8
MOLDBOARD SIDE SHIFT	E332	3	2D-9
RIPPER	E332/1	2	2D-15
SADDLE LOCK PIN	E332	4	2D-10
SCARIFIER	E332/1	1	2D-14
STEERING	D212	1	1P-12
WHEEL LEAN	E332	1	2D-7
ARTICULATION	D101	7	1P-2
DECALS (ARTICULATED)	L125	2	2G-16
DECALS (RIGID)	L125	1	2G-15
DIFFERENTIAL ASSEMBLY	B403	4	1N-10
DIFFERENTIAL COMPONENTS	B403	5	1N-11
DRIVE SHAFT	B301	1	1M-15
DRIVE SHAFT COMPONENTS	B316	1	1M-16
ELECTRICAL CABLE SWITCH PANEL	F401	2	2E-4
CABLES BATT. FG70 FG75	F401	7	2E-6
CABLES BATTERIES FG70	F401	11	2E-12
CABLES BATTERIES FG75	F401	14	2E-16
CABLES FG70	F401	10	2E-11
CABLES FG75	F401	15	2F-2
FUSES	F401	3	2E-5
SWITCH PANEL	F401	1	2E-3
SWITCH PANEL	F401	1	2E-3
ELECTRONIC DATA MONITOR	F401	12	2E-14
ELEMENT IMPLEMENT OIL	E328	1	2C-10
TRANS. OIL FG70	B201	11	1I-3
TRANS. OIL FG75	B217	1	1M-14
AIR	A223	2	1F-8
ENGINE OIL	A303	1	1G-12
FUEL	A226	1	1F-12
END CAP VALVE	E331	7	2D-3
END CAP VALVE	E331	9	2D-4
ENGINE	A000	1	1E-2
BLOCK	A101	1	1E-5
BLOCK PLUGS	A101	2	1E-6
CAMSHAFT	A107	1	1E-16
CAMSHAFT DRIVE	A106	1	1E-15
CONNECTING RODS	A105	1	1E-14
COOLANT THERMOSTAT	A402	1	1G-15
CRANKSHAFT	A103	1	1E-11
CYLINDER SLEEVES	A105	1	1E-14
DAMPER	A104	1	1E-13
EXHAUST MANIFOLD	A254	1	1G-7
EXHAUST VALVE	A107	1	1E-16
FLYWHEEL	A103	1	1E-11
FLYWHEEL HOUSING	A102	2	1E-10
FRONT COVER	A102	1	1E-9
FUEL PUMP DRIVE	A106	1	1E-15
HEAD	A101	3	1E-7
INTAKE VALVE	A107	1	1E-16
LIFTING BRACKET	A101	4	1E-8
MAIN BEARING	A103	2	1E-12
MAIN BEARING CAPS	A101	1	1E-5
MOUNTS FG70	A002	1	1E-3
MOUNTS FG75	A002/1	1	1E-4
OIL DIPSTICK	A301	2	1G-10
OIL FILL PLUG	A301	2	1G-10
OIL FILTER	A303	1	1G-12
OIL HEAT EXCHANGER	A303	1	1G-12
OIL PAN	A102	1	1E-9
OIL PUMP	A302	1	1G-11

FIATALLIS

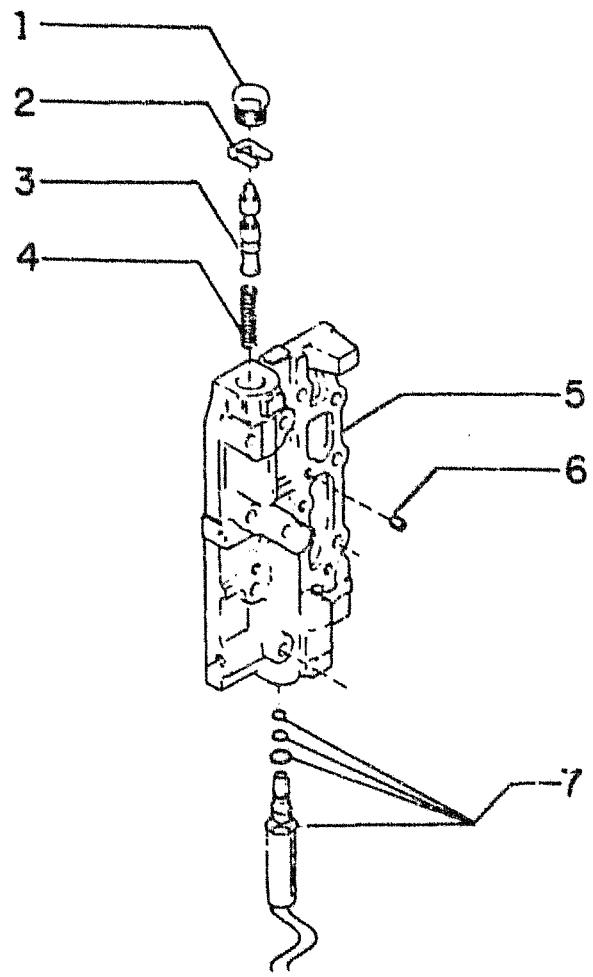

FIATALLIS FG 75R 75A B2.01/1 **QUADRO** 23 **PAG.** 1

ITEM	PEÇA Nº	QTDE	COD.	DESCRIPTION	DESCRIÇÃO
1	70924290	1	050T	PLUG	BUJÃO
2	73118118	1	045F	CLIP	PRESILHA
3	75285812	1	010D	NUT	PORCA
4	75285805	1	100M	SPRING	MOLA
5	75285802	1	010V	VALVE	VÁLVULA
6	73131677	7	050T	PLUG	BUJÃO
7	75206641	1	010V	VALVE	VÁLVULA

FIATALLIS

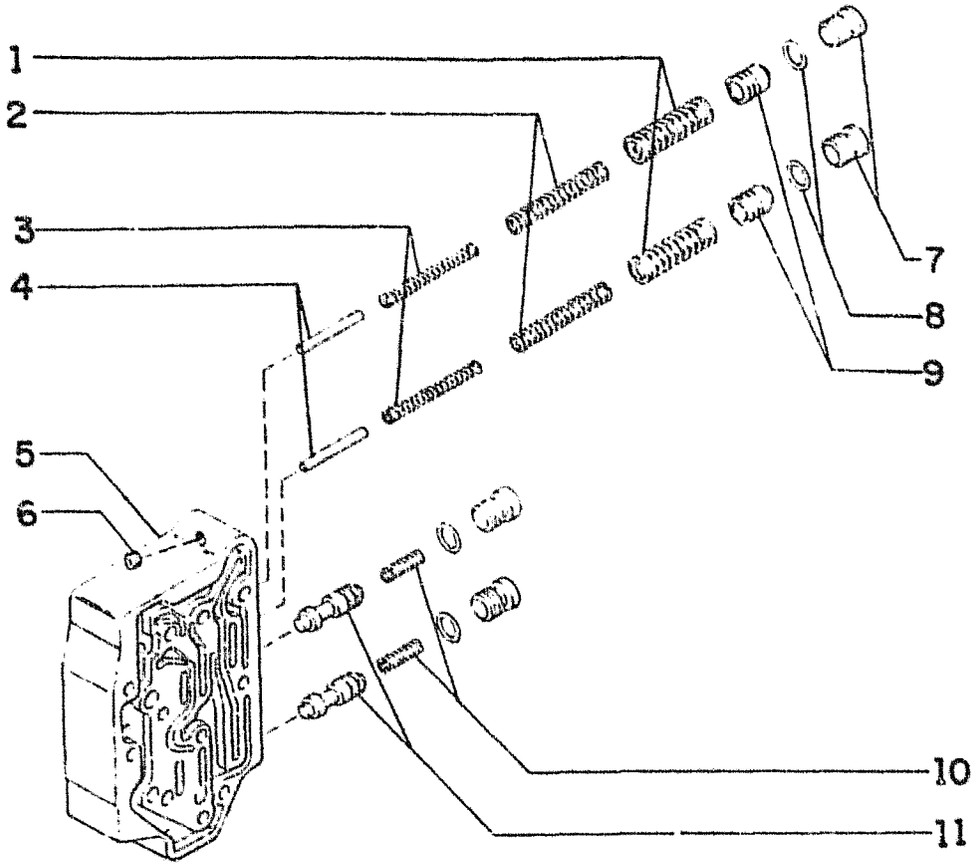

FIATALLIS FG 75R 75A B2.01/1 **QUADRO** 24 **PAG.** 1

ITEM	PEÇA Nº	QTDE	COD.	DESCRIPTION	DESCRIÇÃO
1	75285817	2	100M	SPRING	MOLA
2	75285816	2	100M	SPRING	MOLA
3	75285815	2	100M	SPRING	MOLA
4	75285814	2	080P	PIN	PINO
5	75285801	1	010V	VALVE	VÁLVULA
6	75285625	2	050T	PLUG	BUJÃO
7	73118329	2	050T	PLUG	BUJÃO
8	70923875	2	045A	RING	ANEL
9	75285818	2	010V	VALVE	VÁLVULA
10	73118126	2	100M	SPRING	MOLA
11	75285819	2	016A	SHAFT	EIXO

FIATALLIS

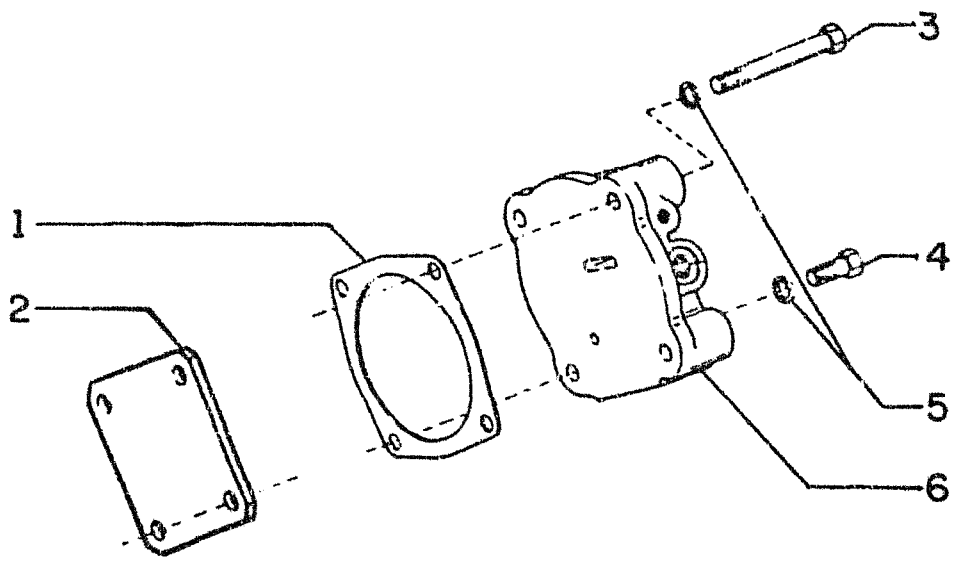

FIATALLIS FG 75R 75A B2.01/1 **QUADRO** 25 **PAG.** 1

ITEM	PEÇA Nº	QTDE	COD.	DESCRIPTION	DESCRIÇÃO
1	75285821	1	120G	GASKET	JUNTA
2	75285822	1	110P	PLATE	PLACA
3	75285823	2	040V	SCREW	PAPAFUSO
4	75285824	2	040V	SCREW	PARAFUSO
5	70910287	2	170R	LOCKWASHER	ARRUELA PRESS
6	75285820	1	010V	VALVE	VÁLVULA

FIATALLIS

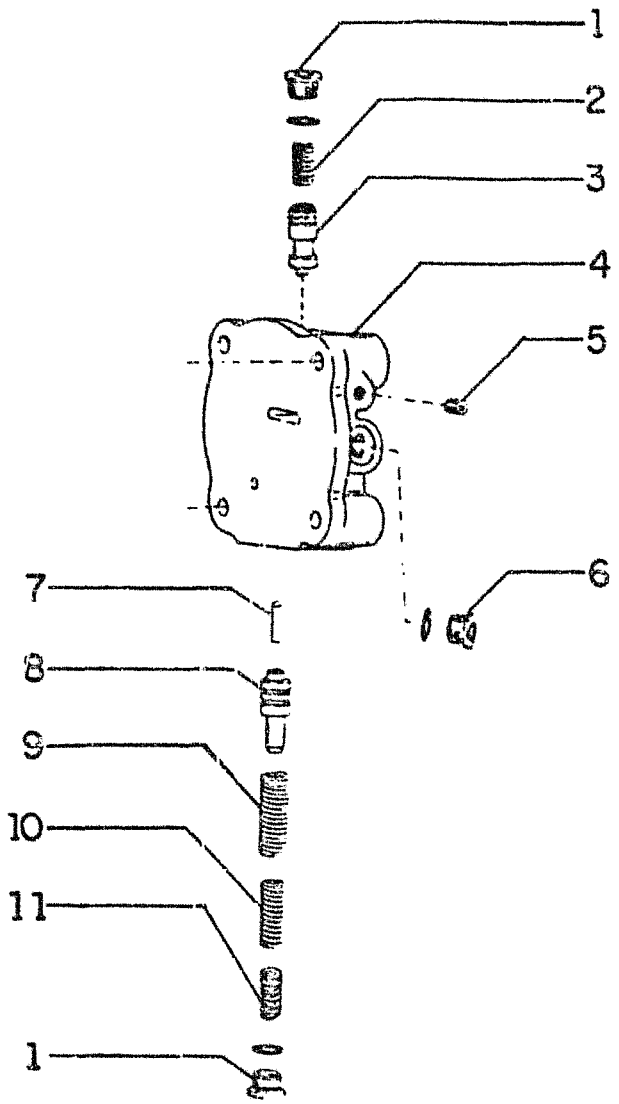

FIATALLIS FG 75R 75A B2.01/1 **QUADRO** 26 **PAG.** 1

ITEM	PEÇA Nº	QTDE	COD.	DESCRIPTION	DESCRIÇÃO
1	73118329	2	050T	PLUG	BUJÃO
2	73118126	1	100M	SPRING	MOLA
3	75285825	1	016A	SHAFT	EIXO
4	75285820	1	010V	VALVE	VÁLVULA
5	70922374	1	050T	PLUG	BUJÃO
6	75285826	1	050T	PLUG	BUJÃO
7	75285814	1	080P	PIN	PINO
8	75285818	1	010V	VALVE	VÁLVULA
9	75285827	1	100M	SPRING	MOLA
10	75285828	1	100M	SPRING	MOLA
11	75285829	1	100M	SPRING	MOLA

FIATALLIS

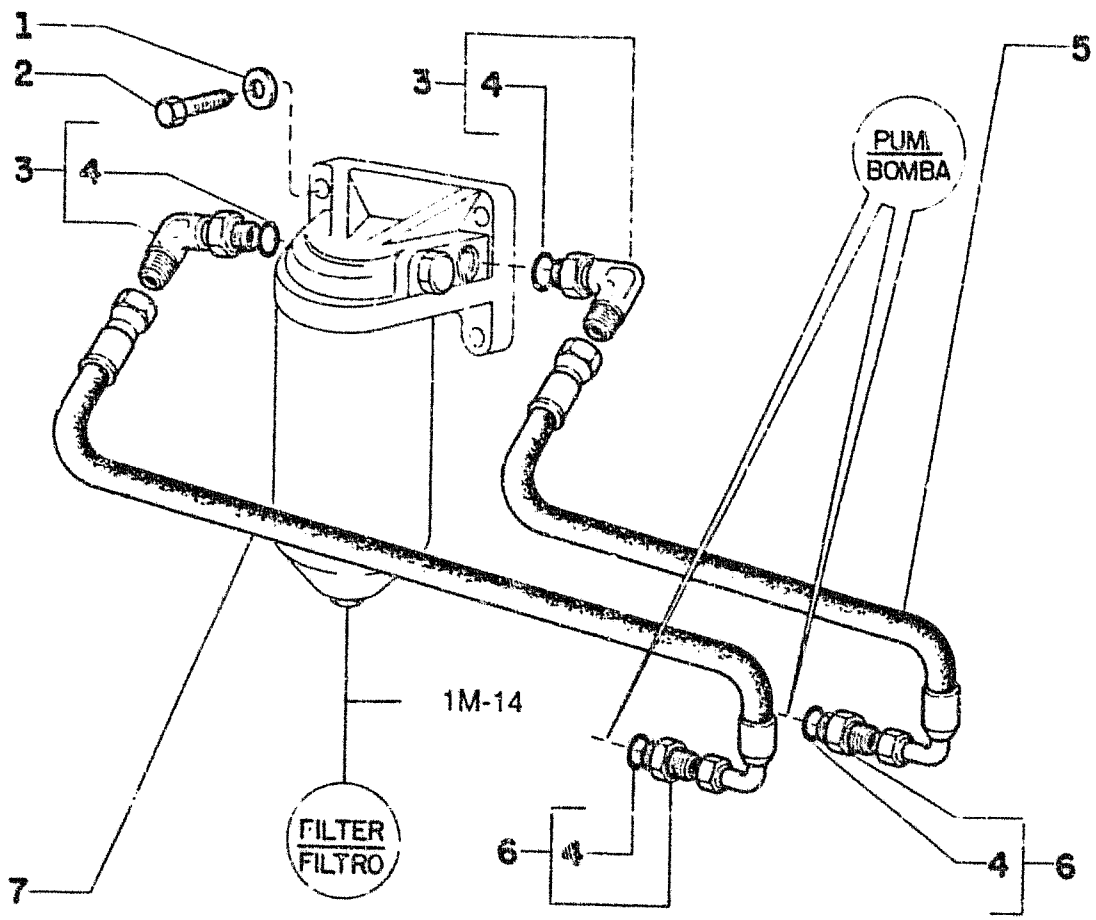

FIATALLIS FG 70R 70A 75R 75A B2.06 **QUADRO** 1 **PAG.** 1

ITEM	PEÇA Nº	QTDE	COD.	DESCRIPTION	DESCRIÇÃO
1	70677006	4	.131R	WASHER	ARRUELA
2	70921076	4	040V	SCREW	PARAFUSO
3	70921203	2	020R	FITTING	CONEXÃO
4	70921206	4	158G	O'RING	O'RING
5	73158844	1	192T	HOSE ASSY	MANGUEIRA
6	70921217	2	075B	CONNECTOR	CONECTOR
7	73158843	1	192T	HOSE ASSY	MANGUEIRA

FILTER OIL TRANSMISSION SYSTEM
SISTEMA FILTRO DE OLEO DA TRANSMISSÃO

B2.06 | 1

FIATALLIS

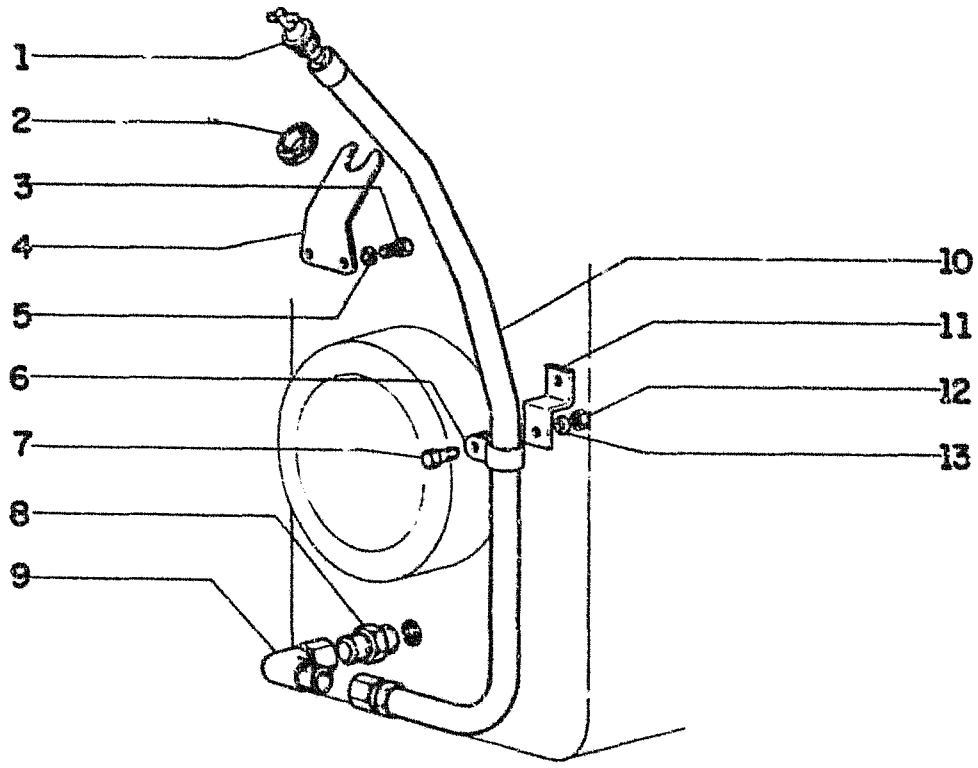

FIATALLIS FG 70R 70A B2.06 **QUADRO** 2 **PAG.** 1

ITEM	PEÇA Nº	QTDE	COD.	DESCRIPTION	DESCRIÇÃO
1	73158775	1	091A	DIPSTICK	HASTE DE NIVEL
2	76021289	1	045A	RING	ANEL
3	70927400	2	040V	SCREW	PARAFUSO
4	75238793	1	300S	SUPPORT	SUPORTE
5	70914678	2	170R	LOCKWASHER	ARRUELA PRESS.
6	70929806	1	031F	CLAMP	ABRAÇADEIRA
7	70921175	1	040V	SCREW	PARAFUSO
8	70919342	1	020R	FITTING	CONEXÃO
9	70919624	1	020R	FITTING	CONEXÃO
10	75238983	1	193T	TUBE	TUBO
11	75238987	1	300S	SUPPORT	SUPORTE
12	70911028	1	010D	NUT	PORCA
13	70928460	1	131R	WASHER	ARRUELA

TRANSMISSION OIL DIPSTICK
VARETA DE NÍVEL DE ÓLEO DA TRANSMISSÃO

B2.06 | 2

FIATALLIS

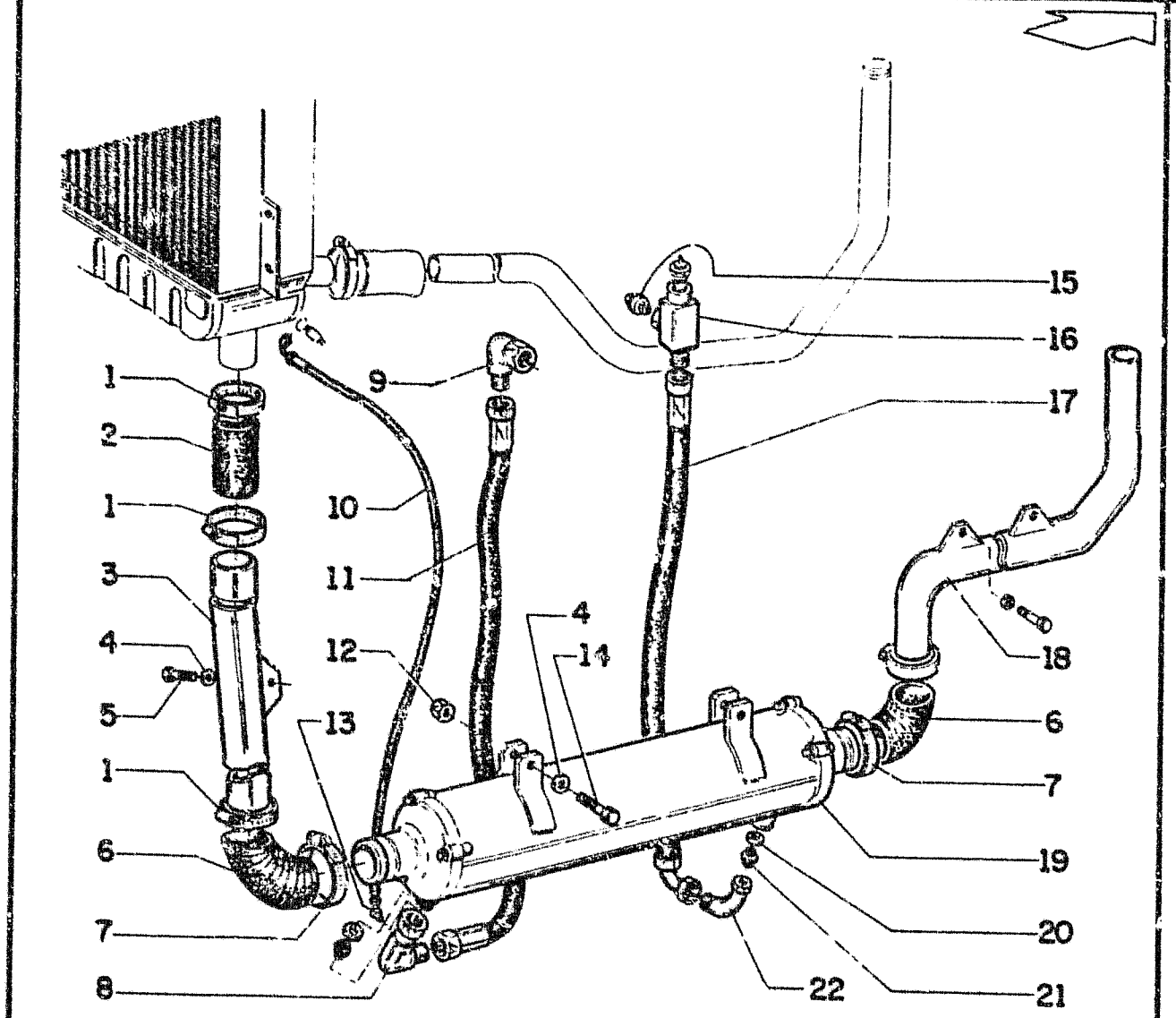

FIATALLIS FG 70R 70A B2.06 **QUADRO** 3 **PAG.** 1

ITEM	PEÇA Nº	QTDE	COD.	DESCRIPTION	DESCRIÇÃO
1	70921913	5	031F	CLAMP	ABRAÇADEIRA
2	73107726	1	285T	HOSE	MANGUEIRA
3	75235174	1	193T	TUBE	TUBO
4	70677006	5	131R	WASHER	ARRUELA
5	70922763	1	040V	SCREW	PARAFUSO
6	75221770	2	085G	ELBOW	COTOVELO
7	70921914	2	031F	CLAMP	ABRAÇADEIRA
8	73155831	1	085G	ELBOW	COTOVELO
9	70919625	1	085G	ELBOW	COTOVELO
10	73155834	1	192T	HOSE ASSY	MANGUEIRA
11	75237755	1	192T	HOSE ASSY	MANGUEIRA
12	70911026	2	010D	NUT	PORCA
13	70919464	1	085G	ELBOW	COTOVELO
14	70927218	2	040V	SCREW	PARAFUSO
15	70923174	2	075B	CONNECTOR	CONECTOR
16	70925835	1	020R	FITTING	CONEXÃO
17	75237754	1	192T	HOSE ASSY	MANGUEIRA
18	73158769	1	193T	TUBE	TUBO
19	75235217	1	025S	HEAT EXCHANGER	TROCADOR CALOR
20	73136636	2	131R	WASHER	ARRUELA
21	73136629	2	075B	CONNECTOR	CONECTOR
22	70329744	1	085G	ELBOW	COTOVELO

TRANSMISSION OIL COOLER GROUP
GRUPO REFRIGERAÇAO DA TRANSMISSÂO

B2.06 | 3

FIATALLIS

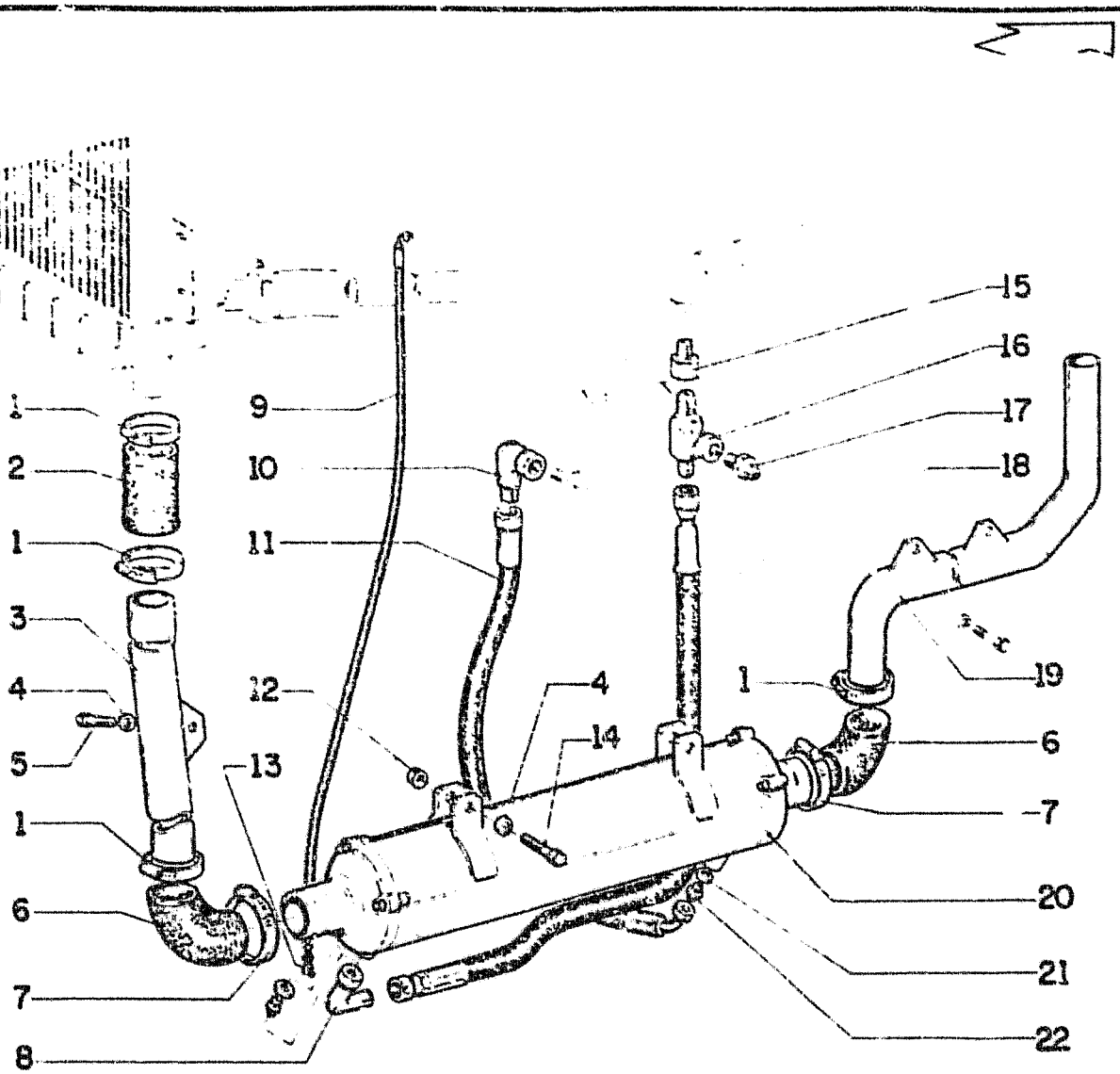

FIATALLIS FG 75R 75A B2.06/1 **QUADRO 1** **PAG. 1**

ITEM	PEÇA Nº	QTDE	COD.	DESCRIPTION	DESCRIÇÃO
1	70921913	5	031F	CLAMP	ABRAÇADEIRA
2	73107726	1	285T	HOSE	MANGUEIRA
3	75235174	1	193T	TUBE	TUBO
4	70677006	3	131R	WASHER	ARRUELA
5	70922763	1	040V	SCREW	PARAFUSO
6	75221770	2	085G	ELBOW	COTOVELO
7	70921914	2	031F	CLAMP	ABRAÇADEIRA
8	73155931	1	085G	ELBOW	COTOVELO
9	73155834	1	192T	HOSE ASSY	MANGUEIRA
10	70919625	1	085G	ELBOW	COTOVELO
11	75237755	1	192T	HOSE ASSY	MANGUEIRA
12	70911026	2	010D	NUT	PORCA
13	70919464	1	085G	ELBOW	COTOVELO
14	70927218	2	040V	SCREW	PARAFUSO
15	75238305	1	075B	CONNECTOR	CONECTOR
16	70925835	1	020R	FITTING	CONEXÃO
17	70923174	2	075B	CONNECTOR	CONECTOR
18	75237754	1	192T	HOSE ASSY	MANGUEIRA
19	73158769	1	193T	TUBE	TUBO
20	75235217	1	025S	HEAT EXCHANGER	TROCADOR CALOR
21	73136636	2	131R	WASHER	ARRUELA
22	73136629	2	075B	CONNECTOR	CONECTOR

TRANSMISSION OIL COOLER
TROCADOR DE CALOR DO ÓLEO DA TRANSMISSÃO

B2.06/1 | 1

FIATALLIS

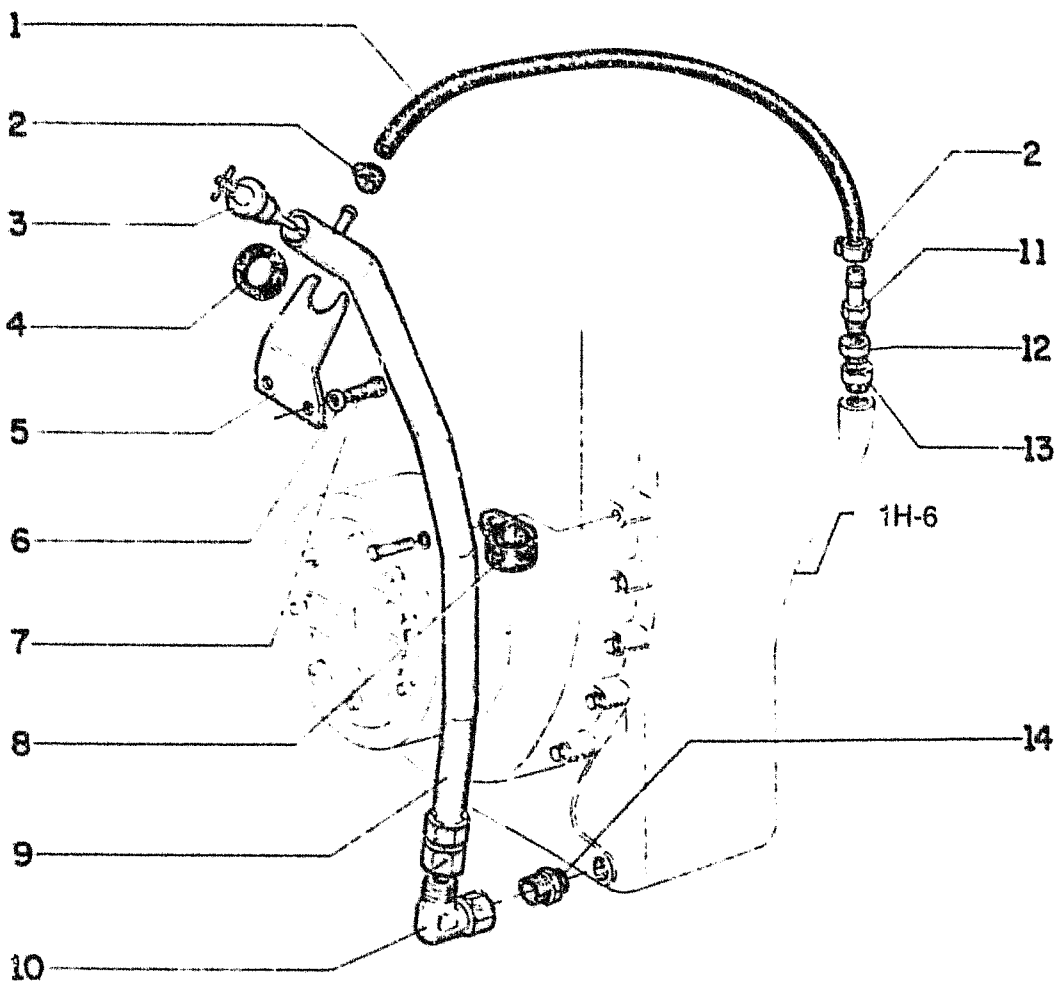

FIATALLIS 75R 75A B2.06/1 **QUADRO** 2 **PAG.** 1

ITEM	PEÇA Nº	QTDE	COD.	DESCRIPTION	DESCRIÇÃO
1	75237776	1	192T	HOSE ASSY	MANGUEIRA
2	79084753	2	031F	CLAMP	ABRAÇADEIRA
3	75237787	1	090A	ROD	HASTE
4	76021289	1	045A	RING	ANEL
5	75238793	1	300S	SUPPORT	SUPORTE
6	70914678	2	170R	LOCKWASHER	ARRUELA PRESSÃO
7	70927400	2	040V	SCREW	PARAFUSO
8	70929806	1	031F	CLAMP	ABRAÇADEIRA
9	75238792	1	193T	TUBE	TUBO
10	70919624	4	020R	FITTING	CONEXÃO
11	70927038	1	020R	FITTING	CONEXÃO
12	70901840	1	095B	BUSHING	BUCHA
13	70901825	1	020R	FITTING	CONEXÃO
14	70913342	2	020R	FITTING	CONEXÃO

TRANSMISSION OIL DIPSTICK
VARETA DO OLEO DA TRANSMISSÃO

B2.06/1 | 2

FIATALLIS

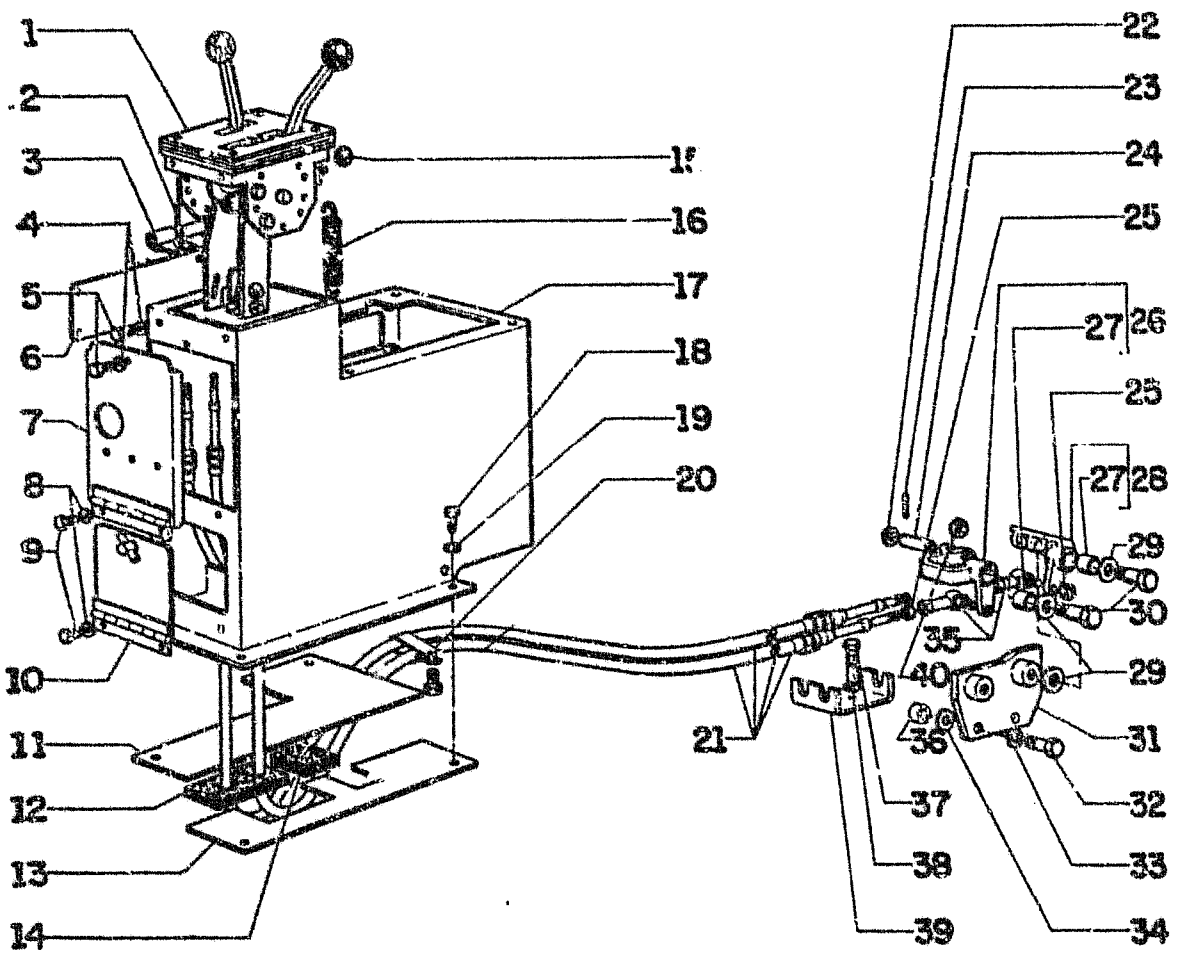

FIATALLIS FL 70R 70A B2.07 QUADRO 1 PAG. 1

ITEM	PEÇA Nº	QTDE	COD.	DESCRIPTION	DESCRIÇÃO
1	73159050	1	7117	CONTROL LEVERS	ALAVANCAS
2	73159099	1	045L	LEVER	ALAVANCA
3	73159092	1	140C	HINGE	DOBRADIÇA
4	70929662	5	131R	WASHER	ARRUELA
5	70921566	5	040V	SCREW	PARAFUSO
6	73150602	1	105P	PLATE	CHAPA
7	73152940	1	265C	COVER	TAMPA
8	70926190	8	131R	WASHER	ARRUELA
9	70927541	8	040V	SCREW	PARAFUSO
10	73152282	1	265C	COVER	TAMPA
11	73153599	1	105P	PLATE	CHAPA
12	73159089	1	122G	SEAL	RETENTOR
13	73153598	1	105P	PLATE	CHAPA
14	73153601	1	122G	SEAL	RETENTOR
15	73113247	1	150P	KNOB	MANOPLA
16	73111435	1	100M	SPRING	MOLA
17	73159093	1	080M	BRACKET	CONSOLE
18	70921556	4	040V	SCREW	PARAFUSO
19	70928178	4	131R	WASHER	ARRUELA
20	70932871	2	031F	CLAMP	ABRAÇADEIRA
21	73159051	2	105F	ROPE	CABO
22	70910335	4	131R	WASHER	ARRUELA
23	70900802	4	270C	COTTER PIN	CONTRA PINO
24	73125917	2	080P	PIN	PINO
25	70911040	6	010D	NUT	PORCA
26	73159018	1	063R	BELL CRANCK	ALAVANCA ANGULA
27	70087751	2	095B	BUSHING	BUCHA
28	73159017	1	063R	BELL CRANCK	ALAVANCA ANGULA
29	70927282	4	131R	WASHER	ARRUELA
30	73125926	2	040V	SCREW	PARAFUSO
31	73125921	1	300S	SUPPORT	SUPORTE
32	70924842	2	040V	SCREW	PARAFUSO
33	70919312	2	170R	LOCKWASHER	ARRUELA PRESS
34	70680153	8	198S	SHIM	CALÇO
35	70686384	2	061E	END	EXTREMIDADE

TRANSMISSION CONTROL
CONTROLE DA TRANSMISSÃO

B2.07 | 1

FIATALLIS

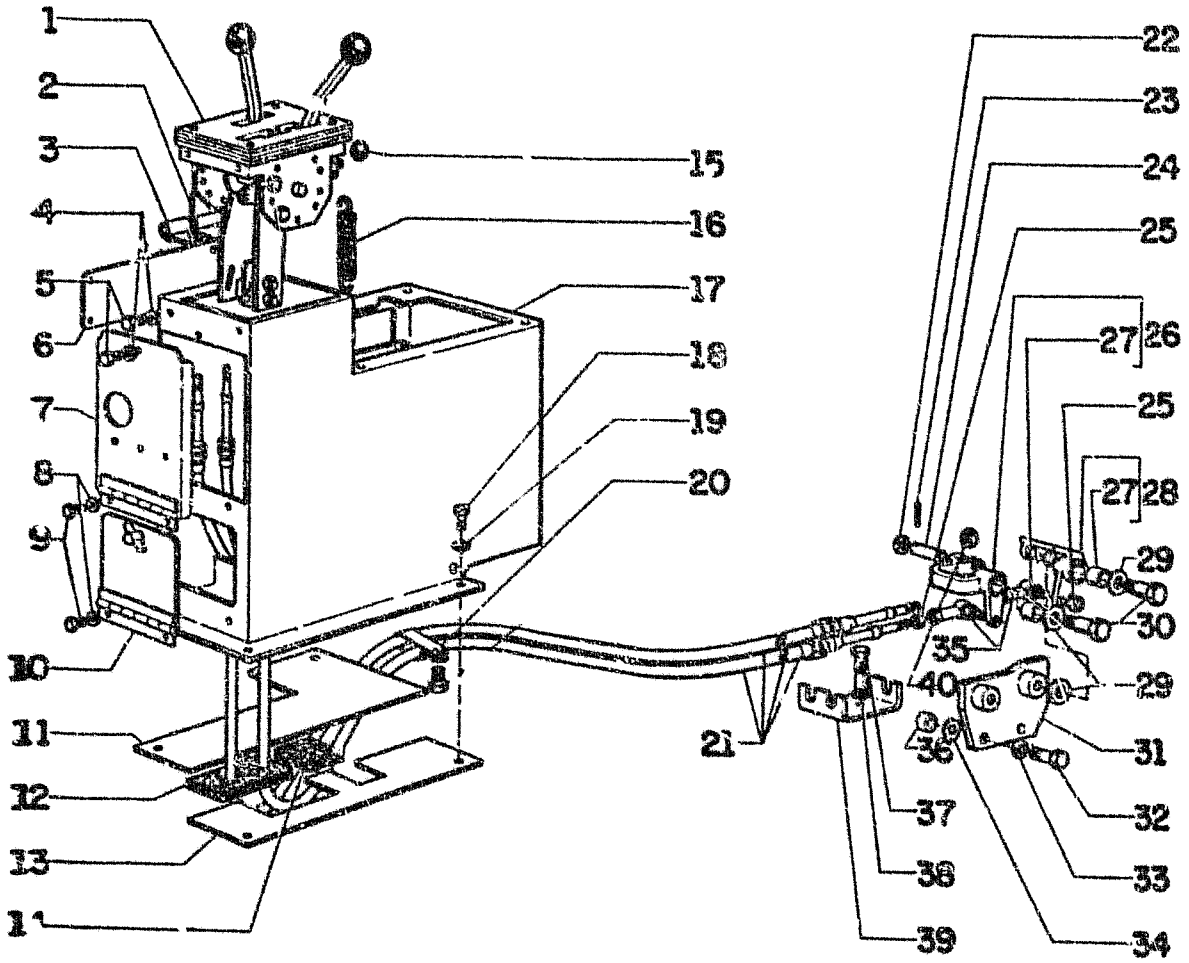

FIATALLIS FG 70R 70A B2.07 **QUADRO** 1 **PAG.** 2

ITEM	PEÇA Nº	QTDE	COD.	DESCRIPTION	DESCRIÇÃO
36	73125919	2	075D	SPACER	ESPAÇADOR
37	70922300	2	040V	SCREW	PARAFUSO
38	70929156	2	131R	WASHER	ARRUELA
39	73159010	1	105P	PLATE	CHAPA
40	73125916	4	075D	SPACER	ESPAÇADOR

TRANSMISSION CONTROL
CONTROLE DA TRANSMISSÃO

B2.07 | 1

FIATALLIS

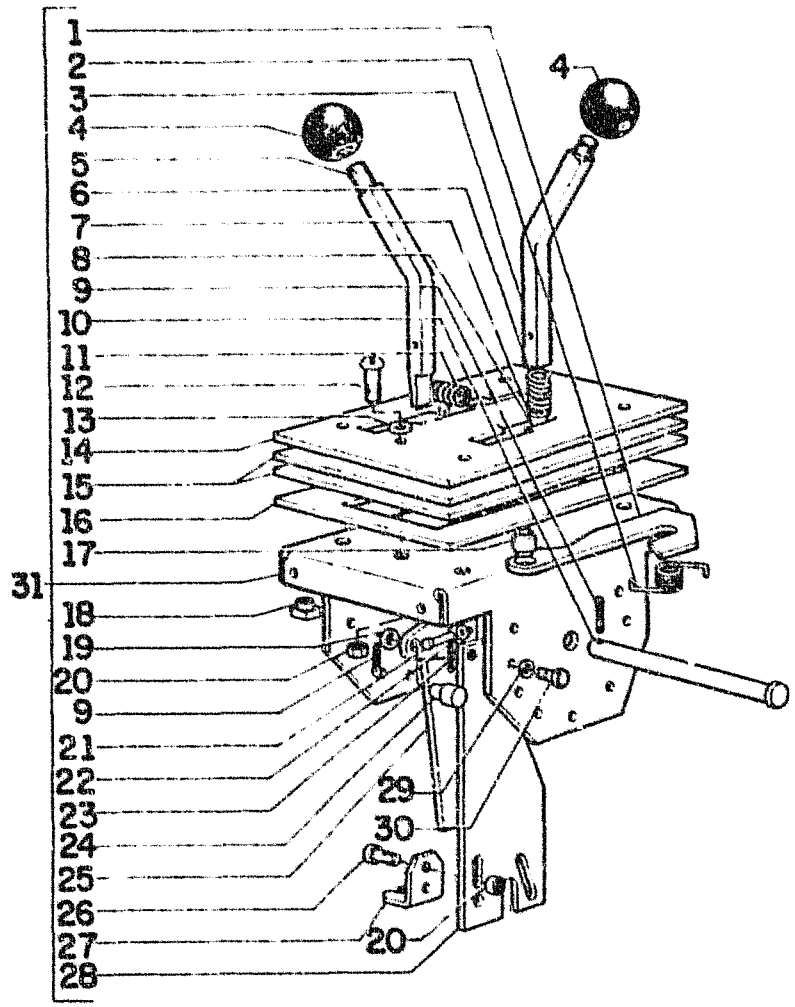

FIATALLIS FG 70R 70A B2.07 **QUADRO** 2 **PAG.** 1

ITEM	PEÇA Nº	QTDE	COD.	DESCRIPTION	DESCRIÇÃO
1	73131019	1	080P	PIN	PINO
2	73131026	1	100M	SPRING	MOLA
3	73159463	1	045L	LEVER	ALAVANCA
4	73111596	2	150P	KNOB	MANOPLA
5	73159464	1	045L	LEVER	ALAVANCA
6	73123926	1	100M	SPRING	MOLA
7	73123921	1	060D	DISC	DISCO
8	70905358	1	140S	BALL	ESFERA
9	70904001	4	270C	COTTER PIN	CONTRA PINO
10	73131019	1	080P	PIN	PINO
11	73132653	1	100M	SPRING	MOLA
12	70935471	5	040V	SCREW	PARAFUSO
13	73131027	1	131R	WASHER	ARRUELA
14	73159465	1	105P	PLATE	CHAPA
15	73159466	2	105P	PLATE	CHAPA
16	73159467	1	105P	PLATE	CHAPA
17	73131024	1	095B	BUSHING	BUCHA
18	73131028	4	010D	NUT	PORCA
19	73131029	3	131R	WASHER	ARRUELA
20	70923358	8	010D	NUT	PORCA
21	73123927	2	080P	PIN	PINO
22	70931855	2	131R	WASHER	ARRUELA
23	70900970	4	270C	COTTER PIN	CONTRA PINO
24	73111597	2	165S	ARTICULATION	ARTICULAÇÃO
25	73128614	1	014B	STRAP	CINTA
26	70928136	4	040V	SCREW	PARAFUSO
27	73128618	2	300S	SUPPORT	SUPORTE
28	73128615	1	014B	STRAP	CINTA
29	70914105	4	131R	WASHER	ARRUELA
30	70929002	4	040V	SCREW	PARAFUSO
31	73159050	1	7117	CONTROL LEVERS	ALAVANCAS

TRANSMISSION SHIFT CONTROL ASSEMBLY
CONJUNTO DE COMANDO MUDANÇA DE MARCHA

B2.07 | 2

FIATALLIS

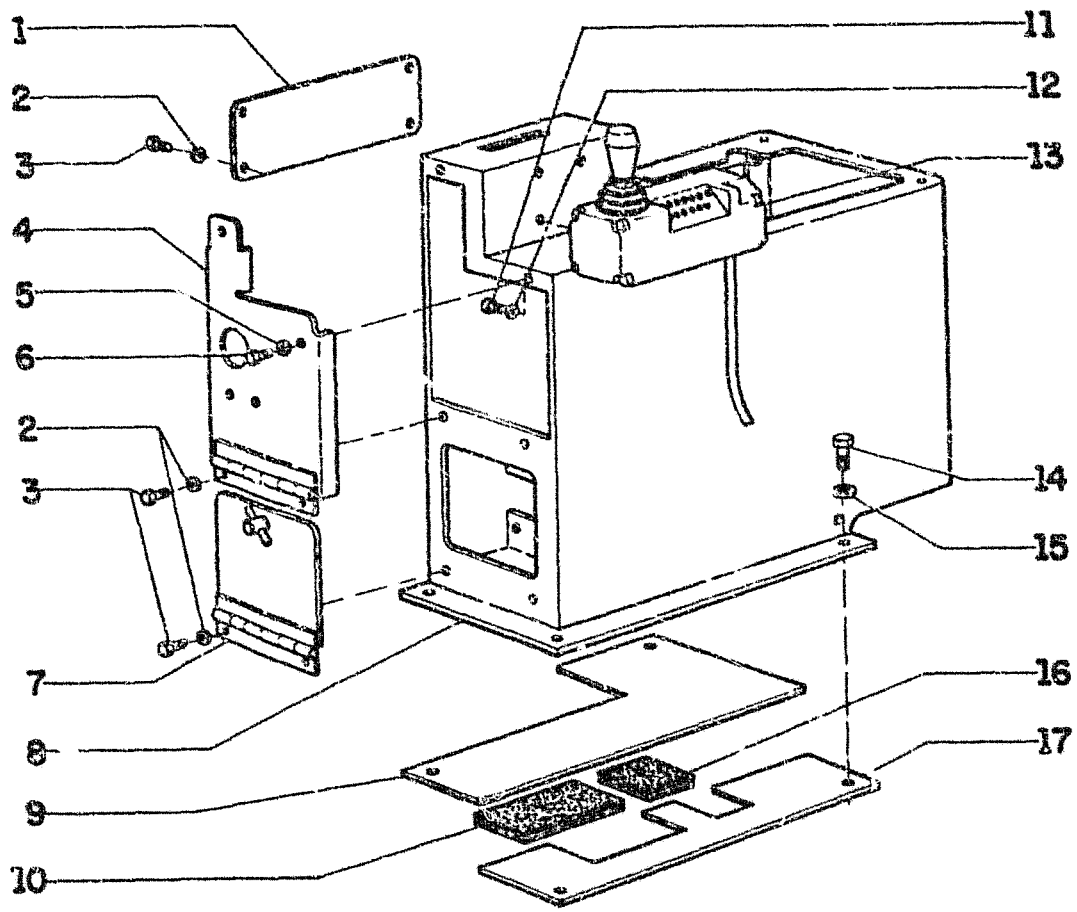

FIATALLIS FG 75R 75A B2.07/1 **QUADRO** 2 **PAG.** 1

ITEM	PEÇA Nº	QTDE	COD.	DESCRIPTION	DESCRIÇÃO
1	73150602	1	105P	PLATE	CHAPA
2	70927541	8	040V	SCREW	PARAFUSO
3	70928190	8	131R	WASHER	ARRUELA
4	75238358	1	265C	COVER	TAMPA
5	70933756	2	131R	WASHER	ARRUELA
6	70907722	2	040V	SCREW	PARAFUSO
7	73152282	1	265C	COVER	TAMPA
8	75237891	1	080M	BRACKET	CONSOLE
9	73153599	1	105P	PLATE	CHAPA
10	73153600	1	122G	SEAL	RETENTOR
11	10444631	4	040V	SCREW	PARAFUSO
12	11195371	4	131R	WASHER	ARRUELA
13	75237905	1	7117	CONTROL LEVERS	ALAVANCAS
14	70921556	4	040V	SCREW	PARAFUSO
15	70928178	4	131R	WASHER	ARRUELA
16	73153601	1	122G	SEAL	RETENTOR
17	73153598	1	105P	PLATE	CHAPA

TRANSMISSION CONTROL
CONTROLE DA TRANSMISSÃO

B2.07/1 | 2

FIATALLIS

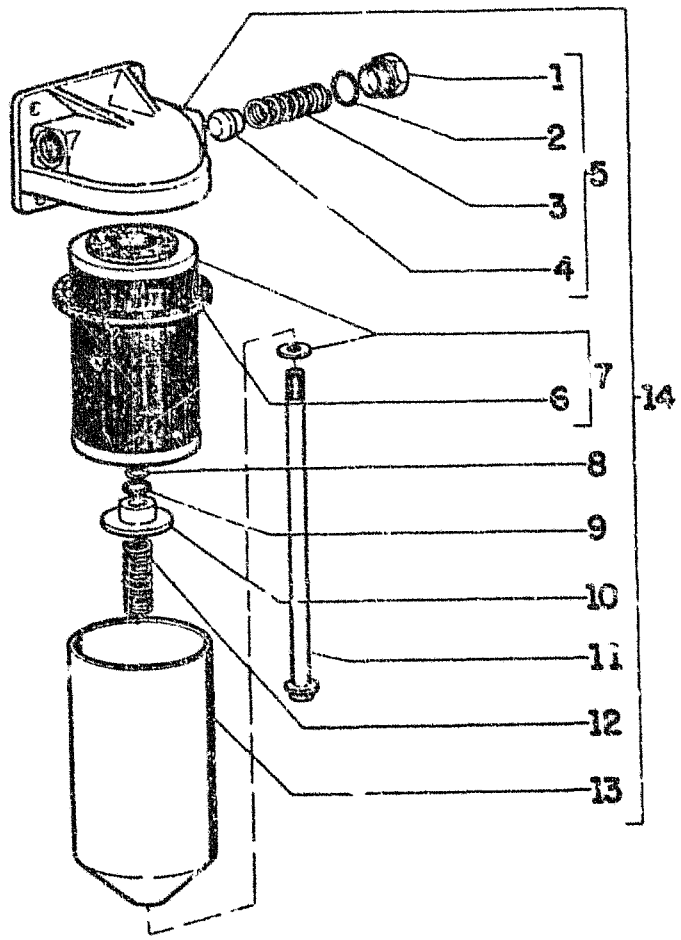

FIATALLIS FG 75R 75A B2.17 **QUADRO 1** **PAG. 1**

ITEM	PEÇA Nº	QTDE	COD.	DESCRIPTION	DESCRIÇÃO
1	73132151	1	050T	PLUG	BUJÃO
2	73132152	1	158G	O'RING	O'RING
3	73132145	1	100M	SPRING	MOLA
4	73132935	1	010V	VALVE	VÁLVULA
5	73132154	1	002K	KIT	KIT
6	70923856	1	158G	O'RING	O'RING
7	73132155	1	002K	KIT	KIT
8	73132153	1	045A	RING	ANEL
9	73132148	1	158G	O'RING	O'RING
10	73132149	1	060S	CUP	PRATO
11	73132150	1	040V	SCREW	PARAFUSO
12	73132147	1	100M	SPRING	MOLA
13	75214203	1	115S	TANK	RESERVATORIO
14	73129543	1	067F	OIL FILTER	FILTRO DE ÓLEO

FILTER ASSEMBLY
CONJUNTO DO FILTRO

B2.17 | 1

FIATALLIS

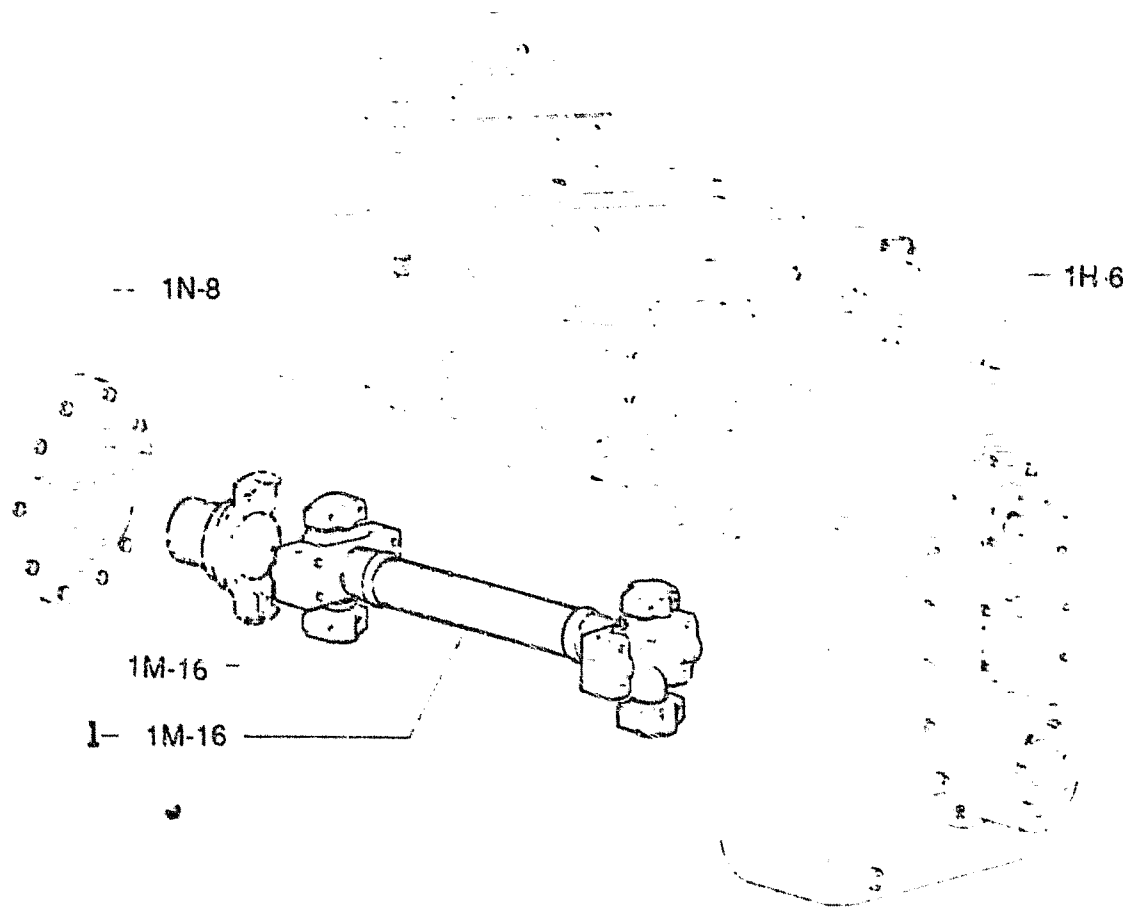

FIATALLIS FG 70R 70A 75R 75A B3.01 QUADRO 1 PAG. 1

ITEM	PEÇA Nº	QTDE	COD.	DESCRIPTION	DESCRIÇÃO
1	73158774	1	A191	PROPELLER SHAFT	EIXO CARDAN(1)
	73148577	1	A191	PROPELLER SHAFT	EIXO CARDAN(2)

(1) FOR FG70R/70A - PARA FG 70R/70A

(2) FOR FG75R/75A - PARA FG 75R/75A

TRANSMISSION ASSEMBLY
CONJUNTO DA TRANSMISSAO

B3.01 | 1

FIATALLIS

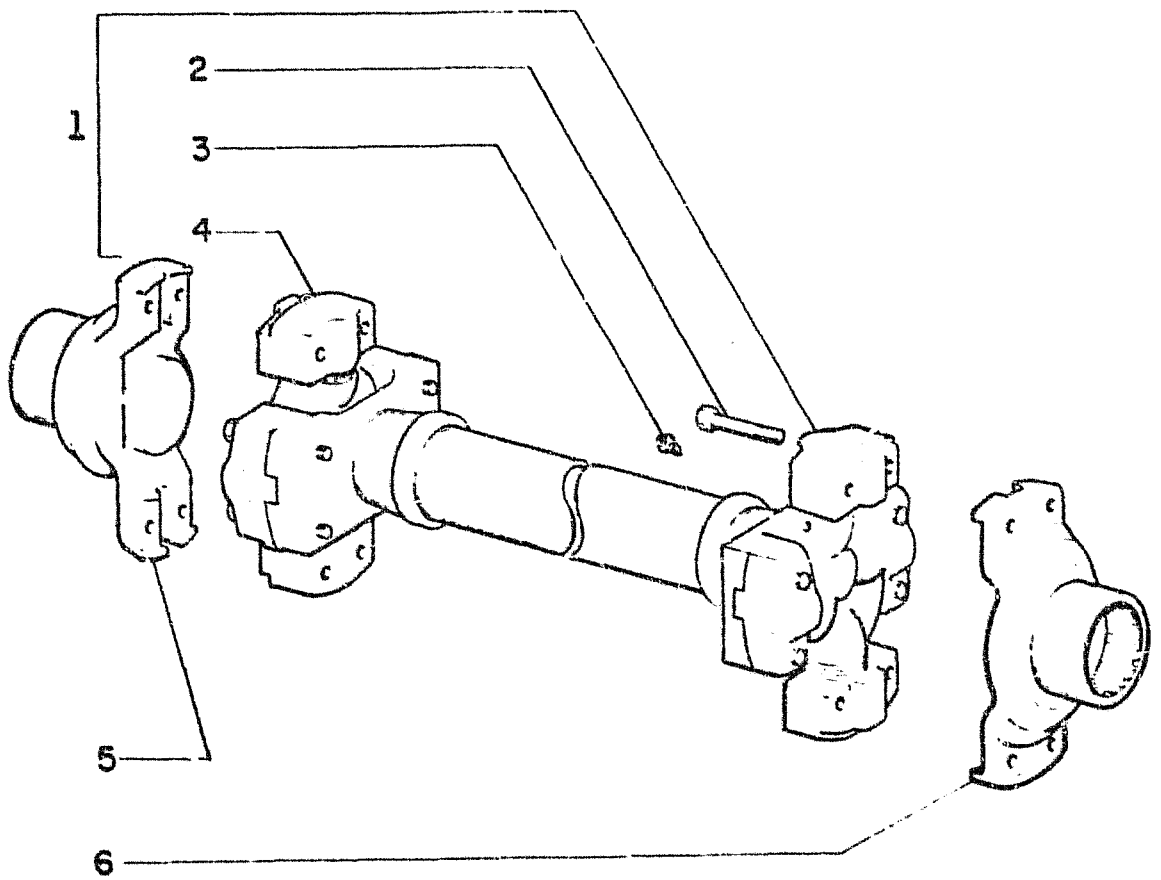

FIATALLIS FG 70R 70A 75R 75A B3.16 QUADRO 1 PAG. 1

ITEM	PEÇA Nº	QTDE	COD.	DESCRIPTION	DESCRIÇÃO
1	73158774	1	A191	PROPELLER SHAFT	EIXO CARDAN(1)
	73148577	1	A191	PROPELLER SHAFT	EIXO CARDAN(2)
2	70925632	8	040V	SCREW	PARAFUSO
3	70918185	2	060I	GREASE FITTING	PINO GRAXEIRO
4	73134821	2	320C	SPIDER(2)	CRUZETA
	73159603	2	320C	SPIDER(1)	CRUZETA
5	73134819	1	070F	FLANGE	FLANGE
6	71005116	1	070F	FLANGE	FLANGE

(1) FOR FG70R/70A - PARA FG 70R/70A

(2) FOR FG75R/75A - PARA FG 75R/75A

UNIVERSAL JOINT ASSEMBLY
CONJUNTO DO CARDAN

B3.16 | 1

DESCRIPTION	SBGRP	TAV	GRID
ENGINE PISTONS	A105	1	1E-14
ROCKER ASSEMBLY	A107	1	1E-16
ROD BEARINGS	A105	1	1E-14
SIDE PLATES	L101	2	2F-14
SLEEVES	A105	1	1E-14
SUMP	A102	1	1E-9
EXHAUST PIPE	A256	1	1G-8
FAN	A409	1	1G-17
BELTS	A409	1	1G-17
DRIVE FG70	A409	2	1H-2
DRIVE FG75	A409/1	2	1H-3
DRIVE FG75	A409/1	4	1H-5
IDLER FG75	A409/1	3	1H-4
FIATALLIS TO CUMMINS CROSS REF NUMBERS			2M-2
FILTER IMPLEMENT OIL	E328	1	2C-10
FILTER, AIR	A223	2	1F-8
FILTER, COOLANT	A402	1	1G-15
FILTER, ENGINE OIL	A303	1	1G-12
FILTER, FUEL	A226	1	1F-12
FILTER, TRANS OIL FG70	B201	11	1I-3
FILTER, TRANS. OIL FG75	B217	1	1M-14
FORWARD CLUTCH FG70	B201	7	1H-15
FRAME (NOT ARTICULATED)	D101	1	1O-10
FRONT (ARTICUALTED)	D101	3	1O-13
REAR (ARTICUALTED)	D101	4	1O-14
FRONT AXLE FRAME	B401	1	1N-2
FRONT AXLE WHEEL END	B401	3	1N-4
FUEL FILTER	A226	1	1F-12
INJECTION PUMP	A224	1	1F-9
INJECTION PUMP COMPONENTS	A227	1	1F-13
LINES, HIGH PRESSURE	A224	1	1F-10
LINES, LOW PRESSURE	A201	2	1F-2
NOZZLE	A235	2	1G-6
NOZZLE HOLDER	A235	1	1G-5
PUMP GOVERNOR COMPONENTS	A228	1	1G-2
SEDIMENT BOWL	A225	1	1F-11
TANK	A201	1	1E-17
THROTTLE CONTROL	A221	1	1F-3
THROTTLE CONTROL LEVER	A221	4	1F-6
THROTTLE LINKAGE FG70	A221	2	1F-4
THROTTLE LINKAGE FG75	A221	3	1F-5
TRANSFER PUMP	A224	1	1F-9
FUSES ELECTRICAL	F401	3	2E-5
GOVERNOR, FUEL PUMP COMPONENTS	A228	1	1G-2
GOVERNOR, GROUND SPEED FG70	A221	2	1F-4
GROUND SPEED GOVERNOR FG70	A221	2	1F-4
HEAT EXCHANGER, ENGINE OIL	A303	1	1G-12
HIGH FWD & 5 - 6 SPEED CLUTCH FG75	B201/1	16	1L-10
HIGH SPEED CLUTCH FG70	B201	9	1H-17
HOOD	L101	1	2F-13
HORN	F401	18	2F-6
HOURMETER	F401	3	2E-5
IMPLEMENT CONTROL VALVE SHIELD	D101	2	1O-11
CONTROLVALVE LEVERS	D201	3	1P-7
CONTROLVALVE LEVERS	D201	4	1P-8
IMPLEMENT CONTROLVALVE LINKAGE	D201	2	1P-5
OIL FILTER	E328	1	2C-10
OIL RESERVOIR	E328	1	2C-10
PUMP, COMPONENTS	E329	1	2C-12
INDICATOR, CLOGGED AIR FILTER	A222	1	1F-7
INJECTION PUMP COMPONENTS	A227	1	1F-13
INSTRUMENT PANEL	F401	12	2E-14
LATERAL SHIFT VALVE	E331	2	2C-14
LIGHTS	F401	9	2E-10
BRAKE COMPONENTS	F405	2	2F-8
TURN SIGNAL COMPONENTS	F405	3	2F-9
TURN SIGNAL	F401	13	2E-15
LOCK VALVE	E302	32	2B-7
LOW FORWARD CLUTCH FG75	B201/1	12	1L-6
LOW SPEED CLUTCH FG70	B201	8	1H 16
LUBRICATION SYSTEM	A301	1	1G-9
MAIN RELIEF VALVE, LEFT	E331	10	2D-5
MAIN RELIEF VALVE, RIGHT	E331	11	2D-6
MODULATING VALVE TRANS FG70	B201	18	1I-10
COMPONENTS	E313	1	2C-5
COMPONENTS	E313	2	2C-7
COMPONENTS	E313	3	2C-8
DRAWBAR	E310	2	2B-15
LIFT CYLINDER	E332	6	2D-12
PITCH CYLINDER	E332	2	2D-8
PITCH VALVE	E331	2	2C-14
SHIELD	E313	4	2C-9
SIDE SHIFT CYLINDER	E332	3	2D-9
MONITORING SENSORS	F401	16	2F-4
MONITORING SENSORS	F401	17	2F-5
MUFFLER	A256	1	1G-8
OPERATOR CONSOLE	D201	1	1P-3
PLATFORM	D101	2	1O-11
SEAT BELT	L604	2	2H-3
SEAT	L604	1	2H-2
OUTPUT FLANGE NUT FG70	B201	14	1I-6
OUTPUT SHAFT FG70	B201	10	1I-2
PARKING BRAKE LEVER	C135	1	1O-7
BRAKE LINKAGE FG70	C135	2	1O-8
PARKING BRAKE LINKAGE FG75	C135/1	2	1O-9
BRAKE FG70	B201	12	1I-4
BRAKE FG75	B201/1	2	1I-12
PIPING CIRCLE SHIFT (ARTICULATED)	E302	5	1Q-8
CIRCLE SHIFT (RIGID)	E302	4	1Q-7
MOLDBOARD LIFT (ARTICULATED)	E302	13	2A-3
MOLDBOARD LIFT (RIGID)	E302	12	2A-2
SADDLE LOCK PIN (ARTICULATED)	E302	17	2A-8
SADDLE LOCK PIN (RIGID)	E302	16	2A-7
ARTICULATION	E302	26	2A-15
ARTICULATION	E302	24	2A-13
BRAKE PUMP FG70	E302	32	2B-6
PIPING BRAKE PUMP FG70	E302/1	32	2B-12
CIRCLE TURN (ARTICULATED)	E302	15	2A-6
CIRCLE TURN (RIGID)	E302	14	2A-5
CONTROL VALVE (ARTICULATED)	E302	3	1Q-6
CONTROL VALVE (RIGID)	E302	2	1Q-4
FRONT ATTACHMENT (ARTIC'D)	E302	30	2B-4
FRONT ATTACHMENT (RIGID)	E302	29	2B-3
FRONT ATTACHMENT FG70	E302	31	2B-5
FRONT WHEEL LEAN (ARTIC'D)	E302	7	1Q-10
FRONT WHEEL LEAN (RIGID)	E302	6	1Q-9
FRONT WHEEL LEAN	E302	8	1Q-11
IMPLEMENT PUMP FG70	E302	32	2B-6
IMPLEMENT PUMP FG70	E302/1	32	2B-12
PUMP, BRAKE FG70	E302	32	2B-6
PUMP, BRAKE FG70	E302/1	32	2B-12
PUMP, IMPLEMENT FG70	E302	32	2B-6
PUMP, IMPLEMENT FG70	E302/1	32	2B-12
PUMP, STERING FG70	E302	32	2B-6
PUMP, STERING FG70	E302/1	32	2B-12
REAR FRAME	E302	1	1Q-2
RIPPER CYLINDER	E302/1	2	2B-9
RIPPER	E302/1	3	2B-10
SCARIFIER	E302/1	1	2B-8
SIDE SHIFT & PITCH (ARTIC'D)	E302	19	2A-10
SIDE SHIFT & PITCH (RIGID)	E302	18	2A-9
SIDE SHIFT & PITCH	E302	20	2A-11
STEERING (ARTICULATED)	E302	27	2A-17
STEERING (ARTICULATED)	E302	28	2B-2
STEERING (RIGID)	E302	25	2A-14
STEERING PUMP FG70	E302	32	2B-6
PIPING, STEERING PUMP FG70	E302/1	32	2B-12
PUMP, BRAKE COMPONENTS	D213	1	1P-13
COOLANT	A403	1	1G-16
ENGINE OIL	A302	1	1G-11
FUEL INJECTION	A224	1	1F-9
FUEL INJECTION COMPONENTS	A227	1	1F-13
FUEL TRANSFER	A224	1	1F-9
IMPLEMENT COMPONENTS	E329	1	2C-12
STEERING COMPONENTS	D213	1	1P-13

FIATALLIS

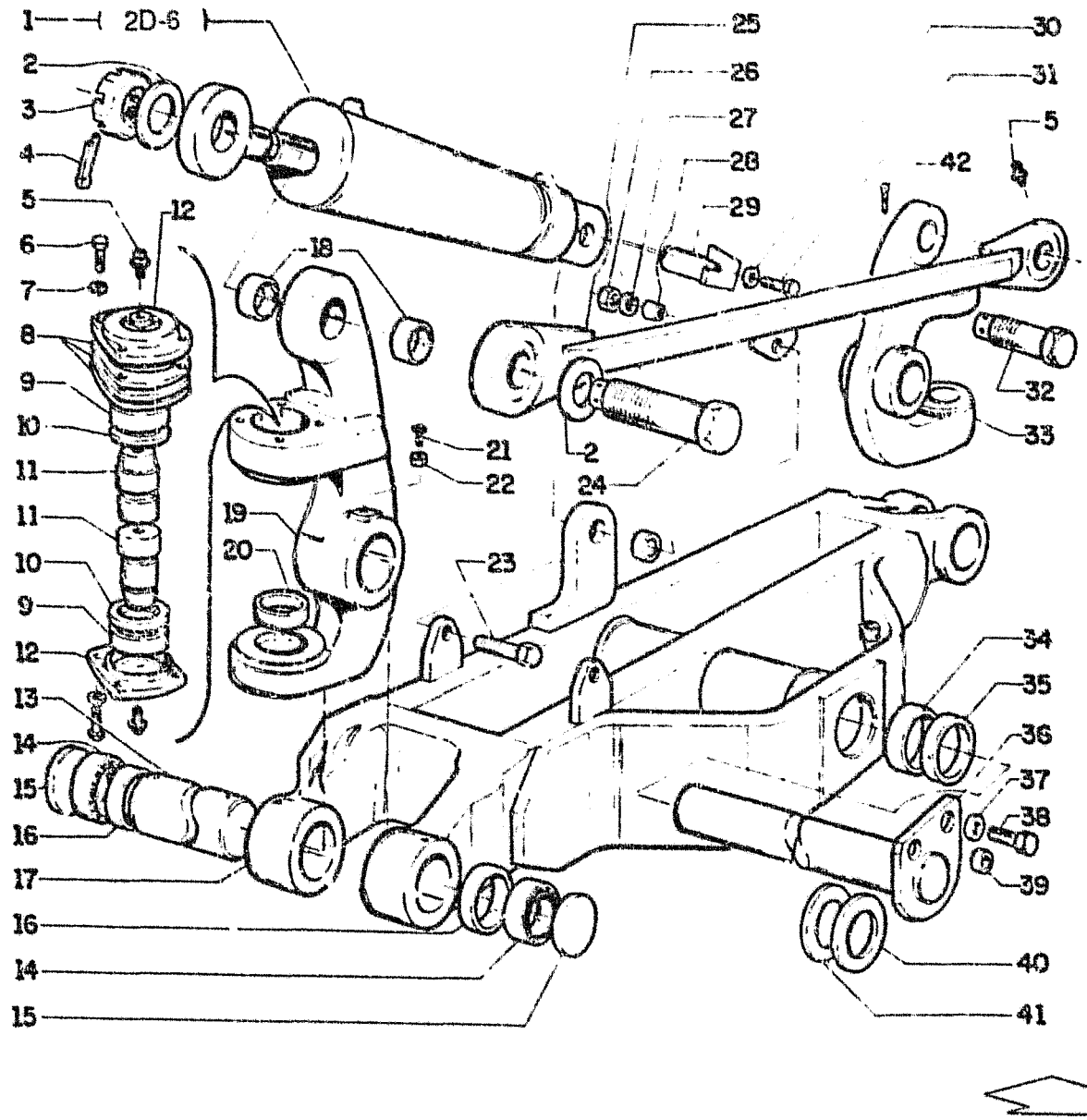

FIATALLIS FG 70R 70A 75R 75A B4.01 QUADRO 1 PAG. 1

ITEM	PEÇA Nº	QTDE	COD.	DESCRIPTION	DESCRIÇÃO
1	75220689	1	1070	TILT CYLINDER	CILINDRO INCL.
2	70054889	2	131R	WASHER	ARRUELA
3	70911061	2	010D	NUT	PORCA
4	70901344	1	270C	COTTER PIN	CONTRA PINO
5	70914465	12	060I	GREASE FITTING	PINO GRAXEIRO
6	70921076	16	040V	SCREW	PARAFUSO
7	70929156	16	131R	WASHER	ARRUELA
8	73124681	10	198S	SHIM	CALÇO
8	73124682	10	198S	SHIM	CALÇO
8	73124683	14	198S	SHIM	CALÇO
9	73124678	4	341C	BEARING	ROLAMENTO
10	73124671	4	122G	SEAL	RETENTOR
11	73124680	4	080P	PIN	PINO
12	73124522	4	265C	COVER	TAMPA
13	73124516	2	080P	PIN	PINO
14	73124679	4	341C	BEARING	ROLAMENTO
15	70930423	4	064C	CAP	TAMPÃO
16	73124672	4	122G	SEAL	RETENTOR
17	73124515	1	M149	FRONT AXLE	EIXO MOTOR
18	70668028	6	146R	BALL JOINT	ROTULA ESFERICA
19	73124520	1	125F	FORK	GARFO
20	73125713	2	122G	SEAL	RETENTOR
21	73125712	2	040V	SCREW	PARAFUSO
22	70913830	2	010D	NUT	PORCA
23	70922544	1	040V	SCREW	PARAFUSO
24	70683838	1	040V	SCREW	PARAFUSO
25	73125722	1	151B	BAR	BARRA
26	70911030	1	010D	NUT	PORCA
27	70914726	1	170R	LOCKWASHER	ARRUELA PRESS
28	73125726	4	075D	SPACER	ESPAÇADOR
29	70673051	1	080P	PIN	PINO
30	70677006	1	131R	WASHER	ARRUELA
31	70922763	1	040V	SCREW	PARAFUSO
32	70683837	1	040V	SCREW	PARAFUSO
33	73124519	1	125F	FORK	GARFO
34	75221259	2	075D	SPACER	ESPAÇADOR

FRONT AXLE
EIXO DIANTEIRO

B4.01 | 1

FIATALLIS

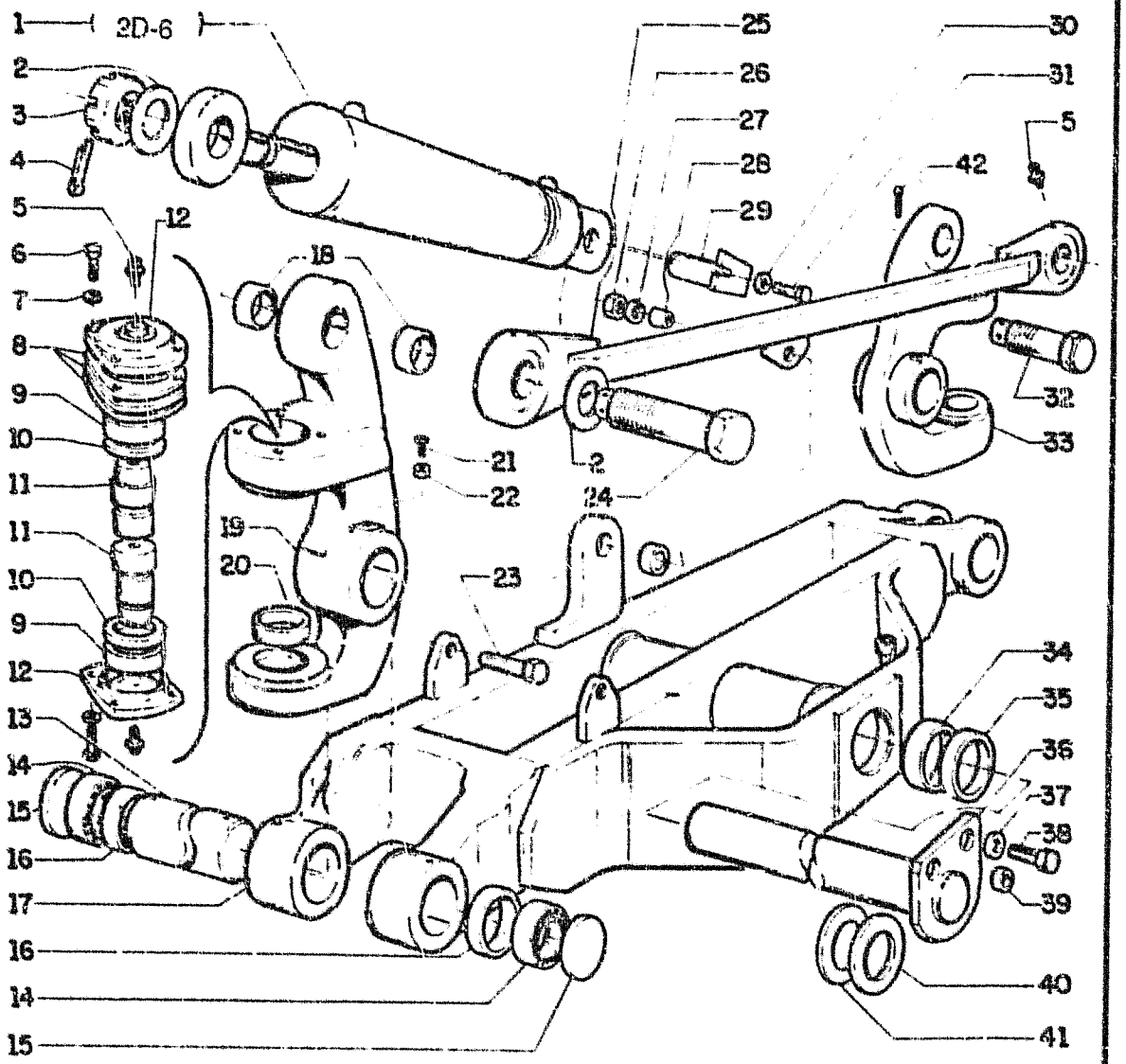

FIATALLIS FG 70R 70A 75R 75A B4.01 QUADRO 1 PAG. 2

ITEM	PEÇA Nº	QTDE	COD.	DESCRIPTION	DESCRIÇÃO
35	75221258	2	095B	BUSHING	BUCHA
36	73153514	1	016A	SHAFT	EIXO
37	70930850	2	131R	WASHER	ARRUELA
38	70920585	2	040V	SCREW	PARAFUSO
39	73153515	2	075D	SPACER	ESPAÇADOR
40	73135173	*	198S	SHIM	CALÇO
41	73135174	*	198S	SHIM	CALÇO
42	70901345	1	270C	COTTER PIN	CONTRA PINO

FRONT AXLE
EIXO DIANTEIRO

B4.01 | 1

FIATALLIS

FIATALLIS FG 70R 70A 75R 75A B4.01 QUADRO 3 PAG. 1

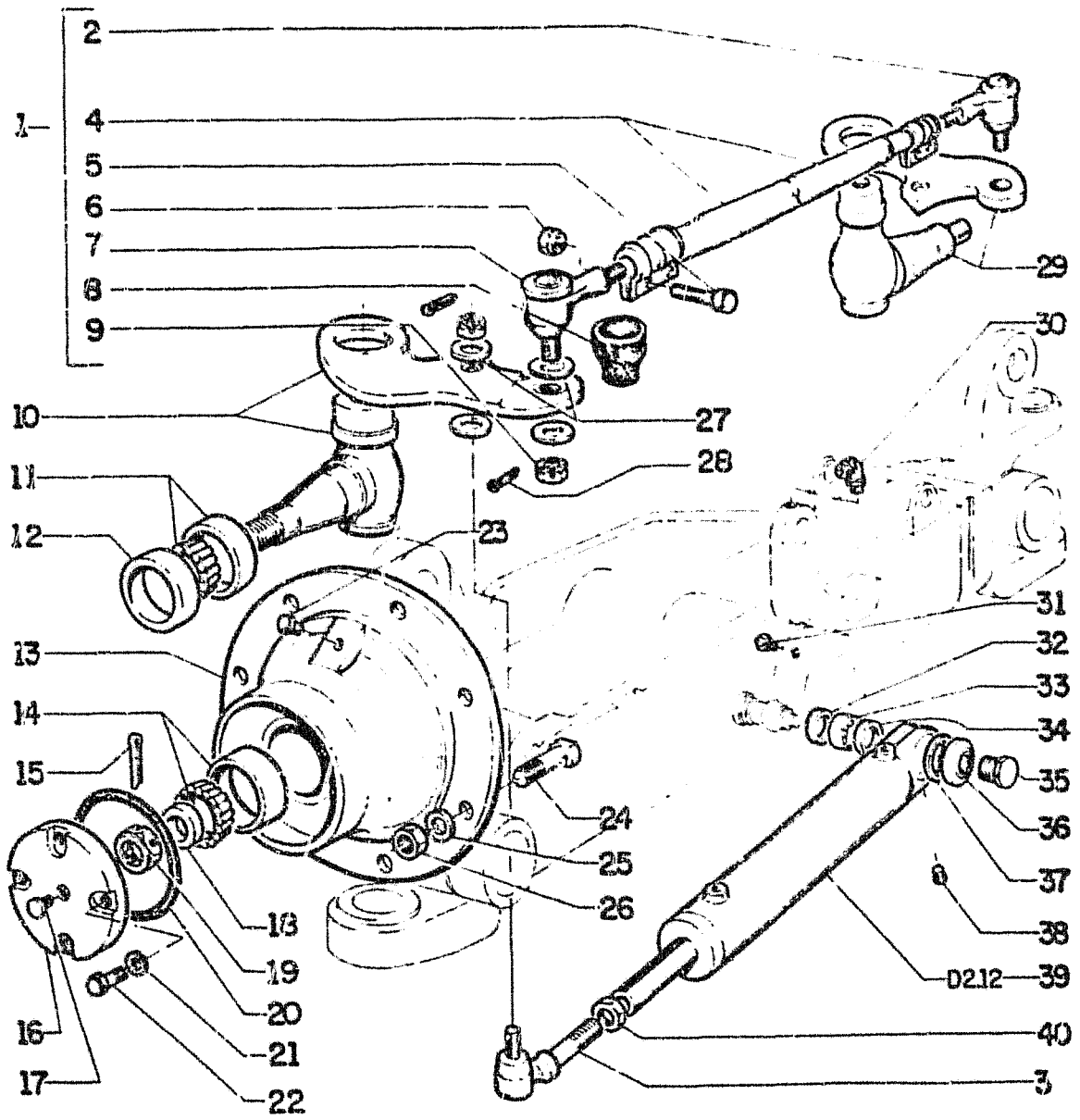

ITEM	PEÇA Nº	QTDE	COD.	DESCRIPTION	DESCRIÇÃO
1	75221735	1	151B	BAR	BARRA
2	75221276	1	061E	END	EXTREMIDADE
3	75219488	2	403C	STEER'G CYLIND.	CILINDRO DIREÇ
4	75221734	1	090A	ROD	HASTE
5	11227721	4	040V	SCREW	PARAFUSO
6	12575721	4	010D	NUT	PORCA
7	75221277	1	061E	END	EXTREMIDADE
8	75221272	2	334C	DUST BOOT	COIFA PARA PO
9	70916896	2	010D	NUT	PORCA
10	73124696	1	016A	SHAFT	EIXO
11	73124684	2	341C	BEARING	ROLAMENTO
12	73135111	1	157G	LIP SEAL	RETENTOR P/EIXO
13	73124691	2	160R	WHEEL	RODA
14	70684817	2	341C	BEARING	ROLAMENTO
15	70901348	2	270C	COTTER PIN	CONTRA PINO
16	73124693	2	265C	COVER	TAMPA
17	70922577	2	050T	PLUG	BUJÃO
18	70932867	2	131R	WASHER	ARRUELA
19	70922271	2	010D	NUT	PORCA
20	70923824	2	158G	O'RING	O'RING
21	70910287	8	170R	LOCKWASHER	ARRUELA PRESSÃO
22	70921565	8	040V	SCREW	PARAFUSO
23	70901666	4	050T	PLUG	BUJÃO
24	73125714	20	040V	SCREW	PARAFUSO
25	70677012	20	131R	WASHER	ARRUELA
26	70012767	20	010D	NUT	PORCA
27	75220798	4	274S	ROD	HASTE
28	70904002	4	270C	COTTER PIN	CONTRA PINO
29	73124697	1	016A	SHAFT	EIXO
30	70915276	2	060I	GREASE FITTING	PINO GRAXEIRO
31	70914465	2	060I	GREASE FITTING	PINO GRAXEIRO
32	73125725	2	122G	SEAL	RETENTOR
33	70668028	2	146R	BALL JOINT	ROTULA ESFERICA
34	70926957	2	187A	SNAP RING	ANEL ELÁSTICO
35	70928312	2	040V	SCREW	PARAFUSO

FRONT AXLE
EIXO DIANTEIRO

B4.01 | 3

FIATALLIS

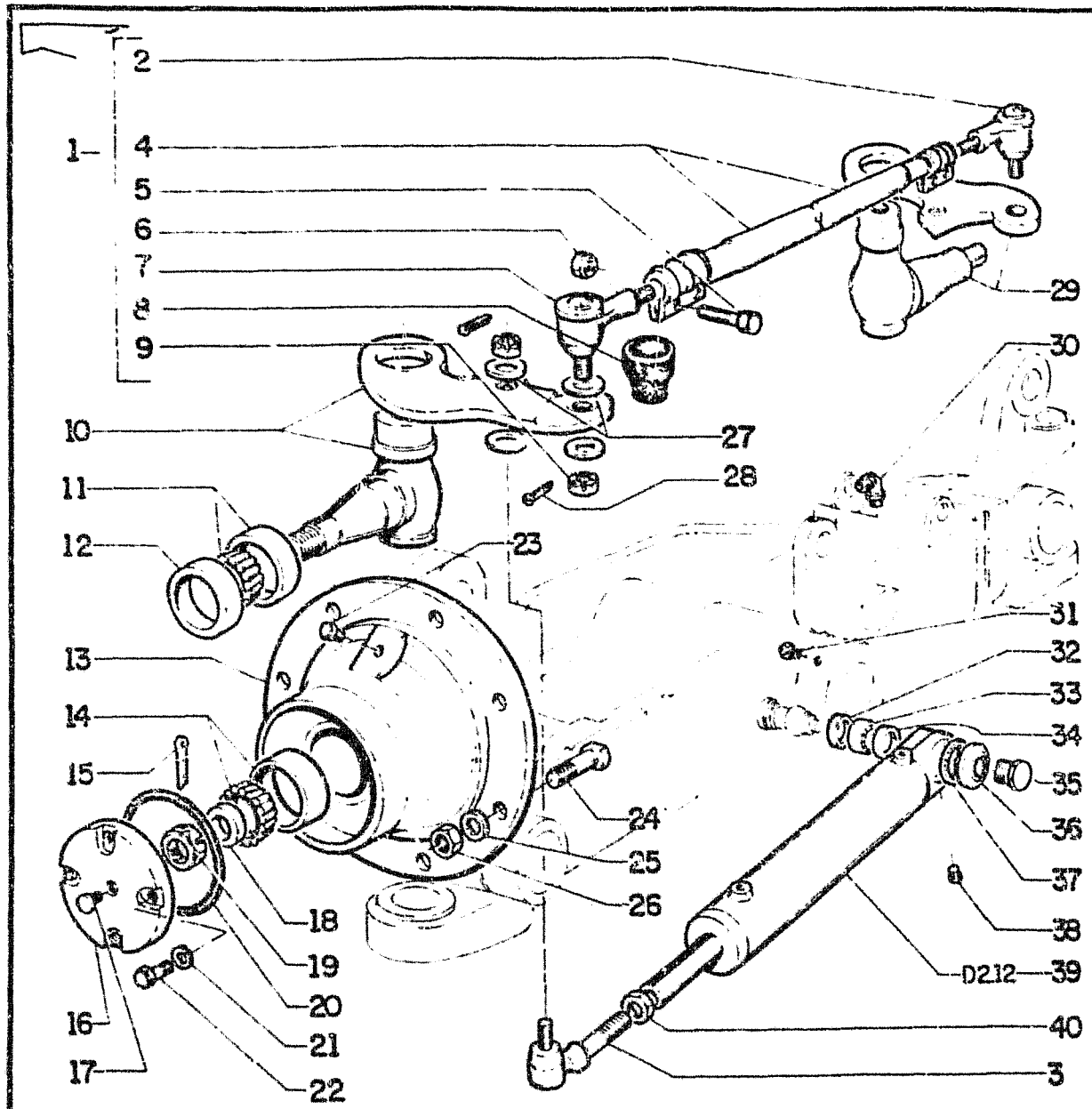

ITEM	PEÇA Nº	QTDE	COD.	DESCRIPTION	DESCRIÇÃO
36	73125724	2	050T	PLUG	BUJÃO
37	70927700	4	187A	SNAP RING	ANEL ELÁSTICO
38	70910231	2	050T	PLUG	BUJÃO
39	73065116	2	403C	STEER'G CYLIND.	CILINDRO DIREÇ.
40	70911051	2	257C	LOCK NUT	CONTRAPORCA

FRONT AXLE
EIXO DIANTEIRO

B4.01 | 3

FIATALLIS

FIATALLIS FG 70R 75R B4.03 **QUADRO** 1 **PAG.** 1

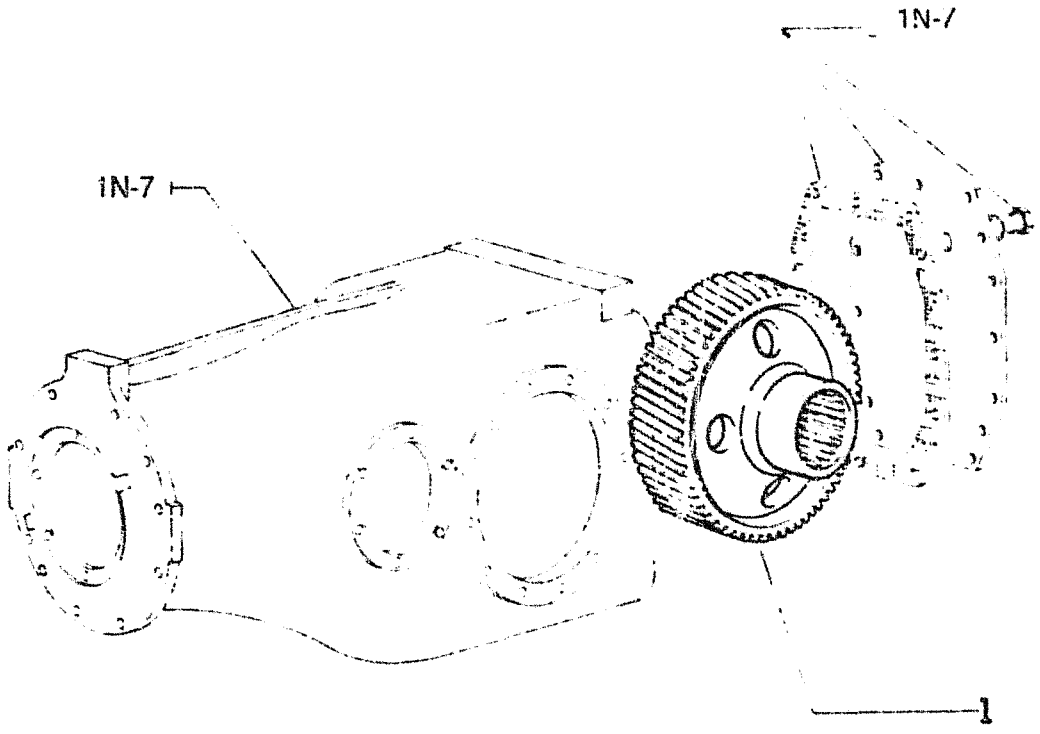

ITEM	PEÇA Nº	QTDE	COD.	DESCRIPTION	DESCRIÇÃO
1	73148829	1	297C	RING GEAR	COROA

	REAR AXLE EIXO TRASEIRO	B4.03	1

FIATALLIS

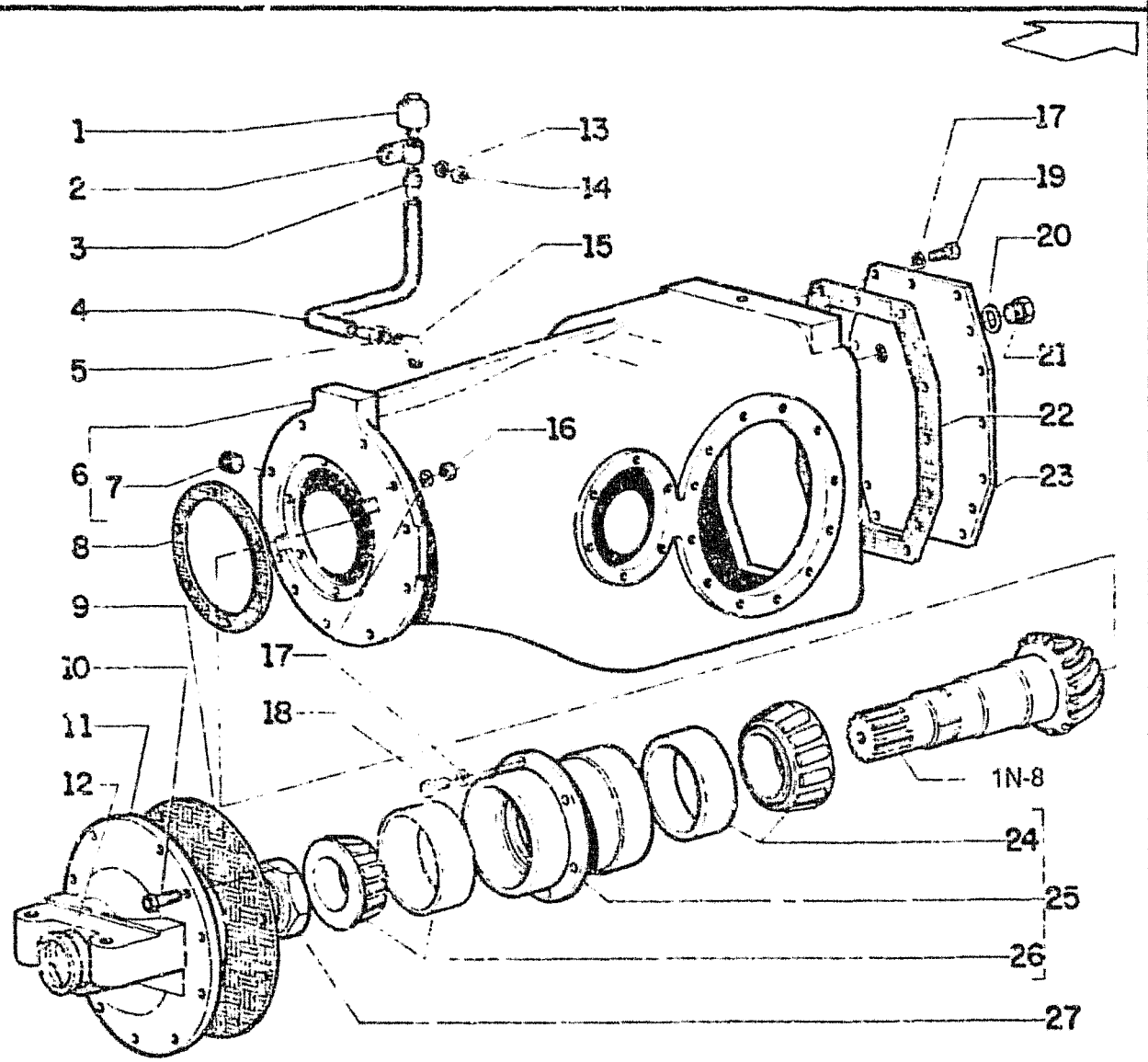

FIATALLIS FG 70R 70A 75R 75A B4.03 **QUADRO 2 PAG. 1**

ITEM	PEÇA Nº	QTDE	COD.	DESCRIPTION	DESCRIÇÃO
1	70050748	1	145S	BREATHER	RESPIRO
2	73125067	1	300S	SUPPORT	SUPORTE
3	70925957	1	020R	FITTING	CONEXÃO
4	73127954	1	285T	HOSE	MANGUEIRA
5	70920806	1	020R	FITTING	CONEXÃO
6	75218915	1	035S	CASE	CARCAÇA
7	70901666	6	050T	PLUG	BUJÃO
8	70673190	6	198S	SHIM	CALÇO
8	70200314	3	198S	SHIM	CALÇO
8	70200078	4	198S	SHIM 0,005"	CALÇO
9	75218932	1	120G	GASKET	JUNTA
10	70922526	12	040V	SCREW	PARAFUSO
11	75218931	1	300S	SUPPORT	SUPORTE
12	70670186	1	122G	SEAL	RETENTOR
13	70620156	1	131R	WASHER	ARRUELA
14	70911034	1	010D	NUT	PORCA
15	70919135	1	085G	ELBOW	COTOVELO
16	70911028	12	010D	NUT	PORCA
17	70912441	34	170R	LOCKWASHER	ARRUELA PRESS
18	70920574	6	040V	SCREW	PARAFUSO
19	70920583	16	040V	SCREW	PARAFUSO
20	70667252	1	067G	COUPLING	EIXO CARDAN
21	70035250	1	050T	PLUG	BUJÃO
22	73127131	1	120G	GASKET	JUNTA
23	73124830	1	265C	COVER	TAMPA
24	70683928	1	341C	BEARING	ROLAMENTO
25	73129701	1	079L	REST	MANCAL
26	70684817	1	341C	BEARING	ROLAMENTO
27	70632655	1	010D	NUT	PORCA

REAR AXLE
EIXO TRASEIRO

B4.03 | 2

FIATALLIS

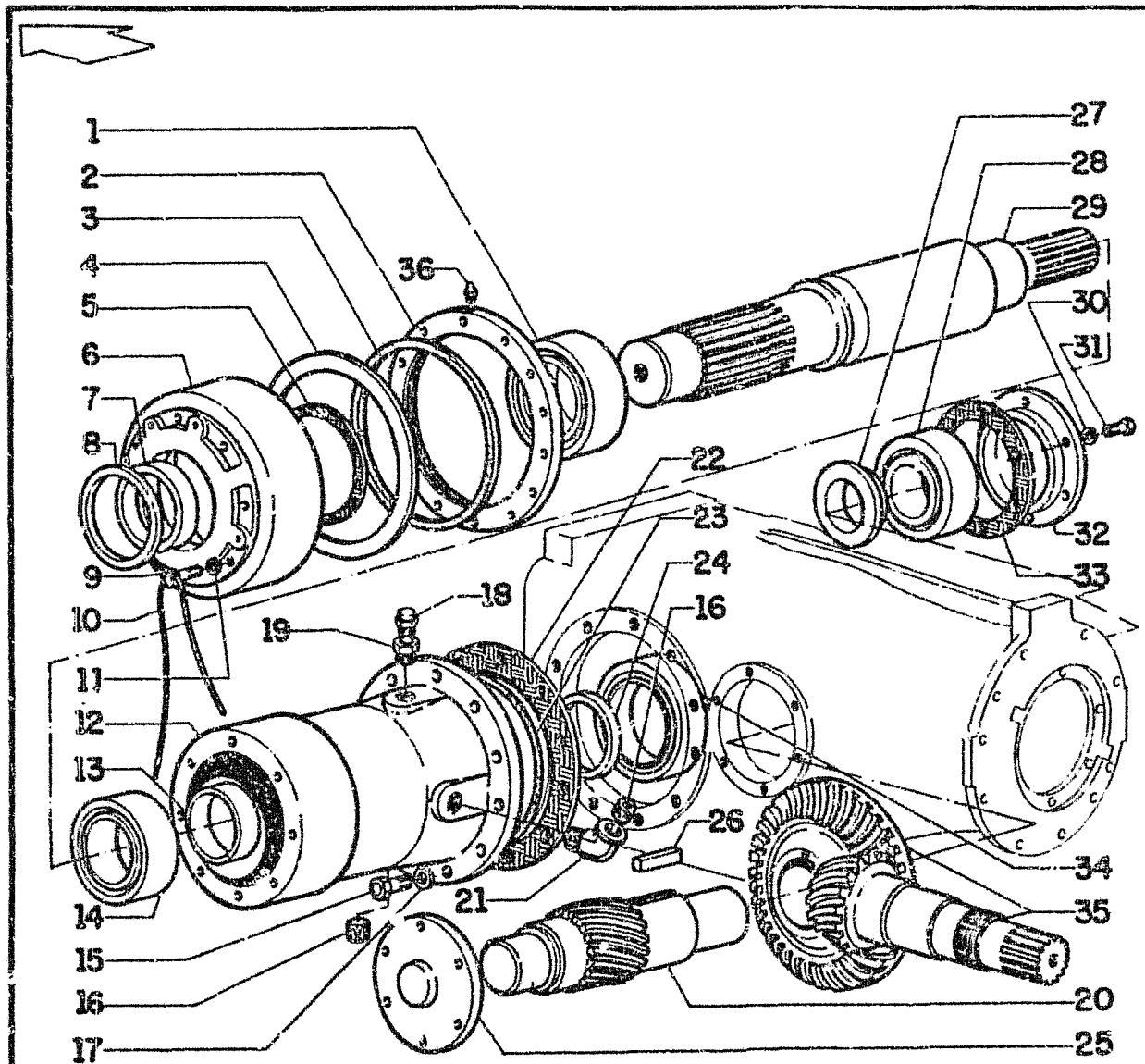

FIATALLIS FG 70R 70A 75R 75A B4.03 QUADRO 3 PAG. 1

ITEM	PEÇA Nº	QTDE	COD.	DESCRIPTION	DESCRIÇÃO
1	73133298	2	341C	BEARING	ROLAMENTO
2	70653837	2	045A	RING	ANEL
3	73145398	2	122G	SEAL	RETENTOR
4	70653828	2	045A	RING	ANEL
5	73134354	3	198S	SHIM	CALÇO
	73134353	13	198S	SHIM	CALÇO
	73134352	3	198S	SHIM	CALÇO
6	73134355	2	265C	COVER	TAMPA
7	70634440	2	030M	SLEEVE	LUVA
8	70634519	2	157G	LIP SEAL	RETENTOR P/EIXO
9	70927475	16	040V	SCREW	PARAFUSO
10	70052519	2	061F	STEEL WIRE	ARAME DE AÇO
11	70928178	16	131R	WASHER	ARRUELA
12	75213499	2	035S	CASE (1)	CARCAÇA
	73134357	2	035S	CASE (2)	CARCAÇA
13	75213805	2	030M	SLEEVE	LUVA
14	73129486	2	341C	BEARING	ROLAMENTO
15	70921068	24	040V	SCREW	PARAFUSO
16	70901666	4	050T	PLUG	BUJÃO
17	70928358	24	131R	WASHER	ARRUELA
18	73021062	2	145S	BREATHER	RESPIRO
19	70902071	2	020R	FITTING	CONEXÃO
20	73148827	1	122P	PINION	PINHAO
21	70911076	2	020R	FITTING	CONEXÃO
22	73127756	2	198S	SHIM	CALÇO
	73127757	3	198S	SHIM	CALÇO
	73127758	5	198S	SHIM	CALÇO
23	70925482	2	158G	O'RING	O'RING
24	75213501	2	122G	SEAL	RETENTOR
25	70066751	1	265C	COVER	TAMPA
26	70604982	1	060L	KEY	CHAVETA
27	73148957	1	075D	SPACER	ESPAÇADOR
28	70683926	2	341C	BEARING	ROLAMENTO
29	75237124	1	M150	REAR AXLE (1)	EIXO TRASEIRO
	75237122	1	M150	REAR AXLE (2)	EIXO TRASEIRO
30	70912441	12	170R	LOCKWASHER	ARRUELA PRESSÃO

REAR AXLE
EIXO TRASEIRO

B4.03 | 3

FIATALLIS

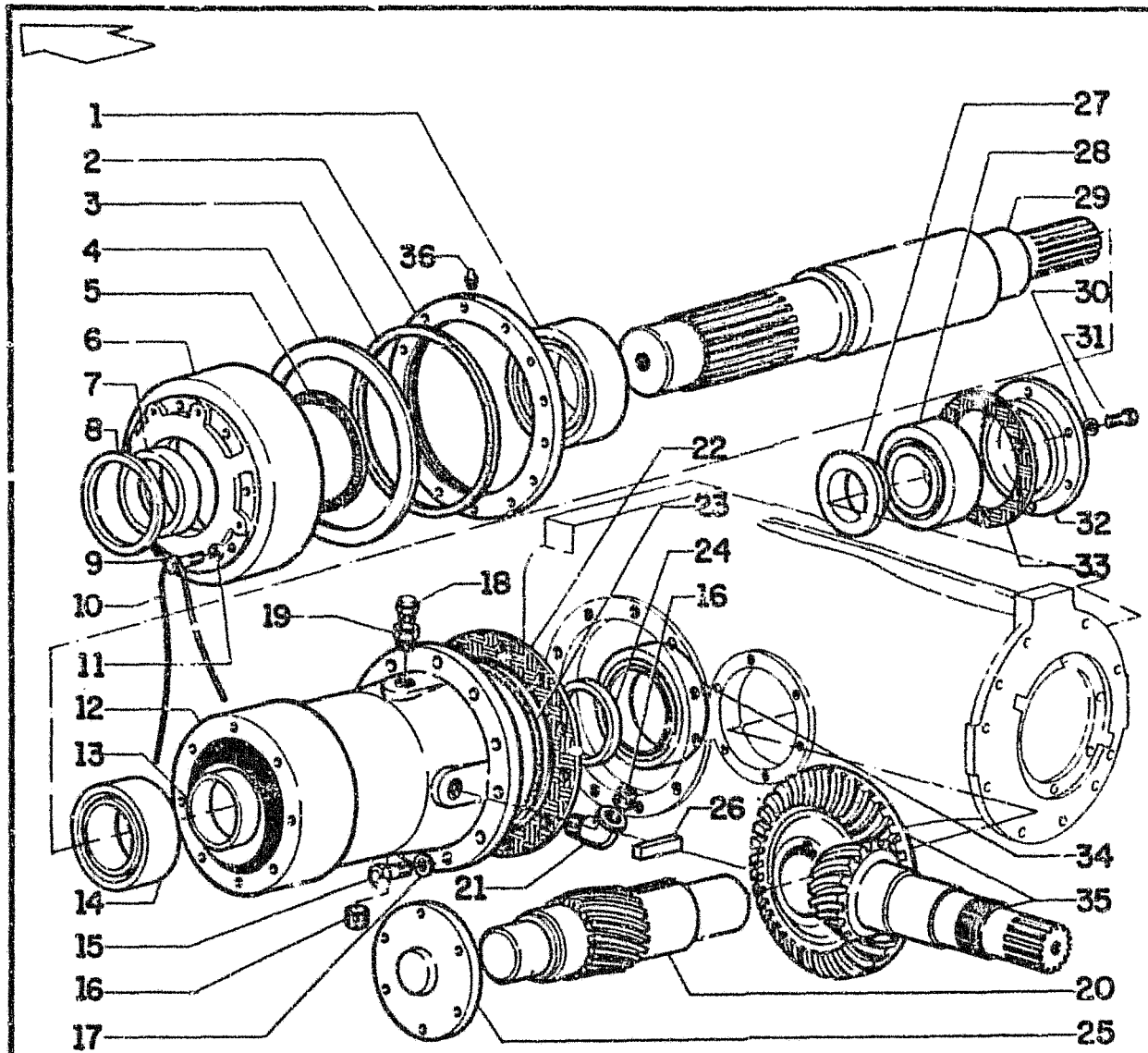

FIATALLIS FG 70R 70A 75R 75A B4.03 QUADRO 3 PAG. 2

ITEM	PEÇA Nº	QTDE	COD.	DESCRIPTION	DESCRIÇÃO
31	70920585	12	040V	SCREW	PARAFUSO
32	73124840	1	265C	COVER	TAMPA
33	70605085	7	198S	SHIM	CALÇO
	70065042	7	198S	SHIM	CALÇO
	70673189	5	198S	SHIM	CALÇO
34	73125860	2	341C	BEARING	ROLAMENTO
35	70677828	1	285C	BEVEL GEAR SET	PAR CONICO
36	70914465	2	060I	GREASE FITTING	PINO GRAXEIRO

(1) FOR FG 70A 75A - PARA FG 70A 75A

(2) FOR FG 70R 75R - PARA FG 70R 75R

	REAR AXLE EIXO TRASEIRO	B4.03	3

FIATALLIS

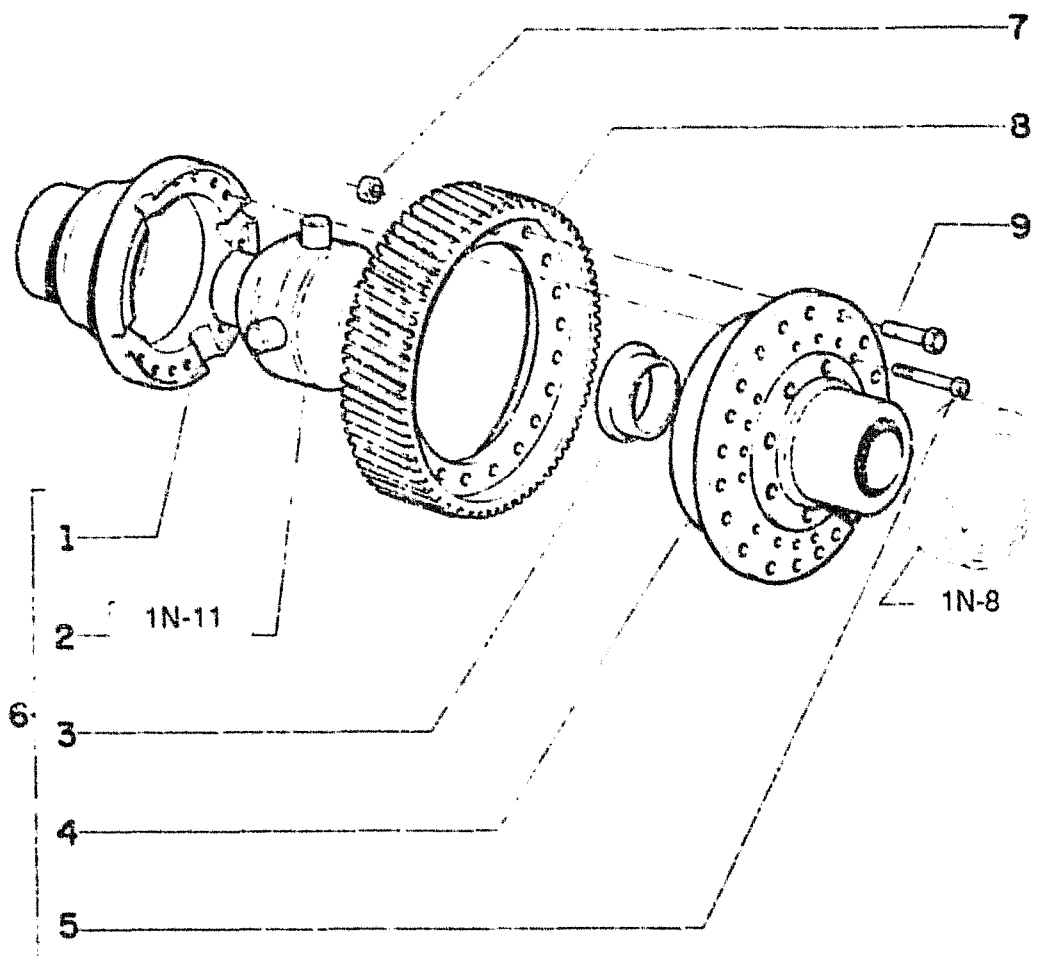

FIATALLIS FG 70A 75A B4.03 **QUADRO** 4 **PAG.** 1

ITEM	PEÇA Nº	QTDE	COD.	DESCRIPTION	DESCRIÇÃO
1	73148834	1	034S	HALF CASE	SEMI-CAIXA
2	73140103	1	0443	DIFFERENTIAL	DIFERENCIAL
3	75214052	2	095B	BUSHING	BUCHA
4	73148833	1	034S	HALF CASE	SEMI-CAIXA
5	73148883	16	040V	SCREW	PARAFUSO
6	73148832	1	040D	DIFFERENTIAL	DIFERENCIAL
7	70916170	20	010D	NUT	PORCA
8	73148831	1	297C	RING GEAR	COROA
9	70922789	20	040V	SCREW	PARAFUSO

DIFFERENTIAL ASSEMBLY
CONJUNTO DIFERENCIAL

B4.03 | 4

FIATALLIS

FIATALLIS FG 70A 75A B4.03 QUADRO 5 PAG. 1

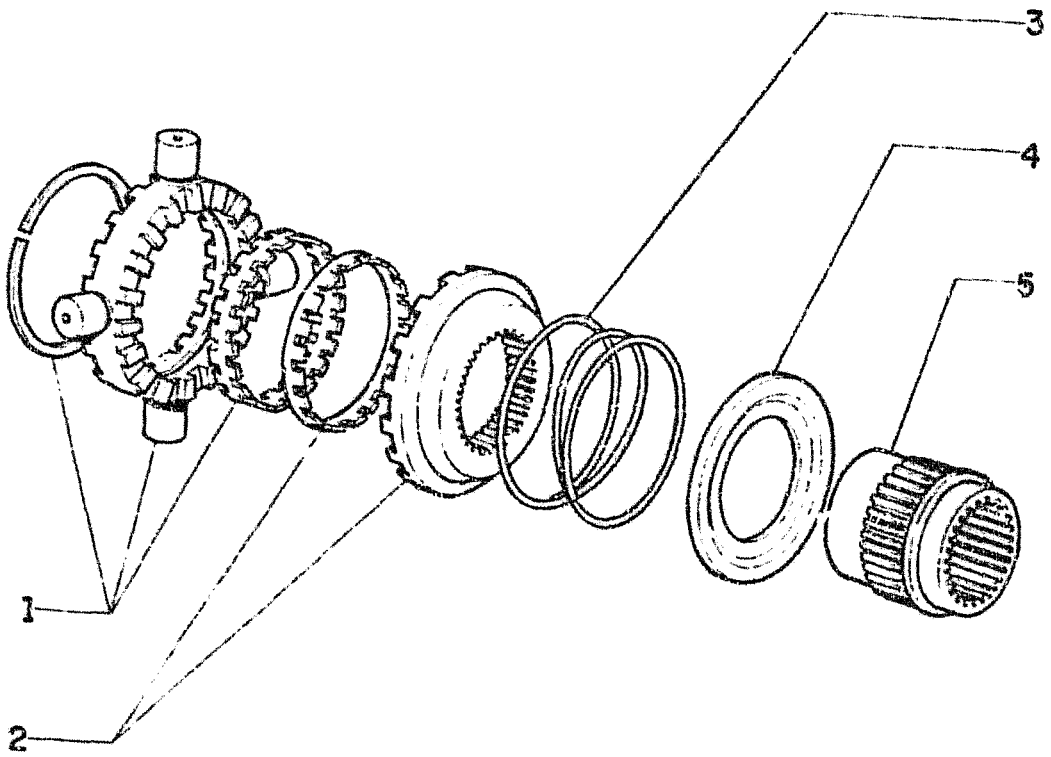

ITEM	PEÇA Nº	QTDE	COD.	DESCRIPTION	DESCRIÇÃO
1	73149202	1	320C	SPIDER	CRUZETA
2	73064718	2	095F	CLUTCH	EMBREAGEM
3	73064717	2	100M	SPRING	MOLA
4	73064716	2	122G	SEAL	RETENTOR
5	73064715	2	050I	GEAR	ENGRENAGEM

DIFFERENTIAL ASSEMBLY
CONJUNTO DO DIFERENCIAL

B4.03 | 5

FIATALLIS

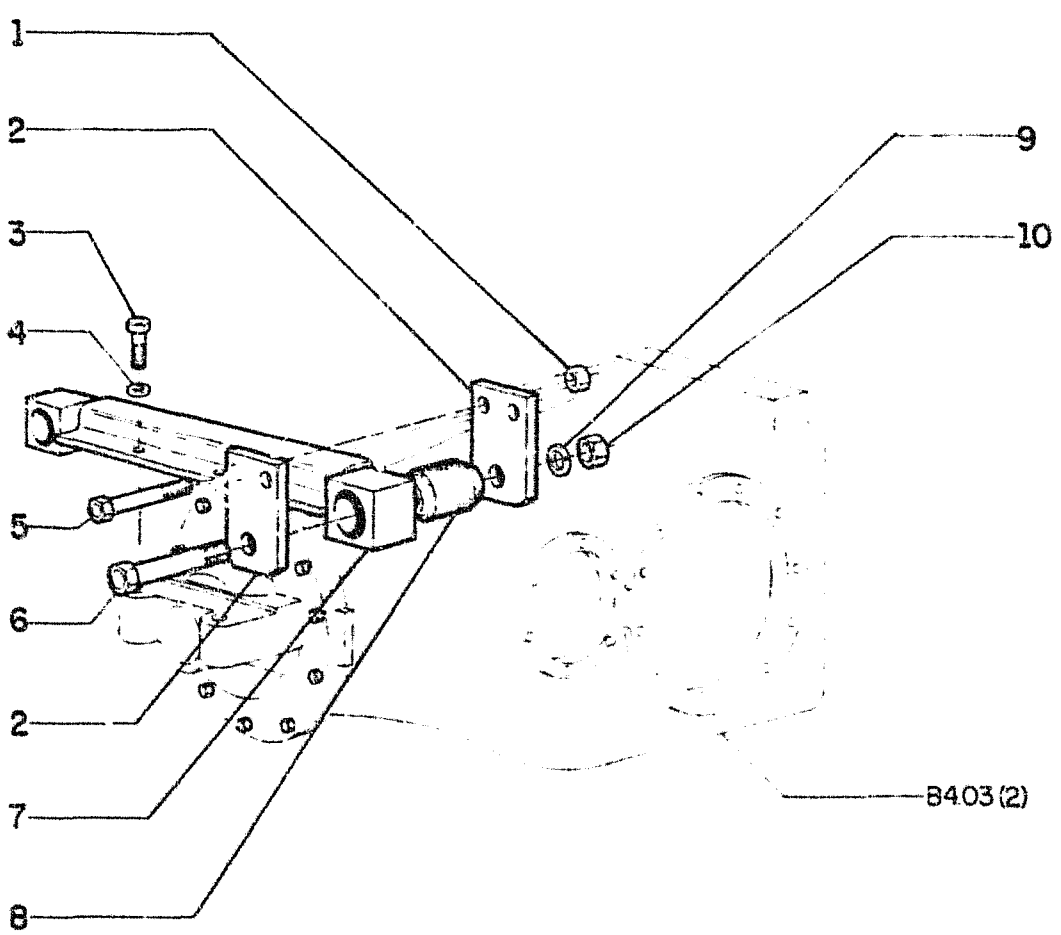

FIATALLIS FG 70R 70A 75R 75A B4.03 **QUADRO** 6 **PAG.** 1

ITEM	PEÇA Nº	QTDE	COD.	DESCRIPTION	DESCRIÇÃO
1	70911030	4	010D	NUT	PORCA
2	70688590	4	105P	PLATE	CHAPA
3	70925381	2	040V	SCREW	PARAFUSO
4	70914728	2	170R	LOCKWASHER	ARRUELA PRESS
5	70929971	4	040V	SCREW	PARAFUSO
6	70928175	2	040V	SCREW	PARAFUSO
7	73149087	1	300S	SUPPORT	SUPORTE
8	70670189	2	345C	CUSHION	COXIM
9	70914730	2	170R	LOCKWASHER	ARRUELA PRESS
10	70913820	2	010D	NUT	PORCA

REAR AXLE SUPPORT
SUPORTE DO EIXO TRASEIRO

B4.03 | 6

FIATALLIS

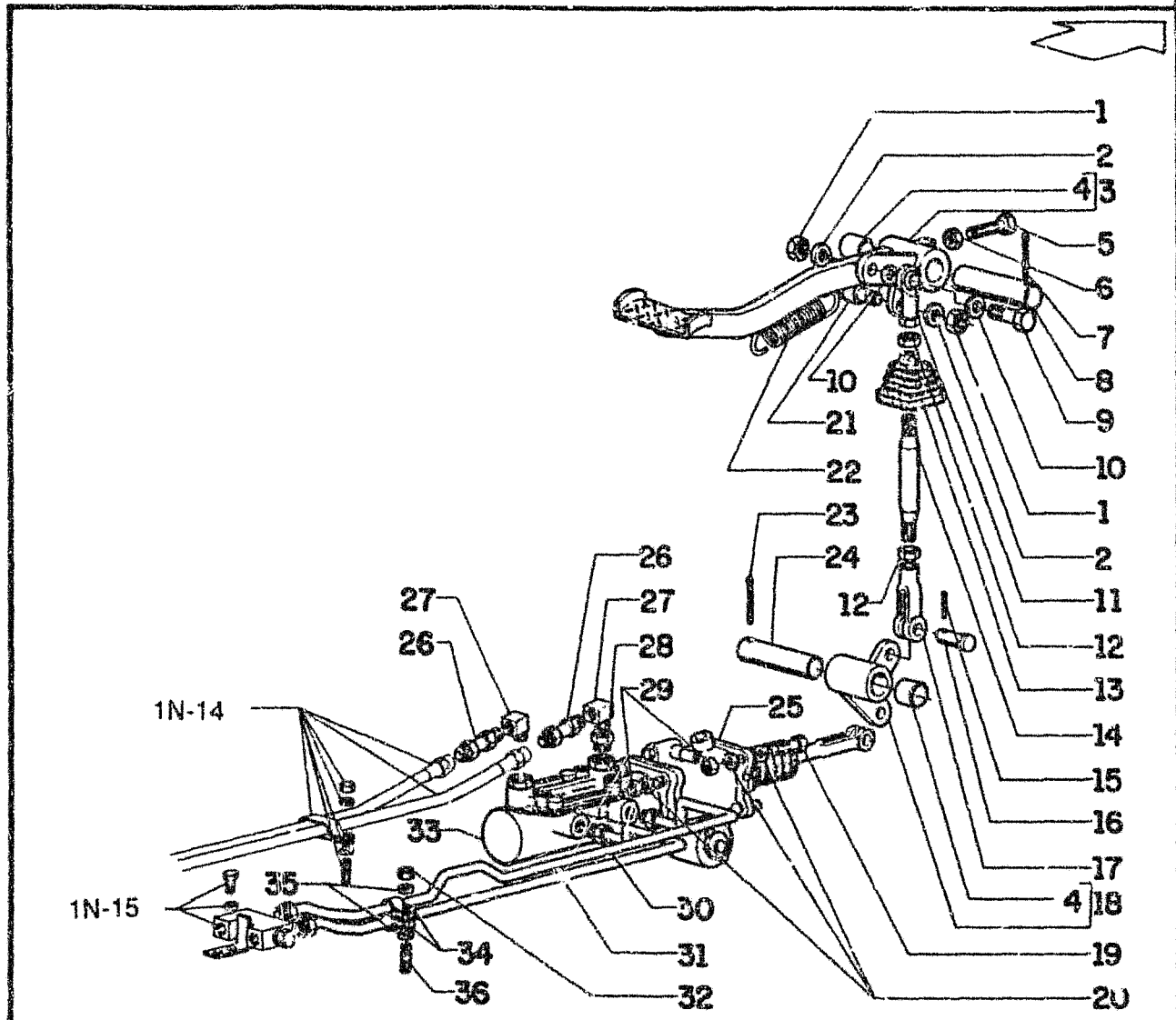

FIATALLIS FG 70R 70A 75R 75A C1.01 **QUADRO 1 PAG. 1**

ITEM	PEÇA Nº	QTDE	COD.	DESCRIPTION	DESCRIÇÃO
1	70911028	2	010D	NUT	PORCA
2	70912441	2	170R	LOCKWASHER	ARRUELA PRESSÃO
3	73153729	1	060P	PEDAL	PEDAL
4	73125303	4	095B	BUSHING	BUCHA
5	70929155	1	040V	SCREW	PARAFUSO
6	70910510	1	010D	NUT	PORCA
7	70910024	1	270C	COTTER PIN	CONTRA PINO
8	73153727	1	016A	SHAFT	EIXO
9	70921598	1	040V	SCREW	PARAFUSO
10	70677008	2	131R	WASHER	ARRUELA
11	70638732	1	061E	END	EXTREMIDADE
12	70913177	2	010D	NUT	PORCA
13	75214658	1	122G	SEAL	RETENTOR
14	75221528	1	142T	TIEROD	TIRANTE
15	70900805	2	270C	COTTER PIN	CONTRA PINO
16	70049993	2	080P	PIN	PINO
17	70917666	1	085F	YOKE	FORQUILHA
18	75221529	1	063R	BELL CRANCK	ALAVANCA ANGULA
19	70922287	2	040V	SCREW	PARAFUSO
20	70929156	10	131R	WASHER	ARRUELA
21	75213668	2	080P	PIN	PINO
22	70051193	1	100M	SPRING	MOLA
23	70904007	1	270C	COTTER PIN	CONTRA PINO
24	75221536	1	016A	SHAFT	EIXO
25	73154544	1	170C	MASTER CYLINDER	CILINDRO MESTRE
26	75213914	2	020R	FITTING	CONEXÃO
27	70913704	2	085G	ELBOW	COTOVELO
28	70901838	2	050T	PLUG	BUJÃO
29	70916950	8	010D	NUT	PORCA
30	75221552	1	193T	TUBE	TUBO
31	75221551	1	193T	TUBE	TUBO
32	70911034	1	010D	NUT	PORCA
33	73154545	1	310S	BRAKE BOOSTER	CILINDRO MESTRE
34	70928654	2	031F	CLAMP	ABRAÇADEIRA
35	70915815	2	131R	WASHER	ARRUELA
36	70687145	1	210P	STUD	PRISIONEIRO

BRAKE CONTROL
CONTROLE DO FREIO

C1.01 | 1

REVISED 1/92

FIATALLIS

FIATALLIS FG 70R 70A 75R 75A C1.01 QUADRO 2 PAG. 1

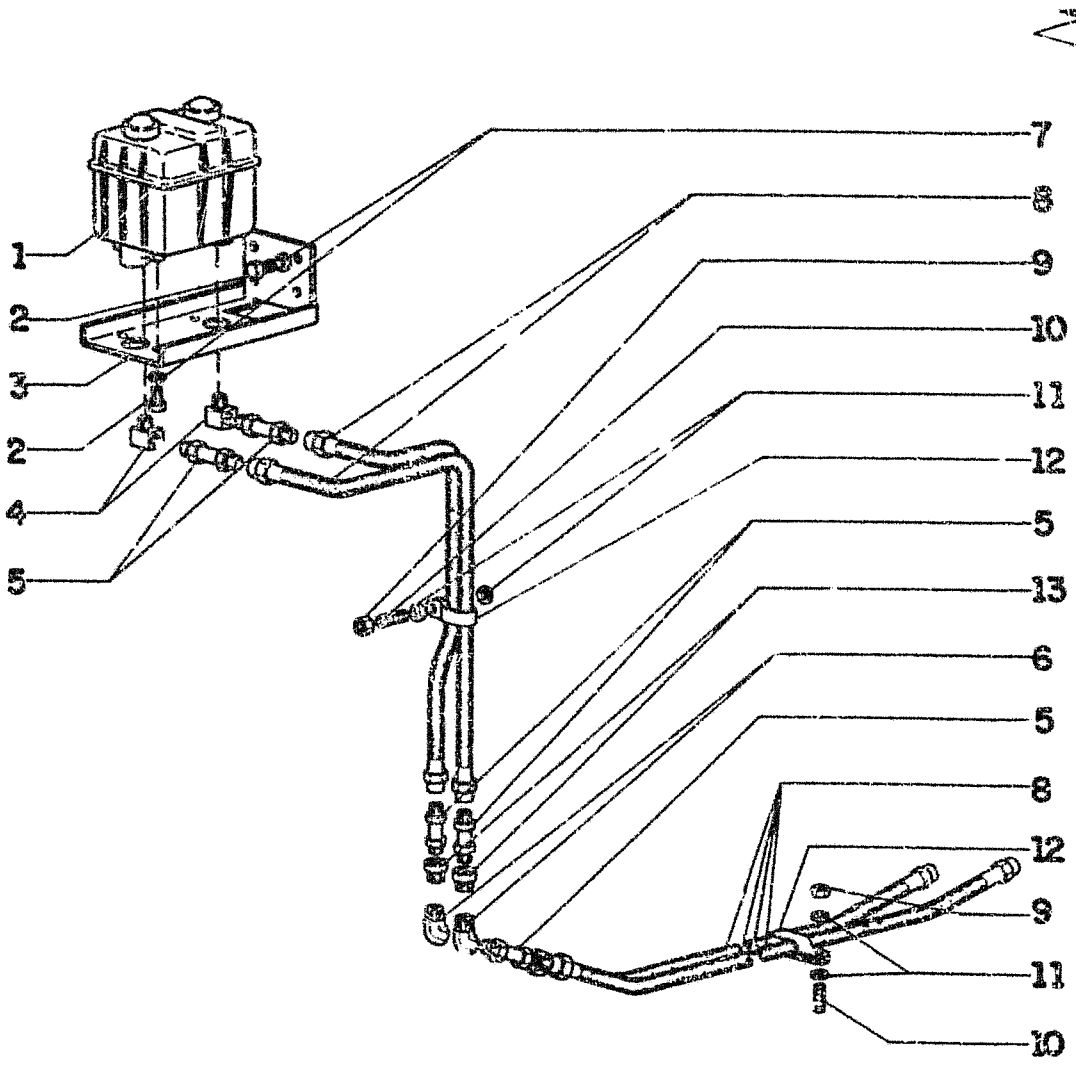

ITEM	PEÇA Nº	QTDE	COD.	DESCRIPTION	DESCRIÇÃO
1	73154546	1	115S	TANK	RESERVATORIO
2	70922925	8	040V	SCREW	PARAFUSO
3	75221547	1	300S	SUPPORT	SUPORTE
4	70913704	2	085G	ELBOW	COTOVELO
5	75213914	2	020R	FITTING	CONEXÃO
6	70917418	2	085G	ELBOW	COTOVELO
7	70929662	8	131R	WASHER	ARRUELA
8	75221548	4	192T	HOSE ASSY	MANGUEIRA
9	70911034	4	010D	NUT	PORCA
10	70687145	4	210P	STUD	PRISIONEIRO
11	70915815	8	131R	WASHER	ARRUELA
12	70932619	4	031F	CLAMP	ABRAÇADEIRA
13	70914646	2	020R	FITTING	CONEXÃO

BRAKE CONTROL
CONTROLE DO FREIO

C1.01 | 2

FIATALLIS

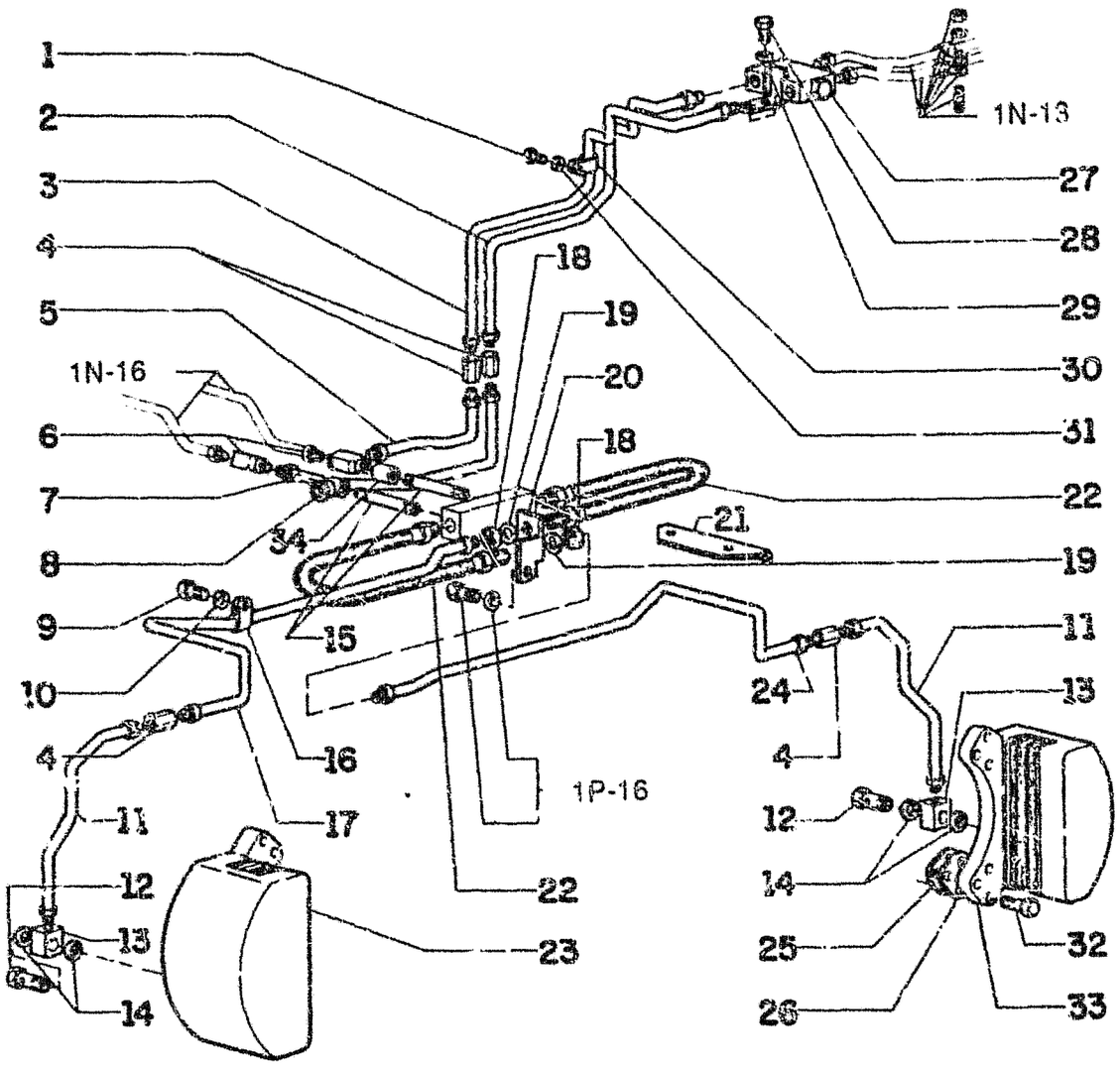

FIATALLIS FG 70R 70A 75R 75A C1.01 **QUADRO** 3 **PAG.** 1

ITEM	PEÇA Nº	QTDE	COD.	DESCRIPTION	DESCRIÇÃO
1	70927400	2	040V	SCREW	PARAFUSO
2	75221812	1	193T	TUBE	TUBO
3	75221555	1	193T	TUBE	TUBO
4	73124482	4	235C	CONNECTION	CONEXAO
5	75221814	1	193T	TUBE	TUBO
6	70917593	2	020R	FITTING	CONEXÃO
7	75221816	1	193T	TUBE	TUBO
8	70901702	1	020R	FITTING	CONEXÃO
9	70922300	2	040V	SCREW	PARAFUSO
10	70630753	2	131R	WASHER	ARRUELA
11	75221825	2	193T	TUBE	TUBO
12	75213416	2	040V	SCREW	PARAFUSO
13	75213410	2	235C	CONNECTION	CONEXAO
14	10278660	4	131R	WASHER	ARRUELA
15	70062035	2	075B	CONNECTOR	CONECTOR
16	70640677	4	031F	CLAMP	ABRAÇADEIRA
17	75221560	1	193T	TUBE	TUBO
18	70911049	2	010D	NUT	PORCA
19	70910543	2	131R	WASHER	ARRUELA
20	75221821	1	300S	SUPPORT	SUPORTE
21	70604769	4	070R	GUARD	PROTEÇÃO
22	70600675	2	192T	HOSE ASSY	MANGUEIRA
23	75221846	1	093F	BRAKE	FREIO
24	75221557	1	193T	TUBE	TUBO
25	75221867	6	198S	SHIM	CALÇO
26	75221868	6	198S	SHIM	CALÇO
27	73134431	1	010V	VALVE	VÁLVULA
28	70927541	1	040V	SCREW	PARAFUSO
29	70677004	1	131R	WASHER	ARRUELA
30	70928654	2	031F	CLAMP	ABRAÇADEIRA
31	70915815	2	131R	WASHER	ARRUELA
32	75221848	12	040V	SCREW	PARAFUSO
33	75221847	1	093F	BRAKE	FREIO
34	70901763	1	030M	SLEEVE	LUVA

WHEEL BRAKE
FREIO

C1.01 | 3

FIATALLIS

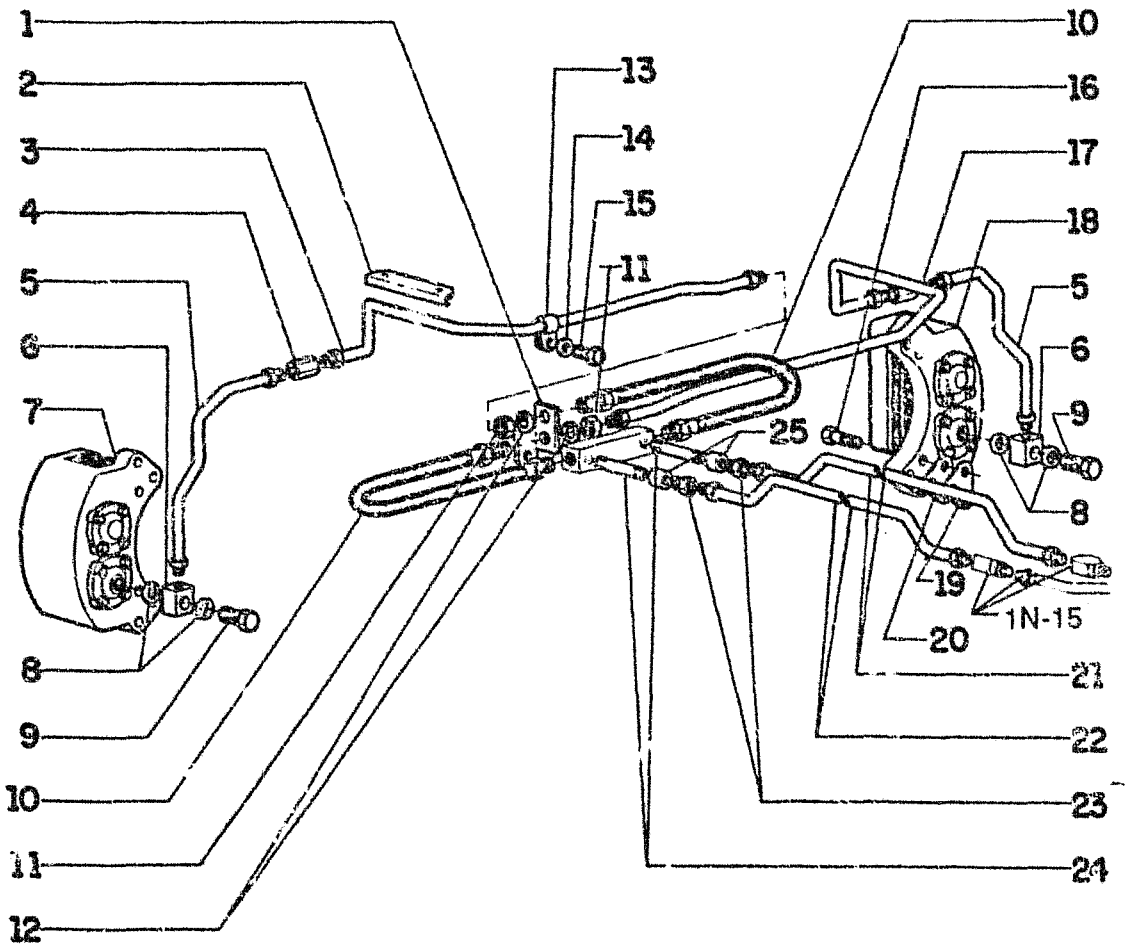

FIATALLIS FG 70R 70A 75R 75A C1.01 QUADRO 4 PAG. 1

ITEM	PEÇA Nº	QTDE	COD.	DESCRIPTION	DESCRIÇÃO
1	75221822	1	300S	SUPPORT	SUPORTE
2	70604769	2	070R	GUARD	PROTEÇÃO
3	75221559	1	193T	TUBE	TUBO
4	73124486	2	235C	CONNECTION	CONEXAO
5	75221828	2	193T	TUBE	TUBO
6	75213410	2	235C	CONNECTION	CONEXAO
7	75221847	1	093F	BRAKE	FREIO
8	10278660	4	131R	WASHER	ARRUELA
9	75213416	2	040V	SCREW	PARAFUSO
10	70600675	2	192T	HOSE ASSY	MANGUEIRA
11	70911049	2	010D	NUT	PORCA
12	70910543	2	131R	WASHER	ARRUELA
13	70640677	4	031F	CLAMP	ABRAÇADEIRA
14	70630753	4	131R	WASHER	ARRUELA
15	70922300	4	040V	SCREW	PARAFUSO
16	75221849	12	040V	SCREW	PARAFUSO
17	75221558	1	193T	TUBE	TUBO
18	75221846	1	093F	BRAKE	FREIO
19	75221868	6	198S	SHIM	CALÇO
20	75221867	6	198S	SHIM	CALÇO
21	75221820	1	193T	TUBE	TUBO
22	75221818	1	193T	TUBE	TUBO
23	70914646	2	020R	FITTING	CONEXÃO
24	70062035	2	075B	CONNECTOR	CONECTOR
25	70901763	2	030M	SLEEVE	LUVA

WHEEL BRAKE
FREIO

C1.01 | 4

FG70 FG70A
FG75 FG75A

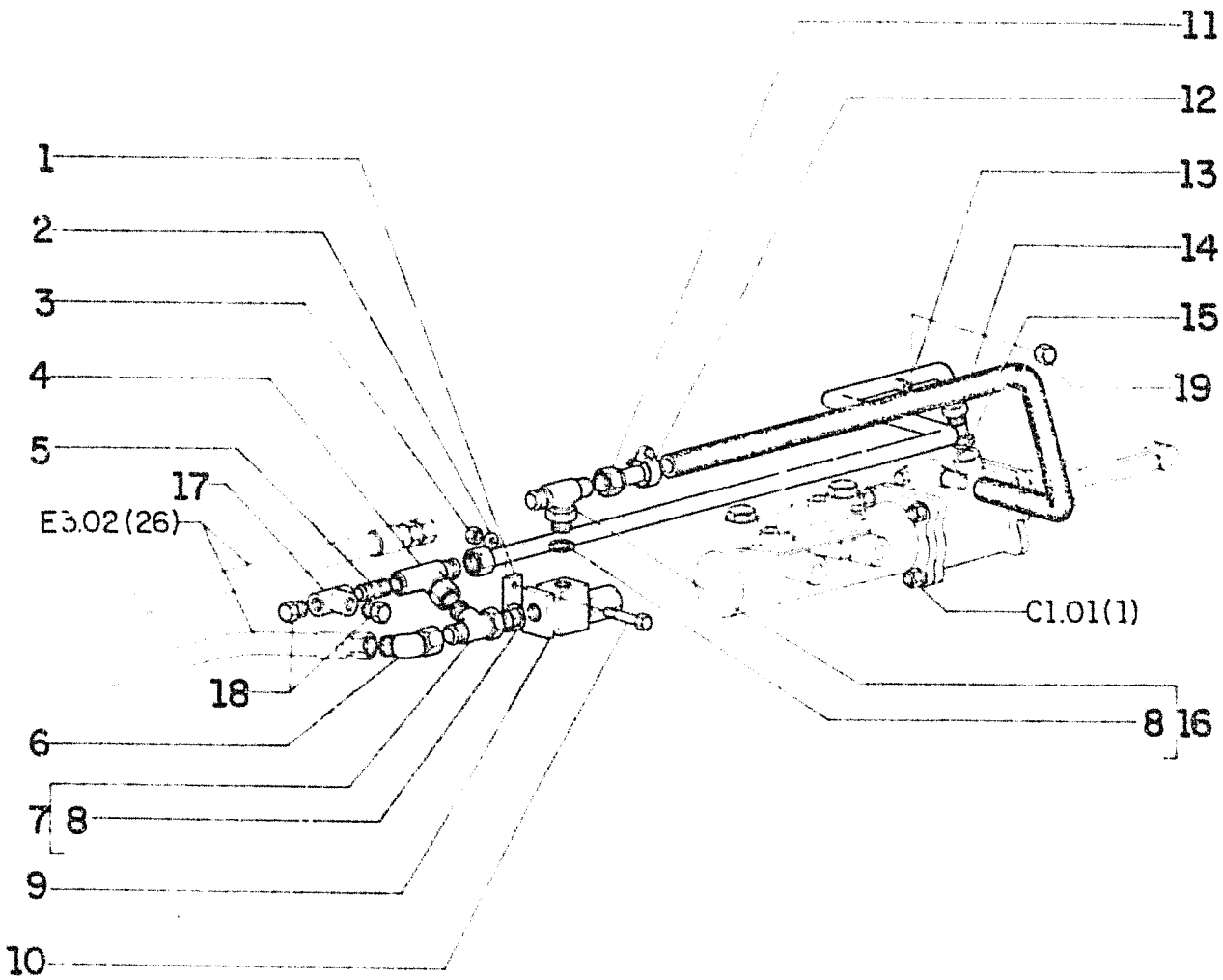

ITEM	PART NO.	QTY	COD	DESCRIPTION	DESRICAO
1	73127633	1	105P	PLATE	CHAPA
2	70928190	2	131R	WASHER	ARRUELA
3	70920329	2	010D	NUT	PORCA
4	75238361	1	020R	FITTING	CONEXAO
5	70916634	1	020R	FITTING	CONEXAO
6	70925018	1	020R	FITTING	CONEXAO
7	70922792	1	020R	FITTING	CONEXAO
8	70921349	2	158G	O-RING	ANELO
9	75222439	1	010V	VALVE	VALVULA
10	70934150	2	040V	SCREW	PARAFUSO
11	70920807	2	020R	FITTING	CONEXAO
12	70925755	2	031F	CLAMP	ABRACADEIRO
13	75221540	1	193T	TUBE	TUBO
14	75221541	1	285T	HOSE	MANGUEIRA
15	14453080	1	158G	O-RING	ANELO
16	70923157	1	020R	FITTING	CONEXAO
17	70901702	1	020R	FITTING	CONEXAO
18	70919134	2	026T	BLOCK	TAMPAO
19	70921467	1	064C	CAP	TAMPAO

DESCRIPTION	SBGRP	TAV	GRID
PIPING TRANSMISSION FG70	B201	15	1I-7
RADIATOR	A401	2	1G-14
GRID	A401	2	1G-14
PIPING	A401	1	1G-13
WRAP AROUND	L101	1	2F-13
REAR AXLE BEVEL GEAR	B403	3	1N-8
AXLE BULL GEAR	B403	1	1N-6
AXLE DRIVE SHAFTS	B403	3	1N-8
AXLE EXTENSION HOUSING	B403	3	1N-8
AXLE PINION GEAR	B403	2	1N-7
AXLE SUPPORT	B403	6	1N-12
AXLE WHEEL ENDS	D316	1	1P-14
RESERVOIR, IMPLEMENT OIL	E328	1	2C-10
REVERSE & 3 - 4 SPEED CLUTCH FG75	B201/1	14	1L-8
REVERSE CLUTCH FG70	B201	6	1H-14
REVERSE IDLER ASSEMBLY FG75	B201/1	13	1L-7
RIPPER	E310/1	2	2C-4
CYLINDER	E332/1	2	2D-15
VALVE	E331	3	2C-15
ROTARY DISTRIBUTOR COMPONENTS	E331	1	2C-13
ROTARY DISTRIBUTOR	E302	23	2A-12
SADDLE	E310	1	2B-13
LOCK PIN CYLINDER	E332	4	2D-10
SADDLE LOCK VALVE	E331	4	2C-16
SCARIFIER	E310/1	1	2C-3
CYLINDER	E332/1	1	2D-14
VALVE	E331	6	2D-2
SEAT	L604	1	2H-2
SEAT BELT	L604	2	2H-3
SECOND SPEED CLUTCH FG70	B201	7	1H-15
SENSORS, MONITORING	F401	16	2F-4
SENSORS, MONITORING	F401	17	2F-5
STARTER COMPONENTS	F608	1	2H-11
STARTER MOTOR	F200	1	2E-2
STEERING CONTROL VALVE	D202	1	1P-10
CYLINDER	D212	1	1P-12
PUMP COMPONENTS	D213	1	1P-13
WHEEL	D201	1	1P-3
SWITCH ARTICULATION	F401	19	2F-7
PANEL ELECTRICAL CABLE	F401	2	2E-4
PANEL ELECTRICAL	F401	1	2E-3
TANDEM	D333	1	1P-16
TANK, IMPLEMENT OIL	E328	1	2C-10
THERMOSTAT,ENGINE COOLANT	A402	1	1G-15
THIRD SPEED CLUTCH FG70	B201	6	1H-14
THROTTLE CONTROL	A221	1	1F-3
CONTROL LEVER	A221	4	1F-6
LINKAGE FG70	A221	2	1F-4
THROTTLE LINKAGE FG75	A221	3	1F-5
TIRES & WHEELS	D316	2	1P-15
TRANSMISSION FG70	B200	1	1H-6
TRANSMISSION FG70	B200/1	1	1H-7
CASE & TUBING FG70	B201	1	1H-8
CONTROL FG75	B207/1	2	1M-13
CONTROL LEVER FG70	B207	2	1M-12
CONTROL LINKAGE FG70	B207	1	1M-10
CONTROL VALVE FG70	B201	18	1I-10
CONTROL VALVE FG75	B201/1	20	1L-14
CONTROL VALVE FG75	B201/1	21	1L-15
CONTROL VALVE FG75	B201/1	22	1L-16
CONTROL VALVE FG75	B201/1	23	1L-17
DECLUTCH VALVE	C101	6	1O-2
GEARING FG70	B201	5	1H-13
GEARING FG75	B201/1	8	1L-2
GUARD	D101	2	1O-11
HEAT EXCHANGER FG7	B206/1	1	1M-8
HEAT EXCHANGER FG70	B206	3	1M-7
HOUSING FG75	B201/1	4	1I-14
IDLER SHAFT FG75	B201/1	17	1L-11
MODUALTING VALVE FG75	B201/1	24	1M-2
MODULATING VALVE FG70	B201	18	1I-10
OIL FILTER FG70	B201	11	1I-3
OIL FILTER FG75	B217	1	1M-14
OIL FILTER LINES FG75	B206	1	1M-5
OIL DIPSTICK FG70	B206	2	1M-6
OIL DIPSTICK FG75	B206/1	2	1M-9
OUTPUT FLANGE FG70	B201	13	1I-5
OUTPUT SHAFT FG70	B201	10	1I-2
OUTPUT SHAFT FG75	B201/1	18	1L-12
PUMP FG70	B201	15	1I-7
PUMP MOUNT FG75	B201/1	19	1L-13
REGULATING VALVE FG70	B201	16	1I-8
REGULATING VALVE FG75	B201/1	25	1M-3
REGULATING VALVE FG75	B201/1	26	1M-4
TURN SIGNAL	F401	13	2E-15
VALVE ARTICULATION	E331	2	2C-14
BLADE LIFT	E331	5	2C-17
CIRCLE SHIFT	E331	3	2C-15
END CAP	E331	7	2D-3
END CAP	E331	9	2D-4
LATERAL SHIFT	E331	2	2C-14
MAIN RELIEF , LEFT	E331	10	2D-5
MAIN RELIEF , RIGHT	E331	11	2D-6
MOLDBOARD PITCH	E331	2	2C-14
RIPPER	E331	3	2C-15
SADDLE LOCK	E331	4	2C-16
SCARIFIER	E331	6	2D-2
STEERING CONTROL VALVE	D202	1	1P-10
VALVE TRANS CONTROL FG75	B201/1	22	1L-16
TRANS CONTROL FG75	B201/1	23	1L-17
TRANS MODULATING FG70	B201	18	1I-10
TRANS MODUALTING FG75	B201/1	24	1M-2
TRANS REGULATING FG75	B201/1	25	1M-3
TRANS REGULATING FG75	B201/1	26	1M-4
TRANSMISSION CONTROL FG70	B201	18	1I-10
WHEEL LEAN	E331	2	2C-14
WHEEL LEAN CYLINDER	E332	1	2D-7
WHEEL LEAN VALVE	E331	2	2C-14
WHEELS & TIRES	D316	2	1P-15
WINDOW WIPERS	L104	6	2G-7
WIPERS WINDOW	L104	6	2G-7

FIATALLIS

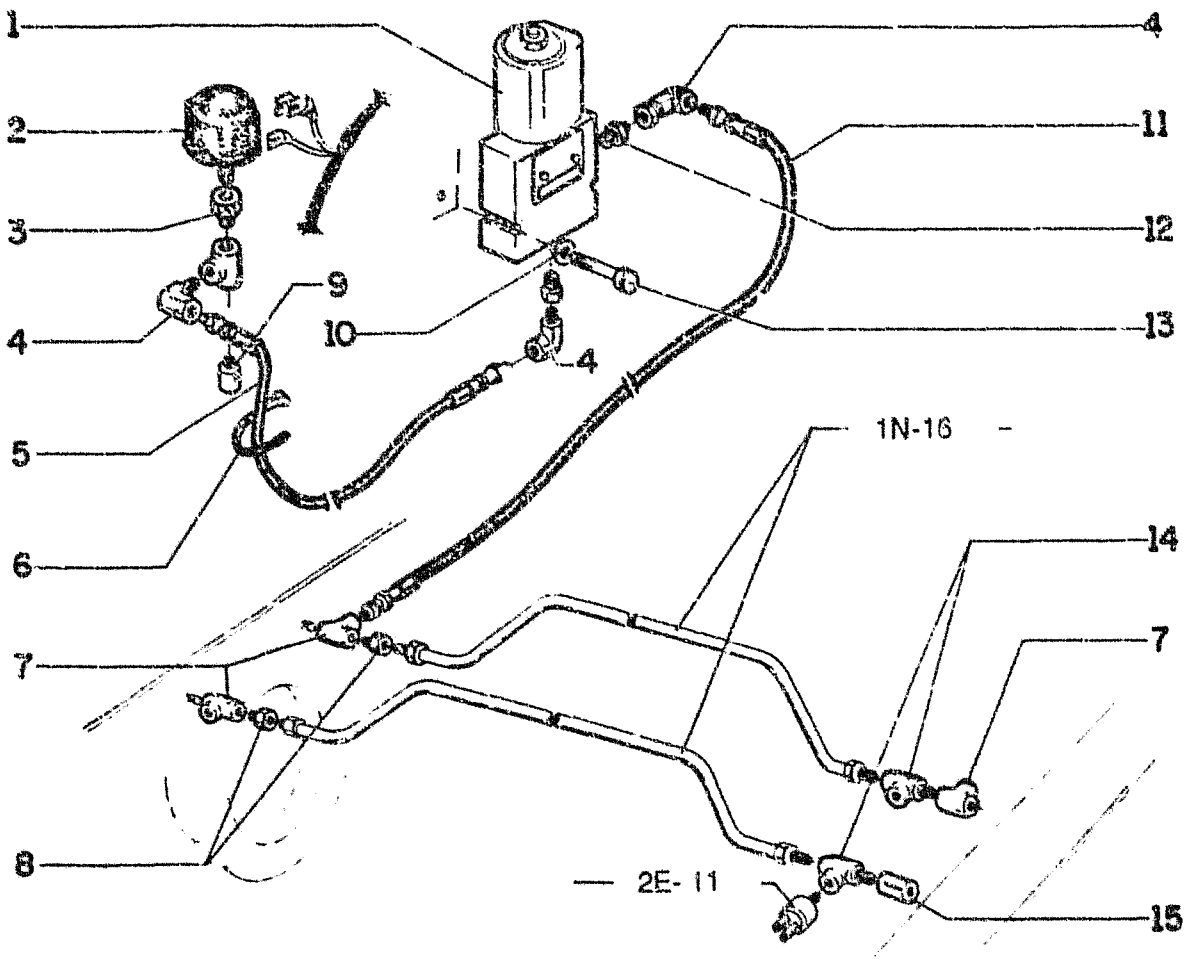

FIATALLIS FG 70R 70A C1.01 **QUADRO** 6 **PAG.** 1

ITEM	PEÇA Nº	QTDE	COD.	DESCRIPTION	DESCRIÇÃO
1	73159101	1	030E	SOLENOID VALVE	SOLENÓIDE
2	70638413	1	040V	SCREW	PARAFUSO
3	73159096	1	020R	FITTING	CONEXÃO
4	70913704	3	085G	ELBOW	COTOVELO
5	73111893	1	192T	HOSE ASSY	MANGUEIRA
6	70196765	2	C31F	CLAMP	ABRAÇADEIRA
7	70901702	1	020R	FITTING	CONEXÃO
8	70914646	2	020R	FITTING	CONEXÃO
9	70926037	1	020R	FITTING	CONEXÃO
10	70928190	2	131R	WASHER	ARRUELA
11	73159097	1	192T	HOSE ASSY	MANGUEIRA
12	70901825	2	020R	FITTING	CONEXÃO
13	70930790	2	040V	SCREW	PARAFUSO
14	70917593	2	020R	FITTING	CONEXÃO
15	70901763	1	030M	SLEEVE	LUVA

TRANSMISSION DECLUTCH CUT OFF
DESEMBREAGEM DA TRANSMISSAO

C1.01 | 6

FIATALLIS

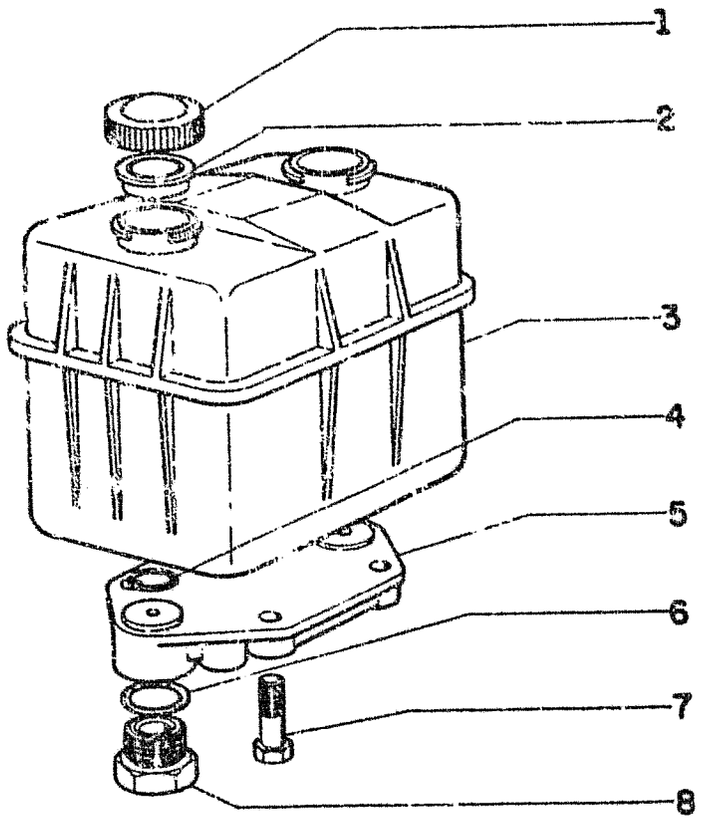

FIATALLIS FG 70R 70A 75R 75A C1.08 **QUADRO** 1 **PAG.** 1

ITEM	PEÇA Nº	QTDE	COD.	DESCRIPTION	DESCRIÇÃO
1	75285864	2	265C	COVER	TAMPA
2	75285863	2	265C	COVER	TAMPA
3	75221946	1	300C	BODY	CORPO
4	75285868	2	158G	O'RING	O'RING
5	75221947	1	300S	SUPPORT	SUPORTE
6	75285867	2	158G	O'RING	O'RING
7	75285865	4	040V	SCREW	PARAFUSO
8	75285866	2	020R	FITTING	CONEXÃO

BRAKE FLUID TANK
RESERVATÓRIO DE ÓLEO DO FREIO

C1.08

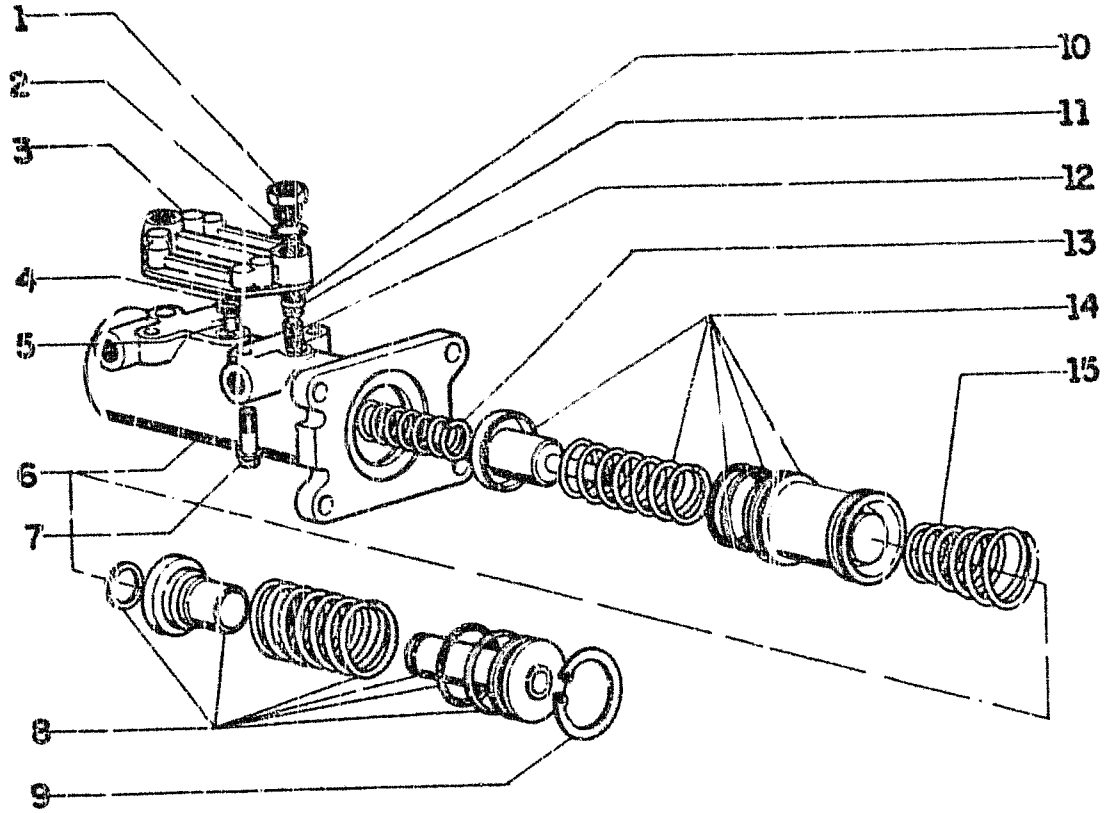

FG70 FG70A
FG75 FG75A

ITEM	PART NO.	QTY	COD	DESCRIPTION	DESRICAO
-	73160642	1	1K	KIT, SEAL INCLUDES ITEMS 2,4,8,10,13-15	KIT
1	75285918	2	02R	FITTING	CONEXAO
2	75285917	2	158G	O-RING	O'RING
3	75285919	1	265C	COVER	TAMPA
4	75285916	1	158G	O-RING	O'RING
5	75285915	1	080P	PIN	PINO
6	75285913	1	300C	BODY	CORPO
7	75285914	4	040V	SCREW	PARAFUSO
8	75285921	1	235S	PISTON	EMBOLO
9	75285920	1	045A	RING	ANEL
10	75285927	2	158G	O-RING	O'RING
11	75285926	2	010V	VALVE	VALVULA
12	75285925	2	100M	SPRING	MOLA
13	75285924	1	100M	SPRING	MOLA
14	75285922	1	235S	PISTON	EMBOLO
15	75285923	1	100M	SPRING	MOLA

BRAKE MASTER CYLINDER
73154544

C108 | **2**

REVISED 1/92

FG70 FG70A
FG75 FG75A

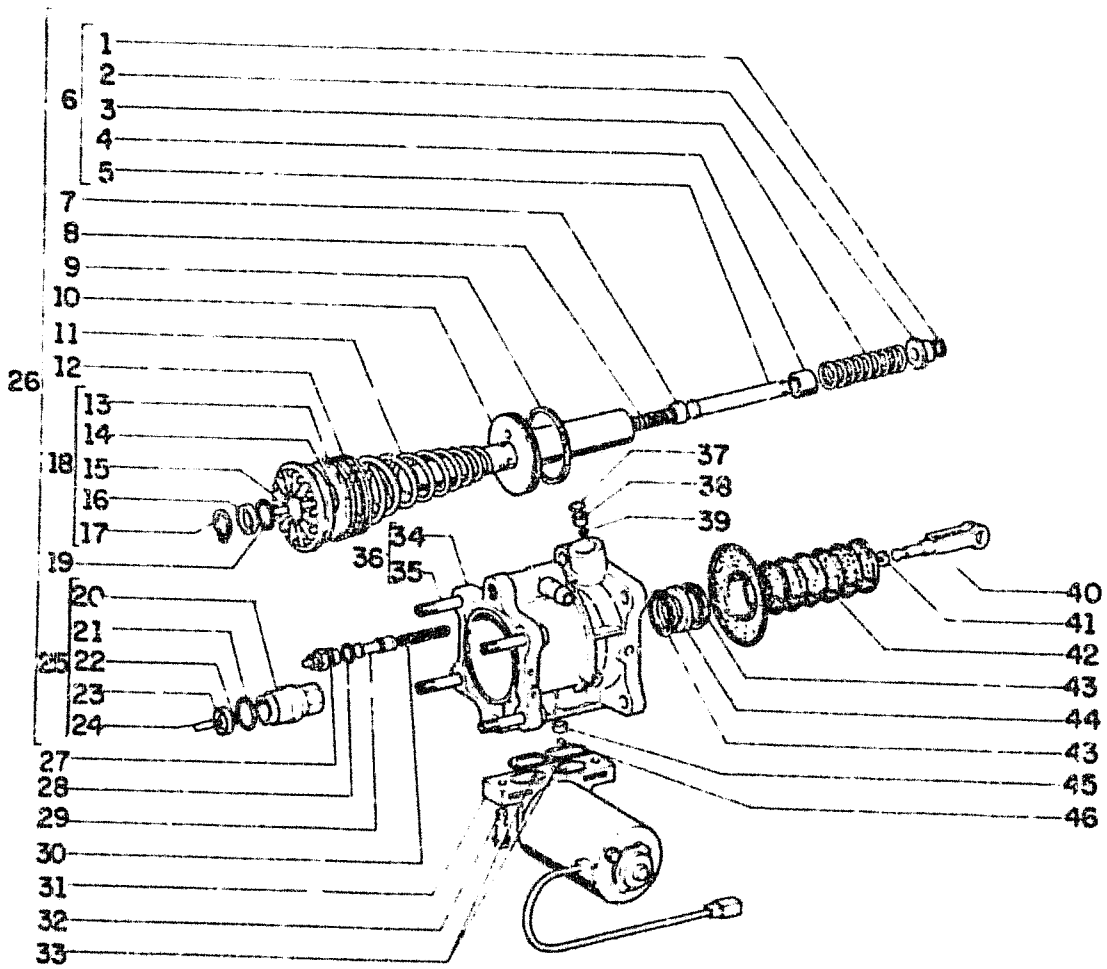

ITEM	PART NO.	QTY	COD	DESCRIPTION	DESRICAO
-	73160641	1	IK	KIT, SEAL INCLUDES ITEMS 7,14,17,19,21-23 28,33,37-39,42-44	KIT
-	73160644	1	310S	BRAKE BOOSTER INCLUDES ALL ITEMS EXCEPT 31-33	CILINDRO MEST
-	73160643	1	155P	PUMP ASSY INCLUDES ITEMS 31-33	BOMBA
1	75285910	1	045A	RING	ANEL
2	75285909	1	060S	CUP	PRATO
3	75285908	1	100M	SPRING	MOLA
4	75285907	1	095B	BUSHING	BUCHA
5	75285906	1	274S	ROD	HASTE
6	75285911	1	130P	PLUNGER	PISTAO
7	75285905	1	060S	CUP	PRATO
8	75285904	1	100M	SPRING	MOLA
9	75285903	1	122G	SEAL	RETENTOR
10	75285902	1	130P	PLUNGER	PISTAO
11	75285901	1	100M	SPRING	MOLA
12	75285900	2	158G	O-RING	O'RING
13	75285898	1	060S	CUP	PRATO
14	75285897	1	158G	O-RING	O'RING
15	75285896	1	265C	COVER	TAMPA
16	75285894	1	045A	RING	ANEL
17	75285893	1	187A	SNAP RING	ANEL ELASTICO
18	75285899	1	265C	COVER	TAMPA
19	75285895	1	158G	O-RING	O'RING
20	75285887	1	050T	PLUG	BUJAO
21	75285890	1	158G	O-RING	O'RING
22	75285889	1	122G	SEAL	RETENTOR
23	75285891	1	122G	SEAL	RETENTOR
24	75282888	1	080P	PIN	PINO
25	75285892	1	050T	PLUG	BUJAO

POWER BRAKE BOOSTER
73154545

C108 | **3**

REVISED 1/92

FG70 FG70A
FG75 FG75A

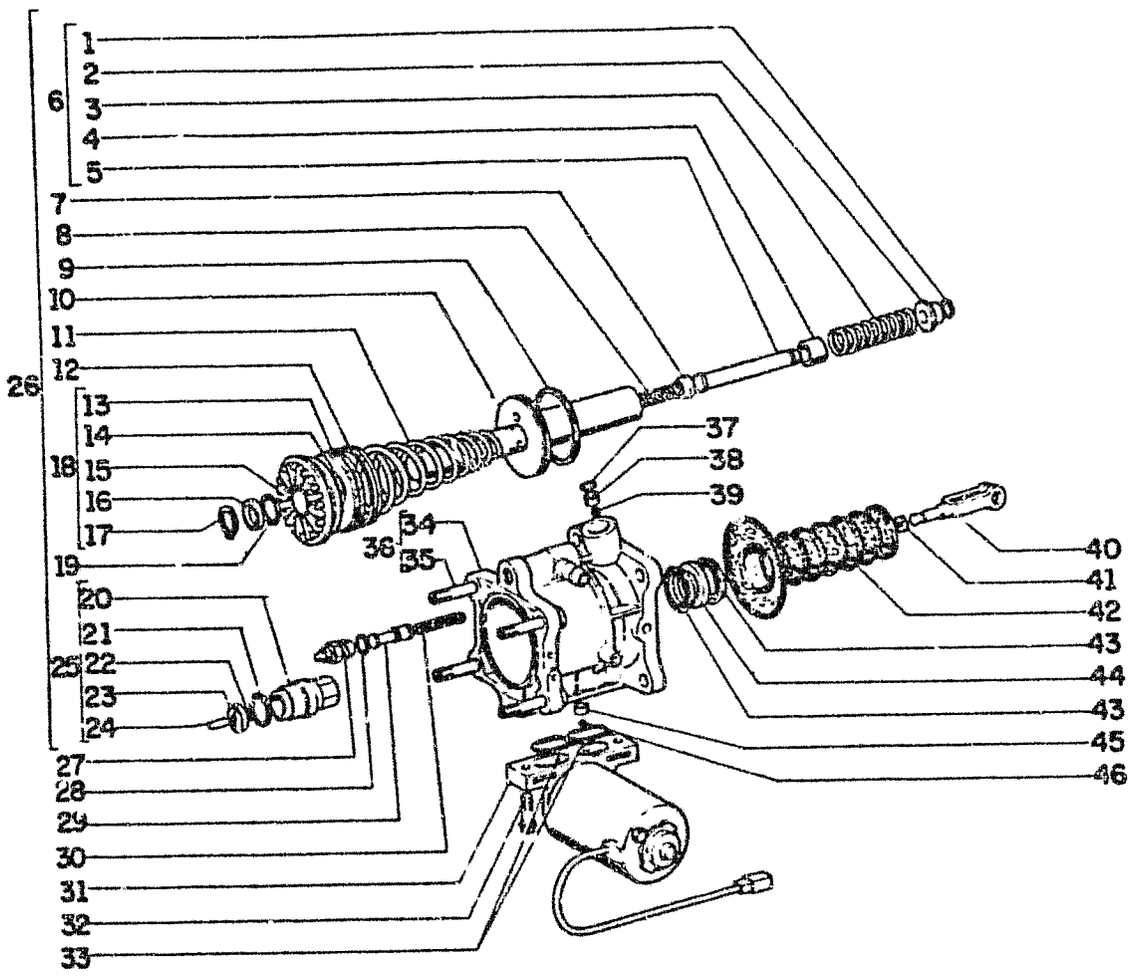

ITEM	PART NO.	QTY	COD	DESCRIPTION	DESRICAO
26	75285912	1	130P	PLUNGER	PISTAO
27	75285878	1	075I	SWITCH	INTERRUPTOR
28	75285879	1	158G	O-RING	O'RING
29	75285880	1	130P	PLUNGER	PISTAO
30	75285881	1	100M	SPRING	MOLA
31	75285872	1	155P	PUMP	BOMBA
32	75285871	2	040V	SCREW	PARAFUSO
33	75285870	2	158G	O-RING	O'RING
34	75285885	1	035S	CASE	CARCACA
35	75285884	4	040V	SCREW	PARAFUSO
36	75285886	4	035S	CASE	CARCACA
37	75285928	1	158G	O-RING	O'RING
38	75285930	1	010V	VALVE	VALVULA
39	75285929	1	140S	BALL	ESFERA
40	75285875	1	274S	ROD	HASTE
41	75285876	1	045A	RING	ANEL
42	75285877	1	334C	DUST BOOT	COIFA PARA PO
43	75285882	2	122G	SEAL	RETENTOR
44	75285883	1	045A	RING	ANEL
45	75285874	1	045A	RING	ANEL
46	75285873	1	140S	BALL	ESFERA

POWER BRAKE BOOSTER
73154545

C108 | **3**

REVISED 1/92

FIATALLIS

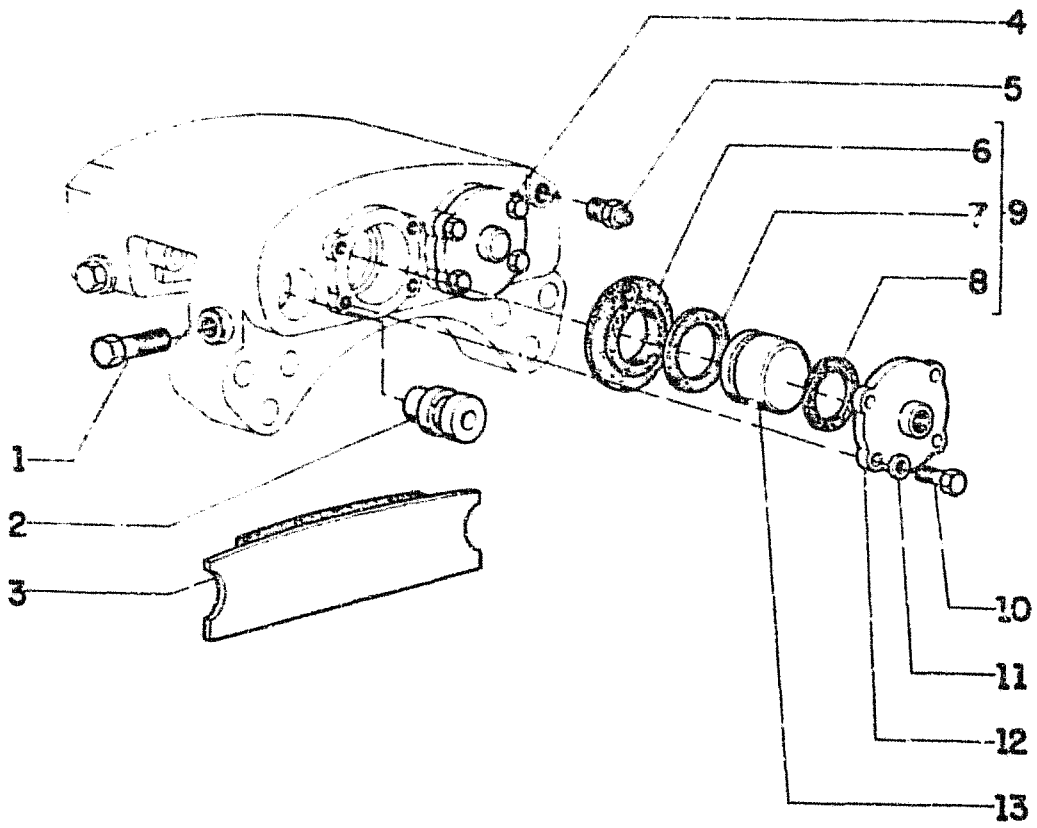

FIATALLIS FG 70R 70A 75R 75A C1.18 **QUADRO 1 PAG. 1**

ITEM	PEÇA Nº	QTDE	COD.	DESCRIPTION	DESCRIÇÃO
1	70927212	16	040V	SCREW	PARAFUSO
2	73110558	16	080P	PIN	PINO
3	75285169	8	042P	BRAKE LINING	PASTILHA FREIO
4	73110564	4	265C	COVER	TAMPA
5	73111046	4	010V	VALVE	VÁLVULA
6	73068124	16	065C	BOOT	SANFONA
7	73068125	16	158G	O'RING	O'RING
8	73068123	8	158G	O'RING	O'RING
9	73110563	4	002K	KIT	KIT
10	70921076	32	040V	SCREW	PARAFUSO
11	70911115	32	131R	WASHER	ARRUELA
12	73110565	4	265C	COVER	TAMPA
13	73110566	16	130P	PLUNGER	PISTAO

BRAKE HEAD ASSEMBLY
PINÇA DO FREIO A DISCO

C1.18 | 1

FIATALLIS

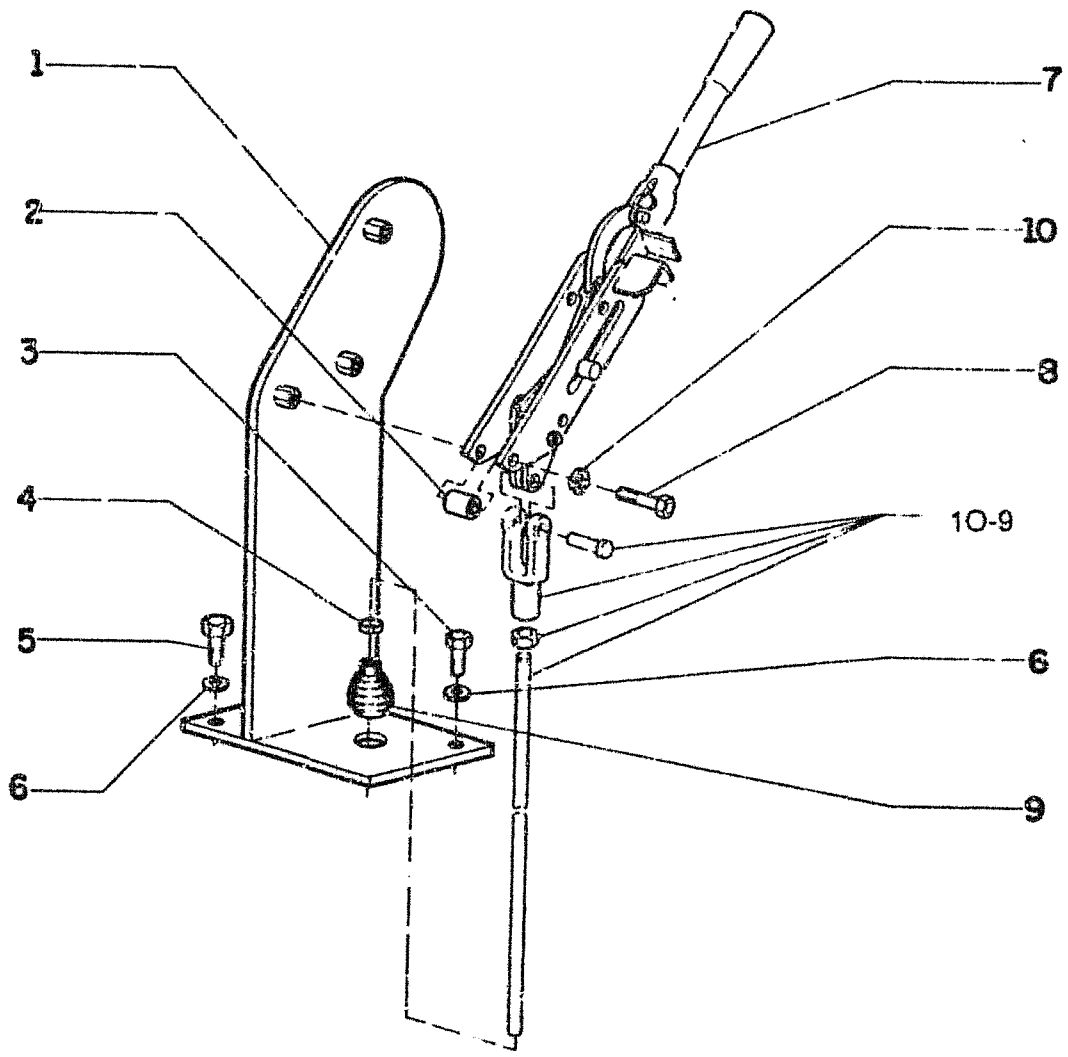

FIATALLIS FG 70R 70A 75R 75A C1.35 **QUADRO 1** **PAG. 1**

ITEM	PEÇA Nº	QTDE	COD.	DESCRIPTION	DESCRIÇÃO
1	73151200	1	300S	SUPPORT	SUPORTE
2	75220799	3	075D	SPACER	ESPAÇADOR
3	70929771	1	040V	SCREW	PARAFUSO
4	70921910	1	031F	CLAMP	ABRAÇADEIRA
5	70921556	2	040V	SCREW	PARAFUSO
6	70677008	3	131R	WASHER	ARRUELA
7	73153062	1	045L	LEVER	ALAVANCA
8	70920995	3	040V	SCREW	PARAFUSO
9	70078908	1	065C	BOOT	SANFONA
10	70677006	3	131R	WASHER	ARRUELA

PARKING BRAKE CONTROL
CONTROLE DO FREIO DE ESTACIONAMENTO

C1.35 | 1

FIATALLIS

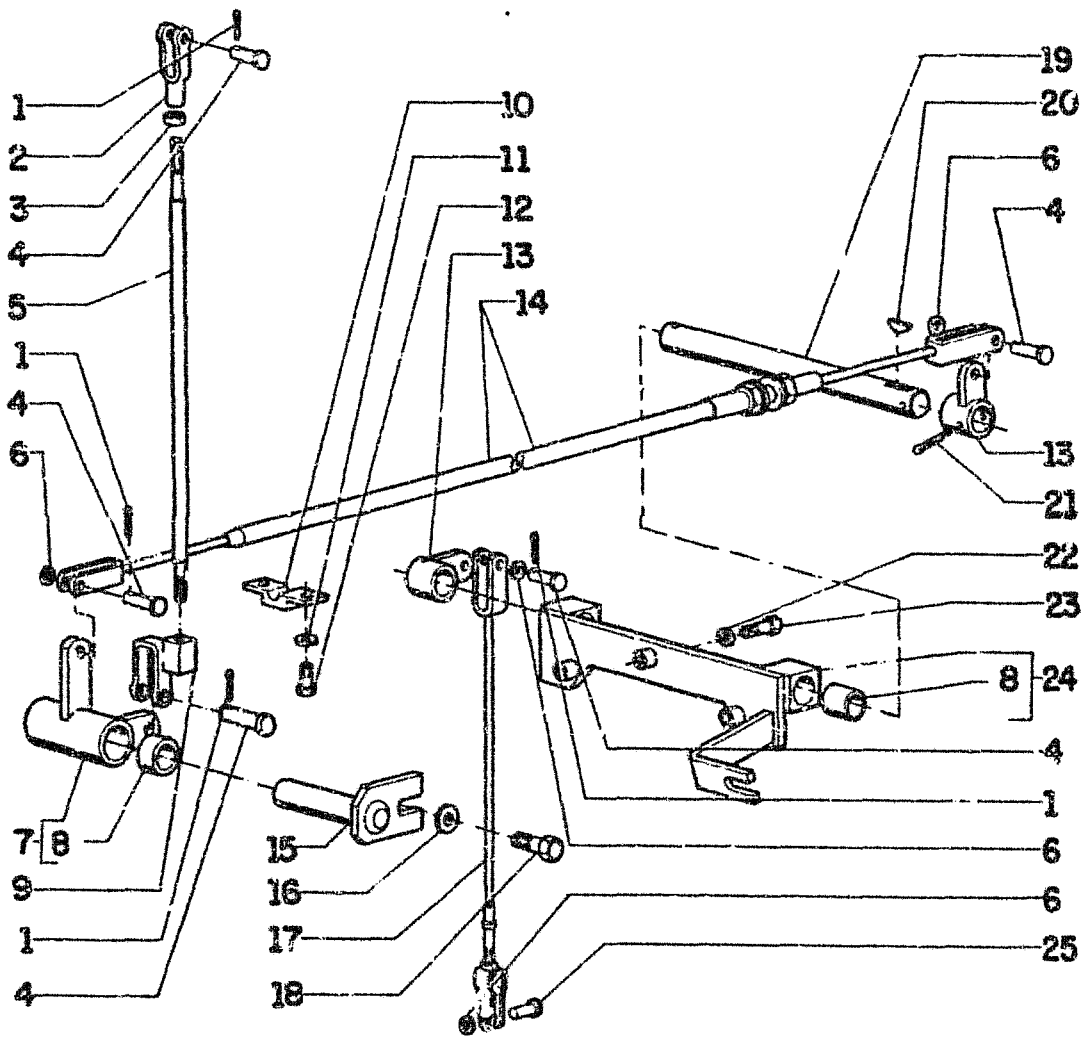

FIATALLIS FG 70R 70A C1.35 **QUADRO** 2 **PAG.** 1

ITEM	PEÇA Nº	QTDE	COD.	DESCRIPTION	DESCRIÇÃO
1	70918448	6	270C	COTTER PIN	CONTRA PINO
2	70628736	1	085F	YOKE	FORQUILHA
3	70911041	2	010D	NUT	PORCA
4	70078810	5	080P	PIN	PINO
5	73151209	1	142T	TIEROD	TIRANTE
6	70930370	5	131R	WASHER	ARRUELA
7	73151195	1	045L	LEVER	ALAVANCA
8	70035285	4	095B	BUSHING	BUCHA
9	70670615	1	085F	YOKE	FORQUILHA
10	71004339	1	031F	CLAMP	ABRAÇADEIRA
11	70677004	2	131R	WASHER	ARRUELA
12	70927541	2	040V	SCREW	PARAFUSO
13	73159021	2	045L	LEVER	ALAVANCA
14	73159024	1	105F	ROPE	CABO
15	73129958	1	080P	PIN	PINO
16	70677006	1	131R	WASHER	ARRUELA
17	73159023	1	105F	ROPE	CABO
18	70922763	1	040V	SCREW	PARAFUSO
19	73159022	1	016A	SHAFT	EIXO
20	70932825	2	061L	WOODRUFF KEY	CHAVETA WOODRUF
21	70904002	2	270C	COTTER PIN	CONTRA PINO
22	70926190	3	131R	WASHER	ARRUELA
23	70924080	3	040V	SCREW	PARAFUSO
24	73159014	1	300S	SUPPORT	SUPORTE
25	10033411	1	080P	PIN	PINO

PARKING BRAKE CONTROL
CONTROLE DO FREIO DE ESTACIONAMENTO

C1.35 | 2

FIATALLIS

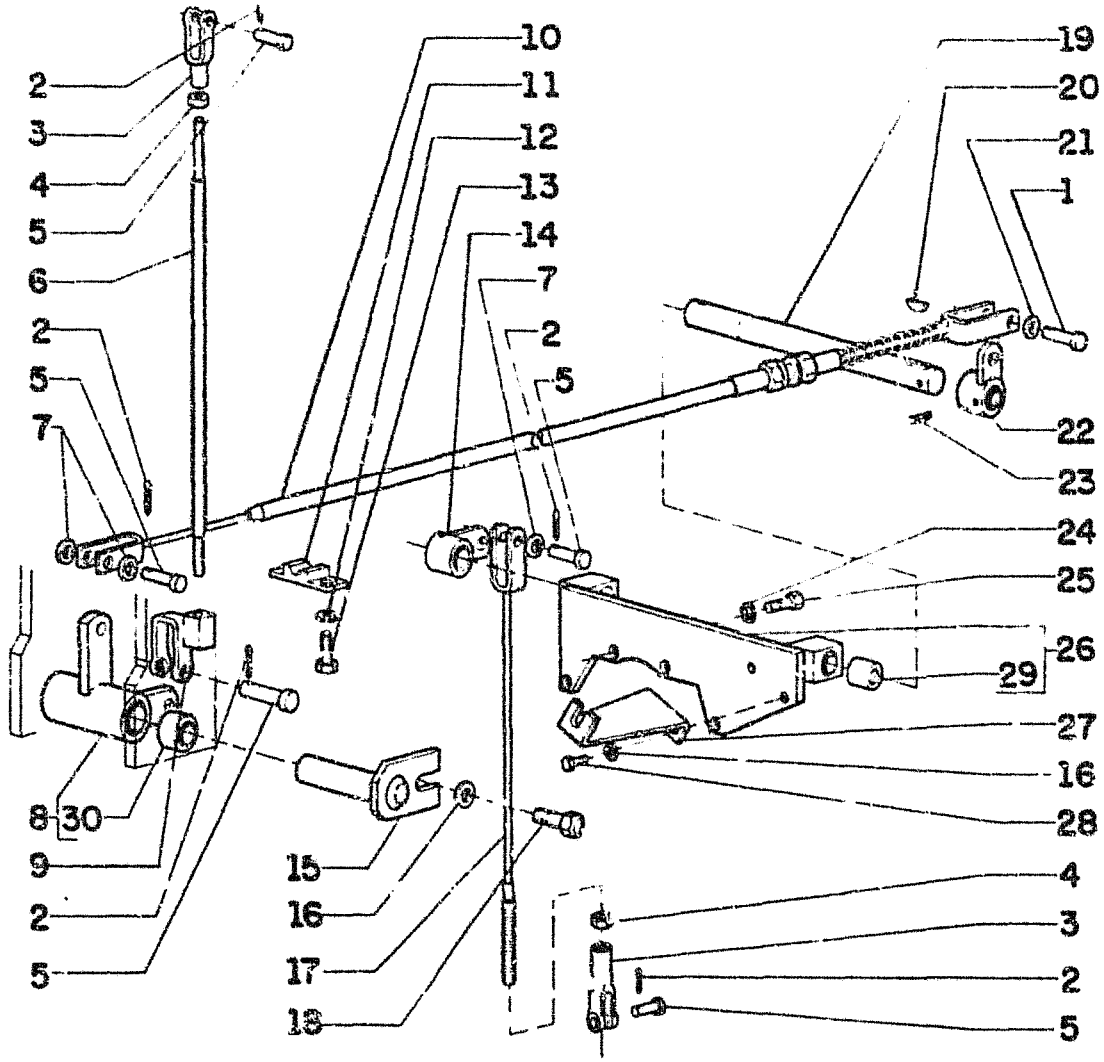

FIATALLIS FG 75R 75A C1.35/1 **QUADRO** 2 **PAG.** 1

ITEM	PEÇA Nº	QTDE	COD.	DESCRIPTION	DESCRIÇÃO
1	10005010	1	080P	PIN	PINO
2	70918448	6	270C	COTTER PIN	CONTRA PINO
3	70628736	2	085F	YOKE	FORQUILHA
4	70911041	3	010D	NUT	PORCA
5	70078810	5	080P	PIN	PINO
6	73151209	1	142T	TIEROD	TIRANTE
7	70929156	4	131R	WASHER	ARRUELA
8	73151195	1	045L	LEVER	ALAVANCA
9	70670615	1	085F	YOKE	FORQUILHA
10	73151203	1	105F	ROPE	CABO
11	71004339	1	031F	CLAMP	ABRAÇADEIRA
12	70677004	2	131R	WASHER	ARRUELA
13	70927541	2	040V	SCREW	PARAFUSO
14	73150789	1	045L	LEVER	ALAVANCA
15	73129958	1	080P	PIN	PINO
16	70677006	6	131R	WASHER	ARRUELA
17	73150815	1	105F	ROPE	CABO
18	70922763	1	040V	SCREW	PARAFUSO
19	73150793	1	016A	SHAFT	EIXO
20	70932825	2	061L	WOODRUFF KEY	CHAVETA WOODRUF
21	70931523	2	131R	WASHER	ARRUELA
22	73150790	1	045L	LEVER	ALAVANCA
23	70904002	2	270C	COTTER PIN	CONTRA PINO
24	70677007	4	131R	WASHER	ARRUELA
25	70924618	4	040V	SCREW	PARAFUSO
26	73150784	1	120P	PLATE	PRATO
27	73150807	1	120P	PLATE	PRATO
28	70922262	2	040V	SCREW	PARAFUSO
29	70035285	2	095B	BUSHING	BUCHA
30	70035285	2	095B	BUSHING	BUCHA

PARKING BRAKE CONTROL
CONTROLE DO FREIO DE ESTACIONAMENTO

C1.35/1 | 2

FIATALLIS

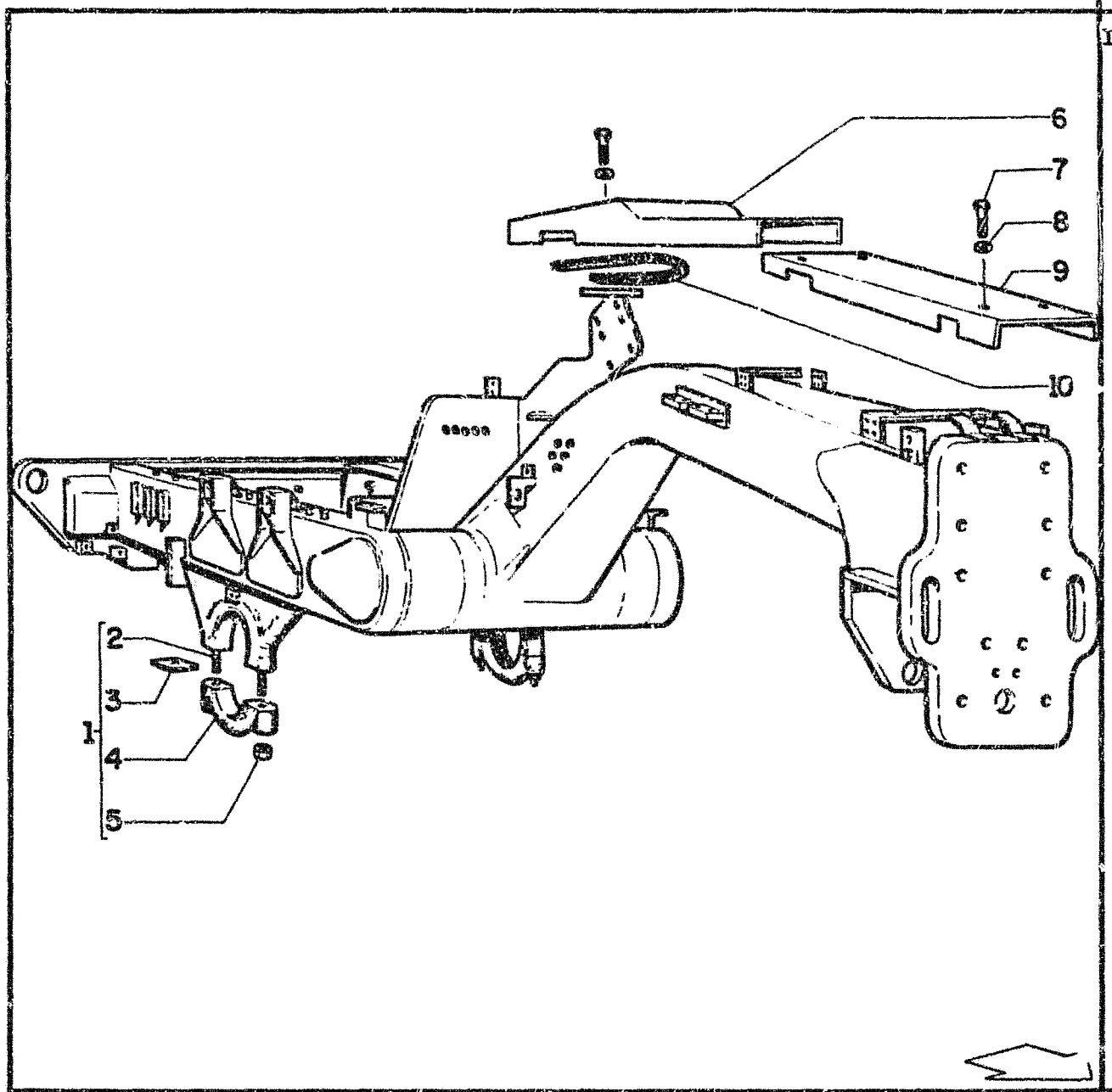

FIATALLIS FG 70R 75R D1.01 **QUADRO** 1 **PAG.** 1

ITEM	PEÇA Nº	QTDE	COD.	DESCRIPTION	DESCRIÇÃO
1	75235492	1	072I	FRAME	CHASSI
2	70502258	4	210P	STUD	PRISIONEIRO
3	70604493	24	198S	SHIM	CALÇO
4	70604160	2	265C	COVER	TAMPA
5	70600236	4	010D	NUT	PORCA
6	75221723	1	105P	PLATE	CHAPA
7	70927373	8	040V	SCREW	PARAFUSO
8	70677005	8	131R	WASHER	ARRUELA
9	75221717	1	105P	PLATE	CHAPA
10	75221727	1	122G	SEAL	RETENTOR

FRAME
CHASSI

D1.01 | 1

FIATALLIS

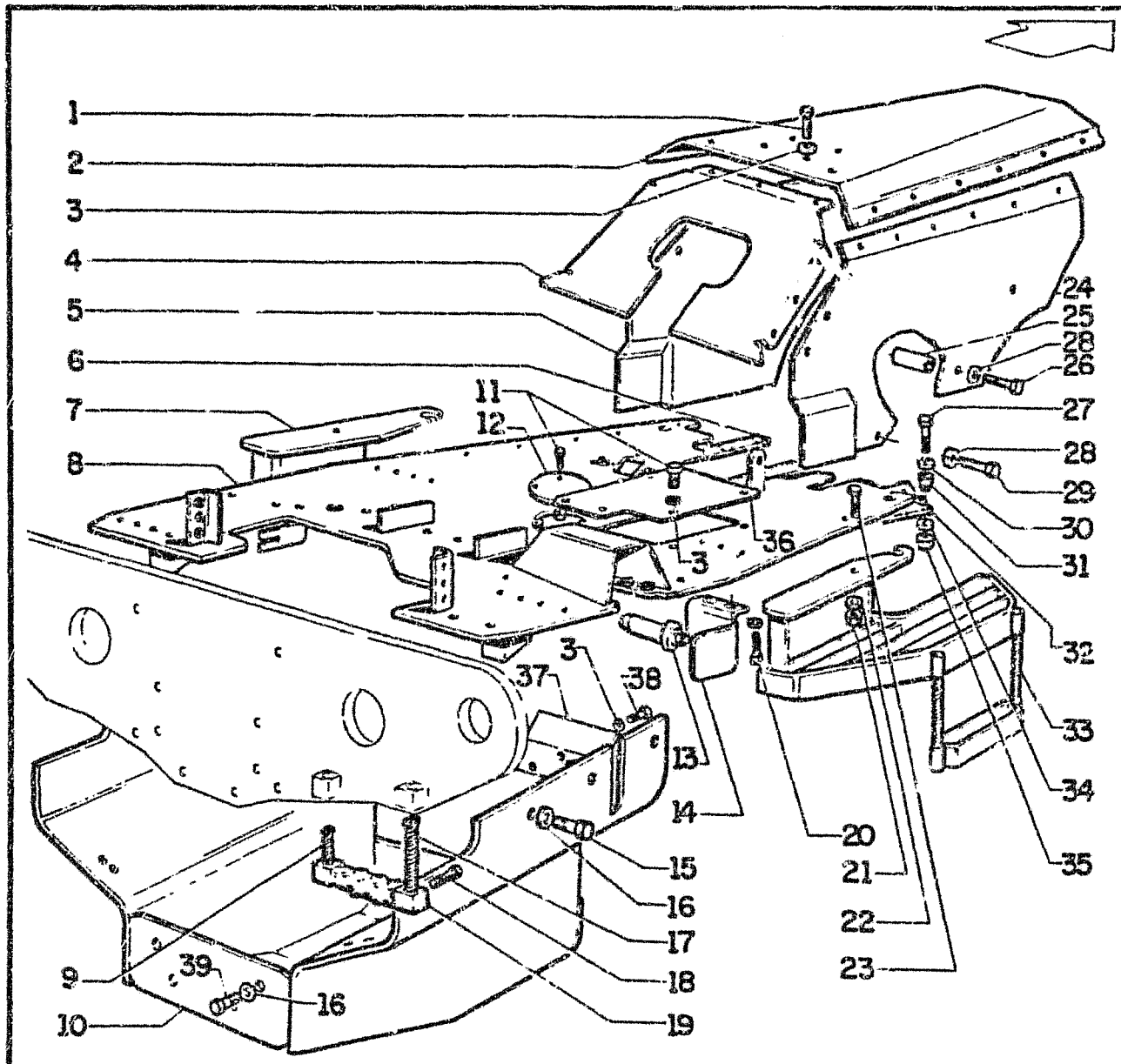

FIATALLIS FG 70R 75R D1.01 **QUADRO** 2 **PAG.** 1

ITEM	PEÇA Nº	QTDE	COD.	DESCRIPTION	DESCRIÇÃO
1	70922763	25	040V	SCREW	PARAFUSO
2	75220006	1	265C	COVER	TAMPA
3	70677006	25	131R	WASHER	ARRUELA
4	75220025	1	265C	COVER	TAMPA
5	75220014	1	105P	PLATE	CHAPA
6	73153267	1	122G	SEAL	RETENTOR
7	73150729	1	022S	LADDER	ESCADA
8	75221971	1	050P	FLOOR	PISO
9	73125932	2	111C	CABLE	CABO ELETRICO
10	75236381	1	070R	GUARD	PROTEÇÃO
11	70922300	8	040V	SCREW	PARAFUSO
12	73153860	1	265C	COVER	TAMPA
13	73136247	4	080P	PIN	PINO
14	73150743	4	105P	PLATE	CHAPA
15	70920583	6	040V	SCREW	PARAFUSO
16	70677008	20	131R	WASHER	ARRUELA
17	73125933	2	111C	CABLE	CABO ELETRICO
18	70927219	8	040V	SCREW	PARAFUSO
19	73125935	2	022S	LADDER	ESCADA
20	70920583	8	040V	SCREW	PARAFUSO
21	70916170	4	010D	NUT	PORCA
22	70677012	4	131R	WASHER	ARRUELA
23	70922544	4	040V	SCREW	PARAFUSO
24	75221973	1	105P	PLATE	CHAPA
25	73127781	5	075D	SPACER	ESPAÇADOR
26	70927378	5	040V	SCREW	PARAFUSO
27	70922510	2	040V	SCREW	PARAFUSO
28	70677006	33	131R	WASHER	ARRUELA
29	70922763	7	040V	SCREW	PARAFUSO
30	70677008	10	131R	WASHER	ARRUELA
31	73034129	2	345C	CUSHION	COXIM
32	73152267	1	122G	SEAL	RETENTOR
33	73150728	1	022S	LADDER	ESCADA
34	70920105	2	131R	WASHER	ARRUELA
35	70915972	2	010D	NUT	PORCA

DASHBOARD AND FLOOR
PISO E PROTEÇOES

D1.01 | 2

SA FIATALLIS

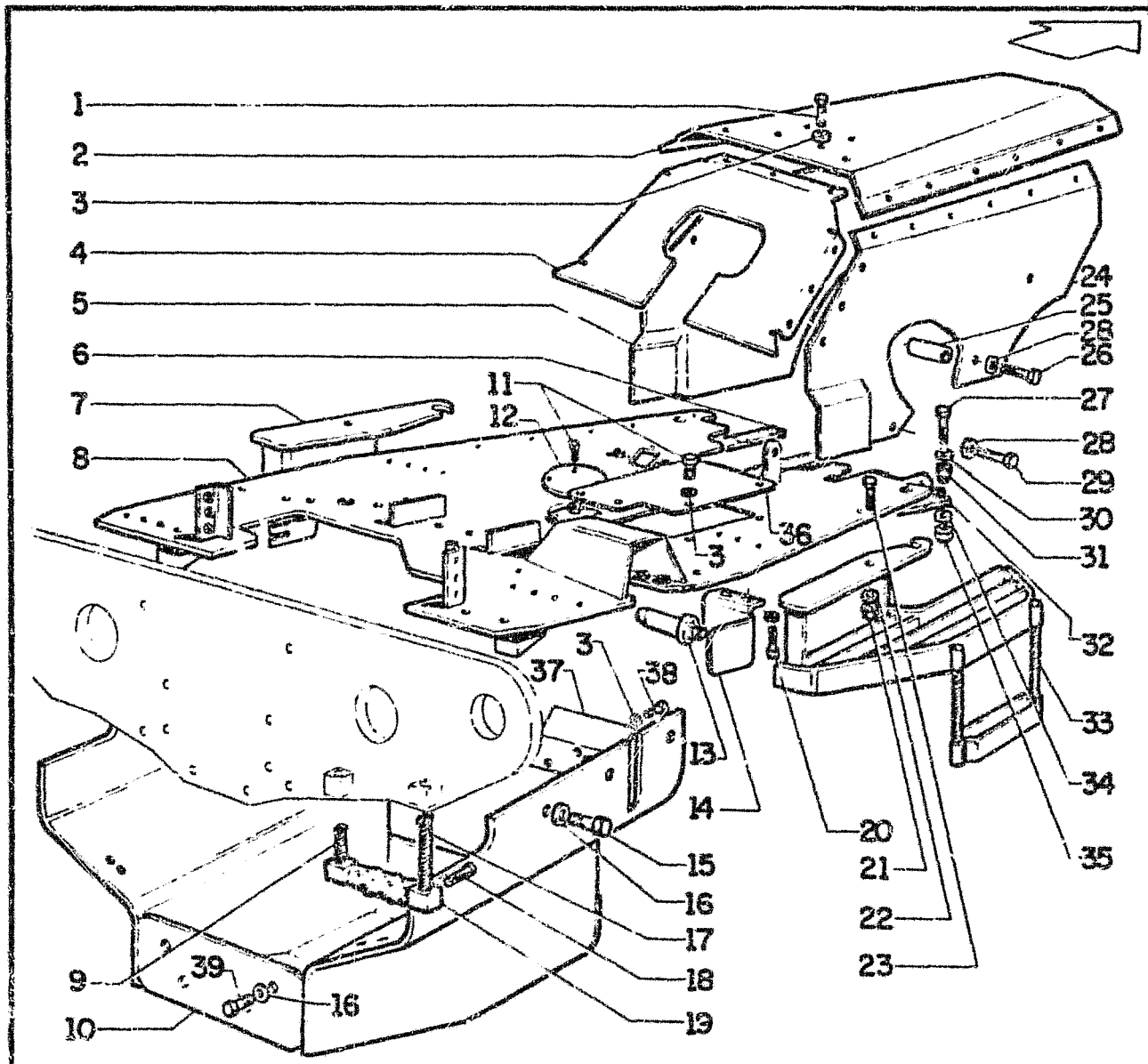

FIATALLIS FG 70R 75R D1.01 **QUADRO** 2 **PAG.** 2

ITEM	PEÇA Nº	QTDE	COD.	DESCRIPTION	DESCRIÇÃO
36	75222276	1	265C	COVER	TAMPA
37	73155819	1	105P	PLATE	CHAPA
38	70927157	4	040V	SCREW	PARAFUSO
39	70927556	4	040V	SCREW	PARAFUSO

DASHBOARD AND FLOOR
PISO E PROTEÇOES

D1.01 | 2

FIATALLIS

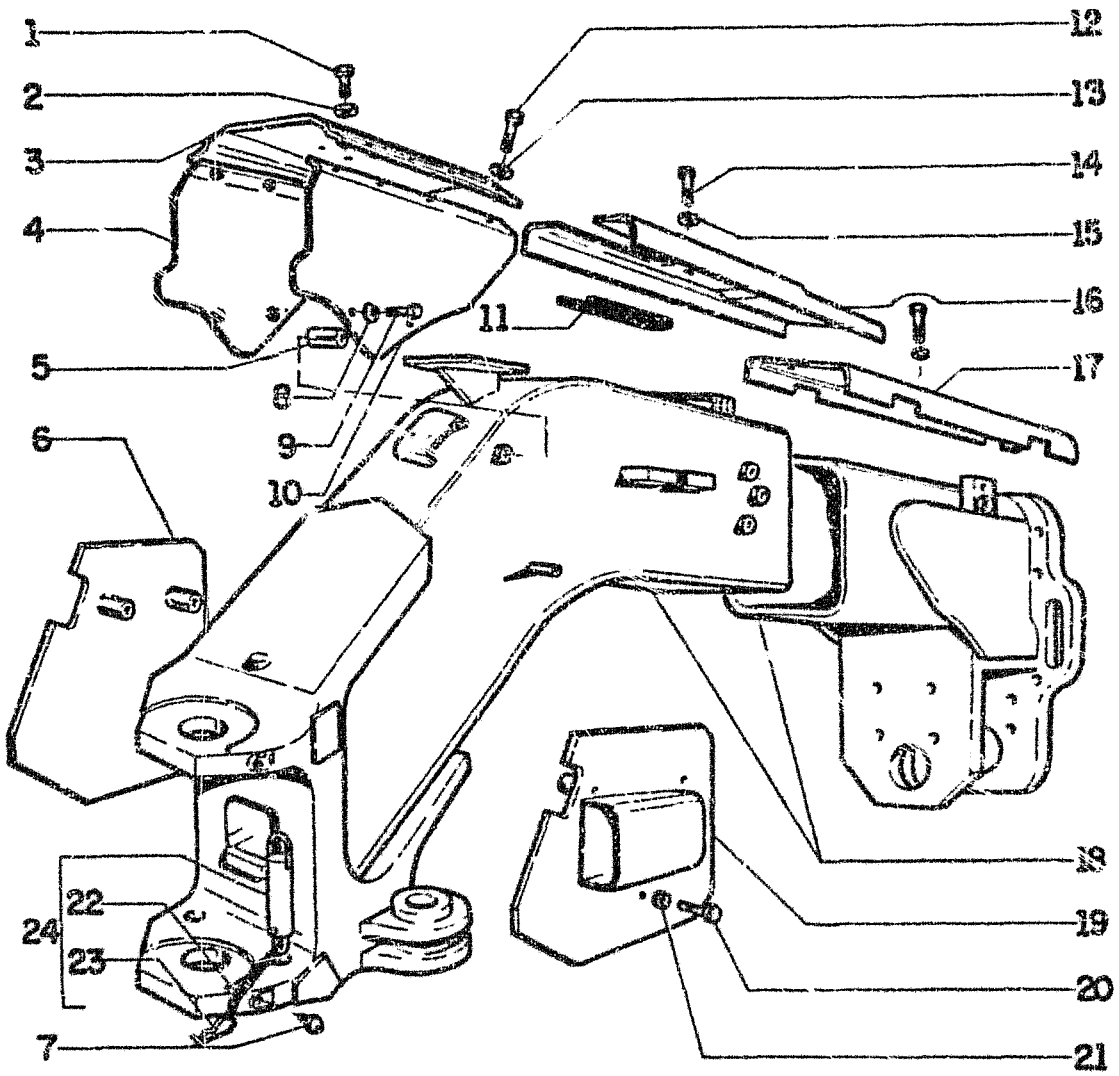

FIATALLIS FG 70A 75A D1.01 **QUADRO** 3 **PAG.** 1

ITEM	PEÇA Nº	QTDE	COD.	DESCRIPTION	DESCRIÇÃO
1	70927173	4	040V	SCREW	PARAFUSO
2	70677006	4	131R	WASHER	ARRUELA
3	75220010	1	070R	GUARD	PROTEÇÃO
4	75220020	1	265C	COVER	TAMPA
5	75221728	4	075D	SPACER	ESPAÇADOR
6	75214977	1	070R	GUARD	PROTEÇÃO
7	70914465	2	060I	GREASE FITTING	PINO GRAXEIRO
8	70904208	4	170R	LOCKWASHER	ARRUELA PRESSÃO
9	70921122	4	040V	SCREW	PARAFUSO
10	75220026	1	265C	COVER	TAMPA
11	75221727	1	122G	SEAL	RETENTOR
12	70922763	8	040V	SCREW	PARAFUSO
13	70677006	8	131R	WASHER	ARRUELA
14	70927373	8	040V	SCREW	PARAFUSO
15	70677005	8	131R	WASHER	ARRUELA
16	75221723	1	105P	PLATE	CHAPA
17	75221717	1	105P	PLATE	CHAPA
18	73153447	1	286T	FRONT MAIN FRAM	CHASSI DIANTEIR
19	75214978	1	070R	GUARD	PROTEÇÃO
20	70927174	6	040V	SCREW	PARAFUSO
21	70916965	6	170R	LOCKWASHER	ARRUELA PRESSÃO
22	4955502	2	095C	CHAIN	CORRENTE
23	8268534	2	202S	SPRING PIN	PINO ELÁSTICO
24	75222471	2	080P	PIN	PINO

FRONT FRAME
CHASSI DIANTEIRO

D1.01 | 3

202

FIATALLIS

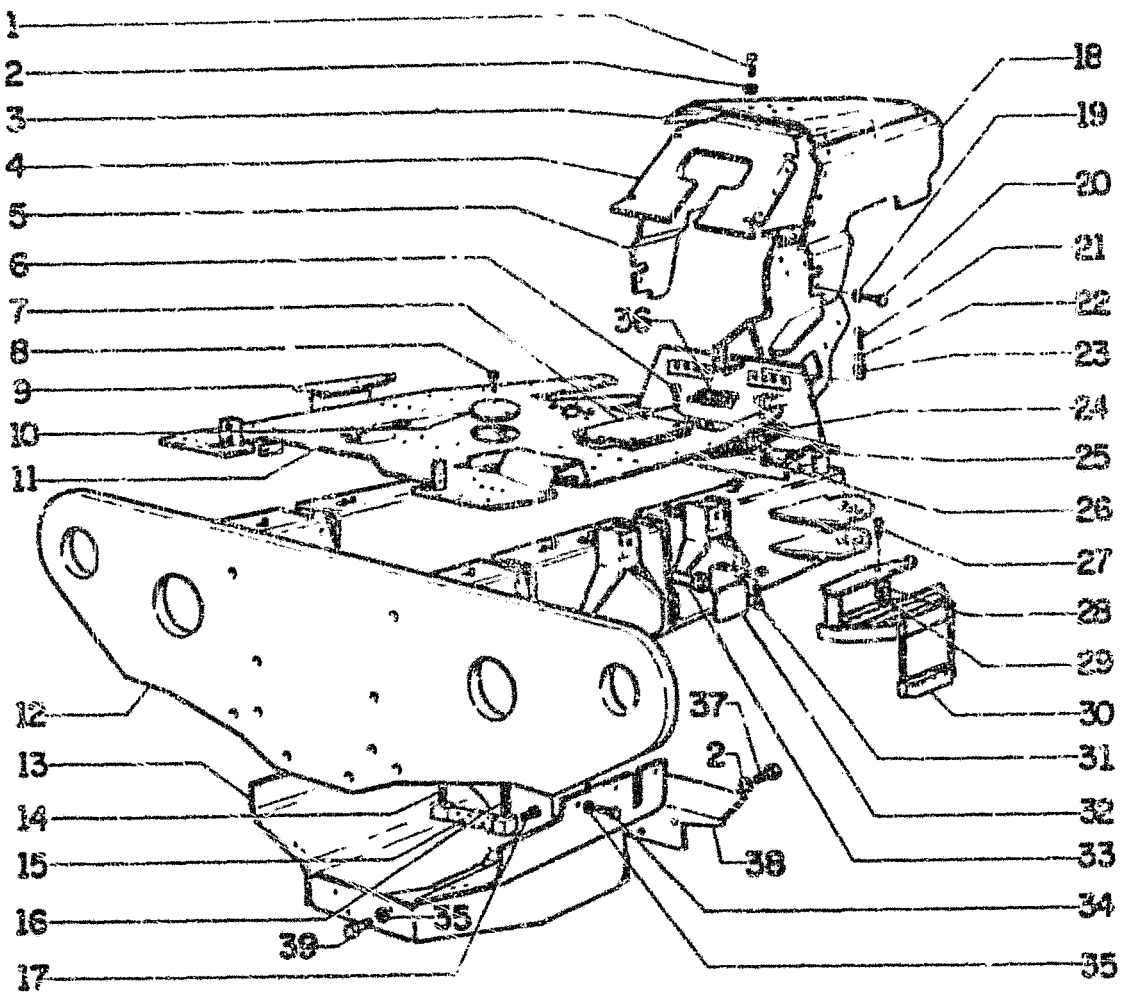

FIATALLIS FG 70A 75A D1.01 **QUADRO** 4 **PAG.** 1

ITEM	PEÇA Nº	QTDE	COD.	DESCRIPTION	DESCRIÇÃO
1	70922763	4	040V	SCREW	PARAFUSO
2	70677006	6	131R	WASHER	ARRUELA
3	75220013	1	070R	GUARD	PROTEÇÃO
4	75220025	1	265C	COVER	TAMPA
5	75220012	1	070R	GUARD	PROTEÇÃO
6	70922300	5	040V	SCREW	PARAFUSO
7	75222276	1	265C	COVER	TAMPA
8	70922300	3	040V	SCREW	PARAFUSO
9	73150729	1	022S	LADDER	ESCADA
10	73153860	1	265C	COVER	TAMPA
11	75222448	1	050P	FLOOR	PISO
12	75235631	1	287T	REAR MAIN FRAME	CHASSI TRASEIRO
13	75236381	1	070R	GUARD	PROTEÇÃO
14	73125932	2	111C	CABLE	CABO ELETRICO
15	73125935	2	022S	LADDER	ESCADA
16	73125933	2	111C	CABLE	CABO ELETRICO
17	70927219	8	040V	SCREW	PARAFUSO
18	75220011	1	070R	GUARD	PROTEÇÃO
19	70677006	15	131R	WASHER	ARRUELA
20	70922763	15	040V	SCREW	PARAFUSO
21	70922510	2	040V	SCREW	PARAFUSO
22	70677008	2	131R	WASHER	ARRUELA
23	73034129	2	345C	CUSHION	COXIM
24	73153265	2	122G	SEAL	RETENTOR
25	70920105	2	131R	WASHER	ARRUELA
26	70915972	2	010D	NUT	PORCA
27	70922544	4	040V	SCREW	PARAFUSO
28	70677012	4	131R	WASHER	ARRUELA
29	70916170	4	010D	NUT	PORCA
30	73150728	2	022S	LADDER	ESCADA
31	70920583	8	040V	SCREW	PARAFUSO
32	73150743	4	105P	PLATE	CHAPA
33	73136247	4	080P	PIN	PINO
34	70920583	6	040V	SCREW	PARAFUSO
35	70677008	22	131R	WASHER	ARRUELA

REAR MAIN FRAME
CHASSI TRASEIRO

D1.01 | 4

FIATALLIS

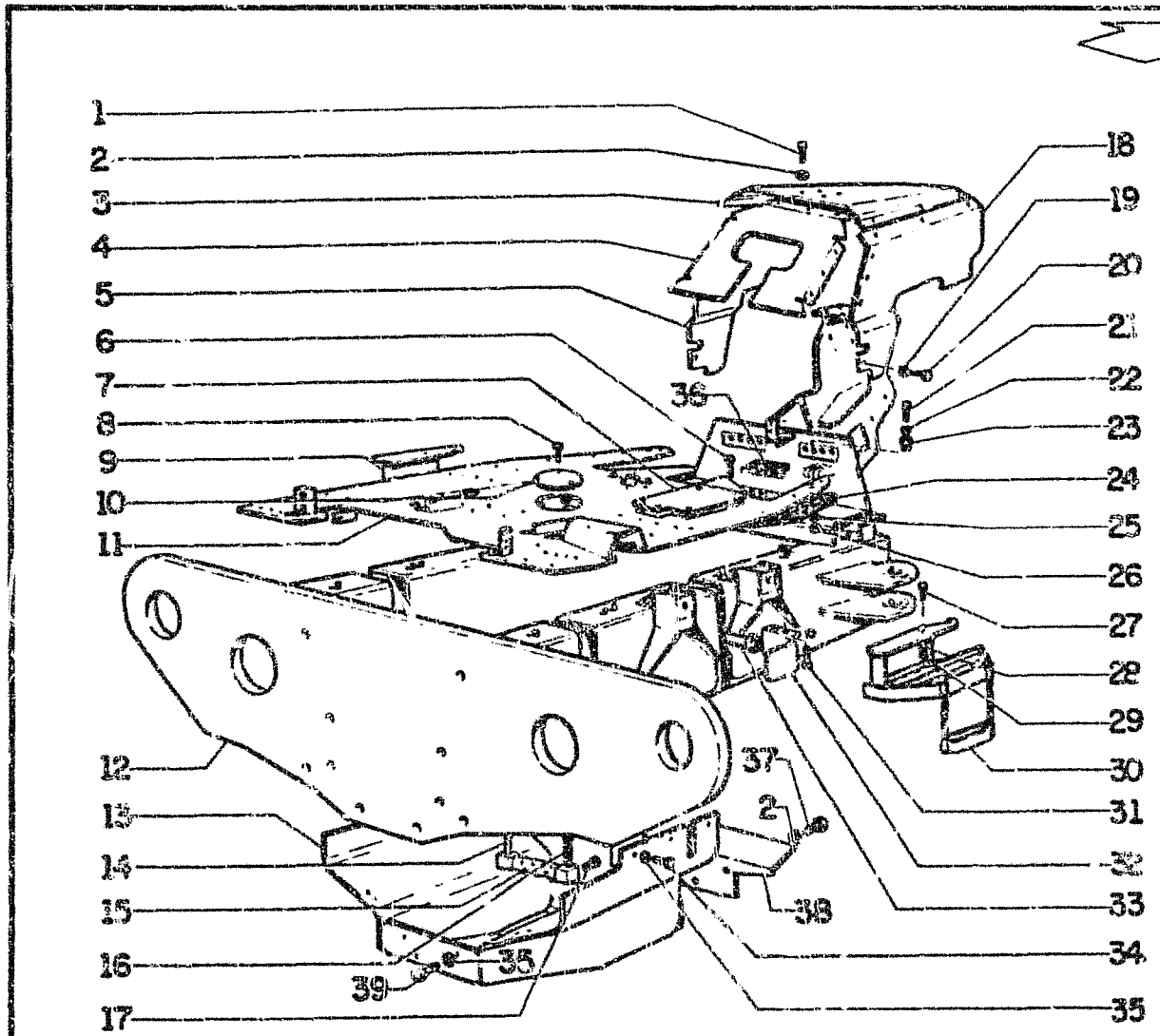

FIATALLIS FG 70A 75A D1.01 **QUADRO** 4 **PAG.** 2

ITEM	PEÇA Nº	QTDE	COD.	DESCRIPTION	DESCRIÇÃO
36	73153266	1	122G	SEAL	RETENTOR
37	70927157	4	040V	SCREW	PARAFUSO
38	73155819	1	105P	PLATE	CHAPA
39	70921556	4	040V	SCREW	PARAFUSO

REAR MAIN FRAME
CHASSI TRASEIRO

D1.01 | 4

FIATALLIS

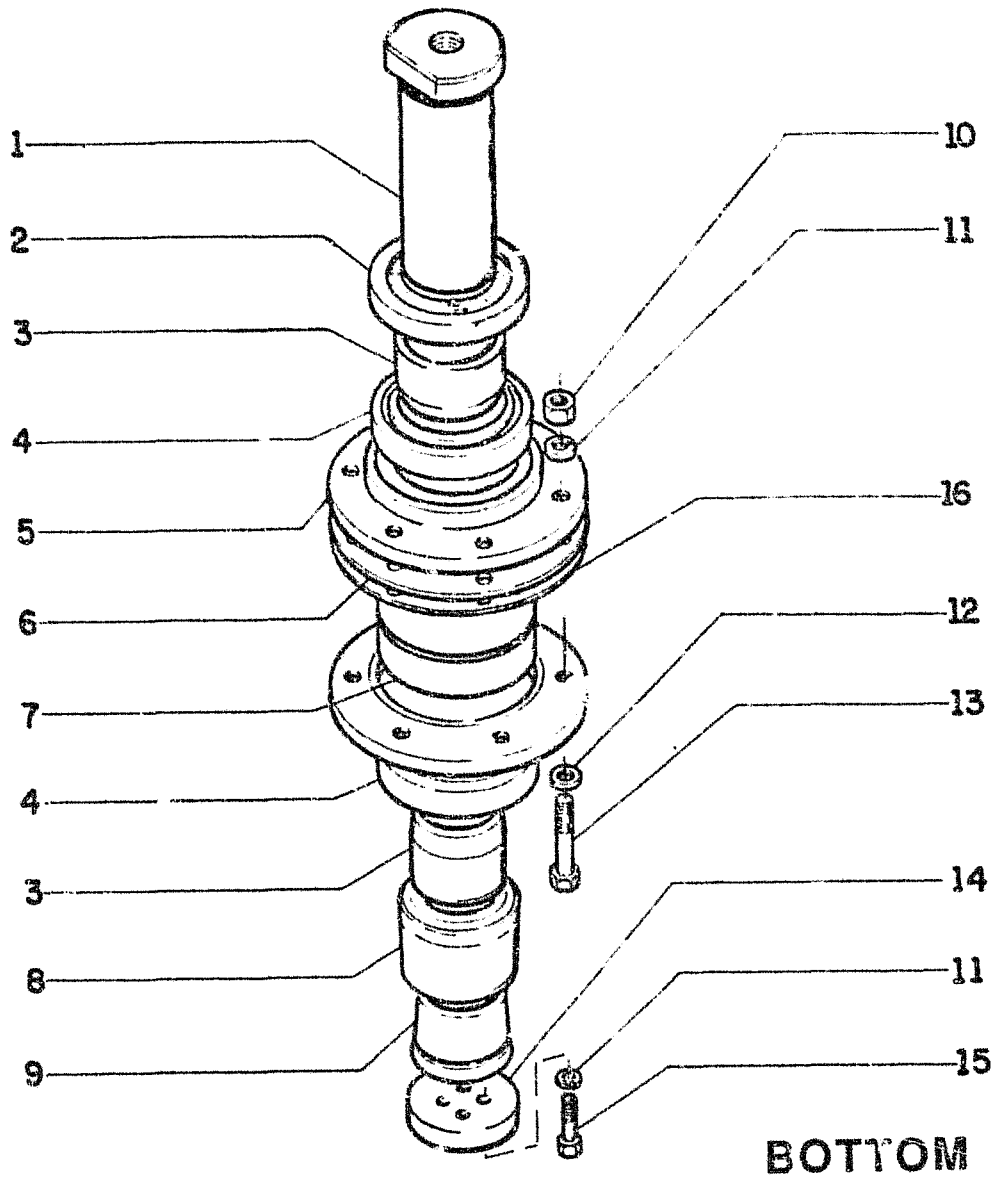

FIATALLIS FG 70A 75A D1.01 **QUADRO** 5 **PAG.** 1

ITEM	PEÇA Nº	QTDE	COD.	DESCRIPTION	DESCRIÇÃO
1	75213817	1	080P	PIN	PINO
2	75213776	1	045A	RING	ANEL
3	75213769	2	095B	BUSHING	BUCHA
4	75213760	2	122G	SEAL	RETENTOR
5	75213782	2	070F	FLANGE	FLANGE
6	75214968	*	198S	SHIM	CALÇO
7	73069310	1	341C	BEARING	ROLAMENTO
8	73074360	1	045A	RING	ANEL
9	73074359	1	333C	WEDGE	CUNHA
10	70911028	6	010D	NUT	PORCA
11	70912441	10	170R	LOCKWASHER	ARRUELA PRESS
12	70928188	6	131R	WASHER	ARRUELA
13	70921567	6	040V	SCREW	PARAFUSO
14	73072895	1	060D	DISC	DISCO
15	70920585	4	040V	SCREW	PARAFUSO
16	75237664	*	198S	SHIM	CALÇO

* USAR QUANT. NECESSÁRIA
AS REQUIRED

	ARTICULATION JOINT JUNTA DA ARTICULAÇAO	D1.01	5

FIATALLIS

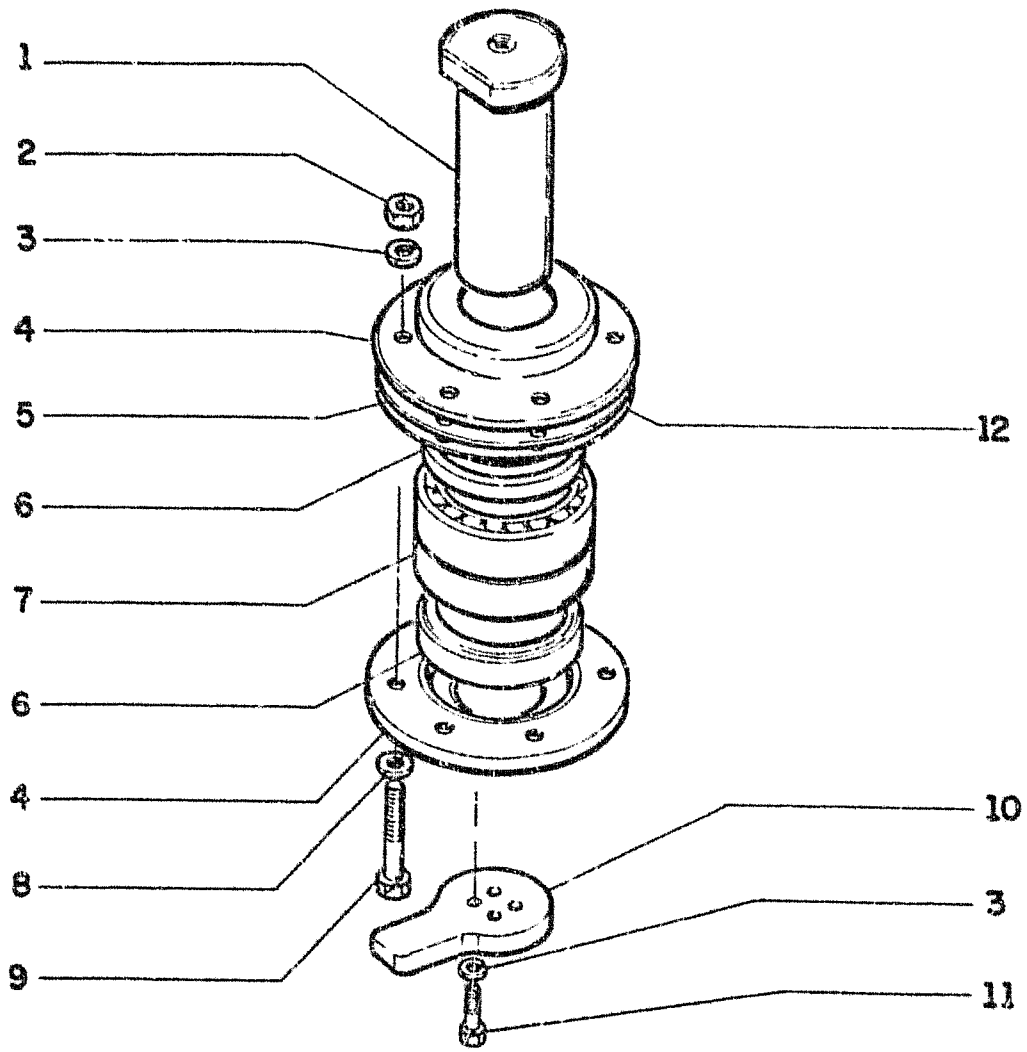

TOP

FIATALLIS FG 70A 75A D1.01 **QUADRO** 6 **PAG.** 1

ITEM	PEÇA Nº	QTDE	COD.	DESCRIPTION	DESCRIÇÃO
1	75213817	1	080P	PIN	PINO
2	70911028	6	010D	NUT	PORCA
3	70912441	10	170R	LOCKWASHER	ARRUELA PRESS
4	75213783	2	070F	FLANGE	FLANGE
5	75214969	*	198S	SHIM	CALÇO
6	75213761	2	122G	SEAL	RETENTOR
7	73069310	1	341C	BEARING	ROLAMENTO
8	70928188	6	131R	WASHER	ARRUELA
9	70921567	6	040V	SCREW	PARAFUSO
10	73074170	1	050N	PAWL	TRAVA
11	70920585	4	040V	SCREW	PARAFUSO
12	75237665	*	198S	SHIM	CALÇO

*** USAR QUANT. NECESSÁRIA**
AS REQUIRED

ARTICULATION JOINT
JUNTA DA ARTICULAÇAO

D1.01 | 6

FIATALLIS

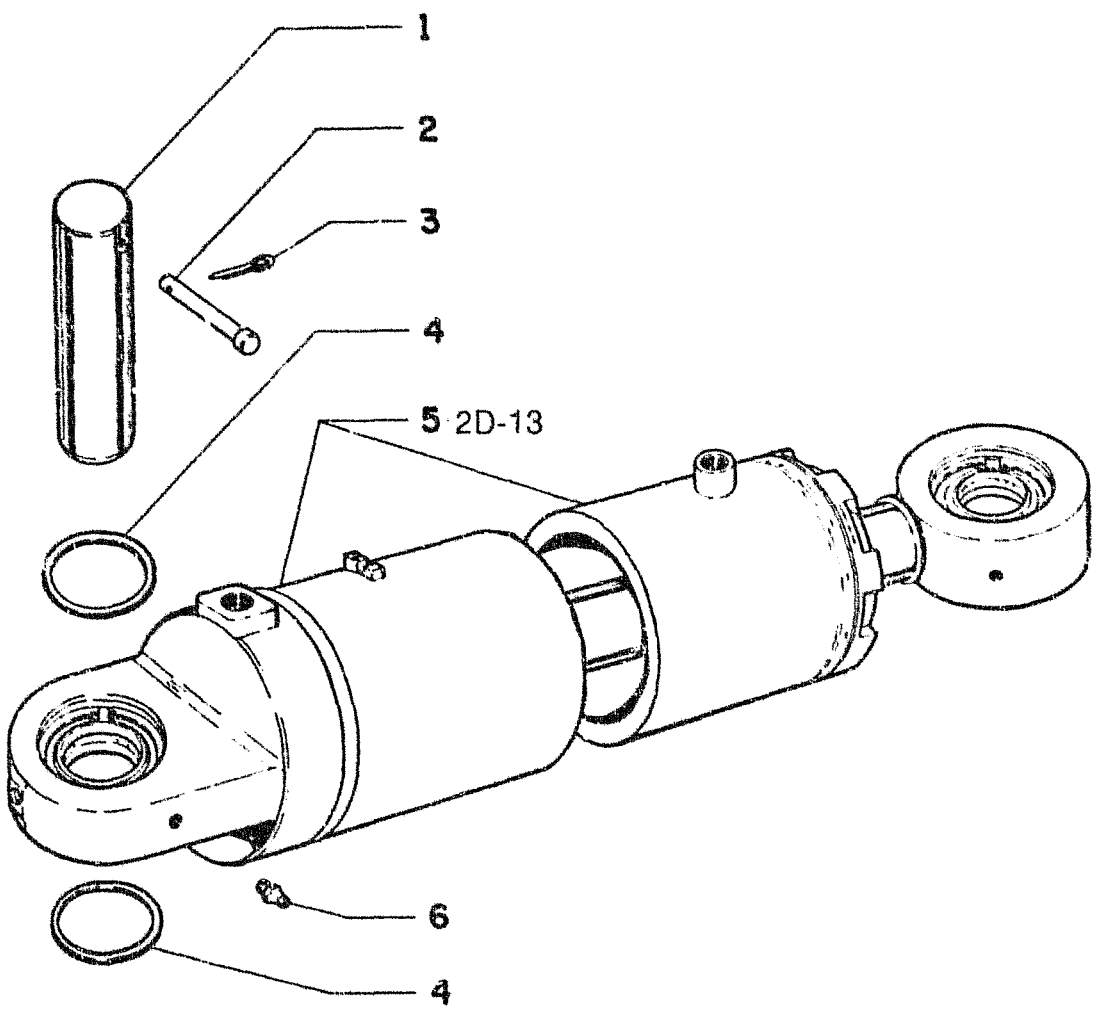

FIATALLIS FG 70A 75A D1.01 **QUADRO** 7 **PAG.** 1

ITEM	PEÇA Nº	QTDE	COD.	DESCRIPTION	DESCRIÇÃO
1	75213765	4	080P	PIN	PINO
2	75213766	4	270C	COTTER PIN	CONTRA PINO
3	70900805	4	270C	COTTER PIN	CONTRA PINO
4	75213767	*	198S	SHIM	CALÇO
5	75213774	1	164C	CYLINDER RH	CILINDRO DIR
5	75213779	1	164C	CYLINDER LH	CILINDRO ESQ
6	70914465	4	060I	GREASE FITTING	PINO GRAXEIRO

* USAR QUANT. NECESSÁRIA
AS REQUIRED

ARTICULATION CONTROL
CONTROLE DA ARTICULAÇAO

D1.01 | 7

FIATALLIS

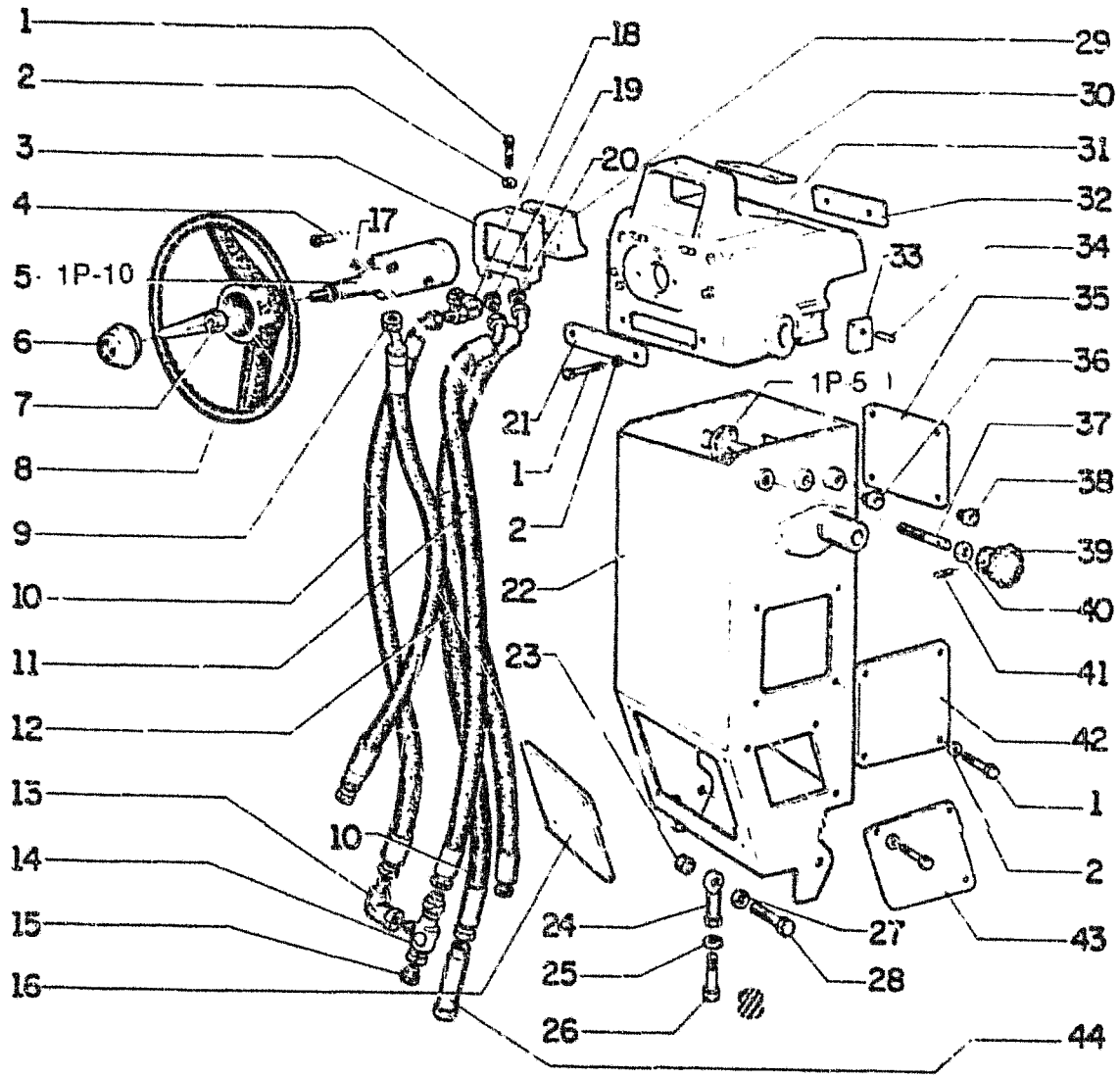

FIATALLIS FG 70R 70A 75R 75A D2.01			QUADRO 1	PAG. 1
ITEM	PEÇA Nº	QTDE	COD. DESCRIPTION	DESCRIÇÃO
1	70928182	33	040V SCREW	PARAFUSO
2	70928190	33	131R WASHER	ARRUELA
3	73149442	1	025P PANEL	PAINEL
4	70922843	4	040V SCREW	PARAFUSO
5	75216135	1	036S STEERING HOUSIN	CAIXA DIREÇÃO
6	73136547	1	064C CAP	TAMPÃO
7	70252471	1	010D NUT	PORCA
8	73125777	1	050V STEERING WHEEL	VOLANTE
9	75237524	1	285T HOSE	MANGUEIRA
10	73126193	2	285T HOSE	MANGUEIRA
11	75237611	1	285T HOSE	MANGUEIRA
12	75237612	2	285T HOSE	MANGUEIRA
13	70921279	1	085G ELBOW	COTOVELO
14	70921298	1	020R FITTING	CONEXÃO
15	70921409	5	075B CONNECTOR	CONECTOR
16	73126209	1	105P PLATE	CHAPA
17	70929662	4	131R WASHER	ARRUELA
18	70930804	1	085G ELBOW	COTOVELO
19	70924403	5	075B CONNECTOR	CONECTOR
20	75237616	1	075B CONNECTOR	CONECTOR
21	73122862	1	105P PLATE	CHAPA
22	73153730	1	001A TOWER ASSY	CONJUNTO TORRE
23	70911029	2	010D NUT	PORCA
24	73125851	4	146R BALL JOINT	ROTULA ESFER
25	70912942	2	170R LOCKWASHER	ARRUELA PRESS
26	70921476	2	040V SCREW	PARAFUSO
27	70927381	10	131R WASHER	ARRUELA
28	70921403	2	040V SCREW	PARAFUSO
29	REF. SGR F4.01(12)	1	025P ELECTR.MONITOR	MONITOR ELETR.
30	73152816	1	064C CAP	TAMPÃO
31	75221676	1	300S SUPPORT	SUPORTE
32	75221672	1	105P PLATE	CHAPA
33	73126191	2	105P PLATE	CHAPA
34	73126192	2	080P PIN	PINO
35	73125379	1	105P PLATE	CHAPA

OPERATOR'S CONSOLE
CONSOLE DO OPERADOR

D2.01 | 1

FIATALLIS

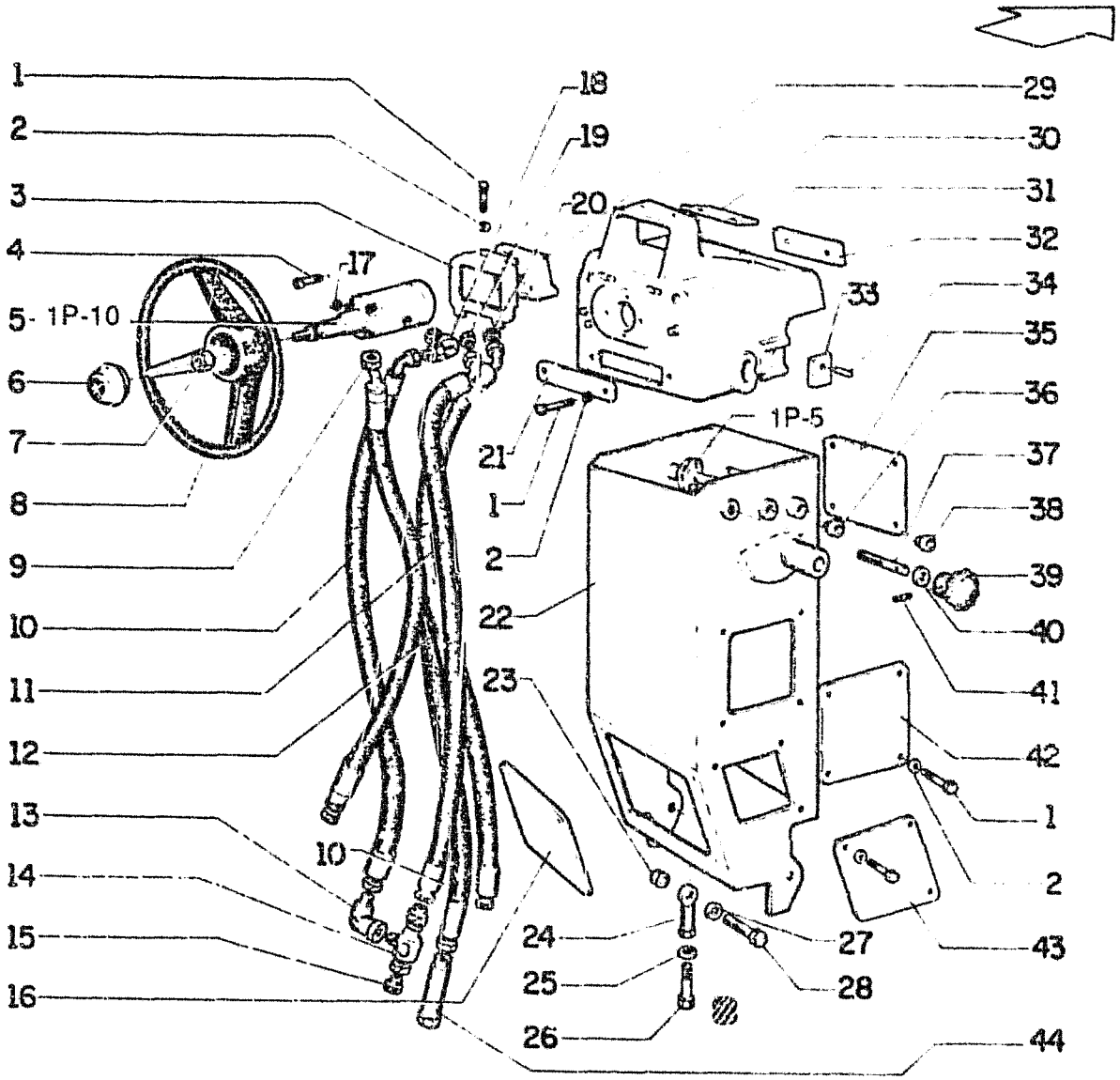

FIATALLIS FG 70R 70A 75R 75A D2.01 **QUADRO** 1 **PAG.** 2

ITEM	PEÇA Nº	QTDE	COD.	DESCRIPTION	DESCRIÇÃO
36	73126187	2	095B	BUSHING	BUCHA
37	73153776	1	016A	SHAFT	EIXO
38	73126186	2	095B	BUSHING	BUCHA
39	75221673	1	150P	KNOB	MANOPLA
40	70913546	1	131R	WASHER	ARRUELA
41	70912235	1	040V	SCREW	PARAFUSO
42	73126185	1	105P	PLATE	CHAPA
43	73126181	2	105P	PLATE	CHAPA
44	75222860	1	075B	CONNECTOR	CONECTOR

OPERATOR'S CONSOLE
CONSOLE DO OPERADOR

D2.01 | 1

FIATALLIS

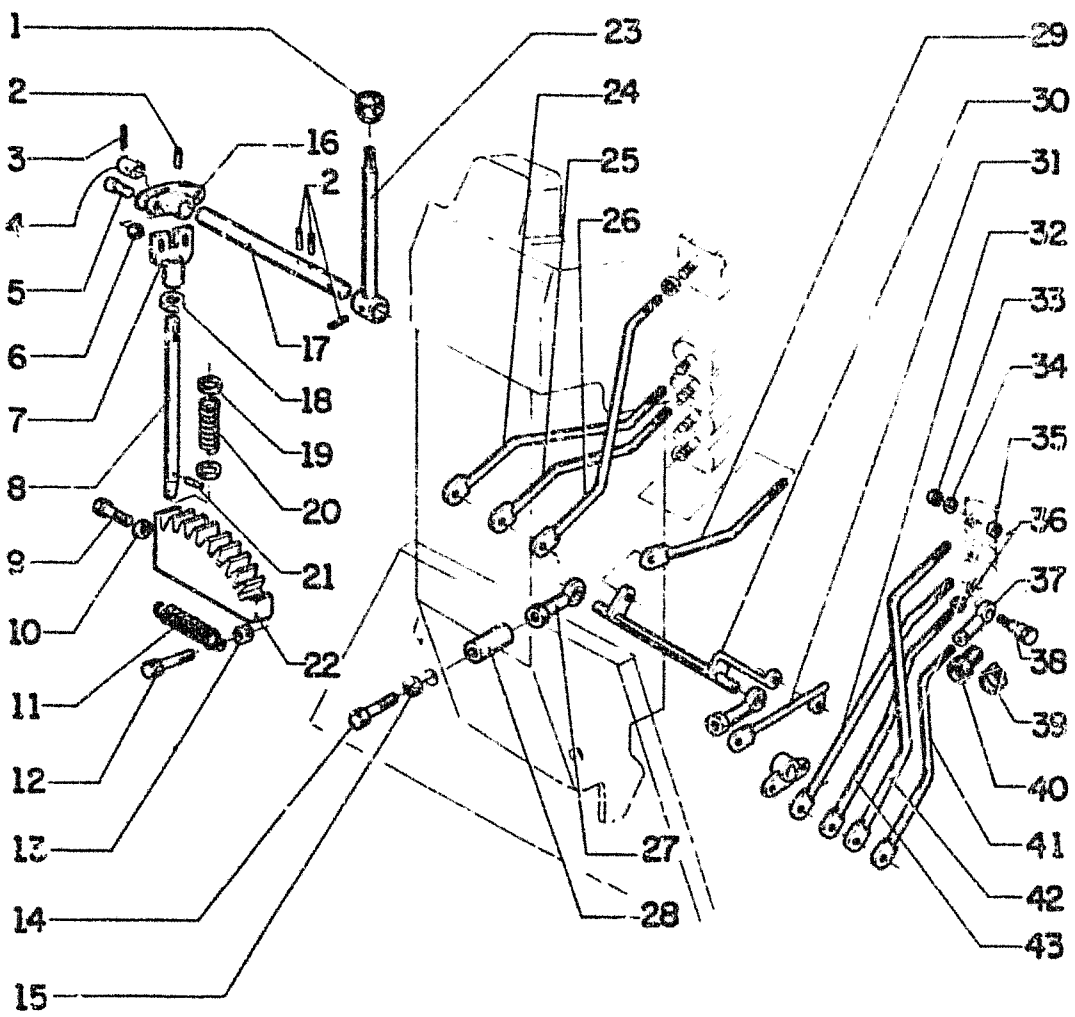

FIATALLIS FG 70R 70A 75R 75A D2.01 **QUADRO 2** **PAG. 1**

ITEM	PEÇA Nº	QTDE	COD.	DESCRIPTION	DESCRIÇÃO
1	73153747	1	150P	KNOB	MANOPLA
2	70915797	4	202S	SPRING PIN	PINO ELÁSTICO
3	70900801	2	270C	COTTER PIN	CONTRA PINO
4	75221287	1	079L	REST	MANCAL
5	70082875	2	080P	PIN	PINO
6	70929156	4	131R	WASHER	ARRUELA
7	73126176	1	085F	YOKE	FORQUILHA
8	73126184	1	016A	SHAFT	EIXO
9	70922287	2	040V	SCREW	PARAFUSO
10	70929156	2	131R	WASHER	ARRUELA
11	73154919	1	100M	SPRING	MOLA
12	70920583	1	040V	SCREW	PARAFUSO
13	70911028	1	010D	NUT	PORCA
14	70927603	2	040V	SCREW	PARAFUSO
15	70927381	2	131R	WASHER	ARRUELA
16	73121505	1	045L	LEVER	ALAVANCA
17	73153871	1	016A	SHAFT	EIXO
18	70911037	1	010D	NUT	PORCA
19	70915714	2	131R	WASHER	ARRUELA
20	70622102	1	100M	SPRING	MOLA
21	70915634	1	202S	SPRING PIN	PINO ELÁSTICO
22	73154920	1	312C	RACK	CREMALHEIRA
23	73153873	1	045L	LEVER	ALAVANCA
24	75236323	1	142T	TIEROD	TIRANTE
25	75236326	1	142T	TIEROD	TIRANTE
26	75236328	1	142T	TIEROD	TIRANTE
27	73125851	2	146R	BALL JOINT	ROTULA ESFERICA
28	75237851	2	074B	BLOCK	BLOCO
29	75236334	4	142T	TIEROD	TIRANTE
30	75236678	1	016A	SHAFT	EIXO
31	75236375	1	142T	TIEROD	TIRANTE
32	75236330	2	142T	TIEROD	TIRANTE
33	70911026	8	010D	NUT	PORCA
34	70910287	16	170R	LOCKWASHER	ARRUELA PRESSÃO

OPERATOR'S CONSOLE
CONSOLE DO OPERADOR

D2.01 | 2

FIATALLIS

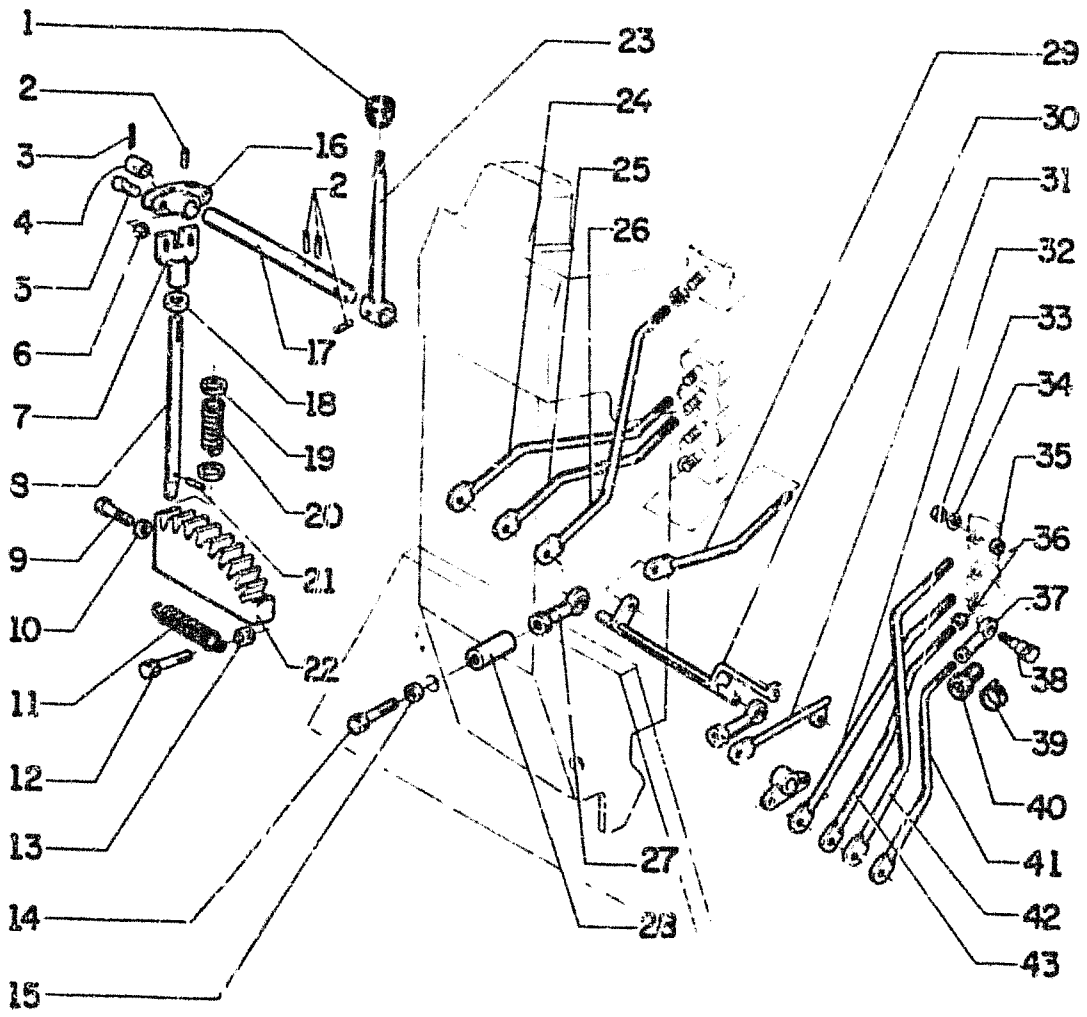

FIATALLIS FG 70R 70A 75R 75A D2.01 **QUADRO** 2 **PAG.** 2

ITEM	PEÇA Nº	QTDE	COD.	DESCRIPTION	DESCRIÇÃO
35	70677006	4	131R	WASHER	ARRUELA
36	70911048	8	010D	NUT	PORCA
37	70617932	8	146R	BAIL JOINT	ROTULA ESFERICA
38	70927225	8	040V	SCREW	PARAFUSO
39	75221602	8	031F	CLAMP	ABRAÇADEIRA
40	73153774	8	166S	BELLOWS	SANFONA
41	75236338	1	142T	TIEROD	TIRANTE
42	75236336	1	142T	TIEROD	TIRANTE
43	75236332	1	142T	TIEROD	TIRANTE

OPERATOR'S CONSCLE
CONSOLE DO OPERADOR

D2.01 | 2

FIATALLIS

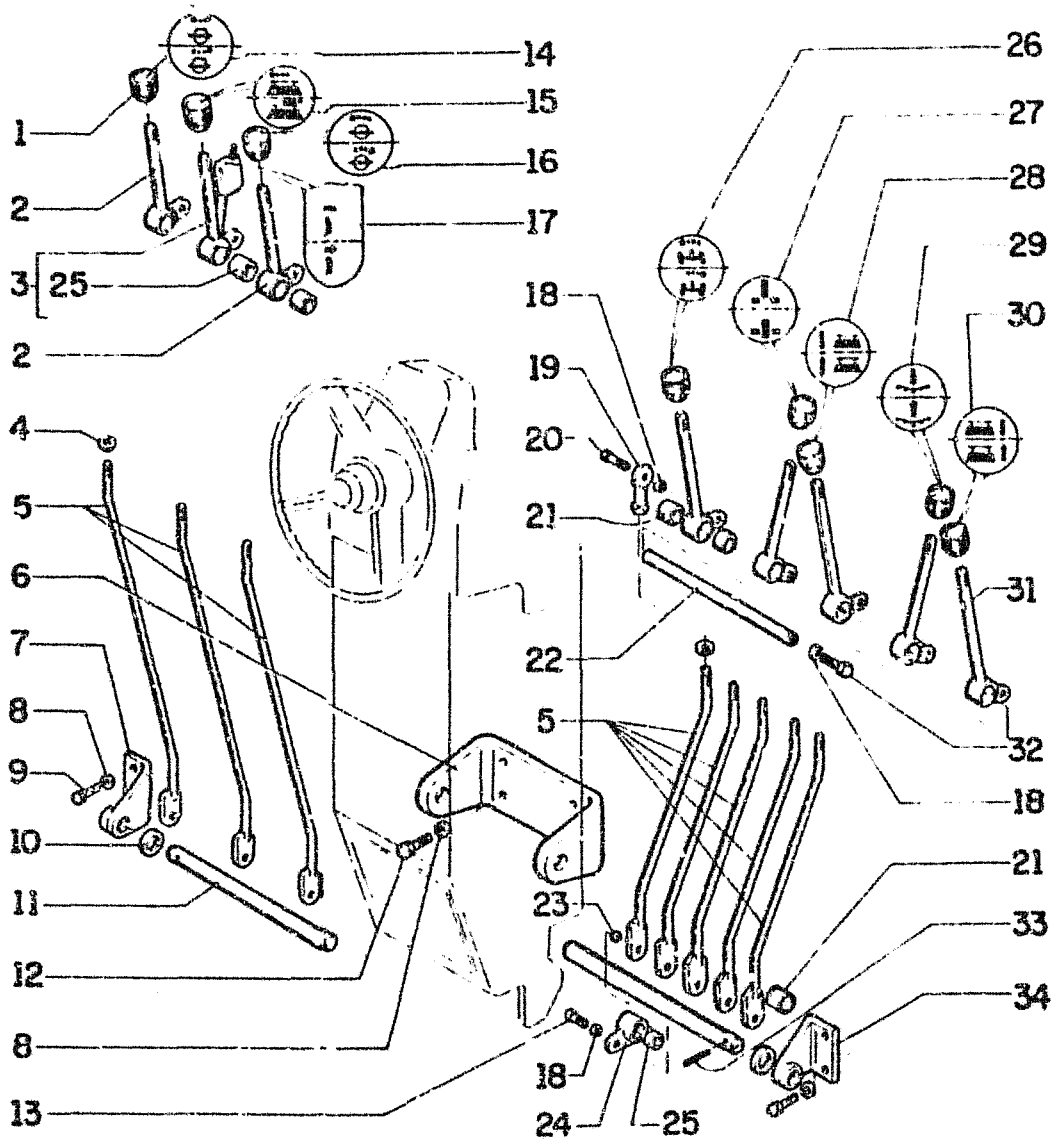

FIATALLIS FG 70R 75R D2.01 **QUADRO** 3 **PAG.** 1

ITEM	PEÇA Nº	QTDE	COD.	DESCRIPTION	DESCRIÇÃO
1	73153747	8	150P	KNOB	MANOPLA
2	73153752	2	045L	LEVER	ALAVANCA
3	73159412	1	045L	LEVER	ALAVANCA
4	70911048	16	010D	NUT	PORCA
5	73154520	8	142T	TIEROD	TIRANTE
6	73153760	1	300S	SUPPORT	SUPORTE
7	73154521	1	300S	SUPPORT	SUPORTE
8	70910287	8	170R	LOCKWASHER	ARRUELA PRESS
9	70921076	4	040V	SCREW	PARAFUSO
10	73121925	28	131R	WASHER	ARRUELA
11	73153759	2	016A	SHAFT	EIXO
12	70921565	4	040V	SCREW	PARAFUSO
13	70928798	18	040V	SCREW	PARAFUSO
14	73134481	1	008D	DECAL	DECALCOMANIA
15	73134476	1	008D	DECAL	DECALCOMANIA
16	73134480	1	008D	DECAL	DECALCOMANIA
17	73159415	1	065T	DECAL	ADESIVO
18	70929156	38	131R	WASHER	ARRUELA
19	70617932	8	061E	END	EXTREMIDADE
20	70927212	8	040V	SCREW	PARAFUSO
21	73153775	6	075D	SPACER	ESPAÇADOR
22	73126213	2	016A	SHAFT	EIXO
23	73153755	18	095B	BUSHING	BUCHA
24	75237867	8	045L	LEVER	ALAVANCA
25	73125852	16	341C	BEARING	ROLAMENTO
26	73134478	1	008D	DECAL	DECALCOMANIA
27	73159744	1	065T	DECAL	ADESIVO
28	73134483	1	008D	DECAL	DECALCOMANIA
29	73134477	1	008D	DECAL	DECALCOMANIA
30	73134482	1	008D	DECAL	DECALCOMANIA
31	73153754	5	045L	LEVER	ALAVANCA
32	70934710	2	040V	SCREW	PARAFUSO
33	70904002	2	270C	COTTER PIN	CONTRA PINO
34	73154522	1	300S	SUPPORT	SUPORTE

OPERATOR'S CONSOLE
CONSOLE DO OPERADOR

D2.01 | 3

FIATALLIS

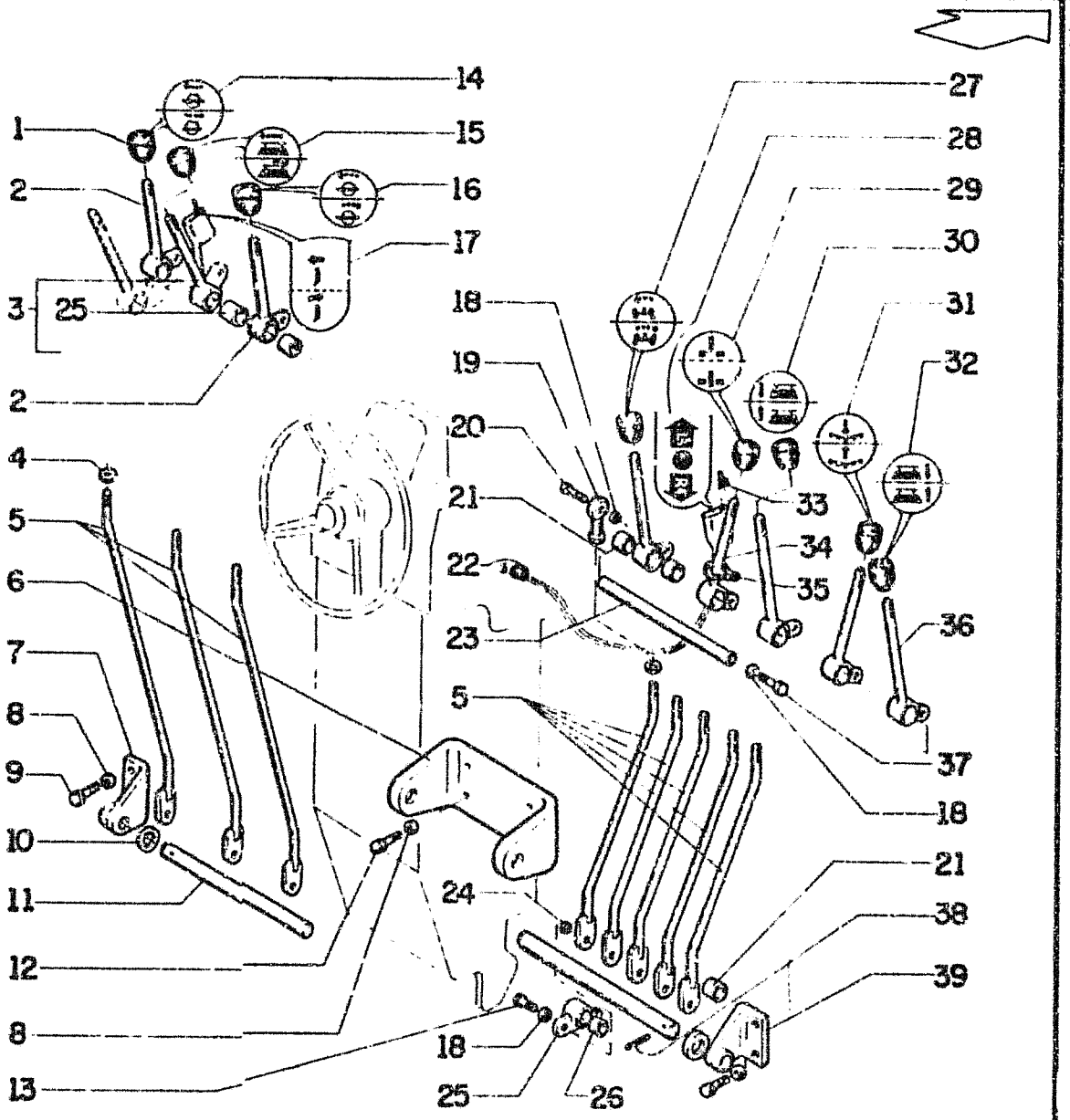

FIATALLIS FG 70A 75A D2.01 **QUADRO** 4 **PAG.** 1

ITEM	PEÇA Nº	QTDE	COD.	DESCRIPTION	DESCRIÇÃO
1	73153747	8	150P	KNOB	MANOPLA
2	73153752	2	045L	LEVER	ALAVANCA
3	73159412	1	045L	LEVER	ALAVANCA
4	70911048	16	010D	NUT	PORCA
5	73154520	8	142T	TIEROD	TIRANTE
6	73153760	1	300S	SUPPORT	SUPORTE
7	73154521	1	300S	SUPPORT	SUPORTE
8	70910287	16	170R	LOCKWASHER	ARRUELA PRESS
9	70921076	4	040V	SCREW	PARAFUSO
10	73121925	28	131R	WASHER	ARRUELA
11	73153759	2	016A	SHAFT	EIXO
12	70921565	4	040V	SCREW	PARAFUSO
13	70928798	18	040V	SCREW	PARAFUSO
14	73134481	1	008D	DECAL	DECALCOMANIA
15	73134476	1	008D	DECAL	DECALCOMANIA
16	73134480	1	008D	DECAL	DECALCOMANIA
17	73159415	1	065T	DECAL	ADESIVO
18	70929156	38	131R	WASHER	ARRUELA
19	70617932	8	146R	BALL JOINT	ROTULA ESFERIC
20	70927212	8	040V	SCREW	PARAFUSO
21	73153775	6	075D	SPACER	ESPAÇADOR
22	70927202	1	085I	INSULATOR	ISOLANTE
23	73126213	2	016A	SHAFT	EIXO
24	73153755	18	095B	BUSHING	BUCHA
25	75237867	8	045L	LEVER	ALAVANCA
26	73125952	16	095B	BUSHING	BUCHA
27	73134478	1	008D	DECAL	DECALCOMANIA
28	73153854	1	065T	DECAL	ADESIVO
29	73159744	1	065T	DECAL	ADESIVO
30	73134483	1	008D	DECAL	DECALCOMANIA
31	73134477	1	008D	DECAL	DECALCOMANIA
32	73134482	1	008D	DECAL	DECALCOMANIA
33	73112915	1	075I	SWITCH	INTERRUPTOR
34	73153853	1	045L	LEVER	ALAVANCA
35	70196765	10	031F	CLAMP	ABRAÇADEIRA

OPERATOR'S CONSOLE
CONSOLE DO OPERADOR

D2.01 | 4

FIATALLIS

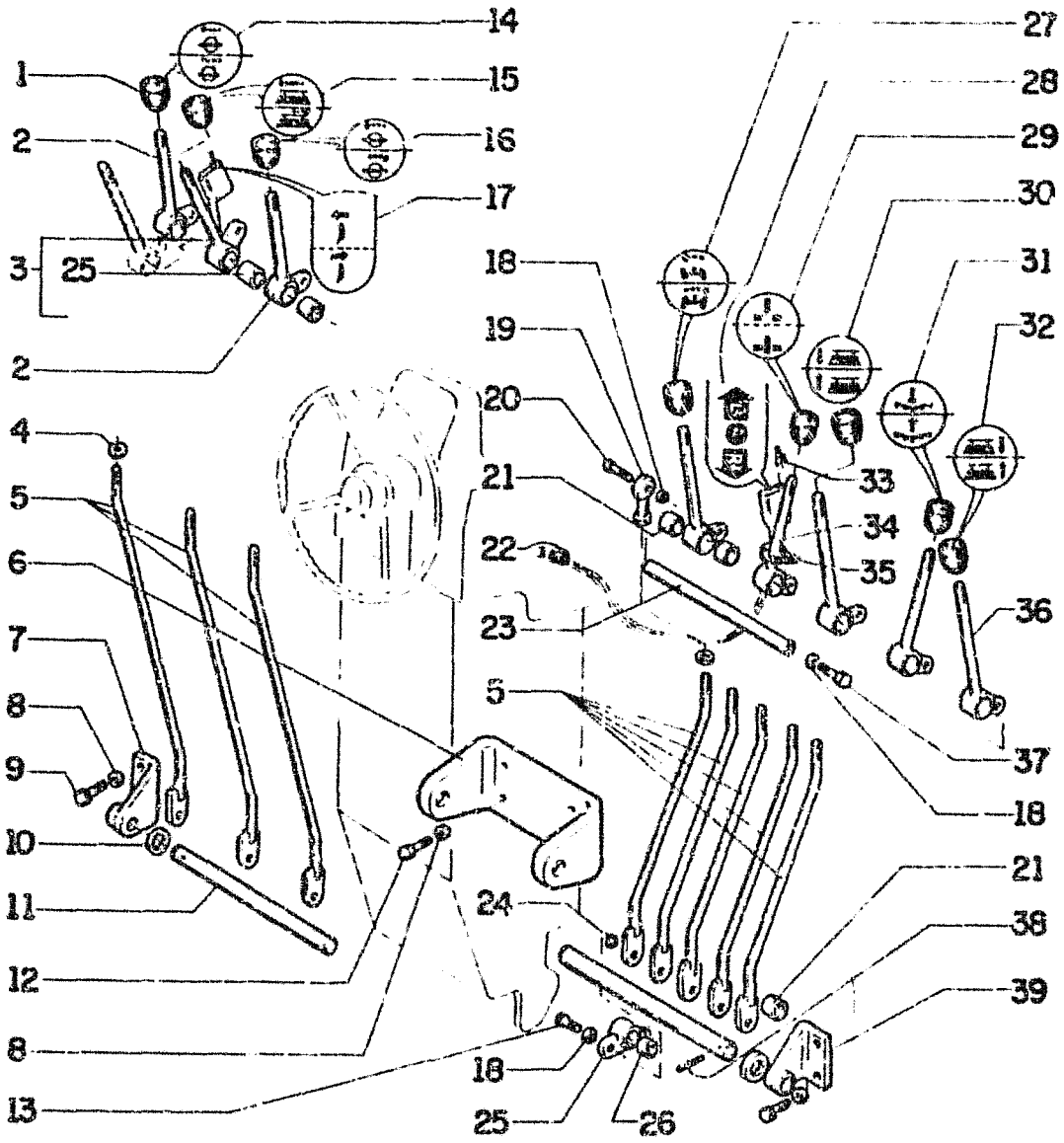

FIATALLIS FG 70A 75A D2.01 **QUADRO** 4 **PAG.** 2

ITEM	PEÇA Nº	QTDE	COD.	DESCRIPTION	DESCRIÇÃO
36	73153754	4	045L	LEVER	ALAVANCA
37	70934710	2	040V	SCREW	PARAFUSO
38	70904002	2	270C	COTTER PIN	CONTRA PINO
39	73154522	1	300S	SUPPORT	SUPORTE

	OPERATOR'S CONSOLE CONSOLE DO OPERADOR	D2.01	4

FIATALLIS

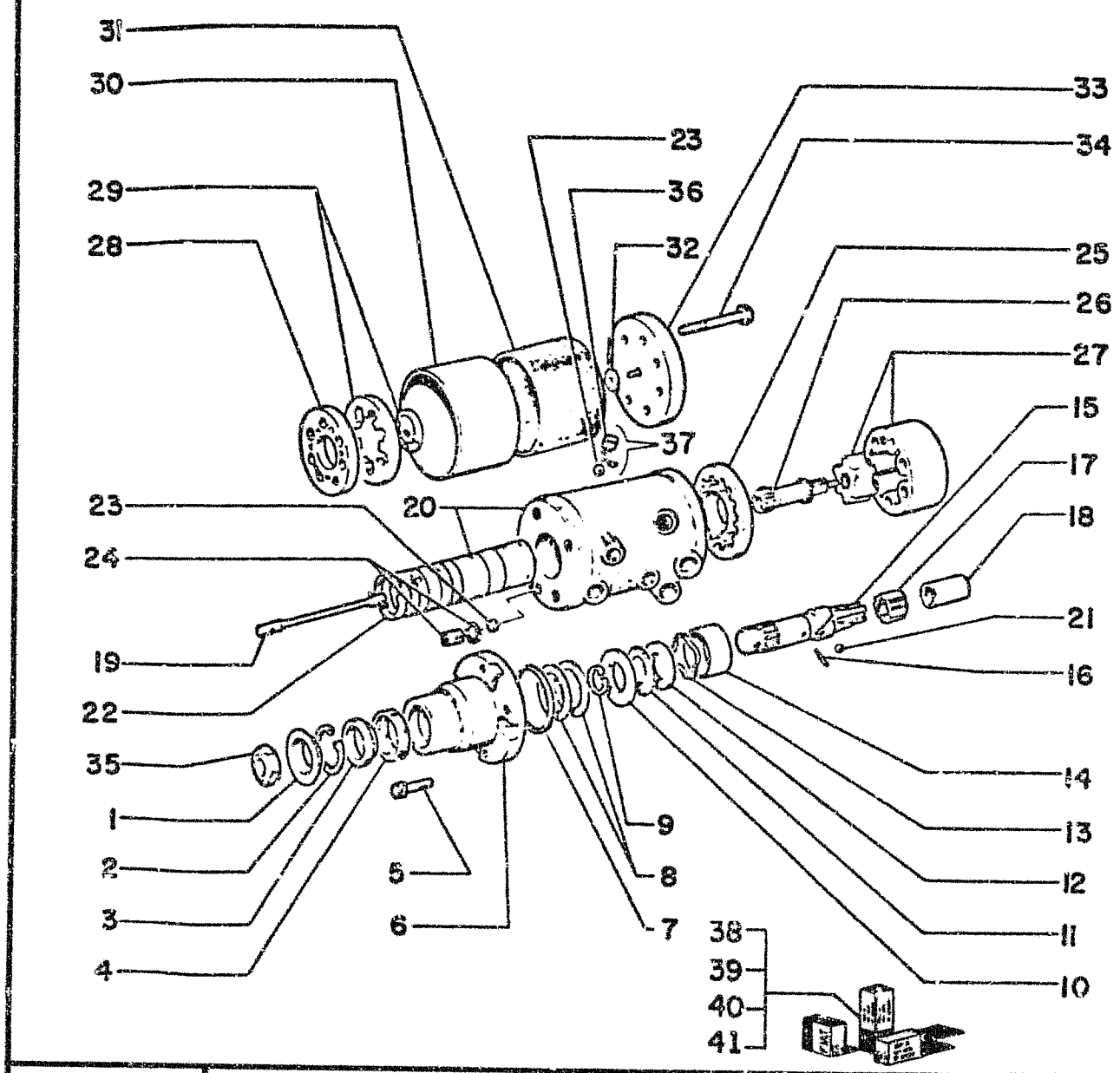

FIATALLIS FG 70R 70A 75R 75A D2.02 **QUADRO** 1 **PAG.** 1

ITEM	PEÇA Nº	QTDE	COD.	DESCRIPTION	DESCRIÇÃO
1	75203170	1	100C	RETAINER	ENCOSTO
2	75203171	1	050N	PAWL	TRAVA
3	75203172	1	075D	SPACER	ESPAÇADOR
4	75203173	1	122G	SEAL	RETENTOR
5	75203174	4	040V	SCREW	PARAFUSO
6	75203354	1	265C	COVER	TAMPA
7	75203176	1	045A	RING	ANEL
8	75203177	1	075D	SPACER	ESPAÇADOR
9	75203178	1	045A	RING	ANEL
10	75203179	1	023R	THRUST PLATE	CHAPA ENCOSTO
11	75203180	1	341C	BEARING	ROLAMENTO
12	75203181	1	023R	THRUST PLATE	CHAPA ENCOSTO
13	75203182	1	023R	THRUST PLATE	CHAPA ENCOSTO
14	75203355	1	075D	SPACER	ESPAÇADOR
15	75203356	1	016A	SHAFT	EIXO
16	75203185	1	080P	PIN	PINO
17	75203186	1	095B	BUSHING	BUCHA
18	75203187	1	075D	SPACER	ESPAÇADOR
19	75203188	1	016A	SHAFT	EIXO
20	75203357	1	035S	CASE	CARCAÇA
21	75203190	1	140S	BALL	ESFERA
22	75203358	1	100M	SPRING	MOLA
23	75203190	2	140S	BALL	ESFERA
24	75203359	1	050T	PLUG	BUJÃO
25	75203193	1	075D	SPACER	ESPAÇADOR
26	75203194	1	016A	SHAFT	EIXO
27	75203360	1	145R	ROTOR	ROTOR
28	75203196	1	105P	PLATE	CHAPA
29	75203197	1	045A	RING	ANEL
30	75203198	1	030M	SLEEVE	LUVA
31	75203199	1	045A	RING	ANEL
32	75203200	1	131R	WASHER	ARRUELA
33	75203201	1	265C	COVER	TAMPA
34	75203202	1	040V	SCREW	PARAFUSO
35	75203433	1	010D	NUT	PORCA

STEERING WHEEL
UNIDADE HIDROSTATICA DA DIREÇAO

D2.02 | 1

FIATALLIS

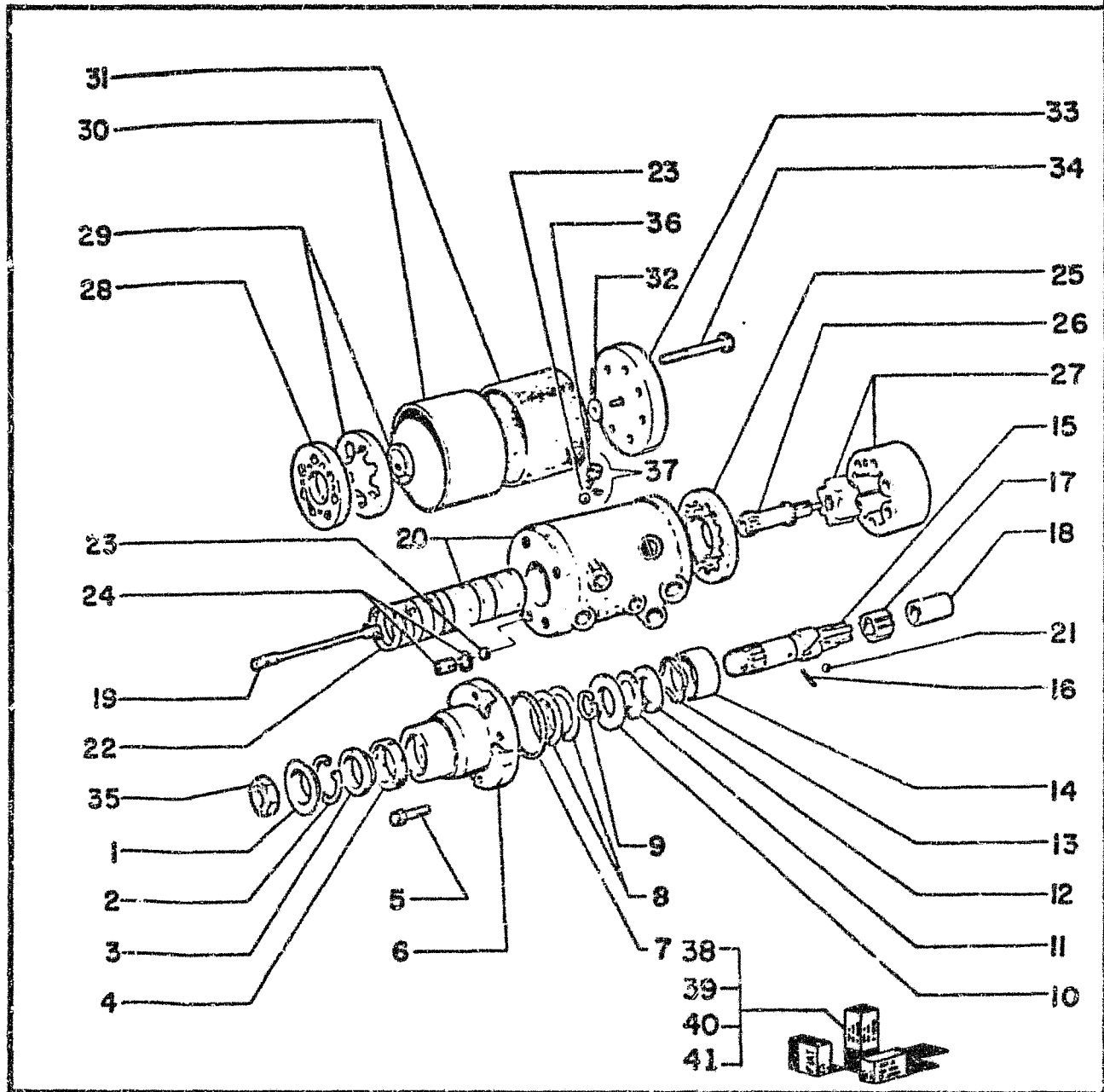

FIATALLIS FG 70R 70A 75R 75A D2.02 QUADRO 1 PAG. 2

ITEM	PEÇA Nº	QTDE	COD.	DESCRIPTION	DESCRIÇÃO
36	75203434	2	050T	PLUG	BUJÃO
37	75207914	1	050T	PLUG	BUJÃO
38	75203440	1	002K	KIT 1-4,7,23,24,37	KIT
39	75207946	1	002K	KIT 32,33	KIT
40	75207947	1	002K	KIT 23,36	KIT
41	75207945	1	002K	KIT 8-22,26	KIT

STEERING WHEEL
UNIDADE HIDROSTATICA DA DIREÇAO

D2.02 | 1

218

FIATALLIS

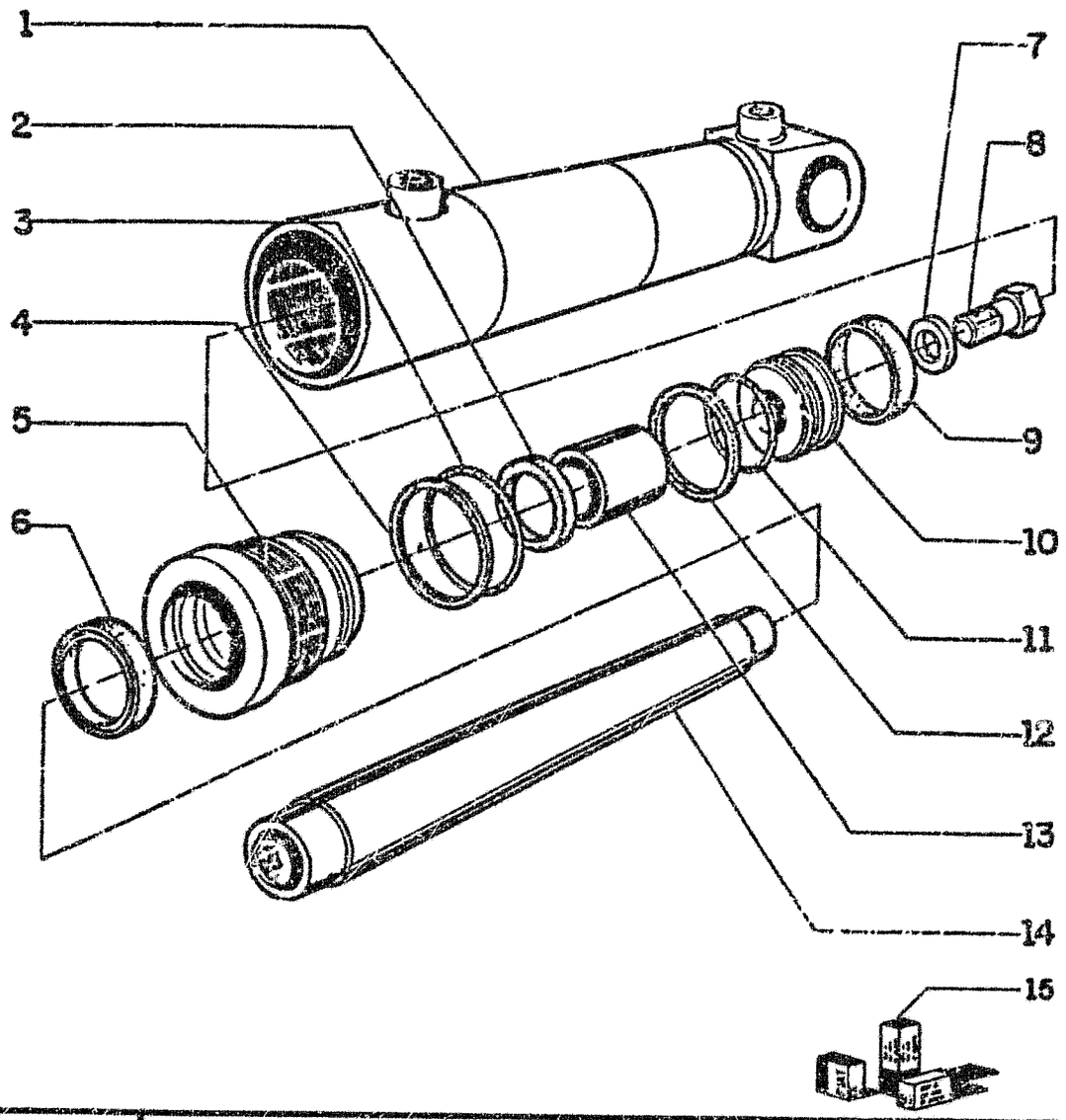

FIATALLIS FG 70R 70A 75R 75A D2.12 **QUADRO** 1 **PAG.** 1

ITEM	PEÇA Nº	QTDE	COD.	DESCRIPTION	DESCRIÇÃO
1	73065115	1	193T	TUBE	TUBO
2	73069566	1	122G	SEAL	RETENTOR
3	70924158	1	158G	O'RING	O'RING
4	73063363	1	122G	SEAL	RETENTOR
5	73065105	1	132F	HEAD	FUNDO DIANTEIRO
6	73055125	1	122G	SEAL	RETENTOR
7	70931306	1	131R	WASHER	ARRUELA
8	70921169	1	040V	SCREW	PARAFUSO
9	73065110	1	122G	SEAL	RETENTOR
10	73132432	1	132P	PISTON	PISTAO
11	70923684	1	158G	O'RING	O'RING
12	73065109	1	122G	SEAL	RETENTOR
13	73065106	1	095B	BUSHING	BUCHA
14	73132430	1	090A	ROD	HASTE
15	73065112	K	002K	KIT (INCLUDE ITEMS 2-3-4-6-9-11-12)	KIT (INCLUE ITENS 2-3-4-6-9-11-12)

STEERING CYLINDER
CILINDRO DE DIREÇAO

D2.12 | 1

SA FIATALLIS

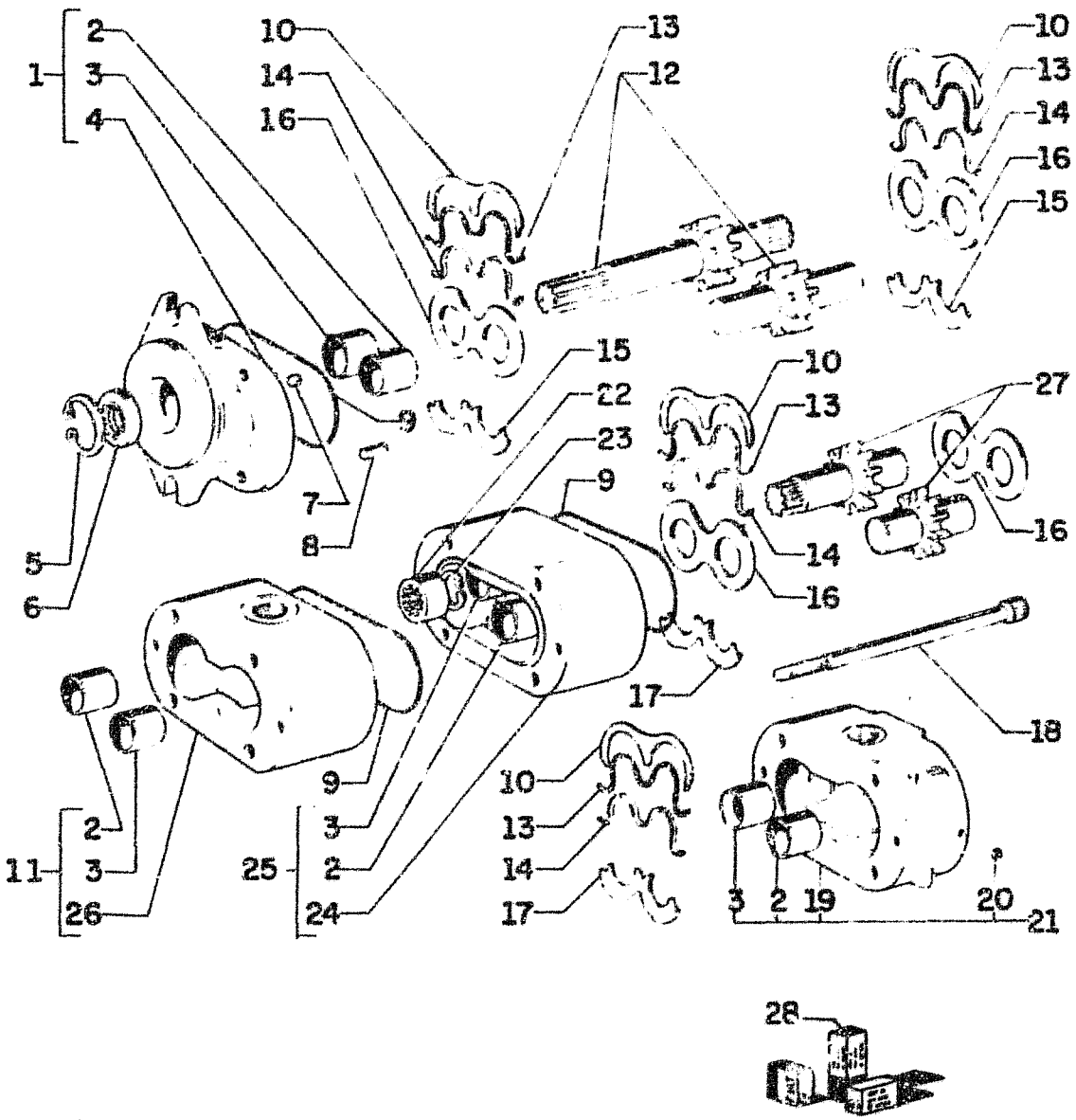

FIATALLIS FG 70R 70A 75R 75A D2.13 **QUADRO** 1 **PAG.** 1

ITEM	PEÇA Nº	QTDE	COD.	DESCRIPTION	DESCRIÇÃO
1	75285695	1	070F	FLANGE	FLANGE
2	75285668	4	095B	BUSHING	BUCHA
3	75285669	4	095B	BUSHING	BUCHA
4	75285689	1	070F	FLANGE	FLANGE
5	75285693	1	187A	SNAP RING	ANEL EIÁSTICO
6	75285692	1	045A	RING	ANEL
7	75285670	1	050T	PLUG	BUJÃO
8	75285684	6	080P	PIN	PINO
9	75285678	3	158G	O'RING	O'RING
10	75285687	4	045A	RING	ANEL
11	75285697	1	300C	BODY	CORPO
12	75285699	1	050I	GEAR	ENGRENAGEM
13	75285676	4	158G	O'RING	O'RING
14	75285672	4	045A	RING	ANEL
15	75285674	2	105P	PLATE	CHAPA
16	75285686	4	105P	PLATE	CHAPA
17	75285673	2	105P	PLATE	CHAPA
18	75285675	4	040V	SCREW	PARAFUSO
19	75285683	1	300C	BODY	CCRPO
20	75285671	1	140S	BALL	ESFERA
21	75285696	1	300C	BODY	CORPO
22	75285688	1	030M	SLEEVE	LUVA
23	75285690	1	187A	SNAP RING	ANEL ELÁSTICO
24	75285685	1	300C	BODY	CORPO
25	75285698	1	300C	BODY	CORPO
26	75285689	1	070F	FLANGE	FLANGE
27	75285700	1	050I	GEAR	ENGRENAGEM
28	75285681	1	002K	KIT 5,15-17	KIT
28	75285680	1	002K	KIT 6,9,10,13,14	KIT

PUMP ASSY (BRAKE/STEERING) 75236406
CONJUNTO DA BOMBA (DIRECAO/FREIO)

D2.13 | 1

FIATALLIS

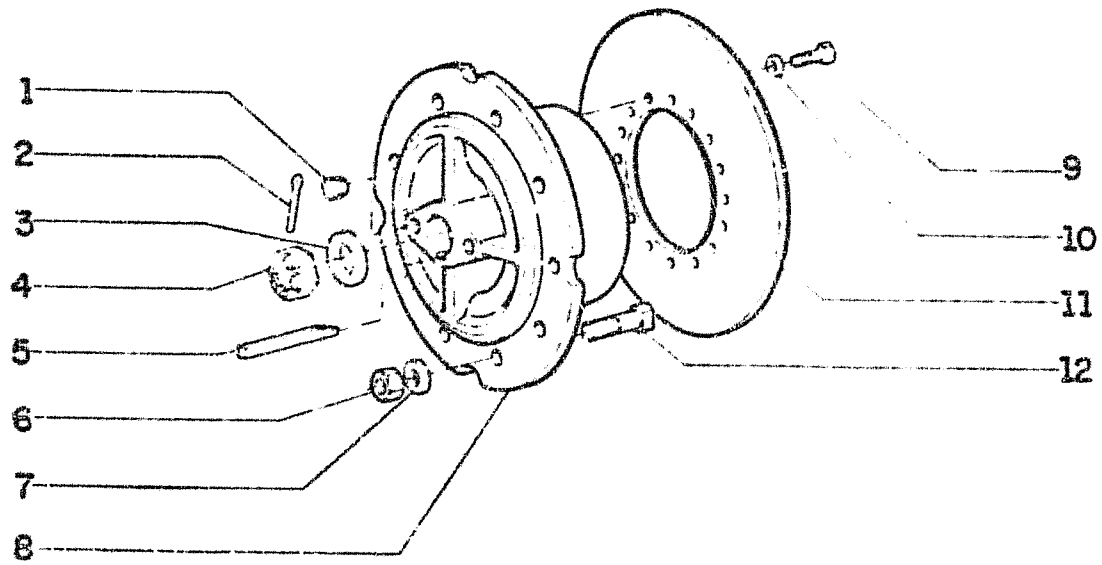

FIATALLIS FG 70R 70A 75R 75A D3.16 QUADRO 1 PAG. 1

ITEM	PEÇA Nº	QTDE	COD.	DESCRIPTION	DESCRIÇÃO
1	75201391	8	265C	COVER	TAMPA
2	70901348	4	270C	COTTER PIN	CONTRA PINO
3	70605918	4	131R	WASHER	ARRUELA
4	70060670	4	010D	NUT	PORCA
5	73132641	4	060L	KEY	CHAVETA
6	70012767	40	010D	NUT	PORCA
7	70677012	40	131R	WASHER	ARRUELA
8	75221774	4	091D	WHEEL DISC	CUBO DA RODA
9	14257931	64	040V	SCREW	PARAFUSO
10	70927381	64	131R	WASHER	ARRUELA
11	75218940	4	064D	BRAKE DISC	DISCO DE FREIO
12	73125714	40	040V	SCREW	PARAFUSO

REAR WHEELS
RODAS TRASEIRAS

D3.16 | 1

FIATALLIS

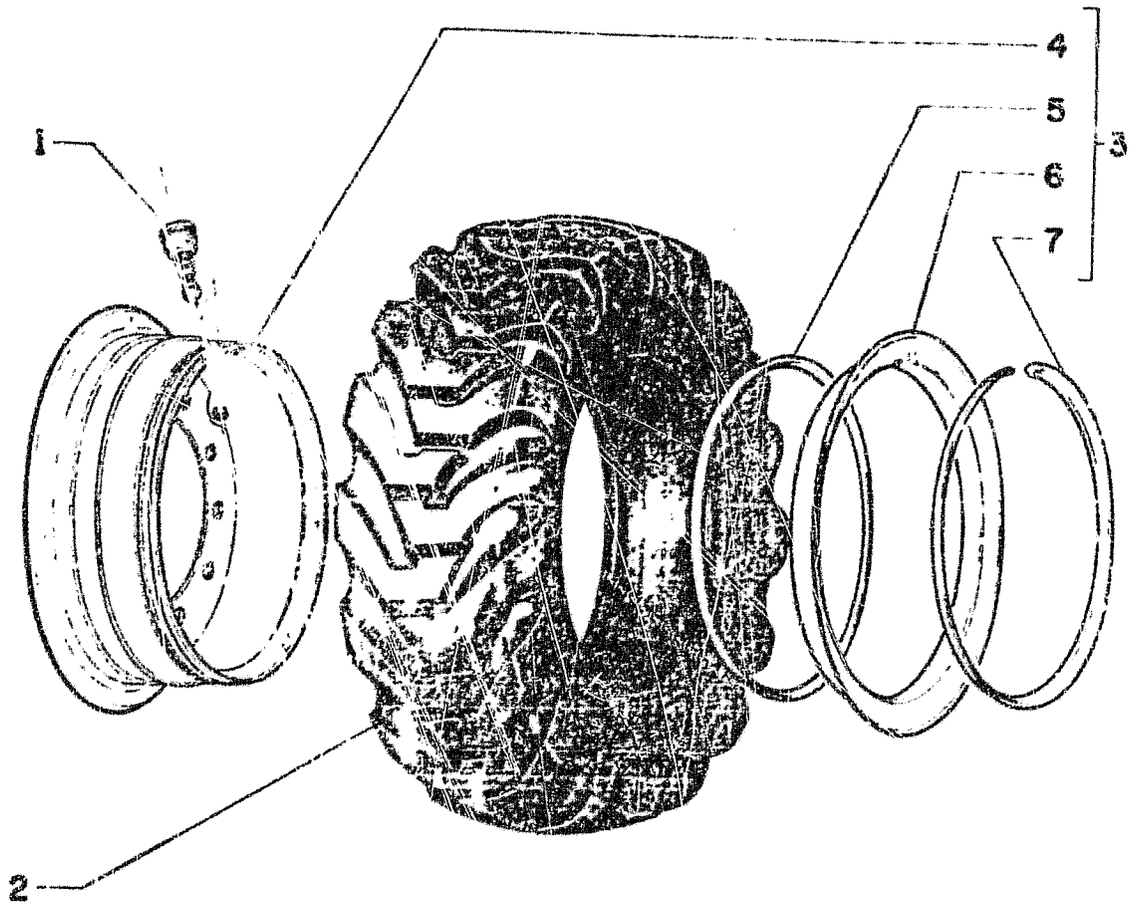

FIATALLIS FG 70R 70A 75R 75A D3.16 **QUADRO 2** **PAG. 1**

ITEM	PEÇA Nº	QTDE	COD.	DESCRIPTION	DESCRIÇÃO
1	70096481	6	010V	VALVE	VÁLVULA
2	70097577	6	147P	TIRE (1)	PNEU
2	70097578	6	147P	TIRE (2)	PNEU
3	73125241	6	135C	RIM	ARO
4	73125240	6	135C	RIM	ARO
5	73024120	6	158G	O'RING	O'RING
6	73125238	6	045A	RING	ANEL
7	73125239	6	045A	RING	ANEL

(1) FOR FG70R/70A - PARA FG 70R/70A

(2) FOR FG75R/75A - PARA FG 75R/75A

FIATALLIS

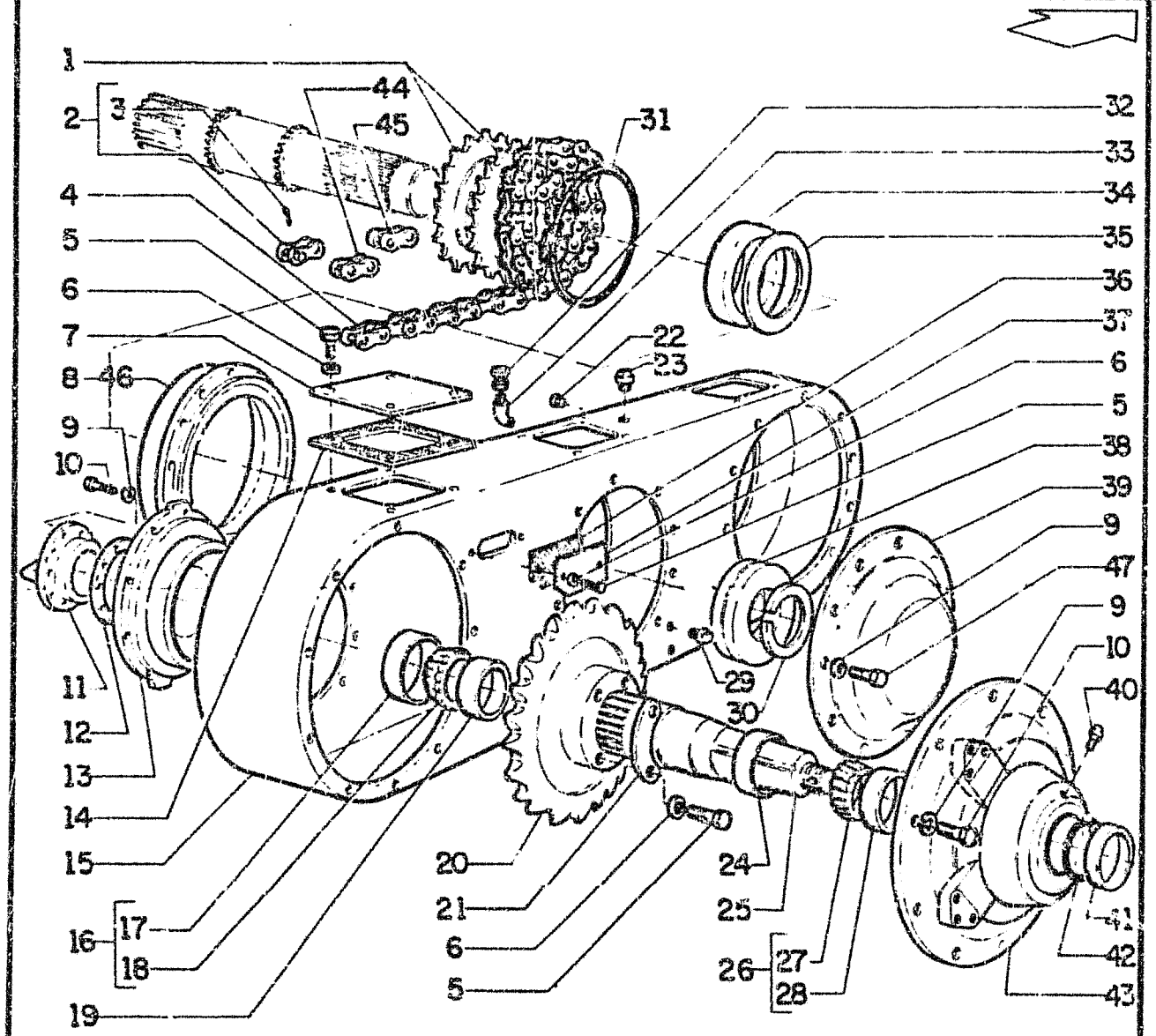

FIATALLIS FG 70R 70A 75R 75A D3.33	QUADRO 1	PAG. 1

ITEM	PEÇA Nº	QTDE	COD.	DESCRIPTION	DESCRIÇÃO
1	75236196	4	163R	SPROCKET	RODA MOTRIZ
2	70605507	-	145M	TRACK LINK	ELO DE CORREN
3	73151154	-	270C	COTTER PIN	CONTRA PINO
4	73155084	4	095C	CHAIN	CORRENTE
5	70922763	56	040V	SCREW	PARAFUSO
6	70910287	56	170R	LOCKWASHER	ARRUELA PRESS
7	70604481	6	265C	COVER	TAMPA
8	75222544	2	135M	HUB RIGHT	CUBO DIREITO
9	70912441	192	170R	LOCKWASHER	ARRUELA PRESS
10	70920574	168	040V	SCREW	PARAFUSO
11	75222182	4	056L	TRAVEL LIMITER	LIMITADOR
12	70684815	8	198S	SHIM (0,076mm)	CALÇO
12	70684814	4	198S	SHIM (0,127mm)	CALÇO
12	70684813	76	198S	SHIM (0,254mm)	CALÇO
13	73125874	4	100C	RETAINER	ENCOSTO
14	70604482	6	120G	GASKET	JUNTA
15	75222296	2	035S	CASE	CARCAÇA
16	70684817	4	341C	BEARING	ROLAMENTO
17	70680631	4	060S	CUP	PRATO
18	70684816	4	341C	BEARING	ROLAMENTO
19	70980615	4	122G	SEAL	RETENTOR
20	73125098	4	163R	SPROCKET	RODA MOTRIZ
21	70653821	8	120P	PLATE	PRATO
22	70901651	2	050T	PLUG	BUJÃO
23	70912768	2	050T	PLUG	BUJÃO
24	70653820	4	122G	SEAL	RETENTOR
25	70684820	4	016A	SHAFT	EIXO
26	70681245	4	341C	BEARING	ROLAMENTO
27	70051997	4	341C	BEARING	ROLAMENTO
28	70042877	4	060S	CUP	PRATO
29	70912725	4	050T	PLUG	BUJÃO
30	70927763	2	187A	SNAP RING	ANEL ELÁSTICO
31	70653846	2	158G	O'RING	O'RING

TANDEM (RIGHT-LEFT)
TANDEM (DIREITO-ESQUERDO)

D3.33 | 1

FIATALLIS

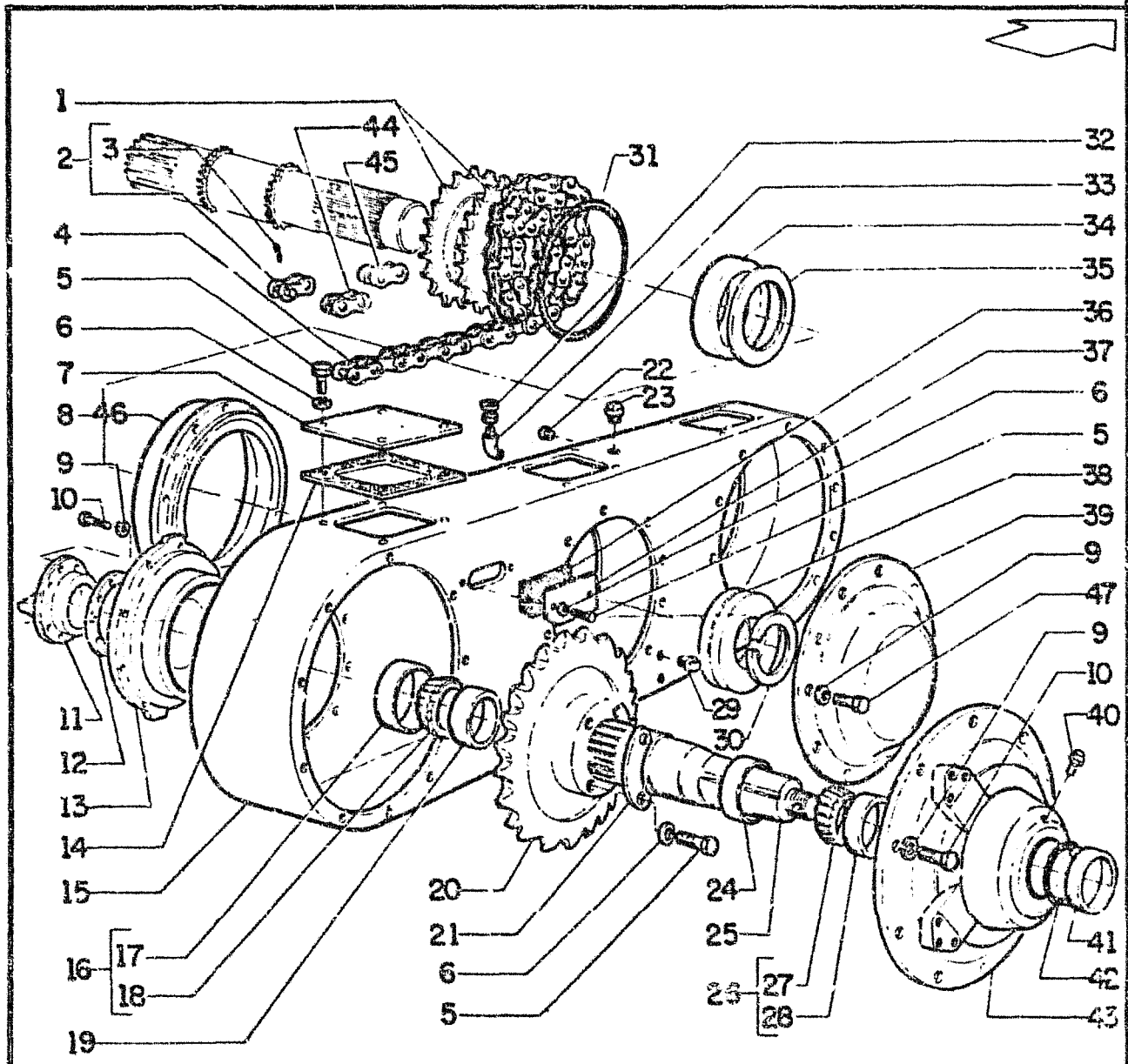

FIATALLIS FG 70R 70A 75R 75A D3.33 **QUADRO** 1 **PAG.** 2

ITEM	PEÇA Nº	QTDE	COD.	DESCRIPTION	DESCRIÇÃO
32	70634161	2	145S	BREATHER	RESPIRO
33	70907059	2	085G	ELBOW	COTOVELO
34	70620170	2	095B	BUSHING	BUCHA
35	70653828	2	045A	RING	ANEL
36	73125187	8	120G	GASKET	JUNTA
37	73125188	8	265C	COVER	TAMPA
38	70634395	2	341C	BEARING	ROLAMENTO
39	73123080	2	079L	REST	MANCAL
40	70914465	8	060I	GREASE FITTING	PINO GRAXEIRO
41	70631119	4	122G	SEAL	RETENTOR
42	70927714	4	187A	SNAP RING	ANEL ELÁSTICO
43	75221772	4	100C	RETAINER	ENCOSTO
44	70605578	-	010M	LINK	ELO
45	70605508	-	010M	LINK	ELO
46	75222543	2	135M	HUB LEFT	CUBO ESQUERDO
47	70920582	22	040V	SCREW	PARAFUSO

	TANDEM (RIGHT-LEFT) TANDEM (DIREITO-ESQUERDO)	D3.33	1

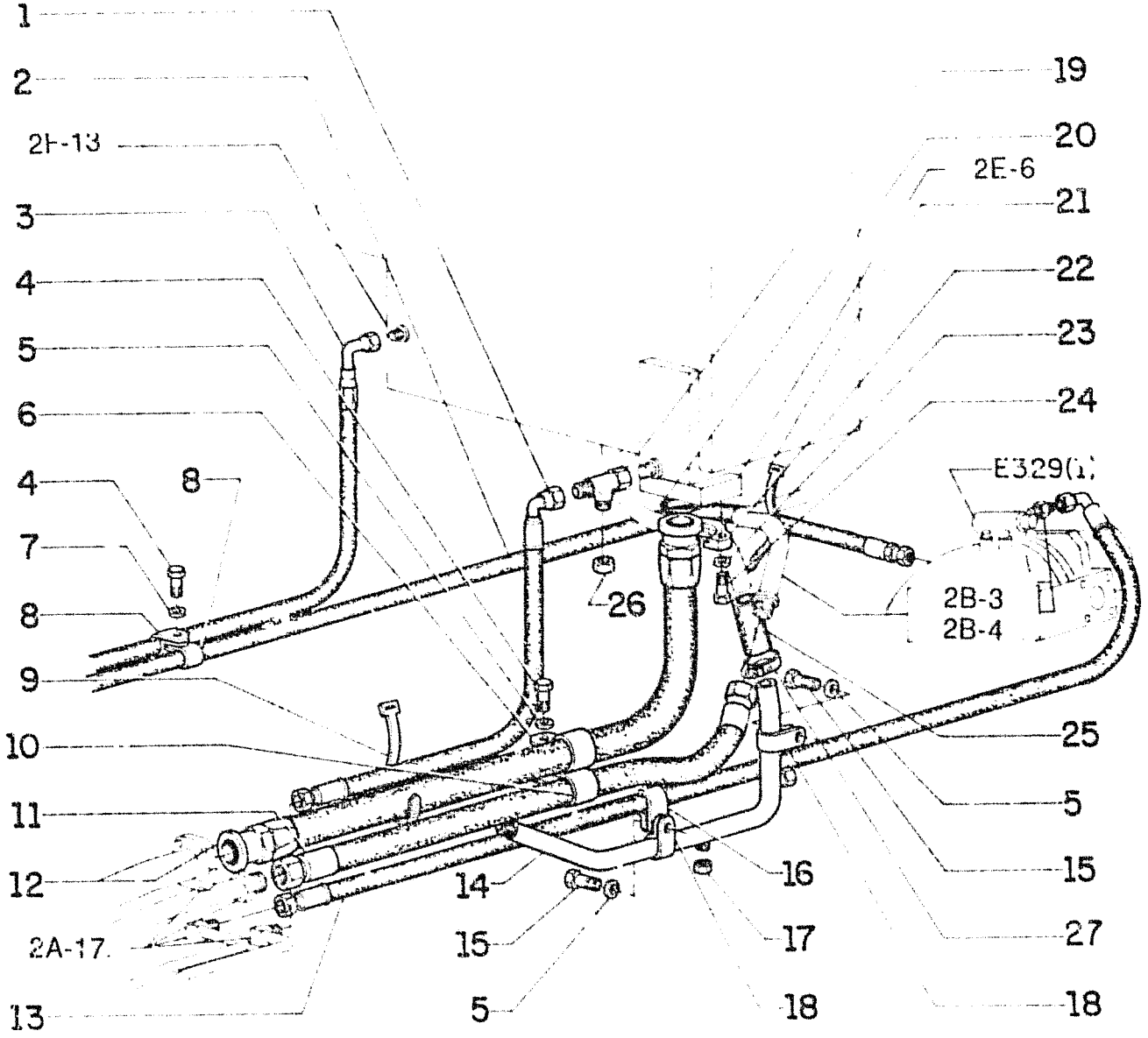

FG70 FG70A
FG75 FG75A

ITEM	PART NO.	QTY	COD	DESCRIPTION	DESRICAO
1	73128634	1	192T	HOSE	MANGUEIRA
2	73148896	1	192T	HOSE	MANGUEIRA
3	75238343	1	192T	HOSE	MANGUEIRA
4	70922300	5	040V	SCREW	PARAFUSO
5	70677006	7	131R	WASHER	ARRUELA
6	70927390	1	031F	CLAMP	ABRACADEIRA
7	70915815	4	131R	WASHER	ARRUELA
8	70927310	7	031F	CLAMP	ABRACADEIRA
9	70198775	2	031F	CLAMP	ABRACADEIRA
10	70927312	1	031F	CLAMP	ABRACADEIRA
11	73150571	1	192T	HOSE	MANGUEIRA
12	73150569	1	192T	HOSE	MANGUEIRA
13	75216220	1	192T	HOSE	MANGUEIRA
14	73150630	1	193T	TUBE	TUBO
15	70927400	2	040V	SCREW	PARAFUSO
16	70927387	1	031F	CLAMP	ABRACADEIRA
17	70921244	2	064C	CAP	TAMPAO
18	70928010	2	031F	CLAMP	ABRACADEIRA
19	70922792	1	020B	FITTING	CONEXAO
20	70923578	1	153G	O-RING	ANELC
21	70196765	1	031F	CLAMP	ABRACADEIRA
22	70921118	2	070F	FLANGE	FLANGE
23	70912441	4	170R	LOCKWASHER	ARRUELA PRESSAO
24	70920583	4	040V	SCREW	PARAFUSO
25	73128476	1	285T	HOSE	MANGUEIRA
26	70923737	1	064C	CAP	TAMPAO
27	70921912	4	031F	CLAMP	ABRACADEIRO

REAR HYDRAULIC SYSTEM
SISTEMA HIDRAULICA TRASEIRO

E302 | **1**

FIATALLIS

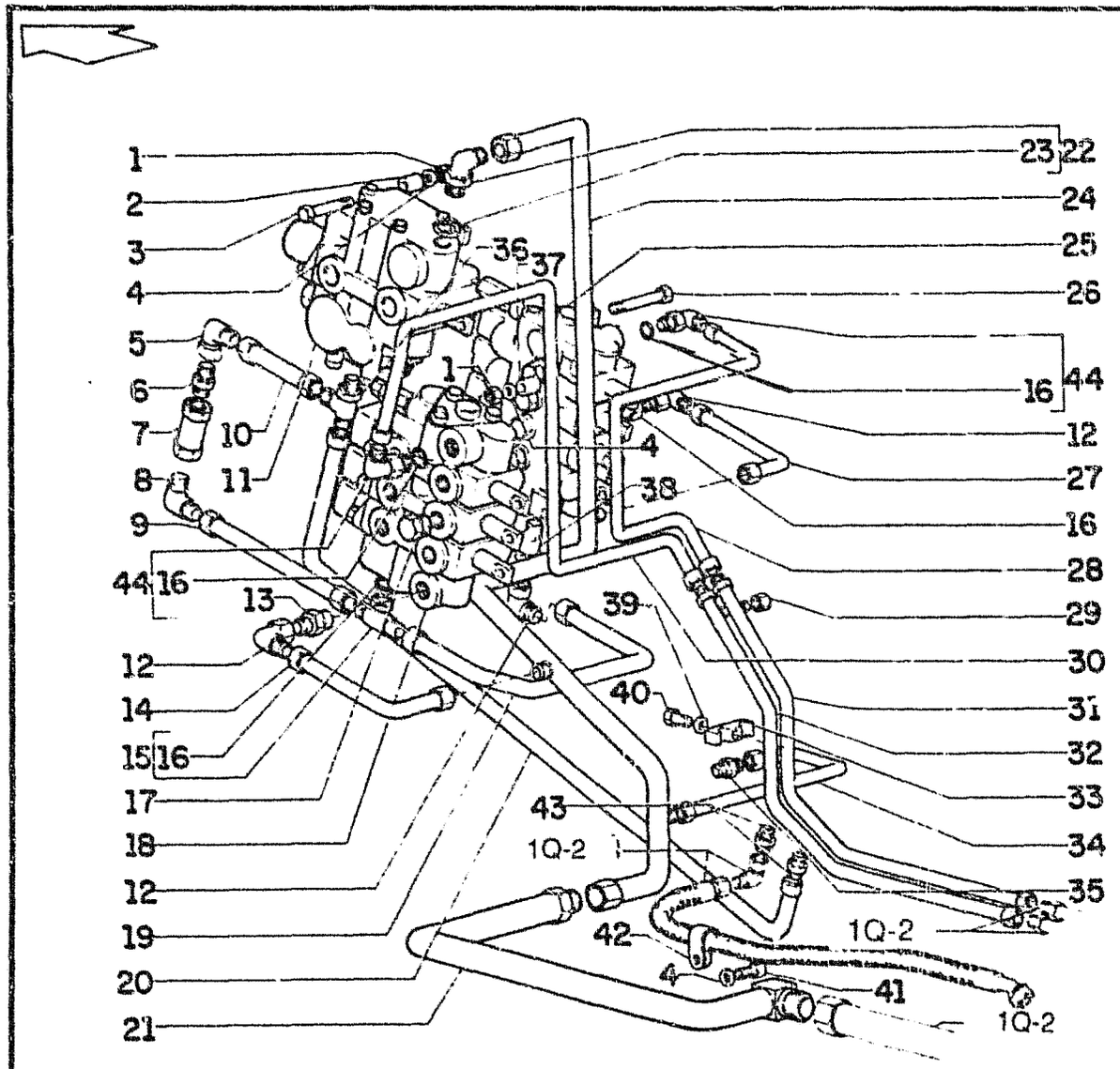

FIATALLIS FG 70R 75R E3.02 **QUADRO** 2 **PAG.** 1

ITEM	PEÇA Nº	QTDE	COD.	DESCRIPTION	DESCRIÇÃO
1	70911026	9	010D	NUT	PORCA
2	75236838	3	074B	BLOCK	BLOCO
3	70924843	3	040V	SCREW	PARAFUSO
4	70677006	10	131R	WASHER	ARRUELA
5	70919624	1	020R	FITTING	CONEXÃO
6	70919342	1	020R	FITTING	CONEXÃO
7	75216234	1	010V	VALVE	VÁLVULA
8	70919272	1	085G	ELBOW	COTOVELO
9	75236896	1	193T	TUBE	TUBO
10	75236879	1	193T	TUBE	TUBO
11	75216099	1	010V	VALVE	VÁLVULA
12	70921279	3	085G	ELBOW	COTOVELO
13	70921409	2	075B	CONNECTOR	CONECTOR
14	75236900	1	193T	TUBE	TUBO
15	73158845	1	020R	FITTING	CONEXÃO
16	70921349	4	158G	O'RING	O'RING
17	70921573	2	026T	BLOCK	TAMPÃO
18	75236488	1	010V	VALVE	VÁLVULA
19	75236898	1	193T	TUBE	TUBO
20	75236740	1	193T	TUBE	TUBO
21	75236912	1	193T	TUBE	TUBO
22	70935805	1	085G	ELBOW	COTOVELO
23	70921206	2	158G	O'RING	O'RING
24	75236916	1	193T	TUBE	TUBO
25	75236489	1	010V	VALVE	VÁLVULA
26	70922849	6	040V	SCREW	PARAFUSO
27	75236894	1	193T	TUBE	TUBO
28	75236888	1	193T	TUBE	TUBO
29	70921467	2	064C	CAP	TAMPÃO
30	75236890	1	193T	TUBE	TUBO
31	75236873	1	193T	TUBE	TUBO
32	75236875	1	193T	TUBE	TUBO
33	70623355	2	031F	CLAMP	ABRAÇADEIRA
34	75236949	1	193T	TUBE	TUBO
35	70919062	1	020R	FITTING	CONEXÃO

FRONT HYDRAULIC SYSTEM
SISTEMA HIDRAULICO DIANTEIRO

E3.02 | 2

FIATALLIS

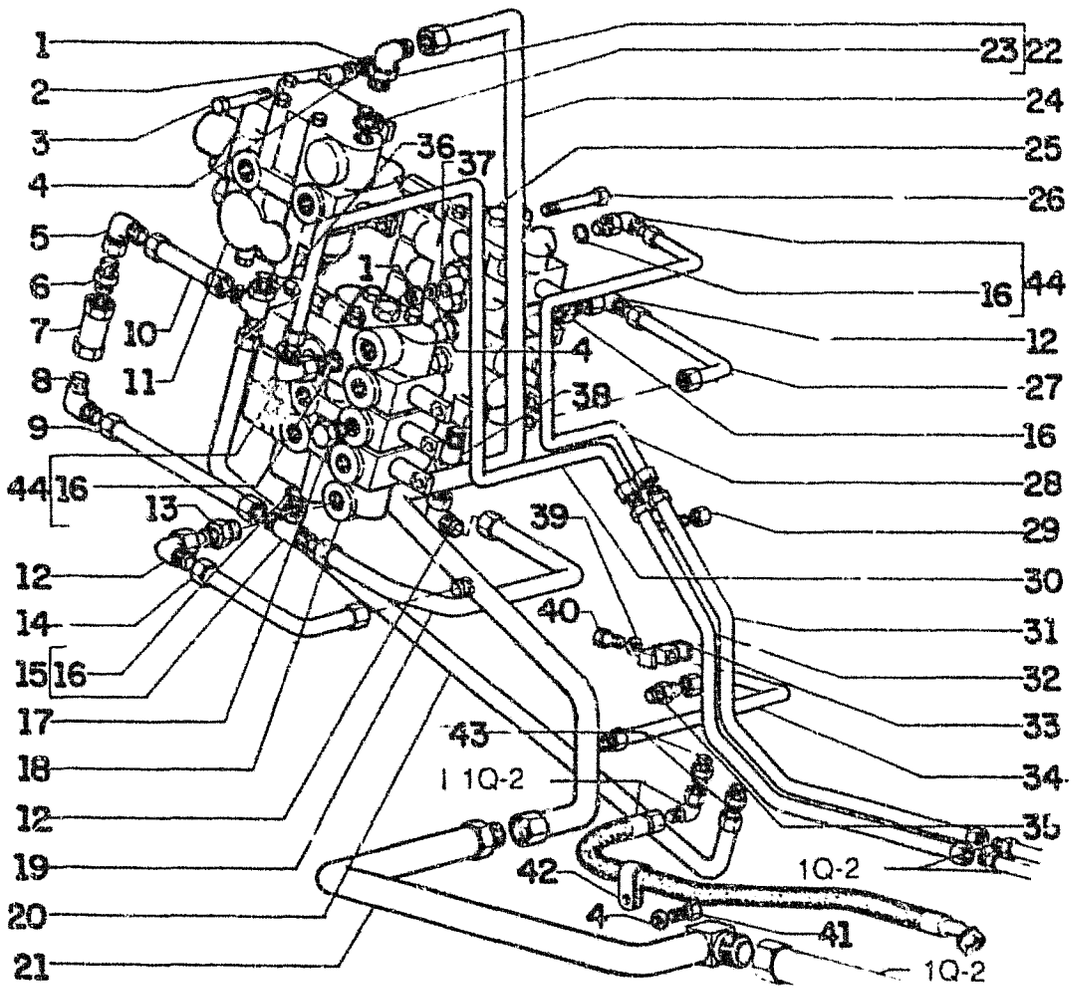

FIATALLIS FG 70R 75R E3.02 **QUADRO** 2 **PAG.** 2

ITEM	PEÇA Nº	QTDE	COD.	DESCRIPTION	DESCRIÇÃO
36	70922181	1	020R	FITTING	CONEXÃO
37	75236839	6	074B	BLOCK	BLOCO
38	70927571	1	075B	CONNECTOR	CONECTOR
39	70677006	2	131R	WASHER	ARRUELA
40	70921076	2	040V	SCREW	PARAFUSO
41	70922300	1	040V	SCREW	PARAFUSO
42	70928010	1	031F	CLAMP	ABRAÇADEIRA
43	70921217	2	075B	CONNECTOR	CONECTOR
44	70921402	2	085G	ELBOW	COTOVELO

	FRONT HYDRAULIC SYSTEM SISTEMA HIDRAULICO DIANTEIRO	E3.02	2

FIATALLIS

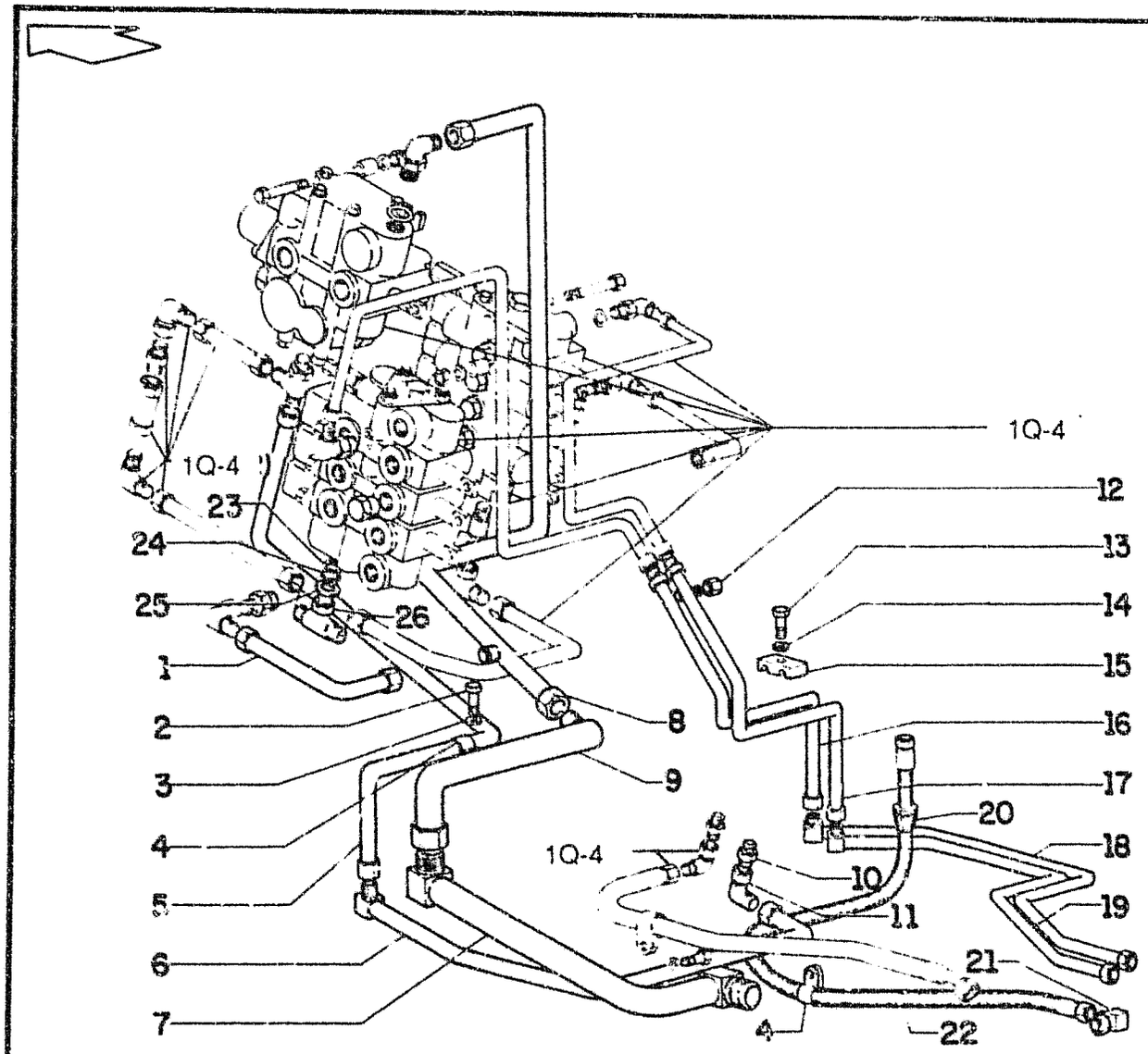

FIATALLIS FG 70A 75A E3.02 **QUADRO** 3 **PAG.** 1

ITEM	PEÇA Nº	QTDE	COD.	DESCRIPTION	DESCRIÇÃO
1	75237010	1	193T	TUBE	TUBO
2	70921076	2	040V	SCREW	PARAFUSO
3	70915815	2	131R	WASHER	ARRUELA
4	70927310	3	031F	CLAMP	ABRAÇADEIRA
5	75237127	1	193T	TUBE	TUBO
6	75237094	1	193T	TUBE	TUBO
7	73149997	1	193T	TUBE	TUBO
8	75237005	1	193T	TUBE	TUBO
9	75237007	1	193T	TUBE	TUBO
10	70921217	2	075B	CONNECTOR	CONECTOR
11	70919624	2	020R	FITTING	CONEXÃO
12	70921467	2	064C	CAP	TAMPÃO
13	70921173	2	040V	SCREW	PARAFUSO
14	70677006	2	131R	WASHER	ARRUELA
15	70623355	2	031F	CLAMP	ABRAÇADEIRA
16	75237021	1	193T	TUBE	TUBO
17	75237029	1	193T	TUBE	TUBO
18	75237019	1	193T	TUBE	TUBO
19	75237017	1	193T	TUBE	TUBO
20	73125876	1	085I	INSULATOR	ISOLANTE
21	75236940	1	285T	HOSE	MANGUEIRA
22	70921013	1	085G	ELBOW	COTOVELO
23	75285599	1	158G	O'RING	O'RING
24	75204312	1	158G	O'RING	O'RING
25	75204324	1	045A	RING	ANEL
26	73158845	1	020R	FITTING	CONEXÃO

FRONT HYDRAULIC SYSTEM
SISTEMA HIDRAULICO DIANTEIRO

E3.02 | 3

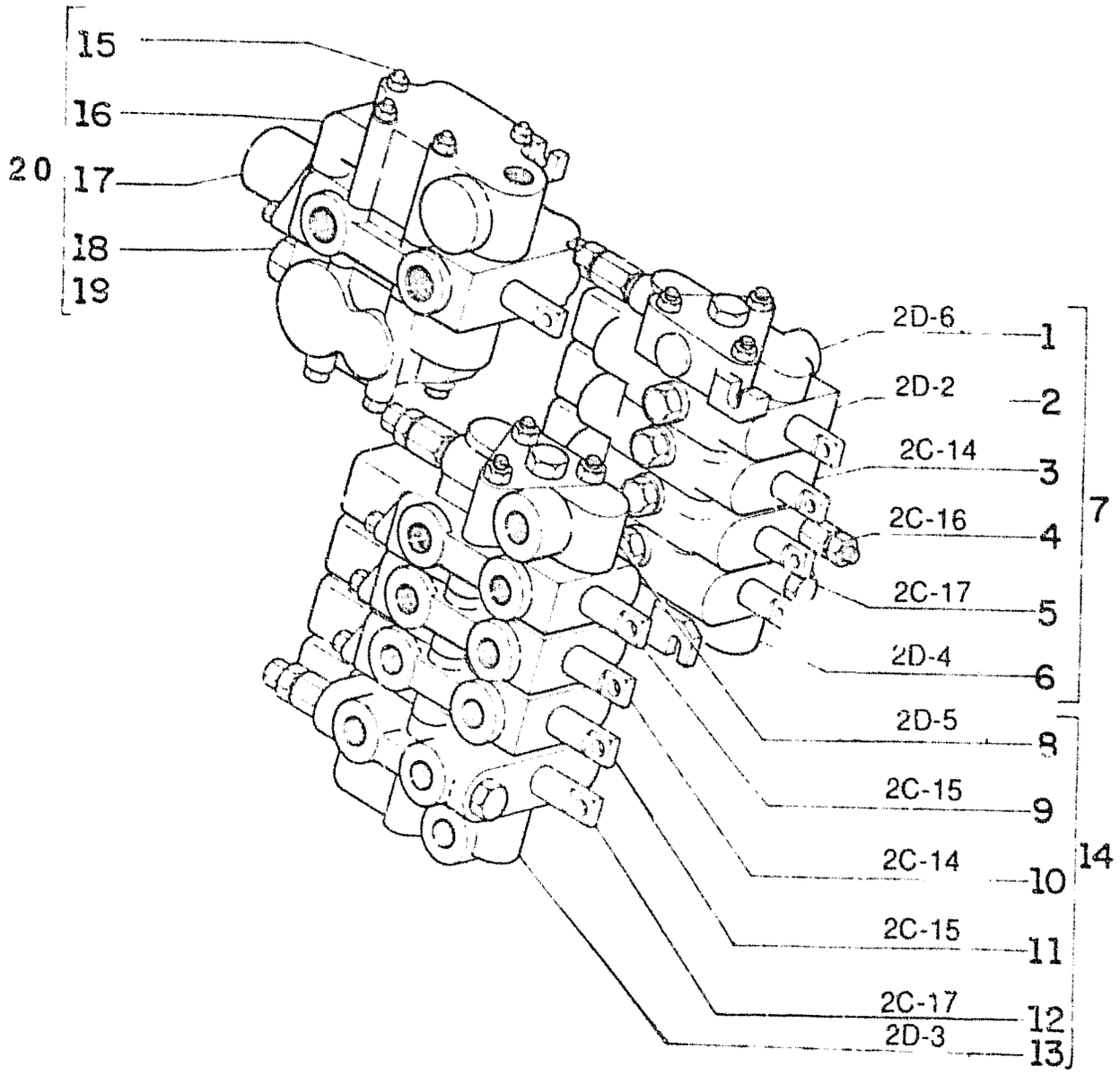

FG70 FG70A
FG75 FG75A

ITEM	PART NO.	QTY	COD	DESCRIPTION	DESRICAO
1	75285738	1	010V	VALVE	VALVULA
2	75285784	1	010V	VALVE	VALVULA
3	75285786	1	010V	VALVE	VALVULA
4	75285783	1	010V	VALVE	VALVULA
5	75285785	1	010V	VALVE	VALVULA
6	75285782	1	010V	VALVE	VALVULA
7	75236489	1	010V	VALVE ASSY	CONJ. DISTRUB.
8	75285733	1	010V	VALVE	VALVULA
9	75285720	1	010V	VALVE	VALVULA
10	75285718	1	010V	VALVE	VALVULA
11	75285720	1	010V	VALVE	VALVULA
12	75285736	1	010V	VALVE	VALVULA
13	75285730	1	010V	VALVE	VALVULA
14	75236488	1	010V	VALVE ASSY	CONJ. DISTRUB.
15	75204345	K	002K	KIT ROD NUT	KIT
16	75204344	1	010V	VALVE	VALVULA
17	75204333	1	010V	VALVE	VALVULA
18	75204332	1	010V	VALVE	VALVULA
19	75204470	K	002K	KIT SEAL	KIT VEDACAO
20	75216099	1	010V	VALVE ASSY	CONJ. DISTRUB.

VALVE ASSEMBLY
CONJUNTO DA VALVULA

E302 | 3A

FIATALLIS

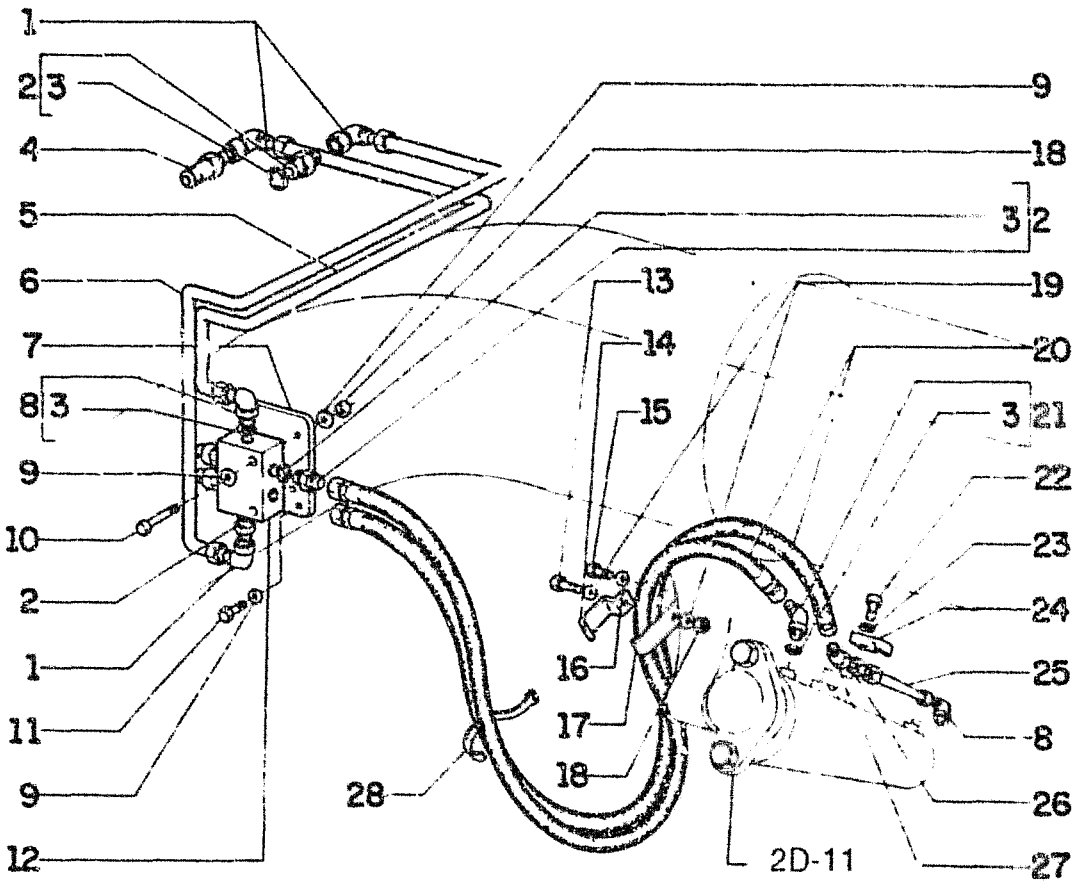

FIATALLIS FG 70R 75R E3.02 **QUADRO** 4 **PAG.** 1

ITEM	PEÇA Nº	QTDE	COD.	DESCRIPTION	DESCRIÇÃO
1	70921279	3	085G	ELBOW	COTOVELO
2	70921409	4	075B	CONNECTOR	CONECTOR
3	70921349	7	158G	O'RING	O'RING
4	70927571	1	075B	CONNECTOR	CONECTOR
5	75236553	1	193T	TUBE	TUBO
6	75236549	1	193T	TUBE	TUBO
7	73127641	1	105P	PLATE	CHAPA
8	70921402	2	085G	ELBOW	COTOVELO
9	70677006	7	131R	WASHER	ARRUELA
10	70920996	6	040V	SCREW	PARAFUSO
11	70922300	3	040V	SCREW	PARAFUSO
12	73130105	1	1108	LOCK VALVE	VALVULA DE BLOQ
13	70922763	1	040V	SCREW	PARAFUSO
14	73134510	1	031F	CLAMP	ABRAÇADEIRA
15	70922262	1	040V	SCREW	PARAFUSO
16	70677006	1	131R	WASHER	ARRUELA
17	73134550	1	031F	CLAMP	ABRAÇADEIRA
18	70911026	3	010D	NUT	PORCA
19	70929156	3	131R	WASHER	ARRUELA
20	73126279	2	192T	HOSE ASSY	MANGUEIRA
21	70922507	1	085G	ELBOW	COTOVELO
22	70921565	1	040V	SCREW	PARAFUSO
23	70929156	3	131R	WASHER	ARRUELA
24	73127629	1	031F	CLAMP	ABRAÇADEIRA
25	73130116	1	193T	TUBE	TUBO
26	70919788	1	020R	FITTING	CONEXÃO
27	70920690	1	085G	ELBOW	COTOVELO
28	70196765	4	031F	CLAMP	ABRAÇADEIRA

CIRCLE SHIFT HYDRAULICS
SISTEMA HIDR. DE INCLINAÇAO DO GIRA CIRCULO

E3.02 | 4

FIATALLIS

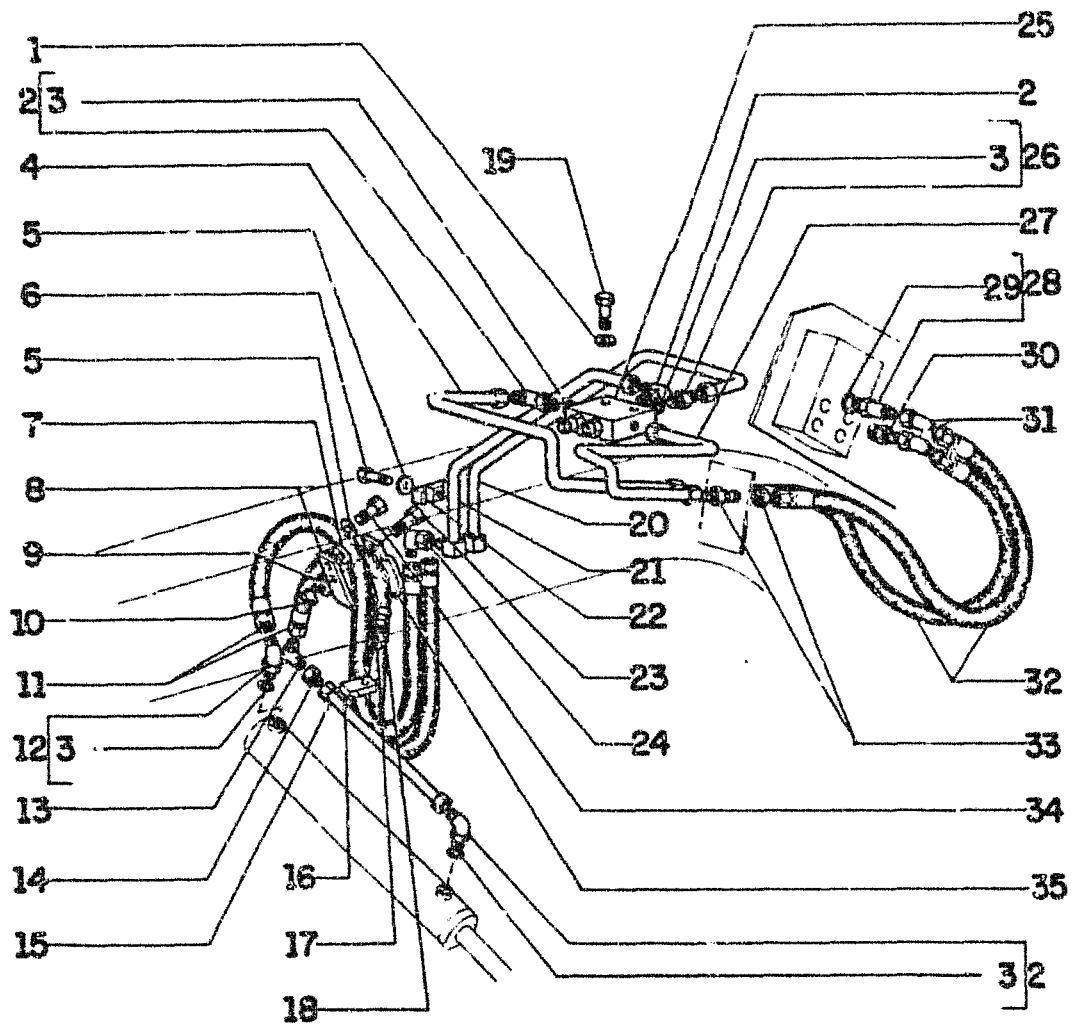

FIATALLIS FG 70A 75A E3.02 **QUADRO** 5 **PAG.** 1

ITEM	PEÇA Nº	QTDE	COD.	DESCRIPTION	DESCRIÇÃO
1	70677006	2	131R	WASHER	ARRUELA
2	70921402	3	085G	ELBOW	COTOVELO
3	70921349	6	158G	O'RING	O'RING
4	75237273	1	193T	TUBE	TUBO
5	70677006	2	131R	WASHER	ARRUELA
6	70921076	1	040V	SCREW	PARAFUSO
7	73135018	1	030M	SLEEVE	LUVA
8	73134511	1	105P	PLATE	CHAPA
9	70929156	2	131R	WASHER	ARRUELA
10	70911026	3	010D	NUT	PORCA
11	73126279	2	192T	HOSE ASSY	MANGUEIRA
12	70922507	1	085G	ELBOW	COTOVELO
13	70920690	1	085G	ELBOW	COTOVELO
14	70919788	1	020R	FITTING	CONEXÃO
15	73130116	1	193T	TUBE	TUBO
16	73127629	1	031F	CLAMP	ABRAÇADEIRA
17	70929156	1	131R	WASHER	ARRUELA
18	70921565	1	040V	SCREW	PARAFUSO
19	70920996	2	040V	SCREW	PARAFUSO
20	75214790	1	193T	TUBE	TUBO
21	75214791	1	193T	TUBE	TUBO
22	70623355	1	031F	CLAMP	ABRAÇADEIRA
23	70922763	1	040V	SCREW	PARAFUSO
24	70921279	2	085G	ELBOW	COTOVELO
25	73130105	1	1108	LOCK VALVE	VALVULA DE BLOQ
26	70921409	2	075B	CONNECTOR	CONECTOR
27	75237271	1	193T	TUBE	TUBO
28	75237101	1	075B	CONNECTOR	CONECTOR
29	70921349	2	158G	O'RING	O'RING
30	75222859	1	075B	CONNECTOR	CONECTOR
31	70921279	2	085G	ELBOW	COTOVELO
32	75214261	2	192T	HOSE ASSY	MANGUEIRA
33	70927261	2	020R	FITTING	CONEXÃO
34	70922262	1	040V	SCREW	PARAFUSO
35	73134510	1	031F	CLAMP	ABRAÇADEIRA

CIRCLE SHIFT HYDRAULIC
SISTEMA HIDRAULICO DE DESL. LATERAL DO CIRCULO

E3.02 | 5

FIATALLIS

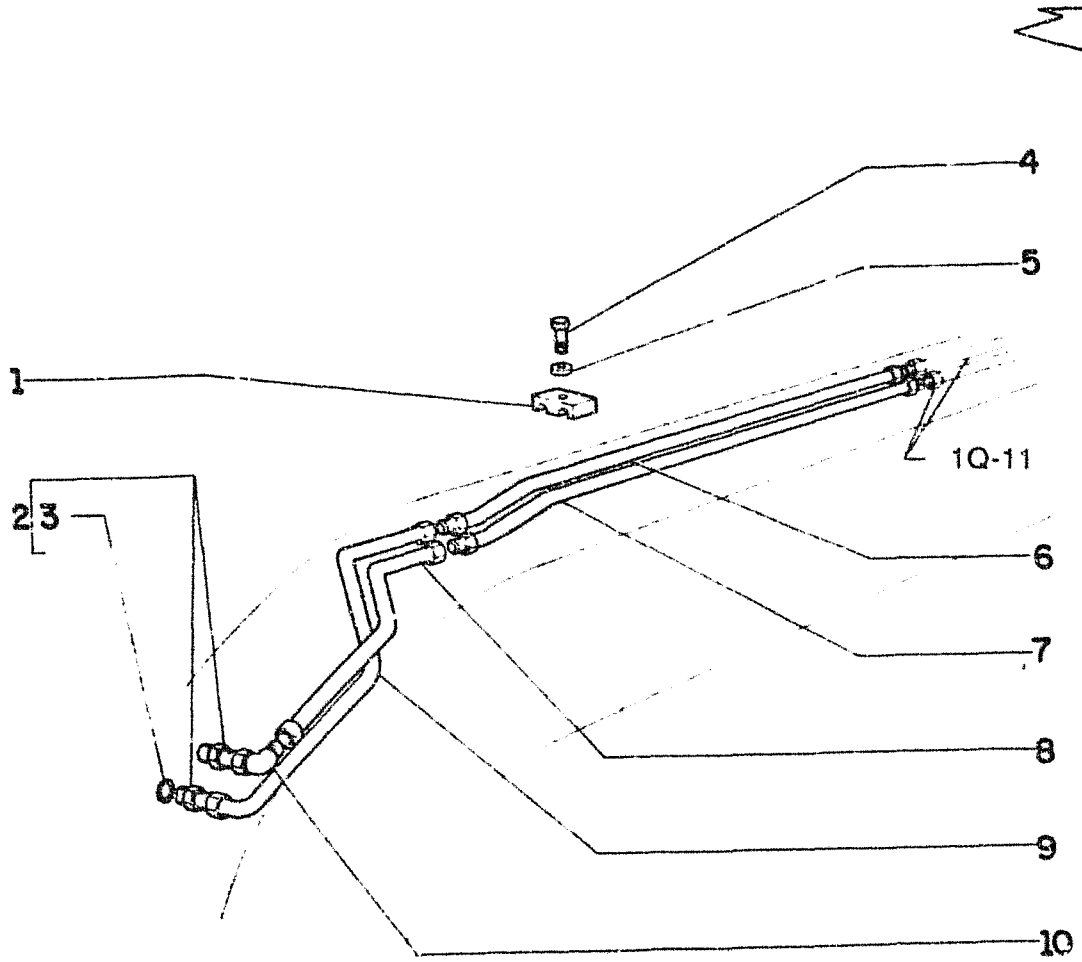

FIATALLIS FG 70R 75R E3.02 **QUADRO** 6 **PAG.** 1

ITEM	PEÇA Nº	QTDE	COD.	DESCRIPTION	DESCRIÇÃO
1	70623355	2	031F	CLAMP	ABRAÇADEIRA
2	70921409	2	075B	CONNECTOR	CONECTOR
3	70921349	2	158G	O'RING	O'RING
4	70921076	2	040V	SCREW	PARAFUSO
5	70677006	2	131R	WASHER	ARRUELA
6	73125664	1	193T	TUBE	TUBO
7	73125665	1	193T	TUBE	TUBO
8	75236456	1	193T	TUBE	TUBO
9	75236454	1	193T	TUBE	TUBO
10	70921279	2	085G	ELBOW	COTOVELO

FRONT WHEEL LEAN PIPING
SISTEMA HIDR. DE INCLINAÇAO DA RODA DIANTEIRA

E3.02 | 6

FIATALLIS

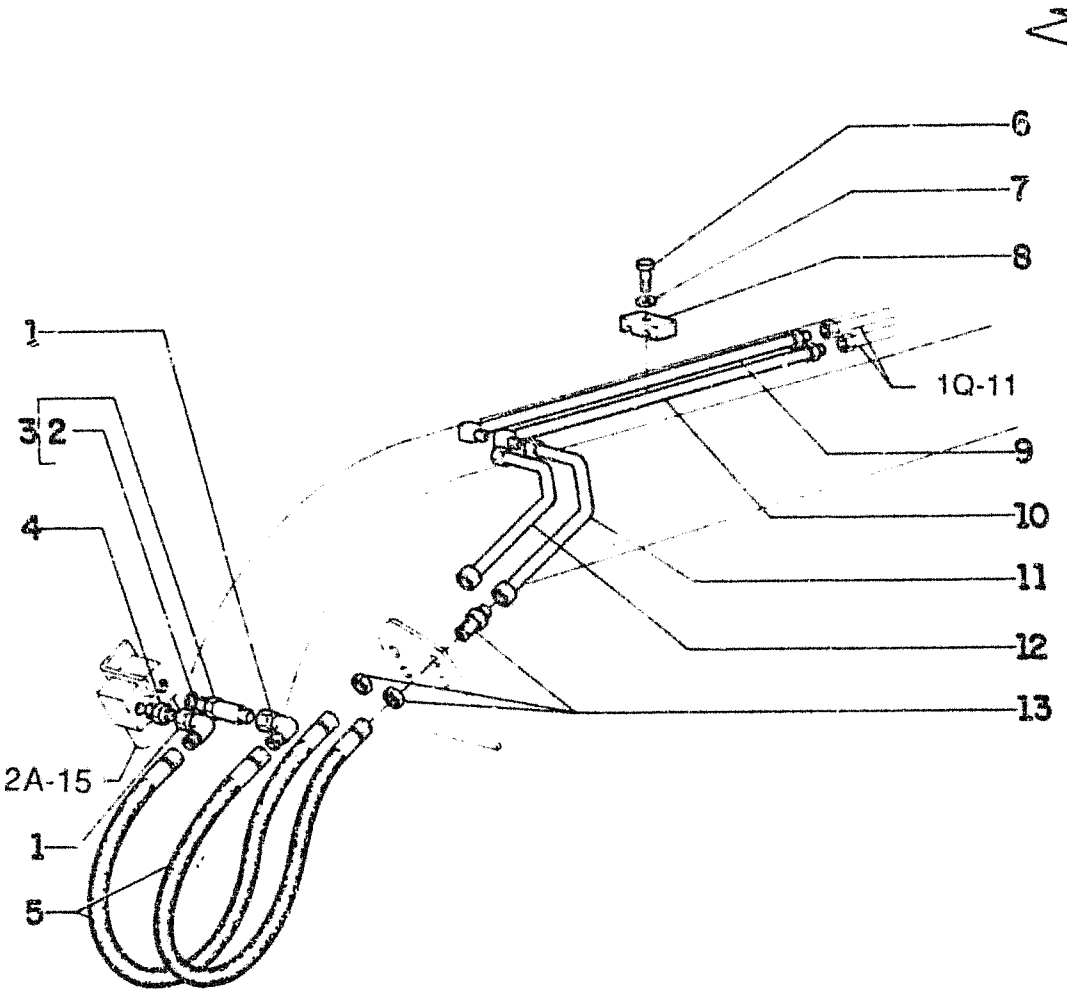

FIATALLIS FG 70A 75A E3.02 **QUADRO** 7 **PAG.** 1

ITEM	PEÇA Nº	QTDE	COD.	DESCRIPTION	DESCRIÇÃO
1	70921279	2	085G	ELBOW	COTOVELO
2	70921885	2	158G	O'RING	O'RING
3	75237265	1	075B	CONNECTOR	CONECTOR
4	70924403	1	075B	CONNECTOR	CONECTOR
5	75214261	2	192T	HOSE ASSY	MANGUEIRA
6	70921076	1	040V	SCREW	PARAFUSO
7	70677006	1	131R	WASHER	ARRUELA
8	70623355	1	031F	CLAMP	ABRAÇADEIRA
9	75237194	1	193T	TUBE	TUBO
10	75237192	1	193T	TUBE	TUBO
11	75237170	1	193T	TUBE	TUBO
12	75237168	1	193T	TUBE	TUBO
13	70927261	2	020R	FITTING	CONEXÃO

FRONT WHEEL LEAN PIPING
SISTEMA HIDR. DE INCLINAÇAO DA RODA DIANTEIRA

E3.02 | 7

FIATALLIS

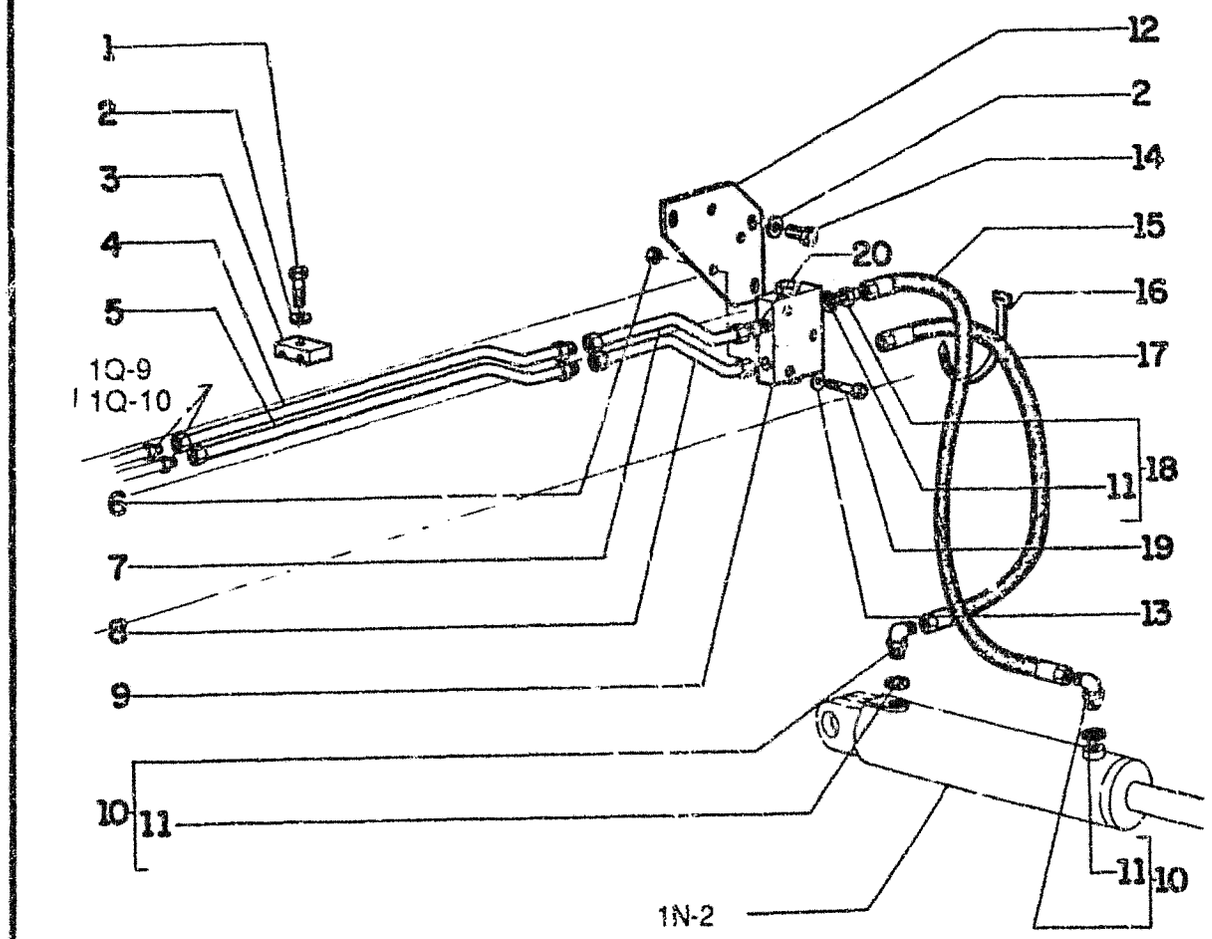

FIATALLIS FG 70A 75A E3.02 **QUADRO** 8 **PAG.** 1

ITEM	PEÇA Nº	QTDE	COD.	DESCRIPTION	DESCRIÇÃO
1	70921076	1	040V	SCREW	PARAFUSO
2	70677006	7	131R	WASHER	ARRUELA
3	70623355	1	031F	CLAMP	ABRAÇADEIRA
4	75214303	1	193T	TUBE	TUBO
5	75214305	1	193T	TUBE	TUBO
6	70911024	3	010D	NUT	PORCA
7	73126554	1	193T	TUBE	TUBO
8	73126556	1	193T	TUBE	TUBO
9	73148118	1	010V	VALVE	VÁLVULA
10	70921402	2	085G	ELBOW	COTOVELO
11	70921349	6	158G	O'RING	O'RING
12	73126564	1	105P	PLATE	CHAPA
13	70928190	6	131R	WASHER	ARRUELA
14	70927400	3	040V	SCREW	PARAFUSO
15	73126557	1	192T	HOSE ASSY	MANGUEIRA
16	70196765	2	031F	CLAMP	ABRAÇADEIRA
17	73126558	1	192T	HOSE ASSY	MANGUEIRA
18	70921409	4	075B	CONNECTOR	CONECTOR
19	70930790	3	040V	SCREW	PARAFUSO
20	73127626	1	010V	VALVE	VÁLVULA

FRONT WHEEL LEAN PIPING
SISTEMA HIDRAULICO DE INCLINAÇAO DA RODA

E3.02 | 8

FIATALLIS

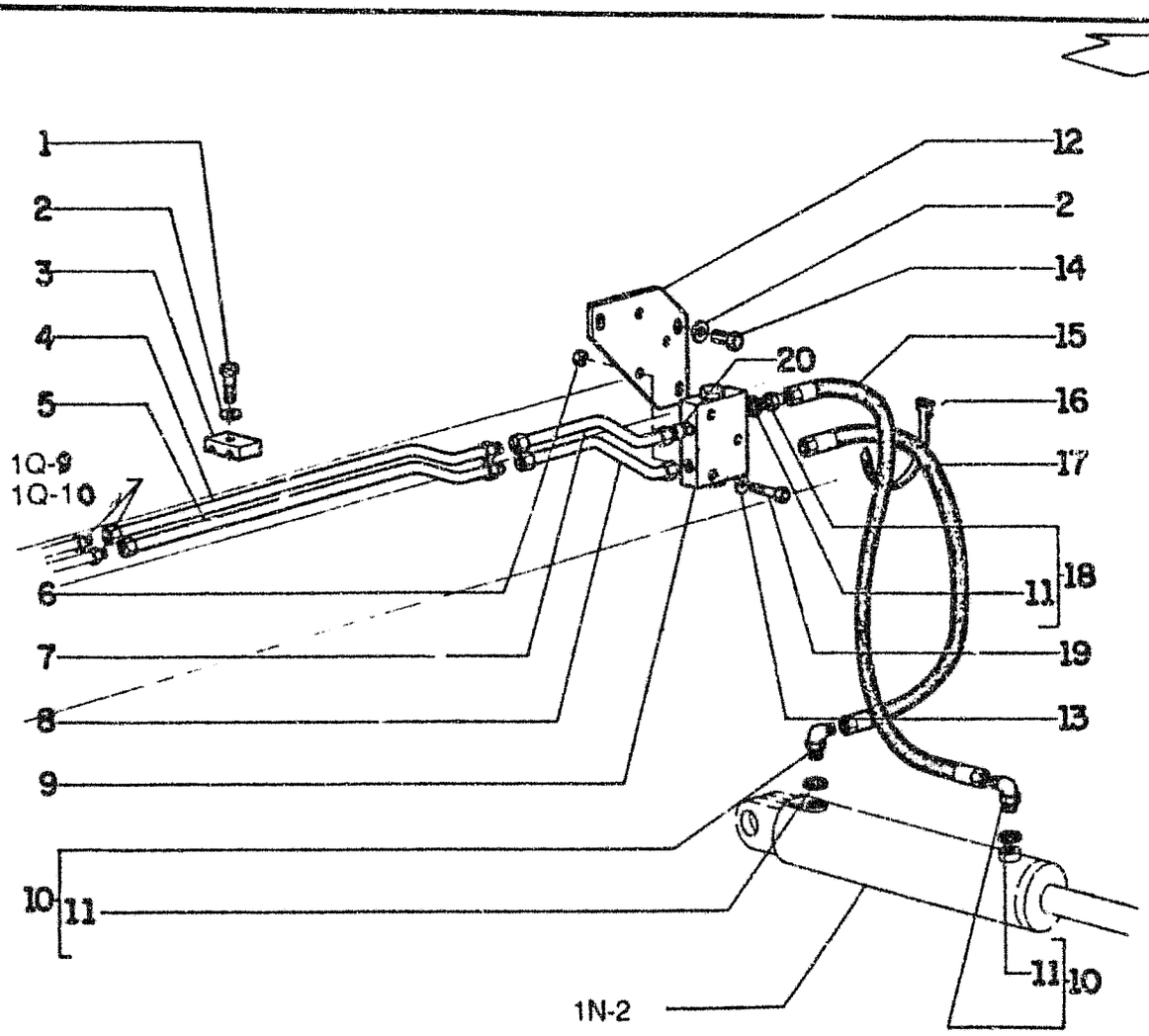

FIATALLIS FG 70R 75R E3.02 **QUADRO** 9 **PAG.** 1

ITEM	PEÇA Nº	QTDE	COD.	DESCRIPTION	DESCRIÇÃO
1	70921076	1	040V	SCREW	PARAFUSO
2	70677006	7	131R	WASHER	ARRUELA
3	70623355	1	031F	CLAMP	ABRAÇADEIRA
4	73126553	1	193T	TUBE	TUBO
5	73126555	1	193T	TUBE	TUBO
6	70911024	3	010D	NUT	PORCA
7	73126554	1	193T	TUBE	TUBO
8	73126556	1	193T	TUBE	TUBO
9	73148118	1	010V	VALVE	VÁLVULA
10	70921402	2	085G	ELBOW	COTOVELO
11	70921349	6	158G	O'RING	O'RING
12	73126564	1	105P	PLATE	CHAPA
13	70938190	6	131R	WASHER	ARRUELA
14	70927400	3	040V	SCREW	PARAFUSO
15	73126557	1	192T	HOSE ASSY	MANGUEIRA
16	70196765	2	031F	CLAMP	ABRAÇADEIRA
17	73126558	1	192T	HOSE ASSY	MANGUEIRA
18	70921409	4	075B	CONNECTOR	CONECTOR
19	70930790	3	040V	SCREW	PARAFUSO
20	73127626	2	010V	VALVE	VÁLVULA

FRONT WHEEL LEAN PIPING
SISTEMA HIDRAULICO DE INCLINAÇAO DAS RODAS

E3.02 | 9

DESCRIPTION	SBGRP	TAV	GRID
1 - 2 SPEED CLUTCH FG75	B201/1	15	1L-9
3 - 4 SPEED & REVERSE CLUTCH FG75	B201/1	14	1L-8
5 - 6 SPEED & HIGH FWD CLUTCH FG75	B201/1	16	1L-10
ADAPTER, TRANS HOUSING FG75	B201/1	1	1I-11
AIR CLEANER	A222	1	1F-7
AIR FILTER	A223	2	1F-8
AIR PRE-CLEANER	A222	1	1F-7
ALTERNATOR	F200	1	2E-2
BELT	F200	1	2E-2
COMPONENTS	F603	1	2F-10
ARTICULATION CYLINDER	D101	7	1P-2
CYLINDER	E332	8	2D-13
JOINT (BOTTOM)	D101	5	1O-16
JOINT (TOP)	D101	6	1O-17
SWITCH	F401	19	2F-7
VALVE	E331	2	2C-14
BACK UP ALARM FG70	F401	8	2E-8
BACK UP ALARM FG75	F401/1	8	2E-9
BATTERIES FG70	F401	11	2E-12
BATTERIES FG70 FG75	F401	7	2E-6
BATTERIES FG75	F401	14	2E-16
CABLES FG70	F401	11	2E-12
CABLES FG70 FG75	F401	7	2E-6
CABLES FG75	F401	14	2E-16
BATTERY BOX	L130	1	2G-17
BELT, ALTERNATOR	F200	1	2E-2
BELTS, FAN	A409	1	1G-17
BLADE LIFT VALVE	E331	5	2C-17
BRAKE CALIPER	C118	1	1O-6
DISC	D316	1	1P-14
FLUID HIGH PRESSURE LINES LT.	C101	4	1N-16
FLUID HIGH PRESSURE LINES RT.	C101	3	1N-15
FLUID RESERVOIR	C101	2	1N-14
FLUID RESERVOIR COMPONENTS	C108	1	1O-3
MASTER CYINDER	C108	2	1O-4
MASTER CYLINDER LINES	C101	5	1N-17
PEDAL	C101	1	1N-13
POWER BOOSTER	C108	3	1O-5
PUMP COMPONENTS	D213	1	1P-13
CAB	L103	1	2F-15
DOOR	L104	2	2G-2
FAN ASSEMBLY	L104	9	2G-10
FANS	L104	8	2G-9
FLOOR MAT	L104	1	2F-16
HEATER FITTINGS	L104	11	2G-12
HEATER	L104	10	2G-11
LIGHTING	L104	5	2G-6
ROOF LINER	L104	4	2G-5
CAB SEALS	L104	3	2G-4
WIRING	L104	7	2G-8
CABLES ELECTRICAL FG70	F401	10	2E-11
CABLES ELECTRICAL FG75	F401	15	2F-2
CANOPY	L104/1	1	2G-13
CANOPY LINER	L104/1	2	2G-14
CIRCLE	E310	2	2B-15
SHIFT CYLINDER	E332	5	2D-11
SHIFT VALVE	E331	3	2C-15
TURN GEAR BOX COMPONENTS	E310	4	2B-16
TURN GEAR BOX	E310	2	2B-15
TURN MOTOR COMPONENTS	E310	5	2C-2
TURN MOTOR	E310	2	2B-15
CLUTCH , 3 - 4 SPEED & REVERSE FG75	B201/1	14	1L-8
HIGH SPEED FG70	B201	9	1H-17
LOW SPEED FG70	B201	8	1H-16
REVERSE & 3 - 4 SPEED FG75	B201/1	14	1L-8
SECOND SPEED FG70	B201	7	1H-15
THIRD SPEED FG70	B201	6	1H-14
5 - 6 SPEED & HIGH FWD FG75	B201/1	16	1L-10
FORWARDFG70	B201	7	1H-15
HIGH FWD & 5 - 6 SPEED FG75	B201/1	16	1L-10
LOW FORWARD FG75	B201/1	12	1L-6
REVERSE FG70	B201	6	1H-14
CONTROL VALVE TRANSMISSION FG70	B201	18	1I-10
CONVERTER FG70	B201	3	1H-11
COMPONENTS FG75	B201/1	7	1I-17
FLEX PLATES FG75	B201/1	6	1I-16
GEAR FG70	B201	4	1H-12
GEAR FG75	B201/1	9	1L-3
GEAR FG75	B201/1	10	1L-4
GEAR FG75	B201/1	11	1L-5
HOUSING FG70	B201	2	1H-10
HOUSING FG75	B201/1	3	1I-13
SHAFTS FG75	B201/1	5	1I-15
COOLANT PUMP	A403	1	1G-16
FILTER	A402	1	1G-15
CYLINDER ARTICULATION	E332	8	2D-13
CIRCLE SHIFT	E332	5	2D-11
MOLDBOARD LIFT	E332	6	2D-12
MOLDBOARD PITCH	E332	2	2D-8
MOLDBOARD SIDE SHIFT	E332	3	2D-9
RIPPER	E332/1	2	2D-15
SADDLE LOCK PIN	E332	4	2D-10
SCARIFIER	E332/1	1	2D-14
STEERING	D212	1	1P-12
WHEEL LEAN	E332	1	2D-7
ARTICULATION	D101	7	1P-2
DECALS (ARTICULATED)	L125	2	2G-16
DECALS (RIGID)	L125	1	2G-15
DIFFERENTIAL ASSEMBLY	B403	4	1N-10
DIFFERENTIAL COMPONENTS	B403	5	1N-11
DRIVE SHAFT	B301	1	1M-15
DRIVE SHAFT COMPONENTS	B316	1	1M-16
ELECTRICAL CABLE SWITCH PANEL	F401	2	2E-4
CABLES BATT. FG70 FG75	F401	7	2E-6
CABLES BATTERIES FG70	F401	11	2E-12
CABLES BATTERIES FG75	F401	14	2E-16
CABLES FG70	F401	10	2E-11
CABLES FG75	F401	15	2F-2
FUSES	F401	3	2E-5
SWITCH PANEL	F401	1	2E-3
SWITCH PANEL	F401	1	2E-3
ELECTRONIC DATA MONITOR	F401	12	2E-14
ELEMENT IMPLEMENT OIL	E328	1	2C-10
TRANS. OIL FG70	B201	11	1I-3
TRANS. OIL FG75	B217	1	1M-14
AIR	A223	2	1F-8
ENGINE OIL	A303	1	1G-12
FUEL	A226	1	1F-12
END CAP VALVE	E331	7	2D-3
END CAP VALVE	E331	9	2D-4
ENGINE	A000	1	1E-2
BLOCK	A101	1	1E-5
BLOCK PLUGS	A101	2	1E-6
CAMSHAFT	A107	1	1E-16
CAMSHAFT DRIVE	A106	1	1E-15
CONNECTING RODS	A105	1	1E-14
COOLANT THERMOSTAT	A402	1	1G-15
CRANKSHAFT	A103	1	1E-11
CYLINDER SLEEVES	A105	1	1E-14
DAMPER	A104	1	1E-13
EXHAUST MANIFOLD	A254	1	1G-7
EXHAUST VALVE	A107	1	1E-16
FLYWHEEL	A103	1	1E-11
FLYWHEEL HOUSING	A102	2	1E-10
FRONT COVER	A102	1	1E-9
FUEL PUMP DRIVE	A106	1	1E-15
HEAD	A101	3	1E-7
INTAKE VALVE	A107	1	1E-16
LIFTING BRACKET	A101	4	1E-8
MAIN BEARING	A103	2	1E-12
MAIN BEARING CAPS	A101	1	1E-5
MOUNTS FG70	A002	1	1E-3
MOUNTS FG75	A002/1	1	1E-4
OIL DIPSTICK	A301	2	1G-10
OIL FILL PLUG	A301	2	1G-10
OIL FILTER	A303	1	1G-12
OIL HEAT EXCHANGER	A303	1	1G-12
OIL PAN	A102	1	1E-9
OIL PUMP	A302	1	1G-11

FIATALLIS

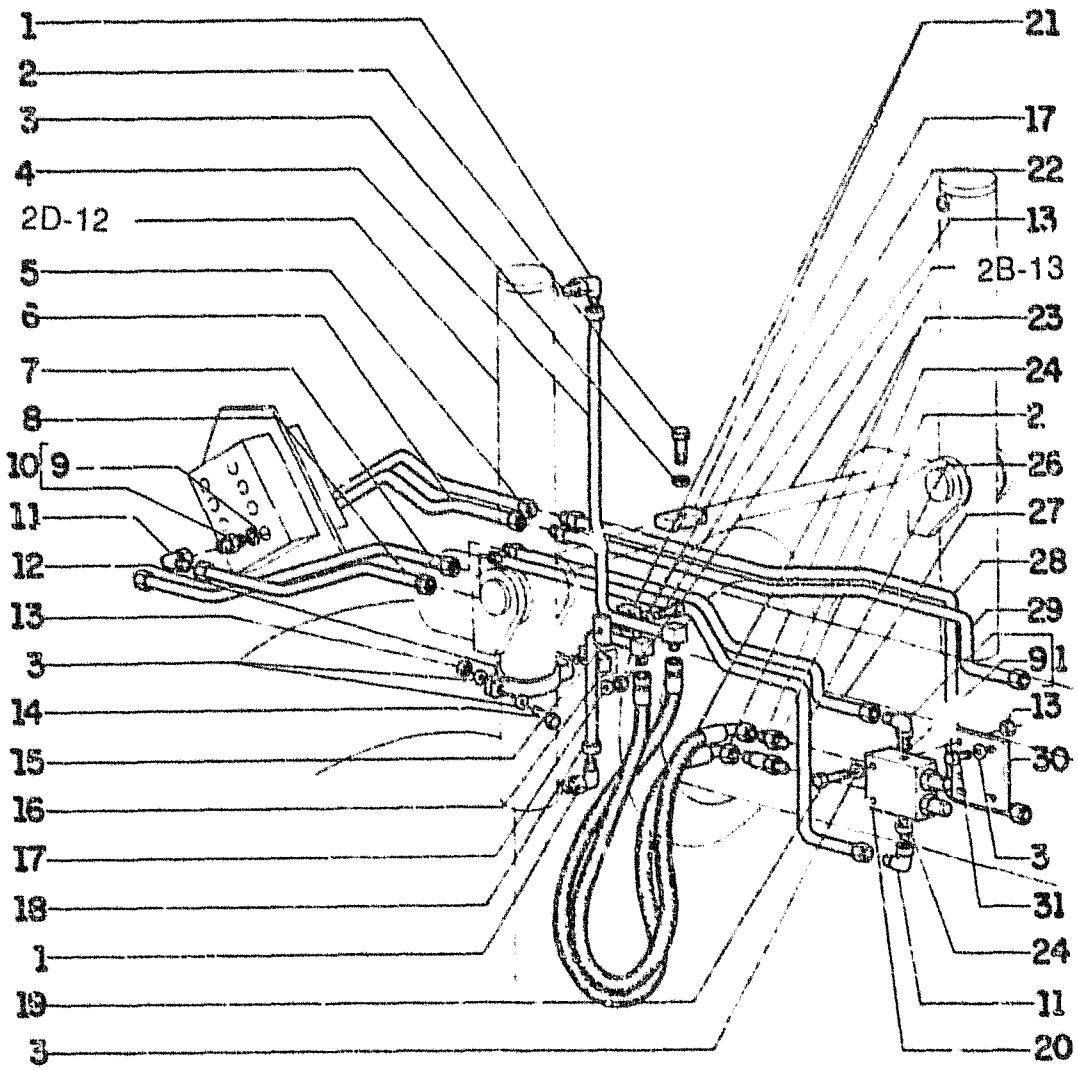

FIATALLIS FG 70R 75R E3.02 **QUADRO** 12 **PAG.** 1

ITEM	PEÇA Nº	QTDE	COD.	DESCRIPTION	DESCRIÇÃO
1	70921402	6	085G	ELBOW	COTOVELO
2	70921076	2	040V	SCREW	PARAFUSO
3	70677006	17	131R	WASHER	ARRUELA
4	73127106	2	193T	TUBE	TUBO
5	75236547	1	193T	TUBE	TUBO
6	75236533	1	193T	TUBE	TUBO
7	75236462	1	193T	TUBE	TUBO
8	75236464	1	193T	TUBE	TUBO
9	70921349	12	158G	O'RING	O'RING
10	70921409	4	075B	CONNECTOR	CONECTOR
11	70921279	6	085G	ELBOW	COTOVELO
12	73127110	2	031F	CLAMP	ABRAÇADEIRA
13	70911026	8	010D	NUT	PORCA
14	70922287	2	040V	SCREW	PARAFUSO
15	70621602	2	074B	BLOCK	BLOCO
16	73127629	2	031F	CLAMP	ABRAÇADEIRA
17	70910287	4	170R	LOCKWASHER	ARRUELA PRESS
18	73127107	2	193T	TUBE	TUBO
19	70920996	6	040V	SCREW	PARAFUSO
20	73130105	2	1108	LOCK VALVE	VALVULA DE BLCQ
21	70623355	4	031F	CLAMP	ABRAÇADEIRA
22	70928243	2	040V	SCREW	PARAFUSO
23	73127637	4	192T	HOSE ASSY	MANGUEIRA
24	70921409	4	075B	CONNECTOR	CONECTOR
25	70927571	2	075B	CONNECTOR	CONECTOR
26	73135219	1	193T	TUBE	TUBO
27	73135221	1	193T	TUBE	TUBO
28	73135223	1	193T	TUBE	TUBO
29	73135225	1	193T	TUBE	TUBO
30	73127641	2	105P	PLATE	CHAPA
31	70922300	6	040V	SCREW	PARAFUSO

MOLDBOARD LIFT PIPING SYSTEM
SISTEMA HIDR. DE LEVANTAMENTO DO GIRA CIRCULO

E3.02 | 12

FIATALLIS

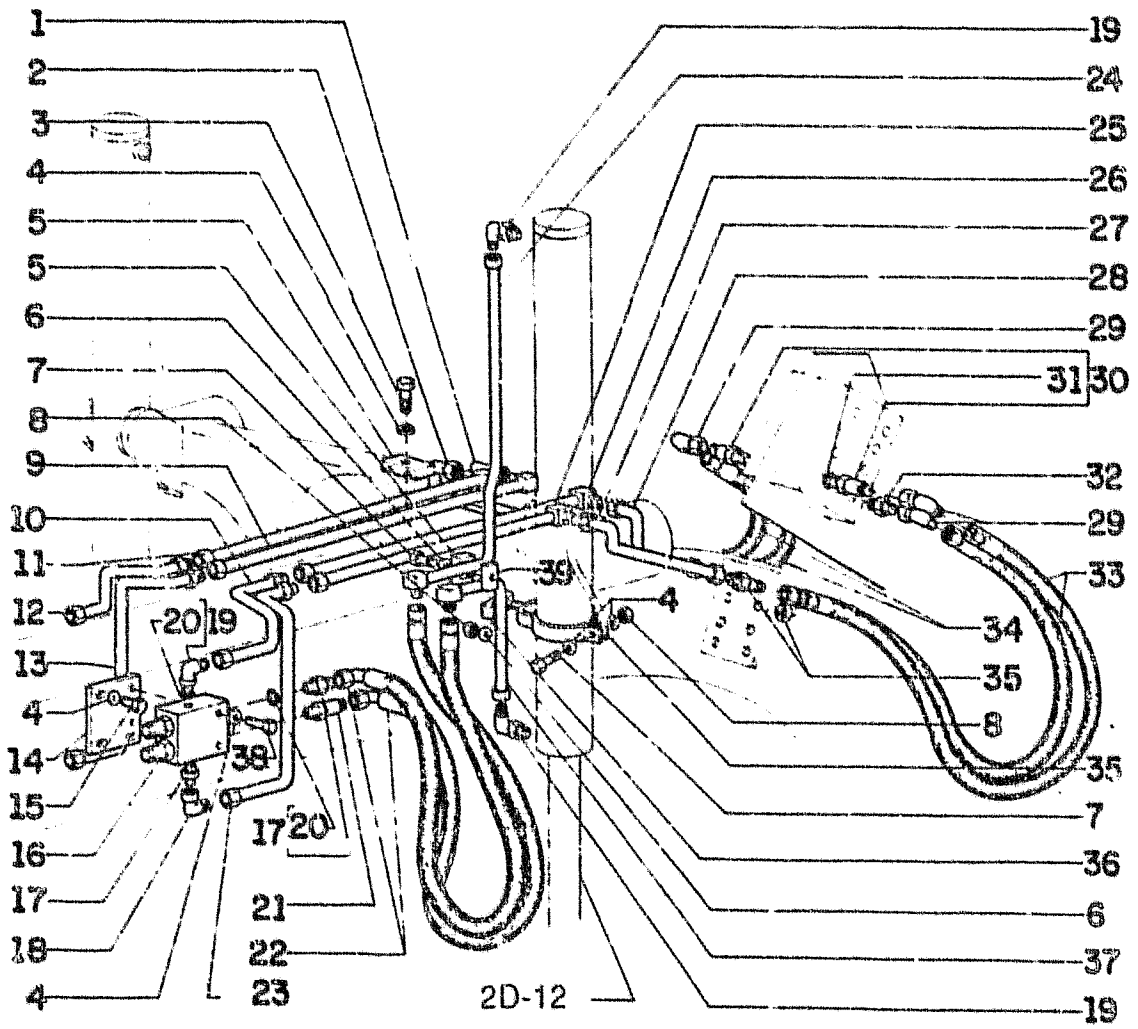

FIATALLIS FG 70A 75A E3.02 **QUADRO** 13 **PAG.** 1

ITEM	PEÇA Nº	QTDE	COD.	DESCRIPTION	DESCRIÇÃO
1	75237188	1	193T	TUBE	TUBO
2	75237190	1	193T	TUBE	TUBO
3	70920995	1	040V	SCREW	PARAFUSO
4	70977006	15	131R	WASHER	ARRUELA
5	70623355	3	031F	CLAMP	ABRAÇADEIRA
6	70910287	4	170R	LOCKWASHER	ARRUELA PRESS
7	70928243	2	040V	SCREW	PARAFUSO
8	70911026	8	010D	NUT	PORCA
9	75237243	1	193T	TUBE	TUBO
10	75214747	1	193T	TUBE	TUBO
11	75237245	1	193T	TUBE	TUBO
12	75214731	1	193T	TUBE	TUBO
13	75237515	1	193T	TUBE	TUBO
14	73127641	2	105P	PLATE	CHAPA
15	70922300	6	040V	SCREW	PARAFUSO
16	73130105	2	110S	LOCK VALVE	VALVULA DE BLOQ
17	70921409	4	075B	CONNECTOR	CONECTOR
18	70921279	2	085G	ELBOW	COTOVELO
19	70921402	5	085G	ELBOW	COTOVELO
20	70921349	8	158G	O'RING	O'RING
21	70927571	2	075B	CONNECTOR	CONECTOR
22	73127637	4	192T	HOSE ASSY	MANGUEIRA
23	75237371	1	193T	TUBE	TUBO
24	73127106	2	193T	TUBE	TUBO
25	75237326	1	193T	TUBE	TUBO
26	75237322	1	193T	TUBE	TUBO
27	75237252	1	193T	TUBE	TUBO
28	75237254	1	193T	TUBE	TUBO
29	70921279	4	085G	ELBOW	COTOVELO
30	75237101	2	075B	CONNECTOR	CONECTOR
31	70921205	4	158G	O'RING	O'RING
32	75222859	2	075B	CONNECTOR	CONECTOR
33	75223103	2	192T	HOSE ASSY	MANGUEIRA
34	75214261	2	192T	HOSE ASSY	MANGUEIRA
35	70927261	4	020R	FITTING	CONEXÃO

MOLDBOARD LIFT PIPING SYSTEM
SISTEMA HIDR. DE LEVANTAMENTO DO GIRA CIRCULO

E3.02 | 13

FIATALLIS

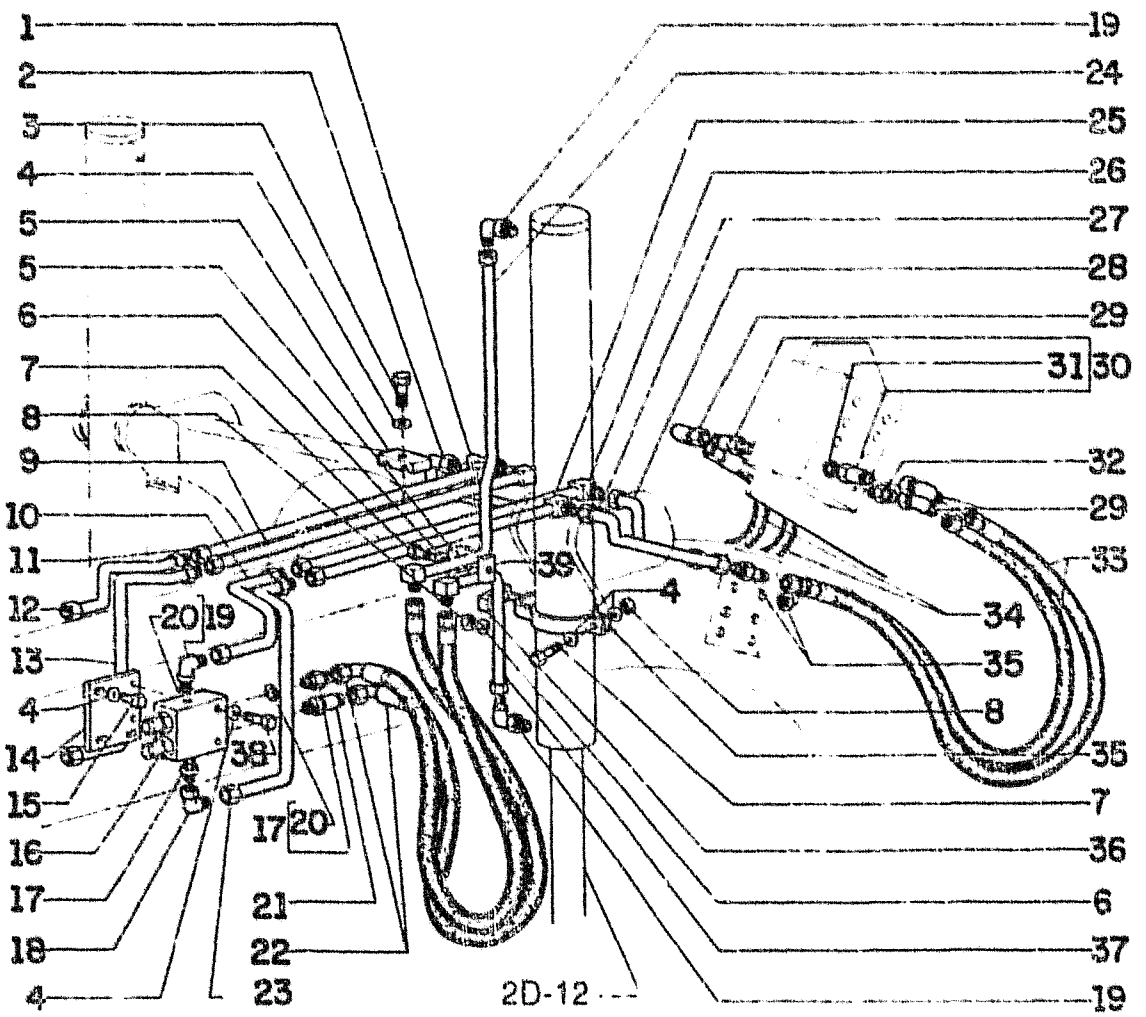

FIATALLIS FG 70A 75A E3.02 **QUADRO** 13 **PAG.** 2

ITEM	PEÇA Nº	QTDE	COD.	DESCRIPTION	DESCRIÇÃO
36	73127629	2	031F	CLAMP	ABRAÇADEIRA
37	73127107	2	193T	TUBE	TUBO
38	70920996	4	040V	SCREW	PARAFUSO
39	70621602	2	074B	BLOCK	BLOCO

HYDRAULIC SYSTEM MOLDBOARD
SISTEMA HIDRUALICO DESL.LAT.INCL.DA LAMINA

E3.02 | 13

FIATALLIS

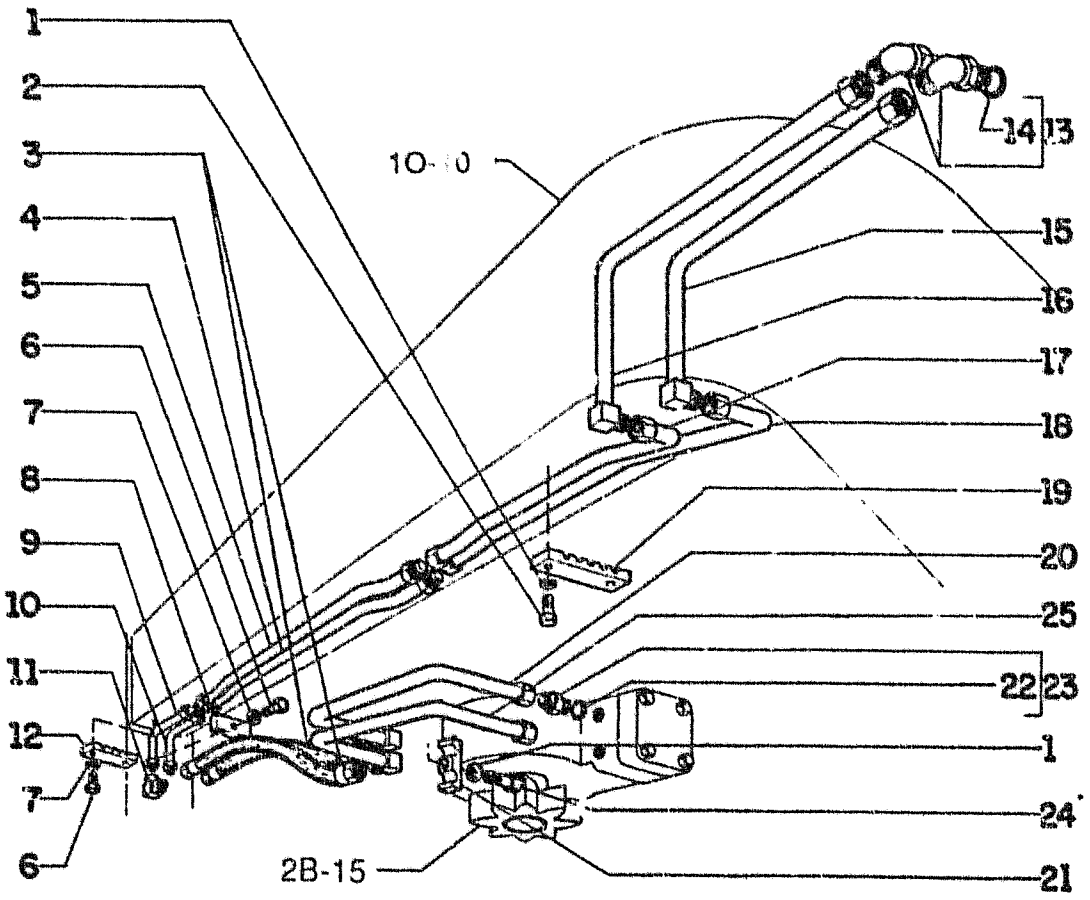

FIATALLIS FG 70R 75R E3.02 **QUADRO** 14 **PAG.** 1

ITEM	PEÇA Nº	QTDE	COD.	DESCRIPTION	DESCRIÇÃO
1	70677006	6	131R	WASHER	ARRUELA
2	70922287	6	040V	SCREW	PARAFUSO
3	73121561	2	192T	HOSE ASSY	MANGUEIRA
4	73126567	1	193T	TUBE	TUBO
5	73126565	1	193T	TUBE	TUBO
6	70924864	3	040V	SCREW	PARAFUSO
7	70677008	3	131R	WASHER	ARRUELA
8	73127638	1	031F	CLAMP	ABRAÇADEIRA
9	73126566	1	193T	TUBE	TUBO
10	73126568	1	193T	TUBE	TUBO
11	73121563	2	235C	CONNECTION	CONEXAO
12	73126571	1	031F	CLAMP	ABRAÇADEIRA
13	70921203	2	020R	FITTING	CONEXÃO
14	70921206	2	158G	O'RING	O'RING
15	75236515	1	193T	TUBE	TUBO
16	75236501	1	193T	TUBE	TUBO
17	73125669	1	193T	TUBE	TUBO
18	73125667	1	193T	TUBE	TUBO
19	73125864	3	031F	CLAMP	ABRAÇADEIRA
20	73154075	2	193T	TUBE	TUBO
21	73127628	2	031F	CLAMP	ABRAÇADEIRA
22	70921205	2	158G	O'RING	O'RING
23	70922981	2	020R	FITTING	CONEXÃO
24	70927225	2	040V	SCREW	PARAFUSO
25	73154077	1	193T	TUBE	TUBO

CIRCLE TURN HYDRAULIC
SISTEMA HIDRAULICO DO GIRA CIRCULO

E3.02 | 14

FIATALLIS

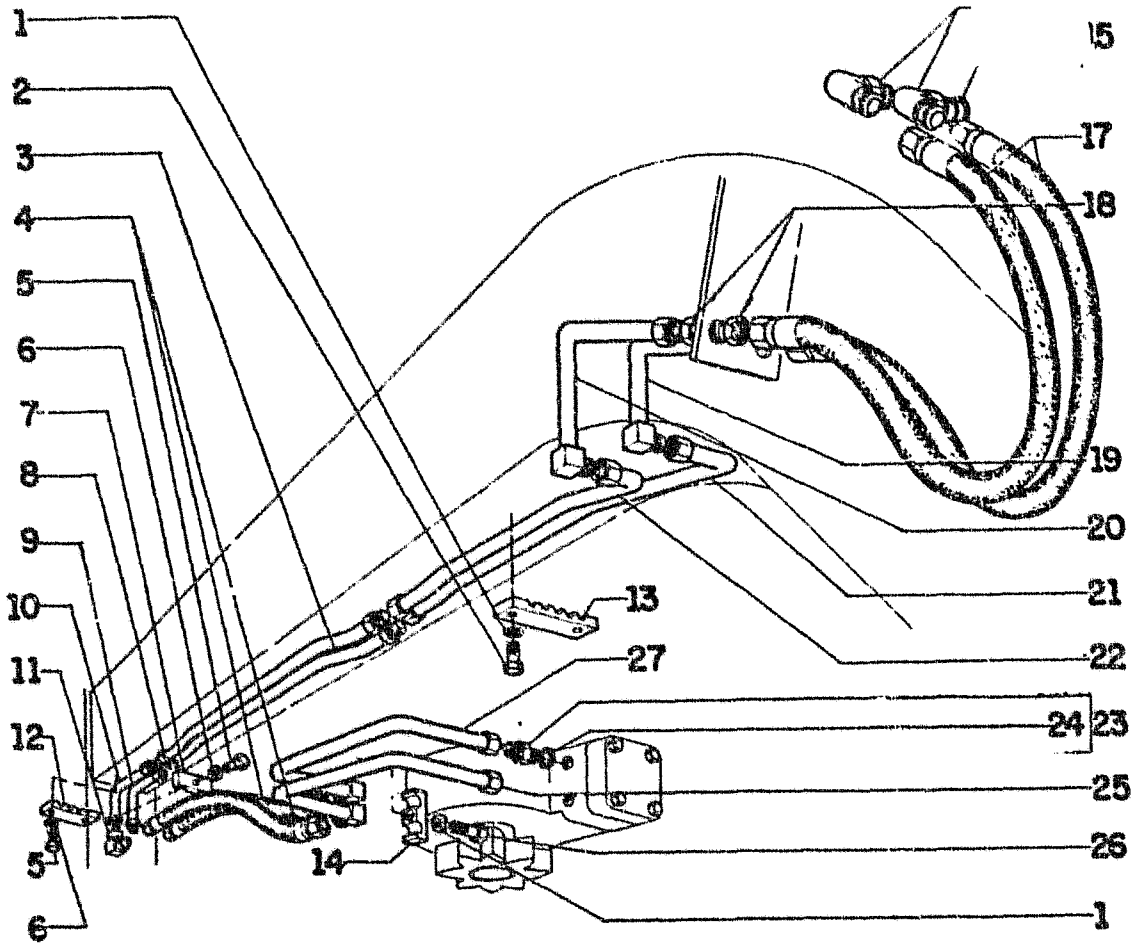

FIATALLIS FG 70A 75A E3.02 **QUADRO** 15 **PAG.** 1

ITEM	PEÇA Nº	QTDE	COD.	DESCRIPTION	DESCRIÇÃO
1	70677006	4	131R	WASHER	ARRUELA
2	70922287	4	040V	SCREW	PARAFUSO
3	73126567	1	193T	TUBE	TUBO
4	73121561	2	192T	HOSE ASSY	MANGUEIRA
5	70924864	3	040V	SCREW	PARAFUSO
6	70677008	3	131R	WASHER	ARRUELA
7	73127638	1	031F	CLAMP	ABRAÇADEIRA
8	73126565	1	193T	TUBE	TUBO
9	73126568	1	193T	TUBE	TUBO
10	73126566	1	193T	TUBE	TUBO
11	73121563	2	235C	CONNECTION	CONEXAO
12	73126571	1	031F	CLAMP	ABRAÇADEIRA
13	73125864	3	031F	CLAMP	ABRAÇADEIRA
14	73127628	2	031F	CLAMP	ABRAÇADEIRA
15	70921203	1	020R	FITTING	CONEXÃO
16	70921206	2	158G	O'RING	O'RING
17	75223102	2	192T	HOSE ASSY	MANGUEIRA
18	70927063	2	020R	FITTING	CONEXÃO
19	75237263	1	193T	TUBE	TUBO
20	75237230	1	193T	TUBE	TUBO
21	75237275	1	193T	TUBE	TUBO
22	75237284	1	193T	TUBE	TUBO
23	70922981	2	020R	FITTING	CONEXÃO
24	70921205	2	158G	O'RING	O'RING
25	73154077	2	193T	TUBE	TUBO
26	70927225	2	040V	SCREW	PARAFUSO
27	73154075	1	193T	TUBE	TUBO

CIRCLE TURN HYDRAULIC
SISTEMA HIDRAULICO DO GIRA CIRCULO

E3.02 | 15

FIATALLIS

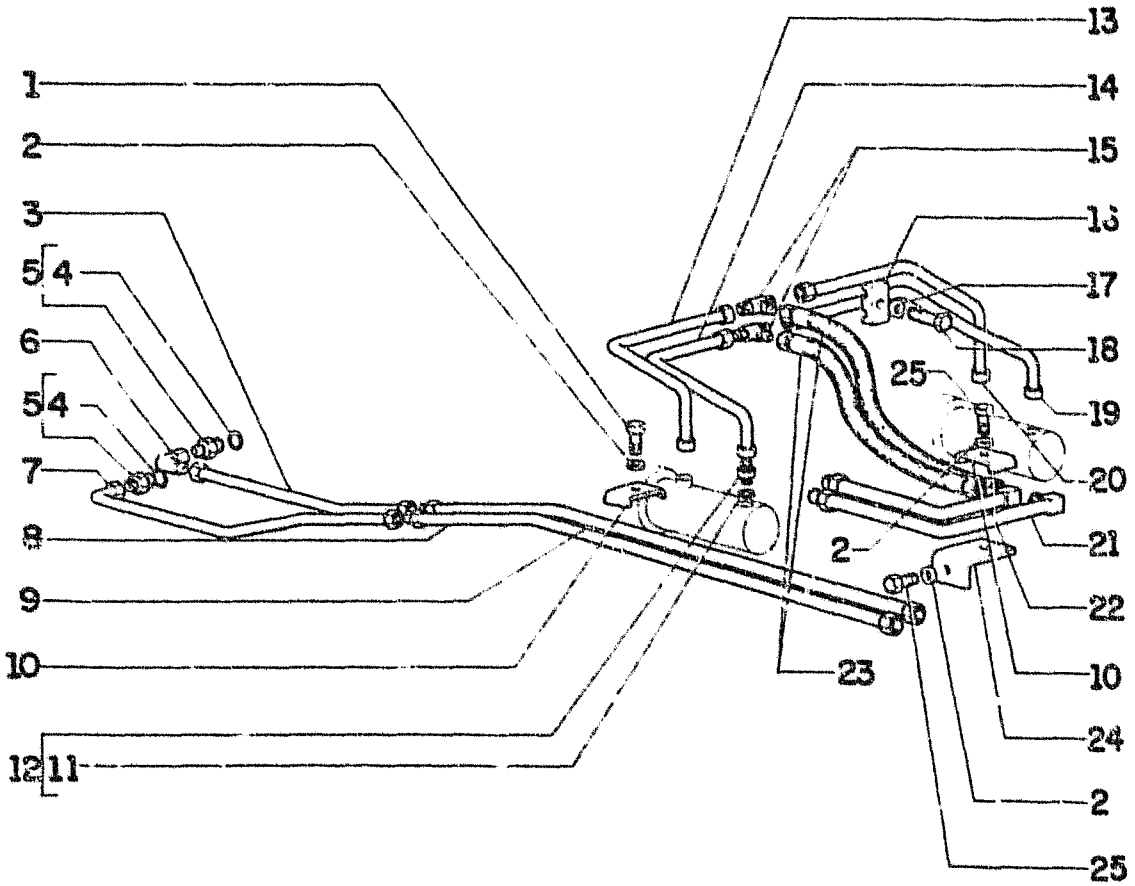

FIATALLIS FG 70R 75R E3.02 **QUADRO** 16 **PAG.** 1

ITEM	PEÇA Nº	QTDE	COD.	DESCRIPTION	DESCRIÇÃO
1	70922287	2	040V	SCREW	PARAFUSO
2	70677006	4	131R	WASHER	ARRUELA
3	75236460	1	193T	TUBE	TUBO
4	70921349	2	158G	O'RING	O'RING
5	70922457	2	075B	CONNECTOR	CONECTOR
6	70921013	1	085G	ELBOW	COTOVELO
7	75236458	1	193T	TUBE	TUBO
8	75236641	1	193T	TUBE	TUBO
9	75236631	1	193T	TUBE	TUBO
10	73126130	3	031F	CLAMP	ABRAÇADEIRA
11	70921349	4	158G	O'RING	O'RING
12	70922457	4	075B	CONNECTOR	CONECTOR
13	73127111	1	193T	TUBE	TUBO
14	73127112	1	193T	TUBE	TUBO
15	70919087	2	020R	FITTING	CONEXÃO
16	70695523	2	031F	CLAMP	ABRAÇADEIRA
17	70910287	2	170R	LOCKWASHER	ARRUELA PRESS
18	70927361	2	040V	SCREW	PARAFUSO
19	73127113	1	193T	TUBE	TUBO
20	73127114	1	193T	TUBE	TUBO
21	73126129	1	193T	TUBE	TUBO
22	73126127	1	193T	TUBE	TUBO
23	70659547	2	192T	HOSE ASSY	MANGUEIRA
24	73125866	1	300S	SUPPORT	SUPORTE
25	70921076	2	040V	SCREW	PARAFUSO

SADDLE LOCK PIN CYLINDER AND PIPING
SISTEMA HIDRAULICO DE TRAVAMENTO DA SELA

E3.02 | 16

FIATALLIS

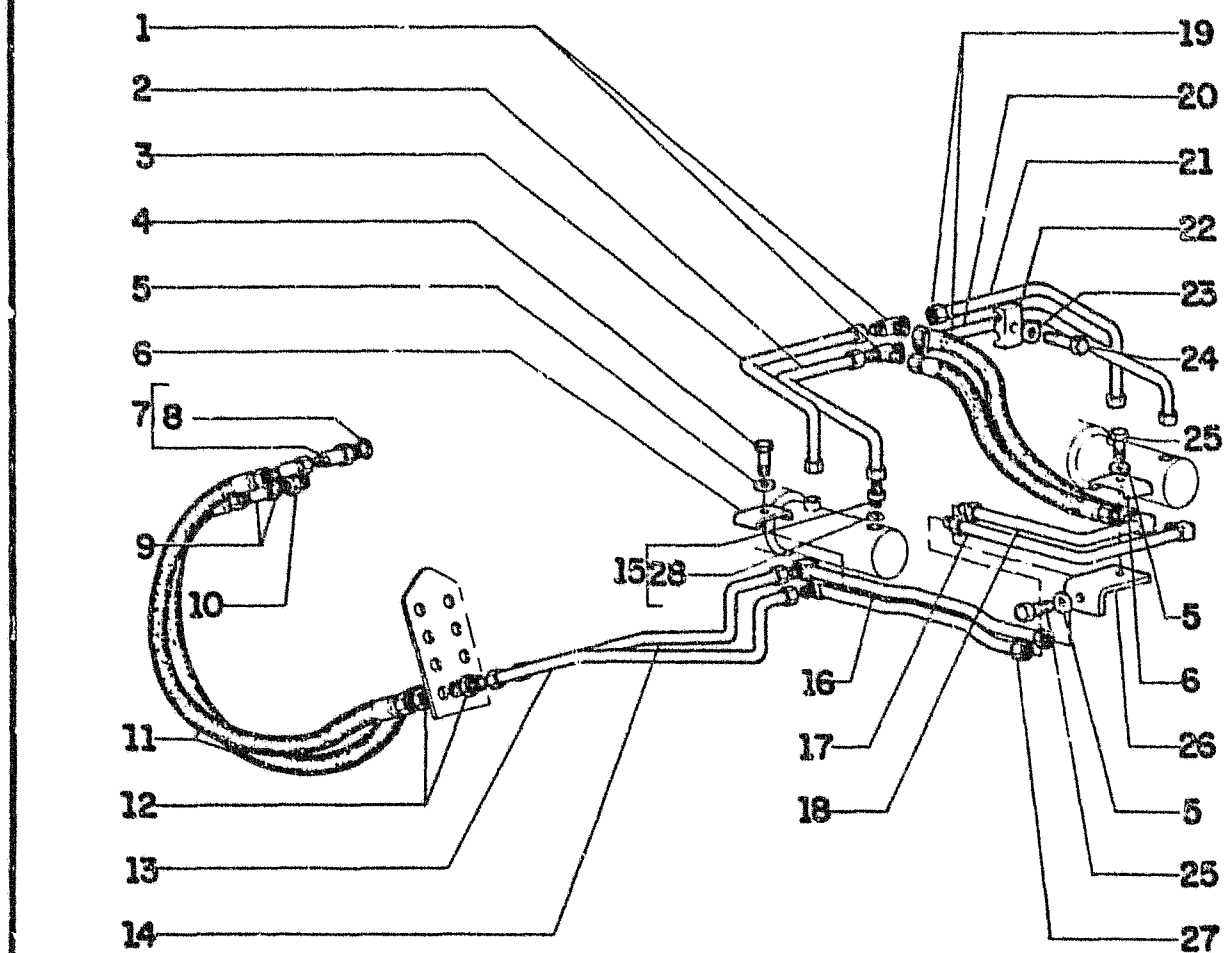

FIATALLIS FG 70R 70A 75R 75A E3.02 **QUADRO** 17 **PAG.** 1

ITEM	PEÇA Nº	QTDE	COD.	DESCRIPTION	DESCRIÇÃO
1	73127354	2	192T	HOSE ASSY	MANGUEIRA
1	70919087	2	020R	FITTING	CONEXÃO
2	73127112	1	193T	TUBE	TUBO
3	73127111	1	193T	TUBE	TUBO
4	70922287	1	040V	SCREW	PARAFUSO
5	70677006	2	131R	WASHER	ARRUELA
6	73126130	2	031F	CLAMP	ABRAÇADEIRA
7	75237102	1	075B	CONNECTOR	CONECTOR
8	70921349	2	158G	O'RING	O'RING
9	70921279	2	085G	ELBOW	COTOVELO
10	75222859	1	075B	CONNECTOR	CONECTOR
11	75214782	2	192T	HOSE ASSY	MANGUEIRA
12	70927261	2	020R	FITTING	CONEXÃO
13	75237237	1	193T	TUBE	TUBO
14	75237233	1	193T	TUBE	TUBO
15	70922457	4	075B	CONNECTOR	CONECTOR
16	75214740	1	193T	TUBE	TUBO
17	73126129	1	193T	TUBE	TUBO
18	73126127	1	193T	TUBE	TUBO
19	70659547	2	192T	HOSE ASSY	MANGUEIRA
20	73127113	1	193T	TUBE	TUBO
21	73127114	1	193T	TUBE	TUBO
22	70695523	2	031F	CLAMP	ABRAÇADEIRA
23	70910287	2	170R	LOCKWASHER	ARRUELA PRESS
24	70927361	2	040V	SCREW	PARAFUSO
25	70921076	2	040V	SCREW	PARAFUSO
26	73125866	1	300S	SUPPORT	SUPORTE
27	75214741	1	193T	TUBE	TUBO
28	70921349	4	158G	O'RING	O'RING

SADDLE LOCK PIN CYLINDER AND PIPING
SISTEMA HIDRAULICO DE TRAVAMENTO DA SELA

E3.02 | 17

FIATALLIS

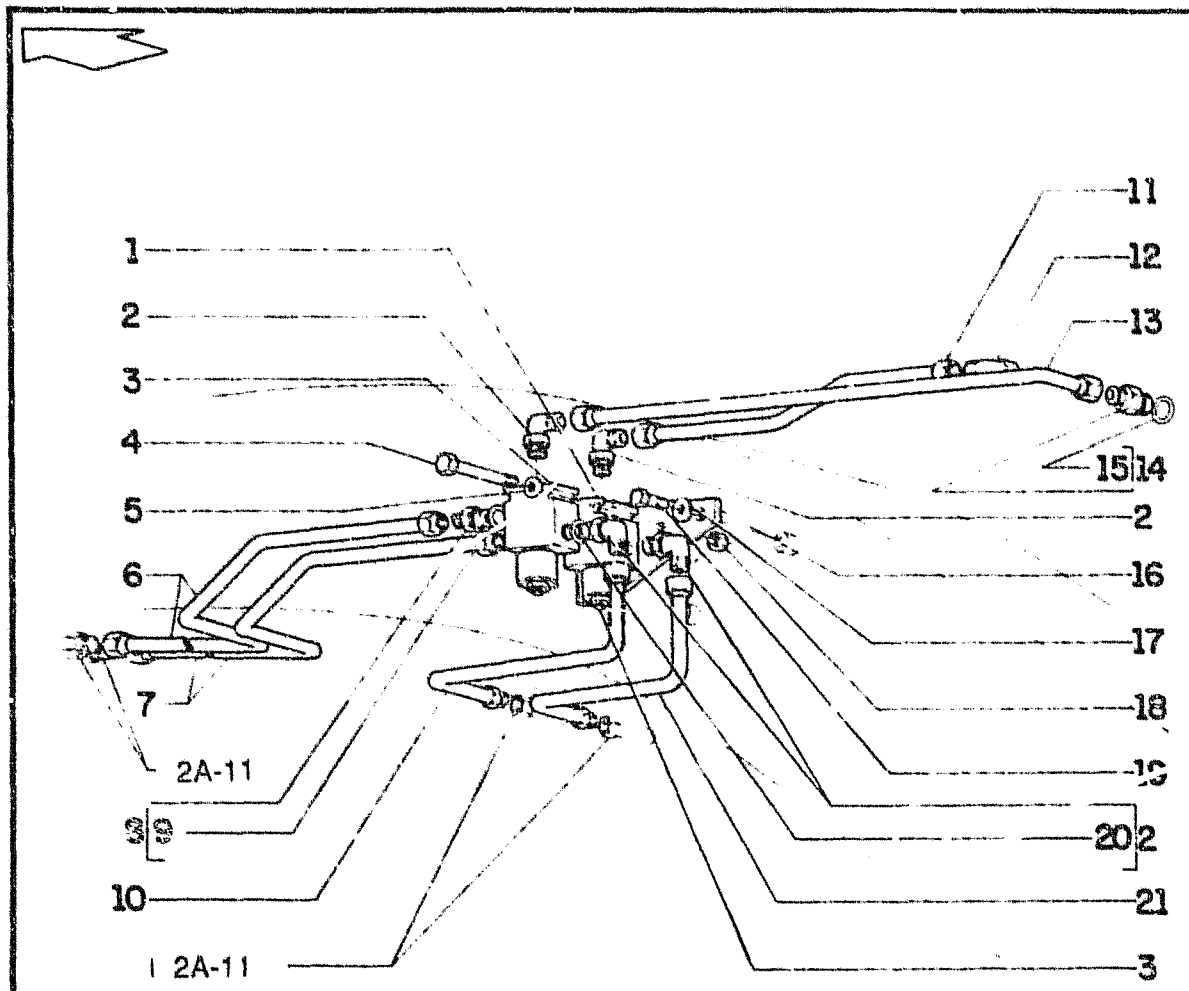

FIATALLIS FG 70R 75R E3.02 **QUADRO** 18 **PAG.** 1

ITEM	PEÇA Nº	QTDE	COD.	DESCRIPTION	DESCRIÇÃO
1	75236643	1	075D	SPACER	ESPAÇADOR
2	70930804	4	085G	ELBOW	COTOVELO
3	73154750	2	010V	SOLENOID VALVE (SHIFT/PITCH)	
4	70931206	2	040V	SCREW	PARAFUSO
5	70928190	2	131R	WASHER	ARRUELA
6	75236559	1	193T	TUBE	TUBO
7	75236569	1	193T	TUBE	TUBO
8	70924403	2	075B	CONNECTOR	CONECTOR
9	70921885	2	158G	O'RING	O'RING
10	75236520	1	193T	TUBE	TUBO
11	75236528	1	193T	TUBE	TUBO
12	70921279	1	085G	ELBOW	COTOVELO
13	75236525	1	193T	TUBE	TUBO
14	70921409	2	075B	CONNECTOR	CONECTOR
15	70921349	2	158G	O'RING	O'RING
16	73125908	1	105P	PLATE	CHAPA
17	70677006	3	131R	WASHER	ARRUELA
18	70911024	2	010D	NUT	PORCA
19	70922300	3	040V	SCREW	PARAFUSO
20	70921885	4	158G	O'RING	O'RING
21	75236522	1	193T	TUBE	TUBO

SIDE SHIFT AND PITCH CONTROL
SISTEMA HIDR. DESLOCAMENTO LATERAL DA LAMINA

E3.02 | 18

FIATALLIS

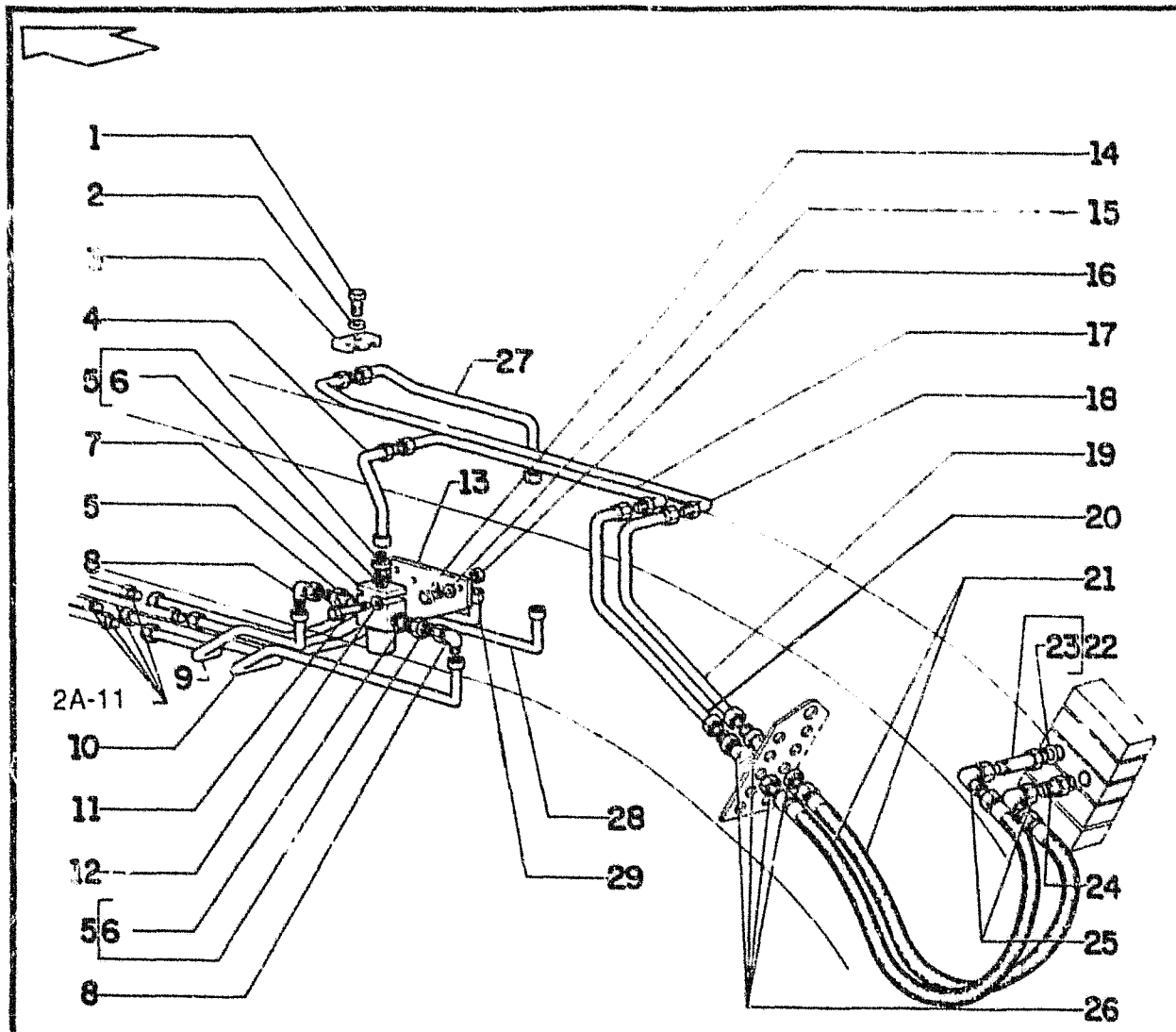

FIATALLIS FG 70A 75A E3.02 **QUADRO** 19 **PAG.** 1

ITEM	PEÇA Nº	QTDE	COD.	DESCRIPTION	DESCRIÇÃO
1	70921076	2	040V	SCREW	PARAFUSO
2	70677006	2	131R	WASHER	ARRUELA
3	70623355	4	031F	CLAMP	ABRAÇADEIRA
4	75237178	1	193T	TUBE	TUBO
5	70924403	6	075B	CONNECTOR	CONECTOR
6	70921205	6	158G	O'RING	O'RING
7	73154750	2	010V	VALVE	VÁLVULA
8	70921279	4	085G	ELBOW	COTOVELO
9	75237196	1	193T	TUBE	TUBO
10	75237198	1	193T	TUBE	TUBO
11	70930238	4	040V	SCREW	PARAFUSO
12	70928190	4	131R	WASHER	ARRUELA
13	73125808	2	105P	PLATE	CHAPA
14	70922300	6	040V	SCREW	PARAFUSO
15	70677006	6	131R	WASHER	ARRUELA
16	70920329	4	010D	NUT	PORCA
17	75214833	1	193T	TUBE	TUBO
18	75237513	1	193T	TUBE	TUBO
19	75237250	1	193T	TUBE	TUBO
20	75237248	1	193T	TUBE	TUBO
21	75223104	2	192T	HOSE ASSY	MANGUEIRA
22	75237101	1	075B	CONNECTOR	CONECTOR
23	70921205	2	158G	O'RING	O'RING
24	75222859	1	075B	CONNECTOR	CONECTOR
25	70921279	2	085G	ELBOW	COTOVELO
26	70927261	2	020R	FITTING	CONEXÃO
27	75237176	1	193T	TUBE	TUBO
28	75237205	1	193T	TUBE	TUBO
29	75237203	1	193T	TUBE	TUBO

SIDE SHIFT AND PITCH CONTROL
SISTEMA HIDR. DESLOCAMENTO LATERAL DA LAMINA

E3.02 | 19

FIATALLIS

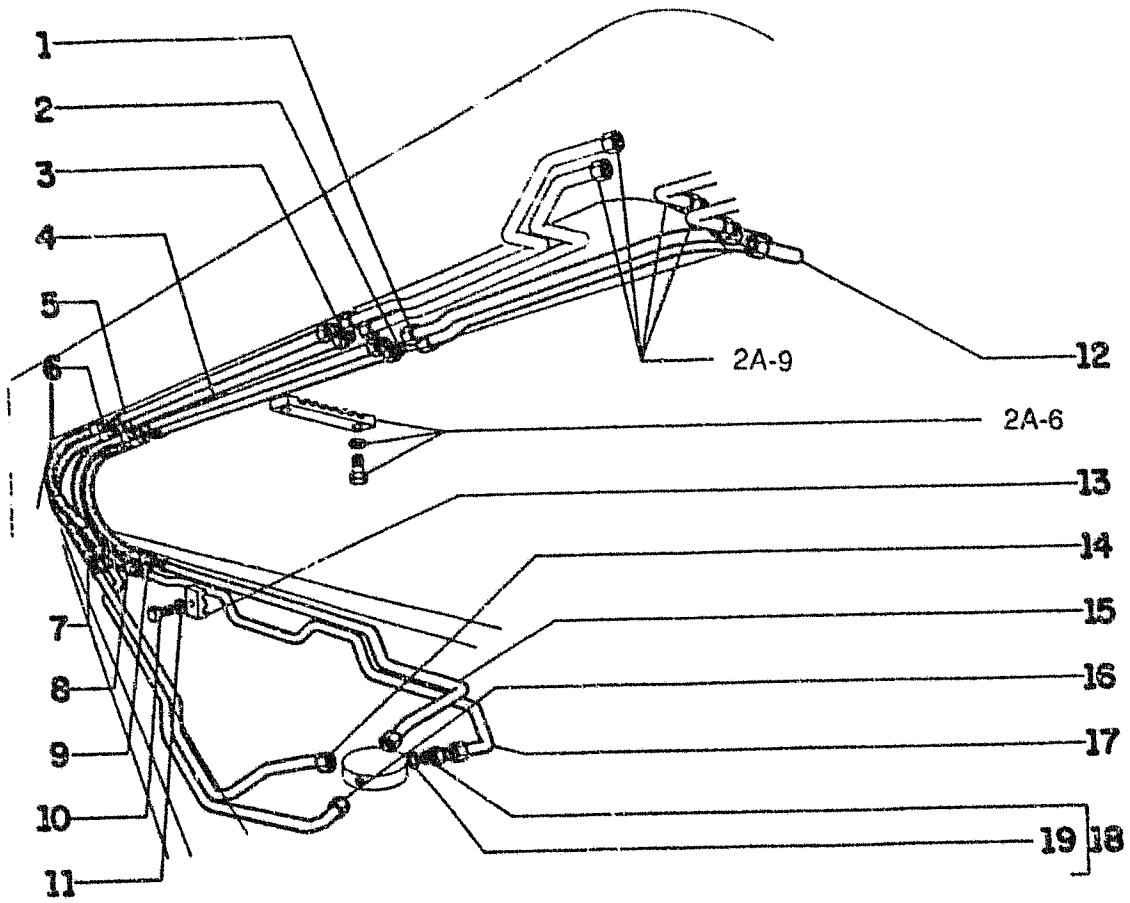

FIATALLIS FG 70R 70A 75R 75A E3.02 **QUADRO** 20 **PAG.** 1

ITEM	PEÇA Nº	QTDE	COD.	DESCRIPTION	DESCRIÇÃO
1	73125677	1	193T	TUBE	TUBO
2	73126551	1	193T	TUBE (1)	TUBO
2	75214300	1	193T	TUBE (2)	TUBO
3	73126549	1	193T	TUBE (1)	TUBO
3	75214294	1	193T	TUBE (2)	TUBO
4	73126550	1	193T	TUBE (1)	TUBO
4	75214298	1	193T	TUBE (2)	TUBO
5	73126548	1	193T	TUBE (1)	TUBO
5	75214296	1	193T	TUBE (2)	TUBO
6	73126545	1	192T	HOSE ASSY	MANGUEIRA
7	73126546	1	192T	HOSE ASSY	MANGUEIRA
8	73126544	1	192T	HOSE ASSY	MANGUEIRA
9	73126543	1	192T	HOSE ASSY	MANGUEIRA
10	70921076	8	040V	SCREW	PARAFUSO
11	70677006	8	131R	WASHER	ARRUELA
12	73125675	1	193T	TUBE	TUBO
13	70695523	8	031F	CLAMP	ABRAÇADEIRA
14	73129639	1	193T	TUBE	TUBO
15	73129640	1	193T	TUBE	TUBO
16	73129638	1	193T	TUBE	TUFO
17	73129641	1	193T	TUBE	TUBO
18	70923717	4	075B	CONNECTOR	CONECTOR
19	70921205	4	158G	O'RING	O'RING

(1) FOR FG70R/70A - PARA FG 70R/70A

(2) FOR FG75R/75A - PARA FG 75R/75A

SIDE SHIFT AND PITCH CONTROL
SISTEMA HIDR. DESLOCAMENTO LATERAL DA LAMINA

E3.02 | 20

FIATALLIS

FIATALLIS FG 70R 70A 75R 75A E3.02 QUADRO 23 PAG. 1

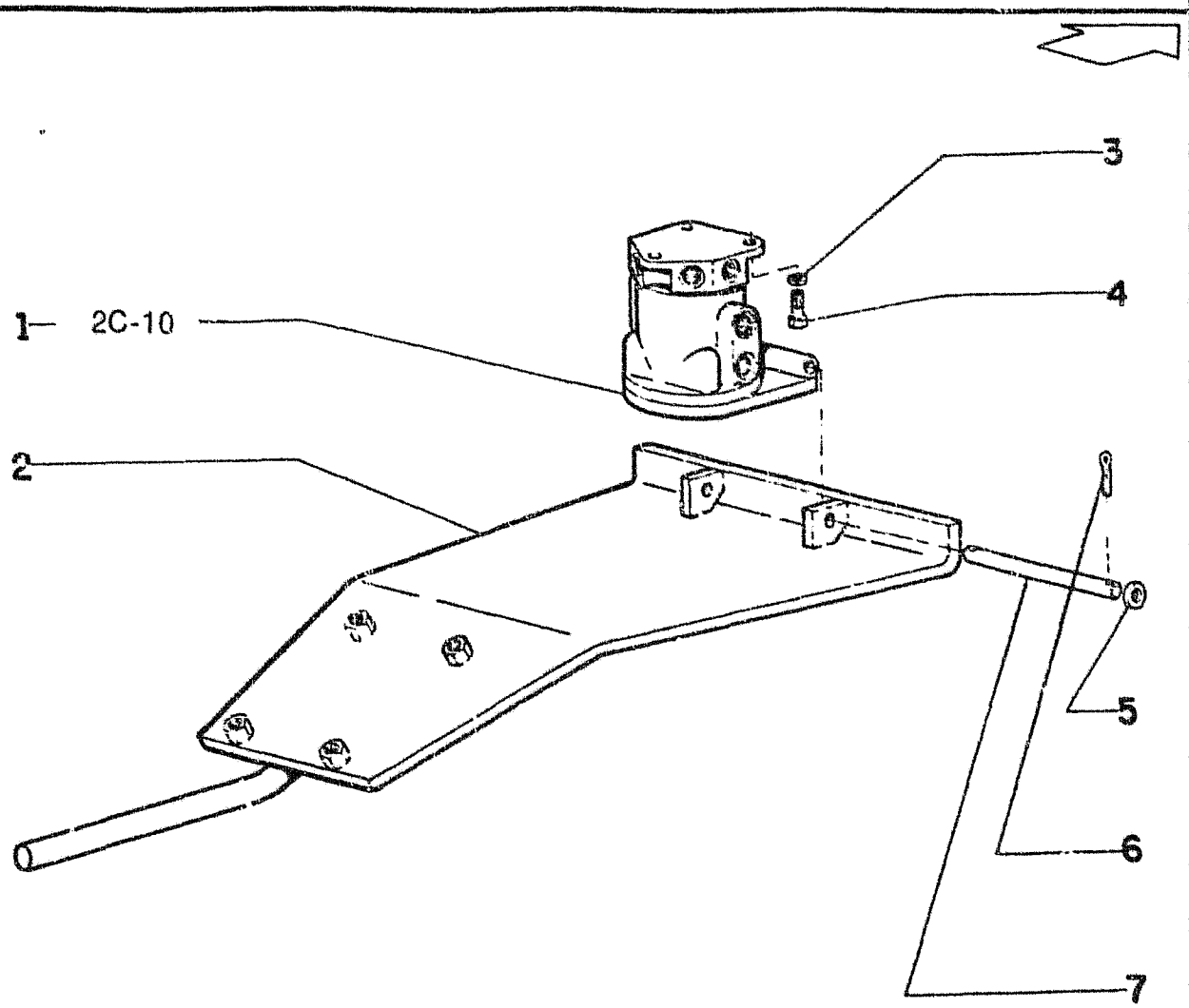

ITEM	PEÇA Nº	QTDE	COD.	DESCRIPTION	DESCRIÇÃO
1	73125855	1	145R	ROTOR	ROTOR
2	73127359	1	105P	PLATE	CHAPA
3	70912441	3	170R	LOCKWASHER	ARRUELA PRESS
4	70927172	3	040V	SCREW	PARAFUSO
5	70911115	2	131R	WASHER	ARRUELA
6	70900942	2	270C	COTTER PIN	CONTRA PINO
7	70658592	1	080P	PIN	PINO

ROTARY DISTRIBUTOR AND BRACKET
DISTRIBUIDOR ROTATIVO E SUPORTE

E3.02 | 23

FIATALLIS

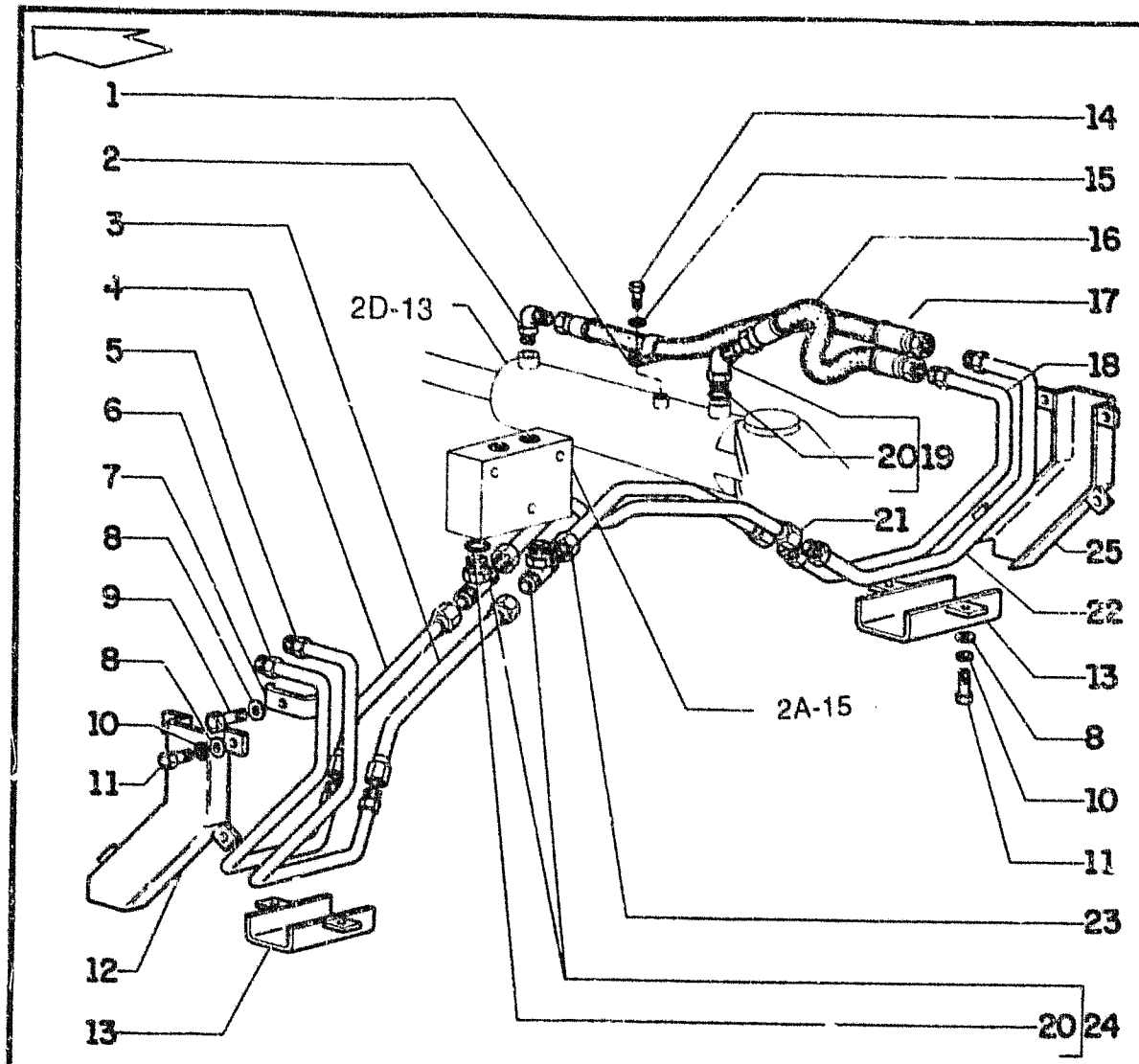

FIATALLIS FG 70A 75A E3.02 **QUADRO** 24 **PAG.** 1

ITEM	PEÇA Nº	QTDE	COD.	DESCRIPTION	DESCRIÇÃO
1	70929344	2	031F	CLAMP	ABRAÇADEIRA
2	70921402	2	085G	ELBOW	COTOVELO
3	73149577	1	193T	TUBE	TUBO
4	73149575	1	193T	TUBE	TUBO
5	75214468	1	193T	TUBE	TUBO
6	75214474	1	193T	TUBE	TUBO
7	73127628	4	031F	CLAMP	ABRAÇADEIRA
8	70677006	16	131R	WASHER	ARRUELA
9	70921076	4	040V	SCREW	PARAFUSO
10	70910287	12	170R	LOCKWASHER	ARRUELA PRESS
11	70922262	12	040V	SCREW	PARAFUSO
12	75214496	1	070R	GUARD	PROTEÇÃO
13	75214501	2	070R	GUARD	PROTEÇÃO
14	70927541	2	040V	SCREW	PARAFUSO
15	70677004	2	131R	WASHER	ARRUELA
16	75214893	2	192T	HOSE ASSY	MANGUEIRA
17	75221783	2	192T	HOSE ASSY	MANGUEIRA
18	75214472	1	193T	TUBE	TUBO
19	70922507	2	085G	ELBOW	COTOVELO
20	70921349	6	158G	O'RING	O'RING
21	73149837	1	193T	TUBE	TUBO
22	75214470	1	193T	TUBE	TUBO
23	73149835	1	193T	TUBE	TUBO
24	70923157	2	020R	FITTING	CONEXÃO
25	75214499	1	070R	GUARD	PROTEÇÃO

ARTICULATION HYDRAULIC SYSTEM AND PIPING
SISTEMA HIDRÁULICO DE ARTICULAÇÃO E TUBULAÇÕES

E3.02 | 24

FIATALLIS

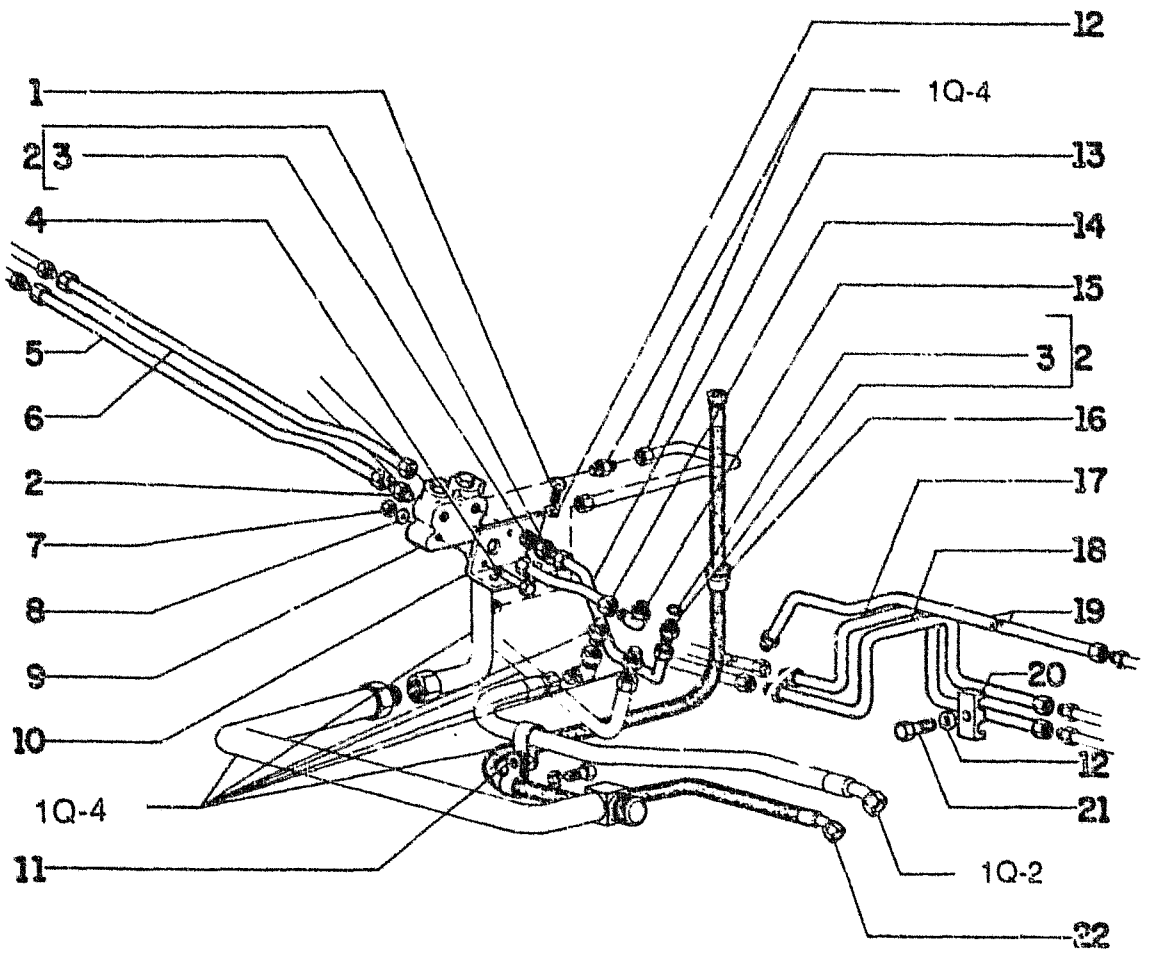

FIATALLIS FG 70R 75R E3.02 **QUADRO** 25 **PAG.** 1

ITEM	PEÇA Nº	QTDE	COD.	DESCRIPTION	DESCRIÇÃO
1	70922300	2	040V	SCREW	PARAFUSO
2	70921409	5	075B	CONNECTOR	CONECTOR
3	70921349	6	158G	O'RING	O'RING
4	70922913	3	040V	SCREW	PARAFUSO
5	75236651	1	193T	TUBE	TUBO
6	75236649	1	193T	TUBE	TUBO
7	70911024	3	010D	NUT	PORCA
8	70928190	3	131R	WASHER	ARRUELA
9	75215943	1	010V	VALVE	VÁLVULA
10	75215944	1	300S	SUPPORT	SUPORTE
11	70927310	1	031F	CLAMP	ABRAÇADEIRA
12	70677006	3	131R	WASHER	ARRUELA
13	75236667	1	193T	TUBE	TUBO
14	75236669	1	193T	TUBE	TUBO
15	70921402	1	085G	ELBOW	COTOVELO
16	73125876	1	085I	INSULATOR	ISOLANTE
17	75236840	1	193T	TUBE	TUBO
18	75236836	1	193T	TUBE	TUBO
19	75221540	1	193T	TUBE	TUBO
20	70623355	1	031F	CLAMP	ABRAÇADEIRA
21	70921076	1	040V	SCREW	PARAFUSO
22	75236940	1	285T	HOSE	MANGUEIRA

STEERING CYLINDER PIPING
SISTEMA HIDRAULICO DE DIREÇAO

E3.02 | 25

FIATALLIS

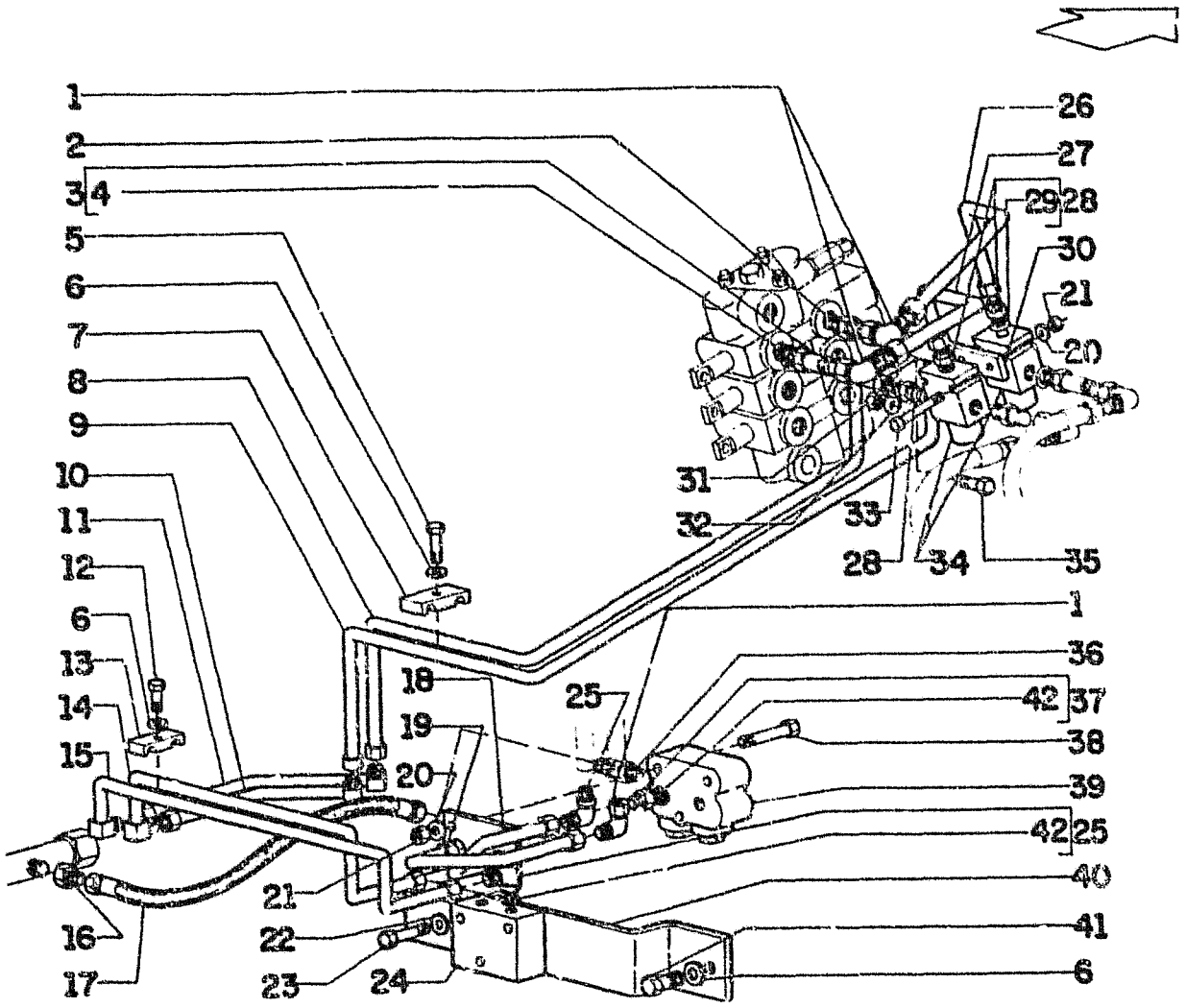

FIATALLIS FG 70A 75A E3.02 **QUADRO** 26 **PAG.** 1

ITEM	PEÇA Nº	QTDE	COD.	DESCRIPTION	DESCRIÇÃO
1	70921279	3	085G	ELBOW	COTOVELO
2	75222859	1	075B	CONNECTOR	CONECTOR
3	75237101	1	075B	CONNECTOR	CONECTOR
4	70921205	2	158G	O'RING	O'RING
5	70921076	1	040V	SCREW	PARAFUSO
6	70915815	2	131R	WASHER	ARRUELA
7	73127628	1	031F	CLAMP	ABRAÇADEIRA
8	75237125	1	193T	TUBE	TUBO
9	75237119	1	193T	TUBE	TUBO
10	75237092	1	193T	TUBE	TUBO
11	75237090	1	193T	TUBE	TUBO
12	70927173	1	040V	SCREW	PARAFUSO
13	70623355	1	031F	CLAMP	ABRAÇADEIRA
14	75237096	1	193T	TUBE	TUBO
15	75237098	1	193T	TUBE	TUBO
16	70926768	1	020R	FITTING	CONEXÃO
17	75212747	1	285T	HOSE	MANGUEIRA
18	75237111	1	193T	TUBE	TUBO
19	75237109	1	193T	TUBE	TUBO
20	70928199	3	131R	WASHER	ARRUELA
21	70911024	3	010D	NUT	PORCA
22	70911114	3	131R	WASHER	ARRUELA
23	70934150	3	040V	SCREW	PARAFUSO
24	73148118	1	010V	VALVE	VÁLVULA
25	70921402	3	085G	ELBOW	COTOVELO
26	75237114	1	193T	TUBE	TUBO
27	75237117	1	193T	TUBE	TUBO
28	70924403	4	075B	CONNECTOR	CONECTOR
29	70921885	4	158G	O'RING	O'RING
30	75237107	1	300S	SUPPORT	SUPORTE
31	70911026	2	010D	NUT	PORCA
32	70677006	2	131R	WASHER	ARRUELA
33	70931206	2	040V	SCREW	PARAFUSO
34	73154750	2	010V	ARTICULATION SOLENOID VALVE	
35	70921565	2	040V	SCREW	PARAFUSO

FRONT HYDRAULIC SYSTEM
SISTEMA HIDRAULICO DIANTEIRO

E3.02 | 26

SA FIATALLIS

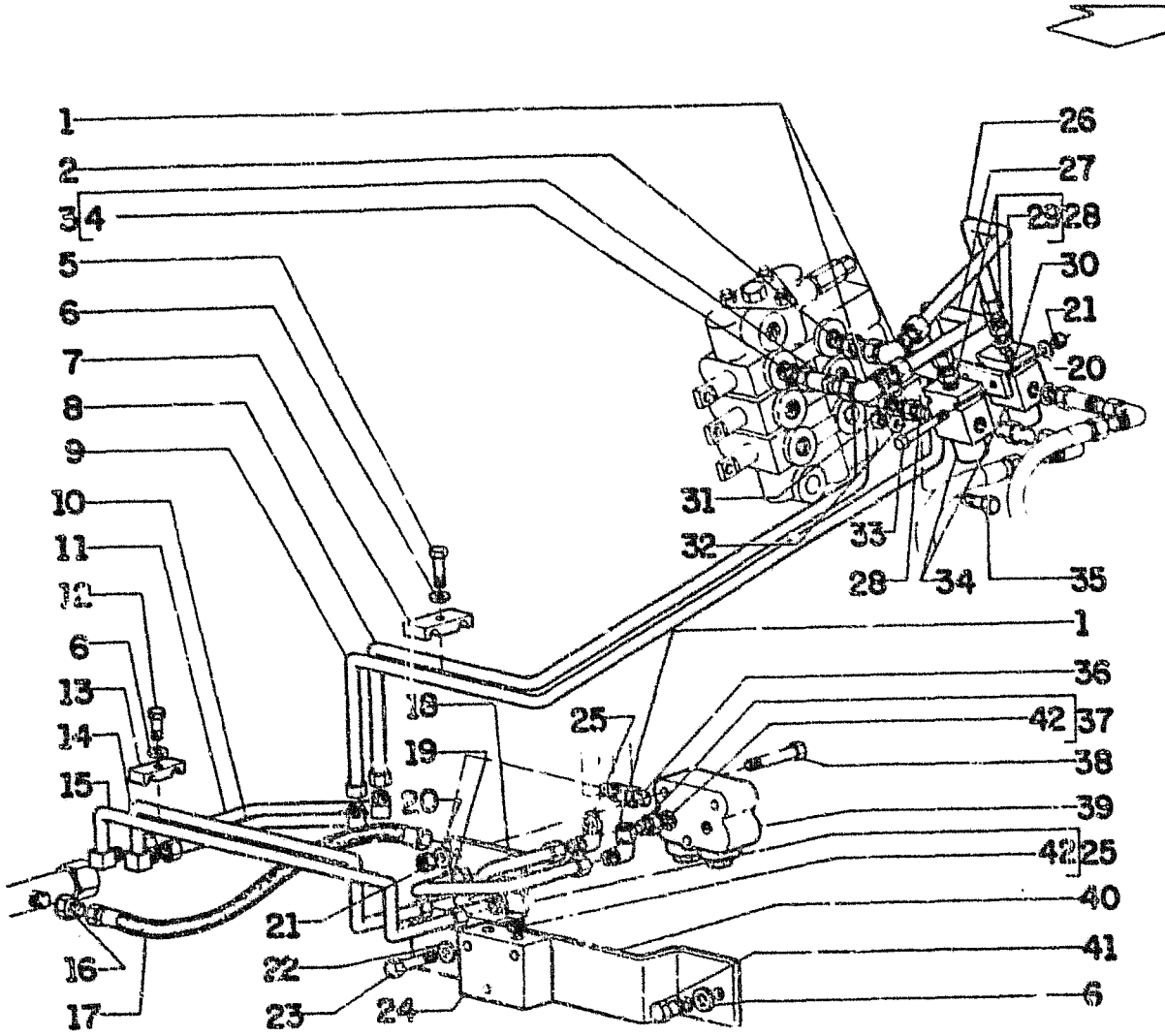

FIATALLIS FG 70A 75A E3.02 **QUADRO** 26 **PAG.** 2

ITEM	PEÇA Nº	QTDE	COD.	DESCRIPTION	DESCRIÇÃO
36	70919135	1	085G	ELBOW	COTOVELO
37	70921409	2	075B	CONNECTOR	CONECTOR
38	70922913	3	040V	SCREW	PARAFUSO
39	75215943	1	010V	VALVE	VÁLVULA
40	75237130	1	300S	SUPPORT	SUPORTE
41	70922763	2	040V	SCREW	PARAFUSO
42	70921349	5	158G	O'RING	O'RING

FRONT HYDRAULIC SYSTEM
SISTEMA HIDRAULICO DIANTEIRO

E3.02 | 26

FIATALLIS

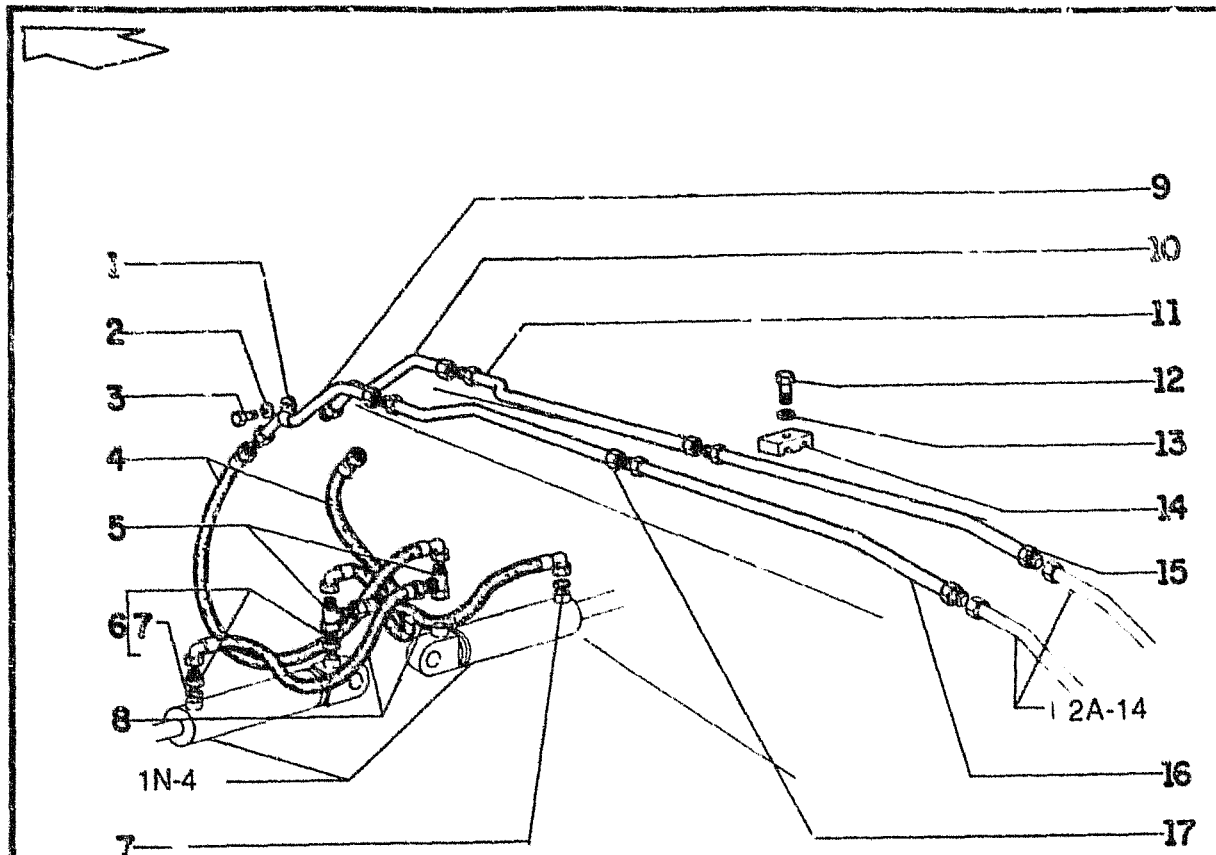

FIATALLIS FG 70R 75R E3.02 **QUADRO** 27 **PAG.** 1

ITEM	PEÇA Nº	QTDE	COD.	DESCRIPTION	DESCRIÇÃO
1	70927155	2	031F	CLAMP	ABRAÇADEIRA
2	70677006	2	131R	WASHER	ARRUELA
3	70922300	2	040V	SCREW	PARAFUSO
4	73134218	2	192T	HOSE ASSY	MANGUEIRA
5	70921297	2	020R	FITTING	CONEXÃO
6	70922457	4	075B	CONNECTOR	CONECTOR
7	70921349	6	158G	O'RING	O'RING
8	73134219	2	192T	HOSE ASSY	MANGUEIRA
9	73126562	1	193T	TUBE	TUBO
10	73126560	1	193T	TUBE	TUBO
11	73126559	1	193T	TUBE	TUBO
12	70921076	2	040V	SCREW	PARAFUSO
13	70677006	2	131R	WASHER	ARRUELA
14	70623355	2	031F	CLAMP	ABRAÇADEIRA
15	75236662	1	193T	TUBE	TUBO
16	75236658	1	193T	TUBE	TUBO
17	73126561	1	193T	TUBE	TUBO

STEERING CYLINDER PIPING
SISTEMA HIDRAULICO DE DIREÇAO

E3.02 | 27

DESCRIPTION	SBGRP	TAV	GRID
ENGINE PISTONS	A105	1	1E-14
ROCKER ASSEMBLY	A107	1	1E-16
ROD BEARINGS	A105	1	1E-14
SIDE PLATES	L101	2	2F-14
SLEEVES	A105	1	1E-14
SUMP	A102	1	1E-9
EXHAUST PIPE	A256	1	1G-8
FAN	A409	1	1G-17
BELTS	A409	1	1G-17
DRIVE FG70	A409	2	1H-2
DRIVE FG75	A409/1	2	1H-3
DRIVE FG75	A409/1	4	1H-5
IDLER FG75	A409/1	3	1H-4
FIATALLIS TO CUMMINS CROSS REF NUMBERS			2M-2
FILTER IMPLEMENT OIL	E328	1	2C-10
FILTER, AIR	A223	2	1F-8
FILTER, COOLANT	A402	1	1G-15
FILTER, ENGINE OIL	A303	1	1G-12
FILTER, FUEL	A226	1	1F-12
FILTER, TRANS OIL FG70	B201	11	1I-3
FILTER, TRANS. OIL FG75	B217	1	1M-14
FORWARD CLUTCH FG70	B201	7	1H-15
FRAME (NOT ARTICULATED)	D101	1	1O-10
FRONT (ARTICUALTED)	D101	3	1O-13
REAR (ARTICUALTED)	D101	4	1O-14
FRONT AXLE FRAME	B401	1	1N-2
FRONT AXLE WHEEL END	B401	3	1N-4
FUEL FILTER	A226	1	1F-12
INJECTION PUMP	A224	1	1F-9
INJECTION PUMP COMPONENTS	A227	1	1F-13
LINES, HIGH PRESSURE	A224	1	1F-10
LINES, LOW PRESSURE	A201	2	1F-2
NOZZLE	A235	2	1G-6
NOZZLE HOLDER	A235	1	1G-5
PUMP GOVERNOR COMPONENTS	A228	1	1G-2
SEDIMENT BOWL	A225	1	1F-11
TANK	A201	1	1E-17
THROTTLE CONTROL	A221	1	1F-3
THROTTLE CONTROL LEVER	A221	4	1F-6
THROTTLE LINKAGE FG70	A221	2	1F-4
THROTTLE LINKAGE FG75	A221	3	1F-5
TRANSFER PUMP	A224	1	1F-9
FUSES ELECTRICAL	F401	3	2E-5
GOVERNOR, FUEL PUMP COMPONENTS	A228	1	1G-2
GOVERNOR, GROUND SPEED FG70	A221	2	1F-4
GROUND SPEED GOVERNOR FG70	A221	2	1F-4
HEAT EXCHANGER, ENGINE OIL	A303	1	1G-12
HIGH FWD & 5 - 6 SPEED CLUTCH FG75	B201/1	16	1L-10
HIGH SPEED CLUTCH FG70	B201	9	1H-17
HOOD	L101	1	2F-13
HORN	F401	18	2F-6
HOURMETER	F401	3	2E-5
IMPLEMENT CONTROL VALVE SHIELD	D101	2	1O-11
CONTROLVALVE LEVERS	D201	3	1P-7
CONTROLVALVE LEVERS	D201	4	1P-8
IMPLEMENT CONTROLVALVE LINKAGE	D201	2	1P-5
OIL FILTER	E328	1	2C-10
OIL RESERVOIR	E328	1	2C-10
PUMP, COMPONENTS	E329	1	2C-12
INDICATOR, CLOGGED AIR FILTER	A222	1	1F-7
INJECTION PUMP COMPONENTS	A227	1	1F-13
INSTRUMENT PANEL	F401	12	2E-14
LATERAL SHIFT VALVE	E331	2	2C-14
LIGHTS	F401	9	2E-10
BRAKE COMPONENTS	F405	2	2F-8
TURN SIGNAL COMPONENTS	F405	3	2F-9
TURN SIGNAL	F401	13	2E-15
LOCK VALVE	E302	32	2B-7
LOW FORWARD CLUTCH FG75	B201/1	12	1L-6
LOW SPEED CLUTCH FG70	B201	8	1H-16
LUBRICATION SYSTEM	A301	1	1G-9
MAIN RELIEF VALVE, LEFT	E331	10	2D-5
MAIN RELIEF VALVE, RIGHT	E331	11	2D-6
MODULATING VALVE TRANS FG70	B201	18	1I-10
COMPONENTS	E313	1	2C-5
COMPONENTS	E313	2	2C-7
COMPONENTS	E313	3	2C-8
DRAWBAR	E310	2	2B-15
LIFT CYLINDER	E332	6	2D-12
PITCH CYLINDER	E332	2	2D-8
PITCH VALVE	E331	2	2C-14
SHIELD	E313	4	2C-9
SIDE SHIFT CYLINDER	E332	3	2D-9
MONITORING SENSORS	F401	16	2F-4
MONITORING SENSORS	F401	17	2F-5
MUFFLER	A256	1	1G-8
OPERATOR CONSOLE	D201	1	1P-3
PLATFORM	D101	2	1O-11
SEAT BELT	L604	2	2H-3
SEAT	L604	1	2H-2
OUTPUT FLANGE NUT FG70	B201	14	1I-6
OUTPUT SHAFT FG70	B201	10	1I-2
PARKING BRAKE LEVER	C135	1	1O-7
BRAKE LINKAGE FG70	C135	2	1O-8
PARKING BRAKE LINKAGE FG75	C135/1	2	1O-9
BRAKE FG70	B201	1	1I-4
BRAKE FG75	B201/1	2	1I-12
PIPING CIRCLE SHIFT (ARTICULATED)	E302	5	1Q-8
CIRCLE SHIFT (RIGID)	E302	4	1Q-7
MOLDBOARD LIFT (ARTICULATED)	E302	13	2A-3
MOLDBOARD LIFT (RIGID)	E302	12	2A-2
SADDLE LOCK PIN (ARTICULATED)	E302	17	2A-8
SADDLE LOCK PIN (RIGID)	E302	16	2A-7
ARTICULATION	E302	26	2A-15
ARTICULATION	E302	24	2A-13
BRAKE PUMP FG70	E302	32	2B-6
PIPING BRAKE PUMP FG70	E302/1	32	2B-12
CIRCLE TURN (ARTICULATED)	E302	15	2A-6
CIRCLE TURN (RIGID)	E302	14	2A-5
CONTROL VALVE (ARTICULATED)	E302	3	1Q-6
CONTROL VALVE (RIGID)	E302	2	1Q-4
FRONT ATTACHMENT (ARTIC'D)	E302	30	2B-4
FRONT ATTACHMENT (RIGID)	E302	29	2B-3
FRONT ATTACHMENT FG70	E302	31	2B-5
FRONT WHEEL LEAN (ARTIC'D)	E302	7	1Q-10
FRONT WHEEL LEAN (RIGID)	E302	6	1Q-9
FRONT WHEEL LEAN	E302	8	1Q-11
IMPLEMENT PUMP FG70	E302	32	2B-6
IMPLEMENT PUMP FG70	E302/1	32	2B-12
PUMP, BRAKE FG70	E302	32	2B-6
PUMP, BRAKE FG70	E302/1	32	2B-12
PUMP, IMPLEMENT FG70	E302	32	2B-6
PUMP, IMPLEMENT FG70	E302/1	32	2B-12
PUMP, STERING FG70	E302	32	2B-6
PUMP, STERING FG70	E302/1	32	2B-12
REAR FRAME	E302	1	1Q-2
RIPPER CYLINDER	E302/1	2	2B-9
RIPPER	E302/1	3	2B-10
SCARIFIER	E302/1	1	2B-8
SIDE SHIFT & PITCH (ARTIC'D)	E302	19	2A-10
SIDE SHIFT & PITCH (RIGID)	E302	18	2A-9
SIDE SHIFT & PITCH	E302	20	2A-11
STEERING (ARTICULATED)	E302	27	2A-17
STEERING (ARTICULATED)	E302	28	2B-2
STEERING (RIGID)	E302	25	2A-14
STEERING PUMP FG70	E302	32	2B-6
PIPING, STEERING PUMP FG70	E302/1	32	2B-12
PUMP, BRAKE COMPONENTS	D213	1	1P-13
COOLANT	A403	1	1G-16
ENGINE OIL	A302	1	1G-11
FUEL INJECTION	A224	1	1F-9
FUEL INJECTION COMPONENTS	A227	1	1F-13
FUEL TRANSFER	A224	1	1F-9
IMPLEMENT COMPONENTS	E329	1	2C-12
STEERING COMPONENTS	D213	1	1P-13

FIATALLIS

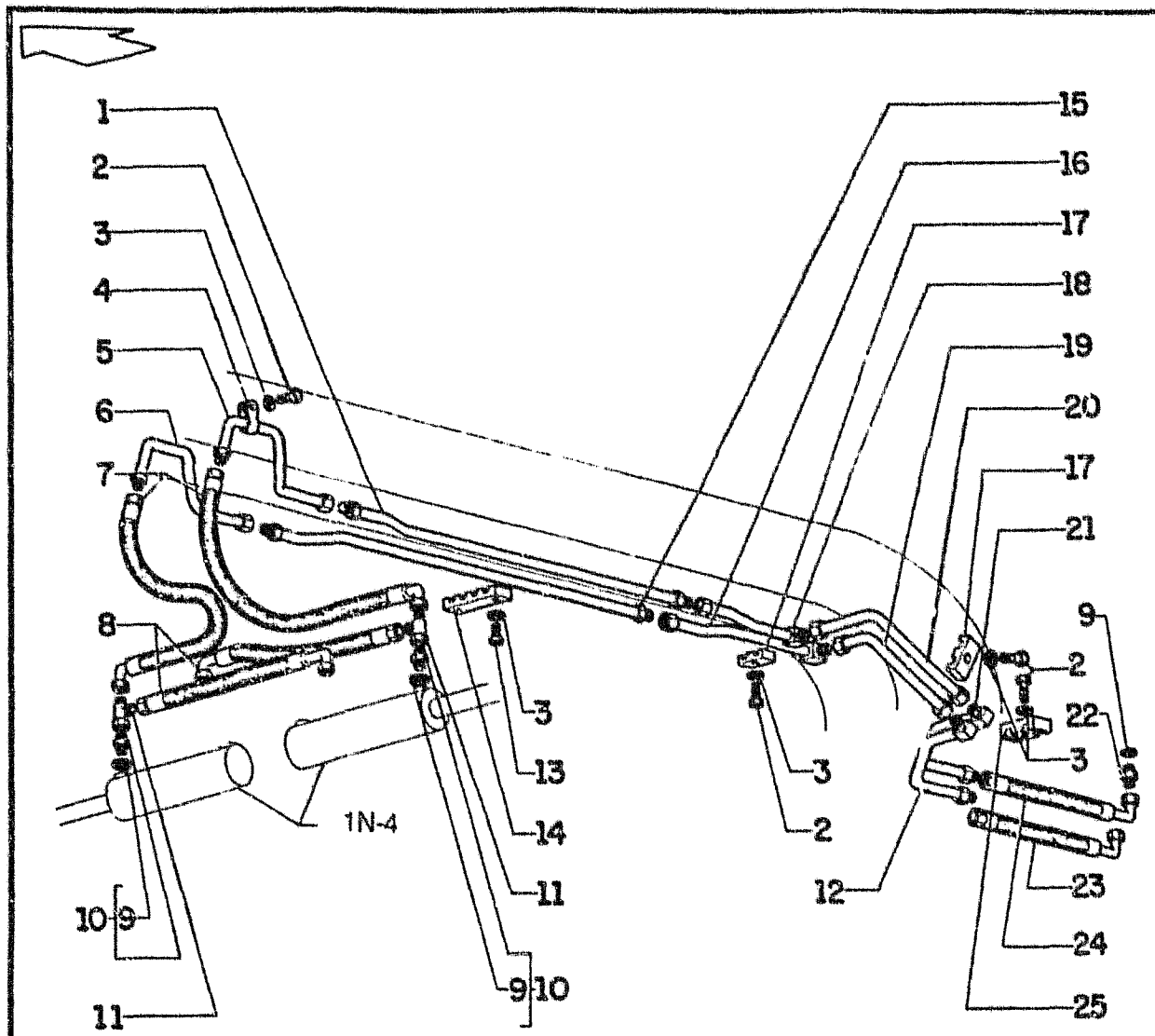

FIATALLIS FG 70A 75A E3.02 **QUADRO** 28 **PAG.** 1

ITEM	PEÇA Nº	QTDE	COD.	DESCRIPTION	DESCRIÇÃO
1	75214354	1	193T	TUBE	TUBO
2	70921076	6	040V	SCREW	PARAFUSO
3	70677006	10	131R	WASHER	ARRUELA
4	70927155	2	031F	CLAMP	ABRAÇADEIRA
5	75214777	1	193T	TUBE	TUBO
6	75214776	1	193T	TUBE	TUBO
7	73134218	2	192T	HOSE ASSY	MANGUEIRA
8	73134219	2	192T	HOSE ASSY	MANGUEIRA
9	70921349	6	158G	O'RING	O'RING
10	70922457	2	075B	CONNECTOR	CONECTOR
11	70921297	2	020R	FITTING	CONEXÃO
12	75213943	1	193T	TUBE	TUBO
13	70922287	4	040V	SCREW	PARAFUSO
14	73125864	2	031F	CLAMP	ABRAÇADEIRA
15	75214352	1	193T	TUBE	TUBO
16	75237303	1	193T	TUBE	TUBO
17	70623355	3	031F	CLAMP	ABRAÇADEIRA
18	75237305	1	193T	TUBE	TUBO
19	75237314	1	193T	TUBE	TUBO
20	75237312	1	193T	TUBE	TUBO
21	75213945	1	193T	TUBE	TUBO
22	70921409	2	075B	CONNECTOR	CONECTOR
23	75214022	1	192T	HOSE ASSY	MANGUEIRA
24	75214021	1	192T	HOSE ASSY	MANGUEIRA
25	75214492	1	031F	CLAMP	ABRAÇADEIRA

STEERING CYLINDER PIPING
SISTEMA HIDRAULICO DE DIREÇAO

E3.02 | 28

FIATALLIS

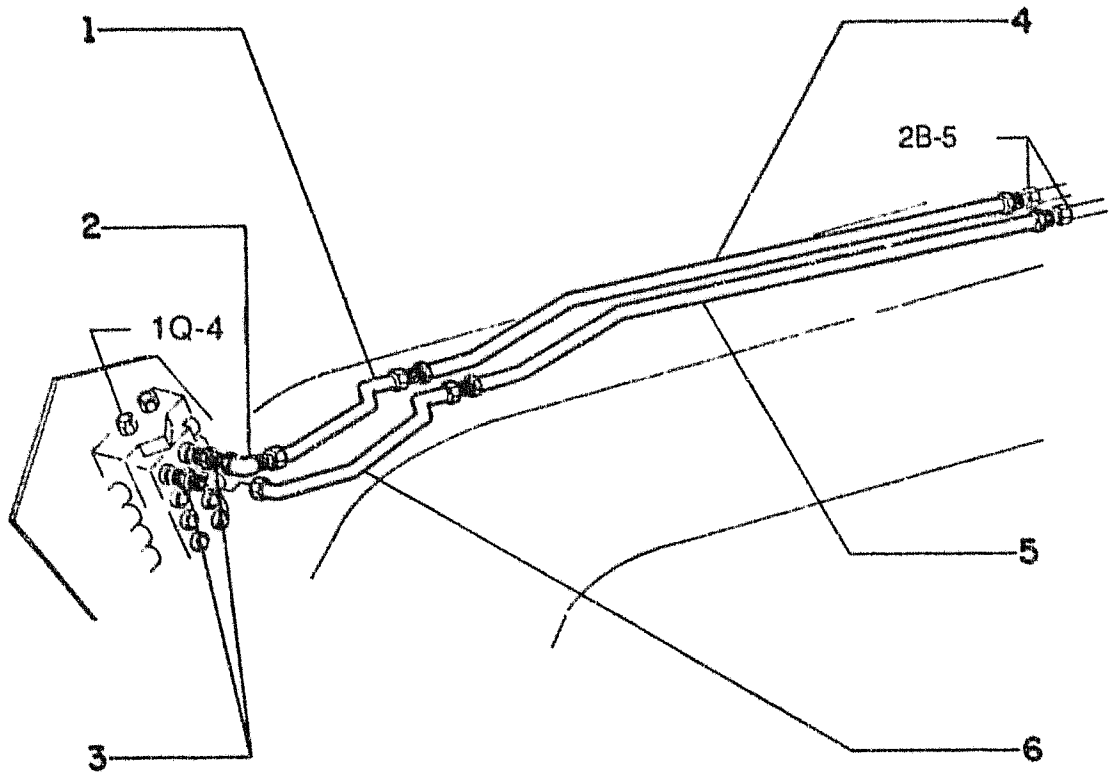

FIATALLIS FG 70R 75R E3.02 **QUADRO** 29 **PAG.** 1

ITEM	PEÇA Nº	QTDE	COD.	DESCRIPTION	DESCRIÇÃO
1	75236450	1	193T	TUBE	TUBO
2	70921279	1	085G	ELBOW	COTOVELO
3	70921409	2	075B	CONNECTOR	CONECTOR
4	73125652	1	193T	TUBE	TUBO
5	73125649	1	193T	TUBE	TUBO
6	75236452	1	193T	TUBE	TUBO

FRONT ATTACHMENT PIPING
IMPLEMENTO DA TUBULAÇAO FRONTAL

E3.02 | 29

FIATALLIS

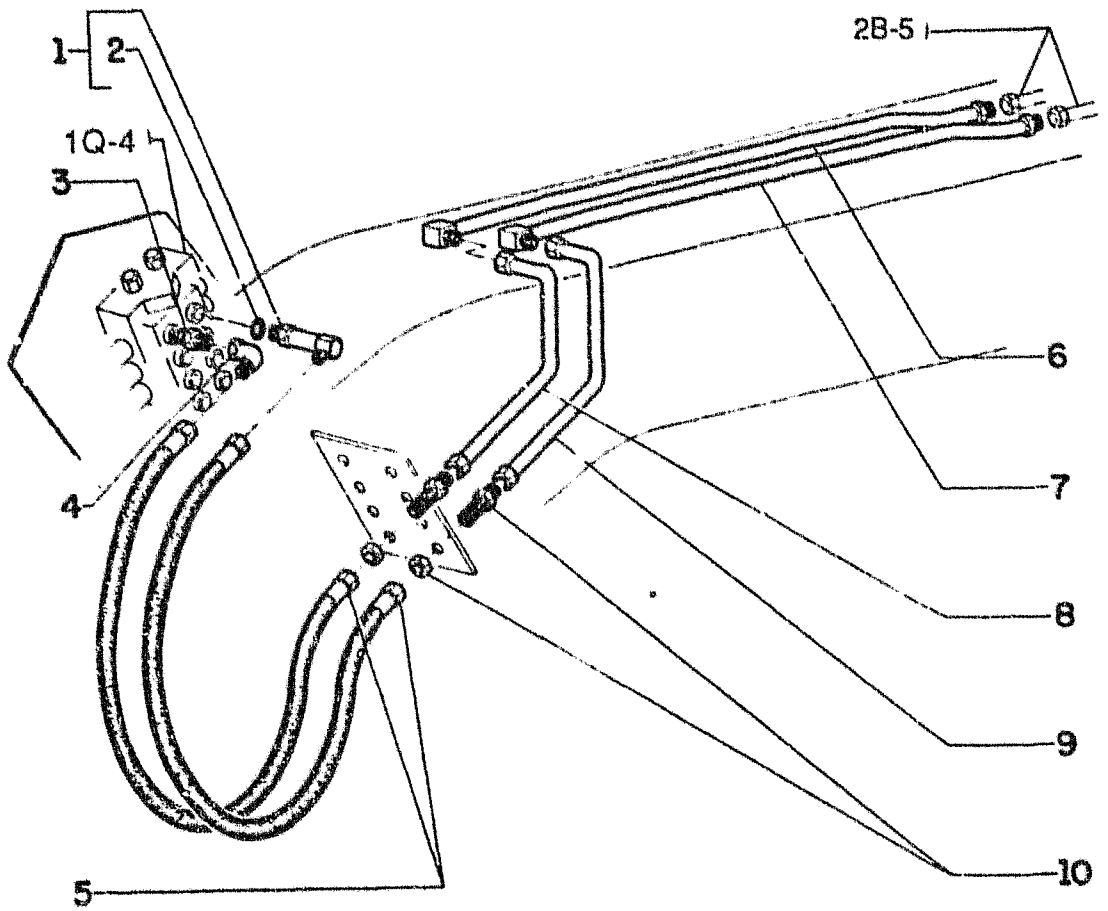

FIATALLIS FG 70A 75A E3.02 **QUADRO** 30 **PAG.** 1

ITEM	PEÇA Nº	QTDE	COD.	DESCRIPTION	DESCRIÇÃO
1	75220005	1	085G	ELBOW	COTOVELO
2	70921205	1	158G	O'RING	O'RING
3	70924296	1	075B	CONNECTOR	CONECTOR
4	70921279	1	085G	ELBOW	COTOVELO
5	75214262	2	192T	HOSE ASSY	MANGUEIRA
6	75214883	1	193T	TUBE	TUBO
7	75214885	1	193T	TUBE	TUBO
8	75221197	1	193T	TUBE	TUBO
9	75237337	1	193T	TUBE	TUBO
10	70927261	2	020R	FITTING	CONEXÃO

FRONT ATTACHMENT PIPING
IMPLEMENTO DA TUBULAÇAO FRONTAL

E3.02 | 30

252

FIATALLIS

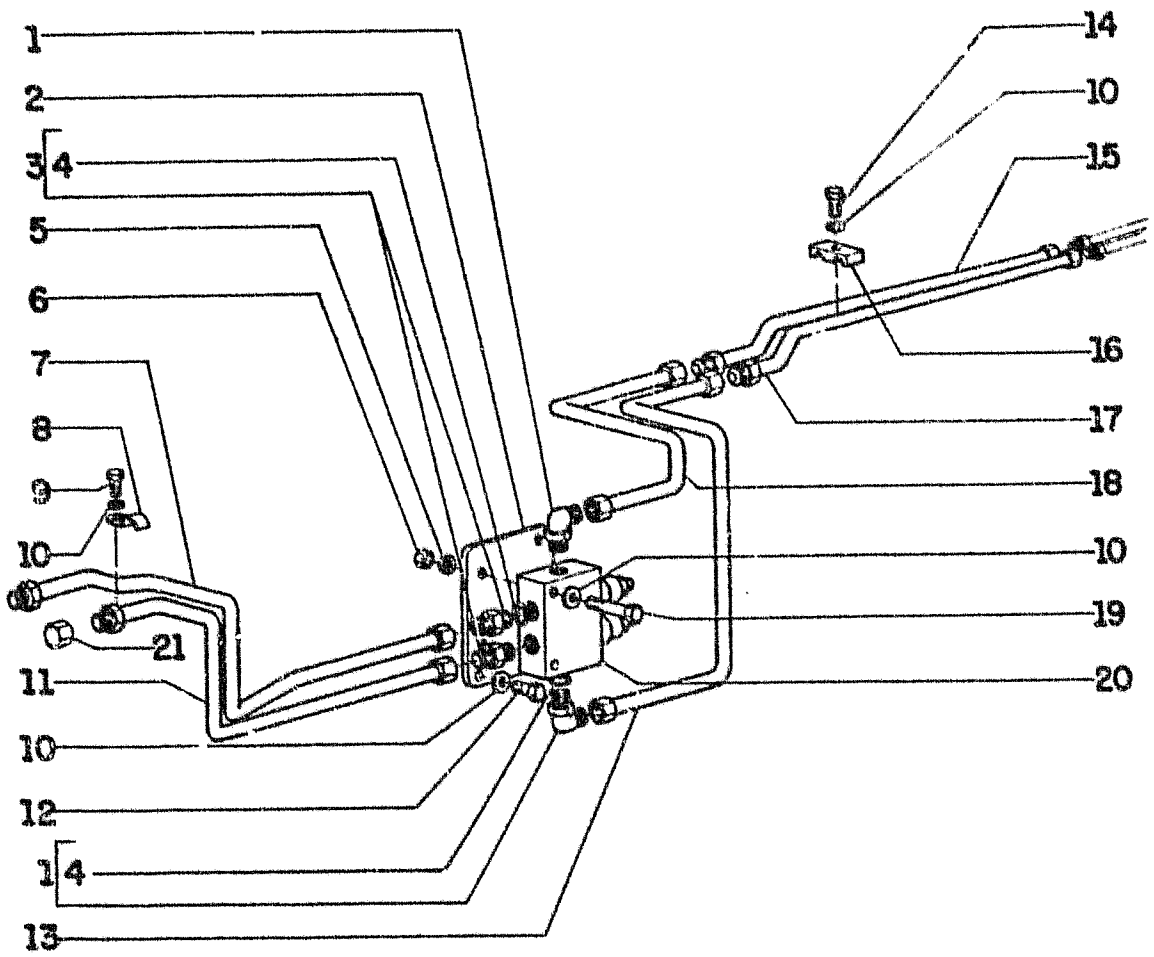

FIATALLIS FG 70R 70A 75R 75A E3.02 **QUADRO** 31 **PAG.** 1

ITEM	PEÇA Nº	QTDE	COD.	DESCRIPTION	DESCRIÇÃO
1	70921402	2	085G	ELBOW	COTOVELO
2	73127641	1	105P	PLATE	CHAPA
3	70921409	2	075B	CONNECTOR	CONECTOR
4	70921349	4	158G	O'RING	O'RING
5	70929156	2	131R	WASHER	ARRUELA
6	70911026	2	010D	NUT	PORCA
7	73158311	1	193T	TUBE	TUBO
8	70927155	2	031F	CLAMP	ABRAÇADEIRA
9	70927484	2	040V	SCREW	PARAFUSO
10	70677006	7	131R	WASHER	ARRUELA
11	73158312	1	193T	TUBE	TUBO
12	70922300	3	040V	SCREW	PARAFUSO
13	73158313	1	193T	TUBE	TUBO
14	70920995	3	040V	SCREW	PARAFUSO
15	73125650	1	193T	TUBE	TUBO
16	70623355	3	031F	CLAMP	ABRAÇADEIRA
17	73125653	1	193T	TUBE	TUBO
18	73158314	1	193T	TUBE	TUBO
19	70920996	2	040V	SCREW	PARAFUSO
20	73152606	1	010V	VALVE	VÁLVULA
21	70923737	2	064C	CAP	TAMPÃO

FRONT ATTACHMENT PIPING
IMPLEMENTO DA TUBULAÇAO FRONTAL

E3.02 | 31

FIATALLIS

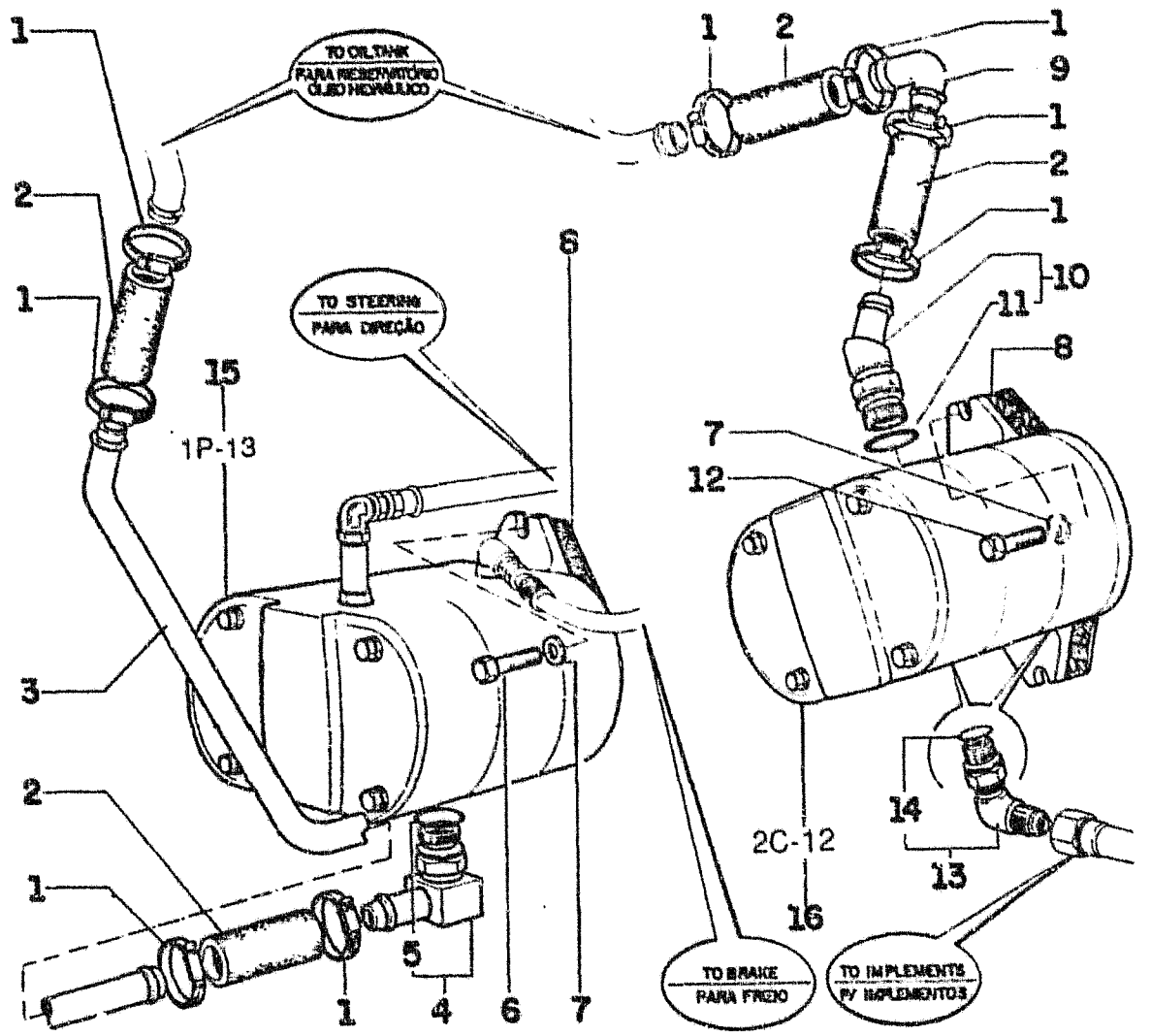

FIATALLIS FG 70R 70A E3.02 **QUADRO** 32 **PAG.** 1

ITEM	PEÇA Nº	QTDE	COD.	DESCRIPTION	DESCRIÇÃO
1	70921912	8	031F	CLAMP	ABRAÇADEIRA
2	73129171	4	285T	HOSE	MANGUEIRA
3	73158796	1	193T	TUBE	TUBO
4	70931240	1	085G	ELBOW	COTOVELO
5	14458680	1	158G	O'RING	O'RING
6	11106431	2	040V	SCREW	PARAFUSO
7	70930370	2	131R	WASHER	ARRUELA
8	70651322	2	120G	GASKET	JUNTA
9	73158797	1	193T	TUBE	TUBO
10	73158842	1	085G	ELBOW	COTOVELO
11	14458160	1	158G	O'RING	O'RING
12	70921076	2	040V	SCREW	PARAFUSO
13	70922507	2	085G	ELBOW	COTOVELO
14	70921349	1	158G	O'RING	O'RING
15	75236406	1	155P	PUMP	BOMBA
16	75236405	1	155P	PUMP	BOMBA

HIDRAULIC SYSTEM
SISTEMA HIDRAULICO

E3.02 | 32

FG70 FG70A
FG75 FG75A

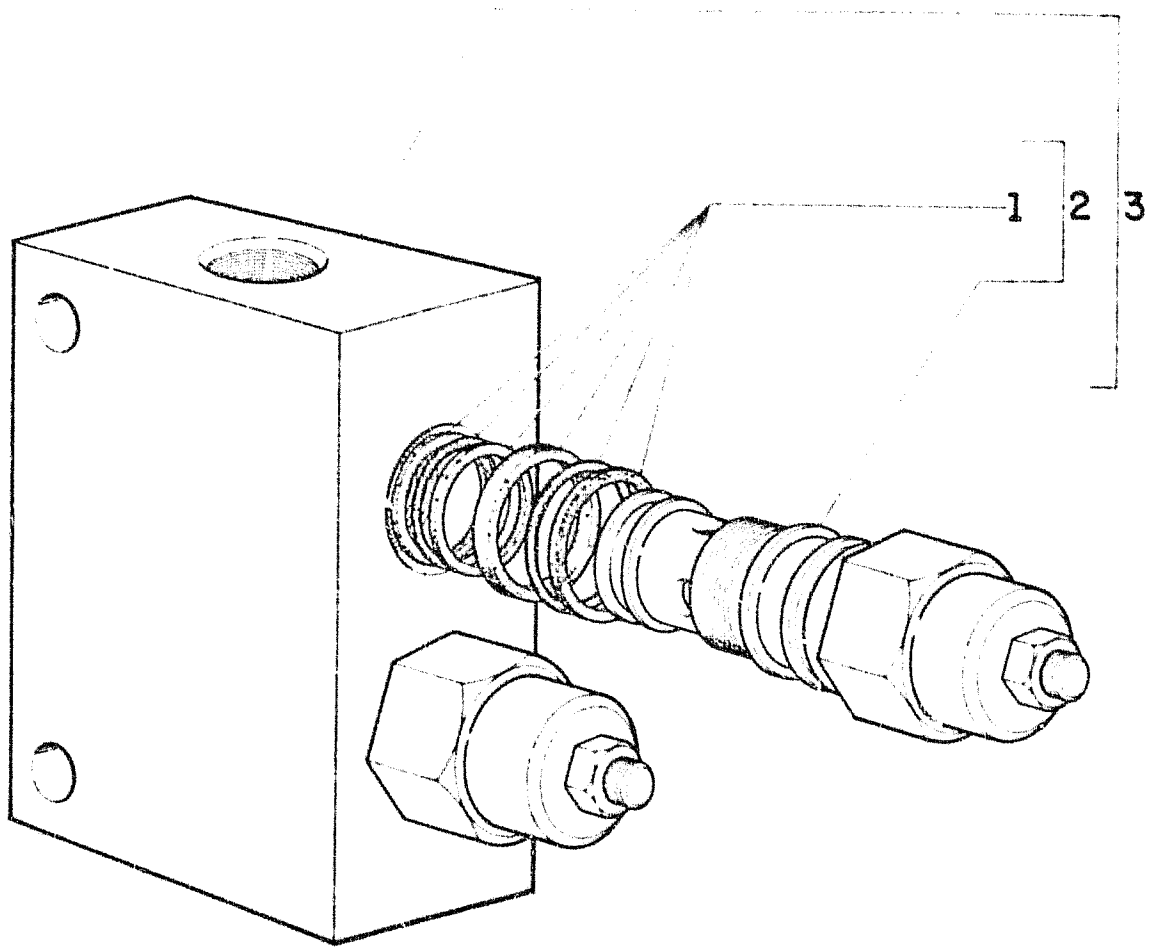

ITEM	PART NO.	QTY	COD	DESCRIPTION	DESRICAO
1	73130695	2	2/T	SEAL KIT	KIT VACACAO
2	73130694	2	010V	VALVE, RELIEF	VALVULA ALIVIO
3	73130105	1	010V	LOCK VALVE	VALVULA BROQU.

LOCK VALVE
VALVULA DE BLOQUEID

FIATALLIS

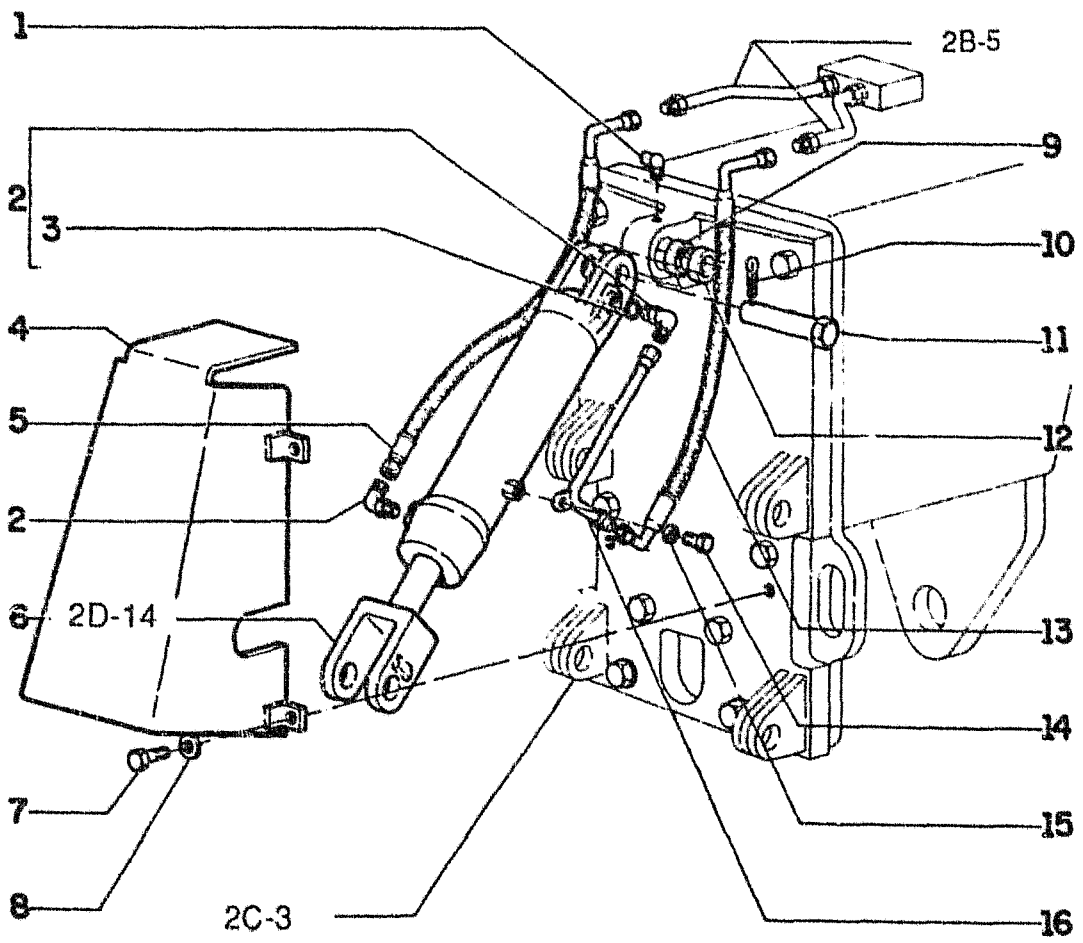

FIATALLIS FG 70R 70A 75R 75A E3.02/1 **QUADRO 1 PAG. 1**

ITEM	PEÇA Nº	QTDE	COD.	DESCRIPTION	DESCRIÇÃO
1	70915276	1	060I	GREASE FITTING	PINO GRAXEIRO
2	70921402	2	085G	ELBOW	COTOVELO
3	70921349	2	158G	O'RING	O'RING
4	73126258	1	070R	GUARD	PROTEÇÃO
5	73126265	1	192T	HOSE ASSY	MANGUEIRA
6	73067421	1	164C	CYLINDER	CILINDRO
7	70922475	4	040V	SCREW	PARAFUSO
8	70677012	4	131R	WASHER	ARRUELA
9	70928851	2	095B	BUSHING	BUCHA
10	70911279	2	270C	COTTER PIN	CONTRA PINO
11	70689718	2	080P	PIN	PINO
12	70689717	4	075D	SPACER	ESPAÇADOR
13	73126267	1	192T	HOSE ASSY	MANGUEIRA
14	70922763	1	040V	SCREW	PARAFUSO
15	70677006	1	131R	WASHER	ARRUELA
16	73126270	1	193T	TUBE	TUBO

SCARIFIER PIPING
ESCARIFICADOR E MANGUEIRAS

E3.02/1 | 1

FIATALLIS

FIATALLIS FG 70R 70A 75R 75A E3.02/1 **QUADRO** 2 **PAG.** 1

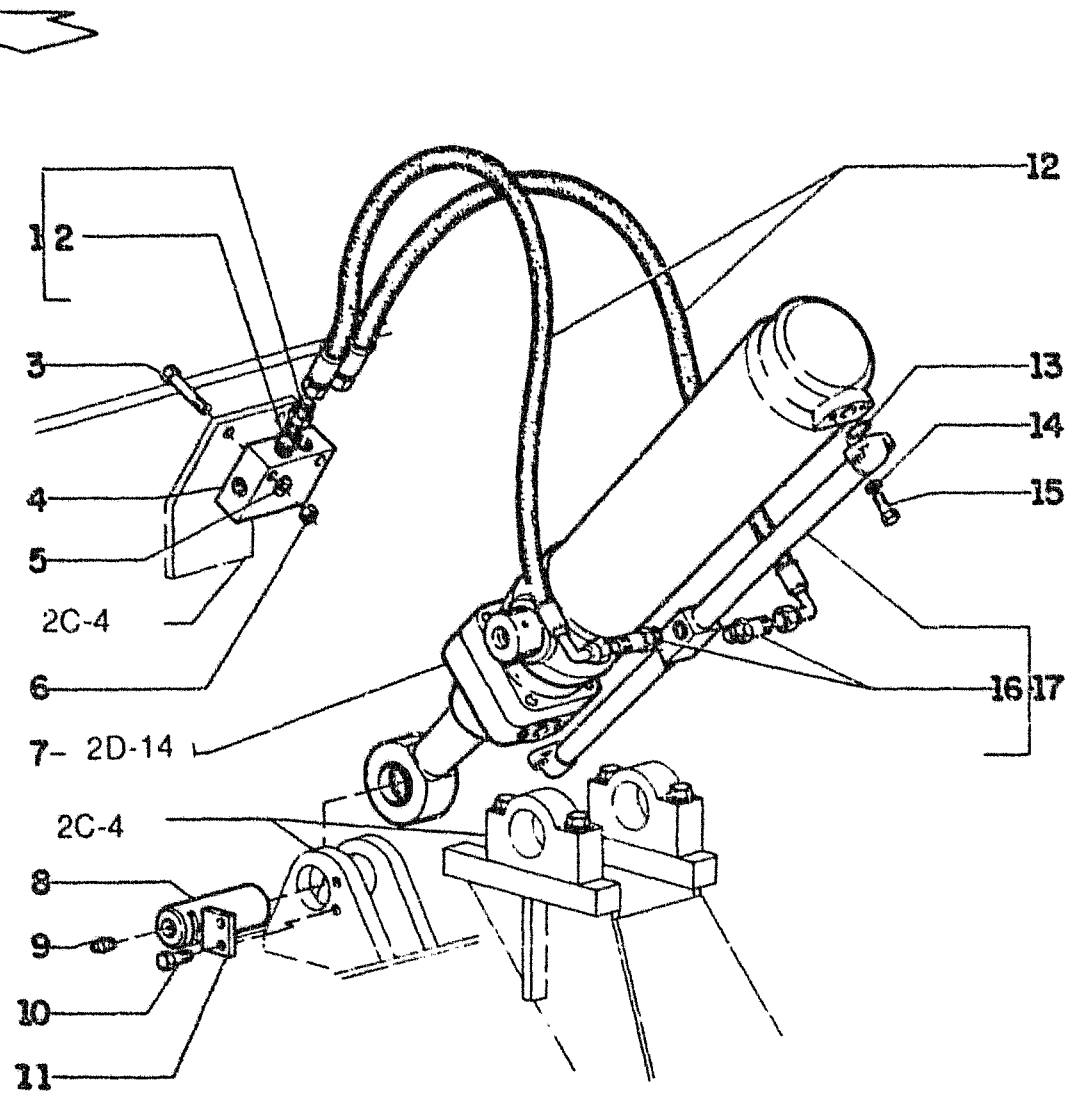

ITEM	PEÇA Nº	QTDE	COD.	DESCRIPTION	DESCRIÇÃO
1	70921409	2	075B	CONNECTOR	CONECTOR
2	70921349	2	158G	O'RING	O'RING
3	70920996	2	040V	SCREW	PARAFUSO
4	73130105	1	1108	LOCK VALVE	VALVULA
5	70929156	4	131R	WASHER	ARRUELA
6	70911026	2	010D	NUT	PORCA
7	8299529	1	164C	CYLINDER	CILINDRO
8	76002504	1	080P	PIN	PINO
9	13407211	1	060I	GREASE FITTING	PINO GRAXEIRO
10	15540431	2	040V	SCREW	PARAFUSO
11	8270126	1	105P	PLATE	CHAPA
12	73127637	2	192T	HOSE ASSY	MANGUEIRA
13	14463280	2	158G	O'RING	O'RING
14	10571971	4	170R	LOCKWASHER	ARRUELA PRESS
15	15540921	4	040V	SCREW	PARAFUSO
16	70933498	2	020R	FITTING	CONEXÃO
17	75216418	1	188C	MANIFOLD	COLETOR

RIPPER PIPING CYLINDER
TUBULAÇÃO DO RIPPER E CILINDRO

E3.02/1 | 2

FIATALLIS

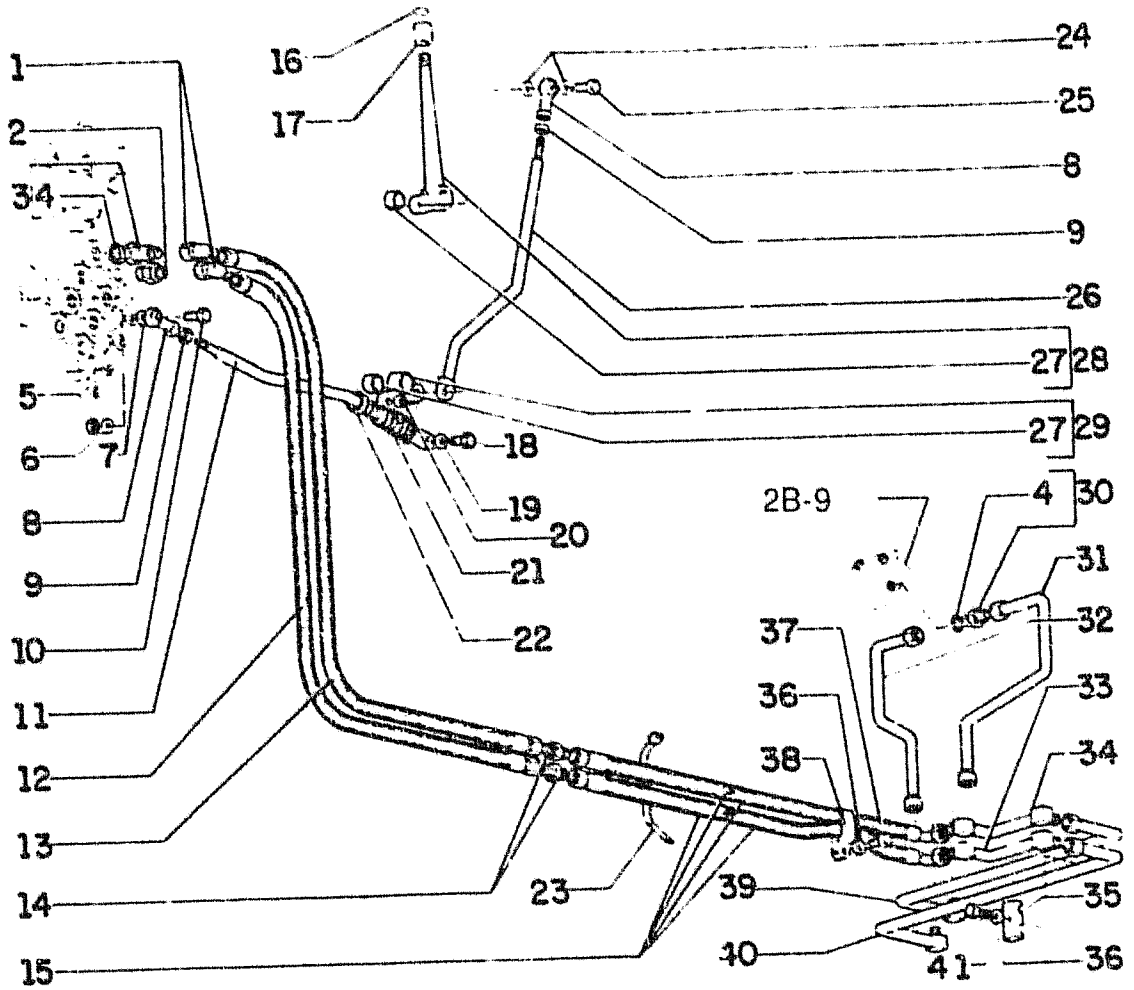

FIATALLIS FG 70R 70A 75R 75A E3.02/1 QUADRO 3 PAG. 1

ITEM	PEÇA Nº	QTDE	COD.	DESCRIPTION	DESCRIÇÃO
1	70921279	2	085G	ELBOW	COTOVELO
2	75222859	1	075B	CONNECTOR	CONECTOR
3	75237101	1	075B	CONNECTOR	CONECTOR
4	70921349	4	158G	O'RING	O'RING
5	70911025	1	010D	NUT	PORCA
6	70910287	1	170R	LOCKWASHER	ARRUELA PRESS
7	70677005	1	131R	WASHER	ARRUELA
8	70617932	2	061E	END	EXTREMIDADE
9	70911098	2	010D	NUT	PORCA
10	7312620[illegible]	1	040V	SCREW	PARAFUSO
11	75236324	1	142T	TIEROD	TIRANTE
12	73148888	1	192T	HOSE ASSY	MANGUEIRA
13	73148889	1	192T	HOSE ASSY	MANGUEIRA
14	70919066	2	020R	FITTING	CONEXÃO
15	73151891	2	192T	HOSE ASSY	MANGUEIRA
16	73134477	1	008D	DECAL	DECALCOMANIA
17	73153747	1	150P	KNOB	MANOPLA
18	70928798	2	040V	SCREW	PARAFUSO
19	70929156	2	131R	WASHER	ARRUELA
20	73153755	2	095B	BUSHING	BUCHA
21	73153774	1	166S	BELLOWS	SANFONA
22	75221602	1	031F	CLAMP	ABRAÇADEIRA
23	7093087[illegible]	12	031F	CLAMP	ABRAÇADEIRA
24	70929156	2	131R	WASHER	ARRUELA
25	70927212	1	040V	SCREW	PARAFUSO
26	73154520	1	142T	TIEROD	TIRANTE
27	73125852	2	341C	BEARING	ROLAMENTO
28	73153752	2	045L	LEVER	ALAVANCA
29	75237867	1	045L	LEVER	ALAVANCA
30	70921409	2	075B	CONNECTOR	CONECTOR
31	7521643[illegible]	1	193T	TUBE	TUBO
32	75238491	1	193T	TUBE	TUBO
33	75238493	1	193T	TUBE	TUBO
34	75238492	1	193T	TUBE	TUBO
35	70623355	1	031F	CLAMP	ABRAÇADEIRA

RIPPER PIPING
TUBULAÇAO DO RIPPER

E3.02/1 | 3

FIATALLIS

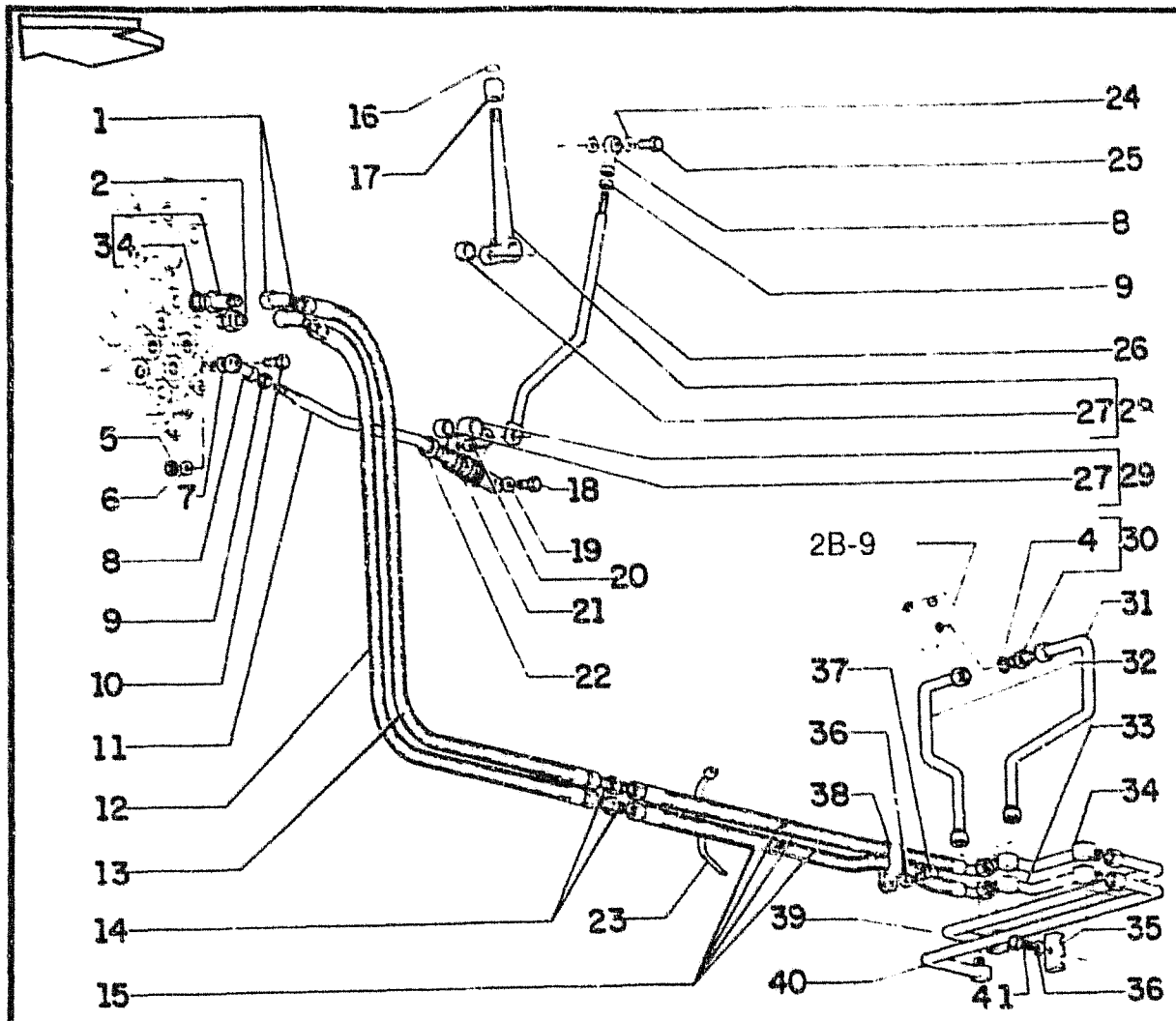

FIATALLIS FG 70R 70A 75R 75A E3.02/1 QUADRO 3 PAG. 2

ITEM	PEÇA Nº	QTDE	COD.	DESCRIPTION	DESCRIÇÃO
36	70677006	2	131R	WASHER	ARRUELA
37	70922763	1	040V	SCREW	PARAFUSO
38	70642536	1	031F	CLAMP	ABRAÇADEIRA
39	75238495	1	193T	TUBE	TUBO
40	75238494	1	193T	TUBE	TUBO

RIPPER PIPING
TUBULAÇAO DO RIPPER

E3.02/1 | 3

FIATALLIS

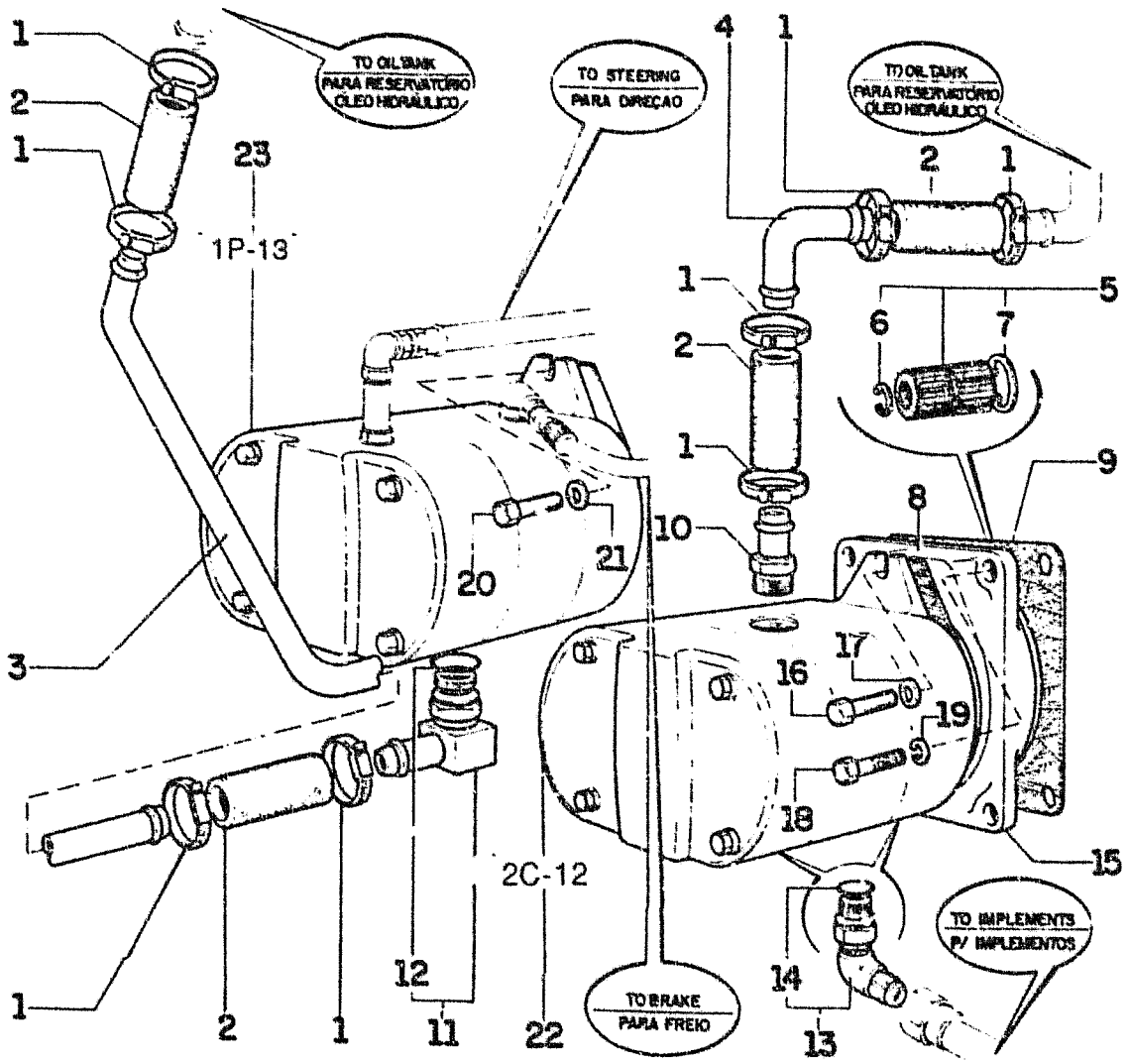

FIATALLIS FG 75R 75A E3.02/1 **QUADRO** 32 **PAG.** 1

ITEM	PEÇA Nº	QTDE	COD.	DESCRIPTION	DESCRIÇÃO
1	70921912	8	031F	CLAMP	ABRAÇADEIRA
2	73129171	4	285T	HOSE	MANGUEIRA
3	73158796	1	193T	TUBE	TUBO
4	73160061	1	193T	TUBE	TUBO
5	73160063	1	030M	SLEEVE	LUVA
6	75206093	1	187A	SNAP RING	ANEL ELASTICO
7	71004761	1	122G	SEAL	RETENTOR
8	70651322	1	120G	GASKET	JUNTA
9	70188771	1	120G	GASKET	JUNTA
10	70929258	1	020R	FITTING	CONEXÃO
11	70931240	1	085G	ELBOW	COTOVELO
12	14458680	1	158G	O'RING	O'RING
13	70921402	1	085G	ELBOW	COTOVELO
14	70921349	1	158G	O'RING	O'RING
15	73160062	1	070F	FLANGE	FLANGE
16	70921076	2	040V	SCREW	PARAFUSO
17	70677006	2	131R	WASHER	ARRUELA
18	70920582	4	040V	SCREW	PARAFUSO
19	70928460	4	131R	WASHER	ARRUELA
20	11106431	2	040V	SCREW	PARAFUSO
21	70930370	2	131R	WASHER	ARRUELA
22	75236405	1	155P	PUMP	BOMBA
23	75236406	1	155P	PUMP	BOMBA

HYDRAULIC SYSTEM
SISTEMA HIDRAULICO

E3.02/1 | 32

FIATALLIS

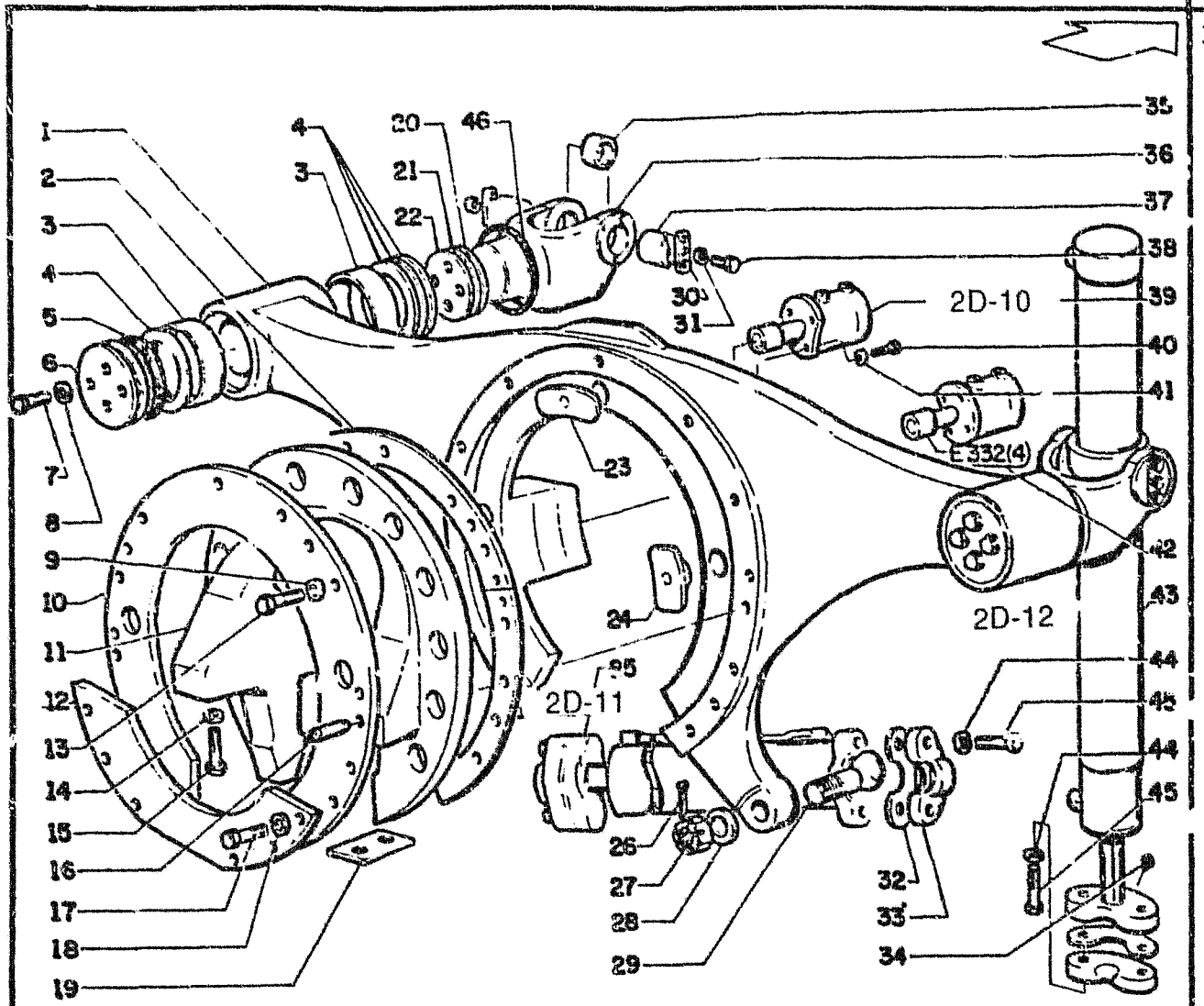

FIATALLIS FG 70R 70A 75R 75A E3.10 **QUADRO** 1 **PAG.** 1

ITEM	PEÇA Nº	QTDE	COD.	DESCRIPTION	DESCRIÇÃO
1	73127108	1	001A	SADDLE	SELA
2	73131791	*	198S	SHIM	CALÇO
3	73156874	4	095B	BUSHING	BUCHA
4	73124555	4	045A	RING	ANEL
5	73125405	4	122G	SEAL	RETENTOR
6	73124476	2	265C	COVER	TAMPA
7	70920585	8	040V	SCREW	PARAFUSO
8	70928178	8	131R	WASHER	ARRUELA
9	70912942	7	170R	LOCKWASHER	ARRUELA PRESS
10	73124471	1	045A	RING	ANEL
11	73124468	1	300S	SUPPORT	SUPORTE
12	73124480	1	105P	PLATE	CHAPA
13	70921535	7	040V	SCREW	PARAFUSO
14	70928452	8	131R	WASHER	ARRUELA
15	70925431	8	040V	SCREW	PARAFUSO
16	70910179	2	080P	PIN	PINO
17	70921174	6	040V	SCREW	PARAFUSO
18	70912942	6	170R	LOCKWASHER	ARRUELA PRESS
19	73130333	*	198S	SHIM	CALÇO
20	73125406	*	198S	SHIM	CALÇO
21	73125407	*	198S	SHIM	CALÇO
22	73125408	*	198S	SHIM	CALÇO
23	73124551	1	095B	BUSHING	BUCHA
24	73124552	2	095B	BUSHING	BUCHA
25	75220709	1	164C	CYLINDER	CILINDRO
26	70900808	1	270C	COTTER PIN	CONTRA PINO
27	70911174	1	010D	NUT	PORCA
28	70900822	1	131R	WASHER	ARRUELA
29	73125403	1	140S	BALL	ESFERA
30	70607617	4	151B	BAR	BARRA
31	70910287	12	170R	LOCKWASHER	ARRUELA PRESS
32	70620920	*	198S	SHIM	CALÇO
33	70620479	4	265C	COVER.	TAMPA
34	70914465	4	060I	GREASE FITTING	PINO GRAXEIRO
35	73125404	4	095B	BUSHING	BUCHA
36	73124473	2	085F	YOKE	FORQUILHA

SADDLE AND CYLINDER
SELA E CILINDRO ACIONAMENTO

E3.10 | 1

FIATALLIS

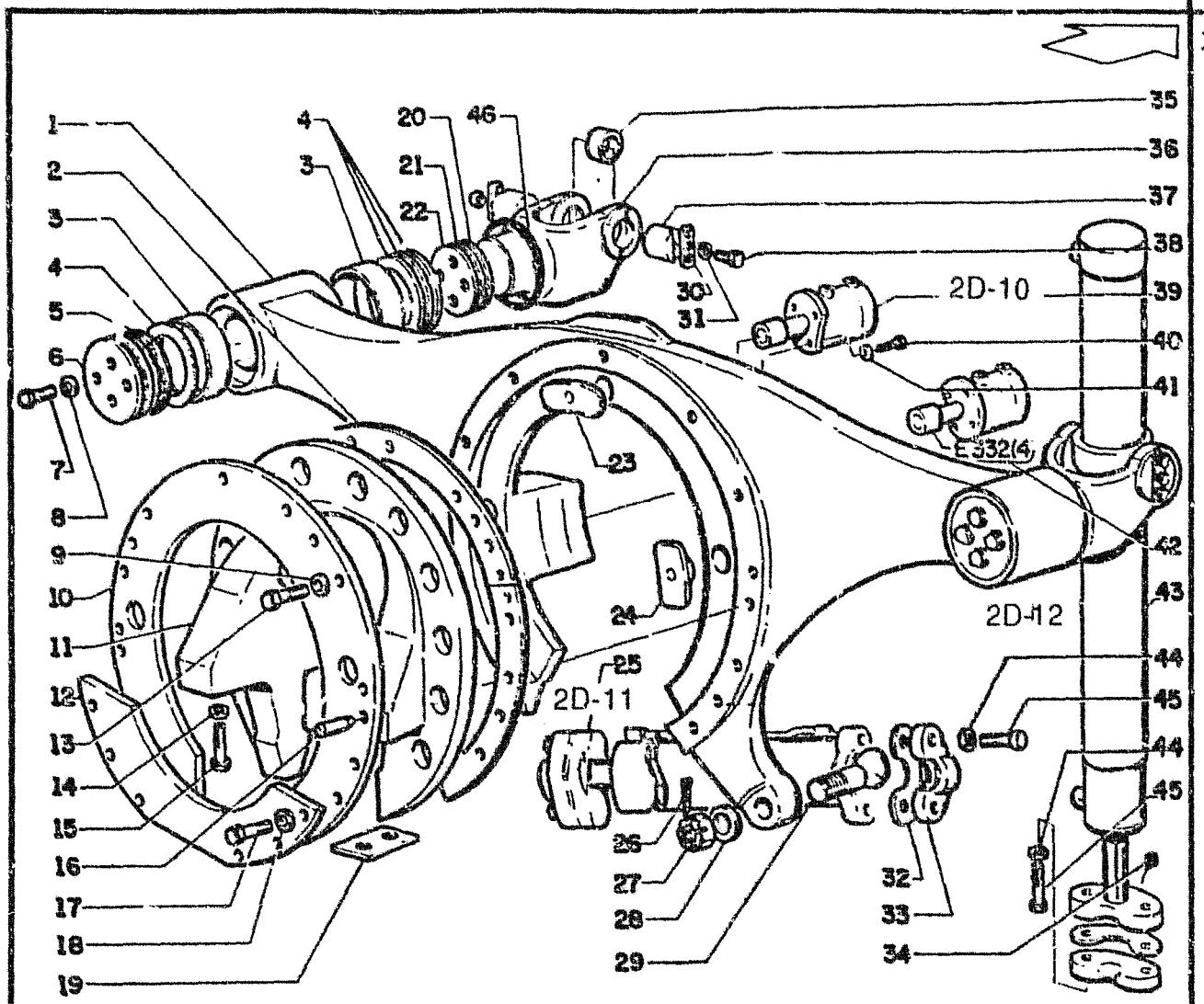

FIATALLIS FG 70R 70A 75R 75A E3.10 **QUADRO** 1 **PAG.** 2

ITEM	PEÇA Nº	QTDE	COD.	DESCRIPTION	DESCRIÇÃO
37	73125400	4	080P	PIN	PINO
38	70923276	12	040V	SCREW	PARAFUSO
39	73124575	1	164C	CYLINDRO	CILINDRO
40	70920583	8	040V	SCREW	PARAFUSO
41	70912441	8	170R	LOCKWASHER	ARRUELA PRESS
42	73124588	1	164C	CYLINDRO	CILINDRO
43	75220788	2	11GI	LIFT CYLINDERS	CIL. ELEVAÇÃO
44	70914726	8	170R	LOCKWASHER	ARRUELA PRESS
45	70923137	8	040V	SCREW	PARAFUSO
46	73124475	2	045A	RING	ANEL

* **USAR QUANT. NECESSÁRIA**
AS REQUIRED

	SADDLE AND CYLINDER SELA E CILINDRO ACIONAMENTO	E3.10	1

FIATALLIS

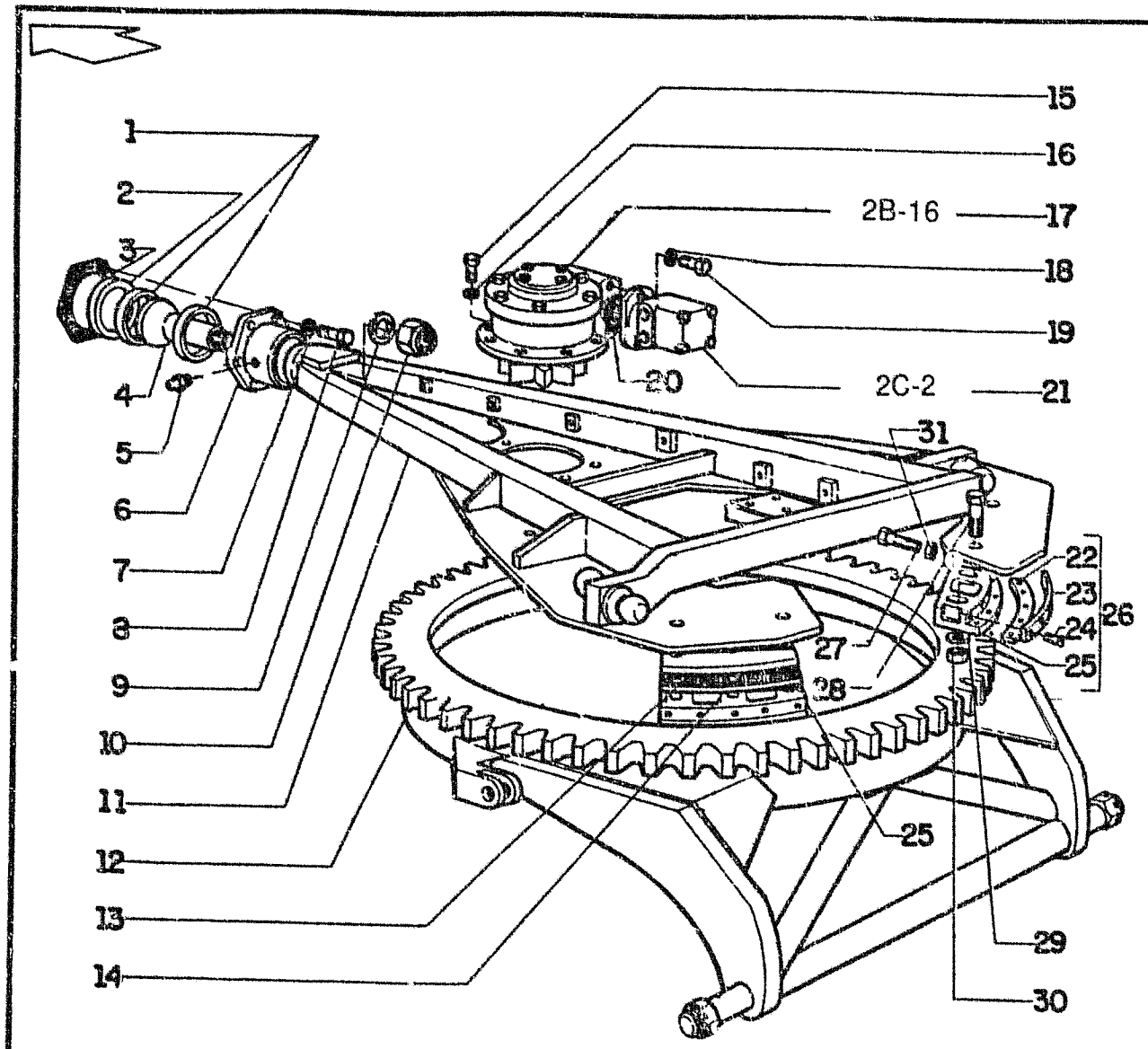

FIATALLIS FG 70R 70A 75R 75A E3.10 **QUADRO** 2 **PAG.** 1

ITEM	PEÇA Nº	QTDE	COD.	DESCRIPTION	DESCRIÇÃO
1	73130017	2	095B	BUSHING	BUCHA
2	73125534	1	075D	SPACER	ESPAÇADOR
3	70673457	10	198S	SHIM	CALÇO
4	73125531	1	140S	BALL	ESFERA
5	70912497	1	060I	GREASE FITTING	PINO GRAXEIRO
6	73125524	1	079L	REST	MANCAL
7	70912942	8	170R	LOCKWASHER	ARRUELA PRESSÃO
8	70921174	8	040V	SCREW	PARAFUSO
9	70927662	1	131R	WASHER	ARRUELA
10	70921374	1	010D	NUT	PORCA
11	75221396	1	013B	DRAWBAR	BARRA DE TRAÇÃO
12	73133579	1	174R	CIRCLE	CIRCULO
13	73125482	4	105P	PLATE	CHAPA
14	73125483	40	198S	SHIM	CALÇO
15	70925415	6	040V	SCREW	PARAFUSO
16	70928914	6	131R	WASHER	ARRUELA
17	75215790	1	058R	REDUCTION GEAR	REDUTOR
18	70928460	2	131R	WASHER	ARRUELA
19	70922508	2	040V	SCREW	PARAFUSO
20	70930278	1	158G	O'RING	O'RING
21	73153845	1	127M	HYDRAULIC MOTOR	MOTOR HIDRAUL.
22	73125480	4	295S	SHOE	SAPATA
23	73125481	4	295S	SHOE	SAPATA
24	73126330	40	040V	SCREW	PARAFUSO
25	73125488	4	145G	GUIDE	GUIA
26	73125517	4	145G	GUIDE	GUIA
27	73125522	8	040V	SCREW	PARAFUSO
28	70929092	8	040V	SCREW	PARAFUSO
29	70929704	8	131R	WASHER	ARRUELA
30	70053994	8	010D	NUT	PORCA
31	70901421	8	010D	NUT	PORCA

MOLDBORD DRAWBAR AND CIRCLE
BARRA DE TRAÇAO E CIRCULO

E3.10 | 2

FIATALLIS

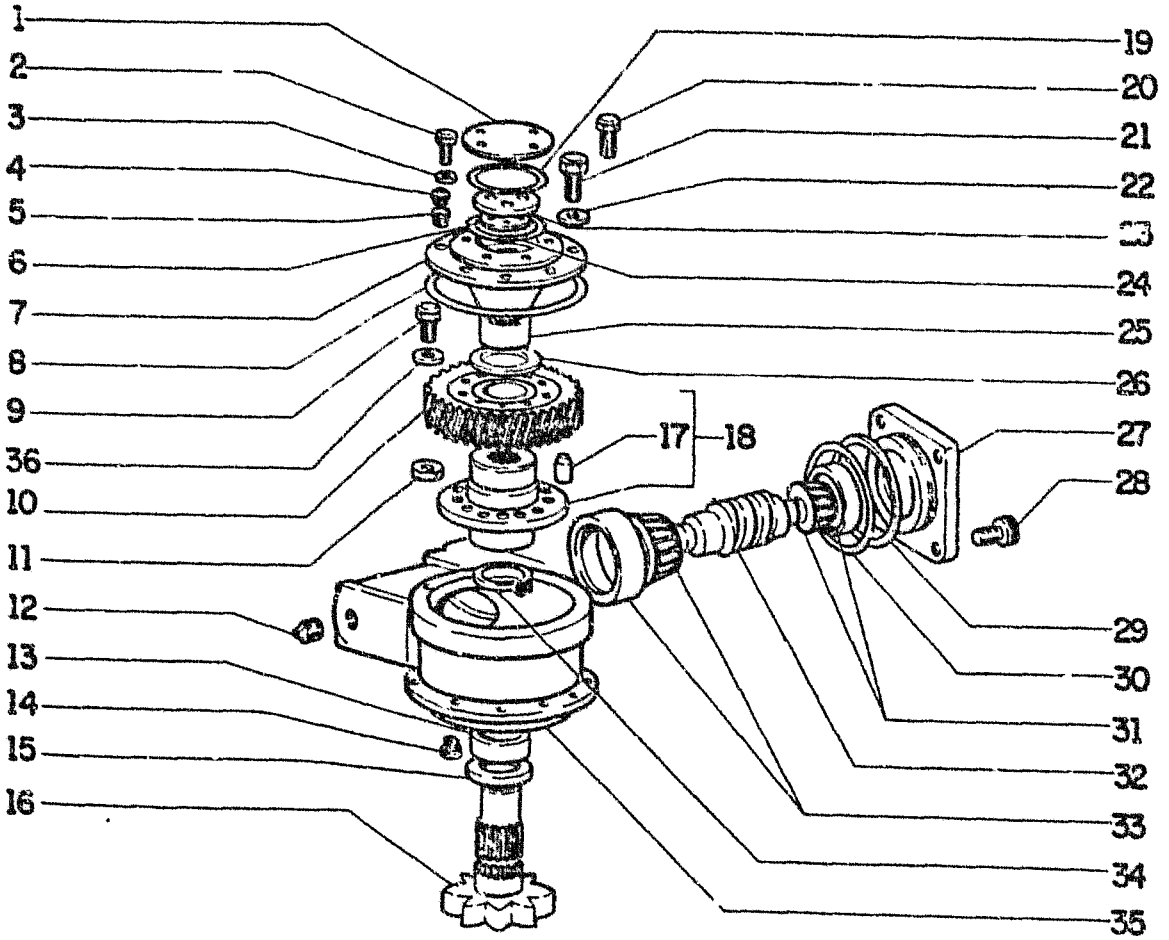

FIATALLIS FG 70R 70A 75R 75A E3.10 **QUADRO 4 PAG. 1**

ITEM	PEÇA Nº	QTDE	COD.	DESCRIPTION	DESCRIÇÃO
1	73125496	1	265C	COVER	TAMPA
2	70921076	3	040V	SCREW	PARAFUSO
3	70929156	3	131R	WASHER	ARRUELA
4	70916619	1	060I	GREASE FITTING	PINO GRAXEIRO
5	70901838	1	050T	PLUG	BUJÃO
6	73125519	-	198S	SHIM 0,250 mm	CALÇO
6	73125520	-	198S	SHIM 0,130 mm	CALÇO
6	73125521	-	198S	SHIM 0,076 mm	CALÇO
7	73125511	1	265C	COVER	TAMPA
8	70925457	1	158G	O'RING	O'RING
9	70922744	10	040V	SCREW	PARAFUSO
10	73125509	1	297C	RING GEAR	COROA
11	70911030	10	010D	NUT	PORCA
12	70901652	1	050T	PLUG	BUJÃO
13	73130969	1	095B	BUSHING	BUCHA
14	70920416	1	056T	DRAIN PLUG	BUJÃO DE DRENO
15	70634037	1	122G	SEAL	RETENTOR
16	73125501	1	016A	SHAFT	EIXO
17	73129961	2	090G	DOWEL	PINO CENTRAGEM
18	73130013	1	135M	HUB	CUBO
19	70923817	1	158G	O'RING	O'RING
20	70922300	4	040V	SCREW	PARAFUSO
21	70920574	6	040V	SCREW	PARAFUSO
22	70912441	6	170R	LOCKWASHER	ARRUELA PRESS
23	73125500	1	265C	COVER	TAMPA
24	73125494	1	131R	WASHER	ARRUELA
25	73125493	1	095B	BUSHING	BUCHA
26	73125494	1	131R	WASHER	ARRUELA
27	75215791	1	265C	COVER	TAMPA
28	70922065	4	040V	SCREW	PARAFUSO
29	73125497	-	198S	SHIM 0,250 mm	CALÇO
29	73125498	-	198S	SHIM 0,130 mm	CALÇO
29	73125499	-	198S	SHIM 0,076 mm	CALÇO
30	70923590	1	158G	O'RING	O'RING

REDUCTION GEAR
REDUTOR

E3.10 | 4

FIATALLIS

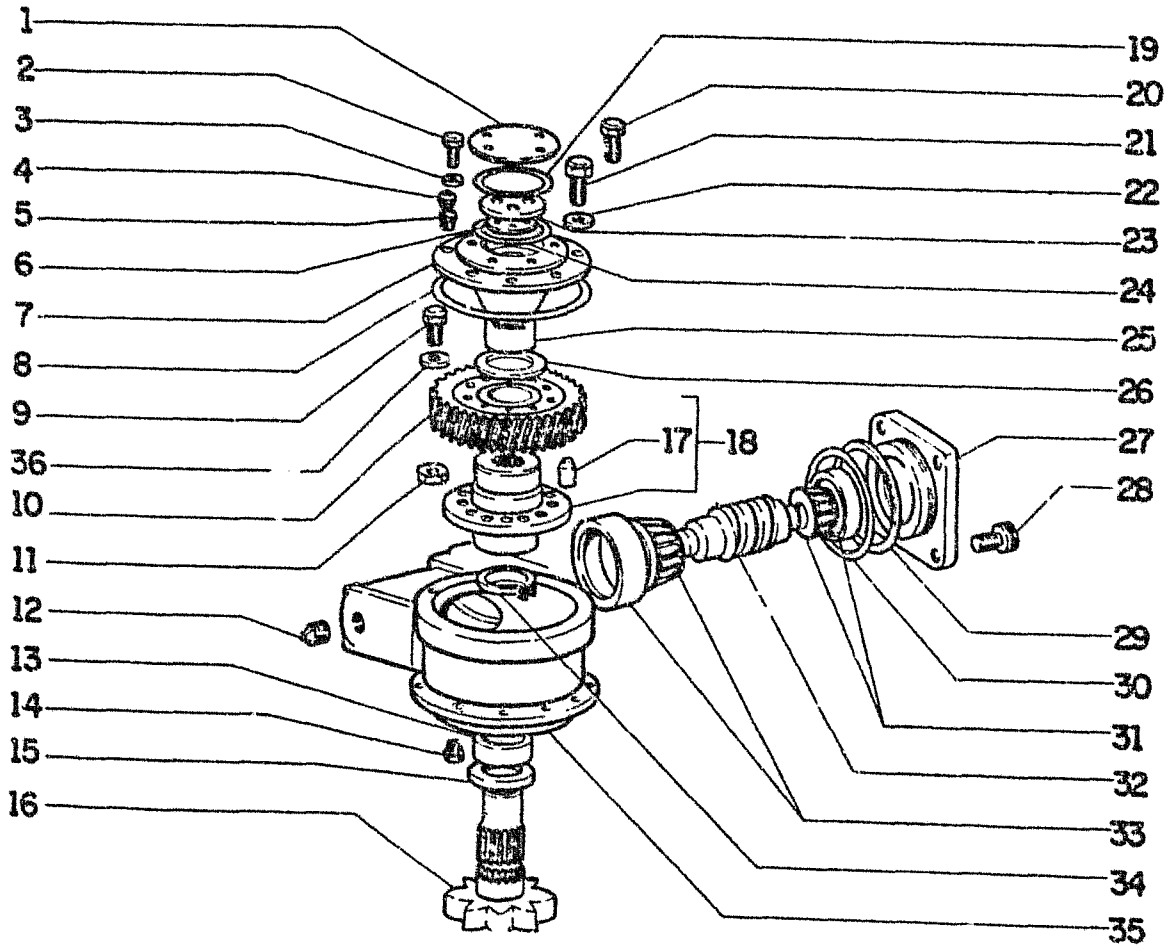

FIATALLIS FG 70R 70A 75R 75A E3.10 **QUADRO** 4 **PAG.** 1

ITEM	PEÇA Nº	QTDE	COD.	DESCRIPTION	DESCRIÇÃO
33	73124983	1	341C	BEARING	ROLAMENTO
34	70622212	1	187A	SNAP RING	ANEL ELÁSTICO
35	73125513	1	035S	CASE	CARCAÇA
36	70928914	10	131R	WASHER	ARRUELA

REDUCTION GEAR
REDUTOR

E3.10 | 4

DESCRIPTION	SBGRP	TAV	GRID
PIPING TRANSMISSION FG70	B201	15	1I-7
RADIATOR	A401	2	1G-14
GRID	A401	2	1G-14
PIPING	A401	1	1G-13
WRAP AROUND	L101	1	2F-13
REAR AXLE BEVEL GEAR	B403	3	1N-8
AXLE BULL GEAR	B403	1	1N-6
AXLE DRIVE SHAFTS	B403	3	1N-8
AXLE EXTENSION HOUSING	B403	3	1N-8
AXLE PINION GEAR	B403	2	1N-7
AXLE SUPPORT	B403	6	1N-12
AXLE WHEEL ENDS	D316	1	1P-14
RESERVOIR, IMPLEMENT OIL	E328	1	2C-10
REVERSE & 3 - 4 SPEED CLUTCH FG75	B201/1	14	1L-8
REVERSE CLUTCH FG70	B201	6	1H-14
REVERSE IDLER ASSEMBLY FG75	B201/1	13	1L-7
RIPPER	E310/1	2	2C-4
CYLINDER	E332/1	2	2D-15
VALVE	E331	3	2C-15
ROTARY DISTRIBUTOR COMPONENTS	E331	1	2C-13
ROTARY DISTRIBUTOR	E302	23	2A-12
SADDLE	E310	1	2B-13
LOCK PIN CYLINDER	E332	4	2D-10
SADDLE LOCK VALVE	E331	4	2C-16
SCARIFIER	E310/1	1	2C-3
CYLINDER	E332/1	1	2D-14
VALVE	E331	6	2D-2
SEAT	L604	1	2H-2
SEAT BELT	L604	2	2H-3
SECOND SPEED CLUTCH FG70	B201	7	1H-15
SENSORS, MONITORING	F401	16	2F-4
SENSORS, MONITORING	F401	17	2F-5
STARTER COMPONENTS	F608	1	2F-11
STARTER MOTOR	F200	1	2E-2
STEERING CONTROL VALVE	D202	1	1P-10
CYLINDER	D212	1	1P-12
PUMP COMPONENTS	D213	1	1P-13
WHEEL	D201	1	1P-3
SWITCH ARTICULATION	F401	19	2F-7
PANEL ELECTRICAL CABLE	F401	2	2E-4
PANEL ELECTRICAL	F401	1	2E-3
TANDEM	D333	1	1P-16
TANK, IMPLEMENT OIL	E328	1	2C-10
THERMOSTAT,ENGINE COOLANT	A402	1	1G-15
THIRD SPEED CLUTCH FG70	B201	6	1H-14
THROTTLE CONTROL	A221	1	1F-3
CONTROL LEVER	A221	4	1F-6
LINKAGE FG70	A221	2	1F-4

DESCRIPTION	SBGRP	TAV	GRID
THROTTLE LINKAGE FG75	A221	3	1F-5
TIRES & WHEELS	D316	2	1P-15
TRANSMISSION FG70	B200	1	1H-6
TRANSMISSION FG70	B200/1	1	1H-7
CASE & TUBING FG70	B201	1	1H-8
CONTROL FG75	B207/1	2	1M-13
CONTROL LEVER FG70	B207	2	1M-12
CONTROL LINKAGE FG70	B207	1	1M-10
CONTROL VALVE FG70	B201	18	1I-10
CONTROL VALVE FG75	B201/1	20	1L-14
CONTROL VALVE FG75	B201/1	21	1L-15
CONTROL VALVE FG75	B201/1	22	1L-16
CONTROL VALVE FG75	B201/1	23	1L-17
DECLUTCH VALVE	C101	6	1O-2
GEARING FG70	B201	5	1H-13
GEARING FG75	B201/1	8	1L-2
GUARD	D101	2	1O-11
HEAT EXCHANGER FG7	B206/1	1	1M-8
HEAT EXCHANGER FG70	B206	3	1M-7
HOUSING FG75	B201/1	4	1I-14
IDLER SHAFT FG75	B201/1	17	1L-11
MODUALTING VALVE FG75	B201/1	24	1M-2
MODULATING VALVE FG70	B201	18	1I-10
OIL FILTER FG70	B201	11	1I-3
OIL FILTER FG75	B217	1	1M-14
OIL FILTER LINES FG75	B206	1	1M-5
OIL DIPSTICK FG70	B206	2	1M-6
OIL DIPSTICK FG75	B206/1	2	1M-9
OUTPUT FLANGE FG70	B201	13	1I-5
OUTPUT SHAFT FG70	B201	10	1I-2
OUTPUT SHAFT FG75	B201/1	18	1L-12
PUMP FG70	B201	15	1I-7
PUMP MOUNT FG75	B201/1	19	1L-13
REGULATING VALVE FG70	B201	16	1I-8
REGULATING VALVE FG75	B201/1	25	1M-3
REGULATING VALVE FG75	B201/1	26	1M-4
TURN SIGNAL	F401	13	2E-15
VALVE ARTICULATION	E331	2	2C-14
BLADE LIFT	E331	5	2C-17
CIRCLE SHIFT	E331	3	2C-15
END CAP	E331	7	2D-3
END CAP	E331	9	2D-4
LATERAL SHIFT	E331	2	2C-14
MAIN RELIEF , LEFT	E331	10	2D-5
MAIN RELIEF , RIGHT	E331	11	2D-6
MOLDBOARD PITCH	E331	2	2C-14
RIPPER	E331	3	2C-15
SADDLE LOCK	E331	4	2C-16
SCARIFIER	E331	6	2D-2
STEERING CONTROL VALVE	D202	1	1P-10

DESCRIPTION	SBGRP	TAV	GRID
VALVE TRANS CONTROL FG75	B201/1	22	1L-16
TRANS CONTROL FG75	B201/1	23	1L 17
TRANS MODULATING FG70	B201	18	1I-10
TRANS MODUALTING FG75	B201/1	24	1M-2
TRANS REGULATING FG75	B201/1	25	1M-3
TRANS REGULATING FG75	B201/1	26	1M-4
TRANSMISSION CONTROL FG70	B201	18	1I-10
WHEEL LEAN	E331	2	2C-14
WHEEL LEAN CYLINDER	E332	1	2D-7
WHEEL LEAN VALVE	E331	2	2C-14
WHEELS & TIRES	D316	2	1P-15
WINDOW WIPERS	L104	6	2G-7
WIPERS WINDOW	L104	6	2G-7

FIATALLIS

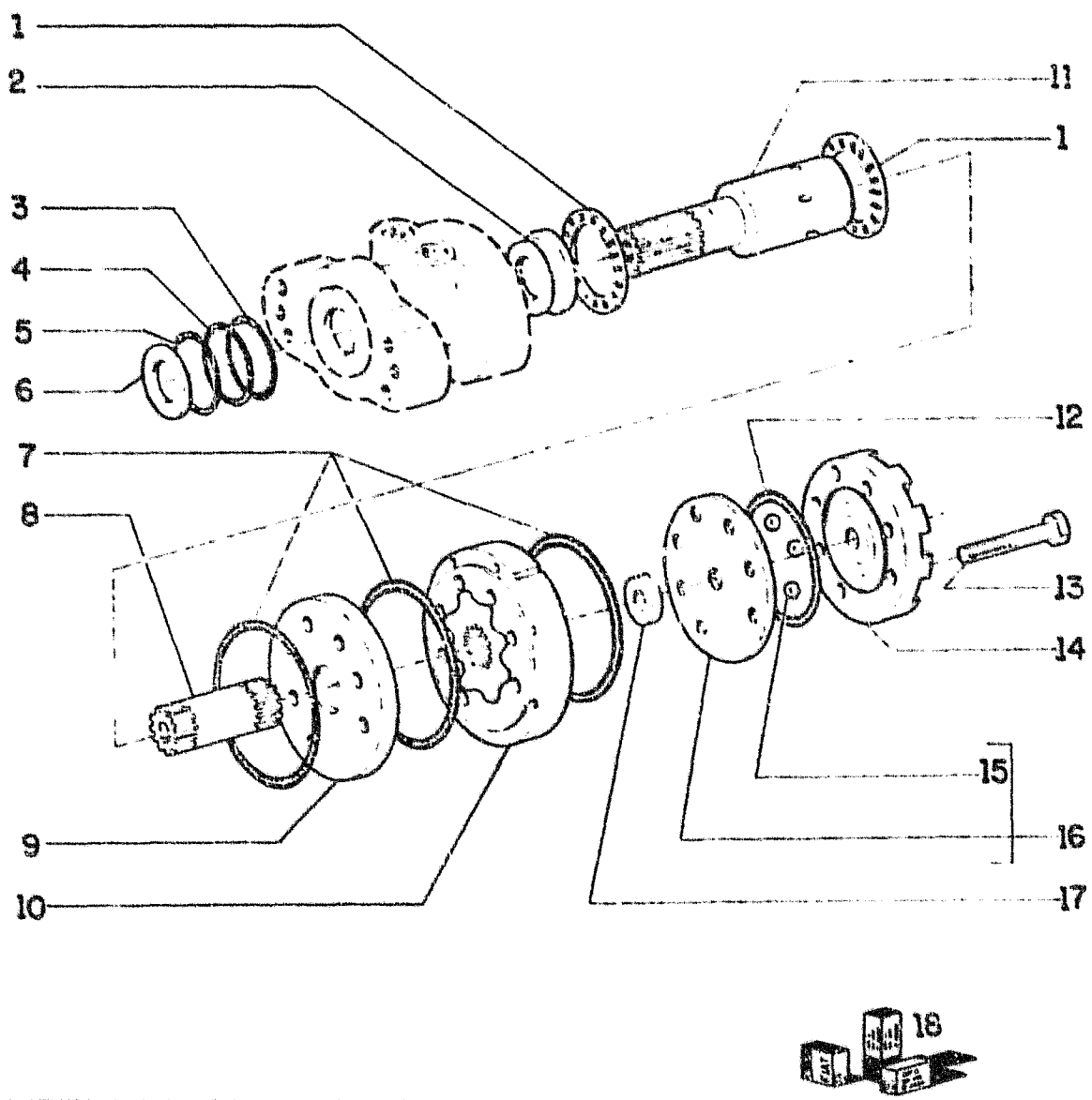

FIATALLIS FG 70R 70A 75R 75A E3.10 **QUADRO 5** **PAG. 1**

ITEM	PEÇA Nº	QTDE	COD.	DESCRIPTION	DESCRIÇÃO
1	75206718	2	341C	BEARING	ROLAMENTO
2	75206719	1	122G	SEAL	RETENTOR
3	75206720	1	122G	SEAL	RETENTOR
4	75206721	1	158G	O'RING	O'RING
5	75206722	1	045A	RING	ANEL
6	75206723	1	131R	WASHER	ARRUELA
7	75206724	3	158G	O'RING	O'RING
8	75206725	1	016A	SHAFT	EIXO
9	75206726	1	105P	PLATE	CHAPA
	75206727	1	070R	GUARD	PROTEÇÃO
10	75206728	1	145R	ROTOR	ROTOR
11	75206729	1	016A	SHAFT	EIXO
12	75206730	1	122G	SEAL	RETENTOR
13	75206731	7	040V	SCREW	PARAFUSO
14	75206732	1	265C	COVER	TAMPA
15	75206733	4	140S	BALL	ESFERA
16	75206734	1	105P	PLATE	CHAPA
17	75206735	1	075D	SPACER	ESPAÇADOR
18	75206736	K	002K	KIT	KIT

HYDRAULIC MOTOR ASSEMBLY
MOTOR HIDRAULICO DO GIRA CÍRCULO

E3.10 | 5

FIATALLIS

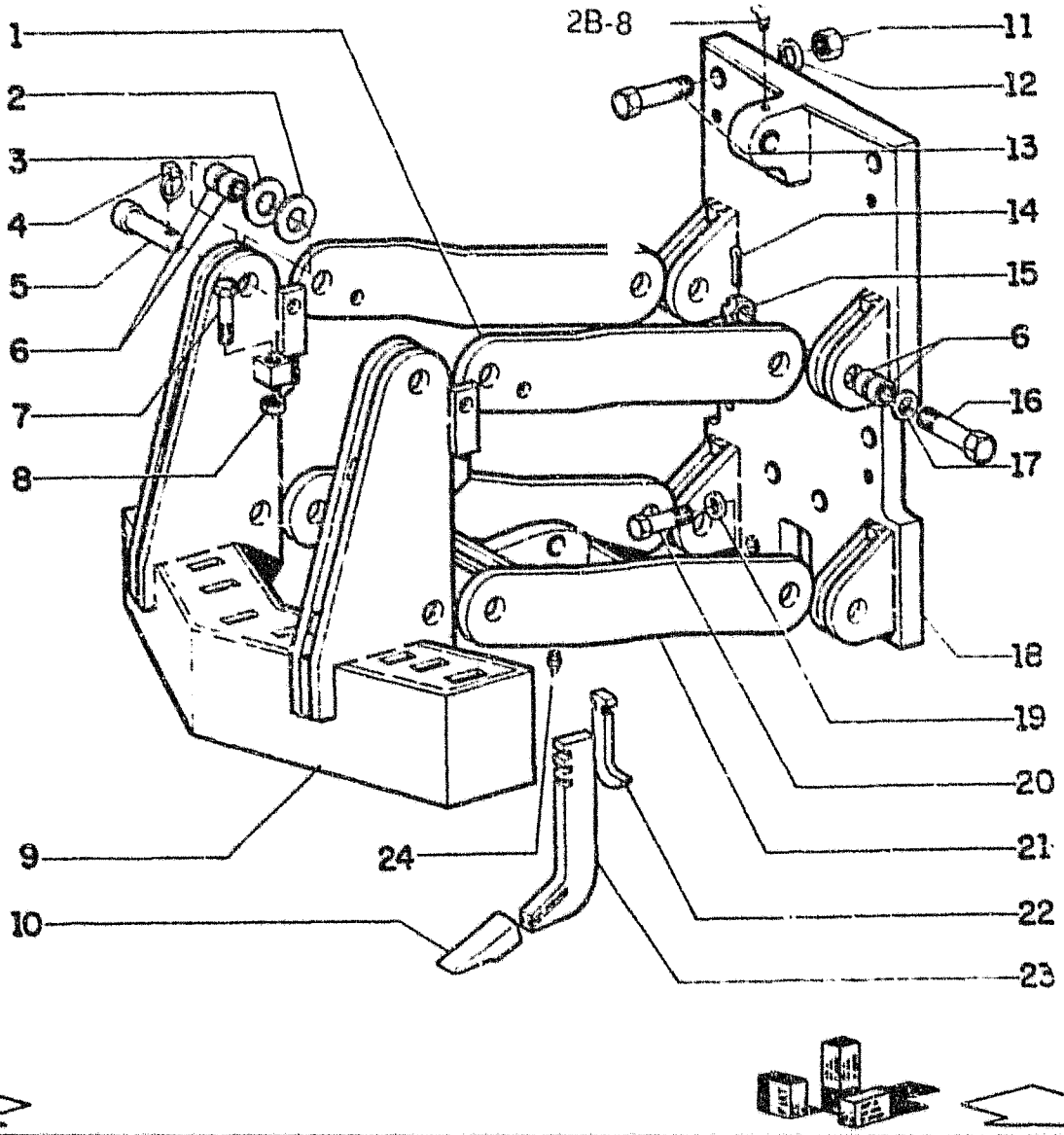

FIATALLIS FG 70R 70A 75R 75A E3.10/1 **QUADRO 1 PAG. 1**

ITEM	PEÇA Nº	QTDE	COD.	DESCRIPTION	DESCRIÇÃO
1	73132794	2	110P	PLATE	PLACA
2	73127763	16	131R	WASHER	ARRUELA
3	73127764	16	131R	WASHER	ARRUELA
4	73132781	24	080P	PIN	PINO
5	73132780	4	080P	PIN	PINO
6	73126245	24	095B	BUSHING	BUCHA
7	70933227	2	040V	SCREW	PARAFUSO
8	70917793	2	010D	NUT	PORCA
9	73126264	1	004T	WALL CHART	QUADRO
10	70062160	11	242P	SHANK TIP	PONTA DO DENTE
11	70927619	6	010D	NUT	PORCA
12	70929276	6	131R	WASHER	ARRUELA
13	70925427	6	040V	SCREW	PARAFUSO
14	70911689	4	080P	PIN	PINO
15	70911061	4	010D	NUT	PORCA
16	70082175	4	040V	SCREW	PARAFUSO
17	70912299	4	131R	WASHER	ARRUELA
18	73126263	1	300S	SUPPORT	SUPORTE
19	70678072	2	131R	WASHER	ARRUELA
20	70926785	2	040V	SCREW	PARAFUSO
21	73126250	1	130B	ARM	BRAÇO
22	73125907	11	060L	KEY	CHAVETA
23	70677256	11	090A	ROD	HASTE
24	70914465	1	060I	GREASE FITTING	PINO GRAXEIRO

SCARIFIER
ESCARIFICADOR

E3.10/1 | 1

FIATALLIS

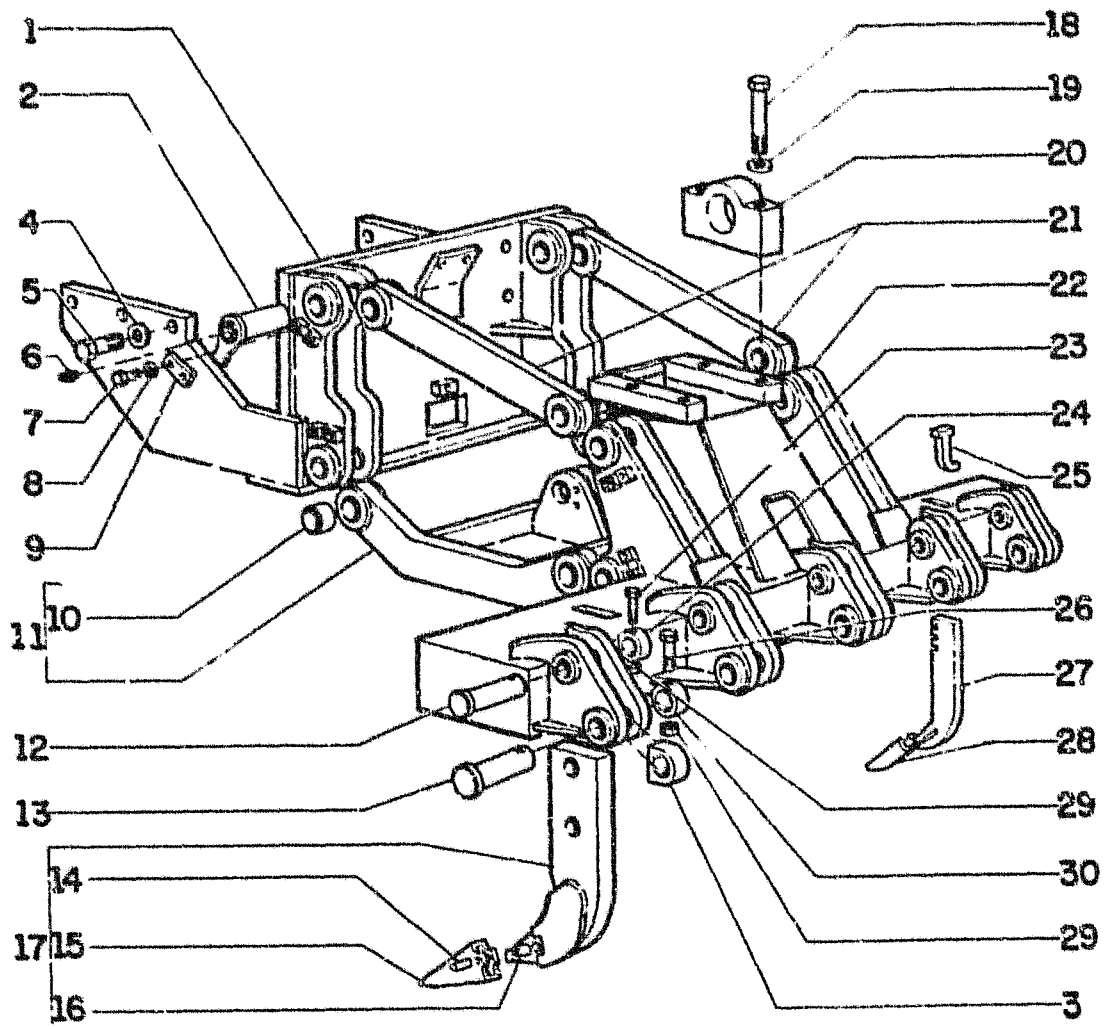

FIATALLIS FG 70R 70A 75R 75A E3.10/1 **QUADRO** 3 **PAG.** 1

ITEM	PEÇA Nº	QTDE	COD.	DESCRIPTION	DESCRIÇÃO
1	75216494	1	300S	SUPPORT	SUPORTE
2	75216516	8	080P	PIN	PINO
3	75216517	5	300S	SUPPORT	SUPORTE
4	70928370	16	131R	WASHER	ARRUELA
5	70926785	16	040V	SCREW	PARAFUSO
6	13407211	8	060I	GREASE FITTING	PINO GRAXEIRO
7	15540431	16	040V	SCREW	PARAFUSO
8	14254231	16	040V	SCREW	PARAFUSO
9	75216512	8	105P	PLATE	CHAPA
10	75216487	16	095B	BUSHING	BUCHA
11	75216489	1	072I	FRAME	CHASSI
12	75216513	5	080P	PIN	PINO
13	75216509	5	080P	PIN	PINO
14	8282869	5	080P	PIN	PINO
15	8282867	5	025D	RIPPER SHANK	DENTE DO RIPPER
16	8282870	5	030M	SLEEVE	LUVA
17	75216444	5	025D	RIPPER SHANK	DENTE DO RIPPER
18	15861721	4	040V	SCREW	PARAFUSO
19	14199510	4	113P	LOCKPLATE	PLACA TRAVAM.
20	8299560	2	079L	REST	MANCAL
21	75216485	2	045L	LEVER	ALAVANCA
22	75216474	1	1501	TOOL BAR	PORTA FERRAM.
23	70922510	5	040V	SCREW	PARAFUSO
24	75216511	5	045A	RING	ANEL
25	73125907	4	060L	KEY	CHAVETA
26	70921598	5	040V	SCREW	PARAFUSO
27	70677256	4	090A	ROD	HASTE
28	70002160	4	242P	SHANK TIP	PONTA DO DENTE
29	70911028	10	010D	NUT	PORCA
30	75216510	5	045A	RING	ANEL

RIPPER TOOL BAR AND LINKAGE (73141576)
BARRA DO IMPLEM. E ARTIC. DO ESCARIFICADOR (73141576)

E3.10/1 | 2

FIATALLIS

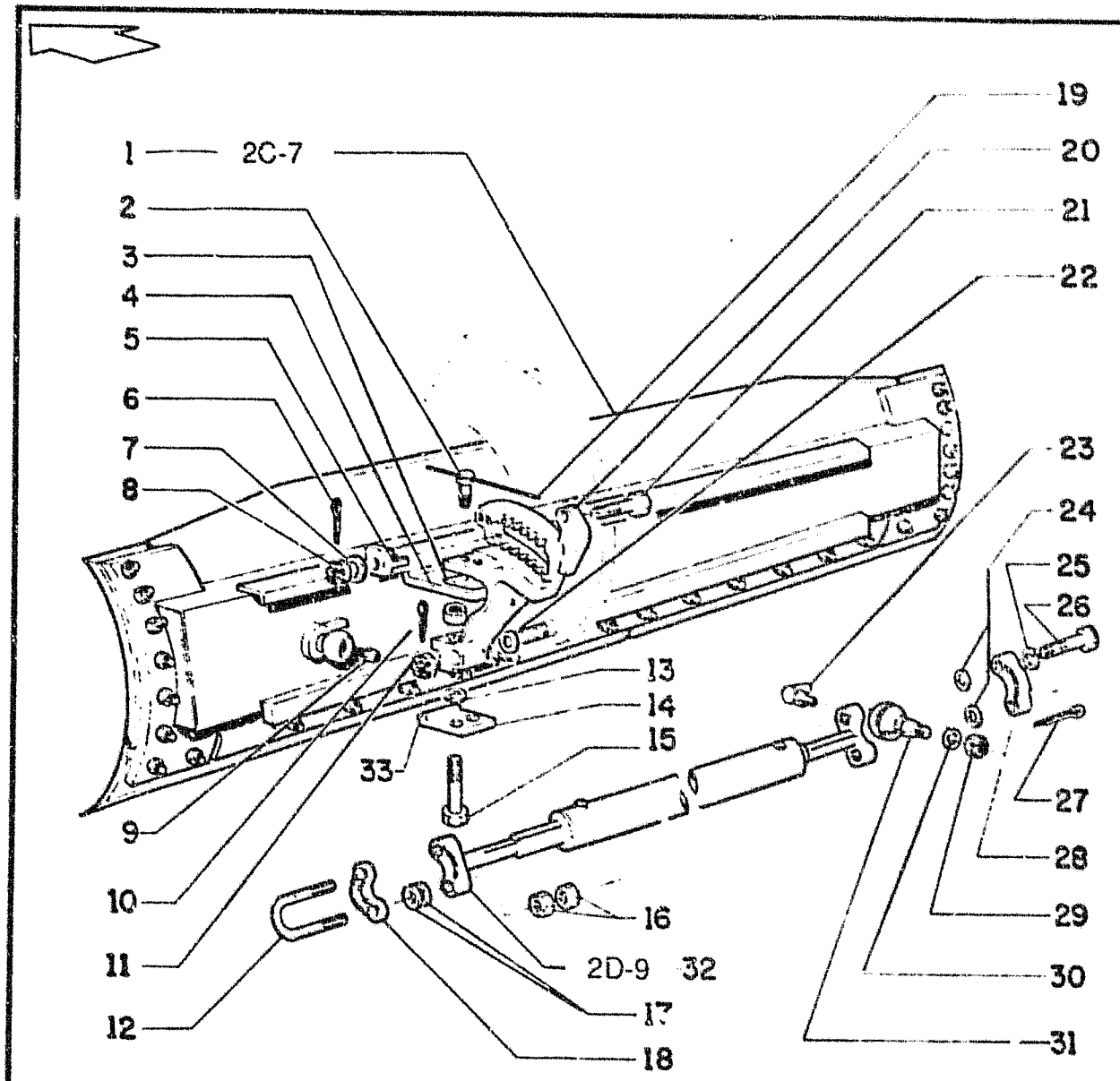

FIATALLIS FG 70R 70A 75R 75A E3.13 **QUADRO** 1 **PAG.** 1

ITEM	PEÇA Nº	QTDE	COD.	DESCRIPTION	DESCRIÇÃO
1	73129587	1	010L	MOLDBOARD	LÂMINA
2	70929083	4	040V	SCREW	PARAFUSO
3	73154653	1	105P	PLATE	CHAPA
4	73154652	1	145G	GUIDE	GUIA
5	70687675	1	145G	GUIDE (L.H.)	GUIA (ESQ.)
5	70687676	1	145G	GUIDE (R.H.)	GUIA (DIR.)
6	70900813	1	270C	COTTER PIN	CONTRA PINO
7	70602663	2	131R	WASHER	ARRUELA
8	70918853	2	010D	NUT	PORCA
9	70914465	1	060I	GREASE FITTING	PINO GRAXEIRO
10	70911069	1	270C	COTTER PIN	CONTRA PINO
11	70911174	2	010D	NUT	PORCA
12	70605665	1	089G	CLIP	GRAMPO
13	70915978	20	131R	WASHER	ARRUELA
14	70079507	2	300S	SUPPORT	SUPORTE
15	70928410	4	040V	SCREW	PARAFUSO
16	70911049	4	010D	NUT	PORCA
17	70053992	16	198S	SHIM	CALÇO
18	70053986	1	075S	BALL SOCKET	SEDE ESFÉRICA
19	70023633	2	061F	STEEL WIRE	ARAME DE AÇO
20	75219871	1	080M	CONSOLE (L.H)	CONSOLE (ESQ.)
	75219870	1	080M	CONSOLE (R.H)	CONSOLE (DIR.)
21	70662676	2	040V	SCREW	PARAFUSO
22	70634237	6	131R	WASHER	ARRUELA
23	70915276	1	060I	GREASE FITTING	PINO GRAXEIRO
24	70930364	2	131R	WASHER	ARRUELA
25	70912942	2	170R	LOCKWASHER	ARRUELA PRESS
26	70921597	2	040V	SCREW	PARAFUSO
27	70900808	1	270C	COTTER PIN	CONTRA PINO
28	70683870	1	075S	BALL SOCKET	SEDE ESFÉRICA
29	70911174	1	010D	NUT	PORCA

MOLDBOARD
LAMINA

E3.13 | 1

FIATALLIS

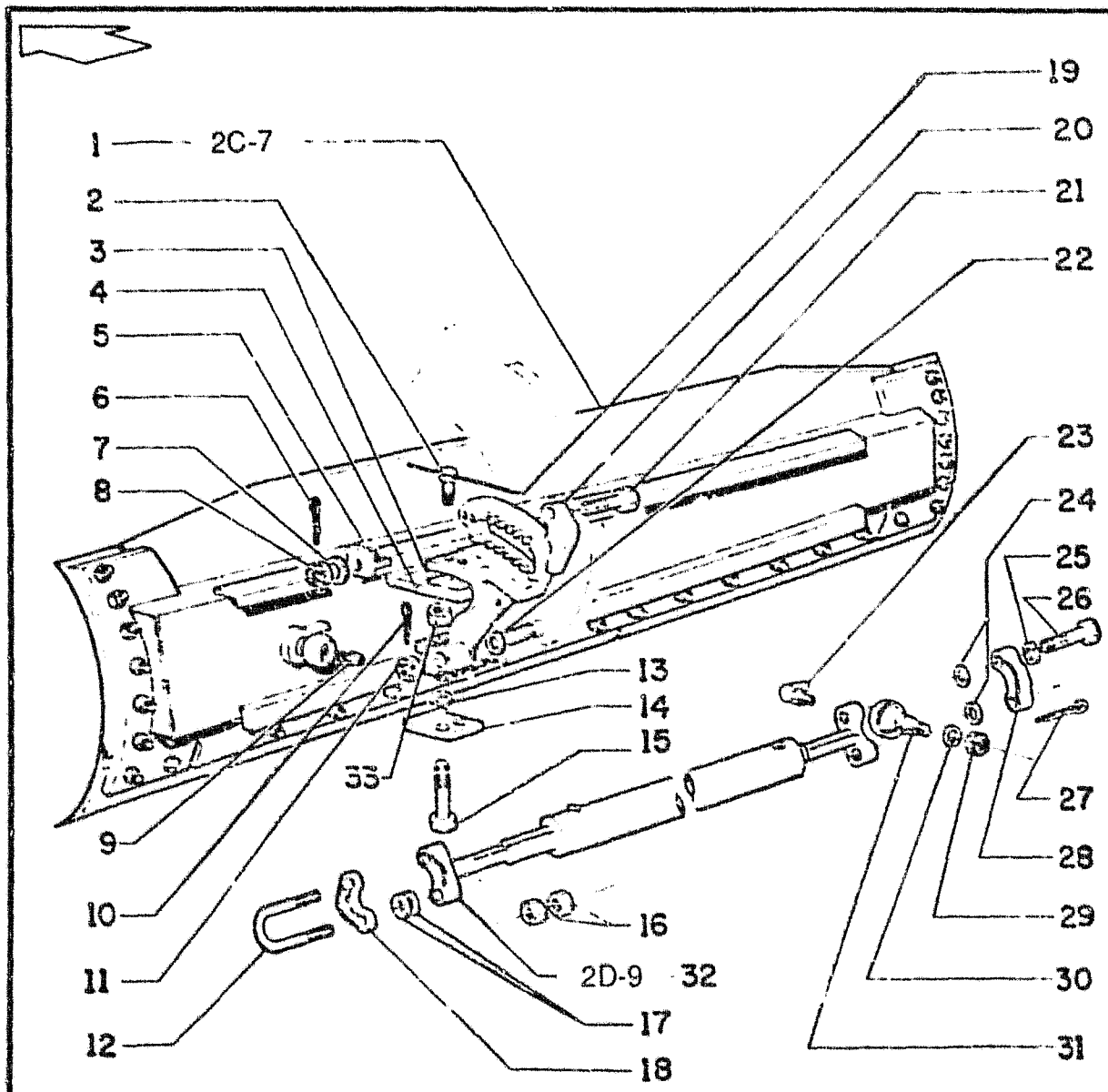

FIATALLIS FG 70R 70A 75R 75A E3.13 QUADRO 1 PAG. 2

ITEM	PEÇA Nº	QTDE	COD.	DESCRIPTION	DESCRIÇÃO
30	70900822	1	131R	WASHER	ARRUELA
31	70081334	1	140S	BALL	ESFERA
32	75220868	1	164C	CYLINDER	CILINDRO
33	70933178	4	010D	NUT	PORCA

MOLDBOARD
LAMINA

E3.13 | 1

FIATALLIS

FIATALLIS FG 70R 70A 75R 75A E3.13 QUADRO 2 PAG. 1

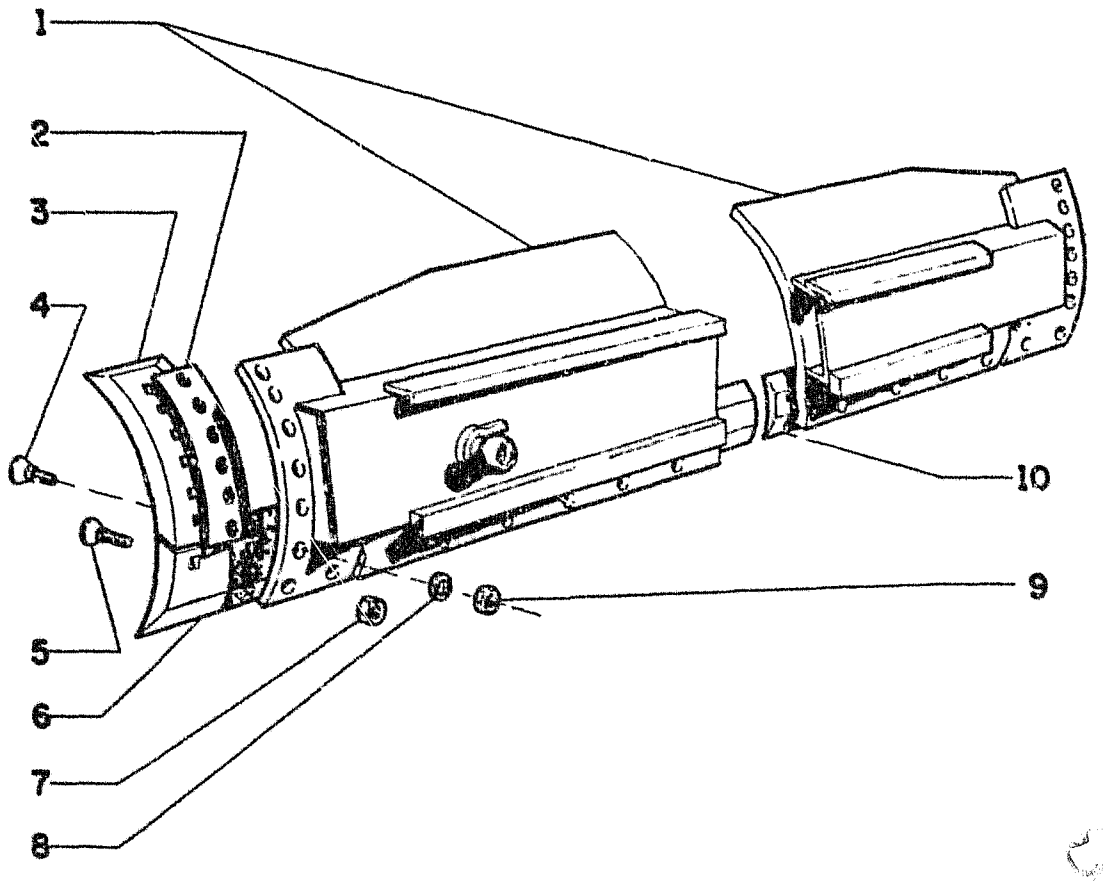

ITEM	PEÇA Nº	QTDE	COD.	DESCRIPTION	DESCRIÇÃO
1	75221781	1	010L	MOLDBOARD 12 Ft	LÂMINA 12 Pés
2	70644917	12	198S	SHIM	CALÇO
3	70643293	2	019T	END BIT	FACA LATERAL
4	70931930	12	040V	SCREW	PARAFUSO
5	70617127	16	040V	SCREW	PARAFUSO
6	70099351	1	018T	CUTTING EDGE	FACA
7	70911029	12	010D	NUT	PORCA
8	70912942	12	170R	LOCKWASHER	ARRUELA PRESS
9	70911029	16	010D	NUT	PORCA
10	70099352	1	018T	CUTTING EDGE	FACA

MOLDBOARD
LAMINA

E3.13 | 2

FIATALLIS

FIATALLIS FG 70R 70A 75R 75A E3.13 QUADRO 3 PAG. 1

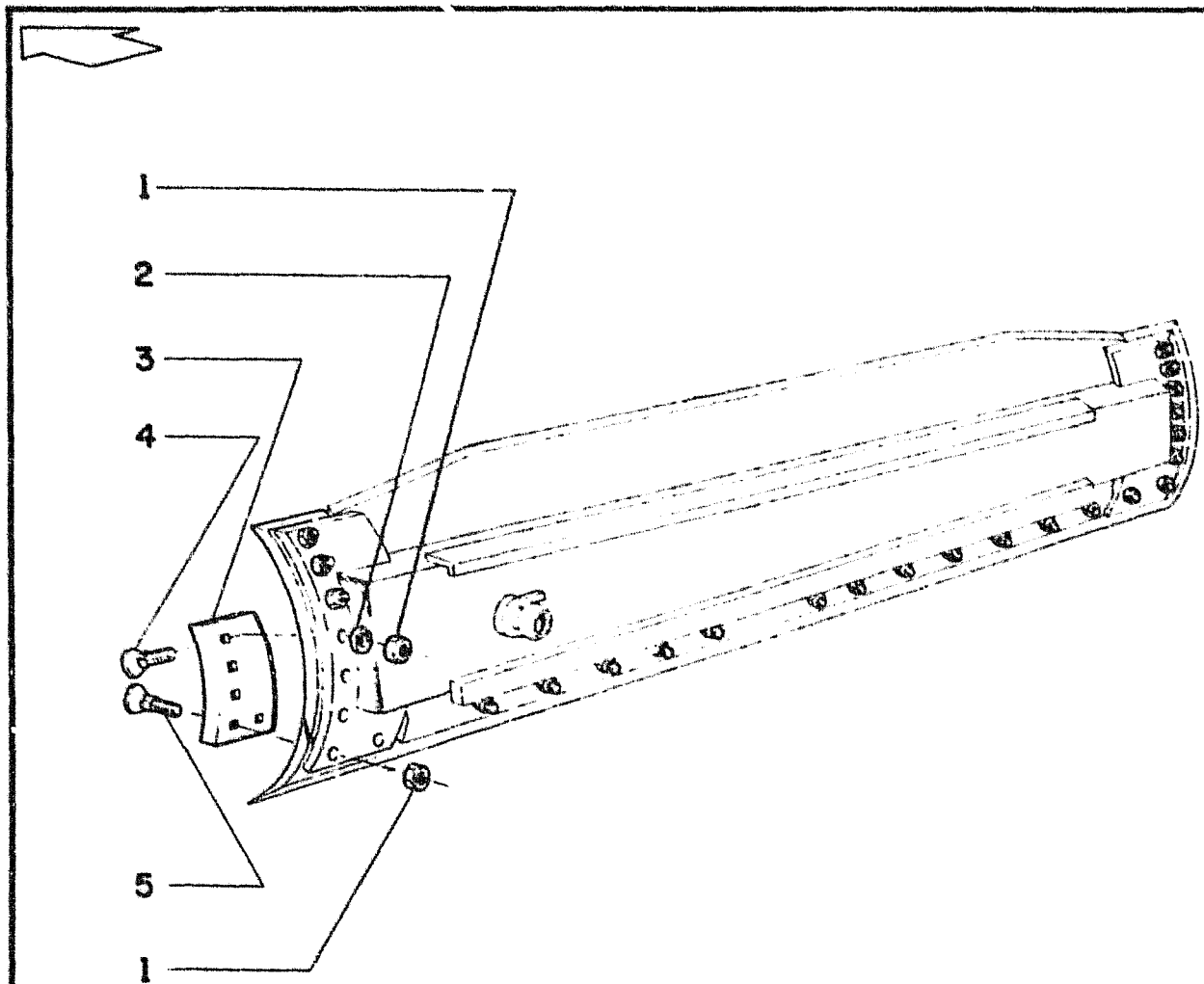

ITEM	PEÇA Nº	QTDE	COD.	DESCRIPTION	DESCRIÇÃO
1	70911029	5	010D	NUT	PORCA
2	70912942	3	170R	LOCKWASHER	ARRUELA PRESS
3	70646379	1	019T	END BIT	FACA LATERAL
3	70646380	1	019T	END BIT	FACA LATERAL
4	70932589	3	040V	SCREW	PARAFUSO
5	70931936	2	040V	SCREW	PARAFUSO

MOLDBOARD
REFORÇO PARA LAMINA

E3.13 | 3

FIATALLIS

FIATALLIS FG 70R 70A 75R 75A E3.13 QUADRO 4 PAG. 1

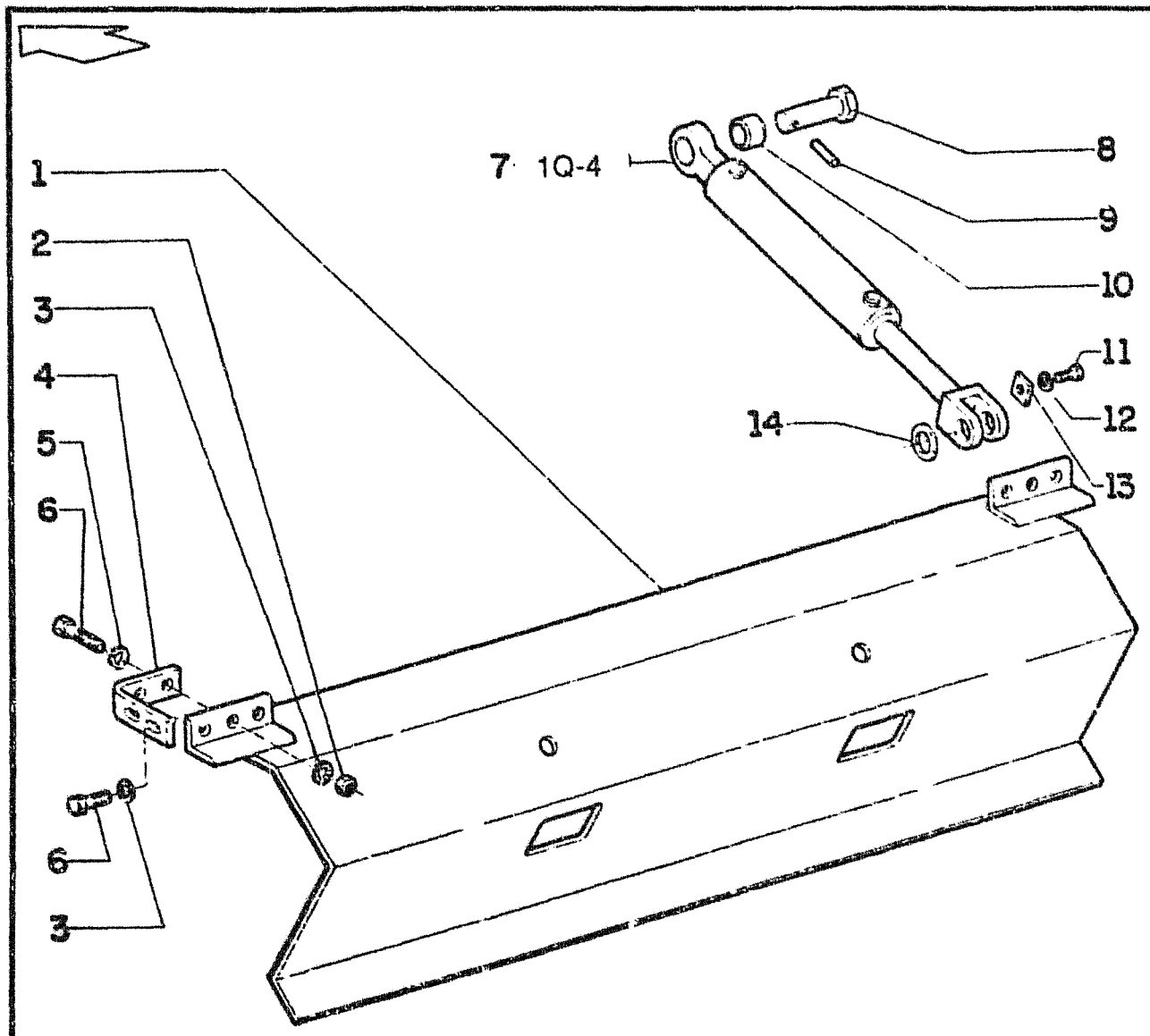

ITEN	PEÇA Nº	QTDE	COD.	DESCRIPTION	DESCRIÇÃO
1	70683865	1	0113	CYLINDERS PIPIN	PROTEÇÃO DA TUB
2	70911028	4	010D	NUT	PORCA
3	70912441	4	170R	LOCKWASHER	ARRUELA PRESS
4	70646763	2	060A	ANGLE	CANTONEIRA
5	70928844	4	131R	WASHER	ARRUELA
6	70920583	4	040V	SCREW	PARAFUSO
7	73126610	2	1070	TILT CYLINDER	CILINDRO INCL
8	70684051	4	080P	PIN	PINO
9	70916171	4	202S	SPRING PIN	PINO ELÁSTICO
10	70654453	4	095B	BUSHING	BUCHA
11	70922262	2	040V	SCREW	PARAFUSO
12	70910287	2	170R	LOCKWASHER	ARRUELA PRESS
13	70658598	2	105P	PLATE	CHAPA
14	70911159	2	131R	WASHER	ARRUELA

MOLDBOARD SIDE SHIFT HIDRAULIC
SISTEMA HIDRAULICO DE DESLOCAMENTO DA LAMINA

E3.13 | 4

FIATALLIS

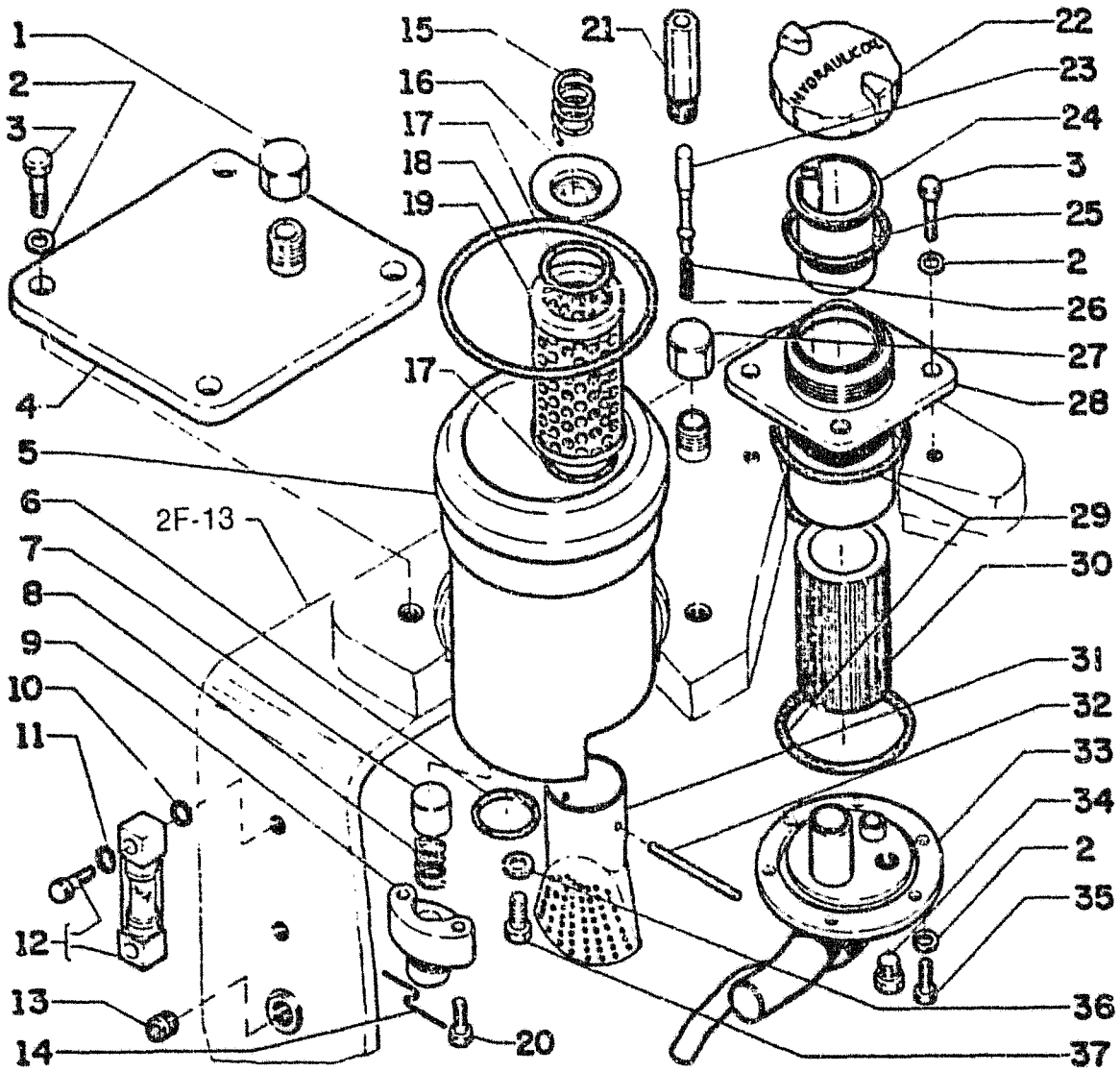

FIATALLIS FG 70R 70A 75R 75A E3.28 **QUADRO 1** **PAG. 1**

ITEM	PEÇA Nº	QTDE	COD.	DESCRIPTION	DESCRIÇÃO
1	70923737	1	064C	CAP	TAMPÃO
2	70677006	14	131R	WASHER	ARRUELA
3	70927173	8	040V	SCREW	PARAFUSO
4	73124657	1	265C	COVER	TAMPA
5	73124652	1	255C	FILTER SHELL	CARCAÇA FILTRO
6	70923579	1	158G	O'RING	O'RING
7	70647151	1	010V	VALVE	VÁLVULA
8	70647108	1	100M	SPRING	MOLA
9	70647122	1	064C	CAP	TAMPÃO
10	70935117	2	055A	SEAL RING	ANEL DE VEDAÇÃO
11	70928497	2	055A	SEAL RING	ANEL DE VEDAÇÃO
12	70678984	1	I091	OIL LEVER INDIC	INDICADOR NIVEL
13	70904224	2	050T	PLUG	BUJÃO
14	70023633	1	061F	STEEL WIRE	ARAME DE AÇO
15	70641027	1	100M	SPRING	MOLA
16	70666422	1	064C	CAP	TAMPÃO
17	70924146	2	158G	O'RING	O'RING
18	70923951	1	158G	O'RING	O'RING
19	73125853	1	020E	FILTERING ELEM.	ELEM. FILTRANTE
20	70927597	2	040V	SCREW	PARAFUSO
21	70666634	1	145G	GUIDE	GUIA
22	70665726	1	265C	COVER	TAMPA
23	70665767	1	235S	PISTON	ÊMBOLO
24	70671325	1	065F	FILTER	FILTRO
25	70923950	1	158G	O'RING	O'RING
26	70666654	1	100M	SPRING	MOLA
27	70921467	1	064C	CAP	TAMPÃO
28	73148266	1	193T	TUBE	TUBO
29	70923594	2	158G	O'RING	O'RING
30	73124631	1	065F	FILTER	FILTRO
31	73124630	1	065F	FILTER	FILTRO
32	70919271	1	270C	COTTER PIN	CONTRA PINO
33	73148327	1	193T	TUBE	TUBO
34	70920416	1	056T	DRAIN PLUG	BUJÃO DE DRENO
35	70922763	6	040V	SCREW	PARAFUSO

OIL TANK
TANQUE DE OLEO

E3.28 | 1

FIATALLIS

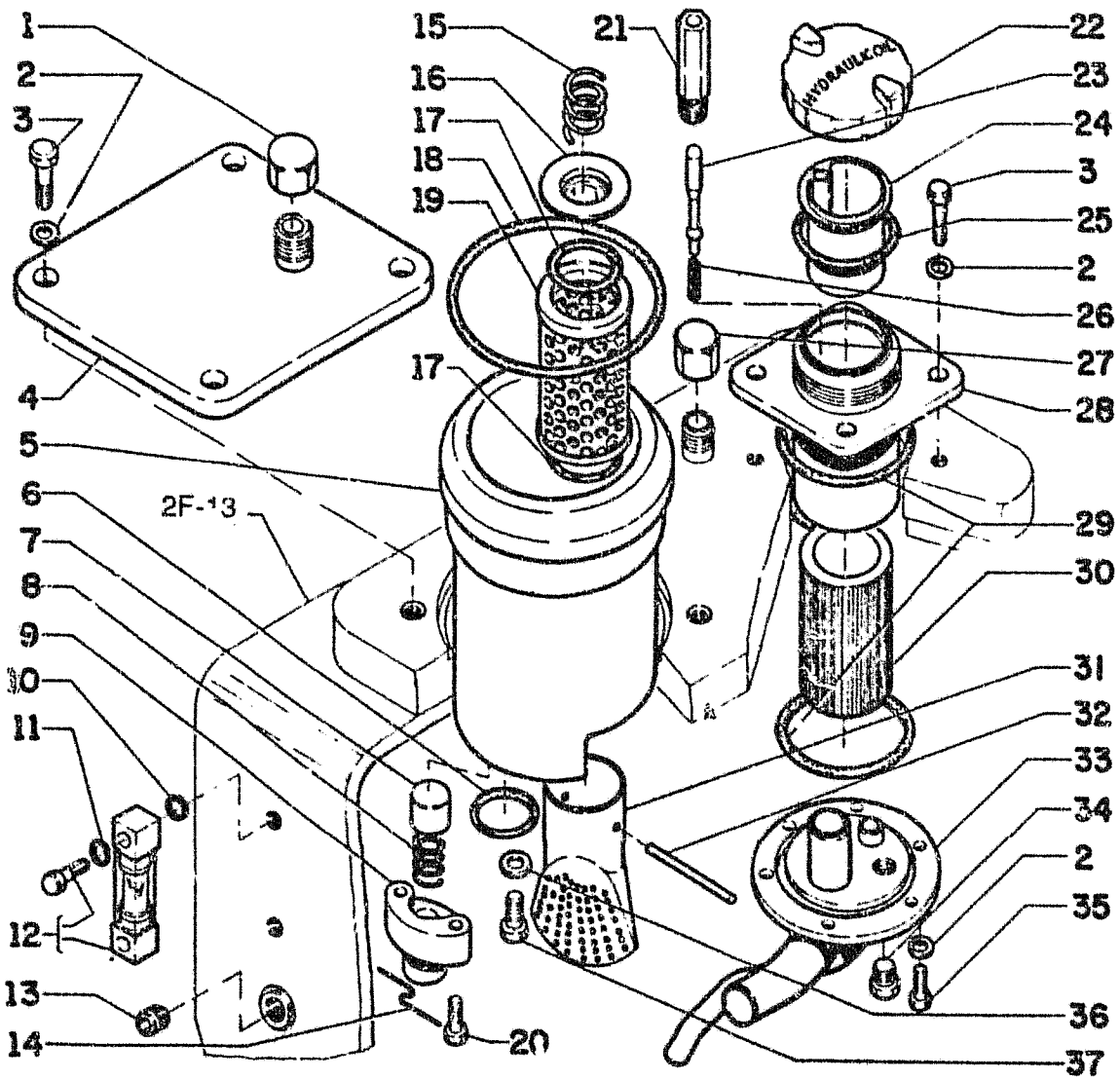

FIATALLIS FG 70R 70A 75R 75A E3.28 **QUADRO** 1 **PAG.** 2

ITEM	PEÇA Nº	QTDE	COD.	DESCRIPTION	DESCRIÇÃO
36	70910287	1	170R	LOCKWASHER	ARRUELA PRESS
37	70928798	1	040V	SCREW	PARAFUSO

	OIL TANK TANQUE DE OLEO	E3.28	1

FIATALLIS

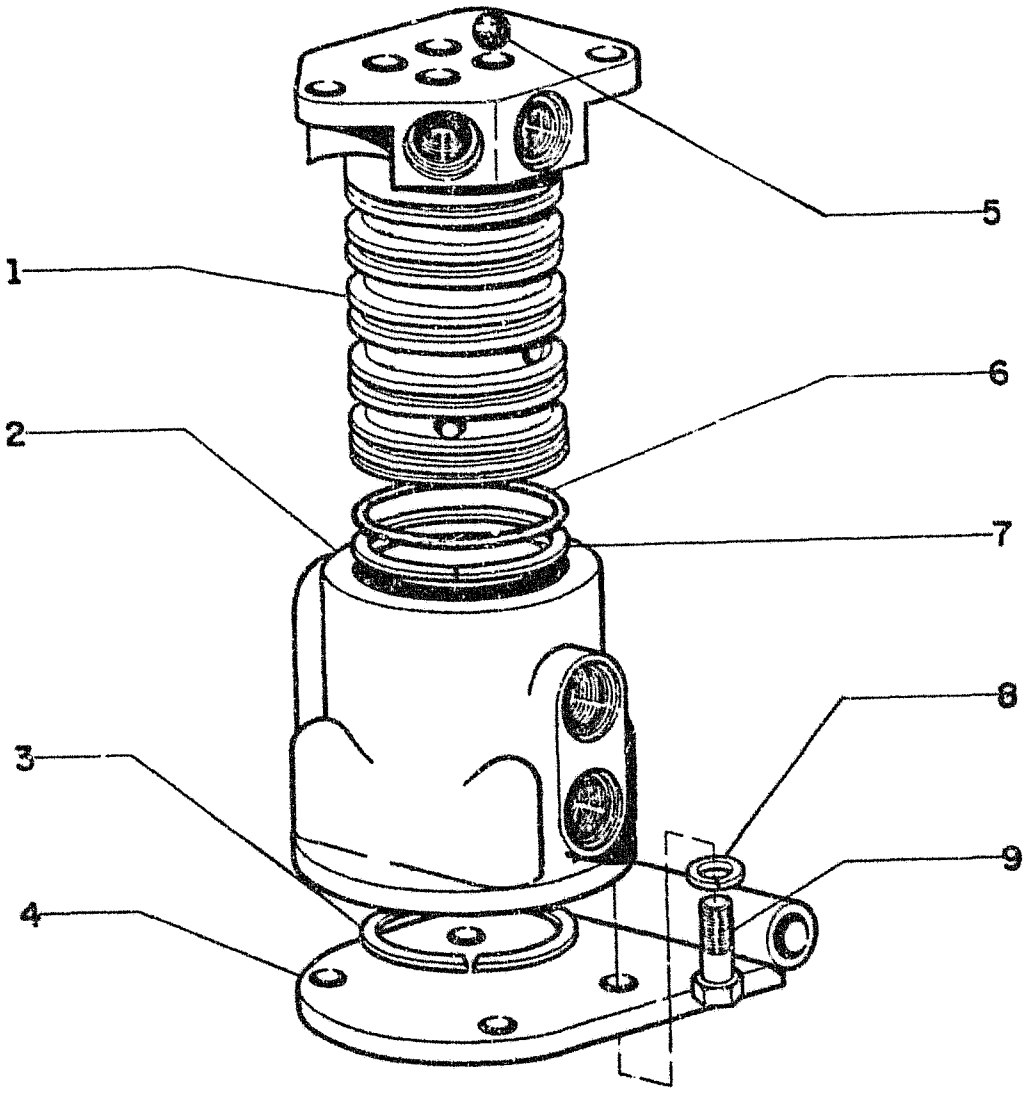

FIATALLIS FG 70R 70A 75R 75A E3.31 **QUADRO** 1 **PAG.** 1

ITEM	PEÇA Nº	QTDE	COD.	DESCRIPTION	DESCRIÇÃO
1	73127351	1	145R	ROTOR	ROTOR
2	70658265	1	035S	CASE	CARCAÇA
3	70050292	1	187A	SNAP RING	ANEL ELÁSTICO
4	70658594	1	105P	PLATE	CHAPA
5	20063500	4	140S	BALL	ESFERA
6	70925257	5	045A	RING	ANEL
7	70926622	8	045A	RING	ANEL
8	70910287	4	170R	LOCKWASHER	ARRUELA PRESS
9	70922763	4	040V	SCREW	PARAFUSO

VALVE ASSEMBLY 73125855
CONJUNTO DA VALVULA

E3.31 | 1

FIATALLIS

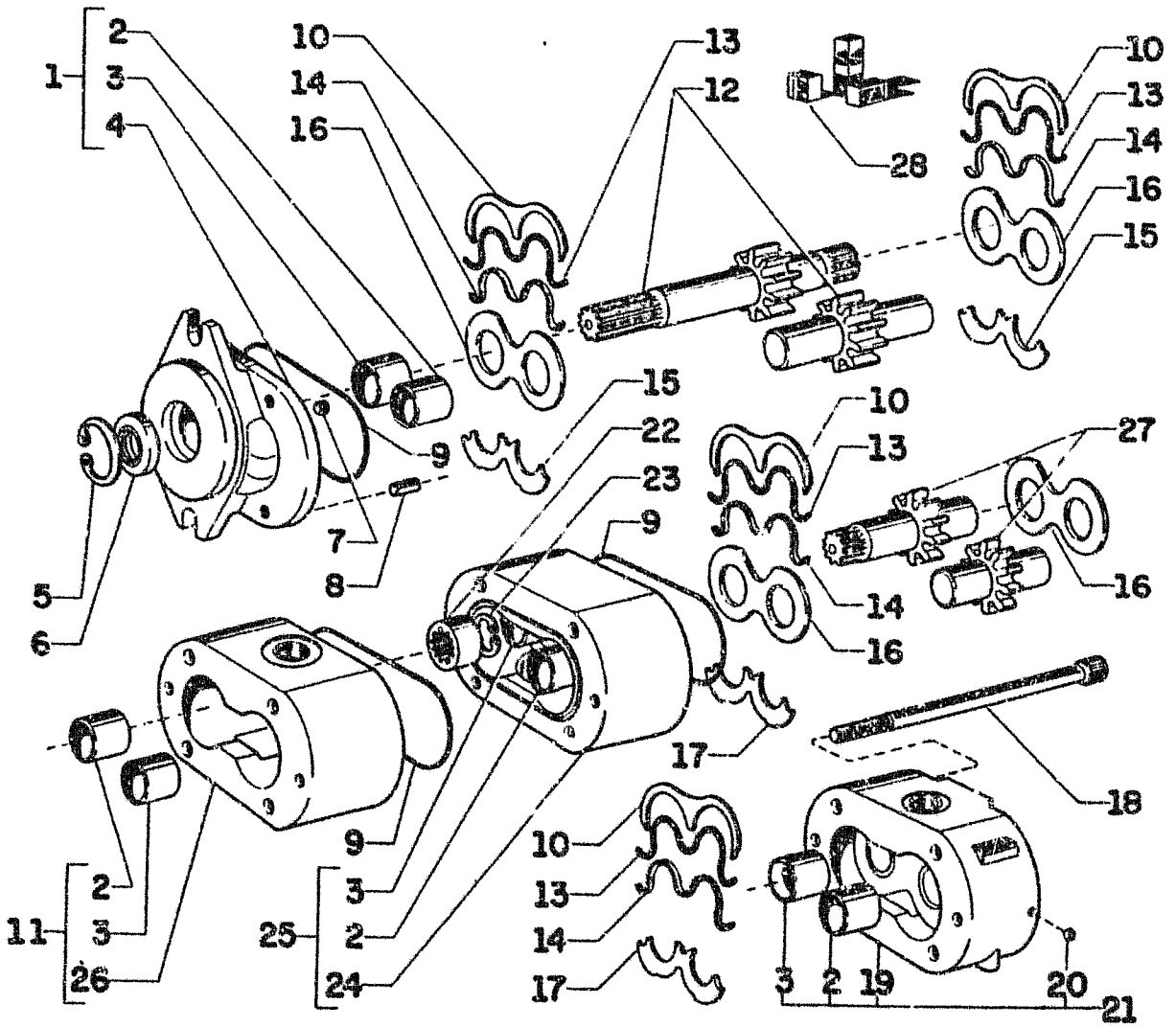

FIATALLIS FG 70R 70A 75R 75A E3.29 **QUADRO 1** **PAG. 1**

ITEM	PEÇA Nº	QTDE	COD.	DESCRIPTION	DESCRIÇÃO
1	75285695	1	070F	FLANGE	FLANGE
2	75285668	4	095B	BUSHING	BUCHA
3	75285669	4	095B	BUSHING	BUCHA
4	75285689	1	070F	FLANGE	FLANGE
5	75285693	1	187A	SNAP RING	ANEL ELÁSTICO
6	75285692	1	045A	RING	ANEL
7	75285670	1	050T	PLUG	BUJÃO
8	75285684	6	080P	PIN	PINO
9	75285678	3	158G	O'RING	O'RING
10	75285687	4	045A	RING	ANEL
11	75285729	1	300C	BODY	CORPO
12	75285726	1	050I	GEAR	ENGRENAGEM
13	75285676	4	158G	O'RING	O'RING
14	75285672	4	045A	RING	ANEL
15	75285674	2	105P	PLATE	CHAPA
16	75285686	4	105P	PLATE	CHAPA
17	75285673	2	105P	PLATE	CHAPA
18	75285675	4	040V	SCREW	PARAFUSO
19	75285683	1	300C	BODY	CORPO
20	75285671	1	140S	BALL	ESFERA
21	75285728	1	300C	BODY	CORPO
22	75285688	1	030M	SLEEVE	LUVA
23	75285690	1	187A	SNAP RING	ANEL ELÁSTICO
24	75285685	1	300C	BODY	CORPO
25	75285698	1	300C	BODY	CORPO
26	75285725	1	300C	BODY	CORPO
27	75285727	1	050I	GEAR	ENGRENAGEM
28	75285681	1	002K	KIT	KIT
28	75285680	1	002K	KIT	KIT

PUMP ASSEMBLY
CONJUNTO DA BOMBA

E 3.29 | 1

FIATALLIS

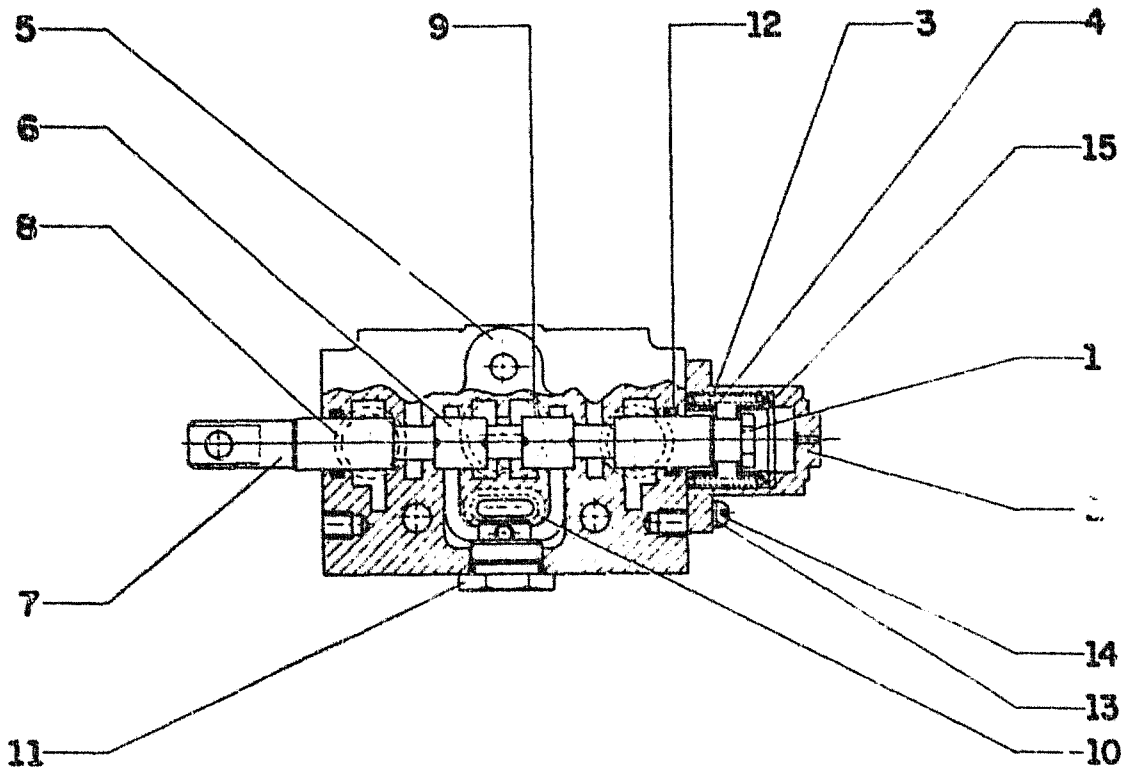

FIATALLIS FG 70R 70A 75R 75A E3.31 **QUADRO** 2 **PAG.** 1

ITEM	PEÇA Nº	QTDE	COD.	DESCRIPTION	DESCRIÇÃO
1	75285703	1	090A	ROD	HASTE
2	75285704	1	265C	COVER	TAMPA
3	75285705	1	100M	SPRING	MOLA
4	75285706	2	120P	PLATE	PRATO
5	75285707	1	300C	BODY	CORPO
6	75285708	1	090A	ROD	HASTE
7	75285709	1	090A	ROD	HASTE
8	75285710	2	158G	O'RING	O'RING
9	75285711	1	158G	O'RING	O'RING
10	75285712	1	158G	O'RING	O'RING
11	75285713	1	010V	VALVE	VÁLVULA
12	75285714	2	158G	O'RING	O'RING
13	75285715	2	131R	WASHER	ARRUELA
14	75285716	2	040V	SCREW	PARAFUSO
15	75285717	1	198S	SHIM	CALÇO

MOLDBOARD PITCH/LATERAL SHIFT ARTICULATION/WHEEL LEAN

VALVE ASSEMBLY
CONJUNTO DA VALVULA

E3.31 | 2

FIATALLIS

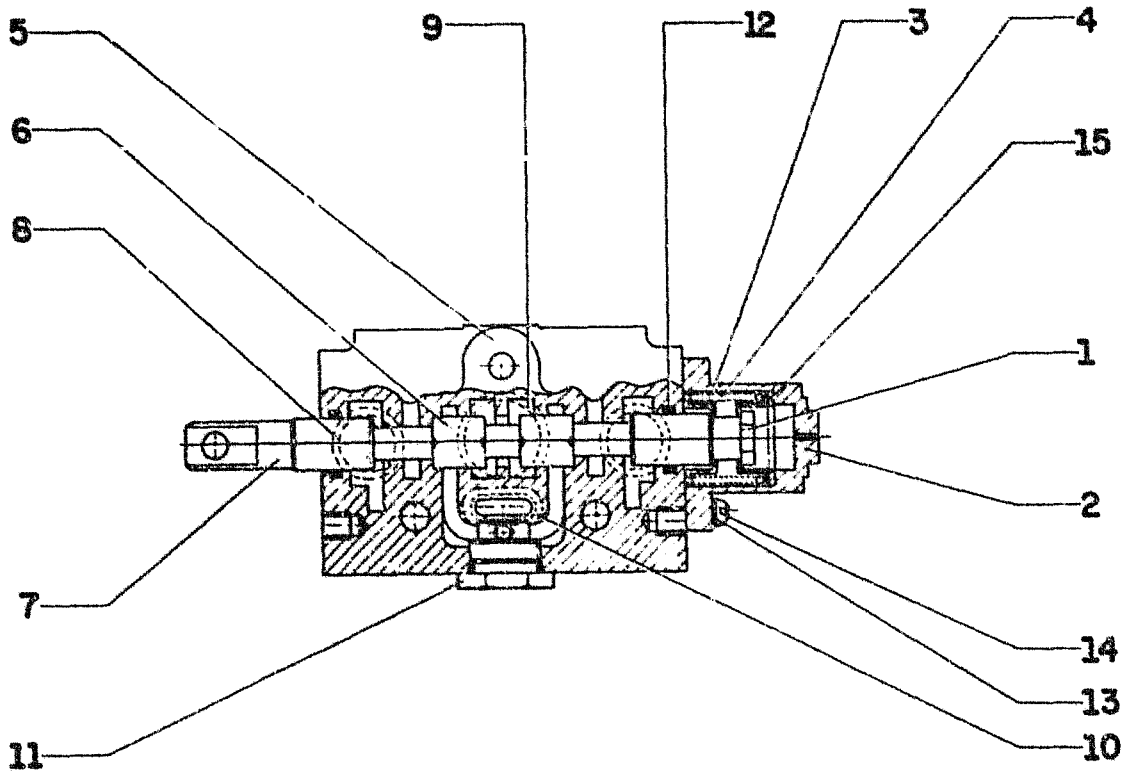

FIATALLIS FG 70R 70A 75R 75A E3.31 **QUADRO** 3 **PAG.** 1

ITEM	PEÇA Nº	QTDE	COD.	DESCRIPTION	DESCRIÇÃO
1	75285703	1	090A	ROD	HASTE
2	75285704	1	265C	COVER	TAMPA
3	75285705	1	100M	SPRING	MOLA
4	75285706	2	120P	PLATE	PRATO
5	75285707	1	300C	BODY	CORPO
6	75285719	1	090A	ROD	HASTE
7	75285709	1	090A	ROD	HASTE
8	75285710	2	158G	O'RING	O'RING
9	75285711	1	158G	O'RING	O'RING
10	75285712	1	158G	O'RING	O'RING
11	75285713	1	010V	VALVE	VÁLVULA
12	75285714	2	158G	O'RING	O'RING
13	75285715	2	131P	WASHER	ARRUELA
14	75285716	2	040V	SCREW	PARAFUSO
15	75285717	1	198S	SHIM	CALÇO

VALVE ASSEMBLY — RIPPER
CONJUNTO DA VALVULA — CIRCLE SHIFT

E3.31 | 3

FIATALLIS

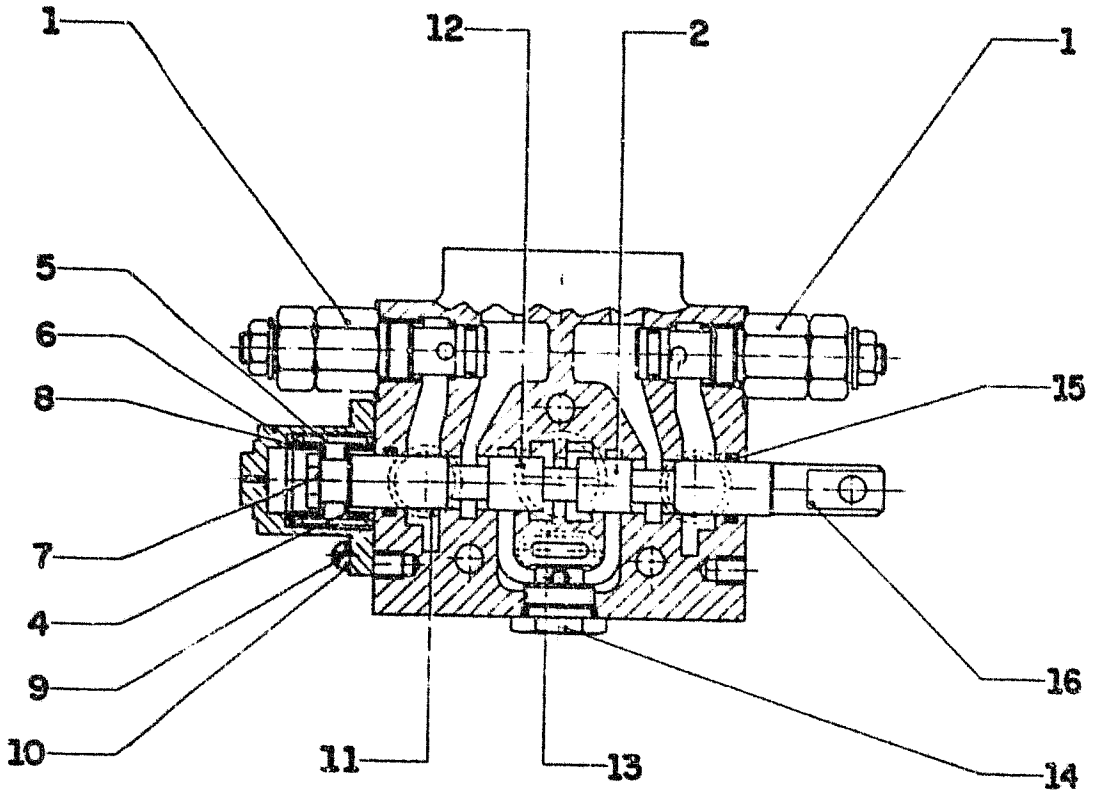

FIATALLIS FG 70R 70A 75R 75A E3.31 QUADRO 4 PAG. 1

ITEM	PEÇA Nº	QTDE	COD.	DESCRIPTION	DESCRIÇÃO
1	75204306	2	010V	VALVE	VÁLVULA
2	75285708	1	090A	ROD	HASTE
3	75285734	1	300C	BODY	CORPO
4	75285706	2	120P	PLATE	PRATO
5	75285705	1	100M	SPRING	MOLA
6	75285704	1	265C	COVER	TAMPA
7	75285703	1	090A	ROD	HASTE
8	75285717	1	198S	SHIM	CALÇO
9	75285716	2	040V	SCREW	PARAFUSO
10	75285715	2	131R	WASHER	ARRUELA
11	75285710	2	158G	O'RING	O'RING
12	75285711	1	158G	O'RING	O'RING
13	75285712	1	158G	O'RING	O'RING
14	75285713	1	010V	VALVE	VÁLVULA
15	75285714	2	158G	O'RING	O'RING
16	75285709	1	090A	ROD	HASTE

VALVE ASSEMBLY SADDLE LOCK
CONJUNTO DA VALVULA

E3.31 | 4

FIATALLIS

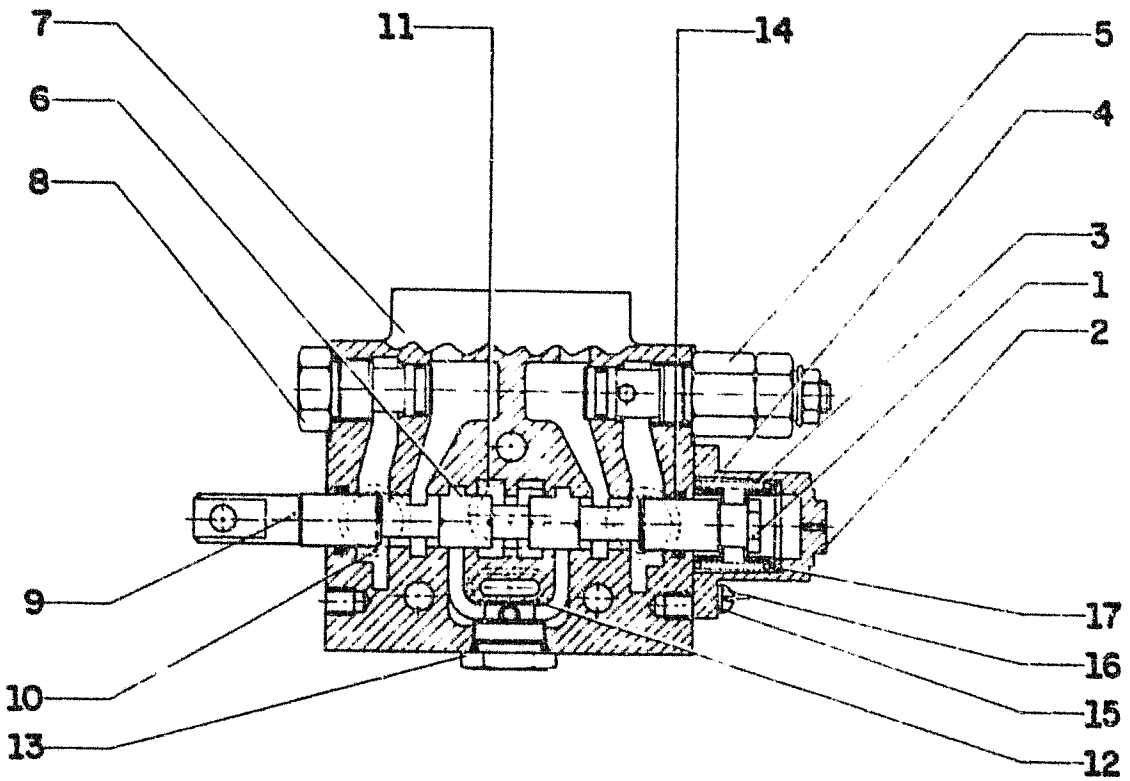

FIATALLIS FG 70R 70A 75R 75A E3.31 **QUADRO** 5 **PAG.** 1

ITEM	PEÇA Nº	QTDE	COD.	DESCRIPTION	DESCRIÇÃO
1	75285703	1	090A	ROD	HASTE
2	75285704	1	265C	COVER	TAMPA
3	75285705	1	100M	SPRING	MOLA
4	75285706	2	120P	PLATE	PRATO
5	75204306	1	010V	VALVE	VÁLVULA
6	75285719	1	090A	ROD	HASTE
7	75285734	1	300C	BODY	CORPO
8	75285735	1	026T	BLOCK	TAMPÃO
9	75285709	1	090A	ROD	HASTE
10	75285710	2	158G	O'RING	O'RING
11	75285711	1	158G	O'RING	O'RING
12	75285712	1	158G	O'RING	O'RING
13	75285713	1	010V	VALVE	VÁLVULA
14	75285714	2	158G	O'RING	O'RING
15	75285715	2	131R	WASHER	ARRUELA
16	75285716	2	040V	SCREW	PARAFUSO
17	75285717	1	198S	SHIM	CALÇO

VALVE ASSEMBLY MOLDBOARD LIFT
CONJUNTO DA VALVULA

E3.31 | 5

DESCRIPTION	SBGRP	TAV	GRID
1 - 2 SPEED CLUTCH FG75	B201/1	15	1L-9
3 - 4 SPEED & REVERSE CLUTCH FG75	B201/1	14	1L-8
5 - 6 SPEED & HIGH FWD CLUTCH FG75	B201/1	16	1L-10
ADAPTER, TRANS HOUSING FG75	B201/1	1	1I-11
AIR CLEANER	A222	1	1F-7
AIR FILTER	A223	2	1F-8
AIR PRE-CLEANER	A222	1	1F-7
ALTERNATOR	F200	1	2E-2
BELT	F200	1	2E-2
COMPONENTS	F603	1	2F-10
ARTICULATION CYLINDER	D101	7	1P-2
CYLINDER	E332	8	2D-13
JOINT (BOTTOM)	D101	5	1O-16
JOINT (TOP)	D101	6	1O-17
SWITCH	F401	19	2F-7
VALVE	E331	2	2C-14
BACK UP ALARM FG70	F401	8	2E-8
BACK UP ALARM FG75	F401/1	8	2E-9
BATTERIES FG70	F401	11	2E-12
BATTERIES FG70 FG75	F401	7	2E-6
BATTERIES FG75	F401	14	2E-16
CABLES FG70	F401	11	2E-12
CABLES FG70 FG75	F401	7	2E-6
CABLES FG75	F401	14	2E-16
BATTERY BOX	L130	1	2G-17
BELT, ALTERNATOR	F200	1	2E-2
BELTS, FAN	A409	1	1G-17
BLADE LIFT VALVE	E331	5	2C-17
BRAKE CALIPER	C118	1	1O-6
DISC	D316	1	1P-14
FLUID HIGH PRESSURE LINES LT.	C101	4	1N-16
FLUID HIGH PRESSURE LINES RT.	C101	3	1N-15
FLUID RESERVOIR	C101	2	1N-14
FLUID RESERVOIR COMPONENTS	C108	1	1O-3
MASTER CYINDER	C108	2	1O-4
MASTER CYLINDER LINES	C101	5	1N-17
PEDAL	C101	1	1N-13
POWER BOOSTER	C108	3	1O-5
PUMP COMPONENTS	D213	1	1P-13
CAB	L103	1	2F-15
DOOR	L104	2	2G-2
FAN ASSEMBLY	L104	9	2G-10
FANS	L104	8	2G-9
FLOOR MAT	L104	1	2F-16
HEATER FITTINGS	L104	11	2G-12
HEATER	L104	10	2G-11
LIGHTING	L104	5	2G-6
ROOF LINER	L104	4	2G-5
CAB SEALS	L104	3	2G-4
WIRING	L104	7	2G-8
CABLES ELECTRICAL FG70	F401	10	2E-11
CABLES ELECTRICAL FG75	F401	15	2F-2
CANOPY	L104/1	1	2G-13
CANOPY LINER	L104/1	2	2G-14
CIRCLE	E310	2	2B-15
SHIFT CYLINDER	E332	5	2D-11
SHIFT VALVE	E331	3	2C-15
TURN GEAR BOX COMPONENTS	E310	4	2B-16
TURN GEAR BOX	E310	2	2B-15
TURN MOTOR COMPONENTS	E310	5	2C-2
TURN MOTOR	E310	2	2B-15
CLUTCH , 3 - 4 SPEED & REVERSE FG75	B201/1	14	1L-8
HIGH SPEED FG70	B201	9	1H-17
LOW SPEED FG70	B201	8	1H-16
REVERSE & 3 - 4 SPEED FG75	B201/1	14	1L-8
SECOND SPEED FG70	B201	7	1H-15
THIRD SPEED FG70	B201	6	1H-14
5 - 6 SPEED & HIGH FWD FG75	B201/1	16	1L-10
FORWARDFG70	B201	7	1H-15
HIGH FWD & 5 - 6 SPEED FG75	B201/1	16	1L-10
LOW FORWARD FG75	B201/1	12	1L-6
REVERSE FG70	B201	6	1H-14
CONTROL VALVE TRANSMISSION FG70	B201	18	1I-10
CONVERTER FG70	B201	3	1H-11
COMPONENTS FG75	B201/1	7	1I-17
FLEX PLATES FG75	B201/1	6	1I-16
GEAR FG70	B201	4	1H-12
GEAR FG75	B201/1	9	1L-3
GEAR FG75	B201/1	10	1L-4
GEAR FG75	B201/1	11	1L-5
HOUSING FG70	B201	2	1H-10
HOUSING FG75	B201/1	3	1I-13
SHAFTS FG75	B201/1	5	1I-15
COOLANT PUMP	A403	1	1G-16
FILTER	A402	1	1G-15
CYLINDER ARTICULATION	E332	8	2D-13
CIRCLE SHIFT	E332	5	2D-11
MOLDBOARD LIFT	E332	6	2D-12
MOLDBOARD PITCH	E332	2	2D-8
MOLDBOARD SIDE SHIFT	E332	3	2D-9
RIPPER	E332/1	2	2D-15
SADDLE LOCK PIN	E332	4	2D-10
SCARIFIER	E332/1	1	2D-14
STEERING	D212	1	1P-12
WHEEL LEAN	E332	1	2D-7
ARTICULATION	D101	7	1P-2
DECALS (ARTICULATED)	L125	2	2G-16
DECALS (RIGID)	L125	1	2G-15
DIFFERENTIAL ASSEMBLY	B403	4	1N-10
DIFFERENTIAL COMPONENTS	B403	5	1N-11
DRIVE SHAFT	B301	1	1M-15
DRIVE SHAFT COMPONENTS	B316	1	1M-16
ELECTRICAL CABLE SWITCH PANEL	F401	2	2E-4
CABLES BATT. FG70 FG75	F401	7	2E-6
CABLES BATTERIES FG70	F401	11	2E-12
CABLES BATTERIES FG75	F401	14	2E-16
CABLES FG70	F401	10	2E-11
CABLES FG75	F401	15	2F-2
FUSES	F401	3	2E-5
SWITCH PANEL	F401	1	2E-3
SWITCH PANEL	F401	1	2E-3
ELECTRONIC DATA MONITOR	F401	12	2E-14
ELEMENT IMPLEMENT OIL	E328	1	2C-10
TRANS. OIL FG70	B201	11	1I-3
TRANS. OIL FG75	B217	1	1M-14
AIR	A223	2	1F-8
ENGINE OIL	A303	1	1G-12
FUEL	A226	1	1F-12
END CAP VALVE	E331	7	2D-3
END CAP VALVE	E331	9	2D-4
ENGINE	A000	1	1E-2
BLOCK	A101	1	1E-5
BLOCK PLUGS	A101	2	1E-6
CAMSHAFT	A107	1	1E-16
CAMSHAFT DRIVE	A106	1	1E-15
CONNECTING RODS	A105	1	1E-14
COOLANT THERMOSTAT	A402	1	1G-15
CRANKSHAFT	A103	1	1E-11
CYLINDER SLEEVES	A105	1	1E-14
DAMPER	A104	1	1E-13
EXHAUST MANIFOLD	A254	1	1G-7
EXHAUST VALVE	A107	1	1E-16
FLYWHEEL	A103	1	1E-11
FLYWHEEL HOUSING	A102	2	1E-10
FRONT COVER	A102	1	1E-9
FUEL PUMP DRIVE	A106	1	1E-15
HEAD	A101	3	1E-7
INTAKE VALVE	A107	1	1E-16
LIFTING BRACKET	A101	4	1E-8
MAIN BEARING	A103	2	1E-12
MAIN BEARING CAPS	A101	1	1E-5
MOUNTS FG70	A002	1	1E-3
MOUNTS FG75	A002/1	1	1E-4
OIL DIPSTICK	A301	2	1G-10
OIL FILL PLUG	A301	2	1G-10
OIL FILTER	A303	1	1G-12
OIL HEAT EXCHANGER	A303	1	1G-12
OIL PAN	A102	1	1E-9
OIL PUMP	A302	1	1G-11

FIATALLIS

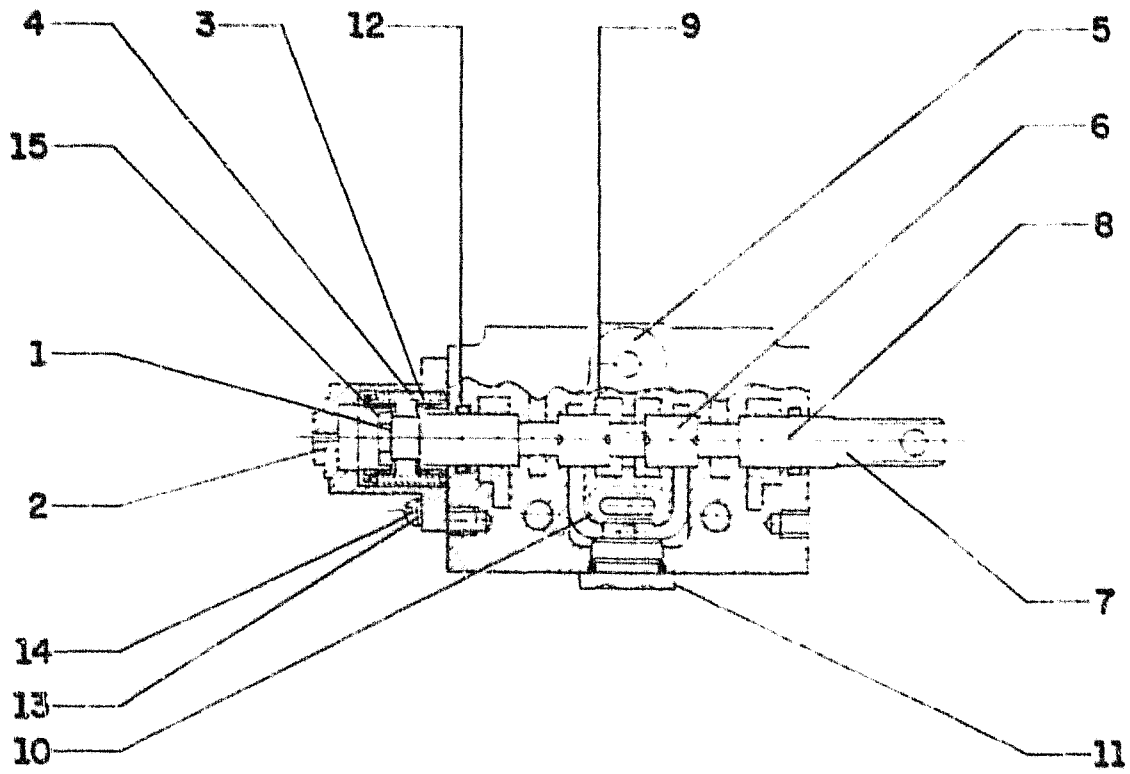

FIATALLIS FG 70R 70A 75R 75A E3.31 QUADRO 6 PAG. 1

ITEM	PEÇA Nº	QTDE	COD.	DESCRIPTION	DESCRIÇÃO
1	75285703	1	090A	ROD	HASTE
2	75285704	1	265C	COVER	TAMPA
3	75285705	1	100M	SPRING	MOLA
4	75285706	2	120P	PLATE	PRATO
5	75285707	1	300C	BODY	CORPO
6	75285719	1	090A	ROD	HASTE
7	75285709	1	090A	ROD	HASTE
8	75285710	2	158G	O'RING	O'RING
9	75285711	1	158G	O'RING	O'RING
10	75285712	1	158G	O'RING	O'RING
11	75285713	1	010V	VALVE	VÁLVULA
12	75285714	2	158G	O'RING	O'RING
13	75285715	2	131R	WASHER	ARRUELA
14	75285716	2	040V	SCREW	PARAFUSO
15	75285717	1	198S	SHIM	CALÇO

VALVE ASSEMBLY SCARIFIER
CONJUNTO DA VALVULA

E3.31 | 6

FIATALLIS

FIATALLIS FG 70R 70A 75R 75A E3.31 QUADRO 7 PAG. 1

ITEM	PEÇA Nº	QTDE	COD.	DESCRIPTION	DESCRIÇÃO
1	75285730	1	300C	BODY	CORPO

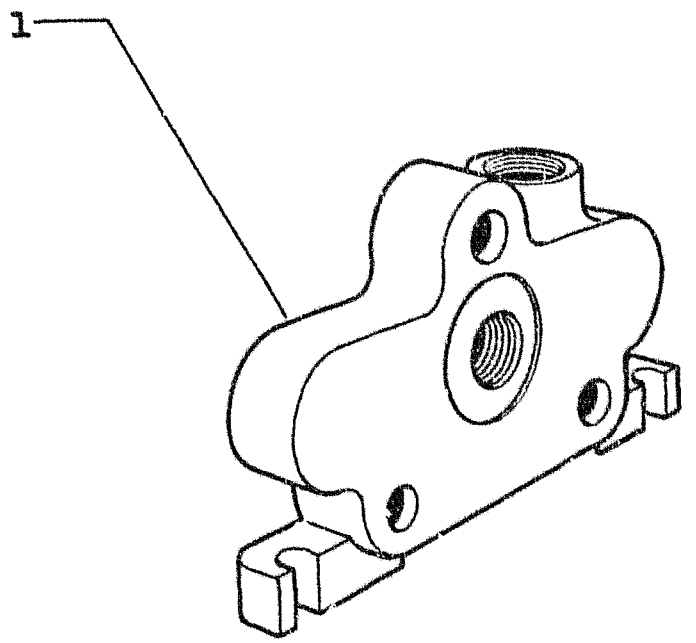

LEFT BODY END CAP
CORPO DE DESCARGA ESQUERDO

E3.31 | 7

FIATALLIS

FIATALLIS FG 7CR 70A 75R 75A E3.31 QUADRO 9 PAG. 1

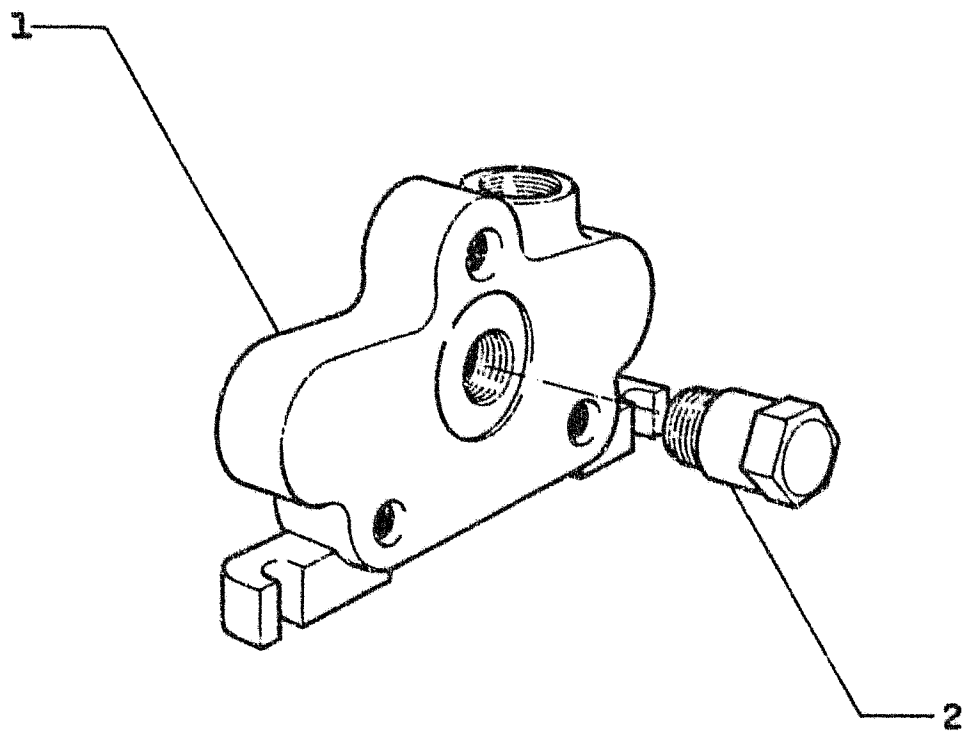

ITEM	PEÇA Nº	QTDE	COD.	DESCRIPTION	DESCRIÇÃO
1	75285780	1	300C	BODY	CORPO
2	75285781	1	040V	SCREW	PARAFUSO

VALVE ASSEMBLY END CAP
CONJUNTO DA VALVULA

E3.31 | 9

FIATALLIS

FIATALLIS FG 70R 70A 75R 75A E3.31 QUADRO 10 PAG. 1

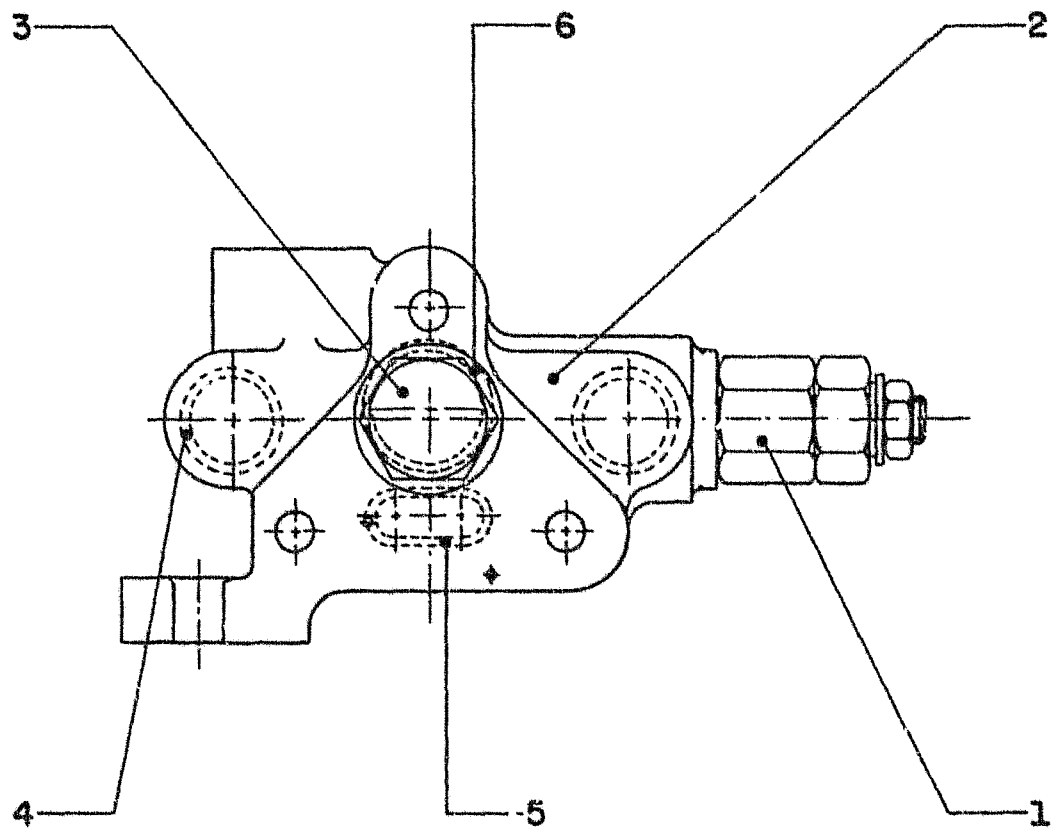

ITEM	PEÇA Nº	QTDE	COD.	DESCRIPTION	DESCRIÇÃO
1	75204306	1	010V	VALVE	VÁLVULA
2	75285731	1	300C	BODY	CORPO
3	75285732	1	026T	BLOCK	TAMPÃO
4	75285710	2	158G	O'RING	O'RING
5	75285712	1	158G	O'RING	O'RING
6	75285711	1	158G	O'RING	O'RING

VALVE ASSEMBLY LEFT MAIN RELIEF VALVE
CONJUNTO DA VALVULA ESQUERDO

E3.31 | 10

FIATALLIS

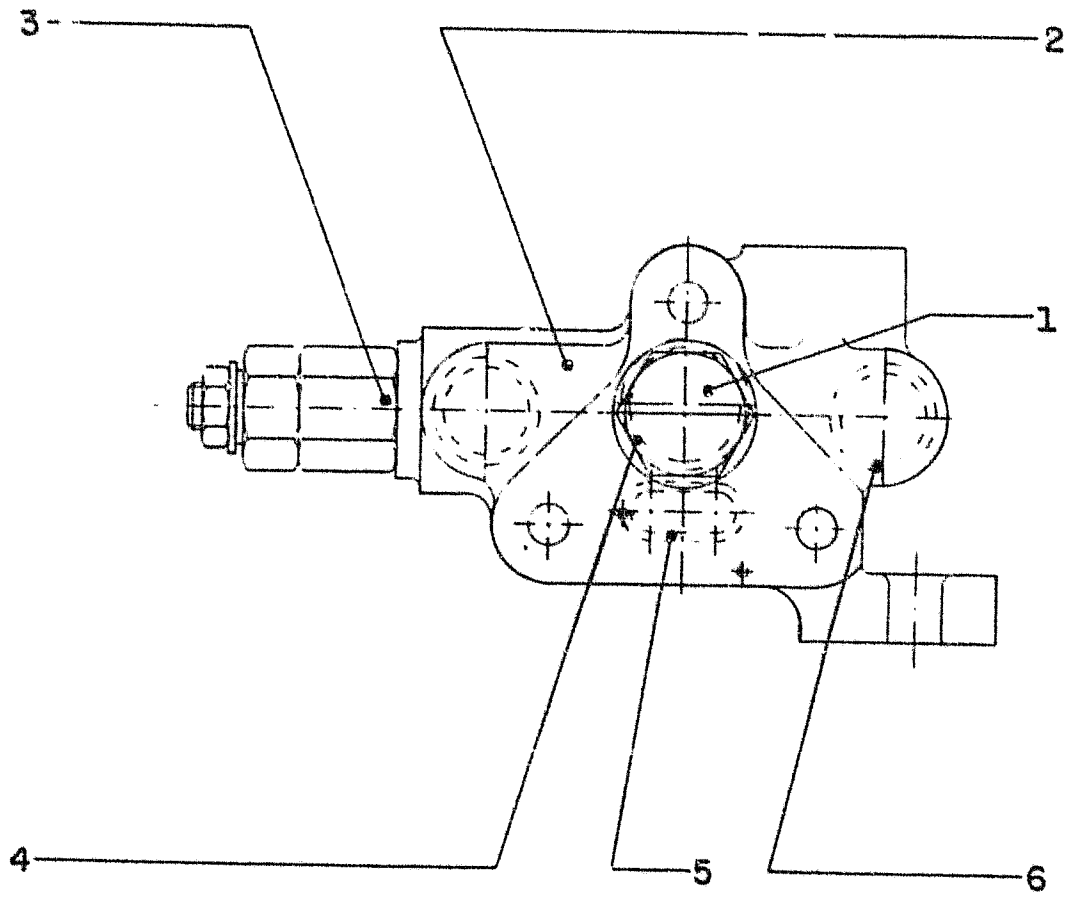

FIATALLIS FG 7GR 70A 75R 75A E3.31 **QUADRO** 11 **PAG.** 1

ITEM	PEÇA Nº	QTDE	COD.	DESCRIPTION	DESCRIÇÃO
1	75285732	1	026T	BLOCK	TAMPÃO
2	75285737	1	300C	BODY	CORPO
3	75204306	1	010V	VALVE	VÁLVULA
4	75285711	1	158G	O'RING	O'RING
5	75285712	1	158G	O'RING	O'RING
6	75285710	2	158G	O'RING	O'RING

VALVE ASSEMBLY - RIGHT MAIN RELIEF VALVE
CONJUNTO DA VALVULA DIREITA

E3.31 | 11

FIATALLIS

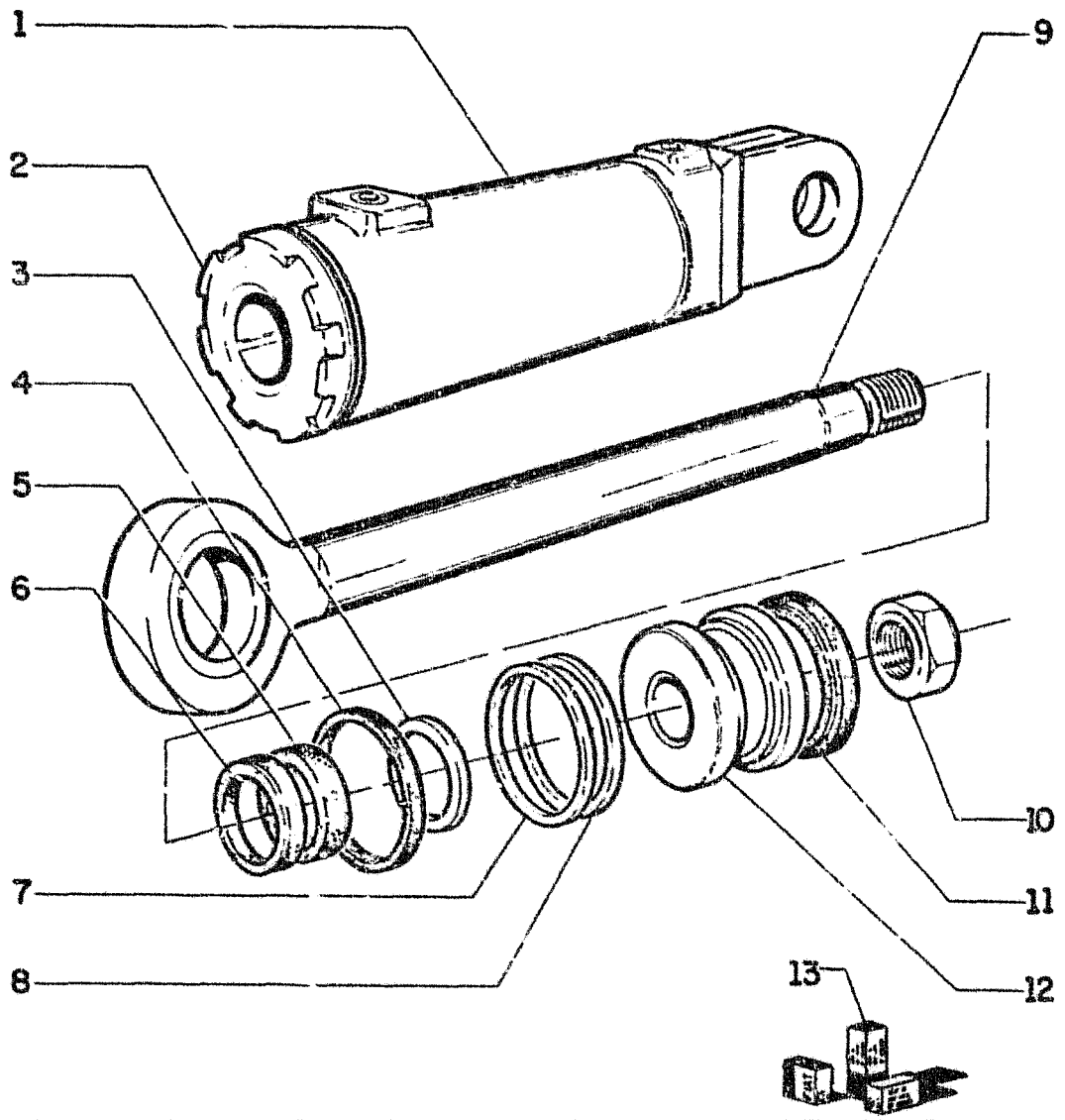

FIATALLIS FG 70R 70A 75R 75A E3.32 QUADRO 1 PAG. 1

ITEM	PEÇA Nº	QTDE	COD.	DESCRIPTION	DESCRIÇÃO
1	75220693	1	193T	TUBE	TUBO
2	75220924	1	132F	HEAD	FUNDO DIANTEIRO
3	8297074	1	055A	SEAL RING	ANEL DE VEDAÇÃO
4	14465780	1	158G	O'RING	O'RING
5	8297073	1	122G	SEAL	RETENTOR
6	8288832	1	122G	SEAL	RETENTOR
7	8297075	1	055A	SEAL RING	ANEL DE VEDAÇÃO
8	14465480	1	158G	O'RING	O'RING
9	75220690	1	090A	ROD	HASTE
10	8298615	1	010D	NUT	PORCA
11	8291561	1	045A	RING	ANEL
12	79038228	1	132P	PISTON	PISTÃO DO MOTOR
13	75220700	-	002K	KIT INCLUDES ITEMS 3-4-5-6-7-8-11)	KIT (INCLUI ITENS 3-4-5-6-7-8-11)

TILT CYLINDER (75220689)
CILINDRO DE INCLINAÇAO

E3.32 | 1

FIATALLIS

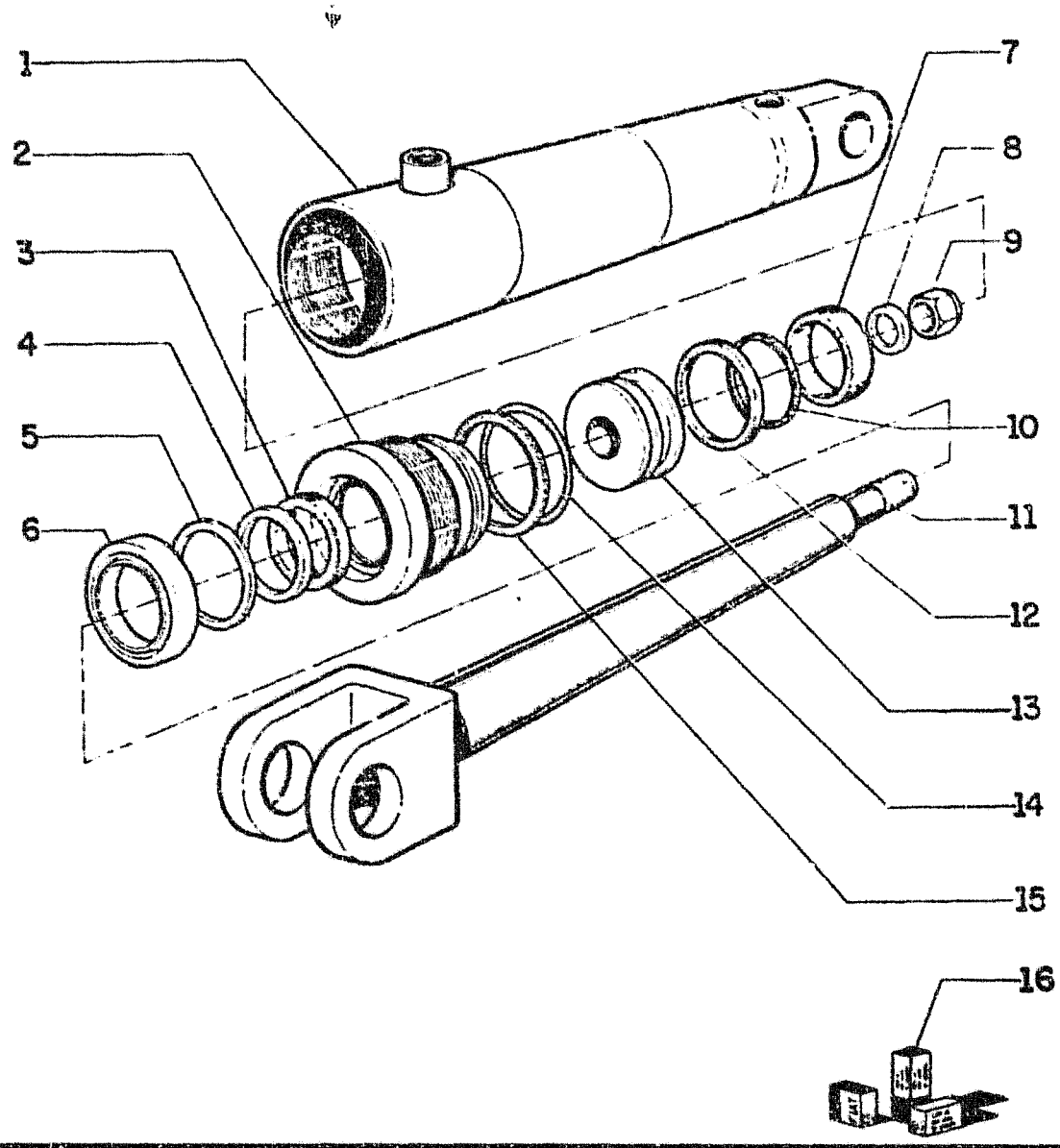

FIATALLIS FG 70R 70A 75R 75A E3.32 **QUADRO 2 PAG. 1**

ITEM	PEÇA Nº	QTDE	COD.	DESCRIPTION	DESCRIÇÃO
1	73126609	1	053C	TUBE	CAMISA CILINDRO
2	73126595	1	132F	HEAD	FUNDO DIANTEIRO
3	73126597	1	122G	SEAL	RETENTOR
4	73126612	1	095B	BUSHING	BUCHA
5	70927694	1	187A	SNAP RING	ANEL ELÁSTICO
6	73126611	1	122G	SEAL	RETENTOR
7	73126600	1	045A	RING	ANEL
8	73126605	1	075D	SPACER	ESPAÇADOR
9	70933798	1	010D	NUT	PORCA
10	73126602	1	122G	SEAL	RETENTOR
11	73126593	1	274S	ROD	HASTE
12	73126601	1	122G	SEAL	RETENTOR
13	73126603	1	132P	PISTON	PISTÃO DO MOTOR
14	70924114	1	045A	RING	ANEL
15	73126599	1	045A	RING	ANEL
16	73140088	-	002K	KIT(INCLUDE ITEMS 3-5-6-7-10-12-14-15)	KIT(INCLUI ITENS 3-5-6-7-10-12-14-15)

MOLDBOARD PITCH CYLINDER (73126610)
CILINDRO DE INCLINAÇAO DA LAMINA

E3.32 | 2

FIATALLIS

FIATALLIS FG 70R 70A 75R 75A E3.32 QUADRO 3 PAG. 1

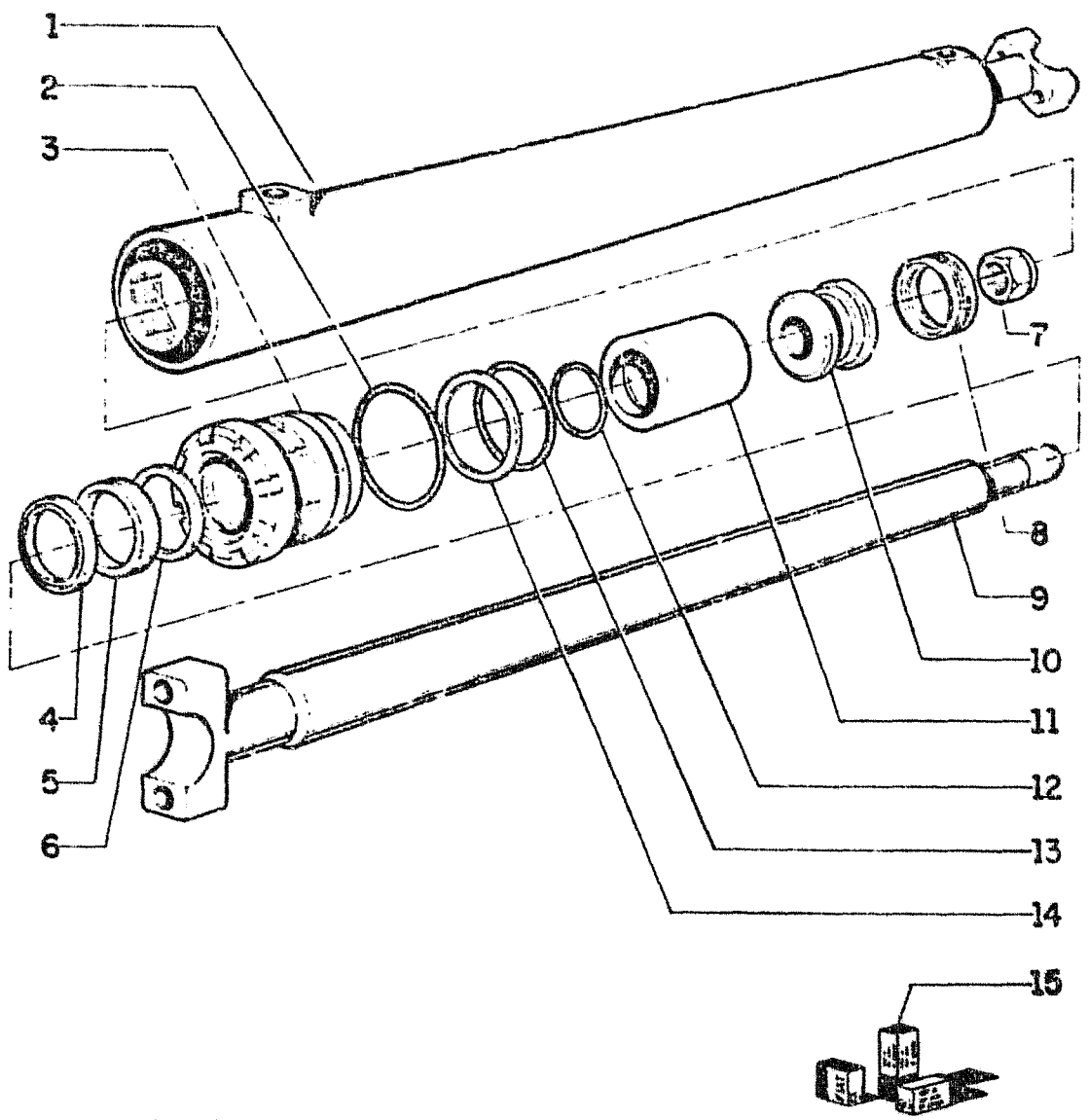

ITEM	PEÇA Nº	QTDE	COD.	DESCRIPTION	DESCRIÇÃO
1	75220872	1	053C	TUBE	CAMISA CILINDRO
2	14465480	1	158G	O'RING	O'RING
3	75218748	1	132F	HEAD	FUNDO DIANTEIRO
4	8288832	1	122G	SEAL	RETENTOR
5	8297073	1	122G	SEAL	RETENTOR
6	8297074	1	055A	SEAL RING	ANEL DE VEDAÇÃO
7	8281325	1	010D	NUT	PORCA
8	8291506	1	122G	SEAL	RETENTOR
9	75220869	1	274S	ROD	HASTE
10	79033730	1	235S	PISTON	ÍMBOLO
11	75220877	1	075D	SPACER	ESPAÇADOR
12	14464380	2	158G	O'RING	O'RING
13	14465180	1	158G	O'RING	O'RING
14	8297295	1	045A	RING	ANEL
15	75220878	-	002K	KIT (INCLUDE ITEMS 2-4-5-6-8-12-13-14)	KIT (INCLUI ITENS 2-4-5-6-8-12-13-14)

MOLDBOARD SIDE SHIFT CYLINDER (75220868)
CILINDRO DE DESLOCAMENTO LATERAL DA LAMINA

E3.32 | 3

FIATALLIS

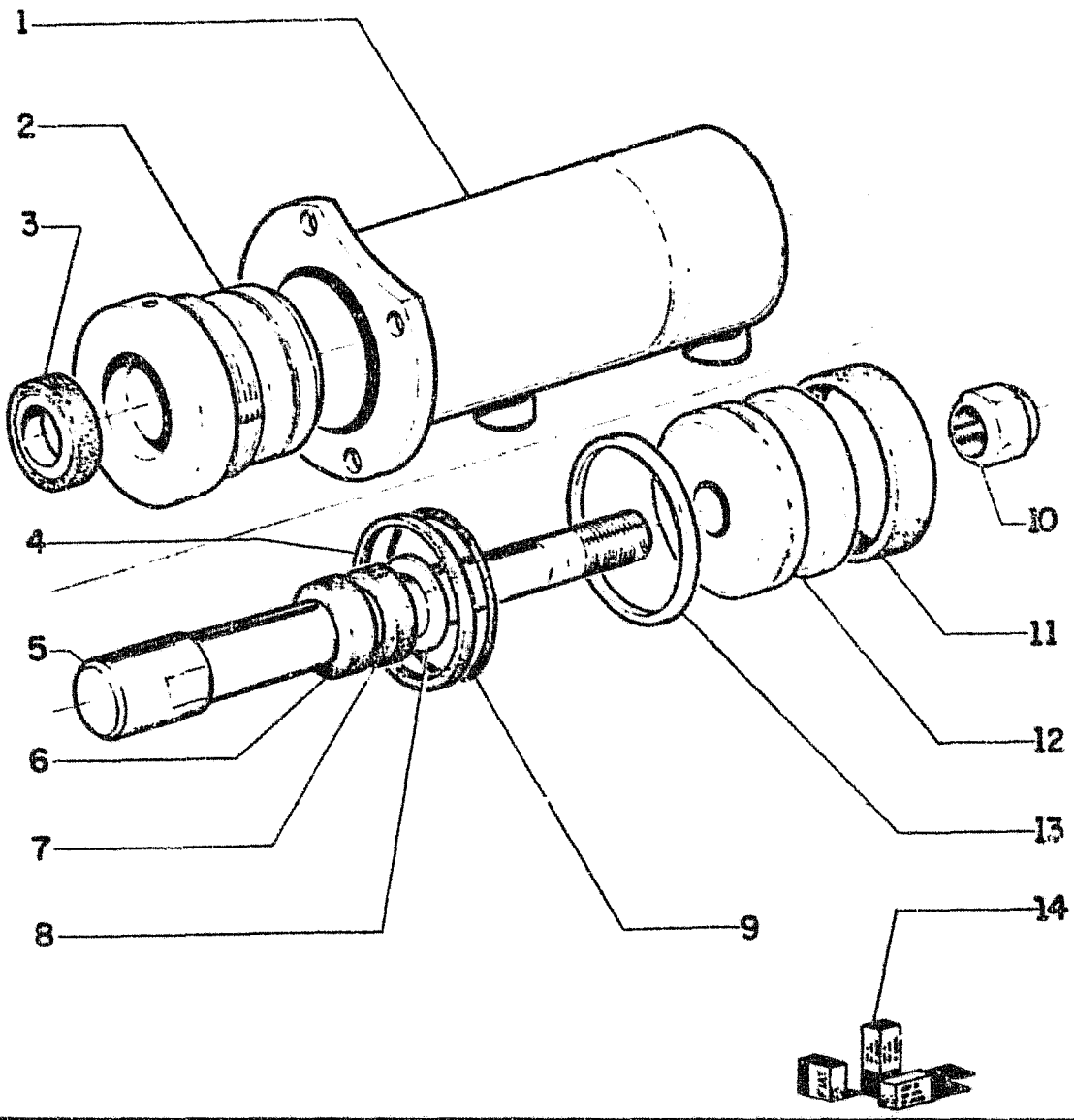

FIATALLIS FG 70R 70A 75R 75A E3.32 **QUADRO 4 PAG. 1**

ITEM	PEÇA Nº	QTDE	COD.	DESCRIPTION	DESCRIÇÃO
1	73124573	1	053C	TUBE	CAMISA CILINDRO
1	73124577	1	053C	TUBE	CAMISA CILINDRO
2	73065286	1	132F	HEAD	FUNDO DIANTEIRO
3	73055116	1	045A	RING	ANEL
4	73063363	1	132G	SEAL	RETENTOR
5	75236893	1	274S	ROD	HASTE
6	73070372	1	001A	W/O CODE	SEM CÓDIGO
7	73063066	1	095B	BUSHING	BUCHA
8	70927699	1	187A	SNAP RING	ANEL ELÁSTICO
9	70924158	1	158G	O'RING	O'RING
10	73073273	1	010D	NUT	PORCA
11	73058667	1	045A	RING	ANEL
12	73058668	1	132P	PISTON	PISTÃO DO MOTOR
13	73058666	1	045A	RING	ANEL
14	73064517	-	002K	KIT INCLUDES 3,4,6,9,11-13	KIT

SADDLE LOCK PIN CYL. 73124588 (RH) 73124575 (LH)
CIL. DE TRAVAM. DA SELA 73124588 (DIR.)73124575 (ESQ.)

E3.32 | 4

FIATALLIS

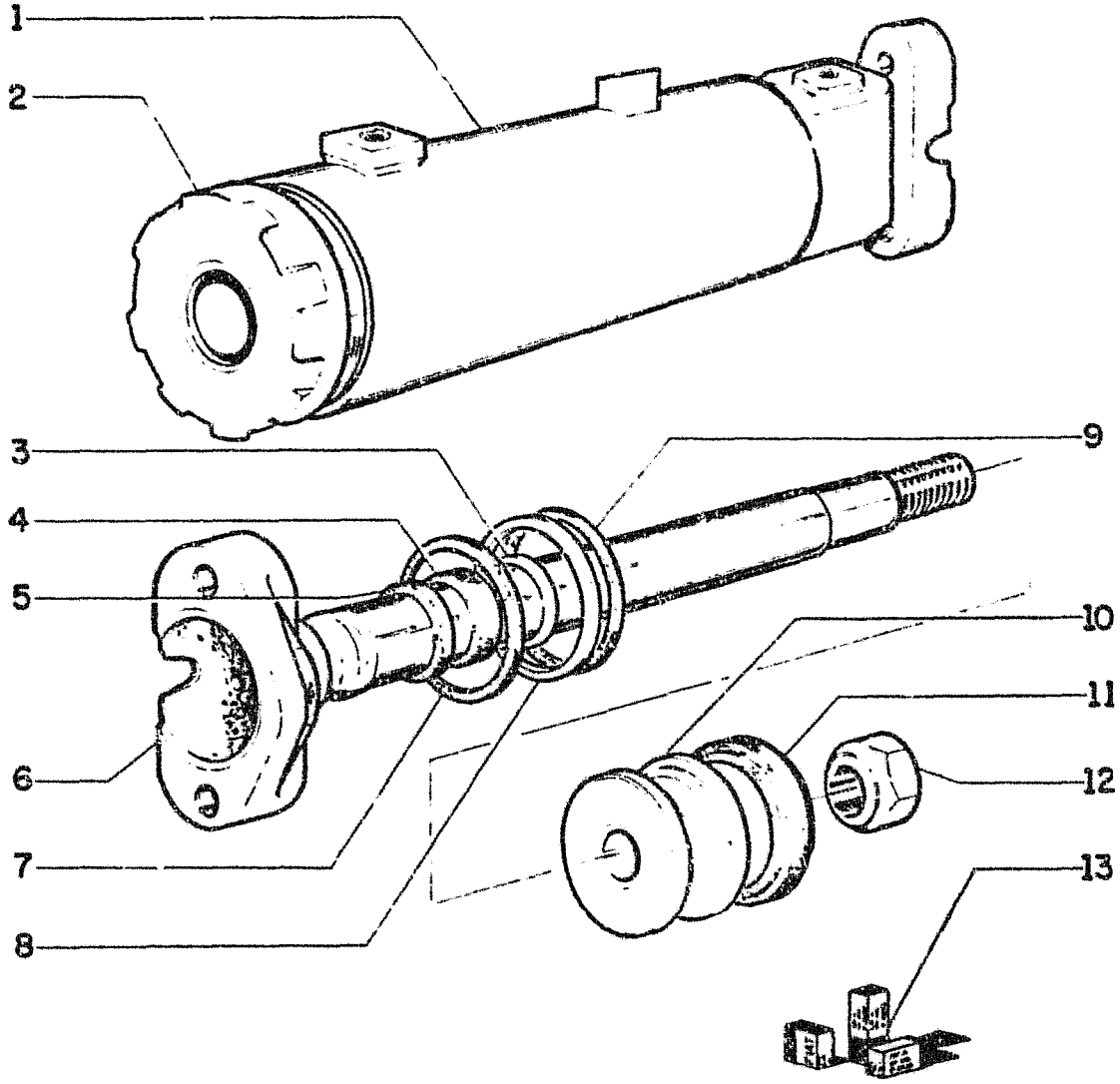

FIATALLIS FG 70R 70A 75R 75A E3.32 **QUADRO 5 PAG. 1**

ITEM	PEÇA Nº	QTDE	COD.	DESCRIPTION	DESCRIÇÃO
1	75220713	1	053C	TUBE	CAMISA CILINDRO
2	75220924	1	132F	HEAD	FUNDO DIANTEIRO
3	8297074	1	055A	SEAL RING	ANEL DE VEDAÇÃO
4	8297073	1	122G	SEAL	RETENTOR
5	8288832	1	122G	SEAL	RETENTOR
6	75220710	1	274S	ROD	HASTE
7	14465780	1	158G	O'RING	O'RING
8	8297075	1	055A	SEAL RING	ANEL DE VEDAÇÃO
9	14465480	1	158G	O'RING	O'RING
10	79038228	1	132P	PISTON	PISTÃO
11	8291561	1	045A	RING	ANEL
12	8298615	1	010D	NUT	PORCA
13	75220700	-	002K	KIT (INCLUDES ITEMS 3,4,5,7,8, 9, 11)	KIT (INCLUE ITENS 3,4,5,7,8,9,11)

CIRCLE SHIFT CYLINDER (75220709)
CILINDRO DE DESLOCAMENTO DO CIRCULO

E3.32 | 5

FIATALLIS

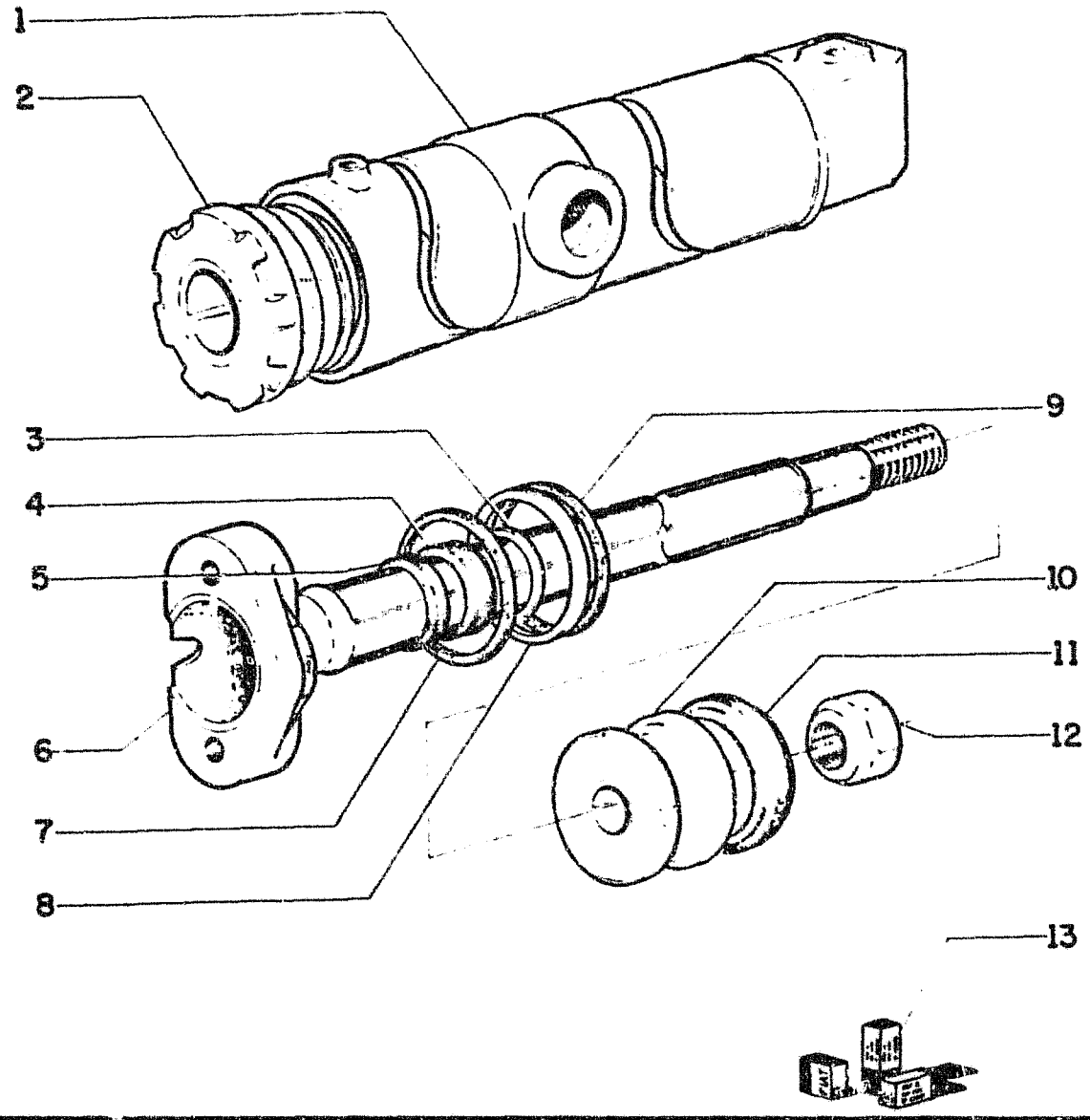

FIATALLIS FG 70R 70A 75R 75A E3.32 **QUADRO** 6 **PAG.** 1

ITEM	PEÇA Nº	QTDE	COD.	DESCRIPTION	DESCRIÇÃO
1	75220793	1	053C	TUBE	CAMISA CILINDRO
2	75220792	1	132F	HEAD	FUNDO DIANTEIRO
3	79021959	1	045A	RING	ANEL
4	79021958	1	122G	SEAL	RETENTOR
5	79021957	1	122G	SEAL	RETENTOR
6	75220789	1	274S	ROD	HASTE
7	14465780	1	158G	O'RING	O'RING
8	8297075	1	055A	SEAL RING	ANEL DE VEDAÇÃO
9	14465480	1	158G	O'RING	O'RING
10	79038228	1	132P	PISTON	PISTÃO
11	8291561	1	045A	RING	ANEL
12	8298615	1	010D	NUT	PORCA
13	75220797	K	002K	KIT(INCLUDES ITEMS 3-4-5-7-8-9-11)	KIT (INCLUI ITENS 3-4-5-7-8-9-11)

MOLDBOARD LIFT CYLINDER (75220788)
CILINDRO DE LEVANTAMENTO DA LÂMINA

E3.32 | 6

FIATALLIS

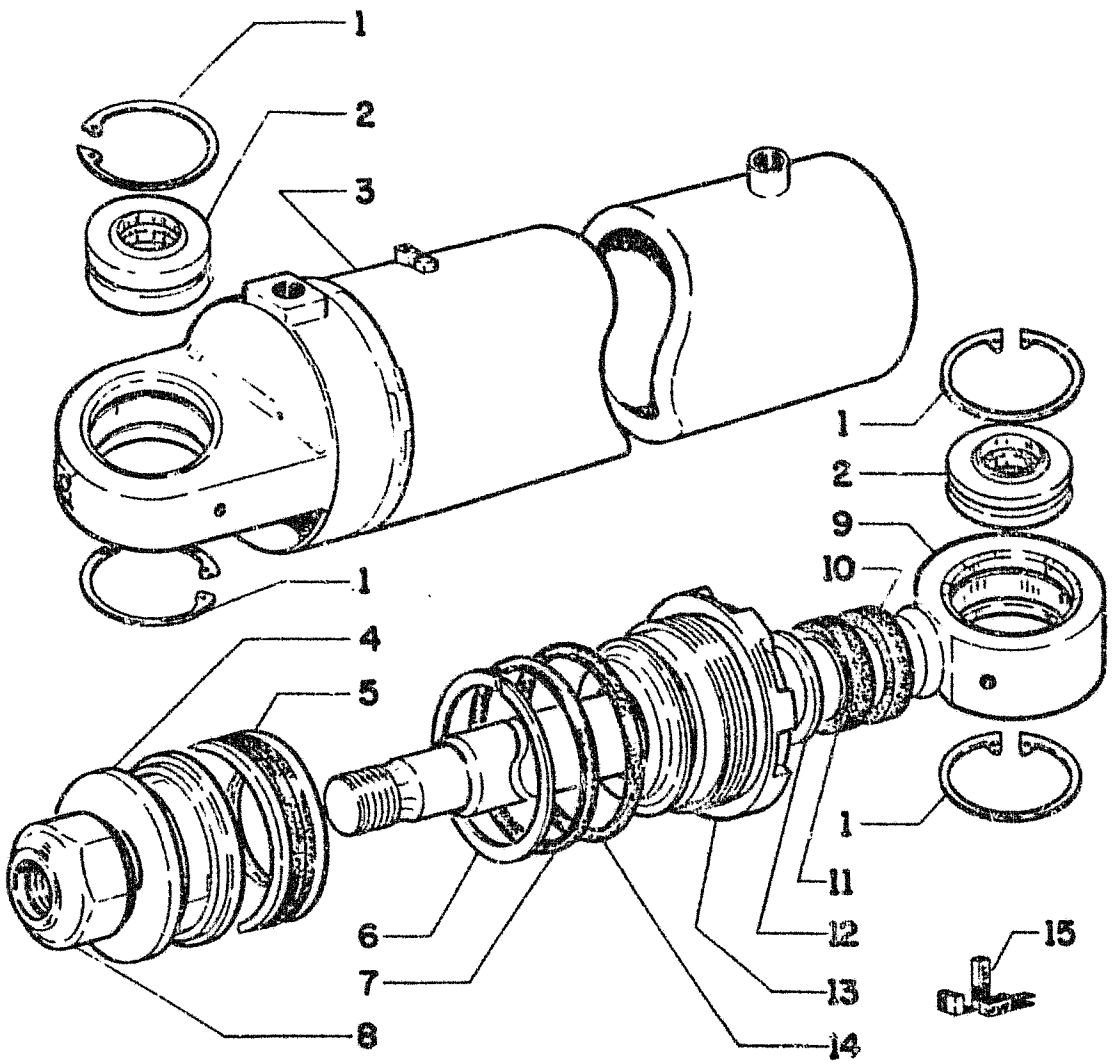

FIATALLIS FG 70R 70A 75R 75A E3.32 **QUADRO** 8 **PAG.** 1

ITEM	PEÇA Nº	QTDE	COD.	DESCRIPTION	DESCRIÇÃO
1	11061076	8	187A	SNAP RING	ANEL ELÁSTICO
2	70928851	4	095B	BUSHING	BUCHA
3	75213542	1	193T	TUBE	TUBO
3	75213543	1	193T	TUBE	TUBO
4	79038730	2	235S	PISTON	ÊMBOLO
5	8291506	2	122G	SEAL	RETENTOR
6	8297295	2	045A	RING	ANEL
7	14465180	2	158G	O'RING	O'RING
8	8281325	2	010D	NUT	PORCA
9	75213768	2	274S	ROD	HASTE
10	8288822	2	122G	SEAL	RETENTOR
11	8297294	2	122G	SEAL	RETENTOR
12	8297296	2	055A	SEAL RING	ANEL DE VEDAÇÃO
13	75220934	2	132F	HEAD	FUNDO DIANTEIRO
14	14465480	2	158G	O'RING	O'RING
15	75209587	-	002K	KIT(INCLUDES ITEMS 5-7,10-12,14	KIT(INCLUI ITENS

ARTICULATION CYLINDER (RIGHT 75213774) (LEFT 75213779)
CILINDRO DE ARTICULAÇAO

E3.32 | 8

FIATALLIS

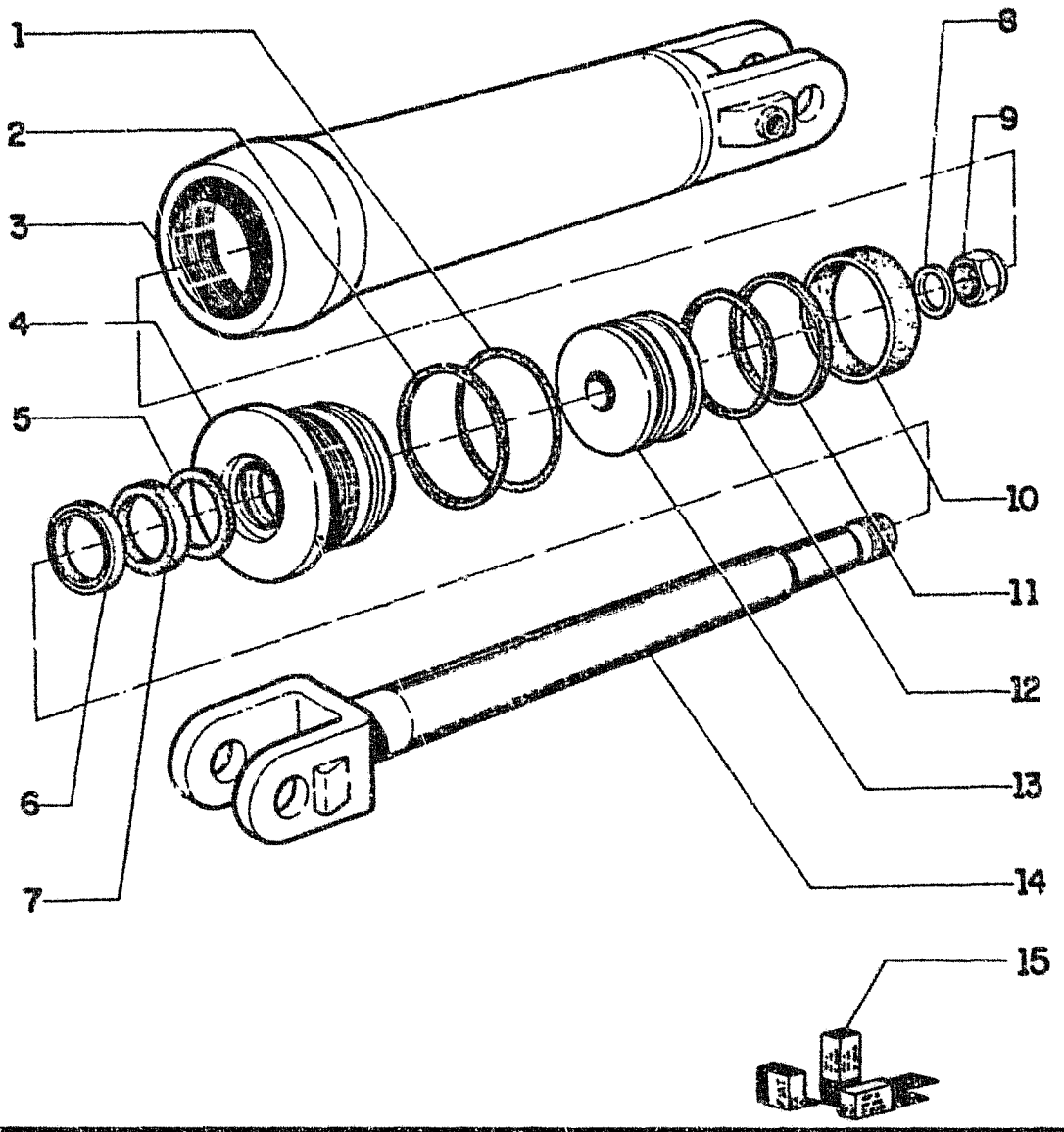

FIATALLIS FG 70R 70A 75R 75A E3.32/1 **QUADRO** 1 **PAG.** 1

ITEM	PEÇA Nº	QTDE	COD.	DESCRIPTION	DESCRIÇÃO
1	70927242	1	158G	O'RING	O'RING
2	70926629	1	045A	RING	ANEL
3	73067551	1	164C	CYLINDER	CILINDRO
4	73067593	1	119T	HEAD	CABEÇA
5	73067518	1	045A	RING	ANEL
6	73053637	1	176R	SCRAPER	RASPADORA
7	73067915	1	055A	SEAL RING	ANEL DE VEDAÇ
8	73055413	1	075D	SPACER	ESPAÇADOR
9	73073210	1	010D	NUT	PORCA
10	73055430	1	045A	RING	ANEL
11	73055431	1	045A	RING	ANEL
12	70927343	1	045A	RING	ANEL
13	73067547	1	235S	PISTON	ÊMBOLO
14	73067546	1	090A	ROD	HASTE
15	73159181	K	002K	KIT INCLUDES ITENS (1-2-5-6-7-10-11-12)	KIT

SCARIFIER LIFT CYLINDER (73067421)
CILINDRO DO ESCARIFICADOR

E3.32/1 | 1

FIATALLIS

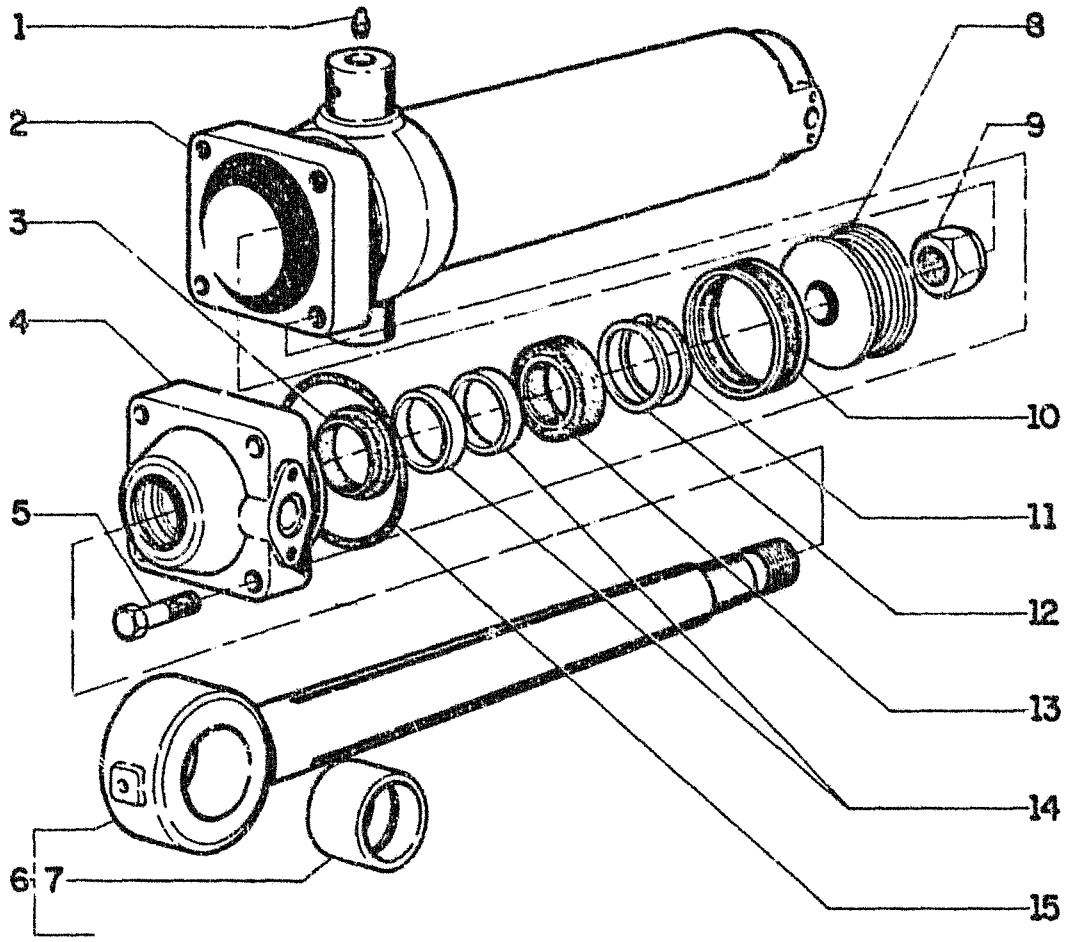

FIATALLIS FG 70R 70A 75R 75A E3.32/1 **QUADRO** 2 **PAG.** 1

ITEM	PEÇA Nº	QTDE	COD.	DESCRIPTION	DESCRIÇÃO
1	13407211	2	060I	GREASE FITTING	PINO GRAXEIRO
2	8299524	1	164C	CYLINDER	CILINDRO
3	8288748	1	055A	SEAL RING	ANEL DE VEDAÇ.
4	8288335	1	265C	COVER	TAMPA
5	14253530	4	040V	SCREW	PARAFUSO
6	8299526	1	090A	ROD	HASTE
7	8286948	1	095B	BUSHING	BUCHA
8	8290223	1	235S	PISTON	ÊMBOLO
9	8299528	1	010D	NUT	PORCA
10	8291904	1	122G	SEAL	RETENTOR
11	11061675	1	045A	RING	ANEL
12	8288726	1	075B	CONNECTOR	CONECTOR
13	8287759	1	122G	SEAL	RETENTOR
14	8288749	2	095B	BUSHING	BUCHA
15	14466480	1	158G	O'RING	O'RING

RIPPER CYLINDER 8299529
CILINDRO DO RIPPER

E3.32/1 | 2

DESCRIPTION	SBGRP	TAV	GRID
ENGINE PISTONS	A105	1	1E-14
ROCKER ASSEMBLY	A107	1	1E-16
ROD BEARINGS	A105	1	1E-14
SIDE PLATES	L101	2	2F-14
SLEEVES	A105	1	1E-14
SUMP	A102	1	1E-9
EXHAUST PIPE	A256	1	1G-8
FAN	A409	1	1G-17
BELTS	A409	1	1G-17
DRIVE FG70	A409	2	1H-2
DRIVE FG75	A409/1	2	1H-3
DRIVE FG75	A409/1	4	1H-5
IDLER FG75	A409/1	3	1H-4
FIAT ALLIS TO CUMMINS CROSS REF NUMBERS			2M-2
FILTER IMPLEMENT OIL	E328	1	2C-10
FILTER, AIR	A223	2	1F-8
FILTER, COOLANT	A402	1	1G-15
FILTER, ENGINE OIL	A303	1	1G-12
FILTER, FUEL	A226	1	1F-12
FILTER, TRANS OIL FG70	B201	11	1I-3
FILTER, TRANS. OIL FG75	B217	1	1M-14
FORWARD CLUTCH FG70	B201	7	1H-15
FRAME (NOT ARTICULATED)	D101	1	1O-10
FRONT (ARTICUALTED)	D101	3	1O-13
REAR (ARTICUALTED)	D101	4	1O-14
FRONT AXLE FRAME	B401	1	1N-2
FRONT AXLE WHEEL END	B401	3	1N-4
FUEL FILTER	A226	1	1F-12
INJECTION PUMP	A224	1	1F-9
INJECTION PUMP COMPONENTS	A227	1	1F-13
LINES, HIGH PRESSURE	A224	1	1F-10
LINES, LOW PRESSURE	A201	2	1F-2
NOZZLE	A235	2	1G-6
NOZZLE HOLDER	A235	1	1G-5
PUMP GOVERNOR COMPONENTS	A228	1	1G-2
SEDIMENT BOWL	A225	1	1F-11
TANK	A201	1	1E-17
THROTTLE CONTROL	A221	1	1F-3
THROTTLE CONTROL LEVER	A221	4	1F-6
THROTTLE LINKAGE FG70	A221	2	1F-4
THROTTLE LINKAGE FG75	A221	3	1F-5
TRANSFER PUMP	A224	1	1F-9
FUSES ELECTRICAL	F401	3	2E-5
GOVERNOR, FUEL PUMP COMPONENTS	A228	1	1G-2
GOVERNOR, GROUND SPEED FG70	A221	2	1F-4
GROUND SPEED GOVERNOR FG70	A221	2	1F-4
HEAT EXCHANGER, ENGINE OIL	A303	1	1G-12
HIGH FWD & 5 - 6 SPEED CLUTCH FG75	B201/1	16	1L-16
HIGH SPEED CLUTCH FG70	B201	9	1H-17
HOOD	L101	1	2F-13
HORN	F401	18	2F-6
HOURMETER	F401	3	2E-5
IMPLEMENT CONTROL VALVE SHIELD	D101	2	1O-11
CONTROLVALVE LEVERS	D201	3	1P-7
CONTROLVALVE LEVERS	D201	4	1P-8
IMPLEMENT CONTROLVALVE LINKAGE	D201	2	1P-5
OIL FILTER	E328	1	2C-10
OIL RESERVOIR	E328	1	2C-10
PUMP, COMPONENTS	E329	1	2C-12
INDICATOR, CLOGGED AIR FILTER	A222	1	1F-7
INJECTION PUMP COMPONENTS	A227	1	1F-13
INSTRUMENT PANEL	F401	12	2E-14
LATERAL SHIFT VALVE	E331	2	2C-14
LIGHTS	F401	9	2E-10
BRAKE COMPONENTS	F405	2	2F-8
TURN SIGNAL COMPONENTS	F405	3	2F-9
TURN SIGNAL	F401	13	2E-15
LOCK VALVE	E302	32	2B-7
LOW FORWARD CLUTCH FG75	B201/1	12	1L-6
LOW SPEED CLUTCH FG70	B201	8	1H-16
LUBRICATION SYSTEM	A301	1	1G-9
MAIN RELIEF VALVE, LEFT	E331	10	2D-5
MAIN RELIEF VALVE, RIGHT	E331	11	2D-6
MODULATING VALVE TRANS FG70	B201	18	1I-10
COMPONENTS	E313	1	2C-5
COMPONENTS	E313	2	2C-7
COMPONENTS	E313	3	2C-8
DRAWBAR	E310	2	2B-15
LIFT CYLINDER	E332	6	2D-12
PITCH CYLINDER	E332	2	2D-8
PITCH VALVE	E331	2	2C-14
SHIELD	E313	4	2C-9
SIDE SHIFT CYLINDER	E332	3	2D-9
MONITORING SENSORS	F401	16	2F-4
MONITORING SENSORS	F401	17	2F-5
MUFFLER	A256	1	1G-8
OPERATOR CONSOLE	D201	1	1P-3
PLATFORM	D101	2	1O-11
SEAT BELT	L604	2	2H-3
SEAT	L604	1	2H-2
OUTPUT FLANGE NUT FG70	B201	14	1I-6
OUTPUT SHAFT FG70	B201	10	1I-2
PARKING BRAKE LEVER	C135	1	1O-7
BRAKE LINKAGE FG70	C135	2	1O-8
PARKING BRAKE LINKAGE FG75	C135/1	2	1O-9
BRAKE FG70	B201	12	1I-4
BRAKE FG75	B201/1	2	1I-12
PIPING CIRCLE SHIFT (ARTICULATED)	E302	5	1Q-8
CIRCLE SHIFT (RIGID)	E302	4	1Q-7
MOLDBOARD LIFT (ARTICULATED)	E302	13	2A-3
MOLDBOARD LIFT (RIGID)	E302	12	2A-2
SADDLE LOCK PIN (ARTICULATED)	E302	17	2A-8
SADDLE LOCK PIN (RIGID)	E302	16	2A-7
ARTICULATION	E302	26	2A-15
ARTICULATION	E302	24	2A-13
BRAKE PUMP FG70	E302	32	2B-6
PIPING BRAKE PUMP FG70	E302/1	32	2B-12
CIRCLE TURN (ARTICULATED)	E302	15	2A-6
CIRCLE TURN (RIGID)	E302	14	2A-5
CONTROL VALVE (ARTICULATED)	E302	3	1Q-6
CONTROL VALVE (RIGID)	E302	2	1Q-4
FRONT ATTACHMENT (ARTIC'D)	E302	30	2B-4
FRONT ATTACHMENT (RIGID)	E302	29	2B-3
FRONT ATTACHMENT FG70	E302	31	2B-5
FRONT WHEEL LEAN (ARTIC'D)	E302	7	1Q-10
FRONT WHEEL LEAN (RIGID)	E302	6	1Q-9
FRONT WHEEL LEAN	E302	8	1Q-11
IMPLEMENT PUMP FG70	E302	32	2B-6
IMPLEMENT PUMP FG70	E302/1	32	2B-12
PUMP, BRAKE FG70	E302	32	2B-6
PUMP, BRAKE FG70	E302/1	32	2B-12
PUMP, IMPLEMENT FG70	E302	32	2B-6
PUMP, IMPLEMENT FG70	E302/1	32	2B-12
PUMP, STERING FG70	E302	32	2B-6
PUMP, STERING FG70	E302/1	32	2B-12
REAR FRAME	E302	1	1Q-2
RIPPER CYLINDER	E302/1	2	2B-9
RIPPER	E302/1	3	2B-10
SCARIFIER	E302/1	1	2B-8
SIDE SHIFT & PITCH (ARTIC'D)	E302	19	2A-10
SIDE SHIFT & PITCH (RIGID)	E302	18	2A-9
SIDE SHIFT & PITCH	E302	20	2A-11
STEERING (ARTICULATED)	E302	27	2A-17
STEERING (ARTICULATED)	E302	28	2B-2
STEERING (RIGID)	E302	25	2A-14
STEERING PUMP FG70	E302	32	2B-6
PIPING, STEERING PUMP FG70	E302/1	32	2B-12
PUMP, BRAKE COMPONENTS	D213	1	1P-13
COOLANT	A403	1	1G-16
ENGINE OIL	A302	1	1G-11
FUEL INJECTION	A224	1	1F-9
FUEL INJECTION COMPONENTS	A227	1	1F-13
FUEL TRANSFER	A224	1	1F-9
IMPLEMENT COMPONENTS	E329	1	2C-12
STEERING COMPONENTS	D213	1	1P-13

FIATALLIS

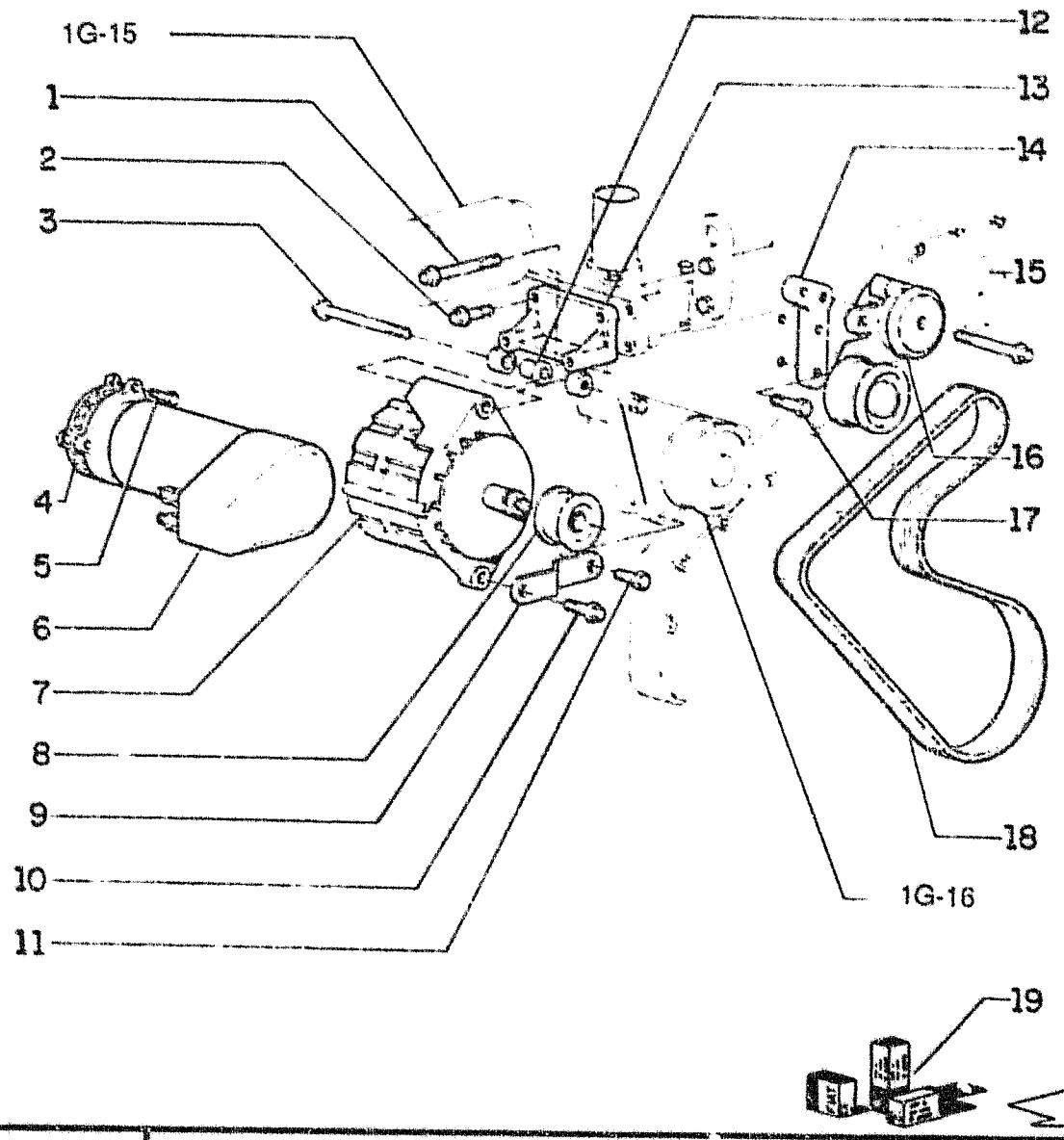

FIATALLIS FG 70R 70A 75R 75A F2.00 **QUADRO 1 PAG. 1**

ITEM	PEÇA Nº	QTDE	COD.	DESCRIPTION	DESCRIÇÃO
1	75206818	2	040V	SCREW	PARAFUSO
2	75208388	2	040V	SCREW	PARAFUSO
3	75206636	1	040V	SCREW	PARAFUSO
4	75204994	1	123G	SEAL ASSY	RETENTOR
5	75204954	3	040V	SCREW	PARAFUSO
6	75204899	1	133M	STARTER MOTOR	MOTOR ARRANQUE
7	75208381	1	025A	ALTERNATOR	ALTERNADOR
8	75206637	1	230P	PULLEY	POLIA
9	75206816	1	300S	SUPPORT	SUPORTE
10	75206638	1	040V	SCREW	PARAFUSO
11	75208384	1	040V	SCREW	PARAFUSO
12	75206635	1	075D	SPACER	ESPAÇADOR
13	75206640	1	300S	SUPPORT	SUPORTE
14	75206814	1	300S	SUPPORT	SUPORTE
15	75208259	1	040V	SCREW	PARAFUSO
16	75208258	1	087T	BELT STRETCHER	ESTICADOR DA CO
17	75208388	2	040V	SCREW	PARAFUSO
18	75206822	1	173C	BELT	CORREIA
19	75221462	K	002K	KIT ITEMS 1-18	KIT

ELECTRICAL PARTS MOUNTING KIT
KIT PARA INSTALAÇAO DE COMPONENTES ELETRICOS

F2.00 | 1

FIATALLIS

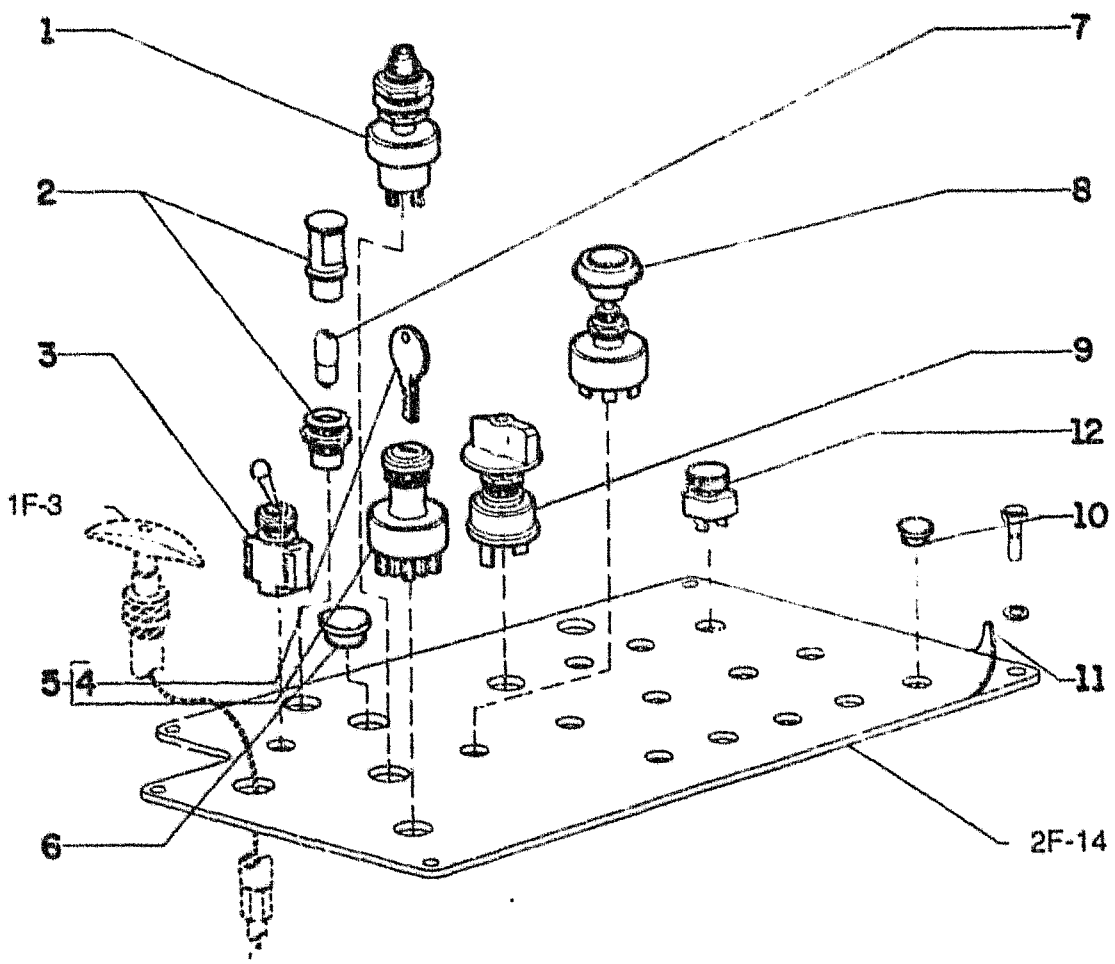

FIATALLIS FG 70R 70A 75R 75A F4.01 **QUADRO 1 PAG. 1**

ITEM	PEÇA Nº	QTDE	COD.	DESCRIPTION	DESCRIÇÃO
1	73073459	1	075I	HORN SWITCH	INTERRUPTOR
2	73072041	2	030L	PANEL LIGHT SWITCHES	LÂMPADA
3	73125891	1	075I	LIFT FLOAT SWITCH	INTERRUPTOR
4	73075836	1	150C	KEY	CHAVE
5	73075753	1	210C	SWITCH	CHAVE COMUTADOR
6	70921376	1	064C	CAP	TAMPÃO
7	73072026	2	087L	BULB	LÂMPADA
8	73150630	1	075I	REAR WIPER SWITCH	INTERRUPTOR
9	73057960	1	075I	LIGHT SWITCH	INTERRUPTOR
10	70922803	8	064C	CAP	TAMPÃO
11	73150625	1	008D	DECAL	DECALCOMANIA
12	73144833	3	075I	HEATER SWITCH	INTERRUPTOR

ELECTRICAL INSTRUMENT
INSTRUMENTO ELETRICO

F4.01 | 1

FIATALLIS

FIATALLIS FG 70R 70A 75R 75A F4.01 QUADRO 2 PAG. 1

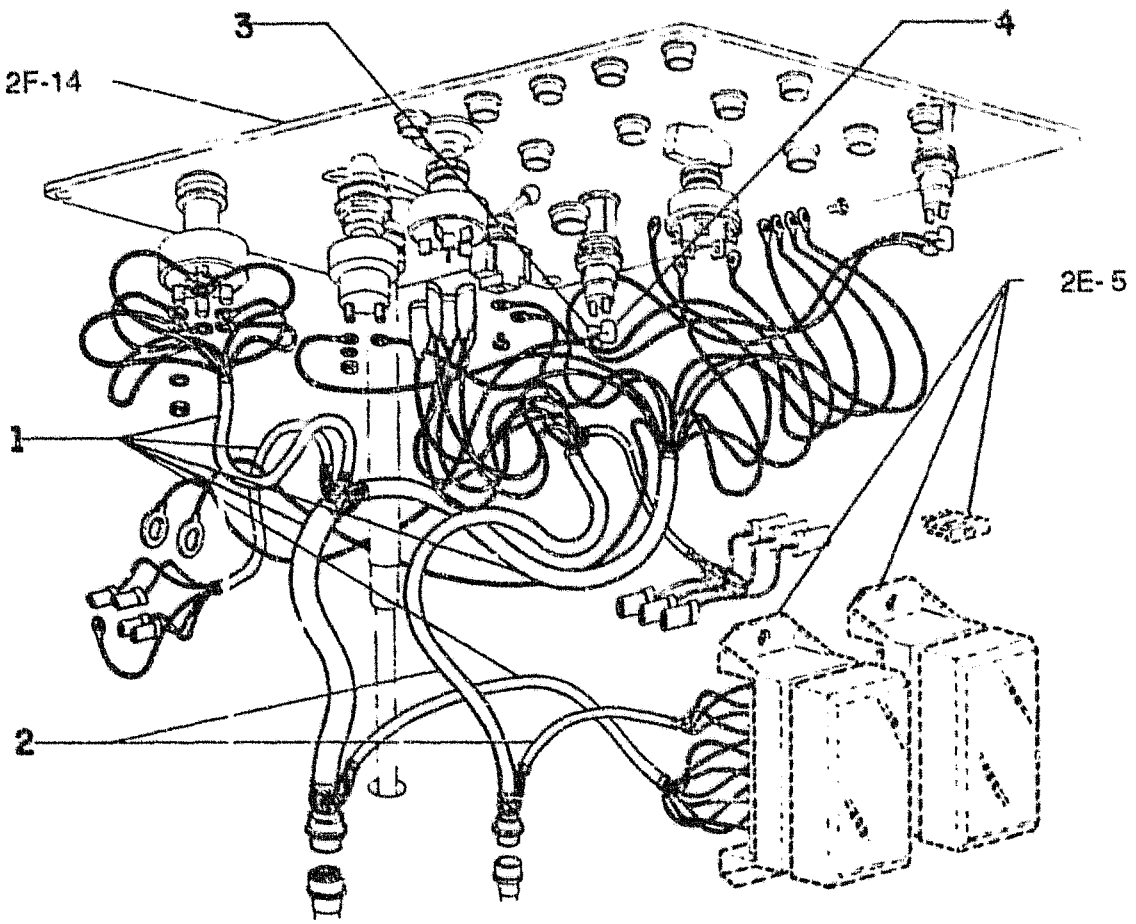

ITEM	PEÇA Nº	QTDE	COD.	DESCRIPTION	DESCRIÇÃO
1	73153966	1	111C	CABLE	CABO ELETRICO
2	73153967	1	111C	CABLE	CABO ELETRICO
3	73146522	1	111C	CABLE	CABO ELETRICO
4	73147227	1	111C	CABLE	CABO ELETRICO

FIATALLIS

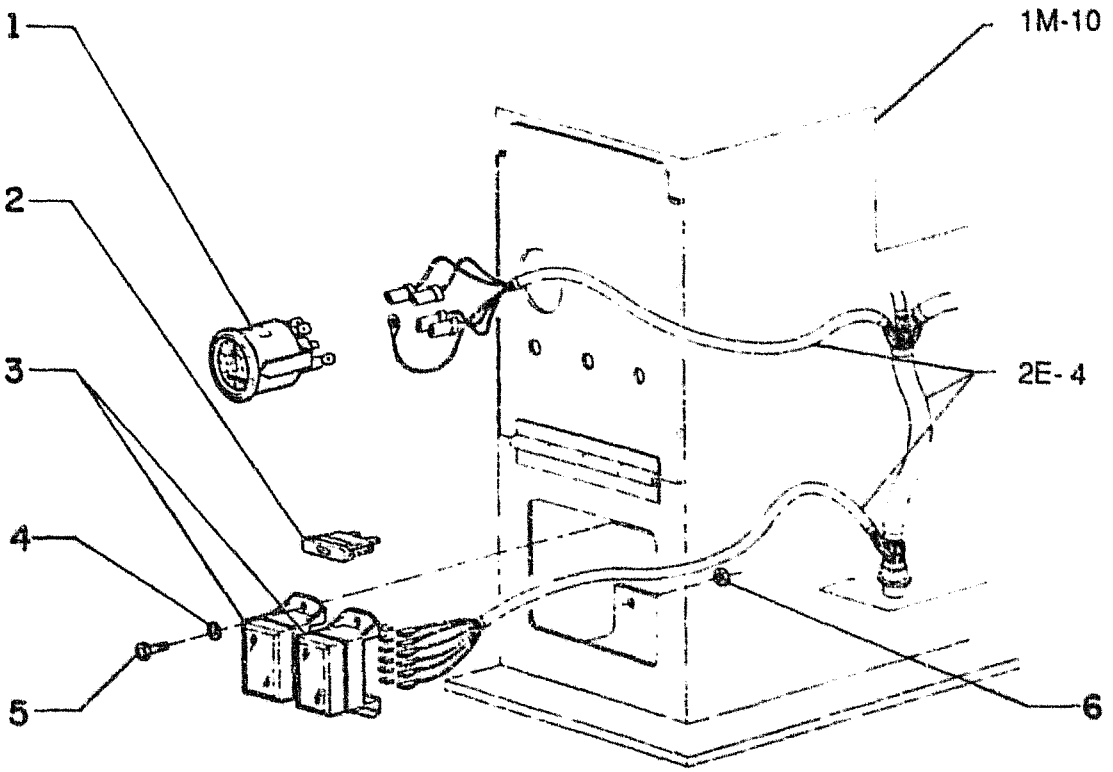

FIATALLIS FG 70R 70A, 75R 75A — F4.01 **QUADRO** 3 **PAG.** 1

ITEM	PEÇA Nº	QTDS	COD.	DESCRIPTION	DESCRIÇÃO
1	75220416	1	248C	HOURMETER	HORIMETRO
2	11054690	2	110F	FUSE	FUSIVEL
2	11054790	1	110F	FUSE	FUSIVEL
2	11055090	7	110F	FUSE	FUSIVEL
3	79078595	2	188P	FUSE HOLDER	PORTA-FUSÍVEL
4	14496307	4	131R	WASHER	ARRUELA
5	10977534	4	040V	SCREW	PARAFUSO
6	15896421	4	010D	NUT	PORCA

FIATALLIS

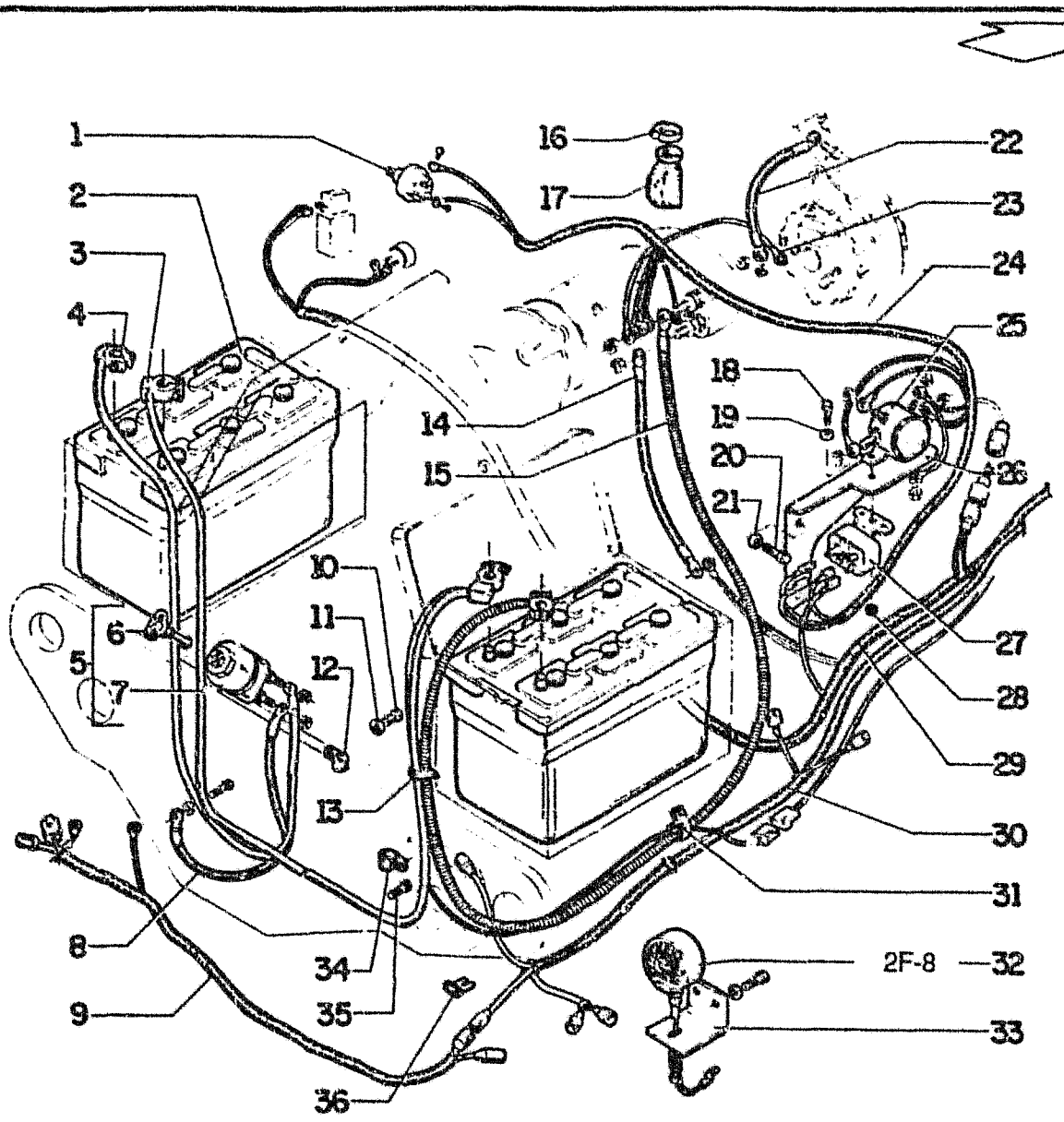

FIATALLIS FG 70R 70A 75R 75A F4.01 **QUADRO** 7 **PAG.** 1

ITEM	PEÇA Nº	QTDE	COD.	DESCRIPTION	DESCRIÇÃO
1	73110555	1	133S	SENSOR	SENSOR
2	75211328	2	025B	BATTERY	BATERIA
2	75235523	2	025B	BATTERY	BATERIA
2	75237719	2	025B	BATTERY	BATERIA
2	73128216	2	025B	BATTERY	BATERIA
3	73126909	1	111C	CABLE	CABO ELETRICO
4	73153049	1	111C	CABLE	CABO ELETRICO
5	79073031	1	075I	SWITCH	INTERRUPTOR
6	79073033	1	150C	KEY	CHAVE
7	79073032	1	150C	KEY	CHAVE
8	73153050	1	111C	CABLE	CABO ELETRICO
9	73153951	1	111C	CABLE	CABO ELETRICO
10	70922300	11	040V	SCREW	PARAFUSO
11	70630753	11	131R	WASHER	ARRUELA
12	70639314	10	031F	CLAMP	ABRAÇADEIRA
13	70196765	17	031F	CLAMP	ABRAÇADEIRA
14	73126796	1	111C	CABLE	CABO ELETRICO
15	73152180	1	111C	CABLE	CABO ELETRICO
16	70922660	1	031F	CLAMP	ABRAÇADEIRA
17	70076572	1	065C	BOOT	SANFONA
18	70927541	2	040V	SCREW	PARAFUSO
19	70928190	2	131R	WASHER	ARRUELA
20	11112331	2	040V	SCREW	PARAFUSO
21	70928178	2	131R	WASHER	ARRUELA
22	73126797	1	111C	CABLE	CABO ELETRICO
23	73152766	1	111C	CABLE	CABO ELETRICO
24	73153958	1	111C	CABLE	CABO ELETRICO
25	73117176	1	075I	SWITCH	INTERRUPTOR
26	75238339	1	300S	SUPPORT	SUPORTE
27	73072566	1	085T	RELAY	RELE
28	70911024	2	010D	NUT	PORCA
29	73159027	1	111C	CABLE	CABO ELETRICO
30	73153954	1	111C	CABLE	CABO ELETRICO

ELECTRICAL SYSTEM
SISTEMA ELETRICO

F4.01 | 7

FIATALLIS

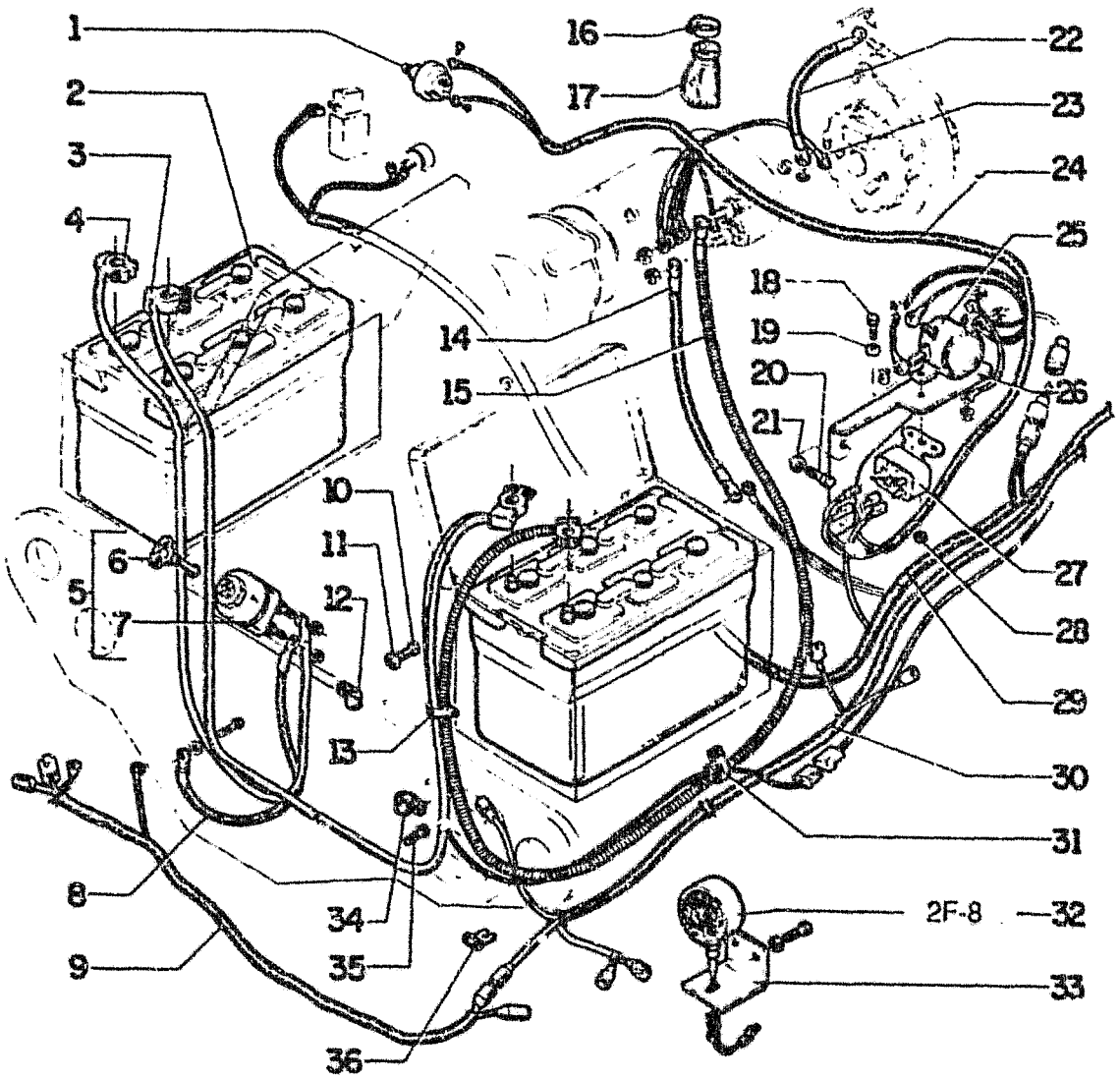

31	70929703	2	031F	CLAMP / ABRAÇADEIRA
32	73069238	2	009F	LIGHT / FAROL
33	73124844	2	300S	SUPPORT / SUPORTE
34	70928656	14	031F	CLAMP / ABRAÇADEIRA
35	70922763	8	040V	SCREW / PARAFUSO
36	70639313	2	031F	CLAMP / ABRAÇADEIRA

FIATALLIS

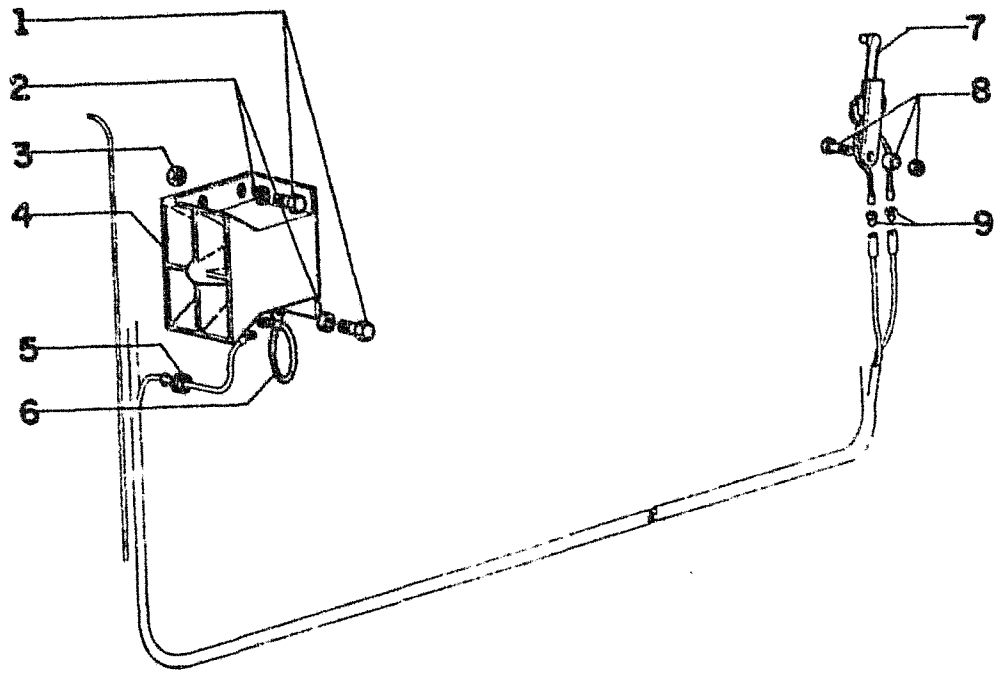

FIATALLIS FG 70R 70A F4.01 **QUADRO** 8 **PAG.** 1

ITEM	PEÇA Nº	QTDE	COD.	DESCRIPTION	DESCRIÇÃO
1	70927401	4	040V	SCREW	PARAFUSO
2	70928190	4	131R	WASHER	ARRUELA
3	70911024	4	J10D	NUT	PORCA
4	73131968	1	0760	BACK UP ALAPM	ALARME DE RÉ
5	70023176	1	045A	RING	ANEL
6	70671763	1	111C	CABLE	CABO ELETRICO
7	73159008	1	075I	SWITCH	INTERRUPTOR
8	73128604	1	075D	SPACER	ESPAÇADOR
9	73121530	2	060C	WIRE TERMINAL	TERMINAL DO FIO

BACK UP ALARM SYSTEM
SISTEMA ALARME DE RE

F4.01 | 8

FIATALLIS

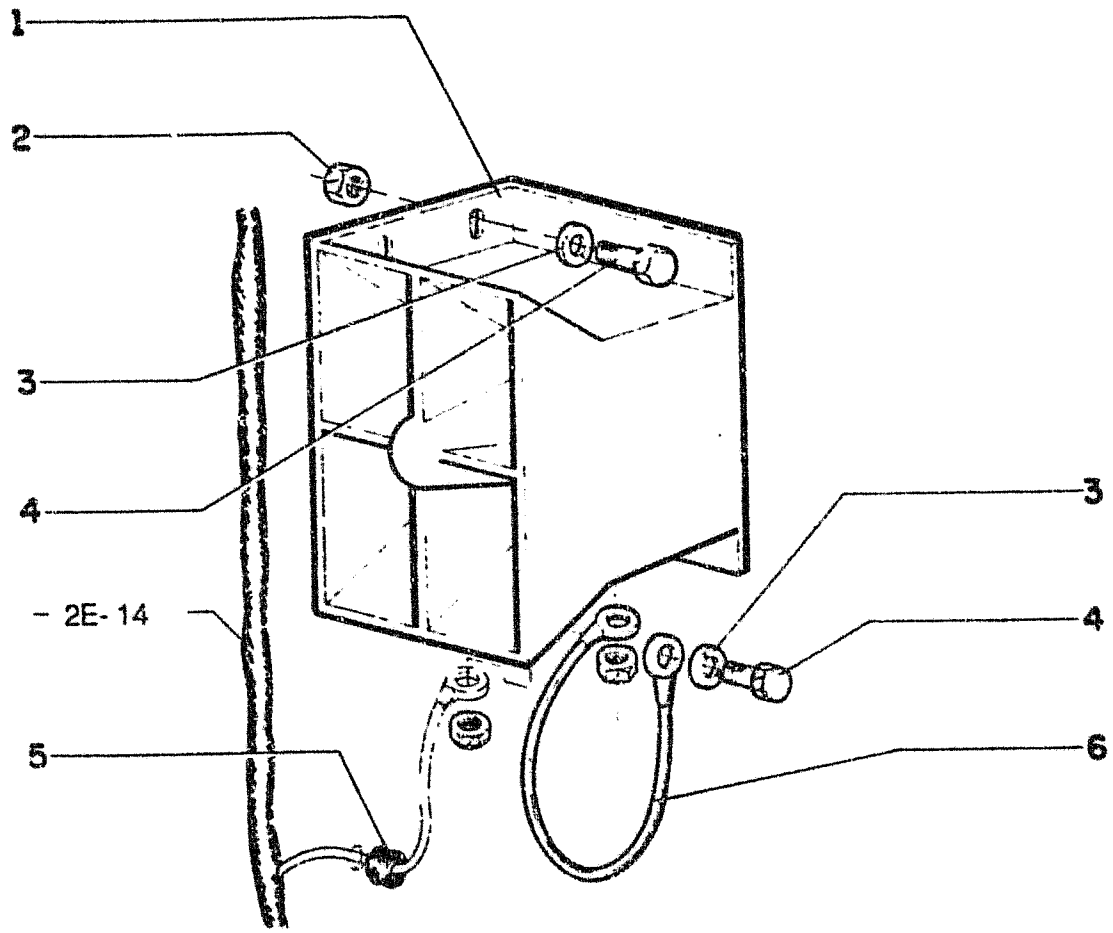

FIATALLIS FG 75R 75A F4.01/1 **QUADRO** 8 **PAG.** 1

ITEM	PEÇA Nº	QTDE	COD.	DESCRIPTION	DESCRIÇÃO
1	73131968	1	0760	BACK UP ALARM	ALARME DE RÉ
2	70911024	4	010D	NUT	PORCA
3	70928190	4	131R	WASHER	ARRUELA
4	70927401	4	040V	SCREW	PARAFUSO
5	70023176	1	045A	RING	ANEL
6	70671763	1	111C	CABLE	CABO ELETRICO

BACK UP ALARM SYSTEM
SISTEMA ALARME DE RE

F4.01/1 | 8

FIATALLIS

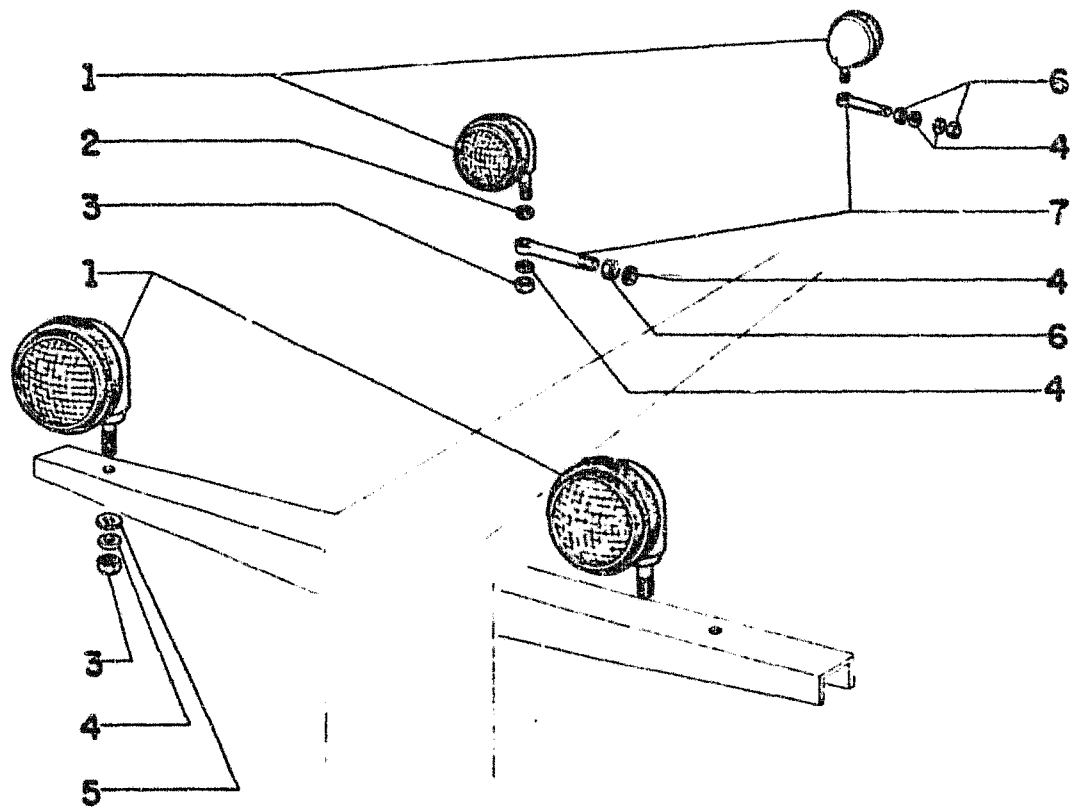

FIATALLIS FG 70R 70A 75R 75A F4.01 QUADRO 9 PAG. 1

ITEM	PEÇA Nº	QTDE	COD.	DESCRIPTION	DESCRIÇÃO
1	70621429	5	0766	FLOODLIGHT	FAROIS DIANT.
2	70977008	3	131R	WASHER	ARRUELA
3	70911043	3	010D	NUT	PORCA
4	70912441	8	170R	LOCKWASHER	ARRUELA PRESS
5	70900818	2	131R	WASHER	ARRUELA
6	70911035	3	010D	NUT	PORCA
7	70065935	3	040V	SCREW	PARAFUSO

LIGHTING SYSTEM
SISTEMA DE ILUMINAÇAO

F4.01 | 9

FIATALLIS

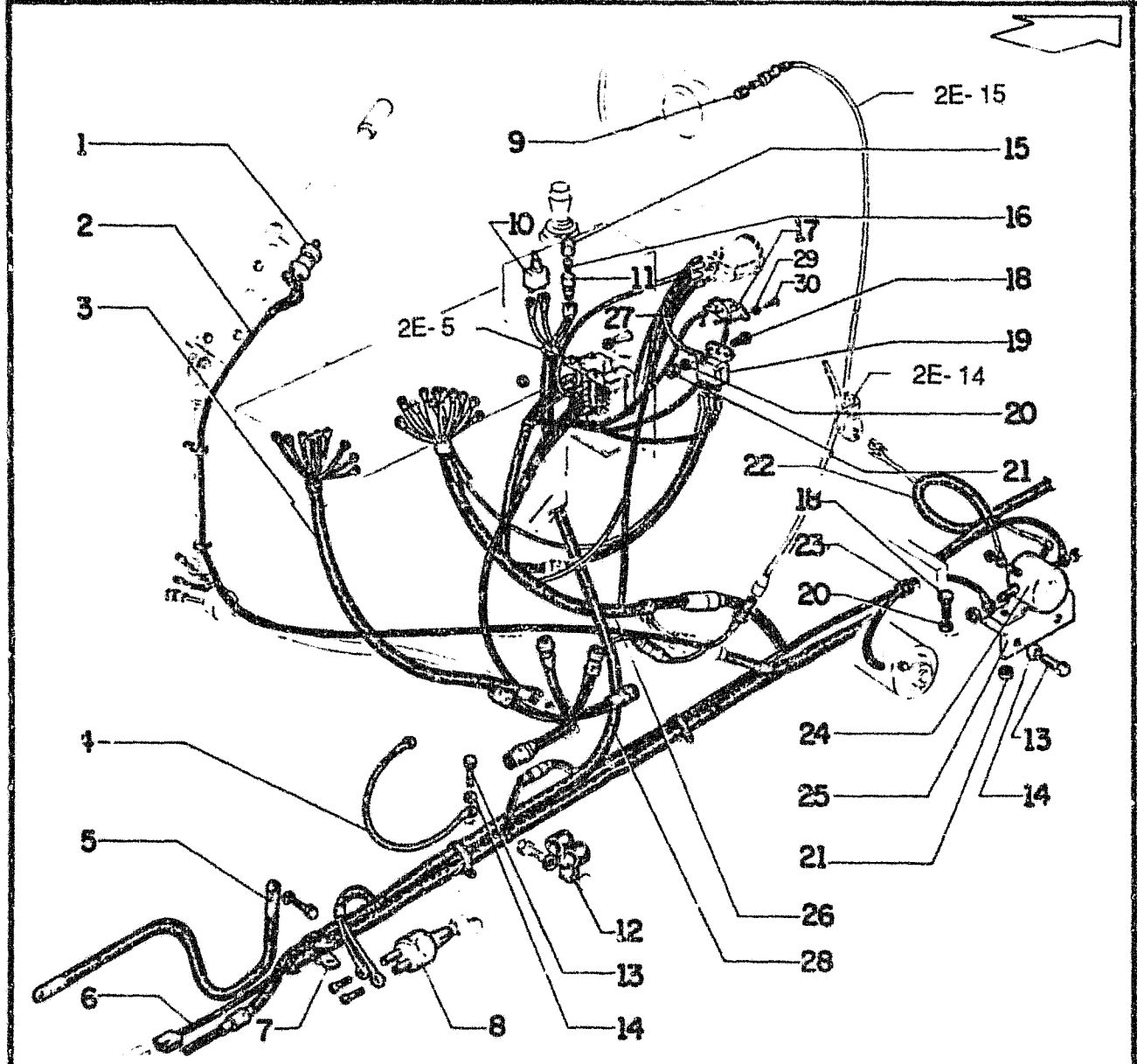

FIATALLIS FG 70R 70A F4.01 **QUADRO** 10 **PAG.** 1

ITEM	PEÇA Nº	QTDE	COD.	DESCRIPTION	DESCRIÇÃO
1	70183714	1	075I	PARKING BRAKE SWITCH	RUPTOR
2	73159028	1	111C	CABLE	CABO ELETRICO
3	73153967	1	111C	CABLE	CABO ELETRICO
4	73126160	1	111C	CABLE	CABO ELETRICO
5	73152169	1	111C	CABLE	CABO ELETRICO
6	75222599	1	111C	CABLE	CABO ELETRICO
7	70929279	1	031F	CLAMP	ABRAÇADEIRA
8	70094334	2	075I	SWITCH	INTERRUPTOR
9	73072028	1	170T	LENS	LENTE
10	73112915	2	075I	MOLDBOARD SHIFT/PITCH SWITCH	
11	73072027	2	300S	SUPPORT	SUPORTE
12	70929702	6	031F	CLAMP	ABRAÇADEIRA
13	70927400	10	040V	SCREW	PARAFUSO
14	70929156	14	131R	WASHER	ARRUELA
15	73153094	1	170T	LENS	LENTE
16	73072025	2	030L	LAMP	LÂMPADA
17	70671696	1	110F	FUSE	FUSIVEL
17	75235148	1	150C	KEY	CHAVE
18	70927541	4	040V	SCREW	PARAFUSO
19	73072566	1	085T	RELAY	RELE
20	70928190	4	131R	WASHER	ARRUELA
21	70911024	4	010D	NUT	PORCA
22	75237351	1	111C	CABLE	CABO ELETRICO
23	70935012	1	045A	RING	ANEL
24	73117176	1	075I	BRAKE MOTOR RELAY	TERRUPTOR
25	73128103	1	300S	SUPPORT	SUPORTE
26	73153966	1	111C	CABLE	CABO ELETRICO
27	73126111	3	111C	CABLE	CABO ELETRICO
28	73159027	1	111C	CABLE	CABO ELETRICO
29	70917458	2	131R	WASHER	ARRUELA
30	70922928	2	040V	SCREW	PARAFUSO

ELECTRICAL SYSTEM
SISTEMA ELETRICO

F4.01 | 10

FIATALLIS

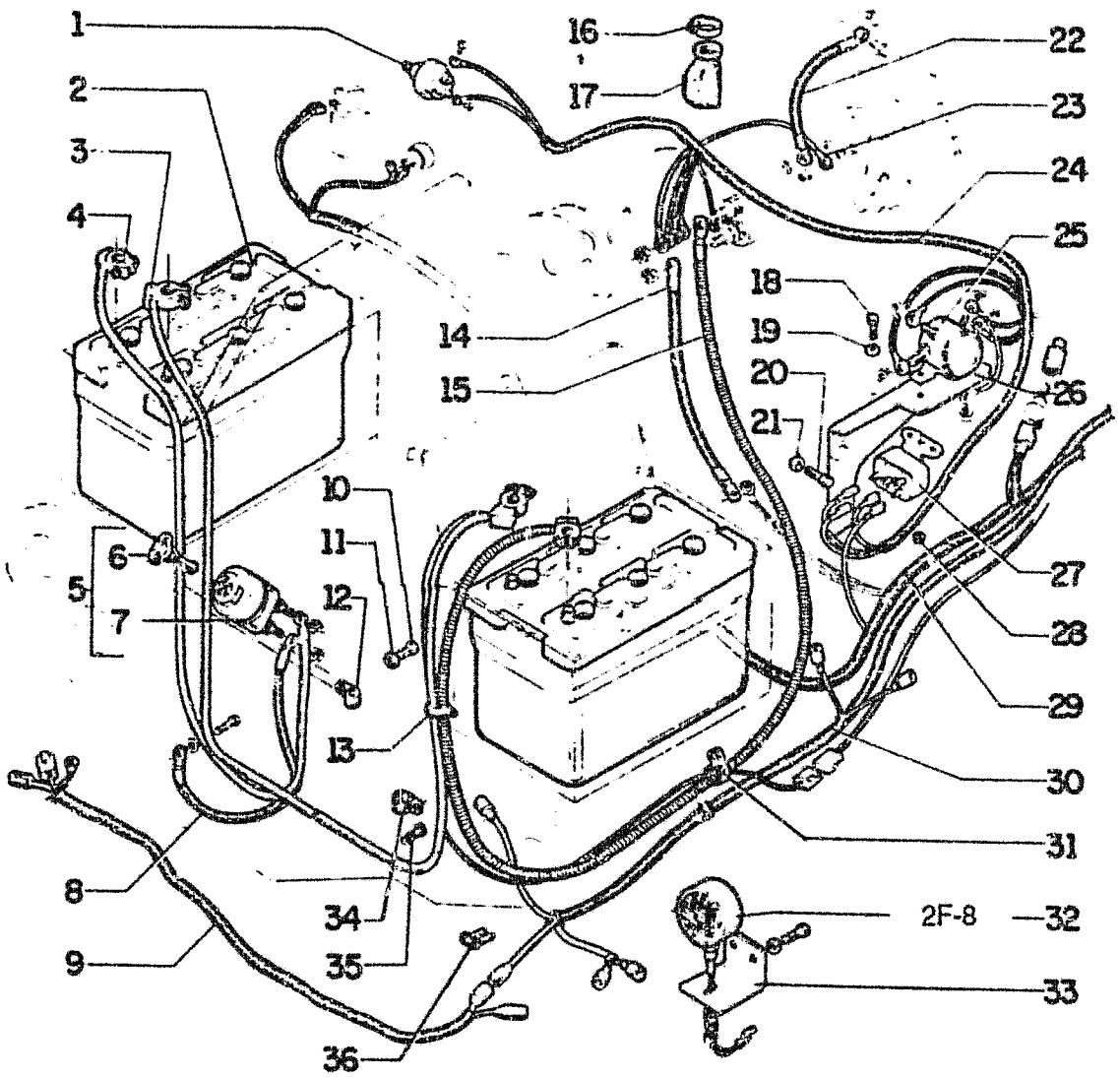

FIATALLIS FG 70R 70A F4.01 **QUADRO** 11 **PAG.** 1

ITEM	PEÇA Nº	QTDE	COD.	DESCRIPTION	DESCRIÇÃO
1	73110555	1	133S	ENGINE OIL PRESSURE SWITCH	
2	75211328	2	025B	BATTERY	BATERIA
2	75235523	2	025B	BATTERY	BATERIA
2	75237719	2	025B	BATTERY	BATERIA
2	73128216	2	025B	BATTERY	BATERIA
3	73126909	1	111C	CABLE	CABO ELETRICO
4	73153049	1	111C	CABLE	CABO ELETRICO
5	79073031	1	075I	SWITCH	INTERRUPTOR
6	79073033	1	150C	KEY	CHAVE
7	79073032	1	150C	KEY	CHAVE
8	73153050	1	111C	CABLE	CABO ELETRICO
9	73153951	1	111C	CABLE	CABO ELETRICO
10	70922300	11	040V	SCREW	PARAFUSO
11	70630753	11	131R	WASHER	ARRUELA
12	70639314	10	031F	CLAMP	ABRAÇADEIRA
13	70196765	17	031F	CLAMP	ABRAÇADEIRA
14	73126796	1	111C	CABLE	CABO ELETRICO
15	73152180	1	111C	CABLE	CABO ELETRICO
16	70922660	1	031F	CLAMP	ABRAÇADEIRA
17	70076572	1	065C	BOOT	SANFONA
18	70927541	2	040V	SCREW	PARAFUSO
19	70928190	2	131R	WASHER	ARRUELA
20	11112331	2	040V	SCREW	PARAFUSO
21	70928178	2	131R	WASHER	ARRUELA
22	73126797	1	111C	CABLE	CABO ELETRICO
23	73152766	1	111C	CABLE	CABO ELETRICO
24	73153958	1	111C	CABLE	CABO ELETRICO
25	73117176	1	075I	SWITCH	INTERRUPTOR
26	75238339	1	300S	SUPPORT	SUPORTE
27	73072566	1	085T	START PROTECTION RELAY	
28	70911024	2	010D	NUT	PORCA
29	73159026	1	111C	CABLE	CABO ELETRICO
30	73153954	1	111C	CABLE	CABO ELETRICO
31	70929703	2	031F	CLAMP	ABRAÇADEIRA
32	73069238	2	009F	STOP & TAIL LAMP	FAROL
33	73124844	2	300S	SUPPORT	SUPORTE

ELECTRICAL SYSTEM
SISTEMA ELETRICO

F4.01 | 11

FIATALLIS

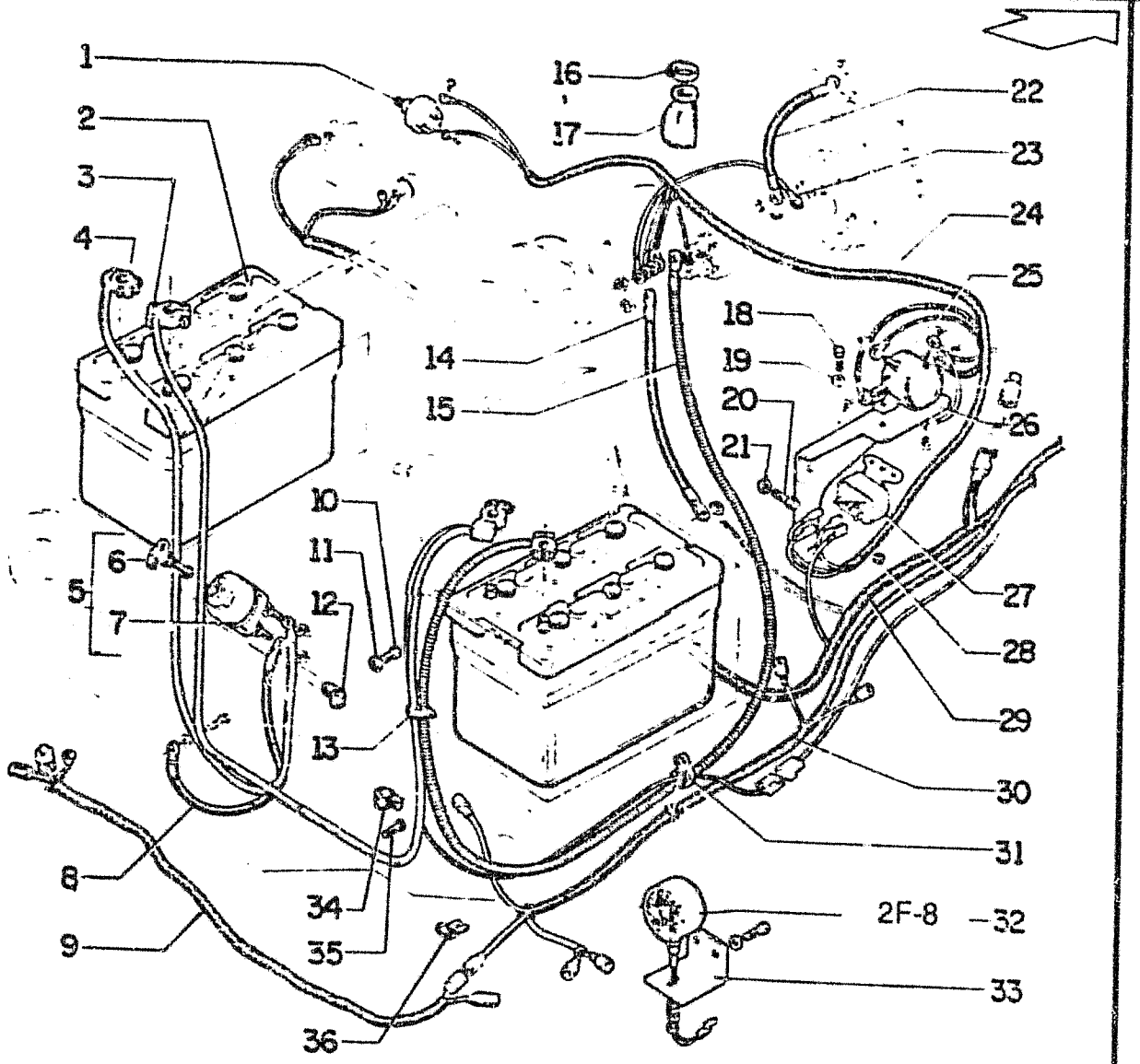

FIATALLIS FG 70R 70A F4.01 **QUADRO** 11 **PAG.** 2

ITEM	PEÇA Nº	QTDE	COD.	DESCRIPTION	DESCRIÇÃO
34	70928656	14	031F	CLAMP	ABRAÇADEIRA
35	70922763	8	040V	SCREW	PARAFUSO
36	70639313	2	031F	CLAMP	ABRAÇADEIRA

FIATALLIS

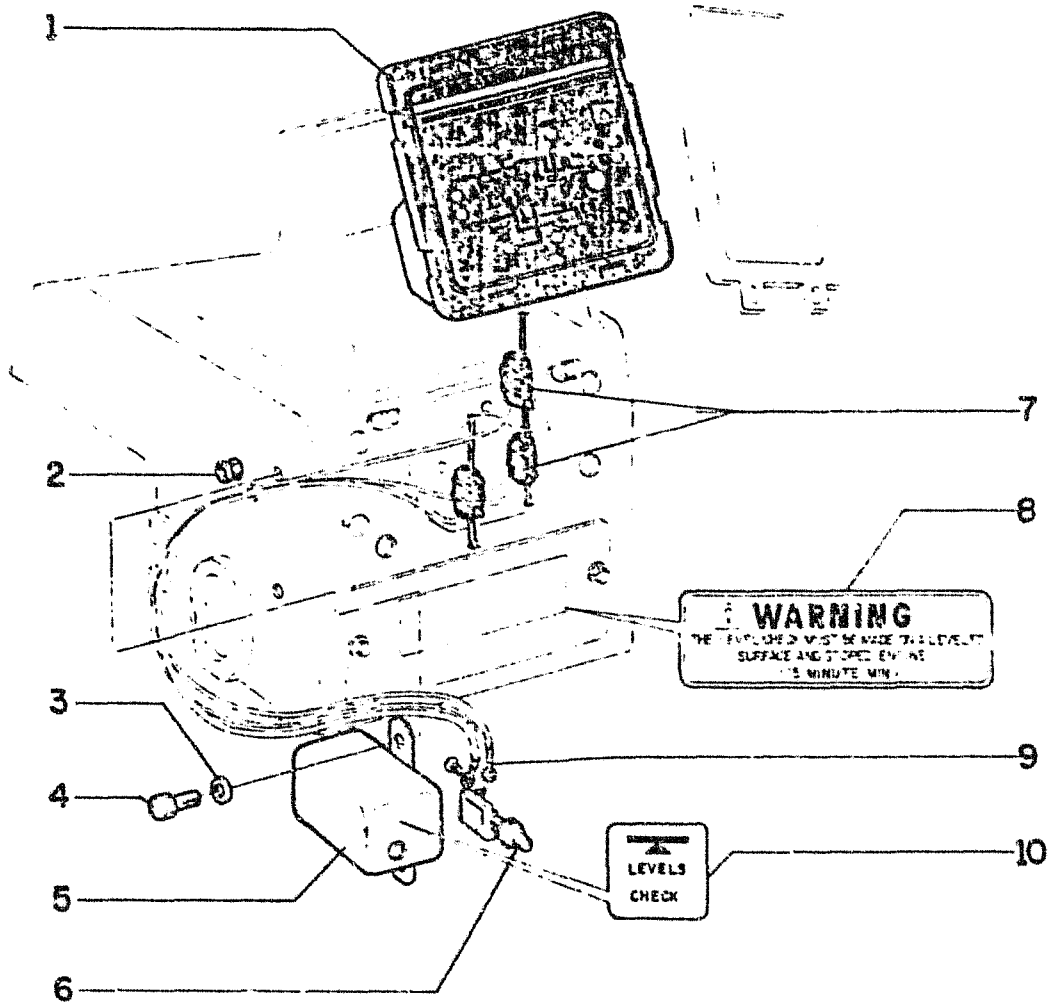

FIATALLIS FG 70R 70A 75R 75A F4.01 **QUADRO** 12 **PAG.** 1

ITEM	PEÇA Nº	QTDE	COD.	DESCRIPTION	DESCRIÇÃO
1	79096376	1	141P	INSTRUM. PANEL	PAINEL INSTRUM
2	70023176	1	045A	RING	ANEL
3	70928190	2	131R	WASHER	ARRUELA
4	70929002	2	040V	SCREW	PARAFUSO
5	75238182	1	120P	PLATE	PRATO
6	73160099	1	075I	SWITCH	INTERRUPTOR
7	75238158	3	075B	CONNECTOR	CONECTOR
8	75238188	1	065T	DECAL	ADESIVO
9	75216160	2	060C	WIRE TERMINAL	TERMINAL DO FIO
10	75238187	1	065T	DECAL	ADESIVO

INSTRUM. PANEL SYSTEM
SISTEMA DO PAINEL DE INSTRUMENTOS

F4.01 | 12

FIATALLIS

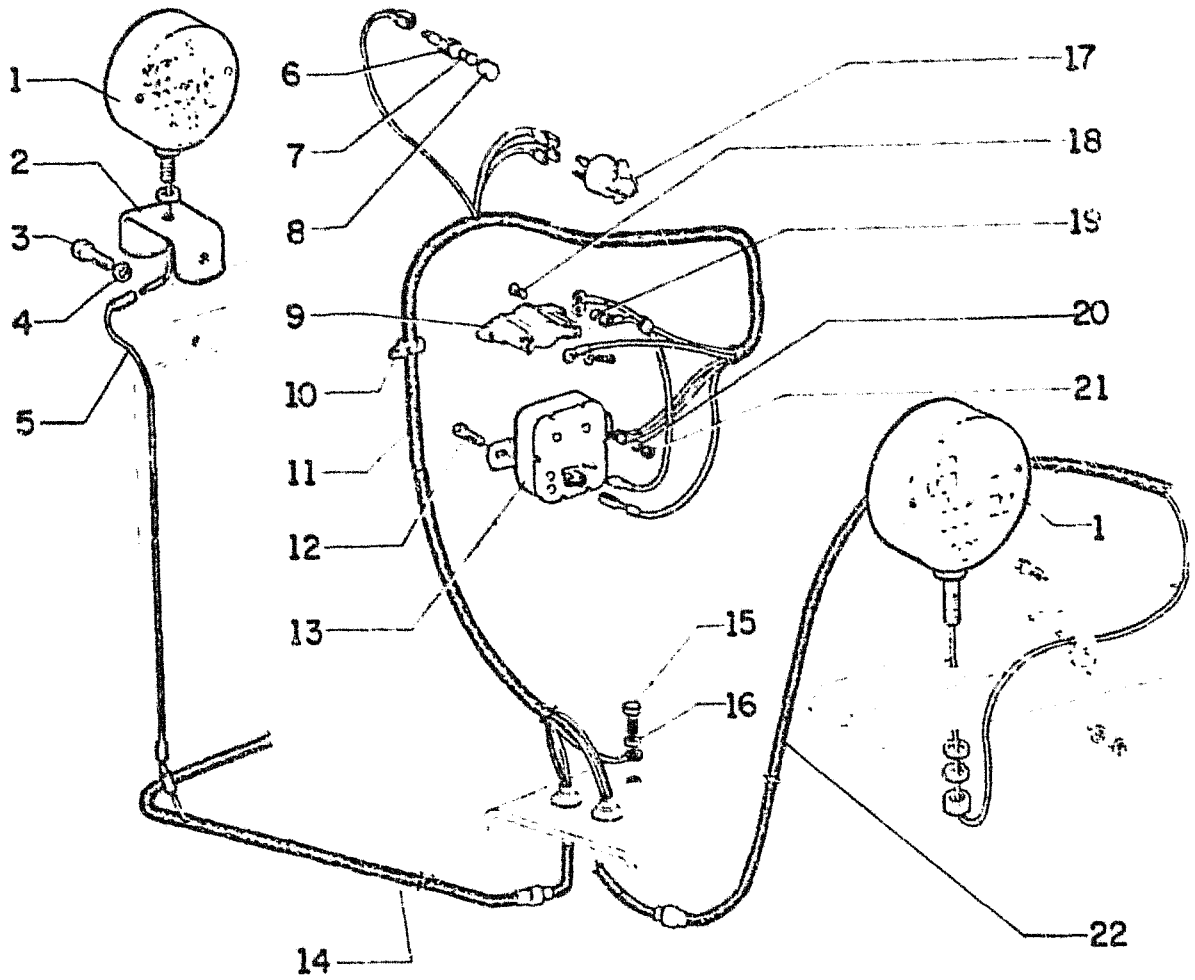

FIATALLIS FG 70R 70A 75R 75A F4.01 **QUADRO 13** PAG. 1

ITEM	PEÇA Nº	QTDE	COD.	DESCRIPTION	DESCRIÇÃO
1	73154376	4	0769	TURN SIGNAL LAMP	PISCA-PISCA
2	70699376	2	300S	SUPPORT	SUPORTE
3	70922300	2	040V	SCREW	PARAFUSO
4	70910287	2	170R	LOCKWASHER	ARRUELA PRESS.
5	73153947	1	111C	CABLE	CABO ELETRICO
6	73072027	2	300S	SUPPORT	SUPORTE
7	73072025	2	030L	LAMP	LÂMPADA
8	73072029	2	170T	LENS	LENTE
9	70671696	1	110F	FUSE	FUSIVEL
10	70196765	10	031F	CLAMP	ABRAÇADEIRA
11	73153947	1	111C	CABLE	CABO ELETRICO
12	70927541	2	040V	SCREW	PARAFUSO
13	70663928	1	085T	RELAY	RELE
14	73153954	1	111C	CABLE	CABO ELETRICO
15	70927484	1	040V	SCREW	PARAFUSO
16	70929156	1	131R	WASHER	ARRUELA
17	73072024	1	075I	TURN SIGNAL SWITCH	INTERRUPTOR
18	70922928	2	040V	SCREW	PARAFUSO
19	70917458	2	131R	WASHER	ARRUELA
20	70928190	2	131R	WASHER	ARRUELA
21	70900365	2	010D	NUT	PORCA
22	73153956	1	111C	CABLE	CABO ELETRICO

TURN SIGNAL SYSTEM
SISTEMA PISCA PISCA

F4.01 | 13

FIATALLIS

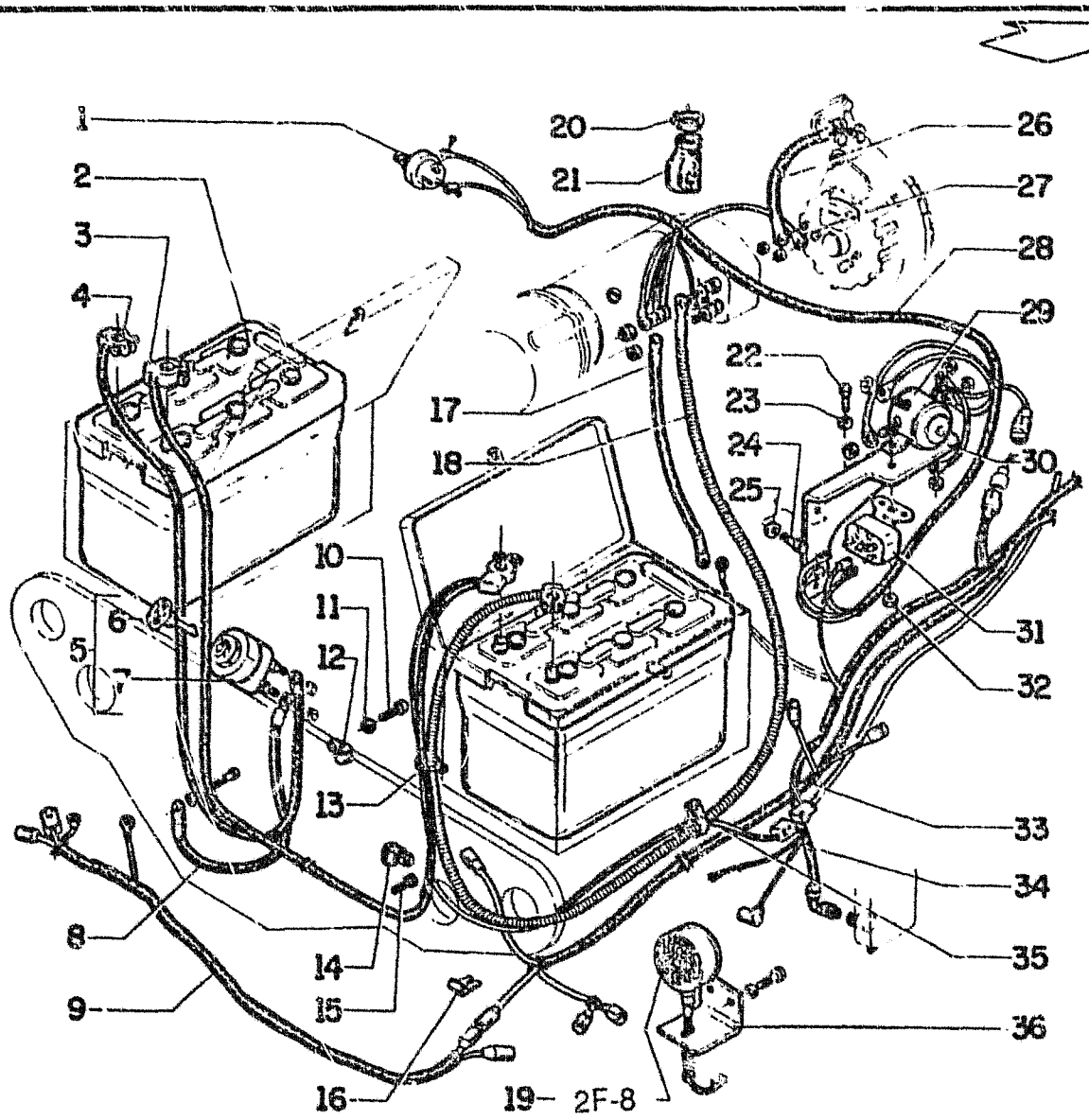

FIATALLIS FG 75R 75A F4.01 **QUADRO** 14 **PAG.** 1

ITEM	PEÇA Nº	QTDE	COD.	DESCRIPTION	DESCRIÇÃO
1	73110555	1	133S	SENSOR	SENSOR
2	75211328	2	025B	BATTERY	BATERIA
2	75235523	2	025B	BATTERY	BATERIA
2	75237719	2	025B	BATTERY	BATERIA
2	73128216	2	025B	BATTERY	BATERIA
3	73126909	1	111C	CABLE	CABO ELETRICO
4	73153049	1	111C	CABLE	CABO ELETRICO
5	79073031	1	075I	BATTERY DISCONNECT SWITCH	
6	79073033	1	150C	KEY	CHAVE
7	79073032	1	150C	KEY	CHAVE
8	73153050	1	111C	CABLE	CABO ELETRICO
9	73153951	1	111C	CABLE	CABO ELETRICO
10	70922300	11	040V	SCREW	PARAFUSO
11	70630753	11	131R	WASHER	ARRUELA
12	70639314	10	031F	CLAMP	ABRAÇADEIRA
13	70196765	17	031F	CLAMP	ABRAÇADEIRA
14	70928656	14	031F	CLAMP	ABRAÇADEIRA
15	70922763	8	040V	SCREW	PARAFUSO
16	70639313	2	031F	CLAMP	ABRAÇADEIRA
17	73126796	1	111C	CABLE	CABO ELETRICO
18	73152180	1	111C	CABLE	CABO ELETRICO
19	73069238	2	009F	LIGHT	FAROL
20	70922660	1	031F	CLAMP	ABRAÇADEIRA
21	70076572	1	065C	BOOT	SANFONA
22	70927541	2	040V	SCREW	PARAFUSO
23	70928190	2	131R	WASHER	ARRUELA
24	11112331	2	040V	SCREW	PARAFUSO
25	70928178	2	131R	WASHER	ARRUELA
26	73126797	1	111C	CABLE	CABO ELETRICO
27	73152766	1	111C	CABLE	CABO ELETRICO
28	73153958	1	111C	CABLE	CABO ELETRICO
29	73117176	1	075I	SWITCH	INTERRUPTOR
30	75238339	1	300S	SUPPORT	SUPORTE
31	73072566	1	085T	RELAY	RELE
32	70911024	2	010D	NUT	PORCA
33	73153954	1	111C	CABLE	CABO ELETRICO

ELECTRICAL SYSTEM
SISTEMA ELETRICO

F4.01 | 14

FIATALLIS

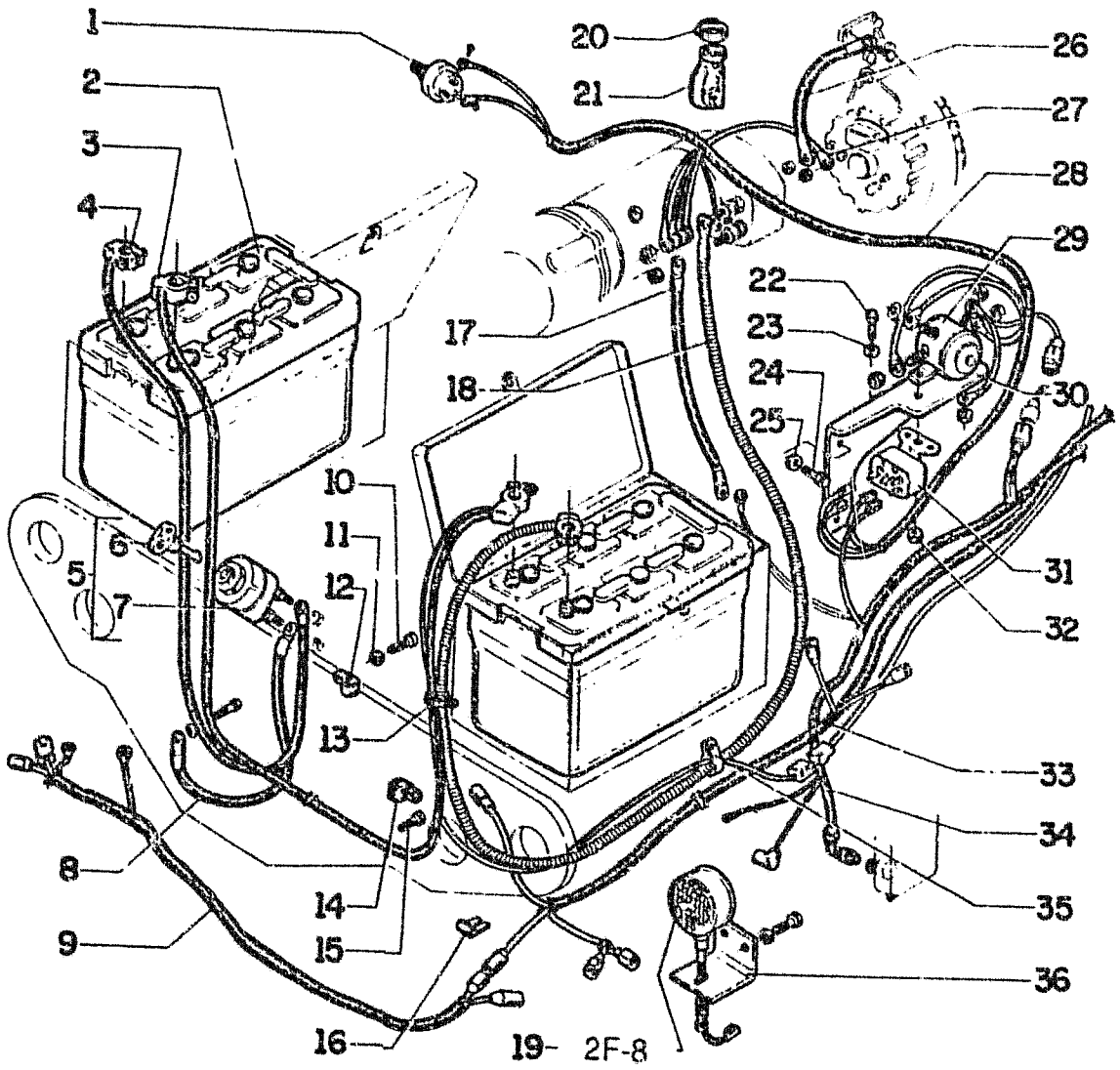

FIATALLIS FG 75R 75A F4.01 **QUADRO** 14 **PAG.** 2

ITEM	PEÇA Nº	QTDE	COD.	DESCRIPTION	DESCRIÇÃO
34	75237909	1	111C	CABLE	CABO ELETRICO
35	70929703	2	031F	CLAMP	ABRAÇADEIRA
36	73124844	2	300S	SUPPORT	SUPORTE

DESCRIPTION	SBGRP	TAV	GRID
PIPING TRANSMISSION FG70	B201	15	1I-7
RADIATOR	A401	2	1G-14
GRID	A401	2	1G-14
PIPING	A401	1	1G-13
WRAP AROUND	L101	1	2F-13
REAR AXLE BEVEL GEAR	B403	3	1N-8
AXLE BULL GEAR	B403	1	1N-6
AXLE DRIVE SHAFTS	B403	3	1N-8
AXLE EXTENSION HOUSING	B403	3	1N-8
AXLE PINION GEAR	B403	2	1N-7
AXLE SUPPORT	B403	6	1N-12
AXLE WHEEL ENDS	D316	1	1P-14
RESERVOIR, IMPLEMENT OIL	E328	1	2C-10
REVERSE & 3 - 4 SPEED CLUTCH FG75	B201/1	14	1L-8
REVERSE CLUTCH FG70	B201	6	1H-14
REVERSE IDLER ASSEMBLY FG75	B201/1	13	1L-7
RIPPER	E310/1	2	2C-4
CYLINDER	E332/1	2	2D-15
VALVE	E331	3	2C-15
ROTARY DISTRIBUTOR COMPONENTS	E331	1	2C-13
ROTARY DISTRIBUTOR	E302	23	2A-12
SADDLE	E310	1	2B-13
LOCK PIN CYLINDER	E332	4	2D-10
SADDLE LOCK VALVE	E331	4	2C-16
SCARIFIER	E310/1	1	2C-3
CYLINDER	E332/1	1	2D-14
VALVE	E331	6	2D-2
SEAT	L604	1	2H-2
SEAT BELT	L604	2	2H-3
SECOND SPEED CLUTCH FG70	B201	7	1H-15
SENSORS, MONITORING	F401	16	2F-4
SENSORS, MONITORING	F401	17	2F-5
STARTER COMPONENTS	F608	1	2F-11
STARTER MOTOR	F200	1	2E-2
STEERING CONTROL VALVE	D202	1	1P-10
CYLINDER	D212	1	1P-12
PUMP COMPONENTS	D213	1	1P-13
WHEEL	D201	1	1P-3
SWITCH ARTICULATION	F401	19	2F-7
PANEL ELECTRICAL CABLE	F401	2	2E-4
PANEL ELECTRICAL	F401	1	2E-3
TANDEM	D333	1	1P-16
TANK, IMPLEMENT OIL	E328	1	2C-10
THERMOSTAT,ENGINE COOLANT	A402	1	1G-15
THIRD SPEED CLUTCH FG70	B201	6	1H-14
THROTTLE CONTROL	A221	1	1F-3
CONTROL LEVER	A221	4	1F-6
LINKAGE FG70	A221	2	1F-4
THROTTLE LINKAGE FG75	A221	3	1F-5
TIRES & WHEELS	D316	2	1P-15
TRANSMISSION FG70	B200	1	1H-6
TRANSMISSION FG70	B200/1	1	1H-7
CASE & TUBING FG70	B201	1	1H-8
CONTROL FG75	B207/1	2	1M-13
CONTROL LEVER FG70	B207	2	1M-12
CONTROL LINKAGE FG70	B207	1	1M-10
CONTROL VALVE FG70	B201	18	1I-10
CONTROL VALVE FG75	B201/1	20	1L-14
CONTROL VALVE FG75	B201/1	21	1L-15
CONTROL VALVE FG75	B201/1	22	1L-16
CONTROL VALVE FG75	B201/1	23	1L-17
DECLUTCH VALVE	C101	6	1O-2
GEARING FG70	B201	5	1H-13
GEARING FG75	B201/1	8	1L-2
GUARD	D101	2	1O-11
HEAT EXCHANGER FG7	B206/1	1	1M-8
HEAT EXCHANGER FG70	B206	3	1M-7
HOUSING FG75	B201/1	4	1I-14
IDLER SHAFT FG75	B201/1	17	1L-11
MODUALTING VALVE FG75	B201/1	24	1M-2
MODULATING VALVE FG70	B201	18	1I-10
OIL FILTER FG70	B201	11	1I-3
OIL FILTER FG75	B217	1	1M-14
OIL FILTER LINES FG75	B206	1	1M-5
OIL DIPSTICK FG70	B206	2	1M-6
OIL DIPSTICK FG75	B206/1	2	1M-9
OUTPUT FLANGE FG70	B201	13	1I-5
OUTPUT SHAFT FG70	B201	10	1I-2
OUTPUT SHAFT FG75	B201/1	18	1L-12
PUMP FG70	B201	15	1I-7
PUMP MOUNT FG75	B201/1	19	1L-13
REGULATING VALVE FG70	B201	16	1I-8
REGULATING VALVE FG75	B201/1	25	1M-3
REGULATING VALVE FG75	B201/1	26	1M-4
TURN SIGNAL	F401	13	2E-15
VALVE ARTICULATION	E331	2	2C-14
BLADE LIFT	E331	5	2C-17
CIRCLE SHIFT	E331	3	2C-15
END CAP	E331	7	2D-3
END CAP	E331	9	2D-4
LATERAL SHIFT	E331	2	2C-14
MAIN RELIEF , LEFT	E331	10	2D-5
MAIN RELIEF , RIGHT	E331	11	2D-6
MOLDBOARD PITCH	E331	2	2C-14
RIPPER	E331	3	2C-15
SADDLE LOCK	E331	4	2C-16
SCARIFIER	E331	6	2D-2
STEERING CONTROL VALVE	D202	1	1P-10
VALVE TRANS CONTROL FG75	B201/1	22	1L-16
TRANS CONTROL FG75	B201/1	23	1L-17
TRANS MODULATING FG70	B201	18	1I-10
TRANS MODUALTING FG75	B201/1	24	1M-2
TRANS REGULATING FG75	B201/1	25	1M-3
TRANS REGULATING FG75	B201/1	26	1M-4
TRANSMISSION CONTROL FG70	B201	18	1I-10
WHEEL LEAN	E331	2	2C-14
WHEEL LEAN CYLINDER	E332	1	2D-7
WHEEL LEAN VALVE	E331	2	2C-14
WHEELS & TIRES	D316	2	1P-15
WINDOW WIPERS	L104	6	2G-7
WIPERS WINDOW	L104	6	2G-7

FIATALLIS

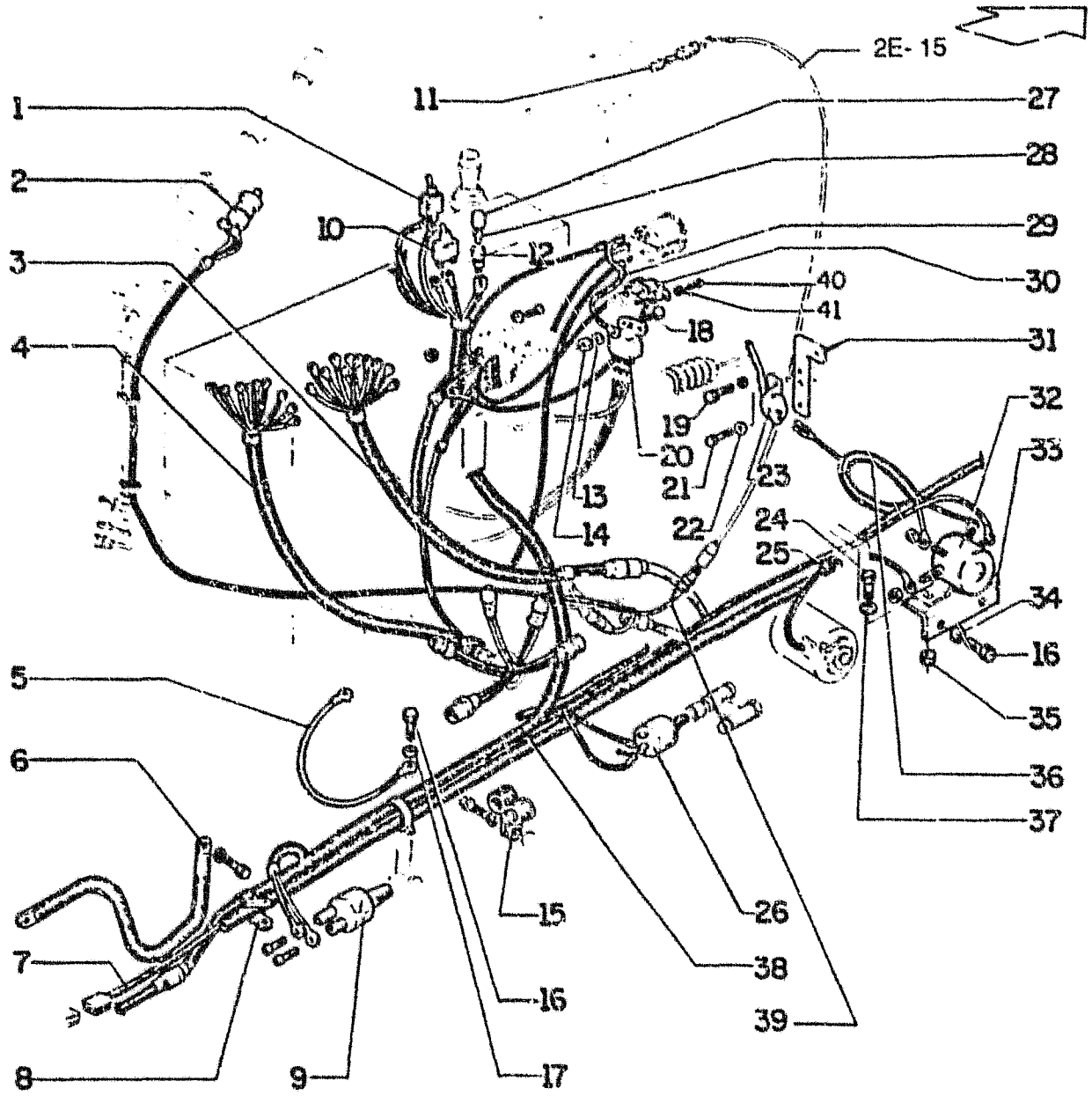

FIATALLIS FG 75R 75A F4.01 **QUADRO** 15 **PAG.** 1

ITEM	PEÇA Nº	QTDE	COD.	DESCRIPTION	DESCRIÇÃO
1	73125891	1	075I	DOZER FLOAT SWITCH	TERRUPTOR
2	70183714	1	075I	PARKING BRAKE SWITCH	RRUPTOR
3	73153966	1	111C	CABLE	CABO ELETRICO
4	73153967	1	111C	CABLE	CABO ELETRICO
5	73126160	1	111C	CABLE	CABO ELETRICO
6	73152169	1	111C	CABLE	CABO ELETRICO
7	75222599	1	111C	CABLE	CABO ELETRICO
8	70929279	1	031F	CLAMP	ABRAÇADEIRA
9	70094334	2	075I	BRAKE LIGHT SWITCH	ERRUPTOR
10	73112915	2	075I	WHEEL LEAN SWITCH	TERRUPTOR
11	73072028	1	170T	LENS	LENTE
12	73072027	2	300S	SUPPORT	SUPORTE
13	70928190	4	131R	WASHER	ARRUELA
14	70911024	4	010D	NUT	PORCA
15	70929702	6	031F	CLAMP	ABRAÇADEIRA
16	70927400	10	040V	SCREW	PARAFUSO
17	70929156	14	131R	WASHER	ARRUELA
18	70927541	4	040V	SCREW	PARAFUSO
19	70928182	2	040V	SCREW	PARAFUSO
20	73072566	1	085T	RELAY	RELE
21	70917452	2	040V	SCREW	PARAFUSO
22	70904203	2	170R	LOCKWASHER	ARRUELA PRESS
23	70648427	1	075I	BRAKE PEDAL SWITCH	TERRUPTOR
24	70927541	4	040V	SCREW	PARAFUSO
25	70935012	1	045A	RING	ANEL
26	73139080	1	075I	TRANS MAIN PRESSURE SWITCH	
27	73153094	1	170T	LENS	LENTE
28	73072025	2	030L	LAMP	LÂMPADA
29	73126111	3	111C	CABLE	CABO ELETRICO
30	70671696	1	110F	FUSE	FUSIVEL
30	75235148	1	150C	KEY	CHAVE
31	75238057	1	105P	PLATE	CHAPA
32	73117176	1	075I	BRAKE MOTOR RELAY	NTERRUPTOR
33	73128103	1	300S	SUPPORT	SUPORTE
34	70929156	14	131R	WASHER	ARRUELA
35	70911024	4	010D	NUT	PORCA

ELECTRICAL SYSTEM
SISTEMA ELETRICO

F4.01 | 15

FIATALLIS

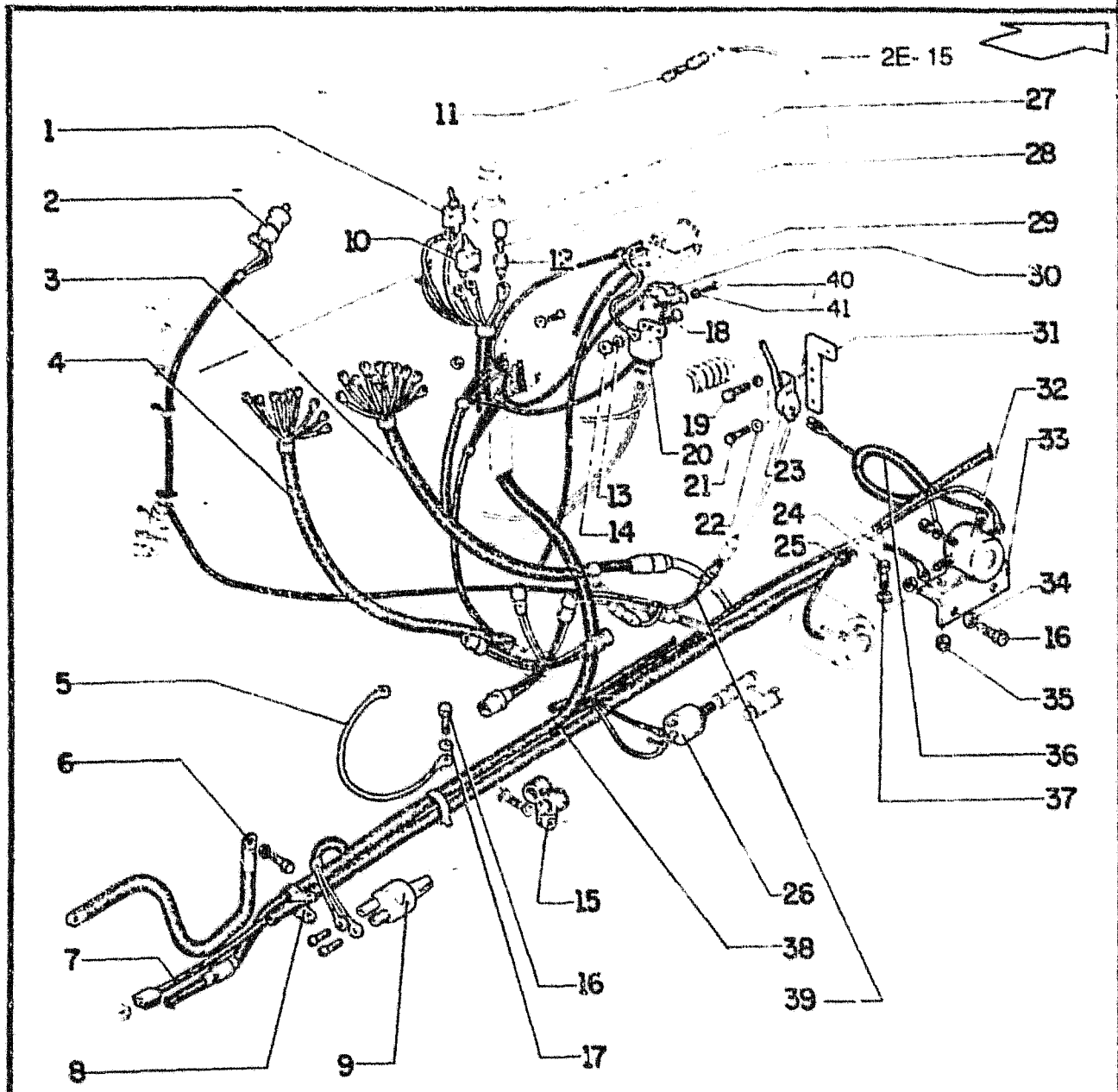

FIATALLIS FG 75R 75A F4.01 QUADRO 15 PAG. 2

ITEM	PEÇA Nº	QTDE	COD.	DESCRIPTION	DESCRIÇÃO
36	75237352	1	111C	CABLE	CABO ELETRICO
37	70928190	12	131R	WASHER	ARRUELA
38	73159027	1	111C	CABLE	CABO ELETRICO
39	73153949	1	111C	CABLE	CABO ELETRICO
40	70922928	2	040V	SCREW	PARAFUSO
41	70917458	2	131R	WASHER	ARRUELA

ELECTRICAL SYSTEM
SISTEMA ELETRICO

F4.01 | 15

FIATALLIS

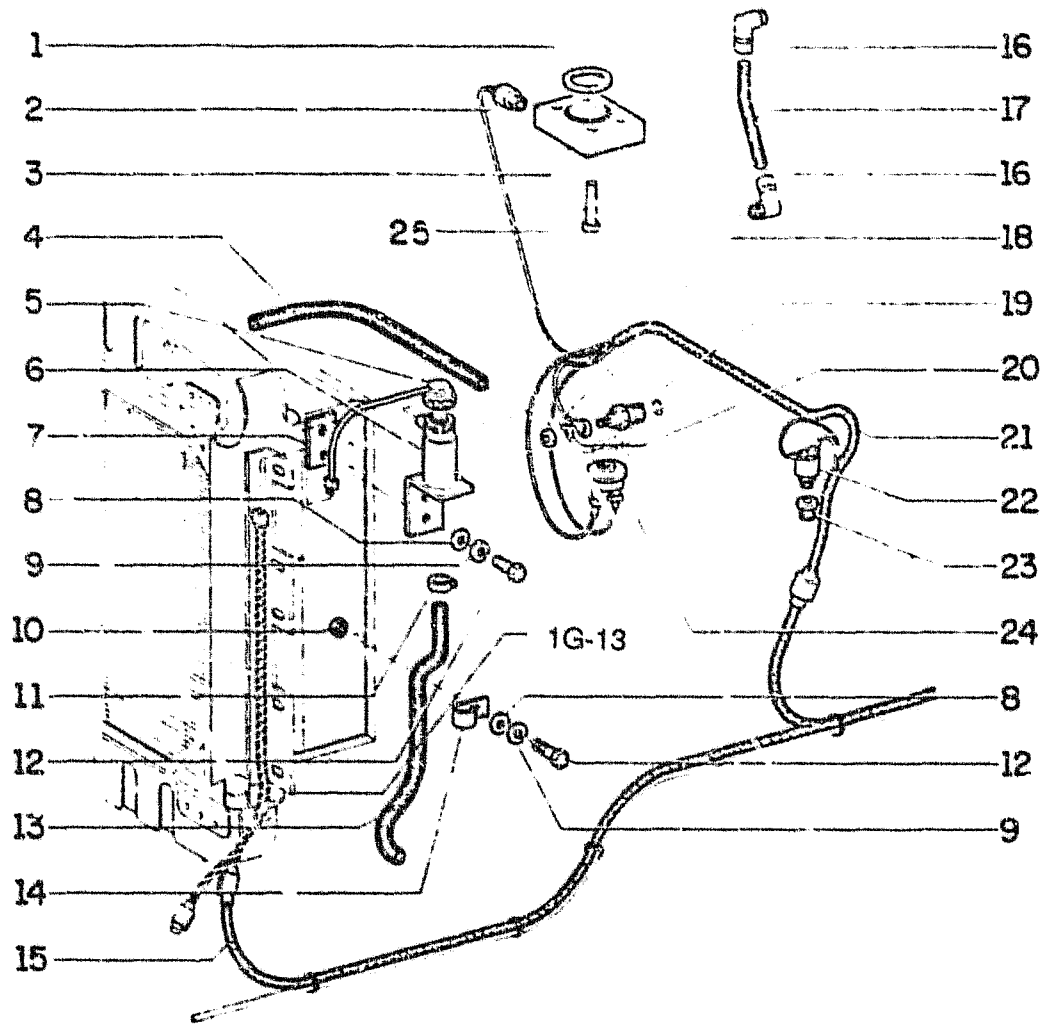

FIATALLIS FG 70R 70A 75R 75A F4.01 **QUADRO 16 PAG. 1**

ITEM	PEÇA Nº	QTDE	COD.	DESCRIPTION	DESCRIÇÃO
1	70923578	1	045A	RING	ANEL
2	79094756	1	075I	HYDRAULIC FILTER PRESSURE SWITCH	
3	73152221	1	074B	BLOCK	BLOCO
4	75221778	1	285T	HOSE	MANGUEIRA
5	79102087	1	035I	COOLANT LEVEL SENSOR	CADOR
6	73152211	1	300S	SUPPORT	SUPORTE
7	73152215	1	105P	PLATE	CHAPA
8	70677006	3	131R	WASHER	ARRUELA
9	70916965	3	170R	LOCKWASHER	ARRUELA PRESS.
10	70911026	1	010D	NUT	PORCA
11	12179490	4	031F	CLAMP	ABRAÇADEIRA
12	70922763	3	040V	SCREW	PARAFUSO
13	75221777	1	285T	HOSE	MANGUEIRA
14	70927155	1	031F	CLAMP	ABRAÇ EIRA
15	73153955	1	111C	CABLE	CABO ELETRICO
16	70928923	4	085G	ELBOW	COTOVELO
17	75221776	1	285T	HOSE	MANGUEIRA
18	70910251	2	010D	NUT	PORCA
19	73113213	1	133S	TRANS TEMP SWITCH (1)	OR
19	73153276	1	035I	TRANS TEMP SWITCH (2)	CADOR
20	70910284	2	170R	LOCKWASHER	ARRUELA PRESS
21	73159025	1	111C	CABLE(1)	CABO ELETRICO
21	73153952	1	111C	CABLE(2)	CABO ELETRICO
22	73139080	1	075I	BRAKE MAIN PRESSURE SWITCH	
23	70901834	1	020R	FITTING	CONEXAO
24	73110555	1	133S	ENGINE OIL PRESSURE SWITCH	
25	70922510	4	040V	SCREW	PARAFUSO

(1)FOR FG70R 70A
(2)FOR FG75R 75A

ELECTRICAL SYSTEM
SISTEMA ELETRICO

F4.01 | 16

FIATALLIS

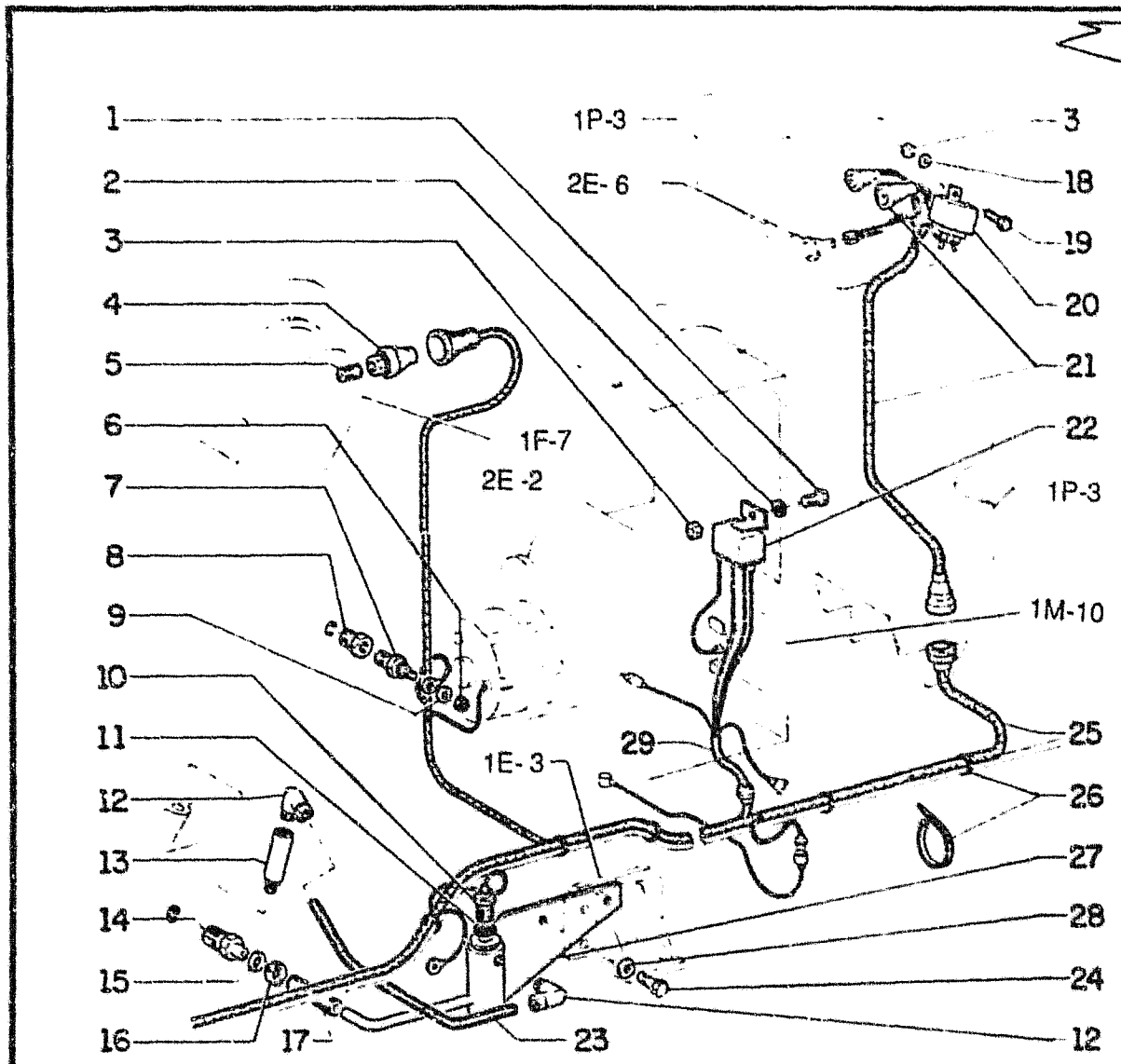

FIATALLIS FG 70R 70A 75R 75A F4.01 **QUADRO** 17 **PAG.** 1

ITEM	PEÇA Nº	QTDE	COD.	DESCRIPTION	DESCRIÇÃO
1	70927541	1	040V	SCREW	PARAFUSO
2	70928190	2	131R	WASHER	ARRUELA
3	70911024	2	010D	NUT	PORCA
4	79102142	1	035I	AIR CLEANER SWITCH	CADOR
5	70901867	1	020R	FITTING	CONEXÃO
6	70910251	2	010D	NUT	PORCA
7	73113214	1	035I	ENGINE COOLANT TEMPERATURE SENSOR	
8	70901828	1	020R	FITTING	CONEXÃO
9	70910284	2	170R	LOCKWASHER	ARRUELA PRESS
10	79102088	1	035I	ENGINE OIL LEVEL	INDICADOR
11	10265060	1	131R	WASHER	ARRUELA
12	70928923	4	085G	ELBOW	COTOVELO
13	73152449	1	193T	TUBE	TUBO
14	73154134	1	075B	CONNECTOR	CONECTOR
15	10272956	1	131R	WASHER	ARRUELA
16	70925755	2	031F	CLAMP	ABRAÇADEIRA
17	73107497	1	285T	HOSE	MANGUEIRA
18	70911114	1	131R	WASHER	ARRUELA
19	70928138	1	040V	SCREW	PARAFUSO
20	79102052	1	105A	HORN	BUZINA
21	73153965	1	111C	CABLE	CABO ELETRICO
22	73072566	1	085T	RELAY	RELE
23	75221775	1	285T	HOSE	MANGUEIRA
24	11112231	2	040V	SCREW	PARAFUSO
25	73153955	1	111C	CABLE	CABO ELETRICO
26	70196765	12	031F	CLAMP	ABRAÇADEIRA
27	73154127	1	300S	SUPPORT	SUPORTE
28	70926191	2	131R	WASHER	ARRUELA
29	75236524	1	111C	CABLE	CABO ELETRICO
29	75236524	1	111C	CABLE	CABO ELETRICO

ELETRONIC DATA MONITOR
MONITOR ELETRÔNICO

F4.01 | 17

FIATALLIS

FIATALLIS FG 70R 70A 75R 75A F4.01 QUADRO 18 PAG. 1

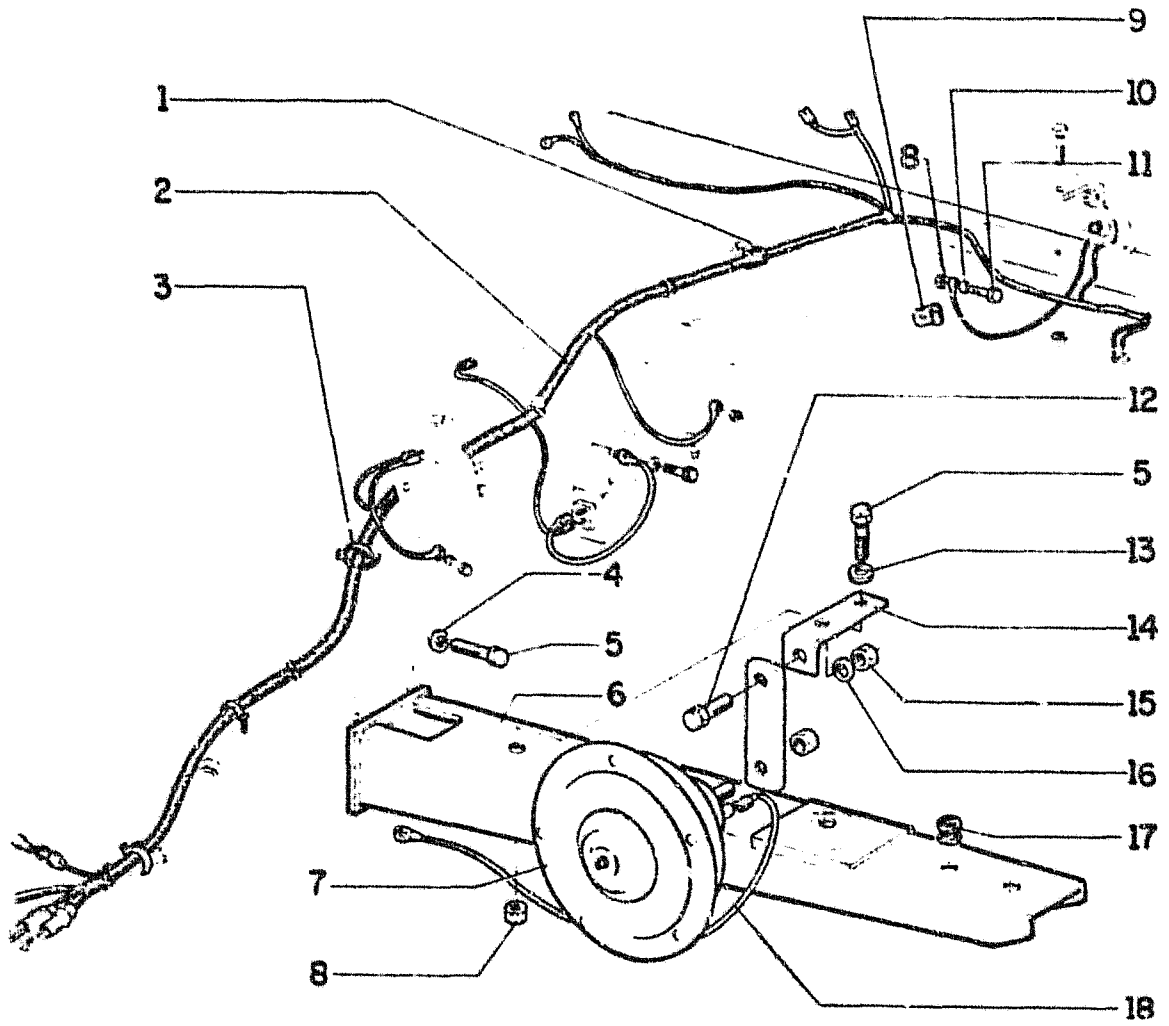

ITEM	PEÇA Nº	QTDE	COD.	DESCRIPTION	DESCRIÇÃO
1	70929702	2	031F	CLAMP	ABRAÇADEIRA
2	73153956	1	111C	CABLE	CABO ELETRICO
3	70196765	6	031F	CLAMP	ABRAÇADEIRA
4	70910287	4	170R	LOCKWASHER	ARRUELA PRESS
5	70922763	8	040V	SCREW	PARAFUSO
6	73113184	2	300S	SUPPORT	SUPORTE
7	75210608	1	105A	HORN	BUZINA
8	70911026	5	010D	NUT	PORCA
9	70639314	4	031F	CLAMP	ABRAÇADEIRA
10	70929156	4	131R	WASHER	ARRUELA
11	70927400	4	040V	SCREW	PARAFUSO
12	70922925	1	040V	SCREW	PARAFUSO
13	70929156	1	131R	WASHER	ARRUELA
14	73130543	1	300S	SUPPORT	SUPORTE
15	70911025	1	010D	NUT	PORCA
16	70929662	2	131R	WASHER	ARRUELA
17	70929412	2	045A	RING	ANEL
18	73126111	3	111C	CABLE	CABO ELETRICO

ELECTRICAL SYSTEM
SISTEMA ELETRICO

F4.01 | 18

FIATALLIS

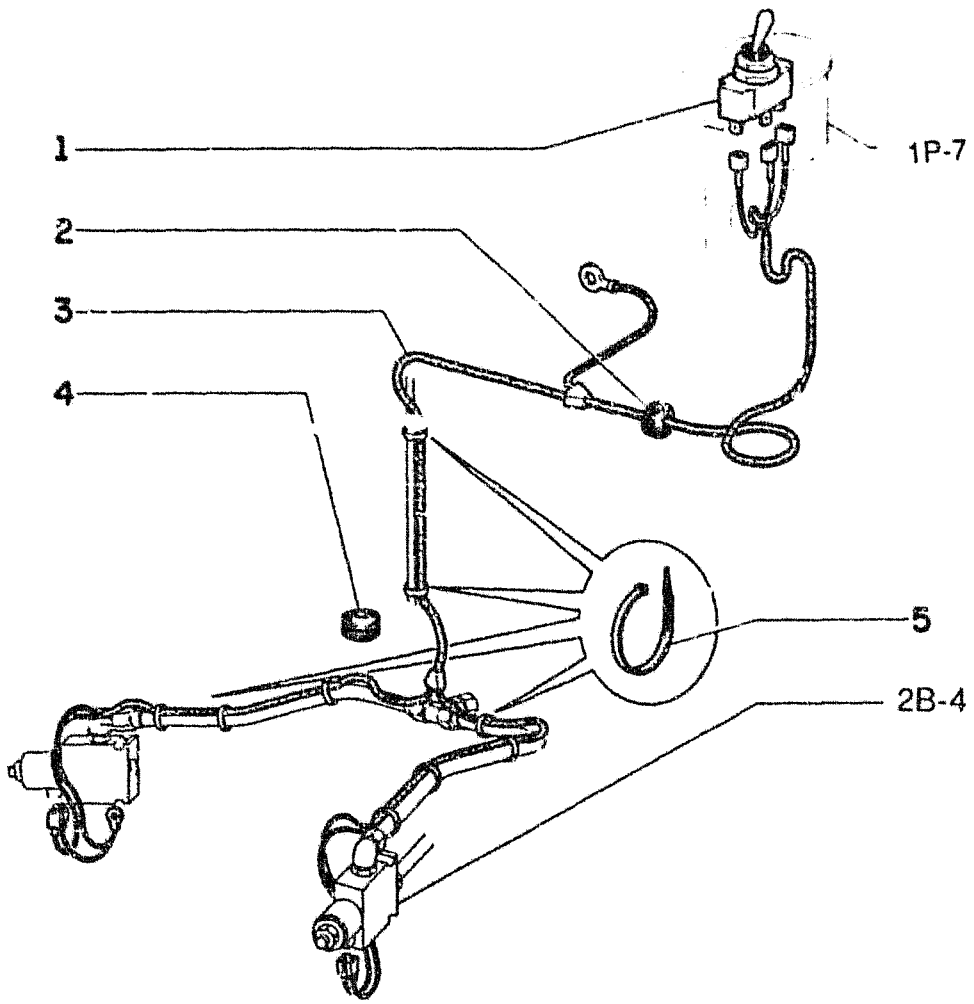

FIATALLIS FG 70A 75A F4.01 **QUADRO** 19 **PAG.** 1

ITEM	PEÇA Nº	QTDE	COD.	DESCRIPTION	DESCRIÇÃO
1	75217221	1	075I	SWITCH	INTERRUPTOR
2	709272(2	1	085I	INSULATOR	ISOLANTE
3	75217750	1	111C	CABLE	CABO ELETRICO
4	70923510	1	045A	RING	ANEL
5	70196765	10	031F	CLAMP	ABRAÇADEIRA

FIATALLIS

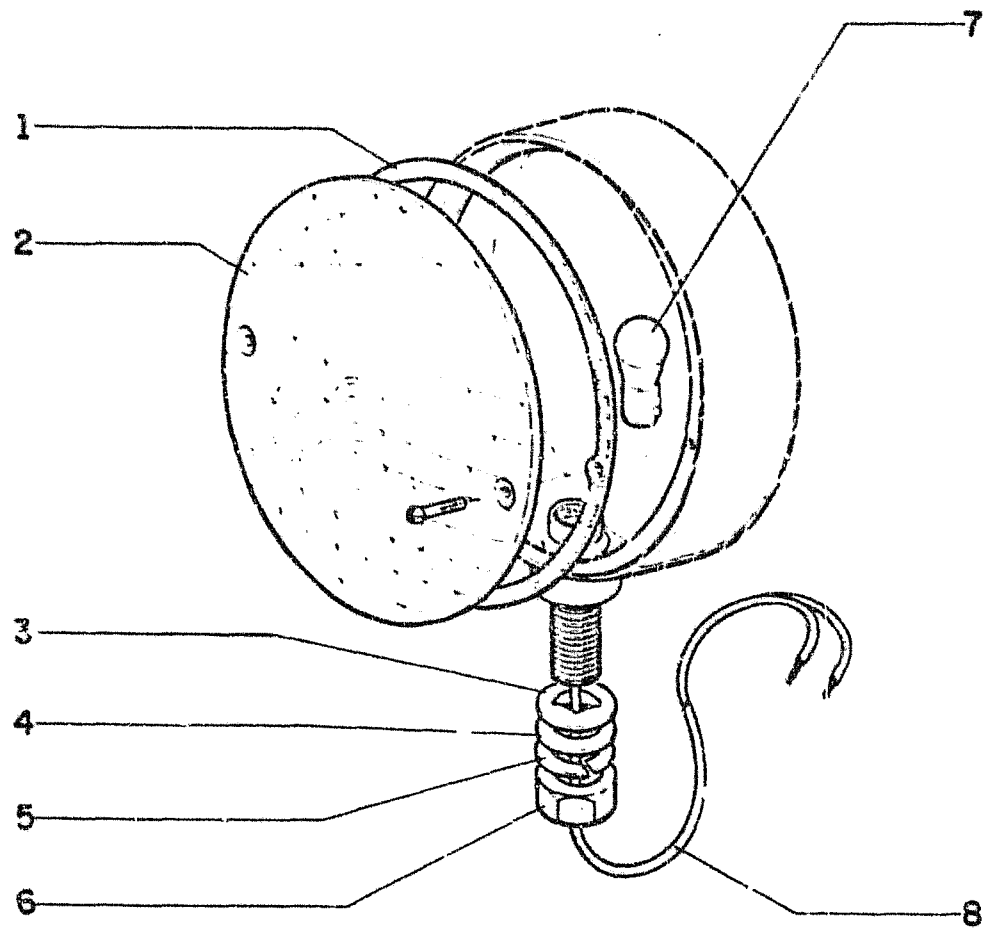

FIATALLIS FG 70R 70A 75R 75A F4.05 QUADRO 2 PAG. 1

ITEM	PEÇA Nº	QTDE	COD.	DESCRIPTION	DESCRIÇÃO
1	73069196	1	120G	GASKET	JUNTA
2	73069239	1	170T	LENS	LENTE
3	73069241	1	045P	PAD	GUIA
4	70906985	1	131R	WASHER	ARRUELA
5	70914678	1	170R	LOCKWASHER	ARRUELA PRESS
6	70912201	1	010D	NUT	PORCA
7	3039643	1	030L	LAMP	LÂMPADA
8	73069240	1	060C	WIRE TERMINAL	TERMINAL DO FIO

LIGHT ASSEMBLY
CONJUNTO FAROLETE TRASEIRO

F4.05 | 2

FIATALLIS

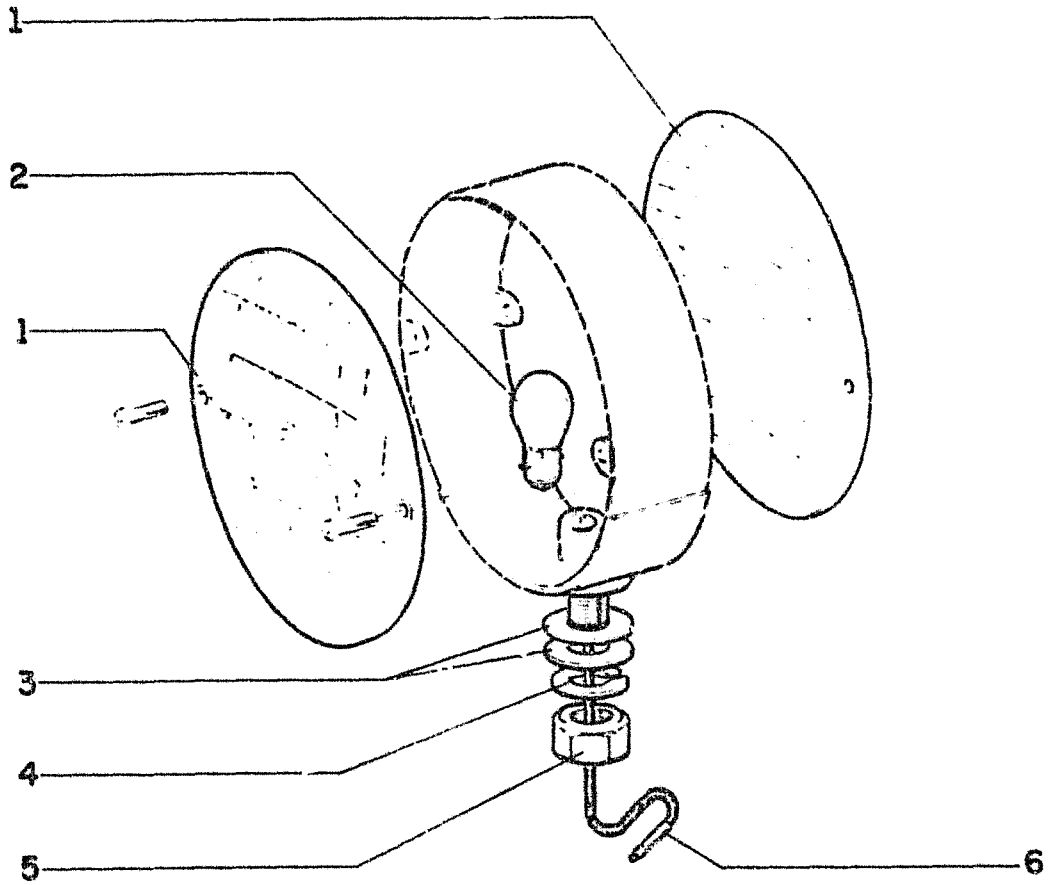

FIATALLIS FG 70R 70A 75R 75A F4.05 QUADRO 3 PAG. 1

ITEM	PEÇA Nº	QTDE	COD.	DESCRIPTION	DESCRIÇÃO
1	73150128	2	170T	LENS	LENTE
2	70934706	1	030L	LAMP	LÂMPADA
3	70912298	2	131R	WASHER	ARRUELA
4	70914678	1	170R	LOCKWASHER	ARRUELA PRESS
5	70900368	1	010D	NUT	PORCA
6	73052008	1	060C	WIRE TERMINAL	TERMINAL DO FIO

LIGHT ASSEMBLY
CONJUNTO LAMPADA DO PISCA-PISCA

F4.05 | 3

317

FIATALLIS

FIATALLIS FG 70R 70A 75R 75A F6.03 QUADRO 1 PAG. 1

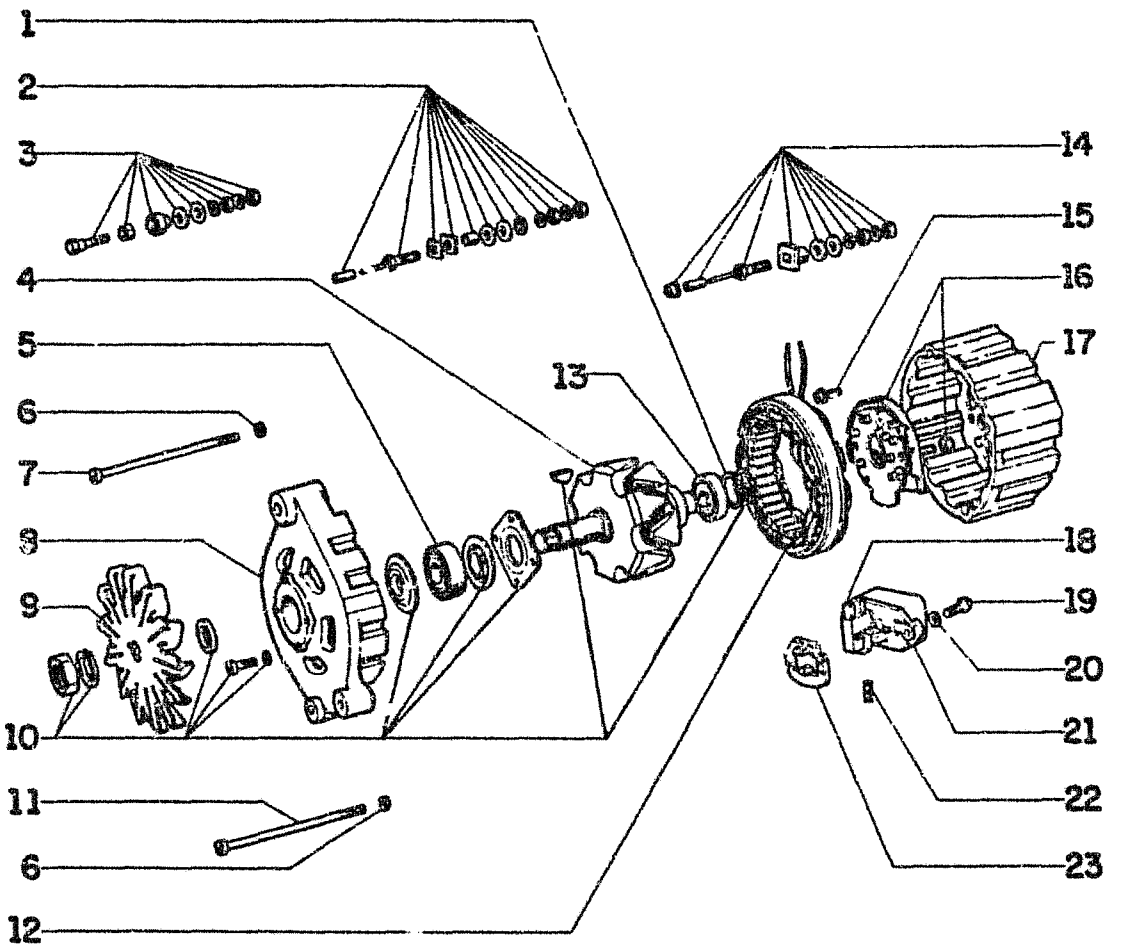

ITEM	PEÇA Nº	QTDE	COD.	DESCRIPTION	DESCRIÇÃO
1	75204451	1	050N	PAWL	TRAVA
2	75207760	K	002K	KIT	KIT
3	75207759	K	002K	KIT	KIT
4	75207746	1	145R	ROTOR	ROTOR
5	26794880	1	341C	BEARING	ROLAMENTO
6	10519301	4	131R	WASHER	ARRUELA
7	75207754	3	040V	SCREW	PARAFUSO
8	75207745	1	300S	SUPPORT	SUPORTE
9	75204342	1	030V	FAN	VENTILADOR
10	75207758	K	002K	KIT	KIT
11	75207756	1	040V	SCREW	PARAFUSO
12	75207753	1	271S	STATOR	ESTATOR
13	75207748	1	341C	BEARING	ROLAMENTO
14	75207631	K	002K	KIT	KIT
15	75207751	3	040V	SCREW	PARAFUSO
16	75207750	1	053D	DIODE	DIODO
17	75207749	1	300S	SUPPORT	SUPORTE
18	75207752	1	177S	BRUSH	ESCOVA
19	75207755	2	040V	SCREW	PARAFUSO
20	75204450	6	170R	LOCKWASHER	ARRUELA PRESS
21	75206957	1	169R	REGULATOR	REGULADOR
22	75207625	2	100M	SPRING	MOLA
23	75207757	1	120G	GASKET	JUNTA

ALTERNATOR BOSCH
ALTERNADOR BOSCH

F6.03 | 1

FIATALLIS

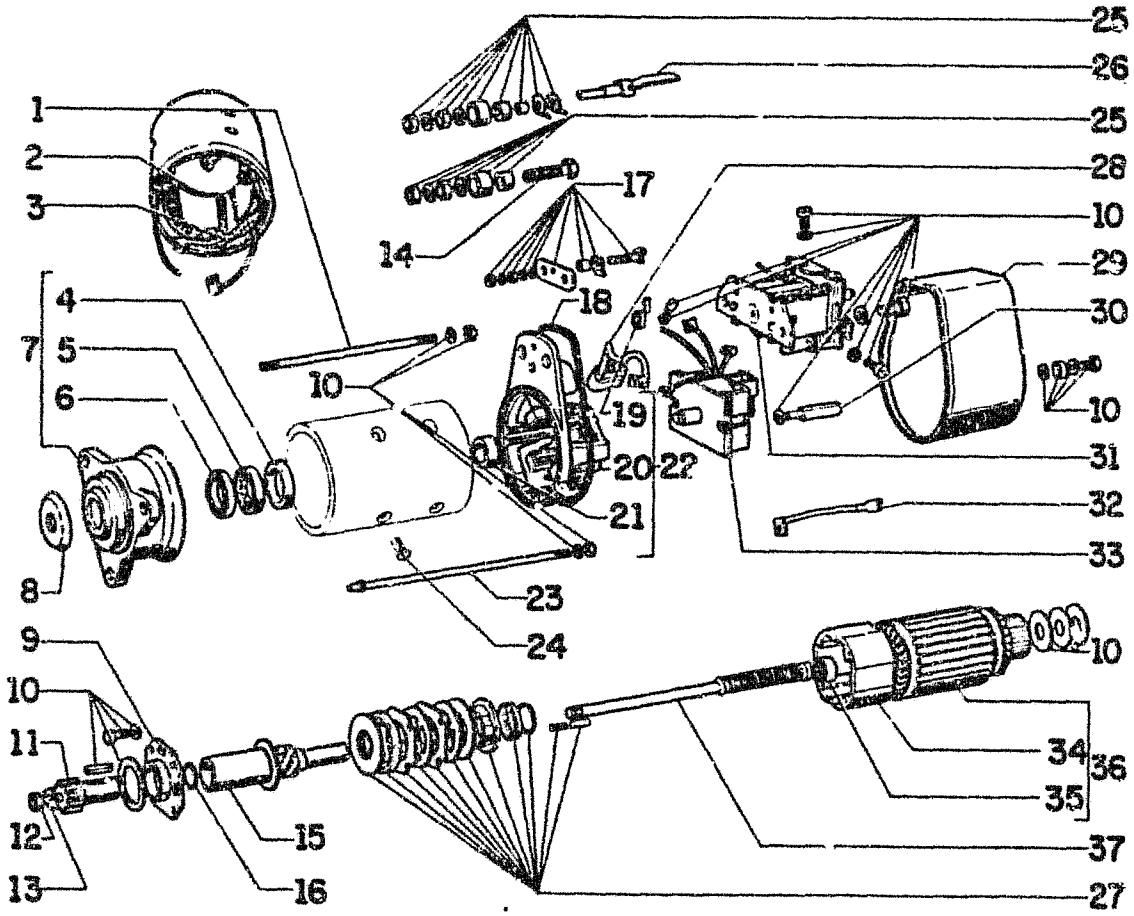

FIATALLIS FG 70R 70A 75R 75A F6.08 **QUADRO** 1 **PAG.** 1

ITEM	PEÇA Nº	QTDE	COD.	DESCRIPTION	DESCRIÇÃO
1	75207427	1	210P	STUD	PRISIONEIRO
2	75204562	1	083B	COIL	BOBINA
3	75204563	1	085I	INSULATOR	ISOLANTE
4	75206998	1	095B	BUSHING	BUCHA
5	75206999	1	341C	BEARING	ROLAMENTO
6	75204565	1	045A	RING	ANEL
7	75206985	1	300S	SUPPORT	SUPORTE
8	75207436	1	131R	WASHER	ARRUELA
9	75206988	1	300S	SUPPORT	SUPORTE
10	75206984	K	002K	KIT	KIT
11	75207426	1	285C	BEVEL GEAR SET	PAR CONICO
12	75207431	1	010D	NUT	PORCA
13	75207430	1	050N	PAWL	TRAVA
14	75204205	1	040V	SCREW	PARAFUSO
15	75207425	1	274S	ROD	HASTE
16	75204564	1	045A	RING	ANEL
17	75206997	K	002K	KIT	KIT
18	14467680	1	158G	O'RING	O'RING
19	75206994	1	100M	SPRING	MOLA
20	75206992	1	300S	SUPPORT	SUPORTE
21	75206993	1	095B	BUSHING	BUCHA
22	75206987	1	300S	SUPPORT	SUPORTE
23	75207428	3	210P	STUD	PRISIONEIRO
24	75205289	*	040V	SCREW	PARAFUSO
24	75205288	*	040V	SCREW	PARAFUSO
25	75206966	K	002K	KIT	KIT
26	75206995	1	040V	SCREW	PARAFUSO
27	75207761	K	002K	KIT	KIT
28	75204566	1	177S	BRUSH	ESCOVA
29	75207435	1	265C	COVER	TAMPA
30	75207434	2	210P	STUD	PRISIONEIRO
31	75207432	1	075I	SWITCH	INTERRUPTOR
32	75207437	1	111C	CABLE	CABO ELETRICO
33	75207433	1	075I	SWITCH	INTERRUPTOR
34	75206990	1	070F	FLANGE	FLANGE

STARTER ENGINE BOSCH
MOTOR DE PARTIDA BOSCH

F6.08 | 1

FIATALLIS

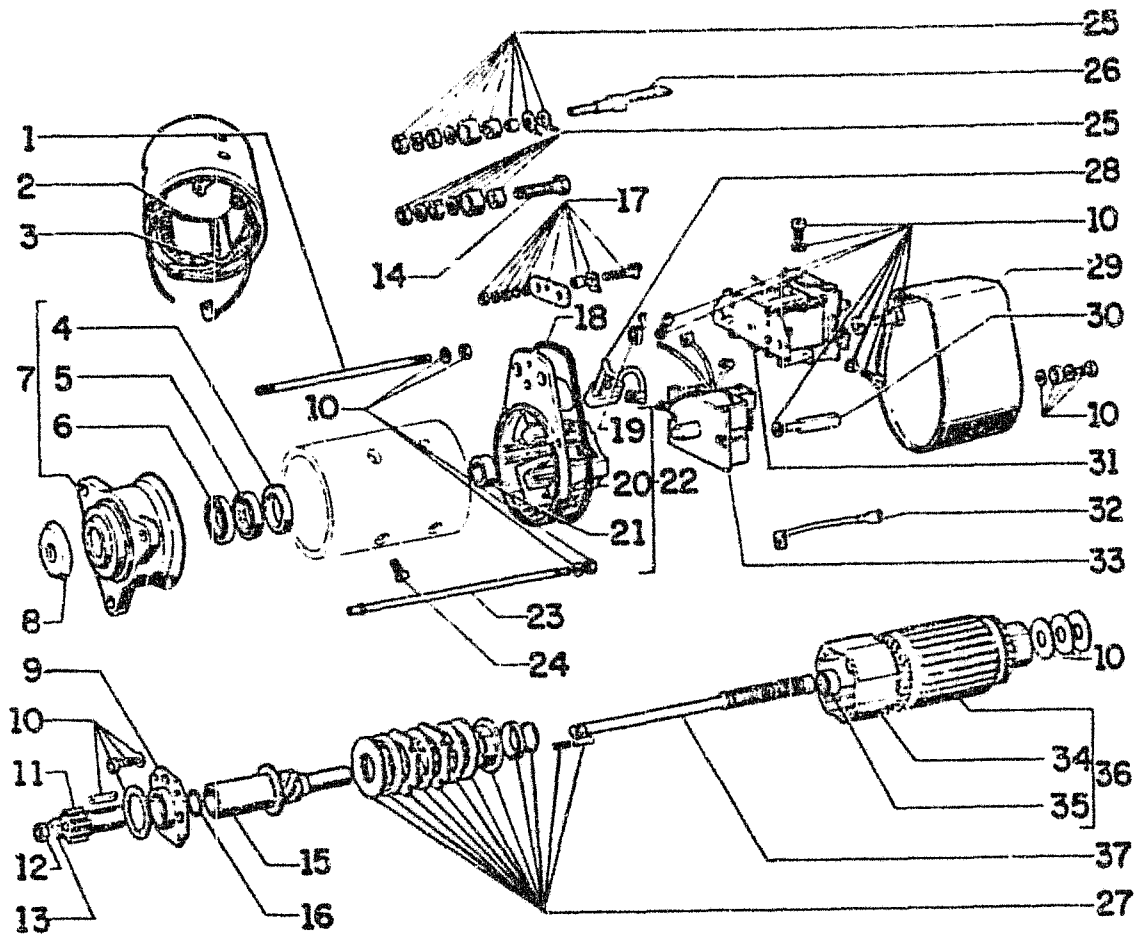

FIATALLIS FG 70R 70A 75R 75A F6.08 QUADRO 1 PAG. 2

ITEM	PEÇA Nº	QTDE	COD.	DESCRIPTION	DESCRIÇÃO
35	75206991	1	341C	BEARING	ROLAMENTO
36	75206986	1	046I	ARMATURE	INDUZIDO
37	75207429	1	016A	SHAFT	EIXO

STARTER ENGINE BOSCH
MOTOR DE PARTIDA BOSCH

F6.08 | 1

FIATALLIS

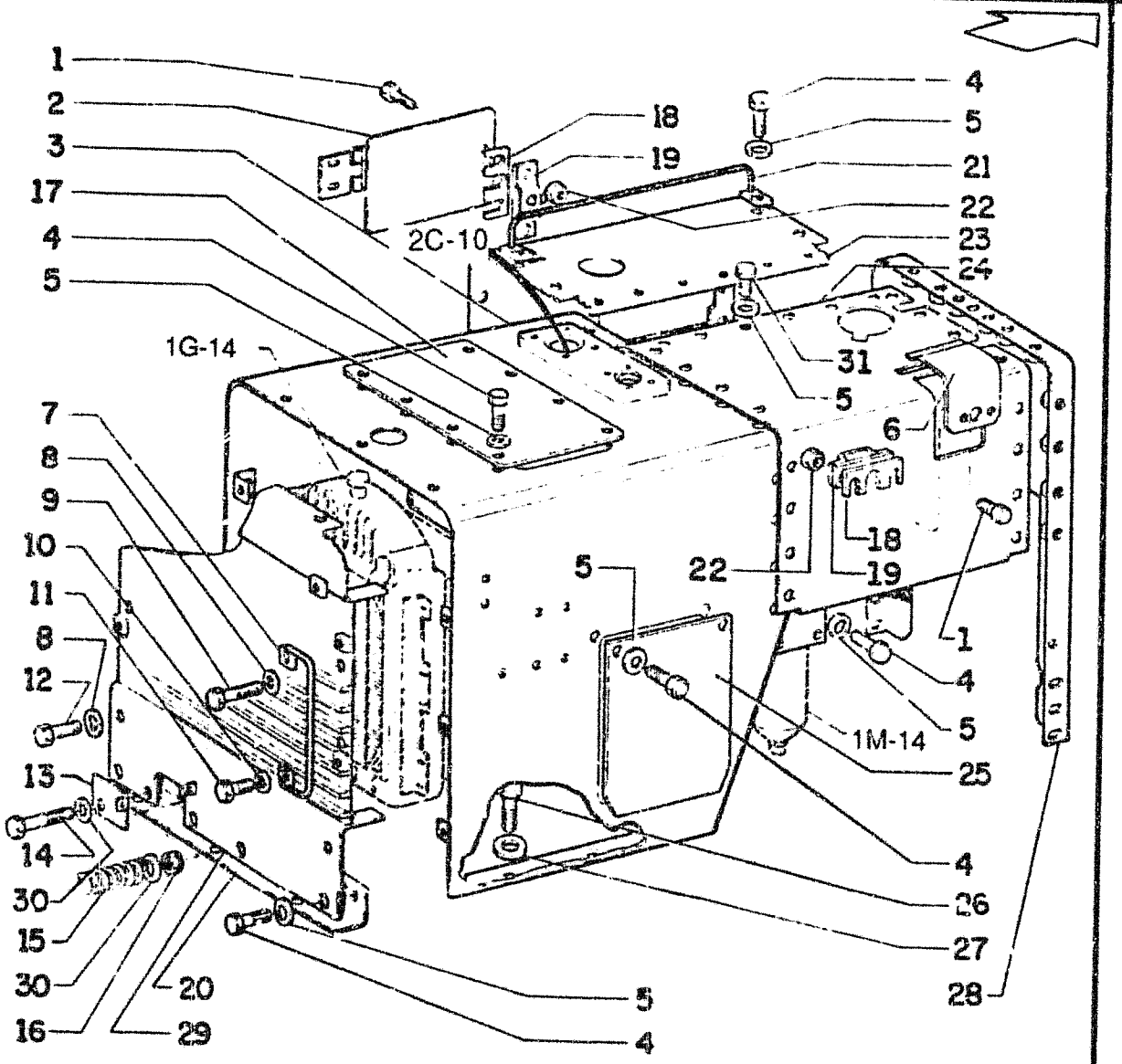

FIATALLIS FG 70R 70A 75R 75A L1.01 **QUADRO** 1 **PAG.** 1

ITEM	PEÇA Nº	QTDE	COD.	DESCRIPTION	DESCRIÇÃO
1	70927541	4	040V	SCREW	PARAFUSO
2	73152825	1	265C	COVER	TAMPA
3	75237726	1	176C	HOOD	CAPO
4	70922763	38	040V	SCREW	PARAFUSO
5	70677006	38	131R	WASHER	ARRUELA
6	75221544	1	105P	PLATE	CHAPA
7	73125367	2	020M	HANDLE	ALÇA
8	70928844	12	131R	WASHER	ARRUELA
9	70921556	4	040V	SCREW	PARAFUSO
10	70677008	4	131R	WASHER	ARRUELA
11	70920582	10	040V	SCREW	PARAFUSO
12	70921175	2	040V	SCREW	PARAFUSO
13	73125364	1	265C	COVER	TAMPA
14	70920996	1	040V	SCREW	PARAFUSO
15	70619261	1	100M	SPRING	MOLA
16	709[illegible]8308	3	010D	NUT	PORCA
17	75236739	1	265C	COVER	TAMPA
18	73072341	8	198S	SHIM	CALÇO
19	73069458	2	120S	LOCK	FECHADU[illegible]A
20	73155816	1	060A	ANGLE	CANTONEIRA
21	73148661	2	023M	GRAB HANDLE	ALÇA DE APOIO
22	70911024	4	010D	NUT	PORCA
23	73154362	1	105P	PLATE	CHAPA
24	75221840	1	176C	HOOD	CAPO
25	73152011	2	265C	COVER	TAMPA
26	70921174	6	040V	SCREW	PARAFUSO
27	70677010	6	131R	WASHER	ARRUELA
28	75221853	1	300S	SUPPORT	SUPORTE
29	73152396	1	070R	GUARD	PROTEÇÃO
30	70929156	4	131R	WASHER	ARRUELA
31	70922300	6	040V	SCREW	PARAFUSO

SHELL AND RADIATOR
RADIADOR E CAPUZ

L1.01 | 1

FIATALLIS

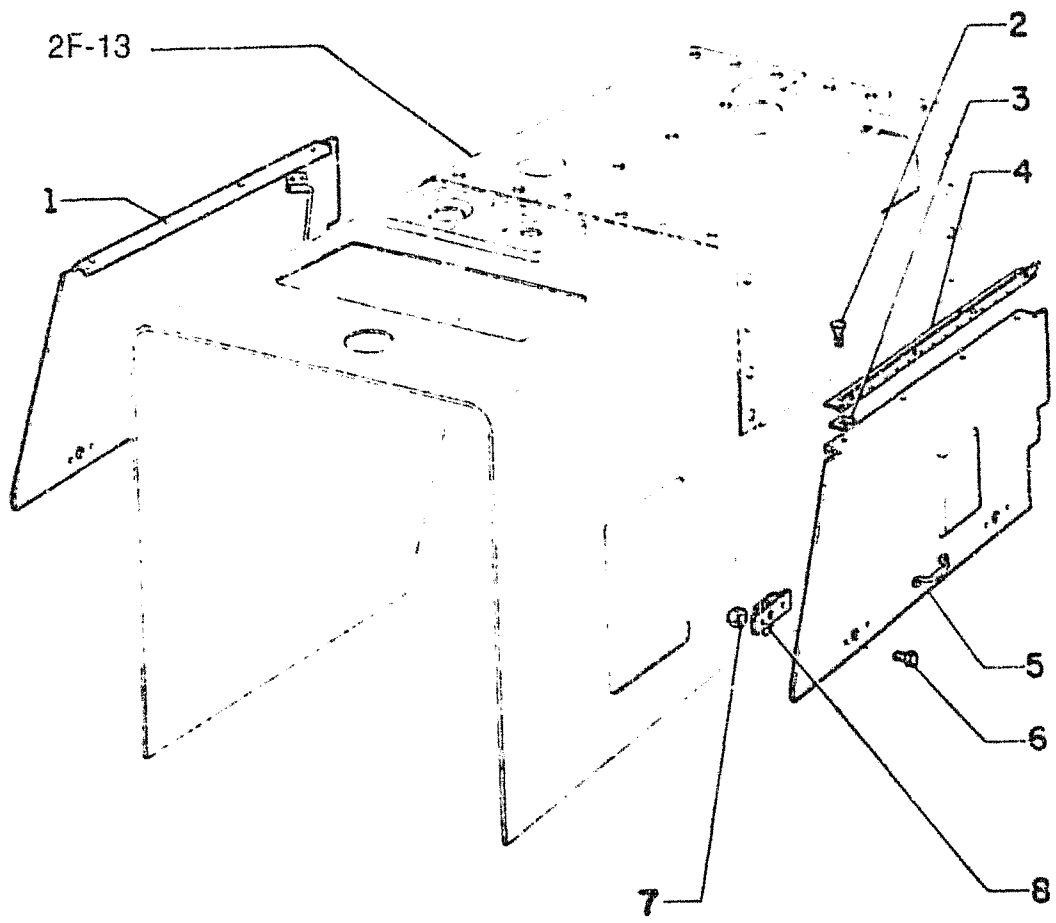

FIATALLIS FG 70R 70A 75R 75A L1.01 QUADRO 2 PAG. 1

ITEM	PEÇA Nº	QTDE	COD.	DESCRIPTION	DESCRIÇÃO
1	73154364	1	325C	DASHBOARD	PAINEL
2	70922300	16	040V	SCREW	PARAFUSO
3	73072341	16	198S	SHIM	CALÇO
4	73154331	2	140C	HINGE	DOBRADIÇA
5	73154366	1	325C	DASHBOARD	PAINEL
6	70927541	8	040V	SCREW	PARAFUSO
7	70911024	8	010D	NUT	PORCA
8	73069458	4	120S	LOCK	FECHADURA

SIDE PANEL.
PROTEÇAO DO MOTOR

L1.01 | 2

322

FIATALLIS

FIATALLIS FG 70R 70A 75R 75A L1.03 QUADRO 1 PAG. 1

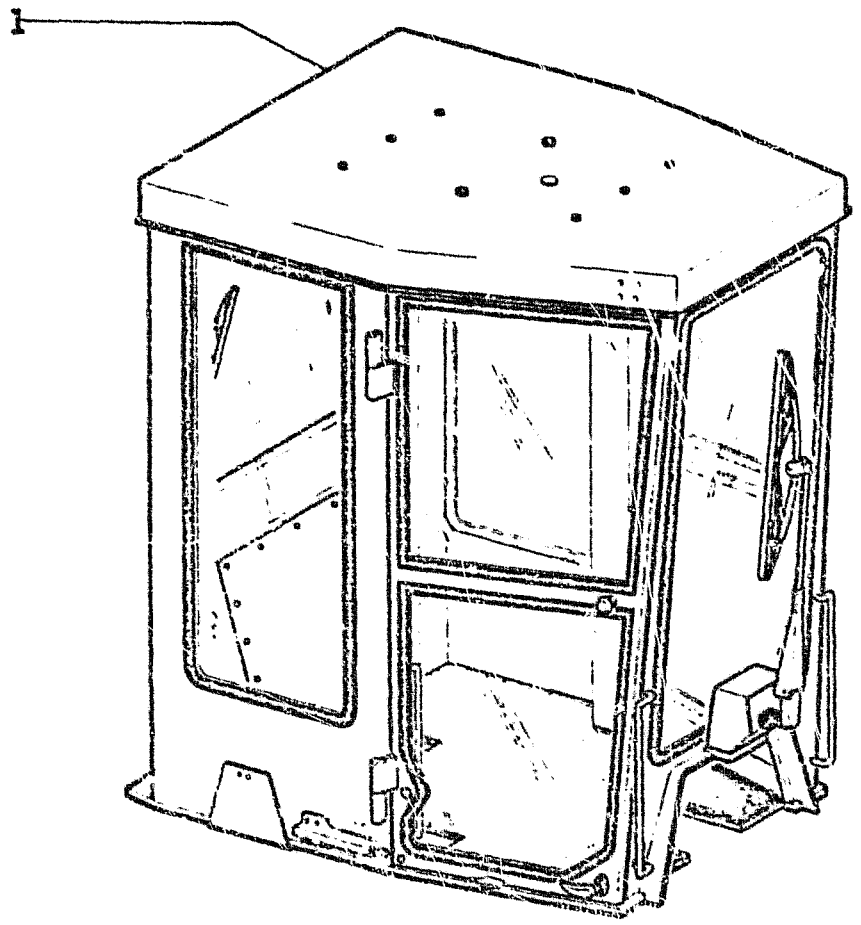

ITEM	PEÇA Nº	QTDE	COD.	DESCRIPTION	DESCRIÇÃO
1	73149800	1	393C	ROPS CAB	CABINA ROPS

CAB ASSEMBLY
CONJUNTO DA CABINE

L1.03 | 1

FIATALLIS

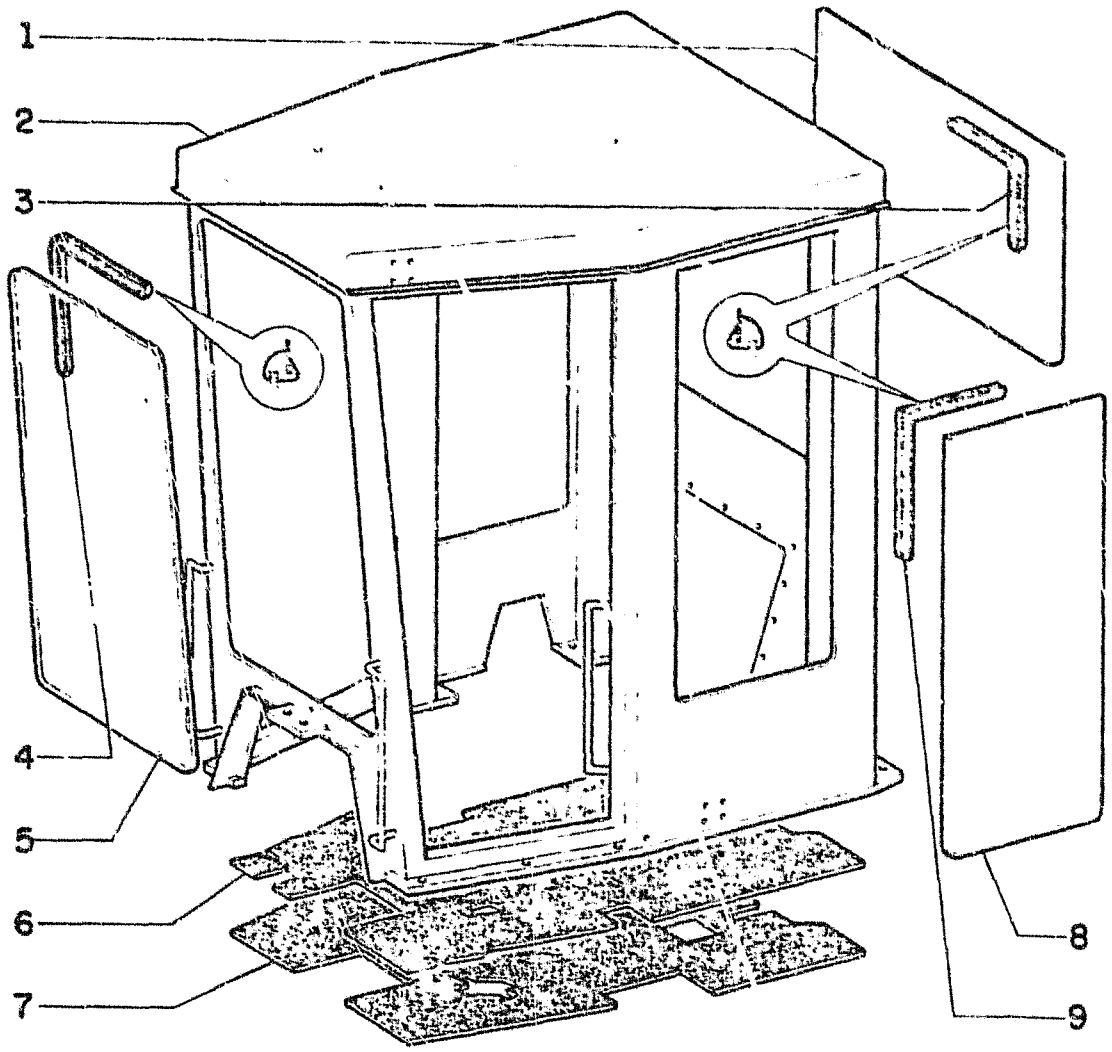

FIATALLIS FG 70R 70A 75R 75A L1.04 **QUADRO 1** **PAG. 1**

ITEM	PEÇA Nº	QTDE	COD.	DESCRIPTION	DESCRIÇÃO
1	73150611	1	069F	WINDOW	JANELA
2	73149801	1	008C	CAB	CABINA
3	73150619	1	120G	GASKET	JUNTA
4	73150616	1	120G	GASKET	JUNTA
5	73152909	1	315C	GLASS	VIDRO
6	73151373	1	030T	MAT	TAPETE
7	73151372	1	030T	MAT	TAPETE
8	73150610	2	C407	GLASS PLATES	VIDROS
9	73150618	2	120G	GASKET	JUNTA

CAB
CABINE

L.1.04 | 1

DESCRIPTION	SBGRP	TAV	GRID
1 - 2 SPEED CLUTCH FG75	B201/1	15	1L-9
3 - 4 SPEED & REVERSE CLUTCH FG75	B201/1	14	1L-8
5 - 6 SPEED & HIGH FWD CLUTCH FG75	B201/1	16	1L-10
ADAPTER, TRANS HOUSING FG75	B201/1	1	1I-11
AIR CLEANER	A222	1	1F-7
AIR FILTER	A223	2	1F-8
AIR PRE-CLEANER	A222	1	1F-7
ALTERNATOR	F200	1	2E-2
BELT	F200	1	2E-2
COMPONENTS	F603	1	2F-10
ARTICULATION CYLINDER	D101	7	1P-2
CYLINDER	E332	8	2D-13
JOINT (BOTTOM)	D101	5	1O-16
JOINT (TOP)	D101	6	1O-17
SWITCH	F401	19	2F-7
VALVE	E331	2	2C-14
BACK UP ALARM FG70	F401	8	2E-8
BACK UP ALARM FG75	F401/1	8	2E-9
BATTERIES FG70	F401	11	2E-12
BATTERIES FG70 FG75	F401	7	2E-6
BATTERIES FG75	F401	14	2E-16
CABLES FG70	F401	11	2E-12
CABLES FG70 FG75	F401	7	2E-6
CABLES FG75	F401	14	2E-16
BATTERY BOX	L130	1	2G-17
BELT, ALTERNATOR	F200	1	2E-2
BELTS, FAN	A409	1	1G-17
BLADE LIFT VALVE	E331	5	2C-17
BRAKE CALIPER	C118	1	1O-6
DISC	D316	1	1P-14
FLUID HIGH PRESSURE LINES LT.	C101	4	1N-16
FLUID HIGH PRESSURE LINES RT.	C101	3	1N-15
FLUID RESERVOIR	C101	2	1N-14
FLUID RESERVOIR COMPONENTS	C108	1	1O-3
MASTER CYINDER	C108	2	1O-4
MASTER CYLINDER LINES	C101	5	1N-17
PEDAL	C101	1	1N-13
POWER BOOSTER	C108	3	1O-5
PUMP COMPONENTS	D213	1	1P-13
CAB	L103	1	2F-15
DOOR	L104	2	2G-2
FAN ASSEMBLY	L104	9	2G-10
FANS	L104	8	2G-9
FLOOR MAT	L104	1	2F-16
HEATER FITTINGS	L104	11	2G-12
HEATER	L104	10	2G-11
LIGHTING	L104	5	2G-6
ROOF LINER	L104	4	2G-5

DESCRIPTION	SBGRP	TAV	GRID
CAB SEALS	L104	3	2G-4
WIRING	L104	7	2G-8
CABLES ELECTRICAL FG70	F401	10	2E-11
CABLES ELECTRICAL FG75	F401	15	2F-2
CANOPY	L104/1	1	2G-13
CANOPY LINER	L104/1	2	2G-14
CIRCLE	E310	2	2B-15
SHIFT CYLINDER	E332	5	2D-11
SHIFT VALVE	E331	3	2C-15
TURN GEAR BOX COMPONENTS	E310	4	2B-16
TURN GEAR BOX	E310	2	2B-15
TURN MOTOR COMPONENTS	E310	5	2C-2
TURN MOTOR	E310	2	2B-15
CLUTCH , 3 - 4 SPEED & REVERSE FG75	B201/1	14	1L-8
HIGH SPEED FG70	B201	9	1H-17
LOW SPEED FG70	B201	8	1H-16
REVERSE & 3 - 4 SPEED FG75	B201/1	14	1L-8
SECOND SPEED FG70	B201	7	1H-15
THIRD SPEED FG70	B201	6	1H-14
5 - 6 SPEED & HIGH FWD FG75	B201/1	16	1L-10
FORWARDFG70	B201	7	1H-15
HIGH FWD & 5 - 6 SPEED FG75	B201/1	16	1L-10
LOW FORWARD FG75	B201/1	12	1L-6
REVERSE FG70	B201	6	1H-14
CONTROL VALVE TRANSMISSION FG70	B201	18	1I-10
CONVERTER FG70	B201	3	1H-11
COMPONENTS FG75	B201/1	7	1I-17
FLEX PLATES FG75	B201/1	6	1I-16
GEAR FG70	B201	4	1H-12
GEAR FG75	B201/1	9	1L-3
GEAR FG75	B201/1	10	1L-4
GEAR FG75	B201/1	11	1L-5
HOUSING FG70	B201	2	1H-10
HOUSING FG75	B201/1	3	1I-13
SHAFTS FG75	B201/1	5	1I-15
COOLANT PUMP	A403	1	1G-16
FILTER	A402	1	1G-15
CYLINDER ARTICULATION	E332	8	2D-13
CIRCLE SHIFT	E332	5	2D-11
MOLDBOARD LIFT	E332	6	2D-12
MOLDBOARD PITCH	E332	2	2D-8
MOLDBOARD SIDE SHIFT	E332	3	2D-9
RIPPER	E332/1	2	2D-15
SADDLE LOCK PIN	E332	4	2D-10
SCARIFIER	E332/1	1	2D-14
STEERING	D212	1	1P-12
WHEEL LEAN	E332	1	2D-7
ARTICULATION	D101	7	1P-2
DECALS (ARTICULATED)	L125	2	2G-16
DECALS (RIGID)	L125	1	2G-15
DIFFERENTIAL ASSEMBLY	B403	4	1N-10

DESCRIPTION	SBGRP	TAV	GRID
DIFFERENTIAL COMPONENTS	B403	5	1N-11
DRIVE SHAFT	BC01	1	1M-15
DRIVE SHAFT COMPONENTS	B316	1	1M-16
ELECTRICAL CABLE SWITCH PANEL	F401	2	2E-4
CABLES BATT. FG70 FG75	F401	7	2E-6
CABLES BATTERIES FG70	F401	11	2E-12
CABLES BATTERIES FG75	F401	14	2E-16
CABLES FG70	F401	10	2E-11
CABLES FG75	F401	15	2F-2
FUSES	F401	3	2E-5
SWITCH PANEL	F401	1	2E-3
SWITCH PANEL	F401	1	2E-3
ELECTRONIC DATA MONITOR	F401	12	2E-14
ELEMENT IMPLEMENT OIL	E328	1	2C-10
TRANS. OIL FG70	B201	11	1I-3
TRANS. OIL FG75	B217	1	1M-14
AIR	A223	2	1F-8
ENGINE OIL	A303	1	1G-12
FUEL	A226	1	1F-12
END CAP VALVE	E331	7	2D-3
END CAP VALVE	E331	9	2D-4
ENGINE	A000	1	1E-2
BLOCK	A101	1	1E-5
BLOCK PLUGS	A101	2	1E-6
CAMSHAFT	A107	1	1E-16
CAMSHAFT DRIVE	A106	1	1E-15
CONNECTING RODS	A105	1	1E-14
COOLANT THERMOSTAT	A402	1	1G-15
CRANKSHAFT	A103	1	1E-11
CYLINDER SLEEVES	A105	1	1E-14
DAMPER	A104	1	1E-13
EXHAUST MANIFOLD	A254	1	1G-7
EXHAUST VALVE	A107	1	1E-16
FLYWHEEL	A103	1	1E-11
FLYWHEEL HOUSING	A102	2	1E-10
FRONT COVER	A102	1	1E-9
FUEL PUMP DRIVE	A106	1	1E-15
HEAD	A101	3	1E-7
INTAKE VALVE	A107	1	1E-16
LIFTING BRACKET	A101	4	1E-8
MAIN BEARING	A103	2	1E-12
MAIN BEARING CAPS	A101	1	1E-5
MOUNTS FG70	A002	1	1E-3
MOUNTS FG75	A002/1	1	1E-4
OIL DIPSTICK	A301	2	1G-10
OIL FILL PLUG	A301	2	1G-10
OIL FILTER	A303	1	1G-12
OIL HEAT EXCHANGER	A303	1	1G-12
OIL PAN	A102	1	1E-9
OIL PUMP	A302	1	1G-11

FIATALLIS

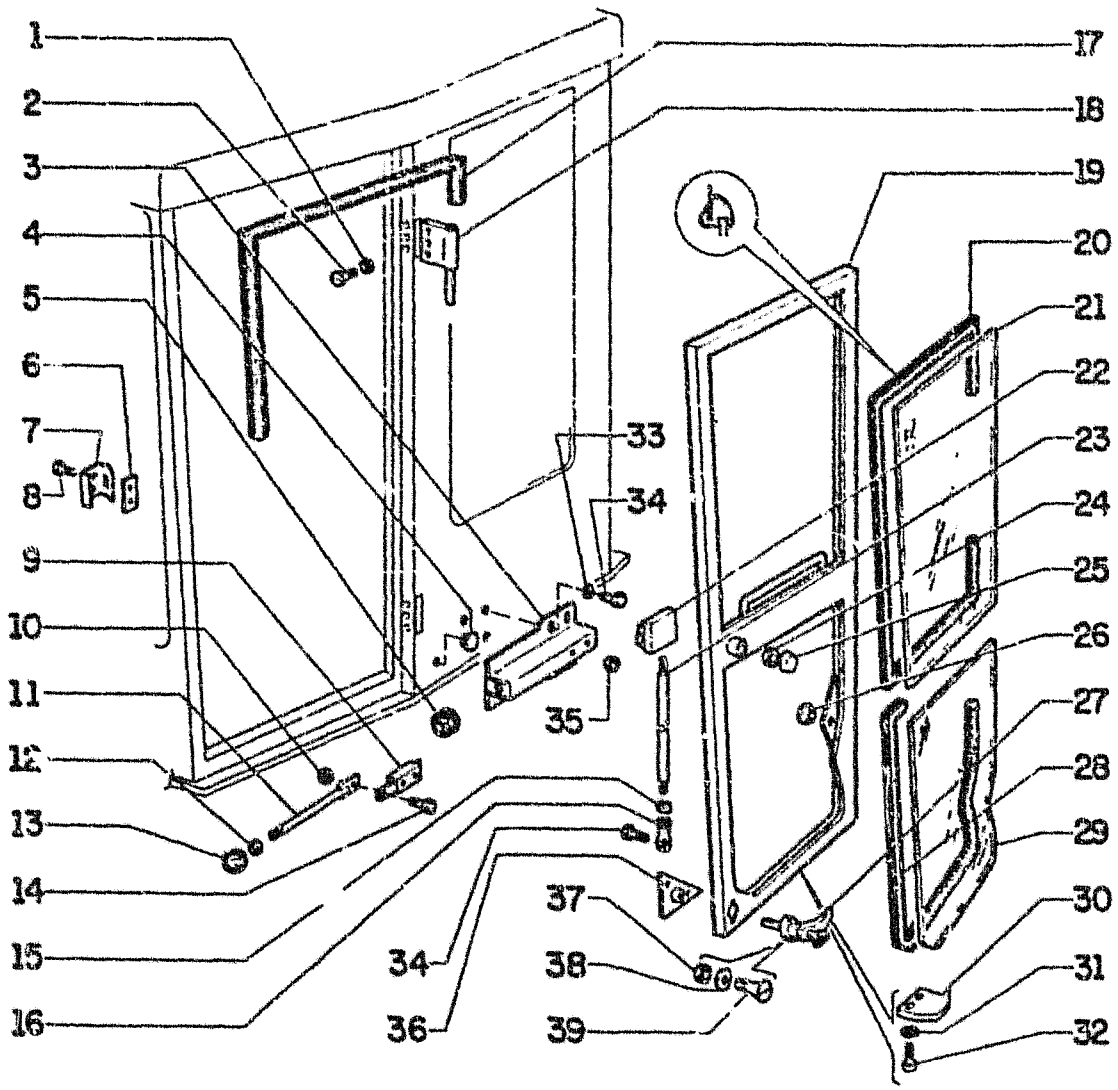

FIATALLIS FG 70R 70A 75R 75A L1.04 QUADRO 2 PAG. 1

ITEM	PEÇA Nº	QTDE	COD.	DESCRIPTION	DESCRIÇÃO
1	70929156	16	131R	WASHER	ARRUELA
2	70922300	36	040V	SCREW	PARAFUSO
3	73153197	2	105P	PLATE	CHAPA
4	70921442	4	026T	BLOCK	TAMPÃO
5	70926719	2	120G	GASKET	JUNTA
6	73153205	6	198S	SHIM	CALÇO
7	73153220	1	198S	SHIM	CALÇO
7	73153221	1	198S	SHIM	CALÇO
8	70922763	6	040V	SCREW	PARAFUSO
9	79073382	2	120S	LOCK	FECHADURA
10	70911024	7	010D	NUT	PORCA
11	73150115	2	274S	ROD	HASTE
12	70911041	2	010D	NUT	PORCA
13	70091855	2	150P	KNOB	MANOPLA
14	70922911	12	040V	SCREW	PARAFUSO
15	70910267	4	010D	NUT	PORCA
16	73070190	4	061E	END	EXTREMIDADE
17	73151815	1	122G	SEAL	RETENTOR
18	73150140	4	140C	HINGE	DOBRADIÇA
19	73149802	1	180P	DOOR LH	PORTA ESQ
19	73149803	1	180P	DOOR RH	PORTA DIR
20	73150620	2	120G	GASKET	JUNTA
21	73150608	2	C407	GLASS PLATES	VIDROS
22	73153179	1	120S	LOCK LEFT	FECHADURA ESQU
22	73153180	1	120S	LOCK RIGHT	FECHADURA DIR
23	73150135	2	142T	TIEROD	TIRANTE
24	12164711	2	010D	NUT	PORCA
25	76010146	2	198S	SHIM	CALÇO
26	70928956	3	120B	BUTTON	BOTAO
27	73153170	1	120S	LOCK LEFT	FECHADURA ESQU
27	73153171	1	120S	LOCK RIGHT	FECHADURA DIR

CAB
CABINE

L1.04 | 2

FIATALLIS

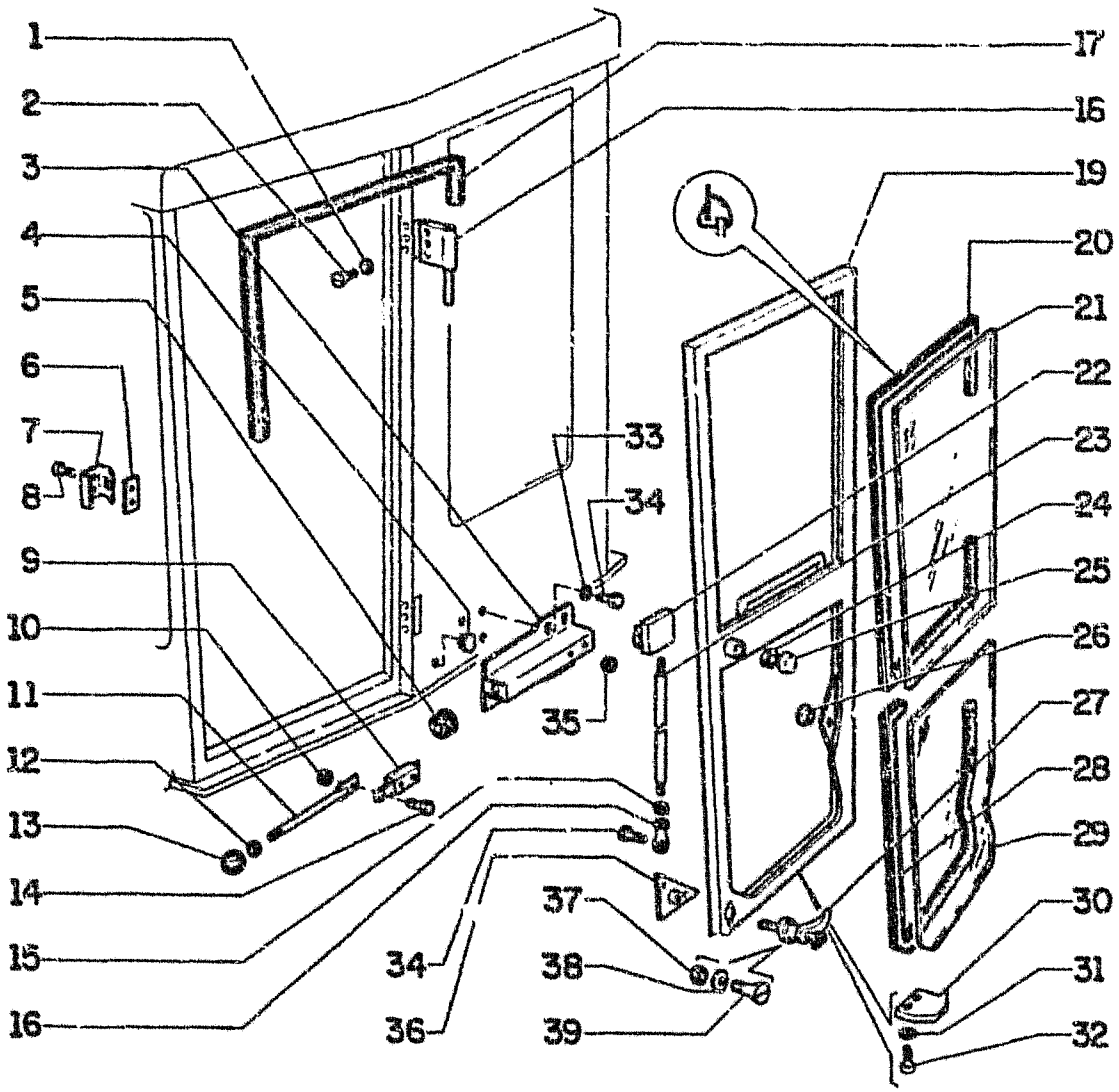

FIATALLIS FG 70R 70A 75R 75A L1.04 **QUADRO** 2 **PAG.** 2

ITEM	PEÇA Nº	QTDE	COD.	DESCRIPTION	DESCRIÇÃO
28	73150617	2	120G	GASKET	JUNTA
29	73150609	2	C407	GLASS PLATES	VIDROS
30	73153196	2	120S	LOCK	FECHADURA
31	70677006	38	131R	WASHER	ARRUELA
32	70922300	35	040V	SCREW	PARAFUSO
33	70677004	18	131R	WASHER	ARRUELA
34	70927541	16	040V	SCREW	PARAFUSO
35	70920329	2	010D	NUT	PORCA
36	73153795	2	105P	PLATE	CHAPA
37	70922714	4	010D	NUT	PORCA
38	70910243	4	170R	LOCKWASHER	ARRUELA PRESSÃO
39	70922704	4	040V	SCREW	PARAFUSO

CAB
CABINE

L1.04 | 2

FIATALLIS

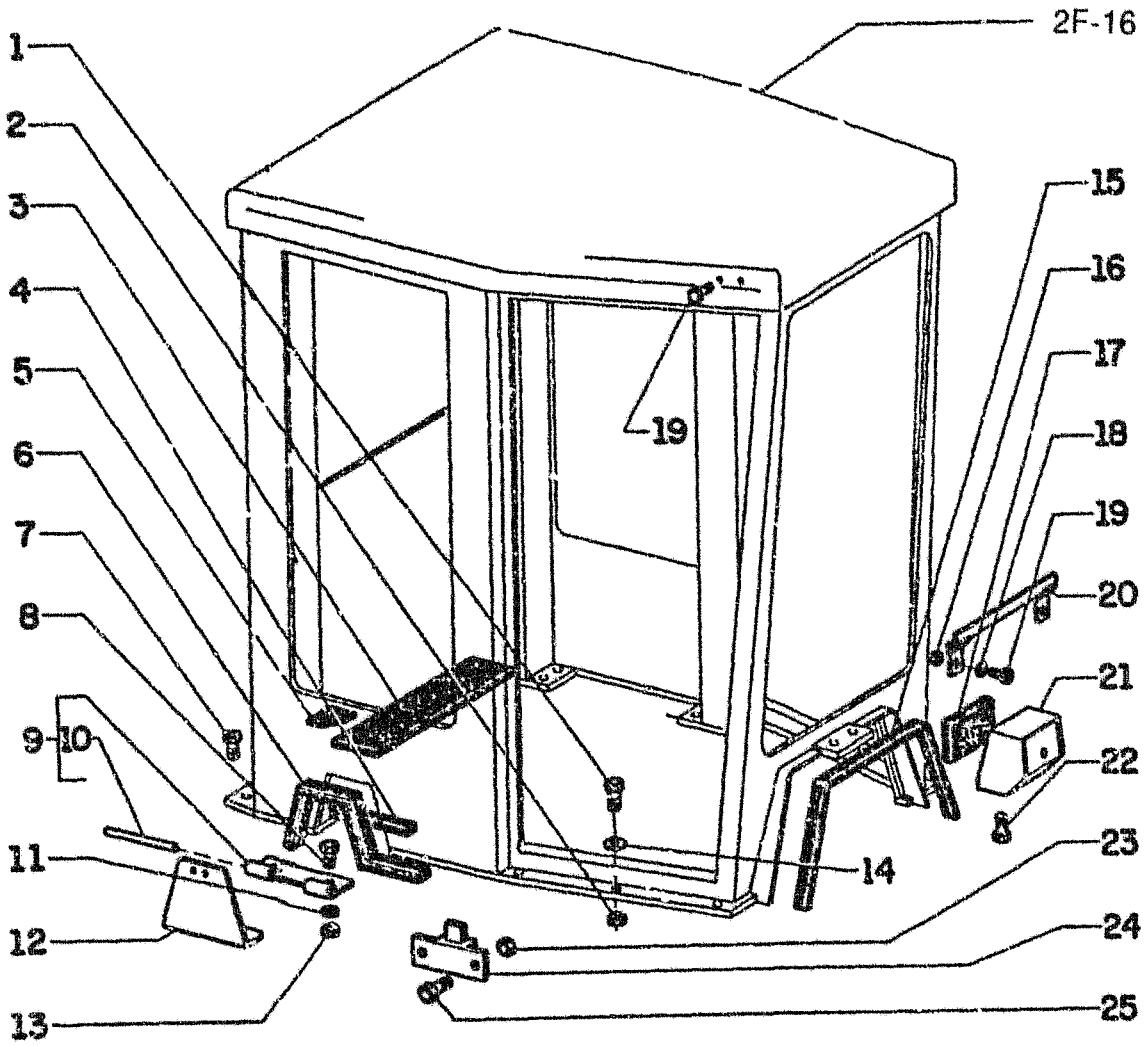

FIATALLIS FG 70R 70A 75R 75A L1.04 QUADRO 3 PAG. 1

ITEM	PEÇA Nº	QTDE	COD.	DESCRIPTION	DESCRIÇÃO
1	70925483	4	040V	SCREW	PARAFUSO
2	70916170	20	010D	NUT	PORCA
3	73150566	1	120G	GASKET	JUNTA
4	73150596	1	120G	GASKET	JUNTA
5	73150595	2	120G	GASKET	JUNTA
6	73150597	1	120G	GASKET	JUNTA
7	70922544	16	040V	SCREW	PARAFUSO
8	70921565	2	040V	SCREW	PARAFUSO
9	73071349	2	140C	HINGE	DOBRADIÇA
10	73154912	1	142T	TIEROD	TIRANTE
11	70677006	4	131R	WASHER	ARRUELA
12	73154910	1	265C	COVER	TAMPA
13	70911026	2	010D	NUT	PORCA
14	70677012	20	131R	WASHER	ARRUELA
15	73150598	1	120G	GASKET	JUNTA
16	70911026	4	010D	NUT	PORCA
17	73154909	1	120G	GASKET	JUNTA
18	70677006	37	131R	WASHER	ARRUELA
19	70927173	10	040V	SCREW	PARAFUSO
20	73154927	1	300S	SUPPORT	SUPORTE
21	73154004	1	300S	SUPPORT	SUPORTE
22	70920585	2	040V	SCREW	PARAFUSO
23	70911024	2	010D	NUT	PORCA
24	73069458	1	120S	LOCK	FECHADURA
25	70927541	2	040V	SCREW	PARAFUSO

CAB
CABINE

L1.04 | 3

FIATALLIS

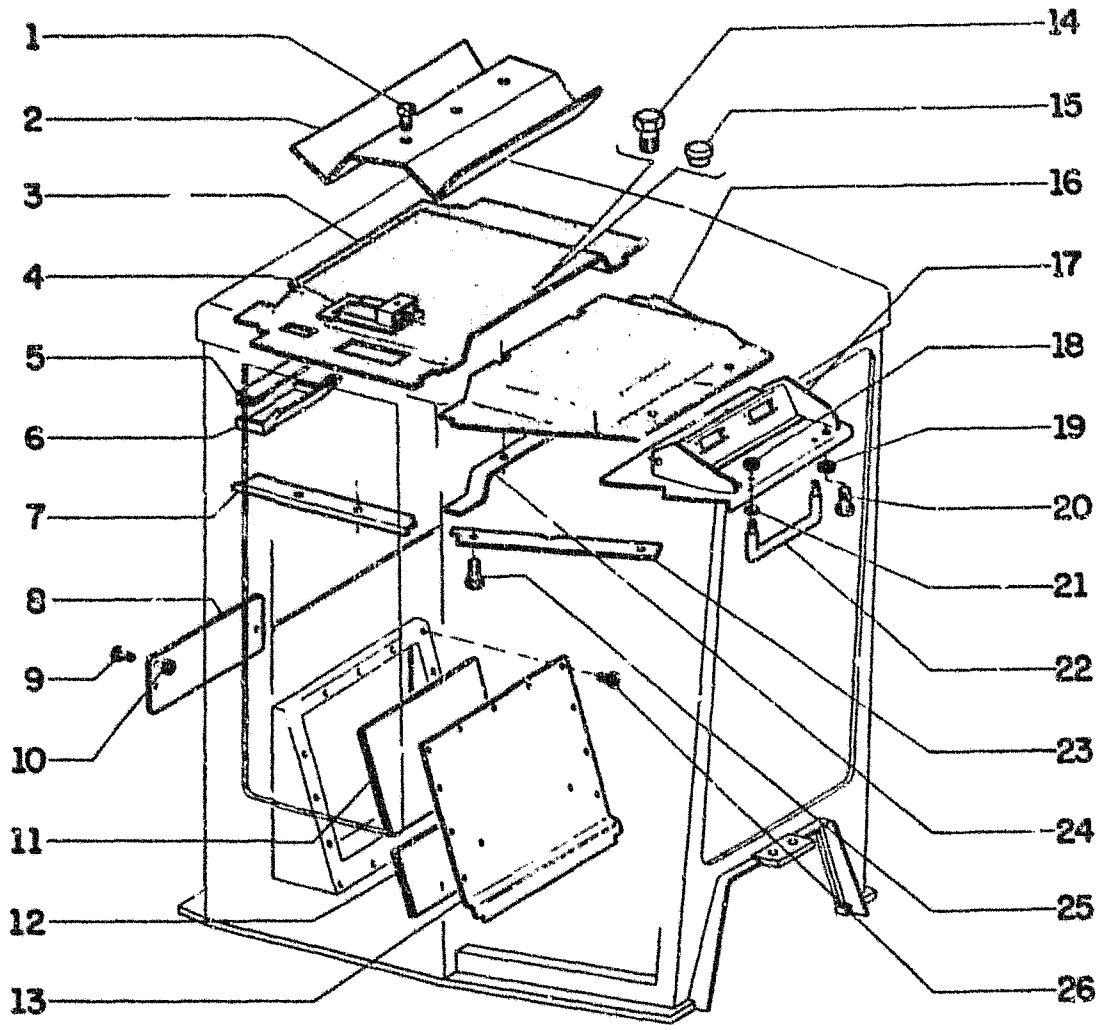

FIATALLIS FG 70R 70A 75R 75A L1.04 **QUADRO** 4 **PAG.** 1

ITEM	PEÇA Nº	QTDE	COD.	DESCRIPTION	DESCRIÇÃO
1	70922911	12	040V	SCREW	PARAFUSO
2	73152661	2	105P	PLATE	CHAPA
3	73150909	1	078F	LINING	FORRAÇÃO
4	73153160	1	300S	SUPPORT	SUPORTE
5	73151024	1	105P	PLATE	CHAPA
5	73151001	1	105P	PLATE	CHAPA
6	73151215	1	265C	COVER	TAMPA
7	73151017	1	105P	PLATE	CHAPA
7	73151018	1	105P	PLATE	CHAPA
8	73154934	1	105P	PLATE	CHAPA
9	70916081	7	040V	SCREW	PARAFUSO
10	70911024	7	010D	NUT	PORCA
11	73151219	1	085I	INSULATOR	ISOLANTE
12	73151220	1	085I	INSULATOR	ISOLANTE
13	73150776	1	265C	COVER	TAMPA
14	70924277	2	040V	SCREW	PARAFUSO
15	70901666	1	050T	PLUG	BUJÃO
16	73150910	1	078F	LINING	FORRAÇÃO
17	73154691	1	105P	PLATE	CHAPA
18	70911026	2	010D	NUT	PORCA
19	70677008	4	131R	WASHER	ARRUELA
20	70920582	2	040V	SCREW	PARAFUSO
21	70677004	18	131R	WASHER	ARRUELA
22	73155026	1	300S	SUPPORT	SUPORTE
23	73151002	2	105P	PLATE	CHAPA
24	73151080	1	105P	PLATE	CHAPA
25	73150259	15	040V	SCREW	PARAFUSO
26	70928730	22	040V	SCREW	PARAFUSO

CAB
CABINE

L1.04 | 4

FIATALLIS

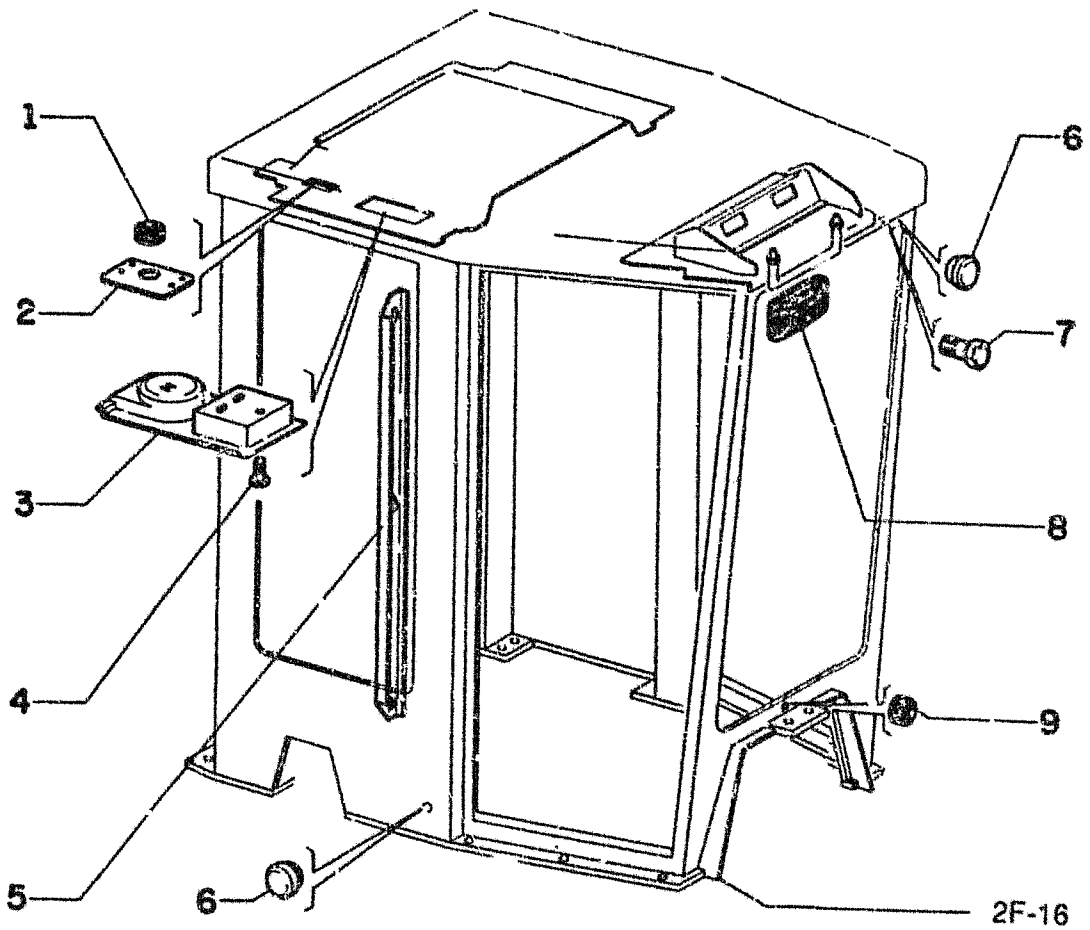

FIATALLIS FG 70R 70A 75R 75A L1.04 **QUADRO** 5 **PAG.** 1

ITEM	PEÇA Nº	QTDE	COD.	DESCRIPTION	DESCRIÇÃO
1	70930860	2	120G	GASKET	JUNTA
2	73150997	1	105P	PLATE	CHAPA
3	79067876	1	75G6	LIGHTS	ILUMINAÇÃO
4	70922708	1	040V	SCREW	PARAFUSO
5	73151582	1	105P	PLATE	CHAPA
6	73108389	19	050T	PLUG	BUJÃO
7	70922763	6	040V	SCREW	PARAFUSO
8	75221401	1	185S	REAR VIEW MIRRO	ESPELHO RETROV
9	70929977	1	120G	GASKET	JUNTA

CAB
CABINE

L1.04 | 5

FIATALLIS

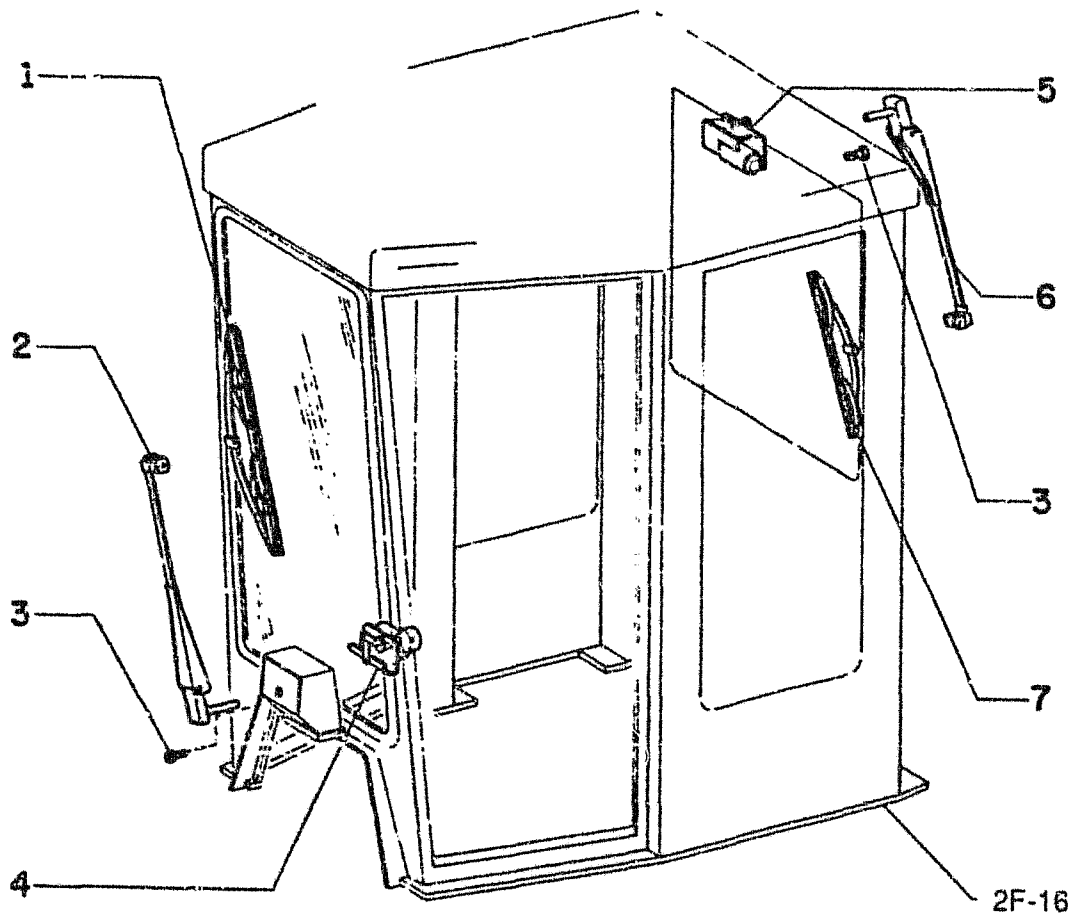

FIATALLIS FG 70R 70A 75R 75A L1.04 **QUADRO** 6 **PAG.** 1

ITEM	PEÇA Nº	QTDE	COD.	DESCRIPTION	DESCRIÇÃO
1	73142385	1	499P	BLADE	PALHETA
2	73153160	1	130B	ARM	BRAÇO
3	10902434	2	040V	SCREW	PARAFUSO
4	73153159	1	137M	ELECTRIC MOTOR	MOTOR ELETRICO
5	73144216	1	137M	ELECTRIC MOTOR	MOTOR ELETRICO
6	73144217	1	130B	ARM	BRAÇO
7	73144218	1	499P	BLADE	PALHETA

CAB
CABINE

L1.04 | 6

FIATALLIS

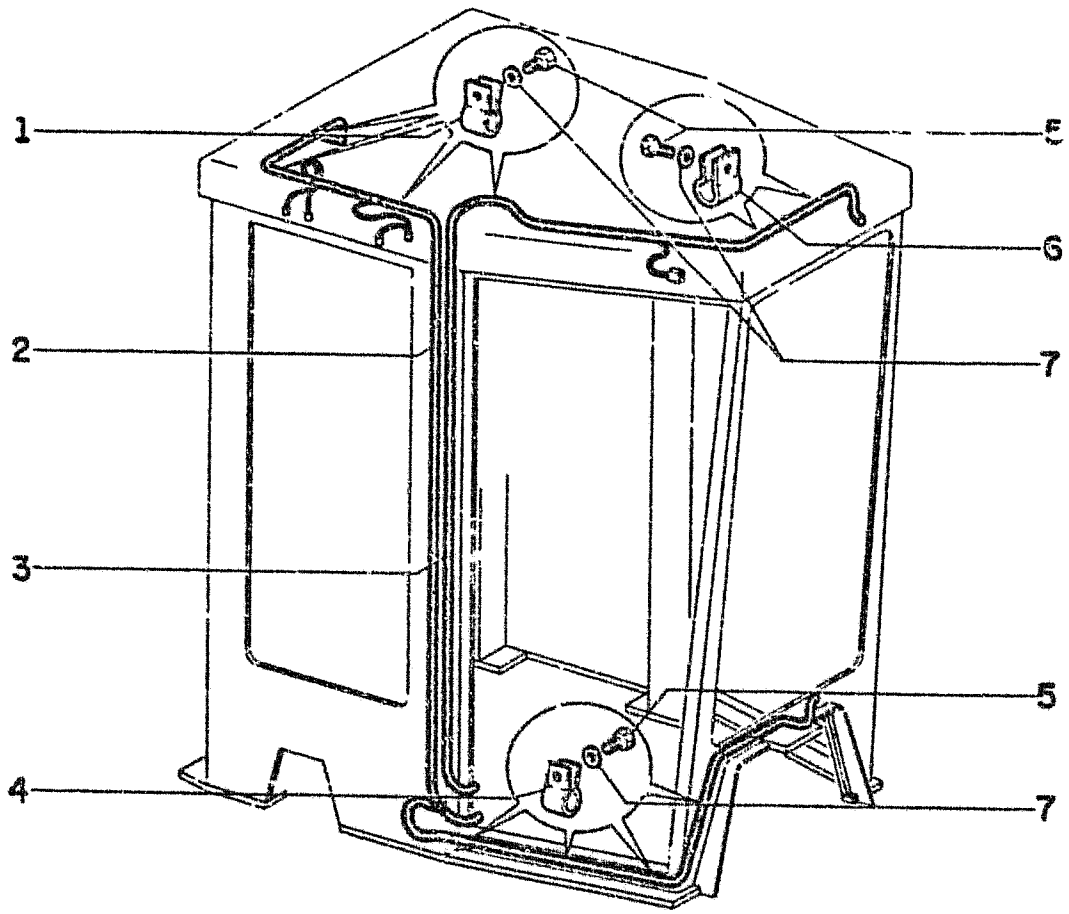

FIATALLIS FG 70R 70A 75R 75A L1.04 **QUADRO 7** **PAG. 1**

ITEM	PEÇA Nº	QTDE	COD.	DESCRIPTION	DESCRIÇÃO
1	70925617	4	031F	CLAMP	ABRAÇADEIRA
2	73153948	1	111C	CABLE	CABO ELETRICO
3	73153953	1	111C	CABLE	CABO ELETRICO
4	70926917	7	031F	CLAMP	ABRAÇADEIRA
5	70922300	36	040V	SCREW	PARAFUSO
6	70925615	2	031F	CLAMP	ABRAÇADEIRA
7	70677006	38	131R	WASHER	ARRUELA

FIATALLIS

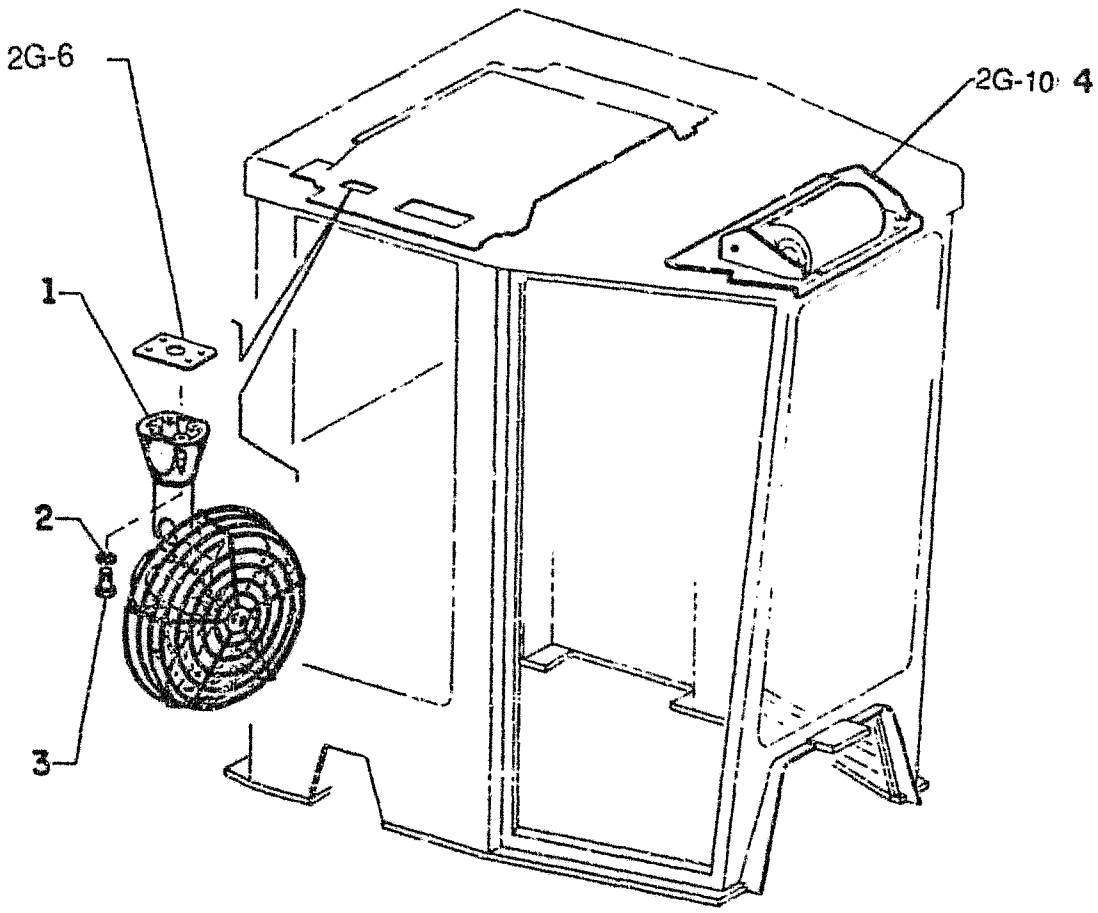

FIATALLIS FG 70R 70A 75R 75A L1.04 QUADRO 8 PAG. 1

ITEM	PEÇA Nº	QTDE	COD.	DESCRIPTION	DESCRIÇÃO
1	73150754	1	030V	FAN	VENTILADOR
2	70909055	2	170R	LOCKWASHER	ARRUELA PRESSÃO
3	70925655	4	040V	SCREW	PARAFUSO
4	73154690	1	030V	FAN	VENTILADOR

CAB
CABINE

L1.04 | 8

FIATALLIS

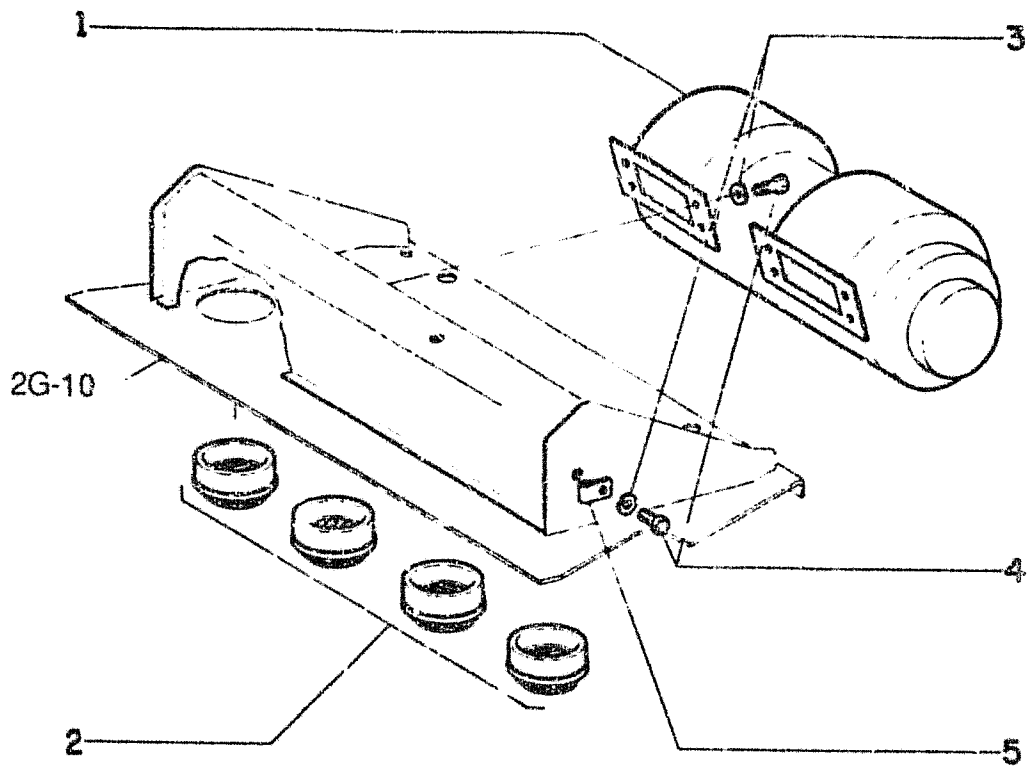

FIATALLIS FG 70R 70A 75R 75A L1.04 **QUADRO** 9 **PAG.** 1

ITEM	PEÇA Nº	QTDE	COD.	DESCRIPTION	DESCRIÇÃO
1	73154696	1	030V	FAN	VENTILADOR
2	73073934	4	045D	DIFFUSER	DIFUSOR
3	70904204	11	170R	LOCKWASHER	ARRUELA PRESS
4	70928138	11	040V	SCREW	PARAFUSO
5	70929722	3	045F	CLIP	PRESILHA

FAN ASSEMBLY
CONJUNTO DO VENTILADOR

L1.04 | 9

FIATALLIS

FIATALLIS FG 70R 70A 75R 75A L1.04 QUADRO 10 PAG. 1

ITEM	PEÇA Nº	QTDE	COD.	DESCRIPTION	DESCRIÇÃO
1	73155751	1	105R	HEATER	AQUECEDOR
2	70901828	2	020R	FITTING	CONEXÃO
3	70925053	2	020R	FITTING	CONEXÃO
4	70921911	4	031F	CLAMP	ABRAÇADEIRA
5	73071749	2	285T	HOSE	MANGUEIRA
6	73150779	2	085I	INSULATOR	ISOLANTE

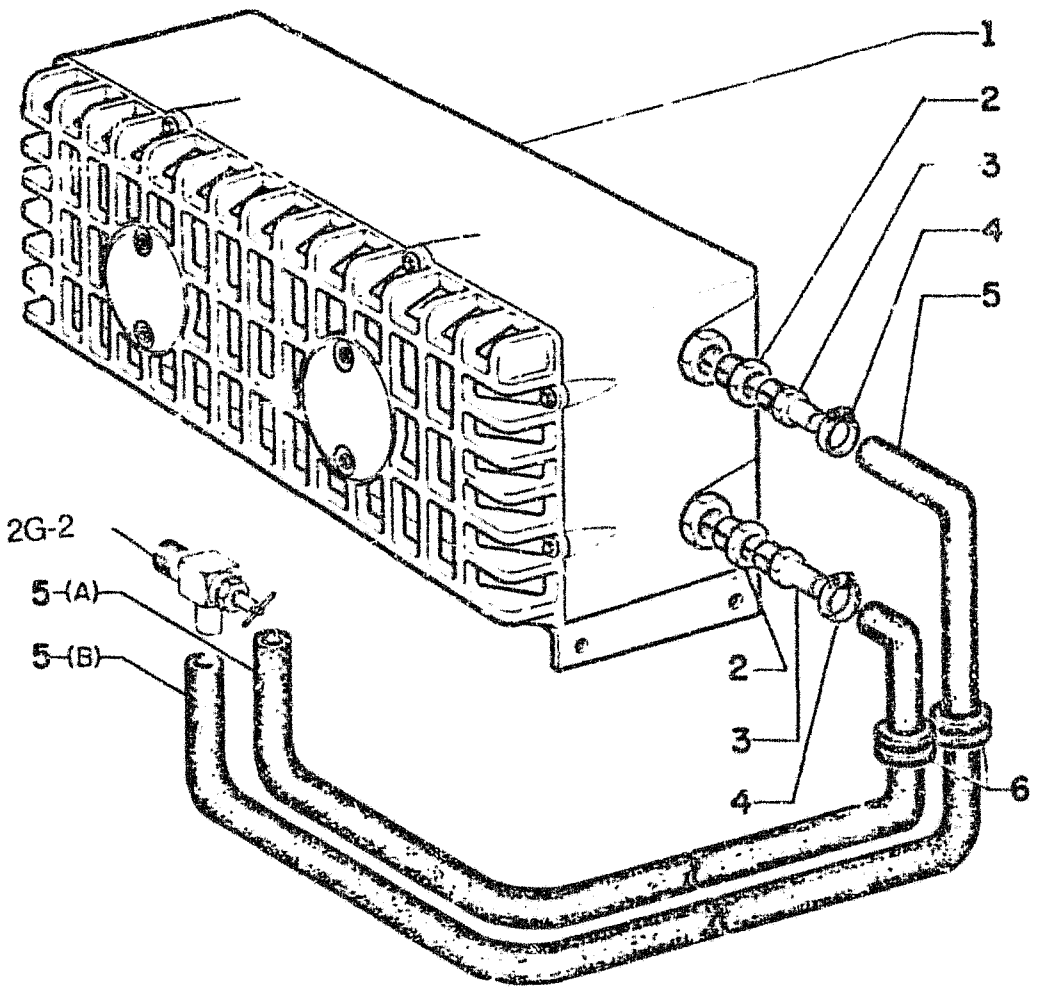

HEATER
AQUECEDOR

L1.04 | 10

FIATALLIS

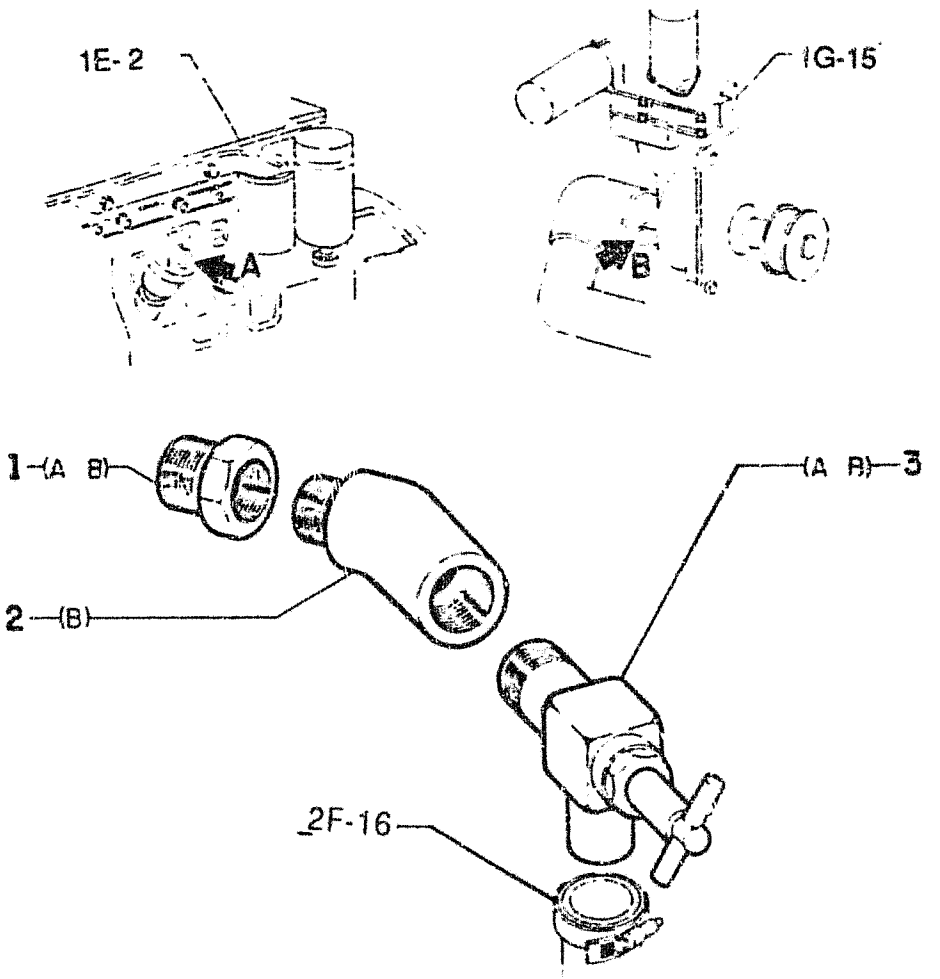

FIATALLIS FG 70R 70A 75R 75A L1.04 QUADRO 11 PAG. 1

ITEM	PEÇA Nº	QTDE	COD.	DESCRIPTION	DESCRIÇÃO
1	70901835	2	020R	FITTING	CONEXÃO
2	70910149	1	085G	ELBOW	COTOVELO
3	70089894	2	010V	VALVE	VÁLVULA

HEATER
AQUECEDOR

L1.04 | 11

FIATALLIS

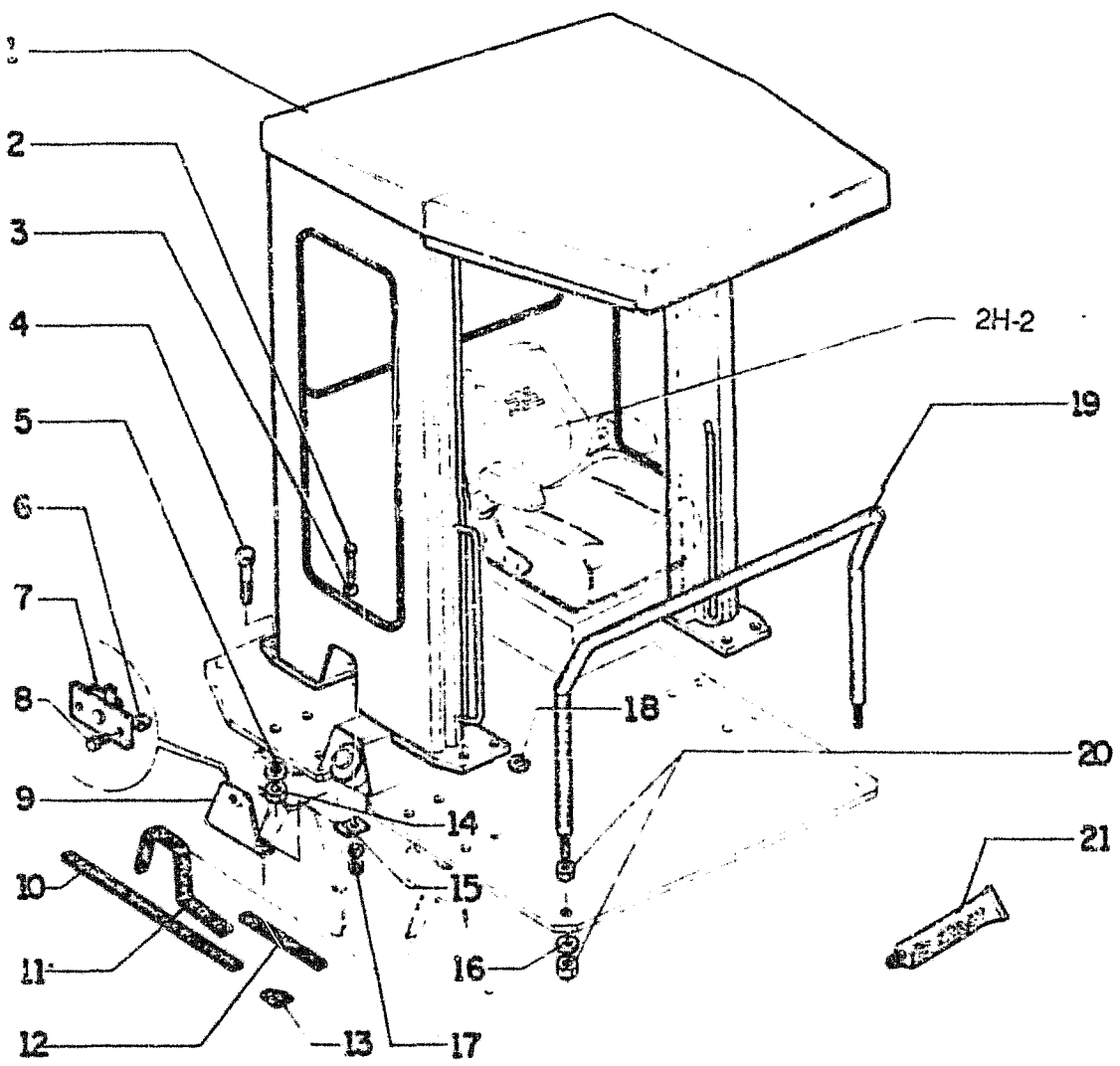

FIATALLIS FG 70R 70A 75R 75A L1.04/1 QUADRO 1. PAG. 1

ITEM	PEÇA Nº	QTDE	COD.	DESCRIPTION	DESCRIÇÃO
1	73152555	1	393C	ROPS CAB	CABINA ROPS
2	70921565	2	040V	SCREW	PARAFUSO
3	70677006	4	131R	WASHER	ARRUELA
4	70922544	20	040V	SCREW	PARAFUSO
5	70677012	20	131R	WASHER	ARRUELA
6	70911024	2	010D	NUT	PORCA
7	73069458	1	120S	LOCK	FECHADURA
8	70927541	2	040V	SCREW	PARAFUSO
9	73154910	1	265C	COVER	TAMPA
10	73150596	1	120G	GASKET	JUNTA
11	73150597	1	120G	GASKET	JUNTA
12	73150566	1	120G	GASKET	JUNTA
13	73150595	2	120G	GASKET	JUNTA
14	70916170	20	010D	NUT	PORCA
15	73071349	2	140C	HINGE	DOBRADIÇA
16	70928452	2	131R	WASHER	ARRUELA
17	70911026	2	010D	NUT	PORCA
18	70910200	2	010D	NUT	PORCA
19	73152557	1	193T	TUBE	TUBO
20	70911032	4	010D	NUT	PORCA
21	73077381	*	141M	PUTTY	MASSA P/VEDAÇ

CANOPY W/A
CONJUNTO SOLDADO DO TOLDO

L1.04/1 | 1

FIATALLIS

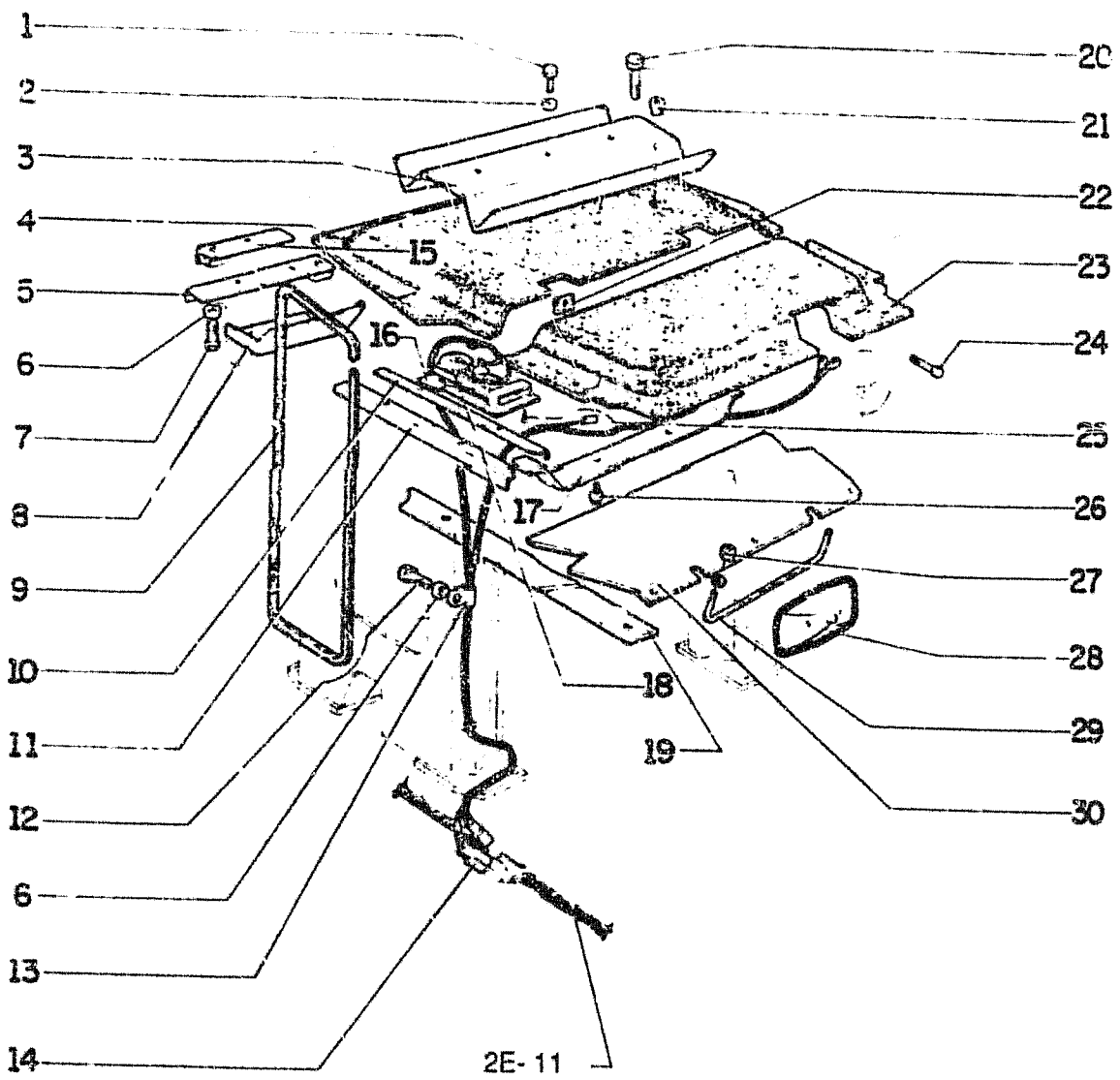

FIATALLIS FG 70R 7CA 75R 75A L1.04/1 **QUADRO** 2 **PAG.** 1

ITEM	PEÇA Nº	QTDE	COD.	DESCRIPTION	DESCRIÇÃO
1	70922911	6	040V	SCREW	PARAFUSO
2	70677004	6	131R	WASHER	ARRUELA
3	73152661	2	105P	PLATE	CHAPA
4	73150909	1	078F	LINING	FORRAÇÃO
5	73151024	1	105P	PLATE	CHAPA
6	70677006	7	131R	WASHER	ARRUELA
7	70922300	4	040V	SCREW	PARAFUSO
8	73151215	1	265C	COVER	TAMPA
9	73052486	*	120G	GASKET	JUNTA
10	73151017	1	105P	PLATE	CHAPA
11	73151018	1	105P	PLATE	CHAPA
12	70922300	1	040V	SCREW	PARAFUSO
13	70926517	3	131R	WASHER	ARRUELA
14	73155199	1	111C	CABLE	CABO ELETRICO
15	73151001	1	105P	PLATE	CHAPA
16	73153166	1	300S	SUPPORT	SUPORTE
17	73151080	1	105P	PLATE	CHAPA
18	79067876	1	75G6	LIGHTS	ILUMINAÇÃO
19	73151002	2	105P	PLATE	CHAPA
20	70924277	2	040V	SCREW	PARAFUSO
21	70901666	1	050T	PLUG	BUJÃO
22	75236665	6	031F	CLAMP	ABRAÇADEIRA
23	73150910	1	078F	LINING	FORRAÇÃO
24	70922763	2	040V	SCREW	PARAFUSO
25	70922708	1	040V	SCREW	PARAFUSO
26	73150259	18	040V	SCREW	PARAFUSO
27	70911026	2	010D	NUT	PORCA
28	75221401	1	185S	REAR VIEW MIRRO	ESPELHO RETROVI
29	73155026	2	300S	SUPPORT	SUPORTE
30	73155198	1	105P	PLATE	CHAPA

CAB
CABINE

L1.04/1 | 2

FIATALLIS

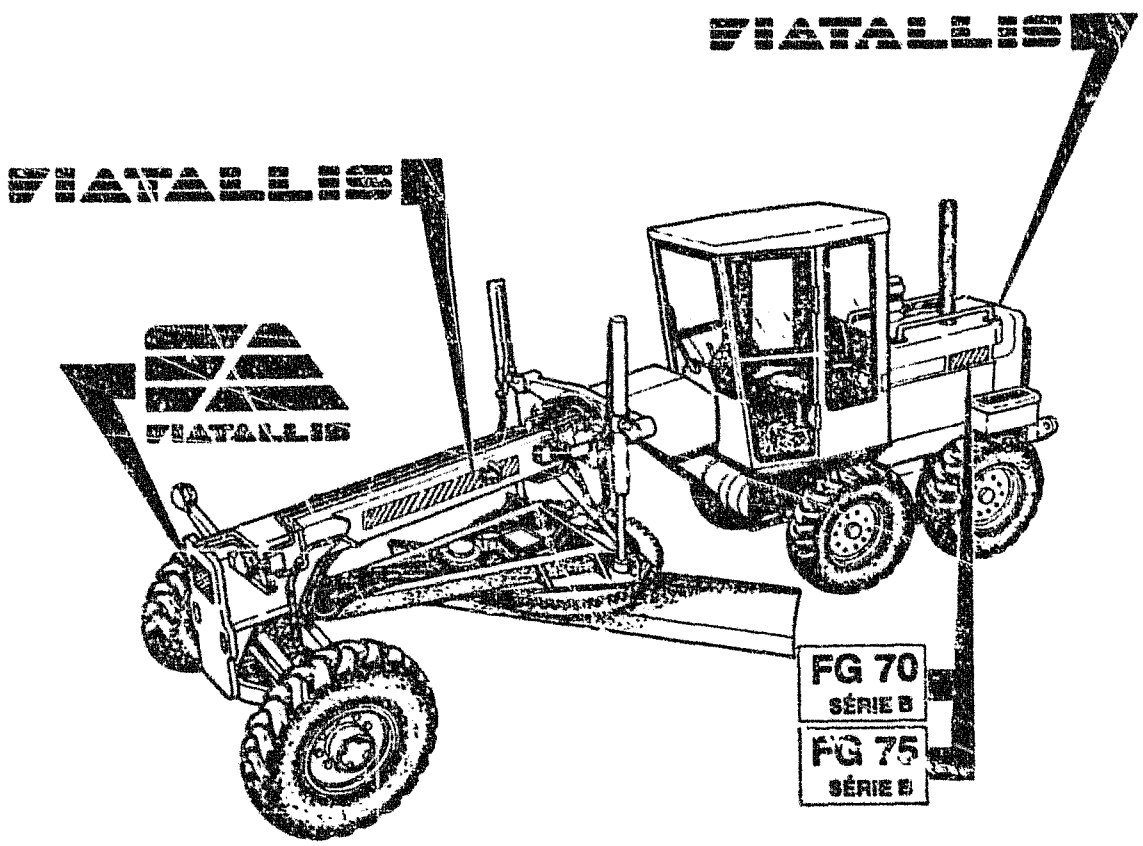

1-2

FIATALLIS FG 70R 75R L1.25 **QUADRO** 1 **PAG.** 1

ITEM	PEÇA Nº	QTDE	COD.	DESCRIPTION	DESCRIÇÃO
1	75286062	K	002K	KIT(ENGL)70R	KIT(INGL)70R
1	75286091	K	002K	KIT(PORT)70R	KIT(PORT)70R
2	75286064	K	002K	KIT(ENGL)75R	KIT(INGL)75R
2	75286093	K	002K	KIT(PORT)75R	KIT(PORT)75R

	TYPE PLATES KIT JOGO DE DECALQUE	L1.25	1

FIATALLIS

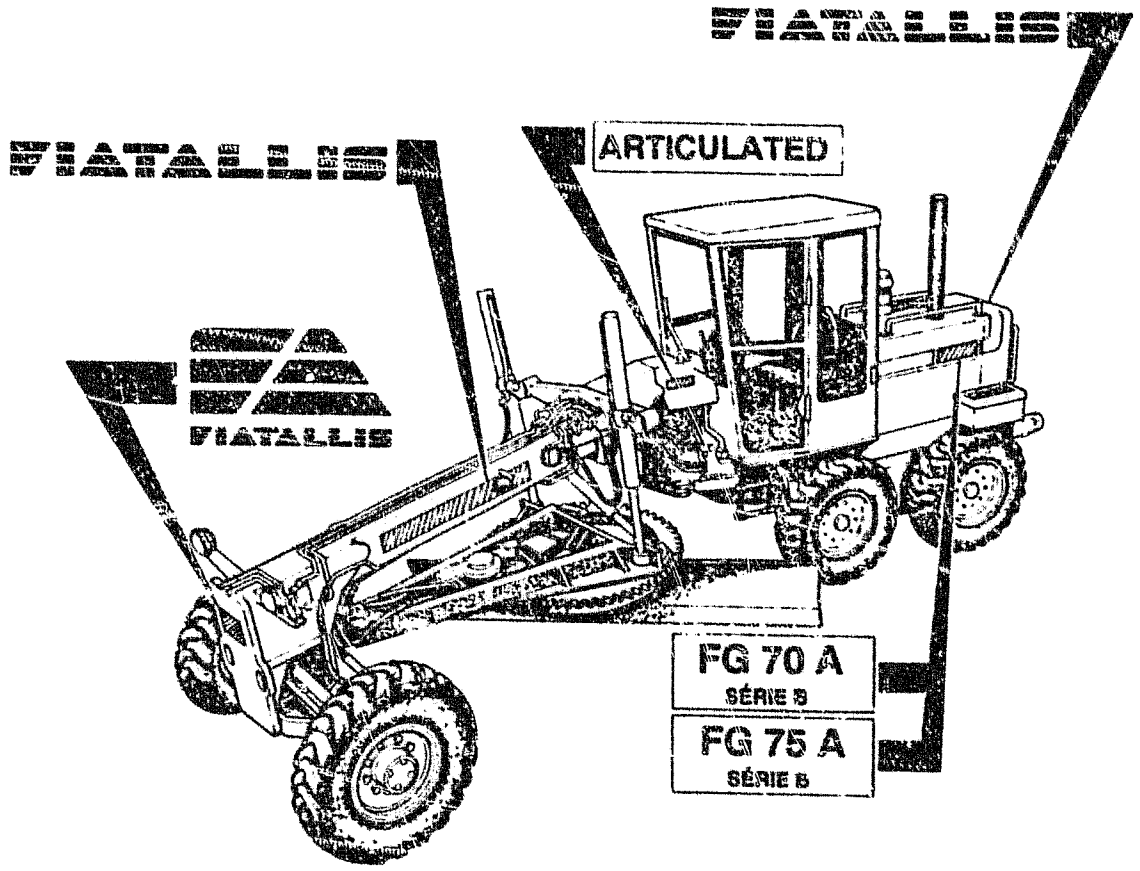

FIATALLIS FG 70A 75A L1.25 **QUADRO** 2 **PAG.** 1

ITEM	PEÇA Nº	QTDE	COD.	DESCRIPTION	DESCRIÇÃO
1	75286063	K	002K	KIT (ENGL) 70A	KIT (INGL) 70A
1	75286092	K	002K	KIT (PORT) 70A	KIT (PORT) 70A
2	75286065	K	002K	KIT (ENGL) 75A	KIT (INGL) 75A
2	75286094	K	002K	KIT (PORT) 75A	KIT (PORT) 75A



TYPE PLATES KIT
JOGO DE DECALQUE

L1.25 | 2

FIATALLIS

FIATALLIS FG 70R 70A 75R 75A L1.30 QUADRO 1 PAG. 1

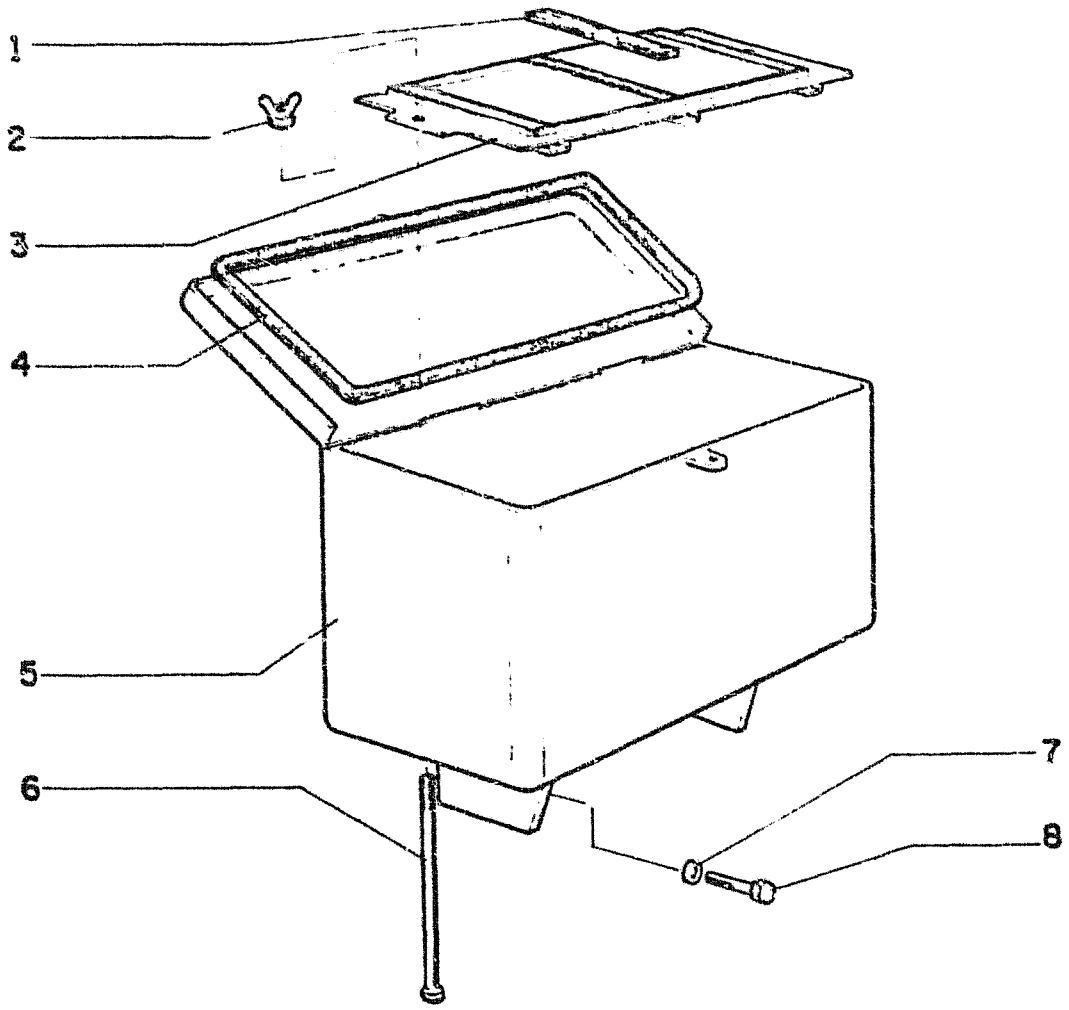

ITEM	PEÇA Nº	QTDE	COD.	DESCRIPTION	DESCRIÇÃO
1	73125817	3	151B	BAR	BARRA
2	73125821	2	010D	NUT	PORCA
3	73125835	1	74G0	BATT.SEAT/SUPP.	BAT. SUP./PROT
4	73125816	1	120G	GASKET	JUNTA
5	73153047	2	74G0	BATT.SEAT/SUPP.	BAT. SUP./PROT
6	70917737	2	040V	SCREW	PARAFUSO
7	70927173	12	040V	SCREW	PARAFUSO
8	70677006	12	131R	WASHER	ARRUELA

	BATTERY BOX ASSEMBLY CAIXA DE BATERIA	L1.30	1

340

DESCRIPTION	SBGRP	TAV	GRID
ENGINE PISTONS	A105	1	1E-14
ROCKER ASSEMBLY	A107	1	1E-16
ROD BEARINGS	A105	1	1E-14
SIDE PLATES	L101	2	2F-14
SLEEVES	A105	1	1E-14
SUMP	A102	1	1E-9
EXHAUST PIPE	A256	1	1G-8
FAN	A409	1	1G-17
BELTS	A409	1	1G-17
DRIVE FG70	A409	2	1H-2
DRIVE FG75	A409/1	2	1H-3
DRIVE FG75	A409/1	4	1H-5
IDLER FG75	A409/1	3	1H-4
FIATALLIS TO CUMMINS CROSS REF NUMBERS			2M-2
FILTER IMPLEMENT OIL	E328	1	2C-10
FILTER, AIR	A223	2	1F-8
FILTER, COOLANT	A402	1	1G-15
FILTER, ENGINE OIL	A303	1	1G-12
FILTER, FUEL	A226	1	1F-12
FILTER, TRANS OIL FG70	B201	11	1I-3
FILTER, TRANS. OIL FG75	B217	1	1M-14
FORWARD CLUTCH FG70	B201	7	1H-15
FRAME (NOT ARTICULATED)	D101	1	1O-10
FRONT (ARTICUALTED)	D101	3	1O-13
REAR (ARTICUALTED)	D101	4	1O-14
FRONT AXLE FRAME	B401	1	1N-2
FRONT AXLE WHEEL END	B401	3	1N-4
FUEL FILTER	A226	1	1F-12
INJECTION PUMP	A224	1	1F-9
INJECTION PUMP COMPONENTS	A227	1	1F-13
LINES, HIGH PRESSURE	A224	1	1F-10
LINES, LOW PRESSURE	A201	2	1F-2
NOZZLE	A235	2	1G-6
NOZZLE HOLDER	A235	1	1G-5
PUMP GOVERNOR COMPONENTS	A228	1	1G-2
SEDIMENT BOWL	A225	1	1F-11
TANK	A201	1	1E-17
THROTTLE CONTROL	A221	1	1F-3
THROTTLE CONTROL LEVER	A221	4	1F-6
THROTTLE LINKAGE FG70	A221	2	1F-4
THROTTLE LINKAGE FG75	A221	3	1F-5
TRANSFER PUMP	A224	1	1F-9
FUSES ELECTRICAL	F401	3	2E-5
GOVERNOR, FUEL PUMP COMPONENTS	A228	1	1G-2
GOVERNOR, GROUND SPEED FG70	A221	2	1F-4
GROUND SPEED GOVERNOR FG70	A221	2	1F-4
HEAT EXCHANGER, ENGINE OIL	A303	1	1G-12
HIGH FWD & 5 - 6 SPEED CLUTCH FG75	B201/1	16	1L-10
HIGH SPEED CLUTCH FG70	B201	9	1H-17
HOOD	L101	1	2F-13
HORN	F401	18	2F-6
HOURMETER	F401	3	2E-5
IMPLEMENT CONTROL VALVE SHIELD	D101	2	1O-11
CONTROLVALVE LEVERS	D201	3	1P-7
CONTROLVALVE LEVERS	D201	4	1P-8
IMPLEMENT CONTROLVALVE LINKAGE	D201	2	1P-5
OIL FILTER	E328	1	2C-10
OIL RESERVOIR	E328	1	2C-10
PUMP, COMPONENTS	E329	1	2C-12
INDICATOR, CLOGGED AIR FILTER	A222	1	1F-7
INJECTION PUMP COMPONENTS	A227	1	1F-13
INSTRUMENT PANEL	F401	12	2E-14
LATERAL SHIFT VALVE	E331	2	2C-14
LIGHTS	F401	9	2E-10
BRAKE COMPONENTS	F405	2	2F-8
TURN SIGNAL COMPONENTS	F405	3	2F-9
TURN SIGNAL	F401	13	2E-15
LOCK VALVE	E302	32	2B-7
LOW FORWARD CLUTCH FG75	B201/1	12	1L-6
LOW SPEED CLUTCH FG70	B201	8	1H-16
LUBRICATION SYSTEM	A301	1	1G-9
MAIN RELIEF VALVE, LEFT	E331	10	2D-5
MAIN RELIEF VALVE, RIGHT	E331	11	2D-6
MODULATING VALVE TRANS FG70	B201	18	1I-10
COMPONENTS	E313	1	2C-5
COMPONENTS	E313	2	2C-7
COMPONENTS	E313	3	2C-8
DRAWBAR	E310	2	2B-15
LIFT CYLINDER	E332	6	2D-12
PITCH CYLINDER	E332	2	2D-8
PITCH VALVE	E331	2	2C-14
SHIELD	E313	4	2C-9
SIDE SHIFT CYLINDER	E332	3	2D-9
MONITORING SENSORS	F401	16	2F-4
MONITORING SENSORS	F401	17	2F-5
MUFFLER	A256	1	1G-8
OPERATOR CONSOLE	D201	1	1P-3
PLATFORM	D101	2	1O-11
SEAT BELT	L604	2	2H-3
SEAT	L604	1	2H-2
OUTPUT FLANGE NUT FG70	B201	14	1I-6
OUTPUT SHAFT FG70	B201	10	1I-2
PARKING BRAKE LEVER	C135	1	1O-7
BRAKE LINKAGE FG70	C135	2	1O-8
PARKING BRAKE LINKAGE FG75	C135/1	2	1O-9
BRAKE FG70	B201	12	1I-4
BRAKE FG75	B201/1	2	1I-12
PIPING CIRCLE SHIFT (ARTICULATED)	E302	5	1Q-8
CIRCLE SHIFT (RIGID)	E302	4	1Q-7
MOLDBOARD LIFT (ARTICULATED)	E302	13	2A-3
MOLDBOARD LIFT (RIGID)	E302	12	2A-2
SADDLE LOCK PIN (ARTICULATED)	E302	17	2A-8
SADDLE LOCK PIN (RIGID)	E302	16	2A-7
ARTICULATION	E302	26	2A-15
ARTICULATION	E302	24	2A-13
BRAKE PUMP FG70	E302	32	2B-6
PIPING BRAKE PUMP FG70	E302/1	32	2B-12
CIRCLE TURN (ARTICULATED)	E302	15	2A-6
CIRCLE TURN (RIGID)	E302	14	2A-5
CONTROL VALVE (ARTICULATED)	E302	3	1Q-6
CONTROL VALVE (RIGID)	E302	2	1Q-4
FRONT ATTACHMENT (ARTIC'D)	E302	30	2B-4
FRONT ATTACHMENT (RIGID)	E302	29	2B-3
FRONT ATTACHMENT FG70	E302	31	2B-5
FRONT WHEEL LEAN (ARTIC'D)	E302	7	1Q-10
FRONT WHEEL LEAN (RIGID)	E302	6	1Q-9
FRONT WHEEL LEAN	E302	8	1Q-11
IMPLEMENT PUMP FG70	E302	32	2B-6
IMPLEMENT PUMP FG70	E302/1	32	2B-12
PUMP, BRAKE FG70	E302	32	2B-6
PUMP, BRAKE FG70	E302/1	32	2B-12
PUMP, IMPLEMENT FG70	E302	32	2B-6
PUMP, IMPLEMENT FG70	E302/1	32	2B-12
PUMP, STERING FG70	E302	32	2B-6
PUMP, STERING FG70	E302/1	32	2B-12
REAR FRAME	E302	1	1O-2
RIPPER CYLINDER	E302/1	2	2B-9
RIPPER	E302/1	3	2B-10
SCARIFIER	E302/1	1	2B-8
SIDE SHIFT & PITCH (ARTIC'D)	E302	19	2A-10
SIDE SHIFT & PITCH (RIGID)	E302	18	2A-9
SIDE SHIFT & PITCH	E302	20	2A-11
STEERING (ARTICULATED)	E302	27	2A-17
STEERING (ARTICULATED)	E302	28	2B-2
STEERING (RIGID)	E302	25	2A-14
STEERING PUMP FG70	E302	32	2B-6
PIPING, STEERING PUMP FG70	E302/1	32	2B-12
PUMP, BRAKE COMPONENTS	D213	1	1P-13
COOLANT	A403	1	1G-16
ENGINE OIL	A302	1	1G-11
FUEL INJECTION	A224	1	1F-9
FUEL INJECTION COMPONENTS	A227	1	1F-13
FUEL TRANSFER	A224	1	1F-9
IMPLEMENT COMPONENTS	E329	1	2C-12
STEERING COMPONENTS	D213	1	1P-13

FIATALLIS

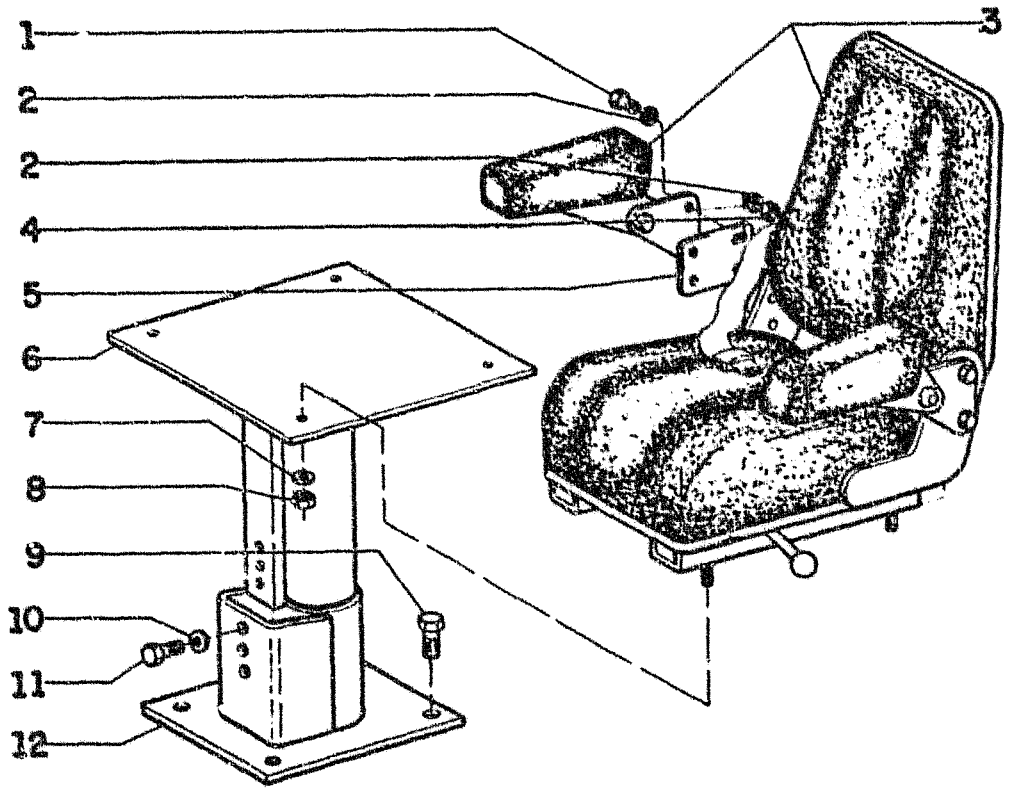

FIATALLIS FG 70R 70A 75R 75A L6.04 **QUADRO** 1 **PAG.** 1

ITEM	PEÇA Nº	QTDE	CÓD.	DESCRIPTION	DESCRIÇÃO
1	16043631	2	040V	SCREW	PARAFUSO
2	10730301	4	131R	WASHER	ARRUELA
3	75217549	1	080S	SEAT	ASSENTO
4	16100821	2	010D	NUT	PORCA
5	75236178	1	105P	PLATE	CHAPA
6	73148972	1	300S	SUPPORT	SUPORTE
7	70677005	4	131R	WASHER	ARRUELA
8	70911025	4	010D	NUT	PORCA
9	70920583	4	040V	SCREW	PARAFUSO
10	70677008	2	131R	WASHER	ARRUELA
11	70920582	2	040V	SCREW	PARAFUSO
12	73148971	1	300S	SUPPORT	SUPORTE

DRIVER'S SEAT
ASSENTO DO OPERADOR

L6.04 | 1

FIATALLIS

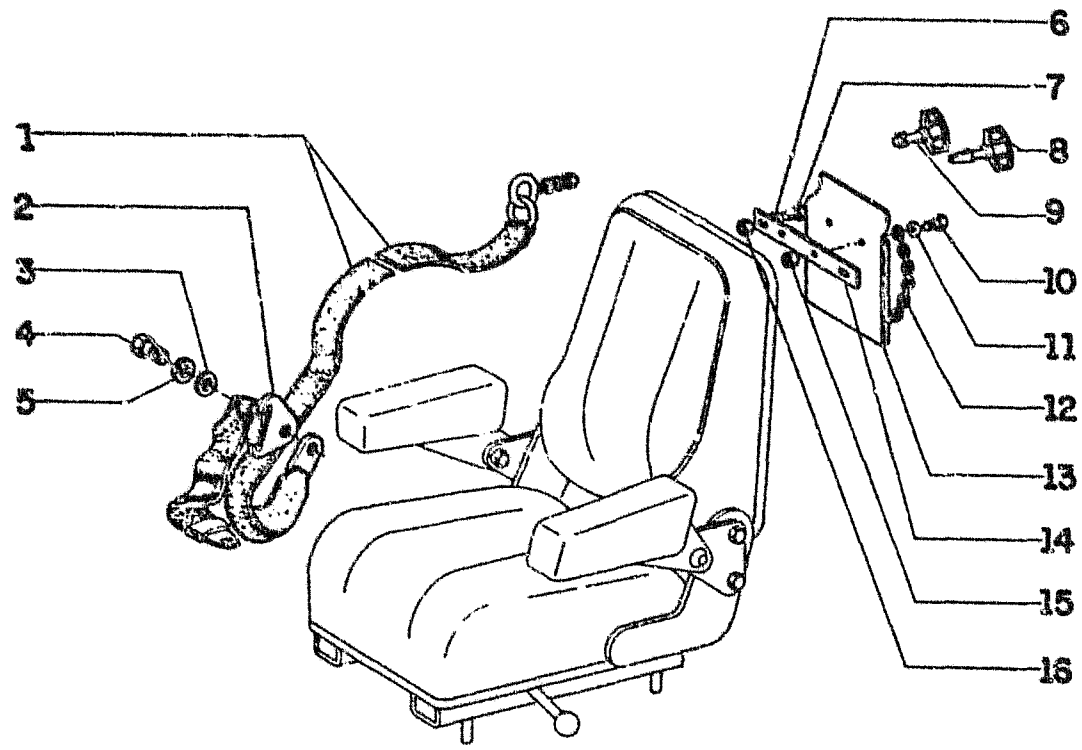

FIATALLIS FG 70R 70A 75R 75A L6.04 QUADRO 2 PAG. 1					
ITEM	PEÇA Nº	QTDE	COD.	DESCRIPTION	DESCRIÇÃO
1	73146062	1	182C	SAFETY BELT	CINTO SEGURAN
2	73075858	1	182C	SAFETY BELT	CINTO SEGURAN
3	70910919	2	131R	WASHER	ARRUELA
4	70927485	2	040V	SCREW	PARAFUSO
5	70914678	2	170R	LOCKWASHER	ARRUELA PRESS
6	70630753	2	131R	WASHER	ARRUELA
7	70927400	2	040V	SCREW	PARAFUSO
8	79074140	1	150C	KEY	CHAVE
9	79073033	1	150C	KEY	CHAVE
10	70907722	2	040V	SCREW	PARAFUSO
11	70911114	4	131R	WASHER	ARRUELA
12	73108440	1	095C	CHAIN	CORRENTE
13	73106441	1	150B	BAG	BOLSA
14	73109117	1	105P	PLATE	CHAPA
15	70911327	2	010D	NUT	PORCA
16	70912772	2	010D	NUT	PORCA

DRIVER'S SEAT
ASSENTO DO OPERADOR

L6.04 | 2

DESCRIPTION	SBGRP	TAV	GRID
PIPING TRANSMISSION FG70	B201	15	1I-7
RADIATOR	A401	2	1G-14
GRID	A401	2	1G-14
PIPING	A401	1	1G-13
WRAP AROUND	L101	1	2F-13
REAR AXLE BEVEL GEAR	B403	3	1N-8
AXLE BULL GEAR	B403	1	1N-6
AXLE DRIVE SHAFTS	B403	3	1N-8
AXLE EXTENSION HOUSING	B403	3	1N-8
AXLE PINION GEAR	B403	2	1N-7
AXLE SUPPORT	B403	6	1N-12
AXLE WHEEL ENDS	D316	1	1P-14
RESERVOIR, IMPLEMENT OIL	E328	1	2C-10
REVERSE & 3 - 4 SPEED CLUTCH FG75	B201/1	14	1L-8
REVERSE CLUTCH FG70	B201	6	1H-14
REVERSE IDLER ASSEMBLY FG75	B201/1	13	1L-7
RIPPER	E310/1	2	2C-4
CYLINDER	E332/1	2	2D-15
VALVE	E331	3	2C-15
ROTARY DISTRIBUTOR COMPONENTS	E331	1	2C-13
ROTARY DISTRIBUTOR	E302	23	2A-12
SADDLE	E310	1	2B-13
LOCK PIN CYLINDER	E332	4	2D-10
SADDLE LOCK VALVE	E331	4	2C-16
SCARIFIER	E310/1	1	2C-3
CYLINDER	E332/1	1	2D-14
VALVE	E331	6	2D-2
SEAT	L604	1	2H-2
SEAT BELT	L604	2	2H-3
SECOND SPEED CLUTCH FG70	B201	7	1H-15
SENSORS, MONITORING	F401	16	2F-4
SENSORS, MONITORING	F401	17	2F-5
STARTER COMPONENTS	F608	1	2F-11
STARTER MOTOR	F200	1	2E-2
STEERING CONTROL VALVE	D202	1	1P-10
CYLINDER	D212	1	1P-12
PUMP COMPONENTS	D213	1	1P-13
WHEEL	D201	1	1P-3
SWITCH ARTICULATION	F401	19	2F-7
PANEL ELECTRICAL CABLE	F401	2	2E-4
PANEL ELECTRICAL	F401	1	2E-3
TANDEM	D333	1	1P-16
TANK, IMPLEMENT OIL	E328	1	2C-10
THERMOSTAT,ENGINE COOLANT	A402	1	1G-15
THIRD SPEED CLUTCH FG70	B201	6	1H-14
THROTTLE CONTROL	A221	1	1F-3
CONTROL LEVER	A221	4	1F-6
LINKAGE FG70	A221	2	1F-4
THROTTLE LINKAGE FG75	A221	3	1F-5
TIRES & WHEELS	D316	2	1P-15
TRANSMISSION FG70	B200	1	1H-6
TRANSMISSION FG70	B200/1	1	1H-7
CASE & TUBING FG70	B201	1	1H-8
CONTROL FG75	B207/1	2	1M-13
CONTROL LEVER FG70	B207	2	1M-12
CONTROL LINKAGE FG70	B207	1	1M-10
CONTROL VALVE FG70	B201	18	1I-10
CONTROL VALVE FG75	B201/1	20	1L-14
CONTROL VALVE FG75	B201/1	21	1L-15
CONTROL VALVE FG75	B201/1	22	1L-16
CONTROL VALVE FG75	B201/1	23	1L-17
DECLUTCH VALVE	C101	6	1O-2
GEARING FG70	B201	5	1H-13
GEARING FG75	B201/1	8	1L-2
GUARD	D101	2	1O-11
HEAT EXCHANGER FG7	B206/1	1	1M-8
HEAT EXCHANGER FG70	B206	3	1M-7
HOUSING FG75	B201/1	4	1I-14
IDLER SHAFT FG75	B201/1	17	1L-11
MODUALTING VALVE FG75	B201/1	24	1M-2
MODULATING VALVE FG70	B201	18	1I-10
OIL FILTER FG70	B201	11	1I-3
OIL FILTER FG75	B217	1	1M-14
OIL FILTER LINES FG75	B206	1	1M-5
OIL DIPSTICK FG70	B206	2	1M-6
OIL DIPSTICK FG75	B206/1	2	1M-9
OUTPUT FLANGE FG70	B201	13	1I-5
OUTPUT SHAFT FG70	B201	10	1I-2
OUTPUT SHAFT FG75	B201/1	18	1L-12
PUMP FG70	B201	15	1I-7
PUMP MOUNT FG75	B201/1	19	1L-13
REGULATING VALVE FG70	B201	16	1I-8
REGULATING VALVE FG75	B201/1	25	1M-3
REGULATING VALVE FG75	B201/1	26	1M-4
TURN SIGNAL	F401	13	2E-15
VALVE ARTICULATION	E331	2	2C-14
BLADE LIFT	E331	5	2C-17
CIRCLE SHIFT	E331	3	2C-15
END CAP	E331	7	2D-3
END CAP	E331	9	2D-4
LATERAL SHIFT	E331	2	2C-14
MAIN RELIEF , LEFT	E331	10	2D-5
MAIN RELIEF , RIGHT	E331	11	2D-6
MOLDBOARD PITCH	E331	2	2C-14
RIPPER	E331	3	2C-15
SADDLE LOCK	E331	4	2C-16
SCARIFIER	E331	6	2D-2
STEERING CONTROL VALVE	D202	1	1P-10
VALVE TRANS CONTROL FG75	B201/1	22	1L-16
TRANS CONTROL FG75	B201/1	23	1L-17
TRANS MODULATING FG70	B201	18	1I-10
TRANS MODUALTING FG75	B201/1	24	1M-2
TRANS REGULATING FG75	B201/1	25	1M-3
TRANS REGULATING FG75	B201/1	26	1M-4
TRANSMISSION CONTROL FG70	B201	18	1I-10
WHEEL LEAN	E331	2	2C-14
WHEEL LEAN CYLINDER	E332	1	2D-7
WHEEL LEAN VALVE	E331	2	2C-14
WHEELS & TIRES	D316	2	1P-15
WINDOW WIPERS	L104	6	2G-7
WIPERS WINDOW	L104	6	2G-7

DESCRIPTION	SBGRP	TAV	GRID
1 - 2 SPEED CLUTCH FG75	B201/1	15	1L-9
3 - 4 SPEED & REVERSE CLUTCH FG75	B201/1	14	1L-8
5 - 6 SPEED & HIGH FWD CLUTCH FG75	B201/1	16	1L-10
ADAPTER, TRANS HOUSING FG75	B201/1	1	1I-11
AIR CLEANER	A222	1	1F-7
AIR FILTER	A223	2	1F-8
AIR PRE-CLEANER	A222	1	1F-7
ALTERNATOR	F200	1	2E-2
BELT	F200	1	2E-2
COMPONENTS	F603	1	2F-10
ARTICULATION CYLINDER	D101	7	1P-2
CYLINDER	E332	8	2D-13
JOINT (BOTTOM)	D101	5	1O-16
JOINT (TOP)	D101	6	1O-17
SWITCH	F401	19	2F-7
VALVE	E331	2	2C-14
BACK UP ALARM FG70	F401	8	2E-8
BACK UP ALARM FG75	F401/1	8	2E-9
BATTERIES FG70	F401	11	2E-12
BATTERIES FG70 FG75	F401	7	2E-6
BATTERIES FG75	F401	14	2E-16
CABLES FG70	F401	11	2E-12
CABLES FG70 FG75	F401	7	2E-6
CABLES FG75	F401	14	2E-16
BATTERY BOX	L130	1	2G-17
BELT, ALTERNATOR	F200	1	2E-2
BELTS, FAN	A409	1	1G-17
BLADE LIFT VALVE	E331	5	2C-17
BRAKE CALIPER	C118	1	1C-6
DISC	D316	1	1P-14
FLUID HIGH PRESSURE LINES LT.	C101	4	1N-16
FLUID HIGH PRESSURE LINES RT.	C101	3	1N-15
FLUID RESERVOIR	C101	2	1N-14
FLUID RESERVOIR COMPONENTS	C103	1	1O-3
MASTER CYINDER	C108	2	1O-4
MASTER CYLINDER LINES	C101	5	1N-17
PEDAL	C101	1	1N-13
POWER BOOSTER	C108	3	1O-5
PUMP COMPONENTS	D213	1	1P-13
CAB	L103	1	2F-15
DOOR	L104	2	2G-2
FAN ASSEMBLY	L104	9	2G-10
FANS	L104	8	2G-9
FLOOR MAT	L104	1	2F-16
HEATER FITTINGS	L104	11	2G-12
HEATER	L104	10	2G-11
LIGHTING	L104	5	2G-6
ROOF LINER	L104	4	2G-5
CAB SEALS	L104	3	2G-4
WIRING	L104	7	2G-8
CABLES ELECTRICAL FG70	F401	10	2E-11
CABLES ELECTRICAL FG75	F401	15	2F-2
CANOPY	L104/1	1	2G-13
CANOPY LINER	L104/1	2	2G-14
CIRCLE	E310	2	2B-15
SHIFT CYLINDER	E332	5	2D-11
SHIFT VALVE	E331	3	2C-15
TURN GEAR BOX COMPONENTS	E310	4	2B-16
TURN GEAR BOX	E310	2	2B-15
TURN MOTOR COMPONENTS	E310	5	2C-2
TURN MOTOR	E310	2	2B-15
CLUTCH , 3 - 4 SPEED & REVERSE FG75	B201/1	14	1L-8
HIGH SPEED FG70	B201	9	1H-17
LOW SPEED FG70	B201	8	1H-16
REVERSE & 3 - 4 SPEED FG75	B201/1	14	1L-8
SECOND SPEED FG70	B201	7	1H-15
THIRD SPEED FG70	B201	6	1H-14
5 - 6 SPEED & HIGH FWD FG75	B201/1	16	1L-10
FORWARDFG70	B201	7	1H-15
HIGH FWD & 5 - 6 SPEED FG75	B201/1	16	1L-10
LOW FORWARD FG75	B201/1	12	1L-6
REVERSE FG70	B201	6	1H-14
CONTROL VALVE TRANSMISSION FG70	B201	18	1I-10
CONVERTER FG70	B201	3	1H-11
COMPONENTS FG75	B201/1	7	1I-17
FLEX PLATES FG75	B201/1	6	1I-16
GEAR FG70	B201	4	1H-12
GEAR FG75	B201/1	9	1L-3
GEAR FG75	B201/1	10	1L-4
GEAR FG75	B201/1	11	1L-5
HOUSING FG70	B201	2	1H-10
HOUSING FG75	B201/1	3	1I-13
SHAFTS FG75	B201/1	5	1I-15
COOLANT PUMP	A403	1	1G-16
FILTER	A402	1	1G-15
CYLINDER ARTICULATION	E332	8	2D-13
CIRCLE SHIFT	E332	5	2D-11
MOLDBOARD LIFT	E332	6	2D-12
MOLDBOARD PITCH	E332	2	2D-8
MOLDBOARD SIDE SHIFT	E332	3	2D-9
RIPPER	E332/1	2	2D-15
SADDLE LOCK PIN	E332	4	2D-10
SCARIFIER	E332/1	1	2D-14
STEERING	D212	1	1P-12
WHEEL LEAN	E332	1	2D-7
ARTICULATION	D101	7	1P-2
DECALS (ARTICULATED)	L125	2	2G-16
DECALS (RIGID)	L125	1	2G-15
DIFFERENTIAL ASSEMBLY	B403	4	1N-10
DIFFERENTIAL COMPONENTS	B403	5	1N-11
DRIVE SHAFT	B301	1	1M-15
DRIVE SHAFT COMPONENTS	B316	1	1M-16
ELECTRICAL CABLE SWITCH PANEL	F401	2	2E-4
CABLES BATT. FG70 FG75	F401	7	2E-6
CABLES BATTERIES FG70	F401	11	2E-12
CABLES BATTERIES FG75	F401	14	2E-16
CABLES FG70	F401	10	2E-11
CABLES FG75	F401	15	2F-2
FUSES	F401	3	2E-5
SWITCH PANEL	F401	1	2E-3
SWITCH PANEL	F401	1	2E-3
ELECTRONIC DATA MONITOR	F401	12	2E-14
ELEMENT IMPLEMENT OIL	E328	1	2C-10
TRANS. OIL FG70	B201	11	1I-3
TRANS. OIL FG75	B217	1	1M-14
AIR	A223	2	1F-8
ENGINE OIL	A303	1	1G-12
FUEL	A226	1	1F-12
END CAP VALVE	E331	7	2D-3
END CAP VALVE	E331	9	2D-4
ENGINE	A000	1	1E-2
BLOCK	A101	1	1E-5
BLOCK PLUGS	A101	2	1E-6
CAMSHAFT	A107	1	1E-16
CAMSHAFT DRIVE	A106	1	1E-15
CONNECTING RODS	A105	1	1E-14
COOLANT THERMOSTAT	A402	1	1G-15
CRANKSHAFT	A103	1	1E-11
CYLINDER SLEEVES	A105	1	1E-14
DAMPER	A104	1	1E-13
EXHAUST MANIFOLD	A254	1	1G-7
EXHAUST VALVE	A107	1	1E-16
FLYWHEEL	A103	1	1E-11
FLYWHEEL HOUSING	A102	2	1E-10
FRONT COVER	A102	1	1E-9
FUEL PUMP DRIVE	A106	1	1E-15
HEAD	A101	3	1E-7
INTAKE VALVE	A107	1	1E-16
LIFTING BRACKET	A101	4	1E-8
MAIN BEARING	A103	2	1E-12
MAIN BEARING CAPS	A101	1	1E-5
MOUNTS FG70	A002	1	1E-3
MOUNTS FG75	A002/1	1	1E-4
OIL DIPSTICK	A301	2	1G-10
OIL FILL PLUG	A301	2	1G-10
OIL FILTER	A303	1	1G-12
OIL HEAT EXCHANGER	A303	1	1G-12
OIL PAN	A102	1	1E-9
OIL PUMP	A302	1	1G-11

DESCRIPTION	SBGRP	TAV	GRID
ENGINE PISTONS	A105	1	1E-14
ROCKER ASSEMBLY	A107	1	1E-16
ROD BEARINGS	A105	1	1E-14
SIDE PLATES	L101	2	2F-14
SLEEVES	A105	1	1E-14
SUMP	A102	1	1E-9
EXHAUST PIPE	A256	1	1G-8
FAN	A409	1	1G-17
BELTS	A409	1	1G-17
DRIVE FG70	A409	2	1H-2
DRIVE FG75	A409/1	2	1H-3
DRIVE FG75	A409/1	4	1H-5
IDLER FG75	A409/1	3	1H-4
FIATALLIS TO CUMMINS CROSS REF NUMBERS			2M-2
FILTER IMPLEMENT OIL	E328	1	2C-10
FILTER, AIR	A223	2	1F-8
FILTER, COOLANT	A402	1	1G-15
FILTER, ENGINE OIL	A303	1	1G-12
FILTER, FUEL	A226	1	1F-12
FILTER, TRANS OIL FG70	B201	11	1I-3
FILTER, TRANS. OIL FG75	B217	1	1M-14
FORWARD CLUTCH FG70	B201	7	1H-15
FRAME (NOT ARTICULATED)	D101	1	1O-10
FRONT (ARTICUALTED)	D101	3	1O-13
REAR (ARTICUALTED)	D101	4	1O-14
FRONT AXLE FRAME	B401	1	1N-2
FRONT AXLE WHEEL END	B401	3	1N-4
FUEL FILTER	A226	1	1F-12
INJECTION PUMP	A224	1	1F-9
INJECTION PUMP COMPONENTS	A227	1	1F-13
LINES, HIGH PRESSURE	A224	1	1F-10
LINES, LOW PRESSURE	A201	2	1F-2
NOZZLE	A235	2	1G-6
NOZZLE HOLDER	A235	1	1G-5
PUMP GOVERNOR COMPONENTS	A228	1	1G-2
SEDIMENT BOWL	A225	1	1F-11
TANK	A201	1	1E-17
THROTTLE CONTROL	A221	1	1F-3
THROTTLE CONTROL LEVER	A221	4	1F-6
THROTTLE LINKAGE FG70	A221	2	1F-4
THROTTLE LINKAGE FG75	A221	3	1F-5
TRANSFER PUMP	A224	1	1F-9
FUSES ELECTRICAL	F401	3	2E-5
GOVERNOR, FUEL PUMP COMPONENTS	A228	1	1G-2
GOVERNOR, GROUND SPEED FG70	A221	2	1F-4
GROUND SPEED GOVERNOR FG70	A221	2	1F-4
HEAT EXCHANGER, ENGINE OIL	A303	1	1G-12
HIGH FWD & 5 - 6 SPEED CLUTCH FG75	B201/1	16	1L-10
HIGH SPEED CLUTCH FG70	B201	9	1H-17
HOOD	L101	1	2F-13
HORN	F401	18	2F-6
HOURMETER	F401	3	2E-5
IMPLEMENT CONTROL VALVE SHIELD	D101	2	1O-11
CONTROLVALVE LEVERS	D201	3	1P-7
CONTROLVALVE LEVERS	D201	4	1P-8
IMPLEMENT CONTROLVALVE LINKAGE	D201	2	1P-5
OIL FILTER	E328	1	2C-10
OIL RESERVOIR	E328	1	2C-10
PUMP, COMPONENTS	E329	1	2C-12
INDICATOR, CLOGGED AIR FILTER	A222	1	1F-7
INJECTION PUMP COMPONENTS	A227	1	1F-13
INSTRUMENT PANEL	F401	12	2E-14
LATERAL SHIFT VALVE	E331	2	2C-14
LIGHTS	F401	9	2E-10
BRAKE COMPONENTS	F405	2	2F-8
TURN SIGNAL COMPONENTS	F405	3	2F-9
TURN SIGNAL	F401	13	2E-15
LOCK VALVE	E302	32	2B-7
LOW FORWARD CLUTCH FG75	B201/1	12	1L-6
LOW SPEED CLUTCH FG70	B201	8	1H-16
LUBRICATION SYSTEM	A301	1	1G-9
MAIN RELIEF VALVE, LEFT	E331	10	2D-5
MAIN RELIEF VALVE, RIGHT	E331	11	2D-6
MODULATING VALVE TRANS FG70	B201	18	1I-10
COMPONENTS	E313	1	2C-5
COMPONENTS	E313	2	2C-7
COMPONENTS	E313	3	2C-8
DRAWBAR	E310	2	2B-15
LIFT CYLINDER	E332	6	2D-12
PITCH CYLINDER	E332	2	2D-8
PITCH VALVE	E331	2	2C-14
SHIELD	E313	4	2C-9
SIDE SHIFT CYLINDER	E332	3	2D-9
MONITORING SENSORS	F401	16	2F-4
MONITORING SENSORS	F401	17	2F-5
MUFFLER	A256	1	1G-8
OPERATOR CONSOLE	D201	1	1P-3
PLATFORM	D101	2	1O-11
SEAT BELT	L604	2	2H-3
SEAT	L604	1	2H-2
OUTPUT FLANGE NUT FG70	B201	14	1I-6
OUTPUT SHAFT FG70	B201	10	1I-2
PARKING BRAKE LEVER	C135	1	1O-7
BRAKE LINKAGE FG70	C135	2	1O-8
PARKING BRAKE LINKAGE FG75	C135/1	2	1O-9
BRAKE FG70	B201	12	1I-4
BRAKE FG75	B201/1	2	1I-12
PIPING CIRCLE SHIFT (ARTICULATED)	E302	5	1Q-8
CIRCLE SHIFT (RIGID)	E302	4	1Q-7
MOLDBOARD LIFT (ARTICULATED)	E302	13	2A-3
MOLDBOARD LIFT (RIGID)	E302	12	2A-2
SADDLE LOCK PIN (ARTICULATED)	E302	17	2A-8
SADDLE LOCK PIN (RIGID)	E302	16	2A-7
ARTICULATION	E302	26	2A-15
ARTICULATION	E302	24	2A-13
BRAKE PUMP FG70	E302	32	2B-6
PIPING BRAKE PUMP FG70	E302/1	32	2B-12
CIRCLE TURN (ARTICULATED)	E302	15	2A-6
CIRCLE TURN (RIGID)	E302	14	2A-5
CONTROL VALVE (ARTICULATED)	E302	3	1Q-6
CONTROL VALVE (RIGID)	E302	2	1Q-4
FRONT ATTACHMENT (ARTIC'D)	E302	30	2B-4
FRONT ATTACHMENT (RIGID)	E302	29	2B-3
FRONT ATTACHMENT FG70	E302	31	2B-5
FRONT WHEEL LEAN (ARTIC'D)	E302	7	1Q-10
FRONT WHEEL LEAN (RIGID)	E302	6	1Q-9
FRONT WHEEL LEAN	E302	8	1Q-11
IMPLEMENT PUMP FG70	E302	32	2B-6
IMPLEMENT PUMP FG70	E302/1	32	2B-12
PUMP, BRAKE FG70	E302	32	2B-6
PUMP, BRAKE FG70	E302/1	32	2B-12
PUMP, IMPLEMENT FG70	E302	32	2B-6
PUMP, IMPLEMENT FG70	E302/1	32	2B-12
PUMP, STERING FG70	E302	32	2B-6
PUMP, STERING FG70	E302/1	32	2B-12
REAR FRAME	E302	1	1Q-2
RIPPER CYLINDER	E302/1	2	2B-9
RIPPER	E302/1	3	2B-10
SCARIFIER	E302/1	1	2B-8
SIDE SHIFT & PITCH (ARTIC'D)	E302	19	2A-10
SIDE SHIFT & PITCH (RIGID)	E302	18	2A-9
SIDE SHIFT & PITCH	E302	20	2A-11
STEERING (ARTICULATED)	E302	27	2A-17
STEERING (ARTICULATED)	E302	28	2B-2
STEERING (RIGID)	E302	25	2A-14
STEERING PUMP FG70	E302	32	2B-6
PIPING, STEERING PUMP FG70	E302/1	32	2B-12
PUMP, BRAKE COMPONENTS	D213	1	1P-13
COOLANT	A403	1	1G-16
ENGINE OIL	A302	1	1G-11
FUEL INJECTION	A224	1	1F-9
FUEL INJECTION COMPONENTS	A227	1	1F-13
FUEL TRANSFER	A224	1	1F-9
IMPLEMENT COMPONENTS	E329	1	2C-12
STEERING COMPONENTS	D213	1	1P-13

IN THE EVENT THAT YOUR FIATALLIS DEALER IS NOT A CUMMINS ENGINE DEALER, YOU MUST HAVE YOUR ENGINE SERVICED BY A CUMMINS DEALER. THE FOLLOWING PAGES ARE A CROSS REFERENCE LIST OF FIATALLIS PART NUMBERS, FOUND IN THE GRADER PARTS CATALOG, TO CUMMINS PART NUMBERS. WHEN ORDERING PARTS FROM YOUR CUMMINS DEALER, REFER ONLY TO THE CUMMINS NUMBERS. BE SURE TO HAVE YOUR ENGINE MODEL NUMBER AND ENGINE SERIAL NUMBER WITH YOU WHEN ORDERING PARTS.

FG70B & FG75B CROSS REFERENCE LIST FOR CUMMINS ENGINE PARTS

SUBGROUP	TAV	ITEM	FIATALLIS PART #	CUMMINS PART #
A101	1	1	75208207	3901838
A101	1	2	75208208	3902468
A101	1	3	75208209	3901837
A101	1	4	75208210	3902466
A101	1	5	75208135	3906619
A101	1	6	75286250	3919003
A101	1	7	75286307	3919297
A101	1	8	75208146	S915A
A101	1	9	75208118	S962
A101	1	10	75208119	143066
A101	1	11	75208120	3900257
A101	1	12	75208211	3905401
A101	1	13	75286308	3901685
A101	1	14	75208140	3004258
A101	1	15	75286309	3917313
A101	1	16	75286310	3916369
A101	1	17	75208113	3907734
A101	1	18	75208126	3905449
A101	1	19	75208127	3906737
A101	1	20	75208128	3904341
A101	1	21	75208129	3914311
A101	1	22	75208131	3921216
A101	1	23	75208157	3904386
A101	1	24	75208158	3902425
A101	1	25	75208212	3901846
A101	1	26	75206804	S923E
A101	1	27	75208211	3905401
A101	1	28	75208101	3802086
A101	1	29	75286124	3904046
A101	1	30	75285747	3914304
A101	1	31	75208153	3900630
A101	2	1	75208212	3901846
A101	2	2	75208218	156075
A101	2	3	75208122	3352815
A101	2	4	75208140	3004258
A101	2	5	75206805	S923E
A101	2	6	75206807	S995
A101	2	7	75206804	S923E
A101	2	8	75208144	135231
A101	2	9	75206876	3027646
A101	2	10	75206804	S923E
A101	2	11	75208211	3905401
A101	3	1	75208130	3914311
A101	3	2	75206875	3032693
A101	3	3	75208214	3353870
A101	3	4	75208215	3904716
A101	3	5	75208216	3900965
A101	3	6	75208217	3908830
A101	3	7	75206811	217631
A101	3	8	75206834	3907234
A101	3	9	75206833	3907233
A101	4	2	75208326	3903200
A101	4	3	75208325	3907861
A102	1	1	75286101	3914303
A102	1	2	75286182	3914945
A102	1	3	75206845	3913431
A102	1	4	75286110	3910960
A102	1	5	75208153	3900630
A102	1	6	75206380	3902116
A102	1	7	75208155	3914017
A102	1	8	75206857	3906722
A102	1	9	75208135	3906619
A102	1	10	75204991	
A102	1	11	10259960	3900216
A102	1	12	75208160	3900215
A102	1	13	75286100	3915772
A102	1	14	75208162	3905933
A102	1	15	75208163	3903927
A102	1	16	75208164	3904849
A102	1	17	75208165	3903924
A102	1	18	75208166	3907998
A102	1	19	75208167	3914302

FG70B & FG75B CROSS REFERENCE LIST FOR CUMMINS ENGINE PARTS

SUBGROUP	TAV	ITEM	FIATALLIS PART #	CUMMINS PART #
A102	1	20	75208168	3900627
A102	1	21	75207979	3913638
A102	1	22	75286078	3913427
A102	1	23	75208168	3900627
A102	1	24	75206836	3908316
A102	1	25	75206843	3910266
A102	1	26	75208174	3907860
A102	1	27	75286161	3912225
A102	1	28	75208176	3908738
A102	1	29	75208177	3900628
A102	1	30	75208157	3904386
A102	1	31	75208158	3902425
A102	1	32	75208102	3802087
A102	2	1	75208178	3910540
A102	2	2	75208179	3904181
A102	2	3	75206813	3352374
A102	2	4	75208196	3908095
A102	2	5	75206842	3910260
A102	2	6	75208183	3910248
A102	2	7	75208110	3909410
A102	2	8	75208185	3907535
A102	2	9	75206846	3911649
A102	2	10	75208900	3900633
A102	2	11	75208188	3903475
A102	2	12	75208189	3903463
A102	2	13	75208109	3901979
A102	2	14	75208294	3900629
A102	2	15	75208192	3912473
A102	2	16	75286074	3913638
A102	2	17	75206877	3902735
A102	2	18	75286073	3914301
A102	2	19	75286075	3918113
A103	1	1	75208362	3901395
A103	1	2	75208363	3900269
A103	1	3	75208364	3911220
A103	1	4	75208365	3905427
A103	1	5	75285333	3917443
A103	1	6	75208356	3904483
A103	2	1	75208081	3802144
A103	2	1	75208361	3802210
A103	2	1	75208078	3802211
A103	2	1	75208079	3802212
A103	2	1	75208080	3802213
A104	1	1	75206819	3914455
A104	1	2	75204971	3906733
A105	1	1	75206850	3802121
A105	1	2	75208112	3802110
A105	1	3	75206849	3352808
A105	1	4	75208114	3802088
A105	1	5	75208115	3917737
A105	1	6	75206821	3901996
A105	1	7	75208087	3913990
A105	1	8	75208204	3901383
A105	1	9	75208205	3901380
A105	1	10	75208088	3901430
A105	1	10	75206861	3901431
A105	1	10	75206862	3901432
A105	1	10	75206863	3901433
A105	1	10	75206864	3901434
A105	1	11	75208206	3901381
A105	1	12	75208202	3901597
A106	1	1	75208348	3912614
A106	1	2	75286085	3912894
A106	1	3	75286086	3912895
A106	1	4	75208349	3907677
A106	1	5	75208352	3918380
A106	1	6	75208353	3902595
A106	1	7	75205744	3913287
A106	1	8	75208356	3904483
A106	1	11	75286304	3903917
A106	1	12	75286305	3912205
A106	1	13	75208354	3902601

FG70B & FG75B CROSS REFERENCE LIST FOR CUMMINS ENGINE PARTS

SUBGROUP	TAV	ITEM	FIATALLIS PART #	CUMMINS PART #
A106	1	14	75286306	154916
A107	1	1	75208222	3906250
A107	1	2	75208223	3901717
A107	1	3	75286105	S-205
A107	1	4	75208225	3900706
A107	1	5	75208227	3901717
A107	1	6	75208226	3901717
A107	1	7	75286106	3907555
A107	1	8	75206820	3901764
A107	1	9	75208228	3907206
A107	1	10	75208229	3906100
A107	1	11	75208232	3901177
A107	1	12	75208233	3912976
A107	1	13	75208234	3906412
A107	1	14	75208235	3915707
A107	1	15	75208236	3915707
A107	1	16	75208239	3802083
A107	1	17	75286115	3914641
A107	1	18	75206076	3900620
A107	1	19	75208244	3901617
A107	1	20	75208245	3901693
A107	1	21	75208231	3906249
A107	1	22	75208246	3910911
A107	1	23	75208247	3905870
A107	1	24	75208249	3905194
A107	1	25	75208248	3912549
A107	1	26	75208237	3907240
A107	1	27	75208240	3912526
A107	1	28	75208238	3802085
A107	1	29	75208241	3917083
A107	1	30	75286107	3910981
A224	1	1	75206874	3353487
A224	1	5	75208371	3352550
A224	2	1	75286118	3915695
A224	2	2	75286082	3911446
A224	2	3	75208924	3903380
A224	2	4	75206945	3907316
A224	2	5	75206944	3907315
A224	2	6	75206943	3907314
A224	2	7	75206946	3910520
A224	2	8	75206947	3907318
A224	2	9	75206948	3907319
A224	2	10	75208933	3902662
A224	2	11	75286084	3915036
A224	2	12	75208935	3907541
A224	2	13	75208931	3907542
A224	2	14	75208944	3903609
A224	2	15	75208945	3906584
A224	2	16	75286117	3914339
A224	2	17	75208947	3904519
A224	2	18	75208948	3903609
A224	2	19	75208952	3903037
A224	2	20	75208949	3914711
A224	2	21	75208932	3911447
A224	2	22	75206824	3905403
A224	2	23	75208953	3900631
A224	2	24	75283122	
A224	2	25	75286083	3912923
A224	2	26	75206882	
A224	2	27	75206883	
A224	2	28	75206954	S251
A224	2	29	75286116	3903723
A226	1	1	75208267	3906694
A226	1	2	75208268	3903846
A226	1	3	75206825	3915240
A226	1	4	75208270	3903845
A226	1	5	75208271	3903293
A226	1	6	75208272	3903293
A226	1	7	75208273	203933
A226	1	8	75208274	3903410
A228	1	52	75207979	3913638

FG70B & FG75B CROSS REFERENCE LIST FOR CUMMINS ENGINE PARTS

SUBGROUP	TAV	ITEM	FIATALLIS PART #	CUMMINS PART #
A235	1	1	75208924	3903380
A235	1	2	75206873	3802095
A235	1	3	75208929	3909886
A235	1	4	75208928	3906659
A235	1	5	75208930	3910279
A235	1	6	75208926	3902112
A254	1	1	75206828	3906720
A254	1	2	75208287	3904446
A254	1	3	75208288	3911942
A254	1	4	75206879	3911941
A301	1	1	75208299	3909408
A301	1	2	75208307	3912072
A301	1	3	75208308	3907741
A301	1	4	75206832	3907169
A301	1	5	75208292	3906794
A301	1	6	75206808	43696A
A301	1	7	75208301	3909669
A301	1	8	75208347	3901249
A301	1	9	75206809	70622
A301	1	10	75208304	3907740
A301	1	11	75206812	3352133
A301	1	12	75208306	3909670
A301	2	1	75208372	101322
A301	2	2	75208373	3905408
A301	2	3	75206830	3906757
A301	2	4	75208375	3905425
A301	2	5	75286111	3900955
A302	1	1	75286160	3921067
A302	1	2	75208384	3900677
A303	1	1	75206167	3917592
A303	1	2	75286174	3037236
A303	1	3	75208320	3008469
A303	1	4	75286339	3008165

SUBGROUP	TAV	ITEM	FIATALLIS PART #	CUMMINS PART #
A303	1	5	75208323	3902338
A303	1	6	75285999	3318853
A303	1	7	75286169	3064197
A303	1	8	75286000	3918334
A303	1	9	75208174	3907860
A303	1	10	75286164	3916073
A303	1	11	75286163	3918403
A303	1	12	75286168	3918532
A303	1	13	75208316	68274
A303	1	14	75286165	118227
A303	1	15	75286172	145508
A303	1	16	75286351	3920326
A303	1	17	75286171	3201562
A303	1	18	75285211	3918174
A303	1	19	75208310	3918175
A303	1	20	75286162	3918332
A303	1	21	75286173	3027232
A303	1	22	75286352	3920327
A402	1	1	75286181	3902114
A402	1	2	75208335	3909394
A402	1	3	75204980	3912837
A402	1	4	75286177	3023198
A402	1	6	75286178	3354070
A402	1	7	75286156	3903118
A402	1	8	75286176	S 1004 1
A402	1	9	75286324	3008690
A402	1	10	75286179	3913025
A402	1	11	75286322	3913026
A402	1	12	75286321	3913027
A402	1	13	75286077	43838D
A402	1	14	75208331	3909389
A402	1	15	75286180	3818885
A402	1	16	75208153	3900630
A402	1	17	75286156	3903118
A402	1	18	75286157	3913030
A402	1	19	75286158	3913032
A402	1	20	75206848	3318157

FG70B & FG75B CROSS REFERENCE LIST FOR CUMMINS ENGINE PARTS

SUBGROUP	TAV	ITEM	FIATALLIS PART #	CUMMINS PART #
A402	1	21	75204983	206963
A402	1	22	75204984	
A402	1	23	75286159	3354061
A402	1	24	75286120	3913028
A402	1	25	75286320	3913034
A402	1	26	75286319	3913029
A402	1	27	75286325	188318
A402	1	28	75286175	S 1000A
A403	1	1	75286121	3917899
A403	1	2	75286076	3900227
A403	1	3	75208389	3902089

SUBGROUP	TAV	ITEM	FIATALLIS PART #	CUMMINS PART #

DESCRIPTION	SBGRP	TAV	GRID
PIPING TRANSMISSION FG70	B201	15	1I-7
RADIATOR	A401	2	1G-14
GRID	A401	2	1G-14
PIPING	A401	1	1G-13
WRAP AROUND	L101	1	2F-13
REAR AXLE BEVEL GEAR	B403	3	1N-8
AXLE BULL GEAR	B403	1	1N-6
AXLE DRIVE SHAFTS	B403	3	1N-8
AXLE EXTENSION HOUSING	B403	3	1N-8
AXLE PINION GEAR	B403	2	1N-7
AXLE SUPPORT	B403	6	1N-12
AXLE WHEEL ENDS	D316	1	1P-14
RESERVOIR, IMPLEMENT OIL	E328	1	2C-10
REVERSE & 3 - 4 SPEED CLUTCH FG75	B201/1	14	1L-8
REVERSE CLUTCH FG70	B201	6	1H-14
REVERSE IDLER ASSEMBLY FG75	B201/1	13	1L-7
RIPPER	E310/1	2	2C-4
CYLINDER	E332/1	2	2D-15
VALVE	E331	3	2C-15
ROTARY DISTRIBUTOR COMPONENTS	E331	1	2C-13
ROTARY DISTRIBUTOR	E302	2	2A-12
SADDLE	E310	1	2B-13
LOCK PIN CYLINDER	E332	4	2D-10
SADDLE LOCK VALVE	E331	4	2C-16
SCARIFIER	E310/1	1	2C-3
CYLINDER	E332/1	1	2D-14
VALVE	E331	6	2D-2
SEAT	L604	1	2H-2
SEAT BELT	L604	2	2H-3
SECOND SPEED CLUTCH FG70	B201	7	1H-15
SENSORS, MONITORING	F401	16	2F-4
SENSORS, MONITORING	F401	17	2F-5
STARTER COMPONENTS	F608	1	2F-11
STARTER MOTOR	F200	1	2E-2
STEERING CONTROL VALVE	D202	1	1P-10
CYLINDER	D212	1	1P-12
PUMP COMPONENTS	D213	1	1P-13
WHEEL	D201	1	1P-3
SWITCH ARTICULATION	F401	19	2F-7
PANEL ELECTRICAL CABLE	F401	2	2E-4
PANEL ELECTRICAL	F401	1	2E-3
TANDEM	D333	1	1P-16
TANK, IMPLEMENT OIL	E328	1	2C-10
THERMOSTAT,ENGINE COOLANT	A402	1	1G-15
THIRD SPEED CLUTCH FG70	B201	6	1H-14
THROTTLE CONTROL	A221	1	1F-3
CONTROL LEVER	A221	4	1F-6
LINKAGE FG70	A221	2	1F-4
THROTTLE LINKAGE FG75	A221	3	1F-5
TIRES & WHEELS	D316	2	1P-15
TRANSMISSION FG70	B200	1	1H-6
TRANSMISSION FG70	B200/1	1	1H-7
CASE & TUBING FG70	B201	1	1H-8
CONTROL FG75	B207/1	2	1M-13
CONTROL LEVER FG70	B207	2	1M-12
CONTROL LINKAGE FG70	B207	1	1M-10
CONTROL VALVE FG70	B201	18	1I-10
CONTROL VALVE FG75	B201/1	20	1L-14
CONTROL VALVE FG75	B201/1	21	1L-15
CONTROL VALVE FG75	B201/1	22	1L-16
CONTROL VALVE FG75	B201/1	23	1L-17
DECLUTCH VALVE	C101	6	1O-2
GEARING FG70	B201	5	1H-13
GEARING FG75	B201/1	8	1L-2
GUARD	D101	2	1O-11
HEAT EXCHANGER FG7	B206/1	1	1M-8
HEAT EXCHANGER FG70	B206	3	1M-7
HOUSING FG75	B201/1	4	1I-14
IDLER SHAFT FG75	B201/1	17	1L-11
MODUALTING VALVE FG75	B201/1	24	1M-2
MODULATING VALVE FG70	B201	18	1I-10
OIL FILTER FG70	B201	11	1I-3
OIL FILTER FG75	B217	1	1M-14
OIL FILTER LINES FG75	B206	1	1M-5
OIL DIPSTICK FG70	B206	2	1M-6
OIL DIPSTICK FG75	B206/1	2	1M-9
OUTPUT FLANGE FG70	B201	13	1I-5
OUTPUT SHAFT FG70	B201	10	1I-2
OUTPUT SHAFT FG75	B201/1	18	1L-12
PUMP FG70	B201	15	1I-7
PUMP MOUNT FG75	B201/1	19	1L-13
REGULATING VALVE FG70	B201	16	1I-8
REGULATING VALVE FG75	B201/1	25	1M-3
REGULATING VALVE FG75	B201/1	26	1M-4
TURN SIGNAL	F401	13	2E-15
VALVE ARTICULATION	E331	2	2C-14
BLADE LIFT	E331	5	2C-17
CIRCLE SHIFT	E331	3	2C-15
END CAP	E331	7	2D-3
END CAP	E331	9	2D-4
LATERAL SHIFT	E331	2	2C-14
MAIN RELIEF , LEFT	E331	10	2D-5
MAIN RELIEF , RIGHT	E331	11	2D-6
MOLDBOARD PITCH	E331	2	2C-14
RIPPER	E331	3	2C-15
SADDLE LOCK	E331	4	2C-16
SCARIFIER	E331	6	2D-2
STEERING CONTROL VALVE	D202	1	1P-10
VALVE TRANS CONTROL FG75	B201/1	22	1L-16
TRANS CONTROL FG75	B201/1	23	1L-17
TRANS MODULATING FG70	B201	18	1I-10
TRANS MODUALTING FG75	B201/1	24	1M-2
TRANS REGULATING FG75	B201/1	25	1M-3
TRANS REGULATING FG75	B201/1	26	1M-4
TRANSMISSION CONTROL FG70	B201	18	1I-10
WHEEL LEAN	E331	2	2C-14
WHEEL LEAN CYLINDER	E332	1	2D-7
WHEEL LEAN VALVE	E331	2	2C-14
WHEELS & TIRES	D316	2	1P-15
WINDOW WIPERS	L104	6	2G-7
WIPERS WINDOW	L104	6	2G-7