RUTHZIL TRATOR COMERCIAL DE PEÇAS LTDA 11 97083-6812 ROLANDO CITRANGULO

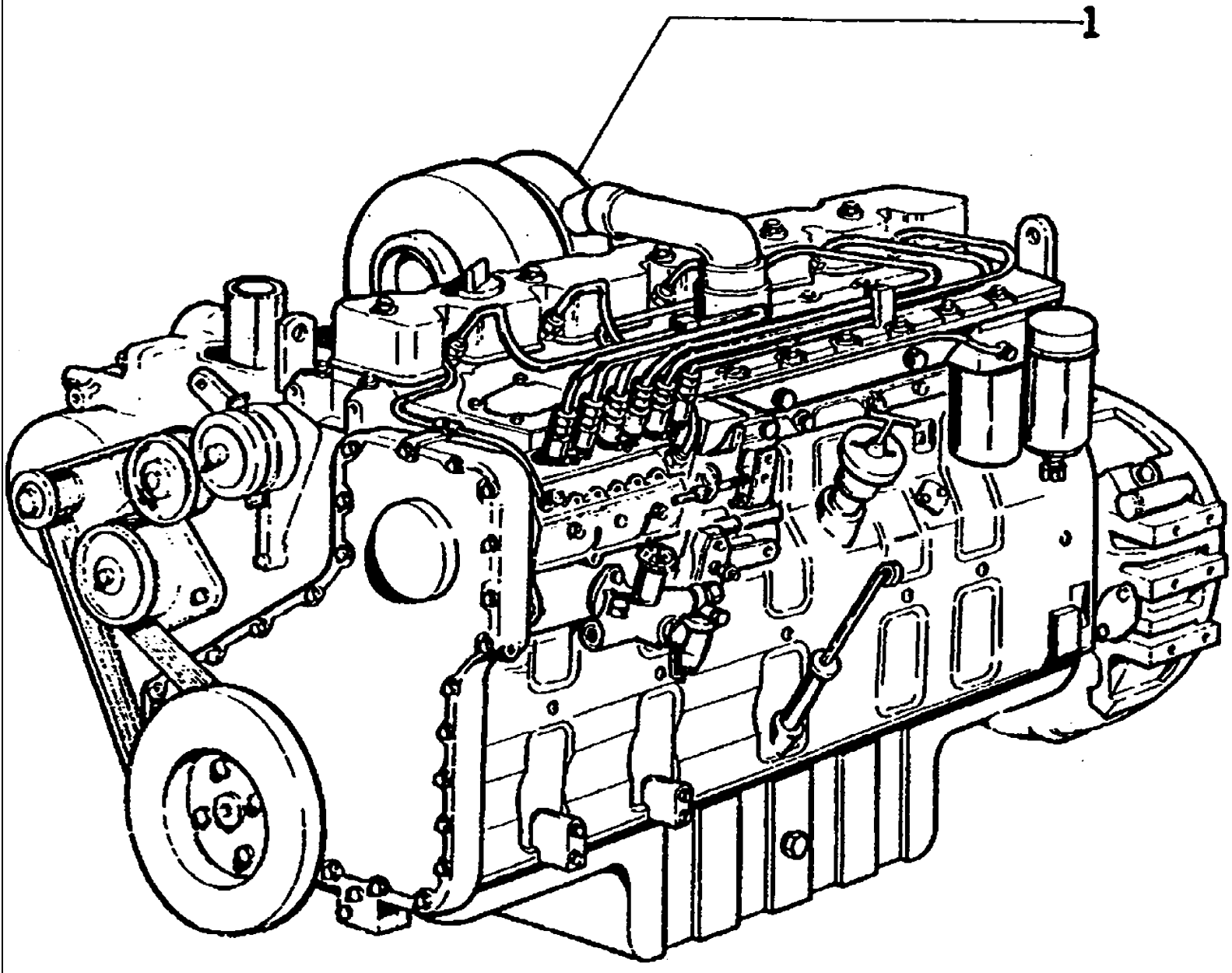

FG85 SERIES B MOTORGRADER

A0.00/1(001) ENGINE

Ref	Numero de Pieza	Ctd	Descripción
1	73152434	1	ENGINE - FG85R/85A
1	73151187	1	ENGINE - FG105A/105A

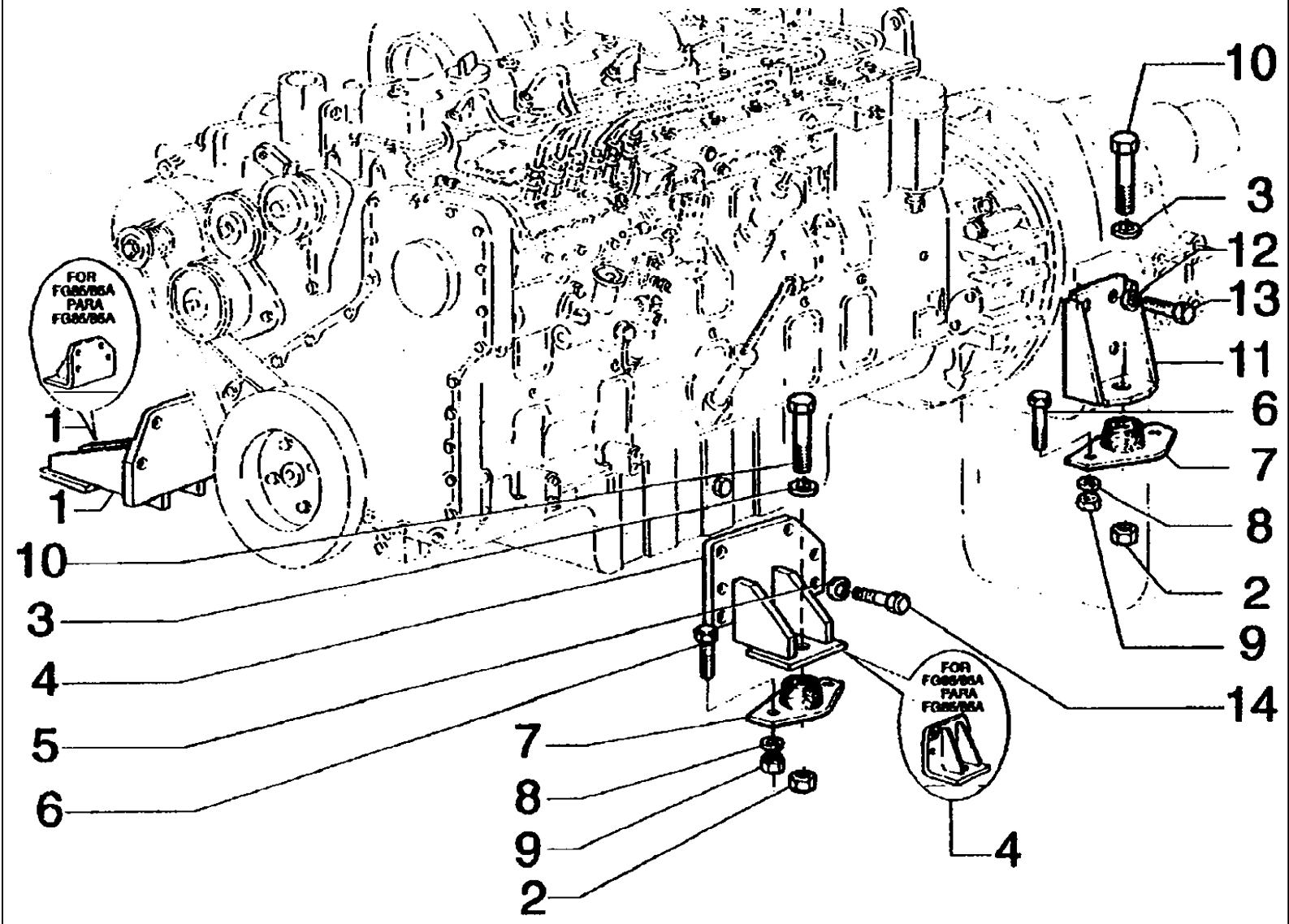
FOR FG85/85A PARA FG85/85A
1
1
10
3
4
5
6
7
8
9
2
FOR FG85/85A PARA FG85/85A
4
10
3
12
13
11
6
7
8
2
9
14

FG85 SERIES B MOTORGRADER

A0.02(001) ENGINE MOUNTS

Ref	Numero de Pieza	Ctd	Descripción
1	75218524	1	SUPPORT
2	73126311	4	NUT
3	10517671	4	LOCKWASHER
4	75218528	1	SUPPORT
5	10517071	8	LOCKWASHER
6	11390531	8	BOLT, Hex, M16 x 1.5 x 40, 10.9, Full Thd
7	4955094	4	CUSHION
8	70927275	8	WASHER
9	12164121	8	NUT, M16 x 1.5, Cl 10
10	11398137	4	BOLT, Hex, M24 x 2 x 80, 10.9
11	75237873	1	SUPPORT
11	75237874	1	SUPPORT
12	70927382	8	WASHER
13	70922743	8	SCREW
14	11112331	8	BOLT, Hex, M12 x 28, 10.9, Full Thd

A0.02/1(001) ENGINE MOUNTS

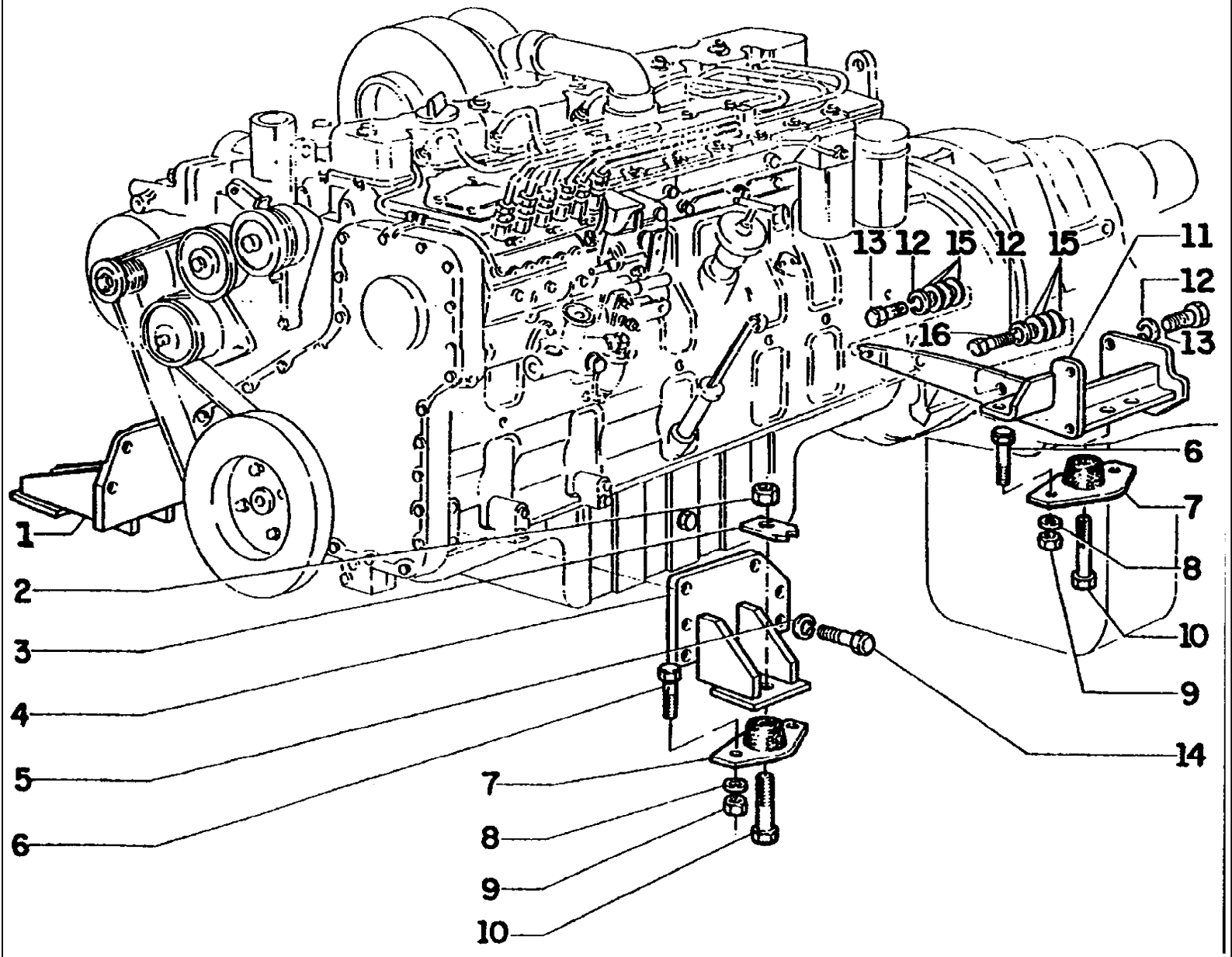

FG85 SERIES B MOTORGRADER

A0.02/1(001) ENGINE MOUNTS

Ref	Numero de Pieza	Ctd	Descripción
1	73157484	1	SUPPORT RIGHT
2	73126311	4	NUT
3	75218568	4	LOCKPLATE
4	73157483	1	SUPPORT LEFT
5	10517073	10	LOCKWASHER
6	11390531	8	BOLT, Hex, M16 x 1.5 x 40, 10.9, Full Thd
7	4955094	4	CUSHION
8	70927257	8	WASHER
9	12164121	1	NUT, M16 x 1.5, Cl 10
10	15997331	4	BOLT, Hex, M24 x 2 x 70, 10.9, Full Thd
11	73157329	1	SUPPORT RIGHT
11	73157334	1	SUPPORT LEFT
12	10520421	6	WASHER, M16 x 30 x 3
13	11124931	5	SCREW
14	11112321	10	SCREW
15	73159357	6	SHIM
16	11124531	1	SCREW

A1.01(001) CRANKCASE & CYLINDER HEAD

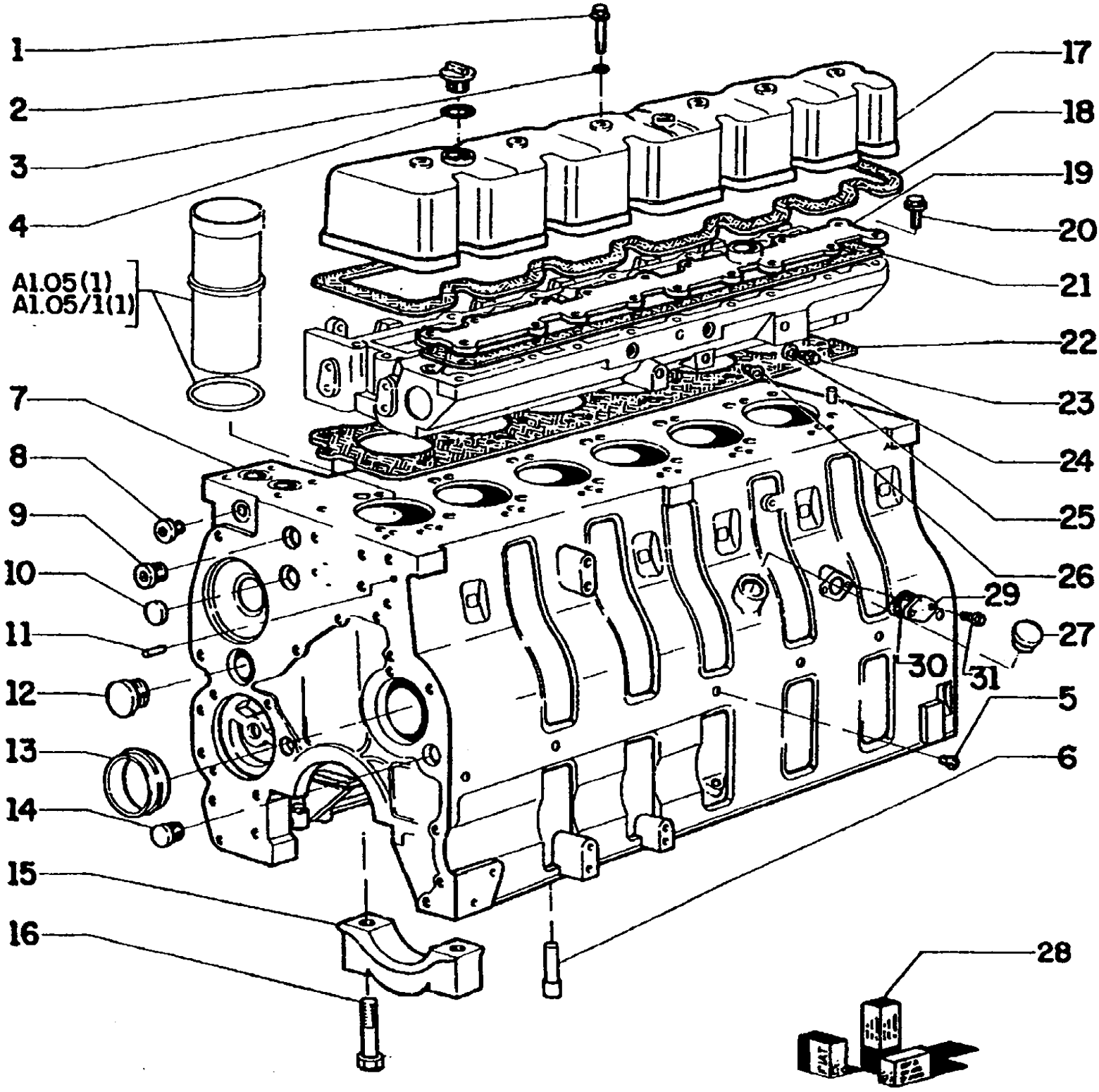

FG85 SERIES B MOTORGRADER

A1.01(001) CRANKCASE & CYLINDER HEAD

Ref	Numero de Pieza	Ctd	Descripción
1	75208207	6	SCREW
2	75208208	1	COVER
3	75208209	6	SEAL RING
4	75208210	1	SEAL RING
5	75208135	6	PLUG
6	75286250	6	NOZZLE
7	75286249	1	CRANKCASE
8	75206804	4	PLUG
9	75206806	1	PLUG
10	75208119	1	PLUG
11	75208120	2	PIN
12	75208211	1	PLUG
13	75286308	1	BUSHING
14	75208140	4	PLUG
15	75286248	7	REST
16	75208125	14	SCREW
17	75208113	1	COVER
18	75208126	1	GASKET
19	75206880	1	COVER
20	75208128	18	SCREW
21	75208129	1	GASKET
22	75208131	1	GASKET
23	75208157	2	PLUG
24	75208158	2	SEAL RING
25	75208212	4	BUSHING
26	75206804	2	PLUG
27	75208211	1	PLUG
28	75208101	1	KIT
29	3904046	1	COVER
30	75285747	1	GASKET
31	75208153	2	SCREW

A1.01(002) PLUG PIN BLOCK

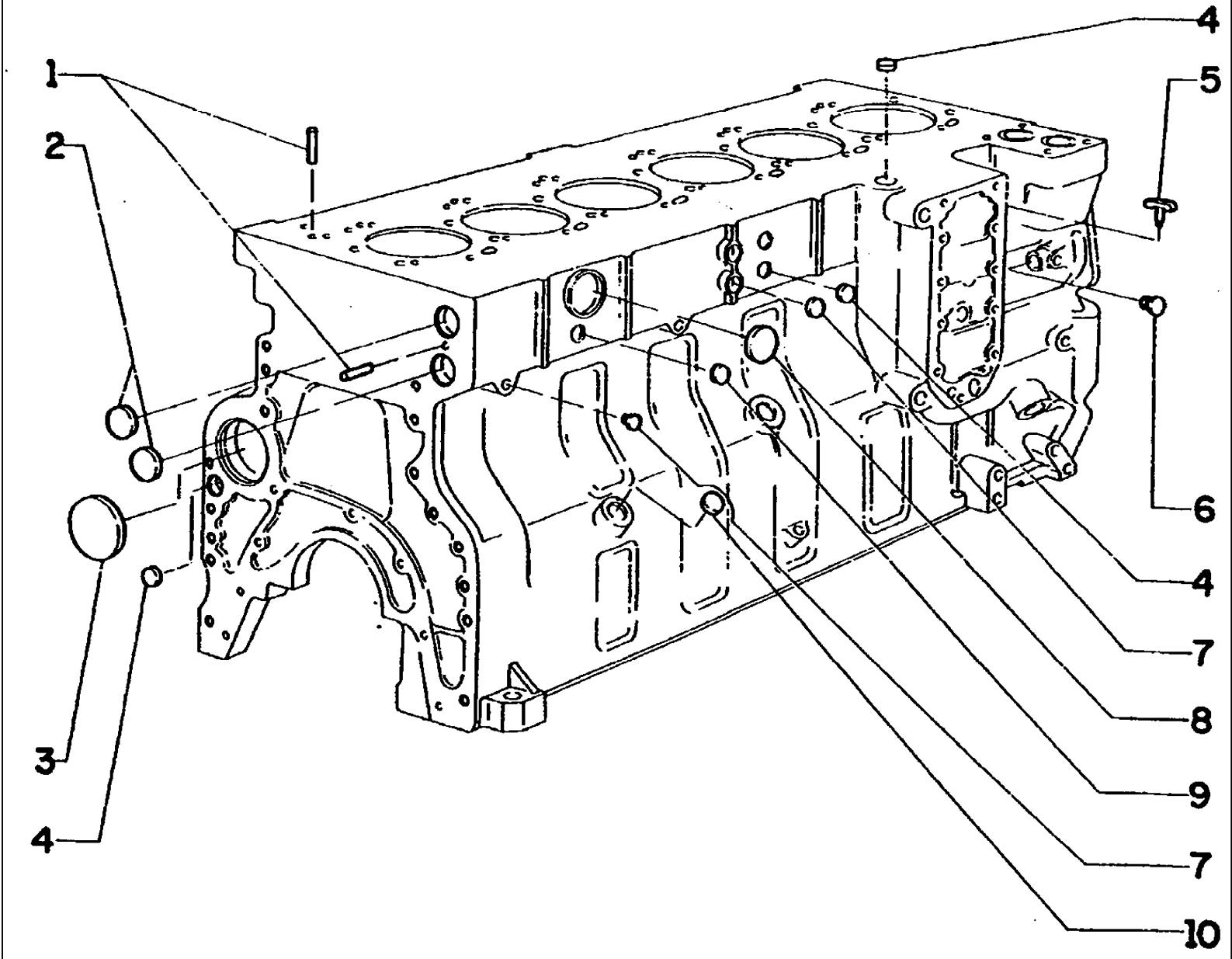

FG85 SERIES B MOTORGRADER

A1.01(002) PLUG PIN BLOCK

Ref	Numero de Pieza	Ctd	Descripción
1	75208212	4	BUSHING
2	75208218	2	PLUG
3	75208139	1	PLUG
4	75208140	4	PLUG
5	75206805	1	COCK
6	75206807	1	PLUG
7	75206804	2	PLUG
8	75208144	1	PLUG
9	75206804	4	PLUG
10	75206804	2	PLUG

A1.01(003) CYLINDER HEAD

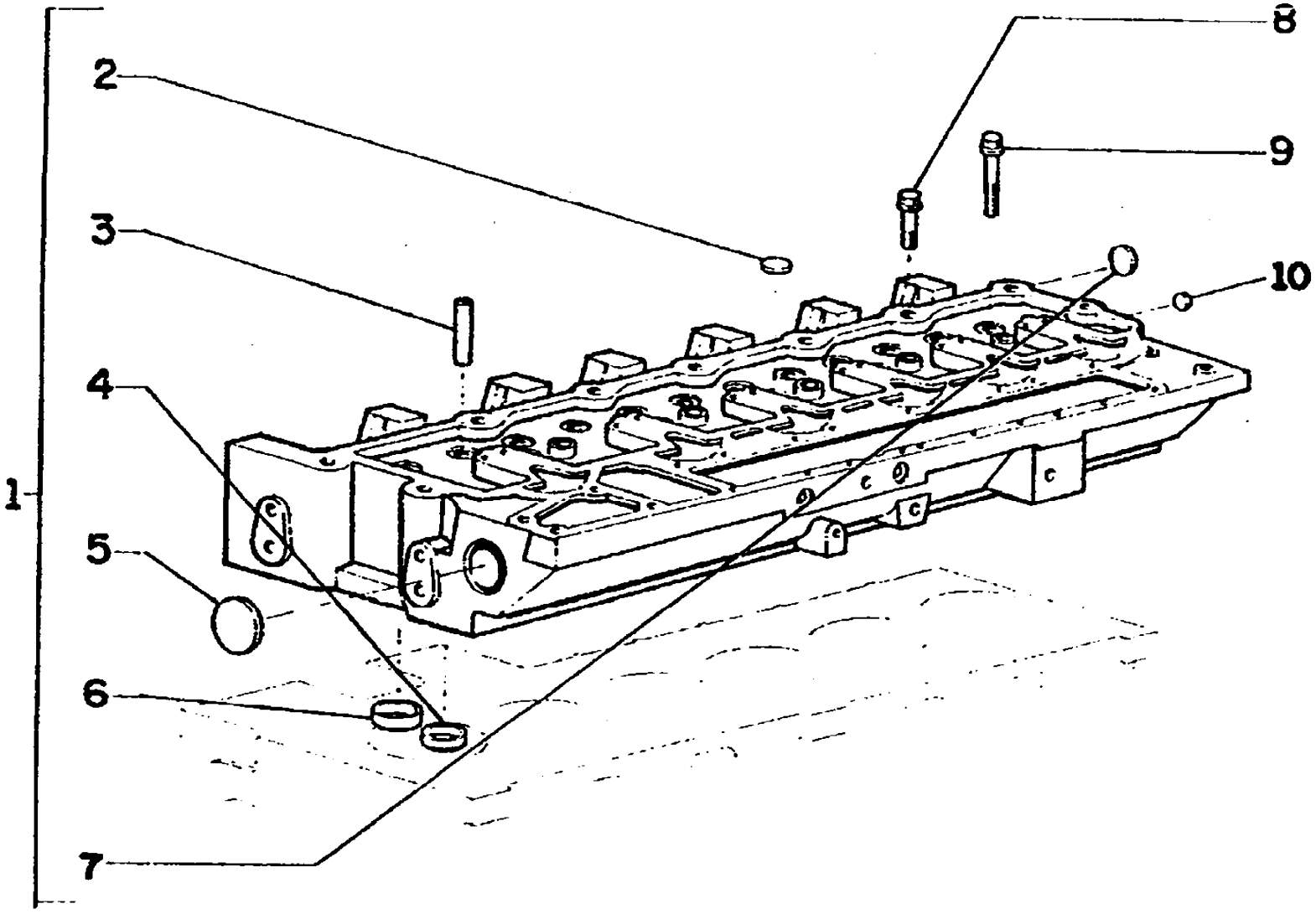

FG85 SERIES B MOTORGRADER

A1.01(003) CYLINDER HEAD

Ref	Numero de Pieza	Ctd	Descripción
1	75208130	1	CYLINDER HEAD
2	75206875	5	PLUG
3	75208214	12	GUIDE
4	75208215	6	SEAT Std
4	75286204	6	SEAT 0.254mm
4	75286205	6	SEAT 0.508mm
5	75208216	2	PLUG
6	75208217	6	SEAT Std
6	75286206	6	SEAT 0.254mm
6	75286207	6	SEAT o.508mm
7	75208218	1	PLUG
8	75206834	12	SCREW
9	75206833	14	SCREW
10	75206811	1	PLUG

A1.01(004) BRACKET LIFTING

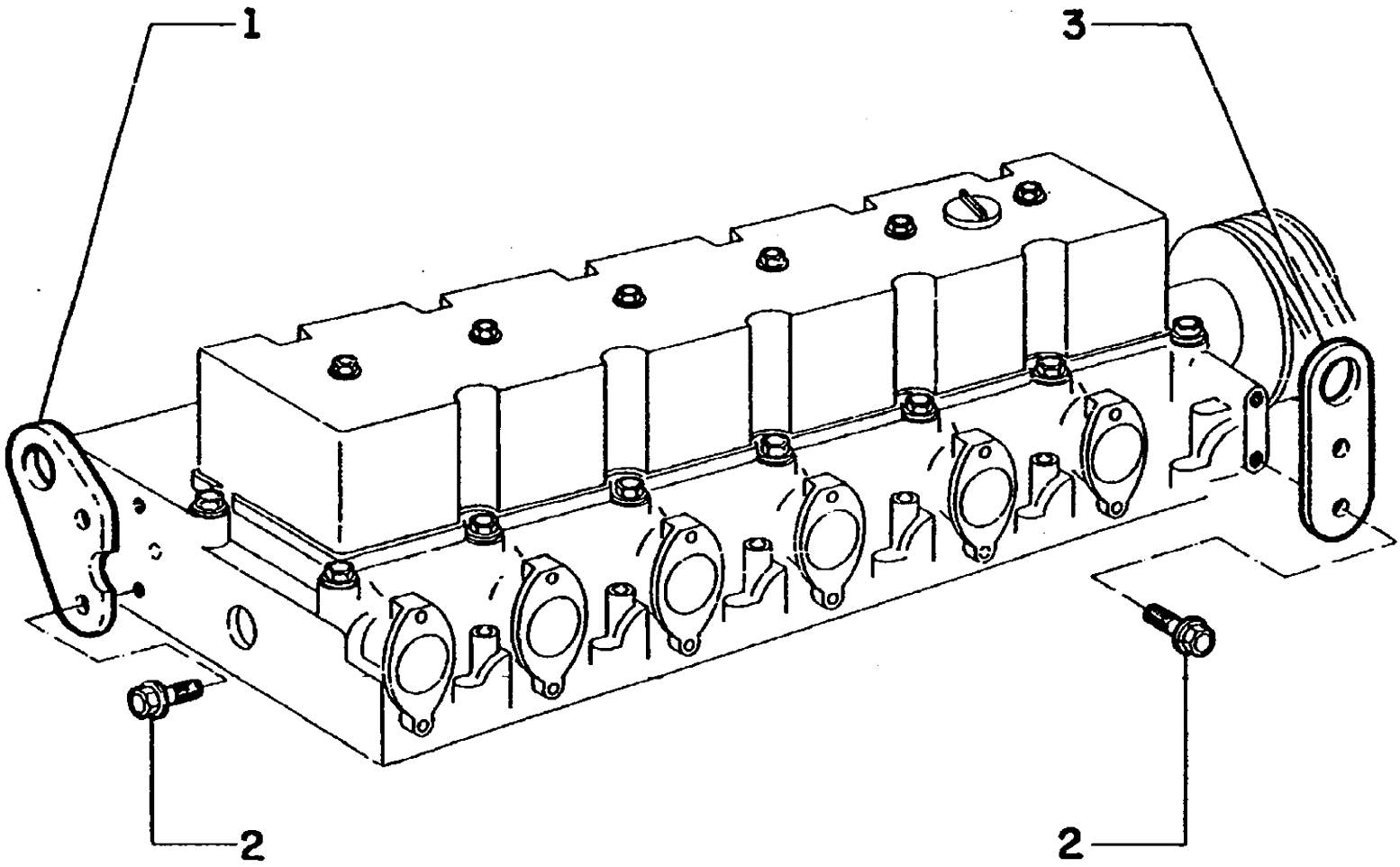

FG85 SERIES B MOTORGRADER

A1.01(004) BRACKET LIFTING

Ref	Numero de Pieza	Ctd	Descripción
1	75218567	1	HANDLE
2	75208326	4	SCREW
3	75208325	1	SUPPORT

A1.02(001) OIL SUMP AND CRANKCASE COVERS

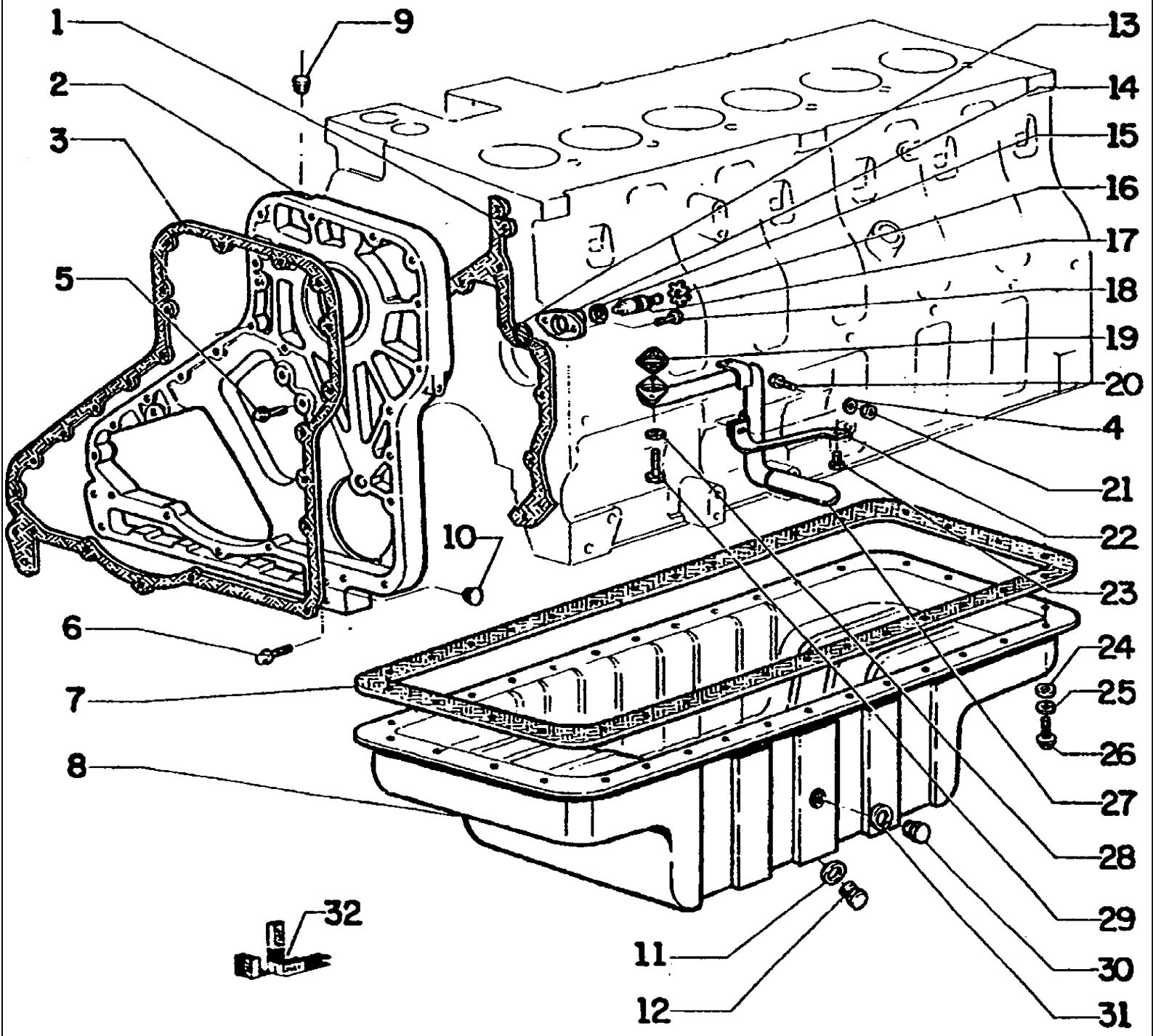

FG85 SERIES B MOTORGRADER

A1.02(001) OIL SUMP AND CRANKCASE COVERS

Ref	Numero de Pieza	Ctd	Descripción
1	75286101	1	GASKET
2	75208150	1	CASE
3	75206845	1	GASKET
4	75286110	1	WASHER
5	75208153	5	SCREW
6	75208380	4	SCREW
7	75208155	1	GASKET
8	75206837	1	SUMP
9	75208135	3	PLUG
10	75204991	1	PLUG
11	10259960	1	WASHER, SEALING, M18.3 x 24 x 1.5, Copper
12	75208160	1	PLUG
13	75206827	1	SEAL ASSY
14	75208162	1	CASE
15	75208163	1	SEAL RING
16	75208164	1	RING
17	75208165	1	PIN
18	75208166	2	SCREW
19	75208167	1	GASKET
20	75208168	1	SCREW
21	75208170	1	NUT
22	75286078	1	SUPPORT
23	75208168	1	SCREW
24	75206836	32	WASHER
25	75206843	32	LOCKWASHER
26	75208174	32	SCREW
27	75286161	1	TUBE
28	75208176	2	SPACER
29	75208177	2	SCREW
30	75286080	1	PLUG
31	75208158	1	SEAL RING
32	75208102	K	KIT

A1.02(002) OIL SUMP AND CRANKCASE

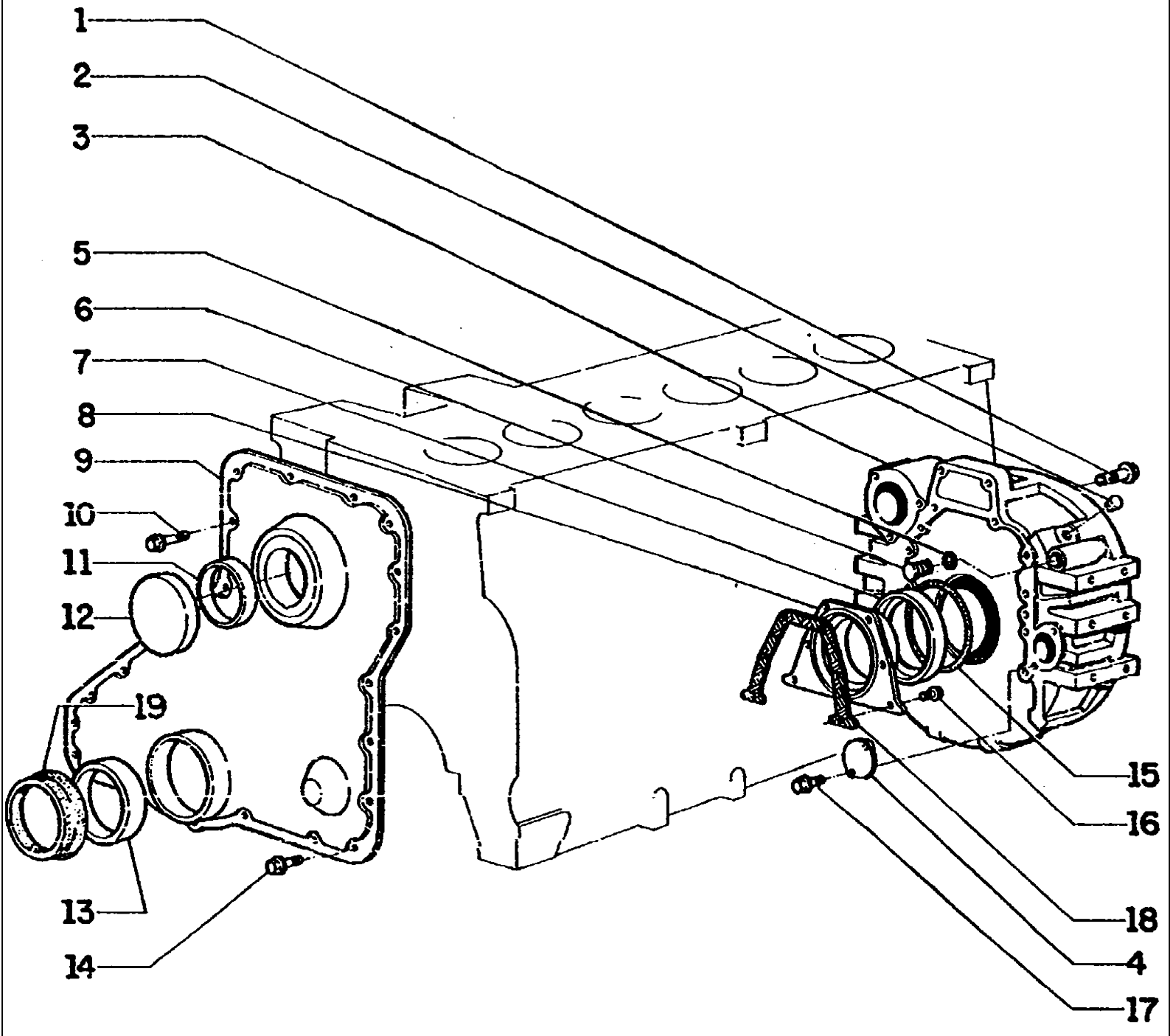

FG85 SERIES B MOTORGRADER

A1.02(002) OIL SUMP AND CRANKCASE

Ref	Numero de Pieza	Ctd	Descripción
1	75208178	12	SCREW
2	75208179	1	PLUG
3	75206813	1	CASE
4	75208196	1	COVER
5	75206842	1	O'RING
6	75208183	1	PLUG
7	75208110	1	SEAL
8	75208185	1	COVER
9	75206846	1	COVER
10	75208900	6	SCREW
11	75208188	1	SEAL RING
12	75208189	1	COVER
13	75208109	1	SEAL
14	75208294	17	SCREW
15	75208192	1	O'RING
16	75286074	8	SCREW
17	75206877	2	SCREW
18	75208195	1	GASKET
19	75286075	1	GUARD

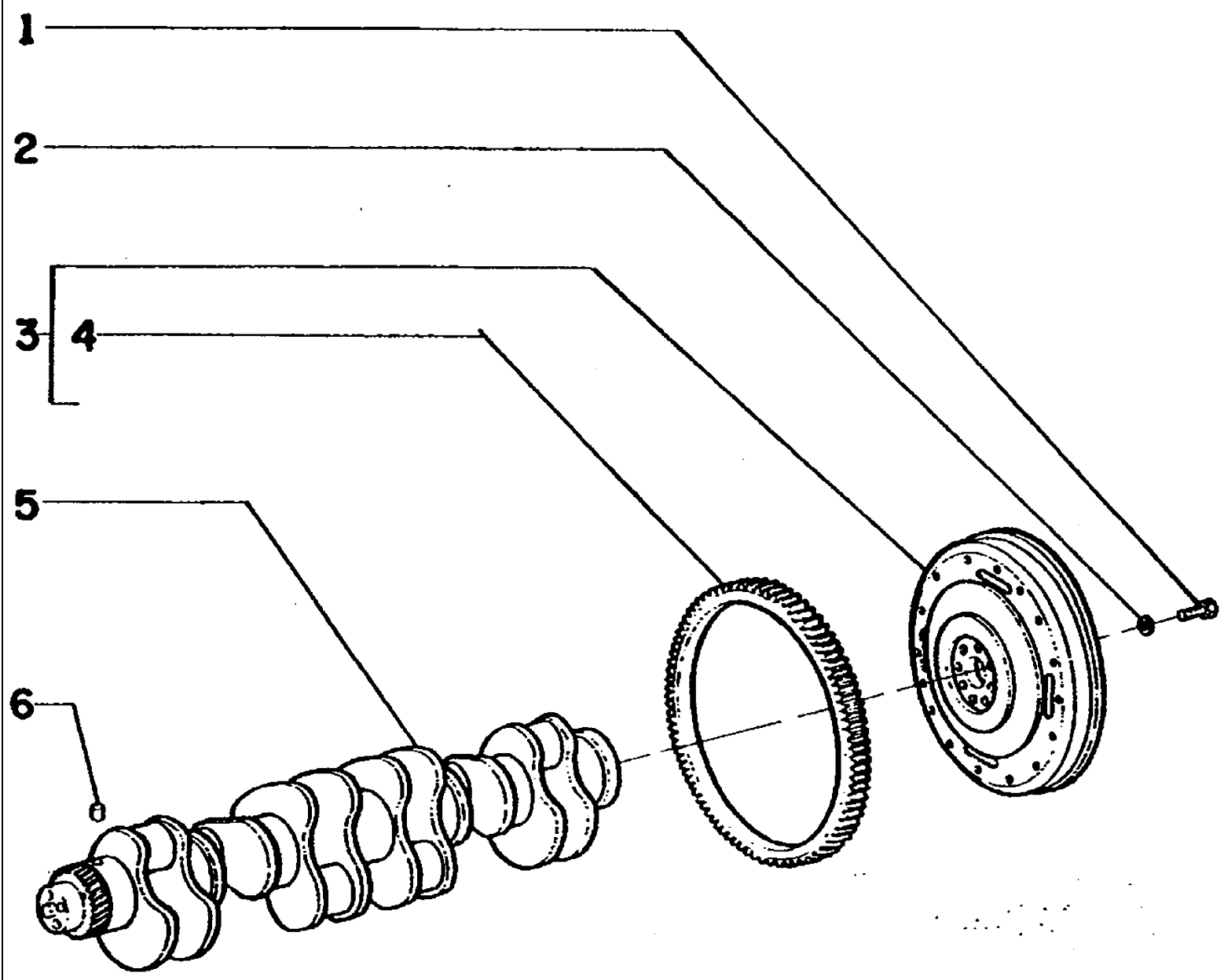
1
2
3
4
5
6

FG85 SERIES B MOTORGRADER

A1.03(001) CRANKSHAFT AND FLYWHEEL

Ref	Numero de Pieza	Ctd	Descripción
1	75208362	8	SCREW
2	75208363	8	WASHER
3	75206839	1	FLYWHEEL - FG85R/85A
3	3919547	1	FLYWHEEL - FG105A/105R
4	75208365	1	RACK(2)
4	75204965	1	RACK - FG85R/85A
5	75285333	1	CRANKSHAFT - FG105A/105R
6	75208358	1	PIN

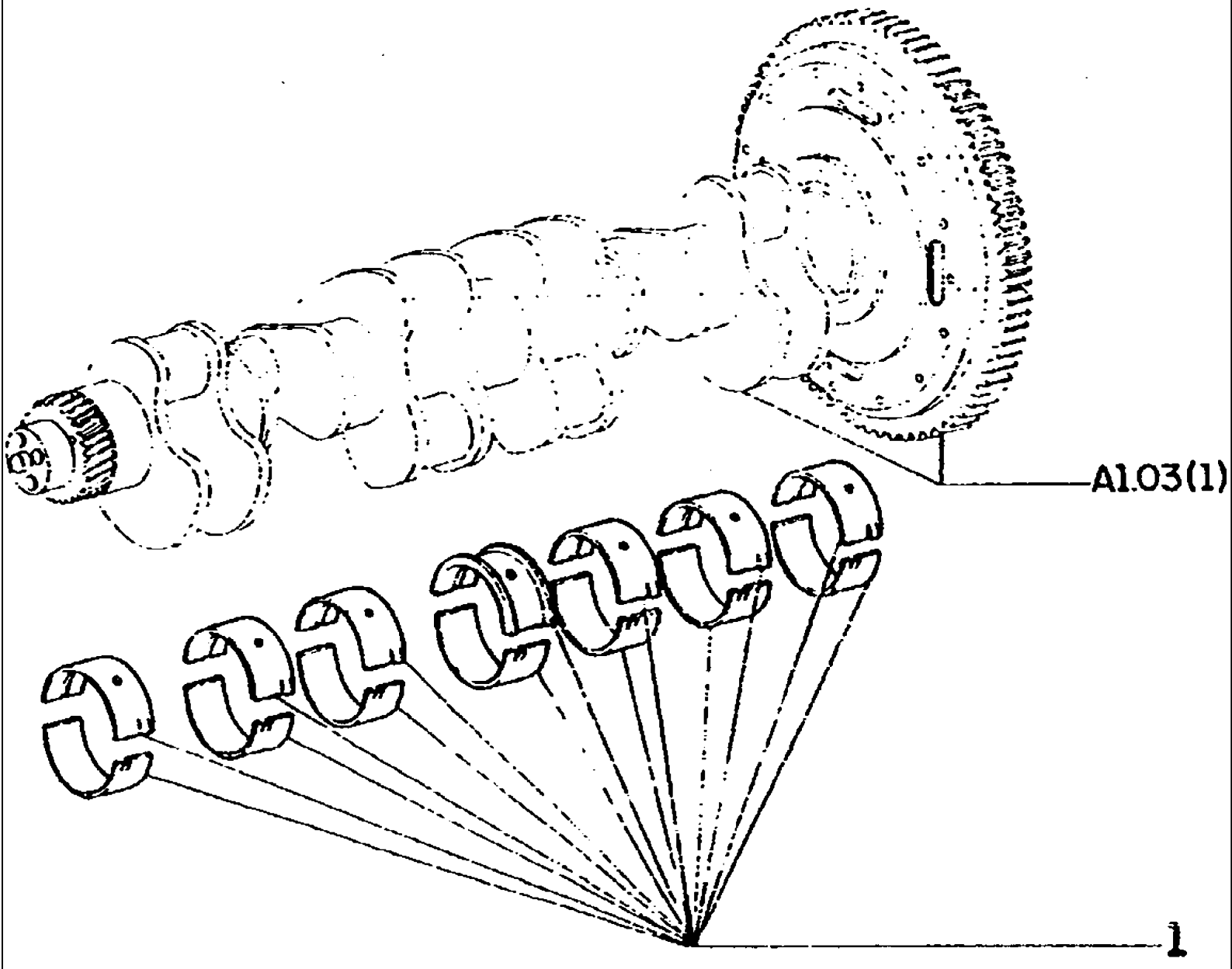
A1.03(1)
1

FG85 SERIES B MOTORGRADER

A1.03(002)

Ref	Numero de Pieza	Ctd	Descripción
1	75208361	1	KIT Std
1	75208078	1	KIT 0.25mm
1	75208079	1	KIT 0.50mm
1	75208080	1	KIT 0.75mm
1	75208081	1	KIT 1.00mm

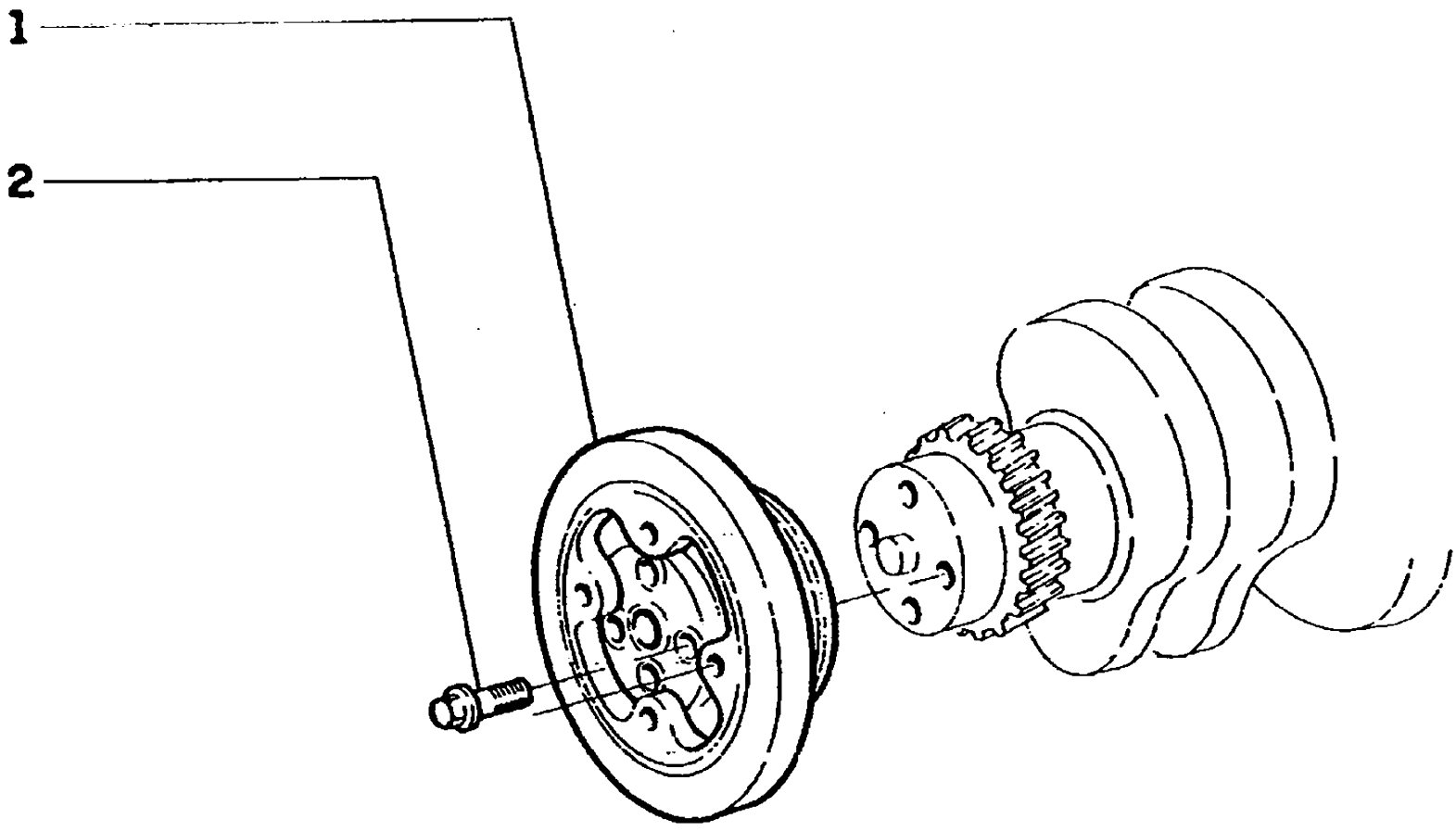
1
2

FG85 SERIES B MOTORGRADER

A1.04(001) DAMPER

Ref	Numero de Pieza	Ctd	Descripción
1	75206819	1	DAMPER
2	75204971	4	SCREW

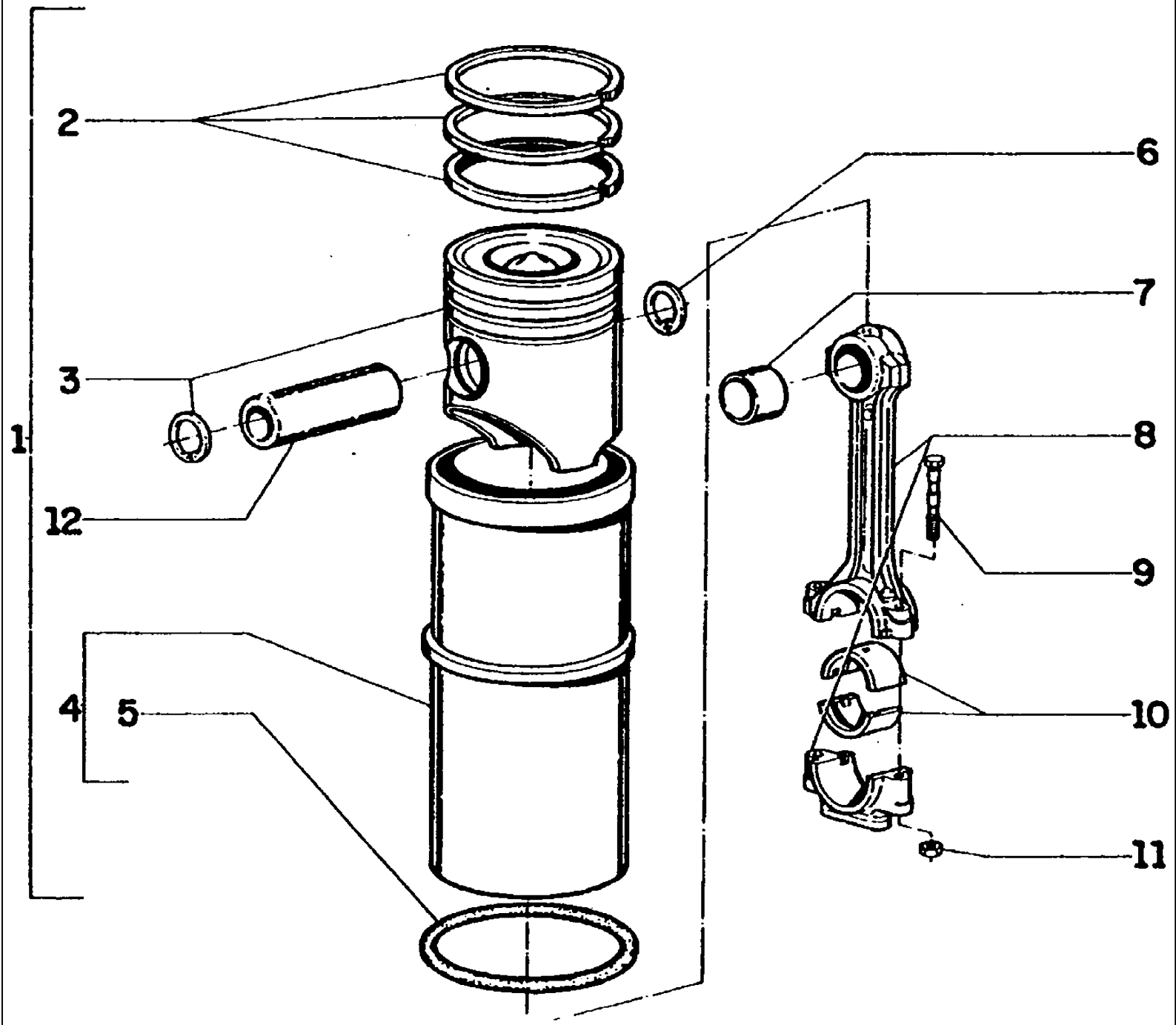
1
2
3
4
5
6
7
8
9
10
11
12

FG85 SERIES B MOTORGRADER

A1.05(001) CONNECTING RODS AND PISTONS

Ref	Numero de Pieza	Ctd	Descripción
1	75286318	1	KIT
2	75208112	1	RING
3	75286317	6	PIN
4	75208114	6	TUBE
5	75208115	6	SEAL RING
6	75206821	12	SNAP RING
7	75208087	6	BUSHING
8	75208204	6	LINK
9	75208205	12	SCREW
10	75208088	12	HALF BUSHINC
10	75206861	12	HALF BUSHING
10	75206862	12	HALF BUSHING
10	75206863	12	HALF BUSHING
10	75206864	12	HALF BUSHING
11	75208206	12	NUT
12	75208202	6	PIN

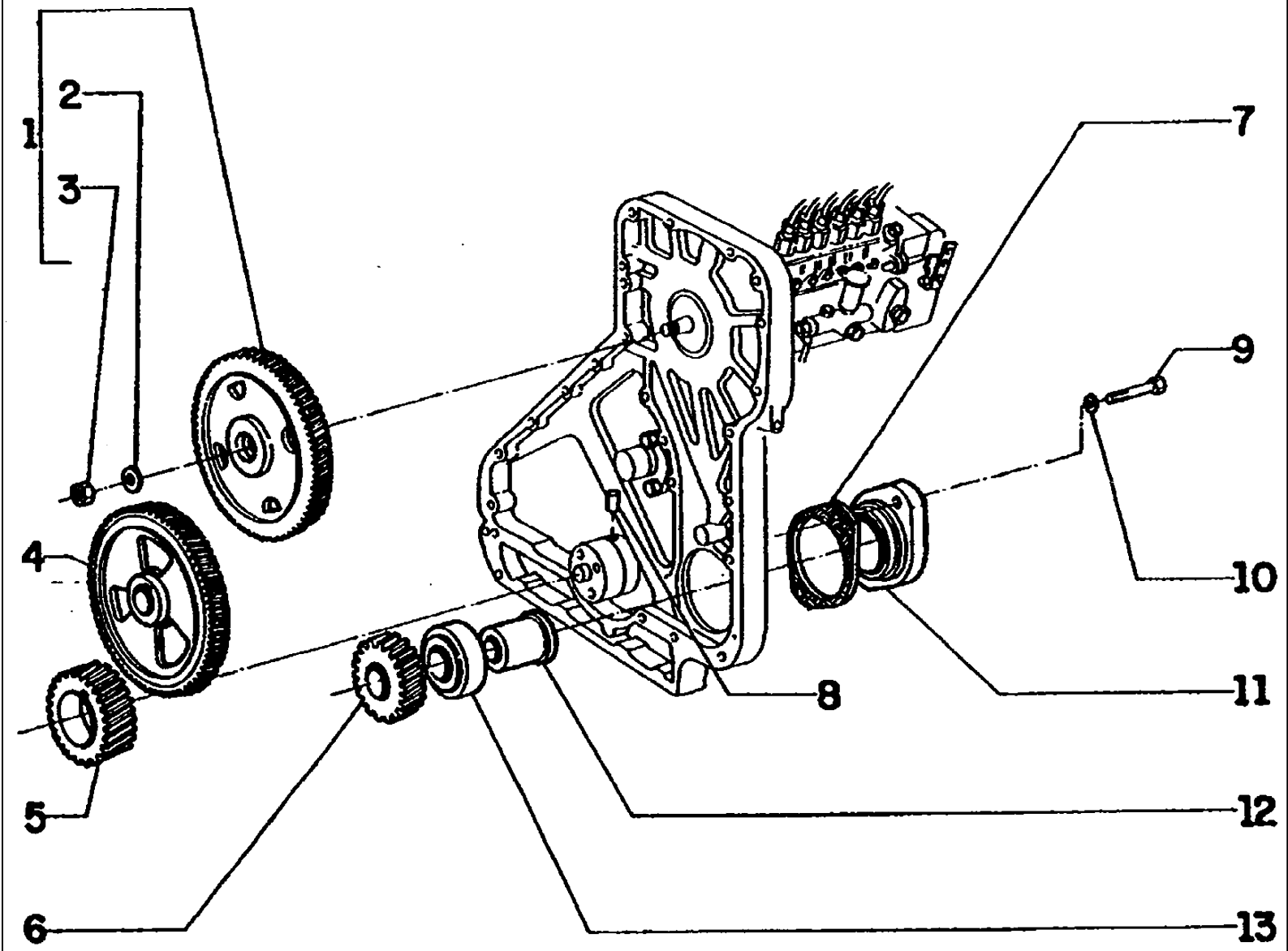
1
2
3
4
5
6
7
8
9
10
11
12
13

FG85 SERIES B MOTORGRADER

A1.06(001) CAMSHAFT DRIVE

Ref	Numero de Pieza	Ctd	Descripción
1	75208348	1	GEAR
2	75286085	1	WASHER
3	75286086	1	NUT
4	75208349	1	GEAR
5	75208352	1	GEAR
6	75208353	1	GEAR
7	75285532	2	SEAL ASSY
8	75208356	1	PIN
9	11113731	2	BOLT, Hex, M12 x 75, 10.9
10	10517073	2	LOCKWASHER
11	75208360	1	SPACER
12	75208355	1	SHAFT
13	75208354	1	BEARING

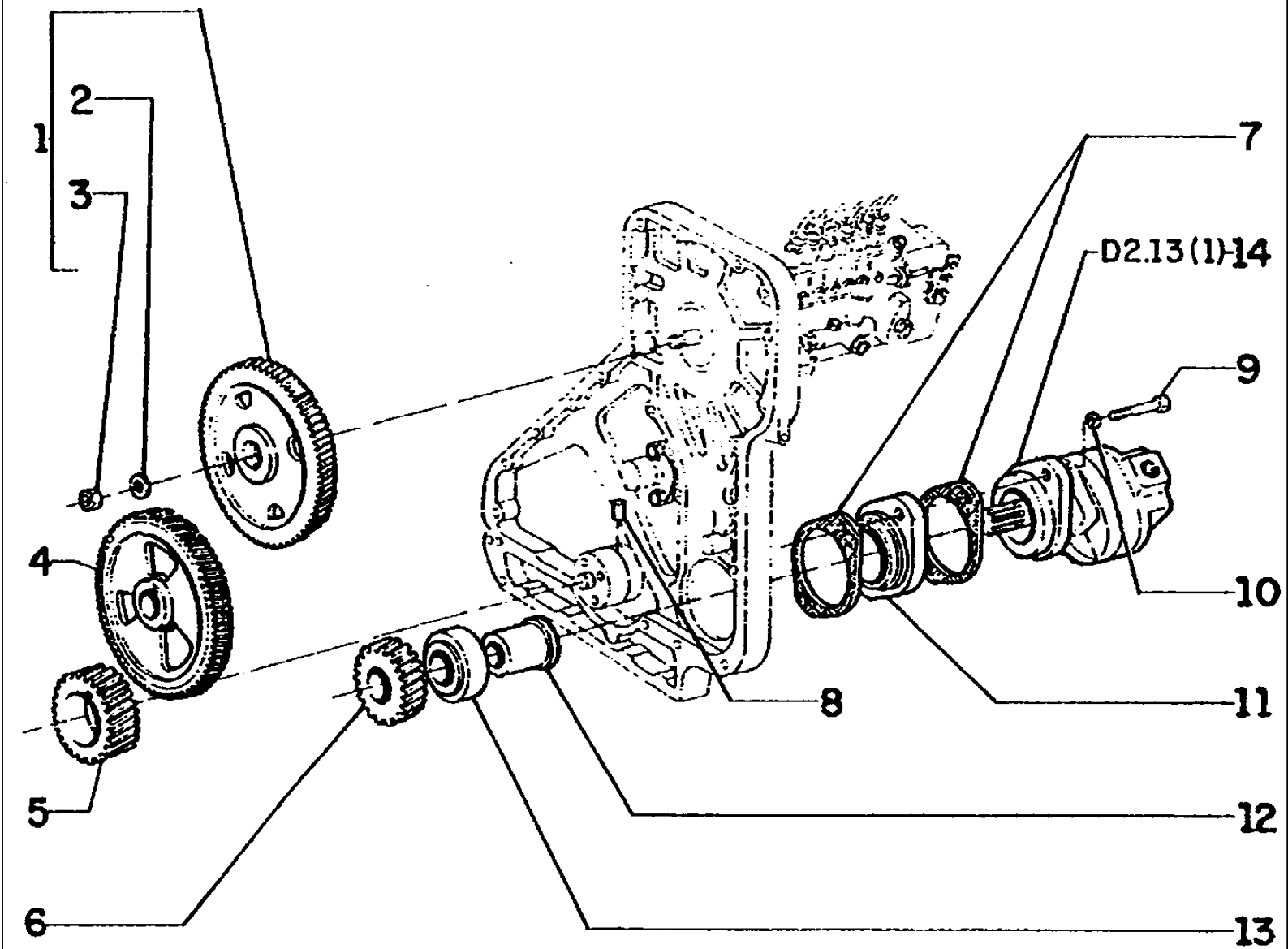
1
2
3
4
5
6
7
D2.13(1)-14
9
10
11
8
12
13

FG85 SERIES B MOTORGRADER

A1.06/1(001) CAMSHAFT DRIVE

Ref	Numero de Pieza	Ctd	Descripción
1	75208348	1	GEAR
2	75286085	1	WASHER
3	75286086	1	NUT
4	75208349	1	GEAR
5	75208352	1	GEAR
6	75208353	1	GEAR
7	75285532	2	SEAL ASSY
8	75208356	1	PIN
9	11113731	2	BOLT, Hex, M12 x 75, 10.9
10	10517073	2	LOCKWASHER
11	75208360	1	SPACER
12	75208355	1	SHAFT
13	75208354	1	BEARING
14	75218591	1	PUMP

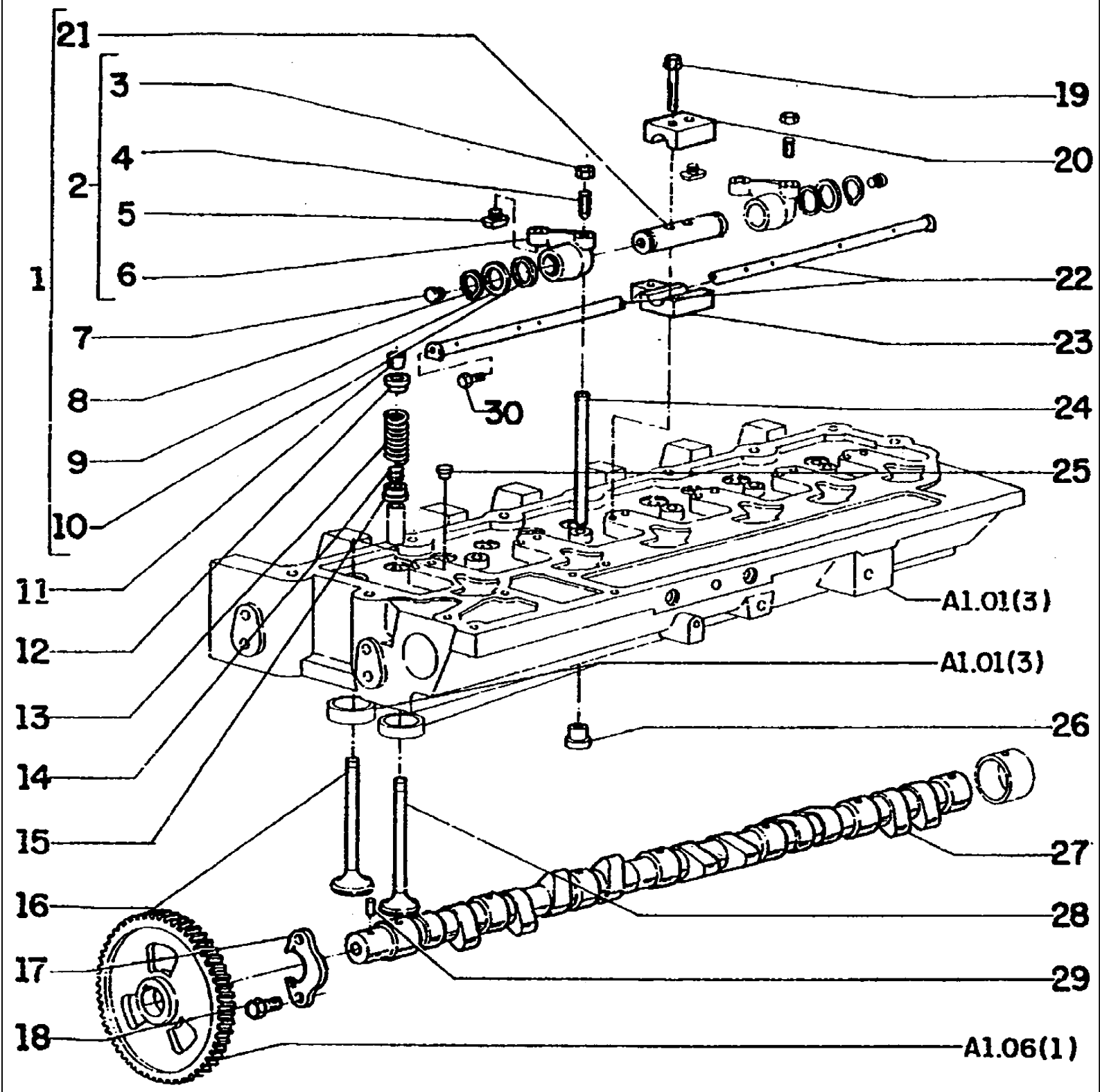
21
3
4
2
5
6
1
7
8
9
10
11
12
13
14
15
16
17
18
19
20
22
23
24
25
26
27
28
29
30
A1.01(3)
A1.01(3)
A1.06(1)

FG85 SERIES B MOTORGRADER

A1.07(001) VALVE GEAR

Ref	Numero de Pieza	Ctd	Descripción
1	75208222	6	ROCKER
2	75208223	6	ROCKER
3	75286105	12	NUT
4	75208225	12	SCREW
5	75208227	2	FILLER CAP
6	75208226	2	ROCKER
7	75286106	12	PLUG
8	75206820	12	SNAP RING
9	75208228	12	WASHER
10	75208229	12	WASHER
11	75208232	24	PAWL
12	75208233	12	CUP
13	75208234	12	SPRING
14	75208235	12	SENSOR
15	75208236	12	CUP
16	75208239	6	INTAKE VALVE
17	75286115	1	SUPPORT
18	75286076	2	SCREW
19	75208244	12	SCREW
20	75208245	6	SUPPORT
21	75208231	6	CAMSHAFT
22	75208246	1	TUBE
23	75208247	6	SUPPORT
24	75208249	12	ROD
25	75208248	6	SENSOR
26	75208237	12	TAPPET
27	75208240	1	CAMSHAFT
28	75208238	6	EXHAUST VALVE
29	75208241	1	PIN
30	75286107	12	SCREW

A2.01(001) FUEL TANK 24 VOLTS MACHINE

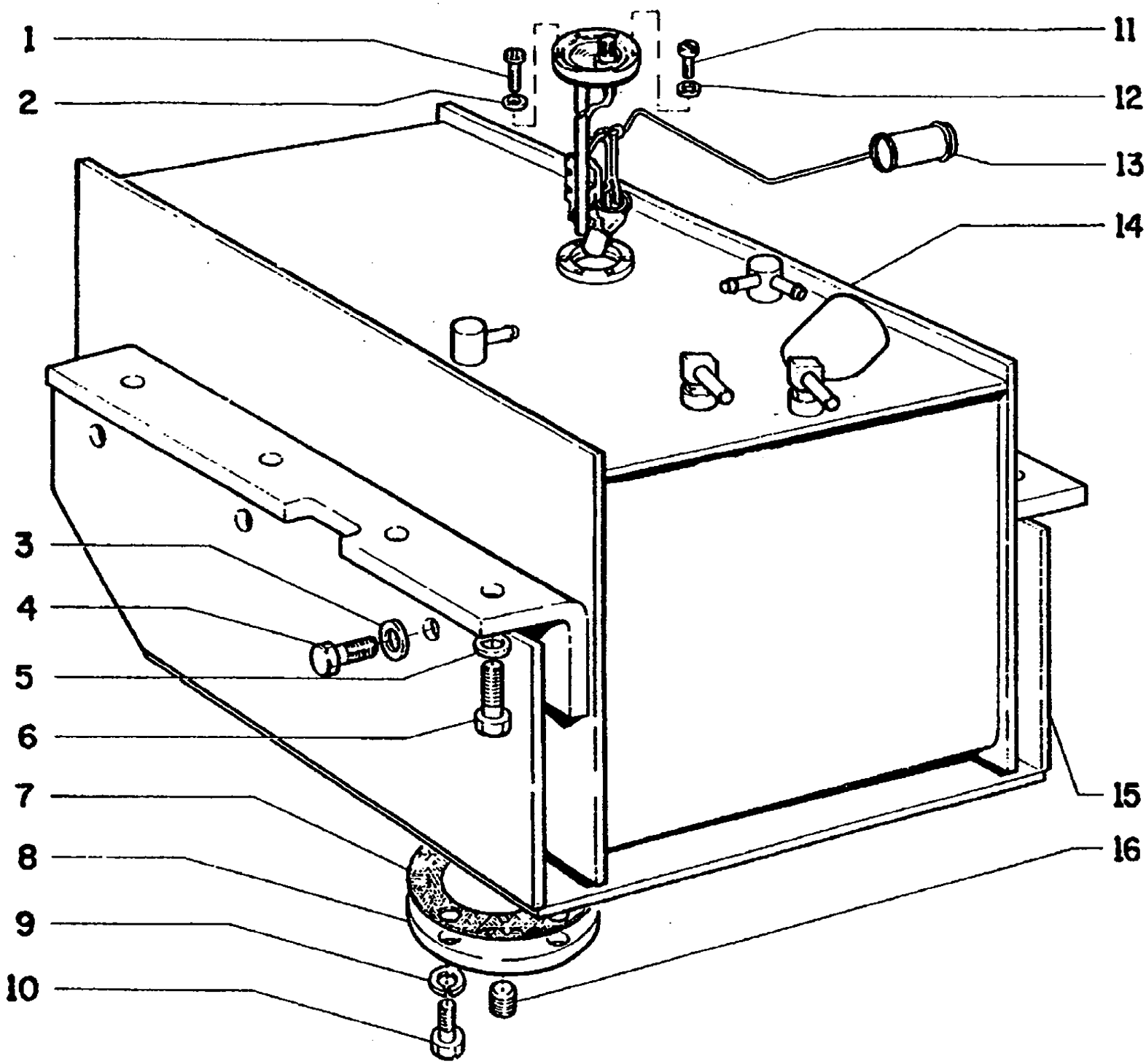

FG85 SERIES B MOTORGRADER

A2.01(001) FUEL TANK 24 VOLTS MACHINE

Ref	Numero de Pieza	Ctd	Descripción
1	13276201	1	SCREW
2	10571671	1	WASHER
3	70911414	8	WASHER
4	70921175	8	SCREW
5	70677008	8	WASHER
6	70924864	8	SCREW
7	70042641	1	GASKET
8	70683277	1	COVER
9	70910287	4	LOCKWASHER
10	70922763	4	SCREW
11	13272111	5	SCREW, Pan Hd, M4 x 14, 5.8
12	10519201	5	WASHER, M4
13	75239190	1	OIL LEVER INDIC
14	75221960	1	FUEL TANK
15	73149136	1	FUEL TANK GUAR
16	70907859	1	DRAIN PLUG

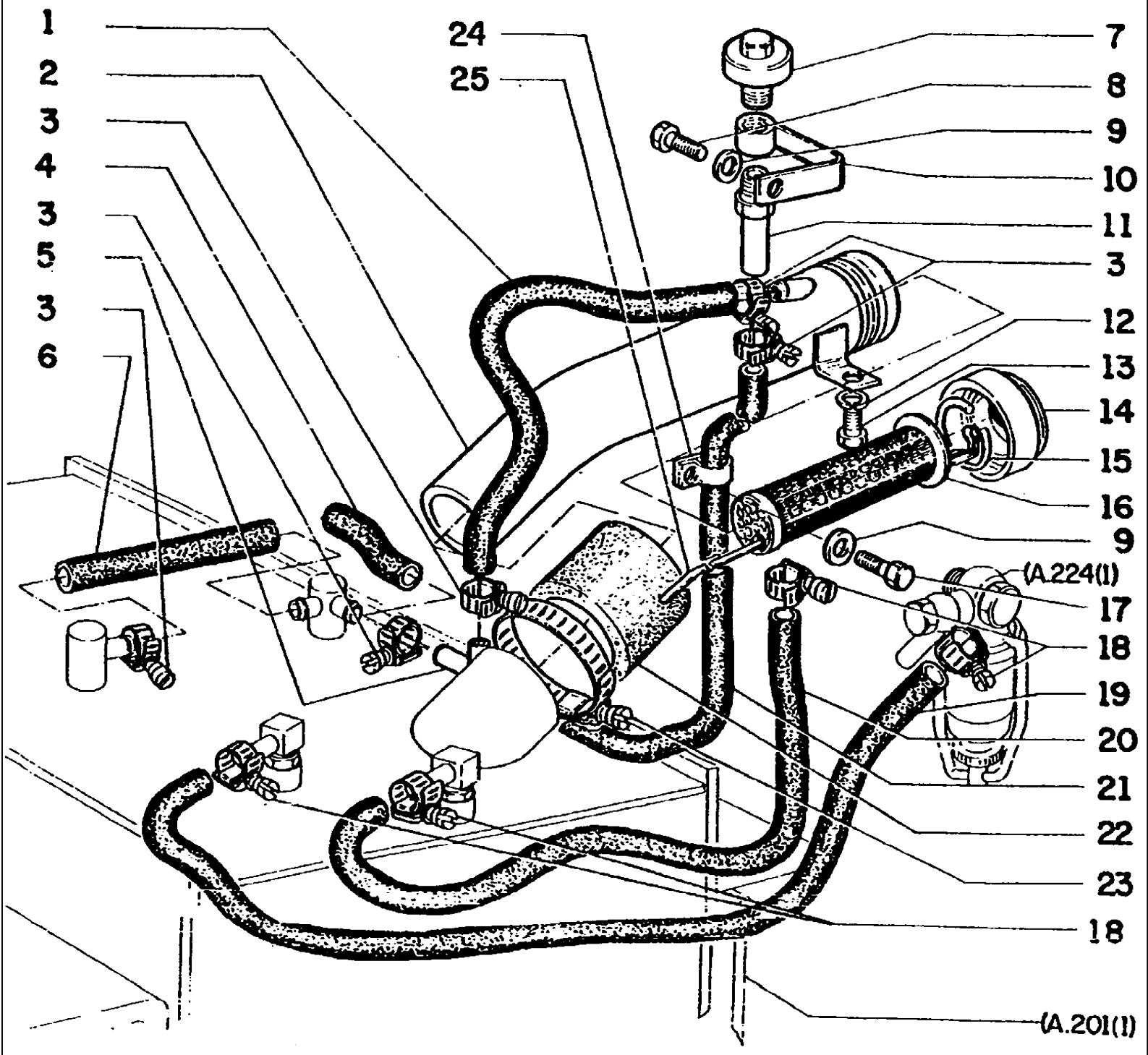
1
2
3
4
3
5
3
6
24
25
7
8
9
10
11
3
12
13
14
15
16
9
(A.224(1))
17
18
19
20
21
22
23
18
(A.201(1))

FG85 SERIES B MOTORGRADER

A2.01(002) FUEL LINES

Ref	Numero de Pieza	Ctd	Descripción
1	73153455	1	HOSE
2	75220988	1	TUBE
3	70921910	16	CLAMP
4	73153814	1	HOSE
5	73153450	1	FITTING
6	73149111	1	HOSE
7	70050748	1	BREATHER
8	70922763	1	SCREW
9	70677006	2	WASHER
10	73153453	1	SUPPORT
11	73153451	1	TUBE
12	70916965	2	LOCKWASHER
13	70921076	2	SCREW
14	75221058	1	COVER - FUEL CAP
15	4971843	1	SNAP RING
16	75201624	1	FUEL FILTER
17	70922300	1	SCREW
18	12179490	8	CLAMP
19	75220500	1	HOSE
20	75220499	1	HOSE
21	73153454	1	HOSE
22	73149112	1	HOSE
23	70922200	4	CLAMP
24	70926049	1	CLAMP
25	73149132	1	DIPSTICK

A2.01/2(001) FUEL TANK - ONLY FOR 12 VOLT MACHINES

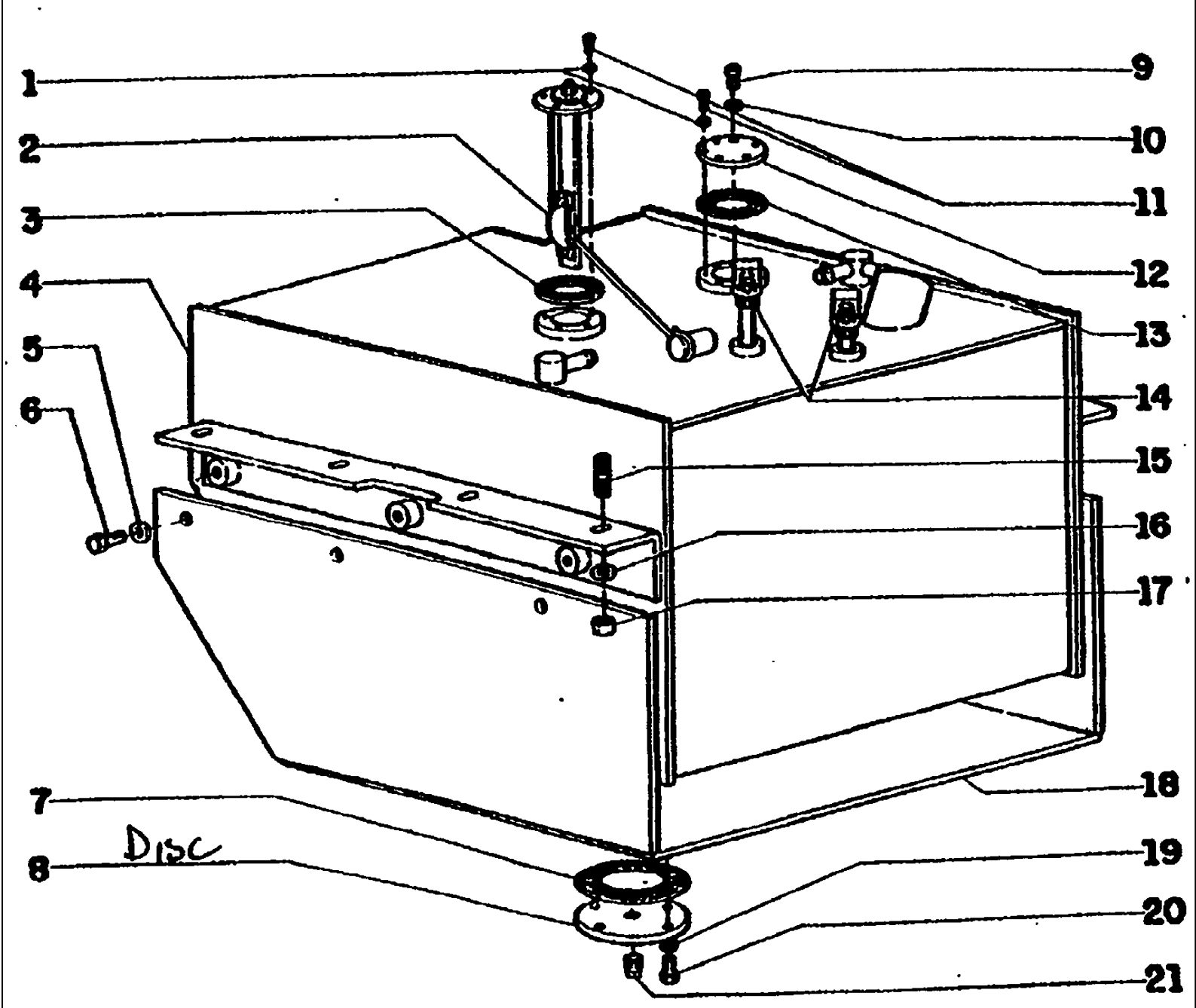

FG85 SERIES B MOTORGRADER

A2.01/2(001) FUEL TANK - ONLY FOR 12 VOLT MACHINES

Ref	Numero de Pieza	Ctd	Descripción
1	10519201	10	WASHER, M4
2	75239190	1	SENSOR
3	70241522	1	GASKET
4	75221960	1	FUEL TANK
5	70911414	8	HASHER
6	70921175	8	SCREW
7	70042641	1	GASKET
8	70683277	1	COVER
9	13276201	1	SCREW
10	10571571	1	WASHER
11	13272111	10	SCREW, Pan Hd, M4 x 14, 5.8
12	75238543	1	COVER
13	75238542	1	GASKET
14	73149128	2	TUBE
15	75239074	8	STUD
16	70677008	8	WASHER
17	70918309	8	NUT
18	73149136	1	FUEL TANK
19	70910287	4	LOCKWASHER
20	70927354	4	SCREW
21	70901652	1	PLUG

A2.21(001) THROTTLE CONTROL

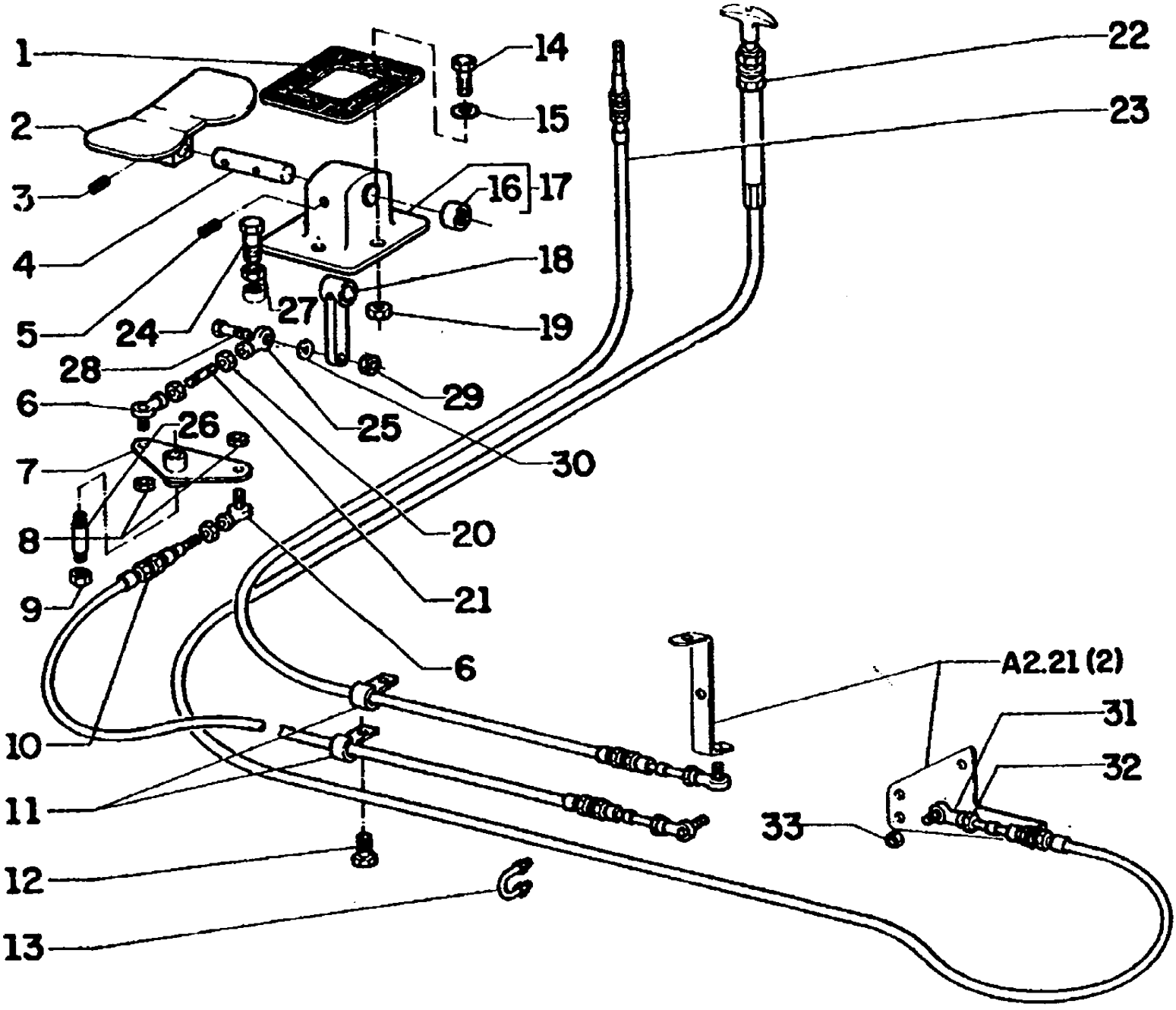

FG85 SERIES B MOTORGRADER

A2.21(001) THROTTLE CONTROL

Ref	Numero de Pieza	Ctd	Descripción
1	73127180	1	GASKET
2	73128452	1	PEDAL
3	70916991	1	Pin, 1/4" x 7/8", Slotted
4	73127179	1	SHAFT
5	70916001	1	PIN
6	70686384	4	END
7	73152112	1	BELL CRANCK
8	70916590	6	NUT
9	70911028	1	NUT
10	73152115	1	ROPE
11	70925618	3	CLAMP
12	70921175	1	SCREW
13	73152117	2	CLAMP
14	70922287	4	SCREW
15	70677006	7	WASHER
16	73125849	2	BEARING
17	73127181	1	SUPPORT
18	73127176	1	LEVER
19	70911026	4	NUT
20	70911040	5	NUT
21	73152125	1	TIEROD
22	73068227	1	ROPE
23	73152114	1	ROPE
24	70920585	2	SCREW
25	73070190	1	END
26	75222095	1	SHAFT
27	70910510	2	NUT
28	70929024	1	SCREW
29	70922714	1	NUT
30	70677004	1	WASHER
31	73121782	1	BALL JOINT
32	70910251	1	NUT
33	70922714	1	NUT

A2.21(002) THROTTLE CONTROL LINKAGE

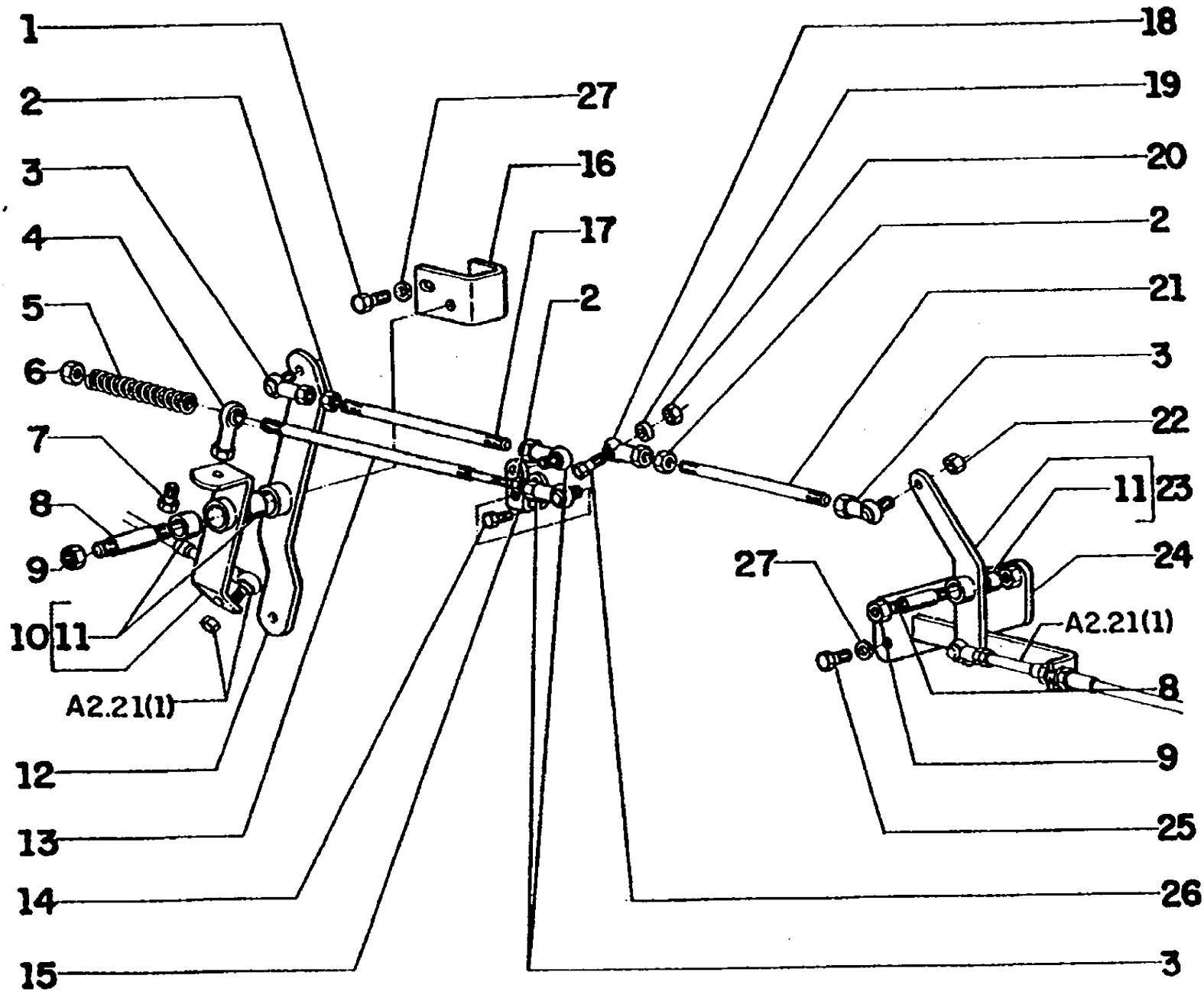

FG85 SERIES B MOTORGRADER

A2.21(002) THROTTLE CONTROL LINKAGE

Ref	Numero de Pieza	Ctd	Descripción
1	11106431	1	SCREW
2	70916590	5	NUT
3	70686384	4	END
4	70638732	1	END
5	73127234	2	SPRING
6	70915972	2	NUT
7	70927353	1	SCREW
8	75222095	2	SHAFT
9	70911028	2	NUT
10	73157021	1	LEVER
11	73125849	4	BEARING
12	73157022	1	LEVER
13	73157027	1	TIEROD
14	10902131	2	BOLT, Hex, M6 x 14, 10.9, Full Thd
15	73157022	1	LEVER
16	73157026	1	PLATE
17	75221308	1	TIEROD
18	73070190	1	END
19	73152129	1	SPACER
20	15896221	1	NUT, M6, Cl 10
21	73157029	1	TIEROD
22	70916590	4	NUT
23	73159542	1	LEVER
24	73157023	1	SUPPORT
25	11106231	2	BOLT, Hex, M10 x 25, 10.9, Full Thd
26	10902631	1	BOLT, Hex, M6 x 25, 10.9
27	10571871	2	WASHER, LOCK, M10

A2.21(003) THROTTLE CONTROL LEVER (73146534)

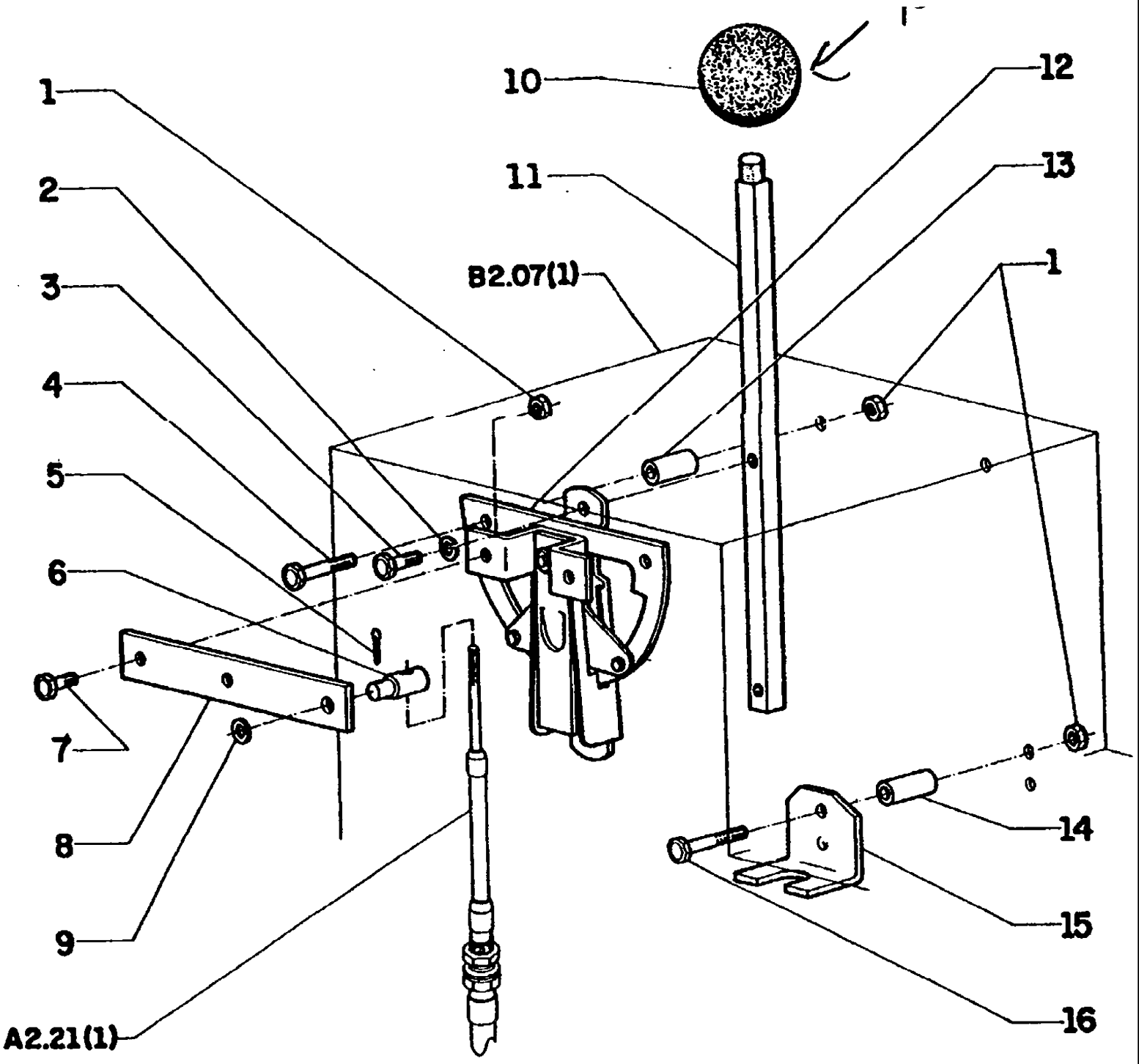

FG85 SERIES B MOTORGRADER

A2.21(003) THROTTLE CONTROL LEVER (73146534)

Ref	Numero de Pieza	Ctd	Descripción
1	70923358	6	NUT
2	70914105	2	WASHER
3	70928138	2	SCREW
4	70930790	2	SCREW
5	70904001	1	COTTER PIN
6	73111597	1	ARTICULATION
7	70928182	2	SCREW
8	73144798	1	LEVER
9	73131029	1	WASHER
10	73111596	1	KNOB
11	75239467	1	LEVER
12	73128609	1	LEVER
13	73128616	2	SPACER
14	70689633	2	SPACER
15	73128618	1	SUPPORT
16	70921383	2	SCREW

A2.22(001) AIR CLEANER AND MOUNTING

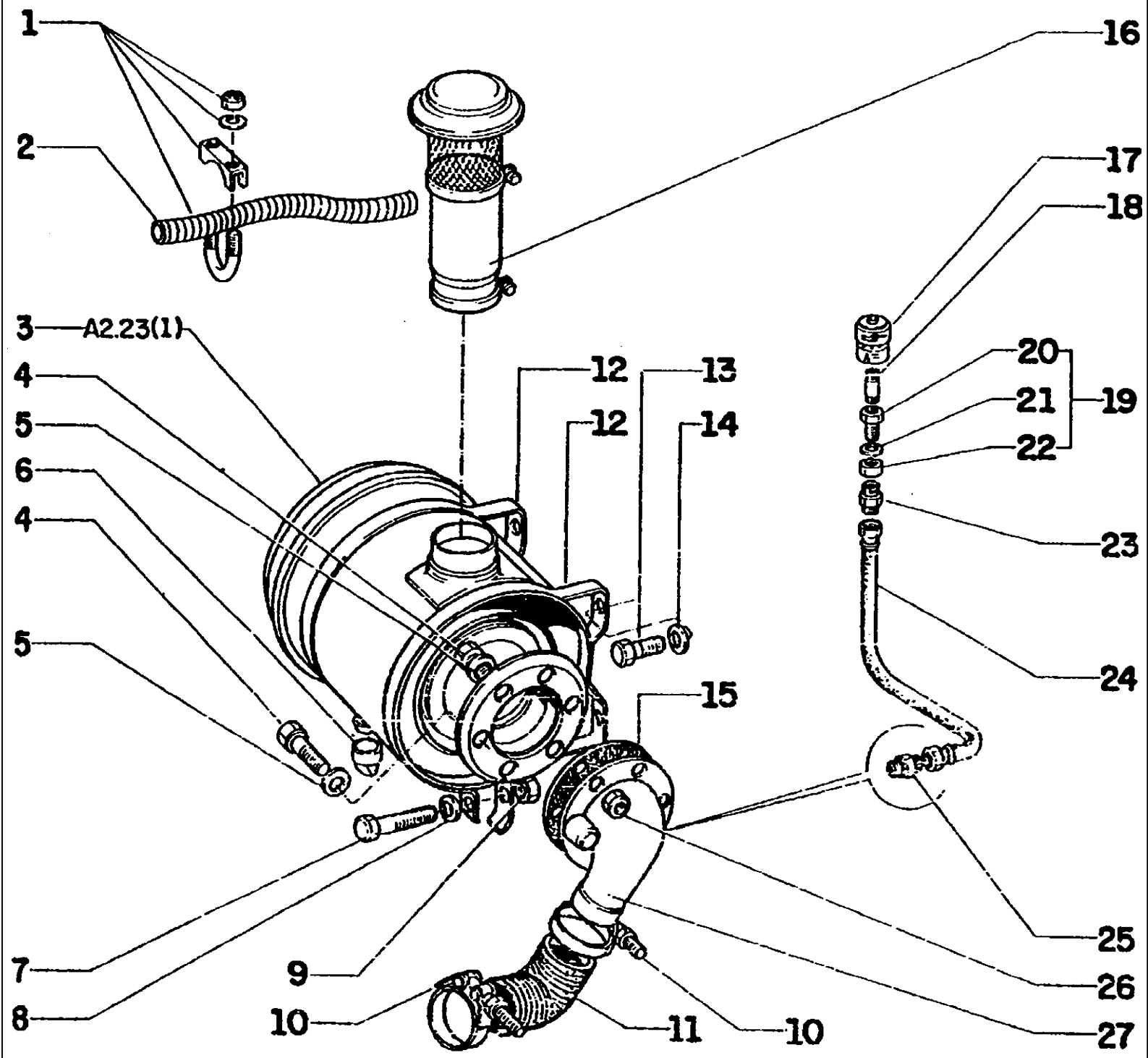

FG85 SERIES B MOTORGRADER

A2.22(001) AIR CLEANER AND MOUNTING

Ref	Numero de Pieza	Ctd	Descripción
1	70929808	2	CLAMP
2	73117686	1	TUBE
3	70659095	1	AIR CLEANER
4	70927173	6	SCREW
5	70930370	6	WASHER
6	70197810	1	VALVE
7	70922287	2	SCREW
8	70630753	2	WASHER
9	70918308	2	NUT
10	70929419	2	CLAMP
11	73152966	1	HOSE
12	70686158	2	CLAMP
13	70921076	2	SCREW
14	70677006	2	WASHER
15	70658759	1	GASKET
16	73121005	1	PRECLEANER
17	74021600	1	INDICATOR
18	70901467	1	FITTING
19	70198097	1	FITTING
20	75215381	1	SCREW
21	70910334	1	WASHER
22	70906907	1	NUT
23	70919171	1	FITTING
24	70198097	1	FITTING
25	70631769	1	FITTING
26	70911026	6	NUT
27	73151629	1	ELBOW

A2.22/1(001) AIR CLEANER AND PIPING FOR FG85A FROM S/N 801+798+797+742 EXCEPT 815. FOR FG105A FROM S/N 342.

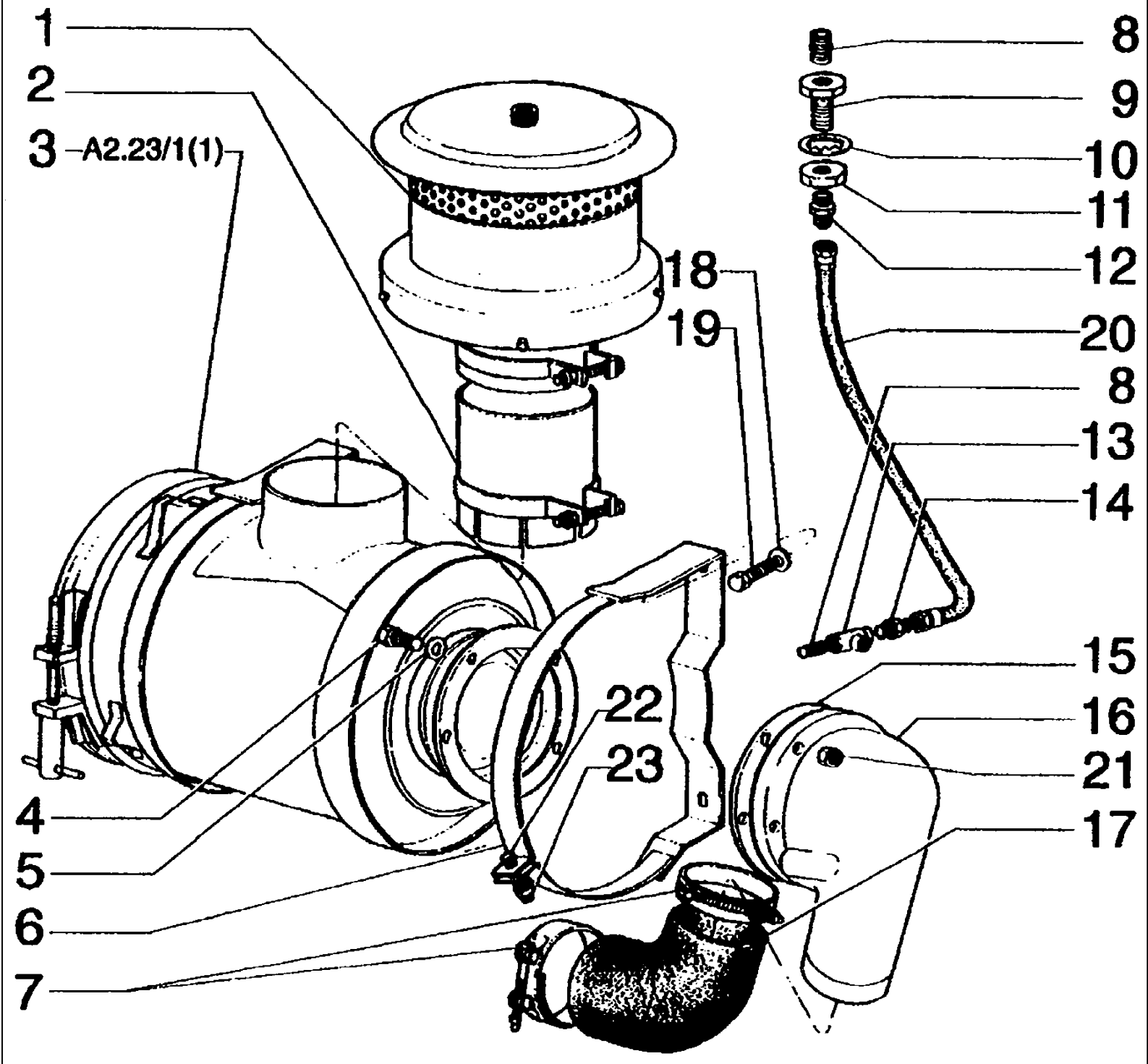

FG85 SERIES B MOTORGRADER

A2.22/1(001) AIR CLEANER AND PIPING FOR FG85A FROM S/N 801+798+797+742 EXCEPT 815. FOR FG105A FROM S/N 342.

Ref	Numero de Pieza	Ctd	Descripción
1	75249112	1	PRECLEANER
2	75248726	1	TUBE
3	75248727	1	CASE
4	70927173	6	SCREW
5	70930370	6	WASHER
6	75248760	2	CLAMP
7	70929419	2	CLAMP
8	70916634	2	CAP
9	75215381	1	SCREW
10	70910334	1	WASHER
11	70906907	1	NUT
12	70919171	1	FITTING
13	70901702	1	FITTING
14	70631769	1	FITTING
15	70658759	1	GASKET
16	73121710	1	ELBOW
17	73151551	1	HOSE
18	70677006	4	WASHER
19	70921076	4	SCREW
20	70693442	1	HOSE ASSY
21	70910324	6	NUT
22	16044331	2	SCREW
23	16100821	2	NUT, M8, Cl 10

FG85 SERIES B MOTORGRADER

A2.22/1(002) PRECLEANER FOR FG85A FROM S/N 801+798+797+742 EXEPT 815. FOR FG105A FROM S/N 342.

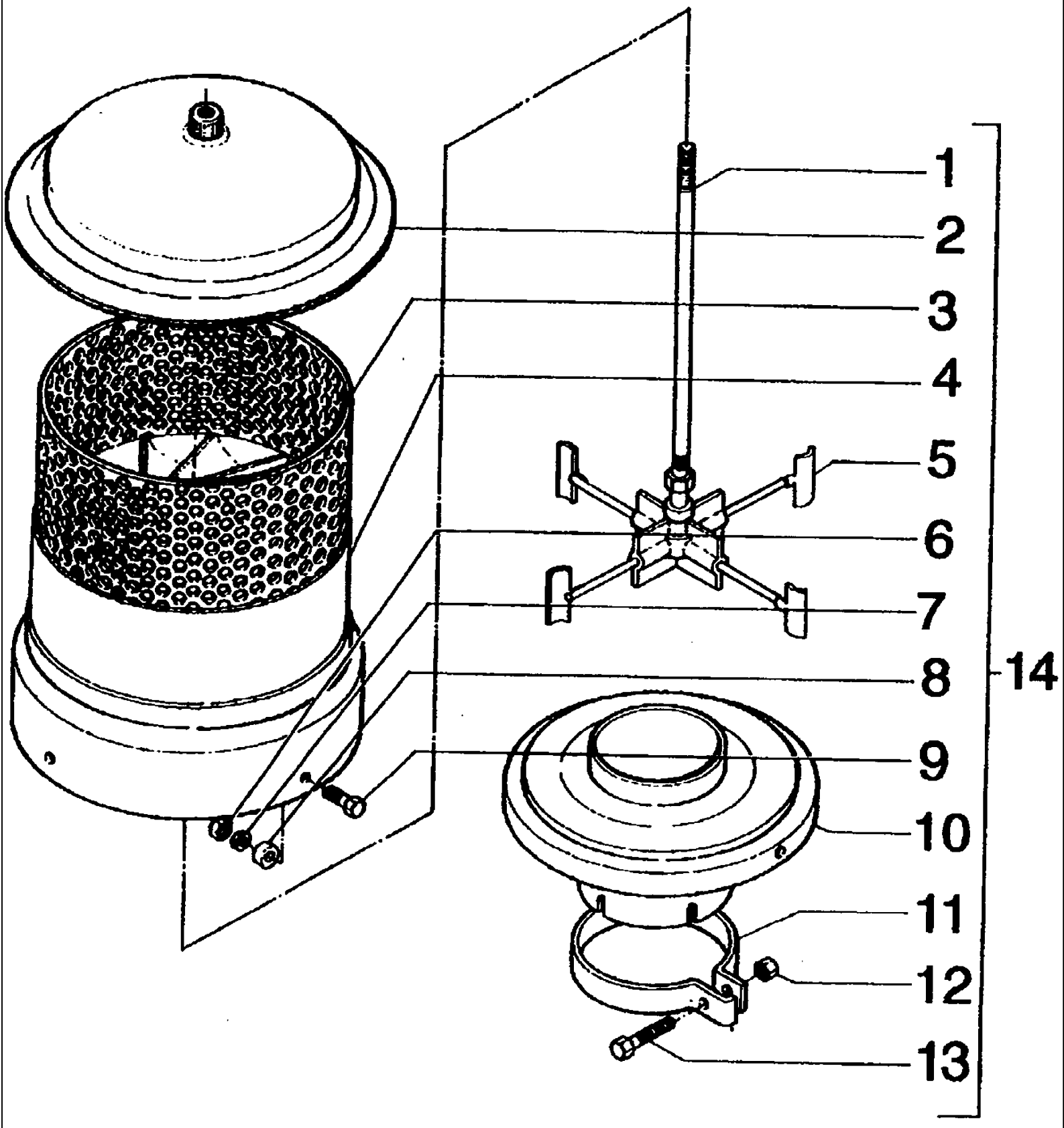

FG85 SERIES B MOTORGRADER

A2.22/1(002) PRECLEANER FOR FG85A FROM S/N 801+798+797+742 EXEPT 815. FOR FG105A FROM S/N 342.

Ref	Numero de Pieza	Ctd	Descripción
1	75288748	1	SHAFT
2	75288749	1	COVER
3	75288750	1	GUARD
4	75288751	1	CASE
5	75288752	1	IMPELLER
6	75288400	3	NUT
7	75288401	3	WASHER
8	75288402	3	SPACER
9	75288403	3	SCREW
10	75288753	1	SUPPORT
11	75288754	1	CLAMP
12	75288755	1	NUT
13	75288756	1	SCREW
14	75249112	1	PRECLEANER

A2.23(001) AIR CLEANERFOR FG85A FROM S/N 801+798+797+742 EXCEPT 815. FOR FG105A FROM S/N 342

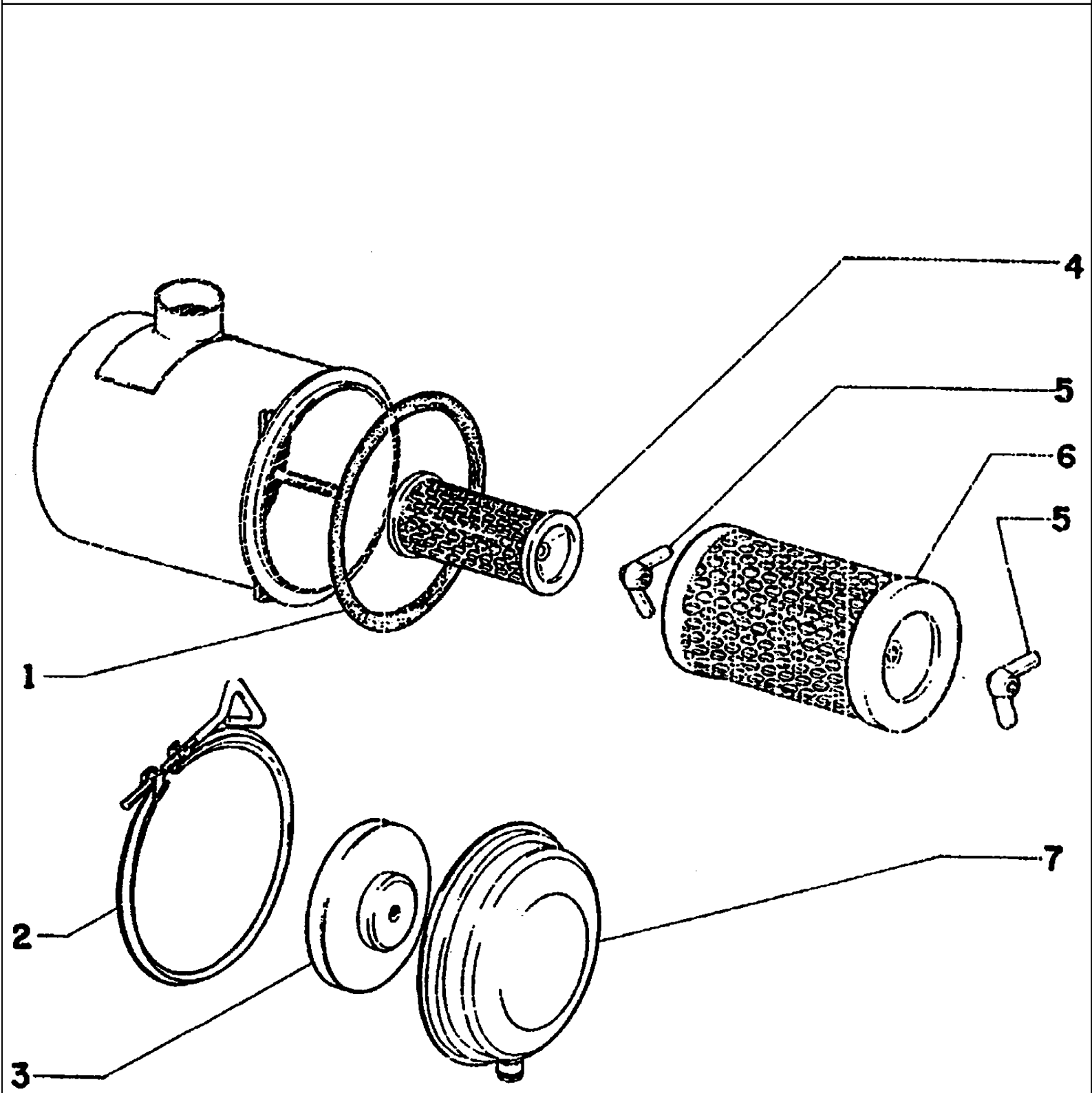

FG85 SERIES B MOTORGRADER

A2.23(001) AIR CLEANERFOR FG85A FROM S/N 801+798+797+742 EXCEPT 815. FOR FG105A FROM S/N 342

Ref	Numero de Pieza	Ctd	Descripción
1	70622895	1	SEAL RING
2	70622897	1	CLAMP
3	70662257	1	DEFLECTOR
4	79043779	1	FILTERING ELEM.
5	70664343	2	NUT
6	79043778	1	FILTERING ELEM.
7	70662258	1	CUP

A2.23/1(001) AIR CLEANER

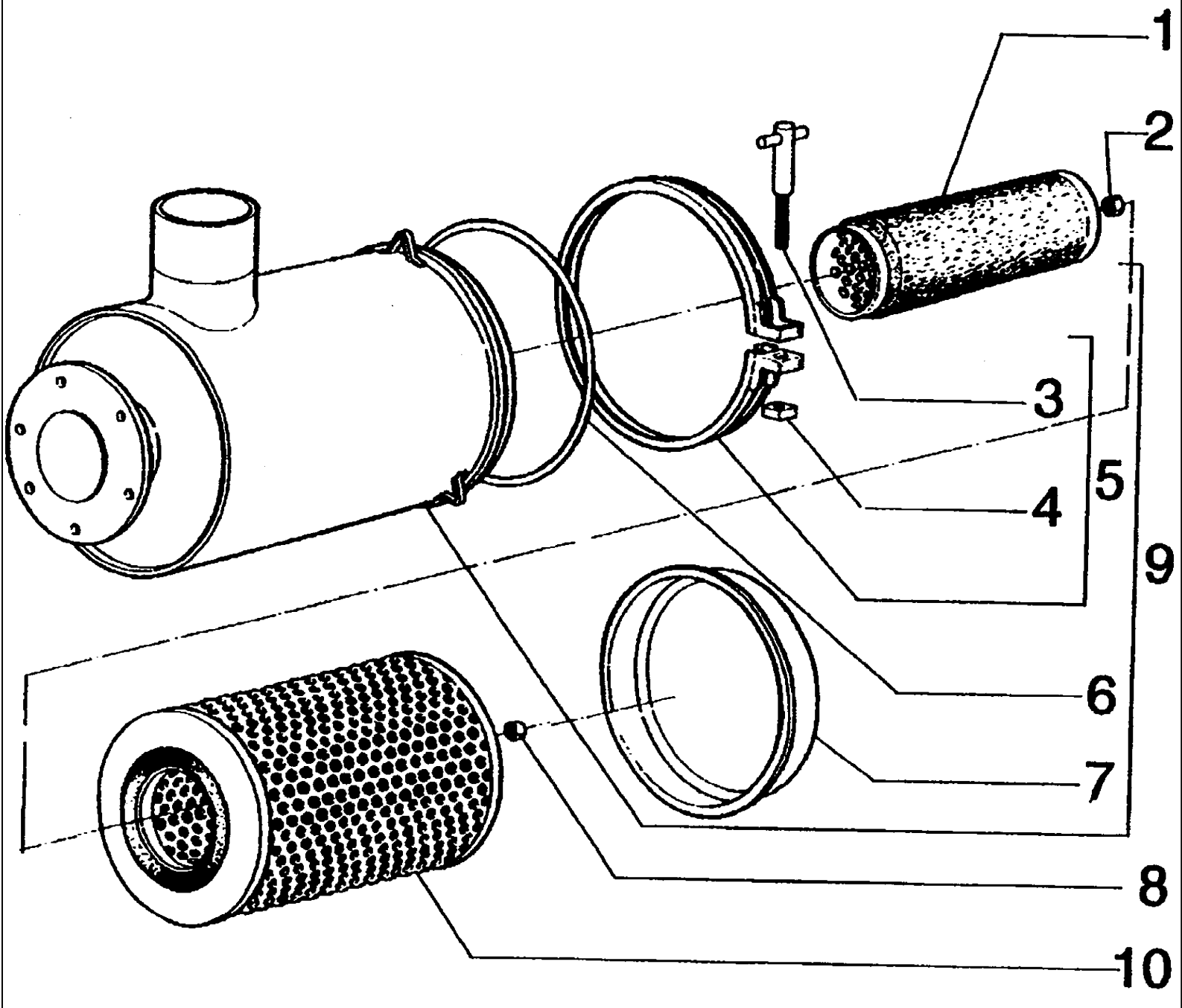

FG85 SERIES B MOTORGRADER

A2.23/1(001) AIR CLEANER

Ref	Numero de Pieza	Ctd	Descripción
1	75248730	1	FILTERING ELEM.
2	75288388	1	NUT
3	75288389	1	SCREW
4	75288390	1	NUT
5	75288391	1	CLAMP
6	75288392	1	O'RING
7	75288393	1	COVER
8	75288394	1	NUT
9	75248727	1	CASE
10	75248729	1	FILTERING ELEM.

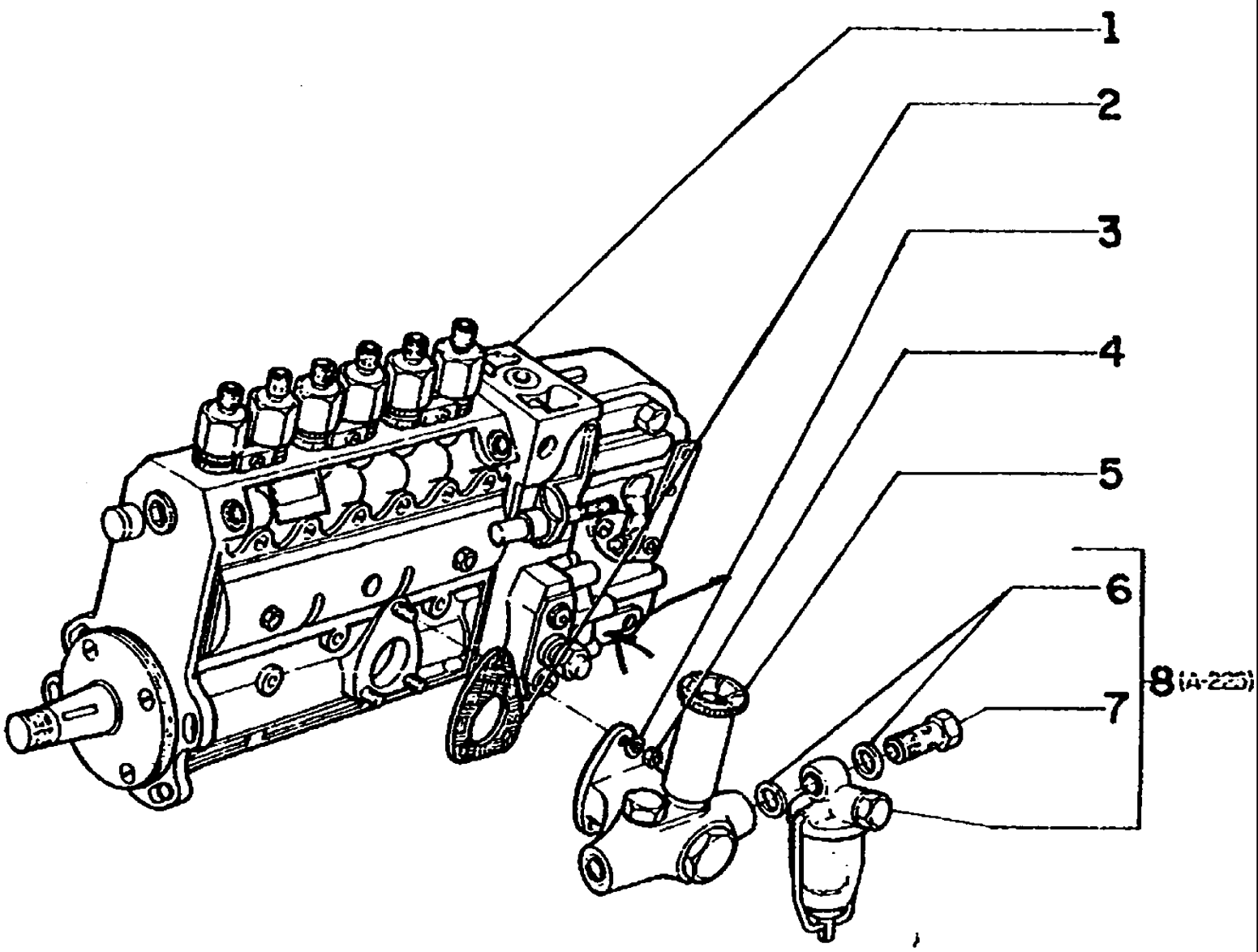
1
2
3
4
5
6
7
8 (A-225)

FG85 SERIES B MOTORGRADER

A2.24(001) FUEL INJECTION SYSTEM

Ref	Numero de Pieza	Ctd	Descripción
1	75206952	1	PUMP(I)
1	75206953	1	PUMP(2)
2	75208368	1	GASKET
3	75208369	3	LOCKWASHER
4	75208370	3	NUT
5	75208371	1	PUMP
6	746152	2	SEAL RING
7	705737	1	FITTING
8	73153815	1	FILTER

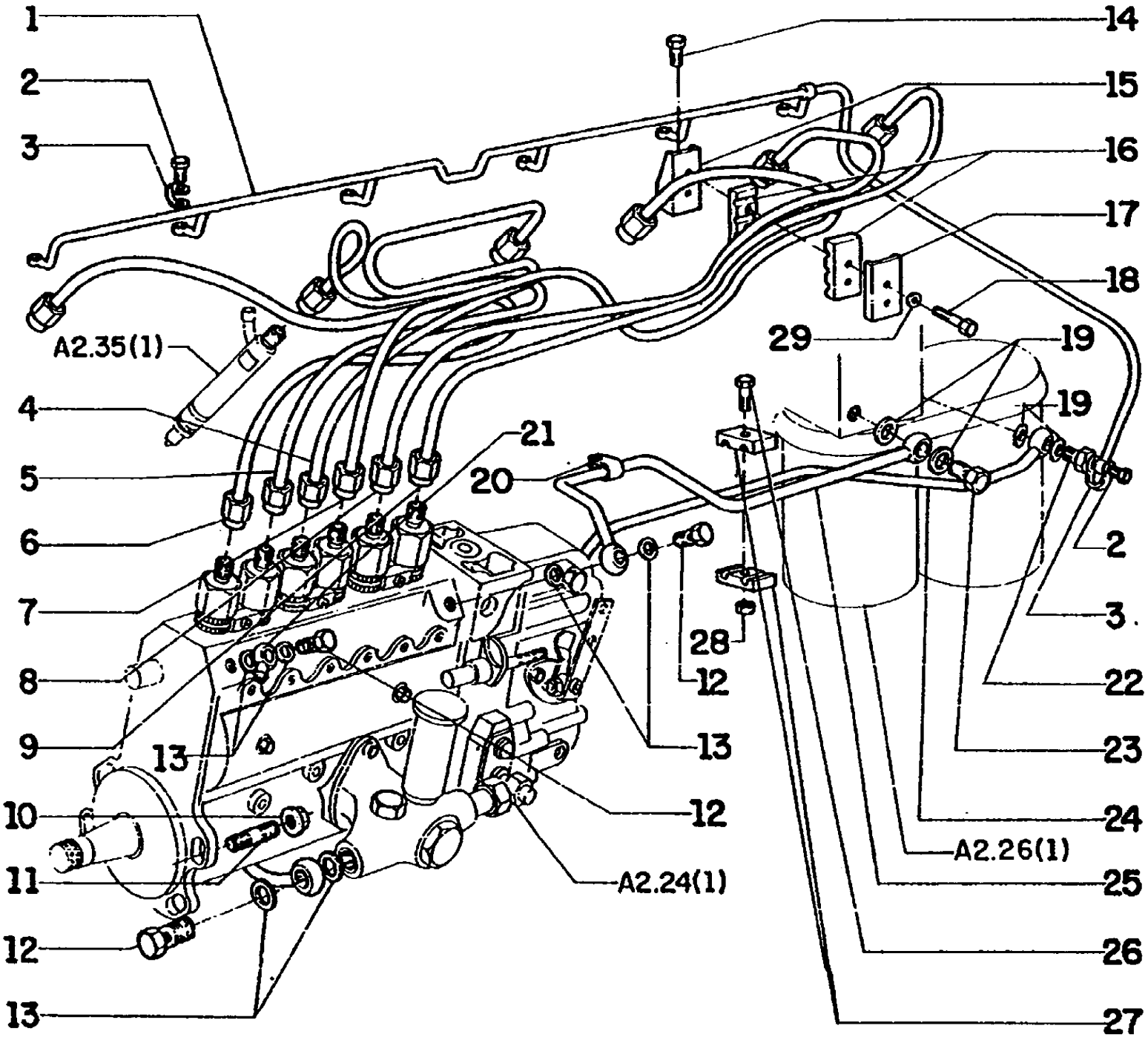
1
2
3
A2.35(1)
4
5
6
7
8
9
13
10
11
12
13
14
15
16
17
18
29
19
19
21
20
2
3
28
12
22
13
23
12
24
A2.26(1)
A2.24(1)
25
26
27

FG85 SERIES B MOTORGRADER

A2.24(002) FUEL INJECTION SYSTEM

Ref	Numero de Pieza	Ctd	Descripción
1	75286118	1	TUBE
2	75208950	7	FITTING
3	75208924	7	WASHER
4	75208936	1	TUBE
5	75206937	1	TUBE
6	75208938	1	TUBE
7	75208942	1	TUBE
8	75208941	1	TUBE
9	75208940	1	TUBE
10	75208933	4	NUT
11	75286084	4	STUD
12	75208935	3	FITTING
13	75208931	6	WASHER
14	75208944	4	SCREW
15	75208945	2	SUPPORT
16	75286117	4	CUSHION
17	75208947	2	SUPPORT
18	75208948	4	SCREW
19	75208952	4	WASHER
20	75208949	2	CLAMP
21	75208932	1	FITTING
22	75286123	1	FITTING
23	75208953	1	FITTING
24	75286122	1	TUBE
25	75286083	1	TUBE
26	75206882	1	SCREW
27	75206883	2	CLAMP
28	75206954	1	NUT
29	75286116	4	WASHER

A2.25(001) FUEL SEDIMENT BOWL

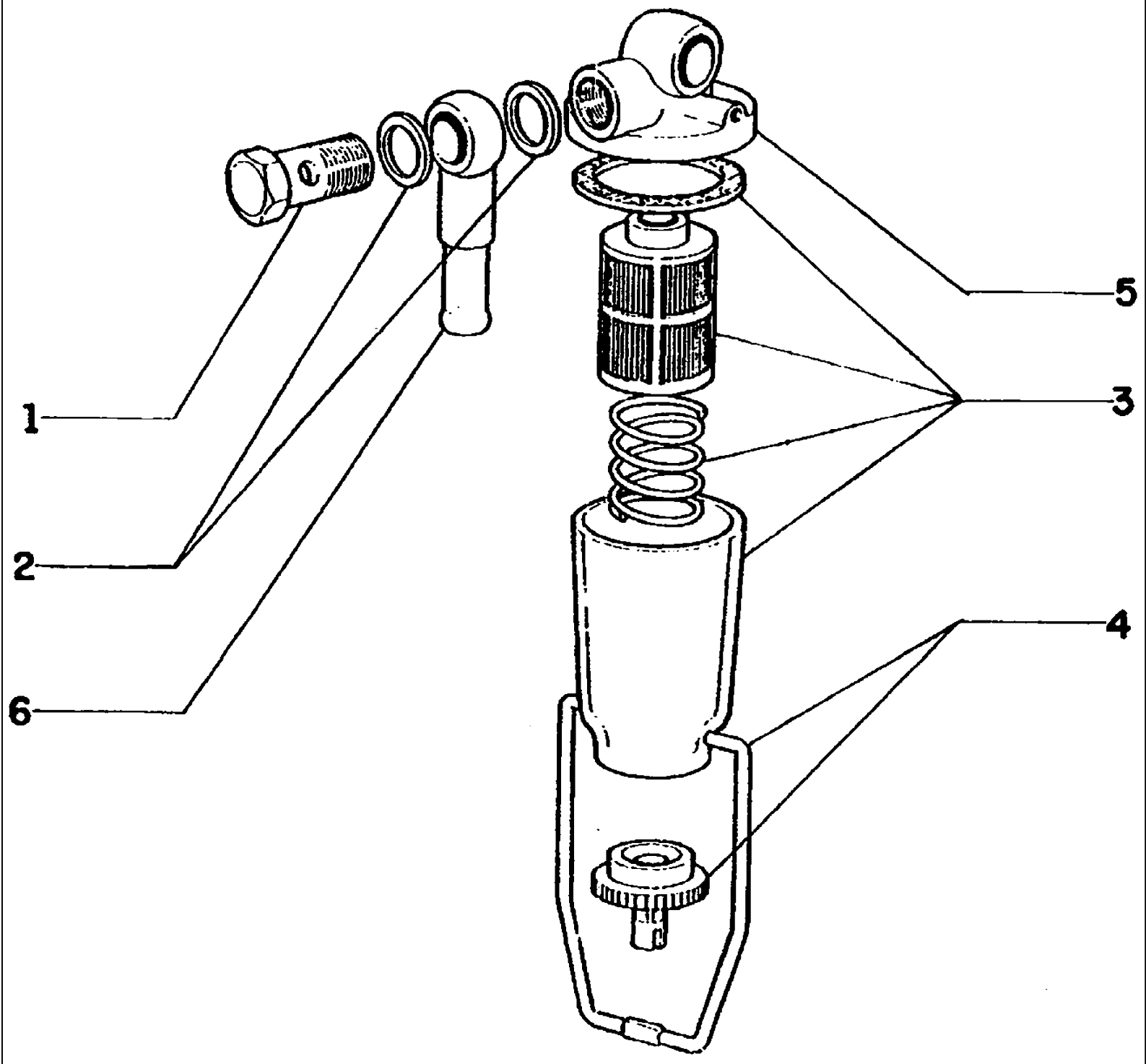

FG85 SERIES B MOTORGRADER

A2.25(001) FUEL SEDIMENT BOWL

Ref	Numero de Pieza	Ctd	Descripción
1	705737	1	FITTING
2	746152	2	SEAL RING
3	8320238	1	KIT
4	766903	1	KIT
5	8320234	1	COVER
6	591685	1	FITTING

A2.26(001) FUEL FILTER

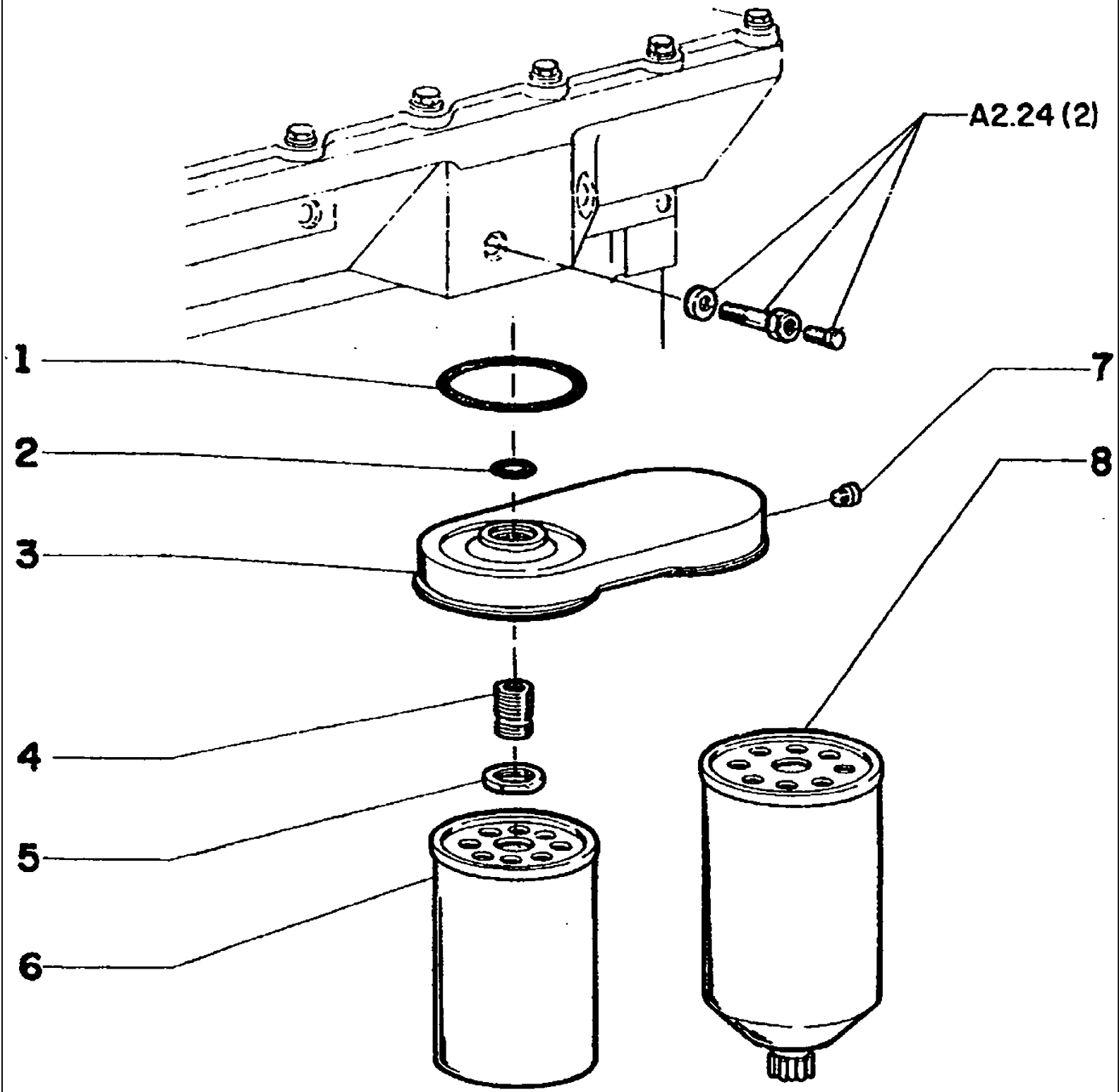

FG85 SERIES B MOTORGRADER

A2.26(001) FUEL FILTER

Ref	Numero de Pieza	Ctd	Descripción
1	75208267	1	O'RING
2	75208268	1	O'RING
3	75206825	1	CYLINDER HEAD
4	75208270	1	FITTING
5	75208271	1	NUT
6	75208272	1	FILTERING ELEM.
7	75208273	1	PLUG
8	75208274	1	FILTERING ELEM.

A2.27(001) INJECTION PUMP

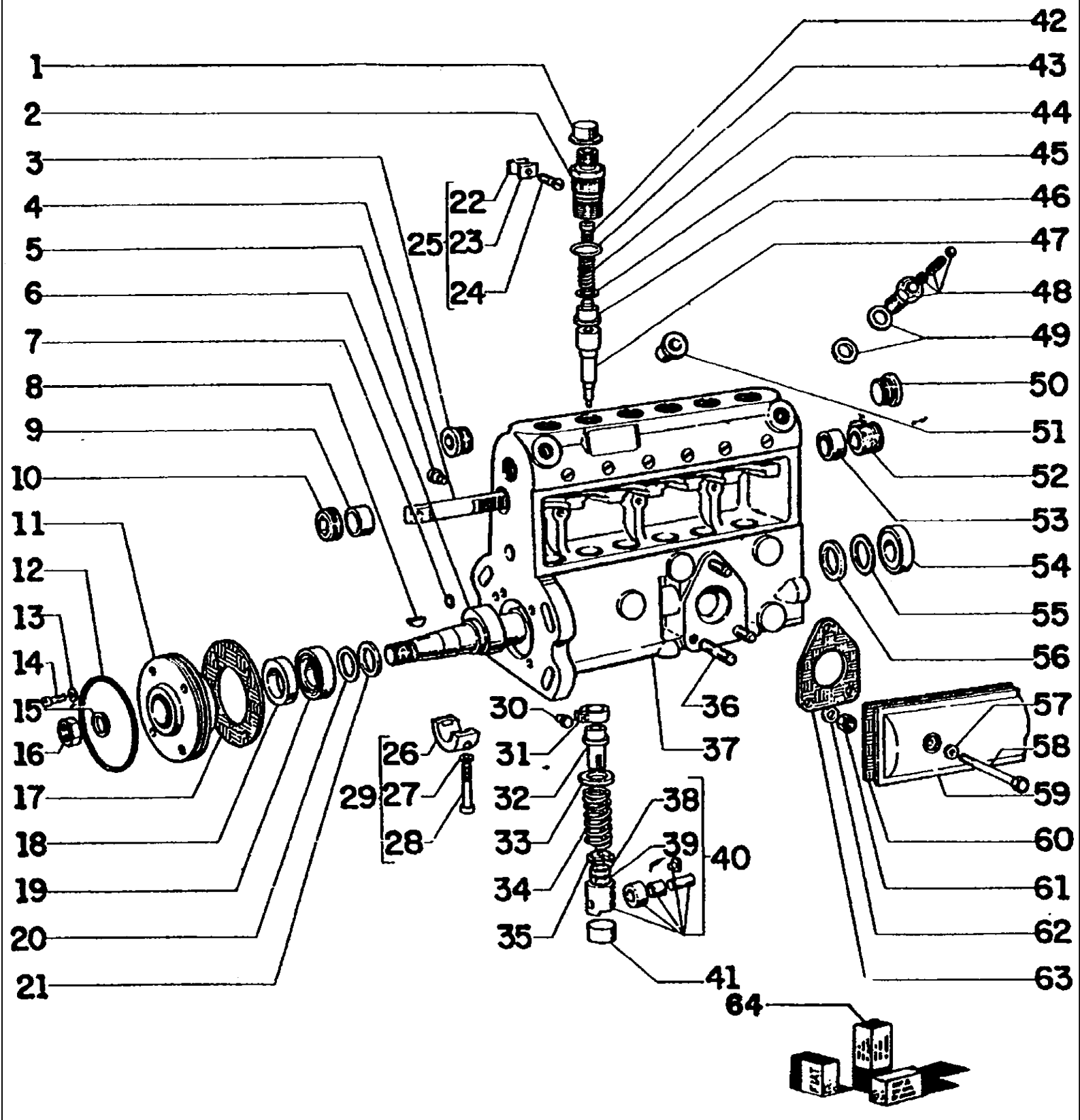

FG85 SERIES B MOTORGRADER

A2.27(001) INJECTION PUMP

Ref	Numero de Pieza	Ctd	Descripción
1	75204423	6	CAP
2	75207959	6	FITTING
3	75204112	1	PLUG
4	75204118	1	CAMSHAFT
5	75204108	1	SCREW
6	75207964	1	SHAFT
7	75207970	1	O'RING
8	75285207	1	KEY
9	75204095	1	RING
10	75204103	1	BUSHING
11	75207965	1	COVER
12	75207969	1	O'RING
13	75204409	4	LOCKWASHER
14	9923751	4	SCREW
15	10517171	1	LOCKWASHER
16	75204494	1	NUT
17	75204419	1	SEAL ASSY
18	75204493	1	SEAL
19	75204491	1	BEARING
20	75204401	*	WASHER
20	75204402	*	WASHER
20	75204403	*	WASHER
20	75204404	*	WASHER
20	75204405	*	WASHER
20	75204406	*	WASHER
20	75204407	*	WASHER
21	75204400	1	WASHER
22	75204417	3	CLAMP
23	75204416	3	CLAMP
24	75204418	3	SCREW
25	75204131	3	CLAMP
26	75204410	1	HALF BEARING
27	75204412	1	SEAL RING
28	75204411	1	SCREW
29	75204132	1	HALF BEARING
30	75204109	6	SCREW
31	75204120	*	TOOTHED SECTOR
31	75204397	*	TOOTHED SECTOR
32	75204097	6	REGULATOR
33	75204083	6	CUP
34	75207960	6	SPRING
35	75207963	6	SEAT
36	74060151	3	STUD

FG85 SERIES B MOTORGRADER

A2.27(001) INJECTION PUMP

Ref	Numero de Pieza	Ctd	Descripción
37	75207955	1	CASE
38	75204110	6	SCREW
39	75207962	6	NUT
40	75207961	6	TAPPET
41	75204298	6	CAP
42	75207971	6	VALVE
43	75285206	6	O'RING
44	75204113	6	SPRING
45	75204396	6	SEAL RING
46	75285205	6	VALVE
47	75207956	6	PLUNGER
48	75207968	1	VALVE
49	79038472	2	RING
50	75207830	1	PLUG
51	75204422	1	CAP
52	75204103	1	BUSHING
53	75204095	1	RING
54	75204492	1	BEARING
55	75204076	*	WASHER
55	75204077	*	WASHER
55	75204078	*	WASHER
55	75204079	*	WASHER
55	75204080	*	WASHER
55	75204074	*	WASHER
55	75204081	*	WASHER
55	75204082	*	WASHER
56	75204399	1	RING
57	75207835	2	SEAL RING
58	75207834	2	SCREW
59	75207967	1	COVER
60	75204100	1	SEAL ASSY
61	15896211	3	NUT, M6, CI 8
62	10516470	3	LOCKWASHER
63	74060150	1	GASKET
64	75204133	K	KIT (INCLUDES
64			ITEMS 13-14-
64			45-57)

A2.28(001) SPEED GOVERNOR

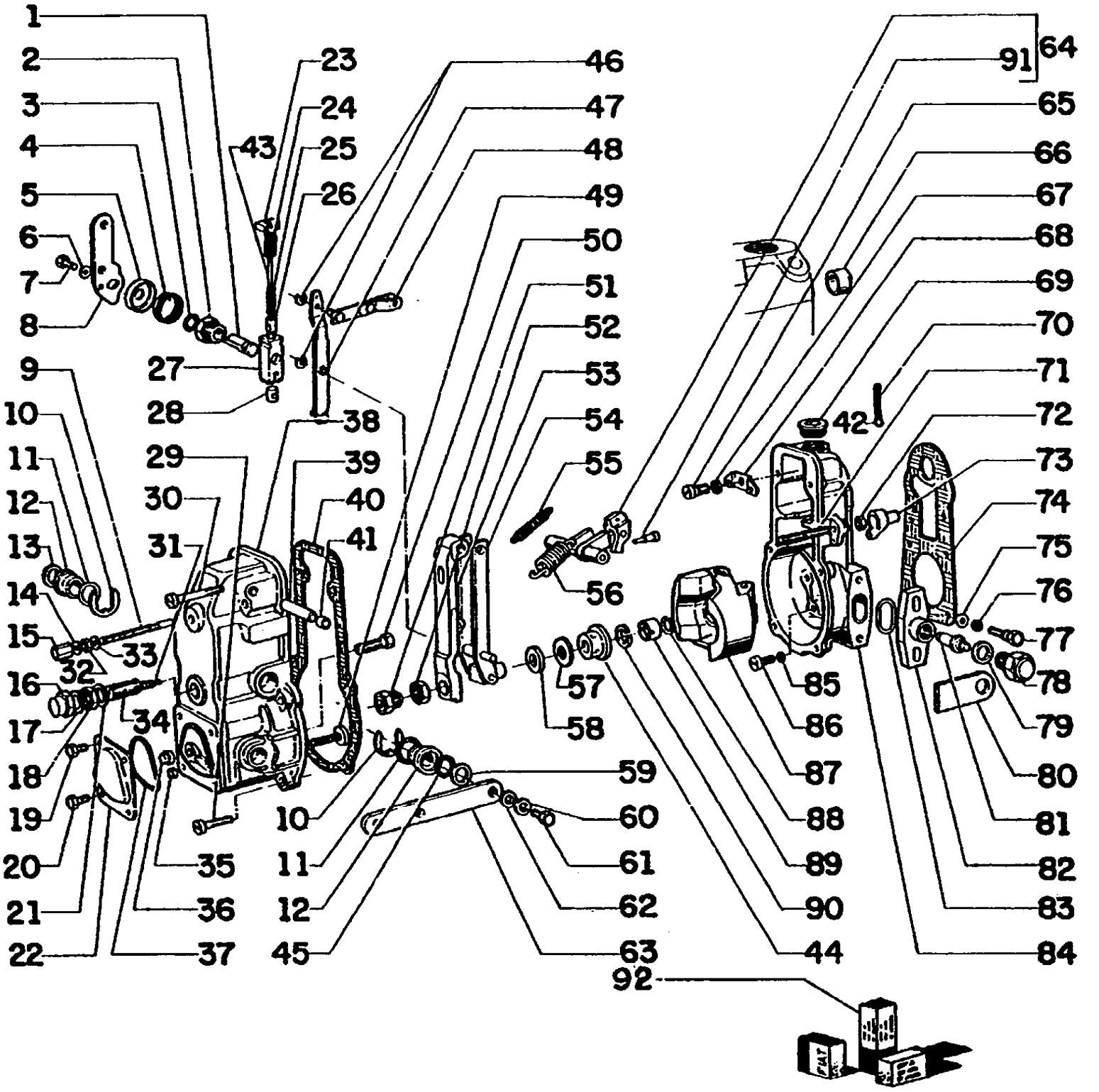

FG85 SERIES B MOTORGRADER

A2.28(001) SPEED GOVERNOR

Ref	Numero de Pieza	Ctd	Descripción
1	75204506	1	PIN
2	75204503	1	BUSHING
3	75204135	1	LEVER
4	75204509	1	SPRING
5	75204504	1	RETAINER
6	10516470	1	LOCKWASHER
7	9007836	1	SCREW
8	75204167	1	LEVER
9	75205247	1	PIN
10	75205259	2	SNAP RING
11	75204370	2	SEAL RING
12	75204143	2	BUSHING
13	75204144	1	GUARD
14	75204364	1	SEAL RING
15	75205244	1	NUT
16	75205245	1	NUT
17	75204956	1	SEAL RING
18	75205242	1	NUT
19	75204376	2	SCREW
20	75204375	2	SCREW
21	75204956	1	SEAL RING
22	75207995	1	COVER
23	75204510	1	SUPPORT
24	75204511	1	SPRING
25	75204505	1	SPRING
26	75204507	1	RETAINER
27	75207987	1	SUPPORT
28	75204159	1	PAD
29	75207993	4	SCREW
30	75205256	2	SCREW
31	75204160	1	SPRING
32	75205258	1	NUT
33	75204364	1	SEAL RING
34	75205248	1	SCREW
35	15896211	1	NUT, M6, Cl 8
36	75207976	1	NUT
37	75207994	1	RING
38	75207974	1	COVER
39	75204157	1	SHAFT
40	75204379	1	SEAL ASSY
41	75204145	1	CAP
42	75204165	2	LEAD SEAL
43	75204502	1	SPRING

FG85 SERIES B MOTORGRADER

A2.28(001) SPEED GOVERNOR

Ref	Numero de Pieza	Ctd	Descripción
44	75207984	1	O'RING
45	79046274	1	SEAL RING
46	75204367	2	SNAP RING
47	75204150	1	LEVER
48	75204151	1	SUPPORT
49	75205249	1	SCREW
50	75207975	1	SCREW
51	75207978	1	RETAINER
52	75207979	1	NUT
53	75207977	1	LEVER
54	75207980	1	LEVER
55	75207992	1	SPRING
56	75207985	1	SPRING
57	75207982	1	BEARING
58	75207983	1	WASHER
59	79046272	*	WASHER
59	79046272	*	WASHER
60	10516470	1	LOCKWASHER
61	9007836	1	SCREW
62	14496401	1	WASHER
63	75207986	1	LEVER
64	75204233	1	LEVER
65	10379011	1	SCREW
66	75204126	1	CAP
67	10516671	1	LOCKWASHER
68	75204230	1	PLATE
69	75205252	1	PLUG
70	75204166	2	WIRE TERMINAL
71	75205293	1	PIN
72	15896211	1	NUT, M6, Cl 8
73	75204368	1	CAP
74	75204147	1	SEAL ASSY
75	75207999	2	WASHER
76	10516671	2	LOCKWASHER
77	75207998	2	SCREW
78	75207989	1	PLUG
79	79046212	1	SEAL RING
80	75207990	1	LOCKPLATE
81	75207991	1	PIN
82	75207996	*	FLANGE
82	75207997	*	FLANGE
83	75285002	1	O'RING
84	75207972	1	CASE

FG85 SERIES B MOTORGRADER

A2.28(001) SPEED GOVERNOR

Ref	Numero de Pieza	Ctd	Descripción
85	10516470	6	LOCKWASHER
86	9923751	6	SCREW
87	75207988	1	FLYWEIGHT
88	75205241	1	LOCKWASHER
89	75205246	1	NUT
90	75207981	1	LOCKWASHER
91	75205250	1	SCREW
92	75285003	K	KIT (INCLUDES
92			ITEMS 11-20-21
92			37-40-42-60-62
92			70-85)

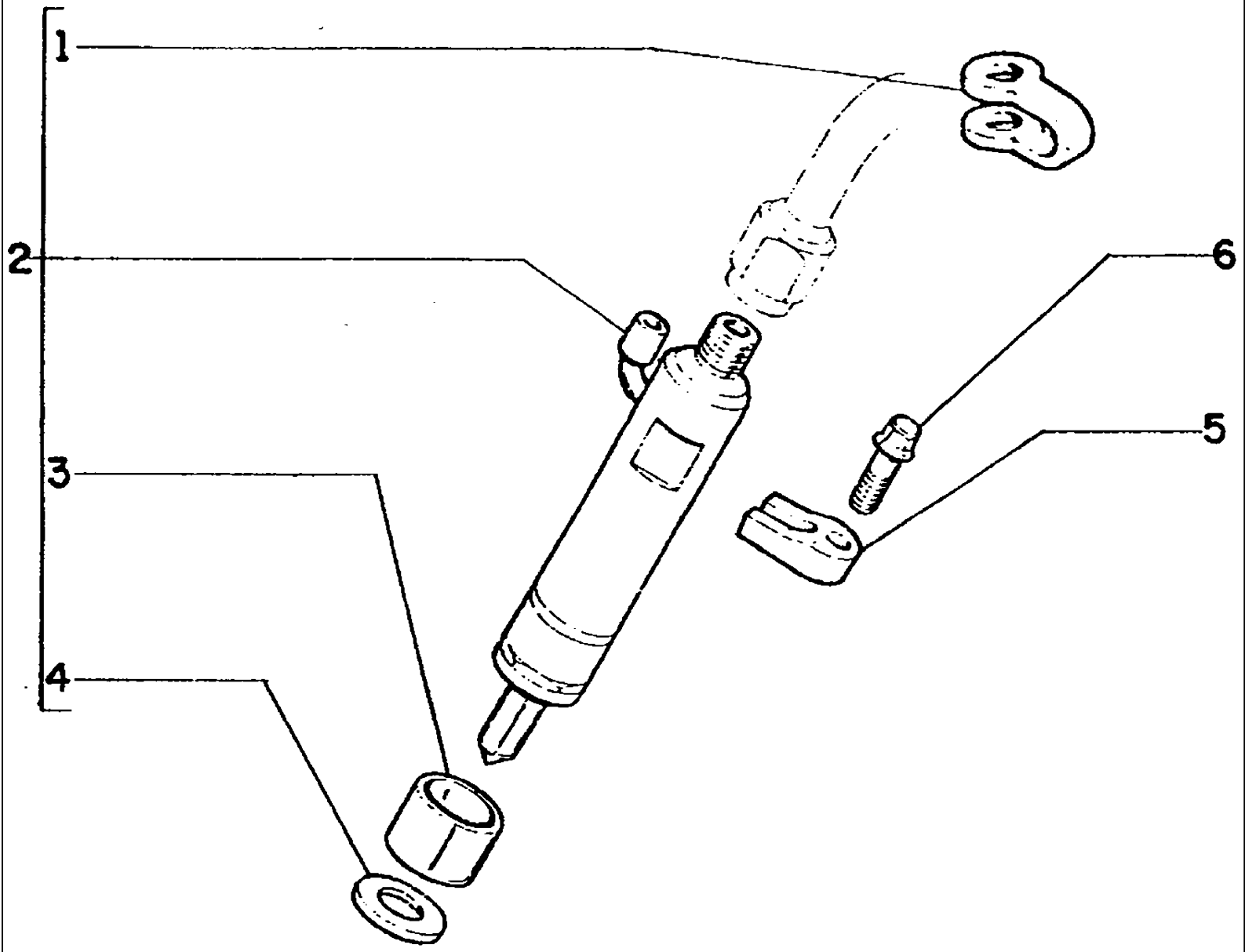
1
2
3
4
5
6

FG85 SERIES B MOTORGRADER

A2.35(001) NOZZLE HOLDER

Ref	Numero de Pieza	Ctd	Descripción
1	75208924	6	WASHER
2	75208927	6	NOZZLE
3	75208929	6	SEAL
4	75208928	6	WASHER
5	75208930	6	SUPPORT
6	75208926	6	SCREW

A2.35(002) NOZZLE HOLDER

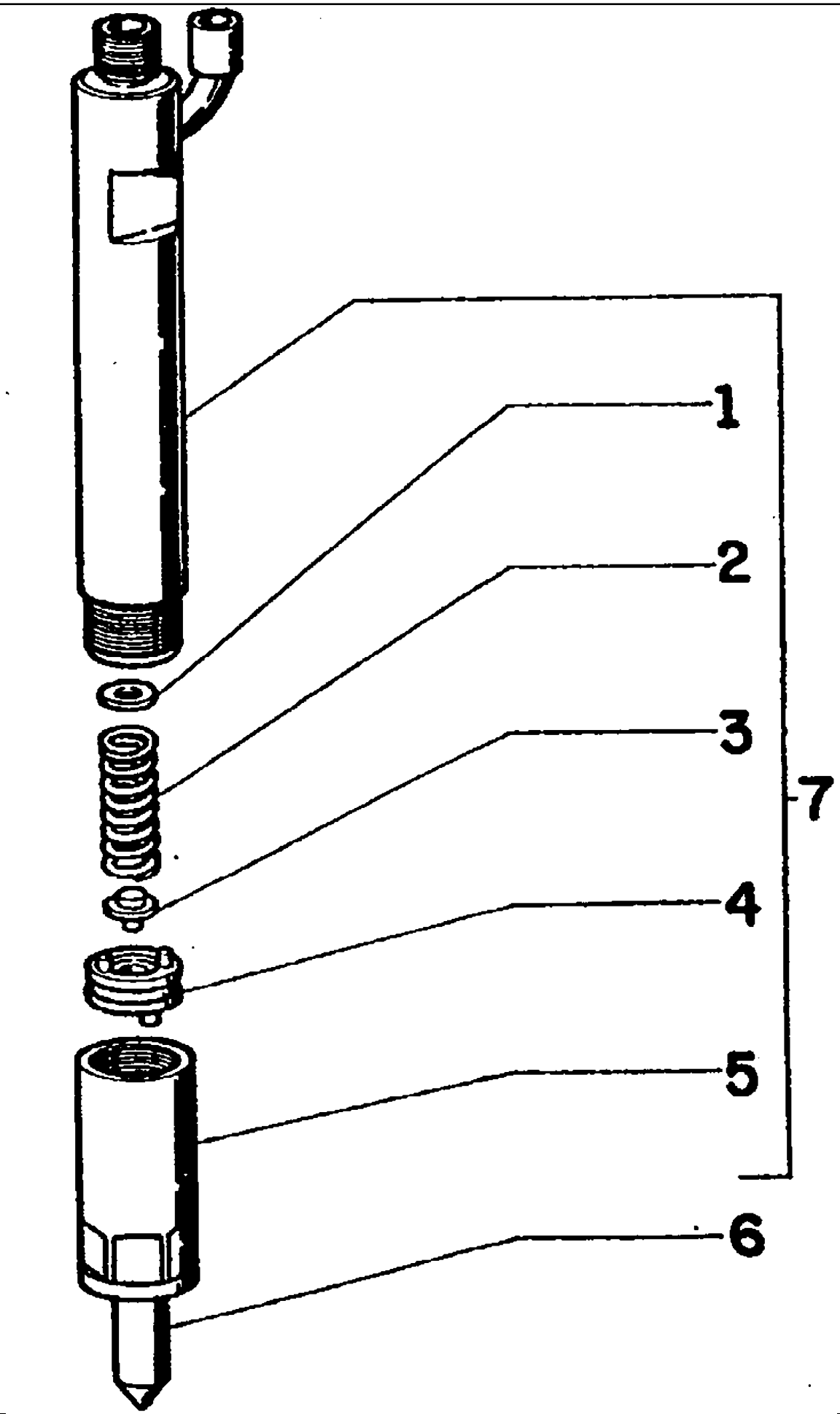

FG85 SERIES B MOTORGRADER

A2.35(002) NOZZLE HOLDER

Ref	Numero de Pieza	Ctd	Descripción
1	75207862	*	WASHER
1	75207849	*	WASHER
1	75207850	*	WASHER
1	75207851	*	WASHER
1	75207852	*	WASHER
1	75207853	*	WASHER
1	75207854	*	WASHER
1	75207855	*	WASHER
1	75207856	*	WASHER
1	75207857	*	WASHER
1	75207858	*	WASHER
1	75207859	*	WASHER
1	75207860	*	WASHER
1	75207861	*	WASHER
1	75207863	*	WASHER
1	75207864	*	WASHER
1	75207865	*	WASHER
1	75207866	*	WASHER
1	75207867	*	WASHER
1	75207868	*	WASHER
1	75207869	*	WASHER
1	75207870	*	WASHER
1	75207871	*	WASHER
1	75207872	*	WASHER
1	75207873	*	WASHER
1	75207874	*	WASHER
1	75207875	*	WASHER
1	75207876	*	WASHER
1	75207877	*	WASHER
1	75207878	*	WASHER
2	75207879	6	SPRING
3	75207880	6	ROD
4	75207881	6	PEDAL
5	75207882	6	NUT
6	75207848	6	NOZZLE
7	75285213	6	NOZZLE HOLDER

A2.43/1(001) COLD WEATHER STARTING AID 12 VOLT MACHINE

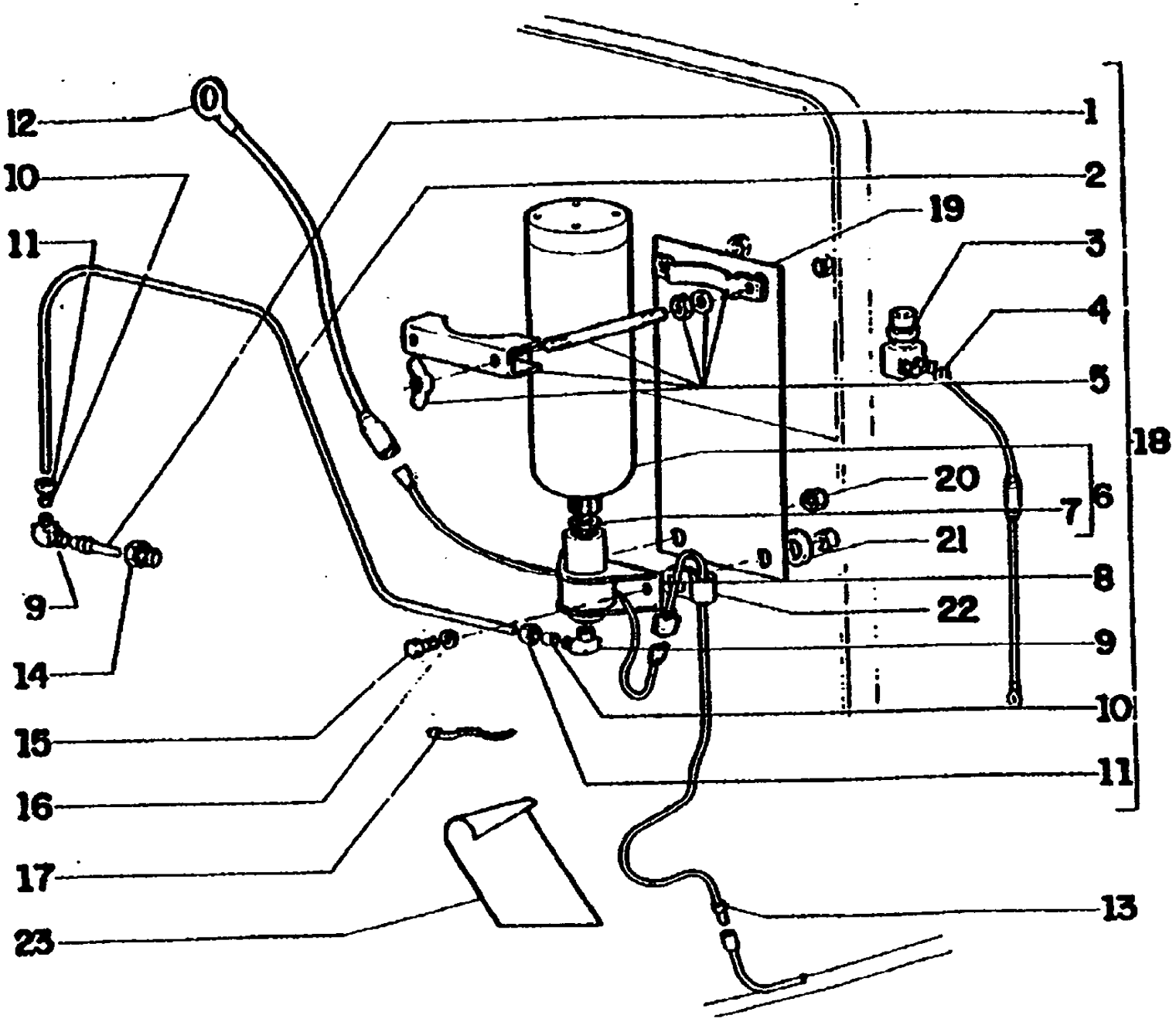

FG85 SERIES B MOTORGRADER

A2.43/1(001) COLD WEATHER STARTING AID 12 VOLT MACHINE

Ref	Numero de Pieza	Ctd	Descripción
1	73146645	1	W/0 CODE
2	73110484	1	TUBE
3	73115559	1	SWITCH
4	73140590	1	CABLE
5	70669359	1	CLAMP
6	73132158	1	CYLINDER
7	73070169	1	GASKET
8	75241755	1	VALVE
9	73052086	2	ELBOW
10	70911841	2	SLEEVE
11	70912589	2	NUT
12	73126111	1	CABLE
13	73153347	1	CABLE
14	70901825	1	FITTING
15	70928138	2	SCREW
16	70910285	2	LOCKWASHER
17	70196765	2	CLIP
18	75241761	1	CYLINDER
19	73153355	1	PLATE
20	70911024	1	NUT
21	70677004	1	WASHER
22	70928176	1	CLAMP
23	74029499	1	DECAL

A2.52(001) TURBO CHARGER

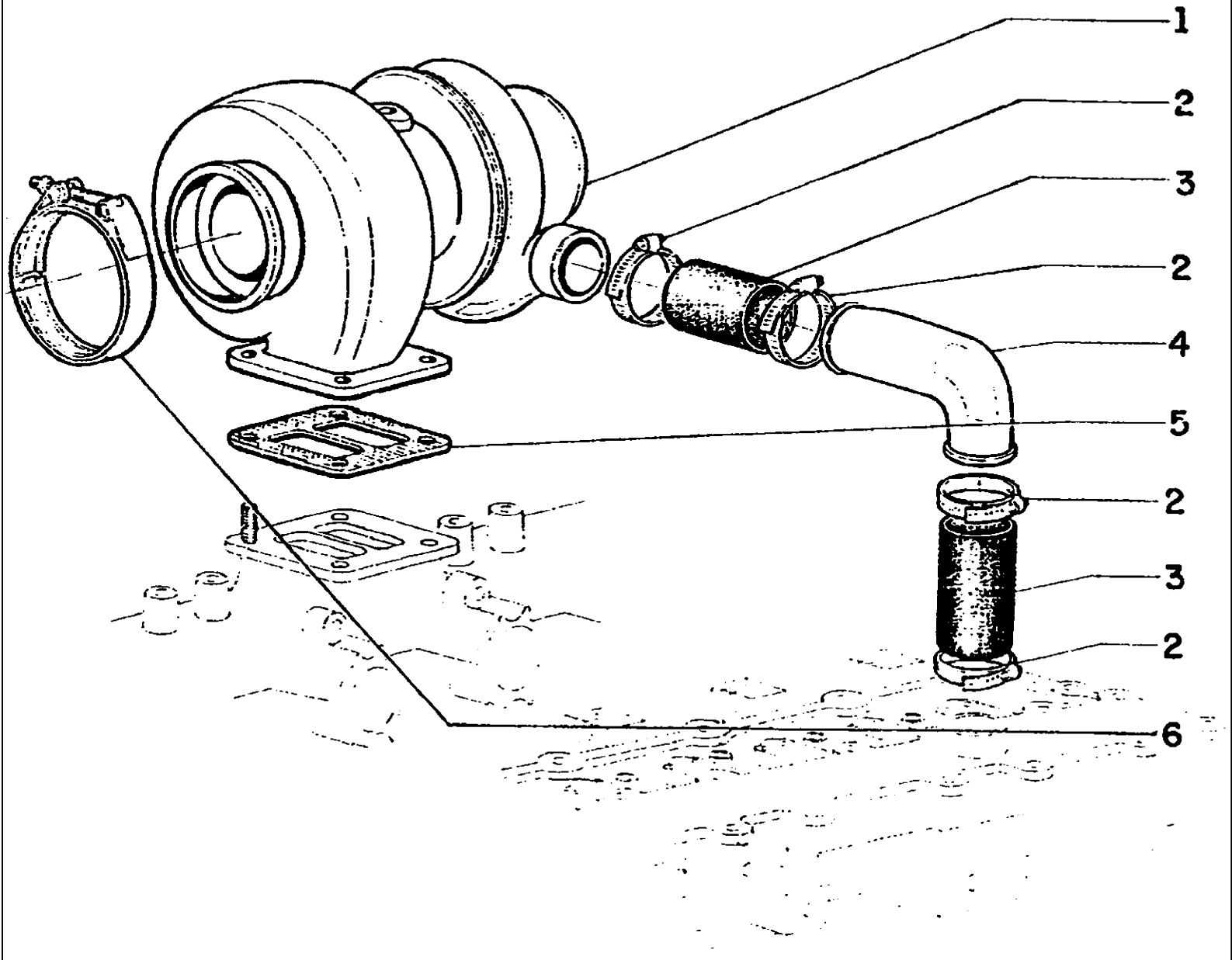

FG85 SERIES B MOTORGRADER

A2.52(001) TURBO CHARGER

Ref	Numero de Pieza	Ctd	Descripción
1	75208275	1	TURBOCHARGER
2	75208283	4	CLAMP
3	75286428	2	HOSE ASSY
4	75208279	1	TUBE
5	75206879	1	SEAL ASSY
6	75208324	1	CLAMP

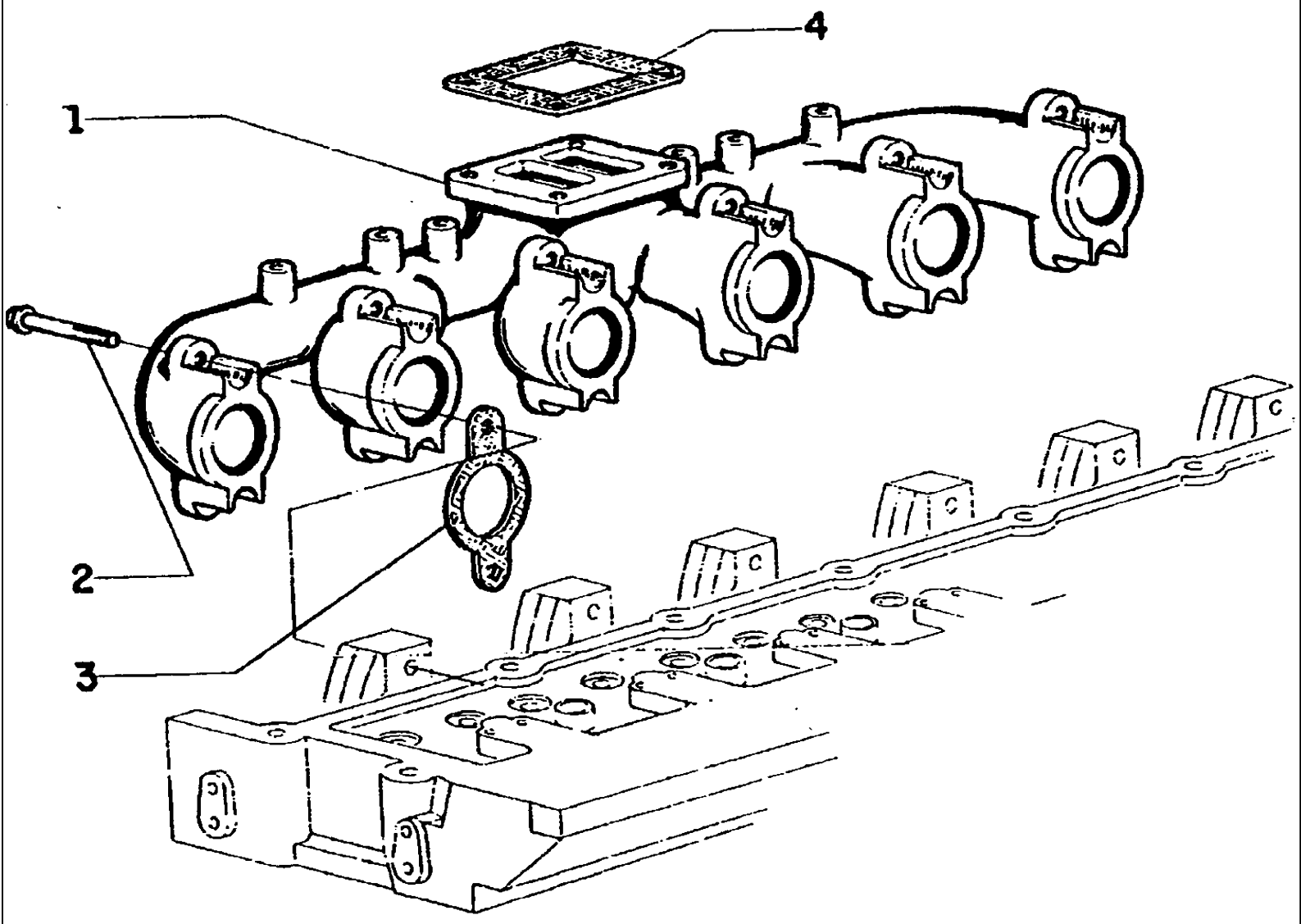
4
1
2
3

FG85 SERIES B MOTORGRADER

A2.54(001) INTAKE AND EXHAUST MANIFOLDS

Ref	Numero de Pieza	Ctd	Descripción
1	75206828	1	EXHAUST MANIF.
2	75208287	12	SCREW
3	75208288	6	SEAL ASSY
4	75206879	1	SEAL ASSY

A2.56(001) MUFFLER AND EXHAUST PIPE

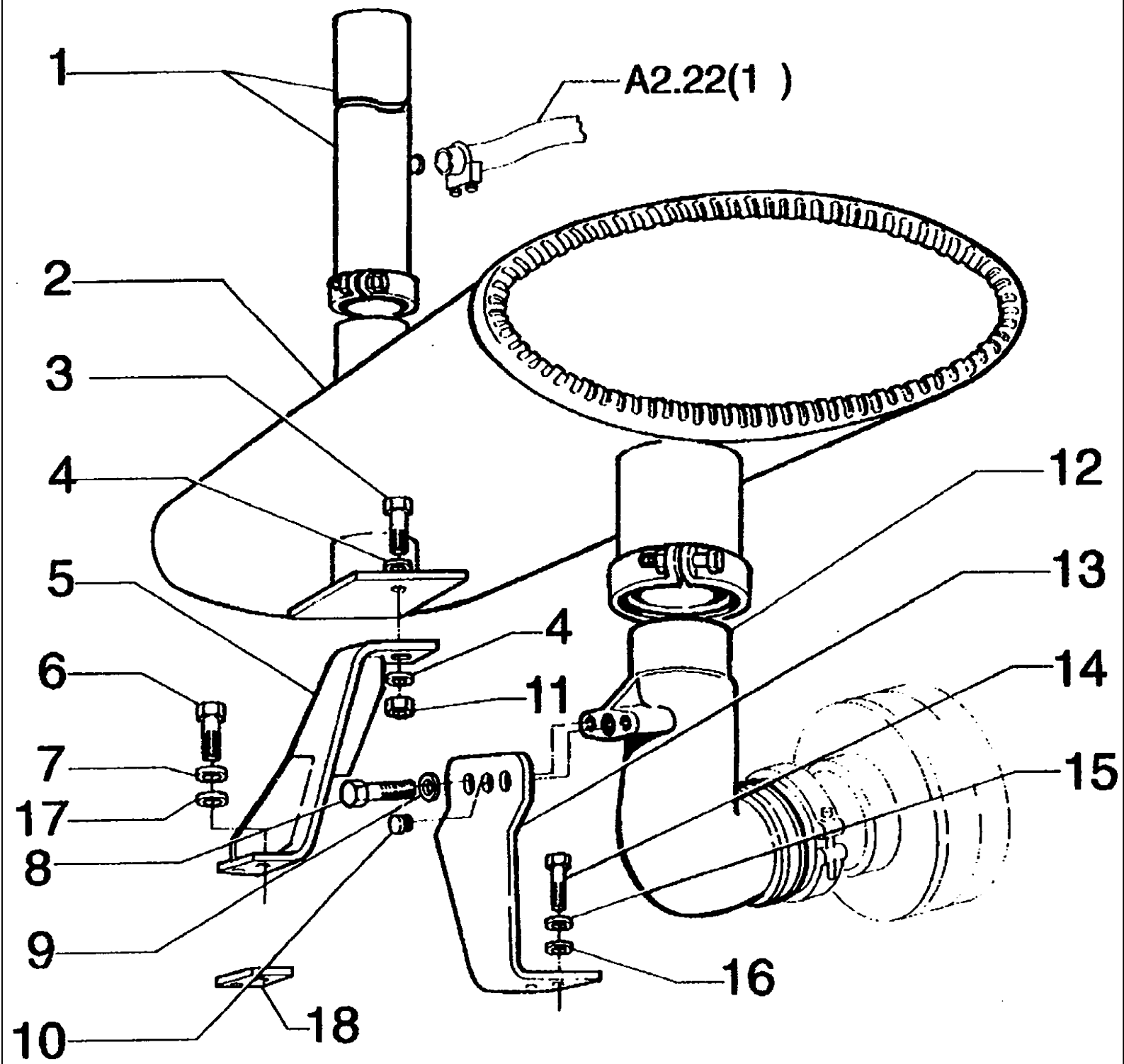

FG85 SERIES B MOTORGRADER

A2.56(001) MUFFLER AND EXHAUST PIPE

Ref	Numero de Pieza	Ctd	Descripción
1	73117687	1	TUBE
2	73121707	1	MUFFLER
3	70927173	1	SCREW
4	70630753	2	WASHER
5	73151746	1	SUPPORT
6	11112321	2	SCREW
7	12646921	2	WASHER, M12 x 28 x 3
8	70922763	2	SCREW
9	70677006	2	WASHER
10	70901652	1	PLUG
11	70911026	1	NUT
12	73151592	1	ELBOW
13	73151714	1	SUPPORT
14	11106031	2	BOLT, Hex, M10 x 20, 10.9, Full Thd
15	70950239	4	LOCKWASHER
16	12646821	4	WASHER
17	70950240	2	LOCKWASHER
18	73157596	1	SPACER

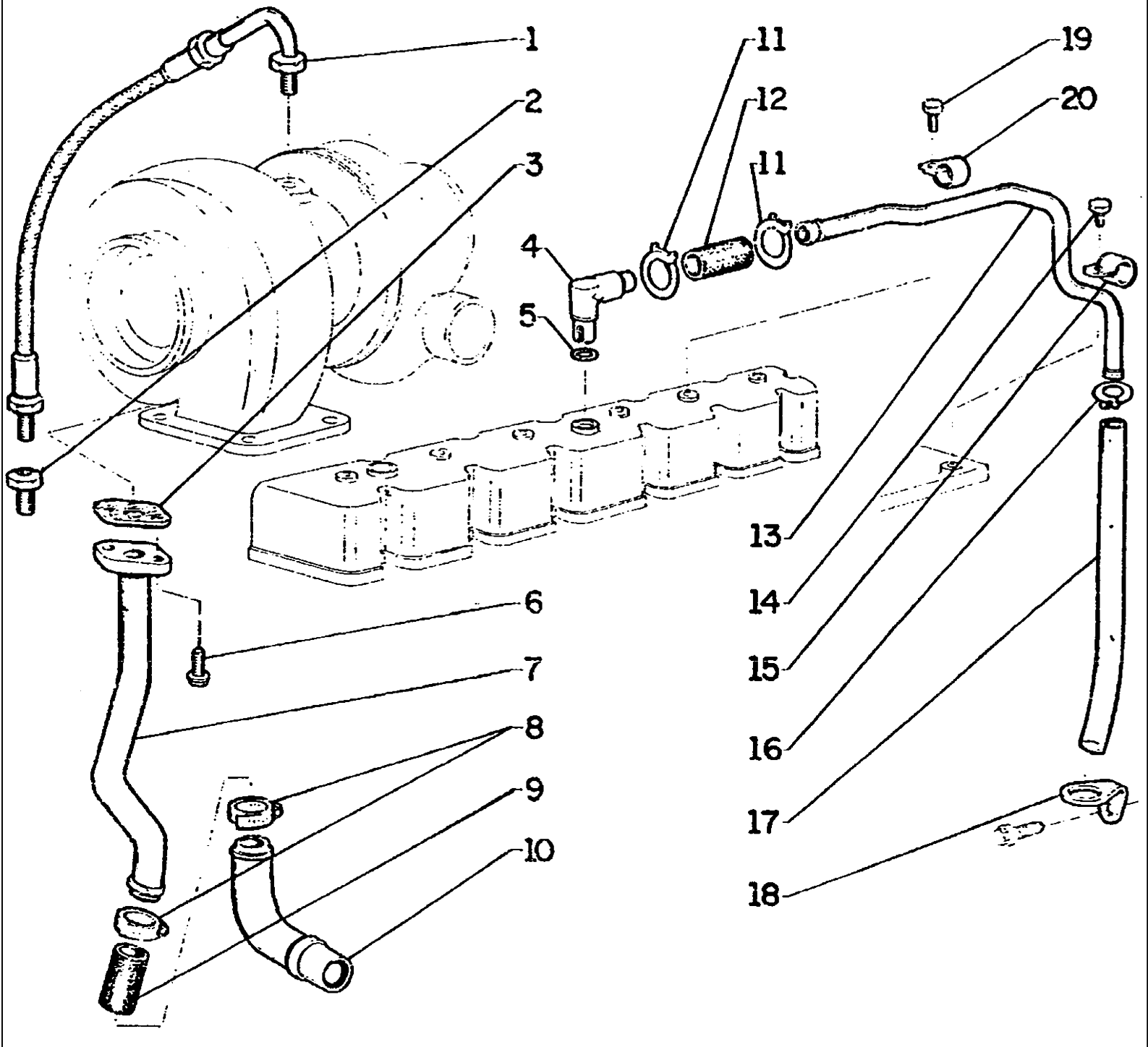
1
2
3
4
5
6
7
8
9
10
11
12
11
13
14
15
16
17
18
19
20

FG85 SERIES B MOTORGRADER

A3.01(001) LUBRICATION SYSTEM

Ref	Numero de Pieza	Ctd	Descripción
1	75208289	1	HOSE ASSY
2	75286539	1	FITTING
3	75208291	1	SEAL ASSY
4	75208292	1	FITTING
5	75206808	1	O'RING
6	75208294	2	SCREW
7	75285531	1	TUBE
8	75206810	1	CLAMP
9	75208297	1	HOSE ASSY
10	75208298	1	TUBE
11	75208299	2	CLAMP
12	75206832	1	HOSE ASSY
13	75208301	1	TUBE
14	75208347	1	SCREW
15	75206809	1	CLAMP
16	75208304	1	CLAMP
17	75206812	1	HOSE ASSY
18	75208306	1	CLAMP
19	75208307	1	SCREW
20	75208308	1	CLAMP

A3.01(002) OIL FILL LOCATION GAUGE OIL LEVEL

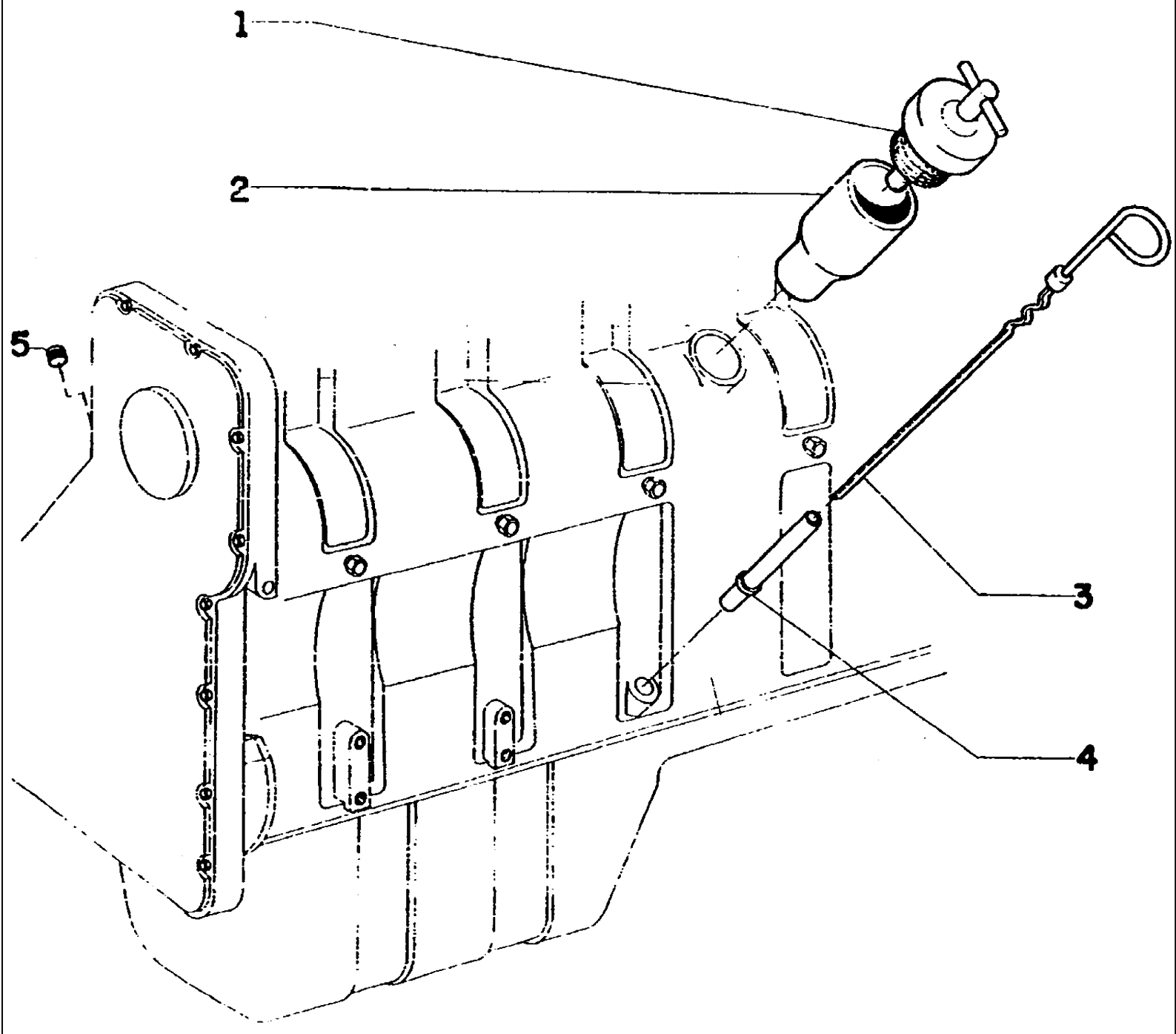

FG85 SERIES B MOTORGRADER

A3.01(002) OIL FILL LOCATION GAUGE OIL LEVEL

Ref	Numero de Pieza	Ctd	Descripción
1	75208372	1	COVER
2	75208373	1	FILLER PLUG
3	75208374	1	DIPSTICK
4	75208375	1	TUBE
5	75286111	1	PLUG

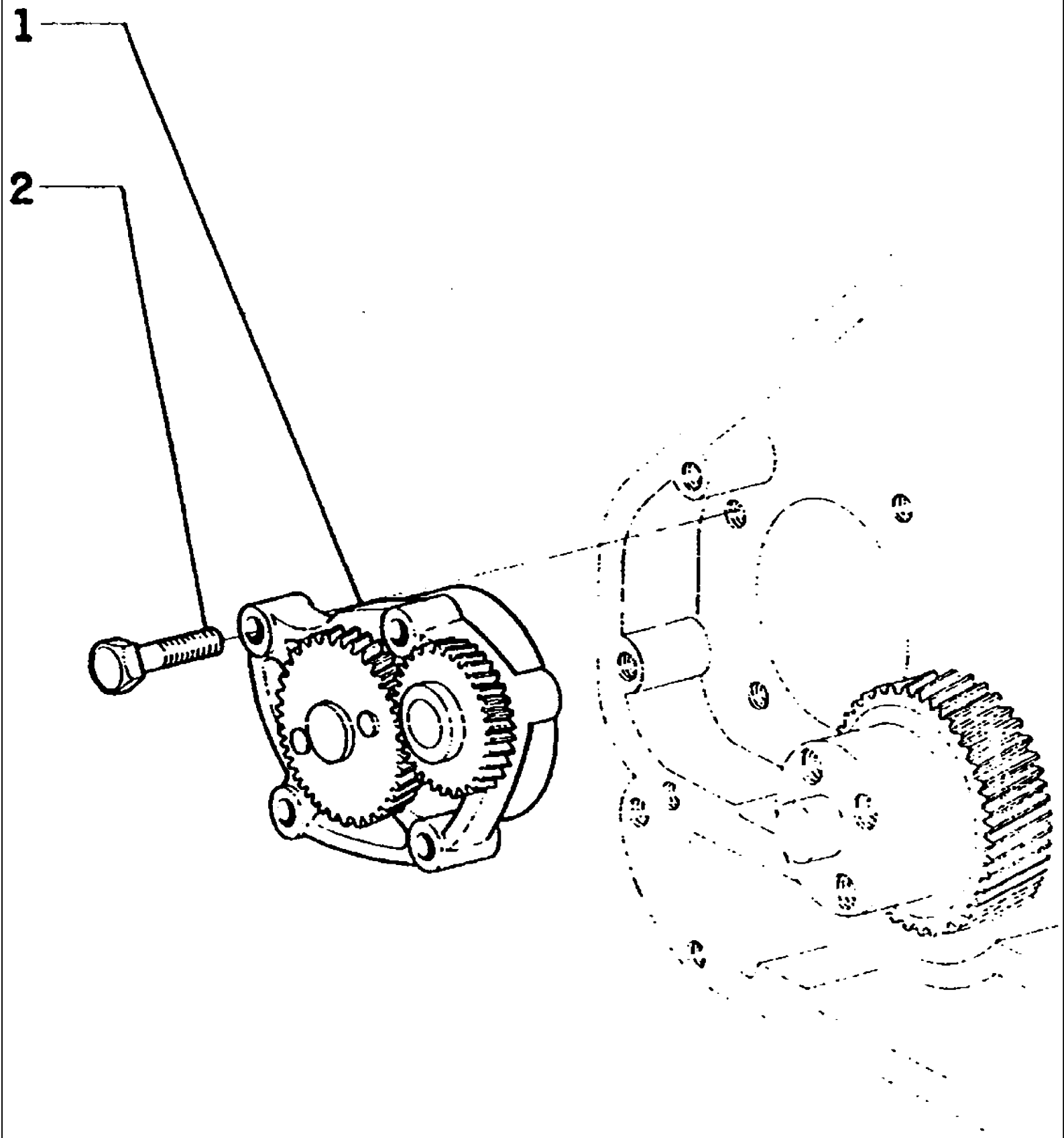
1
2

FG85 SERIES B MOTORGRADER

A3.02(001) OIL PUMP

Ref	Numero de Pieza	Ctd	Descripción
1	75286160	1	PUMP
2	75208384	4	SCREW

A3.03(001) OIL FILTER & HEAT EXCHANGER

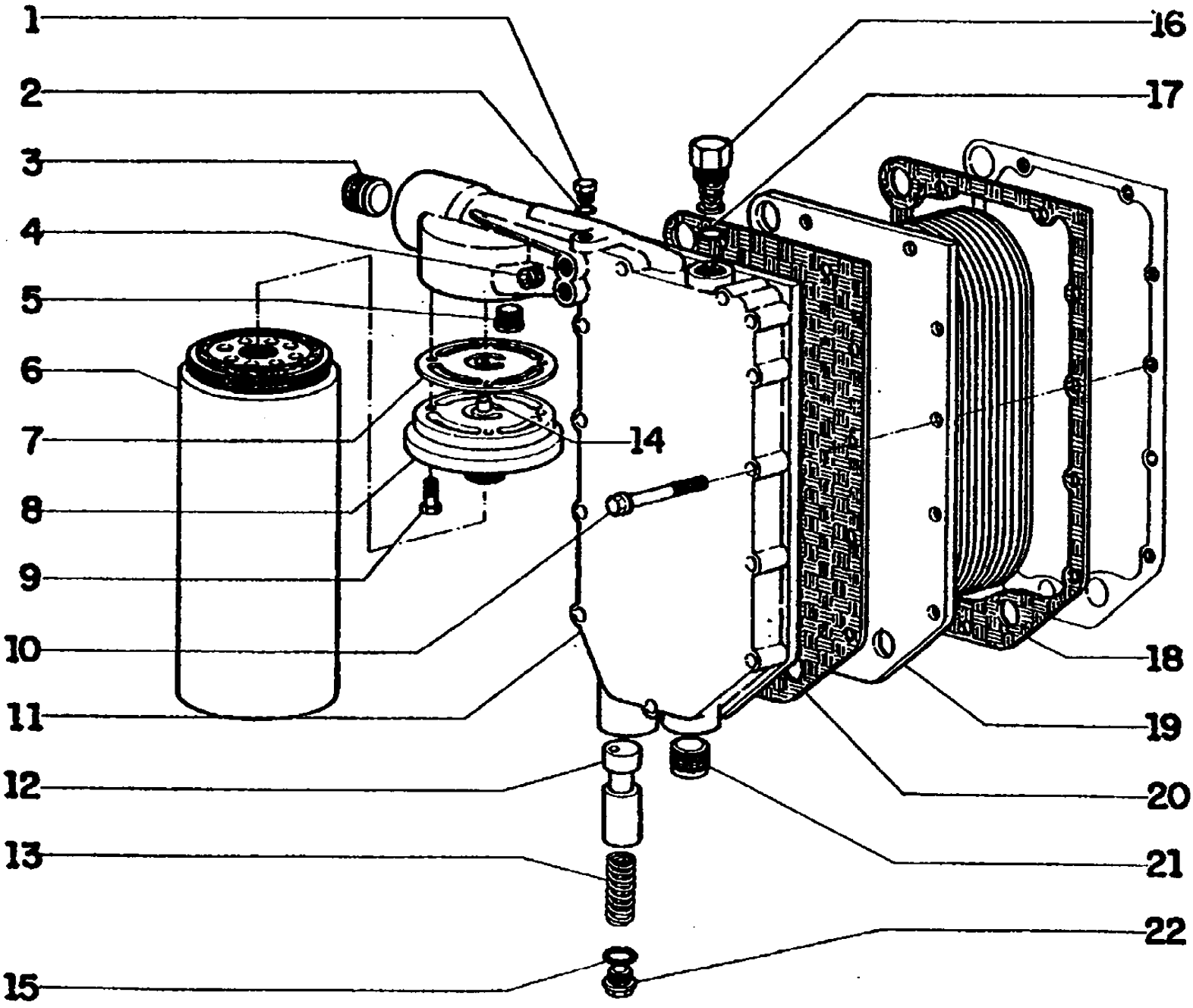

FG85 SERIES B MOTORGRADER

A3.03(001) OIL FILTER & HEAT EXCHANGER

Ref	Numero de Pieza	Ctd	Descripción
1	75286167	1	PLUG
2	75286174	1	O'RING
3	75208320	1	PLUG
4	75286339	1	PLUG
5	75208323	1	VALVE
6	75285999	1	FILTER
7	75286169	1	GASKET
8	75286000	1	HEAD
9	75208174	4	SCREW
10	75286164	11	SCREW
11	75286163	1	COVER
12	75286168	1	VALVE
13	75208316	1	SPRING
14	75286165	1	WASHER
15	75286172	1	O'RING
16	75286351	1	THERMOSTAT
17	75286171	1	O'RING
18	75285211	1	SEAL ASSY
19	75208310	1	HEAT EXCHANGER
20	75286162	1	SEAL ASSY
21	75286173	1	PLUG
22	75286352	1	PLUG

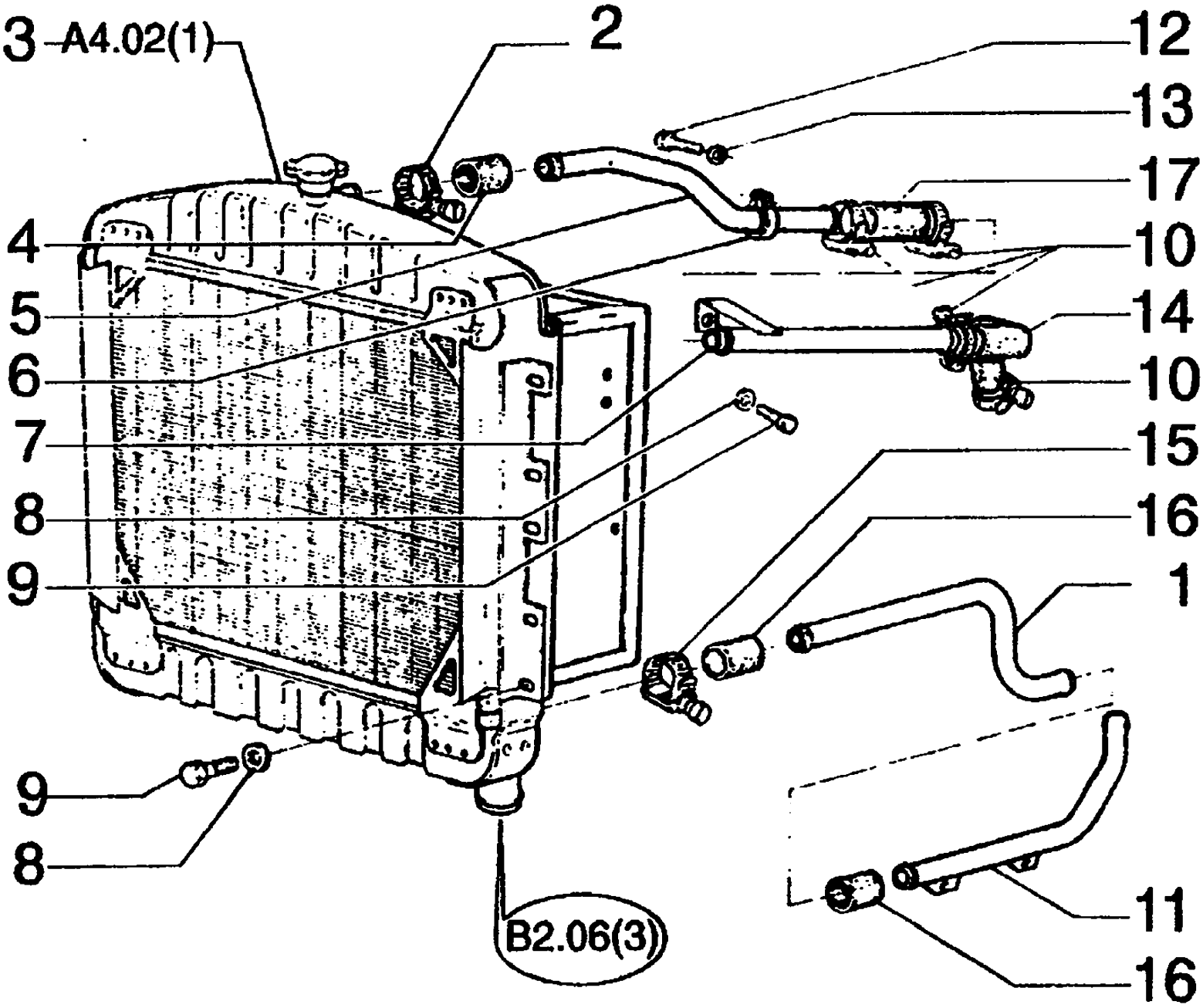
3
A4.02(1)
2
12
13
17
4
10
5
14
6
10
7
15
8
16
9
1
9
8
11
16
B2.06(3)

FG85 SERIES B MOTORGRADER

A4.01(001) RADIADOR AND PIPING

Ref	Numero de Pieza	Ctd	Descripción
1	75235194	1	TUBE
2	70921913	2	CLAMP
3	75236791	1	RADIATOR - FG85R/85A
3	75236886	1	RADIATOR - FG105A/105R
4	73031151	1	HOSE ASSY
5	73155825	1	TUBE
6	70928439	1	CLAMP
7	75245896	1	TUBE
8	70677006	11	WASHER
9	70922763	11	SCREW
10	70921914	4	CLAMP
11	73158771	1	TUBE
12	70927219	1	SCREW
13	70928178	1	WASHER
14	75245895	1	HOSE
15	70925881	5	CLAMP
16	73116330	2	HOSE
17	73031151	1	HOSE ASSY

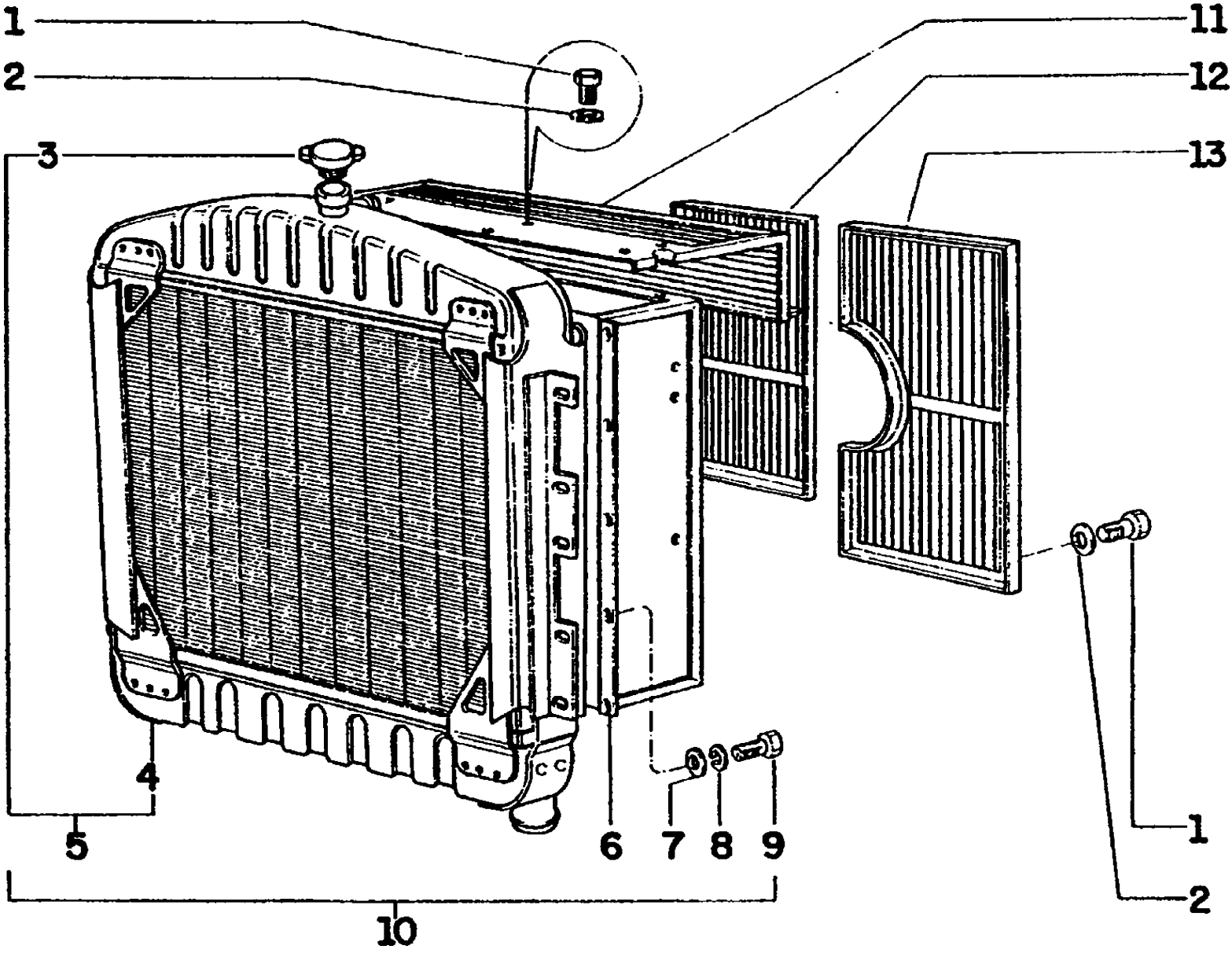
1
2
3
4
5
6
7
8
9
10
11
12
13
1
2

FG85 SERIES B MOTORGRADER

A4.01(002) RADIATOR

Ref	Numero de Pieza	Ctd	Descripción
1	70922300	14	SCREW
2	70929156	14	WASHER
3	75236004	1	COVER
4	75236845	1	RADIATOR
5	75286114	1	RADIATOR
6	75237319	1	DEFLECTOR - FG105A/105R
6	75237324	1	DEFLECTOR - FG85a/85R
7	70900816	10	WASHER
8	70910285	10	LOCKWASHER
9	70928182	10	SCREW
10	75236791	1	RADIATOR (2)
10	75236886	1	RADIATOR (1)
11	75237044	1	SUPPORT
12	75238353	1	GRID
13	75237323	1	GRID

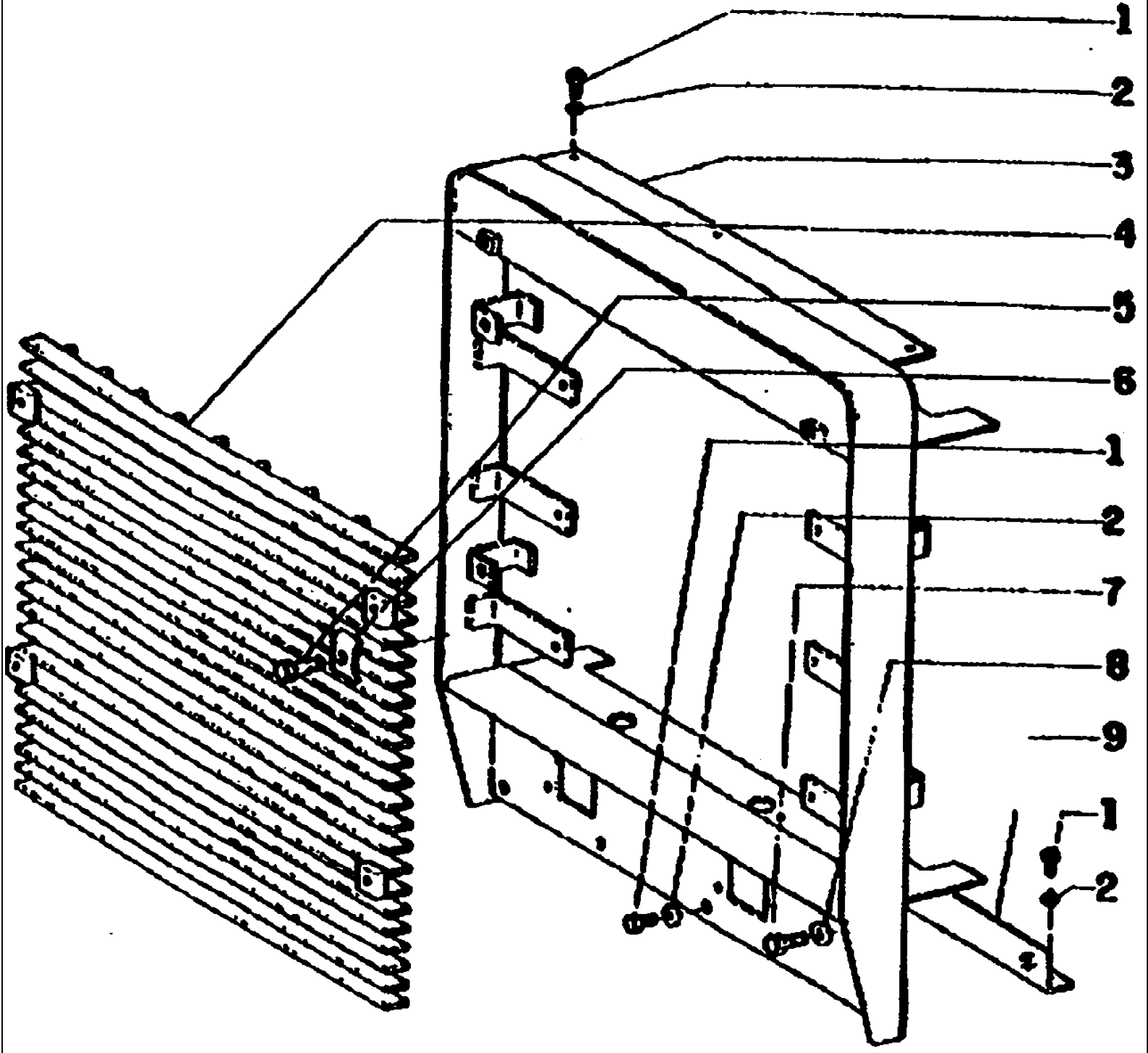
1
2
3
4
5
6
1
2
7
8
9
1
2

FG85 SERIES B MOTORGRADER

A4.01/1(001) SUPPORT AND GRILLE

Ref	Numero de Pieza	Ctd	Descripción
1	70922763	11	SCREW
2	70677006	11	WASHER
3	73160990	1	SUPPORT
4	73155866	1	GRID
5	70921556	4	SCREW
6	70197886	2	CLUMP
7	70920583	2	SCREW
8	70928844	2	WASHER
9	73160992	1	PLATE

A4.02(001) WATER PUMP AND LINES

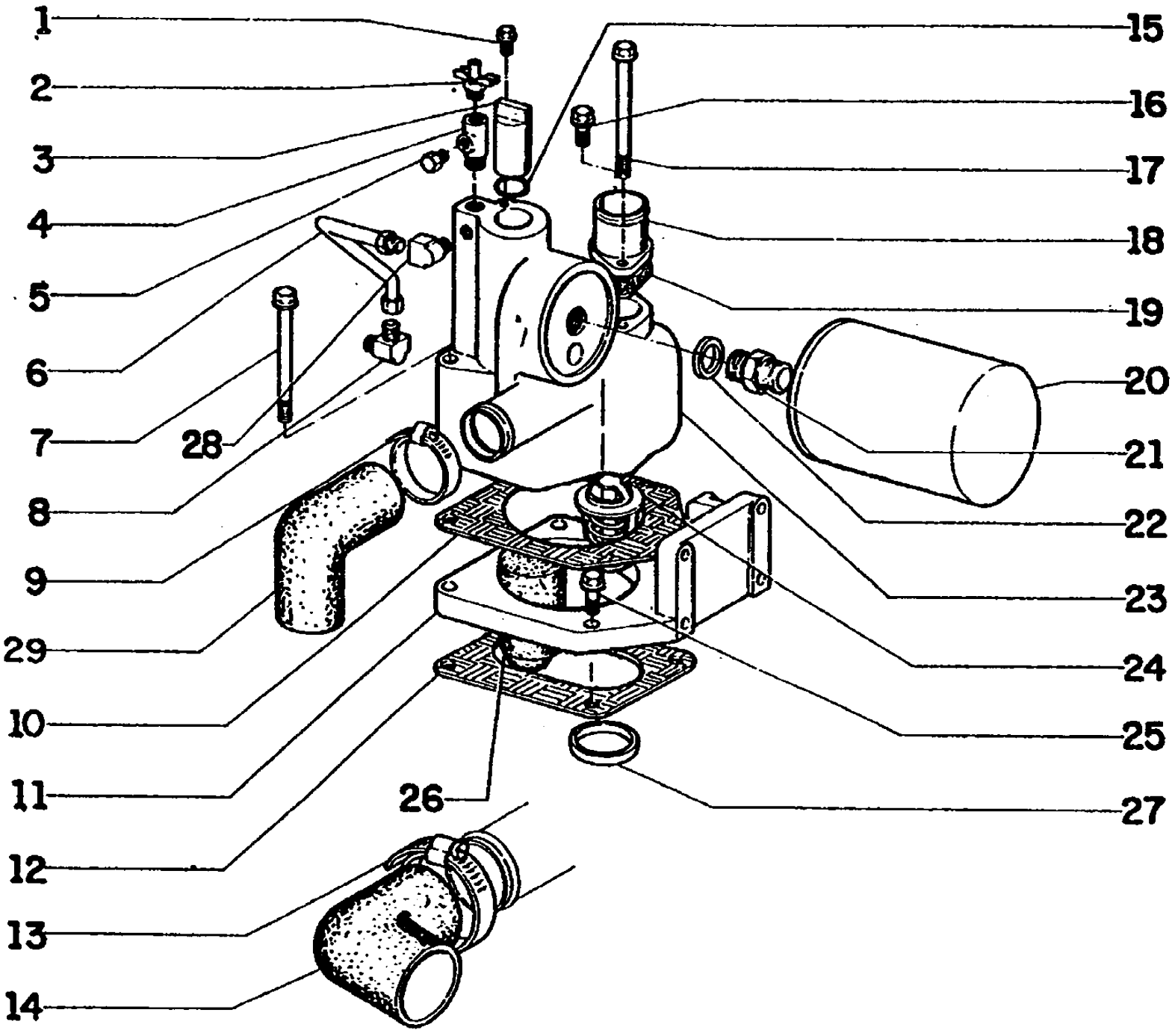

FG85 SERIES B MOTORGRADER

A4.02(001) WATER PUMP AND LINES

Ref	Numero de Pieza	Ctd	Descripción
1	75286181	1	SCREW
2	75208335	1	COCK
3	75204980	1	PIN
4	75286177	1	FITTING
5	70919134	1	PIN
6	75286178	1	TUBE
7	75286156	1	SCREW
8	75286176	1	ELBOW
9	70925881	2	CLAMP
10	75286179	1	GASKET
11	75286322	1	SUPPORT
12	75286321	1	GASKET
13	75286077	1	CLAMP
14	75208331	1	HOSE ASSY
15	75286180	1	0'RING
16	75208153	1	SCREW
17	75286156	1	SCREW
18	75286157	1	TUBE
19	75286158	1	GASKET
20	75208896	1	FILTER ELEMENT
21	75204983	1	CONNECTOR
22	75204984	1	LOCKWASHER
23	75286159	1	CASE
24	75286120	1	THERMOSTAT
25	75286320	2	SCREW
26	75286319	1	BLOCK
27	75286325	1	RING
28	75286175	1	ELBOW
29	73158847	1	ELBOW

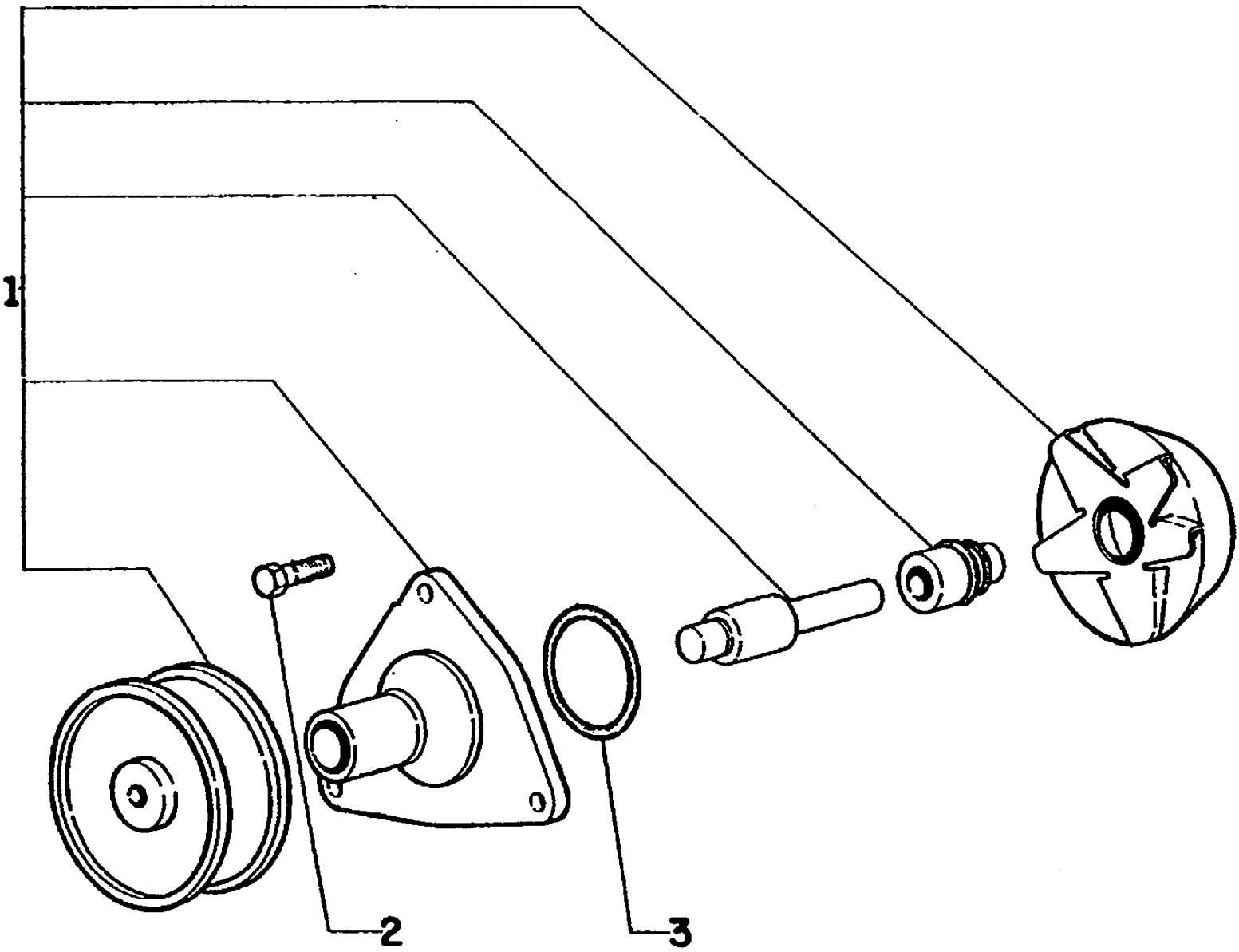
1
2
3

FG85 SERIES B MOTORGRADER

A4.03(001) WATER PUMP

Ref	Numero de Pieza	Ctd	Descripción
1	75286121	1	WATER PUMP
2	75286076	3	SCREW
3	75208389	1	O'RING

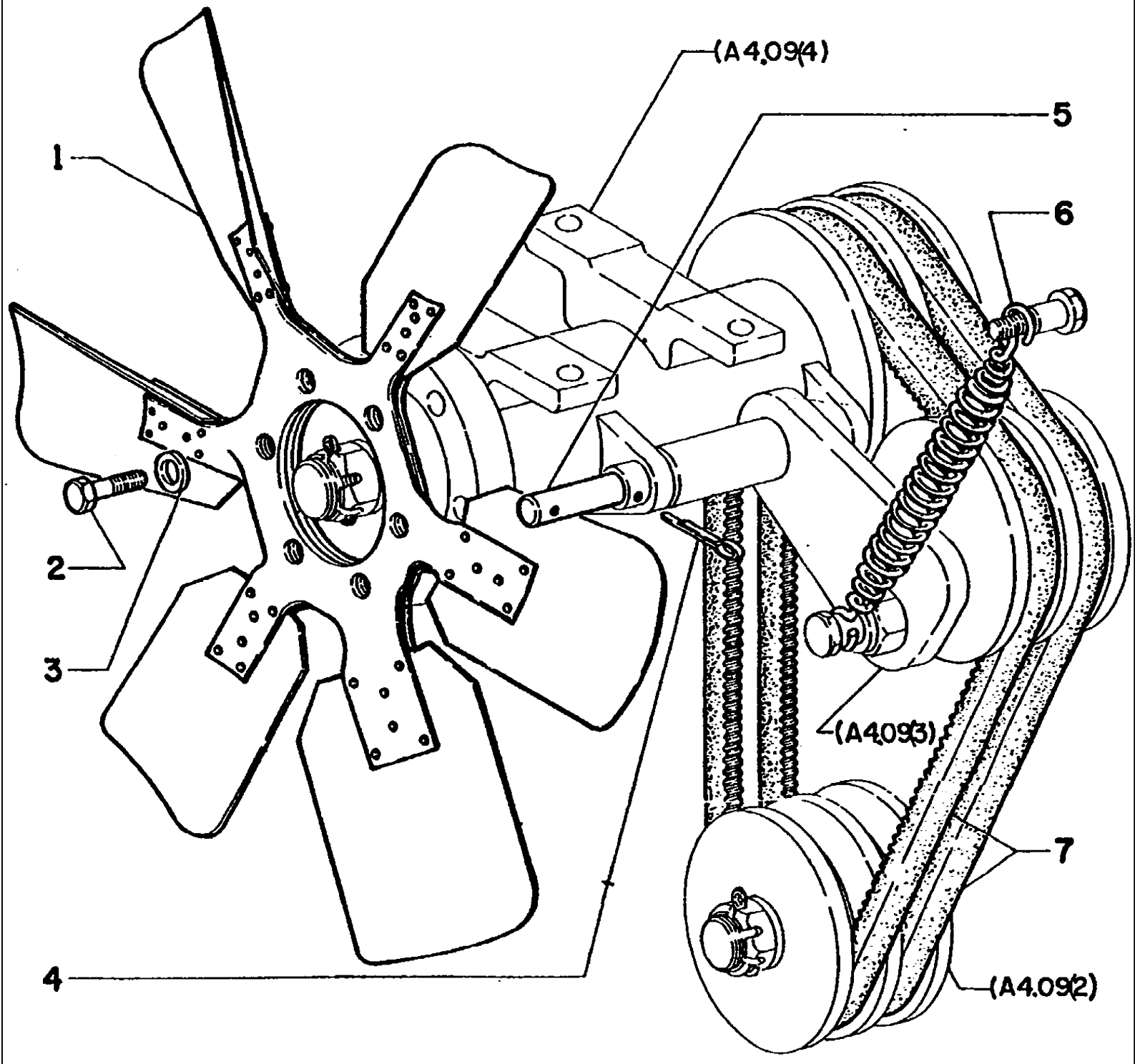
(A4.09(4)
1
5
6
2
3
(A4.09(3)
7
4
(A4.09(2)

FG85 SERIES B MOTORGRADER

A4.09(001) FAN AND FAN DRIVE

Ref	Numero de Pieza	Ctd	Descripción
1	73130184	1	FAN
1	73126156	1	FAN
2	70927173	6	SCREW
3	70929156	6	WASHER
4	70900808	1	Pin, Split (Cotter), 1/8" x 1 1/2"
5	73148534	1	SHAFT
6	73160804	1	SPRING
7	73148503	1	BELT
7	73157291	1	BELT

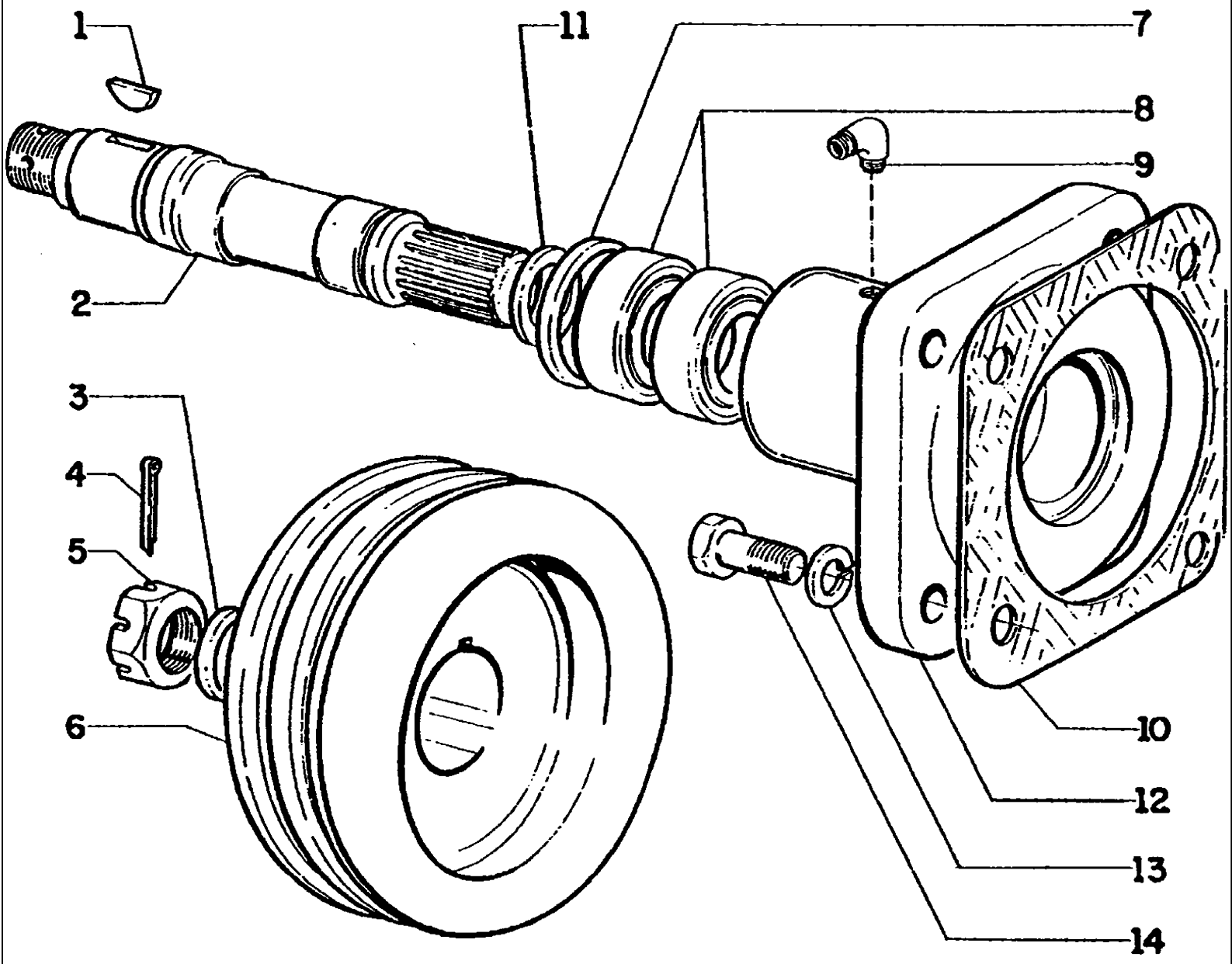
1
11
7
8
9
2
3
4
5
6
10
12
13
14

FG85 SERIES B MOTORGRADER

A4.09(002) FAN DRIVE ASSEMBLY

Ref	Numero de Pieza	Ctd	Descripción
1	70917409	1	KEY
2	73148492	1	SHAFT
3	70929316	1	WASHER
4	70900808	1	Pin, Split (Cotter), 1/8" x 1 1/2"
5	70911174	1	NUT
6	73148494	1	PULLEY
7	73148486	1	SEAL
8	73148491	2	BEARING
9	73126798	1	ELBOW
10	70188771	1	GASKET
11	70927737	1	SNAP RING
12	73148488	1	TUBE
13	70912441	8	LOCKWASHER
14	70927172	4	SCREW

A4.09(003) IDLER ASSEMBLY

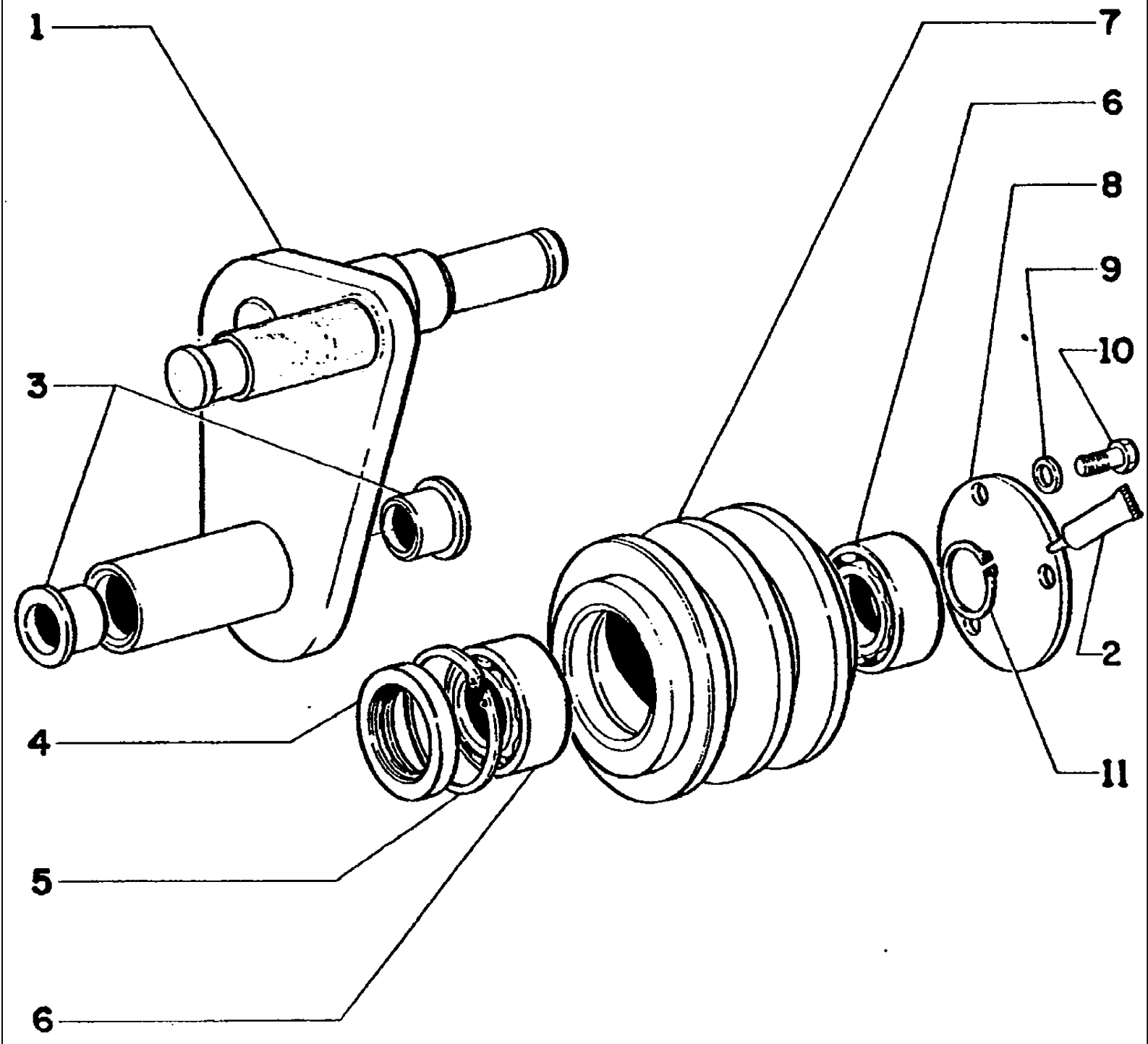

FG85 SERIES B MOTORGRADER

A4.09(003) IDLER ASSEMBLY

Ref	Numero de Pieza	Ctd	Descripción
1	75237702	1	SUPPORT
2	70930984	.5CC	SEALANT
3	73117265	2	BUSHING
4	73148457	1	SEAL
5	70927699	1	SNAP RING
6	73148456	2	BEARING
7	73148455	1	PULLEY
8	73148458	1	COVER
9	70677004	3	WASHER
10	70928182	3	SCREW
11	70927733	1	SNAP RING

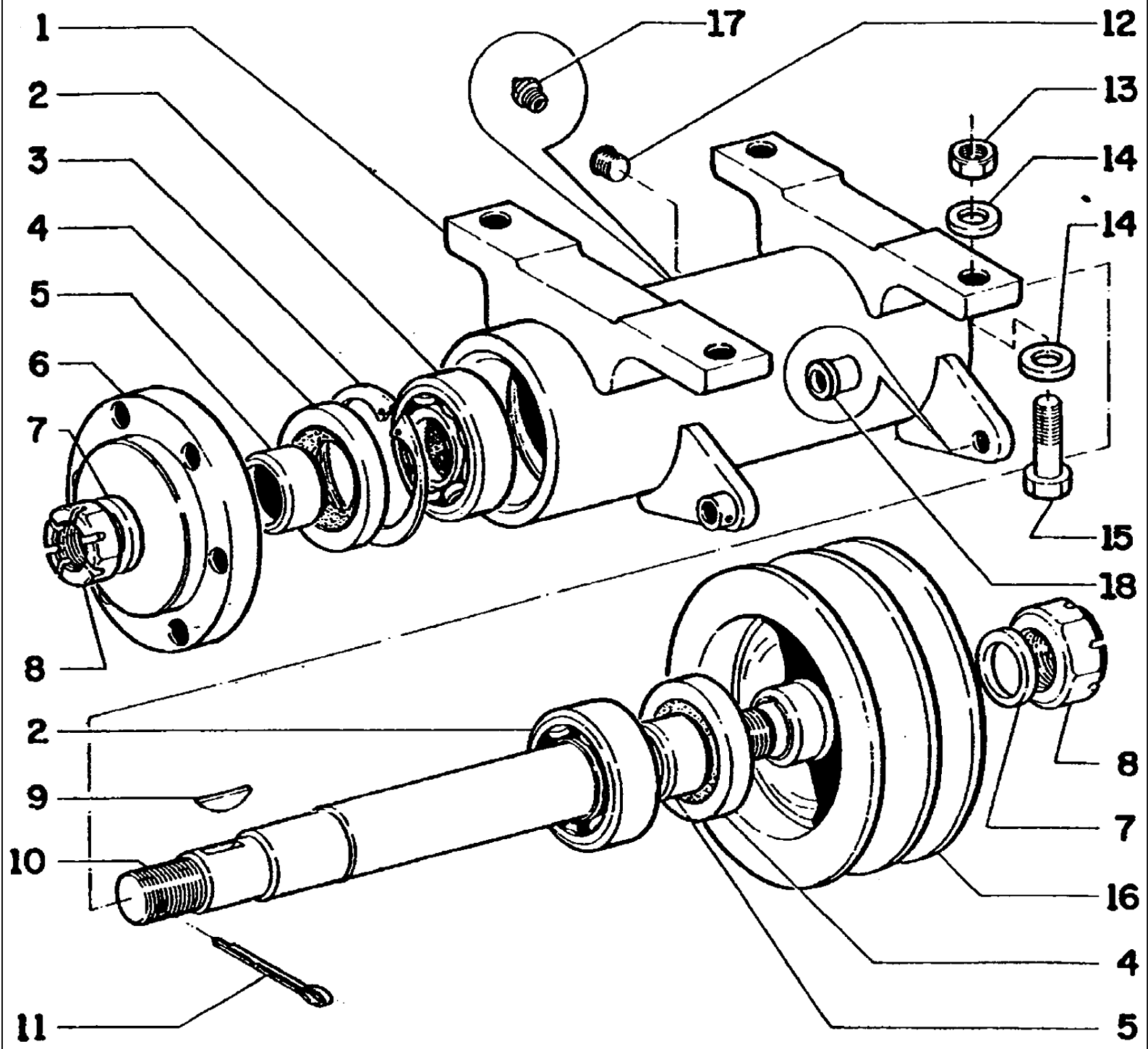
1
2
3
4
5
6
7
8
2
9
10
11
17
12
13
14
14
15
18
8
7
16
4
5

FG85 SERIES B MOTORGRADER

A4.09(004) IDLER ASSEMBLY

Ref	Numero de Pieza	Ctd	Descripción
1	75237695	1	BRACKET
2	70694992	2	BEARING
3	70927709	1	Ring, Snap, 2.875", Int, #287
4	73148467	2	SEAL
5	73148466	2	SLEEVE
6	73148469	1	CUB
7	70929316	2	WASHER
8	70911174	2	NUT
9	70917409	2	KEY
10	75237697	1	SHAFT
11	70900808	2	Pin, Split (Cotter), 1/8" x 1 1/2"
12	70910231	1	PLUG
13	70933037	4	NUT
14	70677008	8	WASHER
15	70921556	4	SCREW
16	73148471	1	PULLEY
17	70916619	1	GREASE FITTING
18	73117265	1	BUSHING

A4.09/1(002) FAN DRIVE ASSEMBLY

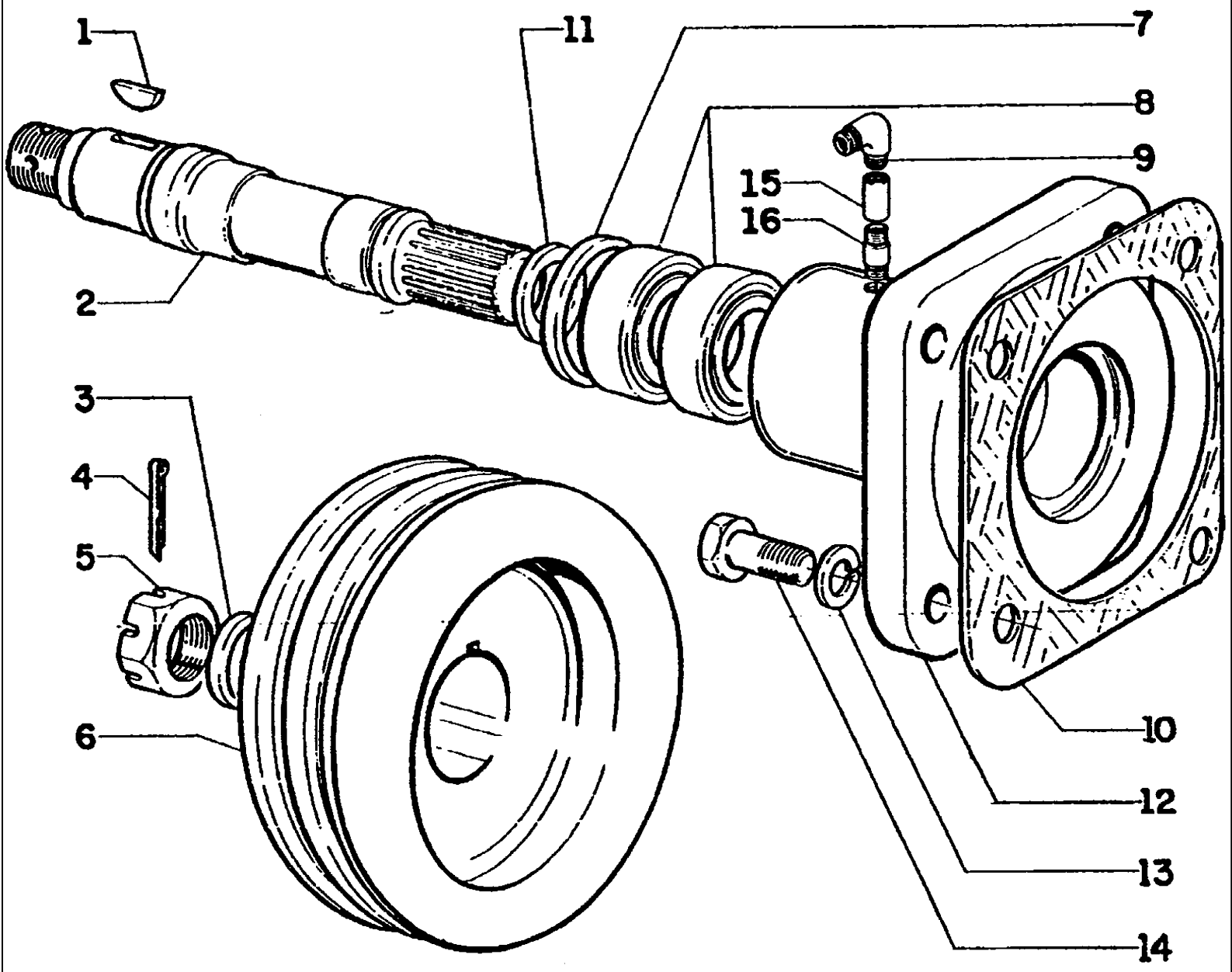

FG85 SERIES B MOTORGRADER

A4.09/1(002) FAN DRIVE ASSEMBLY

Ref	Numero de Pieza	Ctd	Descripción
1	70917409	1	KEY
2	73148492	1	SHAFT
3	70929316	1	WASHER
4	70900808	1	Pin, Split (Cotter), 1/8" x 1 1/2"
5	70911174	1	NUT
6	73148494	1	PULLEY
7	73148486	1	SEAL
8	73148491	2	BEARING
9	73126798	1	ELBOW
10	70188771	1	GASKET
11	70927737	1	SNAP RING
12	73155213	1	TUBE
13	70912441	8	LOCKWASHER
14	70927172	4	SCREW
15	70901763	1	SLEEVE
16	70901470	1	NIPPLE

A4.09/1(003) IDLER ASSEMBLY

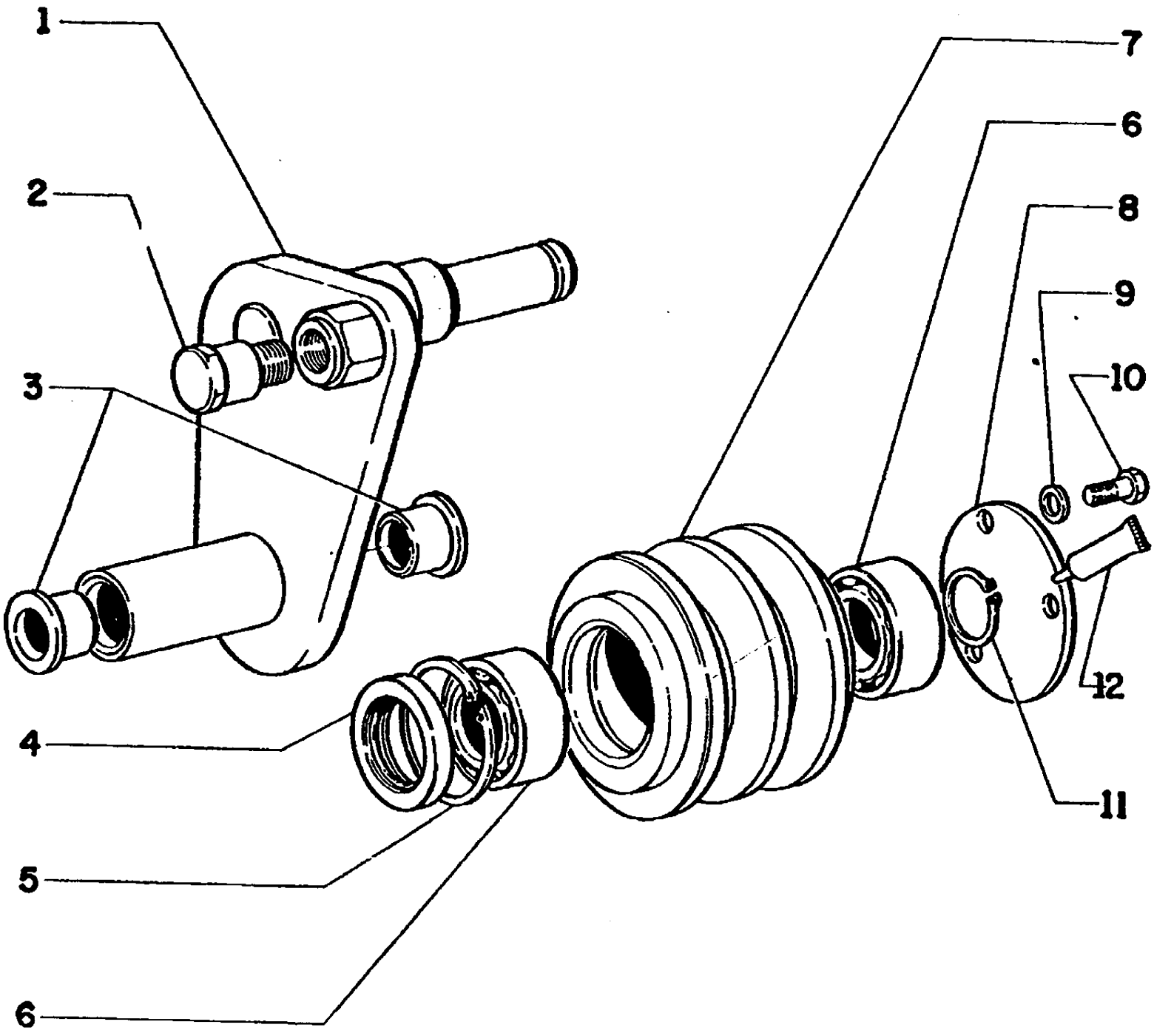

FG85 SERIES B MOTORGRADER

A4.09/1(003) IDLER ASSEMBLY

Ref	Numero de Pieza	Ctd	Descripción
1	73148451	1	SUPPORT
2	70602179	1	SCREW
3	73117265	2	BUSHING
4	73148457	1	SEAL
5	70927699	1	SNAP RING
6	73148456	2	BEARING
7	73148455	1	PULLEY
8	73148458	1	COVER
9	70677004	3	WASHER
10	70928182	3	SCREW
11	70927733	1	SNAP RING
12	70930984	.5CC	SEALANT

A4.09/1(004) FAN DRIVE ASSEMBLY

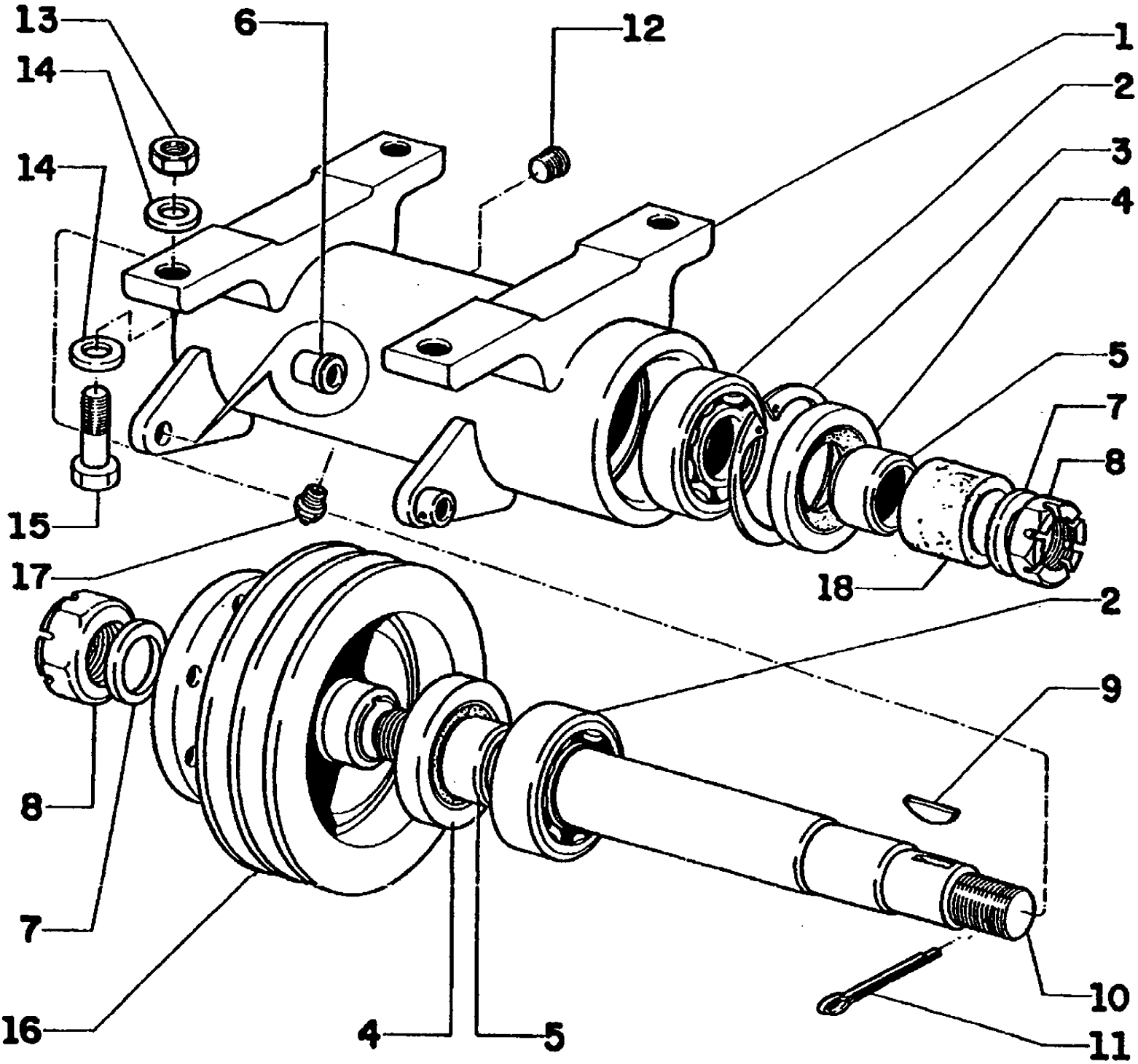

FG85 SERIES B MOTORGRADER

A4.09/1(004) FAN DRIVE ASSEMBLY

Ref	Numero de Pieza	Ctd	Descripción
1	73148460	1	TUBE
2	70694992	2	BEARING
3	70927709	1	Ring, Snap, 2.875", Int, #287
4	73148467	2	SEAL
5	73148466	2	SLEEVE
6	73117265	1	BUSHING
7	70929316	2	WASHER
8	70911174	2	NUT
9	70917409	2	KEY
10	73148465	1	SHAFT
11	70900808	2	Pin, Split (Cotter), 1/8" x 1 1/2"
12	70910231	2	PLUG
13	70933037	4	NUT
14	70677008	8	WASHER
15	70921556	4	SCREW
16	73154718	1	PULLEY
17	70916619	1	GREASE FITTING
18	73154719	1	SLEEVE

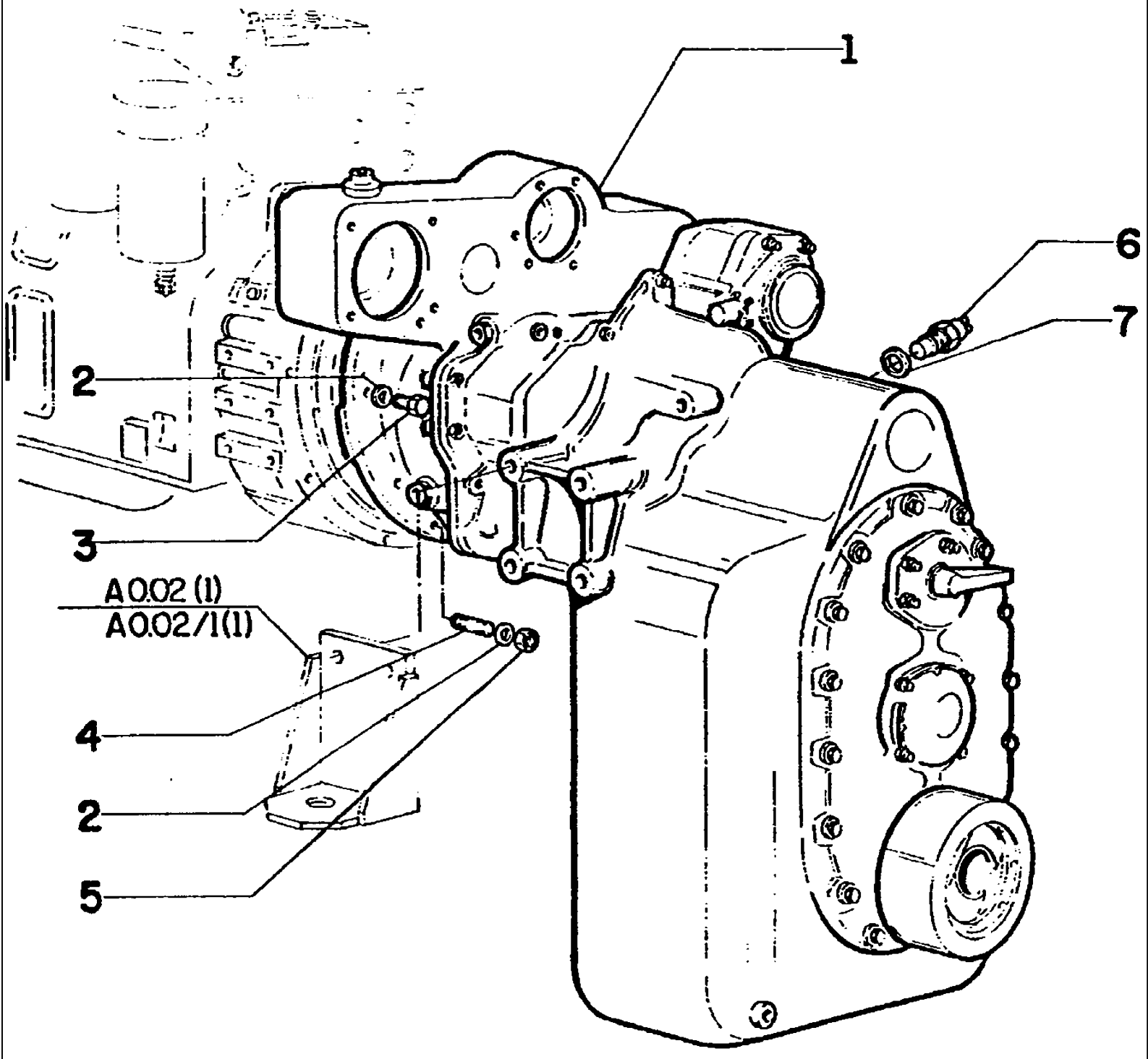
1
6
7
2
3
A0.02 (1)
A0.02/1(1)
4
2
5

FG85 SERIES B MOTORGRADER

B2.00(001) TRANSMISSION FG85A/85R

Ref	Numero de Pieza	Ctd	Descripción
1	73155025	1	TRANSMISSION
2	70930370	12	WASHER
3	11106831	9	BOLT, Hex, M10 x 40, 10.9, Full Thd
4	73152008	3	STUD
5	11701721	3	NUT
6	75285830	1	SENSOR
7	75285794	1	WASHER

B2.00/1(001) TRANSMISSION GASKET KIT 75286425

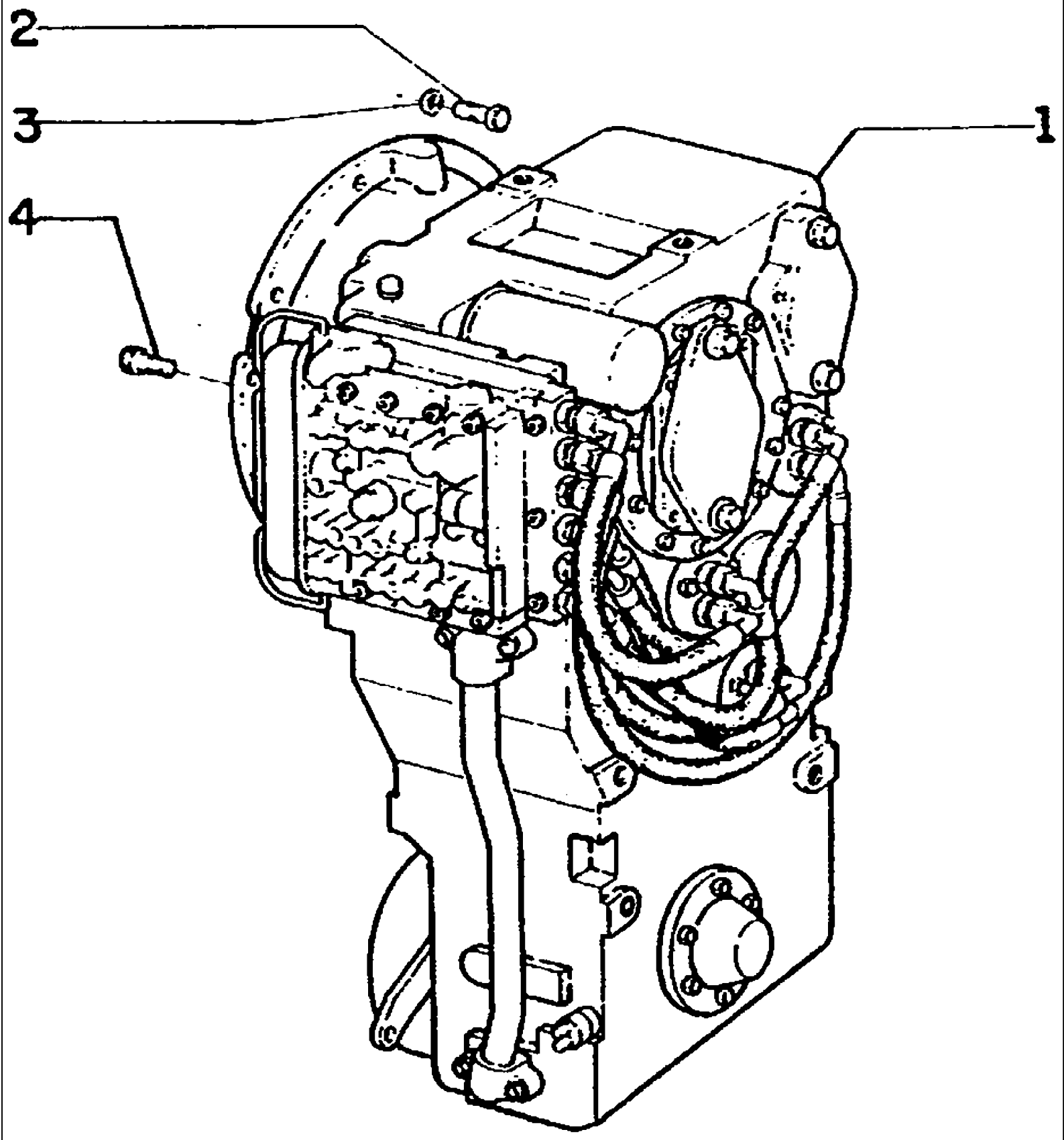

FG85 SERIES B MOTORGRADER

B2.00/1(001) TRANSMISSION GASKET KIT 75286425

Ref	Numero de Pieza	Ctd	Descripción
1	73155228	1	TRANSMISSION
2	11106831	12	BOLT, Hex, M10 x 40, 10.9, Full Thd
3	70930370	12	WASHER
4	14420231	4	SCREW, Hex Soc Hd, M10 x 30, 10.9

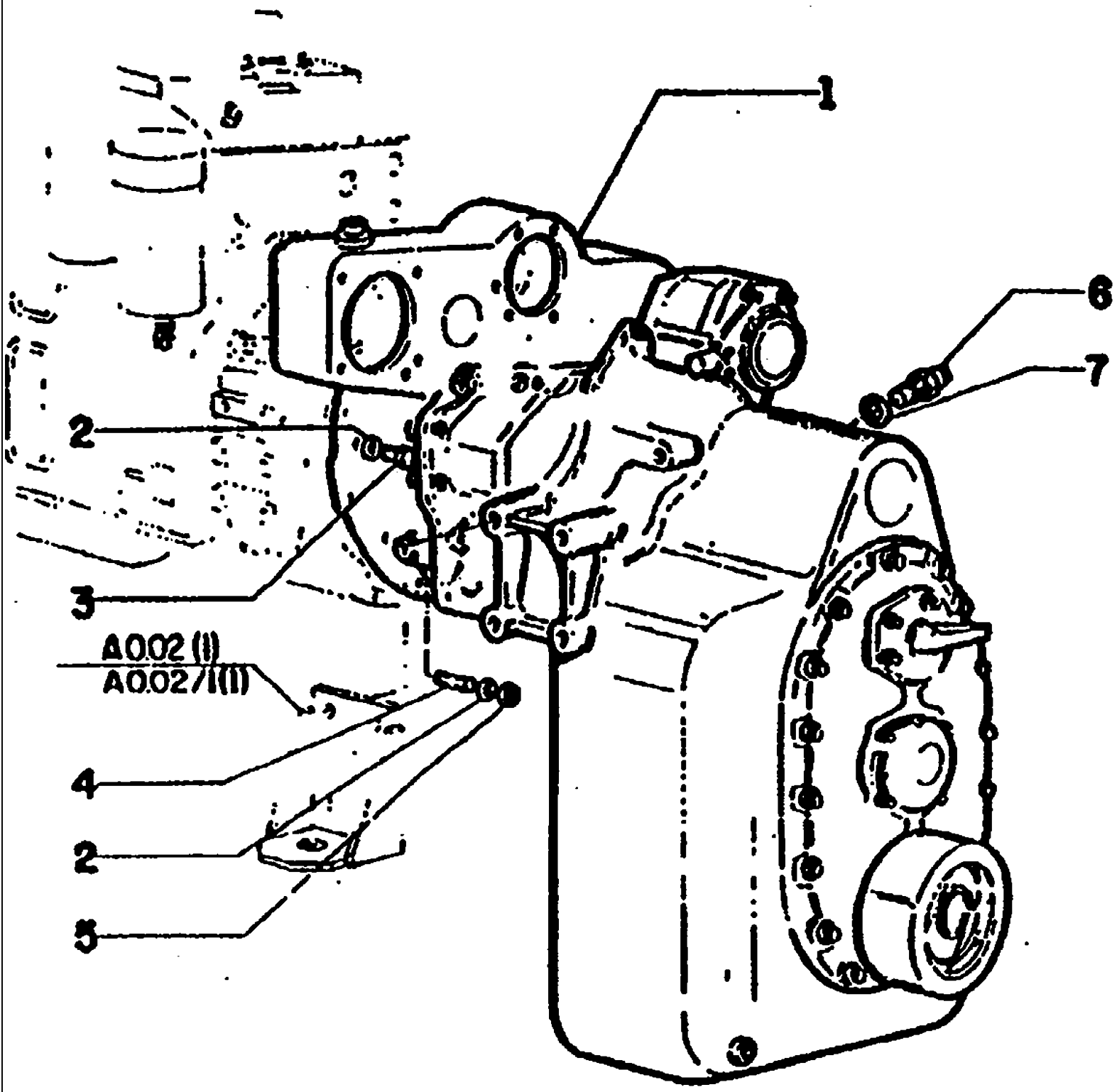
1
6
7
2
3
A002(I)
A002/I(II)
4
2
5

FG85 SERIES B MOTORGRADER

B2.00/2(001) TRANSMISSION

Ref	Numero de Pieza	Ctd	Descripción
1	75241770	1	TRANSMISSION
2	70930370	13	WASHER
3	11106831	9	BOLT, Hex, M10 x 40, 10.9, Full Thd
4	73152008	3	STUD
5	11701721	3	NUT
6	75285830	1	SWITCH
7	75285794	1	WASHER

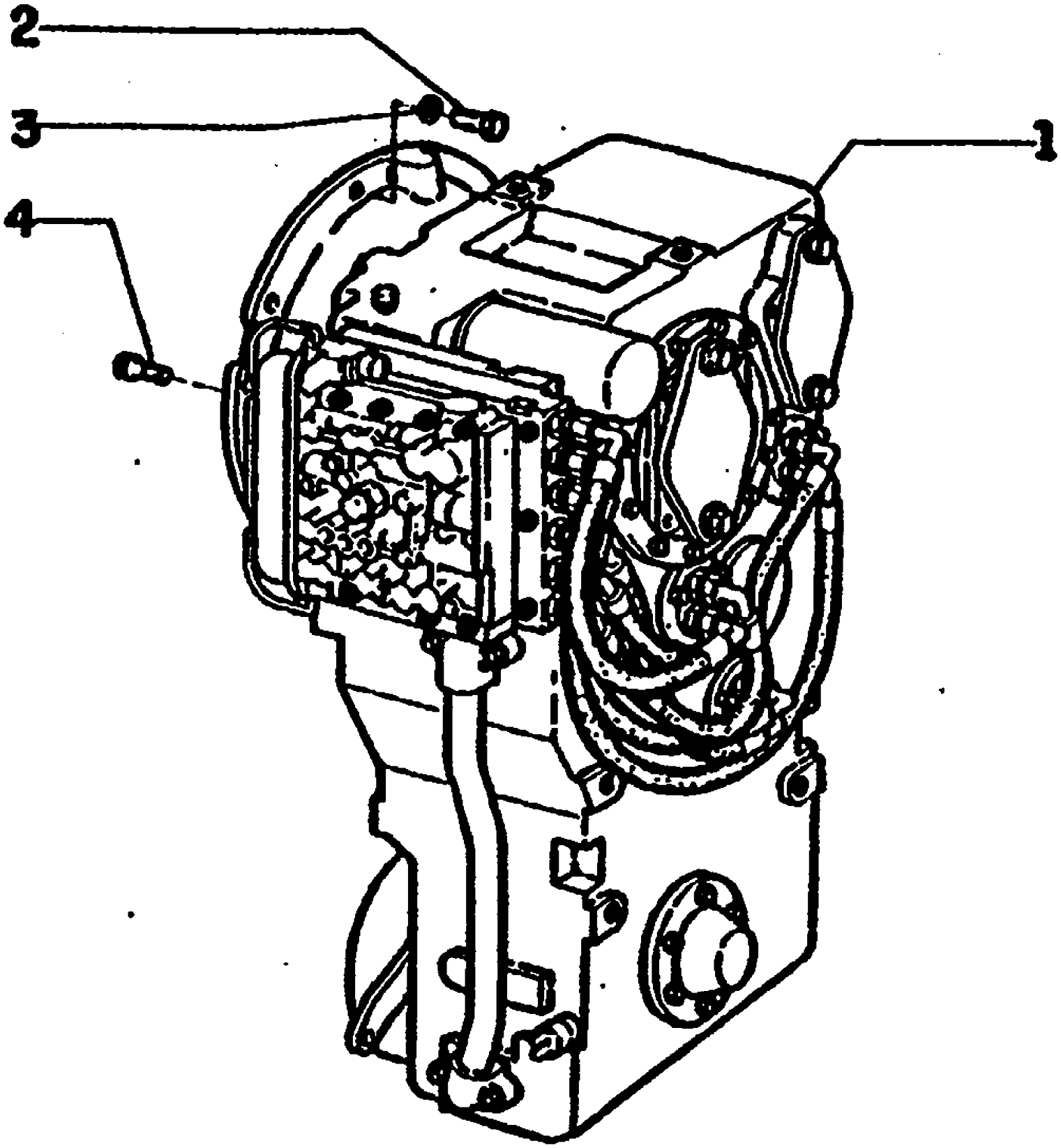
2
3
1
4

FG85 SERIES B MOTORGRADER

B2.00/3(001) TRANSMISSION FOR FG105A/R 12VOLTS MACHINES

Ref	Numero de Pieza	Ctd	Descripción
1	75241769	1	TRANSMISSION
2	11106831	12	BOLT, Hex, M10 x 40, 10.9, Full Thd
3	70930370	12	WASHER
4	14420231	4	SCREW, Hex Soc Hd, M10 x 30, 10.9

B2.01(001) TRANSMISSION GASKET KIT 75286425.

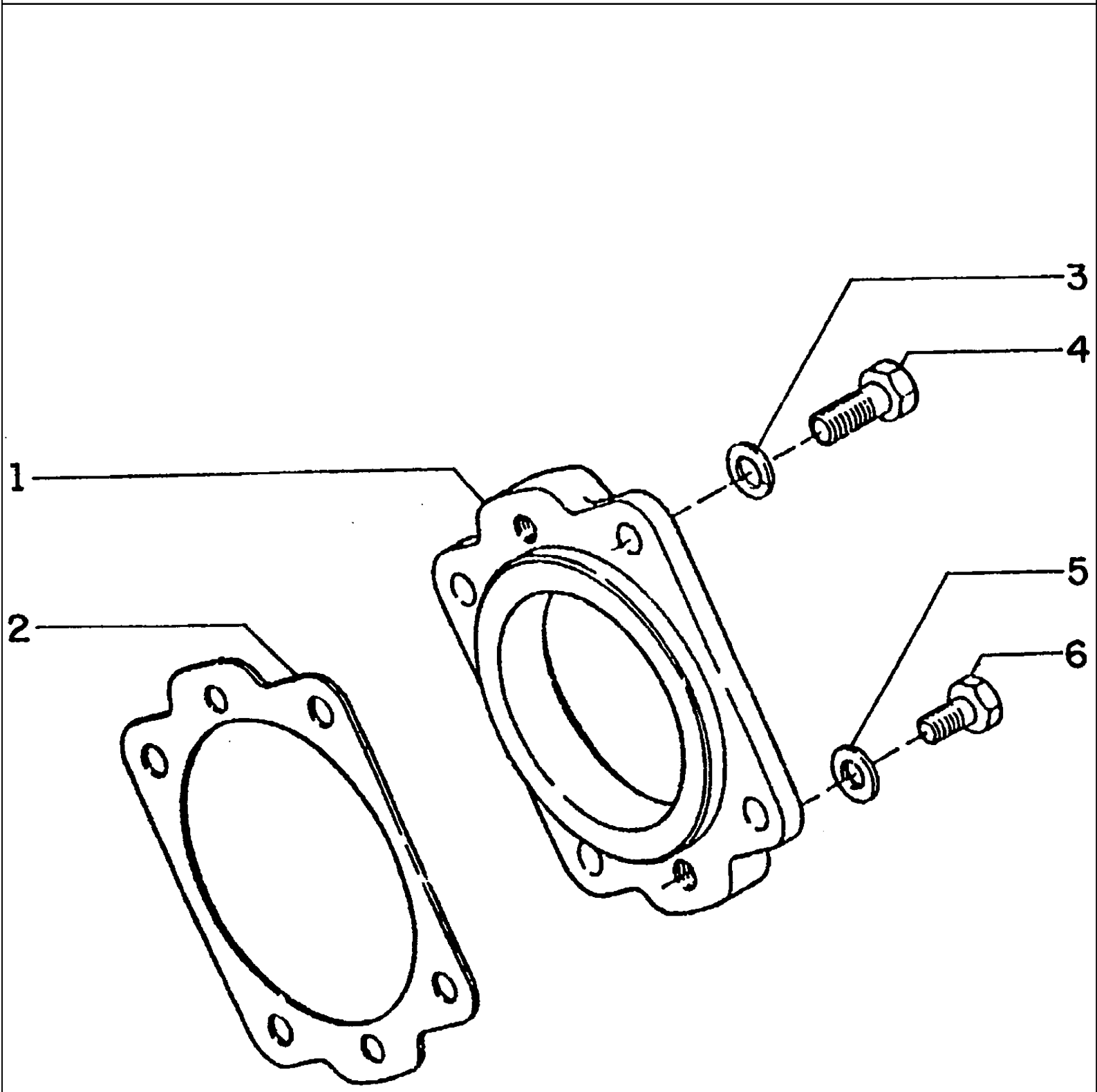

FG85 SERIES B MOTORGRADER

B2.01(001) TRANSMISSION GASKET KIT 75286425.

Ref	Numero de Pieza	Ctd	Descripción
1	75285986	1	SPACER
2	75285985	1	GASKET
3	75206155	2	LOCKWASHER
4	75285987	2	SCREW
5	75206155	2	LOCKWASHER
6	75285987	2	SCREW

B2.01(0019A) TRANSMISSION PUMP & FILTERFOR FG85A FROM S/N 212, EXCEPT 189,204,205,207,208. FOR FG85R FROM S/N

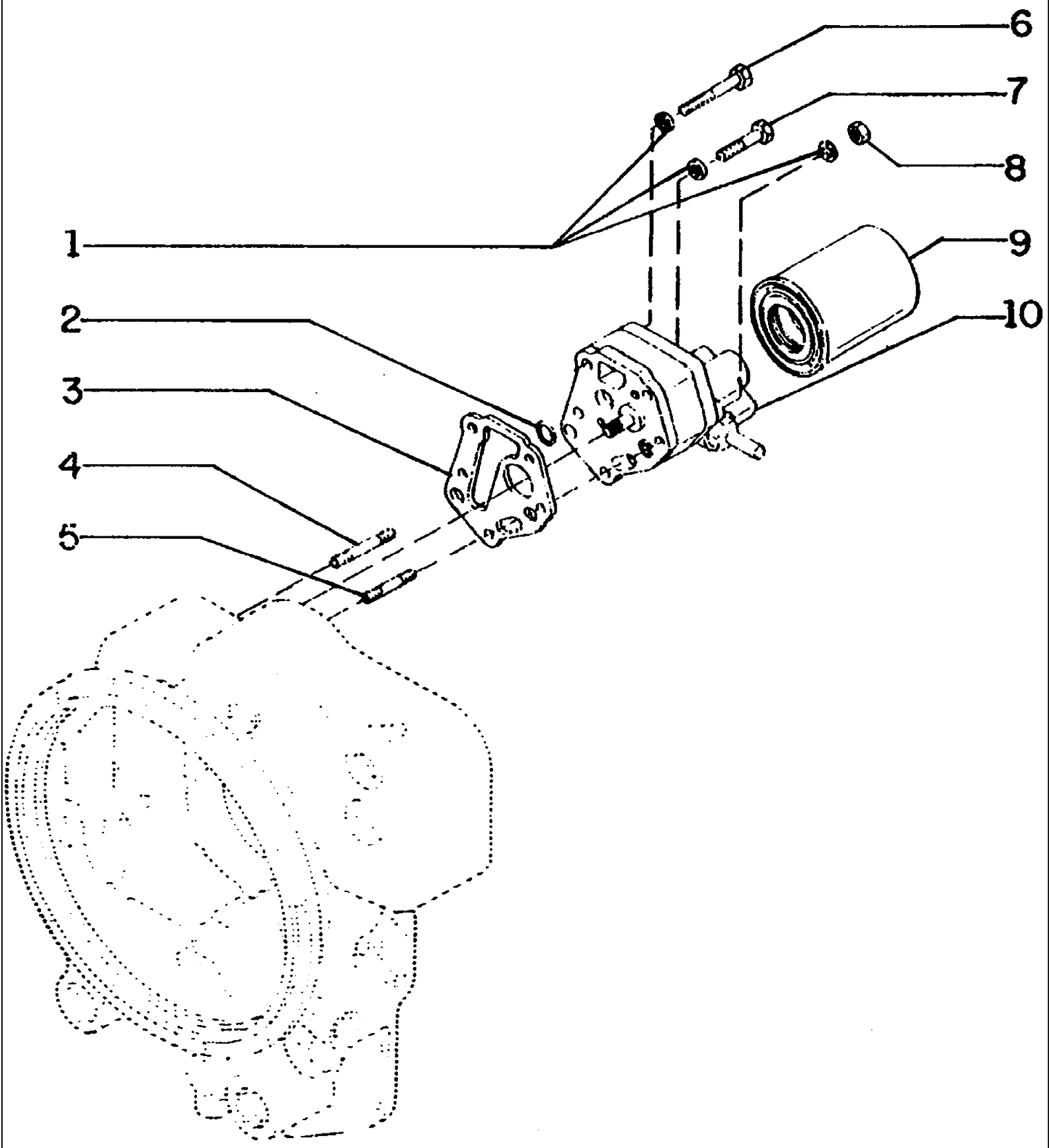

FG85 SERIES B MOTORGRADER

B2.01(0019A) TRANSMISSION PUMP & FILTERFOR FG85A FROM S/N 212, EXCEPT 189,204,205,207,208. FOR FG85R FROM S/N

Ref	Numero de Pieza	Ctd	Descripción
1	75206320	5	LOCKWASHER
2	14457180	1	RING
3	73118167	1	RING
4	75205998	1	STUD
5	75285795	1	STUD
6	75285797	1	SCREW
7	75285798	2	SCREW
8	70910986	2	NUT
9	75286525	1	FILTER
10	75286524	1	PUMP

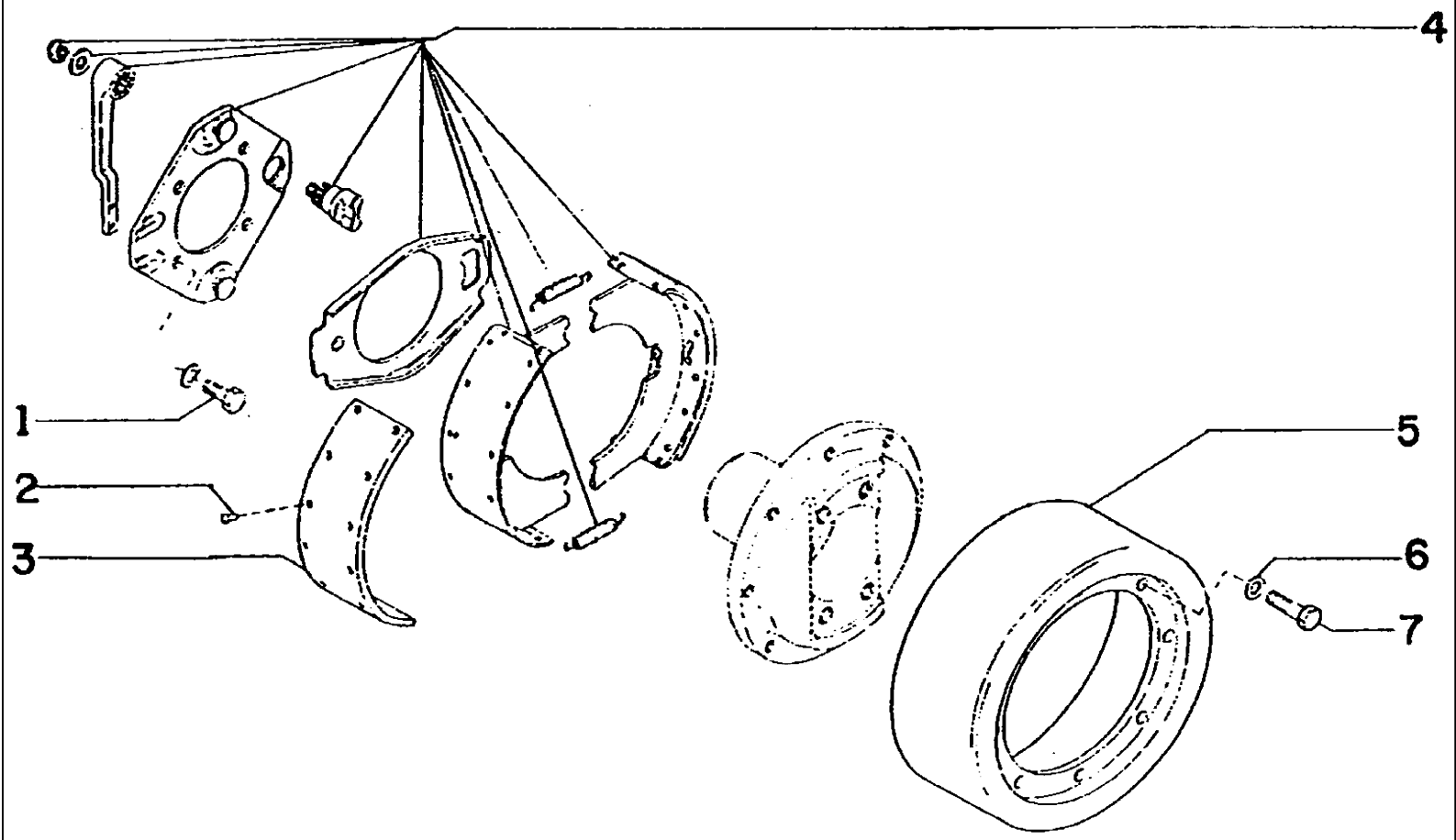
1
2
3
4
5
6
7

FG85 SERIES B MOTORGRADER

B2.01(002) TRANSMISSION FOR FG85A/R

Ref	Numero de Pieza	Ctd	Descripción
1	70691358	4	SCREW
2	75206708	12	RIVET
3	75286103	2	BRAKE BAND
4	70692661	1	BRAKE
5	70691224	1	DRUM
6	70691359	8	LOCKWASHER
7	70922851	8	SCREW
8	75206386	1	BRAKE BAND

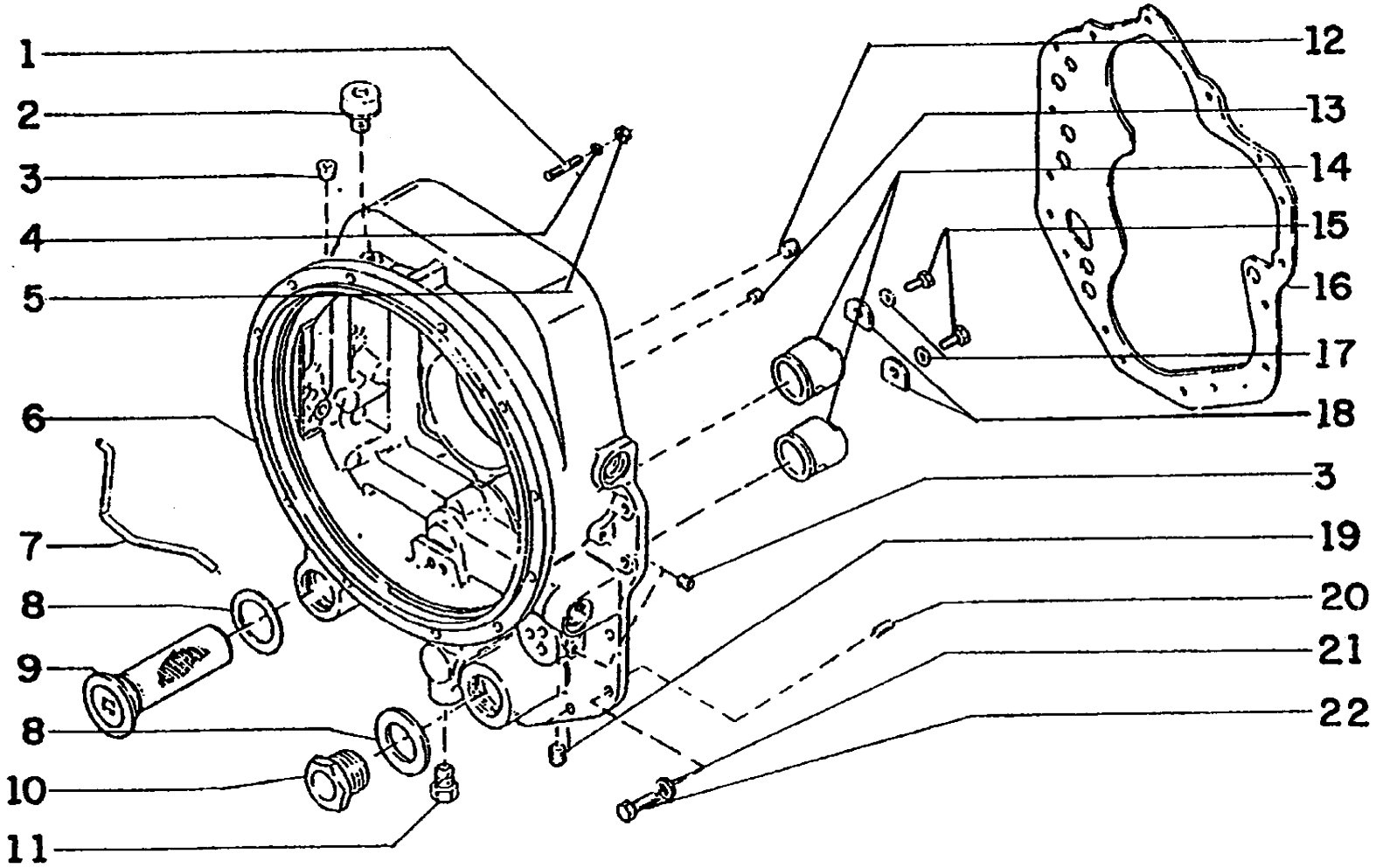
1
2
3
4
5
6
7
8
9
8
10
11
12
13
14
15
16
17
18
3
19
20
21
22

FG85 SERIES B MOTORGRADER

B2.01(003) TRANSMISSION FOR FG85A/R

Ref	Numero de Pieza	Ctd	Descripción
1	75286431	1	STUD
2	75206094	1	BREATHER
3	75206440	1	PLUG
4	75214678	1	LOCKWASHER
5	75285834	1	NUT
6	75206649	1	CASE
7	75285750	1	TUBE
8	71004848	1	GASKET
9	71004849	1	FILTER
10	70673891	1	PLUG
11	75206105	2	PLUG
12	70917970	1	PLUG
13	73131677	2	PLUG
14	75206612	1	SLEEVE
15	70905561	1	SCREW
16	75205458	1	GASKET
17	74052780	1	LOCKWASHER
18	71004822	1	PAWL
19	70922374	2	PLUG
20	71004838	1	PIN
21	70914678	16	LOCKWASHER
22	70916197	16	SCREW

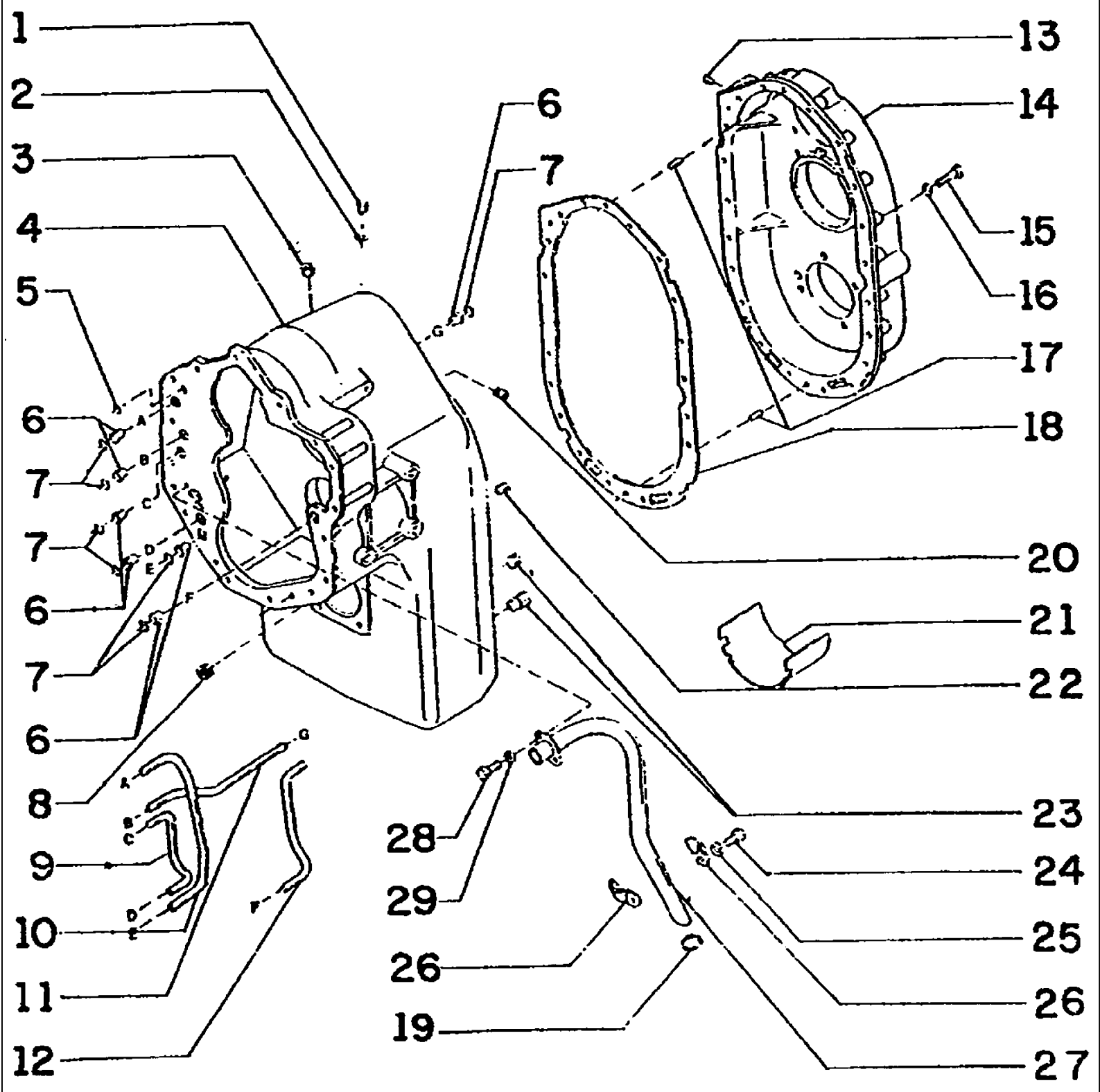
1
2
3
4
5
6
7
8
9
10
11
12
13
14
15
16
17
18
19
20
21
22
23
24
25
26
27
28
29

FG85 SERIES B MOTORGRADER

B2.01(004) TRANSMISSION FOR FG85A/R

Ref	Numero de Pieza	Ctd	Descripción
1	75285793	1	PLUG
2	75286592	1	WASHER
3	75285752	1	SCREW
4	75286591	1	CASE ASS'Y
5	14457180	1	O'RING
6	71004820	1	SLEEVE
7	70929217	1	O'RING
8	75285625	1	PLUG
9	75205469	1	TUBE
10	75205470	1	TUBE
11	73118105	1	TUBE
12	75285755	1	TUBE
13	73131677	1	PLUG
14	75285753	1	COVER
15	75205425	20	SCREW
16	75206320	20	LOCKWASHER
17	71004838	1	PIN
18	73118051	1	GASKET
19	70926788	1	O'RING
20	75206440	1	PLUG
21	75206689	1	DEFLECTOR
22	70673860	1	PLUG
23	70673889	1	PLUG
24	75285752	1	SCREW
25	70910287	1	LOCKWASHER
26	75205993	1	CLAMP
27	75205499	1	TUBE
28	75285754	2	SCREW
29	74052780	2	LOCKWASHER

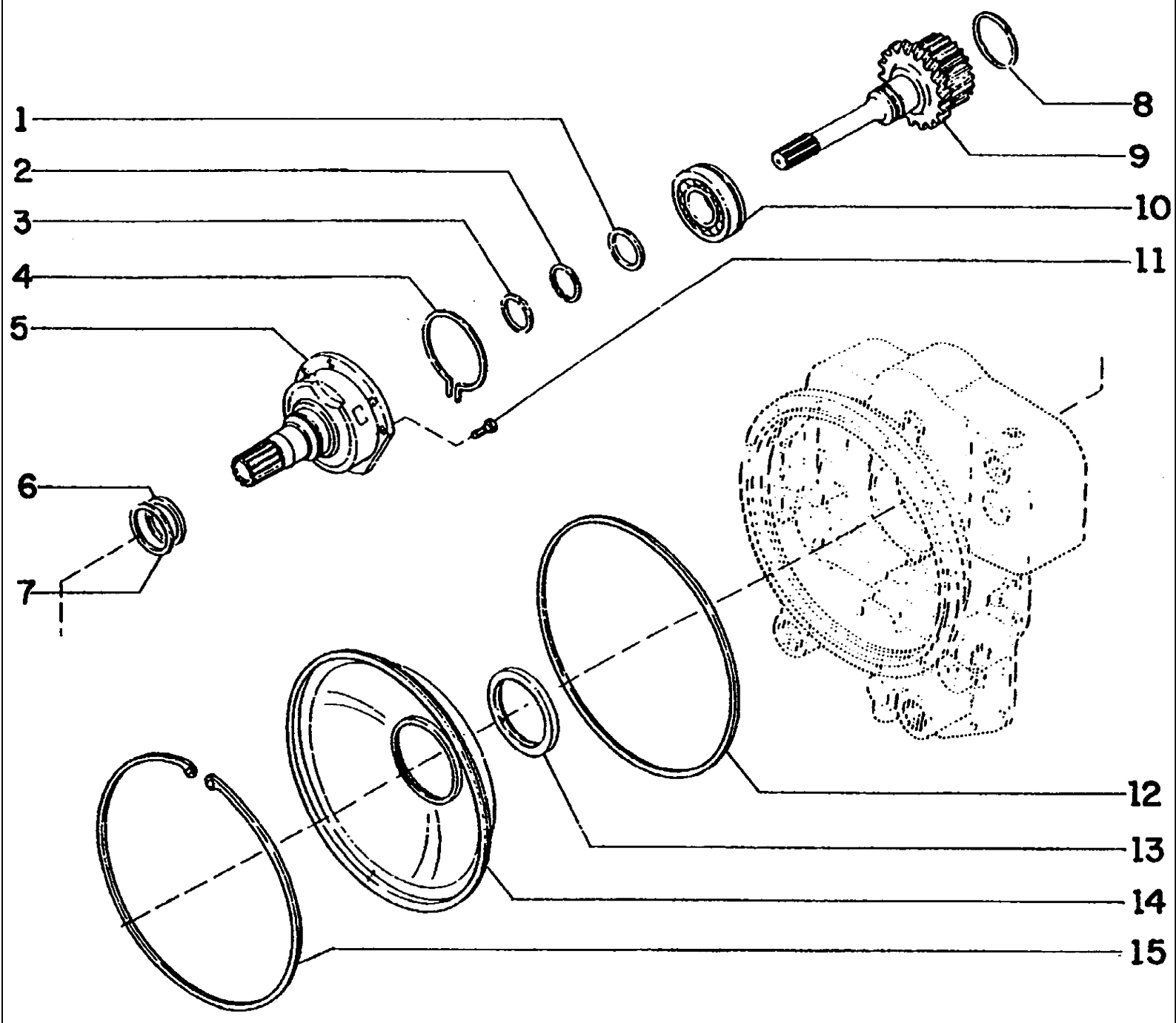
1
2
3
4
5
6
7
8
9
10
11
12
13
14
15

FG85 SERIES B MOTORGRADER

B2.01(005) TRANSMISSION FOR FG85A/R

Ref	Numero de Pieza	Ctd	Descripción
1	73118058	1	WASHER
2	71009065	1	SEAL RING
3	73118059	1	SEAL RING
4	73118057	1	SEAL RING
5	75285762	1	SUPPORT
6	73118062	1	RING
7	75285761	1	SEAL RING
8	75206149	1	SEAL
9	75285758	1	SHAFT
10	73132932	1	BEARING
11	75205465	1	SCREW
12	75205454	1	SEAL RING
13	73118064	1	SEAL RING
14	75206621	1	DEFLECTOR
15	71004787	1	SEAL RING

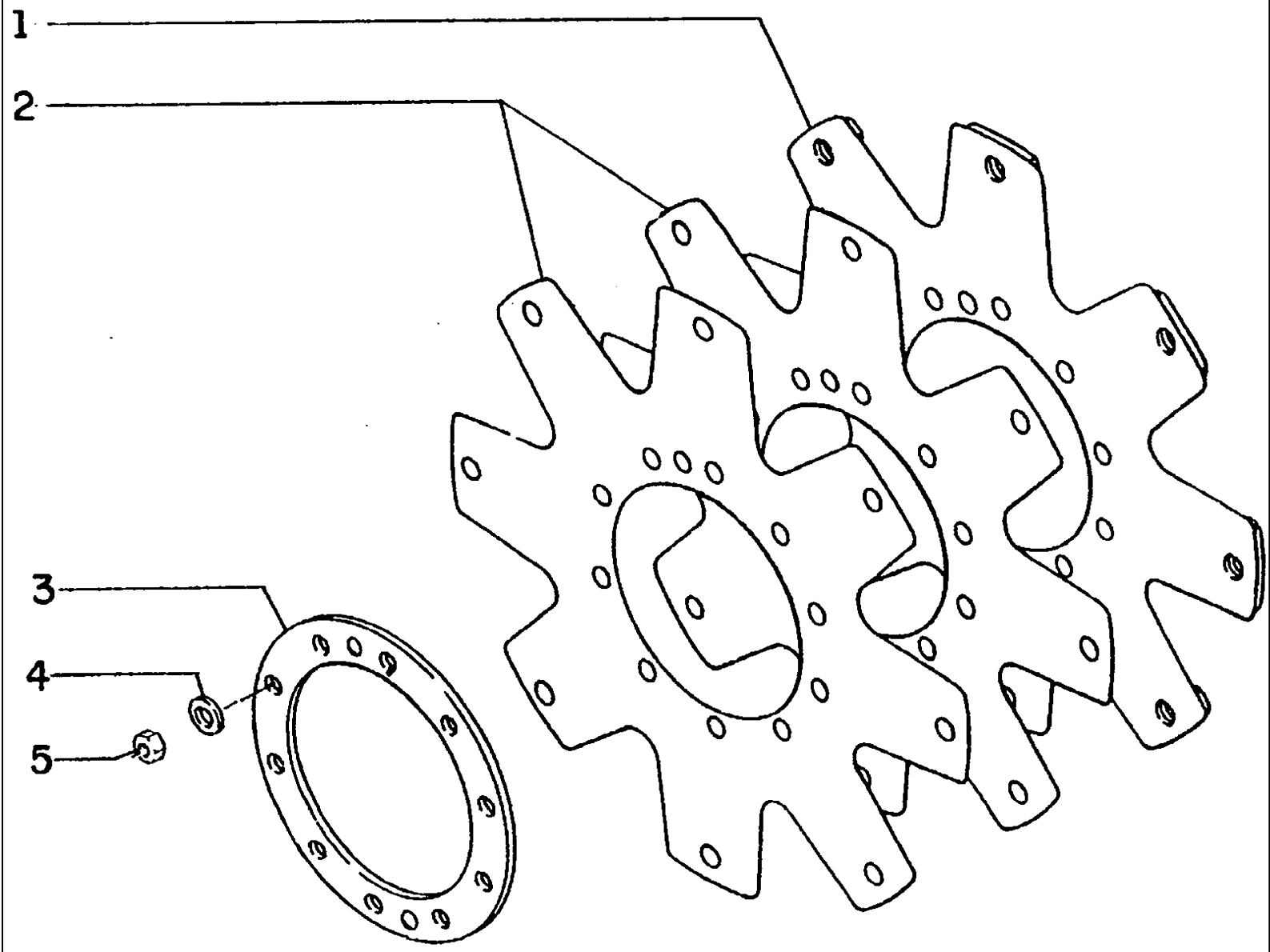
1
2
3
4
5

FG85 SERIES B MOTORGRADER

B2.01(006) TRANSMISSION FOR FG85A/R

Ref	Numero de Pieza	Ctd	Descripción
1	75285759	1	PLATE
2	75285760	3	PLATE
3	73118175	1	DISC
4	70910287	10	LOCKWASHER
5	70910329	10	NUT

B2.01(006A) PLATE FIXING FOR FG85A/R

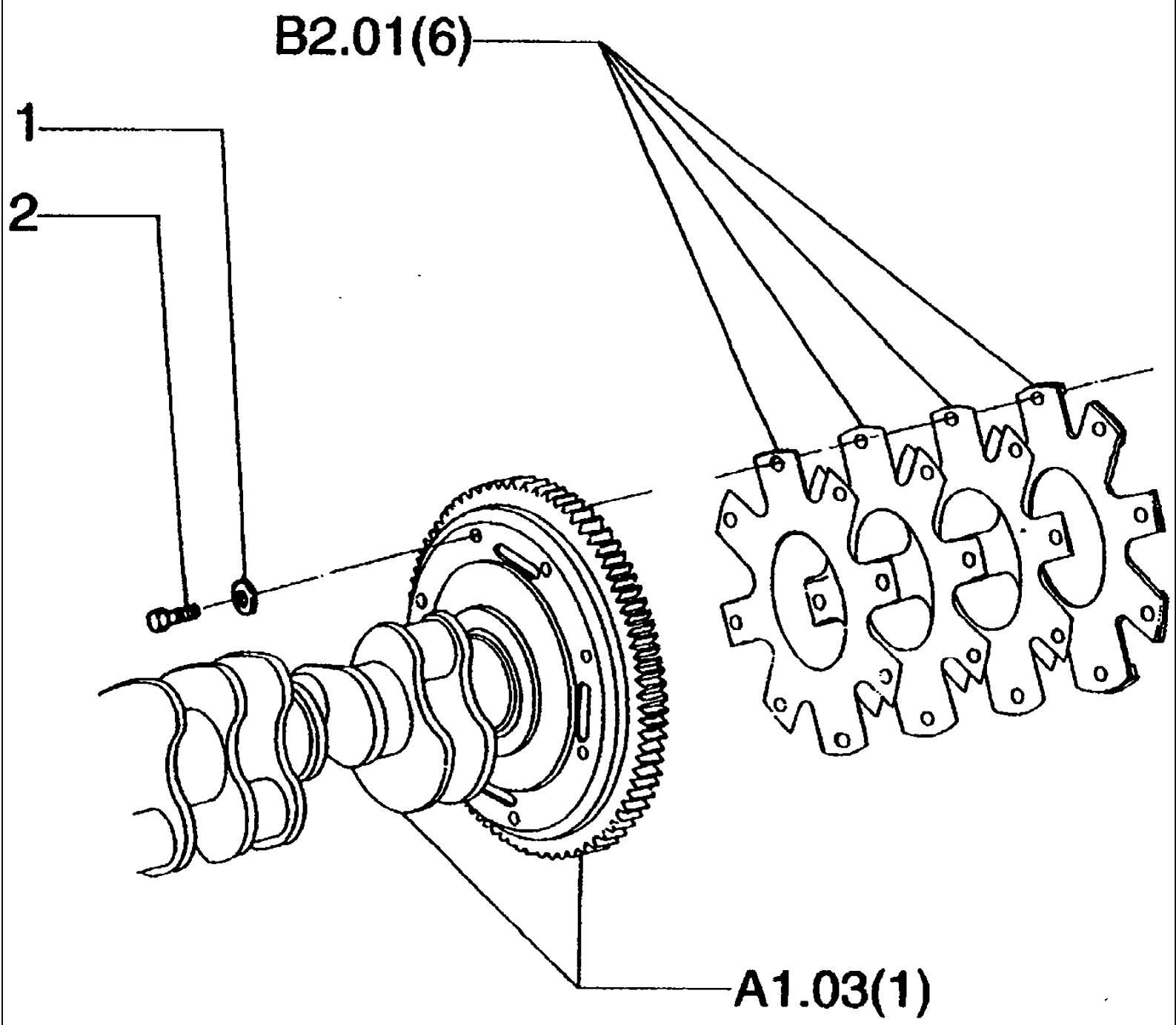

FG85 SERIES B MOTORGRADER

B2.01(006A) PLATE FIXING FOR FG85A/R

Ref	Numero de Pieza	Ctd	Descripción
1	70904206	8	LOCKWASHER
2	73148612	8	SCREW

B2.01(007) TRANSMISSION FOR FG85A/R.

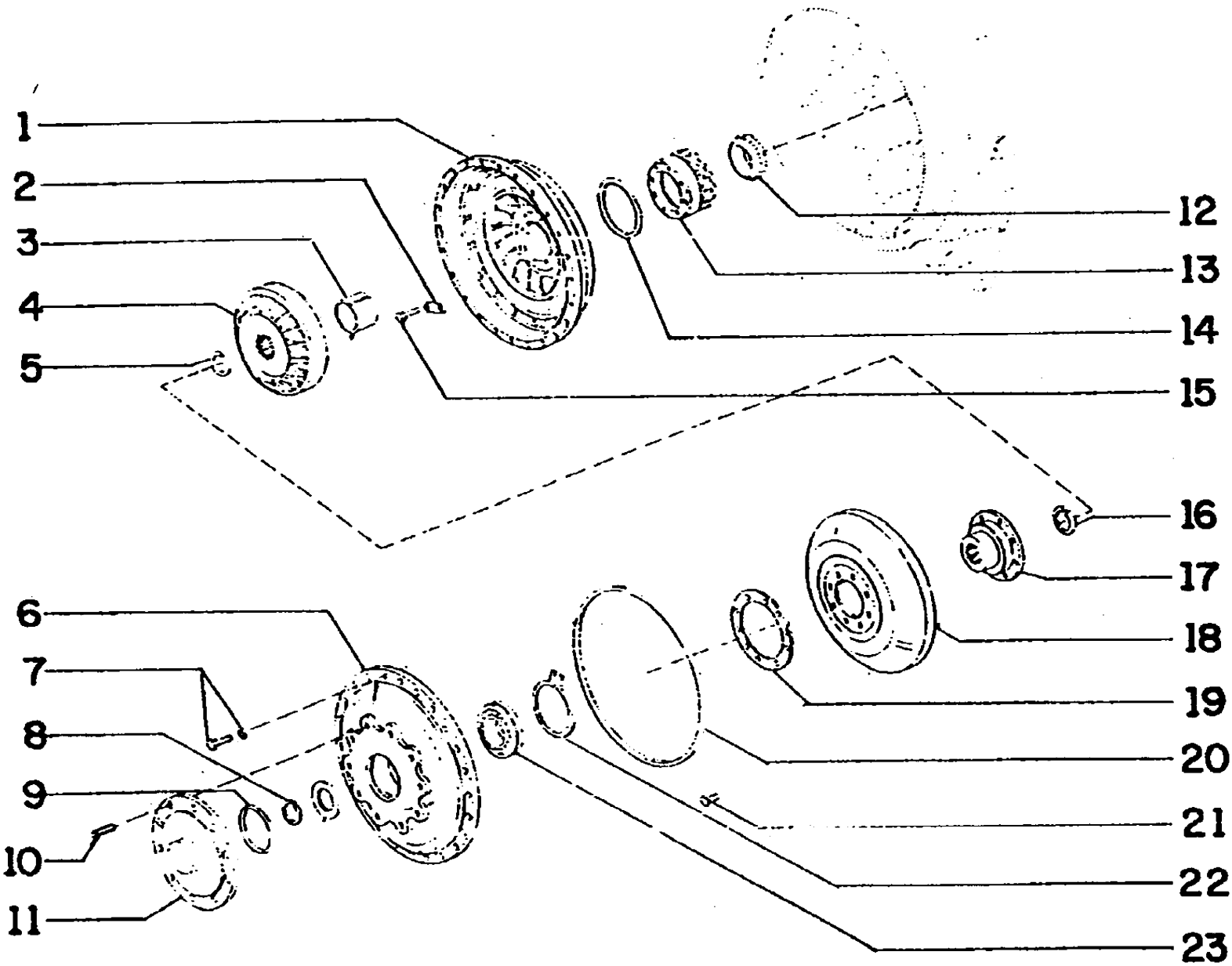

FG85 SERIES B MOTORGRADER

B2.01(007) TRANSMISSION FOR FG85A/R.

Ref	Numero de Pieza	Ctd	Descripción
1	75206625	1	IMPELLER
2	73118068	1	PAWL
3	75285763	1	SPACER
4	75206633	1	STATOR
5	75206677	1	RING
6	75285764	1	COVER
7	75206329	1	SCREW
8	75205426	1	RING
9	75206314	1	RING
10	75285765	1	STUD
11	75206624	1	COVER
12	75206661	1	BEARING
13	75206660	1	HUB
14	73118067	1	RING
15	70916381	1	SCREW
16	75205426	1	RING
17	75206622	1	HUB
18	75206626	1	TURBINE
19	75205999	1	RING
20	75205997	1	RING
21	75205484	1	SCREW
22	75206715	1	SEAL RING
23	75205996	1	BEARING

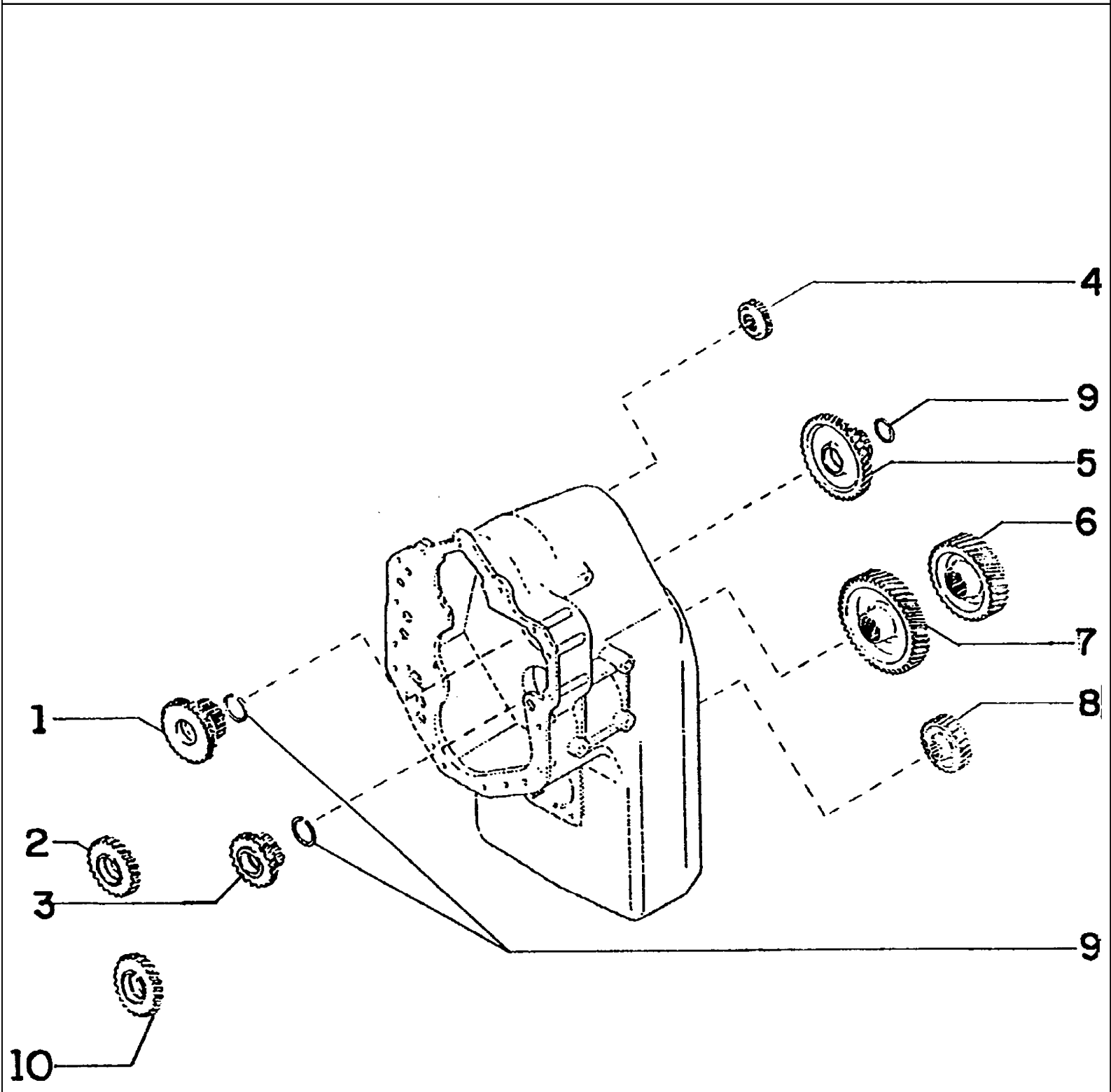
4
9
5
6
7
8
1
2
3
9
10

FG85 SERIES B MOTORGRADER

B2.01(008) TRANSMISSION FOR FG85A/R

Ref	Numero de Pieza	Ctd	Descripción
1	75206659	1	GEAR
2	75205497	1	GEAR
3	75206670	1	GEAR
4	75286802	1	GEAR
5	75286806	1	GEAR
6	75206657	1	GEAR
7	75286436	1	GEAR
8	75285768	1	GEAR
9	75206149	1	SEAL
10	75206654	1	GEAR

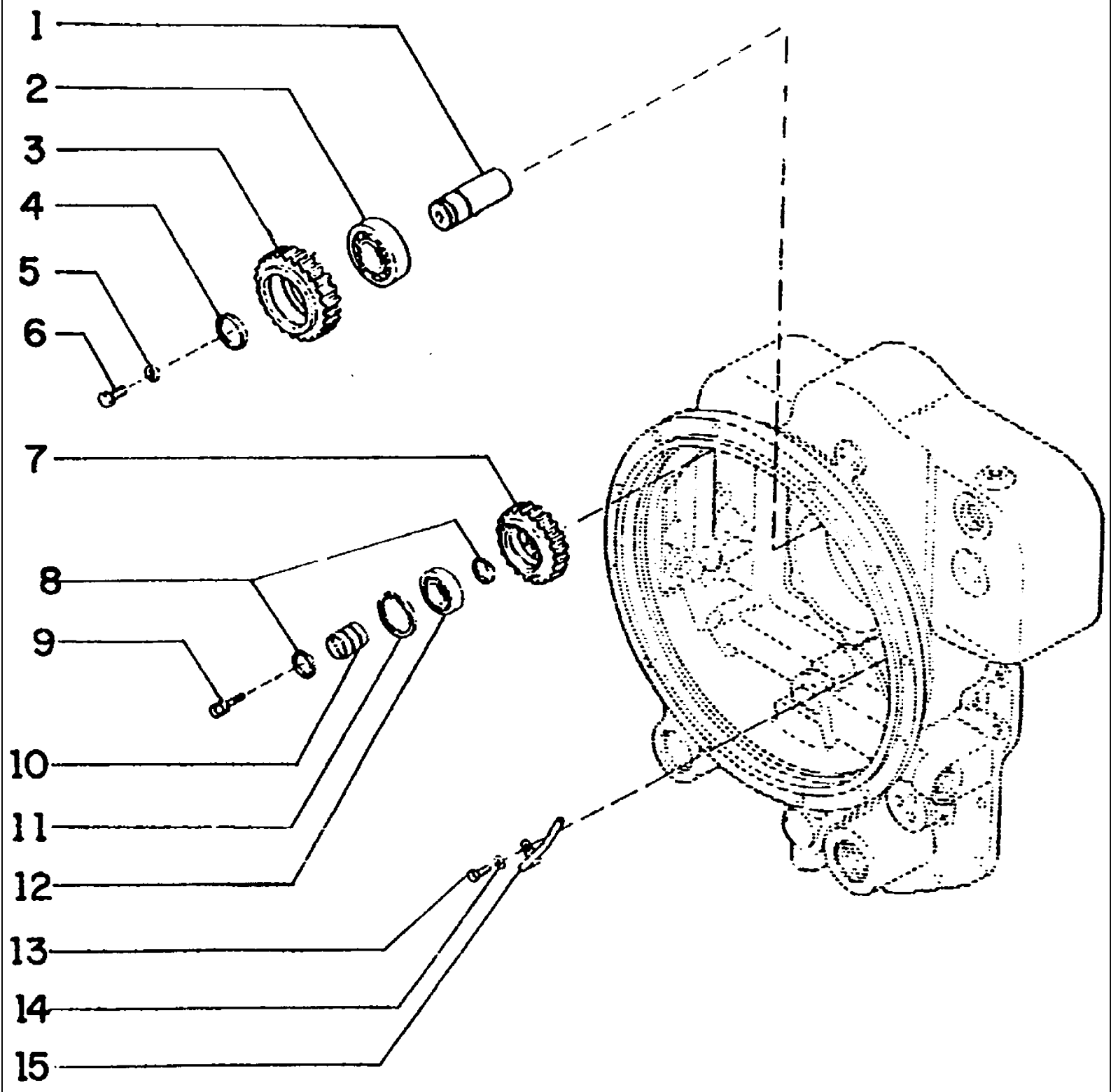
1
2
3
4
5
6
7
8
9
10
11
12
13
14
15

FG85 SERIES B MOTORGRADER

B2.01(009) TRANSMISSION FOR FG85A/R

Ref	Numero de Pieza	Ctd	Descripción
1	75206120	1	AXLE
2	75206599	1	BEARING
3	75205438	1	GEAR
4	75205439	1	WASHER
5	70910287	2	LOCKWASHER
6	75205419	2	SCREW
7	75285769	1	GEAR
8	70929166	1	RING
9	70921076	1	SCREW
10	73118262	1	SUPPORT
11	73118080	1	SEAL RING
12	73116959	1	BEARING
13	75285770	1	SCREW
14	74052780	1	LOCKWASHER
15	75205443	1	TUBE

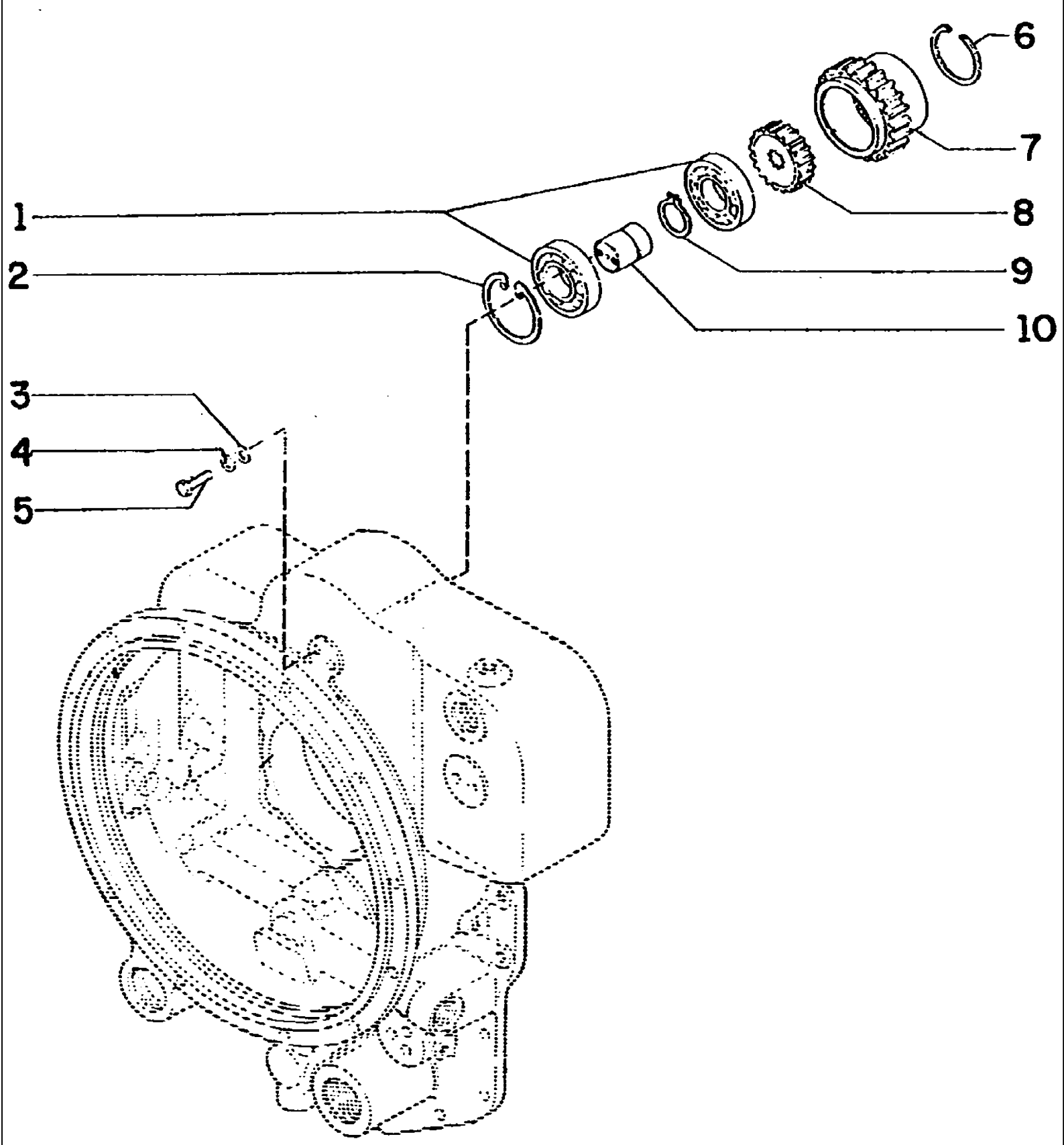
1
2
3
4
5
6
7
8
9
10

FG85 SERIES B MOTORGRADER

B2.01(010) TRANSMISSION FOR FG85A/R

Ref	Numero de Pieza	Ctd	Descripción
1	75206489	2	BEARING
2	73118320	1	SEAL RING
3	75205435	2	WASHER
4	71004797	2	WASHER
5	75205956	2	SCREW
6	75205430	1	SEAL RING
7	75205440	1	GEAR
8	75205441	1	GEAR
9	70929166	1	RING
10	75206601	1	SUPPORT

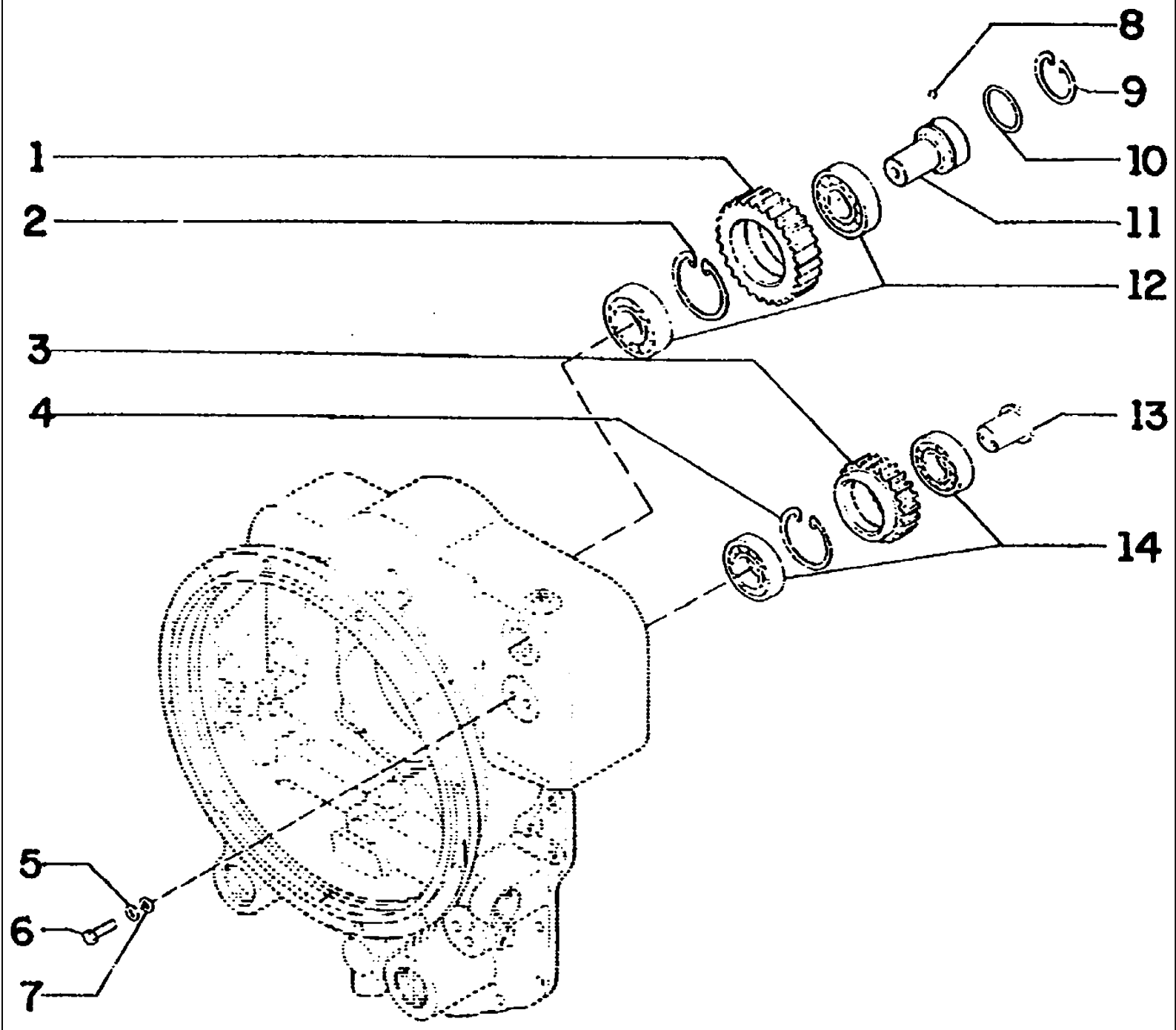
1
2
3
4
5
6
7
8
9
10
11
12
13
14

FG85 SERIES B MOTORGRADER

B2.01(011) TRANSMISSION FOR FG85A/R

Ref	Numero de Pieza	Ctd	Descripción
1	75205442	1	GEAR
2	73118135	1	SNAP RING
3	75205490	1	GEAR
4	73118320	1	SEAL RING
5	71004797	1	WASHER
6	75205417	1	SCREW
7	75205435	1	WASHER
8	70673856	1	BALL
9	75206701	1	RING
10	75206696	1	O'RING
11	75206602	1	SHAFT
12	75206479	2	BEARING
13	75206603	1	SUPPORT
14	75206489	2	BEARING

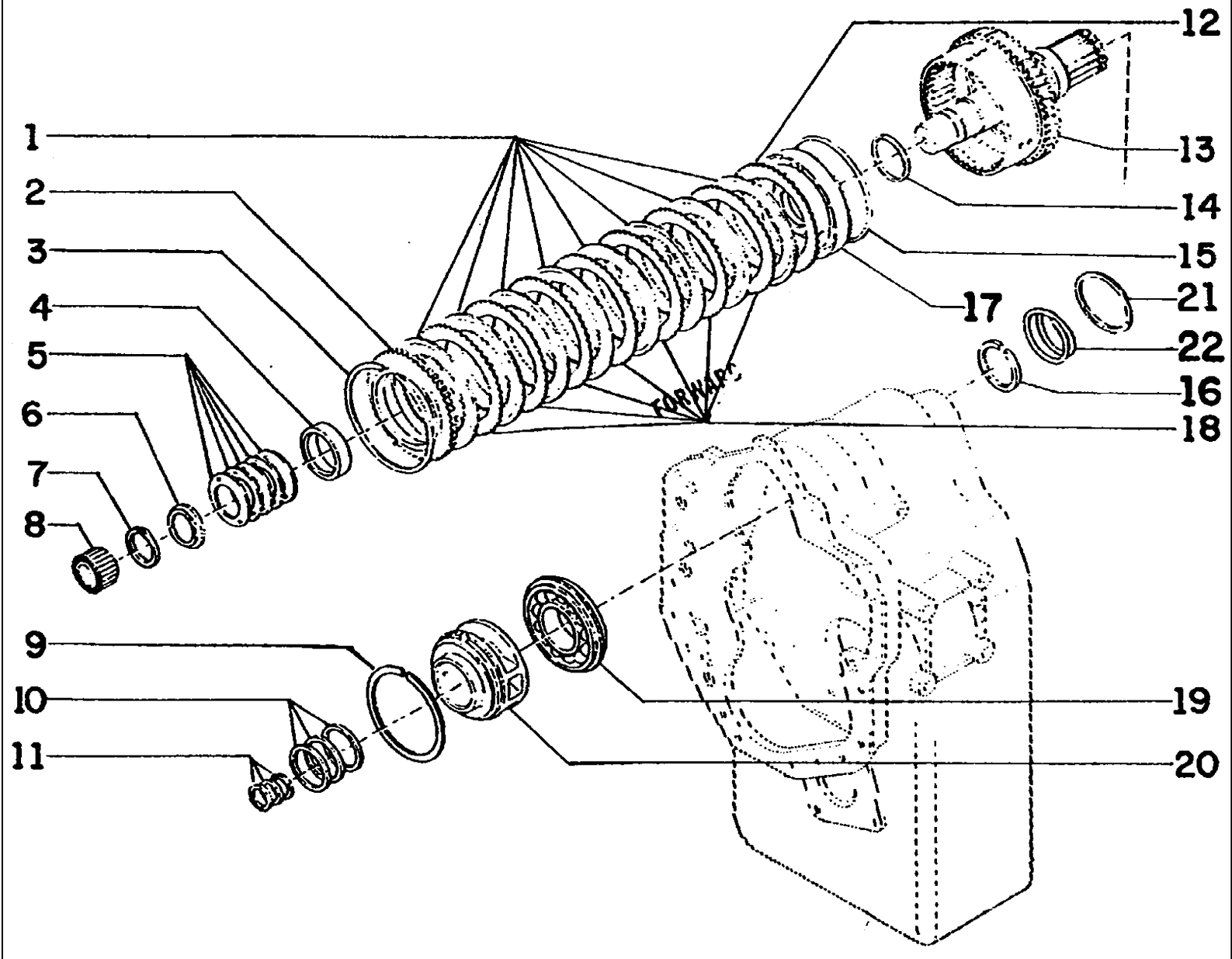
1
2
3
4
5
6
7
8
9
10
11
12
13
14
15
16
17
18
19
20
21
22
FORWARD

FG85 SERIES B MOTORGRADER

B2.01(012) TRANSMISSION FOR FG85A/R

Ref	Numero de Pieza	Ctd	Descripción
1	73118088	12	DISC
2	75206618	1	DISC
3	73118092	1	RING
4	73118090	1	SPACER
5	73118093	7	WASHER
6	75205467	1	SEAL
7	70926000	1	SNAP RING
8	73118097	1	BEARING
9	73118098	1	SEAL
10	75205496	3	RING
11	73118062	3	RING
12	75206644	1	DISC
13	75285771	1	SHAFT
14	73118087	1	RING
15	75206646	1	SEAL RING
16	75286805	1	RING
17	75206645	1	PISTON
18	73118089	11	DISC
19	28969370	1	BEARING
20	73118095	1	SLEEVE
21	75286804	1	RING
22	75286803	1	RING

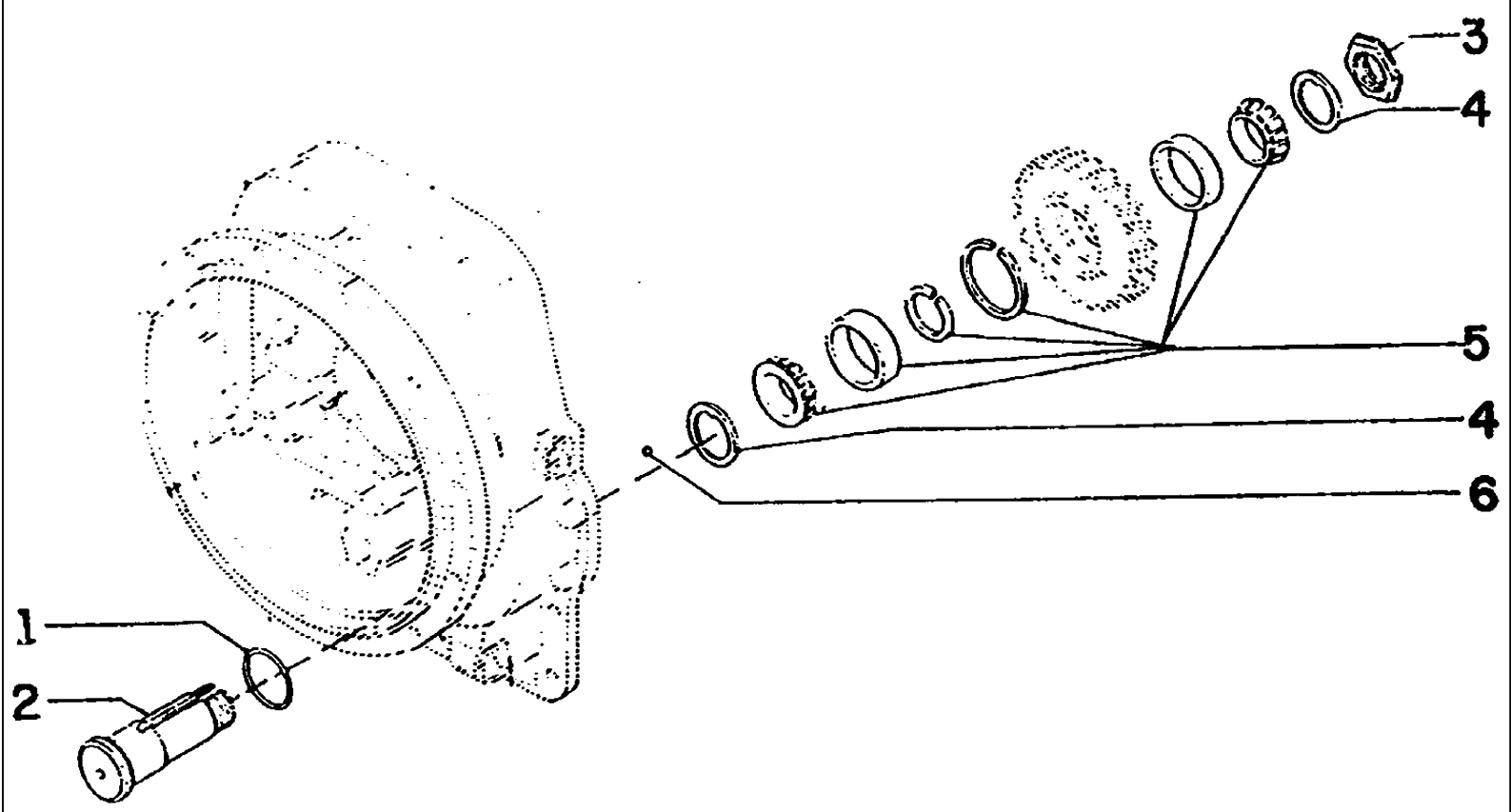
3
4
5
4
6
1
2

FG85 SERIES B MOTORGRADER

B2.01(013) TRANSMISSION FOR FG85A/R

Ref	Numero de Pieza	Ctd	Descripción
1	75206695	2	O'RING
2	75206651	2	SHAFT
3	70059946	2	NUT
4	79030247	2	RING
5	79030261	2	BEARING
6	75205423	2	BALL

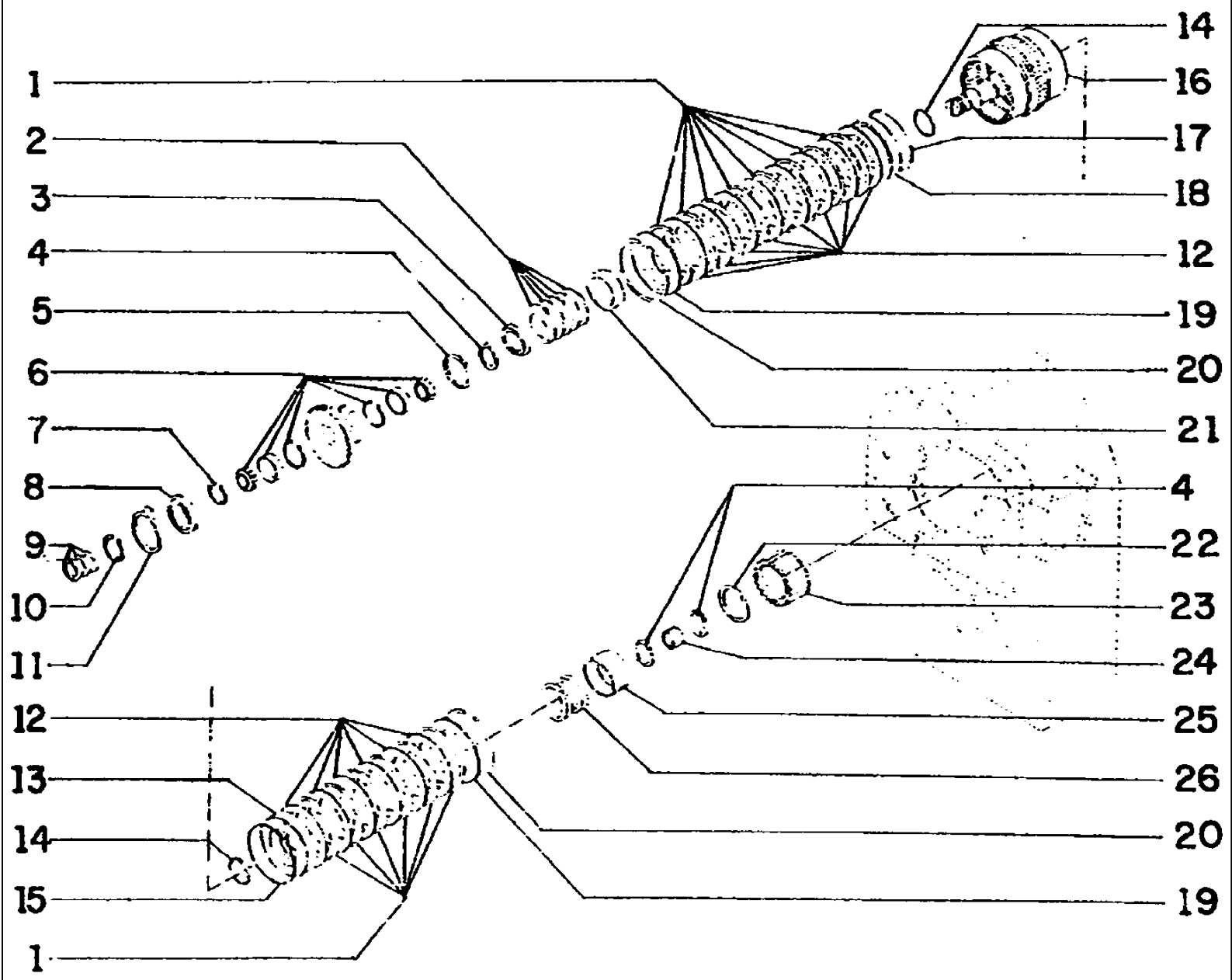
1
2
3
4
5
6
7
8
9
10
11
12
13
14
15
1
14
16
17
18
12
19
20
21
4
22
23
24
25
26
20
19

FG85 SERIES B MOTORGRADER

B2.01(014) TRANSMISSION FOR FG85A/R.

Ref	Numero de Pieza	Ctd	Descripción
1	73118088	12	DISC
2	75286821	1	KIT
3	75205467	2	SEAL
4	70926000	3	SNAP RING
5	75205473	1	RING
6	75206608	1	BEARING
7	75285775	1	RING
7	75285776	1	RING
7	75285777	1	RING
7	75285778	1	RING
7	75285779	1	RING
8	71004962	1	BEARING
9	71004926	3	RING
10	75285772	1	RING
11	71004961	1	RING
12	73118089	11	DISC
13	73118106	1	DISC
14	73118087	1	RING
15	73118086	1	SEAL
16	75285773	1	DIVERTER VALVE
17	75206646	1	SEAL RING
18	75206645	1	PISTON
19	75206618	1	DISC
20	73118092	1	RING
21	73118090	1	SPACER
22	75206149	1	SEAL
23	75285774	1	HUB
24	75205436	1	BEARING
25	73118108	1	SEAL
26	73118107	1	SPRING

B2.01(015) TRANSMISSION FOR FG85A/R.

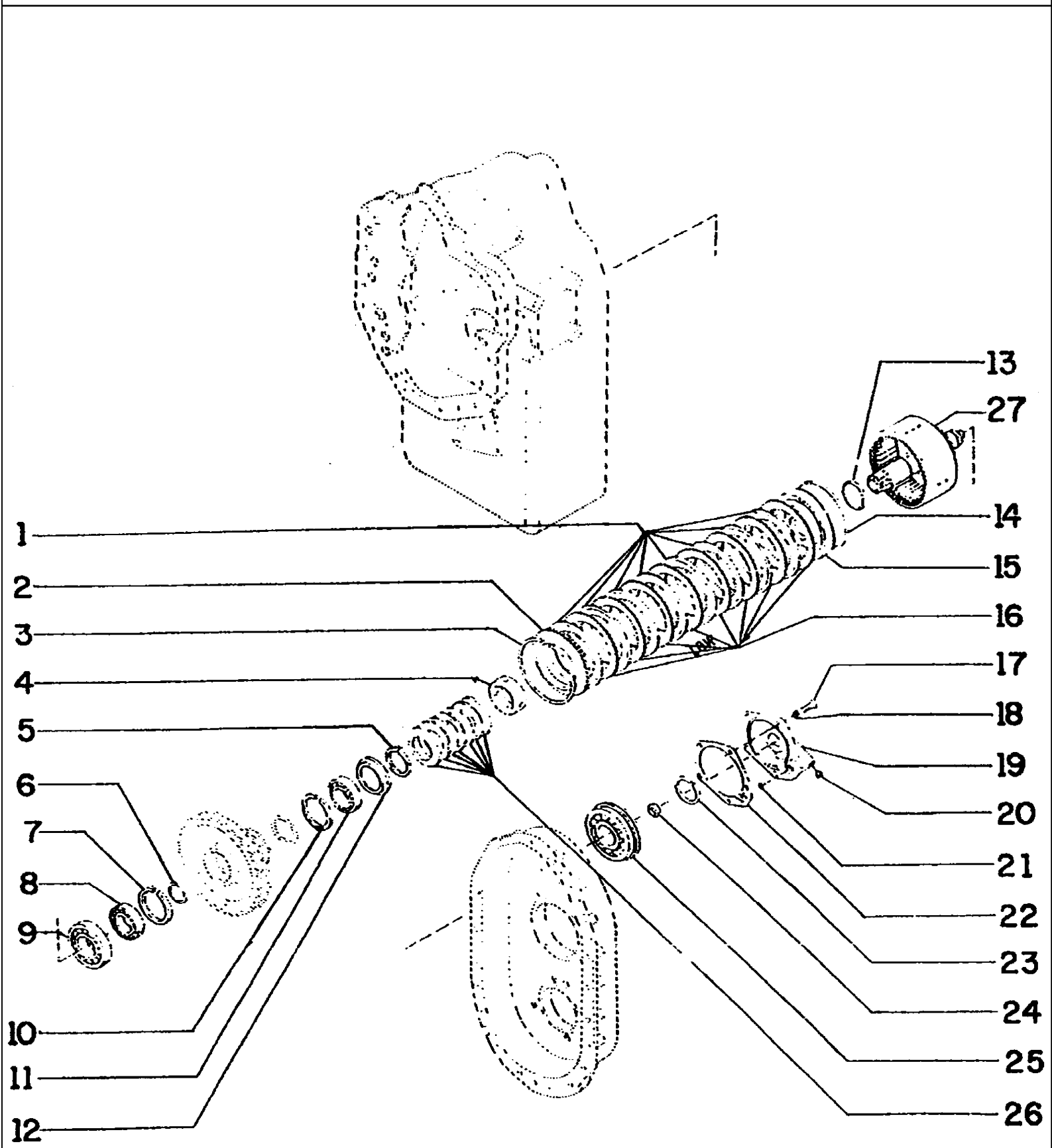

FG85 SERIES B MOTORGRADER

B2.01(015) TRANSMISSION FOR FG85A/R.

Ref	Numero de Pieza	Ctd	Descripción
1	73118133	10	DISC
2	75206618	1	DISC
3	73118092	1	RING
4	75206619	1	SPACER
5	70926000	1	SNAP RING
6	73118138	1	SPACER
7	75205431	1	RING
8	75205481	1	BEARING
9	73132932	1	BEARING
10	75205431	1	RING
11	73118134	1	BEARING
12	75205467	1	SEAL
13	73118087	1	RING
14	73118086	1	SEAL
15	73118236	1	PISTON
16	73118089	10	DISC
17	75206675	4	SCREW
18	70914678	4	LOCKWASHER
19	75206620	1	COVER
20	75206126	1	PLUG
21	75206127	1	SEAL RING
22	75205995	1	GASKET
23	71004997	1	RING
24	73109875	1	RING
25	71004976	1	BEARING
26	75205468	1	SPRING
27	75206655	1	SHAFT

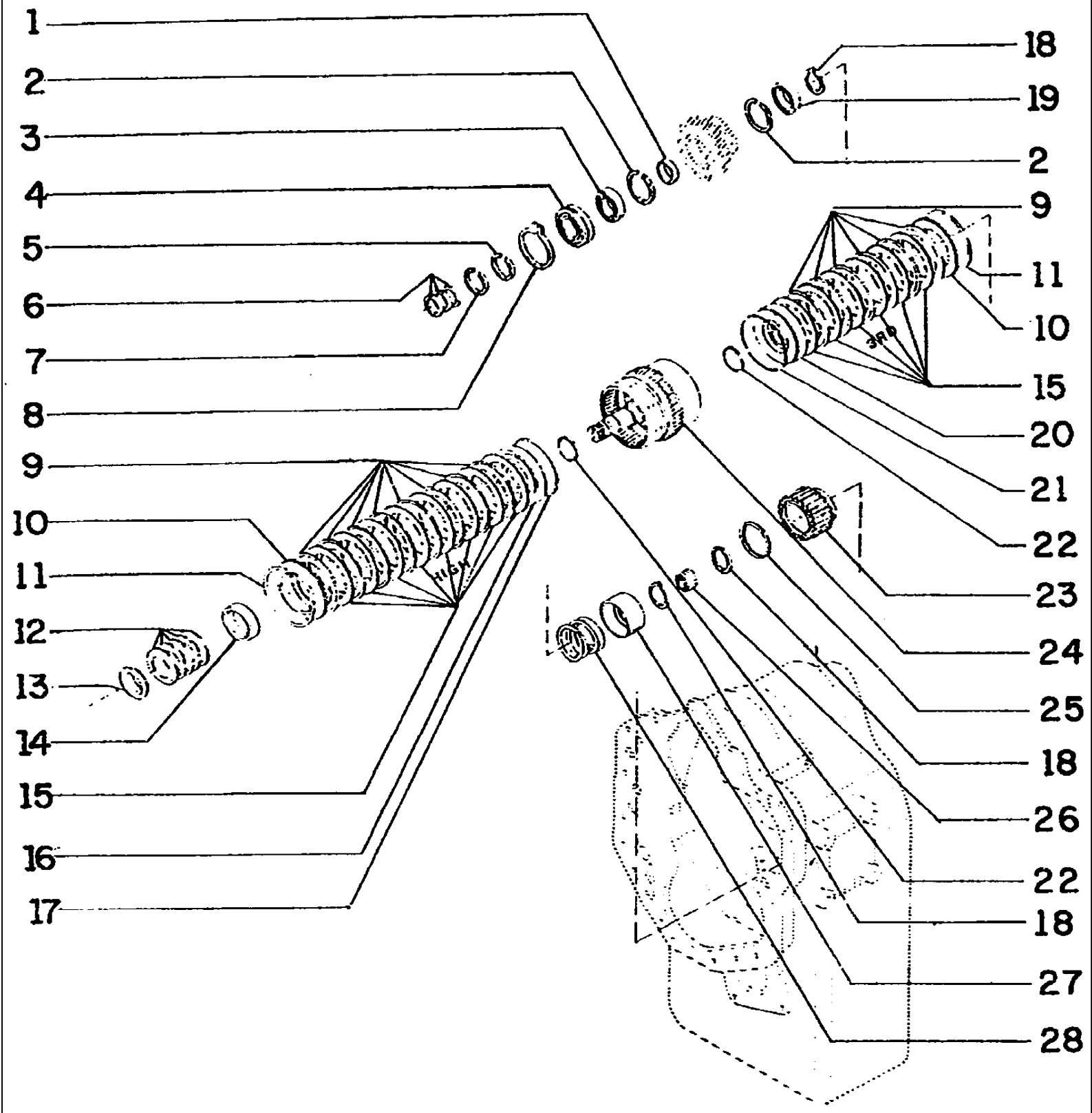
1
2
3
4
5
6
7
8
9
10
11
12
13
14
15
16
17
18
19
2
9
11
10
15
20
21
22
23
24
25
18
26
22
18
27
28

FG85 SERIES B MOTORGRADER

B2.01(016) TRANSMISSION FOR FG85A/R.

Ref	Numero de Pieza	Ctd	Descripción
1	73118112	1	SPACER
2	73118176	1	SEAL
3	71008990	1	BEARING
4	75205475	1	BEARING
5	71004927	1	RING
6	71004926	3	RING
7	75285772	1	RING
8	71004961	1	SNAP RING
9	73118088	12	DISC
10	75206618	1	DISC
11	73118092	1	RING
12	75286821	1	KIT
13	75205467	1	SEAL
14	73118090	1	SPACER
15	73118089	11	DISC
16	75206645	1	PISTON
17	75206646	1	SEAL RING
18	70926000	1	SNAP RING
19	28042480	1	BEARING
20	73118106	1	DISC
21	73118086	1	SEAL
22	73118087	2	RING
23	75285774	1	HUB
24	75285787	1	SHAFT
25	75206149	1	SEAL
26	73118111	1	BEARING
27	73118108	1	SEAL
28	73118107	1	SPRING

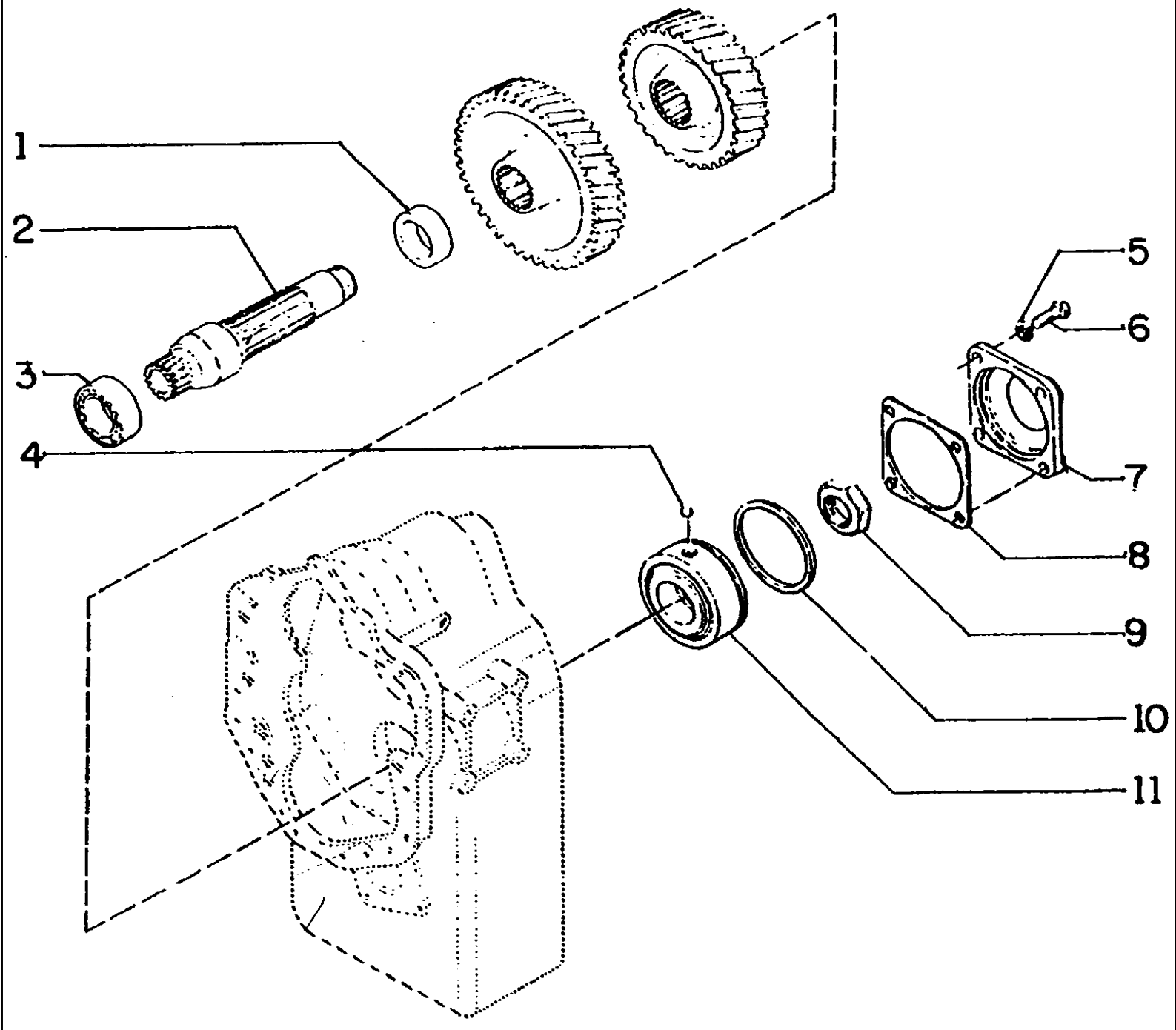
1
2
3
4
5
6
7
8
9
10
11

FG85 SERIES B MOTORGRADER

B2.01(017) TRANSMISSION FOR FG85A/R.

Ref	Numero de Pieza	Ctd	Descripción
1	75206420	1	SPACER
2	75206656	1	AXLE
3	75205434	1	BEARING
4	71004983	1	BALL
5	70910153	4	WASHER
6	75206674	4	SCREW
7	71004988	1	COVER
8	71004987	1	GASKET
9	73130973	1	NUT
10	71004985	1	RING
11	71004984	1	BEARING

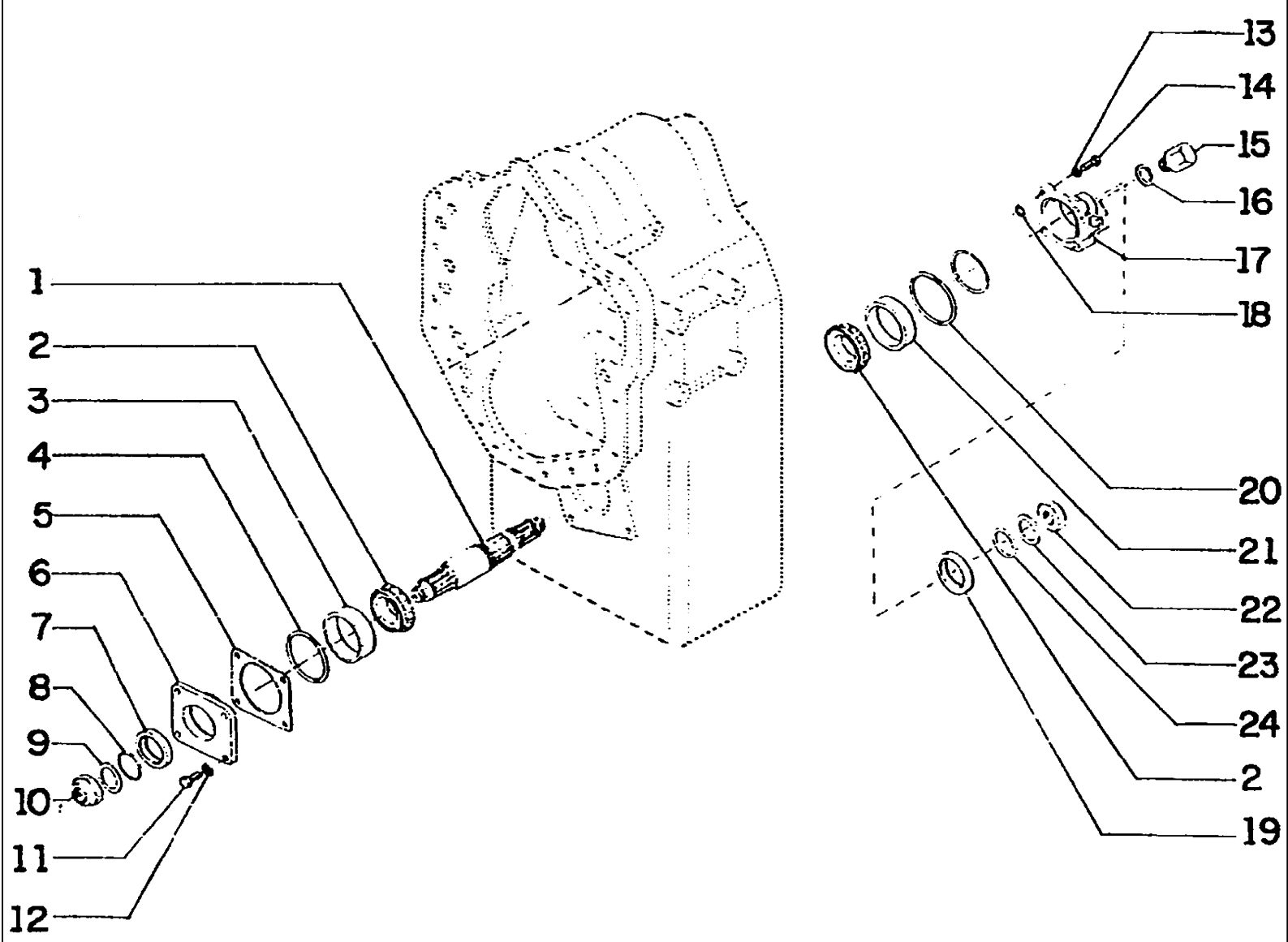
1
2
3
4
5
6
7
8
9
10
11
12
13
14
15
16
17
18
20
21
22
23
24
2
19

FG85 SERIES B MOTORGRADER

B2.01(018) TRANSMISSION FOR FG85A/R

Ref	Numero de Pieza	Ctd	Descripción
1	75285789	1	SHAFT
2	75285788	2	BEARING
3	70606899	1	BEARING
4	75206699	1	RING
5	71005110	1	SHIM *
5	71005109	1	SHIM *
5	71005108	1	SHIM *
5	71005107	1	SHIM *
6	71005111	1	COVER
7	71005117	1	RING
8	75206131	1	SEAL RING
9	71005114	1	WASHER
10	71005113	1	NUT
11	70928528	4	SCREW
12	70910153	4	WASHER
13	75285792	4	LOCKWASHER
14	75206676	4	SCREW
15	75285793	1	PLUG
16	75285794	1	WASHER
17	75285791	1	COVER
18	75206694	1	SEAL RING
19	73118150	1	SEAL
20	75206699	1	RING
21	70932661	1	BEARING
22	71005113	1	NUT
23	71005114	1	WASHER
24	75206131	1	SEAL RING

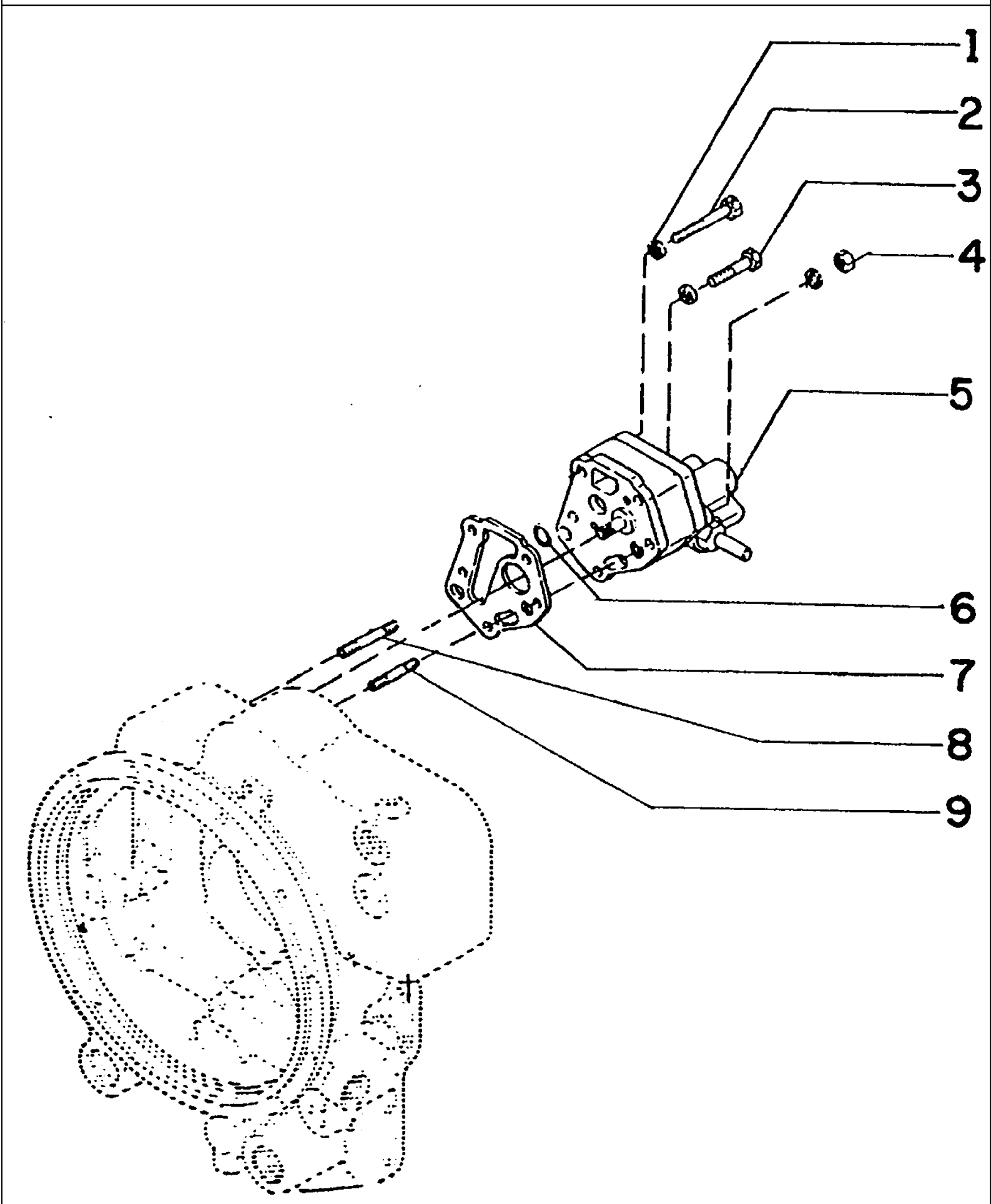
1
2
3
4
5
6
7
8
9

FG85 SERIES B MOTORGRADER

B2.01(019) TRANSMISSION FOR FG85A/R

Ref	Numero de Pieza	Ctd	Descripción
1	75206320	5	LOCKWASHER
2	75285797	1	SCREW
3	75285798	2	SCREW
4	75285834	2	NUT
5	75285796	1	PUMP
6	14457180	1	RING
7	73118167	1	RING
8	75205998	1	STUD
9	75285795	1	STUD

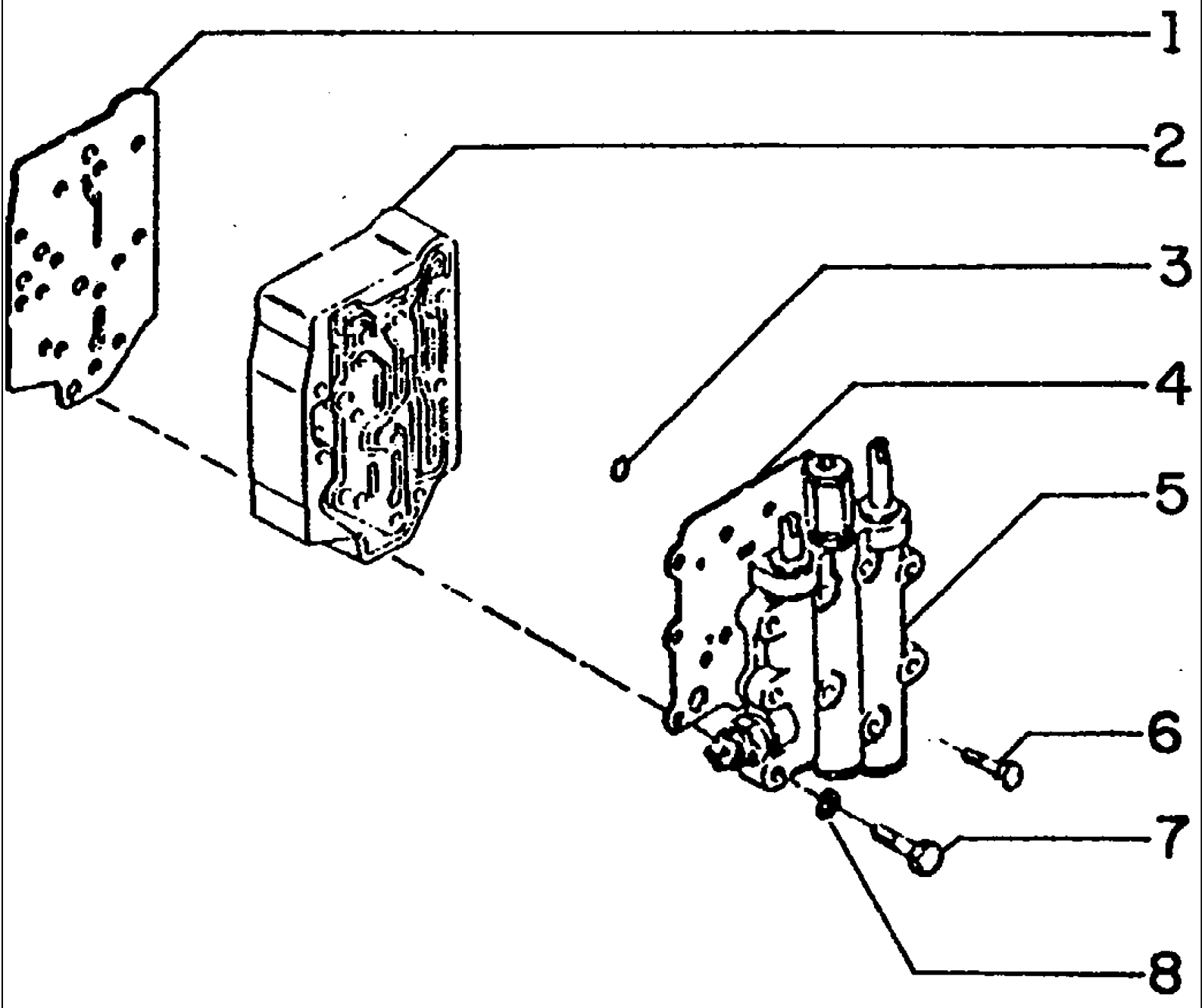
1
2
3
4
5
6
7
8

FG85 SERIES B MOTORGRADER

B2.01(020) TRANSMISSION FOR FG85A/R.

Ref	Numero de Pieza	Ctd	Descripción
1	75204963	1	SEAL ASSY
2	75285801	1	VALVE
3	75285988	1	RING
4	73118122	1	SEAL ASSY
5	75285799	1	CONTROL VALVE
6	75204958	4	SCREW
7	75204959	5	SCREW
8	70910287	9	LOCKWASHER

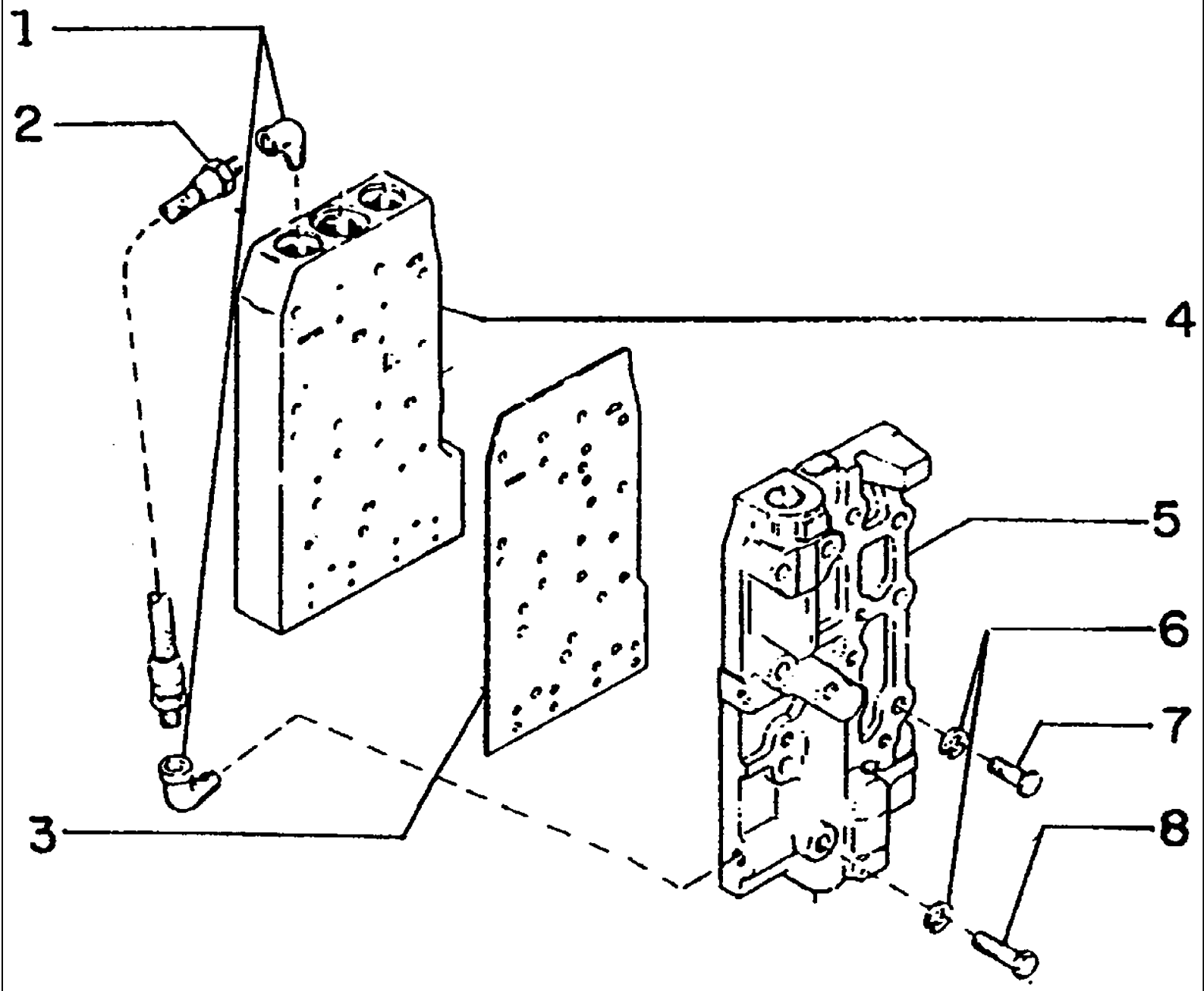
1
2
4
5
6
7
8
3

FG85 SERIES B MOTORGRADER

B2.01(021) TRANSMISSION FOR FG85A/R.

Ref	Numero de Pieza	Ctd	Descripción
1	75206704	2	ELBOW
2	75205472	1	TUBE
3	75205463	1	SEAL ASSY
4	75285803	1	VALVE
5	75285802	1	VALVE
6	70910287	2	LOCKWASHER
7	79059932	2	SCREW
8	75205418	1	SCREW

B2.01(022) TRANSMISSION FOR FG85A/R.

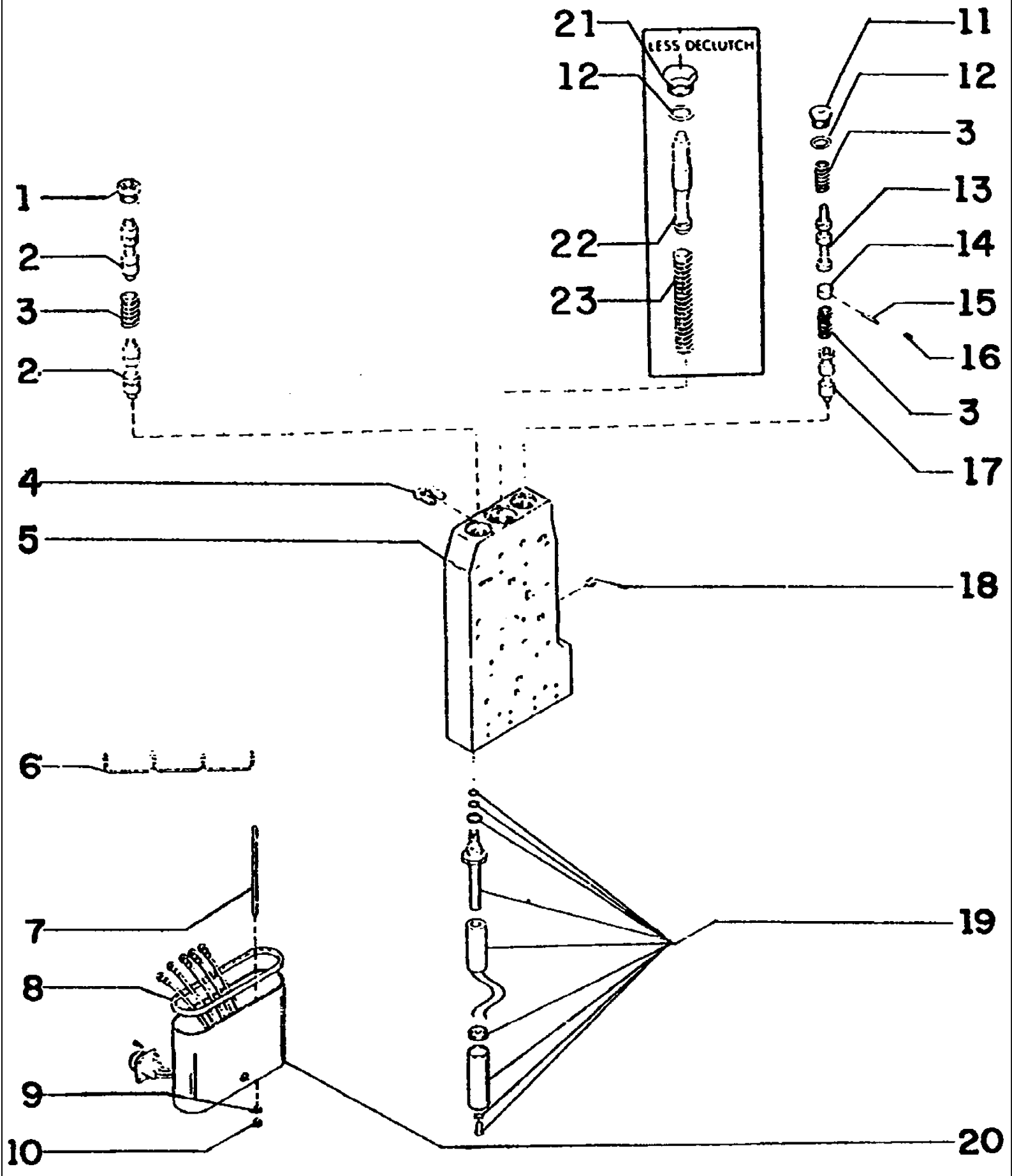

FG85 SERIES B MOTORGRADER

B2.01(022) TRANSMISSION FOR FG85A/R.

Ref	Numero de Pieza	Ctd	Descripción
1	75205471	1	SCREW
2	75285804	1	SHAFT
3	75285805	1	SPRING
4	73118118	1	CLIP
5	75285809	1	VALVE
6	75205477	1	CABLE
7	75205480	2	STUD
8	75206642	1	SEAL
9	75285811	2	LOCKWASHER
10	75285812	2	NUT
11	79053442	1	PLUG
12	70923975	1	RING
13	75285806	1	SHAFT
14	79053464	1	CLIP
15	79053466	1	PIN
16	79053466	1	PIN
17	75285808	1	SHAFT
18	73131677	2	PLUG
19	75206641	5	VALVE
20	75285810	1	COVER
21	70924290	1	PLUG
22	73118119	1	SHAFT
23	73117875	1	SPRING

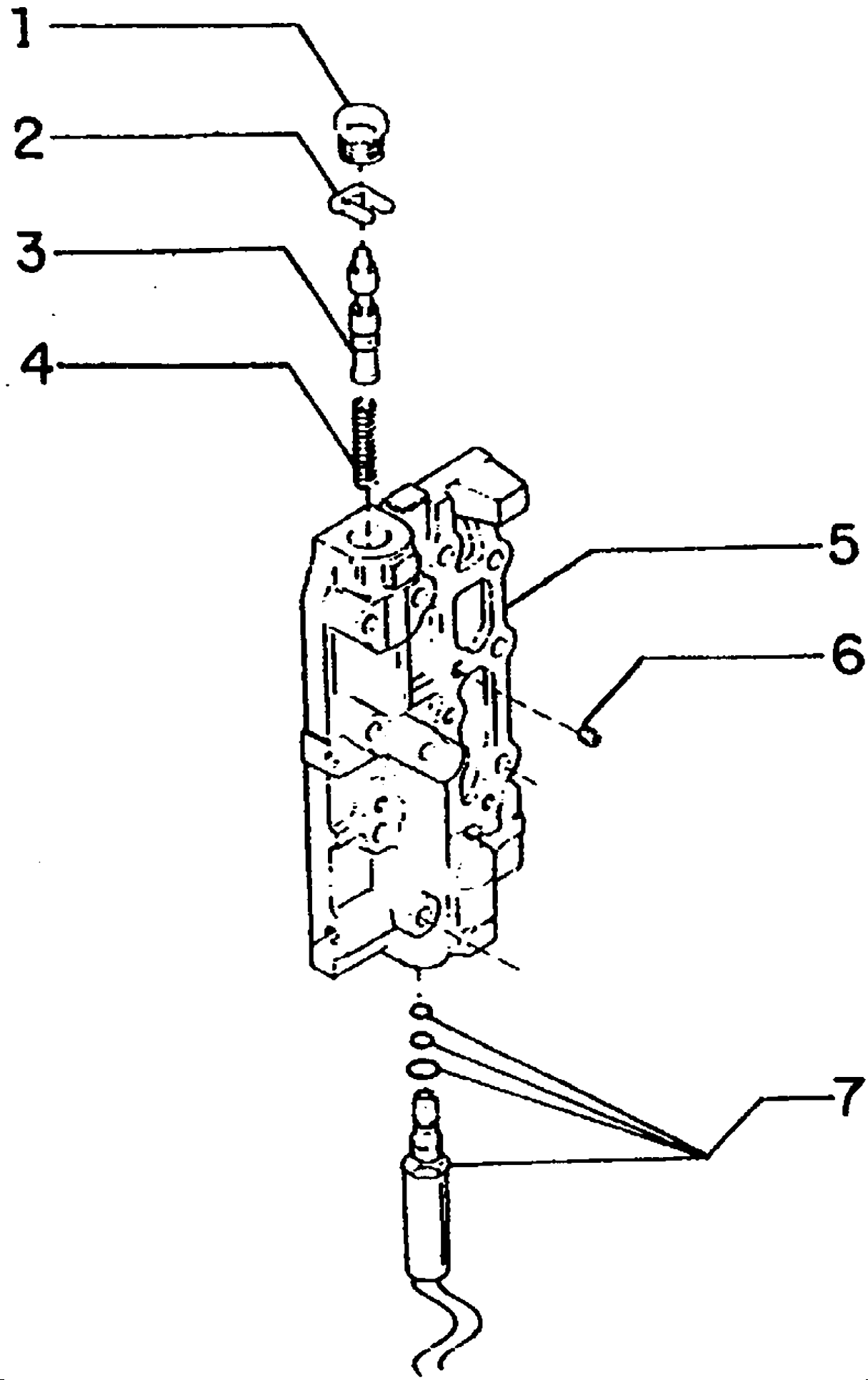
1
2
3
4
5
6
7

FG85 SERIES B MOTORGRADER

B2.01(023) TRANSMISSION FOR FG85A/R.

Ref	Numero de Pieza	Ctd	Descripción
1	70924290	1	PLUG
2	73118118	1	CLIP
3	75285812	1	NUT
4	75285805	1	SPRING
5	75285802	1	VALVE
6	73131677	7	PLUG
7	75206641	5	VALVE

B2.01(024) TRANSMISSION FOR FG85A/R.

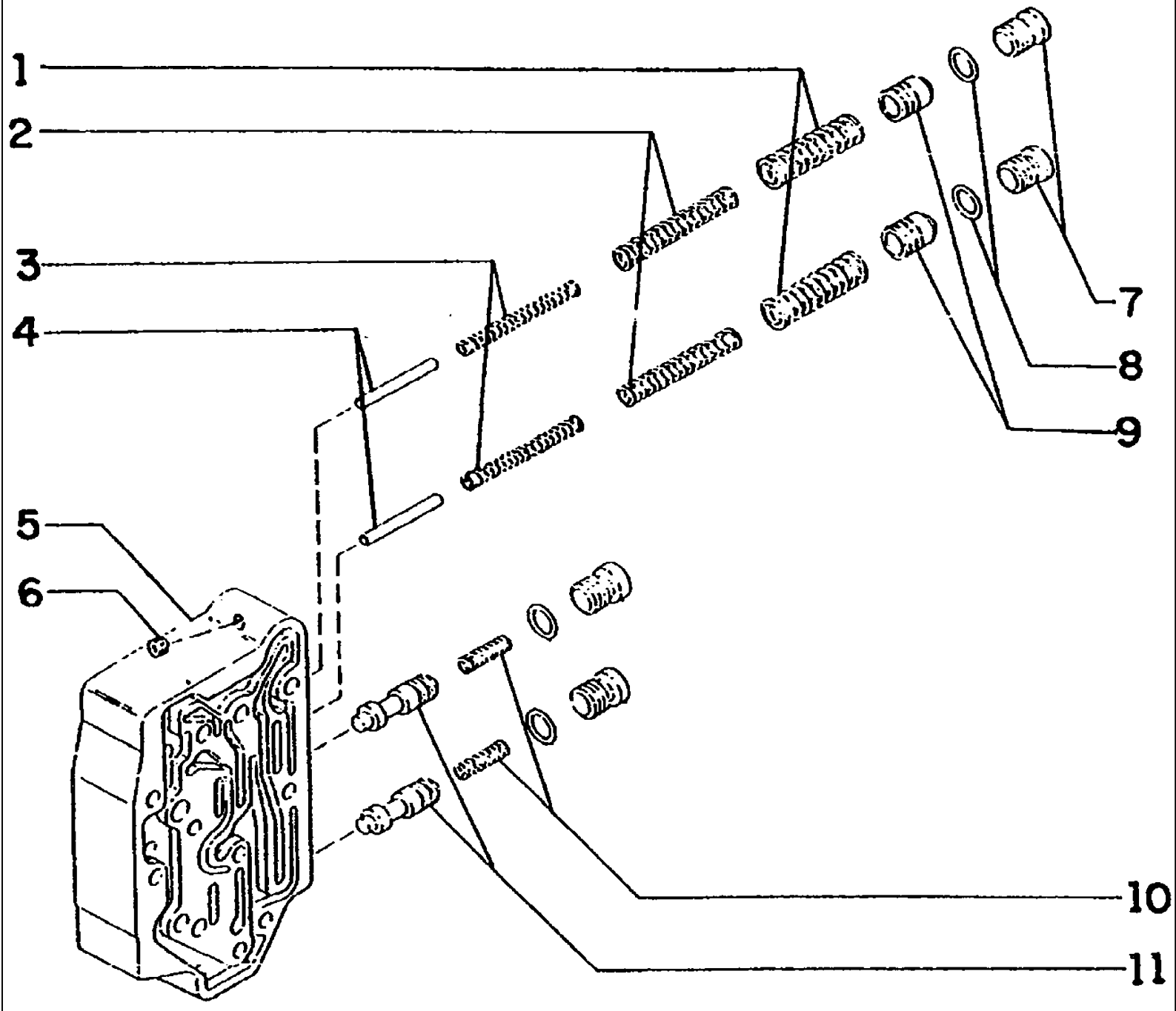

FG85 SERIES B MOTORGRADER

B2.01(024) TRANSMISSION FOR FG85A/R.

Ref	Numero de Pieza	Ctd	Descripción
1	75285817	2	SPRING
2	75285816	2	SPRING
3	75285815	2	SPRING
4	75285814	2	PIN
5	75285801	1	VALVE
6	75285625	2	PLUG
7	73118329	2	PLUG
8	70923875	2	RING
9	75285818	2	VALVE
10	73118126	2	SPRING
11	75285819	2	SHAFT

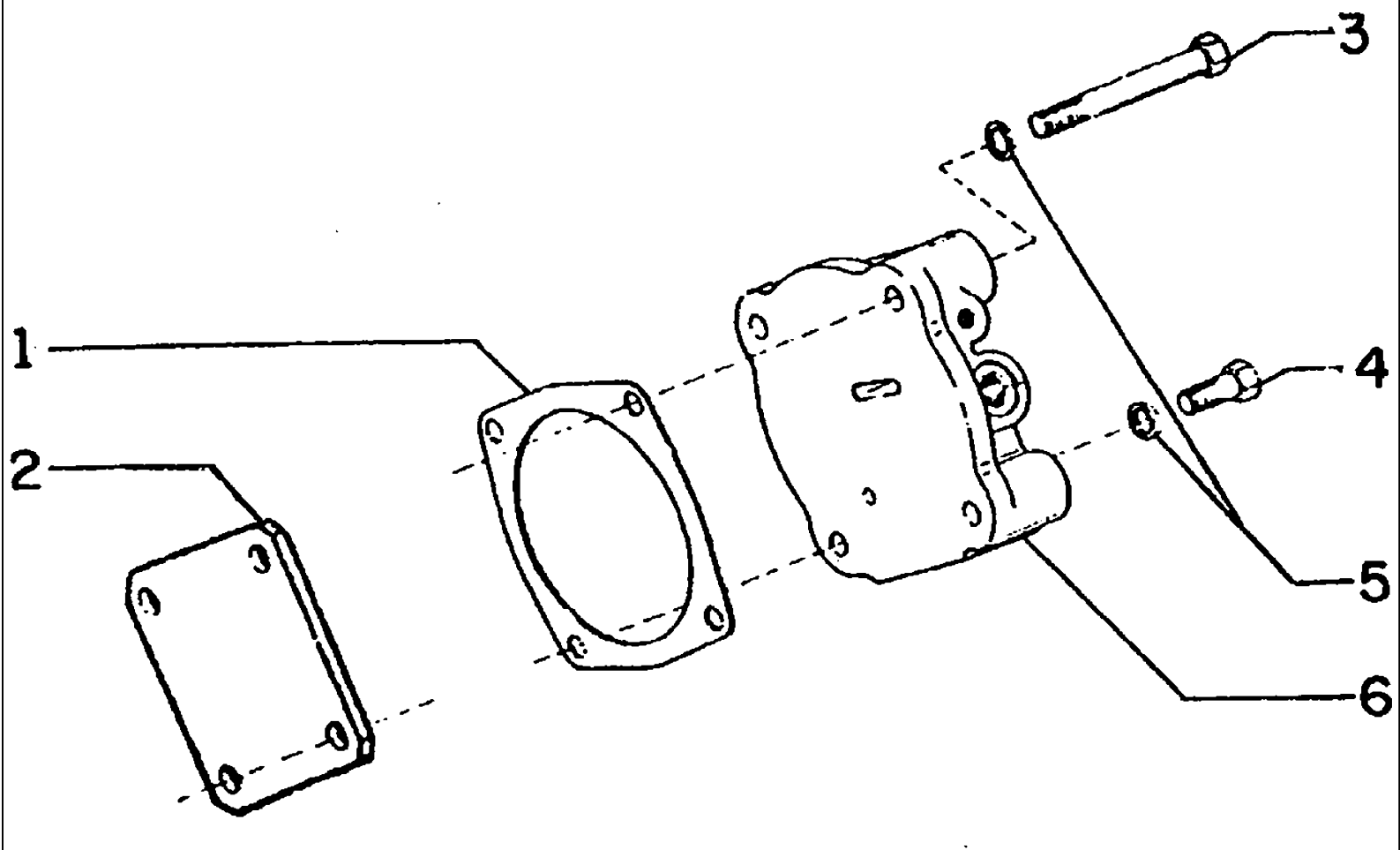
1
2
3
4
5
6

FG85 SERIES B MOTORGRADER

B2.01(025) TRANSMISSION FOR FG85A/R

Ref	Numero de Pieza	Ctd	Descripción
1	75285821	1	GASKET
2	75285822	1	PLATE
3	75285823	2	SCREW
4	75285824	2	SCREW
5	70910287	2	LOCKWASHER
6	75286437	1	VALVE

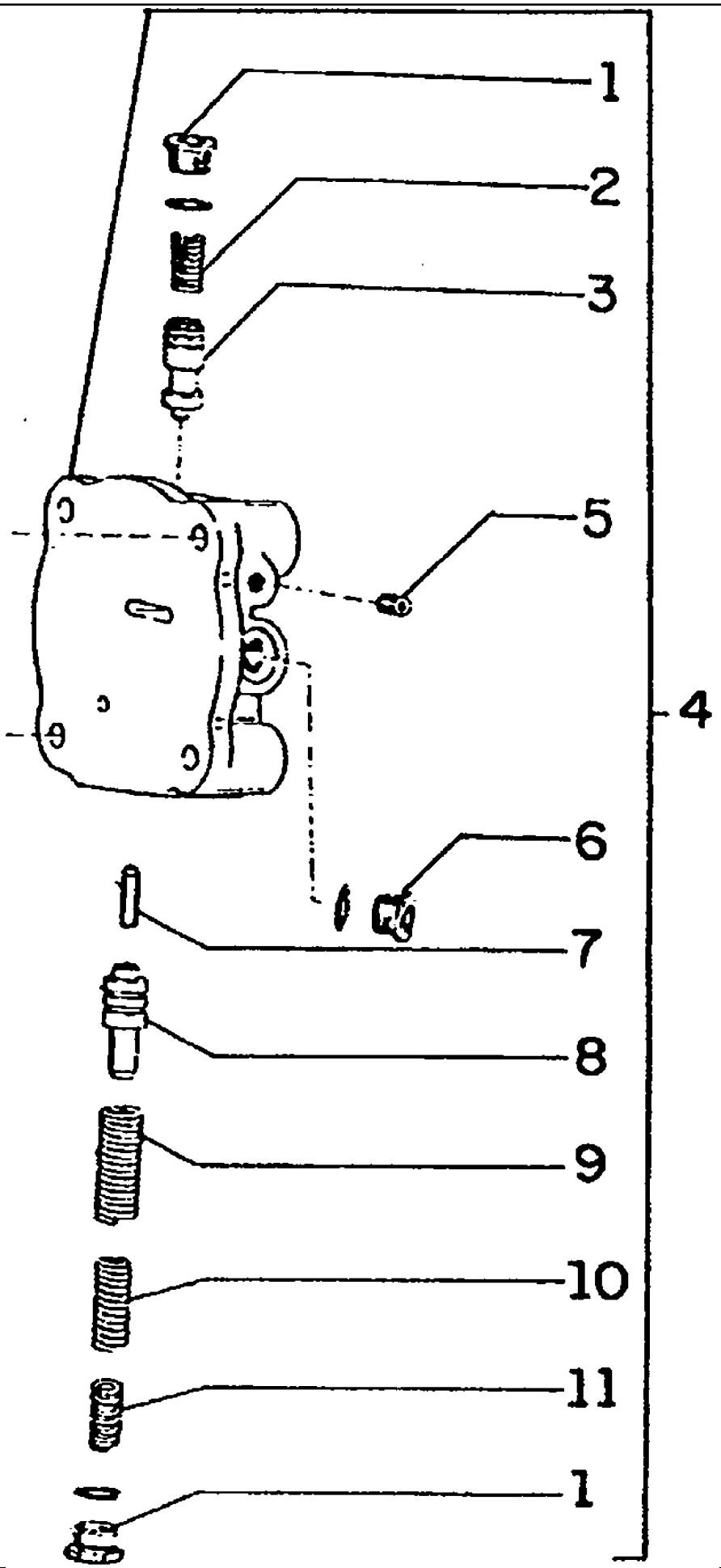
1
2
3
5
4
6
7
8
9
10
11
1

FG85 SERIES B MOTORGRADER

B2.01(026) TRANSMISSION FOR FG85A/R.

Ref	Numero de Pieza	Ctd	Descripción
1	73118329	2	PLUG
2	73118126	1	SPRING
3	75285825	1	SHAFTS
4	75286437	1	VALVE
5	70922374	1	PLUG
6	75285826	1	PLUG
7	75285814	1	PIN
8	75285818	1	VALVE
9	75285827	1	SPRING
10	75285828	1	SPRING
11	75285829	1	SPRING

B2.01/1(001) TRANSMISSION GASKET KIT 75286425.

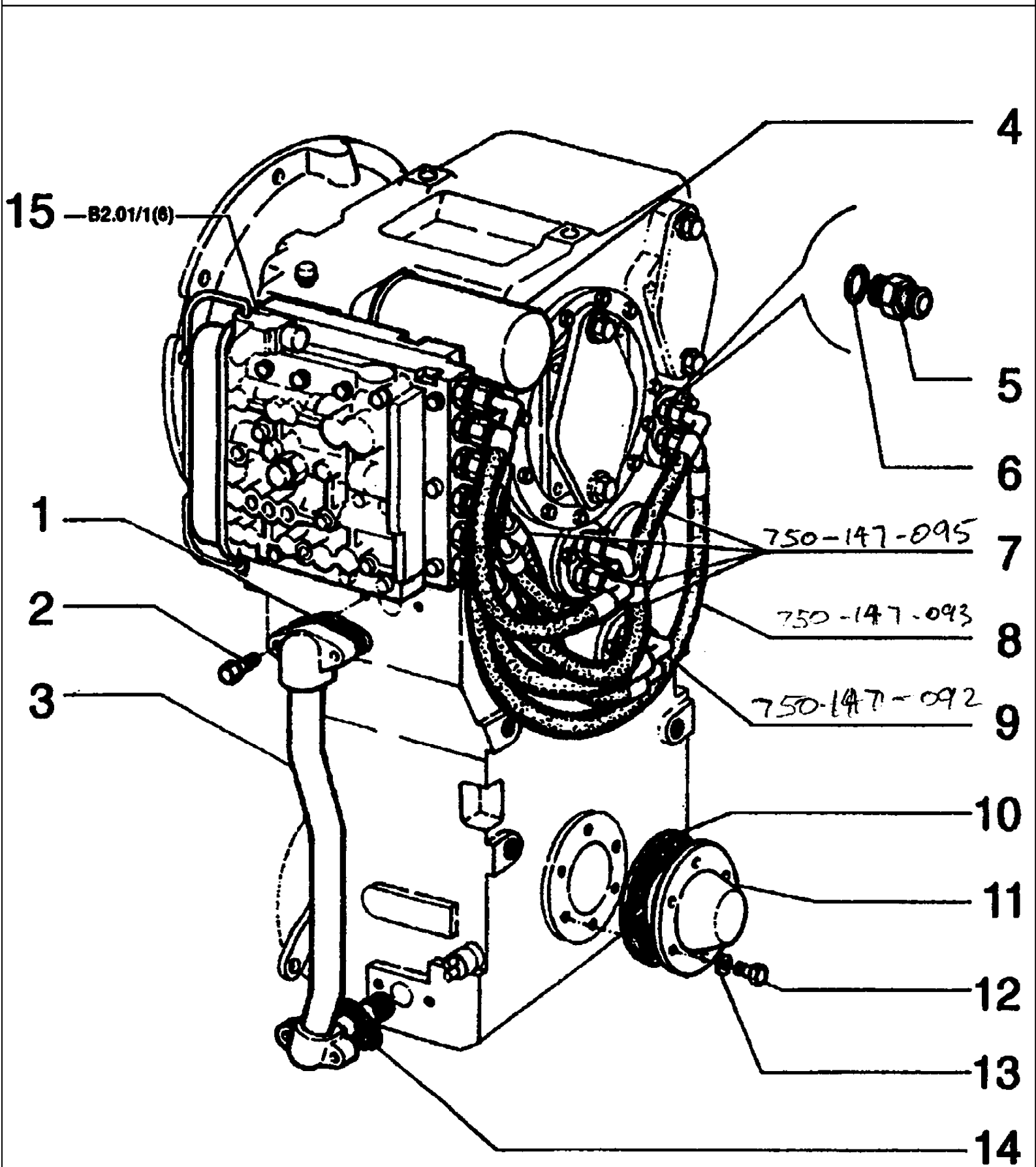

FG85 SERIES B MOTORGRADER

B2.01/1(001) TRANSMISSION GASKET KIT 75286425.

Ref	Numero de Pieza	Ctd	Descripción
1	79106774	1	GASKET
3	75286016	1	TUBE
4	79109089	1	FILTER
5	73142758	6	CONNECTOR
6	73142759	6	O'RING
7	75286019	4	HOSE
8	75286018	1	HOSE
9	75286017	1	HOSE
10	75286011	1	6ASKET
11	75286010	1	COVER
12	16043524	6	BOLT, Hex, M8 x 22, 8.8, Full Thd
13	10730321	6	WASHER
14	79106774	1	GASKET
15	75287628	1	VALVE
2	16044224	4	BOLT, HH, CL 8.8, M8 x 1.25 x 50

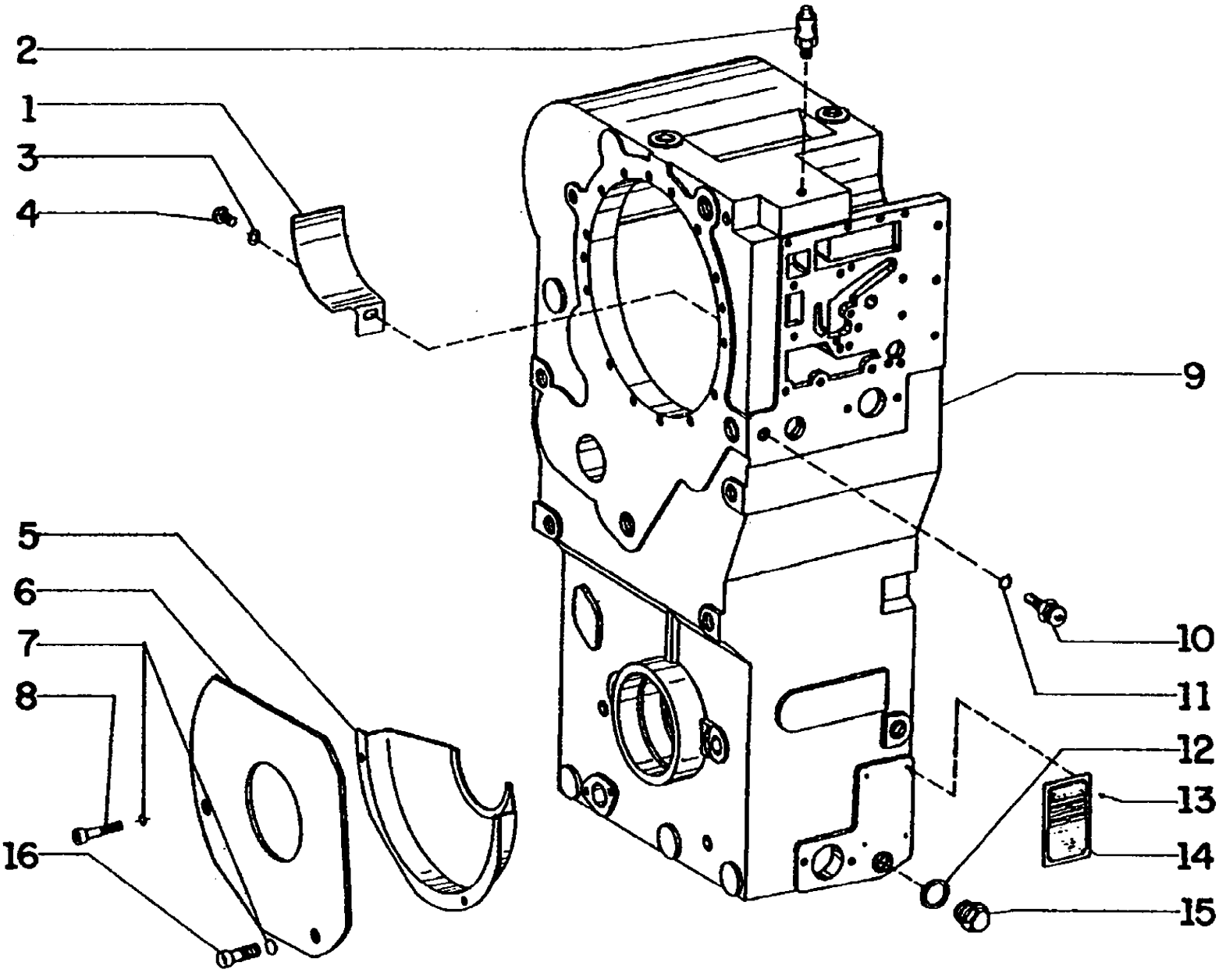
2
1
3
4
9
5
6
7
8
16
10
11
12
13
14
15

FG85 SERIES B MOTORGRADER

B2.01/1(002) TRANSMISSION

Ref	Numero de Pieza	Ctd	Descripción
1	75286001	1	DEFLECTOR
2	73142752	1	BREATHER
3	10730321	1	WASHER
4	16043024	1	SCREW
5	75286381	1	COVER
6	75286380	1	COVER
7	75286005	2	WASHER
8	14306424	1	SCREW
9	75285932	1	CASE
10	75286004	1	trans. temperature sensor
11	79101796	1	O'RING
12	79096829	1	RING
13	75285934	4	RIVET
14	75285933	1	PLATE
15	75286006	1	PLUG
16	14306920	1	SCREW, Hex Soc Hd, M8 x 50, 8.8

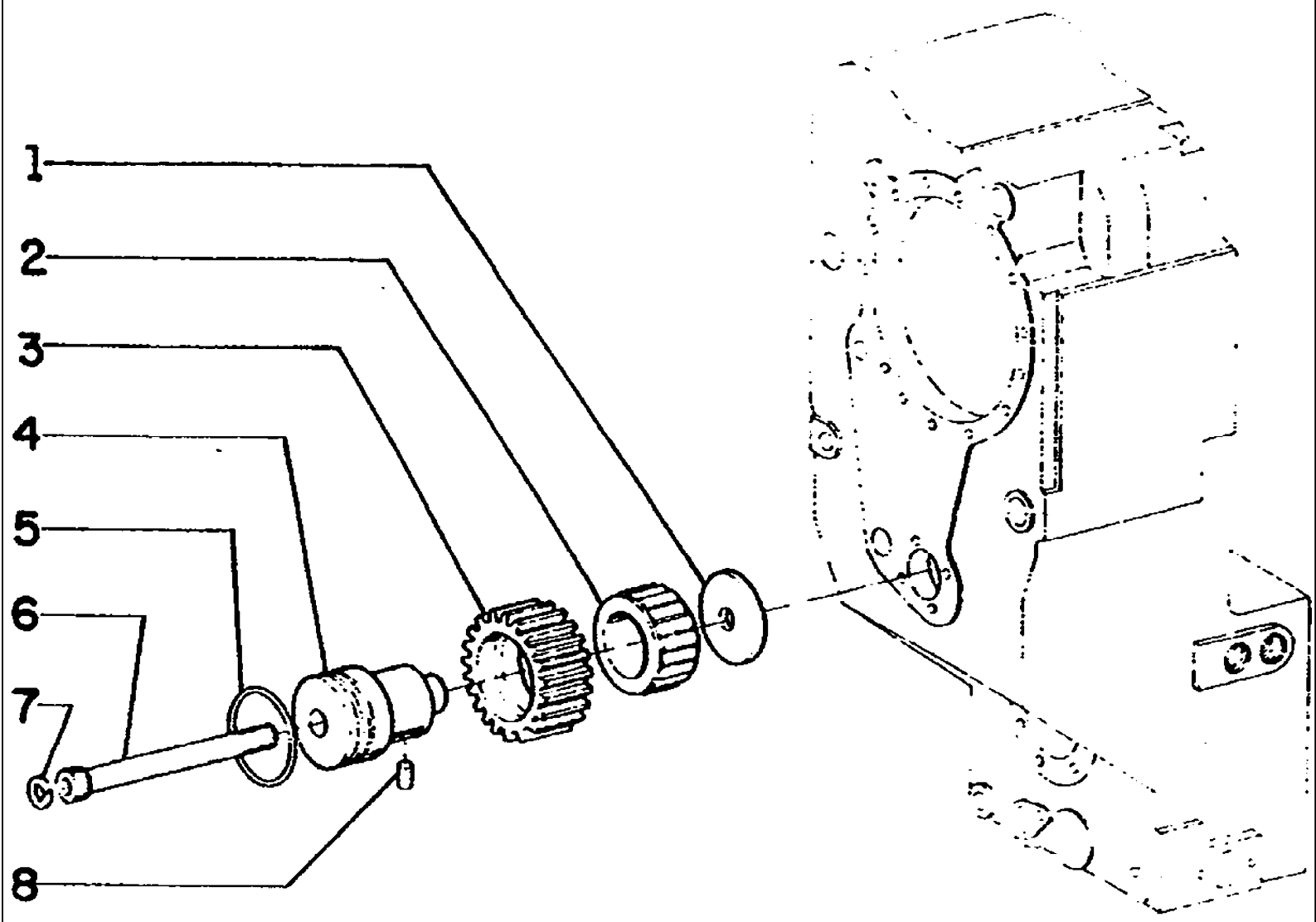
1
2
3
4
5
6
7
8

FG85 SERIES B MOTORGRADER

B2.01/1(003) TRANSMISSION

Ref	Numero de Pieza	Ctd	Descripción
1	75286014	1	SHIM
2	75285954	1	BEARING
3	75285952	1	GEAR
4	75285951	1	SHAFT
5	79094484	1	O'RING
6	75285953	1	SCREW
7	75285955	1	SNAP RING
8	73142840	1	PIN

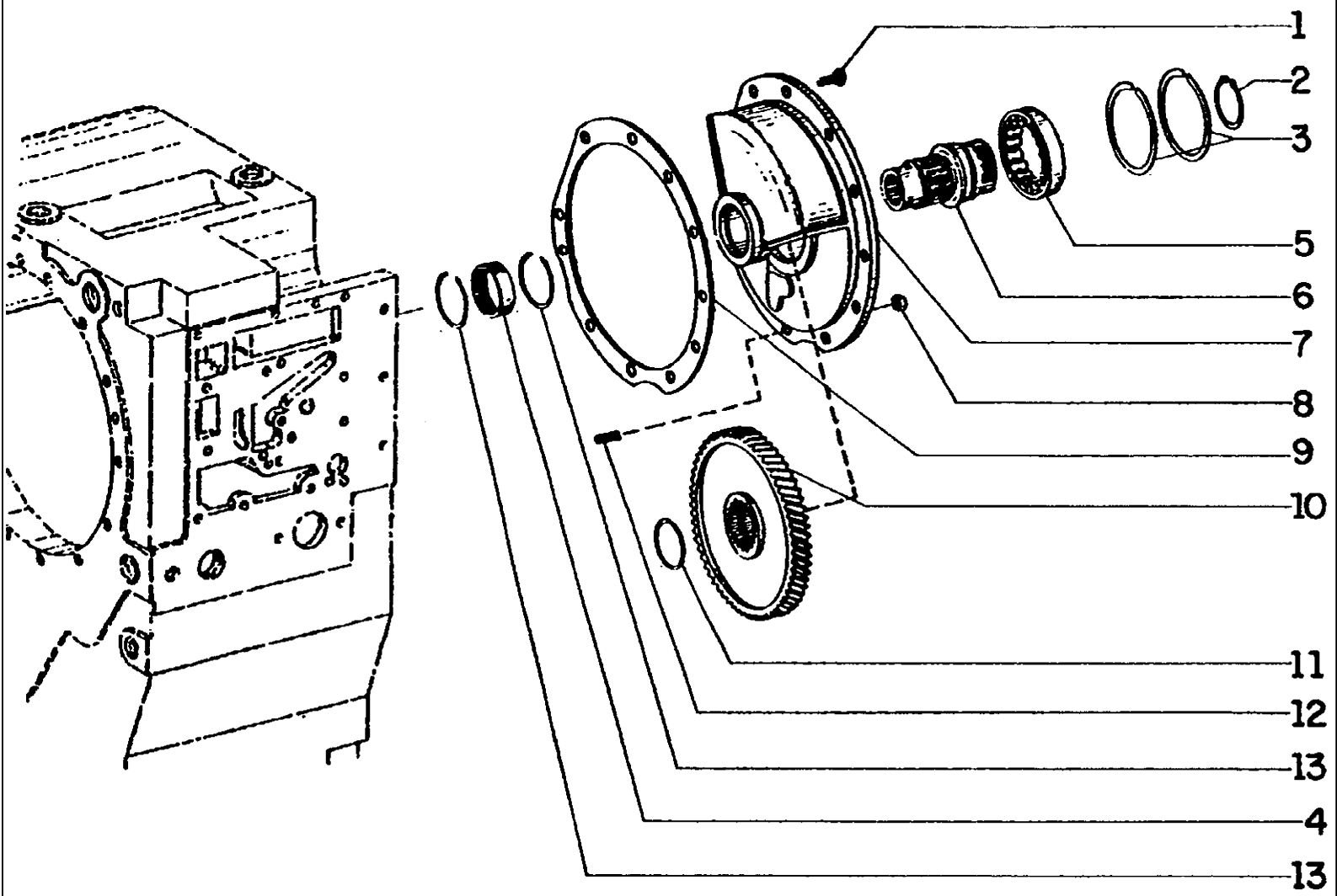
1
2
3
5
6
7
8
9
10
11
12
13
4
13

FG85 SERIES B MOTORGRADER

B2.01/1(004) TRANSMISSION

Ref	Numero de Pieza	Ctd	Descripción
1	16043524	10	BOLT, Hex, M8 x 22, 8.8, Full Thd
2	11069076	1	RING, RETAINING, M45, Ext
3	73143044	2	SNAP RING
4	75286052	1	SLEEVE
5	73143043	1	BEARING
6	75285976	1	SHAFT
7	75286050	1	FLANGE
8	16100811	1	NUT, M8, Cl 8
9	73143047	1	SEAL
10	75286051	1	GEAR
11	75285857	1	SNAP RING
12	13516724	1	STUD
13	75285858	1	SNAP RING

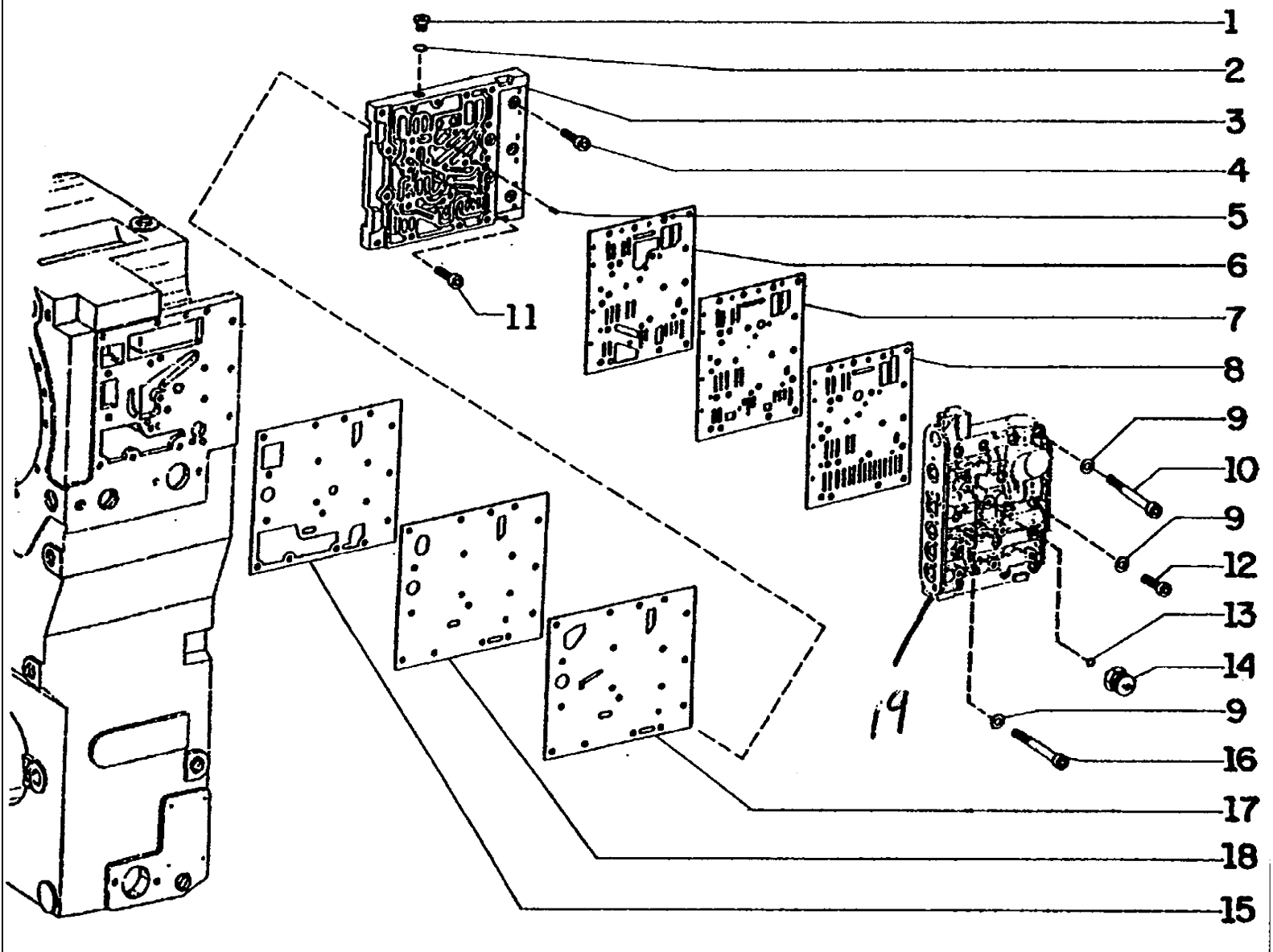
1
2
3
4
5
6
7
8
9
10
9
12
13
14
9
16
17
18
15
11
19

FG85 SERIES B MOTORGRADER

B2.01/1(005) TRANSMISSION

Ref	Numero de Pieza	Ctd	Descripción
1	73142828	1	PLUG
2	14437585	1	O-RING, 8MM ID x 1.5 Thk
3	75285945	1	PLATE
4	14761820	9	SCREW
5	75285946	1	PIN
6	75285947	1	GASKET
7	75285948	1	GASKET
8	75285949	1	GASKET
9	14488901	16	WASHER
10	14359424	6	SCREW
11	14761623	3	SCREW
12	14306824	9	SCREW, Hex Soc Hd, M8 x 45, 10.9
13	14437585	1	O-RING, 8MM ID x 1.5 Thk
14	75286378	1	SWITCH
15	79106649	1	GASKET
16	14309021	1	SCREW
17	79106650	1	GASKET
18	79106618	1	GASKET
19	75287628		CONTROL VALVE

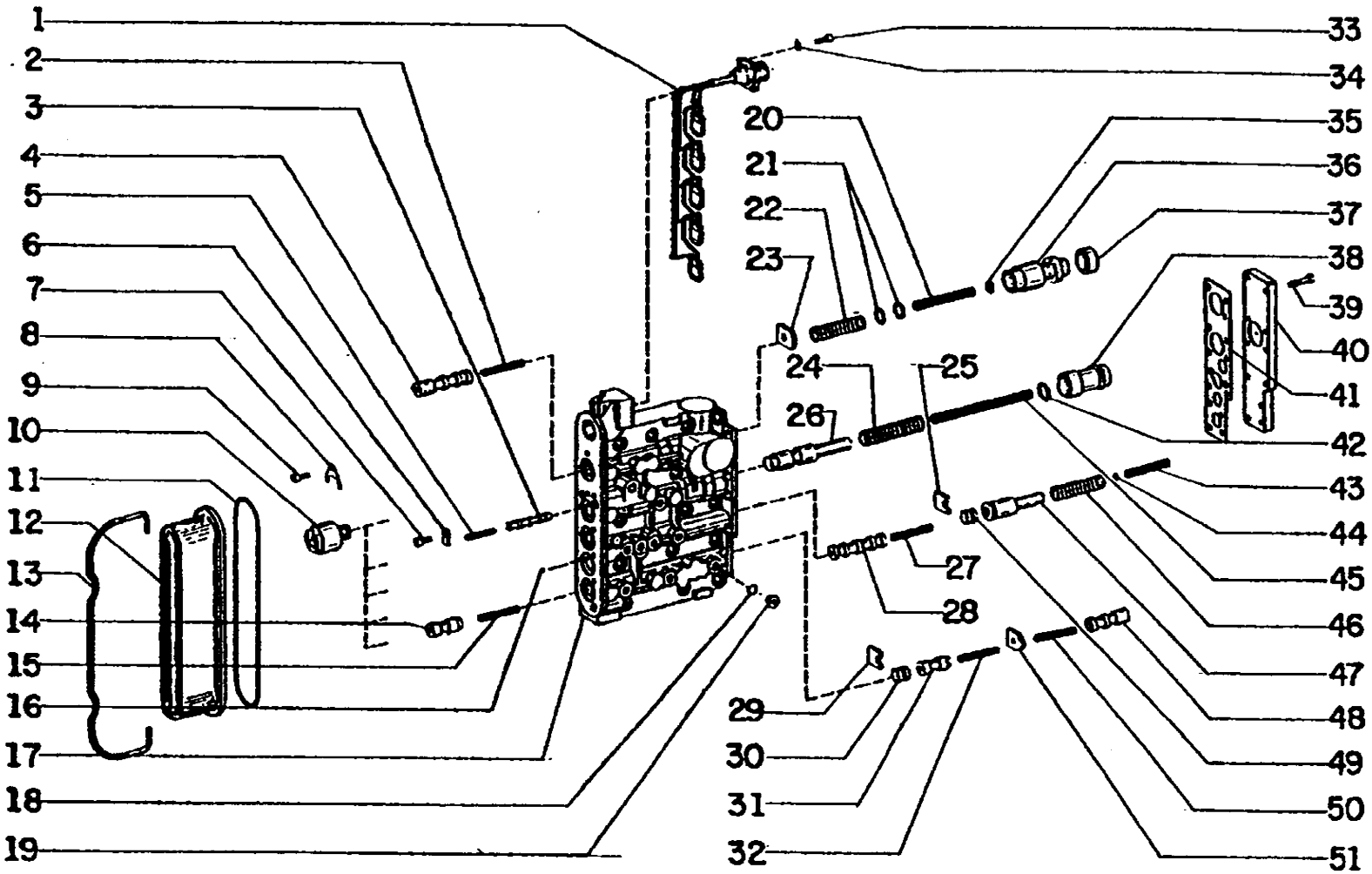
1
2
3
4
5
6
7
8
9
10
11
12
13
14
15
16
17
18
19
20
21
22
23
24
25
26
27
28
29
30
31
32
33
34
35
36
37
38
39
40
41
42
43
44
45
46
47
48
49
50
51

FG85 SERIES B MOTORGRADER

B2.01/1(006) TRANSMISSION

Ref	Numero de Pieza	Ctd	Descripción
1	75285983	1	CABLE
2	79106680	1	SPRING
3	79106687	1	VALVE
4	79106686	1	PISTON
5	79106688	1	SPRING
6	79106689	1	PLATE
7	14304021	1	SCREW, Hex Soc Hd, M5 x 10, 8.8
8	79106692	5	PLATE
9	14304021	5	SCREW, Hex Soc Hd, M5 x 10, 8.8
10	79106691	5	COIL
11	73140668	1	O'RING
12	73140667	1	COVER
13	73140669	1	SUPPORT
14	75285981	1	PISTON
15	79106678	1	SPRING
16	79106690	8	BALL
17	75285977	1	CASE
18	14437585	7	O-RING, 8MM ID x 1.5 Thk
19	73142828	7	PLUG
20	79106659	1	SPRING
21	75286059	2	SHIM
22	73142807	1	SPRING
23	79106656	1	PLATE
24	73142803	1	SPRING
25	79106674	1	PLATE
26	79106672	1	PISTON
27	79106680	1	SPRING
28	75285982	1	PISTON
29	79106674	1	PLATE
30	79106675	1	PIN
31	75285978	1	PISTON
32	79106678	1	SPRING
33	10374911	4	SCREW
34	12601071	4	WASHER
35	79106666	1	WASHER 0,5 mm
35	79106667	1	WASHER 1,0 mm
35	79106668	1	WASHER 2,0 mm
35	79106669	1	WASHER 3,0 mm
35	79106670	1	WASHER 5,0 mm
36	79109099	1	PISTON
37	79106671	1	BUSHING
38	76025807	1	PISTON
39	75286071	11	SCREW

Ref	Numero de Pieza	Ctd	Descripción
40	75285980	1	COVER
41	75285979	1	GASKET
42	79106660	1	WASHER
42	76025986	1	WASHER
42	79106662	1	WASHER
42	76025986	1	WASHER
42	79106665	1	WASHER
42	76025986	1	WASHER
43	73142808	1	SPRING
44	79083676	7	WASHER
45	73142804	1	SPRING
46	73142807	1	SPRING
47	79106676	1	PISTON
48	79106681	1	PISTON
49	79106675	1	PIN
50	79106678	1	SPRING
51	79106679	1	PLATE

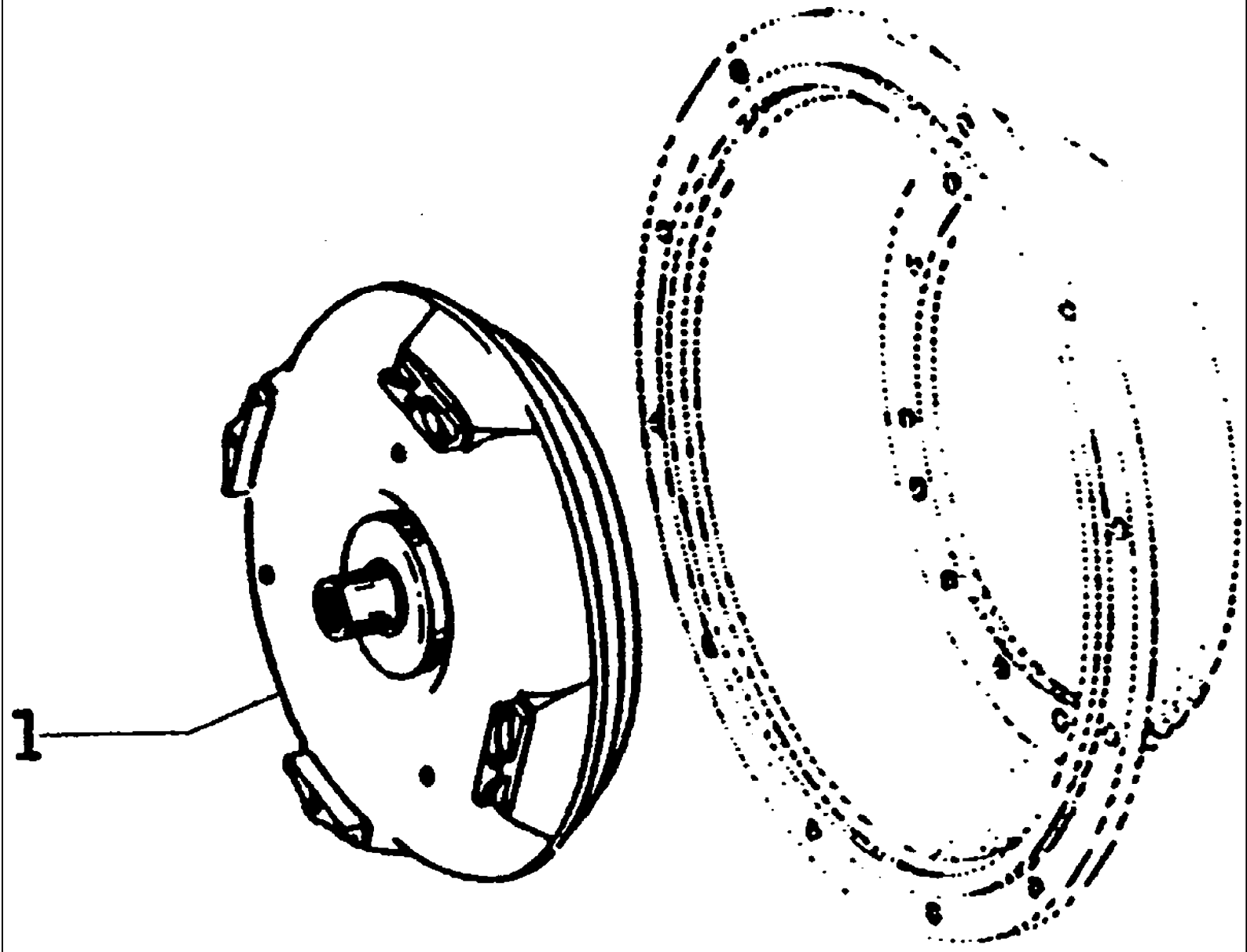
1

FG85 SERIES B MOTORGRADER

B2.01/1(007) TRANSMISSION

Ref	Numero de Pieza	Ctd	Descripción
1	75286003	1	TORQUE CONVERT.

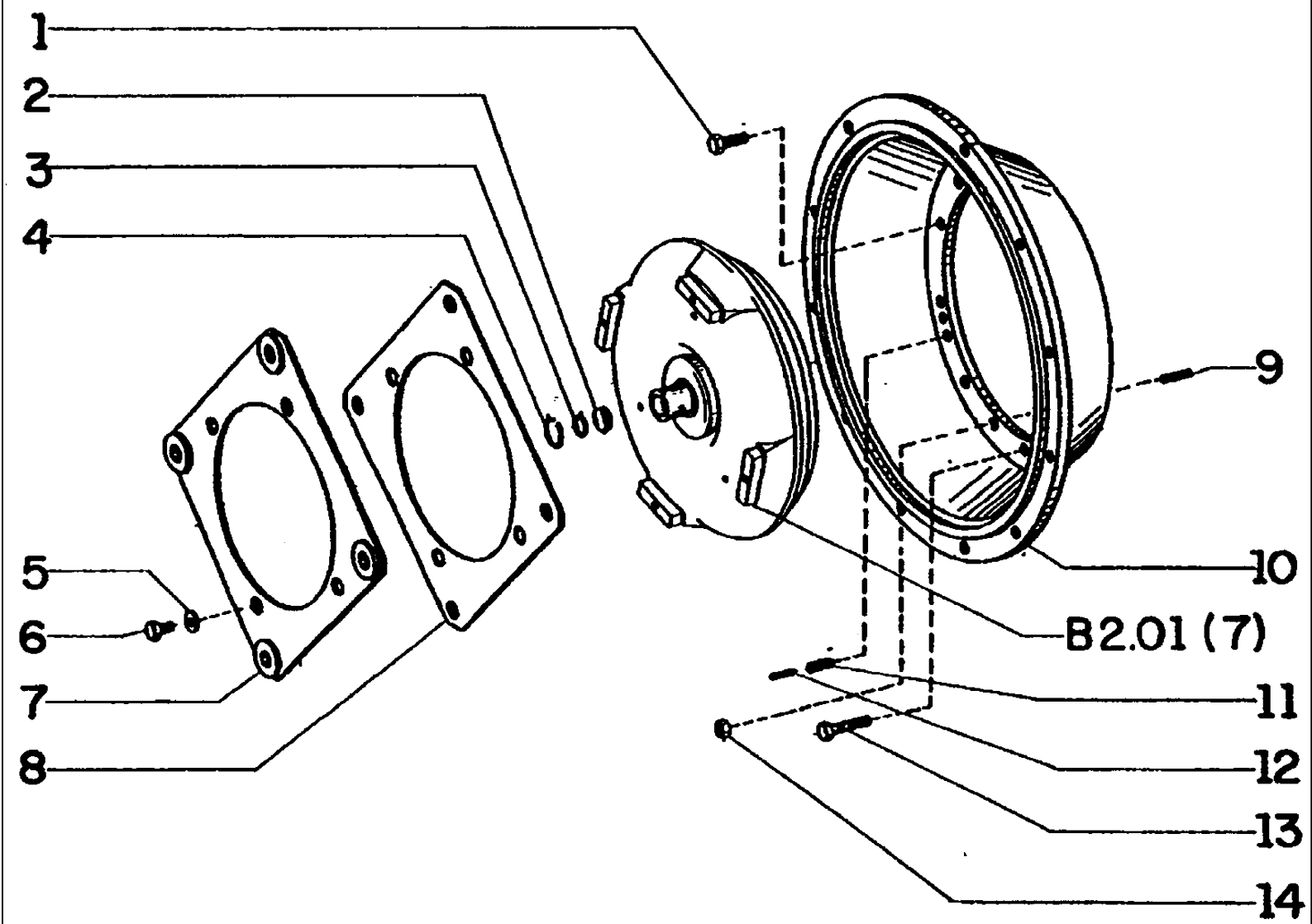
1
2
3
4
5
6
7
8
9
10
B2.01 (7)
11
12
13
14

FG85 SERIES B MOTORGRADER

B2.01/1(008) TRANSMISSION

Ref	Numero de Pieza	Ctd	Descripción
1	11106634	11	BOLT, Hex, M10 x 35, 10.9, Full Thd
2	73142706	1	WASHER
3	73142707	1	RING
4	11058876	1	RING, LOCKING, M30, Int
5	10730521	4	WASHER
6	11103031	4	BOLT, Hex, M10 x 18, 10.9, Full Thd
7	75286379	1	DIAPHRAGM
8	75286377	1	DIAPHRAGM
9	13449724	1	STUD
10	75286376	1	CASE
11	14609770	2	SPRING PIN
12	14604070	2	SPRING PIN
13	11107234	2	BOLT, Hex, M10 x 50, 10.9
14	12164711	1	NUT, M10 x 1.25, Cl 8

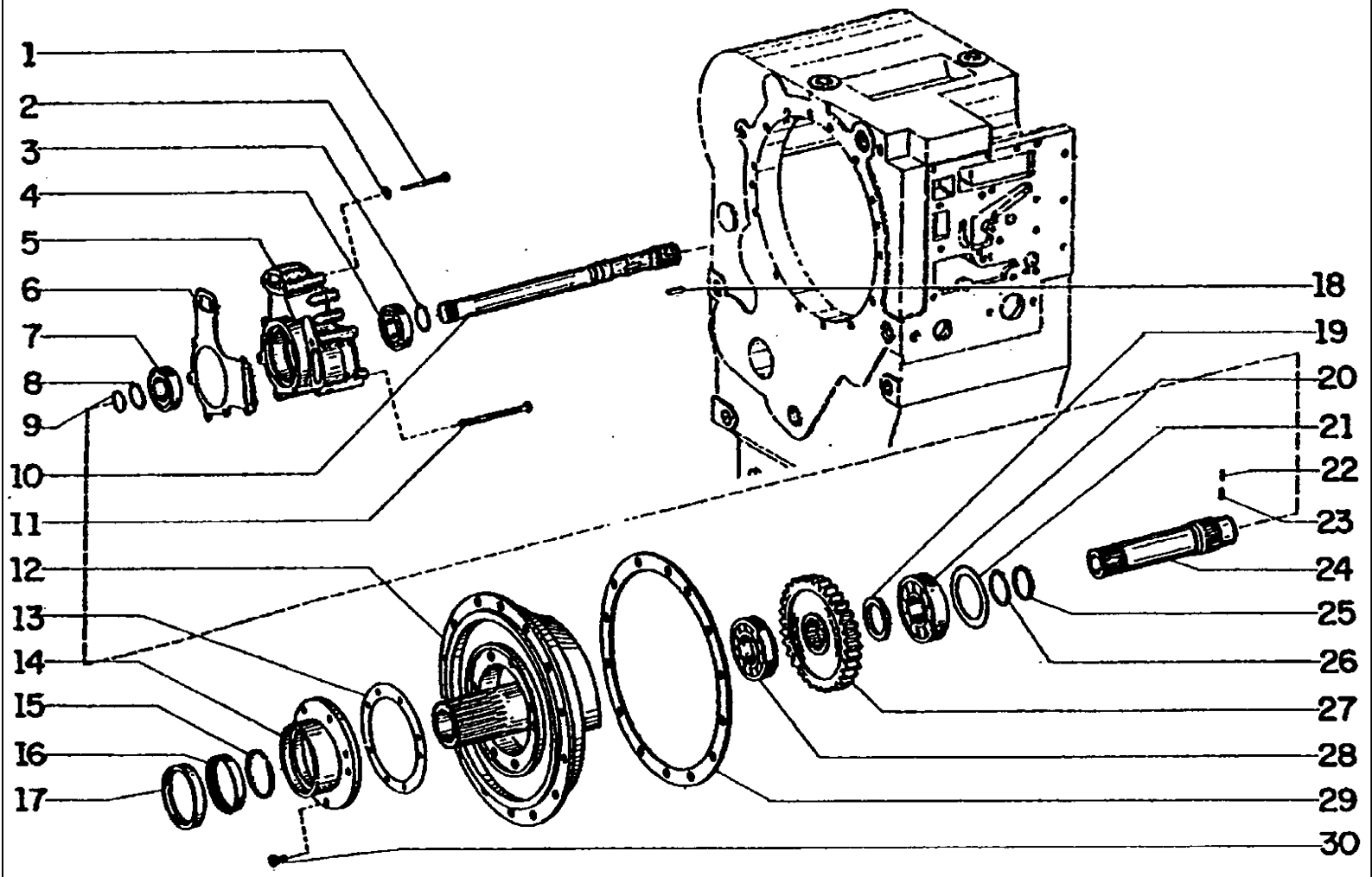
1
2
3
4
5
6
7
8
9
10
11
12
13
14
15
16
17
18
19
20
21
22
23
24
25
26
27
28
29
30

FG85 SERIES B MOTORGRADER

B2.01/1(009) TRANSMISSION

Ref	Numero de Pieza	Ctd	Descripción
1	16044924	4	SCREW
2	10730321	4	WASHER
3	11067876	1	RING, LOCKING, M30, Ext
4	79106614	1	BEARING
5	75285941	1	PUMP
6	79106775	1	SEAL ASSY
7	79106614	1	BEARING
8	11067876	1	RING, LOCKING, M30, Ext
9	73142736	1	RING
10	75285940	1	COUNTERSHAFT
11	75285943	4	SCREW
12	75285939	1	FLANGE
13	79106610	1	SEAL ASSY
14	73142729	1	COVER
15	73142732	1	SNAP RING
16	73142733	1	SLEEVE
17	79101791	1	SEAL
18	75285942	1	KEY
19	75286008	1	WASHER
20	79083533	1	BEARING
21	73142712	1	SHIM 0,3 mm
21	73142713	1	SHIM 0,5 mm
21	73142714	1	SHIM 0,6 mm
21	73142715	1	SHIM 0,7 mm
21	73142716	1	SHIM 0,8 mm
21	73142717	1	SHIM 0,9 mm
21	73142718	1	SHIM 1,0 mm
21	73142719	1	SHIM 1,1 mm
21	73142720	1	SHIM 1,2 mm
21	73142721	1	SHIM 1,3 mm
21	73142722	1	SHIM1,4 mm
22	73142884	1	PIN
23	73142883	1	PIN
24	75285937	1	SHAFT
25	73142726	1	RING
26	11068876	1	RING, SNAP, M40, Ext
27	75285938	1	GEAR
28	79083546	1	BEARING
29	79106773	1	SEAL ASSY
30	16043724	8	SCREW

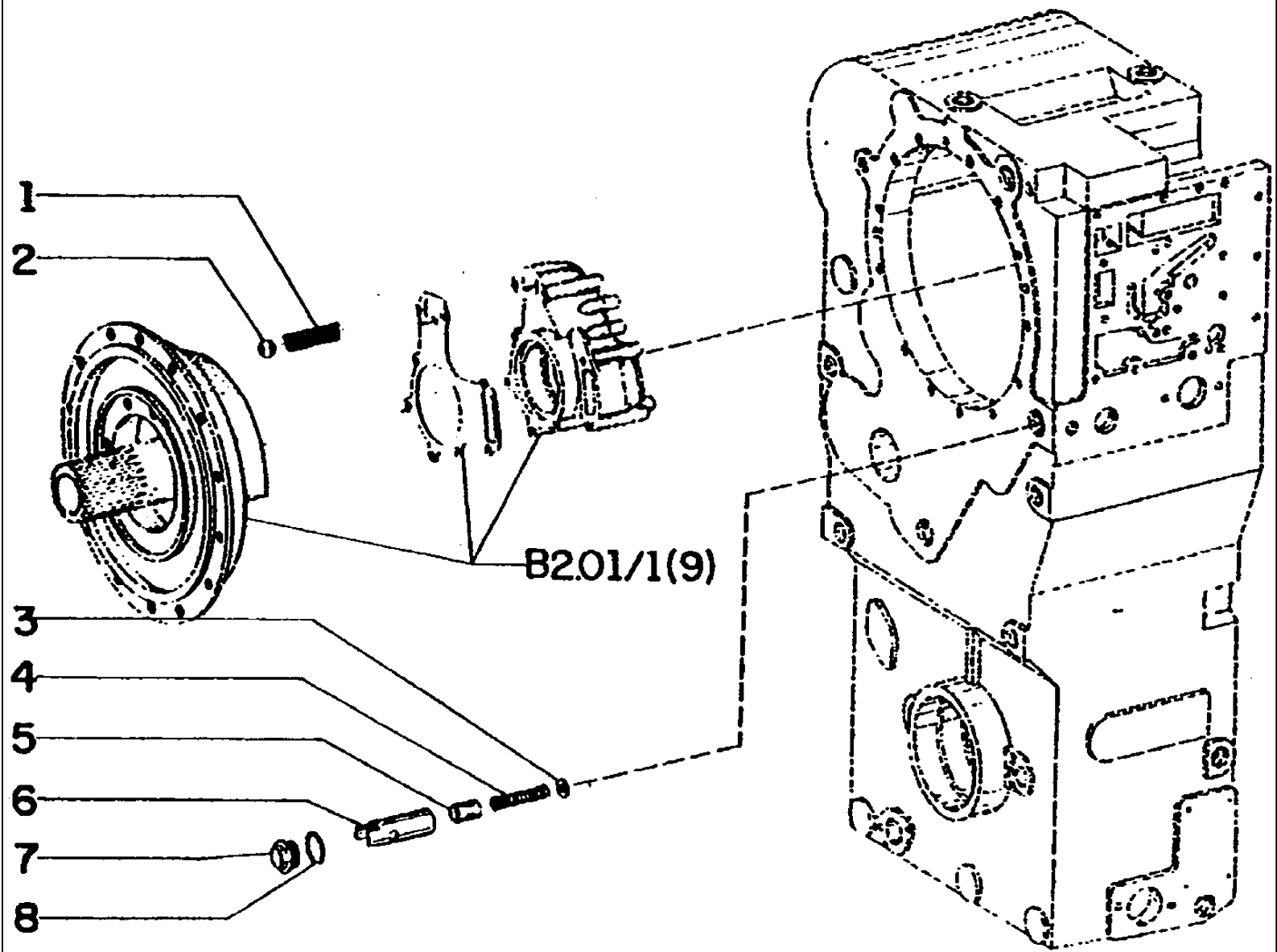
1
2
B2.01/1(9)
3
4
5
6
7
8

FG85 SERIES B MOTORGRADER

B2.01/1(010) TRANSMISSION

Ref	Numero de Pieza	Ctd	Descripción
1	73142767	1	SPRING
2	73140548	1	BALL
3	75285961	1	WASHER
4	75285960	1	SPRING
5	75285959	1	PISTON
6	75285958	1	SLEEVE
7	73140509	1	SCREW
8	79096828	1	RING

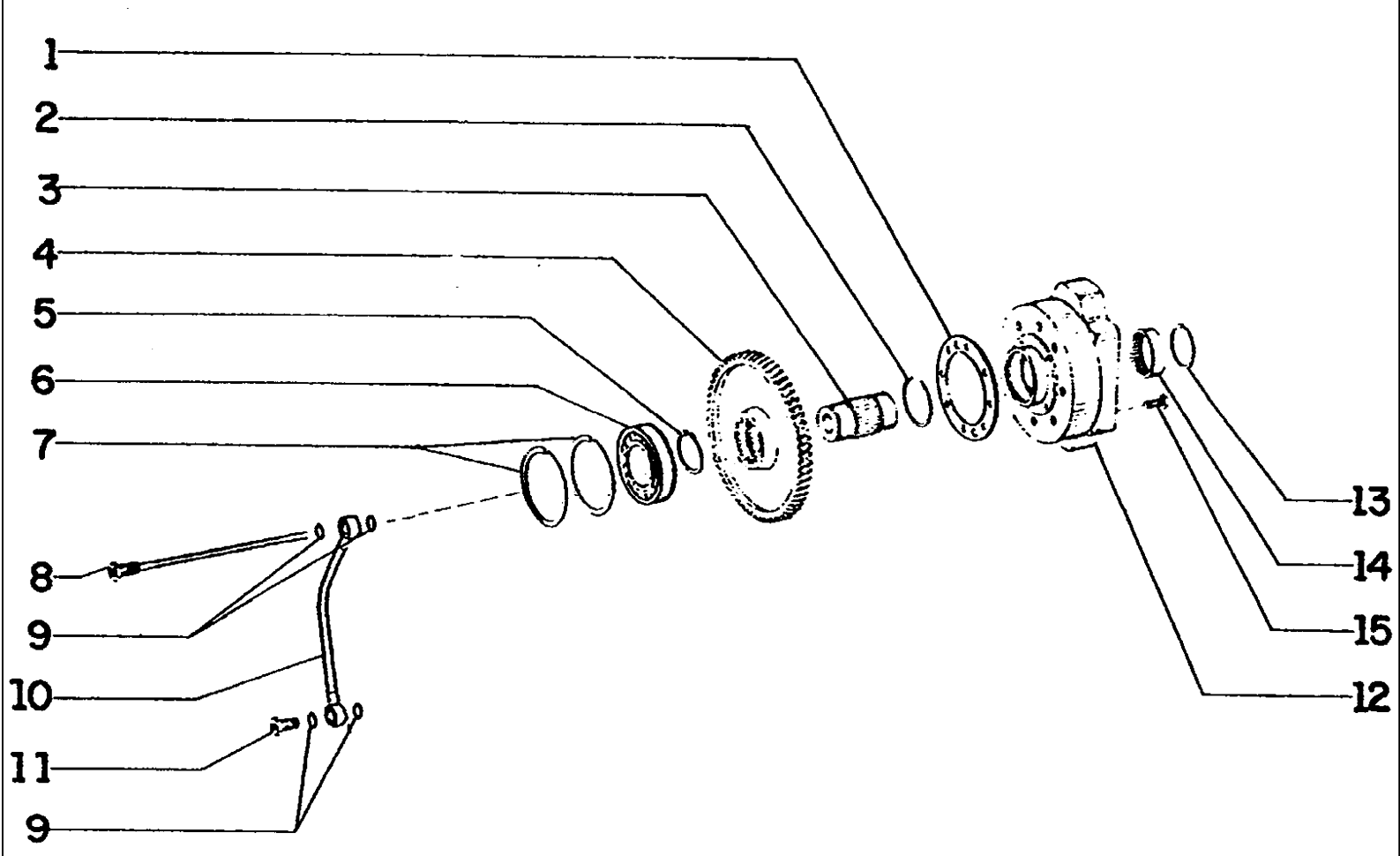
1
2
3
4
5
6
7
8
9
10
11
9
13
14
15
12

FG85 SERIES B MOTORGRADER

B2.01/1(011) TRANSMISSION

Ref	Numero de Pieza	Ctd	Descripción
1	75285859	1	SEAL ASSY
2	75285857	1	SNAP RING
3	75286053	1	GEAR
4	75206854	1	GEAR
5	11069076	1	RING, RETAINING, M45, Ext
6	73143043	1	BEARING
7	73143044	2	SNAP RING
8	75286057	1	FITTING
9	11270260	4	SEAL RING
10	76035169	1	TUBE
11	75286058	1	FITTING
12	75286055	1	COVER
13	75285858	1	CONNECTING ROD
14	75286052	1	SLEEVE
15	16043224	8	BOLT, Hex, M8 x 16, 8.8, Full Thd

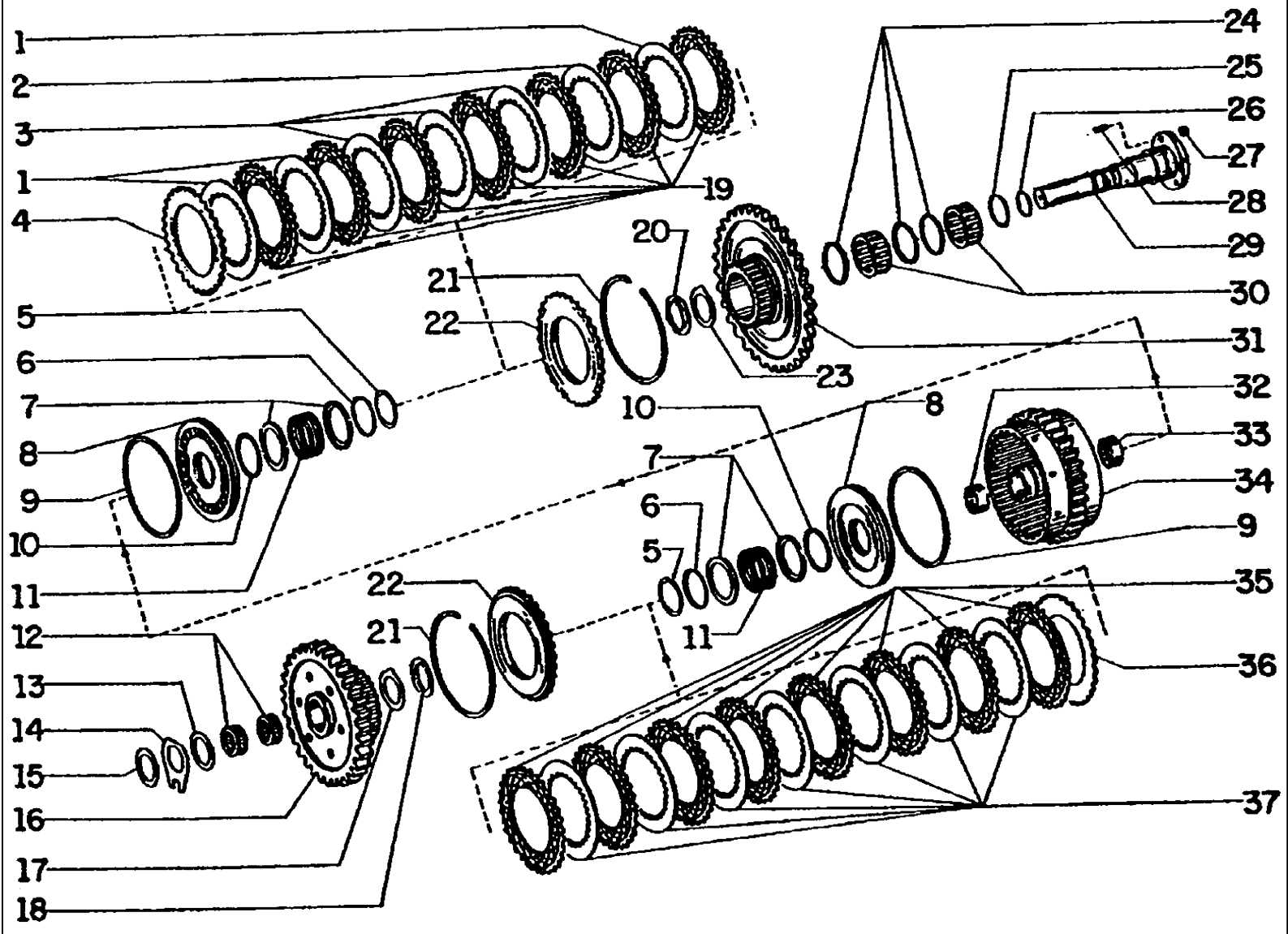
1
2
3
1
4
19
20
21
22
23
24
25
26
27
28
29
30
31
32
33
34
9
35
36
37
5
6
7
8
9
10
11
12
13
14
15
16
17
18
10
8
7
6
5
11
22
21

FG85 SERIES B MOTORGRADER

B2.01/1(012) TRANSMISSION

Ref	Numero de Pieza	Ctd	Descripción
1	73142981	3	DISC
2	73142979	1	DISC 2,0 mm
2	73142981	1	DISC 2,5 mm
3	73142979	3	DISC
4	75286048	1	DISC
5	73142966	2	SEAL RING
6	73142950	2	GUIDE
7	73142965	4	RETAINER
8	79109111	2	PISTON
9	73142962	2	SEAL RING
10	75286382	2	RING
11	73142964	2	SPRING
12	75286046	2	STUD
13	73142951	1	WASHER
14	73142952	1	WASHER
15	79064027	1	SHIM 0,2 mm
15	79064028	1	SHIM 0,4 mm
15	79064029	1	SHIM 0,6 mm
15	79064030	1	SHIM 0,8 mm
15	79064031	1	SHIM 1,0 mm
15	79064032	1	SHIM 1,2 mm
15	79064033	1	SHIM 1,4 mm
15	79064034	1	SHIM 1,6 mm
15	79064035	1	SHIM 1,8 mm
15	73142853	1	SHIM 2,0 mm
15	79064036	1	SHIM 2, 2 mm
15	79064037	1	SHIM 2, 4 mm
15	79064038	1	SHIM 2, 6 mm
15	79064039	1	SHIM 2, 8 mm
16	75286047	1	GEAR
17	73142992	1	WASHER
18	73142957	1	PLATE
19	75285967	7	DISC
20	79060522	1	WASHER
21	73142969	2	SNAP RING
22	79083356	2	SHIM
23	73142984	1	WASHER
24	79060525	3	RING
25	79101809	1	RING
26	79060521	1	RING
27	16100811	3	NUT, M8, Cl 8
28	13516724	3	STUD
29	75285968	1	AXLE

Ref	Numero de Pieza	Ctd	Descripción
30	79066888	2	ROLLER
31	75285969	1	GEAR
32	73142967	1	SLEEVE
33	73142968	1	BEARING
34	79106779	1	DRUM
35	75285967	8	DISC
36	73142989	1	DISC 1,5 mm
36	73142988	1	DISC 2,0 mm
37	73142981	7	DISC

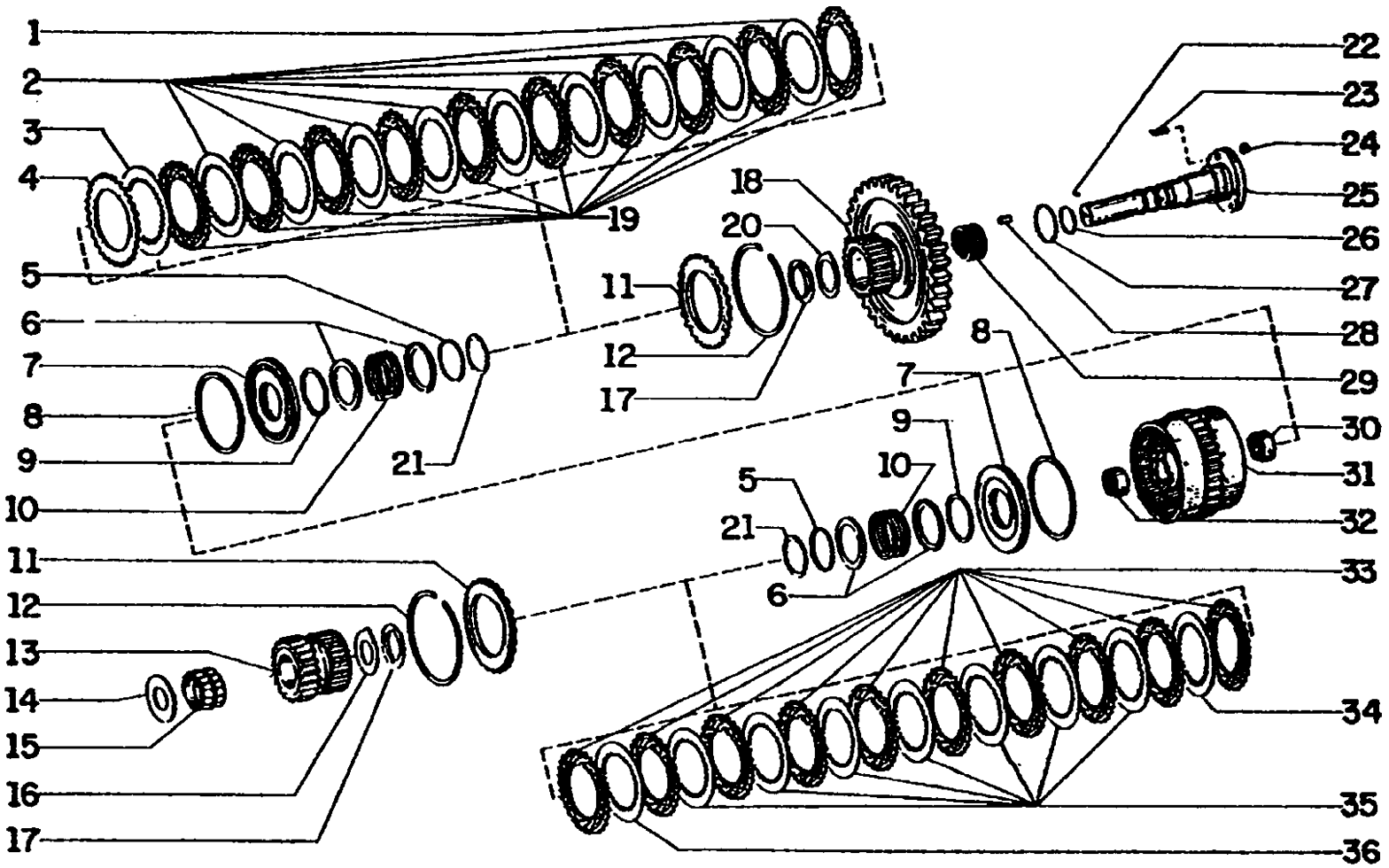
1
2
3
4
5
6
7
8
9
10
11
12
13
14
15
16
17
18
19
20
21
22
23
24
25
26
27
28
29
30
31
32
33
34
35
36

FG85 SERIES B MOTORGRADER

B2.01/1(013) TRANSMISSION

Ref	Numero de Pieza	Ctd	Descripción
1	73143009	1	DISC 2,0 mm
1	79059369	1	DISC 1,5 mm
1	73143008	1	DISC 2,5 mm
2	79059369	8	DISC
3	73143009	1	DISC
4	75286049	1	DISC
5	73142950	2	GUIDE
6	73142965	4	RETAINER
7	79106632	2	PLUNGER
8	73142996	2	RING
9	75286382	2	RING
10	73142964	2	SPRING
11	73142994	2	SHIM
12	73142999	2	SNAP RING
13	75285971	1	GEAR
14	79064027	1	SHIM 0,2 mm
14	79064028	1	SHIM 0,4 mm
14	79064029	1	SHIM 0,6 mm
14	79064030	1	SHIM 0,8 mm
14	79064031	1	SHIM 1,0 mm
14	79064032	1	SHIM I,2 mm
14	79064033	1	SHIM I,4 mm
14	79064034	1	SHIM I,6 mm
14	79064035	1	SHIM I,8 mm
14	73142853	1	SHIM 2,0 mm
14	79064036	1	SHIM 2,2 mm
14	79064037	1	SHIM 2,4 mm
14	79064038	1	SHIM 2,6 mm
14	79064039	1	SHIM 2,8 mm
15	75285973	1	BEARING
16	75285972	1	WASHER
17	73142957	2	PLATE
18	75285974	1	GEAR
19	79072917	10	DISC
20	73142984	1	WASHER
21	73142966	2	SEAL RING
22	73142840	3	PIN
23	13516724	2	STUD
24	16100811	2	NUT, M8, Cl 8
25	75285970	1	AXLE
26	79060521	3	RING
27	79101803	1	RING
28	79083544	12	STUD

Ref	Numero de Pieza	Ctd	Descripción
29	79083543	1	BEARING
30	73142998	1	BEARING
31	75285975	1	PROPELLER SHAFT
32	79066881	1	BEARING
33	79072917	9	DISC
34	73143008	1	DISC
35	73143009	7	DISC
36	73143009	1	DISC 2,0 mm
36	79059369	1	DISC 1,5 mm
36	73143008	1	DISC 2,5 mm

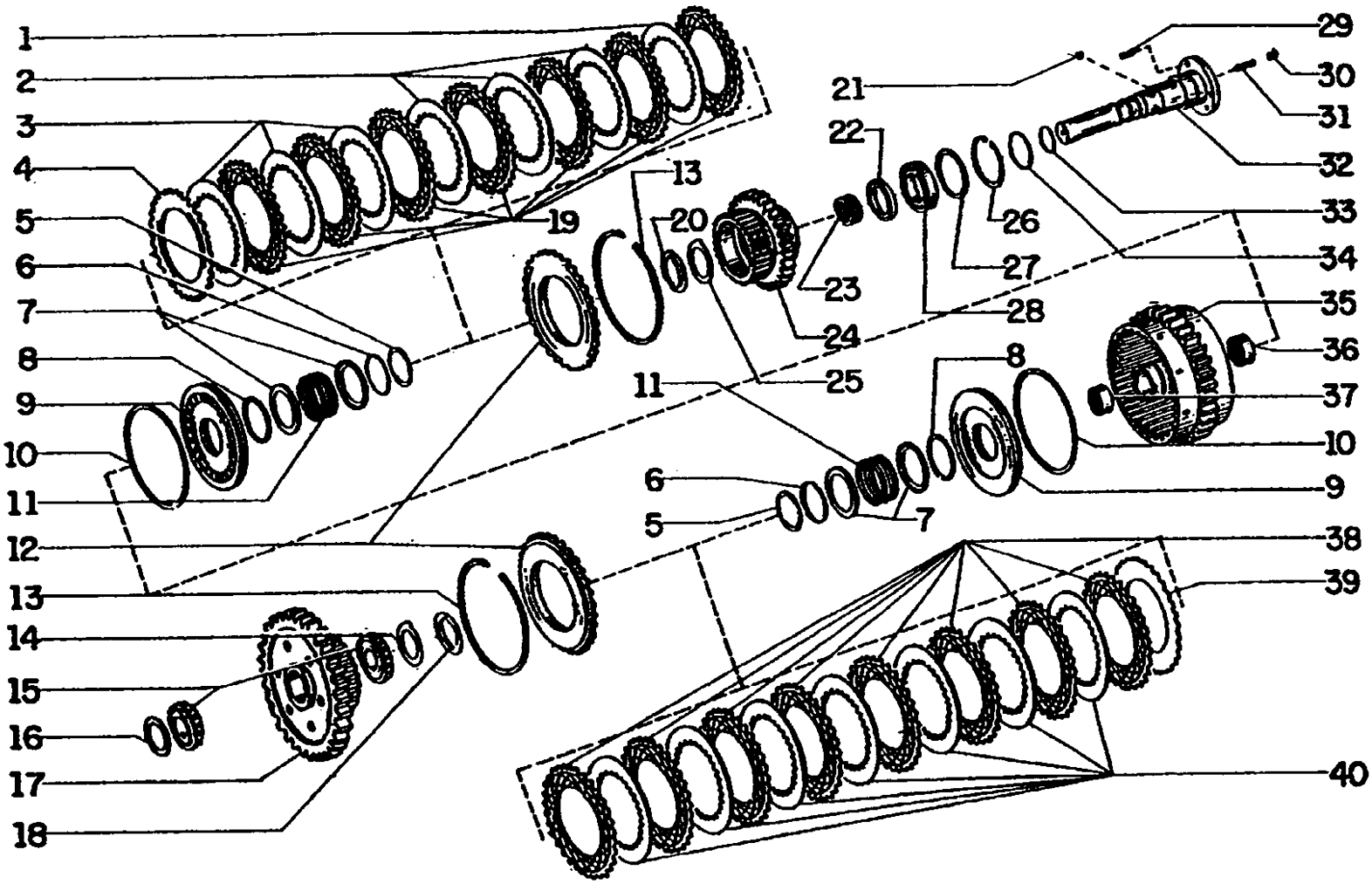
1
2
3
4
5
6
7
8
9
10
11
12
13
14
15
16
17
18
19
20
21
22
23
24
25
26
27
28
29
30
31
32
33
34
35
36
37
38
39
40

FG85 SERIES B MOTORGRADER

B2.01/1(014) TRANSMISSION

Ref	Numero de Pieza	Ctd	Descripción
1	73142979	1	DISC 2,0 mm
1	73142981	1	DISC 2,5 mm
2	73142979	3	DISC
3	73142981	3	DISC
4	75286048	1	DISC
5	73142966	2	SEAL RING
6	73142950	2	GUIDE
7	73142965	4	RETAINER
8	75286382	2	RING
9	79109111	2	PISTON
10	73142962	2	SEAL RING
11	73142964	2	SPRING
12	79083356	2	SHIM
13	73142969	2	SNAP RING
14	73142992	1	WASHER
15	75286042	2	BEARING
16	79064027	1	SHIM 0,2 mm
16	79064028	1	SHIM 0,4 mm
16	79064029	1	SHIM 0,6 mm
16	79064030	1	SHIM 0,8 mm
16	79064031	1	SHIM 1,0 mm
16	79064032	1	SHIM 1,2 mm
16	79064033	1	SHIM 1,4 mm
16	79064034	1	SHIM 1,6 mm
16	79064035	1	SHIM 1,8 mm
16	73142853	1	SHIM 2,0 mm
16	79064036	1	SHIM 2 , 2 mm
16	79064037	1	SHIM 2, 4 mm
16	79064038	1	SHIM 2,6 mm
16	79064039	1	SHIM 2,8 mm
17	75286041	1	GEAR
18	73142957	1	PLATE
19	75285967	7	DISC
20	79060522	1	WASHER
21	75286043	2	BALL
22	75285966	1	RING
23	79083543	1	BEARING
24	75285965	1	GEAR
25	73142970	1	WASHER
26	11061676	1	RING, LOCKING, M75, Int
27	79109123	1	RING
27	73140890	1	RING
27	79109124	1	RING

FG85 SERIES B MOTORGRADER

B2.01/1(014) TRANSMISSION

Ref	Numero de Pieza	Ctd	Descripción
27	79109125	1	RING
27	79109126	1	RING
27	79109127	1	RING
27	75286383	1	SHIM
28	79083541	1	BEARING
29	13516724	3	STUD
30	75286045	2	SCREW
31	75286044	2	NEEDLE ROLLER
32	75285964	1	AXLE
33	79060521	3	RING
34	79101809	1	RING
35	79106778	1	DRUM
36	73142968	1	BEARING
37	73142967	1	SLEEVE
38	75285967	8	DISC
39	73142988	1	DISC 2,5 mm
39	73142989	1	DISC 1,5 mm
40	73142981	7	DISC

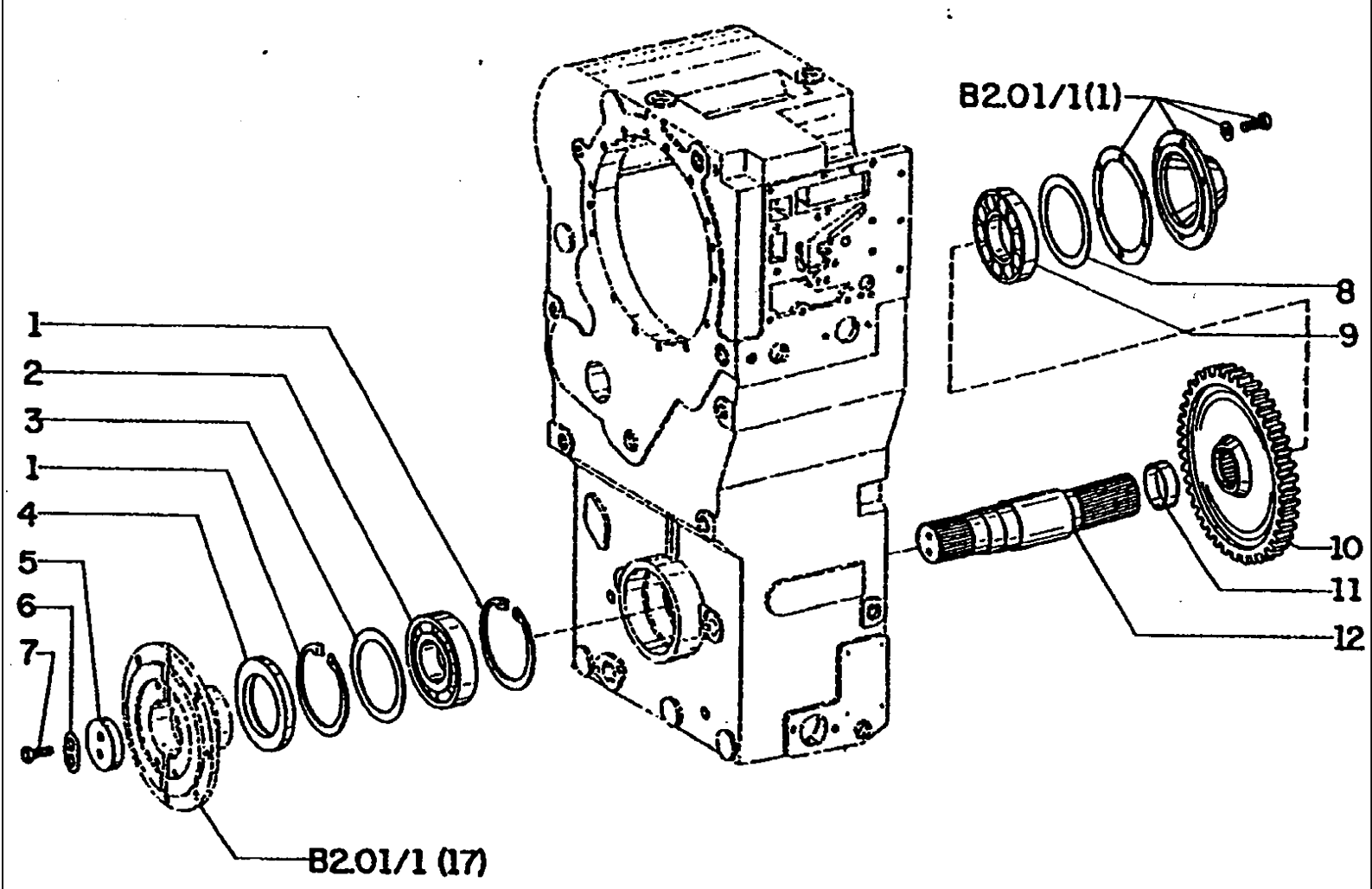
B2.01/1(1)
8
9
1
2
3
1
4
5
6
7
10
11
12
B2.01/1 (17)

FG85 SERIES B MOTORGRADER

B2.01/1(016) TRANSMISSION

Ref	Numero de Pieza	Ctd	Descripción
1	11075976	2	RING, RETAINING, M120, Int
2	73143015	1	BEARING
3	73143017	1	RING 1,8 mm
3	73143018	1	RING 1,5 mm
3	73143019	1	RING 1,6 mm
3	73143020	1	RING 1,7 mm
3	79109118	1	SHIM 0,2 mm
3	79109119	1	SHIM 0,3 mm
3	73143013	1	RING 0,5 mm
4	79064016	1	RING
5	73140824	2	WASHER
6	73140828	1	PAWL
7	11106424	2	BOLT, Hex, M10 x 30, 8.8, Full Thd
8	73143013	1	RING
9	73143012	1	BEARING
10	75285944	1	GEAR
11	73143022	1	RING
12	73143010	1	AXLE

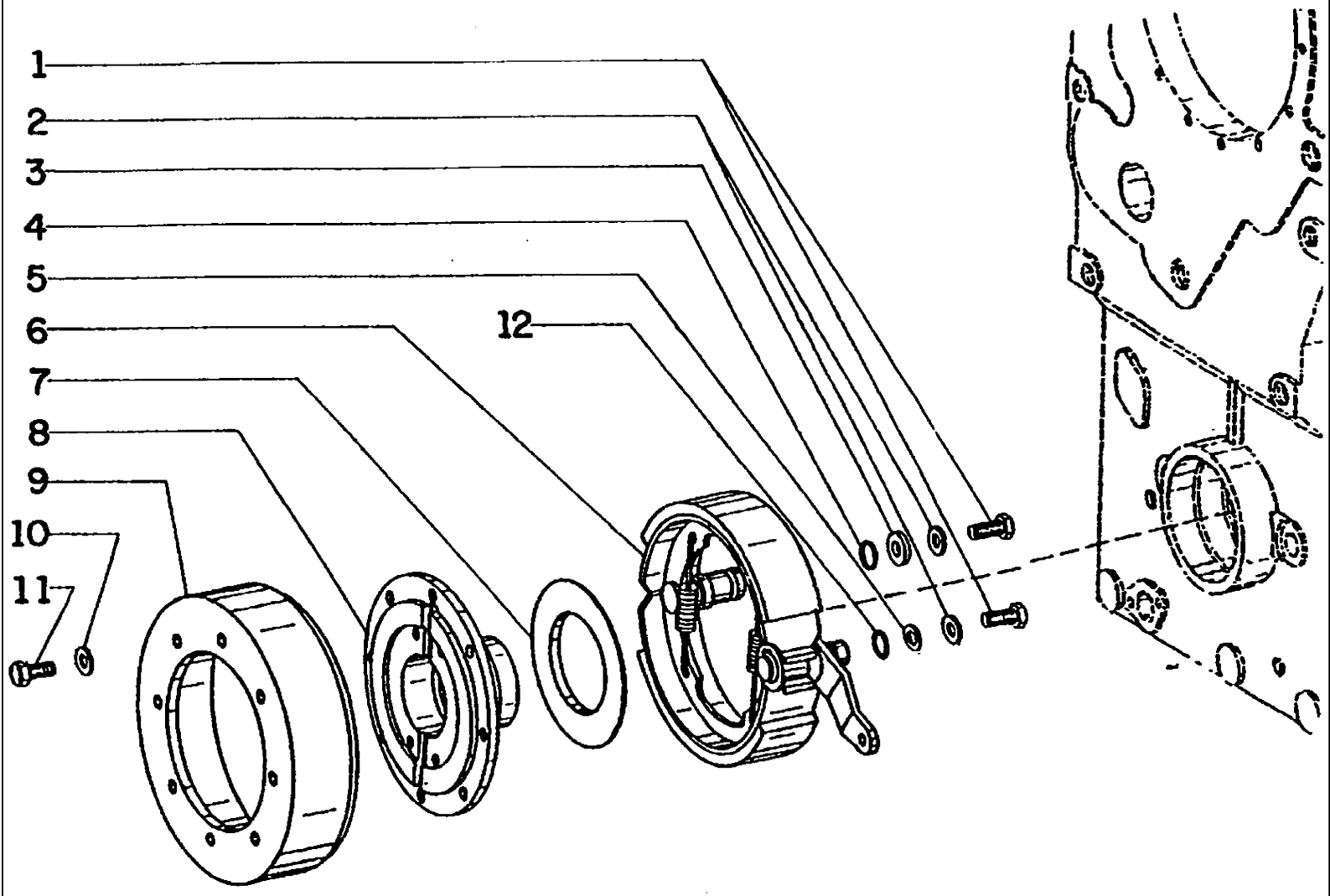
1
2
3
4
5
6
7
8
9
10
11
12

FG85 SERIES B MOTORGRADER

B2.01/1(017) TRANSMISSION

Ref	Numero de Pieza	Ctd	Descripción
1	11106134	2	SCREW
2	10730521	2	WASHER
3	73142882	1	WASHER
4	73143030	1	RING
5	73143028	1	WASHER
6	79107837	1	BRAKE
7	75286002	1	COVER
8	75285957	1	FLANGE
9	73143025	1	DRUM
10	10730521	8	WASHER
11	11106234	8	SCREW
12	73140543	1	O'RING

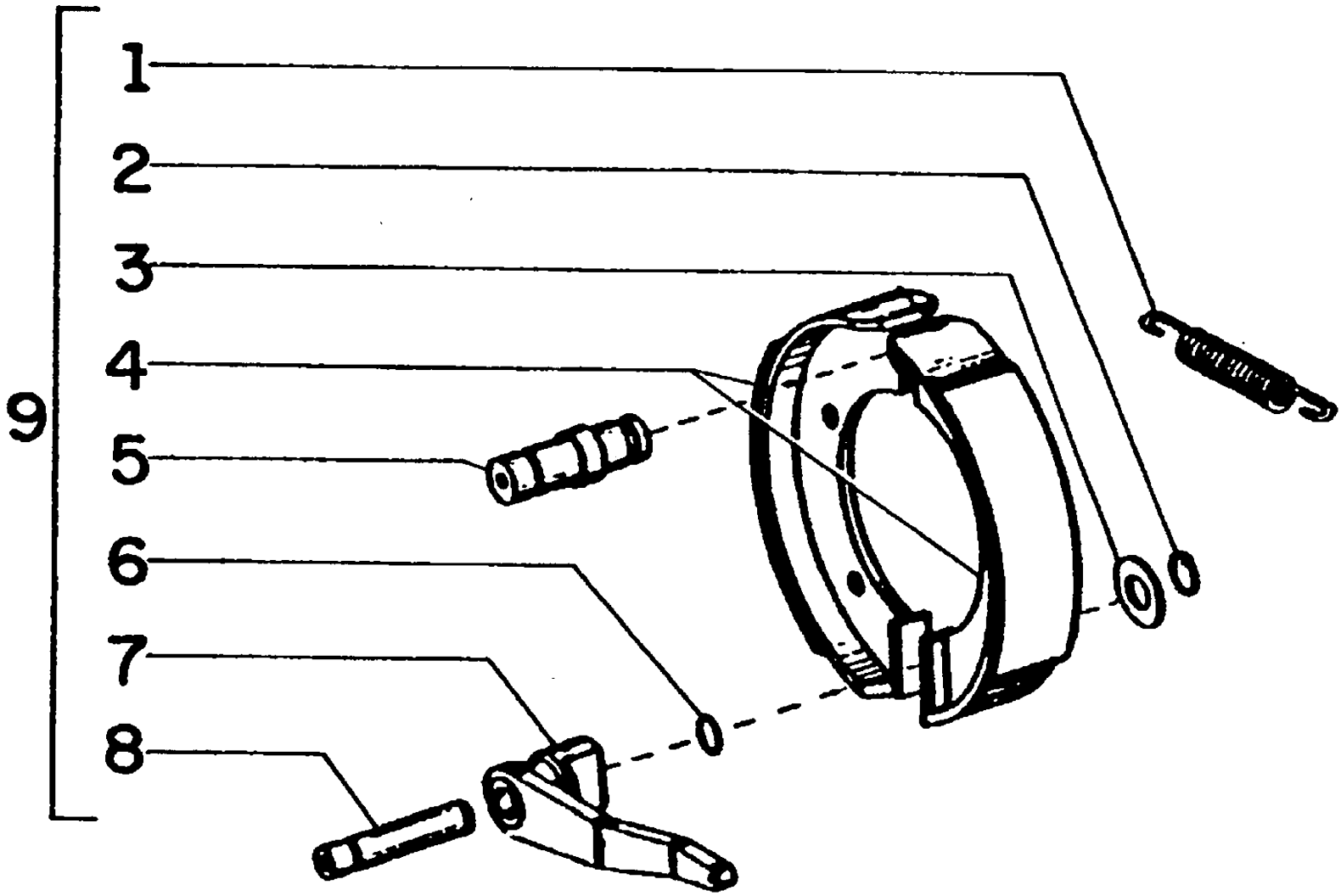
1
2
3
4
5
6
7
8
9

FG85 SERIES B MOTORGRADER

B2.01/1(018) TRANSMISSION

Ref	Numero de Pieza	Ctd	Descripción
1	73143032	2	SPRING
2	73143036	1	SNAP RING
3	73143035	1	DISC
4	79107838	2	BRAKE SHOE
5	73143033	1	PIN
6	79107839	1	O'RING
7	79107807	1	LEVER
8	73143034	1	PIN
9	79107837	1	BRAKE
9	79107837	1	BRAKE

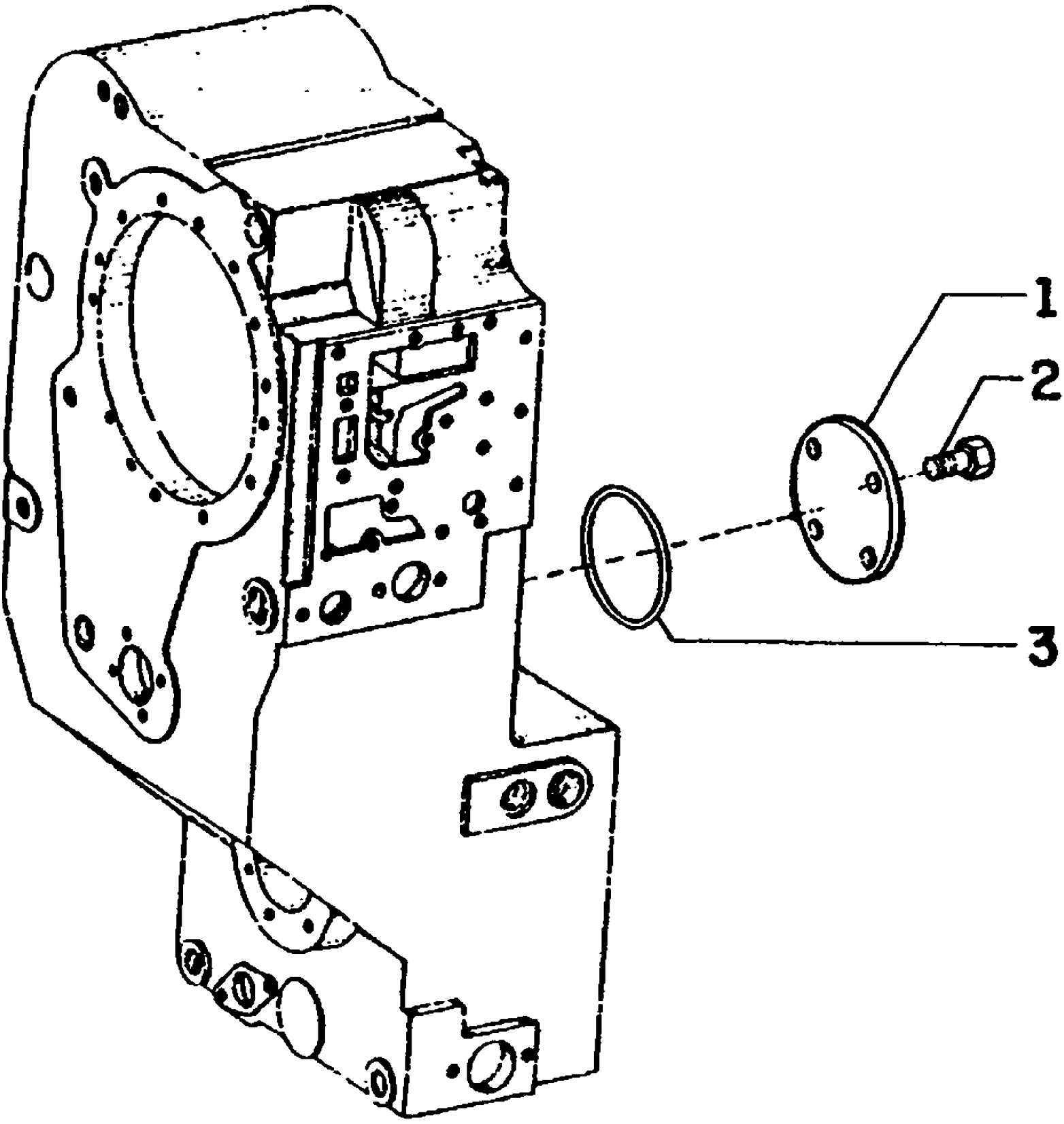
1
2
3

FG85 SERIES B MOTORGRADER

B2.01/1(019) TRANSMISSION

Ref	Numero de Pieza	Ctd	Descripción
1	75286040	1	COVER
2	16043224	4	BOLT, Hex, M8 x 16, 8.8, Full Thd
3	73143690	1	RING

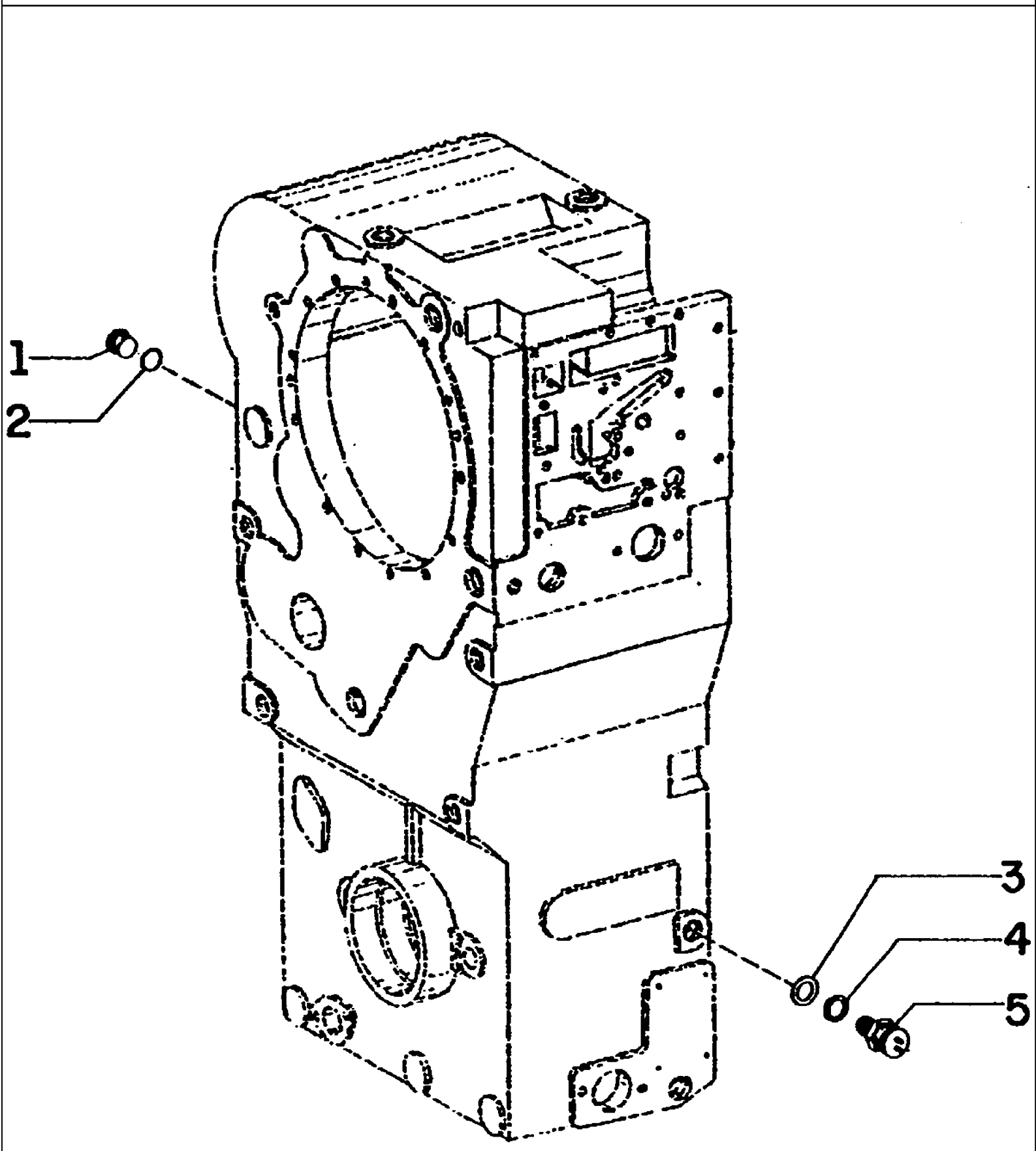
1
2
3
4
5

FG85 SERIES B MOTORGRADER

B2.01/1(020)

Ref	Numero de Pieza	Ctd	Descripción
1	73142775	1	PLUG
2	79101799	1	RING
3	75286025	1	SHIM
3	75286026	1	SHIM
3	75286027	1	SHIM
3	75286028	1	SHIM
3	75286029	1	SHIM
3	75286030	1	SHIM
3	75286031	1	SHIM
3	75286032	1	SHIM
3	75286033	1	SHIM
3	75286034	1	SHIM
4	75286024	1	RING
5	75286023	1	SENSOR for transmisson speed

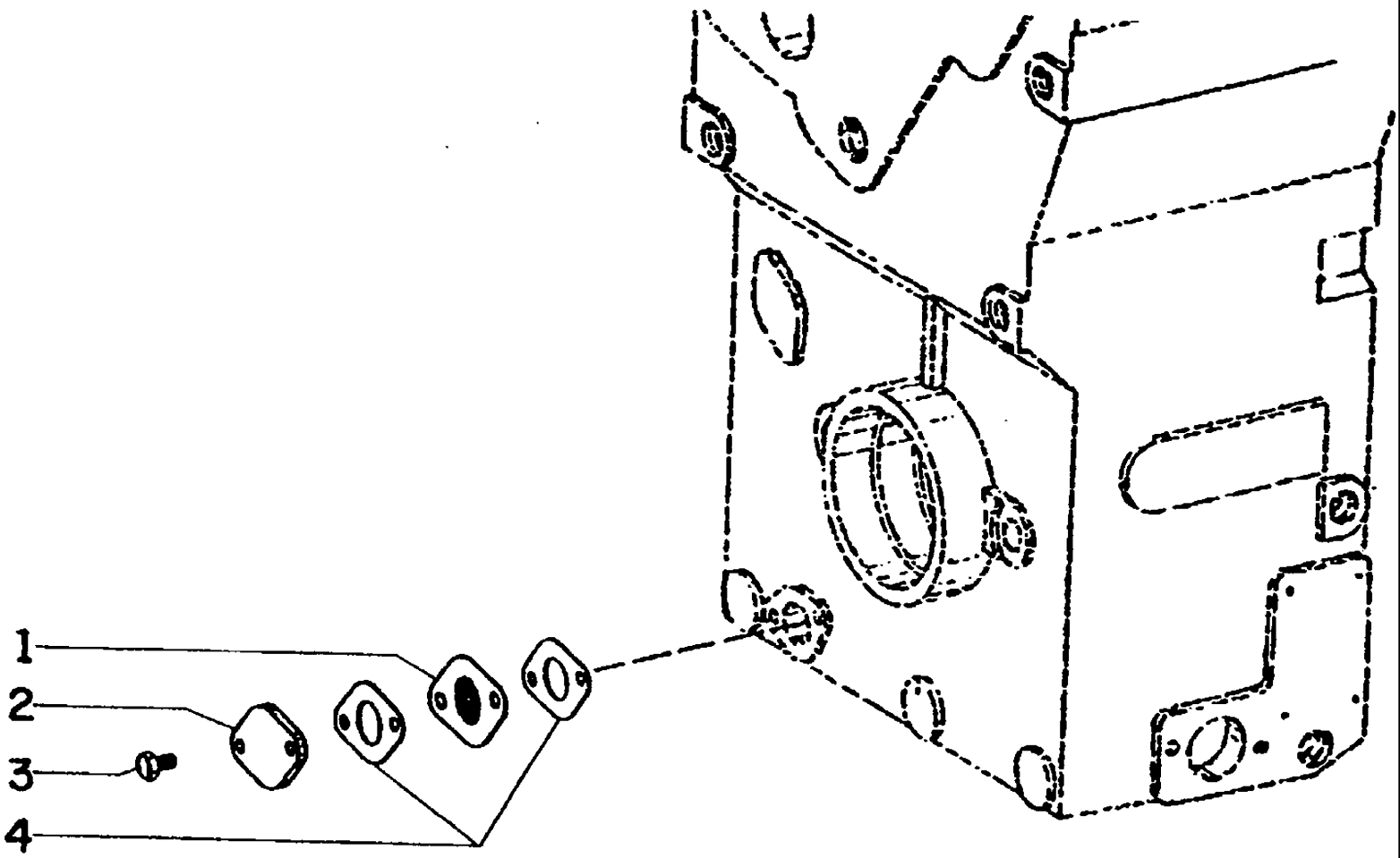
1
2
3
4

FG85 SERIES B MOTORGRADER

B2.01/1(021) TRANSMISSION

Ref	Numero de Pieza	Ctd	Descripción
1	73142762	1	PLATE
2	73143413	1	COVER
3	16043224	2	BOLT, Hex, M8 x 16, 8.8, Full Thd
4	79101792	2	SEAL

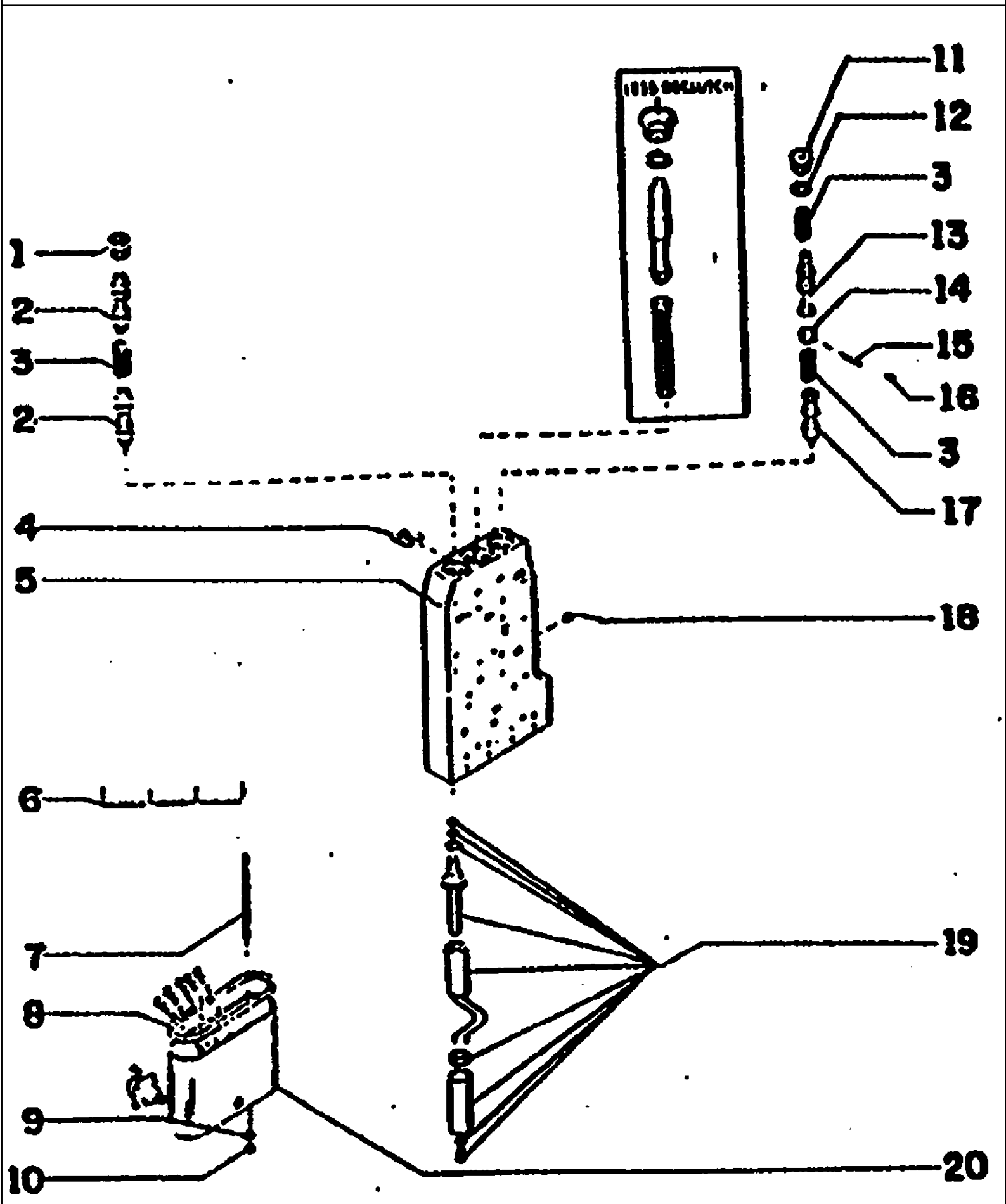
11
12
3
13
14
15
16
3
17
1
2
3
2
4
5
18
6
7
19
8
9
10
20

FG85 SERIES B MOTORGRADER

B2.01/1(022) TRANSMISSION FOR FG85R/A 12VOLT MACHINES

Ref	Numero de Pieza	Ctd	Descripción
1	75205471	1	SCREW
2	75285804	1	SHAFT
3	75285805	1	SPRING
4	73118118	1	CUP
5	75285809	1	VALVE
6	75205477	1	CABLE
7	75205480	2	STUD
8	75206642	1	SEAL
9	75285811	2	LOCKWASHER
10	75285812	2	NUT
11	79053442	1	PLUG
12	70923975	1	RING
13	75285806	1	SHAFT
14	79053464	1	CLIP
15	79053466	1	PIN
16	75285807	1	PIN
17	75285808	1	SHAFT
18	73131677	2	PLUG
19	73147226	5	VALVE
20	75285810	1	COVER
21	70924290	1	PLUG
22	73118119	1	SHAFT
23	73117875	1	SPRING

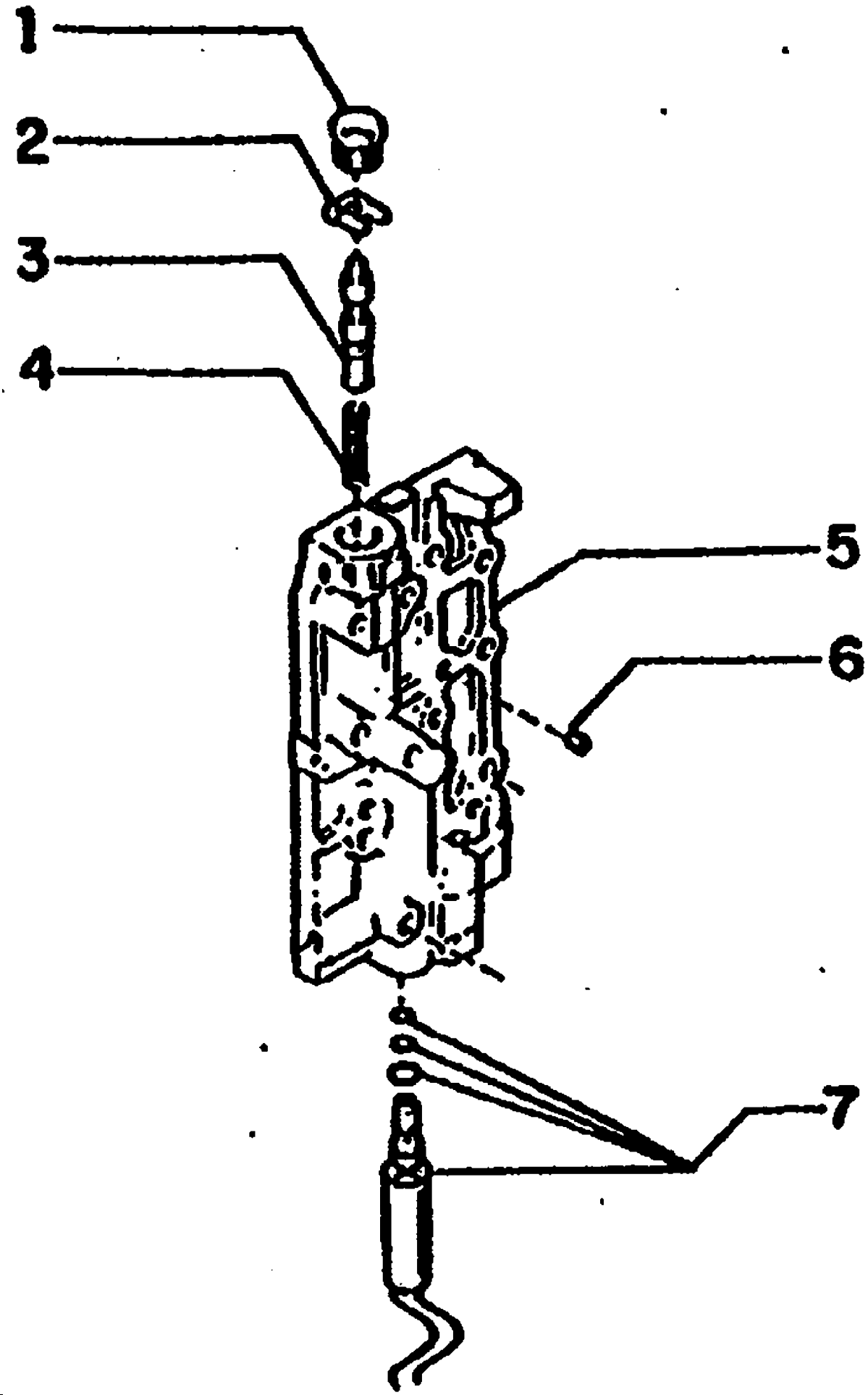
1
2
3
4
5
6
7

FG85 SERIES B MOTORGRADER

B2.01/2(023) TRANSMISSION FOR FG85A/R 12 VOLT MACHINES

Ref	Numero de Pieza	Ctd	Descripción
1	70924290	1	PLUG
2	73118118	1	CUP
3	75285812	1	NUT
4	75285805	1	SPRING
5	75285802	1	VALVE
6	73131677	7	PLUG
7	73147226	1	VALVE

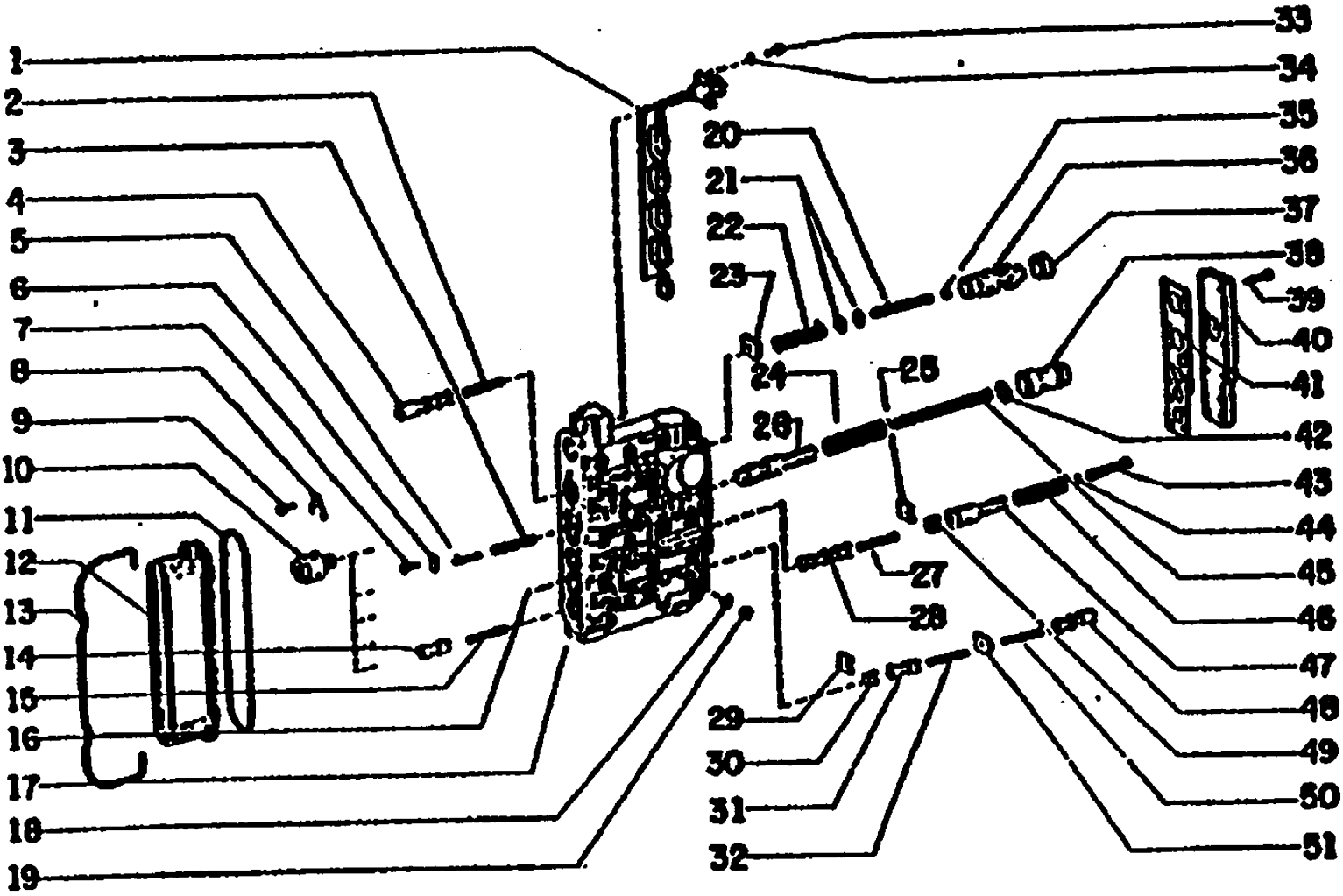
1
2
3
4
5
6
7
8
9
10
11
12
13
14
15
16
17
18
19
20
21
22
23
24
25
26
27
28
29
30
31
32
33
34
35
36
37
38
39
40
41
42
43
44
45
46
47
48
49
50
51

FG85 SERIES B MOTORGRADER

B2.01/3(001) TRANSMISSION FOR FG105A/R 12 VOLT MACHINES

Ref	Numero de Pieza	Ctd	Descripción
1	75285983	1	CABLE
2	79106680	1	SPRING
3	79106687	1	VALVE
4	79106686	1	PISTON
5	79106688	1	SPRING
6	79106689	1	PLATE
7	14304021	1	SCREW, Hex Soc Hd, M5 x 10, 8.8
8	79106692	5	PLATE
9	14304021	5	SCREW, Hex Soc Hd, M5 x 10, 8.8
10	75241773	5	COIL
11	73140668	1	O'RING
12	73140667	1	COVER
13	73140669	1	SUPPORT
14	75285981	1	PISTON
15	79106678	1	SPRING
16	79106690	8	BALL
17	75285977	1	CASE ASS'Y
18	14437585	7	O-RING, 8MM ID x 1.5 Thk
19	73142828	7	PLUG
20	79106659	1	SPRING
21	75286059	2	SHIM
22	73142807	1	SPRING
23	79106656	1	PLATE
24	73142803	1	SPRING
25	79106674	1	PLATE
26	79106672	1	PISTON
27	79106680	1	SPRING
28	75285982	1	PISTON
29	79106674	1	PLATE
30	79106675	1	PIN
31	75285978	1	PISTON
32	79106678	1	SPRING
33	10374911	4	SCREW
34	12601071	4	WASHER
35	79106666	1	WASHER
39	79106667	1	WASHER
35	79106668	1	WASHER
35	79106669	1	WASHER
35	79106670	1	WASHER
36	79109099	1	PLUNGER
37	79106671	1	BUSHING
38	76025807	1	PISTON
39	75286071	11	SCREW

B2.01/3(001) TRANSMISSION FOR FG105A/R 12 VOLT MACHINES

Ref	Numero de Pieza	Ctd	Descripción
40	75285980	1	COVER
41	75285979	1	GASKET
42	79106660	1	WASHER
42	76025986	1	WASHER
42	79106662	1	WASHER
42	76025986	1	WASHER
42	79106665	1	WASHER
42	76025986	1	WASHER
43	73142808	1	SPRING
44	79083676	7	WASHER
45	73142804	1	SPRING
46	73142807	1	SPRING
47	79106676	1	PISTON
48	79106681	1	PISTON
49	79106675	1	PIN
50	79106678	1	SPRING
51	79106679	1	PLATE

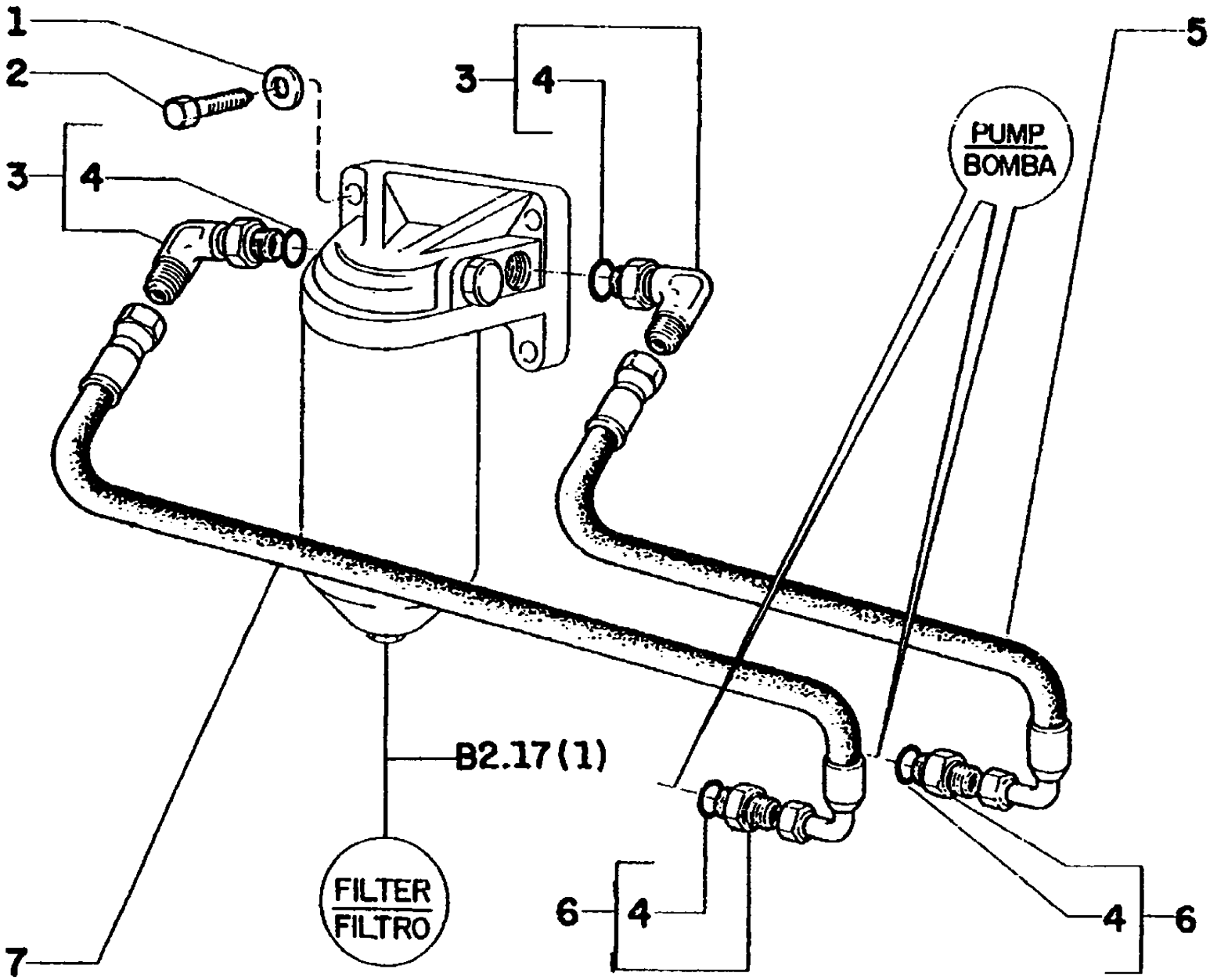
1
2
3
4
3
4
5
PUMP
BOMBA
B2.17(1)
FILTER
FILTRO
6
4
4
6
7

FG85 SERIES B MOTORGRADER

B2.06(001) TRANSMISSION PUMP AND FILTER LINES FOR FG85A/R

Ref	Numero de Pieza	Ctd	Descripción
1	70677006	4	WASHER
2	70921076	4	SCREW
3	70921203	2	FITTING
4	10264660	4	RING
5	73155221	1	HOSE ASSY
6	76011343	2	CONNECTOR
7	73155221	1	HOSE ASSY

B2.06(002) TRANSMISSION OIL DIPSTICK FOR FG85A/R.

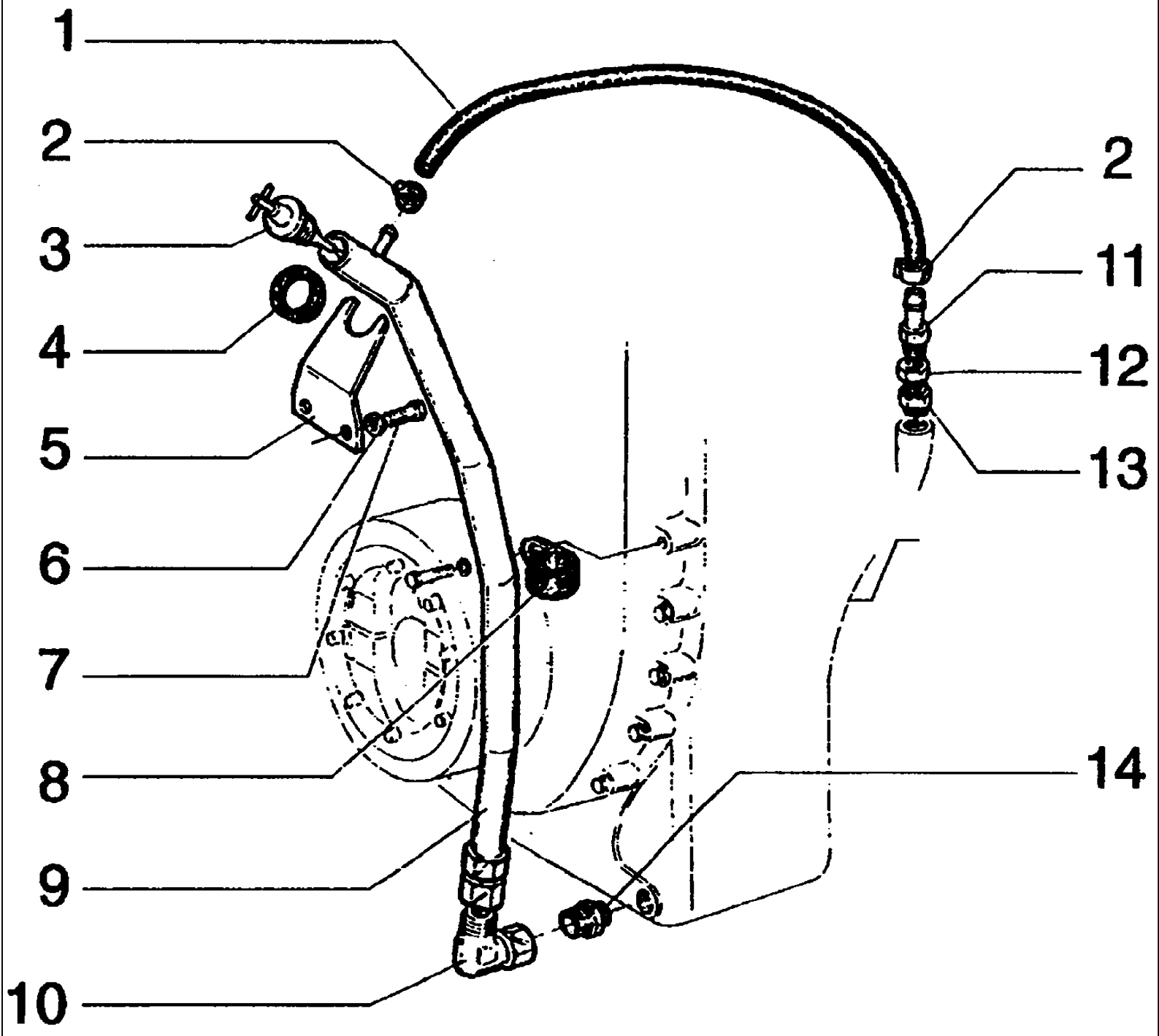

FG85 SERIES B MOTORGRADER

B2.06(002) TRANSMISSION OIL DIPSTICK FOR FG85A/R.

Ref	Numero de Pieza	Ctd	Descripción
1	75237776	1	HOSE ASSY
2	79084753	2	CLAMP
3	75237787	1	ROD
4	76021289	1	RING
5	75238793	1	SUPPORT
6	70914678	2	LOCKWASHER
7	70927400	2	SCREW
8	70929806	1	CLAMP
9	75238792	1	TUBE
10	70919624	1	FITTING
11	70927028	1	FITTING
12	70901838	1	PLUG
13	70904239	1	FITTING
14	70919342	1	FITTING

B2.06(003) TRANSMISSION OIL COOLER GROUP FOR FG85A/R

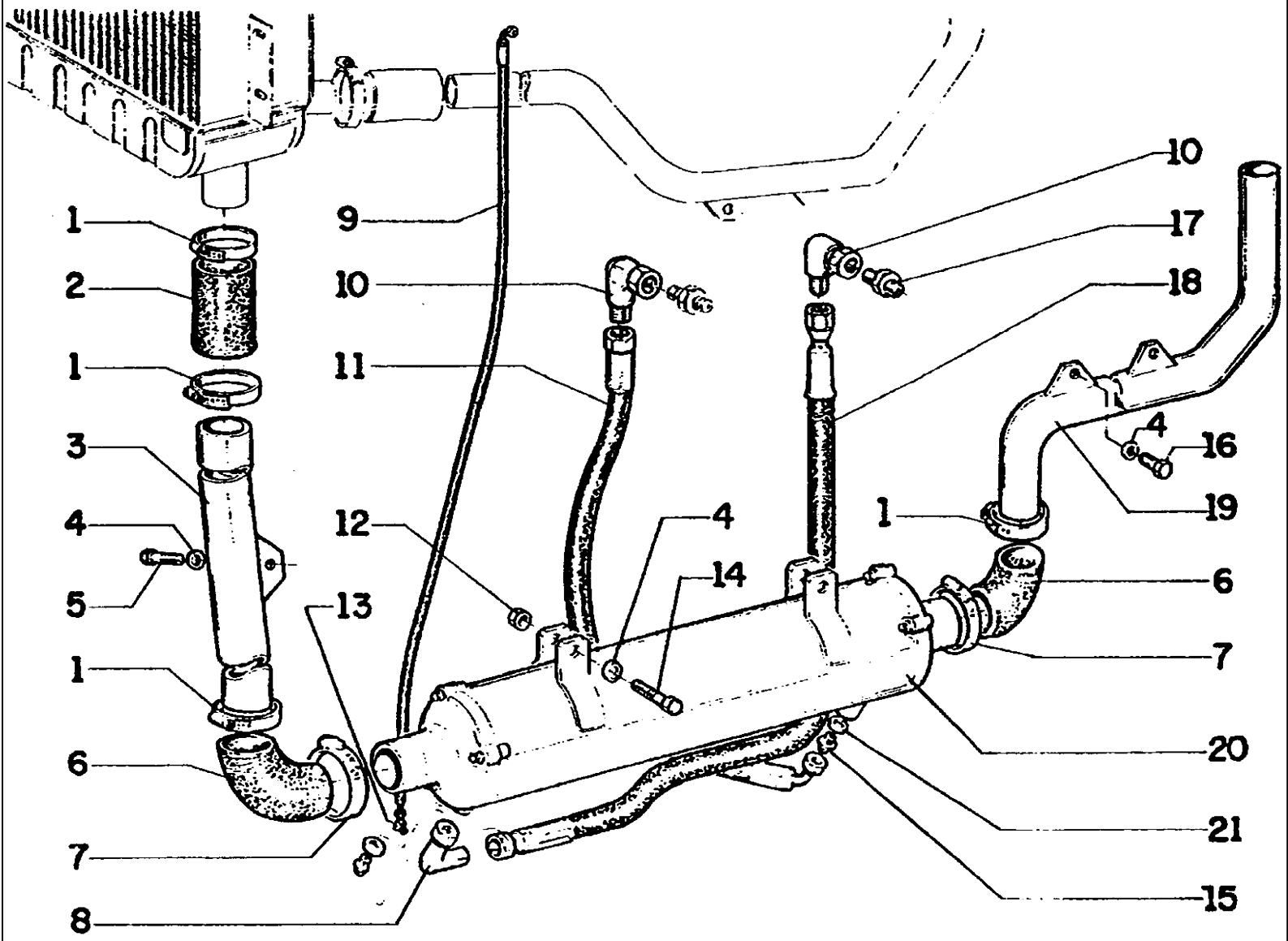

FG85 SERIES B MOTORGRADER

B2.06(003) TRANSMISSION OIL COOLER GROUP FOR FG85A/R

Ref	Numero de Pieza	Ctd	Descripción
1	70921913	5	CLAMP
2	73107726	1	HOSE
3	75235174	1	TUBE
4	70677006	3	WASHER
5	70922763	1	SCREW
6	75221770	2	ELBOW
7	70921914	2	CLAMP
8	73155831	1	ELBOW
9	73155834	1	HOSE ASSY
10	70919625	1	ELBOW
11	75237755	1	HOSE ASSY
12	70911026	2	NUT
13	70919464	1	ELBOW
14	70927218	2	SCREW
15	73136629	2	CONNECTOR
16	70921076	2	SCREW
17	70923174	2	CONNECTOR
18	75237754	1	HOSE ASSY
19	73158769	1	TUBE
20	75235217	1	HEAT EXCHANGER
21	73136636	2	WASHER

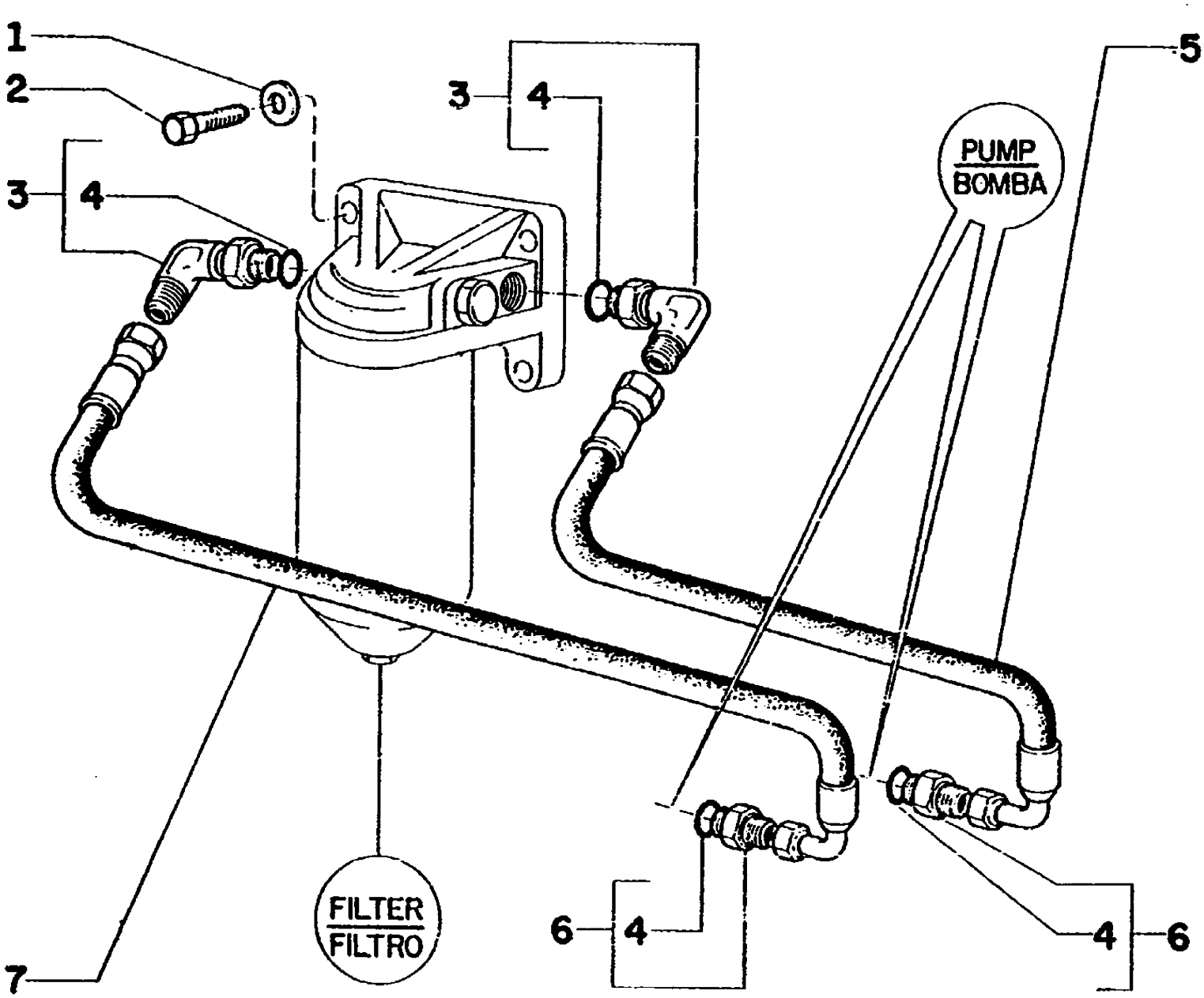
1
2
3
4
3
4
5
PUMP
BOMBA
FILTER
FILTRO
6
4
4
6
7

FG85 SERIES B MOTORGRADER

B2.06/1(001) TRANSMISSION PUMP AND FILTER LINES

Ref	Numero de Pieza	Ctd	Descripción
1	70677006	4	WASHER
2	70921076	4	SCREW
3	70921203	2	FITTING
4	70921206	4	O'RING
5	73158843	1	HOSE ASSY
6	70921217	2	CONNECTOR
7	73158844	1	HOSE ASSY

B2.06/1(002) TRANSMISSION OIL DIPSTICK

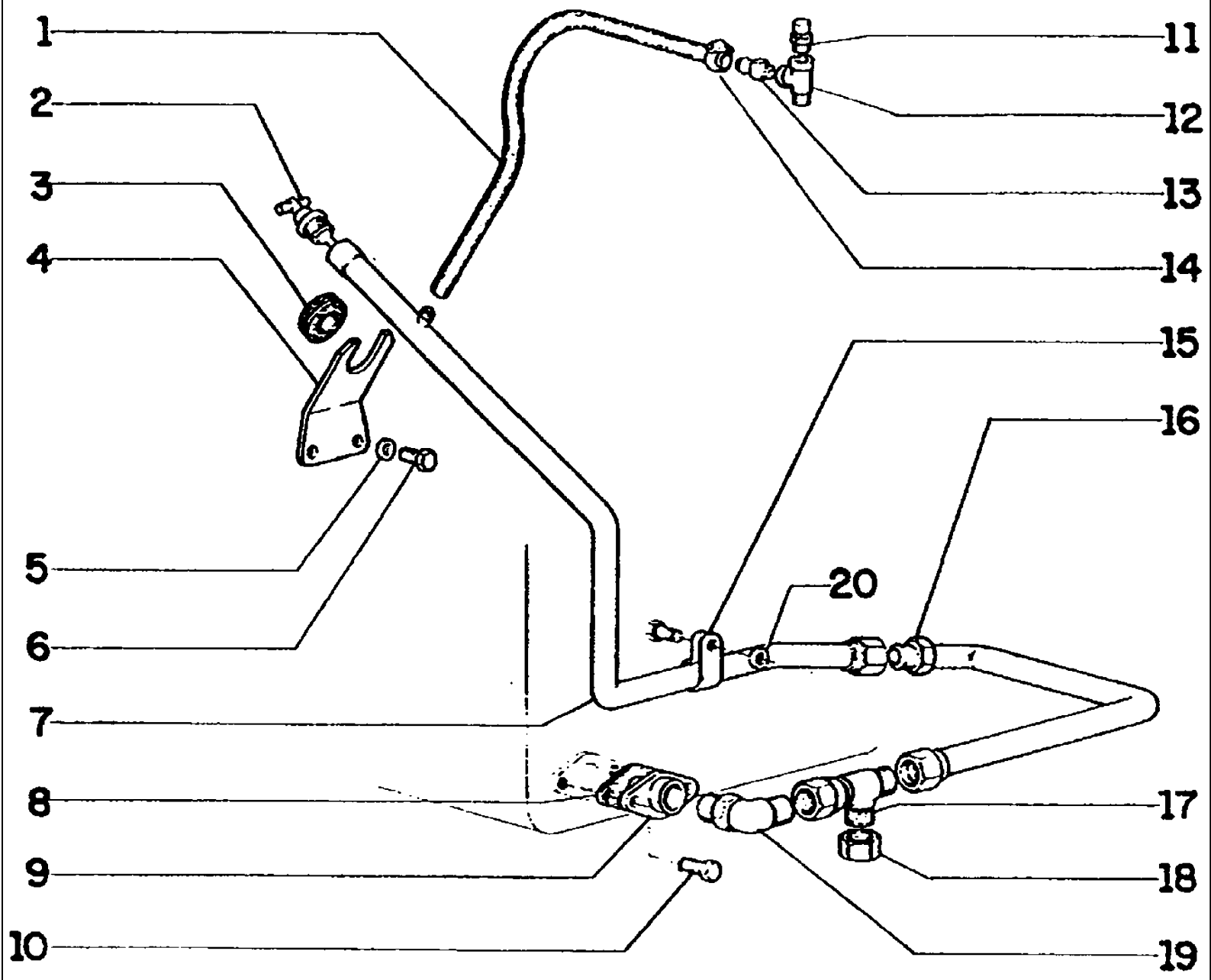

FG85 SERIES B MOTORGRADER

B2.06/1(002) TRANSMISSION OIL DIPSTICK

Ref	Numero de Pieza	Ctd	Descripción
1	73155832	1	HOSE
2	73157344	1	DIPSTICK
3	76021289	1	RING
4	75238793	1	SUPPORT
5	70914678	2	LOCKWASHER
6	70927400	2	SCREW
7	75239072	1	TUBE
8	79101792	1	SEAL
9	73157324	1	FLANGE
10	16043631	2	BOLT, Hex, M8 x 25, 10.9
11	73142752	1	BREATHER
12	70934685	1	FITTING
13	70927028	1	FITTING
14	79084753	2	CLAMP
15	70929806	1	CLAMP
16	75239076	1	TUBE
17	70925836	1	FITTING
18	70922195	1	CAP
19	70921227	1	ELBOW
20	10519621	1	WASHER, M8 x 17 x 2

B2.06/1(003) TRANSMISSION OIL COOLER GROUP

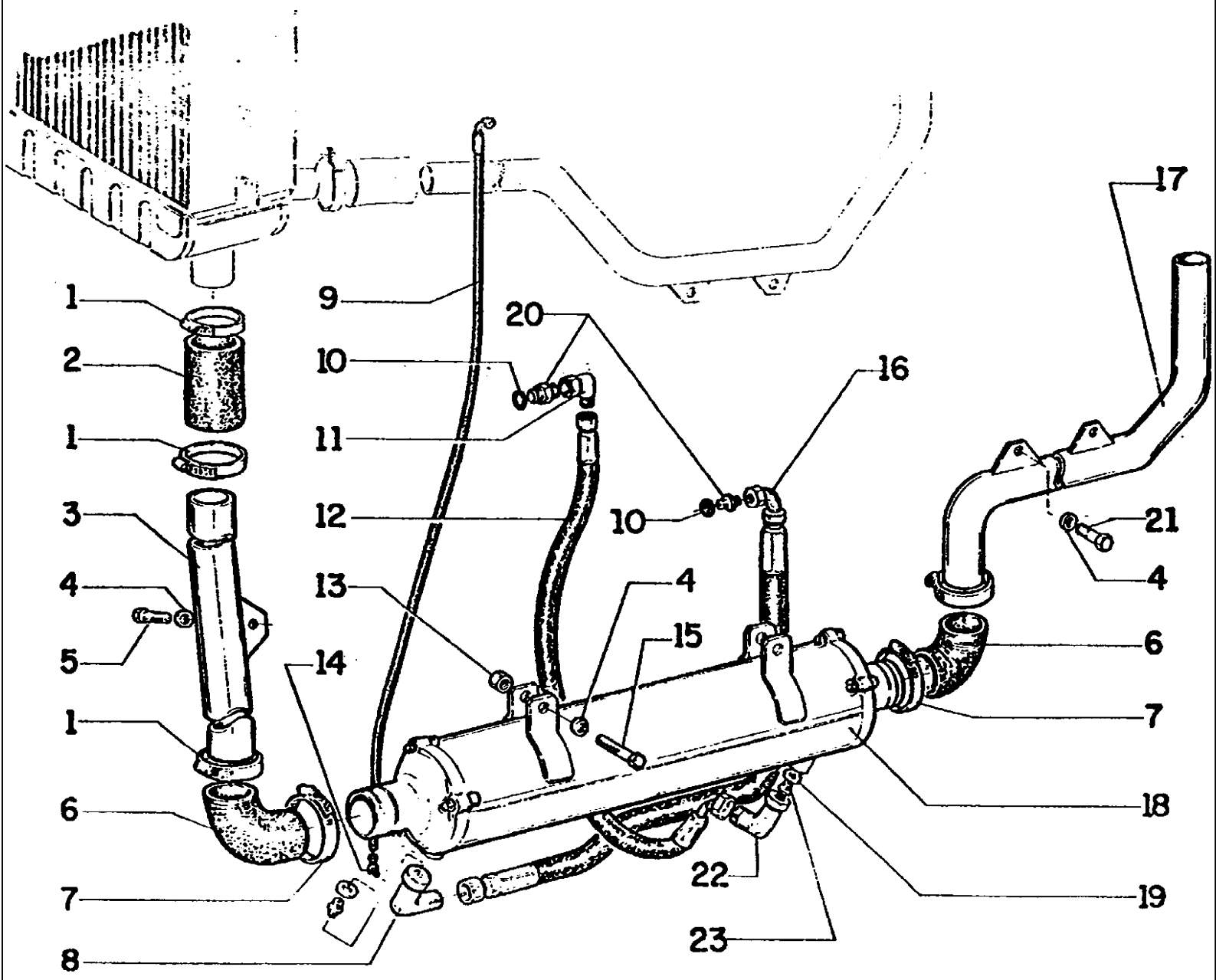

FG85 SERIES B MOTORGRADER

B2.06/1(003) TRANSMISSION OIL COOLER GROUP

Ref	Numero de Pieza	Ctd	Descripción
1	70921913	5	CLAMP
2	73107726	1	HOSE
3	75235174	1	TUBE
4	70677006	5	WASHER
5	70922763	1	SCREW
6	75221770	2	ELBOW
7	70921914	2	CLAMP
8	73155831	1	ELBOW
9	73155834	1	HOSE ASSY
10	134372	2	
11	70919625	1	ELBOW
12	73155220	1	HOSE ASSY
13	70911026	2	NUT
14	70919464	1	ELBOW
15	70927218	2	SCREW
16	73155805	1	HOSE ASSY
17	75238972	1	TUBE
18	75235217	1	HEAT EXCHANGER
19	73136636	2	WASHER
20	75238369	2	FITTING
21	70921076	2	SCREW
22	70929744	1	ELBOW
23	73136629	2	CONNECTOR

B2.07(001) TRANSMISSION CONTROL FOR FG85A/R.

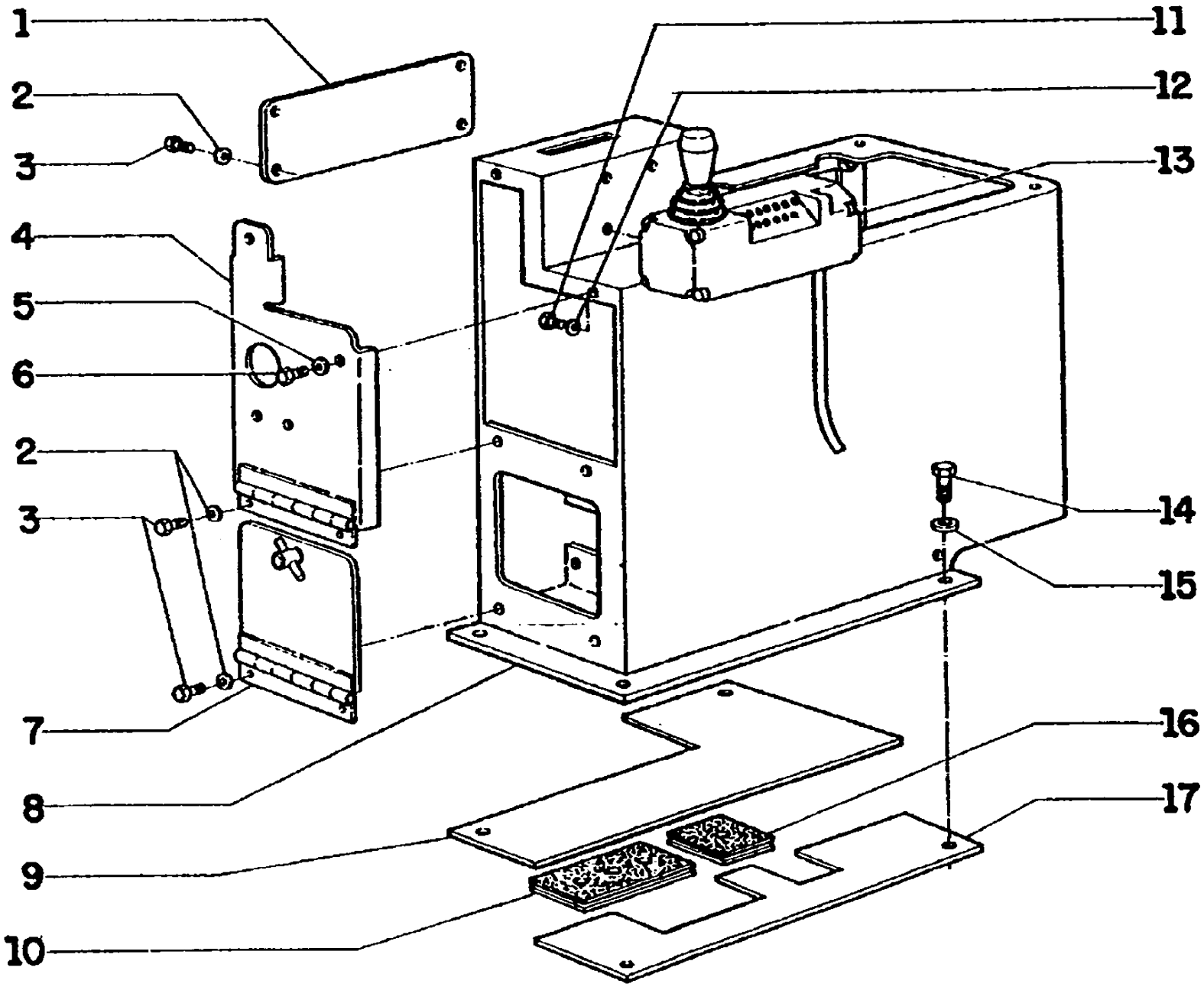

FG85 SERIES B MOTORGRADER

B2.07(001) TRANSMISSION CONTROL FOR FG85A/R.

Ref	Numero de Pieza	Ctd	Descripción
1	73150602	1	PLATE
2	70927541	8	SCREW
3	70928190	8	WASHER
4	75238358	1	COVER
5	70929359	2	WASHER
6	70907722	2	SCREW
7	73152282	1	COVER
8	75237891	1	BRACKET
9	73153599	1	PLATE
10	73153600	1	SEAL
11	10444631	4	SCREW
12	11195371	4	WASHER
13	75242126	1	CONTROL LEVERS
14	70921556	4	SCREW
15	70928178	4	WASHER
16	73153601	1	SEAL
17	73153598	1	PLATE

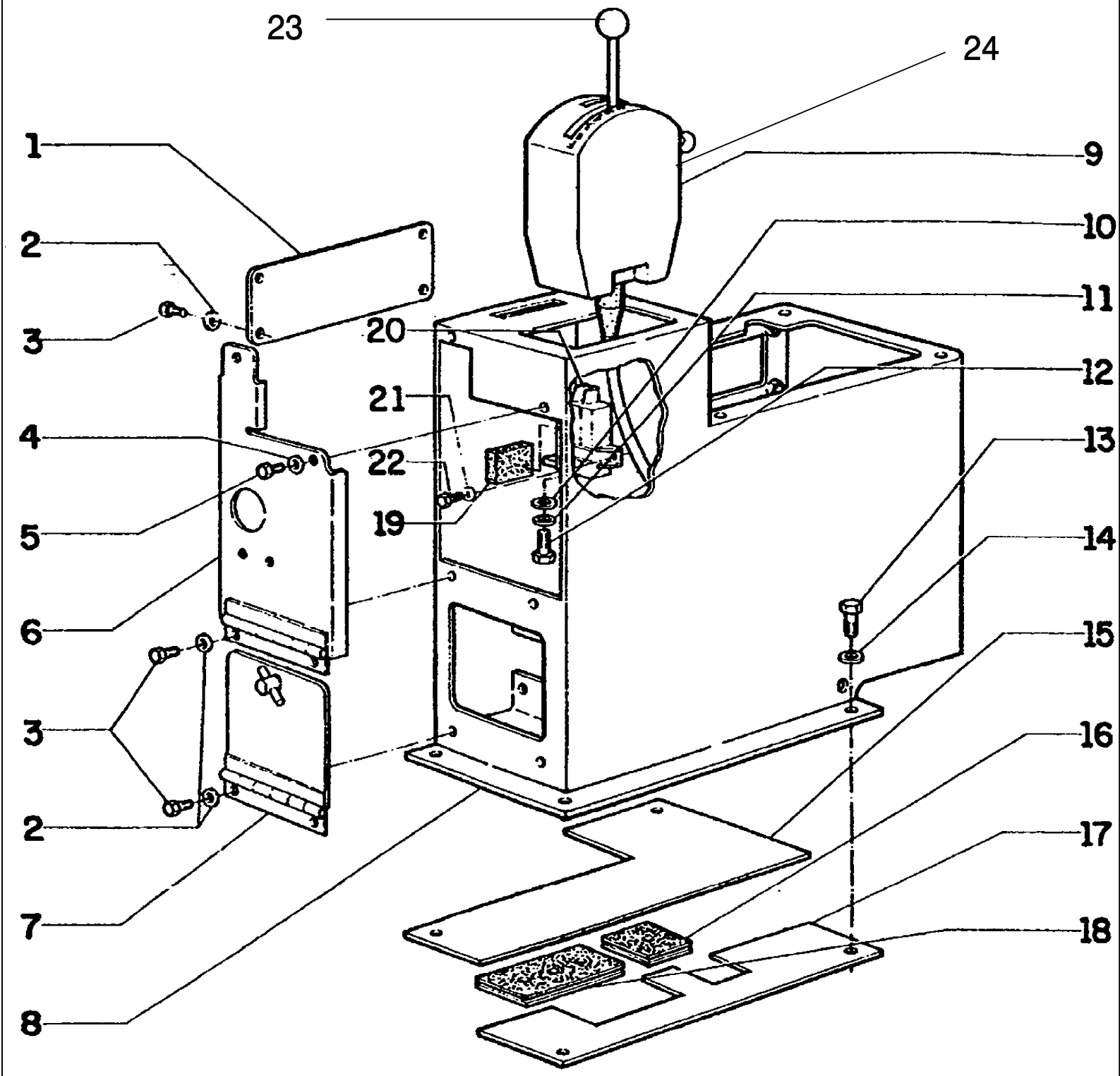
23
24
1
9
2
10
3
11
20
12
21
4
13
22
5
19
14
6
15
3
16
2
17
7
18
8

FG85 SERIES B MOTORGRADER

B2.07/1(001) TRANSMISSION CONTROL

Ref	Numero de Pieza	Ctd	Descripción
1	73150602	1	PLATE
2	70928190	8	WASHER
3	70927541	8	SCREW
4	70929359	2	WASHER
5	70907722	2	SCREW
6	75237525	1	COVER
7	73152282	1	COVER
8	73155793	1	BRACKET
9	75286384	1	CONTROL LEVERS fuse p/n 73161750 for controller
10	10519601	2	WASHER, M8 x 17 x 2
11	10516679	2	LOCKWASHER
12	16043431	2	BOLT, Hex, M8 x 20, 10.9
13	70921556	4	SCREW
14	70928178	4	WASHER
15	73153599	1	PLATE
16	73153601	1	SEAL
17	73153598	1	PLATE
18	73153600	1	SEAL
19	75239060	1	SEAL
20	75286385	1	SAFETY DEVICE
21	70928190	3	WASHER
22	70928182	3	SCREW
23	75286424	1	KNOB
24	73161750	1	FUSE

B2.07/2(001) TRANSMISSION CONTROL FOR FG105A/R 12 VOLT MACHINES

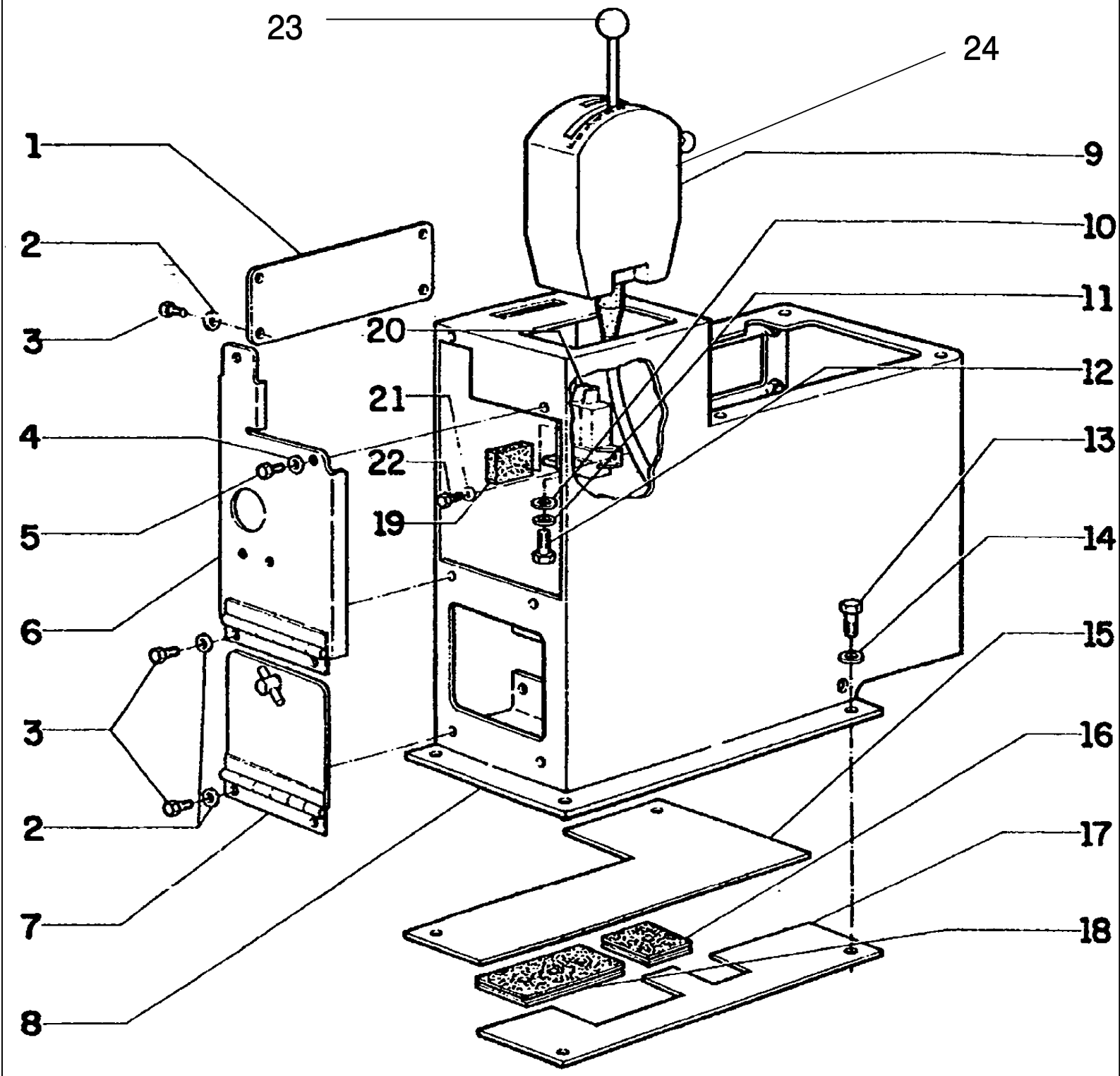

FG85 SERIES B MOTORGRADER

B2.07/2(001) TRANSMISSION CONTROL FOR FG105A/R 12 VOLT MACHINES

Ref	Numero de Pieza	Ctd	Descripción
1	73150602	1	PLATE
2	70928190	8	WASHER
3	70927541	8	SCREW
4	70929359	2	WASHER
5	70907722	2	SCREW
6	75237525	1	COVER
7	73152282	1	COVER
8	73155793	1	BRACKET
9	75241772	1	CONTROL LEVERS
10	10519601	2	WASHER, M8 x 17 x 2
11	10516679	2	LOCKWASHER
12	16043431	2	BOLT, Hex, M8 x 20, 10.9
13	70921556	4	SCREW
14	70928178	4	WASHER
15	73153599	1	PLATE
16	73153601	1	SEAL
17	73153598	1	PLATE
18	73153600	1	SEAL
19	75239060	1	SEAL
20	75241771	1	SAFETY DEVICE
21	70928190	3	WASHER
22	70928182	3	SCREW
23	75286424	1	KNOB
24	73161750	1	FUSE

B2.17(001) FILTER ASSEMBLY FOR FG85A/R

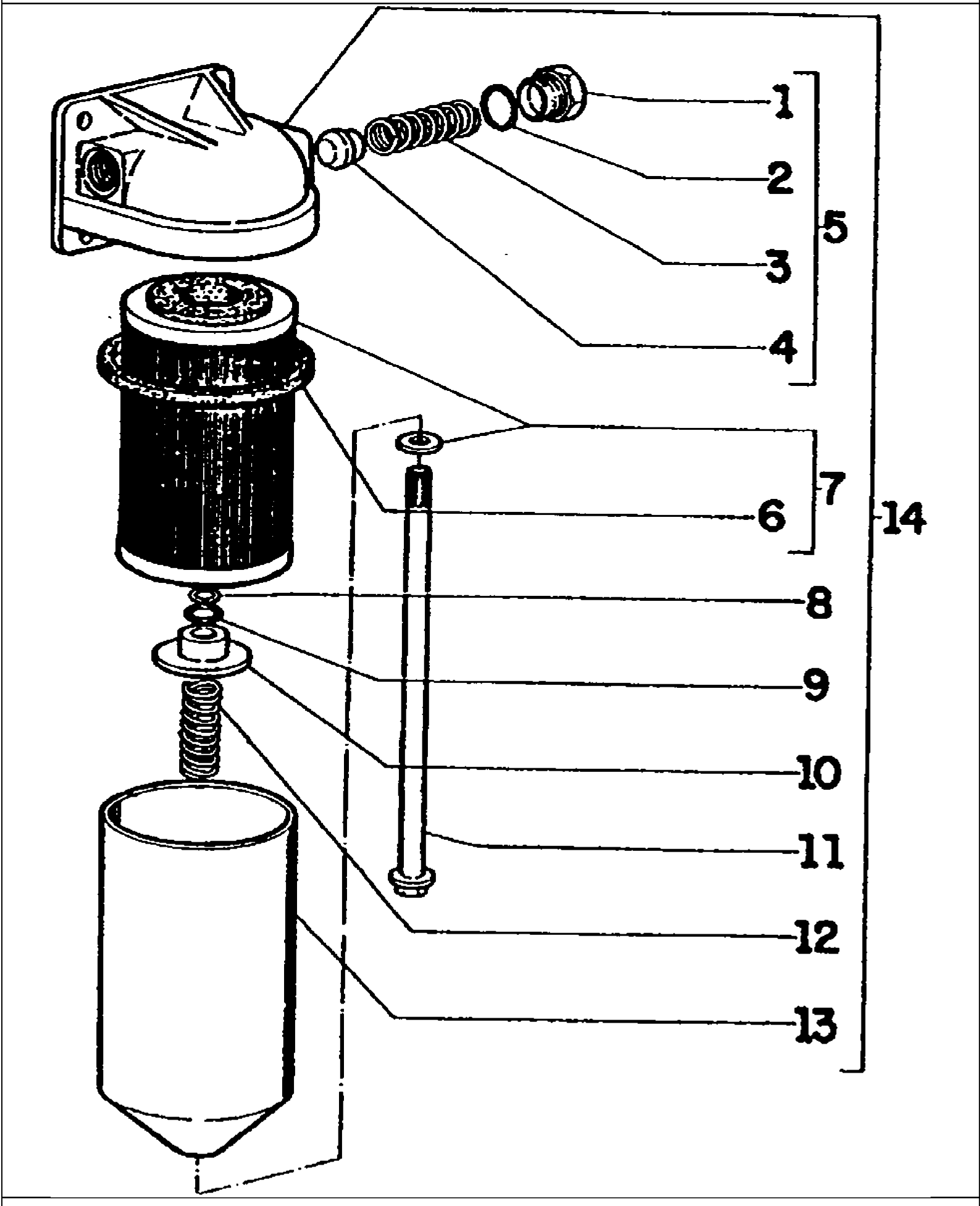

FG85 SERIES B MOTORGRADER

B2.17(001) FILTER ASSEMBLY FOR FG85A/R

Ref	Numero de Pieza	Ctd	Descripción
1	73132151	1	PLUG
2	73132152	1	O'RING
3	73132145	1	SPRING
4	73132935	1	VALVE
5	73132154	1	KIT
6	70923856	1	O'RING
7	73132155	1	KIT
8	73132153	1	RING
9	73132148	1	O'RING
10	73132149	1	CUP
11	73132150	1	SCREW
12	73132147	1	SPRING
13	75214203	1	TANK
14	73129543	1	OIL FILTER

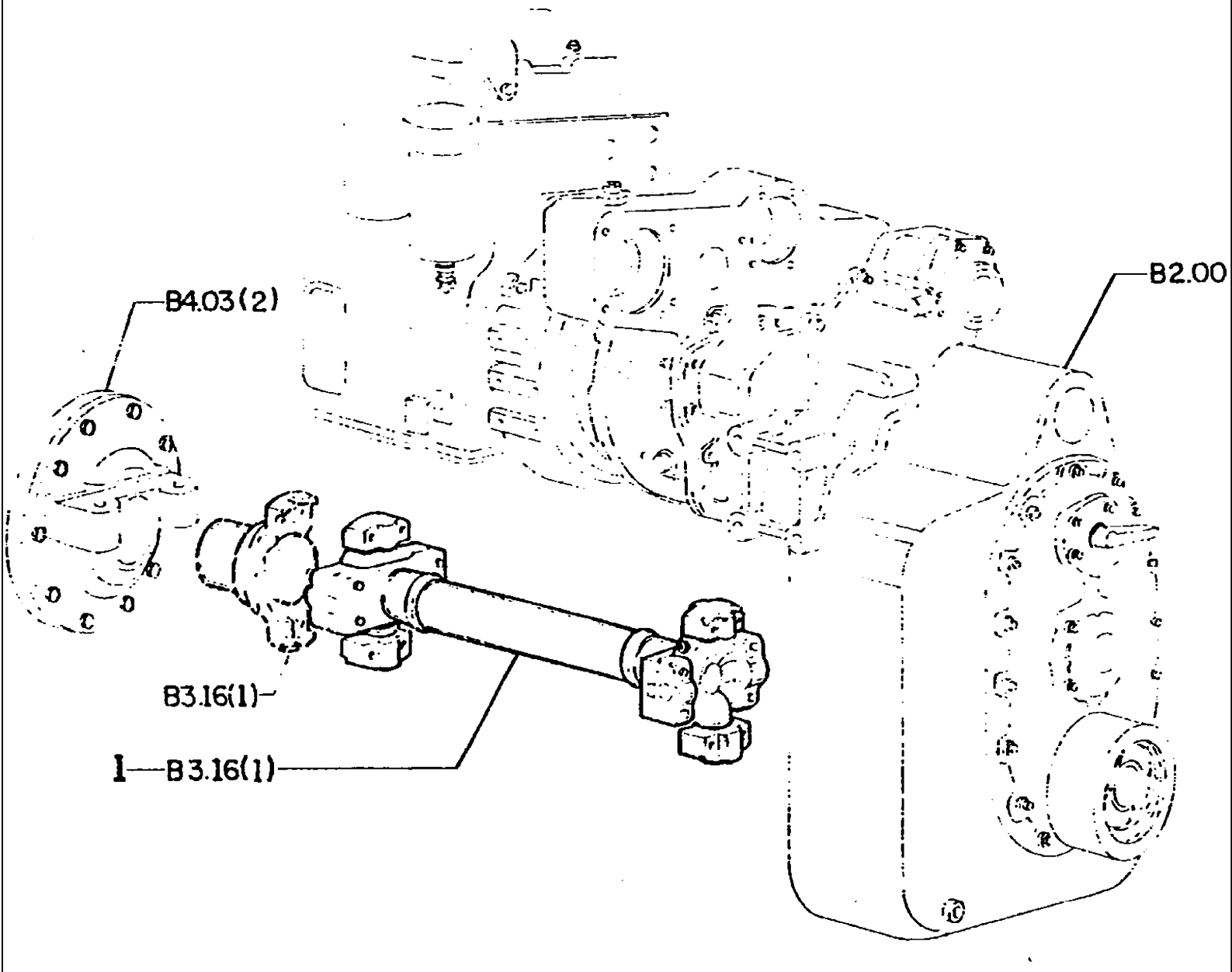
B4.03(2)
B2.00
B3.16(1)
1
B3.16(1)

FG85 SERIES B MOTORGRADER

B3.01(001) UNIVERSAL JOINT ASSEMBLY

Ref	Numero de Pieza	Ctd	Descripción
1	73148577	1	PROPELLER SHAFT
1	73157345	1	PROPELLER SHAFT

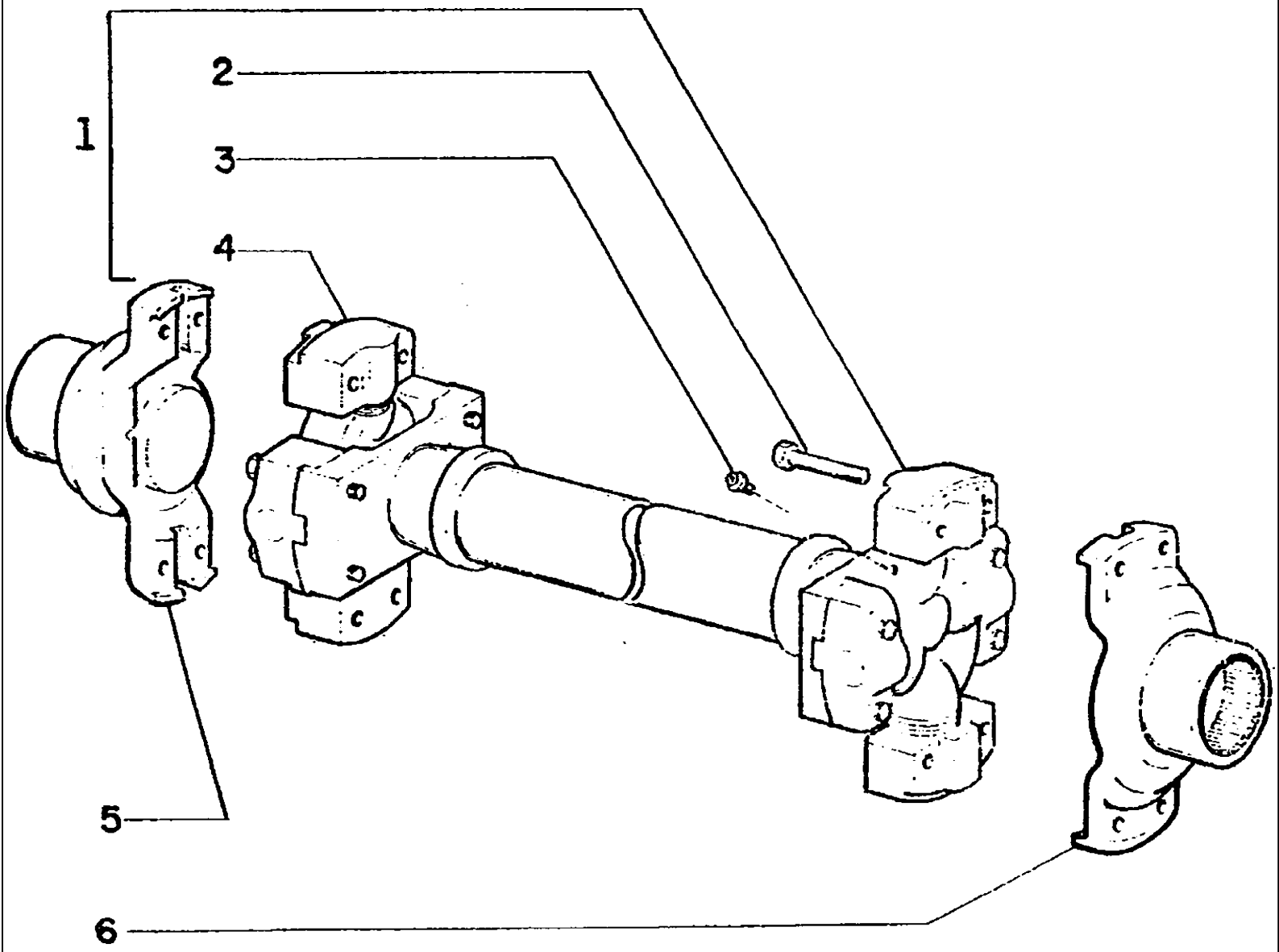
1
2
3
4
5
6

FG85 SERIES B MOTORGRADER

B3.16(001) TRANSMISSION ASSEMBLY

Ref	Numero de Pieza	Ctd	Descripción
1	73148577	1	PROPELLER SHAFT
2	70925632	8	SCREW
3	70918185	2	GREASE FITTING
4	73134821	2	SPIDER
5	73134819	1	FLANGE
6	71005116	1	FLANGE

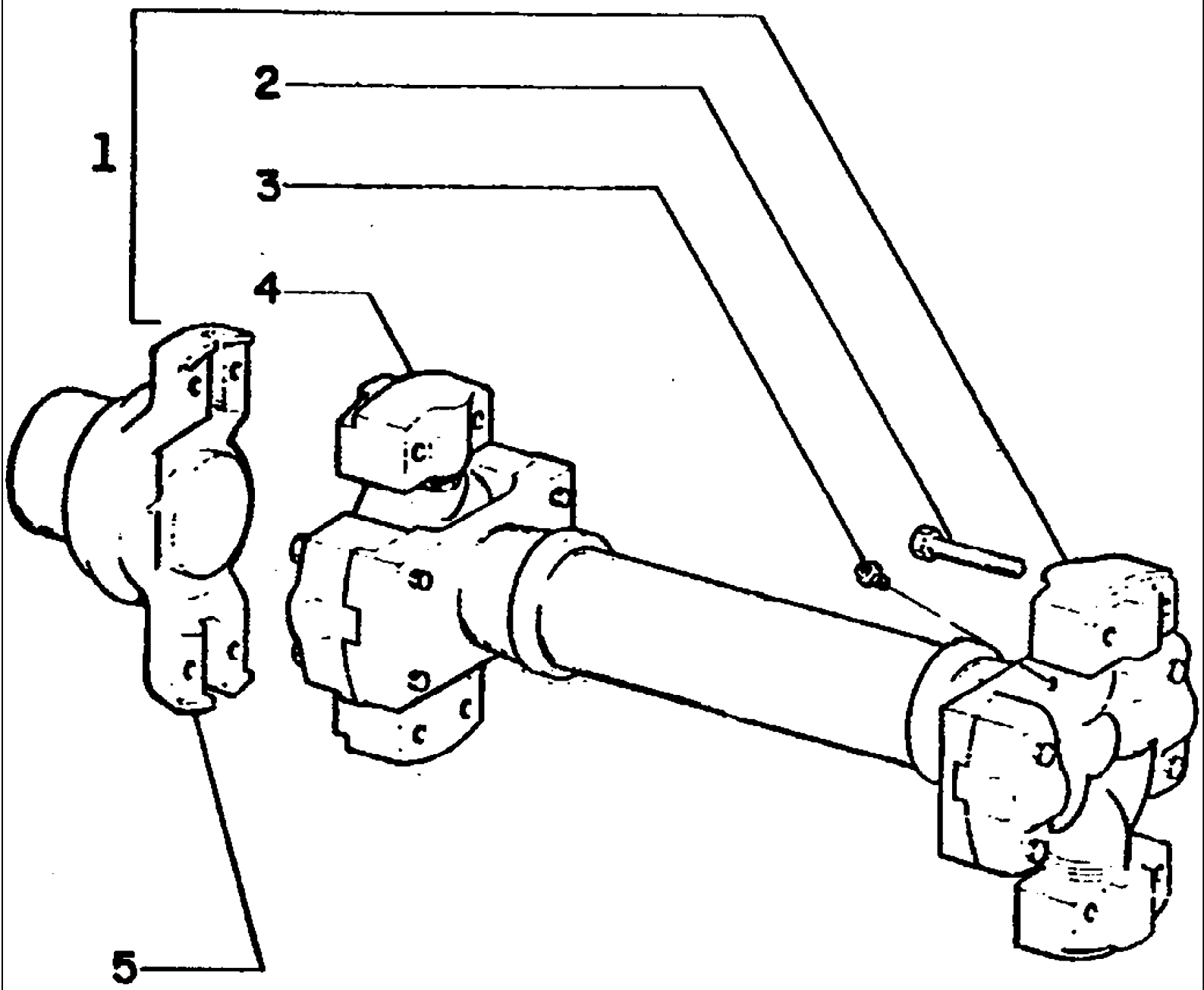
1
2
3
4
5

FG85 SERIES B MOTORGRADER

B3.16(002) TRANSMISSION ASSEMBLY

Ref	Numero de Pieza	Ctd	Descripción
1	73157345	1	PROPELLER SHAFT
2	70925632	8	SCREW
3	70918185	2	GREASE FITTING
4	73159603	2	SPIDER
5	73134819	1	FLANGE

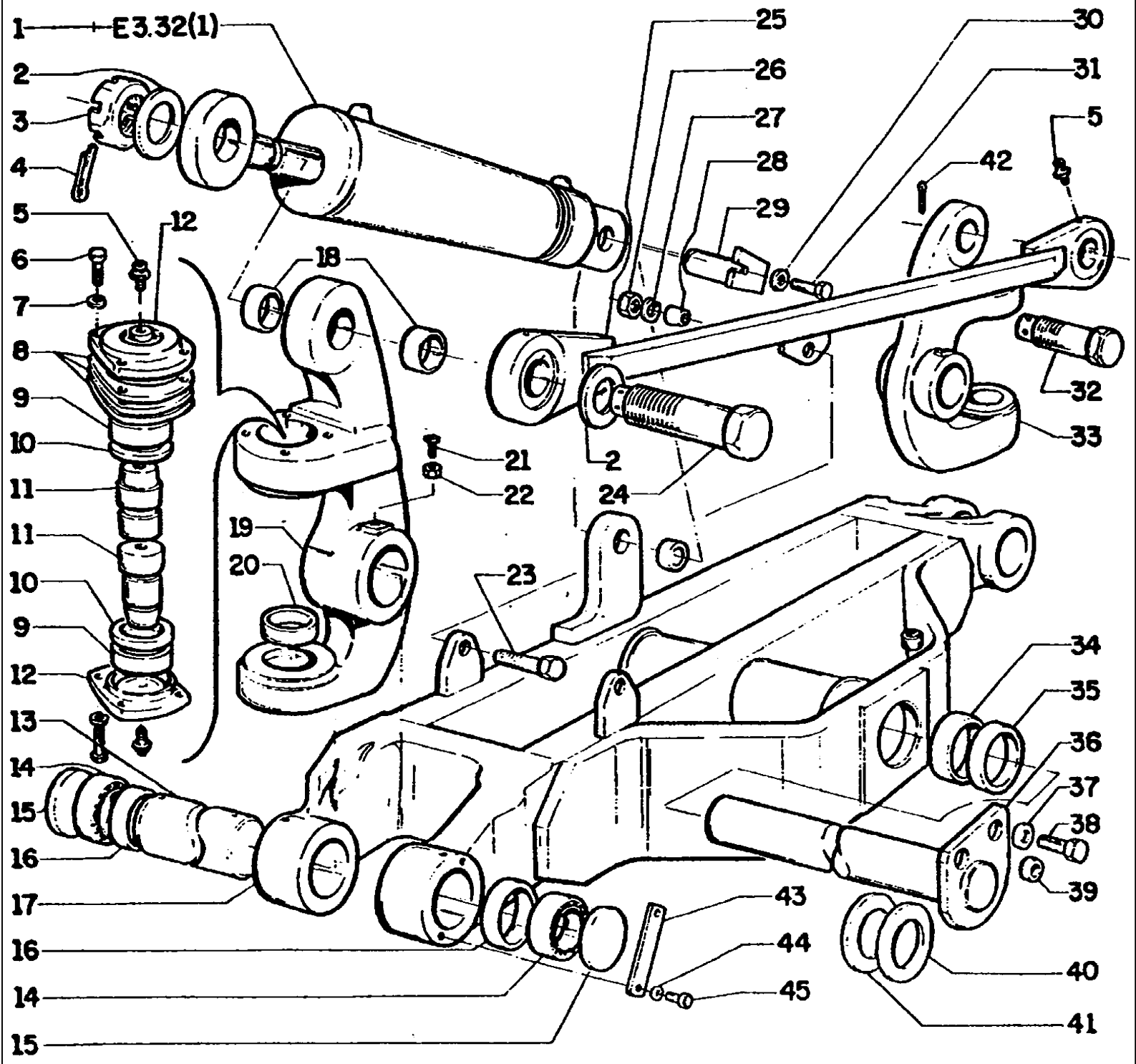
1
E3.32(1)
2
3
4
5
12
6
7
8
9
10
11
11
10
9
12
13
14
15
16
17
16
14
15
18
19
20
21
22
2
24
23
25
26
27
28
29
30
31
5
42
32
33
34
35
36
37
38
39
40
41
43
44
45

FG85 SERIES B MOTORGRADER

B4.01(001) FRONT AXLE

Ref	Numero de Pieza	Ctd	Descripción
1	75220689	1	TILT CYLINDER
2	70054889	2	WASHER
3	70911061	2	NUT
4	70901344	1	Pin, Split (Cotter), 1/4" x 2"
5	70914465	12	GREASE FITTING
6	70921076	16	SCREW
7	70929156	16	WASHER
8	73124681	10	SHIM
8	73124682	10	SHIM
8	73124683	14	SHIM
9	73124678	4	BEARING
10	73124671	4	SEAL
11	73124680	4	PIN
12	73124522	4	COVER
13	75238951	2	PIN
14	73124679	4	BEARING
15	70930423	4	CAP
16	73124672	4	SEAL
17	73124515	1	FRONT AXLE
18	70668028	6	BALL JOINT
19	73124520	1	FORK
20	73125713	2	SEAL
21	73125712	2	SCREW
22	70913830	2	NUT
23	70922544	1	SCREW
24	70683838	1	SCREW
25	73125722	1	BAR
26	70911030	1	NUT
27	70914726	1	LOCKWASHER
28	73125726	4	SPACER
29	70673051	1	PIN
30	70677006	1	WASHER
31	70922763	1	SCREW
32	70683837	1	SCREW
33	73124519	1	FORK
34	75221259	2	SPACER
35	75221258	2	BUSHING
36	73153514	1	SHAFT
37	70930850	2	WASHER
38	70920585	2	SCREW
39	73153515	2	SPACER
40	73135173	*	SHIM
41	73135174	*	SHIM

FG85 SERIES B MOTORGRADER

B4.01(001) FRONT AXLE

Ref	Numero de Pieza	Ctd	Descripción
42	70901345	1	Pin, Split (Cotter), 1/4" x 2 1/2"
43	75238952	4	PLATE
44	70904204	8	LOCKWASHER
45	70928138	8	SCREW

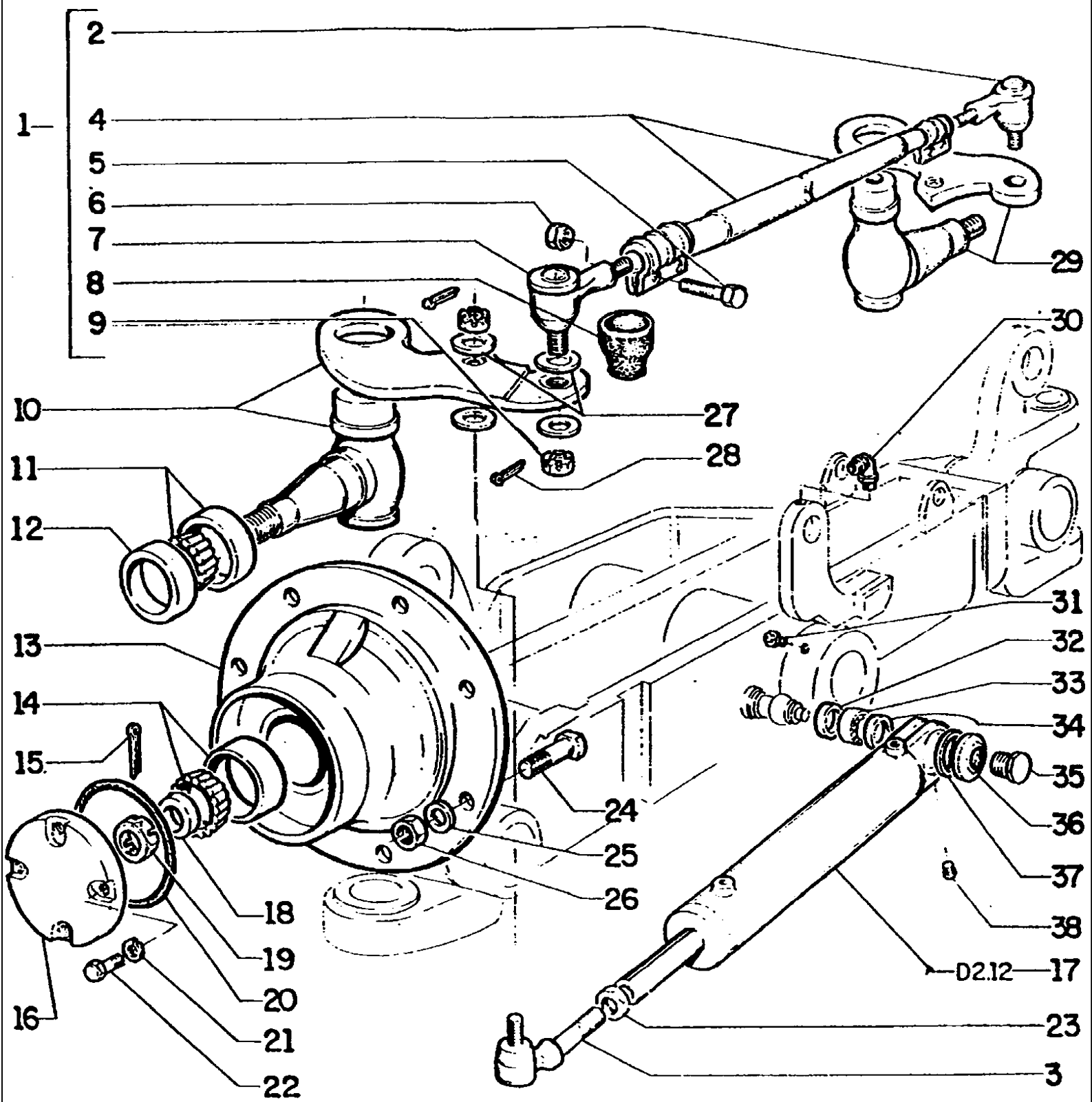
1
2
4
5
6
7
8
9
10
11
12
13
14
15
16
18
19
20
21
22
24
25
26
27
28
29
30
31
32
33
34
35
36
37
38
D2.12
17
23
3

FG85 SERIES B MOTORGRADER

B4.01(003) FRONT AXLE

Ref	Numero de Pieza	Ctd	Descripción
1	75221735	1	BAR
2	75221276	1	END
3	75219488	2	STEER'G CYLIND.
4	75221734	1	ROD
5	11227721	4	BOLT, Hex, M12 x 1.5 x 55, 8.8
6	12575721	4	NUT
7	75221277	1	END
8	75221272	2	DUST BOOT
9	70916896	2	NUT
10	73124696	1	SHAFT
11	73124684	2	BEARING
12	73135111	1	LIP SEAL
13	73124691	2	WHEEL
14	70684817	2	BEARING
15	70901348	2	COTTER PIN
16	73124693	2	COVER
17	73065116	2	STEER'G CYLIND.
18	70932867	2	WASHER
19	70922271	2	NUT
20	70923824	2	O'RING
21	70910287	8	LOCKWASHER
22	70921565	8	SCREW
23	70911051	2	LOCK NUT
24	73125714	20	SCREW
25	70677012	20	WASHER
26	70012767	20	NUT
27	75220798	4	WASHER
28	70904002	4	Pin, Split (Cotter), 1/8" x 2"
29	73124697	1	SHAFT
30	70915276	2	GREASE FITTING
31	70914465	2	GREASE FITTING
32	73125725	2	SEAL
33	70668028	2	BALL JOINT
34	70926957	2	SNAP RING
35	70928312	2	SCREW
36	73125724	2	PLUG
37	70927700	4	Ring, Snap, 2", Int, #200
38	70910231	2	PLUG

B4.01/1(001) FRONT WHEEL AXLE FOR FRONT WHEEL DRIVE

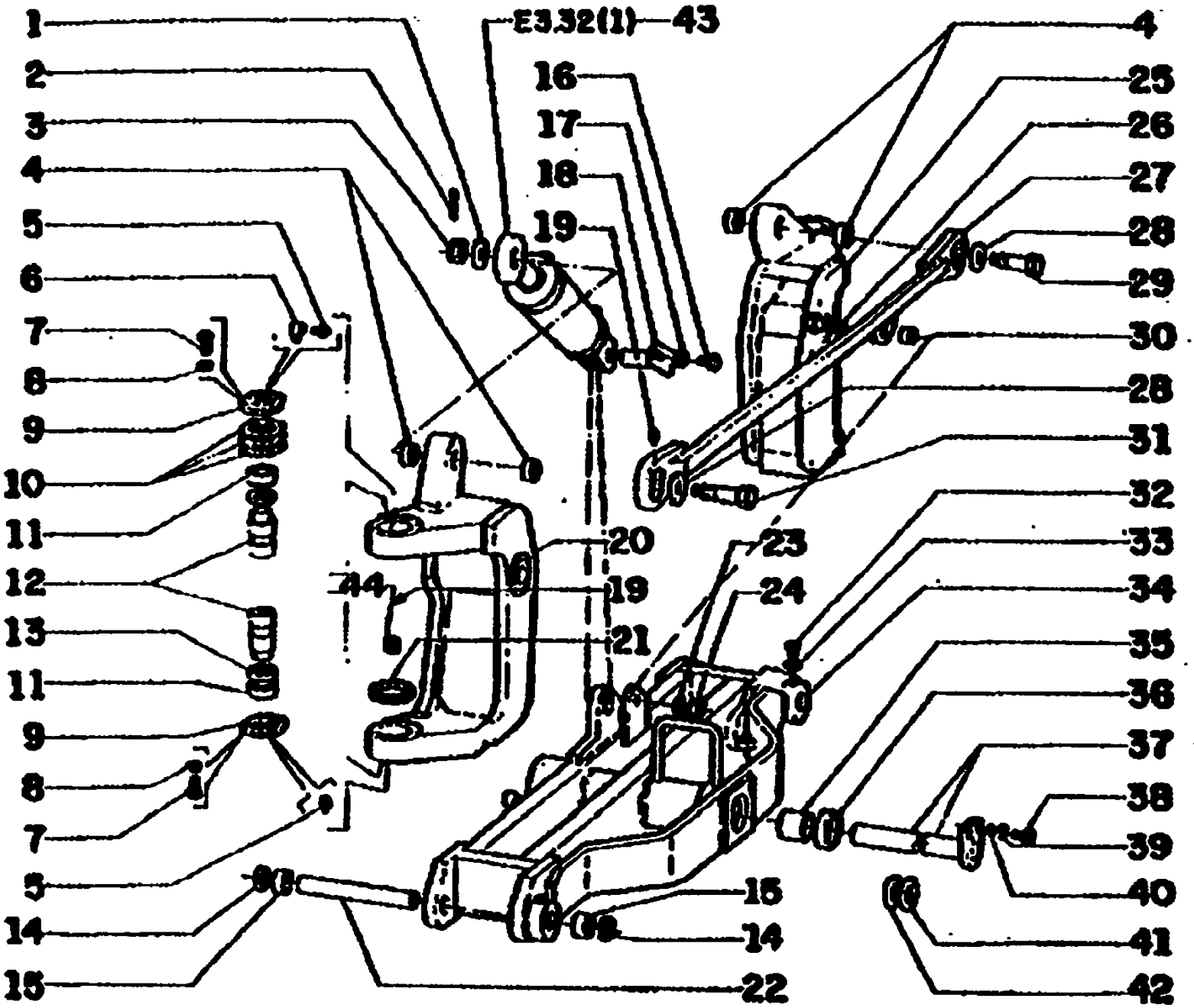

FG85 SERIES B MOTORGRADER

B4.01/1(001) FRONT WHEEL AXLE FOR FRONT WHEEL DRIVE

Ref	Numero de Pieza	Ctd	Descripción
1	70054889	2	WASHER
2	70901345	1	Pin, Split (Cotter), 1/4" x 2 1/2"
3	70911061	1	NUT
4	70660028	6	BALL JOINT
5	70914465	8	GREASE FITTING
6	70907059	2	ELBOW
7	70921076	16	SCREW
8	70929156	16	WASHER
9	73124522	4	COVER
10	73124681	10	SHIM
10	73124682	10	SHIM
10	73124683	14	SHIM
11	73124678	4	BEARING
12	73124680	4	PIN
13	73124671	4	SEAL
14	73124672	4	SEAL
15	73124679	4	BEARING
16	70922763	1	SCREW
17	70677006	1	WASHER
18	70673051	1	PIN
19	70914465	4	GREASE FITTING
20	73154318	1	FORK
21	73125713	2	SEAL
22	73154303	2	PIN
23	70914726	1	LOCKWASHER
24	70911030	1	NUT
25	73154317	1	FORK
26	70922544	1	SCREW
27	73154952	1	BAR
28	70054889	2	WASHER
29	70683837	1	SCREW
30	73125726	1	SPACER
31	70683838	1	SCREW
32	73125712	2	SCREW
33	70913830	2	NUT
34	73154300	1	FRONT AXLE
35	75221259	2	SPACER
36	75221258	2	BUSHING
37	73153514	1	SHAFT
38	70920585	2	SCREW
39	70930850	2	WASHER
40	73153515	2	SPACER
41	73135173	*	SHIM

B4.01/1(001) FRONT WHEEL AXLE FOR FRONT WHEEL DRIVE

Ref	Numero de Pieza	Ctd	Descripción
42	73135174	*	SHIM
43	75220689	1	TILT CYLINDER
44	70917223	4	SCREW

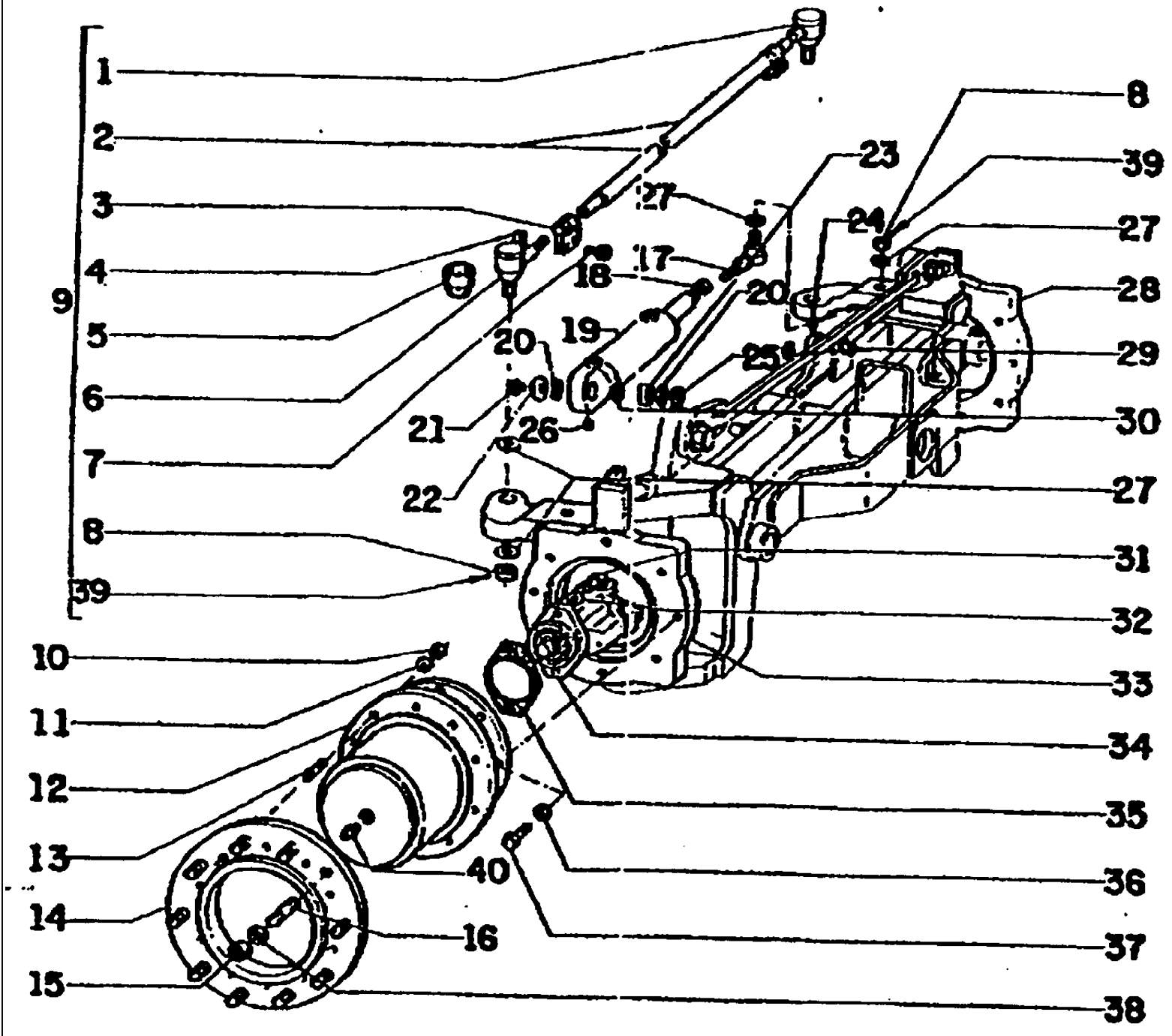
1
2
3
4
5
6
7
8
39
9
10
11
12
13
14
15
16
17
18
19
20
21
22
23
24
25
26
27
28
29
30
31
32
33
34
35
36
37
38
40

FG85 SERIES B MOTORGRADER

B4.01/1(002) FRONT WHEEL AXLE FOR FRONT WHEEL DRIVE

Ref	Numero de Pieza	Ctd	Descripción
1	75221277	1	END
2	73157240	1	ROD
3	75206887	2	CLAMP
4	12575721	4	NUT
5	75221272	2	DUST BOOT
6	75221276	1	END
7	11227721	4	BOLT, Hex, M12 x 1.5 x 55, 8.8
8	70916896	2	NUT
9	73154953	1	BAR
10	70072366	20	NUT
11	70927381	20	WASHER
12	73155697	2	CASE ASS'Y
13	73155340	20	STUD
14	73155698	2	FLANGE
15	70012767	20	NUT
16	73155339	20	STUD
17	75219488	2	STEER'G CYLIND.
18	70911051	2	LOCK NUT
19	73155336	2	STEERING CYLIND.
20	70927700	4	Ring, Snap, 2", Int, #200
21	70928312	2	SCREW
22	73125724	2	PLUG
23	70668028	2	BALL JOINT
24	70915276	2	GREASE FITTING
25	73125725	2	SEAL
26	70910231	2	PLUG
27	75220798	8	WASHER
28	73154941	1	HUB
29	70914465	2	GREASE FITTING
30	70926957	2	SNAP RING
31	70927172	4	SCREW
32	70928460	4	WASHER
33	73154942	1	SUPPORT
34	73155700	1	HYDRAULIC MOTOR
34	73155696	1	HYDRAULIC MOTOR
35	75218926	2	GASKET
36	70927381	16	WASHER
37	70922614	16	SCREW
38	70677012	20	WASHER
39	70904002	4	Pin, Split (Cotter), 1/8" x 2"
40	70914687	2	GREASE FITTING

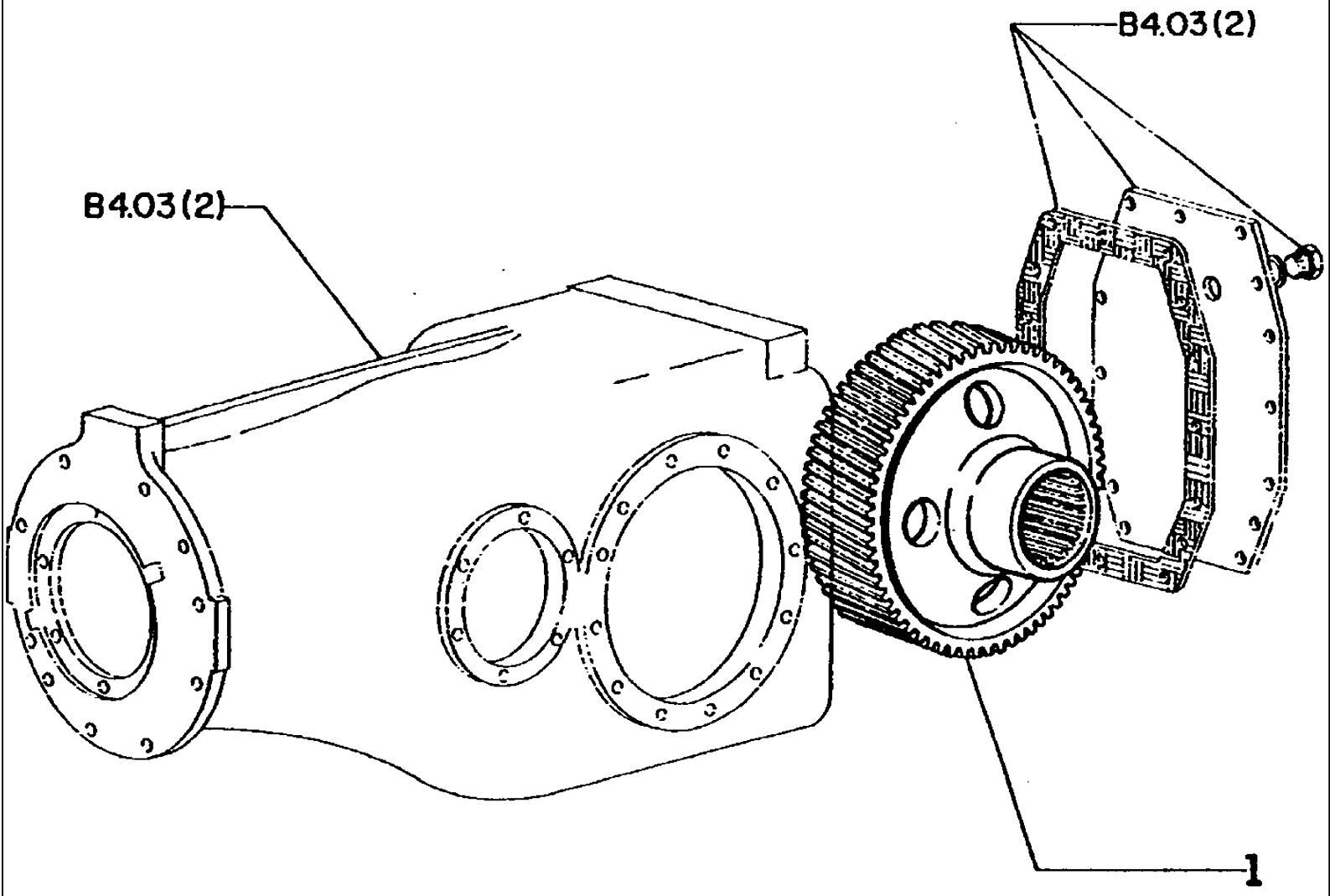
B4.03(2)
B4.03(2)
1

FG85 SERIES B MOTORGRADER

B4.03(001) REAR AXLE

Ref	Numero de Pieza	Ctd	Descripción
1	73148829	1	RING GEAR

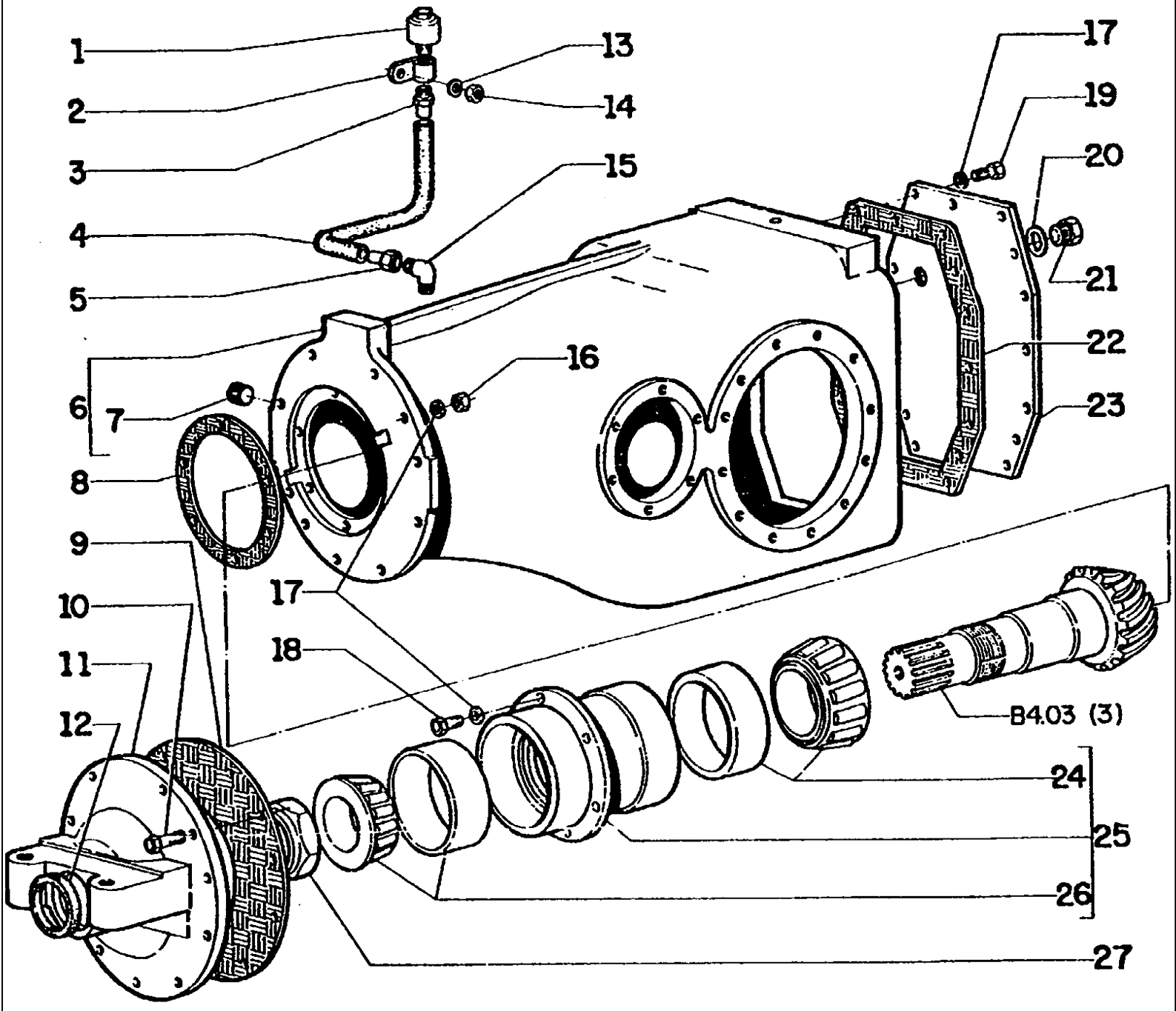
1
2
3
4
5
6
7
8
9
10
11
12
13
14
15
16
17
18
17
19
20
21
22
23
B4.03 (3)
24
25
26
27

FG85 SERIES B MOTORGRADER

B4.03(002) REAR AXLE

Ref	Numero de Pieza	Ctd	Descripción
1	70050748	1	BREATHER
2	73125067	1	SUPPORT
3	70925957	1	FITTING
4	73127954	1	HOSE
5	70920806	1	FITTING
6	75218915	1	CASE
7	70901666	6	PLUG
8	70673190	6	SHIM
8	70200314	3	SHIM
8	70200078	4	SHIM
9	75218932	1	GASKET
10	70922526	12	SCREW
11	75238974	1	SUPPORT
12	70670186	1	SEAL
13	70929156	1	WASHER
14	70911034	1	NUT
15	70919135	1	ELBOW
16	70911028	12	NUT
17	70912441	34	LOCKWASHER
18	70920574	6	SCREW
19	70920583	16	SCREW
20	70667252	1	COUPLING
21	70035250	1	PLUG
22	73127131	1	GASKET
23	73124830	1	COVER
24	70683928	1	BEARING
25	73129701	1	REST
26	70684817	1	BEARING
27	70632655	1	NUT

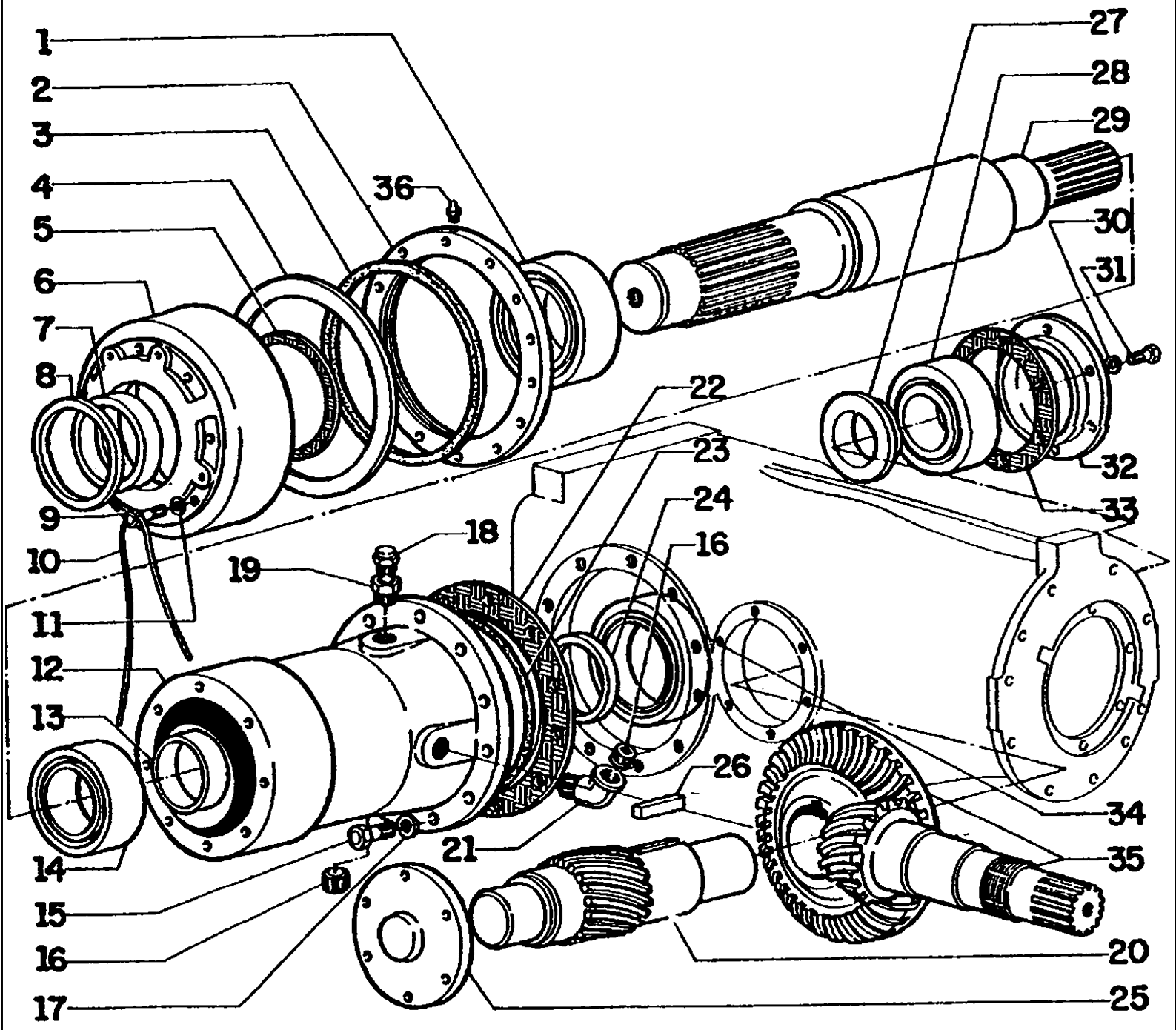
1
2
3
4
5
6
7
8
9
10
11
12
13
14
15
16
17
18
19
21
22
23
24
16
26
27
28
29
30
31
32
33
34
35
20
25
36

FG85 SERIES B MOTORGRADER

B4.03(003) REAR AXLE

Ref	Numero de Pieza	Ctd	Descripción
1	73133298	2	BEARING
2	70653837	2	RING
3	73145398	2	SEAL
4	70653828	2	RING
5	73134354	3	SHIM
5	73134353	13	SHIM
5	73134352	3	SHIM
6	73134355	2	COVER
7	70634440	2	SLEEVE
8	70634519	2	LIP SEAL
9	70927475	16	SCREW
10	70052519	2	STEEL WIRE
11	70928178	16	WASHER
12	75213499	2	CASE - for fg85a,
12	73134357	2	CASE - for fg85r
13	75213805	2	SLEEVE
14	73129486	2	BEARING
15	70921068	24	SCREW
16	70901666	4	PLUG
17	70928358	24	WASHER
18	73021062	2	BREATHER
19	70902071	2	FITTING
20	73148827	1	PINION
21	70911076	2	FITTING
22	73127756	2	SHIM
22	73127757	3	SHIM
22	73127758	5	SHIM
23	70925482	2	O'RING
24	75213501	2	SEAL
25	70066751	1	COVER
26	70604982	1	KEY
27	73148957	1	SPACER
28	70683926	2	BEARING
29	75237123	1	REAR AXLE(I)
29	75237122	1	REAR AXLE(2)
30	70912441	12	LOCKWASHER
31	70920585	12	SCREW
32	73124840	1	COVER
33	70605085	7	SHIM
33	70065042	7	SHIM
33	70673189	5	SHIM
34	73125860	2	BEARING
35	70677828	1	BEVEL GEAR SET

FG85 SERIES B MOTORGRADER

B4.03(003) REAR AXLE

Ref	Numero de Pieza	Ctd	Descripción
36	70914465	2	GREASE FITTING

B4.03(003A) REAR AXLE FG85R EFF S/N 105, FG85A EFF. S/N 227

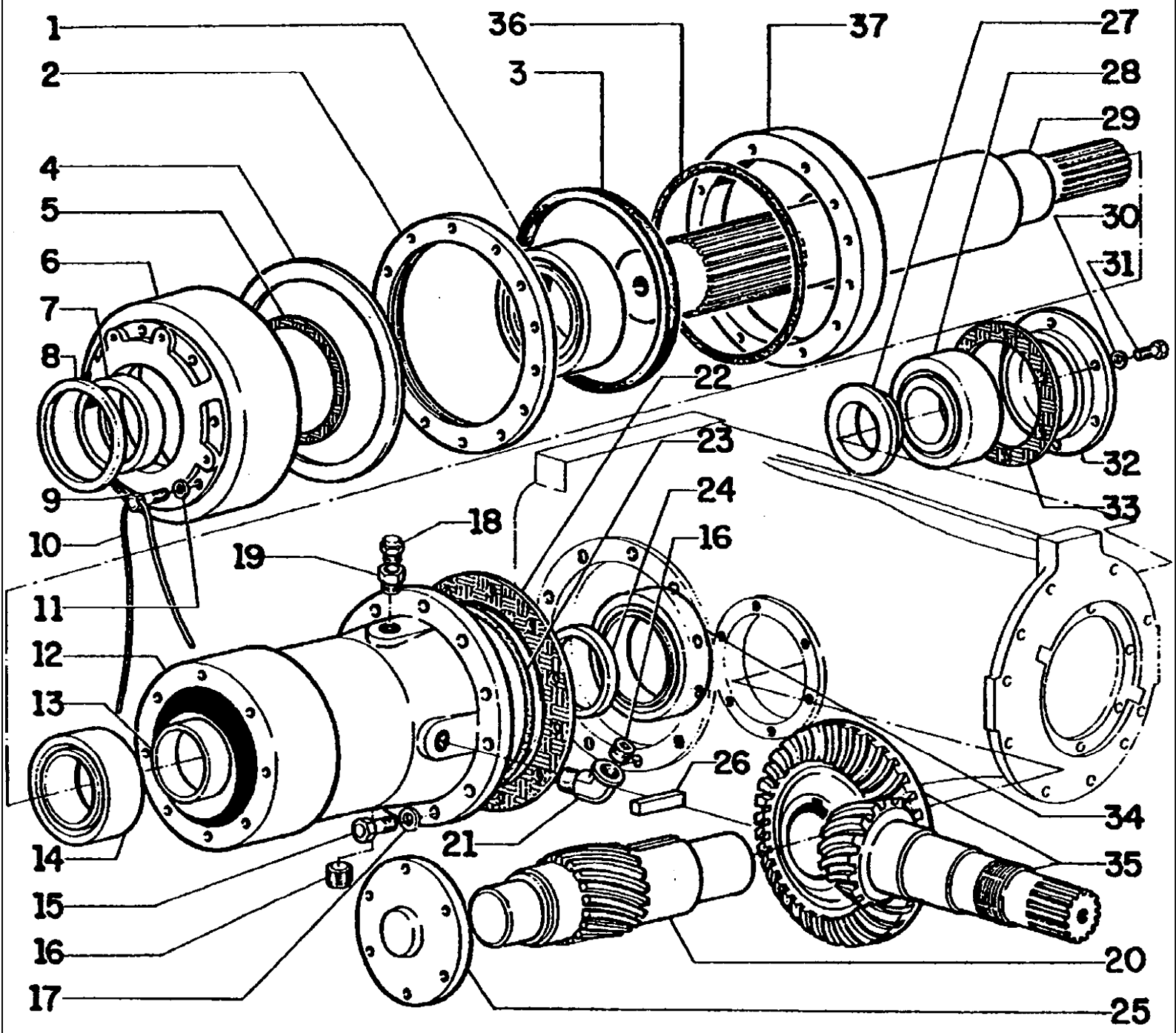

FG85 SERIES B MOTORGRADER

B4.03(003A) REAR AXLE FG85R EFF S/N 105, FG85A EFF. S/N 227

Ref	Numero de Pieza	Ctd	Descripción
1	73133298	2	BEARING
2	73154534	2	RING
3	73154532	2	SEAL
4	70653828	2	RING
5	73134354	3	SHIM
5	73134353	13	SHIM
5	73134352	3	SHIM
6	75239787	2	COVER
7	70634440	2	SLEEVE
8	70634519	2	LIP SEAL
9	70927475	16	SCREW
10	70052519	2	STEEL WIRE
11	70928178	16	WASHER
12	75213499	2	CASE ASS'Y - for fg85a
12	73134357	2	CASE ASS'Y - for fg85r
13	75213805	2	SLEEVE
14	73129486	2	BEARING
15	70921068	24	SCREW
16	70901666	4	PLUG
17	70928358	24	WASHER
18	73021062	2	BREATHER
19	70902071	2	FITTING
20	73148827	1	PINION
21	70911076	2	FITTING
22	73127756	2	SHIM
22	73127757	3	SHIM
22	73127758	5	SHIM
23	70925482	2	O'RING
24	75213501	2	SEAL
25	70066751	1	COVER
26	70604982	1	KEY
27	73148957	1	SPACER
28	70683926	2	BEARING
29	75237123	2	REAR AXLE (1)
29	75237122	2	REAR AXLE (2)
30	70912441	12	LOCKWASHER
31	70920585	12	SCREW
32	73124840	1	COVER
33	70605085	7	SHIM
33	70065042	7	SHIM
33	70673189	5	SHIM
34	73125860	2	BEARING
35	70677828	1	BEVEL GEAR SET

Ref	Numero de Pieza	Ctd	Descripción
36	73133081	2	O'RING
37	75239644	2	RING

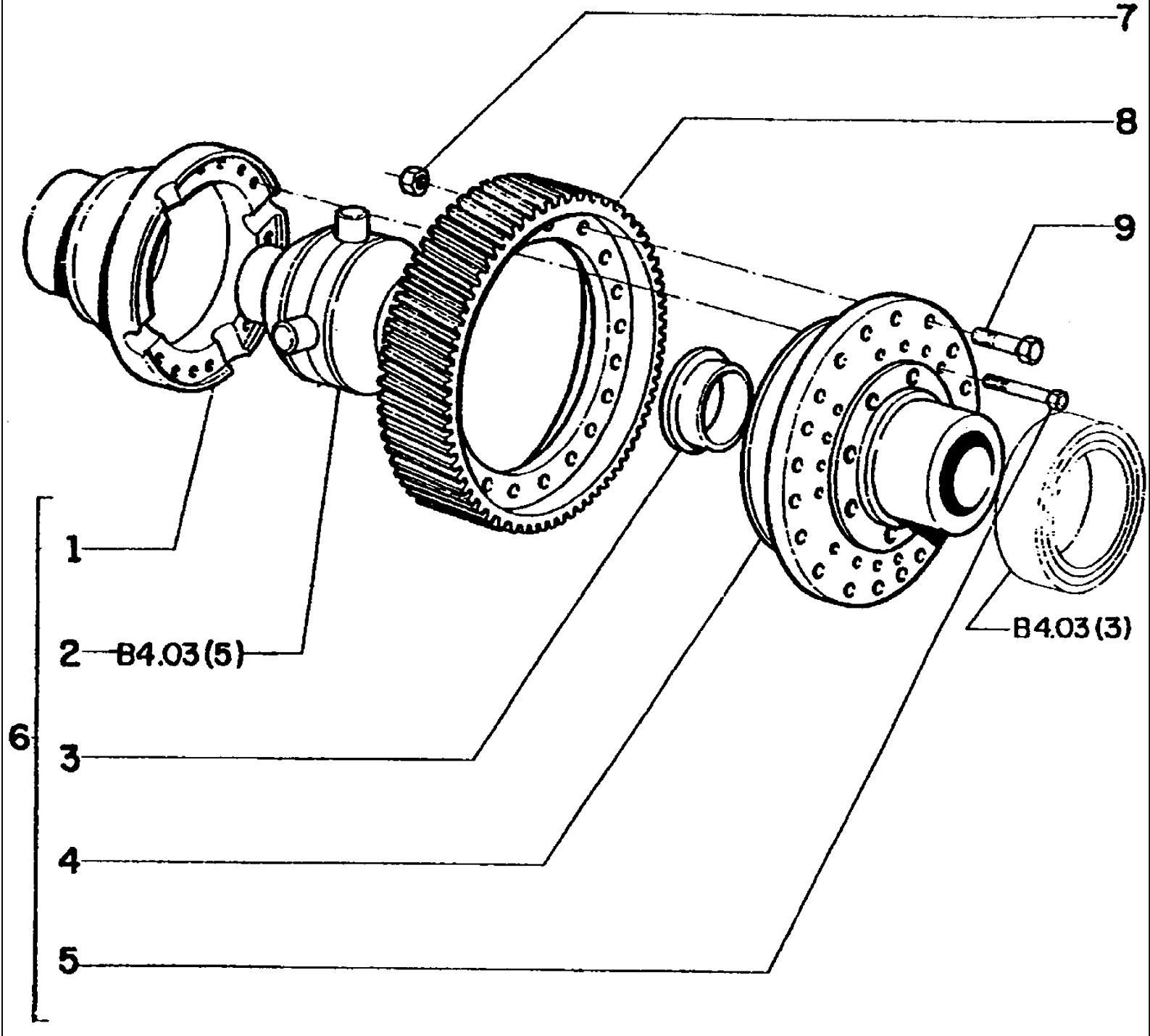
7
8
9
1
2
B4.03(5)
3
4
5
6
B4.03(3)

FG85 SERIES B MOTORGRADER

B4.03(004) REAR AXLE

Ref	Numero de Pieza	Ctd	Descripción
1	73148825	1	HALF CASE
2	73064172	1	DIFFERENTIAL
3	75214347	2	BUSHING
4	73148826	1	HALF CASE
5	73148883	16	SCREW
6	73148824	1	DIFFERENTIAL
7	70916170	20	NUT
8	73148831	1	RING GEAR
9	70922789	20	SCREW

B4.03(004A) DIFFERENTIAL ASSEMBLYFOR FG85A EFF S/N 221+196+204+205+212+215, EXCEPT 226,227,228. FOR FG105A EF

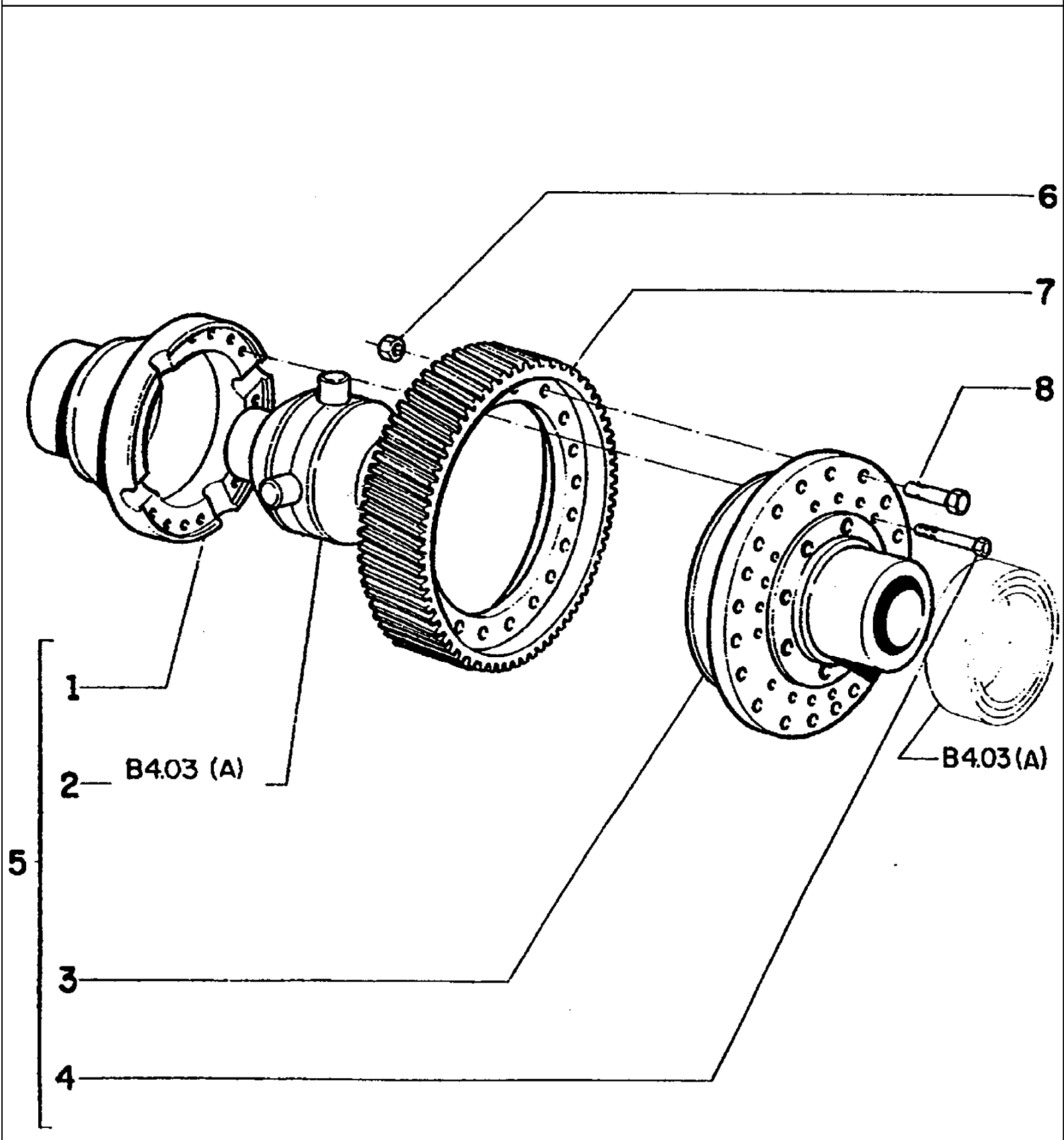

FG85 SERIES B MOTORGRADER

B4.03(004A) DIFFERENTIAL ASSEMBLYFOR FG85A EFF S/N 221+196+204+205+212+215, EXCEPT 226,227,228. FOR FG105A EF

Ref	Numero de Pieza	Ctd	Descripción
1	75239311	1	HALF CASE
2	73064172	1	DIFFERENTIAL
3	75239312	1	HALF CASE
4	73148883	16	SCREW
5	75239309	1	DIFFERENTIAL
6	70916170	20	NUT
7	73148831	1	RING GEAR
8	70922789	20	SCREW

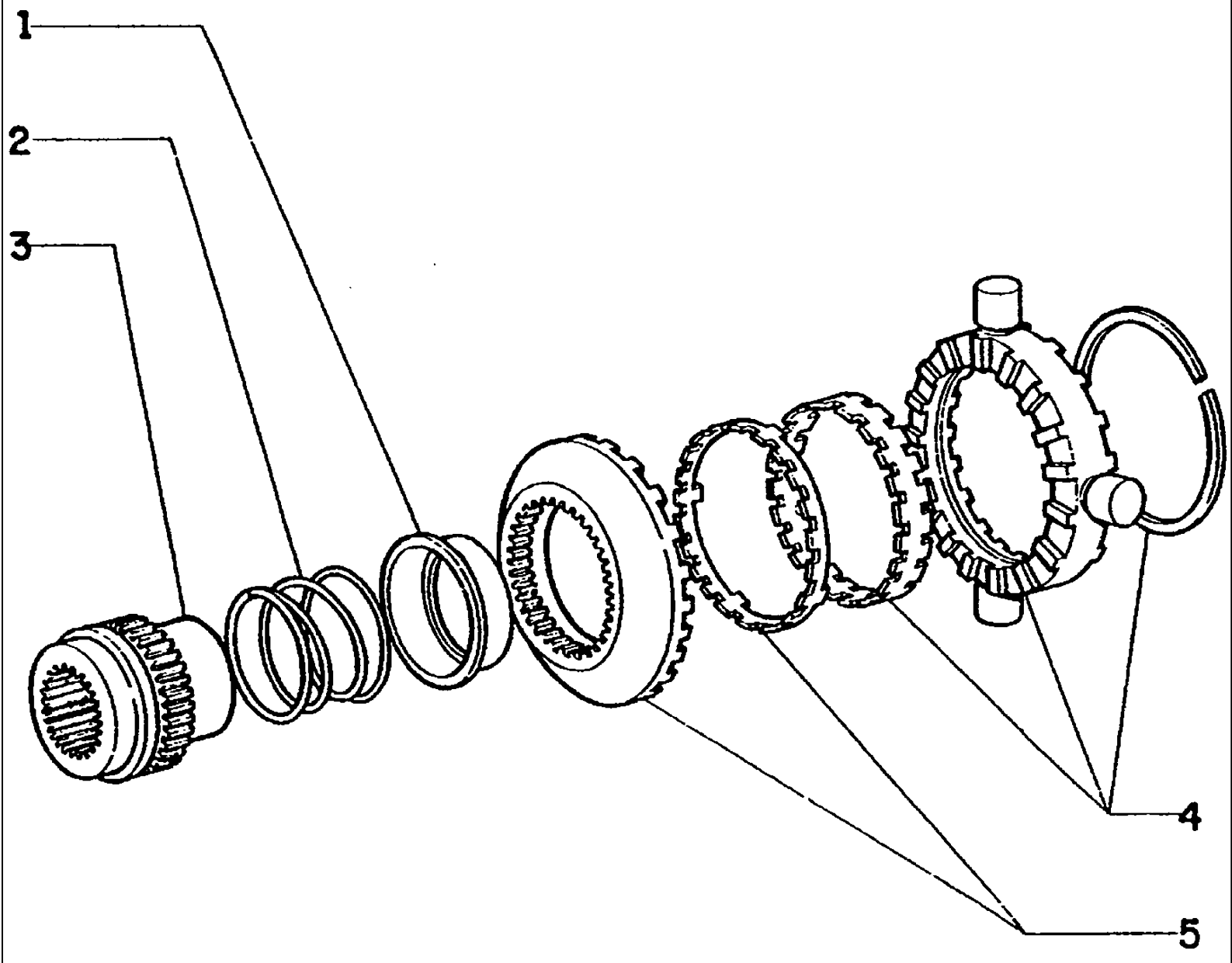
1
2
3
4
5

FG85 SERIES B MOTORGRADER

B4.03(005) REAR AXLE

Ref	Numero de Pieza	Ctd	Descripción
1	73064174	2	SEAL
2	73064173	2	SPRING
3	73064175	2	GEAR
4	73060186	1	SPIDER
5	73063594	2	CLUTCH

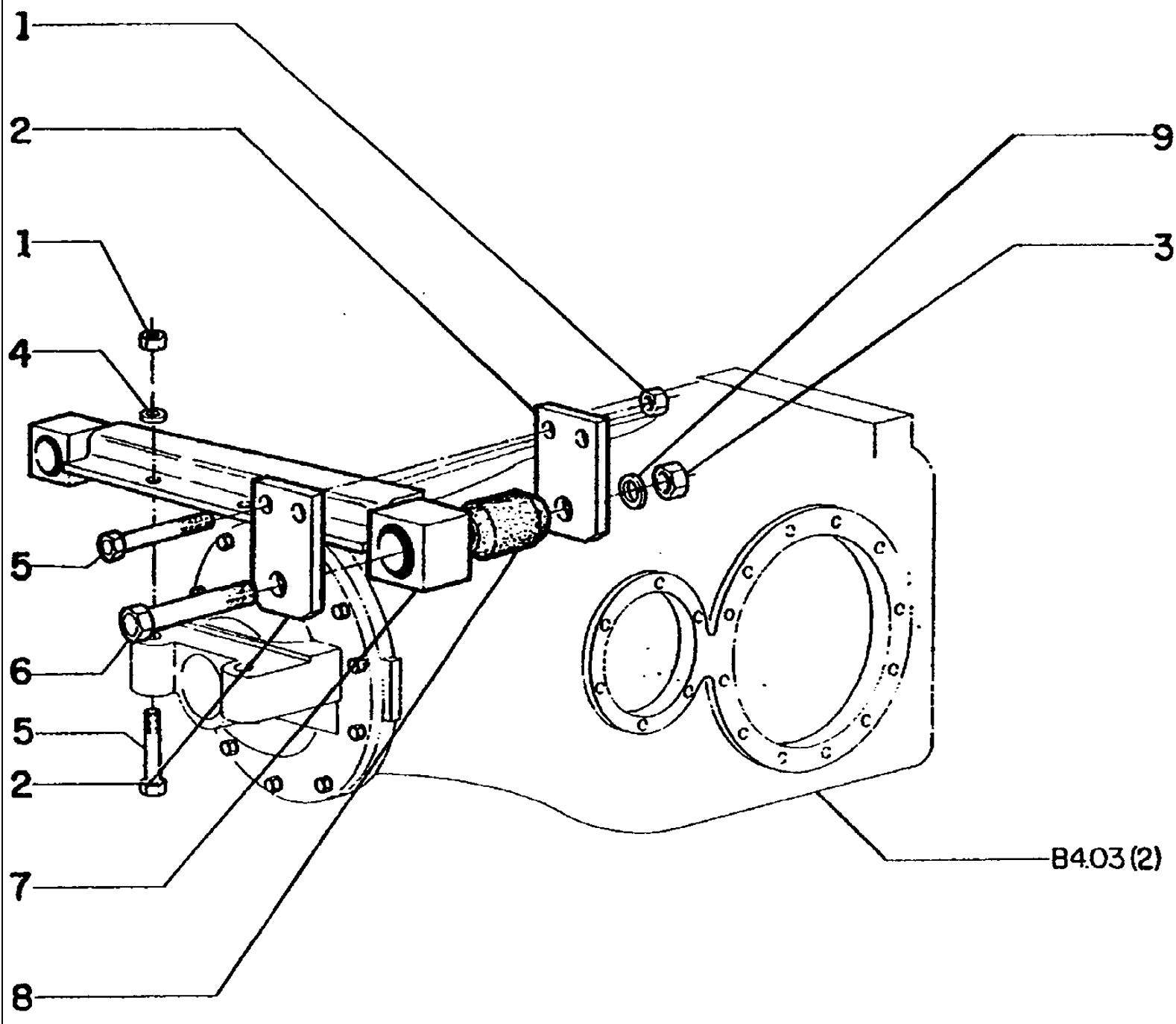
1
2
1
4
5
6
5
2
7
8
9
3
B4.03 (2)

FG85 SERIES B MOTORGRADER

B4.03(006) REAR AXLE SUPPORT

Ref	Numero de Pieza	Ctd	Descripción
1	70911030	6	NUT
2	70688590	4	PLATE
3	70913820	2	NUT
4	70677012	2	WASHER
5	70929971	6	SCREW
6	70928175	2	SCREW
7	73149087	1	SUPPORT
8	70670189	2	CUSHION
9	70914730	2	LOCKWASHER

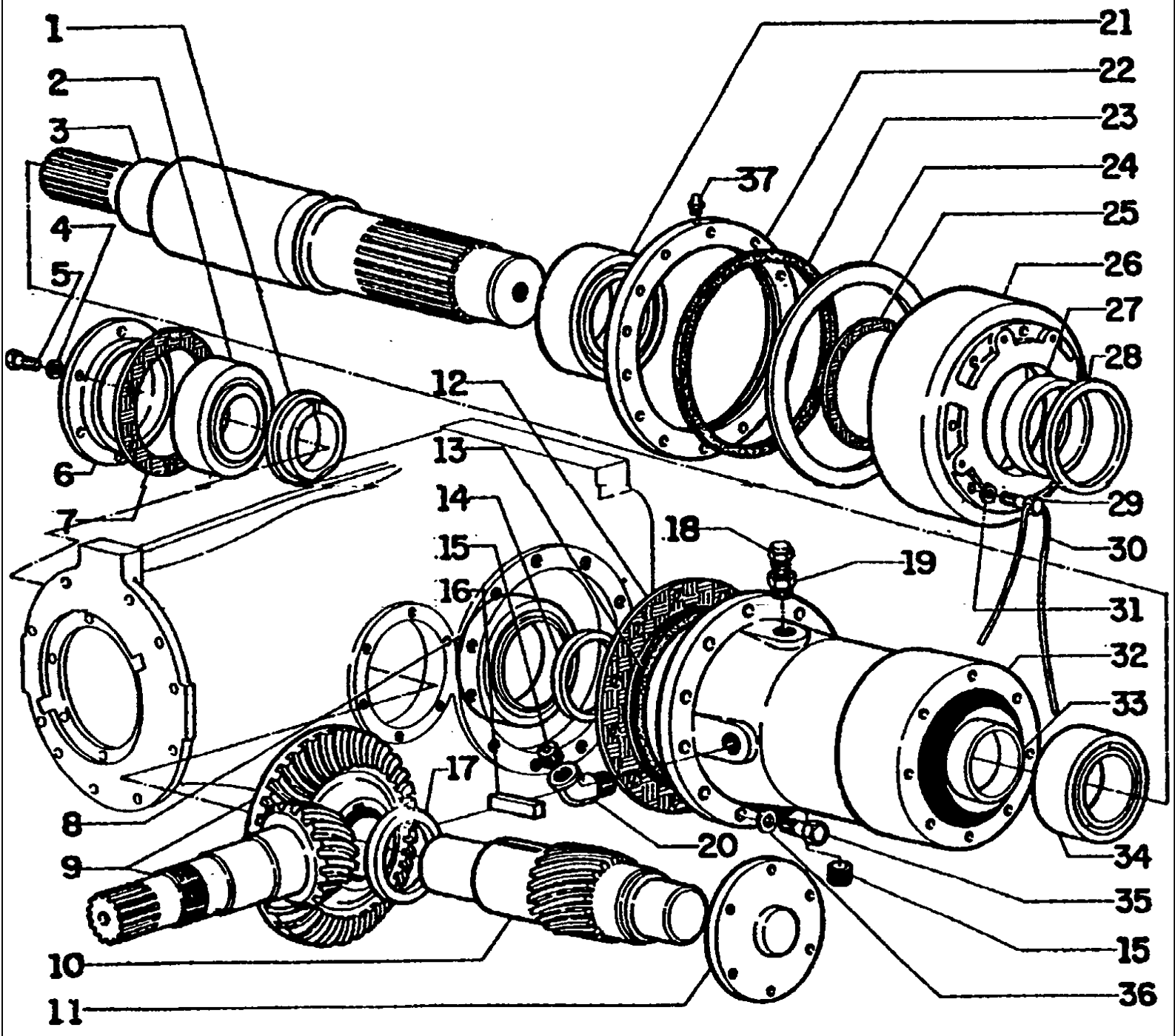
1
2
3
4
5
6
7
8
9
10
11
12
13
14
15
16
17
18
19
20
21
22
23
24
25
26
27
28
29
30
31
32
33
34
35
15
36
37

FG85 SERIES B MOTORGRADER

B4.03/1(003) REAR AXLE

Ref	Numero de Pieza	Ctd	Descripción
1	75221979	1	SPACER
2	70683926	2	BEARING
3	75237123	2	REAR AXLE - for fg105a
3	75237122	2	REAR AXLE - for fg105r.
4	70912441	12	LOCKWASHER
5	70920585	12	SCREW
6	70066751	1	COVER
7	70605085	7	SHIM
7	70065042	7	SHIM
7	70673189	5	SHIM
8	73125860	2	BEARING
9	70677828	1	BEVEL GEAR SET
10	73148827	1	PINION
11	73124840	1	COVER
12	73127756	2	SHIM
12	73127757	3	SHIM
12	73127758	5	SHIM
13	70925482	2	O'RING
14	75213501	2	SEAL
15	70901666	4	PLUG
16	70604982	1	KEY
17	75221978	1	SPACER
18	73121062	2	BREATHER
19	70902071	2	FITTING
20	70911076	2	FITTING
21	73133298	2	BEARING
22	70653837	2	RING
23	73145398	2	SEAL
24	70653828	2	RING
25	73134354	3	SHIM
25	73134353	13	SHIM
25	73134352	3	SHIM
26	73134355	2	COVER
27	70634440	2	SLEEVE
28	70634519	2	LIP SEAL
29	70927475	16	SCREW
30	70052519	2	STEEL WIRE
31	70928178	16	WASHER
32	75213499	2	CASE(I)
32	73134357	2	CASE(2)
33	75213805	2	SLEEVE
34	73129486	2	BEARING
35	70921068	24	SCREW

Ref	Numero de Pieza	Ctd	Descripción
36	70928358	24	WASHER
37	70914465	2	GREASE FITTING

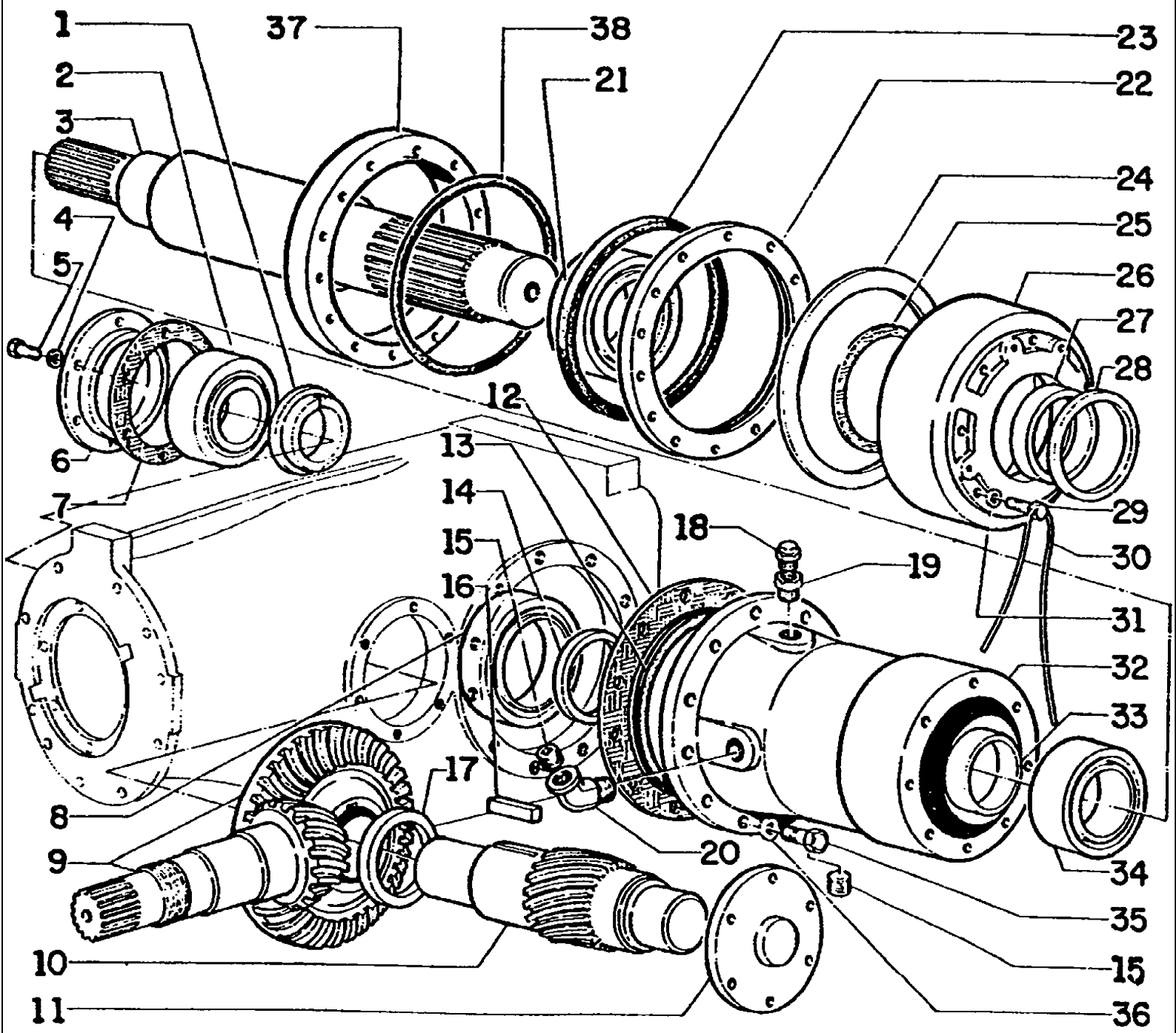
1
2
3
4
5
6
7
8
9
10
11
37
38
21
23
22
24
25
26
27
28
29
30
31
32
33
34
35
15
36
12
13
14
15
16
17
18
19
20

FG85 SERIES B MOTORGRADER

B4.03/1(003A) REAR AXLE

Ref	Numero de Pieza	Ctd	Descripción
1	75221979	1	SPACER
2	70683926	2	BEARING
3	75237123	2	REAR AXLE - for fg85a
3	75237122	2	REAR AXLE - for fg85r.
4	70912441	12	LOCKWASHER
5	70920585	12	SCREW
6	70066751	1	COVER
7	70605085	7	SHIM
7	70065042	7	SHIM
7	70672189	5	SHIM
8	73125860	2	BEARING
9	70677828	1	BEVEL GEAR SET
10	73148827	1	PINION
11	73124840	1	COVER
12	73127756	2	SHIM
12	73127757	3	SHIM
12	73127758	5	SHIM
13	70925482	2	O'RING
14	75213501	2	SEAL
15	70901666	4	PLUG
16	70604982	1	KEY
17	75221978	1	SPACER
18	73121062	2	BREATHER
19	70902071	2	FITTING
20	70911076	2	FITTING
21	73133298	2	BEARING
22	73154534	2	RING
23	73154532	2	SEAL
24	70653828	2	RING
25	73134354	3	SHIM
25	73134353	13	SHIM
25	73134352	3	SHIM
26	75239787	2	COVER
27	70634440	2	SLEEVE
28	70634519	2	LIP SEAL
29	70927475	16	SCREW
30	70052519	2	STEEL WIRE
31	70928178	16	WASHER
32	75213499	2	CASE ASS'Y (1)
32	73134357	2	CASE ASS'Y (2)
33	75213805	2	SLEEVE
34	73129486	2	BEARING
35	70921068	24	SCREW

Ref	Numero de Pieza	Ctd	Descripción
36	70928358	24	WASHER
37	75239644	2	RING
38	73133081	2	O'RING

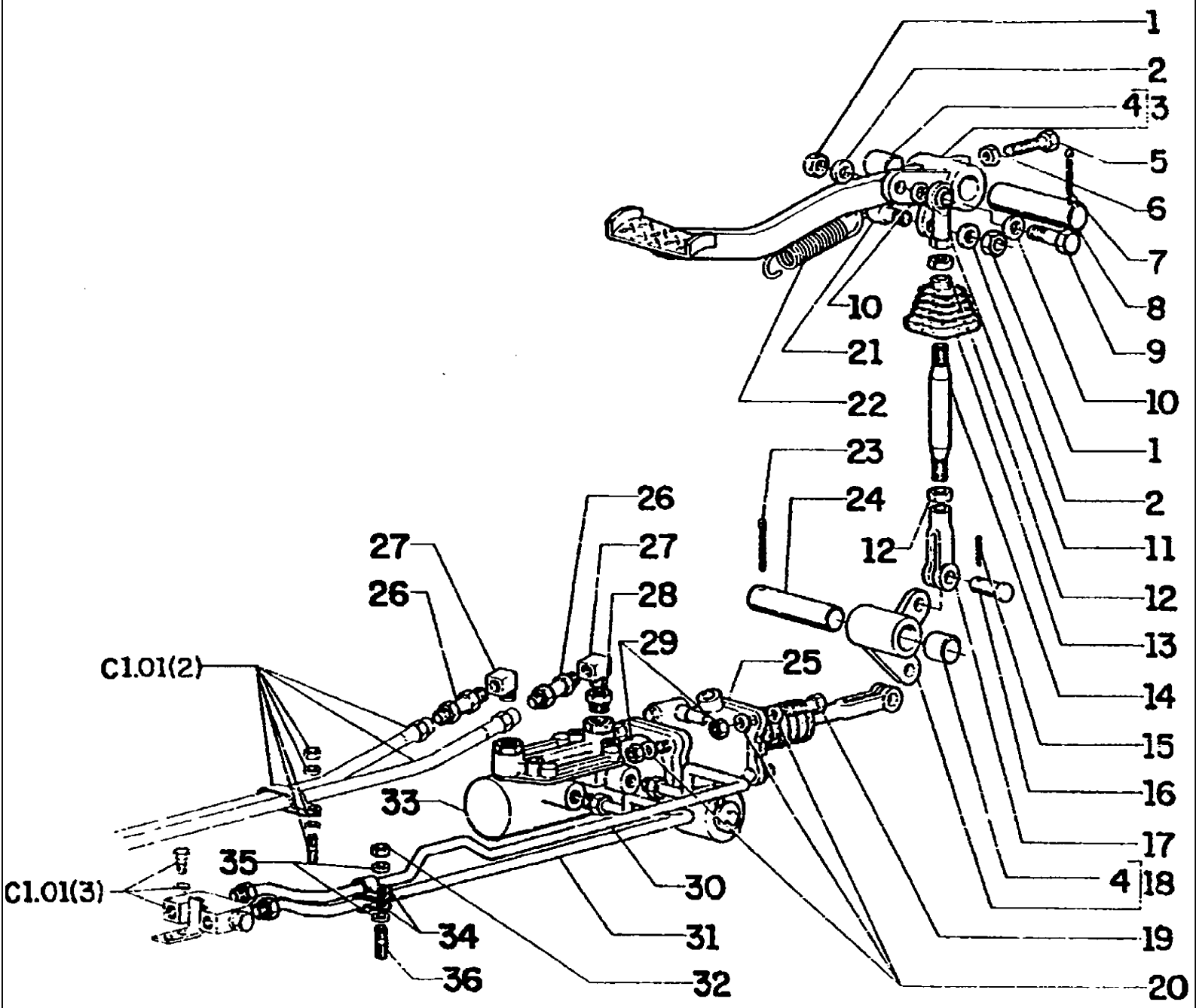
1
2
4
3
5
6
7
8
9
10
10
21
22
23
24
12
1
2
11
12
13
14
15
16
17
4
18
19
20
26
27
27
26
28
29
25
C1.01(2)
33
35
C1.01(3)
30
31
34
36
32

FG85 SERIES B MOTORGRADER

C1.01(001) BRAKE CONTROL

Ref	Numero de Pieza	Ctd	Descripción
1	70911028	2	NUT
2	70912441	2	LOCKWASHER
3	73153729	1	PEDAL
4	73125303	4	BUSHING
5	70929155	1	SCREW
6	70910510	1	NUT
8	73153727	1	SHAFT
9	70921598	1	SCREW
10	70677008	2	WASHER
11	70638732	1	END
12	70913177	2	NUT
13	75214658	1	SEAL
14	75221528	1	TIEROD
15	70900805	2	Pin, Split (Cotter), 1/8" x 3/4"
16	70049993	2	PIN
17	70917666	1	YOKE
18	75221529	1	BELL CRANCK
19	70922287	2	SCREW
20	70929156	10	WASHER
21	75213668	2	PIN
22	70051193	1	SPRING
23	70904007	1	COTTER PIN
24	75221536	1	SHAFT
25	73154544	1	BRAKE-BOOSTER
26	75213914	2	FITTING
27	70913704	2	ELBOW
28	70901838	2	PLUG
29	70916950	8	NUT
30	75221552	1	TUBE
31	75221551	1	TUBE
32	70911034	1	NUT
33	73154545	1	MASTER CYLINDER
7	70910024	1	Pin, Split (Cotter), 3/16" x 2 1/2"
34	70928654	2	CLAMP
35	70915815	2	WASHER
36	70687145	1	STUD

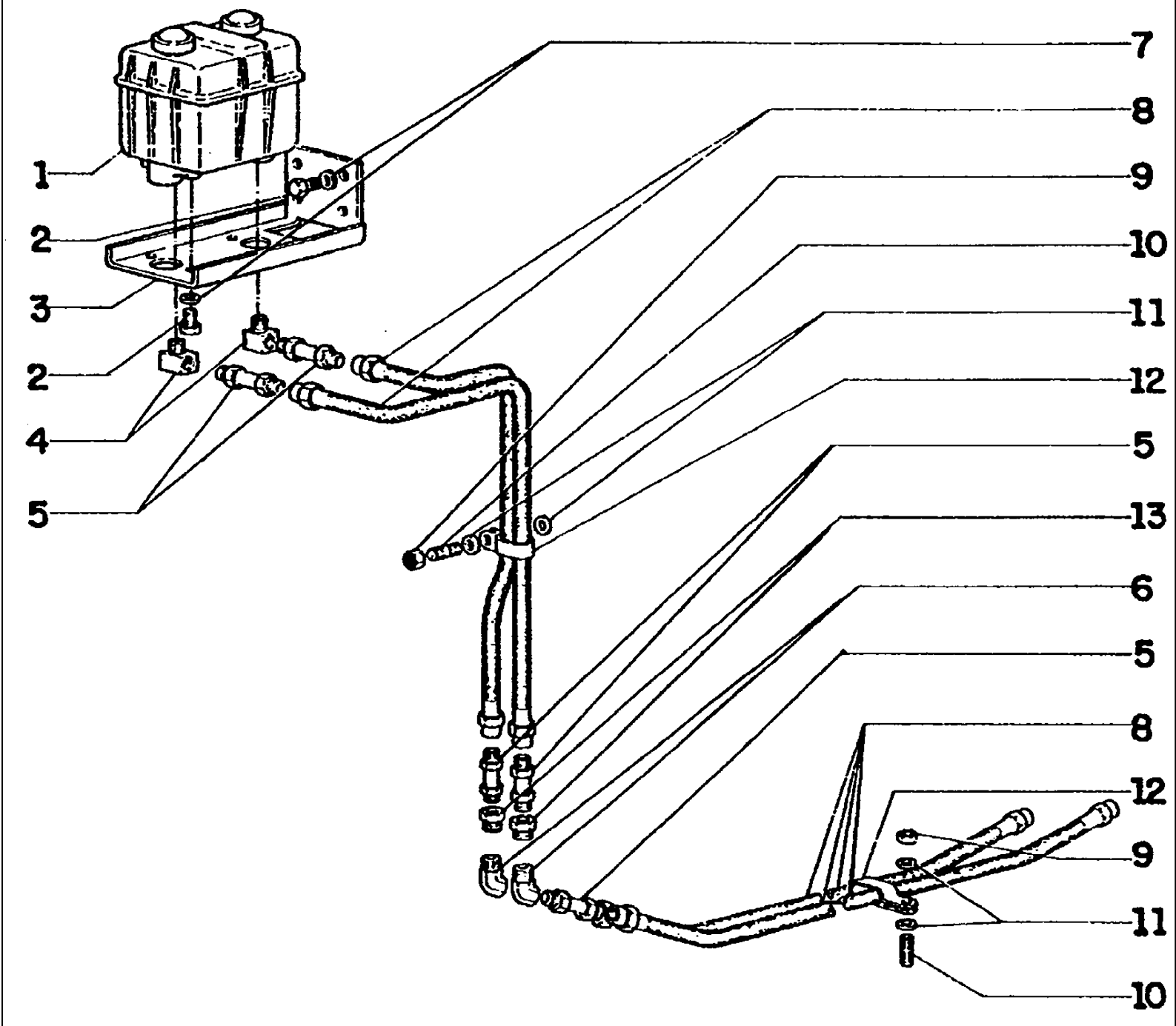
1
2
3
2
4
5
7
8
9
10
11
12
5
13
6
5
8
12
9
11
10

FG85 SERIES B MOTORGRADER

C1.01(002) BRAKE CONTROL

Ref	Numero de Pieza	Ctd	Descripción
1	73154546	1	TANK
2	70922925	8	SCREW
3	75221547	1	SUPPORT
4	70913704	2	ELBOW
5	75213914	2	FITTING
6	70917418	2	ELBOW
7	70929662	8	WASHER
8	75221548	4	HOSE ASSY
9	70911034	4	NUT
10	70687145	4	STUD
11	70915815	8	WASHER
12	70932619	4	CLAMP
13	70914646	2	FITTING

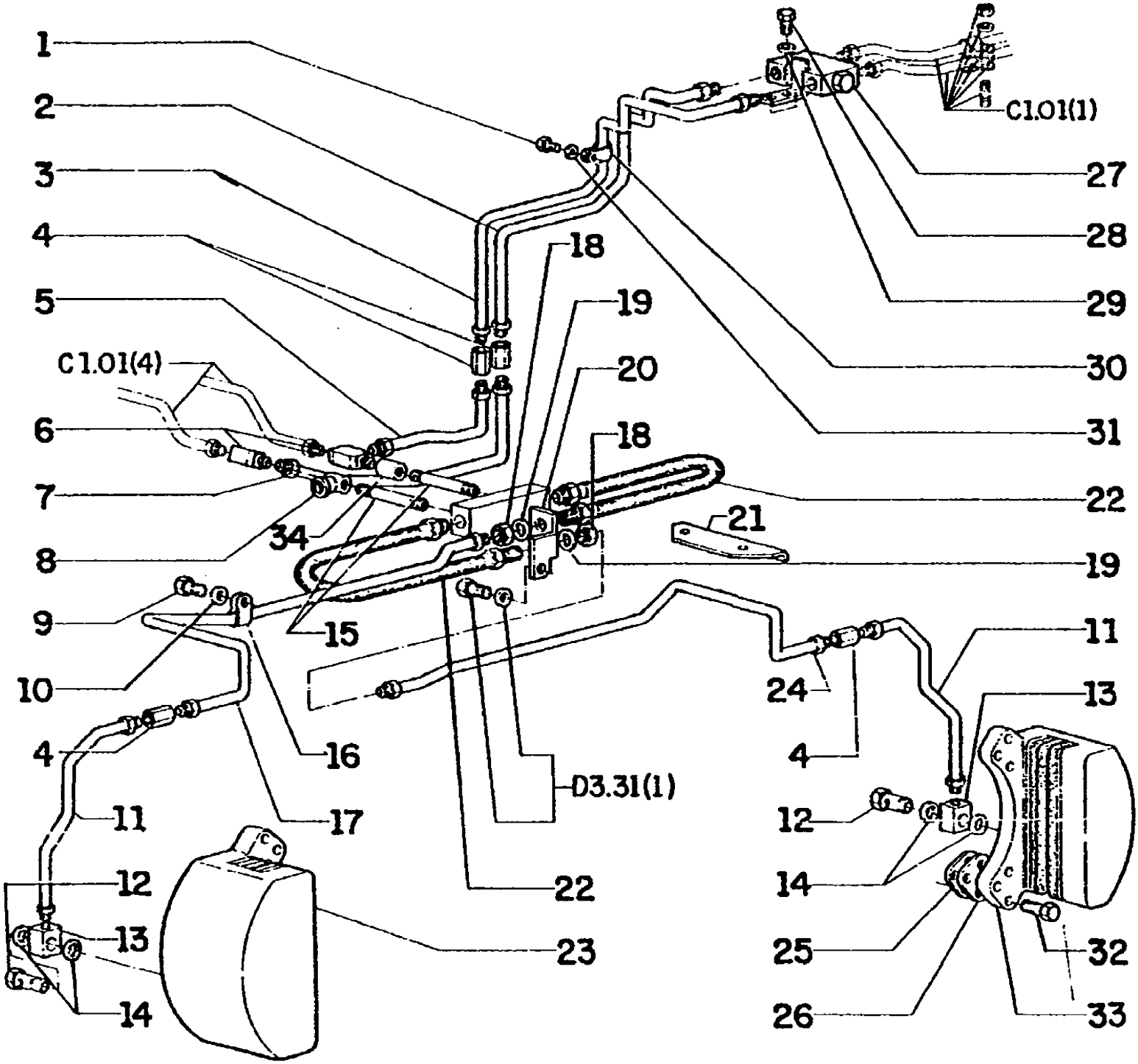
1
2
3
4
5
C1.01(4)
6
7
8
9
10
4
11
12
13
14
C1.01(1)
27
28
29
30
31
18
19
20
18
22
21
19
34
15
16
17
D3.31(1)
22
23
11
24
13
4
12
14
25
26
32
33

FG85 SERIES B MOTORGRADER

C1.01(003) WHEEL BRAKE

Ref	Numero de Pieza	Ctd	Descripción
1	70927400	2	SCREW
2	75221812	1	TUBE
3	75221555	1	TUBE
4	73124486	4	CONNECTION
5	75221814	1	TUBE
6	70917593	2	FITTING
7	75221816	1	TUBE
8	70901702	1	FITTING
9	70922300	2	SCREW
10	70630753	2	WASHER
11	75221828	2	TUBE
12	75213416	2	SCREW
13	75213410	2	CONNECTION
14	10266860	4	WASHER, SEALING, M13.2 x 18 x 1.5, Copper
15	70062035	2	CONNECTOR
16	70640677	4	CLAMP
17	75221560	1	TUBE
18	70911049	2	NUT
19	70910543	2	WASHER
20	75221821	1	SUPPORT
21	70604769	4	GUARD
22	70600675	2	HOSE ASSY
23	75221846	1	BRAKE
24	75221557	1	TUBE
25	75221867	6	SHIM
26	75221868	6	SHIM
27	73134431	1	VALVE
28	70927541	1	SCREW
29	70677004	1	WASHER
30	70928654	2	CLAMP
31	70915815	2	WASHER
32	75221849	12	SCREW
33	75221847	1	BRAKE
34	70901763	1	SLEEVE

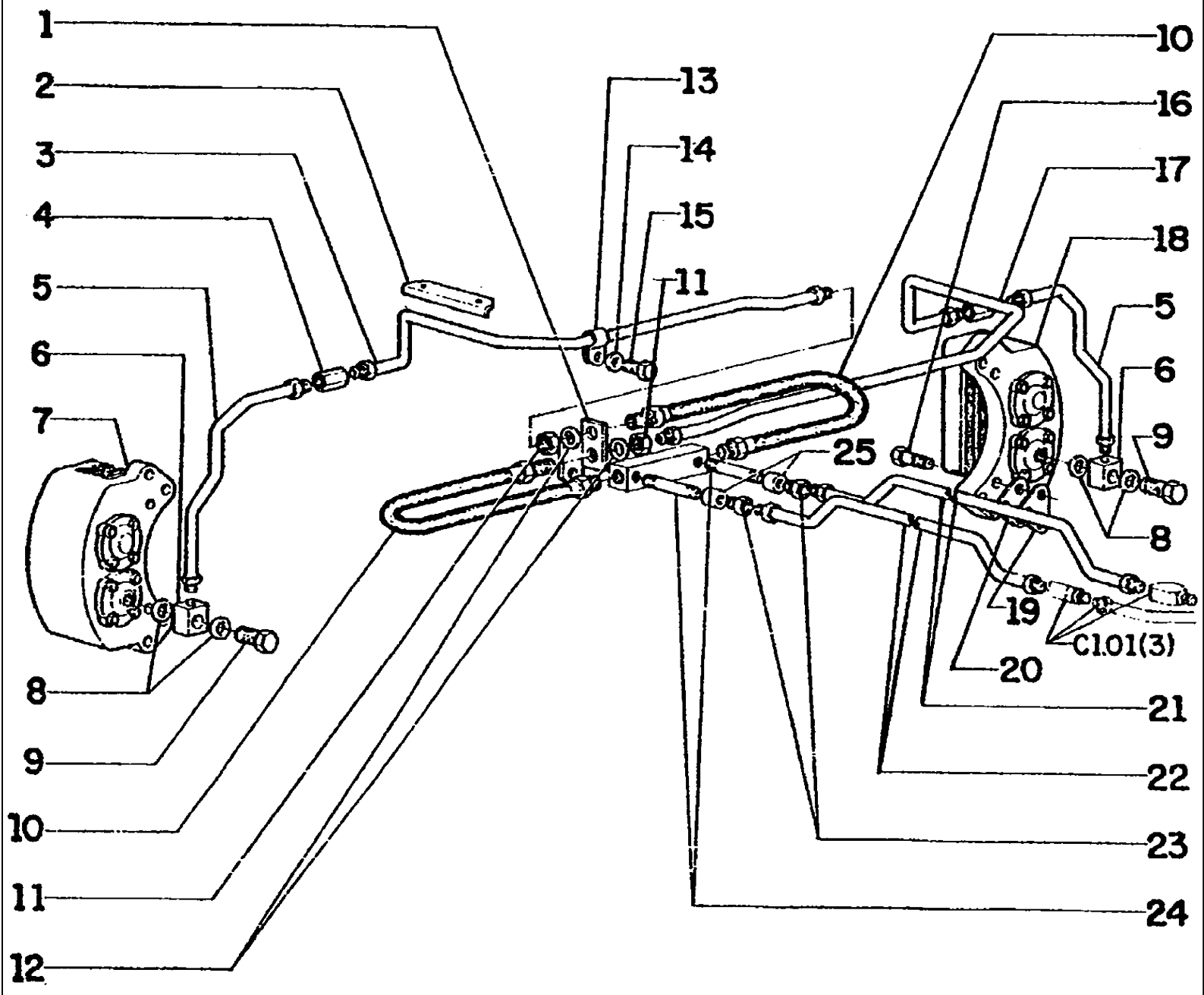
1
2
3
4
5
6
7
8
9
10
11
12
13
14
15
11
25
10
16
17
18
5
6
9
8
19
C1.01(3)
20
21
22
23
24

FG85 SERIES B MOTORGRADER

C1.01(004) WHEEL BRAKE

Ref	Numero de Pieza	Ctd	Descripción
1	75221822	1	SUPPORT
2	70604769	2	GUARD
3	75221559	1	TUBE
4	73124486	2	CONNECTION
5	75221828	2	TUBE
6	75213410	2	CONNECTION
7	75221847	1	BRAKE
8	10266860	4	WASHER, SEALING, M13.2 x 18 x 1.5, Copper
9	75213416	2	SCREW
10	70600675	2	HOSE ASSY
11	70911049	2	NUT
12	70910543	2	WASHER
13	70640677	4	CLAMP
14	70630753	4	WASHER
15	70922300	4	SCREW
16	75221849	12	SCREW
17	75221558	1	TUBE
18	75221846	1	BRAKE
19	75221868	6	SHIM
20	75221867	6	SHIM
21	75221820	1	TUBE
22	75221818	1	TUBE
23	70914646	2	FITTING
24	70062035	2	CONNECTOR
25	70901763	2	SLEEVE

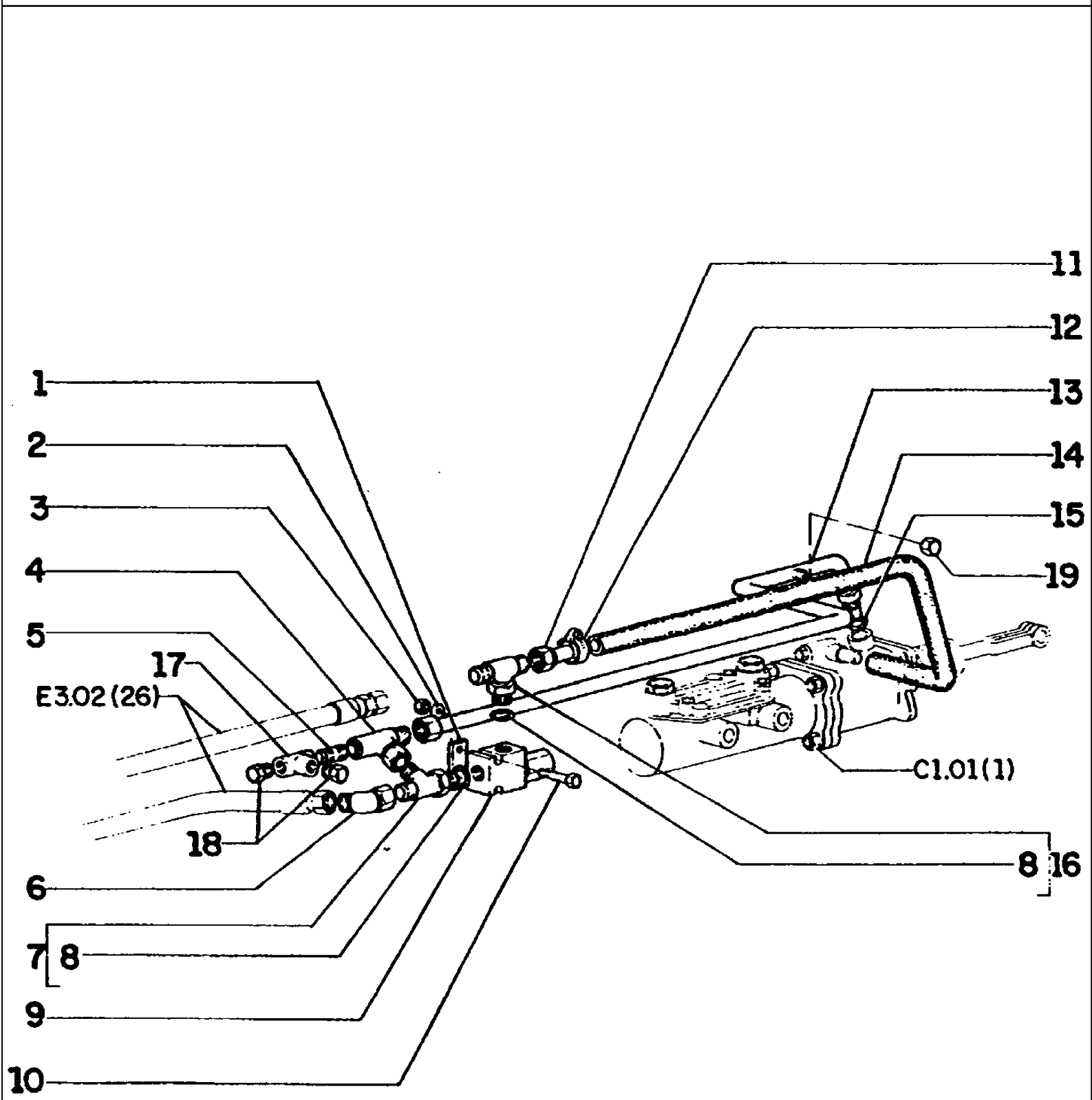
11
12
1
13
2
14
3
15
4
19
5
17
E3.02 (26)
C1.01(1)
18
8
16
6
7
8
9
10

FG85 SERIES B MOTORGRADER

C1.01(005) BRAKE HYDRAULIC SYSTEM

Ref	Numero de Pieza	Ctd	Descripción
1	73127633	1	PLATE
2	70928190	2	WASHER
3	70920329	2	NUT
4	75238361	1	FITTING
5	70916634	1	CAP
6	70925018	1	FITTING
7	70922792	1	FITTING
8	70921349	2	O-Ring, 8-1, 90 Duro, .644" ID x .087" Thk
9	75222439	1	VALVE
10	70934150	2	SCREW
11	70920807	1	FITTING
12	70925755	2	CLAMP
13	75221540	1	TUBE
14	75221541	1	HOSE
15	14453081	1	O'RING
16	70923157	1	FITTING
17	70901702	1	FITTING
18	70919134	2	PIN
19	70921467	1	CAP

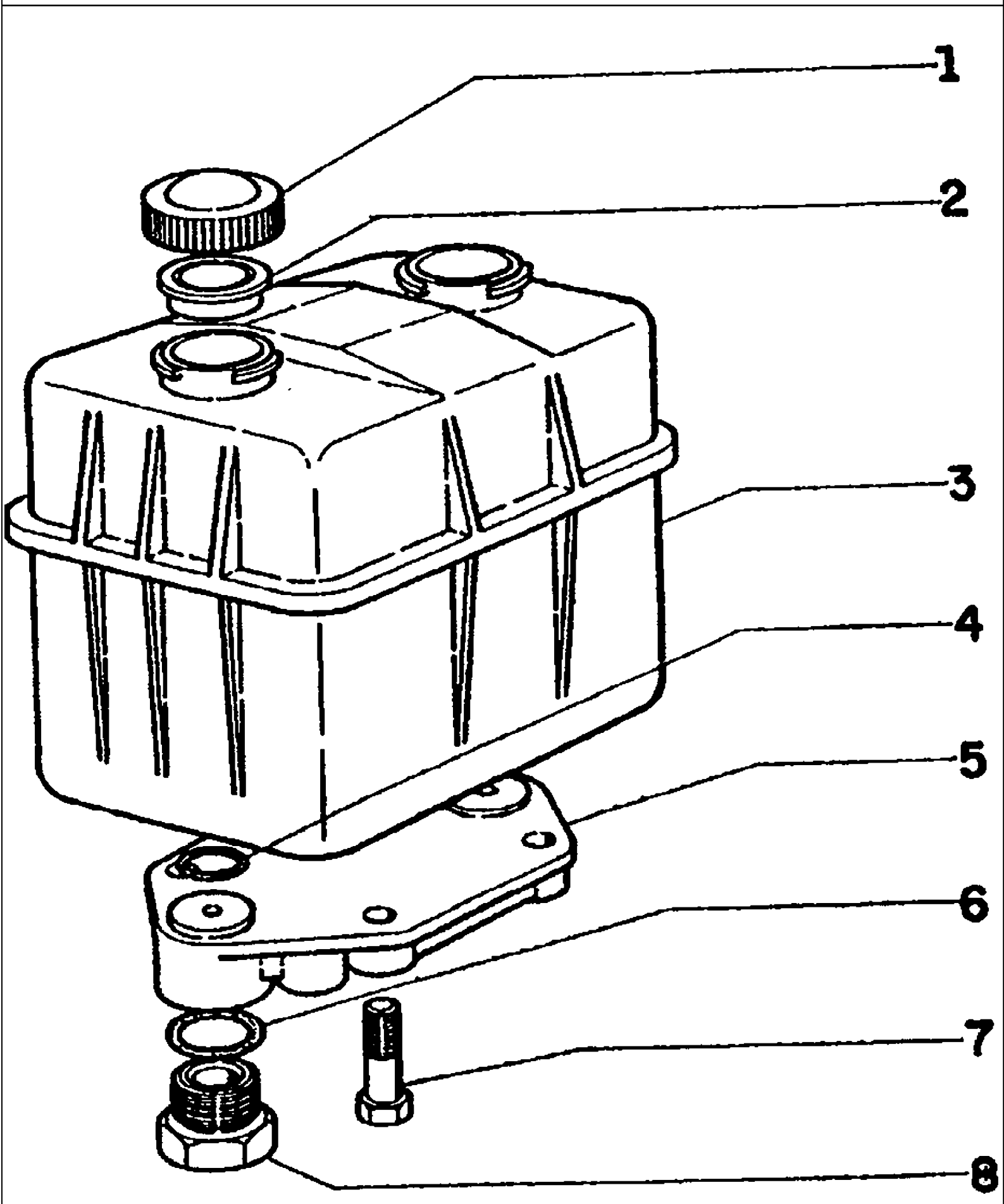
1
2
3
4
5
6
7
8

FG85 SERIES B MOTORGRADER

C1.08(001) BRAKE FLUID TANK

Ref	Numero de Pieza	Ctd	Descripción
1	75285864	2	COVER
2	75285863	2	COVER
3	75221946	1	BODY
4	75285868	2	O'RING
5	75221947	1	SUPPORT
6	75285867	2	O'RING
7	75285865	4	SCREW
8	75285866	2	FITTING

C1.08(002) BRAKE MASTER CYLINDER (73154545)

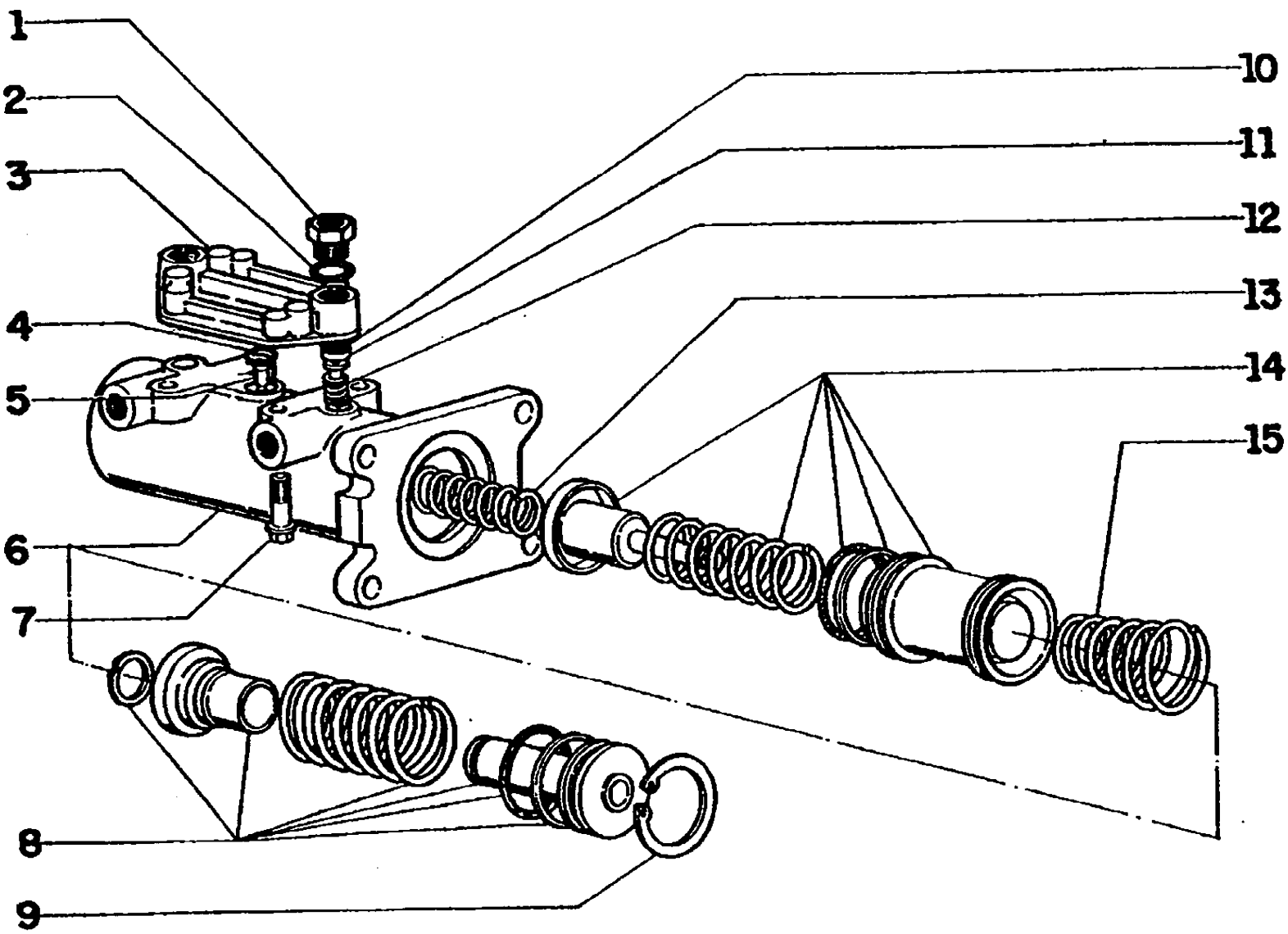

FG85 SERIES B MOTORGRADER

C1.08(002) BRAKE MASTER CYLINDER (73154545)

Ref	Numero de Pieza	Ctd	Descripción
1	75285918	2	FITTING
2	75285917	2	O'RING
3	75285919	1	COVER
4	75285916	1	O'RING
5	75285915	1	PIN
6	75285913	1	BODY
7	75285914	4	SCREW
8	75285921	1	PISTON
9	75285920	1	RING
10	75285927	2	O'RING
11	75285926	2	VALVE
12	75285925	2	SPRING
13	75285924	1	SPRING
14	75285922	1	PISTON
15	75285923	1	SPRING

C1.08(003) POWER BRAKE BOOSTER (73154544)

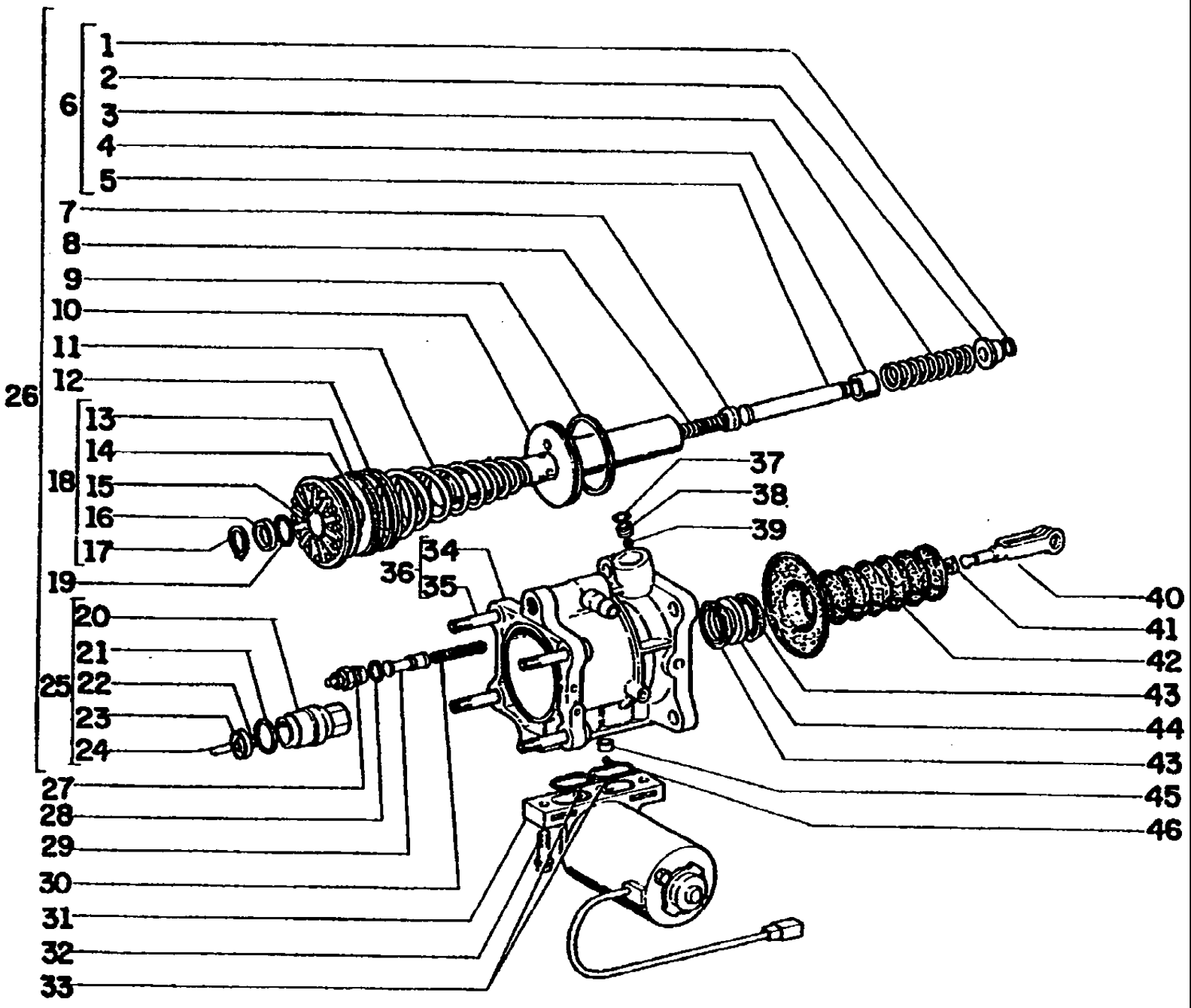

FG85 SERIES B MOTORGRADER

C1.08(003) POWER BRAKE BOOSTER (73154544)

Ref	Numero de Pieza	Ctd	Descripción
1	75285910	1	RING
2	75285909	1	CUP
3	75285908	1	SPRING
4	75285907	1	BUSHING
5	75285906	1	ROD
6	75285911	1	PLUNGER
7	75285905	1	CUP
8	75285904	1	SPRING
9	75285903	1	SEAL
10	75285902	1	PLUNGER
11	75285901	1	SPRING
12	75285900	2	0'RING
13	75285898	1	CUP
14	75285897	1	0'RING
15	75285896	1	COVER
16	75285894	1	RING
17	75285893	1	SNAP RING
18	75285899	1	COVER
19	75285895	1	O'RING
20	75285887	1	PLUG
21	75285890	1	0'RING
22	75285889	1	SEAL
23	75285891	1	SEAL
24	75285888	1	PIN
25	75285892	1	PLUG
26	75285912	1	PLUNGER
27	75285878	1	SWITCH
28	75285879	1	0'RING
29	75285880	1	PLUNGER
30	75285881	1	SPRING
31	75285872	1	PUMP
32	75285871	2	SCREW
33	75285870	2	0'RING
34	75285885	1	CASE
35	75285884	4	SCREW
36	75285886	1	CASE ASS'Y
37	75285928	1	O'RING
38	75285930	1	VALVE
39	75285929	1	BALL
40	75285875	1	ROD
41	75285876	1	RING
42	75285877	1	DUST BOOT
43	75285882	2	SEAL

C1.08(003) POWER BRAKE BOOSTER (73154544)

Ref	Numero de Pieza	Ctd	Descripción
44	75285883	1	RING
45	75285874	1	RING
46	75285873	1	BALL
47	73160641	1	KIT * includes 07,14,17,19,21,22,23,28,33,37,38,41,42,43,44
48	73160643	1	KIT **includes 31,33.
49	73160644	1	KIT ***includes 1thru 11, 14,17,18,19,21,22,24 thru 30,34 thru 44.

C1.18(001) BREAK HEAD ASSY

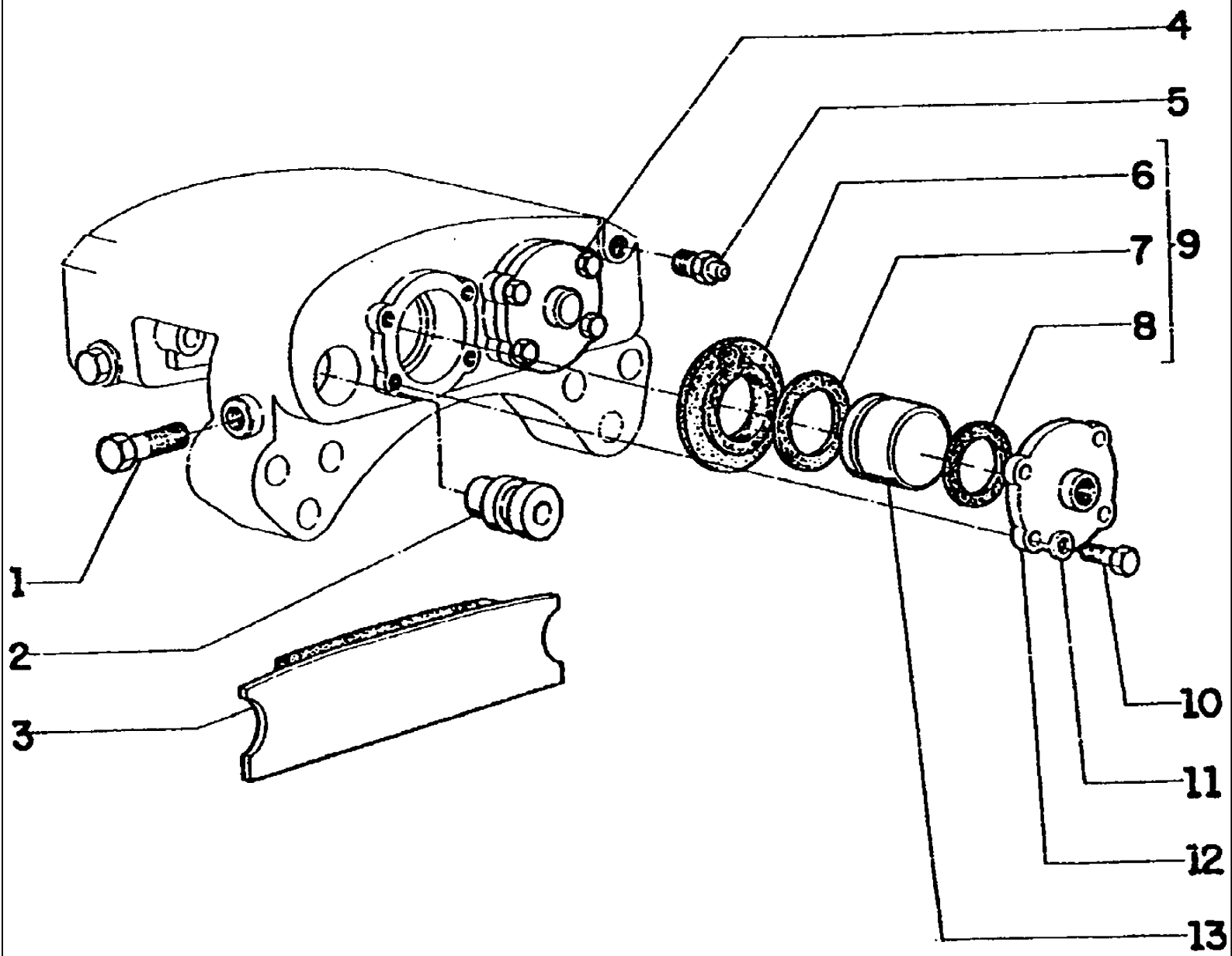

FG85 SERIES B MOTORGRADER

C1.18(001) BREAK HEAD ASSY

Ref	Numero de Pieza	Ctd	Descripción
1	70927212	16	SCREW
2	73110558	16	PIN
3	75285169	8	BRAKE LINING
4	73110564	4	COVER
5	73111046	4	VALVE
6	73068124	16	BOOT
7	73068125	16	O'RING
8	73068123	8	O'RING
9	73110563	4	KIT
10	70921076	32	SCREW
11	70911115	32	WASHER
12	73110565	4	COVER
13	73110566	16	PLUNGER

C1.19(001) BRAKE PUMP ASSEMBLY

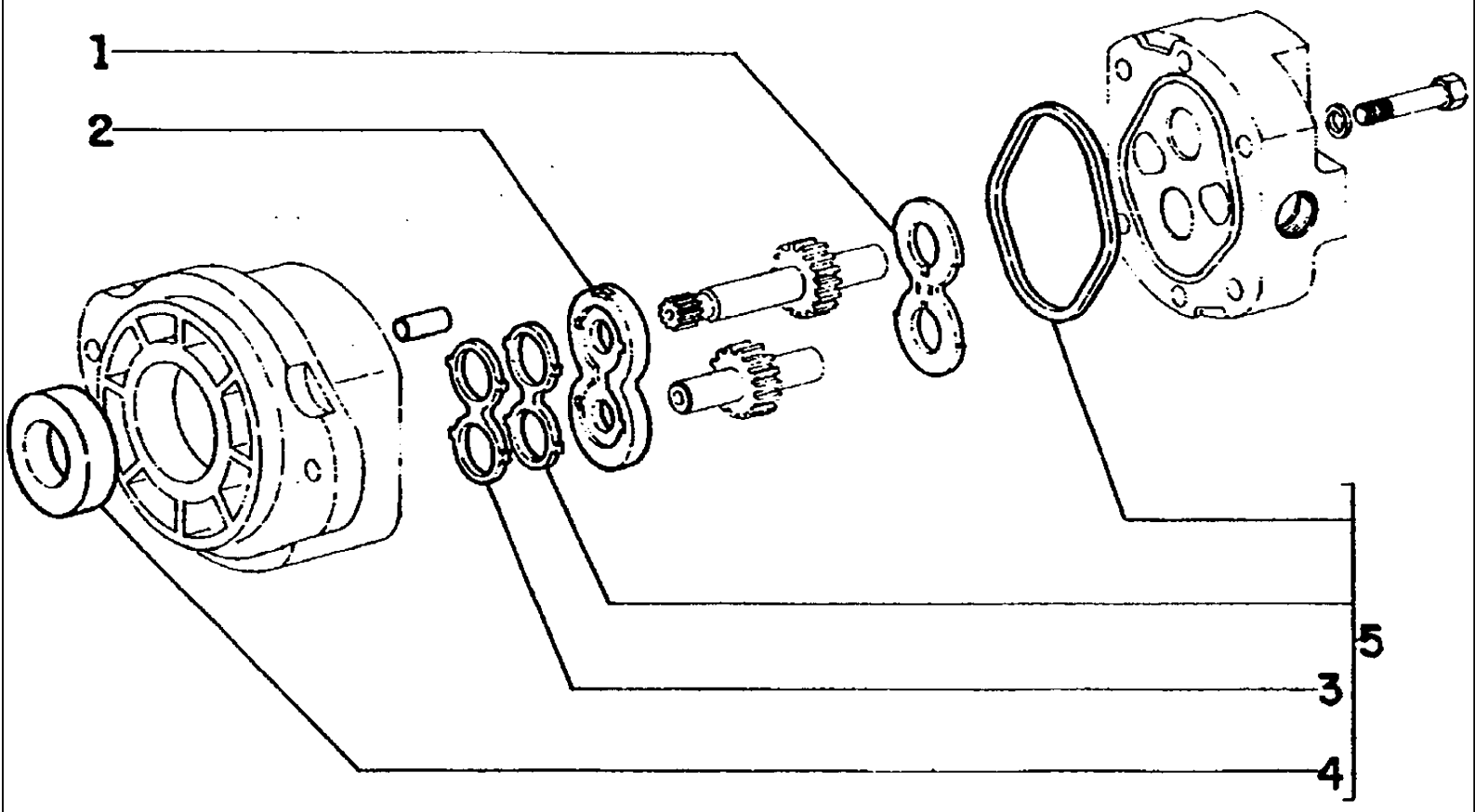

FG85 SERIES B MOTORGRADER

C1.19(001) BRAKE PUMP ASSEMBLY

Ref	Numero de Pieza	Ctd	Descripción
1	73155504	1	SUPPORT
2	73155505	1	SUPPORT
3	73155506	1	SPACER
4	73155507	1	SEAL
5	73155503	1	KIT

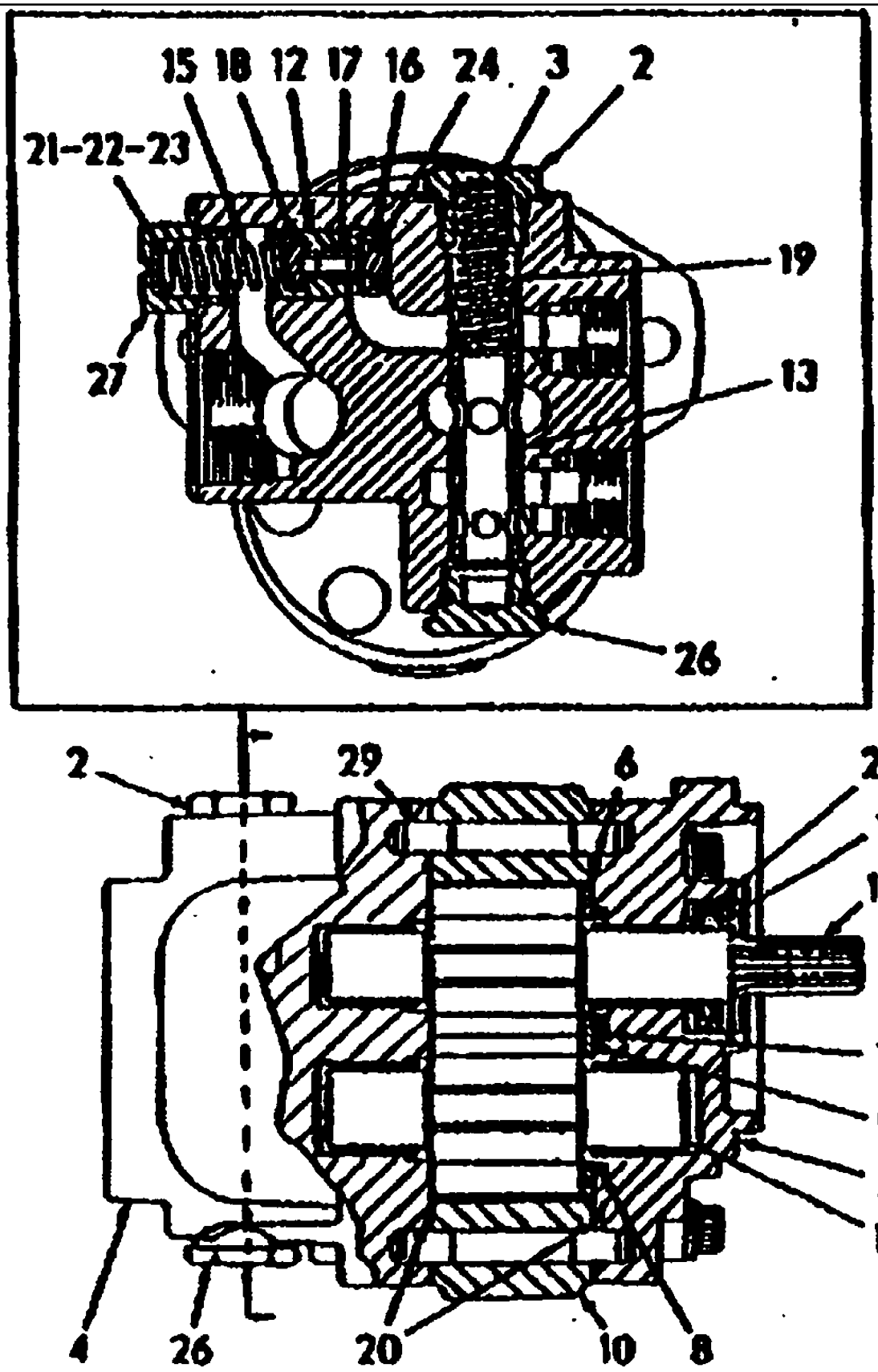
15
18
12
17
16
24
3
2
21-22-23
19
27
13
26
2
29
6
28
1
14
7
9
5
11
4
26
20
10
8

FG85 SERIES B MOTORGRADER

C1.19/1(001) BRAKE PUMP

Ref	Numero de Pieza	Ctd	Descripción
1	73157270	1	SEAL
2	73157271	1	PLUG
3	73157272	1	WASHER
4		1	PLATE
5	73157275	1	PLATE
6	73157273	1	PLATE
7	73157274	1	SEAL RING
8	73157276	1	RING
9	73157277	1	SEAL
10	73157278	1	CASE ASS'Y
11	73157279	1	GEAR
12		1	CARTRIDGE
13		1	CARTRIDGE
14	73157280	1	GEAR
15	73157281	1	SPRING
16		1	VALVE
17	73157282	1	SEAT
18	73157283	1	SEAT
19	73157284	1	SPRING
20	70926216	2	SEAL RING
21	73157285	1	WASHER
22	73157286	1	WASHER
23	73157287	1	WASHER
24		1	RING
29	70927422	8	SCREW
26	73157288	1	PLUG
27	73157368	1	PLUG
28	73157369	1	WASHER
29	73157372	1	DOWEL
30	73157370	1	KIT *includes 1,6-9,20,28
31	73157371	1	KIT **includes 2-4,12,13,15-19,21-24,26,27.

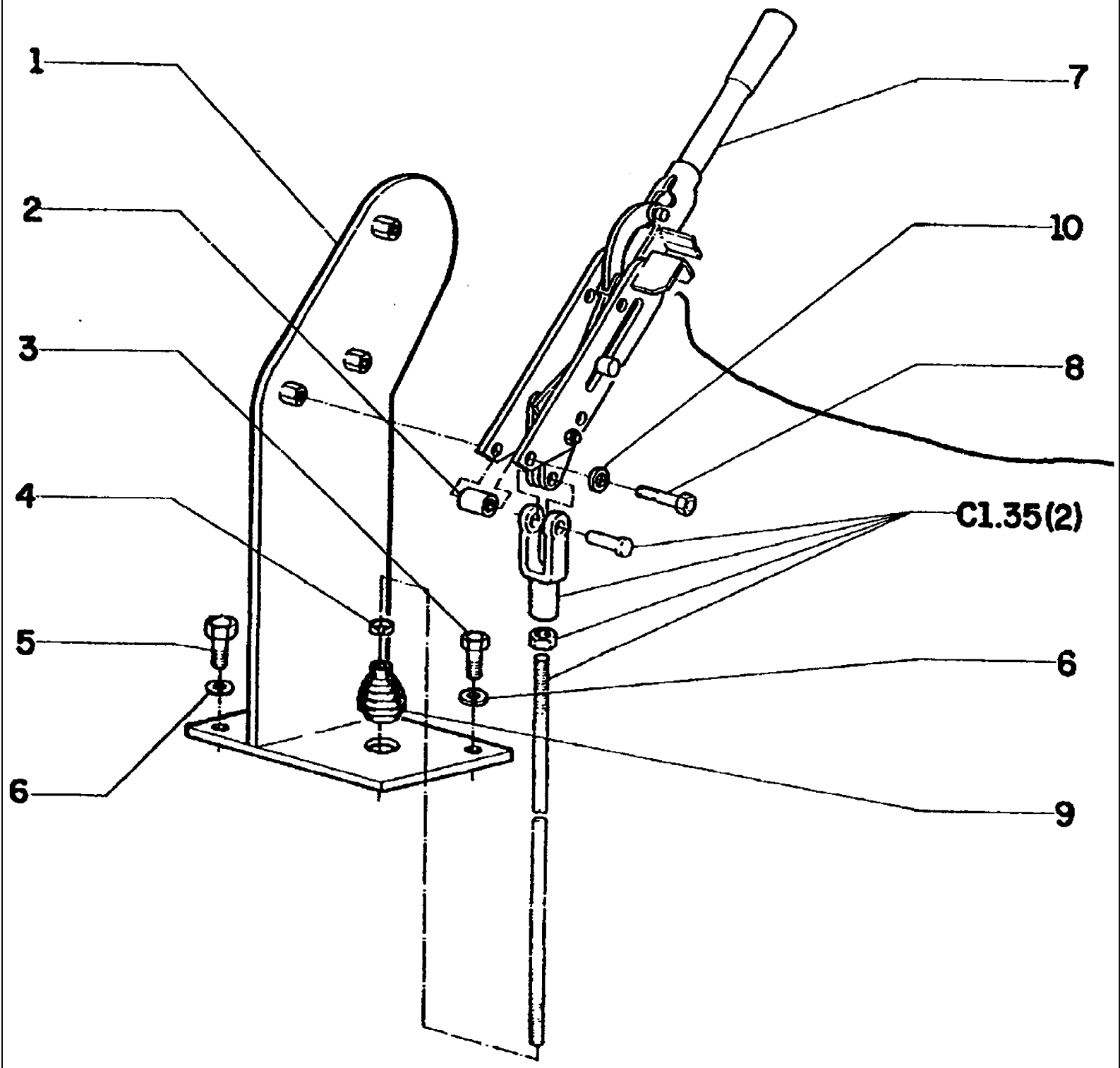
1
2
3
4
5
6
6
7
10
8
C1.35(2)
9

FG85 SERIES B MOTORGRADER

C1.35(001) PARKING BRAKE CONTROL

Ref	Numero de Pieza	Ctd	Descripción
1	75238599	1	SUPPORT
2	75220799	3	SPACER
3	70929771	1	SCREW
4	70921910	1	CLAMP
5	70921556	2	SCREW
6	70677008	3	WASHER
7	75243208	1	LEVER
8	70920995	3	SCREW
9	70078908	1	BOOT
10	70677006	3	WASHER

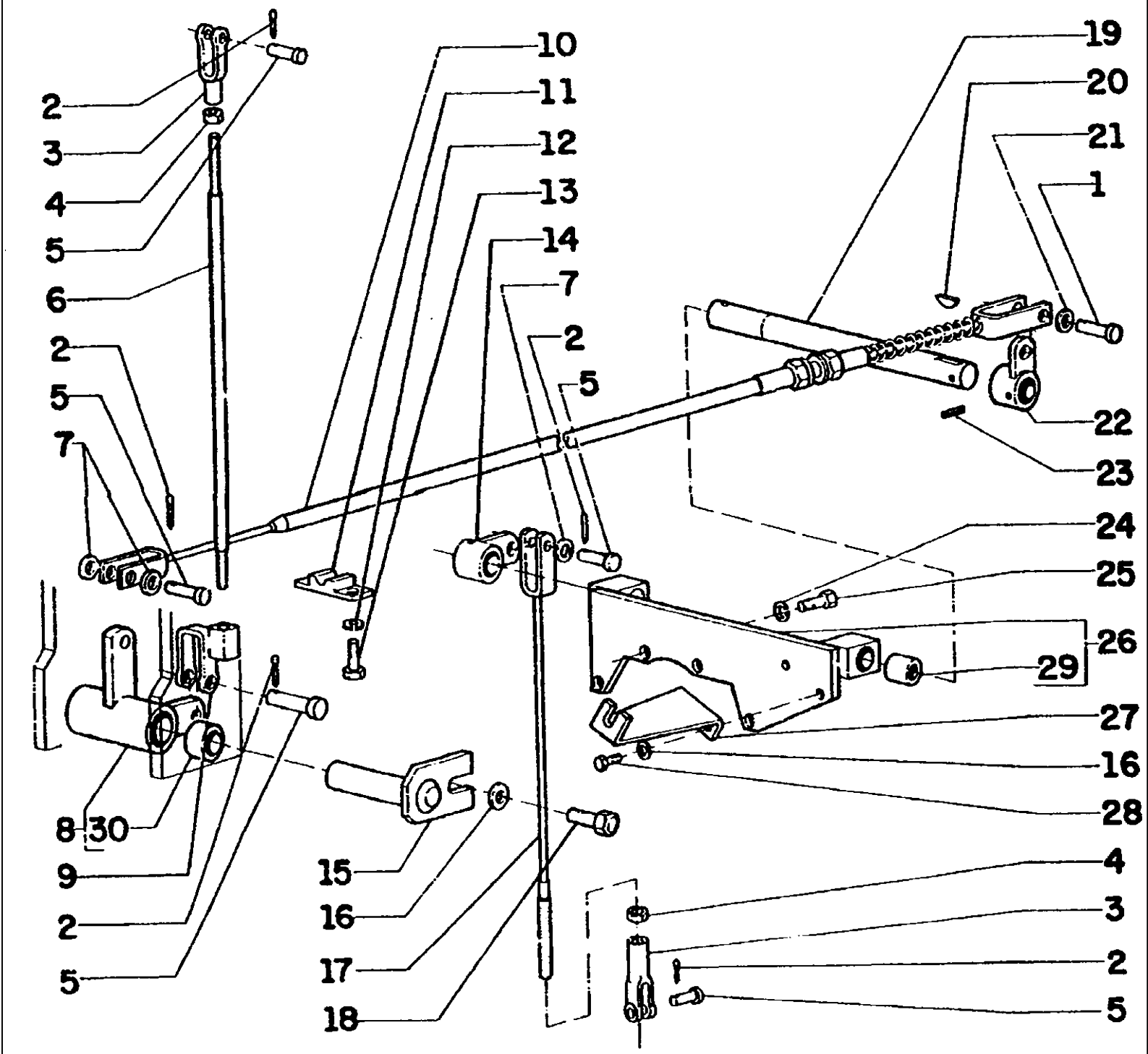
2
3
4
5
6
2
5
7
10
11
12
13
14
7
2
5
19
20
21
1
22
23
24
25
26
29
27
16
28
4
3
2
5
8
30
9
2
5
15
16
17
18

FG85 SERIES B MOTORGRADER

C1.35(002) PARKING BRAKE CONTROL

Ref	Numero de Pieza	Ctd	Descripción
1	10005010	1	PIN
2	70918448	6	Pin, Split (Cotter), 3/32" x 1"
3	70628736	2	YOKE
4	70911041	3	NUT
5	70078810	5	PIN
6	73151209	1	TIEROD
7	70929156	4	WASHER
8	73151195	1	LEVER
9	70670615	1	YOKE
10	73151203	1	ROPE
11	71004339	1	CLAMP
12	70677004	2	WASHER
13	70927541	2	SCREW
14	73150789	1	LEVER
15	73129958	1	PIN
16	70677006	6	WASHER
17	73150815	1	ROPE
18	70922763	1	SCREW
19	73150793	1	SHAFT
20	70932825	2	WOODRUFF KEY
21	70931523	2	WASHER
22	73150790	1	LEVER
23	70904002	2	Pin, Split (Cotter), 1/8" x 2"
24	70677007	4	WASHER
25	70924618	4	SCREW
26	73150784	1	PLATE
27	73150807	1	PLATE
28	70922262	2	SCREW
29	70035285	2	BUSHING
30	70035285	2	BUSHING

C1.35/1(002) PARKING BRAKE CONTROL

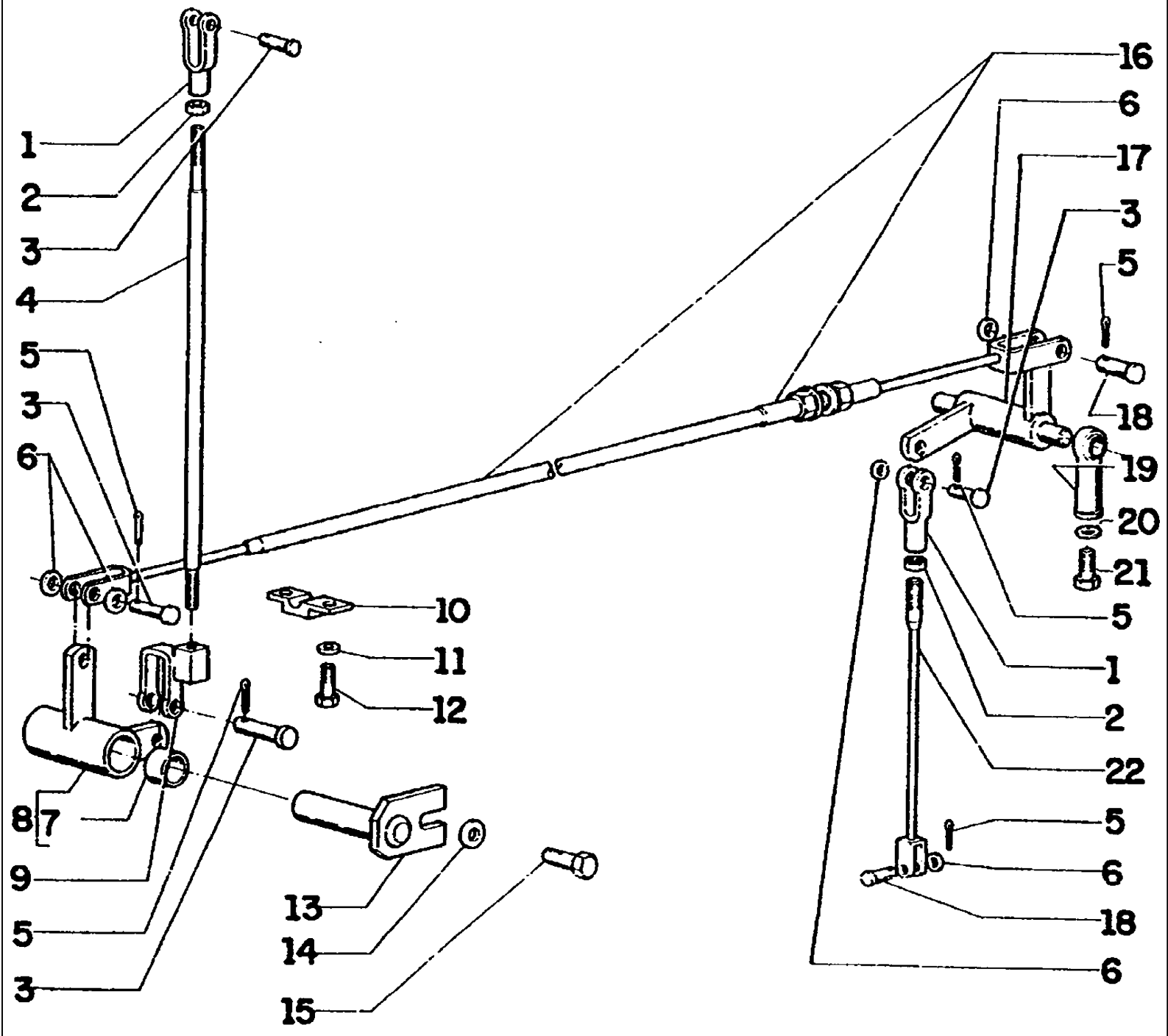

FG85 SERIES B MOTORGRADER

C1.35/1(002) PARKING BRAKE CONTROL

Ref	Numero de Pieza	Ctd	Descripción
1	70628736	2	YOKE
2	70911041	3	NUT
3	70078810	4	PIN
4	73151209	1	TIEROD
5	70918448	6	Pin, Split (Cotter), 3/32" x 1"
6	70931523	4	WASHER
7	70035285	2	BUSHING
8	73151195	1	LEVER
9	70670615	1	YOKE
10	71004339	1	CLAMP
11	70677004	2	WASHER
12	70927541	2	SCREW
13	73129958	1	PIN
14	70677006	1	WASHER
15	70922763	1	SCREW
16	73157330	1	ROPE
17	73157335	1	LEVER
18	10005011	2	PIN
19	73125851	2	BALL JOINT
20	70912942	2	LOCKWASHER
21	70927529	2	SCREW
22	73157331	1	ROPE

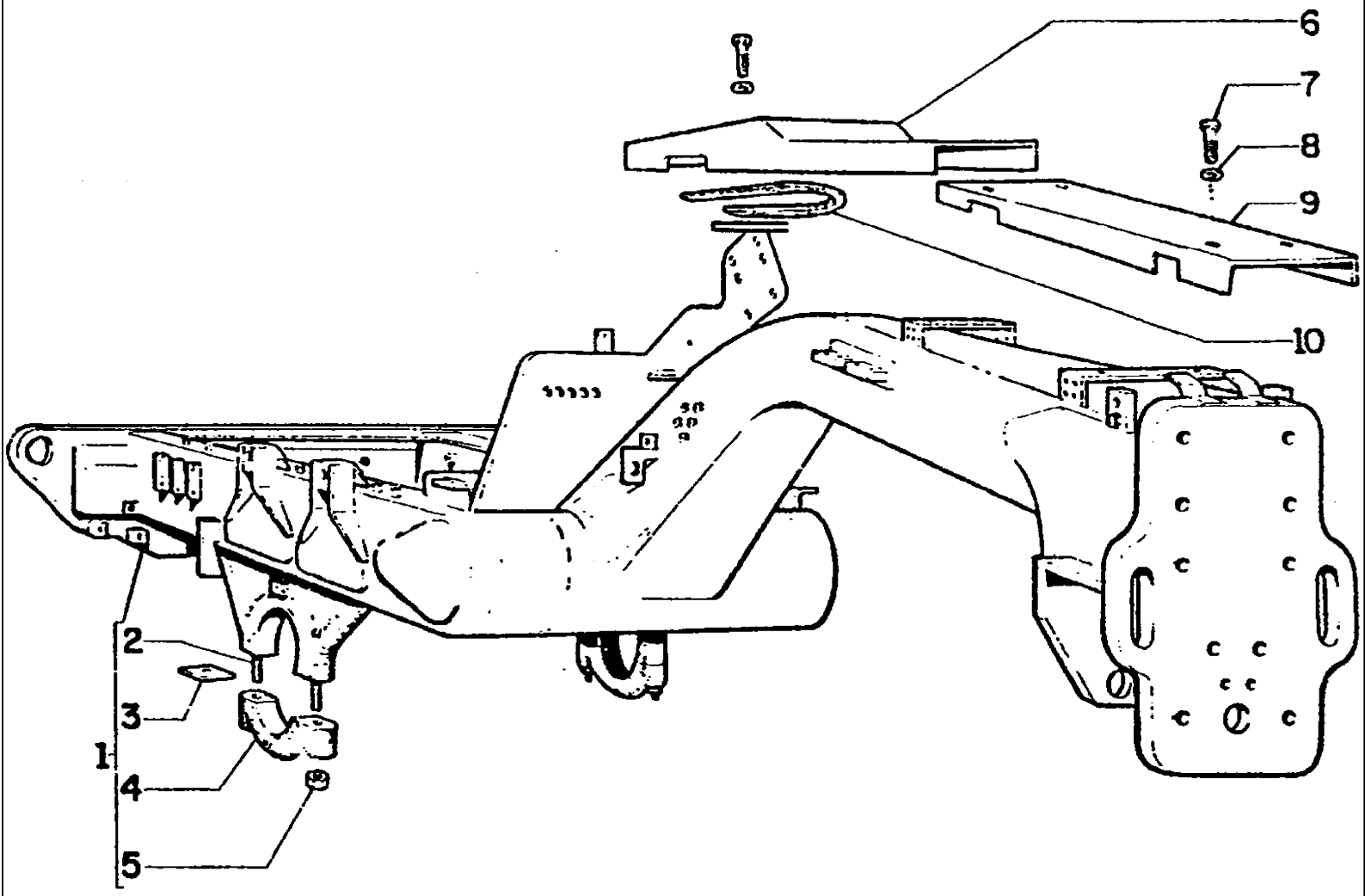
6
7
8
9
10
1
2
3
4
5

FG85 SERIES B MOTORGRADER

D1.01(001) FRAME

Ref	Numero de Pieza	Ctd	Descripción
1	75235492	1	FRAME - for fg85r
1	75238371	1	FRAME - for fg105r
2	70602258	4	STUD
3	70604493	24	SHIM
4	70604160	2	COVER
5	70600236	4	NUT
6	75221723	1	PLATE
7	70927373	8	SCREW
8	70677005	8	WASHER
9	75221717	1	PLATE
10	75221727	1	SEAL

D1.01(002) DASHBOARD AND FLOOR

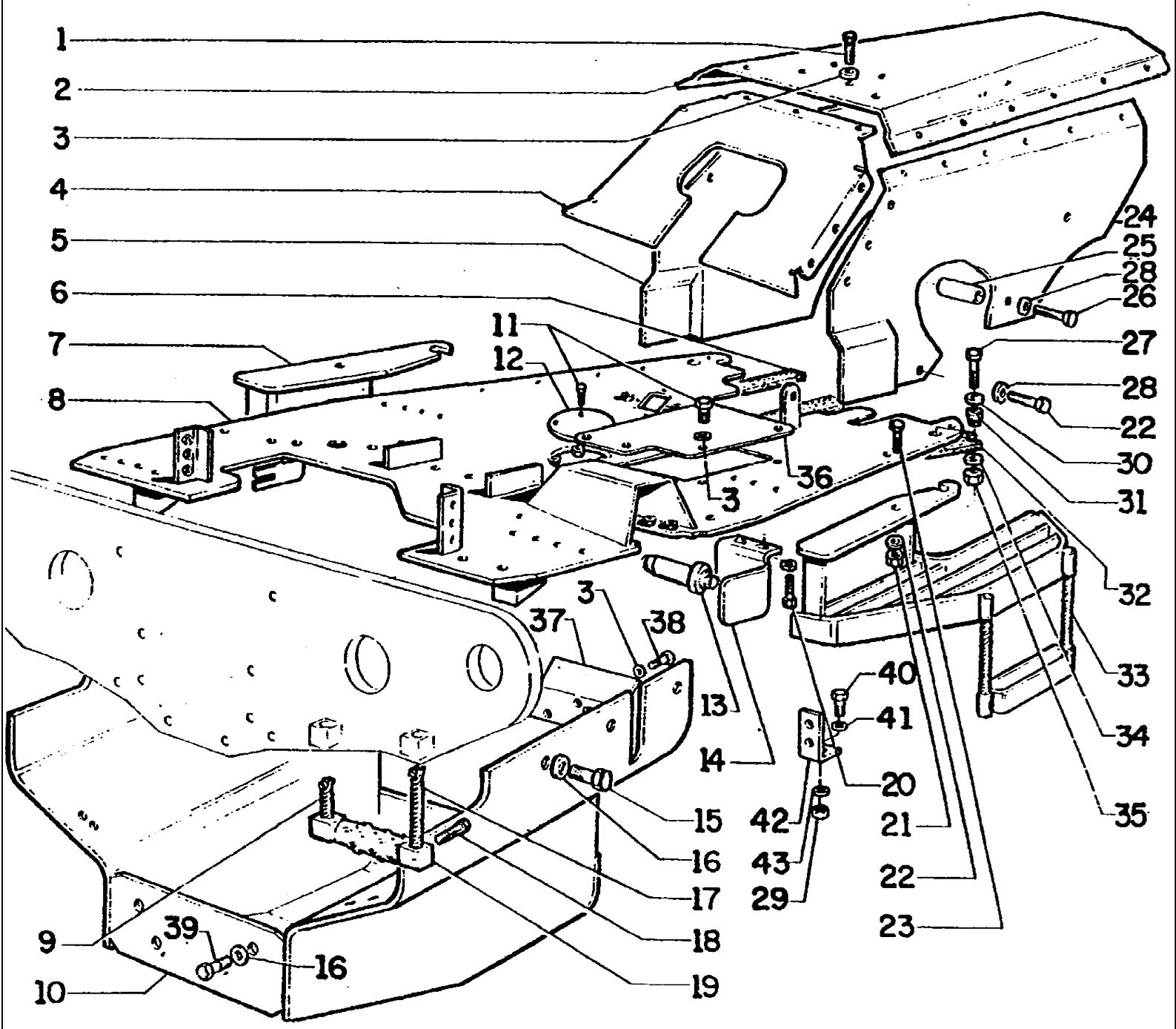

FG85 SERIES B MOTORGRADER

D1.01(002) DASHBOARD AND FLOOR

Ref	Numero de Pieza	Ctd	Descripción
1	70922763	25	SCREW
2	75239210	1	COVER
3	70677006	25	WASHER
4	75239057	1	COVER
5	75239212	1	PLATE
6	73153267	1	SEAL
7	73150729	1	LADDER
8	75221971	1	FLOOR
9	73125932	2	ROPE
10	75236381	1	GUARD
11	70922300	8	SCREW
12	73153860	1	COVER
13	73136247	4	PIN
14	73150743	4	PLATE
15	70920583	6	SCREW
16	70677008	20	WASHER
17	73125933	2	ROPE
18	70927219	8	SCREW
19	73125935	2	LADDER
20	70920583	8	SCREW
21	70916170	4	NUT
22	70677012	4	WASHER
23	70922544	4	SCREW
24	75239214	1	PLATE
25	73127781	5	SPACER
26	70927378	5	SCREW
27	70922510	2	SCREW
28	70677006	33	WASHER
29	70911024	1	NUT
30	70677008	10	WASHER
31	73034129	2	CUSHION
32	73153268	1	GASKET
33	73150728	1	LADDER
34	70920105	2	WASHER
35	70915972	2	NUT
36	75222276	1	COVER
37	73155819	1	PLATE
38	70927157	4	SCREW
39	70927556	4	SCREW
40	70927541	1	SCREW
41	70928190	1	WASHER
42	75239135	1	SUPPORT
43	70910285	1	LOCKWASHER

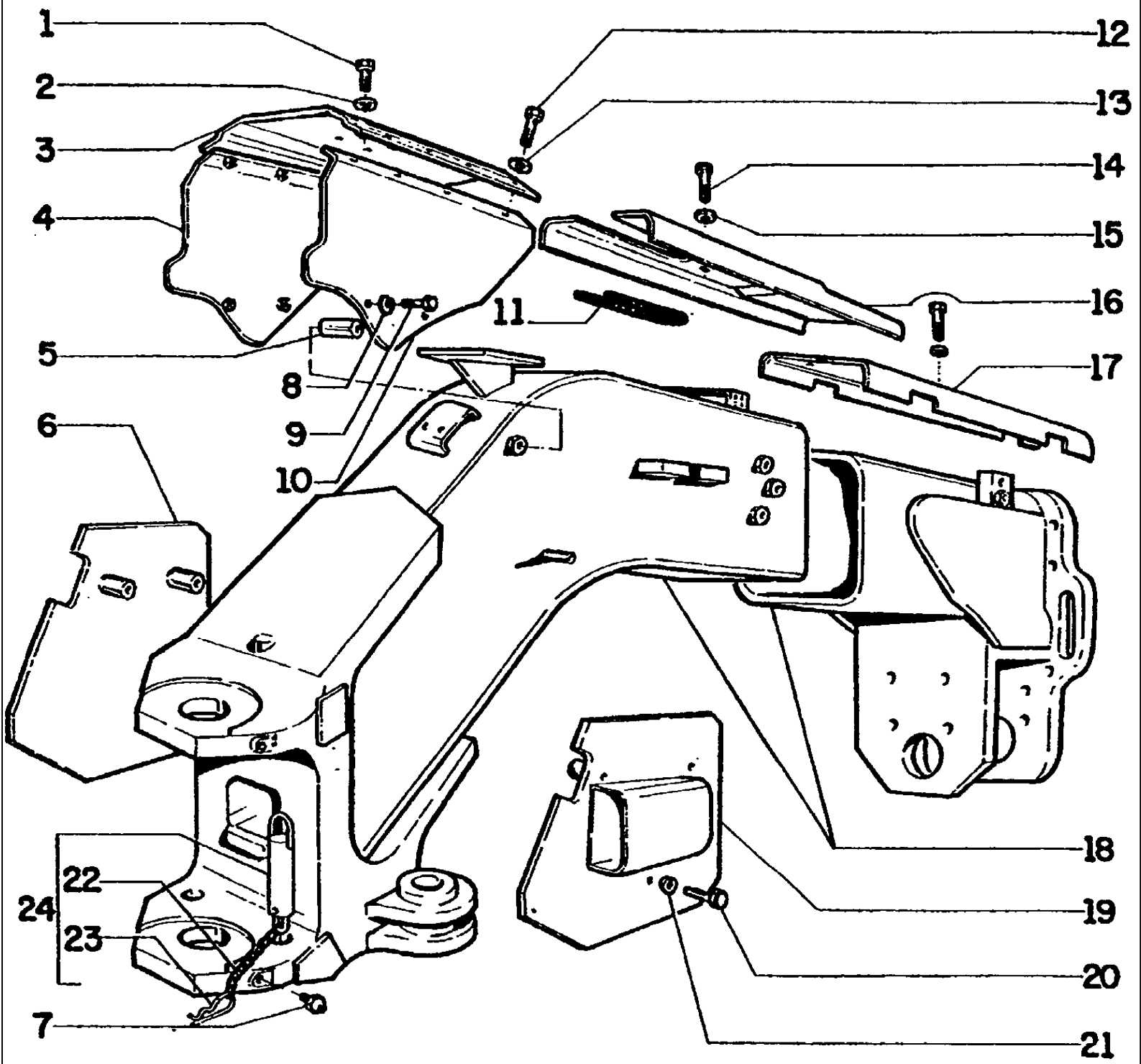
1
2
3
4
5
6
7
8
9
10
11
12
13
14
15
16
17
18
19
20
21
22
23
24

FG85 SERIES B MOTORGRADER

D1.01(003) FRONT FRAME

Ref	Numero de Pieza	Ctd	Descripción
1	70927173	4	SCREW
2	70677006	4	WASHER
3	75239048	1	GUARD
4	75239051	1	GUARD
5	75221728	4	SPACER
6	75214977	1	GUARD
7	70914465	2	GREASE FITTING
8	70904208	4	LOCKWASHER
9	70921122	4	SCREW
10	75239050	1	GUARD
11	75221727	1	SEAL
12	70922763	8	SCREW
13	70677006	8	WASHER
14	70927373	8	SCREW
15	70677005	8	WASHER
16	75221723	1	PLATE
17	75221717	1	PLATE
18	73153447	1	FRONT FRAME - FOR fg85a
18	75238263	1	FRONT FRAME - for fg105a
19	75214978	1	GUARD
20	70927174	6	SCREW
21	70916965	6	LOCKWASHER
22	4955502	2	CHAIN
23	8268534	2	SPRING PIN
24	75222471	2	PIN

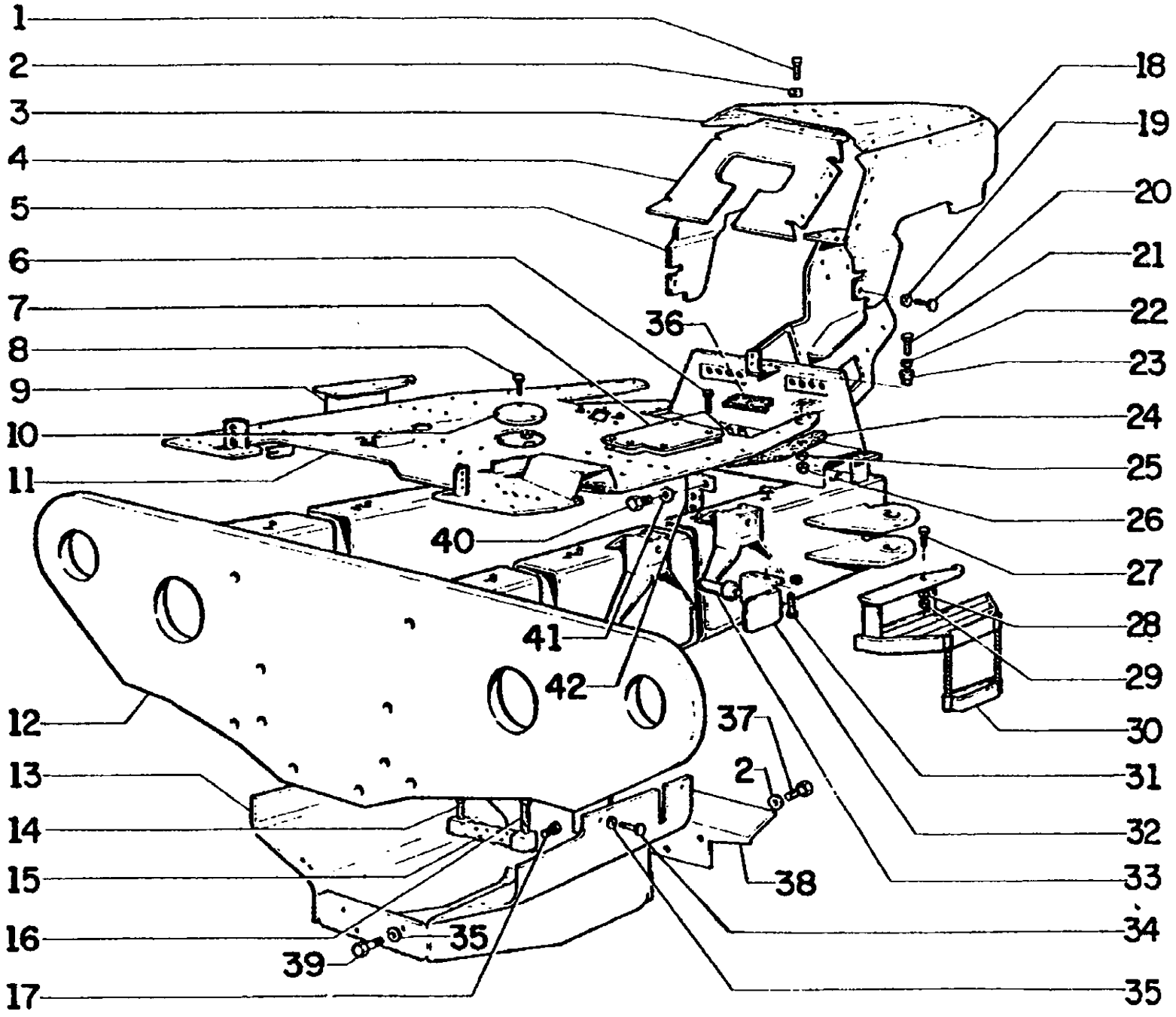
1
2
3
4
5
6
7
8
9
10
11
12
13
14
15
16
17
18
19
20
21
22
23
24
25
26
27
28
29
30
31
32
33
34
35
36
37
2
38
39
35
40
41
42

FG85 SERIES B MOTORGRADER

D1.01(004) REAR MAIN FRAME

Ref	Numero de Pieza	Ctd	Descripción
1	70922763	4	SCREW
2	70677006	6	WASHER
3	75220013	1	GUARD
4	75220025	1	COVER
5	75220012	1	GUARD
6	70922300	5	SCREW
7	75222276	1	COVER
8	70922300	3	SCREW
9	73150729	1	LADDER
10	73153860	1	COVER
11	75222448	1	FLOOR
12	75235631	1	REAR MAIN FR(1)
12	75238278	1	REAR MAIN FR(2)
	75213759		66.903 mm ID
13	75236381	1	GUARD
14	73125932	2	CABLE
15	73125935	2	LADDER
16	73125933	2	CABLE
17	70927219	8	SCREW
18	75220011	1	GUARD
19	70677006	15	WASHER
20	70922763	15	SCREW
21	70922510	2	SCREW
22	70677008	2	WASHER
23	73034129	2	CUSHION
24	73153265	2	SEAL
25	70920105	2	WASHER
26	70915972	2	NUT
27	70922544	4	SCREW
28	70677012	4	WASHER
29	70916170	4	NUT
30	73150728	2	LADDER
31	70920583	8	SCREW
32	73150743	4	PLATE
33	73136247	4	PIN
34	70920583	6	SCREW
35	70677008	22	WASHER
36	73153266	1	SEAL
37	70927157	4	SCREW
38	73155819	1	PLATE
39	70921556	4	SCREW
40	70928182	2	SCREW
41	70928190	2	WASHER

FG85 SERIES B MOTORGRADER

D1.01(004) REAR MAIN FRAME

Ref	Numero de Pieza	Ctd	Descripción
42	75238057	1	PLATE

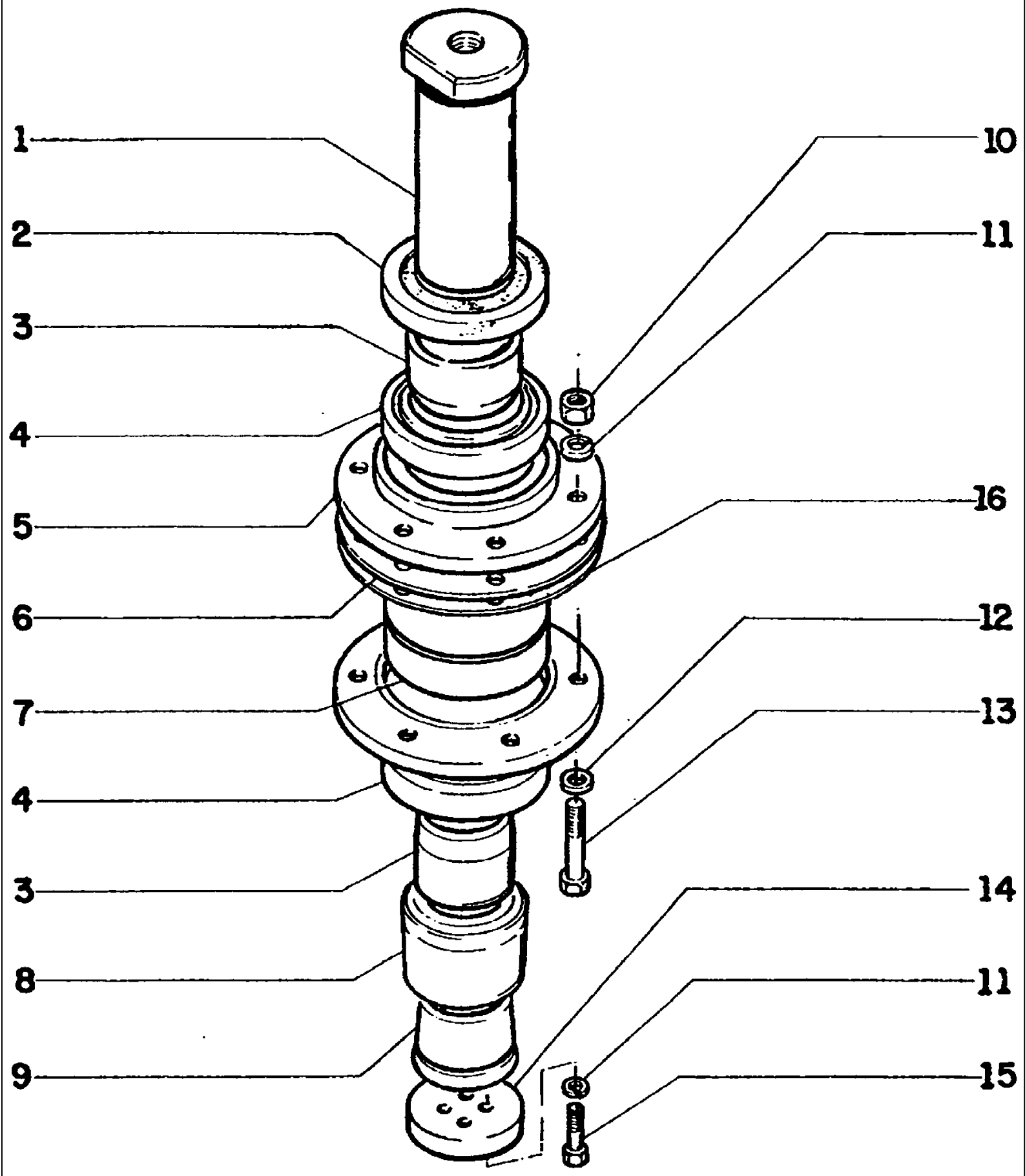
1
2
3
4
5
6
7
4
3
8
9
10
11
16
12
13
14
11
15

FG85 SERIES B MOTORGRADER

D1.01(005) ARTICULATION JOINT

Ref	Numero de Pieza	Ctd	Descripción
1	75213817	1	PIN
2	75213776	1	RING
3	75213769	2	BUSHING
4	75213760	2	SEAL
5	75213782	2	FLANGE
6	75214968	*	SHIM
7	73069310	1	BEARING
8	73074360	1	RING
9	73074359	1	WEDGE
10	70911028	6	NUT
11	70912441	10	LOCKWASHER
12	70928188	6	WASHER
13	70921567	6	SCREW
14	73072895	1	DISC
15	70920585	4	SCREW
16	75237664	*	SHIM

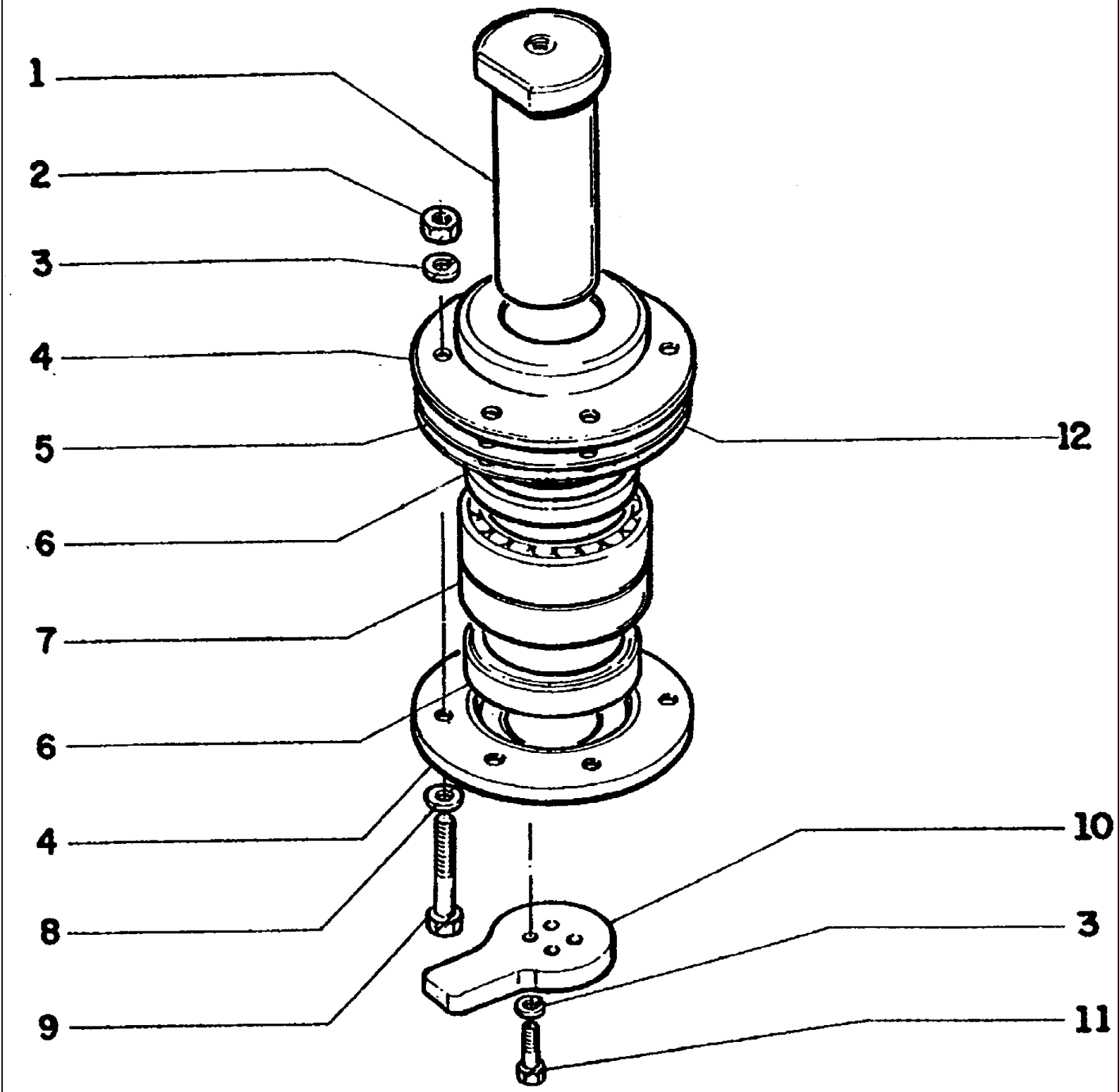
1
2
3
4
5
6
7
6
4
8
9
12
10
3
11

FG85 SERIES B MOTORGRADER

D1.01(006) ARTICULATION JOINT

Ref	Numero de Pieza	Ctd	Descripción
1	75213817	1	PIN
2	70911028	6	NUT
3	70912441	10	LOCKWASHER
4	75213783	2	FLANGE
5	75214969	*	SHIM
6	75213761	2	SEAL
7	73069310	1	BEARING
8	70928188	6	WASHER
9	70921567	6	SCREW
10	73074170	1	PAWL
11	70920585	4	SCREW
12	75237665	*	SHIM

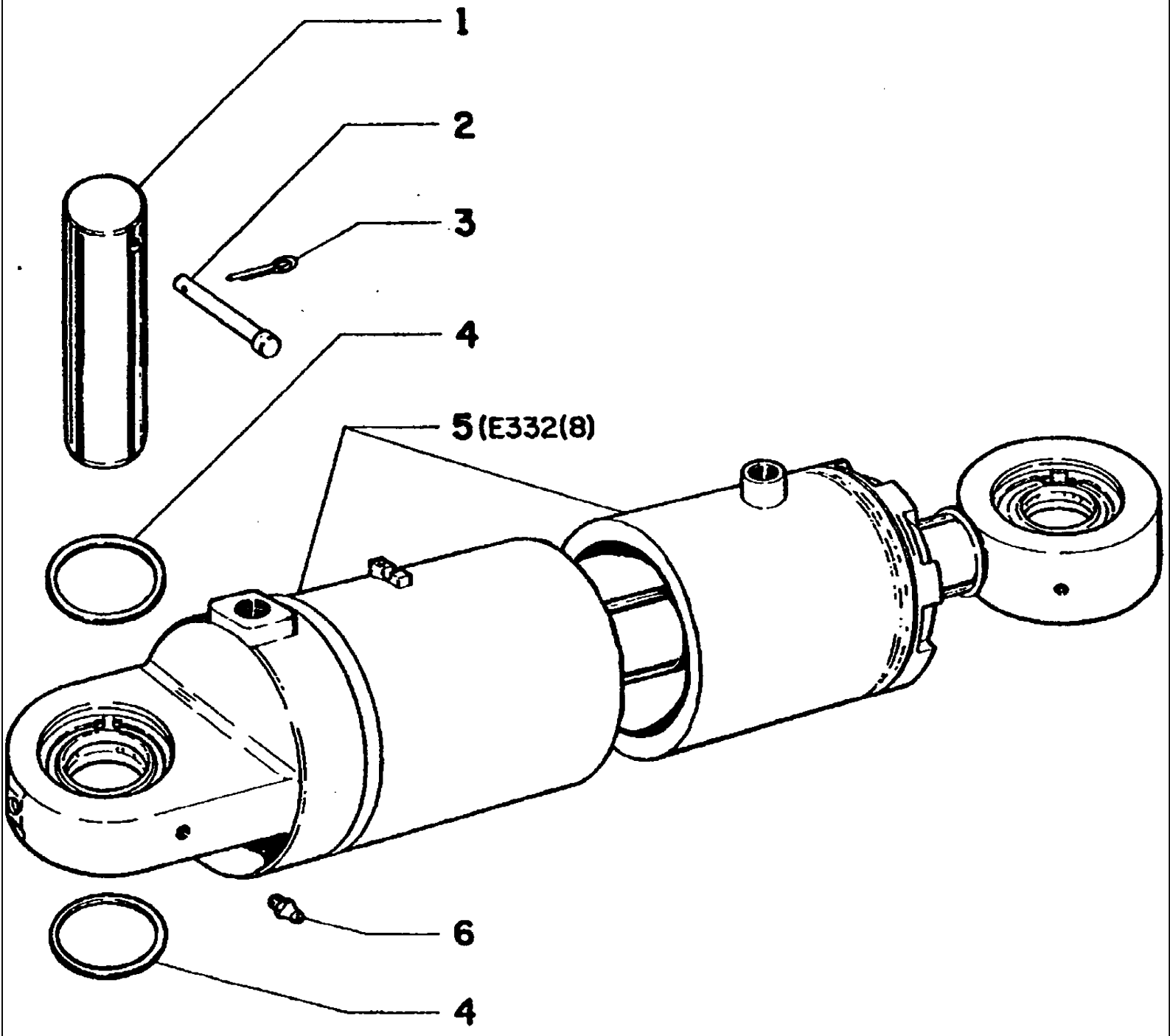
1
2
3
4
5 (E332(8)
6
4

FG85 SERIES B MOTORGRADER

D1.01(007) ARTICULATION CYLINDER

Ref	Numero de Pieza	Ctd	Descripción
1	75213765	4	PIN
2	75213766	4	COTTER PIN
3	70900805	4	Pin, Split (Cotter), 1/8" x 3/4"
4	75213767	*	SHIM
5	75213774	1	CYLINDER
5	75213779	1	CYLINDER
6	70914465	4	GREASE FITTING

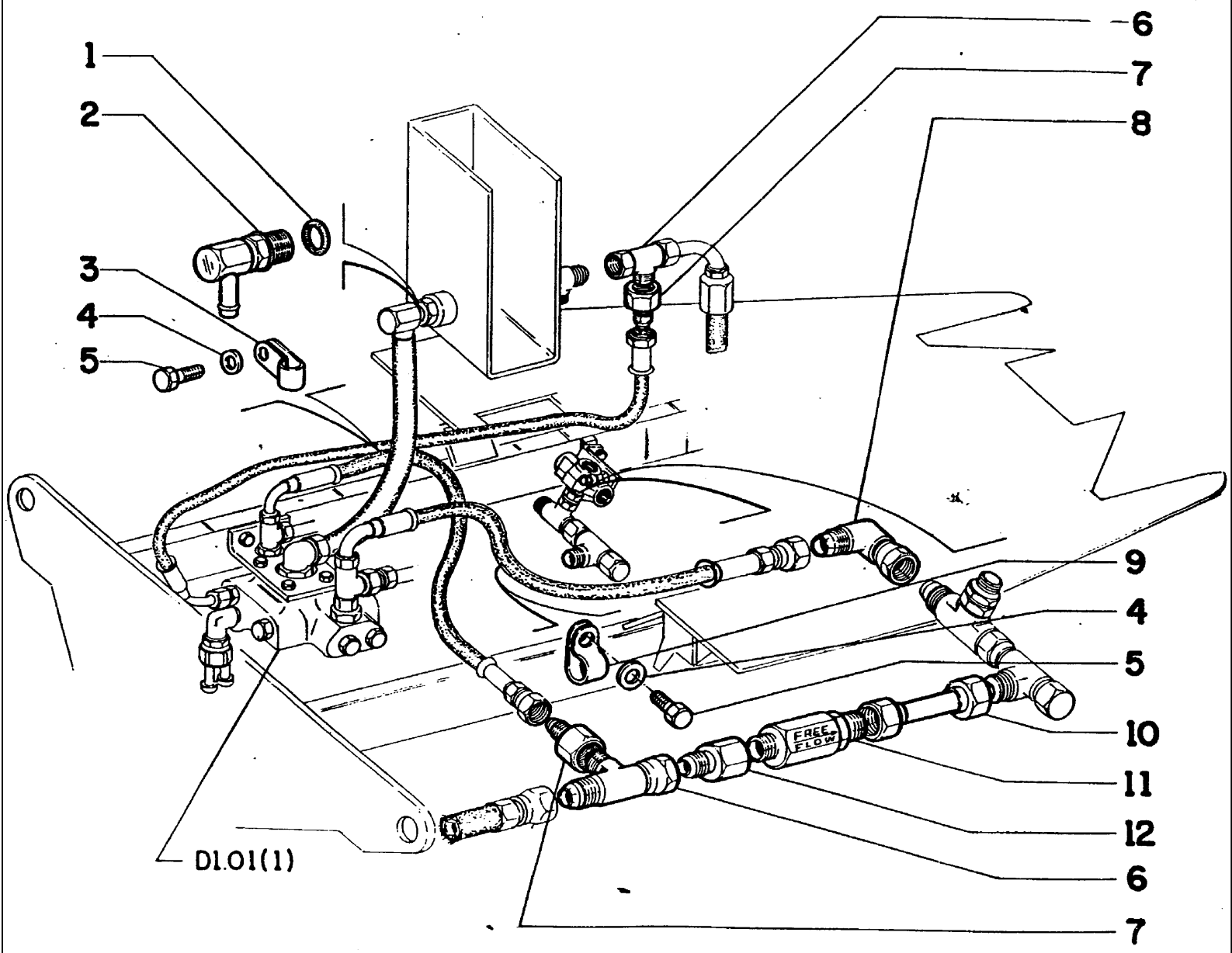
1
2
3
4
5
6
7
8
9
4
5
10
11
12
6
7
FREE FLOW
D1.01(1)

FG85 SERIES B MOTORGRADER

D1.01(1)(001) EMERGENCY STEERING

Ref	Numero de Pieza	Ctd	Descripción
1	70923988	2	O'RING
2	70928888	1	ELBOW
3	70927309	1	CLAMP
4	70677006	2	WASHER
5	70927400	2	SCREWS
6	70921298	2	FITTING
7	70923102	2	FITTING
8	70921279	1	ELBOW
9	70927387	1	CLAMP
10	75222869	1	TUBE
11	73128626	1	VALVE
12	75239900	1	FITTING

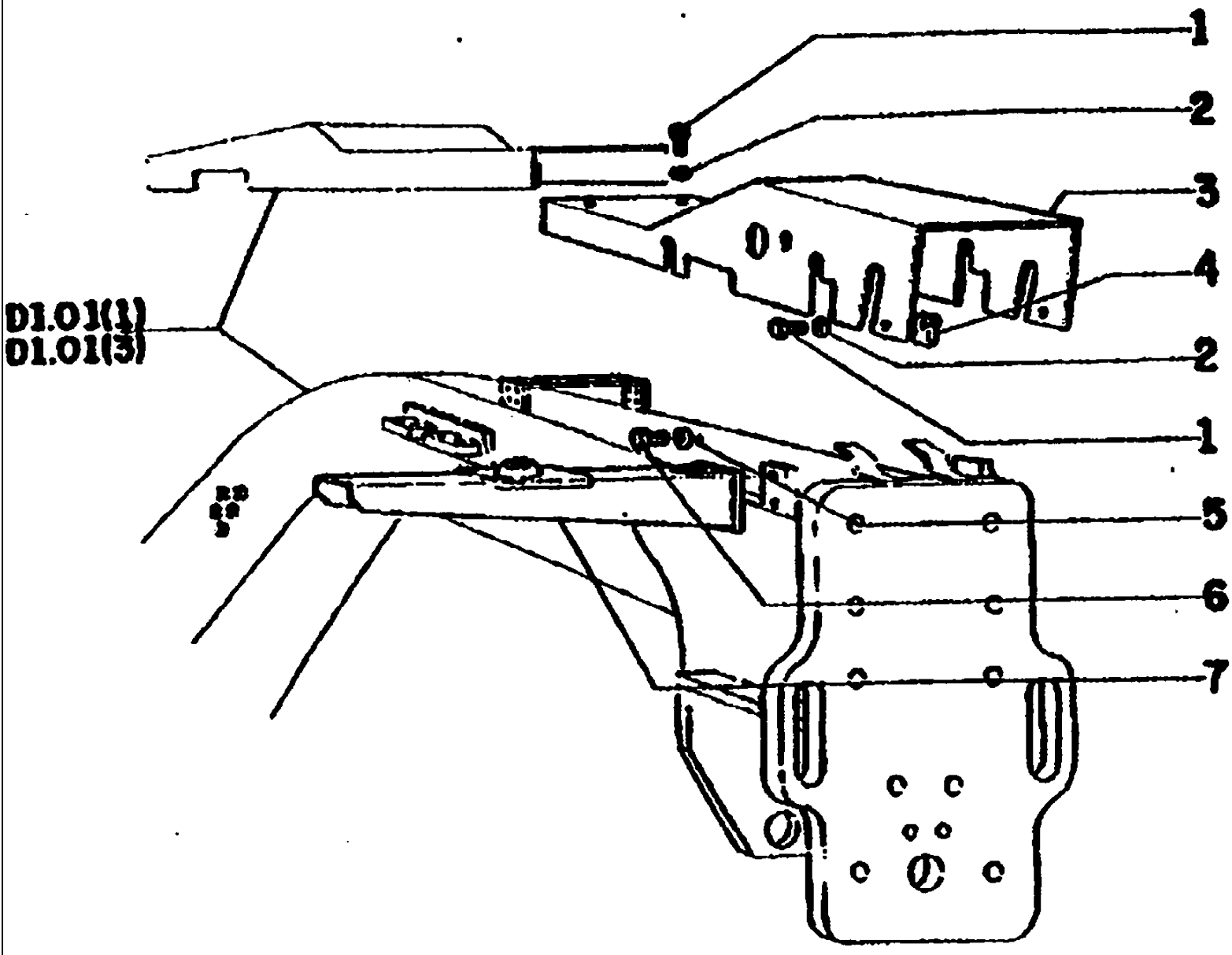
1
2
3
4
2
1
5
6
7
D1.01(1)
D1.01(3)

FG85 SERIES B MOTORGRADER

D1.01/1(001) FRONT WHEEL PROTECTION

Ref	Numero de Pieza	Ctd	Descripción
1	70927373	4	SCREW
2	70677005	4	WASHER
3	73158549	1	GUARD
4	73002406	2	BLOCK
5	70910287	4	LOCKWASHER
6	70922763	4	SCREW
7	73155462	2	SUPPORT

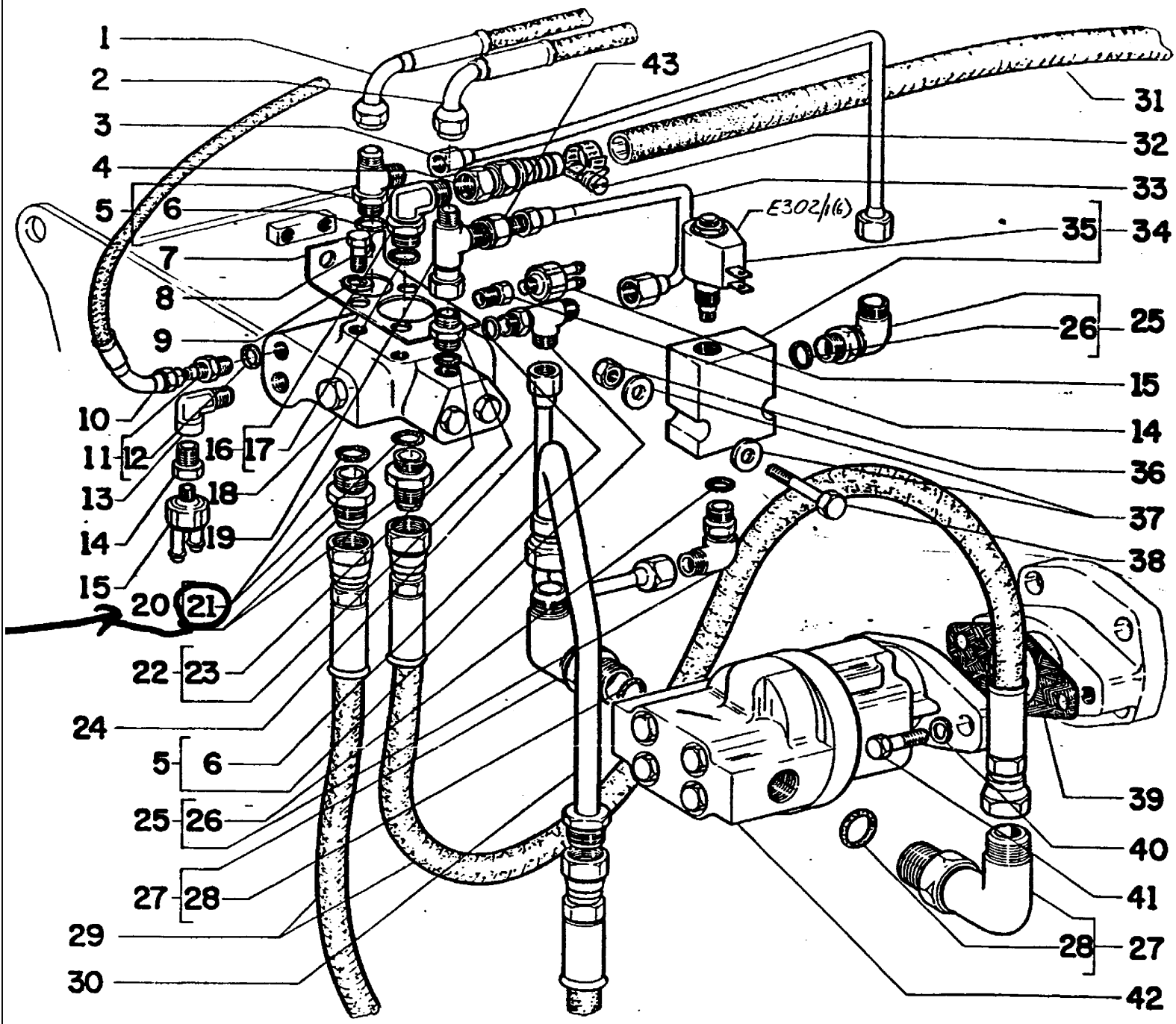
1
2
3
4
5
6
7
8
9
10
11
12
13
14
15
16
17
18
19
20
21
22
23
24
5
6
25
26
27
28
29
30
43
31
32
33
E302/1(6)
35
34
26
25
15
14
36
37
38
39
40
41
28
27
42

FG85 SERIES B MOTORGRADER

D1.01/3(001) EMERGENCY STEERING

Ref	Numero de Pieza	Ctd	Descripción
1	73159489	1	HOSE ASS'Y
2	73159488	1	HOSE ASS'Y
3	73152989	1	TUBE ASS'Y
4	70935039	1	FITTING
5	70924783	2	FITTING
6	70921883	2	O-Ring, 4-1, 90 Duro, .351" ID x .072" Thk
7	73152993	1	SUPPORT
8	70921175	6	SCREWS
9	70912441	6	LOCKWASHER
10	73159139	1	HOSE ASS'Y
11	70923163	1	CONNECTOR
12	70921883	1	O-Ring, 4-1, 90 Duro, .351" ID x .072" Thk
13	70901722	1	ELBOW
14	70901825	2	BUSHING
15	73127291	2	SWITCH
16	70922632	1	ELBOW
17	70923568	1	O'RING
18	73150264	1	VALVE ASS'Y
19	70921298	1	FITTING
20	70922997	2	CONNECTOR
21	70935761	2	O'RING
22	70924296	1	CONNECTOR
23	70923568	1	O'RING
24	73152991	1	TUBE
25	70925011	2	ELBOW
26	70923565	2	O'RING
27	70927094	2	ELBOW
28	70923379	2	O'RING
29	73153012	2	HOSE ASS'Y
30	73152987	1	TUBE
31	73159491	1	HOSE
32	70922650	2	CLAMPS
33	73159137	1	TUBE
34	73121471	1	SOLENOID
35	73130868	1	SOLENOID
36	70920329	2	NUT
37	70928190	4	WASHER
38	70930238	2	SCREWS
39	70651322	1	GASKET
40	70910287	2	LOCKWASHER
41	70922763	2	SCREWS
42	73150265	1	PUMP
43	70923102	1	FITTING

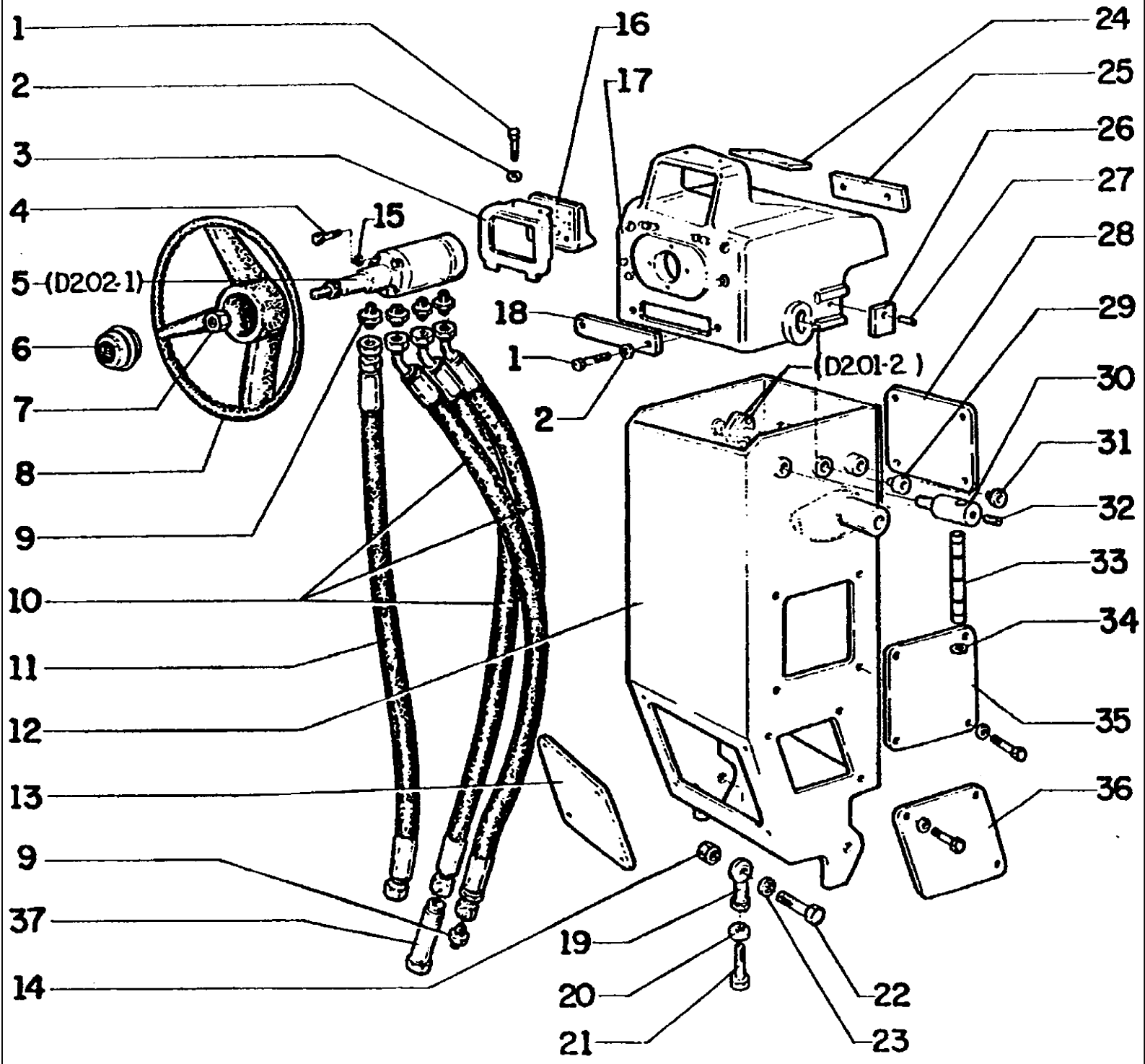
1
2
3
4
5 (D202-1)
6
7
8
9
10
11
12
13
9
37
14
15
16
17
18
1
2
(D201-2)
19
20
21
22
23
24
25
26
27
28
29
30
31
32
33
34
35
36

FG85 SERIES B MOTORGRADER

D2.01(001) OPERATOR'S CONSOLE

Ref	Numero de Pieza	Ctd	Descripción
1	70928182	32	SCREW
2	70928190	32	WASHER
3	73149442	1	PANEL
4	70922843	4	SCREW
5	75221122	1	HYDRAULIC DRIVE
6	73136547	1	CAP
7	70252471	1	NUT
8	73125777	1	STEERING WHEEL
9	70924403	8	CONNECTOR
10	73126193	3	HOSE
11	75221601	1	HOSE
12	73153730	1	CONSOLE
13	73126209	1	PLATE
14	70911029	2	NUT
15	70929662	4	WASHER
16	REF. SGR	1	ELECTR. MONITOR
17	75221676	1	SUPPORT
18	73122862	1	PLATE
19	73125851	2	BALL JOINT
20	70916195	4	LOCKWASHER
21	70921476	2	SCREW
22	70921403	2	SCREW
23	70927381	9	WASHER
24	73152816	1	CAP
25	75221672	1	PLATE
26	73126191	2	PLATE
27	73126192	2	PIN
28	73125379	1	PLATE
29	73126187	2	BUSHING
30	73121498	1	SHAFT
31	73126186	2	BUSHING
32	73129094	1	SCREW
33	73121497	1	SHAFT
34	70935211	2	SNAP RING
35	73126185	1	PLATE
36	73126181	2	PLATE
37	75222860	1	CONNECTOR

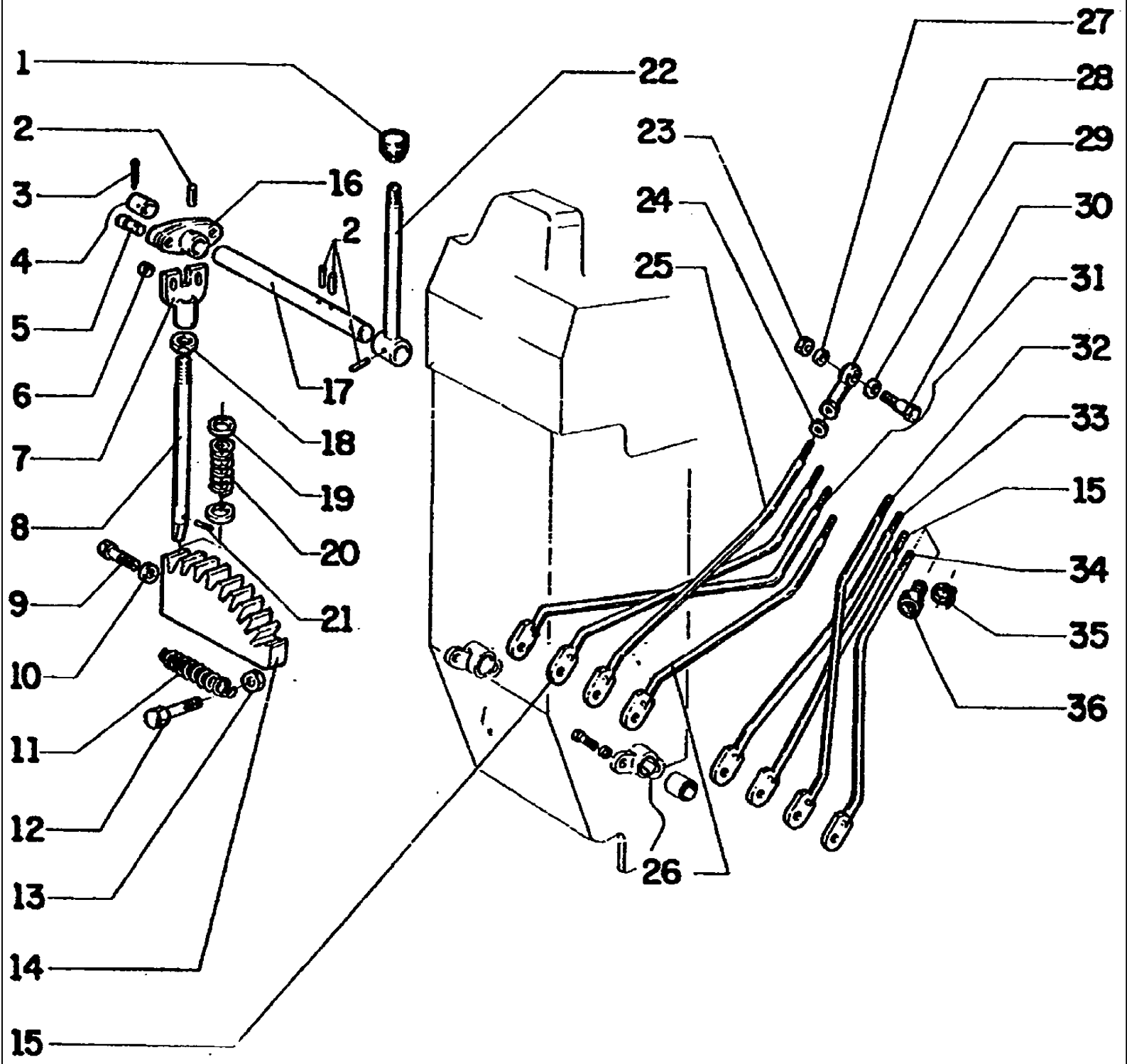
1
2
3
4
5
6
7
8
9
10
11
12
13
14
15
16
2
17
18
19
20
21
22
23
24
25
26
27
28
29
30
31
32
33
15
34
35
36

FG85 SERIES B MOTORGRADER

D2.01(002) OPERATOR'S CONSOLE

Ref	Numero de Pieza	Ctd	Descripción
1	73153747	1	KNOB
2	70915797	4	SPRING PIN
3	280250	2	Pin, Split (Cotter), 3/32" x 3/4"
4	75221287	1	REST
5	70082875	2	PIN
6	70929156	4	WASHER
7	73126176	1	YOKE
8	73126184	1	SHAFT
9	70922287	2	SCREW
10	70677006	10	WASHER
11	73154919	1	SPRING
12	70920583	1	SCREW
13	70911028	1	NUT
14	73154920	1	RACK
15	73153764	2	TIEROD
16	73121505	1	LEVER
17	73153871	1	SHAFT
18	70911037	1	NUT
19	70915714	2	WASHER
20	70622102	1	SPRING
21	70915634	1	Pin, 1/4" x 1 1/8", Slotted
22	73153873	1	LEVER
23	70911026	8	NUT
24	70911048	8	NUT
25	73153768	1	TIEROD
26	73153767	1	TIEROD
27	70910287	16	LOCKWASHER
28	70617932	8	BALL JOINT
29	70677006	4	WASHER
30	70927225	8	SCREW
31	73153770	1	TIEROD
32	73153763	1	TIEROD
33	73153766	1	TIEROD
34	73153762	1	TIEROD
35	75221602	8	CLAMP
36	73153774	8	BELLOWS

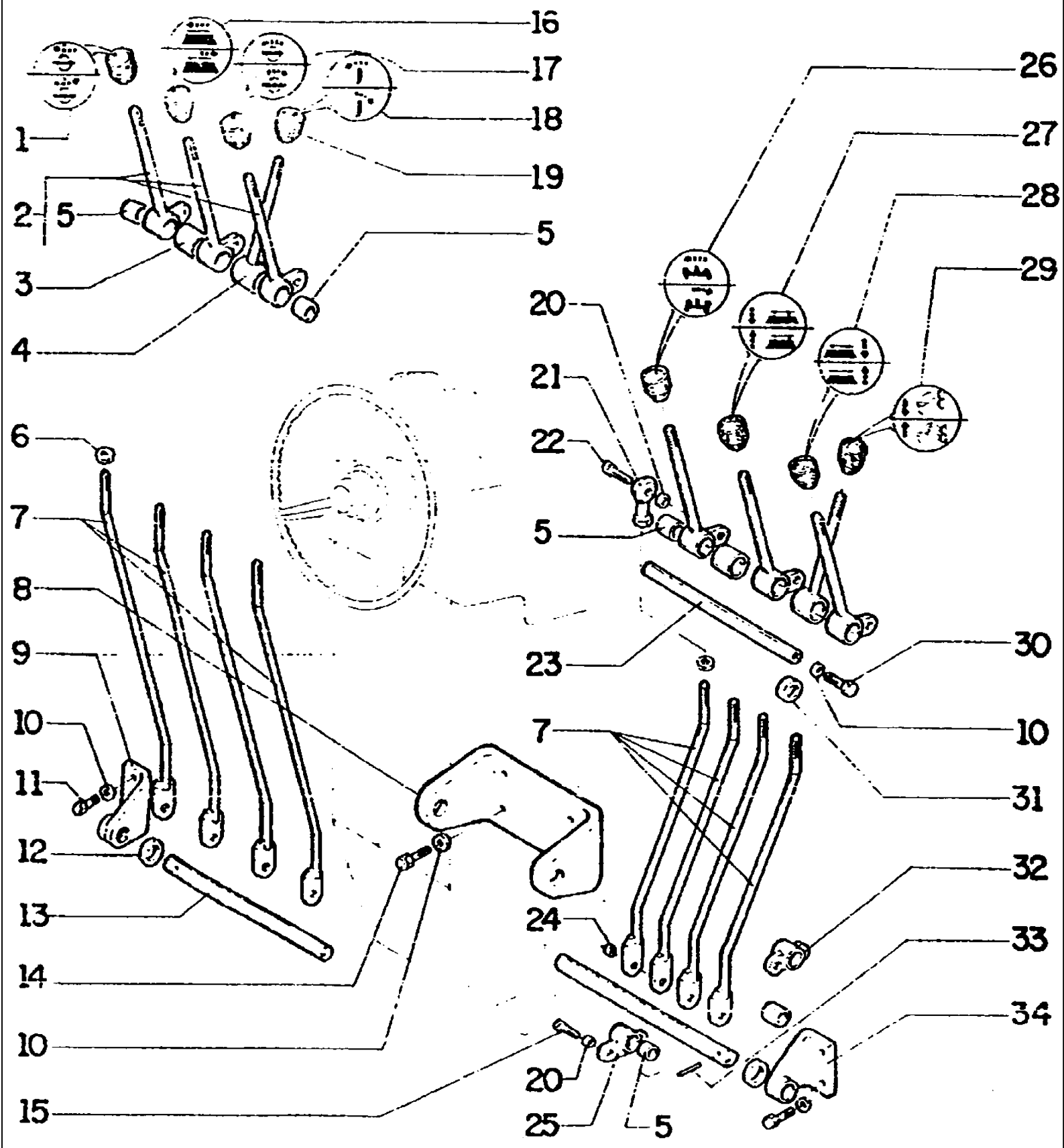
16
17
18
1
19
2
5
5
3
4
26
27
28
29
20
21
22
5
6
7
8
9
10
11
12
13
14
10
15
23
30
10
7
31
32
24
33
34
20
25
5

FG85 SERIES B MOTORGRADER

D2.01(003) OPERATOR'S CONSOLE

Ref	Numero de Pieza	Ctd	Descripción
1	73134481	1	DECAL
2	73153754	6	LEVER
3	73153775	4	SPACER
4	73153752	2	LEVER
5	73125852	32	BEARING
6	70911048	16	NUT
7	73154520	8	TIEROD
8	73153760	1	SUPPORT
9	73154521	1	SUPPORT
10	70910287	16	LOCKWASHER
11	70921076	4	SCREW
12	73121925	28	WASHER
13	73153754	2	LEVER
14	70921565	4	SCREW
15	70928798	16	SCREW
16	73134476	1	DECAL
17	73134480	1	DECAL
18	73134479	1	DECAL
19	73153747	8	KNOB
20	70929156	34	WASHER
21	70617932	16	BALL JOINT
22	70927212	8	SCREW
23	73126213	2	SHAFT
24	73153755	16	BUSHING
25	75237867	4	LEVER
26	73134478	1	DECAL
27	73134483	1	DECAL
28	73134482	1	DECAL
29	73134477	1	DECAL
30	70934710	2	SCREW
31	73126212	2	WASHER
32	75237868	4	LEVER
33	70904002	2	Pin, Split (Cotter), 1/8" x 2"
34	73154522	1	SUPPORT

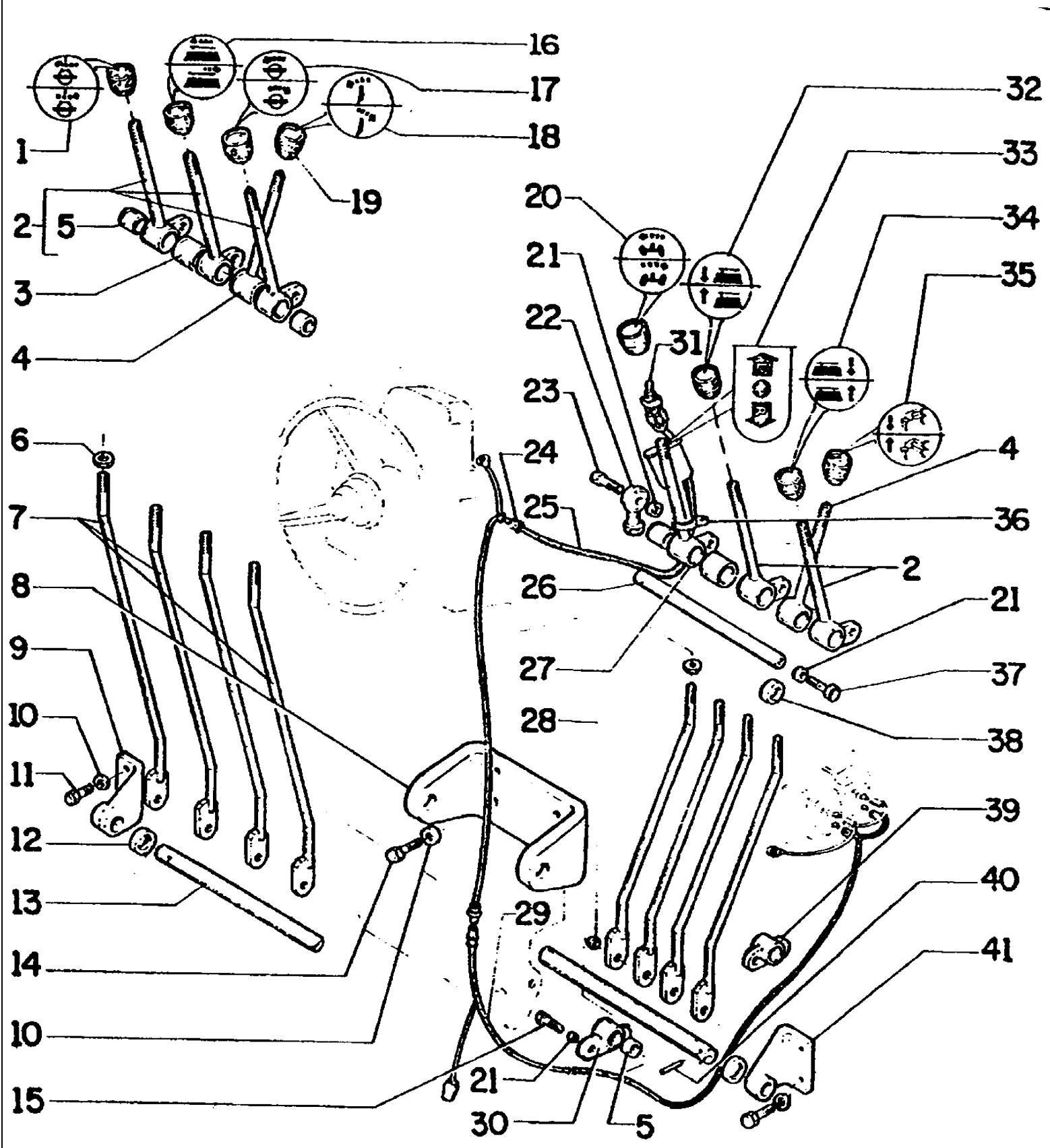
1
2
5
3
4
16
17
18
19
20
21
22
23
24
25
26
27
28
29
30
31
32
33
34
35
36
37
38
39
40
41
6
7
8
9
10
11
12
13
14
15

FG85 SERIES B MOTORGRADER

D2.01(004) OPERATOR'S CONSOLE

Ref	Numero de Pieza	Ctd	Descripción
1	73134481	1	DECAL
2	73153754	5	LEVER
3	73153775	4	SPACER
4	73153752	2	LEVER
5	73125852	32	BEARING
6	70911048	16	NUT
7	73154520	8	TIEROD
8	73153760	1	SUPPORT
9	73154521	1	SUPPORT
10	70910287	16	LOCKWASHER
11	70921076	4	SCREW
12	73121925	28	WASHER
13	73153759	2	SHAFT
14	70921565	4	SCREW
15	70928798	16	SCREW
16	73134476	1	DECAL
17	73134480	1	DECAL
18	73134479	1	DECAL
19	73153747	9	KNOB
20	73134478	1	DECAL
21	70929156	34	WASHER
22	70617932	16	END
23	70927212	8	SCREW
24	70927202	1	INSULATOR
25	75237806	1	CABLE
26	73126213	2	SHAFT
27	73153853	1	LEVER
28	73153755	16	BUSHING
29	75237808	1	CABLE
30	75237867	4	LEVER
31	75217221	1	SWITCH
32	73134483	1	DECAL
33	73159744	1	DECAL
34	73134482	1	DECAL
35	73134477	1	DECAL
36	70196765	10	CLIP
37	70934710	2	SCREW
38	73126212	2	WASHER
39	75237868	4	LEVER
40	70904002	2	Pin, Split (Cotter), 1/8" x 2"
41	73154522	1	SUPPORT

D2.01/1(001) VALVE CONTROL

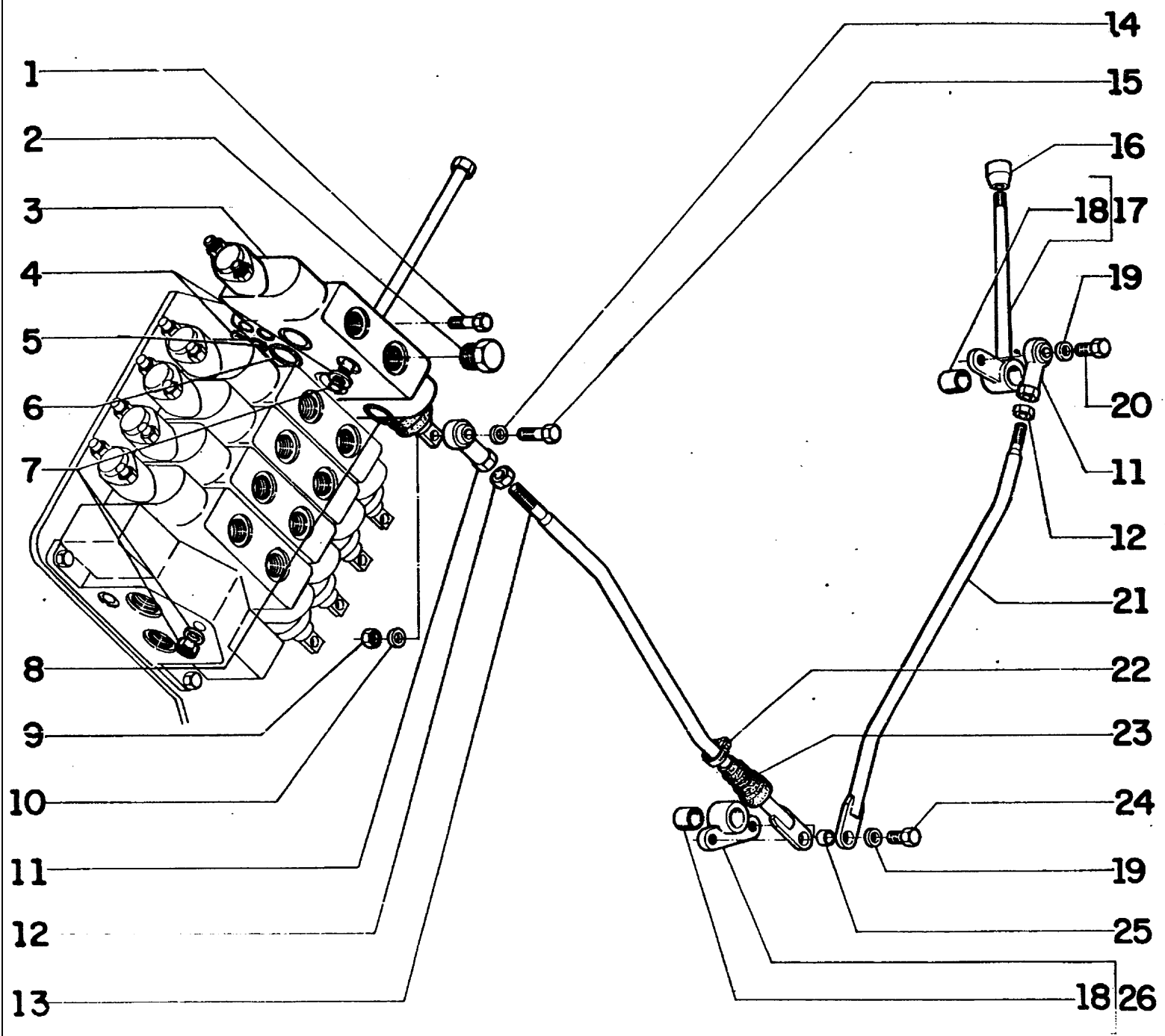

FG85 SERIES B MOTORGRADER

D2.01/1(001) VALVE CONTROL

Ref	Numero de Pieza	Ctd	Descripción
1	70920995	2	SCREW
2	70921204	2	WICK
3	73151104	1	VALVE
4	73151129	3	SHIM
5	70924110	2	O-RING
6	70923988	2	O-RING
7	73151105	1	SCREW KIT
8	70924191	2	O-RING
9	70911026	1	NUT
10	70910287	3	LOCKWASHER
11	70617932	2	BALL JOINT
12	70911048	2	NUT
13	73153769	1	TIEROD
14	70927225	1	SCREW
15	70677006	1	LOCKWASHER
16	73153747	1	KNOB
17	73153752	1	LEVER
18	73125852	2	BUSHING
19	70929156	4	WASHER
20	70927212	1	SCREW
21	73154520	1	TIEROD
22	73153774	1	BELLOWS
23	75221602	1	CLAMP
24	70928798	2	SCREW
25	73153755	2	BUSHING
26	73153758	1	LEVER

D2.02(001) POWER STEERING CONTROL ASSEMBLY

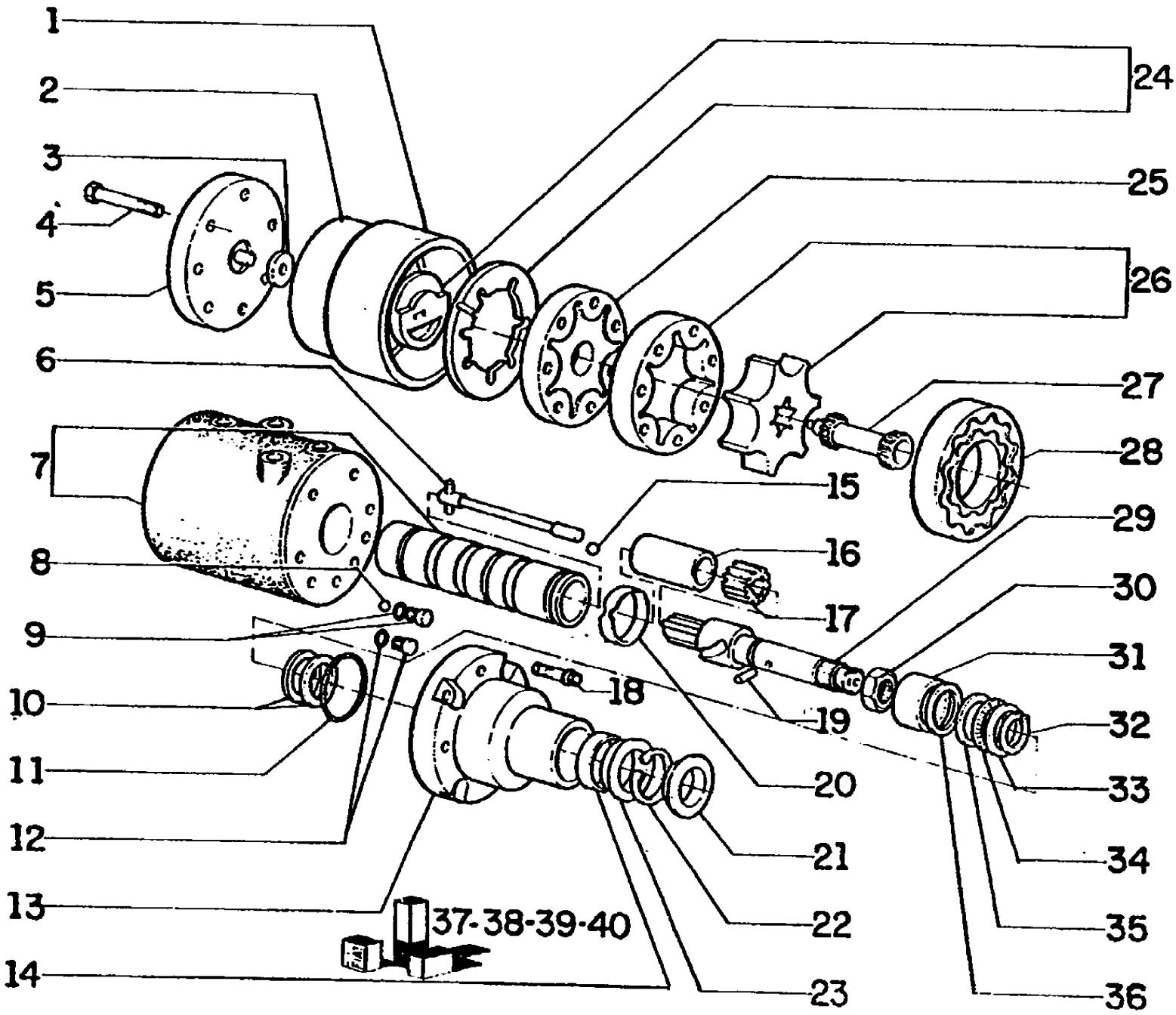

FG85 SERIES B MOTORGRADER

D2.02(001) POWER STEERING CONTROL ASSEMBLY

Ref	Numero de Pieza	Ctd	Descripción
1	75285997	1	SLEEVE
2	75285991	1	SEAL
3	75203200	1	WASHER
4	75285998	7	SCREW
5	75203201	1	COVER
6	75285994	1	TORSION BAR
7	75285996	1	CASE
8	75203191	1	BALL
9	75203359	2	PLUG
10	75285200	1	SHIM
10	75285198	1	SHIM
10	75285199	1	SHIM
10	75285201	1	SHIM
10	75285202	1	SHIM
11	75203176	1	RING
12	75207914	1	PLUG
13	75203354	1	COVER
14	75203173	1	SEAL
15	75203190	1	BALL
16	75285993	1	SPACER
17	75203186	1	BUSHING
18	75203174	4	SCREW
19	75203185	1	PIN
20	75203358	1	SPRING
21	75203170	1	RETAINER
22	75203171	1	PAWL
23	75203172	1	SPACER
24	75203197	1	RING
25	75203196	1	DISC
26	75285990	1	ROTOR
27	75203194	1	SHAFT
28	75203193	1	SPACER
29	75203356	1	SHAFT
30	75286198	1	NUT
31	75203355	1	SPACER
32	75203178	1	RING
33	75203179	1	THRUST PLATE
34	75203180	1	BEARING
35	75203181	1	THRUST PLATE
36	75203182	1	THRUST PLATE
37	75203440	K	KIT (includes
37			8,9,11,12,
37			14,21,22,23)

FG85 SERIES B MOTORGRADER

D2.02(001) POWER STEERING CONTROL ASSEMBLY

Ref	Numero de Pieza	Ctd	Descripción
38	75285992	K	KIT (includes
38			2,3,24,25,
38			26,28)
39	75285995	K	KIT (includes
39			6,10,15,16,17,
39			20,27,29,30,31,
39			32,33,34,35,36)
40	75207946	K	KIT (includes
40			3,4,5)
41	75285200	1	KIT(include 14)

D2.10/1(001) FRONT WHEEL DRIVE CONTROL FOR FRONT WHEEL DRIVE OPTION

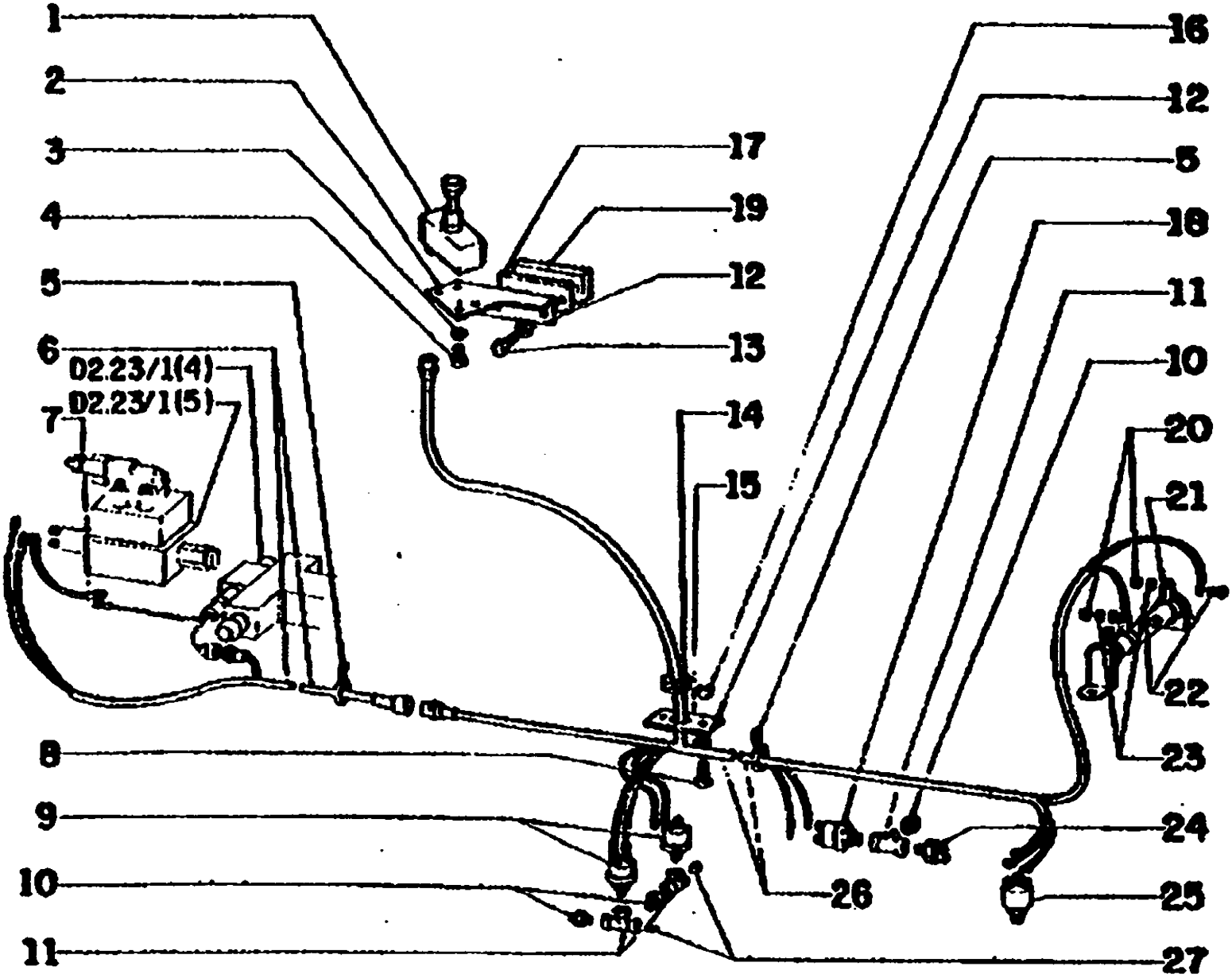

FG85 SERIES B MOTORGRADER

D2.10/1(001) FRONT WHEEL DRIVE CONTROL FOR FRONT WHEEL DRIVE OPTION

Ref	Numero de Pieza	Ctd	Descripción
1	73155692	1	CONTROL UNIT
2	75242301	1	SUPPORT
3	70910285	4	LOCKWASHER
4	70928138	4	SCREW
5	70196765	14	CLIP
6	73155559	1	CABLE
7	73155466	1	CABLE
8	70921565	2	SCREW
9	73155686	3	OIL PRESS. GAUGE
10	70916634	4	CAP
11	70901702	4	FITTING
12	70910287	4	LOCKWASHER
13	70922763	2	SCREW
14	73152811	1	SEAL
15	73155845	1	PLATE
16	70646631	2	NUT
17	73155842	1	PLATE
18	73155687	1	OIL PRESS. GAUGE
19	73155870	1	BLOCK
20	70916621	2	NUT
21	73155691	1	RESISTOR
22	70916079	2	SCREW
23	70910533	2	LOCKWASHER
24	70094334	1	SENSOR
25	73155688	1	TEMPERATURE GAU
26	73155846	1	CABLE
27	70901651	2	PLUG

D2.11(001) STEERING PUMP AND TRANSMISSION PIPING FOR FG85A/R

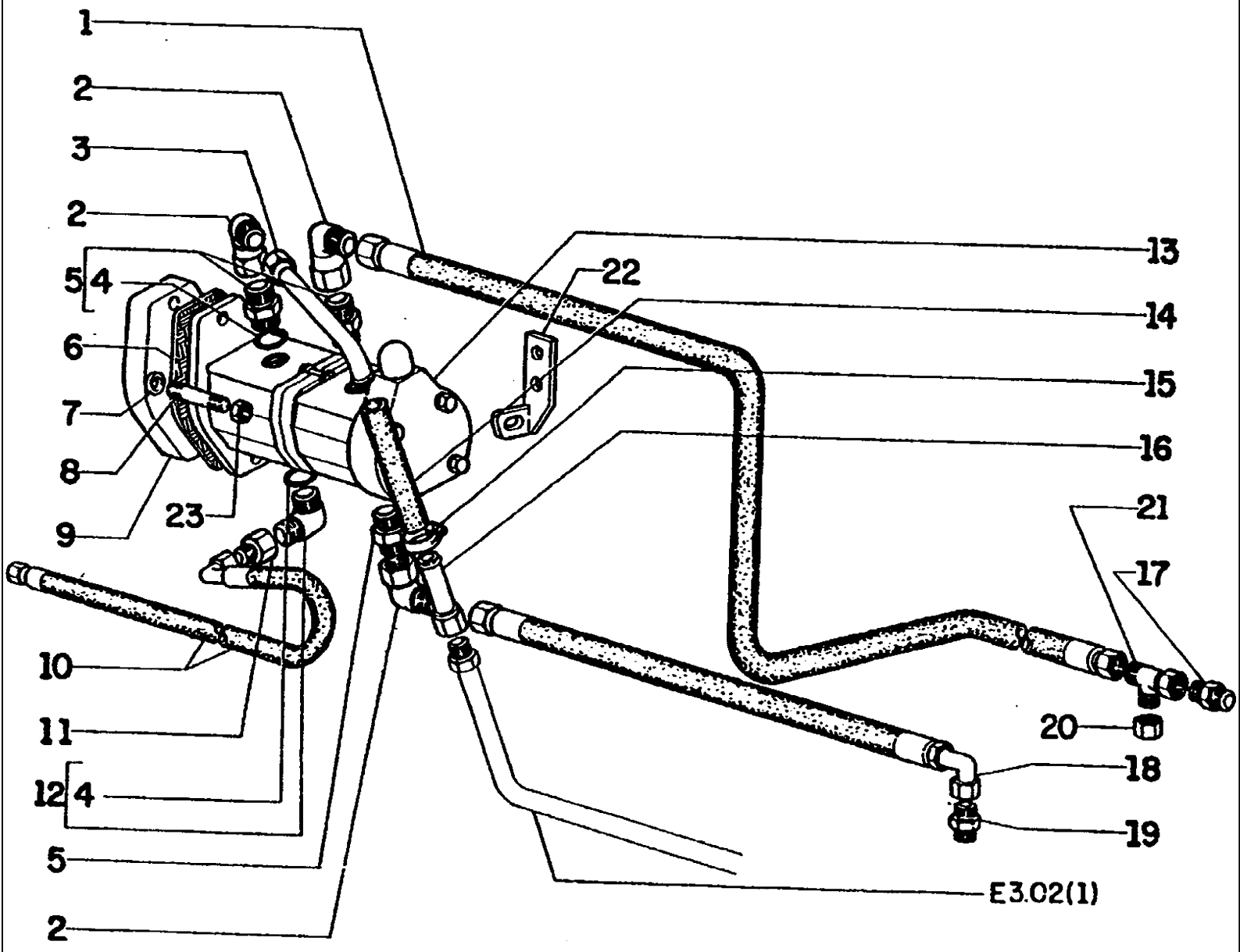

FG85 SERIES B MOTORGRADER

D2.11(001) STEERING PUMP AND TRANSMISSION PIPING FOR FG85A/R

Ref	Numero de Pieza	Ctd	Descripción
1	75237852	1	HOSE ASSY
2	70919624	4	FITTING
3	75238297	1	TUBE
4	70921349	4	O-Ring, 8-1, 90 Duro, .644" ID x .087" Thk
5	70921217	3	CONNECTOR
6	73137195	1	GASKET
7	70950240	2	LOCKWASHER
8	75238877	2	STUD
9	75208360	1	SPACER
10	75216222	1	HOSE ASSY
11	70931681	1	FITTING
12	70921203	1	FITTING
13	75239839	1	PUMP
14	75238306	1	HOSE ASSY
15	70925756	8	CLAMP
16	75238295	1	TUBE
17	70913342	2	FITTING
18	75237853	1	HOSE ASSY
19	75238305	1	CONNECTOR
20	70921244	1	CAP
21	70921691	1	FITTING
22	75237869	1	SUPPORT
23	11702921	2	NUT, M12, CI 10
24	75286604	1	KIT

D2.11(002) STEERING PUMP AND PIPING

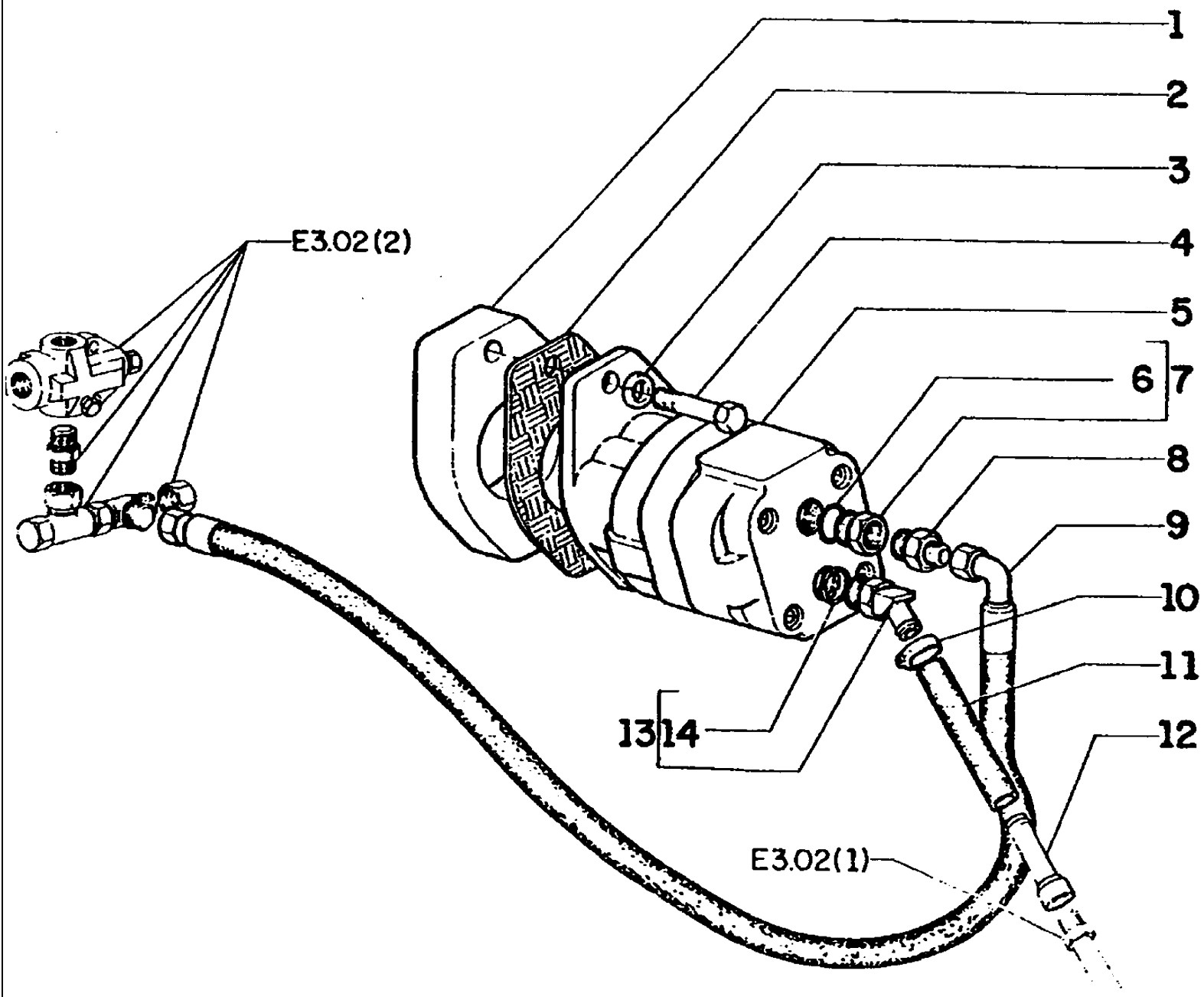

FG85 SERIES B MOTORGRADER

D2.11(002) STEERING PUMP AND PIPING

Ref	Numero de Pieza	Ctd	Descripción
1	75208360	1	SPACER
2	73137195	1	GASKET
3	10517073	2	LOCKWASHER
4	11113731	2	BOLT, Hex, M12 x 75, 10.9
5	75218591	1	PUMP
6	70921349	1	O-Ring, 8-1, 90 Duro, .644" ID x .087" Thk
7	70931681	1	FITTING
8	70921217	1	CONNECTOR
9	75216222	1	HOSE ASSY
10	70925756	2	CLAMP
11	75238885	1	HOSE
12	75238295	1	TUBE
13	70928343	1	ELBOW
14	70930724	1	O'RING

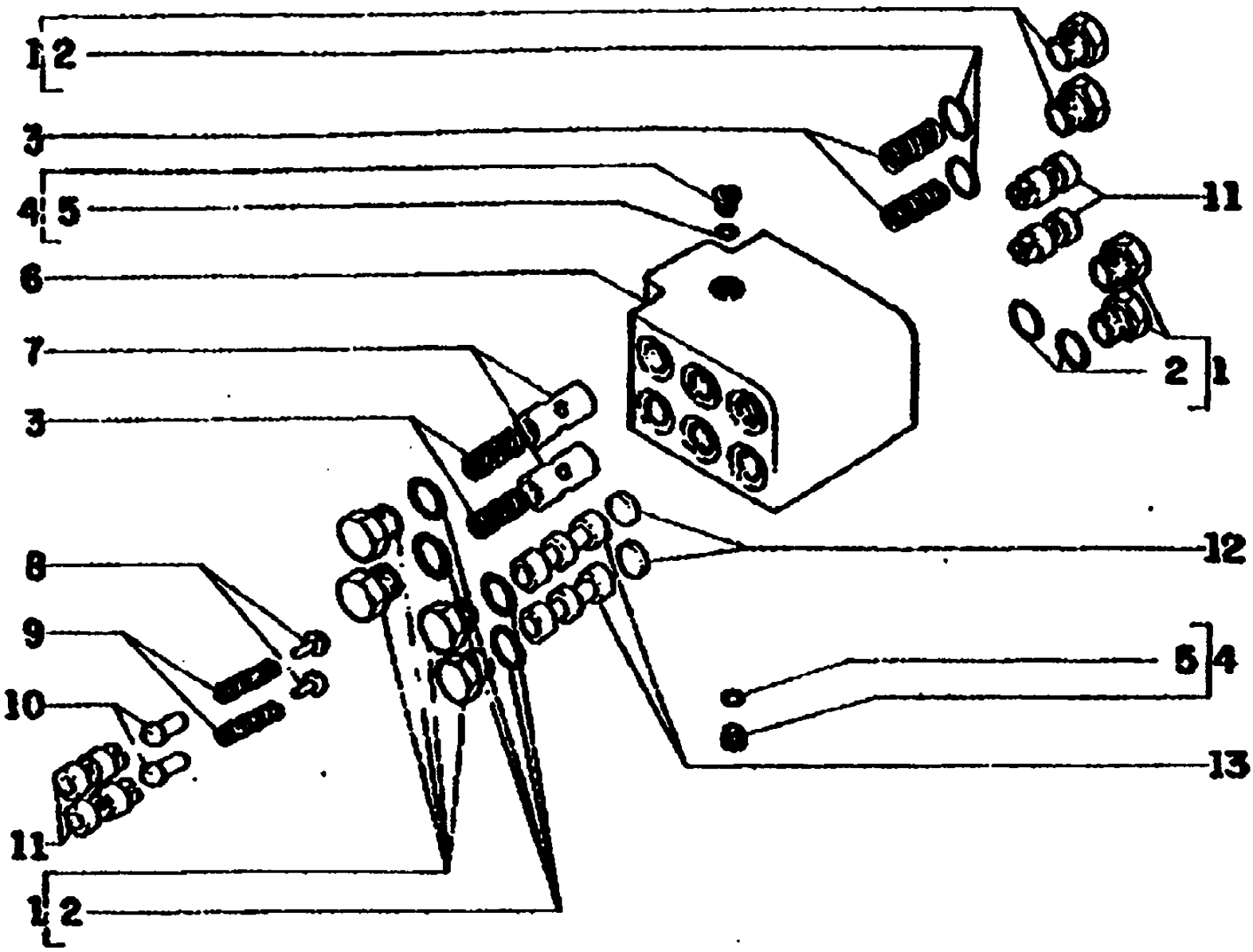
1
2
3
4
5
6
7
3
8
9
10
11
1
2
11
1
2
12
5
4
13

FG85 SERIES B MOTORGRADER

D2.11/1(001) FRONT WHEEL CONTROL VALVE

Ref	Numero de Pieza	Ctd	Descripción
1	70921204	8	BLOCK
2	70921206	8	O'RING
3	73157261	4	SPRING
4	70928603	2	PLUG
5	70921883	2	O-Ring, 4-1, 90 Duro, .351" ID x .072" Thk
6	73157265	1	CASE ASS'Y
7	73157263	2	PLUNGER
8	73157269	2	OVERPRES. VALVE
9	73157267	2	SPRING
10	73157266	2	OVERPRES. VALVE
11	73157268	4	SEAT
12	73157264	2	SPACER
13	73157262	2	PLUNGER

D2.11/1(002) FRONT WHEEL SELECTOR VALVE

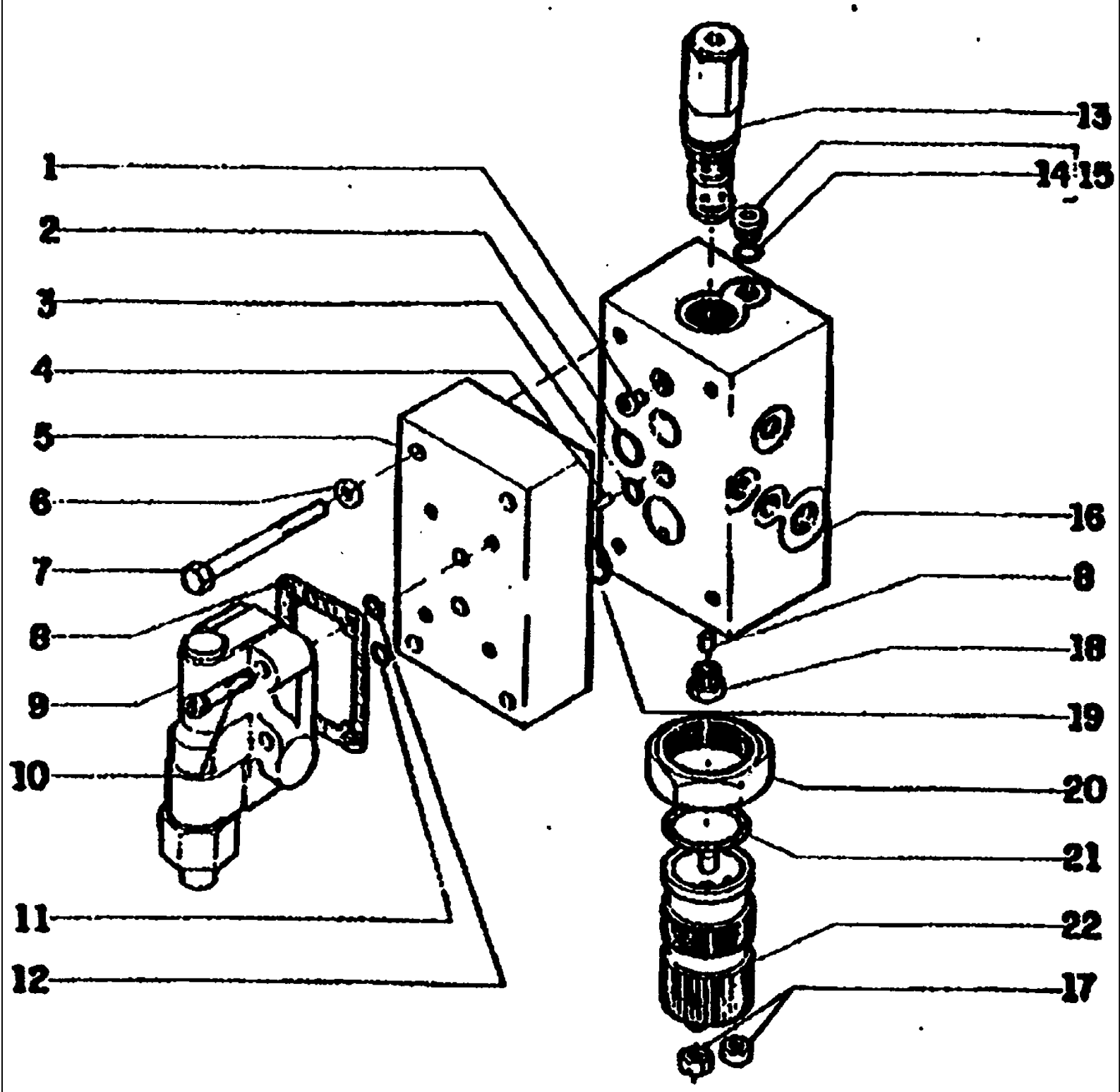

FG85 SERIES B MOTORGRADER

D2.11/1(002) FRONT WHEEL SELECTOR VALVE

Ref	Numero de Pieza	Ctd	Descripción
1	73157257	1	PLUG
2	70923847	1	O'RING
3	73157258	2	O'RING
4	73157250	2	PIN
5	73157253	1	BLOCK
6	70904205	4	LOCKWASHER
7	70923197	4	SCREW
8	73157251	1	SEAL
9	73157252	1	VALVE
10	70922172	4	SCREW
11	70923558	1	O'RING
12	73157256	1	O'RING
13	73157248	1	VALVE
14	70921883	1	O-Ring, 4-1, 90 Duro, .351" ID x .072" Thk
15	70928605	1	PLUG
16	73157254	1	BLOCK
17	70917385	2	NUT
18	73157247	1	PLUG
19	70923808	1	O'RING
20	73157249	1	NUT
21	73157255	1	O'RING
22	73157246	1	SOLENOID

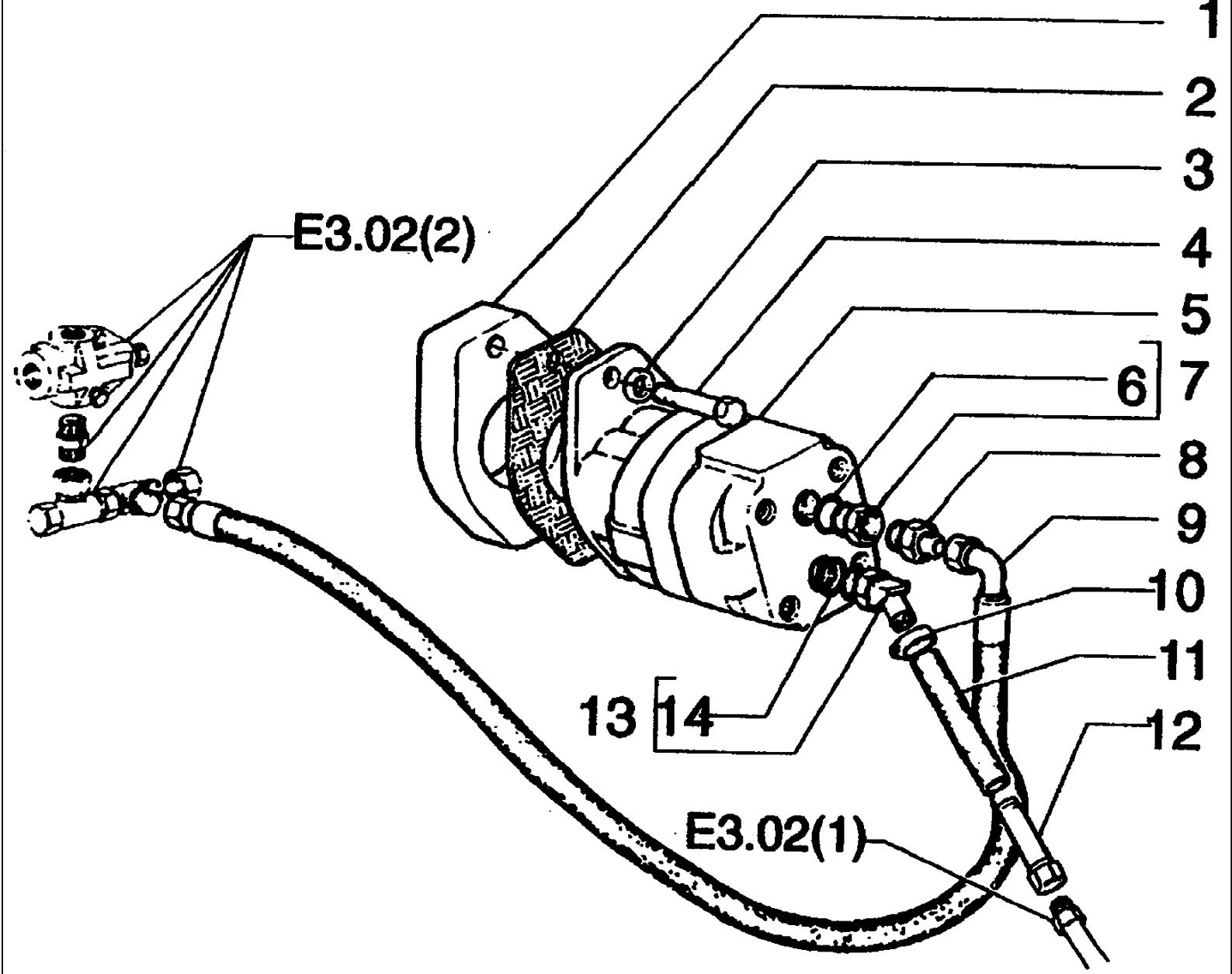
1
2
3
E3.02(2)
4
5
6
7
8
9
10
11
13
14
12
E3.02(1)

FG85 SERIES B MOTORGRADER

D2.11/1(002) STEERING PUMP AND PIPING

Ref	Numero de Pieza	Ctd	Descripción
1	75208360	1	SPACER
2	73137195	1	GASKET
3	10517073	2	LOCKWASHER
4	11113731	2	BOLT, Hex, M12 x 75, 10.9
5	75246340	1	PUMP
6	70921349	1	O-Ring, 8-1, 90 Duro, .644" ID x .087" Thk
7	70931681	1	FITTING
8	70921217	1	CONNECTOR
9	75216222	1	HOSE ASSY
10	70925756	2	CLAMP
11	75238885	1	HOSE
12	75238295	1	TUBE
13	70928343	1	ELBOW
14	70930724	1	O'RING

D2.11/1(003) FRONT WHEEL EQUA-TRAC VALVE

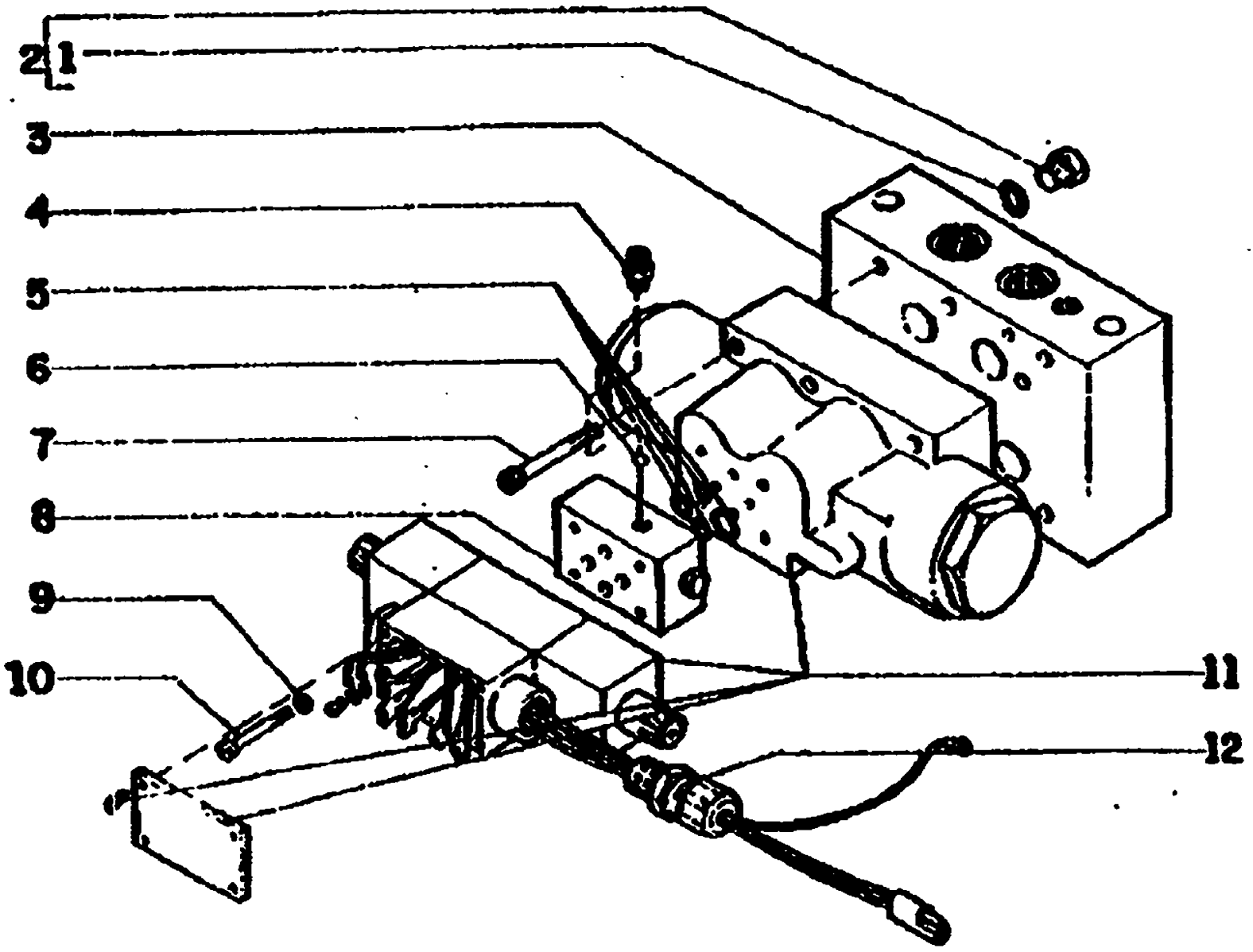

FG85 SERIES B MOTORGRADER

D2.11/1(003) FRONT WHEEL EQUA-TRAC VALVE

Ref	Numero de Pieza	Ctd	Descripción
1	70928488	1	O'RING
2	70935839	1	PLUG
3	73157243	1	BODY
4	73157245	1	FITTING
5	73157238	1	KIT
6	70915771	1	BALL
7	70912281	6	SCREW
8	73157242	1	MANIFOLD
9	70904203	4	LOCKWASHER
10	73157241	4	SCREW
11	73157239	1	VALVE
12	73157244	1	FITTING

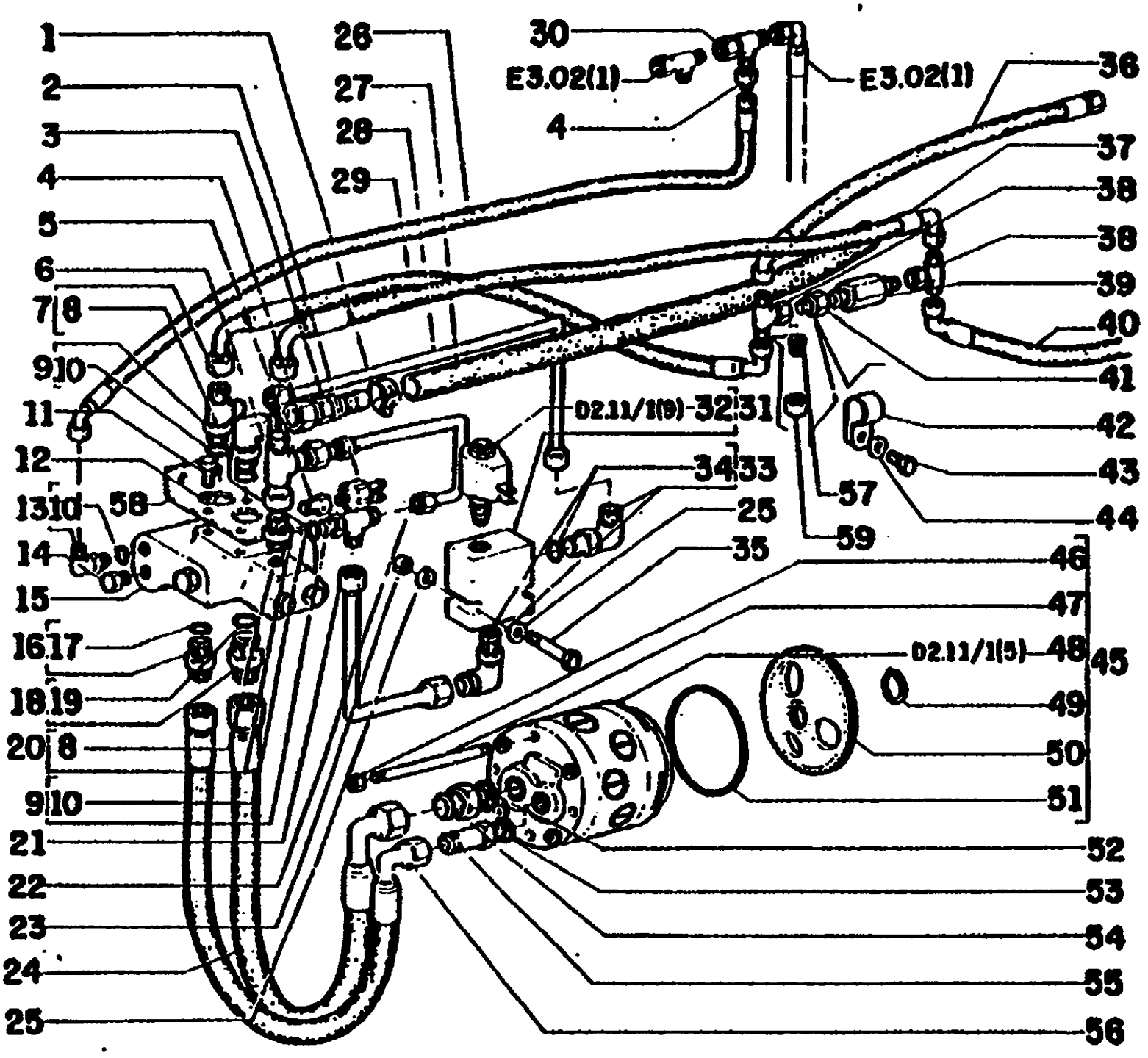
1
2
3
4
5
6
7
8
9
10
11
12
13
14
15
16
17
18
19
20
21
22
23
24
25
26
27
28
29
30
E3.02(1)
4
E3.02(1)
36
37
38
38
39
40
41
42
43
44
D2.11/1(9)-32
31
34
33
25
35
58
57
59
46
47
D2.11/1(5)
48
49
50
51
45
52
53
54
55
56

FG85 SERIES B MOTORGRADER

D2.11/1(004) EMERGENCY STEERING SYSTEM

Ref	Numero de Pieza	Ctd	Descripción
1	70922660	2	CLAMP
2	73127291	1	SWITCH
3	70935039	2	FITTING
4	70923102	2	FITTING
5	70901825	1	FITTING
6	70921298	1	FITTING
7	70922632	1	ELBOW
8	70923568	2	O'RING
9	70924783	2	FITTING
10	70921883	3	O-Ring, 4-1, 90 Duro, .351" ID x .072" Thk
11	70921175	6	SCREW
12	70912441	6	LOCKWASHER
13	70922571	1	ELBOW
14	70907859	1	DRAIN PLUG
15	73150264	1	VALVE
16	70922997	1	FITTING
17	70921214	1	SEAL RING
18	70921228	1	FITTING
19	70921214	1	SEAL RING
20	70924296	1	CONNECTOR
21	73152991	1	TUBE
22	73159137	1	TUBE
23	70920329	2	NUT
24	73158992	1	HOSE ASSY
25	70928190	4	WASHER
26	73159139	1	HOSE ASSY
27	73152992	1	HOSE ASSY
28	73152989	1	TUBE
29	73159136	1	HOSE ASSY
30	70921298	1	FITTING
31	73121471	1	VALVE
32	73130868	1	SOLENOID
33	70925011	2	ELBOW
34	70923565	2	O'RING
35	70930238	2	SCREW
36	73153019	1	HOSE ASSY
37	73159140	1	HOSE ASSY
38	70921276	2	FITTING
39	73128626	1	VALVE
40	73151938	1	HOSE ASSY
41	75239900	1	FITTING
42	70925621	1	CLAMP
43	70922763	1	SCREW

FG85 SERIES B MOTORGRADER

D2.11/1(004) EMERGENCY STEERING SYSTEM

Ref	Numero de Pieza	Ctd	Descripción
44	70930370	1	WASHER
45	73134881	1	PUMP
46	16100811	4	NUT, M8, Cl 8
47	79062657	4	STUD
48	73143688	1	PUMP
49	11066776	2	RING, RETAINING, M19, Ext
50	73143691	1	GEAR
51	79091095	1	O'RING
52	11271160	1	SEAL
53	10263460	1	WASHER, SEALING, M22.3 x 28 x 1.5
54	79066947	1	FITTING
55	79066976	1	FITTING
56	73158991	1	HOSE ASSY
57	73134216	1	FITTING
58	73152993	1	SUPPORT
59	70919068	1	NUT

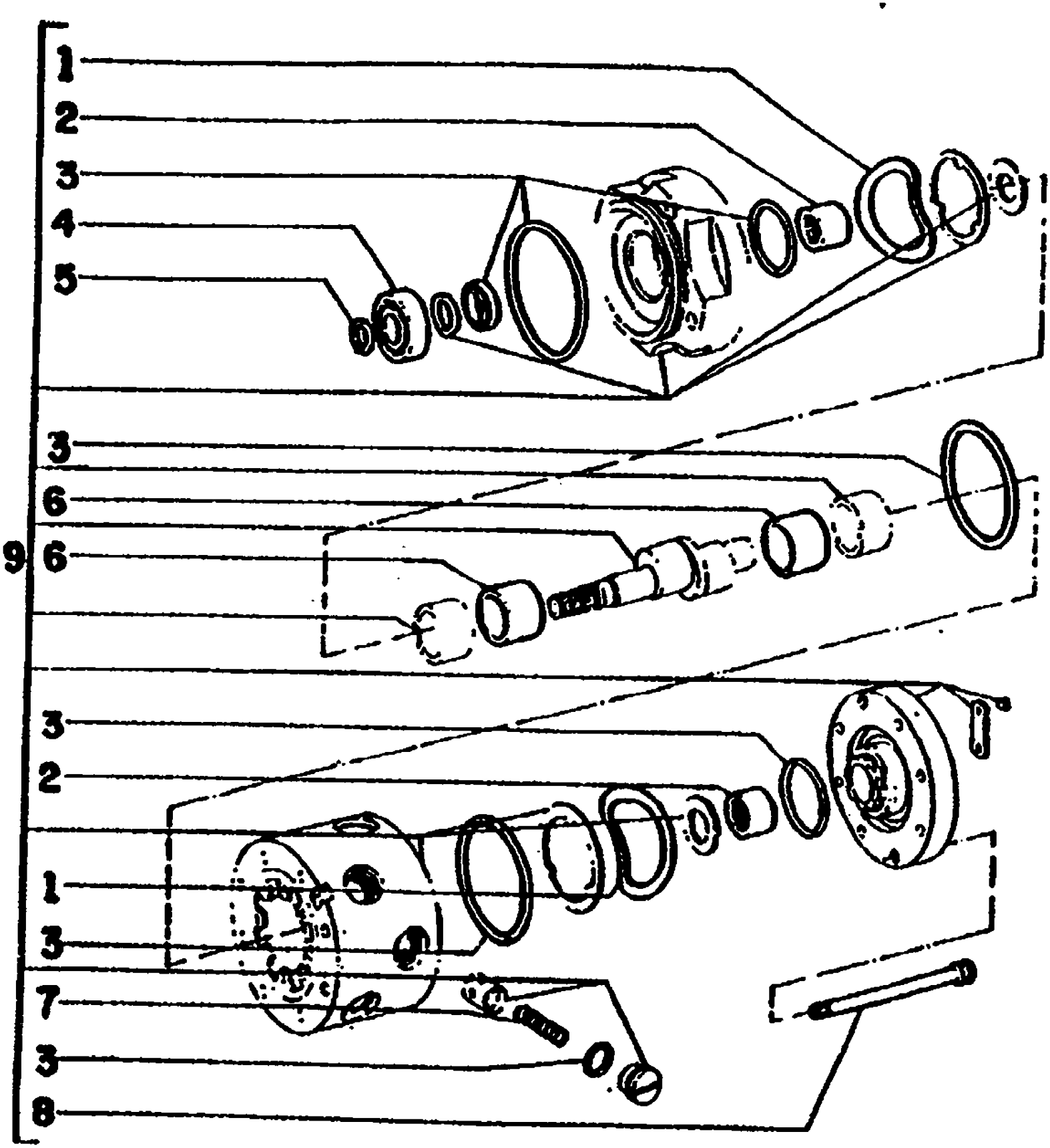
1
2
3
4
5
3
6
9
6
3
2
1
3
7
3
8

FG85 SERIES B MOTORGRADER

D2.11/1(005) EMERGENCY STEERING - PUMP

Ref	Numero de Pieza	Ctd	Descripción
1	79091165	2	RING
2	79072575	2	BEARING
3	79087045	1	KIT
4	79072574	1	BEARING
5	11066876	1	RING, RETAINING, M20, Ext
6	79072576	2	BUSHING
7	79072578	8	SPRING
8	14421670	4	SCREW
9	73143688	1	PUMP

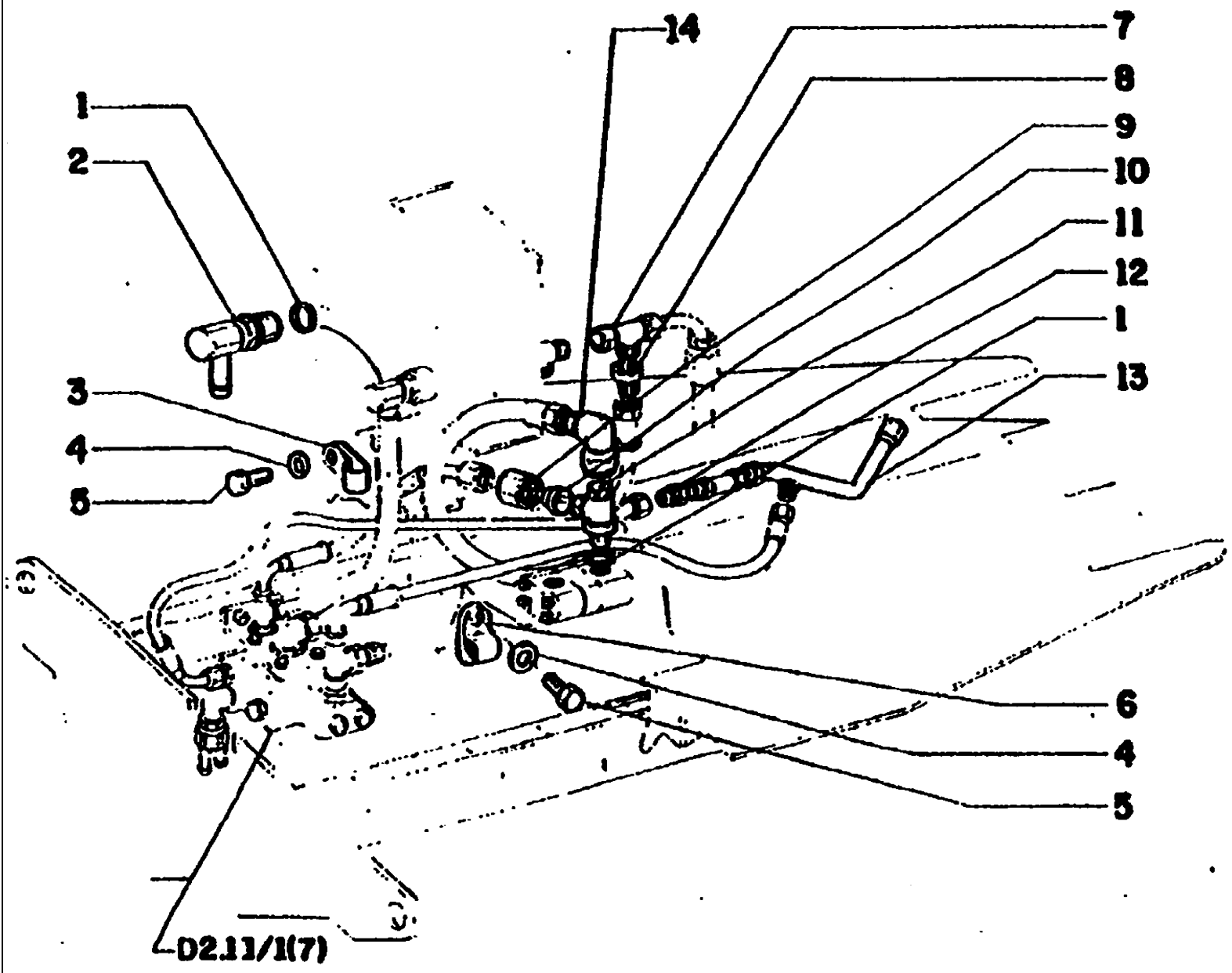
14
7
8
9
10
11
12
1
13
1
2
3
4
5
6
4
5
D2.11/1(7)

FG85 SERIES B MOTORGRADER

D2.11/1(006) EMERGENCY STEERING

Ref	Numero de Pieza	Ctd	Descripción
1	70923988	2	O'RING
2	70928888	1	ELBOW
3	70925619	1	CLAMP
4	70677006	2	WASHER
5	70927400	2	SCREW
6	70925620	1	CLAMP
7	70921298	1	FITTING
8	70923102	1	FITTING
9	70919197	1	NUT
10	70925851	1	FITTING
11	70922181	1	FITTING
12	73159493	1	CONNECTOR
13	73159492	1	TUBE
14	70919625	1	ELBOW

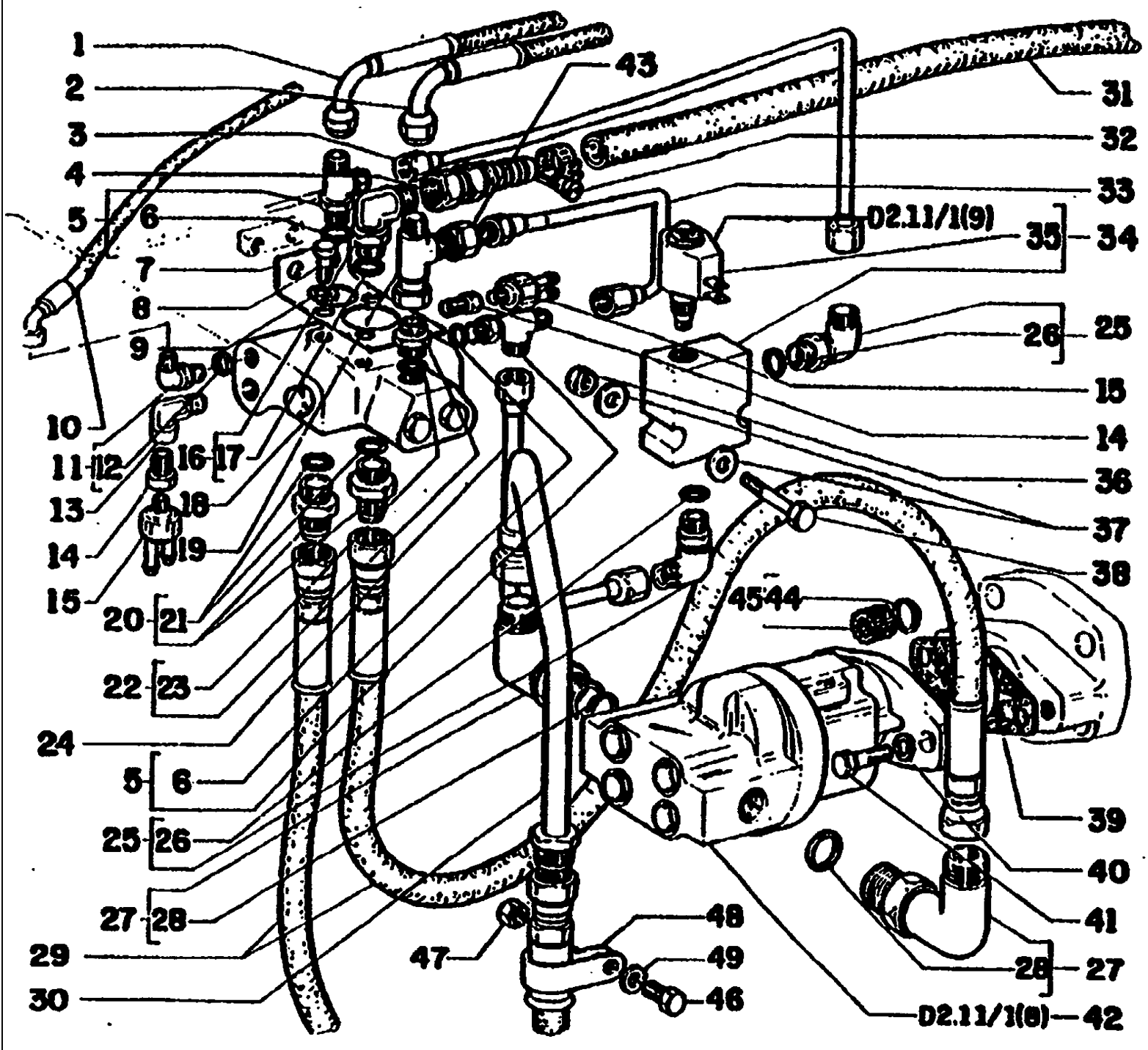
1
2
3
4
5
6
7
8
9
10
11
12
13
14
15
16
17
18
19
20
21
22
23
24
5
6
25
26
27
28
29
30
43
31
32
33
D2.11/1(9)
35
34
26
25
15
14
36
37
38
4544
39
40
41
28
27
D2.11/1(8)
42
48
49
46
47

FG85 SERIES B MOTORGRADER

D2.11/1(007) EMERGENCY STEERING SYSTEM

Ref	Numero de Pieza	Ctd	Descripción
1	73159489	1	HOSE ASSY
2	73159488	1	HOSE ASSY
3	73152989	1	TUBE
4	70935039	1	FITTING
5	70924783	2	FITTING
6	70921883	2	O-Ring, 4-1, 90 Duro, .351" ID x .072" Thk
7	73152993	1	SUPPORT
8	70921175	6	SCREW
9	70912441	6	LOCKWASHER
10	73159139	1	HOSE ASSY
11	70922571	1	ELBOW
12	70921883	1	O-Ring, 4-1, 90 Duro, .351" ID x .072" Thk
13	70901722	1	ELBOW
14	70901825	2	FITTING
15	73127291	2	SWITCH
16	70922632	1	ELBOW
17	70923568	1	O'RING
18	73150264	1	VALVE
19	70921298	1	FITTING
20	70924297	2	FITTING
21	14458180	2	O-RING, -123, 70 Duro, 1.174" ID x .103" Thk
22	70924296	1	CONNECTOR
23	70923568	1	O'RING
24	73152991	1	TUBE
25	70925011	2	ELBOW
26	70923565	2	O'RING
27	70927094	2	ELBOW
28	70923379	2	O'RING
29	73153012	2	HOSE ASSY
30	73152987	1	TUBE
31	73159491	1	HOSE
32	70922660	2	CLAMP
33	73159137	1	TUBE
34	73121471	1	VALVE
35	73130868	1	SOLENOID
36	70920329	2	NUT
37	70928190	4	WASHER
38	70930238	2	SCREW
39	70651322	1	GASKET
40	70910287	2	LOCKWASHER
41	70922763	2	SCREW
42	73150265	1	PUMP
43	70923102	1	FITTING

FG85 SERIES B MOTORGRADER

D2.11/1(007) EMERGENCY STEERING SYSTEM

Ref	Numero de Pieza	Ctd	Descripción
44	71004761	1	SNAP RING
45	73066756	1	SLEEVE
46	70922763	1	SCREW
47	70911026	1	NUT
48	70925621	2	CLAMP
49	70929156	1	WASHER

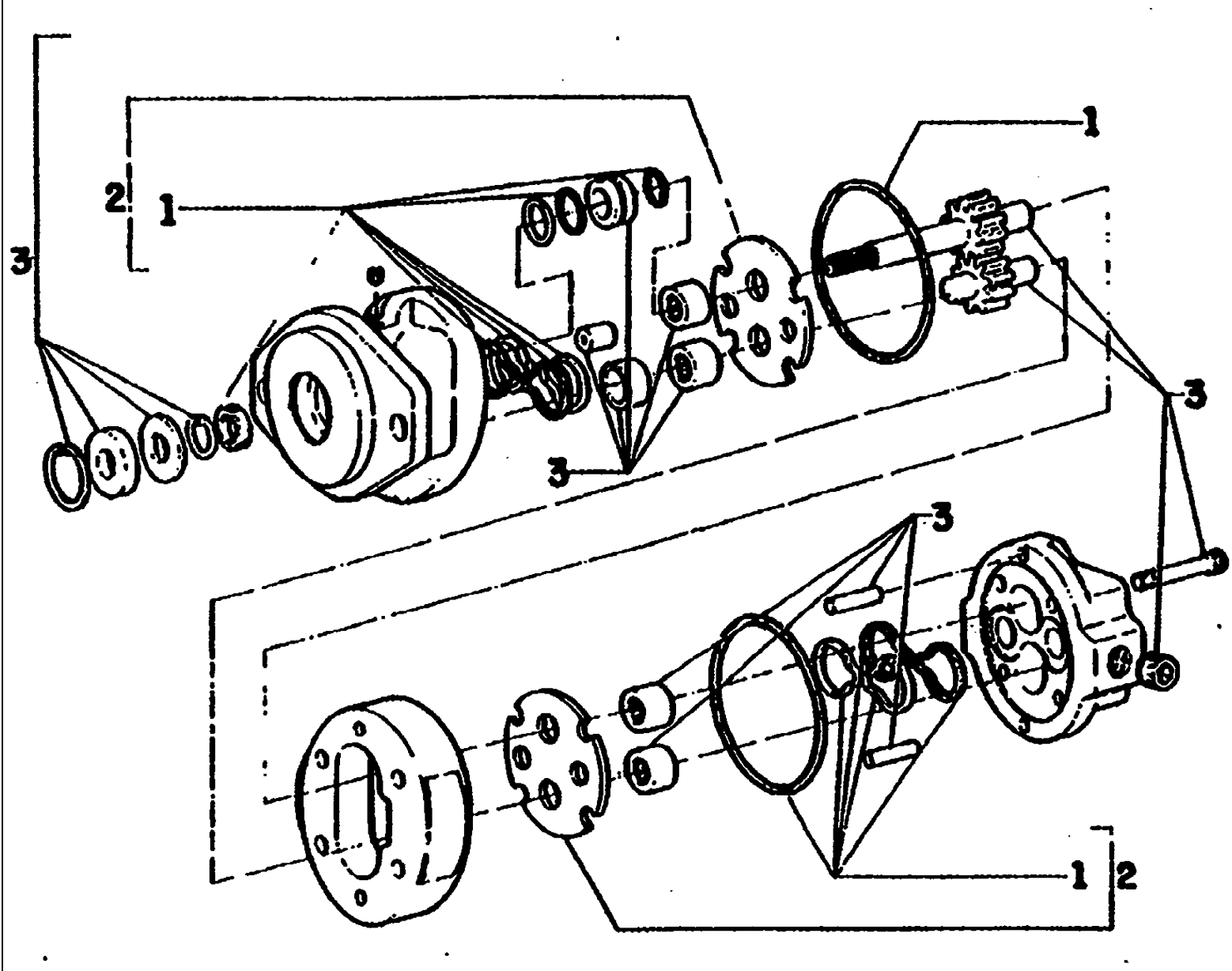
1
2
1
3
3
3
3
1
2

FG85 SERIES B MOTORGRADER

D2.11/1(008) EMERGENCY STEERING - PUMP

Ref	Numero de Pieza	Ctd	Descripción
1	75287022	1	KIT
2	75287023	1	KIT
3	75287024	1	KIT

D2.11/1(009) SOLENOID VALVE EMERGENCY STEERING

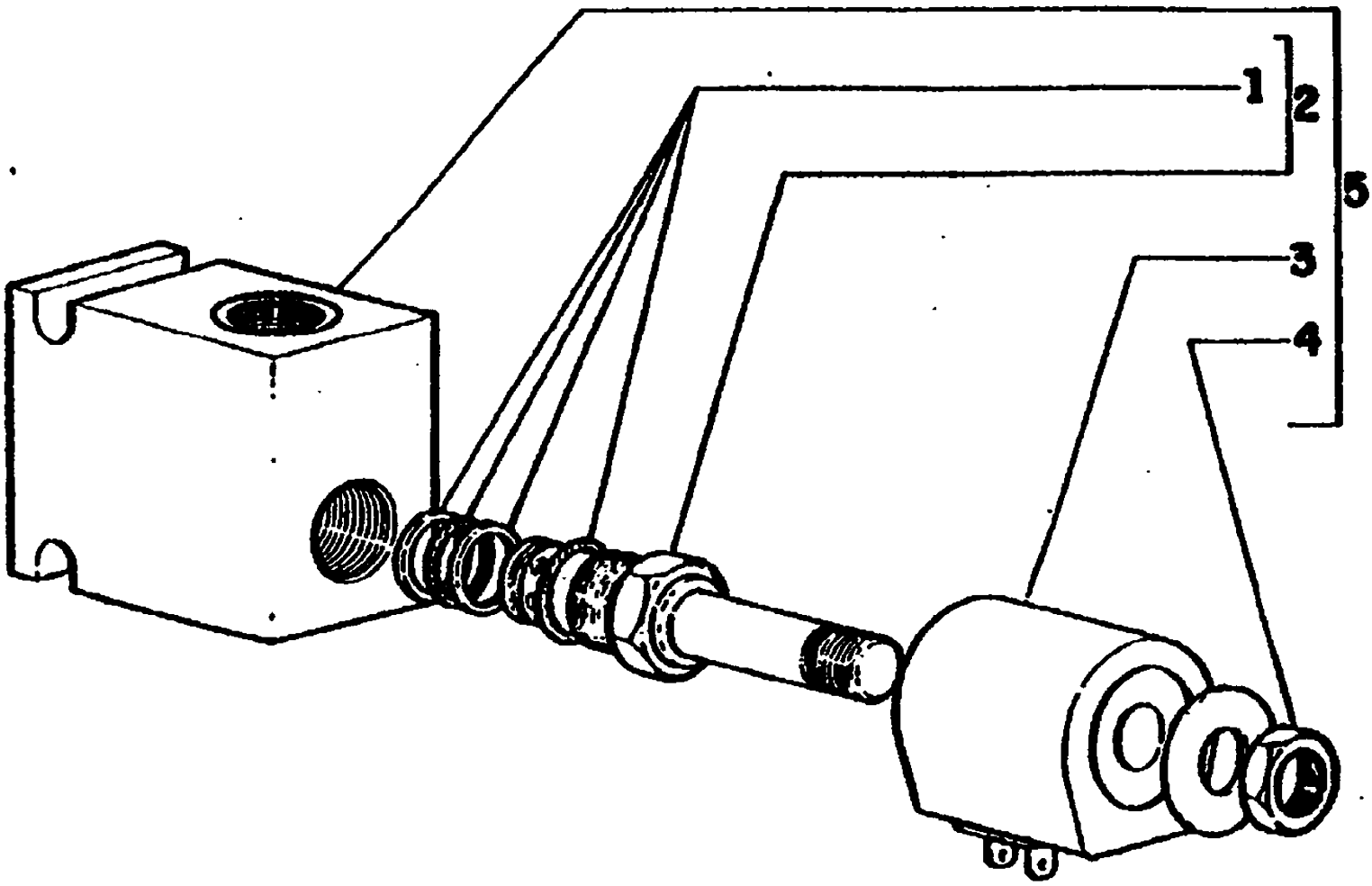

FG85 SERIES B MOTORGRADER

D2.11/1(009) SOLENOID VALVE EMERGENCY STEERING

Ref	Numero de Pieza	Ctd	Descripción
1	73130869	1	KIT
2	73130868	1	SOLENOID
3	73159102	1	COIL
4	73113425	1	NUT
5	73121471	1	VALVE

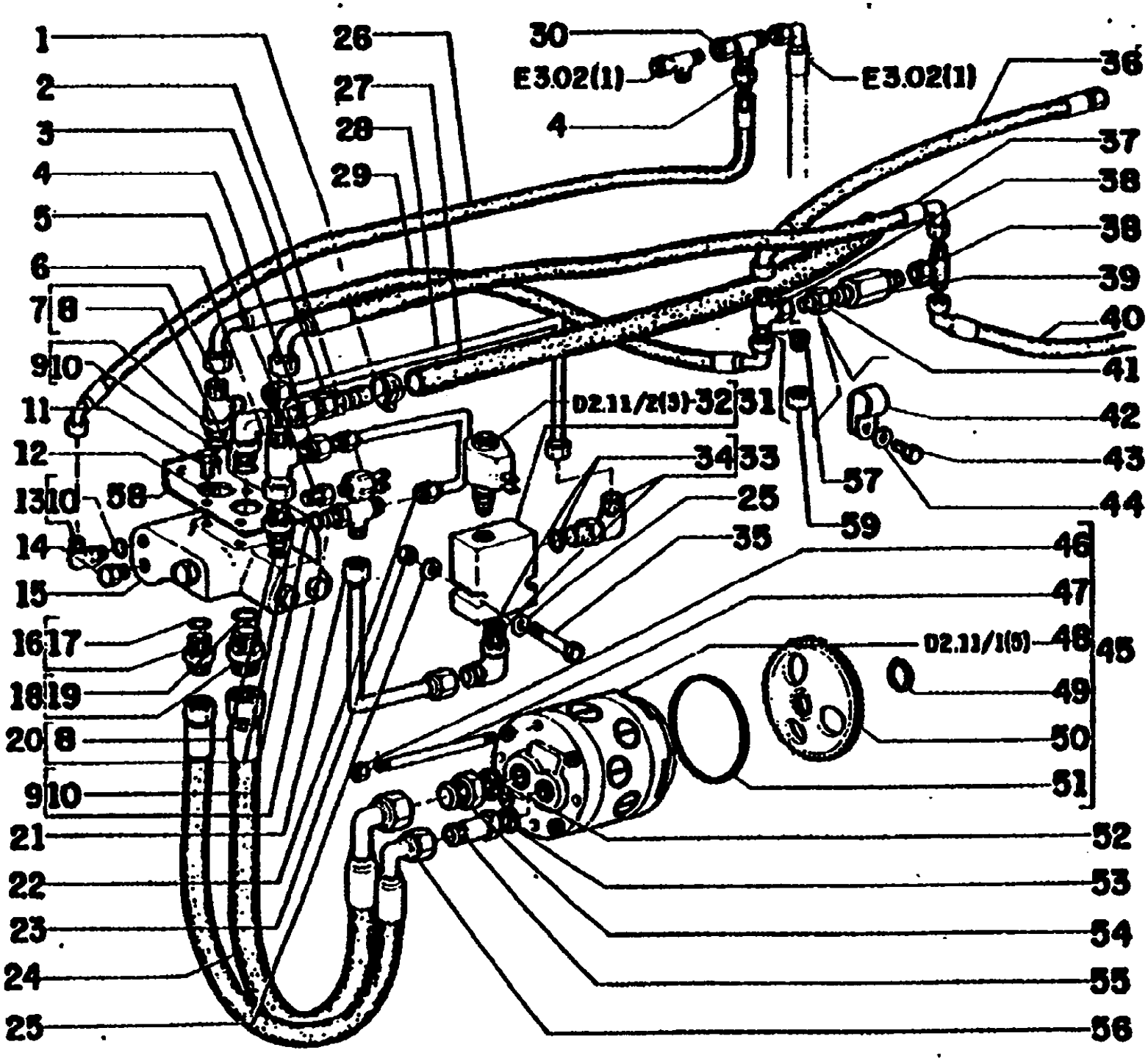
1
2
3
4
5
6
7
8
9
10
11
12
13
14
15
16
17
18
19
20
21
22
23
24
25
26
27
28
29
30
E3.02(1)
4
E3.02(1)
36
37
38
38
39
40
41
42
43
44
D2.11/2(3)
32
31
34
33
25
35
57
59
58
46
47
D2.11/1(5)
48
45
49
50
51
52
53
54
55
56

FG85 SERIES B MOTORGRADER

D2.11/2(001) EMERGENCY STEERING SYSTEM FOR 12VOLT MACHINES

Ref	Numero de Pieza	Ctd	Descripción
1	70922660	2	CLAMP
2	73127291	1	SWITCH
3	70935039	2	FITTING
4	70923102	2	FITTING
5	70901825	1	FITTING
6	70921298	1	FITTING
7	70922632	1	ELBOW
8	70923568	2	O'RING
9	70924783	2	FITTING
10	70921883	3	O-Ring, 4-1, 90 Duro, .351" ID x .072" Thk
11	70921175	6	SCREW
12	70912441	6	LOCKWASHER
13	70922571	1	ELBOW
14	70907859	1	DRAIN PLUG
15	73150264	1	VALVE
16	70922997	1	FITTING
17	70921214	1	SEAL RING
18	70921228	1	FITTING
19	70921214	1	SEAL RING
20	70924296	1	CONNECTOR
21	73152991	1	TUBE
22	73159137	1	TUBE
23	70920329	2	NUT
24	73158992	1	HOSE ASSY
25	70928190	4	WASHER
26	73159139	1	HOSE ASSY
27	73152992	1	HOSE ASSY
28	73152989	1	TUBE
29	73159136	1	HOSE ASSY
30	70921298	1	FITTING
31	75241752	1	SOLENOID
32	75287124	1	SOLENOID
33	70925011	2	ELBOW
34	70923565	2	O'RING
35	70930238	2	SCREW
36	73153019	1	HOSE ASSY
37	73159140	1	HOSE ASSY
38	70921276	2	FITTING
39	73128626	1	VALVE
40	73151938	1	HOSE ASSY
41	75239900	1	FITTING
42	70925621	1	CLAMP
43	70922763	1	SCREW

FG85 SERIES B MOTORGRADER

D2.11/2(001) EMERGENCY STEERING SYSTEM FOR 12VOLT MACHINES

Ref	Numero de Pieza	Ctd	Descripción
44	70930370	1	WASHER
45	73134881	1	PUMP
46	16100811	4	NUT, M8, Cl 8
47	79062657	4	STUD
48	73143688	1	PUMP
49	11066776	2	RING, RETAINING, M19, Ext
50	73143691	1	GEAR
51	79091095	1	O'RING
52	11271160	1	SEAL
53	10263460	1	WASHER, SEALING, M22.3 x 28 x 1.5
54	79066947	1	FITTING
55	79066976	1	FITTING
56	73158991	1	HOSE ASSY
57	73134216	1	FITTING
58	73152993	1	SUPPORT
59	70919068	1	NUT

D2.11/2(002) EMERGENCY STEERING SYSTEM FOR FG85 SERIES FOR 12VOLTS MACHINES

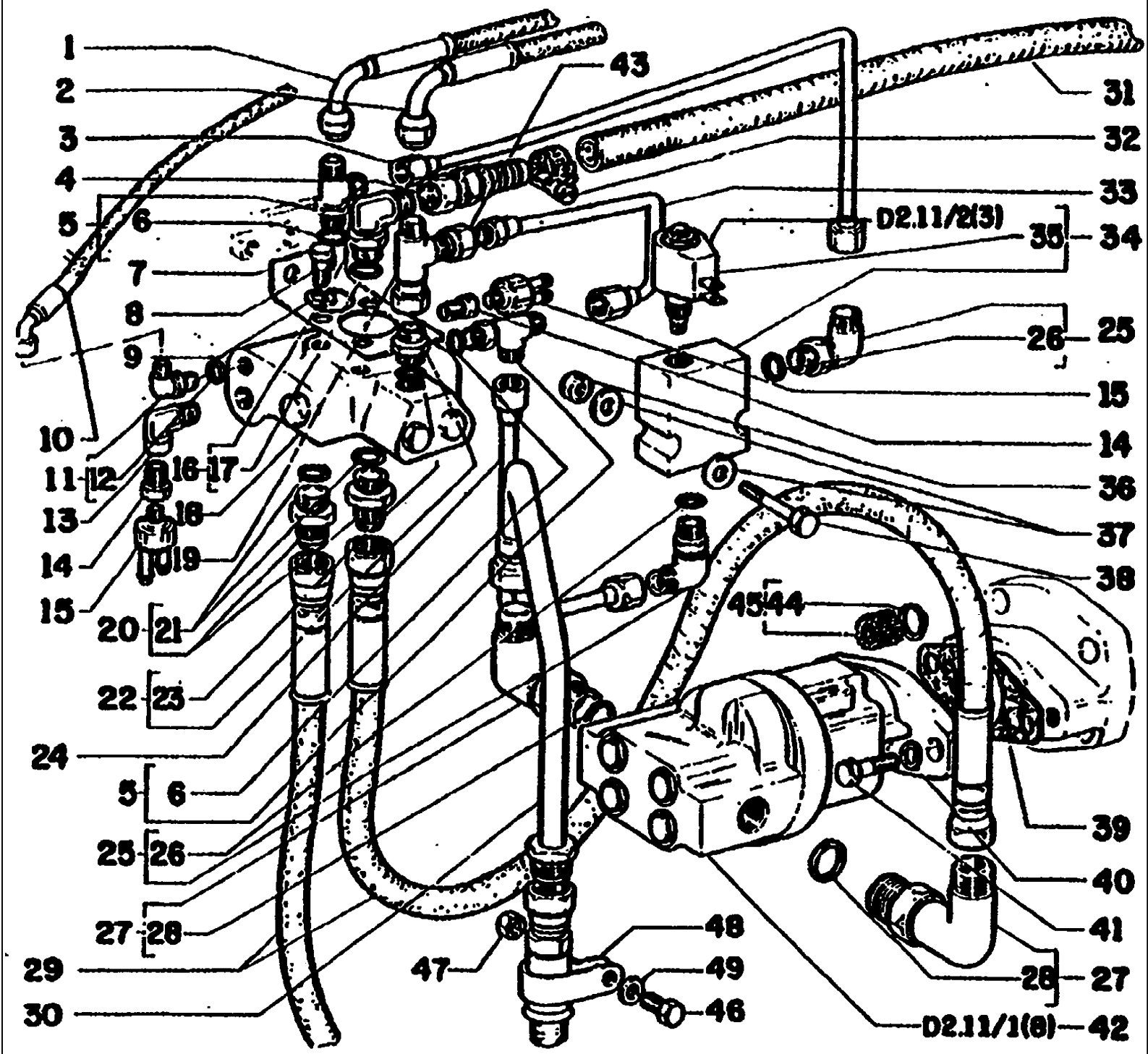

FG85 SERIES B MOTORGRADER

D2.11/2(002) EMERGENCY STEERING SYSTEM FOR FG85 SERIES FOR 12VOLTS MACHINES

Ref	Numero de Pieza	Ctd	Descripción
1	73159489	1	HOSE ASSY
2	73159488	1	HOSE ASSY
3	73152989	1	TUBE
4	70935039	1	FITTING
5	70924783	2	FITTING
6	70921883	2	O-Ring, 4-1, 90 Duro, .351" ID x .072" Thk
7	73152993	1	SUPPORT
8	70921175	6	SCREW
9	70912441	6	LOCKWASHER
10	73159139	1	HOSE ASSY
11	70922571	1	ELBOW
12	70921883	1	O-Ring, 4-1, 90 Duro, .351" ID x .072" Thk
13	70901722	1	ELBOW
14	70901825	2	FITTINGS
15	73127291	2	SWITCH
16	70922632	1	ELBOW
17	70923568	1	O'RING
18	73150264	1	VALVE
19	70921298	1	FITTING
20	70924297	2	FITTING
21	14458180	2	O-RING, -123, 70 Duro, 1.174" ID x .103" Thk
22	70924296	1	CONNECTOR
23	70923568	1	O'RING
24	73152991	1	TUBE
25	70925011	2	ELBOW
26	70923565	2	O'RING
27	70927094	2	ELBOW
28	70923379	2	O'RING
29	73153012	2	HOSE ASSY
30	73152987	1	TUBE
31	73159491	1	HOSE
32	70922660	2	CLAMP
33	73159137	1	TUBE
34	75241752	1	SOLENOID
35	75287124	1	SOLENOID
36	70920329	2	NUT
37	70928190	4	WASHER
38	70930238	2	SCREW
39	70651322	1	GASKET
40	70910287	2	LOCKWASHER
41	70922763	2	SCREW
42	73150265	1	PUMP
43	70923102	1	FITTING

FG85 SERIES B MOTORGRADER

D2.11/2(002) EMERGENCY STEERING SYSTEM FOR FG85 SERIES FOR 12VOLTS MACHINES

Ref	Numero de Pieza	Ctd	Descripción
44	71004761	1	SNAP RING
45	73066756	1	SLEEVE
46	70922263	1	SCREW
47	70911026	1	NUT
48	70925621	2	CLAMP
49	70929156	1	WASHER

D2.11/2(003) SOLENOID VALVE ASS'Y - STEERING EMERGENCY FOR 12VOLT MACHINES

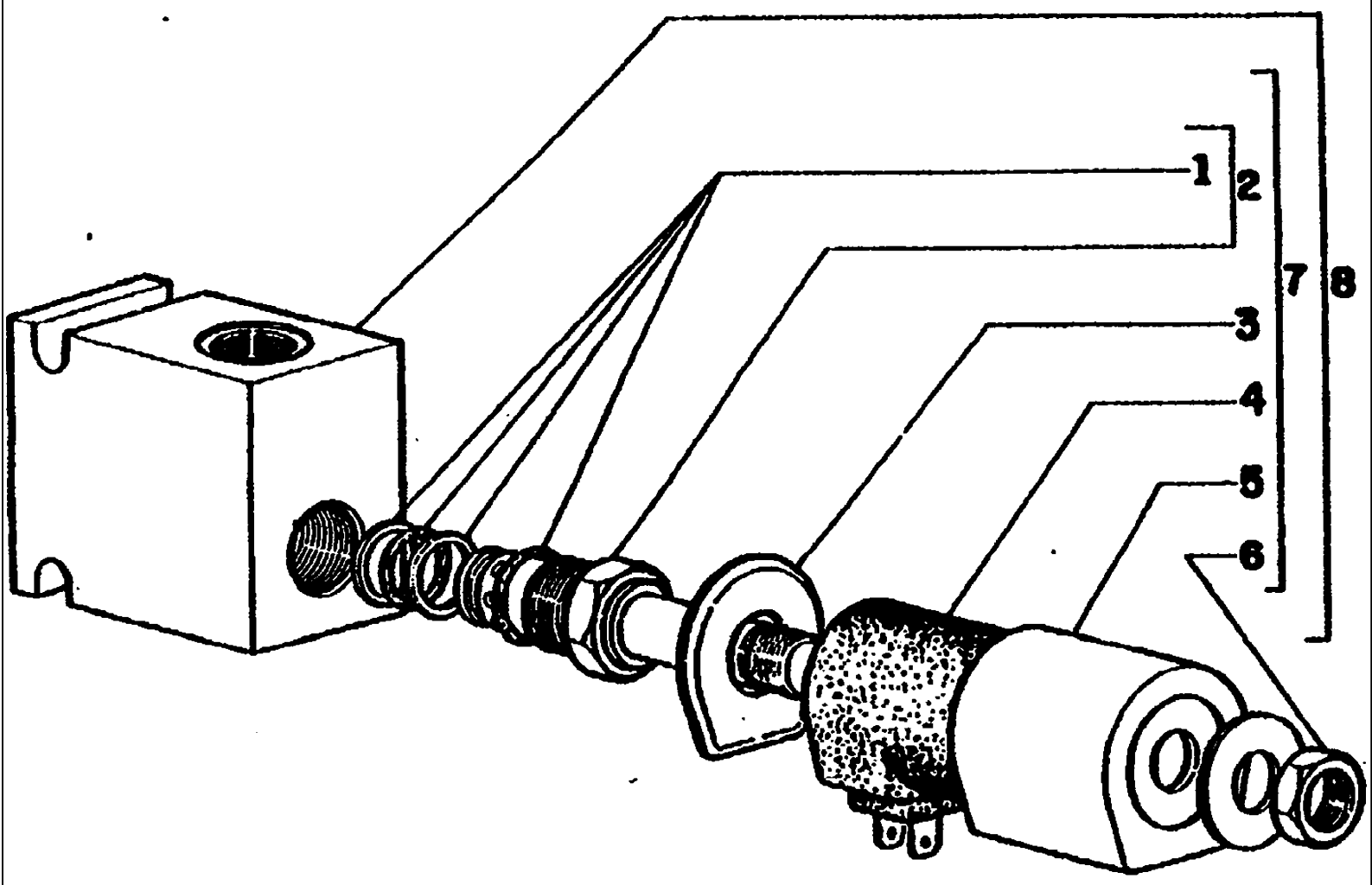

FG85 SERIES B MOTORGRADER

D2.11/2(003) SOLENOID VALVE ASS'Y - STEERING EMERGENCY FOR 12VOLT MACHINES

Ref	Numero de Pieza	Ctd	Descripción
1	73130869	1	KIT
2	73130868	1	SOLENOID
3	73128151	1	COVER
4	75241740	1	VALVE
5	73128153	1	CASE ASS'Y
6	73113425	1	NUT
7	75287124	1	SOLENOID
8	75241752	1	SOLENOID

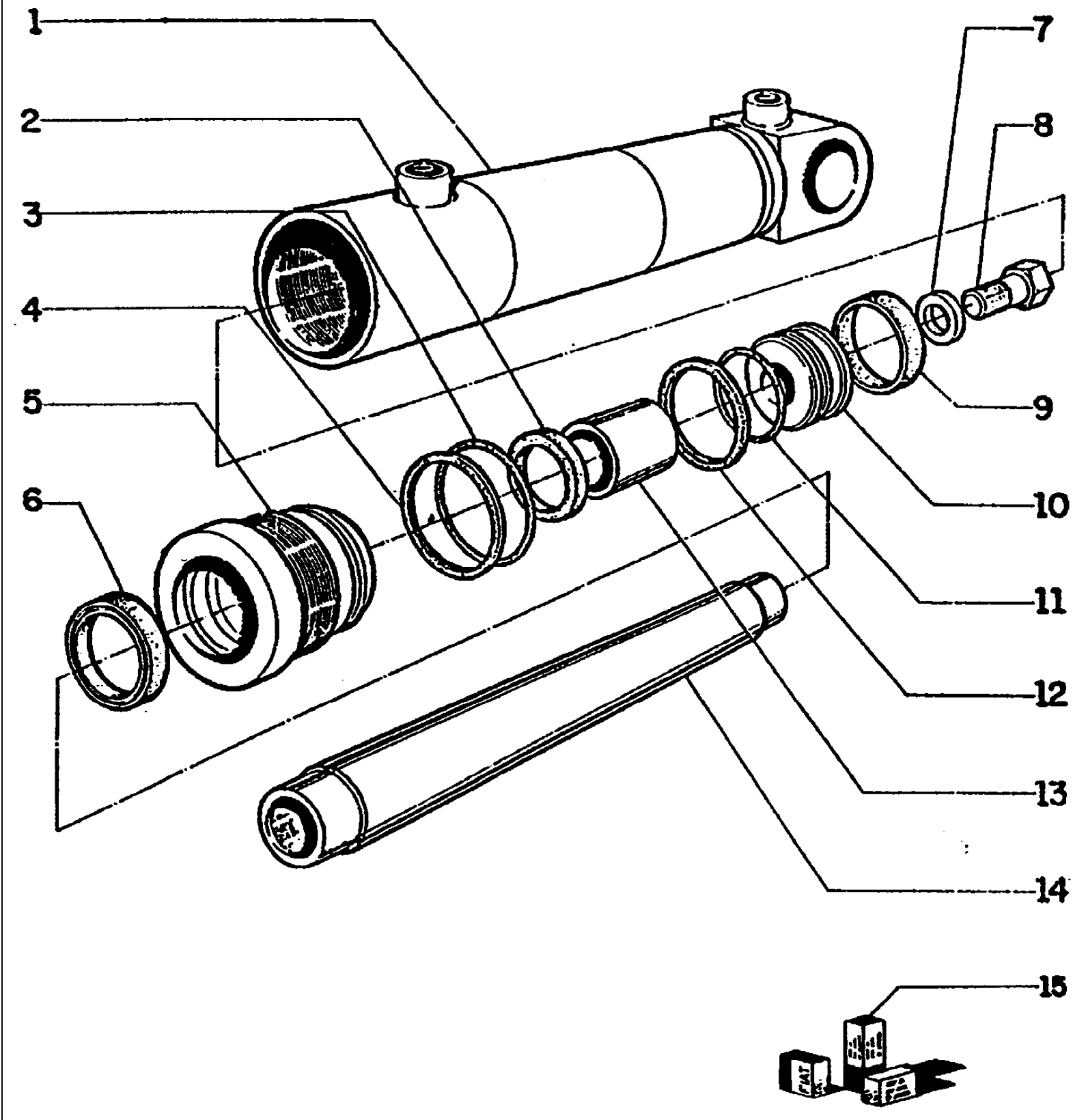
1
2
3
4
5
6
7
8
9
10
11
12
13
14
15

FG85 SERIES B MOTORGRADER

D2.12(001) STEERING CYLINDER

Ref	Numero de Pieza	Ctd	Descripción
1	73065115	1	TUBE
2	73069566	1	SEAL
3	70924158	1	0'RING
4	73063363	1	SEAL
5	73065105	1	HEAD
6	73055125	1	SEAL
7	70931306	1	WASHER
8	70921169	1	SCREW
9	73065110	1	SEAL
10	73132432	1	PISTON
11	70923684	1	O'RING
12	73065109	1	SEAL
13	73065106	1	BUSHING
14	73132430	1	ROD
15	73065112	K	KIT (INCLUDE
15			ITEMS 2-3-4-6-9-
15			11-12)

D2.13(001) STEERING PUMP (75218591)FG85A EFF S/N 734, FG105A EFF S/N 260.

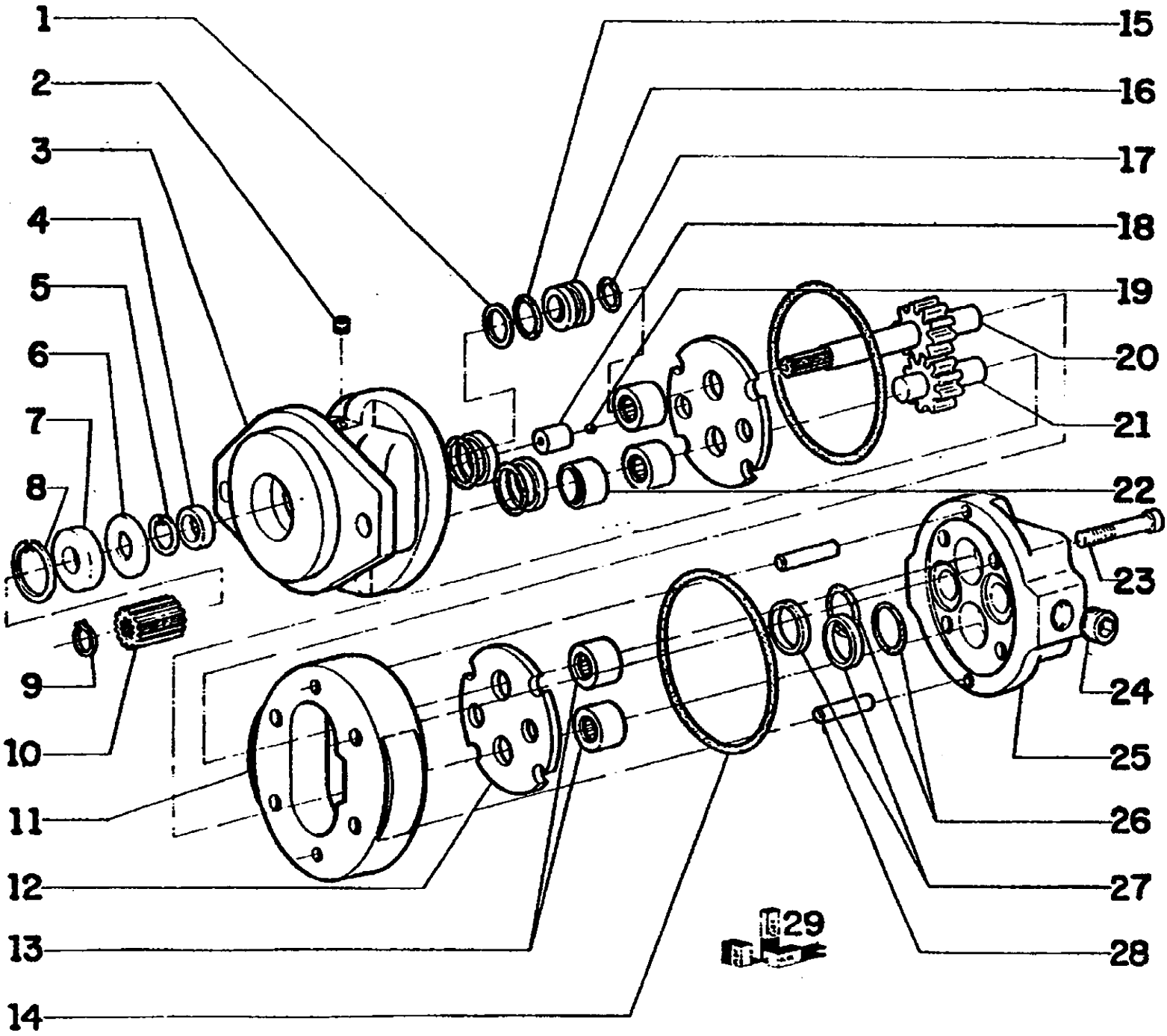

FG85 SERIES B MOTORGRADER

D2.13(001) STEERING PUMP (75218591)FG85A EFF S/N 734, FG105A EFF S/N 260.

Ref	Numero de Pieza	Ctd	Descripción
1	75203011	1	RING
2	75203010	1	PLUG
3	75204916	1	SUPPORT
4	75203008	1	SEAL RING
5	75203007	1	SNAP RING
6	75204917	1	WASHER
7	75204918	1	SEAL RING
8	75204919	1	SNAP RING
9	75204920	1	SNAP RING
10	75204921	1	GEAR
11	75204922	1	CASE
12	75203016	2	PLATE
13	75203022	4	BEARING
14	75203017	2	O'RING
15	75203012	1	O'RING
16	75203014	1	BUSHING
17	75203013	1	SNAP RING
18	75204923	2	VALVE
19	75204924	2	BALL
20	75204925	1	SHAFT
21	75204926	1	SHAFT
22	75203015	1	SPACER
23	75204927	4	SCREW
24	75204928	2	PLUG
25	75204929	1	COVER
26	75204930	4	0'RING
27	75204931	4	RING
28	75204932	2	DOWEL
29	75204933	K	KIT (includes
29			1,4,5,6,12,14,
29			15,17,26,27
29	75204934	K	KIT (includes
29			1,4,5,6,14,15,
29			17,26,27
29	75204935	K	KIT (includes
29			1,4,5,6,15,17

D2.13/1(001) STEERING PUMP (75246340)

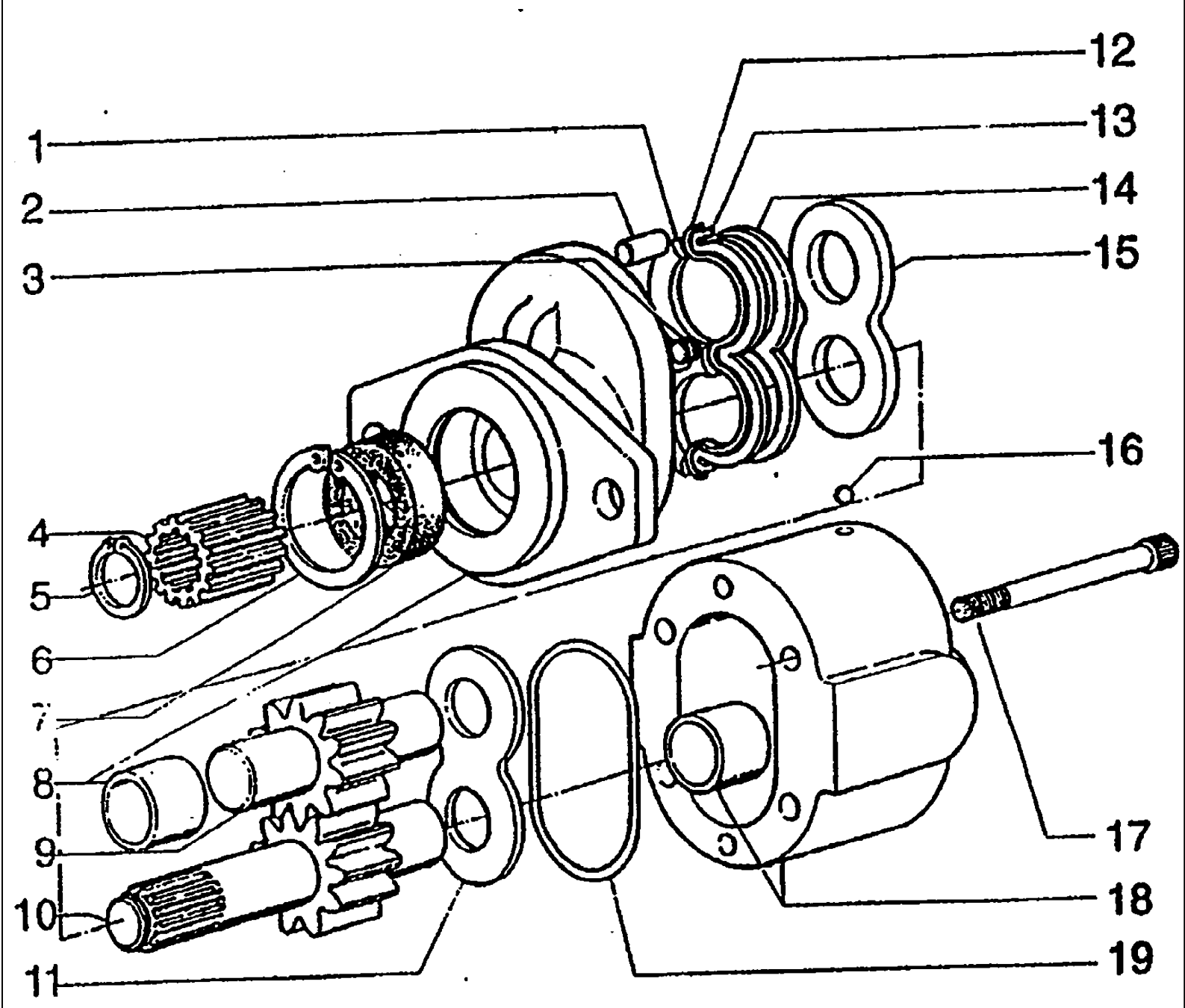

FG85 SERIES B MOTORGRADER

D2.13/1(001) STEERING PUMP (75246340)

Ref	Numero de Pieza	Ctd	Descripción
1	75285672	2	RING
2	75285684	2	PIN
3	75285670	1	PLUG
4	75288379	1	GEAR
5	75288378	1	SNAP RING
6	75285693	1	SNAP RING
7	75288383	1	SEAL RING
8	75288377	1	SUPPORT
9	75288382	1	SHAFT
10	75288380	1	SHAFT
11	75285686	1	PLATE
12	75285672	2	RING
13	75285687	2	RING
14	75285676	2	O'RING
15	75205932	1	PLATE
16	75285671	1	BALL
17	75288381	4	SCREW
18	75288376	1	BODY
19	75285678	1	O'RING

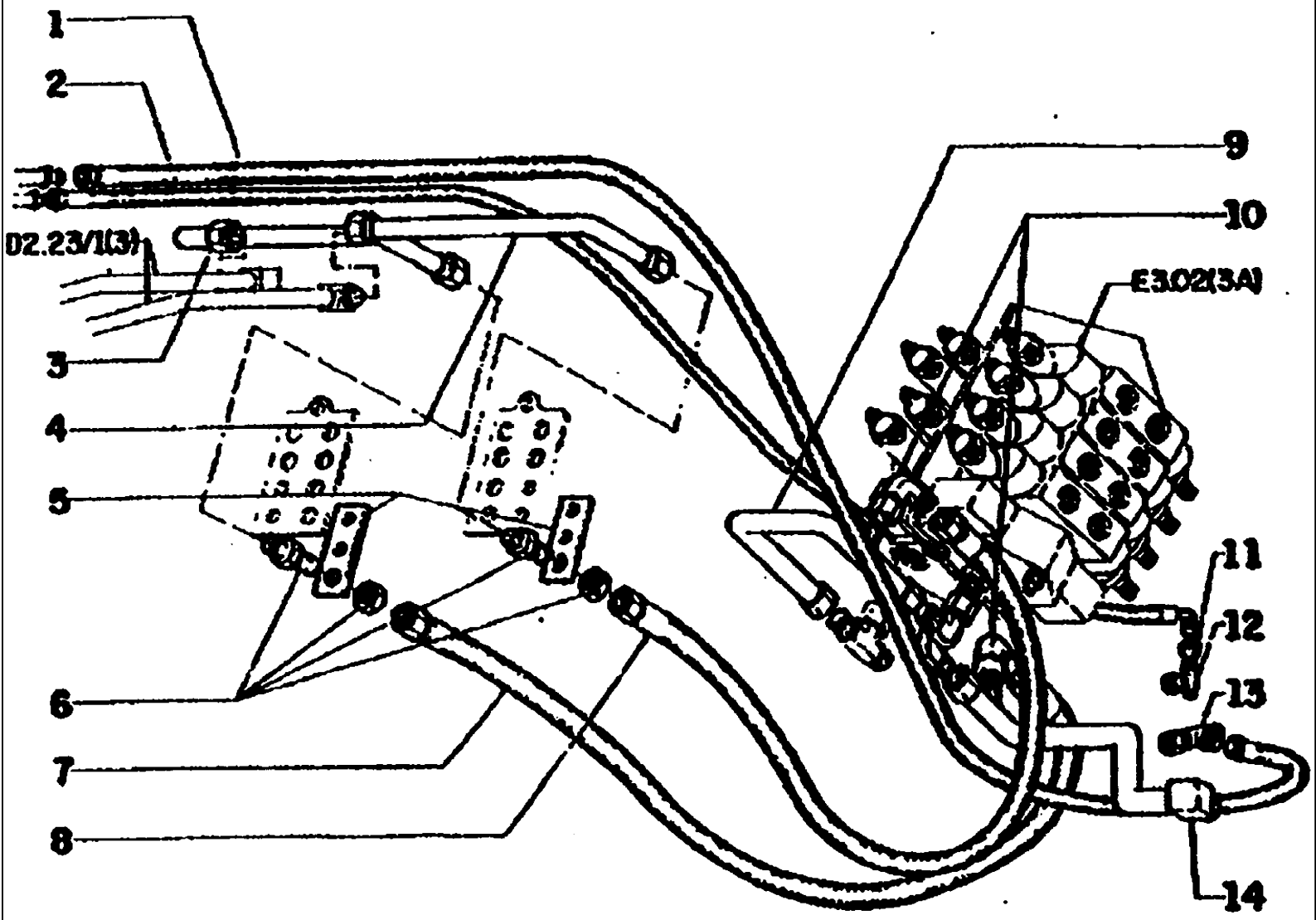
1
2
D2.23/1(3)
3
4
5
6
7
8
9
10
E3.02(3A)
11
12
13
14

FG85 SERIES B MOTORGRADER

D2.23/1(001) FRONT WHEEL DRIVE PIPING

Ref	Numero de Pieza	Ctd	Descripción
1	73155571	1	HOSE ASSY
2	73155572	1	HOSE ASSY
3	73155558	1	TUBE
4	73155557	1	TUBE
5	73155560	2	PLATE
6	70927063	2	FITTING
7	73155564	1	HOSE ASSY
8	73155563	1	HOSE ASSY
9	73155567	1	TUBE
10	70919624	2	FITTING
11	70926786	1	FITTING
12	70921014	1	FITTING
13	70921298	1	FITTING
14	73155568	1	TUBE

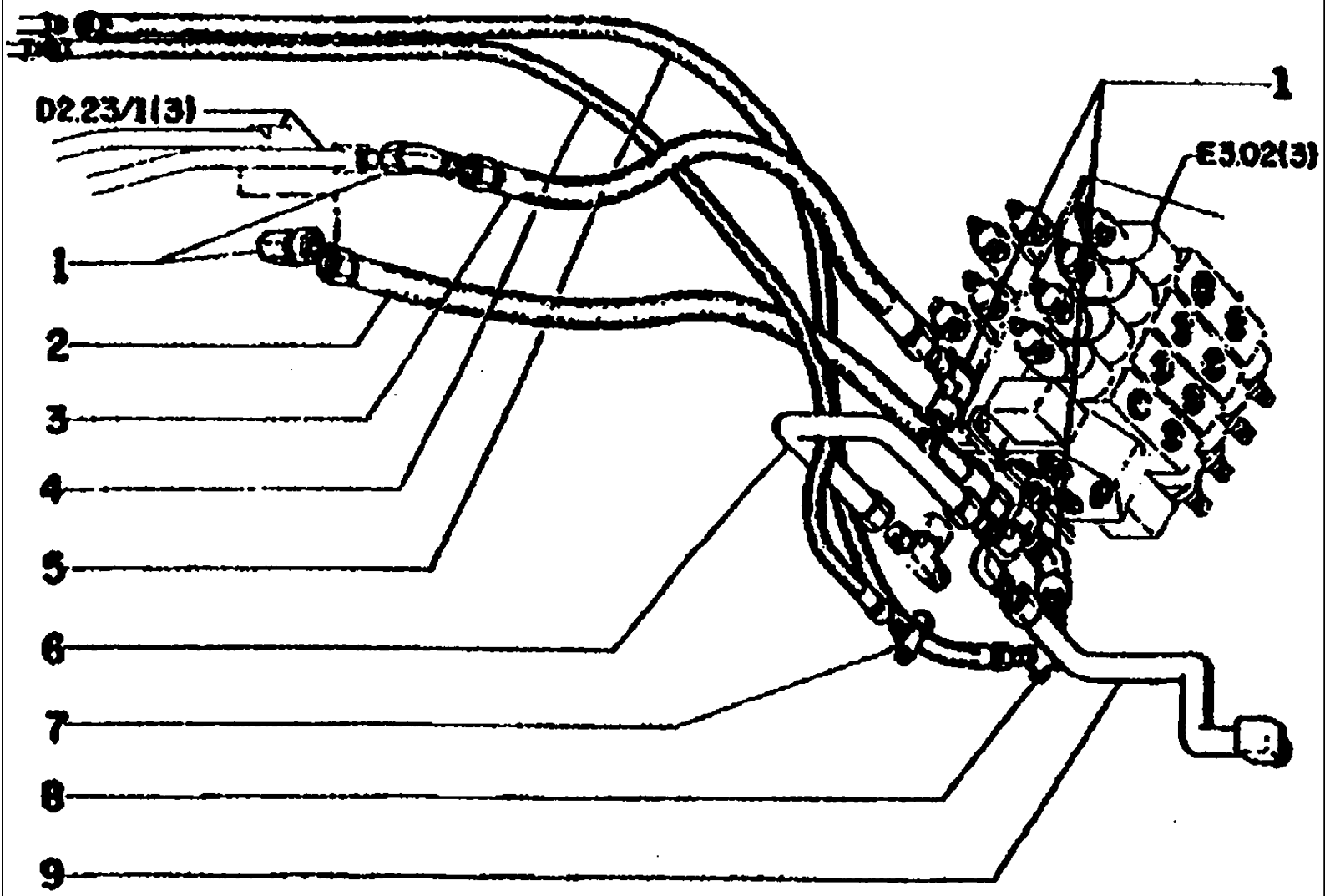
D2.23/1(3)
1
2
3
4
5
6
7
8
9
1
E3.02(3)

FG85 SERIES B MOTORGRADER

D2.23/1(002) FRONT WHEEL DRIVE PIPING

Ref	Numero de Pieza	Ctd	Descripción
1	70919624	4	FITTING
2	73155566	1	HOSE ASSY
3	73155565	1	HOSE ASSY
4	73155570	1	HOSE ASSY
5	73155569	1	HOSE ASSY
6	73155567	1	TUBE
7	70926975	1	FITTING
8	70921298	1	FITTING
9	73155568	1	TUBE

D2.23/1(003) FRONT WHEEL DRIVE PIPING

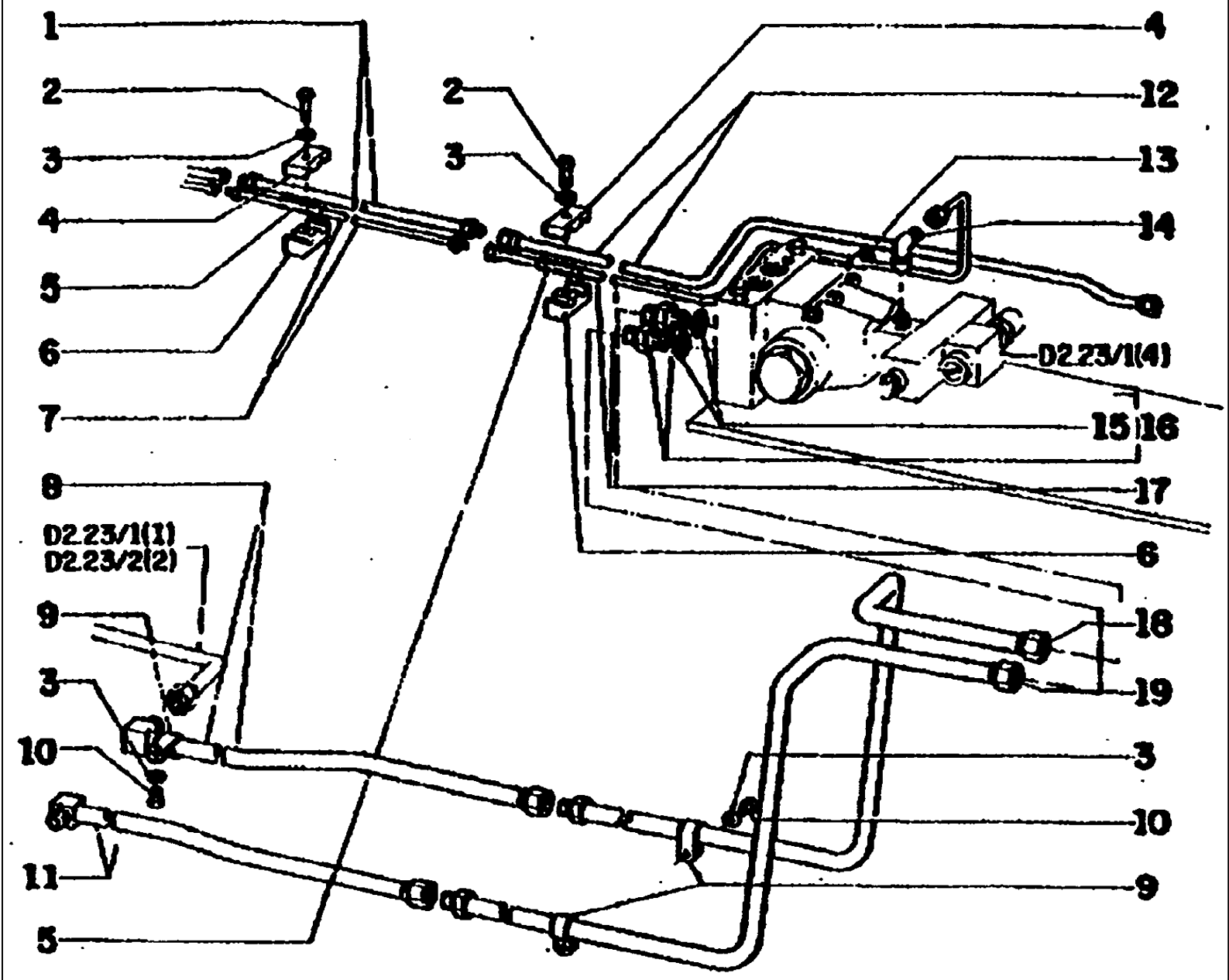

FG85 SERIES B MOTORGRADER

D2.23/1(003) FRONT WHEEL DRIVE PIPING

Ref	Numero de Pieza	Ctd	Descripción
1	73155469	1	TUBE
2	70920995	2	SCREW
3	70677006	8	WASHER
4	70623355	2	CLAMP
5	73155548	2	BOOT
6	73155556	2	BLOCK
7	73155468	1	TUBE
8	73158315	1	TUBE
9	70927310	6	CLAMP
10	70927400	6	SCREW
11	73158316	1	TUBE
12	73158299	1	TUBE3
13	70926866	1	CLAMP
14	70924044	1	FITTING
15	70935175	2	O'RING
16	70921217	2	CONNECTOR
17	73158296	1	TUBE
18	73158292	1	TUBE
19	73158293	1	TUBE

D2.23/1(004) FRONT WHEEL DRIVE PIPING AND VALVE

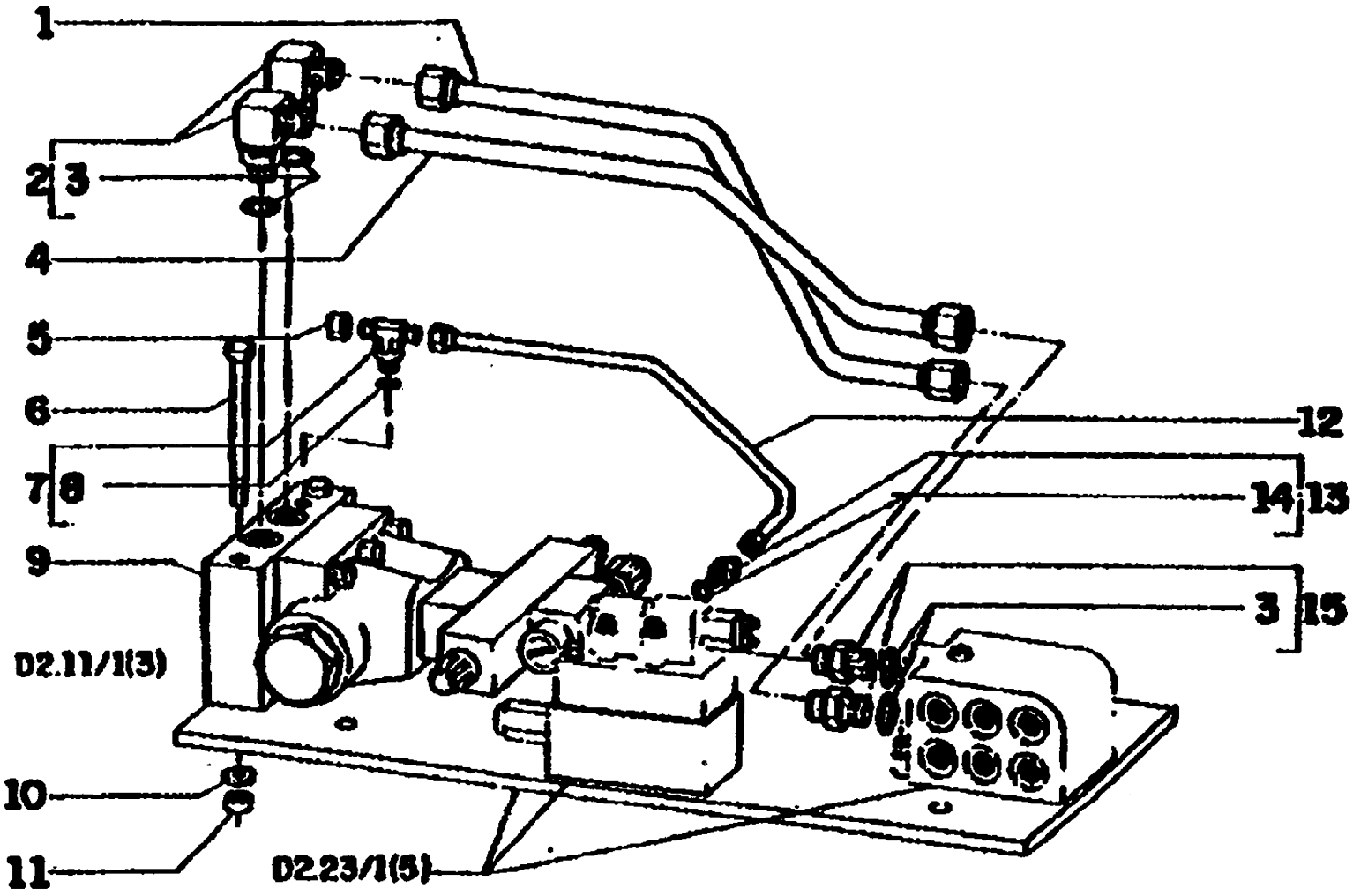

FG85 SERIES B MOTORGRADER

D2.23/1(004) FRONT WHEEL DRIVE PIPING AND VALVE

Ref	Numero de Pieza	Ctd	Descripción
1	73158295	1	TUBE
2	73158439	2	ELBOW
3	70935175	4	O'RING
4	73158294	1	TUBE
5	70919552	1	CAP
6	70922265	2	SCREW
7	70923894	1	FITTING
8	70935531	1	O'RING
9	73155463	1	VALVE
10	70928188	2	WASHER
11	70911028	2	NUT
12	73158297	1	TUBE
13	70925656	1	FITTING
14	70925921	1	O'RING
15	70921217	2	CONNECTOR

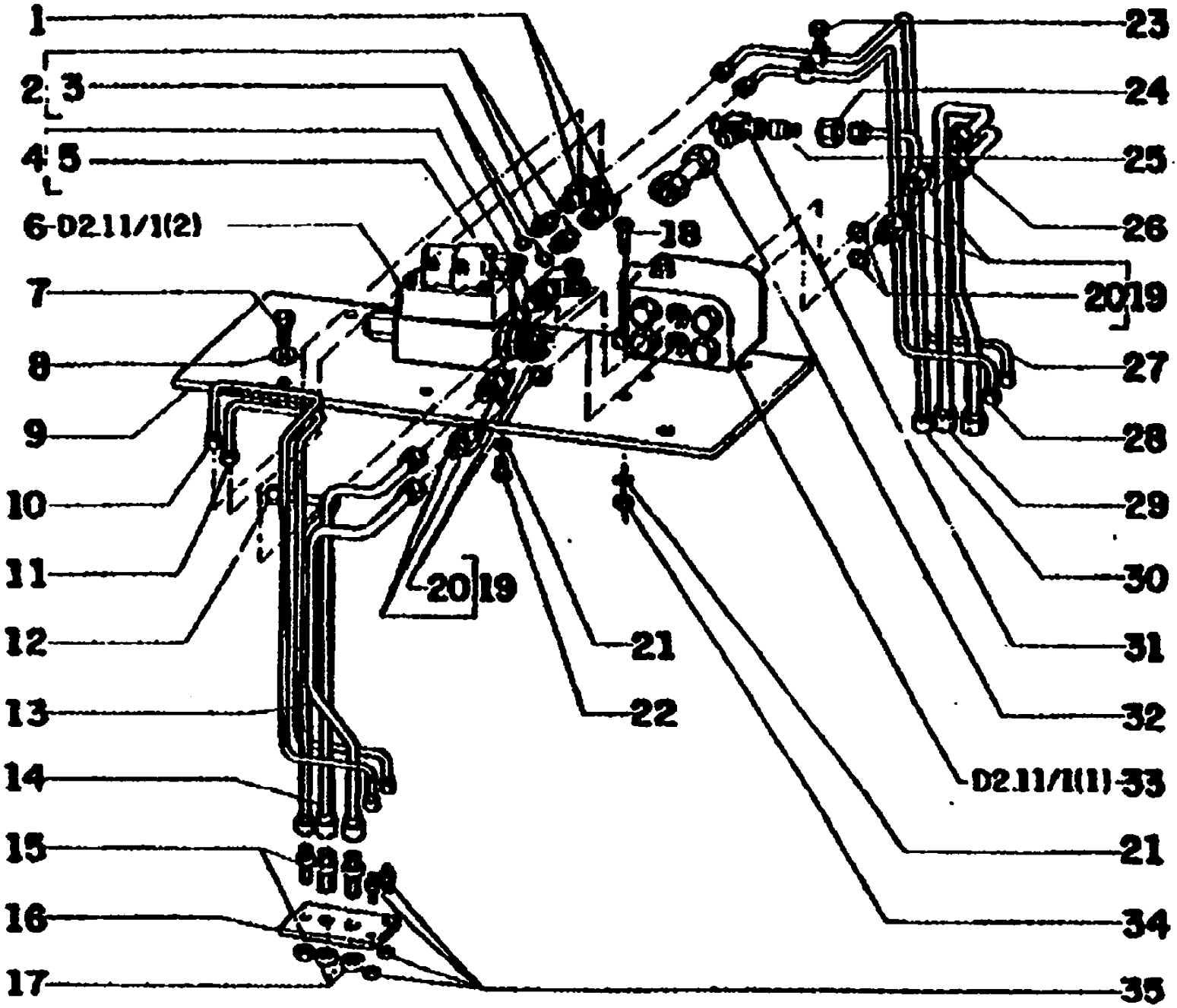
1
2
3
4
5
6
D2.11/1(2)
7
8
9
10
11
12
13
14
15
16
17
18
20
19
21
22
23
24
25
26
20
19
27
28
29
30
31
32
D2.11/1(1)
33
21
34
35

FG85 SERIES B MOTORGRADER

D2.23/1(005) FRONT WHEEL DRIVE PIPING

Ref	Numero de Pieza	Ctd	Descripción
1	70926975	2	FITTING
2	70923163	2	CONNECTOR
3	70925921	2	O'RING
4	70922792	1	FITTING
5	70935176	1	O'RING
6	73155464	1	VALVE
7	70920582	4	SCREW
8	70677008	4	WASHER
9	73158310	1	PLATE
10	73158308	1	TUBE
11	73158309	1	TUBE
12	73158301	1	TUBE
13	73158305	1	TUBE
14	73158303	1	TUBE
15	70925049	2	FITTING
16	73155446	2	PLATE
17	70927261	4	FITTING
18	70922286	2	SCREW
19	70924296	4	CONNECTOR
20	70935175	4	O'RING
21	70931220	4	WASHER
22	70921422	2	SCREW
23	70921467	2	CAP
24	70919068	2	NUT
25	70922730	2	FITTING
26	73158304	1	TUBE
27	73158306	1	TUBE
28	73158307	4	TUBE
29	73158302	1	TUBE
30	73158300	1	TUBE
31	70921472	1	FITTING
32	73158298	1	TUBE
33	73155465	1	VALVE
34	70911025	2	NUT
35	70928916	4	FITTING

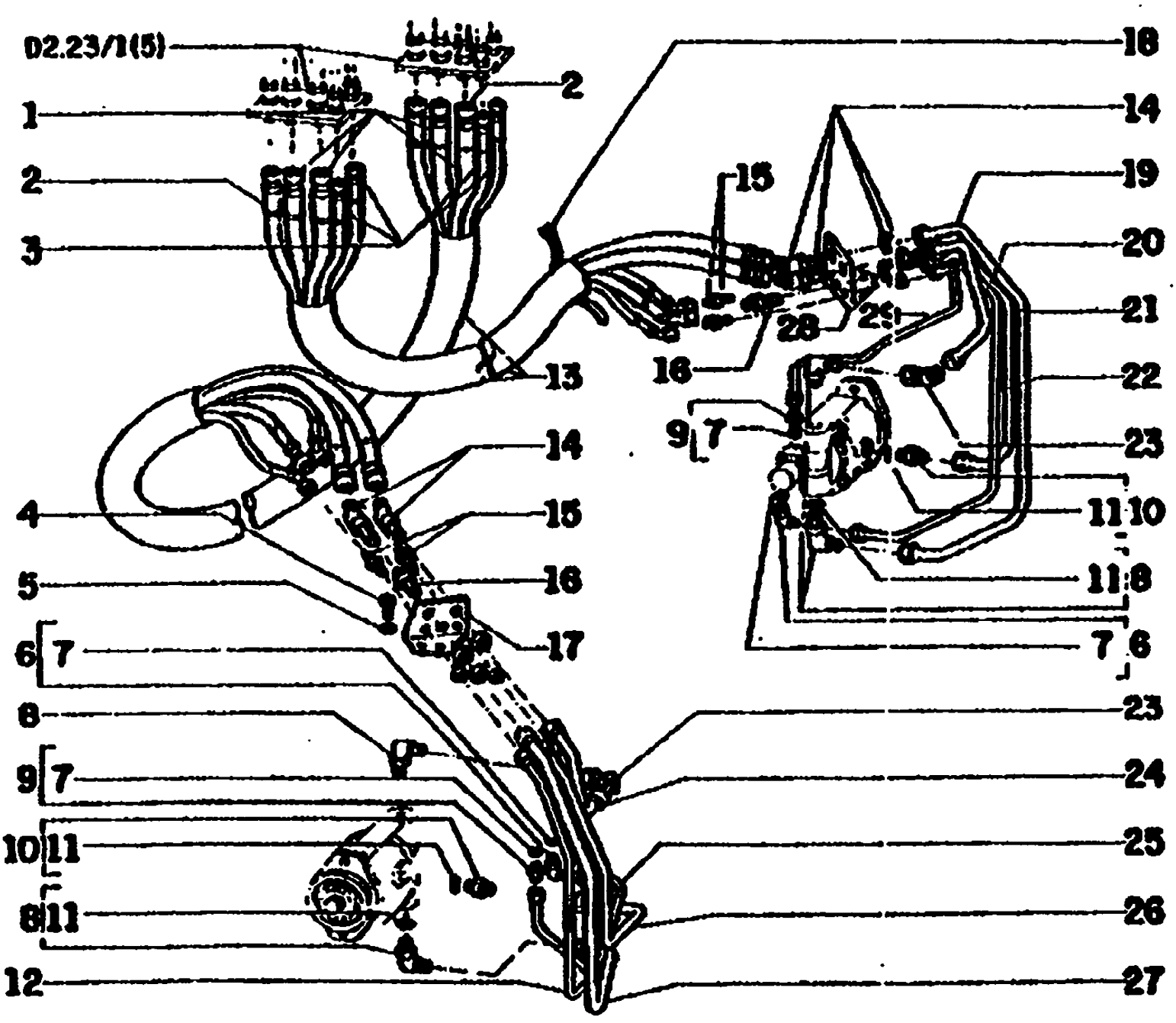
D2.23/1(5)
1
2
3
4
5
6 7
8
9 7
10 11
8 11
12
2
13
14
15
16
17
18
14
19
15
20
21
16
22
9 7
23
11 10
11 8
7 6
23
24
25
26
27

FG85 SERIES B MOTORGRADER

D2.23/1(006) FRONT WHEEL DRIVE PIPING

Ref	Numero de Pieza	Ctd	Descripción
1	73155439	4	HOSE ASSY
2	73155440	2	HOSE ASSY
3	73155441	4	HOSE ASSY
4	70921076	4	SCREW
5	70910287	4	LOCKWASHER
6	70922571	2	ELBOW
7	70925921	4	O'RING
8	70927094	4	ELBOW
9	70923163	2	CONNECTOR
10	70922457	2	CONNECTOR
11	70935176	2	O'RING
12	73155347	1	TUBE
13	73155351	2	SLEEVE
14	70927245	4	FITTING
15	70928916	4	FITTING
16	70925049	4	FITTING
17	73154949	1	SUPPORT
18	70198775	2	CLAMP
19	73155344	1	TUBE
20	73155342	1	TUBE
21	73155346	1	TUBE
22	73155350	1	TUBE
23	70925018	2	FITTING
24	73155341	1	TUBE
25	73155349	1	TUBE
26	73155345	1	TUBE
27	73155343	1	TUBE
28	73154950	1	SUPPORT
29	73155348	1	TUBE

D2.29/1(001) HYDRAULIC MOTOR 73155696-LEFT 73155700-RIGHT

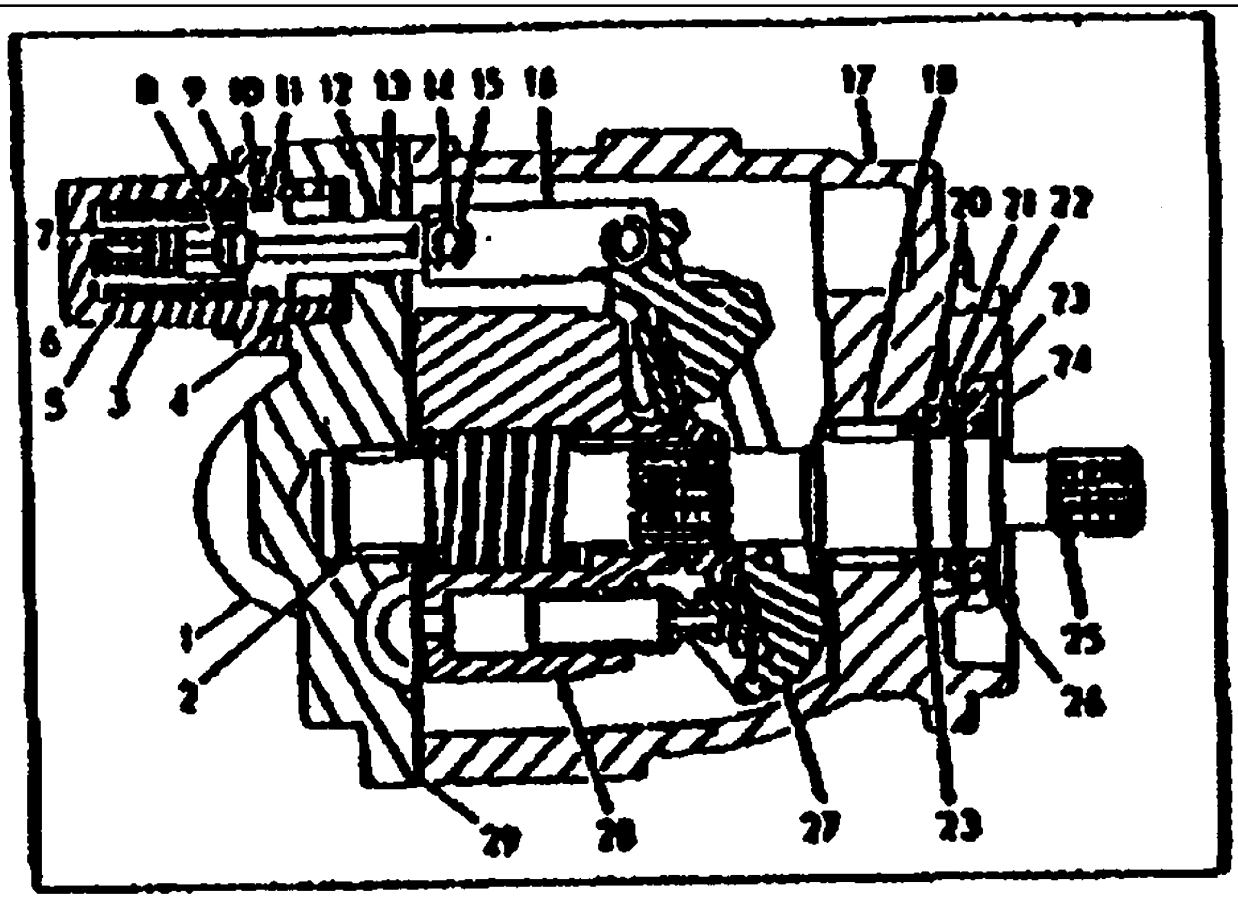

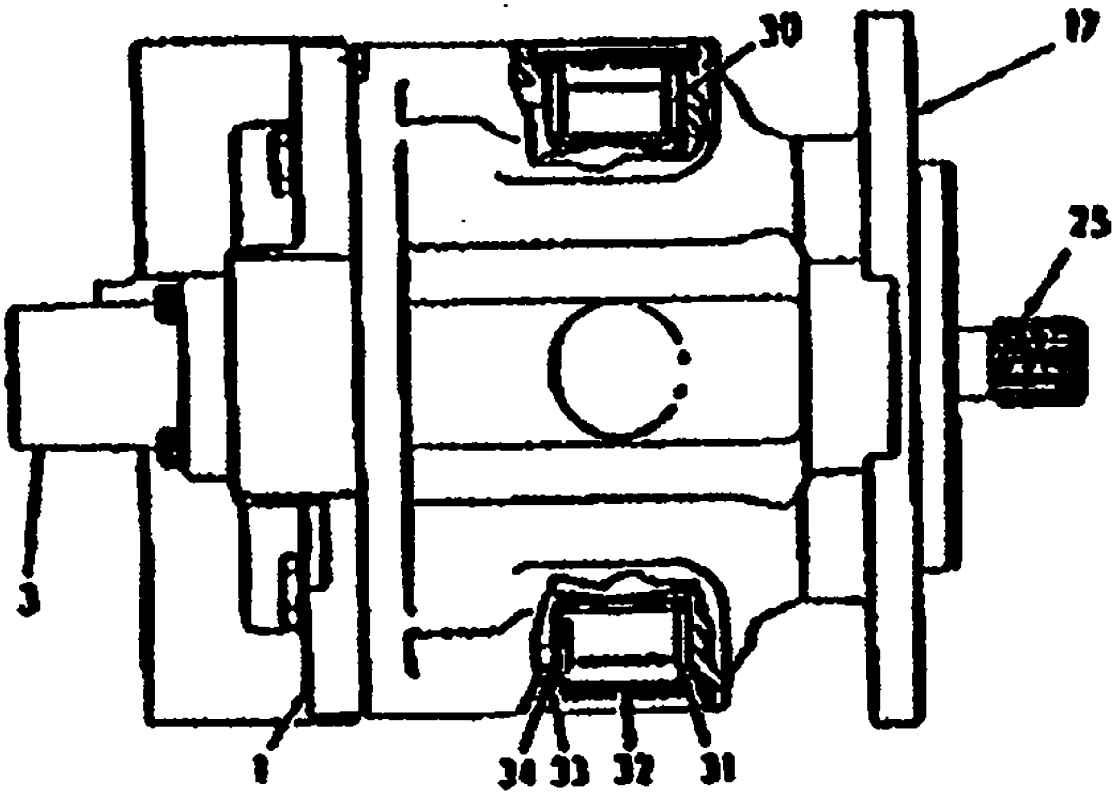

SASKATOON 7521892



FG85 SERIES B MOTORGRADER

D2.29/1(001) HYDRAULIC MOTOR 73155696-LEFT 73155700-RIGHT

Ref	Numero de Pieza	Ctd	Descripción
1	73157441	1	PLATE
2	73157442	1	BEARING
3	73157447	1	CASE ASS'Y
4	73157446	1	SEAL RING
5	73157461	1	SPRING
6	73157451	1	SEAL
7	73157464	1	SPRING
8	73157465	1	QUICK RELEASE V
9	73157443	1	PISTON
10	73157445	1	RING
11	73157444	1	SEAL RING
12	70924937	1	O'RING
13	73157462	1	RING
14	73157450	2	ROD
15	73157458	4	RING
16	73157449	2	LINK
17	73157434	1	CASE ASS'Y
18	73157435	1	BEARING
19	73157436	2	COTTER PIN
20	73157452	2	RING
21	73157453	1	BEARING
22	73157455	1	WASHER
23	73157457	2	RING
24	73157456	1	RING
25	73157433	1	SHAFT
26	73157460	1	SEAL
27	73157448	1	SHAFT
28	73157440	1	KIT
29	73157439	1	SEAL ASSY
30	73157432	1	RING
31	73157437	2	BEARING
32	73157438	2	COVER
33	73157454	2	SEAL RING
34	70927696	2	Ring, Snap, 1.625", Int, #162
35	73157463	1	KIT*

D2.29/1(002) FRONT WHEEL DRIVE PLANETARY GEAR BOX

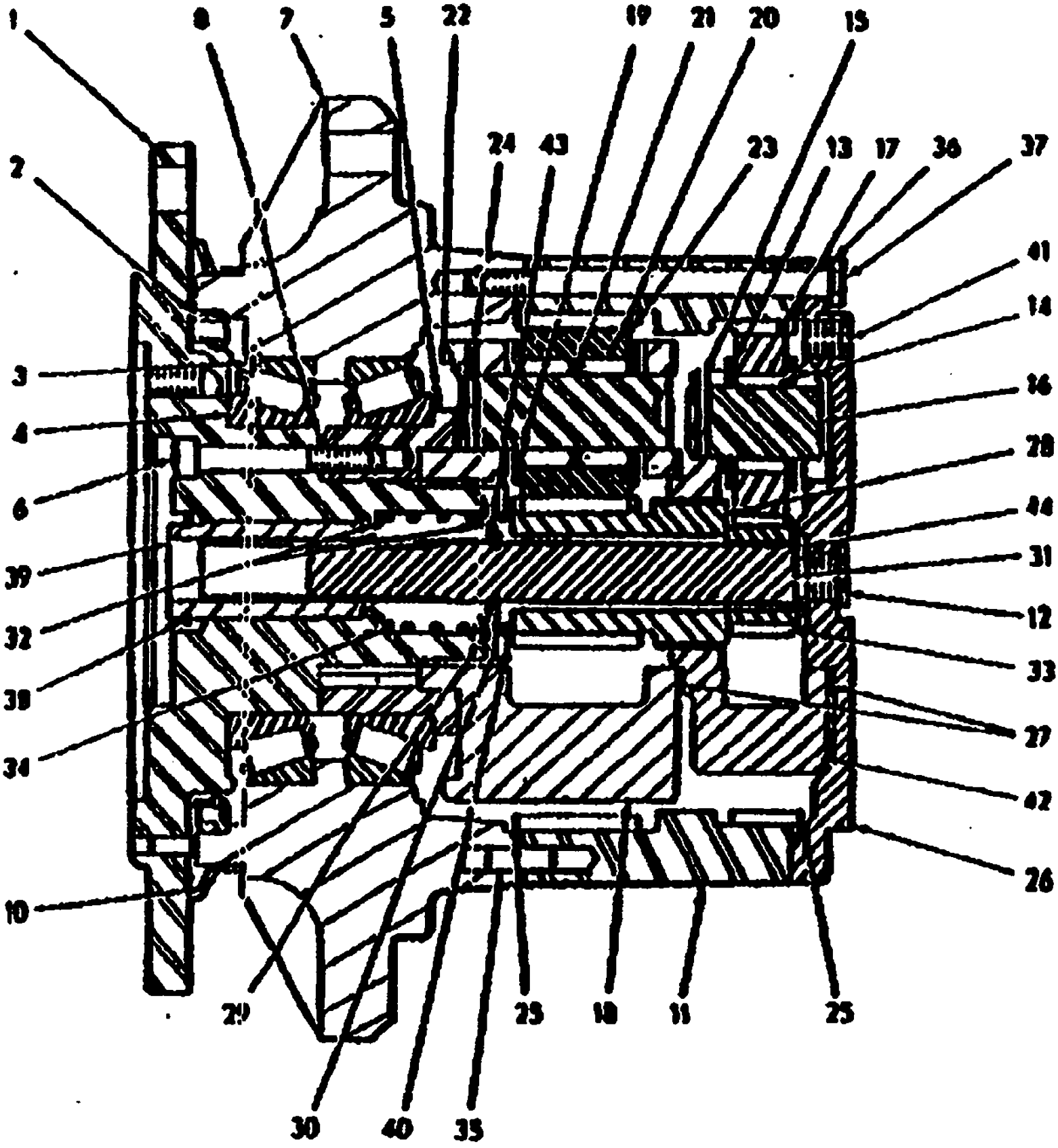

FG85 SERIES B MOTORGRADER

D2.29/1(002) FRONT WHEEL DRIVE PLANETARY GEAR BOX

Ref	Numero de Pieza	Ctd	Descripción
1	73157376	1	CASE ASS'Y
2	73157374	1	SEAL
3	73157375	2	BEARING
4	73157376	2	BEARING
5	73157377	1	HUB
6	73157378	9	SCREW
7	73157379	1	HUB
8	73157380	1	SHIN
9	73157381	2	MAGNETIC PLUG
10	73157382	1	SEAL
11	73157383	1	RING GEAR
12	73157384	1	HUB
13	73157385	12	WASHER
14	73157386	57	ROLLER
15	73157387	3	DOWEL
16	73157388	3	SHAFT
17	73157389	3	GEAR
18	73157390	1	HUB
19	73157391	12	WASHER
20	73157392	100	ROLLER
21	73157393	3	SPACER
22	73157394	3	SHAFT
23	73157395	3	GEAR
24	73157396	3	DOWEL
25	73157397	2	SEAL RING
26	73157398	1	COVER
27	73157399	2	WASHER
28	73157415	1	GEAR
29	73157416	1	SEAL RING
30	73157417	1	RING
31	73157418	1	SHAFT
32	73157419	2	WASHER
33	73157420	1	GEAR
34	73157421	1	SPRING
35	73157422	2	DOWEL
36	73157423	20	LOCKWASHER
37	73157424	20	SCREW
38	73157425	1	RING
39	73157426	1	COUPLING
40	73157427	1	SPACER
41	73157428	2	PLUG
42	73157429	1	PLUG
43	73157430	1	WASHER

FG85 SERIES B MOTORGRADER

D2.29/1(002) FRONT WHEEL DRIVE PLANETARY GEAR BOX

Ref	Numero de Pieza	Ctd	Descripción
44	73157430	1	SPACER

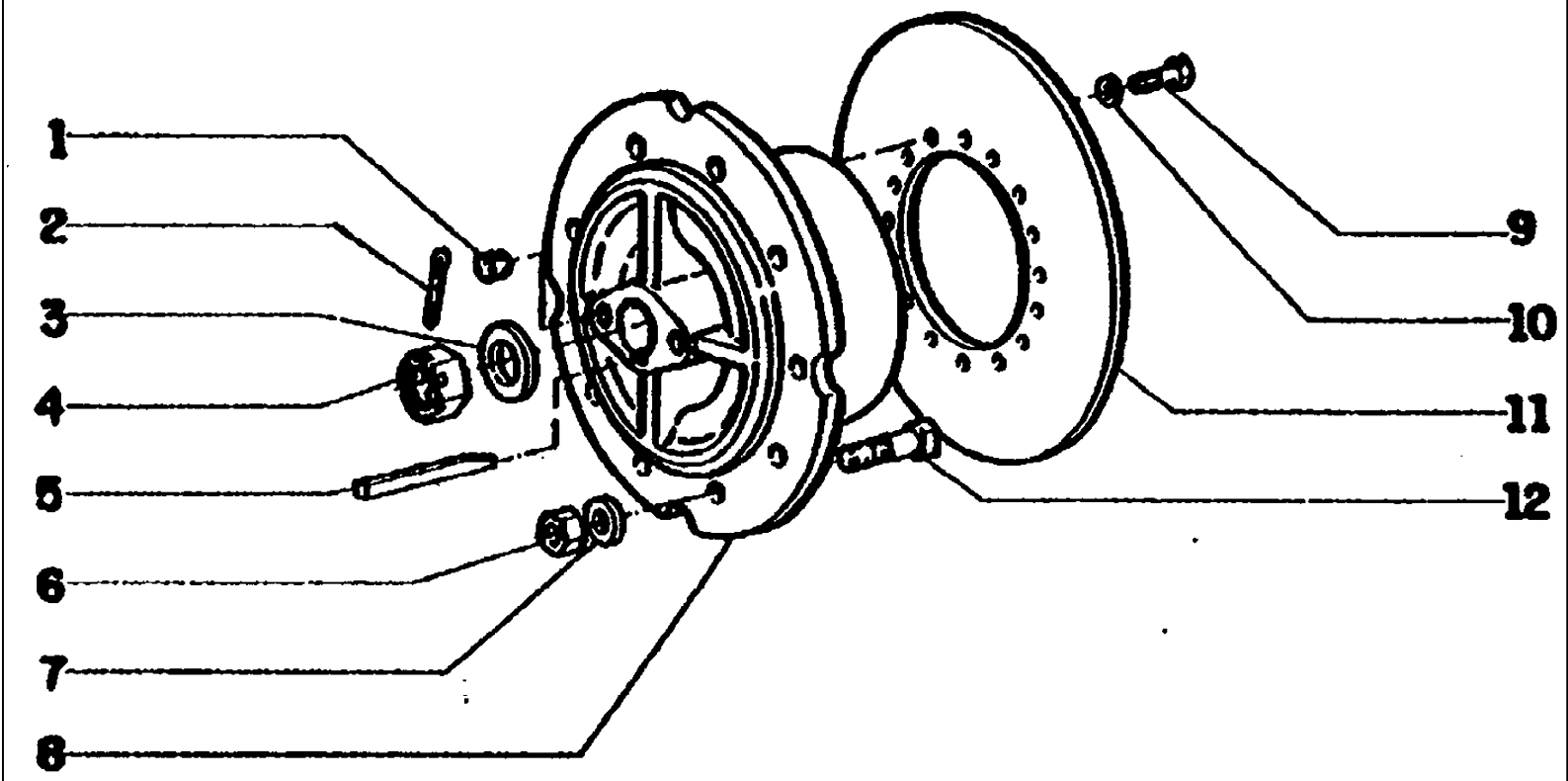
1
2
3
4
5
6
7
8
9
10
11
12

FG85 SERIES B MOTORGRADER

D3.16(001) REAR WHEEL

Ref	Numero de Pieza	Ctd	Descripción
1	75201391	8	COVER
2	70901348	4	COTTER PIN
3	70605918	4	WASHER
4	70060670	4	NUT
5	73132641	4	KEY
6	70012767	40	NUT
7	70677012	40	WASHER
8	75221774	4	WHEEL DISC
9	14257931	64	SCREW
10	70927381	64	WASHER
11	75218940	4	BRAKE DISC
12	73125714	40	SCREW

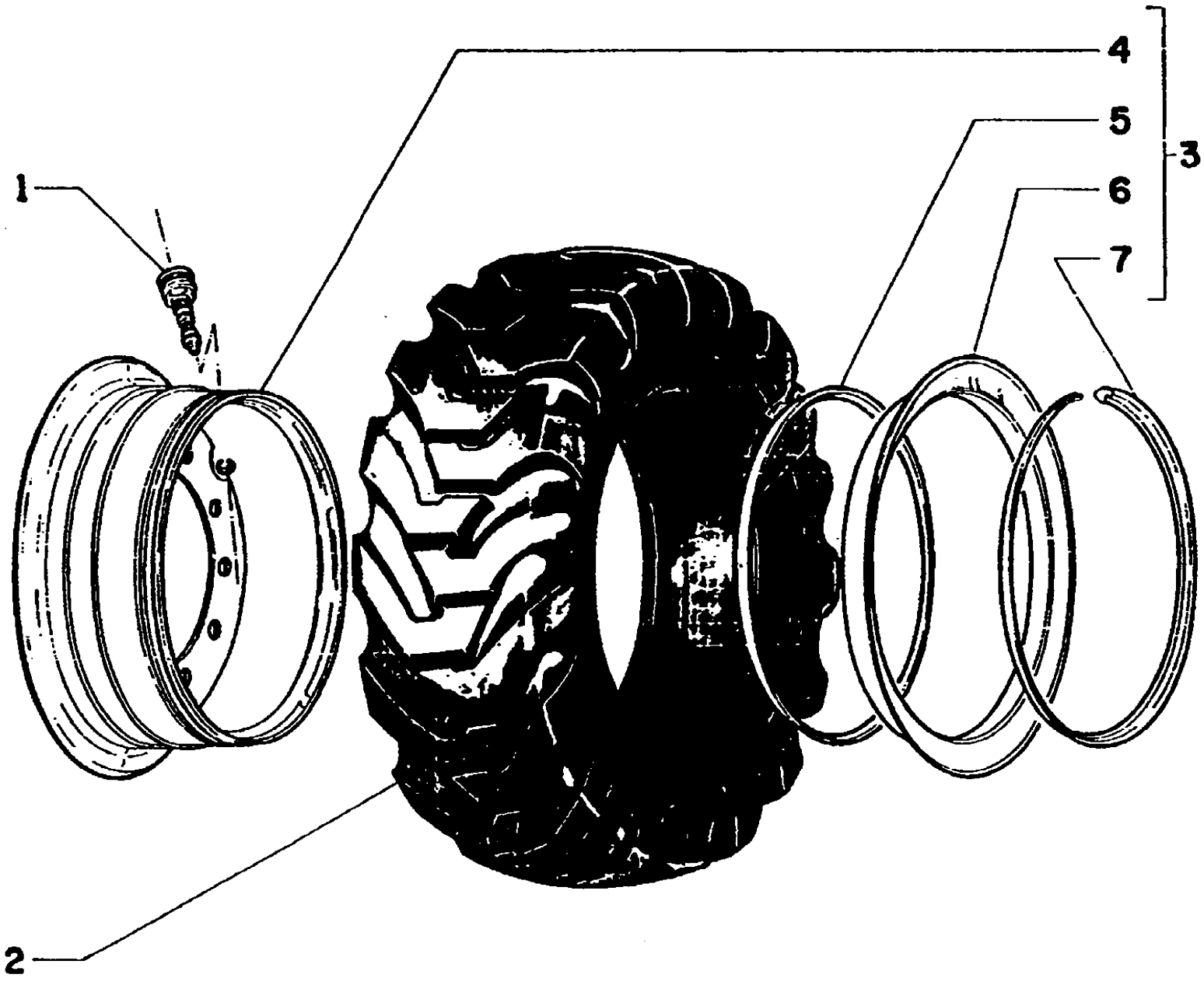
4
5
3
6
7
1
2

FG85 SERIES B MOTORGRADER

D3.16(002) TIRES AND WHEELS GROUP

Ref	Numero de Pieza	Ctd	Descripción
1	70096481	6	VALVE
2	70097578	6	TIRE - for fg85a/r
2	73038797	6	TIRE - for fg105a/r
3	73125241	6	RIM - for fg85a/r
3	73125541	6	RIM - for fg105a/r
4	73125240	6	RIM - for fg85a/r
4	73125540	6	RIM - for fg105a/r
5	73024120	6	O'RING - for fg85a/r
5	73087765	6	O'RING - for fg105a/r
6	73125238	6	RING - for fg85a/r
6	73125537	6	RING - for fg105a/r
7	73125239	6	RING - for fg85a/r
7	73125538	6	RING - for fg105a/r

D3.16/1(001) WHEEL BRAKE GUARD

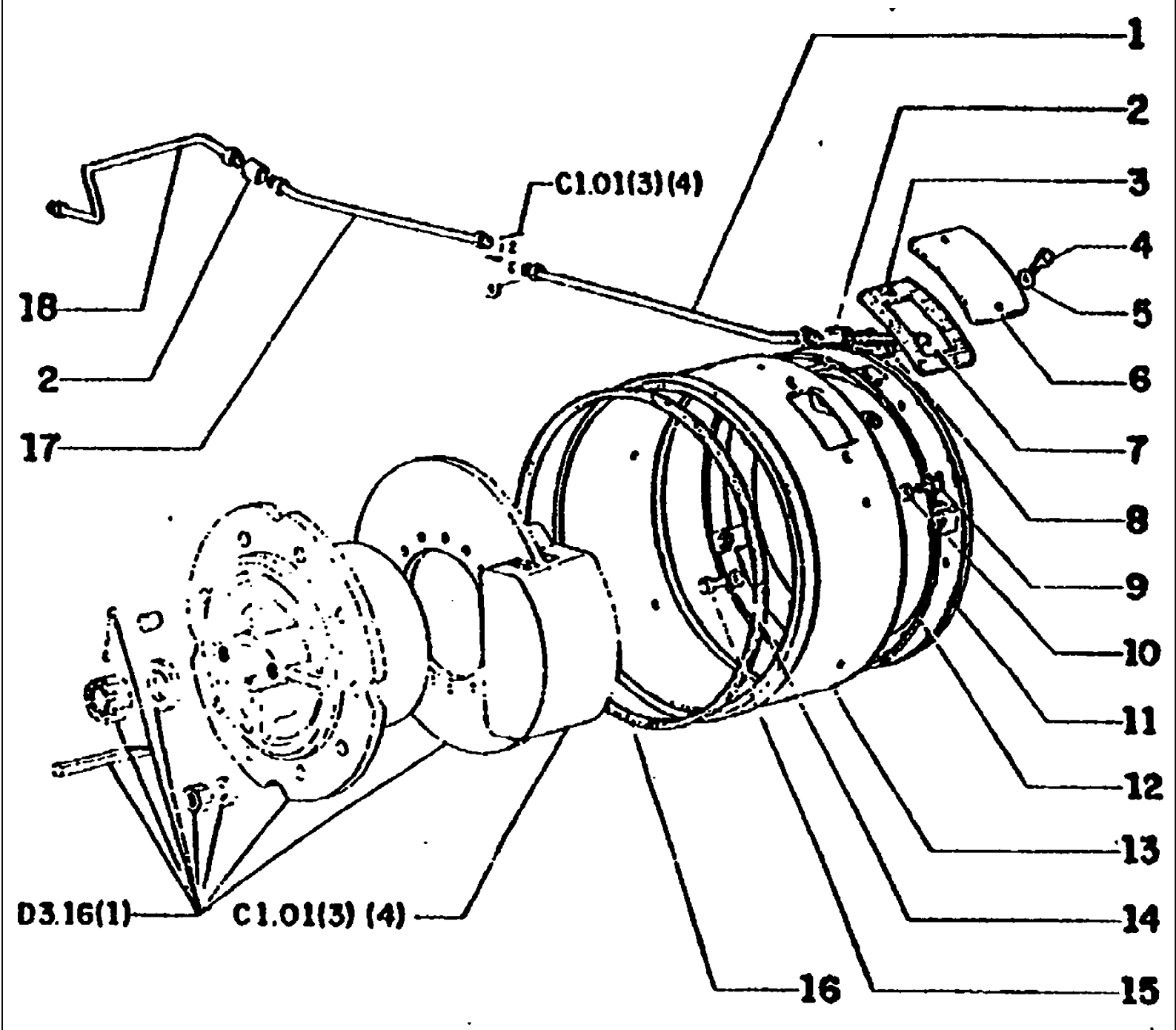

FG85 SERIES B MOTORGRADER

D3.16/1(001) WHEEL BRAKE GUARD

Ref	Numero de Pieza	Ctd	Descripción
1	73160869	1	TUBE
1	73160870	1	TUBE
2	73124486	8	CONNECTION
3	73160882	4	GASKET
4	70921076	8	SCREW
5	70910287	8	LOCKWASHER
6	73160881	4	COVER
7	73160866	1	TUBE
7	73160865	1	TUBE
8	70933894	4	RING
9	70920583	20	SCREW
10	70646627	20	NUT
11	73160879	2	PLATE
11	73160880	2	PLATE
12	73160862	4	O'RING
13	73160877	4	COVER (**)for fg105a/r
13	73160878	4	COVER (*)for fg85r/a
14	70912441	40	LOCKWASHER
15	70920585	40	SCREW
16	73160845	4	SEAL
17	73160874	1	TUBE
17	73160873	1	TUBE
18	73160865	1	TUBE
18	73160866	1	TUBE

D3.33(001) TANDEM R.H.

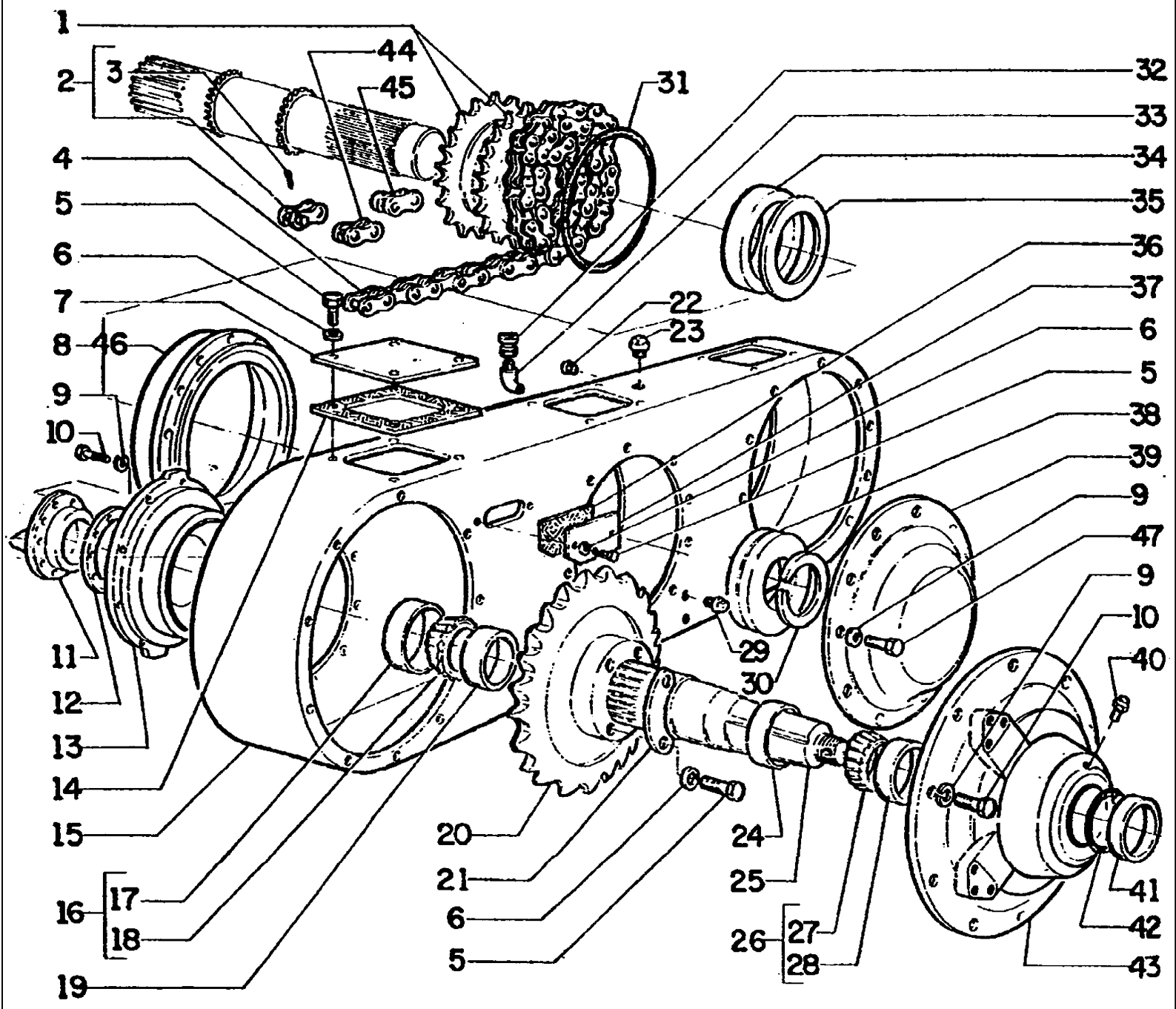

FG85 SERIES B MOTORGRADER

D3.33(001) TANDEM R.H.

Ref	Numero de Pieza	Ctd	Descripción
1	70653827	4	SPROCKET
2	70605507	-	TRACK LINK
3	73151154	-	COTTER PIN
4	73155084	4	CHAIN
5	70922763	56	SCREW
6	70910287	56	LOCKWASHER
7	70604481	6	COVER
8	75222544	2	HUB RIGHT
9	70912441	192	LOCKWASHER
10	70920574	168	SCREW
11	70684819	4	DOG-POINT
12	70684815	8	SHIM 0.076mm
12	70684814	4	SHIM 0.127mm
12	70684813	76	SHIM 0.254mm
13	73125874	4	RETAINER
14	70604482	6	GASKET
15	75222296	2	CASE
16	70684817	4	BEARING
17	70680631	4	CUP
18	70684816	4	BEARING
19	70680615	4	SEAL
20	73125098	4	SPROCKET
21	70653821	8	PLATE
22	70901651	2	PLUG
23	70912768	2	PLUG
24	70653820	4	SEAL
25	70684820	4	SHAFT
26	70681245	4	BEARING
27	70051997	4	BEARING
28	70042877	4	CUP
29	70912725	4	PLUG
30	70927763	2	SNAP RING
31	70653846	2	O'RING
32	70634161	2	BREATHER
33	70907059	2	ELBOW
34	70620170	2	BUSHING
35	70653828	2	RING
36	73125187	8	BASKET
37	73125188	8	COVER
38	70634395	2	BEARING
39	73123080	2	REST
40	70914465	8	GREASE FITTING
41	70631119	4	SEAL

Ref	Numero de Pieza	Ctd	Descripción
42	70927714	4	Ring, Snap, 4.00", Int, #400
43	75221772	4	RETAINER
44	70605578	-	LINK
45	70605508	-	LINK
46	75222543	2	HUB LEFT
47	70920582	22	SCREW

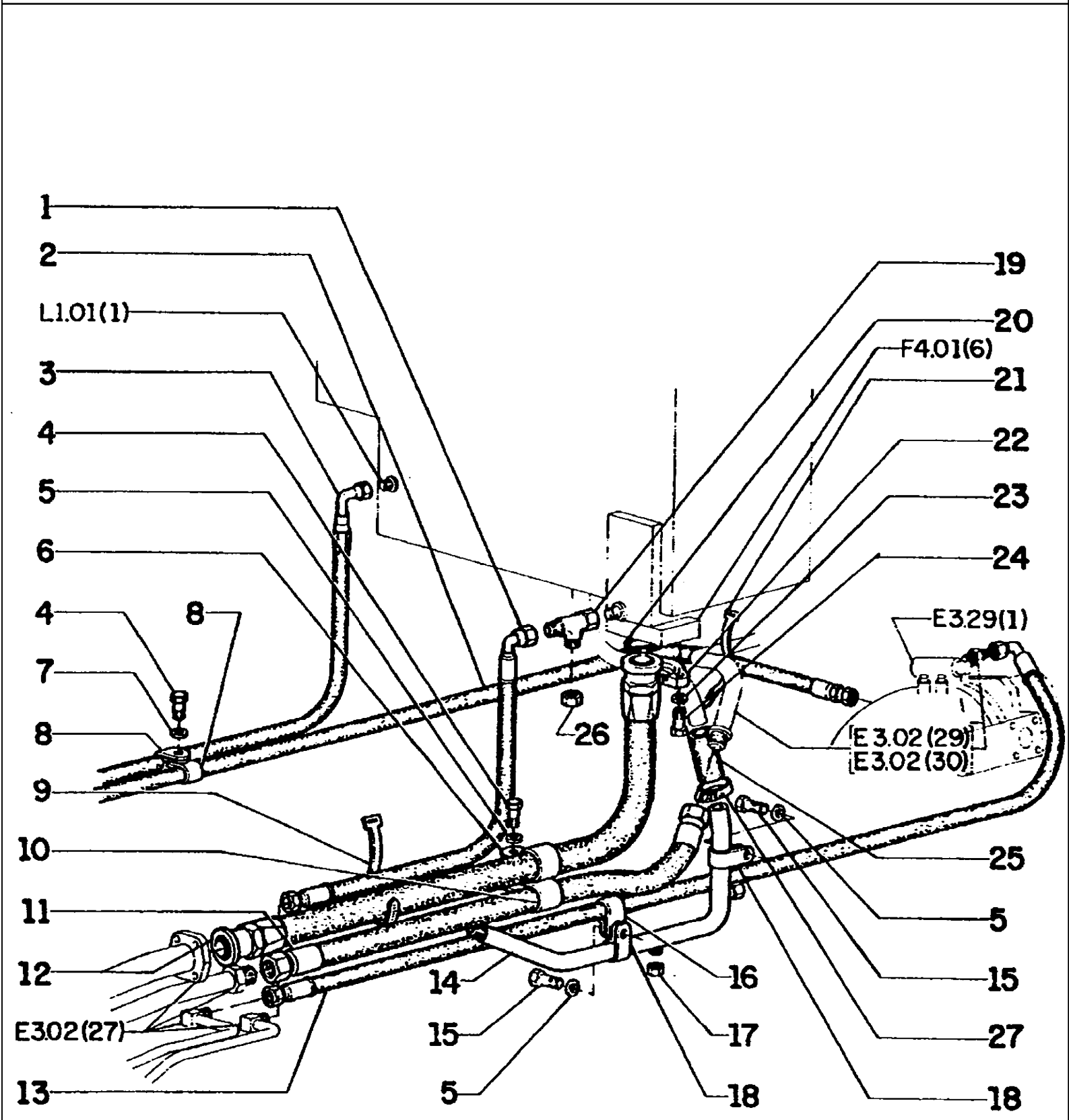
1
2
L1.01(1)
3
4
5
6
4
8
7
8
9
10
11
12
E3.02(27)
13
14
15
5
16
17
18
19
20
F4.01(6)
21
22
23
24
E3.29(1)
E3.02(29)
E3.02(30)
26
25
5
15
27
18

FG85 SERIES B MOTORGRADER

E3.02(001) REAR HYDRAULIC SYSTEM

Ref	Numero de Pieza	Ctd	Descripción
1	73128634	1	HOSE ASSY
2	73148896	1	HOSE ASSY
3	75238343	1	HOSE ASSY
4	70922300	5	SCREW
5	70677006	7	WASHER
6	70927390	1	CLAMP
7	70915815	4	WASHER
8	70927310	7	CLAMP
9	70198775	2	CLAMP
10	70927312	1	CLAMP
11	73150571	1	HOSE ASSY
12	73150569	1	HOSE ASSY
13	75216220	1	HOSE ASSY
14	73150633	1	TUBE
15	70927400	2	SCREW
16	70927387	1	CLAMP
17	70921244	2	CAP
18	70928010	2	CLAMP
19	70922792	1	FITTING
20	70923578	1	RING
21	70196765	1	CLAMP
22	70921118	2	FLANGE
23	70912441	4	LOCKWASHER
24	70920583	4	SCREW
25	73128476	1	HOSE
26	70923737	1	CAP
27	70921912	4	CLAMP

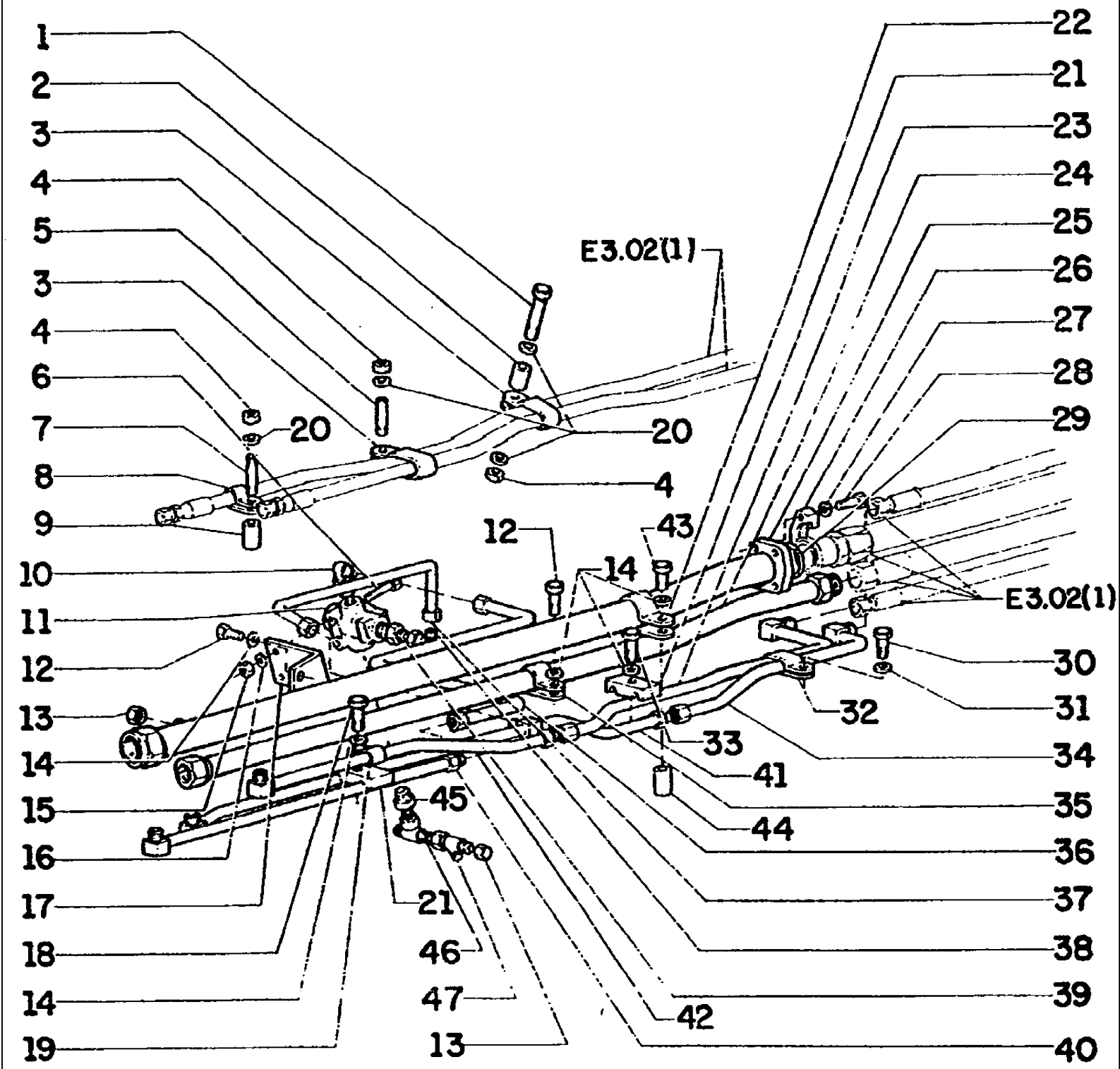
1
2
3
4
5
3
4
6
7
8
9
10
11
12
13
14
15
16
17
18
14
19
20
20
4
E3.02(1)
12
14
43
21
46
47
13
45
41
44
42
22
21
23
24
25
26
27
28
29
E3.02(1)
30
31
32
33
34
35
36
37
38
39
40

FG85 SERIES B MOTORGRADER

E3.02(002) REAR HYDRAULIC SYSTEM

Ref	Numero de Pieza	Ctd	Descripción
1	70920995	1	SCREW
2	70043024	1	SPACER
3	70929745	2	CLAMP
4	70911034	3	NUT
5	70687145	1	STUD
6	70928389	2	SCREW
7	70681804	1	STUD
8	70927310	1	CLAMP
9	73141215	1	SPACER
10	70924786	1	ELBOW
11	73053741	1	OVERPRES. VALVE
12	70923300	8	LOCKWASHER
13	70923737	1	CAP
14	70677006	10	WASHER
15	70911025	2	NUT
16	70677005	2	WASHER
17	73150686	1	SUPPORT
18	70921565	1	SCREW
19	70927155	1	CLAMP
20	70915815	4	WASHER
21	73127628	3	CLAMP
22	70927312	3	CLAMP
23	75236173	1	TUBE
24	73150898	1	TUBE
25	73150856	1	TUBE
26	70921118	2	FLANGE
27	70912441	4	LOCKWASHER
28	70920583	4	SCREW
29	70923578	1	RING
30	70927400	1	SCREW
31	70929156	1	WASHER
32	70932619	1	CLAMP
33	70921076	2	SCREW
34	75236178	1	TUBE
35	70627264	3	CLAMP
36	73150858	1	TUBE
37	73150865	1	TUBE
38	70921279	1	ELBOW
39	70924296	1	CONNECTOR
40	73150860	1	TUBE
41	75236176	1	TUBE
42	75236171	1	TUBE
43	70920996	1	SCREW

Ref	Numero de Pieza	Ctd	Descripción
44	73019345	1	BLOCK
45	70923717	1	CONNECTOR
46	70921298	1	FITTING
47	70921276	1	FITTING

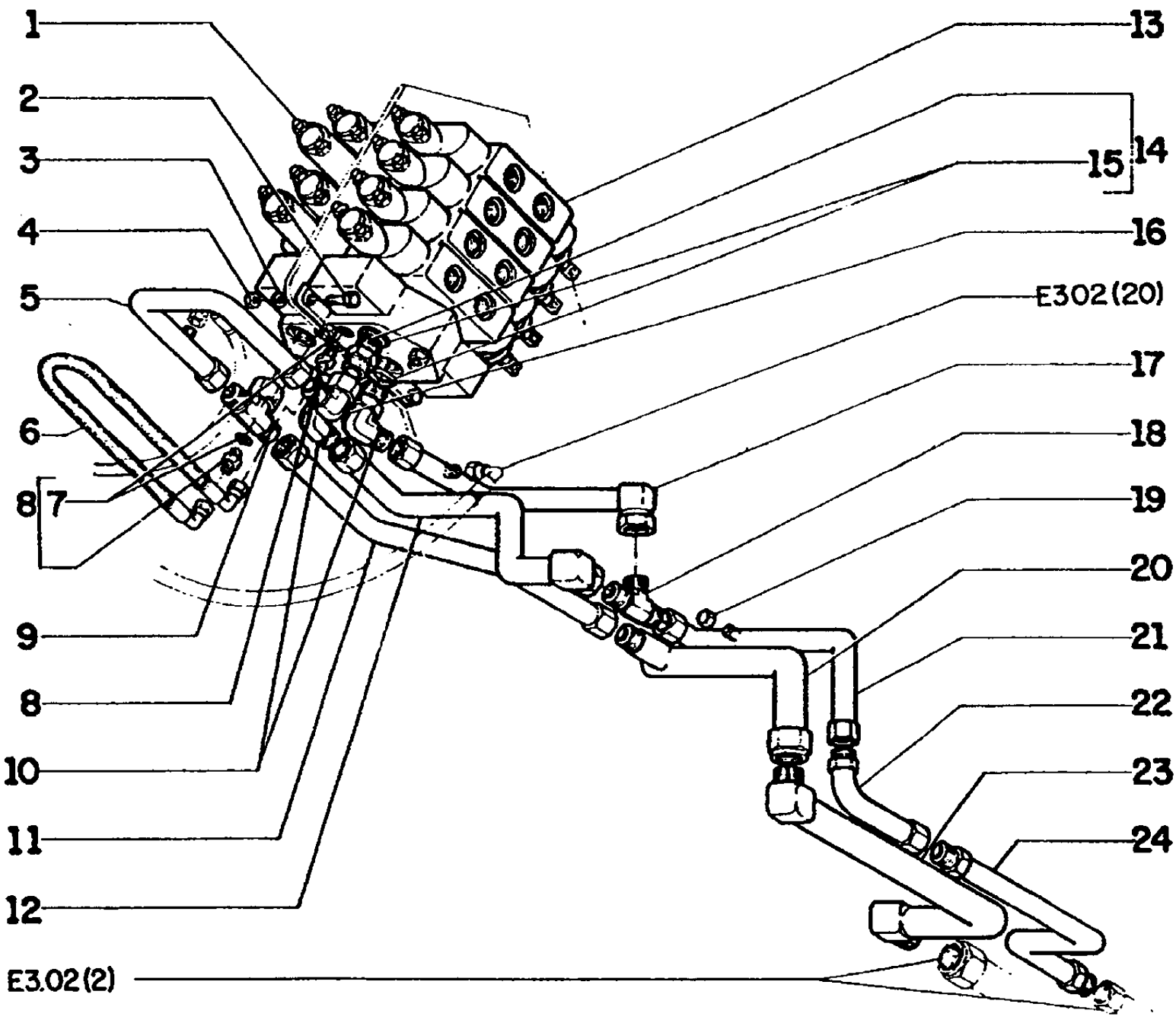
1
2
3
4
5
6
8 7
9
8
10
11
12
E3.02(2)
13
15 14
16
E302(20)
17
18
19
20
21
22
23
24

FG85 SERIES B MOTORGRADER

E3.02(003A) FRONT HYDRAULIC SYSTEM

Ref	Numero de Pieza	Ctd	Descripción
1	73150298	1	VALVE
2	70936307	4	SCREW
3	70910287	16	LOCKWASHER
4	70911026	6	NUT
5	73151827	1	TUBE
6	75221784	1	TUBE
7	70921885	2	O-Ring, 6-1, 90 Duro, .468" ID x .078" Thk
8	70926292	2	CONNECTOR
9	70925834	1	FITTING
10	70921203	2	FITTING
11	73151825	1	TUBE
12	73151821	1	TUBE
13	73150297	1	VALVE
14	70921217	2	CONNECTOR
15	70921206	4	O'RING
16	70919624	1	FITTING
17	73151823	1	TUBE
18	70920490	1	FITTING
19	70919552	2	CAP
20	73150028	1	TUBE
21	73151819	1	TUBE
22	73076741	1	TUBE
23	73149997	1	TUBE
24	73149923	1	TUBE

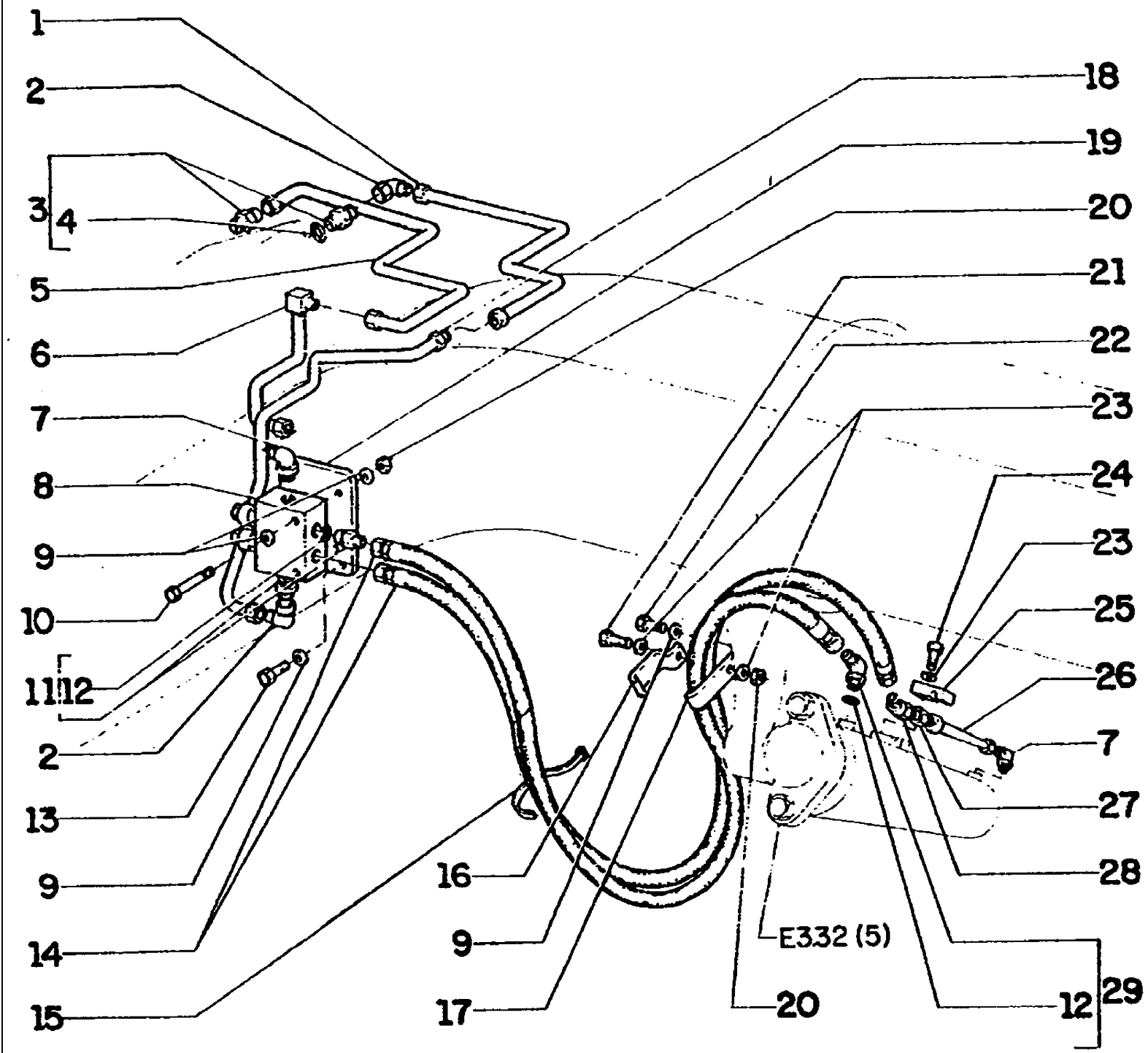
1
2
3
4
5
6
7
8
9
10
11
12
2
13
9
14
15
16
9
17
18
19
20
21
22
23
24
23
25
26
7
27
28
E332 (5)
20
12
29

FG85 SERIES B MOTORGRADER

E3.02(004) CIRCLE SHIFT HYDRAULIC

Ref	Numero de Pieza	Ctd	Descripción
1	73152054	1	TUBE
2	70921279	2	ELBOW
3	70924296	2	CONNECTOR
4	70921205	2	O'RING
5	73152044	1	TUBE
6	73152051	1	TUBE
7	70921402	2	ELBOW
7	70921402	2	ELBOW
8	73130105	1	LOCK VALVE
9	70677006	8	WASHER
10	70920996	2	SCREW
11	70921409	3	CONNECTOR
12	70921349	6	O-Ring, 8-1, 90 Duro, .644" ID x .087" Thk
13	70922300	3	SCREW
14	73126279	2	HOSE ASSY
15	70196765	4	CLAMP
16	73134510	1	CLAMP
17	73134511	1	PLATE
18	73152056	1	TUBE
19	73127641	1	PLATE
20	70911026	3	NUT
21	70922763	1	SCREW
22	70922262	1	SCREW
23	70929156	3	WASHER
24	70921565	1	SCREW
25	73127629	1	CLAMP
26	73130116	1	TUBE
27	70919788	1	FITTING
28	70920690	1	ELBOW
29	70922507	1	ELBOW

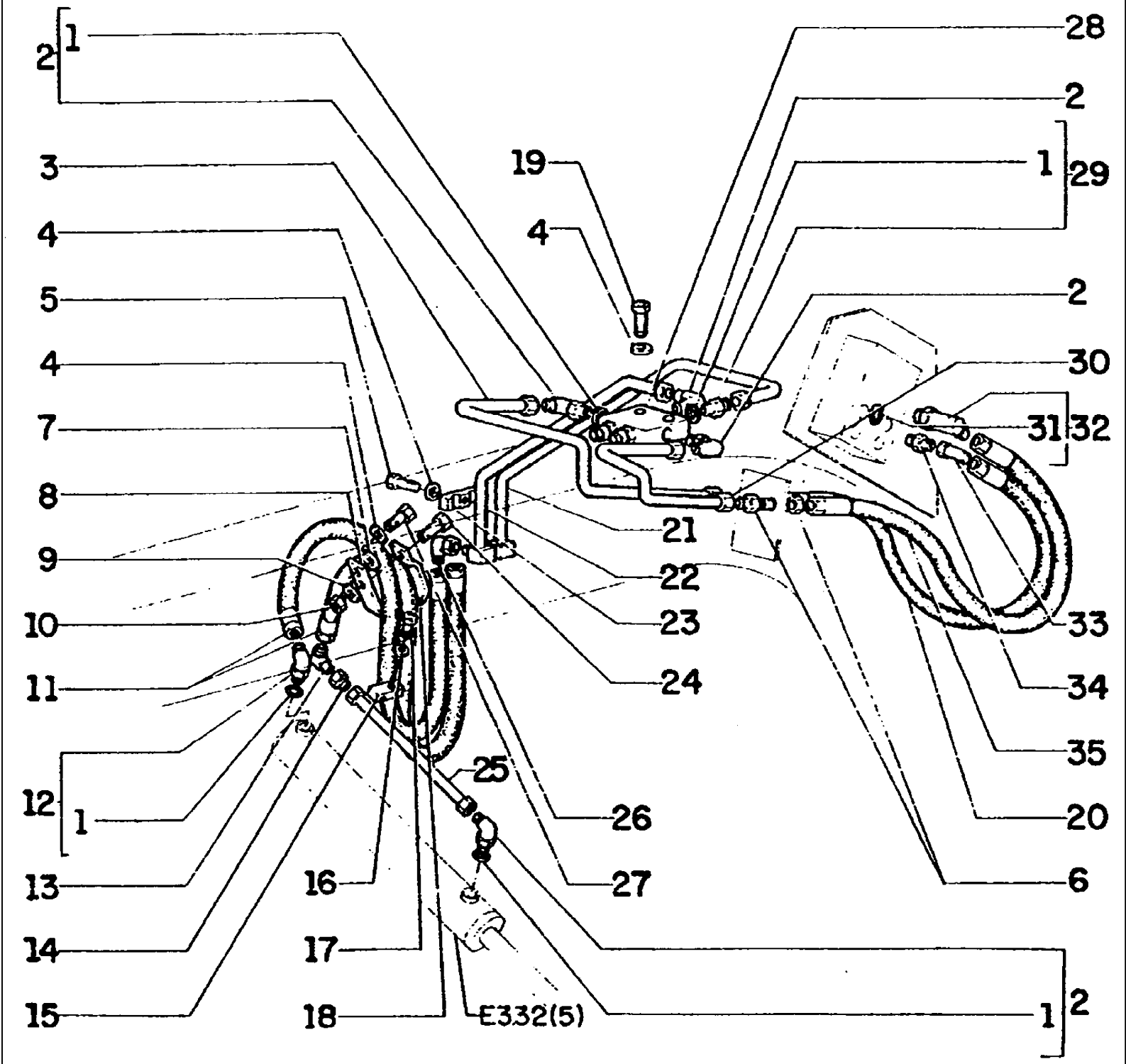
2
1
3
4
5
4
7
8
9
10
11
12
1
13
14
15
16
17
18
E332(5)
25
26
27
19
4
21
22
23
24
28
2
1
29
2
30
31
32
33
34
35
20
6
1
2

FG85 SERIES B MOTORGRADER

E3.02(005) CIRCLE SHIFT HYDRAULIC

Ref	Numero de Pieza	Ctd	Descripción
1	70921349	6	O-Ring, 8-1, 90 Duro, .644" ID x .087" Thk
2	70921402	4	ELBOW
3	75221211	1	TUBE
4	70677006	4	WASHER
5	70921076	1	SCREW
6	70927261	2	FITTING
7	73135018	1	SLEEVE
8	73134511	1	PLATE
9	70929156	2	WASHER
10	70911026	3	NUT
11	73126279	2	HOSE ASSY
12	70922507	1	ELBOW
13	70920690	1	ELBOW
14	70919788	1	FITTING
15	73127629	1	CLAMP
16	70929156	1	WASHER
17	70921565	1	SCREW
18	73134510	1	CLAMP
19	70920996	2	SCREW
20	75214782	1	HOSE ASSY
21	75214790	1	TUBE
22	75214791	1	TUBE
23	70623355	1	CLAMP
24	70922763	1	SCREW
25	73130116	1	TUBE
26	70921279	2	ELBOW
27	70922262	1	SCREW
28	73130105	1	LOCK VALVE
29	70921409	1	CONNECTOR
30	75237395	1	TUBE
31	70921205	2	O'RING
32	75220005	1	ELBOW
33	70921279	1	ELBOW
34	70924296	1	CONNECTOR
35	75214783	1	HOSE ASSY

E3.02(006) FRONT WHEEL LEAN PIPING

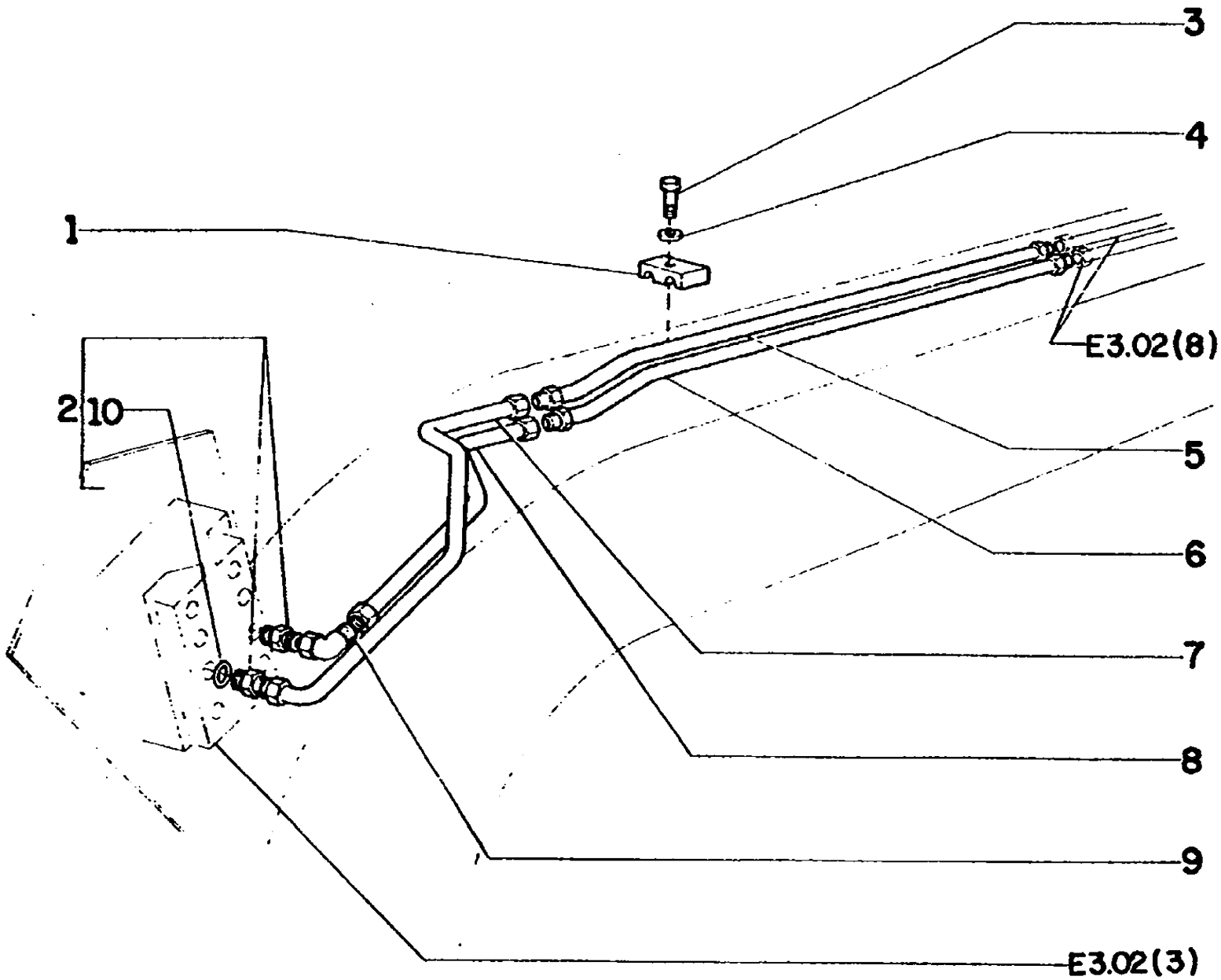

FG85 SERIES B MOTORGRADER

E3.02(006) FRONT WHEEL LEAN PIPING

Ref	Numero de Pieza	Ctd	Descripción
1	70623355	2	CLAMP
2	70923717	2	CONNECTOR
3	70921076	2	SCREW
4	70677006	2	WASHER
5	73125664	1	TUBE
6	73125665	1	TUBE
7	73152080	1	TUBE
8	70921279	1	TUBE
9	70921279	1	ELBOW
10	70921205	2	O'RING

E3.02(007) FRONT WHEEL LEAN PIPING

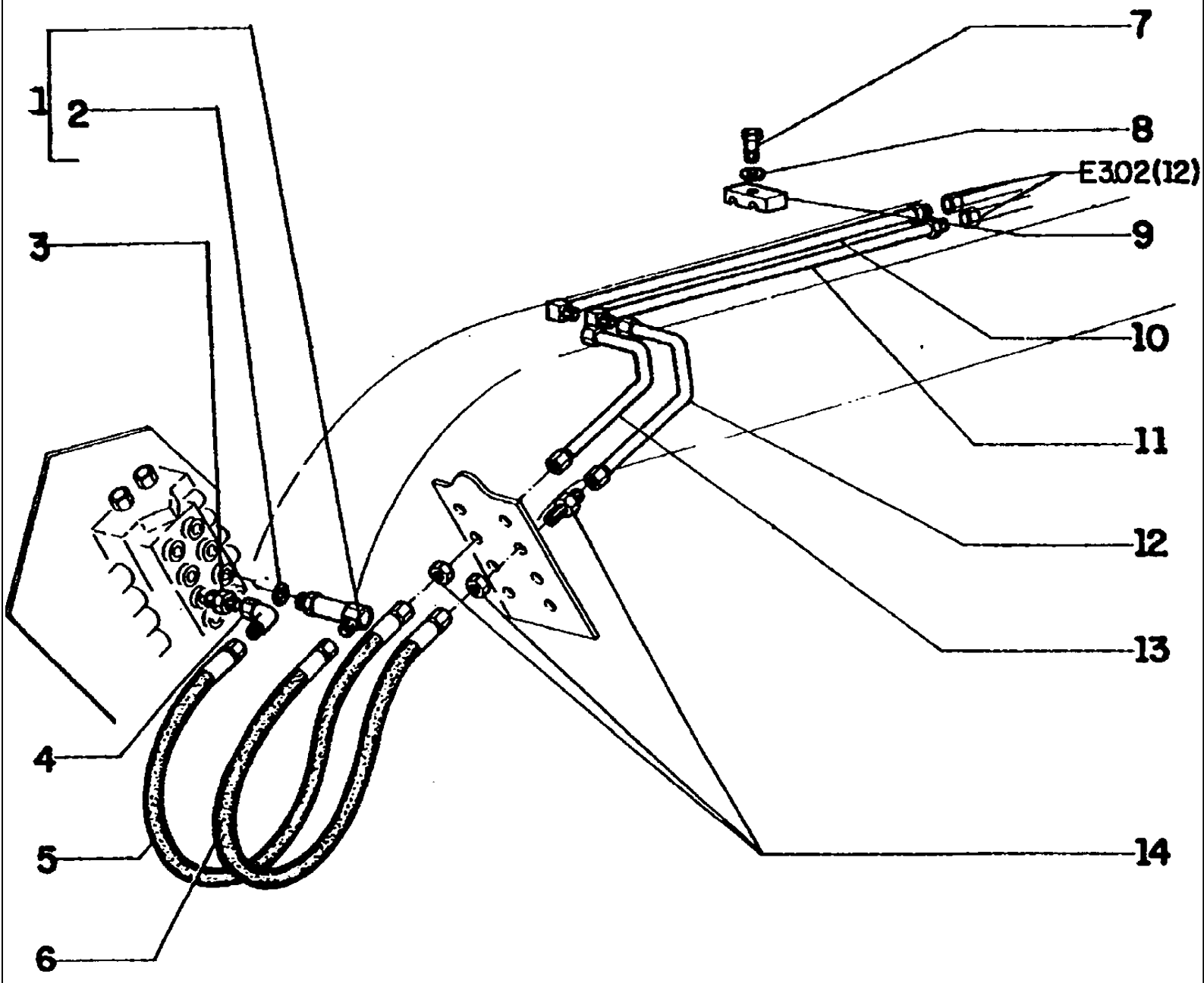

FG85 SERIES B MOTORGRADER

E3.02(007) FRONT WHEEL LEAN PIPING

Ref	Numero de Pieza	Ctd	Descripción
1	75220005	1	ELBOW
2	70921205	2	O'RING
3	70924296	1	CONNECTOR
4	70921279	1	ELBOW
5	75214782	1	HOSE ASSY
6	75214783	1	HOSE ASSY
7	70921076	1	SCREW
8	70677006	1	WASHER
9	70623355	1	CLAMP
10	75214725	1	TUBE
11	75214726	1	TUBE
12	75221213	1	TUBE
13	75214724	1	TUBE
14	70927261	2	FITTING

E3.02(008) FRONT WHEEL LEAN PIPING

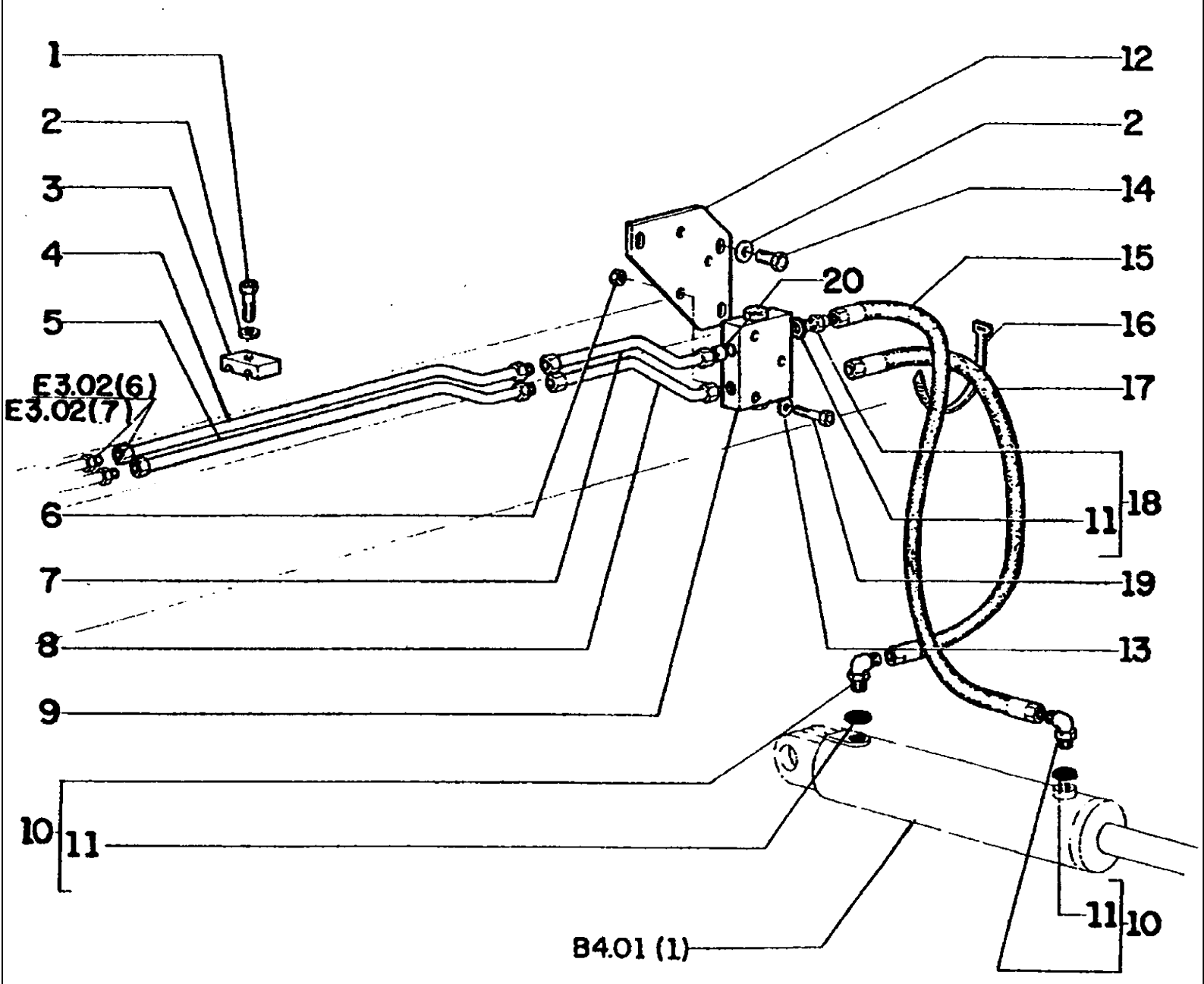

FG85 SERIES B MOTORGRADER

E3.02(008) FRONT WHEEL LEAN PIPING

Ref	Numero de Pieza	Ctd	Descripción
1	70921076	1	SCREW
2	70677006	7	WASHER
3	70623355	1	CLAMP
4	75214303	1	TUBE - for fg85a/r
4	73126553	1	TUBE - for fg105a/r
5	75214305	1	TUBE - for fg85a/r
5	73126555	1	TUBE - for fg105a/r
6	70911024	3	NUT
7	73126554	1	TUBE
8	73126556	1	TUBE
9	73148118	1	VALVE
10	70921402	2	ELBOW
11	70921349	6	O-Ring, 8-1, 90 Duro, .644" ID x .087" Thk
12	73126564	1	PLATE
13	70928190	6	WASHER
14	70927400	3	SCREW
15	73126557	1	HOSE ASSY
16	70196765	2	CLAMP
17	73126558	1	HOSE ASSY
18	70921409	4	CONNECTOR
19	70930238	3	SCREW

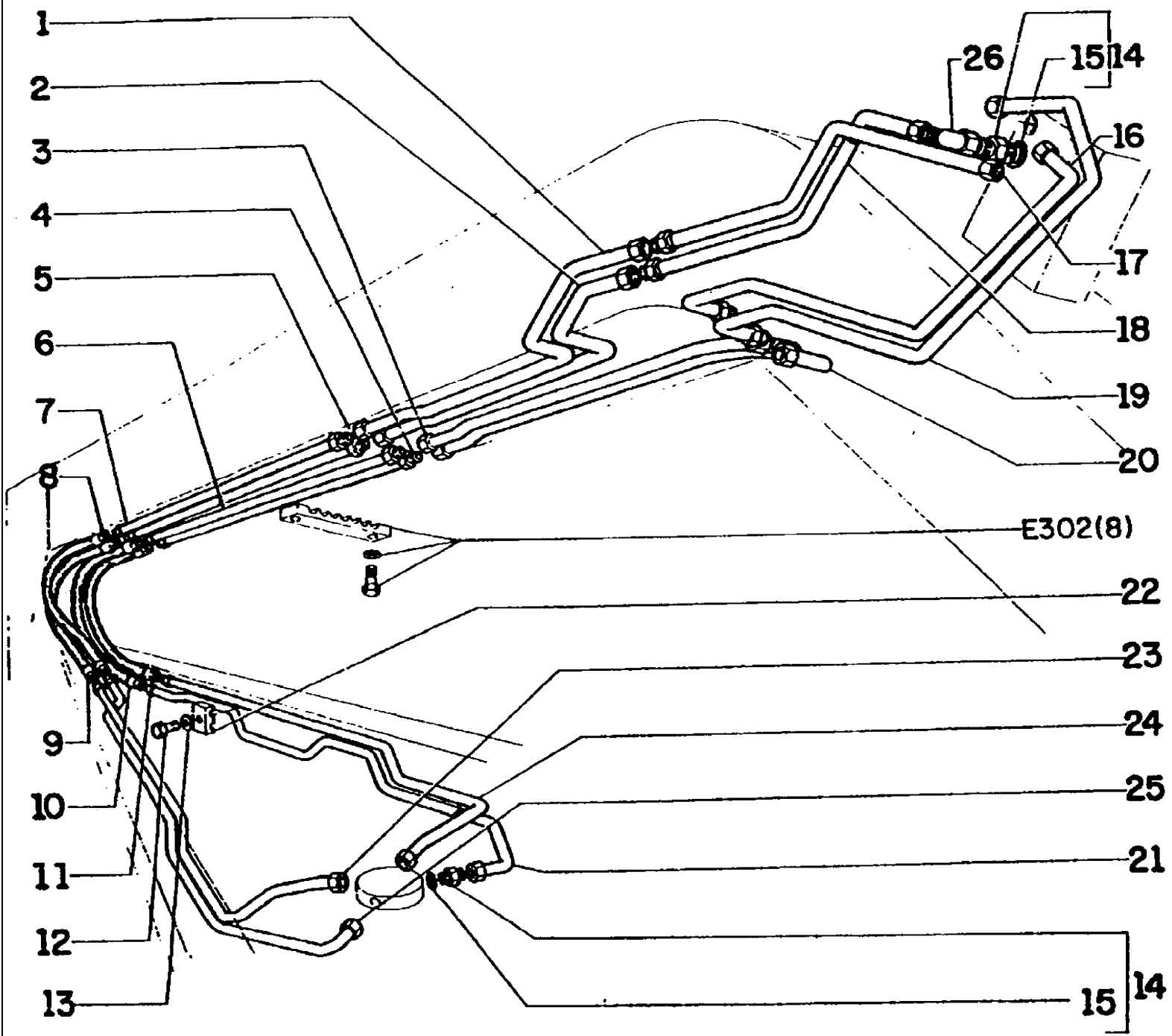
1
2
3
4
5
6
7
8
9
10
11
12
13
26
15
14
16
17
18
19
20
E302(8)
22
23
24
25
21
15
14

FG85 SERIES B MOTORGRADER

E3.02(009) HYDRAULIC SYSTEM MOLDBOARD

Ref	Numero de Pieza	Ctd	Descripción
1	73125671	1	TUBE
2	73125673	1	TUBE
3	73125677	1	TUBE
4	73126551	1	TUBE
5	73126549	1	TUBE
6	73126550	1	TUBE
7	73126548	1	TUBE
8	73126545	1	HOSE ASSY
9	73126546	1	HOSE ASSY
10	73126544	1	HOSE ASSY
11	73126543	1	HOSE ASSY
12	70921076	8	SCREW
13	70677006	8	WASHER
14	70924296	4	CONNECTOR
15	70921205	8	O'RING
16	73152064	1	TUBE
17	73152068	1	TUBE
18	73152066	1	TUBE
19	73152062	1	TUBE
20	73125675	1	TUBE
21	70923717	4	CONNECTOR
22	70695523	8	CLAMP
23	73129639	1	TUBE
24	73129640	1	TUBE
25	73129638	1	TUBE
26	73129641	1	TUBE

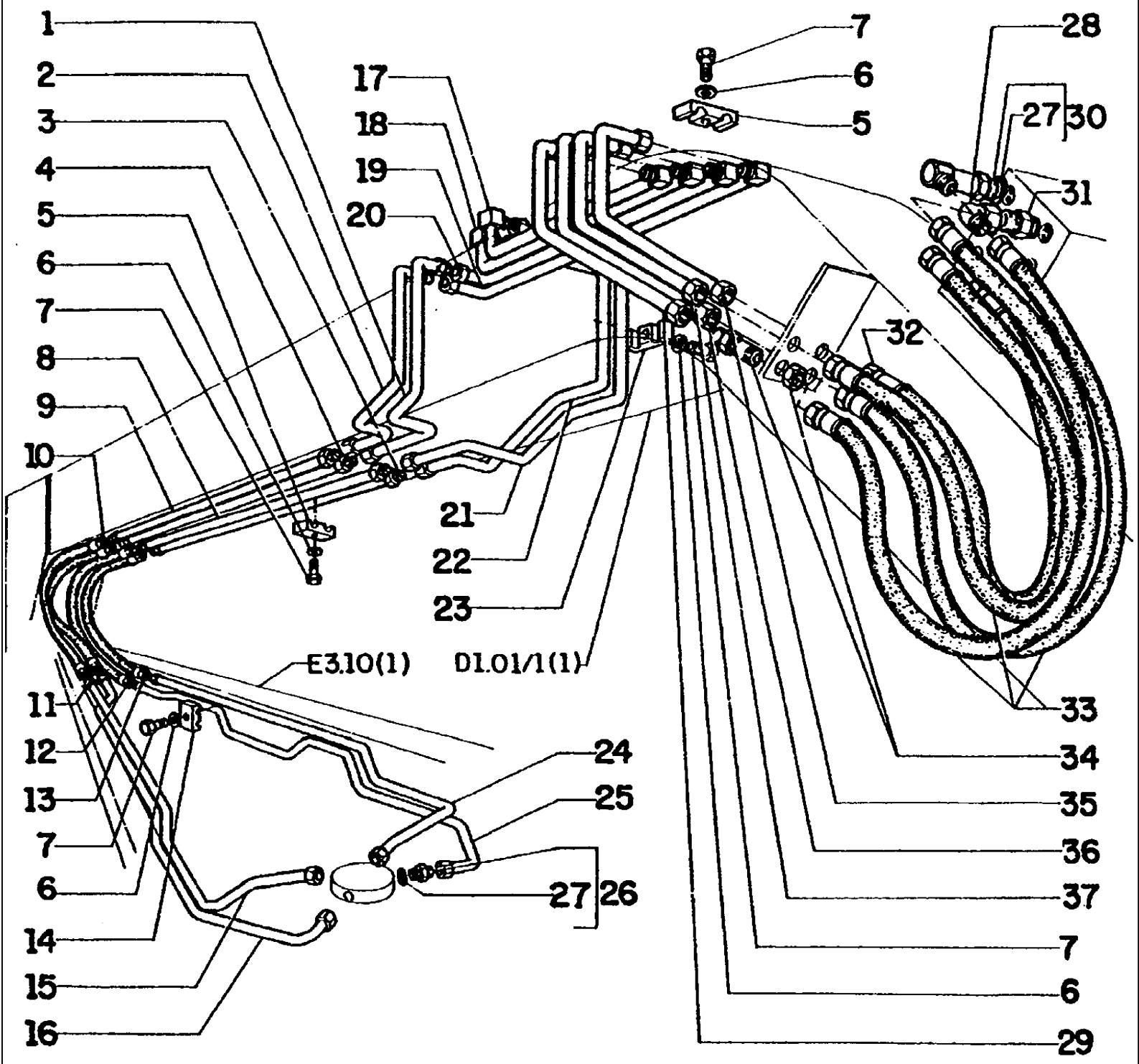
1
2
3
4
5
6
7
8
9
10
11
12
13
7
6
14
15
16
17
18
19
20
21
22
23
E3.10(1)
D1.01/1(1)
24
25
27
26
7
6
5
28
27
30
31
32
33
34
35
36
37
7
6
29

FG85 SERIES B MOTORGRADER

E3.02(010) SIDE SHIFT AND PITCH CONTROL

Ref	Numero de Pieza	Ctd	Descripción
1	75214845	1	TUBE
2	75214843	1	TUBE
3	75214300	1	TUBE
4	75214294	1	TUBE
5	70623355	5	CLAMP
6	70677006	13	WASHER
7	70921076	13	SCREW
8	75214298	1	TUBE
9	75214296	1	TUBE
10	73126546	1	HOSE ASSY
11	73126545	1	HOSE ASSY
12	73126544	1	HOSE ASSY
13	73126543	1	HOSE ASSY
14	70695523	8	CLAMP
15	73129639	1	TUBE
16	73129638	1	TUBE
17	75221195	1	TUBE
18	75214835	1	TUBE
19	75214831	1	TUBE
20	75214833	1	TUBE
21	75214841	1	TUBE
22	75214839	1	TUBE
23	73127628	1	CLAMP
24	73129640	1	TUBE
25	73129641	1	TUBE
26	70923717	4	CONNECTOR
27	70921205	8	O'RING
28	70921279	2	ELBOW
29	75221201	1	TUBE
30	75220005	2	ELBOW
31	75221203	2	TUBE
32	75214783	1	HOSE ASSY
33	75214262	3	HOSE ASSY
34	70927261	4	FITTING
35	75214825	1	TUBE
36	75214827	1	TUBE
37	75221203	1	TUBE

E3.02(011) MOLDBOARD SIDE SHIFT CYLINDER

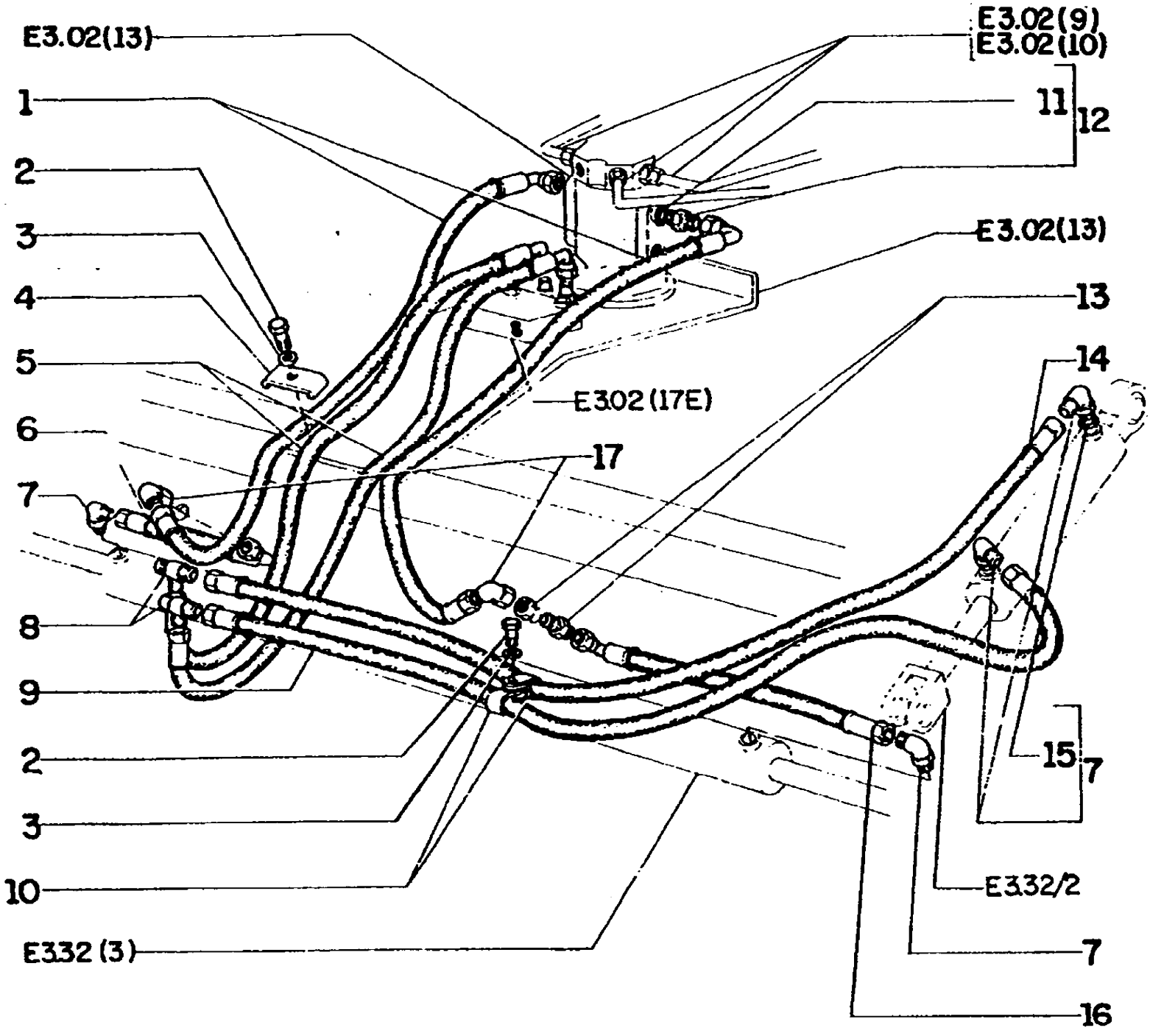

FG85 SERIES B MOTORGRADER

E3.02(011) MOLDBOARD SIDE SHIFT CYLINDER

Ref	Numero de Pieza	Ctd	Descripción
1	73127354	2	HOSE ASSY
2	70922763	8	SCREW
3	70677006	8	WASHER
4	73127364	4	CLAMP
5	73127355	2	HOSE ASSY
6	73127357	1	HOSE ASSY
7	70921402	6	ELBOW
8	70921472	2	FITTING
9	73127353	2	HOSE ASSY
10	70929748	8	CLAMP
11	70921205	2	O'RING
12	70923717	4	CONNECTOR
13	70927261	2	FITTING
14	73127352	2	HOSE ASSY
15	70921349	6	O-Ring, 8-1, 90 Duro, .644" ID x .087" Thk
16	73127356	1	HOSE ASSY
17	70921279	2	ELBOW

E3.02(013) SIDE SHIFTAND PITCH CONTROL

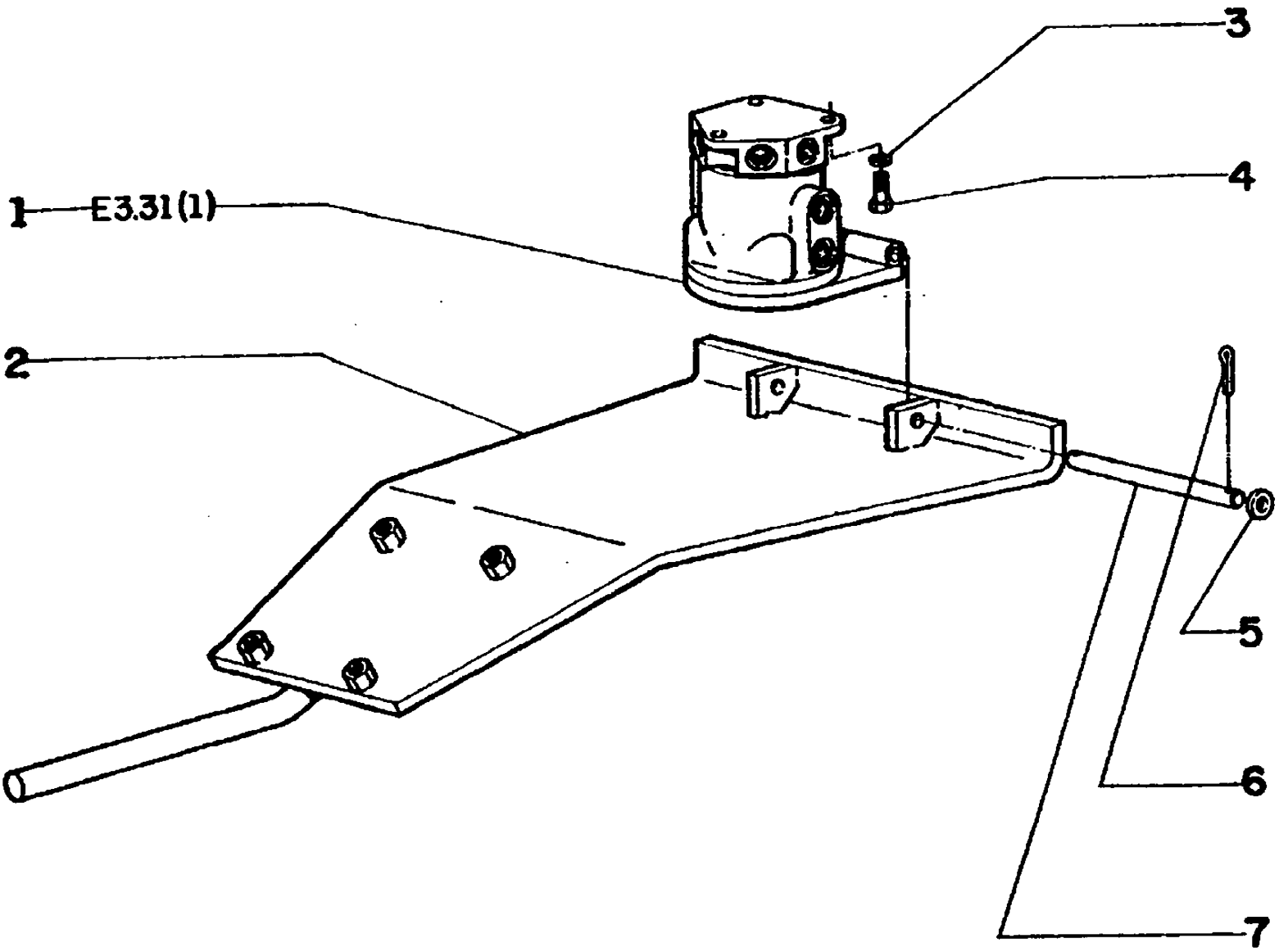

FG85 SERIES B MOTORGRADER

E3.02(013) SIDE SHIFTAND PITCH CONTROL

Ref	Numero de Pieza	Ctd	Descripción
1	73125855	1	ROTOR
2	73127359	1	PLATE
3	70912441	3	LOCKWASHER
4	70927172	3	SCREW
5	70911115	2	WASHER
6	70900942	2	COTTER PIN
7	70658592	1	PIN

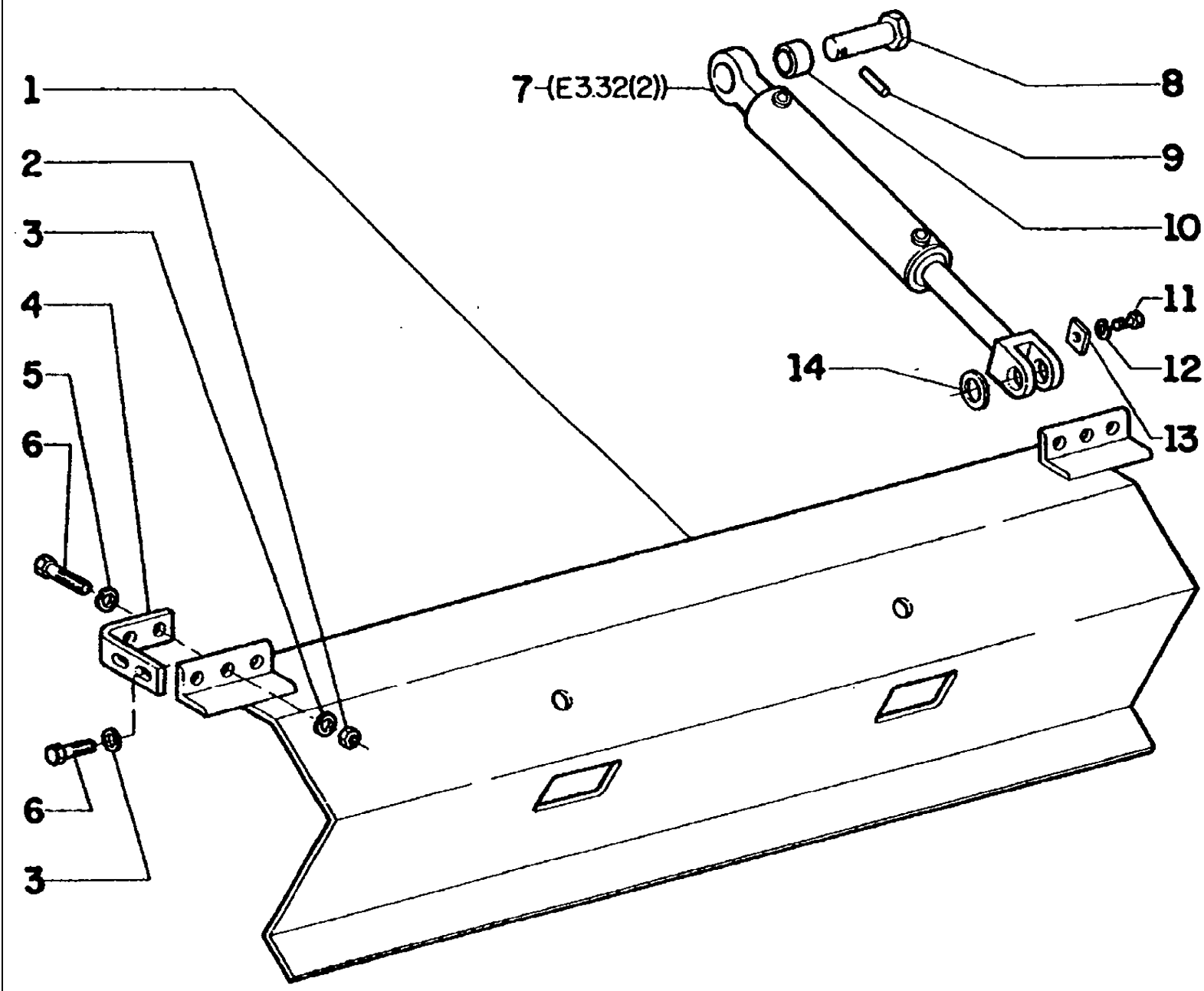
1
2
3
4
5
6
6
3
7-(E3.32(2))
8
9
10
11
12
13
14

FG85 SERIES B MOTORGRADER

E3.02(014) HYDRAULIC SYSTEM MOLDBOARD

Ref	Numero de Pieza	Ctd	Descripción
1	70683865	1	PIPING PROTECT.
2	70911028	4	NUT
3	70912441	4	LOCKWASHER
4	70646763	2	ANGLE
5	70928844	4	WASHER
6	70920583	4	SCREW
7	73126610	2	TILT CYLINDER
8	70684051	4	PIN
9	70916171	4	Pin, 1/4" x 1 1/2", Slotted
10	70654453	4	BUSHING
11	70922262	2	SCREW
12	70910287	2	LOCKWASHER
13	70658598	2	PLATE
14	70911159	2	WASHER

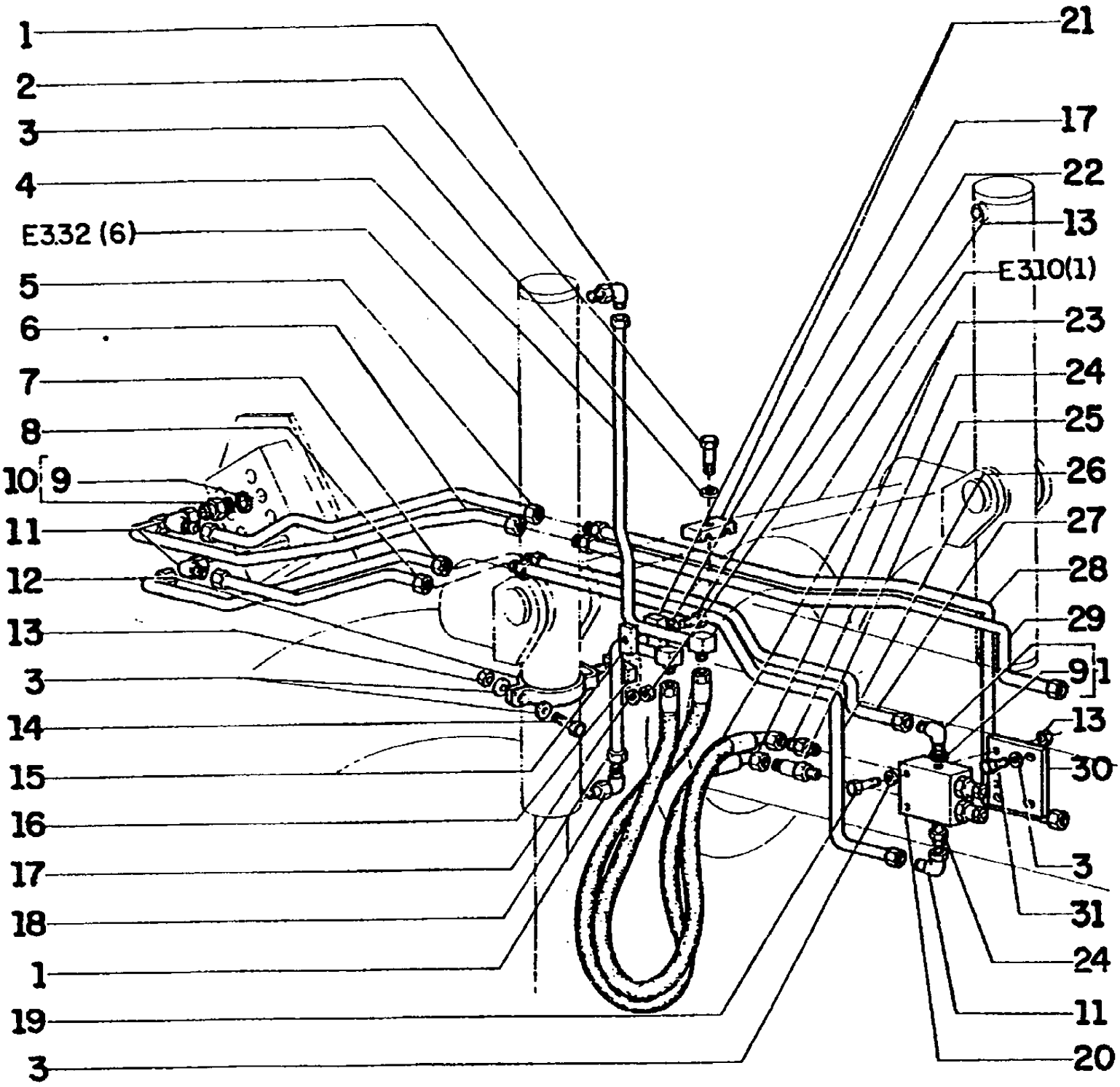
1
2
3
4
E332 (6)
5
6
7
8
10 9
11
12
13
3
14
15
16
17
18
1
19
3
21
17
22
13
E310(1)
23
24
25
26
27
28
29
9 1
13
30
3
31
24
11
20

FG85 SERIES B MOTORGRADER

E3.02(015) MOLDBOARD LIFT PIPING

Ref	Numero de Pieza	Ctd	Descripción
1	70921402	6	ELBOW
2	70921076	2	SCREW
3	70677006	17	WASHER
4	73127106	2	TUBE
5	73152076	1	TUBE
6	73152074	1	TUBE
7	73152082	1	TUBE
8	73152084	1	TUBE
9	70921205	8	O'RING
10	70924296	4	CONNECTOR
11	70921279	6	ELBOW
12	73127110	2	CLAMP
13	70911026	8	NUT
14	70922287	2	SCREW
15	70621602	2	BLOCK
16	73127629	2	CLAMP
17	70910287	4	LOCKWASHER
18	73127107	2	TUBE
19	70920996	6	SCREW
20	73130105	2	LOCK VALVE
21	70623355	4	CLAMP
22	70928243	2	SCREW
23	73127637	4	HOSE ASSY
24	70921409	4	CONNECTOR
25	70927571	2	CONNECTOR
26	73135219	1	TUBE
27	73135221	1	TUBE
28	73135223	1	TUBE
29	73135225	1	TUBE
30	73127641	2	PLATE
31	70922300	6	SCREW

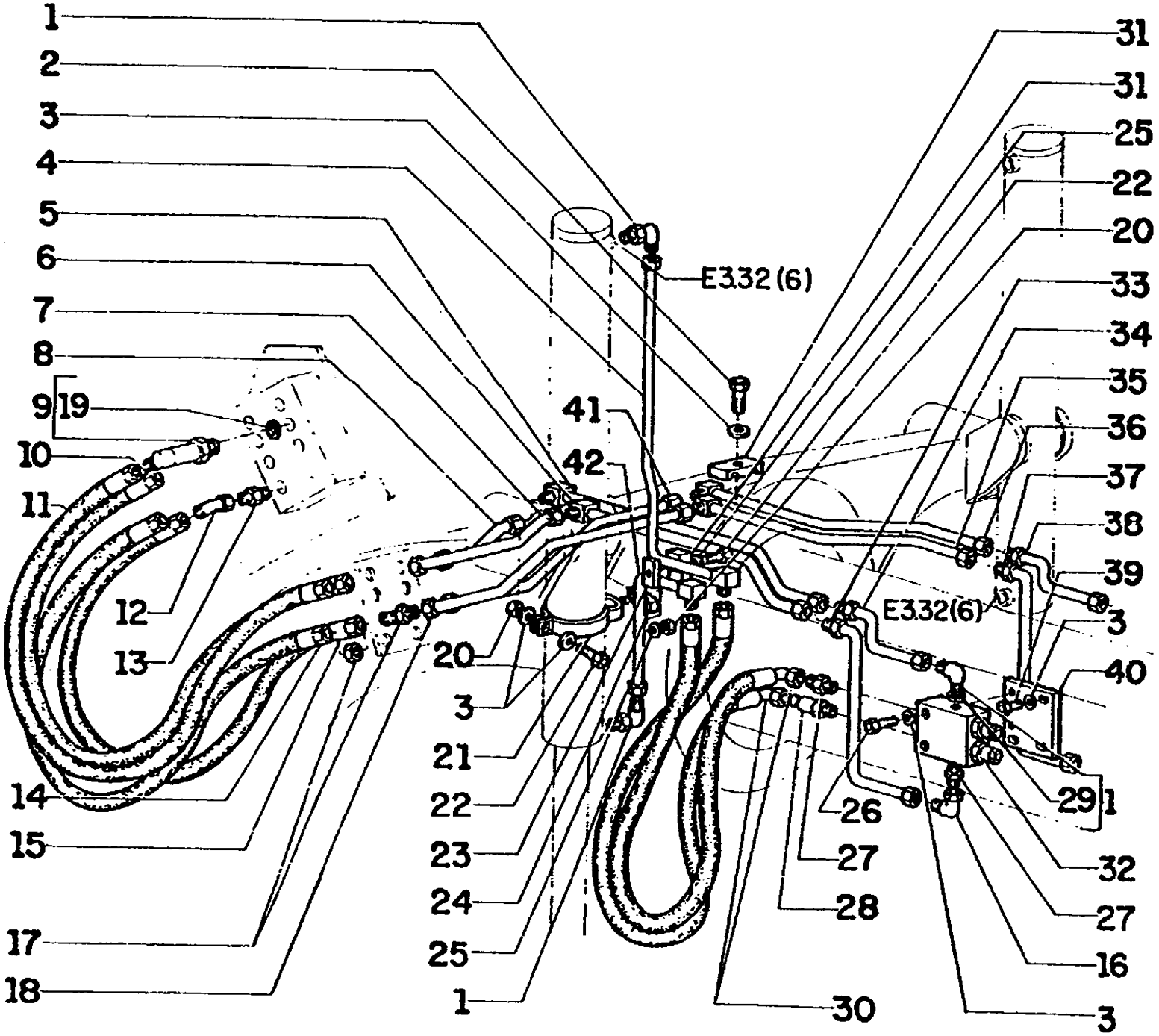
1
2
3
4
5
6
7
8
9
19
10
11
12
13
14
15
17
18
20
3
21
22
23
24
25
1
41
42
E332 (6)
E332(6)
31
31
25
22
20
33
34
35
36
37
38
39
3
40
29
1
26
27
28
30
32
27
16
3

FG85 SERIES B MOTORGRADER

E3.02(016) MOLDBOARD LIFT PIPING

Ref	Numero de Pieza	Ctd	Descripción
1	70921402	4	ELBOW
2	70920995	1	SCREW
3	70677006	15	WASHER
4	73127106	2	TUBE
5	75214729	1	TUBE
6	75214730	1	TUBE
7	75237501	1	TUBE
8	75214727	1	TUBE
9	75220005	2	ELBOW
10	75214783	1	HOSE ASSY
11	75214262	1	HOSE ASSY
12	70921279	2	ELBOW
13	70924296	2	CONNECTOR
14	75214782	1	HOSE ASSY
15	75214261	1	HOSE ASSY
16	70921279	2	ELBOW
17	70927261	4	FITTING
18	75237503	1	TUBE
19	70921205	4	O'RING
20	70911026	4	NUT
21	73127110	2	CLAMP
22	70922287	4	SCREW
23	70621602	2	BLOCK
24	73127629	2	CLAMP
25	70910287	4	LOCKWASHER
26	70920996	4	SCREW
27	70921409	4	CONNECTOR
28	70927571	2	CONNECTOR
29	70921349	8	O-Ring, 8-1, 90 Duro, .644" ID x .087" Thk
30	73127637	4	HOSE ASSY
31	70623355	3	CLAMP
32	73130105	2	LOCK VALVE
33	75237515	1	TUBE
34	75214731	1	TUBE
35	75214744	1	TUBE
36	75214745	1	TUBE
37	75237371	1	TUBE
38	75214747	1	TUBE
39	70922300	6	SCREW
40	73127641	2	PLATE
41	75214743	1	TUBE
42	73127107	1	TUBE

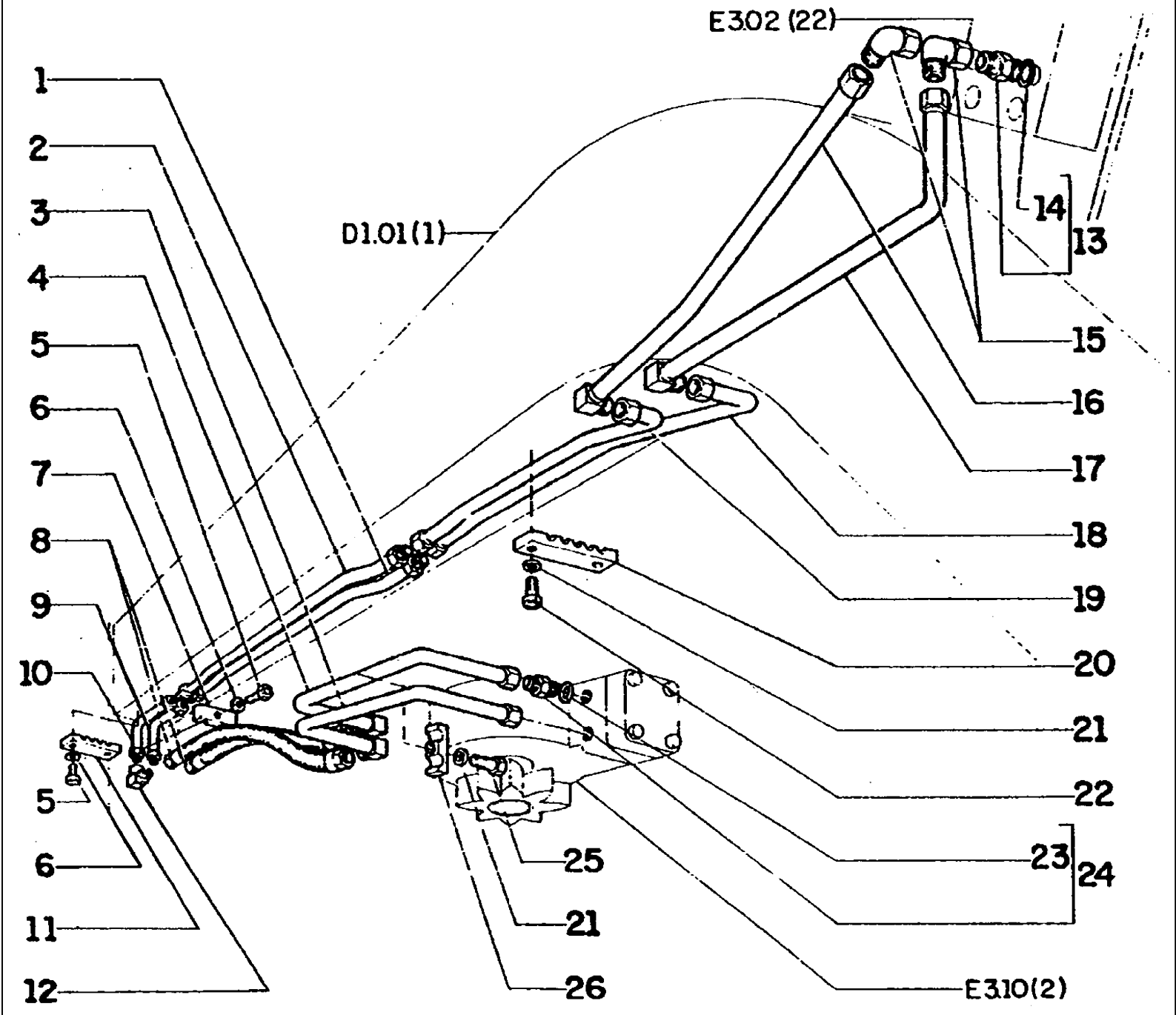
E302 (22)
D1.01(1)
1
2
3
4
5
6
7
8
9
10
5
6
11
12
14
13
15
16
17
18
19
20
21
22
23
24
25
21
26
E310(2)

FG85 SERIES B MOTORGRADER

E3.02(017) CIRCLE TURN HYDRAULIC

Ref	Numero de Pieza	Ctd	Descripción
1	73126567	1	TUBE
2	73126565	1	TUBE
3	73154075	1	TUBE
4	73154077	1	TUBE
5	70924864	3	SCREW
6	70677008	3	WASHER
7	73127638	1	CLAMP
8	73121561	2	HOSE ASSY
9	73126568	1	TUBE
10	73126566	1	TUBE
11	73126571	1	CLAMP
12	73121563	2	CONNECTION
13	70921217	2	CONNECTOR
14	70921206	2	O'RING
15	70919624	2	FITTING
16	73152060	1	TUBE
17	73152058	1	TUBE
18	73125667	1	TUBE
19	73125669	1	TUBE
20	73125864	3	CLAMP
21	70677006	6	WASHER
22	70922287	6	SCREW
23	70921205	2	O'RING
24	70922981	2	FITTING
25	70927225	2	SCREW
26	73127628	2	CLAMP

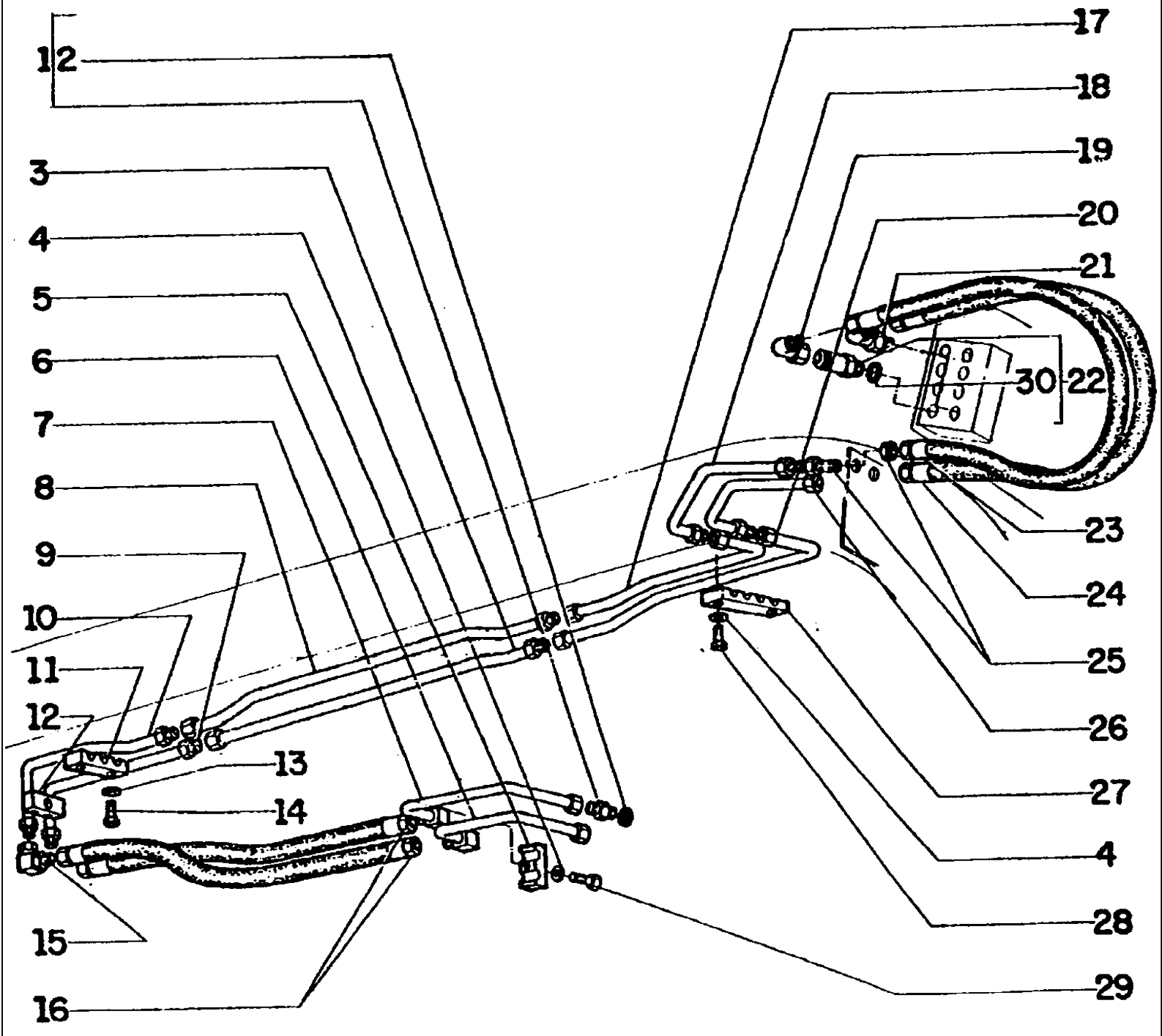
1
2
3
4
5
6
7
8
9
10
11
12
13
14
15
16
17
18
19
20
21
30
22
23
24
25
26
27
4
28
29

FG85 SERIES B MOTORGRADER

E3.02(018) CIRCLE TURN HYDRAULIC

Ref	Numero de Pieza	Ctd	Descripción
1	70922981	2	FITTING
2	70921205	2	O'RING
3	73126567	1	TUBE
4	70677006	4	WASHER
5	73127628	2	CLAMP
6	73154077	1	TUBE
7	73154075	1	TUBE
8	73126565	1	TUBE
9	73126568	1	TUBE
10	73126566	1	TUBE
11	73126571	1	CLAMP
12	73127638	1	CLAMP
13	70677008	3	WASHER
14	70924864	3	SCREW
15	73121563	2	CONNECTION
16	73121561	2	HOSE ASSY
17	75214284	1	TUBE
18	75237388	1	TUBE
19	70919624	1	FITTING
20	75214282	1	TUBE
21	70921203	1	FITTING
22	75221231	1	FITTING
23	75214781	1	HOSE ASSY
24	75214780	1	HOSE ASSY
25	70927063	2	FITTING
26	75237382	1	TUBE
27	75218256	1	CLAMP
28	70922287	2	SCREW
29	70927225	2	SCREW

E3.02(019) SADDLE LOCK PIN CYLINDER AND PIPING

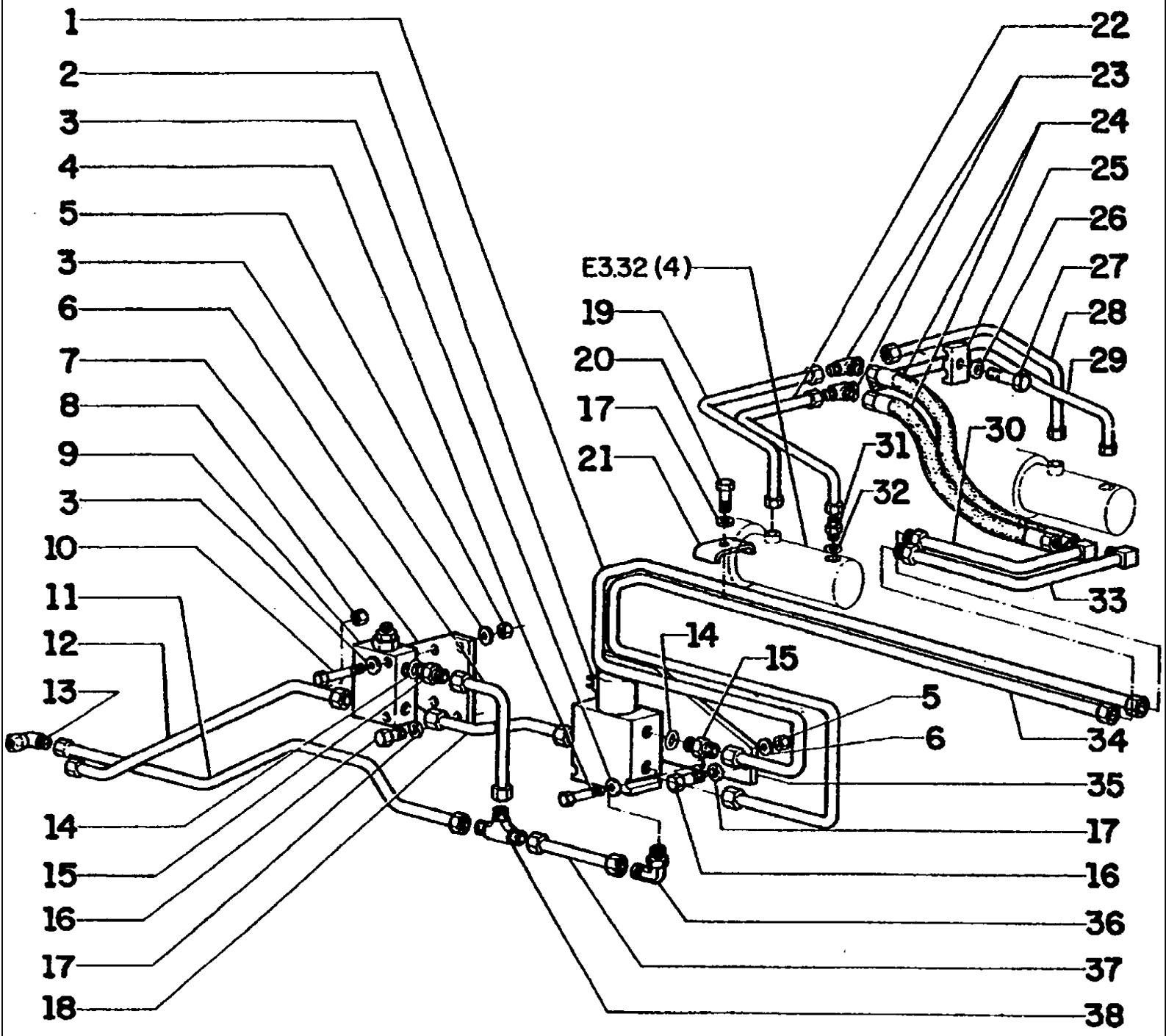

FG85 SERIES B MOTORGRADER

E3.02(019) SADDLE LOCK PIN CYLINDER AND PIPING

Ref	Numero de Pieza	Ctd	Descripción
1	75239313	1	TUBE
2	73124881	1	VALVE
3	70928190	8	WASHER
4	70930238	2	SCREW
5	70920329	4	NUT
6	73125681	1	TUBE
7	73125807	1	PLATE
8	70921467	1	CAP
9	73124880	1	VALVE
10	70934150	2	SCREW
11	73152031	1	TUBE
12	73152037	1	TUBE
13	70921013	2	ELBOW
14	70921885	7	O-Ring, 6-1, 90 Duro, .468" ID x .078" Thk
15	70922522	6	CONNECTOR
16	70922300	6	SCREW
17	70677006	8	WASHER
18	73125679	1	TUBE
19	73127111	1	TUBE
20	70922287	2	SCREW
21	73126130	2	CLAMP
22	73127112	1	TUBE
23	70919087	2	FITTING
24	70659547	2	HOSE ASSY
25	70695523	2	CLAMP
26	70910287	2	LOCKWASHER
27	70927361	2	SCREW
28	73127114	1	TUBE
29	73127113	1	TUBE
30	73126127	1	TUBE
31	70922457	4	CONNECTOR
32	70921349	4	O-Ring, 8-1, 90 Duro, .644" ID x .087" Thk
33	73126129	1	TUBE
34	75239314	1	TUBE
35	73125808	1	PLATE
36	70925295	1	ELBOW
37	73126283	1	TUBE
38	70919087	1	FITTING

E3.02(020) SADDLE LOCK PIN CYLINDER AND PIPING

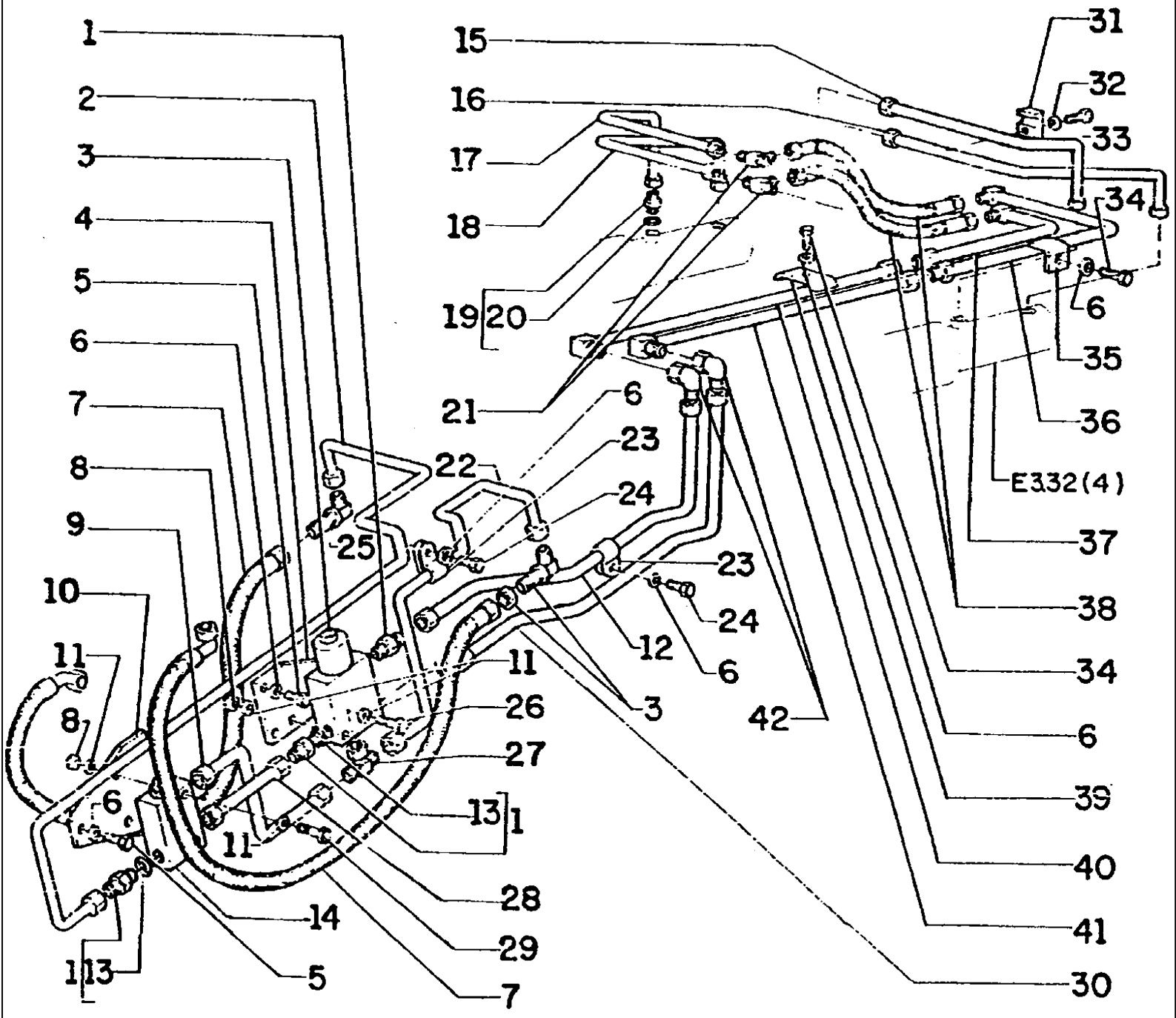

FG85 SERIES B MOTORGRADER

E3.02(020) SADDLE LOCK PIN CYLINDER AND PIPING

Ref	Numero de Pieza	Ctd	Descripción
1	70922522	7	CONNECTOR
2	75237481	1	TUBE
3	73124881	1	VALVE
4	73125808	1	PLATE
5	70922300	6	SCREW
6	70677006	11	WASHER
7	75214263	2	HOSE ASSY
8	70920329	4	NUT
9	75214734	1	TUBE
10	73125807	1	PLATE
11	70928190	8	WASHER
12	75221215	1	TUBE
13	70921885	7	O-Ring, 6-1, 90 Duro, .468" ID x .078" Thk
14	73124880	1	VALVE
15	73127111	1	TUBE
16	73127112	1	TUBE
17	73127114	1	TUBE
18	73127113	1	TUBE
19	70922457	4	CONNECTOR
20	70921349	4	O-Ring, 8-1, 90 Duro, .644" ID x .087" Thk
21	70919087	2	FITTING
22	75237477	1	TUBE
23	70926917	4	CLAMP
24	70927400	3	SCREW
25	70928378	1	FITTING
26	70930238	2	SCREW
27	70921014	1	FITTING
28	75214733	1	TUBE
29	70934150	2	SCREW
30	75221217	1	TUBE
31	70695523	2	CLAMP
32	70910287	2	LOCKWASHER
33	70927361	2	SCREW
34	70921076	2	SCREW
35	73125866	1	SUPPORT
36	73126129	1	TUBE
37	73126127	1	TUBE
38	70659547	2	HOSE ASSY
39	73126130	2	CLAMP
40	75214740	1	TUBE
41	75214741	1	TUBE

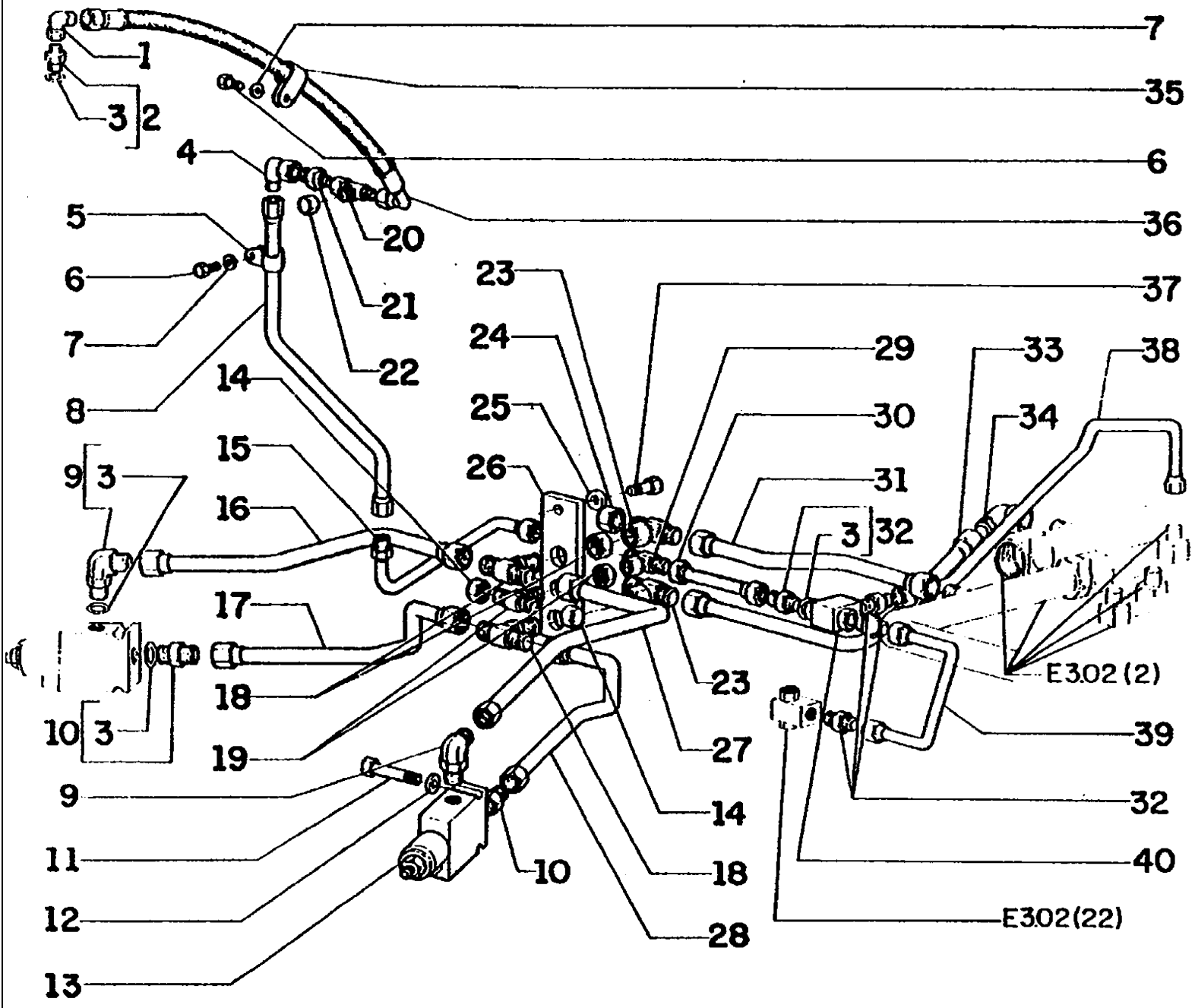
1
3
2
4
5
6
7
8
9
3
10
3
9
11
12
13
14
15
16
17
18
19
20
21
22
23
24
25
26
27
14
18
10
28
7
35
6
36
37
29
33
38
30
34
31
3
32
23
E3.02 (2)
39
32
40
E3.02(22)

FG85 SERIES B MOTORGRADER

E3.02(021) HYDRAULIC ARTICULATION SYSTEM

Ref	Numero de Pieza	Ctd	Descripción
1	70924044	1	FITTING
2	70926292	1	CONNECTOR
3	70921885	9	O-Ring, 6-1, 90 Duro, .468" ID x .078" Thk
4	70921013	1	ELBOW
5	70926917	1	CLAMP
6	70922300	2	SCREW
7	70929156	2	WASHER
8	73149898	1	TUBE
9	70930804	2	ELBOW
10	70924403	2	CONNECTOR
11	70930790	4	SCREW
12	70677004	4	WASHER
13	73124881	2	VALVE
14	70919552	2	CAP
15	73149900	1	TUBE
16	73149820	1	TUBE
17	73149794	1	TUBE
18	70928808	2	FITTING
19	70929190	1	FITTING
20	70926975	1	FITTING
21	70919540	1	CONNECTOR
22	70921467	1	CAP
23	70921276	2	FITTING
24	70923737	2	CAP
25	70929156	1	WASHER
26	73149916	1	PLATE
27	73149822	1	TUBE
28	73149796	1	TUBE
29	70921014	1	FITTING
30	75214733	1	TUBE
31	73149931	1	TUBE
32	70922522	4	CONNECTOR
33	73149929	1	TUBE
34	70921279	1	ELBOW
35	70927309	1	CLAMP
36	73125338	1	HOSE ASSY
37	70922300	1	SCREW
38	75238919	1	TUBE
39	75238925	1	TUBE
40	73157766	1	VALVE

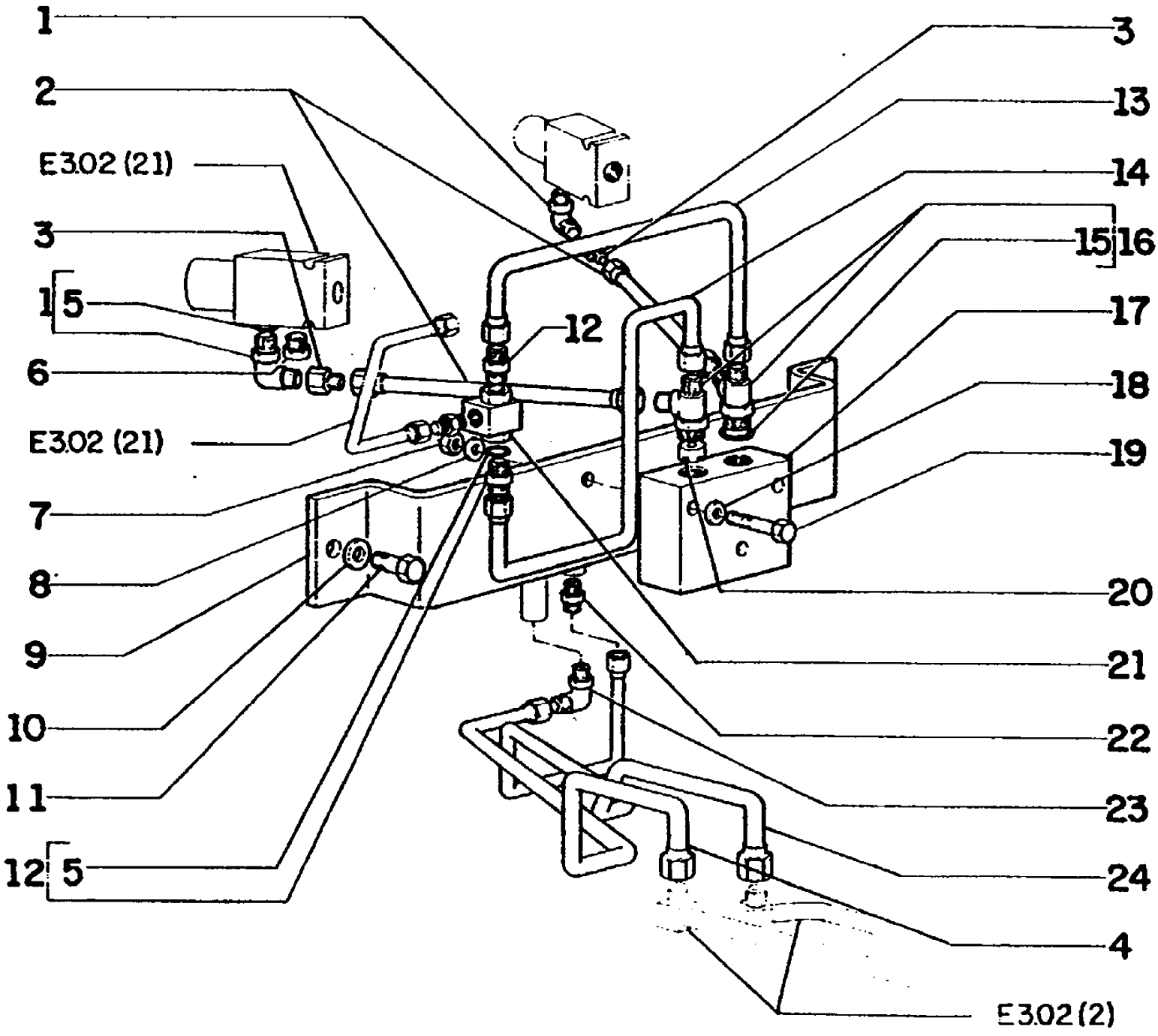
1
2
E3.02 (21)
3
15
6
E3.02 (21)
7
8
9
10
11
12
5
12
3
13
14
15
16
17
18
19
20
21
22
23
24
4
E3.02 (2)

FG85 SERIES B MOTORGRADER

E3.02(022) HYDRAULIC ARTICULATION SYSTEM

Ref	Numero de Pieza	Ctd	Descripción
1	70922523	2	ELBOW
2	73149791	2	TUBE
3	73149778	2	FITTING
4	73149943	1	TUBE
5	70921885	4	O-Ring, 6-1, 90 Duro, .468" ID x .078" Thk
6	70922577	2	PLUG
7	70911024	3	NUT
8	70929156	3	WASHER
9	73149919	1	PLATE
10	70677006	2	WASHER
11	70922763	2	SCREW
12	70922522	2	CONNECTOR
13	75238923	1	TUBE
14	75238921	1	TUBE
15	70921349	2	O-Ring, 8-1, 90 Duro, .644" ID x .087" Thk
16	70930806	2	FITTING
17	73148118	1	VALVE
18	70911114	3	WASHER
19	70934150	3	SCREW
20	73127626	2	VALVE
21	73157766	1	VALVE
22	70921409	1	CONNECTOR
23	70921402	1	ELBOW
24	73149986	1	TUBE

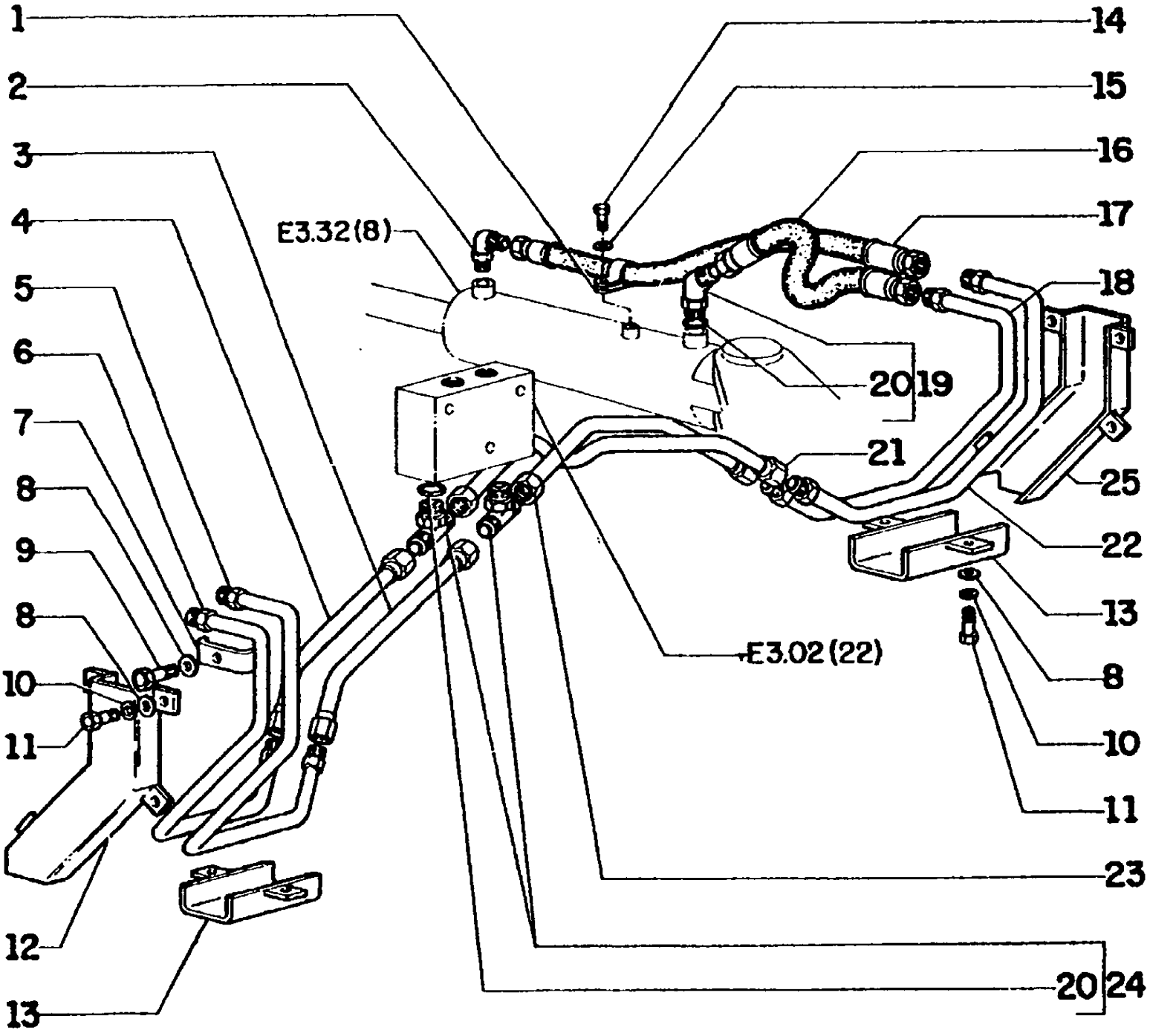
1
2
3
4
5
6
7
8
9
8
10
11
12
13
E3.32(8)
14
15
16
17
18
20 19
21
25
22
13
8
10
11
E3.02(22)
23
20 24

FG85 SERIES B MOTORGRADER

E3.02(023) ARTICULATION HYDRAULIC SYSTEM AND PIPING

Ref	Numero de Pieza	Ctd	Descripción
1	70929344	2	CLAMP
2	70921402	2	ELBOW
3	73149577	1	TUBE
4	73149575	1	TUBE
5	75214468	1	TUBE
6	75214474	1	TUBE
7	73127628	4	CLAMP
8	70677006	16	WASHER
9	70921076	4	SCREW
10	70910287	12	LOCKWASHER
11	70922262	12	SCREW
12	75214496	1	GUARD
13	75214501	2	GUARD
14	70927541	2	SCREW
15	70677004	2	WASHER
16	75214893	2	HOSE ASSY
17	75221783	2	HOSE ASSY
18	75214472	1	TUBE
19	70922507	2	ELBOW
20	70921349	6	O-Ring, 8-1, 90 Duro, .644" ID x .087" Thk
21	73149837	1	TUBE
22	75214470	1	TUBE
23	73149835	1	TUBE
24	70923157	2	FITTING
25	75214499	1	GUARD

E3.02(024) STEERING CYLINDER PIPING

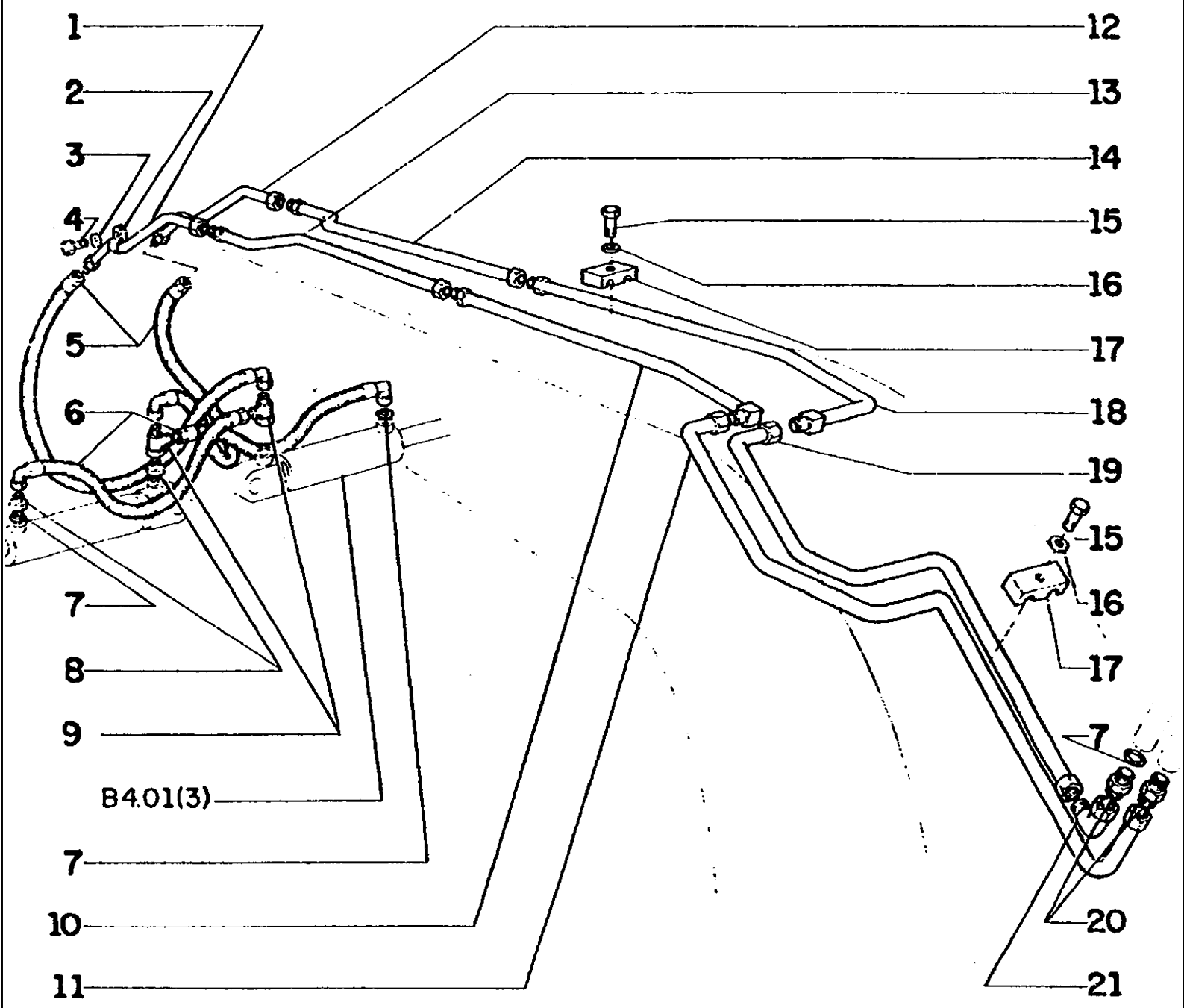

FG85 SERIES B MOTORGRADER

E3.02(024) STEERING CYLINDER PIPING

Ref	Numero de Pieza	Ctd	Descripción
1	73126562	1	TUBE
2	70927155	2	CLAMP
3	70677006	2	WASHER
4	70922300	2	SCREW
5	73134218	2	HOSE ASSY
6	73134219	2	HOSE ASSY
7	70921349	6	O-Ring, 8-1, 90 Duro, .644" ID x .087" Thk
8	70922457	4	CONNECTOR
9	70921297	2	FITTING
10	73125662	1	TUBE
11	73125267	1	TUBE
12	73126560	1	TUBE
13	73126561	1	TUBE
14	73126559	1	TUBE
15	70921076	5	SCREW
16	70677006	5	WASHER
17	70623355	5	CLAMP
18	73125663	1	TUBE
19	73125266	1	TUBE
20	70921409	2	CONNECTOR
21	70921279	1	ELBOW

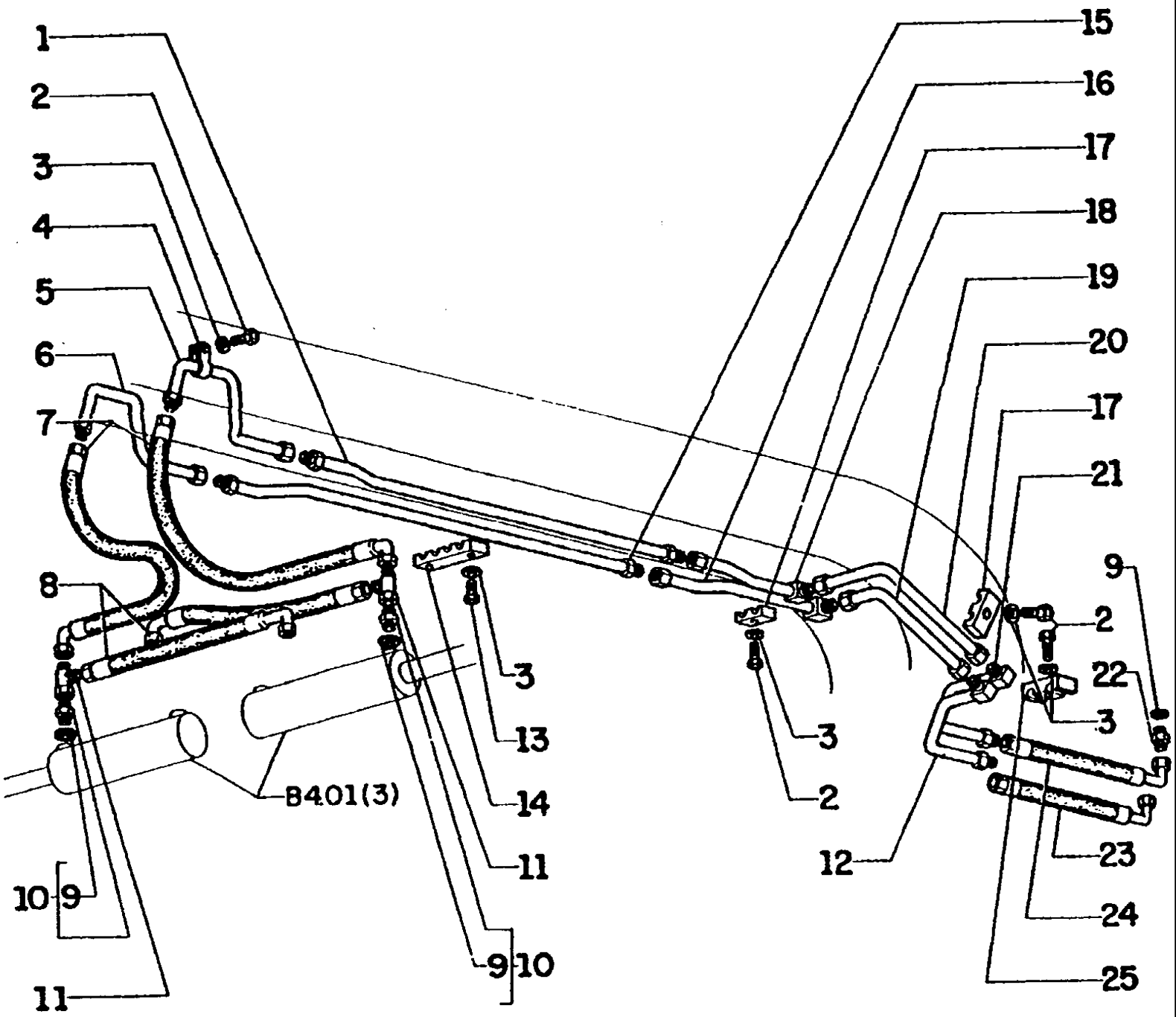
1
2
3
4
5
6
7
8
10
9
11
B401(3)
3
13
14
11
9
10
15
16
17
18
19
20
17
21
9
2
22
3
3
2
12
23
24
25

FG85 SERIES B MOTORGRADER

E3.02(025) STEERING CYLINDER PIPING

Ref	Numero de Pieza	Ctd	Descripción
1	75214354	1	TUBE
2	70921076	6	SCREW
3	70677006	10	WASHER
4	70927155	2	CLAMP
5	75214777	1	TUBE
6	75214776	1	TUBE
7	73134218	2	HOSE ASSY
8	73134219	2	HOSE ASSY
9	70921349	6	O-Ring, 8-1, 90 Duro, .644" ID x .087" Thk
10	70922457	2	CONNECTOR
11	70921297	2	FITTING
12	75213943	1	TUBE
14	75218256	2	CLAMP
15	75214352	1	TUBE
16	75238289	1	TUBE
17	70623355	3	CLAMP
18	75238287	1	TUBE
19	75238293	1	TUBE
20	75238291	1	TUBE
21	75213945	1	TUBE
22	70921409	2	CONNECTOR
23	75214022	1	HOSE ASSY
24	75214021	1	HOSE ASSY
25	75214492	1	CLAMP

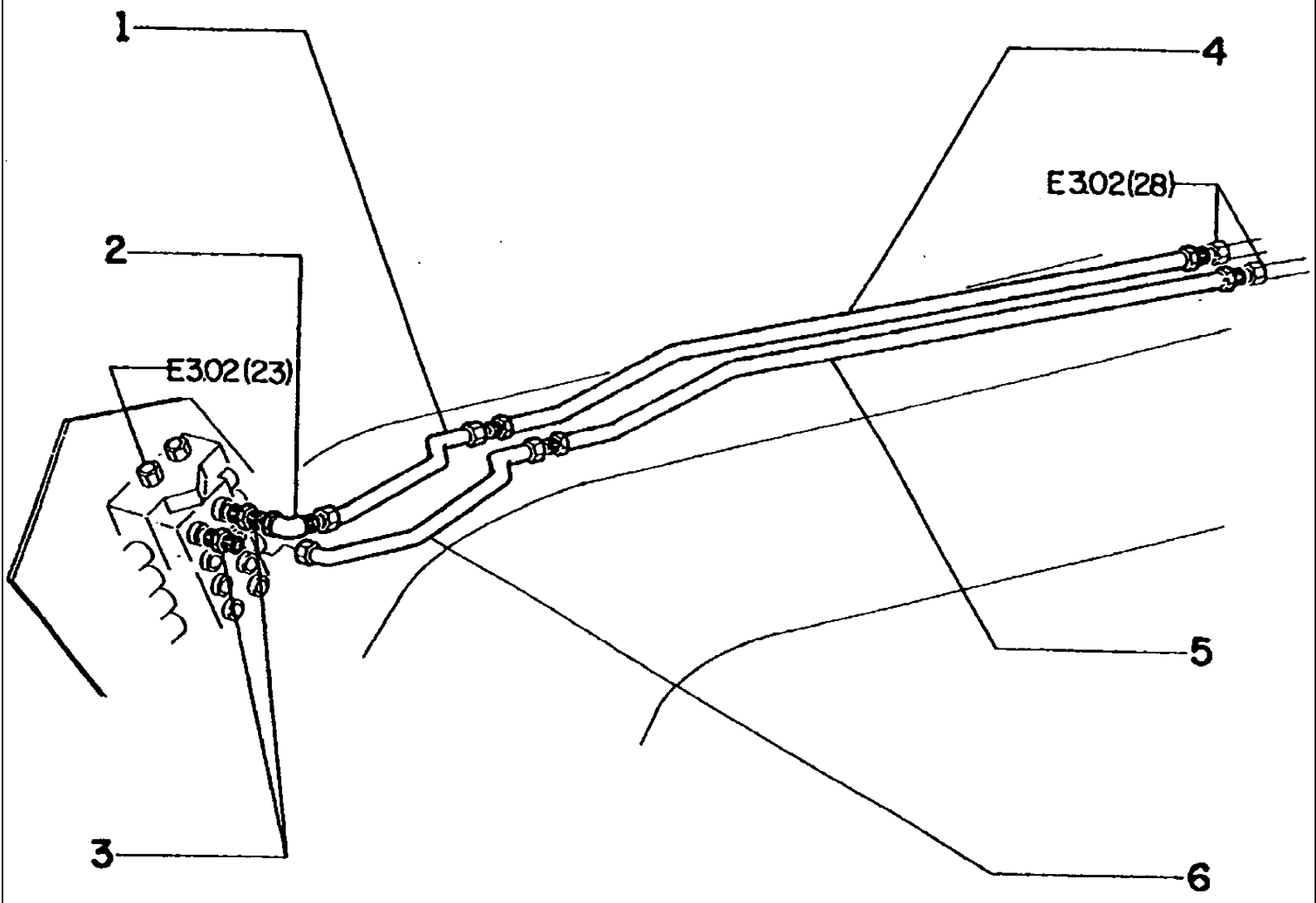
1
2
3
4
5
6
E302(23)
E302(28)

FG85 SERIES B MOTORGRADER

E3.02(026) SCARIFIER HYDRAULIC SYSTEM

Ref	Numero de Pieza	Ctd	Descripción
1	73152072	1	TUBE
2	70921279	1	ELBOW
3	70924296	2	CONNECTOR
4	73125649	1	TUBE
5	73125652	1	TUBE
6	73152070	1	TUBE

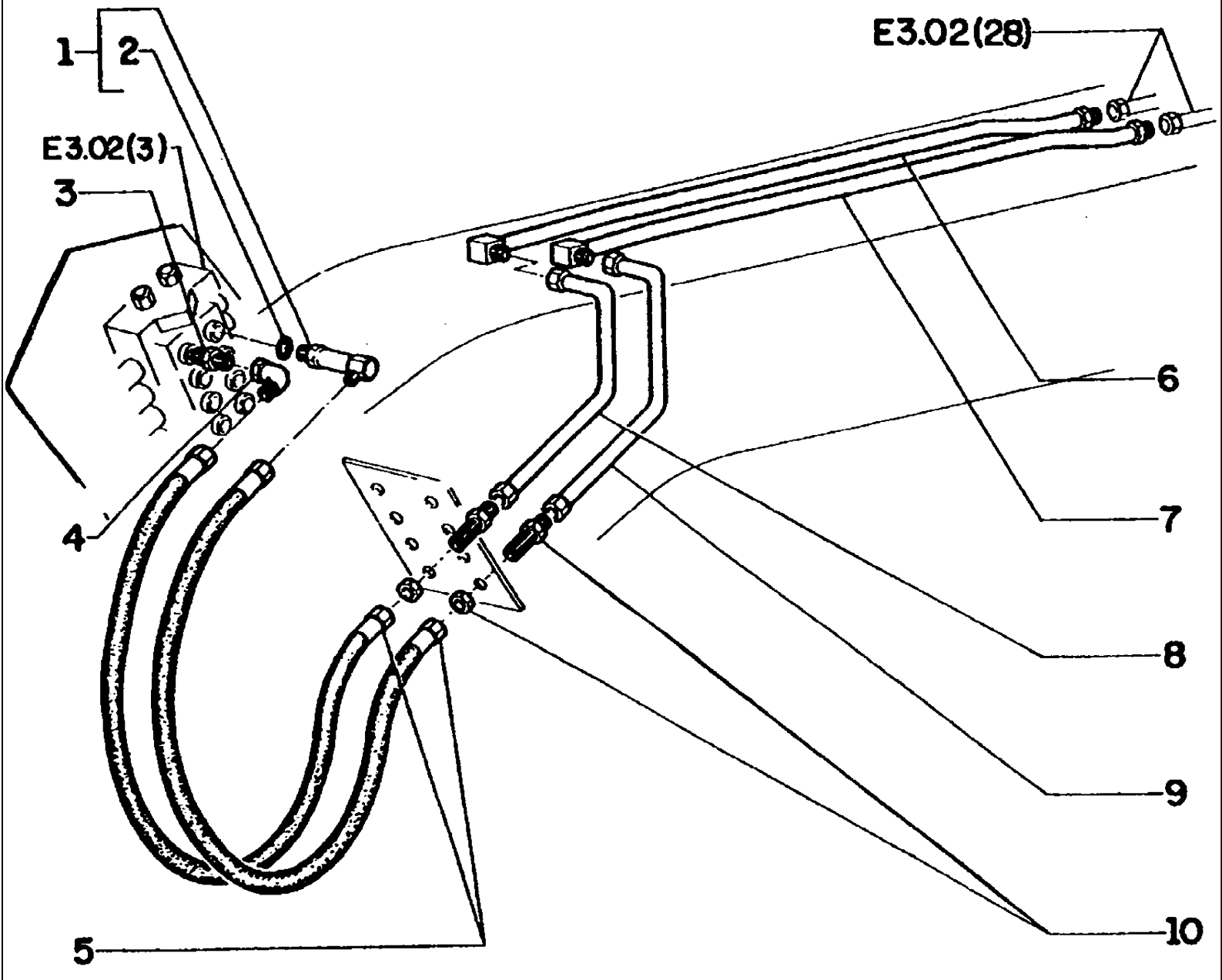
1
2
E3.02(3)
3
4
5
E3.02(28)
6
7
8
9
10

FG85 SERIES B MOTORGRADER

E3.02(027) SCARIFIER HYDRAULIC SYSTEM

Ref	Numero de Pieza	Ctd	Descripción
1	75220005	1	ELBOW
2	70921205	1	O'RING
3	70924296	1	CONNECTOR
4	70921279	1	ELBOW
5	75214262	2	HOSE ASSY
6	75214883	1	TUBE
7	75214885	1	TUBE
8	75221197	1	TUBE
9	75237337	1	TUBE
10	70927261	2	FITTING

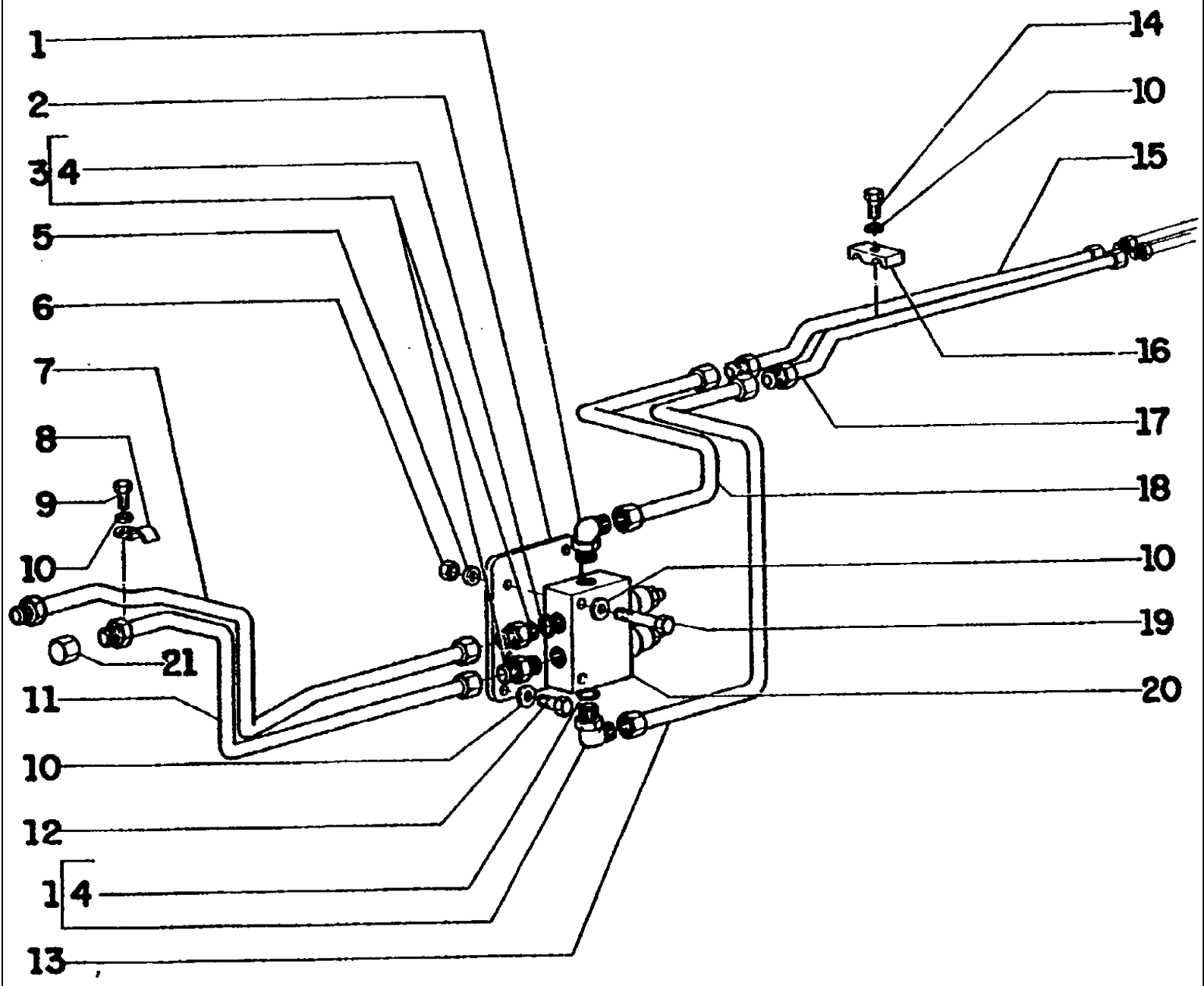
1
2
3
4
5
6
7
8
9
10
21
11
10
12
14
13
14
10
15
16
17
18
10
19
20

FG85 SERIES B MOTORGRADER

E3.02(028) SCARIFIER HYDRAULIC SYSTEM

Ref	Numero de Pieza	Ctd	Descripción
1	70921402	2	ELBOW
2	73127641	1	PLATE
3	70921409	2	CONNECTOR
4	70921349	4	O-Ring, 8-1, 90 Duro, .644" ID x .087" Thk
5	70929156	2	WASHER
6	70911026	2	NUT
7	73158311	1	TUBE
8	70927155	2	CLAMP
9	70927484	2	SCREW
10	70677006	1	WASHER
11	73158312	1	TUBE
12	70922300	3	SCREW
13	73158313	1	TUBE
14	70920995	3	SCREW
15	73125650	1	TUBE
16	70623355	3	CLAMP
17	73125653	1	TUBE
18	73158314	1	TUBE
19	70920996	2	SCREW
20	73152606	1	VALVE
21	70923737	2	CAP

E3.02(029) REAR HYDRAULIC SYSTEM FOR FG85A EFF S/N 734

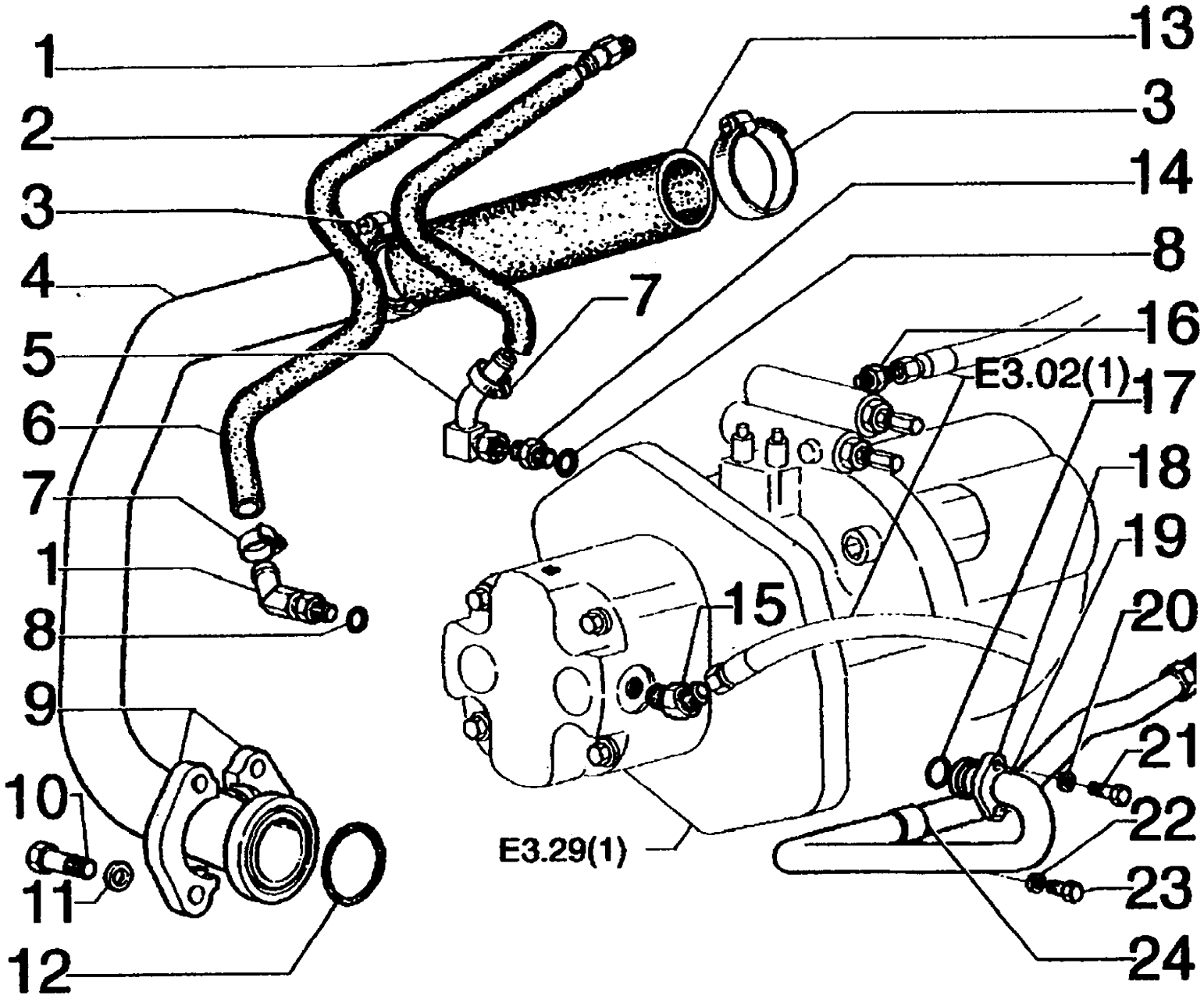

FG85 SERIES B MOTORGRADER

E3.02(029) REAR HYDRAULIC SYSTEM FOR FG85A EFF S/N 734

Ref	Numero de Pieza	Ctd	Descripción
1	70928343	3	ELBOW
2	73148714	1	HOSE
3	70925280	4	CLAMP
4	73148267	1	TUBE
5	73151816	1	ELBOW
6	73148713	1	HOSE
7	70925756	4	CLAMP
8	70930724	2	O'RING
9	70921558	2	FLANGE
10	70920583	6	SCREW
11	70912441	4	LOCKWASHER
12	70923814	1	O'RING
13	73148331	1	HOSE
14	70933479	1	CONNECTOR
14	70921326	1	FITTING
15	70925943	1	ELBOW
16	73148796	1	CONNECTOR
17	70923664	1	O'RING
18	70921117	2	FLANGE
19	75237783	1	TUBE
20	70914678	4	LOCKWASHER
21	70925193	4	SCREW
22	70630753	1	WASHER
23	11106231	1	BOLT, Hex, M10 x 25, 10.9, Full Thd
24	70638780	1	CLAMP

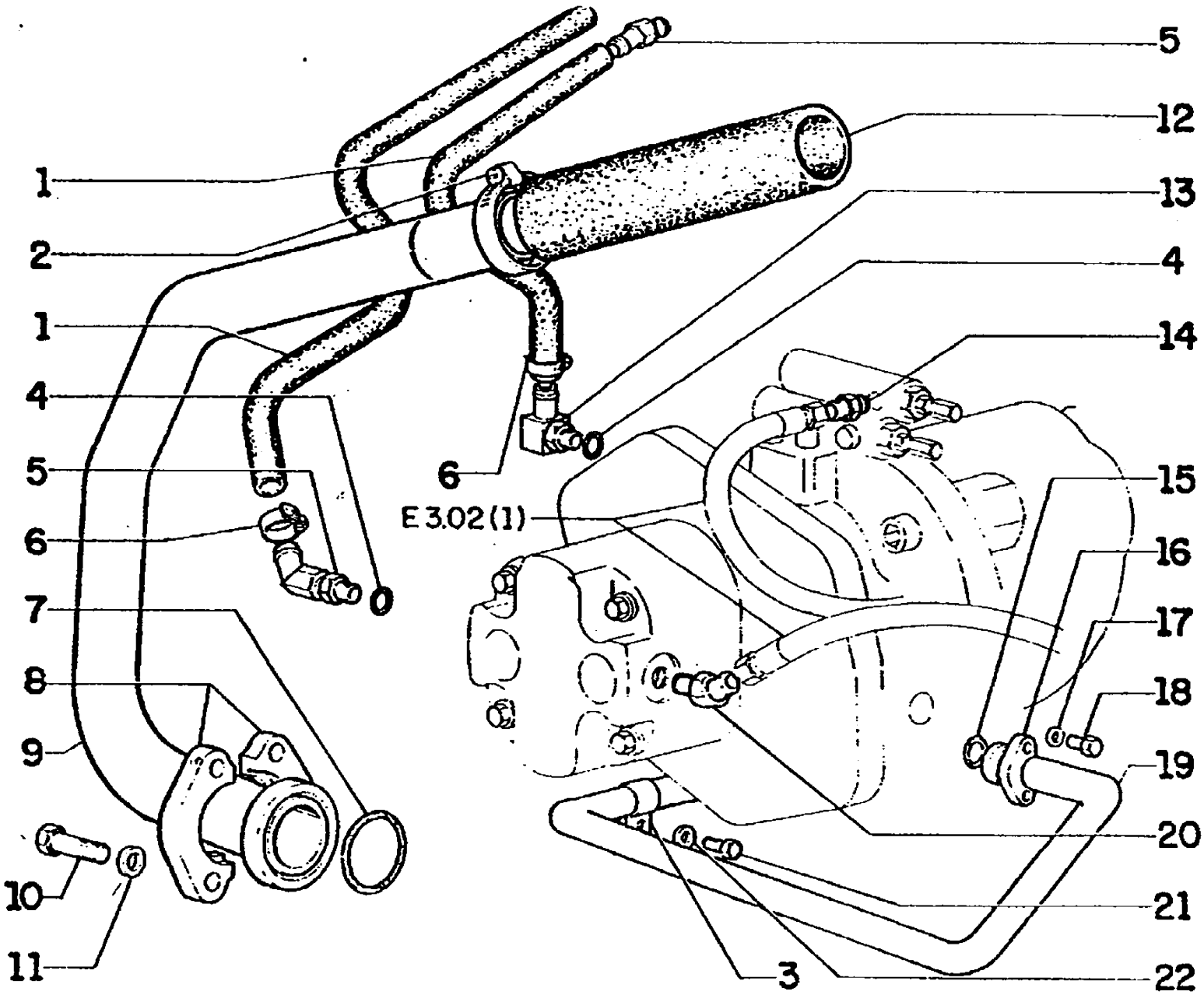
5
12
1
13
2
4
1
14
4
5
15
6
E 3.02 (1)
16
6
7
17
8
18
9
19
20
10
21
11
3
22

FG85 SERIES B MOTORGRADER

E3.02(030) REAR HYDRAULIC SYSTEM

Ref	Numero de Pieza	Ctd	Descripción
1	73155223	1	HOSE
2	70926041	4	CLAMP
3	70638780	1	CLAMP
4	70930724	2	O'RING
5	70928343	3	ELBOW
6	70925756	4	CLAMP
7	70923814	1	O'RING
8	70921558	2	FLANGE
9	73157342	1	TUBE
10	70920583	4	SCREW
11	70912441	4	LOCKWASHER
12	73148331	1	HOSE
13	70929261	1	CONNECTOR
14	73148796	1	CONNECTOR
15	70923664	1	O'RING
16	70921117	2	FLANGE
17	70914678	4	LOCKWASHER
18	70925193	4	SCREW
19	73157341	1	TUBE
20	70925943	1	ELBOW
21	11106231	1	BOLT, Hex, M10 x 25, 10.9, Full Thd
22	70630753	1	WASHER

E3.02(031) LOCK VALVE ASSY

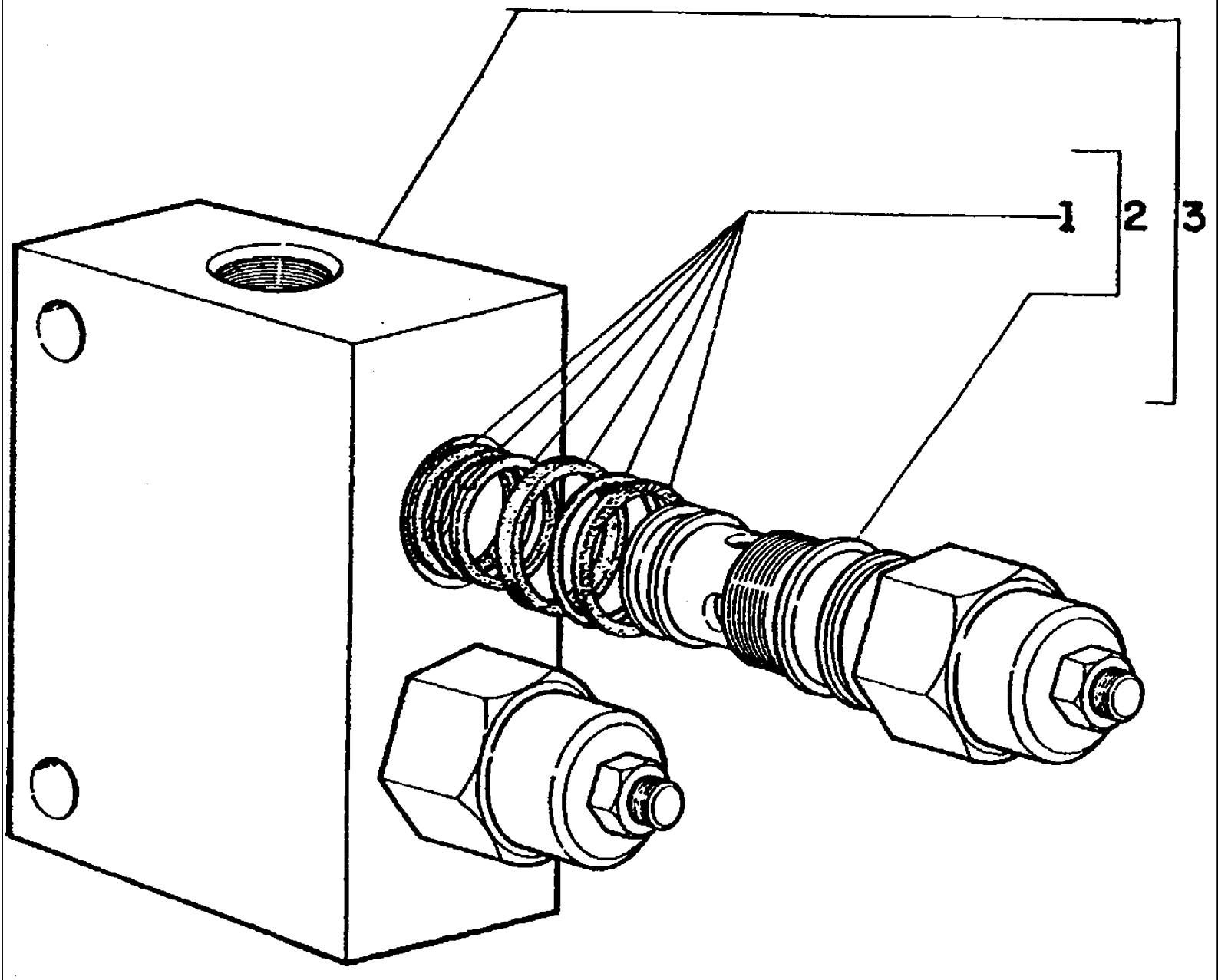

FG85 SERIES B MOTORGRADER

E3.02(031) LOCK VALVE ASSY

Ref	Numero de Pieza	Ctd	Descripción
1	73130695	2	KIT
2	73130694	2	VALVE
3	73130105	1	LOCK VALVE

E3.02(032) LOCK VALVE ASSY

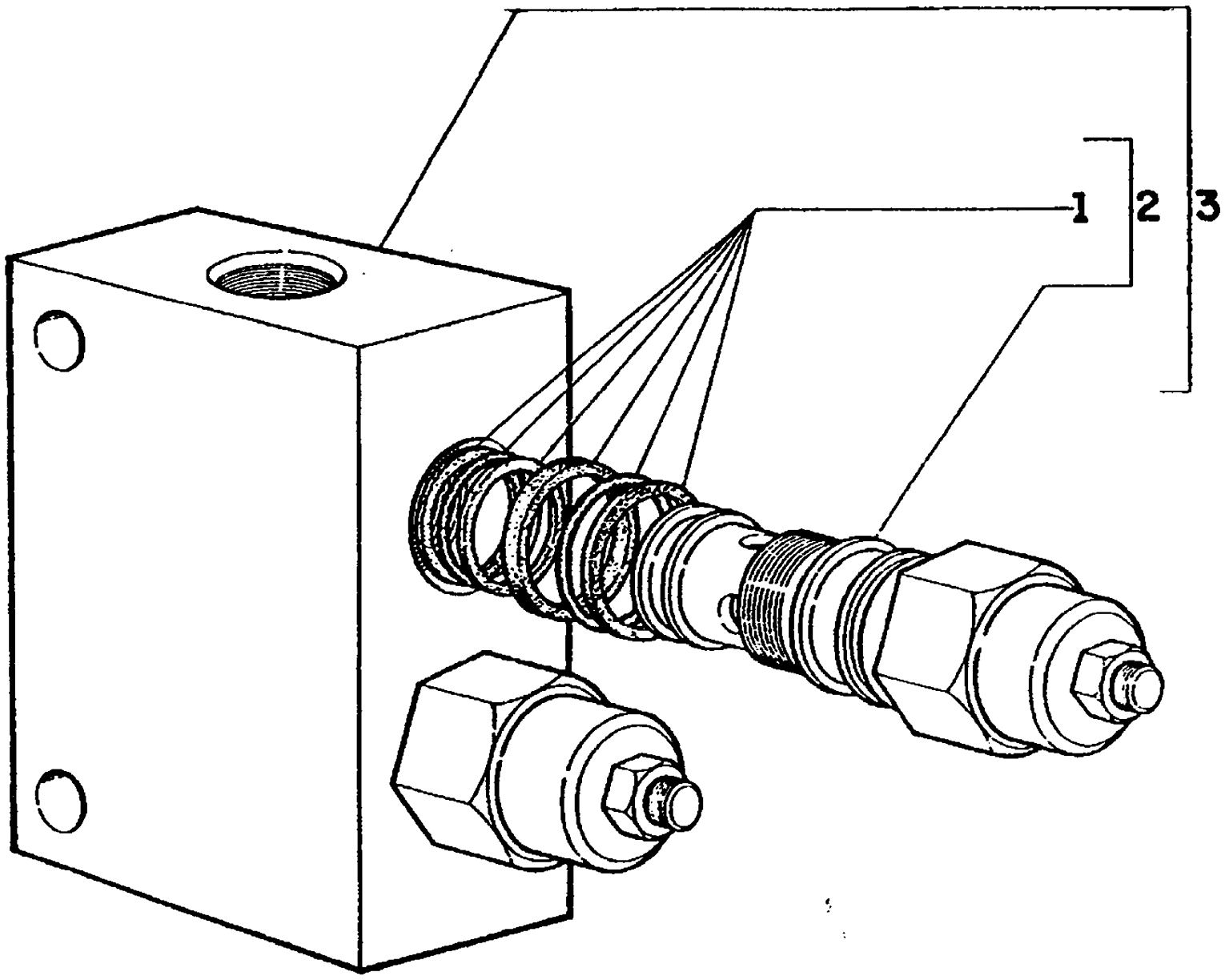

FG85 SERIES B MOTORGRADER

E3.02(032) LOCK VALVE ASSY

Ref	Numero de Pieza	Ctd	Descripción
1	73130695	2	KIT
2	73150433	2	VALVE
3	73152606	1	VALVE

E3.02(033) SOLENOID VALVE ASS'Y - SADDLE LOCK PIN

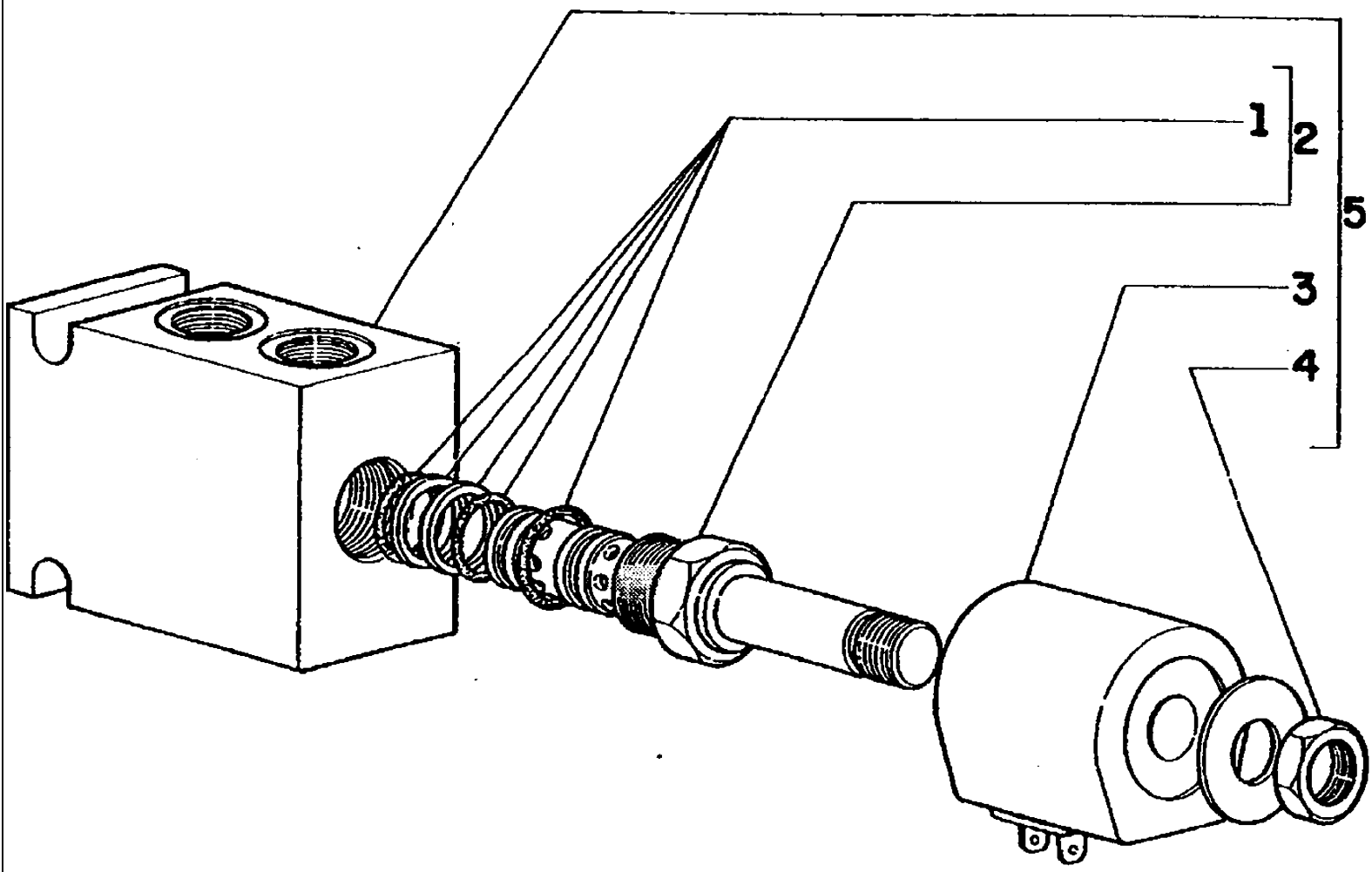

FG85 SERIES B MOTORGRADER

E3.02(033) SOLENOID VALVE ASS'Y - SADDLE LOCK PIN

Ref	Numero de Pieza	Ctd	Descripción
1	73122994	1	KIT
2	73128150	1	VALVE
3	73159102	1	COIL
4	73113425	1	NUT
5	73124881	1	VALVE

E3.02/1(001) FRONT WHEEL HYDRAULIC OIL COOLER PIPING

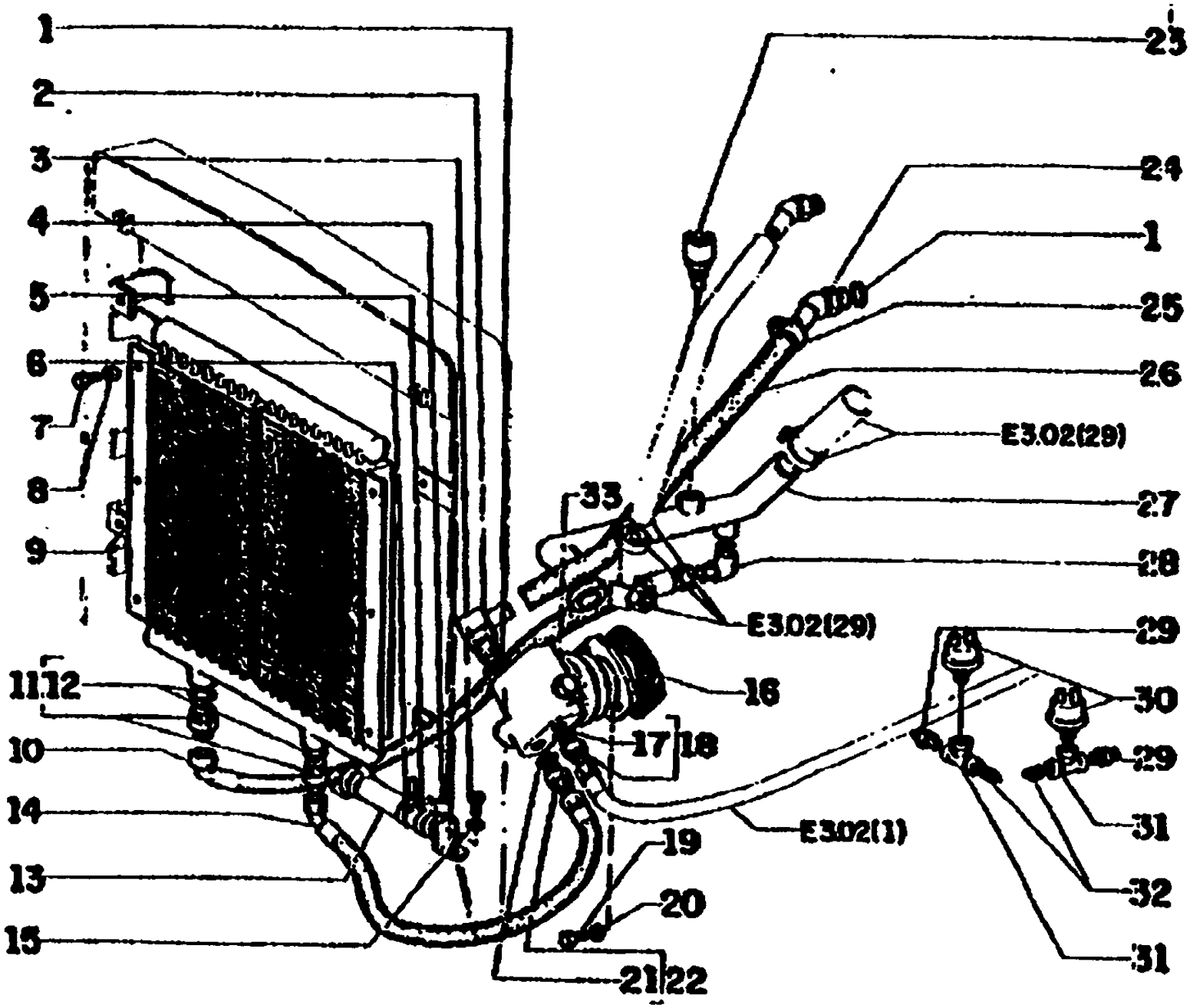

FG85 SERIES B MOTORGRADER

E3.02/1(001) FRONT WHEEL HYDRAULIC OIL COOLER PIPING

Ref	Numero de Pieza	Ctd	Descripción
1	70930724	4	O'RING
2	70930978	1	ELBOW
3	70928138	2	SCREW
4	70916079	2	SCREW
5	70910533	2	LOCKWASHER
6	70916621	2	NUT
7	70922763	6	SCREW
8	70677006	6	WASHER
9	73155689	1	HOSE ASSY
10	73155713	1	HOSE ASSY
11	70924296	2	CONNECTOR
12	70928486	2	O'RING
13	73155691	1	RESISTOR
14	73155714	1	HOSE ASSY
15	70677004	2	WASHER
16	70651322	1	GASKET
17	70921349	1	O-Ring, 8-1, 90 Duro, .644" ID x .087" Thk
18	70921409	1	CONNECTOR
19	70921076	2	SCREW
20	70930730	2	LOCKWASHER
21	70921205	1	O'RING
22	70923717	1	CONNECTOR
23	73155688	1	TEMPERATURE GAU
24	70928930	1	ELBOW
25	70921912	2	CLAMP
26	73160985	1	HOSE ASSY
27	73155712	1	TUBE
28	70919206	1	ELBOW
29	70916634	2	CAP
30	73155686	2	OIL PRESS. GAUGE
31	70901702	2	FITTING
32	70901651	2	PLUG
33	73155693	1	OIL PUMP

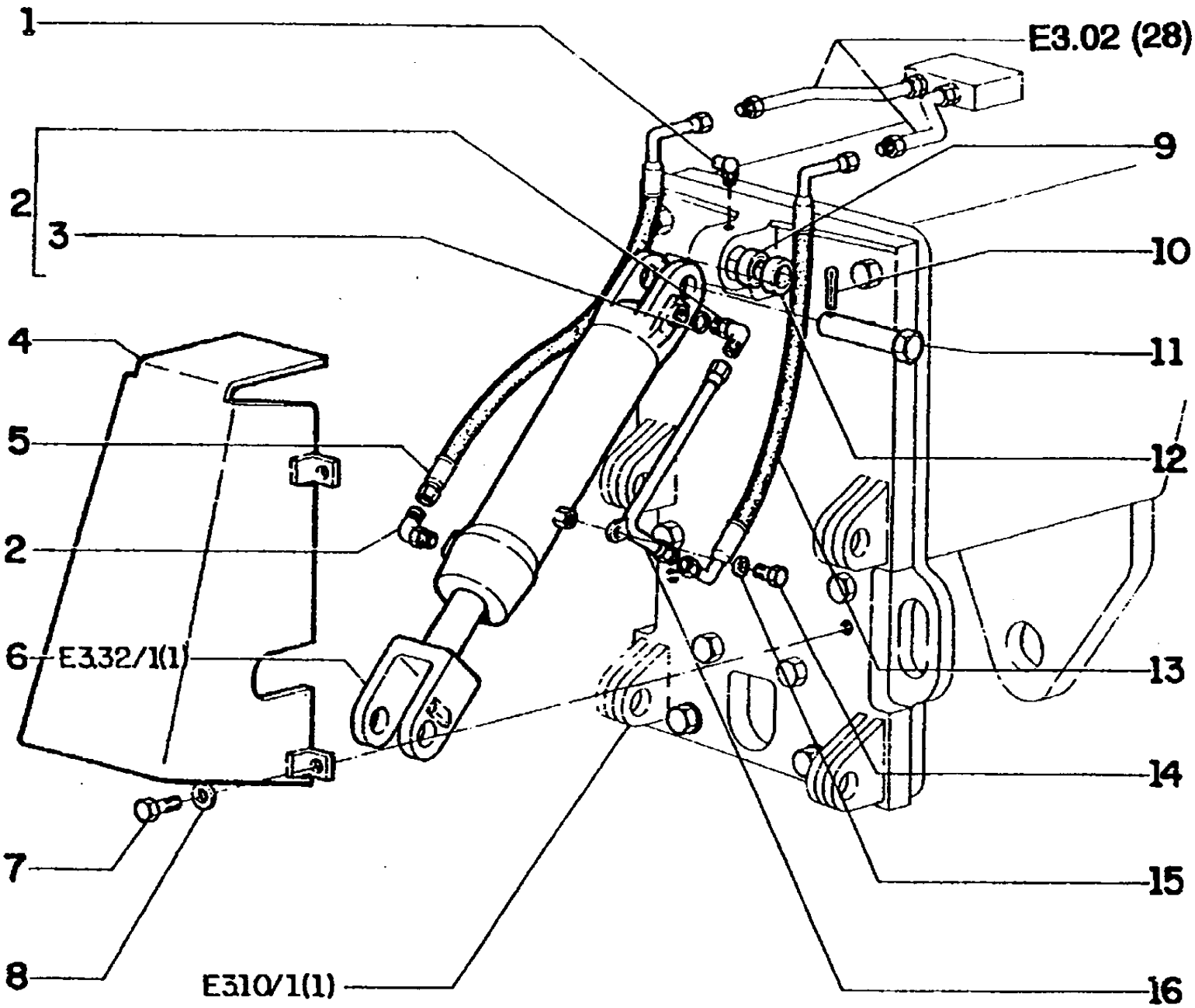
1
E3.02 (28)
9
2
3
10
4
11
5
12
2
6
E332/1(1)
13
14
7
15
8
E310/1(1)
16

FG85 SERIES B MOTORGRADER

E3.02/1(001) SCRIFIER PIPING

Ref	Numero de Pieza	Ctd	Descripción
1	70915276	1	GREASE FITTING
2	70921402	2	ELBOW
3	70921349	2	O-Ring, 8-1, 90 Duro, .644" ID x .087" Thk
4	73126258	1	GUARD
5	73126265	1	HOSE ASSY
6	73067421	1	CYLINDER
7	70922475	4	SCREW
8	70677012	4	WASHER
9	70928851	2	BUSHING
10	70911279	2	COTTER PIN
11	70689718	2	PIN
12	70689717	4	SPACER
13	73126267	1	HOSE ASSY
14	70922763	1	SCREW
15	70677006	1	WASHER
16	73126270	1	TUBE

E3.02/1(002) FRONT WHEEL HYDRAULIC OIL COOLER PIPING

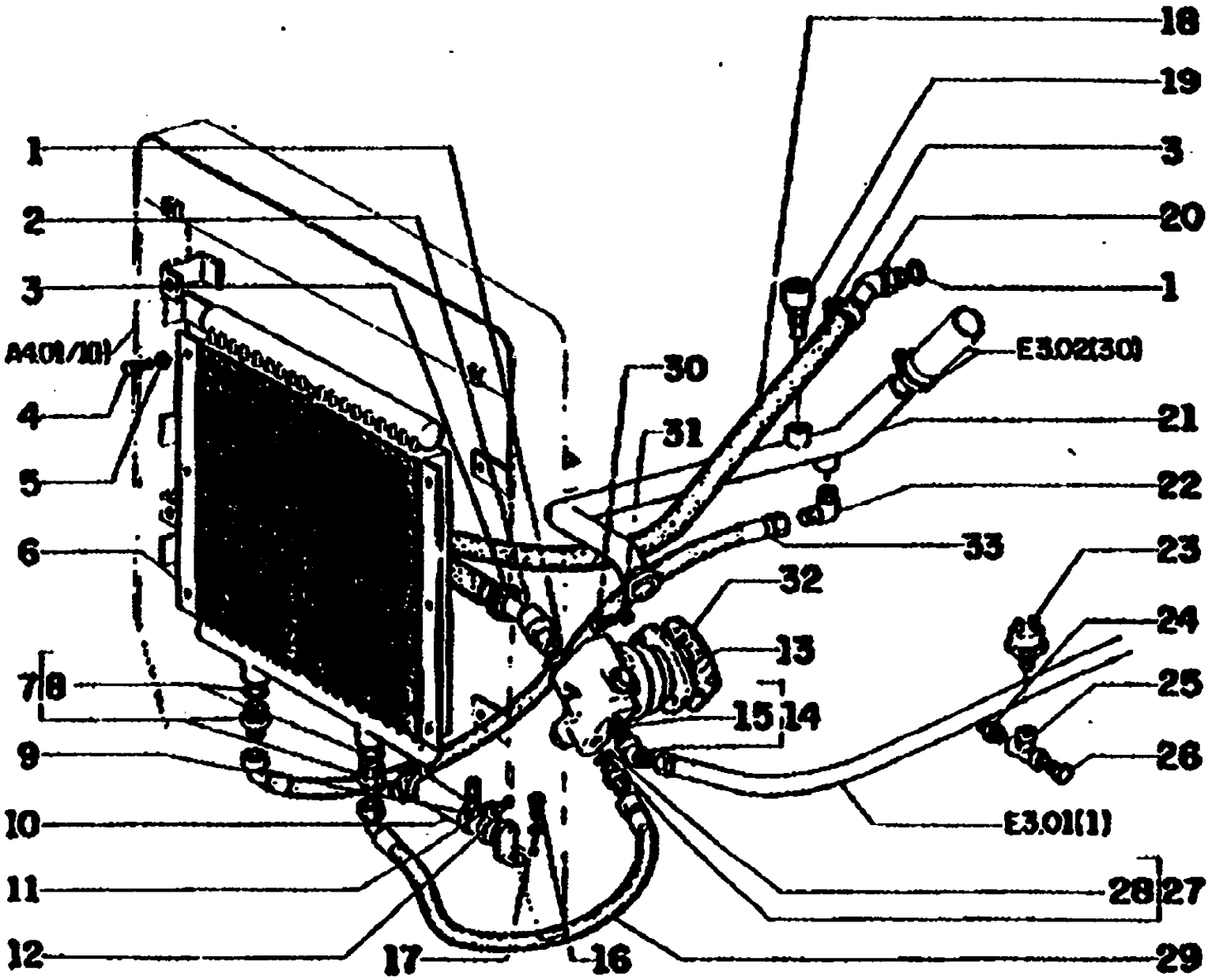

FG85 SERIES B MOTORGRADER

E3.02/1(002) FRONT WHEEL HYDRAULIC OIL COOLER PIPING

Ref	Numero de Pieza	Ctd	Descripción
1	70930724	2	O'RING
2	70929191	1	ELBOW
3	70921912	2	CLAMP
4	70922763	6	SCREW
5	70677006	6	WASHER
6	70677006	1	HEAT EXCHANGER
7	70924296	2	CONNECTOR
8	70928486	2	O'RING
9	70916621	2	NUT
10	73155691	1	RESISTOR
11	70910533	2	LOCKWASHER
12	70916079	2	SCREW
13	73155693	1	OIL PUMP
14	70922507	1	ELBOW
15	70921349	1	O-Ring, 8-1, 90 Duro, .644" ID x .087" Thk
16	70928138	2	SCREW
17	70677004	2	WASHER
18	73160985	1	HOSE ASSY
19	73155688	1	TEMPERATURE GAU
20	70928930	1	ELBOW
21	73160983	1	TUBE
22	70919206	1	ELBOW
23	73155686	3	OIL PRESS. GAUGE
24	70916634	3	CAP
25	70901702	3	FITTING
26	70901651	3	PLUG
27	70923717	1	CONNECTOR
28	70921205	1	O'RING
29	73160984	1	HOSE ASSY
30	70921076	2	SCREW
31	70930730	2	LOCKWASHER
32	70651322	1	GASKET

E3.02/1(002) RIPPER PIPING CYLINDER

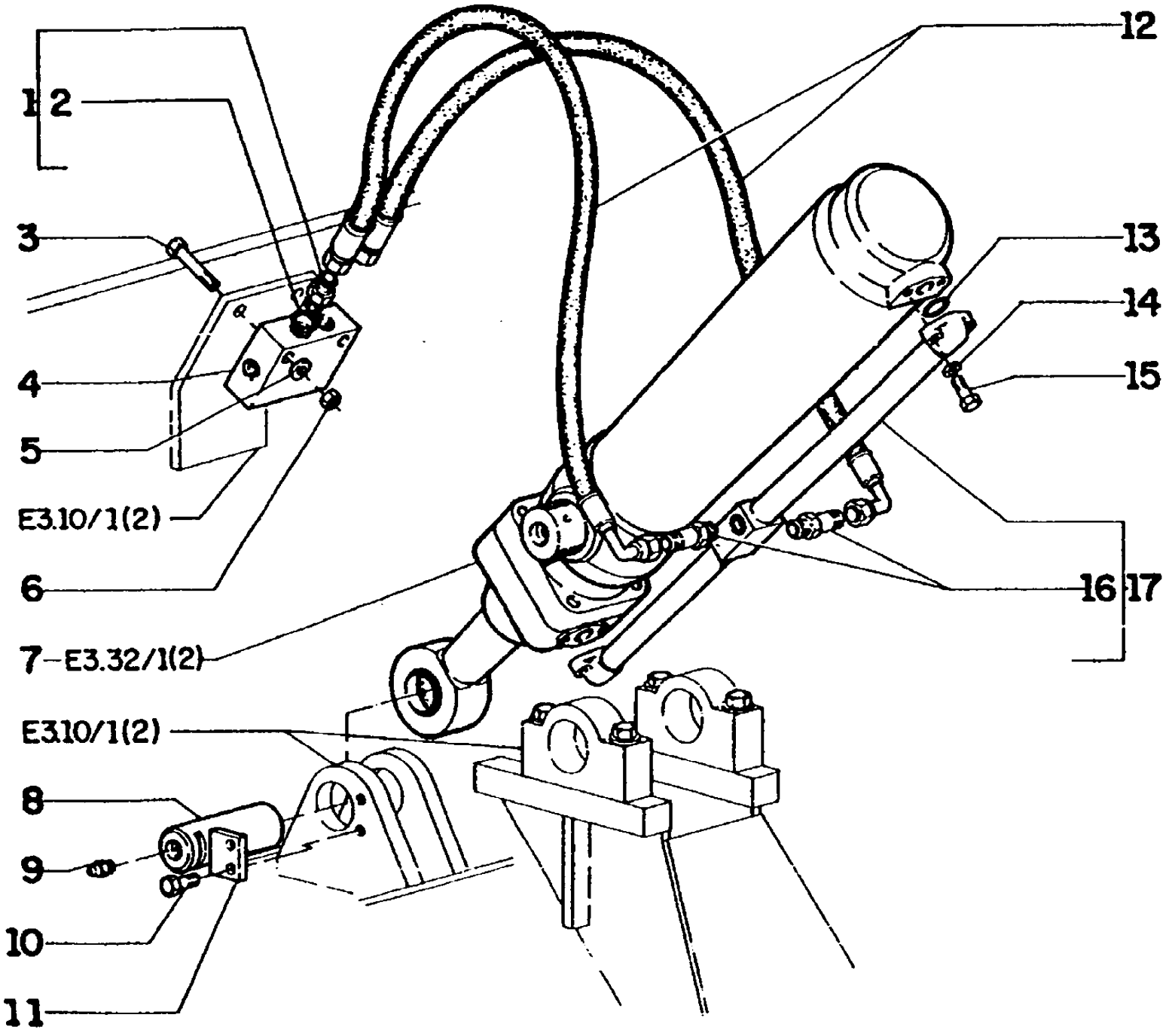

FG85 SERIES B MOTORGRADER

E3.02/1(002) RIPPER PIPING CYLINDER

Ref	Numero de Pieza	Ctd	Descripción
1	70921409	2	CONNECTOR
2	70921349	2	O-Ring, 8-1, 90 Duro, .644" ID x .087" Thk
3	70920996	2	SCREW
4	73130105	1	LOCK VALVE
5	70929156	4	WASHER
6	70911026	2	NUT
7	8299529	1	CYLINDER
8	76002504	1	PIN
9	13407211	1	NIPPLE, LUBE, M10 x 1
10	15540431	2	BOLT, Hex, M12 x 1.25 x 30, 10.9, Full Thd
11	8270126	1	PLATE
12	73127637	2	HOSE ASSY
13	14463280	2	O-RING, -214, 70 Duro, .984" ID x .139" Thk
14	10571971	4	LOCKWASHER
15	15540921	4	BOLT, Hex, M12 x 1.25 x 55, 8.8
16	70933498	2	FITTING
17	75216418	1	MANIFOLD

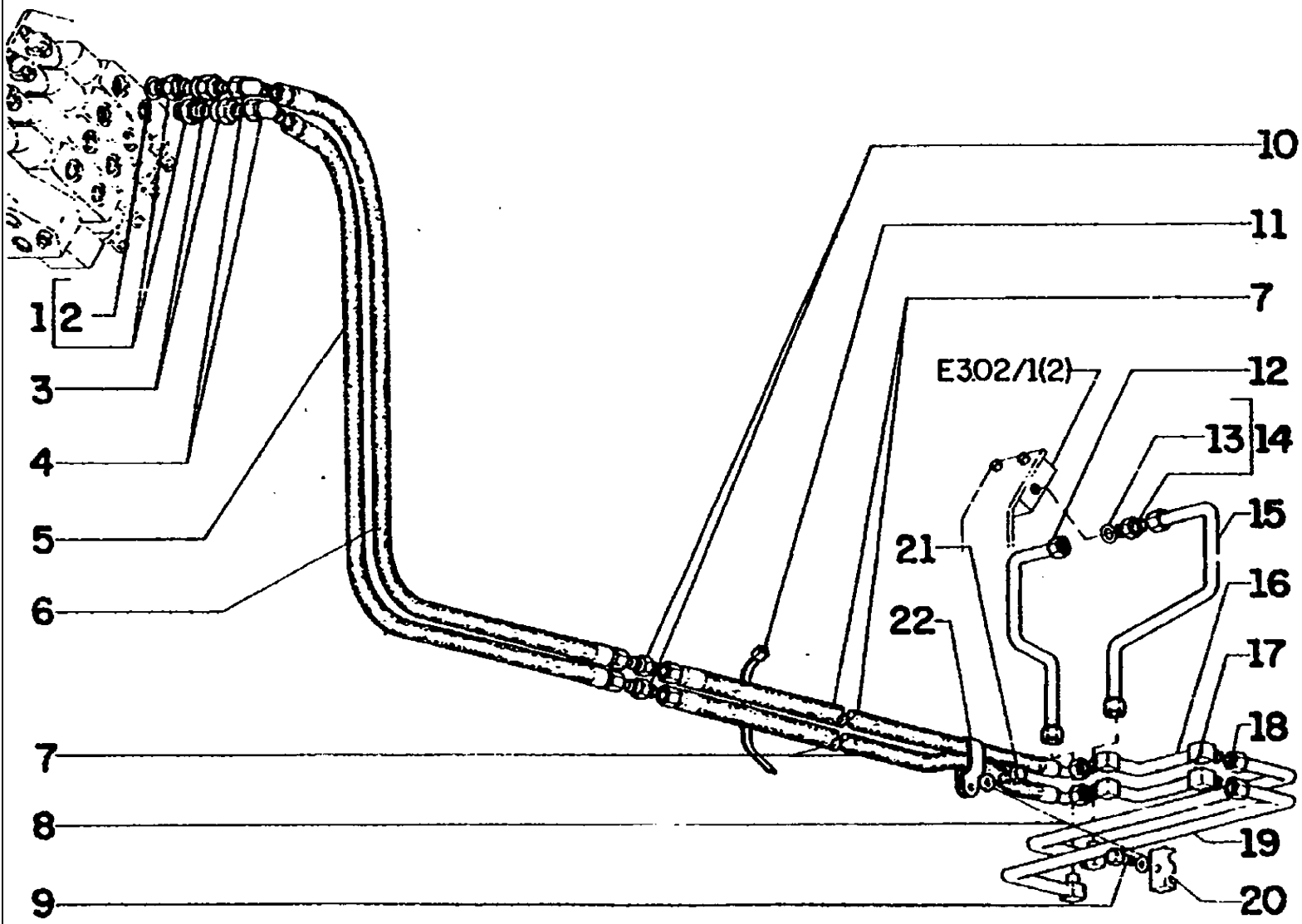
1
2
3
4
5
6
7
8
9
10
11
7
E302/1(2)
12
13
14
15
21
16
22
17
18
19
20

FG85 SERIES B MOTORGRADER

E3.02/1(003) RIPPER PIPING

Ref	Numero de Pieza	Ctd	Descripción
1	70921217	2	CONNECTOR
2	70921206	2	O'RING
3	70931681	2	FITTING
4	70921279	2	ELBOW
5	73148888	1	HOSE ASSY
6	73148889	1	HOSE ASSY
7	73151891	2	HOSE ASSY
8	70677006	2	WASHER
9	70921076	1	SCREW
10	70919066	2	FITTING
11	70930871	12	CLAMP
12	75238491	1	TUBE
13	70921349	2	O-Ring, 8-1, 90 Duro, .644" ID x .087" Thk
14	70921409	2	CONNECTOR
15	75216432	1	TUBE
16	75238492	1	TUBE
17	75238493	1	TUBE
18	75238495	1	TUBE
19	75238494	1	TUBE
20	70623355	1	CLAMP
21	70922763	1	SCREW
22	70642536	1	CLAMP

E3.02/1(003) SADDLE LOCK PIN CYLINDER AND PIPING FOR 12VOLT UNITS

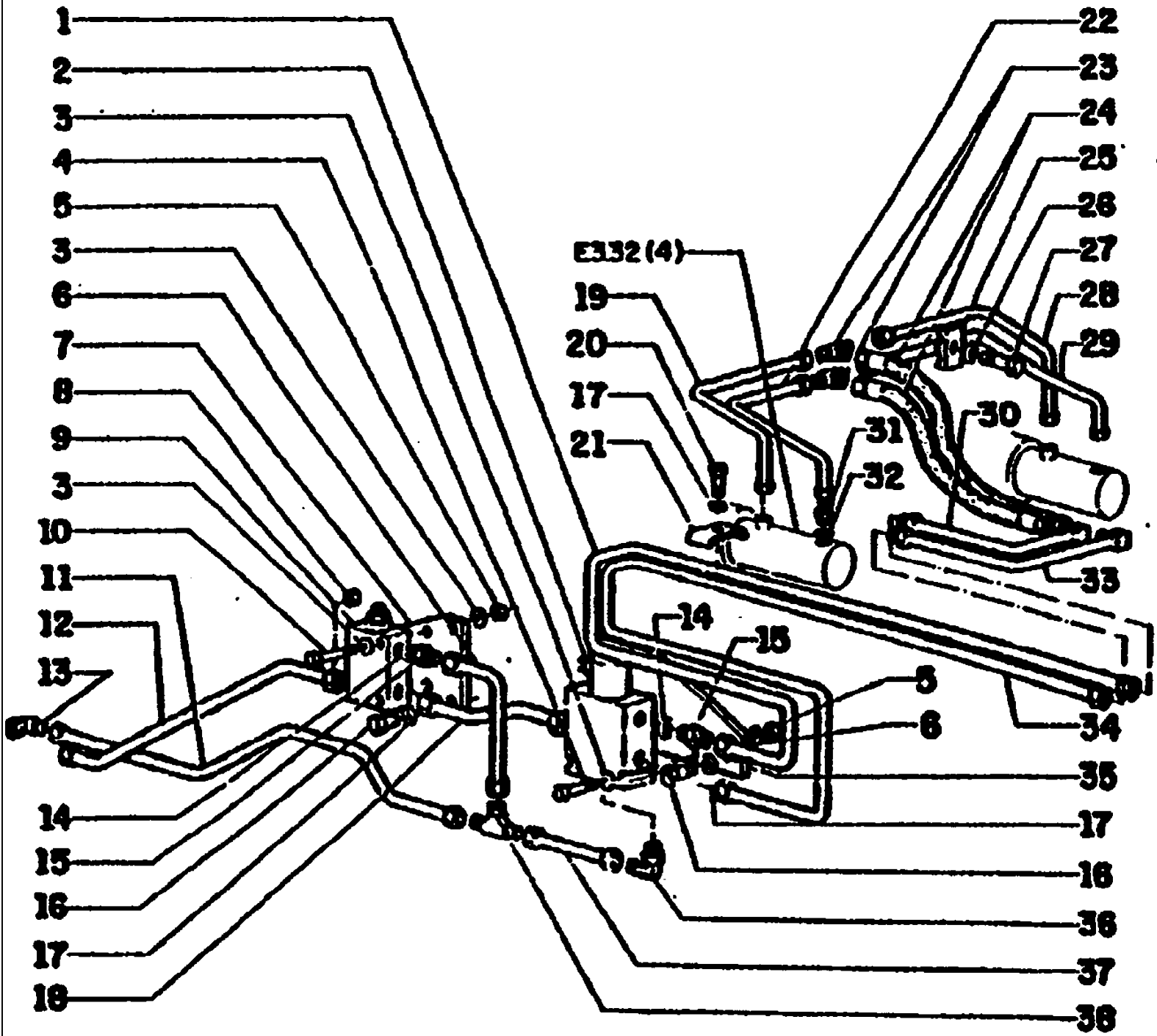

FG85 SERIES B MOTORGRADER

E3.02/1(003) SADDLE LOCK PIN CYLINDER AND PIPING FOR 12VOLT UNITS

Ref	Numero de Pieza	Ctd	Descripción
1	75239313	1	TUBE
2	75215568	1	VALVE
3	70928190	8	WASHER
4	70930238	2	SCREW
5	70920329	4	NUT
6	73125681	1	TUBE
7	73125807	1	PLATE
8	70921467	1	CAP
9	73124880	1	VALVE
10	70934150	2	SCREW
11	73152031	1	TUBE
12	73152037	1	TUBE
13	70921013	2	ELBOW
14	70921885	7	O-Ring, 6-1, 90 Duro, .468" ID x .078" Thk
15	70922522	6	CONNECTOR
16	70922300	6	SCREW
17	70677006	8	WASHER
18	73125679	1	TUBE
19	73127111	1	TUBE
20	70922287	2	SCREW
21	73126130	2	CLAMP
22	73127112	1	TUBE
23	70919087	2	FITTING
24	70659547	2	HOSE ASSY
25	70695523	2	CLAMP
26	70910287	2	LOCKWASHER
27	70927361	2	SCREW
28	73127114	1	TUBE
29	73127113	1	TUBE
30	73126127	1	TUBE
31	70922457	4	CONNECTOR
32	70921349	4	O-Ring, 8-1, 90 Duro, .644" ID x .087" Thk
33	73126129	1	TUBE
34	75239314	1	TUBE
35	73125808	1	PLATE
36	70925295	1	ELBOW
37	73126283	1	TUBE
38	70919087	1	FITTING

E3.02/1(004) SADDLE LOCK PIN CYLINDER AND PIPING FOR 12VOLT UNITS

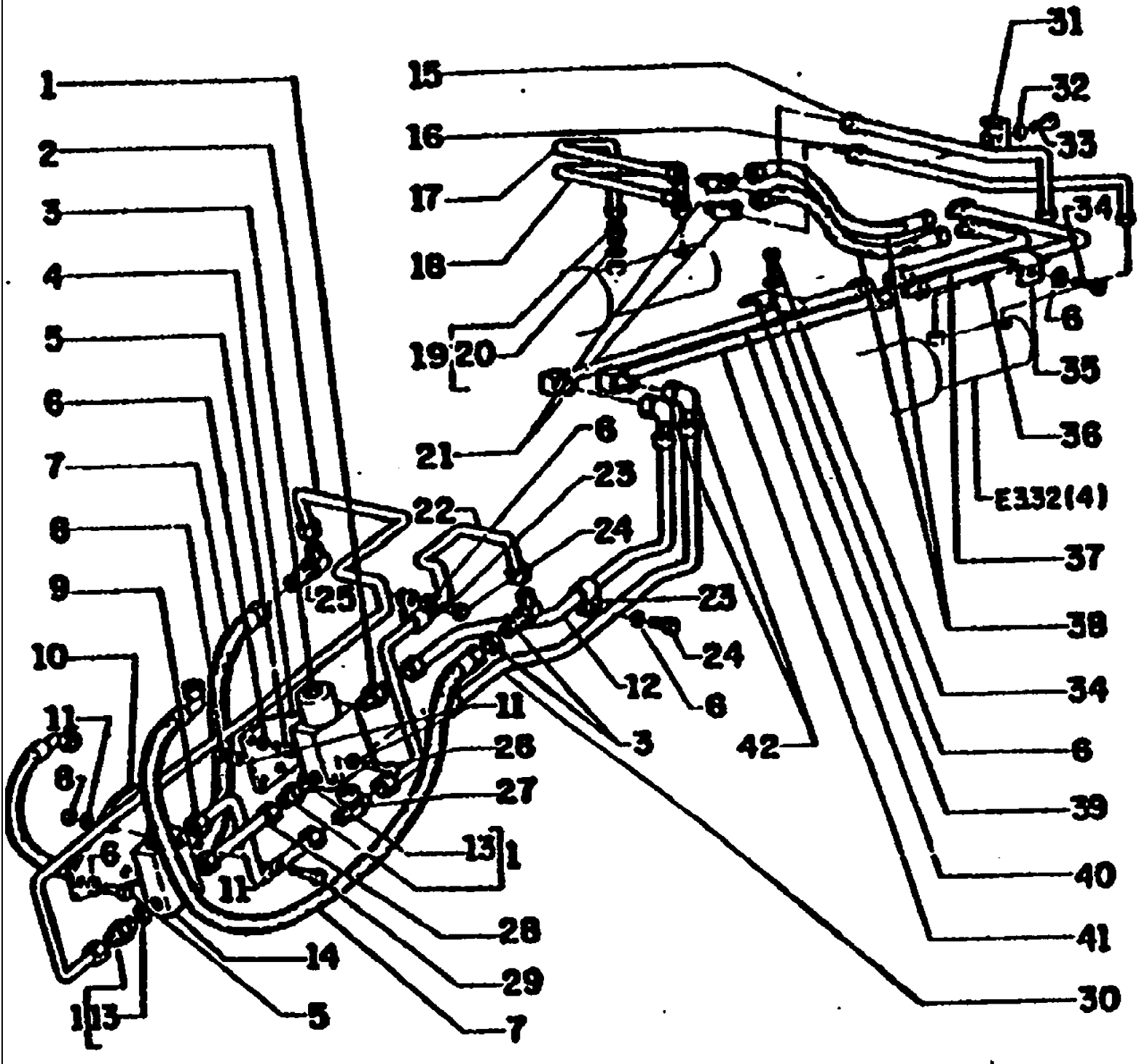

FG85 SERIES B MOTORGRADER

E3.02/1(004) SADDLE LOCK PIN CYLINDER AND PIPING FOR 12VOLT UNITS

Ref	Numero de Pieza	Ctd	Descripción
1	70922522	7	CONNECTOR
2	75237481	1	TUBE
3	75215568	1	VALVE
4	73125808	1	PLATE
5	70922300	6	SCREW
6	70677006	11	WASHER
7	75214263	2	HOSE ASSY
8	70920329	4	NUT
9	75214734	1	TUBE
10	73125807	1	PLATE
11	70928190	8	WASHER
12	75221215	1	TUBE
13	70921885	7	O-Ring, 6-1, 90 Duro, .468" ID x .078" Thk
14	73124880	1	VALVE
15	73127111	1	TUBE
16	73127112	1	TUBE
17	73127114	1	TUBE
18	73127113	1	TUBE
19	70922457	4	CONNECTOR
20	70921349	4	O-Ring, 8-1, 90 Duro, .644" ID x .087" Thk
21	70919087	2	FITTING
22	75237477	1	TUBE
23	70926917	4	CLAMP
24	70927400	3	SCREW
25	70928378	1	FITTING
26	70930238	2	SCREW
27	70921014	1	FITTING
28	75214733	1	TUBE
29	70934150	2	SCREW
30	75221217	1	TUBE
31	70695523	2	CLAMP
32	70910287	2	LOCKWASHER
33	70927361	2	SCREW
34	70921076	2	SCREW
35	73125866	1	SUPPORT
36	73126129	1	TUBE
37	73126127	1	TUBE
38	70659547	2	HOSE ASSY
39	73126130	2	CLAMP
40	75214740	1	TUBE
41	75214741	1	TUBE

E3.02/1(005) MOLDBOARD FLOAT CONTROL

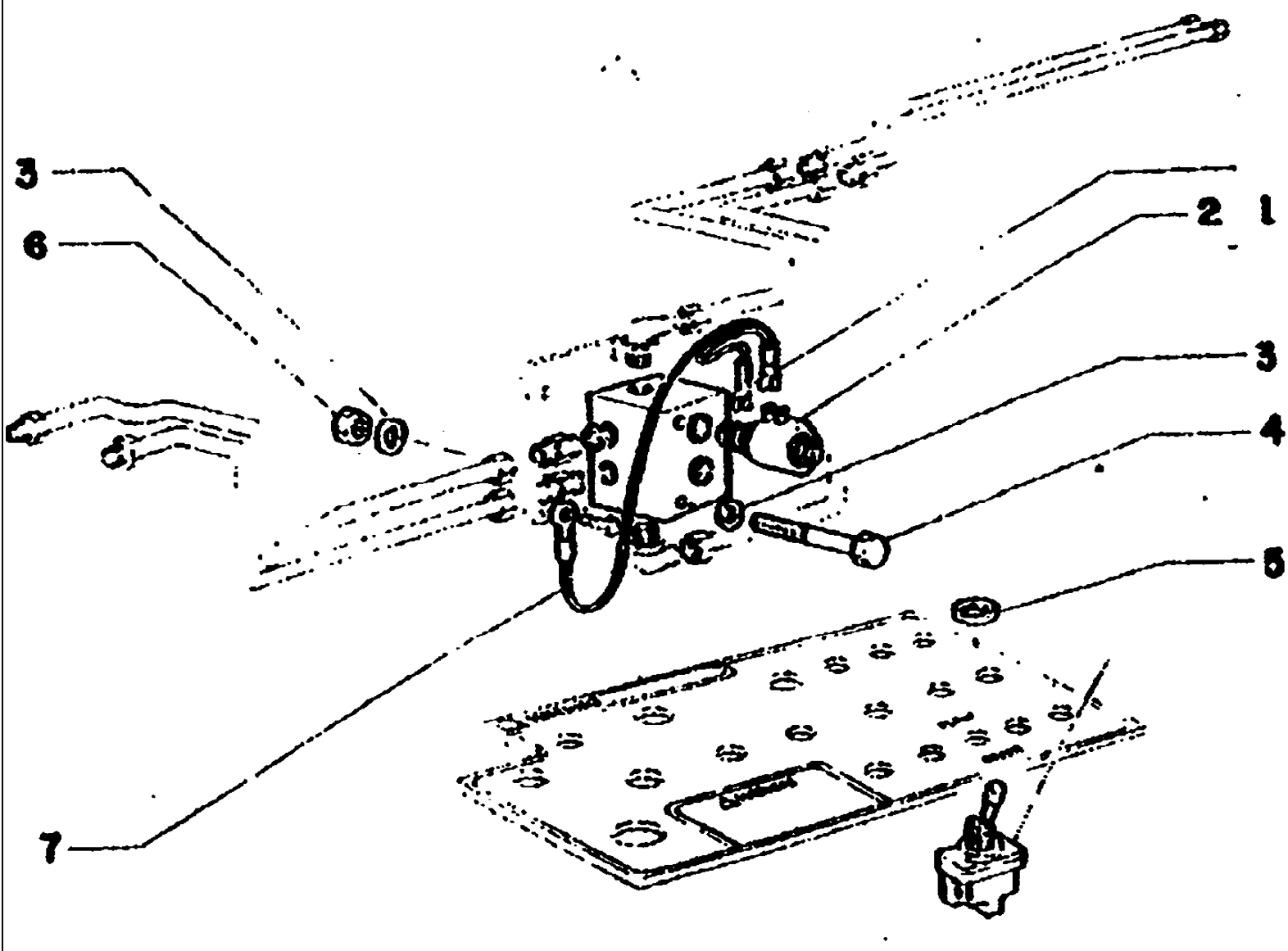

FG85 SERIES B MOTORGRADER

E3.02/1(005) MOLDBOARD FLOAT CONTROL

Ref	Numero de Pieza	Ctd	Descripción
1	73153505	1	SOLENOID
2	73132976	2	VALVE
3	70929156	4	WASHER
4	70927536	2	SCREW
5	73125891	1	SWITCH
6	70911026	2	NUT
7	73132558	1	CABLE

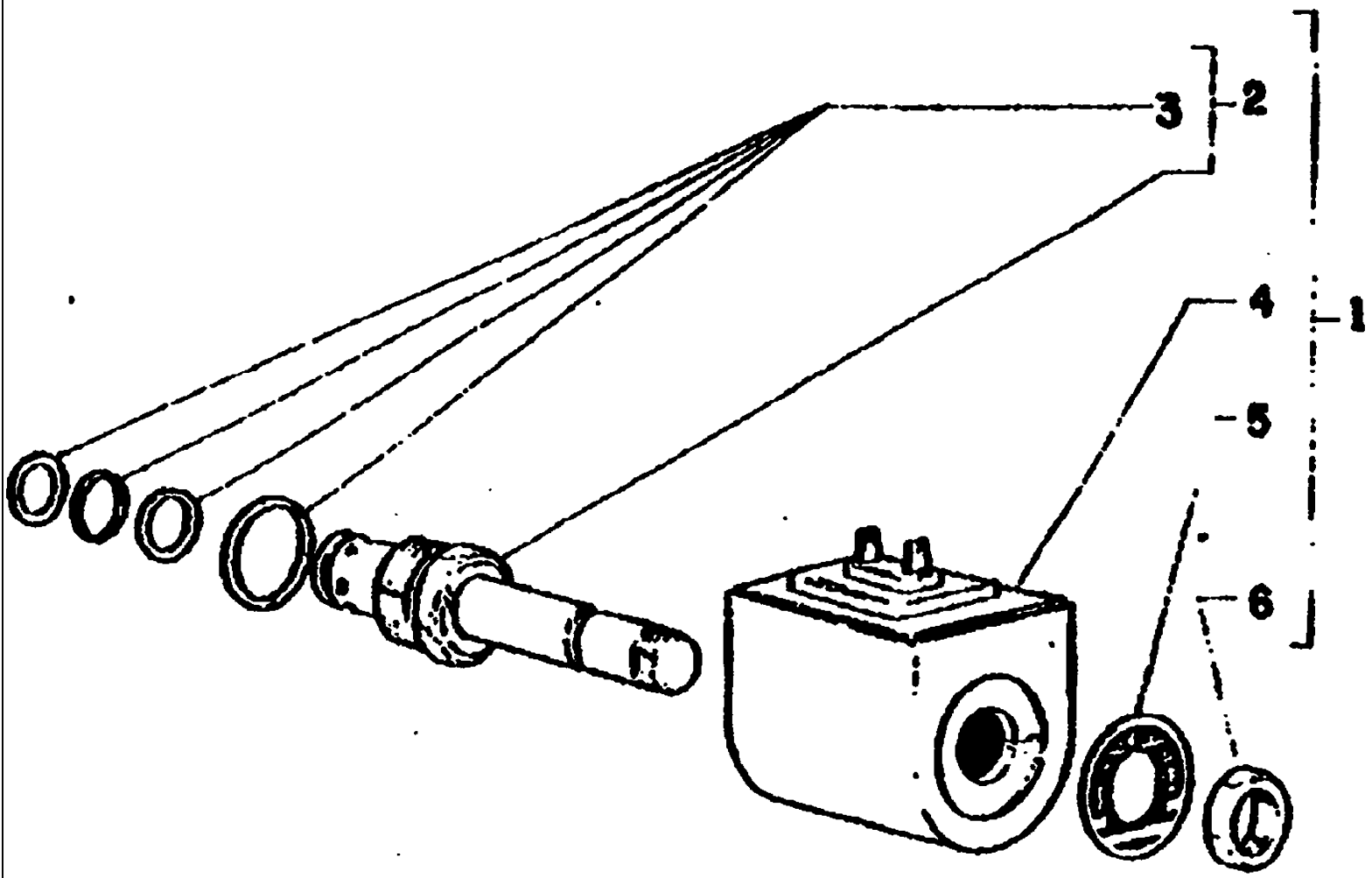
3
2
4
1
5
6

FG85 SERIES B MOTORGRADER

E3.02/1(006) SOLENOID VALVE

Ref	Numero de Pieza	Ctd	Descripción
1	73132976	1	VALVE
2	73133624	1	VALVE
3	75286423	1	KIT
4	73128152	1	VALVE
5	75286422	1	WASHER
6	73113425	1	NUT

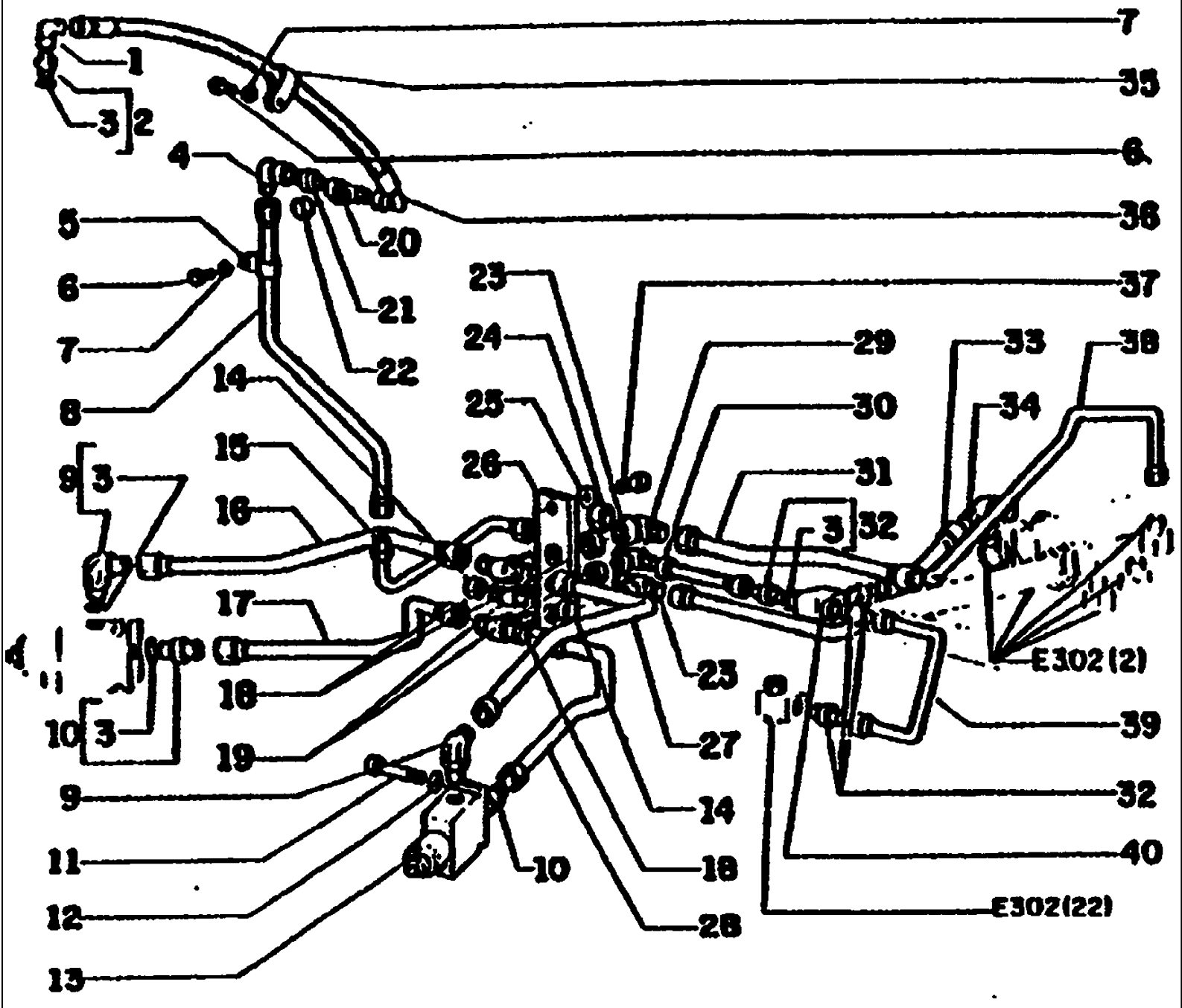
1
2
3
4
5
6
7
8
9
10
11
12
13
14
15
16
17
18
19
20
21
22
23
24
25
26
27
28
29
30
31
32
33
34
35
36
37
38
39
40
E302(2)
E302(22)

FG85 SERIES B MOTORGRADER

E3.02/1(008) HYDRAULIC ARTICULATION SYSTEM FOR 12VOLT UNITS

Ref	Numero de Pieza	Ctd	Descripción
1	70924044	1	FITTING
2	70926292	1	CONNECTOR
3	70921885	9	O-Ring, 6-1, 90 Duro, .468" ID x .078" Thk
4	70921013	1	ELBOW
5	70926917	1	CLAMP
6	70922300	2	SCREW
7	70929156	2	WASHER
8	73149898	1	TUBE
9	70930804	2	ELBOW
10	70924403	2	CONNECTOR
11	70930790	4	SCREW
12	70677004	4	WASHER
13	75215568	2	VALVE
14	70919552	2	CAP
15	73149900	1	TUBE
16	73149820	1	TUBE
17	73149794	1	TUBE
18	70928808	2	FITTING
19	70929190	1	FITTING
20	70926975	1	FITTING
21	70919540	1	CONNECTOR
22	70921467	1	CAP
23	70921276	2	FITTING
24	70923737	2	CAP
25	70929156	1	WASHER
26	73149916	1	PLATE
27	73149822	1	TUBE
28	73149796	1	TUBE
29	70921014	1	FITTING
30	75214733	1	TUBE
31	73149931	1	TUBE
32	70922522	4	CONNECTOR
33	73149929	1	TUBE
34	70921279	1	ELBOW
35	70927309	1	CLAMP
36	73125338	1	HOSE ASSY
37	70922300	1	SCREW
38	75238919	1	TUBE
39	75238925	1	TUBE
40	73157766	1	VALVE

E3.02/2(001) MOLDBOARD FLOAT CONTROL FOR 12VOLTS UNITS

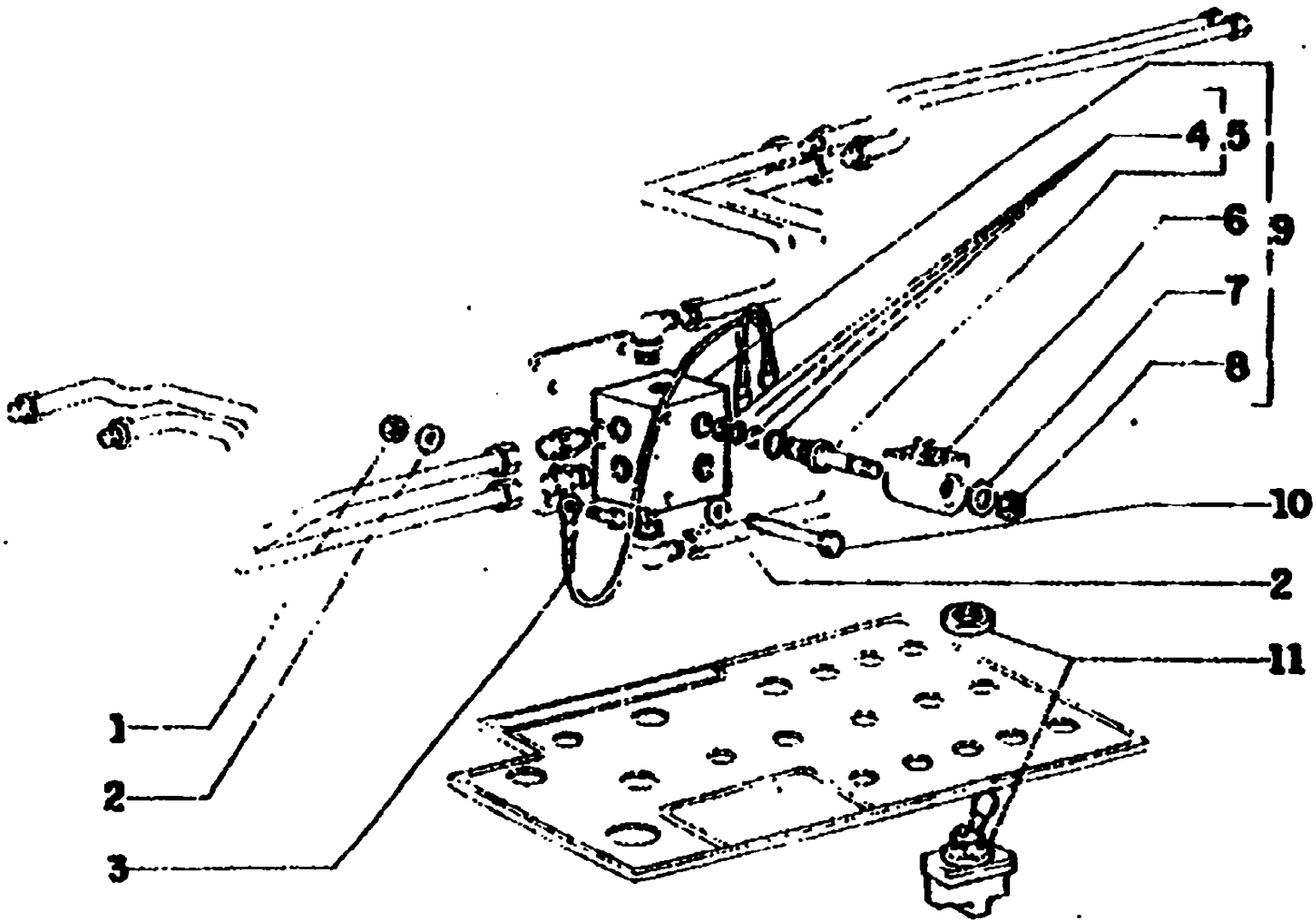

FG85 SERIES B MOTORGRADER

E3.02/2(001) MOLDBOARD FLOAT CONTROL FOR 12VOLTS UNITS

Ref	Numero de Pieza	Ctd	Descripción
1	70911026	2	NUT
2	70929156	4	WASHER
3	73132558	1	CABLE
4	75286423	1	KIT
5	73133624	1	VALVE
6	75241740	1	VALVE
7	75286422	1	WASHER
8	73113425	1	NUT
9	75241741	1	SOLENOID
10	70927536	2	SCREW
11	73125891	1	SWITCH

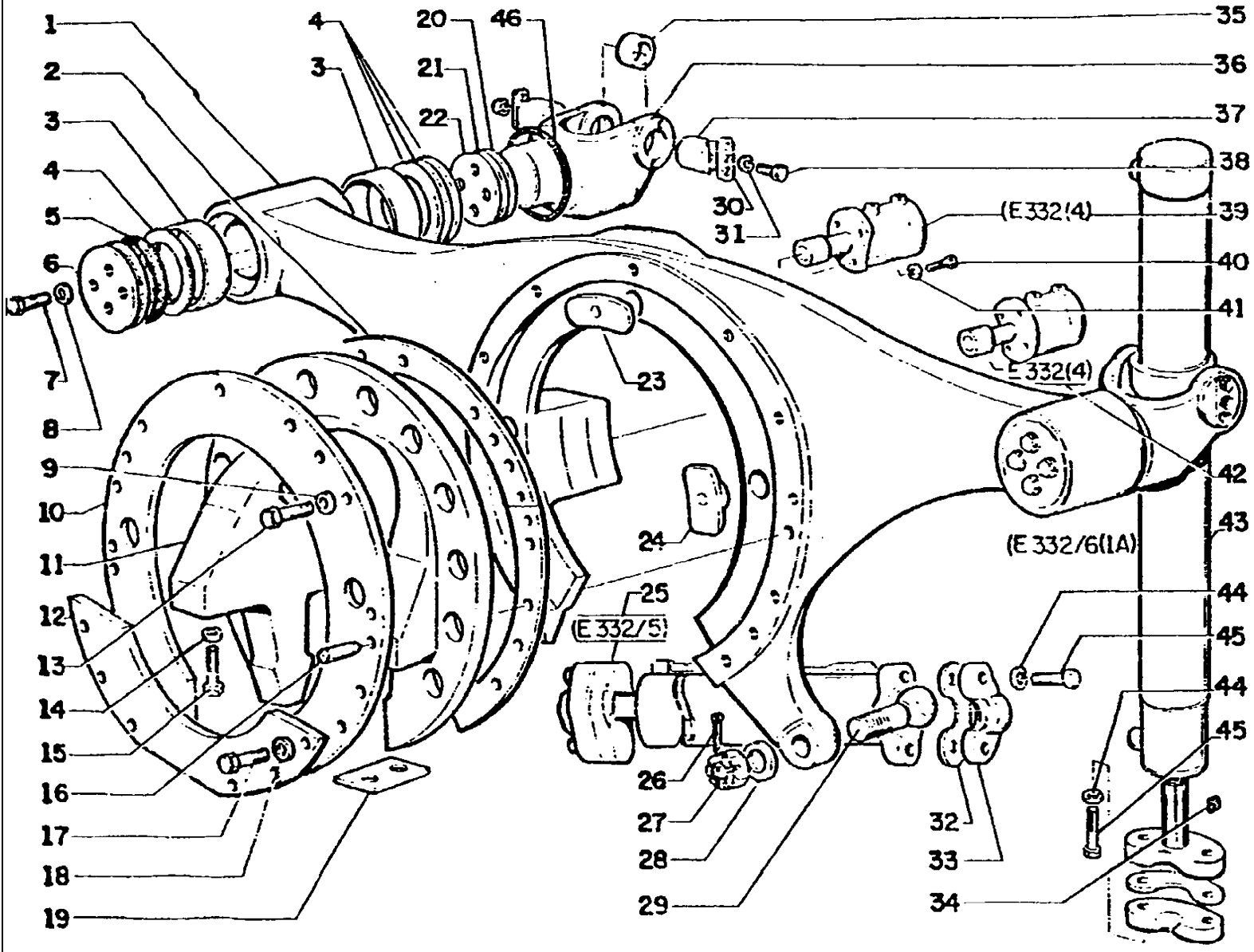
1
2
3
4
5
6
7
8
9
10
11
12
13
14
15
16
17
18
19
20
21
22
46
4
3
23
24
25
(E 332/5)
26
27
28
29
30
31
35
36
37
38
(E 332/4)
39
40
41
(E 332/4)
42
(E 332/6(1A))
43
44
45
44
45
32
33
34

FG85 SERIES B MOTORGRADER

E3.10(001) SADDLE AND LIFTING CYLINDERS

Ref	Numero de Pieza	Ctd	Descripción
1	73127108	1	SADDLE
2	73131791	*	SHIM
3	73156874	4	BUSHING
4	73124555	4	RING
5	73125405	4	SEAL
6	73124476	2	COVER
7	70920585	8	SCREW
8	70928178	8	WASHER
9	70912942	7	LOCKWASHER
10	73124471	1	RING
11	73124468	1	SUPPORT
12	73124490	1	PLATE
13	70921535	7	SCREW
14	70928452	8	WASHER
15	70925431	8	SCREW
16	70910179	2	PIN
17	70921174	6	SCREW
18	70912942	6	LOCKWASHER
19	73130333	*	SHIM
20	73125406	*	SHIM (0.07mm)
21	73125407	*	SHIM (0.12mm)
22	73125408	*	SHIM (0.50mm)
23	73124551	1	BUSHING
24	73124552	2	BUSHING
25	75220709	1	CYLINDER
26	70900808	1	Pin, Split (Cotter), 1/8" x 1 1/2"
27	70911174	1	NUT
28	70900822	1	WASHER
29	73125403	1	BALL
30	70607617	4	BAR
31	70910287	12	LOCKWASHER
32	70620920	*	SHIM
33	70620479	4	COVER
34	70914465	4	GREASE FITTING
35	73125404	4	BUSHING
36	73124473	2	YOKE
37	73125400	4	PIN
38	70923276	12	SCREW
39	73124575	1	CYLINDER
40	70920583	8	SCREW
41	70912441	8	LOCKWASHER
42	73124588	1	CYLINDER
43	75220788	2	LIFT CYLINDERS

Ref	Numero de Pieza	Ctd	Descripción
44	70914726	8	LOCKWASHER
45	70923137	8	SCREW
46	73124475	2	RING

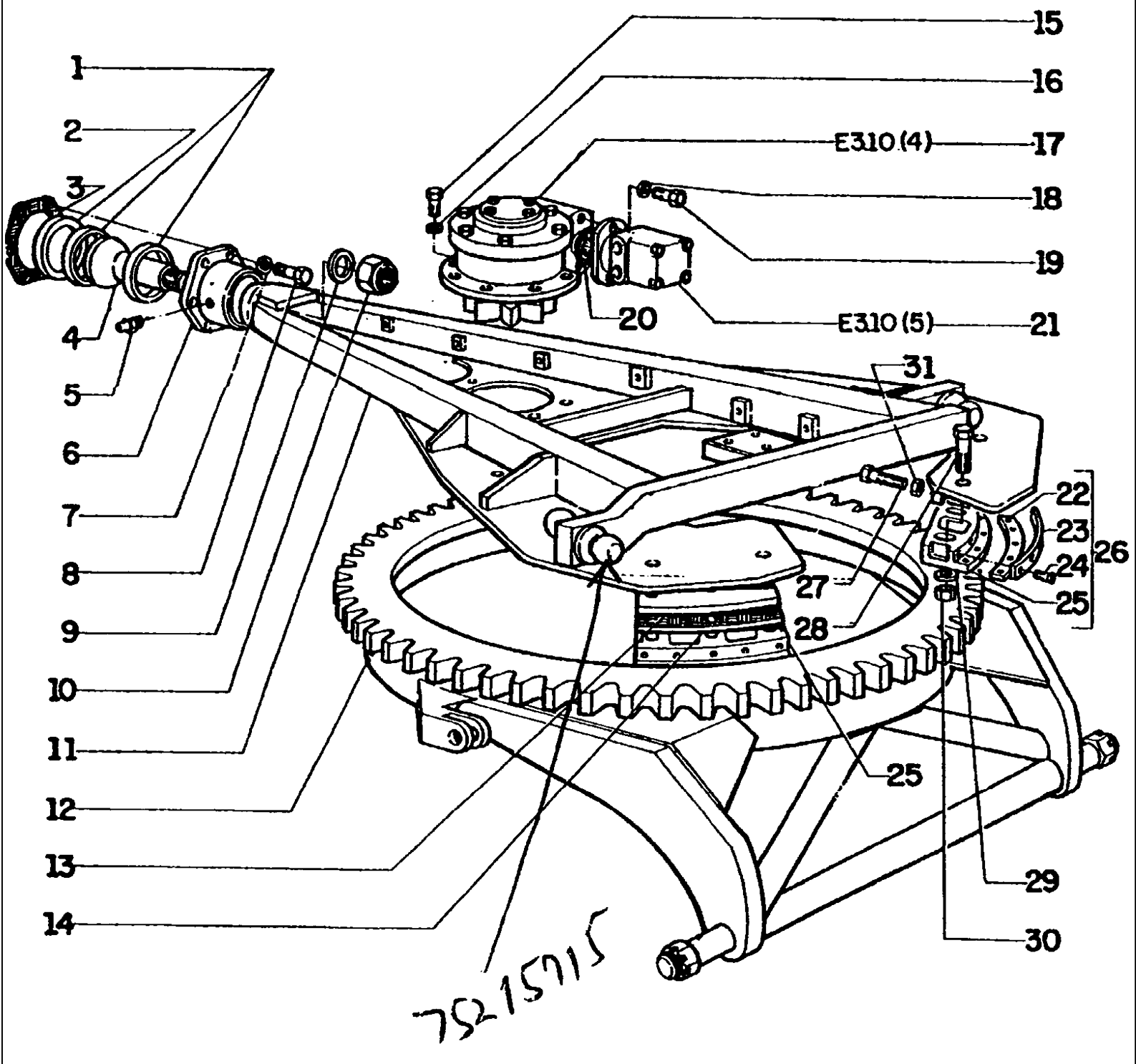
1
2
3
4
5
6
7
8
9
10
11
12
13
14
15
16
E310(4)
17
18
19
20
E310(5)
21
31
22
23
24
25
26
27
28
25
29
30
7521515

FG85 SERIES B MOTORGRADER

E3.10(002) MOLDBOARD DRAWBAR & CIRCLE

Ref	Numero de Pieza	Ctd	Descripción
1	73130017	2	BUSHING
2	73125534	1	SPACER
3	70673457	10	SHIM
4	73125531	1	BALL
5	70912497	1	GREASE FITTING
6	73125524	1	REST
7	70912942	8	LOCKWASHER
8	70921174	8	SCREW
9	70927662	1	WASHER
10	70921374	1	NUT
11	75221396	1	DRAWBAR
12	73133579	1	CIRCLE
13	73125482	4	PLATE
14	73125483	40	SHIM
15	70925415	6	SCREW
16	70928914	6	WASHER
17	75215790	1	REDUCTION GEAR
18	70928460	2	WASHER
19	70922508	2	SCREW
20	70930278	1	O'RING
21	73153845	1	HYDRAULIC MOTOR
22	73125480	1	STRIP
23	73125481	1	STRIP
24	73126330	40	SCREW
25	73125488	4	GUIDE
26	73125517	4	GUIDE
27	73125522	8	SCREW
28	70929092	8	SCREW
29	70929704	8	WASHER
30	70053994	8	NUT
31	70901421	8	NUT

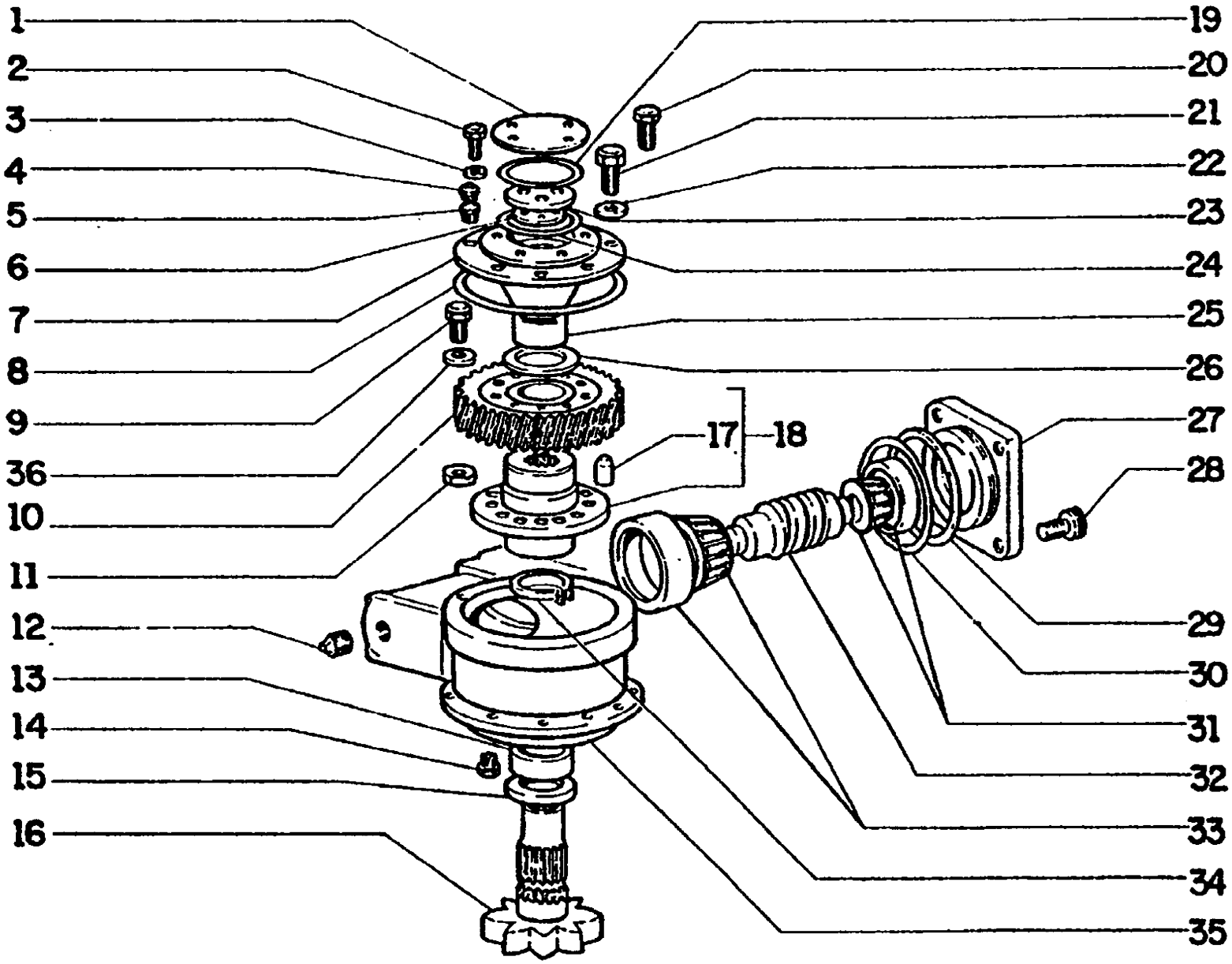
1
2
3
4
5
6
7
8
9
36
10
11
12
13
14
15
16
17
18
19
20
21
22
23
24
25
26
27
28
29
30
31
32
33
34
35

FG85 SERIES B MOTORGRADER

E3.10(004) REDUCTION GEAR

Ref	Numero de Pieza	Ctd	Descripción
1	73125496	1	COVER
2	70921076	3	SCREW
3	70929156	3	WASHER
4	70916619	1	GREASE FITTING
5	70901838	1	PLUG
6	73125519	-	SHIM 0,250 mm
6	73125520	-	SHIM 0,130 mm
6	73125521	-	SHIM 0,076 mm
7	73125511	1	COVER
8	70925457	1	O'RING
9	70922744	10	SCREW
10	75258894	1	RING GEAR; Replaces 73125509
11	70911030	10	NUT
12	70901652	1	PLUG
13	73130969	1	BUSHING
14	70920416	1	DRAIN PLUG
15	70634037	1	SEAL
16	73125501	1	SHAFT
17	73129961	2	DOWEL
18	73130013	1	HUB
19	70923817	1	O'RING
20	70922300	4	SCREW
21	70920574	6	SCREW
22	70912441	6	LOCKWASHER
23	73125500	1	COVER
24	73125494	1	WASHER
25	73125493	1	BUSHING
26	73125494	1	WASHER
27	75215791	1	COVER
28	70922065	4	SCREW
29	73125497	-	SHIM 0,250 mm
29	73125498	—	SHIM 0,130 mm
29	73125499	-	SHIM 0,076 mm
30	70923590	1	O'RING
31	73124983	1	BEARING
32	75215793	1	WORM SCREW
33	73124983	1	BEARING
34	70622212	1	SNAP RING
35	73125513	1	CASE
36	70928914	10	WASHER

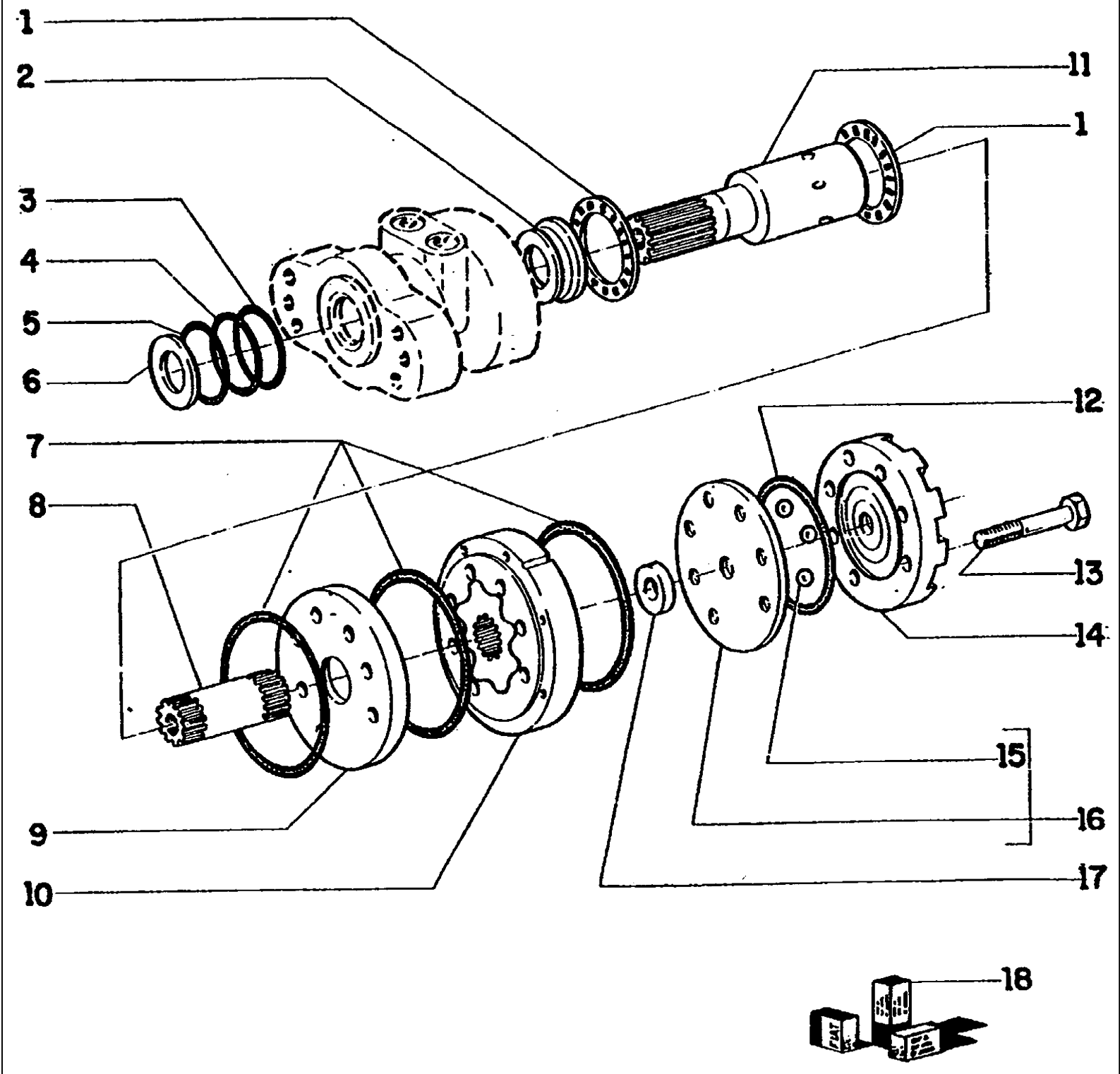
1
2
3
4
5
6
7
8
9
10
11
1
12
13
14
15
16
17
18

FG85 SERIES B MOTORGRADER

E3.10(005) HYDRAULIC MOTOR ASSEMBLY

Ref	Numero de Pieza	Ctd	Descripción
1	75206718	2	BEARING
2	75206719	1	SEAL
3	75206720	1	SEAL
4	75206721	1	O'RING
5	75206722	1	RING
6	75206723	1	WASHER
7	75206724	3	O'RING
8	75206725	1	SHAFT
9	75206726	1	PLATE
10	75206728	1	ROTOR
11	75206729	1	SHAFT
12	75206730	1	SEAL
13	75206731	7	SCREW
14	75206732	1	COVER
15	75206733	4	BALL
16	75206734	1	PLATE
17	75206735	1	SPACER
18	75206736	K	KIT (includes
18			2,3,4,5,6,7,12)

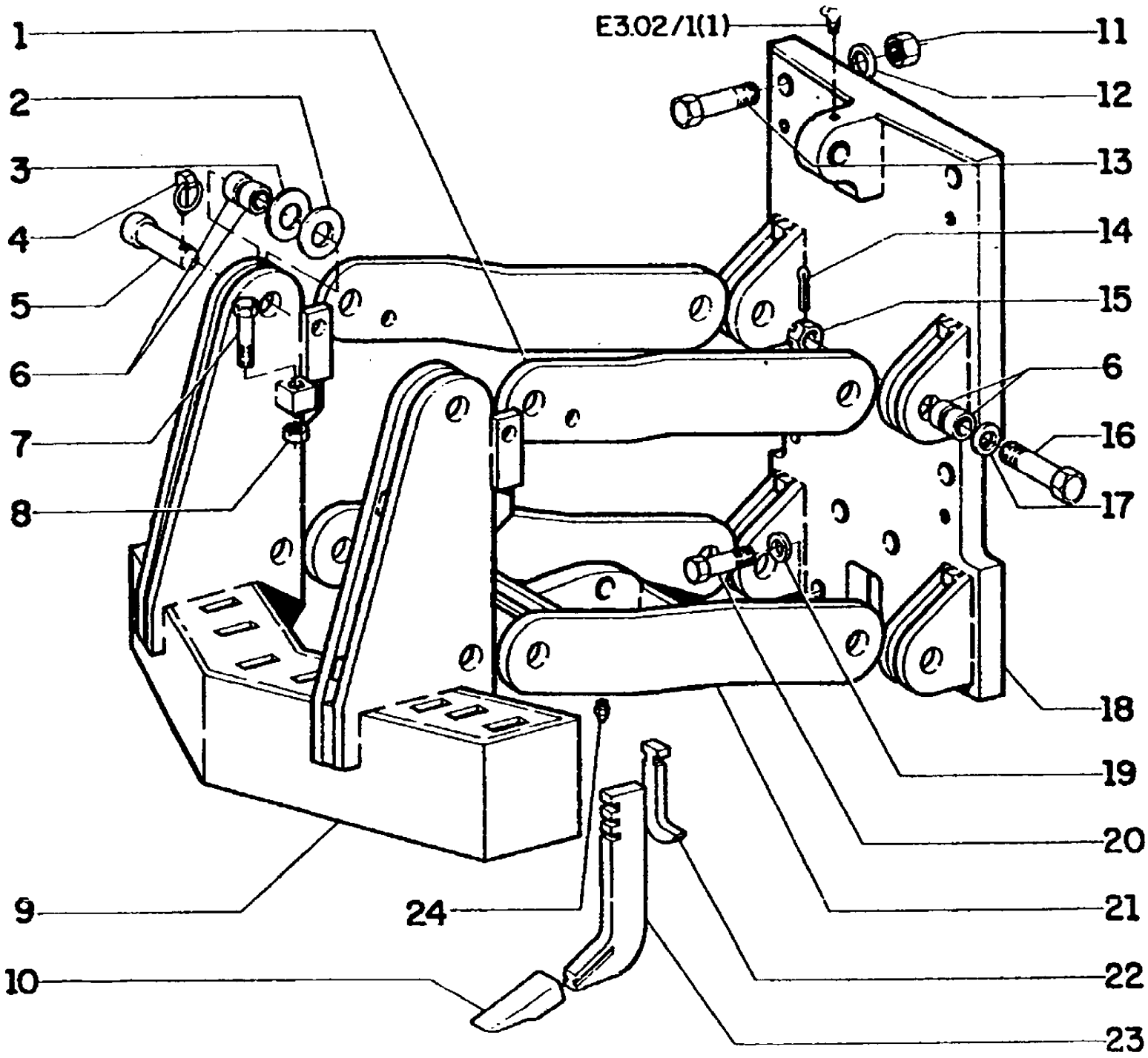
E3.02/1(1)
1
2
3
4
5
6
7
8
9
10
11
12
13
14
15
6
16
17
18
19
20
21
22
23
24

FG85 SERIES B MOTORGRADER

E3.10/1(001) SCARIFIER

Ref	Numero de Pieza	Ctd	Descripción
1	73132794	2	PLATE
2	73127763	16	WASHER
3	73127764	16	WASHER
4	73132781	24	PIN
5	73132780	4	PIN
6	73126245	24	BUSHING
7	70933227	2	SCREW
8	70917793	2	NUT
9	73126264	1	WALL CHART
10	70062160	11	SHANK TIP
11	70927619	6	NUT
12	70929276	6	WASHER
13	70925427	6	SCREW
14	70911689	4	Pin, Split (Cotter), 1/4" x 3"
15	70911061	4	NUT
16	70082175	4	SCREW
17	70912299	4	WASHER
18	73126263	1	SUPPORT
19	70678072	2	WASHER
20	70926785	2	SCREW
21	73126250	1	ARM
22	73125907	11	KEY
23	70677256	11	ROD
24	70914465	1	GREASE FITTING

E3.10/1(002) RIPPER TOOL BAR AND LINKAGE

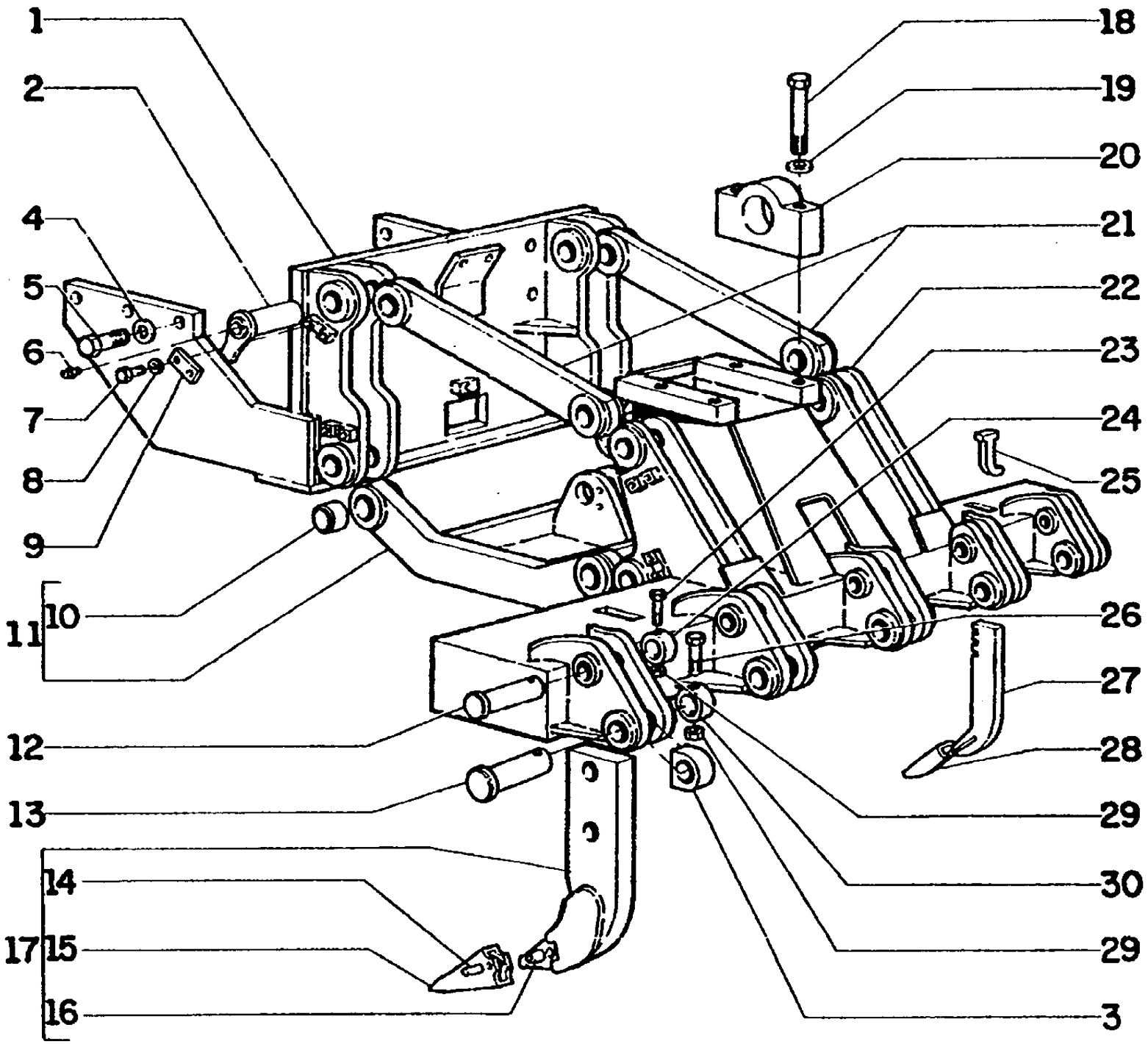

FG85 SERIES B MOTORGRADER

E3.10/1(002) RIPPER TOOL BAR AND LINKAGE

Ref	Numero de Pieza	Ctd	Descripción
1	75216494	1	SUPPORT
2	75216516	8	PIN
3	75216517	5	SUPPORT
4	70928370	16	WASHER
5	70926785	16	SCREW
6	13407211	8	NIPPLE, LUBE, M10 x 1
7	15540431	16	BOLT, Hex, M12 x 1.25 x 30, 10.9, Full Thd
8	14254231	16	SCREW
9	75216512	8	PLATE
10	75216487	16	BUSHING
11	75216489	1	FRAME
12	75216513	5	PIN
13	75216509	5	PIN
14	8282869	5	PIN
15	8282867	5	RIPPER SHANK
16	8282870	5	SLEEVE
17	75216444	5	RIPPER SHANK
18	15861721	4	SCREW
19	14199510	4	LOCKPLATE
20	8299560	2	REST
21	75216485	2	LEVER
22	75216474	1	TOOL BAR
23	70922510	5	SCREW
24	75216511	5	RING
25	73125907	9	KEY
26	70921598	5	SCREW
27	70677256	9	ROD
28	70062160	9	SHANK TIP
29	70911028	10	NUT
30	75216510	5	RING

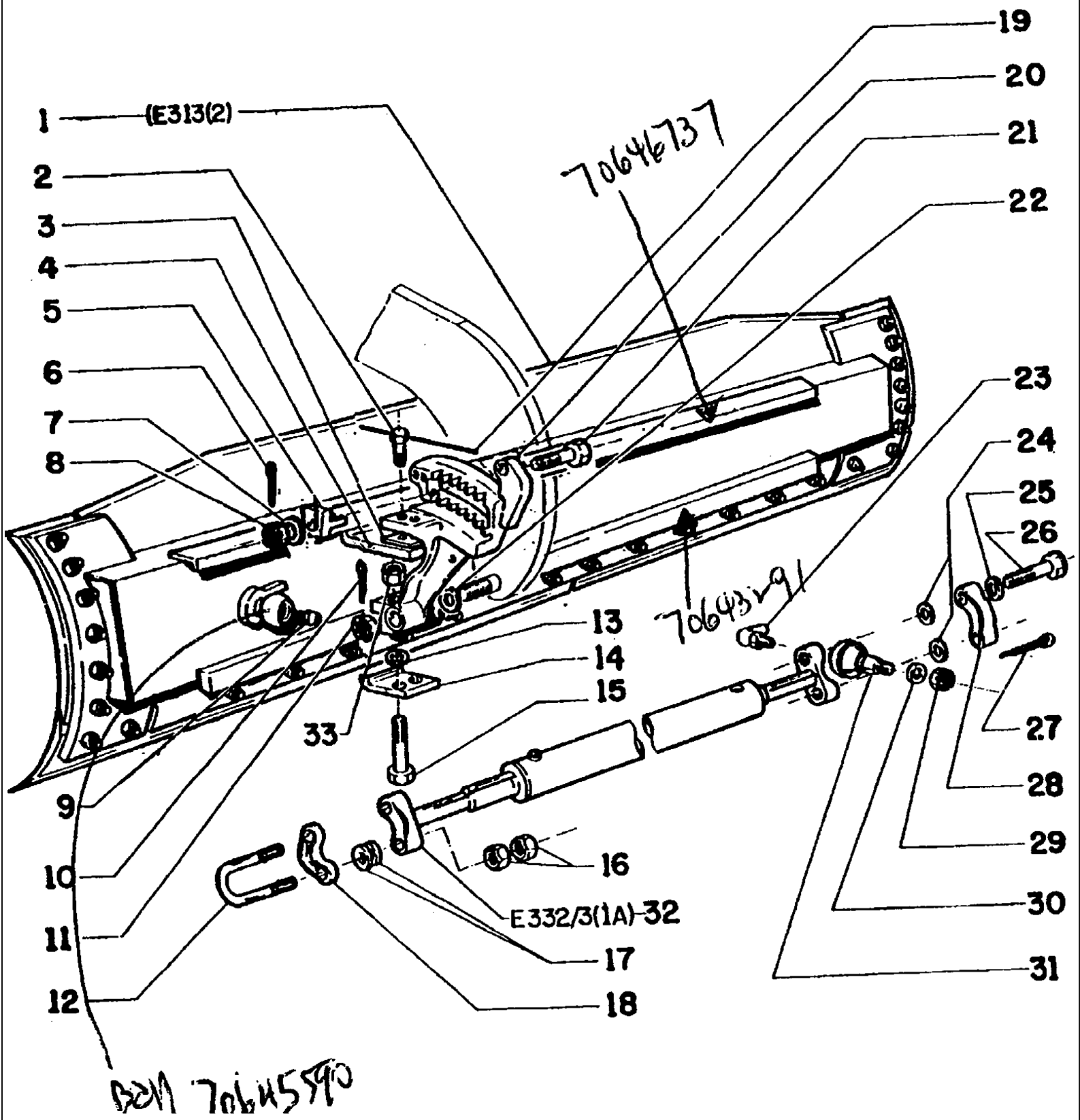
1
(E313(2)
2
3
4
5
6
7
8
9
10
11
12
13
14
15
16
17
18
19
20
21
22
23
24
25
26
27
28
29
30
31
E332/3(1A)-32
33
70646737
70643791
70645790

FG85 SERIES B MOTORGRADER

E3.13(001) MOLDBOARD

Ref	Numero de Pieza	Ctd	Descripción
1	73129494	1	MOLDBOARD(I)
1	73129577	1	MOLDBOARD(2)
2	70929083	4	SCREW
3	73154653	1	PLATE
4	73154652	1	GUIDE
5	70687675	1	GUIDE LH
	70687676	1	GUIDE RH
6	70900813	1	COTTER PIN
7	70602663	2	WASHER
8	70918853	2	NUT
9	70914465	1	GREASE FITTING
10	70911069	1	COTTER PIN
11	70922271	2	NUT
12	70605665	1	CLIP
13	70915978	20	WASHER
14	70079507	2	SUPPORT
15	70928410	4	SCREW
16	70911049	4	NUT
17	70053992	16	SHIM
18	70053986	1	BALL SOCKET
19	70023633	2	STEEL WIRE
20	75219871	1	BRACKET LH
20	75219870	1	BRACKET RH
21	70662676	2	SCREW
22	70634237	6	WASHER
23	70915276	1	GREASE FITTING
24	70930364	2	WASHER
25	70912942	2	LOCKWASHER
26	70921597	2	SCREW
27	70900808	1	Pin, Split (Cotter), 1/8" x 1 1/2"
28	70683870	1	BALL SOCKET
29	70911174	1	NUT
30	70900822	1	WASHER
31	70081334	1	BALL
32	75220868	1	CYLINDER
33	70933178	4	NUT

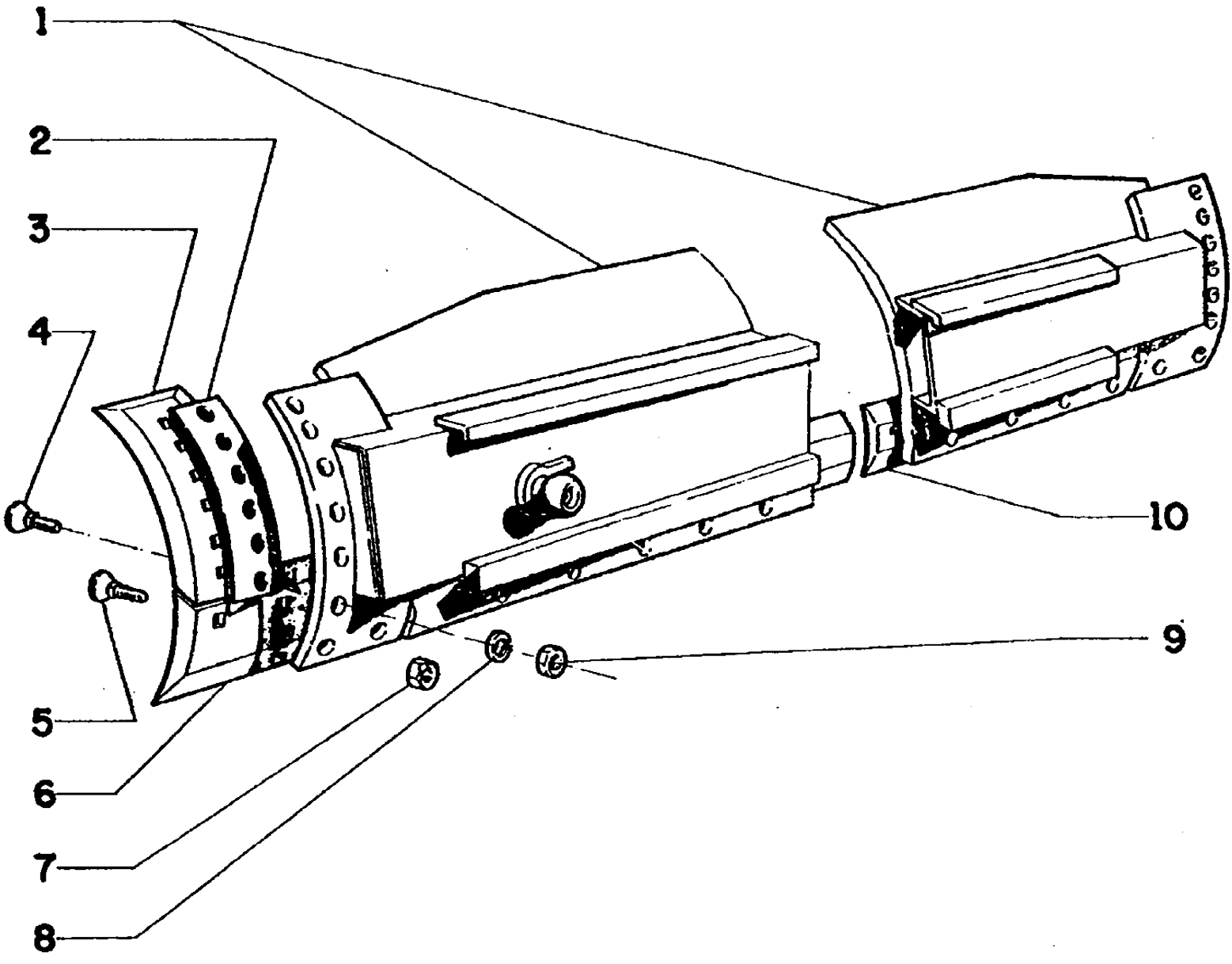
1
2
3
4
5
6
7
8
9
10

FG85 SERIES B MOTORGRADER

E3.13(002) MOLDBOARD

Ref	Numero de Pieza	Ctd	Descripción
1	75221758	1	MOLDBOARD - for fg105r/a
1	75221782	1	MOLDBOARD - for fg85a/r
2	70644917	12	SHIM
3	70643293	2	END BIT
4	70931930	12	SCREW
5	70617127	18	SCREW - for fg105r/a
5	70617127	17	SCREW - for fg85a/r
6	70099353	1	CUTTING EDGE LH
7	70911029	12	NUT
8	70912942	12	LOCKWASHER
9	70911029	18	NUT - for fg105r/a
9	70911029	17	NUT - for fg85a/r
10	70099354	1	CUT. EDGE RH - for fg105r/a
10	70099352	1	CUT. EDGE RH - for fg85a/r

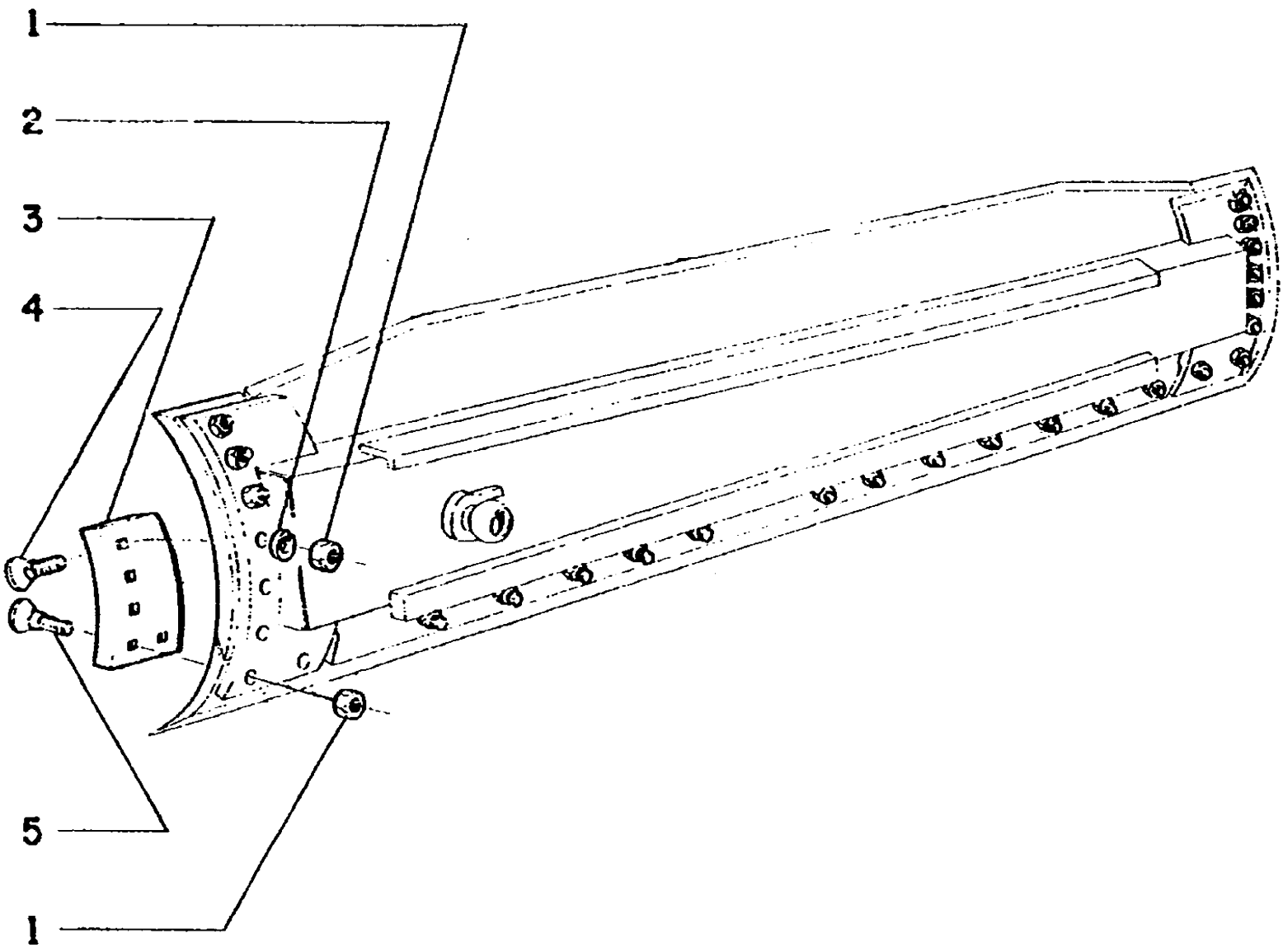
1
2
3
4
5
1

FG85 SERIES B MOTORGRADER

E3.13(003) MOLDBOARD

Ref	Numero de Pieza	Ctd	Descripción
1	70911029	5	NUT
2	70912942	3	LOCKWASHER
3	70646379	1	END BIT LEFT
3	70646380	1	END BIT RIGHT
4	70932589	3	SCREW
5	70931936	2	SCREW

E3.13(003) MOLDBOARD 13 FT.

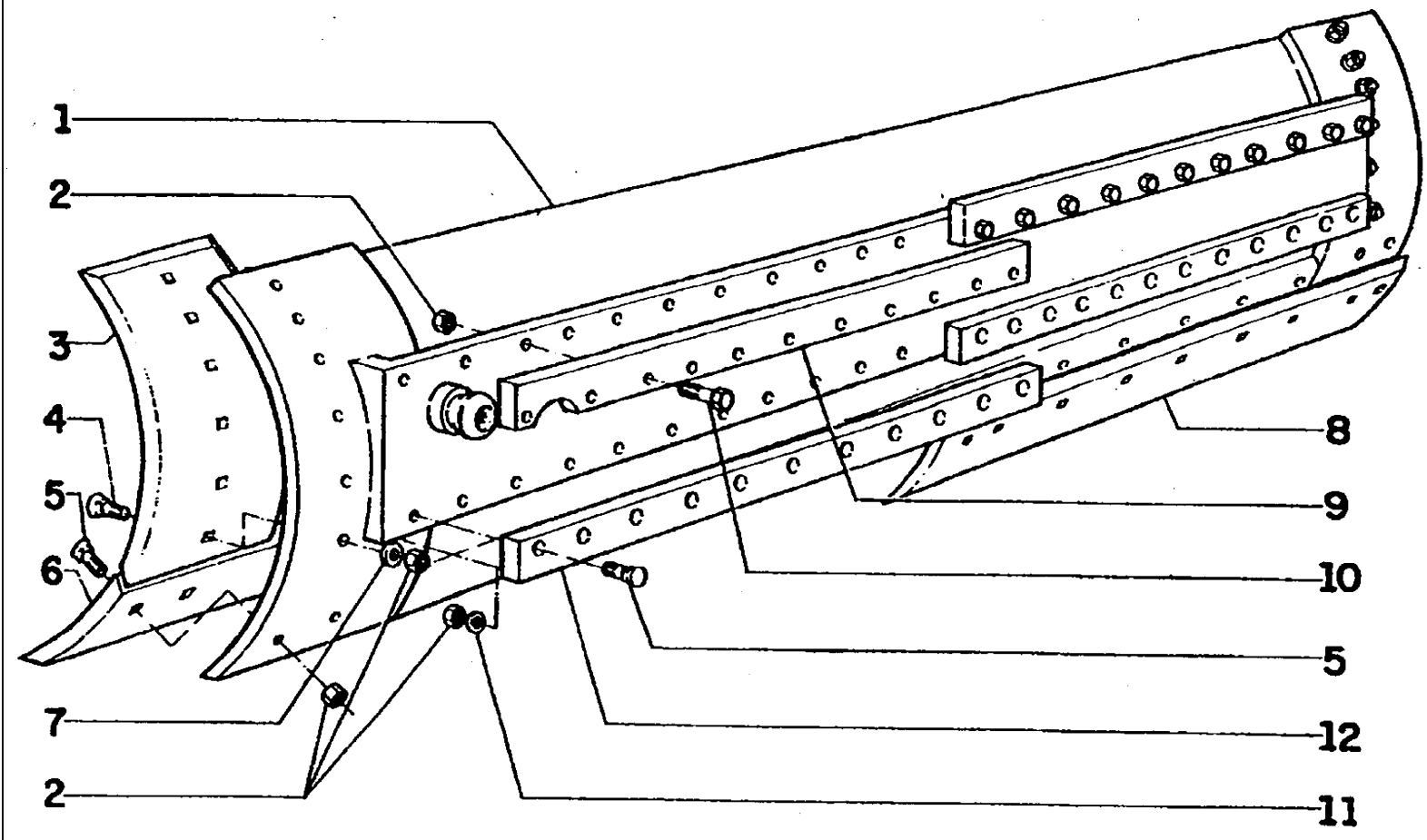

6 Ft & 7 Ft Blades Can Be Used In Combination for Both 12 Ft & 13 Ft Blades.□□□73128969 LH 6Ft. Heat Treated□73128970 RH 6Ft. Heat Treated□73128971 LH 7Ft. Heat Treated□73128972 RH 7Ft. Heat Treated□or□70099351 LH 6Ft. Carbon Steel□70099352 RH 6Ft. Carbon Steel□70099353 LH 7Ft. Carbon Steel□70099354 RH 7Ft. Carbon Steel

FG85 SERIES B MOTORGRADER

E3.13(003) MOLDBOARD 13 FT.

Ref	Numero de Pieza	Ctd	Descripción
1	75241467	1	
2	70911029	73	
3	75241478	2	END BIT
4	70931930	12	
5	70617127	39	
6	70099353	1	7 Foot; Left-Hand; Carbon Steel
7	70912942	12	
8	70099352	1	6 Foot; Right-Hand; Carbon Steel
9	75239608	2	BAR
10	70921174	22	
11	70927381	22	
12	75239609	2	

6 Ft & 7 Ft Blades Can Be Used In Combination for Both 12 Ft & 13 Ft Blades.□□□73128969 LH 6Ft. Heat Treated□□73128970 RH 6Ft. Heat Treated□□73128971 LH 7Ft. Heat Treated□□73128972 RH 7Ft. Heat Treated□□or□□70099351 LH 6Ft. Carbon Steel□□70099352 RH 6Ft. Carbon Steel□□70099353 LH 7Ft. Carbon Steel□□70099354 RH 7Ft. Carbon Steel

E3.13(004) MOLDBOARD LH SUPPORT

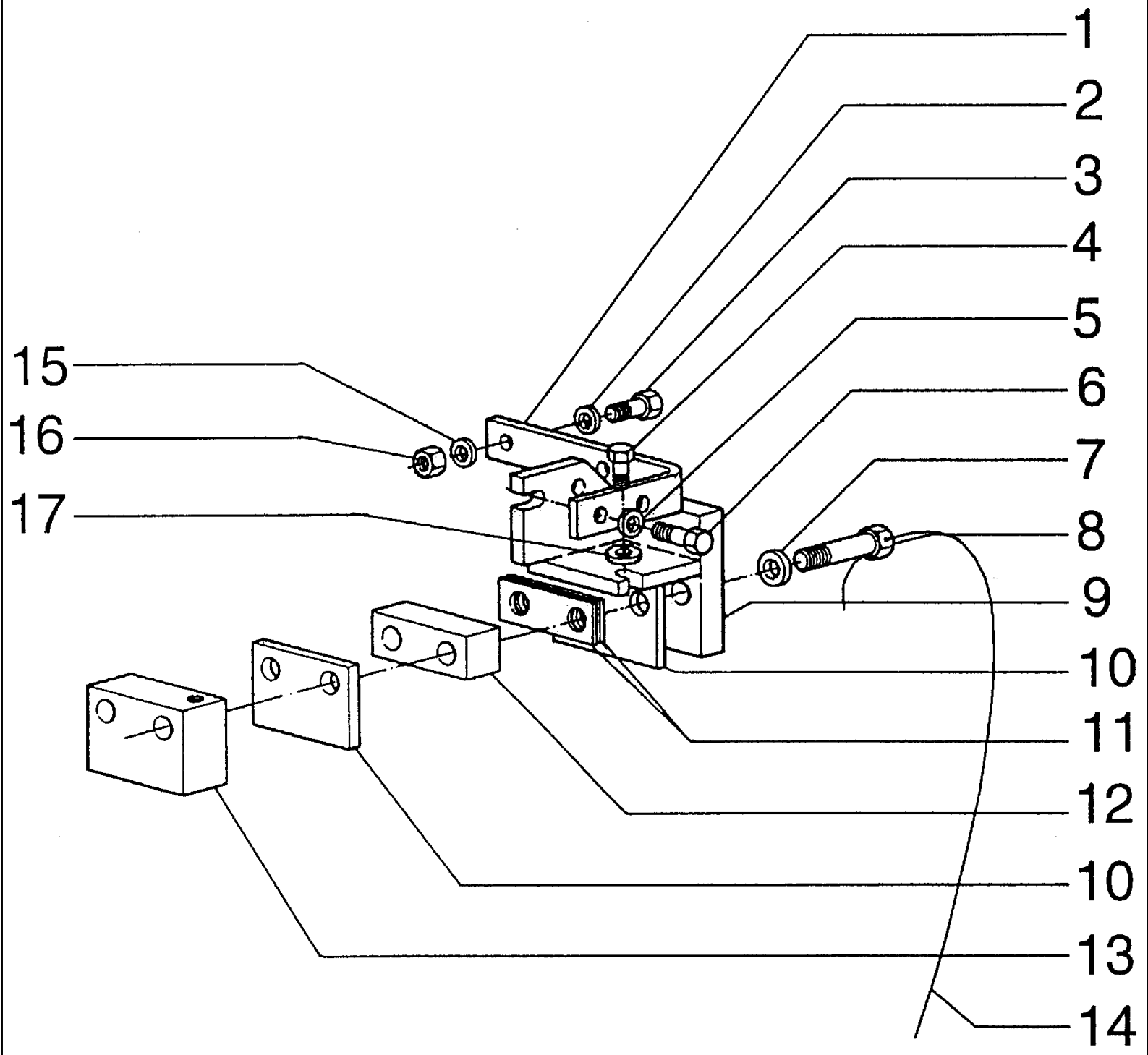

FG85 SERIES B MOTORGRADER

E3.13(004) MOLDBOARD LH SUPPORT

Ref	Numero de Pieza	Ctd	Descripción
1	70646763	1	SUPPORT, , ANGLE
2	70928844	2	WASHER,
3	70920583	2	SCREW,
4	70922763	2	SCREW,
5	70933257	2	WASHER,
6	70922763	2	SCREW,
7	70927382	2	WASHER,
8	75241420	2	SCREW,
9	75246181	1	SUPPORT, SUPPORT
10	75239625	2	PLATE,
11	75246277	24	SHIM,
12	75239626	1	SPACER, , SPACER
13	75246258	1	PLATE, , BLOCK
14	75241062	1	WIRE, , LOCK
15	70912441	2	WASHER, , LOCK
16	70911028	2	NUT,
17	70933257	2	WASHER,

E3.13(004A) MOLDBOARD RH SUPPORT

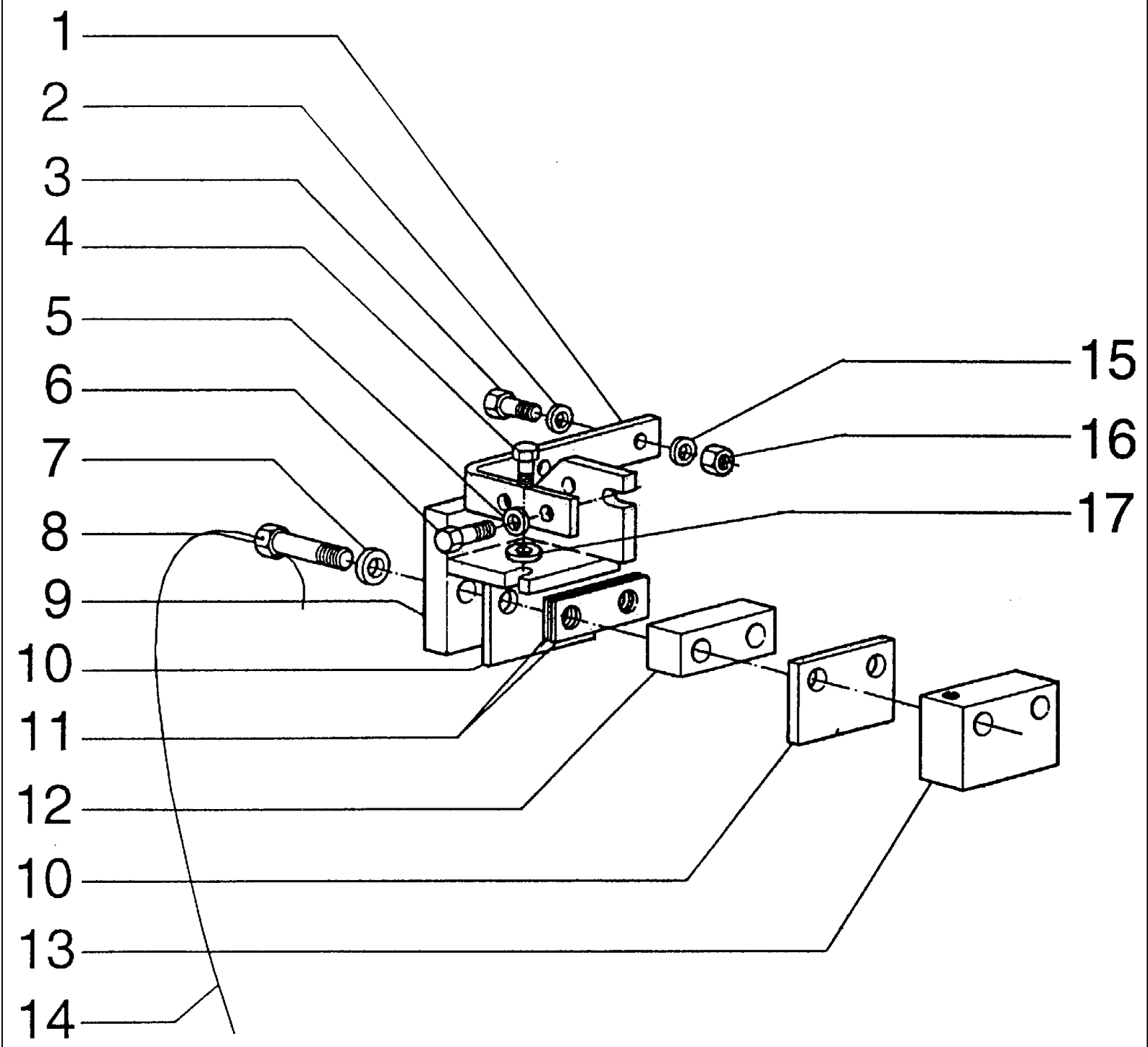

FG85 SERIES B MOTORGRADER

E3.13(004A) MOLDBOARD RH SUPPORT

Ref	Numero de Pieza	Ctd	Descripción
1	70646763	1	SUPPORT, , ANGLE
2	70928844	2	WASHER,
3	70920583	2	SCREW,
4	70922763	2	SCREW,
5	70933257	2	WASHER,
6	70922763	2	SCREW,
7	70927382	2	WASHER,
8	75241420	2	SCREW,
9	75246177	1	SUPPORT, SUPPORT
10	75239625	2	PLATE,
11	75246277	24	SHIM,
12	75239626	1	SPACER, , SPACER
13	75246258	1	PLATE, , BLOCK
14	75241062	1	WIRE, , LOCK
15	70912441	2	WASHER, , LOCK
16	70911028	2	NUT,
17	70933257	2	WASHER,

E3.13(005) DOZER BLADE AND SKID PLATES

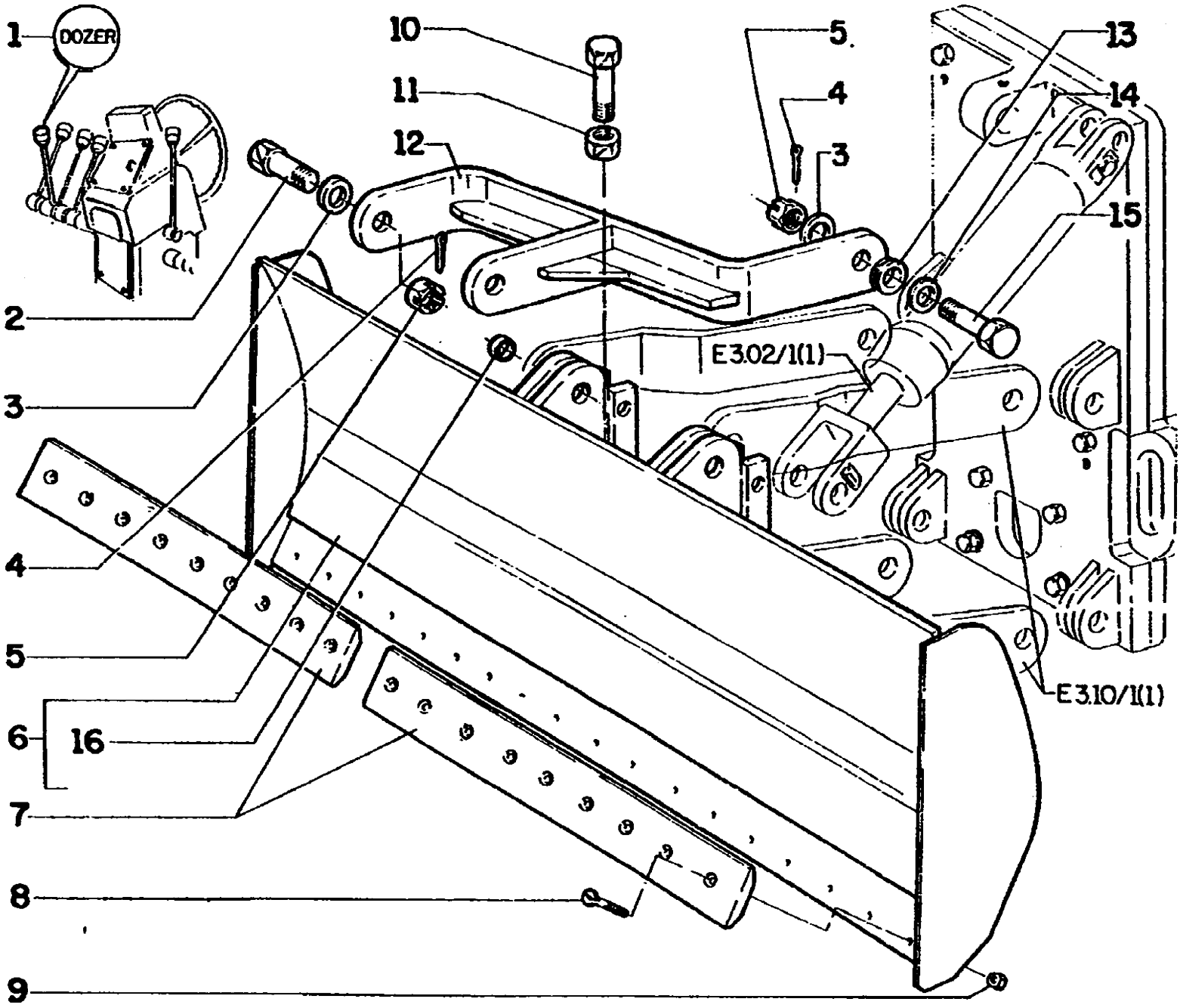

FG85 SERIES B MOTORGRADER

E3.13(005) DOZER BLADE AND SKID PLATES

Ref	Numero de Pieza	Ctd	Descripción
1	73132920	1	DECAL
2	70082174	2	SCREW
3	70912299	10	WASHER
4	70901345	6	Pin, Split (Cotter), 1/4" x 2 1/2"
5	70911061	6	NUT
6	73132898	1	MOLDBOARD
7	73132918	2	CUTTING EDGE
8	73132919	18	SCREW
9	12164321	18	NUT
10	70933227	2	SCREW
11	70917793	2	NUT
12	73134312	2	ARM
13	70601966	2	SPACER
14	70054889	2	WASHER
15	70683837	4	SCREW
16	73126245	20	BUSHING

E3.13/1(001) MOLDBOARD 13 FT.

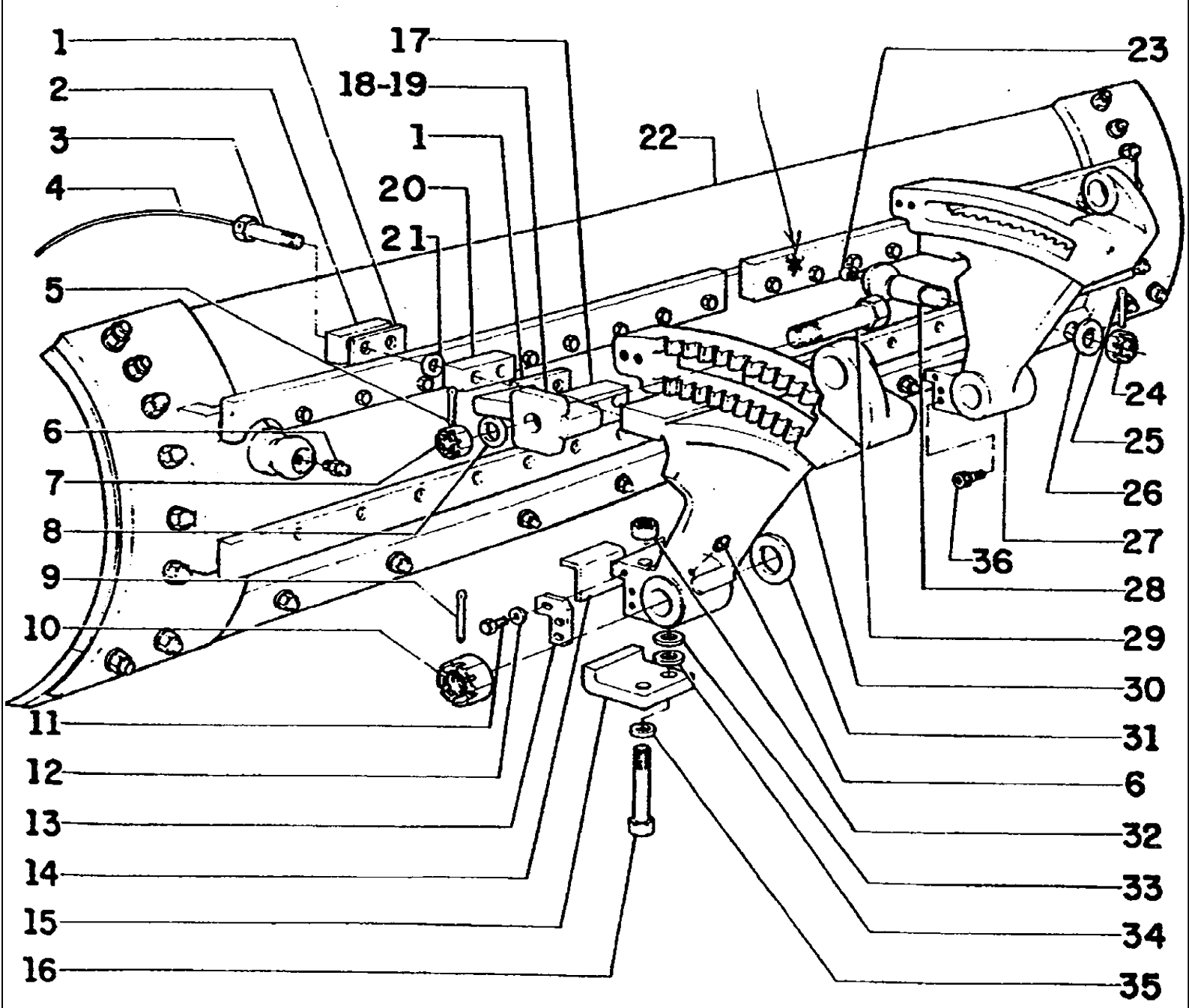

FG85 SERIES B MOTORGRADER

E3.13/1(001) MOLDBOARD 13 FT.

Ref	Numero de Pieza	Ctd	Descripción
1	75239625	4	PLATE
2	75239627	2	GUIDE
3	75241420	4	SCREW
4	75241062	2	STEEL WIRE
5	70900813	2	COTTER PIN
6	70914465	3	GREASE FITTING
7	70918853	2	NUT
8	70602663	2	WASHER
9	70911069	2	COTTER PIN
10	70922271	2	NUT
11	70927216	6	SCREW
12	70931523	12	WASHER
13	75239620	4	PLATE
14	75239622	2	PLATE
15	75243732	2	SUPPORT
16	70928410	4	SCREW
17	75239624	2	GUIDE
18	75241449	1	GUIDE LH
19	75241448	1	GUIDE RH
20	75239626	2	SPACER
21	73121925	24	WASHER
22	75241476	1	MOLDBOARD
23	70915276	1	GREASE FITTING
24	70911174	1	NUT
25	70900808	1	Pin, Split (Cotter), 1/8" x 1 1/2"
26	70900822	1	WASHER
27	75239616	1	SUPPORT
28	70081334	1	BALL
29	70662676	2	SCREW
30	75239615	1	SUPPORT
31	70634237	6	WASHER
32	70933178	4	NUT
33	70915978	20	WASHER
34	70928189	4	WASHER
35	70928452	4	WASHER
36	70918981	4	SCREW

E3.13/1(002) MOLDBOARD 14 FT.

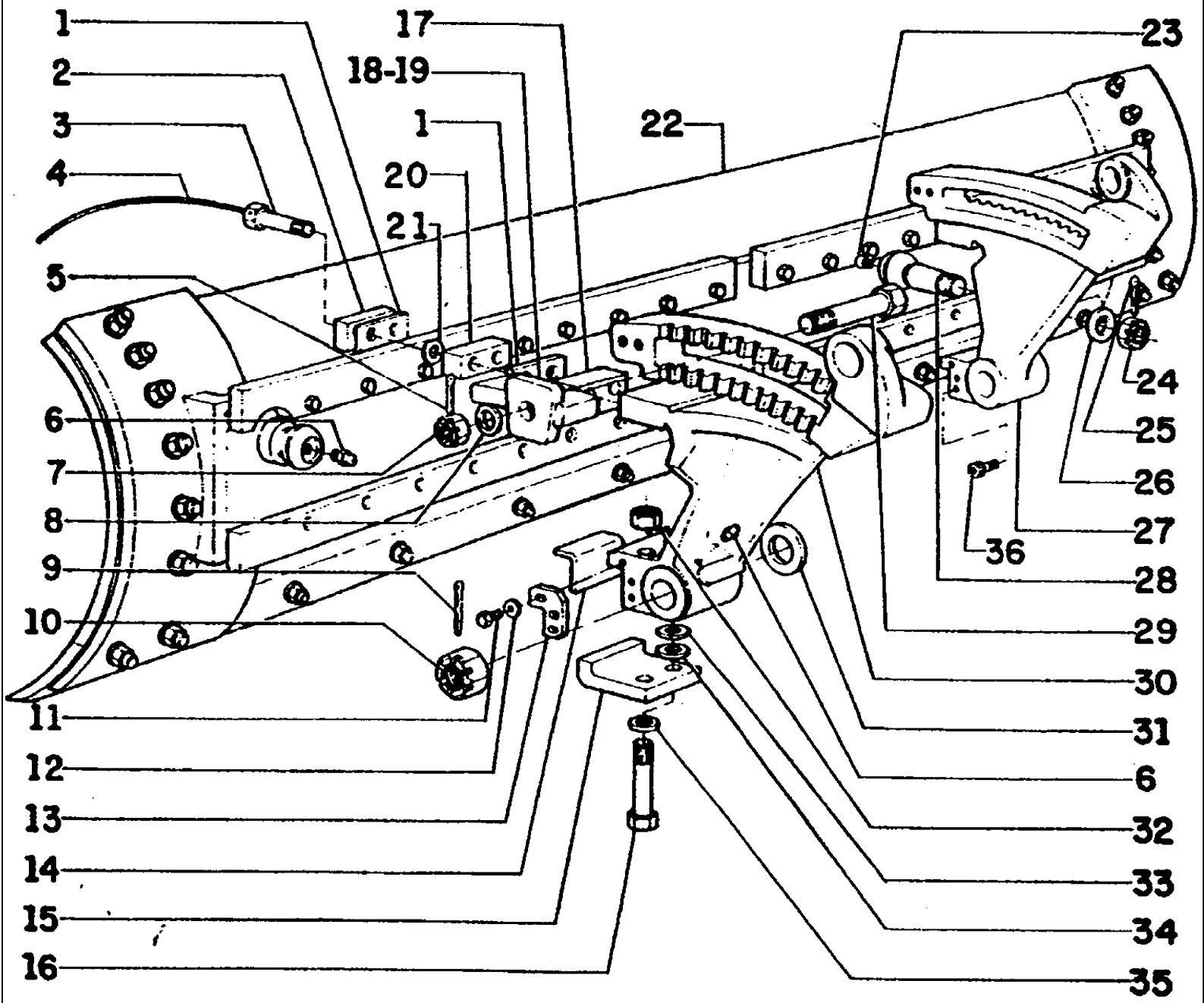

FG85 SERIES B MOTORGRADER

E3.13/1(002) MOLDBOARD 14 FT.

Ref	Numero de Pieza	Ctd	Descripción
1	75239625	4	PLATE
2	75239627	2	GUIDE
3	75241420	4	SCREW
4	75241062	2	STEEL WIRE
5	70900813	2	COTTER PIN
6	70914465	3	GREASE FITTING
7	70918853	2	NUT
8	70602663	2	WASHER
9	70911069	2	COTTER PIN
10	70922271	2	NUT
11	70927216	6	SCREW
12	70931523	12	WASHER
13	75239620	4	PLATE
14	75239622	2	PLATE
15	75243732	2	SUPPORT
16	70928410	4	SCREW
17	75239624	2	GUIDE
18	75241449	1	GUIDE LH
19	75241448	1	GUIDE RH
20	75239626	2	SPACER
21	73121925	24	WASHER
22	75241475	1	MOLDBOARD
23	70915276	1	GREASE FITTING
24	70911174	1	NUT
25	70900808	1	Pin, Split (Cotter), 1/8" x 1 1/2"
26	70900822	1	WASHER
27	75239616	1	SUPPORT
28	70081334	1	BALL
29	70662676	2	SCREW
30	75239615	1	SUPPORT
31	70634237	6	WASHER
32	70933178	4	NUT
33	70915978	20	WASHER
34	70928189	4	WASHER
35	70928452	4	WASHER
36	70918981	4	SCREW

E3.13/1(004) MOLDBOARD 14 FT.

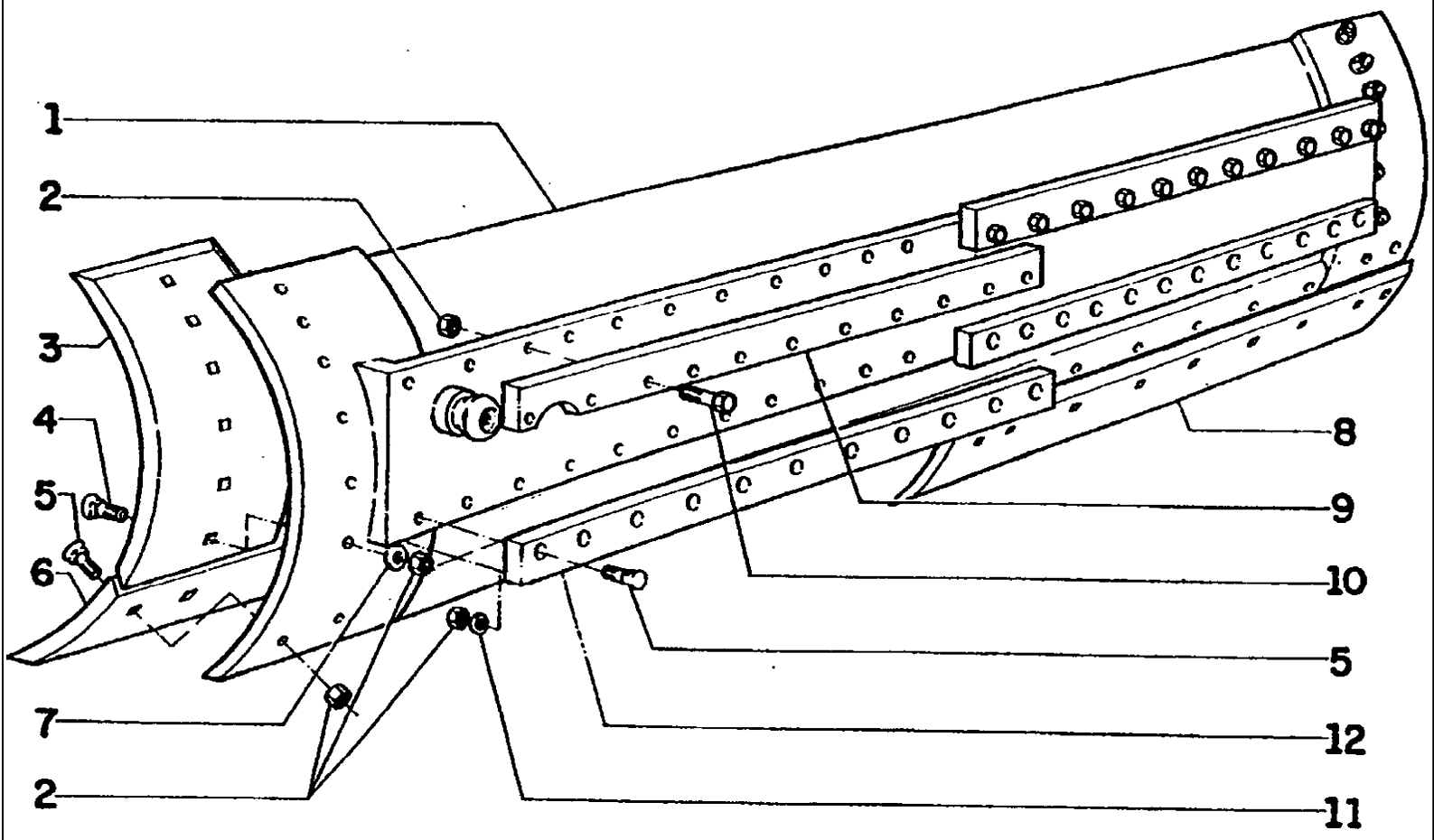

FG85 SERIES B MOTORGRADER

E3.13/1(004) MOLDBOARD 14 FT.

Ref	Numero de Pieza	Ctd	Descripción
1	75241466	1	MOLDBOARD
2	70911029	74	NUT
3	75241478	2	END BIT
4	70931930	12	SCREW
5	70617127	40	SCREW
6	70099353	1	CUTTING EDGE
7	70912942	12	LOCKWASHER
8	70099354	1	CUTTING EDGE
9	75239608	2	BAR
10	70921174	22	SCREW
11	70927381	22	WASHER
12	75239609	2	BAR

E3.28(001) HYDRAULIC OIL TANK ASSEMBLY

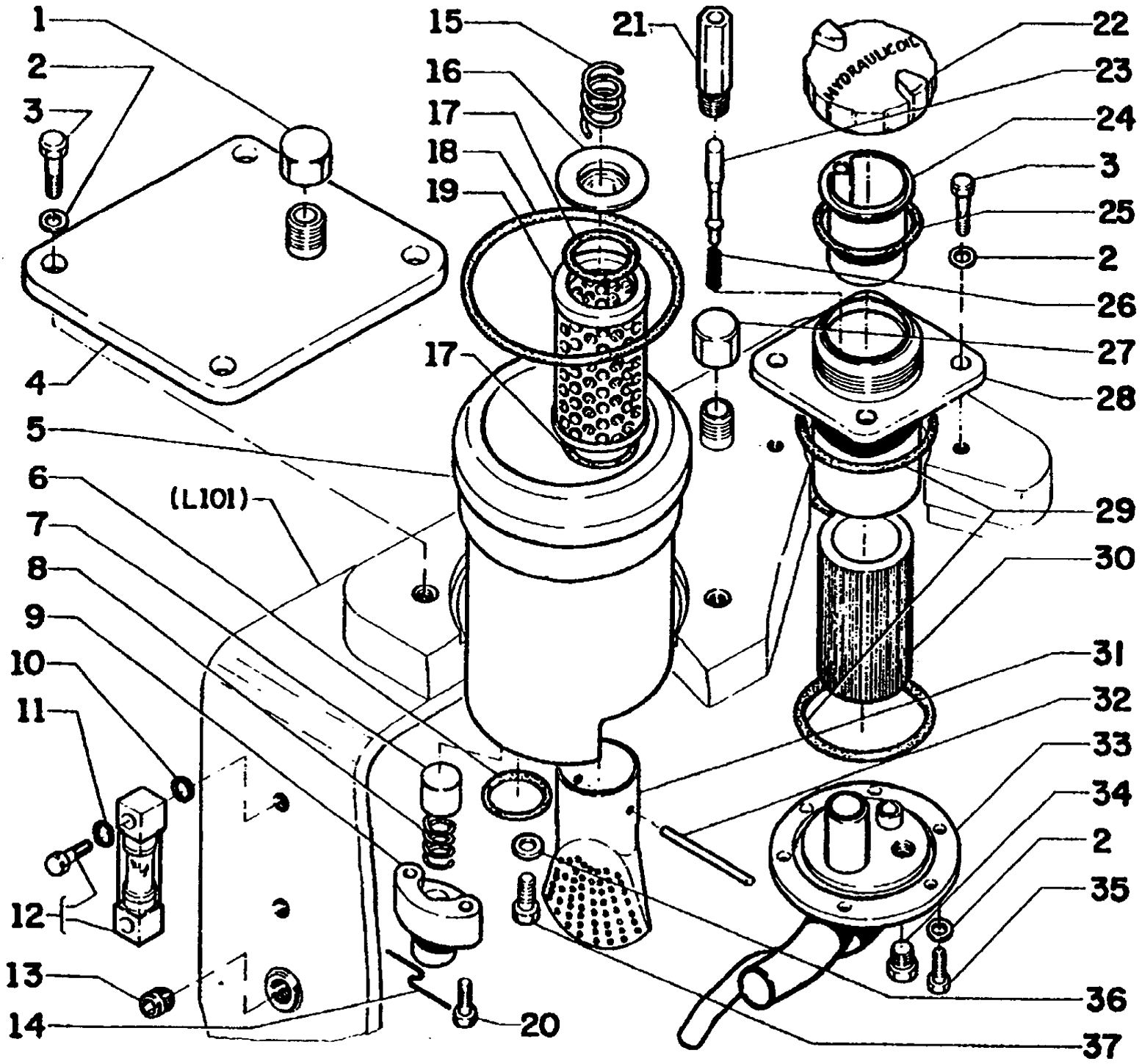

FG85 SERIES B MOTORGRADER

E3.28(001) HYDRAULIC OIL TANK ASSEMBLY

Ref	Numero de Pieza	Ctd	Descripción
1	70923737	1	CAP
2	70677006	14	WASHER
3	70927173	8	SCREW
4	73124657	1	COVER
5	73124652	1	FILTER SHELL
6	70923579	1	O'RING
7	70647151	1	VALVE
8	70647108	1	SPRING
9	70647122	1	CAP
10	70935117	2	SEAL RING
11	70928497	2	SEAL RING
12	70678984	1	OIL LEVER INDIC
13	70904224	2	PLUG
14	70023633	1	STEEL WIRE
15	70641027	1	SPRING
16	70666422	1	CAP
17	70924146	2	O'RING
18	70923951	1	O'RING
19	73125853	1	FILTERING ELEM.
20	70927597	2	SCREW
21	70666634	1	GUIDE
22	70665726	1	COVER
23	70665767	1	PISTON
24	70671325	1	FILTER
25	70923950	1	O'RING
26	70666654	1	SPRING
27	70921467	1	CAP
28	73148266	1	TUBE
29	70923594	2	O'RING
30	73124631	1	FILTER
31	73124630	1	FILTER
32	70919271	1	COTTER PIN
33	73148327	1	TUBE
34	70920416	1	DRAIN PLUG
35	70922763	6	SCREW
36	70910287	1	LOCKWASHER
37	70928798	1	SCREW

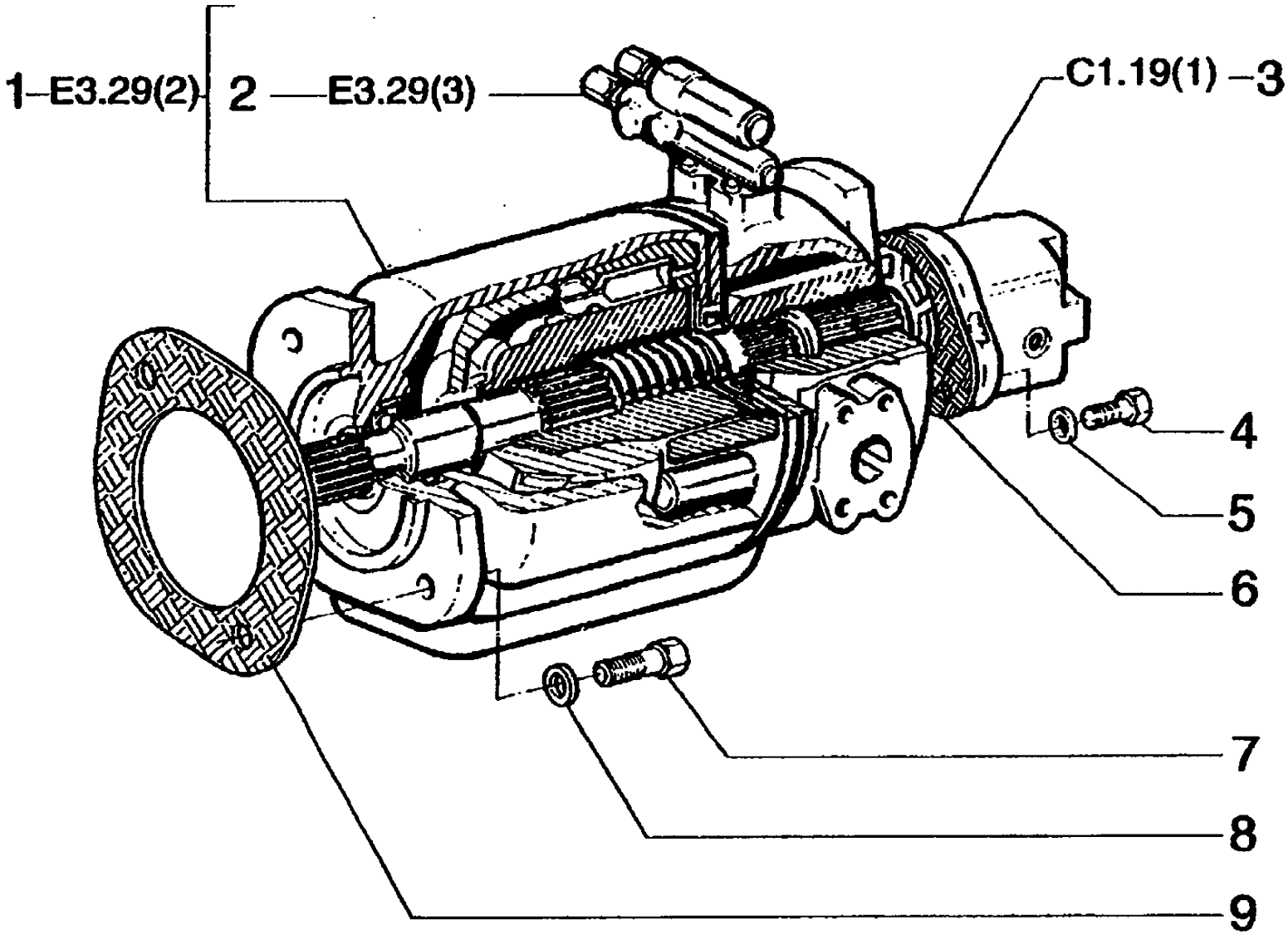
1–E3.29(2)
2
E3.29(3)
C1.19(1)
3
4
5
6
7
8
9

FG85 SERIES B MOTORGRADER

E3.29(001) PUMP ASSEMBLY

Ref	Numero de Pieza	Ctd	Descripción
1	73152397	1	EQUIPMENT PUMP
2	75286316	1	VALVE
3	73150854	1	PUMP
4	11106231	2	BOLT, Hex, M10 x 25, 10.9, Full Thd
5	70930370	2	WASHER
6	70651322	1	GASKET
7	70920585	2	SCREW
8	10517270	2	LOCKWASHER
9	73151829	1	GASKET

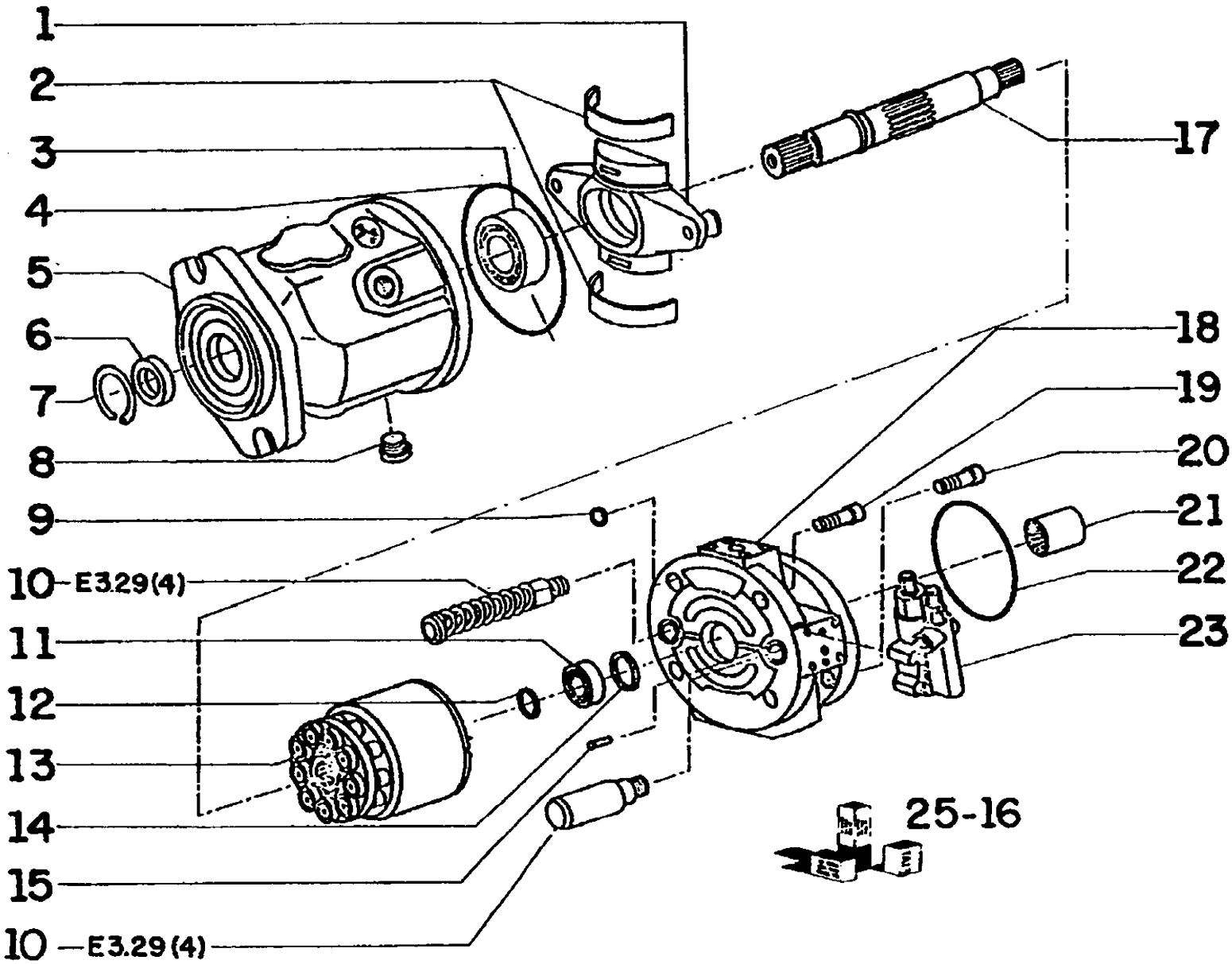
1
2
3
4
5
6
7
8
9
10 E3.29(4)
11
12
13
14
15
10 E3.29(4)
17
18
19
20
21
22
23
25-16

FG85 SERIES B MOTORGRADER

E3.29(002) PUMP ASSEMBLY

Ref	Numero de Pieza	Ctd	Descripción
1	75286456	1	CRADLE
2	75286462	2	CRADLE BEARING
3	75286460	1	BEARING
4	75286464	1	O'RING
5	75286454	1	CASE
6	75286463	1	SEAL
7	75286466	1	SNAP RING
8	75286469	1	PLUG
9	75286465	4	O'RING
10	75286453	1	PISTON ASS'Y
11	75286461	1	BEARING
12	75286459	1	DISC
13	75286452	1	CYLINDER
14	75286458	1	WASHER
15	75286470	1	PIN
16	75286475	1	KIT (INCLUDES
16			ITEMS 1 & 13)
17	75286457	1	SHAFT
18	75286455	1	SYCRONIZER
19	75286467	4	SCREW
20	75286472	2	SCREW
21	75286471	1	DRIVE
22	75286473	1	O'RING
23	75286468	1	VALVE
25	75286474	1	KIT (INCLUDES
25			ITEMS 4-6-9-22)

E3.29(003) CYLINDER ASSEMBY

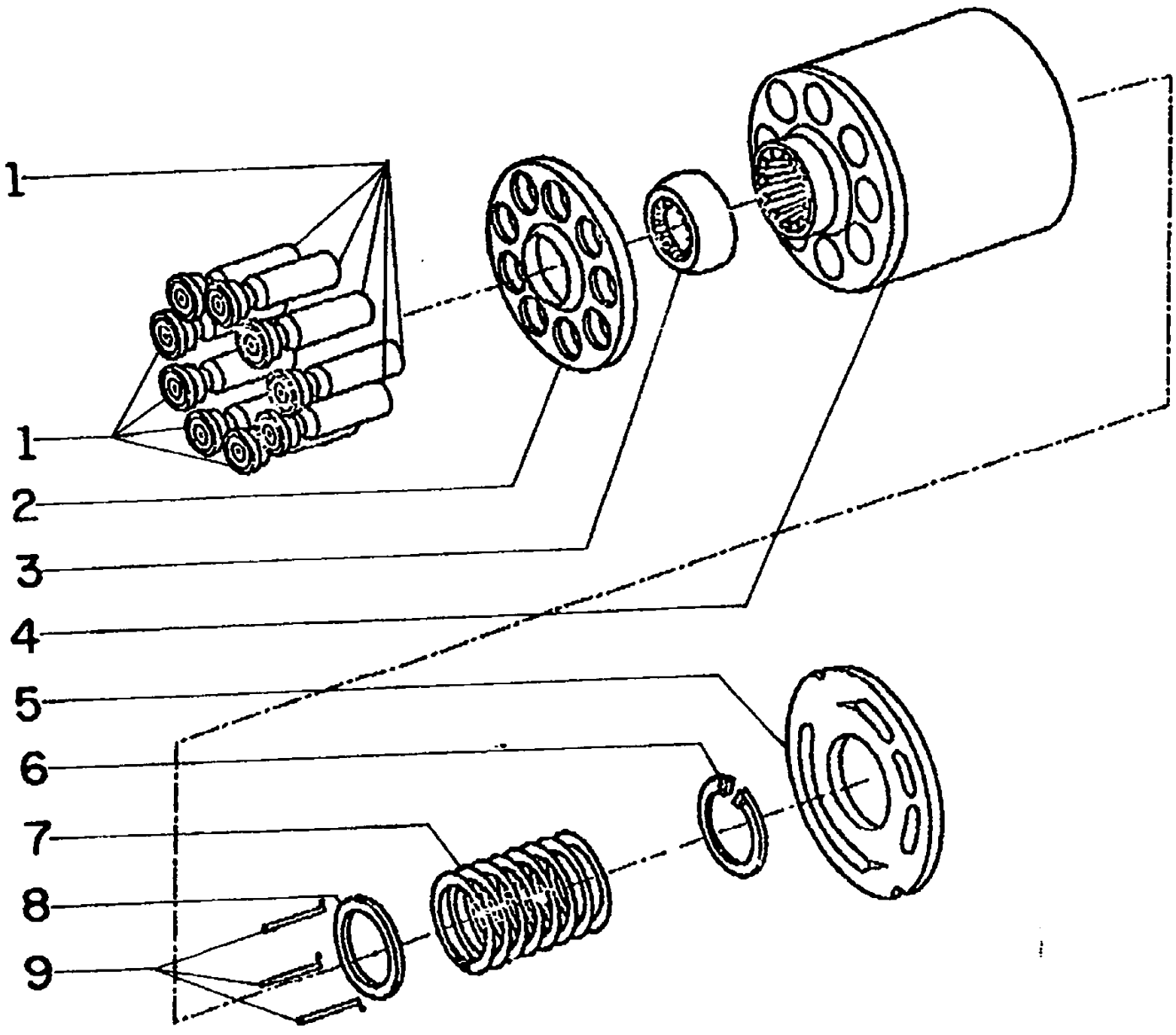

FG85 SERIES B MOTORGRADER

E3.29(003) CYLINDER ASSEMBY

Ref	Numero de Pieza	Ctd	Descripción
1	75286476	9	PISTON
2	75286479	1	PLATE
3	75286480	1	SEAL
4	75286477	1	CYLINDER
5	75286478	1	PLATE
6	75286483	1	SNAP RING
7	75286481	1	SPRING
8	75286484	1	DISC
9	75286482	3	PIN

E3.29(004) CONTROL PISTON ASSEMBLY

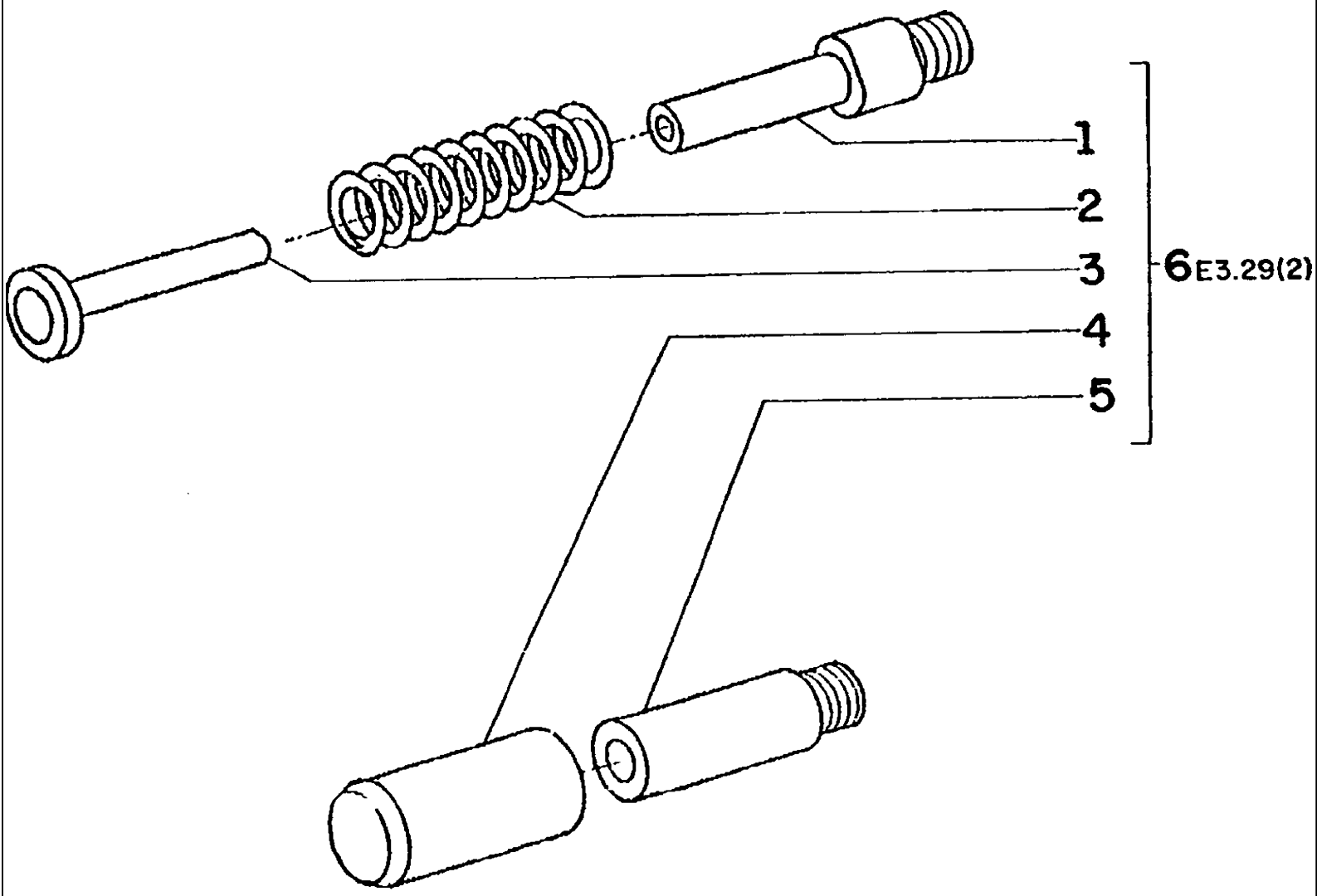

FG85 SERIES B MOTORGRADER

E3.29(004) CONTROL PISTON ASSEMBLY

Ref	Numero de Pieza	Ctd	Descripción
1	75286488	1	PAD
2	75286489	1	SPRING
3	75286487	1	PIN
4	75286485	1	COVER
5	75286486	1	ROD
6	75286453	1	PISTON ASS'Y

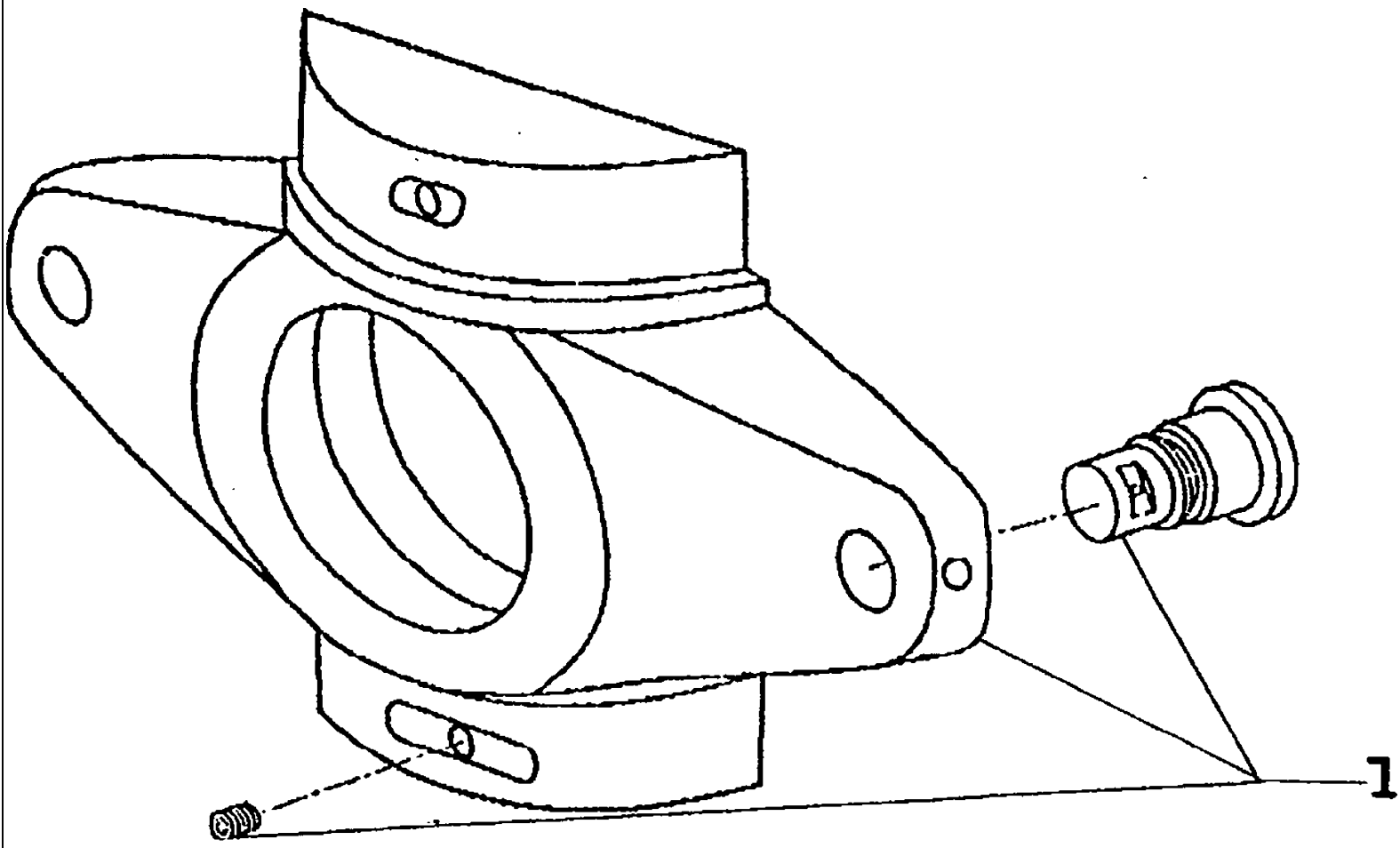
A
1

FG85 SERIES B MOTORGRADER

E3.29(005) ARTICULATION ASSEMBLY

Ref	Numero de Pieza	Ctd	Descripción
1	75286456	1	CRADLE

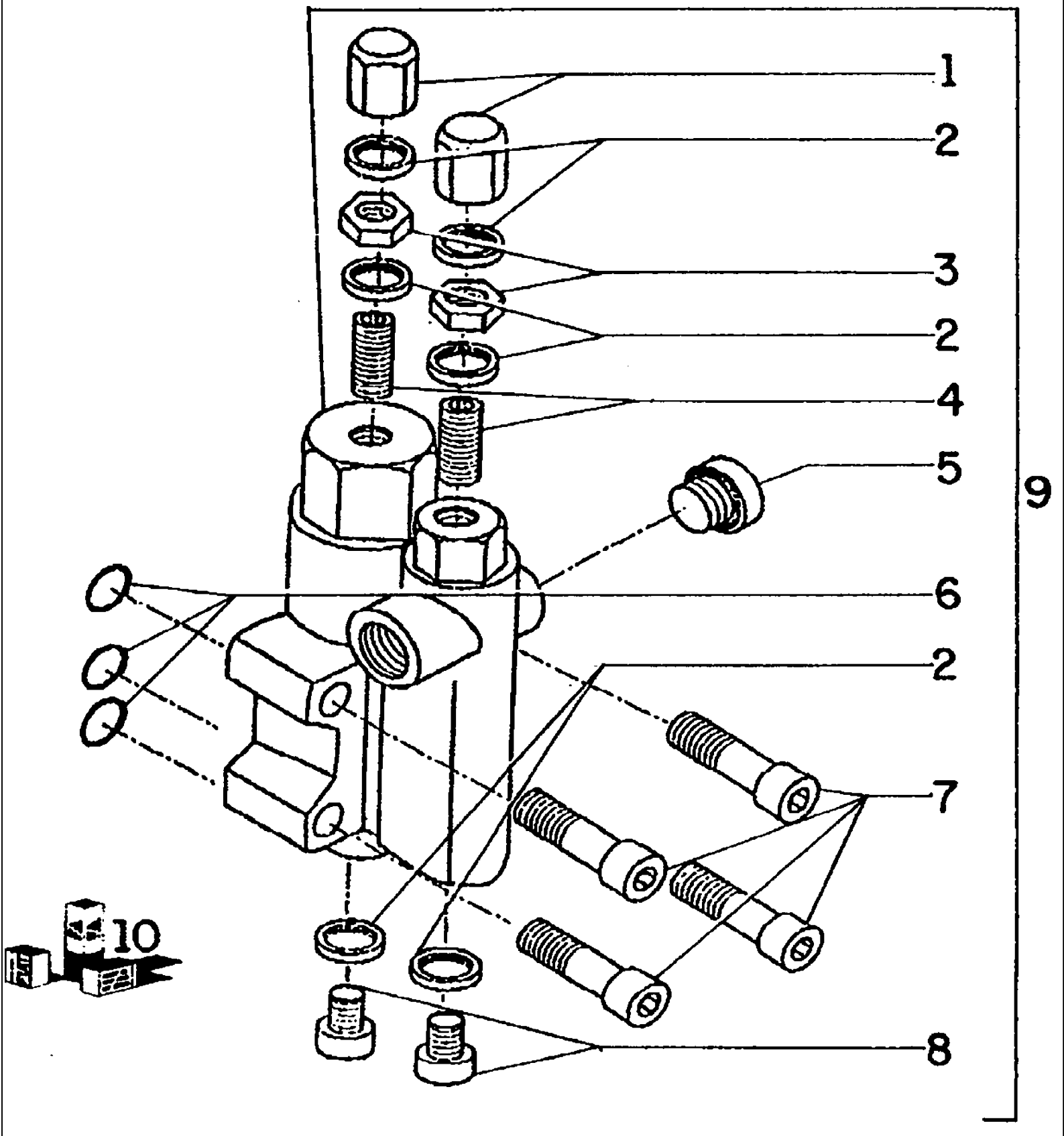
1
2
3
2
4
5
9
6
2
7
10
8

FG85 SERIES B MOTORGRADER

E3.29(006) VALVE ASSEMBLY

Ref	Numero de Pieza	Ctd	Descripción
1	75286490	2	NUT
2	75286491	6	RING
3	75286492	2	NUT
4	75286493	2	SCREW
5	75286497	1	PLUG
6	75286494	3	O'RING
7	75286496	4	SCREW
8	75286495	2	PLUG
9	75286468	1	VALVE
10	75286498	1	KIT (INCLUDES
10			ITEMS 2 & 5)

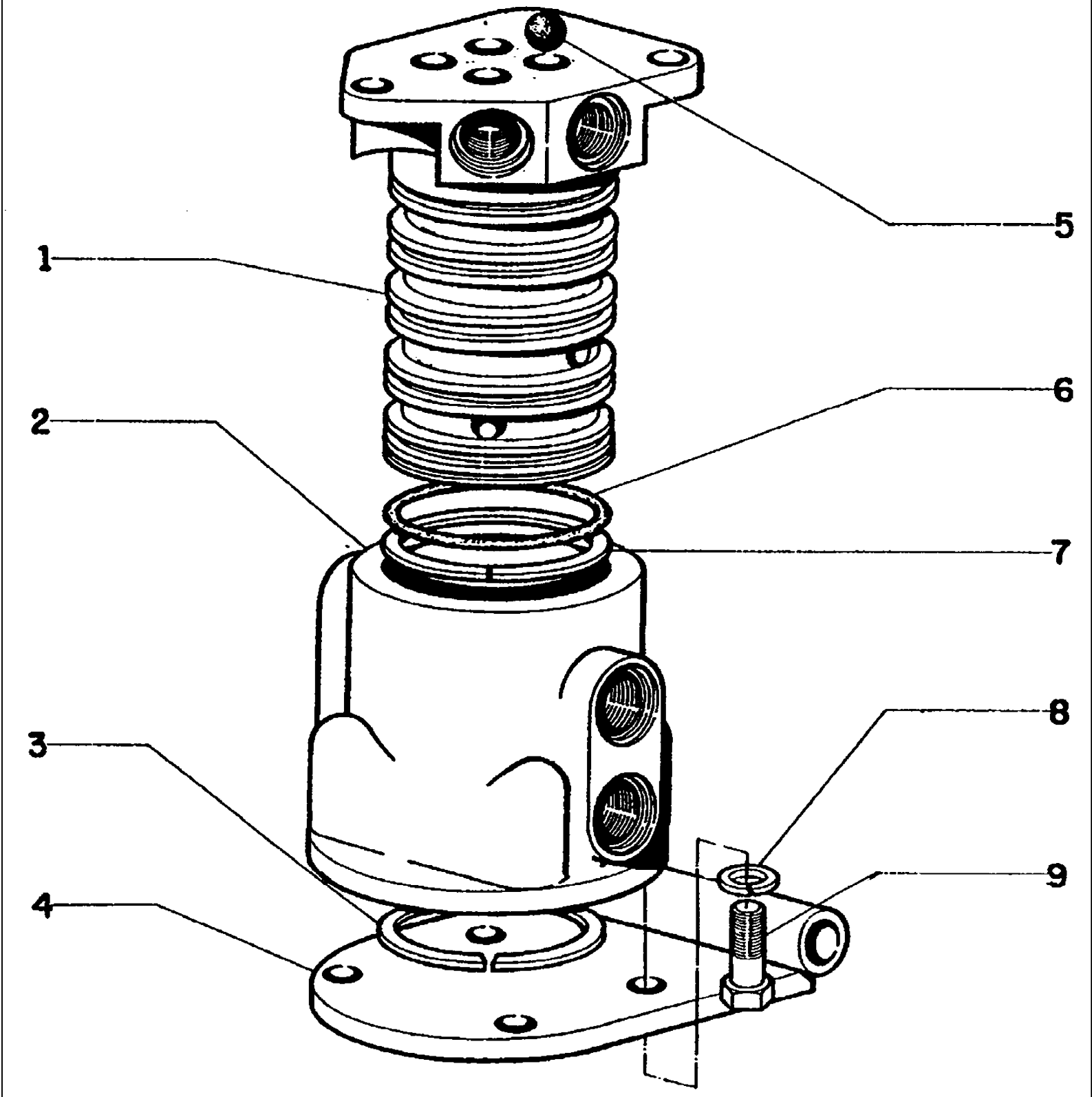
1
2
3
4
5
6
7
8
9

FG85 SERIES B MOTORGRADER

E3.31(001) ROTARY DISTRIBUTOR

Ref	Numero de Pieza	Ctd	Descripción
1	73127351	1	ROTOR
2	70658265	1	CASE
3	70050292	1	SNAP RING
4	70658594	1	PLATE
5	20063500	4	BALL
6	70925257	5	RING
7	70926622	8	RING
8	70910287	4	LOCKWASHER
9	70922763	4	SCREW

E3.31(002) RIGHT SIDE VALVE ASSEMBLY (73150298)

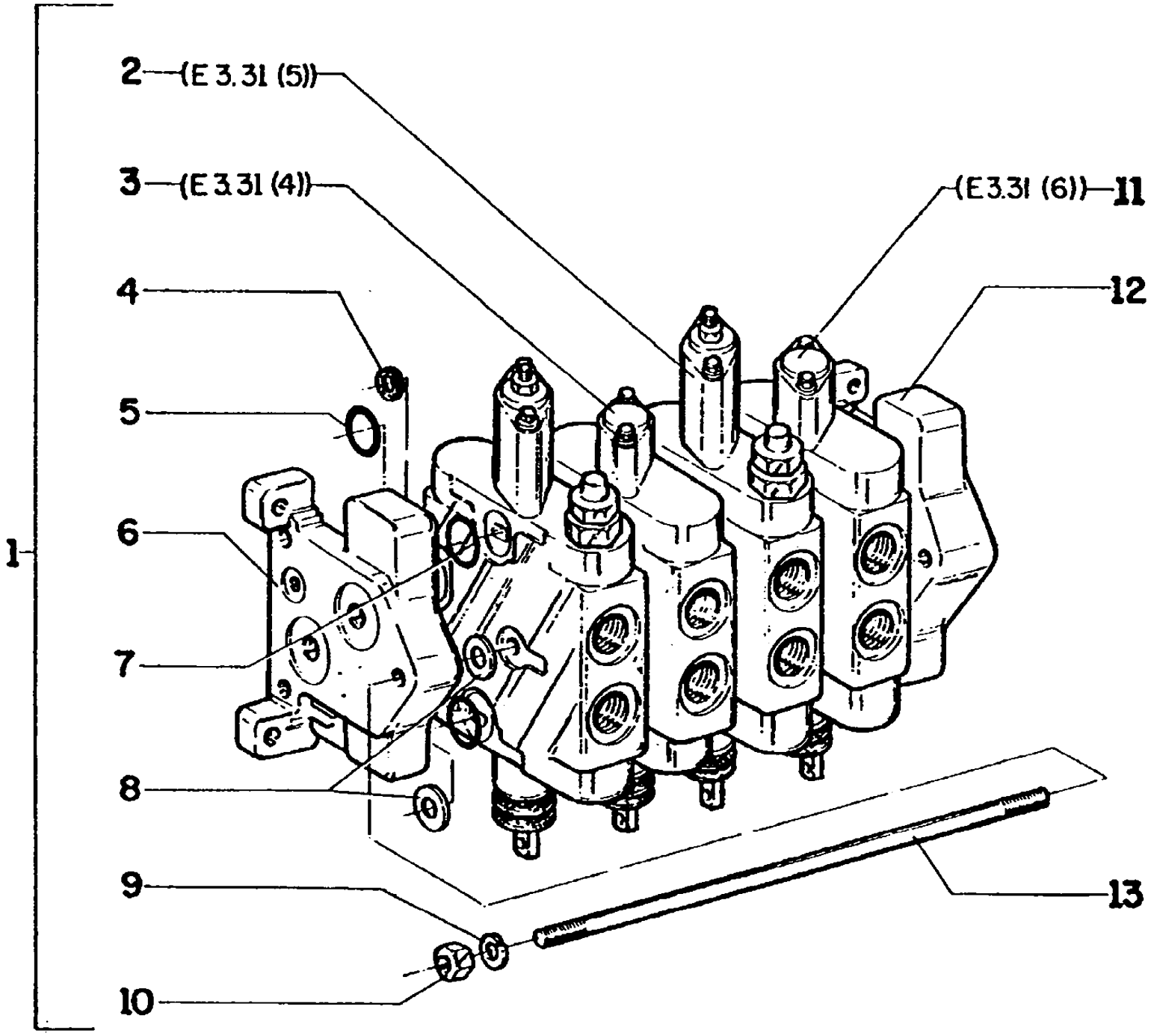

FG85 SERIES B MOTORGRADER

E3.31(002) RIGHT SIDE VALVE ASSEMBLY (73150298)

Ref	Numero de Pieza	Ctd	Descripción
1	73150298	1	VALVE
2	73151103	2	BODY
3	73151102	1	BODY
4	70924191	5	O'RING
5	70924110	5	O'RING
6	73151153	1	PLATE
7	70923988	10	O'RING
8	73151129	15	SHIM
9	70910287	6	LOCKWASHER
10	70933623	6	NUT
11	73151104	1	BODY
12	73155508	1	PLATE
13	73151106	3	STUD

E3.31(003) LEFT SIDE VALVE ASSEMBLY (73150297)

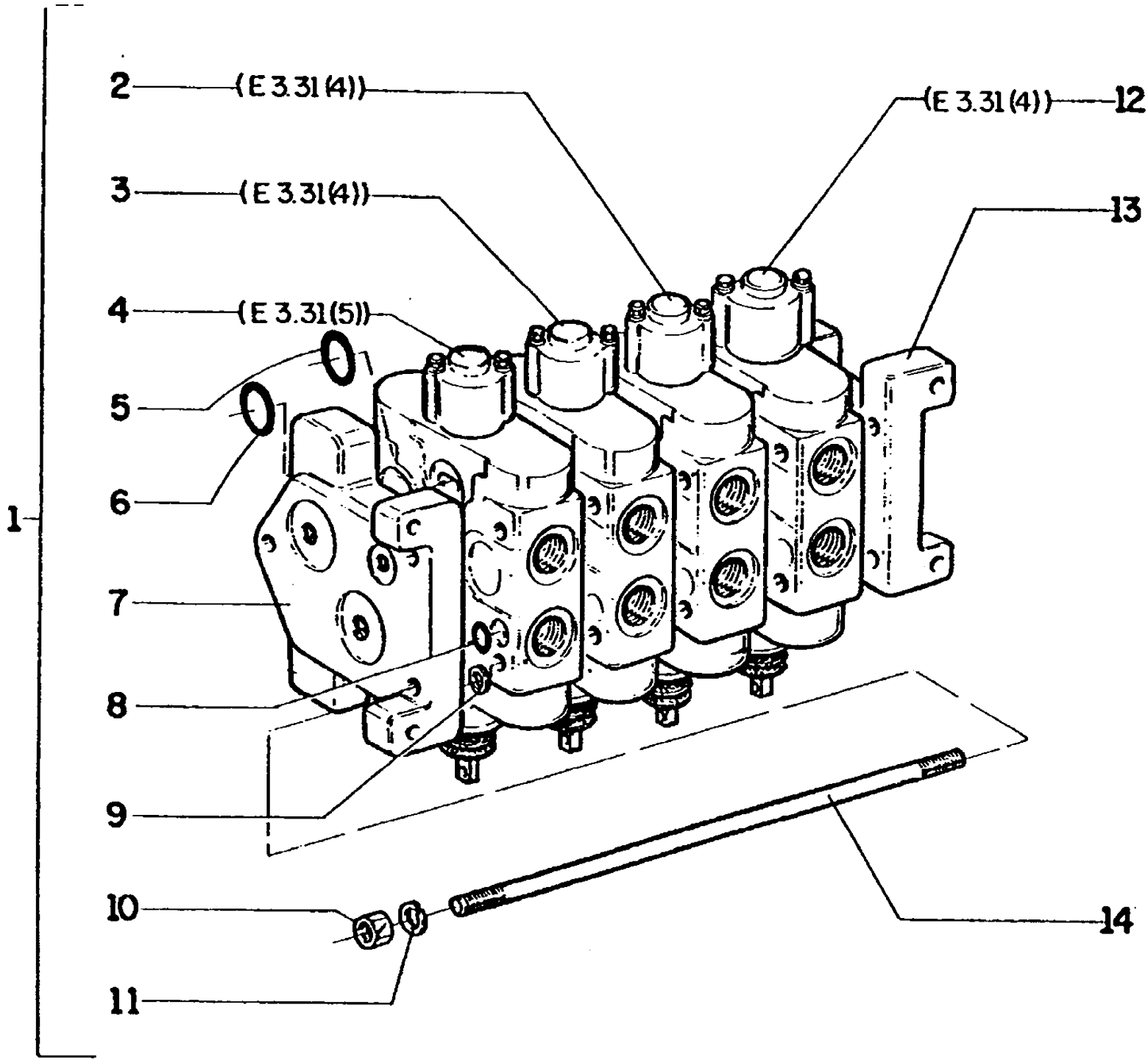

FG85 SERIES B MOTORGRADER

E3.31(003) LEFT SIDE VALVE ASSEMBLY (73150297)

Ref	Numero de Pieza	Ctd	Descripción
1	73150297	1	VALVE
2	73151102	1	BODY
3	73151101	1	BODY
4	73151100	1	BODY
5	70923988	12	O'RING
6	70924191	6	O'RING
7	73151128	1	COVER
8	70924110	6	O'RING
9	73151129	18	SHIM
10	70933623	6	NUT
11	70910287	6	LOCKWASHER
12	73151099	1	BODY
13	73151127	1	COVER
14	73151106	3	STUD

E3.31(004) VALVE ASSEMBLY (73151102)

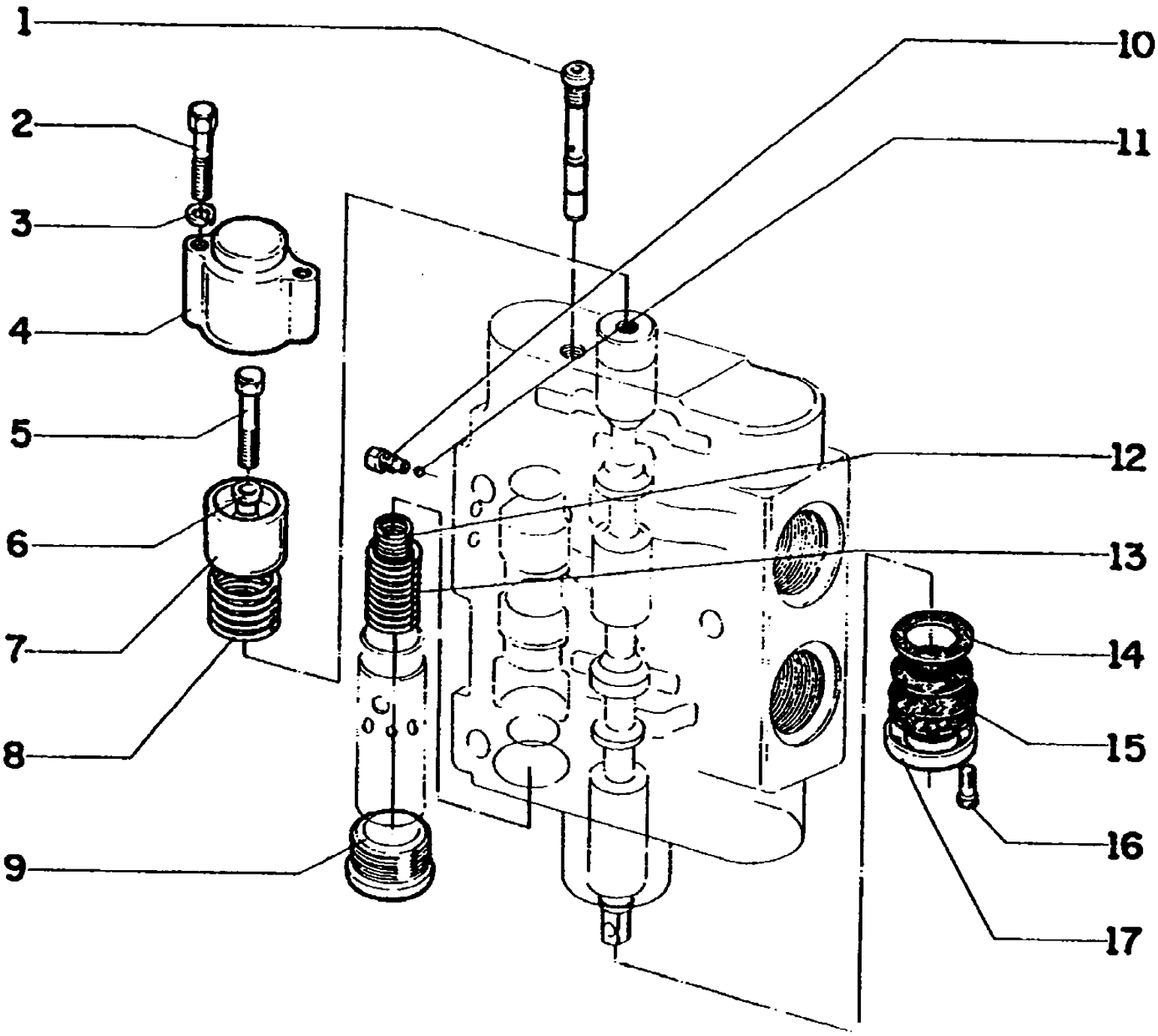

FG85 SERIES B MOTORGRADER

E3.31(004) VALVE ASSEMBLY (73151102)

Ref	Numero de Pieza	Ctd	Descripción
1	73151138	1	VALVE
2	70930238	2	SCREW
3	70910285	2	LOCKWASHER
4	73151146	1	COVER
5	73151142	1	SCREW
6	73151145	1	SPACER
7	73151143	1	RETAINER
8	73158290	1	SPRING
9	73151139	1	PLUG
10	73151136	1	PLUG
11	73151137	1	BALL
12	73151135	1	SPRING
13	73151140	1	SPRING
14	73151133	1	SEAL
15	73151131	1	BOOT
16	73151130	2	SCREW
17	73151132	1	COVER

E3.31(005) VALVE ASSEMBLY (73151100)

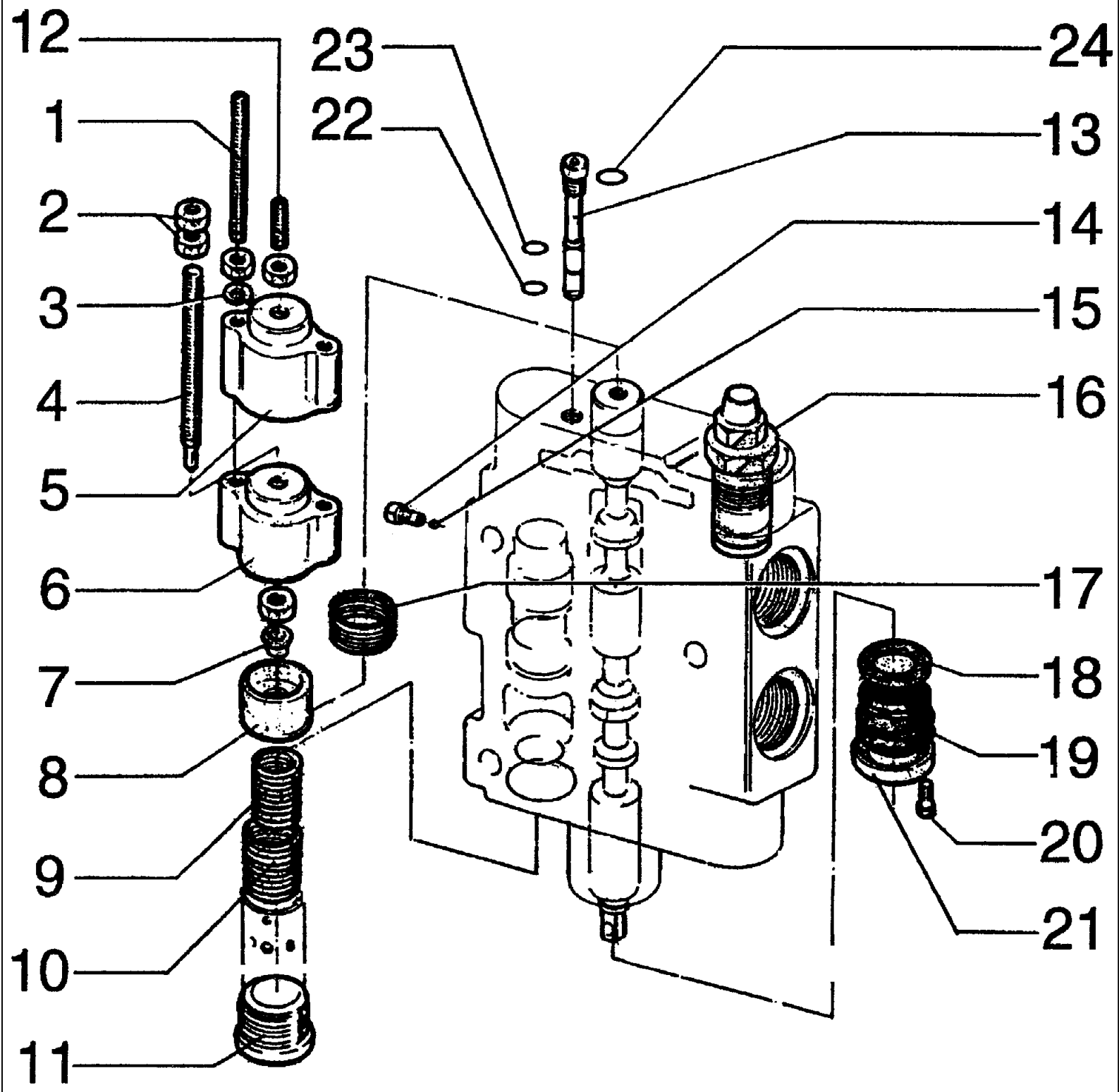

FG85 SERIES B MOTORGRADER

E3.31(005) VALVE ASSEMBLY (73151100)

Ref	Numero de Pieza	Ctd	Descripción
1	73151151	2	STUD
2	70911327	5	NUT
3	70910285	2	LOCKWASHER
4	73151147	1	STUD
5	73151097	1	PLATE
6	73151152	1	COVER
7	73151145	1	SPACER
8	73151143	1	RETAINER
9	73151135	1	SPRING
10	73151140	1	SPRING
11	73151139	1	PLUG
12	73151147	1	STUD
13	73151138	1	VALVE
14	73151136	1	PLUG
15	73151137	1	BALL
16	73151149	1	VALVE
17	73158290	1	SPRING
18	73151133	1	SEAL
19	73151131	1	BOOT
20	73151130	2	SCREW
21	73151132	1	COVER
22	14452581	1	O-RING
23	14452781	1	O-RING
24	14452881	1	O-RING, -011, Cl 7, .301" ID x .070" Thk

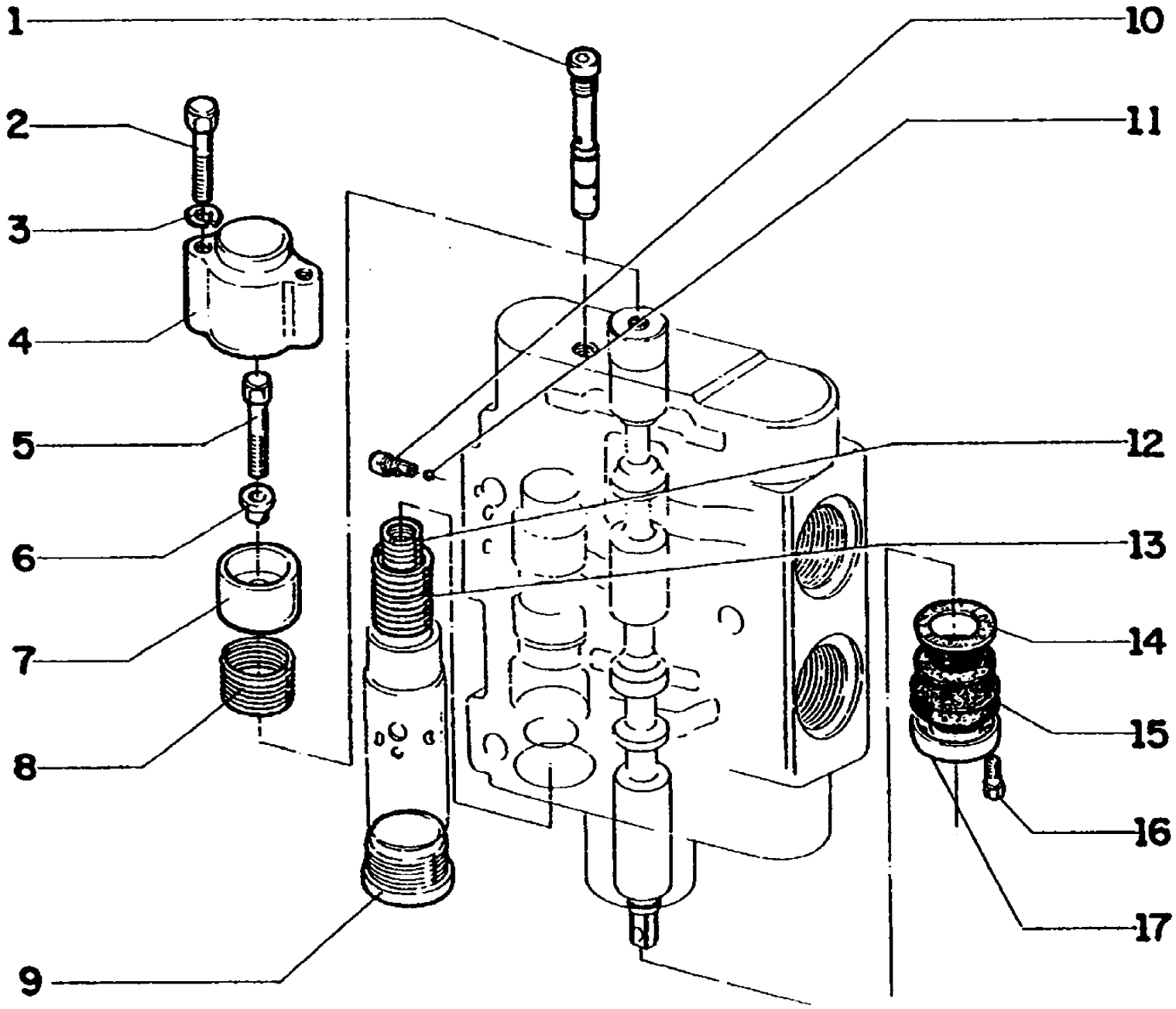
1
2
3
4
5
6
7
8
9
10
11
12
13
14
15
16
17

FG85 SERIES B MOTORGRADER

E3.31(006) VALVE ASSEMBLY

Ref	Numero de Pieza	Ctd	Descripción
1	73151138	1	VALVE
2	70930238	2	SCREW
3	70910285	2	LOCKWASHER
4	73151146	1	COVER
5	73151142	1	SCREW
6	73151145	1	SPACER
7	73151143	1	RETAINER
8	73151290	1	SPRING
9	73151139	1	PLUG
10	73151136	1	PLUG
11	73151137	1	BALL
12	73151135	1	SPRING
13	73151140	1	SPRING
14	73151133	1	SEAL
15	73151131	1	BOOT
16	73151130	2	SCREW
17	73151132	1	COVER

E3.32(001) TILT CYLINDER (75220389)

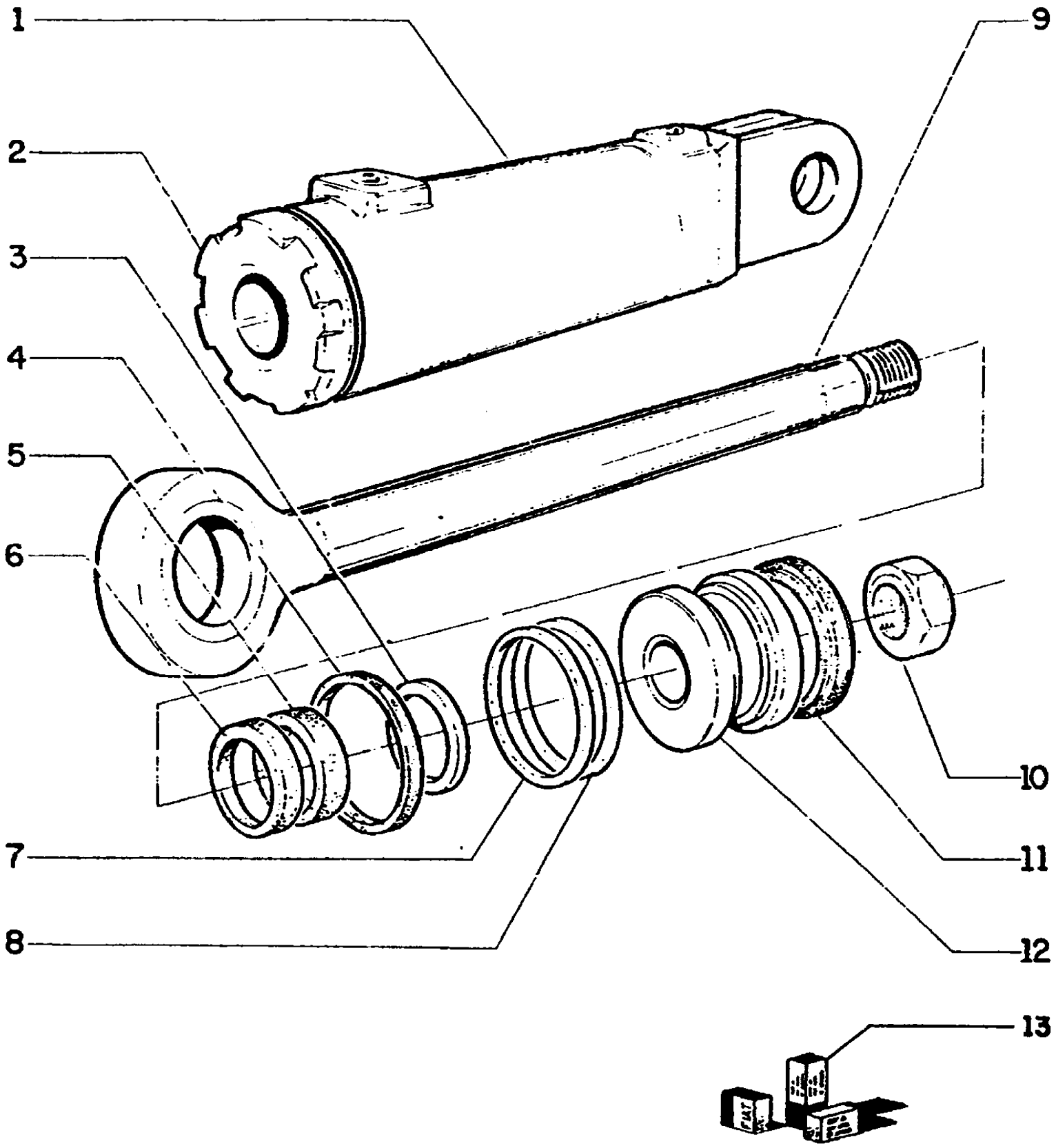

FG85 SERIES B MOTORGRADER

E3.32(001) TILT CYLINDER (75220389)

Ref	Numero de Pieza	Ctd	Descripción
1	75220693	1	TUBE
2	75220924	1	HEAD
3	8297074	1	SEAL RING
4	14465780	1	O-RING, -239, 70 Duro, 3.609" ID x .139" Thk
5	8297073	1	SEAL
6	8288832	1	SEAL
7	8297075	1	SEAL RING
8	14465480	1	O-RING, -236, 70 Duro, 3.234" ID x .139" Thk
9	75220690	1	ROD
10	8298615	1	NUT
11	8291561	1	RING
12	79038228	1	PISTON
13	75220700	K	KIT INCLUDES ITEMS
13			3-4-5-6-7-8-11)

E3.32(002) MOLDBOARD PITCH CYLINDER (73126610)

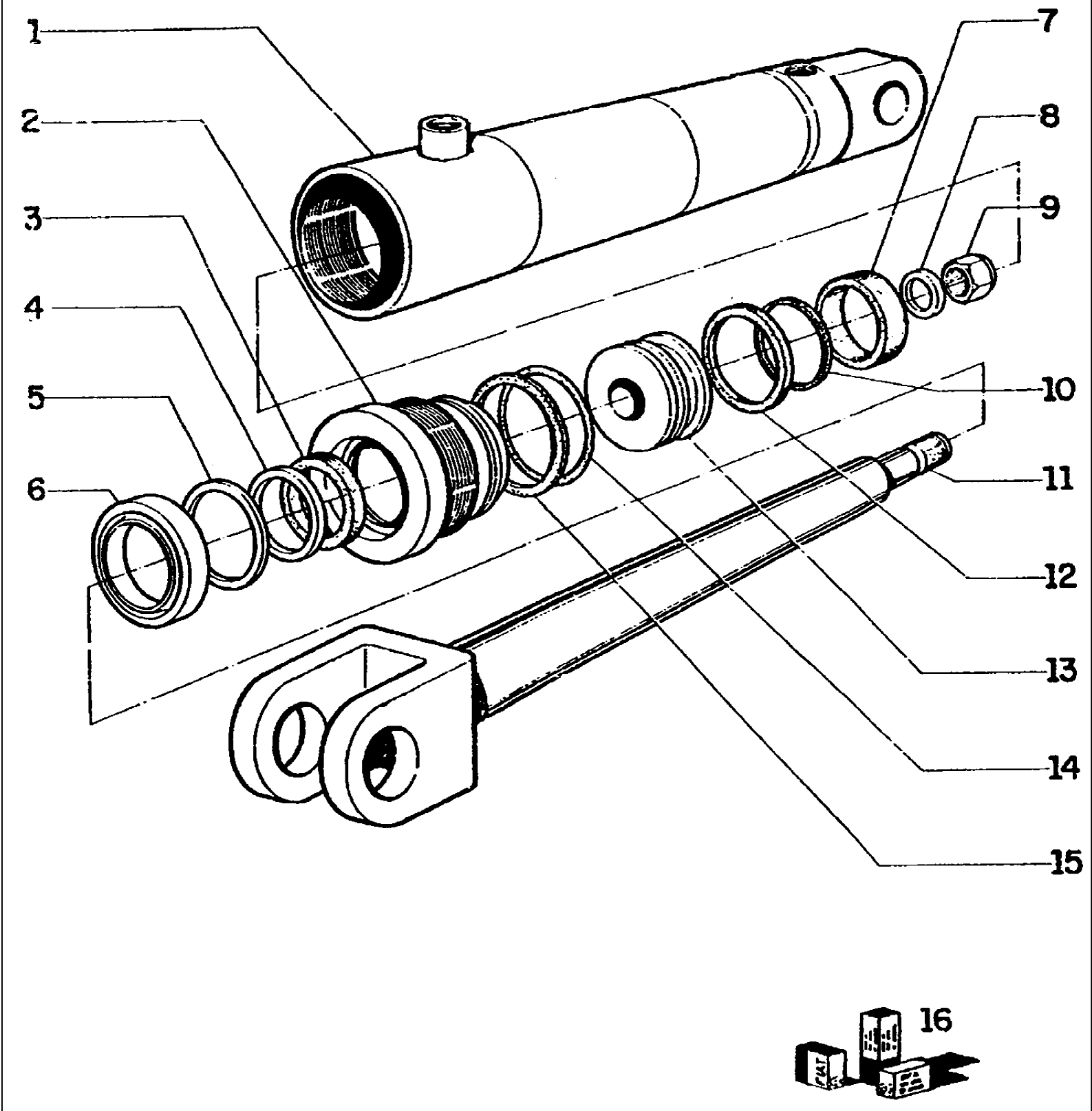

FG85 SERIES B MOTORGRADER

E3.32(002) MOLDBOARD PITCH CYLINDER (73126610)

Ref	Numero de Pieza	Ctd	Descripción
1	73126609	1	TUBE
2	73126595	1	HEAD
3	73126597	1	SEAL
4	73126612	1	BUSHING
5	70927694	1	SNAP RING
6	73126611	1	SEAL
7	73126600	1	RING
8	73126605	1	SPACER
9	70933798	1	NUT
10	73126602	1	SEAL
11	73126593	1	ROD
12	73126601	1	SEAL
13	73126603	1	PISTON
14	70924114	1	RING
15	73126599	1	RING
16	73140088	1	KIT (INCLUDE ITEMS
16			3-5-6-7-10-12-14-
16			15)

E3.32(003) MOLDBOARD SIDE SHIFT CYLINDER (75220868)

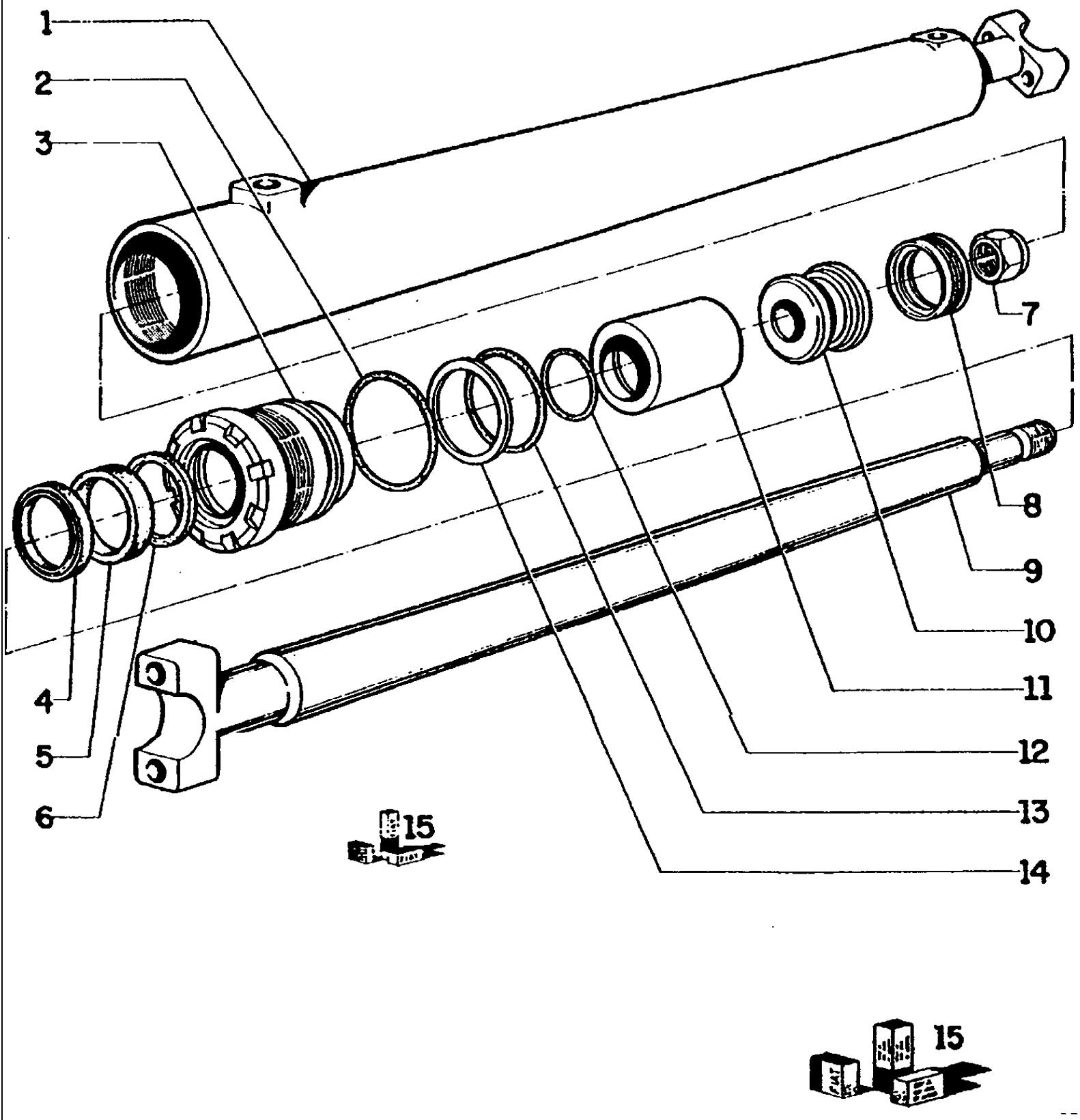

FG85 SERIES B MOTORGRADER

E3.32(003) MOLDBOARD SIDE SHIFT CYLINDER (75220868)

Ref	Numero de Pieza	Ctd	Descripción
1	75220872	1	TUBE
2	14465480	1	O-RING, -236, 70 Duro, 3.234" ID x .139" Thk
3	75218748	1	HEAD
4	8288832	1	SEAL
5	8297073	1	SEAL
6	8297074	1	SEAL RING
7	8281325	1	NUT
8	8291506	1	SEAL
9	75220869	1	ROD
10	79038730	1	PISTON
11	75220877	1	SPACER
12	14464380	2	O-RING, -225, 70 Duro, 1.859" ID x .139" Thk
13	14465180	1	O'RING
14	8297295	1	RING
15	75220878	—	(INCLUDE
15			ITEMS 2-4-5-6-
15			8-12-13-14)

E3.32(004) SADDLE LOCK PIN CYL. 73124588 (RH) 73124575 (LH)

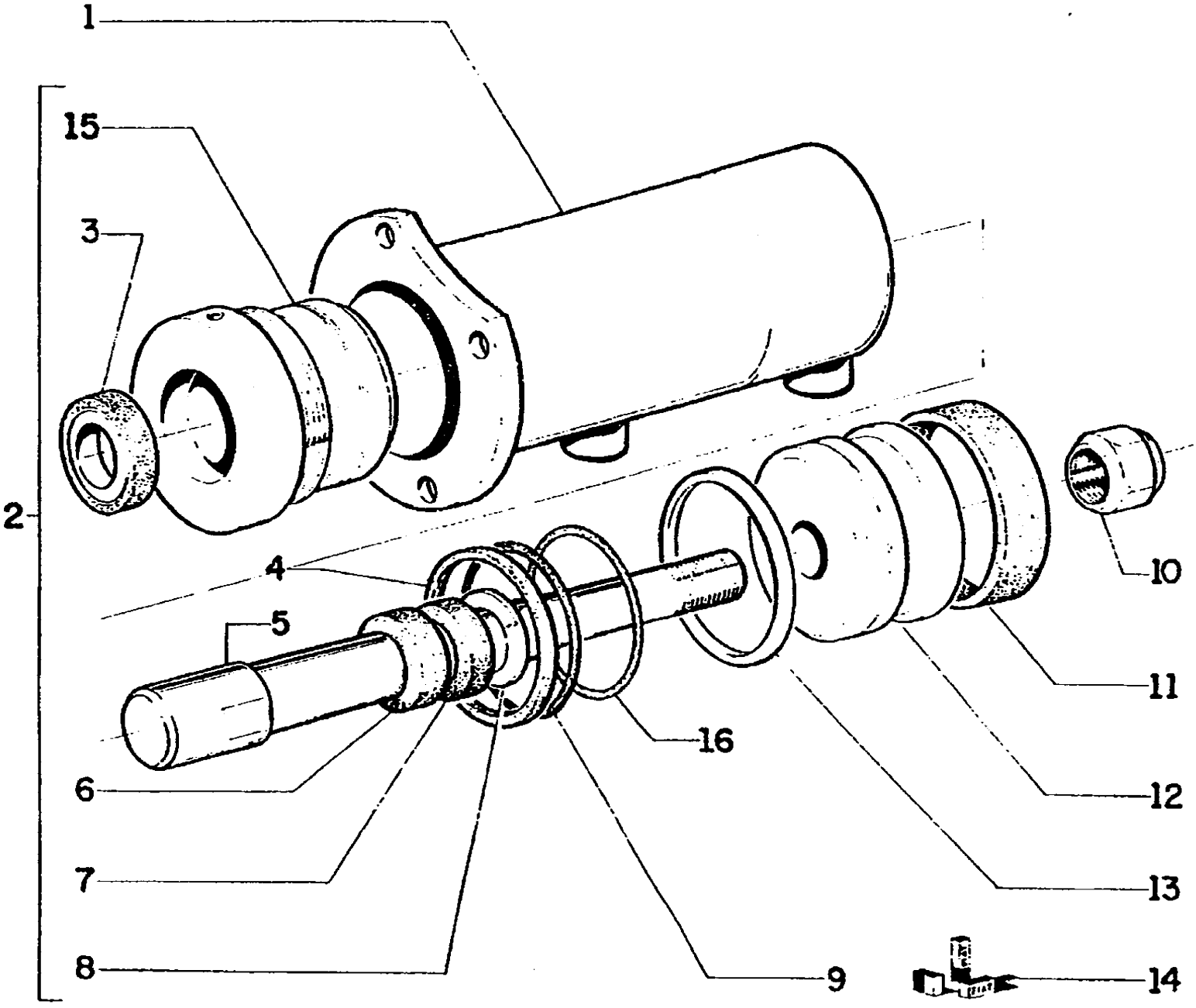

FG85 SERIES B MOTORGRADER

E3.32(004) SADDLE LOCK PIN CYL. 73124588 (RH) 73124575 (LH)

Ref	Numero de Pieza	Ctd	Descripción
1	73124573	1	TUBE RH
1	73124577	1	TUBE LH
2	73065286	1	HEAD
3	73055116	1	RING
4	73063363	1	SEAL
5	73124571	1	ROD
6	73070372	1	SEAL RING
7	73063066	1	BUSHING
8	70927699	1	SNAP RING
9	70924158	1	O'RING
10	73073273	1	NUT
11	73058667	1	RING
12	73058668	1	PISTON
13	73058666	1	RING
14	73064517	1	KIT *
15	73065285	1	HEAD
16	70928874	1	RING

E3.32(005) CIRCLE SHIFT CYLINDER

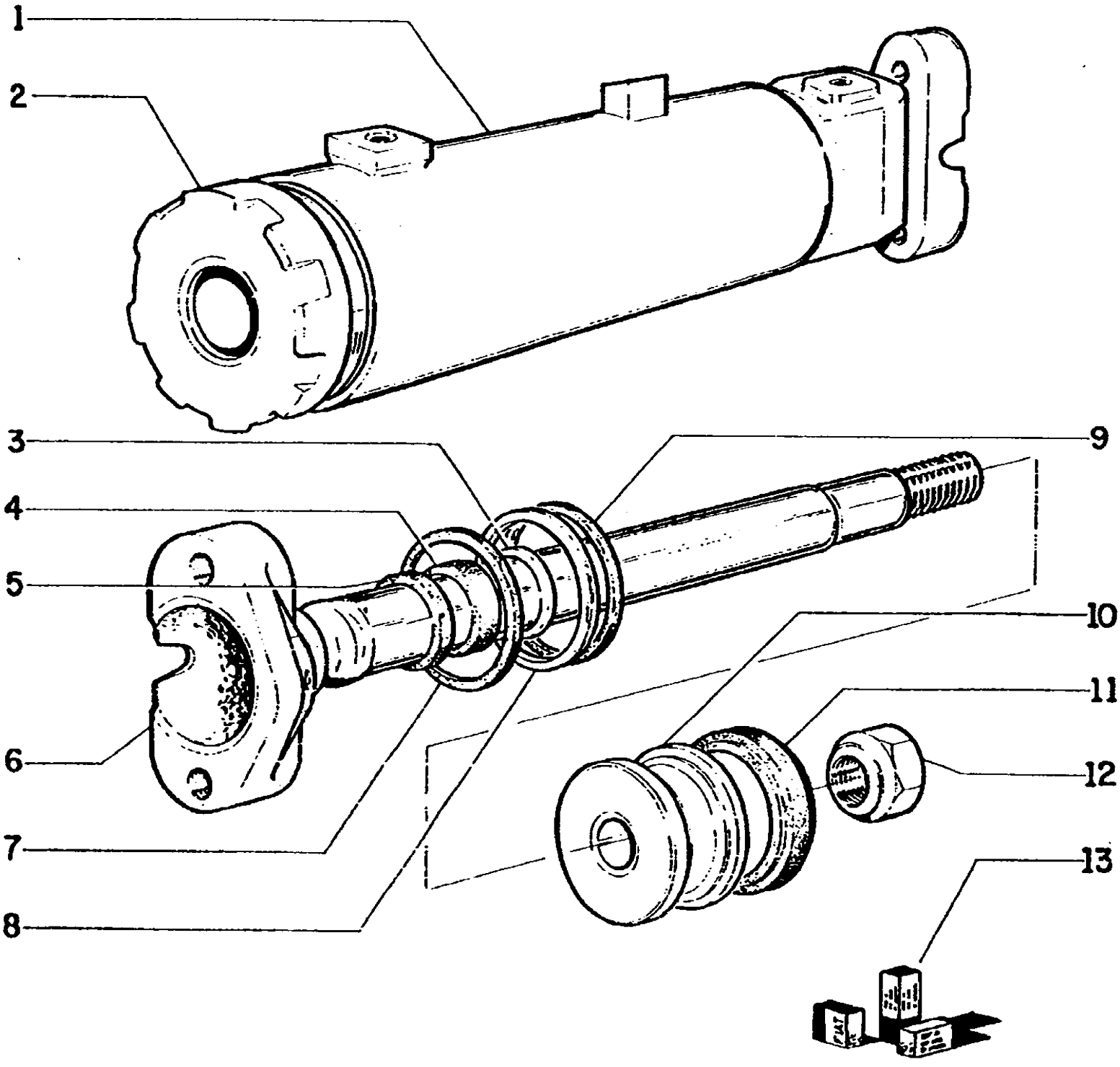

FG85 SERIES B MOTORGRADER

E3.32(005) CIRCLE SHIFT CYLINDER

Ref	Numero de Pieza	Ctd	Descripción
1	75220713	1	TUBE
2	75220924	1	HEAD
3	8297074	1	SEAL RING
4	8297073	1	SEAL
5	8288832	1	SEAL
6	75220710	1	ROD
7	14465780	1	O-RING, -239, 70 Duro, 3.609" ID x .139" Thk
8	8297075	1	SEAL RING
9	14465480	1	O-RING, -236, 70 Duro, 3.234" ID x .139" Thk
10	79038228	1	PISTON
11	8291561	1	RING
12	8298615	1	NUT
13	75220700	-	KIT (INCLUDES
13			ITEMS 3,4,5,7,8,
13			9,11)

E3.32(006) MOLDBOARD LIFT CYLINDER

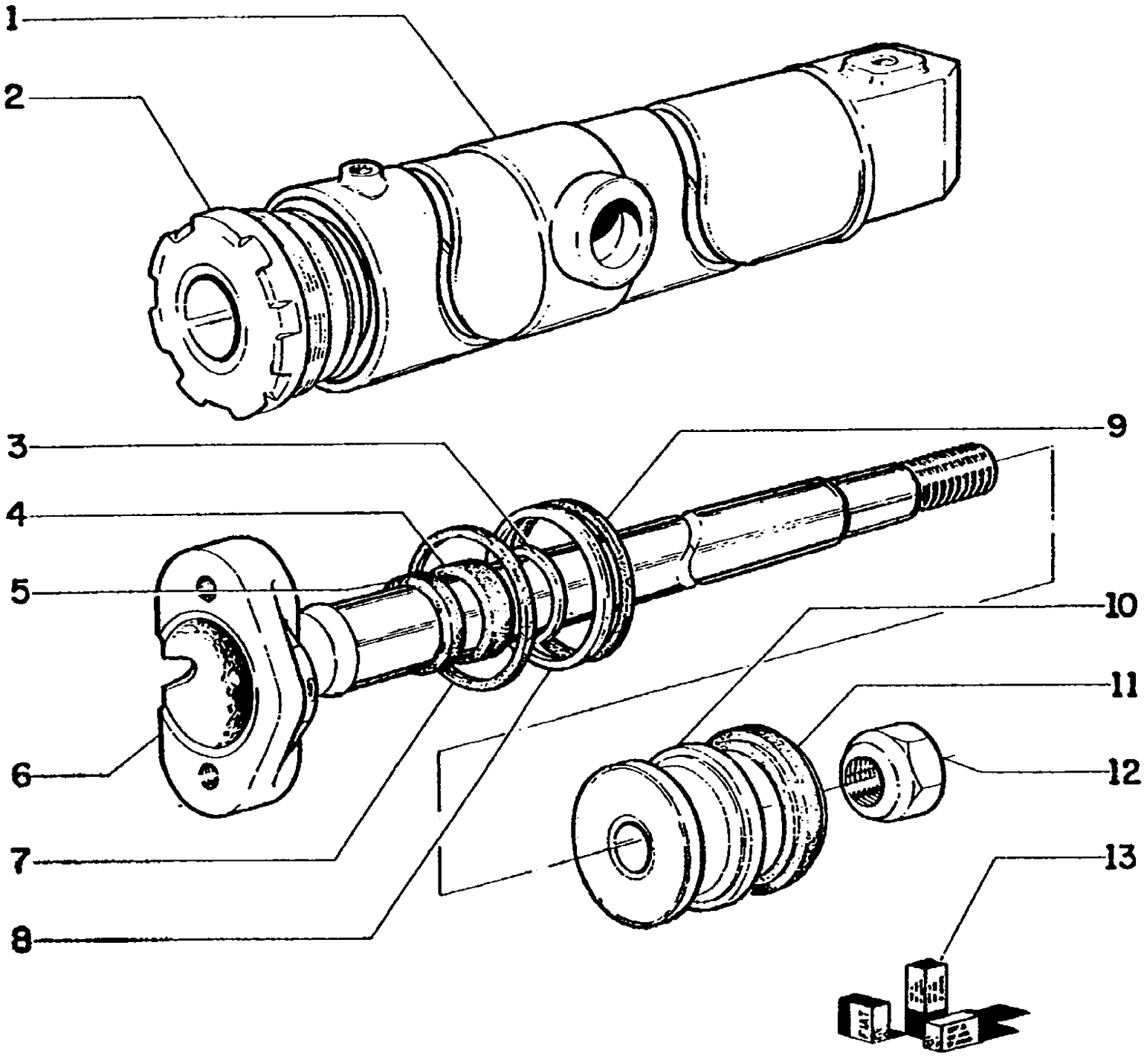

FG85 SERIES B MOTORGRADER

E3.32(006) MOLDBOARD LIFT CYLINDER

Ref	Numero de Pieza	Ctd	Descripción
1	75220793	1	TUBE
2	75220792	1	HEAD
3	79021959	1	RING
4	79021958	1	SEAL
5	79021957	1	SEAL
6	75220789	1	ROD
7	14465780	1	O-RING, -239, 70 Duro, 3.609" ID x .139" Thk
8	8297075	1	SEAL RING
9	14465480	1	O-RING, -236, 70 Duro, 3.234" ID x .139" Thk
10	79038228	1	PISTON
11	8291561	1	RING
12	8298615	1	NUT
13	75220797	K	KIT(INCLUDES ITEMS
13			3-4-5-7-8-9-11)

E3.32(008) ARTICULATION CYLINDER 75213774 (RH) 75213779 (LH)

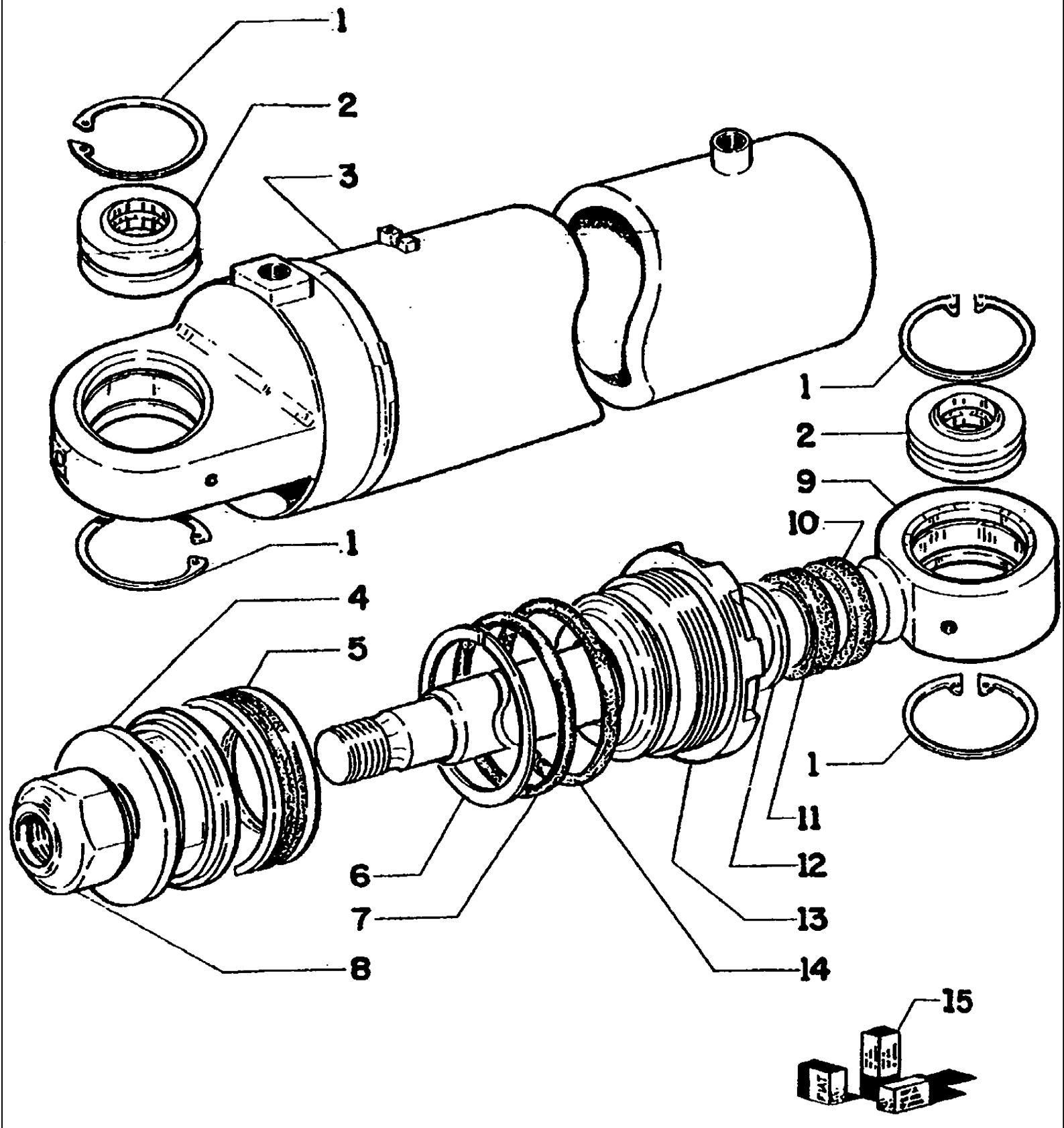

FG85 SERIES B MOTORGRADER

E3.32(008) ARTICULATION CYLINDER 75213774 (RH) 75213779 (LH)

Ref	Numero de Pieza	Ctd	Descripción
1	11061076	8	RING, M62, Int
2	70928851	4	BUSHING
3	75213542	1	TUBE
3	75213543	1	TUBE
4	79038730	2	PISTON
5	8291506	2	SEAL
6	8297295	2	RING
7	14465180	2	O'RING
8	8281325	2	NUT
9	75213768	2	ROD
10	8288822	2	SEAL
11	8297294	2	SEAL
12	8297296	2	SEAL RING
13	75220934	2	HEAD
14	14465480	2	O-RING, -236, 70 Duro, 3.234" ID x .139" Thk
15	75209587	1	KIT (includes
15			5,6,7,10,
15			11,12,14

E3.32/1(001) SCARIFIER LIFT CYLINDER

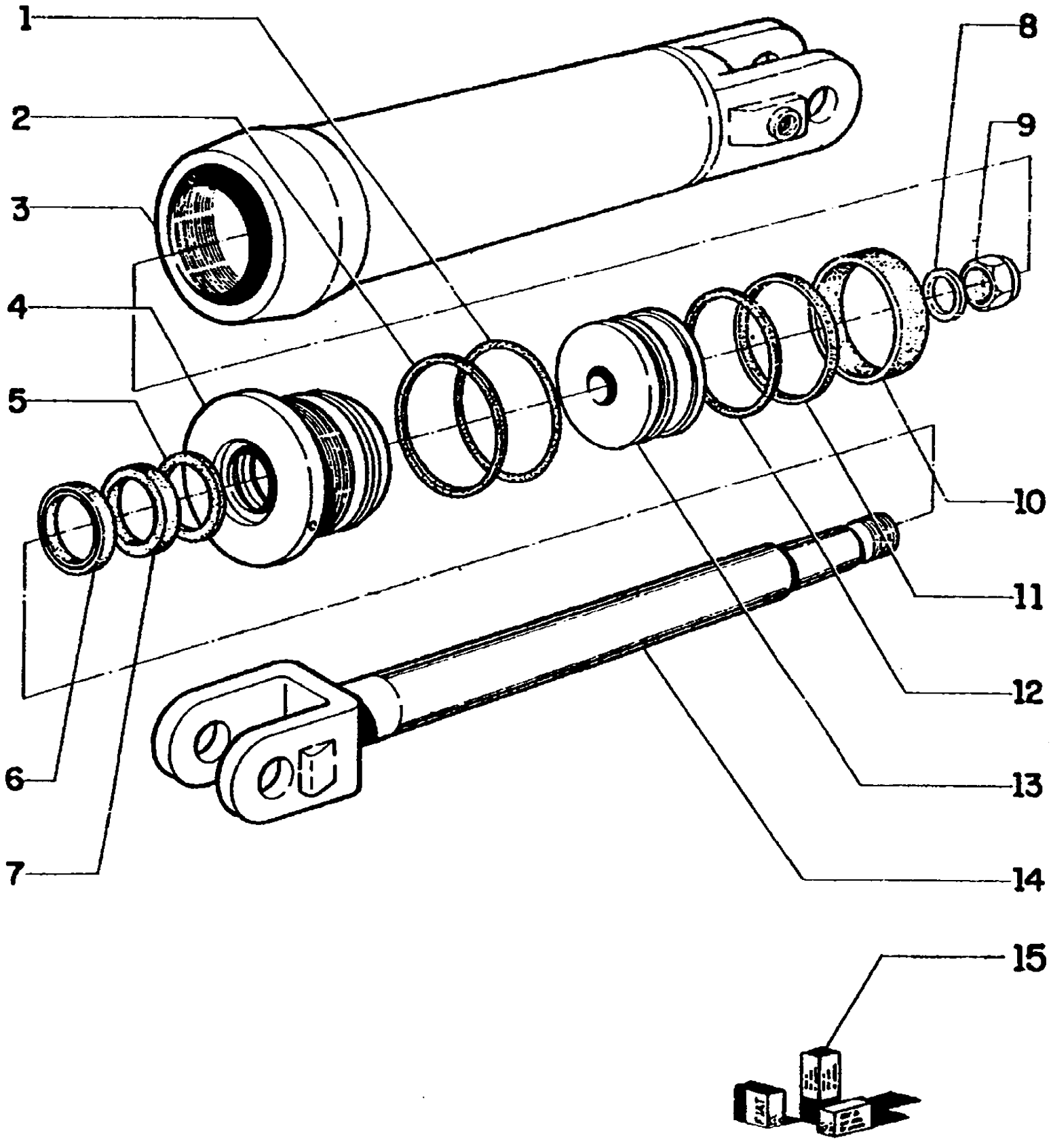

FG85 SERIES B MOTORGRADER

E3.32/1(001) SCARIFIER LIFT CYLINDER

Ref	Numero de Pieza	Ctd	Descripción
1	70927242	1	O'RING
2	70926629	1	RING
3	73067551	1	CYLINDER
4	73067593	1	HEAD
5	73067518	1	RING
6	73053637	1	SCRAPER
7	73067915	1	SEAL RING
8	73055413	1	SPACER
9	73073210	1	NUT
10	73055430	1	RING
11	73055431	1	RING
12	70927343	1	RING
13	73067547	1	PISTON
14	73067546	1	ROD
15	73159181	K	KIT
15			INCLUDES ITEMS (1-2-5-
15			6-7-10-11-12)

E3.32/1(002) RIPPER LIFT CYLINDER

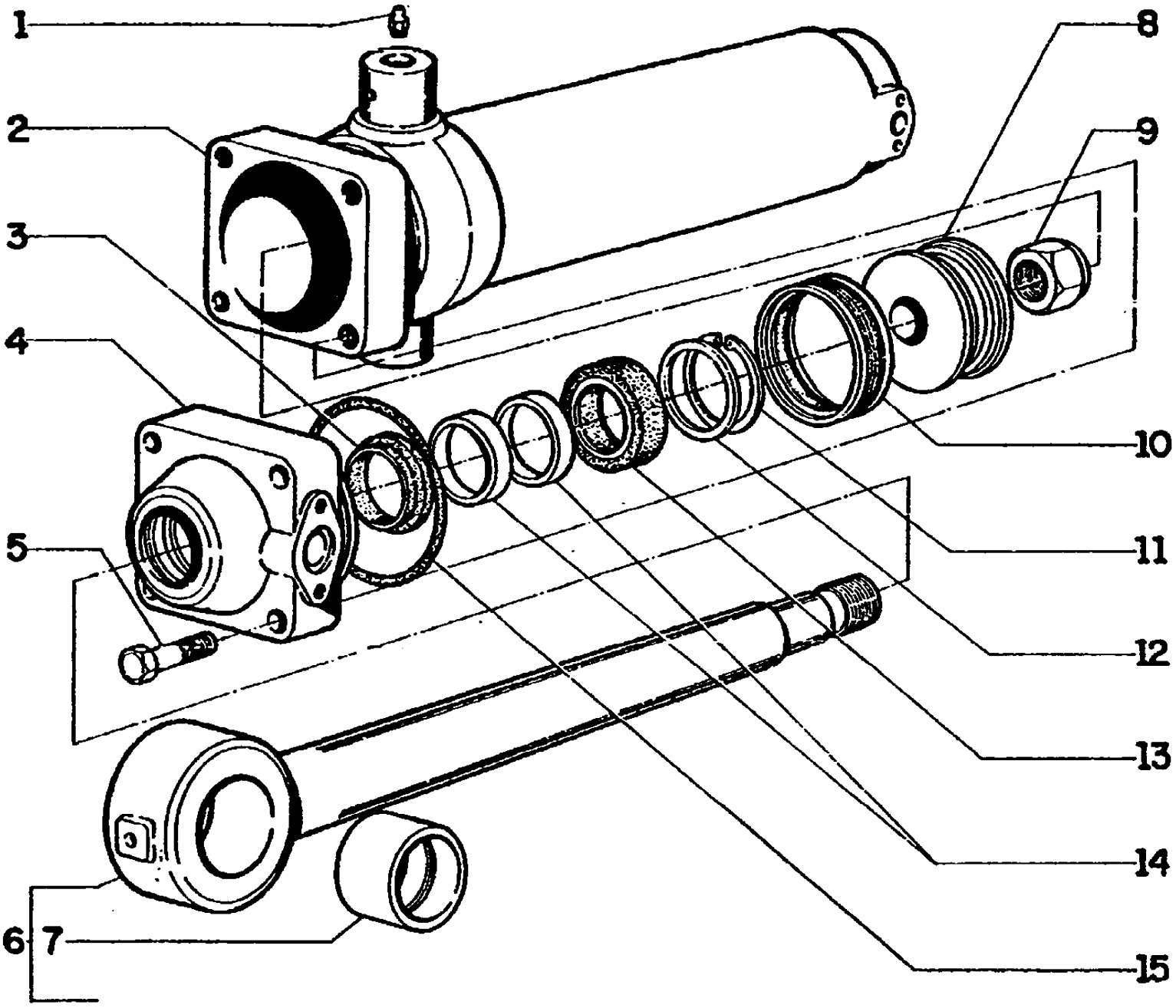

FG85 SERIES B MOTORGRADER

E3.32/1(002) RIPPER LIFT CYLINDER

Ref	Numero de Pieza	Ctd	Descripción
1	13407211	2	NIPPLE, LUBE, M10 x 1
2	8299524	1	CYLINDER
3	8288748	1	SEAL RING
4	8288335	1	COVER
5	14258530	4	SCREW
6	8299526	1	ROD
7	8286948	1	BUSHING
8	8290223	1	PISTON
9	8299528	1	NUT
10	8291904	1	SEAL
11	11061675	1	RING
12	8288726	1	CONNECTOR
13	8287759	1	SEAL
14	8288749	2	BUSHING
15	14466480	1	O'RING

F2.00(001) ELECTRIC PARTS MOUNTING KIT

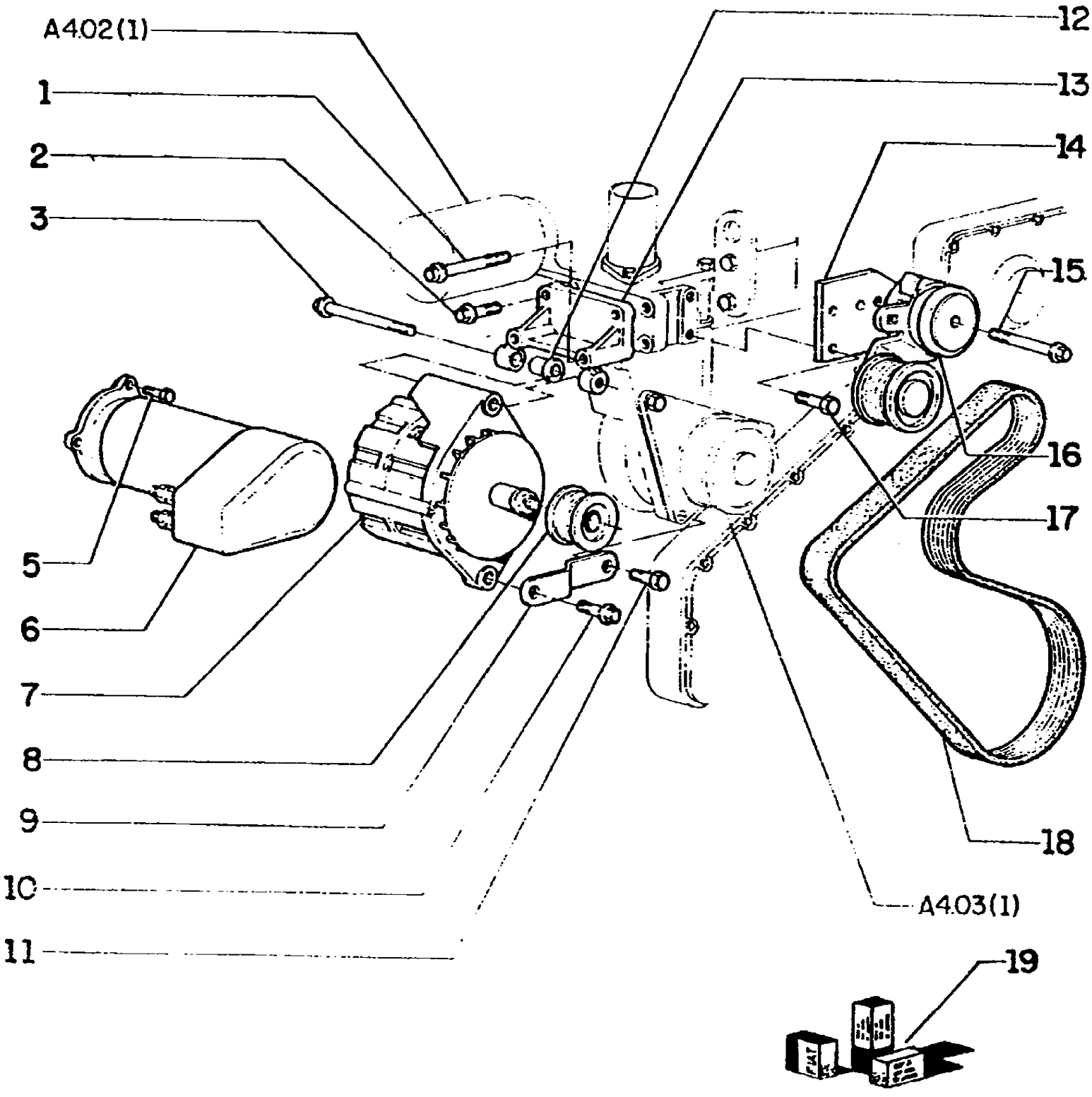

FG85 SERIES B MOTORGRADER

F2.00(001) ELECTRIC PARTS MOUNTING KIT

Ref	Numero de Pieza	Ctd	Descripción
1	75206818	2	SCREW
2	75208388	2	SCREW
3	75206636	1	SCREW
4			
5	75204954	3	SCREW
6	75204899	1	STARTER MOTOR
7	75208381	1	ALTERNATOR
8	75206637	1	PULLEY
9	75206816	1	SUPPORT
10	75206638	1	SCREW
11	75208384	1	SCREW
12	75206635	1	SPACER
13	75206640	1	SUPPORT
14	75286313	1	SUPPORT
15	75208287	1	SCREW
16	75286312	1	BELT STRETCHER
17	75208256	2	SCREW
18	75206859	1	BELT
19	75221462	K	KIT (includes items 1 : 18)

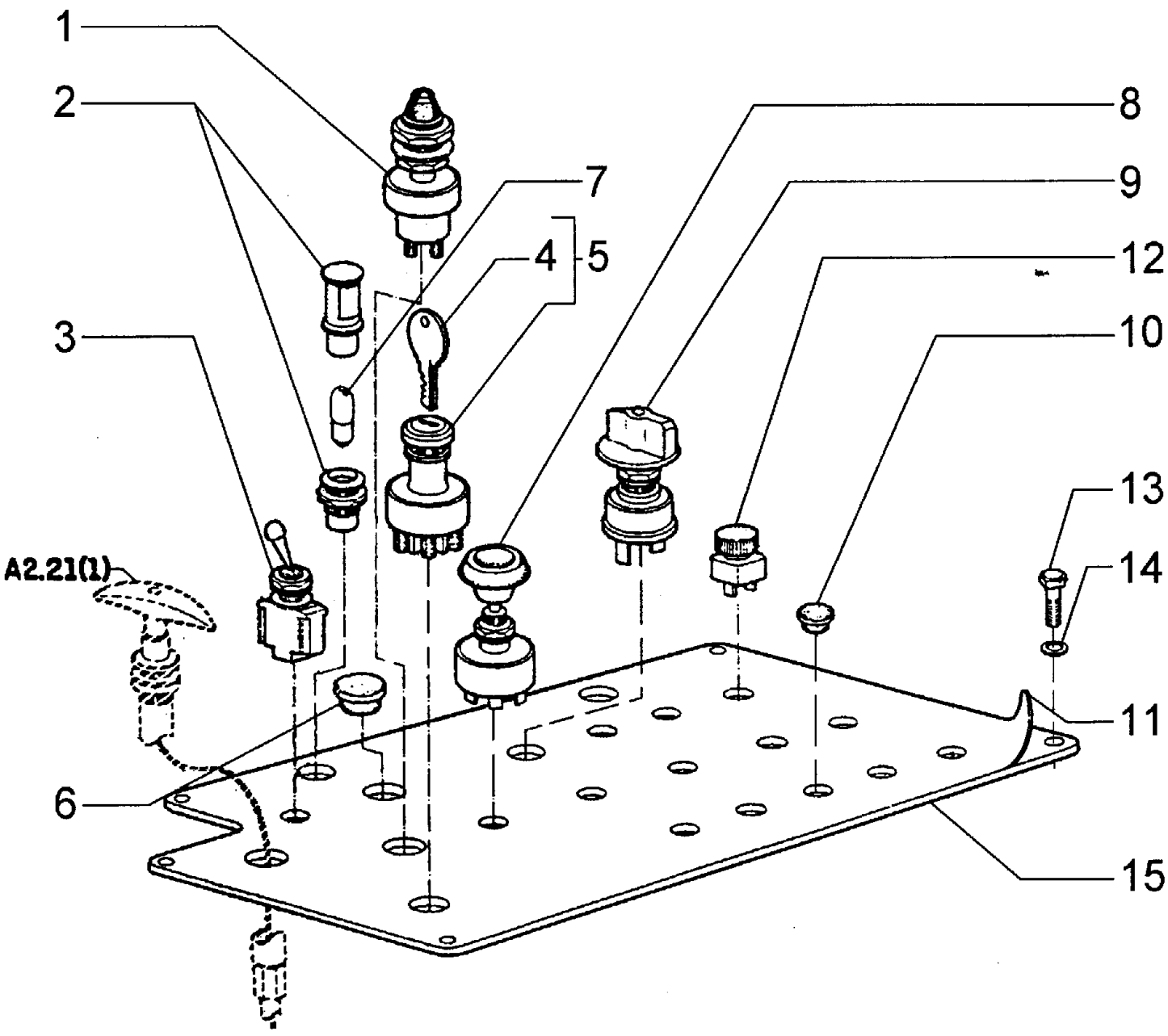
1
2
3
4
5
6
7
8
9
10
11
12
13
14
15
A2.21(1)

FG85 SERIES B MOTORGRADER

F4.01(001) ELECTRIC INSTRUMENT

Ref	Numero de Pieza	Ctd	Descripción
1	73073459	1	SWITCH HORN
2	73072041	2	LAMP
3	73125891	1	SWITCH SADDLE LOCK PIN
4	73075836	1	KEY
5	73075753	1	SWITCH
6	70921376	1	CAP
7	73072026	2	BULB
8	73150630	1	SWITCH FRONT BLADE FLOAT
9	73057960	1	SWITCH LIGHTS
10	70922803	8	CAP
11	73150625	1	DECAL
12	73144833	3	SWITCH HEATER
13	70927541	5	SCREW
14	70928190	5	WASHER
15	73152947	1	COVER

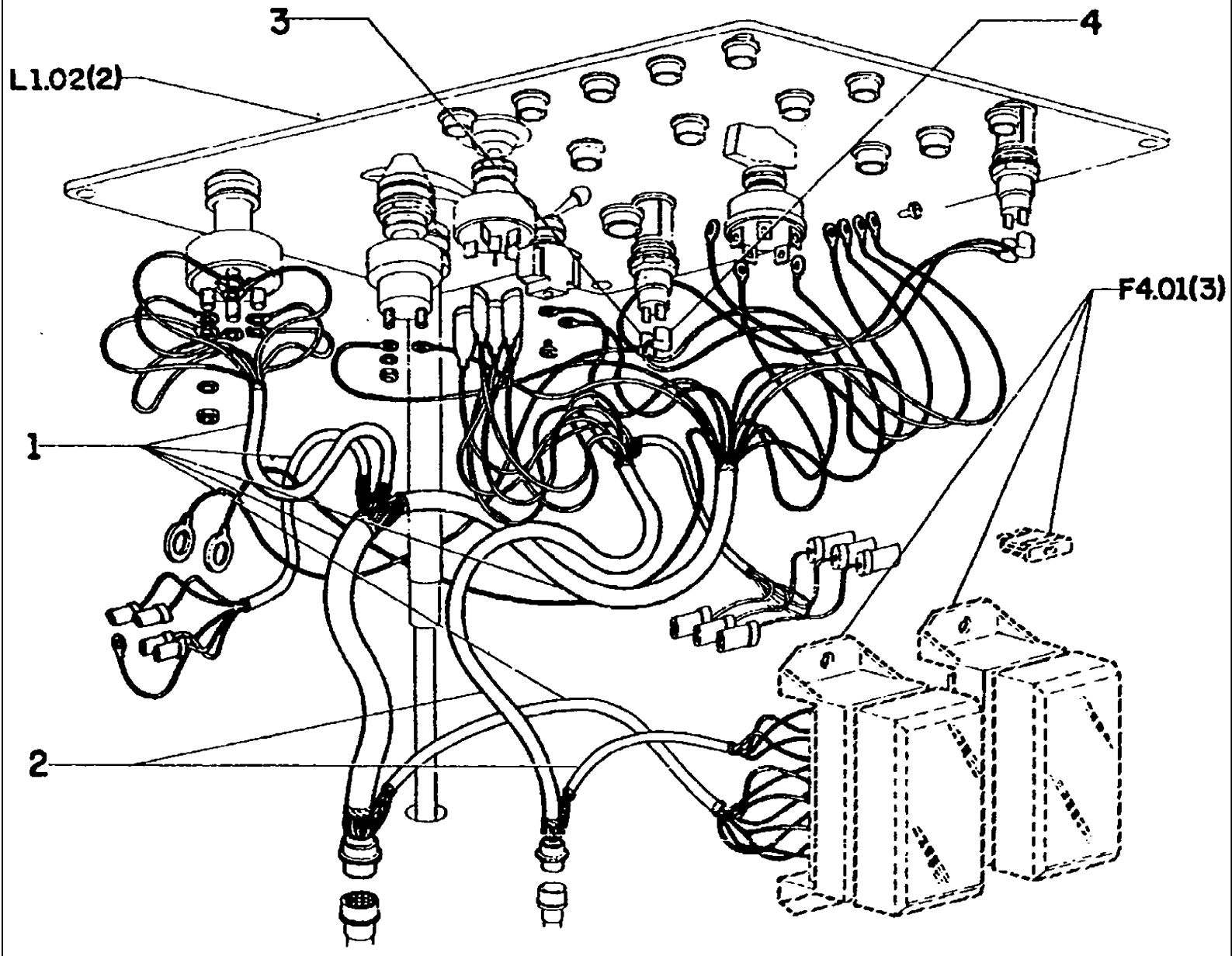
3
4
L1.02(2)
F4.01(3)
1
2

FG85 SERIES B MOTORGRADER

F4.01(002) ELECTRICAL SYSTEM

Ref	Numero de Pieza	Ctd	Descripción
1	73153966	1	CABLE
2	73153967	1	CABLE
3	73146522	1	CABLE
4	73147227	1	CABLE

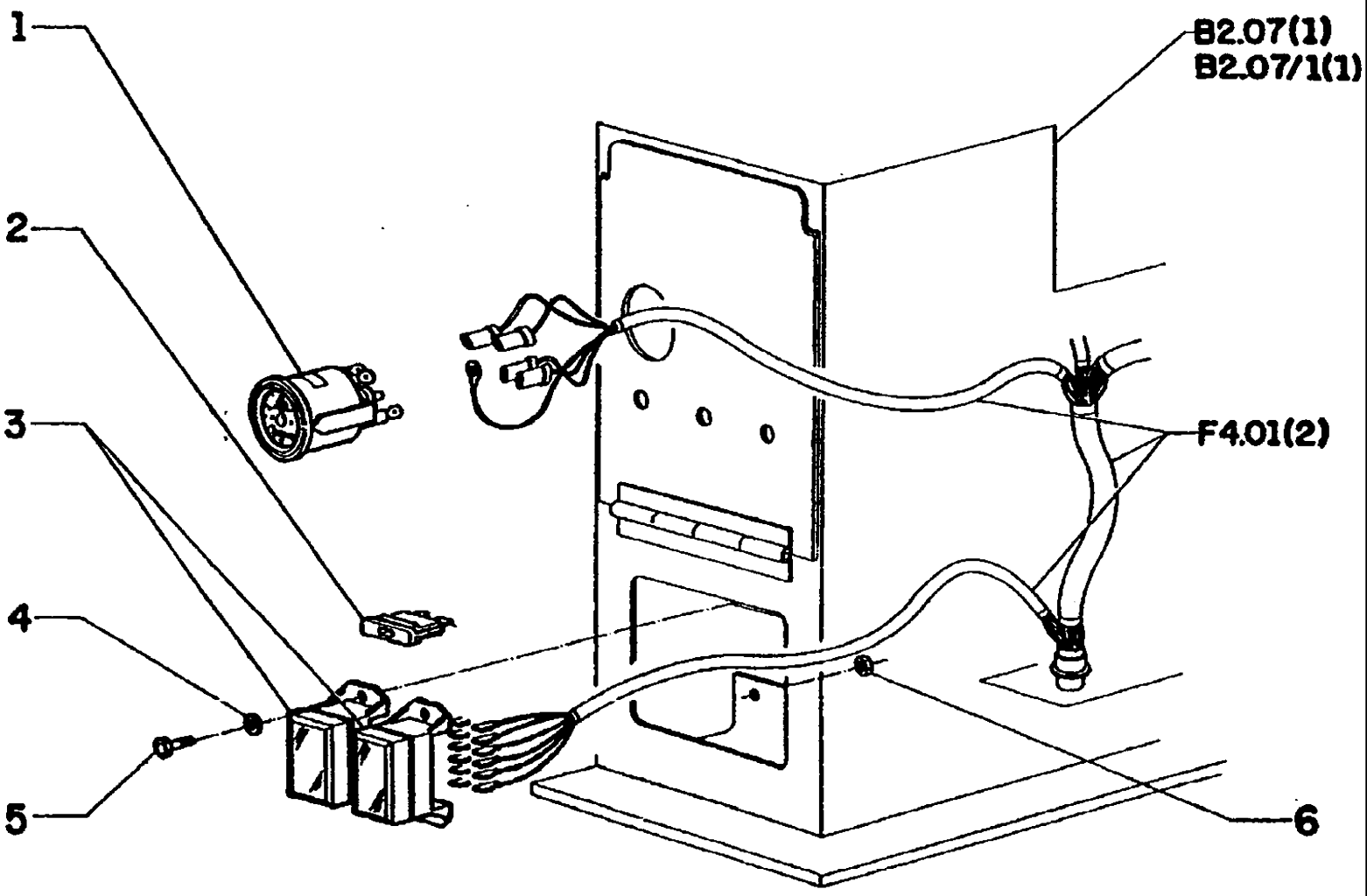
1
2
3
4
5
6
B2.07(1)
B2.07/1(1)
F4.01(2)

FG85 SERIES B MOTORGRADER

F4.01(003) ELECTRICAL SYSTEM

Ref	Numero de Pieza	Ctd	Descripción
1	75220416	1	HOURMETER
2	11054690	2	FUSE
2	11054890	1	FUSE
2	11055090	7	FUSE
3	79078595	2	FUSE HOLDER
4	14496307	4	WASHER
5	10977534	4	BOLT, Hex, M5 x 10, 10.9, Full Thd
6	15896421	4	NUT, M5, Cl 10

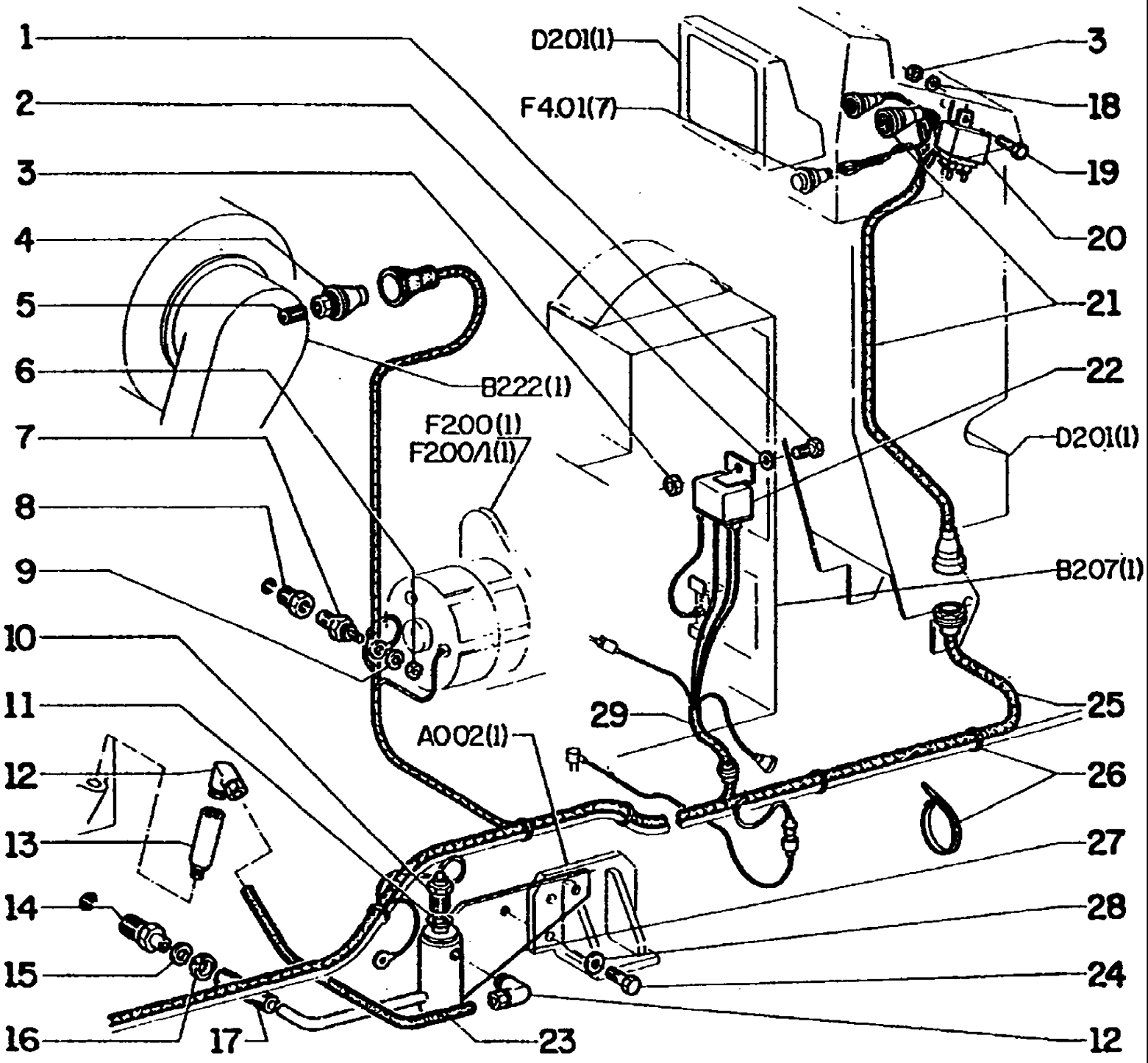
1
2
3
4
5
6
7
8
9
10
11
12
13
14
15
16
17
D201(1)
F4.01(7)
B222(1)
F200(1)
F200A(1)
A002(1)
29
23
3
18
19
20
21
22
D201(1)
B207(1)
25
26
27
28
24
12

FG85 SERIES B MOTORGRADER

F4.01(005) INDICATOR LIGHTS AND WIRING

Ref	Numero de Pieza	Ctd	Descripción
1	70927541	1	SCREW
2	70928190	2	WASHER
3	70911024	2	NUT
4	79102142	1	INDICATOR
5	70901467	1	FITTING
6	70910251	2	NUT
7	73113214	1	Water Temp Switch for the Temp Light
8	70901828	1	FITTING
9	70910284	2	LOCKWASHER
10	79102088	1	INDICATOR
11	10265060	1	WASHER
12	70928923	4	ELBOW
13	73152449	1	TUBE
14	73154134	1	CONNECTOR
15	10279560	1	WASHER, SEALING, M22.3 x 28 x 1, Copper
16	70925755	2	CLAMP
17	73107497	1	HOSE
18	70911114	1	WASHER
19	70928138	1	SCREW
20	79102052	1	HORN
21	73153965	1	CABLE
22	75241360	1	RELAY
23	75221775	1	HOSE
24	11112231	2	BOLT, Hex, M12 x 25, 10.9, Full Thd
25	73153955	1	CABLE
26	70196765	12	CLIP
27	73154127	1	SUPPORT
28	70926191	2	WASHER
29	75236524	1	CABLE

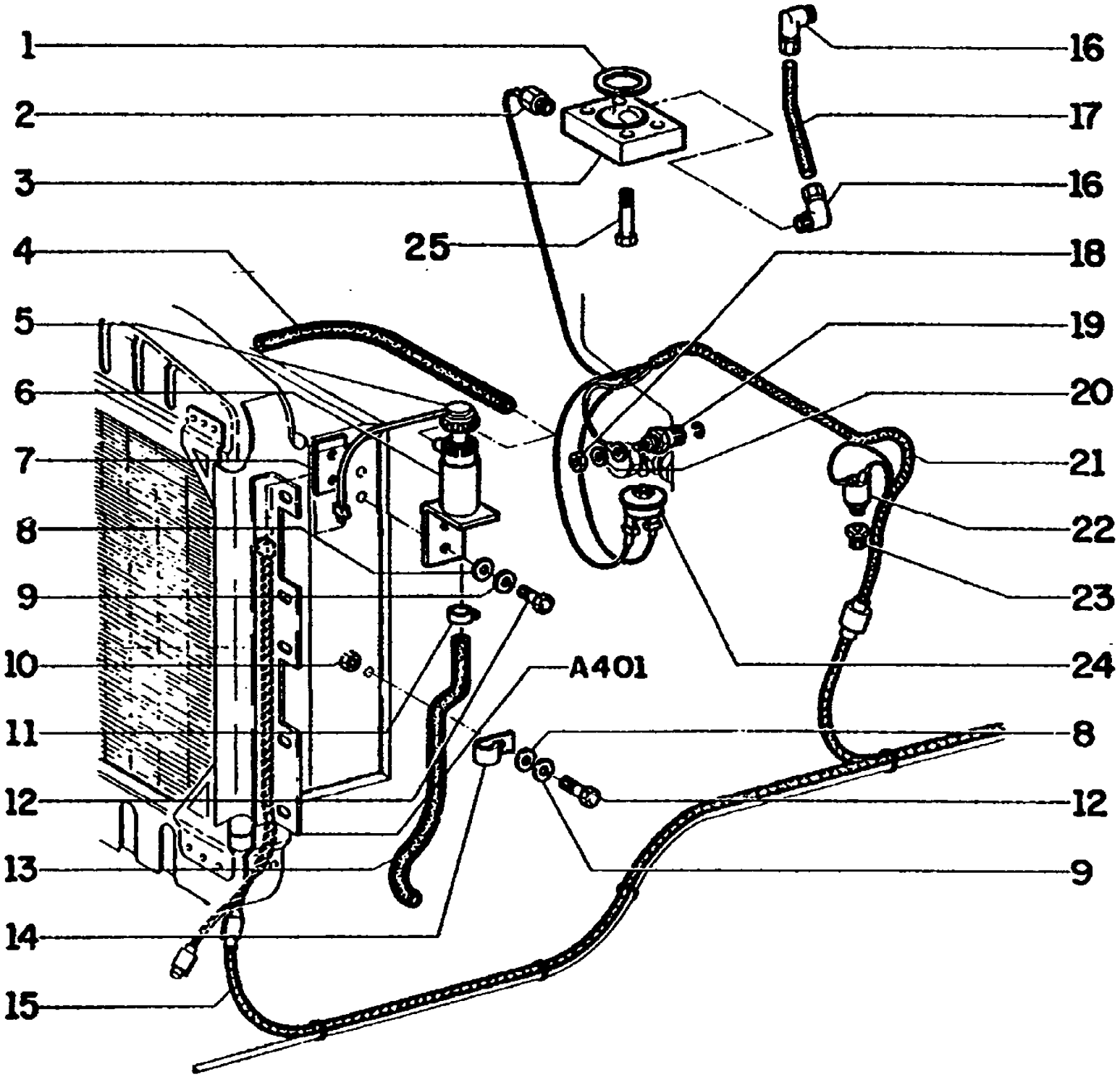
1
2
3
4
5
6
7
8
9
10
11
12
13
14
15
16
17
16
25
18
19
20
21
22
23
24
A401
8
12
9

FG85 SERIES B MOTORGRADER

F4.01(006) INDICATOR LIGHTS AND WIRING

Ref	Numero de Pieza	Ctd	Descripción
1	70923578	1	RING
2	79094756	1	SWITCH
3	73152221	1	BLOCK
4	75221778	1	HOSE
5	79102087	1	INDICATOR
6	73152211	1	SUPPORT
7	73152215	1	PLATE
8	70677006	3	WASHER
9	70916965	3	LOCKWASHER
10	70911026	1	NUT
11	12179490	4	CLAMP
12	70922763	3	SCREW
13	75221777	1	HOSE
14	70927155	1	CLAMP
15	73153955	1	CABLE
16	70928923	4	ELBOW
17	75221776	1	HOSE
18	70910251	2	NUT
19	73153276	1	INDICATOR
20	70910284	2	LOCKWASHER
21	73153952	1	CABLE(I)
21	75236558	1	CABLE (2)
22	73139080	1	SWITCH
23	70901834	1	FITTING
24	73110555	1	SENSOR
25	70922510	4	SCREW

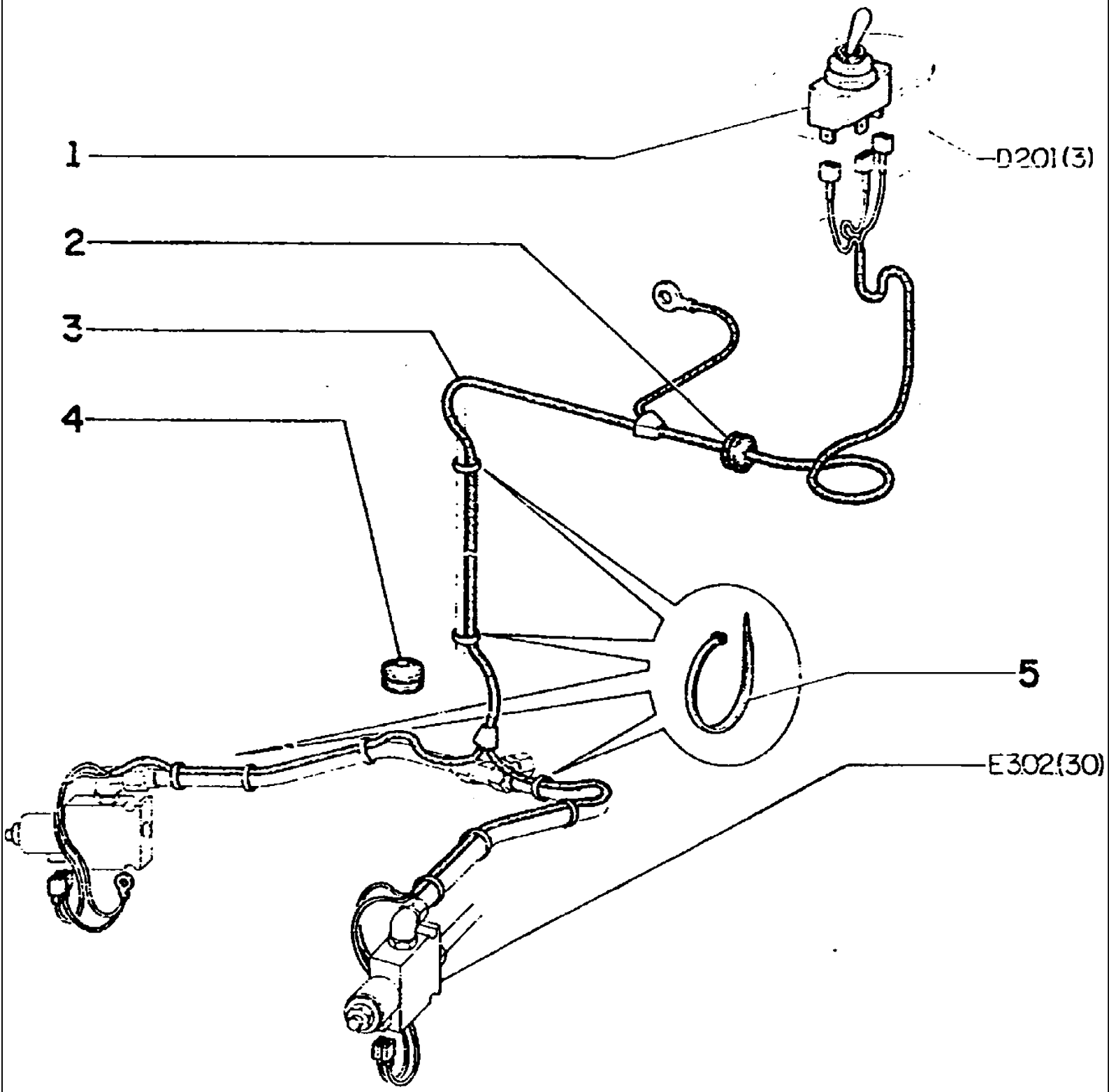
1
2
3
4
5
D201(3)
E302(30)

FG85 SERIES B MOTORGRADER

F4.01(007) ARTICULATION CYLINDER CONTROL

Ref	Numero de Pieza	Ctd	Descripción
1	75217221	1	SWITCH
2	70927202	1	INSULATOR
3	75217750	1	CABLE
4	70923510	1	RING
5	70196765	10	CLAMP

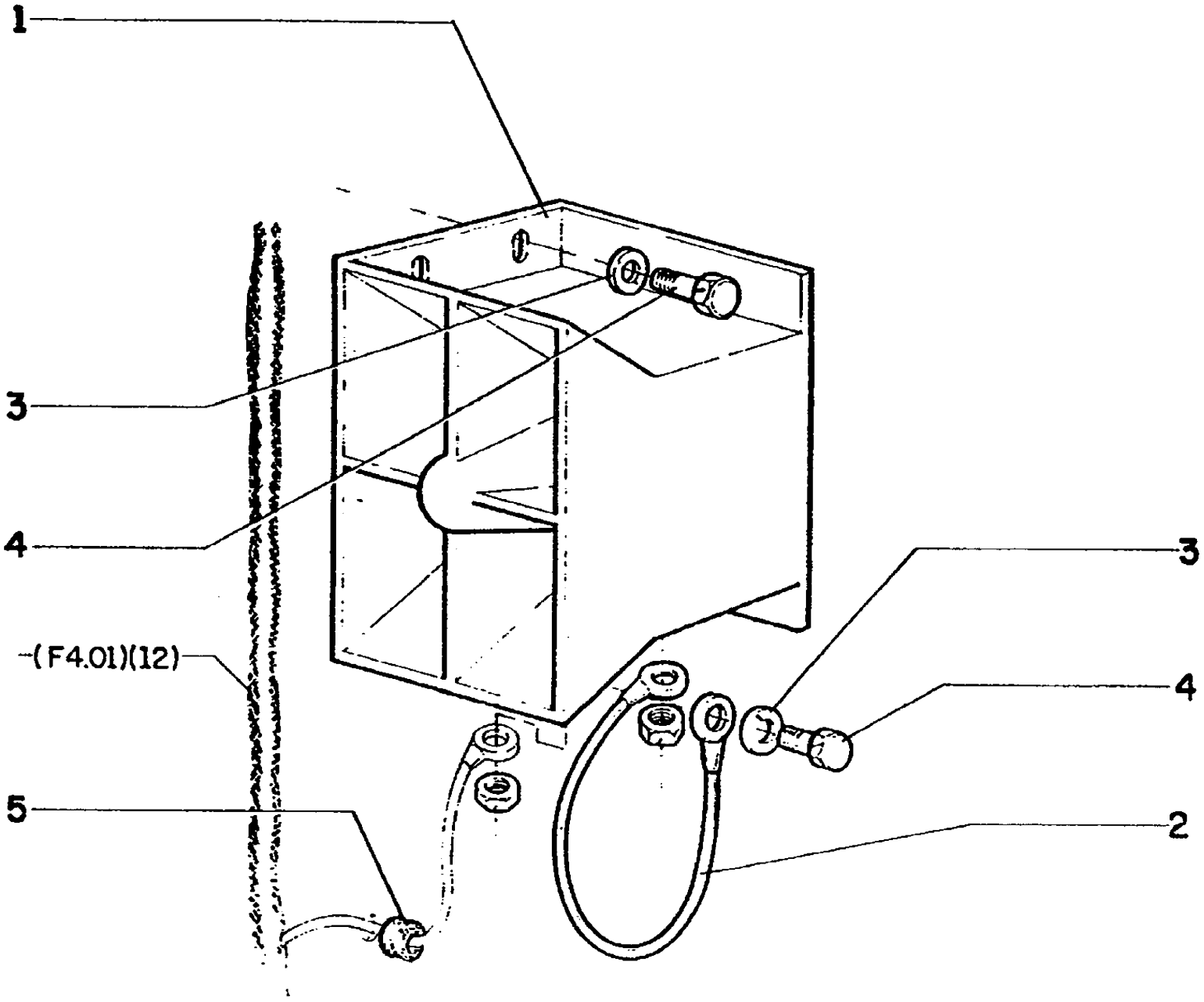
1
3
4
(F4.01)(12)
5
3
4
2

FG85 SERIES B MOTORGRADER

F4.01(008) BACK UP ALARM SYSTEM

Ref	Numero de Pieza	Ctd	Descripción
1	73131968	1	BACK UP ALARM
2	70671763	1	CABLE
3	70928190	4	WASHER
4	70927401	4	SCREW
5	70023176	1	RING

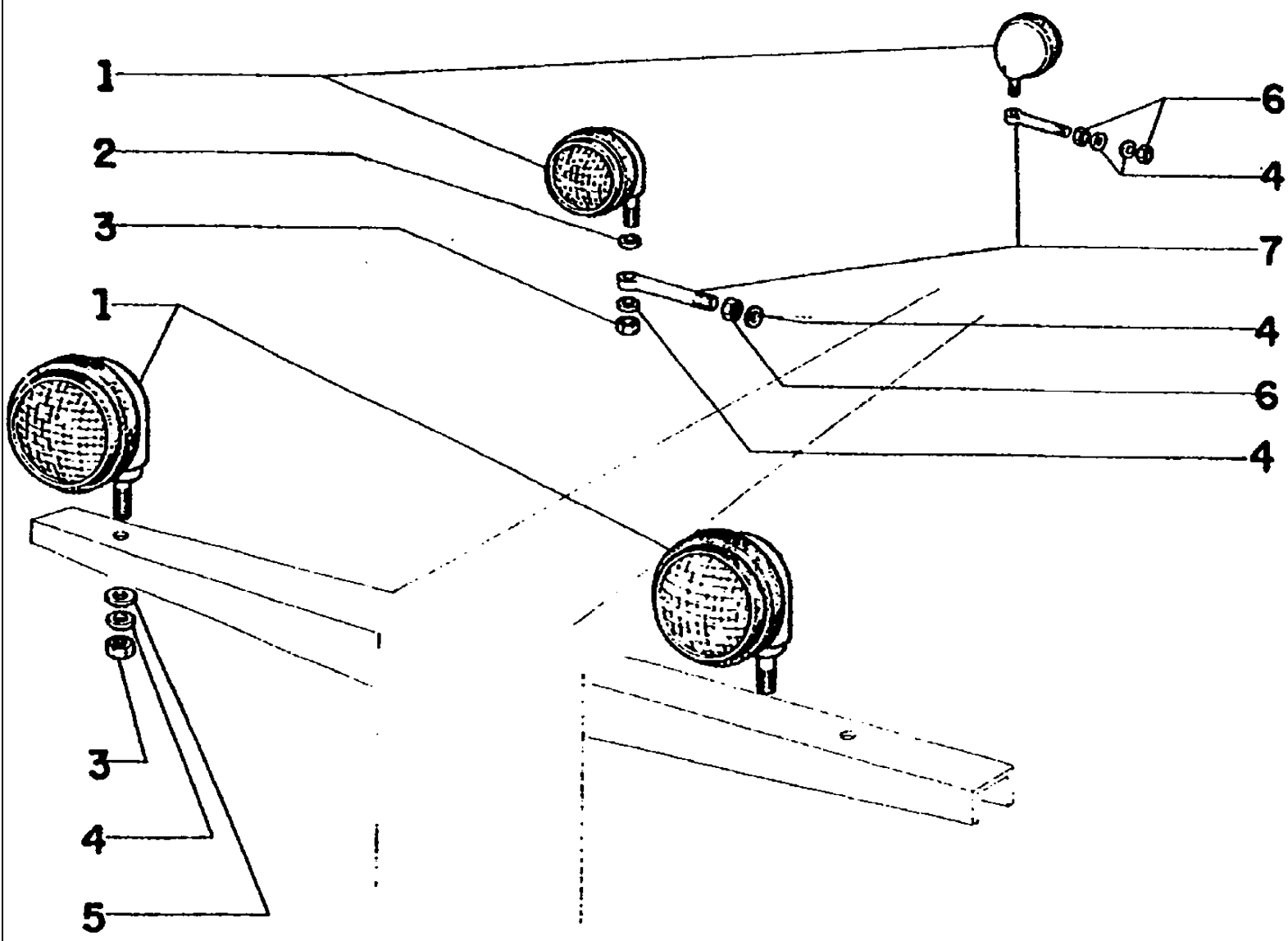
1
2
3
1
3
4
5
6
4
7
4
6
4

FG85 SERIES B MOTORGRADER

F4.01(009) LIGHTING SYSTEM

Ref	Numero de Pieza	Ctd	Descripción
1	70621429	5	FLOODLIGHT
2	70677008	3	WASHER
3	70911043	3	NUT
4	70912441	8	LOCKWASHER
5	70900818	2	WASHER
6	70911035	3	NUT
7	70065935	3	SCREW

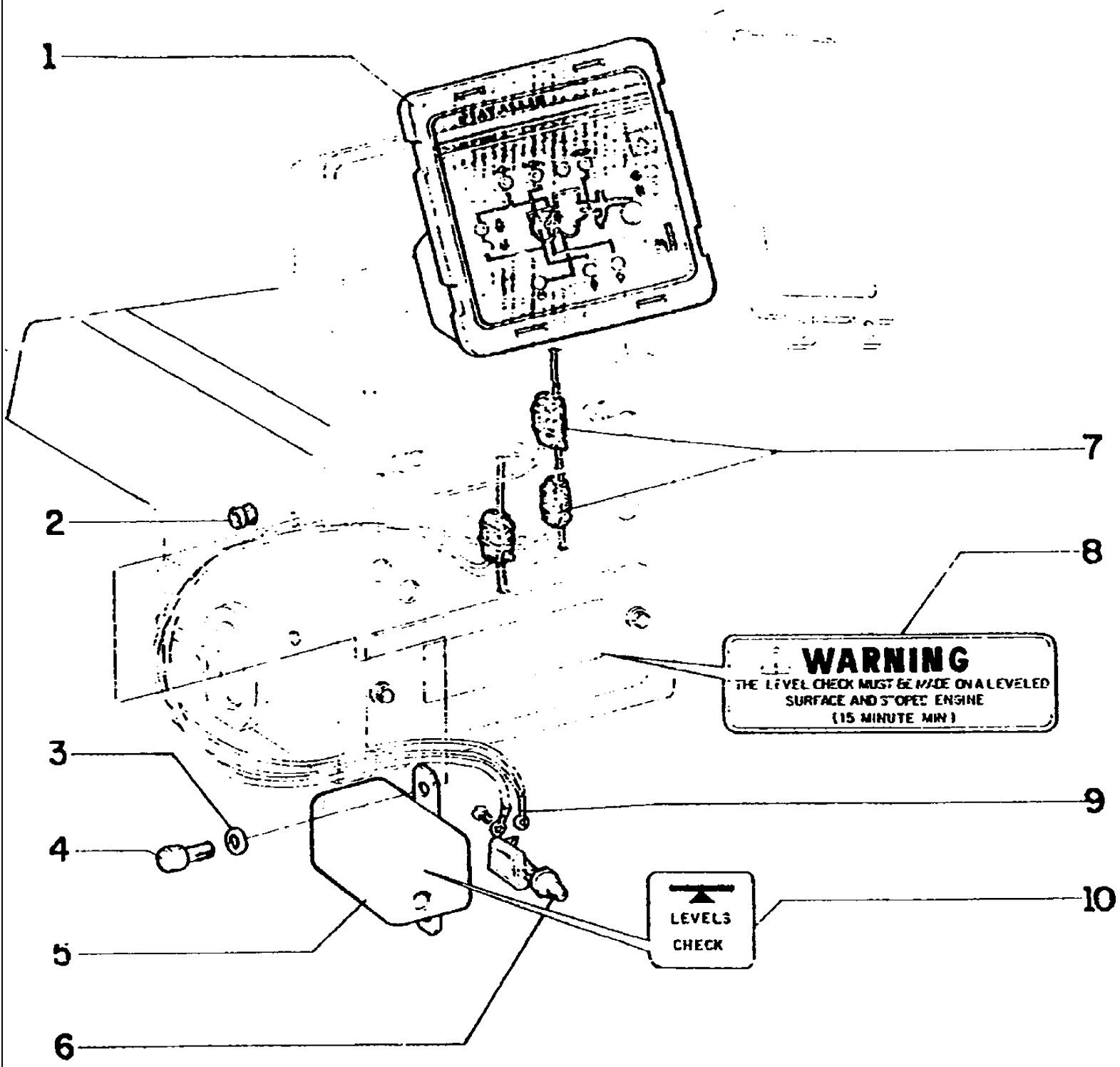
1
2
3
4
5
6
7
8
WARNING
THE LEVEL CHECK MUST BE MADE ON A LEVELED SURFACE AND STOPPED ENGINE
(15 MINUTE MIN.)
9
LEVELS
CHECK
10

FG85 SERIES B MOTORGRADER

F4.01(010) ELECTRONIC DATA MONITOR

Ref	Numero de Pieza	Ctd	Descripción
1	79096376	1	INSTRUM. PANEL
2	70023176	1	RING
3	70928190	2	WASHER
4	70929002	2	SCREW
5	75238182	1	PLATE
6	73160099	1	SWITCH
7	75238158	3	CONNECTOR
8	75238188	1	DECAL
9	75216160	2	WIRE TERMINAL
10	75238187	1	DECAL

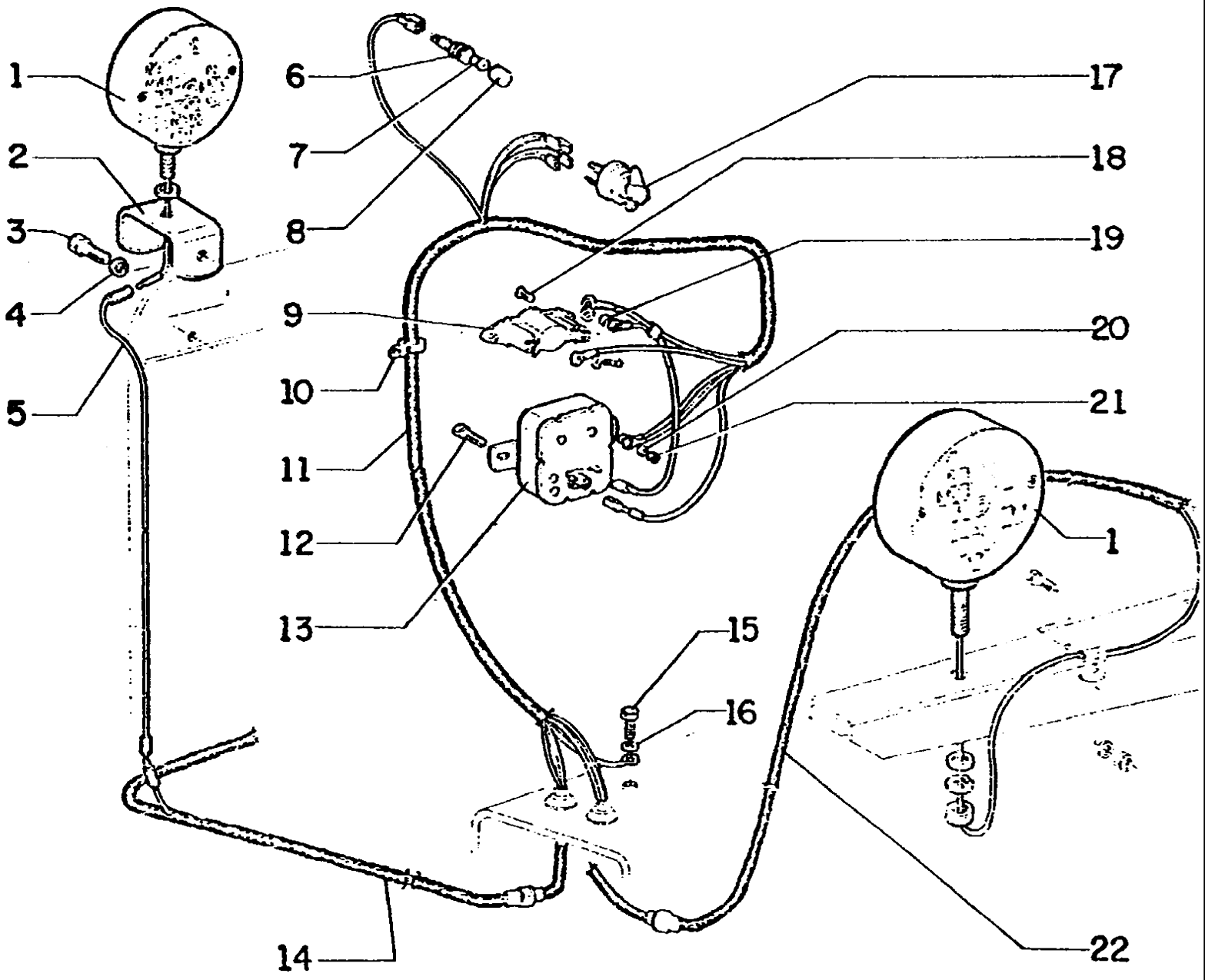
1
2
3
4
5
6
7
8
9
10
11
12
13
14
15
16
17
18
19
20
21
1
22

FG85 SERIES B MOTORGRADER

F4.01(011) TURN SIGNAL GROUP

Ref	Numero de Pieza	Ctd	Descripción
1	73154376	4	TURN SIGNALS
2	70699376	2	SUPPORT
3	70922300	2	SCREW
4	70910287	2	LOCKWASHER
5	73153947	1	CABLE
6	73072027	2	SUPPORT
7	73072025	2	LAMP
8	73072029	2	LENS
9	70671696	1	FUSE
10	70196765	10	CLAMP
11	73153957	1	CABLE
12	70927541	2	SCREW
13	70663928	1	RELAY
14	73153954	1	CABLE
15	70927484	1	SCREW
16	70929156	1	WASHER
17	73072024	1	SWITCH
18	70922928	2	SCREW
19	70917458	2	WASHER
20	70928190	2	WASHER
21	70900365	2	NUT
22	73153956	1	CABLE

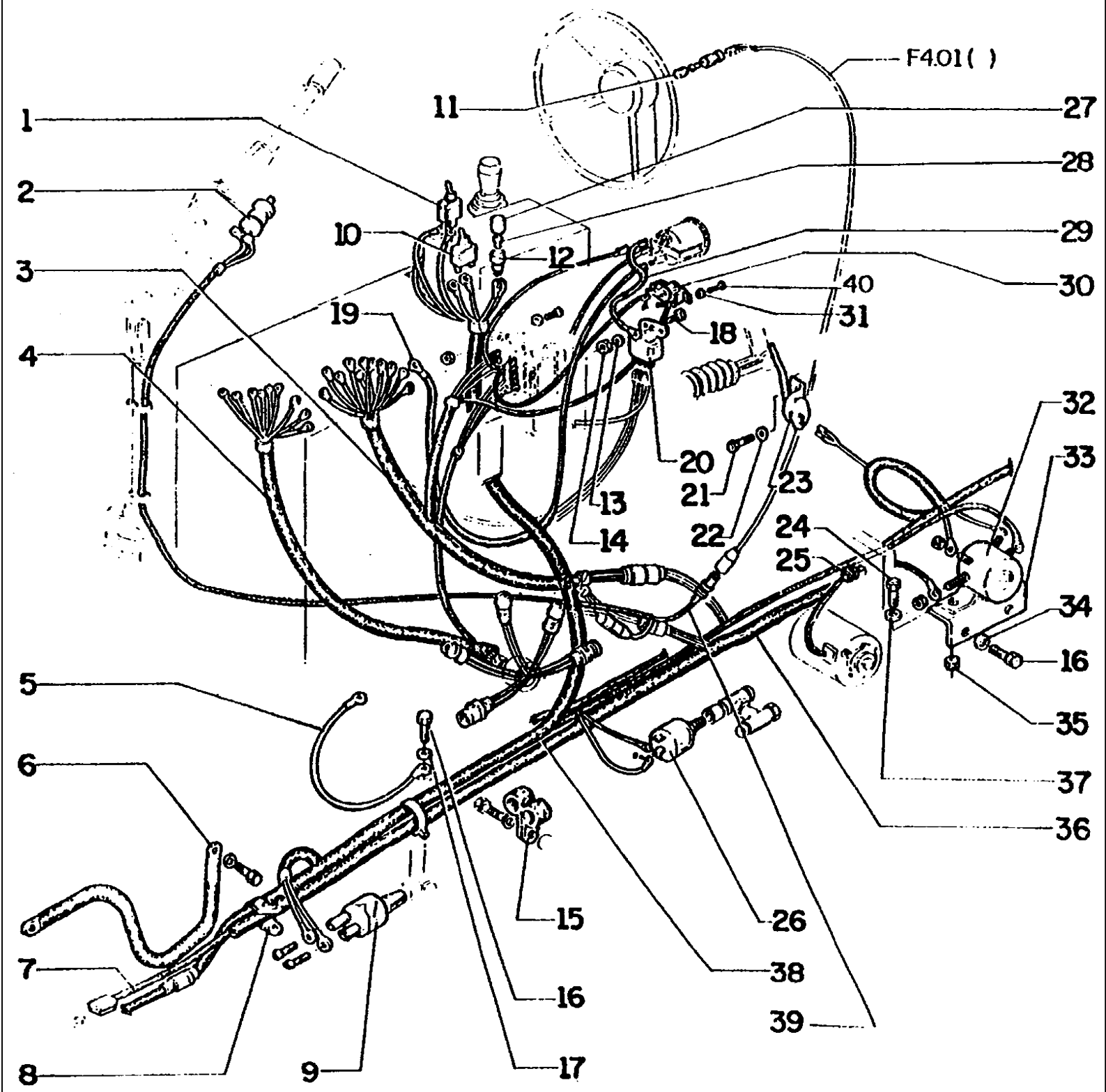
F4.01( )
1
2
3
4
5
6
7
8
9
10
11
12
13
14
15
16
17
18
19
20
21
22
23
24
25
26
27
28
29
30
31
32
33
34
16
35
37
36
38
39

FG85 SERIES B MOTORGRADER

F4.01(012) ELECTRICAL GROUP

Ref	Numero de Pieza	Ctd	Descripción
1	73125891	1	SWITCH
2	76021318	1	SWITCH
3	73153966	1	CABLE
4	73153967	1	CABLE
5	73126160	1	CABLE
6	73152169	1	CABLE
7	75222599	1	CABLE
8	70929279	1	CLAMP
9	70094334	2	SENSOR
10	73112915	2	SWITCH
11	73072028	1	LENS
12	73072027	2	SUPPORT
13	70928190	4	WASHER
14	70911024	4	NUT
15	70929702	6	CLAMP
16	70927400	10	SCREW
17	70929156	14	WASHER
18	70927541	4	SCREW
19	75222600	1	CABLE
20	75241360	1	RELAY
21	70917452	2	SCREW
22	70904203	3	LOCKWASHER
23	70648427	1	SWITCH
24	70927541	4	SCREW
25	70935012	1	RING
26	73139080	1	SWITCH
27	73153094	1	LENS
28	73072025	2	LAMP
29	73126111	3	CABLE
30	70671696	1	FUSE
31	70917458	2	WASHER
32	73117176	1	SWITCH
33	73128103	1	SUPPORT
34	70929156	14	WASHER
35	70911024	4	NUT
36	73153954	1	CABLE
37	70928190	12	WASHER
38	73155880	1	CABLE (1)
38	75237909	1	CABLE (2)
39	73153949	1	CABLE
40	70922928	2	SCREW

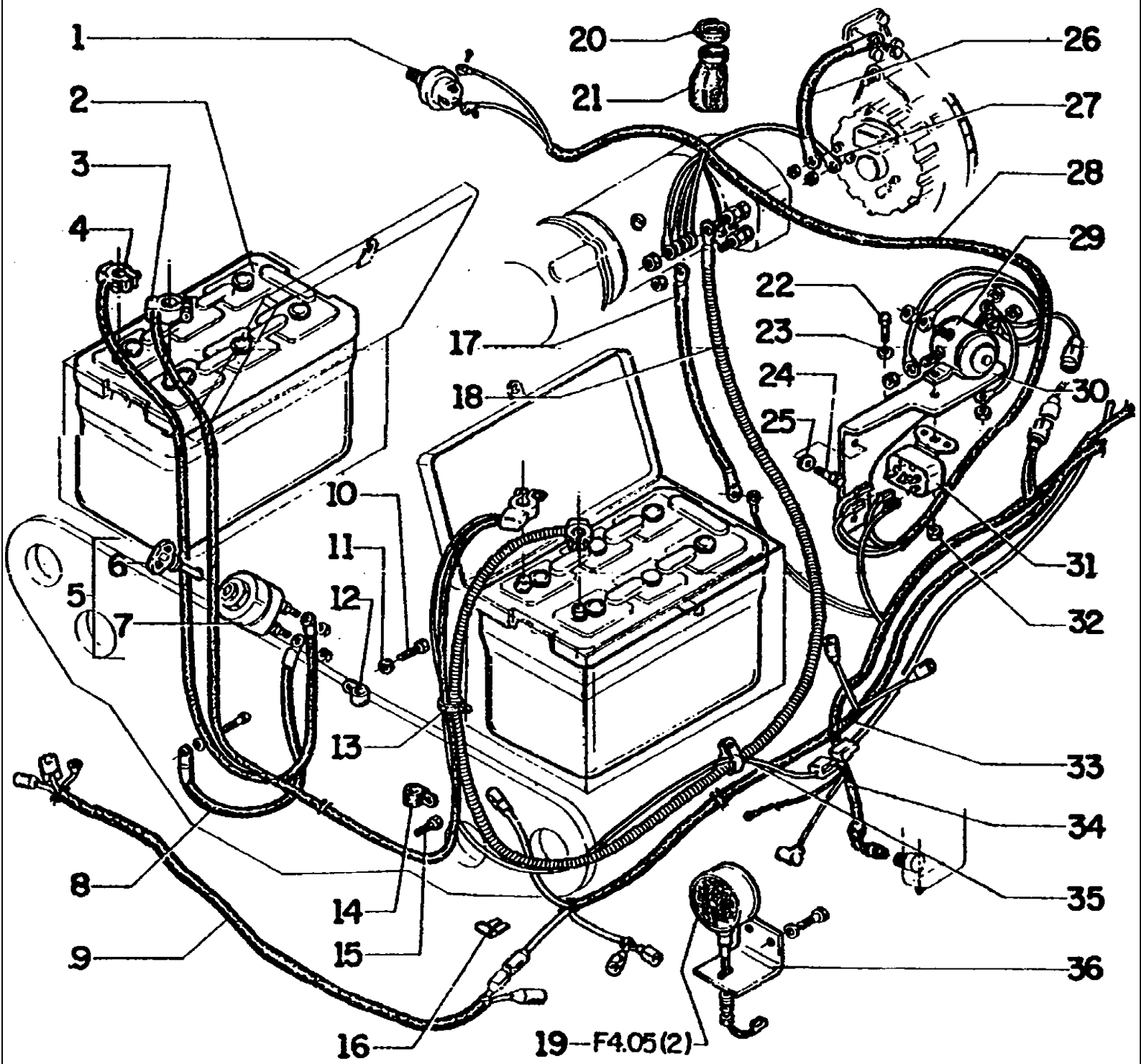
1
2
3
4
5
6
7
8
9
10
11
12
13
14
15
16
17
18
19—F4.05(2)
20
21
22
23
24
25
26
27
28
29
30
31
32
33
34
35
36

FG85 SERIES B MOTORGRADER

F4.01(013) ELECTRICAL GROUP

Ref	Numero de Pieza	Ctd	Descripción
1	73110555	1	SENSOR
2	75211328	2	BATTERY
2	75235523	2	BATTERY
2	75237719	2	BATTERY
2	73128216	2	BATTERY
3	73126909	1	CABLE
4	73153049	1	CABLE
5	79073031	1	SWITCH
6	79073033	1	KEY
7	79073032	1	KEY
8	73153050	1	CABLE
9	73153951	1	CABLE
10	70922300	11	SCREW
11	70630753	11	WASHER
12	70639314	10	CLAMP
13	70196765	17	CLAMP
14	70928656	14	CLAMP
15	70922763	8	SCREW
16	70639313	2	CLAMP
17	73126796	1	CABLE
18	73152180	1	CABLE
19	73069238	2	LIGHT
20	70922660	1	CLAMP
21	70076572	1	BOOT
22	70927541	2	SCREW
23	70928190	2	WASHER
24	11112331	2	BOLT, Hex, M12 x 28, 10.9, Full Thd
25	70928178	2	WASHER
26	73126797	1	CABLE
27	73152766	1	CABLE
28	73153958	1	CABLE
29	73117176	1	SWITCH
30	75238339	1	SUPPORT
31	75241360	1	RELAY
32	70911024	2	NUT
33	73153954	1	CABLE
34	75237909	1	CABLE
35	70929703	2	CLAMP
36	73124844	2	SUPPORT

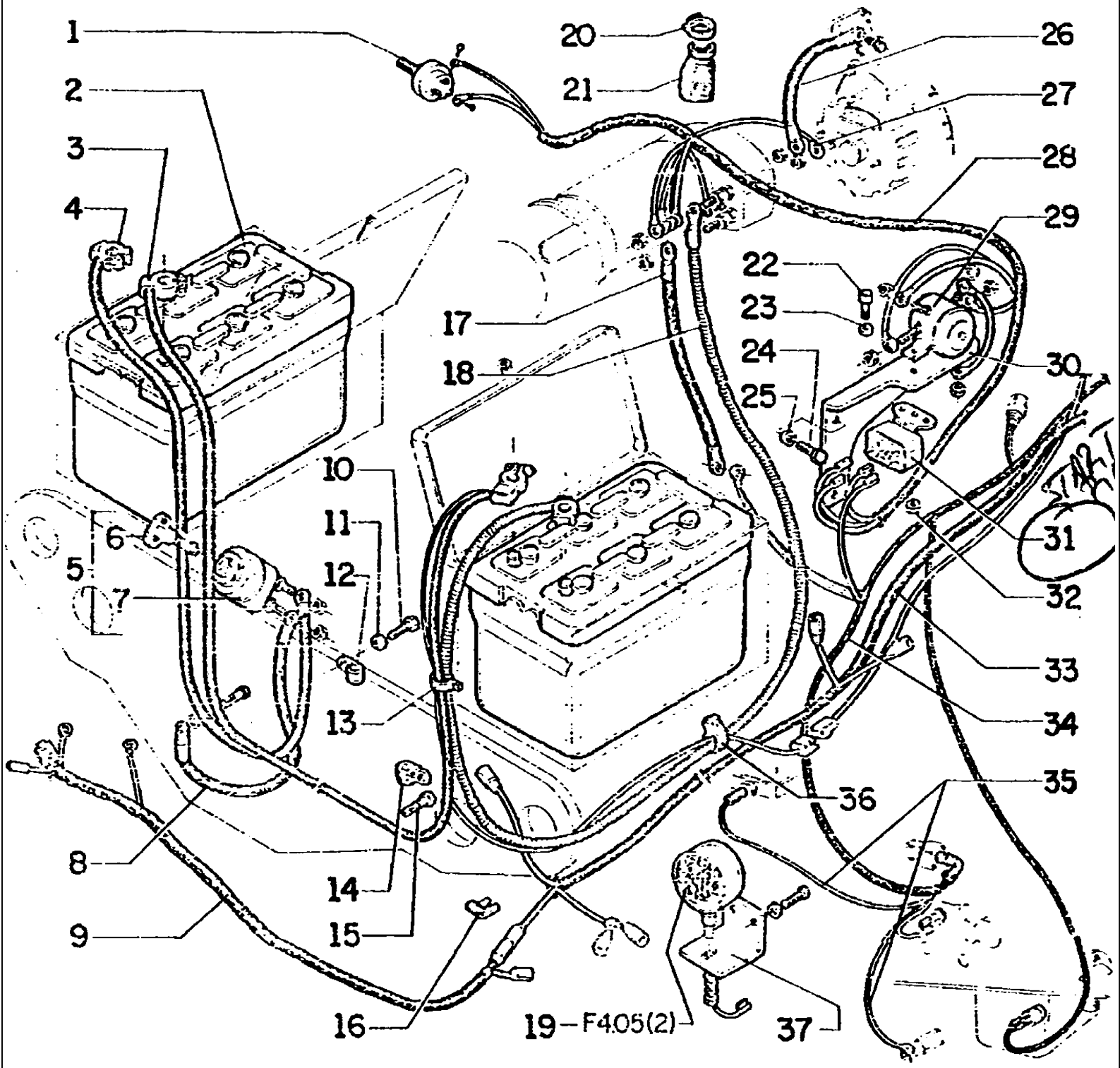
1
2
3
4
5
6
7
8
9
10
11
12
13
14
15
16
17
18
19 – F4.05(2)
20
21
22
23
24
25
26
27
28
29
30
31
32
33
34
35
36
37

FG85 SERIES B MOTORGRADER

F4.01(014) ELECTRICAL SYSTEM

Ref	Numero de Pieza	Ctd	Descripción
1	73110555	1	SENSOR
2	75211328	2	BATTERY
2	75235523	2	BATTERY
2	75237719	2	BATTERY
2	73128216	2	BATTERY
3	73126909	1	CABLE
4	73153049	1	CABLE
5	79073031	1	SWITCH
6	79073033	1	KEY
7	79073032	1	KEY
8	73153050	1	CABLE
9	73153951	1	CABLE
10	70922300	11	SCREW
11	70630753	11	WASHER
12	70639314	10	CLAMP
13	70196765	17	CLIP
14	70928656	14	CLAMP
15	70922763	8	SCREW
16	70639313	2	CLAMP
17	73126796	1	CABLE
18	73152180	1	CABLE
19	73069238	2	LIGHT
20	70922660	1	CLAMP
21	70076572	1	BOOT
22	70927541	2	SCREW
23	70928190	2	WASHER
24	11112331	2	BOLT, Hex, M12 x 28, 10.9, Full Thd
25	70928178	2	WASHER
26	73126797	1	CABLE
27	73152766	1	CABLE
28	73153958	1	CABLE
29	73117176	1	SWITCH
30	75238339	1	SUPPORT
31	75241360	1	RELAY
32	70911024	2	NUT
33	73153954	1	CABLE
34	73155880	1	CABLE
35	75236558	1	CABLE
36	70929703	2	CLAMP
37	73124844	2	SUPPORT

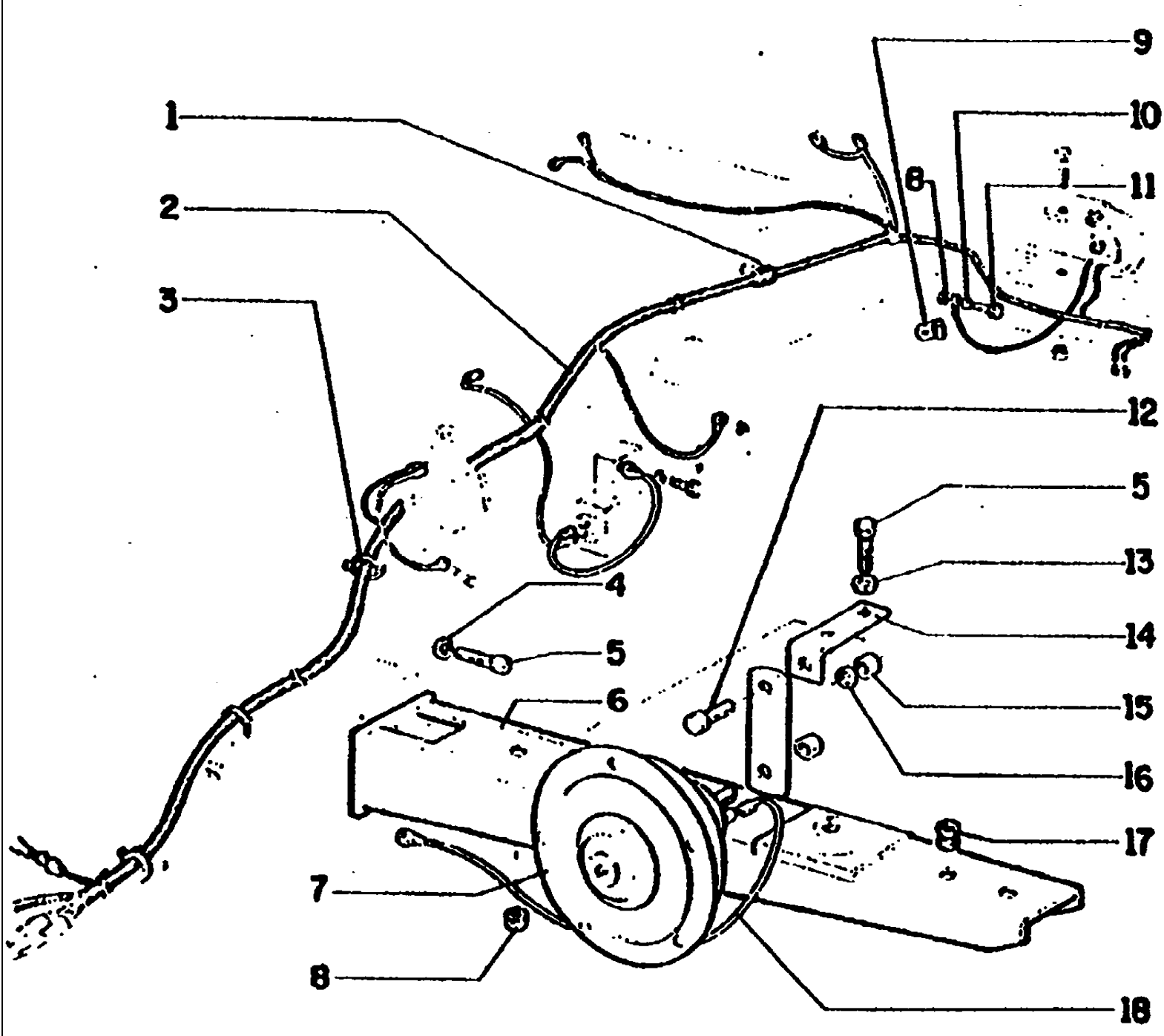
1
2
3
4
5
6
7
8
9
10
11
12
5
13
14
15
16
17
18

FG85 SERIES B MOTORGRADER

F4.01(015) ELECTRICAL SYSTEM

Ref	Numero de Pieza	Ctd	Descripción
1	70929702	2	CLAMP
2	73153956	1	CABLE
3	70196765	6	CLAMP
4	70910287	4	LOCKWASHER
5	70922763	8	SCREW
6	73113184	2	SUPPORT
7	75210608	1	HORN
8	70911026	5	NUT
9	70639314	4	CLAMP
10	70929156	4	WASHER
11	70927400	4	SCREW
12	70922925	1	SCREW
13	70929156	1	WASHER
14	73130543	1	SUPPORT
15	70911025	1	NUT
16	70929662	2	WASHER
17	70929412	2	RING
18	73126111	3	CABLE

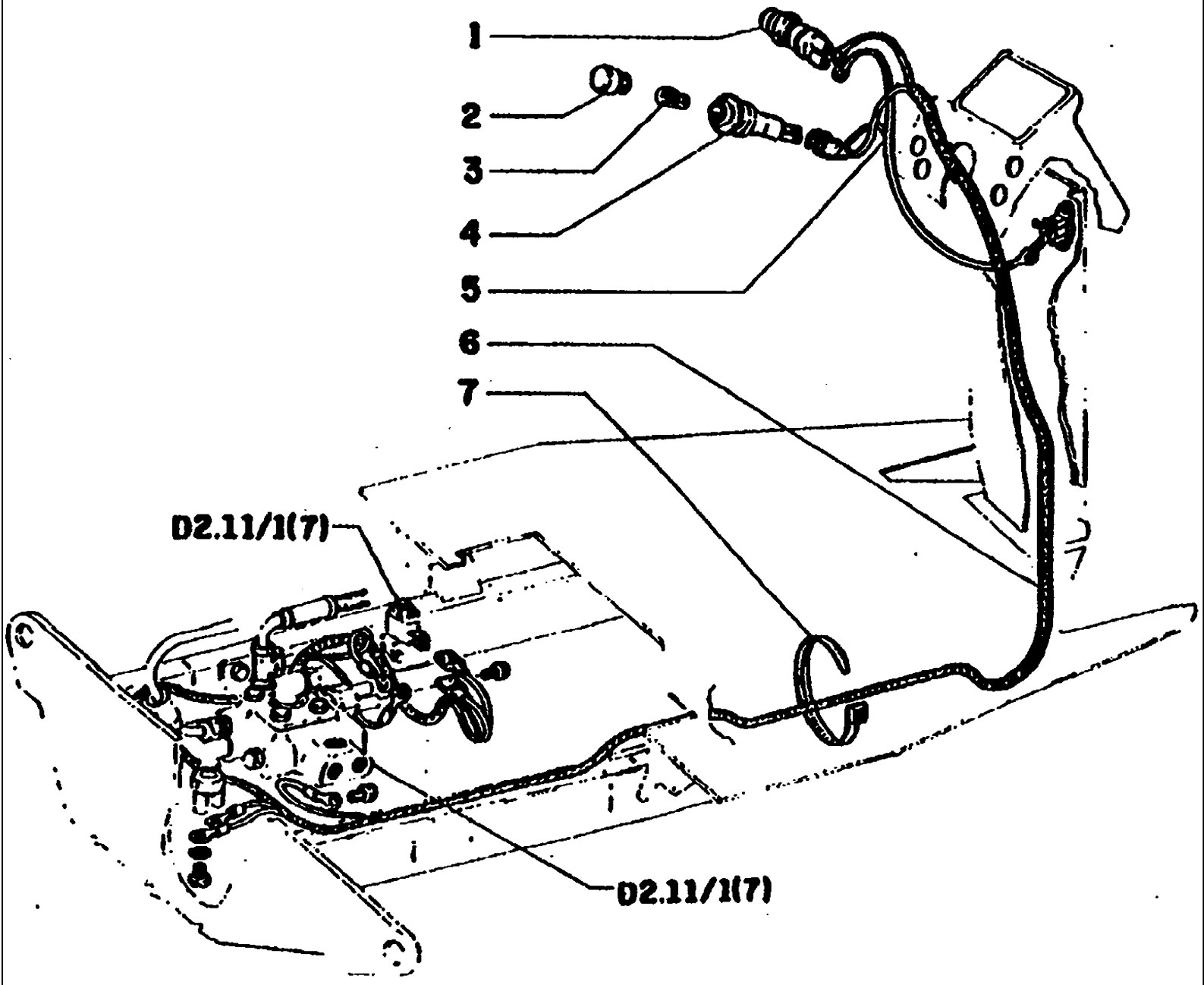
1
2
3
4
5
6
7
D2.11/1(7)
D2.11/1(7)

FG85 SERIES B MOTORGRADER

F4.01/1(001) EMERGENCY STEERING

Ref	Numero de Pieza	Ctd	Descripción
1	73073459	1	SWITCH
2	73137185	1	LENS
3	73072025	1	LAMP
4	73072027	1	SUPPORT
5	73153093	1	CABLE
6	73153020	1	CABLE
7	70196765	20	CLIP

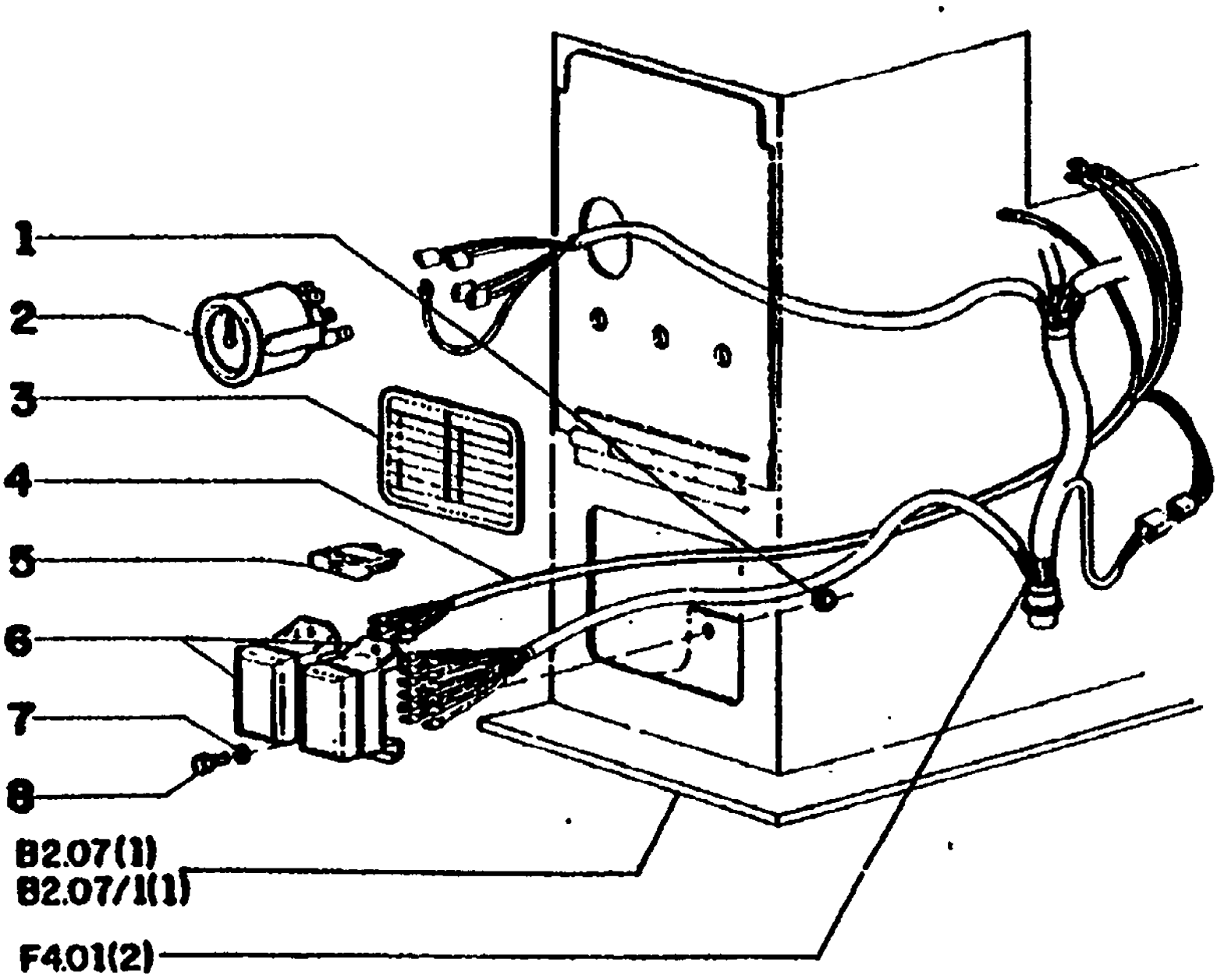
1
2
3
4
5
6
7
8
B2.07(1)
B2.07/1(1)
F4.01(2)

FG85 SERIES B MOTORGRADER

F4.01/1(002) ELECTRICAL SYSTEM - FOR UNITS WITH 12 VOLTS SYSTEM

Ref	Numero de Pieza	Ctd	Descripción
1	15896421	4	NUT, M5, Cl 10
2	75241685	1	TACHOMETER
3	75241785	1	DECAL
4	75241765	1	CABLE
5	11054690	1	FUSE
5	11054990	1	FUSE, 10 Amp
5	11055090	4	FUSE
5	11055190	1	FUSE
5	11055290	1	FUSE
5	11055390	1	FUSE
6	79078595	2	FUSE HOLDER
7	14496307	4	WASHER
8	10977534	4	BOLT, Hex, M5 x 10, 10.9, Full Thd

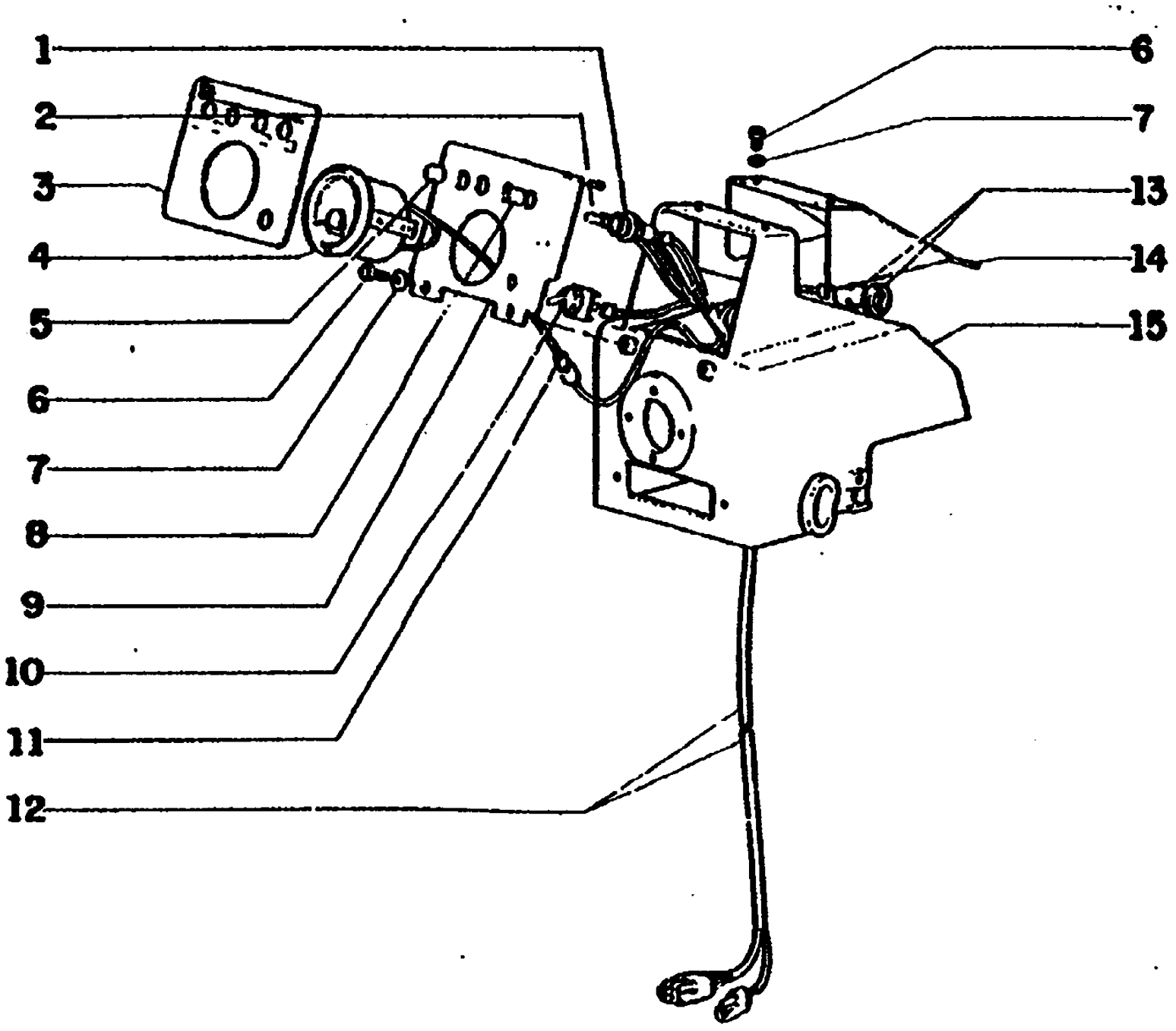
1
2
3
4
5
6
7
8
9
10
11
12
6
7
13
14
15

FG85 SERIES B MOTORGRADER

F4.01/1(003) ELECTRICAL SYSTEM - FOR UNITS WITH 12 VOLTS SYSTEM

Ref	Numero de Pieza	Ctd	Descripción
1	73072027	4	SUPPORT
2	70928298	4	LAMP
3	75241678	1	DECAL
4	75241685	1	TACHOMETER
5	73137185	3	LENS
6	70928182	6	SCREW
7	70928190	6	WASHER
8	73072028	1	LENS
9	75241677	1	COVER
10	75217221	1	SWITCH
11	73121530	1	WIRE TERMINAL
12	75241686	1	CABLE
13	75241340	1	HORN
14	75241681	1	COVER
15	75241673	1	SUPPORT

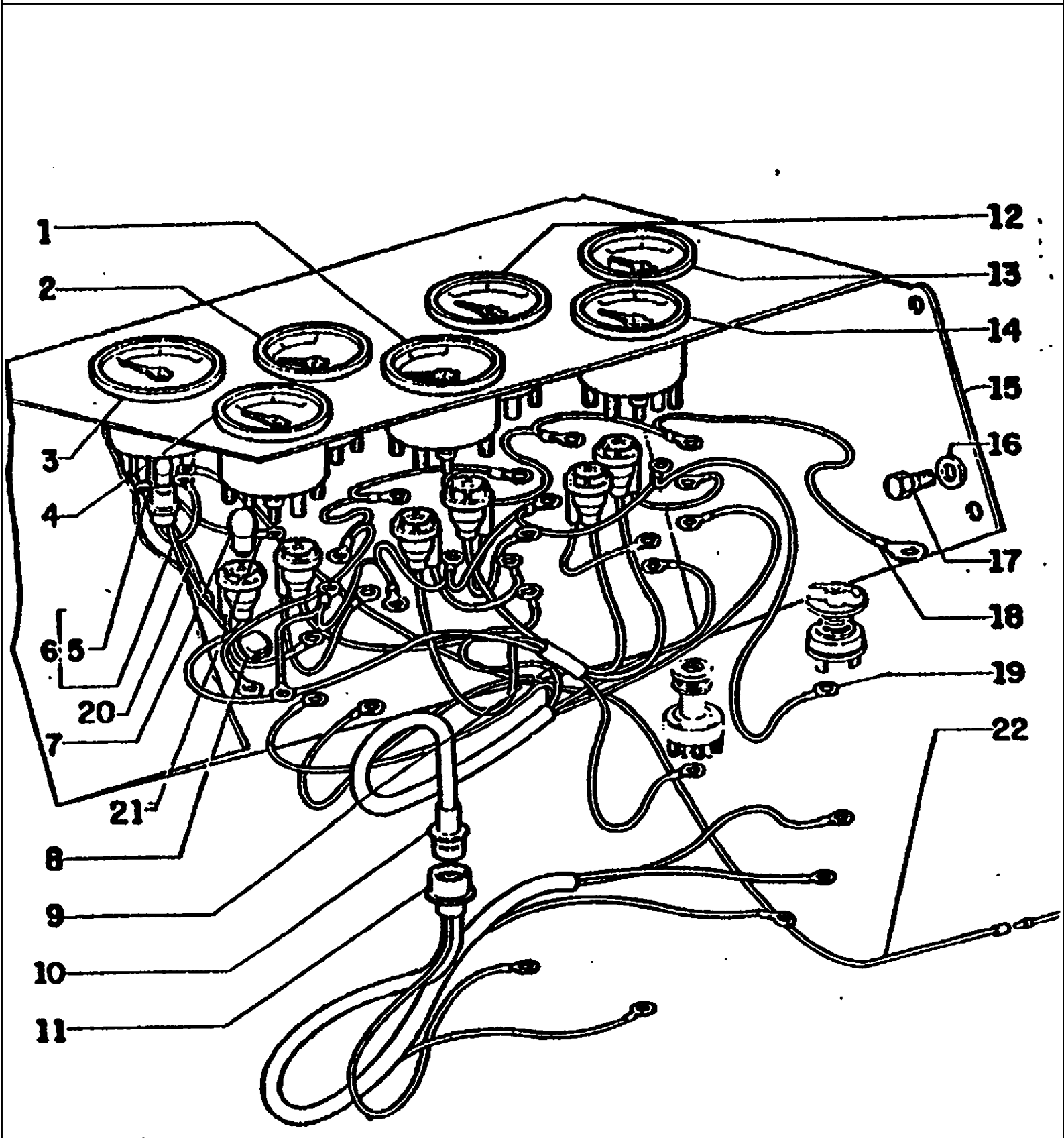
1
2
3
4
5
6
7
8
9
10
11
12
13
14
15
16
17
18
19
20
21
22

FG85 SERIES B MOTORGRADER

F4.01/1(004) ELECTRIC INSTRUMENTS - FOR UNITS WITH 12 VOLTS SYSTEM

Ref	Numero de Pieza	Ctd	Descripción
1	75241711	1	VOLTMETER
2	73157572	1	OIL PRESS. GAUGE
3	75241710	1	TEMPERATURE GAU
4	73157571	1	TEMPERATURE GAU
5	70928297	1	BULB
6	75241666	1	CABLE
7	70928297	6	BULB
8	75238158	1	CONNECTOR
9	73159719	1	CABLE
10	73159722	1	CABLE
11	73159723	1	CABLE (*)
11	73159724	1	CABLE (*)
12	73157575	1	TEMPERATURE GAU
13	75239182	1	INDICATOR
14	73159155	1	OIL PRESS. GAUGE
15	75241661	1	PANEL
16	70929156	4	WASHER
17	70922300	4	SCREW
18	73159720	1	CABLE
19	73159721	1	CABLE
20	75241667	1	CABLE
21	75241668	1	CABLE
22	75241669	1	CABLE

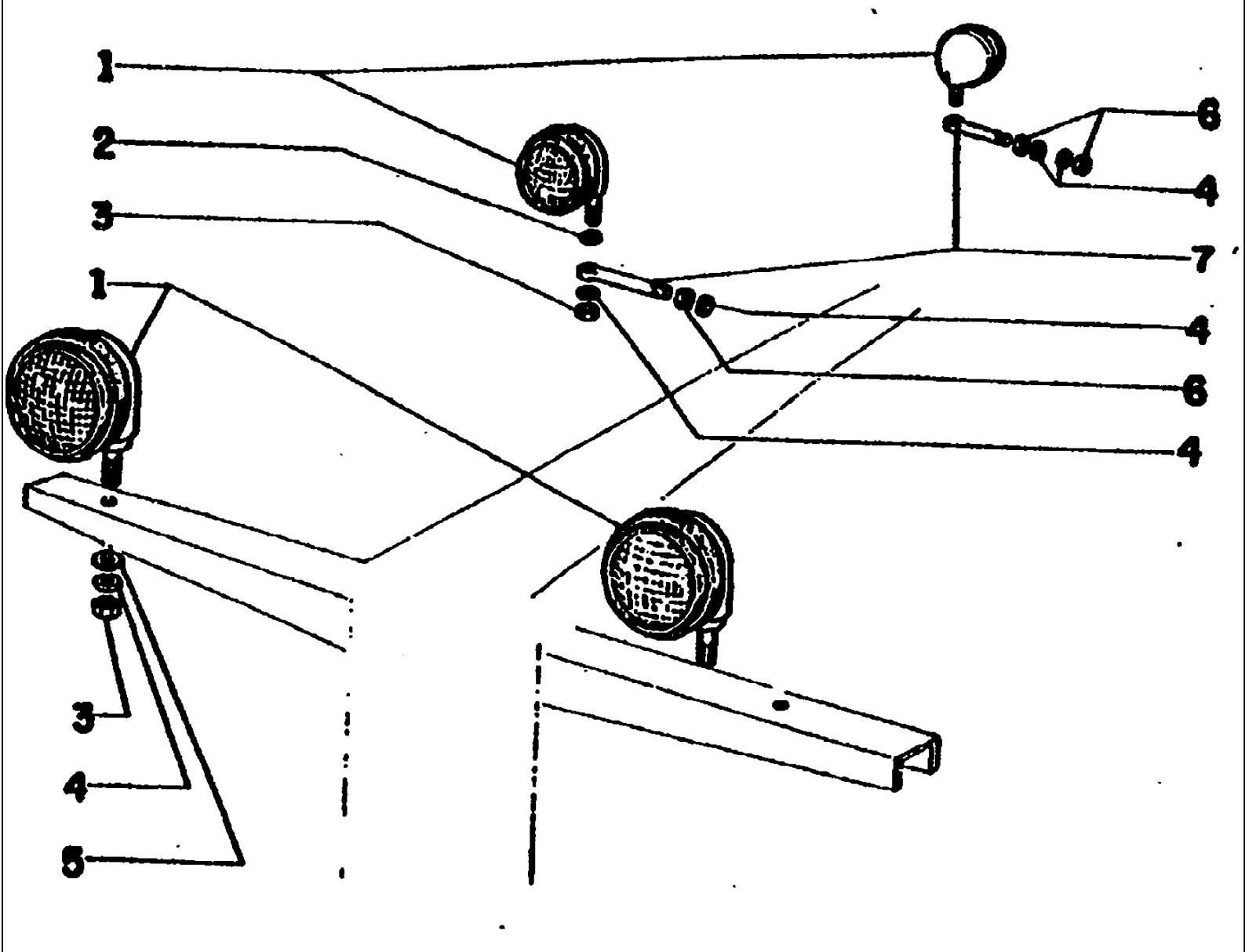
1
2
3
1
6
4
7
4
6
4
3
4
5

FG85 SERIES B MOTORGRADER

F4.01/1(005) ELECTRIC SYSTEM-LIGHTS - FOR UNITS WITH 12 VOLTS SYSTEM

Ref	Numero de Pieza	Ctd	Descripción
1	75241817	5	FLOODLIGHT
2	70677008	3	WASHER
3	70911043	3	NUT
4	70912441	8	LOCKWASHER
5	70900818	2	WASHER
6	70911035	3	NUT
7	70065935	3	SCREW

F4.01/1(006) REAR FLOOD LIGHT LEFT - FOR UNITS WITH 12 VOLTS SYSTEM

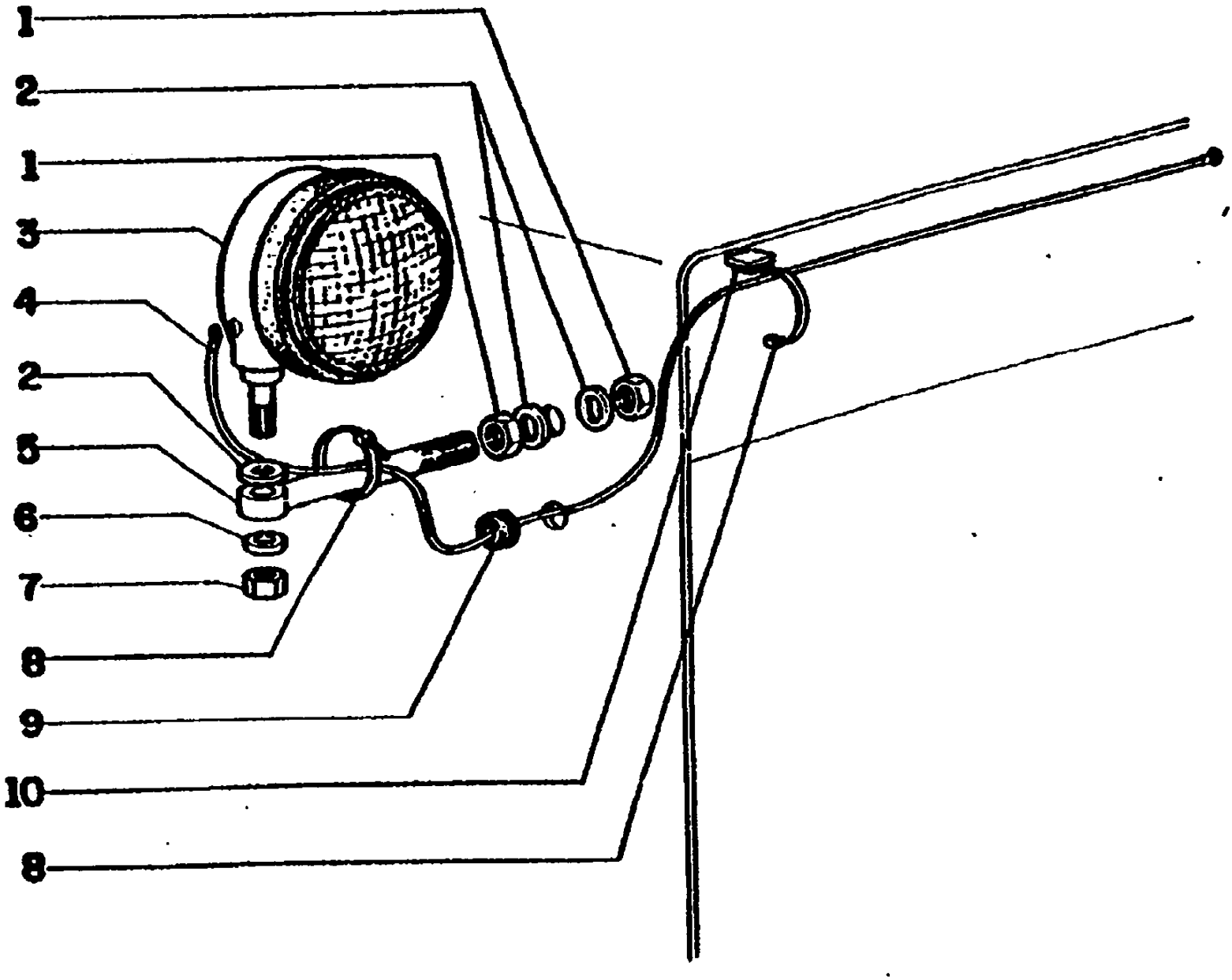

FG85 SERIES B MOTORGRADER

F4.01/1(006) REAR FLOOD LIGHT LEFT - FOR UNITS WITH 12 VOLTS SYSTEM

Ref	Numero de Pieza	Ctd	Descripción
1	70911035	2	NUT
2	70912441	3	LOCKWASHER
3	75241817	1	FLOODLIGHT
4	75239440	1	CABLE
5	70065935	1	SCREW
6	70677008	1	WASHER
7	70911043	1	NUT
8	70196765	3	CLIP
9	70023176	1	RING
10	73125890	2	SUPPORT

F4.01/1(007) CAB FLOOD LIGHTS - FOR UNITS WITH 12 VOLTS SYSTEM

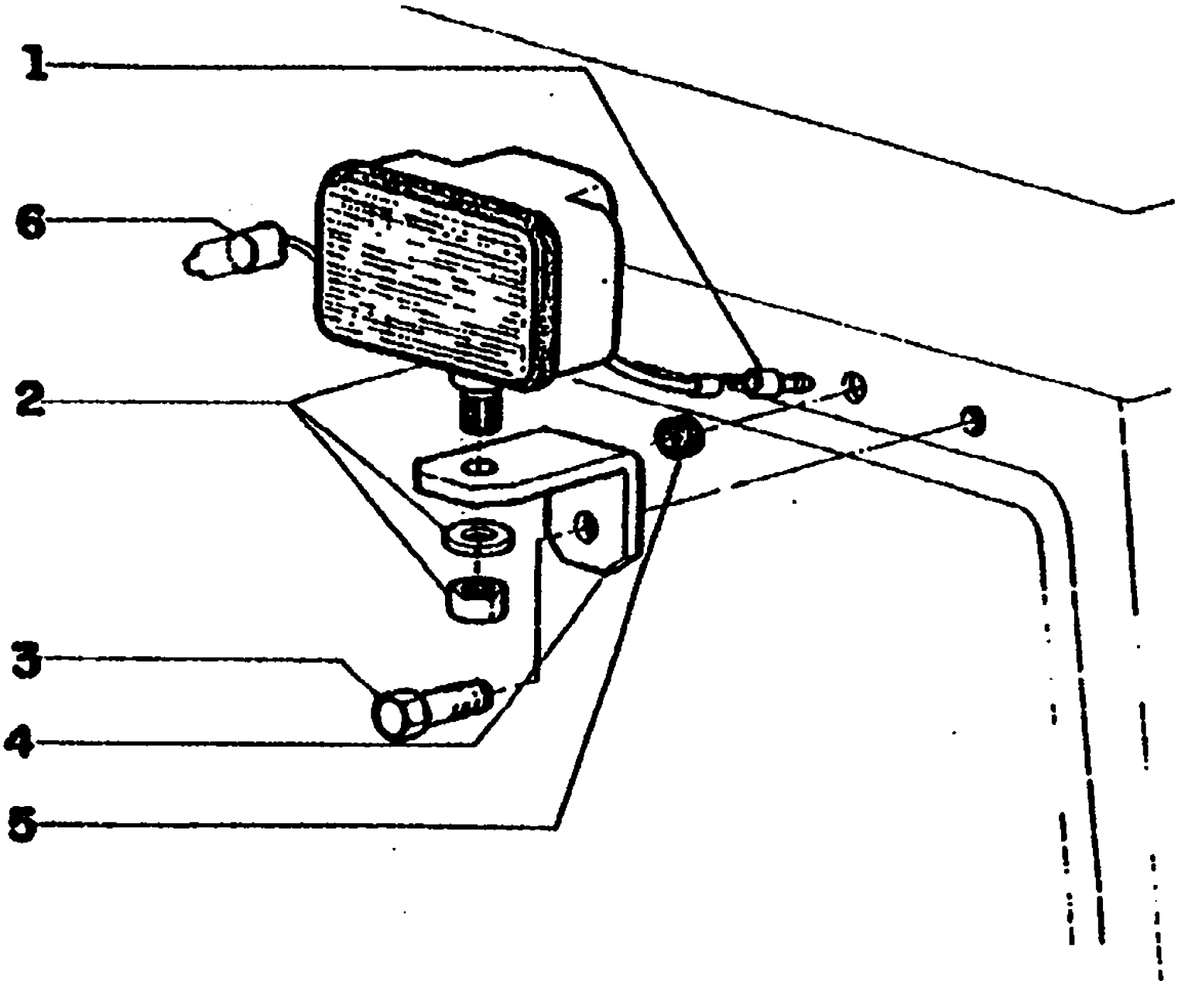

FG85 SERIES B MOTORGRADER

F4.01/1(007) CAB FLOOD LIGHTS - FOR UNITS WITH 12 VOLTS SYSTEM

Ref	Numero de Pieza	Ctd	Descripción
1	73121530	2	WIRE TERMINAL
2	75220421	2	FLOODLIGHT
3	70922763	2	SCREW
4	73154271	2	SUPPORT
5	70934738	2	RING
6	14151590	2	LAMP

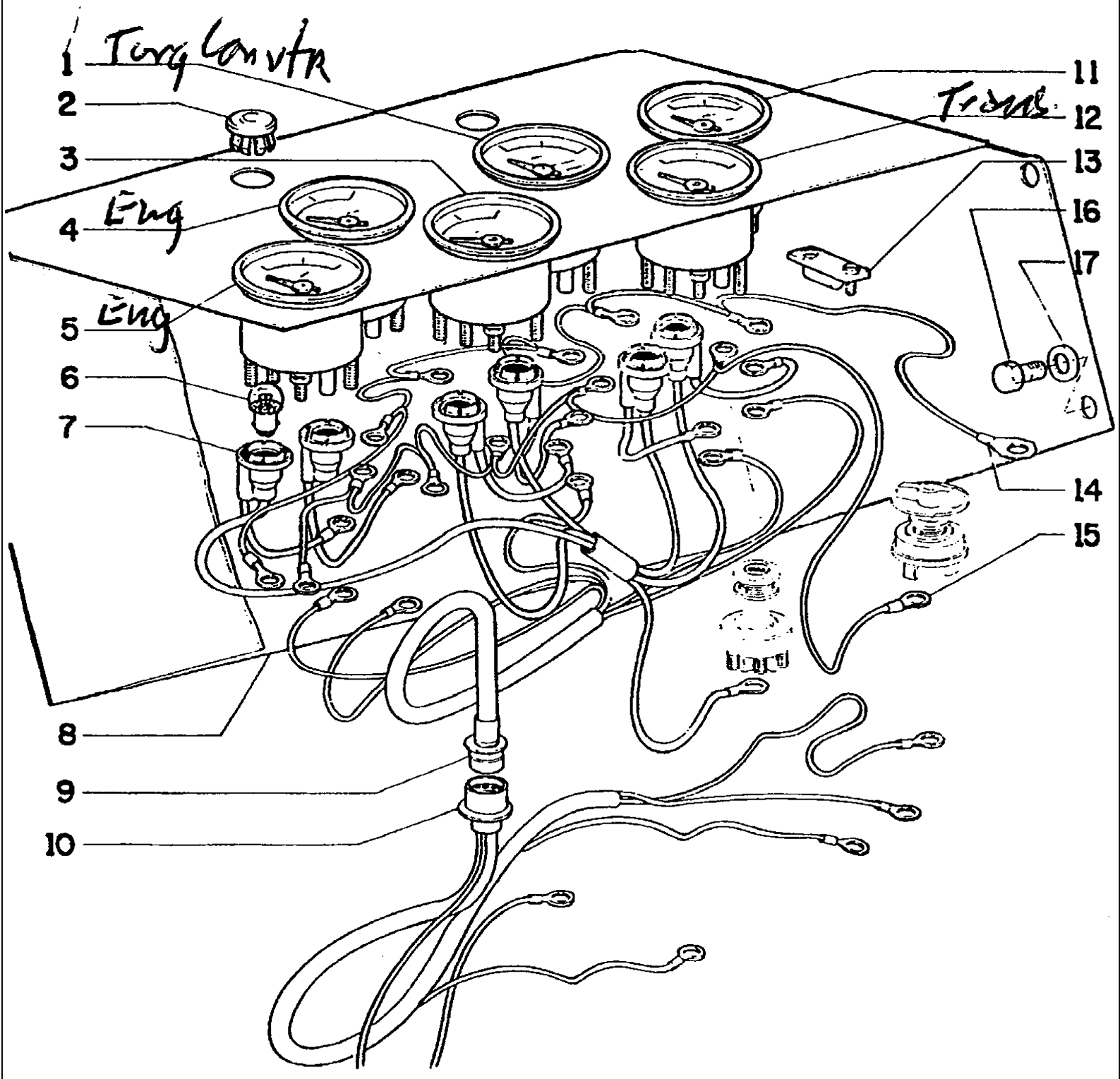
1
2
3
4
5
6
7
8
9
10
11
12
13
14
15
16
17

FG85 SERIES B MOTORGRADER

F4.01/1(008) ELECTRIC INSTRUMENTS

Ref	Numero de Pieza	Ctd	Descripción
1	73157575	1	TEMPERATURE GAU
2	70924850	2	BLOCK
3	73157588	1	VOLTMETER
4	73157572	1	OIL PRESS. GAUGE
5	73157571	1	TEMPERATURE GAU
6	70929158	6	BULB
7	73159719	1	CABLE
8	75239181	1	PANEL
9	73159722	1	CABLE
10	73159723	1	CABLE, FOR FG85A/R
10	73159724	1	CABLE, FOR FG105A/R
11	75239182	1	INDICATOR
12	73159155	1	OIL PRESS. GAUGE
13	73159720	5	REDUCTION GEAR
14	73159720	1	CABLE
15	73159721	1	CABLE
16	70922300	4	SCREW
17	70929156	4	WASHER

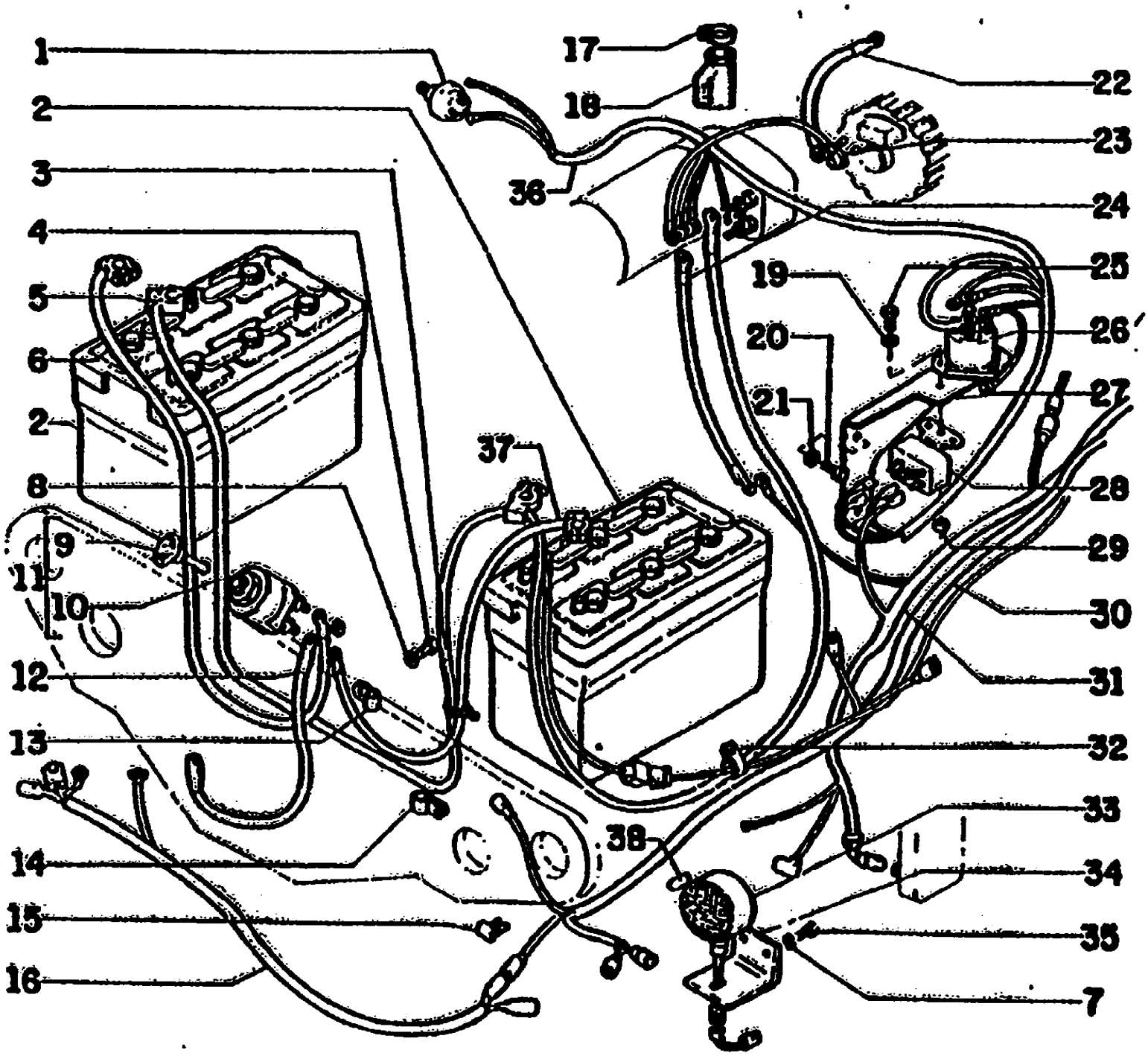
1
2
3
4
5
6
2
8
9
11
10
12
13
14
15
16
17
18
36
37
38
22
23
24
25
19
26
20
27
21
28
29
30
31
32
33
34
35
7

FG85 SERIES B MOTORGRADER

F4.01/1(009) ELECTRICAL SYSTEM - FOR UNITS WITH 12 VOLTS SYSTEM

Ref	Numero de Pieza	Ctd	Descripción
1	73110555	1	SENSOR
2	75211328	2	BATTERY
2	75240775	2	BATTERY
3	70196765	17	CLIP
4	70922300	11	SCREW
5	75241782	1	CABLE
6	75241787	1	CABLE
7	70630753	4	WASHER
8	70630753	11	WASHER
9	79073033	1	KEY
10	79073032	1	KEY
11	79073031	1	SWITCH
12	73153050	1	CABLE
13	70639314	10	CLAMP
14	70928656	14	CLAMP
15	70639313	2	CLAMP
16	73153951	1	CABLE
17	70922660	1	CLAMP
18	70076572	1	BOOT
19	70928190	2	WASHER
20	11112331	2	BOLT, Hex, M12 x 28, 10.9, Full Thd
21	70928178	2	WASHER
22	73126797	1	CABLE
23	75241784	1	CABLE
24	73126796	1	CASK
25	70927541	2	SCREW
26	76022545	1	RELAY
27	75238339	1	SUPPORT
28	75240906	1	RELAY
29	70911024	2	NUT
30	73153954	1	CABLE
31	75237909	1	CABLE
32	70929703	2	CLAMP
33	73069238	2	LIGHT
34	73124844	2	SUPPORT
35	70922300	4	SCREW
36	73153958	1	CABLE
37	75241788	1	CABLE
38	14144690	1	LAMP

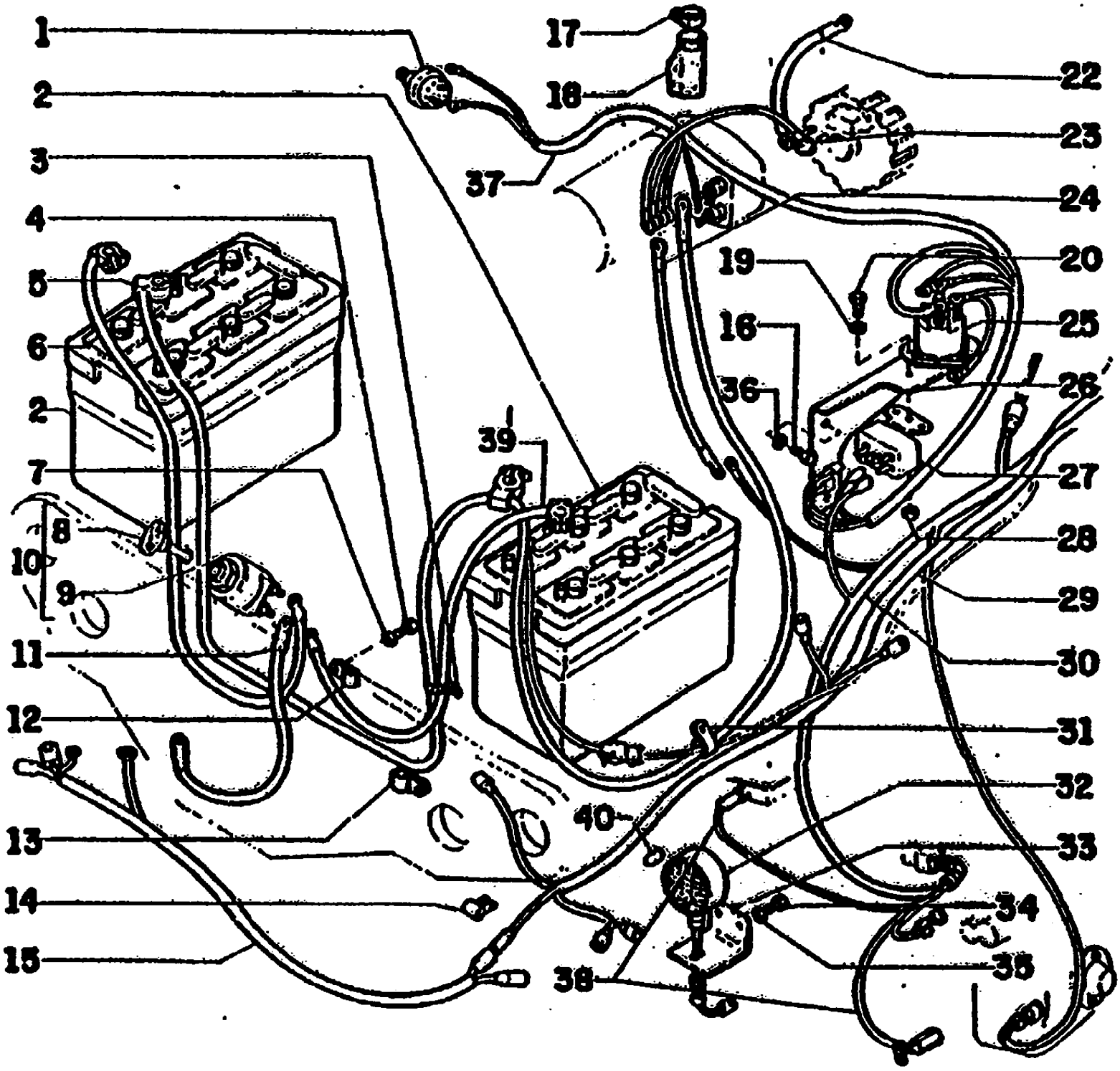
1
2
3
4
5
6
2
7
8
10
9
11
12
13
14
15
17
18
37
39
40
38
22
23
24
19
20
16
25
36
26
27
28
29
30
31
32
33
34
35

FG85 SERIES B MOTORGRADER

F4.01/1(010) ELECTRICAL SYSTEM - FOR UNITS WITH 12 VOLTS SYSTEM

Ref	Numero de Pieza	Ctd	Descripción
1	73110555	1	SENSOR
2	75211328	2	BATTERY
2	75240775	2	BATTERY
3	70196765	17	CLIP
4	70922300	11	SCREW
5	75241782	1	CABLE
6	75241787	1	CABLE
7	70630753	11	WASHER
8	79073033	1	KEY
9	79073032	1	KEY
10	79073031	1	SWITCH
11	73153050	1	CABLE
12	70639314	10	CLAMP
13	70928656	14	CLAMP
14	70639313	2	CLAMP
15	73153951	1	CABLE
16	11112331	2	BOLT, Hex, M12 x 28, 10.9, Full Thd
17	70922660	1	CLAMP
18	70076572	1	BOOT
19	70928190	2	WASHER
20	70927541	2	SCREW
21	75241788	1	CABLE
22	73126797	1	CABLE
23	75241784	1	CABLE
24	73126796	1	CABLE
25	76022545	1	RELAY
26	75238339	1	SUPPORT
27	75240906	1	RELAY
28	70911024	2	NUT
29	73153954	1	CABLE
30	73155880	1	CABLE
31	70929703	2	CLAMP
32	73069238	2	LIGHT
33	73124844	2	SUPPORT
34	70922300	4	SCREW
35	70630753	4	WASHER
36	70928178	2	WASHER
37	73153958	1	CABLE
38	75236558	1	CABLE
39	75241788	1	CABLE
40	14144690	1	LAMP

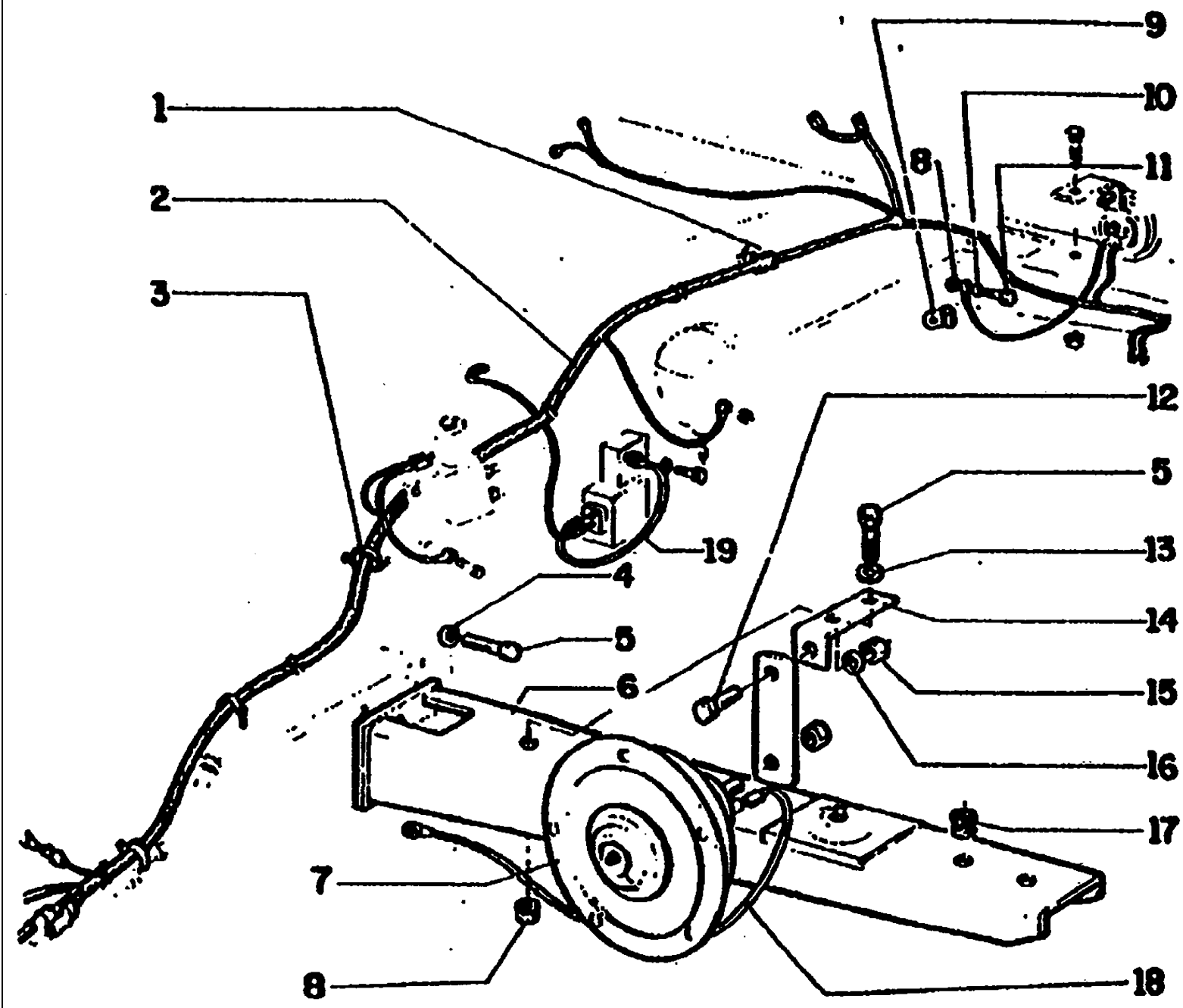
1
2
3
4
5
6
7
8
9
10
11
12
13
14
15
16
17
18
19

FG85 SERIES B MOTORGRADER

F4.01/1(011) ELECTRICAL SYSTEM

Ref	Numero de Pieza	Ctd	Descripción
1	70929702	2	CLAMP
2	73153956	1	CABLE
3	70196765	6	CLIP
4	70910287	4	LOCKWASHER
5	70922763	8	SCREW
6	73113184	2	SUPPORT
7	75216315	1	HORN
8	70911026	5	NUT
9	70639314	4	CLAMP
10	70929156	4	WASHER
11	70927400	4	SCREW
12	70922925	1	SCREW
13	70929156	1	WASHER
14	73130543	1	SUPPORT
15	70911025	1	NUT
16	70929662	2	WASHER
17	70929412	2	INSULATOR
18	73126111	3	CABLE
19	73132558	2	CABLE

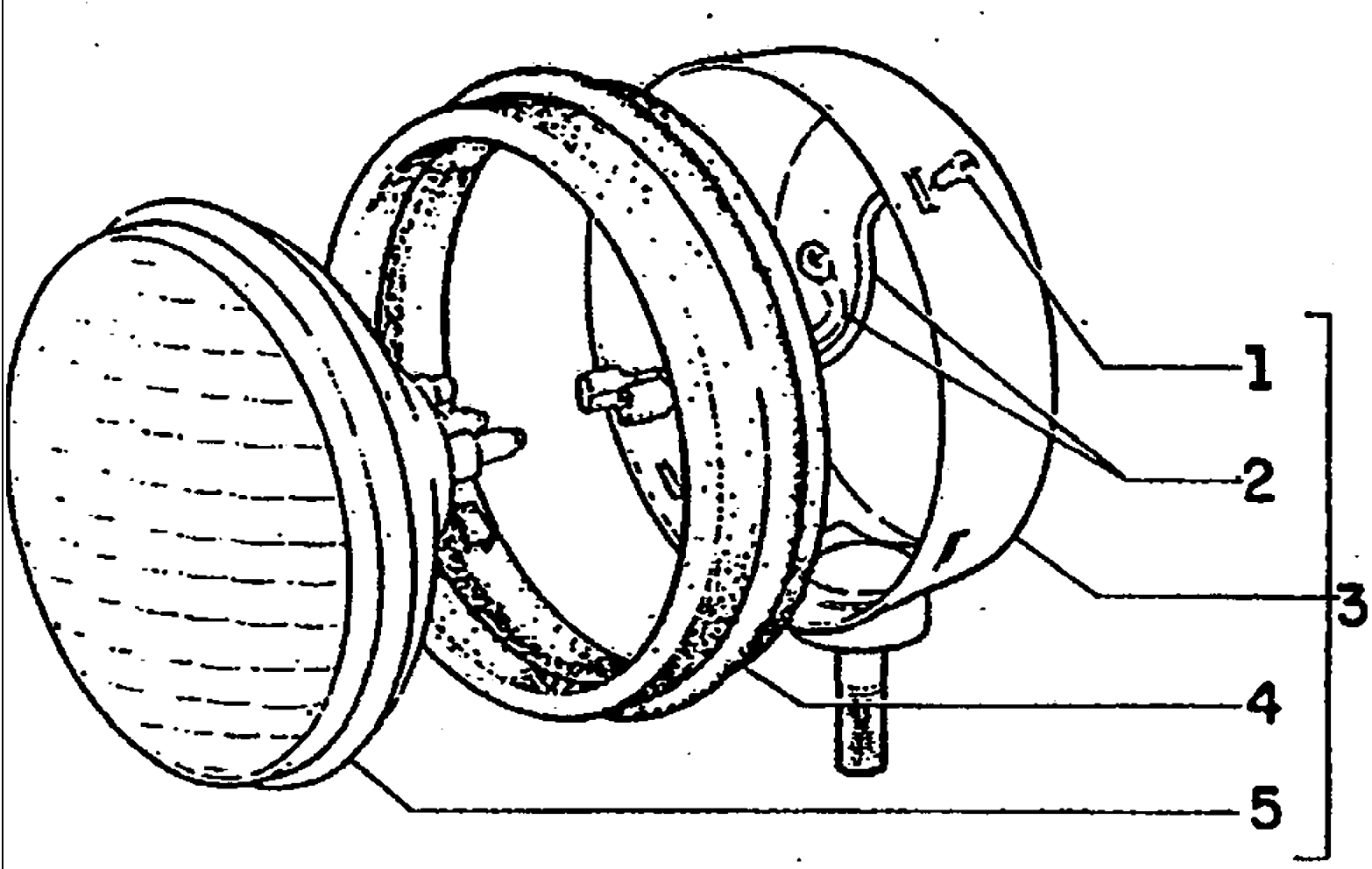
1
2
3
4
5

FG85 SERIES B MOTORGRADER

F4.05(001) LIGHT ASSEMBLY

Ref	Numero de Pieza	Ctd	Descripción
1	70912731	2	SCREW
2	70621724	2	ROPE
3	70621429	1	FLOODLIGHT
4	70621428	1	SEAL
5	70182763	1	LAMP

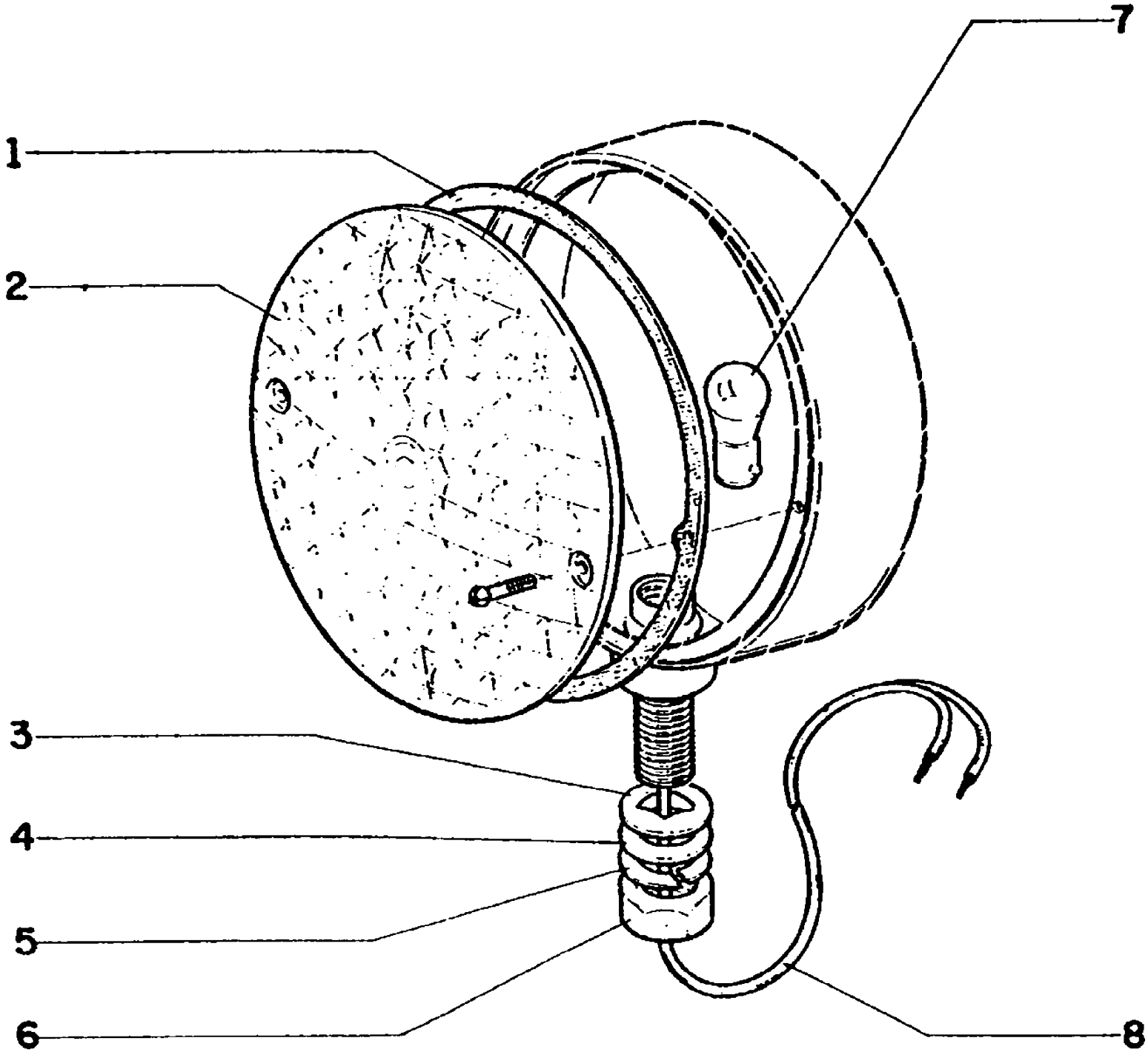
1
2
3
4
5
6
7
8

FG85 SERIES B MOTORGRADER

F4.05(002) LIGHT ASSEMBLY

Ref	Numero de Pieza	Ctd	Descripción
1	73069196	1	GASKET
2	73069239	1	LENS
3	73069241	1	PAD
4	70906985	1	WASHER
5	70914678	1	LOCKWASHER
6	70912201	1	NUT
7	73039643	1	LAMP
8	73069240	1	WIRE TERMINAL

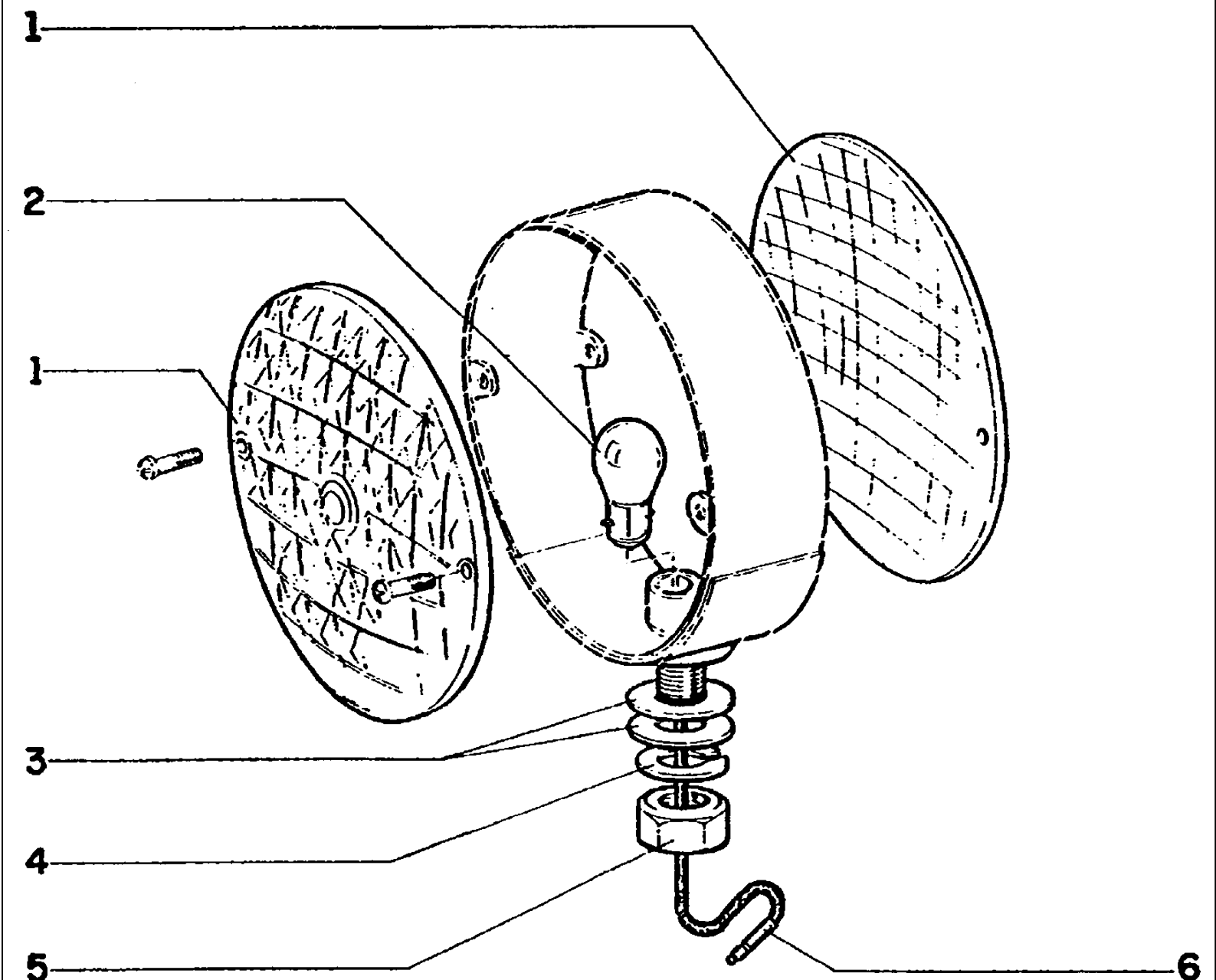
1
2
1
3
4
5
6

FG85 SERIES B MOTORGRADER

F4.05(003) LIGHT ASSEMBLY

Ref	Numero de Pieza	Ctd	Descripción
1	73150128	2	LENS
2	70934706	1	LAMP
3	70912298	2	WASHER
4	70914678	1	LOCKWASHER
5	70900368	1	NUT
6	73052008	1	WIRE TERMINAL

F4.05/1(002) LIGHT ASSEMBLY - FOR UNITS WITH 12 VOLTS SYSTEM

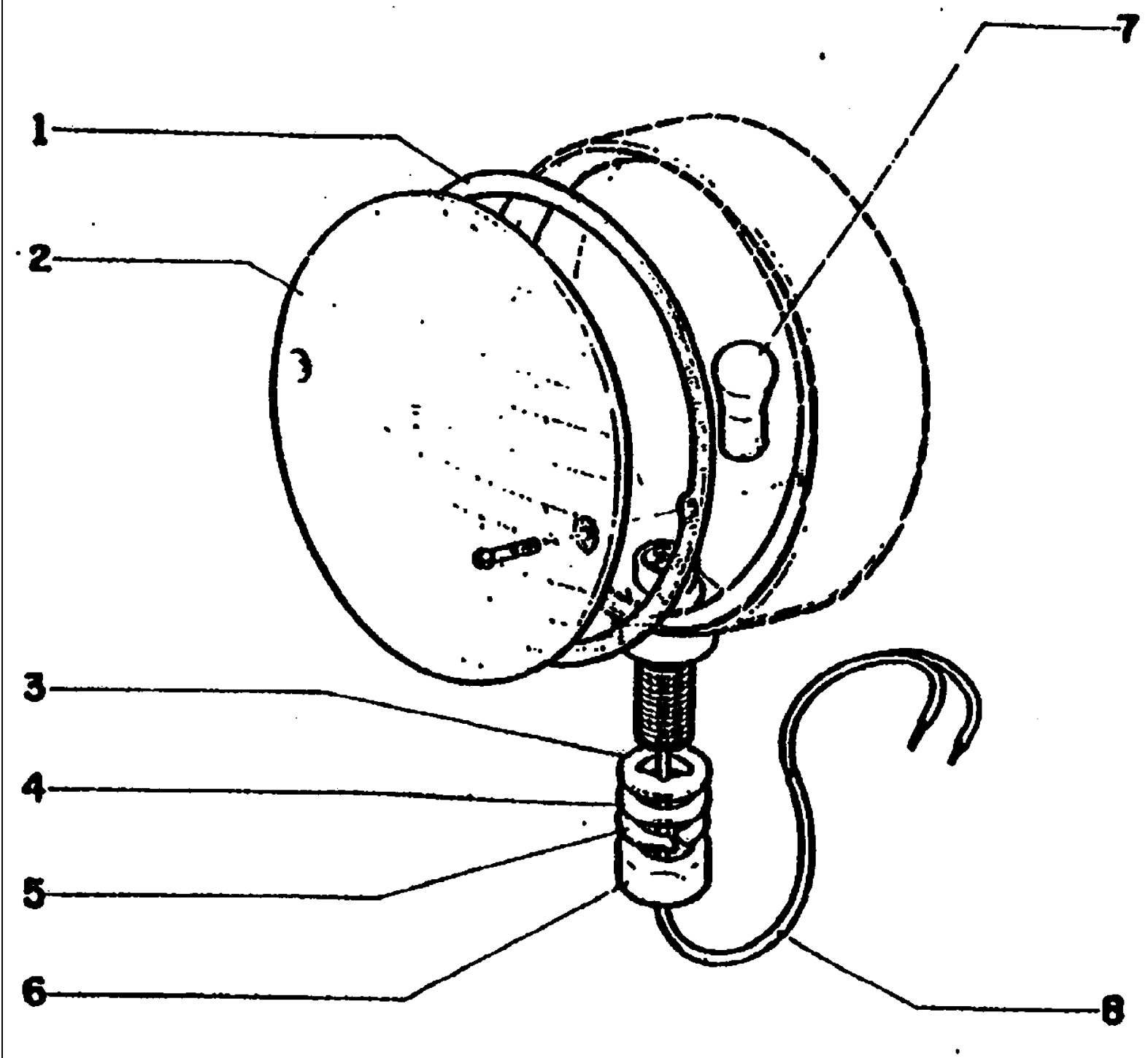

FG85 SERIES B MOTORGRADER

F4.05/1(002) LIGHT ASSEMBLY - FOR UNITS WITH 12 VOLTS SYSTEM

Ref	Numero de Pieza	Ctd	Descripción
1	73069196	1	GASKET
2	73069239	1	LENS
3	73069241	1	PAD
4	70906905	1	WASHER
5	70914679	1	LOCKWASHER
6	70912201	1	NUT
7	14144690	1	LAMP
8	73069240	1	WIRE TERMINAL

F6.03(001) ALTERNATOR BOSCH

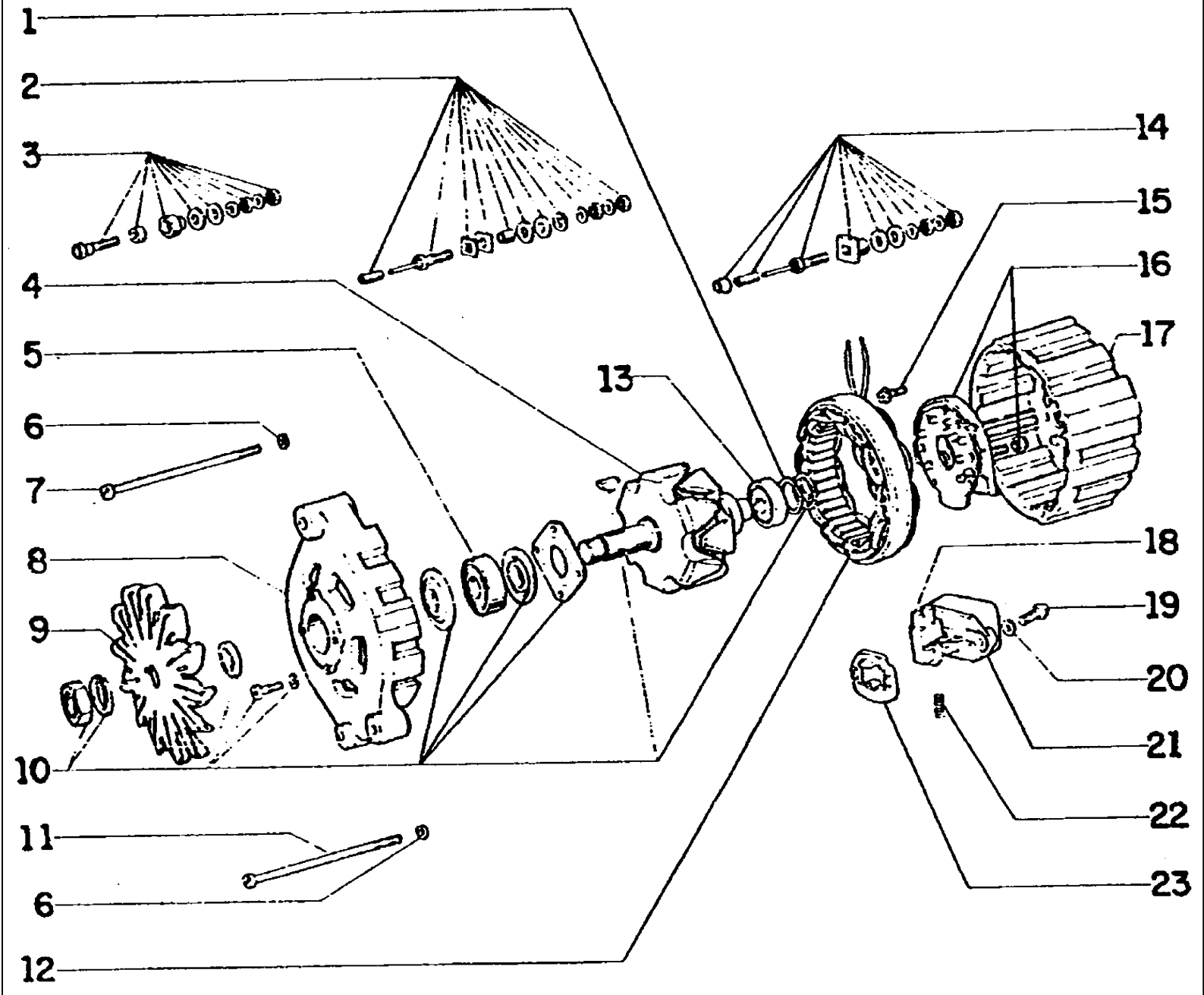

FG85 SERIES B MOTORGRADER

F6.03(001) ALTERNATOR BOSCH

Ref	Numero de Pieza	Ctd	Descripción
1	75204451	1	PAWL
2	75207760	K	KIT
3	75207759	K	KIT
4	75207746	1	ROTOR
5	26794880	1	BEARING
6	10519301	4	WASHER, M5 x 9.55 x 1
7	75207754	3	SCREW
8	75207745	1	SUPPORT
9	75204242	1	FAN
10	75207758	K	KIT
11	75207756	1	SCREW
12	75207753	1	STATOR
13	75207748	1	BEARING
14	75207631	K	KIT
15	75207751	3	SCREW
16	75207750	1	DIODE
17	75207749	1	SUPPORT
18	75207752	1	BRUSH
19	75207755	2	SCREW
20	75204450	6	LOCKWASHER
21	75206957	1	REGULATOR
22	75207625	2	SPRING
23	75207757	1	GASKET

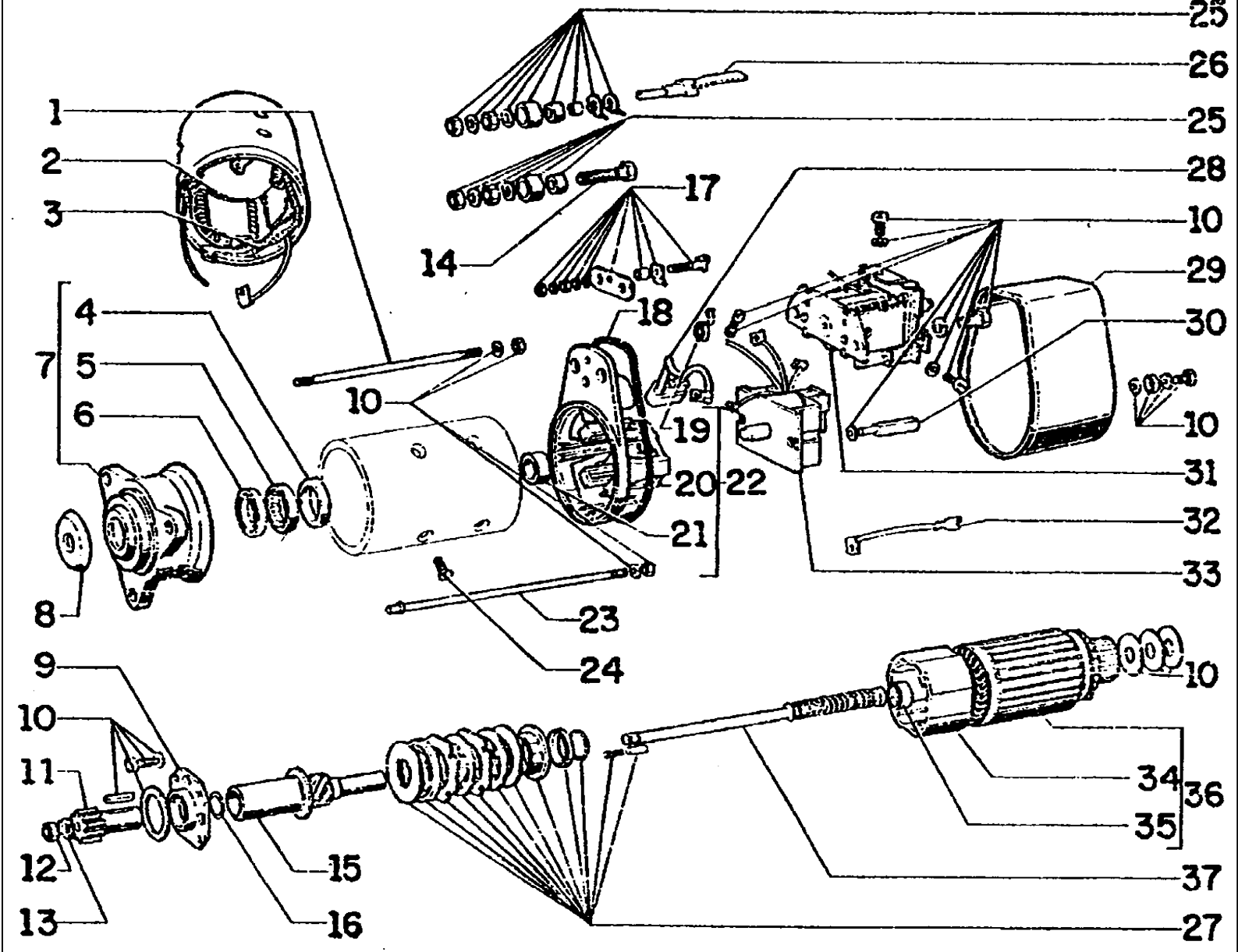
25
26
25
1
2
3
28
17
10
14
29
18
4
30
7
5
10
6
19
10
10
31
20
22
32
21
33
8
23
24
9
10
10
11
34
36
35
12
15
37
13
16
27

FG85 SERIES B MOTORGRADER

F6.08(001) STARTER ENGINE BOSCH

Ref	Numero de Pieza	Ctd	Descripción
1	75207427	1	STUD
2	75204562	1	COIL
3	75204563	1	INSULATOR
4	75206998	1	BUSHING
5	75206999	1	BEARING
6	75204565	1	RING
7	75206985	1	SUPPORT
8	75207436	1	WASHER
9	75206988	1	SUPPORT
10	75206984	K	KIT
11	75207426	1	BEVEL GEAR SET
12	75207431	1	NUT
13	75207430	1	PAWL
14	75204205	1	SCREW
15	75207425	1	ROD
16	75204564	1	RING
17	75206997	K	KIT
18	14467680	1	O-RING, -258, 70 Duro, 5.984" ID x .139" Thk
19	75206994	1	SPRING
20	75206992	1	SUPPORT
21	75206993	1	BUSHING
22	75206987	1	SUPPORT
23	75207428	3	STUD
24	75205289	*	SCREW
24	9969213	*	SCREW
25	75206996	K	KIT
26	75206995	1	SCREW
27	75207809	K	KIT
28	75204566	1	BRUSH
29	79076024	1	COVER
30	75207434	2	STUD
31	75207793	1	RELAY
32	75207437	1	CABLE
33	75207433	1	SWITCH
34	75206990	1	FLANGE
35	75206991	1	BEARING
36	75206986	1	ARMATURE
37	75207429	1	SHAFT

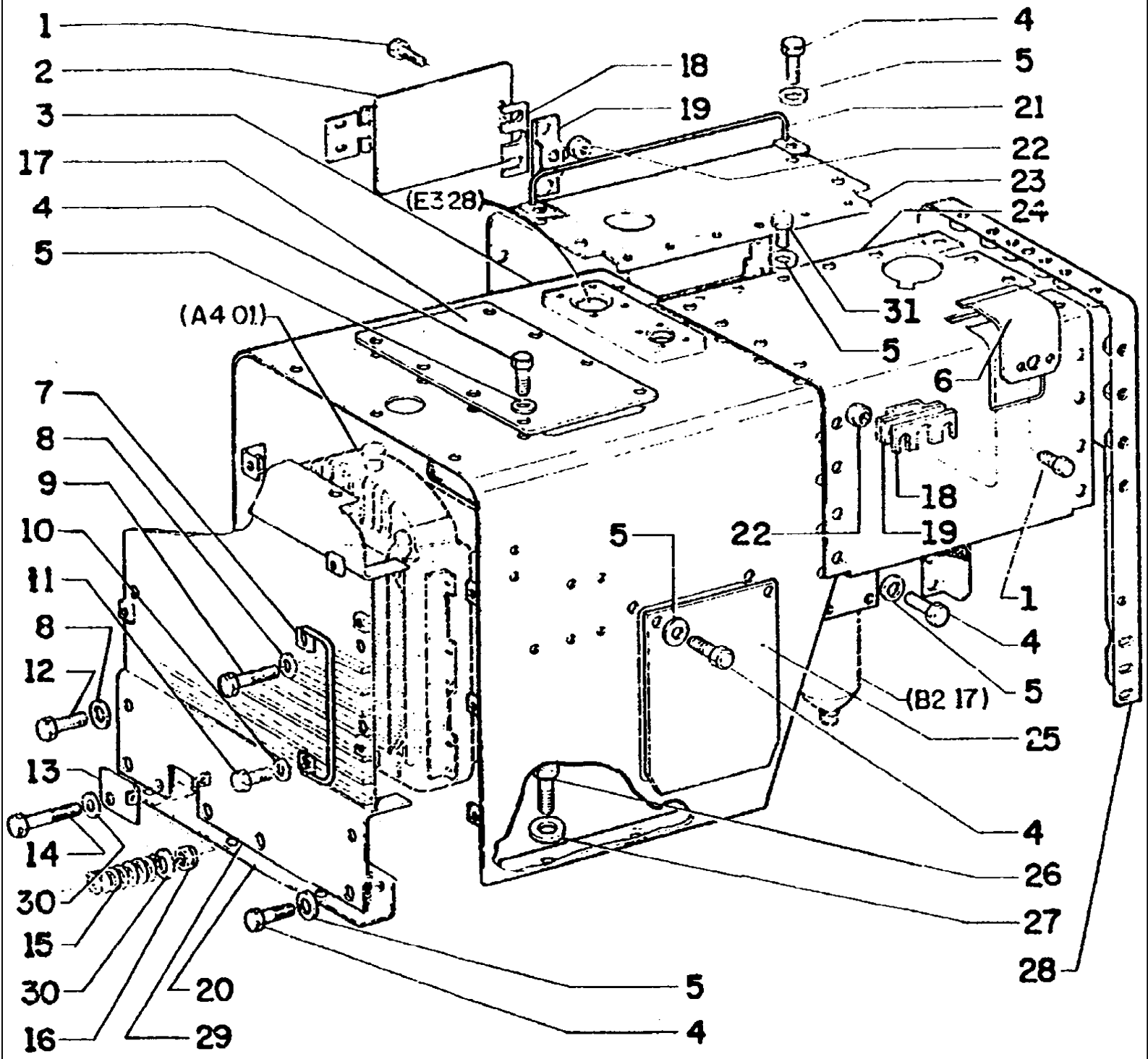
1
2
3
17
4
5
(A4 01)
7
8
9
10
11
8
12
13
14
30
15
30
16
20
29
5
4
18
19
(E3 28)
4
5
21
22
23
24
31
5
6
18
22
19
5
1
4
5
(B2 17)
25
4
26
27
28

FG85 SERIES B MOTORGRADER

L1.01(001) SHELL AND RADIATOR

Ref	Numero de Pieza	Ctd	Descripción
1	70927541	4	SCREW
2	73152825	1	COVER
3	75237726	1	HOOD
4	70922763	38	SCREW
5	70677006	38	WASHER
6	75221544	1	PLATE
7	73125367	2	HANDLE
8	70928844	12	WASHER
9	70921556	4	SCREW
10	70677008	4	WASHER
11	70920582	10	SCREW
12	70921175	2	SCREW
13	73125364	1	COVER
14	70920996	1	SCREW
15	70619261	1	SPRING
16	70918308	3	NUT
17	75236739	1	COVER
18	73072341	8	SHIM
19	73069458	2	LOCK
20	73155816	1	ANGLE
21	73148661	2	GRAB HANDLE
22	70911024	4	NUT
23	73154362	1	PLATE
24	75221840	1	HOOD
25	73152011	2	COVER
26	70921174	6	SCREW
27	70677010	6	WASHER
28	75221853	1	SUPPORT
29	73152396	1	GUARD
30	70929156	4	WASHER
31	70922300	6	SCREW

L1.01(002) SIDE PANEL

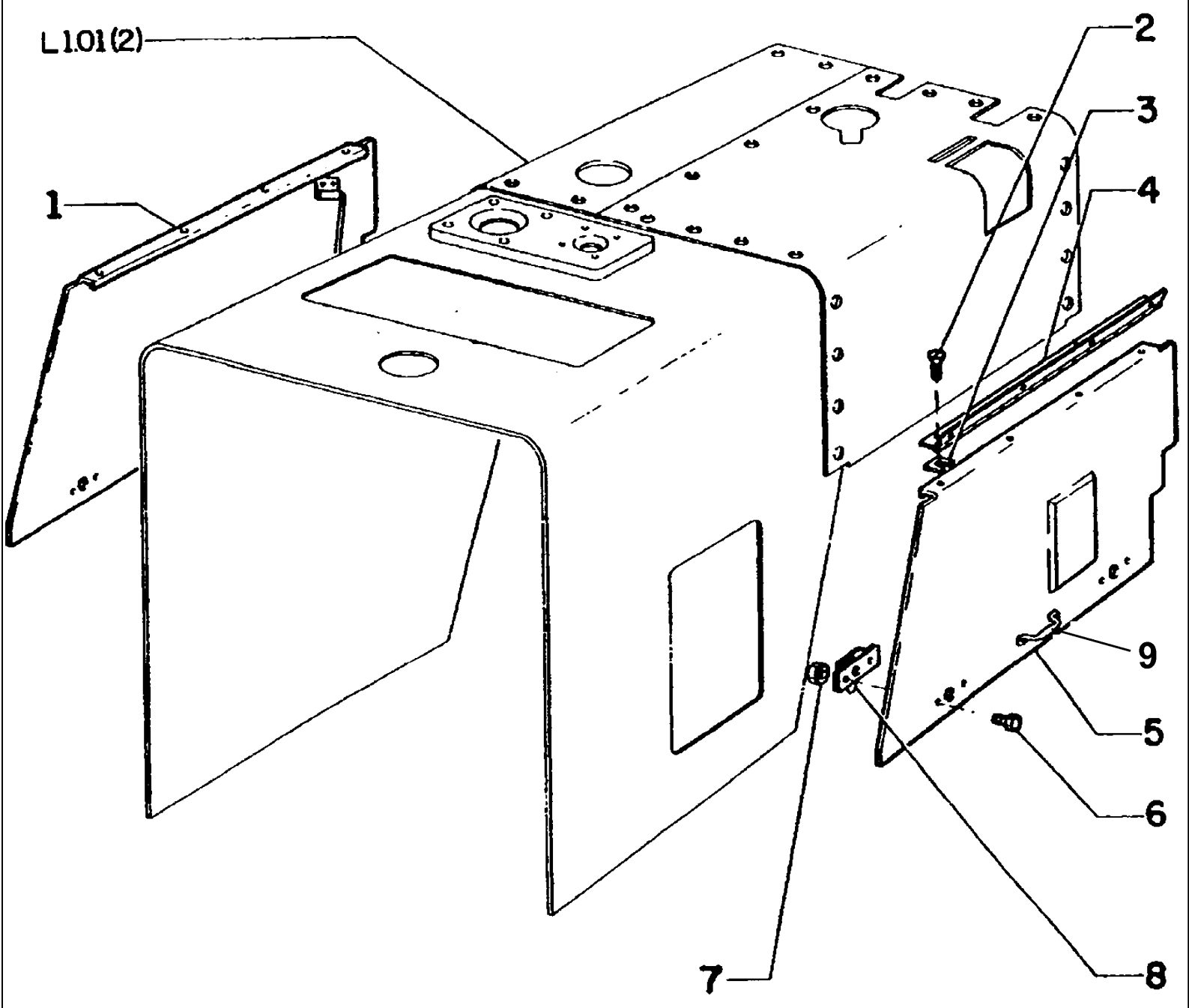

FG85 SERIES B MOTORGRADER

L1.01(002) SIDE PANEL

Ref	Numero de Pieza	Ctd	Descripción
1	73154364	1	DASHBOARD
2	70922300	16	SCREW
3	73072341	16	SHIM
4	73154331	2	HINGE
5	73154366	1	DASHBOARD
6	70927541	8	SCREW
7	70911024	8	NUT
8	73069458	4	LOCK
9	70032834	1	HANDLE

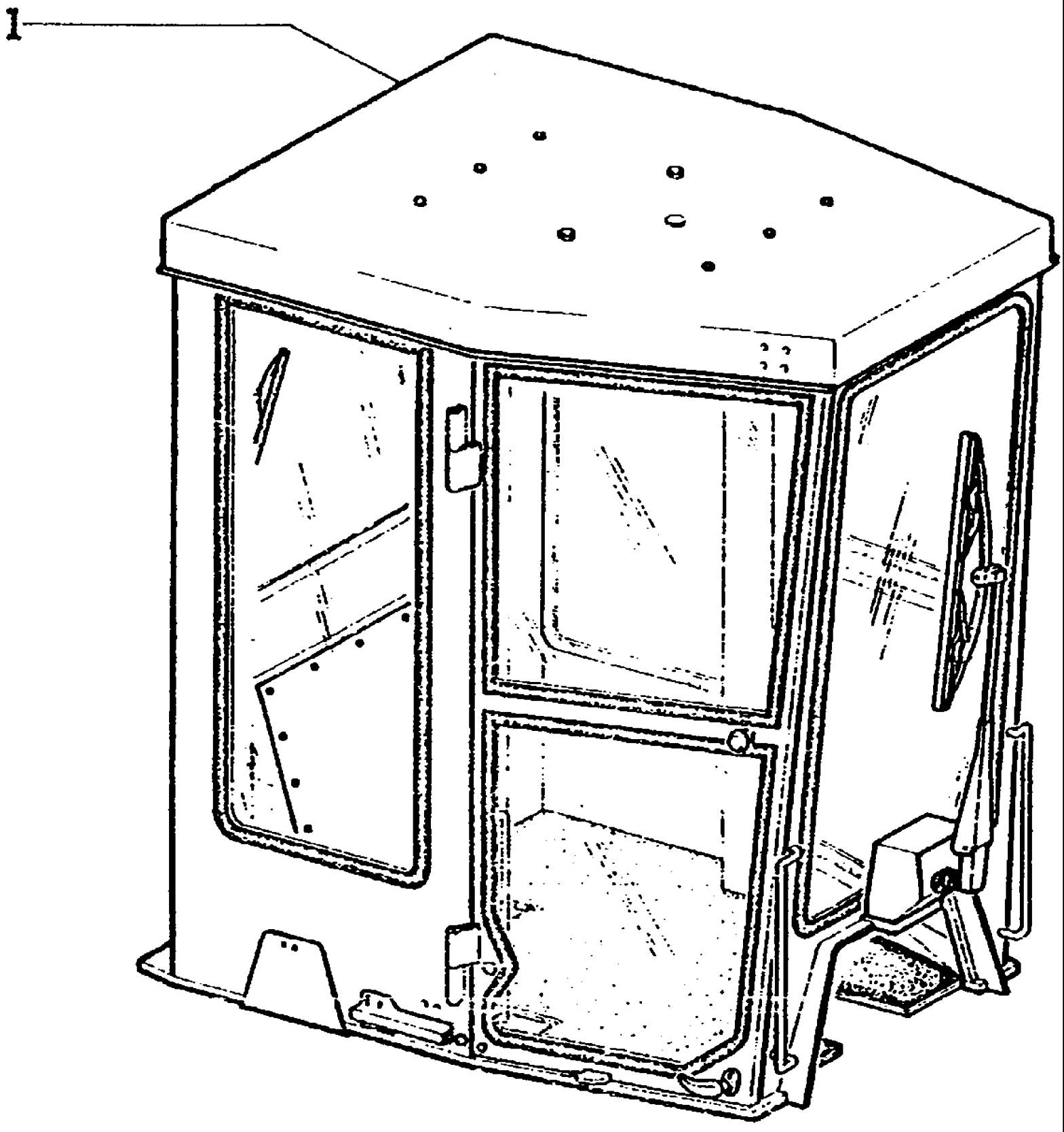
1

FG85 SERIES B MOTORGRADER

L1.03(001) CAB ASSEMBLY

Ref	Numero de Pieza	Ctd	Descripción
1	73149800	1	ROPS CAB

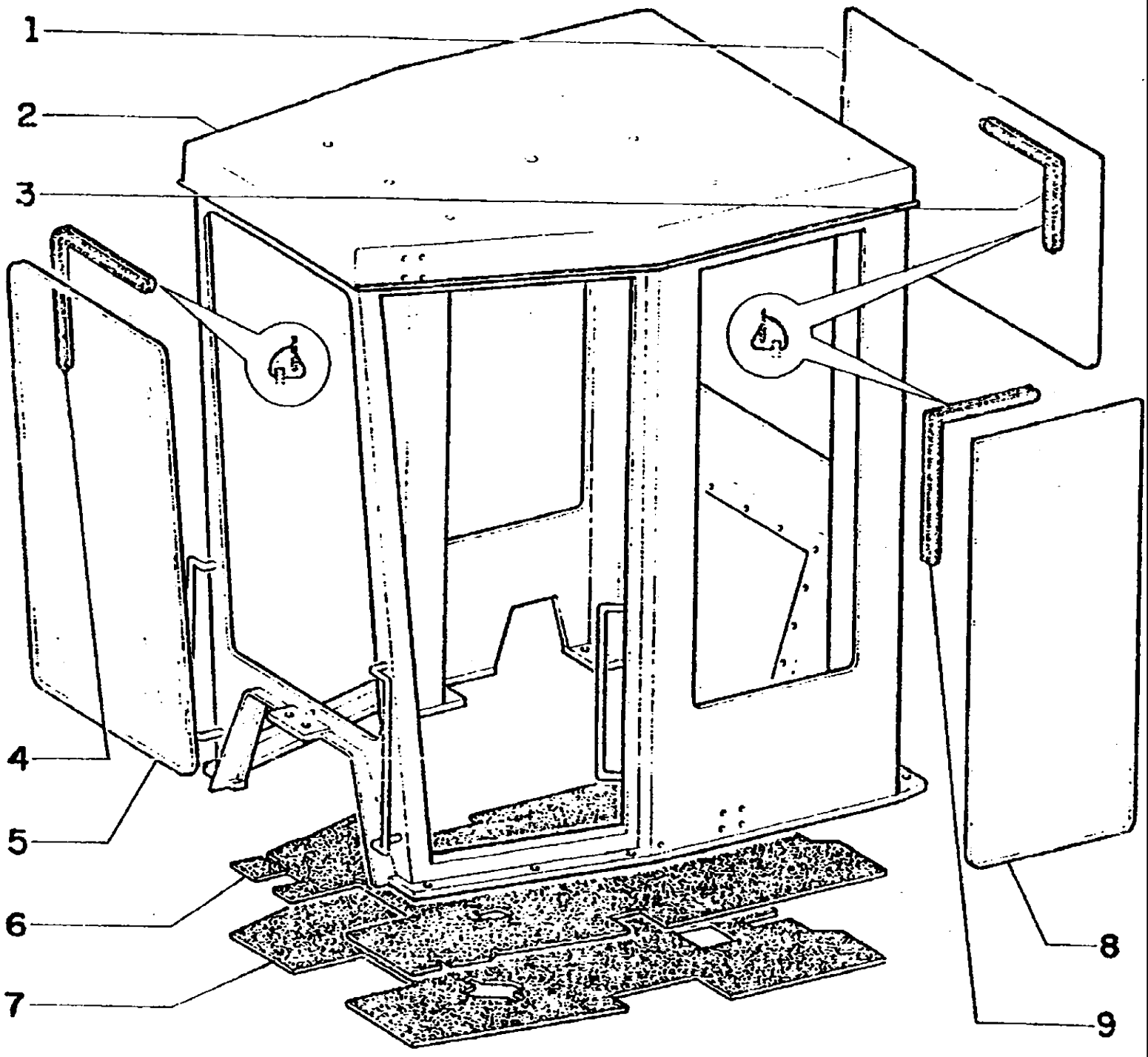
1
2
3
4
5
6
7
8
9

FG85 SERIES B MOTORGRADER

L1.04(001) CAB

Ref	Numero de Pieza	Ctd	Descripción
1	73150611	1	WINDOW
2	73149801	1	CAB
3	73150619	1	GASKET
4	73150616	1	GASKET
5	73152909	1	GLASS
6	73151373	1	MAT
7	73151372	1	MAT
8	73150610	2	GLASS PLATES
9	73150618	2	GASKET

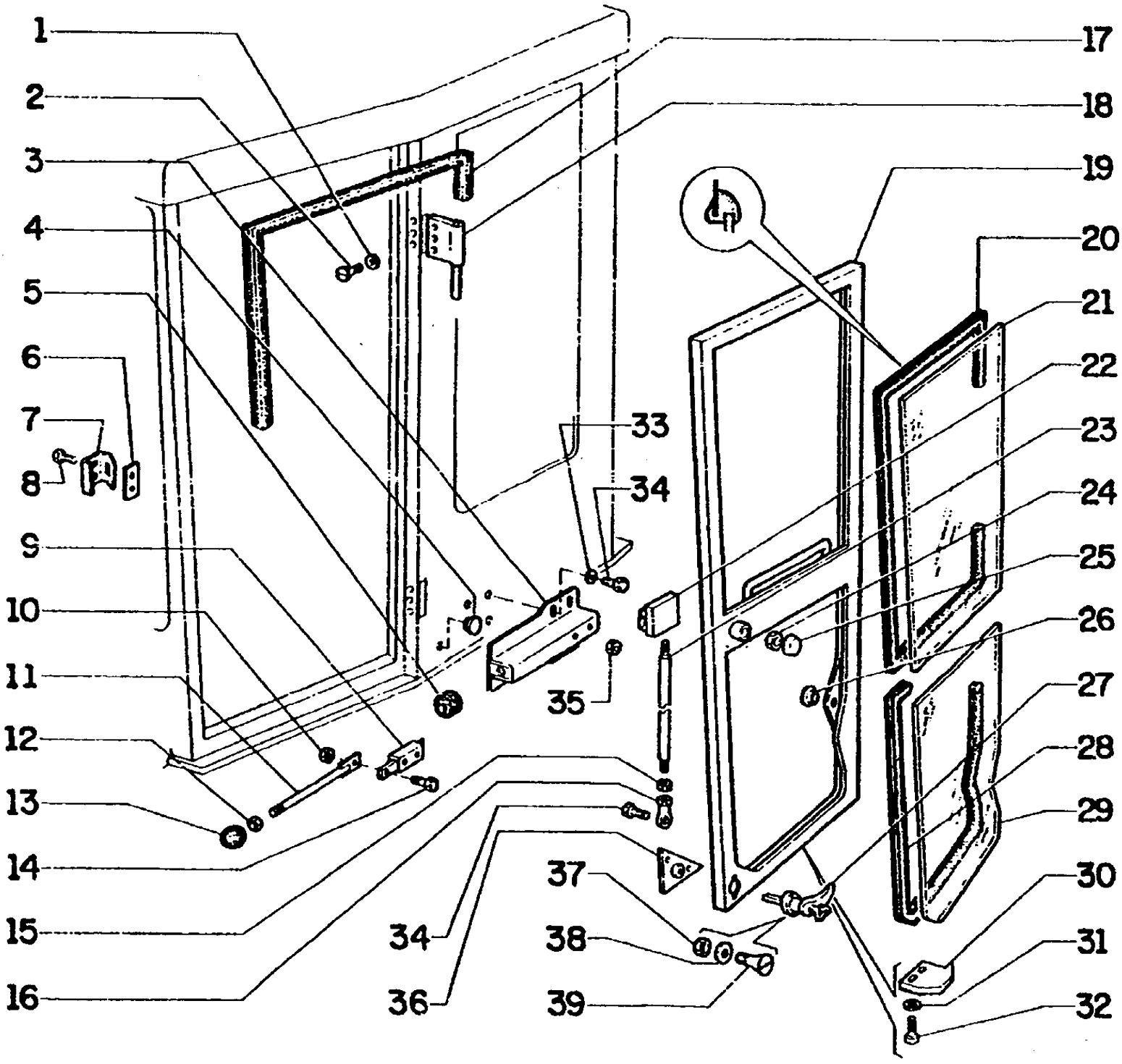
1
2
3
4
5
6
7
8
9
10
11
12
13
14
15
16
17
18
19
20
21
22
23
24
25
26
27
28
29
30
31
32
33
34
35
34
36
37
38
39

FG85 SERIES B MOTORGRADER

L1.04(002) CAB

Ref	Numero de Pieza	Ctd	Descripción
1	70929156	16	WASHER
2	70922300	35	SCREW
3	73153197	2	PLATE
4	70921442	4	BLOCK
5	70926719	2	GASKET
6	73153205	6	SHIM
7	73153220	1	SHIM
7	73153221	1	SHIM
8	70922763	6	SCREW
9	79073382	2	PAWL
10	70911024	7	NUT
11	73150115	2	ROD
12	70911041	2	NUT
13	70091855	2	KNOB
14	70922911	12	SCREW
15	70910267	4	NUT
16	73070190	4	END
17	73151815	1	SEAL
18	73150140	4	HINGE
19	73149802	1	DOOR LH
19	73149803	1	DOOR RH
20	73150620	2	GASKET
21	73150608	2	GLASS PLATES
22	73153179	1	LOCK LH
22	73153180	1	LOCK RH
23	73150135	2	TIEROD
24	12164711	2	NUT, M10 x 1.25, Cl 8
25	76010146	2	SHIM
26	70928956	3	BUTTON
27	73153170	1	LOCKLH
27	73153171	1	LOCKRH
27A	73061191	1	KEY
28	73150617	2	GASKET
29	73150609	2	GLASS PLATES
30	73153196	2	PAWL
31	70677006	37	WASHER
32	70922300	35	SCREW
33	70677004	18	WASHER
34	70927541	16	SCREW
35	70920329	2	NUT
36	73153795	2	PLATE
37	70922714	4	NUT
38	70910243	4	LOCKWASHER

Ref	Numero de Pieza	Ctd	Descripción
39	70922704	4	SCREW

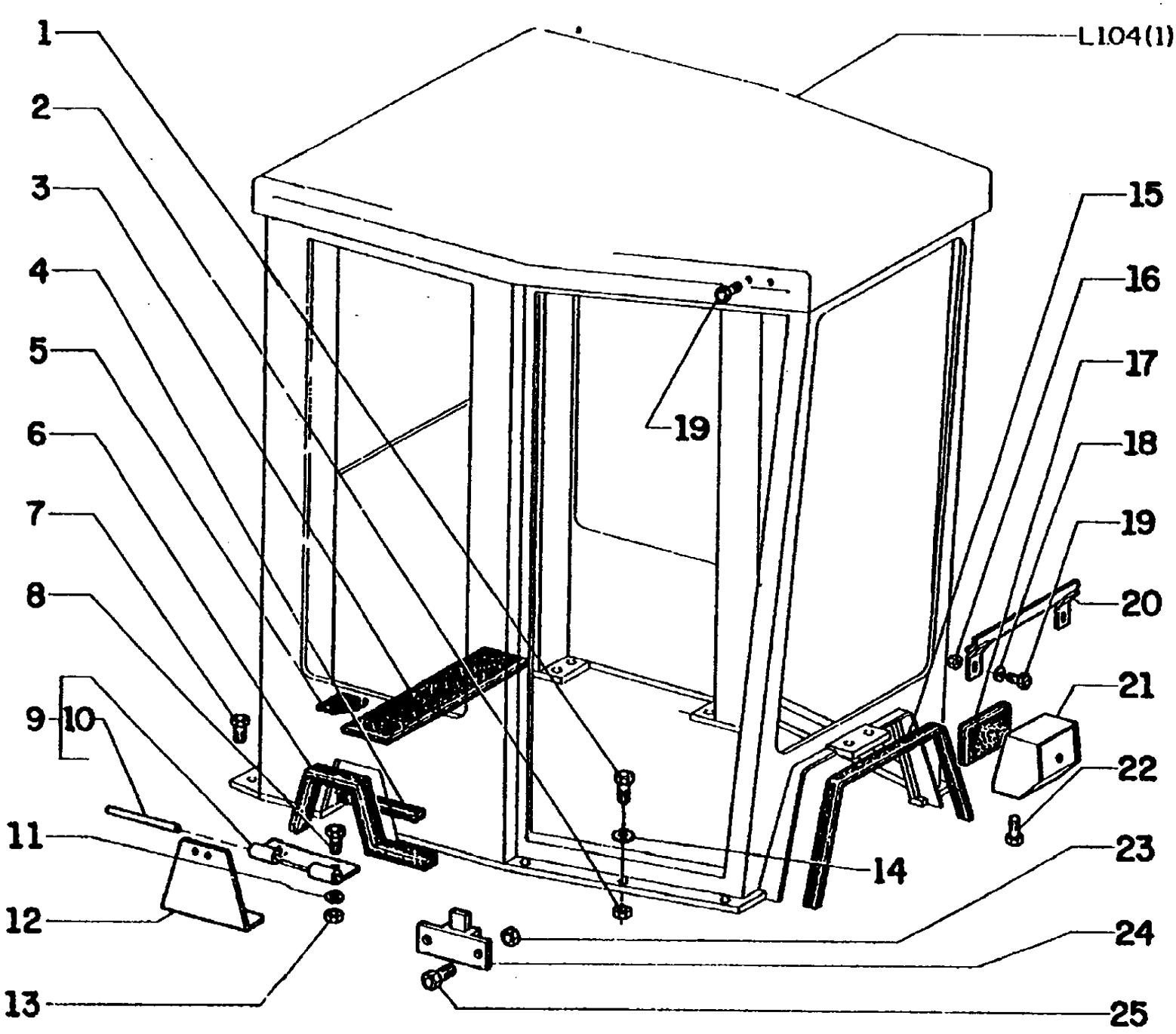
L1.04(1)
1
2
3
4
5
6
7
8
9
10
11
12
13
14
15
16
17
18
19
19
20
21
22
23
24
25

FG85 SERIES B MOTORGRADER

L1.04(003) CAB

Ref	Numero de Pieza	Ctd	Descripción
1	70925483	4	SCREW
2	70916170	20	NUT
3	73150566	1	GASKET
4	73150596	1	GASKET
5	73150595	2	GASKET
6	73150597	1	GASKET
7	70922544	16	SCREW
8	70921565	2	SCREW
9	73071349	2	HINGE
10	73154912	1	TIEROD
11	70677006	4	WASHER
12	73154910	1	COVER
13	70911026	2	NUT
14	70677012	20	NUT
15	73150598	1	GASKET
16	70911026	4	NUT
17	73154909	1	GASKET
18	70677006	37	WASHER
19	70927173	10	SCREW
20	73154927	1	SUPPORT
21	73154904	1	SUPPORT
22	70920585	2	SCREW
23	70911024	2	NUT
24	73069458	1	LOCK
25	70927541	2	SCREW

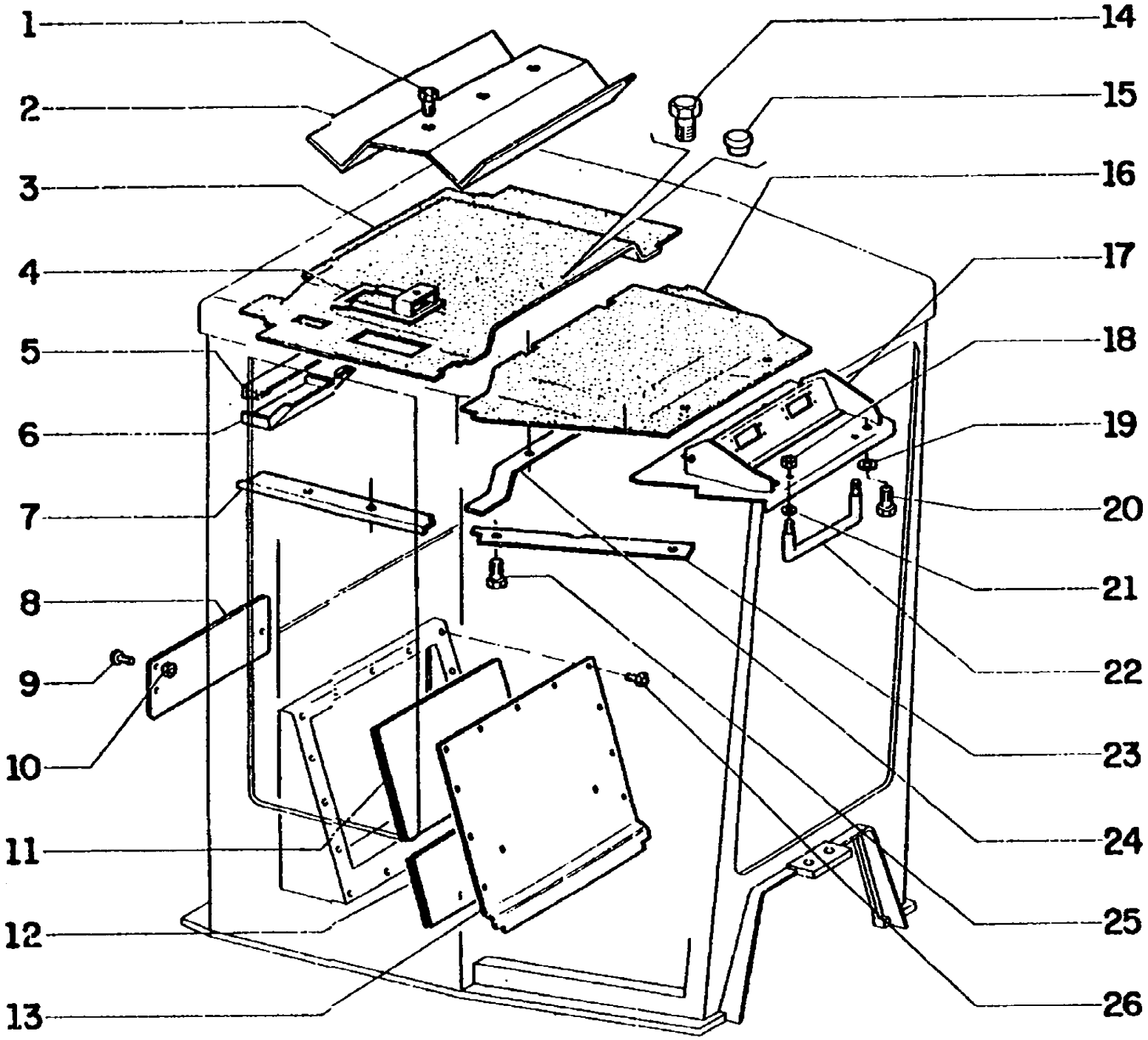
1
2
3
4
5
6
7
8
9
10
11
12
13
14
15
16
17
18
19
20
21
22
23
24
25
26

FG85 SERIES B MOTORGRADER

L1.04(004) CAB

Ref	Numero de Pieza	Ctd	Descripción
1	70922911	12	SCREW
2	73152661	2	PLATE
3	73150909	1	LINING
4	73153166	1	SUPPORT
5	73151024	1	PLATE
5	73151001	1	PLATE
6	73151215	1	COVER
7	73151017	1	PLATE
7	73151018	1	PLATE
8	73154934	1	PLATE
9	70916081	7	SCREW
10	70911024	7	NUT
11	73151219	1	INSULATOR
12	73151220	1	INSULATOR
13	75238803	1	COVER
14	70924277	2	SCREW
15	70901666	1	PLUG
16	73150910	1	LINING
17	73154691	1	PLATE
18	70911026	2	NUT
19	70677008	4	WASHER
20	70920582	2	SCREW
21	70677004	18	WASHER
22	73155026	1	SUPPORT
23	73151002	2	PLATE
24	73151080	1	PLATE
25	73150259	15	SCREW
26	70928730	22	SCREW

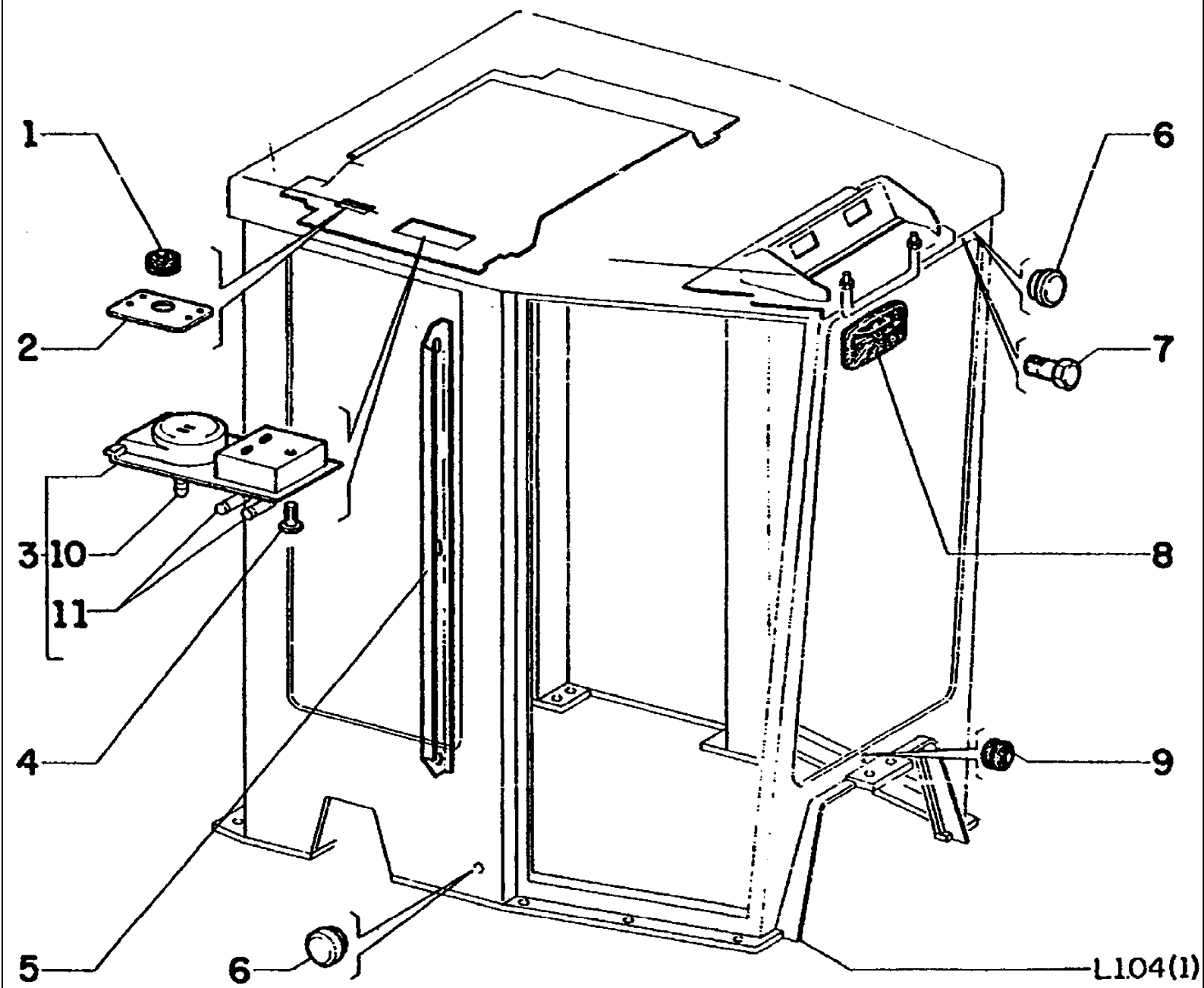
1
2
3
10
11
4
5
6
6
7
8
9
L104(1)

FG85 SERIES B MOTORGRADER

L1.04(005) CAB

Ref	Numero de Pieza	Ctd	Descripción
1	70930860	2	GASKET
2	73150997	1	PLATE
3	79067876	1	LIGHTS
4	70922708	1	SCREW
5	73151582	1	PLATE
6	73068389	19	BLOCK
7	70922763	6	SCREW
8	75221401	1	REAR VIEW MIRR.
9	70929977	1	GASKET
10	79051015	1	LAMP
11	14150290	2	LAMP

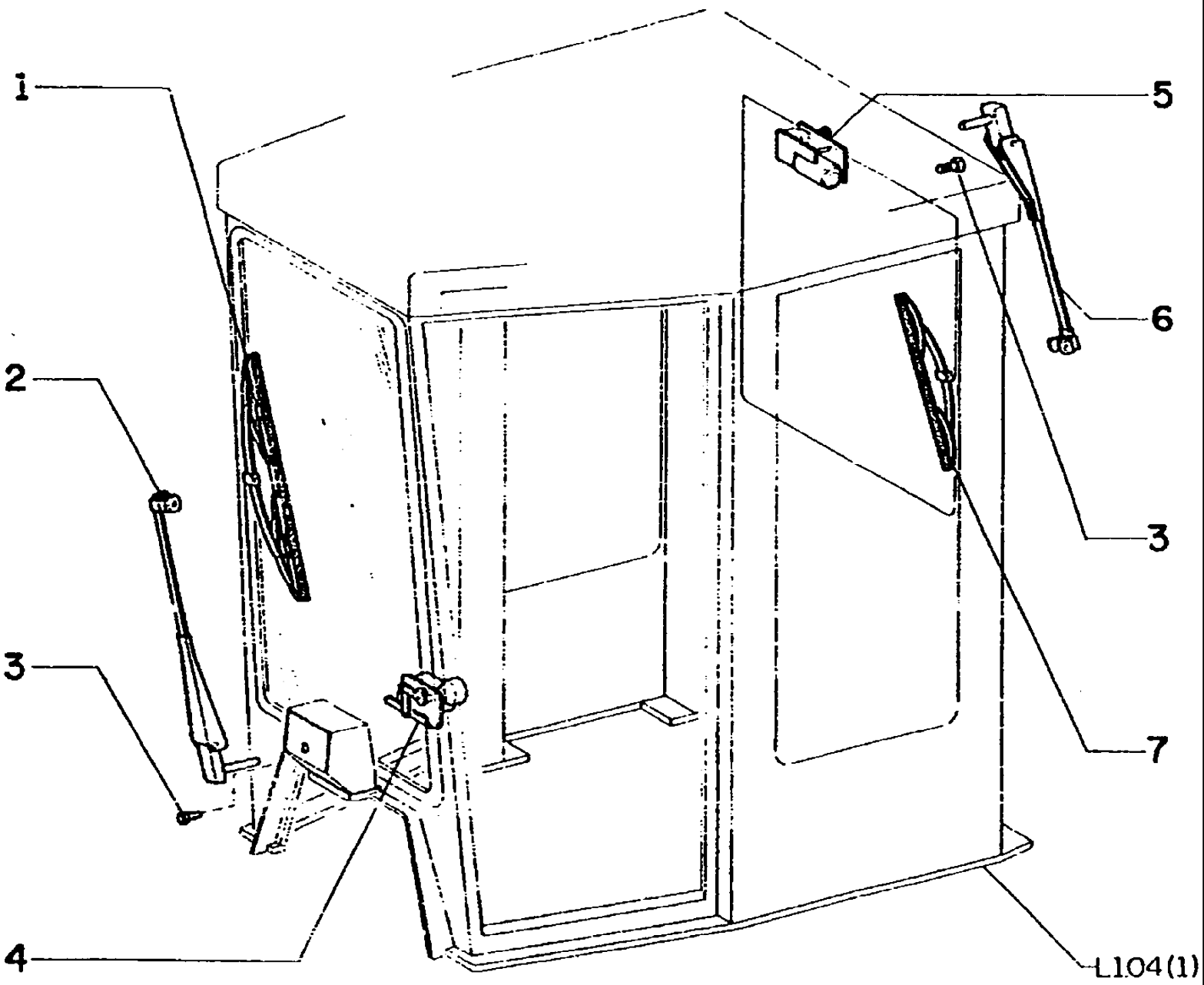
1
2
3
4
5
6
3
7
L104(1)

FG85 SERIES B MOTORGRADER

L1.04(006) CAB

Ref	Numero de Pieza	Ctd	Descripción
1	73142385	1	BLADE FAN
2	73153160	1	ARM
3	10902434	2	BOLT, Hex, M6 x 20, 10.9, Full Thd
4	73153159	1	ELECTRIC MOTOR
5	73144216	1	ELECTRIC MOTOR
6	73144217	1	ARM
7	73144218	1	BLADE

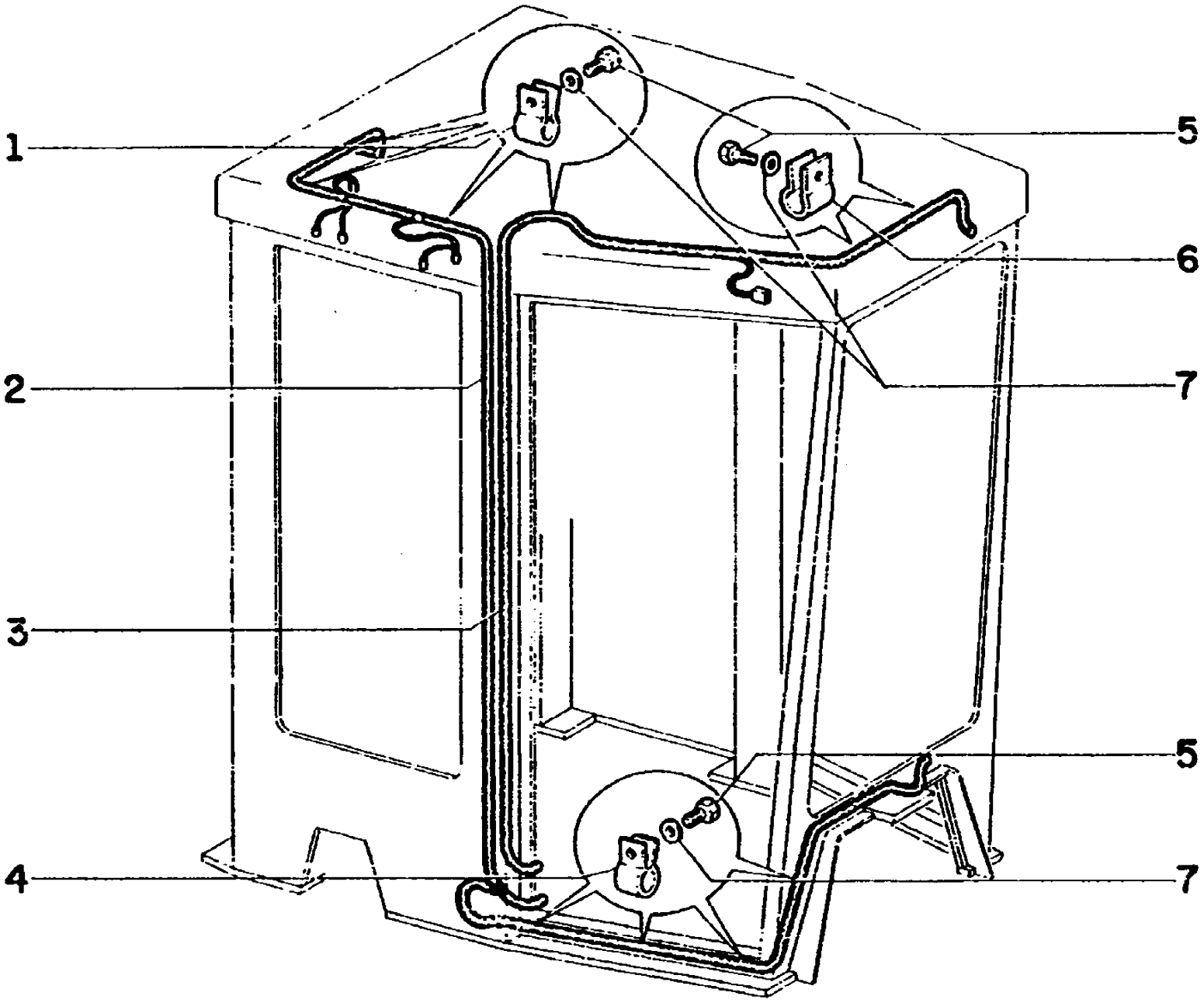
1
2
3
4
5
5
6
7
7

FG85 SERIES B MOTORGRADER

L1.04(007) CAB

Ref	Numero de Pieza	Ctd	Descripción
1	70925617	4	CLAMP
2	73153948	1	CABLE
3	73153953	1	CABLE
4	70926917	7	CLAMP
5	70922300	36	SCREW
6	70925615	2	CLAMP
7	70677006	38	WASHER

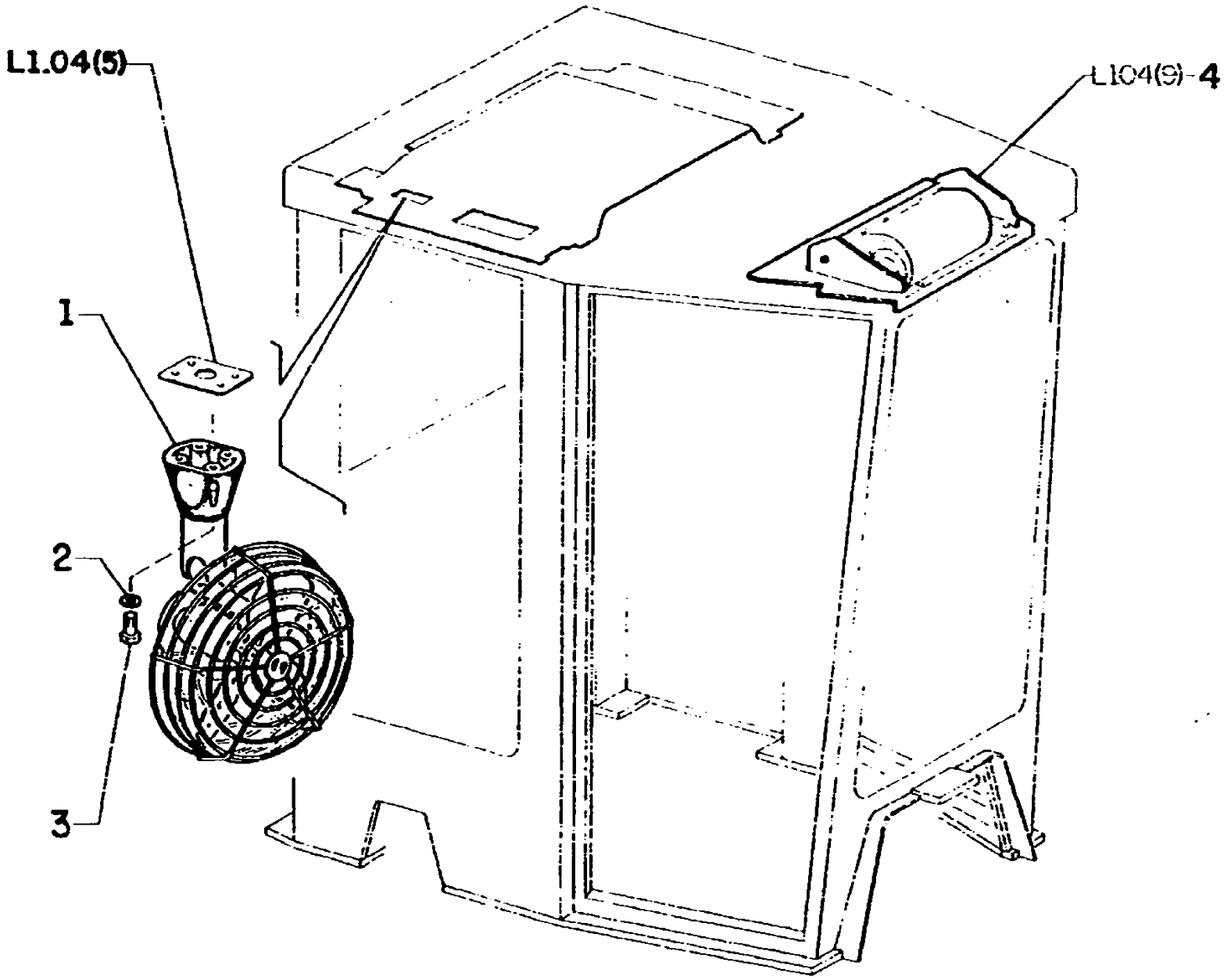
L1.04(5)
L104(9)-4
1
2
3

FG85 SERIES B MOTORGRADER

L1.04(008) CAB

Ref	Numero de Pieza	Ctd	Descripción
1	73150754	1	FAN
2	70909055	2	LOCKWASHER
3	70925655	4	SCREW
4	73154690	1	FAN

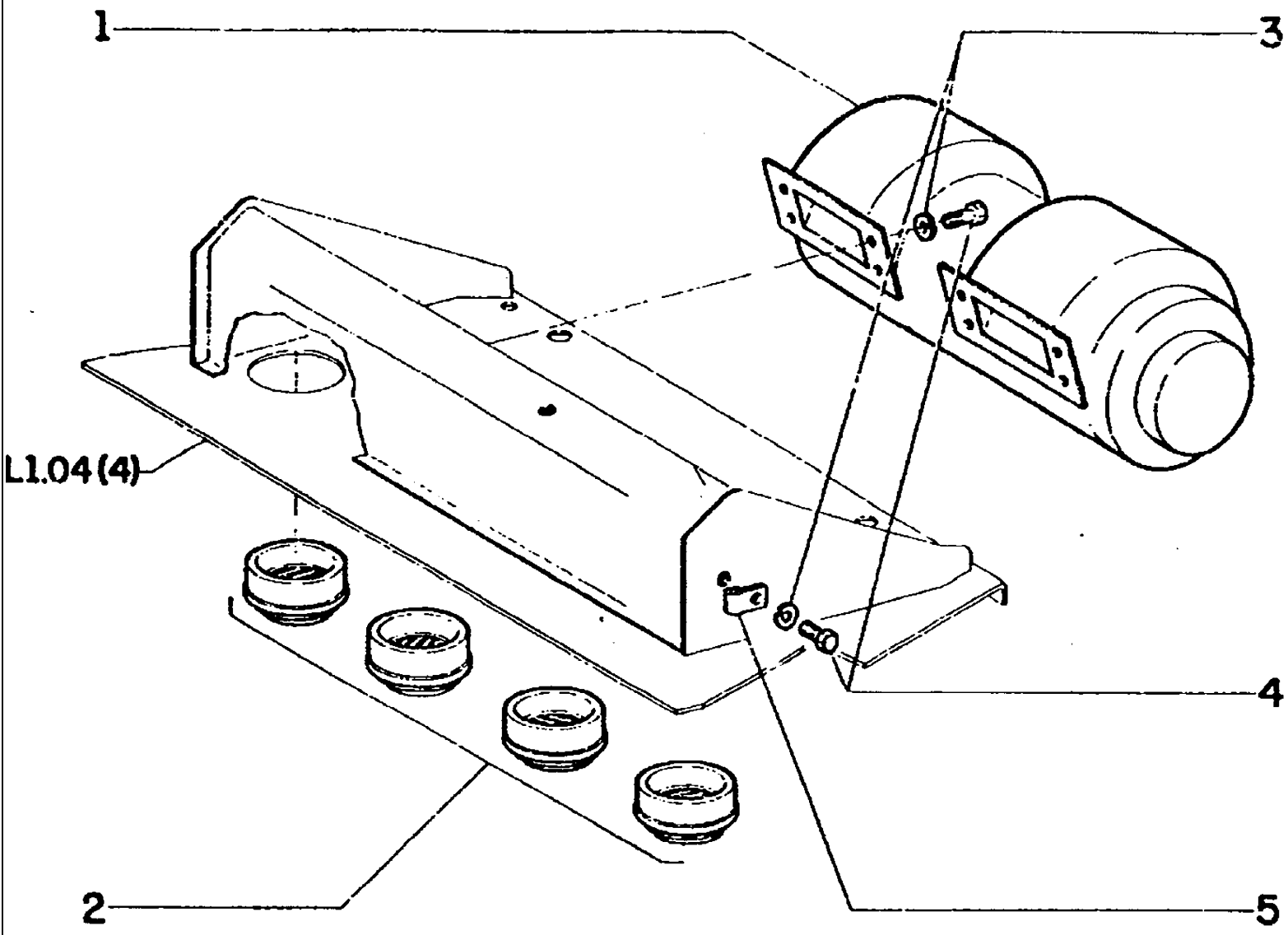
1
3
L1.04 (4)
4
2
5

FG85 SERIES B MOTORGRADER

L1.04(009) VENTILATOR ASSEMBLY

Ref	Numero de Pieza	Ctd	Descripción
1	73154696	1	FAN
2	73073934	4	DIFFUSER
3	70904204	11	LOCKWASHER
4	70928138	11	SCREW
5	70929722	3	CLIP

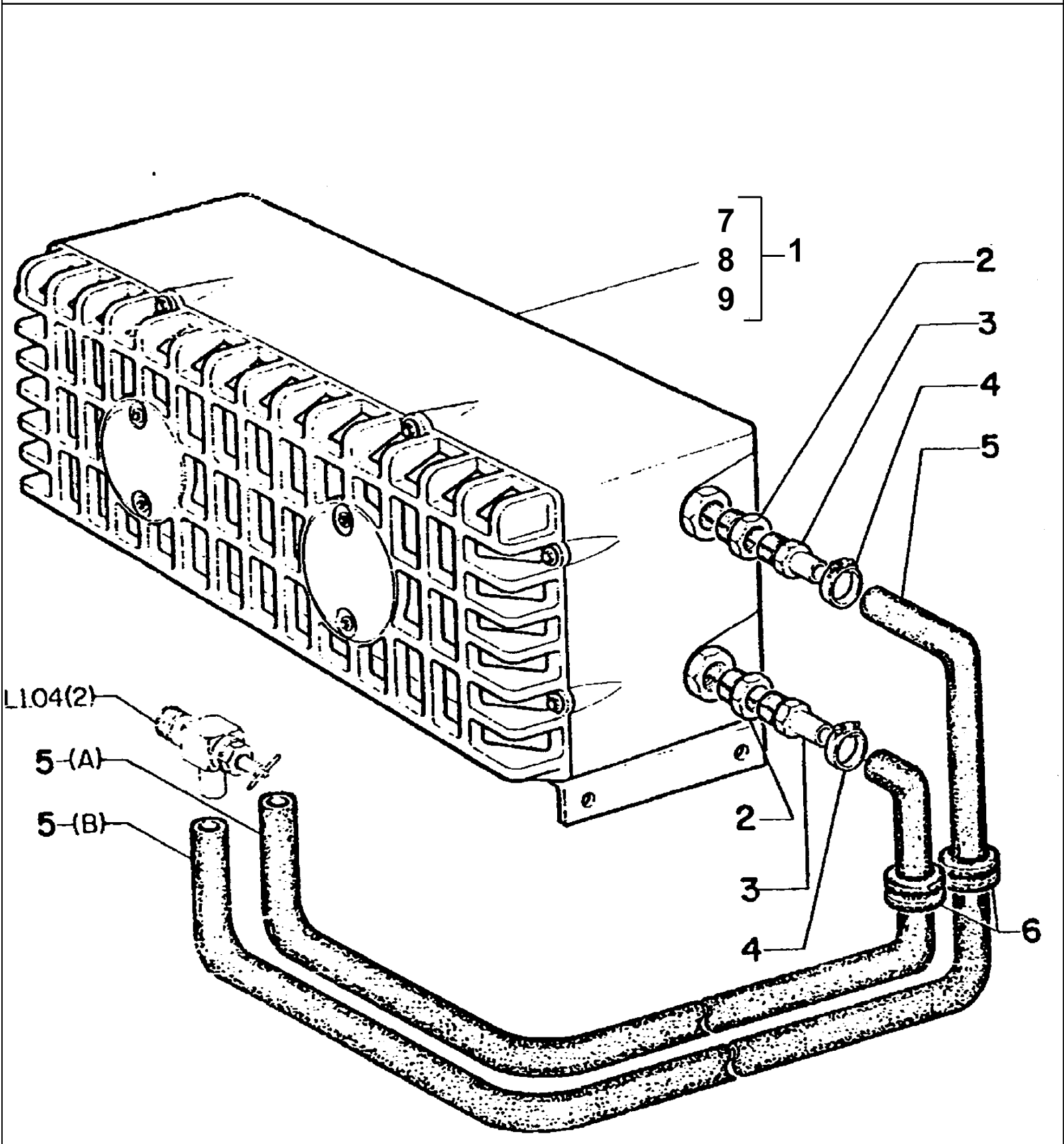
7
8
9
1
2
3
4
5
L1.04(2)
5-(A)
5-(B)
2
3
4
6

FG85 SERIES B MOTORGRADER

L1.04(010) HEATER

Ref	Numero de Pieza	Ctd	Descripción
1	73155751	1	HEATER
2	70901828	2	FITTING
3	70925053	2	FITTING
4	70921911	4	CLAMP
5	73071749	2	HOSE
6	73150779	2	INSULATOR
7	73069009	1	MOTOR
8	73069006	1	BLOWER
9	73058346	1	CORE, HEATER

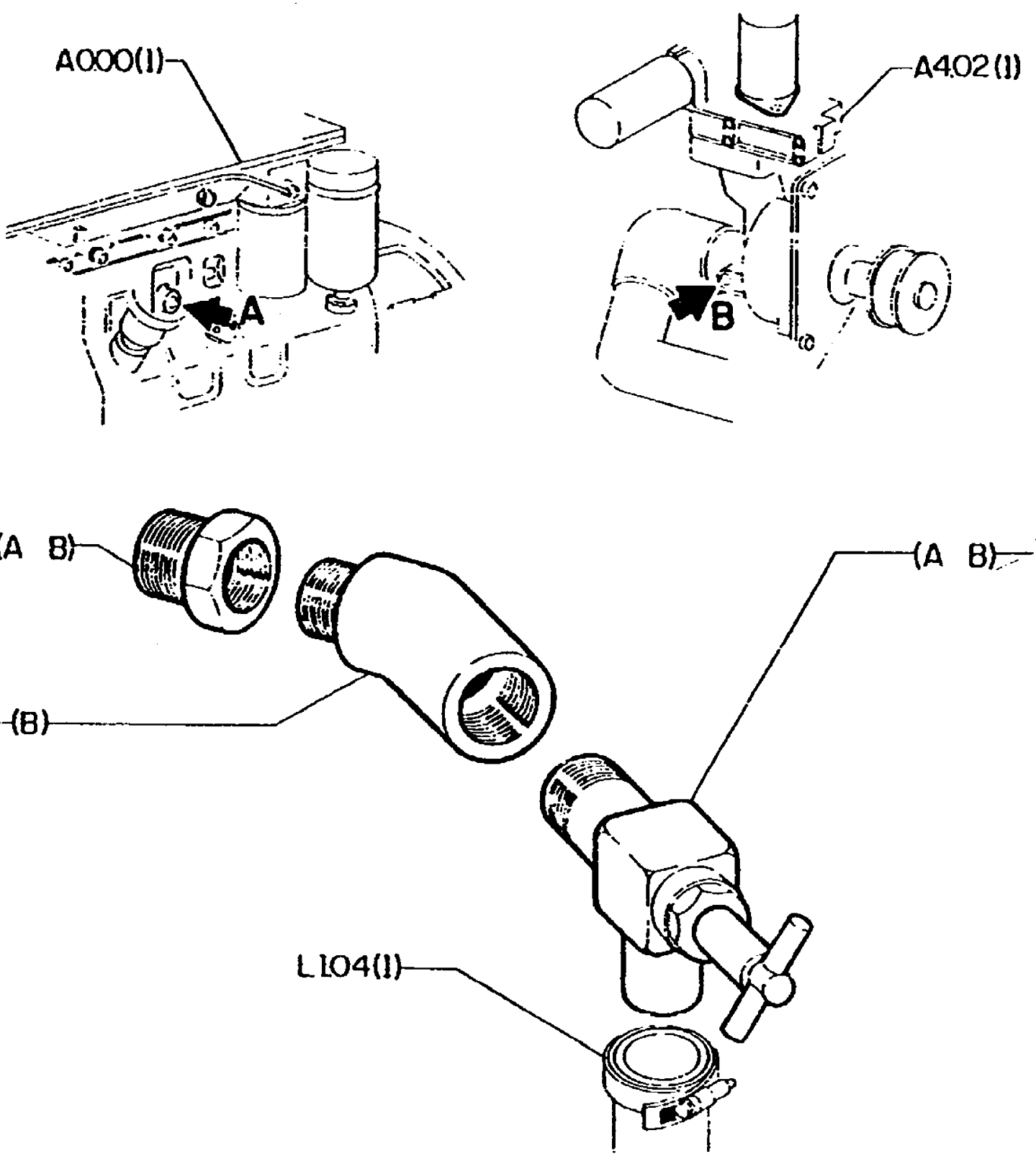
A000(1)
A
A402(1)
B
1 (A B)
2 (B)
(A B) 3
L104(1)

FG85 SERIES B MOTORGRADER

L1.04(011) HEATER

Ref	Numero de Pieza	Ctd	Descripción
1	70901835	2	FITTING
2	70910149	1	ELBOW
3	70089894	2	VALVE

L1.04/1(001) CANOPY W/A

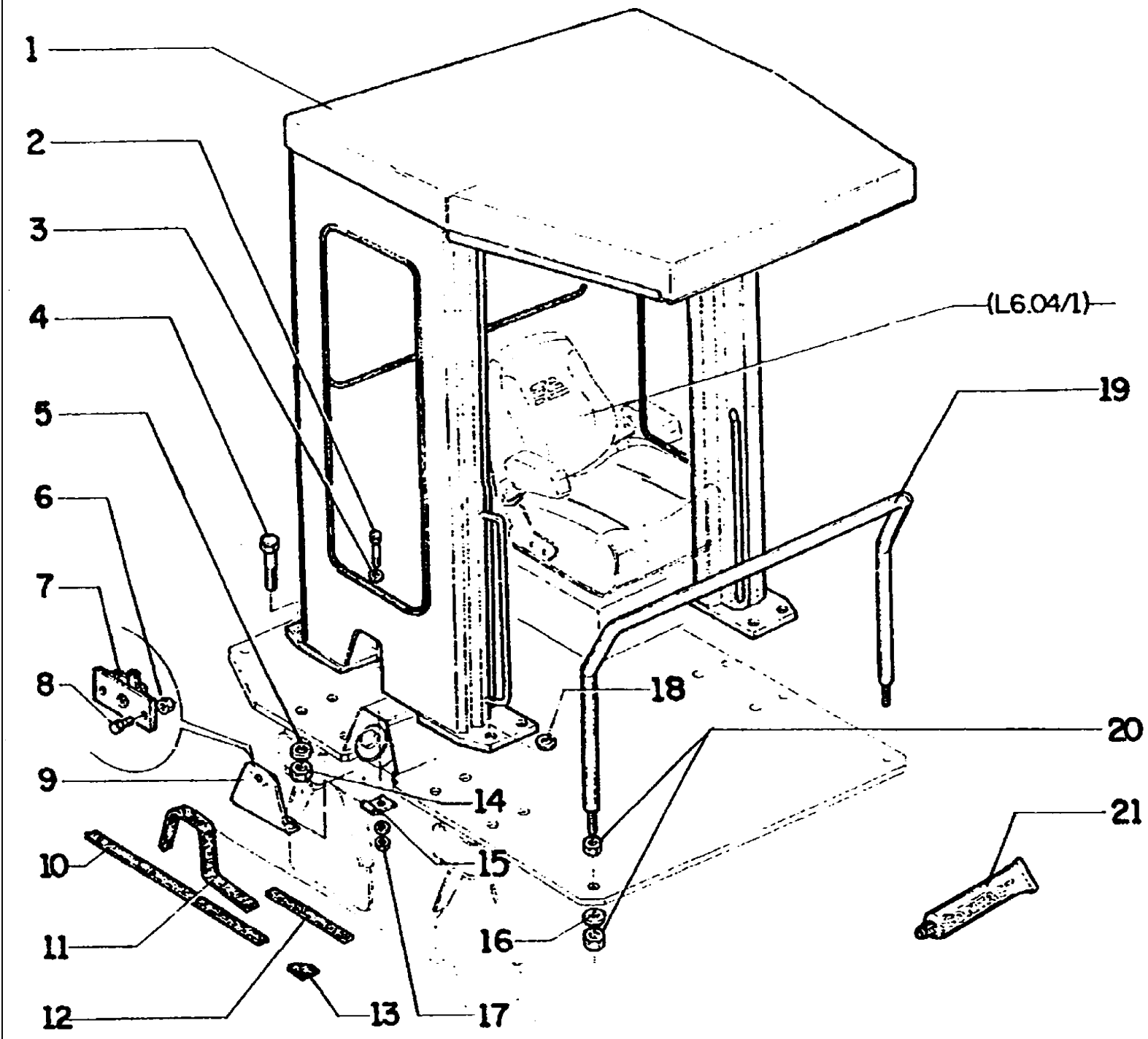

FG85 SERIES B MOTORGRADER

L1.04/1(001) CANOPY W/A

Ref	Numero de Pieza	Ctd	Descripción
1	73152555	1	ROPS CAB
2	70921565	2	SCREW
3	70677006	4	WASHER
4	70922544	20	SCREW
5	70677012	20	WASHER
6	70911024	2	NUT
7	73069458	1	LOCK
8	70927541	2	SCREW
9	73154910	1	COVER
10	73150596	1	GASKET
11	73150597	1	GASKET
12	73150566	1	GASKET
13	73150595	2	GASKET
14	70916170	20	NUT
15	73071349	2	HINGE
16	70928452	2	WASHER
17	70911026	2	NUT
18	70910200	2	NUT
19	73152557	1	TUBE
20	70911032	4	NUT
21	73077381	*	PUTTY

L1.04/1(002) CAB - FOR UNITS WITH 12 VOLTS SYSTEM

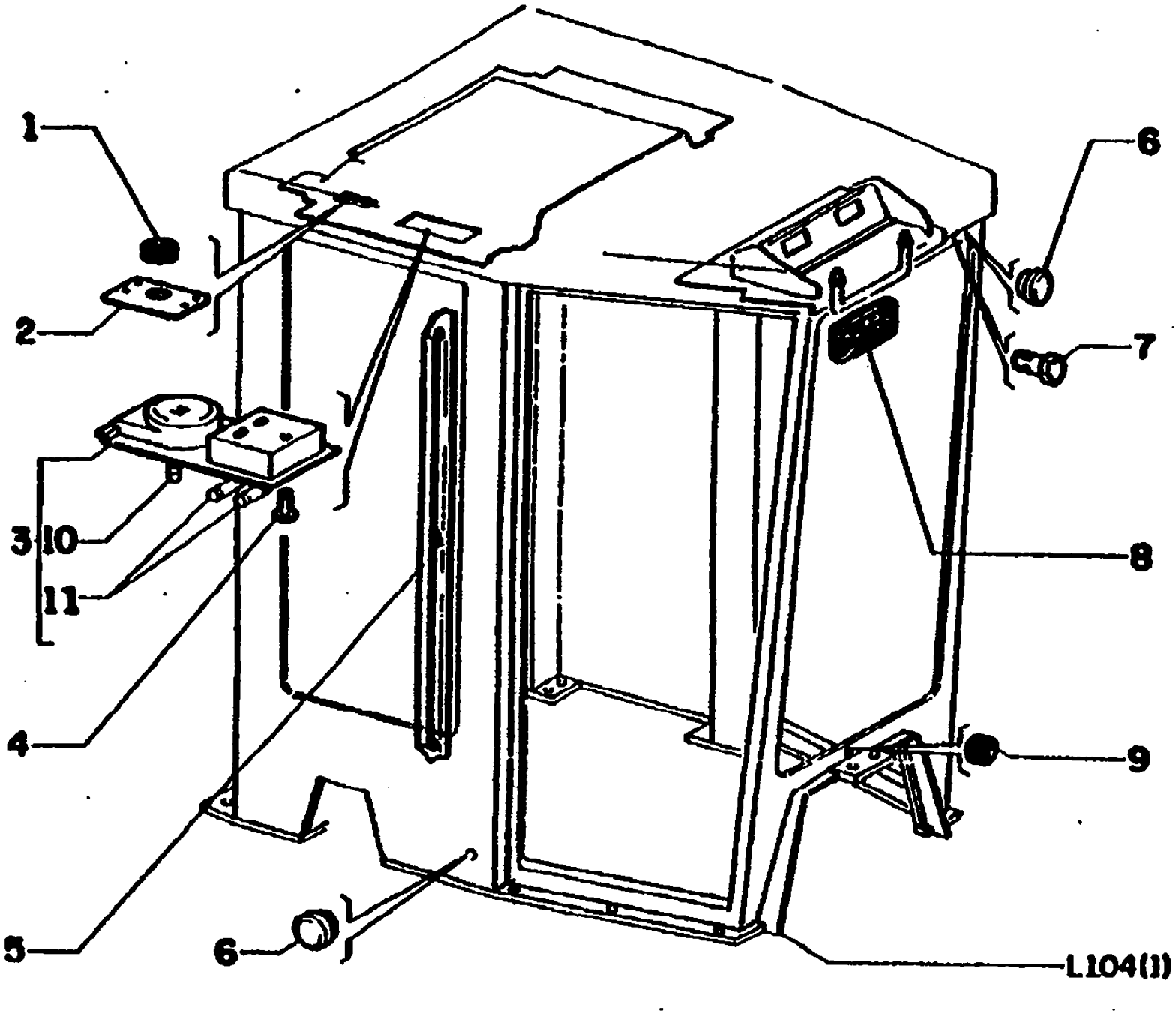

FG85 SERIES B MOTORGRADER

L1.04/1(002) CAB - FOR UNITS WITH 12 VOLTS SYSTEM

Ref	Numero de Pieza	Ctd	Descripción
1	70930860	2	GASKET
2	73150997	1	PLATE
3	75241716	1	LIGHTS
4	70922708	1	SCREW
5	73151582	1	PLATE
6	73108389	19	PLUG
7	70922763	6	SCREW
8	75221401	1	REAR VIEW MIRR.
9	70929977	1	GASKET
10	14142390	1	LAMP
11	14150190	2	LAMP

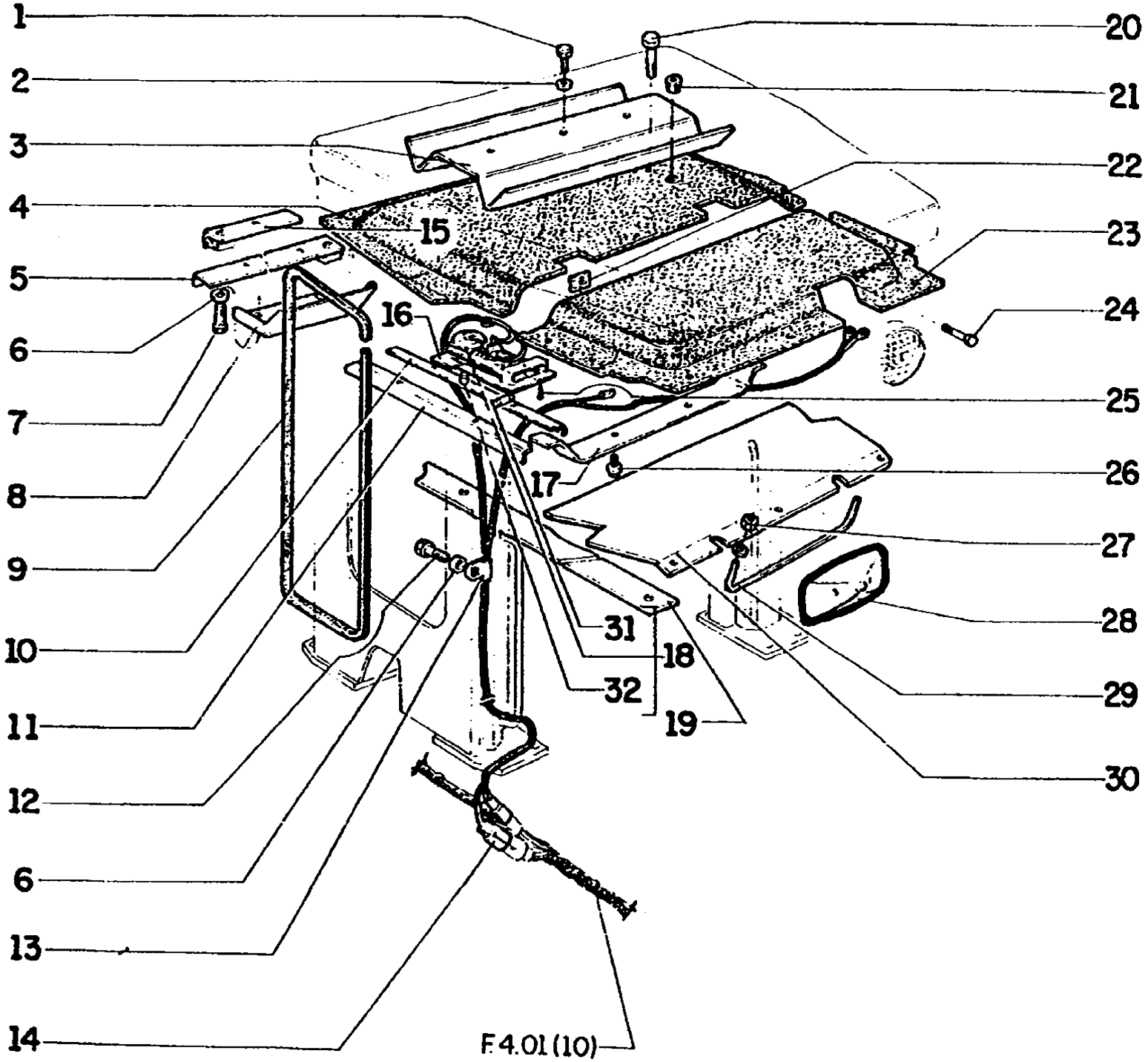
1
2
3
4
5
6
7
8
9
10
11
12
6
13
14
15
16
17
18
19
20
21
22
23
24
25
26
27
28
29
30
31
32
F4.01(10)

FG85 SERIES B MOTORGRADER

L1.04/1(002) CANOPY W/A

Ref	Numero de Pieza	Ctd	Descripción
1	70922911	6	SCREW
2	70677004	6	WASHER
3	73152661	2	PLATE
4	73150909	1	LINING
5	73151024	1	PLATE
6	70677006	7	WASHER
7	70922300	4	SCREW
8	73151215	1	COVER
9	73052486	*	GASKET
10	73151017	1	PLATE
11	73151018	1	PLATE
12	70922300	1	SCREW
13	70926917	3	CLAMP
14	73155199	1	CABLE
15	73151001	1	PLATE
16	73153166	1	SUPPORT
17	75239263	1	PLATE
18	79067876	1	LIGHTS
19	73151002	2	PLATE
20	70924277	2	SCREW
21	70901666	1	PLUG
22	73070823	6	CLAMP
23	73150910	1	LINING
24	70922763	2	SCREW
25	70922708	1	SCREW
26	73150259	18	SCREW
27	70911026	2	NUT
28	75221401	1	REAR VIEW MIRR.
29	73155026	2	SUPPORT
30	73155198	1	PLATE
31	14150290	2	LAMP
32	79051015	1	LAMP

L1.04/1(003) CAB - FOR UNITS WITH 12 VOLTS SYSTEM

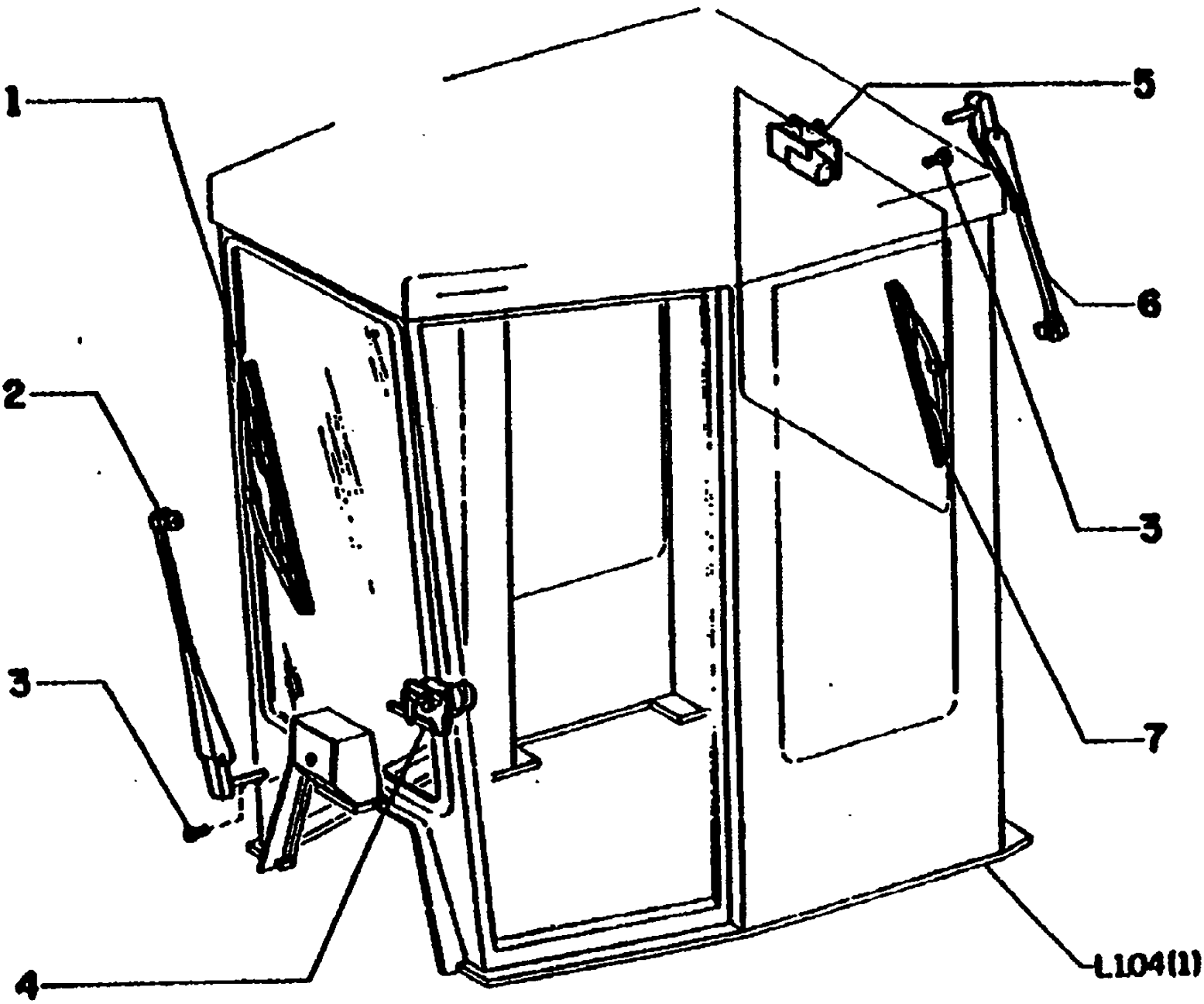

FG85 SERIES B MOTORGRADER

L1.04/1(003) CAB - FOR UNITS WITH 12 VOLTS SYSTEM

Ref	Numero de Pieza	Ctd	Descripción
1	73142385	1	BLADE
2	73153160	1	ARM
3	10902434	2	BOLT, Hex, M6 x 20, 10.9, Full Thd
4	75241734	1	ELECTRIC MOTOR
5	75241733	1	ELECTRIC MOTOR
6	73144217	1	ARM
7	73144218	1	BLADE

L1.04/1(004) CAB - FOR UNITS WITH 12 VOLTS SYSTEM

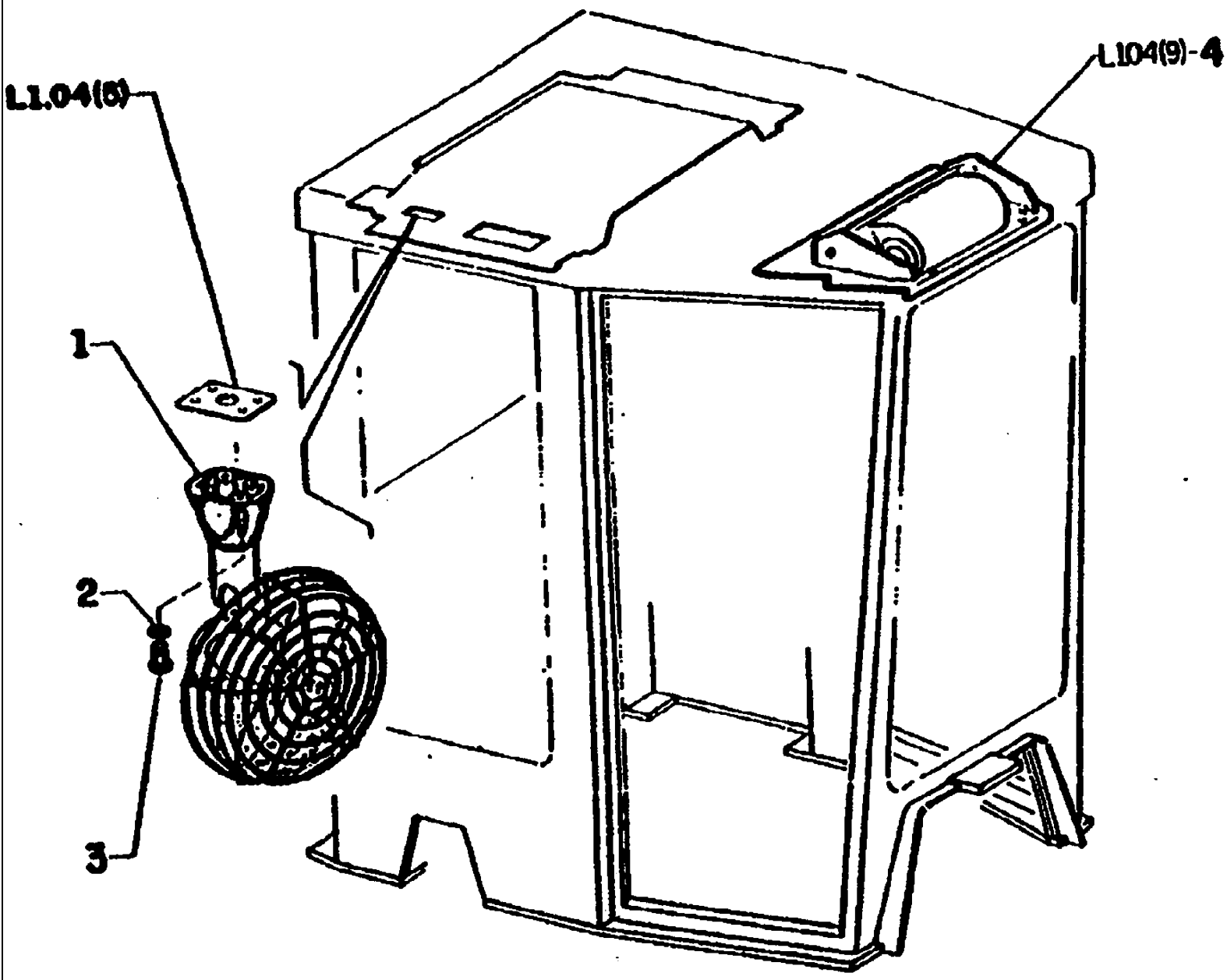

FG85 SERIES B MOTORGRADER

L1.04/1(004) CAB - FOR UNITS WITH 12 VOLTS SYSTEM

Ref	Numero de Pieza	Ctd	Descripción
1	75241704	1	PAN
2	70909055	2	LOCKWASHER
3	70925655	4	SCREW
4	75241705	1	PAN

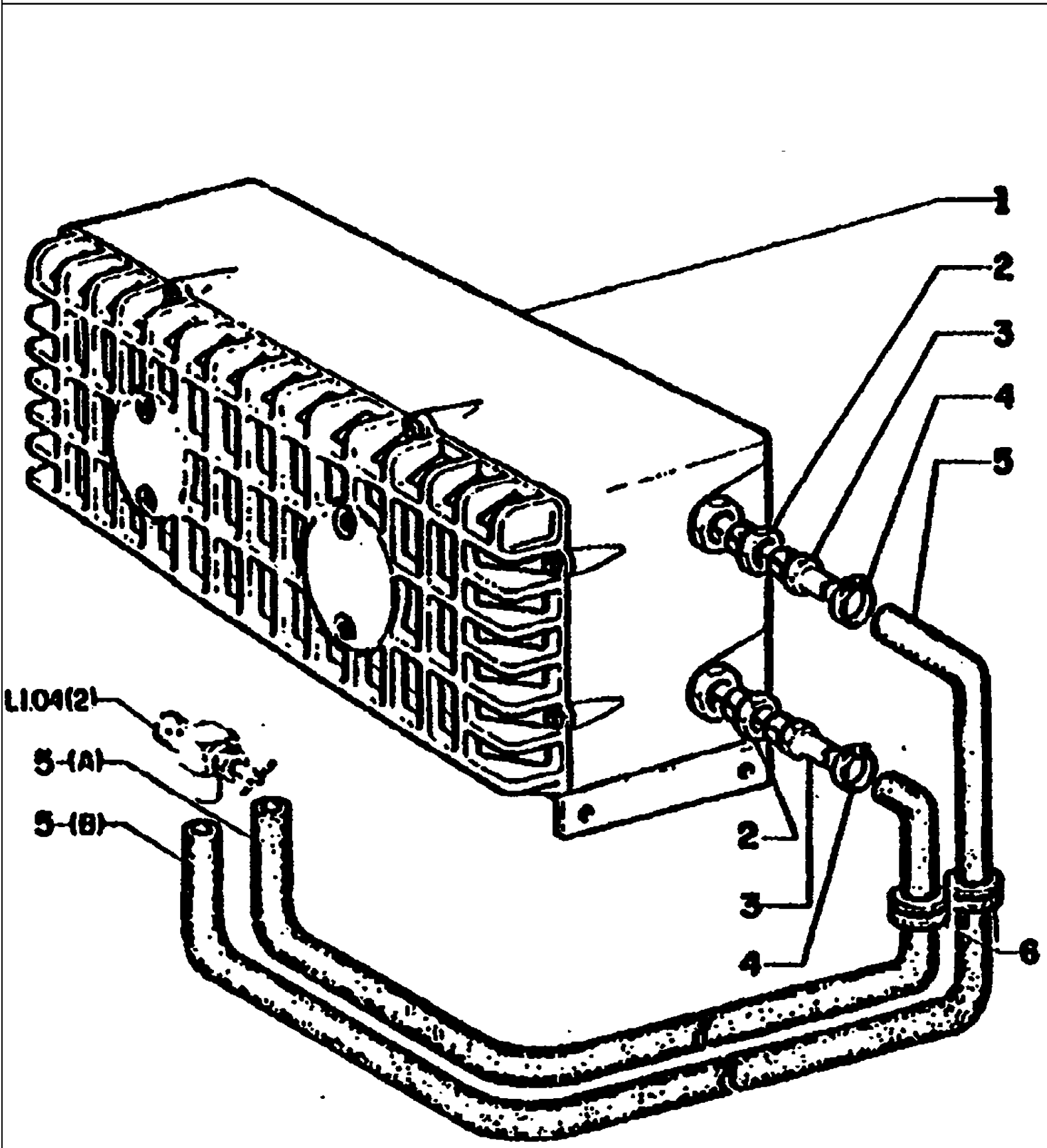
1
2
3
4
5
L1.04(2)
5-(A)
5-(B)
2
3
4
6

FG85 SERIES B MOTORGRADER

L1.04/1(005) HEATER - FOR UNITS WITH 12 VOLTS SYSTEM

Ref	Numero de Pieza	Ctd	Descripción
1	75241693	1	HEATER
2	70901828	2	FITTING
3	70925053	2	FITTING
4	70921911	4	CLAMP
5	73071749	2	HOSE
6	73150779	2	INSULATOR

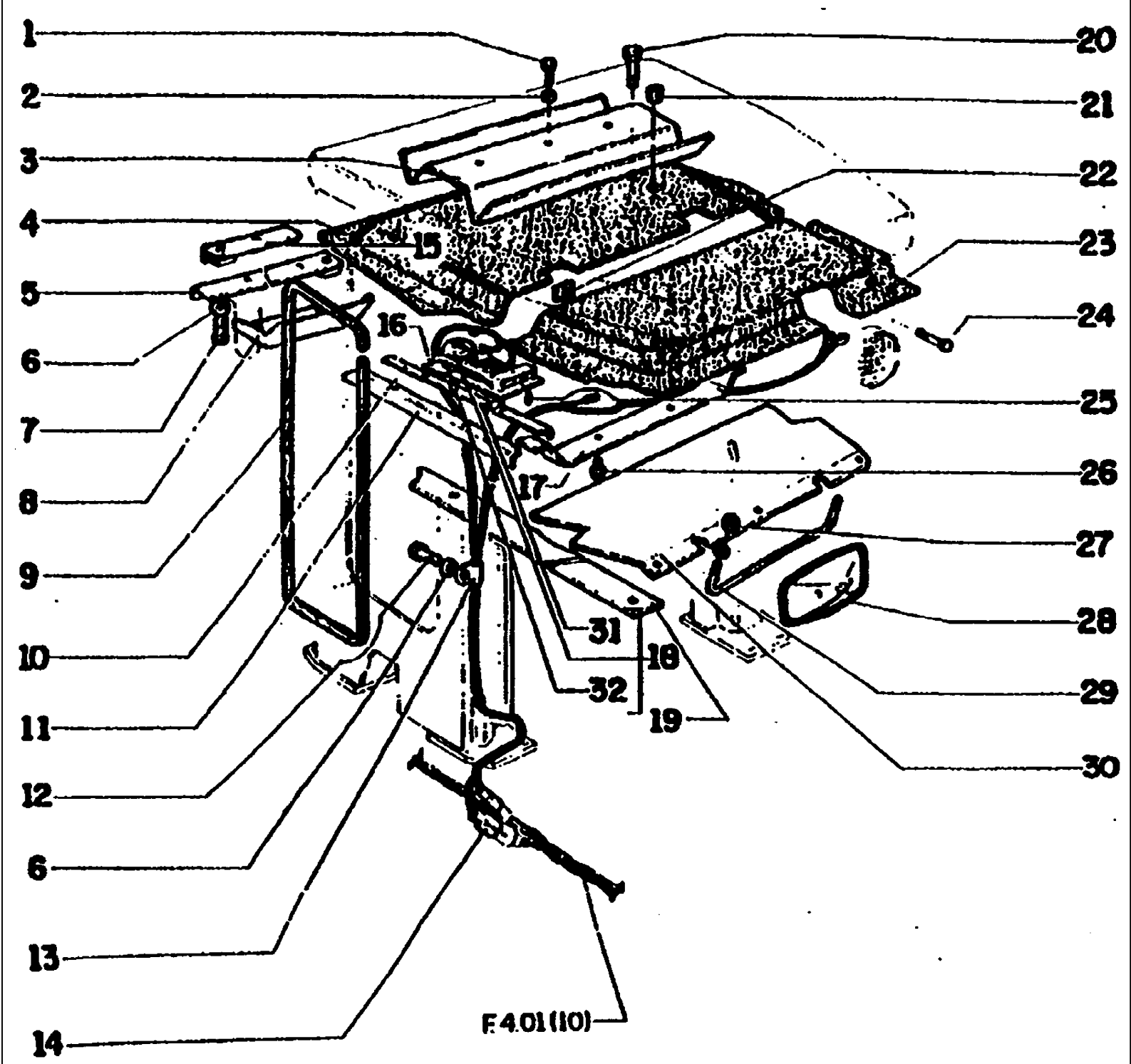
1
2
3
4
5
6
7
8
9
10
11
12
6
13
14
15
16
17
31
32
18
19
20
21
22
23
24
25
26
27
28
29
30
F 4.01 (10)

FG85 SERIES B MOTORGRADER

L1.04/1(006) CAB - FOR UNITS WITH 12 VOLTS SYSTEM

Ref	Numero de Pieza	Ctd	Descripción
1	70922911	6	SCREW
2	70677004	6	WASHER
3	73152661	2	PLATE
4	73150909	1	LINING
5	73151024	1	PLATE
6	70677006	7	WASHER
7	70922300	4	SCREW
8	73151215	1	COVER
9	73052486	*	CASKET
10	73151017	1	PLATE
11	73151018	1	PLATE
12	70922300	1	SCREW
13	70926917	3	CLAMP
14	73155199	1	CABLE
15	73151001	1	PLATE
16	73153166	1	SUPPORT
17	75239263	1	PLATE
18	79103273	1	LIGHTS
19	73151002	2	PLATE
20	70924277	2	SCREW
21	70901666	1	PLUG
22	73070823	6	CLAMP
23	73150910	1	LINING
24	70922763	2	SCREW
25	70922708	1	SCREW
26	73150259	18	SCREW
27	70911026	2	NUT
28	75221401	1	REAR VIEW MIRROR
29	73155026	2	SUPPORT
30	73155198	1	PLATE
31	14150190	2	LAMP
32	14142390	1	LAMP

FIATALLIS

FIATALLIS

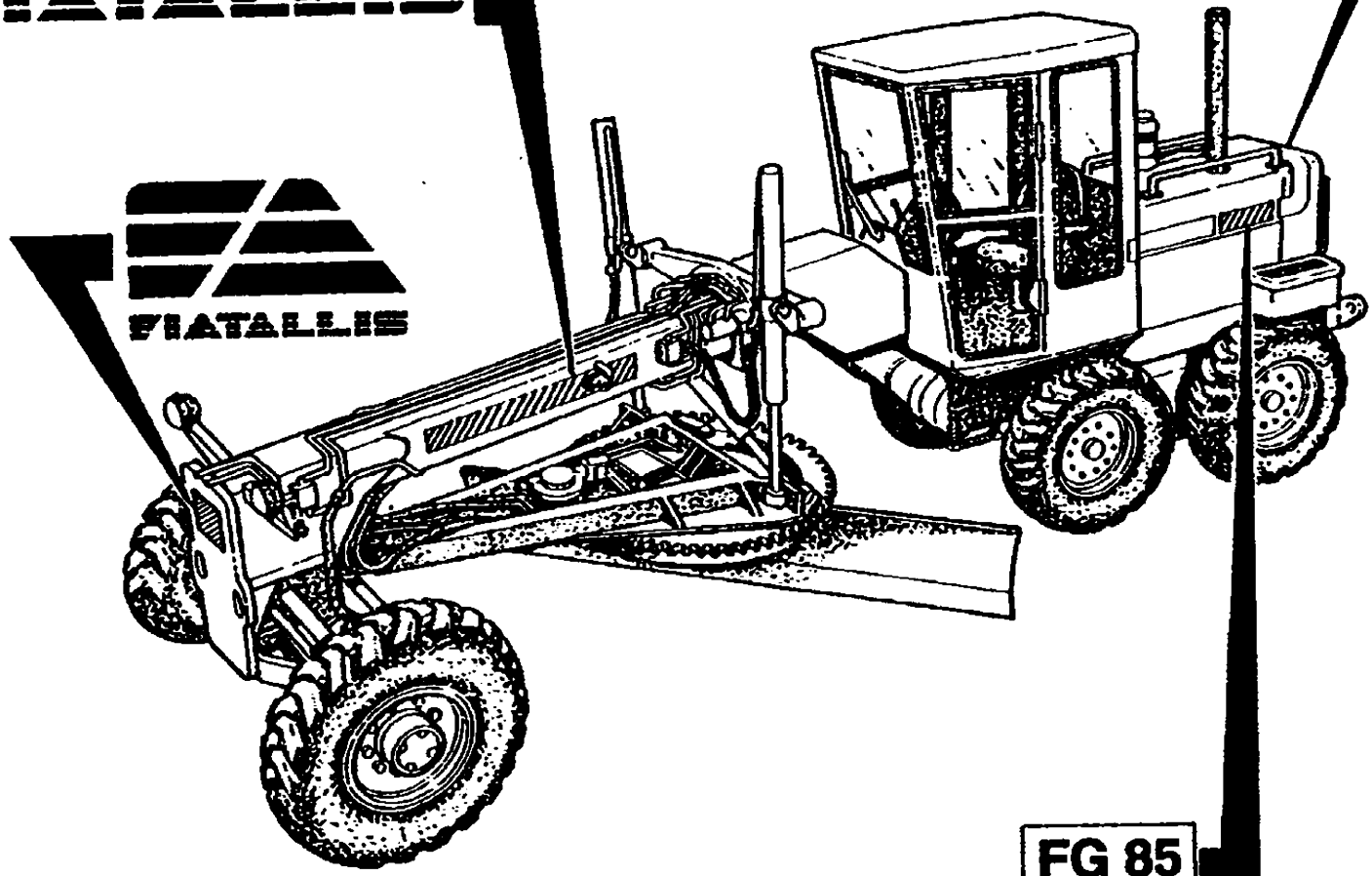

FIATALLIS

FG 85
SÉRIE B

FG 105
SÉRIE B

1-2

FG85 SERIES B MOTORGRADER

L1.25(001) KIT TYPE PLATES

Ref	Numero de Pieza	Ctd	Descripción
1	75286066	K	KIT (ENGL)85R
1	75286095	K	KIT (PORT)85R
2	75286068	K	KIT (ENGL)105R
2	75286097	K	KIT (PORT)105R

FIATALLIS

FIATALLIS

ARTICULATED

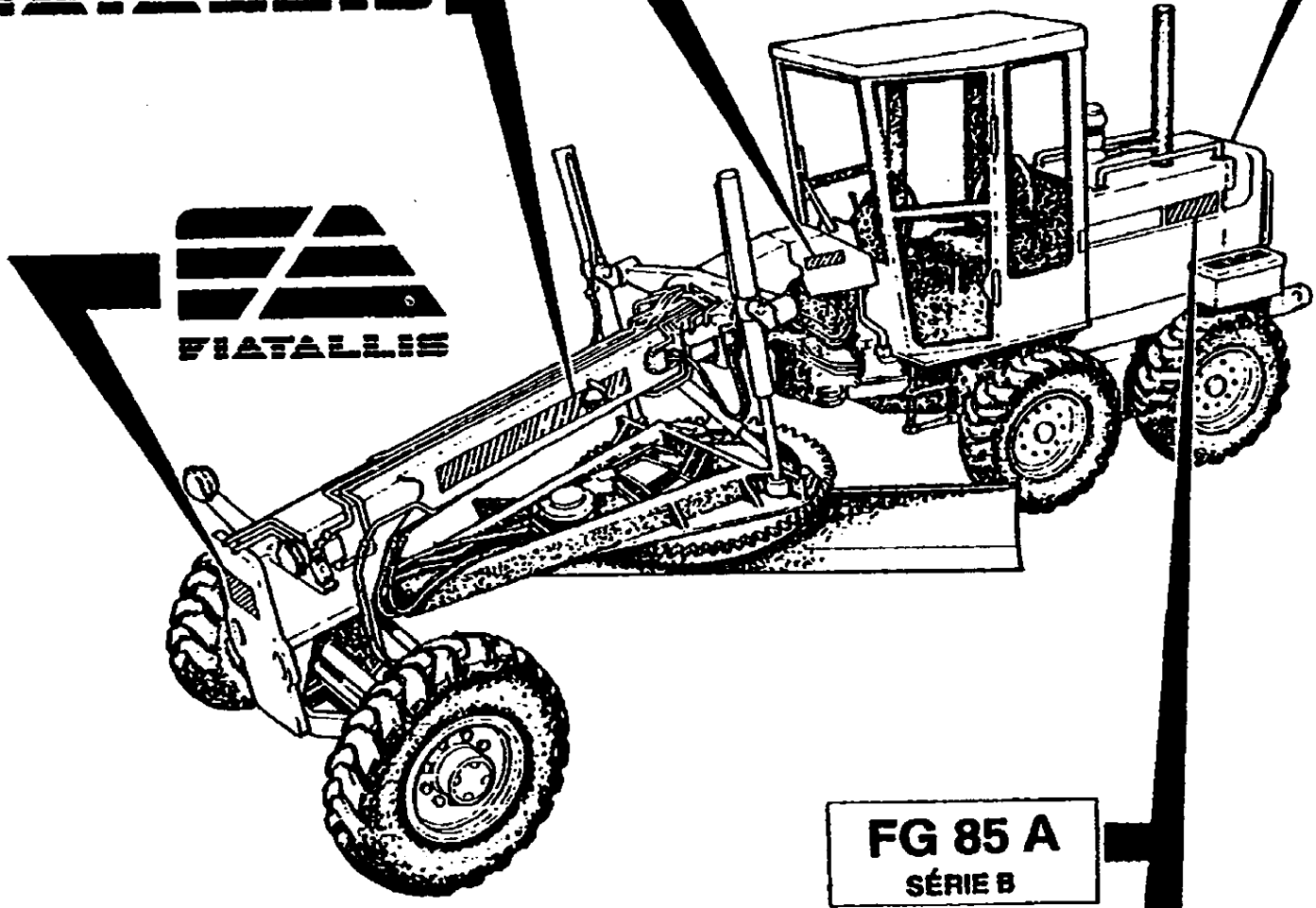

FIATALLIS

FG 85 A
SÉRIE B

FG 105 A
SÉRIE B

FG85 SERIES B MOTORGRADER

L1.25(002) KIT TYPE PLATES

Ref	Numero de Pieza	Ctd	Descripción
1	75286067	K	KIT
1	75286096	K	KIT
2	75286069	K	KIT
2	75286098	K	KIT

L1.30(001) BATTERY BOX ASSEMBLY

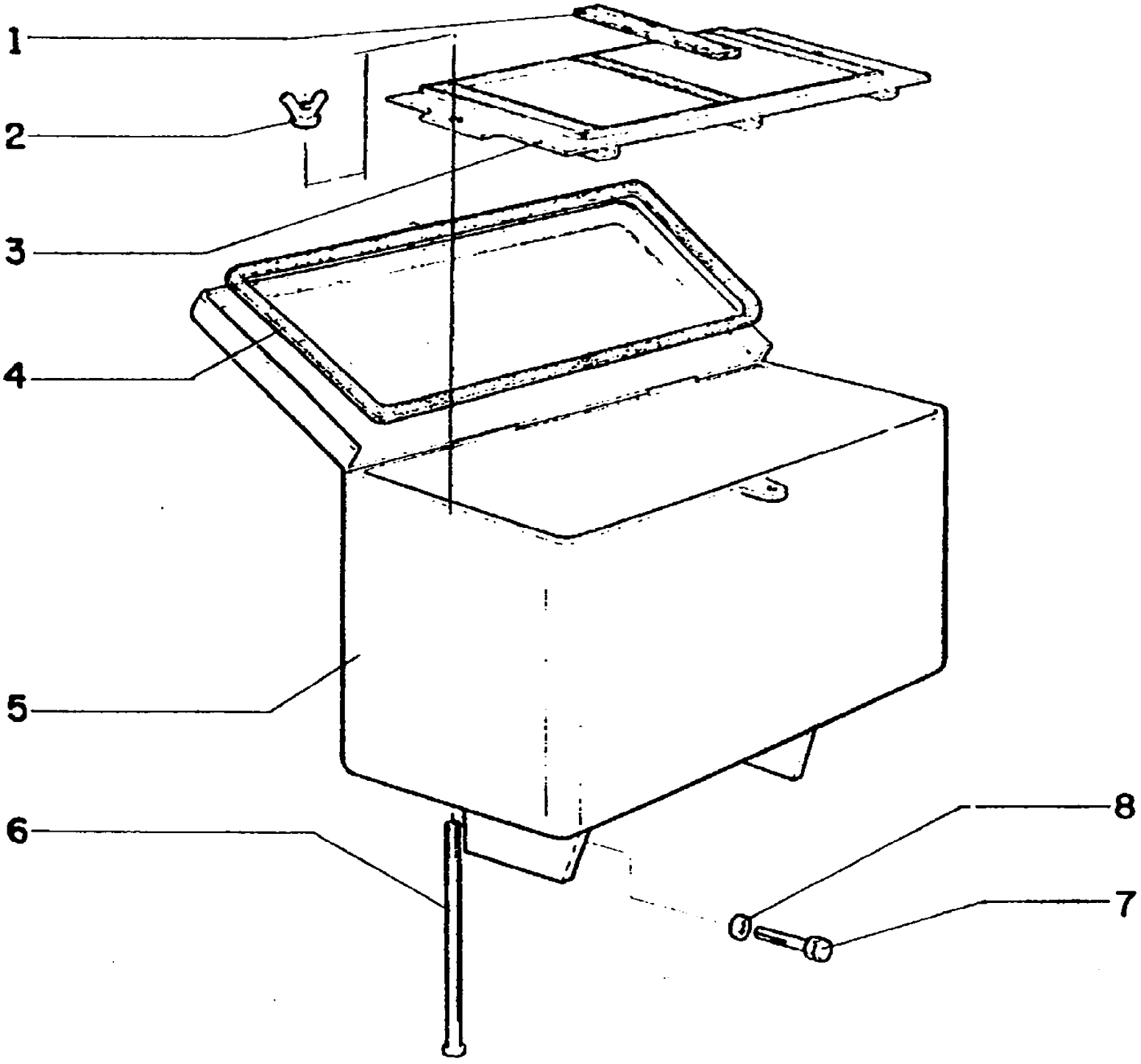

FG85 SERIES B MOTORGRADER

L1.30(001) BATTERY BOX ASSEMBLY

Ref	Numero de Pieza	Ctd	Descripción
1	73125817	3	BAR
2	73125821	2	NUT
3	73125835	1	BATT.SEAT/SUPP.
4	73125816	1	GASKET
5	73153047	2	BATT.SEAT/SUPP.
6	70917737	2	SCREW
7	70927173	12	SCREW
8	70677006	12	WASHER

L6.04(001) DRIVER'S SEAT

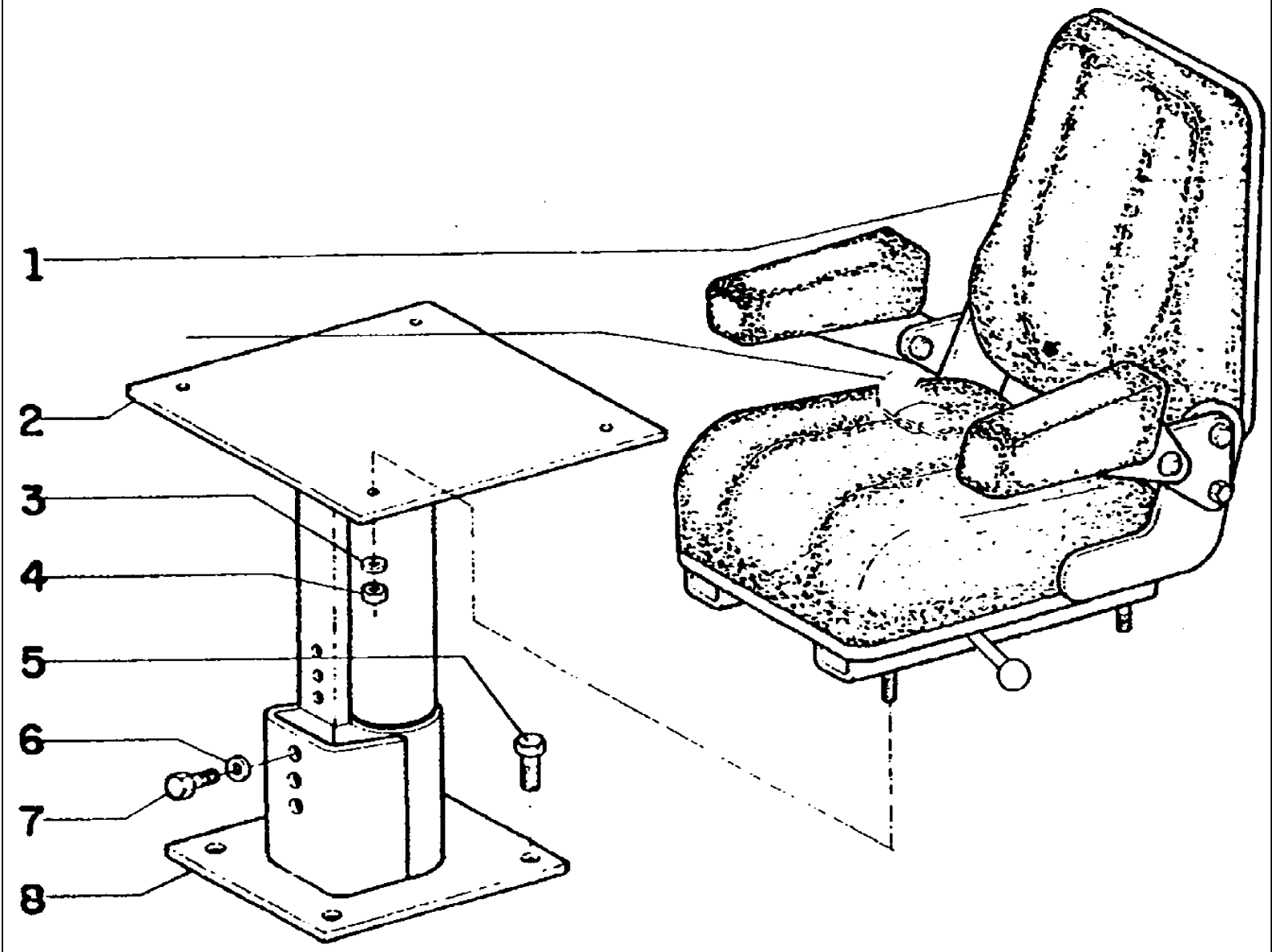

FG85 SERIES B MOTORGRADER

L6.04(001) DRIVER'S SEAT

Ref	Numero de Pieza	Ctd	Descripción
1	75217549	1	SEAT
2	73148972	1	SUPPORT
3	70677005	4	WASHER
4	70911025	4	NUT
5	70920583	4	SCREW
6	70677008	2	WASHER
7	70920582	2	SCREW
8	73148971	1	SUPPORT

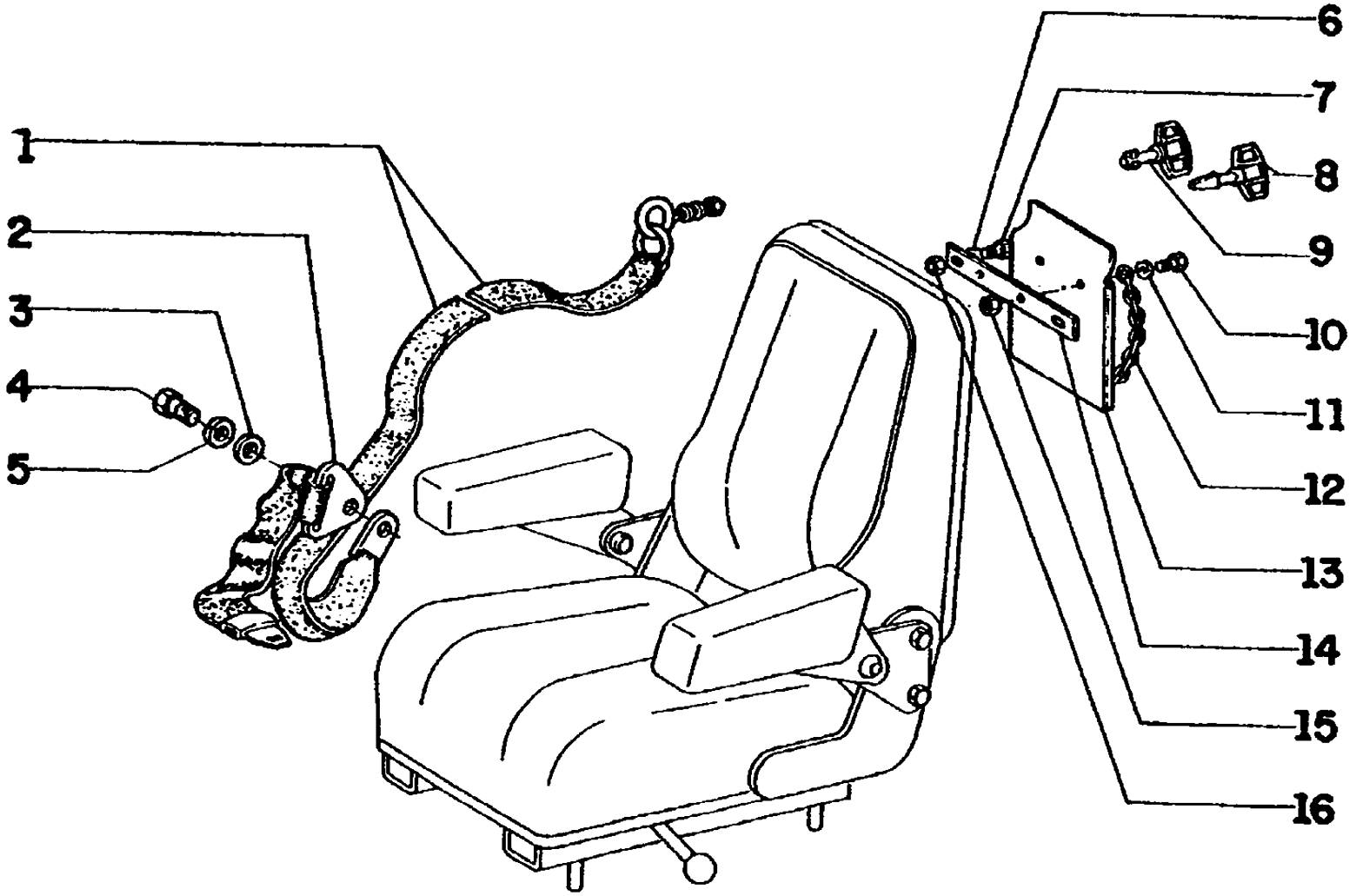
1
2
3
4
5
6
7
8
9
10
11
12
13
14
15
16

FG85 SERIES B MOTORGRADER

L6.04(002) DRIVER'S SEAT

Ref	Numero de Pieza	Ctd	Descripción
1	73146062	1	SAFETY BELT
2	73075858	1	SAFETY BELT
3	70910919	2	WASHER
4	70927485	2	SCREW
5	70914678	2	LOCKWASHER
6	70630753	2	WASHER
7	70927400	2	SCREW
8	79074140	1	KEY
9	79073033	1	KEY
10	70907722	2	SCREW
11	70911114	4	WASHER
12	73108440	1	CHAIN
13	73108441	1	BAG
14	73109117	1	PLATE
15	70911327	2	NUT
16	70912772	2	NUT