RUTHZIL TRATOR COMERCIAL DE PEÇAS LTDA 11 97083-6812 ROLANDO CITRANGULO

JUNHO 1990

FH120 FIAT ALLIS

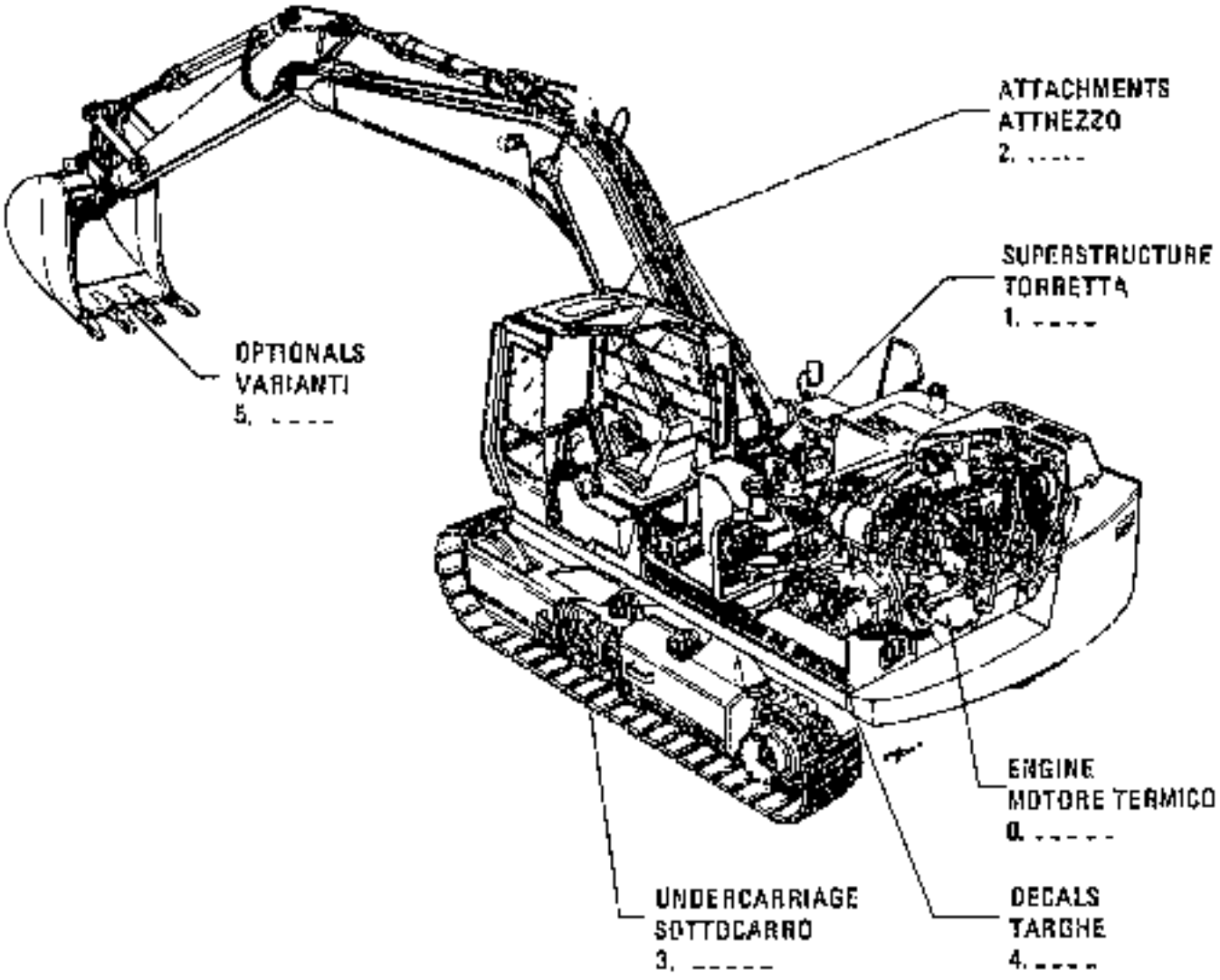

SPARE PARTS

Parti di Ricambio
Ersatzteile
Pièces détachées
Piezas de repuesto

IDENTIFICATION AND VERSION LIST
IDENTIFICAZIONE ED ELENCO DELLE VERSIONI
IDENTIFICATION ET LISTE DES VERSIONS
KENNZEICHEN UND VERZEICHNIS DER VERSIONEN
IDENTIFICACIÓN Y LISTA DE VERSIONES

MODELS - MODELLI - MODELES MODELLE - MODELOS	ENGINEERING CODE - DENOMINAZIONE TECNICA DESIGNATION TECHNIQUE - TECHNISCHE BEZEICHNUNG DESIGNACION TECNICA
FH 170	**71405001**

MODEL SERIAL NUMBER NUMERO DI MATRICOLA DEL MODELLO NUMERO DE SERIE DU MODELE MODELL-SERIENNUMMER NUMERO DE SERIE DEL MODELO	
PRODUCT CODE CODICE PRODOTTO CODE DE PRODUCTION PRODUCT KODEX CODIGO DEL PRODUCTO	UNIT NO TELAIO NUMERO DE L'UNITE EINHEITS-NR. NUM. DE LA UNIDAD
12 H	**0051 E**

ENGINE MODEL MODELLO DEL MOTORE MODELE DU MOTEUR MOTORBAUMUSTER MODELO DEL MOTOR
8045 SI 25 All. 001



Machine serial number location
Posizione del numero di matricola della macchina
Emplacement du numero de serie de la machine
Ort der Seriennummer der Maschine
Ubicación del número de serie de la máquina

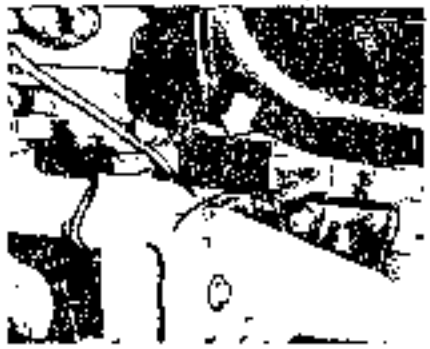

Engine serial number location
Posizione del numero di matricola del motore
Emplacement du numero de serie du moteur
Ort der Seriennummer des Motors
Ubicación del número de serie del motor

A-3

NOTICE

The right is reserved to change the construction or material of any parts where it seems desirable to do so without incurring the obligation of installing such changes on units already delivered.
Additional publications pertaining to this model and to all other products are available through the dealers. Publications are generally available in several languages.
Refer to Service Publications Index for all such publications; the index is available from the dealers.

INSTRUCTIONS FOR ORDERING PARTS

At the time this parts catalog was published the listed part numbers were current. It is our policy to constantly improve our machines and therefore, part numbers and design may change.
When ordering parts, verify part numbers through your dealer's microfiche and master numerical index which are up to date with all the latest part numbers.

ORDER PARTS FROM THE DEALER COVERING THE LOCAL TERRITORY

Orders for spare parts ust include the following data (see page 2):

- Model, Serial Number, Engine model, Engine serial number, marked on engine block.

- Specify the part number (shown on Spare Parts Catalog list), possibly completed by it description. If parts refer to an assembly which has a model or serial number, also include this information.

- Give post office address, town, county and state where parts are to be shipped.

- Also specify whether material is to be shipped by freight, express or parcel post.

- Confirm all telephone or telegraph orders in writing.

Parts can only be returned to/through the dealer from whom the parts were purchased and **must have prior written authorization.** Each return will be treated individually.
Unless claims for shortages or errors are made immediately upon receipt of goods, they will not be considered. When broken goods are received, a full description of the damage should be made by the carrier agent on the freight bill.
Manufacturer's responsibility is limited, and ceases upon completion of sale conditions provided for each delivery.

Fiatallis is not responsible for any liability arising from any damage resulting from defects caused by parts and/or components not approved by Fiatallis for use in maintaining and/or repairing products manufactured or merchandized by Fiatallis.

In any case, no warranty of any kind is made or shall be imposed with respect to products manufactured or merchandized by Fiatallis when failures are caused by the use of parts and/or components not approved by Fiatallis.

A-4

USE OF THE CATALOG

To locate the parts correctly, proceed as follows:
a) Consult the **version list** on page 2 to find the code of the version required; see following para 1 ⑥.
b) Consult the illustrations, the associated **spare parts lists** as directed below in 1 and 2.
c) To identify the components of the possible special equipment of the machine, consult the **optional equipment list** on page 18 to find the code number and subgroup.

1. **Illustrations** (see example on page 5)
Illustrations show the parts of each subgroup. The parts illustrated are identified by a **reference number** (ITEM). This number may be replaced by other indications, for example:
1.000: Part shown only in subgroup **1.000**
Moreover, each illustration shows:
— **Subgroup number or optional equipment number** ① — **Illustration number** ② — **Updating indication** ③ , for example:
Suffix **06**, to print no. **604.01.046**, indicates that subgroup modification is shown in 6th updating of the catalog dated **23-2-81**. When code ③, is missing, no changes were introduced. **Number of the Parts Technical Notice** (N.T.R.) reporting the 6th updating ④; **subgroup title** ⑤ — **version code** ⑥ with reference to previous point (a).

In lack of said codes, the illustration applies to all model versions covered by the catalog.
— **indication of part kit** ⑦ , with associated part numbers and part kit symbol. (See page 11 for kit composition) — **number of assembly** ⑧ .

2. **Spare parts lists** (see example on page 5)
They list the spare parts of each subgroup contained in the corresponding illustrations. The following is shown for each part.
⑨ ITEM: **number associating the part shown with the respective "part number"**.
⑩ PART NUMBER: **spare part order number**
⑪ Q.TY: **total quantity of the part.**
⑫ TRANS. CODE:

⑬ DESCRIPTION/DENOMINAZIONE: **Description of the part in English and Italian.**
In case of modification, the description is completed with the following kinds of indication and directions for replacement if any.
⑭ 4606783
C 951 means that the part is valid up to modification 951.
⑮ 79021573
D 951 means that the part is valid after modification 951.
Effectiveness example:
Up to S/N 004652 ⑯: installed on machines with serial nos. up to 004652.
S/N 004653 and up ⑰: installed on machines with serial nos. from 004653.
Examples of direction for replacement:
4606783 = 79021573: ⑱ on exhaustion of stocks of part 4606783 fit part 79021573.
4606787 = 79021574 + 79021576 ⑱: on exhaustion of stocks of part 4606787 fit part 79021574 plus 79021576.
4606792 = 79021576 – 4606794 ⑱: on exhaustion of stocks of part 4606792 fit 79021576 and discard 4606794.
If no directions for replacement are given under effectiveness indication, this means that the old and new parts are not interchangeable and, hence, the former must be supplied as spare.
Other useful indications may be provided ⑲ under DESCRIPTION/DENOMINAZIONE after the sign —
Terms RIGHT/DESTRO and LEFT/SINISTRO refer to the direction of machine forward travel.
Should the word WRONG appear next to a part name without the corresponding CORRECT on the line immediately below it means that the associated part was erroneously included at an earlier stage
⑳ **Standard part dimensional data.**

3. **MODIFICATIONS SUMMARY**
This summary shows the modifications, the versions involved, the effective points, the subgroups affected and special directions for replacement as required.

FH200 01-02

LIFT CYLINDER (RIGHT)	VERIN DE RELEVAGE(DROIT)
CILINDRO SOLLEV. (DESTRO)	HUBZYLINDER (RECHTS)
71405788	GATO ELEVACION (DERECHO)

2.030 TAV.2

N.T.R. 63 - 23-2-81
604.01.046.05

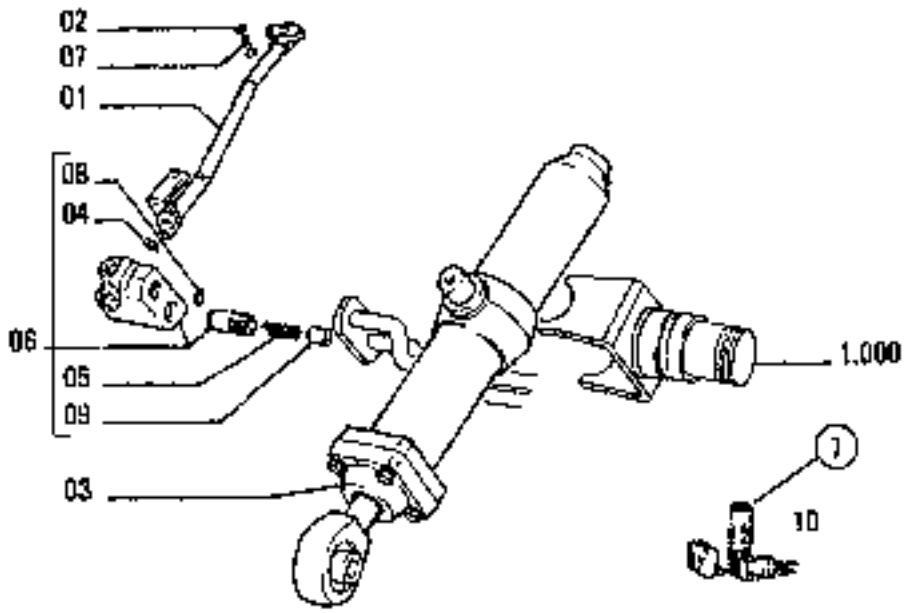

FH200

LIFT CYLINDER (RIGHT)	VERIN DE RELEVAGE(DROIT)
CILINDRO SOLLEV. (DESTRO)	HUBZYLINDER (RECHTS)
71405788	GATO ELEVACION (DERECHO)

2.030 TAV.2

N.T.R. 63 - 23-2-81
604.01.046.05

ITEM	PART NUMBER	QTY	TR. CO.	DESCRIPTION	DESCRIZIONE
01	1316955	1	193T	TUBE -RIGHT	TUBO RIGIDO -DEST.
	4513436	1	193T	TUBE -RIGHT	TUBO RIGIDO -DEST.
	4606783	1	193T	TUBE -LEFT	TUBO RIGIDO -SIN.
				C951 UP TO S/N 004652	C951 FINO AL TELAIO 004652
				4606783-79021573	
	79021573	1	193T	TUBE -LEFT	TUBO RIGIDO -SIN.
				D951 FROM S/N 004653	D951 DAL TELAIO 004653
02	12538601	2	131R	WASHER	ROSETTA
03	4606785	1	164C	CYLINDER -ASS.Y RIGHT	CILINDRO -COMPL. DEST.
				SEE TAV.3	VED. TAV.3
	4606787	1	164C	CYLINDER -ASS.Y LEFT	CILINDRO -COMPL. SIN.
				C951 UP TO S/N 004652	C951 FINO AL TELAIO 004652
				4606787-79021574-79021576	
	79021574	1	164C	CYLINDER -ASS.Y LEFT	CILINDRO -COMPL. SIN.
				D951 FROM S/N 004653	D951 DAL TELAIO 004653
04	4606788	1	156G	O-RING -WRONG-	GUARNIZIONE O-R -ERRATA
	4606789	1	156G	O-RING -CORRECT-	GUARNIZIONE O-R -CORRIGE
05	4606790	1	100M	SPRING	MOLLA
06	4606791	1	10V	VALVE -ASS.Y RIGHT	VALVOLA -COMPL. DEST.
	4606792	1	10V	VALVE -ASS.Y LEFT	VALVOLA -COMPL. SIN.
				C951 UP TO S/N 004652	C951 FINO AL TELAIO 004652
				4606792-79021576-4606794	
	79021575	1	10V	VALVE -ASS.Y LEFT	VALVOLA -COMPL. SIN.
				D951 FROM S/N 004653	D951 DAL TELAIO 004653
07	11307021	2	40V	SCREW 8X1X20	VITE 8X1X20
08	4453381	1	156G	O-RING	GUARNIZIONE O-R
09	4606795	1	50T	PLUG	TAPPO
10	79021577		1K	KIT.-SEE PAG.32	KIT-VED. PAG.32

ATTENTION

Le constructeur se réserve le droit de modifier la construction ou le matériau de toute pièce, si cela se révèle nécessaire, sans devoir apporter ces modifications sur les pièces déjà livrées.
D'autres publications concernant ce modèle et tous les autres modèles sont disponibles auprès des Concessionnaires. En général, ces publications sont disponibles en plusieurs langues.
Pour trouver ces publications, se référer au catalogue des publications techniques. Des exemplaires du catalogue sont disponibles auprès des Concessionnaires.

INSTRUCTIONS POUR LA COMMANDE DES PIECES DE RECHANGE

Les numéros de commande indiqués sur ce catalogue sont mis à jour à la date de sortie de la publication. Nous nous efforçons constamment d'améliorer les machines et, par conséquent, les numéros de commande et les illustrations peuvent ne plus être à jour.
Au moment de passer commande des pièces de rechange, contrôler les numéros de commande auprès de Votre Concessionnaire, qui dispose des microfiches et de la liste générale des pièces de rechange.

PASSER COMMANDE DE PIECES DE RECHANGE CHEZ LE CONCESSIONNAIRE DE VOTRE ZONE

Les commandes de pièces de rechange doivent comporter les indications suivantes (voir page 2):

- Modèle de la machine, Numéro du chassis, Type du moteur, Numéro du moteur estampillé sur le bâti moteur.

- Indiquer le numéro de commande de la pièce désirée (indiquée sur les listes du catalogue), accompagné si possible de sa désignation.
Si les pièces se rapportent à un groupe possédant son propre numéro de modèle ou de série, indiquer aussi ce dernier.

- Indiquer dans l'adresse, le bureau de poste, la ville, la région et le pays où les pièces de rechange doivent être envoyées.

- Indiquer de plus les modalités d'expédition du matériel (par mer, par terre, exprès ou colis postal).

- Confirmer par écrit toutes les commandes anticipées par téléphone ou télégraphe.

En cas de renvois de pièces, ils pourront être effectués seulement à/ou par l'intermédiaire du Concessionnaire chez lequel les pièces ont été achetées et ils devront être autorisés au préalable par écrit. Tout renvoi sera examiné à la fois.
Les réclamations pour manques et défauts, qui ne seront pas présentées immédiatement à la réception de la marchandise, seront rejetées.
En cas de réception de marchandise endommagée, une description complète doit être présentée par l'agent transporteur sur le bordereau d'expédition.
La responsabilité du constructeur se limite et cesse au moment de l'exécution des conditions de vente prévues pour chaque fourniture.

REGLES POUR LA CONSULTATION DU CATALOGUE

En vue d'une recherche correcte des pièces de rechange, il est nécessaire de:
a) Consulter la **liste des versions** à page 2, pour repérer le code éventuel de la version concernée; voir paragraphe **1**, point **(5)** ci-après.
b) Consulter les **planches illustrées**, et leurs **listes de pièces de rechange** comme indiqué aux paragraphes 1 et 2.
c) Pour les modèles comportant des variantes, consulter la **liste des variantes** à page 16, où il est reporté, par ordre progressif, le sous-groupe et le numéro code correspondant.

1. **Illustrations** (voir exemple page 10)
Elles représentent les pièces de rechange de chaque groupe dans lesquels la machine est divisée.
Les pièces de rechange représentées sont repérées par le **numéro de référence** (ITEM). Le numéro de référence peut être remplacé par d'autres indications, par exemple.
1.000: pièce illustrée exclusivement au Sgr. **1.000.**
Chaque illustration reporte en outre:
Code de sous-groupe ou code de la variante ① — **numéro de planche** ② — **indications de mise à jour** ③, par exemple:
Le suffixe 06, ajouté au numéro d'imprimé **604.01.046**, indique que le sous-groupe a été modifié avec la 6ème mise à jour du catalogue, parue en date **23 février 1981**. Le manque de l'indication ③, signifie qu'aucune modification n'a été apportée **Numéro du Bulletin Technique Rechangus** (N.T.R.) où la 6ème mise à jour ④ a paru — **désignation du sous-groupe** ⑤ — **code de la version** ⑥, avec référence au point (a) précédent. L'absence de codes veut dire que la planche est valable pour toutes les versions du modèle auquel se rapporte le catalogue — **indication de l'existence de lists de rechange** ⑦, avec les numéros de référence correspondants (pour la composition des trousses voir page 32) — Numéro d'ensemble ⑧.

2. **Listes des pièces de rechange** (voir exemple page 10)
Ces listes énumèrent les pièces de rechange de chaque groupe, contenues dans les illustrations correspondantes, et elles reportent pour chaque pièce.
⑨ ITEM: **numéro d'appariage de la pièce représentée avec son "part number"**.
⑩ PART NUMBER: **numéro de commande de la pièce de rechange**.
⑪ Q.TY: **quantité totale de la pièce**, rapportée à la planche.
⑫ TRANS. CODE: -

⑬ DESCRIPTION/DENOMINAZIONE: **description de la pièce en anglais et en italien**. En cas de modification, la désignation est complétée par le types suivants d'indication et les INSTRUCTIONS DE RECHANGE éventuelles:
⑭ 4606783
C 951 = pièce valide jusqu'à la modification n° 951
⑮ 79021573
D 951 = pièce valide depuis la modification n° 951.
Exemple d'indication d'effectuation d'une modification:
jusqu'au châssis n° 004652 (**16**) montées sur des machines avec n° de châssis jusqu'à 004652.
depuis le châssis n° 004653 ⑰: montées sur des machines avec n° de châssis à partir de 004653.
Exemple de consignes de rechange:
4606783 = 79021573 ⑱: dès l'épuisement des stocks de la pièce 4606783, monter la pièce 79021573.
4606787 = 79021574 + 79021576 ⑲: dès l'épuisement des stocks de la pièce 4606787, monter la pièce 79021574 plus la pièce 79021576;
4606792 = 79021575 – 4606794 ⑳: dès l'épuisement des stocks de la pièce 4606792, monter la pièce 79021575 en éliminant la pièce 4606794.
Si aucune consigne de rechange n'est reportée, cela veut dire que la pièce de l'ancien montage doit être toujours livrée de rechange, n'étant pas interchangeable avec celle du nouveau montage.
D'autres indications utiles ㉑ peuvent figurer dans la colonne DESCRIPTION/DENOMINAZIONE, après le signe — (pour la traduction de ces termes de l'anglais ou de l'italien en français, allemand et espagnol voir la liste des désignations supplémentaires au début du Glossaire page). Les termes RIGHT/DROIT et LEFT/GAUCHE se rapportent à la direction de roulement avant de l'engin. Si le terme WRONG/ERRATO figure à côté de la désignation sans le terme correspondant CORRECT/CORRIGEZ à la ligne suivante, cela veut dire que cette pièce avait été incluse par erreur.
㉒ Dimensions des pièces normalisées.

3. **RESUME DES MODIFICATIONS**
Enumération de toutes les modifications, les versions éventuelles, leurs effectuations, les sous-groupes concernés et les consignes pour les rechanges.

FH200 01-02

LIFT CYLINDER (RIGHT) — VÉRIN DE RELEVAGE(DROIT)
CILINDRO SOLLEV. (DESTRO) — HUBZYLINDER (RECHTS)
71405786 — GATO ELEVACION (DERECHO)

2.030 TAV.2

N.T.R. 63 - 23-2-81
604.01.046.05

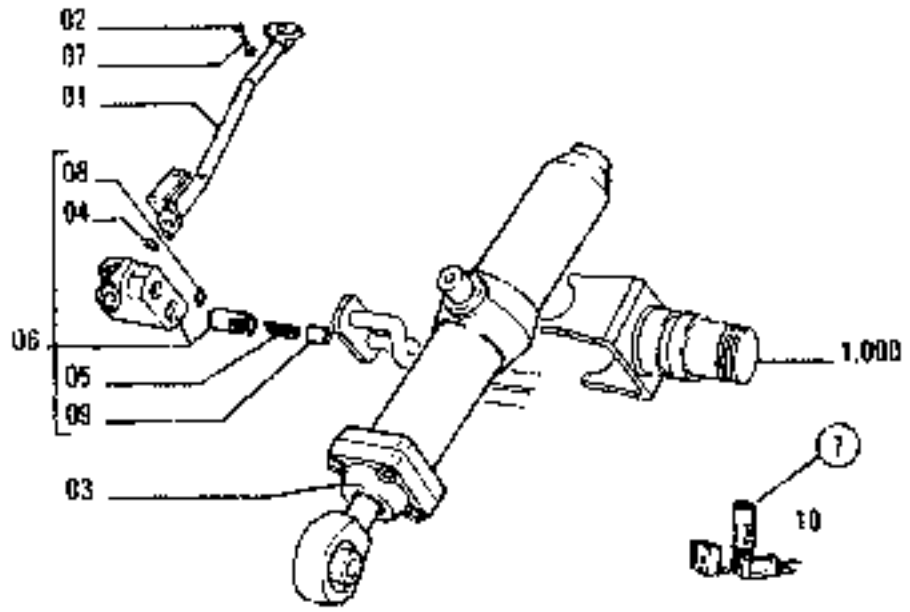

FH200

LIFT CYLINDER (RIGHT) — VÉRIN DE RELEVAGE(DROIT)
CILINDRO SOLLEV. (DESTRO) — HUBZYLINDER (RECHTS)
71405786 — GATO ELEVACION (DERECHO)

2.030 TAV.2

N.T.R. 63 - 23-2-81
604.01.046.05

ITEM	PART NUMBER	QTY	TR. CO.	DESCRIPTION — (13) — DESCRIZIONE
01	4216965	1	193T	TUBE -RIGHT — TUBO RIGIDO -DEST.
	4513436	1	193T	TUBE -RIGHT — TUBO RIGIDO -DEST.
	4606783	1	193T	TUBE -LEFT — TUBO RIGIDO -SIN.
				C951 UP TO S/N 004652 — C951 FINO AL TELAIO 004652
				4606783=79021573
	79021573	1	193T	TUBE -LEFT — TUBO RIGIDO -SIN.
				D951 FROM S/N 004653 — D951 DAL TELAIO 004653
02	12038601	2	131R	WASHER — ROSETTA
03	4606788	1	164C	CYLINDER -ASS.Y RIGHT — CILINDRO -COMPL. DEST.
				SEE TAV.3 — VED. TAV.3
	4606787	1	164C	CYLINDER -ASS.Y LEFT — CILINDRO -COMPL. SIN.
				C951 UP TO S/N 004652 — C951 FINO AL TELAIO 004652
				4606787=79021574-79021576
	79021574	1	164C	CYLINDER -ASS.Y LEFT — CILINDRO -COMPL. SIN.
				D951 FROM S/N 004653 — D951 DAL TELAIO 004653
04	4606789	1	158G	O-RING -WRONG — GUARNIZIONE O-R -ERRATA
	4606789	1	158G	O-RING -CORRECT — GUARNIZIONE O-R -CORRIGE
05	4606790	1	100M	SPRING — MOLLA
06	4606791	1	10V	VALVE -ASS.Y RIGHT — VALVOLA -COMPL. DEST.
	4606792	1	10V	VALVE -ASS.Y LEFT — VALVOLA -COMPL. SIN.
				C951 UP TO S/N 004652 — C951 FINO AL TELAIO 004652
				4606792=79021576-4006794
	79021575	1	10V	VALVE -ASS.Y LEFT — VALVOLA -COMPL. SIN.
				D951 FROM S/N 004653 — D951 DAL TELAIO 004653
07	11307021	2	40V	SCREW 8X1X20 — VITE 8X1X20
08	14453381	1	158G	O-RING — GUARNIZIONE O-R
09	4606795	1	50T	PLUG — TAPPO
10	79021577		1K	KIT.-SEE PAG.32 — KIT-VED. PAG.32

A-9

LISTE ALPHABETIQUE

DESIGNATION	SGR.	TAV.
ACCESSOIRES D'ENTRETIEN	5.0083	1
ARBRE A CAMES	0.120	1
ATTACHES ALTERNATEUR	0.400	1
AUTORADIO	5.0321	1
BAIE DE LA CABINE-DROIT	1.250	7
BAIE DE LA CABINE-GAUCHE	1.250	6
BALANCIER (2,1m)	5.0022	1
BALANCIER (2,5m)	? 003	1
BALANCIER (3m)	5.0036	1
	5.0036	2
BALANCIER N.3 (2.5m)	2.003	2
BIELLE	0.081	1
BLOC-CYKINDRES	0.040	1
	0.040	2
	0.040	3
BRAS MONOBLOCQUE	2.000	1
CABINE	1.250	4
CABINE - PLATE-FORME	1 250	1
CABINE-CHASSIS	1.250	7
CAPOTAGE	1.300	1
	1.300	2
CARTER D'HUILE	0.042	1
CEINTURE DE SECURITE	5 0536	1
CHASSIS INFERIEUR	3 000	1
CHASSIS SUPERIEUR	1 000	1
CHENILLE	3.050	1
COLLECTEUR D'ADMISSION	0 071	1
COLLECTEUR D'ECHAPPEMENT	0 077	1
COMMANDE DE DISTRIBUTION	0.100	1
COMMANDE DE POMPE D'EAU	0.340	1
COMMANDE DE VENTILATEUR	0.345	1
COMMANDE ROTATION P.H.	1.030	7
COMMANDES	1.070	1
COMMANDES D'ACCELERATEUR	0 004	1
COMMANDES DIVERSES	0 350	1
COUVERCLES DE BLOC-CYL	0 043	1
	0 043	2
CROCHETS DE LEVAGE MOT.	0.450	1
CULASSE DE CYLINDRE	0.060	1
	0.060	2
CYLINDRE DE GODET	2.030	5
DEMARRAGE A FROID	5.0025	1
DEMARREUR	0.360	2
DEMARREUR-FIXATIONS	0.360	1
DISTRIBUTEUR	1.050	2
	1.050	3
	1.050	4
	1 050	5
DISTRIBUTEUR ROT.-COMP	3 060	2
DISTRIBUTEUR ROTATIF	3 060	1
ECHANGEUR THERMIQUE	0.310	1
	0.310	2
ELECTROVALVE	1.080	2

DESIGNATION	SGR.	TAV.
FILTRE A AIR	0.001	1
FILTRE A COMBUSTIBLE	0.200	1
FILTRE A HUILE DU MOTEUR	0.302	1
GALET DE RETOUR CHENILLE	3.030	1
GALET PORTEUR DE CHENILLE	3.040	1
GODET	2.020	1
INSTALLATION ELECTRIQUE	1.220	2
JAUGE D'HUILE MOTEUR	0.305	2
KIT DE RECHANGE	4 003	1
MANILLE	1.300	3
MANIPULATEUR-COMPOSANTS	1.070	2
MODULE DE CONTROLE	1.200	2
MONTAGE DE MARTEAU CLECO.	5 0020	2
MOTEUR HYDR.-COMPOSANTS	1.040	3
MOTEUR HYDRAULIQUE-COMP	3.010	3
MOTEUR THERMIQUE	0.021	1
MOTORED. TRANSLATION	3.010	1
MOTORED.TRANS.-COMP.	3.010	2
MOTOREDUCTOR ROTACION	1 040	1
PISTON	0.082	1
PLAQUES	4 500	1
POMPE A EAU	0.320	1
POMPE A EAU-COMPOSANTS	0.320	2
POMPE A HUILE DU MOTEUR	0.300	1
POMPE CIRCUIT HYDR.	1.030	1
POMPE D'ALIMENTATION	0 201	1
POMPE D'INJECTION	0.140	2
	0.140	3
	0.140	4
	0.140	5
POMPE D'INJECTION-TUYAUT.	0.140	1
POMPE DE SERVOCOMMANDE	1.030	6
POMPE EQUIP.-COMPOSANTS	1.030	2
POMPE TRANSVASEMENT COMB.	5.0160	1
PORTE DE LA CABINE	1.250	5
POULIE DE VILEBREQUIN	0.084	1
RADIATEUR	0.003	1
RADIATEUR-COMPOSANTS	0.003	2
	0.003	3
RECHAUFFEUR	1.280	1
RECHAUFFEUR-COMPOSANTS	1.280	2
REDUCTEUR-COMPOSANTS	1.040	2
REG. POMPE HYDR.-COMP.	1.030	3
REGULATEUR P.H.-COUVERCLE	1.030	4
	1.030	5
RENIFLARD DU MOTEUR	0.045	1
	0.045	1A
RESERVOIR COMBUSTIBLE	1.010	1
RESERVOIR D'HUILE	1.020	1
ROUE TENDEUSE	3.020	1
SIEGE CHAUFFE	5 0155	1
SIEGE DE CONDUC (Bostrom)	5.0151	1

REVISED JUNE 1990

A-10

SUBGROUP	GRID
0.000 TAV1	1C-11
0.000 TAV1	1C-12
0.001 TAV1	1C-13
0.001 TAV1	1C-14
0.002 TAV1	1C-15
0.002 TAV1	1C-16
0.003 TAV1	1C-17
0.003 TAV1	1C-18
0.003 TAV2	1C-19
0.003 TAV2	1C-20
0.003 TAV3	1C-21
0.003 TAV3	1C-22
0.004 TAV1	1C-23
0.004 TAV1	1C-24
0.021 TAV1	1D-3
0.021 TAV1	1D-4
0.040 TAV1	1D-5
0.040 TAV1	1D-6
0.040 TAV2	1D-7
0.040 TAV2	1D-8
0.040 TAV3	1D-9
0.040 TAV3	1D-10
0.042 TAV1	1D-11
0.042 TAV1	1D-12
0.043 TAV1	1D-13
0.043 TAV1	1D-14
0.043 TAV2	1D-15
0.043 TAV2	1D-16
0.045 TAV1	1D-17
0.045 TAV1	1D-18
0.045 TAV1A	1D-19
0.045 TAV1A	1D-20
0.060 TAV1	1D-21
0.060 TAV1	1D-22
0.060 TAV2	1D-23
0.060 TAV2	1D-24
0.071 TAV1	1E-3
0.071 TAV1	1E-4
0.077 TAV1	1E-5
0.077 TAV1	1E-6
0.080 TAV1	1E-7
0.080 TAV1	1E-8
0.081 TAV1	1E-9
0.081 TAV1	1E-10
0.082 TAV1	1E-11
0.082 TAV1	1E-12
0.083 TAV1	1E-13
0.083 TAV1	1E-14
0.084 TAV1	1E-15
0.084 TAV1	1E-16
0.100 TAV1	1E-17
0.100 TAV1	1E-18
0.120 TAV1	1E-19
0.120 TAV1	1E-20
0.140 TAV1	1E-21
0.140 TAV1	1E-22
0.140 TAV2	1E-23
0.140 TAV2	1E-24
0.140 TAV3	1F-3
0.140 TAV3	1F-4
0.140 TAV4	1F-5
0.140 TAV4	1F-6
0.140 TAV5	1F-7
0.140 TAV5	1F-8
0.149 TAV1	1F-9
0.149 TAV1	1F-10
0.200 TAV1	1F-11
0.200 TAV1	1F-12
0.201 TAV1	1F-13
0.201 TAV1	1F-14
0.203 TAV1	1F-15
0.203 TAV1	1F-16
0.240 TAV1	1F-17
0.240 TAV1	1F-18
0.240 TAV2	1F-19
0.240 TAV2	1F-20
0.241 TAV1	1F-21
0.241 TAV1	1F-22
0.300 TAV1	1F-23
0.300 TAV1	1F-24
0.302 TAV1	1G-3
0.302 TAV1	1G-4
0.305 TAV1	1G-5
0.305 TAV1	1G-6
0.305 TAV2	1G-7
0.305 TAV2	1G-8
0.310 TAV1	1G-9
0.310 TAV1	1G-10
0.310 TAV2	1G-11
0.310 TAV2	1G-12
0.320 TAV1	1G-13
0.320 TAV1	1G-14
0.320 TAV2	1G-15
0.320 TAV2	1G-16
0.323 TAV1	1G-17
0.323 TAV1	1G-18
0.326 TAV1	1G-19
0.326 TAV1	1G-20
0.340 TAV1	1G-21
0.340 TAV1	1G-22
0.345 TAV1	1G-23
0.345 TAV1	1G-24
0.350 TAV1	1H-3
0.350 TAV1	1H-4
0.360 TAV1	1H-5
0.360 TAV1	1H-6
0.360 TAV2	1H-7
0.360 TAV2	1H-8
0.400 TAV1	1H-9
0.400 TAV1	1H-10
0.400 TAV2	1H-11
0.400 TAV2	1H-12
0.400 TAV3	1H-13
0.400 TAV3	1H-14
0.450 TAV1	1H-15
0.450 TAV1	1H-16
1.000 TAV1	1I-3
1.000 TAV1	1I-4
1.010 TAV1	1I-5
1.010 TAV1	1I-6
1.020 TAV1	1I-7
1.020 TAV1	1I-8
1.030 TAV1	1I-9
1.030 TAV1	1I-10
1.030 TAV2	1I-11
1.030 TAV2	1I-12
1.030 TAV3	1I-13
1.030 TAV3	1I-14
1.030 TAV4	1I-15
1.030 TAV4	1I-16
1.030 TAV5	1I-17
1.030 TAV5	1I-18
1.030 TAV6	1I-19
1.030 TAV6	1I-20
1.030 TAV7	1I-21
1.030 TAV7	1I-22
1.030 TAV8	1I-23
1.030 TAV8	1I-24
1.040 TAV1	1J-3
1.040 TAV1	1J-4
1.040 TAV2	1J-5
1.040 TAV2	1J-6
1.040 TAV3	1J-7
1.040 TAV3	1J-8
1.040 TAV3	1J-9
1.040 TAV3	1J-10
1.040 TAV4	1J-11
1.040 TAV4	1J-12
1.050 TAV1	1J-13
1.050 TAV1	1J-14
1.050 TAV1	1J-15
1.050 TAV1	1J-16
1.050 TAV2	1J-17
1.050 TAV2	1J-18
1.050 TAV3	1J-19
1.050 TAV3	1J-20
1.050 TAV4	1J-21
1.050 TAV4	1J-22
1.050 TAV5	1J-23
1.050 TAV5	1J-24
1.060 TAV1	1K-3
1.060 TAV1	1K-4
1.070 TAV1	1K-5
1.070 TAV1	1K-6
1.070 TAV2	1K-7
1.070 TAV2	1K-8
1.070 TAV3	1K-9
1.070 TAV3	1K-10
1.080 TAV1	1K-11
1.080 TAV1	1K-12
1.080 TAV2	1K-13
1.080 TAV2	1K-14
1.081 TAV1	1K-15
1.081 TAV1	1K-16
1.081 TAV2	1K-17
1.081 TAV2	1K-18
1.082 TAV1	1K-19
1.082 TAV1	1K-20
1.082 TAV1	1K-21
1.082 TAV1	1K-22
1.082 TAV2	1K-23
1.082 TAV2	1K-24
1.082 TAV3	1L-3
1.082 TAV3	1L-4
1.083 TAV1	1L-5
1.083 TAV1	1L-6
1.084 TAV1	1L-7
1.084 TAV1	1L-8
1.200 TAV1	2D-3
1.200 TAV1	2D-4
1.200 TAV2	2D-5
1.200 TAV2	2D-6
1.200 TAV3	2D-7
1.200 TAV3	2D-8
1.210 TAV1	2D-9
1.210 TAV1	2D-10
1.220 TAV1	2D-11
1.220 TAV1	2D-12
1.220 TAV2	2D-13
1.220 TAV2	2D-14
1.220 TAV2	2D-15
1.220 TAV2	2D-16
1.220 TAV3	2D-17
1.220 TAV3	2D-18
1.220 TAV4	2D-19
1.220 TAV4	2D-20
1.250 TAV1	2D-21
1.250 TAV1	2D-22
1.250 TAV2	2D-23
1.250 TAV2	2D-24
1.250 TAV4	2E-3
1.250 TAV4	2E-4
1.250 TAV4	2E-5
1.250 TAV4	2E-6
1.250 TAV5	2E-7
1.250 TAV5	2E-8
1.250 TAV6	2E-9
1.250 TAV6	2E-10
1.250 TAV7	2E-11
1.250 TAV7	2E-12
1.250 TAV7	2E-13
1.250 TAV7	2E-14
1.290 TAV1	2E-15
1.290 TAV1	2E-16
1.290 TAV2	2E-17
1.290 TAV2	2E-18
1.300 TAV1	2E-19
1.300 TAV1	2E-20
1.300 TAV2	2E-21
1.300 TAV2	2E-22
1.300 TAV3	2E-23
1.300 TAV3	2E-24
2.000 TAV1	2F-3
2.000 TAV1	2F-4
2.003 TAV1	2F-5
2.003 TAV1	2F-6
2.003 TAV2	2F-7
2.003 TAV2	2F-8
2.020 TAV1	2F-9
2.020 TAV1	2F-10
2.020 TAV1	2F-11
2.020 TAV1	2F-12
2.030 TAV1	2F-13
2.030 TAV1	2F-14
2.030 TAV2	2F-15
2.030 TAV2	2F-16
2.030 TAV3	2F-17
2.030 TAV3	2F-18
2.030 TAV4	2F-19
2.030 TAV4	2F-20
2.030 TAV5	2F-21
2.030 TAV5	2F-22
2.040 TAV1	2F-23
2.040 TAV1	2F-24
3.000 TAV1	2G-3
3.000 TAV1	2G-4
3.010 TAV1	2G-5
3.010 TAV1	2G-6
3.010 TAV2	2G-7
3.010 TAV2	2G-8
3.010 TAV3	2G-9
3.010 TAV3	2G-10
3.010 TAV4	2G-11
3.010 TAV4	2G-12
3.010 TAV5	2G-13
3.010 TAV5	2G-14
3.020 TAV1	2G-15
3.020 TAV1	2G-16
3.030 TAV1	2G-17
3.030 TAV1	2G-18
3.040 TAV1	2G-19
3.040 TAV1	2G-20
3.050 TAV1	2G-21
3.050 TAV1	2G-22
3.050 TAV1	2G-23
3.050 TAV1	2G-24
3.060 TAV2	2H-3
3.060 TAV2	2H-4
3.070 TAV1	2H-5
3.070 TAV1	2H-6
4.000 TAV1	2H-7
4.000 TAV1	2H-8
4.500 TAV1	2H-9
4.500 TAV1	2H-10
5.0020TAV1	2H-11
5.0020TAV1	2H-12
5.0020TAV2	2H-13
5.0020TAV2	2H-14
5.0022TAV1	2H-15
5.0022TAV1	2H-16
5.0022TAV2	2H-17
5.0022TAV2	2H-18
5.0026TAV1	2H-19
5.0026TAV1	2H-20
5.0036TAV1	2H-21
5.0036TAV1	2H-22
5.0036TAV2	2H-23
5.0036TAV2	2H-24
5.0151TAV1	2I-3
5.0151TAV1	2I-4
5.0536TAV1	2I-5
5.0536TAV1	2I-6
5.0540TAV1	2I-7
5.0540TAV1	2I-8
6.0063TAV1	2I-9
6.0063TAV1	2I-10

A-11

LISTE ALPHABETIQUE

DESIGNATION	SGR	TAV.
SIEGE DE CONDUCTEUR	1.250	2
SILENCIEUX	0.002	1
SOUPAPE D'ECHAPPEMENT	1.040	4
SOUPAPE REGULATEUR P.H.	1.030	5
SUSPENSIONS DU MOTEUR	0.000	1
TABLIER DROIT	1.200	1
	1.200	3
TABLIER GAUCHE	1.210	1
THERMOSTAT ET TUYAUT.	0.326	1
TURBOCOMPRESSEUR	0.240	1
	0.240	2
TUYAUT. SERVOCOMMANDES(1)	1.080	1
TUYAUT. SERVOCOMMANDES(2)	1.081	1
TUYAUT. SERVOCOMMANDES(3)	1.082	1
TUYAUT. SERVOCOMMANDES(4)	1.083	1
TUYAUT. SERVOCOMMANDES(5)	1.084	1
TUYAUTERIE DU COMBUSTIBLE	0.203	1
TUYAUTERIE ET INJECTEURS	0.149	1
TUYAUTERIES AVANT	2.030	1
TUYAUTERIES DE GRAISSEURS	2.040	1
TUYAUTERIES HUILE MOTEUR	0.305	1
TUYAUTERIES INFERIEURES	3.070	1
TUYAUTERIES POMPE/DISTR.	1.050	1
TUYAUTERIES PRINCIPALES	1.060	1
TUYAUTERIES REFROIDISS.	0.323	1
TUYAUTERIES TURBOCOMPR.	0.241	1
VALVE AMORTISSEUSE	1.082	3
VALVE ANTI-CHUTE 1er BRAS	5.0060	1
VALVE ANTI-CHUTE DE BAL.	5.0061	1
VALVE DE BUTEE	1.082	2
VALVE DE DECHARGE	3.010	5
VALVE DE FREINAGE-COMPOS.	3.010	4
VALVE DE NON-RETOUR	1.061	2
VALVE PILOTE	1.070	3
VERIN D'ENFONCEMENT	2.030	4
VERIN DE RELEVAGE(DROIT)	2.030	2
VERIN DE RELEVAGE(GAUCHE)	2.030	3
VILEBREQUIN	0.090	1
VOLANT DU MOTEUR	0.083	1

ADVERTENCIA

El Fabricante se reserva el derecho de modificar la construcción o el material de cualquier pieza, si ello resultase procedente, pero sin obligarse a aplicar tales modificaciones a las unidades ya en servicio.
Otras publicaciones referentes a este modelo, lo mismo que a todos los restantes modelos, son disponibles en los Concesionarios. Tales publicaciones, por lo general, son disponibles en diversas lenguas.
Para conocer tales publicaciones consúltese el catálogo de las publicaciones técnicas. Ejemplares de este catálogo obran en los Concesionarios.

COMO SE ENCARGAN LOS RECAMBIOS

Los números de catálogo de las piezas reseñadas en esta publicación están al día hasta la fecha de salida a luz de la misma. Nuestra política estriba en el afán de mejorar constantemente las máquinas, y por lo tanto, los números de catálogo y los grabados a veces puede no sean más efectivos. Con motivo, pues, de ir a encargar piezas de repuesto, verifique los números de catálogo con su Concesionario, el cual dispone de las microfichas y de la lista general de los recambios puesta al día.

ENCARGUENSE LOS RECAMBIOS AL CONCESIONARIO DE SU ZONA

Los encargos de piezas de repuesto tienen que incluir los datos siguientes (véase página 2):

• Modelo de la máquina, Número de fabricación del chasis, Modelo del motor, Número de fabricación del motor, punzonado en el bloque de cilindros.

• Indicar el número de catálogo de cada pieza encargada - tal cual figura en las listas del catálogo - posiblemente acompañado de la denominación que corresponde.
Si los recambios pertenecen a un conjunto que posee su propio número de modelo o de serie, indíquense incluso tales datos.

• En la dirección indíquense la oficina de correos, la ciudad, provincia y nación a donde han de remitirse los recambios.

• Además, indíquense las modalidades de expedición del material: transporte marítimo, terrestre, expreso, o paquete postal.

• Confirmar por escrito todos los encargos enunciados por teléfono y por cable.

Eventuales devoluciones de piezas podrán hacerse tan sólo a/o por conducto del Concesionario al cual se han comprado las piezas, y **deberán ser previamente autorizadas por escrito.** Cada devolución se tomará en cuenta según se merece.
Las reclamaciones por faltas o defectos no se tomarán en cuenta, a no ser que vengan efectuadas inmediatamente después de recibir la mercancía.
En caso de que se reciba mercancía que ha sufrido daños, una completa descripción del daño debería ser efectuada por el agente del transportista en el mismo documento de expedición.
La responsabilidad del fabricante es limitada y cesa al cumplirse las condiciones de venta previstas para cada aprovisionamiento.

A-13

CÓMO SE MANEJA EL CATÁLOGO

Para buscar correctamente las piezas de repuesto, es preciso:
a) consultar **la lista de versiones** pág. 2, para identificar, en su caso, el código de la versión que interesa, véase el siguiente párrafo 1, punto 6.
b) consultar **las láminas**, y las respectivas **listas de piezas de repuesto** conforme se explica en los párrafos **1** y **2**;
c) para los modelos que comprenden variantes, consultar **la lista de variantes** pág. 31, donde se indica, por orden progresivo, el subgrupo y el correspondiente número de código.

1. **Láminas** (véase el ejemplo, a pág. 15)
Representan las piezas de repuesto de cada subgrupo en que se divide la máquina. Las piezas de repuesto representadas se designan mediante un número de referencia (ITEM), el cual puede ir sustituido por otras indicaciones: ejemplo:
1.000: pieza instalada únicamente en el Sgr. 1.000
Además, en cada lámina figuran:
El código del subgrupo o código de la variante ① — el número de la lámina ② — la indicación de su revisión ③; ejemplo: el sufijo **06**, que se agrega al número de la publicación **604.01.046**, significa que el subgrupo ha sido modificado en la 6ª revisión del catálogo, editado en fecha de **22 de febrero de 1981**; de carecer la indicación ③, significa que no ha habido modificaciones. **Número del Boletín Técnico de Recambios** (N.T.R.) en el cual se ha efectuado la 6ª revisión ④ — **la denominación del subgrupo** ⑤ — **el código de la versión** ⑥, con referencia al punto (a) que antecede, de faltar ese código, se entiende que la lámina es aplicable a todas las versiones del modelo de que se trata en el catálogo. — **la indicación de la existencia de fornituras de recambios** ⑦, con los respectivos números de referencia (véase en la pág. 32 la composición de las fornituras); — Número de conjunto ⑧.

2 **Listas de las piezas de repuesto** (véase el ejemplo en la pág. 15)
En ellas se reseñan las piezas de repuesto de cada subgrupo representadas en las láminas correspondientes, indicando para cada pieza:
⑨ ITEM: **el número de cada pieza representada que se acompaña a su «part number».**
⑩ PART NUMBER: **número de catálogo de cada pieza de repuesto.**
⑪ Q.TY: **número total de la pieza, representada en la lámina.**
⑫ TRANS. CODE: -

⑬ DESCRIPTION/DENOMINAZIONE: **denominación de la pieza en inglés e italiano.** En caso de modificaciones, la denominación viene integrada por los tipos de indicación siguientes y, en su caso, por las NORMAS DE RECAMBIO.
⑭ 4606783
C 951 = pieza aplicable hasta la modificación 951;
⑮ 79021573
D 951 = pieza aplicable a partir de la modificación 951.
Ejemplo de indicación de aplicación de la modificación:
hasta el chasis nº 004652 ⑯: incorporada a las máquinas con chasis hasta el número 004652;
a partir del chasis nº 004653 ⑰: incorporada a las máquinas a partir del chasis con número 004653.
Ejemplo de normas de recambio:
4606783 = 79021573 ⑱: al agotarse las reservas en almacén de la pieza 4606783, aplíquese la 79021573.
4606787 = 79021574 + 79021576 ⑲: al agotarse las reservas en almacén de la pieza 4606787, aplíquese la 79021574 más la 79021576;
4606792 = 79021576 - 4606794 ⑳: al agotarse las reservas en almacén de la pieza 4606792, aplíquese la 79021576 eliminando la 4606794. Suponiendo que en la indicación de incorporación no se acompañen normas de recambio, ello significa que siempre tiene que entregarse el recambio de la pieza ante-modificación, por no ser intercambiable con aquella post-modificación.
Otras indicaciones útiles ㉑ pueden consignarse en la columna DESCRIPTION/DENOMINAZIONE, después del signo — (la traducción de estas voces del inglés o italiano al francés, alemán y español, figura en la lista de voces suplementarias que precede el glosario (pág.). Las voces RIGHT/DERECHO y LEFT/IZQUIERDO se refieren al sentido de marcha de la máquina.
Suponiendo que a una denominación se acompañe la palabra WRONG/DONDE DICE, y en el renglón siguiente no aparezca la correspondiente CORRECT/LEASE, significa que la pieza sobra, por un error.
㉒ Dimensiones de las piezas normalizadas.

3. **RESUMEN DE LAS MODIFICACIONES**
Este resumen sirve para sintetizar las modificaciones, eventuales versiones y relativas aplicaciones, los subgrupos afectados y las normas de recambio.

FH200 (6) 01-02

LIFT CYLINDER (RIGHT)	VERIN DE RELEVAGE(DROIT)	2.030 TAV.2
CILINDRO SOLLEV. (DESTRO)	HUBZYLINDER (RECHTS)	
71405798 (0)	GATO ELEVACION (DERECHO) (5)	(4) N.T.R. 63 - 23-2-81 604.01.046.06 (3)

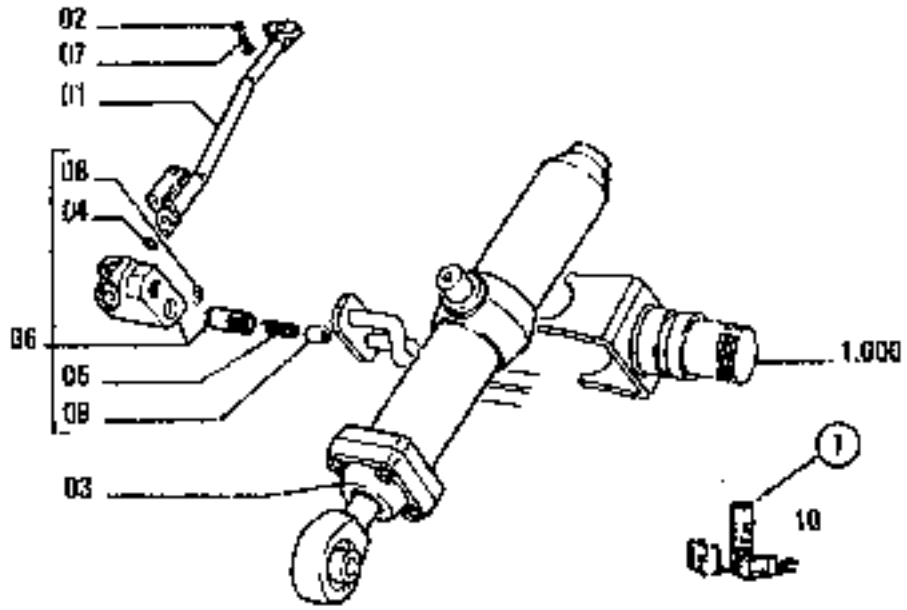

FH200

LIFT CYLINDER (RIGHT)	VERIN DE RELEVAGE(DROIT)	2.030 TAV.2
CILINDRO SOLLEV. (DESTRO)	HUBZYLINDER (RECHTS)	
71405798	GATO ELEVACION (DERECHO)	N.T.R. 63 - 23-2-81 604.01.046.06

ITEM	PART NUMBER	QTY	TR. CO.	DESCRIPTION (13)	DESCRIZIONE
(9) 01	4516966	1	193T	TUBE -RIGHT	TUBO RIGIDO -DEST.
(10)	4513436	1	193T	TUBE -RIGHT	TUBO RIGIDO -DEST.
	4606783	1	193T	TUBE -LEFT (16)	TUBO RIGIDO -SIN.
				(14) C951 UP TO S/N 004652	C951 FINO AL TELAIO 004652
(11)				4606783=79021579 (18)	
	79021579	1	193T	TUBE -LEFT	TUBO RIGIDO -SIN.
				D951 FROM S/N 004653	D951 DAL TELAIO 004653
02	12638601	2	131R	WASHER	ROSETTA
03	4606786	1	164C	CYLINDER -ASS.Y RIGHT	CILINDRO -COMPL. DEST.
				SEE TAV.3	VED. TAV.3
(12)	4606787	1	164C	CYLINDER -ASS.Y LEFT	CILINDRO -COMPL. SIN.
				C951 UP TO S/N 004652 (19)	C951 FINO AL TELAIO 004652
				(15) 4606787=79021574+79021576	
	79021574	1	164C	CYLINDER -ASS.Y LEFT	CILINDRO -COMPL. SIN.
				D951 FROM S/N 004653	D951 DAL TELAIO 004653
04	4606788	1	158G	O-RING -WRONG	GUARNIZIONE O-R -ERRATA
	4606789	1	158G	O-RING -CORRECT (21)	GUARNIZIONE O-R -CORRIGE
05	4606790	1	100M	SPRING	MOLLA
06	4606791	1	10V	VALVE -ASS.Y RIGHT	VALVOLA -COMPL. DEST.
	4606792	1	10V	VALVE -ASS.Y LEFT (20)	VALVOLA -COMPL. SIN.
				C951 UP TO S/N 004652	C951 FINO AL TELAIO 004652
				4606792=79021576-4606794	
	79021576	1	10V	VALVE -ASS.Y LEFT (17)	VALVOLA -COMPL. SIN.
				D951 FROM S/N 004653	D951 DAL TELAIO 004653
07	11307021	2	40V	SCREW 8X1X20	VITE 8X1X20
08	14453301	1	158G	O-RING (22)	GUARNIZIONE O-R
09	4606795	1	53T	PLUG	TAPPO
10	79021577		1K	KIT.-SEE PAG.32	KIT-VED. PAG.32

INDICE ALFABETICO

DENOMINACIONES	SGR.	TAV.
ANCLAJES MOTOR	0.000	1
APLICACION DE MARTILLO O.	5.0020	2
ARBOL DE LEVAS	0.120	1
ASIENTO CON CALEFACCION	5.0155	1
ASIENTO DE COND. (Bostrom)	5.0151	1
ASIENTO DE CONDUCTOR	1.250	2
AUTORRADIO	5.0321	1
BIELA	0.081	1
BLOQUE CILINDROS	0.040	1
	0.040	2
	0.040	3
BOMBA DE ACEITE DEL MOTOR	0.300	1
BOMBA DE AGUA	0.320	1
BOMBA DE AGUA-COMPONENTES	0.320	2
BOMBA DE ALIMENTACION	0.201	1
BOMBA DE INYECCION	0.140	2
	0.140	3
	0.140	4
	0.140	5
BOMBA DE INYECCION-TUBER.	0.140	1
BOMBA DEL SERVOMANDO	1.030	8
BOMBA HIDR.-COMPONENTES	1.030	2
BOMBA HIDRAULICA	1.030	1
BRAZO ELEVACION 3 (2,5m)	2.003	2
BRAZO MONOBLOQUE	2.000	1
BRAZO TERMINAL (2,1m)	5.0022	1
BRAZO TERMINAL (2,5m)	2.003	1
BRAZO TERMINAL (3m)	5.0038	1
	5.0038	2
CABINA	1.250	4
CABINA-BASTIDOR	1.250	7
CABINA-PISO	1.250	1
CALORIFERO	1.290	1
CALORIFERO-COMPONENTES	1.290	2
CAMBIADOR DE CALOR	0.310	1
	0.310	2
CANCAMOS DE LEVANTAMIENTO	0.460	1
CAPOTS	1.300	1
	1.300	2
CARTER DE ACEITE	0.042	1
CHASIS INFERIOR	3.000	1
CHASIS SUPERIOR	1.000	1
CIGÜEÑAL	0.090	1
CINTURON DE SEGURANZA	5.0536	1
COLECTOR DE ASPIRACION	0.071	1
COLECTOR DE ESCAPE	0.077	1
CUCHARA	2.020	1
CULATA	0.050	1
CULATA	0.050	2
DEPOSITO DE ACEITE	1.020	1
DEPOSITO DE COMBUSTIBLE	1.010	1
DISPOSITIVO TERMOSTARTER	5.0025	1
DISTRIBUIDOR	1.050	2
	1.050	3
	1.050	4
	1.050	5
DISTRIBUIDOR ROTAT.-COMP.	3.060	2
DISTRIBUIDOR ROTATIVO	3.060	1
ELECTROVALVULA	1.080	2
EMBOLO	0.082	1
FILTRO DE ACEITE MOTOR	0.302	1
FILTRO DE AIRE	0.031	1
FILTRO DEL COMBUSTIBLE	0.200	1
GATO DE CUCHARA	2.030	5
GATO DE PENETRACION	2.030	4
GATO ELEVACION (DERECHO)	2.030	2
GATO ELEVACION(IZQUIERDO)	2.030	3
HERRAMIENTAS	5.0083	1
INSTALACION ELECTRICA	1.220	2
JUEGO DE RECAMBIOS	4.000	1
MANDO DE ROTACION B.H.	1.030	7
MANDOS	1.070	1
MANDOS DEL ACELERADOR	0.004	1
MANDOS VARIOS	0.350	1
MANIJA	1.300	3
MANIPULADOR-COMPONENTES	1.070	2
MOTOR	0.021	1
MOTOR DE ARRANQUE	0.360	2
MOTOR DE ARRANQUE-ANCLAJ.	0.360	1
MOTOR HIDR.-COMPONENTES	1.040	2
MOTOR HIDRAULICO-COMP.	3.010	3
ORUGA	3.050	1
PANEL DE CONTROL	1.200	2
PIÑONES DE DISTRIBUCION	0.100	1
PLACAS	4.500	1
POLEA DE LA BOMBA DE AGUA	0.340	1
POLEA DEL CIGÜEÑAL	0.084	1
POLEA DEL VENTILADOR	0.345	1
PUERTA DE LA CABINA	1.250	5
RADIADOR	0.003	1
RADIADOR-COMPONENTES	0.003	2
	0.003	3
REDUCTOR DE ROTACION	1.040	1
REDUCTOR-COMPONENTE	1.040	2
REDUCTORES DE TRANSLACION	3.010	1
REDUCTORES TRAS.-COMP.	3.010	2
REGULADOR B.H.-TAPA	1.030	4
	1.030	5
REGULADOR DE BOMBA HIDR.	1.030	2
RESPIRADERO	0.045	1
	0.045	1A
RODILLO DE APOYO O-RUGA	3.040	1

SUBGROUP	GRID
0.000 TAV1	1C-11
0.000 TAV1	1C-12
0.001 TAV1	1C-13
0.001 TAV1	1C-14
0.002 TAV1	1C-15
0.002 TAV1	1C-16
0.003 TAV1	1C-17
0.003 TAV1	1C-18
0.003 TAV2	1C-19
0.003 TAV2	1C-20
0.003 TAV3	1C-21
0.003 TAV3	1C-22
0.004 TAV1	1C-23
0.004 TAV1	1C-24
0.021 TAV1	1D-3
0.021 TAV1	1D-4
0.040 TAV1	1D-5
0.040 TAV1	1D-6
0.040 TAV2	1D-7
0.040 TAV2	1D-8
0.040 TAV3	1D-9
0.040 TAV3	1D-10
0.042 TAV1	1D-11
0.042 TAV1	1D-12
0.043 TAV1	1D-13
0.043 TAV1	1D-14
0.043 TAV2	1D-15
0.043 TAV2	1D-16
0.045 TAV1	1D-17
0.045 TAV1	1D-18
0.045 TAV1A	1D-19
0.045 TAV1A	1D-20
0.060 TAV1	1D-21
0.060 TAV1	1D-22
0.060 TAV2	1D-23
0.060 TAV2	1D-24
0.071 TAV1	1E-3
0.071 TAV1	1E-4
0.077 TAV1	1E-5
0.077 TAV1	1E-6
0.080 TAV1	1E-7
0.080 TAV1	1E-8
0.081 TAV1	1E-9
0.081 TAV1	1E-10
0.082 TAV1	1E-11
0.082 TAV1	1E-12
0.082 TAV1	1E-13
0.083 TAV1	1E-14
0.084 TAV1	1E-15
0.084 TAV1	1E-16
0.100 TAV1	1E-17
0.100 TAV1	1E-18
0.120 TAV1	1E-19
0.120 TAV1	1E-20
0.140 TAV1	1E-21
0.140 TAV1	1E-22
0.140 TAV2	1E-23
0.140 TAV2	1E-24
0.140 TAV3	1F-3
0.140 TAV3	1F-4
0.140 TAV4	1F-5
0.140 TAV4	1F-8
0.140 TAV5	1F-7
0.140 TAV5	1F-8
0.149 TAV1	1F-9
0.149 TAV1	1F-10
0.200 TAV1	1F-11
0.200 TAV1	1F-12
0.201 TAV1	1F-13
0.201 TAV1	1F-14
0.203 TAV1	1F-15
0.203 TAV1	1F-16
0.240 TAV1	1F-17
0.240 TAV1	1F-18
0.240 TAV2	1F-19
0.240 TAV2	1F-20
0.241 TAV1	1F-21
0.241 TAV1	1F-22
0.300 TAV1	1F-23
0.300 TAV1	1F-24
0.302 TAV1	1G-3
0.302 TAV1	1G-4
0.305 TAV1	1G-5
0.305 TAV1	1G-6
0.305 TAV2	1G-7
0.305 TAV2	1G-8
0.310 TAV1	1G-9
0.310 TAV1	1G-10
0.310 TAV2	1G-11
0.310 TAV2	1G-12
0.320 TAV1	1G-13
0.320 TAV1	1G-14
0.320 TAV2	1G-15
0.320 TAV2	1G-16
0.323 TAV1	1G-17
0.323 TAV1	1G-18
0.326 TAV1	1G-19
0.326 TAV1	1G-20
0.340 TAV1	1G-21
0.340 TAV1	1G-22
0.345 TAV1	1G-23
0.345 TAV1	1G-24
0.350 TAV1	1H-3
0.350 TAV1	1H-4
0.360 TAV1	1H-5
0.360 TAV1	1H-6
0.360 TAV2	1H-7
0.360 TAV2	1H-8
0.400 TAV1	1H-9
0.400 TAV1	1H-10
0.400 TAV2	1H-11
0.400 TAV2	1H-12
0.400 TAV3	1H-13
0.400 TAV3	1H-14
0.450 TAV1	1H-15
0.450 TAV1	1H-16
1.000 TAV1	1I-3
1.000 TAV1	1I-4
1.010 TAV1	1I-5
1.010 TAV1	1I-6
1.020 TAV1	1I-7
1.020 TAV1	1I-8
1.030 TAV1	1I-9
1.030 TAV1	1I-10
1.030 TAV2	1I-11
1.030 TAV2	1I-12
1.030 TAV3	1I-13
1.030 TAV3	1I-14
1.030 TAV4	1I-15
1.030 TAV4	1I-16
1.030 TAV5	1I-17
1.030 TAV5	1I-18
1.030 TAV6	1I-19
1.030 TAV6	1I-20
1.030 TAV7	1I-21
1.030 TAV7	1I-22
1.030 TAV8	1I-23
1.030 TAV8	1I-24
1.040 TAV1	1J-3
1.040 TAV1	1J-4
1.040 TAV2	1J-5
1.040 TAV2	1J-6
1.040 TAV3	1J-7
1.040 TAV3	1J-8
1.040 TAV3	1J-9
1.040 TAV3	1J-10
1.040 TAV4	1J-11
1.040 TAV4	1J-12
1.050 TAV1	1J-13
1.050 TAV1	1J-14
1.050 TAV1	1J-15
1.050 TAV1	1J-16
1.050 TAV2	1J-17
1.050 TAV2	1J-18
1.050 TAV3	1J-19
1.050 TAV3	1J-20
1.050 TAV4	1J-21
1.050 TAV4	1J-22
1.050 TAV5	1J-23
1.050 TAV5	1J-24
1.060 TAV1	1K-3
1.060 TAV1	1K-4
1.070 TAV1	1K-5
1.070 TAV1	1K-6
1.070 TAV2	1K-7
1.070 TAV2	1K-8
1.070 TAV3	1K-9
1.070 TAV3	1K-10
1.080 TAV1	1K-11
1.080 TAV1	1K-12
1.080 TAV2	1K-13
1.080 TAV2	1K-14
1.081 TAV1	1K-15
1.081 TAV1	1K-16
1.081 TAV2	1K-17
1.081 TAV2	1K-18
1.082 TAV1	1K-19
1.082 TAV1	1K-20
1.082 TAV1	1K-21
1.082 TAV1	1K-22
1.082 TAV2	1K-23
1.082 TAV2	1K-24
1.082 TAV3	1L-3
1.082 TAV3	1L-4
1.083 TAV1	1L-5
1.083 TAV1	1L-6
1.084 TAV1	1L-7
1.084 TAV1	1L-8
1.200 TAV1	2D-3
1.200 TAV1	2D-4
1.200 TAV2	2D-5
1.200 TAV2	2D-6
1.200 TAV3	2D-7
1.200 TAV3	2D-8
1.210 TAV1	2D-9
1.210 TAV1	2D-10
1.220 TAV1	2D-11
1.220 TAV1	2D-12
1.220 TAV2	2D-13
1.220 TAV2	2D-14
1.220 TAV2	2D-15
1.220 TAV2	2D-16
1.220 TAV3	2D-17
1.220 TAV3	2D-18
1.220 TAV4	2D-19
1.220 TAV4	2D-20
1.250 TAV1	2D-21
1.250 TAV1	2D-22
1.250 TAV2	2D-23
1.250 TAV2	2D-24
1.250 TAV4	2E-3
1.250 TAV4	2E-4
1.250 TAV4	2E-5
1.250 TAV4	2E-6
1.250 TAV5	2E-7
1.250 TAV5	2E-8
1.250 TAV6	2E-9
1.250 TAV6	2E-10
1.250 TAV7	2E-11
1.250 TAV7	2E-12
1.250 TAV7	2E-13
1.250 TAV7	2E-14
1.290 TAV1	2E-15
1.290 TAV1	2E-16
1.290 TAV2	2E-17
1.290 TAV2	2E-18
1.300 TAV1	2E-19
1.300 TAV1	2E-20
1.300 TAV2	2E-21
1.300 TAV2	2E-22
1.300 TAV3	2E-23
1.300 TAV3	2E-24
2.000 TAV1	2F-3
2.000 TAV1	2F-4
2.003 TAV1	2F-5
2.003 TAV1	2F-6
2.003 TAV2	2F-7
2.003 TAV2	2F-8
2.020 TAV1	2F-9
2.020 TAV1	2F-10
2.020 TAV1	2F-11
2.020 TAV1	2F-12
2.030 TAV1	2F-13
2.030 TAV1	2F-14
2.030 TAV2	2F-15
2.030 TAV2	2F-16
2.030 TAV3	2F-17
2.030 TAV3	2F-18
2.030 TAV4	2F-19
2.030 TAV4	2F-20
2.030 TAV5	2F-21
2.030 TAV5	2F-22
2.040 TAV1	2F-23
2.040 TAV1	2F-24
3.000 TAV1	2G-3
3.000 TAV1	2G-4
3.010 TAV1	2G-5
3.010 TAV1	2G-6
3.010 TAV2	2G-7
3.010 TAV2	2G-8
3.010 TAV3	2G-9
3.010 TAV3	2G-10
3.010 TAV4	2G-11
3.010 TAV4	2G-12
3.010 TAV5	2G-13
3.010 TAV5	2G-14
3.020 TAV1	2G-15
3.020 TAV1	2G-16
3.030 TAV1	2G-17
3.030 TAV1	2G-18
3.040 TAV1	2G-19
3.040 TAV1	2G-20
3.050 TAV1	2G-21
3.050 TAV1	2G-22
3.060 TAV1	2G-23
3.060 TAV1	2G-24
3.060 TAV2	2H-3
3.060 TAV2	2H-4
3.070 TAV1	2H-5
3.070 TAV1	2H-6
4.000 TAV1	2H-7
4.000 TAV1	2H-8
4.500 TAV1	2H-9
4.500 TAV1	2H-10
5.0020TAV1	2H-11
5.0020TAV1	2H-12
5.0020TAV2	2H-13
5.0020TAV2	2H-14
5.0022TAV1	2H-15
5.0022TAV1	2H-16
5.0022TAV2	2H-17
5.0022TAV2	2H-18
5.0025TAV1	2H-19
5.0025TAV1	2H-20
5.0038TAV1	2H-21
5.0038TAV1	2H-22
5.0038TAV2	2H-23
5.0038TAV2	2H-24
5.0151TAV1	2I-3
5.0151TAV1	2I-4
5.0536TAV1	2I-5
5.0536TAV1	2I-6
5.0540TAV1	2I-7
5.0540TAV1	2I-8
5.0083TAV1	2I-9
5.0083TAV1	2I-10

INDICE ALFABETICO

DENOMINACIONES	SGR.	TAV.
RODILLO DE SOPORTE ORUGA	3.030	1
RUBERIAS DE ENGRASADORES	2.040	1
RUEDA GUIADORA	3.020	1
SILENCIADOR	0.002	1
SOPORTES DE ALTERNADOR	0.400	1
TABLERO DERECHO	1.200	1
	1.200	3
TABLERO IZQUIERDO	1.210	1
TAPAS DEL BLOQUE	0.043	1
	0.043	2
TERMOSTATO Y TUBERIAS	0.326	1
TUBERIAS ACEITE MOTOR	0.305	1
TUBERIAS ANTEPORTES	2.030	1
TUBERIAS BOMBA/DISTR.	1.050	1
TUBERIAS DE COMBUSTIBLE	0.203	1
TUBERIAS DE REFRIGERACION	0.329	1
TUBERIAS INFERIORES	3.070	1
TUBERIAS PRINCIPALES	1.060	1
TUBERIAS SERVOMANDOS (3)	1.082	1
TUBERIAS SERVOMANDOS (4)	1.083	1
TUBERIAS SERVOMANDOS (5)	1.084	1
TUBERIAS SERVOMANDOS(1)	1.080	1
TUBERIAS SERVOMANDOS/2)	1.081	1
TUBERIAS TURBOCOMPRESOR	0.241	1
TUBERIAS Y INYECTORES	0.149	1
TURBOCOMPRESOR	0.240	1
	0.240	2
VALV.ANTICAIDA BR.ELEV.	5.0080	1
VALV.ANTICAIDA BR.TERMIN.	5.0081	1
VALVULA AMORTIGUADORA	1.082	3
VALVULA DE DESCARGA-COMP.	3.010	5
VALVULA DE ESCAPE	1.040	4
VALVULA DE FRENO-COMP.	3.010	4
VALVULA DE REGULADOR B.P.	1.030	6
VALVULA DE RETENCION	1.081	2
	1.082	2
VALVULA PILOTO	1.070	3
VARILLA DE NIVEL	0.305	2
VENTANA DE CABINA-DERECHO	1.250	7
VENTANA DE CABINA-IZQUIE.	1.250	6
VOLANTE DEL DIRECCIONAL	0.083	1

OPTIONAL EQUIPMENT - ELENCO DELLE VARIANTI - LISTE DES VARIANTES
LISTE DER VARIANTEN - LISTA DE VARIANTES

SGR.	CODE-CODICE-CODE KENNUMMER-CODIGO	DESCRIPTION-DENOMINAZIONE DESIGNATION-BENENNUNG-DENOMINAC.	VERSION-VERSIONE AUSFUHRUNGEN-VERSIONES
5.0020	71406171	APPLICATION OF OL. HAMMER APPLICAZIONE MARTELLO ID. MONTAGE DE MARTEAU OLEOD. VERWENDUNG OELD. HAMMERS APLICACION DE MARTILLO O.	
5.0022	71405999	DIPPER STICK (2.1M) BRACCIO PENETRAZ BALANCIER LOEFFELSTIEL. BRAZO TERMINAL	
5.0025	73158459	COLD STARTING AID DISP. AVVIAMENTO A FREDDO DEMARRAGE A FROID KALTSTARTVORRICHTUNG DISPOSITIVO TERMOSTARTER	
5.0038	71405936	DIPPER STICK(3M) BRACCIO PENETRAZIONE BALANCIER LOEFFELSTIEL BRAZO TERMINAL	
5.0063	71405996	TOOL KIT ACCESSORI MANUTENZIONE ACCESSOIRES D'ENTRETIEN BORDWERKZEUGE HERRAMIENTAS	
5.0151	71406293	OPERATOR'S SEAT SEDILE SIEGE DE CONDUC FAHRERSITZ ASIENTO DE COND.	

KIT INDEX - INDICE DEI KITS - LISTE DES KITS - VERZEICHNIS DER ERSATZTEILSETZE - INDICE DE FORNITURAS

KIT PART NUMBER	KIT COMPONENTS	TRAN CODE	DESCRIPTION	DESCRIZIONE	SGR	TAV.	ITEM	QTA'
1907188	1907188	K11	KIT - FOR ALTERNATOR	KIT - PER ALTERNATORE	0.400	3	01	1
1901385		K15A	KIT-CRANK.THRUST RINGS(+0,000)	KIT-ANELLI SPALLAM. (+0,000)				
	4707775	90S	HALF RING	SEMIANELLO	0.080	1	09	2
	4707779	90S	HALF RING	SEMIANELLO	0.080	1	08	2
1901386		K15B	KIT-CRANK.THRUST RINGS(+0,127)	KIT-ANELLI SPALLAM. (+0,127)				
	4707776	90S	HALF RING	SEMIANELLO	0.080	1	09	2
	4707780	90S	HALF RING	SEMIANELLO	0.080	1	08	2
1901387		K15C	KIT-CRANK.THRUST RINGS(+0,254)	KIT-ANELLI SPALLAM. (+0,254)				
	4708063	90S	HALF RING	SEMIANELLO	0.080	1	09	2
	4708069	90S	HALF RING	SEMIANELLO	0.080	1	08	2
1901388		K15D	KIT-CRANK.THRUST RINGS(+0.508)	KIT-ANELLI SPALLAM. (+0.508)				
	4708064	90S	HALF RING	SEMIANELLO	0.080	1	09	2
	4708070	90S	HALF RING	SEMIANELLO	0.080	1	08	2
1930176		K19A	KIT-CYL.BLOCK BEARINGS(-0.000)	KIT-SEMICUSC.DI BANCO (-0.000)				
	4754062	103S	HALF BEARING	SEMICUSCINETTO	0.080	1	06	1
	4754064	103S	HALF BEARING	SEMICUSCINETTO	0.080	1	07	1
1930177		K19B	KIT-CYL.BLOCK BEARINGS(-0,254)	KIT-SEMICUSC.DI BANCO (-0,254)				
	4771248	103S	HALF BEARING	SEMICUSCINETTO	0.080	1	06	1
	4771258	103S	HALF BEARING	SEMICUSCINETTO	0.080	1	07	1
1930178		K19C	KIT-CYL.BLOCK BEARINGS(-0,508)	KIT-SEMICUSC.DI BANCO (-0,508)				
	4771249	103S	HALF BEARING	SEMICUSCINETTO	0.080	1	06	1
	4771259	103S	HALF BEARING	SEMICUSCINETTO	0.080	1	07	1
1930179		K19D	KIT-CYL.BLOCK BEARINGS(-0,762)	KIT-SEMICUSC.DI BANCO (-0,762)				
	4771250	103S	HALF BEARING	SEMICUSCINETTO	0.080	1	06	1
	4771260	103S	HALF BEARING	SEMICUSCINETTO	0.080	1	07	1
1930180		K19E	KIT-CYL.BLOCK BEARINGS(-1,016)	KIT-SEMICUSC.DI BANCO (-1,016)				
	4771251	103S	HALF BEARING	SEMICUSCINETTO	0.080	1	06	1
	4771261	103S	HALF BEARING	SEMICUSCINETTO	0.080	1	07	1
1930201		K21A	KIT-CON. ROD BEARINGS (-0,000)	KIT-SEMICUSC. BIELLA (-0,000)				
	4780959	103S	HALF BEARING	SEMICUSCINETTO	0.081	1	04	2
1930202		K21B	KIT-CON. ROD BEARINGS (-0,254)	KIT-SEMICUSC. BIELLA (-0,254)				
	4780961	103S	HALF BEARING	SEMICUSCINETTO	0.081	1	04	2
1930203		K21C	KIT-CON. ROD BEARINGS (-0,508)	KIT-SEMICUSC. BIELLA (-0,508)				
	4780962	103S	HALF BEARING	SEMICUSCINETTO	0.081	1	04	2
1930204		K21D	KIT-CON. ROD BEARINGS (-0,762)	KIT-SEMICUSC. BIELLA (-0,762)				
	4780963	103S	HALF BEARING	SEMICUSCINETTO	0.081	1	04	2
1930205		K21E	KIT-CON. ROD BEARINGS (-1,016)	KIT-SEMICUSC. BIELLA (-1,016)				
	4780964	103S	HALF BEARING	SEMICUSCINETTO	0.081	1	04	2
1930206		K17A	KIT-FOR ONE PISTON (+0,0)	KIT PER UNO STANTUFFO (+0,0)				
	4754400	45A	RING	ANELLO	0.082	1	05	1
	4754401	45A	RING	ANELLO	0.082	1	06	1
	4758713	45A	RING	ANELLO	0.082	1	04	1
	4770451	60P	PIN	PERNO	0.082	1	02	1
	4770452	187A	SNAP RING	ANELLO ELASTICO	0.082	1	03	2
	4770996	132P	PISTON	PISTONE	0.082	1	01	1
1930207		K17B	KIT-FOR ONE PISTON (+0,4)	KIT-PER UNO STANTUFFO (+0,4)				
	4770451	60P	PIN	PERNO	0.082	1	02	1
	4770452	187A	SNAP RING	ANELLO ELASTICO	0.082	1	03	2
	4770632	45A	RING	ANELLO	0.082	1	06	1
	4771788	45A	RING	ANELLO	0.082	1	04	1
	4771793	45A	RING	ANELLO	0.082	1	05	1
	4771827	132P	PISTON	PISTONE	0.082	1	01	1
1930208		K18C	KIT-PISTON RINGS(+0,8)	KIT-ANELLI STANTUFFO (+0,8)				
	4770451	60P	PIN	PERNO	0.082	1	02	1
	4770452	187A	SNAP RING	ANELLO ELASTICO	0.082	1	03	2
	4770634	45A	RING	ANELLO	0.082	1	06	1
	4771790	45A	RING	ANELLO	0.082	1	04	1
	4771795	45A	RING	ANELLO	0.082	1	05	1
	4771829	132P	PISTON	PISTONE	0.082	1	01	1
1930209		K18A	KIT-PISTON RINGS(+0,0)	KIT-ANELLI STANTUFFO (+0,0)				
	4754400	45A	RING	ANELLO	0.082	1	05	1
	4754401	45A	RING	ANELLO	0.082	1	06	1
	4758713	45A	RING	ANELLO	0.082	1	04	1

A-20

SUBGROUP	GRID
0.000 TAV1	1C-11
0.000 TAV1	1C-12
0.001 TAV1	1C-13
0.001 TAV1	1C-14
0.002 TAV1	1C-15
0.002 TAV1	1C-16
0.003 TAV1	1C-17
0.003 TAV1	1C-18
0.003 TAV2	1C-19
0.003 TAV2	1C-20
0.003 TAV3	1C-21
0.003 TAV3	1C-22
0.004 TAV1	1C-23
0.004 TAV1	1C-24
0.021 TAV1	1D-3
0.021 TAV1	1D-4
0.040 TAV1	1D-5
0.040 TAV1	1D-6
0.040 TAV2	1D-7
0.040 TAV2	1D-8
0.040 TAV3	1D-9
0.040 TAV3	1D-10
0.042 TAV1	1D-11
0.042 TAV1	1D-12
0.043 TAV1	1D-13
0.043 TAV1	1D-14
0.043 TAV2	1D-15
0.043 TAV2	1D-16
0.045 TAV1	1D-17
0.045 TAV1	1D-18
0.045 TAV1A	1D-19
0.045 TAV1A	1D-20
0.060 TAV1	1D-21
0.060 TAV1	1D-22
0.060 TAV2	1D-23
0.060 TAV2	1D-24
0.071 TAV1	1E-3
0.071 TAV1	1E-4
0.077 TAV1	1E-5
0.077 TAV1	1E-6
0.080 TAV1	1E-7
0.080 TAV1	1E-8
0.081 TAV1	1E-9
0.081 TAV1	1E-10
0.082 TAV1	1E-11
0.082 TAV1	1E-12
0.083 TAV1	1E-13
0.083 TAV1	1E-14
0.084 TAV1	1E-15
0.084 TAV1	1E-16
0.100 TAV1	1E-17
0.100 TAV1	1E-18
0.120 TAV1	1E-19
0.120 TAV1	1E-20
0.140 TAV1	1E-21
0.140 TAV1	1E-22
0.140 TAV2	1E-23
0.140 TAV2	1E-24
0.140 TAV3	1F-3
0.140 TAV3	1F-4
0.140 TAV4	1F-5
0.140 TAV4	1F-6
0.140 TAV5	1F-7
0.140 TAV5	1F-8
0.149 TAV1	1F-9
0.149 TAV1	1F-10
0.200 TAV1	1F-11
0.200 TAV1	1F-12
0.201 TAV1	1F-13
0.201 TAV1	1F-14
0.203 TAV1	1F-15
0.203 TAV1	1F-16
0.240 TAV1	1F-17
0.240 TAV1	1F-18
0.240 TAV2	1F-19
0.240 TAV2	1F-20
0.241 TAV1	1F-21
0.241 TAV1	1F-22
0.300 TAV1	1F-23
0.300 TAV1	1F-24
0.302 TAV1	1G-3
0.302 TAV1	1G-4
0.305 TAV1	1G-5
0.305 TAV1	1G-6
0.305 TAV2	1G-7
0.305 TAV2	1G-8
0.310 TAV1	1G-9
0.310 TAV1	1G-10
0.310 TAV2	1G-11
0.310 TAV2	1G-12
0.320 TAV1	1G-13
0.320 TAV1	1G-14
0.320 TAV2	1G-15
0.320 TAV2	1G-16
0.323 TAV1	1G-17
0.323 TAV1	1G-18
0.326 TAV1	1G-19
0.326 TAV1	1G-20
0.340 TAV1	1G-21
0.340 TAV1	1G-22
0.345 TAV1	1G-23
0.345 TAV1	1G-24
0.350 TAV1	1H-3
0.350 TAV1	1H-4
0.360 TAV1	1H-5
0.360 TAV1	1H-6
0.360 TAV2	1H-7
0.360 TAV2	1H-8
0.400 TAV1	1H-9
0.400 TAV1	1H-10
0.400 TAV2	1H-11
0.400 TAV2	1H-12
0.400 TAV3	1H-13
0.400 TAV3	1H-14
0.450 TAV1	1H-15
0.450 TAV1	1H-16
1.000 TAV1	1I-3
1.000 TAV1	1I-4
1.010 TAV1	1I-5
1.010 TAV1	1I-6
1.020 TAV1	1I-7
1.020 TAV1	1I-8
1.030 TAV1	1I-9
1.030 TAV1	1I-10
1.030 TAV2	1I-11
1.030 TAV2	1I-12
1.030 TAV3	1I-13
1.030 TAV3	1I-14
1.030 TAV4	1I-15
1.030 TAV4	1I-16
1.030 TAV5	1I-17
1.030 TAV5	1I-18
1.030 TAV6	1I-19
1.030 TAV6	1I-20
1.030 TAV7	1I-21
1.030 TAV7	1I-22
1.030 TAV8	1I-23
1.030 TAV8	1I-24
1.040 TAV1	1J-3
1.040 TAV1	1J-4
1.040 TAV2	1J-5
1.040 TAV2	1J-6
1.040 TAV3	1J-7
1.040 TAV3	1J-8
1.040 TAV3	1J-9
1.040 TAV3	1J-10
1.040 TAV4	1J-11
1.040 TAV4	1J-12
1.050 TAV1	1J-13
1.050 TAV1	1J-14
1.050 TAV1	1J-15
1.050 TAV1	1J-16
1.050 TAV2	1J-17
1.050 TAV2	1J-18
1.050 TAV3	1J-19
1.050 TAV3	1J-20
1.050 TAV4	1J-21
1.050 TAV4	1J-22
1.050 TAV5	1J-23
1.050 TAV5	1J-24
1.060 TAV1	1K-3
1.060 TAV1	1K-4
1.070 TAV1	1K-5
1.070 TAV1	1K-6
1.070 TAV2	1K-7
1.070 TAV2	1K-8
1.070 TAV3	1K-9
1.070 TAV3	1K-10
1.080 TAV1	1K-11
1.080 TAV1	1K-12
1.080 TAV2	1K-13
1.080 TAV2	1K-14
1.081 TAV1	1K-15
1.081 TAV1	1K-16
1.081 TAV2	1K-17
1.081 TAV2	1K-18
1.082 TAV1	1K-19
1.082 TAV1	1K-20
1.082 TAV1	1K-21
1.082 TAV1	1K-22
1.082 TAV2	1K-23
1.082 TAV2	1K-24
1.082 TAV3	1L-3
1.082 TAV3	1L-4
1.083 TAV1	1L-5
1.083 TAV1	1L-6
1.084 TAV1	1L-7
1.084 TAV1	1L-8
1.200 TAV1	2D-3
1.200 TAV1	2D-4
1.200 TAV2	2D-5
1.200 TAV2	2D-6
1.200 TAV3	2D-7
1.200 TAV3	2D-8
1.210 TAV1	2D-9
1.210 TAV1	2D-10
1.220 TAV1	2D-11
1.220 TAV1	2D-12
1.220 TAV2	2D-13
1.220 TAV2	2D-14
1.220 TAV2	2D-15
1.220 TAV2	2D-16
1.220 TAV3	2D-17
1.220 TAV3	2D-18
1.220 TAV4	2D-19
1.220 TAV4	2D-20
1.250 TAV1	2D-21
1.250 TAV1	2D-22
1.250 TAV2	2D-23
1.250 TAV2	2D-24
1.250 TAV4	2E-3
1.250 TAV4	2E-4
1.250 TAV4	2E-5
1.250 TAV4	2E-6
1.250 TAV5	2E-7
1.250 TAV5	2E-8
1.250 TAV6	2E-9
1.250 TAV6	2E-10
1.250 TAV7	2E-11
1.250 TAV7	2E-12
1.250 TAV7	2E-13
1.250 TAV7	2E-14
1.290 TAV1	2E-15
1.290 TAV1	2E-16
1.290 TAV2	2E-17
1.290 TAV2	2E-18
1.300 TAV1	2E-19
1.300 TAV1	2E-20
1.300 TAV2	2E-21
1.300 TAV2	2E-22
1.300 TAV3	2E-23
1.300 TAV3	2E-24
2.000 TAV1	2F-3
2.000 TAV1	2F-4
2.003 TAV1	2F-5
2.003 TAV1	2F-6
2.003 TAV2	2F-7
2.003 TAV2	2F-8
2.020 TAV1	2F-9
2.020 TAV1	2F-10
2.020 TAV1	2F-11
2.020 TAV1	2F-12
2.030 TAV1	2F-13
2.030 TAV1	2F-14
2.030 TAV2	2F-15
2.030 TAV2	2F-16
2.030 TAV3	2F-17
2.030 TAV3	2F-18
2.030 TAV4	2F-19
2.030 TAV4	2F-20
2.030 TAV6	2F-21
2.030 TAV5	2F-22
2.040 TAV1	2F-23
2.040 TAV1	2F-24
3.000 TAV1	2G-3
3.000 TAV1	2G-4
3.010 TAV1	2G-5
3.010 TAV1	2G-6
3.010 TAV2	2G-7
3.010 TAV2	2G-8
3.010 TAV3	2G-9
3.010 TAV3	2G-10
3.010 TAV4	2G-11
3.010 TAV4	2G-12
3.010 TAV5	2G-13
3.010 TAV5	2G-14
3.020 TAV1	2G-15
3.020 TAV1	2G-16
3.030 TAV1	2G-17
3.030 TAV1	2G-18
3.040 TAV1	2G-19
3.040 TAV1	2G-20
3.050 TAV1	2G-21
3.050 TAV1	2G-22
3.060 TAV1	2G-23
3.060 TAV1	2G-24
3.060 TAV2	2H-3
3.060 TAV2	2H-4
3.070 TAV1	2H-5
3.070 TAV1	2H-6
4.000 TAV1	2H-7
4.000 TAV1	2H-8
4.500 TAV1	2H-9
4.500 TAV1	2H-10
5.0020TAV1	2H-11
5.0020TAV1	2H-12
5.0020TAV2	2H-13
5.0020TAV2	2H-14
5.0022TAV1	2H-15
5.0022TAV1	2H-16
5.0022TAV2	2H-17
5.0022TAV2	2H-18
5.0025TAV1	2H-19
5.0025TAV1	2H-20
5.0038TAV1	2H-21
5.0038TAV1	2H-22
5.0038TAV2	2H-23
5.0038TAV2	2H-24
5.0151TAV1	2I-3
5.0151TAV1	2I-4
5.0536TAV1	2I-5
5.0536TAV1	2I-6
5.0540TAV1	2I-7
5.0540TAV1	2I-8
5.0083TAV1	2I-9
5.0083TAV1	2I-10

KIT INDEX - INDICE DEI KITS - LISTE DES KITS - VERZEICHNIS DER ERSATSTEILSETZE - INDICE DE FORNITURAS

KIT PART NUMBER	KIT COMPONENTS	TRAN. CODE	DESCRIPTION	DESCRIZIONE	SGR.	TAV.	ITEM	QTA'
1930210		K18B	KIT-PISTON RINGS(+0,4)	KIT-ANELLI STANTUFFO (+0,4)				
	4770692	45A	RING	ANELLO	0,092	1	06	1
	4771788	45A	RING	ANELLO	0,092	1	04	1
	4771793	45A	RING	ANELLO	0,092	1	05	1
1930211		K18C	KIT-PISTON RINGS(+0,8)	KIT-ANELLI STANTUFFO (+0,8)				
	4770694	45A	RING	ANELLO	0,092	1	06	1
	4771790	45A	RING	ANELLO	0,092	1	04	1
	4771795	45A	RING	ANELLO	0,092	1	05	1
1930798		K41	KIT-OIL PAN GASKETS	KIT-GUARN. COPPA OLIO				
	4001577	122G	SEAL	GUARNIZIONE	0,042	1	01	1
	4782788	122G	SEAL	GUARNIZIONE	0,042	1	04	1
	4782787	122G	SEAL	GUARNIZIONE	0,042	1	03	1
71400058		K4	KIT-BUCKET CYL. SEALS	KIT-GUARN. CILIN. BENNA				
	71400001	45A	RING	ANELLO	2,030	5	16	1
	71400002	122G	SEAL	GUARNIZIONE	2,030	5	14	1
	71400003	45A	RING	ANELLO	2,030	5	15	1
71400069		K4	KIT-BUCKET CYL. SEALS	KIT-GUARN. CILIN. BENNA				
	71400025	122G	SEAL	GUARNIZIONE	2,030	5	24	1
	71400026	45A	RING	ANELLO	2,030	5	26	2
	71400027	45A	RING	ANELLO	2,030	5	25	2
71400049		K1	KIT-LIFT RIGHT CYL. SEALS	KIT-GUARN.CILINDRO SOLL.DX				
	71400004	45A	RING	ANELLO	2,030	2	19	1
	71400005	122G	SEAL	GUARNIZIONE	2,030	2	17	1
	71400006	45A	RING	ANELLO	2,030	2	18	1
71400068		K2	LIFT LEFT CYL. SEAL KIT	KIT GUARN.CILINDRO SOLL.SX				
	71400004	45A	RING	ANELLO	2,030	3	19	1
	71400005	122G	SEAL	GUARNIZIONE	2,030	3	17	1
	71400006	45A	RING	ANELLO	2,030	3	18	1
71400092		K1	KIT-LIFT RIGHT CYL. SEALS	KIT-GUARN.CILINDRO SOLL.DX				
	71400028	122G	SEAL	GUARNIZIONE	2,030	2	25	1
	71400029	45A	RING	ANELLO	2,030	2	27	2
	71400030	45A	RING	ANELLO	2,030	2	26	2
71400093		K2	LIFT LEFT CYL. SEAL KIT	KIT GUARN.CILINDRO SOLL.SX				
	71400028	122G	SEAL	GUARNIZIONE	2,030	3	25	1
	71400029	45A	RING	ANELLO	2,030	3	27	2
	71400030	45A	RING	ANELLO	2,030	3	26	1
71400106		K3	KIT-DIPPER CYL. SEALS	KIT-GUARN. CILIN. PENETRAZIONE				
	71400007	45A	RING	ANELLO	2,030	4	14	1
	71400008	122G	SEAL	GUARNIZIONE	2,030	4	13	1
	71400009	45A	RING	ANELLO	2,030	4	15	1
71400116		K3	KIT-DIPPER CYL. SEALS	KIT-GUARN. CILIN. PENETRAZIONE				
	71400031	122G	SEAL	GUARNIZIONE	2,030	4	26	1
	71400032	45A	RING	ANELLO	2,030	4	28	2
	71400033	45A	RING	ANELLO	2,030	4	27	2
79067856	79067856	2K	KIT	KIT	0,149	1	09	
79070385	79070385	K31	KIT - FOR ALTERNATOR	KIT - PER ALTERNATORE	0,400	2	18	
79071796		K30	KIT-FOR INJECTION PUMP	KIT-PER POMPA INIEZIONE				
79078926	79078926	105P	PLATE	PIASTRA	0,400	3	19	
79087523	79087523	K10	TURBOCHARGER REVISION KIT	KIT REVISIONE TURBOCOMPRESS.	0,240	1	01	
79087244		K14	KIT - CYLINDER HEAD SEALS	KIT - GUARNIZ. TESTA CILINDRI				
	4769441	120G	GASKET	GUARNIZIONE PIANA	0,050	1	02	1
	4782836	120G	GASKET	GUARNIZIONE PIANA	0,050	1	04	1
79087245		K13	KIT - CYLINDER BLOCK SEALS	KIT - GUARNIZ.BASAMENTO MOTORE				
	4001577	122G	SEAL	GUARNIZIONE	0,042	1	01	1
	4782788	122G	SEAL	GUARNIZIONE	0,042	1	04	1
	4782787	122G	SEAL	GUARNIZIONE	0,042	1	03	1
	4606564	122G	SEAL	GUARNIZIONE	0,043	2	01	1
	4607590	122G	SEAL	GUARNIZIONE	0,043	1	03	1
	4553283	120G	GASKET	GUARNIZIONE PIANA	0,040	2	02	1
	4781578	122G	SEAL	GUARNIZIONE	0,043	1	23	1
	4781580	122G	SEAL	GUARNIZIONE	0,043	1	05	1
	4782953	122G	SEAL	GUARNIZIONE	0,043	1	24	1
	4783040	120G	GASKET	GUARNIZIONE PIANA	0,140	2	10	1

SUBGROUP	GRID
0.000 TAV1	1C-11
0.000 TAV1	1C-12
0.001 TAV1	1C-13
0.001 TAV1	1C-14
0.002 TAV1	1C-15
0.002 TAV1	1C-16
0.003 TAV1	1C-17
0.003 TAV1	1C-18
0.003 TAV2	1C-19
0.003 TAV2	1C-20
0.003 TAV3	1C-21
0.003 TAV3	1C-22
0.004 TAV1	1C-23
0.004 TAV1	1C-24
0.021 TAV1	1D-3
0.021 TAV1	1D-4
0.040 TAV1	1D-5
0.040 TAV1	1D-6
0.040 TAV2	1D-7
0.040 TAV2	1D-8
0.040 TAV3	1D-9
0.040 TAV3	1D-10
0.042 TAV1	1D-11
0.042 TAV1	1D-12
0.043 TAV1	1D-13
0.043 TAV1	1D-14
0.043 TAV2	1D-15
0.043 TAV2	1D-16
0.045 TAV1	1D-17
0.045 TAV1	1D-18
0.045 TAV1A	1D-19
0.045 TAV1A	1D-20
0.060 TAV1	1D-21
0.060 TAV1	1D-22
0.060 TAV2	1D-23
0.060 TAV2	1D-24
0.071 TAV1	1E-3
0.071 TAV1	1E-4
0.077 TAV1	1E-5
0.077 TAV1	1E-6
0.080 TAV1	1E-7
0.080 TAV1	1E-8
0.081 TAV1	1E-9
0.081 TAV1	1E-10
0.082 TAV1	1E-11
0.082 TAV1	1E-12
0.083 TAV1	1E-13
0.083 TAV1	1E-14
0.084 TAV1	1E-15
0.084 TAV1	1E-16
0.100 TAV1	1E-17
0.100 TAV1	1E-18
0.120 TAV1	1E-19
0.120 TAV1	1E-20
0.140 TAV1	1E-21
0.140 TAV1	1E-22
0.140 TAV2	1E-23
0.140 TAV2	1E-24
0.140 TAV3	1F-3
0.140 TAV3	1F-4
0.140 TAV4	1F-5
0.140 TAV4	1F-6
0.140 TAV5	1F-7
0.140 TAV5	1F-8
0.149 TAV1	1F-9
0.149 TAV1	1F-10
0.200 TAV1	1F-11
0.200 TAV1	1F-12
0.201 TAV1	1F-13
0.201 TAV1	1F-14
0.203 TAV1	1F-15
0.203 TAV1	1F-16
0.240 TAV1	1F-17
0.240 TAV1	1F-18
0.240 TAV2	1F-19
0.240 TAV2	1F-20
0.241 TAV1	1F-21
0.241 TAV1	1F-22
0.300 TAV1	1F-23
0.300 TAV1	1F-24
0.302 TAV1	1G-3
0.302 TAV1	1G-4
0.305 TAV1	1G-5
0.305 TAV1	1G-6
0.305 TAV2	1G-7
0.305 TAV2	1G-8
0.310 TAV1	1G-9
0.310 TAV1	1G-10
0.310 TAV2	1G-11
0.310 TAV2	1G-12
0.320 TAV1	1G-13
0.320 TAV1	1G-14
0.320 TAV2	1G-15
0.320 TAV2	1G-16
0.323 TAV1	1G-17
0.323 TAV1	1G-18
0.325 TAV1	1G-19
0.326 TAV1	1G-20
0.340 TAV1	1G-21
0.340 TAV1	1G-22
0.345 TAV1	1G-23
0.345 TAV1	1G-24
0.350 TAV1	1H-3
0.350 TAV1	1H-4
0.360 TAV1	1H-5
0.360 TAV1	1H-6
0.360 TAV2	1H-7
0.360 TAV2	1H-8
0.400 TAV1	1H-9
0.400 TAV1	1H-10
0.400 TAV2	1H-11
0.400 TAV2	1H-12
0.400 TAV3	1H-13
0.400 TAV3	1H-14
0.450 TAV1	1H-15
0.450 TAV1	1H-16
1.000 TAV1	1I-3
1.000 TAV1	1I-4
1.010 TAV1	1I-5
1.010 TAV1	1I-6
1.020 TAV1	1I-7
1.020 TAV1	1I-8
1.030 TAV1	1I-9
1.030 TAV1	1I-10
1.030 TAV2	1I-11
1.030 TAV2	1I-12
1.030 TAV3	1I-13
1.030 TAV3	1I-14
1.030 TAV4	1I-15
1.030 TAV4	1I-16
1.030 TAV5	1I-17
1.030 TAV5	1I-18
1.030 TAV6	1I-19
1.030 TAV6	1I-20
1.030 TAV7	1I-21
1.030 TAV7	1I-22
1.030 TAV8	1I-23
1.030 TAV8	1I-24
1.040 TAV1	1J-3
1.040 TAV1	1J-4
1.040 TAV2	1J-5
1.040 TAV2	1J-6
1.040 TAV3	1J-7
1.040 TAV3	1J-8
1.040 TAV3	1J-9
1.040 TAV3	1J-10
1.040 TAV4	1J-11
1.040 TAV4	1J-12
1.050 TAV1	1J-13
1.050 TAV1	1J-14
1.050 TAV1	1J-15
1.050 TAV1	1J-16
1.050 TAV2	1J-17
1.050 TAV2	1J-18
1.050 TAV3	1J-19
1.050 TAV3	1J-20
1.050 TAV4	1J-21
1.050 TAV4	1J-22
1.050 TAV5	1J-23
1.050 TAV5	1J-24
1.060 TAV1	1K-3
1.060 TAV1	1K-4
1.070 TAV1	1K-5
1.070 TAV1	1K-6
1.070 TAV2	1K-7
1.070 TAV2	1K-8
1.070 TAV3	1K-9
1.070 TAV3	1K-10
1.080 TAV1	1K-11
1.080 TAV1	1K-12
1.080 TAV2	1K-13
1.080 TAV2	1K-14
1.081 TAV1	1K-15
1.081 TAV1	1K-16
1.081 TAV2	1K-17
1.081 TAV2	1K-18
1.082 TAV1	1K-19
1.082 TAV1	1K-20
1.082 TAV1	1K-21
1.082 TAV1	1K-22
1.082 TAV2	1K-23
1.082 TAV2	1K-24
1.082 TAV3	1L-3
1.082 TAV3	1L-4
1.083 TAV1	1L-5
1.083 TAV1	1L-6
1.084 TAV1	1L-7
1.084 TAV1	1L-8
1.200 TAV1	2D-3
1.200 TAV1	2D-4
1.200 TAV2	2D-5
1.200 TAV2	2D-6
1.200 TAV3	2D-7
1.200 TAV3	2D-8
1.210 TAV1	2D-9
1.210 TAV1	2D-10
1.220 TAV1	2D-11
1.220 TAV1	2D-12
1.220 TAV2	2D-13
1.220 TAV2	2D-14
1.220 TAV2	2D-15
1.220 TAV2	2D-16
1.220 TAV3	2D-17
1.220 TAV3	2D-18
1.220 TAV4	2D-19
1.220 TAV4	2D-20
1.250 TAV1	2D-21
1.250 TAV1	2D-22
1.250 TAV2	2D-23
1.250 TAV2	2D-24
1.250 TAV4	2E-3
1.250 TAV4	2E-4
1.250 TAV4	2E-5
1.250 TAV4	2E-6
1.250 TAV5	2E-7
1.250 TAV5	2E-8
1.250 TAV6	2E-9
1.250 TAV6	2E-10
1.250 TAV7	2E-11
1.250 TAV7	2E-12
1.250 TAV7	2E-13
1.250 TAV7	2E-14
1.290 TAV1	2E-15
1.290 TAV1	2E-16
1.290 TAV2	2E-17
1.290 TAV2	2E-18
1.300 TAV1	2E-19
1.300 TAV1	2E-20
1.300 TAV2	2E-21
1.300 TAV2	2E-22
1.300 TAV3	2E-23
1.300 TAV3	2E-24
2.000 TAV1	2F-3
2.000 TAV1	2F-4
2.003 TAV1	2F-5
2.003 TAV1	2F-6
2.003 TAV2	2F-7
2.003 TAV2	2F-8
2.020 TAV1	2F-9
2.020 TAV1	2F-10
2.020 TAV1	2F-11
2.020 TAV1	2F-12
2.030 TAV1	2F-13
2.030 TAV1	2F-14
2.030 TAV2	2F-15
2.030 TAV2	2F-16
2.030 TAV2	2F-18
2.030 TAV3	2F-17
2.030 TAV3	2F-18
2.030 TAV4	2F-19
2.030 TAV4	2F-20
2.030 TAV5	2F-21
2.030 TAV5	2F-22
2.040 TAV1	2F-23
2.040 TAV1	2F-24
3.000 TAV1	2G-3
3.000 TAV1	2G-4
3.010 TAV1	2G-5
3.010 TAV1	2G-6
3.010 TAV2	2G-7
3.010 TAV2	2G-8
3.010 TAV3	2G-9
3.010 TAV3	2G-10
3.010 TAV4	2G-11
3.010 TAV4	2G-12
3.010 TAV5	2G-13
3.010 TAV5	2G-14
3.020 TAV1	2G-15
3.020 TAV1	2G-16
3.030 TAV1	2G-17
3.030 TAV1	2G-18
3.040 TAV1	2G-19
3.040 TAV1	2G-20
3.050 TAV1	2G-21
3.050 TAV1	2G-22
3.060 TAV1	2G-23
3.060 TAV1	2G-24
3.060 TAV2	2H-3
3.060 TAV2	2H-4
3.070 TAV1	2H-5
3.070 TAV1	2H-6
4.000 TAV1	2H-7
4.000 TAV1	2H-8
4.500 TAV1	2H-9
4.500 TAV1	2H-10
5.0020TAV1	2H-11
5.0020TAV1	2H-12
5.0020TAV2	2H-13
5.0020TAV2	2H-14
5.0022TAV1	2H-15
5.0022TAV1	2H-16
5.0022TAV2	2H-17
5.0022TAV2	2H-18
5.0025TAV1	2H-19
5.0025TAV1	2H-20
5.0038TAV1	2H-21
5.0038TAV1	2H-22
5.0038TAV2	2H-23
5.0038TAV2	2H-24
5.0151TAV1	2I-3
5.0151TAV1	2I-4
5.0538TAV1	2I-5
5.0596TAV1	2I-6
5.0540TAV1	2I-7
5.0540TAV1	2I-8
5.0083TAV1	2I-9
5.0083TAV1	2I-10

KIT INDEX - INDICE DEI KITS - LISTE DES KITS - VERZEICHNIS DER ERSATSTEILSETZE - INDICE DE FORNITURAS

KIT PART NUMBER	KIT COMPONENTS	TRAN. CODE	DESCRIPTION	DESCRIZIONE	SGR.	TAV.	ITEM	QTA'
7.097245	14459281	158G	O-RING	GUARNIZIONE O-R	0.326	1	12	1
	14469880	158G	O-RING	GUARNIZIONE O-R	0.043	2	15	1
	14482080	158G	O-RING	GUARNIZIONE O-R	0.043	2	16	1
	40000011	122G	SEAL	GUARNIZIONE	0.043	1	22	1
	40003900	122G	SEAL	GUARNIZIONE	0.043	2	20	1
79097246		K22	KIT-MANIFOLD GASKETS	KIT-GUARNIZIONI COLLETTORI				
	4782472	120G	GASKET	GUARNIZIONE PIANA	0.240	2	03	1
	4632113	120G	GASKET	GUARNIZIONE PIANA	0.240	2	02	1
	4632117	120G	GASKET	GUARNIZIONE PIANA	0.240	2	01	1
	4632123	120G	GASKET	GUARNIZIONE PIANA	0.240	1	04	1
	4760065	120G	GASKET	GUARNIZIONE PIANA	0.241	1	02	1
	4770265	120G	GASKET	GUARNIZIONE PIANA	0.326	1	09	1
	4776435	120G	GASKET	GUARNIZIONE PIANA	0.326	1	13	1
	4776544	120G	GASKET	GUARNIZIONE PIANA	0.071	1	03	2
	4813566	120G	GASKET	GUARNIZIONE PIANA	0.077	1	09	4
	4923212	120G	GASKET	GUARNIZIONE PIANA	0.326	1	07	1

"FILTER CARE" KIT
MODEL: FH120

500 HOUR KIT
PART NUMBER: 75127404

QUANTITY	PART NUMBER	DESCRIPTION
1	84796459	Lube Oil Filter
1	84795601	Fuel Filter
1	71467480	O-ring, Hydraulic Ret.
1	71405964	Hydraulic Ret. Filter

1000 HOUR KIT
PART NUMBER: 75127485

1	84796459	Lube Oil Filter
1	84795601	Fuel Filter
1	71401964	Hydraulic Ret. Filter
1	71467480	O-ring Hydraulic Ret.
1	71402469	Pilot Control Filter
1	71408283	Air Filter inner
1	71405431	Air Filter outer

EXTRA CARE KIT
BASE MACHINE
PART NUMBER 75127486

5	84796459	Lube Oil Filter
3	84795601	Fuel Filter
2	71405964	Hydraulic Ret. Filter
2	71467480	O-ring, Hyd Ret
1	71402469	Pilot Control Filter
1	71401954	O-ring, Pilot Filter
1	71405431	Air Filter outer
1	84815721	Air Belt
1	84820910	Fan Belt
1	11054880	3A Fuse
1	11054890	4A Fuse
1	11054930	10A Fuse
4	85482377	Track Bea
6	85482375	Track Nut
1	11054850	7.5A Fuse
1	71406783	Air Filter inner

SUBGROUP GRID	SUBGROUP GRID	SUBGROUP GRID	SUBGROUP GRID	SUBGROUP GRID
0.000 TAV1 ..... 1C-11	0.140 TAV5 ..... 1F-8	1.030 TAV3 ..... 1I-13	1.200 TAV1 ..... 2D-4	2.040 TAV1 ..... 2F-23
0.000 TAV1 ..... 1C-12	0.149 TAV1 ..... 1F-9	1.030 TAV3 ..... 1I-14	1.200 TAV2 ..... 2D-5	2.040 TAV1 ..... 2F-24
0.001 TAV1 ..... 1C-13	0.149 TAV1 ..... 1F-10	1.030 TAV4 ..... 1I-15	1.200 TAV2 ..... 2D-6	3.000 TAV1 ..... 2G-3
0.001 TAV1 ..... 1C-14	0.200 TAV1 ..... 1F-11	1.030 TAV4 ..... 1I-16	1.200 TAV3 ..... 2D-7	3.000 TAV1 ..... 2G-4
0.002 TAV1 ..... 1C-15	0.200 TAV1 ..... 1F-12	1.030 TAV5 ..... 1I-17	1.200 TAV3 ..... 2D-8	3.010 TAV1 ..... 2G-5
0.002 TAV1 ..... 1C-16	0.201 TAV1 ..... 1F-13	1.030 TAV5 ..... 1I-18	1.210 TAV1 ..... 2D-9	3.010 TAV1 ..... 2G-6
0.003 TAV1 ..... 1C-17	0.201 TAV1 ..... 1F-14	1.030 TAV6 ..... 1I-19	1.210 TAV1 ..... 2D-10	3.010 TAV2 ..... 2G-7
0.003 TAV1 ..... 1C-18	0.203 TAV1 ..... 1F-15	1.030 TAV6 ..... 1I-20	1.220 TAV1 ..... 2D-11	3.010 TAV2 ..... 2G-8
0.003 TAV2 ..... 1C-19	0.203 TAV1 ..... 1F-16	1.030 TAV7 ..... 1I-21	1.220 TAV1 ..... 2D-12	3.010 TAV3 ..... 2G-9
0.003 TAV2 ..... 1C-20	0.240 TAV1 ..... 1F-17	1.030 TAV7 ..... 1I-22	1.220 TAV2 ..... 2D-13	3.010 TAV3 ..... 2G-10
0.003 TAV3 ..... 1C-21	0.240 TAV1 ..... 1F-18	1.030 TAV8 ..... 1I-23	1.220 TAV2 ..... 2D-14	3.010 TAV4 ..... 2G-11
0.003 TAV3 ..... 1C-22	0.240 TAV2 ..... 1F-19	1.030 TAV8 ..... 1I-24	1.220 TAV2 ..... 2D-15	3.010 TAV4 ..... 2G-12
0.004 TAV1 ..... 1C-23	0.240 TAV2 ..... 1F-20	1.040 TAV1 ..... 1J-3	1.220 TAV2 ..... 2D-16	3.010 TAV5 ..... 2G-13
0.004 TAV1 ..... 1C-24	0.241 TAV1 ..... 1F-21	1.040 TAV1 ..... 1J-4	1.220 TAV3 ..... 2D-17	3.010 TAV5 ..... 2G-14
0.021 TAV1 ..... 1D-3	0.241 TAV1 ..... 1F-22	1.040 TAV2 ..... 1J-5	1.220 TAV3 ..... 2D-18	3.020 TAV1 ..... 2G-15
0.021 TAV1 ..... 1D-4	0.300 TAV1 ..... 1F-23	1.040 TAV2 ..... 1J-6	1.220 TAV4 ..... 2D-19	3.020 TAV1 ..... 2G-16
0.040 TAV1 ..... 1D-5	0.300 TAV1 ..... 1F-24	1.040 TAV3 ..... 1J-7	1.220 TAV4 ..... 2D-20	3.030 TAV1 ..... 2G-17
0.040 TAV1 ..... 1D-6	0.302 TAV1 ..... 1G-3	1.040 TAV3 ..... 1J-8	1.250 TAV1 ..... 2D-21	3.030 TAV1 ..... 2G-18
0.040 TAV2 ..... 1D-7	0.302 TAV1 ..... 1G-4	1.040 TAV3 ..... 1J-9	1.250 TAV1 ..... 2D-22	3.040 TAV1 ..... 2G-19
0.040 TAV2 ..... 1D-8	0.305 TAV1 ..... 1G-5	1.040 TAV3 ..... 1J-10	1.250 TAV2 ..... 2D-23	3.040 TAV1 ..... 2G-20
0.040 TAV3 ..... 1D-9	0.305 TAV1 ..... 1G-6	1.040 TAV4 ..... 1J-11	1.250 TAV2 ..... 2D-24	3.050 TAV1 ..... 2G-21
0.040 TAV3 ..... 1D-10	0.305 TAV2 ..... 1G-7	1.040 TAV4 ..... 1J-12	1.250 TAV4 ..... 2E-3	3.050 TAV1 ..... 2G-22
0.042 TAV1 ..... 1D-11	0.305 TAV2 ..... 1G-8	1.050 TAV1 ..... 1J-13	1.250 TAV4 ..... 2E-4	3.060 TAV1 ..... 2G-23
0.042 TAV1 ..... 1D-12	0.310 TAV1 ..... 1G-9	1.050 TAV1 ..... 1J-14	1.250 TAV4 ..... 2E-5	3.060 TAV1 ..... 2G-24
0.043 TAV1 ..... 1D-13	0.310 TAV1 ..... 1G-10	1.050 TAV1 ..... 1J-15	1.250 TAV4 ..... 2E-6	3.060 TAV2 ..... 2H-3
0.043 TAV1 ..... 1D-14	0.310 TAV2 ..... 1G-11	1.050 TAV1 ..... 1J-16	1.250 TAV5 ..... 2E-7	3.060 TAV2 ..... 2H-4
0.043 TAV2 ..... 1D-15	0.310 TAV2 ..... 1G-12	1.050 TAV2 ..... 1J-17	1.250 TAV5 ..... 2E-8	3.070 TAV1 ..... 2H-5
0.043 TAV2 ..... 1D-16	0.320 TAV1 ..... 1G-13	1.050 TAV2 ..... 1J-18	1.250 TAV6 ..... 2E-9	3.070 TAV1 ..... 2H-6
0.045 TAV1 ..... 1D-17	0.320 TAV1 ..... 1G-14	1.050 TAV3 ..... 1J-19	1.250 TAV6 ..... 2E-10	4.000 TAV1 ..... 2H-7
0.045 TAV1 ..... 1D-18	0.320 TAV2 ..... 1G-15	1.050 TAV3 ..... 1J-20	1.250 TAV7 ..... 2E-11	4.000 TAV1 ..... 2H-8
0.045 TAV1A 1D-19	0.320 TAV2 ..... 1G-16	1.060 TAV4 ..... 1J-21	1.250 TAV7 ..... 2E-12	4.300 TAV1 ..... 2H-9
0.045 TAV1A 1D-20	0.323 TAV1 ..... 1G-17	1.050 TAV4 ..... 1J-22	1.250 TAV7 ..... 2E-13	4.500 TAV1 ..... 2H-10
0.060 TAV1 ..... 1D-21	0.323 TAV1 ..... 1G-18	1.050 TAV5 ..... 1J-23	1.250 TAV7 ..... 2E-14	5.0020TAV1 ..... 2H-11
0.060 TAV1 ..... 1D-22	0.326 TAV1 ..... 1G-19	1.050 TAV5 ..... 1J-24	1.290 TAV1 ..... 2E-15	5.0020TAV1 ..... 2H-12
0.060 TAV2 ..... 1D-23	0.326 TAV1 ..... 1G-20	1.060 TAV1 ..... 1K-3	1.290 TAV1 ..... 2E-16	5.0020TAV2 ..... 2H-13
0.060 TAV2 ..... 1D-24	0.340 TAV1 ..... 1G-21	1.060 TAV1 ..... 1K-4	1.290 TAV2 ..... 2E-17	5.0020TAV2 ..... 2H-14
0.071 TAV1 ..... 1E-3	0.340 TAV1 ..... 1G-22	1.070 TAV1 ..... 1K-5	1.290 TAV2 ..... 2E-18	5.0027TAV1 ..... 2H-15
0.071 TAV1 ..... 1E-4	0.345 TAV1 ..... 1G-23	1.070 TAV1 ..... 1K-6	1.300 TAV1 ..... 2E-19	5.0022TAV1 ..... 2H-16
0.077 TAV1 ..... 1E-5	0.345 TAV1 ..... 1G-24	1.070 TAV2 ..... 1K-7	1.300 TAV1 ..... 2E-20	5.0022TAV2 ..... 2H-17
0.077 TAV1 ..... 1E-6	0.350 TAV1 ..... 1H-3	1.070 TAV2 ..... 1K-8	1.300 TAV2 ..... 2E-21	5.0022TAV2 ..... 2H-18
0.080 TAV1 ..... 1E-7	0.350 TAV1 ..... 1H-4	1.070 TAV3 ..... 1K-9	1.300 TAV2 ..... 2E-22	5.0025TAV1 ..... 2H-19
0.080 TAV1 ..... 1E-8	0.360 TAV1 ..... 1H-5	1.070 TAV3 ..... 1K-10	1.300 TAV3 ..... 2E-23	5.0025TAV1 ..... 2H-20
0.081 TAV1 ..... 1E-9	0.360 TAV1 ..... 1H-6	1.080 TAV1 ..... 1K-11	1.300 TAV3 ..... 2E-24	5.0036TAV1 ..... 2H-21
0.081 TAV1 ..... 1E-10	0.360 TAV2 ..... 1H-7	1.080 TAV1 ..... 1K-12	2.000 TAV1 ..... 2F-3	5.0038TAV1 ..... 2H-22
0.082 TAV1 ..... 1E-11	0.360 TAV2 ..... 1H-8	1.080 TAV2 ..... 1K-13	2.000 TAV1 ..... 2F-4	5.0038TAV2 ..... 2H-23
0.082 TAV1 ..... 1E-12	0.400 TAV1 ..... 1H-9	1.080 TAV2 ..... 1K-14	2.003 TAV1 ..... 2F-5	5.0038TAV2 ..... 2H-24
0.083 TAV1 ..... 1E-13	0.400 TAV1 ..... 1H-10	1.081 TAV1 ..... 1K-15	2.003 TAV1 ..... 2F-6	5.0151TAV1 ..... 2I-3
0.083 TAV1 ..... 1E-14	0.400 TAV2 ..... 1H-11	1.081 TAV1 ..... 1K-16	2.003 TAV2 ..... 2F-7	5.0151TAV1 ..... 2I-4
0.084 TAV1 ..... 1E-15	0.400 TAV2 ..... 1H-12	1.081 TAV2 ..... 1K-17	2.003 TAV2 ..... 2F-8	5.0536TAV1 ..... 2I-5
0.084 TAV1 ..... 1E-16	0.400 TAV3 ..... 1H-13	1.081 TAV2 ..... 1K-18	2.020 TAV1 ..... 2F-9	5.0536TAV1 ..... 2I-6
0.100 TAV1 ..... 1E-17	0.400 TAV3 ..... 1H-14	1.082 TAV1 ..... 1K-19	2.020 TAV1 ..... 2F-10	5.0540TAV1 ..... 2I-7
0.100 TAV1 ..... 1E-18	0.450 TAV1 ..... 1H-15	1.082 TAV1 ..... 1K-20	2.020 TAV1 ..... 2F-11	5.0540TAV1 ..... 2I-8
0.120 TAV1 ..... 1E-19	0.450 TAV1 ..... 1H-16	1.082 TAV1 ..... 1K-21	2.020 TAV1 ..... 2F-12	5.0083TAV1 ..... 2I-9
0.120 TAV1 ..... 1E-20	1.000 TAV1 ..... 1I-3	1.082 TAV1 ..... 1K-22	2.030 TAV1 ..... 2F-13	5.0083TAV1 ..... 2I-10
0.140 TAV1 ..... 1E-21	1.000 TAV1 ..... 1I-4	1.082 TAV2 ..... 1K-23	2.030 TAV1 ..... 2F-14	
0.140 TAV1 ..... 1E-22	1.010 TAV1 ..... 1I-5	1.082 TAV2 ..... 1K-24	2.030 TAV2 ..... 2F-15	
0.140 TAV2 ..... 1E-23	1.010 TAV1 ..... 1I-6	1.082 TAV3 ..... 1L-3	2.030 TAV2 ..... 2F-16	
0.140 TAV2 ..... 1E-24	1.020 TAV1 ..... 1I-7	1.082 TAV3 ..... 1L-4	2.030 TAV3 ..... 2F-17	
0.140 TAV3 ..... 1F-3	1.020 TAV1 ..... 1I-8	1.083 TAV1 ..... 1L-5	2.030 TAV3 ..... 2F-18	
0.140 TAV3 ..... 1F-4	1.030 TAV1 ..... 1I-9	1.083 TAV1 ..... 1L-6	2.030 TAV4 ..... 2F-19	
0.140 TAV4 ..... 1F-5	1.030 TAV1 ..... 1I-10	1.084 TAV1 ..... 1L-7	2.030 TAV4 ..... 2F-20	
0.140 TAV4 ..... 1F-6	1.030 TAV2 ..... 1I-11	1.084 TAV1 ..... 1L-8	2.030 TAV5 ..... 2F-21	
0.140 TAV5 ..... 1F-7	1.030 TAV2 ..... 1I-12	1.200 TAV1 ..... 2D-3	2.030 TAV5 ..... 2F-22	

NUMERICAL INDEX - INDICE NUMERICO - LISTE NUMERIQUE
NUMERISCHES ERSATZEILVERZEILVERZEICHNIS - INDICE NUMERICO

PART. N.	SGR.	TAV.	ITEM
561295	0.305	1	18
563652	0.060	2	01
564530	0.350	1	08
586164	1.200	1	32
586164	1.210	1	34
771326	0.149	1	05
772051	0.149	1	08
772051	0.200	1	01
1282401	0.400	1	16
1368754	0.323	1	08
1390713	0.140	1	01
1390713	0.203	1	01
1901385	0.080	1	10
1901386	0.080	1	10
1901387	0.080	1	10
1901388	0.080	1	10
1930176	0.080	1	10
1930177	0.080	1	10
1930178	0.080	1	10
1930179	0.080	1	10
1930180	0.080	1	10
1930201	0.081	1	05
1930202	0.081	1	05
1930203	0.081	1	05
1930204	0.081	1	05
1930205	0.081	1	05
1930206	0.082	1	07
1930207	0.082	1	07
1930208	0.082	1	07
1930209	0.082	1	07
1930210	0.082	1	07
1930211	0.082	1	07
1930798	0.042	1	17
4031577	0.042	1	01
4232606	0.060	1	18
4232606	0.140	2	20
4318965	0.345	1	15
4338920	0.060	2	02
4470778	0.400	1	15
4547718	0.345	1	05
4564844	0.140	1	02
4570798	0.060	2	03
4570799	0.060	2	03
4585990	0.310	1	09
4587730	0.300	1	13
4599398	0.120	1	01
4599557	0.320	2	01
4599560	0.320	2	02
4599561	0.320	1	06
4599562	0.323	1	02
4599607	0.040	2	01
4600128	0.400	1	01
4600189	0.084	1	01
4600190	0.084	1	02
4600631	0.043	1	01
4600893	0.040	3	10
4600893	0.045	1	01
4601295	0.060	2	04
4601296	0.060	2	05
4603449	0.040	1	01
4603450	0.040	1	02
4603451	0.040	1	03
4605220	0.043	1	02
4605564	0.043	2	01
4605853	0.400	1	18
4605854	0.400	1	08
4607590	0.043	1	03
4607590	0.350	1	09
4607627	0.140	1	01
4607646	0.140	1	04
4607647	0.140	1	05
4607722	0.140	2	01
4607786	0.043	2	02
4607786	0.060	1	19
4607933	0.042	1	02
4613290	0.300	1	06
4613292	0.300	1	14
4613293	0.300	1	08
4613351	0.300	1	05
4613353	0.300	1	17
4619405	0.350	1	06
4620989	0.200	1	02
4632113	0.240	2	02
4632117	0.240	2	11
4632123	0.240	1	04
4639661	0.060	2	07
4653282	0.040	2	02
4653283	0.040	2	03
4654154	0.320	2	12
4655844	0.080	1	02
4655847	0.084	1	03
4659217	0.203	1	02
4659218	0.203	1	03
4659219	0.203	1	04
4661543	0.326	1	08
4663081	0.071	1	01
4663081	5.0025	1	12
4666029	0.040	2	04
4667452	0.140	2	02
4667452	0.350	1	13
4667612	0.305	2	02
4670939	0.300	1	14
4681251	0.060	2	06
4682937	0.060	2	10
4689861	0.120	1	02
4690509	0.120	1	02
4690510	0.120	1	02
4690511	0.120	1	02
4695922	0.450	1	01
4695923	0.450	1	04
4699783	0.060	2	11
4704106	0.083	1	01
4707775	0.080	1	09
4707776	0.080	1	09
4707779	0.080	1	08
4707780	0.080	1	08
4708063	0.080	1	09
4708064	0.080	1	09
4708069	0.080	1	08
4708070	0.080	1	08
4716734	0.040	3	12
4716734	0.045	1	02
4717026	0.400	1	15
4718740	0.043	2	03
4719705	0.305	1	07
4719706	0.305	1	08
4724588	0.310	2	08
4724814	0.323	1	06
4725331	0.045	1	03
4739213	0.305	1	05
4747164	0.345	1	18
4754062	0.080	1	06
4754064	0.080	1	07
4754400	0.082	1	05
4754401	0.082	1	06
4755015	0.300	1	12
4755435	0.240	2	15
4755436	0.240	2	16
4756569	0.060	1	01
4757883	0.201	1	01
4758243	0.345	1	03
4758713	0.082	1	04
4759659	0.060	1	20
4759803	0.310	2	06
4759806	0.310	2	05
4760060	0.071	1	02
4760061	0.077	1	01
4760064	0.241	1	01
4760065	0.241	1	02
4760312	0.323	1	05
4760316	0.323	1	10
4761704	0.310	2	01
4761918	0.310	1	01
4763439	0.040	3	01
4763440	0.040	3	02
4763570	0.045	1	04

SUBGROUP	GRID
0.000 TAV1	1C-11
0.000 TAV1	1C-12
0.001 TAV1	1C-13
0.001 TAV1	1C-14
0.002 TAV1	1C-15
0.002 TAV1	1C-16
0.003 TAV1	1C-17
0.003 TAV1	1C-18
0.003 TAV2	1C-19
0.003 TAV2	1C-20
0.003 TAV3	1C-21
0.003 TAV3	1C-22
0.004 TAV1	1C-23
0.004 TAV1	1C-24
0.021 TAV1	1D-3
0.021 TAV1	1D-4
0.040 TAV1	1D-5
0.040 TAV1	1D-6
0.040 TAV2	1D-7
0.040 TAV2	1D-8
0.040 TAV3	1D-9
0.040 TAV3	1D-10
0.042 TAV1	1D-11
0.042 TAV1	1D-12
0.043 TAV1	1D-13
0.043 TAV1	1D-14
0.043 TAV2	1D-15
0.043 TAV2	1D-16
0.045 TAV1	1D-17
0.045 TAV1	1D-18
0.045 TAV1A	1D-19
0.045 TAV1A	1D-20
0.060 TAV1	1D-21
0.060 TAV1	1D-22
0.060 TAV2	1D-23
0.060 TAV2	1D-24
0.071 TAV1	1E-3
0.071 TAV1	1E-4
0.077 TAV1	1E-5
0.077 TAV1	1E-6
0.080 TAV1	1E-7
0.080 TAV1	1E-8
0.081 TAV1	1E-9
0.081 TAV1	1E-10
0.082 TAV1	1E-11
0.082 TAV1	1E-12
0.083 TAV1	1E-13
0.083 TAV1	1E-14
0.084 TAV1	1E-15
0.084 TAV1	1E-16
0.100 TAV1	1E-17
0.100 TAV1	1E-18
0.120 TAV1	1E-19
0.120 TAV1	1E-20
0.140 TAV1	1E-21
0.140 TAV1	1E-22
0.140 TAV2	1E-23
0.140 TAV2	1E-24
0.140 TAV3	1F-3
0.140 TAV3	1F-4
0.140 TAV4	1F-5
0.140 TAV4	1F-6
0.140 TAV5	1F-7
0.140 TAV5	1F-8
0.149 TAV1	1F-9
0.149 TAV1	1F-10
0.200 TAV1	1F-11
0.200 TAV1	1F-12
0.201 TAV1	1F-13
0.201 TAV1	1F-14
0.203 TAV1	1F-15
0.203 TAV1	1F-16
0.240 TAV1	1F-17
0.240 TAV1	1F-18
0.240 TAV2	1F-19
0.240 TAV2	1F-20
0.241 TAV1	1F-21
0.241 TAV1	1F-22
0.300 TAV1	1F-23
0.300 TAV1	1F-24
0.302 TAV1	1G-3
0.302 TAV1	1G-4
0.305 TAV1	1G-5
0.305 TAV1	1G-6
0.305 TAV2	1G-7
0.305 TAV2	1G-8
0.310 TAV1	1G-9
0.310 TAV1	1G-10
0.310 TAV2	1G-11
0.310 TAV2	1G-12
0.320 TAV1	1G-13
0.320 TAV1	1G-14
0.320 TAV2	1G-15
0.320 TAV2	1G-16
0.323 TAV1	1G-17
0.323 TAV1	1G-18
0.326 TAV1	1G-19
0.326 TAV1	1G-20
0.340 TAV1	1G-21
0.340 TAV1	1G-22
0.345 TAV1	1G-23
0.345 TAV1	1G-24
0.350 TAV1	1H-3
0.350 TAV1	1H-4
0.360 TAV1	1H-5
0.360 TAV1	1H-6
0.360 TAV2	1H-7
0.360 TAV2	1H-8
0.400 TAV1	1H-9
0.400 TAV1	1H-10
0.400 TAV2	1H-11
0.400 TAV2	1H-12
0.400 TAV3	1H-13
0.400 TAV3	1H-14
0.450 TAV1	1H-15
0.450 TAV1	1H-16
1.000 TAV1	1I-3
1.000 TAV1	1I-4
1.010 TAV1	1I-5
1.010 TAV1	1I-6
1.020 TAV1	1I-7
1.020 TAV1	1I-8
1.030 TAV1	1I-9
1.030 TAV1	1I-10
1.030 TAV2	1I-11
1.030 TAV2	1I-12
1.030 TAV3	1I-13
1.030 TAV3	1I-14
1.030 TAV4	1I-15
1.030 TAV4	1I-16
1.030 TAV5	1I-17
1.030 TAV5	1I-18
1.030 TAV6	1I-19
1.030 TAV6	1I-20
1.030 TAV7	1I-21
1.030 TAV7	1I-22
1.030 TAV8	1I-23
1.030 TAV8	1I-24
1.040 TAV1	1J-3
1.040 TAV1	1J-4
1.040 TAV2	1J-5
1.040 TAV2	1J-6
1.040 TAV3	1J-7
1.040 TAV3	1J-8
1.040 TAV3	1J-9
1.040 TAV3	1J-10
1.040 TAV4	1J-11
1.040 TAV4	1J-12
1.050 TAV1	1J-13
1.050 TAV1	1J-14
1.050 TAV1	1J-15
1.050 TAV1	1J-16
1.050 TAV2	1J-17
1.050 TAV2	1J-18
1.050 TAV3	1J-19
1.050 TAV3	1J-20
1.050 TAV4	1J-21
1.050 TAV4	1J-22
1.050 TAV5	1J-23
1.050 TAV5	1J-24
1.060 TAV1	1K-3
1.060 TAV1	1K-4
1.070 TAV1	1K-5
1.070 TAV1	1K-6
1.070 TAV2	1K-7
1.070 TAV2	1K-8
1.070 TAV3	1K-9
1.070 TAV3	1K-10
1.080 TAV1	1K-11
1.080 TAV1	1K-12
1.080 TAV2	1K-13
1.080 TAV2	1K-14
1.081 TAV1	1K-15
1.081 TAV1	1K-16
1.081 TAV2	1K-17
1.081 TAV2	1K-18
1.082 TAV1	1K-19
1.082 TAV1	1K-20
1.082 TAV1	1K-21
1.082 TAV1	1K-22
1.082 TAV2	1K-23
1.082 TAV2	1K-24
1.082 TAV3	1L-3
1.082 TAV3	1L-4
1.083 TAV1	1L-5
1.083 TAV1	1L-6
1.084 TAV1	1L-7
1.084 TAV1	1L-8
1.200 TAV1	2D-3
1.200 TAV1	2D-4
1.200 TAV2	2D-5
1.200 TAV2	2D-6
1.200 TAV3	2D-7
1.200 TAV3	2D-8
1.210 TAV1	2D-9
1.210 TAV1	2D-10
1.220 TAV1	2D-11
1.220 TAV1	2D-12
1.220 TAV2	2D-13
1.220 TAV2	2D-14
1.220 TAV2	2D-15
1.220 TAV2	2D-16
1.220 TAV3	2D-17
1.220 TAV3	2D-18
1.220 TAV4	2D-19
1.220 TAV4	2D-20
1.250 TAV1	2D-21
1.250 TAV1	2D-22
1.250 TAV2	2D-23
1.250 TAV2	2D-24
1.250 TAV4	2E-3
1.250 TAV4	2E-4
1.250 TAV4	2E-5
1.250 TAV4	2E-6
1.250 TAV5	2E-7
1.250 TAV5	2E-8
1.250 TAV6	2E-9
1.250 TAV6	2E-10
1.250 TAV7	2E-11
1.250 TAV7	2E-12
1.250 TAV7	2E-13
1.250 TAV7	2E-14
1.290 TAV1	2E-15
1.290 TAV1	2E-16
1.290 TAV2	2E-17
1.290 TAV2	2E-18
1.300 TAV1	2E-19
1.300 TAV1	2E-20
1.300 TAV2	2E-21
1.300 TAV2	2E-22
1.300 TAV3	2E-23
1.300 TAV3	2E-24
2.000 TAV1	2F-3
2.000 TAV1	2F-4
2.003 TAV1	2F-5
2.003 TAV1	2F-6
2.003 TAV2	2F-7
2.003 TAV2	2F-8
2.020 TAV1	2F-9
2.020 TAV1	2F-10
2.020 TAV1	2F-11
2.020 TAV1	2F-12
2.030 TAV1	2F-13
2.030 TAV1	2F-14
2.030 TAV2	2F-15
2.030 TAV2	2F-16
2.030 TAV3	2F-17
2.030 TAV3	2F-18
2.030 TAV4	2F-19
2.030 TAV4	2F-20
2.030 TAV5	2F-21
2.030 TAV5	2F-22
2.040 TAV1	2F-23
2.040 TAV1	2F-24
3.000 TAV1	2G-3
3.000 TAV1	2G-4
3.010 TAV1	2G-5
3.010 TAV1	2G-6
3.010 TAV2	2G-7
3.010 TAV2	2G-8
3.010 TAV3	2G-9
3.010 TAV3	2G-10
3.010 TAV4	2G-11
3.010 TAV4	2G-12
3.010 TAV5	2G-13
3.010 TAV5	2G-14
3.020 TAV1	2G-15
3.020 TAV1	2G-16
3.030 TAV1	2G-17
3.030 TAV1	2G-18
3.040 TAV1	2G-19
3.040 TAV1	2G-20
3.050 TAV1	2G-21
3.050 TAV1	2G-22
3.060 TAV1	2G-23
3.060 TAV1	2G-24
3.060 TAV2	2H-3
3.060 TAV2	2H-4
3.070 TAV1	2H-5
3.070 TAV1	2H-6
4.000 TAV1	2H-7
4.000 TAV1	2H-8
4.500 TAV1	2H-9
4.500 TAV1	2H-10
5.0020TAV1	2H-11
5.0020TAV1	2H-12
5.0020TAV2	2H-13
5.0020TAV2	2H-14
5.0022TAV1	2H-15
5.0022TAV1	2H-16
5.0022TAV2	2H-17
5.0022TAV2	2H-18
5.0025TAV1	2H-19
5.0025TAV1	2H-20
5.0038TAV1	2H-21
5.0038TAV1	2H-22
5.0038TAV2	2H-23
5.0038TAV2	2H-24
5.0151TAV1	2I-3
5.0151TAV1	2I-4
5.0536TAV1	2I-5
5.0536TAV1	2I-6
6.0540TAV1	2I-7
5.0540TAV1	2I-8
5.0083TAV1	2I-9
5.0083TAV1	2I-10

NUMERICAL INDEX - INDICE NUMERICO - LISTE NUMERIQUE
NUMERISCHES ERSATZEILVERZEILVERZEICHNIS - INDICE NUMERICO

PART. N.	SGR.	TAV.	ITEM
4763572	0.323	1	15
4764577	0.040	3	03
4765377	0.241	1	05
4767452	0.100	1	05
4769412	0.120	1	05
4769414	0.100	1	03
4769416	0.100	1	06
4769417	0.100	1	01
4769417	0.140	2	03
4769418	0.100	1	01
4769419	0.100	1	04
4769419	0.140	2	04
4769420	0.100	1	02
4769420	0.140	2	05
4769441	0.060	1	02
4769590	0.350	1	12
4769749	0.043	1	04
4769877	0.045	1	05
4770055	0.140	2	06
4770056	0.140	2	07
4770255	0.080	1	05
4770265	0.326	1	03
4770435	0.326	1	13
4770451	0.082	1	02
4770452	0.082	1	03
4770454	0.120	1	06
4770623	0.040	1	04
4770624	0.040	1	04
4770632	0.082	1	05
4770634	0.082	1	06
4770680	0.140	2	08
4770859	0.060	1	03
4770996	0.082	1	01
4771242	0.350	1	01
4771247	0.060	1	06
4771248	0.080	1	06
4771249	0.080	1	06
4771250	0.080	1	06
4771251	0.080	1	06
4771257	0.080	1	07
4771258	0.080	1	07
4771259	0.080	1	07
4771260	0.080	1	07
4771261	0.080	1	07
4771788	0.082	1	04
4771790	0.082	1	04
4771793	0.082	1	05
4771795	0.082	1	05
4771827	0.082	1	01
4771829	0.082	1	01
4771872	0.081	1	02
4772231	0.345	1	17
4772904	0.240	2	01
4773265	0.305	1	12
4774405	0.326	1	11
4775923	0.305	1	15
4776544	0.071	1	03
4777690	0.305	1	16
4779122	0.083	1	02
4780108	0.060	2	12
4780206	0.240	2	13
4780558	0.060	2	13
4780559	0.060	2	14
4780612	0.149	1	04
4780627	0.081	1	03
4780959	0.081	1	04
4780960	0.081	1	04
4780961	0.081	1	04
4780962	0.081	1	04
4780963	0.081	1	04
4780964	0.081	1	04
4781342	0.081	1	01
4781579	0.043	1	23
4781580	0.043	1	05
4782452	0.040	2	14
4782453	0.302	1	01
4782472	0.240	2	03
4782787	0.042	1	03
4782788	0.042	1	04
4782836	0.060	1	04
4782853	0.043	1	24
4782886	0.140	2	09
4783048	0.140	2	09
4783049	0.140	2	10
4783226	0.081	1	02
4784008	0.320	2	03
4784011	0.140	2	11
4784054	0.140	2	12
4784055	0.140	2	13
4784890	0.060	2	15
4784968	0.201	1	02
4785501	0.305	1	17
4786512	0.043	1	06
4787154	0.043	2	04
4787485	0.400	1	07
4788084	0.350	1	05
4788086	0.350	1	14
4788086	0.350	1	02
4788087	0.350	1	02
4788087	0.350	1	14
4790861	0.203	1	05
4791124	0.149	1	02
4792169	0.040	1	05
4793112	0.300	1	11
4793794	0.080	1	09
4794193	0.080	1	08
4795600	0.200	1	03
4795601	0.200	1	04
4796457	0.060	1	05
4796458	0.302	1	02
4796470	0.080	1	01
4798845	0.140	2	14
4799425	0.302	1	02
4801571	0.310	1	05
4802126	0.060	1	06
4802127	0.060	1	06
4803954	0.060	1	07
4803955	0.060	1	07
4803956	0.060	1	07
4804219	0.043	1	07
4806133	0.400	1	19
4806716	0.060	2	15
4807378	0.360	1	01
4808080	0.320	2	07
4808268	0.400	1	14
4809519	0.400	1	14
4809603	0.400	1	13
4809524	0.080	1	04
4811045	0.083	1	03
4811892	0.040	3	08
4812047	0.060	1	24
4813001	0.077	1	02
4813370	0.320	1	01
4813442	0.320	2	06
4813566	0.077	1	03
4813652	0.300	1	01
4813654	0.300	1	04
4814180	0.400	1	13
4814703	0.060	1	01
4814845	0.040	1	06
4814847	0.203	1	06
4814848	0.203	1	07
4815584	0.305	1	01
4815585	0.305	1	11
4816108	0.040	3	04
4817438	0.042	1	05
4817756	0.240	1	00
4817788	0.240	2	10
4817998	0.077	1	04
4818862	0.060	1	08
4819721	0.340	1	04
4820056	0.310	1	06
4821051	0.149	1	01
4822134	0.077	1	05
4823210	0.326	1	06
4823212	0.326	1	07
4823497	0.203	1	08
4824165	0.149	1	07
4824218	0.120	1	07

B-4

NUMERICAL INDEX - INDICE NUMERICO - LISTE NUMERIQUE
NUMERISCHES ERSATZEILVERZEILVERZEICHNIS - INDICE NUMERICO

PART. N	SGR.	TAV.	ITEM
4824416	0.060	2	16
4824417	0.060	2	16
4824476	0.203	1	09
4824539	0.040	1	07
4824586	0.140	1	07
4830629	0.323	1	03
4830631	0.240	1	03
4830930	0.345	1	01
4832321	0.060	1	09
4833907	0.140	1	08
4836317	0.060	1	02
4838482	0.326	1	14
4838660	0.060	2	06
4838782	0.140	1	06
4840138	0.345	1	10
4842030	0.084	1	04
4842033	0.345	1	14
4842338	0.345	1	02
4842339	0.345	1	04
4842403	0.060	2	09
4842696	0.043	2	05
4842703	0.305	2	01
4842704	0.305	2	05
4842705	0.305	2	09
4842710	0.326	1	01
4843497	0.345	1	07
4845136	0.060	1	04
4845548	0.340	1	01
4845740	0.323	1	13
4847102	0.042	1	12
4847926	0.323	1	01
4850650	0.043	1	07
4854716	0.323	1	02
4952483	1.300	1	32
4952483	1.300	2	15
4952483	3.000	1	12
4971843	2.030	5	18B
4976587	1.010	1	11
4982514	0.004	1	33
4982514	1.010	1	14
4982514	1.080	1	33
4982514	1.081	1	48
4982514	1.083	1	29
4982514	1.290	1	06
4982514	5.0020	2	50
4991456	1.220	2	08
7302776	0.320	2	04
8110544	0.021	1	09
8110982	0.323	1	18
8110983	0.000	1	01
8110984	0.000	1	02
8110985	0.000	1	05
8111002	0.000	1	07
8111003	0.000	1	04
8111007	0.345	1	20
8272791	1.082	1	24
8272791	5.0020	2	76
8293408	2.030	1	09
9917954	0.140	3	01
9917955	0.140	3	02
9917979	0.140	4	07
9918092	0.140	4	07
9918094	0.140	4	07
9927795	0.360	2	02
9962261	0.140	5	13
10039470	5.0020	1	19
10100220	2.000	1	09
10100230	1.000	1	10
10100230	2.000	1	09
10100230	2.003	2	14
10100230	5.0022	2	14
10160401	0.345	1	06
10160701	0.040	-	08
10181711	0.203	1	10
10184311	0.203	1	11
10205910	0.120	1	09
10260060	0.203	1	12
10260060	0.310	2	09
10260160	0.071	1	11
10260160	0.140	1	09
10260160	0.203	1	13
10262760	0.140	1	10
10263360	0.326	1	17
10263460	1.220	2	67
10265060	0.042	1	11
10265060	1.220	2	72
10265460	0.040	2	05
10269850	0.071	1	04
10276111	0.042	1	10
10278311	0.040	3	05
10278660	0.323	1	23
10278660	0.326	1	20
10278660	1.220	2	77
10279560	0.071	1	05
10280060	0.203	1	14
10284460	5.0025	1	14
10296160	0.203	1	15
10296260	0.040	3	06
10298460	0.040	2	06
10300511	0.040	2	07
10338930	2.020	1	07
10396980	1.300	1	58
10398180	1.300	2	39
10399480	1.070	1	24
10399480	1.200	1	46
10400080	1.300	1	64
10418301	5.0038	2	56
10450390	0.305	2	06
10450690	0.045	1A	03
10516470	5.0160	1	13
10516874	1.010	1	18
10516874	1.040	2	29
10516874	1.070	1	35
10516874	1.070	1	63
10516874	1.082	1	02
10516874	1.083	1	03
10516874	1.084	1	22
10516874	1.210	1	51
10516874	2.030	2	09
10516874	2.030	3	09
10516874	2.030	5	09
10516874	5.0020	1	03
10516874	5.0020	2	03
10516874	5.0039	2	47
10517070	3.020	1	12
10517074	1.050	1	07
10517074	1.060	1	02
10517074	1.081	1	54
10517074	2.030	1	29
10517074	2.030	2	12
10517074	2.030	3	12
10517074	2.030	4	07
10517074	2.030	5	07
10517074	3.060	1	01
10517074	3.070	1	09
10517074	5.0020	2	63
10517174	1.050	1	02
10517270	3.020	1	15
10517274	1.082	1	23
10517274	3.000	1	22
10517274	3.010	1	01
10517274	5.0020	2	78
10519601	0.043	1	08
10519601	0.071	1	06

SUBGROUP	GRID
0.000 TAV1	1C-11
0.000 TAV1	1C-12
0.001 TAV1	1C-13
0.001 TAV1	1C-14
0.002 TAV1	1C-15
0.002 TAV1	1C-16
0.003 TAV1	1C-17
0.003 TAV1	1C-18
0.003 TAV2	1C-19
0.003 TAV2	1C-20
0.003 TAV3	1C-21
0.003 TAV3	1C-22
0.004 TAV1	1C-23
0.004 TAV1	1C-24
0.021 TAV1	1D-3
0.021 TAV1	1D-4
0.040 TAV1	1D-5
0.040 TAV1	1D-6
0.040 TAV2	1D-7
0.040 TAV2	1D-8
0.040 TAV3	1D-9
0.040 TAV3	1D-10
0.042 TAV1	1D-11
0.042 TAV1	1D-12
0.043 TAV1	1D-13
0.043 TAV1	1D-14
0.043 TAV2	1D-15
0.043 TAV2	1D-16
0.046 TAV1	1D-17
0.045 TAV1	1D-18
0.045 TAV1A	1D-19
0.045 TAV1A	1D-20
0.060 TAV1	1D-21
0.060 TAV1	1D-22
0.060 TAV2	1D-23
0.060 TAV2	1D-24
0.071 TAV1	1E-3
0.071 TAV1	1E-4
0.077 TAV1	1E-5
0.077 TAV1	1E-6
0.080 TAV1	1E-7
0.080 TAV1	1E-8
0.081 TAV1	1E-9
0.081 TAV1	1E-10
0.082 TAV1	1E-11
0.082 TAV1	1E-12
0.083 TAV1	1E-13
0.083 TAV1	1E-14
0.084 TAV1	1E-15
0.084 TAV1	1E-16
0.100 TAV1	1E-17
0.100 TAV1	1E-18
0.120 TAV1	1E-19
0.120 TAV1	1E-20
0.140 TAV1	1E-21
0.140 TAV1	1E-22
0.140 TAV2	1E-23
0.140 TAV2	1E-24
0.140 TAV3	1F-3
0.140 TAV3	1F-4
0.140 TAV4	1F-5
0.140 TAV4	1F-6
0.140 TAV5	1F-7
0.140 TAV6	1F-8
0.149 TAV1	1F-9
0.149 TAV1	1F-10
0.200 TAV1	1F-11
0.200 TAV1	1F-12
0.201 TAV1	1F-13
0.201 TAV1	1F-14
0.203 TAV1	1F-15
0.203 TAV1	1F-16
0.240 TAV1	1F-17
0.240 TAV1	1F-18
0.240 TAV2	1F-19
0.240 TAV2	1F-20
0.241 TAV1	1F-21
0.241 TAV1	1F-22
0.300 TAV1	1F-23
0.300 TAV1	1F-24
0.302 TAV1	1G-3
0.302 TAV1	1G-4
0.305 TAV1	1G-5
0.305 TAV1	1G-6
0.305 TAV2	1G-7
0.305 TAV2	1G-8
0.310 TAV1	1G-9
0.310 TAV1	1G-10
0.310 TAV2	1G-11
0.310 TAV2	1G-12
0.320 TAV1	1G-13
0.320 TAV1	1G-14
0.320 TAV2	1G-15
0.320 TAV2	1G-16
0.329 TAV1	1G-17
0.323 TAV1	1G-18
0.326 TAV1	1G-19
0.326 TAV1	1G-20
0.340 TAV1	1G-21
0.340 TAV1	1G-22
0.345 TAV1	1G-23
0.345 TAV1	1G-24
0.350 TAV1	1H-3
0.350 TAV1	1H-4
0.360 TAV1	1H-5
0.360 TAV1	1H-6
0.360 TAV2	1H-7
0.360 TAV2	1H-8
0.400 TAV1	1H-9
0.400 TAV1	1H-10
0.400 TAV2	1H-11
0.400 TAV2	1H-12
0.400 TAV3	1H-13
0.400 TAV3	1H-14
0.450 TAV1	1H-15
0.450 TAV1	1H-16
1.000 TAV1	1I-3
1.000 TAV1	1I-4
1.010 TAV1	1I-6
1.010 TAV1	1I-6
1.020 TAV1	1I-7
1.020 TAV1	1I-8
1.030 TAV1	1I-9
1.030 TAV1	1I-10
1.030 TAV2	1I-11
1.030 TAV2	1I-12
1.030 TAV3	1I-13
1.030 TAV3	1I-14
1.030 TAV4	1I-15
1.030 TAV4	1I-16
1.030 TAV5	1I-17
1.030 TAV6	1I-18
1.030 TAV6	1I-19
1.030 TAV6	1I-20
1.030 TAV7	1I-21
1.030 TAV7	1I-22
1.030 TAV8	1I-23
1.030 TAV8	1I-24
1.040 TAV1	1J-3
1.040 TAV1	1J-4
1.040 TAV2	1J-5
1.040 TAV2	1J-6
1.040 TAV3	1J-7
1.040 TAV3	1J-8
1.040 TAV3	1J-9
1.040 TAV3	1J-10
1.040 TAV4	1J-11
1.040 TAV4	1J-12
1.050 TAV1	1J-13
1.050 TAV1	1J-14
1.050 TAV1	1J-15
1.050 TAV1	1J-16
1.050 TAV2	1J-17
1.050 TAV2	1J-18
1.050 TAV3	1J-19
1.050 TAV3	1J-20
1.050 TAV4	1J-21
1.050 TAV4	1J-22
1.050 TAV5	1J-23
1.050 TAV5	1J-24
1.060 TAV1	1K-3
1.060 TAV1	1K-4
1.070 TAV1	1K-5
1.070 TAV1	1K-6
1.070 TAV2	1K-7
1.070 TAV2	1K-8
1.070 TAV3	1K-9
1.070 TAV3	1K-10
1.080 TAV1	1K-11
1.080 TAV1	1K-12
1.080 TAV2	1K-13
1.080 TAV2	1K-14
1.081 TAV1	1K-15
1.081 TAV1	1K-16
1.081 TAV2	1K-17
1.081 TAV2	1K-18
1.082 TAV1	1K-19
1.082 TAV1	1K-20
1.082 TAV1	1K-21
1.082 TAV1	1K-22
1.082 TAV2	1K-23
1.082 TAV2	1K-24
1.082 TAV3	1L-3
1.082 TAV3	1L-4
1.083 TAV1	1L-5
1.083 TAV1	1L-6
1.084 TAV1	1L-7
1.084 TAV1	1L-8
1.200 TAV1	2D-3
1.200 TAV1	2D-4
1.200 TAV2	2D-5
1.200 TAV2	2D-6
1.200 TAV3	2D-7
1.200 TAV3	2D-8
1.210 TAV1	2D-9
1.210 TAV1	2D-10
1.220 TAV1	2D-11
1.220 TAV1	2D-12
1.220 TAV2	2D-13
1.220 TAV2	2D-14
1.220 TAV2	2D-15
1.220 TAV2	2D-16
1.220 TAV3	2D-17
1.220 TAV3	2D-18
1.220 TAV4	2D-19
1.220 TAV4	2D-20
1.250 TAV1	2D-21
1.250 TAV1	2D-22
1.250 TAV2	2D-23
1.250 TAV2	2D-24
1.250 TAV4	2E-3
1.250 TAV4	2E-4
1.250 TAV4	2E-5
1.250 TAV4	2E-6
1.250 TAV5	2E-7
1.250 TAV6	2E-8
1.250 TAV6	2E-9
1.250 TAV6	2E-10
1.250 TAV7	2E-11
1.250 TAV7	2E-12
1.250 TAV7	2E-13
1.250 TAV7	2E-14
1.290 TAV1	2E-15
1.290 TAV1	2E-16
1.290 TAV2	2E-17
1.290 TAV2	2E-18
1.300 TAV1	2E-19
1.300 TAV1	2E-20
1.300 TAV2	2E-21
1.300 TAV2	2E-22
1.300 TAV3	2E-23
1.300 TAV3	2E-24
2.000 TAV1	2F-3
2.000 TAV1	2F-4
2.003 TAV1	2F-5
2.003 TAV1	2F-6
2.003 TAV2	2F-7
2.003 TAV2	2F-8
2.020 TAV1	2F-9
2.020 TAV1	2F-10
2.020 TAV1	2F-11
2.020 TAV1	2F-12
2.030 TAV1	2F-13
2.030 TAV1	2F-14
2.030 TAV2	2F-15
2.030 TAV2	2F-16
2.030 TAV3	2F-17
2.030 TAV3	2F-18
2.030 TAV4	2F-19
2.030 TAV4	2F-20
2.030 TAV5	2F-21
2.030 TAV5	2F-22
2.040 TAV1	2F-23
2.040 TAV1	2F-24
3.000 TAV1	2G-3
3.000 TAV1	2G-4
3.010 TAV1	2G-5
3.010 TAV1	2G-6
3.010 TAV2	2G-7
3.010 TAV2	2G-8
3.010 TAV3	2G-9
3.010 TAV3	2G-10
3.010 TAV4	2G-11
3.010 TAV4	2G-12
3.010 TAV5	2G-13
3.010 TAV5	2G-14
3.020 TAV1	2G-15
3.020 TAV1	2G-16
3.030 TAV1	2G-17
3.030 TAV1	2G-18
3.040 TAV1	2G-19
3.040 TAV1	2G-20
3.050 TAV1	2G-21
3.050 TAV1	2G-22
3.060 TAV1	2G-23
3.060 TAV1	2G-24
3.060 TAV2	2H-3
3.060 TAV2	2H-4
3.070 TAV1	2H-5
3.070 TAV1	2H-6
4.000 TAV1	2H-7
4.000 TAV1	2H-8
4.500 TAV1	2H-9
4.500 TAV1	2H-10
5.0020TAV1	2H-11
5.0020TAV1	2H-12
5.0020TAV2	2H-13
5.0020TAV2	2H-14
5.0022TAV1	2H-15
5.0022TAV1	2H-16
5.0022TAV2	2H-17
5.0022TAV2	2H-18
5.0025TAV1	2H-19
5.0025TAV1	2H-20
5.0036TAV1	2H-21
5.0036TAV1	2H-22
5.0039TAV2	2H-23
5.0039TAV2	2H-24
5.0151TAV1	2I-3
5.0151TAV1	2I-4
5.0536TAV1	2I-5
5.0536TAV1	2I-6
5.0540TAV1	2I-7
5.0540TAV1	2I-8
5.0083TAV1	2I-9
5.0083TAV1	2I-10

NUMERICAL INDEX - INDICE NUMERICO - LISTE NUMERIQUE
NUMERISCHES ERSATZEILVERZEILVERZEICHNIS - INDICE NUMERICO

PART. N.	SQR.	TAV.	ITEM
10519601	0.140	2	15
10519601	0.305	1	09
10519601	0.305	2	07
10519601	0.310	1	04
10519601	0.310	2	03
10519621	0.077	1	06
10519621	0.201	1	03
10519621	0.326	1	15
10519660	0.060	1	10
10571274	1.200	3	38
10571374	1.220	1	13
10571374	1.220	2	56
10571374	1.250	8	24
10571374	1.290	1	12
10571376	1.200	3	20
10571474	1.200	3	34
10571474	1.220	2	15
10571476	1.200	3	22
10571574	0.004	1	31
10571574	1.070	1	02
10571574	1.200	1	05
10571574	1.200	3	29
10571574	1.200	3	17
10571574	1.210	1	05
10571574	1.220	1	00
10571574	1.220	2	18
10571576	1.200	1	42
10571576	1.210	1	41
10571774	0.003	3	111
10571774	0.004	1	18
10571774	0.323	1	20
10571774	1.070	1	88
10571774	1.070	1	66
10571774	1.200	2	43
10571774	1.220	2	50
10571774	1.300	1	21
10571774	1.300	2	10
10571774	5.0151	1	10
10571779	0.201	1	04
10571779	5.0025	1	07
10571874	0.001	1	01
10571874	0.002	1	11
10571874	0.004	1	38
10571874	1.020	1	12
10571874	1.030	1	09
10571874	1.080	1	02
10571874	1.081	1	02
10571874	1.200	1	26
10571874	1.200	1	35
10571874	1.220	2	65
10571874	1.290	1	21
10571874	1.300	1	15
10571874	1.300	2	01
10571874	2.030	4	09
10571879	0.345	1	23
10571974	0.001	1	06
10571974	0.002	1	06
10571974	1.300	2	17
10571974	3.000	1	17
10571979	5.0025	1	04
10572074	0.004	1	34
10572074	1.000	1	26
10572074	1.040	2	32
10572074	2.020	1	06
10572174	0.003	1	04
10572174	1.010	1	03
10572174	1.020	1	03
10702811	0.201	1	05
10791021	0.004	1	27
10791311	0.400	2	08
10802806	5.0020	1	20
10839610	0.040	2	08
10839610	0.043	1	09
10839610	0.300	1	07
10839610	0.300	1	15
10839710	0.043	2	06
10863190	1.220	1	02A
10902134	1.200	1	10
10902134	1.200	3	16
10902134	1.210	1	06
10902234	1.070	1	01
10902321	0.350	1	10
10902421	0.240	2	17
10902824	0.043	1	10
10977534	1.200	3	32
10977834	1.220	2	25
10978221	0.203	1	16
10979234	0.002	1	10
10979234	1.082	1	60
10979234	1.084	1	21
10979234	1.220	2	63
10979234	1.290	1	31
10979234	1.300	2	41
10979334	1.010	1	17
10979334	1.070	1	81
10979334	1.220	2	06
10979434	5.0038	2	57
11054690	1.200	3	13
11054690	1.200	3	13
11054690	1.200	3	13
11054990	1.200	3	13
11060476	1.050	1	32
11061576	0.345	1	16
11066276	0.004	1	25
11066575	0.060	2	17
11067776	1.300	3	08
11067974	1.070	1	76
11098634	2.030	2	08
11098634	2.030	3	08
11106034	0.001	1	02
11106034	1.000	1	21
11106034	1.030	1	07
11106034	1.080	1	36
11106034	1.081	1	44
11106034	1.082	1	12
11106034	1.200	1	34
11106034	1.210	1	36
11106034	1.300	1	14
11106034	1.300	2	02
11106134	1.020	1	11
11106234	0.001	1	14
11106234	0.002	1	10
11106234	1.000	1	21
11106234	1.200	1	25
11106234	1.210	1	50
11106234	1.220	2	05

NUMERICAL INDEX - INDICE NUMERICO - LISTE NUMERIQUE
NUMERISCHES ERSATZEILVERZEILVERZEICHNIS - INDICE NUMERICO

PART. N.	SGR.	TAV.	ITEM
11106234	1.290	1	01
11106234	5.0020	1	10
11106434	0.004	1	37
11106434	1.070	1	31
11106434	1.080	1	01
11106434	1.082	1	13
11106434	1.250	1	47
11106434	1.300	1	59
11106434	2.030	2	08
11106434	2.030	3	08
11106434	2.040	1	04
11106534	1.030	1	08
11106634	1.070	1	58
11106634	1.082	1	52
11106634	1.083	1	02
11106634	1.084	1	26
11106634	2.030	4	08
11106634	2.030	5	08
11106634	5.0020	1	02
11106634	5.0020	2	02
11106834	1.070	1	40
11106834	2.030	5	08
11107234	1.081	1	16
11107334	1.081	1	03
11107434	1.081	1	10
11107434	5.0038	2	46
11107734	1.082	1	01
11108234	1.080	1	10
11108234	5.0020	1	23
11112134	0.001	1	05
11112234	1.080	1	01
11112234	1.300	1	10
11112234	1.300	2	30
11112234	3.000	1	11
11112434	1.300	2	16
11112434	3.060	1	02
11112434	5.0025	1	03
11112621	3.020	1	13
11112634	1.050	1	08
11112834	0.002	1	05
11112834	1.060	1	18
11112834	3.070	1	16
11113034	1.061	1	53
11113034	1.300	1	37
11113034	2.030	5	06
11113034	3.070	1	08
11113234	1.060	1	10
11113234	2.030	1	23
11113234	2.030	4	06
11113234	2.030	5	06
11113234	5.0020	2	62
11113334	1.050	1	24
11113334	2.030	4	06
11113334	3.000	1	10
11113434	1.060	1	12
11113434	5.0020	2	80
11113534	1.050	1	47
11113534	2.030	2	11
11113534	2.030	3	11
11115534	1.050	1	01
11115634	0.000	1	06
11115634	1.000	1	27
11115834	2.020	1	05
[illegible]8534	0.003	1	09
[illegible]8534	1.010	1	02
11118534	1.020	1	01
11118534	3.000	1	21
11118534	3.030	1	01
11118711	3.020	1	16
11119334	3.010	1	02
11119534	1.020	1	02
11119774	3.040	1	01
11119934	3.000	1	06
11120934	0.000	1	10
11127534	0.003	1	03
11127534	0.003	1	09
11127534	3.030	1	01
11190571	0.241	1	04
11190571	0.320	1	05
11190571	0.345	1	13
11190579	0.305	2	12
11190579	0.360	1	02
11190579	0.400	1	12
11190579	0.450	1	03
11193871	0.040	2	09
11193871	0.040	3	07
11193871	0.043	2	07
11193871	0.120	1	09
11193871	0.140	1	11
11193871	0.240	2	05
11193871	0.300	1	03
11193871	0.305	1	05
11193871	0.320	2	08
11193871	0.323	1	04
11193871	0.323	1	12
11193871	0.340	1	03
11193871	0.350	1	05
11193871	0.450	1	07
11193874	0.043	2	08
11193874	0.060	1	21
11193874	0.305	2	04
11193874	0.326	1	10
11193879	0.300	1	10
11193879	0.400	1	03
11194171	0.140	2	16
11195470	0.203	1	17
11197771	0.043	1	11
11197771	0.240	2	18
11197771	0.350	1	11
11198071	0.060	2	18
11198071	0.300	1	19
11198371	0.043	2	09
11198371	0.084	1	05
11198371	0.200	1	05
11198371	0.240	2	20
11198371	0.310	1	11
11198371	0.323	1	17
11198371	0.345	1	09
11198374	0.042	1	06
11198374	0.326	1	05
11198679	0.400	1	05
11200171	0.043	2	10
11288024	0.084	1	06
11288024	0.345	1	12
11306921	0.043	2	11
11306924	0.042	1	07
11306924	0.200	1	06
11306924	0.360	1	03
11306924	1.030	1	05
11307024	0.042	1	08
11307024	0.326	1	04
11307024	0.345	1	11
11343724	0.042	1	09
11408321	0.043	2	12
11701721	0.002	1	02
11701721	0.004	1	10
11701721	1.082	1	55
11701721	1.300	1	38
11702921	0.002	1	07
11702921	1.050	1	22
11702921	1.060	1	13
11702921	1.300	1	20
11702921	5.0020	2	79
11797821	0.040	2	10
11903011	0.071	1	10
11903717	0.203	1	18
12077086	0.323	1	07

SUBGROUP	GRID
0.000 TAV1	1C-11
0.000 TAV1	1C-12
0.001 TAV1	1C-13
0.001 TAV1	1C-14
0.002 TAV1	1C-15
0.002 TAV1	1C-16
0.003 TAV1	1C-17
0.003 TAV1	1C-18
0.003 TAV2	1C-19
0.003 TAV2	1C-20
0.003 TAV3	1C-21
0.003 TAV3	1C-22
0.004 TAV1	1C-23
0.004 TAV1	1C-24
0.021 TAV1	1D-3
0.021 TAV1	1D-4
0.040 TAV1	1D-5
0.040 TAV1	1D-6
0.040 TAV2	1D-7
0.040 TAV2	1D-8
0.040 TAV3	1D-9
0.040 TAV3	1D-10
0.042 TAV1	1D-11
0.042 TAV1	1D-12
0.043 TAV1	1D-13
0.043 TAV1	1D-14
0.043 TAV2	1D-15
0.043 TAV2	1D-16
0.045 TAV1	1D-17
0.045 TAV1	1D-18
0.045 TAV1A	1D-19
0.045 TAV1A	1D-20
0.060 TAV1	1D-21
0.060 TAV1	1D-22
0.060 TAV2	1D-23
0.060 TAV2	1D-24
0.071 TAV1	1E-3
0.071 TAV1	1E-4
0.077 TAV1	1E-5
0.077 TAV1	1E-6
0.080 TAV1	1E-7
0.080 TAV1	1E-8
0.081 TAV1	1E-9
0.081 TAV1	1E-10
0.082 TAV1	1E-11
0.082 TAV1	1E-12
0.083 TAV1	1E-13
0.083 TAV1	1E-14
0.084 TAV1	1E-15
0.084 TAV1	1E-16
0.100 TAV1	1E-17
0.100 TAV1	1E-18
0.120 TAV1	1E-19
0.120 TAV1	1E-20
0.140 TAV1	1E-21
0.140 TAV1	1E-22
0.140 TAV2	1E-23
0.140 TAV2	1E-24
0.140 TAV3	1F-3
0.140 TAV3	1F-4
0.140 TAV4	1F-5
0.140 TAV4	1F-6
0.140 TAV5	1F-7
0.140 TAV5	1F-8
0.149 TAV1	1F-9
0.149 TAV1	1F-10
0.200 TAV1	1F-11
0.200 TAV1	1F-12
0.201 TAV1	1F-13
0.201 TAV1	1F-14
0.203 TAV1	1F-15
0.203 TAV1	1F-16
0.240 TAV1	1F-17
0.240 TAV1	1F-18
0.240 TAV2	1F-19
0.240 TAV2	1F-20
0.241 TAV1	1F-21
0.241 TAV1	1F-22
0.300 TAV1	1F-23
0.300 TAV1	1F-24
0.302 TAV1	1G-3
0.302 TAV1	1G-4
0.305 TAV1	1G-5
0.305 TAV1	1G-6
0.305 TAV2	1G-7
0.305 TAV2	1G-8
0.310 TAV1	1G-9
0.310 TAV1	1G-10
0.310 TAV2	1G-11
0.310 TAV2	1G-12
0.320 TAV1	1G-13
0.320 TAV1	1G-14
0.320 TAV2	1G-15
0.320 TAV2	1G-16
0.323 TAV1	1G-17
0.323 TAV1	1G-18
0.326 TAV1	1G-19
0.326 TAV1	1G-20
0.340 TAV1	1G-21
0.340 TAV1	1G-22
0.345 TAV1	1G-23
0.345 TAV1	1G-24
0.350 TAV1	1H-3
0.350 TAV1	1H-4
0.360 TAV1	1H-5
0.360 TAV1	1H-6
0.360 TAV2	1H-7
0.360 TAV2	1H-8
0.400 TAV1	1H-9
0.400 TAV1	1H-10
0.400 TAV2	1H-11
0.400 TAV2	1H-12
0.400 TAV3	1H-13
0.400 TAV3	1H-14
0.450 TAV1	1H-15
0.450 TAV1	1H-16
1.000 TAV1	1I-3
1.000 TAV1	1I-4
1.010 TAV1	1I-5
1.010 TAV1	1I-6
1.020 TAV1	1I-7
1.020 TAV1	1I-8
1.030 TAV1	1I-9
1.030 TAV1	1I-10
1.030 TAV2	1I-11
1.030 TAV2	1I-12
1.030 TAV3	1I-13
1.030 TAV3	1I-14
1.030 TAV4	1I-15
1.030 TAV4	1I-16
1.030 TAV5	1I-17
1.030 TAV5	1I-18
1.030 TAV6	1I-19
1.030 TAV6	1I-20
1.030 TAV7	1I-21
1.030 TAV7	1I-22
1.030 TAV8	1I-23
1.030 TAV8	1I-24
1.040 TAV1	1J-3
1.040 TAV1	1J-4
1.040 TAV2	1J-5
1.040 TAV2	1J-6
1.040 TAV3	1J-7
1.040 TAV3	1J-8
1.040 TAV3	1J-9
1.040 TAV3	1J-10
1.040 TAV4	1J-11
1.040 TAV4	1J-12
1.050 TAV1	1J-13
1.050 TAV1	1J-14
1.050 TAV1	1J-15
1.050 TAV1	1J-16
1.050 TAV2	1J-17
1.050 TAV2	1J-18
1.050 TAV3	1J-19
1.050 TAV3	1J-20
1.050 TAV4	1J-21
1.050 TAV4	1J-22
1.050 TAV5	1J-23
1.050 TAV5	1J-24
1.060 TAV1	1K-3
1.060 TAV1	1K-4
1.070 TAV1	1K-5
1.070 TAV1	1K-6
1.070 TAV2	1K-7
1.070 TAV2	1K-8
1.070 TAV3	1K-9
1.070 TAV3	1K-10
1.080 TAV1	1K-11
1.080 TAV1	1K-12
1.080 TAV2	1K-13
1.080 TAV2	1K-14
1.081 TAV1	1K-15
1.081 TAV1	1K-16
1.081 TAV2	1K-17
1.081 TAV2	1K-18
1.082 TAV1	1K-19
1.082 TAV1	1K-20
1.082 TAV1	1K-21
1.082 TAV1	1K-22
1.082 TAV2	1K-23
1.082 TAV2	1K-24
1.082 TAV3	1L-3
1.082 TAV3	1L-4
1.083 TAV1	1L-5
1.083 TAV1	1L-6
1.084 TAV1	1L-7
1.084 TAV1	1L-8
1.200 TAV1	2D-3
1.200 TAV1	2D-4
1.200 TAV2	2D-5
1.200 TAV2	2D-6
1.200 TAV3	2D-7
1.200 TAV3	2D-8
1.210 TAV1	2D-9
1.210 TAV1	2D-10
1.220 TAV1	2D-11
1.220 TAV1	2D-12
1.220 TAV2	2D-13
1.220 TAV2	2D-14
1.220 TAV2	2D-15
1.220 TAV2	2D-16
1.220 TAV3	2D-17
1.220 TAV3	2D-18
1.220 TAV4	2D-19
1.220 TAV4	2D-20
1.250 TAV1	2D-21
1.250 TAV1	2D-22
1.250 TAV2	2D-23
1.250 TAV2	2D-24
1.250 TAV4	2E-3
1.250 TAV4	2E-4
1.250 TAV4	2E-5
1.250 TAV4	2E-6
1.250 TAV5	2E-7
1.250 TAV5	2E-8
1.250 TAV6	2E-9
1.250 TAV6	2E-10
1.250 TAV7	2E-11
1.250 TAV7	2E-12
1.250 TAV7	2E-13
1.250 TAV7	2E-14
1.290 TAV1	2E-15
1.290 TAV1	2E-16
1.290 TAV2	2E-17
1.290 TAV2	2E-18
1.300 TAV1	2E-19
1.300 TAV1	2E-20
1.300 TAV2	2E-21
1.300 TAV2	2E-22
1.300 TAV3	2E-23
1.300 TAV3	2E-24
2.000 TAV1	2F-3
2.000 TAV1	2F-4
2.003 TAV1	2F-5
2.003 TAV1	2F-6
2.003 TAV2	2F-7
2.003 TAV2	2F-8
2.020 TAV1	2F-9
2.020 TAV1	2F-10
2.020 TAV1	2F-11
2.020 TAV1	2F-12
2.030 TAV1	2F-13
2.030 TAV1	2F-14
2.030 TAV2	2F-15
2.030 TAV2	2F-16
2.030 TAV3	2F-17
2.030 TAV3	2F-18
2.030 TAV4	2F-19
2.030 TAV4	2F-20
2.030 TAV5	2F-21
2.030 TAV5	2F-22
2.040 TAV1	2F-23
2.040 TAV1	2F-24
3.000 TAV1	2G-3
3.000 TAV1	2G-4
3.010 TAV1	2G-5
3.010 TAV1	2G-6
3.010 TAV2	2G-7
3.010 TAV2	2G-8
3.010 TAV3	2G-9
3.010 TAV3	2G-10
3.010 TAV4	2G-11
3.010 TAV4	2G-12
3.010 TAV5	2G-13
3.010 TAV5	2G-14
3.020 TAV1	2G-15
3.020 TAV1	2G-16
3.030 TAV1	2G-17
3.030 TAV1	2G-18
3.040 TAV1	2G-19
3.040 TAV1	2G-20
3.050 TAV1	2G-21
3.050 TAV1	2G-22
3.060 TAV1	2G-23
3.060 TAV1	2G-24
3.060 TAV2	2H-3
3.060 TAV2	2H-4
3.070 TAV1	2H-5
3.070 TAV1	2H-6
4.000 TAV1	2H-7
4.000 TAV1	2H-8
4.500 TAV1	2H-9
4.500 TAV1	2H-10
5.0020TAV1	2H-11
5.0020TAV1	2H-12
5.0020TAV2	2H-13
5.0020TAV2	2H-14
5.0022TAV1	2H-15
5.0022TAV1	2H-16
5.0022TAV2	2H-17
5.0022TAV2	2H-18
5.0025TAV1	2H-19
5.0025TAV1	2H-20
5.0038TAV1	2H-21
5.0038TAV1	2H-22
5.0038TAV2	2H-23
5.0038TAV2	2H-24
5.0151TAV1	2I-3
5.0151TAV1	2I-4
5.0536TAV1	2I-5
5.0536TAV1	2I-6
5.0540TAV1	2I-7
5.0540TAV1	2I-8
5.0083TAV1	2I-9
5.0083TAV1	2I-10

NUMERICAL INDEX - INDICE NUMERICO - LISTE NUMERIQUE
NUMERISCHES ERSATZEILVERZEILVERZEICHNIS - INDICE NUMERICO

PART. N.	SGR.	TAV.	ITEM
12163221	1.070	1	10
12163321	0.000	1	11
12163321	0.004	1	06
12164011	0.043	2	13
12164021	0.004	1	35
12164711	0.200	1	07
12164711	0.305	2	11
12164711	0.345	1	09
12164711	0.400	1	09
12164721	1.030	1	19
12173790	0.240	2	14
12174790	0.241	1	06
12181390	0.240	2	14
12182190	0.323	1	09
12182890	0.045	1	06
12601374	1.030	1	15
12601474	1.030	1	06
12601474	1.030	1	20
12626021	0.201	1	06
12638601	0.043	1	12
12643731	1.200	1	04
12644321	1.300	1	31
12646801	0.400	1	11
13270224	1.200	3	36
13271917	1.200	3	19
13272024	1.220	2	14
13272214	1.250	8	37
13272214	1.290	1	11
13272224	1.220	1	12
13272224	1.220	2	55
13274217	1.200	3	21
13275914	1.200	3	24
13275924	1.200	3	27
13276024	1.220	1	09
13276124	1.220	2	17
13276217	1.200	1	41
13276417	1.200	1	45
13276417	1.210	1	43
13277017	1.200	1	38
13277017	1.210	1	40
13286111	1.210	1	24
13312917	1.210	1	23
13407211	2.003	2	19D
13407211	2.003	2	18D
13407211	2.003	2	17
13407211	2.030	4	18
13407211	2.030	5	12
13407211	2.040	1	08
13407211	4.000	1	00
13407211	5.0022	2	19D
13407211	5.0022	2	18D
13407211	5.0022	2	17
13407211	5.0038	2	17
13407211	5.0038	2	18D
13407211	5.0038	2	19D
13407811	2.030	2	31
13407811	2.030	3	31
13407811	2.030	4	18
13407811	2.030	5	29
13407811	4.000	1	01
13407811	5.0038	2	58
13516221	0.060	2	19
13516920	0.201	1	07
13517530	0.060	1	11
13517824	0.040	2	11
13543321	0.071	1	07
13543620	0.043	1	13
13543621	0.043	1	14
13546321	0.071	1	08
13546921	0.043	1	15
13683701	4.500	1	07
13739811	0.320	2	09
14048217	0.305	1	10
14048227	0.077	1	07
14084211	0.400	2	13
14165470	0.040	2	12
14169070	3.020	1	17
14176770	3.040	1	11
14177670	3.020	1	04
14196670	0.060	2	20
14233221	0.140	2	17
14278934	1.030	1	04
14282170	0.060	1	12
14282470	0.060	1	13
14282770	0.040	1	09
14282970	0.060	1	14
14306221	5.0151	1	09
14306434	1.060	1	08
14306434	2.030	2	04
14306434	2.030	3	04
14306434	2.030	5	04
14306434	5.0020	2	58
14311024	1.070	2	19
14323811	0.040	1	10
14323811	1.010	1	23
14323911	0.040	1	11
14323911	0.060	1	15
14325001	0.320	2	10
14325601	0.043	2	14
14325711	3.000	1	02
14326001	1.020	1	24
14326001	3.000	1	03
14327401	0.040	1	13
14328101	0.080	1	03
14328201	0.040	1	13
14328301	0.060	2	21
14328501	0.040	1	14
14328501	0.310	1	12
14329901	0.040	1	15
14420124	1.070	2	14
14420234	1.050	1	13
14420234	1.060	1	30
14420234	1.250	1	51
14420234	2.030	2	05
14420234	2.030	3	05
14420334	2.030	4	04
14420734	1.050	1	38
14420934	1.050	1	27
14422234	5.0081	1	22
14423434	1.200	1	33
14423434	1.210	1	35
14426334	1.050	1	52
14426631	2.030	2	30
14426631	2.030	3	30
14426631	2.030	5	19
14432934	1.050	1	26
14432434	1.300	1	22
14453599	0.149	1	09
14453981	0.060	1	16
14454381	0.400	2	12
14457281	0.300	1	16
14457481	0.310	1	07
14457581	0.310	1	02
14457680	0.042	1	13
14457681	0.305	1	13
14458281	0.310	2	04
14458680	0.201	1	08
14463280	1.030	1	11

NUMERICAL INDEX - INDICE NUMERICO - LISTE NUMERIQUE
NUMERISCHES ERSATZEILVERZEILVERZEICHNIS - INDICE NUMERICO

PART. N.	SGR.	TAV.	ITEM
14463281	0.326	1	12
14463281	0.326	1	12
14463880	0.043	2	15
14467480	1.020	1	09
14472380	2.030	5	21
14472680	2.030	2	22
14472680	2.030	3	22
14472980	2.030	4	25
14482580	1.020	1	22
14482780	1.020	1	16
14483080	0.043	2	16
14496321	1.200	3	33
14496406	1.200	1	43
14496406	1.210	1	42
14496421	1.200	3	28
14496421	1.220	1	01
14496431	1.200	1	08
14496431	1.210	1	04
14496521	0.003	3	113
14496531	0.002	1	14
14496531	1.070	1	71
14496531	1.200	2	42
14496531	1.220	2	11
14496531	1.300	1	26
14496531	1.300	2	05
14496531	5.0025	1	08
14496621	1.220	2	07
14496631	1.000	1	20
14496631	1.010	1	19
14496631	1.070	1	36
14496631	1.070	1	62
14496631	1.081	1	07
14496631	1.082	1	53
14496631	1.083	1	17
14496631	1.084	1	27
14496631	1.200	1	27
14496631	1.210	1	37
14496631	1.250	8	04
14496631	1.290	1	22
14496631	1.300	1	60
14496631	5.0020	1	12
14496631	5.0020	2	12
14496701	0.400	1	17
14496721	1.060	1	03
14496731	1.200	1	31
14496731	1.210	1	33
14496731	1.300	1	11
14496731	5.0025	1	05
14496731	5.0536	1	02
14496831	0.004	1	24
14496931	1.070	1	80
14497629	1.200	3	37
14497731	1.220	1	11
14497821	1.220	2	26
14499421	0.003	3	116
14522421	5.0083	1	03
14525021	5.0083	1	03
14534079	5.0083	1	21
14534279	5.0083	1	21
14534379	5.0083	1	21
14534479	5.0083	1	21
14534579	5.0083	1	21
14549579	5.0083	1	03
14549879	5.0083	1	03
14550079	5.0083	1	03
14582790	5.0083	1	26
14601470	1.070	1	42
14601470	5.0020	1	06
14607070	1.070	1	43
14607070	5.0020	1	07
14626090	5.0083	1	24
14626290	5.0083	1	25
14626671	5.0083	1	27
14761123	5.0152	1	07
15201934	1.040	2	31
15213934	5.0020	1	14
15215624	0.004	1	07
15224034	1.040	1	03
15238234	1.250	1	11
15541021	0.310	1	08
15541521	0.310	1	08
15541824	0.400	1	04
15645504	1.250	8	74
15687478	1.220	1	04
15840534	0.000	1	03
15888721	0.310	1	10
15888721	0.320	1	02
15888821	0.043	1	16
15896221	0.004	1	32
15970121	0.240	2	19
15970321	1.220	2	62
15970521	0.323	1	16
15970521	0.450	1	02
15970524	0.200	1	06
15970621	1.220	2	62
15970724	1.030	1	21
15970921	0.241	1	03
15970921	0.320	1	04
15970924	0.400	1	10
15970931	0.345	1	22
15971924	0.241	1	03
15972424	0.326	1	04
15987934	0.345	1	19
16040334	1.000	1	02
16040824	0.004	1	12
16043221	0.310	2	02
16043224	0.003	3	108
16043224	0.043	2	17
16043224	0.305	1	06
16043234	0.004	1	17
16043234	1.220	2	49
16043234	1.220	2	49
16043234	1.300	1	25
16043321	0.300	1	09
16043324	0.040	2	13
16043324	0.060	1	22
16043421	0.043	2	18
16043421	0.120	1	10
16043421	0.300	1	16
16043421	0.320	2	11
16043424	0.003	3	109
16043424	0.305	1	04
16043424	0.305	2	03
16043424	0.305	2	10
16043424	0.340	1	02
16043424	1.030	1	13
16043434	1.200	2	41
16043434	1.300	2	11
16043521	0.043	1	17
16043534	0.002	1	11
16043534	0.323	1	09
16043534	5.0025	1	05
16043621	0.140	2	18
16043621	0.240	2	12
16043621	0.310	2	07
16043621	0.323	1	11
16043624	0.003	3	115
16043624	0.040	3	08
16043624	0.326	1	09
16043821	0.043	1	17
16043934	1.230	2	10
16043921	0.043	1	19

SUBGROUP	GRID
0.000 TAV1	1C-11
0.000 TAV1	1C-12
0.001 TAV1	1C-13
0.001 TAV1	1C-14
0.002 TAV1	1C-15
0.002 TAV1	1C-16
0.003 TAV1	1C-17
0.003 TAV1	1C-18
0.003 TAV2	1C-19
0.003 TAV2	1C-20
0.003 TAV3	1C-21
0.003 TAV3	1C-22
0.004 TAV1	1C-23
0.004 TAV1	1C-24
0.021 TAV1	1D-3
0.021 TAV1	1D-4
0.040 TAV1	1D-5
0.040 TAV1	1D-6
0.040 TAV2	1D-7
0.040 TAV2	1D-8
0.040 TAV3	1D-9
0.040 TAV3	1D-10
0.042 TAV1	1D-11
0.042 TAV1	1D-12
0.043 TAV1	1D-13
0.043 TAV1	1D-14
0.043 TAV2	1D-15
0.043 TAV2	1D-16
0.045 TAV1	1D-17
0.045 TAV1	1D-18
0.045 TAV1A	1D-19
0.045 TAV1A	1D-20
0.060 TAV1	1D-21
0.060 TAV1	1D-22
0.060 TAV2	1D-23
0.060 TAV2	1D-24
0.071 TAV1	1E-3
0.071 TAV1	1E-4
0.077 TAV1	1E-5
0.077 TAV1	1E-6
0.080 TAV1	1E-7
0.080 TAV1	1E-8
0.081 TAV1	1E-9
0.081 TAV1	1E-10
0.082 TAV1	1E-11
0.082 TAV1	1E-12
0.083 TAV1	1E-13
0.083 TAV1	1E-14
0.084 TAV1	1E-15
0.084 TAV1	1E-16
0.100 TAV1	1E-17
0.100 TAV1	1E-18
0.120 TAV1	1E-19
0.120 TAV1	1E-20
0.140 TAV1	1E-21
0.140 TAV1	1E-22
0.140 TAV2	1E-23
0.140 TAV2	1E-24
0.140 TAV3	1F-3
0.140 TAV3	1F-4
0.140 TAV4	1F-5
0.140 TAV4	1F-6
0.140 TAV5	1F-7
0.140 TAV5	1F-8
0.149 TAV1	1F-9
0.149 TAV1	1F-10
0.200 TAV1	1F-11
0.200 TAV1	1F-12
0.201 TAV1	1F-13
0.201 TAV1	1F-14
0.203 TAV1	1F-15
0.203 TAV1	1F-16
0.240 TAV1	1F-17
0.240 TAV1	1F-18
0.240 TAV2	1F-19
0.240 TAV2	1F-20
0.241 TAV1	1F-21
0.241 TAV1	1F-22
0.300 TAV1	1F-23
0.300 TAV1	1F-24
0.302 TAV1	1G-3
0.302 TAV1	1G-4
0.305 TAV1	1G-5
0.305 TAV1	1G-6
0.305 TAV2	1G-7
0.305 TAV2	1G-8
0.310 TAV1	1G-9
0.310 TAV1	1G-10
0.310 TAV2	1G-11
0.310 TAV2	1G-12
0.320 TAV1	1G-13
0.320 TAV1	1G-14
0.320 TAV2	1G-15
0.320 TAV2	1G-16
0.323 TAV1	1G-17
0.323 TAV1	1G-18
0.326 TAV1	1G-19
0.326 TAV1	1G-20
0.340 TAV1	1G-21
0.340 TAV1	1G-22
0.345 TAV1	1G-23
0.345 TAV1	1G-24
0.350 TAV1	1H-3
0.350 TAV1	1H-4
0.360 TAV1	1H-5
0.360 TAV1	1H-6
0.360 TAV2	1H-7
0.360 TAV2	1H-8
0.400 TAV1	1H-9
0.400 TAV1	1H-10
0.400 TAV2	1H-11
0.400 TAV2	1H-12
0.400 TAV3	1H-13
0.400 TAV3	1H-14
0.460 TAV1	1H-15
0.460 TAV1	1H-16
1.000 TAV1	1I-3
1.000 TAV1	1I-4
1.010 TAV1	1I-5
1.010 TAV1	1I-6
1.020 TAV1	1I-7
1.020 TAV1	1I-8
1.030 TAV1	1I-9
1.030 TAV1	1I-10
1.030 TAV2	1I-11
1.030 TAV2	1I-12
1.030 TAV3	1I-13
1.030 TAV3	1I-14
1.030 TAV4	1I-15
1.030 TAV4	1I-16
1.030 TAV5	1I-17
1.030 TAV5	1I-18
1.030 TAV6	1I-19
1.030 TAV6	1I-20
1.030 TAV7	1I-21
1.030 TAV7	1I-22
1.030 TAV8	1I-23
1.030 TAV8	1I-24
1.040 TAV1	1J-3
1.040 TAV1	1J-4
1.040 TAV2	1J-5
1.040 TAV2	1J-6
1.040 TAV3	1J-7
1.040 TAV3	1J-8
1.040 TAV3	1J-9
1.040 TAV3	1J-10
1.040 TAV4	1J-11
1.040 TAV4	1J-12
1.050 TAV1	1J-13
1.050 TAV1	1J-14
1.050 TAV1	1J-16
1.050 TAV1	1J-16
1.050 TAV2	1J-17
1.050 TAV2	1J-18
1.050 TAV3	1J-19
1.050 TAV3	1J-20
1.050 TAV4	1J-21
1.050 TAV4	1J-22
1.050 TAV5	1J-23
1.050 TAV5	1J-24
1.060 TAV1	1K-3
1.060 TAV1	1K-4
1.070 TAV1	1K-5
1.070 TAV1	1K-6
1.070 TAV2	1K-7
1.070 TAV2	1K-8
1.070 TAV3	1K-9
1.070 TAV3	1K-10
1.080 TAV1	1K-11
1.080 TAV1	1K-12
1.080 TAV2	1K-13
1.080 TAV2	1K-14
1.081 TAV1	1K-15
1.081 TAV1	1K-16
1.081 TAV2	1K-17
1.081 TAV2	1K-18
1.082 TAV1	1K-19
1.082 TAV1	1K-20
1.082 TAV1	1K-21
1.082 TAV1	1K-22
1.082 TAV2	1K-23
1.082 TAV2	1K-24
1.082 TAV3	1L-3
1.082 TAV3	1L-4
1.083 TAV1	1L-5
1.083 TAV1	1L-6
1.084 TAV1	1L-7
1.084 TAV1	1L-8
1.200 TAV1	2D-3
1.200 TAV1	2D-4
1.200 TAV2	2D-5
1.200 TAV2	2D-6
1.200 TAV3	2D-7
1.200 TAV3	2D-8
1.210 TAV1	2D-9
1.210 TAV1	2D-10
1.220 TAV1	2D-11
1.220 TAV1	2D-12
1.220 TAV2	2D-13
1.220 TAV2	2D-14
1.220 TAV2	2D-15
1.220 TAV2	2D-16
1.220 TAV3	2D-17
1.220 TAV3	2D-18
1.220 TAV4	2D-19
1.220 TAV4	2D-20
1.250 TAV1	2D-21
1.250 TAV1	2D-22
1.250 TAV2	2D-23
1.250 TAV2	2D-24
1.250 TAV4	2E-3
1.250 TAV4	2E-4
1.250 TAV4	2E-5
1.250 TAV4	2E-6
1.250 TAV5	2E-7
1.250 TAV5	2E-8
1.250 TAV6	2E-9
1.250 TAV6	2E-10
1.250 TAV7	2E-11
1.250 TAV7	2E-12
1.250 TAV7	2E-13
1.250 TAV7	2E-14
1.290 TAV1	2E-15
1.290 TAV1	2E-16
1.290 TAV2	2E-17
1.290 TAV2	2E-18
1.300 TAV1	2E-19
1.300 TAV1	2E-20
1.300 TAV2	2E-21
1.300 TAV2	2E-22
1.300 TAV3	2E-23
1.300 TAV3	2E-24
2.000 TAV1	2F-3
2.000 TAV1	2F-4
2.003 TAV1	2F-5
2.003 TAV1	2F-6
2.003 TAV2	2F-7
2.003 TAV2	2F-8
2.020 TAV1	2F-9
2.020 TAV1	2F-10
2.020 TAV1	2F-11
2.020 TAV1	2F-12
2.030 TAV1	2F-13
2.030 TAV1	2F-14
2.030 TAV2	2F-15
2.030 TAV2	2F-16
2.030 TAV3	2F-17
2.030 TAV3	2F-18
2.030 TAV4	2F-19
2.030 TAV4	2F-20
2.030 TAV5	2F-21
2.030 TAV5	2F-22
2.040 TAV1	2F-23
2.040 TAV1	2F-24
3.000 TAV1	2G-3
3.000 TAV1	2G-4
3.010 TAV1	2G-5
3.010 TAV1	2G-6
3.010 TAV2	2G-7
3.010 TAV2	2G-8
3.010 TAV3	2G-9
3.010 TAV3	2G-10
3.010 TAV4	2G-11
3.010 TAV4	2G-12
3.010 TAV5	2G-13
3.010 TAV5	2G-14
3.020 TAV1	2G-15
3.020 TAV1	2G-16
3.030 TAV1	2G-17
3.030 TAV1	2G-18
3.040 TAV1	2G-19
3.040 TAV1	2G-20
3.050 TAV1	2G-21
3.050 TAV1	2G-22
3.060 TAV1	2G-23
3.060 TAV1	2G-24
3.060 TAV2	2H-3
3.060 TAV2	2H-4
3.070 TAV1	2H-5
3.070 TAV1	2H-6
4.000 TAV1	2H-7
4.000 TAV1	2H-8
4.500 TAV1	2H-9
4.500 TAV1	2H-10
5.0020TAV1	2H-11
5.0020TAV1	2H-12
5.0020TAV2	2H-13
5.0020TAV2	2H-14
5.0022TAV1	2H-15
5.0022TAV1	2H-16
5.0022TAV2	2H-17
5.0022TAV2	2H-18
5.0025TAV1	2H-19
5.0025TAV1	2H-20
5.0038TAV1	2H-21
5.0038TAV1	2H-22
5.0038TAV2	2H-23
5.0038TAV2	2H-24
5.0151TAV1	2I-3
5.0151TAV1	2I-4
5.0536TAV1	2I-5
5.0536TAV1	2I-6
5.0540TAV1	2I-7
5.0540TAV1	2I-8
5.0083TAV1	2I-9
5.0083TAV1	2I-10

NUMERICAL INDEX - INDICE NUMERICO - LISTE NUMERIQUE
NUMERISCHES ERSATZEILVERZEILVERZEICHNIS - INDICE NUMERICO

PART. N.	SGR.	TAV.	ITEM
16043921	0.043	2	19
16043921	0.071	1	09
16043921	0.240	2	04
16043921	0.323	1	14
16043924	0.305	1	14
16044024	0.040	3	11
16044024	0.450	1	05
16044034	1.300	2	36
16044221	0.043	1	19
16044224	0.400	1	02
16044321	0.300	1	02
16044421	0.140	2	19
16044521	0.060	2	22
16044521	0.350	1	07
16044621	0.043	1	20
16044921	0.043	1	20
16044921	0.045	1	07
16044921	0.310	1	03
16045621	0.045	1	08
16100811	0.043	1	21
16100811	0.060	2	23
16100811	0.140	1	12
16100811	0.305	2	08
16100811	0.350	1	04
16100811	0.450	1	06
16100811	1.220	1	10
16100821	0.149	1	06
16100821	0.201	1	09
16100821	1.030	1	14
16100821	1.070	1	67
16100821	1.070	1	85
16100821	5.0020	1	15
16101511	0.400	1	06
16104111	0.060	1	17
16321021	0.100	1	07
16500311	0.240	2	06
16506911	0.240	2	07
16507611	0.240	2	08
16508260	0.240	2	09
17764691	0.045	1A	02
19025186	1.220	2	68
40000011	0.043	1	22
40000012	0.043	1	22
40003800	0.043	2	20
45001066	3.050	1	10
45011273	1.220	2	80
45015167	1.000	1	35
45015167	5.0022	2	33
45017400	1.030	1	03
45019639	3.040	1	00
45481893	3.020	1	05
45481893	3.040	1	10
45481894	3.040	1	02
45481895	3.020	1	09
45481895	3.040	1	04
45481993	3.020	1	27E
45481995	3.020	1	27D
45482377	3.050	1	03
45482379	3.050	1	04
45482490	3.050	1	08
45482627	3.020	1	24
45482628	3.020	1	21
45482868	3.040	1	13
45482869	3.040	1	12
45482870	3.040	1	09
45482871	3.040	1	08
45483282	1.030	1	16
45483289	1.030	1	17
45483290	1.030	1	18
45483292	1.030	1	12
46177482	0.305	1	02
70923841	1.060	1	16
70923841	1.082	1	32
70923841	1.082	1	78
70923841	2.030	1	36
70923841	2.030	1	33
70923841	2.030	1	22
70923841	4.000	1	02
70923841	5.0038	2	43
70923843	1.050	1	72
70923843	1.060	1	56
70923843	2.030	1	23
70923843	3.070	1	01
70923843	4.000	1	02
70923843	5.0020	2	74
70924110	1.050	1	11
70924110	1.060	1	28
70924110	2.030	2	13
70924110	2.030	3	13
70924110	2.030	4	03
70924157	1.050	1	39
70924191	1.060	1	32
70924191	2.030	2	03
70924191	2.030	3	03
70924191	2.030	5	03
70924191	5.0020	2	59
70924192	5.0020	2	70A
70924776	1.220	2	89
70928280	5.0536	1	01
71304923	5.0083	1	31
71314412	3.020	1	26
71318326	3.050	1	05
71318327	3.050	1	06
71320138	1.220	2	61
71320219	4.500	1	29
71400001	2.030	5	16
71400002	2.030	5	14
71400003	2.030	5	15
71400004	2.030	2	19
71400004	2.030	3	19
71400005	2.030	2	17
71400005	2.030	3	17
71400006	2.030	2	18
71400006	2.030	3	18
71400007	2.030	4	14
71400008	2.030	4	13

NUMERICAL INDEX - INDICE NUMERICO - LISTE NUMERIQUE
NUMERISCHES ERSATZEILVERZEILVERZEICHNIS - INDICE NUMERICO

PART. N.	SGR.	TAV.	ITEM
71400008	2.030	4	15
71400025	2.030	5	24
71400026	2.030	5	26
71400027	2.030	5	25
71400028	2.030	2	25
71400028	2.030	3	25
71400029	2.030	2	27
71400029	2.030	3	27
71400030	2.030	2	26
71400030	2.030	3	26
71400031	2.030	4	26
71400032	2.030	4	28
71400033	2.030	4	27
71400049	2.030	5	1 2-30
71400050	2.030	5	13
71400056	2.030	5	17
71400057	2.030	5	18
71400058	2.030	5	18A
71400060	2.030	5	20
71400061	2.030	5	22
71400063	2.030	5	22A
71400068	2.030	5	23
71400069	2.030	5	30
71400070	2.030	2	29
71400070	2.030	3	29
71400070	2.030	5	27
71400071	2.030	5	28
71400072	2.030	2	1 4-32
71400073	2.030	2	14
71400073	2.030	3	14
71400074	2.030	2	14A
71400074	2.030	3	14A
71400074	2.030	4	11A
71400074	2.030	4	12A
71400074	2.030	5	13A
71400078	2.030	2	15
71400079	2.030	2	15A
71400079	2.030	3	15A
71400085	2.030	2	16
71400085	2.030	3	16
71400087	2.030	2	16A
71400087	2.030	3	16A
71400088	2.030	2	16B
71400088	2.030	3	16B
71400089	2.030	2	20
71400089	2.030	3	20
71400090	2.030	2	21
71400090	2.030	3	21
71400091	2.030	2	24
71400091	2.030	3	24
71400092	2.030	2	32
71400092	2.030	3	32
71400093	2.030	2	23
71400093	2.030	3	23
71400094	2.030	2	28
71400094	2.030	3	28
71400095	2.030	4	1 1-29
71400096	2.030	4	11
71400100	2.030	4	12
71400106	2.030	4	16
71400107	2.030	4	17
71400109	2.030	4	17B
71400110	2.030	4	17A
71400111	2.030	4	19
71400112	2.030	4	20
71400113	2.030	4	21
71400114	2.030	4	22
71400115	2.030	4	24
71400116	2.030	4	29
71400346	2.030	3	1 4-32
71400347	2.030	3	15
71400357	2.030	4	12
71400651	2.030	4	23
71400784	3.050	1	09
71400785	3.050	1	07
71400786	3.050	1	12
71400793	5.0004	1	02
71400798	3.050	1	02
71400891	3.020	1	01-26
71400892	3.020	1	01
71400893	3.020	1	02
71400894	3.020	1	03
71400895	3.020	1	11
71400896	3.020	1	14
71400897	3.020	1	18
71400898	3.020	1	19
71400899	3.020	1	20
71400901	3.020	1	23
71400903	3.020	1	27
71400904	3.020	1	27A
71400905	3.020	1	27B
71400947	3.030	1	00
71400948	3.030	1	02
71400949	3.030	1	03
71400950	3.030	1	04
71400951	3.030	1	05
71400952	3.030	1	06
71400953	3.030	1	07
71400954	3.030	1	08
71400955	3.030	1	10
71400956	3.030	1	11
71400957	3.030	1	12
71400959	3.030	1	12A
71400978	3.020	1	22
71400979	3.050	1	00
71400980	3.050	1	01
71401561	1.070	1	04
71401562	1.070	2	00
71401565	1.070	2	01
71401566	1.070	2	02
71401567	1.070	2	03
71401568	1.070	2	04
71401571	1.070	2	07
71401572	1.070	2	08
71401573	1.070	2	11
71401574	1.070	2	11A
71401574	1.070	2	12A
71401575	1.070	2	11B
71401575	1.070	2	12B
71401576	1.070	2	11C
71401576	1.070	2	12C
71401576	1.070	3	11C
71401577	1.070	2	11D
71401578	1.070	2	11E
71401578	1.070	2	12E
71401578	1.070	3	11E
71401579	1.070	2	12
71401580	1.070	2	12D
71401581	1.070	2	13
71401583	1.070	2	16
71401584	1.070	2	17
71401585	1.070	2	18
71401586	1.070	2	24
71401587	1.070	2	25
71401588	1.070	2	26
71401592	1.020	1	23
71401593	1.020	1	28
71401597	1.010	1	21
71401598	1.010	1	22
71401610	1.010	1	24A
71401610	1.020	1	28A
71401611	1.020	1	28B
71401617	1.030	1	00
71401618	1.040	1	00

SUBGROUP	GRID
0.000 TAV1	1C-11
0.000 TAV1	1C-12
0.001 TAV1	1C-13
0.001 TAV1	1C-14
0.002 TAV1	1C-15
0.002 TAV1	1C-16
0.003 TAV1	1C-17
0.003 TAV1	1C-18
0.003 TAV2	1C-19
0.003 TAV2	1C-20
0.003 TAV3	1C-21
0.003 TAV3	1C-22
0.004 TAV1	1C-23
0.004 TAV1	1C-24
0.021 TAV1	1D-3
0.021 TAV1	1D-4
0.040 TAV1	1D-5
0.040 TAV1	1D-6
0.040 TAV2	1D-7
0.040 TAV2	1D-8
0.040 TAV3	1D-9
0.040 TAV3	1D-10
0.042 TAV1	1D-11
0.042 TAV1	1D-12
0.043 TAV1	1D-13
0.043 TAV1	1D-14
0.043 TAV2	1D-15
0.043 TAV2	1D-16
0.045 TAV1	1D-17
0.045 TAV1	1D-18
0.045 TAV1A	1D-19
0.045 TAV1A	1D-20
0.060 TAV1	1D-21
0.060 TAV1	1D-22
0.060 TAV2	1D-23
0.060 TAV2	1D-24
0.071 TAV1	1E-3
0.071 TAV1	1E-4
0.077 TAV1	1E-5
0.077 TAV1	1E-6
0.080 TAV1	1E-7
0.080 TAV1	1E-8
0.081 TAV1	1E-9
0.081 TAV1	1E-10
0.082 TAV1	1E-11
0.082 TAV1	1E-12
0.083 TAV1	1E-13
0.083 TAV1	1E-14
0.084 TAV1	1E-15
0.084 TAV1	1E-16
0.100 TAV1	1E-17
0.100 TAV1	1E-18
0.120 TAV1	1E-19
0.120 TAV1	1E-20
0.140 TAV1	1E-21
0.140 TAV1	1E-22
0.140 TAV2	1E-23
0.140 TAV2	1E-24
0.140 TAV3	1F-3
0.140 TAV3	1F-4
0.140 TAV4	1F-5
0.140 TAV4	1F-6
0.140 TAV5	1F-7
0.140 TAV5	1F-8
0.149 TAV1	1F-9
0.149 TAV1	1F-10
0.200 TAV1	1F-11
0.200 TAV1	1F-12
0.201 TAV1	1F-13
0.201 TAV1	1F-14
0.203 TAV1	1F-15
0.203 TAV1	1F-16
0.240 TAV1	1F-17
0.240 TAV1	1F-18
0.240 TAV2	1F-19
0.240 TAV2	1F-20
0.241 TAV1	1F-21
0.241 TAV1	1F-22
0.300 TAV1	1F-23
0.300 TAV1	1F-24
0.302 TAV1	1G-3
0.302 TAV1	1G-4
0.305 TAV1	1G-5
0.305 TAV1	1G-6
0.305 TAV2	1G-7
0.305 TAV2	1G-8
0.310 TAV1	1G-9
0.310 TAV1	1G-10
0.310 TAV2	1G-11
0.310 TAV2	1G-12
0.320 TAV1	1G-13
0.320 TAV1	1G-14
0.320 TAV2	1G-15
0.320 TAV2	1G-16
0.323 TAV1	1G-17
0.323 TAV1	1G-18
0.326 TAV1	1G-19
0.326 TAV1	1G-20
0.340 TAV1	1G-21
0.340 TAV1	1G-22
0.345 TAV1	1G-23
0.345 TAV1	1G-24
0.350 TAV1	1H-3
0.350 TAV1	1H-4
0.360 TAV1	1H-5
0.360 TAV1	1H-6
0.360 TAV2	1H-7
0.360 TAV2	1H-8
0.400 TAV1	1H-9
0.400 TAV1	1H-10
0.400 TAV2	1H-11
0.400 TAV2	1H-12
0.400 TAV3	1H-13
0.400 TAV3	1H-14
0.450 TAV1	1H-15
0.450 TAV1	1H-16
1.000 TAV1	1I-3
1.000 TAV1	1I-4
1.010 TAV1	1I-5
1.010 TAV1	1I-6
1.020 TAV1	1I-7
1.020 TAV1	1I-8
1.030 TAV1	1I-9
1.030 TAV1	1I-10
1.030 TAV2	1I-11
1.030 TAV2	1I-12
1.030 TAV3	1I-13
1.030 TAV3	1I-14
1.030 TAV4	1I-15
1.030 TAV4	1I-16
1.030 TAV5	1I-17
1.030 TAV5	1I-18
1.030 TAV6	1I-19
1.030 TAV6	1I-20
1.030 TAV7	1I-21
1.030 TAV7	1I-22
1.030 TAV8	1I-23
1.030 TAV8	1I-24
1.040 TAV1	1J-3
1.040 TAV1	1J-4
1.040 TAV2	1J-5
1.040 TAV2	1J-6
1.040 TAV3	1J-7
1.040 TAV3	1J-8
1.040 TAV3	1J-9
1.040 TAV3	1J-10
1.040 TAV4	1J-11
1.040 TAV4	1J-12
1.050 TAV1	1J-13
1.050 TAV1	1J-14
1.050 TAV1	1J-15
1.050 TAV1	1J-16
1.050 TAV2	1J-17
1.050 TAV2	1J-18
1.050 TAV3	1J-19
1.050 TAV3	1J-20
1.050 TAV4	1J-21
1.050 TAV4	1J-22
1.050 TAV5	1J-23
1.050 TAV5	1J-24
1.060 TAV1	1K-3
1.060 TAV1	1K-4
1.070 TAV1	1K-5
1.070 TAV1	1K-6
1.070 TAV2	1K-7
1.070 TAV2	1K-8
1.070 TAV3	1K-9
1.070 TAV3	1K-10
1.080 TAV1	1K-11
1.080 TAV1	1K-12
1.080 TAV2	1K-13
1.080 TAV2	1K-14
1.081 TAV1	1K-15
1.081 TAV1	1K-16
1.081 TAV2	1K-17
1.081 TAV2	1K-18
1.082 TAV1	1K-19
1.082 TAV1	1K-20
1.082 TAV1	1K-21
1.082 TAV1	1K-22
1.082 TAV2	1K-23
1.082 TAV2	1K-24
1.082 TAV3	1L-3
1.082 TAV3	1L-4
1.083 TAV1	1L-5
1.083 TAV1	1L-6
1.084 TAV1	1L-7
1.084 TAV1	1L-8
1.200 TAV1	2D-3
1.200 TAV1	2D-4
1.200 TAV2	2D-5
1.200 TAV2	2D-6
1.200 TAV3	2D-7
1.200 TAV3	2D-8
1.210 TAV1	2D-9
1.210 TAV1	2D-10
1.220 TAV1	2D-11
1.220 TAV1	2D-12
1.220 TAV2	2D-13
1.220 TAV2	2D-14
1.220 TAV2	2D-15
1.220 TAV2	2D-16
1.220 TAV3	2D-17
1.220 TAV3	2D-18
1.220 TAV4	2D-19
1.220 TAV4	2D-20
1.250 TAV1	2D-21
1.250 TAV1	2D-22
1.250 TAV2	2D-23
1.250 TAV2	2D-24
1.250 TAV4	2E-3
1.250 TAV4	2E-4
1.250 TAV4	2E-5
1.250 TAV4	2E-6
1.250 TAV5	2E-7
1.250 TAV5	2E-8
1.250 TAV6	2E-9
1.250 TAV6	2E-10
1.250 TAV7	2E-11
1.250 TAV7	2E-12
1.250 TAV7	2E-13
1.250 TAV7	2E-14
1.290 TAV1	2E-15
1.290 TAV1	2E-16
1.290 TAV2	2E-17
1.290 TAV2	2E-18
1.300 TAV1	2E-19
1.300 TAV1	2E-20
1.300 TAV2	2E-21
1.300 TAV2	2E-22
1.300 TAV3	2E-23
1.300 TAV3	2E-24
2.000 TAV1	2F-3
2.000 TAV1	2F-4
2.003 TAV1	2F-5
2.003 TAV1	2F-6
2.003 TAV2	2F-7
2.003 TAV2	2F-8
2.020 TAV1	2F-9
2.020 TAV1	2F-10
2.020 TAV1	2F-11
2.020 TAV1	2F-12
2.030 TAV1	2F-13
2.030 TAV1	2F-14
2.030 TAV2	2F-15
2.030 TAV2	2F-16
2.030 TAV3	2F-17
2.030 TAV3	2F-18
2.030 TAV4	2F-19
2.030 TAV4	2F-20
2.030 TAV5	2F-21
2.030 TAV5	2F-22
2.040 TAV1	2F-23
2.040 TAV1	2F-24
3.000 TAV1	2G-3
3.000 TAV1	2G-4
3.010 TAV1	2G-5
3.010 TAV1	2G-6
3.010 TAV2	2G-7
3.010 TAV2	2G-8
3.010 TAV3	2G-9
3.010 TAV3	2G-10
3.010 TAV4	2G-11
3.010 TAV4	2G-12
3.010 TAV5	2G-13
3.010 TAV5	2G-14
3.020 TAV1	2G-15
3.020 TAV1	2G-16
3.030 TAV1	2G-17
3.030 TAV1	2G-18
3.040 TAV1	2G-19
3.040 TAV1	2G-20
3.050 TAV1	2G-21
3.050 TAV1	2G-22
3.060 TAV1	2G-23
3.060 TAV1	2G-24
3.060 TAV2	2H-3
3.060 TAV2	2H-4
3.070 TAV1	2H-5
3.070 TAV1	2H-6
4.000 TAV1	2H-7
4.000 TAV1	2H-8
4.500 TAV1	2H-9
4.500 TAV1	2H-10
5.0020TAV1	2H-11
5.0020TAV1	2H-12
5.0020TAV2	2H-13
5.0020TAV2	2H-14
5.0022TAV1	2H-15
5.0022TAV1	2H-16
5.0022TAV2	2H-17
5.0022TAV2	2H-18
5.0025TAV1	2H-19
5.0025TAV1	2H-20
5.0038TAV1	2H-21
5.0038TAV1	2H-22
5.0038TAV2	2H-23
5.0038TAV2	2H-24
5.0151TAV1	2I-3
5.0151TAV1	2I-4
5.0536TAV1	2I-5
5.0536TAV1	2I-6
5.0540TAV1	2I-7
5.0540TAV1	2I-8
5.0083TAV1	2I-9
5.0083TAV1	2I-10

NUMERICAL INDEX - INDICE NUMERICO - LISTE NUMERIQUE
NUMERISCHES ERSATZEILVERZEILVERZEICHNIS - INDICE NUMERICO

PART. N.	SGR.	TAV.	ITEM
71401619	1.050	1	00
71401620	1.070	1	64
71401621	3.010	1	00
71401622	3.060	1	00
71401625	1.081	1	00
71401626	1.062	1	11
71401627	1.082	1	00
71401628	1.050	1	40
71401629	1.050	1	30
71401630	1.062	1	03
71401631	1.070	1	65
71401632	1.080	1	23
71401633	1.080	1	09
71401634	1.081	1	08
71401645	1.010	1	24
71401647	1.010	1	24B
71401648	3.000	1	05
71401658	5.0020	1	00
71401662	1.030	2	01
71401663	1.030	2	02
71401664	1.030	2	03
71401665	1.030	2	07
71401666	1.030	2	08
71401667	1.030	2	09
71401668	1.030	2	11
71401669	1.030	2	12
71401670	1.030	2	13
71401671	1.030	2	14
71401671	1.040	4	02
71401671	1.050	4	09
71401672	1.030	2	15
71401673	1.030	3	01
71401674	1.030	3	02
71401675	1.030	3	03
71401676	1.030	3	09
71401677	1.030	3	10
71401678	1.030	3	11
71401679	1.030	3	12
71401680	1.030	3	14
71401681	1.030	3	15
71401682	1.030	3	16
71401683	1.030	3	17
71401684	1.030	3	20
71401685	1.030	3	21
71401685	1.030	4	12
71401685	1.030	5	19
71401686	1.030	3	22
71401686	1.030	4	17
71401686	1.030	5	18
71401687	1.030	3	23
71401688	1.030	3	27
71401688	1.030	4	10
71401688	1.030	5	15
71401688	1.040	3	32
71401688	1.050	2	03
71401688	1.050	3	03
71401688	1.050	4	10
71401688	1.050	5	06
71401688	3.010	3	64
71401688	3.010	4	21
71401689	1.030	3	28
71401690	1.030	3	29
71401691	1.030	3	30
71401692	1.030	3	30
71401693	1.030	3	31
71401694	1.030	3	32
71401695	1.030	7	16
71401696	1.030	7	17
71401697	1.030	7	18
71401698	1.030	7	19
71401699	1.030	8	11
71401700	1.030	8	12
71401701	1.030	8	13
71401702	1.030	8	14
71401703	1.030	8	15
71401704	1.030	8	16
71401705	1.030	4	04
71401706	1.030	4	05
71401707	1.030	4	06
71401708	1.030	4	07
71401708	1.030	5	10
71401709	1.030	4	08
71401710	1.030	4	09
71401711	1.081	2	00
71401712	1.030	4	11
71401713	1.030	4	14
71401714	1.030	4	15
71401715	1.030	5	03
71401715	1.030	6	03
71401716	1.030	5	07
71401717	1.030	5	08
71401718	1.030	5	09
71401719	1.030	5	11
71401720	1.030	5	12
71401721	1.030	5	13
71401723	1.030	5	16
71401724	1.030	5	17
71401725	1.081	2	01
71401726	1.030	6	05
71401727	1.030	6	06
71401728	1.030	6	13
71401729	1.030	5	04
71401730	1.030	5	05
71401731	1.040	1	01
71401732	1.040	1	02
71401733	1.040	2	00
71401734	1.040	2	02
71401735	1.040	2	03
71401736	1.040	2	04
71401737	1.040	2	06
71401738	1.040	2	07
71401739	1.040	2	10
71401740	1.040	2	13
71401741	1.040	2	14
71401742	1.040	2	15
71401743	1.040	2	16
71401744	1.040	2	17
71401745	1.040	2	19
71401746	1.040	2	20
71401747	1.040	2	21
71401748	1.040	2	24
71401749	1.040	2	26
71401750	1.040	2	27
71401751	1.040	2	28
71401752	1.040	2	30
71401753	1.040	2	35
71401755	1.040	2	41
71401756	1.040	2	45
71401757	1.040	2	46
71401758	1.040	2	48
71401759	1.040	2	50
71401760	1.040	2	51
71401761	1.040	2	52
71401762	1.040	2	53
71401763	1.040	2	55
71401764	1.040	2	56
71401765	1.040	2	57
71401766	1.040	2	58
71401767	1.040	2	44
71401768	1.081	2	02
71401769	1.081	2	03
71401770	1.082	3	05
71401771	1.082	3	09
71401772	1.082	3	12
71401773	1.082	3	13
71401774	1.082	2	15
71401774	1.082	3	18
71401775	1.082	3	20
71401776	3.010	3	66
71401776	3.010	4	07
71401777	1.082	3	22
71401778	1.082	3	23
71401779	1.082	3	25
71401780	1.082	3	26
71401781	1.082	3	27
71401782	1.082	3	28
71401783	1.082	3	29
71401784	1.082	3	30
71401785	1.082	3	20

B-16

NUMERICAL INDEX - INDICE NUMERICO - LISTE NUMERIQUE
NUMERISCHES ERSATZEILVERZEILVERZEICHNIS - INDICE NUMERICO

PART. N.	SGR.	TAV.	ITEM
71401786	1.082	2	16
71401787	1.082	2	03
71401788	1.082	2	04
71401789	1.082	2	07
71401790	1.082	2	18
71401792	1.082	2	19
71401794	1.082	2	14
71401795	1.040	3	64
71401796	1.080	1	00
71401797	1.080	1	31
71401798	1.050	4	03
71401798	1.080	2	05
71401799	1.050	4	04
71401800	1.050	4	05
71401801	1.050	4	06
71401802	1.040	4	00
71401802	3.010	3	42
71401803	1.050	4	08
71401804	1.040	4	01
71401805	1.050	3	01
71401806	1.082	3	19
71401807	1.050	5	13
71401808	1.050	5	14
71401809	1.050	5	15
71401810	1.050	5	16
71401811	1.050	5	17
71401812	1.050	5	18
71401813	1.050	5	19
71401814	1.050	5	20
71401815	1.050	5	21
71401816	1.050	5	22
71401817	1.050	5	23
71401818	1.050	5	24
71401819	1.050	5	25
71401820	1.050	5	26
71401821	1.050	5	27
71401822	1.050	5	28
71401823	1.050	2	05
71401823	1.050	5	29
71401824	1.050	2	06
71401824	1.050	5	30
71401825	1.050	5	31
71401826	1.050	5	32
71401827	1.050	5	33
71401828	1.050	5	34
71401829	1.050	5	35
71401830	1.050	5	36
71401832	1.050	5	39
71401833	1.050	4	41
71401834	1.050	4	42
71401835	1.050	4	43
71401836	1.050	4	44
71401837	1.050	4	45
71401838	1.050	4	46
71401839	1.050	4	47
71401840	1.050	4	48
71401841	3.060	2	00
71401842	3.060	2	01
71401843	3.060	2	04
71401844	3.060	2	02
71401845	3.060	2	06
71401846	3.060	2	07
71401847	3.060	2	09
71401848	3.060	2	10
71401849	3.060	2	11
71401850	3.060	2	12
71401851	3.060	2	13
71401852	3.060	2	14
71401853	3.060	2	15
71401854	1.070	3	26
71401854	3.060	2	16
71401855	1.050	4	49
71401856	1.050	4	50
71401857	1.050	4	51
71401858	1.050	4	52
71401859	1.050	4	69
71401860	1.050	4	70
71401861	1.050	4	71
71401862	1.050	4	76
71401864	1.050	5	81
71401865	1.050	5	82
71401866	1.050	5	83
71401867	1.050	5	85
71401868	1.050	4	91
71401869	1.050	4	92
71401870	1.050	4	93
71401871	1.050	4	94
71401872	1.050	4	95
71401873	1.050	2	07
71401873	1.050	3	04
71401873	1.050	5	96
71401874	1.050	4	97
71401875	1.050	5	01
71401876	1.050	5	02
71401877	1.050	5	03
71401878	1.050	5	04
71401879	1.050	5	05
71401880	1.050	5	11
71401881	1.050	2	02
71401881	1.050	3	02
71401882	1.040	4	04
71401883	1.080	2	01
71401884	1.050	4	11
71401884	1.050	5	08
71401885	1.050	5	09
71401886	1.082	2	17
71401887	1.040	4	05
71401888	1.050	5	10
71401889	1.050	4	13
71401890	1.050	4	14
71401891	1.082	3	15
71401892	1.082	3	16
71401893	1.040	4	06
71401894	1.040	3	01
71401895	1.040	3	02
71401896	1.040	3	03
71401897	1.040	3	04
71401898	1.040	3	07
71401899	1.040	3	09
71401900	1.040	3	10
71401901	1.040	3	11
71401902	1.040	3	12
71401903	1.040	3	13
71401904	1.040	3	14
71401905	1.040	3	15
71401906	1.040	3	16
71401907	1.040	3	17
71401908	1.040	3	20
71401909	1.040	3	21
71401910	1.040	3	22
71401911	1.040	3	23
71401912	1.040	3	24
71401913	1.040	3	25
71401914	1.040	3	29
71401915	1.040	3	30
71401916	1.040	2	37
71401916	1.040	3	31
71401917	1.040	3	36
71401918	1.040	3	37
71401919	1.040	3	38
71401920	1.040	3	39
71401921	1.040	3	41
71401922	1.040	3	42
71401923	1.040	3	43
71401924	1.040	3	44
71401925	1.040	3	46
71401926	1.040	3	47
71401927	1.040	3	48
71401928	1.040	3	49
71401929	1.040	3	50
71401930	1.040	3	51
71401931	1.040	3	52
71401932	1.040	3	53
71401933	1.040	3	54
71401934	1.040	3	55
71401935	1.040	3	56
71401936	1.040	3	57
71401937	1.040	3	58
71401938	1.040	3	60

SUBGROUP	GRID
0.000 TAV1	1C-11
0.000 TAV1	1C-12
0.001 TAV1	1C-13
0.001 TAV1	1C-14
0.002 TAV1	1C-15
0.002 TAV1	1C-16
0.003 TAV1	1C-17
0.003 TAV1	1C-18
0.003 TAV2	1C-19
0.003 TAV2	1C-20
0.003 TAV3	1C-21
0.003 TAV3	1C-22
0.004 TAV1	1C-23
0.004 TAV1	1C-24
0.021 TAV1	1D-3
0.021 TAV1	1D-4
0.040 TAV1	1D-5
0.040 TAV1	1D-6
0.040 TAV2	1D-7
0.040 TAV2	1D-8
0.040 TAV3	1D-9
0.040 TAV3	1D-10
0.042 TAV1	1D-11
0.042 TAV1	1D-12
0.043 TAV1	1D-13
0.043 TAV1	1D-14
0.043 TAV2	1D-15
0.043 TAV2	1D-16
0.045 TAV1	1D-17
0.045 TAV1	1D-18
0.045 TAV1A	1D-19
0.045 TAV1A	1D-20
0.060 TAV1	1D-21
0.060 TAV1	1D-22
0.060 TAV2	1D-23
0.060 TAV2	1D-24
0.071 TAV1	1E-3
0.071 TAV1	1E-4
0.077 TAV1	1E-5
0.077 TAV1	1E-6
0.080 TAV1	1E-7
0.080 TAV1	1E-8
0.081 TAV1	1E-9
0.081 TAV1	1E-10
0.082 TAV1	1E-11
0.082 TAV1	1E-12
0.083 TAV1	1E-13
0.083 TAV1	1E-14
0.084 TAV1	1E-15
0.084 TAV1	1E-16
0.100 TAV1	1E-17
0.100 TAV1	1E-18
0.120 TAV1	1E-19
0.120 TAV1	1E-20
0.140 TAV1	1E-21
0.140 TAV1	1E-22
0.140 TAV2	1E-23
0.140 TAV2	1E-24
0.140 TAV3	1F-3
0.140 TAV3	1F-4
0.140 TAV4	1F-5
0.140 TAV4	1F-6
0.140 TAV5	1F-7
0.140 TAV5	1F-8
0.149 TAV1	1F-9
0.149 TAV1	1F-10
0.200 TAV1	1F-11
0.200 TAV1	1F-12
0.201 TAV1	1F-13
0.201 TAV1	1F-14
0.203 TAV1	1F-15
0.203 TAV1	1F-16
0.240 TAV1	1F-17
0.240 TAV1	1F-18
0.240 TAV2	1F-19
0.240 TAV2	1F-20
0.241 TAV1	1F-21
0.241 TAV1	1F-22
0.300 TAV1	1F-23
0.300 TAV1	1F-24
0.302 TAV1	1G-3
0.302 TAV1	1G-4
0.305 TAV1	1G-5
0.305 TAV1	1G-6
0.305 TAV2	1G-7
0.305 TAV2	1G-8
0.310 TAV1	1G-9
0.310 TAV1	1G-10
0.310 TAV2	1G-11
0.310 TAV2	1G-12
0.320 TAV1	1G-13
0.320 TAV1	1G-14
0.320 TAV2	1G-15
0.320 TAV2	1G-16
0.323 TAV1	1G-17
0.323 TAV1	1G-18
0.326 TAV1	1G-19
0.326 TAV1	1G-20
0.340 TAV1	1G-21
0.340 TAV1	1G-22
0.345 TAV1	1G-23
0.345 TAV1	1G-24
0.350 TAV1	1H-3
0.350 TAV1	1H-4
0.360 TAV1	1H-5
0.360 TAV1	1H-6
0.360 TAV2	1H-7
0.360 TAV2	1H-8
0.400 TAV1	1H-9
0.400 TAV1	1H-10
0.400 TAV2	1H-11
0.400 TAV2	1H-12
0.400 TAV3	1H-13
0.400 TAV3	1H-14
0.450 TAV1	1H-15
0.450 TAV1	1H-16
1.000 TAV1	1I-3
1.000 TAV1	1I-4
1.010 TAV1	1I-5
1.010 TAV1	1I-6
1.020 TAV1	1I-7
1.020 TAV1	1I-8
1.030 TAV1	1I-9
1.030 TAV1	1I-10
1.030 TAV2	1I-11
1.030 TAV2	1I-12
1.030 TAV3	1I-13
1.030 TAV3	1I-14
1.030 TAV4	1I-15
1.030 TAV4	1I-16
1.030 TAV5	1I-17
1.030 TAV5	1I-18
1.030 TAV6	1I-19
1.030 TAV6	1I-20
1.030 TAV7	1I-21
1.030 TAV7	1I-22
1.030 TAV8	1I-23
1.030 TAV8	1I-24
1.040 TAV1	1J-3
1.040 TAV1	1J-4
1.040 TAV2	1J-5
1.040 TAV2	1J-6
1.040 TAV3	1J-7
1.040 TAV3	1J-8
1.040 TAV3	1J-9
1.040 TAV3	1J-10
1.040 TAV4	1J-11
1.040 TAV4	1J-12
1.050 TAV1	1J-13
1.050 TAV1	1J-14
1.050 TAV1	1J-15
1.050 TAV1	1J-16
1.050 TAV2	1J-17
1.050 TAV2	1J-18
1.050 TAV3	1J-19
1.050 TAV3	1J-20
1.050 TAV4	1J-21
1.050 TAV4	1J-22
1.050 TAV5	1J-23
1.050 TAV5	1J-24
1.060 TAV1	1K-3
1.060 TAV1	1K-4
1.070 TAV1	1K-5
1.070 TAV1	1K-6
1.070 TAV2	1K-7
1.070 TAV2	1K-8
1.070 TAV3	1K-9
1.070 TAV3	1K-10
1.080 TAV1	1K-11
1.080 TAV1	1K-12
1.080 TAV2	1K-13
1.080 TAV2	1K-14
1.081 TAV1	1K-15
1.081 TAV1	1K-16
1.081 TAV2	1K-17
1.081 TAV2	1K-18
1.082 TAV1	1K-19
1.082 TAV1	1K-20
1.082 TAV1	1K-21
1.082 TAV1	1K-22
1.082 TAV2	1K-23
1.082 TAV2	1K-24
1.082 TAV3	1L-3
1.082 TAV3	1L-4
1.083 TAV1	1L-5
1.083 TAV1	1L-6
1.084 TAV1	1L-7
1.084 TAV1	1L-8
1.200 TAV1	2D-3
1.200 TAV1	2D-4
1.200 TAV2	2D-5
1.200 TAV2	2D-6
1.200 TAV3	2D-7
1.200 TAV3	2D-8
1.210 TAV1	2D-9
1.210 TAV1	2D-10
1.220 TAV1	2D-11
1.220 TAV1	2D-12
1.220 TAV2	2D-13
1.220 TAV2	2D-14
1.220 TAV2	2D-15
1.220 TAV2	2D-16
1.220 TAV3	2D-17
1.220 TAV3	2D-18
1.220 TAV4	2D-19
1.220 TAV4	2D-20
1.250 TAV1	2D-21
1.250 TAV1	2D-22
1.250 TAV2	2D-23
1.250 TAV2	2D-24
1.250 TAV4	2E-3
1.250 TAV4	2E-4
1.250 TAV4	2E-5
1.250 TAV4	2E-6
1.250 TAV5	2E-7
1.250 TAV5	2E-8
1.250 TAV6	2E-9
1.250 TAV6	2E-10
1.250 TAV7	2E-11
1.250 TAV7	2E-12
1.250 TAV7	2E-13
1.250 TAV7	2E-14
1.290 TAV1	2E-15
1.290 TAV1	2E-16
1.290 TAV2	2E-17
1.290 TAV2	2E-18
1.300 TAV1	2E-19
1.300 TAV1	2E-20
1.300 TAV2	2E-21
1.300 TAV2	2E-22
1.300 TAV3	2E-23
1.300 TAV3	2E-24
2.000 TAV1	2F-3
2.000 TAV1	2F-4
2.003 TAV1	2F-5
2.003 TAV1	2F-6
2.003 TAV2	2F-7
2.003 TAV2	2F-8
2.020 TAV1	2F-9
2.020 TAV1	2F-10
2.020 TAV1	2F-11
2.020 TAV1	2F-12
2.030 TAV1	2F-13
2.030 TAV1	2F-14
2.030 TAV2	2F-15
2.030 TAV2	2F-16
2.030 TAV3	2F-17
2.030 TAV3	2F-18
2.030 TAV4	2F-19
2.030 TAV4	2F-20
2.030 TAV5	2F-21
2.030 TAV5	2F-22
2.040 TAV1	2F-23
2.040 TAV1	2F-24
3.000 TAV1	2G-3
3.000 TAV1	2G-4
3.010 TAV1	2G-5
3.010 TAV1	2G-6
3.010 TAV2	2G-7
3.010 TAV2	2G-8
3.010 TAV3	2G-9
3.010 TAV3	2G-10
3.010 TAV4	2G-11
3.010 TAV4	2G-12
3.010 TAV5	2G-13
3.010 TAV5	2G-14
3.020 TAV1	2G-15
3.020 TAV1	2G-16
3.030 TAV1	2G-17
3.030 TAV1	2G-18
3.040 TAV1	2G-19
3.040 TAV1	2G-20
3.050 TAV1	2G-21
3.050 TAV1	2G-22
3.060 TAV1	2G-23
3.060 TAV1	2G-24
3.060 TAV2	2H-3
3.060 TAV2	2H-4
3.070 TAV1	2H-5
3.070 TAV1	2H-6
4.000 TAV1	2H-7
4.000 TAV1	2H-8
4.500 TAV1	2H-9
4.500 TAV1	2H-10
5.0020TAV1	2H-11
5.0020TAV1	2H-12
5.0020TAV2	2H-13
5.0020TAV2	2H-14
5.0022TAV1	2H-15
5.0022TAV1	2H-16
5.0022TAV2	2H-17
5.0022TAV2	2H-18
5.0025TAV1	2H-19
5.0025TAV1	2H-20
5.0038TAV1	2H-21
5.0038TAV1	2H-22
5.0038TAV2	2H-23
5.0038TAV2	2H-24
5.0151TAV1	2I-3
5.0151TAV1	2I-4
5.0536TAV1	2I-5
5.0536TAV1	2I-6
5.0540TAV1	2I-7
5.0540TAV1	2I-8
5.0083TAV1	2I-9
5.0083TAV1	2I-10

NUMERICAL INDEX - INDICE NUMERICO - LISTE NUMERIQUE
NUMERISCHES ERSATZEILVERZEILVERZEICHNIS - INDICE NUMERICO

PART. N.	SGR.	TAV.	ITEM
71401939	1.040	3	61
71401940	1.040	3	62
71401941	1.040	3	63
71401942	1.040	3	65
71401943	1.040	3	66
71401944	1.040	3	67
71401945	1.040	3	68
71401945	1.040	4	03
71401946	1.040	3	70
71401947	1.040	3	71
71401948	1.040	3	72
71401949	1.040	3	74
71401950	1.050	2	04
71401951	1.050	2	01
71401953	1.080	1	09B
71401954	1.080	1	09A
71401955	1.070	3	00
71401956	1.070	3	01
71401957	1.070	3	03
71401958	1.070	2	05
71401958	1.070	3	05
71401959	1.070	2	06
71401959	1.070	3	06
71401960	1.070	3	08
71401961	1.070	3	11
71401962	1.070	3	11A
71401963	1.080	2	02
71401964	1.080	2	02A
71401965	1.070	3	11D
71401966	1.080	2	02B
71401967	1.070	2	15
71401967	1.070	3	15
71401968	1.070	3	16
71401969	1.070	3	17
71401970	1.070	3	24
71401971	1.070	3	25
71401973	1.070	3	27
71401974	1.070	3	28
71401975	1.070	3	29
71401976	1.070	3	31
71401977	1.070	3	35
71401979	1.070	3	37
71401980	1.070	3	30
71401981	1.080	2	02C
71401982	1.080	2	02D
71401983	1.080	2	02D
71401984	1.080	2	02D
71401985	1.080	2	02E
71401986	1.080	2	02F
71401987	1.080	2	03
71401990	1.080	2	06
71401991	1.080	2	08
71401992	1.080	2	09
71401993	1.080	2	10
71401994	1.080	2	11
71401995	1.080	2	12
71401996	1.080	2	13
71401997	1.080	2	14
71401998	1.080	2	15
71401999	1.080	2	16
71402000	1.080	2	17
71402002	1.080	2	19
71402003	1.080	2	20
71402004	1.080	2	25
71402005	1.080	2	26
71402006	1.080	2	27
71402007	3.010	2	00
71402008	3.010	2	01
71402009	3.010	2	02
71402010	3.010	2	03
71402011	3.010	2	04
71402012	3.010	2	05
71402013	3.010	2	06
71402014	3.010	2	07
71402015	3.010	2	08
71402016	3.010	2	09
71402017	3.010	2	11
71402018	3.010	2	12
71402019	3.010	2	13
71402020	3.010	2	14
71402021	3.010	2	15
71402022	3.010	2	16
71402023	3.010	2	17
71402024	3.010	2	18
71402025	3.010	2	19
71402026	3.010	2	21
71402027	3.010	2	22
71402028	3.010	2	23
71402029	3.010	2	24
71402030	3.010	2	25
71402031	3.010	2	26
71402032	3.010	2	27
71402033	3.010	2	28
71402034	3.010	2	31
71402035	3.010	2	32
71402036	3.010	2	33
71402037	3.010	2	34
71402038	3.010	2	35
71402039	3.010	2	36
71402040	3.010	2	37
71402041	3.010	2	38
71402042	3.010	2	39
71402043	3.010	2	41
71402044	3.010	2	42
71402045	3.010	2	43
71402046	3.010	2	44
71402047	3.010	3	00
71402048	3.010	3	02
71402049	3.010	3	03
71402050	3.010	3	05
71402051	3.010	3	06
71402052	3.010	3	08
71402053	3.010	3	12
71402054	3.010	3	14
71402055	3.010	3	17
71402056	3.010	3	19
71402057	3.010	3	20
71402058	3.010	3	21
71402059	3.010	3	22
71402060	3.010	3	24
71402061	3.010	3	27
71402062	3.010	3	28
71402063	3.010	3	32
71402064	3.010	3	33
71402065	3.010	3	34
71402066	3.010	3	36
71402067	3.010	3	37
71402068	3.010	3	38
71402069	3.010	3	39
71402072	3.010	3	45
71402073	3.010	3	46
71402074	3.010	3	47
71402075	3.010	3	48
71402076	3.010	3	62
71402079	3.010	3	65
71402081	3.010	3	68
71402082	3.010	3	70
71402083	3.010	4	00
71402084	3.010	4	03
71402085	3.010	4	05
71402086	3.010	2	29
71402087	3.010	4	08
71402088	3.010	4	09
71402089	3.010	4	10
71402090	3.010	4	11
71402091	3.010	4	12
71402092	3.010	4	14
71402093	3.010	4	15
71402095	3.010	4	17
71402096	3.010	4	19
71402098	1.070	3	39
71402098	3.010	3	63
71402098	3.010	4	22
71402099	3.010	4	23
71402100	3.010	4	25
71402101	3.010	4	26
71402102	3.010	4	27
71402103	3.010	4	30
71402104	3.010	5	02

NUMERICAL INDEX - INIXCE NUMERICO - LISTE NUMERIQUE
NUMERISCHES ERSATZEILVERZEILVERZEICHNIS - INDICE NUMERICO

PART. N.	SGR.	TAV.	ITEM
71402105	3.010	5	03
71402106	3.010	5	06
71402108	3.010	5	17
71402109	3.010	5	18
71402111	3.010	5	21
71402112	3.010	5	22
71402113	3.010	5	23
71402152	3.010	3	41
71402462	1.080	2	18
71402465	1.050	4	53
71402466	1.050	4	54
71402489	1.080	1	37
71402547	1.020	1	29
71402914	1.070	3	11B
71403512	1.220	2	13
71403513	1.200	2	00
71403516	1.200	3	04
71403517	1.200	3	05
71403518	1.200	3	06
71403520	1.200	3	11
71403521	1.200	3	23
71403528	1.200	3	35
71403529	1.220	1	03
71403531	1.220	2	54
71403535	1.220	1	05
71403536	1.220	2	74
71403541	1.200	3	12
71403543	1.220	2	81
71403558	1.220	2	78
71403561	1.220	1	14
71403562	1.220	2	83
71403564	1.220	2	86
71403565	1.220	2	84
71403566	1.220	2	85
7140 3567	1.220	2	87
71403568	1.220	2	88
71403571	1.220	2	09
71403574	1.220	2	24
71403575	1.200	3	26
71403582	1.220	2	82
71403587	1.220	1	08
71403588	1.220	1	07
71403590	1.220	1	02
71403592	1.200	3	02
71403593	1.200	3	03
71403594	1.200	3	10
71403595	1.220	2	76
71403596	1.220	1	06
71403603	1.200	2	01
71403604	1.200	2	02
71403605	1.200	2	03
71403606	1.200	2	04
71403607	1.200	2	05
71403608	1.200	2	06
71403609	1.200	2	07
71403610	1.200	2	08
71403611	1.200	2	09
71403612	1.200	2	10
71403613	1.200	2	11
71403614	1.200	2	12
71403615	1.200	2	13
71403616	1.200	2	14
71403617	1.200	2	15
71403618	1.200	2	16
71403619	1.200	2	17
71403620	1.200	2	18
71403621	1.200	2	19
71403622	1.200	2	20
71403623	1.200	2	21
71403624	1.200	2	22
71403625	1.200	2	23
71403626	1.200	2	24
71403627	1.200	2	25
71403628	1.200	2	26
71403629	1.200	2	27
71403630	1.200	2	28
71403631	1.200	2	29
71403632	1.200	2	30
71403633	1.200	2	31
71403634	1.200	2	32
71403635	1.200	2	33
71403636	1.200	2	34
71403637	1.200	2	35
71403638	1.200	2	36
71403639	1.200	2	37
71403640	1.200	2	38
71403641	1.200	2	39
71403652	1.290	2	01
71403653	1.290	2	02
71403654	1.290	2	03
71403655	1.290	2	04
71403656	1.290	2	05
71403657	1.290	2	06
71403658	1.290	2	07
71403659	1.290	2	08
71403660	1.290	2	09
71403661	1.220	2	57
71403726	5.0025	1	02
71403906	1.081	1	29
71403910	1.081	1	40
71403913	1.050	1	09
71403929	1.080	1	25
71403930	1.080	1	24
71403932	1.080	1	16
71403936	1.081	1	35
71403943	1.060	1	62
71403945	1.080	1	19
71403946	1.081	1	27
71403947	1.080	1	28
71403948	1.080	1	21
71403950	1.081	1	34
71403953	1.081	1	31
71403955	1.050	1	74
71403956	1.081	1	32
71403957	1.050	1	63
71403958	1.050	1	62
71403967	1.082	1	39
71403987	1.084	1	18
71403988	1.084	1	17
71403989	1.084	1	16
71403990	1.084	1	15
71403991	1.084	1	13
71403993	1.084	1	11
71403994	1.084	1	12
71403995	1.084	1	08
71403996	1.084	1	07
71403997	1.084	1	06
71403998	1.084	1	10
71404001	1.083	1	11
71404002	1.083	1	12
71404003	1.084	1	05
71404006	2.040	1	01
71404007	1.082	1	37
71404008	1.082	1	38
71404009	1.082	1	46
71404010	1.083	1	07
71404011	1.083	1	10
71404012	1.082	1	34
71404027	1.083	1	08
71404028	1.082	1	42
71404029	1.082	1	41
71404045	1.082	1	55
71404046	1.082	1	36
71404047	1.082	1	48
71404048	1.082	1	43
71404049	1.082	1	47
71404052	1.082	1	49
71404058	2.030	1	31
71404059	1.082	1	10
71404065	2.030	1	35A
71404065	2.030	1	32A
71404066	2.030	1	32
71404068	1.081	1	28
71404069	1.081	1	30

SUBGROUP	GRID
0.000 TAV1	1C-11
0.000 TAV1	1C-12
0.001 TAV1	1C-13
0.001 TAV1	1C-14
0.002 TAV1	1C-15
0.002 TAV1	1C-16
0.003 TAV1	1C-17
0.003 TAV1	1C-18
0.003 TAV2	1C-19
0.003 TAV2	1C-20
0.003 TAV3	1C-21
0.003 TAV3	1C-22
0.004 TAV1	1C-23
0.004 TAV1	1C-24
0.021 TAV1	1D-3
0.021 TAV1	1D-4
0.040 TAV1	1D-5
0.040 TAV1	1D-6
0.040 TAV2	1D-7
0.040 TAV2	1D-8
0.040 TAV3	1D-9
0.040 TAV3	1D-10
0.042 TAV1	1D-11
0.042 TAV1	1D-12
0.043 TAV1	1D-13
0.043 TAV1	1D-14
0.043 TAV2	1D-15
0.043 TAV2	1D-16
0.045 TAV1	1D-17
0.045 TAV1	1D-18
0.045 TAV1A	1D-19
0.045 TAV1A	1D-20
0.060 TAV1	1D-21
0.060 TAV1	1D-22
0.060 TAV2	1D-23
0.060 TAV2	1D-24
0.071 TAV1	1E-3
0.071 TAV1	1E-4
0.077 TAV1	1E-5
0.077 TAV1	1E-6
0.080 TAV1	1E-7
0.080 TAV1	1E-8
0.081 TAV1	1E-9
0.081 TAV1	1E-10
0.082 TAV1	1E-11
0.082 TAV1	1E-12
0.083 TAV1	1E-13
0.083 TAV1	1E-14
0.084 TAV1	1E-15
0.084 TAV1	1E-16
0.100 TAV1	1E-17
0.100 TAV1	1E-18
0.120 TAV1	1E-19
0.120 TAV1	1E-20
0.140 TAV1	1E-21
0.140 TAV1	1E-22
0.140 TAV2	1E-23
0.140 TAV2	1E-24
0.140 TAV3	1F-3
0.140 TAV3	1F-4
0.140 TAV4	1F-5
0.140 TAV4	1F-6
0.140 TAV5	1F-7
0.140 TAV5	1F-8
0.149 TAV1	1F-9
0.149 TAV1	1F-10
0.200 TAV1	1F-11
0.200 TAV1	1F-12
0.201 TAV1	1F-13
0.201 TAV1	1F-14
0.203 TAV1	1F-15
0.203 TAV1	1F-16
0.240 TAV1	1F-17
0.240 TAV1	1F-18
0.240 TAV2	1F-19
0.240 TAV2	1F-20
0.241 TAV1	1F-21
0.241 TAV1	1F-22
0.300 TAV1	1F-23
0.300 TAV1	1F-24
0.302 TAV1	1G-3
0.302 TAV1	1G-4
0.305 TAV1	1G-5
0.305 TAV1	1G-6
0.305 TAV2	1G-7
0.305 TAV2	1G-8
0.310 TAV1	1G-9
0.310 TAV1	1G-10
0.310 TAV2	1G-11
0.310 TAV2	1G-12
0.320 TAV1	1G-13
0.320 TAV1	1G-14
0.320 TAV2	1G-15
0.320 TAV2	1G-16
0.323 TAV1	1G-17
0.323 TAV1	1G-18
0.326 TAV1	1G-19
0.326 TAV1	1G-20
0.340 TAV1	1G-21
0.340 TAV1	1G-22
0.345 TAV1	1G-23
0.345 TAV1	1G-24
0.350 TAV1	1H-3
0.350 TAV1	1H-4
0.360 TAV1	1H-5
0.360 TAV1	1H-6
0.360 TAV2	1H-7
0.360 TAV2	1H-8
0.400 TAV1	1H-9
0.400 TAV1	1H-10
0.400 TAV2	1H-11
0.400 TAV2	1H-12
0.400 TAV3	1H-13
0.400 TAV3	1H-14
0.450 TAV1	1H-15
0.450 TAV1	1H-16
1.000 TAV1	1I-3
1.000 TAV1	1I-4
1.010 TAV1	1I-5
1.010 TAV1	1I-6
1.020 TAV1	1I-7
1.020 TAV1	1I-8
1.030 TAV1	1I-9
1.030 TAV1	1I-10
1.090 TAV2	1I-11
1.090 TAV2	1I-12
1.030 TAV3	1I-13
1.030 TAV3	1I-14
1.030 TAV4	1I-15
1.030 TAV4	1I-16
1.030 TAV5	1I-17
1.030 TAV5	1I-18
1.030 TAV6	1I-19
1.030 TAV6	1I-20
1.030 TAV7	1I-21
1.030 TAV7	1I-22
1.030 TAV8	1I-23
1.030 TAV8	1I-24
1.040 TAV1	1J-3
1.040 TAV1	1J-4
1.040 TAV2	1J-5
1.040 TAV2	1J-6
1.040 TAV3	1J-7
1.040 TAV3	1J-8
1.040 TAV3	1J-9
1.040 TAV3	1J-10
1.040 TAV4	1J-11
1.040 TAV4	1J-12
1.050 TAV1	1J-13
1.050 TAV1	1J-14
1.050 TAV1	1J-15
1.050 TAV1	1J-16
1.050 TAV2	1J-17
1.050 TAV2	1J-18
1.050 TAV3	1J-19
1.050 TAV3	1J-20
1.050 TAV4	1J-21
1.050 TAV4	1J-22
1.050 TAV5	1J-23
1.050 TAV5	1J-24
1.060 TAV1	1K-3
1.000 TAV1	1K-4
1.070 TAV1	1K-5
1.070 TAV1	1K-6
1.070 TAV2	1K-7
1.070 TAV2	1K-8
1.070 TAV3	1K-9
1.070 TAV3	1K-10
1.080 TAV1	1K-11
1.080 TAV1	1K-12
1.080 TAV2	1K-13
1.080 TAV2	1K-14
1.081 TAV1	1K-15
1.081 TAV1	1K-16
1.081 TAV2	1K-17
1.081 TAV2	1K-18
1.082 TAV1	1K-19
1.082 TAV1	1K-20
1.082 TAV1	1K-21
1.082 TAV1	1K-22
1.082 TAV2	1K-23
1.082 TAV2	1K-24
1.082 TAV3	1L-3
1.082 TAV3	1L-4
1.083 TAV1	1L-5
1.083 TAV1	1L-6
1.084 TAV1	1L-7
1.084 TAV1	1L-8
1.200 TAV1	2D-3
1.200 TAV1	2D-4
1.200 TAV2	2D-5
1.200 TAV2	2D-6
1.200 TAV3	2D-7
1.200 TAV3	2D-8
1.210 TAV1	2D-9
1.210 TAV1	2D-10
1.220 TAV1	2D-11
1.220 TAV1	2D-12
1.220 TAV2	2D-13
1.220 TAV2	2D-14
1.220 TAV2	2D-15
1.220 TAV2	2D-16
1.220 TAV3	2D-17
1.220 TAV3	2D-18
1.220 TAV4	2D-19
1.220 TAV4	2D-20
1.250 TAV1	2D-21
1.250 TAV1	2D-22
1.250 TAV2	2D-23
1.250 TAV2	2D-24
1.250 TAV4	2E-3
1.250 TAV4	2E-4
1.250 TAV4	2E-5
1.250 TAV4	2E-6
1.250 TAV5	2E-7
1.250 TAV5	2E-8
1.250 TAV6	2E-9
1.250 TAV6	2E-10
1.250 TAV7	2E-11
1.250 TAV7	2E-12
1.250 TAV7	2E-13
1.250 TAV7	2E-14
1.290 TAV1	2E-15
1.290 TAV1	2E-16
1.290 TAV2	2E-17
1.290 TAV2	2E-18
1.300 TAV1	2E-19
1.300 TAV1	2E-20
1.300 TAV2	2E-21
1.300 TAV2	2E-22
1.300 TAV3	2E-23
1.300 TAV3	2E-24
2.000 TAV1	2F-3
2.000 TAV1	2F-4
2.003 TAV1	2F-5
2.003 TAV1	2F-6
2.003 TAV2	2F-7
2.003 TAV2	2F-8
2.020 TAV1	2F-9
2.020 TAV1	2F-10
2.020 TAV1	2F-11
2.020 TAV1	2F-12
2.030 TAV1	2F-13
2.030 TAV1	2F-14
2.030 TAV2	2F-15
2.030 TAV2	2F-16
2.030 TAV3	2F-17
2.030 TAV3	2F-18
2.030 TAV4	2F-19
2.030 TAV4	2F-20
2.030 TAV5	2F-21
2.030 TAV5	2F-22
2.040 TAV1	2F-23
2.040 TAV1	2F-24
3.000 TAV1	2G-3
3.000 TAV1	2G-4
3.010 TAV1	2G-5
3.010 TAV1	2G-6
3.010 TAV2	2G-7
3.010 TAV2	2G-8
3.010 TAV3	2G-9
3.010 TAV3	2G-10
3.010 TAV4	2G-11
3.010 TAV4	2G-12
3.010 TAV5	2G-13
3.010 TAV5	2G-14
3.020 TAV1	2G-15
3.020 TAV1	2G-16
3.030 TAV1	2G-17
3.030 TAV1	2G-18
3.040 TAV1	2G-19
3.040 TAV1	2G-20
3.050 TAV1	2G-21
3.050 TAV1	2G-22
3.060 TAV1	2G-23
3.060 TAV1	2G-24
3.060 TAV2	2H-3
3.060 TAV2	2H-4
3.070 TAV1	2H-5
3.070 TAV1	2H-6
4.000 TAV1	2H-7
4.000 TAV1	2H-8
4.500 TAV1	2H-9
4.500 TAV1	2H-10
5.0020TAV1	2H-11
5.0020TAV1	2H-12
5.0020TAV2	2H-13
5.0020TAV2	2H-14
5.0022TAV1	2H-15
5.0022TAV1	2H-16
5.0022TAV2	2H-17
5.0022TAV2	2H-18
5.0025TAV1	2H-19
5.0025TAV1	2H-20
5.0038TAV1	2H-21
5.0038TAV1	2H-22
5.0038TAV2	2H-23
5.0038TAV2	2H-24
5.0151TAV1	2I-3
5.0151TAV1	2I-4
5.0536TAV1	2I-5
5.0536TAV1	2I-6
5.0540TAV1	2I-7
5.0540TAV1	2I-8
5.0083TAV1	2I-9
5.0083TAV1	2I-10

NUMERICAL INDEX - INDICE NUMERICO - LISTE NUMERIQUE
NUMERISCHES ERSATZEILVERZEILVERZEICHNIS - INDICE NUMERICO

PART. N.	SGR.	TAV.	ITEM
71404070	1.081	1	36
71404071	1.081	1	37
71404072	1.081	1	39
71404073	1.081	1	41
71404074	1.082	1	08
71404075	1.083	1	09
71404076	1.060	1	15
71404077	1.060	1	25
71404078	1.060	1	26
71404079	1.060	1	43
71404080	1.060	1	44
71404081	1.060	1	49
71404082	1.060	1	50
71404083	1.060	1	51
71404084	1.060	1	53
71404085	1.060	1	10
71404117	1.050	1	70
71404118	5.0038	2	32A
71404120	5.0038	2	33
71404132	5.0038	2	32
71404137	1.050	1	58
71404160	5.0020	2	39A
71404161	1.050	1	84A
71404161	5.0081	2	04A
71404162	1.050	1	71A
71404162	1.060	1	54A
71404162	1.060	1	55A
71404162	3.070	1	00A
71404162	5.0020	2	64A
71404163	1.050	1	75A
71404163	1.080	1	03A
71404163	1.080	1	05A
71404163	1.081	1	12A
71404163	1.081	1	04A
71404163	1.081	1	20A
71404163	1.083	1	05A
71404163	1.084	1	03A
71404163	5.0020	2	38A
71404163	5.0020	2	41A
71404163	5.0020	2	42A
71404163	5.0020	2	71A
71404164	1.050	5	38
71404164	1.060	1	07
71404164	3.010	5	12
71404165	1.040	3	59
71404165	1.050	1	65A
71404165	1.050	1	64A
71404165	1.050	4	07
71404165	1.050	5	07
71404165	1.080	1	15A
71404165	1.080	2	04
71404165	1.081	1	05A
71404165	1.082	1	26A
71404165	1.082	1	07A
71404165	1.082	1	05A
71404165	1.082	1	77A
71404165	1.082	3	21
71404165	1.083	1	30A
71404165	1.083	1	06A
71404165	1.084	1	02A
71404165	1.084	1	01A
71404165	3.070	1	12A
71404165	3.070	1	11A
71404165	5.0020	2	37A
71404165	5.0020	2	40A
71404166	1.030	5	14
71404166	1.050	1	57A
71404166	1.080	1	06A
71404166	1.081	1	55A
71404166	1.081	1	25A
71404166	1.081	1	06A
71404166	1.081	2	04
71404166	1.082	1	04A
71404166	1.082	1	14A
71404166	1.082	1	76A
71404166	5.0038	2	42A
71404169	1.050	1	28
71404169	5.0081	1	21
71404170	1.050	1	53
71404172	2.030	1	35
71404176	5.0020	2	32
71404177	5.0020	2	33
71404327	1.050	1	75
71404327	1.081	1	12
71404327	1.081	1	12
71404329	1.080	1	06
71404329	1.081	1	55
71404333	1.080	1	05
71404333	1.081	1	04
71404337	1.050	1	71
71404341	1.050	1	57
71404345	1.050	1	65
71404345	1.081	1	05
71404345	1.082	1	05
71404345	1.084	1	01
71404349	1.082	1	04
71404351	1.081	1	20
71404351	1.084	1	03
71404351	5.0020	2	41
71404355	1.082	1	26
71404355	5.0020	2	39
71404357	1.050	1	64
71404357	1.080	1	15
71404357	1.082	1	07
71404357	1.083	1	06
71404357	1.083	1	30
71404357	1.084	1	02
71404357	3.070	1	12
71404357	5.0020	2	40
71404361	5.0038	2	42
71404363	2.040	1	02
71404363	5.0038	2	52
71404364	2.040	1	17
71404364	5.0038	2	54
71404365	1.050	1	84
71404382	1.082	1	77
71404384	2.040	1	18
71404387	1.080	1	09
71404389	1.060	1	33
71404389	5.0020	2	57
71404390	1.082	1	22
71404390	5.0020	2	77
71404391	5.0081	2	04
71404393	1.087	1	25
71404393	1.081	1	25
71404395	1.081	1	06
71404395	1.082	1	14
71404395	1.082	1	76
71404406	5.0038	2	34
71404407	1.050	1	12
71404407	1.060	1	29
71404408	1.083	1	05
71404408	5.0020	2	42
71404412	1.060	1	55
71404414	1.080	1	54
71404414	3.070	1	00
71404431	5.0020	2	38
71404433	5.0020	2	37
71404438	3.070	1	11
71404439	1.050	1	59
71404452	5.0020	2	71
71404494	5.0020	2	35
71404496	5.0020	2	34

NUMERICAL INDEX - INDICE NUMERICO - LISTE NUMERIQUE
NUMERISCHES ERSATZEILVERZEILVERZEICHNIS - INDICE NUMERICO

PART. N.	SGR.	TAV.	ITEM
71404501	0.001	1	10
71404503	1.050	1	35
71404503	5.0020	2	73
71404504	1.050	1	55
71404505	0.001	1	11
71404615	5.0020	2	70
71404768	5.0020	2	30
71404769	5.0020	2	31
71404772	5.0020	2	75
71405003	0.000	1	08
71405003	0.003	1	01
71405003	0.003	1	01
71405003	1.010	1	04
71405003	1.020	1	04
71405004	1.020	1	27
71405005	1.020	1	00
71405040	1.020	1	17
71405041	3.000	1	00
71405107	2.000	1	00
71405108	2.000	1	01
71405108	2.003	2	19A
71405108	2.003	2	18A
71405108	2.003	2	01
71405108	2.030	1	08
71405108	5.0022	2	01
71405108	5.0022	2	18A
71405108	5.0022	2	19A
71405108	5.0038	2	19A
71405108	5.0038	2	18A
71405108	5.0038	2	01
71405109	2.000	1	06
71405109	2.000	1	00B
71405109	2.003	1	00C
71405109	5.0022	1	00D
71405109	5.0038	1	00A
71405110	1.000	1	07
71405110	2.000	1	08
71405110	2.003	2	13
71405110	5.0022	2	13
71405110	5.0038	2	13
71405113	2.000	1	27
71405114	2.000	1	28
71405115	2.000	1	29
71405115	2.003	2	20
71405115	5.0022	2	20
71405116	2.000	1	00A
71405117	2.000	1	00C
71405118	2.000	1	00D
71405151	2.003	1	00
71405152	2.003	2	04
71405152	5.0022	2	04
71405152	5.0038	2	04
71405153	2.003	2	05
71405153	5.0022	2	05
71405153	5.0038	2	05
71405155	2.003	2	16
71405155	5.0022	2	16
71405155	5.0038	2	16
71405156	2.003	2	18
71405156	5.0022	2	18
71405156	5.0038	2	18
71405158	2.003	2	19B
71405158	2.003	2	18B
71405158	5.0022	2	19B
71405158	5.0022	2	18B
71405158	5.0038	2	19B
71405158	5.0038	2	19B
71405159	2.003	1	00E
71405159	2.003	2	18C
71405159	2.003	2	19C
71405159	5.0022	1	00E
71405159	5.0022	2	18C
71405159	5.0022	2	19C
71405159	5.0038	1	00C
71405159	5.0038	2	18C
71405159	5.0038	2	19C
71405160	2.003	2	19
71405160	5.0022	2	19
71405160	5.0038	2	19
71405160	5.0038	2	19
71405163	2.003	2	21
71405163	5.0022	2	21
71405163	5.0038	2	21
71405164	2.003	2	22
71405164	5.0022	2	22
71405164	5.0038	2	22
71405165	2.003	2	23
71405165	5.0022	2	23
71405165	5.0038	2	23
71405166	2.003	2	24
71405166	5.0022	2	24
71405166	5.0038	2	24
71405167	2.003	2	25
71405167	5.0022	2	25
71405167	5.0038	2	25
71405168	2.003	2	06
71405168	5.0022	2	06
71405168	5.0038	2	06
71405172	1.000	1	35
71405172	2.000	1	11
71405172	2.003	2	31
71405172	5.0022	2	31
71405172	5.0038	2	31
71405174	2.003	1	00A
71405174	5.0022	1	00A
71405174	5.0038	1	00B
71405175	2.003	1	00B
71405175	5.0022	1	00B
71405175	5.0038	1	00D
71405176	2.003	1	00C
71405176	5.0022	1	00C
71405176	5.0038	1	00E
71405200	1.010	1	06
71405200	1.010	1	12
71405201	1.010	1	12
71405202	1.010	1	13
71405203	1.010	1	20
71405204	1.010	1	26
71405228	1.010	1	15
71405229	1.010	1	09
71405231	1.000	1	00
71405233	1.000	1	06
71405235	1.000	1	09
71405237	1.000	1	13
71405238	1.000	1	16
71405239	1.000	1	28
71405240	1.000	1	30
71405241	1.000	1	31
71405242	1.000	1	32
71405371	0.000	1	09
71405374	0.000	1	12
71405375	0.000	1	13
71405378	0.003	1	02
71405379	0.002	1	00
71405380	0.002	1	03
71405381	0.002	1	12
71405382	0.002	1	04
71405383	0.002	1	08
71405384	0.002	1	09
71405389	0.001	1	00
71405390	0.001	1	04
71405391	0.001	1	08
71405392	0.001	1	13
71405393	0.001	1	15
71405394	0.001	1	12
71405431	0.001	1	00A
71405431	0.001	1	17A
71405435	2.020	1	09

SUBGROUP	GRID
0.000 TAV1	1C-11
0.000 TAV1	1C-12
0.001 TAV1	1C-13
0.001 TAV1	1C-14
0.002 TAV1	1C-15
0.002 TAV1	1C-16
0.003 TAV1	1C-17
0.003 TAV1	1C-18
0.003 TAV2	1C-19
0.003 TAV2	1C-20
0.003 TAV3	1C-21
0.003 TAV3	1C-22
0.004 TAV1	1C-23
0.004 TAV1	1C-24
0.021 TAV1	1D-3
0.021 TAV1	1D-4
0.040 TAV1	1D-5
0.040 TAV1	1D-6
0.040 TAV2	1D-7
0.040 TAV2	1D-8
0.040 TAV3	1D-9
0.040 TAV3	1D-10
0.042 TAV1	1D-11
0.042 TAV1	1D-12
0.043 TAV1	1D-13
0.043 TAV1	1D-14
0.043 TAV2	1D-15
0.043 TAV2	1D-16
0.045 TAV1	1D-17
0.045 TAV1	1D-18
0.045 TAV1A	1D-19
0.045 TAV1A	1D-20
0.060 TAV1	1D-21
0.060 TAV1	1D-22
0.060 TAV2	1D-23
0.060 TAV2	1D-24
0.071 TAV1	1E-3
0.071 TAV1	1E-4
0.077 TAV1	1E-5
0.077 TAV1	1E-6
0.080 TAV1	1E-7
0.080 TAV1	1E-8
0.081 TAV1	1E-9
0.081 TAV1	1E-10
0.082 TAV1	1E-11
0.082 TAV1	1E-12
0.083 TAV1	1E-13
0.083 TAV1	1E-14
0.084 TAV1	1E-15
0.084 TAV1	1E-16
0.100 TAV1	1E-17
0.100 TAV1	1E-18
0.120 TAV1	1E-19
0.120 TAV1	1E-20
0.140 TAV1	1E-21
0.140 TAV1	1E-22
0.140 TAV2	1E-23
0.140 TAV2	1E-24
0.140 TAV3	1F-3
0.140 TAV3	1F-4
0.140 TAV4	1F-5
0.140 TAV4	1F-6
0.140 TAV5	1F-7
0.140 TAV5	1F-8
0.149 TAV1	1F-9
0.149 TAV1	1F-10
0.200 TAV1	1F-11
0.200 TAV1	1F-12
0.201 TAV1	1F-13
0.201 TAV1	1F-14
0.203 TAV1	1F-15
0.203 TAV1	1F-16
0.240 TAV1	1F-17
0.240 TAV1	1F-18
0.240 TAV2	1F-19
0.240 TAV2	1F-20
0.241 TAV1	1F-21
0.241 TAV1	1F-22
0.300 TAV1	1F-23
0.300 TAV1	1F-24
0.302 TAV1	1G-3
0.302 TAV1	1G-4
0.305 TAV1	1G-5
0.305 TAV1	1G-6
0.305 TAV2	1G-7
0.305 TAV2	1G-8
0.310 TAV1	1G-9
0.310 TAV1	1G-10
0.310 TAV2	1G-11
0.310 TAV2	1G-12
0.320 TAV1	1G-13
0.320 TAV1	1G-14
0.320 TAV2	1G-15
0.320 TAV2	1G-16
0.323 TAV1	1G-17
0.323 TAV1	1G-18
0.326 TAV1	1G-19
0.326 TAV1	1G-20
0.340 TAV1	1G-21
0.340 TAV1	1G-22
0.345 TAV1	1G-23
0.345 TAV1	1G-24
0.350 TAV1	1H-3
0.350 TAV1	1H-4
0.360 TAV1	1H-5
0.360 TAV1	1H-6
0.360 TAV2	1H-7
0.360 TAV2	1H-8
0.400 TAV1	1H-9
0.400 TAV1	1H-10
0.400 TAV2	1H-11
0.400 TAV2	1H-12
0.400 TAV3	1H-13
0.400 TAV3	1H-14
0.450 TAV1	1H-15
0.450 TAV1	1H-16
1.000 TAV1	1I-3
1.000 TAV1	1I-4
1.010 TAV1	1I-5
1.010 TAV1	1I-6
1.020 TAV1	1I-7
1.020 TAV1	1I-8
1.030 TAV1	1I-9
1.030 TAV1	1I-10
1.030 TAV2	1I-11
1.030 TAV2	1I-12
1.030 TAV3	1I-13
1.030 TAV3	1I-14
1.030 TAV4	1I-15
1.030 TAV4	1I-16
1.030 TAV5	1I-17
1.030 TAV5	1I-18
1.030 TAV6	1I-19
1.030 TAV6	1I-20
1.030 TAV7	1I-21
1.030 TAV7	1I-22
1.030 TAV8	1I-23
1.030 TAV8	1I-24
1.040 TAV1	1J-3
1.040 TAV1	1J-4
1.040 TAV2	1J-5
1.040 TAV2	1J-6
1.040 TAV3	1J-7
1.040 TAV3	1J-8
1.040 TAV3	1J-9
1.040 TAV3	1J-10
1.040 TAV4	1J-11
1.040 TAV4	1J-12
1.050 TAV1	1J-13
1.050 TAV1	1J-14
1.050 TAV1	1J-15
1.050 TAV1	1J-16
1.050 TAV2	1J-17
1.050 TAV2	1J-18
1.050 TAV3	1J-19
1.050 TAV3	1J-20
1.050 TAV4	1J-21
1.050 TAV4	1J-22
1.050 TAV5	1J-23
1.050 TAV5	1J-24
1.060 TAV1	1K-3
1.060 TAV1	1K-4
1.070 TAV1	1K-5
1.070 TAV1	1K-6
1.070 TAV2	1K-7
1.070 TAV2	1K-8
1.070 TAV3	1K-9
1.070 TAV3	1K-10
1.080 TAV1	1K-11
1.080 TAV1	1K-12
1.080 TAV2	1K-13
1.080 TAV2	1K-14
1.081 TAV1	1K-15
1.081 TAV1	1K-16
1.081 TAV2	1K-17
1.081 TAV2	1K-18
1.082 TAV1	1K-19
1.082 TAV1	1K-20
1.082 TAV1	1K-21
1.082 TAV1	1K-22
1.082 TAV2	1K-23
1.082 TAV2	1K-24
1.082 TAV3	1L-3
1.082 TAV3	1L-4
1.083 TAV1	1L-5
1.083 TAV1	1L-6
1.084 TAV1	1L-7
1.084 TAV1	1L-8
1.200 TAV1	2D-3
1.200 TAV1	2D-4
1.200 TAV2	2D-5
1.200 TAV2	2D-6
1.200 TAV3	2D-7
1.200 TAV3	2D-8
1.210 TAV1	2D-9
1.210 TAV1	2D-10
1.220 TAV1	2D-11
1.220 TAV1	2D-12
1.220 TAV2	2D-13
1.220 TAV2	2D-14
1.220 TAV2	2D-15
1.220 TAV2	2D-16
1.220 TAV3	2D-17
1.220 TAV3	2D-18
1.220 TAV4	2D-19
1.220 TAV4	2D-20
1.250 TAV1	2D-21
1.250 TAV1	2D-22
1.250 TAV2	2D-23
1.250 TAV2	2D-24
1.250 TAV4	2E-3
1.250 TAV4	2E-4
1.250 TAV4	2E-5
1.250 TAV4	2E-6
1.250 TAV5	2E-7
1.250 TAV5	2E-8
1.250 TAV6	2E-9
1.250 TAV6	2E-10
1.250 TAV7	2E-11
1.250 TAV7	2E-12
1.250 TAV7	2E-13
1.250 TAV7	2E-14
1.290 TAV1	2E-15
1.290 TAV1	2E-16
1.290 TAV2	2E-17
1.290 TAV2	2E-18
1.300 TAV1	2E-19
1.300 TAV1	2E-20
1.300 TAV2	2E-21
1.300 TAV2	2E-22
1.300 TAV3	2E-23
1.300 TAV3	2E-24
2.000 TAV1	2F-3
2.000 TAV1	2F-4
2.003 TAV1	2F-5
2.003 TAV1	2F-6
2.003 TAV2	2F-7
2.003 TAV2	2F-8
2.020 TAV1	2F-9
2.020 TAV1	2F-10
2.020 TAV1	2F-11
2.020 TAV1	2F-12
2.030 TAV1	2F-13
2.030 TAV1	2F-14
2.030 TAV2	2F-15
2.030 TAV2	2F-16
2.030 TAV3	2F-17
2.030 TAV3	2F-18
2.030 TAV4	2F-19
2.030 TAV4	2F-20
2.030 TAV5	2F-21
2.030 TAV5	2F-22
2.040 TAV1	2F-23
2.040 TAV1	2F-24
3.000 TAV1	2G-3
3.000 TAV1	2G-4
3.010 TAV1	2G-5
3.010 TAV1	2G-6
3.010 TAV2	2G-7
3.010 TAV2	2G-8
3.010 TAV3	2G-9
3.010 TAV3	2G-10
3.010 TAV4	2G-11
3.010 TAV4	2G-12
3.010 TAV5	2G-13
3.010 TAV5	2G-14
3.020 TAV1	2G-15
3.020 TAV1	2G-16
3.030 TAV1	2G-17
3.030 TAV1	2G-18
3.040 TAV1	2G-19
3.040 TAV1	2G-20
3.050 TAV1	2G-21
3.050 TAV1	2G-22
3.060 TAV1	2G-23
3.060 TAV1	2G-24
3.060 TAV2	2H-3
3.060 TAV2	2H-4
3.070 TAV1	2H-5
3.070 TAV1	2H-6
4.000 TAV1	2H-7
4.000 TAV1	2H-8
4.500 TAV1	2H-9
4.500 TAV1	2H-10
5.0020TAV1	2H-11
5.0020TAV1	2H-12
5.0020TAV2	2H-13
5.0020TAV2	2H-14
5.0022TAV1	2H-15
5.0022TAV1	2H-16
5.0022TAV2	2H-17
5.0022TAV2	2H-18
5.0025TAV1	2H-19
5.0025TAV1	2H-20
5.0038TAV1	2H-21
5.0038TAV1	2H-22
5.0038TAV2	2H-23
5.0038TAV2	2H-24
5.0151TAV1	2I-3
5.0151TAV1	2I-4
5.0536TAV1	2I-5
5.0536TAV1	2I-6
5.0540TAV1	2I-7
5.0540TAV1	2I-8
5.0083TAV1	2I-9
5.0083TAV1	2I-10

NUMERICAL INDEX - INDICE NUMERICO - LISTE NUMERIQUE
NUMERISCHES ERSATZEILVERZEILVERZEICHNIS - INDICE NUMERICO

PART. N.	SGR.	TAV.	ITEM
71405436	2.020	1	08
71405437	2.020	1	01
71405438	2.020	1	04
71405439	2.020	1	03
71405440	2.020	1	02
71405476	0.004	1	19
71405479	0.004	1	29
71405480	0.004	1	30
71405481	0.004	1	35
71405482	0.004	1	20
71405483	0.004	1	21
71405484	0.004	1	23
71405485	0.004	1	26
71405486	0.004	1	28
71405498	1.030	1	01
71405499	1.030	1	02
71405500	1.030	1	22
71405507	1.300	1	00
71405508	1.300	1	01
71405509	1.300	1	02
71405510	1.300	1	03
71405511	1.300	1	04
71405512	1.300	1	05
71405513	1.300	1	06
71405514	1.300	1	07
71405515	1.300	1	08
71405516	1.300	1	09
71405517	1.300	1	12
71405518	1.300	1	13
71405519	1.300	1	16
71405520	1.300	1	17
71405521	1.300	1	18
71405522	1.300	1	19
71405524	1.300	1	24
71405525	1.300	1	27
71405526	1.300	1	28
71405527	1.300	1	29
71405528	1.300	1	30
71405529	1.300	1	33
71405530	1.300	1	34
71405531	1.300	1	35
71405532	1.300	2	00
71405533	1.300	2	04
71405534	1.300	2	06
71405538	1.300	2	18
71405539	1.300	2	19
71405540	1.300	2	20
71405541	1.300	2	21
71405542	1.300	2	22
71405543	1.300	2	23
71405545	1.300	2	29
71405546	1.300	2	32
71405547	1.300	2	33
71405548	1.300	2	34
71405595	1.300	1	10A
71405596	1.300	2	00A
71405600	1.000	1	33
71405600	1.300	2	38
71405601	1.300	3	00
71405684	1.300	1	56
71405685	1.300	1	57
71405685	1.300	2	40
71405686	2.020	1	00B
71405687	2.020	1	00A
71405688	2.020	1	00C
71405690	3.000	1	15
71405691	3.000	1	14
71405692	3.000	1	08
71405693	3.000	1	09
71405694	3.000	1	19
71405723	0.001	1	07
71405729	1.000	1	34
71405731	1.030	1	10
71405736	1.020	1	14
71405739	1.081	1	15
71405740	1.081	1	41A
71405740	1.081	1	39A
71405740	1.081	1	37A
71405740	1.081	1	36A
71405740	1.081	1	30A
71405740	1.081	1	28A
71405740	1.082	1	08A
71405741	1.082	1	17
71405743	1.082	1	29
71405745	1.082	1	58
71405745	1.220	2	57
71405746	1.082	1	56
71405750	1.084	1	20
71405753	1.060	1	00
71405754	1.060	1	05
71405757	1.060	1	05
71405760	1.060	1	09
71405760	1.081	1	52
71405760	2.030	1	24
71405761	1.060	1	17
71405767	1.229	2	03
71405768	1.220	2	04

NUMERICAL INDEX - INDICE NUMERICO - LISTE NUMERIQUE
NUMERISCHES ERSATZEILVERZEILVERZEICHNIS - INDICE NUMERICO

PART. N.	SGR.	TAV.	ITEM
71405770	1.010	1	16
71405770	1.060	1	35
71405770	1.220	2	57
71405770	1.220	2	57
71405771	1.220	2	57
71405772	1.220	2	57
71405773	1.220	2	57
71405774	1.220	2	57
71405778	2.040	1	10
71405780	2.040	1	11
71405782	2.040	1	12
71405784	2.040	1	13
71405786	2.040	1	14
71405793	1.050	1	05
71405797	1.050	1	04
71405801	1.050	1	15
71405804	1.050	1	16
71405806	1.050	1	21
71405809	1.050	1	25
71405814	1.050	1	45
71405815	1.050	1	46
71405816	1.050	1	51
71405818	1.050	1	54
71405824	1.050	1	42
71405826	3.070	1	02
71405828	3.070	1	03
71405830	3.070	1	04
71405832	3.070	1	05
71405834	3.070	1	13
71405838	2.030	2	02
71405840	2.030	2	01
71405841	2.030	2	07
71405841	2.030	3	07
71405842	2.030	2	06
71405842	2.030	3	06
71405845	2.030	2	10
71405845	2.030	3	10
71405846	2.030	3	01
71405848	2.030	3	02
71405849	2.030	4	01
71405851	2.030	4	02
71405853	2.030	4	10
71405855	2.030	5	01
71405857	2.030	5	02
71405859	2.030	5	05
71405860	2.030	5	10
71405861	2.030	5	11
71405863	2.030	1	18
71405865	2.030	1	19
71405867	2.030	1	20
71405869	2.030	1	21
71405871	2.030	1	26
71405873	2.030	1	34
71405873	2.030	1	37
71405873	5.0038	2	35
71405876	0.003	1	00
71405890	5.0038	1	00
71405900	5.0038	2	45
71405901	5.0038	1	00F
71405902	5.0038	1	00G
71405919	1.081	1	51
71405921	1.082	1	71
71405924	1.060	1	65
71405926	1.060	1	66
71405928	5.0038	2	20
71405932	5.0038	2	55
71405938	1.290	1	09
71405939	1.290	1	10
71405940	1.290	1	16
71405941	1.290	1	17
71405942	1.290	1	19
71405943	1.290	1	25
71405944	1.290	1	30
71405949	5.0022	1	00
71405963	1.020	1	06
71405964	1.020	1	06A
71405965	1.020	1	06B
71405966	1.020	1	06C
71405969	1.082	1	72
71405970	1.081	1	56
71405981	5.0083	1	02
71405982	5.0083	1	09
71405983	5.0083	1	09
71405985	5.0083	1	11
71405986	5.0083	1	12
71405987	5.0083	1	13
71405988	5.0083	1	13
71405989	5.0083	1	11
71405990	5.0083	1	13
71405991	5.0083	1	13
71405992	5.0083	1	13
71405993	5.0083	1	19
71405994	5.0083	1	20
71405995	5.0083	1	28
71406000	1.290	1	15
71406001	1.220	2	69
71406003	1.220	2	70
71406004	1.220	2	73
71406005	4.500	1	00
71406006	4.500	1	02
71406007	4.500	1	03
71406008	4.500	1	04
71406009	4.500	1	05
71406010	4.500	1	06
71406011	4.500	1	10
71406012	4.500	1	11
71406013	4.500	1	13
71406014	4.500	1	02
71406015	4.500	1	15
71406016	4.500	1	17
71406017	4.500	1	18
71406018	4.500	1	19
71406019	4.500	1	20
71406020	4.500	1	21
71406021	4.500	1	24
71406022	4.500	1	25
71406034	1.000	1	05
71406038	0.003	1	07
71406039	0.003	1	08
71406040	1.300	1	23
71406049	1.300	2	13
71406054	1.300	2	14
71406058	1.300	2	27
71406064	1.300	1	61
71406070	1.300	1	62
71406070	1.300	3	05
71406071	1.300	1	63
71406073	4.500	1	03
71406074	4.500	1	04
71406075	4.500	1	06
71406076	4.500	1	25
71406077	1.300	3	03
71406078	1.300	3	04
71406080	1.300	3	07
71406087	3.000	1	20
71406088	2.030	4	23
71406124	1.050	1	41
71406126	1.050	1	37
71406128	0.003	2	01
71406129	0.003	2	02
71406130	0.003	2	04
71406131	0.003	2	05
71406132	0.003	2	06
71406133	0.003	2	07
71406134	0.003	2	08
71406135	0.003	2	09
71406136	0.003	2	10
71406137	0.003	2	11
71406138	0.003	2	12
71406139	0.003	2	13
71406140	0.003	2	14
71406141	0.003	2	15
71406142	0.003	2	17
71406143	0.003	2	18
71406144	0.003	2	19
71406145	0.003	2	20
71406165	1.020	1	21

SUBGROUP	GRID
0.000 TAV1	1C-11
0.000 TAV1	1C-12
0.001 TAV1	1C-13
0.001 TAV1	1C-14
0.002 TAV1	1C-15
0.002 TAV1	1C-16
0.003 TAV1	1C-17
0.003 TAV1	1C-18
0.003 TAV2	1C-19
0.003 TAV2	1C-20
0.003 TAV3	1C-21
0.003 TAV3	1C-22
0.004 TAV1	1C-23
0.004 TAV1	1C-24
0.021 TAV1	1D-3
0.021 TAV1	1D-4
0.040 TAV1	1D-5
0.040 TAV1	1D-6
0.040 TAV2	1D-7
0.040 TAV2	1D-8
0.040 TAV3	1D-9
0.040 TAV3	1D-10
0.042 TAV1	1D-11
0.042 TAV1	1D-12
0.043 TAV1	1D-13
0.043 TAV1	1D-14
0.043 TAV2	1D-15
0.043 TAV2	1D-16
0.045 TAV1	1D-17
0.045 TAV1	1D-18
0.045 TAV1A	1D-19
0.045 TAV1A	1D-20
0.060 TAV1	1D-21
0.060 TAV1	1D-22
0.060 TAV2	1D-23
0.060 TAV2	1D-24
0.071 TAV1	1E-3
0.071 TAV1	1E-4
0.077 TAV1	1E-5
0.077 TAV1	1E-6
0.080 TAV1	1E-7
0.080 TAV1	1E-8
0.081 TAV1	1E-9
0.081 TAV1	1E-10
0.082 TAV1	1E-11
0.082 TAV1	1E-12
0.083 TAV1	1E-13
0.083 TAV1	1E-14
0.084 TAV1	1E-15
0.084 TAV1	1E-16
0.100 TAV1	1E-17
0.100 TAV1	1E-18
0.120 TAV1	1E-19
0.120 TAV1	1E-20
0.140 TAV1	1E-21
0.140 TAV1	1E-22
0.140 TAV2	1E-23
0.140 TAV2	1E-24
0.140 TAV3	1F-3
0.140 TAV3	1F-4
0.140 TAV4	1F-5
0.140 TAV4	1F-6
0.140 TAV5	1F-7
0.140 TAV5	1F-8
0.149 TAV1	1F-9
0.149 TAV1	1F-10
0.200 TAV1	1F-11
0.200 TAV1	1F-12
0.201 TAV1	1F-13
0.201 TAV1	1F-14
0.203 TAV1	1F-15
0.203 TAV1	1F-16
0.240 TAV1	1F-17
0.240 TAV1	1F-18
0.240 TAV2	1F-19
0.240 TAV2	1F-20
0.241 TAV1	1F-21
0.241 TAV1	1F-22
0.300 TAV1	1F-23
0.300 TAV1	1F-24
0.302 TAV1	1G-3
0.302 TAV1	1G-4
0.305 TAV1	1G-5
0.305 TAV1	1G-6
0.305 TAV2	1G-7
0.305 TAV2	1G-8
0.310 TAV1	1G-9
0.310 TAV1	1G-10
0.310 TAV2	1G-11
0.310 TAV2	1G-12
0.320 TAV1	1G-13
0.320 TAV1	1G-14
0.320 TAV2	1G-15
0.320 TAV2	1G-16
0.323 TAV1	1G-17
0.323 TAV1	1G-18
0.326 TAV1	1G-19
0.326 TAV1	1G-20
0.340 TAV1	1G-21
0.340 TAV1	1G-22
0.345 TAV1	1G-23
0.345 TAV1	1G-24
0.350 TAV1	1H-3
0.350 TAV1	1H-4
0.360 TAV1	1H-5
0.360 TAV1	1H-6
0.360 TAV2	1H-7
0.360 TAV2	1H-8
0.400 TAV1	1H-9
0.400 TAV1	1H-10
0.400 TAV2	1H-11
0.400 TAV2	1H-12
0.400 TAV3	1H-13
0.400 TAV3	1H-14
0.450 TAV1	1H-15
0.450 TAV1	1H-16
1.000 TAV1	1I-3
1.000 TAV1	1I-4
1.010 TAV1	1I-5
1.010 TAV1	1I-6
1.020 TAV1	1I-7
1.020 TAV1	1I-8
1.030 TAV1	1I-9
1.030 TAV1	1I-10
1.030 TAV2	1I-11
1.030 TAV2	1I-12
1.030 TAV3	1I-13
1.030 TAV3	1I-14
1.030 TAV4	1I-15
1.030 TAV4	1I-16
1.030 TAV5	1I-17
1.030 TAV5	1I-18
1.030 TAV6	1I-19
1.030 TAV6	1I-20
1.030 TAV7	1I-21
1.030 TAV7	1I-22
1.030 TAV8	1I-23
1.030 TAV8	1I-24
1.040 TAV1	1J-3
1.040 TAV1	1J-4
1.040 TAV2	1J-5
1.040 TAV2	1J-6
1.040 TAV3	1J-7
1.040 TAV3	1J-8
1.040 TAV3	1J-9
1.040 TAV3	1J-10
1.040 TAV4	1J-11
1.040 TAV4	1J-12
1.050 TAV1	1J-13
1.050 TAV1	1J-14
1.050 TAV1	1J-15
1.050 TAV1	1J-16
1.050 TAV2	1J-17
1.050 TAV2	1J-18
1.050 TAV3	1J-19
1.050 TAV3	1J-20
1.050 TAV4	1J-21
1.050 TAV4	1J-22
1.050 TAV5	1J-23
1.050 TAV5	1J-24
1.060 TAV1	1K-3
1.060 TAV1	1K-4
1.070 TAV1	1K-5
1.070 TAV1	1K-6
1.070 TAV2	1K-7
1.070 TAV2	1K-8
1.070 TAV3	1K-9
1.070 TAV3	1K-10
1.080 TAV1	1K-11
1.080 TAV1	1K-12
1.080 TAV2	1K-13
1.080 TAV2	1K-14
1.081 TAV1	1K-15
1.081 TAV1	1K-16
1.081 TAV2	1K-17
1.081 TAV2	1K-18
1.082 TAV1	1K-19
1.082 TAV1	1K-20
1.082 TAV1	1K-21
1.082 TAV1	1K-22
1.082 TAV2	1K-23
1.082 TAV2	1K-24
1.082 TAV3	1L-3
1.082 TAV3	1L-4
1.083 TAV1	1L-5
1.083 TAV1	1L-6
1.084 TAV1	1L-7
1.084 TAV1	1L-8
1.200 TAV1	2D-3
1.200 TAV1	2D-4
1.200 TAV2	2D-5
1.200 TAV2	2D-6
1.200 TAV3	2D-7
1.200 TAV3	2D-8
1.210 TAV1	2D-9
1.210 TAV1	2D-10
1.220 TAV1	2D-11
1.220 TAV1	2D-12
1.220 TAV2	2D-13
1.220 TAV2	2D-14
1.220 TAV2	2D-15
1.220 TAV2	2D-16
1.220 TAV3	2D-17
1.220 TAV3	2D-18
1.220 TAV4	2D-19
1.220 TAV4	2D-20
1.250 TAV1	2D-21
1.250 TAV1	2D-22
1.250 TAV2	2D-23
1.250 TAV2	2D-24
1.250 TAV4	2E-3
1.250 TAV4	2E-4
1.250 TAV4	2E-5
1.250 TAV4	2E-6
1.250 TAV5	2E-7
1.250 TAV5	2E-8
1.250 TAV6	2E-9
1.250 TAV6	2E-10
1.250 TAV7	2E-11
1.250 TAV7	2E-12
1.250 TAV7	2E-13
1.250 TAV7	2E-14
1.290 TAV1	2E-15
1.290 TAV1	2E-16
1.290 TAV2	2E-17
1.290 TAV2	2E-18
1.300 TAV1	2E-19
1.300 TAV1	2E-20
1.300 TAV2	2E-21
1.300 TAV2	2E-22
1.300 TAV3	2E-23
1.300 TAV3	2E-24
2.000 TAV1	2F-3
2.000 TAV1	2F-4
2.003 TAV1	2F-5
2.003 TAV1	2F-6
2.003 TAV2	2F-7
2.003 TAV2	2F-8
2.020 TAV1	2F-9
2.020 TAV1	2F-10
2.020 TAV1	2F-11
2.020 TAV1	2F-12
2.030 TAV1	2F-13
2.030 TAV1	2F-14
2.030 TAV2	2F-15
2.030 TAV2	2F-16
2.030 TAV3	2F-17
2.030 TAV3	2F-18
2.030 TAV4	2F-19
2.030 TAV4	2F-20
2.030 TAV5	2F-21
2.030 TAV5	2F-22
2.040 TAV1	2F-23
2.040 TAV1	2F-24
3.000 TAV1	2G-3
3.000 TAV1	2G-4
3.010 TAV1	2G-5
3.010 TAV1	2G-6
3.010 TAV2	2G-7
3.010 TAV2	2G-8
3.010 TAV3	2G-9
3.010 TAV3	2G-10
3.010 TAV4	2G-11
3.010 TAV4	2G-12
3.010 TAV5	2G-13
3.010 TAV5	2G-14
3.020 TAV1	2G-15
3.020 TAV1	2G-16
3.030 TAV1	2G-17
3.030 TAV1	2G-18
3.040 TAV1	2G-19
3.040 TAV1	2G-20
3.050 TAV1	2G-21
3.050 TAV1	2G-22
3.060 TAV1	2G-23
3.060 TAV1	2G-24
3.060 TAV2	2H-3
3.060 TAV2	2H-4
3.070 TAV1	2H-5
3.070 TAV1	2H-6
4.000 TAV1	2H-7
4.000 TAV1	2H-8
4.500 TAV1	2H-9
4.500 TAV1	2H-10
5.0020TAV1	2H-11
5.0020TAV1	2H-12
5.0020TAV2	2H-13
5.0020TAV2	2H-14
5.0022TAV1	2H-15
5.0022TAV1	2H-16
5.0022TAV2	2H-17
5.0022TAV2	2H-18
5.0025TAV1	2H-19
5.0025TAV1	2H-20
5.0038TAV1	2H-21
5.0038TAV1	2H-22
5.0038TAV2	2H-23
5.0038TAV2	2H-24
5.0151TAV1	2I-3
5.0151TAV1	2I-4
5.0536TAV1	2I-5
5.0536TAV1	2I-6
5.0540TAV1	2I-7
5.0540TAV1	2I-8
5.0083TAV1	2I-9
5.0083TAV1	2I-10

NUMERICAL INDEX - INDICE NUMERICO - LISTE NUMERIQUE
NUMERISCHES ERSATZEILVERZEILVERZEICHNIS - INDICE NUMERICO

PART. N.	SGR.	TAV.	ITEM
71406172	1.220	2	90
71406173	5.0536	1	06
71406191	4.500	1	02
71406192	4.500	1	03
71406193	4.500	1	04
71406194	4.500	1	06
71406195	4.500	1	25
71406228	5.0151	1	02
71406230	5.0151	1	04
71406234	5.0151	1	08
71406236	2.030	1	09
71406238	1.300	1	12
71406247	0.003	1	05
71406248	0.003	1	06
71406250	0.001	1	09
71406253	4.500	1	02
71406254	4.500	1	03
71406255	4.500	1	04
71406256	4.500	1	06
71406257	4.500	1	25
71406261	0.001	1	16
71406262	0.001	1	17
71406268	0.001	1	08
71406271	5.0020	2	64
71406274	5.0025	1	00
71406278	5.0025	1	01
71406282	5.0025	1	11
71406283	0.001	1	17C
71406284	1.220	2	08
71406294	5.0151	1	01-05
71406295	5.0151	1	01
71406296	5.0151	1	03
71406297	5.0151	1	05
71406298	5.0151	1	07
71406299	5.0151	1	06
71406339	0.003	3	100
71406340	0.003	3	101
71406341	0.003	3	102
71406342	0.003	3	103
71406343	0.003	3	104
71406344	0.003	3	105
71406345	0.003	3	106
71406346	0.003	3	114
71406347	0.003	3	117
71406348	0.003	3	118
71406355	4.500	1	33
71410537	1.000	1	15
71415005	1.070	1	06
71415006	1.070	1	07
71415007	1.070	1	22
71415011	1.070	1	23
71415014	0.004	1	14
71415014	1.070	1	25
71415015	1.070	1	26
71415016	1.070	1	30
71415017	1.070	1	32
71415018	1.070	1	33
71415019	1.070	1	37
71415023	1.070	1	38
71415025	1.070	1	39
71415026	1.070	1	44
71415027	1.070	1	45
71415028	1.070	1	46
71415029	1.200	1	48
71415029	1.210	1	55
71415031	4.500	1	26
71415033	1.070	1	78
71415034	1.070	1	75
71415040	1.070	1	77
71415041	1.070	1	79
71415042	1.070	1	83
71415043	1.070	1	84
71415044	1.070	1	87
71415045	1.070	1	88
71415047	1.210	1	00
71415060	1.200	1	06
71415060	1.210	1	02
71415062	1.210	1	14
71415066	1.210	1	15
71415067	1.210	1	16
71415068	1.210	1	17
71415071	1.210	1	18
71415072	1.210	1	19
71415076	1.210	1	20
71415077	1.210	1	21
71415078	1.210	1	22
71415080	1.210	1	31
71415083	1.210	1	32
71415213	1.050	1	08
71415214	1.040	1	04
71415221	1.250	1	49
71415223	0.002	1	01
71415238	0.001	1	03
71415425	1.000	1	14
71415427	1.000	1	23
71415428	1.000	1	24
71415431	1.000	1	25
71415432	1.000	1	18
71415433	1.000	1	19
71415445	1.000	1	29
71415609	1.200	1	49
71415611	1.200	1	02
71415612	1.200	1	00
71415625	1.200	1	13
71415629	1.200	1	14
71415630	1.200	1	15
71415631	1.200	1	22
71415645	1.200	1	28
71415647	0.004	1	00
71415654	0.004	1	03
71415655	0.004	1	04
71415656	0.004	1	05
71415657	0.004	1	08
71415660	0.004	1	09

NUMERICAL INDEX - INDICE NUMERICO - LISTE NUMERIQUE
NUMERISCHES ERSATZEILVERZEILVERZEICHNIS - INDICE NUMERICO

PART. N.	SGR.	TAV.	ITEM
71415661	0.004	1	15
71415665	0.004	1	16
71415667	1.200	1	29
71415668	1.200	1	30
71415669	1.200	1	47
71415670	4.500	1	31
71415671	4.500	1	32
71415855	2.030	1	27
71415871	1.050	1	20
71415875	1.050	1	10A
71415875	1.060	1	53A
71415875	1.060	1	51A
71415875	1.060	1	50A
71415875	1.060	1	49A
71415875	1.060	1	44A
71415875	1.060	1	43A
71415875	1.060	1	26A
71415875	1.060	1	25A
71415875	1.060	1	15A
71415875	1.060	1	26
71415880	1.061	1	09
71415883	3.070	1	15
71415884	1.062	1	57
71415884	1.220	2	57
71415894	1.062	1	50
71415894	1.063	1	14
71415894	1.064	1	24
71415894	5.0020	2	45
71415895	1.062	1	51
71415895	1.063	1	15
71415895	1.064	1	25
71415895	5.0020	2	44
71415898	1.070	1	61
71415898	1.220	2	57
71415901	1.070	1	70
71415903	1.070	1	68
71415904	1.070	1	69
71415906	1.070	1	72
71415906	1.300	2	09
71415908	1.050	1	66
71415908	1.060	1	35
71415908	1.061	1	42
71415908	1.062	1	59
71415920	2.040	1	03
71415930	1.050	1	31
71415932	1.050	1	33
71416080	2.035	4	05
71416089	2.030	1	25
71416089	3.070	1	07
71416089	5.0020	2	60
71416090	5.0020	2	61
71416125	1.062	1	64
71416126	1.220	2	01
71416128	1.220	2	02
71416129	1.220	2	01A
71416130	1.220	2	57
71416131	1.200	3	30
71416132	1.220	2	53
71416229	1.200	3	18
71416419	1.300	1	36

SUBGROUP	GRID
0.000 TAV1	1C-11
0.000 TAV1	1C-12
0.001 TAV1	1C-13
0.001 TAV1	1C-14
0.002 TAV1	1C-15
0.002 TAV1	1C-16
0.003 TAV1	1C-17
0.003 TAV1	1C-18
0.003 TAV2	1C-19
0.003 TAV2	1C-20
0.003 TAV3	1C-21
0.003 TAV3	1C-22
0.004 TAV1	1C-23
0.004 TAV1	1C-24
0.021 TAV1	1D-3
0.021 TAV1	1D-4
0.040 TAV1	1D-5
0.040 TAV1	1D-6
0.040 TAV2	1D-7
0.040 TAV2	1D-8
0.040 TAV3	1D-9
0.040 TAV3	1D-10
0.042 TAV1	1D-11
0.042 TAV1	1D-12
0.043 TAV1	1D-13
0.043 TAV1	1D-14
0.043 TAV2	1D-15
0.043 TAV2	1D-16
0.045 TAV1	1D-17
0.045 TAV1	1D-18
0.045 TAV1A	1D-19
0.045 TAV1A	1D-20
0.060 TAV1	1D-21
0.060 TAV1	1D-22
0.060 TAV2	1D-23
0.060 TAV2	1D-24
0.071 TAV1	1E-3
0.071 TAV1	1E-4
0.077 TAV1	1E-5
0.077 TAV1	1E-6
0.080 TAV1	1E-7
0.080 TAV1	1E-8
0.081 TAV1	1E-9
0.081 TAV1	1E-10
0.082 TAV1	1E-11
0.082 TAV1	1E-12
0.083 TAV1	1E-13
0.083 TAV1	1E-14
0.084 TAV1	1E-15
0.084 TAV1	1E-16
0.100 TAV1	1E-17
0.100 TAV1	1E-18
0.120 TAV1	1E-19
0.120 TAV1	1E-20
0.140 TAV1	1E-21
0.140 TAV1	1E-22
0.140 TAV2	1E-23
0.140 TAV2	1E-24
0.140 TAV3	1F-3
0.140 TAV3	1F-4
0.140 TAV4	1F-5
0.140 TAV4	1F-6
0.140 TAV5	1F-7
0.140 TAV5	1F-8
0.149 TAV1	1F-9
0.149 TAV1	1F-10
0.200 TAV1	1F-11
0.200 TAV1	1F-12
0.201 TAV1	1F-13
0.201 TAV1	1F-14
0.203 TAV1	1F-15
0.203 TAV1	1F-16
0.240 TAV1	1F-17
0.240 TAV1	1F-18
0.240 TAV2	1F-19
0.240 TAV2	1F-20
0.241 TAV1	1F-21
0.241 TAV1	1F-22
0.300 TAV1	1F-23
0.300 TAV1	1F-24
0.302 TAV1	1G-3
0.302 TAV1	1G-4
0.305 TAV1	1G-5
0.305 TAV1	1G-6
0.305 TAV2	1G-7
0.305 TAV2	1G-8
0.310 TAV1	1G-9
0.310 TAV1	1G-10
0.310 TAV2	1G-11
0.310 TAV2	1G-12
0.320 TAV1	1G-13
0.320 TAV1	1G-14
0.320 TAV2	1G-15
0.320 TAV2	1G-16
0.323 TAV1	1G-17
0.323 TAV1	1G-18
0.326 TAV1	1G-19
0.326 TAV1	1G-20
0.340 TAV1	1G-21
0.340 TAV1	1G-22
0.345 TAV1	1G-23
0.345 TAV1	1G-24
0.350 TAV1	1H-3
0.350 TAV1	1H-4
0.360 TAV1	1H-5
0.360 TAV1	1H-6
0.360 TAV2	1H-7
0.360 TAV2	1H-8
0.400 TAV1	1H-9
0.400 TAV1	1H-10
0.400 TAV2	1H-11
0.400 TAV2	1H-12
0.400 TAV3	1H-13
0.400 TAV3	1H-14
0.450 TAV1	1H-15
0.450 TAV1	1H-16
1.000 TAV1	1I-3
1.000 TAV1	1I-4
1.010 TAV1	1I-5
1.010 TAV1	1I-6
1.020 TAV1	1I-7
1.020 TAV1	1I-8
1.030 TAV1	1I-9
1.030 TAV1	1I-10
1.030 TAV2	1I-11
1.030 TAV2	1I-12
1.030 TAV3	1I-13
1.030 TAV3	1I-14
1.030 TAV4	1I-15
1.030 TAV4	1I-16
1.030 TAV5	1I-17
1.030 TAV5	1I-18
1.030 TAV6	1I-19
1.030 TAV6	1I-20
1.030 TAV7	1I-21
1.030 TAV7	1I-22
1.030 TAV8	1I-23
1.030 TAV8	1I-24
1.040 TAV1	1J-3
1.040 TAV1	1J-4
1.040 TAV2	1J-5
1.040 TAV2	1J-6
1.040 TAV3	1J-7
1.040 TAV3	1J-8
1.040 TAV3	1J-9
1.040 TAV3	1J-10
1.040 TAV4	1J-11
1.040 TAV4	1J-12
1.050 TAV1	1J-13
1.050 TAV1	1J-14
1.050 TAV1	1J-15
1.050 TAV1	1J-16
1.050 TAV2	1J-17
1.050 TAV2	1J-18
1.050 TAV3	1J-19
1.050 TAV3	1J-20
1.050 TAV4	1J-21
1.050 TAV4	1J-22
1.050 TAV5	1J-23
1.050 TAV5	1J-24
1.060 TAV1	1K-3
1.060 TAV1	1K-4
1.070 TAV1	1K-5
1.070 TAV1	1K-6
1.070 TAV2	1K-7
1.070 TAV2	1K-8
1.070 TAV3	1K-9
1.070 TAV3	1K-10
1.080 TAV1	1K-11
1.080 TAV1	1K-12
1.080 TAV2	1K-13
1.080 TAV2	1K-14
1.081 TAV1	1K-15
1.081 TAV1	1K-16
1.081 TAV2	1K-17
1.081 TAV2	1K-18
1.082 TAV1	1K-19
1.082 TAV1	1K-20
1.082 TAV1	1K-21
1.082 TAV1	1K-22
1.082 TAV2	1K-23
1.082 TAV2	1K-24
1.082 TAV3	1L-3
1.082 TAV3	1L-4
1.083 TAV1	1L-5
1.083 TAV1	1L-6
1.084 TAV1	1L-7
1.084 TAV1	1L-8
1.200 TAV1	2D-3
1.200 TAV1	2D-4
1.200 TAV2	2D-5
1.200 TAV2	2D-6
1.200 TAV3	2D-7
1.200 TAV3	2D-8
1.210 TAV1	2D-9
1.210 TAV1	2D-10
1.220 TAV1	2D-11
1.220 TAV1	2D-12
1.220 TAV2	2D-13
1.220 TAV2	2D-14
1.220 TAV2	2D-15
1.220 TAV2	2D-16
1.220 TAV3	2D-17
1.220 TAV3	2D-18
1.220 TAV4	2D-19
1.220 TAV4	2D-20
1.250 TAV1	2D-21
1.250 TAV1	2D-22
1.250 TAV2	2D-23
1.250 TAV2	2D-24
1.250 TAV4	2E-3
1.250 TAV4	2E-4
1.250 TAV4	2E-5
1.250 TAV4	2E-6
1.250 TAV5	2E-7
1.250 TAV5	2E-8
1.250 TAV6	2E-9
1.250 TAV6	2E-10
1.250 TAV7	2E-11
1.250 TAV7	2E-12
1.250 TAV7	2E-13
1.250 TAV7	2E-14
1.290 TAV1	2E-15
1.290 TAV1	2E-16
1.290 TAV2	2E-17
1.290 TAV2	2E-18
1.300 TAV1	2E-19
1.300 TAV1	2E-20
1.300 TAV2	2E-21
1.300 TAV2	2E-22
1.300 TAV3	2E-23
1.300 TAV3	2E-24
2.000 TAV1	2F-3
2.000 TAV1	2F-4
2.003 TAV1	2F-5
2.003 TAV1	2F-6
2.003 TAV2	2F-7
2.003 TAV2	2F-8
2.020 TAV1	2F-9
2.020 TAV1	2F-10
2.020 TAV1	2F-11
2.020 TAV1	2F-12
2.030 TAV1	2F-13
2.030 TAV1	2F-14
2.030 TAV2	2F-15
2.030 TAV2	2F-16
2.030 TAV3	2F-17
2.030 TAV3	2F-18
2.030 TAV4	2F-19
2.030 TAV4	2F-20
2.030 TAV5	2F-21
2.030 TAV5	2F-22
2.040 TAV1	2F-23
2.040 TAV1	2F-24
3.000 TAV1	2G-3
3.000 TAV1	2G-4
3.010 TAV1	2G-5
3.010 TAV1	2G-6
3.010 TAV2	2G-7
3.010 TAV2	2G-8
3.010 TAV3	2G-9
3.010 TAV3	2G-10
3.010 TAV4	2G-11
3.010 TAV4	2G-12
3.010 TAV5	2G-13
3.010 TAV5	2G-14
3.020 TAV1	2G-15
3.020 TAV1	2G-16
3.030 TAV1	2G-17
3.030 TAV1	2G-18
3.040 TAV1	2G-19
3.040 TAV1	2G-20
3.060 TAV1	2G-21
3.060 TAV1	2G-22
3.080 TAV1	2G-23
3.080 TAV1	2G-24
3.080 TAV2	2H-3
3.080 TAV2	2H-4
3.070 TAV1	2H-5
3.070 TAV1	2H-6
4.000 TAV1	2H-7
4.000 TAV1	2H-8
4.500 TAV1	2H-9
4.500 TAV1	2H-10
5.0020TAV1	2H-11
5.0020TAV1	2H-12
5.0020TAV2	2H-13
5.0020TAV2	2H-14
5.0022TAV1	2H-15
5.0022TAV1	2H-16
5.0022TAV2	2H-17
5.0022TAV2	2H-18
5.0025TAV1	2H-19
5.0025TAV1	2H-20
5.0038TAV1	2H-21
5.0038TAV1	2H-22
5.0038TAV2	2H-23
5.0038TAV2	2H-24
5.0151TAV1	2I-3
5.0151TAV1	2I-4
5.0536TAV1	2I-6
5.0536TAV1	2I-6
5.0540TAV1	2I-7
5.0540TAV1	2I-8
5.0083TAV1	2I-9
5.0083TAV1	2I-10

NUMERICAL INDEX - INDICE NUMERICO - LISTE NUMERIQUE
NUMERISCHES ERSATZEILVERZEILVERZEICHNIS - INDICE NUMERICO

PART. N.	SGR.	TAV.	ITEM
71416909	5.0020	1	01
71416905	5.0020	1	05
71416906	5.0020	1	18
71416907	5.0020	1	21
71416911	5.0020	1	22
71416912	5.0020	1	26
71416915	5.0020	1	52
71416916	5.0020	1	09
71416920	5.0020	1	16
71416936	4.500	1	27
71416942	5.0020	2	68
71416944	5.0020	2	69
71435439	5.0022	2	32
79001605	1.200	3	07
79005909	3.050	1	11
79006025	0.004	1	22
79013422	1.070	1	09
79013422	1.200	3	39
79013422	5.0025	1	15
79019383	1.220	2	79
79022466	0.400	3	11
79022468	0.400	3	04
79022480	0.400	3	15
79022481	0.400	3	13
79022485	0.400	3	20
79025494	0.400	3	08
79028876	5.0025	1	13
79028977	5.0083	1	29
79028978	5.0083	1	29
79028979	5.0083	1	29
79028980	5.0083	1	29
79028981	5.0083	1	30
79030150	5.0083	1	32
79031103	1.220	2	12
79033582	0.400	3	14
79043802	3.020	1	27C
79044795	0.323	1	21
79044796	0.326	1	19
79053146	0.345	1	21
79054407	0.042	1	14
79054463	0.042	1	15
79056873	1.220	2	49
79060064	4.500	1	14
79060297	4.500	1	14
79060540	4.500	1	14
79062581	1.220	2	09
79062701	0.001	1	17D
79065835	1.200	3	01
79067856	0.149	1	09
79068180	1.220	2	71
79068201	1.200	3	15
79069292	1.200	3	01A
79069292	1.250	5	30
79069292	1.300	3	06
79069460	1.220	2	60A
79069496	0.200	1	09
79070045	0.140	4	04
79070060	0.140	5	01
79070064	0.140	5	11
79070065	0.140	5	12
79070069	0.140	5	02
79070071	0.140	5	03
79070072	0.140	5	03
79070076	0.140	5	04
79070087	0.140	5	05
79070088	0.140	5	05
79070109	0.140	4	06
79070113	0.140	4	07
79070115	0.140	5	06
79070137	0.140	3	05
79070140	0.140	3	06
79070150	0.140	3	25
79070151	0.140	4	02
79070159	0.140	4	05
79070168	0.140	3	13
79070172	0.140	3	12

NUMERICAL INDEX - INDICE NUMERICO - LISTE NUMERIQUE
NUMERISCHES ERSATZEILVERZEILVERZEICHNIS - INDICE NUMERICO

PART. N.	SGR.	TAV.	ITEM
79070487	1.200	3	14
79071796	0.140	3	07
79071796	0.140	4	03
79071796	0.140	5	08
79072796	0.001	1	008
79072796	0.001	1	178
79072931	5.0025	1	09
79073139	5.0025	1	16
79074016	0.140	5	09
79075331	0.323	1	22
79075454	5.0025	1	10
79076867	1.300	3	02
79079565	0.002	1	15
79080371	0.360	2	01
79080372	0.360	2	03
79080373	0.360	2	04
79080375	0.360	2	07
79080376	0.360	2	08
79080898	0.326	1	16
79080899	0.326	1	02
79080922	0.326	1	18
79081045	0.360	2	05
79081046	0.360	2	06
79081900	1.220	2	21
79083312	1.200	3	40
79083842	1.010	1	07
79083842	1.290	1	05
79083846	0.003	1	05
79083847	0.003	1	06
79083848	0.001	1	10
79083848	1.050	1	35
79083848	1.050	1	55
79083848	5.0020	2	72
79083849	0.001	1	09
79083851	0.001	1	11
79084752	1.010	1	07
79084752	1.220	2	64
79084795	0.140	5	10
79084798	0.140	3	09
79084800	0.140	3	24
79084801	0.140	3	23
79084802	0.140	3	18
79084803	0.140	3	21
79084804	0.140	3	20
79084805	0.140	3	19
79084807	0.140	3	15
79084809	0.140	3	17
79087623	0.240	1	01
79088048	4.500	1	14
79091137	1.220	2	66
79091894	0.140	3	14
79091895	0.140	3	14
79091896	0.140	3	14
79091897	0.140	3	14
79091898	0.140	4	01
79091899	0.140	4	01
79091900	0.140	4	01
79091901	0.140	4	01
79091902	0.140	4	01
79092019	0.240	1	02
79092952	1.220	2	60
79092953	1.200	3	08
79092954	1.200	3	09
79092955	1.200	3	31
79096762	0.140	5	07
79096763	0.140	4	09
79096764	0.140	3	08
79096765	0.140	3	03
79096766	0.140	3	04
79096767	0.140	3	22
79096768	0.140	3	16
79097244	0.060	1	23
79097245	0.040	2	15
79097245	0.042	1	16
79097245	0.043	1	25
79097245	0.043	2	21
79097245	0.140	2	21
79097246	0.071	1	12
79097246	0.077	1	08
79097246	0.240	1	05
79097246	0.240	2	21
79097246	0.241	1	07
79097246	0.326	1	21
93911108	1.250	1	12
98400768	0.305	2	05
98400770	0.045	1A	01
98401723	0.322	1	03

C-8

NUMERICAL INDEX - INDICE NUMERICO - LISTE NUMERIQUE

NUMERISCHES ERSATZEILVERZEILVERZEICHNIS - INDICE NUMERICO

PART. N.	SGR.	TAV.	PART. N.	SGR.	TAV.	PART. N.	SGR.	TAV.	ITEM
Late Additions									
04757193	0.400	2	79022468	0.400	2				
10338930	2.020	1	79022484	0.400	2				
10572074	2.020	1	79025494	0.400	2				
11115834	2.020	1	79074702	0.400	2				
14497821	0.400	2	79074704	0.400	2				
24941650	0.400	2	79074705	0.400	2				
24941680	0.400	2	79074706	0.400	2				
70198775	5.0025	1	79074707	0.400	2				
70639388	5.0025	1	79074708	0.400	2				
70669359	5.0025	1	79074709	0.400	2				
70901825	5.0025	1	79074710	0.400	2				
70904205	5.0025	1	79074711	0.400	2				
70911025	5.0025	1	79074712	0.400	2				
70911841	5.0025	1	79074713	0.400	2				
70912589	5.0025	1	79074714	0.400	2				
70917730	5.0025	1	79074715	0.400	2				
70918282	2.020	1	79075683	0.400	2				
70919426	2.020	1							
70921566	5.0025	1							
70928138	5.0025	1							
70932930	2.020	1							
71405437	2.020	1							
71405438	2.020	1							
71405439	2.020	1							
71405440	2.020	1							
73052086	5.0025	1							
73070169	5.0025	1							
73075165	5.0025	1							
73075166	5.0025	1							
73115559	5.0025	1							
73115566	5.0025	1							
73119442	5.0025	1							
73132158	5.0025	1							
73138080	5.0025	1							
73153877	5.0025	1							
73153878	5.0025	1							
73153879	5.0025	1							
73156110	2.020	1							
73156111	2.020	1							
73156112	2.020	1							
73156113	2.020	1							
73156114	2.020	1							
73156121	0.020	1							
73156127	2.020	1							
73158357	2.020	1							
73158369	2.020	1							
73158371	2.020	1							
73158373	2.020	1							
73158375	2.020	1							
73158377	2.020	1							
73158379	2.020	1							
73158483	2.020	1							
73158484	2.020	1							
73158494	1.070	1							
73158495	1.070	1							
73158506	2.020	1							
73158507	2.020	1							

NUMERICAL INDEX (LATE ADDITIONS) - INDICE NUMERICO - LISTE NUMERIQUE
NUMERISCHES ERSATZEIL VERZEIL VERZEICHNIS - INDICE NUMERICO

PART. N.	SGR.	TAV.	ITEM
04814160	0.400	1	13
04979701	1.220	3	02
05136392	1.250	7	75
05961723	1.250	5	11
05961734	1.250	5	12
10571374	1.250	7	24
10571474	1.250	4	25
10571474	1.250	7	77
10571574	1.250	4	35
10571574	1.250	5	08
10571574	1.250	7	33
10571774	1.250	2	02
10571774	1.250	4	07D
10571774	1.250	4	11G
10571774	1.250	5	05
10571774	1.250	7	15
10571774	1.250	7	65
10571874	1.250	1	21
10571874	1.250	2	05
10571874	1.250	5	20
10571874	1.250	7	05
10902234	1.250	4	34
10902234	1.250	7	92
11066071	1.250	4	07G
11067874	1.250	4	11N
11106234	1.250	1	20
11106234	1.250	2	04
11106234	1.250	5	28
11106234	1.250	7	02
11106434	1.250	1	47
11690921	1.250	7	29
11701721	1.250	5	19
12574121	1.250	7	78
12574921	1.250	1	10
12605274	1.250	4	11P
12606974	1.250	7	55
13271914	1.250	7	23
13272214	1.250	7	37
13274014	1.250	4	24
13274614	1.250	7	40
13275014	1.250	1	14
13275014	1.250	7	59
13276214	1.250	5	07
13276214	1.250	7	32
13276914	1.250	7	49
13279414	1.250	7	14
13299916	1.250	6	07
13301311	1.250	7	35
13303311	1.250	7	64
14306221	1.250	2	01
14420234	1.250	1	51
14496331	1.250	4	11I
14496431	1.250	1	15
14496431	1.250	4	36
14496431	1.250	5	16
14496431	1.250	7	60
14496531	1.250	4	11H
14496531	1.250	5	04
14496531	1.250	7	16
14496691	1.250	1	26
15238234	1.250	1	11
15645504	1.250	7	74
15896221	1.250	5	10
15896421	1.250	4	11E
15901604	1.250	4	07L
16043134	1.250	4	11F
16043234	1.250	5	03
16043234	1.250	7	18
16043234	1.250	7	84
16043434	1.250	4	07C
16100811	1.250	7	51
16104421	1.250	4	38
70901283	5.0540	1	02
70925160	5.0540	1	10
70928052	5.0540	1	11
70932930	2.020	1	15
70933052	2.020	1	13
71403532	1.220	2	54A
71405003	1.250	1	09
71405699	1.250	1	03
71405702	1.250	1	06
71405705	1.250	1	07
71405706	1.250	2	00
71405707	1.250	2	03
71405708	1.250	1	31
71405716	1.250	1	36
71405717	1.250	1	37
71405718	1.250	1	38
71405719	1.250	1	42
71405721	1.250	1	44
71405722	1.250	1	45
71405767	1.200	3	41
71406337	1.250	1	13
71415030	1.250	1	50
71415221	1.250	1	49
71416419	1.250	7	06
71416422	1.250	7	07
71416423	1.250	7	08
71416424	1.250	7	09
71416425	1.250	7	10
71416429	1.250	7	17
71416434	1.250	7	21
71416436	1.250	7	22
71416437	1.250	7	28
71416440	1.250	7	30
71416441	1.250	7	31
71416444	1.250	7	34
71416445	1.250	7	36
71416446	1.250	7	39
71416448	1.250	7	43
71416450	1.250	7	45
71416452	1.250	7	48
71416455	1.250	7	52
71416456	1.250	7	53
71416459	1.250	7	62
71416461	1.250	7	79
71416462	1.250	7	80
71416464	1.250	7	82
71416465	1.250	7	83
71416466	1.250	7	66
71416467	1.250	7	67
71416490	1.250	5	06
71416491	1.250	4	11B
71416491	1.250	5	15
71416492	1.250	5	18
71416497	1.250	5	26
71416498	1.250	5	27
71416515	1.250	6	04
71416516	1.250	6	05
71416517	1.250	6	06
71416526	1.250	4	07A
71416536	1.250	4	20
71416637	1.250	4	39
71416547	1.250	4	07B
71416549	1.250	4	07E
71416550	1.250	4	07F
71416551	1.250	4	07H
71416552	1.250	4	07I
71416553	1.250	4	08
71416554	1.250	4	09
71416561	1.250	4	22
71416563	1.250	4	22A
71416564	1.250	4	10B
71416564	1.250	4	22B
71416565	1.250	4	10C
71416565	1.250	4	22C
71416566	1.250	4	10D
71416566	1.250	4	22E
71416566	1.250	4	10F
71416573	1.250	4	11A

NUMERICAL INDEX (LATE ADDITIONS) - INDICE NUMERICO - LISTE NUMERIQUE
NUMERISCHES ERSATZEIL VERZEIL VERZEICHNIS - INDICE NUMERICO

PART. N.	SGR.	TAV.	ITEM
71416578	1.250	4	11C
71416579	1.250	4	11D
71416580	1.250	4	11L
71416581	1.250	4	11M
71416588	1.250	4	22D
71416594	1.250	4	14
71416597	1.250	4	17
71416598	1.250	4	18
71416600	1.250	4	23
71416601	1.250	4	26
71416603	1.250	4	28
71416604	1.250	4	29
71416605	1.250	4	30
71416607	1.250	4	33
71416734	1.250	5	23
71416734	1.250	5	25
71416734	1.250	7	76
71416857	1.250	1	00
71416862	1.250	4	10E
71416862	1.250	4	22F
71416867	1.250	5	09
71416931	1.250	4	10A
71417025	1.250	4	31
71417026	1.250	4	32
71417035	1.250	4	21
71417064	1.250	5	21
71417066	1.250	5	14
71417083	1.250	4	40
71417102	1.250	4	03
71417103	1.250	4	04
71417108	1.250	4	12
71417109	1.250	4	41
71417110	1.250	4	13
71417111	1.250	4	15
71417112	1.250	4	16
71417115	1.250	7	03
71417116	1.250	7	11
71417117	1.250	7	12
71417118	1.250	7	13
71417120	1.250	7	42
71417121	1.250	7	44
71417122	1.250	7	50
71417124	1.250	7	68
71417125	1.250	7	69
71417126	1.250	7	70
71417127	1.250	7	71
71417128	1.250	7	72
71417129	1.250	7	73
71417130	1.250	7	90
71417131	1.250	7	91
71417132	1.250	7	93
71417190	1.250	4	06
71417219	1.250	7	81
71417222	1.250	5	01
71417239	1.250	5	02
71417241	1.250	5	22
71417242	1.250	5	13
71417243	1.250	5	24
71417245	1.250	6	01
71417247	1.250	6	02
71417249	1.250	6	02B
71417249	1.250	6	03A
71417250	1.250	6	02A
71417251	1.250	6	03
71417253	1.250	6	09
71417254	1.250	4	07M
71417255	1.250	4	10
71417257	1.250	4	10G
71417258	1.250	4	10H
71417263	1.250	4	42
71431181	1.250	1	05
71431182	1.250	1	04
73100834	2.020	1	18
73158540	2.020	1	19
73158654	4.500	1	02
73158782	1.220	3	01
73159173	5.0540	1	03
73159174	5.0540	1	04
73159175	5.0540	1	05
73159176	5.0540	1	06
73159177	5.0540	1	07
73159178	5.0540	1	08
73159179	5.0540	1	09
73159185	5.0540	1	01
76015770	1.220	3	04
76017021	1.220	3	03
78100821	2.020	1	17
79040883	4.500	1	24
79069292	1.250	5	30
79074703	0.400	1	15
93911108	1.250	1	12

FH120

ENGINE SUSPENSIONS SOSPENSIONI MOTORE	SUSPENSIONS DU MOTEUR MOTORAUFHAENGUNG ANCLAJES MOTOR	0.000 TAV.1

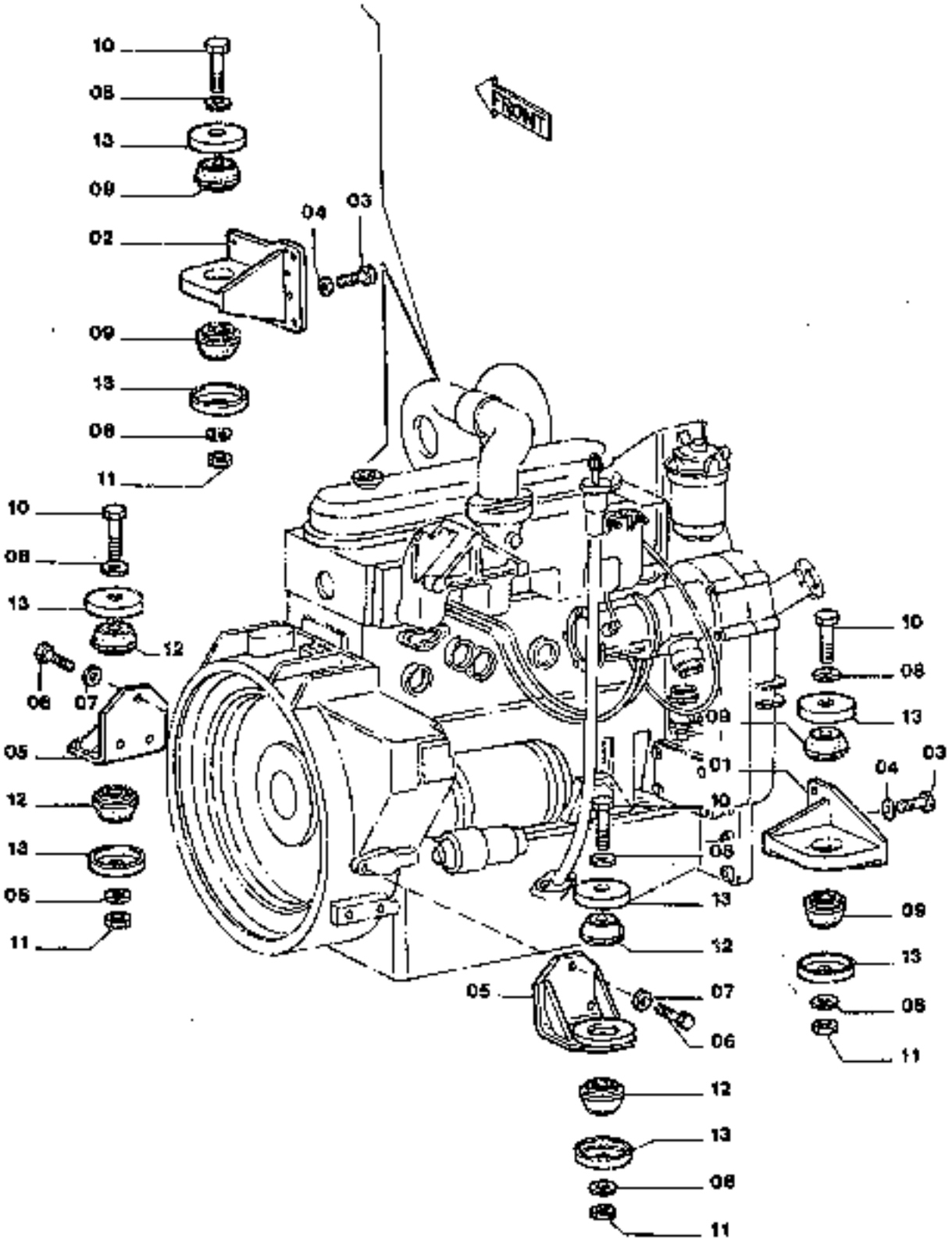

ENGINE SUSPENSIONS
SOSPENSIONI MOTORE

SUSPENSIONS DU MOTEUR
MOTORAUFHAENGUNG
ANCLAJES MOTOR

0.000 TAV.1

ITEM	PART NUMBER	QTY	TR. CO.	DESCRIPTION	DESCRIZIONE
01	8110983	1	225S	BRACKET -RIGHT	STAFFA -DEST.
02	8110984	1	225S	BRACKET -LEFT	STAFFA -SIN.
03	15840534	6	40V	SCREW 16X1,5X50	VITE 16X1,5X50
04	8111003	6	131R	WASHER	ROSETTA
05	8110985	2	225S	BRACKET	STAFFA
06	11115634	6	40V	SCREW 14X2X35	VITE 14X2X35
07	8111002	6	131R	WASHER	ROSETTA
08	71405003	8	131R	WASHER	ROSETTA
09	71405371	4	60T	BLOCK	TASSELLO
10	11120934	4	40V	SCREW 16X2X150	VITE 16X2X150
11	12163321	4	10D	NUT	DADO
12	71405374	4	60T	BLOCK	TASSELLO
13	71405375	8	265C	COVER	COPERCHIO

FH12U

AIR CLEANER FILTRO ARIA	FILTRE A AIR LUFTFILTER FILTRO DE AIRE	0.001 TAV.1

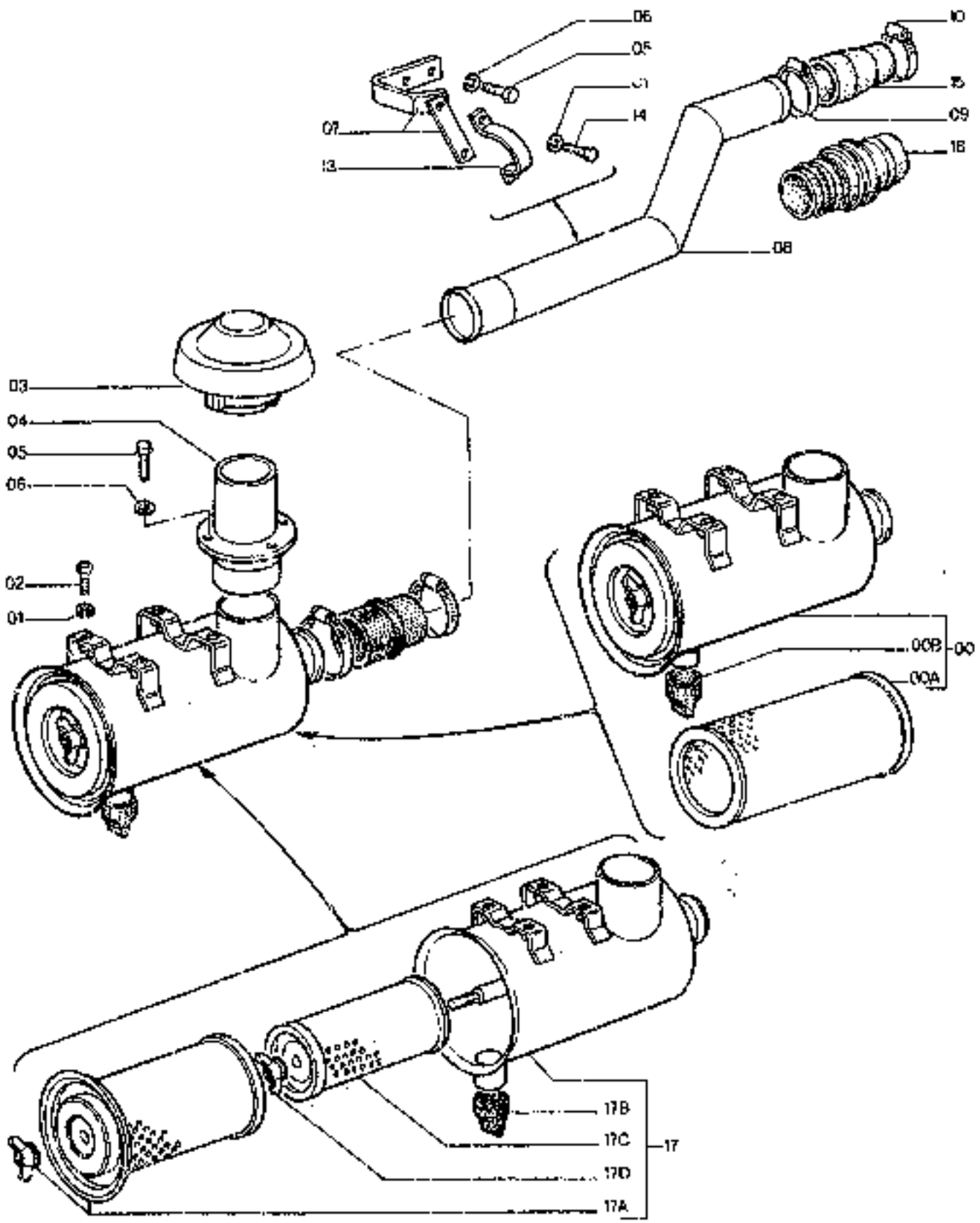

FH120

AIR CLEANER
FILTRO ARIA

FILTRE A AIR
LUFTFILTER
FILTRO DE AIRE

0.001 TAV.1

ITEM	PART NUMBER	QTY	TR CO.	DESCRIPTION		DESCRIZIONE	
00	71405389	1	66F	AIR CLEANER -ASS.LY		FILTRO ARIA -COMPL.	
				C2629 UP TO S/N 71405389=71406262	0294	C2629 FINO AL TELAIO	0294
00A	71405431	1	84C	FILTER ELEMENT		CARTUCCIA FILTRO	
00B	78072795	1	10V	VALVE		VALVOLA	
01	10571974	6	170R	LOCKWASHER		ROSETTA ELASTICA	
02	11106034	4	40V	SCREW 10X1,5X20		VITE 10X1,5X20	
03	71415238	1	204P	AIR INTAKE		PRESA ARIA	
04	71405390	1	193T	TUBE		TUBO RIGIDO	
05	11112134	6	40V	SCREW 12X1,75X20		VITE 12X1,75X20	
06	10571974	6	170R	LOCKWASHER		ROSETTA ELASTICA	
07	71405723	1	225S	BRACKET		STAFFA	
08	71405391	1	193T	TUBE		TUBO RIGIDO	
				C2571 UP TO S/N 71405391=71406261÷71406268	0227	C2571 FINO AL TELAIO	0227
	71405258	1	193T	TUBE		TUBO RIGIDO	
				D2571 FROM S/N	0228	D2571 DAL TELAIO	0228
09	71406250	2	180C	COLLAR		COLLARE	
				D2571 FROM S/N	0228	D2571 DAL TELAIO	0228
	79063848	2	180C	COLLAR		COLLARE	
				C2571 UP TO S/N	0227	C2571 FINO AL TELAIO	0227
10	71404503	1	180C	COLLAR		COLLARE	
				D2571 FROM S/N	0228	D2571 DAL TELAIO	0228
	79063848	1	180C	COLLAR		COLLARE	
				C2571 UP TO S/N	0227	C2571 FINO AL TELAIO	0227
11	71404505	1	180C	COLLAR		COLLARE	
				D2571 FROM S/N	0228	D2571 DAL TELAIO	0228
	79063951	1	180C	COLLAR		COLLARE	
				C2571 UP TO S/N	0227	C2571 FINO AL TELAIO	0227
12	71405394	1	30M	SLEEVE		MANICOTTO	
13	71405392	1	225S	BRACKET		STAFFA	
14	11106234	2	40V	SCREW 10X1,5X25		VITE 10X1,5X25	
15	71405393	1	30M	SLEEVE		MANICOTTO	
				C2571 UP TO S/N 71405393=71406261÷71406268	0227	C2571 FINO AL TELAIO	0227
16	71406261	1	30M	SLEEVE		MANICOTTO	
				D2571 FROM S/N	0228	D2571 DAL TELAIO	0228
17	71406262	1	66F	AIR CLEANER -ASS.LY		FILTRO ARIA -COMPL.	
				D2629 FROM S/N	0295	D2629 DAL TELAIO	0295
17A	71405431	1	84C	FILTER ELEMENT		CARTUCCIA FILTRO	
17B	78072795	1	10V	VALVE		VALVOLA	
17C	71406263	1	84C	FILTER ELEMENT		CARTUCCIA FILTRO	
				D2629 FROM S/N	0295	D2629 DAL TELAIO	0295
17D	79062701	1	10D	NUT		DADO	
				D2629 FROM S/N	0295	D2629 DAL TELAIO	0295

FH120

MUFFLER SILENZIATORE	SILENCIEUX SCHALLDAEMPFER SILENCIADOR	0.002 TAV.1

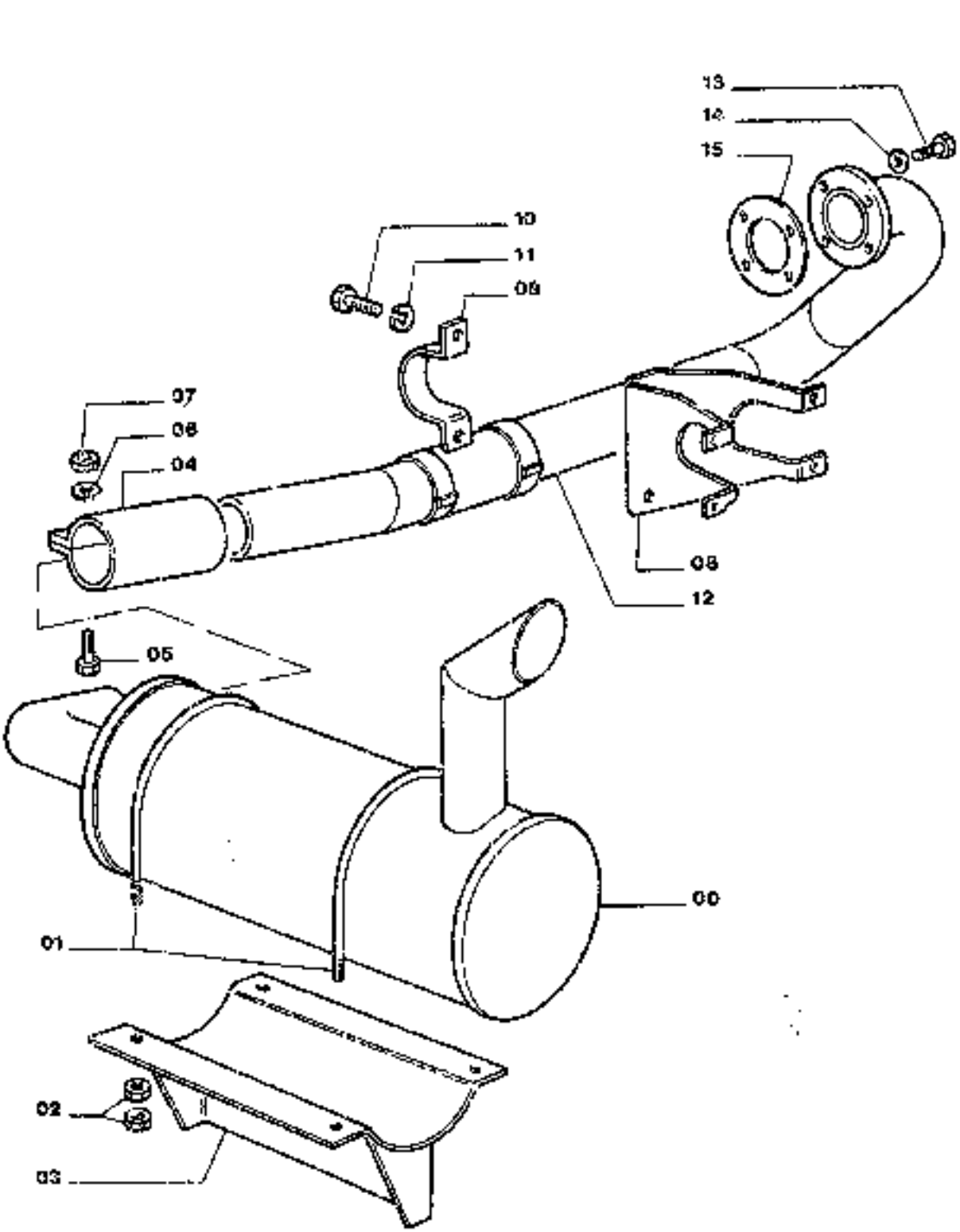

FH120

MUFFLER
SILENZIATORE

SILENCIEUX
SCHALLDAEMPFER
SILENCIADOR

0.002 TAV.1

ITEM	PART NUMBER	QTY	TR. CO.	DESCRIPTION		DESCRIZIONE	
00	71405379	1	160S	MUFFLER		SILENZIATORE	
01	71415223	2	100C	RETAINER		CAVALLOTTO	
02	11701721	8	100	NUT		DADO	
03	71405380	1	225S	BRACKET		STAFFA	
04	71405382	1	31F	CLAMP		FASCETTA	
05	11112834	2	40V	SCREW 12X1,75X40		VITE 12X1,75X40	
06	10571974	2	170R	LOCKWASHER		ROSETTA ELASTICA	
07	11702821	2	100	NUT		DADO	
08	71405383	1	225S	BRACKET		STAFFA	
09	71405384	1	231S	CLIP		STAFFETTA	
10	10379234	2	40V	SCREW 10X1,5X16		VITE 10X1,5X16	
				C2514 UP TO S/N	0050	C2514 FINO AL TELAIO	0050
	11106234	2	40V	SCREW 10X1,5X25		VITE 10X1,5X25	
				D2514 FROM S/N	0051	D2514 DAL TELAIO	0051
11	10571974	2	170R	LOCKWASHER		ROSETTA ELASTICA	
12	71405381	1	193T	TUBE		TUBO RIGIDO	
13	10045534	4	40V	SCREW		VITE	
14	14486531	4	131R	WASHER		ROSETTA	
16	79079665	1	122G	SEAL		GUARNIZIONE	

FH120

RADIATOR RADIATORE	RADIATEUR KUEHLER RADIADOR	0.003	TAV.1

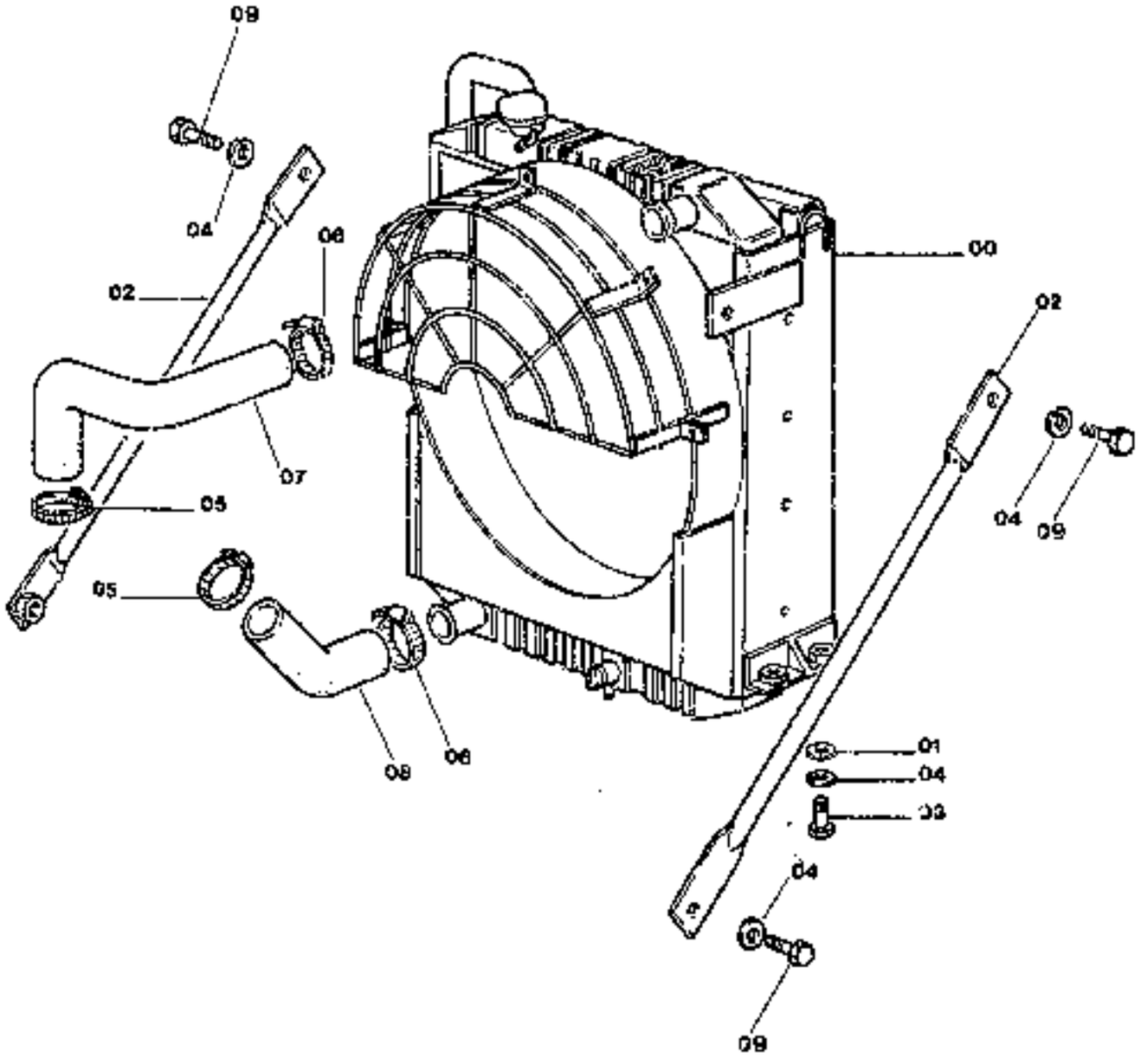

FH120

RADIATOR RADIATORE	RADIATEUR KUEHLER RADIADOR	0,003	TAV.1

	ITEM	PART NUMBER	QTY	TR. CO.	DESCRIPTION		DESCRIZIONE	
*	00	71405876	1	25R	RADIATOR -ASS.LY SEE C-19,20		RADIATORE -COMPL. VED. TAV.2-3	
	01	71405003	4	131R	WASHER		ROSETTA	
					C2514 UP TO S/N	0050	C2514 FINO AL TELAIO	0050
		71405003	4	131R	WASHER		ROSETTA	
	02	71405378	2	142T	TIEROD		TIRANTE	
	03	11127534	4	40V	SCREW 16X2X35		VITE 16X2X35	
	04	10572174	8	170R	LOCKWASHER		ROSETTA ELASTICA	
	05	71405247	2	180C	COLLAR		COLLARE	
					D2571 FROM S/N	0228	D2571 DAL TELAIO	0228
		79083846	2	180C	COLLAR		COLLARE	
					C2571 UP TO S/N	0227	C2571 FINO AL TELAIO	0227
	06	71406248	2	180C	COLLAR		COLLARE	
					D2571 FROM S/N	0228	D2571 DAL TELAIO	0228
		79083847	2	180C	COLLAR		COLLARE	
					C2571 UP TO S/N	0227	C2571 FINO AL TELAIO	0227
	07	71406036	1	285T	HOSE		TUBO FLESSIBILE	
	08	71406039	1	285T	HOSE		TUBO FLESSIBILE	
	09	11116534	4	40V	SCREW 16X2X40		VITE 16X2X40	
					D2514 FROM S/N	0051	D2514 DAL TELAIO	0051
		11137534	4	40V	SCREW 16X2X35		VITE 16X2X35	
					C2514 UP TO S/N	0050	C2514 FINO AL TELAIO	0050

* Sulla macchina sono montati due radiatori completi (**Tipo A** e **Tipo B** con P/N 71405876) in alternativa tra loro e intercambiabili come complessivo.
Per ordinare i componenti è necessario individuare quale radiatore è montato sulla macchina.
Questo si fa osservando il radiatore olio:
Tipo A (TAV. 2) radiatore olio in Ferro larghezza 588 mm.
Tipo B (TAV. 3) radiatore olio in Alluminio larghezza 407 mm.

One of two radiator assemblies (**Type A** and **Type B** P/N 71405876) can equip the machine. They are interchangeable as complete units.
To order component parts it is necessary to identify the type radiator installed on the unit according to the following characteristics:
Type A (TAV. 2) Steel core 588 mm wide (23 in).
Type B (TAV. 3) Aluminum core 407 mm wide (16 in).

Les machines peuvent être équipées de deux types différentes de radiateurs complets (**Type A** et **Type B** avec P/N 71405876) en alternative entre eux et interchangeables comme ensembles.
Pour passer commande de leurs pièces, il faut repérer quel est le type de radiateur monté sur la machine.
Cela est obtenu en observant le radiateur d'huile:
Type A (Pl. 2) radiateur d'huile en fer largeur 588 mm.
Type B (Pl. 3) radiateur d'huile en aluminium largeur 407 mm

Zwei vollständige Kühler (**Tip A und Tip B**, P/N 71405876), alternativ untereinander und auswechselbar als Aggregat, sind auf der Maschine montiert.
Bei der Bestellung der Teile muss der Kühler angegeben werden, der auf der Maschine montiert ist.
Dazu soll der Ölkühler abgelesen werden:
Typ A (Bild 2) Ölkühler aus Eisen Breite 588 mm.
Typ B (Bild 3) Ölkühler aus aluminium Breite 407 mm.

En la máquina se hallan instalados dos radiadores completos (**Tipo A** y **Type B** con P/N 71405876) alternativos uno con otro e intercambiables en su conjunto.
Para encargar sus componentes hay que identificar el radiador instalado en la máquina, cosa que se hace observando el radiador para el aceite:
Tipo A (LÁMINA 2): radiador para el aceite de hierro - anchura 588 mm.
Tipo B (LÁMINA 3): radiador para el aceite de aluminio - anchura 407 mm.

FH120

RADIATOR-COMPONENTS RADIATORE-COMPONENTI 71405875	RADIATEUR-COMPOSANTS KUEHLER-EINZELTEILE RADIADOR-COMPONENTES	0.003 TAV.2

TIPO A

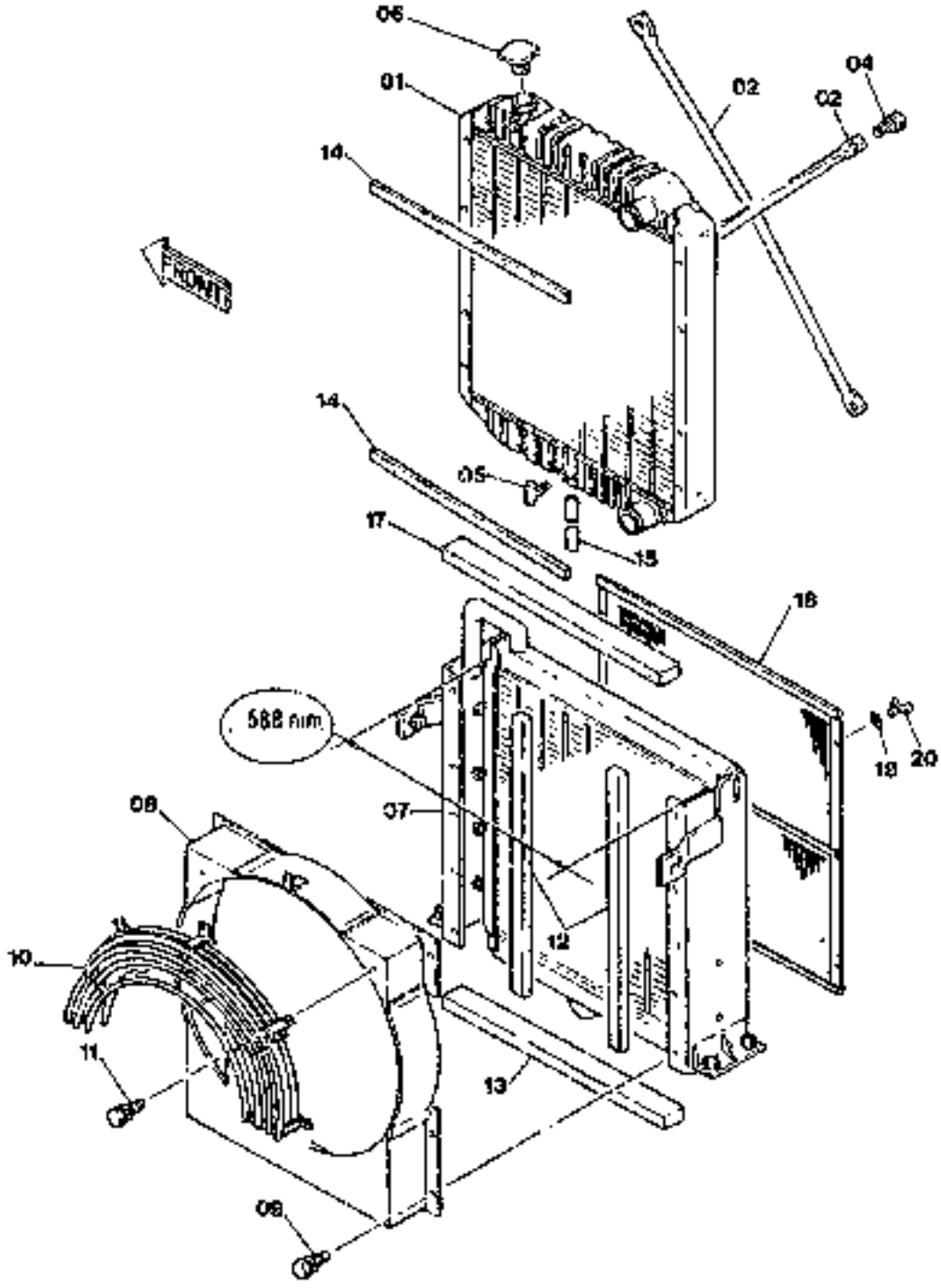

FH120

RADIATOR-COMPONENTS RADIATORE-COMPONENTI 71405878	RADIATEUR-COMPOSANTS KUEHLER-EINZELTEILE RADIADOR-COMPONENTES	0.003 TAV.2

ITEM	PART NUMBER	QTY	TR. CO.	DESCRIPTION	DESCRIZIONE
01	71406128	1	167R	WATER RADIATOR	RADIATORE ACQUA
02	71406129	2	30A	ROD	ASTA
04	71406130	4	40V	SCREW	VITE
05	71406131	1	58T	DRAIN PLUG	TAPPO DI SCARICO
06	71406132	1	50T	PLUG	TAPPO
07	71406133	1	169R	OIL RADIATOR	RADIATORE OLIO
08	71406134	1	70R	GUARD	RIPARO
09	71406135	8	40V	SCREW	VITE
10	71406136	1	70R	GUARD	RIPARO
11	71406137	5	40V	SCREW	VITE
12	71406138	2	122G	SEAL	GUARNIZIONE
13	71406139	1	122G	SEAL	GUARNIZIONE
14	71406140	2	122G	SEAL	GUARNIZIONE
15	71406141	1	30M	SLEEVE	MANICOTTO
17	71406142	1	122G	SEAL	GUARNIZIONE
18	71406143	1	25P	PANEL	PANNELLO
19	71406144	4	131R	WASHER	ROSETTA
20	71406145	4	40V	SCREW	VITE

FH120

RADIATOR-COMPONENTS RADIATORE-COMPONENTI 71405878	RADIATEUR-COMPOSANTS KÜHLER-EINZELTEILE RADIADOR-COMPONENTES	0.003	TAV.3

TIPO B

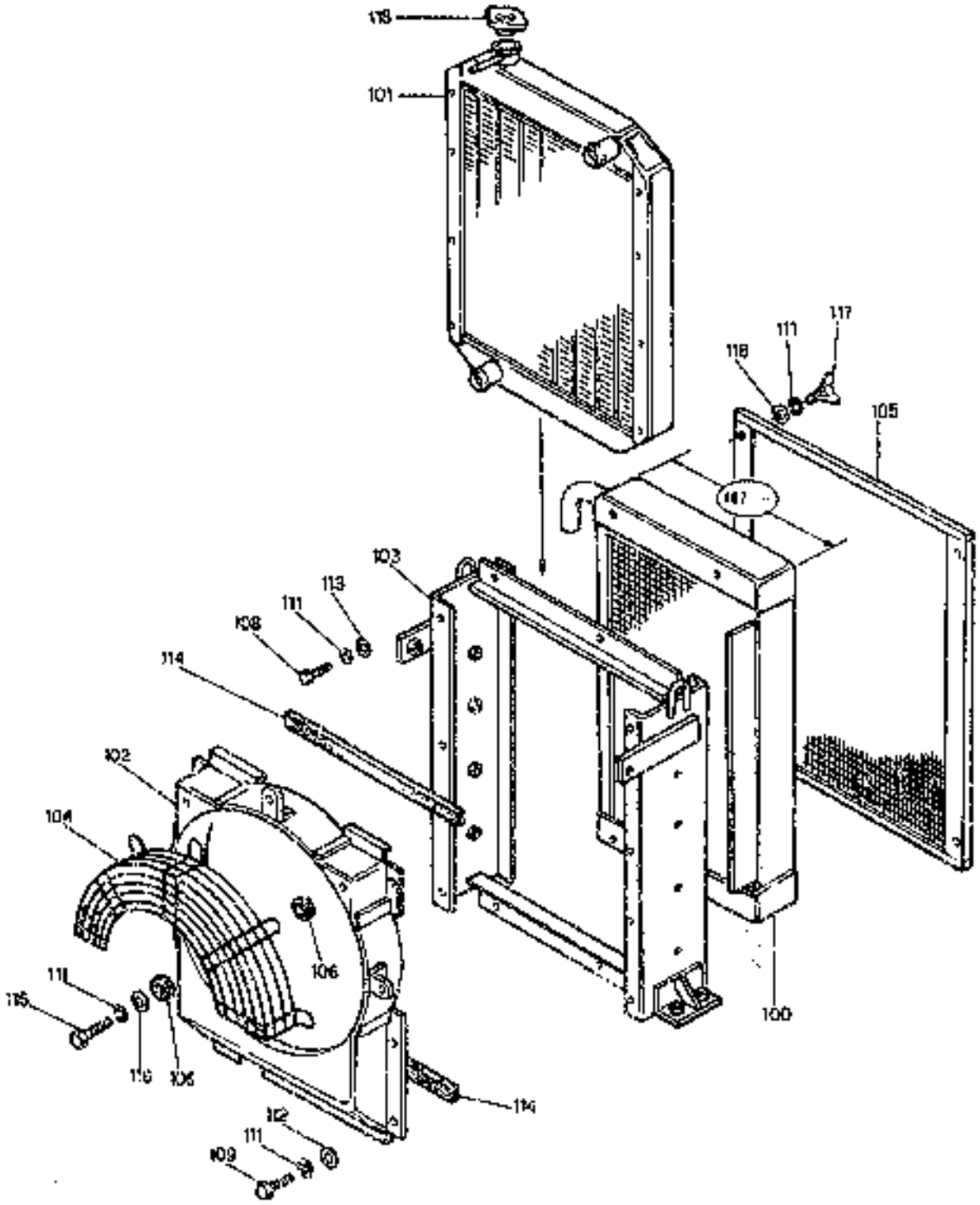

FW129

RADIATOR-COMPONENTS
RADIATORE-COMPONENTI
71405878

RADIATEUR-COMPOSANTS
KÜHLER-EINZELTEILE
RADIADOR-COMPONENTES

0.003 TAV.3

ITEM	PART NUMBER	QTY	TR. CO.	DESCRIPTION	DESCRIZIONE
100	71406339	1	168R	OIL RADIATOR	RADIATORE OLIO
101	71406340	1	167R	WATER RADIATOR	RADIATORE ACQUA
102	71406341	1	70R	GUARD	RIPARO
103	71406342	1	721	FRAME	INTELAIATURA
104	71406343	1	70R	GUARD	RIPARO
105	71406344	1	25P	PANEL	PANNELLO
106	71406345	10	60T	BLOCK	TASSELLO
108	16043224	6	40V	SCREW 8X1,25X16	VITE 8X1,25X16
109	16043424	8	40V	SCREW 8X1,25X20	VITE 8X1,25X20
111	10571774	23	170R	LOCKWASHER	ROSETTA ELASTICA
113	14406521	6	170R	LOCKWASHER	ROSETTA ELASTICA
114	71406346	2	122G	SEAL	GUARNIZIONE
115	16043624	5	40V	SCREW 8X1,25X25	VITE 8X1,25X25
116	14499421	9	131R	WASHER	ROSETTA
117	71406347	4	40V	SCREW	VITE
118	71406348	1	54T	FILLER CAP	TAPPO INTRODUZIONE

ACCELERATOR CONTROLS COMANDI ACCELERATORE	COMMANDES D'ACCELERATEUR GASREGULIERUNG MANDOS DEL ACELERADOR	0.004 TAV.1

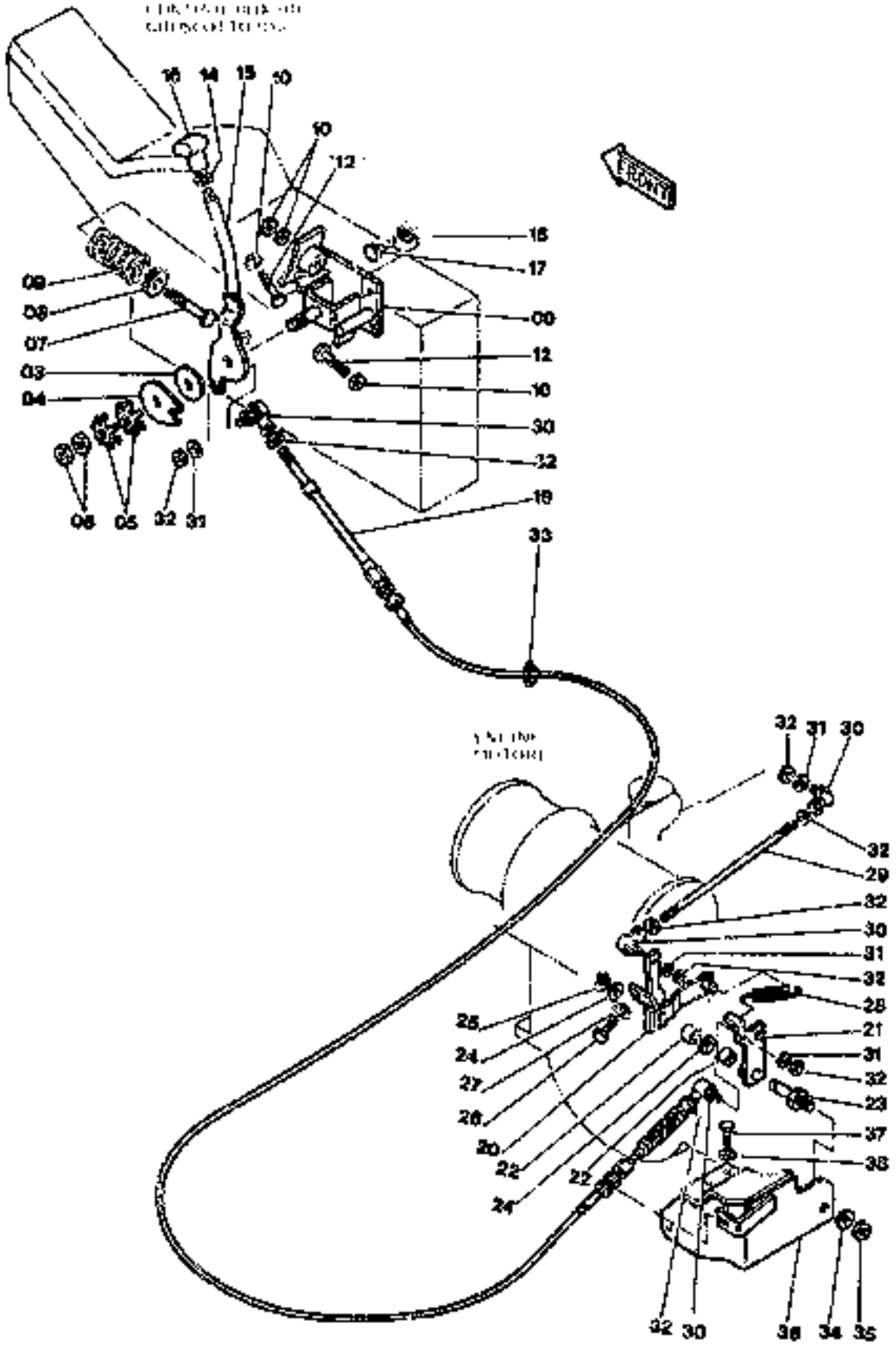

FH120

ACCELERATOR CONTROLS — COMMANDES D'ACCELERATEUR — 0.004 TAV.1
COMANDI ACCELERATORE — GASREGULIERUNG
MANDOS DEL ACELERADOR

ITEM	PART NUMBER	QTY	TTL CO.	DESCRIPTION	DESCRIZIONE
00	71415647	1	225S	BRACKET	STAFFA
03	71415654	1	60D	DISC	DISCO
04	71415655	1	110P	PLAQUE	PIASTRINA
05	71415656	2	131R	WASHER	ROSETTA
06	12163321	2	10D	NUT	DADO
07	15215624	1	40V	SCREW 10X1,5X100	VITE 10X1,5X100
08	71415657	1	131R	WASHER	ROSETTA
09	71415660	1	100M	SPRING	MOLLA
10	11701721	4	10D	NUT	DADO
12	16040624	2	40V	SCREW 10X1,5X40	VITE 10X1,5X40
14	71415014	1	10D	NUT	DADO
15	71415661	1	45L	LEVER	LEVA
16	71415065	1	25I	HANDGRIP	IMPUGNATURA
17	15043734	3	40V	SCREW 8X1,25X16	VITE 8X1,25X16
18	10571774	3	131R	WASHER 8X1,25X16	ROSETTA 8X1,25X16
19	71405476	1	111C	CABLE	CAVO
20	71405402	1	45L	LEVER	LEVA
21	71405483	1	45L	LEVER	LEVA
22	79006025	2	95B	BUSHING	BOCCOLA
23	71405484	1	80P	PIN	PERNO
24	14496831	2	131R	WASHER	ROSETTA
25	11066276	1	187A	SNAP RING	ANELLO ELASTICO
26	71405485	2	40V	SCREW	VITE
27	10781021	2	10D	NUT	DADO
28	71405486	1	100M	SPRING	MOLLA
29	71405479	1	142T	TIEROD	TIRANTE
30	71405480	2	165S	ARTICULATION	SNODO SFERICO
31	10571574	4	131R	WASHER	ROSETTA
32	15898221	6	10D	NUT	DADO
33	4582514	1	31F	CLAMP	FASCETTA
34	10572074	1	170R	LOCKWASHER	ROSETTA ELASTICA
35	1216402*	1	10D	NUT	DADO
36	71405481	1	303S	SUPPORT	SUPPORTO
37	11106434	2	40V	SCREW 10X1,5X30	VITE 10X1,5X30
38	10571874	2	131R	WASHER	ROSETTA

D-1

ALPHABETICAL INDEX

DESCRIPTION	SGR.	TAV.	GRID
Accelerator controls	0.004	1	1C-23
Air Cleaner	0.001	1	1C-13
Alternator-Mounting	0.400	1	1H-9
Alternator (55 amp)	0.400	2	1H-11
Alternator (25 amp)	0.400	3	1H-13
Anti-Shock Valve (Hydr.)	1.082	3	1L-3
Application of Ol. Hammer	5.0020	2	2H-13
Batteries	1.220	4	2D-19
Belts	0.340	1	1G-21
	0.345	1	1G-23
Boom Piping	2.030	1	2F-13
Brake Valve Components	3.010	4	2G-11
Bucket	2.020	1	2F-9
Bucket Cylinder	2.030	5	2F-21
Bull Gear	3.000	1	2G-3
Cab	1.250	1	2D-19
Cab Door	1.250	5	2E-7
Cab Heater-Components	1.290	2	2E-15
Cab Window-Left Side	1.250	6	2E-9
Cab-Frame	1.250	7	2E-11
Cab-Platform	1.250	1	2D-21
Camshaft	0.120	1	1E-19
Check Valve	1.081	2	1K-17
Cold Starting Aid	5.0025	1	2H-19
Connecting Rod	0.081	1	1E-10
Cont. Valve-Hydr. (Ass.Y)	1.050	1	1J-13
Control Valve-Hydr.	1.050	2	1J-17
	1.050	3	1J-19
	1.050	4	1J-21
	1.050	5	1J-23
Controls	1.070	1	1K-5
Counterweight	1.000	1	1I-3
Cowlings	1.300	1	2E-19
	1.300	2	2E-21
Crankshaft	0.080	1	1E-7
Crankshaft Pulley	0.084	1	1E-15
Cylinder Block	0.040	1	1D-5
	0.040	2	1D-7
	0.040	3	1D-9
Cylinder Block Covers	0.043	1	1D-13
	0.043	2	1D-15
Cylinder Head	0.060	1	1D-21
	0.060	2	1D-23
Dashboard (Left)	1.210	1	2D-9
Dashboard (Right)	1.200	1	2D-3
	1.200	3	2D-7
Data Monitor	1.200	2	2D-5
Decals	4.500	1	2H-9
Dipper Stick (2,1m)	5.0022	1	2H-15
Dipper Stick (2,5m) (STD.)	2.003	1	2F-5
Dipper Stick(2,5m)Links(Std.)	2.003	2	2F-7
Dipper Stick (3m)	5.0038	1	2H-21
	5.0038	2	2H-23
Dipper Stick cylinder	2.030	4	2F-19
Dipstick-Engine Oil	0.305	2	1G-7
Discharge Valve	1.040	4	1J-3
Discharge Valve Componen.	3.010	5	2G-13
Drive on Engine (Opt.)	0.350	1	1H-3
Electric System	1.220	2	2D-13
Elements-Engine Oil	0.001	1	1C-13
Elements-fuel	0.200	1	1F-11
Elements-Hydraulic	1.020	1	1E-19
Elements-Pilot	1.080	1	1K-11
Emergency Kits	4.000	1	2H-7
Engine	0.021	1	1D-3
Engine-Controls	0.004	1	1C--23
Engine-Suspensione	0.000	1	1C-11
Engine Breather	0.045	1	1D-17
	0.045	1A	1D-19
Engine Cooling Piping	0.323	1	1G-17
Engine Heat Exchanger	0.310	1	1G-9
	0.310	2	1G-11
Engine Lifting Eyes	0.450	1	1H-15
Engine Oil Filter	0.302	1	1G-3
Engine Oil Piping	0.305	1	1G-5
Engine Oil Pump	0.300	1	1F-23
Engine Oil Sump	0.042	1	1D-11
Engine Piston	0.082	1	1E-11
Engine Suspensions	0.000	1	1C-11
Exhaust Manifold	0.077	1	1E-5
Exhaust Valve	0.060	2	1D-23
Fan	0.345	1	1G-23
Fan Drive	0.345	1	1G-23
"Filter Care" Kit	21		1A-23
Filter-Pilot System	1.080	1	1K-11
Filters-Air	0.001	1	1C-13
Filters-Engine Oil	0.302	1	1G-3
Filters-Fuel	0.200	1	1F-11
Filters-Hydr. System	1.020	1	1I-7
Flywheel-Engine	0.083	1	1E-13
Fuel Filter	0..200	1	1F-11
Fuel Piping	0.203	1	1F-15
Fuel Pump	0.201	1	1F-13
Fuel Tank	1.010	1	1I-5
Fuses	1.200	3	2D-7
Guards	1.300	2	2E-21
Handle	1.300	3	2E-23
Heater	1.290	1	2E-15
Horn	1.220	2	2D-15
Hyd.Pump Drive	1.030	7	1I-21
Hyd.Pump Regulator Valve	1.030	6	1I-19
Hyd.Pump Regulator-Cover	1.030	4	1I-15
	1.030	5	1I-17
Hydr.Pump-Components	1.030	2	1I-11
Hydr.Pump Regulator-Comp.	1.030	3	1I-13

D-2

ALPHABETICAL INDEX

DESCRIPTION	SGR.	TAV.	GRID
Hydraulic Pump	1.030	1	1I-9
Idler	3.020	1	1G-15
Injection Nozzle-Lines	0.149	1	1F-9
Injection Pump	0.140	2	1E-23
	0.140	3	1F-3
	0.140	4	1F-5
	0.140	5	1F-7
Injection Pump-Piping	0.140	1	1E-21
Intake Manifold	0.071	1	1E-3
Intake Valve	0.060	2	1D-21
Lift Cylinder (Left)	2.030	3	1F-17
Lift Cylinder (Right)	2.030	2	2F-15
Lights	1.220	2	2D-15
Lower Frame	3.000	1	2G-3
Lubric. Fitting Piping	2.040	1	2F-23
Main Piping	1.060	1	1K-3
Mirror (Rear)	1.300	2	2E-21
Monobloc Boom	2.000	1	2F-3
Motor - Starter	0.360	2	1H-7
Motor - Swing	1.040	1	1J-3
Motor - Travel	3.010	1	12G-5
Motor - Wiper	1.220	1	2D-13
Muffler	0.002	1	1C-15
Oil Tank	1.020	1	1I-7
Operator's Seat	1.250	2	2D-23
OperatorsSeat(Bostrom)(Std.)	5.0151	1	2I-3
Pilot Gear Pump	1.030	8	1I-23
Pilot Piping(1)	1.080	1	1K-11
Pilot Piping(2)	1.081	1	1K-15
Pilot Piping(3)	1.082	1	1K-19
Pilot Piping (4)	1.083	1	1L-5
Pilot Piping (5)	1.084	1	1L-7
Pilot Valve	1.070	3	1K-9
Pilot Valve-components	1.070	2	1K-7
Pipin-Boom	2.030	1	2F-13
Piping-Engine Oil	0.350	1	1H-3
Piping-Injection	0.149	1	1F-9
Piping-Lube Fittings	2.040	1	2G-23
Piping-Main	1.060	1	1K-3
Piping-Pilot(1)	1.080	1	1K-11
Piping-Pilot(3)	1.082	1	1K-19
Piping-Pilot(4)	1.083	1	1L-5
Piping-Pilot(5)	1.084	1	1L-7
Piping-Pump Contr. Valve	1.050	1	1J-13
Piping-Travel (Lower)	3.070	1	2H-5
Piping-Turbocharger	0.241	1	1F-21
Pump-Engine Oil	0.300	1	1F-23
Pump-Fuel	0.201	1	1F-13
Pump-Hydraulic	1.030	1	1I-9
Pump-Injection	0.140	1	1E-21
Pump-Pilot	1.030	8	1I-23
Pump-Water	0.320	1	1G-13
Pump/Control Valve Piping	1.050	1	1J-13
Radiator	0.003	1	1C-17
Radiator-Components	0.003	2	1C-19
	0.003	3	1C-21
Rocker Arm	0.060	2	1D-23
Rotary Distr.-Components	3.060	2	2H-3
Rotary Distributor	3.060	1	2G-23
Seat Belt (Std.)	5.0536	1	2I-5
Sensors	1.220	2	2D-15
Solenoid Valve	1.080	2	1K-13
Starter	0.360	2	1H-7
Starter-Mounting	0.360	1	1H-5
Stop Valve	1.082	2	1K-23
Swing Motor-Components	1.040	3	1J-7
Swing Red.Unit-Components	1.040	2	1J-5
Swing Reduction Unit	1.040	1	1J-3
Thermostat & Housing	0.326	1	1G-19
Timing Control	0.100	1	1E-17
Tool Kit	5.0093	1	2I-9
track Chain	3.050	1	2G-21
Track Roller	3.040	1	2G-19
Travel Motor-componen.	3.010	3	2G-9
Travel Piping (Lower)	3.070	1	2H-5
Travel Red.Unit-Componen.	3.010	2	2G-7
Travel Reduction Units	3.010	1	2G-5
Turbocharger	0.240	1	1F-17
	0.240	2	1F-19
Turbocharger Piping	0.241	1	1F-21
Upper Frame	1.000	1	1E-17
Upper Roller	3.030	1	2G-17
Valve-Anti-Shock(Hydr.)	1.082	3	1L-3
Valve-Check (Pilot)	1.081	2	1K-17
Valve-Exhaust	0.060	2	1D-23
Valve-Intake	0.060	2	1D-23
Valve-Pilot (Hydr.)	1.070	1	1K-5
Valve-Pilot(Travel)	1.070	1	1K-5
Valve-Solenoid	1.080	2	1K-13
Valve-Stop(Travel)	1.082	1	1K-21
Washer (windshield)	1.220	3	2D-17
Water Pump	0.320	1	1G-13
Water Pump Drive	0.340	1	1G-21
Water Pump-Components	0.320	2	1G-15
Wiper	1.220	1	2D-11

ENGINE MOTORE TERMICO	MOTEUR THERMIQUE MOTOR MOTOR	0.021 TAV.1

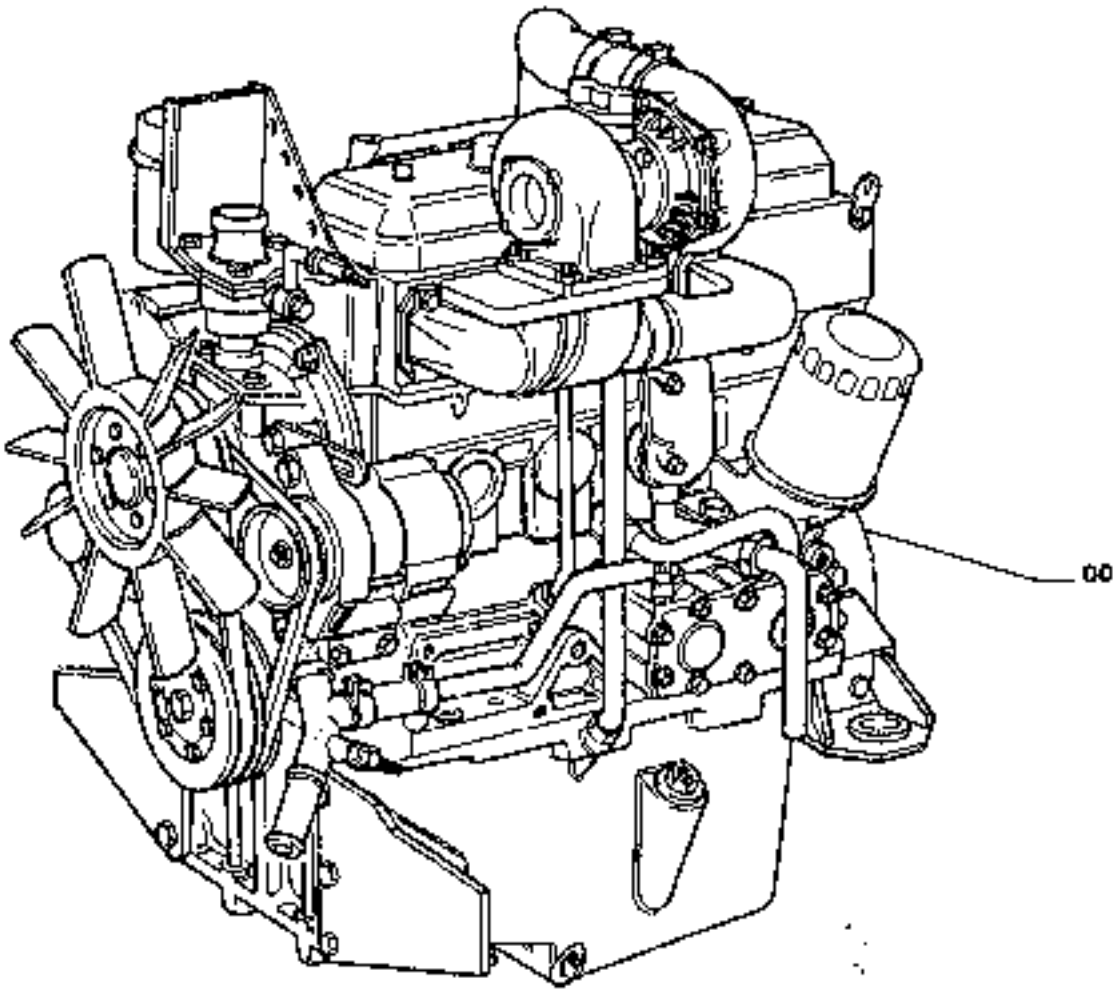

D-4

FH120

ENGINE MOTORE TERMICO	MOTEUR THERMIQUE MOTOR MOTOR	0.021	TAV.1

ITEM	PART NUMBER	QTY	TR. CO.	DESCRIPTION	DESCRIZIONE
00	8110644	1	130M	ENGINE -ASS.LY	MOTORE TERMICO -COMPL.

CYLINDER BLOCK BASAMENTO MOTORE	BLOC-CYLINDRES KURBELGEHAUSE BLOQUE CILINDROS	0,040 TAV.1

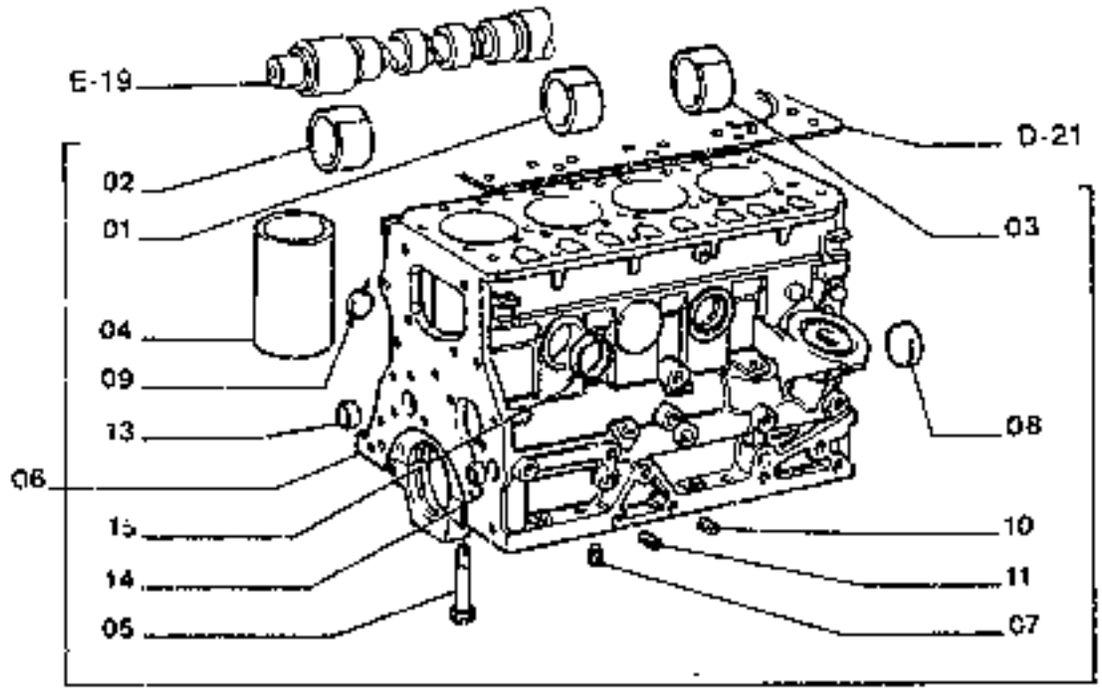

CYLINDER BLOCK
BASAMENTO MOTORE

BLOC-CYLINDRES
KURBELGEHAUSE
BLOQUE CILINDROS

0.040 TAV.1

ITEM	PART NUMBER	QTY	TR. CO.	DESCRIPTION	DESCRIZIONE
01	4603449	1	95B	BUSHING	BOCCOLA
02	4603450	1	95B	BUSHING	BOCCOLA
03	4603451	1	95B	BUSHING	BOCCOLA
04	4770623	4	35C	CYLINDER LINER +0,0	CAMICIA CIL. MOTORE +0,0
	4770624	4	35C	CYLINDER LINER +0,2	CAMICIA CIL. MOTORE +0,2
05	4792169	10	40V	SCREW	VITE
06	4814845	1	20B	CYLINDER BLOCK -ASS.LY	BASAMENTO MOTORE -COMPL.
07	4824539	1	50T	PLUG	TAPPO
08	10160701	1	50T	PLUG	TAPPO
09	14282770	4	50T	PLUG	TAPPO
10	14323811	1	50T	PLUG	TAPPO
11	14323911	4	50T	PLUG	TAPPO
13	14327401	1	50T	PLUG	TAPPO
	14328201	1	50T	PLUG	TAPPO
14	14328501	2	50T	PLUG	TAPPO
15	14329801	1	50T	PLUG	TAPPO

CYLINDER BLOCK BASAMENTO MOTORE	BLOC-CYLINDRES KURBELGEHAUSE BLOQUE CILINDROS	0.040 TAV.2

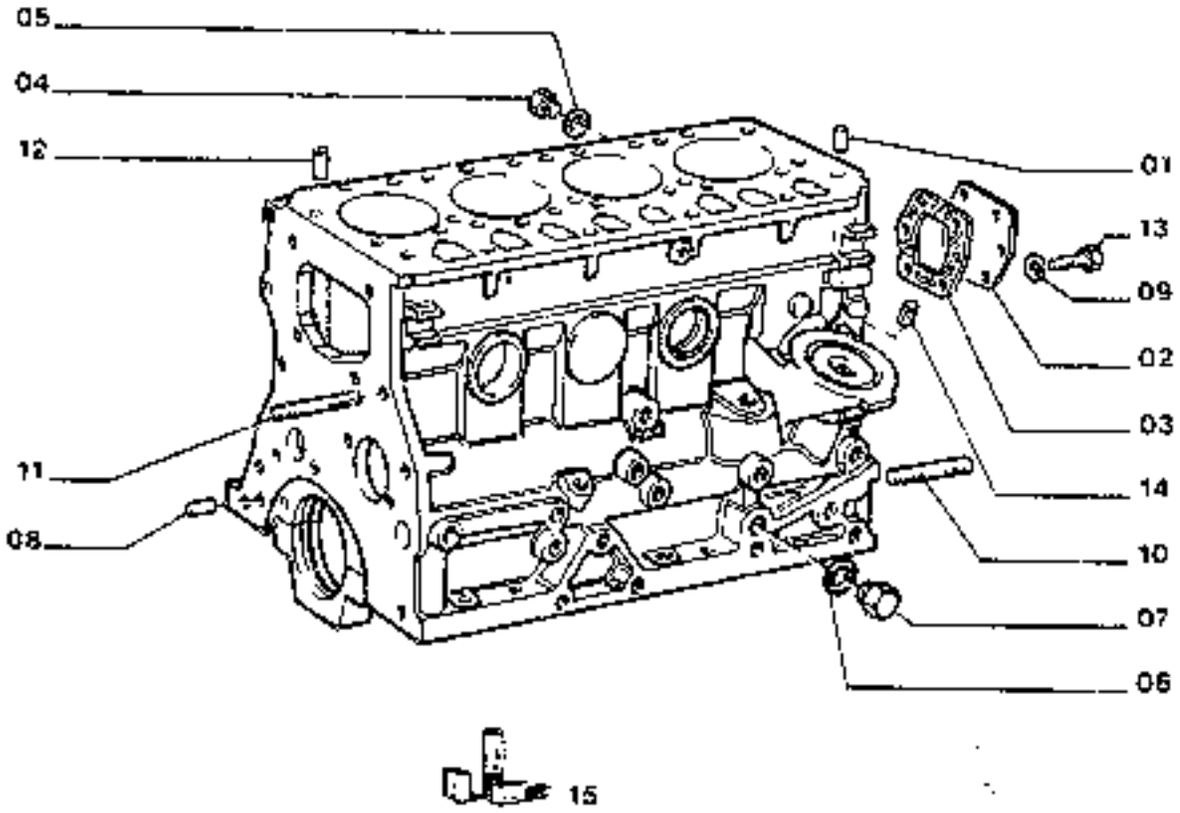

CYLINDER BLOCK
BASAMENTO MOTORE

BLOC-CYKINDRES
KURBELGEHAUSE
BLOQUE CILINDROS

0.040 TAV.2

ITEM	PART NUMBER	QTY	TR. CO.	DESCRIPTION	DESCRIZIONE
01	4699607	1	90G	DOWEL	GRANO
02	4853282	1	265C	COVER	COPERCHIO
03	4853283	1	120G	GASKET -K. 79097245	GUARNIZIONE PIANA -K. 79097245
04	4665029	1	50T	PLUG	TAPPO
05	10265460	1	120G	GASKET	GUARNIZIONE PIANA
06	16206060	1	120G	GASKET	GUARNIZIONE PIANA
07	10300511	1	50T	PLUG	TAPPO
08	10839810	2	90G	DOWEL	GRANO
09	11193871	6	17CH	LOCKWASHER	ROSETTA ELASTICA
10	11797821	2	210P	STUD	PRIGIONIERO
11	13517824	1	210P	STUD	PRIGIONIERO
12	14165470	1	202S	SPRING PIN	SPINA ELASTICA
13	16043324	6	40V	SCREW 8X1,25X18	VITE 8X1,25X18
14	4782452	1	90G	DOWEL	GRANO
15	79097245	1	K13	KIT - CYLINDER BLOCK SEALS FOR COMPONENTS, SEE A - 21	KIT - GUARNIZ.BASAMENTO MOTORE VED. COMPONENTI PAG.

CYLINDER BLOCK BASAMENTO MOTORE	BLOC-CYKNDRES KURBELGEHAUSE BLOQUE CILINDROS	0.040 TAV.3

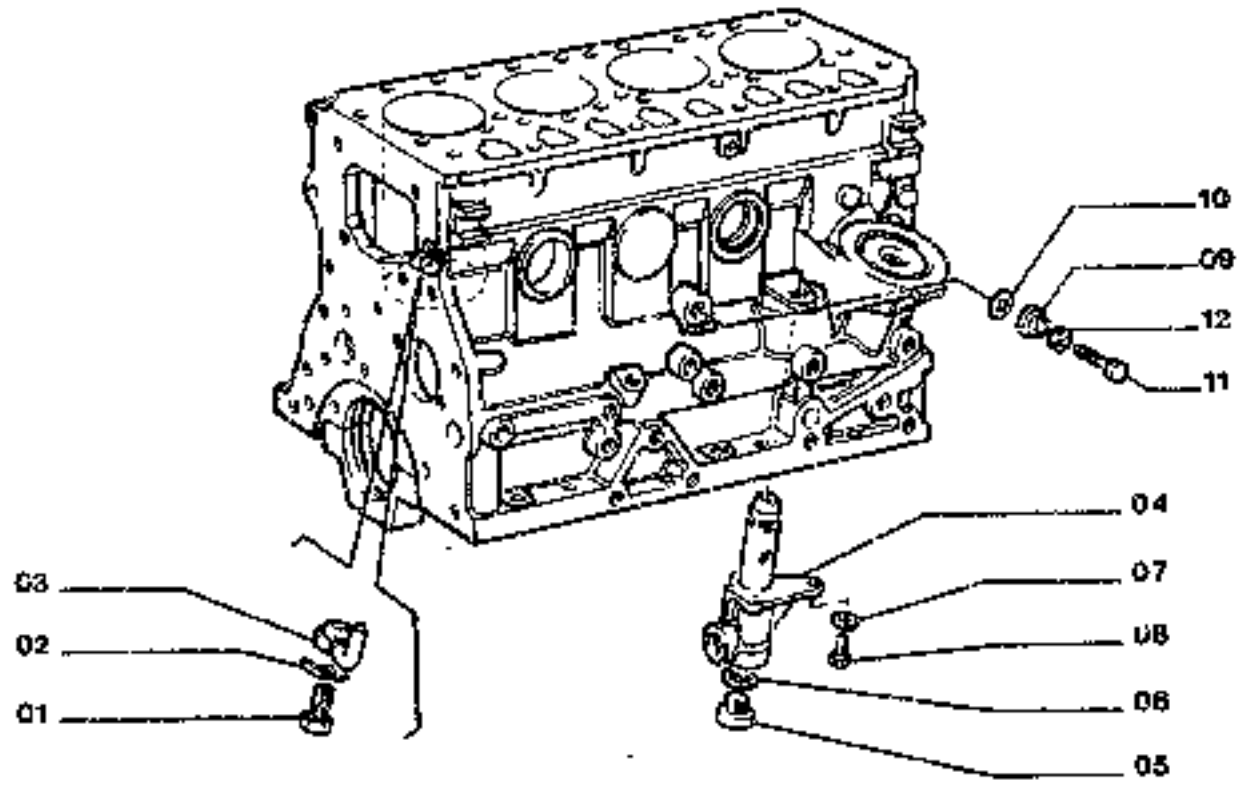

D-10

FH1:20

CYLINDER BLOCK BASAMENTO MOTORE	BLOC-CYKINDRES KURBELGEHAUSE BLOQUE CILINDROS	0,040	TAV.3

ITEM	PART NUMBER	QTY	TR. CO.	DESCRIPTION	DESCRIZIONE
01	4763439	4	20R	FITTING	RACCORDO
02	4763440	4	113P	LOCKPLATE	PIASTRINA DI SICUREZZA
03	4764577	4	20U	JET	UGELLO
04	4816106	1	300S	SUPPORT	SUPPORTO
05	10276311	1	50T	PLUG	TAPPO
06	10295269	1	120G	GASKET	GUARNIZIONE PIANA
07	11193971	2	131R	WASHER	ROSETTA
08	16043624	2	40V	SCREW 8X1,25X25	VITE 8X1,25X25
09	4811882	1	265C	COVER	COPERCHIO
				D2597 FROM ENGINE 298462	D2597 DAL MOTORE 298462
10	4800893	1	159G	O-RING	GUARNIZIONE O-R
				D2597 FROM ENGINE 298462	D2597 DAL MOTORE 298462
11	16044024	1	40V	SCREW 8X1,25X40	VITE 8X1,25X40
				D2597 FROM ENGINE 298462	D2597 DAL MOTORE 298462
12	4716734	1	131R	WASHER	ROSETTA
				D2597 FROM ENGINE 298462	D2597 DAL MOTORE 298462

ENGINE OIL SUMP COPPA OLIO MOTORE	CARTER D'HUILE MOTOROELWANNE CARTER DE ACEITE	0.042 TAV.1

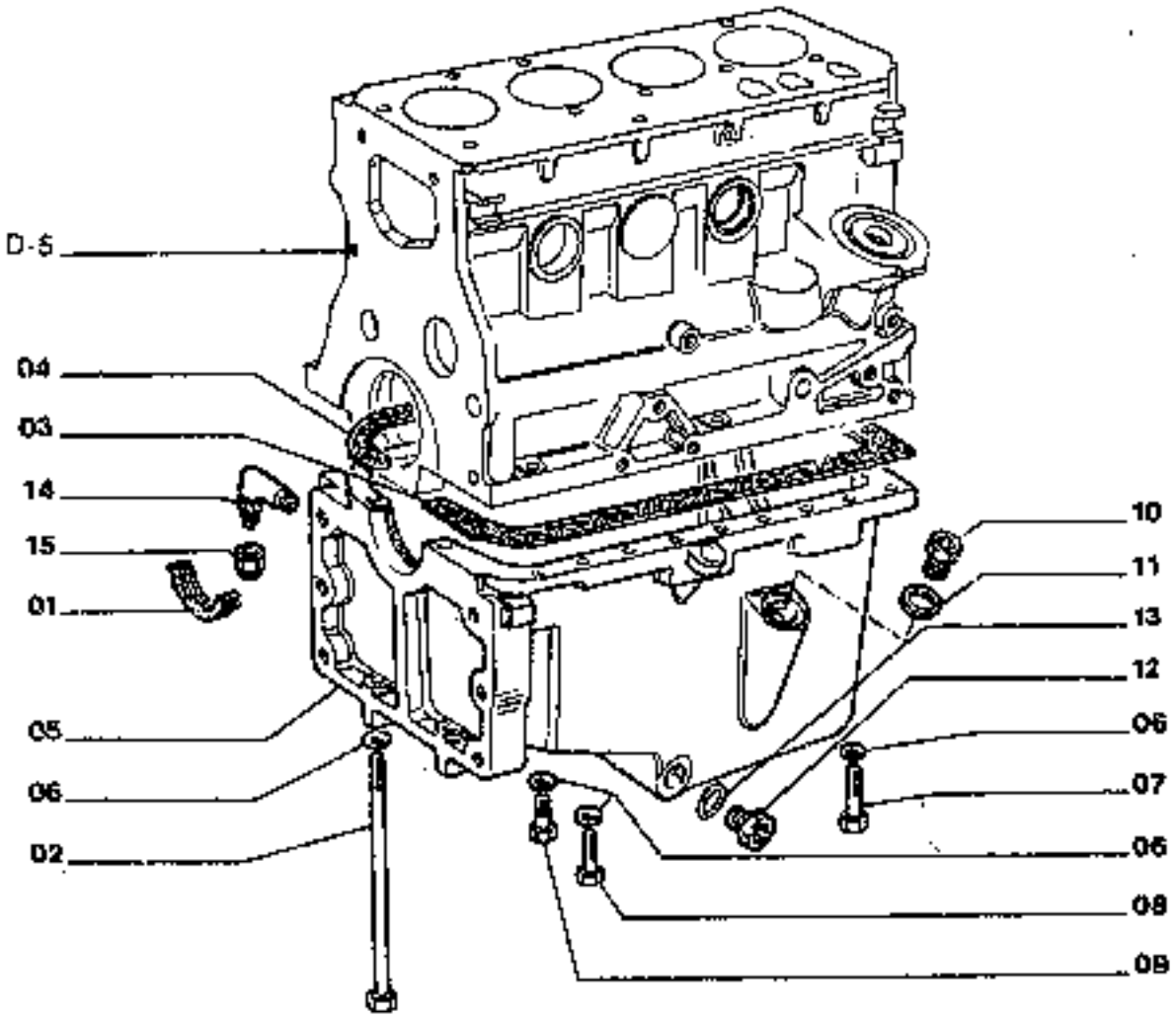

16-17

FH120

ENGINE OIL SUMP
COPPA OLIO MOTORE

CARTER D'HUILE
MOTOROELWANNE
CARTER DE ACEITE

0.042 TAV.1

ITEM	PART NUMBER	QTY	TR. CO.	DESCRIPTION	DESCRIZIONE
01	4031577	1	122G	SEAL -FRONT -K79097245-1930798	GUARNIZIONE -ANT. -K79097245-1930798
02	4807933	3	40V	SCREW	VITE
03	4782787	1	122G	SEAL -LEFT -K79097245-1930798	GUARNIZIONE -SIN. -K79097245-1930798
04	4782788	1	122G	SEAL -RIGHT -K79097245-1930798	GUARNIZIONE -DEST. -K79097245-1930798
05	4817439	1	C274	ENGINE OIL SUMP	COPPA OLIO MOTORE
06	11168374	27	131R	WASHER	ROSETTA
07	11308024	6	40V	SCREW 10X1,25X30	VITE 10X1,25X30
08	11307024	14	40V	SCREW 10X1,25X40	VITE 10X1,25X40
09	11343724	4	40V	SCREW 10X1,25X65	VITE 10X1,25X65
10	10278111	1	50T	PLUG	TAPPO
11	10285080	1	122G	SEAL	GUARNIZIONE
12	4847102	1	50T	PLUG	TAPPO
13	14457680	1	158G	O-RING	GUARNIZIONE O-R
14	79054407	1	20R	FITTING	RACCORDO
15	79054483	1	50T	PLUG	TAPPO
16	79097245	1	K13	KIT - CYLINDER BLOCK SEALS FOR COMPONENTS, SEE A-21	KIT - GUARNIZ.BASAMENTO MOTORE VED. COMPONENTI PAG.
17	1930798	1	K41	KIT-OIL PAN GASKETS FOR COMPONENTS, SEE A-21	KIT-GUARN. COPPA OLIO VED. COMPONENTI PAG.

CYLINDER BLOCK COVERS
COPERCHI BASAMENTO

COUVERCLES DE BLOC-CYL.
DECKEL DES KURBELGEHÄUSES
TAPAS DEL BLOQUE

0.043 TAV.1

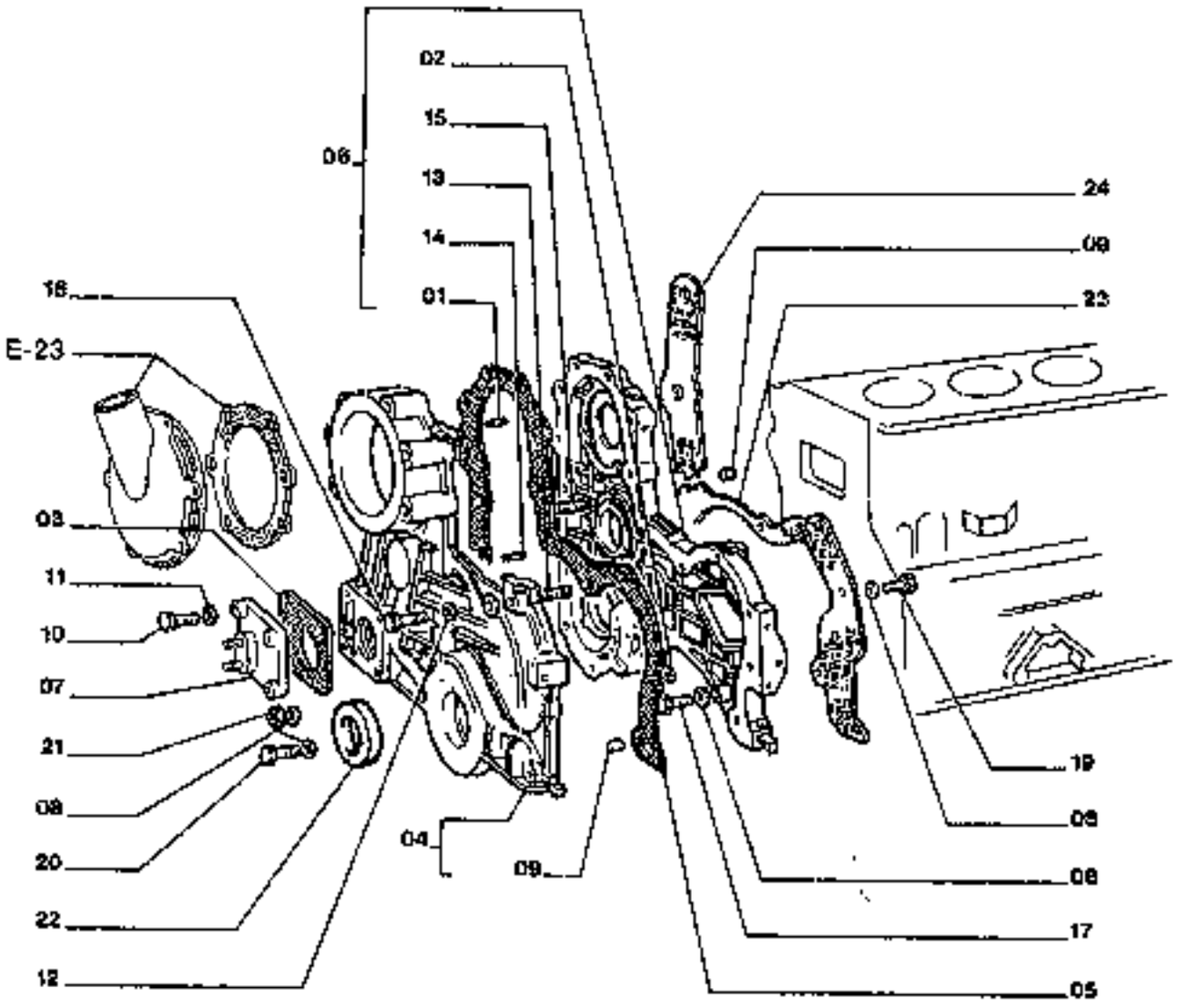

25

CYLINDER BLOCK COVERS — COUVERCLES DE BLOC-CYL. — D.043 TAV.1
COPERCHI BASAMENTO — DECKEL DES KURBELGEHAUSES
TAPAS DEL BLOQUE

ITEM	PART NUMBER	QTY	TR. CO.	DESCRIPTION	DESCRIZIONE
01	4600631	3	210P	STUD	PRIGIONIERO
02	4605220	1	20U	JET	UGELLO
03	4607590	1	122G	SEAL -K. 79097245	GUARNIZIONE -K. 79097245
04	4768749	1	265C	COVER	COPERCHIO
05	4781580	1	122G	SEAL -K. 79097245	GUARNIZIONE -K. 79097245
06	4786512	1	35S	CASE	SCATOLA
07	4804219	1	265C	COVER -ASS.LY	COPERCHIO -COMPL.
				C2596 UP TO ENGINE 320145	C2596 FINO AL MOTORE 320145
	4850650	1	265C	COVER -ASS.LY	COPERCHIO -COMPL.
				D2596 FROM ENGINE 320146	D2596 DAL MOTORE 320146
08	10519601	15	131R	WASHER	ROSETTA
09	10839610	2	90G	DOWEL	GRANO
10	10902824	4	40V	SCREW 6X1X30	VITE 6X1X30
11	11157771	4	131R	WASHER	ROSETTA
12	12538501	1	131R	WASHER	ROSETTA
13	13543620	3	210P	STUD	PRIGIONIERO
14	13543621	1	210P	STUD	PRIGIONIERO
15	13546921	3	210P	STUD	PRIGIONIERO
16	15888521	1	40V	SCREW 10X1,25X70	VITE 10X1,25X70
17	16043521	2	40V	SCREW 8X1,25X22	VITE 8X1,25X22
	16043821	1	40V	SCREW 8X1,25X30	VITE 8X1,25X30
18	16043921	1	40V	SCREW 8X1,25X35	VITE 8X1,25X35
	16044221	4	40V	SCREW 8X1,25X50	VITE 8X1,25X50
20	16044621	3	40V	SCREW 8X1,25X50	VITE 8X1,25X50
	16044821	3	40V	SCREW 8X1,25X85	VITE 8X1,25X85
21	16100811	1	10D	NUT	DADO
22	40000011	1	122G	SEAL -K. 79097245	GUARNIZIONE -K. 79097245
				IN ALTERNATIVE	IN ALTERNATIVA
	40000012	1	122G	SEAL -IN ALTER.	GUARNIZIONE -IN ALTER.
23	4781579	1	122G	SEAL -K. 79097245	GUARNIZIONE -K. 79097245
24	4702653	1	122G	SEAL -K. 79097245	GUARNIZIONE -K. 79097245
25	79097245	1	K13	KIT - CYLINDER BLOCK SEALS	KIT - GUARNIZ.BASAMENTO MOTORE
				FOR COMPONENTS, SEE A-211	VED. COMPONENTI PAG. 32

CYLINDER BLOCK COVERS
COPERCHI BASAMENTO

COUVERCLES DE BLOC-CYL.
DECKEL DES KURBELGEHAUSES
TAPAS DEL BLOQUE

0,043 TAV.2

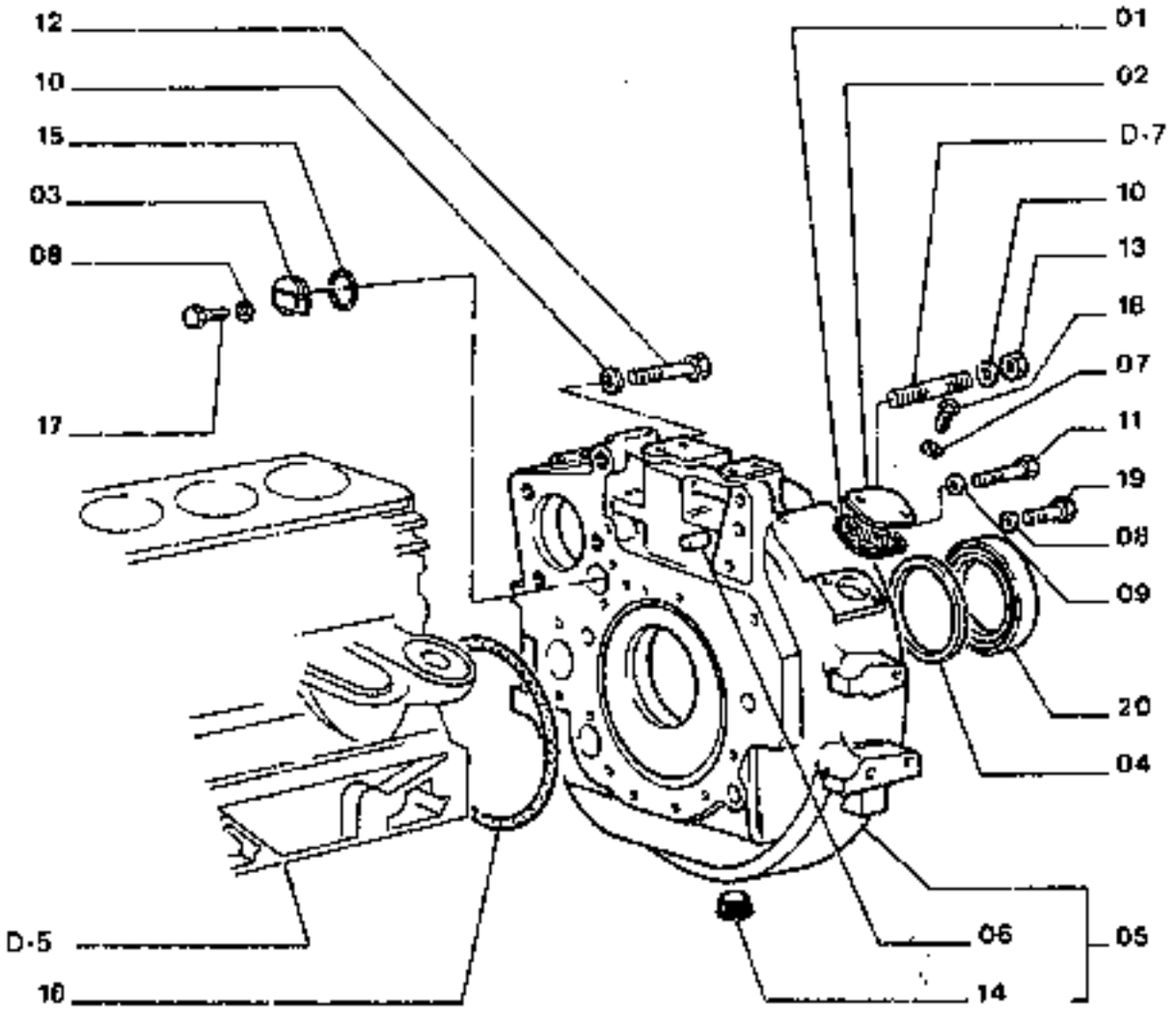



CYLINDER BLOCK COVERS
COPERCHI BASAMENTO

COUVERCLES DE BLOC-CYL
DECKEL DES KURBELGEHAUSES
TAPAS DEL BLOQUE

0.043 TAV.2

ITEM	PART NUMBER	QTY	TR. CO.	DESCRIPTION	DESCRIZIONE
01	4605564	1	122G	SEAL -K. 79097245	GUARNIZIONE -K. 79097245
02	4607706	1	265C	COVER	COPERCHIO
03	4715740	1	50T	PLUG	TAPPO
04	4787154	1	75D	SPACER	DISTANZIALE
05	4842695	1	300S	SUPPORT -ASS.LY	SUPPORTO -COMPL.
06	10839710	2	90G	DOWEL	GRANO
07	11183071	2	131R	WASHER	ROSETTA
08	11193374	3	131R	WASHER	ROSETTA
09	11196371	4	131R	WASHER	ROSETTA
10	11200171	4	131R	WASHER	ROSETTA
11	11306921	4	40V	SCREW 10X1,25X30	VITE 10X1,25X30
12	11408321	2	40V	SCREW 14X1,5X35	VITE 14X1,5X35
13	12164011	2	10D	NUT	DADO
14	14325601	1	50T	PLUG	TAPPO
15	14463880	1	158G	O-RING -K. 79097245	GUARNIZIONE O-R -K. 79097245
16	14463980	1	158G	O-RING -K. 79097245	GUARNIZIONE O-R -K. 79097245
17	15043224	1	40V	SCREW 8X1,25X16	VITE 8X1,25X16
18	15043421	2	40V	SCREW 8X1,25X20	VITE 8X1,25X20
19	15043921	2	40V	SCREW 8X1,25X35	VITE 8X1,25X35
20	40003600	1	122G	SEAL -K. 79097245	GUARNIZIONE -K. 79097245
21	79097245	1	K13	KIT - CYLINDER BLOCK SEALS FOR COMPONENTS, SEE A-21	KIT - GUARNIZ.BASAMENTO MOTORE VED. COMPONENTI PAG. 32

ENGINE BREATHER
SFIATATOIO MOTORE

RENIFLARD DU MOTEUR
ENTLUEFTER
RESPIRADERO

8.045 TAV.1

C 2597 → MOT. N. 298461

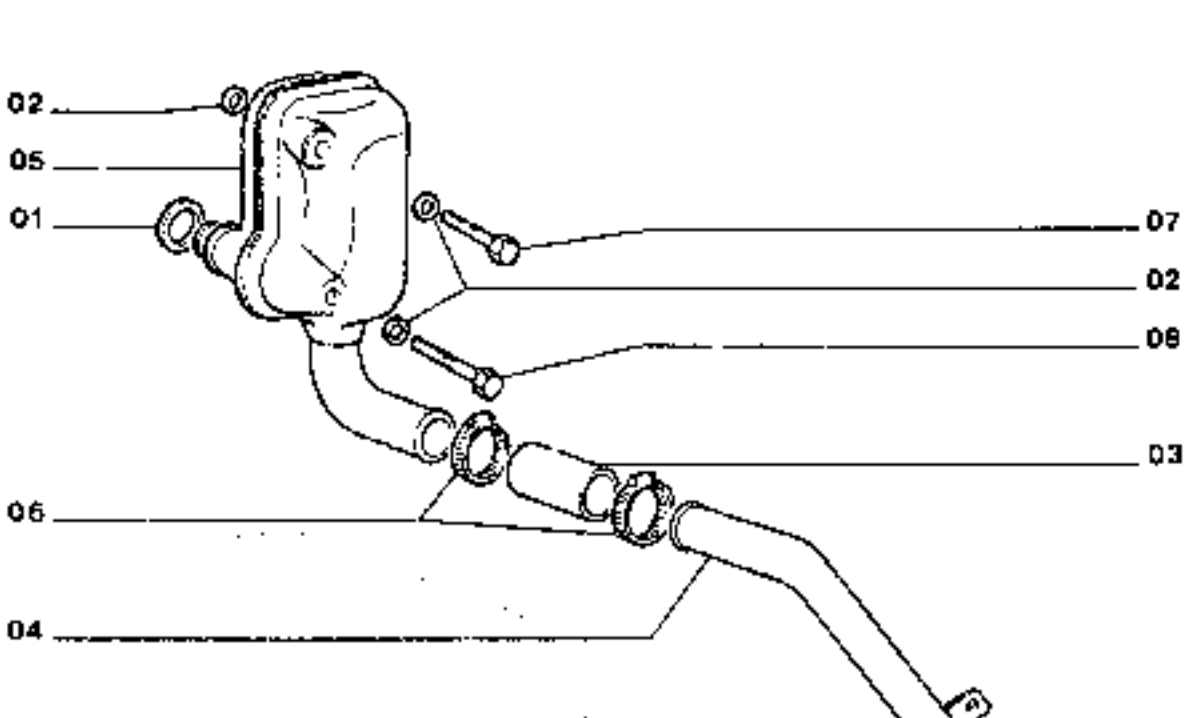

ENGINE BREATHER
SFIATATOIO MOTORE

RENIFLARD DU MOTEUR
ENTLUEFTER
RESPIRADERO

0.045 TAV.1

ITEM	PART NUMBER	QTY	TR. CO.	DESCRIPTION	DESCRIZIONE
01	4600803	1	122G	SEAL	GUARNIZIONE
				C2597 UP TO ENGINE 298461	C2597 FINO AL MOTORE 298461
02	4716734	3	131R	WASHER	ROSETTA
				C2597 UP TO ENGINE 298461	C2597 FINO AL MOTORE 298461
03	4725351	1	30M	SLEEVE	MANICOTTO
				C2597 UP TO ENGINE 298461	C2597 FINO AL MOTORE 298461
04	4763570	1	193T	TUBE	TUBO RIGIDO
				C2597 UP TO ENGINE 298461	C2597 FINO AL MOTORE 298461
05	4768877	1	145S	BREATHER	SFIATATOIO
				C2597 UP TO ENGINE 298461	C2597 FINO AL MOTORE 298461
06	12182860	2	180C	COLLAR	COLLARE
				C2597 UP TO ENGINE 298461	C2597 FINO AL MOTORE 298461
07	16044821	1	40V	SCREW 8X1,25X85	VITE 8X1,25X85
				C2597 UP TO ENGINE 298461	C2597 FINO AL MOTORE 298461
08	16045821	1	40V	SCREW 8X1,25X120	VITE 8X1,25X120
				C2597 UP TO ENGINE 298461	C2597 FINO AL MOTORE 298461

ENGINE BREATHER SFIATATOIO MOTORE	RENIFLARD DU MOTEUR ENTLUEFTER RESPIRADERO	0.045 TAV.1A

D 2597 MOT N 250462 -

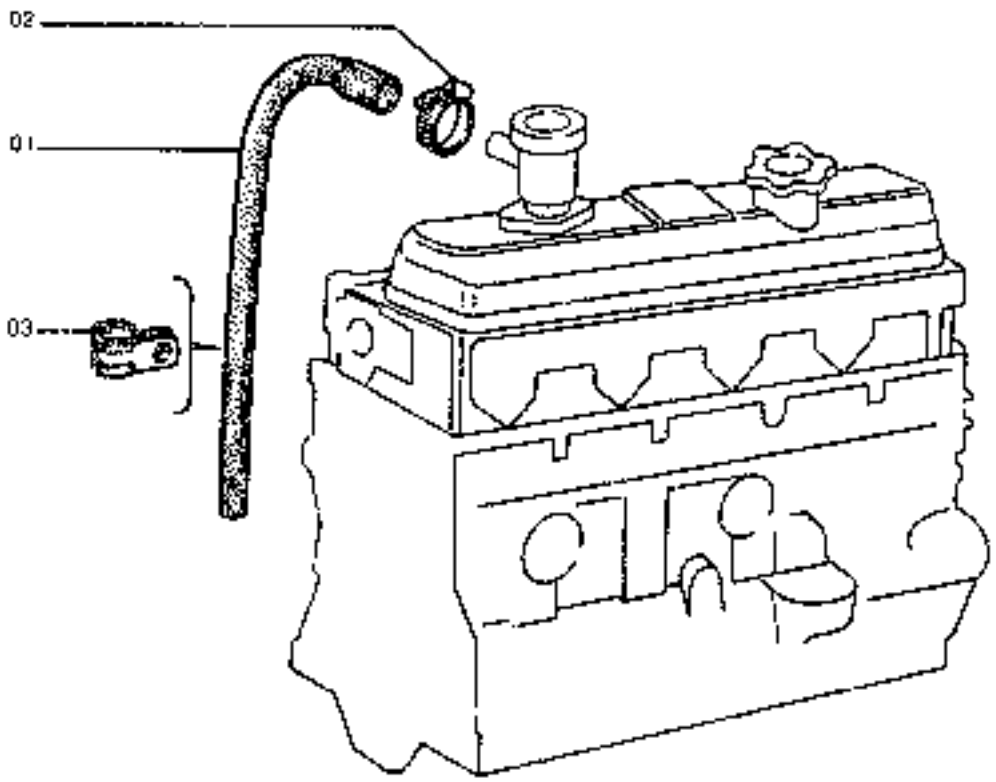

FH129

ENGINE BREATHER
SFIATATOIO MOTORE

RENIFLARD DU MOTEUR
ENTLUEFTER
RESPIRADERO

0.045 TAV.1A

ITEM	PART NUMBER	QTY	TRL CO.	DESCRIPTION	DESCRIZIONE
01	98400770	1	285T	HOSE D2597 FROM ENGINE 298462	TUBO FLESSIBILE D2597 DAL MOTORE 298462
02	17754691	1	180C	COLLAR D2597 FROM ENGINE 298462	COLLARE D2597 DAL MOTORE 298462
03	10450890	2	231S	CLIP D2597 FROM ENGINE 298462	STAFFETTA D2597 DAL MOTORE 298462

CYLINDER HEAD TESTA CILINDRI	CULASSE DE CYLINDRE ZYLINDERKOPF CULATA	0.060 TAV.1

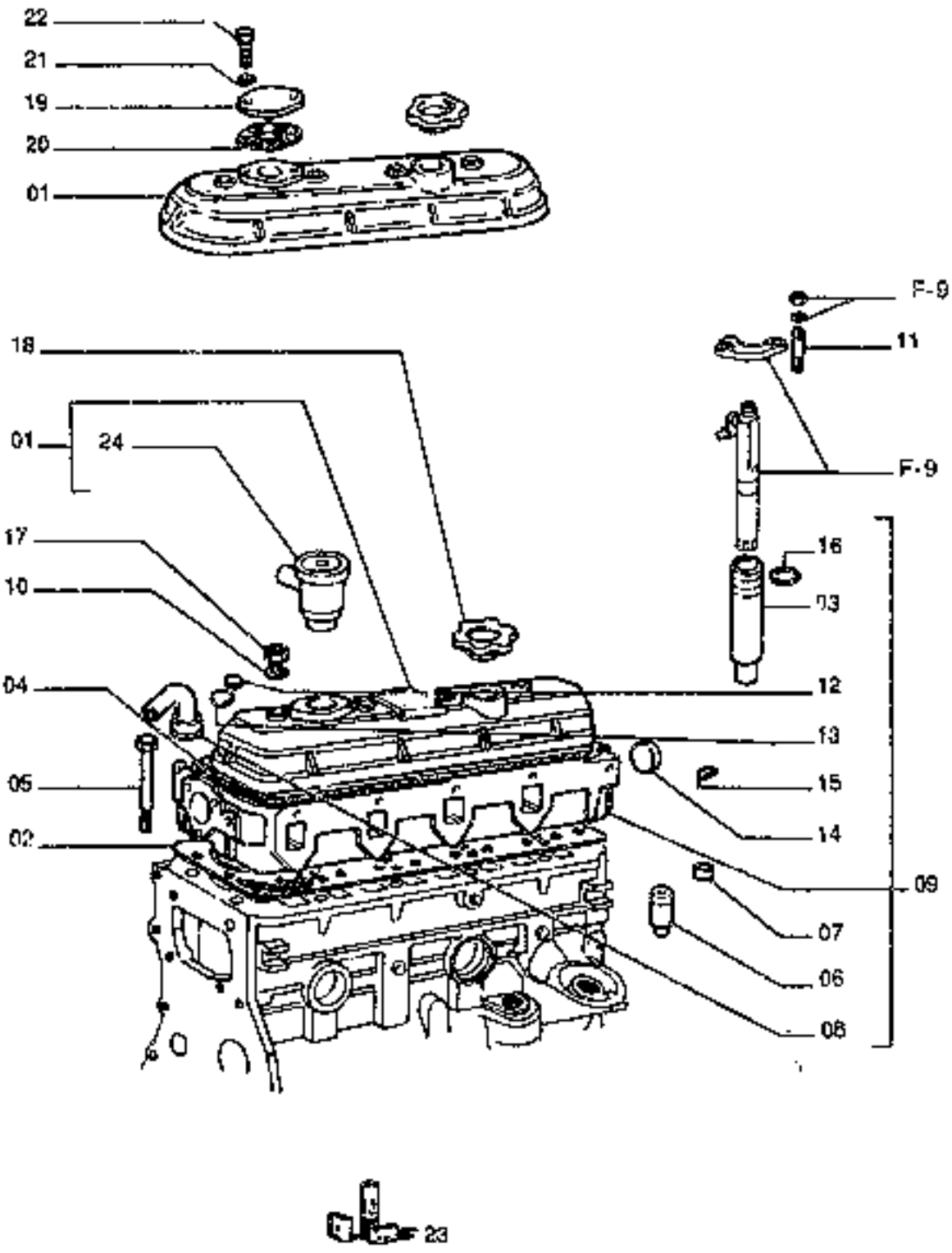

FH120

CYLINDER HEAD TESTA CILINDRI	CULASSE DE CYLINDRE ZYLINDERKOPF CULATA	0.050 TAV.1

ITEM	PART NUMBER	QTY	TR. CO.	DESCRIPTION	DESCRIZIONE
01	4756559	1	265C	COVER	COPERCHIO
				C2597 UP TO ENGINE 298461	C2597 FINO AL MOTORE 298461
	4814703	1	265C	COVER -ASS.LY	COPERCHIO -COMPL.
				D2597 FROM ENGINE 298462	D2597 DAL MOTORE 298462
02	4769441	1	120G	GASKET -K. 79097244	GUARNIZIONE PIANA -K. 79097244
				C2597 UP TO ENGINE 298461	C2597 FINO AL MOTORE 298461
				4769441=4836317	
	4836317	1	120G	GASKET	GUARNIZIONE PIANA
				D2597 FROM ENGINE 298462	D2597 DAL MOTORE 298462
03	4770852	4	101A	CASING	ASTUCCIO
04	4782836	1	120G	GASKET -K. 79097244	GUARNIZIONE PIANA -K. 79097244
				C2597 UP TO ENGINE 298461	C2597 FINO AL MOTORE 298461
				4782836=4845138	
	4845138	1	120G	GASKET	GUARNIZIONE PIANA
				D2597 FROM ENGINE 298462	D2597 DAL MOTORE 298462
05	4786457	16	40V	SCREW	VITE
06	4802126	8	145G	GUIDE +0,0	GUIDA +0,0
	4802127	8	145G	GUIDE +0,2	GUIDA +0,2
07	4803954	4	69S	SEAT +0,0	SEDE +0,0
	4803955	4	69S	SEAT +0,05	SEDE +0,05
	4803956	4	69S	SEAT +0,02	SEDE +0,02
08	4816852	4	20D	DEFLECTOR	DEFLETTORE
09	4832321	1	113T	CYLINDER HEAD -ASS.LY	TESTA CILINDRI -COMPL.
10	10518660	4	131R	WASHER	ROSETTA
11	13917530	8	210P	STUD 8X1,25X57	PRIGIONIERO 8X1,25X57
12	14282170	1	50T	PLUG	TAPPO
13	14282470	9	50T	PLUG	TAPPO
14	14282870	1	50T	PLUG	TAPPO
15	14323911	1	50T	PLUG	TAPPO
16	14453981	8	158G	O-RING	GUARNIZIONE O-R
17	16104111	4	10D	NUT	DADO
18	4232605	1	50T	PLUG	TAPPO
19	4607785	1	265C	COVER	COPERCHIO
				C2597 UP TO ENGINE 298461	C2597 FINO AL MOTORE 298461
20	4759659	1	120G	GASKET	GUARNIZIONE PIANA
				C2597 UP TO ENGINE 298461	C2597 FINO AL MOTORE 298461
21	11193874	2	131R	WASHER	ROSETTA
				C2597 UP TO ENGINE 298461	C2597 FINO AL MOTORE 298461
22	16043124	2	40V	SCREW 8X1,25X18	VITE 8X1,25X18
				C2597 UP TO ENGINE 298461	C2597 FINO AL MOTORE 298461
23	79097244	1	K14	KIT - CYLINDER HEAD SEALS	KIT - GUARNIZ. TESTA CILINDRI
				FOR COMPONENTS, SEE A-21	VED. COMPONENTI PAG.
24	4812047	1	145S	BREATHER	SFIATATOIO
				D2597 FROM ENGINE 298462	D2597 DAL MOTORE 298462

FN120

CYLINDER HEAD TESTA CILINDRI	CULASSE DE CYLINDRE ZYLINDERKOPF CULATA	0.000 TAV.2

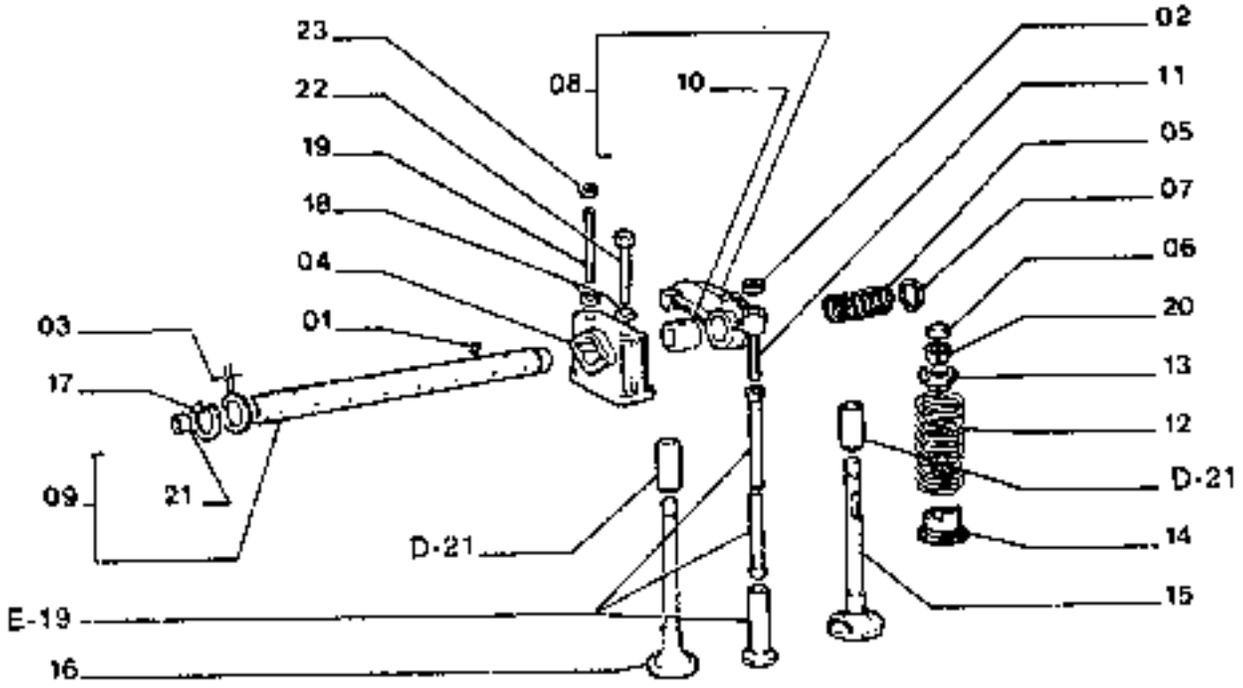

FH120

CYLINDER HEAD
TESTA CILINDRI
CULASSE DE CYLINDRE
ZYLINDERKOPF
CULATA

0.060 TAV.2

ITEM	PART NUMBER	QTY	TR. CO.	DESCRIPTION	DESCRIZIONE
01	563652	1	40V	SCREW	VITE
02	4336920	8	10D	NUT	DADO
03	4570798		198S	SHIM 0,7	SPESSORE 0,7
	4570799		198S	SHIM 0,5	SPESSORE 0,5
04	4601285	4	38XS	SUPPORT	SUPPORTO
05	4601296	3	101M	SPRING	MOLLA
06	4838680	8	65C	BOOT	CAPPUCCIO
07	4839561	6	131R	WASHER	ROSETTA
08	4861251	8	55B	ROCKER -ASS.LY	BILANCIERE -COMPL.
09	4842403	1	16A	SHAFT -ASS.LY	ALBERO -COMPL.
10	4862937	1	95B	BUSHING	BOCCOLA
11	4899783	3	40V	SCREW	VITE
12	4760108	8	103M	SPRING	MOLLA
13	4760558	8	60S	CUP -UPPER	SCODELLINO -SUP.
14	4760559	8	60S	CUP -LOWER	SCODELLINO -INF.
15	4784890	4	112V	EXHAUST VALVE -IN ALTER	VALVOLA SCARICO -IN ALTER.
	4806718	4	112V	EXHAUST VALVE -IN ALTER	VALVOLA SCARICO -IN ALTER.
16	4824416	4	111V	INTAKE VALVE -IN ALTER.	VALVOLA ASPIRAZ. -IN ALTER.
	4824417	4	111V	INTAKE VALVE -IN ALTER.	VALVOLA ASPIRAZ. -IN ALTER.
17	11066675	2	187A	SNAP RING	ANELLO ELASTICO
18	11198071	8	131R	WASHER	ROSETTA
19	13516221	4	210P	STUD	PRIGIONIERO
20	14196670	16	100S	DETENT	SEMICONO
21	14328301	2	50T	PLUG	TAPPO
22	16044521	4	40V	SCREW 8X1,25X65	VITE 8X1,25X65
23	16100811	4	10D	NUT 8X1,25X65	DADO 8X1,25X65

E-1

ALPHABETICAL INDEX

DESCRIPTION	SGR.	TAV.	GRID
Accelerator controls	0.064	1	1C-23
Air Cleaner	0.001	1	1C-13
Alternator-Mounting	0.400	1	1H-9
Alternator (55 amp)	0.400	2	1H-11
Alternator (35 amp)	0.400	3	1H-13
Anti-Shock Valve (Hydr.)	1.062	3	1L-3
Application of Oil. Hammer	5.0020	2	2H-13
Batteries	1.220	4	2D-19
Belts	0.340	1	1G-21
	0.345	1	1G-23
Boom Piping	2.030	1	2F-13
Brake Valve Components	3.010	4	2G-11
Bucket	2.020	1	2F-9
Bucket Cylinder	2.030	5	2F-21
Bull Gear	3.000	1	2G-3
Cab	1.250	1	2D-19
Cab Door	1.250	5	2E-7
Cab Heater-Components	1.290	2	2E-15
Cab Window-Left Side	1.250	6	2E-9
Cab-Frame	1.250	7	2E-11
Cab-Platform	1.250	1	2D-21
Camshaft	0.120	1	1E-19
Check Valve	1.081	2	1K-17
Cold Starting Aid	5.0025	1	2H-19
Connecting Rod	0.081	1	1E-10
Cont. Valve-Hydr. (Ass.Y)	1.050	1	1J-13
Control Valve-Hydr.	1.050	2	1J-17
	1.050	3	1J-19
	1.050	4	1J-21
	1.050	5	1J-23
Controls	1.070	1	1K-5
Counterweight	1.000	1	1I-3
Cowlings	1.300	1	2E-19
	1.300	2	2E-21
Crankshaft	0.080	1	1E-7
Crankshaft Pulley	0.084	1	1E-15
Cylinder Block	0.040	1	1D-5
	0.040	2	1D-7
	0.040	3	1D-9
Cylinder Block Covers	0.043	1	1D-13
	0.043	2	1D-15
Cylinder Head	0.060	1	1D-21
	0.060	2	1D-23
Dashboard (Left)	1.210	1	2D-9
Dashboard (Right)	1.200	1	2D-3
	1.200	3	2D-7
Data Monitor	1.200	2	2D-5
Decals	4.500	1	2H-9
Dipper Stick (2,1m)	5.0022	1	2H-15
Dipper Stick (2,5m) (STD.)	2.003	1	2F-5
Dipper Stick(2,5m)Links(Std.)	2.003	2	2F-7
Dipper Stick (3m)	5.0038	1	2H-21
	5.0038	2	2H-23
Dipper Stick cylinder	2.030	4	2F-19
Dipstick-Engine Oil	0.305	2	1G-7
Discharge Valve	1.040	4	1J-3
Discharge Valve Componen.	3.010	5	2G-13
Drive on Engine (Opt.)	0.350	1	1H-3
Electric System	1.220	2	2D-13
Elements-Engine Oil	0.001	1	1C-13
Elements-fuel	0.200	1	1F-11
Elements-Hydraulic	1.020	1	1E-19
Elements-Pilot	1.080	1	1K-11
Emergency Kits	4.000	1	2H-7
Engine	0.021	1	1D-3
Engine-Controls	0.004	1	1C-23
Engine-Suspensions	0.000	1	1C-11
Engine Breather	0.045	1	1D-17
	0.045	1A	1D-19
Engine Cooling Piping	0.323	1	1G-17
Engine Heat Exchanger	0.310	1	1G-9
	0.310	2	1G-11
Engine Lifting Eyes	0.450	1	1H-15
Engine Oil Filter	0.302	1	1G-3
Engine Oil Piping	0.305	1	1G-5
Engine Oil Pump	0.300	1	1F-23
Engine Oil Sump	0.042	1	1D-11
Engine Piston	0.082	1	1E-11
Engine Suspensions	0.000	1	1C-11
Exhaust Manifold	0.077	1	1E-5
Exhaust Valve	0.060	2	1D-23
Fan	0.345	1	1G-23
Fan Drive	0.345	1	1G-23
"Filter Care" Kit	21		1A-23
Filter-Pilot System	1.080	1	1K-11
Filters-Air	0.001	1	1C-13
Filters-Engine Oil	0.302	1	1G-3
Filters-Fuel	0.200	1	1F-11
Filters-Hydr. System	1.020	1	1I-7
Flywheel-Engine	0.083	1	1E-13
Fuel Filter	0.200	1	1F-11
Fuel Piping	0.203	1	1F-15
Fuel Pump	0.201	1	1F-13
Fuel Tank	1.010	1	1I-5
Fuses	1.200	3	2D-7
Guards	1.300	2	2E-21
Handle	1.300	3	2E-23
Heater	1.290	1	2E-15
Horn	1.220	2	2D-15
Hyd.Pump Drive	1.030	7	1I-21
Hyd.Pump Regulator Valve	1.030	6	1I-19
Hyd.Pump Regulator-Cover	1.030	4	1I-15
	1.030	5	1I-17
Hydr.Pump-Components	1.030	2	1I-11
Hydr.Pump Regulator-Comp.	1.030	3	1I-13

E-2

ALPHABETICAL INDEX

DESCRIPTION	SGR.	TAV.	GRID
Hydraulic Pump	1.030	1	1I-9
Idler	3.020	1	1G-15
Injection Nozzle-Lines	0.149	1	1F-9
Injection Pump	0.140	2	1E-23
	0.140	3	1F-3
	0.140	4	1F-5
	0.140	5	1F-7
Injection Pump-Piping	0.140	1	1E-21
Intake Manifold	0.071	1	1E-3
Intake Valve	0.060	2	1D-21
Lift Cylinder (Left)	2.030	3	1F-17
Lift Cylinder (Right)	2.030	2	2F-15
Lights	1.220	2	2D-15
Lower Frame	3.000	1	2G-3
Lubric. Fitting Piping	2.040	1	2F-23
Main Piping	1.060	1	1K-3
Mirror (Rear)	1.300	2	2E-21
Monobloc Boom	2.000	1	2F-3
Motor - Starter	0.360	2	1H-7
Motor - Swing	1.040	1	1J-3
Motor - Travel	3.010	1	12G-5
Motor - Wiper	1.220	1	2D-13
Muffler	0.002	1	1C-15
Oil Tank	1.020	1	1I-7
Operator's Seat	1.250	2	2D-23
OperatorsSeat(Bostrom)(Std.)	5.0151	1	2I-3
Pilot Gear Pump	1.030	8	1I-23
Pilot Piping(1)	1.080	1	1K-11
Pilot Piping(2)	1.081	1	1K-15
Pilot Piping(3)	1.082	1	1K-19
Pilot Piping (4)	1.083	1	1L-5
Pilot Piping (5)	1.084	1	1L-7
Pilot Valve	1.070	3	1K-9
Pilot Valve-components	1.070	2	1K-7
Pipin-Boom	2.030	1	2F-13
Piping-Engine Oil	0.350	1	1H-3
Piping-Injection	0.149	1	1F-9
Piping-Lube Fittings	2.040	1	2G-23
Piping-Main	1.060	1	1K-3
Piping-Pilot(1)	1.080	1	1K-11
Piping-Pilot(3)	1.082	1	1K-19
Piping-Pilot(4)	1.083	1	1L-5
Piping-Pilot(5)	1.084	1	1L-7
Piping-Pump Contr. Valve	1.050	1	1J-13
Piping-Travel (Lower)	3.070	1	2H-5
Piping-Turbocharger	0.241	1	1F-21
Pump-Engine Oil	0.300	1	1F-23
Pump-Fuel	0.201	1	1F-13
Pump-Hydraulic	1.030	1	1I-9
Pump-Injection	0.140	1	1E-21
Pump-Pilot	1.030	8	1I-23
Pump-Water	0.320	1	1G-13
Pump/Control Valve Piping	1.050	1	1J-13
Radiator	0.003	1	1C-17
Radiator-Components	0.003	2	1C-19
	0.003	3	1C-21
Rocker Arm	0.060	2	1D-23
Rotary Distr.-Components	3.060	2	2H-3
Rotary Distributor	3.060	1	2G-23
Seat Belt (Std.)	5.0536	1	2I-5
Sensors	1.220	2	2D-15
Solenoid Valve	1.080	2	1K-13
Starter	0.360	2	1H-7
Starter-Mounting	0.360	1	1H-5
Stop Valve	1.082	2	1K-23
Swing Motor-Components	1.040	3	1J-7
Swing Red.Unit-Components	1.040	2	1J-5
Swing Reduction Unit	1.040	1	1J-3
Thermostat & Housing	0.326	1	1G-19
Timing Control	0.100	1	1E-17
Tool Kit	5.0083	1	2I-9
Track Chain	3.050	1	2G-21
Track Roller	3.040	1	2G-19
Travel Motor-componen.	3.010	3	2G-9
Travel Piping (Lower)	3.070	1	2H-5
Travel Red.Unit-Componen.	3.010	2	2G-7
Travel Reduction Units	3.010	1	2G-5
Turbocharger	0.240	1	1F-17
	0.240	2	1F-19
Turbocharger Piping	0.241	1	1F-21
Upper Frame	1.000	1	1E-17
Upper Roller	3.030	1	2G-17
Valve-Anti-Shock(Hydr.)	1.082	3	1L-3
Valve-Check (Pilot)	1.081	2	1K-17
Valve-Exhaust	0.060	2	1D-23
Valve-Intake	0.060	2	1D-23
Valve-Pilot (Hydr.)	1.070	1	1K-5
Valve-Pilot(Travel)	1.070	1	1K-5
Valve-Solenoid	1.080	2	1K-13
Valve-Stop(Travel)	1.082	1	1K-21
Washer (windshield)	1.220	3	2D-17
Water Pump	0.320	1	1G-13
Water Pump Drive	0.340	1	1G-21
Water Pump-Components	0.320	2	1G-15
Wiper	1.220	1	2D-11

FH120

INTAKE MANIFOLD COLLETTORE ASPIRAZIONE	COLLECTEUR D'ADMISSION ANSAUGROHR COLECTOR DE ASPIRACION	8.071 TAV.1

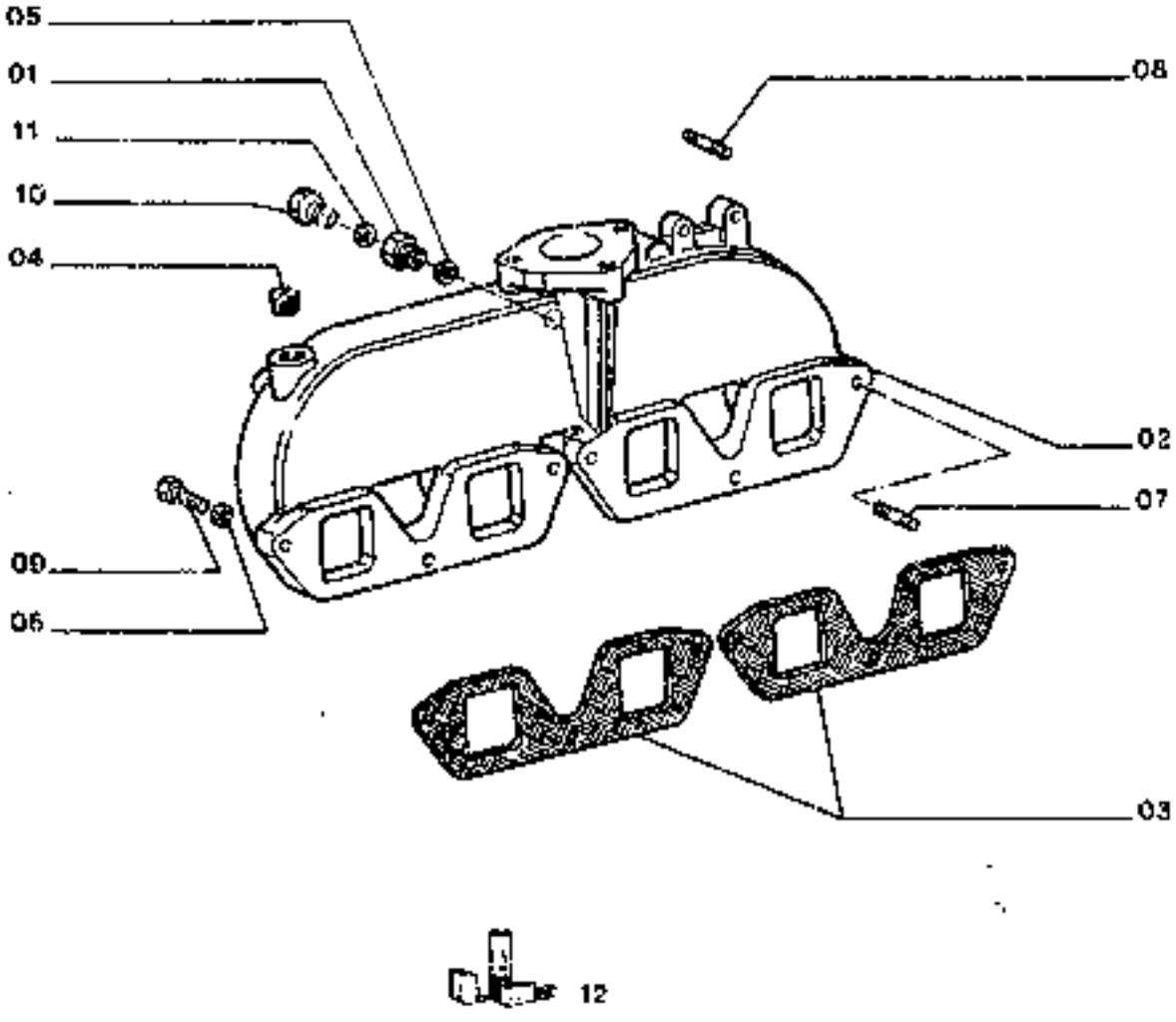

E-4

FN120

INTAKE MANIFOLD COLLETTORE ASPIRAZIONE	COLLECTEUR D'ADMISSION ANSAUGROHR COLECTOR DE ASPIRACION	0.071 TAV.1

ITEM	PART NUMBER	QTY	TR. CO.	DESCRIPTION	DESCRIZIONE
01	4663061	1	26R	FITTING	RACCORDO
02	4760060	1	225C	INTAKE MANIFOLD	COLLETTORE ASPIRAZIONE
03	4776544	2	120G	GASKET -K. 79097246	GUARNIZIONE PIANA -K. 79097246
04	10269600	1	50T	PLUG	TAPPO
05	10278560	1	120G	GASKET	GUARNIZIONE PIANA
06	10518601	5	131R	WASHER	ROSETTA
07	13542321	1	210P	STUD 8X1,25X36	PRIGIONIERO 8X1,25X36
08	13546321	2	210P	STUD 10X1,25X45	PRIGIONIERO 10X1,25X45
09	16043921	5	40V	SCREW 8X1,25X35	VITE 8X1,25X35
10	11903011	1	50T	PLUG	TAPPO
11	10260160	1	120G	GASKET	GUARNIZIONE PIANA
12	79097246	1	K22	KIT-MANIFOLD GASKETS FOR COMPONENTS, SEE A-23	KIT-GUARNIZIONI COLLETTORI VED. COMPONENTI PAG.

FH120

EXHAUST MANIFOLD COLLETTORE DI SCARICO	COLLECTEUR D'ECHAPPEMENT AUSPUFFKRUEMMER COLECTOR DE ESCAPE	0.077 TAV.1

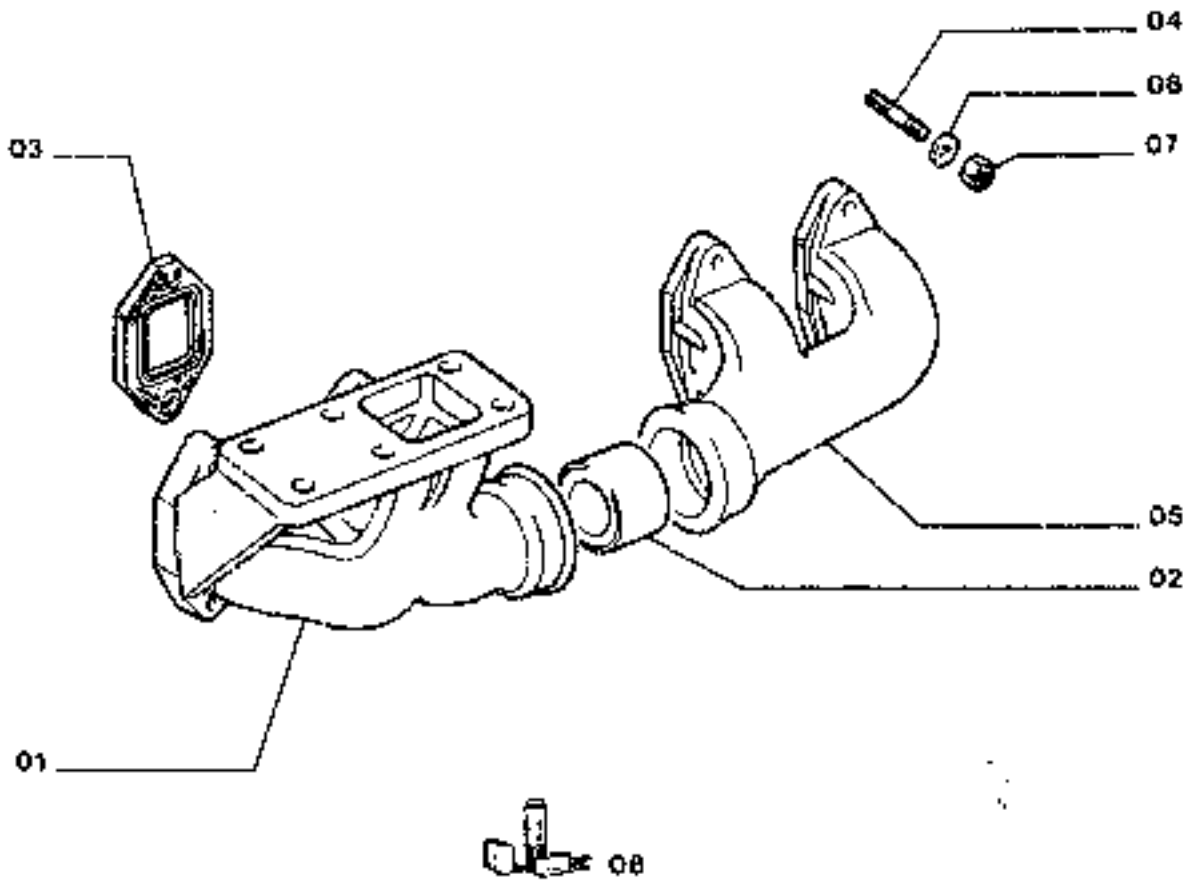

EXHAUST MANIFOLD
COLLETTORE DI SCARICO

COLLECTEUR D'ECHAPPEMENT
AUSPUFFKRUEMMER
COLECTOR DE ESCAPE

0.077 TAV.1

ITEM	PART NUMBER	QTY	TR. CO.	DESCRIPTION	DESCRIZIONE
01	4750061	1	230C	EXHAUST MANIFOLD -FRONT	COLLETTORE DI SCARICO -ANT.
02	4813001	1	193T	TUBE	TUBO RIGIDO
03	4813566	4	120G	GASKET -K 79097246	GUARNIZIONE PIANA -K 79097246
04	4817988	8	210F	STUD	PRIGIONIERO
05	4823134	1	230C	EXHAUST MANIFOLD -REAR	COLLETTORE DI SCARICO -POST.
06	10519621	8	131R	WASHER	ROSETTA
07	14048227	8	10D	NUT	DADO
08	79097246	1	K22	KIT-MANIFOLD GASKETS FOR COMPONENTS, SEE A - 23	KIT-GUARNIZIONI COLLETTORI VED. COMPONENTI PAG. 32

CRANKSHAFT ALBERO MOTORE	VILEBREQUIN KURBELWELLE CIGÜEÑAL	0.060	TAV.1

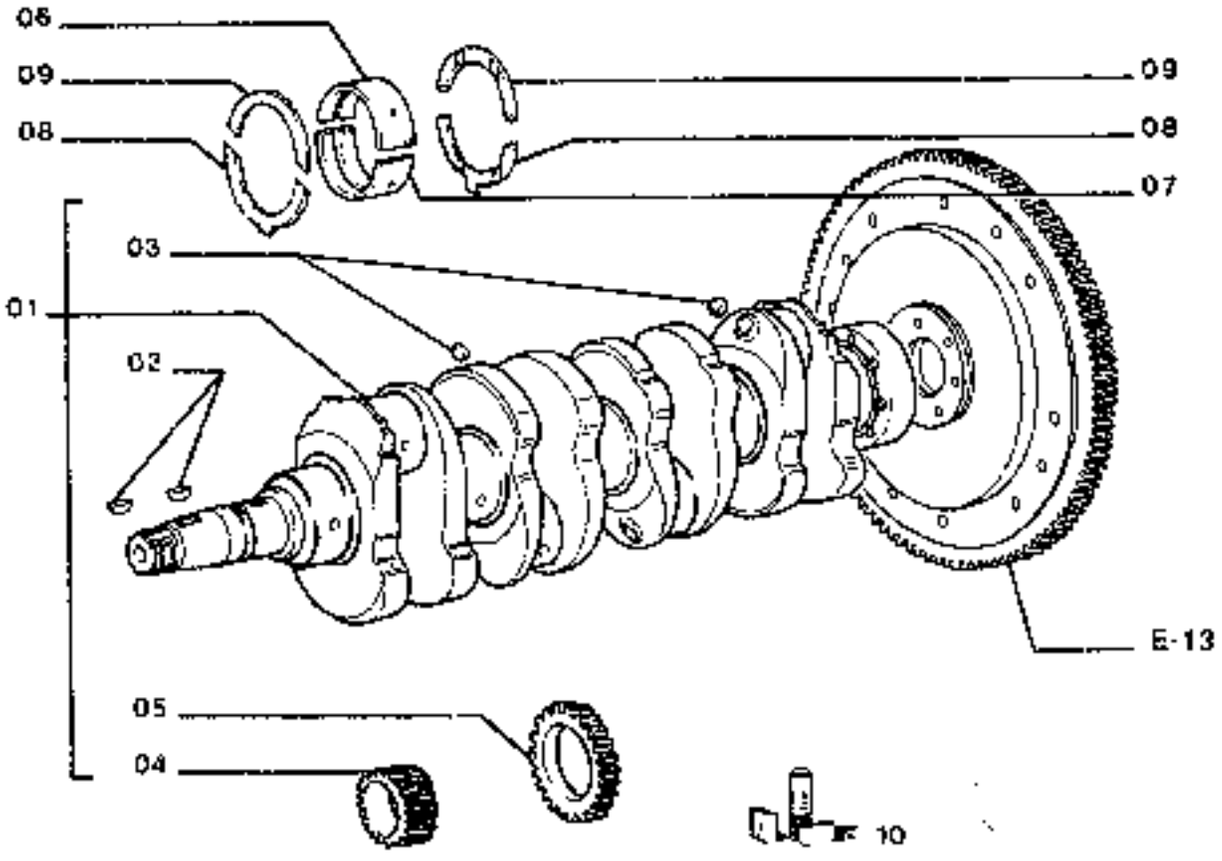

FH120

CRANKSHAFT
ALBERO MOTORE

VILEBREQUIN
KURBELWELLE
CIGÜEÑAL

0.000 TAV.1

ITEM	PART NUMBER	QTY	TR. CO	DESCRIPTION	DESCRIZIONE
01	4796470	1	18A	CRANKSHAFT-ASS.LY	ALBERO MOTORE -COMPL.
02	4655844	2	61L	WOODRUF KEY	LINGUETTA A DISCO
03	14328101	4	50T	PLUG	TAPPO
04	4909524	1	50I	GEAR	INGRANAGGIO
05	4770255	1	50I	GEAR	INGRANAGGIO
06	4754062	5	103S	HALF BEARING -0,000	SEMICUSCINETTO -0,000
	4771247	5	103S	HALF BEARING -0,127	SEMICUSCINETTO -0,127
	4771248	5	103S	HALF BEARING -0,254	SEMICUSCINETTO -0,254
	4771249	5	103S	HALF BEARING -0,508	SEMICUSCINETTO -0,508
	4771250	5	103S	HALF BEARING -0,762	SEMICUSCINETTO -0,762
	4771251	5	103S	HALF BEARING -1,016	SEMICUSCINETTO -1,016
07	4754064	5	103S	HALF BEARING -0,000	SEMICUSCINETTO -0,000
	4771257	5	103S	HALF BEARING -0,127	SEMICUSCINETTO -0,127
	4771258	5	103S	HALF BEARING -0,254	SEMICUSCINETTO -0,254
	4771259	5	103S	HALF BEARING -0,508	SEMICUSCINETTO -0,508
	4771260	5	103S	HALF BEARING -0,762	SEMICUSCINETTO -0,762
	4771261	5	103S	HALF BEARING -1,016	SEMICUSCINETTO -1,016
08	4707779	2	90S	HALF RING +0,000	SEMIANELLO +0,000
	4707780	2	90S	HALF RING +0,127	SEMIANELLO +0,127
	4708069	2	90S	HALF RING +0,254	SEMIANELLO +0,254
	4708070	2	90S	HALF RING +0,508	SEMIANELLO +0,508
	4794193	2	90S	HALF RING +0,381	SEMIANELLO +0,381
09	4707775	2	90S	HALF RING +0,000	SEMIANELLO +0,000
	4707776	2	90S	HALF RING +0,127	SEMIANELLO +0,127
	4708063	2	90S	HALF RING +0,254	SEMIANELLO +0,254
	4708064	2	90S	HALF RING +0,508	SEMIANELLO +0,508
	4793794	2	90S	HALF RING +0,381	SEMIANELLO +0,381
10	1901385	1	K15A	KIT-CRANK.THRUST RINGS(+0,000) FOR COMPONENTS, SEE A-19	KIT-ANELLI SPALLAM. (+0,000) VED. COMPONENTI PAG.
	1901386	1	K15B	KIT-CRANK.THRUST RINGS(+0,127) FOR COMPONENTS, SEE A-19	KIT-ANELLI SPALLAM. (+0,127) VED. COMPONENTI PAG.
	1901387	1	K15C	KIT-CRANK.THRUST RINGS(+0,254) FOR COMPONENTS, SEE A-19	KIT-ANELLI SPALLAM. (+0,254) VED. COMPONENTI PAG.
	1901388	1	K15D	KIT-CRANK.THRUST RINGS(+0,508) FOR COMPONENTS, SEE A-19	KIT-ANELLI SPALLAM. (+0,508) VED. COMPONENTI PAG.
	1930176	5	K19A	KIT-CYL.BLOCK BEARINGS(-0,000) FOR COMPONENTS, SEE A-19	KIT-SEMICUSC.DI BANCO (-0,000) VED. COMPONENTI PAG.
	1930177	5	K19B	KIT-CYL.BLOCK BEARINGS(-0,254) FOR COMPONENTS, SEE A-19	KIT-SEMICUSC.DI BANCO (-0,254) VED. COMPONENTI PAG.
	1930178	5	K19C	KIT-CYL.BLOCK BEARINGS(-0,508) FOR COMPONENTS, SEE A-19	KIT-SEMICUSC.DI BANCO (-0,508) VED. COMPONENTI PAG.
	1930179	5	K19D	KIT-CYL.BLOCK BEARINGS(-0,762) FOR COMPONENTS, SEE A-19	KIT-SEMICUSC.DI BANCO (-0,762) VED. COMPONENTI PAG.
	1930180	5	K19E	KIT-CYL.BLOCK BEARINGS(-1,016) FOR COMPONENTS, SEE A-19	KIT-SEMICUSC.DI BANCO (-1,016) VED. COMPONENTI PAG.

FH120

CONNECTING ROD BIELLA MOTORE	BIELLE PLEUEL BIELA	0.391 TAV.1

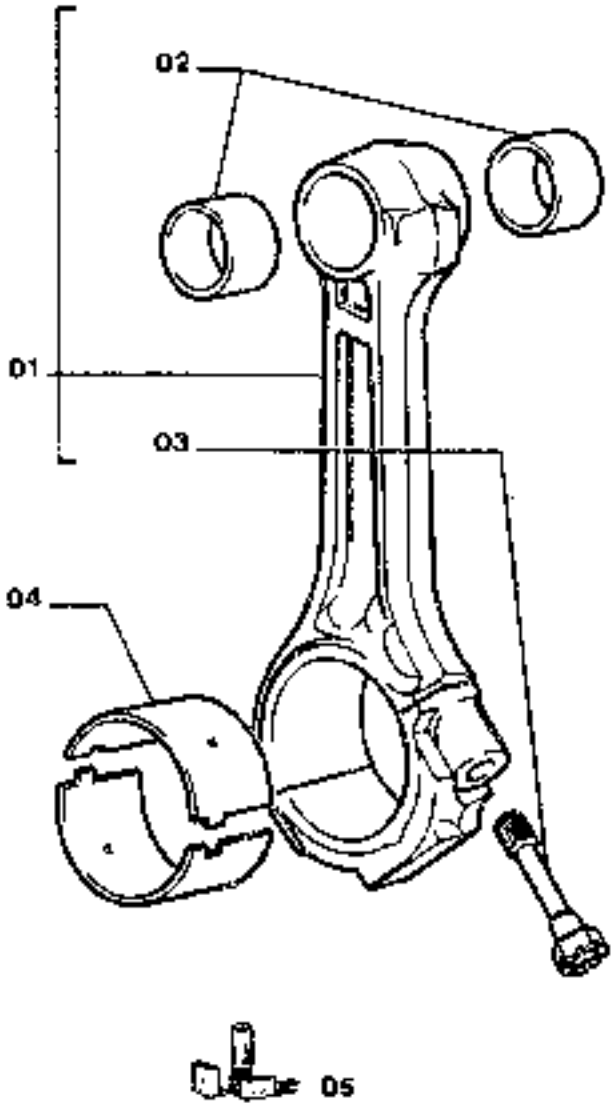

FH120

CONNECTING ROD
BIELLA MOTORE

BIELLE
PLEUEL
BIELA

0.081 TAV.1

ITEM	PART NUMBER	QTY	TR. CO.	DESCRIPTION	DESCRIZIONE
01	4761342	4	51B	CONNECTING ROD -ASSLY	BIELLA MOTORE -COMPL.
02	4771872	1	95B	BUSHING -IN ALTER.	BOCCOLA -IN ALTER.
	4783226	1	95B	BUSHING -IN ALTER.	BOCCOLA -IN ALTER.
03	4760627	2	40V	SCREW	VITE
04	4780959	8	103S	HALF BEARING -0,000	SEMICUSCINETTO -0,000
	4780960	8	103S	HALF BEARING -0,127	SEMICUSCINETTO -0,127
	4780961	8	103S	HALF BEARING -0,254	SEMICUSCINETTO -0,254
	4780962	8	103S	HALF BEARING -0,508	SEMICUSCINETTO -0,508
	4780963	8	103S	HALF BEARING -0,762	SEMICUSCINETTO -0,762
	4780964	8	103S	HALF BEARING -1,016	SEMICUSCINETTO -1,016
05	1930201	4	K21A	KIT-CON. ROD BEARINGS (-0,000) FOR COMPONENTS, SEE A-19	KIT-SEMICUSC. BIELLA (-0,000) VED. COMPONENTI PAG.
	1930202	4	K21B	KIT-CON. ROD BEARINGS (-0,254) FOR COMPONENTS, SEE A-19	KIT-SEMICUSC. BIELLA (-0,254) VED. COMPONENTI PAG.
	1930203	4	K21C	KIT-CON. ROD BEARINGS (-0,508) FOR COMPONENTS, SEE A-19	KIT-SEMICUSC. BIELLA (-0,508) VED. COMPONENTI PAG.
	1930204	4	K21D	KIT-CON. ROD BEARINGS (-0,762) FOR COMPONENTS, SEE A-19	KIT-SEMICUSC. BIELLA (-0,762) VED. COMPONENTI PAG.
	1930205	4	K21E	KIT-CON. ROD BEARINGS (-1,016) FOR COMPONENTS, SEE A-19	KIT-SEMICUSC. BIELLA (-1,016) VED. COMPONENTI PAG.

FH120

ENGINE PISTON PISTONE MOTORE	PISTON KOLBEN EMBOLO	0.082 TAV.1

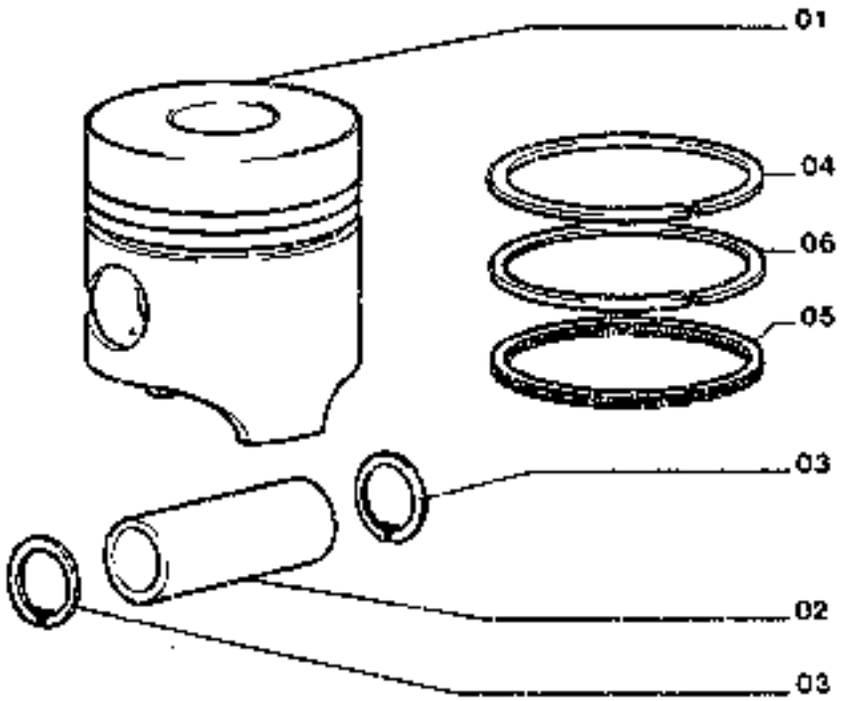



ENGINE PISTON
PISTONE MOTORE

PISTON
KOLBEN
EMBOLO

0.092 TAV.1

ITEM	PART NUMBER	QTY	TR. CO.	DESCRIPTION	DESCRIZIONE
01	4770656	4	132P	PISTON +0,0	PISTONE +0,0
	4771627	4	132P	PISTON +0,4	PISTONE +0,4
	4771629	4	132P	PISTON +0,8	PISTONE +0,8
02	4770451	4	80P	PIN	PERNO
03	4770452	8	187A	SNAP RING	ANELLO ELASTICO
04	4758713	4	45A	RING +0,0	ANELLO +0,0
	4771788	4	45A	RING +0,4	ANELLO +0,4
	4771790	4	45A	RING +0,8	ANELLO +0,8
05	4754500	4	45A	RING +0,0	ANELLO +0,0
	4771793	4	45A	RING +0,4	ANELLO +0,4
	4771795	4	45A	RING +0,8	ANELLO +0,8
06	4754401	4	45A	RING +0,0	ANELLO +0,0
	4770632	4	45A	RING +0,4	ANELLO +0,4
	4770634	4	45A	RING +0,8	ANELLO +0,8
07	1930206	4	K17A	KIT-FOR ONE PISTON (+0,0) FOR COMPONENTS, SEE A-19	KIT-PER UNO STANTUFFO (+0,0) VED. COMPONENTI PAG.
	1930207	4	K17B	KIT-FOR ONE PISTON (+0,4) FOR COMPONENTS, SEE A-19	KIT-PER UNO STANTUFFO (+0,4) VED. COMPONENTI PAG.
	1930208	4	K17C	KIT-FOR ONE PISTON (+0,8) FOR COMPONENTS, SEE A-19	KIT-PER UNO STANTUFFO (+0,8) VED. COMPONENTI PAG.
	1930209	4	K18A	KIT-PISTON RINGS(+0,0) FOR COMPONENTS, SEE A-19	KIT-ANELLI STANTUFFO (+0,0) VED. COMPONENTI PAG.
	1930210	4	K18B	KIT-PISTON RINGS(+0,4) FOR COMPONENTS, SEE A-21	KIT-ANELLI STANTUFFO (+0,4) VED. COMPONENTI PAG.
	1930211	4	K18C	KIT-PISTON RINGS(+0,8) FOR COMPONENTS, SEE A-21	KIT-ANELLI STANTUFFO (+0,8) VED. COMPONENTI PAG.

FLYWHEEL - ENGINE VOLANO MOTORE	VOLANT DU MOTEUR SCHWUNGRAD VOLANTE DEL CIGÜEÑAL	0.093 TAV.1

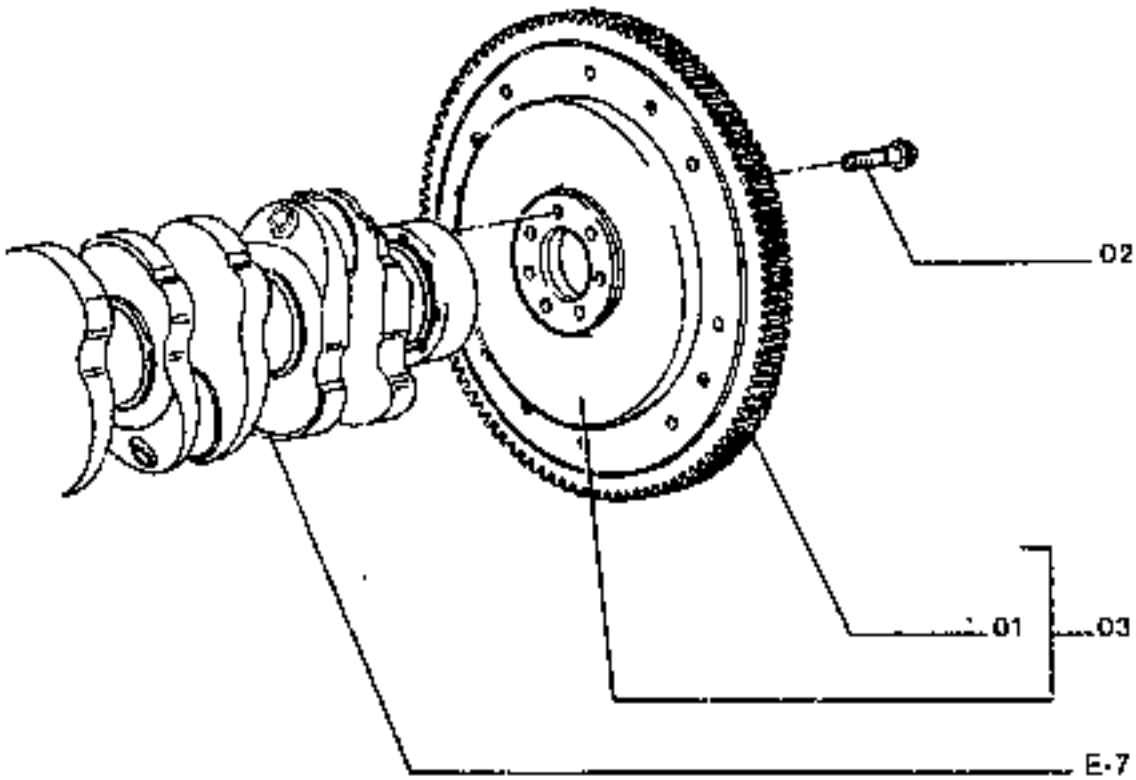

FLYWHEEL - ENGINE
VOLANO MOTORE

VOLANT DU MOTEUR
SCHWUNGRAD
VOLANTE DEL CIGÜEÑAL

0.983 TAV.1

ITEM	PART NUMBER	QTY	TR. CO.	DESCRIPTION	DESCRIZIONE
01	4704106	1	297C	RING GEAR	CORONA DENTATA
02	4778122	7	40V	SCREW	VITE
03	4811045	1	48V	FLYWHEEL	VOLANO

CRANKSHAFT PULLEY PULEGGIA SU ALBERO MOTORE	POULIE DE VILEBREQUIN RIEMENSCHEIBE POLEA DEL CIGÜEÑAL	0.084 TAV.1

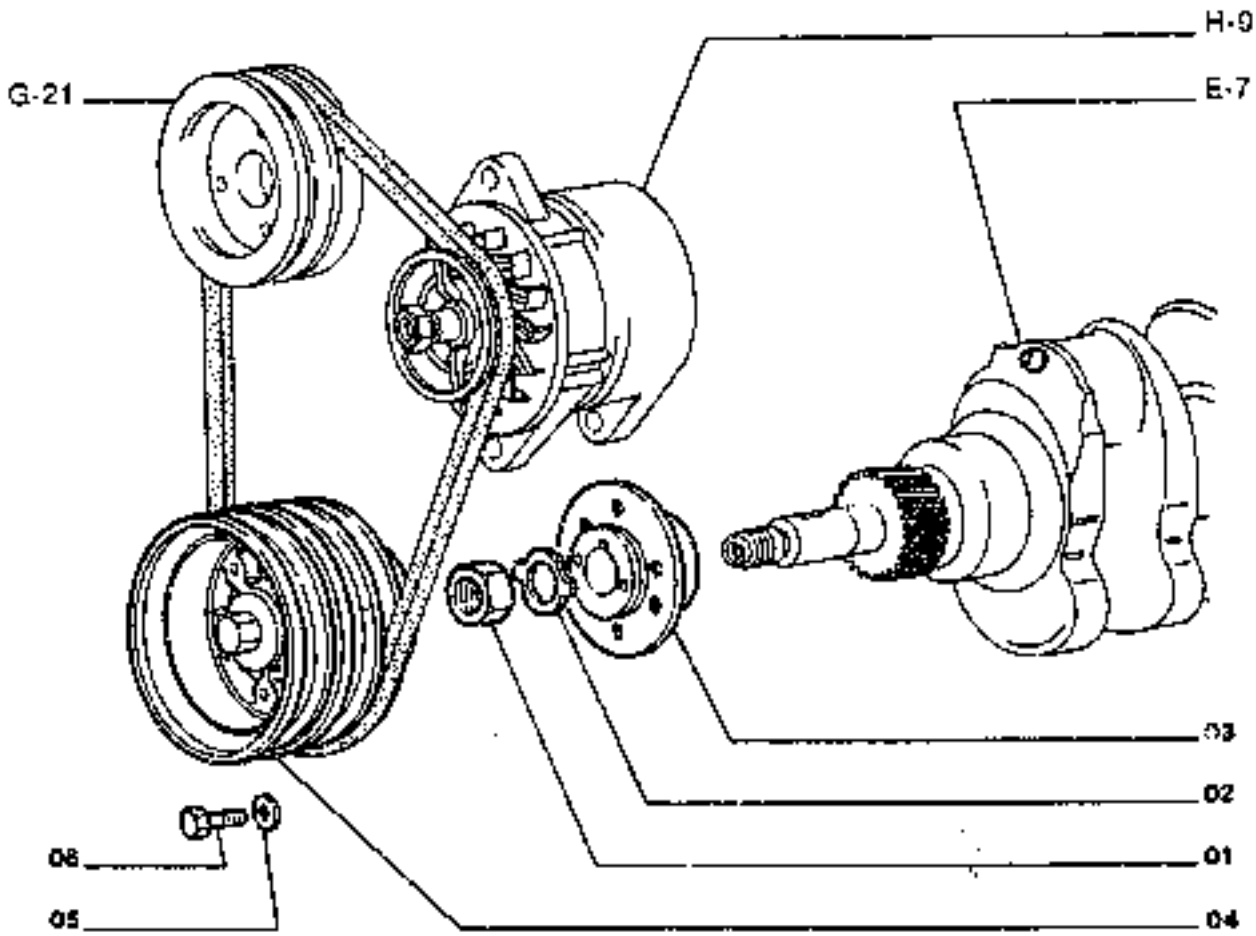

CRANKSHAFT PULLEY — POULIE DE VILEBREQUIN — 0.084 — TAV.1
PULEGGIA SU ALBERO MOTORE — RIEMENSCHEIBE
POLEA DEL CIGÜEÑAL

ITEM	PART NUMBER	QTY	TR. CO.	DESCRIPTION	DESCRIZIONE
01	4600189	1	10D	NUT	DADO
02	4600190	1	110P	PLAQUE	PIASTRINA
03	4555647	1	135M	HUB	MOZZO
04	4642030	1	230P	PULLEY	PULEGGIA
05	11198371	6	131R	WASHER	ROSETTA
06	11298024	6	40V	SCREW	VITE

TIMING CONTROL COMANDO DISTRIBUZIONE	COMMANDE DE DISTRIBUTION STEUERUNGSANTRIEB PIÑONES DE DISTRIBUCION	0.100 TAV.1

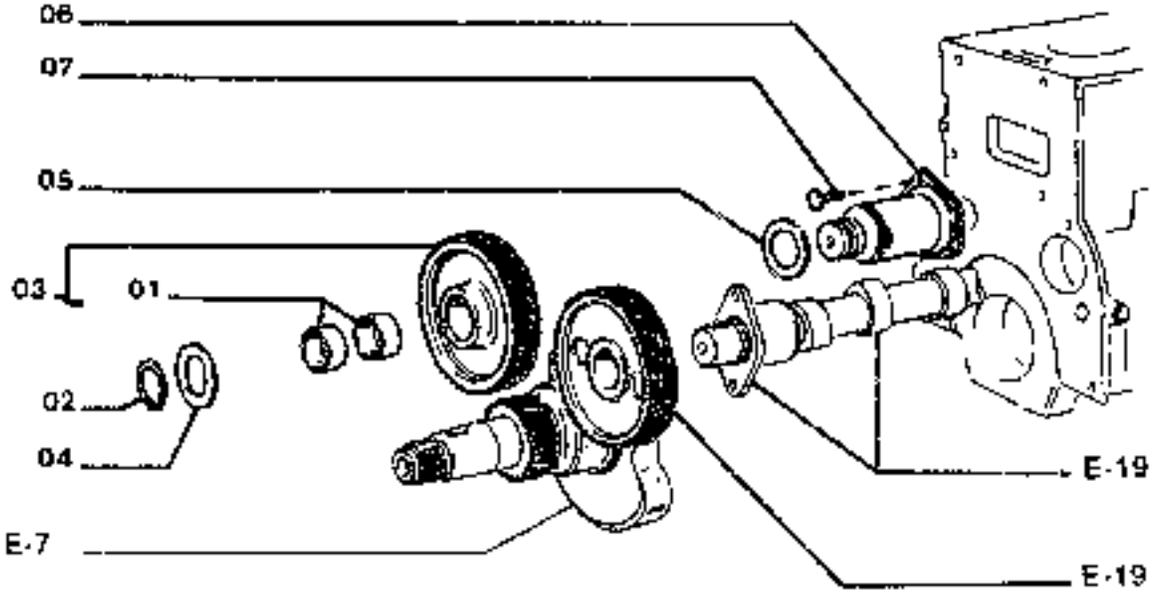

TIMING CONTROL
COMANDO DISTRIBUZIONE

COMMANDE DE DISTRIBUTION
STEUERUNGSANTRIEB
PIÑONES DE DISTRIBUCION

0.100 TAV.1

ITEM	PART NUMBER	QTY	TR. CO.	DESCRIPTION	DESCRIZIONE
01	4769417	2	95B	BUSHING -IN ALTER.	BOCCOLA -IN ALTER.
	4769418	2	95B	BUSHING -IN ALTER.	BOCCOLA -IN ALTER.
02	4769420	1	187A	SNAP RING	ANELLO ELASTICO
03	4769414	1	50N	GEAR	INGRANAGGIO
04	4769419	1	131R	WASHER	ROSETTA
05	4767452	1	131R	WASHER	ROSETTA
06	4769416	1	80P	PIN	PERNO
07	16321021	3	40V	SCREW	VITE

CAMSHAFT ALBERO AD ECCENTRICI	ARBRE A CAMES EXZENTERWELLE ARBOL DE LEVAS	0.120	TAV.1

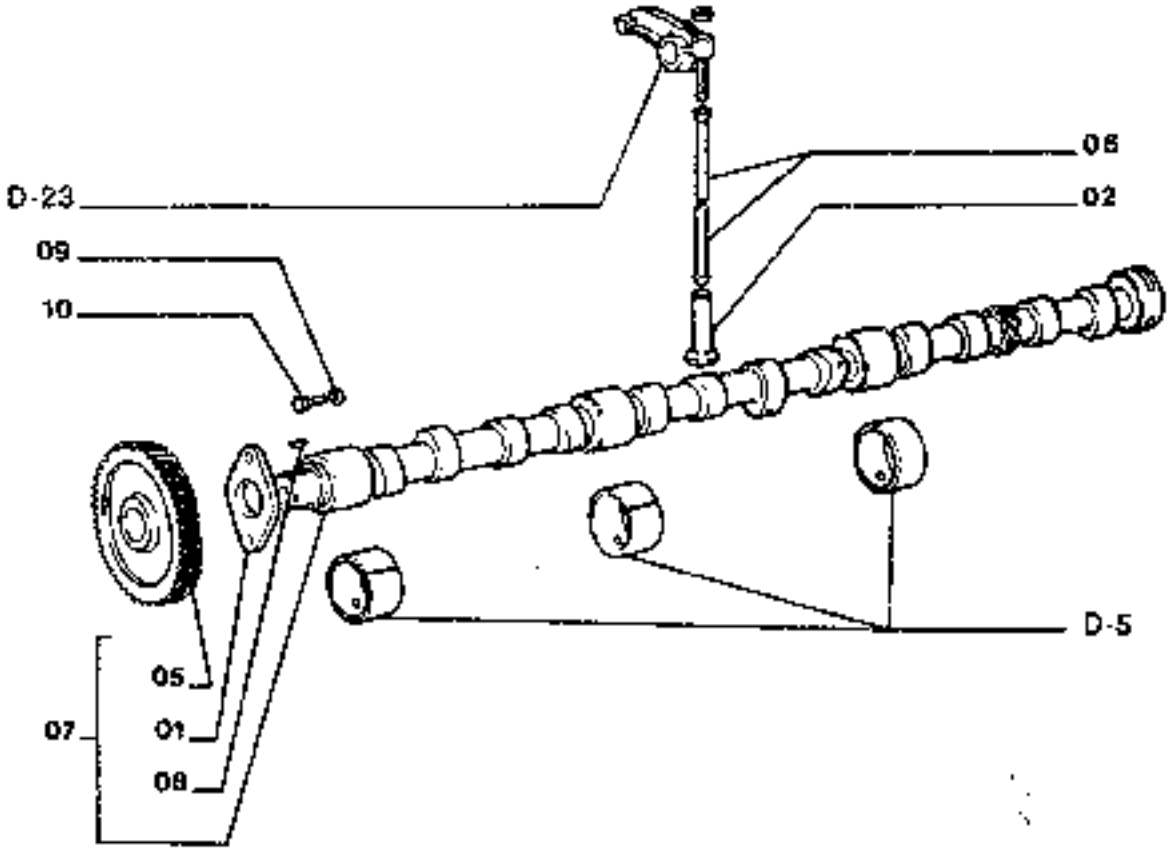

FH120

CAMSHAFT — ARBRE A CAMES — 0.120 TAV.1
ALBERO AD ECCENTRICI — EXZENTERWELLE — ARBOL DE LEVAS

ITEM	PART NUMBER	QTY	TR. CD.	DESCRIPTION	DESCRIZIONE
01	4591[illegible]	1	105P	PLATE	PIASTRA
02	4590661	8	240P	TAPPET +0,0	PUNTERIA +0,0
	4590509	8	240P	TAPPET +0,1	PUNTERIA +0,1
	4590510	8	240P	TAPPET +0,2	PUNTERIA +0,2
	4590511	8	240P	TAPPET +0,3	PUNTERIA +0,3
05	4769412	1	50I	GEAR	INGRANAGGIO
06	1770454	8	90A	ROD	ASTA
07	4824215	1	17A	CAMSHAFT -ASS.LY	ALBERO AD ECCENTRICI -COMPL.
08	10205810	1	51L	WOODRUF KEY	LINGUETTA A DISCO
09	11190371	2	131R	WASHER	ROSETTA
10	16043421	2	40V	SCREW	VITE

INJECTION PUMP POMPA INIEZIONE	POMPE D'INJECTION EINSPRITZPUMPE BOMBA DE INYECCION	0.140 TAV.1

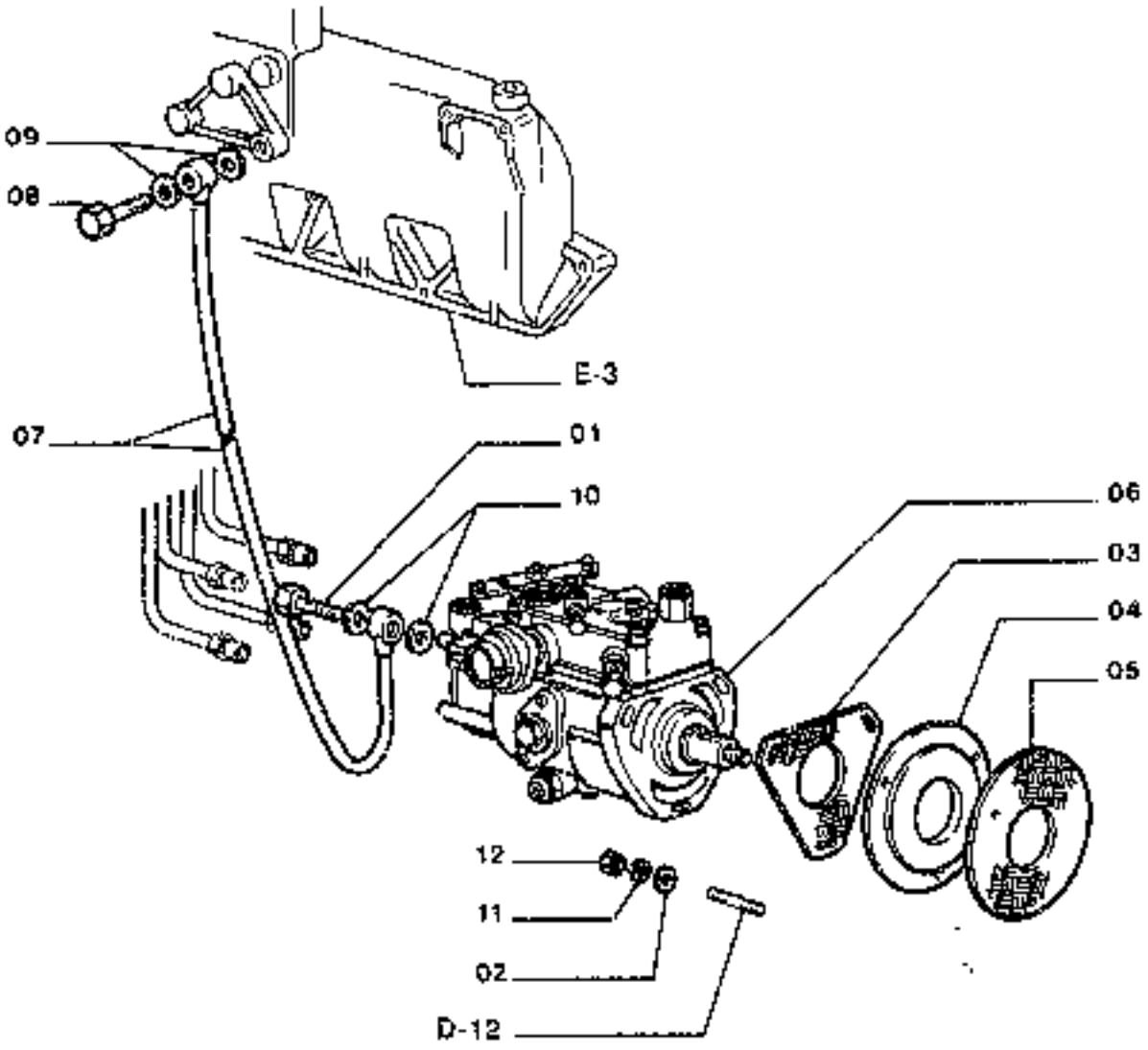

PH120

INJECTION PUMP
POMPA INIEZIONE

POMPE D'INJECTION
EINSPRITZPUMPE
BOMBA DE INYECCION

0.140 TAV.1

ITEM	PART NUMBER	QTY	TA. CO.	DESCRIPTION	DESCRIZIONE
01	1380713	1	20R	FITTING	RACCORDO
02	4554844	3	131R	WASHER	ROSETTA
03	4607627	1	120G	GASKET	GUARNIZIONE PIANA
04	4607646	1	75D	SPACER	DISTANZIALE
05	4607647	1	120G	GASKET	GUARNIZIONE PIANA
06	4836782	1	156P	INJECTION PUMP -ASS.LY SEE F-3-8	POMPA INIEZIONE -COMPL. VED. TAV. 3-4-5
07	4824586	1	285T	HOSE	TUBO FLESSIBILE
08	4833807	1	20R	FITTING	RACCORDO
09	10260160	2	122G	SEAL	GUARNIZIONE
10	10262760	2	122G	SEAL	GUARNIZIONE
11	11193671	3	131R	WASHER	ROSETTA
12	16100611	3	10D	NUT	DADO

FH120

INJECTION PUMP POMPA INIEZIONE 4935782	POMPE D'INJECTION EINSPRITZPUMPE BOMBA DE INYECCION	0.140 TAV.2

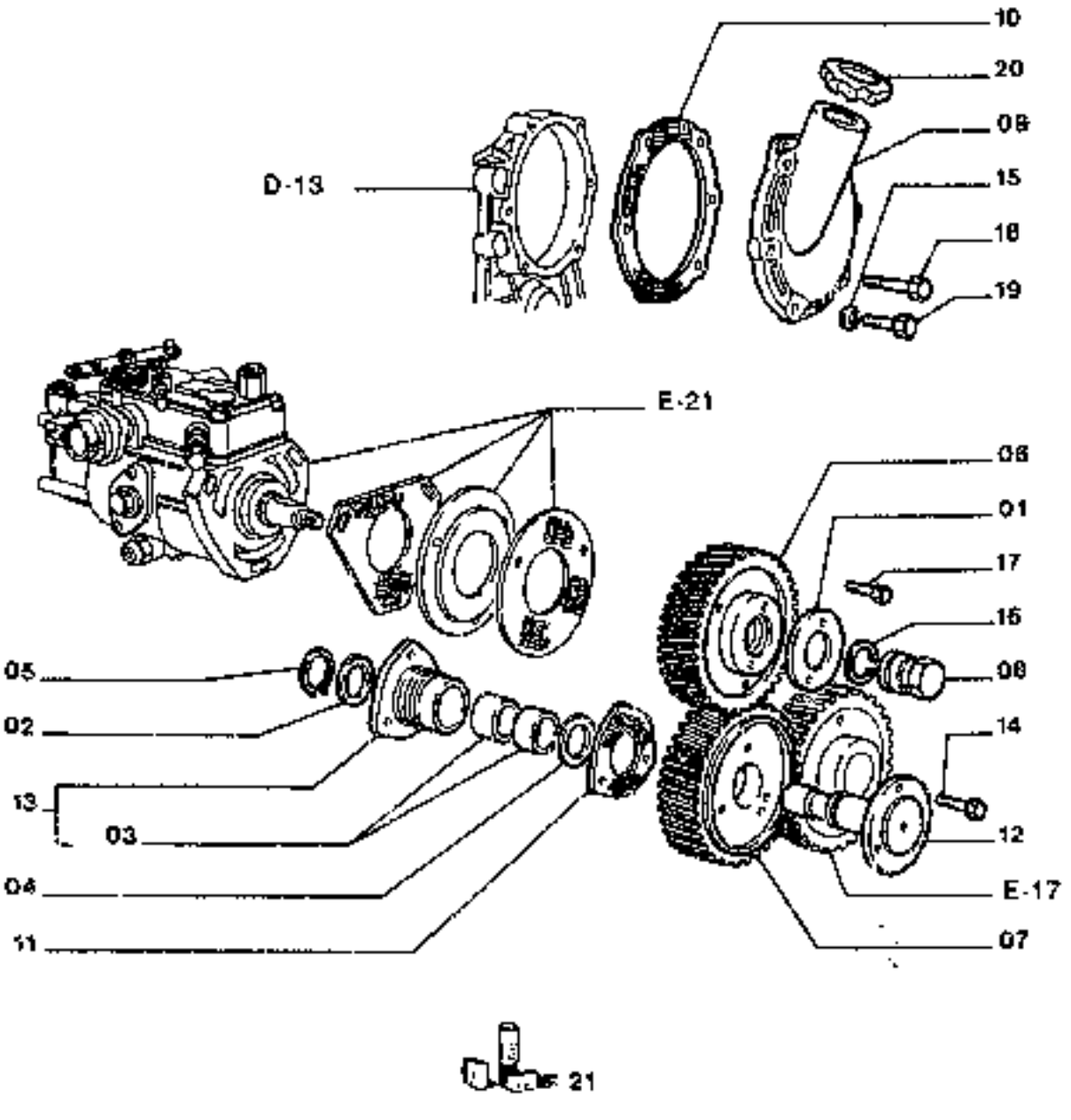

FH120

INJECTION PUMP POMPA INIEZIONE 4936782	POMPE D'INJECTION EINSPRITZPUMPE BOMBA DE INYECCION	0.140 TAV.2

ITEM	PART NUMBER	QTY	TR. CO.	DESCRIPTION	DESCRIZIONE
01	4507722	1	70F	FLANGE	FLANGIA
02	4667462	1	131R	WASHER	ROSETTA
03	4769417	2	95B	PUSHING	BOCCOLA
04	4769419	1	131R	WASHER	ROSETTA
05	4769420	1	187A	SNAP RING	ANELLO ELASTICO
06	4770055	1	50I	GEAR	INGRANAGGIO
07	4770056	1	50I	GEAR	INGRANAGGIO
08	4770680	1	130	NUT	DADO
09	4782588	1	2e5C	COVER	COPERCHIO
				C2598 UP TO ENGINE 300907	C2598 FINO AL MOTORE 300907
	4783048	1	7.65C	COVER	COPERCHIO
				D2598 FROM ENGINE 300908	D2598 DAL MOTORE 300908
10	4783049	1	120G	GASKET -K 79097245	GUARNIZIONE PIANA -K 79097245
11	4784011	2	120G	GASKET	GUARNIZIONE PIANA
12	4784054	1	16A	SHAFT	ALBERO
13	4784055	1	300S	SUPPORT	SUPPORTO
14	4788645	4	40V	SCREW	VITE
15	10519601	6	131R	WASHER	ROSETTA
16	11194171	1	131R	WASHER	ROSETTA
17	14238221	2	40V	SCREW 10X1,25X20	VITE 10X1,25X20
18	16043621	2	40V	SCREW 8X1,25X25	VITE 8X1,25X25
19	16044421	4	40V	SCREW 8X1,25X60	VITE 8X1,25X60
20	4232606	1	50T	PLUG	TAPPO
21	79097245	1	K13	KIT - CYLINDER BLOCK SEALS FOR COMPONENTS, SEE A-21	KIT - GUARNIZ.BASAMENTO MOTORE VED. COMPONENTI PAG.

ALPHABETICAL INDEX

DESCRIPTION	SGR.	TAV.	GRID
Accelerator controls	0.004	1	1C-23
Air Cleaner	0.001	1	1C-13
Alternator-Mounting	0.400	1	1H-9
Alternator (55 amp)	0.400	2	1H-11
Alternator (35 amp)	0.400	3	1H-13
Anti-Shock Valve (Hydr.)	1.092	3	1L-3
Application of Ot. Hammer	5.0020	2	2H-13
Batteries	1.220	4	2D-19
Bells	0.340	1	1G-21
	0.345	1	1G-23
Boom Piping	2.030	1	2F-13
Brake Valve Components	3.010	4	2G-11
Bucket	2.020	1	2F-9
Bucket Cylinder	2.030	5	2F-21
Bull Gear	3.000	1	2G-3
Cab	1.250	1	2D-19
Cab Door	1.250	5	2E-7
Cab Heater-Components	1.290	2	2E-15
Cab Window-Left Side	1.250	6	2E-9
Cab-Frame	1.250	7	2E-11
Cab-Platform	1.250	1	2D-21
Camshaft	0.120	1	1E-19
Check Valve	1.081	2	1K-17
Cold Starting Aid	5.0025	1	2H-19
Connecting Rod	0.081	1	1E-10
Cont. Valve-Hydr. (Ass.Y)	1.050	1	1J-13
Control Valve-Hydr.	1.050	2	1J-17
	1.050	3	1J-19
	1.050	4	1J-21
	1.050	5	1J-23
Controls	1.070	1	1K-5
Counterweight	1.000	1	1I-3
Cowlings	1.300	1	2E-19
	1.300	2	2E-21
Crankshaft	0.080	1	1E-7
Crankshaft Pulley	0.084	1	1E-15
Cylinder Block	0.040	1	1D-5
	0.040	2	1D-7
	0.040	3	1D-9
Cylinder Block Covers	0.043	1	1D-13
	0.043	2	1D-15
Cylinder Head	0.060	1	1D-21
	0.060	2	1D-23
Dashboard (Left)	1.210	1	2D-9
Dashboard (Right)	1.200	1	2D-3
	1.200	3	2D-7
Data Monitor	1.200	2	2D-5
Decals	4.500	1	2H-9
Dipper Stick (2,1m)	5.0022	1	2H-15
Dipper Stick (2,5m) (STD.)	2.003	1	2F-5
Dipper Stick(2,5m)Links(Std.)	2.003	2	2F-7
Dipper Stick (3m)	5.0036	1	2H-21
	5.0036	2	2H-23
Dipper Stick cylinder	2.030	4	2F-19
Dipstick-Engine Oil	0.305	2	1G-7
Discharge Valve	1.040	4	1J-3
Discharge Valve Componen.	3.010	5	2G-13
Drive on Engine (Opt.)	0.350	1	1H-3
Electric System	1.220	2	2D-13
Elements-Engine Oil	0.001	1	1C-13
Elements-fuel	0.200	1	1F-11
Elements-Hydraulic	1.020	1	1E-19
Elements-Pilot	1.090	1	1K-11
Emergency Kits	4.000	1	2H-7
Engine	0.021	1	1D-3
Engine-Controls	0.004	1	1C-23
Engine-Suspensions	0.000	1	1C-11
Engine Breather	0.045	1	1D-17
	0.045	1A	1D-19
Engine Cooling Piping	0.323	1	1G-17
Engine Heat Exchanger	0.310	1	1G-9
	0.310	2	1G-11
Engine Lifting Eyes	0.450	1	1H-15
Engine Oil Filter	0.302	1	1G-3
Engine Oil Piping	0.305	1	1G-5
Engine Oil Pump	0.300	1	1F-23
Engine Oil Sump	0.042	1	1D-11
Engine Piston	0.082	1	1E-11
Engine Suspensions	0.000	1	1C-11
Exhaust Manifold	0.077	1	1E-5
Exhaust Valve	0.060	2	1D-23
Fan	0.345	1	1G-23
Fan Drive	0.345	1	1G-23
"Filter Care" Kit	21		1A-23
Filter-Pilot System	1.080	1	1K-11
Filters-Air	0.001	1	1C-13
Filters-Engine Oil	0.302	1	1G-3
Filters-Fuel	0.200	1	1F-11
Filters-Hydr. System	1.020	1	1I-7
Flywheel-Engine	0.083	1	1E-13
Fuel Filter	0.200	1	1F-11
Fuel Piping	0.203	1	1F-15
Fuel Pump	0.201	1	1F-13
Fuel Tank	1.010	1	1I-5
Fuses	1.200	3	2D-7
Guards	1.300	2	2E-21
Handle	1.00	3	2E-23
Heater	1.490	1	2E-15
Horn	1.220	2	2D-15
Hyd.Pump Drive	1.030	7	1I-21
Hyd.Pump Regulator Valve	1.030	6	1I-19
Hyd.Pump Regulator-Cover	1.030	4	1I-15
	1.030	5	1I-17
Hydr.Pump-Components	1.030	2	1I-11
Hydr.Pump Regulator-Comp.	1.030	3	1I-13

ALPHABETICAL INDEX

DESCRIPTION	SGR.	TAV.	GRID
Hydraulic Pump	1.030	1	1I-9
Idler	3.020	1	1G-15
Injection Nozzle-Lines	0.149	1	1F-9
Injection Pump	0.140	2	1E-23
	0.140	3	1F-3
	0.140	4	1F-5
	0.140	5	1F-7
Injection Pump-Piping	0.140	1	1E-21
Intake Manifold	0.071	1	1E-3
Intake Valve	0.080	2	1D-21
Lift Cylinder (Left)	2.030	3	1F-17
Lift Cylinder (Right)	2.030	2	2F-15
Lights	1.220	2	2D-15
Lower Frame	3.000	1	2G-3
Lubric. Fitting Piping	2.040	1	2F-23
Main Piping	1.060	1	1K-3
Mirror (Rear)	1.300	2	2E-21
Monoblac Boom	2.000	1	2F-3
Motor - Starter	0.360	2	1H-7
Motor - Swing	1.040	1	1J-3
Motor - Travel	3.010	1	12G-5
Motor - Wiper	1.220	1	2D-13
Muffler	0.002	1	1C-15
Oil Tank	1.020	1	1I-7
Operator's Seat	1.250	2	2D-23
OperatorsSeat(Bostrom)(Std.)	5.0151	1	2I-3
Pilot Gear Pump	1.030	8	1I-23
Pilot Piping(1)	1.080	1	1K-11
Pilot Piping(2)	1.081	1	1K-15
Pilot Piping(3)	1.082	1	1K-19
Pilot Piping (4)	1.083	1	1L-5
Pilot Piping (5)	1.084	1	1L-7
Pilot Valve	1.070	3	1K-9
Pilot Valve-components	1.070	2	1K-7
Pipin-Boom	2.030	1	2F-13
Piping-Engine Oil	0.350	1	1H-3
Piping-Injection	0.149	1	1F-9
Piping-Lube Fittings	2.040	1	2G-23
Piping-Main	1.060	1	1K-3
Piping-Pilot(1)	1.080	1	1K-11
Piping-Pilot(3)	1.082	1	1K-19
Piping-Pilot(4)	1.083	1	1L-5
Piping-Pilot(5)	1.084	1	1L-7
Piping-Pump Contr. Valve	1.050	1	1J-13
Piping-Travel (Lower)	3.070	1	2H-5
Piping-Turbocharger	0.241	1	1F-21
Pump-Engine Oil	0.300	1	1F-23
Pump-Fuel	0.201	1	1F-13
Pump-Hydraulic	1.030	1	1I-9
Pump-Injection	0.140	1	1E-21
Pump-Pilot	1.030	8	1I-23
Pump-Water	0.320	1	1G-13
Pump/Control Valve Piping	1.050	1	1J-13
Radiator	0.003	1	1C-17
Radiator-Components	0.003	2	1C-19
	0.003	3	1C-21
Rocker Arm	0.060	2	1D-23
Rotary Distr.-Components	3.060	2	2H-3
Rotary Distributor	3.060	1	2G-23
Seat Belt (Std.)	5.0536	1	2I-5
Sensors	1.220	2	2D-15
Solenoid Valve	1.080	2	1K-13
Starter	0.360	2	1H-7
Starter-Mounting	0.360	1	1H-5
Stop Valve	1.082	2	1K-23
Swing Motor-Components	1.040	3	1J-7
Swing Red.Unit-Components	1.040	2	1J-5
Swing Reduction Unit	1.040	1	1J-3
Thermostat & Housing	0.326	1	1G-19
Timing Control	0.100	1	1E-17
Tool Kit	5.0083	1	2I-9
track Chain	3.050	1	2G-21
Track Roller	3.040	1	2G-19
Travel Motor-componen.	3.010	3	2G-9
Travel Piping (Lower)	3.070	1	2H-5
Travel Red.Unit-Componen.	3.010	2	2G-7
Travel Reduction Units	3.010	1	2G-5
Turbocharger	0.240	1	1F-17
	0.240	2	1F-19
Turbocharger Piping	0.241	1	1F-21
Upper Frame	1.000	1	1E-17
Upper Roller	3.030	1	2G-17
Valve-Anti-Shock(Hydr.)	1.082	3	1L-3
Valve-Check (Pilot)	1.081	2	1K-17
Valve-Exhaust	0.060	2	1D-23
Valve-Intake	0.060	2	1D-23
Valve-Pilot (Hydr.)	1.070	1	1K-5
Valve-Pilot(Travel)	1.070	1	1K-5
Valve-Solenoid	1.080	2	1K-13
Valve-Stop(Travel)	1.082	1	1K-21
Washer (windshield)	1.220	3	2D-17
Water Pump	0.320	1	1G-13
Water Pump Drive	0.340	1	1G-21
Water Pump-Components	0.320	2	1G-15
Wiper	1.220	1	2D-11

INJECTION PUMP POMPA INIEZIONE 4936782	POMPE D'INJECTION EINSPRITZPUMPE BOMBA DE INYECCION	0.140 TAV.3

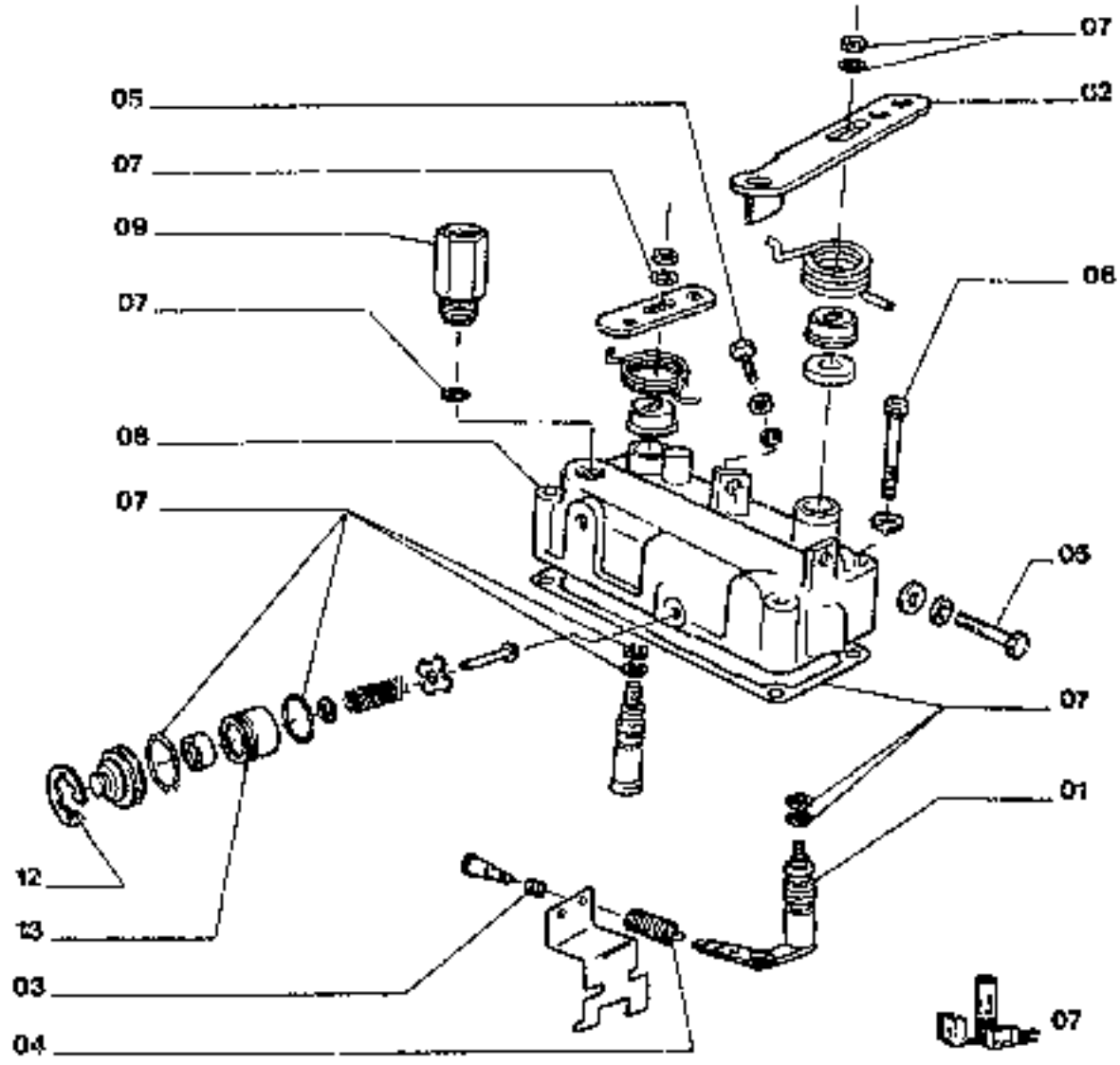

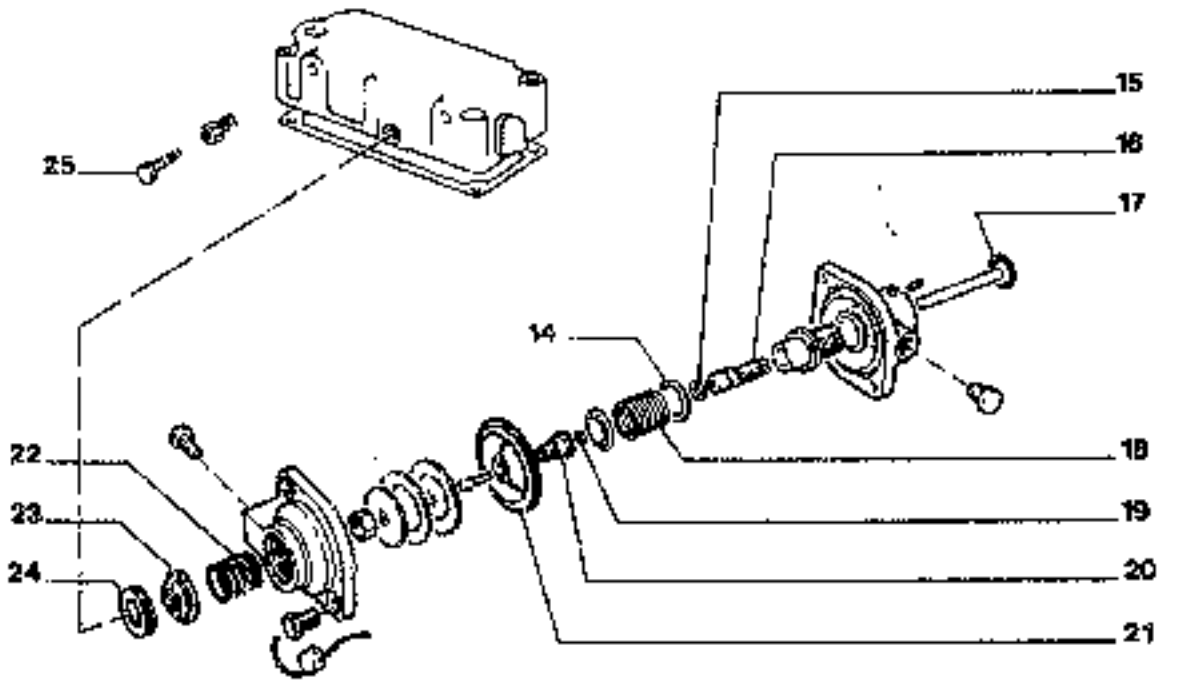

SN120

INJECTION PUMP POMPA INIEZIONE 4938782	POMPE D'INJECTION EINSPRITZPUMPE BOMBA DE INYECCION	0.140 TAV.3

ITEM	PART NUMBER	QTY	TR. CO.	DESCRIPTION	DESCRIZIONE
	1		45L	LEVER	LEVA
01	9917954	1	16A	SHAFT	ALBERO
02	9917955	1	45L	LEVER	LEVA
03	79096765	1	100M	SPRING	MOLLA
04	79096766	1	100M	SPRING	MOLLA
05	79070137	2	40V	SCREW	VITE
06	79070140	4	40V	SCREW	VITE
07	7907/1796	1	K30	KIT-FOR INJECTIN PUMP	KIT-PER POMPA INIEZIONE
08	79096764	1	265C	COVER	COPERCHIO
09	79084796	1	20R	FITTING	RACCORDO
12	79070172	1	187A	SNAP RING	ANELLO ELASTICO
13	79070168	1	30M	SLEEVE	MANICOTTO
14	79091894		198S	SHIM (mm0,20)	SPESSORE (mm0,20)
	79091895		198S	SHIM (mm0,51)	SPESSORE (mm0,51)
	79091896		198S	SHIM (mm0,84)	SPESSORE (mm0,84)
	79091897		198S	SHIM (mm1,25)	SPESSORE (mm1,25)
15	79084807	1	158G	O-RING	GUARNIZIONE O-R
16	79096768	1	40V	SCREW	VITE
17	79084809	1	158G	O-RING	GUARNIZIONE O-R
18	79084802	1	100M	SPRING	MOLLA
19	79084805	1	158G	O-RING	GUARNIZIONE O-R
20	79084804	1	10V	VALVE	VALVOLA
21	79084803	1	35D	DIAPHRAGM	DIAFRAMMA
22	79096767	1	100M	SPRING	MOLLA
23	79084801	1	60D	DISC	DISCO
24	79084800	1	50G	RING NUT	GHIERA
25	79070150	1	40V	SCREW	VITE

INJECTION PUMP	POMPE D'INJECTION	0.140 TAV.4
POMPA INIEZIONE	EINSPRITZPUMPE	
4939782	BOMBA DE INYECCION	

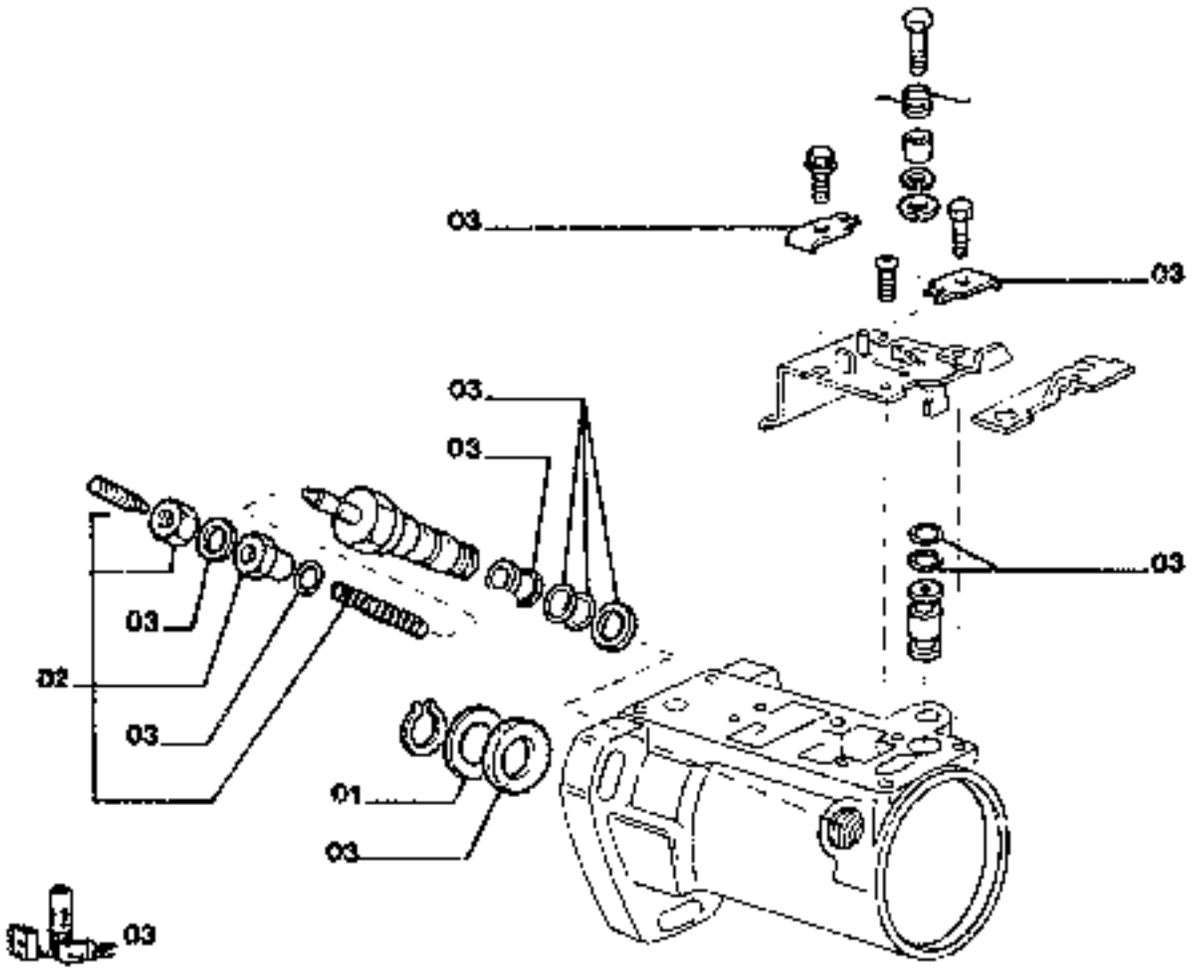

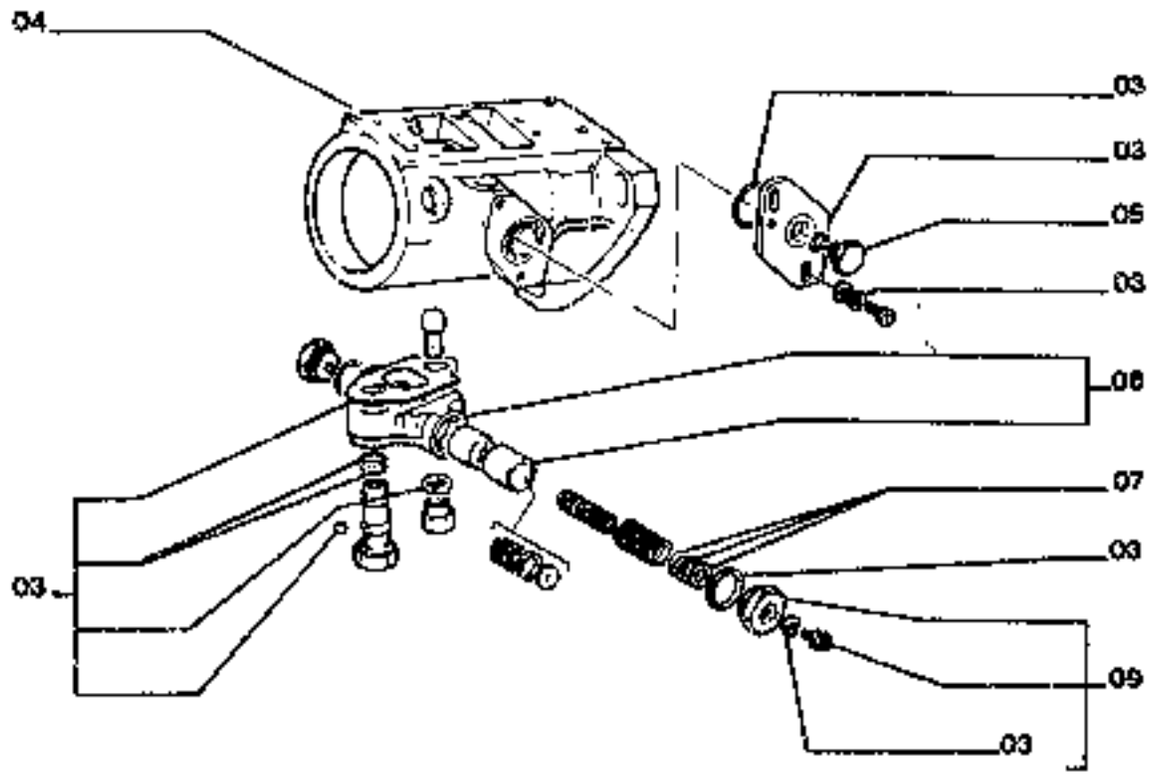

INJECTION PUMP POMPA INIEZIONE 4638782	POMPE D'INJECTION EINSPRITZPUMPE BOMBA DE INYECCION	0.140	TAV.4

ITEM	PART NUMBER	QTY	TR. CO.	DESCRIPTION	DESCRIZIONE
01	79091898		131R	WASHER -THICK mm1,74	ROSETTA -SPESS. mm1,74
	79091899		131R	WASHER -THICK mm1,86	ROSETTA -SPESS. mm1,86
	79091900		131R	WASHER -THICK mm1,98	ROSETTA -SPESS. mm1,98
	79091901		131R	WASHER -THICK mm2,10	ROSETTA -SPESS. mm2,10
	79091902		131R	WASHER -THICK mm2,22	ROSETTA -SPESS. mm2,22
02	79070151	1	10V	VALVE	VALVOLA
03	79071796	1	K30	KIT-FOR INJECTN PUMP	KIT PER POMPA INIEZIONE
04	79070045	1	300C	BODY	CORPO
05	79070159	1	50T	PLUG	TAPPO
06	79070109	1	265C	COVER	COPERCHIO
07	9617979		131R	WASHER -THICK 0,2mm	ROSETTA -SPESS. 0,2mm
	9918092		131R	WASHER -THICK 0,5mm	ROSETTA -SPESS. 0,5mm
	9918094		131R	WASHER -THICK 2mm	ROSETTA -SPESS. 2mm
	79070113		131R	WASHER -THICK 1mm	ROSETTA -SPESS. 1mm
09	79096763	1	50T	PLUG	TAPPO

INJECTION PUMP
POMPA INIEZIONE
4638782

POMPE D'INJECTION
EINSPRITZPUMPE
BOMBA DE INYECCION

0.140 TAV.5

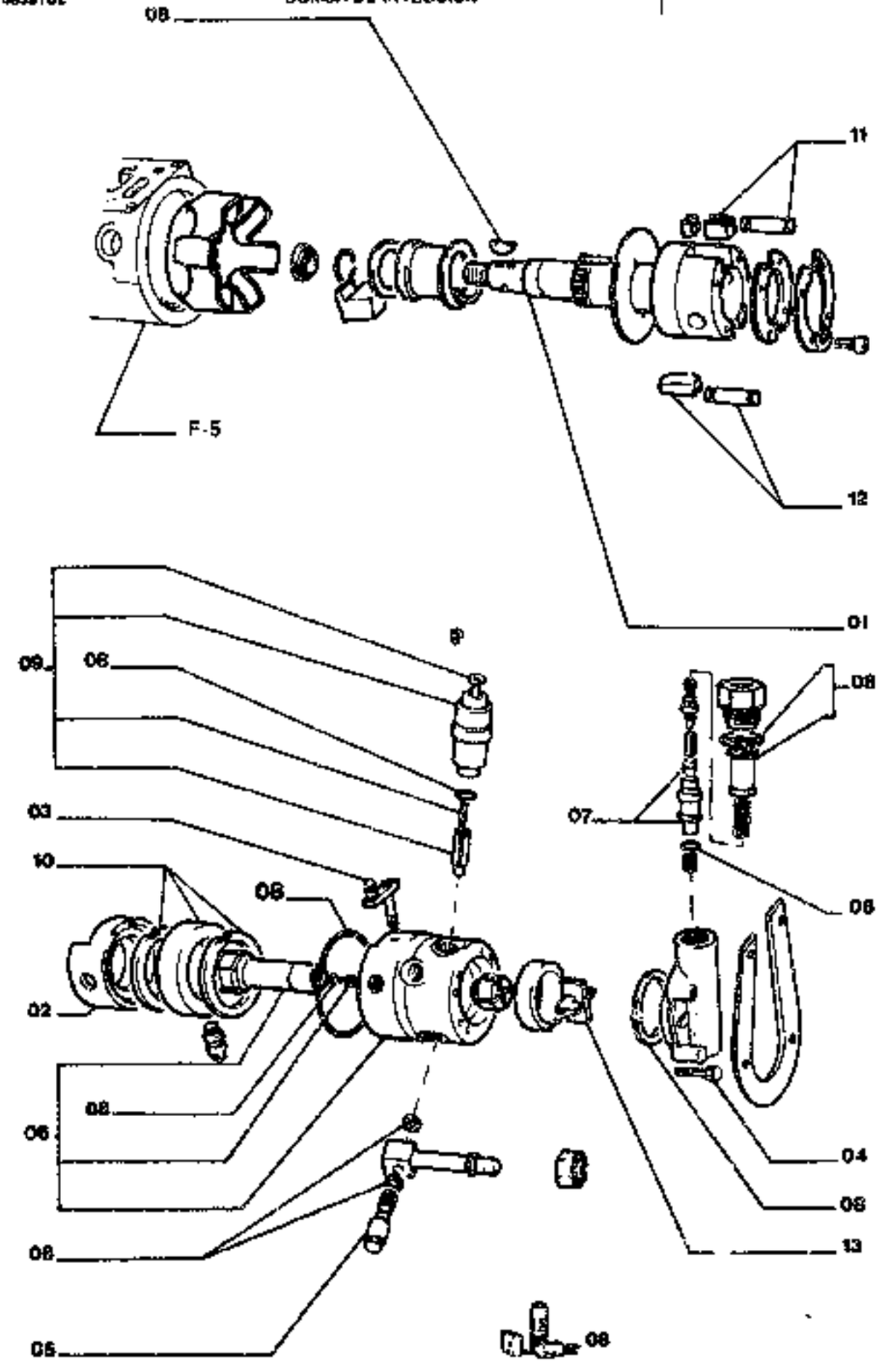

INJECTION PUMP
POMPA INIEZIONE
4635782

POMPE D'INJECTION
EINSPRITZPUMPE
BOMBA DE INYECCION

0.140 TAV.5

ITEM	PART NUMBER	QTY	TR. CO.	DESCRIPTION	DESCRIZIONE
01	79070060	1	16A	SHAFT	ALBERO
02	79070069	1	300S	SUPPORT	SUPPORTO
03	79070071		10V	VALVE -IN ALTER.	VALVOLA -IN ALTER.
	79070072		10V	VALVE -IN ALTER.	VALVOLA -IN ALTER.
04	79070078	4	40V	SCREW	VITE
05	79070087	1	10V	VALVE	VALVOLA
	79070086	3	10V	VALVE	VALVOLA
06	79070115	1	300C	BODY -ASS.LY	CORPO -COMPL.
07	79096762	1	30M	SLEEVE	MANICOTTO
08	79071795	1	K30	KIT-FOR INJECTIN PUMP	KIT PER POMPA INIEZIONE
09	79074015	1	30E	SOLENOID	ELETTROMAGNETE
10	79084795	1	160C	WORM SCREW	CHIOCCIOLA
11	79070054	3	61C	COUNTERWEIGHT	CONTRAPPESO
12	79070065	1	61C	COUNTERWEIGHT	CONTRAPPESO
13	5962261	2	10V	VALVE	VALVOLA

INJECTION NOZZLE-LINES
TUSAZIONI POMPA-INIETTORI

TUYAUTERIE ET INJECTEURS
LEITUNGEN - DUESENSTOCK
TUBERIAS Y INYECTORES

0.146 TAV.1

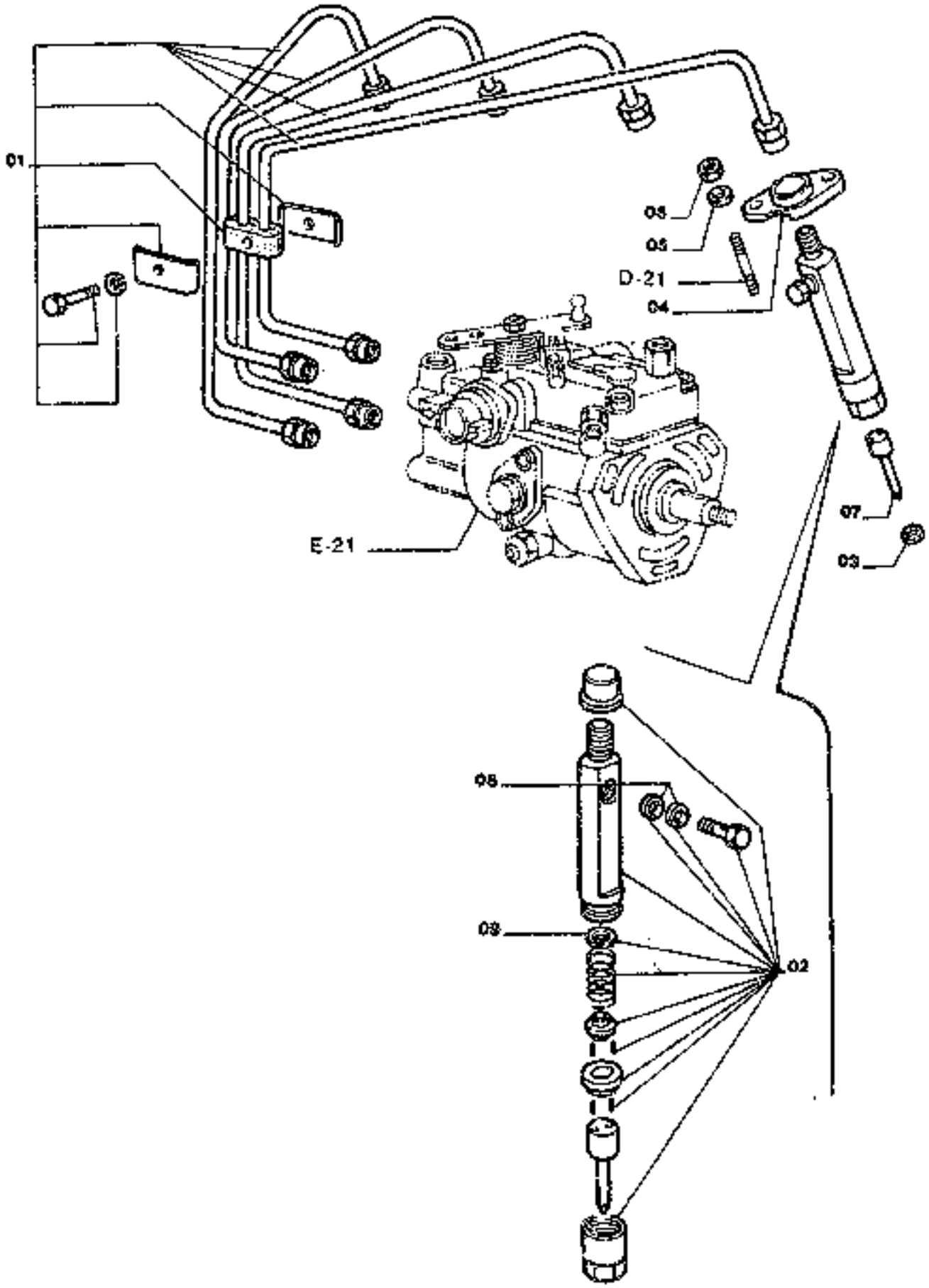

INJECTION NOZZLE-LINES
TUBAZIONI POMPA-INIETTORI

TUYAUTERIE ET INJECTEURS
LEITUNGEN - DUESENSTOCK
TUBERIAS Y INYECTORES

0.148 TAV.1

ITEM	PART NUMBER	QTY	TR. CO.	DESCRIPTION	DESCRIZIONE
01	4921051	1	193T	TUPE -ASS.LY	TUBO RIGIDO -COMPL.
02	4701124	4	195P	NOZZLE HOLDER	PORTAPOLVERIZZATORE
03	14453599	4	122G	SEAL	GUARNIZIONE
04	4730512	4	225S	BRACKET	STAFFA
05	771325	4	131R	WASHER	ROSETTA
06	16100921	4	10D	NUT	DADO
07	4924165	4	148P	NOZZLE	POLVERIZZATORE
08	772031	2	131R	WASHER	ROSETTA
09	79067856	4	2K	KIT -THICK	KIT -SPESS.

FUEL FILTER FILTRO COMBUSTIBILE	FILTRE A COMBUSTIBLE KRAFTSTOFFILTER FILTRO DEL COMBUSTIBILE	0.200 TAV.1

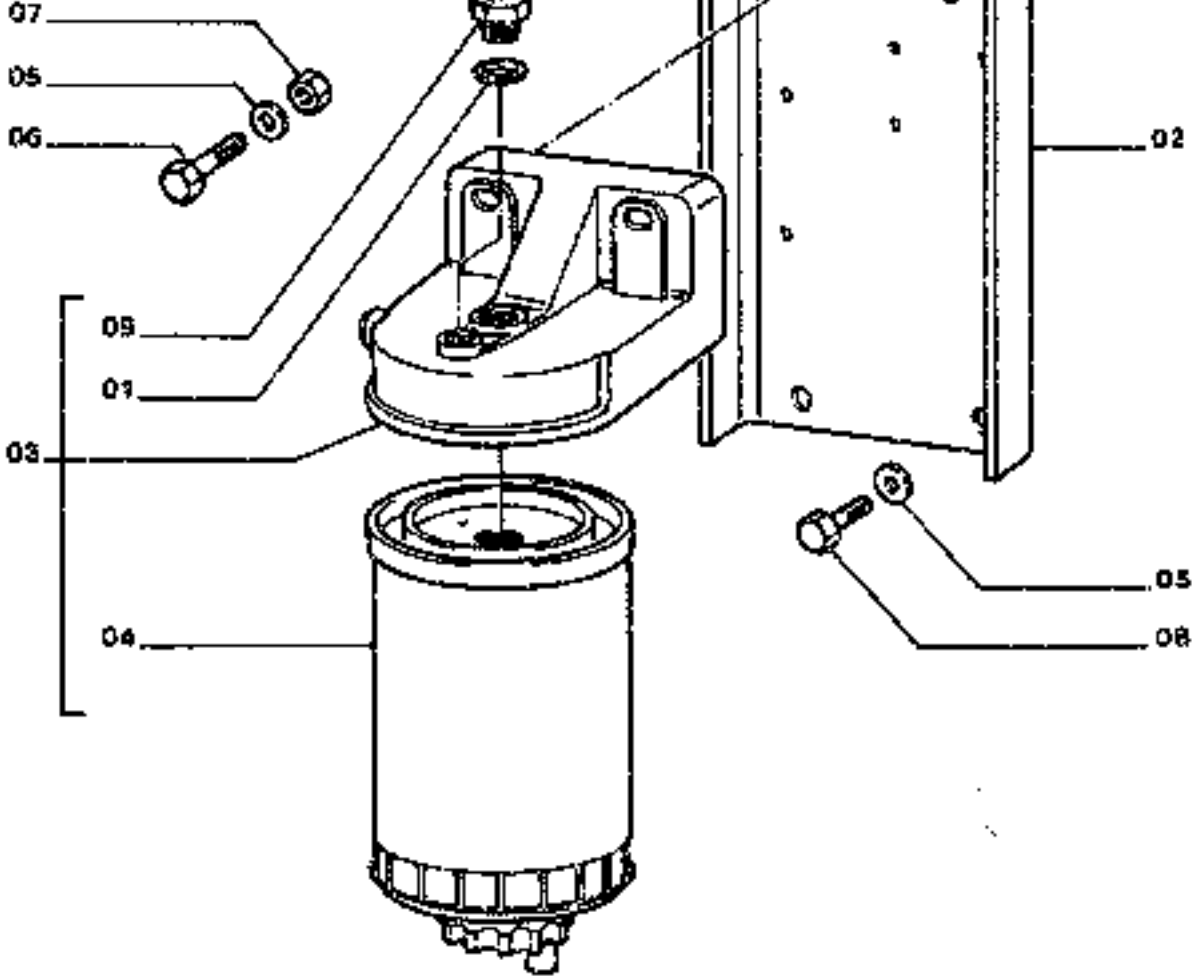

F-12

FN120

FUEL FILTER
FILTRO COMBUSTIBILE

FILTRE A COMBUSTIBLE
KRAFTSTOFFILTER
FILTRO DEL COMBUSTIBLE

0.200 TAV.1

ITEM	PART NUMBER	QTY	TR. CO.	DESCRIPTION	DESCRIZIONE
01	772051	1	131R	WASHER	ROSETTA
02	4620989	1	300S	SUPPORT	SUPPORTO
03	4795600	1	64F	FUEL FILTER -ASS.LY	FILTRO COMBUSTIBILE -COMPL.
04	4795601	1	20E	FILTER ELEMENT	ELEMENTO FILTRANTE
05	11195371	4	131R	WASHER	ROSETTA
06	11308924	2	40V	SCREW 10X1,25X30	VITE 10X1,25X30
07	12164711	2	10D	NUT	DADO
08	15970524	2	40V	SCREW 10X1,25X20	VITE 10X1,25X20
09	79069486	1	40V	SCREW	VITE

FUEL PUMP POMPA ALIMENTAZIONE	POMPE D'ALIMENTATION KRAFTSTOFFPUMPE BOMBA DE ALIMENTACION	0.201 TAV.1

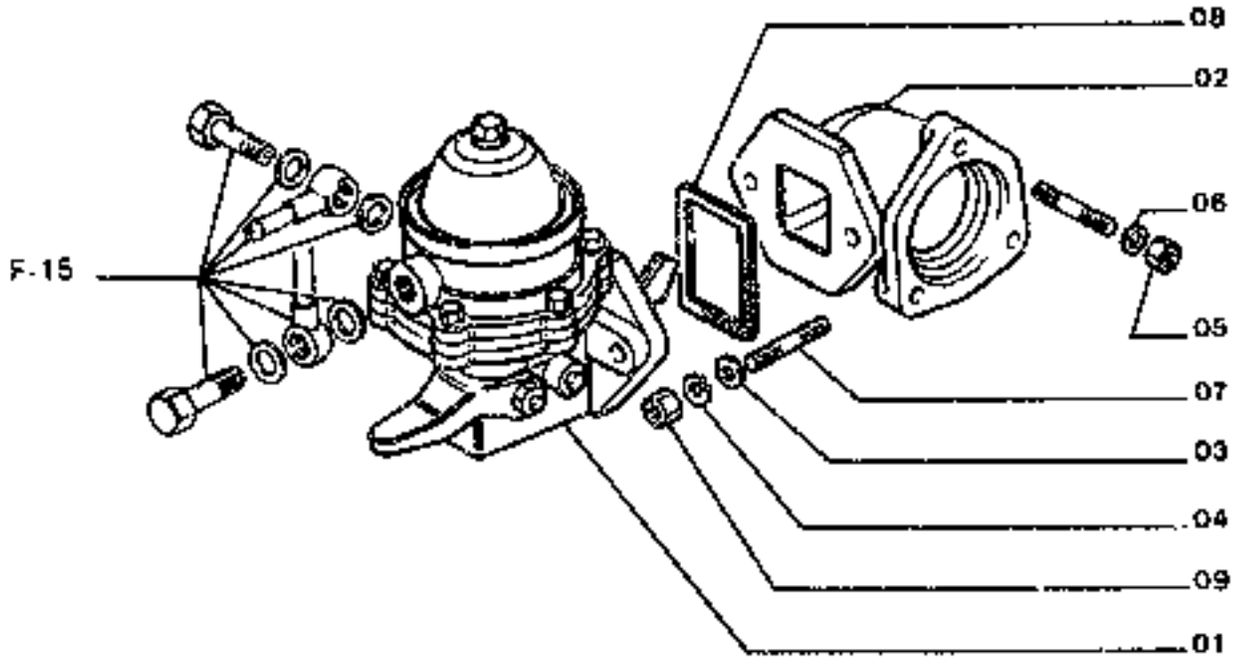

FUEL PUMP
POMPA ALIMENTAZIONE

POMPE D'ALIMENTATION
KRAFTSTOFFPUMPE
BOMBA DE ALIMENTACION

0.201 TAV.1

ITEM	PART NUMBER	QTY	TR. CO.	DESCRIPTION	DESCRIZIONE
01	4757883	1	154P	FUEL PUMP	POMPA ALIMENTAZIONE
02	4764868	2	300S	SUPPORT	SUPPORTO
03	10519521	2	131R	WASHER	ROSETTA
04	10571779	2	131R	WASHER	ROSETTA
05	10702811	3	10D	NUT	DADO
05	12626021	3	131R	WASHER	ROSETTA
07	13616920	2	210P	STUD 8X1,25X34	PRIGIONIERO 8X1,25X34
08	14459580	1	120G	GASKET	GUARNIZIONE PIANA
09	16700821	2	10D	NUT	DADO

FH120

FUEL PIPING TUBAZIONI COMBUSTIBILE	TUYAUTERIE DU COMBUSTIBLE LEITUNGEN KRAFTSTOFF TUBERIAS DE COMBUSTIBLE	0.203 TAV.1

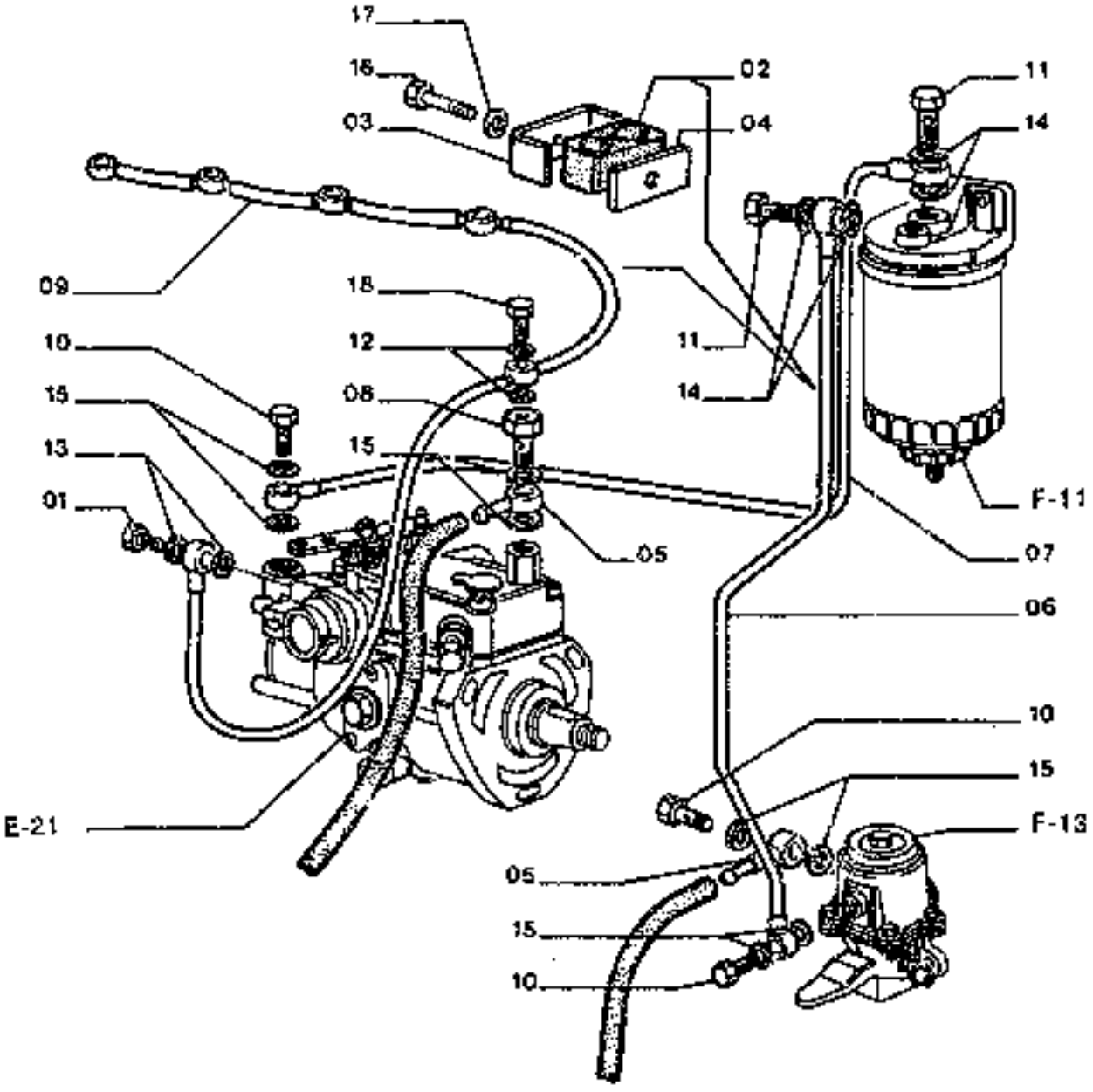

FH120

FUEL PIPING
TUBAZIONI COMBUSTIBILE

TUYAUTERIE DU COMBUSTIBLE
LEITUNGEN KRAFTSTOFF
TUBERIAS DE COMBUSTIBLE

0.203 TAV.1

ITEM	PART NUMBER	QTY	TR. CO.	DESCRIPTION	DESCRIZIONE
01	1390713	1	20R	FITTING	RACCORDO
02	4659217	1	74B	BLOCK	BLOCCHETTO
03	4659218	1	97S	HALF CONNECTOR	SEMIMORSETTO
04	4659219	1	110P	PLAQUE	PIASTRINA
05	4790851	2	20R	FITTING	RACCORDO
06	4814847	1	193T	TUBE	TUBO RIGIDO
07	4814848	1	193T	TUBE	TUBO RIGIDO
08	4823497	1	20R	FITTING	RACCORDO
09	4824476	1	193T	TUBE	TUBO RIGIDO
10	10181711	3	20R	FITTING	RACCORDO
11	10184311	2	20R	FITTING	RACCORDO
12	10260060	2	120G	GASKET	GUARNIZIONE PIANA
13	10260160	2	120G	GASKET	GUARNIZIONE PIANA
14	10280060	4	120G	GASKET	GUARNIZIONE PIANA
15	10296160	6	120G	GASKET	GUARNIZIONE PIANA
16	10976221	1	40V	SCREW 5X0,8X25	VITE 5X0,8X25
17	11185470	1	131R	WASHER	ROSETTA
18	11903717	1	20R	FITTING	RACCORDO

TURBOCHARGER TURBOCOMPRESSORE	TURBOCOMPRESSEUR TURBOLADER TURBOCOMPRESOR	0.240 TAV.1

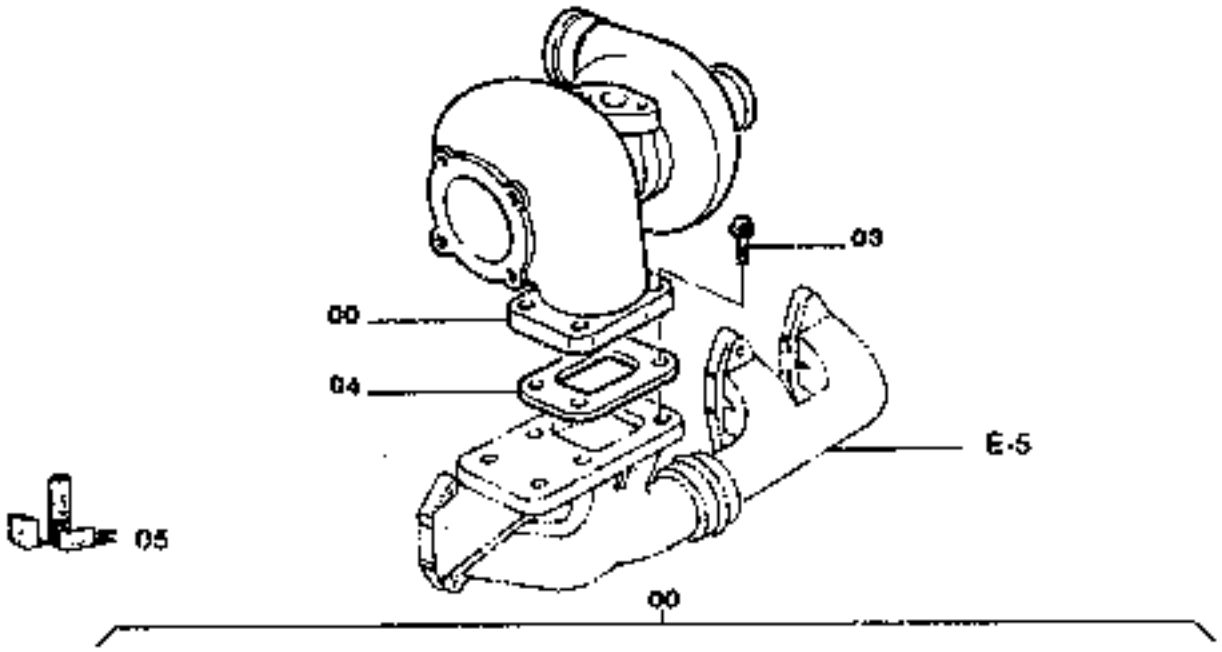

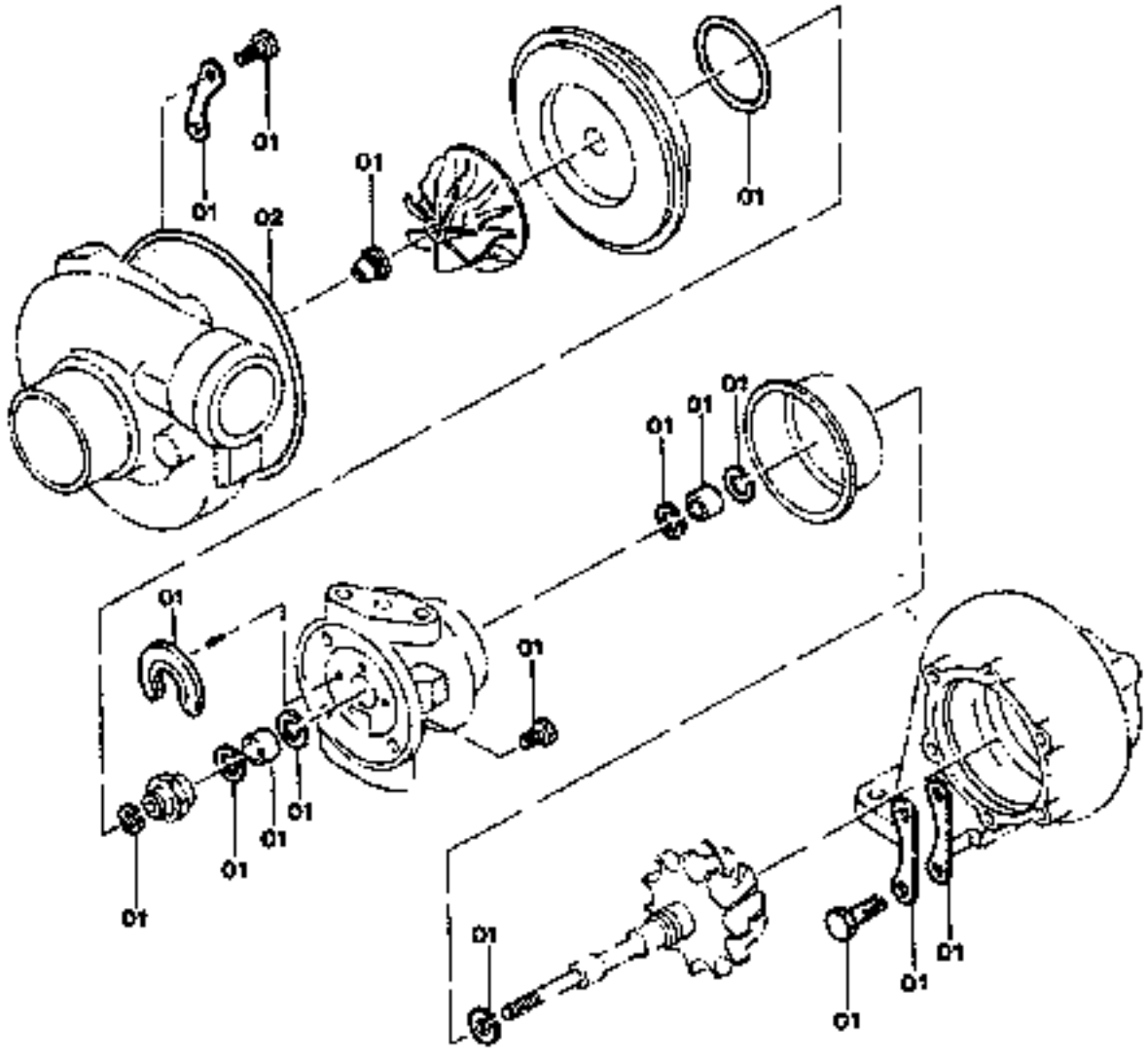

FH120

TURBOCHARGER
TURBOCOMPRESSORE

TURBOCOMPRESSEUR
TURBOLADER
TURBOCOMPRESOR

0,240 TAV.1

ITEM	PART NUMBER	QTY	TR. CD.	DESCRIPTION	DESCRIZIONE
00	4817758	1	210T	TURBOCHARGER -ASS.LY	TURBOCOMPRESSORE -COMPL.
01	79097623	1	K10	TURBOCHARGER REVISION KIT	KIT REVISIONE TURBOCOMPRESS.
02	79092019	1	122G	SEAL	GUARNIZIONE
03	4830631	4	80V	SCREW	VITE
04	4532123	1	120G	GASKET -K. 79097246	GUARNIZIONE PIANA -K. 79097246
05	79097246	1	K22	KIT-MANIFOLD GASKETS FOR COMPONENTS, SEE A-23	KIT-GUARNIZIONI COLLETTORI VED. COMPONENTI PAG.

TURBOCHARGER TURBOCOMPRESSORE	TURBOCOMPRESSEUR TURBOLADER TURBOCOMPRESOR	0.240 TAV.2

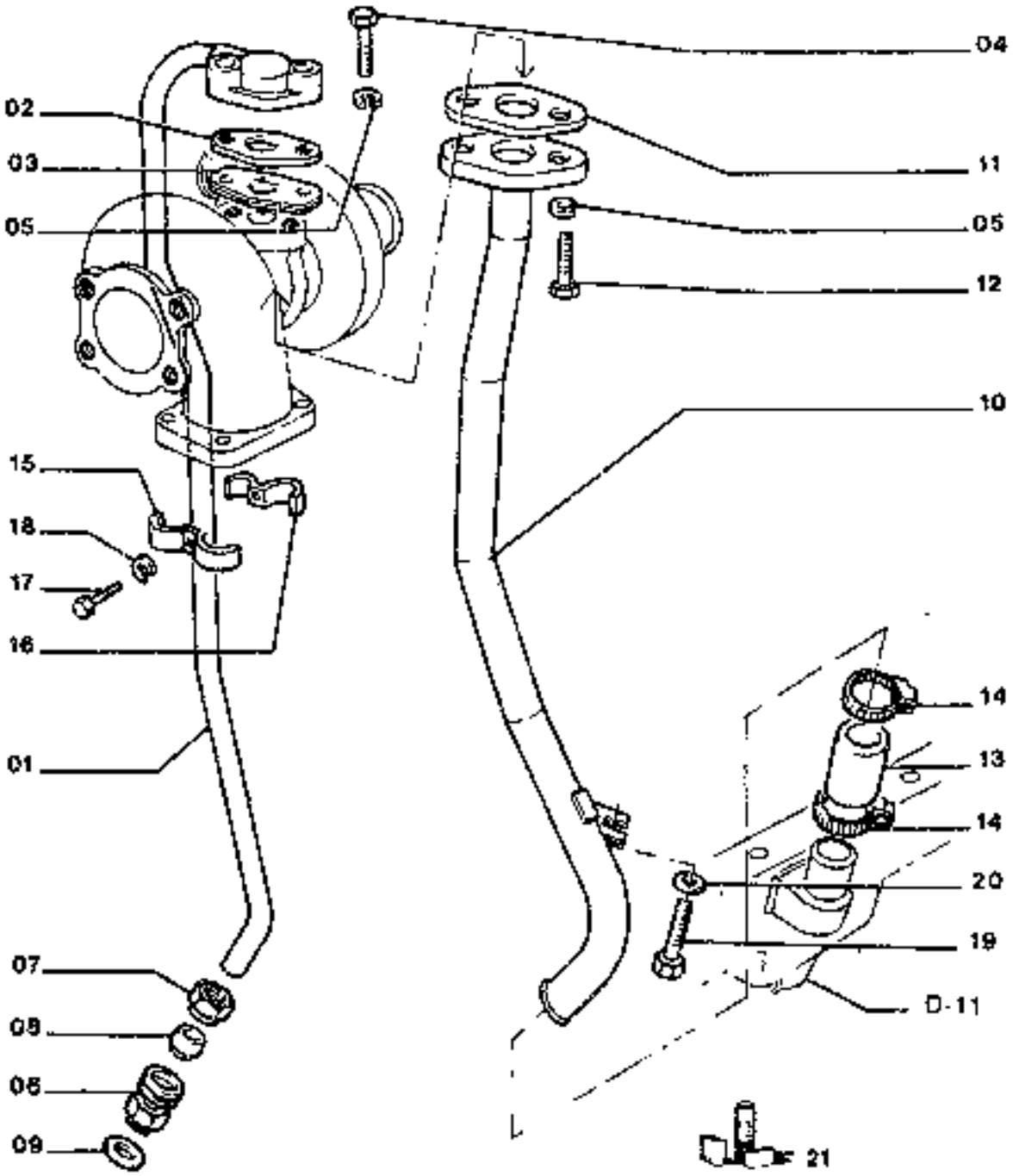

FH120

TURBOCHARGER
TURBOCOMPRESSORE

TURBOCOMPRESSEUR
TURBOLADER
TURBOCOMPRESOR

0.240 TAV.2

ITEM	PART NUMBER	QTY	TR. CO.	DESCRIPTION	DESCRIZIONE
01	4772904	1	193T	TUBE	TUBO RIGIDO
02	4632113	1	120G	GASKET -K 79097246	GUARNIZIONE PIANA -K 79097246
03	4782472	1	120G	GASKET -UPPER 79097246	GUARNIZIONE PIANA -SUP. 790972
04	16043921	2	40V	SCREW 8X1,25X35	VITE 8X1,25X35
05	11193871	4	131R	WASHER	ROSETTA
06	16500311	1	20R	FITTING	RACCORDO
07	16506911	1	18D	NUT	DADO
08	16507611	1	45A	RING	ANELLO
09	16506260	1	122G	SEAL	GUARNIZIONE
10	4617789	1	193T	TUBE	TUBO RIGIDO
11	4632117	1	120G	GASKET -K 79097246	GUARNIZIONE PIANA -K 79097246
12	16043621	2	40V	SCREW 8X1,25X25	VITE 8X1,25X25
13	4790206	1	30M	SLEEVE	MANICOTTO
14	12173790	2	190C	COLLAR C2597 UP TO ENGINE 298461	COLLARE C2597 FINO AL MOTORE 298461
	12161390	2	190C	COLLAR D2597 FROM ENGINE 298462	COLLARE D2597 DAL MOTORE 298462
15	4766436	1	231S	CLIP	STAFFETTA
16	4766436	1	231S	CLIP	STAFFETTA
17	10802421	1	40V	SCREW 6X1X20	VITE 6X1X20
18	11197771	1	131R	WASHER	ROSETTA
19	15970121	1	40V	SCREW	VITE
20	11196371	1	131R	WASHER	ROSETTA
21	79097246	1	K22	KIT-MANIFOLD GASKETS FOR COMPONENTS, SEE A-23	KIT-GUARNIZIONI COLLETTORI VED. COMPONENTI PAG.

TURBOCHARGER PIPING TUBAZIONI TURBOCOMPRESS.	TUYAUTERIES TURBOCOMPR. LEITUNGEN-TURBOLADER TUBERIAS TURBOCOMPRESOR	0.241 TAV.1

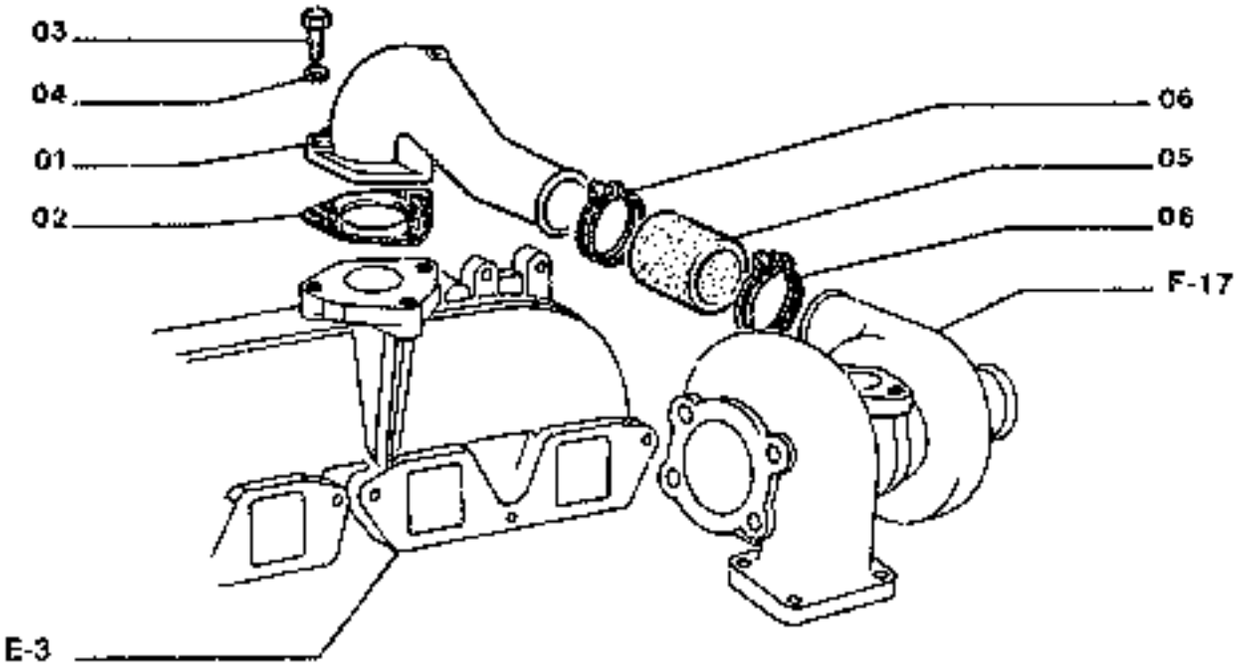



TURBOCHARGER PIPING — TUYAUTERIES TURBOCOMPR. — 0.241 TAV.1
TUBAZIONI TURBOCOMPRESS. — LEITUNGEN-TURBOLADER — TUBERIAS TURBOCOMPRESOR

ITEM	PART NUMBER	QTY	TR. CO.	DESCRIPTION	DESCRIZIONE
01	4760064	1	193T	TUBE	TUBO RIGIDO
02	4760065	1	120G	GASKET -K. 79097246	GUARNIZIONE PIANA -K. 79097246
03	15970921	2	40V	SCREW	VITE
	15071824	1	40V	SCREW 10X1,25X105	VITE 10X1,25X105
04	11150571	3	181R	WASHER	ROSETTA
05	4765377	1	30M	SLEEVE	MANICOTTO
06	12174790	2	180C	COLLAR	COLLARE
07	79097246	1	K22	KIT-MANIFOLD GASKETS FOR COMPONENTS, SEE A-23	KIT-GUARNIZIONI COLLETTORI VED. COMPONENTI PAG. 32

FH12B

ENGINE OIL PUMP POMPA OLIO MOTORE	POMPE A HUILE DU MOTEUR OELPUMPE - MOTOR BOMBA DE ACEITE DEL MOTOR	0.300 TAV.1

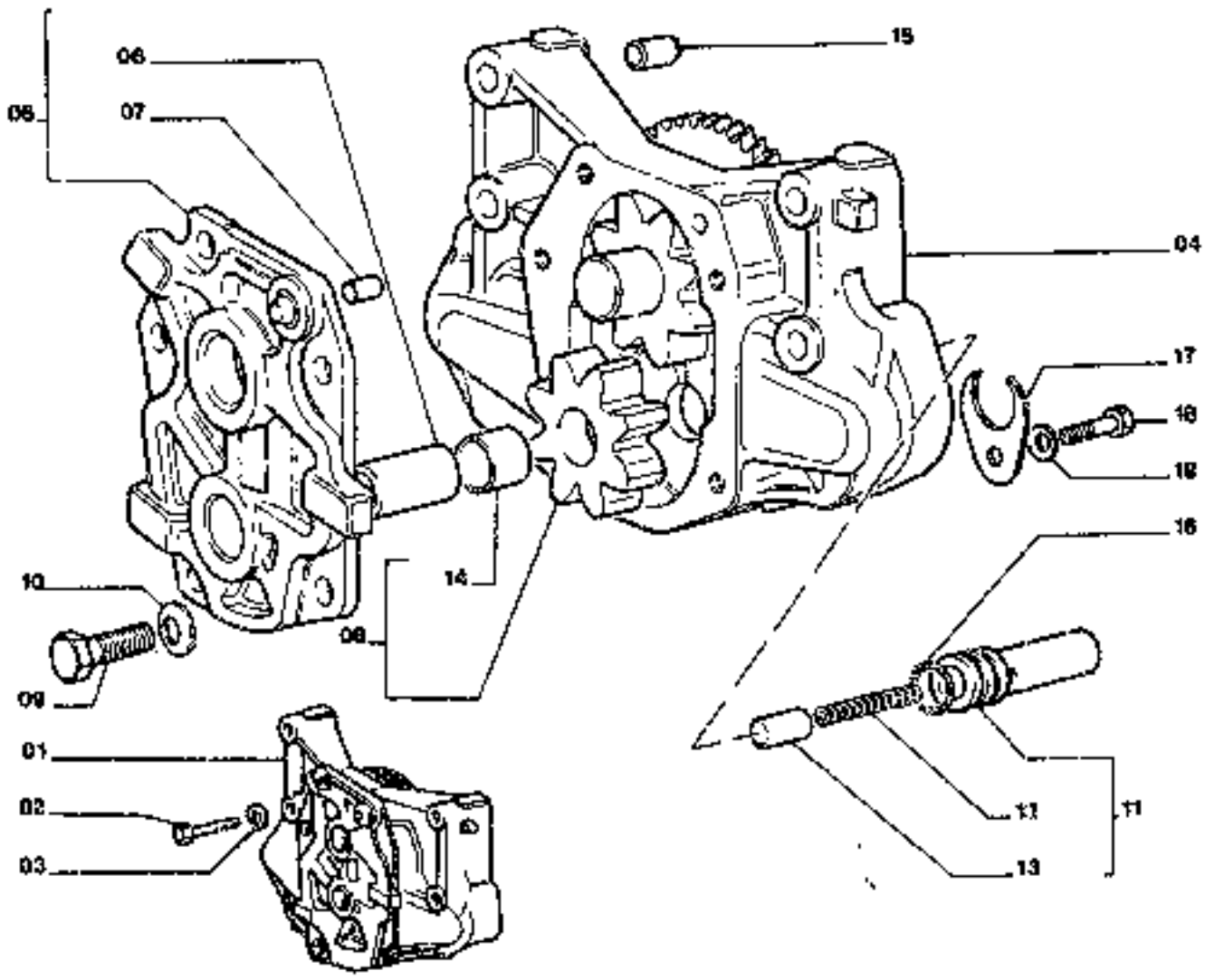

ENGINE OIL PUMP
POMPA OLIO MOTORE

POMPE A HUILE DU MOTEUR
OELPUMPE - MOTOR
BOMBA DE ACEITE DEL MOTOR

0.300 TAV.1

ITEM	PART NUMBER	QTY	TRL CO.	DESCRIPTION	DESCRIZIONE
01	4613552	1	P153	OIL PUMP -ASS.LY	POMPA OLIO -COMPL.
02	16044321	4	40V	SCREW 8X1,25X65	VITE 8X1,25X55
03	11193871	4	131R	WASHER	ROSETTA
04	4613554	*	301C	BODY	CORPO
05	4613351	1	265C	COVER -ASS.LY	COPERCHIO -COMPL.
06	4613290	1	80P	PIN	PERNO
07	10839610	1	90G	DOWEL	GRANO
08	4613293	1	501	GEAR -ASS.LY	INGRANAGGIO -COMPL.
09	16043321	5	40V	SCREW 8X1,25X18	VITE 8X1,25X18
10	11193870	5	131R	WASHER	ROSETTA
11	4793112	1	10V	VALVE -ASS.LY	VALVOLA -COMPL.
12	4756015	1	100M	SPRING	MOLLA
13	4587730	1	10V	VALVE	VALVOLA
14	4613292	1	95B	BUSHING -IN ALTER.	BOCCOLA -IN ALTER.
	4670935	1	85B	BUSHING -IN ALTER.	BOCCOLA -IN ALTER.
15	10823610	2	90G	DOWEL	GRANO
16	14457281	1	158G	O-RING	GUARNIZIONE O-R
17	4613353	1	85F	YOKE	FORCELLA
18	16043421	1	40V	SCREW 8X1,25X20	VITE 8X1,25X20
19	11198071	1	170R	LOCKWASHER	ROSETTA ELASTICA

G-1

ALPHABETICAL INDEX

DESCRIPTION	SGR.	TAV.	GRID
Accelerator contr.Is	0.004	1	1C-23
Air Cleaner	0.001	1	1C-13
Alternator-Mounting	0.400	1	1H-9
Alternator (55 amp)	0.400	2	1H-11
Alternator (35 amp)	0.400	3	1H-13
Anti-Shock Valve (Hydr.)	1.082	3	1L-9
Application of Ol. Hammer	5.0020	2	2H-19
Batteries	1.220	4	2D-19
Belts	0.340	1	1G-21
	0.345	1	1G-23
Boom Piping	2.030	1	2F-13
Brake Valve Components	3.010	4	2G-11
Bucket	2.020	1	2F-9
Bucket Cylinder	2.030	5	2F-21
Bull Gear	3.000	1	2G-3
Cab	1.250	1	2D-19
Cab Door	1.250	5	2E-7
Cab Heater-Components	1.290	2	2E-15
Cab Window-Left Side	1.250	6	2E-9
Cab-Frame	1.250	7	2E-11
Cab-Platform	1.250	1	2D-21
Camshaft	0.120	1	1E-19
Check Valve	1.081	2	1K-17
Cold Starting Aid	5.0025	1	2H-19
Connecting Rod	0.081	1	1E-10
Cont. Valve-Hydr. (Ass.Y)	1.050	1	1J-13
Control Valve-Hydr.	1.050	2	1J-17
	1.050	3	1J-19
	1.050	4	1J-21
	1.050	5	1J-23
Controls	1.070	1	1K-5
Counterweight	1.000	1	1I-3
Cowlings	1.300	1	2E-19
	1.300	2	2E-21
Crankshaft	0.080	1	1E-7
Crankshaft Pulley	0.084	1	1E-15
Cylinder Block	0.040	1	1D-5
	0.040	2	1D-7
	0.040	3	1D-9
Cylinder Block Covers	0.043	1	1D-13
	0.043	2	1D-15
Cylinder Head	0.060	1	1D-21
	0.060	2	1D-23
Dashboard (Left)	1.210	1	2D-9
Dashboard (Right)	1.200	1	2D-3
	1.200	3	2D-7
Data Monitor	1.200	2	2D-5
Decals	4.500	1	2H-9
Dipper Stick (2,1m)	5.0022	1	2H-15
Dipper Stick (2,5m) (STD.)	2.003	1	2F-5
Dipper Stick(2,5m)Links(Std.)	2.003	2	2F-7
Dipper Stick (3m)	5.0038	1	2H-21
	5.0038	2	2H-23
Dipper Stick cylinder	2.030	4	2F-19
Dipstick-Engine Oil	0.305	2	1G-7
Discharge Valve	1.040	4	1J-3
Discharge Valve Componen.	3.010	5	2G-13
Drive on Engine (Opt.)	0.350	1	1H-3
Electric System	1.220	2	2D-13
Elements-Engine Oil	0.001	1	1C-13
Elements-fuel	0.200	1	1F-11
Elements-Hydraulic	1.020	1	1E-19
Elements-Pilot	1.080	1	1K-11
Emergency Kits	4.000	1	2H-7
Engine	0.021	1	1D-3
Engine-Controls	0.004	1	1C--23
Engine-Suspensions	0.000	1	1C-11
Engine Breather	0.045	1	1D-17
	0.045	1A	1D-19
Engine Cooling Piping	0.323	1	1G-17
Engine Heat Exchanger	0.310	1	1G-9
	0.310	2	1G-11
Engine Lifting Eyes	0.450	1	1H-15
Engine Oil Filter	0.302	1	1G-3
Engine Oil Piping	0.305	1	1G-5
Engine Oil Pump	0.300	1	1F-23
Engine Oil Sump	0.042	1	1D-11
Engine Piston	0.082	1	1E-11
Engine Suspensions	0.000	1	1C-11
Exhaust Manifold	0.077	1	1E-5
Exhaust Valve	0.060	2	1D-23
Fan	0.345	1	1G-23
Fan Drive	0.345	1	1G-23
"Filter Care" Kit	21		1A-23
Filter-Pilot System	1.080	1	1K-11
Filters-Air	0.001	1	1C-13
Filters-Engine Oil	0.302	1	1G-3
Filters-Fuel	0.200	1	1F-11
Filters-Hydr. System	1.020	1	1I-7
Flywheel-Engine	0.083	1	1E-13
Fuel Filter	0..200	1	1F-11
Fuel Piping	0.203	1	1F-15
Fuel Pump	0.201	1	1F-13
Fuel Tank	1.010	1	1I-5
Fuses	1.200	3	2D-7
Guards	1.300	2	2E-21
Handle	1.300	3	2E-23
Heater	1.290	1	2E-15
Horn	1.220	2	2D-15
Hyd.Pump Drive	1.030	7	1I-21
Hyd.Pump Regulator Valve	1.030	6	1I-19
Hyd.Pump Regulator-Cover	1.030	4	1I-15
	1.030	5	1I-17
Hydr.Pump-Components	1.030	2	1I-11
Hydr.Pump Regulator-Comp.	1.030	3	1I-13

ALPHABETICAL INDEX

DESCRIPTION	SGR.	TAV.	GRID
Hydraulic Pump	1.030	1	1I-9
Idler	3.020	1	1G-15
Injection Nozzle-Lines	0.149	1	1F-9
Injection Pump	0.140	2	1E-23
	0.140	3	1F-3
	0.140	4	1F-5
	0.140	5	1F-7
Injection Pump-Piping	0.140	1	1E-21
Intake Manifold	0.071	1	1E-3
Intake Valve	0.060	2	1D-21
Lift Cylinder (Left)	2.030	3	1F-17
Lift Cylinder (Right)	2.030	2	2F-15
Lights	1.220	2	2D-15
Lower Frame	3.000	1	2G-3
Lubric. Fitting Piping	2.040	1	2F-23
Main Piping	1.060	1	1K-3
Mirror (Rear)	1.300	2	2E-21
Monobloc Boom	2.000	1	2F-3
Motor - Starter	0.360	2	1H-7
Motor - Swing	1.040	1	1J-3
Motor - Travel	3.010	1	12G-5
Motor - Wiper	1.220	1	2D-13
Muffler	0.002	1	1C-15
Oil Tank	1.020	1	1I-7
Operator's Seat	1.250	2	2D-23
OperatorsSeat(Bostrom)(Std.)	5.0151	1	2I-3
Pilot Gear Pump	1.030	8	1I-23
Pilot Piping(1)	1.060	1	1K-11
Pilot Piping(2)	1.061	1	1K-15
Pilot Piping(3)	1.062	1	1K-19
Pilot Piping (4)	1.063	1	1L-5
Pilot Piping (5)	1.064	1	1L-7
Pilot Valve	1.070	3	1K-9
Pilot Valve-components	1.070	2	1K-7
Pipin-Boom	2.030	1	2F-13
Piping-Engine Oil	0.350	1	1H-3
Piping-Injection	0.149	1	1F-9
Piping-Lube Fittings	2.040	1	2G-23
Piping-Main	1.060	1	1K-3
Piping-Pilot(1)	1.060	1	1K-11
Piping-Pilot(3)	1.062	1	1K-19
Piping-Pilot(4)	1.063	1	1L-5
Piping-Pilot(5)	1.064	1	1L-7
Piping-Pump Contr. Valve	1.050	1	1J-13
Piping-Travel (Lower)	3.070	1	2H-5
Piping-Turbocharger	0.241	1	1F-21
Pump-Engine Oil	0.300	1	1F-23
Pump-Fuel	0.201	1	1F-13
Pump-Hydraulic	1.030	1	1I-9
Pump-Injection	0.140	1	1E-21
Pump-Pilot	1.030	8	1I-23
Pump-Water	0.320	1	1G-13
Pump/Control Valve Piping	1.050	1	1J-13
Radiator	0.003	1	1C-17
Radiator-Components	0.003	2	1C-19
	0.003	3	1C-21
Rocker Arm	0.060	2	1D-23
Rotary Distr.-Components	3.060	2	2H-3
Rotary Distributor	3.060	1	2G-23
Seat Belt (Std.)	5.0536	1	2I-5
Sensors	1.220	2	2D-15
Solenoid Valve	1.060	2	1K-13
Starter	0.360	2	1H-7
Starter-Mounting	0.360	1	1H-5
Stop Valve	1.062	2	1K-23
Swing Motor-Components	1.040	3	1J-7
Swing Red.Unit-Components	1.040	2	1J-5
Swing Reduction Unit	1.040	1	1J-3
Thermostat & Housing	0.326	1	1G-19
Timing Control	0.100	1	1E-17
Tool Kit	5.0083	1	2I-9
track Chain	3.050	1	2G-21
Track Roller	3.040	1	2G-19
Travel Motor-componen.	3.010	3	2G-9
Travel Piping (Lower)	3.070	1	2H-5
Travel Red.Unit-Componen.	3.010	2	2G-7
Travel Reduction Units	3.010	1	2G-5
Turbocharger	0.240	1	1F-17
	0.240	2	1F-19
Turbocharger Piping	0.241	1	1F-21
Upper Frame	1.000	1	1E-17
Upper Roller	3.030	1	2G-17
Valve-Anti-Shock(Hydr.)	1.062	3	1L-3
Valve-Check (Pilot)	1.061	2	1K-17
Valve-Exhaust	0.060	2	1D-23
Valve-Intake	0.060	2	1D-23
Valve-Pilot (Hydr.)	1.070	1	1K-5
Valve-Pilot(Travel)	1.070	1	1K-5
Valve-Solenoid	1.060	2	1K-13
Valve-Stop(Travel)	1.062	1	1K-21
Washer (windshield)	1.220	3	2D-17
Water Pump	0.320	1	1G-13
Water Pump Drive	0.340	1	1G-21
Water Pump-Components	0.320	2	1G-15
Wiper	1.220	1	2D-11

FH120

ENGINE OIL FILTER FILTRO OLIO MOTORE	FILTRE A HUILE DU MOTEUR MOTORÖLFILTER FILTRO DE ACEITE MOTOR	0.302 TAV.1

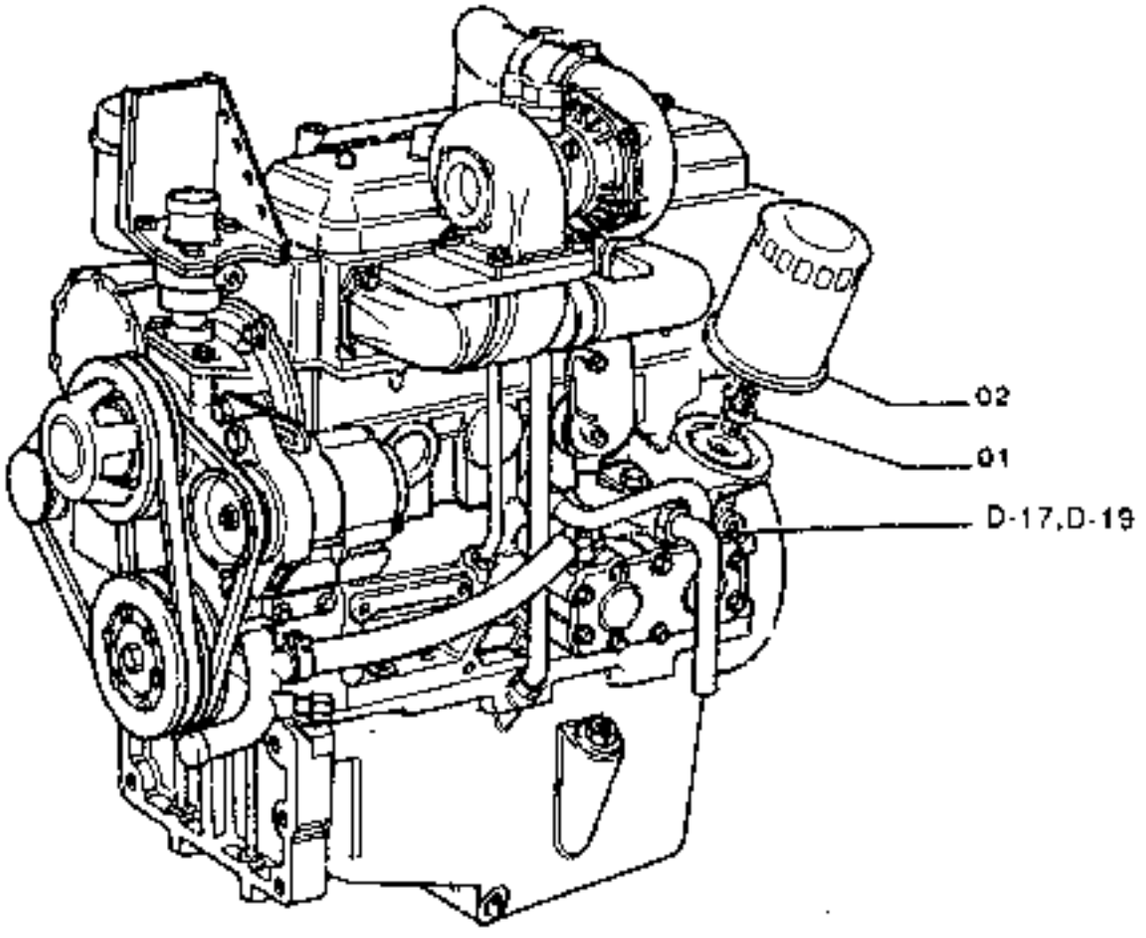

FH120

ENGINE OIL FILTER
FILTRO OLIO MOTORE

FILTRE A HUILE DU MOTEUR
MOTORÖLFILTER
FILTRO DE ACEITE MOTOR

0.302 TAV.1

ITEM	PART NUMBER	QTY	TR. CO.	DESCRIPTION	DESCRIZIONE
01	4782453	1	20R	FITTING	RACCORDO
02	4796458	1	20E	FILTER ELEMENT -IN ALTER.	ELEMENTO FILTRANTE -IN ALTER.
	4789425	1	20E	FILTER ELEMENT -IN ALTER.	ELEMENTO FILTRANTE -IN ALTER.

FN120

ENGINE OIL PIPING TUBAZIONI OLIO MOTORE	TUYAUTERIES HUILE MOTEUR LEITUNGEN-OEL TUBERÍAS ACEITE MOTOR	0.205 TAV.1

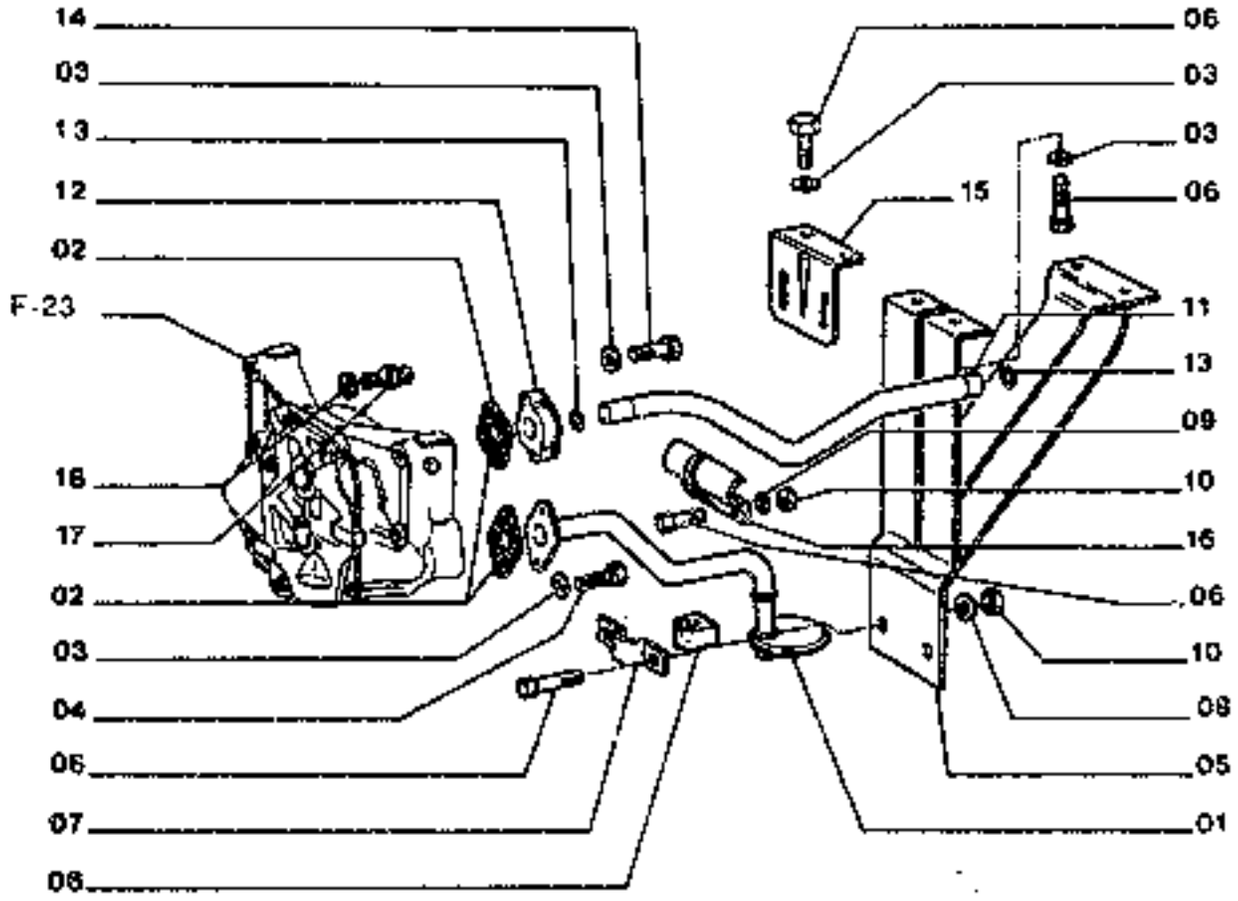

FH120

ENGINE OIL PIPING TUBAZIONI OLIO MOTORE	TUYAUTERIES HUILE MOTEUR LEITUNGEN-OEL TUBERIAS ACEITE MOTOR	0.305 TAV.1

ITEM	PART NUMBER	QTY	TR. CO.	DESCRIPTION	DESCRIZIONE
01	4015504	1	193T	TUBE	TUBO RIGIDO
02	46177492	2	120G	GASKET	GUARNIZIONE PIANA
03	11183871	3	131R	WASHER	ROSETTA
04	16043424	2	40V	SCREW	VITE
05	4739213	1	225S	BRACKET	STAFFA
06	16043224	12	40V	SCREW 8X1,25X16	VITE 8X1,25X16
07	4719705	1	231S	CLIP	STAFFETTA
08	4719706	1	30M	SLEEVE	MANICOTTO
09	10519601	4	131R	WASHER	ROSETTA
10	14043217	4	100	NUT	DADO
11	4015565	1	193T	TUBE	TUBO RIGIDO
12	4773265	1	70F	FLANGE	FLANGIA
13	14457661	4	156G	O-RING	GUARNIZIONE O-R
14	16043924	2	40V	SCREW 8X1,25X35	VITE 8X1,25X35
15	4775923	1	225S	BRACKET	STAFFA
16	4777680	1	231S	CLIP	STAFFETTA
17	4765501	1	20H	FITTING	RACCORDO
18	561293	1	156G	O-RING	GUARNIZIONE O-R

FM129

DIPSTICK-ENGINE OIL ASTA LIVELLO OLIO MOTORE	JAUGE D'HUILE MOTEUR ÖLMESSTAB-MTOR VARILLA DE NIVEL	0.305 TAV.2

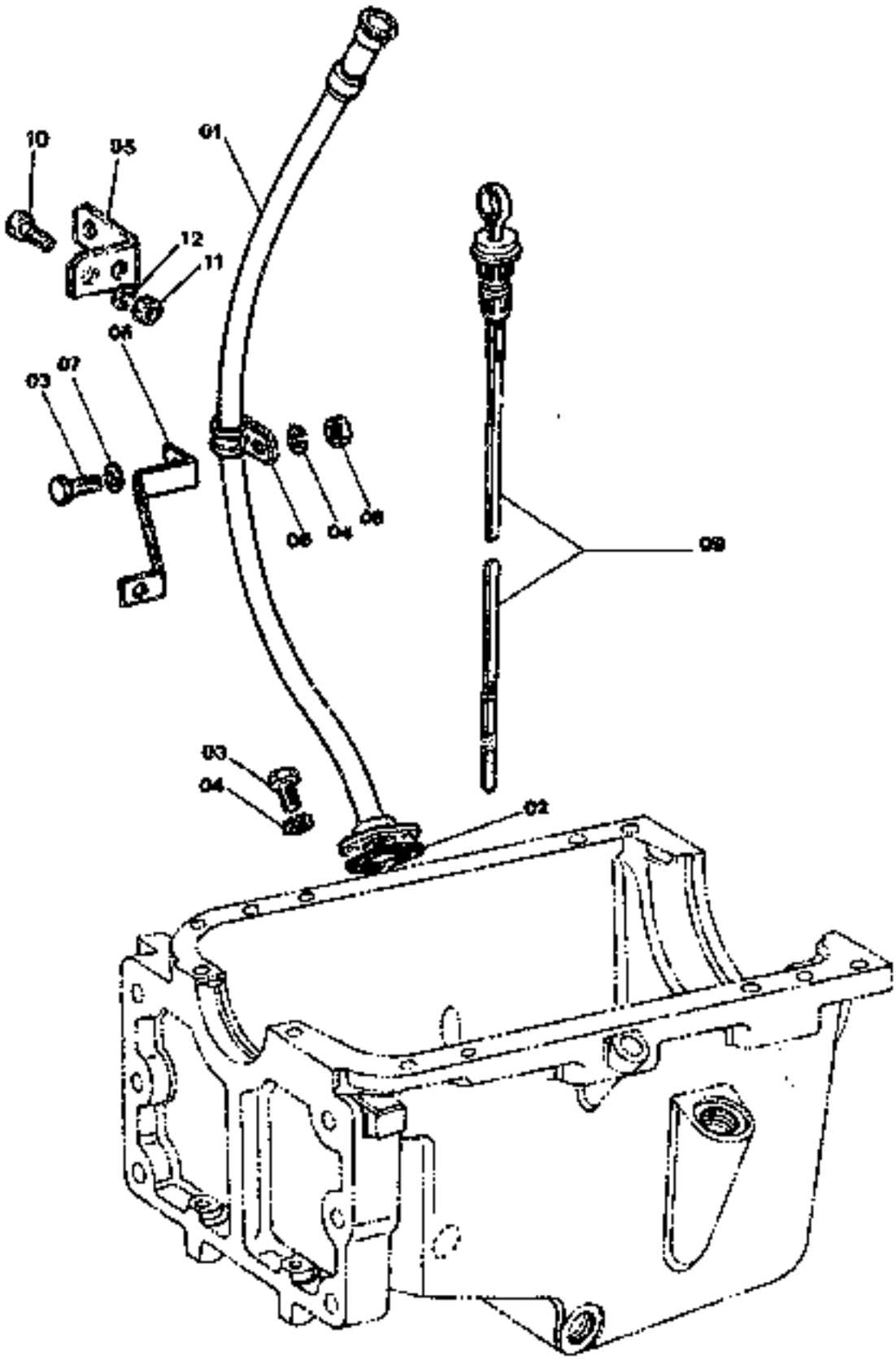

DIPSTICK-ENGINE OIL
ASTA LIVELLO OLIO MOTORE

JAUGE D'HUILE MOTEUR
ÖELMESSTAB-MTOR
VARILLA DE NIVEL

0.305 TAV.2

ITEM	PART NUMBER	QTY	TR. CO.	DESCRIPTION	DESCRIZIONE
01	4842703	1	183T	TUBE	TUBO RIGIDO
02	4667612	1	120G	GASKET	GUARNIZIONE PIANA
03	16043424	3	40V	SCREW 8X1,25X20	VITE 8X1,25X20
04	11193874	3	170R	LOCKWASHER	ROSETTA ELASTICA
05	4842704	1	225S	BRACKET	STAFFA
				C2596 UP TO ENGINE 320145	C2596 FINO AL MOTORE 320145
	98400768	1	225S	BRACKET	STAFFA
				D2596 FROM ENGINE 320146	D2596 DAL MOTORE 320146
06	10450390	1	231S	CLIP	STAFFETTA
07	10519601	1	131R	WASHER	ROSETTA
09	16100611	1	100	NUT	DADO
08	4842705	1	91A	DIPSTICK	ASTA LIVELLO
10	16043424	1	40V	SCREW 8X1,25X20	VITE 8X1,25X20
				D2596 FROM ENGINE 320146	D2596 DAL MOTORE 320146
11	12104711	1	100	NUT	DADO
				D2596 FROM ENGINE 320146	D2596 DAL MOTORE 320146
12	11190579	1	170R	LOCKWASHER	ROSETTA ELASTICA
				D2596 FROM ENGINE 320146	D2596 DAL MOTORE 320146

ENGINE HEAT EXCHANGER
SCAMBIATORE CALORE MOTORE

ECHANGEUR THERMIQUE
WAERMETAUSCHER
CAMBIADOR DE CALOR

0.310 TAV.1

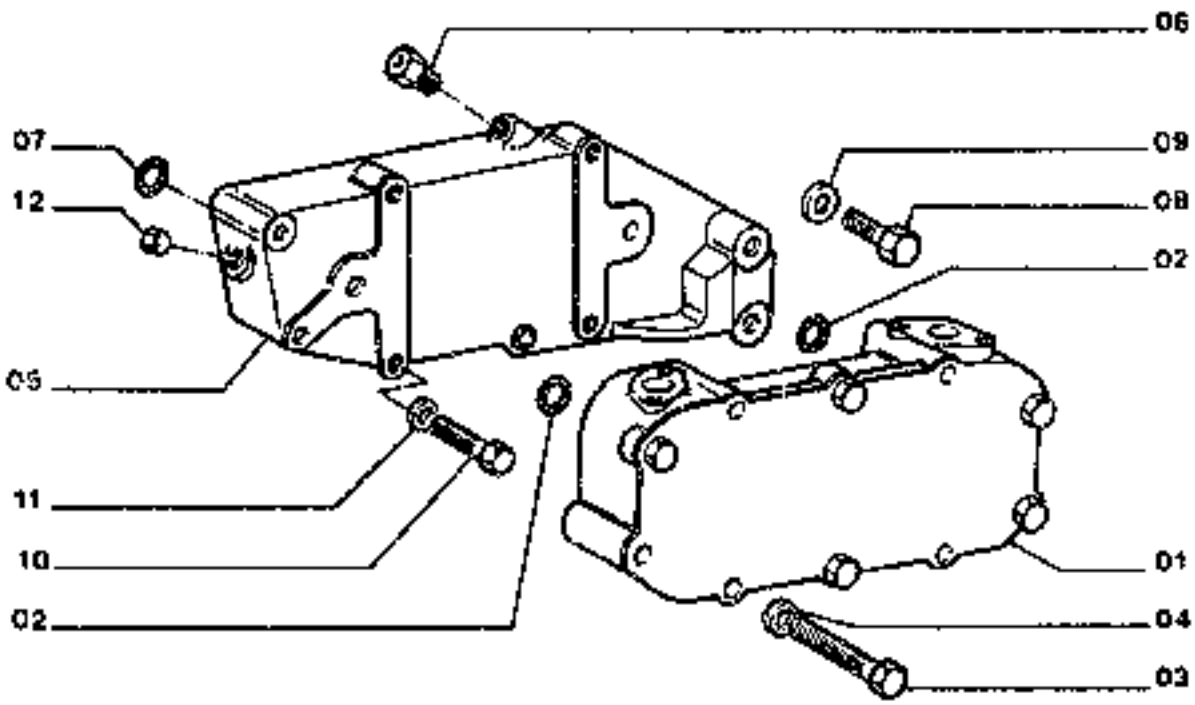

PH125

ENGINE HEAT EXCHANGER — ECHANGEUR THERMIQUE — 0.310 TAV.1
SCAMBIATORE CALORE MOTORE — WAERMETAUSCHER
CAMBIADOR DE CALOR

ITEM	PART NUMBER	QTY	TRI. CO.	DESCRIPTION	DESCRIZIONE
01	4761919	1	25S	HEAT EXCHANGER -ASS.LY SEE G-11	SCAMBIATORE DI CALORE -COMPL. VED. TAV.2
02	14457581	2	158G	O-RING	GUARNIZIONE O-R
03	15044921	5	40V	SCREW 8X1,25X85	VITE 8X1,25X85
04	10519501	5	131R	WASHER	ROSETTA
05	4891571	1	300S	SUPPORT	SUPPORTO
06	4920056	1	20R	FITTING	RACCORDO
07	14457481	2	158G	O-RING	GUARNIZIONE O-R
08	15541021	1	40V	SCREW 12X1,25X60	VITE 12X1,25X60
	15541521	2	40V	SCREW 12X1,25X90	VITE 12X1,25X90
09	4585990	3	131R	WASHER	ROSETTA
10	15088721	1	40V	SCREW 10X1,25X55	VITE 10X1,25X55
11	11198371	1	131R	WASHER	ROSETTA
12	14320501	1	50T	PLUG	TAPPO

ENGINE HEAT EXCHANGER SCAMBIATORE CALORE MOTORE 4761918	ECHANGEUR THERMIQUE WAERMETAUSCHER CAMBIADOR DE CALOR	2.310	TAV.2

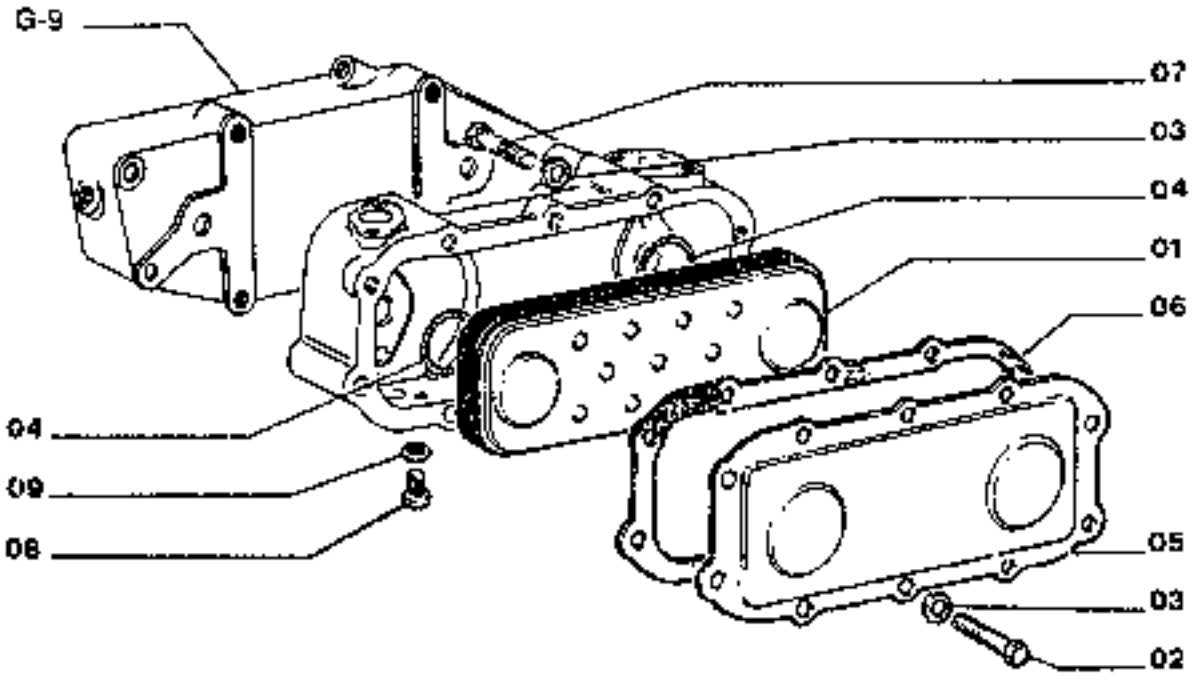

FH120

ENGINE HEAT EXCHANGER — ECHANGEUR THERMIQUE — 0,310 TAV.2
SCAMBIATORE CALORE MOTORE — WAERMETAUSCHER
4761918 — CAMBIADOR DE CALOR

ITEM	PART NUMBER	QTY	TR. CO.	DESCRIPTION	DESCRIZIONE
01	4761704	1	25S	HEAT EXCHANGER	SCAMBIATORE DI CALORE
02	16043221	4	40V	SCREW 8X1,25X16	VITE 8X1,25X16
03	10510601	9	131R	WASHER	ROSETTA
04	14458281	2	158G	O-RING	GUARNIZIONE O-R
05	4759606	1	285C	COVER	COPERCHIO
06	4759603	1	120G	GASKET	GUARNIZIONE PIANA
07	16043621	5	40V	SCREW 8X1,25X25	VITE 8X1,25X2□
08	4724588		50T	PLUG	TAPPO
09	10260060	1	122G	SEAL	GUARNIZIONE

WATER PUMP POMPA ACQUA	POMPE A EAU WASSERPUMPE BOMBA DE AGUA	0.320 TAV.1

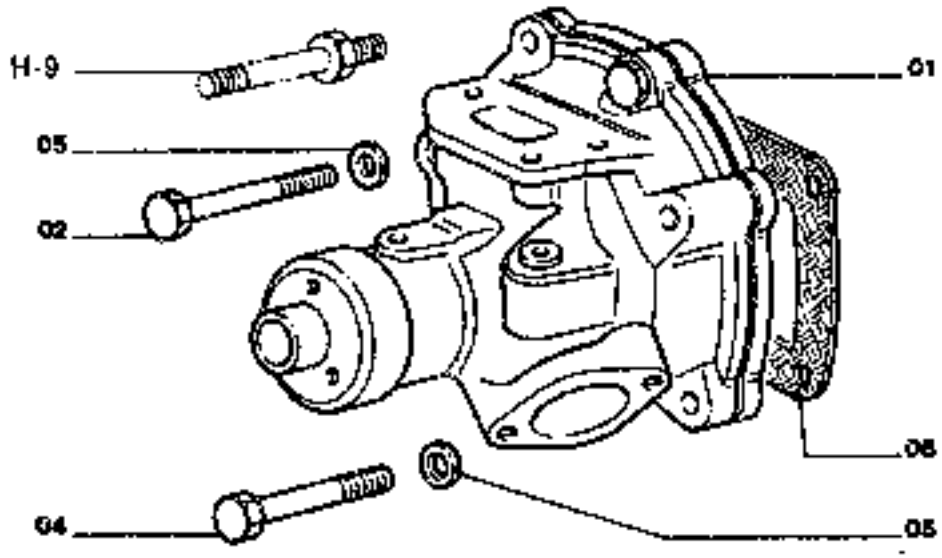

FH120

WATER PUMP
POMPA ACQUA

POMPE A'EAU
WASSERPUMPE
BOMBA DE AGUA

0.320 TAV.1

ITEM	PART NUMBER	QTY	TR. CO.	DESCRIPTION	DESCRIZIONE
01	4613370	1	P152	WATER PUMP -ASS.Y SEE G-15	POMPA ACQUA -COMPL.VED.TAV. 2
02	15860721	2	40V	SCREW 10X1,25X55	VITE 10X1,25X55
04	15970921	1	40V	SCREW 10X1,25X35	VITE 10X1,25X36
05	11190571	4	170R	LOCKWASHER	ROSETTA ELASTICA
06	4598561	1	122G	SEAL	GUARNIZIONE

WATER PUMP-COMPONENTS POMPA ACQUA-COMPONENTI 4813379	POMPE A EAU-COMPOSANTS WASSERPUMPE-EINZELTEILE BOMBA DE AGUA-COMPONENTES	0.320 TAV.2

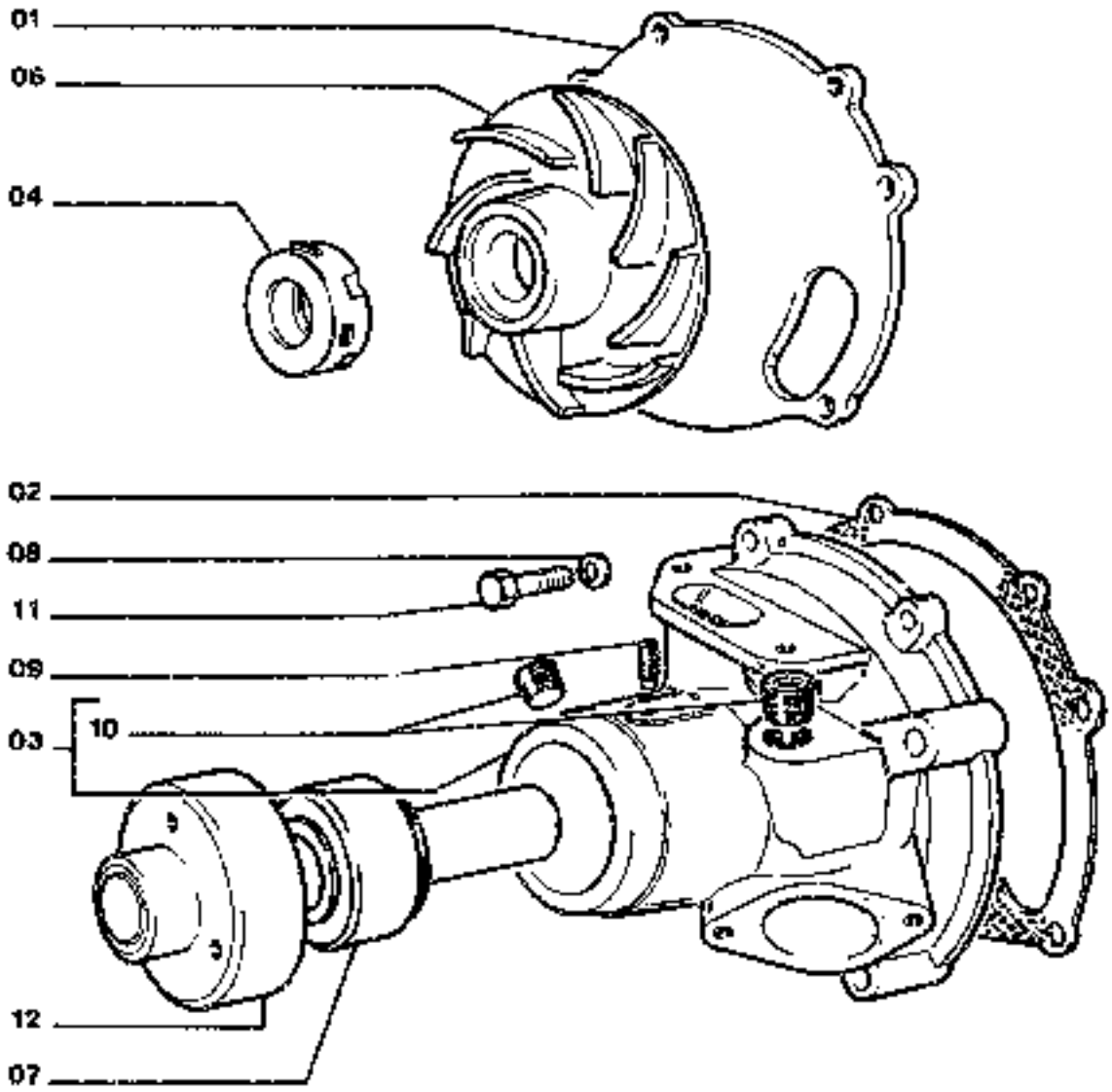

WATER PUMP-COMPONENTS — POMPE A EAU-COMPOSANTS — 0.320 TAV.2
POMPA ACQUA-COMPONENTI — WASSERPUMPE-EINZELTEILE
4813370 — BOMBA DE AGUA-COMPONENTES

ITEM	PART NUMBER	QTY	TR. CO.	DESCRIPTION	DESCRIZIONE
01	4589557	1	265C	COVER	COPERCHIO
02	4589560	1	120G	GASKET	GUARNIZIONE PIANA
03	4784008	1	300C	BODY	CORPO
04	7302776	1	122G	SEAL	GUARNIZIONE
05	4813442	1	60G	IMPELLER	GIRANTE
07	4608080	1	16A	SHAFT	ALBERO
08	11193871	2	131R	WASHER	ROSETTA
09	13739811	1	40V	SCREW 8X1,25X16	VITE 8X1,25X16
10	14325001	2	50T	PLUG	TAPPO
11	16043421	2	40V	SCREW 8X1,25X20	VITE 8X1,25X20
12	4654154	1	135M	HUB	MOZZO

ENGINE COOLING PIPING TUBAZIONI RAFFREDD.MOTORE	TUYAUTERIES REFROIDISS. KUEHLROHRE TUBERIAS DE REFRIGERACION	0.323 TAV.1

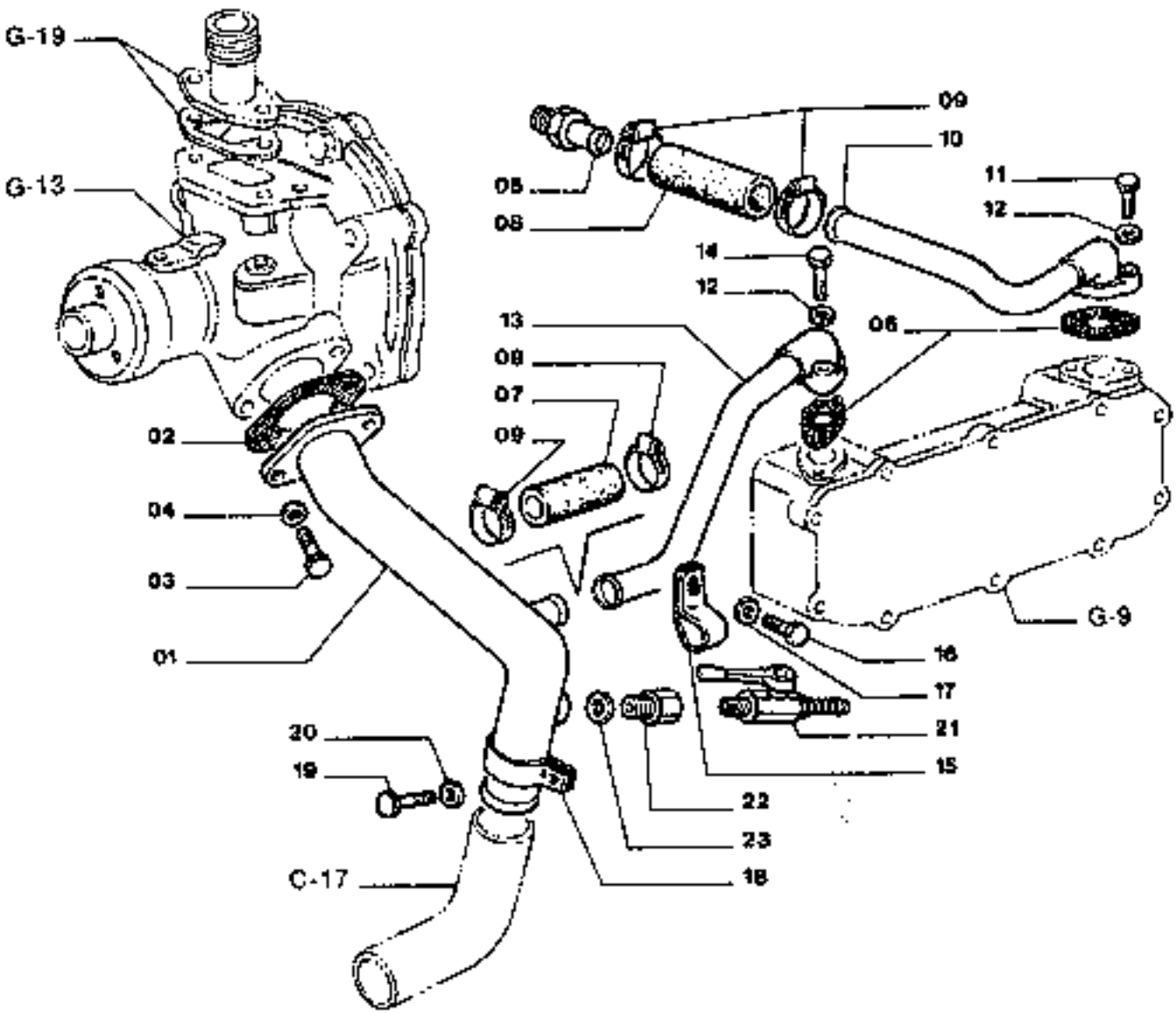

FH120

ENGINE COOLING PIPING — TUYAUTERIES REFROIDISS. — 0.323 TAV.1
TUBAZIONI RAFFREDD.MOTORE — KUEHLROHRE
TUBERIAS DE REFRIGERACION

ITEM	PART NUMBER	QTY	TR. CO.	DESCRIPTION	DESCRIZIONE
01	4847926	1	193T	TUBE	TUBO RIGIDO
02	4599582	1	120G	GASKET	GUARNIZIONE PIANA
				C2575 UP TO ENGINE 363591	C2575 FINO AL MOTORE 363591
	4654716	1	120G	GASKET	GUARNIZIONE PIANA
				D2576 FROM ENGINE 363592	D2576 DAL MOTORE 363592
03	4830623	2	40V	SCREW	VITE
				C2575 UP TO ENGINE 363591	C2575 FINO AL MOTORE 363591
	98401723	2	40V	SCREW	VITE
				D2576 FROM ENGINE 363592	D2576 DAL MOTORE 363592
04	11193871	2	170R	LOCKWASHER	ROSETTA ELASTICA
05	4760312	1	20R	FITTING	RACCORDO
06	4724814	2	120G	GASKET	GUARNIZIONE PIANA
07	12077986	1	30M	SLEEVE	MANICOTTO
08	1368754	1	30M	SLEEVE	MANICOTTO
09	12182180	4	160C	COLLAR	COLLARE
10	4760316	1	193T	TUBE	TUBO RIGIDO
11	16043821	2	40V	SCREW 8X1,25X25	VITE 8X1,25X25
12	11193871	4	170R	LOCKWASHER	ROSETTA ELASTICA
13	4845740	1	193T	TUBE	TUBO RIGIDO
14	16043821	2	40V	SCREW 8X1,25X35	VITE 8X1,25X35
15	4753572	1	225S	BRACKET	STAFFA
16	15979521	1	40V	SCREW 10X1,25X20	VITE 10X1,25X20
17	11193871	1	170R	LOCKWASHER	ROSETTA ELASTICA
18	8110952	1	160C	COLLAR	COLLARE
19	16043534	1	40V	SCREW 8X1,25X22	VITE 8X1,25X22
20	10571774	1	170R	LOCKWASHER	ROSETTA ELASTICA
21	79044795	1	150R	COCK	RUBINETTO
22	79075331	1	20R	FITTING	RACCORDO
23	10278680	1	122G	SEAL	GUARNIZIONE

FH120

THERMOSTAT & HOUSING
TERMOSTATO E TUBAZIONI

THERMOSTAT ET TUYAUT.
THERMOSTAT-MOTOR
TERMOSTATO Y TUBERIAS

0.326 TAV.1

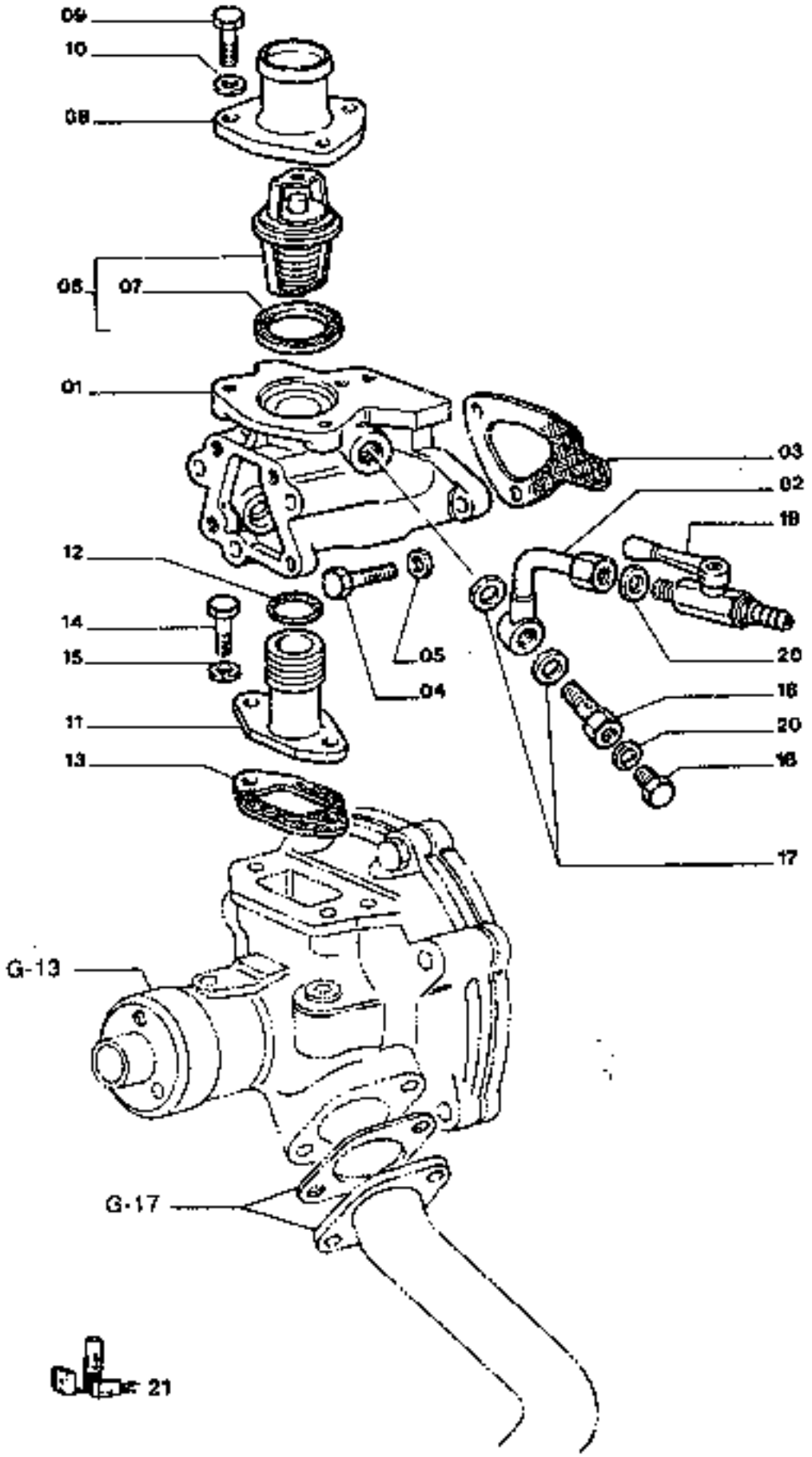

FH120

THERMOSTAT & HOUSING
TERMOSTATO E TUBAZIONI

THERMOSTAT ET TUYAUT.
THERMOSTAT-MOTOR
TERMOSTATO Y TUBERIAS

0,32ß TAV.1

ITEM	PART NUMBER	QTY	TR. CO.	DESCRIPTION	DESCRIZIONE
01	4842710	1	300S	SUPPORT -ASS.LY	SUPPORTO -COMPL.
02	79080899	1	193T	TUBE	TUBO RIGIDO
03	4770265	1	120G	GASKET -K. 79062510	GUARNIZIONE PIANA -K. 79062510
04	11307024	1	40V	SCREW 10X1,25X40	VITE 10X1,25X40
	15972424	3	40V	SCREW 10X1,25X130	VITE 10X1,25X130
05	11198374	4	170R	LOCKWASHER	ROSETTA ELASTICA
06	4823210	1	98T	THERMOSTAT -ASS.LY	TERMOSTATO -COMPL.
07	4823212	1	120G	GASKET -K. 79097246	GUARNIZIONE PIANA -K. 79097246
08	4661543	1	265C	COVER	COPERCHIO
09	16043624	3	40V	SCREW 8X1,25X25	VITE 8X1,25X25
10	11193874	3	170R	LOCKWASHER	ROSETTA ELASTICA
11	4774405	1	193T	TUBE	TUBO RIGIDO
12	14483281	1	158G	O-RING -K. 79094074 -K.79062510	GUARNIZIONE O-R -K. 79094074 -K.79062510
	14483281	1	158G	O-RING -K. 79094074 -K.79062510	GUARNIZIONE O-R -K. 79094074 -K.79062510
13	4770435	1	120G	GASKET -K. 79097246	GUARNIZIONE PIANA -K. 79097246
14	4536482	2	40V	SCREW	VITE
15	10519621	2	131R	WASHER	ROSETTA
16	79080895	1	20R	FITTING	RACCORDO
17	10283380	2	122G	SEAL	GUARNIZIONE
18	79080922	1	50T	PLUG	TAPPO
19	79044709	1	150R	COCK	RUBINETTO
20	10278660	2	122G	SEAL	GUARNIZIONE
21	79097246	1	K22	KIT-MANIFOLD GASKETS FOR COMPONENTS, SEE A-23	KIT-GUARNIZIONI COLLETTORI VED. COMPONENTI PAG.

WATER PUMP DRIVE COMANDO POMPA ACQUA	COMMANDE DE POMPE D'EAU WASSERPUMPENANTRIEB POLEA DE LA BOMBA DE AGUA	0.340 TAV.1

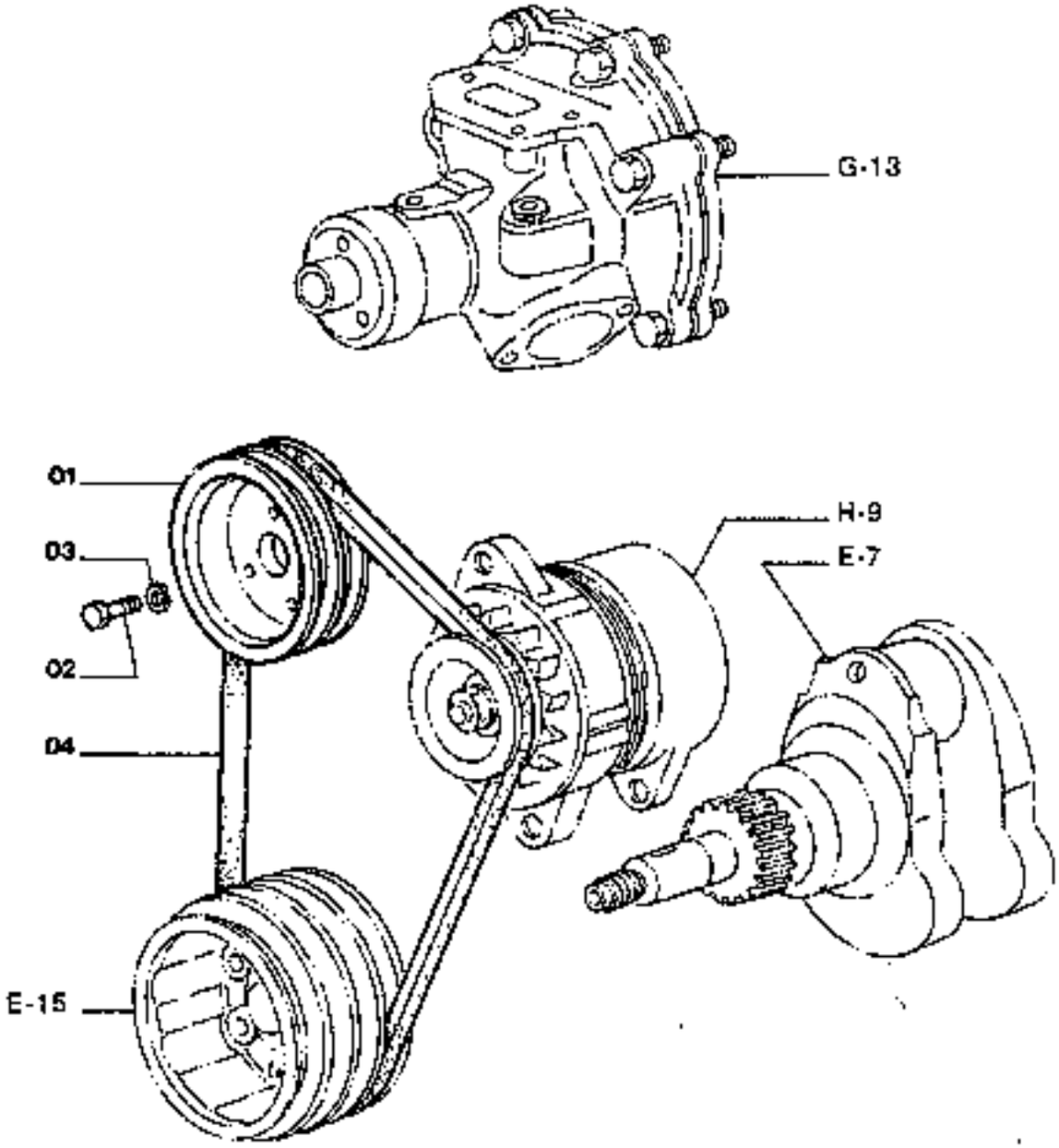

FH120

WATER PUMP DRIVE COMANDO POMPA ACQUA	COMMANDE DE POMPE D'EAU WASSERPUMPENANTRIEB POLEA DE LA BOMBA DE AGUA	0,340	TAV.1

ITEM	PART NUMBER	QTY	TR. CD.	DESCRIPTION	DESCRIZIONE
01	4845546	1	230P	PULLEY	PULEGGIA
02	16043424	3	40V	SCREW 8X1,25X20	VITE 8X1,25X20
03	11193671	3	170R	LOCKWASHER	ROSETTA ELASTICA
04	4819721	1	173C	BELT	CINGHIA

FH120 .

FAN DRIVE COMANDO VENTILATORE	COMMANDE DE VENTILATEUR LUEFTERANTRIEB POLEA DEL VENTILADOR	0.345 TAV.1

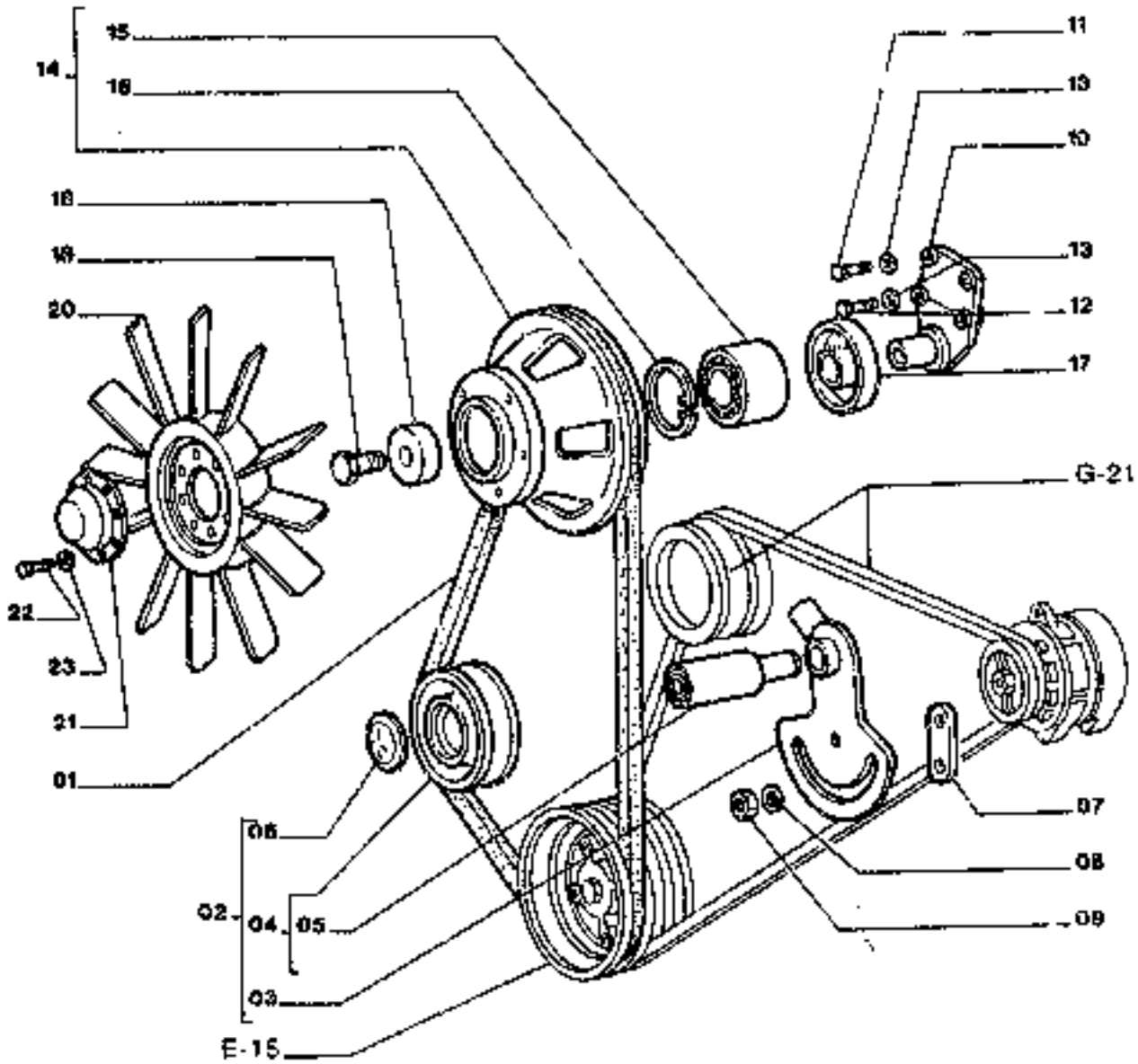

FR120

FAN DRIVE COMANDO VENTILATORE	COMMANDE DE VENTILATEUR LUEFTERANTRIEB POLEA DEL VENTILADOR	0.045 TAV.1

ITEM	PART NUMBER	QTY	TR. CO.	DESCRIPTION	DESCRIZIONE
01	4830930	1	173C	BELT	CINGHIA
02	4842338	1	87T	BELT STRETCHER -ASS.LY	TENDICINGHIA -COMPL.
03	4758243	1	87T	BELT STRETCHER	TENDICINGHIA
04	4842339	1	230P	PULLEY -ASS.LY	PULEGGIA -COMPL.
05	4507719	1	341C	BEARING	CUSCINETTO
06	10166401	1	50T	PLUG	TAPPO
07	4843407	1	75D	SPACER	DISTANZIALE
08	11188371	2	170A	LOCKWASHER	ROSETTA ELASTICA
09	12164711	2	10D	NUT	DADO
10	4840138	1	300S	SUPPORT	SUPPORTO
11	11307024	2	40V	SCREW 10X1,25X40	VITE 10X1,25X40
12	11288024	2	40V	SCREW 10X1,25X60	VITE 10X1,25X60
13	11190671	4	170R	LOCKWASHER	ROSETTA ELASTICA
14	4842033	1	230P	PULLEY -ASS.LY	PULEGGIA -COMPL.
15	4316995	1	341C	BEARING	CUSCINETTO
16	11061576	1	187A	SNAP RING	ANELLO ELASTICO
17	4772231	1	45A	RING	ANELLO
18	4747164	1	131R	WASHER	ROSETTA
19	15987934	1	40V	SCREW 20X1,5X40	VITE 20X1,5X40
20	6111007	1	30V	FAN	VENTILATORE
21	79053146	1	265C	COVER	COPERCHIO
22	15970931	6	40V	SCREW 10X1,25X35	VITE 10X1,25X35
23	10571679	6	170R	LOCKWASHER	ROSETTA ELASTICA

H-1

ALPHABETICAL INDEX

DESCRIPTION	SGR.	TAV.	GRID
Accelerator controls	0.004	1	1C-23
Air Cleaner	0.001	1	1C-13
Alternator-Mounting	0.403	1	1H-9
Alternator (55 amp)	0.400	2	1H-11
Alternator (35 amp)	0.400	3	1H-13
Anti-Shock Valve (Hydr.)	1.082	3	1L-3
Application of Ol. Hammer	5.0020	2	2H-13
Batteries	1.220	4	2D-19
Belts	0.340	1	1G-21
	0.345	1	1G-23
Boom Piping	2.030	1	2F-13
Brake Valve Components	3.010	4	2G-11
Bucket	2.020	1	2F-9
Bucket Cylinder	2.030	5	2F-21
Bull Gear	3.000	1	2G-3
Cab	1.250	1	2D-19
Cab Door	1.250	5	2E-7
Cab Heater-Components	1.290	2	2E-15
Cab Window-Left Side	1.250	6	2E-9
Cab-Frame	1.250	7	2E-11
Cab-Platform	1.250	1	2D-21
Camshaft	0.120	1	1E-19
Check Valve	1.081	2	1K-17
Cold Starting Aid	5.0025	1	2H-19
Connecting Rod	0.081	1	1E-10
Cont. Valve-Hydr. (Ass.Y)	1.050	1	1J-13
Control Valve-Hydr.	1.050	2	1J-17
	1.050	3	1J-19
	1.050	4	1J-21
	1.050	5	1J-23
Controls	1.070	1	1K-5
Counterweight	1.000	1	1I-3
Cowlings	1.300	1	2E-19
	1.300	2	2E-21
Crankshaft	0.080	1	1E-7
Crankshaft Pulley	0.084	1	1E-15
Cylinder Block	0.040	1	1D-5
	0.040	2	1D-7
	0.040	3	1D-9
Cylinder Block Covers	0.043	1	1D-13
	0.043	2	1D-15
Cylinder Head	0.060	1	1D-21
	0.060	2	1D-23
Dashboard (Left)	1.210	1	2D-9
Dashboard (Right)	1.200	1	2D-3
	1.200	3	2D-7
Data Monitor	1.200	2	2D-5
Decals	4.500	1	2H-9
Dipper Stick (2,1m)	5.0022	1	2H-15
Dipper Stick (2,5m) (STD.)	2.003	1	2F-5
Dipper Stick(2,5m)Links(Std.)	2.003	2	2F-7
Dipper Stick (3m)	5.0038	1	2H-21
	5.0038	2	2H-23
Dipper Stick cylinder	2.030	4	2F-19
Dipstick-Engine Oil	0.305	2	1G-7
Discharge Valve	1.040	4	1J-3
Discharge Valve Components	3.010	5	2G-13
Drive on Engine (Opt.)	0.350	1	1H-3
Electric System	1.220	2	2D-13
Elements-Engine Oil	0.001	1	1C-13
Elements-fuel	0.200	1	1F-11
Elements-Hydraulic	1.020	1	1E-19
Elements-Pilot	1.080	1	1K-11
Emergency Kits	4.000	1	2H-7
Engine	0.021	1	1D-3
Engine-Controls	0.004	1	1C-23
Engine-Suspensions	0.000	1	1C-11
Engine Breather	0.045	1	1D-17
	0.045	1A	1D-19
Engine Cooling Piping	0.323	1	1G-17
Engine Heat Exchanger	0.310	1	1G-9
	0.310	2	1G-11
Engine Lifting Eyes	0.450	1	1H-15
Engine Oil Filter	0.302	1	1G-3
Engine Oil Piping	0.305	1	1G-5
Engine Oil Pump	0.300	1	1F-23
Engine Oil Sump	0.042	1	1D-11
Engine Piston	0.082	1	1E-11
Engine Suspensions	0.000	1	1C-11
Exhaust Manifold	0.077	1	1E-5
Exhaust Valve	0.060	2	1D-23
Fan	0.345	1	1G-23
Fan Drive	0.345	1	1G-23
"Filter Care" Kit	21		1A-23
Filter-Pilot System	1.080	1	1K-11
Filters-Air	0.001	1	1C-13
Filters-Engine Oil	0.302	1	1G-3
Filters-Fuel	0.200	1	1F-11
Filters-Hydr. System	1.020	1	1I-7
Flywheel-Engine	0.083	1	1E-13
Fuel Filter	0.200	1	1F-11
Fuel Piping	0.203	1	1F-15
Fuel Pump	0.201	1	1F-13
Fuel Tank	1.010	1	1I-5
Fuses	1.200	3	2D-7
Guards	1.300	2	2E-21
Handle	1.300	3	2E-23
Heater	1.290	1	2E-15
Horn	1.220	2	2D-15
Hyd.Pump Drive	1.030	7	1I-21
Hyd.Pump Regulator Valve	1.030	6	1I-19
Hyd.Pump Regulator-Cover	1.030	4	1I-15
	1.030	5	1I-17
Hydr.Pump-Components	1.030	2	1I-11
Hydr.Pump Regulator-Comp.	1.030	3	1I-13

ALPHABETICAL INDEX

DESCRIPTION	SGR.	TAV.	GRID
Hydraulic Pump	1.030	1	1I-9
Idler	3.020	1	1G-15
Injection Nozzle-Lines	0.149	1	1F-9
Injection Pump	0.140	2	1E-23
	0.140	3	1F-3
	0.140	4	1F-5
	0.140	5	1F-7
Injection Pump-Piping	0.140	1	1E-21
Intake Manifold	0.071	1	1E-3
Intake Valve	0.060	2	1D-21
Lift Cylinder (Left)	2.030	3	1F-17
Lift Cylinder (Right)	2.030	2	2F-15
Lights	1.220	2	2D-15
Lower Frame	3.000	1	2G-3
Lubric. Fitting Piping	2.040	1	2F-23
Main Piping	1.060	1	1K-3
Mirror (Rear)	1.300	2	2E-21
Monobloc Boom	2.000	1	2F-3
Motor - Starter	0.360	2	1H-7
Motor - Swing	1.040	1	1J-3
Motor - Travel	3.010	1	12G-5
Motor - Wiper	1.220	1	2D-13
Muffler	0.002	1	1C-15
Oil Tank	1.020	1	1I-7
Operator's Seat	1.250	2	2D-23
OperatorsSeat(Bostrom)(Std.)	5.0151	1	2I-3
Pilot Gear Pump	1.030	8	1I-23
Pilot Piping(1)	1.080	1	1K-11
Pilot Piping(2)	1.081	1	1K-15
Pilot Piping(3)	1.082	1	1K-19
Pilot Piping (4)	1.083	1	1L-5
Pilot Piping (5)	1.084	1	1L-7
Pilot Valve	1.070	3	1K-9
Pilot Valve-components	1.070	2	1K-7
Pipin-Boom	2.030	1	2F-13
Piping-Engine Oil	0.350	1	1H-3
Piping-Injection	0.149	1	1F-9
Piping-Lube Fittings	2.040	1	2G-23
Piping-Main	1.060	1	1K-3
Piping-Pilot(1)	1.080	1	1K-11
Piping-Pilot(3)	1.082	1	1K-19
Piping-Pilot(4)	1.083	1	1L-5
Piping-Pilot(5)	1.084	1	1L-7
Piping-Pump Contr. Valve	1.050	1	1J-13
Piping-Travel (Lower)	3.070	1	2H-5
Piping-Turbocharger	0.241	1	1F-21
Pump-Engine Oil	0.300	1	1F-23
Pump-Fuel	0.201	1	1F-13
Pump-Hydraulic	1.030	1	1I-9
Pump-Injection	0.140	1	1E-21
Pump-Pilot	1.030	8	1I-23
Pump-Water	0.320	1	1G-13
Pump/Control Valve Piping	1.050	1	1J-13
Radiator	0.003	1	1C-17
Radiator-Components	0.003	2	1C-19
	0.003	3	1C-21
Rocker Arm	0.060	2	1D-23
Rotary Distr.-Components	3.060	2	2H-3
Rotary Distributor	3.060	1	2G-23
Seat Belt (Std.)	5.0536	1	2I-5
Sensors	1.220	2	2D-15
Solenoid Valve	1.080	2	1K-13
Starter	0.360	2	1H-7
Starter-Mounting	0.360	1	1H-5
Stop Valve	1.082	2	1K-23
Swing Motor-Components	1.040	3	1J-7
Swing Red.Unit-Components	1.040	2	1J-5
Swing Reduction Unit	1.040	1	1J-3
Thermostat & Housing	0.326	1	1G-19
Timing Control	0.100	1	1E-17
Tool Kit	5.0083	1	2I-9
track Chain	3.050	1	2G-21
Track Roller	3.040	1	2G-19
Travel Motor-componen.	3.010	3	2G-9
Travel Piping (Lower)	3.070	1	2H-5
Travel Red.Unit-Componen.	3.010	2	2G-7
Travel Reduction Units	3.010	1	2G-5
Turbocharger	0.240	1	1F-17
	0.240	2	1F-19
Turbocharger Piping	0.241	1	1F-21
Upper Frame	1.000	1	1E-17
Upper Roller	3.030	1	2G-17
Valve-Anti-Shock(Hydr.)	1.082	3	1L-9
Valve-Check (Pilot)	1.081	2	1K-17
Valve-Exhaust	0.060	2	1D-23
Valve-Intake	0.060	2	1D-23
Valve-Pilot (Hydr.)	1.070	1	1K-5
Valve-Pilot(Travel)	1.070	1	1K-5
Valve-Solenoid	1.080	2	1K-13
Valve-Stop(Travel)	1.082	1	1K-21
Washer (windshield)	1.220	3	2D-17
Water Pump	0.320	1	1G-13
Water Pump Drive	0.340	1	1G-21
Water Pump-Components	0.320	2	1G-15
Wiper	1.220	1	2D-11

FH120

DRIVE ON ENGINE(OPT.) COMANDO AUSIL. SU MOTORE	COMMANDES DIVERSES VERSCHIEDENE ANTRIEBE MANDOS VARIOS	0.350 TAV.1

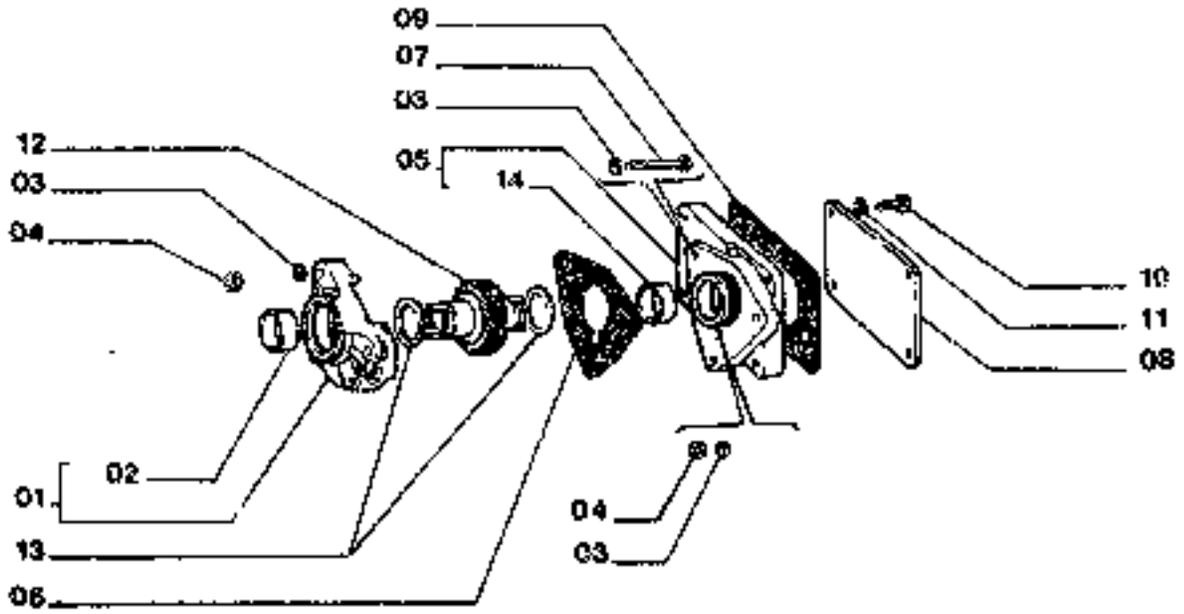

FH120

DRIVE ON ENGINE(OPT.)
COMANDO AUSIL. SU MOTORE

COMMANDES DIVERSES
VERSCHIEDENE ANTRIEBE
MANDOS VARIOS

0.350 TAV.1

ITEM	PART NUMBER	QTY	TR. CO.	DESCRIPTION	DESCRIZIONE
01	4771242	1	300S	SUPPORT -ASS.LY	SUPPORTO -COMPL.
02	4788086	1	95B	BUSHING -IN ALTER.	BOCCOLA -IN ALTER.
	4788087	1	95B	BUSHING -IN ALTER.	BOCCOLA -IN ALTER.
03	11163871	6	131R	WASHER	ROSETTA
04	16100811	4	10D	NUT	DADO
05	4788054	1	300S	SUPPORT -ASS.LY	SUPPORTO -COMPL.
06	4619405	1	120G	GASKET	GUARNIZIONE PIANA
07	16044521	2	40V	SCREW 8X1,25X65	VITE 8X1,25X65
08	[1] 564530	1	265C	COVER	COPERCHIO
09	4607590	1	120G	GASKET	GUARNIZIONE PIANA
10	10902321	4	40V	SCREW 6X1X18	VITE 6X1X18
11	11197771	4	131R	WASHER	ROSETTA
12	4769590	1	16A	SHAFT	ALBERO
13	4667452	2	131R	WASHER	ROSETTA
14	4788086	1	95B	BUSHING -IN ALTER.	BOCCOLA -IN ALTER.
	4788087	1	95B	BUSHING -IN ALTER.	BOCCOLA -IN ALTER.

STARTER-MOUNTING MOTORINO AVVIAM.-FISSAGGI	DEMARREUR-FIXATIONS ANLASSER-BEFESTIGUNG MOTOR DE ARRANQUE-ANCLAJ.	0.360 TAV.1

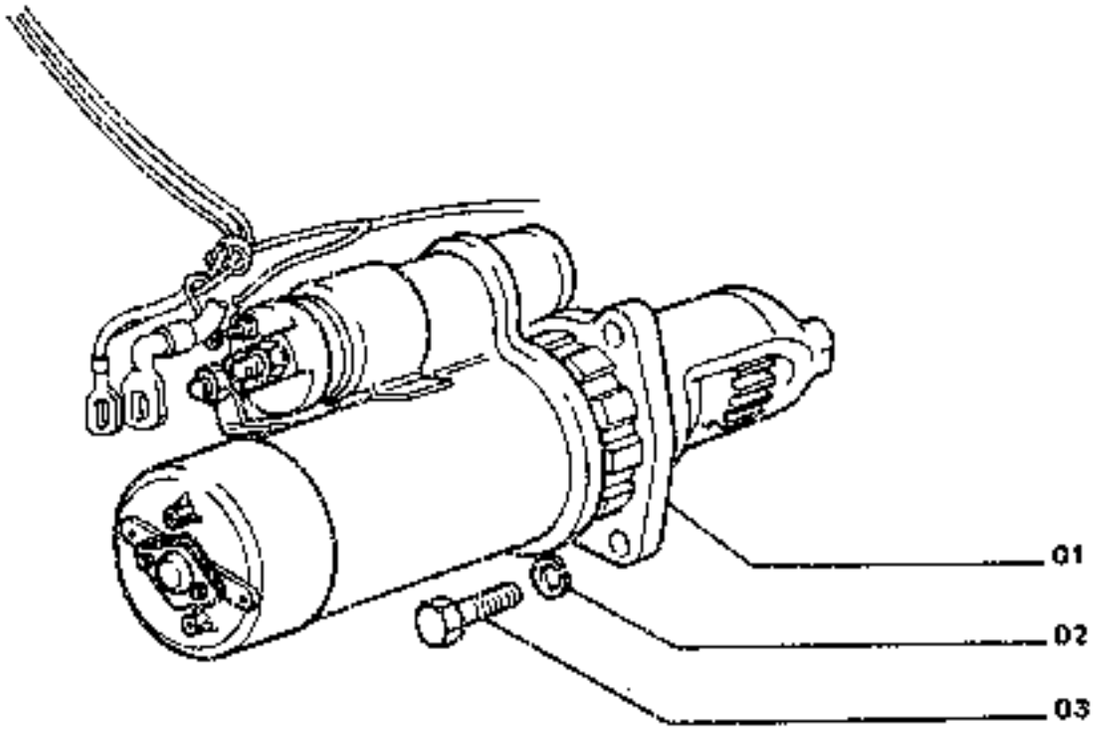

FH120

STARTER-MOUNTING
MOTORINO AVVIAM.-FISSAGGI
DEMARREUR-FIXATIONS
ANLASSER-BEFESTIGUNG
MOTOR DE ARRANQUE-ANCLAJ.

0.360 TAV.1

ITEM	PART NUMBER	QTY	TR. CO.	DESCRIPTION	DESCRIZIONE
01	4807378	1	133M	STARTER -ASS.LY SEE H-7	MOTORINO AVV. -COMPL. VED. TAV.2
02	11190579	3	131R	WASHER	ROSETTA
03	11300824	3	40V	SCREW 10X1.25X30	VITE 10X1.25X30

FH12R

STARTER MOTORINO AVVIAMENTO 4937378	DEMARREUR ANLASSER MOTOR DE ARRANQUE	0.380 TAV.2

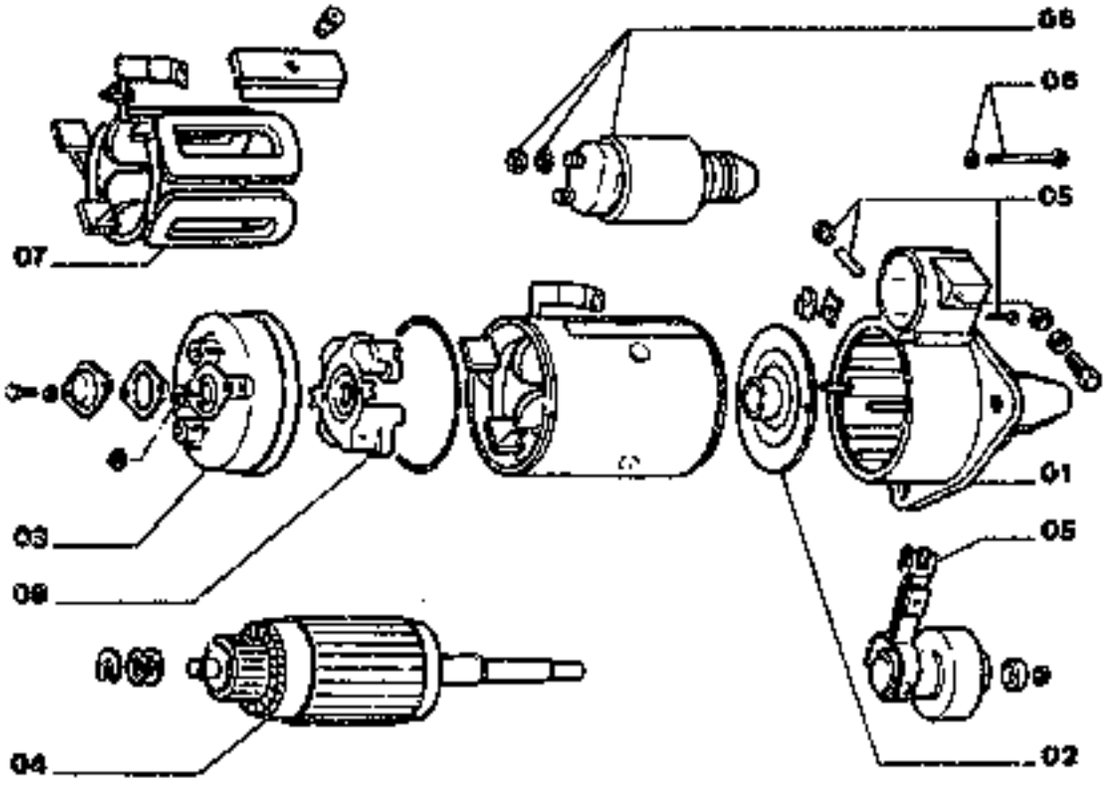

FH120

STARTER MOTORINO AVVIAMENTO 6807378	DEMARREUR ANLASSER MOTOR DE ARRANQUE	0.360 TAV.2

ITEM	PART NUMBER	QTY	TR CO.	DESCRIPTION	DESCRIZIONE
01	79080371	1	300S	SUPPORT	SUPPORTO
02	6827795	1	300S	SUPPORT	SUPPORTO
03	79080372	1	300S	SUPPORT	SUPPORTO
04	79080373	1	40I	ARMATURE	INDOTTO
05	79081045	1	2K	KIT	KIT
06	79081046	1	2K	KIT	KIT
07	79080375	1	63B	COIL	BOBINA
08	79080376	1	197P	BRUSH HOLDER	PORTASPAZZOLE

FH129

ALTERNATOR MOUNTING ALTERNATORE-FISSAGGIO	ATTAQUES ALTERNATEUR DREHSTROMLICHTMASCHINE SOPORTES DE ALTERNADOR	0.400 TAV.1

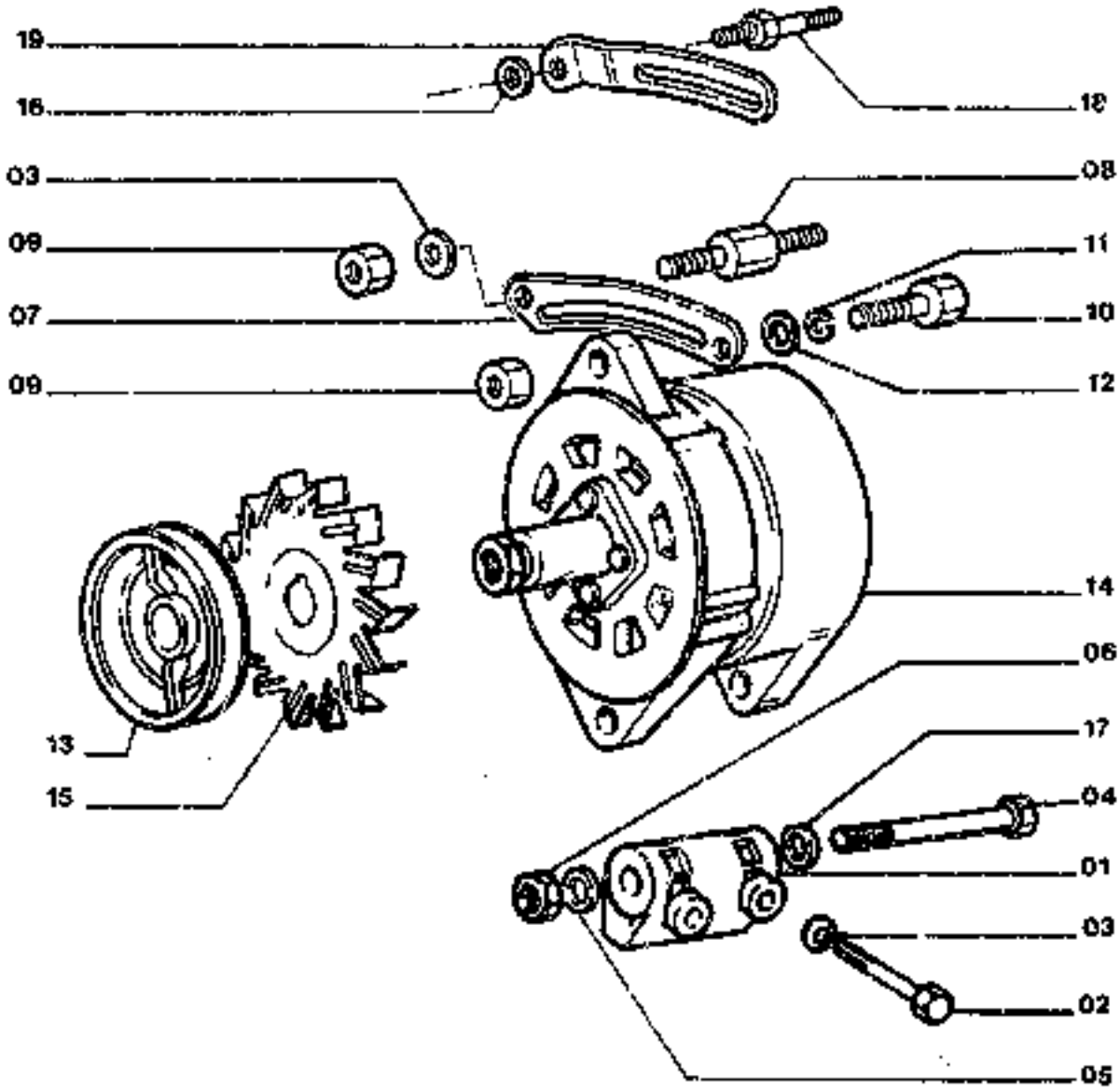

FH120

ALTERNATOR-MOUNTING ALTERNATORE-FISSAGGIO	ATTAQUES ALTERNATEUR DREHSTROMLICHTMASCHINE SOPORTES DE ALTENADOR	0.400 TAV 1

ITEM	PART NUMBER	QTY	TR. CO.	DESCRIPTION	DESCRIZIONE
01	04600128	1	300S	SUPPORT	SUPPORTO
02	16044224	2	40V	SCREW 8X1.25X50	VITE
03	11193679	2	131R	WASHER	ROSETTA
04	15541824	1	40V	SCREW	VITE
05	11198679	1	131R	WASHER	ROSETTA
06	16101511	1	10D	NUT	DADO
07	04787485	1	87T	BELT STRETCHER UP TO ENGINE S/N 298461	TENDICHINGHIA
08	04605854	1	40V	SCREW UP TO ENGINE S/N 298461	VITE
09	12164711	2	10D	BUT	DADO
10	15970924	1	40V	SCREW 10X1.25X35	VITE
11	12646801	1	131R	WASHER	ROSETTA
12	11190579	2	131R	WASHER	ROSETTA
13	06109713	1	230P	PULLEY FOR 04808519	PULEGGIA
	04814180	1	230P	PULLEY FOR 04757193	PULEGGIA
14	04808519	1	25A	ALTERNTOR 35 AMP SEE H-11	ALTERNATORE
	04757193	1	25A	ALTERNATOR 55 AMP SEE H-13	ALTERNATORE
15	04717026	1	36V	BLOWER FOR 04808519	VENTOLA
	79074703	1	36V	BLOWER FOR 04757193	VENTOLA
16	01262401	1	131R	WASHER ENGINE S/N 298462 & UP	ROSETTA
17	14496701	1	131R	WASHER ENGINE S/N 298462 &UP	ROSETTA
18	04605853	1	40V	SCREW ENGINE S/N 298462 &UP	VITE
19	04806133	1	87T	BELT STRETCHER ENGINE S/N 298462 &UP	TENDICINGHIA

ALTERNATOR	ALTERNATEUR	0.400 TAV 2
ALTERNATORE	DREHSTROMLICHTMASCHINE	
04757193	ALTERNADOR	

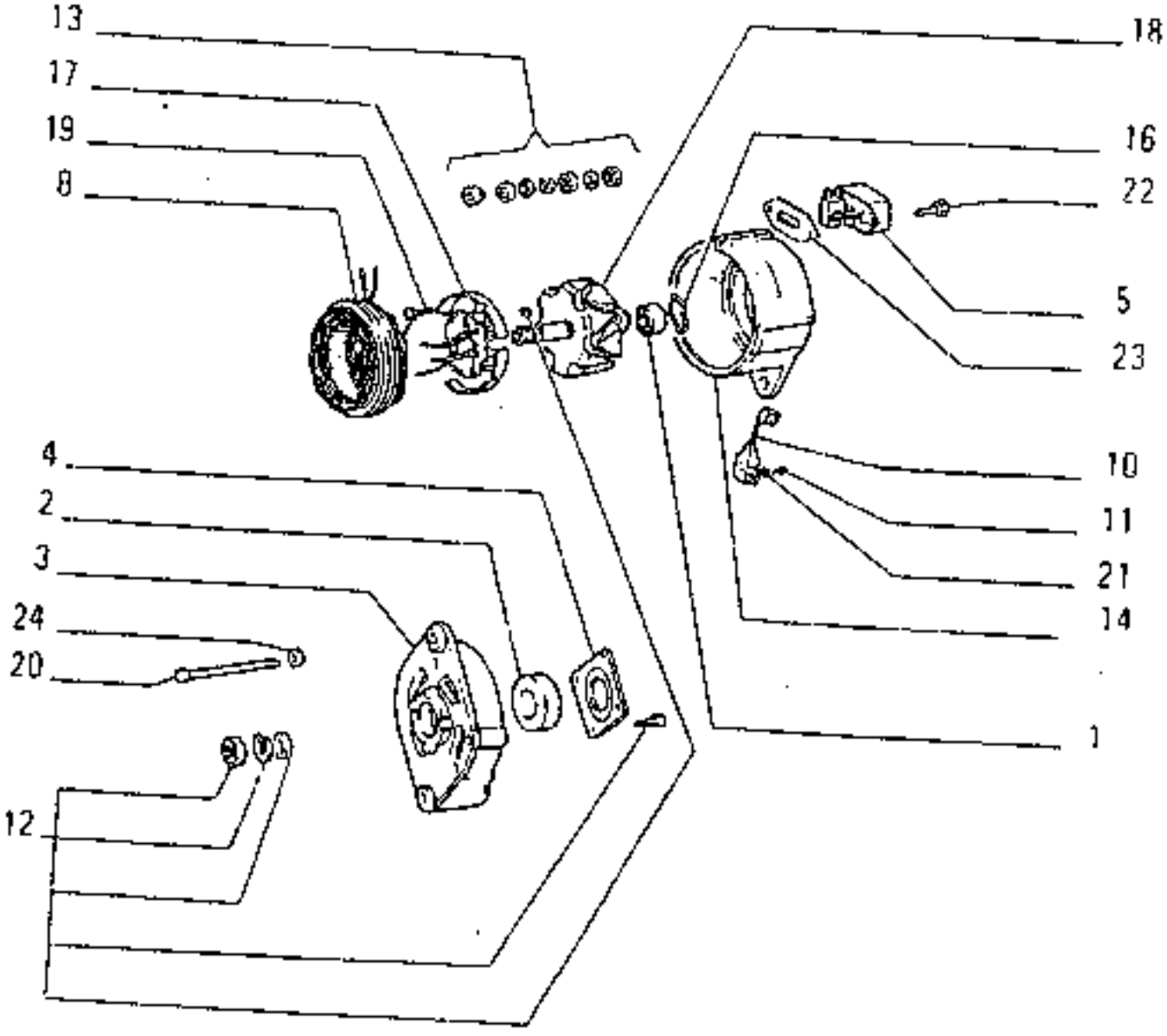

FH120

ALTERNATOR
ALTERNATORE
04757193

ALTERNATEUR
DREHSTROMLICHTMASCHINE
ALTERNADOR

0.400 TAV 2

ITEM	PART NUMBER	QTY	TR. CO.	DESCRIPTION	DESCRIZIONE
00	04757193	1	25A	ALTERNATOR INCLUDES ITEMS 01-24	
01	24941650	1	341C	BEARING 12 X32	
02	24941660	1	341C	BEARING 17 X47	
03	79074704	1	300S	SUPPORT	
04	79022468	1	105P	PLATE	
05	79074715	1	111G	REGULATOTR	
08	79074705	1	271S	STATOR	
10	79074709	1	220C	CONDENSER	
11	79074711	1	40V	SCREW	
12	79022484	1	129S	KIT	
13	79074707	1	129S	KIT	
14	79074708	1	300S	SUPPORT	
16	79025494	1	55A	O-RING	
17	79074712	1	32RF	RECTIFIER	
18	79074713	1	145R	ROTOR	
19	79074706	2	40V	SCREW	
20	79074702	4	40V	SCREW	
21	79074710	3	132R	LOCKWASHER	
22	79075883	2	40V	SCREW	
23	79074714	1	105P	PLATE	
24	14497821	4	131R	WASHER	

ALTERNATOR (MARELLI)	ALTERNATEUR (MARELLI)	0.400 TAV 3
ALTERNATORE (MARELLI)	DREHSTROMLICHTMASCHINE	
4808519	ALTERNADOR (MARELLI)	

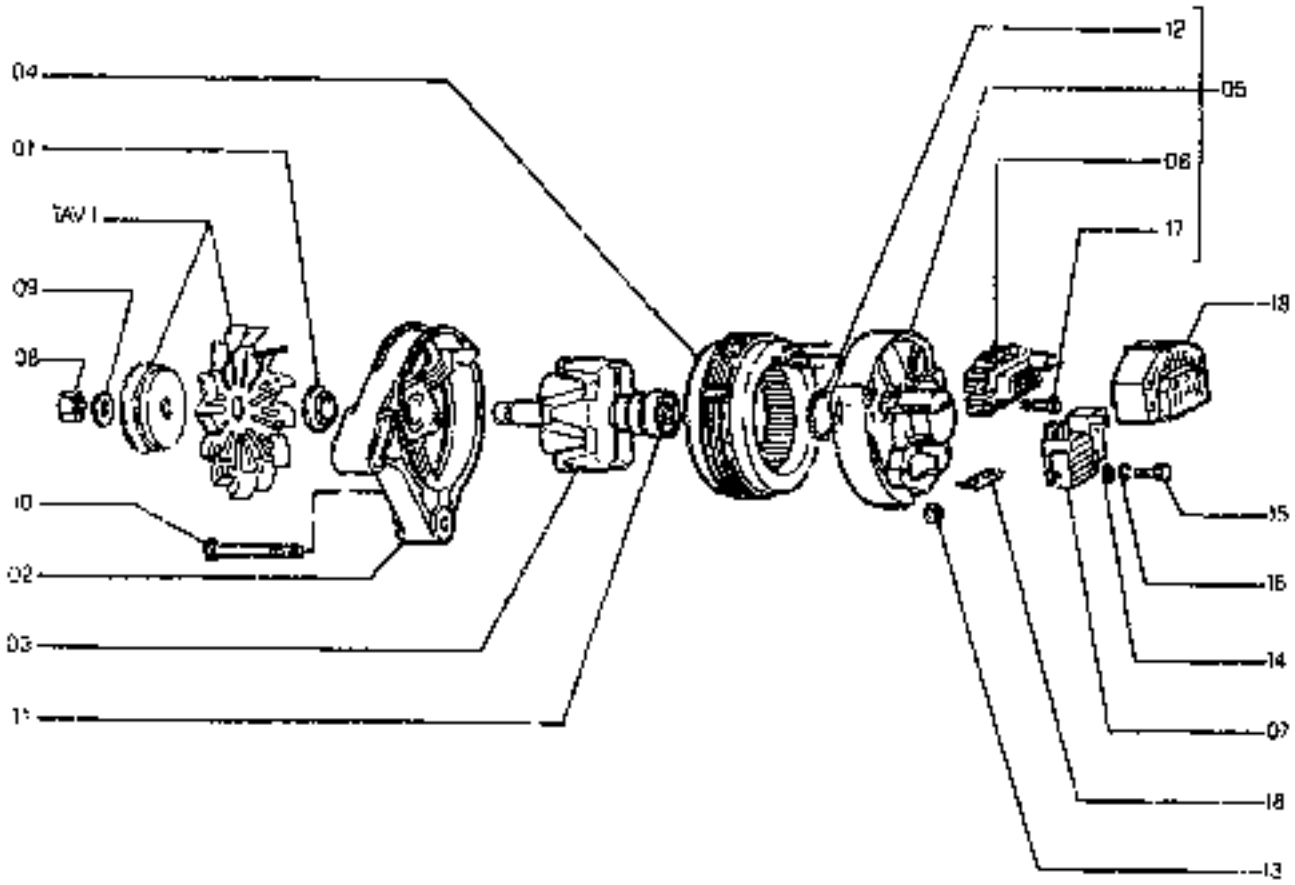

FH120

ALTERNATOR (MARELLI) ALTERNATORE (MARELLI) 4808519	ALTERNATEUR (MARELLI) DREHSTROMLICHTMASCHINE ALTERNADOR (MARELLI)	0.400 TAV 3

ITEM	PART NUMBER	QTY	TR. CO.	DESCRIPTION	DESCRIZIONE
01	04479391	1	45A	RING	ANELLO
02	79070377	1	300S	SUPPORT	SUPPORTO
03	79070378	1	145R	ROTOR	ROTORE
04	79070379	1	271S	STATOR	STATORE
05	79070380	1	300S	SUPPORT	SUPPORTO
06	79070381	1	32R	RECTIFIER	RADDRIZZATORE
07	79070383	1	169R	REGULATOR	REGOLATORE
08	10791311	1	10D	NUT	DADO
09	12035571	1	170R	LOCKWASHER	ROSETTA ELASTICA
10	79070373	3	40V	SCREW	VITE
11	28996480	1	341C	BEARING	CUSCINETTO
12	14454381	1	158G	O-RING	GURNIZIONE O-R
13	14084211	3	10D	NUT	DADO
14	14496201	2	131R	WASHER	ROSETTA
15	10445024	2	40V	SCREW	VITE
16	10571379	2	170R	LOCKWASHER	ROSETTA ELASTICA
17	79070374	1	40V	SCREW	VITE
18	79070385	1	K11	KIT-FOR ALTERNATOR	KIT-PER ALTERN.\TORE

FH12D

ENGINE LIFTING EYES GANCI SOLLEVAMENTO MOTORE	CROCHETS DE LEVAGE MOT. HAKEN FUER HEBEB CANCAMOS DE LEVANTAMIENTO	0.150 TAV.1

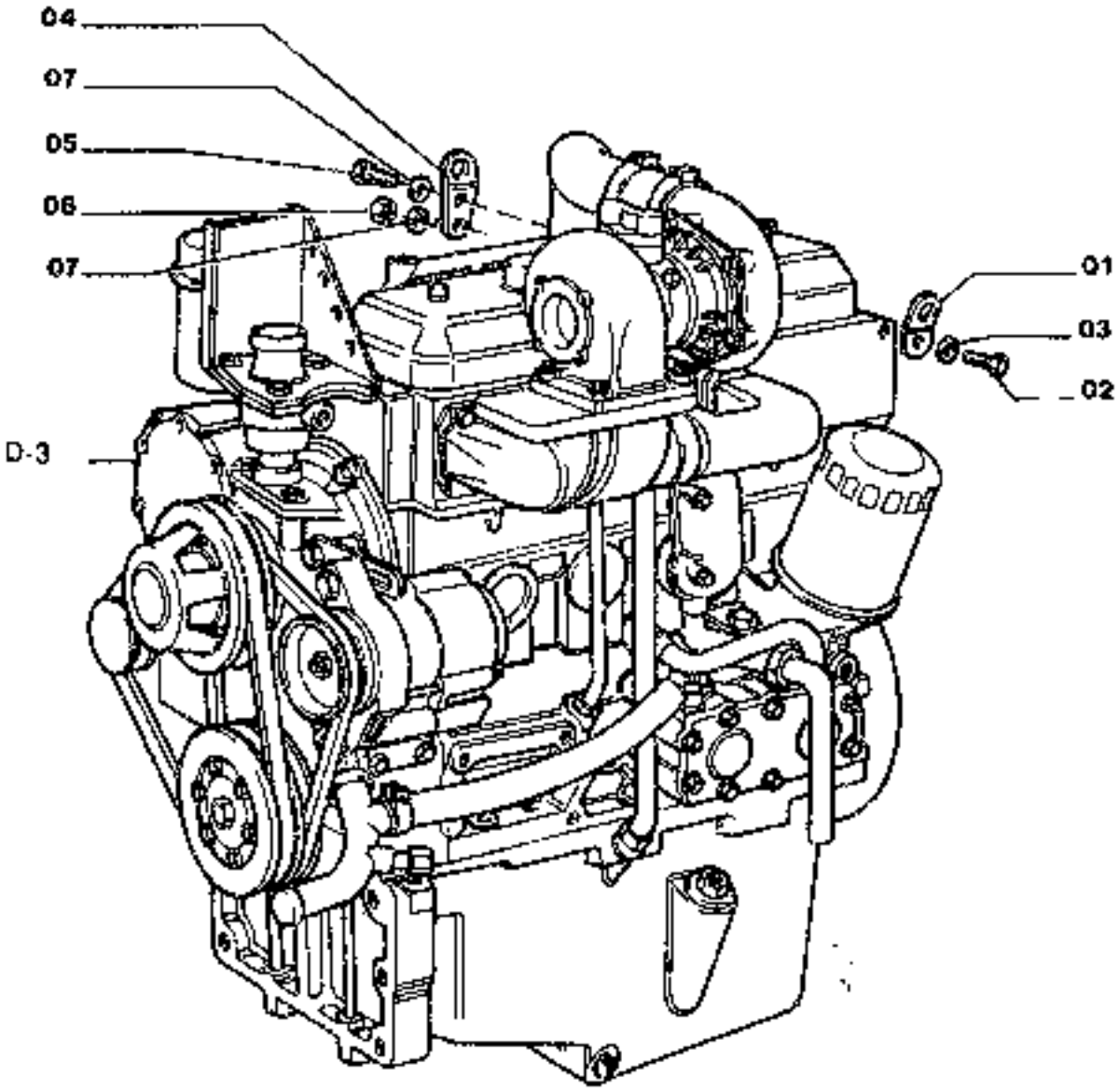

FH120

ENGINE LIFTING EYES	CROCHETS DE LEVAGE MOT.	0.450	TAV.1
GANCI SOLLEVAMENTO MOTORE	MOTORAUGEN		
	CANCAMOS DE LEVANTAMIENTO		

ITEM	PART NUMBER	QTY	TR. CO.	DESCRIPTION	DESCRIZIONE
01	4695922	1	30G	HOOK	GANCIO
02	15970521	1	40V	SCREW 10X1,25X20	VITE 10X1,25X20
03	11180579	1	131R	WASHER	ROSETTA
04	4695923	1	30G	HOOK	GANCIO
05	16044024	1	40V	SCREW 8X1,25X40	VITE 8X1,25X40
06	16100811	1	10D	NUT	DADO
07	11193071	2	131R	WASHER	ROSETTA

I-1

ALPHABETICAL INDEX

DESCRIPTION	SGR.	TAV.	GRID
Accelerator controls	0.004	1	1C-23
Air Cleaner	0.001	1	1C-13
Alternator-Mounting	0.400	1	1H-9
Alternator (55 amp)	0.400	2	1H-11
Alternator (35 amp)	0.400	3	1H-13
Anti-Shock Valve (Hydr.)	1.082	3	1L-3
Application of Gx. Hammer	5.0020	2	2H-13
Batteries	1.220	4	2D-19
Belts	0.340	1	1G-21
	0.345	1	1G-23
Boom Piping	2.030	1	2F-13
Brake Valve Components	3.010	4	2G-11
Bucket	2.020	1	2F-9
Bucket Cylinder	2.030	5	2F-21
Bull Gear	3.000	1	2G-3
Cab	1.250	1	2D-19
Cab Door	1.250	5	2E-7
Cab Heater-Components	1.290	2	2E-15
Cab Window-Left Side	1.250	6	2E-9
Cab-Frame	1.250	7	2E-11
Cab-Platform	1.250	1	2D-21
Camshaft	0.120	1	1E-19
Check Valve	1.081	2	1K-17
Cold Starting Aid	5.0025	1	2H-19
Connecting Rod	0.081	1	1E-10
Cool. Valve-Hydr. (Ass.Y)	1.050	1	1J-13
Control Valve-Hydr	1.050	2	1J-17
	1.050	3	1J-19
	1.050	4	1J-21
	1.050	5	1J-23
Controls	1.070	1	1K-5
Counterweight	1.000	1	1I-3
Cowlings	1.300	1	2E-19
	1.300	2	2E-21
Crankshaft	0.090	1	1E-7
Crankshaft Pulley	0.084	1	1E-15
Cylinder Block	0.040	1	1D-5
	0.040	2	1D-7
	0.040	3	1D-9
Cylinder Block Covers	0.043	1	1D-13
	0.043	2	1D-15
Cylinder Head	0.060	1	1D-21
	0.060	2	1D-23
Dashboard (Left)	1.210	1	2D-9
Dashboard (Right)	1.200	1	2D-3
	1.200	3	2D-7
Data Monitor	1.200	2	2D-5
Decals	4.500	1	2H-9
Dipper Stick (2,1m)	5.0022	1	2H-15
Dipper Stick (2,5m) (STD.)	2.003	1	2F-5
Dipper Stick(2,5m)Links(Std.)	2.003	2	2F-7
Dipper Stick (3m)	5.0038	1	2H-21
	5.0038	2	2H-23
Dipper Stick cylinder	2.030	4	2F-19
Dipstick-Engine Oil	0.305	2	1G-7
Discharge Valve	1.040	4	1J-3
Discharge Valve Componen.	3.010	5	2G-13
Drive on Engine (Cpt.)	0.350	1	1H-3
Electric System	1.220	2	2D-13
Elements-Engine Oil	0.001	1	1C-13
Elements-fuel	0.200	1	1F-11
Elements-Hydraulic	1.020	1	1E-19
Elements-Pilot	1.080	1	1K-11
Emergency Kits	4.000	1	2H-7
Engine	0.021	1	1D-3
Engine-Controls	0.004	1	1C-23
Engine-Suspensions	0.000	1	1C-11
Engine Breather	0.045	1	1D-17
	0.045	1A	1D-19
Engine Cooling Piping	0.323	1	1G-17
Engine Heat Exchanger	0.310	1	1G-9
	0.310	2	1G-11
Engine Lifting Eyes	0.450	1	1H-15
Engine Oil Filter	0.302	1	1G-3
Engine Oil Piping	0.305	1	1G-5
Engine Oil Pump	0.300	1	1F-23
Engine Oil Sump	0.042	1	1D-11
Engine Piston	0.082	1	1E-11
Engine Suspensions	0.000	1	1C-11
Exhaust Manifold	0.077	1	1E-5
Exhaust Valve	0.060	2	1D-23
Fan	0.345	1	1G-23
Fan Drive	0.345	1	1G-23
"Filter Care" Kit	21		1A-23
Filter-Pilot System	1.080	1	1K-11
Filters-Air	0.001	1	1C-13
Filters-Engine Oil	0.302	1	1G-3
Filters-Fuel	0.200	1	1F-11
Filters-Hydr. System	1.020	1	1I-7
Flywheel-Engine	0.083	1	1E-13
Fuel Filter	0.200	1	1F-11
Fuel Piping	0.203	1	1F-15
Fuel Pump	0.201	1	1F-13
Fuel Tank	1.010	1	1I-5
Fuses	1.200	3	2D-7
Guards	1.300	2	2E-21
Handle	1.300	3	2E-23
Heater	1.290	1	2E-15
Horn	1.220	2	2D-15
Hyd.Pump Drive	1.030	7	1I-21
Hyd.Pump Regulator Valve	1.030	6	1I-19
Hyd.Pump Regulator-Cover	1.030	4	1I-15
	1.030	5	1I-17
Hydr.Pump-Components	1.030	2	1I-11
Hydr.Pump Regulator-Comp.	1.030	3	1I-13

I-2

ALPHABETICAL INDEX

DESCRIPTION	SGR.	TAV.	GRID
Hydraulic Pump	1.030	1	1I-9
Idler	3.020	1	1G-15
Injection Nozzle-Lines	0.149	1	1F-9
Injection Pump	0.140	2	1E-23
	0.140	3	1F-3
	0.140	4	1F-5
	0.140	5	1F-7
Injection Pump-Piping	0.140	1	1E-21
Intake Manifold	0.071	1	1E-3
Intake Valve	0.060	2	1D-21
Lift Cylinder (Left)	2.030	3	1F-17
Lift Cylinder (Right)	2.030	2	2F-15
Lights	1.220	2	2D-15
Lower Frame	3.000	1	2G-3
Lubric. Fitting Piping	2.040	1	2F-23
Main Piping	1.060	1	1K-3
Mirror (Rear)	1.300	2	2E-21
Monoblac Boom	2.000	1	2F-9
Motor - Starter	0.360	2	1H-7
Motor - Swing	1.040	1	1J-3
Motor - Travel	3.010	1	12G-5
Motor - Wiper	1.220	1	2D-13
Muffler	0.002	1	1C-15
Oil Tank	1.020	1	1I-7
Operator's Seat	1.250	2	2D-23
OperatorsSeat(Bostrom)(Std.)	5.0151	1	2I-3
Pilot Gear Pump	1.030	8	1I-23
Pilot Piping(1)	1.060	1	1K-11
Pilot Piping(2)	1.061	1	1K-15
Pilot Piping(3)	1.062	1	1K-19
Pilot Piping (4)	1.063	1	1L-5
Pilot Piping (5)	1.064	1	1L-7
Pilot Valve	1.070	3	1K-9
Pilot Valve-components	1.070	2	1K-7
Pipin-Boom	2.030	1	2F-13
Piping-Engine Oil	0.350	1	1H-3
Piping-Injection	0.149	1	1F-9
Piping-Lube Fittings	2.040	1	2G-23
Piping-Main	1.060	1	1K-3
Piping-Pilot(1)	1.060	1	1K-11
Piping-Pilot(3)	1.062	1	1K-19
Piping-Pilot(4)	1.063	1	1L-5
Piping-Pilot(5)	1.064	1	1L-7
Piping-Pump Contr. Valve	1.050	1	1J-13
Piping-Travel (Lower)	3.070	1	2H-5
Piping-Turbocharger	0.241	1	1F-21
Pump-Engine Oil	0.300	1	1F-23
Pump-Fuel	0.201	1	1F-13
Pump-Hydraulic	1.030	1	1I-9
Pump-Injection	0.140	1	1E-21
Pump-Pilot	1.030	8	1I-23
Pump-Water	0.320	1	1G-13
Pump/Control Valve Piping	1.050	1	1J-13
Radiator	0.003	1	1C-17
Radiator-Components	0.003	2	1C-19
	0.003	3	1C-21
Rocker Arm	0.060	2	1D-23
Rotary Distr.-Components	3.060	2	2H-3
Rotary Distributor	3.060	1	2G-23
Seat Belt (Std.)	5.0536	1	2I-5
Sensors	1.220	2	2D-15
Solenoid Valve	1.080	2	1K-13
Starter	0.360	2	1H-7
Starter-Mounting	0.360	1	1H-5
Stop Valve	1.082	2	1K-23
Swing Motor-Components	1.040	3	1J-7
Swing Red.Unit-Components	1.040	2	1J-5
Swing Reduction Unit	1.040	1	1J-3
Thermostat & Housing	0.325	1	1G-19
Timing Control	0.100	1	1E-17
Tool Kit	5.0083	1	2I-9
Track Chain	3.050	1	2G-21
Track Roller	3.040	1	2G-19
Travel Motor-componen.	3.010	3	2G-9
Travel Piping (Lower)	3.070	1	2H-5
Travel Red.Unit-Componen.	3.010	2	2G-7
Travel Reduction Units	3.010	1	2G-5
Turbocharger	0.240	1	1F-17
	0.240	2	1F-19
Turbocharger Piping	0.241	1	1F-21
Upper Frame	1.000	1	1E-17
Upper Roller	3.030	1	2G-17
Valve-Anti-Shock(Hydr.)	1.082	3	1L-3
Valve-Check (Pilot)	1.081	2	1K-17
Valve-Exhaust	0.060	2	1D-23
Valve-Intake	0.060	2	1D-23
Valve-Pilot (Hydr.)	1.070	1	1K-5
Valve-Pilot(Travel)	1.070	1	1K-5
Valve-Solenoid	1.080	2	1K-13
Valve-Stop(Travel)	1.082	1	1K-21
Washer (windshield)	1.220	3	2D-17
Water Pump	0.320	1	1G-13
Water Pump Drive	0.340	1	1G-21
Water Pump-Components	0.320	2	1G-15
Wiper	1.220	1	2D-11

RH120

UPPER FRAME TELAIO SUPERIORE	CHASSIS SUPERIEUR RAHMENOBEN CHASIS SUPERIOR	1.000 TAV.1

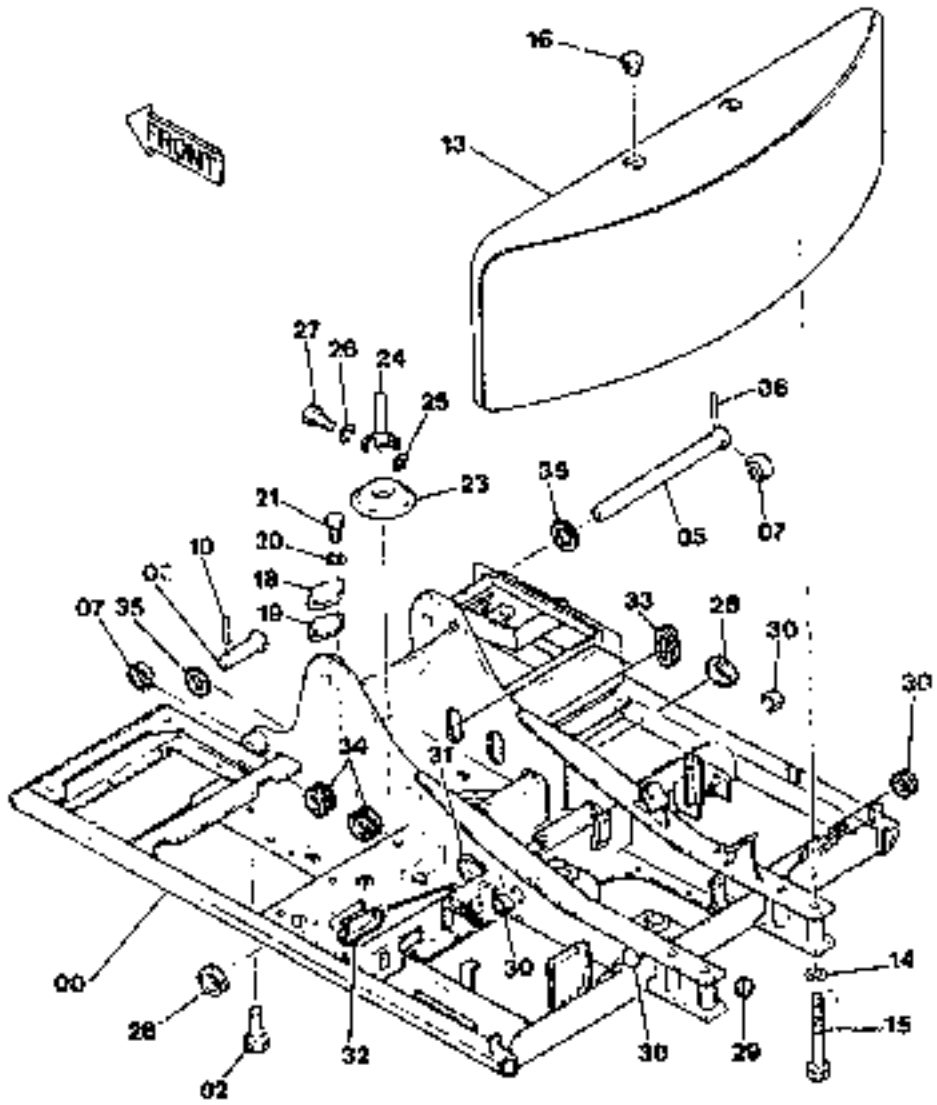

UPPER FRAME
TELAIO SUPERIORE

CHASSIS SUPERIEUR
RAHMENOBEN
CHASIS SUPERIOR

1.000 TAV.1

ITEM	PART NUMBER	QTY	TR. CO.	DESCRIPTION		DESCRIZIONE	
00	71405231	1	7215	UPPER FRAME		TELAIO SUPERIORE	
02	15040934	28	40V	SCREW 18X2,5X100		VITE 18X2,5X100	
05	71405034	1	80P	PIN		PERNO	
06	71405233	1	80P	PIN		PERNO	
07	71405110	3	45A	RING		ANELLO	
09	71405235	2	80P	PIN		PERNO	
10	10100230	2	80P	PIN 16X2X80		PERNO 16X2X80	
13	71405237	1	10Z	COUNTERWEIGHT		ZAVORRA	
14	71415426	4	131R	WASHER		ROSETTA	
15	71410537	4	40V	SCREW		VITE	
16	71405236	2	50T	PLUG		TAPPO	
18	71415432	1	70F	FLANGE		FLANGIA	
19	71415433	1	122G	SEAL		GUARNIZIONE	
20	14498631	2	131R	WASHER		ROSETTA	
21	11106034	2	40V	SCREW 10X1,5X20		VITE 10X1,5X20	
				D2524 FROM S/N	0051	D2524 DAL TELAIO	0051
	11106234	2	40V	SCREW 10X1,5X25		VITE 10X1,5X25	
				D2524 UP TO S/N	0050	D2524 FINO AL TELAIO	0050
23	71415427	1	265C	COVER		COPERCHIO	
24	71415428	1	26N	RIB		NERVATURA	
25	71415431	2	26N	RIB		NERVATURA	
26	10572074	2	131R	WASHER		ROSETTA	
27	11115634	2	40V	SCREW 14X2X35		VITE 14X2X35	
28	71405239	1	122G	SEAL		GUARNIZIONE	
29	71415445	3	85I	INSULATOR		ISOLANTE	
30	71405240	4	85I	INSULATOR		ISOLANTE	
31	71405241	1	122G	SEAL		GUARNIZIONE	
32	71405242	1	122G	SEAL		GUARNIZIONE	
33	71405600	2	122G	SEAL		GUARNIZIONE	
34	71405729	2	122G	SEAL		GUARNIZIONE	
35	45016167	6	198S	SHIM 2MM		SPESSORE 2MM	
	71405172	6	131R	WASHER 1MM		ROSETTA 1MM	

FUEL TANK SERBATOIO COMBUSTIBILE	RESERVOIR COMBUSTIBLE KRAFTSTOFFTANK DEPOSITO DE COMBUSTIBLE	1.010 TAV.1

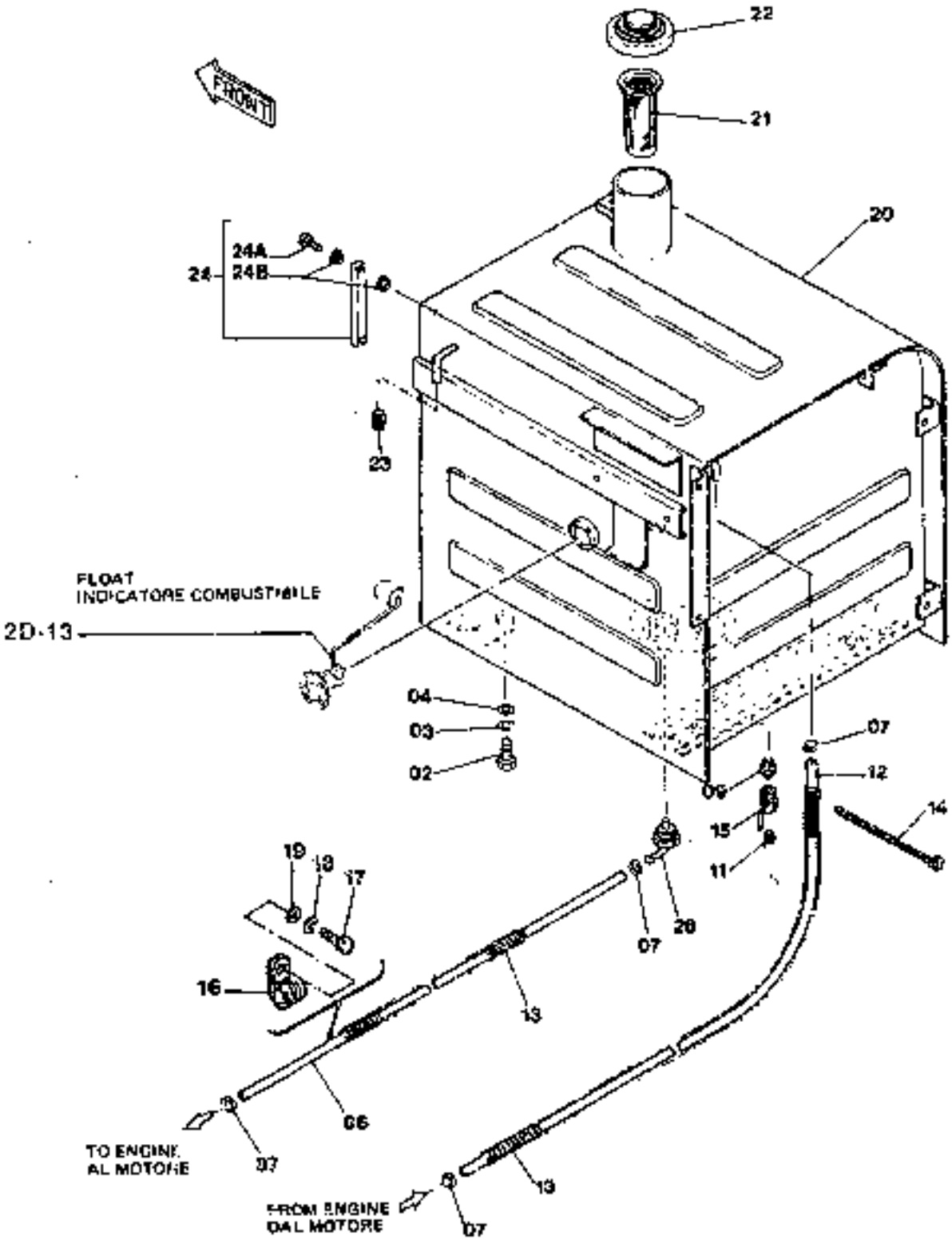

FH120

FUEL TANK SERBATOIO COMBUSTIBILE	RESERVOIR COMBUSTIBLE KRAFTSTOFFTANK DEPOSITO DE COMBUSTIBLE	1.010 TAV.1

ITEM	PART NUMBER	QTY	TR CO.	DESCRIPTION		DESCRIZIONE	
02	11118531	4	40V	SCREW 16X2X40		VITE 16X2X40	
03	10572174	4	170R	LOCKWASHER		ROSETTA ELASTICA	
04	71405003	4	131R	WASHER		ROSETTA	
06	71405200	1	285T	HOSE		TUBO FLESSIBILE	
07	79082642	4	150C	COLLAR		COLLARE	
				C2516 UP TO S/N	0050	C2516 FINO AL TELAIO	0050
	79084752	4	180C	COLLAR		COLLARE	
				D2516 FROM S/N	0051	D2516 DAL TELAIO	0051
09	71405228	1	20R	FITTING		RACCORDO	
11	4976587	1	50T	PLUG		TAPPO	
12	71405200	1	285Y	HOSE		TUBO FLESSIBILE	
				D2514 FROM S/N	0051	D2514 DAL TELAIO	0051
	71405201	1	285T	HOSE		TUBO FLESSIBILE	
				C2514 UP TO S/N	0050	C2514 FINO AL TELAIO	0050
13	71405202	2	285T	HOSE		TUBO FLESSIBILE	
14	4802514	2	31F	CLAMP		FASCETTA	
15	71405228	1	150R	COCK		RUBINETTO	
16	71405770	2	231S	CLIP d=25		STAFFETTA d=25	
				D2516 FROM S/N	0051	D2516 DAL TELAIO	0051
17	10979334	2	40V	SCREW 10X1,5X14		VITE 10X1,5X14	
				D2516 FROM S/N	0051	D2516 DAL TELAIO	0051
18	10516674	2	170R	LOCKWASHER		ROSETTA ELASTICA	
				D2516 FROM S/N	0051	D2516 DAL TELAIO	0051
19	14406631	2	131R	WASHER		ROSETTA	
				D2516 FROM S/N	0051	D2516 DAL TELAIO	0051
20	71405203	1	114S	FUEL TANK		SERBATOIO COMBUSTIBILE	
21	71401597	1	65F	FILTER		FILTRO	
22	71401598	1	50T	PLUG		TAPPO	
23	14923611	1	50T	PLUG		TAPPO	
24	71401645	1	35I	INDICATOR		INDICATORE	
24A	71401610	2	20R	FITTING		RACCORDO	
24B	71401647	4	158G	O-RING		GUARNIZIONE O-R	
26	71405204	1	193T	TUBE		TUBO RIGIDO	

OIL TANK SERBATOIO OLIO	RESERVOIR D'HUILE OELTANK DEPOSITO DE ACEITE	1.020 TAV.1

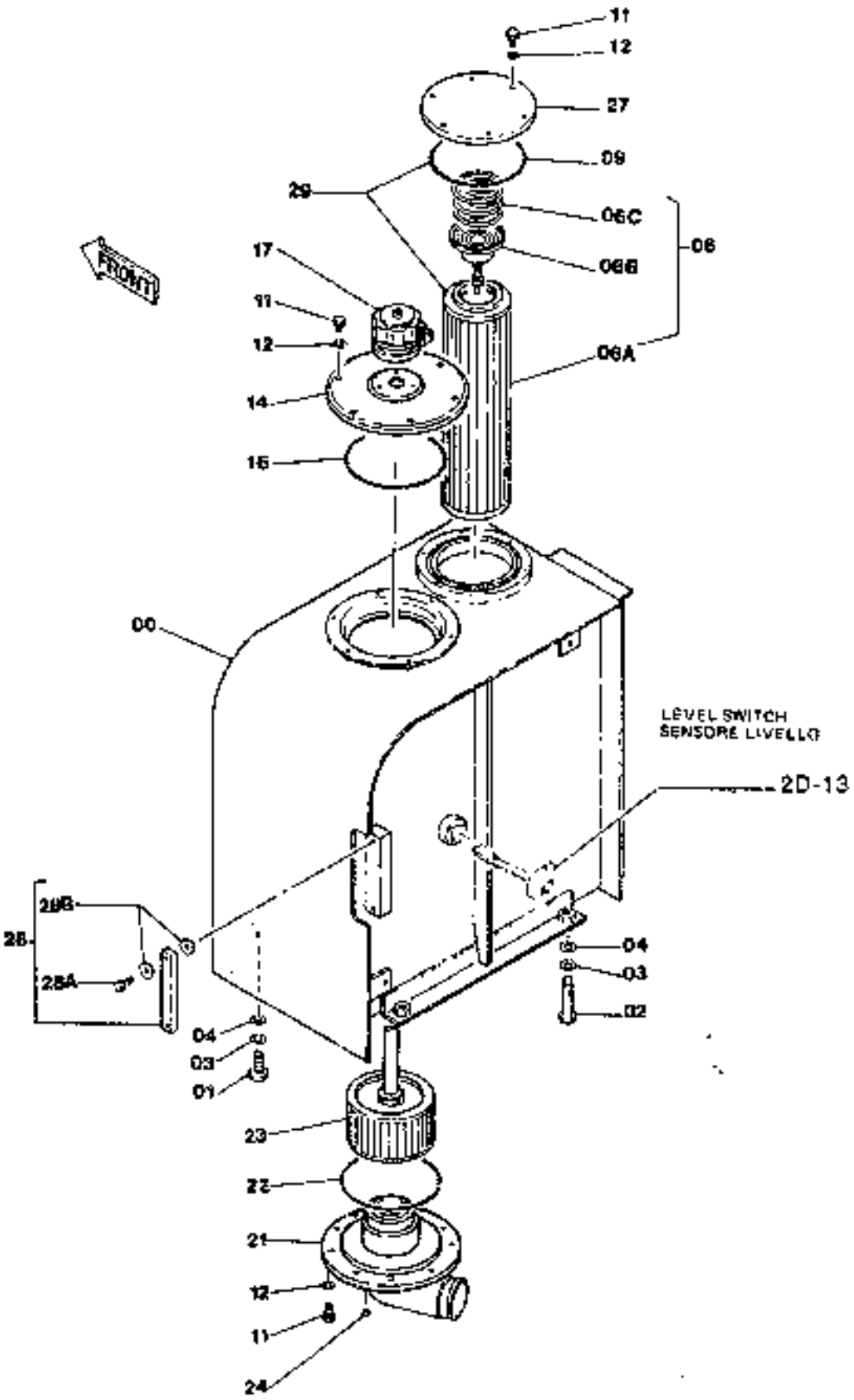

FH120

OIL TANK SERBATOIO OLIO	RESERVOIR D'HUILE OELTANK DEPOSITO DE ACEITE	1.020	TAV.1

ITEM	PART NUMBER	QTY	TR. CO.	DESCRIPTION	DESCRIZIONE
00	71405005	1	113S	OIL RESERVOIR	SERBATOIO OLIO
01	11118534	2	40V	SCREW 16X2X40	VITE 16X2X40
02	11118534	2	40V	SCREW 16X2X80	VITE 16X2X80
03	10572174	4	170R	LOCKWASHER	ROSETTA ELASTICA
04	71405003	4	131R	WASHER	ROSETTA
06	71405963	1	65F	FILTER -ASS.LY	FILTRO -COMPL.
06A	71405964	1	65F	FILTER	FILTRO
06B	71405965	1	10V	VALVE	VALVOLA
06C	71405966	1	100M	SPRING	MOLLA
08	14467480	1	158G	O-RING	GUARNIZIONE O-R
11	11105134	18	40V	SCREW 10X1,5X22	VITE 10X1,5X22
12	10571674	18	131R	WASHER	ROSETTA
14	71405735	1	265C	COVER	COPERCHIO
16	14492780	1	158G	O-RING	GUARNIZIONE O-R
17	71405040	1	50T	PLUG	TAPPO
21	71405165	1	70F	FLANGE	FLANGIA
22	14492580	1	158G	O-RING	GUARNIZIONE O-R
23	71401592	1	65F	FILTER	FILTRO
24	14328001	1	50T	PLUG	TAPPO
27	71405004	1	265C	COVER	COPERCHIO
28	71401593	1	35I	INDICATOR -ASS.LY	INDICATORE -COMPL.
28A	71401610	2	20R	FITTING	RACCORDO
28B	71401611	4	158G	O-RING	GUARNIZIONE O-R
29	71402547	1	2K	KIT	KIT

FH120

HYDRAULIC PUMP POMPA IMPIANTO IDRAULICO	POMPE CIRCUIT HYDR HYDRAULIKPUMPE BOMBA HIDRAULICA	1.030	TAV.1

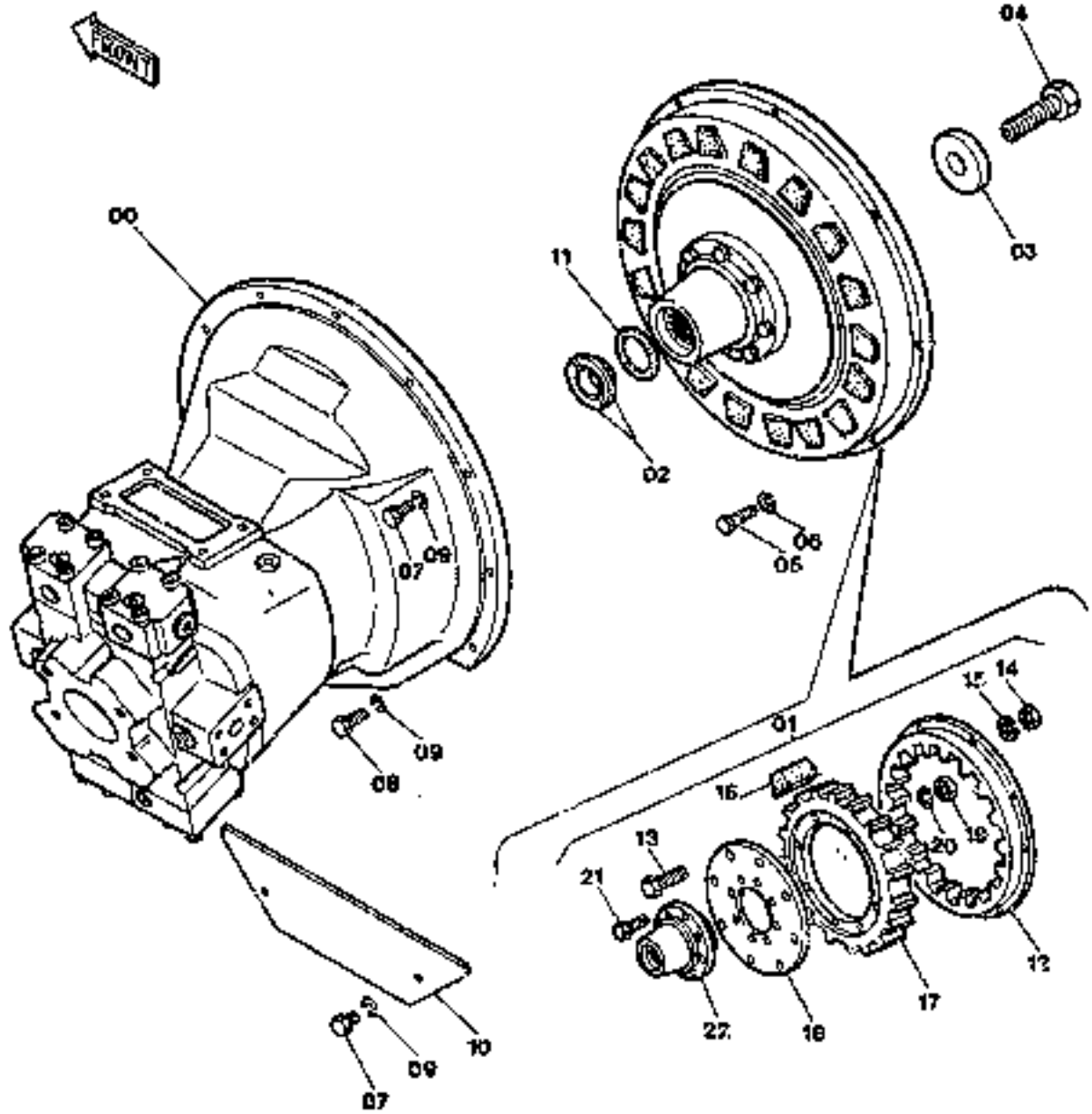

HYDRAULIC PUMP
POMPA IMPIANTO IDRAULICO

POMPE CIRCUIT HYDR.
HYDRAULIKPUMPE
BOMBA HIDRAULICA

1.039 TAV.1

ITEM	PART NUMBER	QTY	TR. CO.	DESCRIPTION	DESCRIZIONE
00	71401617	1	155P	PUMP -ASS.Y SEE I - 9	POMPA -COMPL.VED.TAV. 2
01	71405488	1	67G	COUPLING -ASS.LY	GIUNTO -COMPL.
02	71405489	2	90S	HALF RING	SEMIANELLO
03	43017400	1	131R	WASHER	ROSETTA
04	14278934	1	40V	SCREW 12X1,75X35	VITE 12X1,75X35
05	11305024	8	40V	SCREW 10X1,25X30	VITE 10X1,25X30
06	12601475	8	131R	WASHER	ROSETTA
07	11105034	3	40V	SCREW 10X1,5X20	VITE 10X1,5X20
08	11105534	8	40V	SCREW 10X1,5X32	VITE 10X1,5X32
09	10571874	11	131R	WASHER	ROSETTA
10	71405731	1	265C	COVER	COPERCHIO
11	14463280	1	158G	O-RING	GUARNIZIONE O-R
12	45483282	1	297C	RING GEAR	CORONA DENTATA
13	15043424	5	40V	SCREW 8X1,25X20	VITE 8X1,25X20
14	10100821	8	10D	NUT	DADO
15	12601374	8	131R	WASHER	ROSETTA
16	45483282	20	74B	BLOCK	BLOCCHETTO
17	45483289	1	297C	RING GEAR	CORONA DENTATA
18	45483290	1	80D	DISC	DISCO
19	12184721	8	10D	NUT	DADO
20	12601474	8	131H	WASHER	ROSETTA
21	15979724	8	40V	SCREW 10X1,25X25	VITE 10X1,25X25
22	71405500	1	135M	HUB	MOZZO

HYDR. PUMP-COMPONENTS POMPA ATTREZZ.-COMPONENTI 71401617	POMPE EQUIP.-COMPOSANTS HYDRAULIKPUMP E-BAUTEILT. BOMBA HIDR.-COMPONENTES	1.030 TAV.2

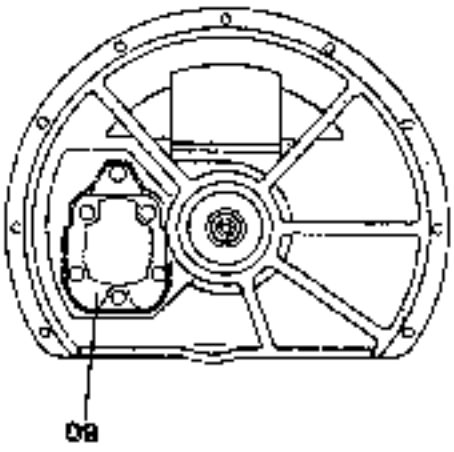

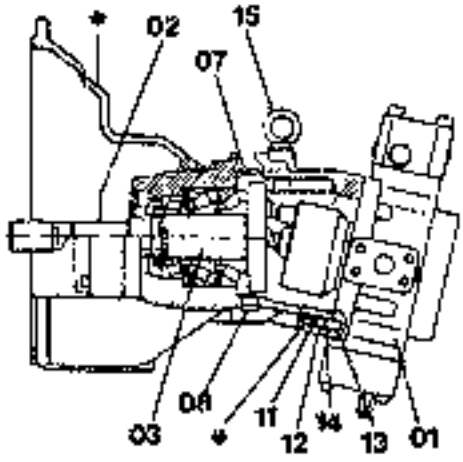

PARTS MARKED * ARE NOT SUPPLIED AS SPARES
I PARTICOLARI CONTRASSEGNATI DA * NON VENGONO FORNITI A RICAMBIO

FH120

HYDR. PUMP-COMPONENTS POMPA ATTREZZ.-COMPONENTI 71401617	POMPE EQUIP.-COMPOSANTS HYDRAULIKPUMPE-EINZELT. BOMBA HIDR.-COMPONENTES	1.039 TAV.2

ITEM	PART NUMBER	QTY	TR. CO.	DESCRIPTION	DESCRIZIONE
01	71401662	1	169R	REGULATOR -ASS.Y SEE I-13	REGOLATORE -COMPL.VED.TAV. 3
02	71401663	1	60N	CORE -ASS.Y SEE I-21	NUCLEO -COMPL.VED.TAV. 7
03	71401664	1	60N	CORE -ASS.LY	NUCLEO -COMPL.
07	71401665	1	50T	PLUG	TAPPO
08	71401666	1	50T	PLUG	TAPPO
09	71401667	1	156P	PUMP -ASS.Y SEE I-23	POMPA -COMPL.VED.TAV. 6
11	71401668	1	140S	BALL	SFERA
12	71401669	1	145G	GUIDE	GUIDA
13	71401670	1	101A	CASING	ASTUCCIO
14	71401671	2	158G	O-RING	GUARNIZIONE O-R
15	71401672	1	45A	RING	ANELLO

HYDR.PUMP REGULATOR-COMP. REG. POMPE HYDR.-COMP.
REG.POMPA IDRAULICA-COMP. HYDRAULIKPUMPE-REGLER
71401852 REGULADOR DE BOMBA HIDR.

1.030 TAV.3

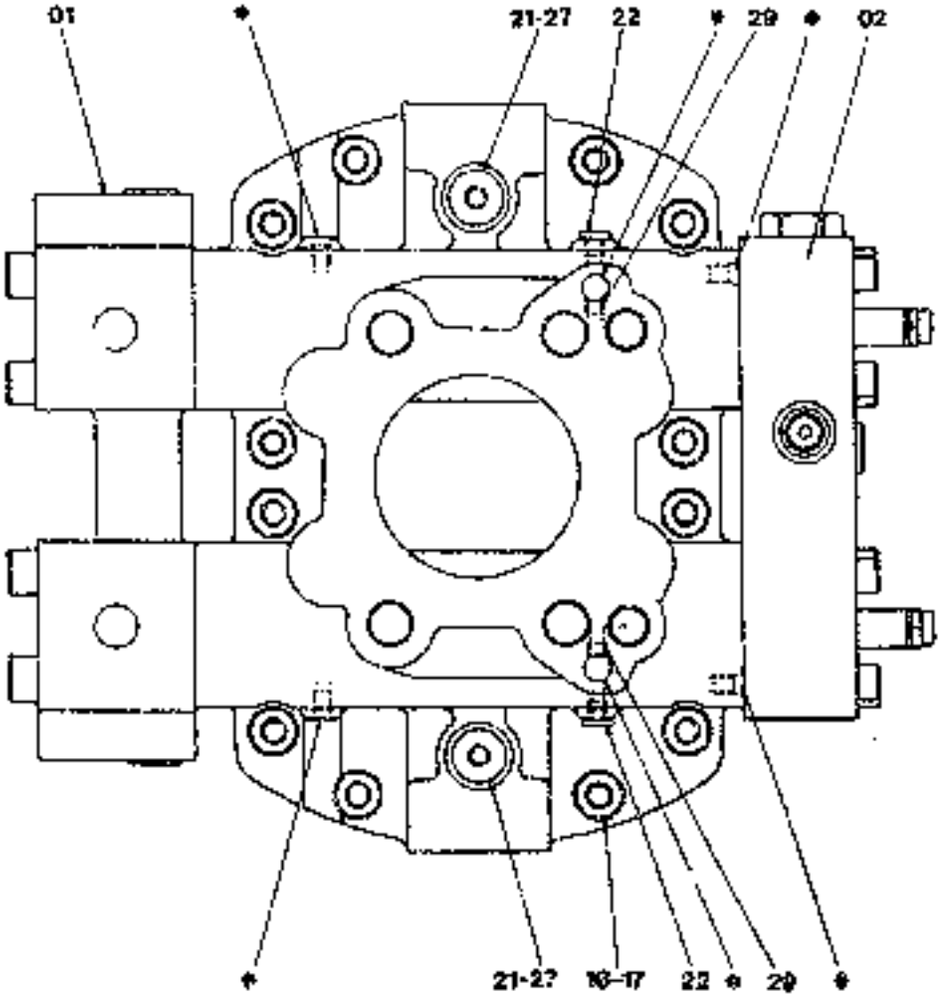

PARTS MARKED ◆ ARE NOT SUPPLIED AS SPARES

I PARTICOLARI CONTRASSEGNATI DA ◆ NON VENGONO FORNITI A RICAMBIO

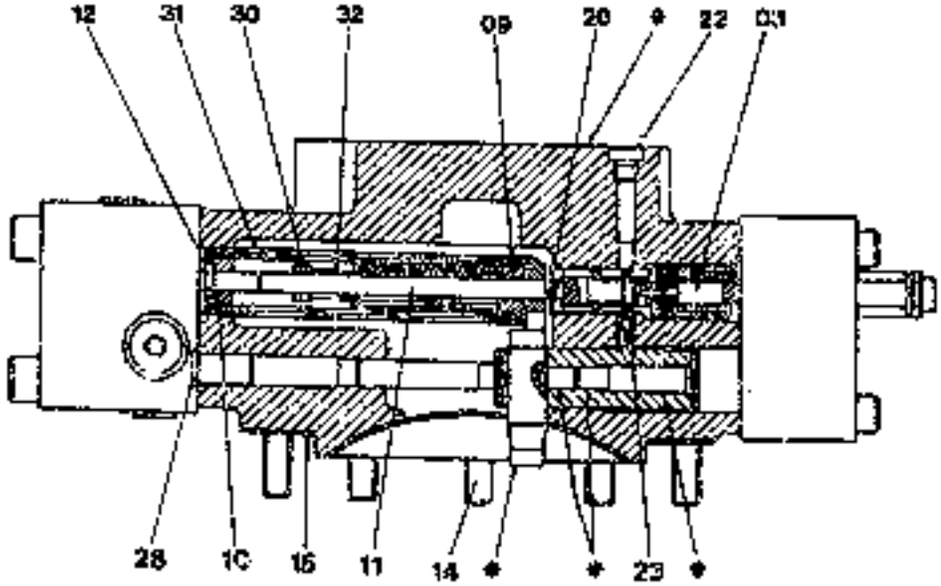

FH120

HYDR.PUMP REGULATOR-COMP. REG. POMPE HYDR.-COMP. 1.030 TAV.3
REG.POMPA IDRAULICA-COMP. HYDRAULIKPUMPE-REGLER
71401662 REGULADOR DE BOMBA HIDR.

ITEM	PART NUMBER	QTY	TR. CO.	DESCRIPTION	DESCRIZIONE
01	71401673	1	265C	COVER -ASS.Y SEE I-15	COPERCHIO -COMPL.VED.TAV. 4
02	71401674	1	265C	COVER -ASS.Y SEE I-17	COPERCHIO -COMPL.VED.TAV. 5
03	71401675	2	10V	VALVE -ASS.Y SEE I-19	VALVOLA -COMPL.VED.TAV. 6
09	71401676	2	101A	CASING	ASTUCCIO
10	71401677	2	60S	CUP	SCODELLINO
11	71401678	2	90A	ROD	ASTA
12	71401679	2	75D	SPACER	DISTANZIALE
14	71401680	2	60P	PIN	PERNO
15	71401681	1	122G	SEAL	GUARNIZIONE
16	71401682	12	40V	SCREW	VITE
17	71401683	12	131R	WASHER	ROSETTA
20	71401684	2	60P	PIN	PERNO
21	71401685	2	50T	PLUG	TAPPO
22	71401686	4	50T	PLUG	TAPPO
23	71401687	2	20U	JET	UGELLO
27	71401688	2	159G	O-RING	GUARNIZIONE O-R
28	71401689	2	60P	PIN	PERNO
29	71401690	2	20U	JET	UGELLO
30	71401691	2	45A	RING -THICK mm. 0,5	ANELLO -SPESS. mm. 0,5
	71401692	2	45A	RING -THICK mm. 1	ANELLO -SPESS. mm. 1
31	71401693	2	100M	SPRING	MOLLA
32	71401694	2	100M	SPRING	MOLLA

FH120

HYDPUMP REGULATOR-COVER REGOLATORE P.I.-COPERCHIO 71401673	REGULATEUR P.H.-COUVERCLE HYDR. PUMPE REGLER-DECKEL REGULADOR B.H.-TAPA	1.030 TAV.4

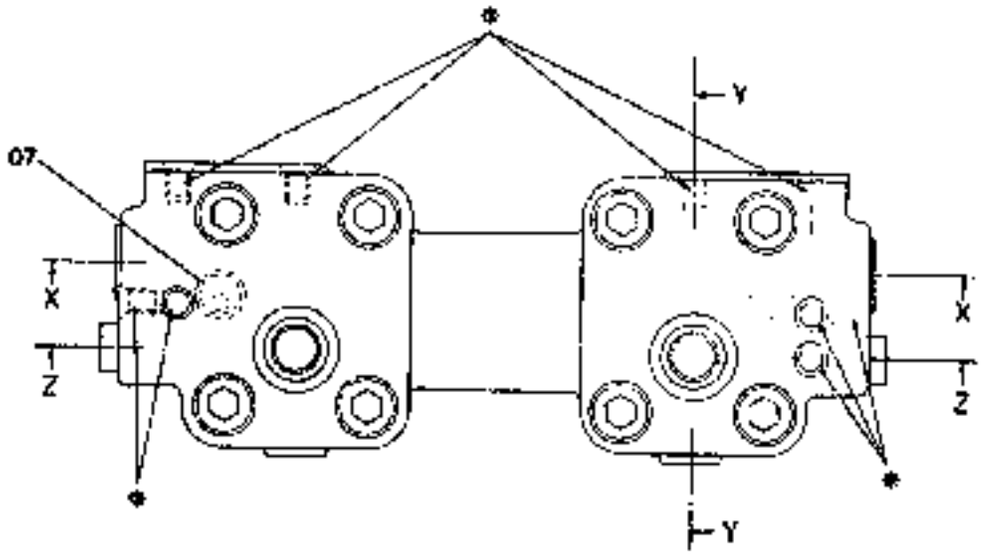

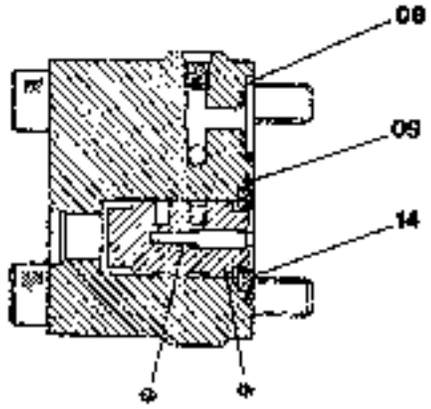

SECTION Y-Y
SEZIONE

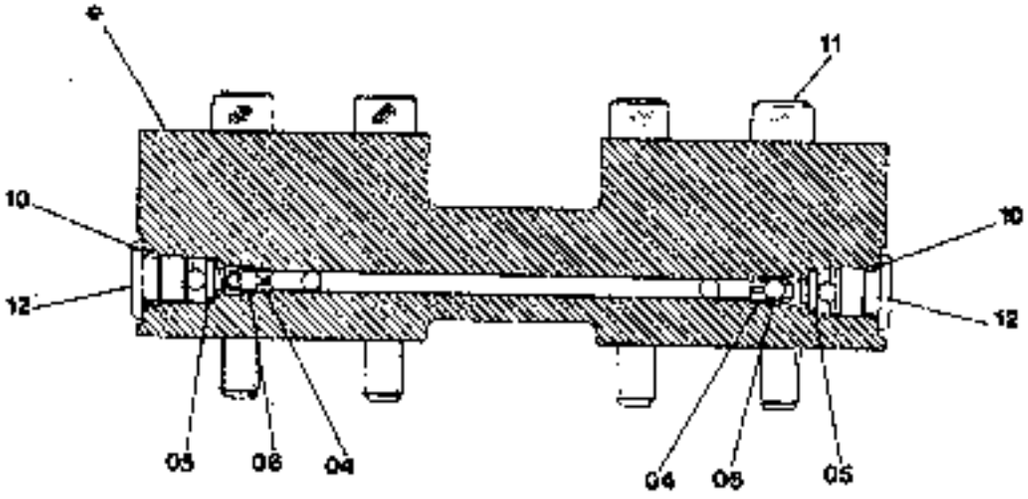

SECTION X-X
SEZIONE

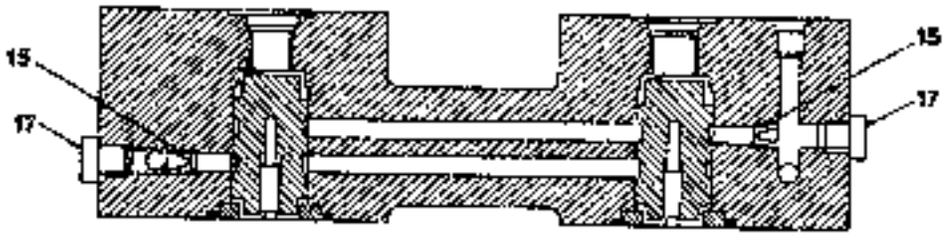

SECTION Z-Z
SEZIONE

PARTS MARKED * ARE NOT SUPPLIED AS SPARES
I PARTICOLARI CONTRASSEGNATI DA * NON VENGONO FORNITI A RICAMBIO

HYD.PUMP REGULATOR-COVER — REGULATEUR P.H.-COUVERCLE — 1.030 TAV.4
REGOLATORE P.I.-COPERCHIO — HYDR.PUMPE REGLER-DECKEL
71401673 — REGULADOR B.H.-TAPA

ITEM	PART NUMBER	QTY	TR. CO.	DESCRIPTION	DESCRIZIONE
04	71401705	2	145G	GUIDE	GUIDA
05	71401706	2	50T	PLUG	TAPPO
06	71401707	2	140S	BALL	SFERA
07	71401708	2	158G	O-RING	GUARNIZIONE O-R
08	71401709	2	158G	O-RING	GUARNIZIONE O-R
09	71401710	2	158G	O-RING	GUARNIZIONE O-R
10	71401568	2	158G	O-RING	GUARNIZIONE O-R
11	71401712	8	40V	SCREW	VITE
12	71401685	2	50T	PLUG	TAPPO
14	71401713	2	75D	SPACER	DISTANZIALE
15	71401714	2	20U	JET	UGELLO
17	71401685	2	50T	PLUG	TAPPO

HYD.PUMP REGULATOR-COVER REGOLATORE P.I.-COPERCHIO 71401074	REGULATEUR P.H.-COUVERCLE HYDR. PUMPE REGLER-DECKEL REGULADOR B.H.-TAPA	1.030 TAV.5

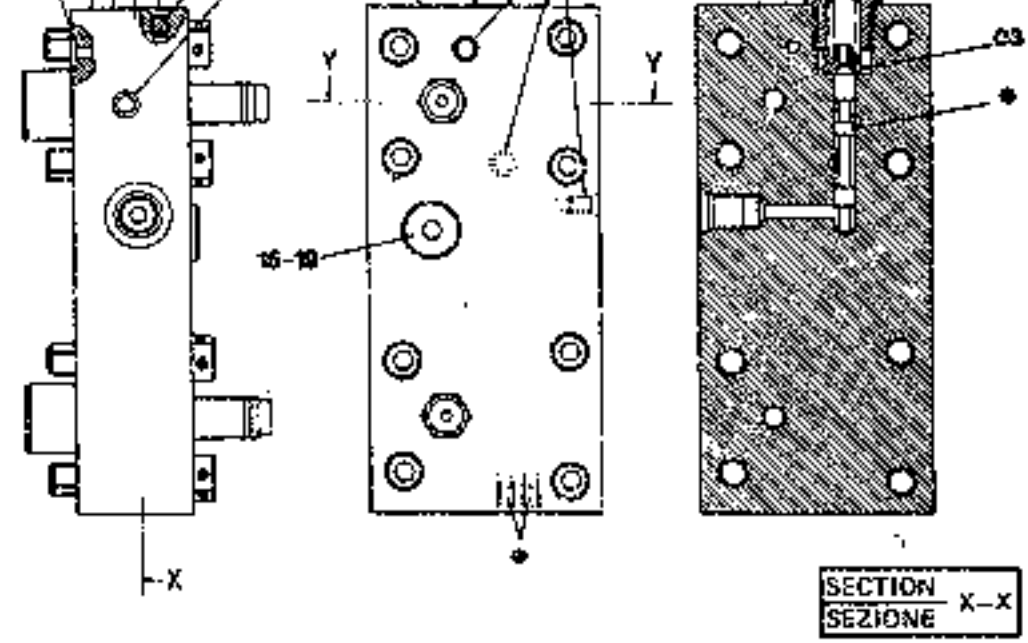

PARTS MARKED * ARE NOT SUPPLIED AS SPARES
I PARTICOLARI CONTRASSEGNATI DA * NON VENGONO FORNITI A RICAMBIO

FH129

HYD.PUMP REGULATOR-COVER REGOLATORE P.I.-COPERCHIO 71401674	REGULATEUR P.H.-COUVERCLE HYDR. PUMPE REGLER-DECKEL REGULADOR B.H.-TAPA	1.030 TAV.5

ITEM	PART NUMBER	QTY	TR. CO.	DESCRIPTION	DESCRIZIONE
03	71401715	1	60S	CUP	SCODELLINO
04	71401729	2	239P	PUSH ROD	PUNTALE
05	71401730	2	132P	PISTON	PISTONE
07	71401716	1	50T	PLUG	TAPPO
08	71401717	2	50N	PAWL	NOTTOLINO
09	71401718	1	100M	SPRING	MOLLA
10	71401708	1	158G	O-RING	GUARNIZIONE O-R
11	71401719	2	158G	O-RING	GUARNIZIONE O-R
12	71401720	2	158G	O-RING	GUARNIZIONE O-R
13	71401721	2	158G	O-RING	GUARNIZIONE O-R
14	71404165	1	158G	O-RING	GUARNIZIONE O-R
15	71401688	1	158G	O-RING	GUARNIZIONE O-R
16	71401723	8	40V	SCREW	VITE
17	71401724	2	40V	SCREW	VITE
18	71401680	1	50T	PLUG	TAPPO
19	71401685	1	50T	PLUG	TAPPO

HYD.PUMP REGULATOR VALVE VALVOLA REGOLATORE P.I. 71405675	SOUPAPE REGULATEUR P.H. HYDR.PUMPE REGLER-VENTIL VALVULA DE REGULADOR B.H.	1.030 TAV.6

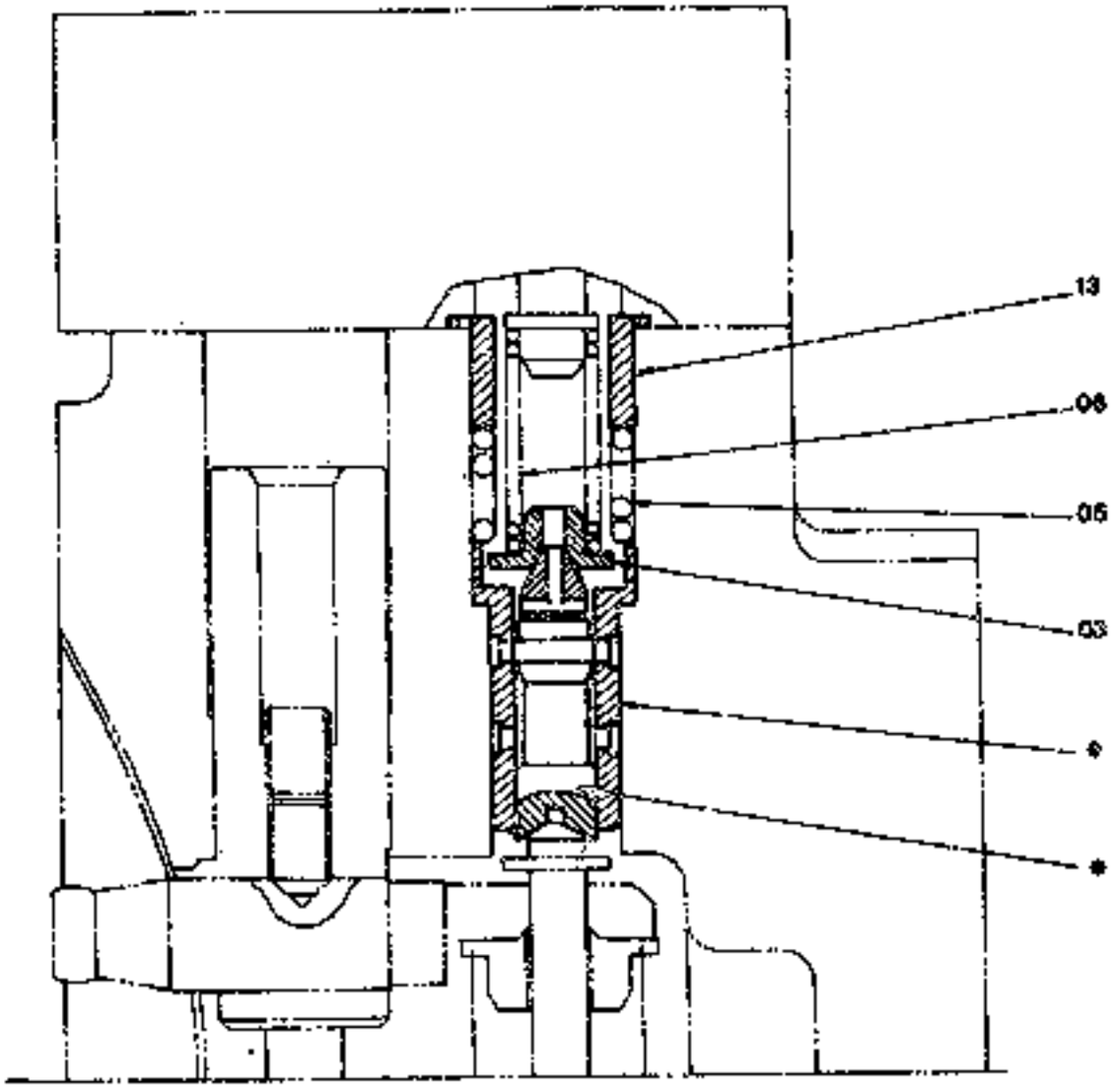

PARTS MARKED * ARE NOT SUPPLIED AS SPARES
I PARTICOLARI CONTRASSEGNATI DA * NON VENGONO FORNITI A RICAMBIO

FH120

HYD.PUMP REGULATOR VALVE
VALVOLA REGOLATORE P.I.
71401875

SOUPAPE REGULATEUR P.H.
HYDR.PUMPE REGLER-VENTIL
VALVULA DE REGULADOR B.M.

1.030 TAV.6

ITEM	PART NUMBER	QTY	TR. CO.	DESCRIPTION	DESCRIZIONE
03	71401715	1	60S	CUP	SCODELLINO
05	71401725	1	100M	SPRING	MOLLA
06	71401727	1	100M	SPRING	MOLLA
13	71401726	1	75D	SPACER	DISTANZIALE

HYD.PUMP DRIVE COMANDO ROTAZIONE P.I. 71401683	COMMANDE ROTATION P.H. H [illegible]PUMPE-SCHWENANTRIEB MANDO DE ROTACION B.H.	1.030 TAV.7

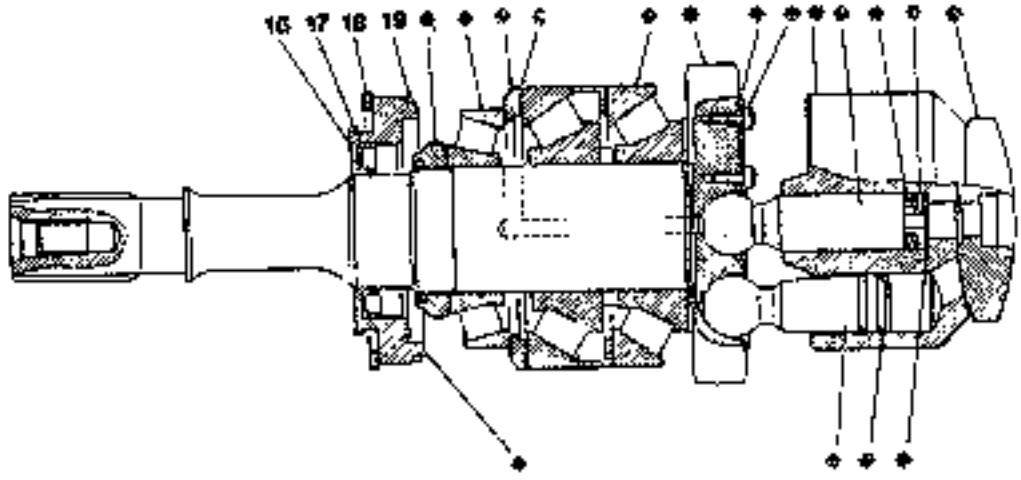

PARTS MARKED ✱ ARE NOT SUPPLIED AS SPARES
I PARTICOLARI CONTRASSEGNATI DA ✱ NON VENGONO FORNITI A RICAMBIO

HYD.PUMP DRIVE
COMANDO ROTAZIONE P.I.
71401603

COMMANDE ROTATION P.H.
HYDR.PUMPE-SCHWENANTRIEB
MANDO DE ROTACION B.H.

1.030 TAV.7

ITEM	PART NUMBER	QTY	TRL CO.	DESCRIPTION	DESCRIZIONE
16	71401695	1	265C	COVER	COPERCHIO
17	71401696	1	122G	SEAL	GUARNIZIONE
18	71401697	1	45A	RING	ANELLO
19	71401698	1	158G	O-RING	GUARNIZIONE O-R

PILOT GEAR PUMP POMPA SERVOCOMANDO 71401467	POMPE DE SERVOCOMMANDE SERVOSTEUERUNGSPUMPE BOMBA DEL SERVOMANDO	1.030 TAV.8

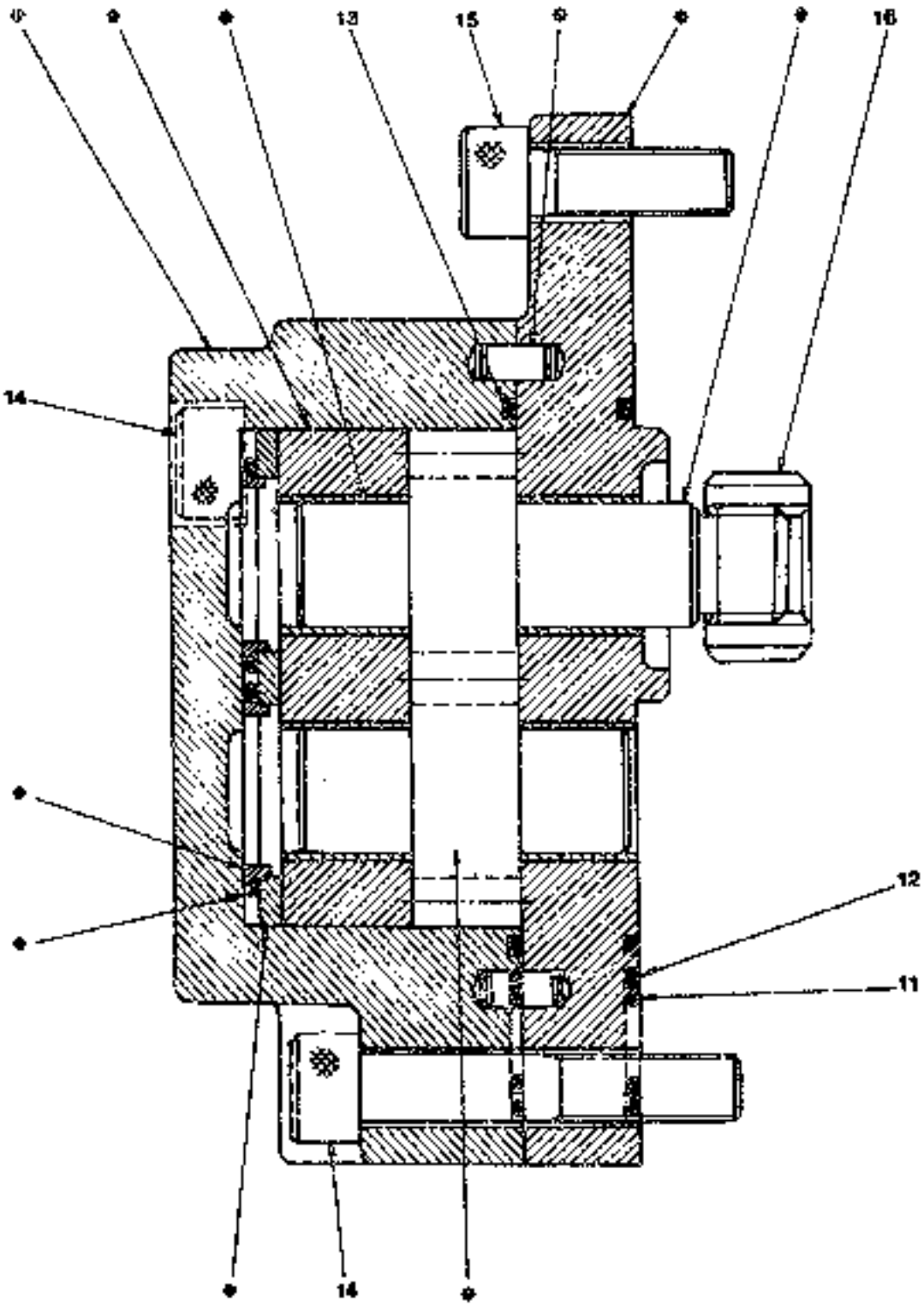

PARTS MARKED ◆ ARE NOT SUPPLIED AS SPARES
I PARTICOLARI CONTRASSEGNATI DA ◆ NON VENGONO FORNITI A RICAMBIO

PILOT GEAR PUMP
POMPA SERVOCOMANDO
71401667

POMPE DE SERVOCOMMANDE
SERVOSTEUERUNGSPUMPE
BOMBA DEL SERVOMANDO

9.030 TAV.8

ITEM	PART NUMBER	QTY	TR. CO.	DESCRIPTION	DESCRIZIONE
11	71401699	2	158G	O-RING	GUARNIZIONE O-R
12	71401700	2	156G	O-RING	GUARNIZIONE O-R
13	71401701	2	159G	O-RING	GUARNIZIONE O-R
14	71401702	5	40V	SCREW	VITE
15	71401703	1	40V	SCREW	VITE
16	71401704	1	30M	SLEEVE	MANICOTTO

J-1

ALPHABETICAL INDEX

DESCRIPTION	SGR.	TAV.	GRID
Accelerator Controls	0.004	1	1C-23
Air Cleaner	0.001	1	1C-13
Alternator-Mounting	0.400	1	1H-9
Alternator (55 amp)	0.400	2	1H-11
Alternator (35 amp)	0.400	3	1H-13
Anti-Shock Valve (Hydr.)	1.082	3	1L-3
Application of Oil, Hammer	5.0020	2	2H-13
Batteries	1.220	4	2D-19
Belts	0.340	1	1G-21
	0.345	1	1G-23
Boom Piping	2.030	1	2F-13
Brake Valve Components	3.010	4	2G-11
Bucket	2.020	1	2F-9
Bucket Cylinder	2.030	5	2F-21
Bull Gear	3.000	1	2G-3
Cab	1.250	1	2D-19
Cab Door	1.250	5	2E-7
Cab Heater-Components	1.290	2	2E-15
Cab Window-Left Side	1.250	6	2E-9
Cab-Frame	1.250	7	2E-11
Cab-Platform	1.250	1	2D-21
Camshaft	0.120	1	1E-19
Check Valve	1.181	2	1K-17
Cold Starting Aid	5.0025	1	2H-19
Connecting Rod	0.091	1	1E-10
Cont. Valve-Hydr. (Ass.Y)	1.050	1	1J-13
Control Valve-Hydr.	1.050	2	1J-17
	1.050	3	1J-19
	1.050	4	1J-21
	1.050	5	1J-23
Controls	1.070	1	1K-5
Counterweight	1.000	1	1I-3
Cowlings	1.300	1	2E-19
	1.300	2	2E-21
Crankshaft	0.080	1	1E-7
Crankshaft Pulley	0.004	1	1E-15
Cylinder Block	0.040	1	1D-5
	0.040	2	1D-7
	0.040	3	1D-9
Cylinder Block Covers	0.043	1	1D-13
	0.043	2	1D-15
Cylinder Head	0.060	1	1D-21
	0.060	2	1D-23
Dashboard (Left)	1.210	1	2D-9
Dashboard (Right)	1.200	1	2D-3
	1.200	3	2D-7
Data Monitor	1.200	2	2D-5
Decals	4.500	1	2H-9
Dipper Stick (2,1m)	5.0022	1	2H-15
Dipper Stick (2,5m) (STD.)	2.003	1	2F-5
Dipper Stick(2,5m)Links(Std.)	2.003	2	2F-7
Dipper Stick (3m)	5.0023	1	2H-21
	5.0039	2	2H-23
Dipper Stick cylinder	2.030	4	2F-19
Dipstick-Engine Oil	0.305	2	1G-7
Discharge Valve	1.040	4	1J-3
Discharge Valve Componen.	3.010	5	2G-13
Drive on Engine (Opt.)	0.350	1	1H-3
Electric System	1.220	2	2D-13
Elements-Engine Oil	0.001	1	1C-13
Elements-fuel	0.200	1	1F-11
Elements-Hydraulic	1.020	1	1E-19
Elements-Pilot	1.080	1	1K-11
Emergency Kits	4.000	1	2H-7
Engine	0.021	1	1D-3
Engine-Controls	0.004	1	1C-23
Engine-Suspensions	0.000	1	1C-11
Engine Breather	0.045	1	1D-17
	0.045	1A	1D-19
Engine Cooling Piping	0.523	1	1G-17
Engine Heat Exchanger	0.310	1	1G-9
	0.310	2	1G-11
Engine Lifting Eyes	0.450	1	1H-15
Engine Oil Filter	0.302	1	1G-3
Engine Oil Piping	0.305	1	1G-5
Engine Oil Pump	0.300	1	1F-23
Engine Oil Sump	0.042	1	1D-11
Engine Piston	0.082	1	1E-11
Engine Suspensions	0.000	1	1C-11
Exhaust Manifold	0.077	1	1E-5
Exhaust Valve	0.060	2	1D-23
Fan	0.345	1	1G-23
Fan Drive	0.345	1	1G-23
"Filter Care" Kit	21		1A-23
Filter-Pilot System	1.080	1	1K-11
Filters-Air	0.001	1	1C-13
Filters-Engine Oil	0.232	1	1G-3
Filters-Fuel	0.200	1	1F-11
Filters-Hydr. System	1.020	1	1I-7
Flywheel-Engine	0.083	1	1E-13
Fuel Filter	0.200	1	1F-11
Fuel Piping	0.203	1	1F-15
Fuel Pump	0.201	1	1F-13
Fuel Tank	1.010	1	1I-5
Fuses	1.200	3	2D-7
Guards	1.300	2	2E-21
Handle	1.300	3	2E-23
Heater	1.290	1	2E-15
Horn	1.220	2	2D-15
Hyd.Pump Drive	1.030	7	1I-21
Hyd.Pump Regulator Valve	1.030	6	1I-19
Hyd.Pump Regulator-Cover	1.030	4	1I-15
	1.030	5	1I-17
Hydr.Pump-Components	1.030	2	1I-11
Hydr.Pump Regulator-Comp.	1.030	3	1I-13

ALPHABETICAL INDEX

DESCRIPTION	SGR.	TAV.	GRID
Hydraulic Pump	1.030	1	1I-9
Idler	3.020	1	1G-15
Injection Nozzle-Lines	0.149	1	1F-9
Injection Pump	0.140	2	1E-23
	0.140	3	1F-3
	0.140	4	1F-5
	0.140	5	1F-7
Injection Pump-Piping	0.140	1	1L-21
Intake Manifold	0.071	1	1E-3
Intake Valve	0.060	2	1D-21
Lift Cylinder (Left)	2.030	3	1F-17
Lift Cylinder (Right)	2.030	2	2F-15
Lights	1.220	2	2D-15
Lower Frame	3.000	1	2G-3
Lubric. Fitting Piping	2.040	1	2F-23
Main Piping	1.060	1	1K-3
Mirror (Rear)	1.300	2	2E-21
Monobloc Boom	2.000	1	2F-3
Motor - Starter	0.360	2	1H-7
Motor - Swing	1.040	1	1J-3
Motor - Travel	3.010	1	12G-5
Motor - Wiper	1.220	1	2D-13
Muffler	0.002	1	1C-15
Oil Tank	1.020	1	1I-7
Operator's Seat	1.250	2	2D-23
OperatorsSeat(Bostrom)(Std.)	5.0151	1	2I-3
Pilot Gear Pump	1.030	8	1I-23
Pilot Piping(1)	1.080	1	1K-11
Pilot Piping(2)	1.081	1	1K-15
Pilot Piping(3)	1.082	1	1K-19
Pilot Piping (4)	1.083	1	1L-5
Pilot Piping (5)	1.084	1	1L-7
Pilot Valve	1.070	3	1K-9
Pilot Valve-components	1.070	2	1K-7
Pipin-Boom	2.030	1	2F-13
Piping-Engine Oil	0.350	1	1H-3
Piping-Injection	0.149	1	1F-9
Piping-Lube Fittings	2.040	1	2G-23
Piping-Main	1.060	1	1K-3
Piping-Pilot(1)	1.080	1	1K-11
Piping-Pilot(3)	1.082	1	1K-19
Piping-Pilot(4)	1.083	1	1L-5
Piping-Pilot(5)	1.084	1	1L-7
Piping-Pump Contr. Valve	1.050	1	1J-13
Piping-Travel (Lower)	3.070	1	2H-5
Piping-Turbocharger	0.241	1	1F-21
Pump-Engine Oil	0.300	1	1F-23
Pump-Fuel	0.201	1	1F-13
Pump-Hydraulic	1.030	1	1I-9
Pump-Injection	0.140	1	1E-21
Pump-Pilot	1.030	8	1I-23

DESCRIPTION	SGR.	TAV.	GRID
Pump-Water	0.320	1	1G-13
Pump/Control Valve Piping	1.050	1	1J-13
Radiator	0.003	1	1C-17
Radiator-Components	0.003	2	1C-19
	0.003	3	1C-21
Rocker Arm	0.060	2	1D-23
Rotary Distr.-Components	3.060	2	2H-3
Rotary Distributor	3.060	1	2G-23
Seat Belt (Std.)	5.0536	1	2I-5
Sensors	1.220	2	2D-15
Solenoid Valve	1.090	2	1K-13
Starter	0.360	2	1H-7
Starter-Mounting	0.360	1	1H-5
Stop Valve	1.082	2	1K-23
Swing Motor-Components	1.040	3	1J-7
Swing Red.Unit-Components	1.040	2	1J-5
Swing Reduction Unit	1.040	1	1J-3
Thermostat & Housing	0.326	1	1G-19
Timing Control	0.100	1	1E-17
Tool Kit	5.0033	1	2I-9
track Chain	3.050	1	2G-21
Track Roller	3.040	1	2G-19
Travel Motor-componen.	3.010	3	2G-9
Travel Piping (Lower)	3.070	1	2H-5
Travel Red.Unit-Componen.	3.010	2	2G-7
Travel Reduction Units	3.010	1	2G-5
Turbocharger	0.240	1	1F-17
	0.240	2	1F-19
Turbocharger Piping	0.241	1	1F-21
Upper Frame	1.000	1	1E-17
Upper Roller	3.030	1	2G-17
Valve-Anti-Shock(Hydr.)	1.092	3	1L-3
Valve-Check (Pilot)	1.081	2	1K-17
Valve-Exhaust	0.050	2	1D-23
Valve-Intake	0.060	2	1D-23
Valve-Pilot (Hydr.)	1.070	1	1K-5
Valve-Pilot(Travel)	1.070	1	1K-5
Valve-Solenoid	1.090	2	1K-13
Valve-Stop(Travel)	1.082	1	1K-21
Washer (windshield)	1.220	3	2D-17
Water Pump	0.320	1	1G-13
Water Pump Drive	0.340	1	1G-21
Water Pump-Components	0.320	2	1C-15
Wiper	1.220	1	2D-11

FH120

SWING REDUCTION UNIT MOTORIDUTTORE DI ROTAZ.	MOTORREDUCTOR ROTACION UNTERSETZUNGGETRIEBE REDUCTOR DE ROTACION	1.040 TAV.1

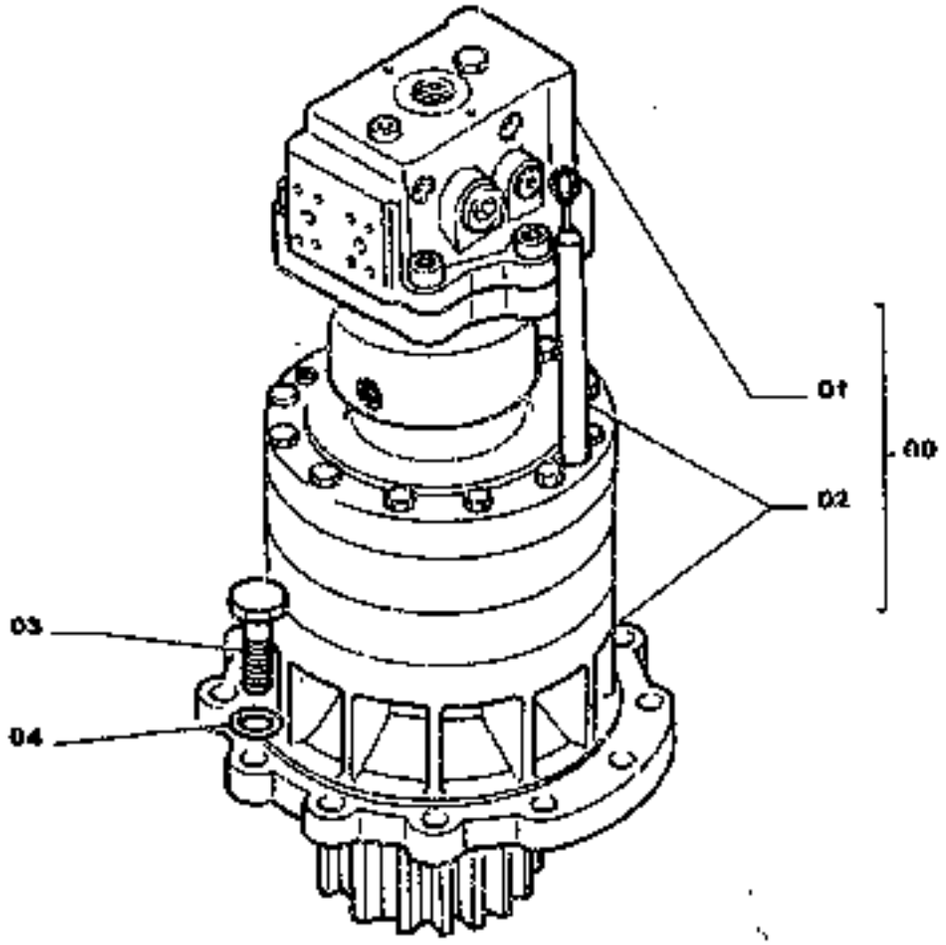

FH120

SWING REDUCTION UNITS
MOTORIDUTTORI DI ROTAZ.
MOTOREDUCTORES ROTACION
UNTERSETZUNGSGETRIEBE
REDUCTORES DE ROTACION

1.040 TAV.1

ITEM	PART NUMBER	QTY	TR. CO.	DESCHIPTION	DESCRIZIONE
00	71401510	1	7482	SWING MOTOREDUCTION -ASS.LY	MOTORIDUTT.ROTAZIONE -COMPL.
01	71401731	1	127M	HYDRAULIC MOTOR -ASS.LY SEE J-8	MOTORE IDRAULICO -COMPL. VED. TAV.3
02	71401732	1	58R	REDUCTION GEAR -ASS.LY SEE J-6	RIDUTTORE -COMPL. VED. TAV.2
03	15224034	10	40V	SCREW 20X2,5X65	VITE 20X2,5X65
04	71415214	10	131R	WASHER	ROSETTA

FH120

SWING RED.UNIT-COMPONENTS RIDUTTORE ROT.-COMPONENTI 71401732	REDUCTEUR-COMPOSANTS UNTERSETZUNG.-EINZELTEILE REDUCTOR-COMPONENTS	1.040 TAV.2

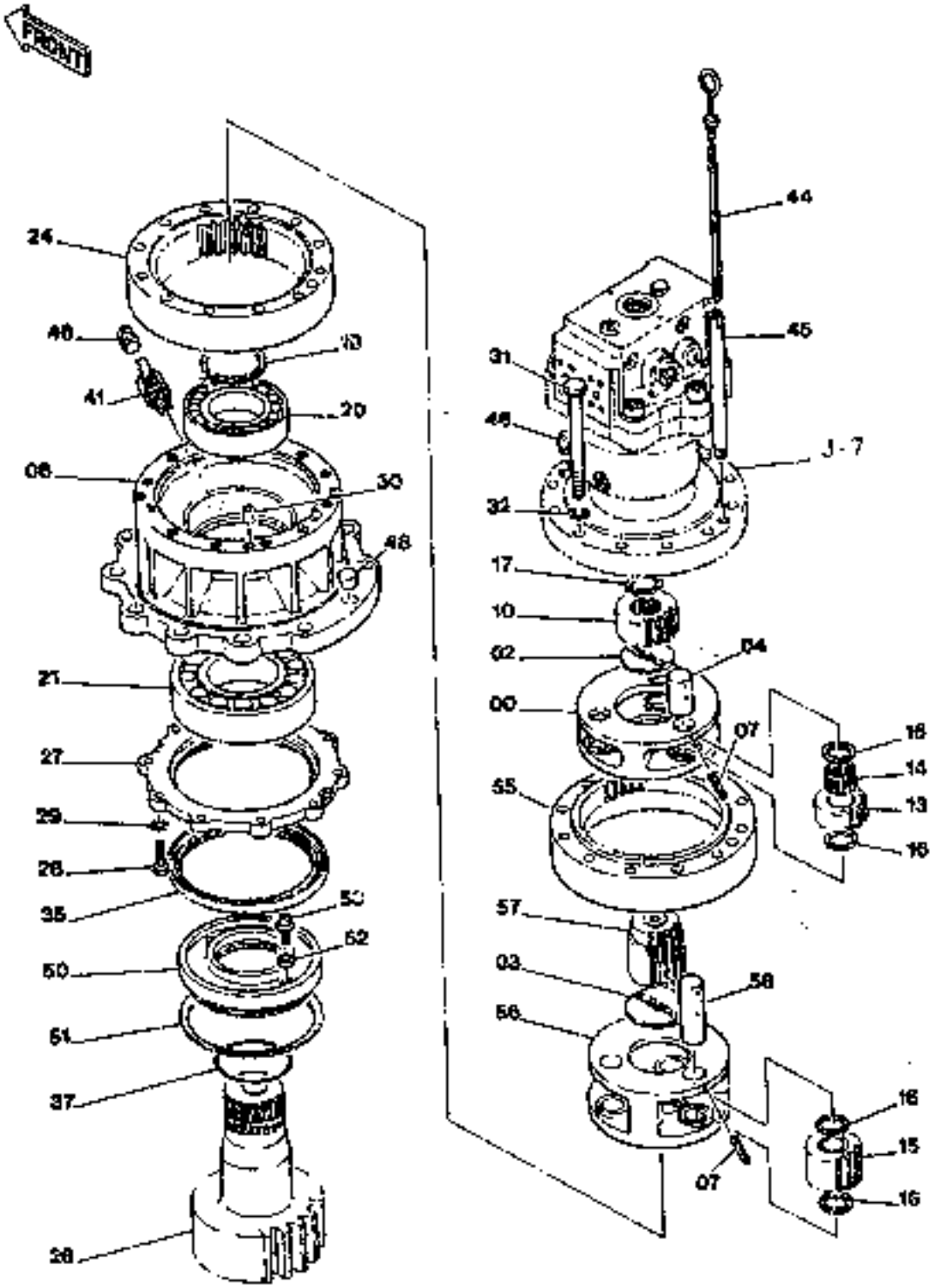

FH120

SWING RED.UNIT-COMPONENTS | REDUCTEUR-COMPOSANTS | 1.040 TAV.2
RIDUTTORE ROT.-COMPONENTI | UNTERSETZUNG.-EINZELTEILE
71401732 | REDUCTOR-COMPONENTS

ITEM	PART NUMBER	QTY	TR. CO.	DESCRIPTION	DESCRIZIONE
00	71401731	1	196P	PLANETARY CARRIER	PORTA-SATELLITI
02	71401731	1	120P	PLATE	PIATTELO
03	71401735	1	120P	PLATE	PIATTELO
04	71401736	3	80P	PIN	PERNO
06	71401737	1	200C	BODY	CORPO
07	71401738	6	200S	PIN	SPINA
10	71401739	1	50I	GEAR	INGRANAGGIO
13	71401740	3	145P	SUN GEAR	PLANETARIO
14	71401741	3	341C	BEARING	CUSCINETTO
15	71401742	3	145P	SUN GEAR	PLANETARIO
16	71401743	12	45A	PING	ANELLO
17	71401744	1	187A	SNAP RING	ANELLO ELASTICO
19	71401745	1	187A	SNAP RING	ANELLO ELASTICO
20	71401746	1	341C	BEARING	CUSCINETTO
21	71401747	1	341C	BEARING	CUSCINETTO
24	71401748	1	297C	RING GEAR	CORONA DENTATA
26	71401749	1	16A	SHAFT	ALBERO
27	71401750	1	265C	COVER	COPERCHIO
28	71401751	10	40V	SCREW	VITE
29	10515874	10	131R	WASHER	ROSETTA
30	71401752	2	200S	PIN	SPINA
31	15201934	12	40V	SCREW	VITE
32	10572074	12	170R	LOCKWASHER	ROSETTA ELASTICA
35	71401753	1	122G	SEAL	GUARNIZIONE
37	71401816	1	158G	O-RING	GUARNIZIONE O-R
41	71401755	1	150R	COCK	RUBINETTO
44	71401767	1	91A	DIPSTICK	ASTA LIVELLO
45	71401756	1	193T	TUBE	TUBO RIGIDO
46	71401757	2	60T	PLUG	TAPPO
48	71401758	2	50T	PLUG	TAPPO
50	71401759	1	30M	SLEEVE	MANICOTTO
51	71401760	1	187A	SNAP RING	ANELLO ELASTICO
52	71401761	2	68C	MAGNET	CALAMITA
53	71401762	2	40V	SCREW	VITE
55	71401763	1	297C	RING GEAR	CORONA DENTATA
56	71401764	1	196P	PLANETARY CARRIER	PORTA-SATELLITI
57	71401765	1	50I	GEAR	INGRANAGGIO
58	71401736	3	80P	PIN	PERNO

SWING MOTOR-COMPONENTS	MOTEUR HYDR.-COMPOSANTS	1.040 TAV.3
MOTORE DI ROTAZ.-COMP.	HYDROMOTOR-EINZELTEILE	
71481731	MOTOR HIDR.-COMPONENTES	

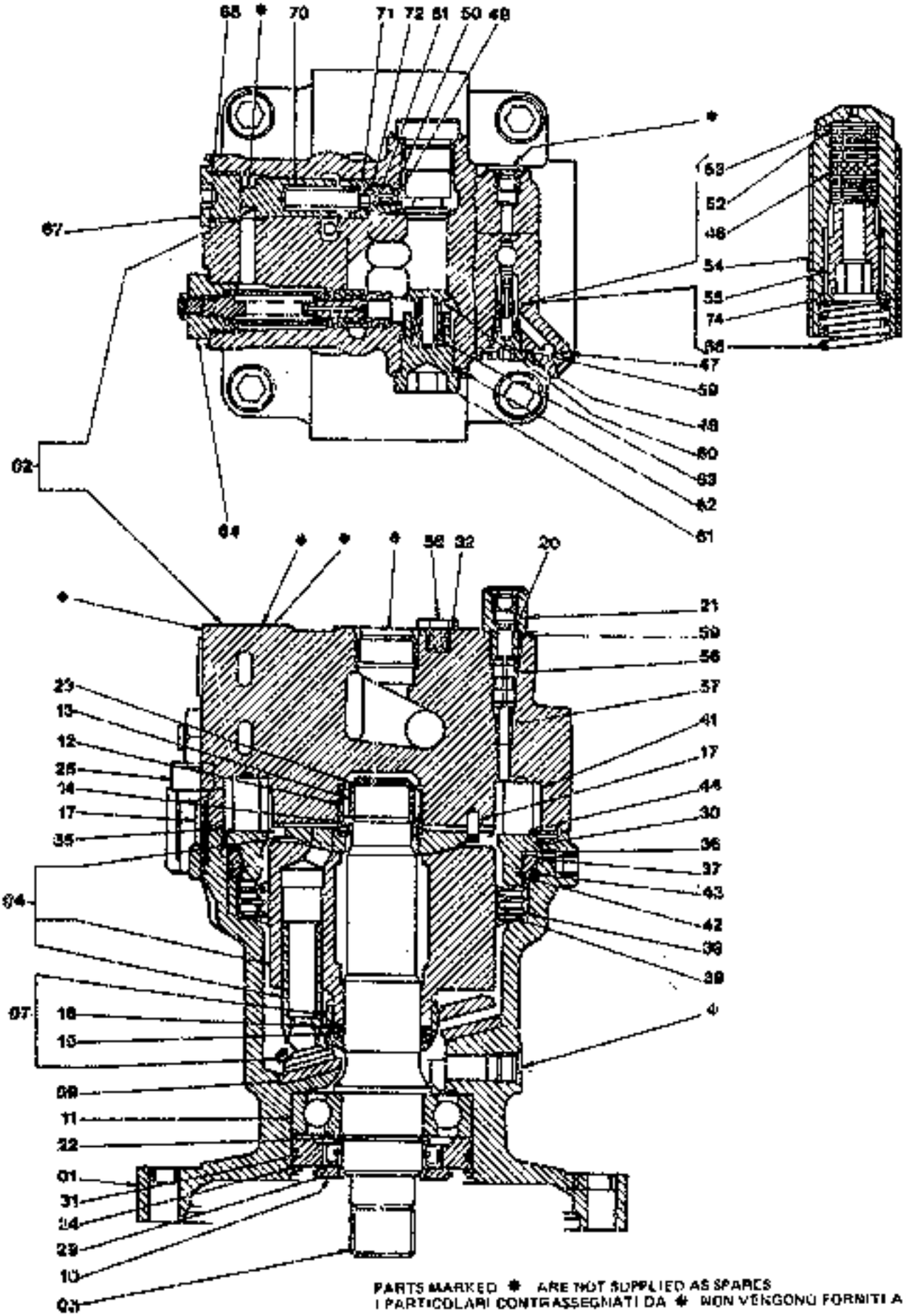

PARTS MARKED * ARE NOT SUPPLIED AS SPARES
I PARTICOLARI CONTRASSEGNATI DA * NON VENGONO FORNITI A RICAMBIO

FH120

SWING MOTOR-COMPONENTS
MOTORE IDR.ROTAZ.-COMP.
71401731

MOTEUR HYDR.-COMPOSANTS
HYDROMOTOR-EINZELTEILE
MOTOR HIDR.-COMPONENTES

1.040 TAV.2

ITEM	PART NUMBER	QTY	TR. CO.	DESCRIPTION	DESCRIZIONE
01	71401894	1	300C	BODY	CORPO
02	71401895	1	265C	COVER -ASS.LY	COPERCHIO -COMPL.
03	71401896	1	16A	SHAFT	ALBERO
04	71401897	1	300C	BODY -ASS.LY	CORPO -COMPL.
07	71401898	1	105F	PLATE -ASS.LY	PIASTRA -COMPL.
09	71401899	1	60D	DISC	DISCO
10	71401900	1	101A	CASING	ASTUCCIO
11	71401901	1	341C	BEARING	CUSCINETTO
12	71401902	1	341C	BEARING	CUSCINETTO
13	71401903	1	45A	RING	ANELLO
14	71401904	2	180C	COLLAR	COLLARE
15	71401905	1	100M	SPRING	MOLLA
16	71401906	1	69S	SEAT	SEDE
17	71401907	3	200S	PIN	SPINA
20	71401908	1	80P	PIN	PERNO
21	71401909	1	50T	PLUG	TAPPO
22	71401910	1	187A	SNAP RING	ANELLO ELASTICO
23	71401911	1	187A	SNAP RING	ANELLO ELASTICO
24	71401912	1	187A	SNAP RING	ANELLO ELASTICO
25	71401913	4	40V	SCREW	VITE
29	71401914	1	122G	SEAL	GUARNIZIONE
30	71401915	1	158G	O-RING	GUARNIZIONE O-R
31	71401916	1	158G	O-RING	GUARNIZIONE O-R
32	71401683	2	158G	O-RING	GUARNIZIONE O-R
36	71401917	1	235S	PISTON	STANTUFFO
37	71401918	1	180C	COLLAR	COLLARE
38	71401919	3	60D	DISC	DISCO
39	71401920	3	120P	PLATE	PIATTELO
41	71401921	8	100M	SPRING	MOLLA
42	71401922	1	158G	O-RING	GUARNIZIONE O-R
43	71401923	1	158G	O-RING	GUARNIZIONE O-R
44	71401924	1	158G	O-RING	GUARNIZIONE O-R
46	71401925	1	65F	FILTER	FILTRO
47	71401926	1	50T	PLUG	TAPPO
48	71401927	1	50T	PLUG	TAPPO
49	71401928	2	140S	BALL	SFERA
50	71401929	2	100M	SPRING	MOLLA
51	71401930	2	145G	GUIDE	GUIDA
52	71401931	5	20U	JET	UGELLO
53	71401932	13	131R	WASHER	ROSETTA
54	71401933	1	300C	BODY	CORPO
55	71401934	1	40V	SCREW	VITE
56	71401935	1	10V	VALVE	VALVOLA
57	71401936	1	100M	SPRING	MOLLA
58	71401937	2	50T	PLUG	TAPPO
59	71404165	2	158G	O-RING	GUARNIZIONE O-R
60	71401938	2	10V	VALVE	VALVOLA
61	71401939	2	50T	PLUG	TAPPO
62	71401940	2	158G	O-RING	GUARNIZIONE O-R
63	71401941	2	100M	SPRING	MOLLA
64	71401795	2	10V	VALVE -ASS.Y SEE J-11	VALVOLA -COMP.VED.TAV. 4
65	71401942	1	158G	O-RING	GUARNIZIONE O-R
66	71401943	1	100M	SPRING	MOLLA
67	71401944	2	50T	PLUG	TAPPO

SWING MOTOR-COMPONENTS MOTORE IDR.ROTAZ.-COMP. 71401731	MOTEUR HYDR.-COMPOSANTS HYDROMOTOR-EINZELTEILE MOTOR HIDR.-COMPONENTES	1.040 TAV.3

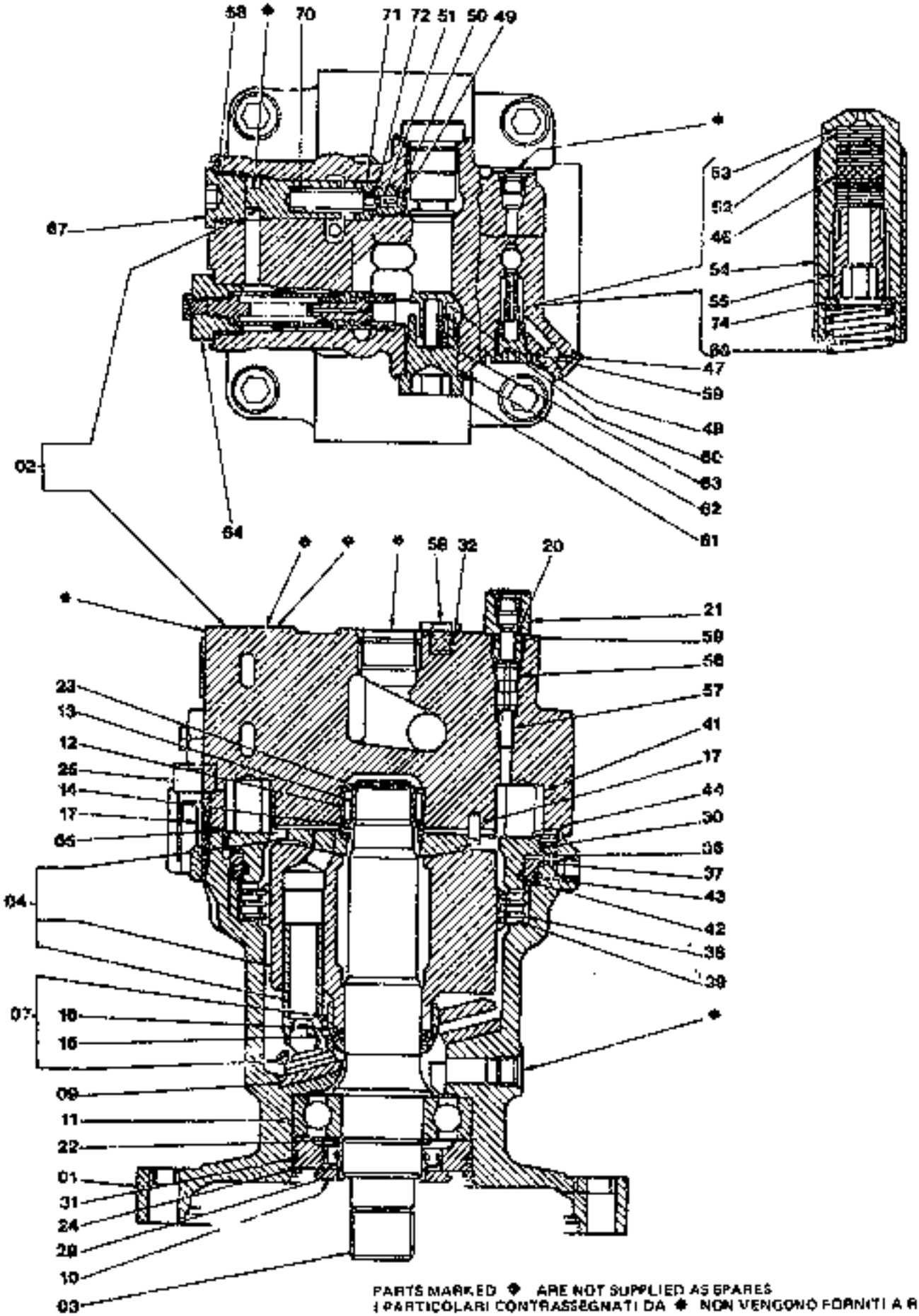

PARTS MARKED ✱ ARE NOT SUPPLIED AS SPARES
I PARTICOLARI CONTRASSEGNATI DA ✱ NON VENGONO FORNITI A RICAMBIO

SWING MOTOR-COMPONENTS MOTORE IDR.ROTAZ.-COMP. 71401721	MOTEUR HYDR.-COMPOSANTS HYDROMOTOR-EINZELTEILE MOTOR HIDR.-COMPONENTES	1.040	TAV.3

ITEM	PART NUMBER	QTY	TR. CO.	DESCRIPTION	DESCRIZIONE
62	71401945	2	158G	O-RING	GUARNIZIONE O-RI
70	71401946	2	100M	SPRING	MOLLA
71	71401947	2	50T	PLUG	TAPPO
72	71401948	2	158G	O-RING	GUARNIZIONE O-R
74	71401949	1	131R	WASHER	ROSETTA

FH120

DISCHARGE VALVE VALVOLA DI SCARICO 71401795	SOUPAPE D'ECHAPPEMENT AUSLASSVENTIL VALVULA DE ESCAPE	1.040 TAV.4

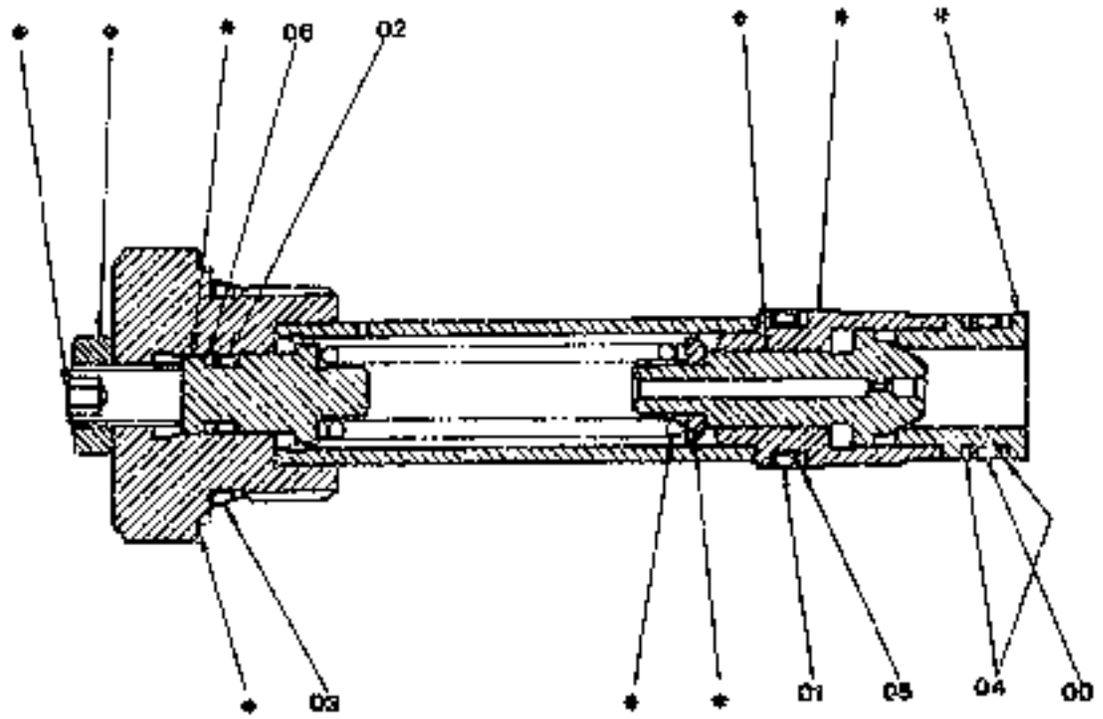

PARTS MARKED * ARE NOT SUPPLIED AS SPARES
I PARTICOLARI CONTRASSEGNATI DA * NON VENGONO FORNITI A RICAMBIO

J-12

DISCHARGE VALVE
VALVOLA DI SCARICO
71401795

SOUPAPE DECHAPPEMENT
AUSLASSVENTIL
VALVULA DE ESCAPE

1,040 TAV.4

ITEM	PART NUMBER	QTY	TR. CO.	DESCRIPTION	DESCRIZIONE
00	71401802	1	158G	O-RING	GUARNIZIONE O-R
01	71401804	1	158G	O-RING	GUARNIZIONE O-R
02	71401671	1	158G	O-RING	GUARNIZIONE O-R
03	71401845	1	158G	O-RING	GUARNIZIONE O-R
04	71401882	2	45A	RING	ANELLO
05	71401887	1	45A	RING	ANELLO
06	71401893	1	45A	RING	ANELLO

PUMP/CONTROL VALVE PIPING TUBAZ.POMPA/DISTRIBUTORE	TUYAUTERIES POMPE/DISTR. LEITUNGEN-PUMPE/STEUERG. TUBERIAS BOMBA/DISTR.	1.050 TAV.1

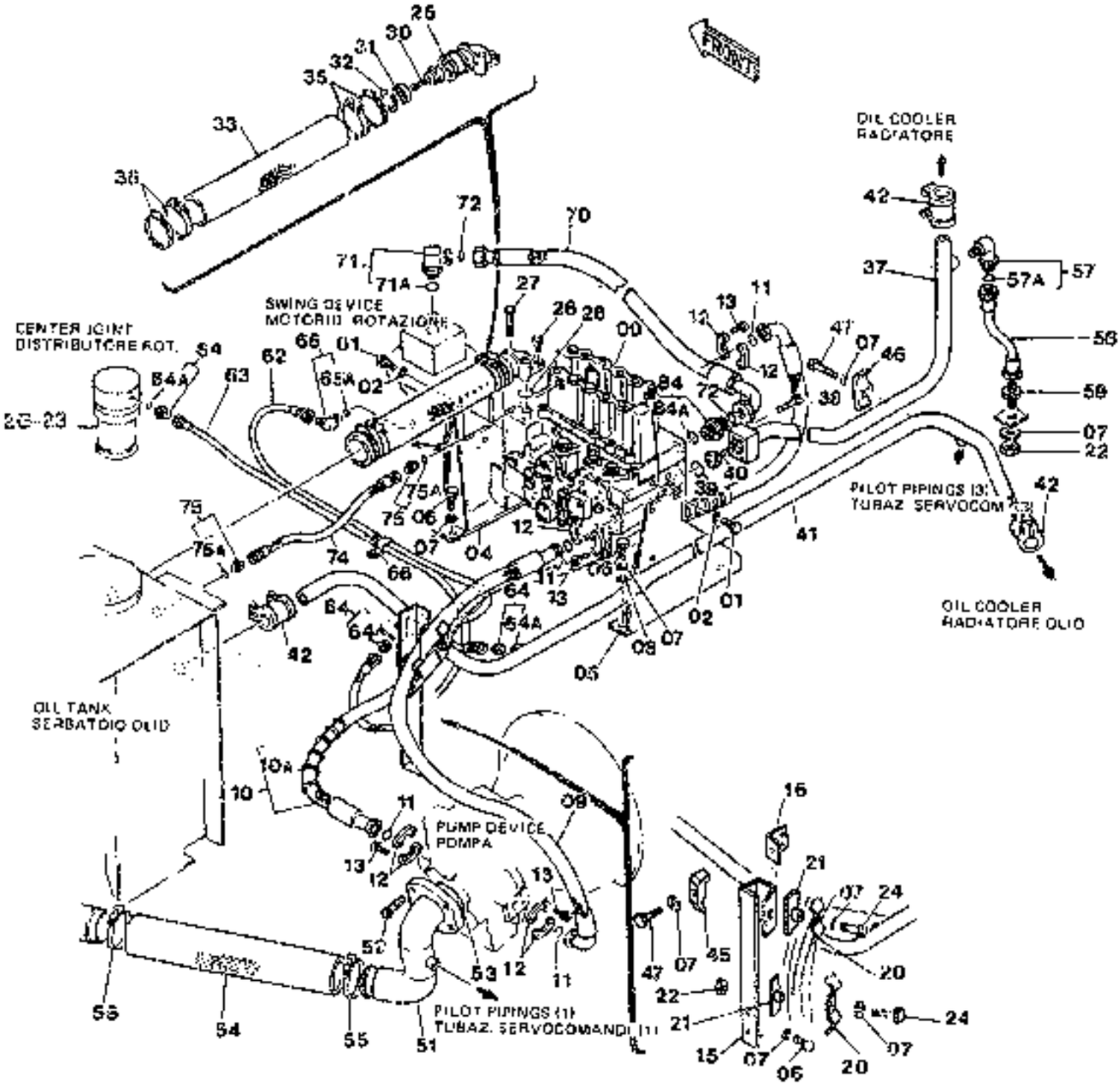

FH120

PUMP/CONTROL VALVE PIPING — TUYAUTERIES POMPE/DISTR. — 1.050 TAV.1
TUBAZ.POMPA/DISTRIBUTORE — LEITUNGEN-PUMPE/STEUERG. — TUBERIAS BOMBA/DISTR.

ITEM	PART NUMBER	QTY	TR. CO.	DESCRIPTION	DESCRIZIONE
00	71401619	1	83D	CONTROL VALVE -ASS.LY	DISTRIBUTORE -COMPL.
				SEE TAV. 2-3-4-5	VED. TAV. 2-3-4-5
01	11115534	8	40V	SCREW 14X2X30	VITE 14X2X30
02	10517174	8	131R	WASHER	ROSETTA
04	71405797	1	225S	BRACKET	STAFFA
05	71405783	1	225S	BRACKET	STAFFA
06	11112634	6	40V	SCREW 12X1,75X35	VITE 12X1,75X35
07	10517074	11	131R	WASHER	ROSETTA
08	71415213	2	131R	WASHER	ROSETTA
09	71403913	1	285T	HOSE	TUBO FLESSIBILE
10	71404085	1	285T	HOSE	TUBO FLESSIBILE
10A	71415875	1	142G	SHEATH	GUAINA
11	70924110	4	158G	O-RING	GUARNIZIONE O-R
12	71404407	8	417S	HALF FLANGE	SEMIFLANGIA
13	14420234	16	40V	SCREW 10X1,5X30	VITE 10X1,5X30
15	71405801	1	225S	BRACKET	STAFFA
16	71405804	1	225S	BRACKET	STAFFA
20	71415871	2	231S	CLIP	STAFFETTA
21	71405808	2	231S	CLIP	STAFFETTA
22	11702021	2	100	NUT	DADO
24	11113334	2	40V	SCREW 12X1,75X55	VITE 12X1,75X55
25	71405808	1	188C	MANIFOLD	COLLETTORE
26	14032334	2	40V	SCREW 10X1,5X22	VITE 10X1,5X22
27	14420934	2	40V	SCREW 10X1,5X65	VITE 10X1,5X65
28	71404169	1	158G	O-RING	GUARNIZIONE O-R
30	71401629	1	10V	VALVE	VALVOLA
31	71415930	1	120P	PLATE	PIATTELO
32	11960476	1	187A	SNAP RING	ANELLO ELASTICO
33	71415932	1	30M	SLEEVE	MANICOTTO
35	71404503	4	180C	COLLAR	COLLARE
				D2599 FROM S/N 0228	D2599 DAL TELAIO 0228
	70003848	4	180C	COLLAR	COLLARE
				C2599 UP TO S/N 0227	C2599 FINO AL TELAIO 0227
37	71406126	1	193T	TUBE	TUBO RIGIDO
38	14420734	4	40V	SCREW 10X1,5X55	VITE 10X1,5X55
39	70924157	1	158G	O-RING	GUARNIZIONE O-R
40	71401628	1	10V	VALVE	VALVOLA
41	71406124	1	193T	TUBE	TUBO RIGIDO
42	71405824	3	67G	COUPLING	GIUNTO
45	71405814	1	231S	CLIP	STAFFETTA
46	71405815	1	231S	CLIP	STAFFETTA
47	11113534	2	40V	SCREW 12X1,75X65	VITE 12X1,75X65
51	71405816	1	193T	TUBE	TUBO RIGIDO
52	14426334	4	40V	SCREW 16X2X45	VITE 16X2X45
53	71404170	1	158G	O-RING	GUARNIZIONE O-R
54	71405818	1	30M	SLEEVE	MANICOTTO
55	71404504	2	180C	COLLAR	COLLARE
				D2599 FROM S/N 0228	D2599 DAL TELAIO 0228
	70003848	2	180C	COLLAR	COLLARE
				C2599 UP TO S/N 0227	C2599 FINO AL TELAIO 0227
57	71404341	1	20R	FITTING -ASS.LY	RACCORDO -COMPL.
57A	714 4166	1	158G	O-RING	GUARNIZIONE O-R
58	71404127	1	285T	HOSE	TUBO FLESSIBILE
59	71404439	1	50T	PLUG	TAPPO

FH120

PUMP/CONTROL VALVE PIPING TUBAZ.POMPA/DISTRIBUTORE	TUYAUTERIES POMPE/DISTR. LEITUNGEN-PUMPE/STEUERG. TUBERIAS BOMBA/DISTR.	1.050 TAV.1

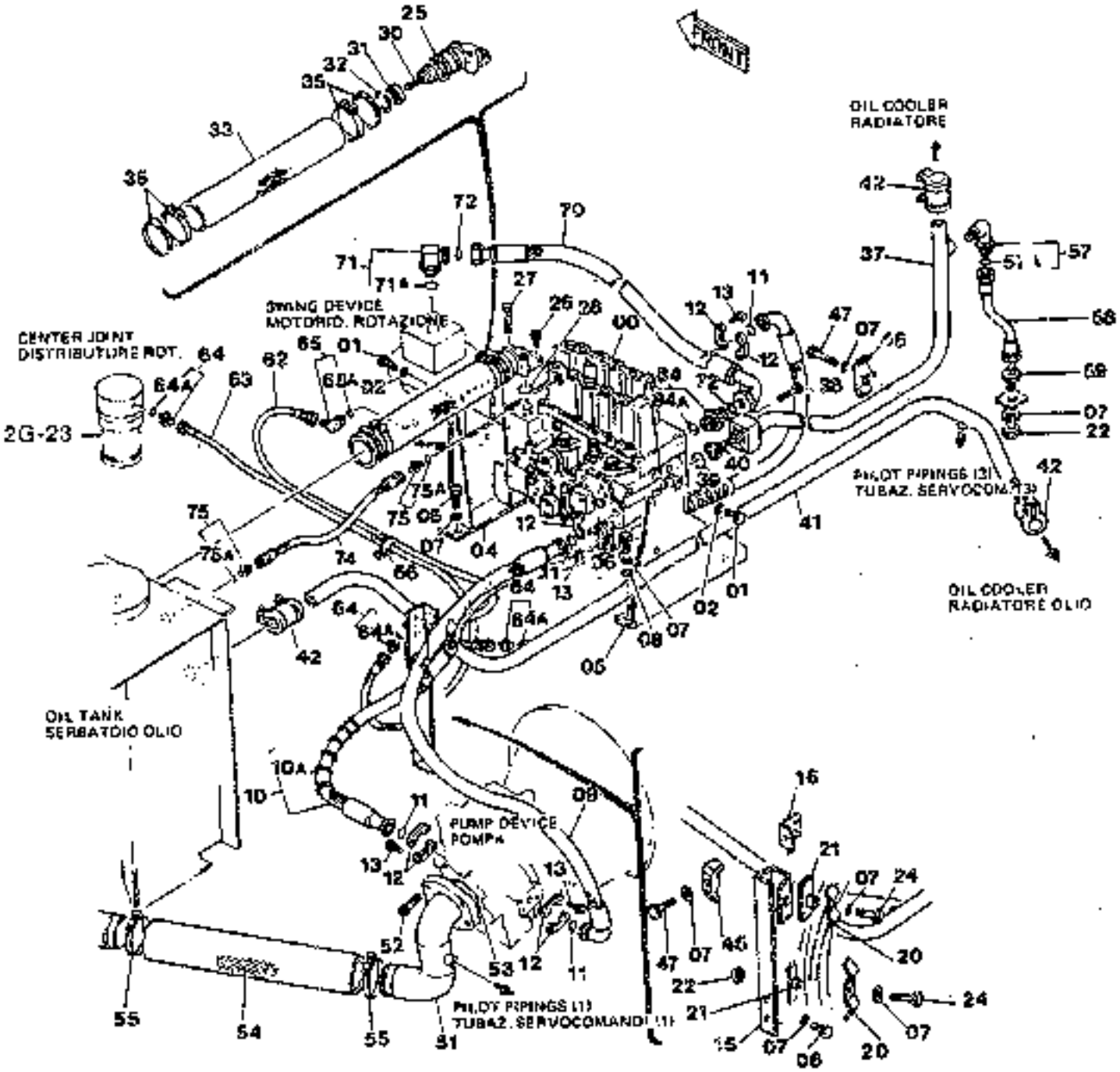

PUMP/CONTROL VALVE PIPING — TUYAUTERIES POMPE/DISTR. — LEITUNGEN-PUMPE/STEUERG. — TUBERIAS BOMBA/DISTR.

1.050 TAV.1

ITEM	PART NUMBER	QTY	TR. CO.	DESCRIPTION	DESCRIZIONE
62	71403956	1	28ST	HOSE	TUBO FLESSIBILE
63	71403957	1	28ST	HOSE	TUBO FLESSIBILE
64	71404357	3	20R	FITTING	RACCORDO
64A	71404165	3	158G	O-RING	GUARNIZIONE O-R
65	71404345	1	20R	FITTING	RACCORDO
65A	71404165	1	158G	O-RING	GUARNIZIONE O-R
66	71415908	1	231S	CLIP	STAFFETTA
70	71404117	1	28ST	HOSE	TUBO FLESSIBILE
71	71404337	1	20R	FITTING	RACCORDO
71A	71404162	1	158G	O-RING	GUARNIZIONE O-R
72	70923843	2	150G	O-RING	GUARNIZIONE O-R
74	71403955	1	28ST	HOSE	TUBO FLESSIBILE
75	71404327	2	20R	FITTING	RACCORDO
75A	71404163	1	158G	O-RING	GUARNIZIONE O-R
84	71404365	1	20R	FITTING	RACCORDO
84A	71404161	1	158G	O-RING	GUARNIZIONE O-R

CONTROL VALVE - HYDR. DISTRIBUTORE IDRAULICO 71401619	DISTRIBUTEUR STEUERGERAET DISTRIBUIDOR	1.050 TAV.2

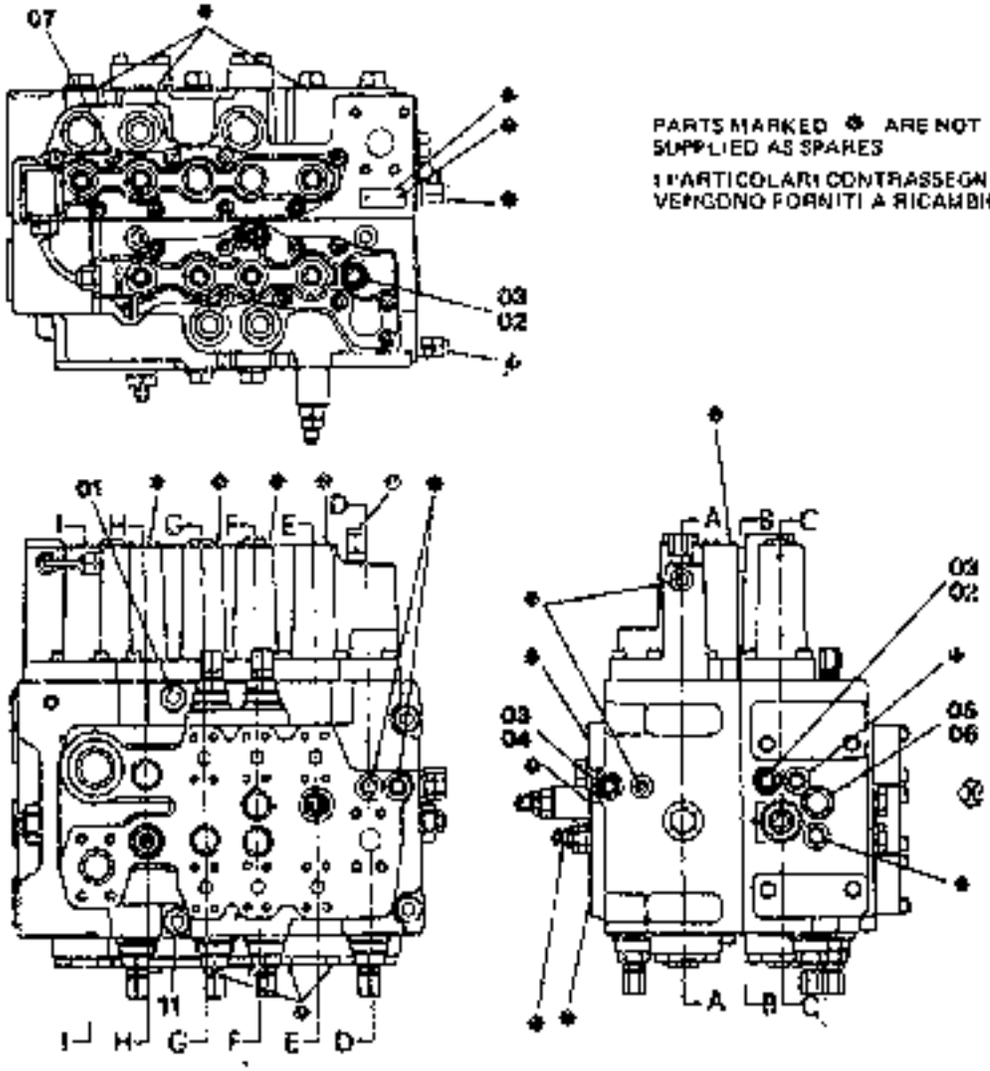

PARTS MARKED ✱ ARE NOT SUPPLIED AS SPARES

I PARTICOLARI CONTRASSEGNATI DA ✱ NON VENGONO FORNITI A RICAMBIO

FH120

CONTROL VALVE - HYDR. | DISTRIBUTEUR | 1.050 TAV.2
DISTRIBUTORE IDRAULICO | STEUERGERAET
71401619 | DISTRIBUIDOR

ITEM	PART NUMBER	QTY	TR. CO.	DESCRIPTION	DESCRIZIONE
01	71401851	6	40V	SCREW	VITE
02	71401861	2	20R	FITTING	RACCORDO
03	71401588	3	158G	O-RING	GUARNIZIONE O-R
04	71401830	1	20R	FITTING	RACCORDO
05	71401823	1	50T	PLUG	TAPPO
06	71401824	1	158G	O-RING	GUARNIZIONE O-R
07	71401873	19	40V	SCREW	VITE

CONTROL VALVE - HYDR. DISTRIBUTORE IDRAULICO 71401618	DISTRIBUTEUR STEUERGERAET DISTRIBUIDOR	1.050 TAV.3

PARTS MARKED ◆ ARE NOT SUPPLIED AS SPARES
I PARTICOLARI CONTRASSEGNATI DA ◆ NON VENGONO FORNITI A RICAMBIO

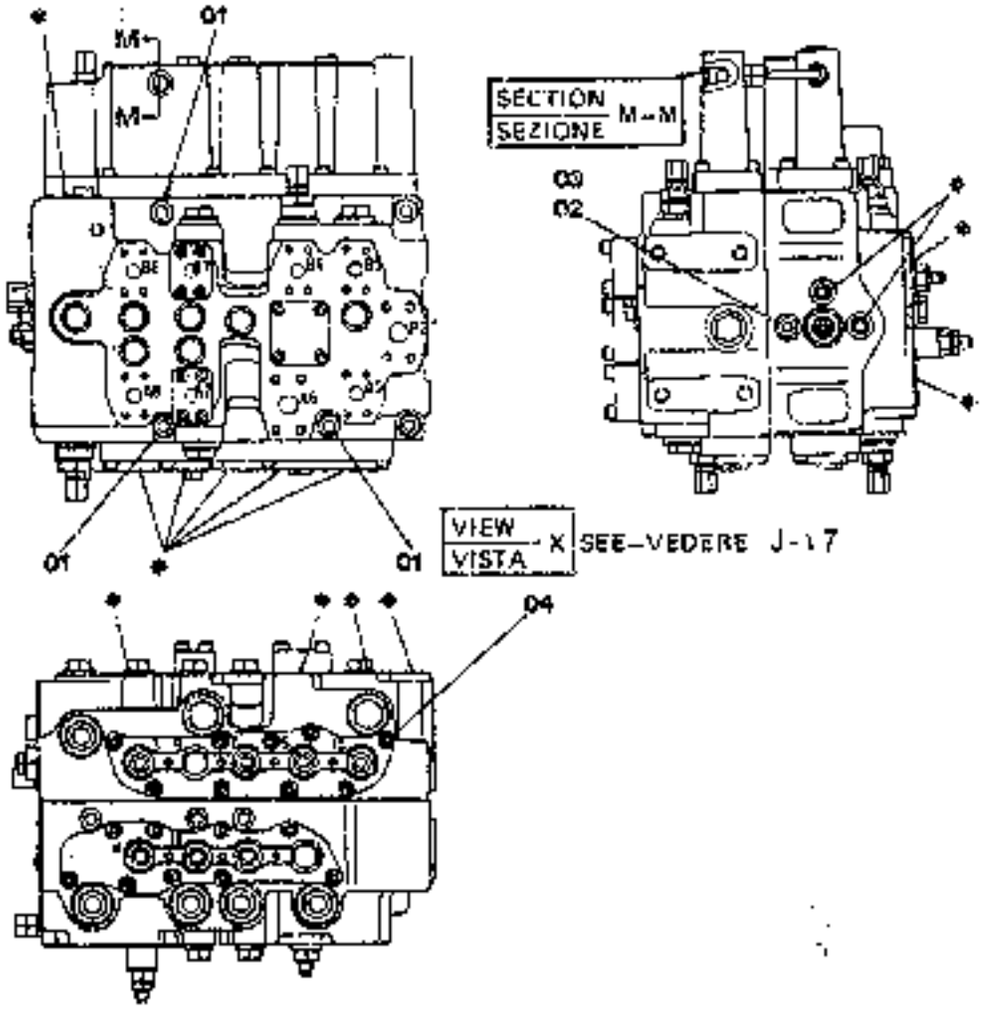

CONTROL VALVE - HYDR.
DISTRIBUTORE IDRAULICO
71401619

DISTRIBUTEUR
STEUERGERAET
DISTRIBUIDOR

1.050 TAV.3

ITEM	PART NUMBER	QTY	TRL CD.	DESCRIPTION	DESCRIZIONE
01	71401805	3	40V	SCREW	VITE
02	71401881	1	20R	FITTING	RACCORDO
03	71401668	1	15BG	O-RING	GUARNIZIONE O-R
04	71401873	18	40V	SCREW	VITE

FH120

CONTROL VALVE - HYDR. DISTRIBUTORE IDRAULICO 71401810	DISTRIBUTEUR STEUERGERAET DISTRIBUIDOR	1:350 TAV.4

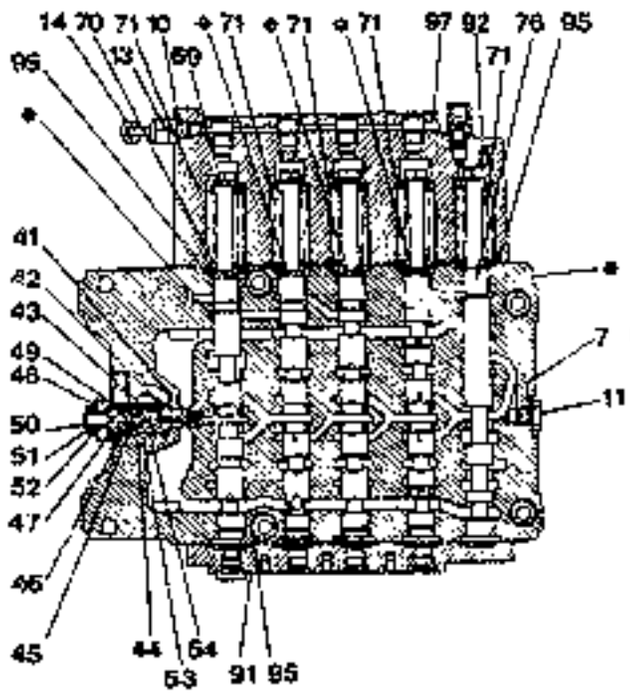

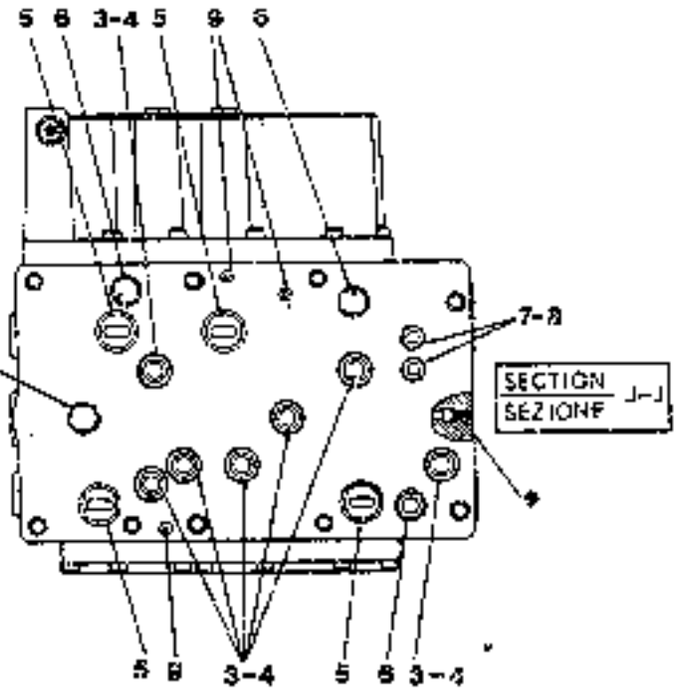

SECTION A-A / SEZIONE — SEE J-17

SECTION B-B / SEZIONE — SEE J-17

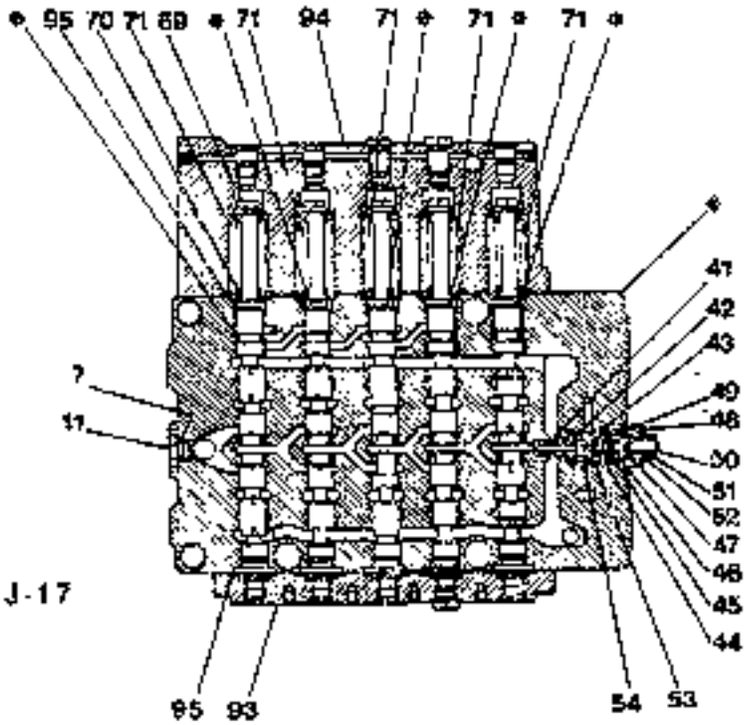

SECTION C-C / SEZIONE — SEE J-17

PARTS MARKED ◆ ARE NOT SUPPLIED AS SPARES

: PARTICOLARI CONTRASSEGNATI DA ◆ NON VENGONO FORNITI A RICAMBIO

CONTROL VALVE - HYDR. | DISTRIBUTEUR | 1.050 TAV.4
DISTRIBUTORE IDRAULICO | STEUERGERAET
71401619 | DISTRIBUIDOR

ITEM	PART NUMBER	QTY	TR. CO.	DESCRIPTION	DESCRIZIONE
03	71401798	7	158C	O-RING	GUARNIZIONE O-R
04	71401799	7	45A	RING	ANELLO
05	71401800	4	158G	O-RING	GUARNIZIONE O-R
06	71401801	4	158G	O-RING	GUARNIZIONE O-R
07	71404165	4	158G	O-RING	GUARNIZIONE O-R
08	71401803	2	45A	RING	ANELLO
09	71401671	3	158G	O-RING	GUARNIZIONE O-R
10	71401688	1	158G	O-RING	GUARNIZIONE O-R
11	71401884	2	50T	PLUG	TAPPO
13	71401889	2	20R	FITTING	RACCORDO
14	71401890	1	193T	TUBE	TUBO RIGIDO
41	71401833	2	40V	SCREW	VITE
42	71401834	2	10V	VALVE	VALVOLA
43	71401835	2	95B	BUSHING	BOCCOLA
44	71401836	2	10V	VALVE	VALVOLA
45	71401837	2	100M	SPRING	MOLLA
46	71401838	2	69S	SEAT	SEDE
47	71401839	2	100M	SPRING	MOLLA
48	71401840	2	300C	BODY	CORPO
49	71401855	2	158G	O-RING	GUARNIZIONE O-R
50	71401856	2	40V	SCREW	VITE
51	71401857	2	5GD	NUT	DADO
52	71401858	2	158G	O-RING	GUARNIZIONE O-R
53	71402465	4	65F	FILTER	FILTRO
54	71402466	2	45A	RING	ANELLO
69	71401859	10	40V	SCREW	VITE
70	71401860	20	60S	CUP	SCODELLINO
71	71401861	10	100M	SPRING	MOLLA
76	71401862	1	130P	PLUNGER	PISTONCINO
91	71401868	1	300C	BODY	CORPO
92	71401869	1	300C	BODY	CORPO
93	71401870	1	300C	BODY	CORPO
94	71401871	1	300C	BODY	CORPO
95	71401872	20	158G	O-RING	GUARNIZIONE O-R
97	71401874	1	50T	PLUG	TAPPO

CONTROL VALVE - HYDR
DISTRIBUTORE IDRAULICO
71401618

DISTRIBUTEUR
STEUERGERAET
DISTRIBUIDOR

1.050 TAV.5

PARTS MARKED * ARE NOT SUPPLIED AS SPARES
I PARTICOLARI CONTRASSEGNATI DA * NON VENGONO FORNITI A RICAMBIO

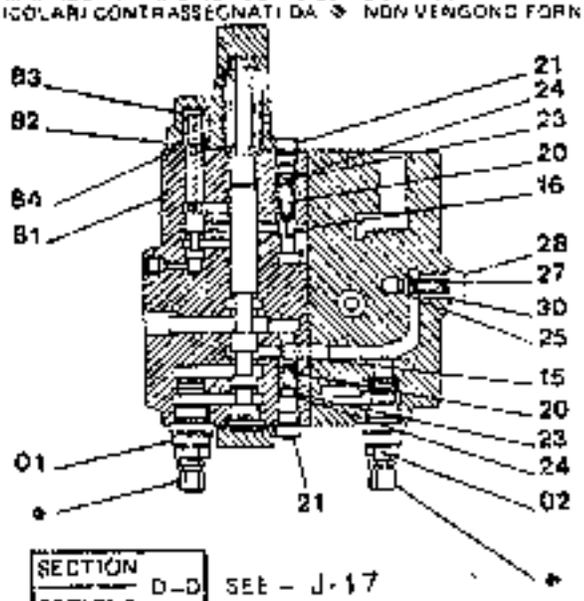

SECTION D-D SEZIONE SEE - J-17

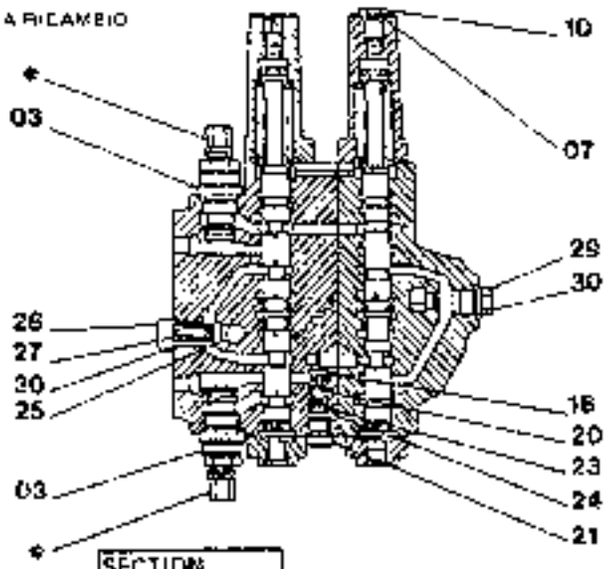

SECTION G-G SEZIONE SEE - J-17

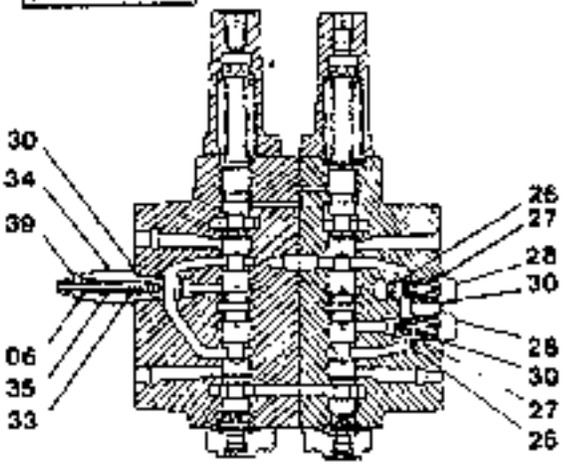

SECTION E-E SEZIONE SEE - J-17

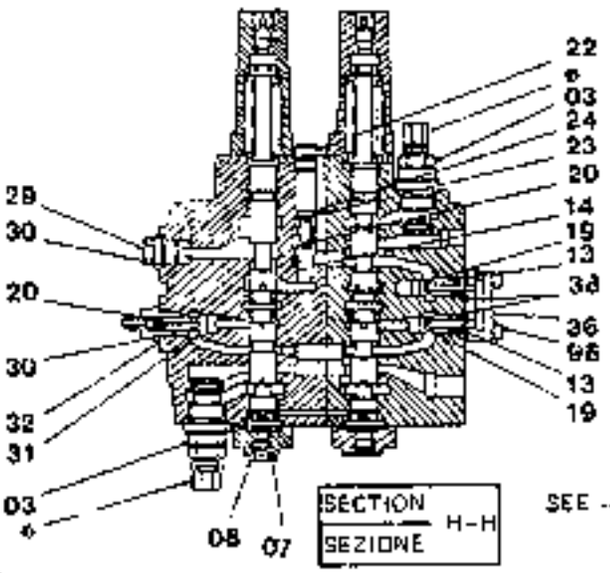

SECTION H-H SEZIONE SEE - J-17

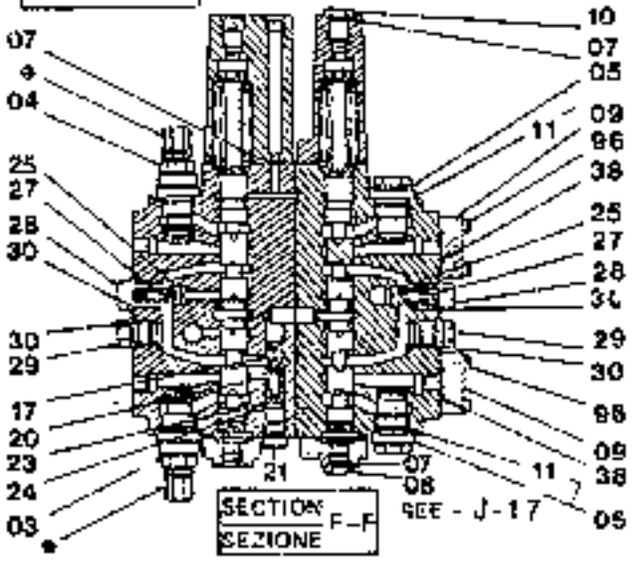

SECTION F-F SEZIONE SEE - J-17

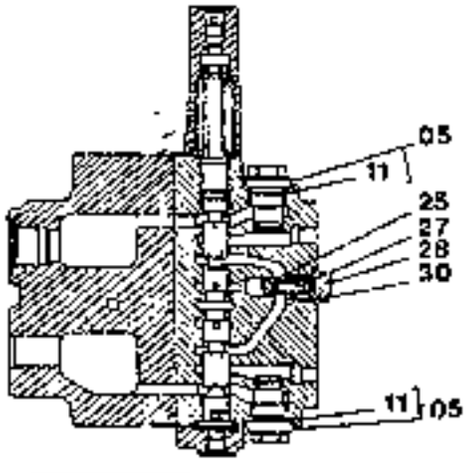

SECTION I-I SEZIONE SEE - J-17

FR120

CONTROL VALVE - HYDR.
DISTRIBUTORE IDRAULICO
71401619

DISTRIBUTEUR
STEUERGERAET
DISTRIBUIDOR

1.050 TAV.5

ITEM	PART NUMBER	QTY	TR. CO.	DESCRIPTION	DESCRIZIONE
01	71401875	1	10V	VALVE	VALVOLA
02	71401876	1	10V	VALVE	VALVOLA
03	71401877	5	10V	VALVE	VALVOLA
04	71401878	1	10V	VALVE	VALVOLA
05	71401879	4	50T	PLUG	TAPPO
06	71401888	1	158G	O-RING	GUARNIZIONE O-R
07	71404165	5	158G	O-RING	GUARNIZIONE O-R
08	71401894	2	50T	PLUG	TAPPO
09	71401895	2	70F	FLANGE	FLANGIA
10	71401898	2	50T	PLUG	TAPPO
11	71401899	4	158G	O-RING	GUARNIZIONE O-R
13	71401907	2	100M	SPRING	MOLLA
14	71401908	1	10V	VALVE	VALVOLA
15	71401909	1	10V	VALVE	VALVOLA
16	71401910	1	10V	VALVE	VALVOLA
17	71401911	1	10V	VALVE	VALVOLA
18	71401912	1	10V	VALVE	VALVOLA
19	71401913	2	10V	VALVE	VALVOLA
20	71401914	6	100M	SPRING	MOLLA
21	71401915	4	50T	PLUG	TAPPO
22	71401916	1	50T	PLUG	TAPPO
23	71401917	5	158G	O-RING	GUARNIZIONE O-R
24	71401918	5	45A	RING	ANELLO
25	71401919	6	10V	VALVE	VALVOLA
26	71401920	1	10V	VALVE	VALVOLA
27	71401921	7	100M	SPRING	MOLLA
28	71401922	7	50T	PLUG	TAPPO
29	71401923	4	50T	PLUG	TAPPO
30	71401924	13	158G	O-RING	GUARNIZIONE O-R
31	71401925	1	10V	VALVE	VALVOLA
32	71401926	1	20R	FITTING	RACCORDO
33	71401927	1	10V	VALVE	VALVOLA
34	71401928	1	20R	FITTING	RACCORDO
35	71401929	1	100M	SPRING	MOLLA
36	71401930	1	70F	FLANGE	FLANGIA
38	71404164	4	158G	O-RING	GUARNIZIONE O-R
39	71401932	1	20R	FITTING	RACCORDO
81	71401954	1	130P	PLUNGER	PISTONCINO
82	71401955	1	131R	WASHER	ROSETTA
83	71401956	1	100M	SPRING	MOLLA
85	71401957	1	158G	O-RING	GUARNIZIONE O-R
96	71401973	12	40V	SCREW	VITE

ALPHABETICAL INDEX

DESCRIPTION	SGR.	TAV.	GRID
Accelerator controls	0.001	1	1C-23
Air Cleaner	0.001	1	1C-13
Alternator-Mounting	0.400	1	1H-9
Alternator (55 amp)	0.400	2	1H-11
Alternator (35 amp)	0.400	3	1H-13
Anti-Shock Valve (Hydr.)	1.082	3	1L-3
Application of Ol. Hammer	5.0020	2	2H-13
Batteries	1.220	4	2D-19
Belts	0.340	1	1G-21
	0.345	1	1G-23
Boom Piping	2.030	1	2F-13
Brake Valve Components	3.010	4	2G-11
Bucket	2.020	1	2F-9
Bucket Cylinder	2.030	5	2F-21
Bull Gear	3.000	1	2G-3
Cab	1.250	1	2D-19
Cab Door	1.250	5	2E-7
Cab Heater-Components	1.290	2	2E-15
Cab Window-Left Side	1.250	6	2E-9
Cab-Frame	1.250	7	2E-11
Cab-Platform	1.250	1	2D-21
Camshaft	0.120	1	1E-19
Check Valve	1.091	2	1K-17
Cold Starting Aid	5.0025	1	2H-10
Connecting Rod	0.091	1	1E-10
Cont. Valve-Hydr. (Ass.Y)	1.050	1	1J-13
Control Valve-Hydr.	1.050	2	1J-17
	1.050	3	1J-19
	1.050	4	1J-21
	1.050	5	1J-23
Controls	1.070	1	1K-5
Counterweight	1.000	1	1I-3
Cowlings	1.300	1	2E-19
	1.300	2	2E-21
Crankshaft	0.050	1	1E-7
Crankshaft Pulley	0.084	1	1E-15
Cylinder Block	0.040	1	1D-5
	0.040	2	1D-7
	0.040	3	1D-9
Cylinder Block Covers	0.043	1	1D-13
	0.043	2	1D-15
Cylinder Head	0.060	1	1D-21
	0.060	2	1D-23
Dashboard (Left)	1.210	1	2D-9
Dashboard (Right)	1.200	1	2D-3
	1.200	3	2D-7
Data Monitor	1.200	2	2D-5
Decals	4.500	1	2H-9
Dipper Stick (2,1m)	5.0022	1	2H-15
Dipper Stick (2,5m) (STD.)	2.003	1	2F-5
Dipper Stick(2,5m)Links(Std.)	2.003	2	2F-7
Dipper Stick (3m)	5.0038	1	2H-21
	5.0038	2	2H-23
Dipper Stick cylinder	2.030	4	2F-19
Dipstick-Engine Oil	0.305	2	1G-7
Discharge Valve	1.040	4	1J-3
Discharge Valve Componen.	3.010	5	2G-13
Drive on Engine (Opt.)	0.350	1	1H-3
Electric System	1.220	2	2D-13
Elements-Engine Oil	0.001	1	1C-13
Elements-fuel	0.200	1	1F-11
Elements-Hydraulic	1.020	1	1E-19
Elements-Pilot	1.060	1	1K-11
Emergency Kits	4.000	1	2H-7
Engine	0.021	1	1D-3
Engine-Controls	0.004	1	1C-23
Engine-Suspensions	0.000	1	1C-11
Engine Breather	0.045	1	1D-17
	0.045	1A	1D-19
Engine Cooling Piping	0.323	1	1G-17
Engine Heat Exchanger	0.310	1	1G-9
	0.310	2	1G-11
Engine Lifting Eyes	0.450	1	1H-15
Engine Oil Filter	0.302	1	1G-3
Engine Oil Piping	0.305	1	1G-5
Engine Oil Pump	0.300	1	1F-23
Engine Oil Sump	0.042	1	1D-11
Engine Piston	0.082	1	1E-11
Engine Suspensions	0.000	1	1C-11
Exhaust Manifold	0.077	1	1E-5
Exhaust Valve	0.060	2	1D-23
Fan	0.345	1	1G-23
Fan Drive	0.345	1	1G-23
"Filter Care" Kit	21		1A-23
Filter-Pilot System	1.080	1	1K-11
Filters-Air	0.001	1	1C-13
Filters-Engine Oil	0.302	1	1G-3
Filters-Fuel	0.200	1	1F-11
Filters-Hydr. System	1.020	1	1I-7
Flywheel-Engine	0.083	1	1E-13
Fuel Filter	0.200	1	1F-11
Fuel Piping	0.203	1	1F-15
Fuel Pump	0.201	1	1F-13
Fuel Tank	1.010	1	1I-5
Fuses	1.200	3	2D-7
Guards	1.300	2	2E-21
Handle	1.300	3	2E-23
Heater	1.290	1	2E-15
Horn	1.220	2	2D-15
Hyd.Pump Drive	1.030	7	1I-21
Hyd.Pump Regulator Valve	1.030	6	1I-19
Hyd.Pump Regulator-Cover	1.030	4	1I-15
	1.030	5	1I-17
Hydr.Pump-Components	1.030	2	1I-11
Hydr.Pump Regulator-Comm.	1.030	3	1I-13

ALPHABETICAL INDEX

DESCRIPTION	SGR.	TAV.	GRID
Hydraulic Pump	1.030	1	1I-9
Idler	3.020	1	1G-15
Injection Nozzle-Lines	0.145	1	1F-9
Injection Pump	0.140	2	1E-23
	0.140	3	1F-3
	0.140	4	1F-5
	0.140	5	1F-7
Injection Pump-Piping	0.140	1	1E-21
Intake Manifold	0.071	1	1E-3
Intake Valve	0.060	2	1D-21
Lift Cylinder (Left)	2.030	3	1F-17
Lift Cylinder (Right)	2.030	2	2F-15
Lights	1.220	2	2D-15
Lower Frame	3.000	1	2G-3
Lubric. Fitting Piping	2.040	1	2F-23
Main Piping	1.060	1	1K-3
Mirror (Rear)	1.300	2	2E-21
Monobloc Boom	2.000	1	2F-3
Motor - Starter	0.360	2	1H-7
Motor - Swing	1.040	1	1J-3
Motor - Travel	3.010	1	12G-5
Motor - Wiper	1.220	1	2D-13
Muffler	0.002	1	1C-15
Oil Tank	1.020	1	1I-7
Operator's Seat	1.250	2	2D-23
OperatorsSeat(Bostrom)(Std.)	5.0151	1	2I-3
Pilot Gear Pump	1.030	8	1I-23
Pilot Piping(1)	1.080	1	1K-11
Pilot Piping(2)	1.081	1	1K-15
Pilot Piping(3)	1.082	1	1K-19
Pilot Piping (4)	1.083	1	1L-5
Pilot Piping (5)	1.084	1	1L-7
Pilot Valve	1.070	3	1K-9
Pilot Valve-components	1.070	2	1K-7
Pipin-Boom	2.030	1	2F-13
Piping-Engine Oil	0.350	1	1H-3
Piping-Injection	0.149	1	1F-9
Piping-Lube Fittings	2.040	1	2G-23
Piping-Main	1.060	1	1K-3
Piping-Pilot(1)	1.080	1	1K-11
Piping-Pilot(3)	1.082	1	1K-19
Piping-Pilot(4)	1.083	1	1L-5
Piping-Pilot(5)	1.084	1	1L-7
Piping-Pump Contr. Valve	1.050	1	1J-13
Piping-Travel (Lower)	3.070	1	2H-5
Piping-Turbocharger	0.241	1	1F-21
Pump-Engine Oil	0.300	1	1F-23
Pump-Fuel	0.201	1	1F-13
Pump-Hydraulic	1.030	1	1I-9
Pump-Injection	0.140	1	1E-21
Pump-Pilot	1.030	8	1I-23
Pump-Water	0.320	1	1G-13
Pump/Control Valve Piping	1.050	1	1J-13
Radiator	0.003	1	1C-17
Radiator-Components	0.003	2	1C-19
	0.003	3	1C-21
Rocker Arm	0.060	2	1D-23
Rotary Distr.-Components	3.060	2	2H-3
Rotary Distributor	3.060	1	2G-23
Seat Belt (Std.)	5.0536	1	2I-5
Sensors	1.220	2	2D-15
Solenoid Valve	1.080	2	1K-13
Starter	0.360	2	1H-7
Starter-Mounting	0.360	1	1H-5
Stop Valve	1.082	2	1K-23
Swing Motor-Components	1.040	3	1J-7
Swing Red.Unit-Components	1.040	2	1J-5
Swing Reduction Unit	1.040	1	1J-3
Thermostat & Housing	0.328	1	1G-19
Timing Control	0.100	1	1E-17
Tool Kit	5.0083	1	2I-9
track Chain	3.050	1	2G-21
Track Roller	3.040	1	2G-19
Travel Motor-componen.	3.010	3	2G-9
Travel Piping (Lower)	3.070	1	2H-5
Travel Red.Unit-Componen.	3.010	2	2G-7
Travel Reduction Units	3.010	1	2G-5
Turbocharger	0.240	1	1F-17
	0.240	2	1F-19
Turbocharger Piping	0.241	1	1F-21
Upper Frame	1.000	1	1E-17
Upper Roller	3.030	1	2G-17
Valve-Anti-Shock(Hydr.)	1.082	3	1L-3
Valve-Check (Pilot)	1.081	2	1K-17
Valve-Exhaust	0.060	2	1D-23
Valve-Intake	0.060	2	1D-23
Valve-Pilot (Hydr.)	1.070	1	1K-5
Valve-Pilot(Travel)	1.070	1	1K-5
Valve-Solenoid	1.080	2	1K-13
Valve-Stop(Travel)	1.082	1	1K-21
Washer (windshield)	1.220	3	2D-17
Water Pump	0.320	1	1G-13
Water Pump Drive	0.340	1	1G-21
Water Pump-Components	0.320	2	1G-15
Wiper	1.220	1	2D-11

FH120

MAIN PIPING TUBAZIONI PRINCIPALI	TUYAUTERIES PRINCIPALES HAUPTLEITUNGEN TUBERIAS PRINCIPALES	1.050 TAV.1

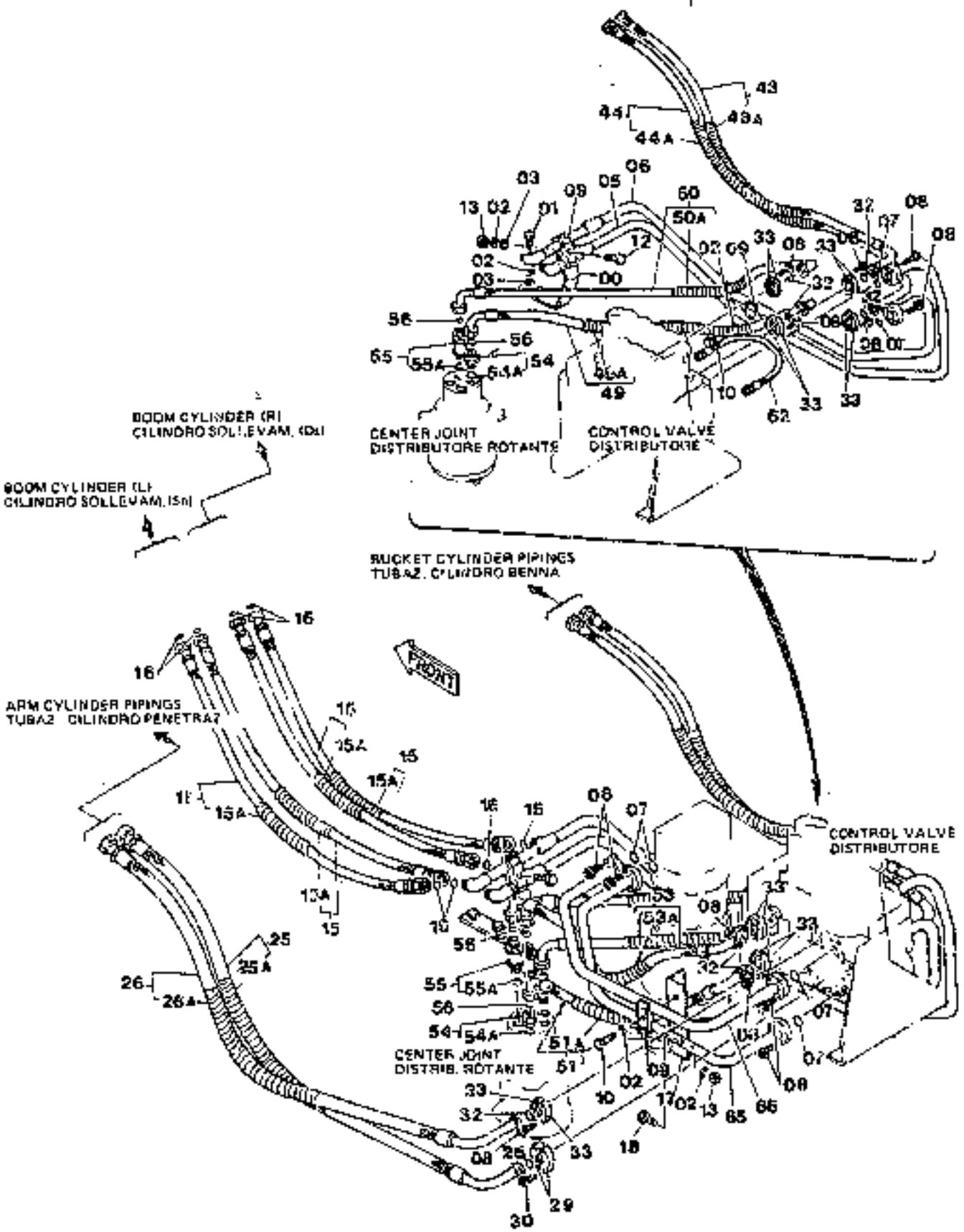

K-4

MAIN PIPING
TUBAZIONI PRINCIPALI

TUYAUTERIES PRINCIPALES
HAUPTLEITUNGEN
TUBERIAS PRINCIPALES

1.050 TAV.1

ITEM	PART NUMBER	QTY	TR. CO.	DESCRIPTION	DESCRIZIONE
00	71405759	1	300S	SUPPORT	SUPPORTO
01	11112234	2	40V	SCREW 12X1,75X25	VITE 12X1,75X25
02	10517074	7	131R	WASHER	ROSETTA
03	14496731	3	131R	WASHER 12X1,75X24	ROSETTA 12X1,75X24
05	71405754	1	193T	TUBE	TUBO RIGIDO
06	71405757	1	193T	TUBE	TUBO RIGIDO
07	71404164	6	158G	O-RING	GUARNIZIONE O-R
08	14306434	52	40V	SCREW 8X1,25X25	VITE 8X1,25X25
09	71405780	3	231S	CLIP	STAFFETTA
10	11113234	2	40V	SCREW 12X1,75X50	VITE 12X1,75X50
12	11113434	1	40V	SCREW 12X1,75X60	VITE 12X1,75X60
13	11702921	3	10D	NUT	DADO
15	71404076	4	285T	HOSE -ASS.LY	TUBO FLESSIBILE -COMPL.
15A	71415875	4	142G	SHEATH	GUAINA
16	70923841	8	158G	O-RING	GUARNIZIONE O-R
17	71405701	1	300S	SUPPORT	SUPPORTO
18	11113836	2	40V	SCREW 12X1,75X40	VITE 12X1,75X40
25	71404077	1	285T	HOSE -ASS.LY	TUBO FLESSIBILE -COMPL.
25A	71415875	1	142G	SHEATH	GUAINA
26	71404078	1	285T	HOSE -ASS.LY	TUBO FLESSIBILE -COMPL.
26A	71415875	1	142G	SHEATH	GUAINA
28	70924110	1	158G	O-RING	GUARNIZIONE O-R
29	71404407	2	417S	HALF FLANGE	SEMIFLANGIA
30	14420234	4	40V	SCREW 10X1,5X30	VITE 10X1,5X30
32	70924191	7	158G	O-RING	GUARNIZIONE O-R
33	71404389	14	417S	HALF FLANGE	SEMIFLANGIA
43	71404079	1	285T	HOSE -ASS.LY	TUBO FLESSIBILE -COMPL.
43A	71415875	1	142G	SHEATH	GUAINA
44	71404080	1	285T	HOSE -ASS.LY	TUBO FLESSIBILE -COMPL.
44A	71415875	1	142G	SHEATH	GUAINA
49	71404081	1	285T	HOSE -ASS.LY	TUBO FLESSIBILE -COMPL.
49A	71415875	1	142G	SHEATH	GUAINA
50	71404082	1	285T	HOSE -ASS.LY	TUBO FLESSIBILE -COMPL.
50A	71415875	1	142G	SHEATH	GUAINA
51	71404083	1	285T	HOSE -ASS.LY	TUBO FLESSIBILE -COMPL.
51A	71415875	1	142G	SHEATH	GUAINA
53	71404084	1	285T	HOSE -ASS.LY	TUBO FLESSIBILE -COMPL.
53A	71415875	1	142G	SHEATH	GUAINA
54	71404414	2	209	FITTING -ASS.LY	RACCORDO -COMPL.
54A	71404162	2	158G	O-RING	GUARNIZIONE O-R
55	71404412	2	209	FITTING -ASS.LY	RACCORDO -COMPL.
55A	71404162	2	158G	O-RING	GUARNIZIONE O-R
56	70923843	4	158G	O-RING	GUARNIZIONE O-R
62	71403843	1	285T	HOSE	TUBO FLESSIBILE
65	71405824	1	193T	TUBE	TUBO RIGIDO
66	71405825	1	193T	TUBE	TUBO RIGIDO

FH120

CONTROLS COMANDI	COMMANDES GERAETEBETAETIGUNG MANDOS	1.0170 TAV.1

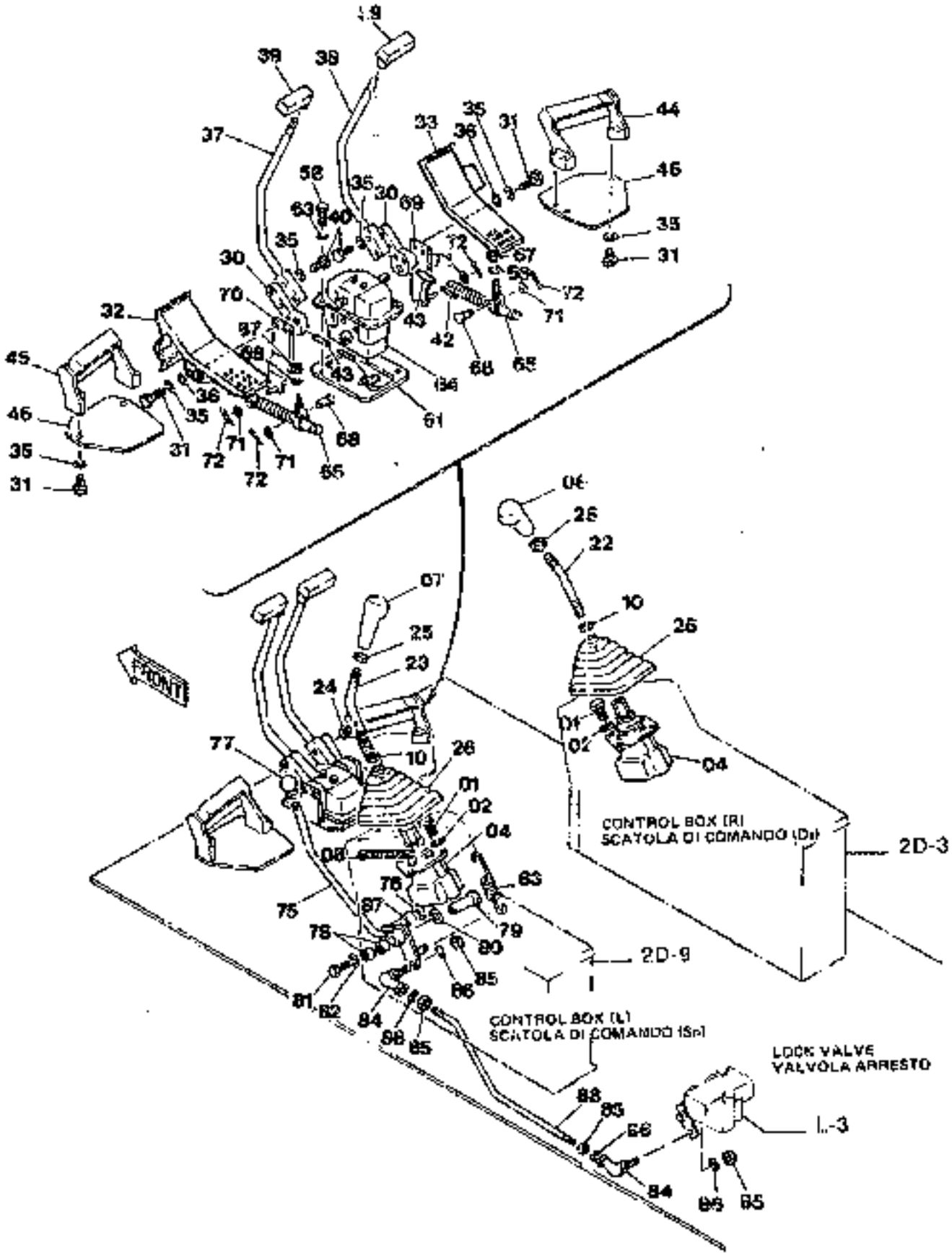

FH120

CONTROLS
COMANDI

COMMANDES
GERAETEBETAETIGUNG
MANDOS

1.070 TAV.1

ITEM	PART NUMBER	QTY	TR. CO.	DESCRIPTION	DESCRIZIONE
01	10902234	8	40V	SCREW 6X1X16	VITE 6X1X16
02	10571574	8	131R	WASHER	ROSETTA
04	71401561	2	144M	PILOT VALVE -ASS.Y SEE K-7	MANIPOLATORE -COMPL.VED.TAV. 2
06	71415005	1	25I	HANDGRIP	IMPUGNATURA
07	71415006	1	25I	HANDGRIP	IMPUGNATURA
08	79013422	1	31F	CLAMP	FASCETTA
10	12163221	1	10D	NUT	DADO
22	71415007	1	45L	LEVER	LEVA
23	71415011	1	45L	LEVER	LEVA
24	10399480	1	45A	RING	ANELLO
25	71415014	2	10D	NUT	DADO
26	71415015	2	166S	BELLOW	SOFFIETTO
30	71415016	2	225S	BRACKET	STAFFA
31	11106434	10	40V	SCREW 10X1,5X30	VITE 10X1,5X30
32	71415017	1	60P	PEDAL	PEDALE
33	71415018	1	60P	PEDAL	PEDALE
35	10516974	14	170R	LOCKWASHER	ROSETTA ELASTICA
36	14496631	4	131R	WASHER	ROSETTA
37	73158494	1	45L	LEVER	LEVA
38	73158495	1	45L	LEVER	LEVA
39	71415025	2	25I	HANDGRIP	IMPUGNATURA
40	11106834	4	40V	SCREW 10X1,5X40	VITE 10X1,5X40
42	14601470	2	202S	SPRING PIN	SPINA ELASTICA
43	14607070	2	202S	SPRING PIN	SPINA ELASTICA
44	71415026	1	78A	FOOTREST	APPOGGIAPIEDE
45	71415027	1	78A	FOOTREST	APPOGGIAPIEDE
46	71415028	2	105P	PLATE	PIASTRA
58	11106634	2	40V	SCREW M10X1,5X35	VITE M10X1.5X35
61	71415806	1	105P	PLATE	PIASTRA
63	10516974	2	170R	LOCKWASHER	ROSETTA ELASTICA
64	71401620	1	10V	VALVE -ASS.Y SEE K-9	VALVOLA -COMPL.VED.TAV. 3
65	71401631	2	36A	SHOCK ABSORBER	AMMORTIZZATORE
66	10571774	2	170R	LOCKWASHER	ROSETTA ELASTICA
67	16100821	2	10D	NUT	DADO
68	71415903	2	60P	PIN	PERNO
69	71415904	1	225S	BRACKET	STAFFA
70	71415901	1	225S	BRACKET	STAFFA
71	14496531	4	131R	WASHER	ROSETTA
72	71415905	4	270C	COTTER PIN	COPIGLIA
73	71415024	1	45L	LEVER	LEVA
76	11087974	1	187A	SNAP RING	ANELLO ELASTICO
77	71415040	1	150P	KNOB	POMELLO
78	71415033	2	95B	BUSHING	BOCCOLA
79	71415041	1	60P	PIN	PERNO
80	14496931	1	131R	WASHER	ROSETTA
81	10979334	1	40V	SCREW 10X1,5X14	VITE 10X1,5X14
82	14496531	1	131R	WASHER	ROSETTA
83	71415042	1	100M	SPRING	MOLLA
84	71415043	2	165S	ARTICULATION	SNODO SFERICO
85	16100821	4	10D	NUT	DADO
86	10571774	4	131R	WASHER	ROSETTA
87	71415044	1	95B	BUSHING	BOCCOLA
88	71415045	1	90A	ROD	ASTA

PILOT VALVE-COMPONENTS
MANIPOLATORE-COMPONENTI
71401561

MANIPULATEUR-COMPOSANTS
STEUERHEBEL-EINZELTEILE
MANIPULADOR-COMPONENTES

1.070 TAV.2

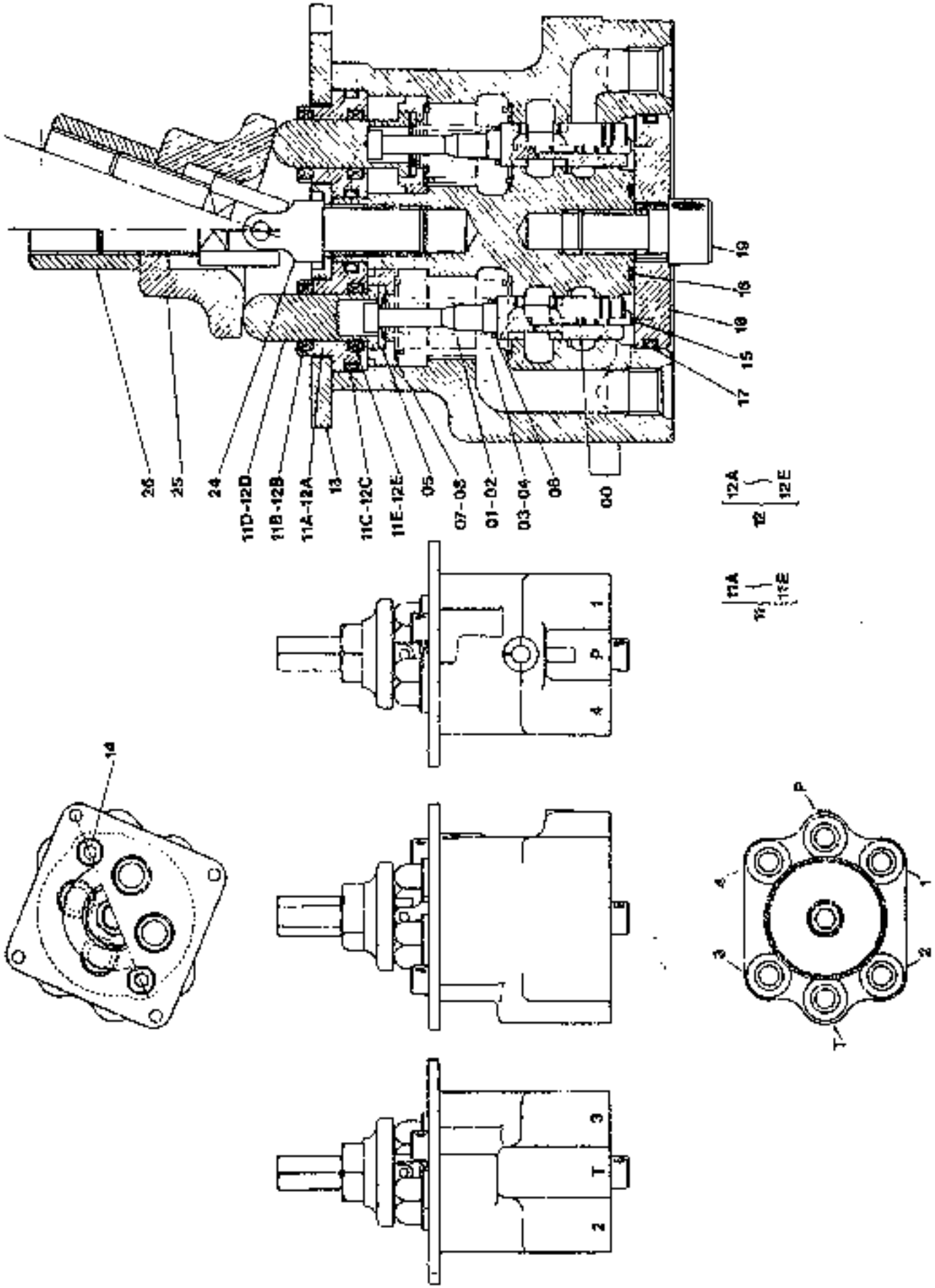

FH120

PILOT VALVE-COMPONENTS
MANIPOLATORE-COMPONENTI
71401561

MANIPULATEUR-COMPOSANTS
STEUERHEBEL-EINZELTEILE
MANIPULADOR-COMPONENTES

1.070 TAV.2

ITEM	PART NUMBER	QTY	TR. CO.	DESCRIPTION	DESCRIZIONE
00	71401562	1	300C	BODY	CORPO
01	71401565	2	100M	SPRING	MOLLA
02	71401566	2	100M	SPRING	MOLLA
03	71401567	2	100M	SPRING	MOLLA
04	71401568	2	100M	SPRING	MOLLA
05	71401958	8	75D	SPACER	DISTANZIALE
06	71401959	20	196S	SHIM	SPESSORE
07	71401571	2	145G	GUIDE -PORT 1-3	GUIDA -SEDE 1-3
08	71401572	2	145G	GUIDE -PORT 2-4	GUIDA -SEDE 2-4
11	71401573	2	130P	PLUNGER -PORT 1-3 ASSEMBLY	PISTONCINO -SEDE 1-3 COMPLESSIVO
11A	71401574	1	95B	BUSHING	BOCCOLA
11B	71401575	1	122G	SEAL	GUARNIZIONE
11C	71401576	1	158G	O-RING	GUARNIZIONE O-R
11D	71401577	1	130P	PLUNGER	PISTONCINO
11E	71401578	1	122G	SEAL	GUARNIZIONE
12	71401579	2	130P	PLUNGER -PORT 2-4 ASSEMBLY	PISTONCINO -SEDE 2-4 COMPLESSIVO
12A	71401574	1	95B	BUSHING	BOCCOLA
12B	71401575	1	122G	SEAL	GUARNIZIONE
12C	71401576	1	158G	O-RING	GUARNIZIONE O-R
12D	71401580	1	130P	PLUNGER	PISTONCINO
12E	71401578	1	122G	SEAL	GUARNIZIONE
13	71401581	1	105P	PLATE	PIASTRA
14	14420124	2	40V	SCREW 10X1,5X25	VITE 10X1,5X25
15	71401987	4	132P	PISTON	PISTONE
16	71401583	1	158G	O-RING	GUARNIZIONE O-R
17	71401584	1	158G	O-RING	GUARNIZIONE O-R
18	71401585	1	105P	PLATE	PIASTRA
19	14311024	1	40V	SCREW 12X1,75X25	VITE 12X1,75X25
24	71401506	1	65G	UNIVERSAL JOINT	GIUNTO CARDANICO
25	71401587	1	10E	CAM	ECCENTRICO
26	71401588	1	10D	NUT	DADO

K-9

FN129

PILOT VALVE VALVOLA PILOTA 71491020	VALVE PILOTE VORSTEUERVENTIL VALVULA PILOTO	1.070	TAV.3

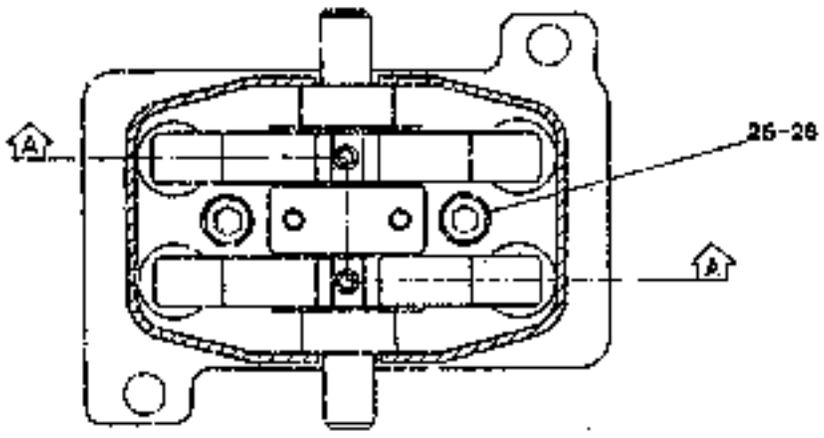

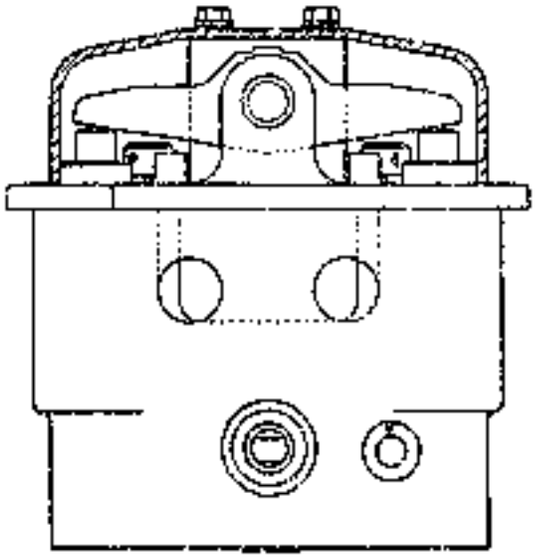

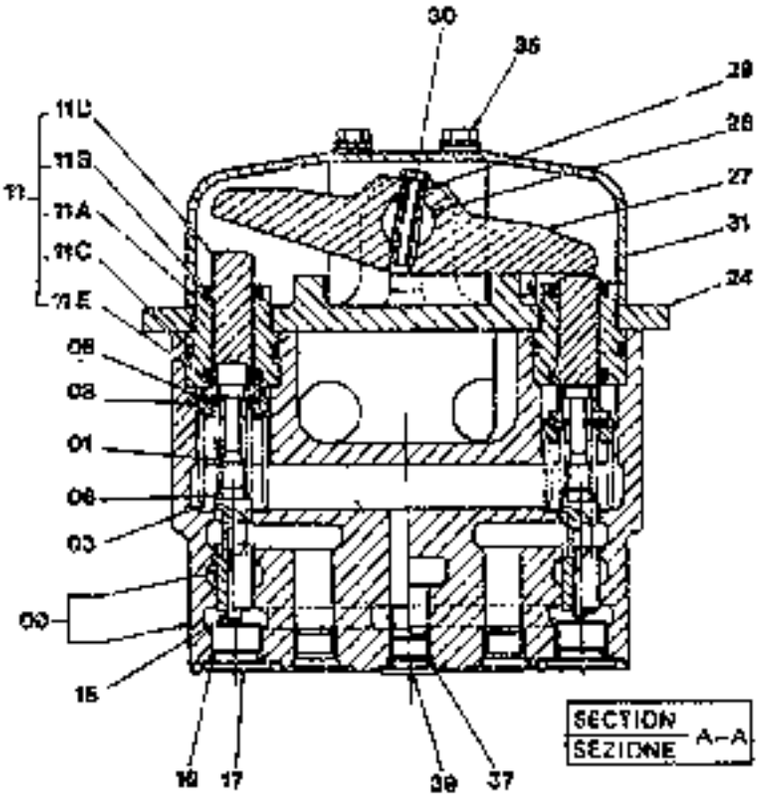

FN120

PILOT VALVE VALVOLA PILOTA 71401620	VALVE PILOTE VORSTEUERVENTIL VALVULA PILOTO	1.979	TAV.3

ITEM	PART NUMBER	QTY	TR. CO.	DESCRIPTION	DESCRIZIONE
00	71401955	1	300C	BODY	CORPO
01	71401956	4	100M	SPRING	MOLLA
03	71401957	4	100M	SPRING	MOLLA
05	71401958	4	75D	SPACER	DISTANZIALE
06	71401959	20	198S	SHIM	SPESSORE
08	71401960	4	145G	GUIDE	GUIDA
11	71401961	4	130P	PLUNGER -ASS.LY	PISTONCINO -COMPL.
11A	71401962	1	95B	BUSHING	BOCCOLA
11B	71402914	1	122G	SEAL	GUARNIZIONE
11C	71401579	1	159G	O-RING	GUARNIZIONE O-R
11D	71401965	1	235S	PISTON	STANTUFFO
11E	71401966	1	122G	SEAL	GUARNIZIONE
15	71401967	4	130P	PLUNGER	PISTONCINO
16	71401968	4	159G	O-RING	GUARNIZIONE O-R
17	71401969	4	50T	PLUG	TAPPO
24	71401970	1	60D	DISC	DISCO
25	71401971	2	40V	SCREW	VITE
26	71401854	2	170R	LOCKWASHER	ROSETTA ELASTICA
27	71401973	2	55B	ROCKER	BILANCIERE
28	71401974	2	80P	PIN	PERNO
29	71401975	2	202S	SPRING PIN	SPINA ELASTICA
30	71401890	2	202S	SPRING PIN	SPINA ELASTICA
31	71401976	1	265C	COVER	COPERCHIO
35	71401977	2	40V	SCREW	VITE
37	71401979	2	159G	O-RING	GUARNIZIONE O-R
39	71402098	2	50T	PLUG	TAPPO

PILOT PIPING (1)
TUBAZIONI SERVOCOMANDI(1)

TUYAUT. SERVOCOMMANDES(1)
LEITUNGEN-SERVOSTEU. (1)
TUBERIAS SERVOMANDOS(1)

1.080 TAV.1

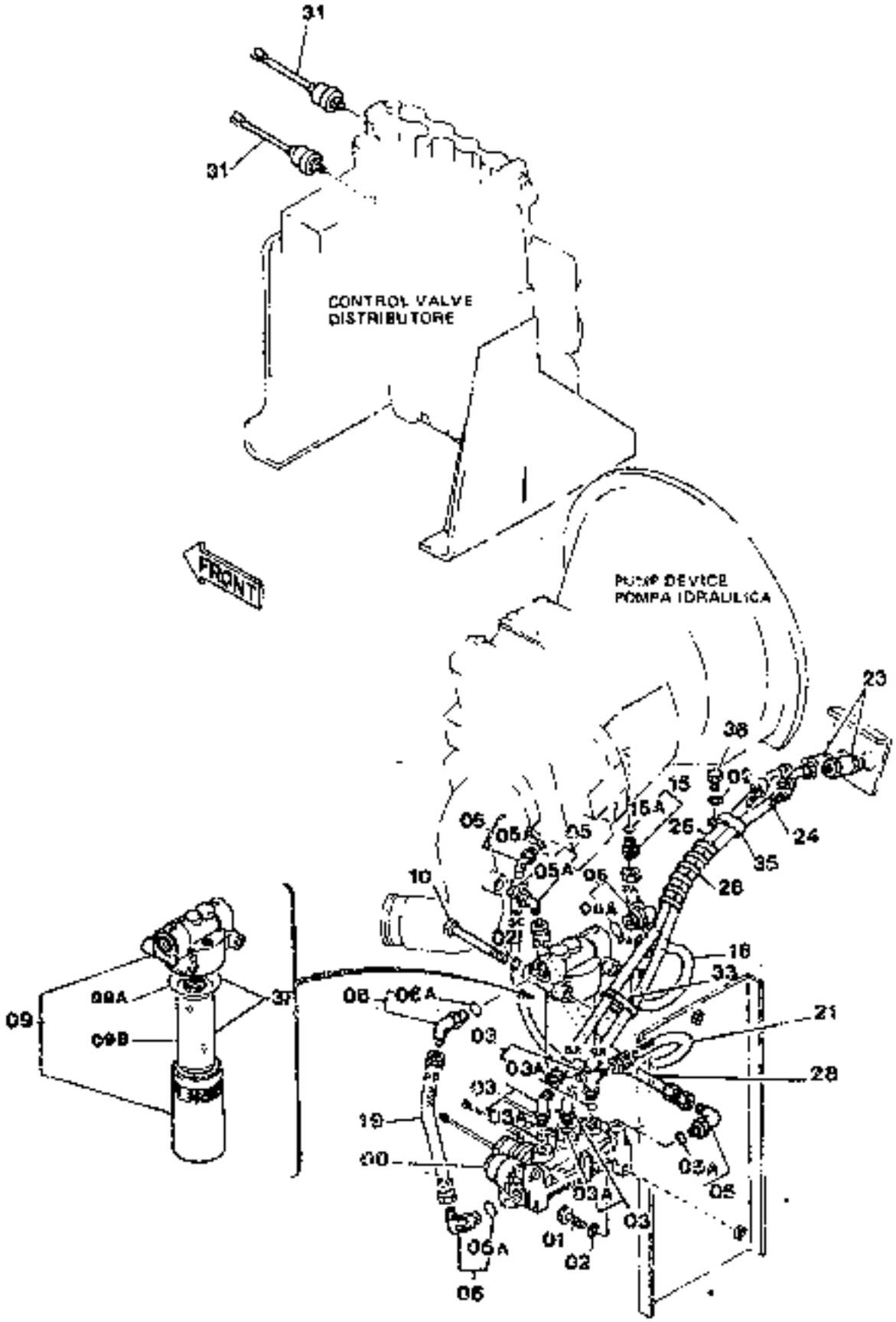

PILOT PIPING (1) | TUYAUT. SERVOCOMMANDES(1) | 1.080 TAV.1
TUBAZIONI SERVOCOMANDI(1) | LEITUNGEN-SERVOSTEU. (1)
TUBERIAS SERVOMANDOS(1)

ITEM	PART NUMBER	QTY	TR CO.	DESCRIPTION	DESCRIZIONE
00	71401796	1	10V	VALVE -SEE K-17 ASSEMBLY	VALVOLA -VED. TAV. 2 COMPLESSIVO
01	11106434	2	40V	SCREW 10X1,5X30	VITE 10X1,5X30
02	10571874	5	131R	WASHER	ROSETTA
03	71404387	3	20R	FITTING -ASS.LY	RACCORDO -COMPL.
03A	71404163	1	158G	O-RING	GUARNIZIONE O-R
05	71404933	3	20R	FITTING -ASS.LY	RACCORDO -COMPL.
05A	71404163	1	158G	O-RING	GUARNIZIONE O-R
06	71404329	3	20R	FITTING -ASS.LY	RACCORDO -COMPL.
06A	71404166	1	158G	O-RING	GUARNIZIONE O-R
09	71401933	1	65F	FILTER -ASS.LY	FILTRO -COMPL.
09A	71401954	1	158G	O-RING	GUARNIZIONE O-R
09B	71401953	1	64C	FILTER ELEMENT	CARTUCCIA FILTRO
10	11108234	2	40V	SCREW 10X1,5X100	VITE 10X1,5X100
15	71404357	1	20R	FITTING -ASS.LY	RACCORDO -COMPL.
15A	71404165	1	158G	O-RING	GUARNIZIONE O-R
18	71403932	1	285T	HOSE	TUBO FLESSIBILE
19	71403945	1	285T	HOSE	TUBO FLESSIBILE
21	71403946	1	285T	HOSE	TUBO FLESSIBILE
23	71401632	2	164C	CYLINDER	CILINDRO
24	71403930	1	285T	HOSE	TUBO FLESSIBILE
25	71403929	1	285T	HOSE	TUBO FLESSIBILE
26	71415875	1	142G	SHEATH	GUAINA
28	71403947	1	285T	HOSE	TUBO FLESSIBILE
31	71401787	2	75I	SWITCH	INTERRUTTORE
33	4882514	1	31F	CLAMP	FASCETTA
35	71405770	1	231S	CLIP	STAFFETTA
				D2519 FROM S/N 0051	D2519 DAL TELAIO 0051
	71413008	1	231S	CLIP	STAFFETTA
				D2519 UP TO S/N 0050	D2519 FINO AL TELAIO 0050
36	11706034	1	40V	SCREW 10X1,5X20	VITE 10X1,5X20
37	11502469	1	2K	KIT	KIT

FN120

SOLENOID VALVE VALVOLA SOLENOIDE 71401796	ELECTROVALVE MAGNETVENTIL ELECTROVALVULA	1.080 TAV.2

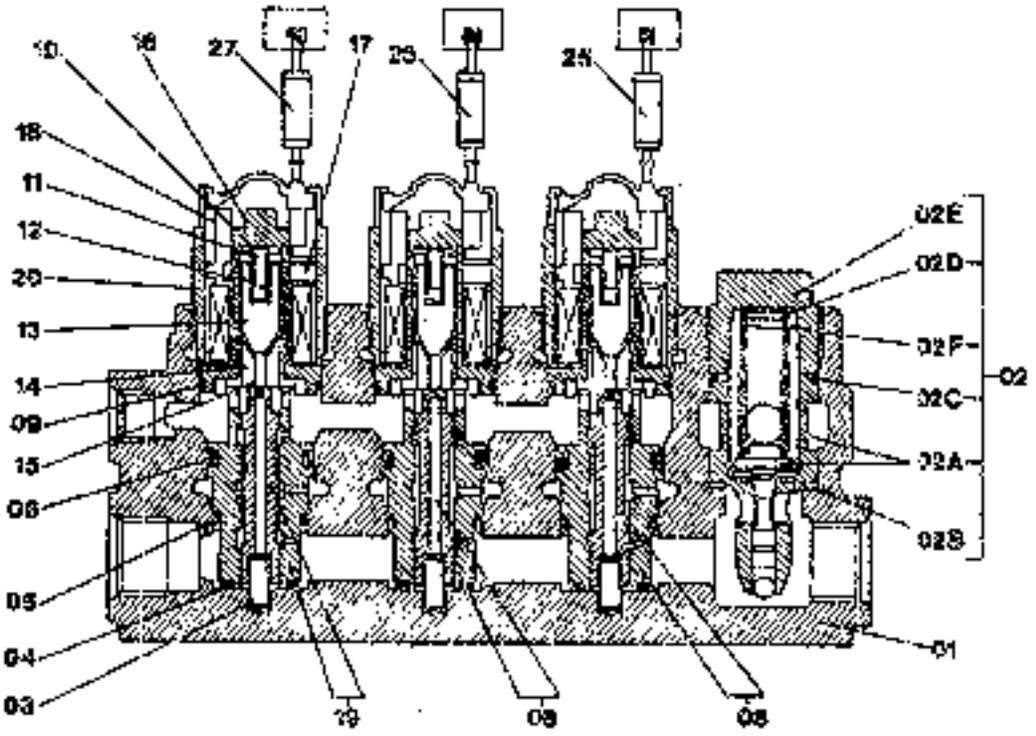

FH120

SOLENOID VALVE VALVOLA SOLENOIDE 71401799	ELECTROVALVE MAGNETVENTIL ELECTROVALVULA	1.080 TAV.2

ITEM	PART NUMBER	QTY	TR. CO.	DESCRIPTION	DESCRIZIONE
01	71401863	1	300C	BODY	CORPO
02	71401963	1	10V	VALVE ASSLY	VALVOLA -COMPL.
02A	71401964	1	10V	VALVE	VALVOLA
02B	71401966	1	122G	SEAL	GUARNIZIONE
02C	71401981	1	158G	O-RING	GUARNIZIONE O-R
02D	71401982	1	198S	SHIM	SPESSORE
	71401983	1	198S	SHIM	SPESSORE
	71401984	1	198S	SHIM	SPESSORE
02E	71401988	1	50T	PLUG	TAPPO
02F	71401986	1	100M	SPRING	MOLLA
03	71401987	3	100M	SPRING	MOLLA
04	71404163	3	156G	O-RING	GUARNIZIONE O-R
05	71401790	3	158G	O-RING	GUARNIZIONE O-R
05	71401990	3	118G	O-RING	GUARNIZIONE O-R
08	71401991	2	130P	PLUNGER	PISTONCINO
09	71401992	3	158G	O-RING	GUARNIZIONE O-R
10	71401993	3	193T	TUBE	TUBO RIGIDO
11	71401994	3	69S	SEAT	SEDE
12	71401995	3	100M	SPRING	MOLLA
13	71401996	3	132P	PISTON	PISTONE
14	71401997	3	26T	BLOCK	TAMPONE
15	71401998	3	90A	ROD	ASTA
16	71401999	3	300C	BODY	CORPO
17	71402000	3	75D	SPACER	DISTANZIALE
18	71402452	3	83B	COIL	BOBINA
19	71402002	1	130P	PLUNGER	PISTONCINO
20	71402003	3	300C	BODY	CORPO
25	71402004	1	20N	BAND	NASTRO
26	71402005	1	20N	BAND	NASTRO
27	71402006	1	20N	BAND	NASTRO

PILOT PIPING (2)
TUBAZIONI SERVOCOMANDI(2)

TUYAUT. SERVOCOMMANDES(2)
LEITUNGEN-SERVOSTEU. (2)
TUBERIAS SERVOMANDOS (2)

1.081 TAV.1

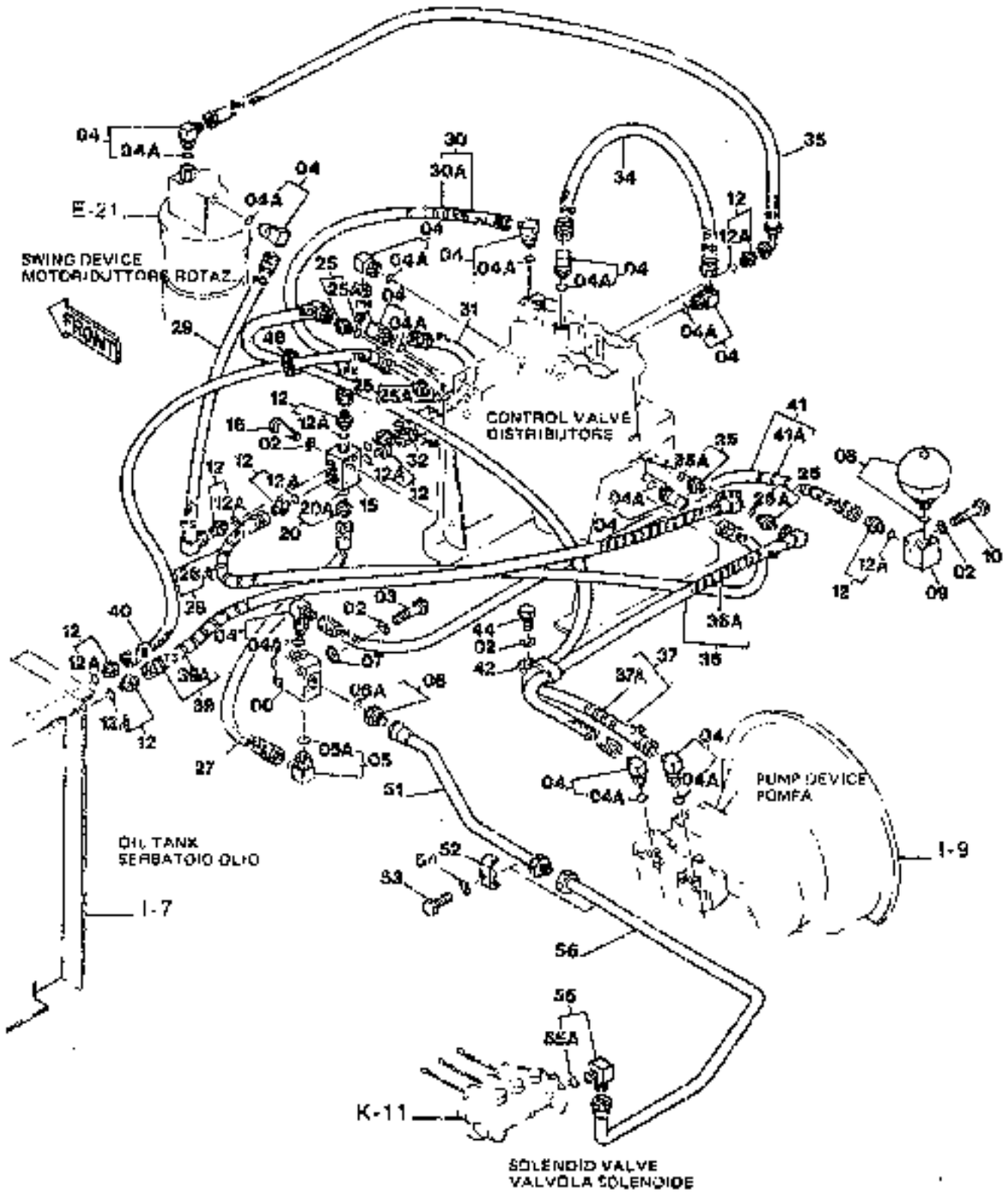

FH120

PILOT PIPING (2)
TUBAZIONI SERVOCOMANDI(2)
TUYAUT. SERVOCOMMANDES(2)
LEITUNGEN-SERVOSTEU. (2)
TUBERIAS SERVOMANDOS.(2)

1.081 TAV.1

ITEM	PART NUMBER	QTY	TR. CO.	DESCRIPTION	DESCRIZIONE
00	71401625	1	10V	VALVE -ASS.Y SEE. K-23	VALVOLA -COMP.VED.TAV. 2
02	16571574	7	131R	WASHER	ROSETTA
03	11107334	2	40V	SCREW M10X55	VITE M10X55
04	71404333	11	20R	FITTING	RACCORDO
04A	71404163	1	158G	O-RING	GUARNIZIONE O-R
05	71404245	1	20R	FITTING -ASS.LY	RACCORDO -COMPL.
05A	71404165	1	158G	O-RING	GUARNIZIONE O-R
08	71404396	1	20R	FITTING -ASS.LY	RACCORDO -COMPL.
08A	71404166	1	158G	O-RING	GUARNIZIONE O-R
07	14496631	2	131R	WASHER 10X1,5X21	ROSETTA 10X1,5X21
08	71401634	1	39A	HYDRAULIC ACCUMULATOR	ACCUMULATORE IDRAULICO
09	71415690	1	74B	BLOCK	BLOCCHETTO
10	11107434	2	40V	SCREW 10X1,5X60	VITE 10X1,5X60
12	71404327	9	20R	FITTING -ASS.LY	RACCORDO -COMPL.
	71404327	2	20R	FITTING -ASS.LY	RACCORDO -COMPL.
				C2521 UP TO S/N 0050	C2521 FINO AL TELAIO 0050
12A	71404163	1	158G	O-RING	GUARNIZIONE O-R
15	71405739	1	189C	MANIFOLD	COLLETTORE
16	11107234	2	40V	SCREW 10X1,5X50	VITE 10X1,5X50
20	71404351	1	20R	FITTING -ASS.LY	RACCORDO -COMPL.
20A	71404163	1	158G	O-RING	GUARNIZIONE O-R
25	71404392	2	20R	FITTING -ASS.LY	RACCORDO -COMPL.
	71404392	2	20R	FITTING -ASS.LY	RACCORDO -COMPL.
				D2521 FROM S/N 0051	D2521 DAL TELAIO 0051
25A	71404165	1	158G	O-RING	GUARNIZIONE O-R
27	71403846	1	285T	HOSE	TUBO FLESSIBILE
28	71404066	1	285T	HOSE -ASS.LY	TUBO FLESSIBILE -COMPL.
28A	71405740	2	142G	SHEATH	GUAINA
29	71403906	1	285T	HOSE	TUBO FLESSIBILE
30	71404069	1	285T	HOSE -ASS.LY	TUBO FLESSIBILE -COMPL.
30A	71405740	1	142G	SHEATH	GUAINA
31	71403953	1	285T	HOSE	TUBO FLESSIBILE
32	71403955	1	285T	HOSE	TUBO FLESSIBILE
34	71403950	1	285T	HOSE	TUBO FLESSIBILE
35	71403936	1	285T	HOSE	TUBO FLESSIBILE
36	71404070	1	285T	HOSE -ASS.LY	TUBO FLESSIBILE -COMPL.
36A	71405740	1	142G	SHEATH	GUAINA
37	71404071	1	285T	HOSE -ASS.LY	TUBO FLESSIBILE -COMPL.
37A	71405740	1	142G	SHEATH	GUAINA
39	71404072	1	285T	HOSE -ASS.LY	TUBO FLESSIBILE -COMPL.
39A	71405740	1	142G	SHEATH	GUAINA
40	71403910	1	285T	HOSE	TUBO FLESSIBILE
41	71404073	1	285T	HOSE -ASS.LY	TUBO FLESSIBILE -COMPL.
41A	71405740	1	142G	SHEATH	GUAINA
42	71415908	1	231S	CLIP	STAFFETTA
44	11106034	1	40V	SCREW 10X1,5X20	VITE 10X1,5X20
46	4982514	1	31F	CLAMP	FASCETTA
51	71405918	1	193T	TUBE	TUBO RIGIDO
52	71405760	3	231S	CLIP	STAFFETTA
53	11113034	3	40V	SCREW	VITE
54	10517074	3	170R	LOCKWASHER	ROSETTA ELASTICA
55	71404329	1	20R	FITTING -ASS.LY	RACCORDO -COMPL.
55A	71404166	1	158G	O-RING	GUARNIZIONE O-R
56	71405870	1	193T	TUBE	TUBO RIGIDO

CHECK VALVE VALVOLA DI NON RITORNO 71401625	VALVE DE NON-RETOUR RUECKSCHLAGVENTIL VALVULA DE RETENCION	1.081	TAV.2

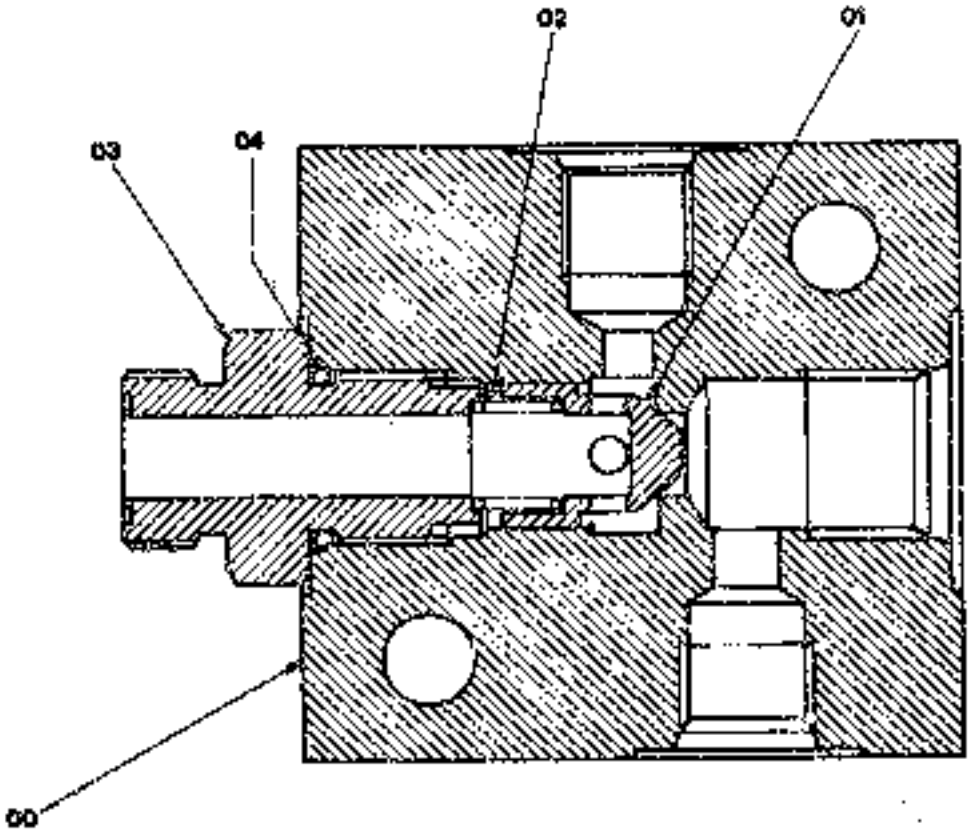

FM120

CHECK VALVE
VALVOLA DI NON RITORNO
71401625

VALVE DE NON-RETOUR
RUECKSCHLAGVENTIL
VALVULA DE RETENCION

1.091 TAV.2

ITEM	PART NUMBER	QTY	TR. CO.	DESCRIPTION	DESCRIZIONE
00	71401711	1	300C	BODY	CORPO
01	71401725	1	130P	PLUNGER	PISTONCINO
02	71401768	1	100M	SPRING	MOLLA
03	71401769	1	20R	FITTING	RACCORDO
04	71404166	1	158G	O-RING	GUARNIZIONE O-R

K-19

FH120

PILOT PIPING (3) TUBAZIONI SERVOCOMANDI (3)	TUYAUT. SERVOCOMMANDES (3) LEITUNGEN SERVOSTEU. (3) TUBERIAS SERVOMANDOS (3)	1.992	TAV.1

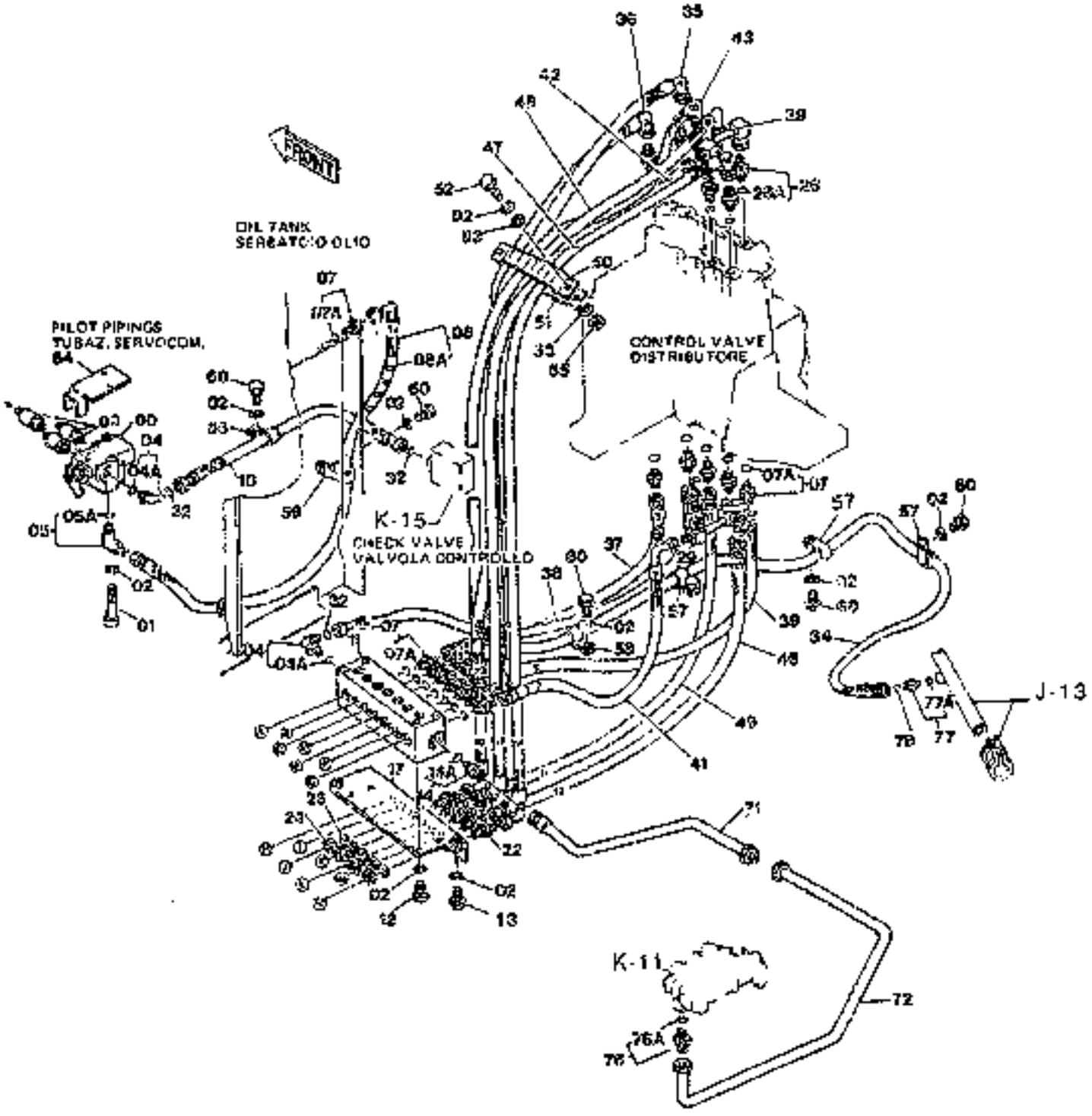

PILOT PIPING (3)
TUBAZIONI SERVOCOMANDI(3)

TUYAUT. SERVOCOMMANDES(3)
LEITUNGEN-SERVOSTEU. (3)
TUBERIAS SERVOMANDOS (3)

1.082 TA.7.1

ITEM	PART NUMBER	QTY	TR. CO.	DESCRIPTION	DESCRIZIONE
00	71401627	1	10V	VALVE -ASS.Y SEE. K-23	VALVOLA -COMP.VED.TAV. 2
01	11107734	2	40V	SCREW 10X1,5X75	VITE 10X1,5X75
02	10516074	16	131R	WASHER	ROSETTA
03	71401633	3	66F	FILTER	FILTRO
04	71404349	2	20R	FITTING -ASS.LY	RACCORDO -COMPL.
04A	71404165	1	158G	O-RING	GUARNIZIONE O-R
05	71404345	1	20R	FITTING -ASS.LY	RACCORDO -COMPL.
05A	71404165	1	158G	O-RING	GUARNIZIONE O-R
07	71404357	15	20R	FITTING -ASS.LY	RACCORDO -COMPL.
07A	71404165	1	158G	O-RING	GUARNIZIONE O-R
08	71404074	1	285T	HOSE -ASS.LY	TUBO FLESSIBILE -COMPL.
08A	71405740	1	142G	SHEATH	GUAINA
10	71404059	1	285T	HOSE	TUBO FLESSIBILE
11	71401626	1	10V	VALVE -ASS.Y SEE. L-3	VALVOLA -COMP.VED.TAV. 3
12	11105034	4	40V	SCREW 10X1,5X20	VITE 10X1,5X20
13	11105434	2	40V	SCREW 10X1,5X30	VITE 10X1,5X30
14	71404395	1	20R	FITTING -ASS.LY	RACCORDO -COMPL.
14A	71404166	1	158G	O-RING	GUARNIZIONE O-R
17	71405741	1	225S	BRACKET	STAFFA
22	71404390	5	20R	FITTING	RACCORDO
23	10517274	5	131R	WASHER	ROSETTA
24	9272791	5	10D	NUT	DADO
25	71404355	7	20R	FITTING -ASS.LY	RACCORDO -COMPL.
25A	71404165	1	158G	O-RING	GUARNIZIONE O-R
29	71405743	2	193T	TUBE	TUBO RIGIDO
32	70923841	3	158G	O-RING	GUARNIZIONE O-R
34	71404012	1	285T	HOSE	TUBO FLESSIBILE
35	71404045	1	285T	HOSE	TUBO FLESSIBILE
36	71404046	1	285T	HOSE	TUBO FLESSIBILE
37	71404007	1	285T	HOSE	TUBO FLESSIBILE
38	71404006	1	285T	HOSE	TUBO FLESSIBILE
39	71403957	1	285T	HOSE	TUBO FLESSIBILE
41	71404029	1	285T	HOSE	TUBO FLESSIBILE
42	71404026	1	285T	HOSE	TUBO FLESSIBILE
43	71404048	1	285T	HOSE	TUBO FLESSIBILE
46	71404009	1	285T	HOSE	TUBO FLESSIBILE
47	71404049	1	285T	HOSE	TUBO FLESSIBILE
48	71404047	1	285T	HOSE	TUBO FLESSIBILE
49	71404052	1	285T	HOSE	TUBO FLESSIBILE
50	71415884	1	231S	CLIP	STAFFETTA
51	71415885	1	231S	CLIP	STAFFETTA
52	11106634	2	40V	SCREW M10X1,5X35	VITE M10X1,5X35
53	14406691	4	131R	WASHER 10X1,5X21	ROSETTA 10X1,5X21
55	11701721	2	10D	NUT	DADO
56	71405748	1	231S	CLIP	STAFFETTA
57	71415884	3	231S	CLIP	STAFFETTA
58	71405745	1	231S	CLIP	STAFFETTA
59	71415908	1	231S	CLIP	STAFFETTA
				C2320 UP TO S/N 0050	C2320 FINO AL TELAIO 0050
	71416731	1	231S	CLIP	STAFFETTA
				D2520 FROM S/N 0051	D2520 DAL TELAIO 0051
60	10979234	6	40V	SCREW 10X1,5X16	VITE 10X1,5X16
64	71416125	1	105P	PLATE	PIASTRA
71	71405921	1	193T	TUBE	TUBO RIGIDO

FH120

PILOT PIPING (3) TUBAZIONI SERVOCOMANDI(3)	TUYAUT. SERVOCOMMANDES(3) LEITUNGEN-SERVOSTEU. (3) TUBERIAS SERVOMANDOS (3)	1.093	TAV.1

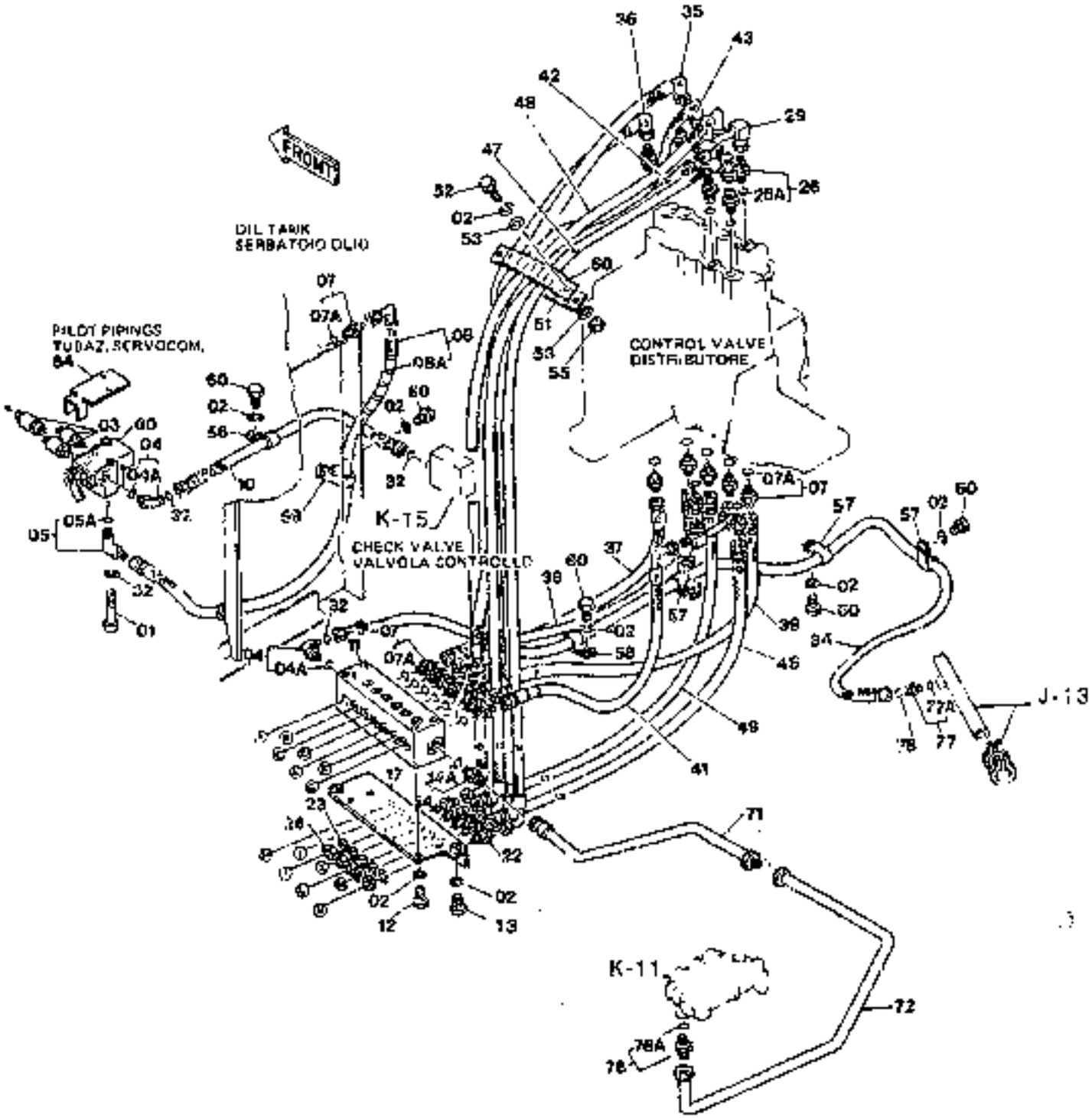

FH120

PILOT PIPING (3)
TUBAZIONI SERVOCOMANDI(3)

TUYAUT. SERVOCOMMANDES(3)
LEITUNGEN-SERVOSTEU. (3)
TUBERIAS SERVOMANDOS (3)

1.082 TAV.1

ITEM	PART NUMBER	QTY	TP. CO.	DESCRIPTION	DESCRIZIONE
72	71405968	1	103T	TUBE	TUBO RIGIDO
76	71404395	1	20R	FITTING	RACCORDO
76A	71404166	1	158G	O-RING	GUARNIZIONE O-R
77	71404382	1	20R	FITTING -ASS.LY	RACCORDO -COMPL.
77A	71404165	1	158G	O-RING	GUARNIZIONE O-R
78	70823641	1	158G	O-RING	GUARNIZIONE O-R

FH12D

STOP VALVE VALVOLA ARRESTO 71401527	VALVE DE SUITEE SPERRVENTIL VALVULA DE RETENCION	1.092 TAV.2

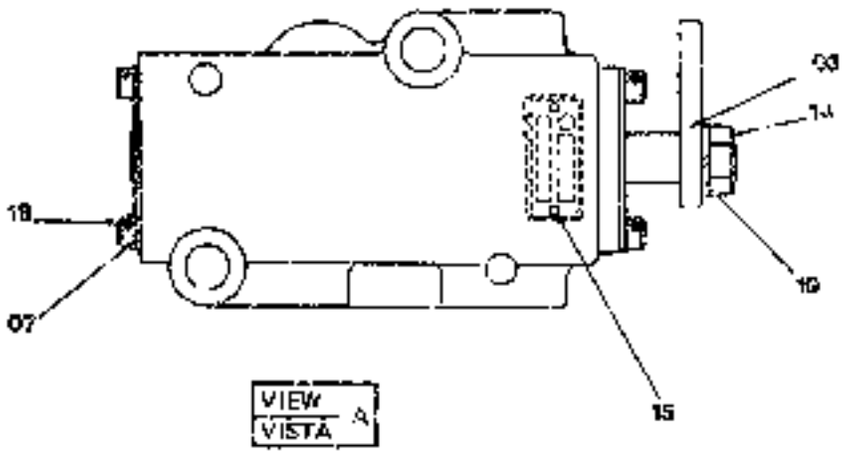

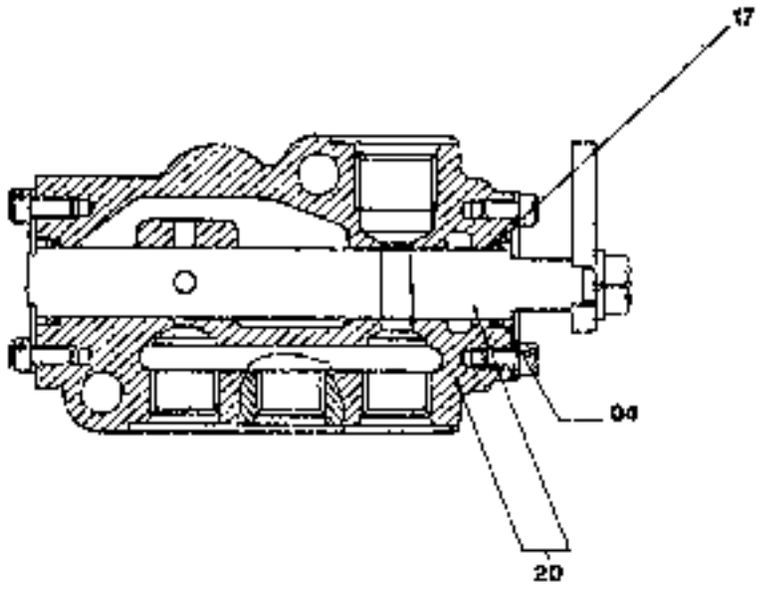

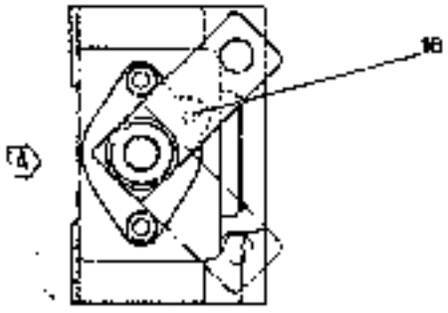

STOP VALVE
VALVOLA ARRESTO
71401627

VALVE DE BUTEE
SPERRVENTIL
VALVULA DE RETENCION

1.082 TAV.2

ITEM	PART NUMBER	QTY	TR. CO.	DESCRIPTION	DESCRIZIONE
03	71401787	1	45L	LEVER	LEVA
04	71401788	2	45A	RING	ANELLO
07	71401789	2	225S	BRACKET	STAFFA
14	71401794	1	10D	NUT	DADO
15	71401774	2	40V	SCREW	VITE
16	71401736	1	14CS	BALL	SFERA
17	71401806	2	156G	O-RING	GUARNIZIONE O-R
18	71401790	4	40V	SCREW	VITE
19	71401792	1	170R	LOCKWASHER	ROSETTA ELASTICA
20	71401705	1	300C	BODY	CORPO

L-1

ALPHABETICAL INDEX

DESCRIPTION	SGR.	TAV.	GRID
Accelerator controls	0.004	1	1C-23
Air Cleaner	0.001	1	1C-13
Alternator-Mounting	0.400	1	1H-9
Alternator (55 amp)	0.400	2	1H-11
Alternator (35 amp)	0.400	3	1H-13
Anti-Shock Valve (Hydr.)	1.082	3	1L-3
Application of Oil. Hammer	5.0020	2	2H-13
Batteries	1.220	1	2D-19
Belts	0.340	1	1G-21
	0.345	1	1G-23
Boom Piping	2.030	1	2F-13
Brake Valve Components	3.010	4	2G-11
Bucket	2.020	1	2F-9
Bucket Cylinder	2.030	5	2F-21
Bull Gear	3.000	1	2G-3
Cab	1.250	1	2D-19
Cab Door	1.250	5	2E-7
Cab Heater-Components	1.290	2	2E-15
Cab Window-Left Side	1.250	6	2E-9
Cab-Frame	1.250	7	2E-11
Cab-Platform	1.250	1	2D-21
Camshaft	0.120	1	1E-19
Check Valve	1.081	2	1K-17
Cold Starting Aid	5.0025	1	2H-19
Connecting Rod	0.081	1	1E-10
Cont. Valve-Hydr. (Ass.Y)	1.050	1	1J-13
Control Valve-Hydr.	1.050	2	1J-17
	1.050	3	1J-19
	1.050	4	1J-21
	1.050	5	1J-23
Controls	1.070	1	1K-5
Counterweight	1.000	1	1I-3
Cowlings	1.300	1	2E-19
	1.300	2	2E-21
Crankshaft	0.080	1	1E-7
Crankshaft Pulley	0.084	1	1E-15
Cylinder Block	0.040	1	1D-5
	0.040	2	1D-7
	0.040	3	1D-9
Cylinder Block Covers	0.043	1	1D-13
	0.043	2	1D-15
Cylinder Head	0.060	1	1D-21
	0.060	2	1D-23
Dashboard (Left)	1.210	1	2D-9
Dashboard (Right)	1.200	1	2D-3
	1.200	3	2D-7
Data Monitor	1.200	2	2D-5
Decals	4.500	1	2H-9
Dipper Stick (2,1m)	5.0022	1	2H-15
Dipper Stick (2,5m) (STD.)	2.003	1	2F-5
Dipper Stick(2,5m)Links(Std.)	2.003	2	2F-7
Dipper Stick (3m)	5.0038	1	2H-21
	5.0038	2	2H-23
Dipper Stick cylinder	2.030	4	2F-19
Dipstick-Engine Oil	0.305	2	1G-7
Discharge Valve	1.040	4	1J-3
Discharge Valve Componen	3.010	5	2G-13
Drive on Engine (Opt.)	0.350	1	1H-3
Electric System	1.220	2	2D-13
Elements-Engine Oil	0.001	1	1C-13
Elements-fuel	0.200	1	1F-11
Elements-Hydraulic	1.020	1	1E-19
Elements-Pilot	1.080	1	1K-11
Emergency Kits	4.000	1	2H-7
Engine	0.021	1	1D-3
Engine-Controls	0.004	1	1C--23
Engine-Suspensions	0.000	1	1C-11
Engine Breather	0.045	1	1D-17
	0.045	1A	1D-19
Engine Cooling Piping	0.323	1	1G-17
Engine Heat Exchanger	0.310	1	1G-9
	0.310	2	1G-11
Engine Lifting Eyes	0.450	1	1H-15
Engine Oil Filter	0.302	1	1G-3
Engine Oil Piping	0.305	1	1G-5
Engine Oil Pump	0.300	1	1F-23
Engine Oil Sump	0.042	1	1D-11
Engine Piston	0.082	1	1E-11
Engine Suspensions	0.000	1	1C-11
Exhaust Manifold	0.077	1	1E-5
Exhaust Valve	0.060	2	1D-25
Fan	0.345	1	1G-23
Fan Drive	0.345	1	1G-23
"Filter Care" Kit	21		1A-23
Filter-Pilot System	1.080	1	1K-11
Filters-Air	0.001	1	1C-13
Filters-Engine Oil	0.302	1	1G-3
Filters-Fuel	0.200	1	1F-11
Filters-Hydr. System	1.020	1	1I-7
Flywheel-Engine	0.083	1	1E-13
Fuel Filter	0..200	1	1F-11
Fuel Piping	0.203	1	1F-15
Fuel Pump	0.201	1	1F-13
Fuel Tank	1.010	1	1I-5
Fuses	1.200	3	2D-7
Guards	1.300	2	2E-21
Handle	1.300	3	2E-23
Heater	1.290	1	2E-15
Horn	1.220	2	2D-15
Hyd.Pump Drive	1.030	7	1I-21
Hyd.Pump Regulator Valve	1.030	6	1I-19
Hyd.Pump Regulator-Cover	1.030	4	1I-15
	1.030	5	1I-17
Hydr.Pump-Components	1.030	2	1I-11
Hydr.Pump Regulator-Comp.	1.030	3	1I-13

ALPHABETICAL INDEX

DESCRIPTION	SGR.	TAV.	GRID
Hydraulic Pump	1.030	1	1I-9
Idler	3.020	1	1G-15
Injection Nozzle-Lines	0.149	1	1F-9
Injection Pump	0.140	2	1E-23
	0.140	3	1F-3
	0.140	4	1F-5
	0.140	5	1F-7
Injection Pump-Piping	0.140	1	1E-21
Intake Manifold	0.071	1	1E-3
Intake Valve	0.060	2	1D-21
Lift Cylinder (Left)	2.030	3	1F-17
Lift Cylinder (Right)	2.030	2	2F-15
Lights	1.220	2	2D-15
Lower Frame	3.000	1	2G-3
Lubric. Fitting Piping	2.040	1	2F-23
Main Piping	1.060	1	1K-3
Mirror (Rear)	1.300	2	2E-21
Monobloc Boom	2.000	1	2F-3
Motor - Starter	0.360	2	1H-7
Motor - Swing	1.040	1	1J-3
Motor - Travel	3.010	1	12G-5
Motor - Wiper	1.220	1	2D-13
Muffler	0.002	1	1C-15
Oil Tank	1.020	1	1I-7
Operator's Seat	1.250	2	2D-23
Operators Seat(Bostrom)(Std.)	5.0151	1	2I-3
Pilot Gear Pump	1.030	8	1I-23
Pilot Piping(1)	1.080	1	1K-11
Pilot Piping(2)	1.081	1	1K-15
Pilot Piping(3)	1.082	1	1K-19
Pilot Piping (4)	1.083	1	1L-5
Pilot Piping (5)	1.084	1	1L-7
Pilot Valve	1.070	3	1K-9
Pilot Valve-components	1.070	2	1K-7
Pipin-Boom	2.030	1	2F-13
Piping-Engine Oil	0.350	1	1H-3
Piping-Injection	0.149	1	1F-9
Piping-Lube Fittings	2.040	1	2G-23
Piping-Main	1.060	1	1K-3
Piping-Pilot(1)	1.080	1	1K-11
Piping-Pilot(3)	1.082	1	1K-19
Piping-Pilot(4)	1.083	1	1L-5
Piping-Pilot(5)	1.084	1	1L-7
Piping-Pump Contr. Valve	1.050	1	1J-13
Piping-Travel (Lower)	3.070	1	2H-5
Piping-Turbocharger	0.241	1	1F-21
Pump-Engine Oil	0.300	1	1F-23
Pump-Fuel	0.201	1	1F-13
Pump-Hydraulic	1.030	1	1I-9
Pump Injection	0.140	1	1E-21
Pump-Pilot	1.030	6	1I-23
Pump-Water	0.320	1	1G-13
Pump/Control Valve Piping	1.050	1	1J-13
Radiator	0.003	1	1C-17
Radiator-Components	0.003	2	1C-19
	0.003	3	1C-21
Rocker Arm	0.060	2	1D-23
Rotary Distr.-Components	3.060	2	2H-3
Rotary Distributor	3.060	1	2G-23
Seat Belt (Std.)	5.0536	1	2I-5
Sensors	1.220	2	2D-15
Solenoid Valve	1.080	2	1K-13
Starter	0.360	2	1H-7
Starter-Mounting	0.360	1	1H-5
Stop Valve	1.082	2	1K-23
Swing Motor-Components	1.040	3	1J-7
Swing Red.Unit-Components	1.040	2	1J-5
Swing Reduction Unit	1.040	1	1J-3
Thermostat & Housing	0.326	1	1G-19
Timing Control	0.100	1	1E-17
Tool Kit	5.0083	1	2I-9
Track Chain	3.050	1	2G-21
Track Roller	3.040	1	2G-19
Travel Motor-componen.	3.010	3	2G-9
Travel Piping (Lower)	3.070	1	2H-5
Travel Red.Unit-Componen.	3.010	2	2G-7
Travel Reduction Units	3.010	1	2G-5
Turbocharger	0.240	1	1F-17
	0.240	2	1F-19
Turbocharger Piping	0.241	1	1F-21
Upper Frame	1.000	1	1E-17
Upper Roller	3.030	1	2G-17
Valve-Anti-Shock(Hydr.)	1.082	3	1L-9
Valve-Check (Pilot)	1.081	2	1K-17
Valve-Exhaust	0.060	2	1D-23
Valve-Intake	0.060	2	1D-23
Valve-Pilot (Hydr.)	1.070	1	1K-5
Valve-Pilot(Travel)	1.070	1	1K-5
Valve-Solenoid	1.080	2	1K-13
Valve-Stop(Travel)	1.082	1	1K-21
Washer (windshield)	1.220	3	2D-17
Water Pump	0.320	1	1G-13
Water Pump Drive	0.340	1	1G-21
Water Pump-Components	0.320	2	1G-15
Wiper	1.220	1	2D-11

ANTI-SHOCK VALVE (HYDR.) VALVOLA ANTIURTO 71401828	VALVE AMORTISSEUSE DAEMPFUNGSVENTIL VALVULA AMORTIGUADORA	1.032 TAV.3

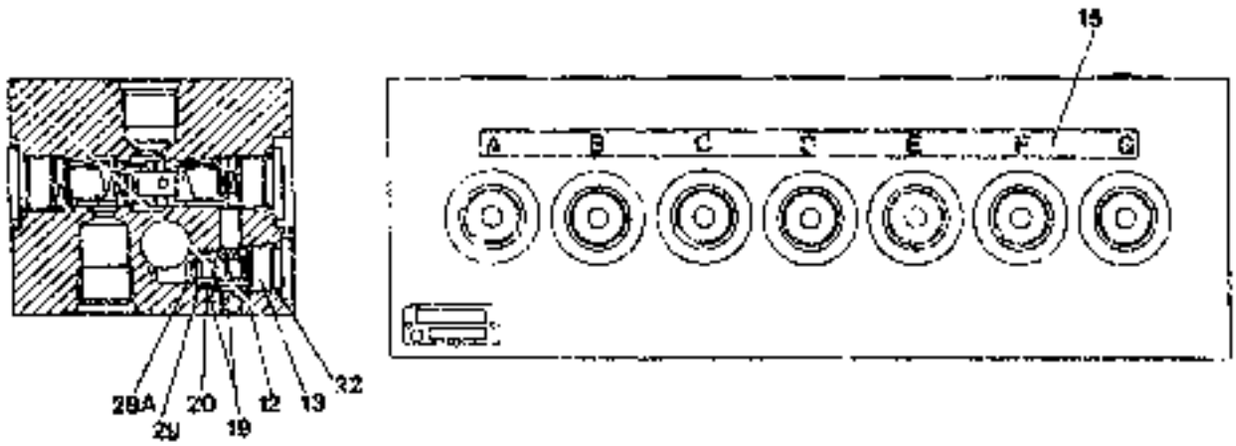

SECTION X
SEZIONE

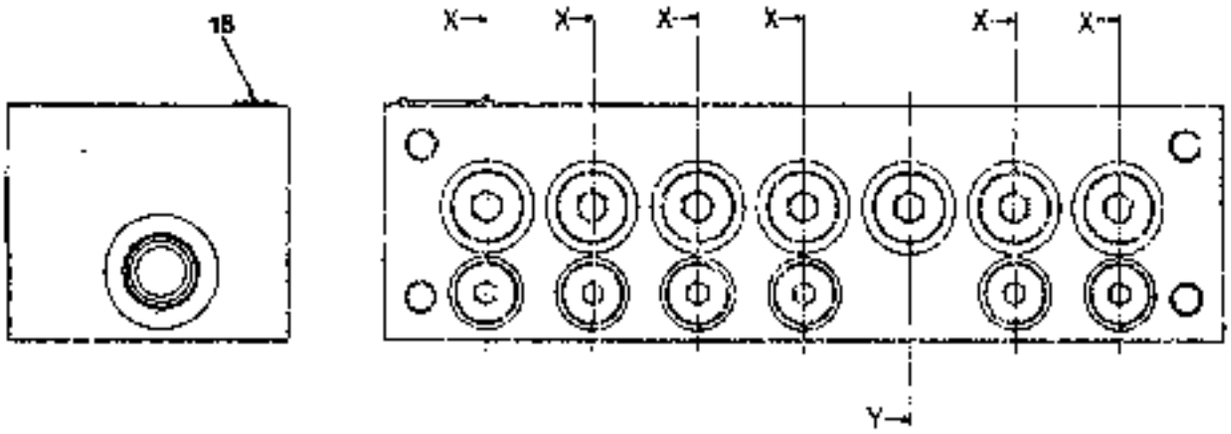

26 (7 Port) – (Vano N. 7)
25 (6 Port) – (Vano N. 6)
24 (5 Port) – (Vano N. 5)
27 (1-2-3-4 Port) – (Vano N. 1-2-3-4)

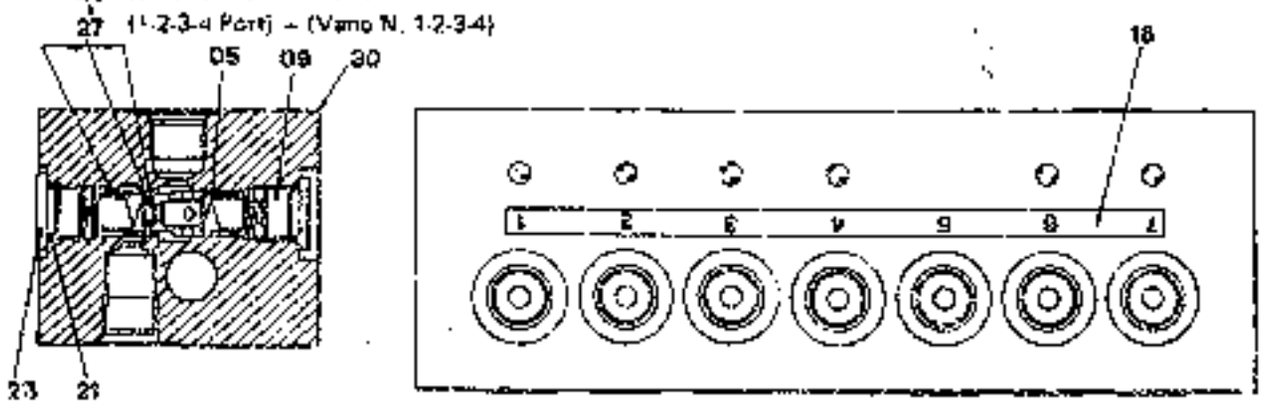

SECTION Y
SEZIONE

ANTI-SHOCK VALVE (HYDR.)
VALVOLA ANTIURTO
71401626

VALVE AMORTISSEUSE
DAEMPFUNGSVENTIL
VALVULA AMORTIGUADORA

1.062 TAV.3

ITEM	PART NUMBER	QTY	TR CO.	DESCRIPTION	DESCRIZIONE
05	71401770	14	100M	SPRING	MOLLA
08	71401771	7	50T	PLUG	TAPPO
12	71401772	6	100M	SPRING	MOLLA
13	71401773	6	50T	PLUG	TAPPO
15	71401091	1	65T	DECAL	TARGA
16	71401882	1	65T	DECAL	TARGA
18	71401774	2	40V	SCREW	VITE
19	71401804	12	140S	BALL	SFERA
20	71401775	6	158G	O-RING	GUARNIZIONE O-R
21	71404165	14	158G	O-RING	GUARNIZIONE O-R
22	71401777	6	158G	O-RING	GUARNIZIONE O-R
23	71401778	7	50T	PLUG	TAPPO
25	71401779	1	235S	PISTON -ASS.LY	STANTUFFO -COMPL.
26	71401780	1	235S	PISTON -ASS.LY	STANTUFFO -COMPL.
27	71401781	4	235S	PISTON -ASS.LY	STANTUFFO -COMPL.
28	71401782	1	235S	PISTON -ASS.LY	STANTUFFO -COMPL.
29	71401783	6	65F	FILTER	FILTRO
30	71401784	1	300G	BODY	CORPO

PILOT PIPING (4)	TUYAUT. SERVOCOMMANDES(4)	1,083 TAV.1
TUBAZIONI SERVOCOMANDI(4)	LEITUNGEN-SERVOSTEU. (4)	
	TUBERIAS SERVOMANDOS (4)	

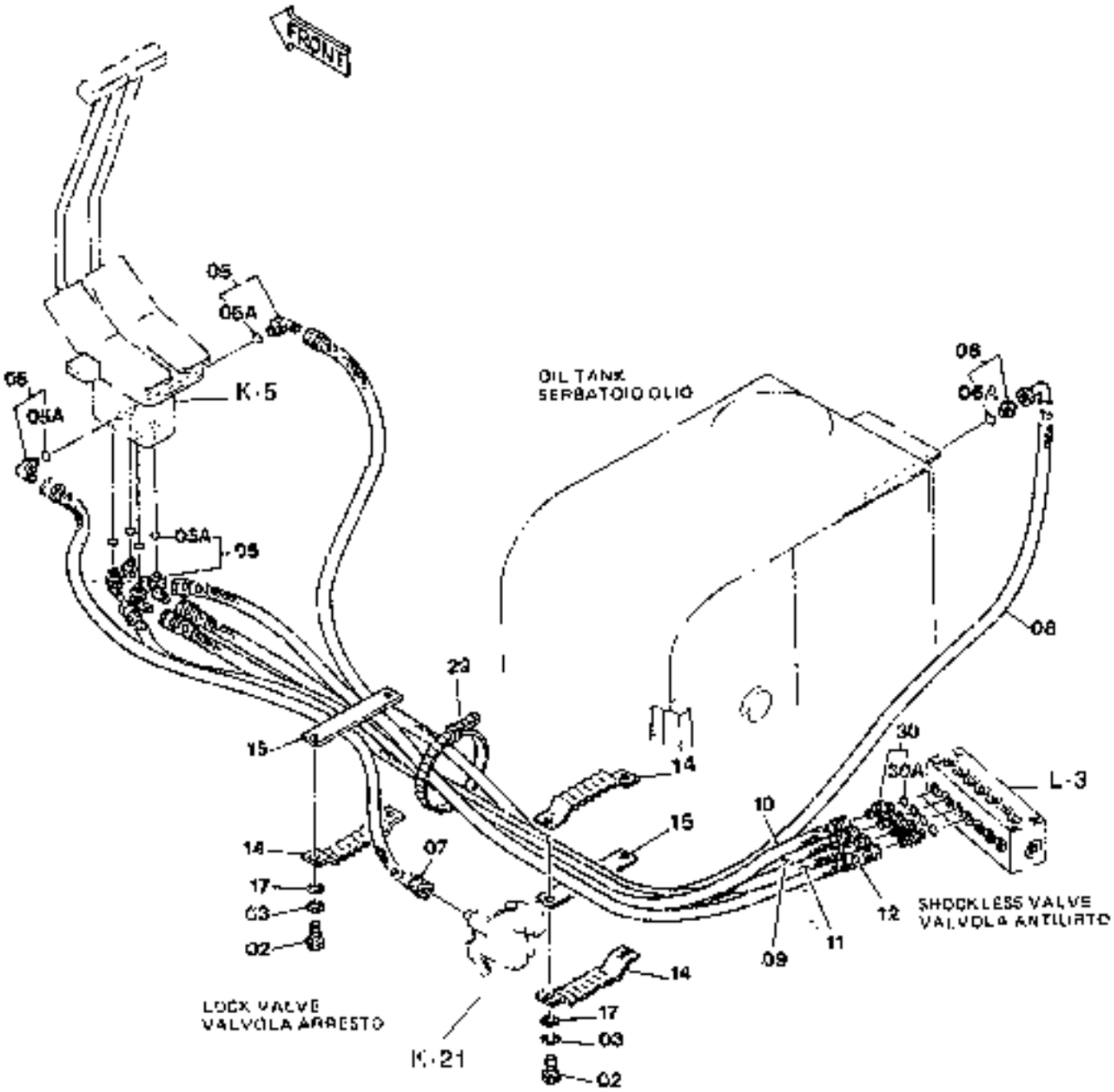

PILOT PIPING (4) — TUYAUT. SERVOCOMMANDES(4) — 1.063 TAV.1
TUBAZIONI SERVOCOMANDI(4) — LEITUNGEN-SERVOSTEU. (4)
TUBERIAS SERVOMANDOS (4)

ITEM	PART NUMBER	QTY	TR. CC.	DESCRIPTION	DESCRIZIONE
02	11106634	4	40V	SCREW M10X1,5X35	VITE M10X1,5X35
03	10516874	4	131R	WASHER	ROSETTA
05	71404408	6	20R	FITTING -ASS.LY	RACCORDO -COMPL.
05A	71404163	6	159G	O-RING	GUARNIZIONE O-R
06	71404357	1	20R	FITTING	RACCORDO
06A	71404165	1	159G	O-RING	GUARNIZIONE O-R
07	71404010	1	285T	HOSE	TUBO FLESSIBILE
08	71404027	1	285T	HOSE	TUBO FLESSIBILE
09	71404075	1	285T	HOSE	TUBO FLESSIBILE
10	71404011	1	285T	HOSE	TUBO FLESSIBILE
11	71404001	1	285T	HOSE	TUBO FLESSIBILE
12	71404002	1	285T	HOSE	TUBO FLESSIBILE
14	71415894	3	231S	CLIP	STAFFETTA
15	71415895	2	231S	CLIP	STAFFETTA
17	14498631	4	131R	WASHER	ROSETTA
29	4982514	2	31F	CLAMP	FASCETTA
30	71404357	4	20R	FITTING	RACCORDO
30A	71404166	4	159G	O-RING	GUARNIZIONE O-R

PILOT PIPING (5)	TUYAUT. SERVOCOMMANDES(5)	1.084 TAV.1
TUBAZIONI SERVOCOMANDI(5)	LEITUNGEN-SERVOSTEU. (5)	
	TUBERIAS SERVOMANDOS (5)	

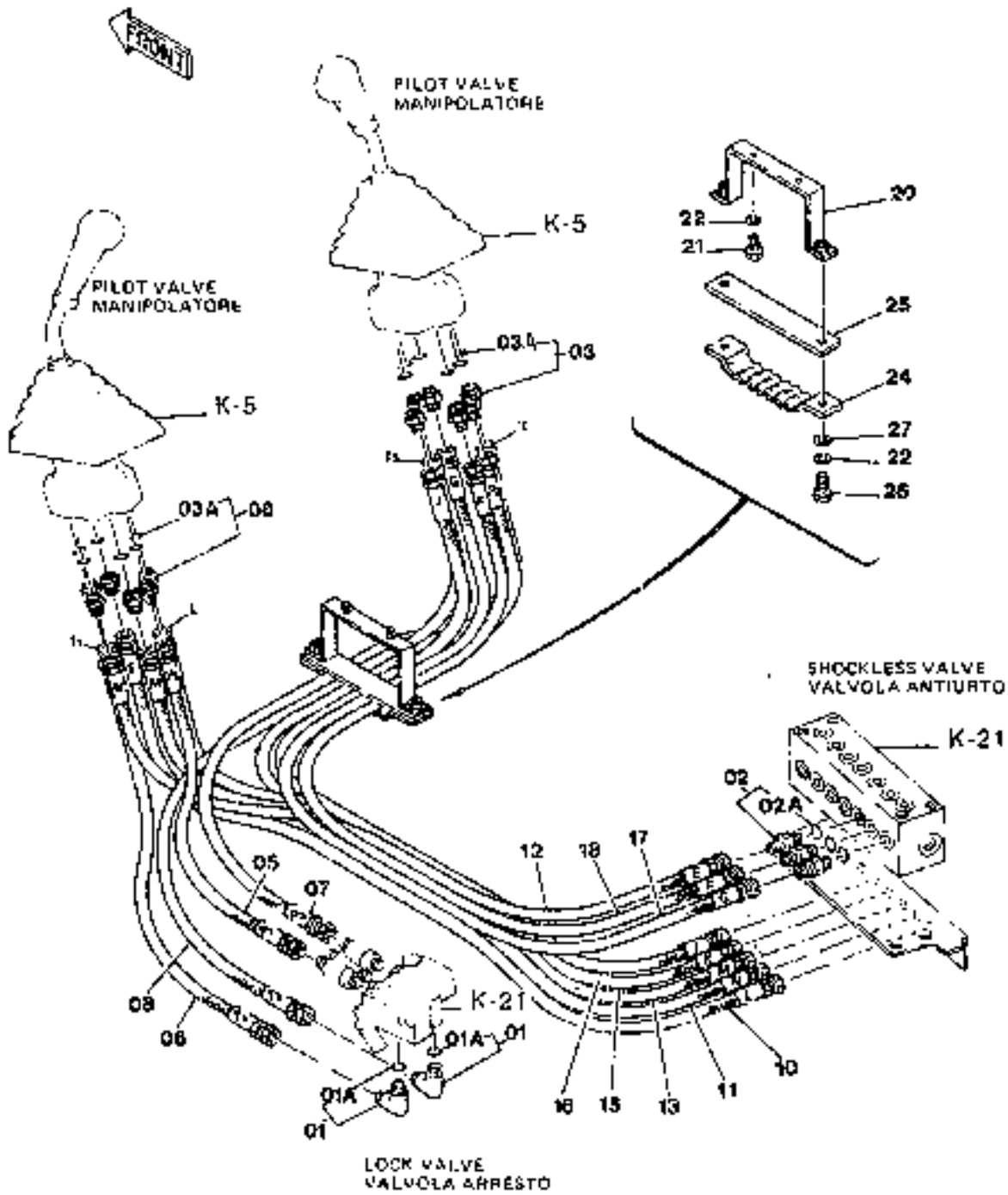

FH120

PILOT PIPING (5)
TUBAZIONI SERVOCOMANDI(5)
TUYAUT. SERVOCOMMANDES(5)
LEITUNGEN-SERVOSTEU. (5)
TUBERIAS SERVOMANDOS (5)

1.084 TAV.1

ITEM	PART NUMBER	QTY	TR. CO.	DESCRIPTION	DESCRIZIONE
01	71404345	2	20R	FITTING	RACCORDO
01A	71404165	2	158G	O-RING	GUARNIZIONE O-R
02	71404357	3	20R	FITTING	RACCORDO
02A	71404165	3	158G	O-RING	GUARNIZIONE O-R
03	71404351	12	20R	FITTING -ASS.LY	RACCORDO -COMPL.
03A	71404163	12	158G	O-RING	GUARNIZIONE O-R
05	71404003	1	28ST	HOSE	TUBO FLESSIBILE
06	71403997	1	28ST	HOSE	TUBO FLESSIBILE
07	71403996	1	28ST	HOSE	TUBO FLESSIBILE
08	71403995	1	28ST	HOSE	TUBO FLESSIBILE
10	71403992	1	28ST	HOSE	TUBO FLESSIBILE
11	71403993	1	28ST	HOSE	TUBO FLESSIBILE
12	71403994	1	28ST	HOSE	TUBO FLESSIBILE
13	71403991	1	28ST	HOSE	TUBO FLESSIBILE
15	71403990	1	28ST	HOSE	TUBO FLESSIBILE
16	71403989	1	28ST	HOSE	TUBO FLESSIBILE
17	71403988	1	28ST	HOSE	TUBO FLESSIBILE
18	71403987	1	28ST	HOSE	TUBO FLESSIBILE
20	71405750	1	225S	BRACKET	STAFFA
21	10979234	2	40V	SCREW 10X1,5X16	VITE 10X1,5X16
22	10516974	4	131R	WASHER	ROSETTA
24	71415004	1	231S	CLIP	STAFFETTA
25	71415005	1	231S	CLIP	STAFFETTA
26	11106634	2	40V	SCREW M10X1,5X35	VITE M10X1,5X35
27	14406631	2	131R	WASHER	ROSETTA

D-1

ALPHABETICAL INDEX

DESCRIPTION	SGR.	TAV.	GRID
Accelerator controls	0.004	1	1C-23
Air Cleaner	0.001	1	1C-13
Alternator-Mounting	0.400	1	1H-9
Alternator (55 amp)	0.400	2	1H-11
Alternator (35 amp)	0.400	3	1H-13
Anti-Shock Valve (Hydr.)	1.082	3	1L-3
Application of Oil Hammer	5.0020	2	2H-13
Batteries	1.220	4	2D-19
Belts	0.340	1	1G-21
	0.345	1	1G-23
Boom Piping	2.080	1	2F-13
Brake Valve Components	3.010	4	2G-11
Bucket	2.020	1	2F-9
Bucket Cylinder	2.030	5	2F-21
Bull Gear	3.000	1	2G-9
Cab	1.250	1	2D-19
Cab Door	1.250	5	2E-7
Cab Heater-Components	1.290	2	2E-15
Cab Window-Left Side	1.250	6	2E-9
Cab-Frame	1.250	7	2E-11
Cab-Platform	1.250	1	2D-21
Camshaft	0.120	1	1E-19
Check Valve	1.081	2	1K-17
Cold Starting Aid	5.0025	1	2H-19
Connecting Rod	0.081	1	1E-10
Cont. Valve-Hydr. (Ass.Y)	1.050	1	1J-13
Control Valve-Hydr.	1.050	2	1J-17
	1.050	3	1J-19
	1.050	4	1J-21
	1.050	5	1J-23
Controls	1.070	1	1K-5
Counterweight	1.000	1	1I-3
Cowlings	1.300	1	2E-19
	1.300	2	2E-21
Crankshaft	0.080	1	1E-7
Crankshaft Pulley	0.084	1	1E-15
Cylinder Block	0.040	1	1D-5
	0.040	2	1D-7
	0.040	3	1D-9
Cylinder Block Covers	0.043	1	1D-13
	0.043	2	1D-15
Cylinder Head	0.060	1	1D-21
	0.060	2	1D-23
Dashboard (Left)	1.210	1	2D-9
Dashboard (Right)	1.200	1	2D-3
	1.200	3	2D-7
Data Monitor	1.200	2	2D-5
Decals	4.500	1	2H-9
Dipper Stick (2,1m)	5.0022	1	2H-15
Dipper Stick (2,5m) (STD.)	2.003	1	2F-5
Dipper Stick(2,5m)Links(Std.)	2.003	2	2F-7
Dipper Stick (3m)	5.0038	1	2H-21
	5.0038	2	2H-23
Dipper Stick cylinder	2.030	4	2F-19
Dipstick-Engine Oil	0.305	2	1G-7
Discharge Valve	1.040	4	1J-3
Discharge Valve Componen.	3.010	5	2G-13
Drive on Engine (Opt.)	0.350	1	1H-3
Electric System	1.220	2	2D-13
Elements-Engine Oil	0.001	1	1C-13
Elements-fuel	0.200	1	1F-11
Elements-Hydraulic	1.020	1	1E-19
Elements-Pilot	1.080	1	1K-11
Emergency Kits	4.000	1	2H-7
Engine	0.021	1	1D-3
Engine-Controls	0.004	1	1C-23
Engine-Suspensions	0.000	1	1C-11
Engine Breather	0.045	1	1D-17
	0.045	1A	1D-19
Engine Cooling Piping	0.323	1	1G-17
Engine Heat Exchanger	0.310	1	1G-9
	0.310	2	1G-11
Engine Lifting Eyes	0.450	1	1H-15
Engine Oil Filter	0.302	1	1G-3
Engine Oil Piping	0.305	1	1G-5
Engine Oil Pump	0.300	1	1F-23
Engine Oil Sump	0.042	1	1D-11
Engine Piston	0.082	1	1E-11
Engine Suspensions	0.000	1	1C-11
Exhaust Manifold	0.077	1	1E-5
Exhaust Valve	0.060	2	1D-23
Fan	0.345	1	1G-23
Fan Drive	0.345	1	1G-23
"Filter Care" Kit	21		1A-25
Filter-Pilot System	1.080	1	1K-11
Filters-Air	0.001	1	1C-13
Filters-Engine Oil	0.302	1	1G-3
Filters-Fuel	0.200	1	1F-11
Filters-Hydr. System	1.020	1	1I-7
Flywheel-Engine	0.083	1	1E-13
Fuel Filter	0.200	1	1F-11
Fuel Piping	0.203	1	1F-15
Fuel Pump	0.201	1	1F-13
Fuel Tank	1.010	1	1I-5
Fuses	1.200	3	2D-7
Guards	1.300	2	2E-21
Handle	1.300	3	2E-23
Heater	1.290	1	2E-15
Horn	1.220	2	2D-15
Hyd.Pump Drive	1.030	7	1I-21
Hyd.Pump Regulator Valve	1.030	6	1I-19
Hyd.Pump Regulator-Cover	1.030	4	1I-15
	1.030	5	1I-17
Hydr.Pump-Components	1.030	2	1I-11
Hydr.Pump Regulator-Comp.	1.030	3	1I-13

D-2

ALPHABETICAL INDEX

DESCRIPTION	SGR.	TAV.	GRID
Hydraulic Pump	1.030	1	1I-9
Idler	3.020	1	1G-15
Injection Nozzle-Lines	0.149	1	1F-9
Injection Pump	0.140	2	1E-23
	0.140	3	1F-3
	0.140	4	1F-5
	0.140	5	1F-7
Injection Pump-Piping	0.140	1	1E-21
Intake Manifold	0.071	1	1E-3
Intake Valve	0.060	2	1D-21
Lift Cylinder (Left)	2.030	3	1F-17
Lift Cylinder (Right)	2.030	2	2F-15
Lights	1.220	2	2D-15
Lower Frame	3.000	1	2G-3
Lubric. Fitting Piping	2.040	1	2F-23
Main Piping	1.060	1	1K-3
Mirror (Rear)	1.300	2	2E-21
Monoblock Boom	2.000	1	2F-3
Motor - Starter	0.360	2	1H-7
Motor - Swing	1.040	1	1J-3
Motor - Travel	3.010	1	12G-5
Motor - Wiper	1.220	1	2D-13
Muffler	0.002	1	1C-15
Oil Tank	1.020	1	1I-7
Operator's Seat	1.250	2	2D-23
OperatorsSeat(Bostrom)(Std)	5.0151	1	2I-3
Pilot Gear Pump	1.030	8	1I-23
Pilot Piping(1)	1.080	1	1K-11
Pilot Piping(2)	1.081	1	1K-15
Pilot Piping(3)	1.082	1	1K-19
Pilot Piping (4)	1.083	1	1L-5
Pilot Piping (5)	1.084	1	1L-7
Pilot Valve	1.070	3	1K-9
Pilot Valve-components	1.070	2	1K-7
Pipin-Boom	2.030	1	2F-13
Piping-Engine Oil	0.350	1	1H-3
Pipin[illegible]njection	0.149	1	1F-9
Pipin[illegible]ube Fittings	2.040	1	2G-23
Piping-Main	1.060	1	1K-3
Piping-Pilot(1)	1.080	1	1K-11
Piping-Pilot(3)	1.082	1	1K-19
Piping-Pilot(4)	1.083	1	1L-5
Piping-Pilot(5)	1.084	1	1L-7
Piping-Pump Contr. Valve	1.050	1	1J-13
Piping-Travel (Lower)	3.070	1	2H-5
Piping-Turbocharger	0.241	1	1F-21
Pump-Engine Oil	0.300	1	1F-23
Pump-Fuel	0.201	1	1F-13
Pump-Hydraulic	1.030	1	1I-9
Pump-Injection	0.140	1	1E-21
Pump-Pilot	1.030	8	1I-23
Pump-Water	0.320	1	1G-13
Pump/Control Valve Piping	1.050	1	1J-13
Radiator	0.003	1	1C-17
Radiator-Components	0.003	2	1C-19
	0.003	3	1C-21
Rocker Arm	0.060	2	1D-23
Rotary Distr.-Components	3.060	2	2H-3
Rotary Distributor	3.060	1	2G-23
Seat Belt (Std.)	5.0536	1	2I-5
Sensors	1.220	2	2D-15
Solenoid Valve	1.080	2	1K-13
Starter	0.360	2	1H-7
Starter-Mounting	0.360	1	1H-5
Stop Valve	1.082	2	1K-23
Swing Motor-Components	1.040	3	1J-7
Swing Red.Unit-Components	1.040	2	1J-5
Swing Reduction Unit	1.040	1	1J-3
Thermostat & Housing	0.325	1	1G-19
Timing Control	0.100	1	1E-17
Tool Kit	5.0063	1	2I-9
track Chain	3.050	1	2G-21
Track Roller	3.040	1	2G-19
Travel Motor-componen.	3.010	3	2G-9
Travel Piping (Lower)	3.070	1	2H-5
Travel Red Unit-Componen.	3.010	2	2G-7
Travel Reduction Units	3.010	1	2G-5
Turbocharger	0.240	1	1F-17
	0.240	2	1F-19
Turbocharger Piping	0.241	1	1F-21
Upper Frame	1.000	1	1E-17
Upper Roller	3.030	1	2G-17
Valve-Anti-Shock(Hydr.)	1.082	3	1L-3
Valve-Check (Pilot)	1.081	2	1K-17
Valve-Exhaust	0.060	2	1D-23
Valve-Intake	0.060	2	1D-23
Valve-Pilot (Hydr.)	1.070	1	1K-5
Valve-Pilot(Travel)	1.070	1	1K-5
Valve-Solenoid	1.080	2	1K-13
Valve-Stop(Travel)	1.082	1	1K-21
Washer (windshield)	1.220	3	2D-17
Water Pump	0.320	1	1G-13
Water Pump Drive	0.340	1	1G-21
Water Pump-Components	0.320	2	1G-15
Wiper	1.220	1	2D-11

DASHBOARD (RIGHT)	TABLIER DROIT	1.200 TAV.1
CRUSCOTTO (DESTRO)	STIRNWAND-RECHTS	
	TABLERO DERECHO	

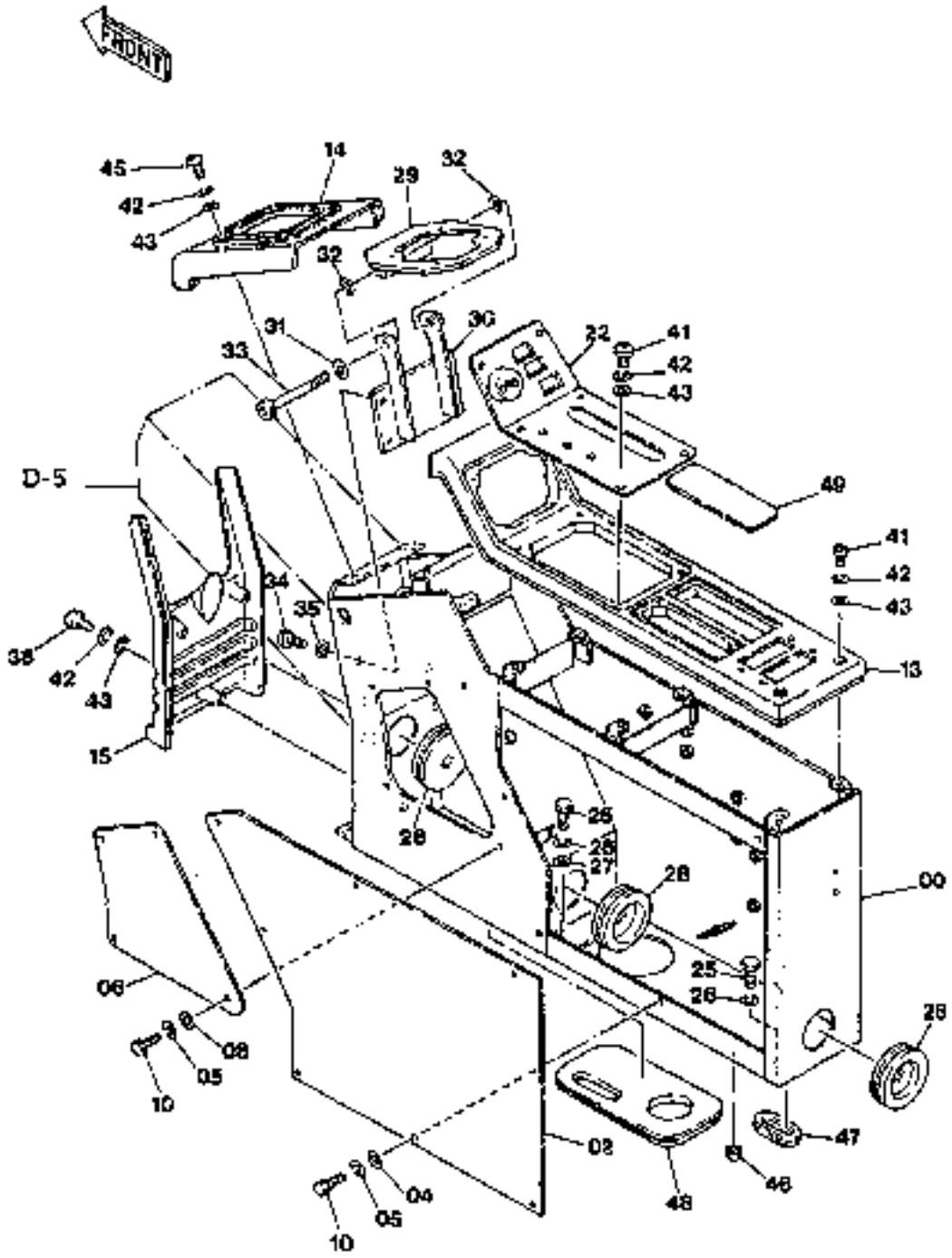

FH120

DASHBOARD (RIGHT) — TABLIER DROIT — 1.200 TAV.1
CRUSCOTTO (DESTRO) — STIRNWAND-RECHTS
TABLERO DERECHO

ITEM	PART NUMBER	QTY	TR. CO.	DESCRIPTION	DESCRIZIONE
00	71415612	1	115M	PILLAR	MONTANTE
02	71415611	1	265C	COVER	COPERCHIO
04	12843731	7	131R	WASHER	ROSETTA
05	10571574	11	131R	WASHER	ROSETTA
06	71415060	1	265C	COVER	COPERCHIO
08	14496431	4	131R	WASHER	ROSETTA
10	10902134	11	40V	SCREW 6X1X14	VITE 6X1X14
13	71415625	1	25P	PANEL	PANNELLO
14	71415629	1	265C	COVER	COPERCHIO
15	71415630	1	265C	COVER	COPERCHIO
22	71415631	1	141P	INSTRUMENT PANEL	PLANCIA PORTASTRUMENTI
25	11106234	6	40V	SCREW 10X1,5X25	VITE 10X1,5X25
26	10571674	6	131R	WASHER	ROSETTA
27	14496631	1	131R	WASHER	ROSETTA
28	71415645	3	145G	GUIDE	GUIDA
29	71415667	1	225S	BRACKET	STAFFA
30	71415668	1	105P	PLATE	PIASTRA
31	14496731	1	131R	WASHER	ROSETTA
32	586164		131R	WASHER	ROSETTA
33	14423434	1	40V	SCREW 12X1,75X100	VITE 12X1,75X100
34	11106034	4	40V	SCREW 10X1,5X20	VITE 10X1,5X20
35	10571674	4	131R	WASHER	ROSETTA
38	13277017	3	40V	SCREW 6X1X40	VITE 6X1X40
41	13276217	8	40V	SCREW 6X1X16	VITE 6X1X16
42	10571576	15	170R	LOCKWASHER	ROSETTA ELASTICA
43	14496406	15	131R	WASHER	ROSETTA
45	13276417	4	40V	SCREW	VITE
46	10393480	1	45A	RING	ANELLO
47	71415669	1	145G	GUIDE	GUIDA
48	71415028	1	265C	COVER	COPERCHIO
49	71415608	1	50T	PLUG	TAPPO

DATA MONITOR
MODULO DI CONTROLLO

MODULE DE CONTROLE
INSTRUMENTE
PANEL DE CONTROL

1,200 TAV.2

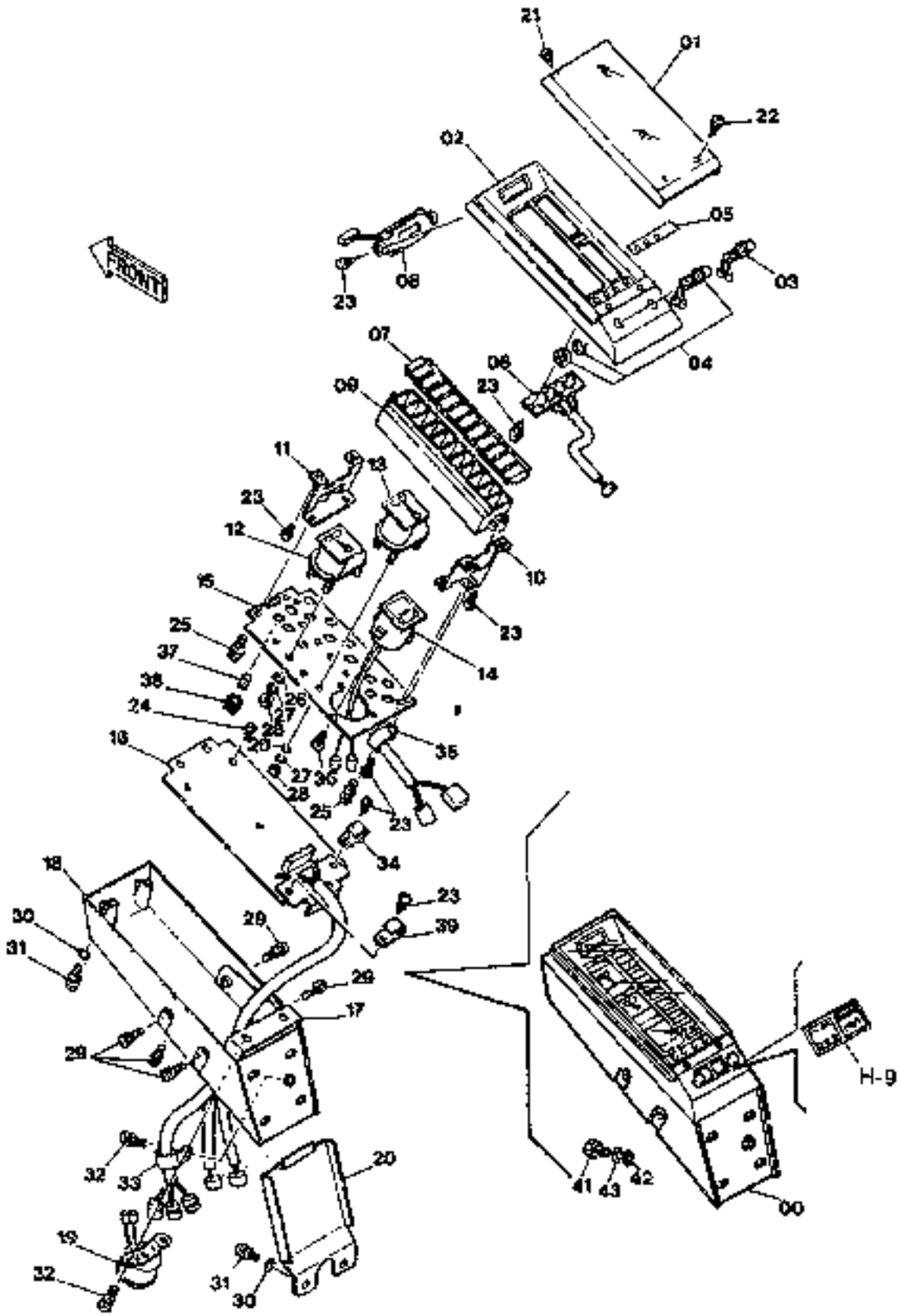

PH120

DATA MONITOR
MODULO DI CONTROLLO

MODULE DE CONTROLE
INSTRUMENTE
PANEL DE CONTROL

1.200 TAV.2

ITEM	PART NUMBER	QTY	TR CO.	DESCRIPTION	DESCRIZIONE
00	71403513	1	25P	PANEL	PANNELLO
01	71403603	1	265C	COVER	COPERCHIO
02	71403604	1	35S	CASE	SCATOLA
03	71403605	1	236P	PUSH BUTTON	PULSANTE
04	71403606	1	236P	PUSH BUTTON	PULSANTE
05	71403607	1	70L	SIDE RAIL	LONGHERINA
06	71403608	1	25P	PANEL	PANNELLO
07	71403609	1	33I	FUEL LEVEL INDICATOR	INDICATORE LIVELLO COMB.
08	71403610	1	240	CLOCK	OROLOGIO
09	71403611	1	35S	CASE	SCATOLA
10	71403612	1	225T	BRACKET	STAFFA
11	71403613	1	225S	BRACKET	STAFFA
12	71403614	1	95T	TEMPERATURE GAUGE	TERMOMETRO ACQUA
13	71403615	1	33I	FUEL LEVEL INDICATOR	INDICATORE LIVELLO COMB.
14	71403616	1	240C	HOURMETER	CONTAORE
15	71403617	1	25P	PANEL	PANNELLO
16	71403618	1	25P	PANEL	PANNELLO
17	71403619	1	225S	BRACKET	STAFFA
18	71403620	1	35S	CASE	SCATOLA
19	71403621	1	105A	HORN	AVVISATORE ACUSTICO
20	71403622	1	265C	COVER	COPERCHIO
21	71403623	2	40V	SCREW	VITE
22	71403624	2	40V	SCREW	VITE
23	71403625	12	40V	SCREW	VITE
24	71403626	2	40V	SCREW	VITE
25	71403627	5	40V	SCREW	VITE
26	71403628	8	131R	WASHER	ROSETTA
27	71403629	8	170R	LOCKWASHER	ROSETTA ELASTICA
28	71403630	8	100	NUT	DADO
29	71403631	6	40V	SCREW	VITE
30	71403632	6	131R	WASHER	ROSETTA
31	71403633	6	40V	SCREW	VITE
32	71403634	3	40V	SCREW	VITE
33	71403635	1	231S	CLIP	STAFFETTA
34	71403636	1	231S	CLIP	STAFFETTA
35	71403637	1	231S	CLIP	STAFFETTA
36	71403638	3	40V	SCREW	VITE
37	71403639	15	87L	BULB	LAMPADINA
38	71403640	15	193P	BULB HOLDER	PORTALAMPADA
39	71403641	1	231S	CLIP	STAFFETTA
41	16043434	4	40V	SCREW 8X1,25X20	VITE 8X1,25X20
42	14496531	4	131R	WASHER	ROSETTA
43	10571774	4	170R	LOCKWASHER	ROSETTA ELASTICA

FH120

DASHBOARD (RIGHT) CRUSCOTTO (DESTRO)	TABLIER DROIT STIRNWAND-RECHTS TABLERO DERECHO	1,200 TAV.3

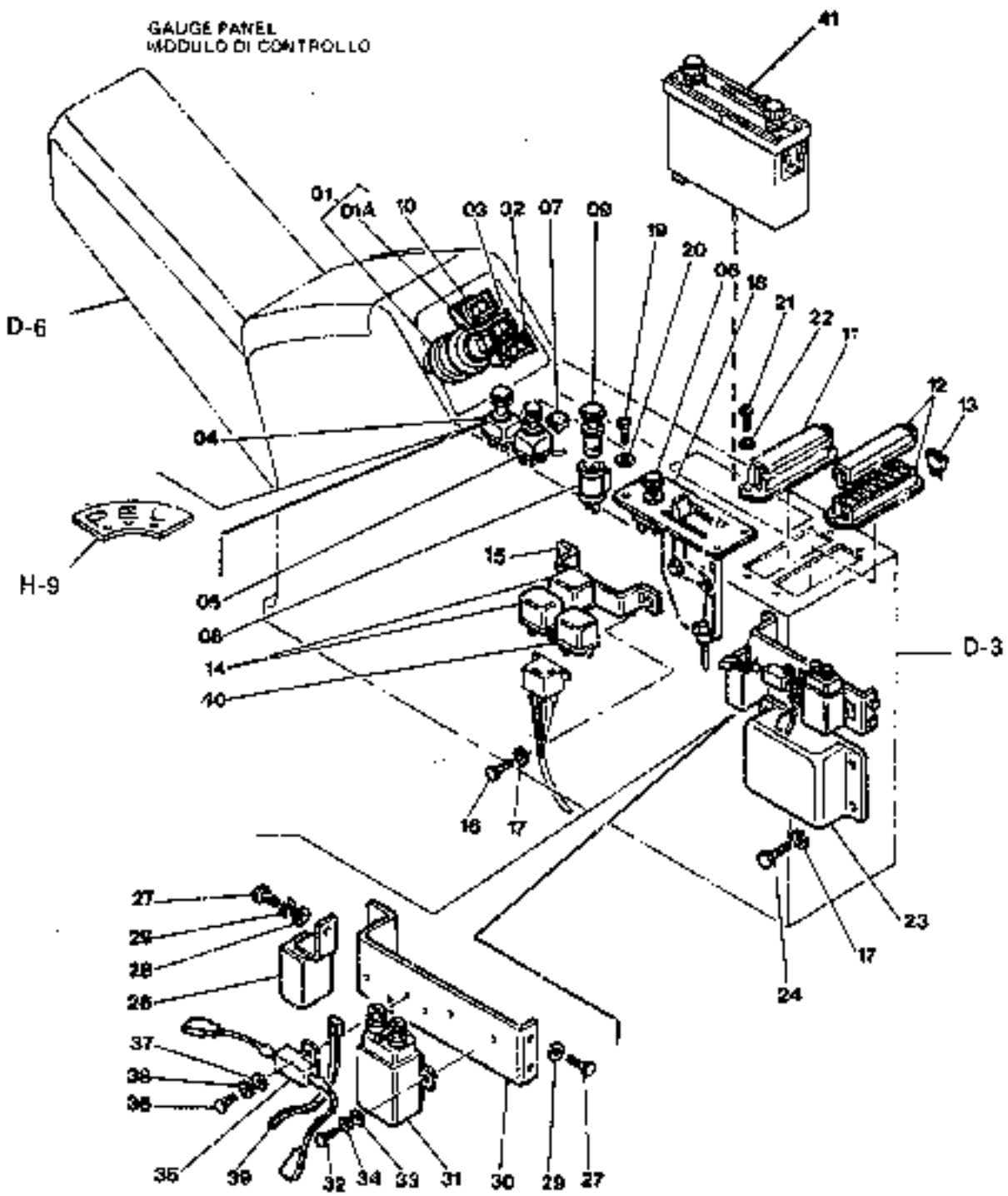

FH120

DASHBOARD (RIGHT) — TABLIER DROIT — 1:200 TAV.3
CRUSCOTTO (DESTRO) — STIRNWAND-RECHTS
TABLERO DERECHO

ITEM	PART NUMBER	QTY	TR. CO.	DESCRIPTION	DESCRIZIONE
01	79065835	1	210C	SWITCH STARTER	COMMUTATORE AVVIAMENTO
01A	79069292	1	150C	KEY	CHIAVE
02	71403592	1	210C	SWITCH SPEED VARIATOR	COMMUTATORE VAR. VELOCITA'
03	71403593	1	210C	SWITCH GAS DECREASE	COMMUTATORE MINIMO AUTOMATICO
04	71403516	1	210C	SWITCH MODE	COMMUTATORE SELEZIONE MODO OPERATIVO
05	71403517	1	210C	SWITCH LIGHTS	COMMUTATORE PROIETTORI
06	71403518	1	210C	SWITCH ELECTROFAN	COMMUTATORE ELETTROVENTILATORE
07	79001605	1	50T	PLUG	TAPPO
08	79092953	1	205P	RECEPTACLE	PRESA DI CORRENTE
09	79092954	1	5A	CIGARETTE LIGHTER	ACCENDISIGARI
10	71403594	1	210C	SWITCH WIPER	COMMUTATORE TERGICRISTALLO
11	71403520	1	35S	CASE -LEFT	SCATOLA -SIN.
12	71403541	1	35S	CASE -RIGHT	SCATOLA -DEST.
13	11054690	3	110F	FUSE 3A	FUSIBILE 3A
	11054690	1	110F	FUSE 4A	FUSIBILE 4A
	11054690	9	110F	FUSE 7,5A	FUSIBILE 7,5A
	11054990	3	110F	FUSE 10A	FUSIBILE 10A
14	79070487	2	85T	RELAY	TELERUTTORE
15	79068201	1	225S	BRACKET	STAFFA
16	10902134	2	40V	SCREW 6X1X14	VITE 6X1X14
17	10571574	6	131R	WASHER	ROSETTA
18	71416228	1	C189	CONTROL	COMANDO
19	13271917	4	40V	SCREW 4X0,7X10	VITE 4X0,7X10
20	10571376	4	131R	WASHER	ROSETTA
21	13274217	4	40V	SCREW 5X0,8X16	VITE 5X0,8X16
22	10571476	4	131R	WASHER	ROSETTA
23	71403521	1	150C	CONTROL UNIT	CENTRALINA
24	13275914	4	40V	SCREW 6X1X10	VITE 6X1X10
26	71403575	1	85T	RELAY	TELERUTTORE
27	13275924	5	40V	SCREW 6X1X10	VITE 6X1X10
28	14496421	1	131R	WASHER	ROSETTA
29	10571574	5	170R	LOCKWASHER	ROSETTA ELASTICA
30	71416131	1	225S	BRACKET	STAFFA
31	79092955	1	85T	RELAY	TELERUTTORE
32	10977534	2	40V	SCREW	VITE
33	14496321	2	131R	WASHER	ROSETTA
34	10571474	2	170R	LOCKWASHER	ROSETTA ELASTICA
35	71403526	1	40R	RESISTANCE	RESISTENZA
36	13270224	2	40V	SCREW 3X0,5X6	VITE 3X0,5X6
37	14497629	2	131R	WASHER	ROSETTA
38	10571274	2	170R	LOCKWASHER	ROSETTA ELASTICA
39	79013422	2	31F	CLAMP	FASCETTA
40	79063312	1	254C	CONTAINER	CONTENITORE
				DIODES	DIODI
41	71405767	1		RADIO	

FH120

DASHBOARD (LEFT) CRUSCOTTO (SINISTRO)	TABLIER GAUCHE STIRNWAND-LINK TABLERO IZQUIERDO	1.210 TAV.1

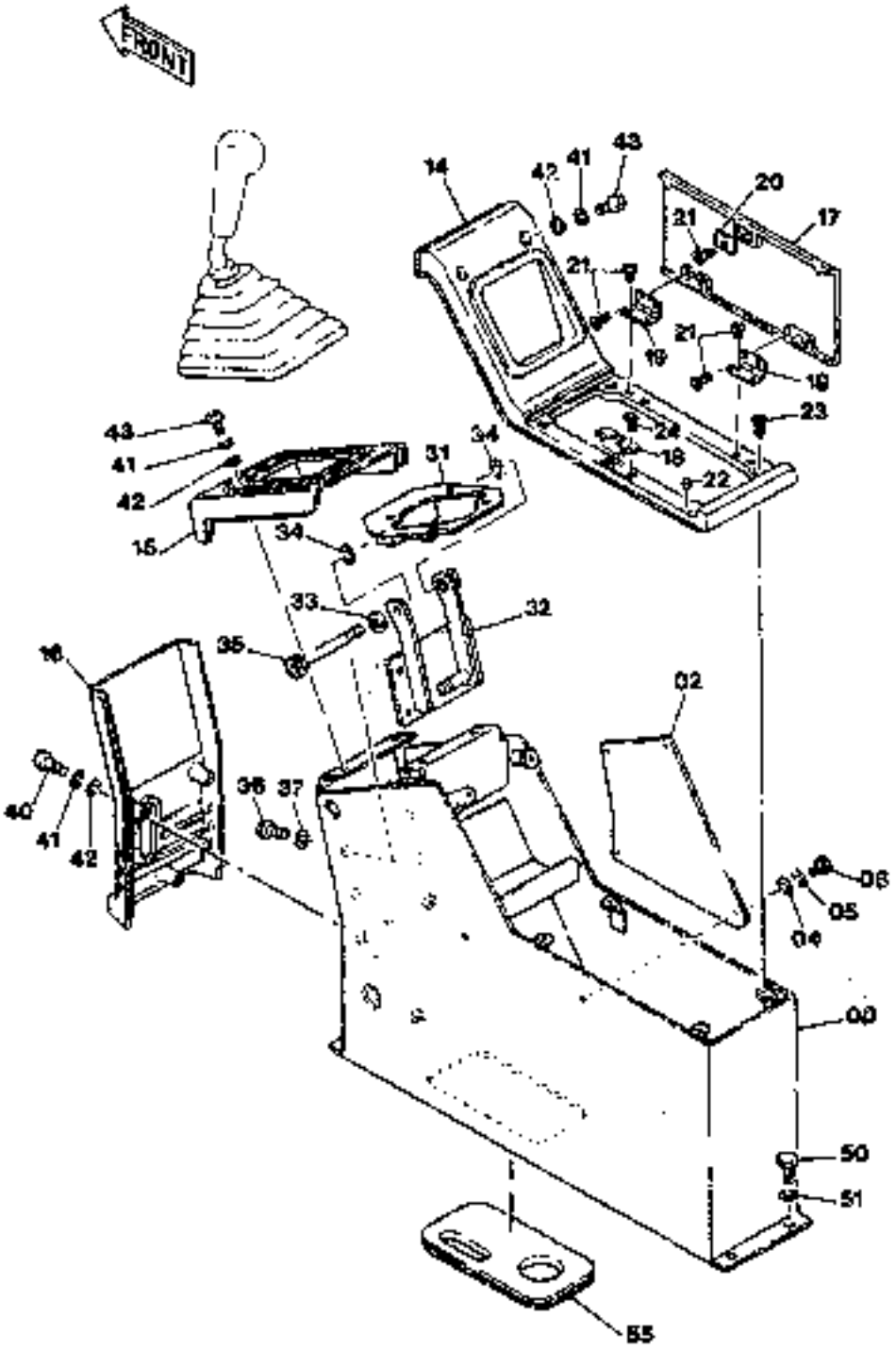

FH120

DASHBOARD (LEFT) — TABLIER GAUCHE — 1.210 TAV.1
CRUSCOTTO (SINISTRO) — STIRNWAND-LINK
TABLERO IZQUIERDO

ITEM	PART NUMBER	QTY	TR. CO.	DESCRIPTION	DESCRIZIONE
00	71415007	1	115M	PILLAR	MONTANTE
02	71415030	1	265C	COVER	COPERCHIO
04	14496431	4	131R	WASHER	ROSETTA
05	10571574	4	131R	WASHER	ROSETTA
08	10902134	4	40V	SCREW 6X1X14	VITE 6X1X14
14	71415082	1	265C	COVER	COPERCHIO
15	71415066	1	265C	COVER	COPERCHIO
16	71415067	1	265C	COVER	COPERCHIO
17	71415068	1	265C	COVER	COPERCHIO
18	71415071	1	58C	MAGNET	CALAMITA
19	71415072	2	140C	HINGE	CERNIERA
20	71415076	1	110P	PLAQUE	PIASTRINA
21	71415077	9	40V	SCREW	VITE
22	71415078	2	60T	BLOCK	TASSELLO
23	13312917	4	40V	SCREW 6X1X14	VITE 6X1X14
24	13295111	2	40V	SCREW 3X0,5X10	VITE 3X0,5X10
31	71415080	1	300S	SUPPORT	SUPPORTO
32	71415083	1	300S	SUPPORT	SUPPORTO
33	14496731	1	131R	WASHER 12X1,75X24	ROSETTA 12X1,75X24
34	588164		131R	WASHER	ROSETTA
35	14423430	1	40V	SCREW 12X1,75X100	VITE 12X1,75X100
36	11105034	4	40V	SCREW 10X1,5X20	VITE 10X1,5X20
37	14496631	4	131R	WASHER	ROSETTA
40	13277017	3	40V	SCREW 6X1X40	VITE 6X1X40
41	10571576	9	170R	LOCKWASHER	ROSETTA ELASTICA
42	14496406	9	131R	WASHER	ROSETTA
43	13276417	6	40V	SCREW 6X1X20	VITE 6X1X20
50	11106234	4	40V	SCREW 10X1,5X25	VITE 10X1,5X25
51	10516974	4	170R	LOCKWASHER	ROSETTA ELASTICA
55	71415029	1	265C	COVER	COPERCHIO

FH120

ELECTRIC SYSTEM IMPIANTO ELETTRICO	INSTALLATION ÉLECTRIQUE ELEKTRISCHE ANLAGE INSTALACION ELECTRICA	1.220 TAV.1

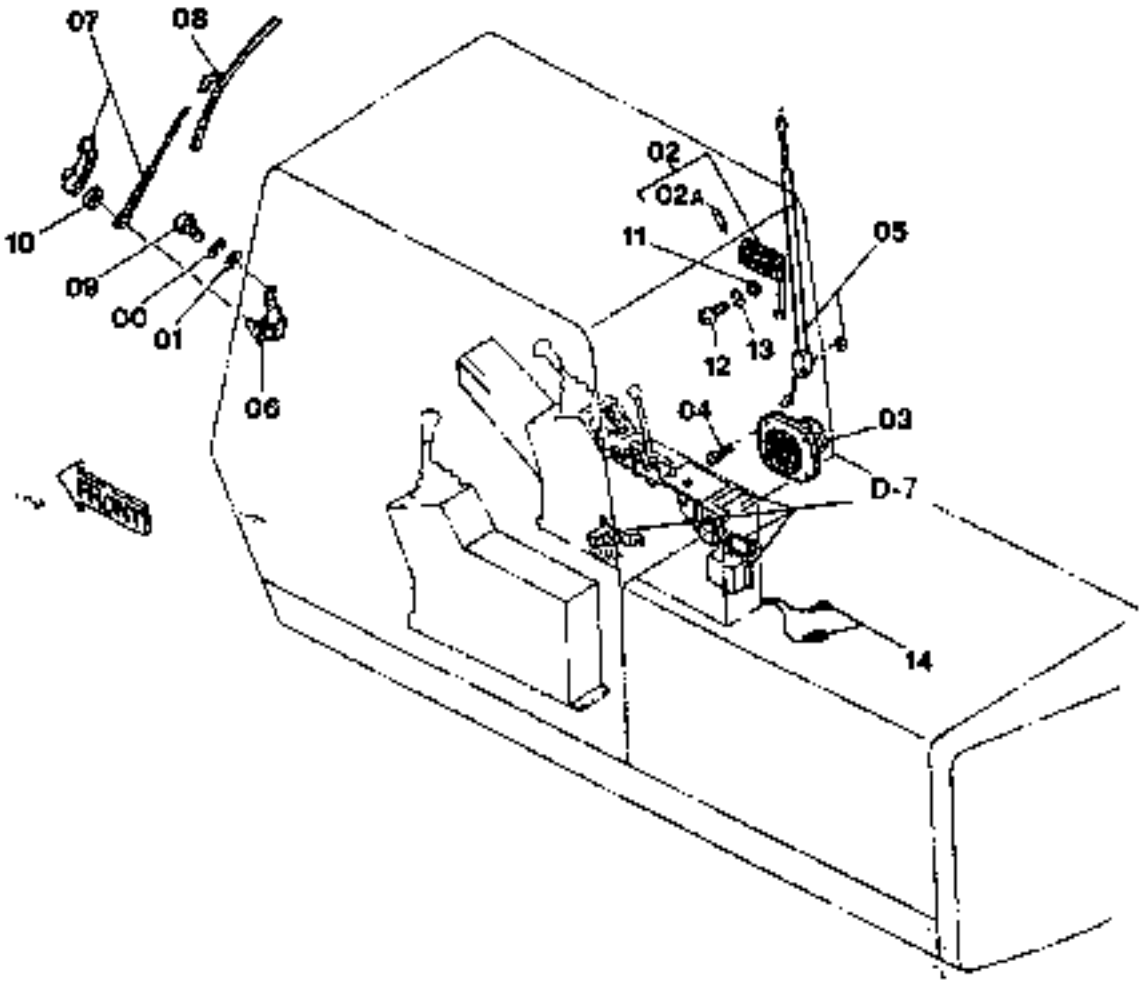

FH120

ELECTRIC SYSTEM IMPIANTO ELETTRICO	INSTALLATION ELECTRIQUE ELEKTRISCHE ANLAGE INSTALACION ELECTRICA	1.220	TAV.1

ITEM	PART NUMBER	QTY	TR. CO.	DESCRIPTION	DESCRIZIONE
00	10571574	3	170R	LOCKWASHER	ROSETTA ELASTICA
01	14496421	3	131R	WASHER	ROSETTA
02	71403590	1	135P	CEILING LIGHT - ASS.LY	PLAFONIERA - COMPL.
02A	10803190	1	30L	LAMP	LAMPADA
03	71403529	1	45D	DIFFUSEUR	DIFFUSORE
04	15997478	4	40V	SCREW 6X1X25	VITE 6X1X25
05	71403536	1	90A	ROD	ASTA
06	71403595	1	58R	REDUCTION GEAR	RIDUTTORE
07	71403588	1	130B	ARM	BRACCIO
08	71403587	1	177S	BRUSH	SPAZZOLA
09	13276024	3	40V	SCREW 6X1X12	VITE 6X .X12
10	15100611	1	10D	NUT	DADO
11	14497731	2	131R	WASHER	ROSETTA
12	13272224	2	40V	SCREW 4X0,7X16	VITE 4X0,7X16
13	10571374	2	170R	LOCKWASHER	ROSETTA ELASTICA
14	71403561	1	111C	CABLE	CAVO

FH120

ELECTRIC SYSTEM IMPIANTO ELETTRICO	INSTALLATION ELECTIQUE ELEKTRISCHE ANLAGE INSTALACION ELECTRICA	1.220 TAV 2

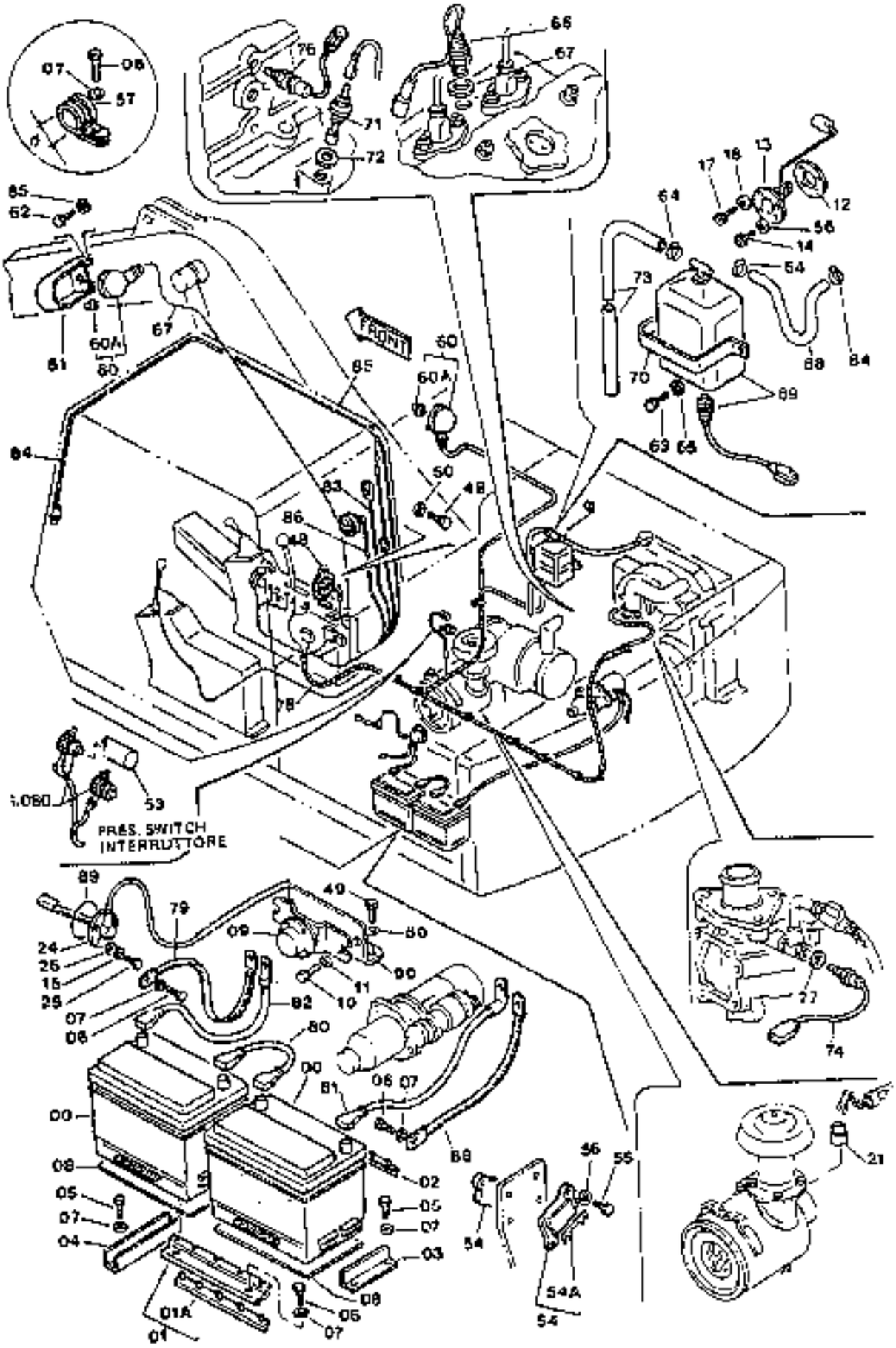

ELECTRIC SYSTEM
IMPIANTO ELETTRICO

INSTALLATION ELECTIQUE
ELEKTRISCHE ANLAGE
INSTALACION ELECTRICA

1.220 TAV 2

ITEM	PART NUMBER	QTY	TR. CO.	DESCRIPTION	DESCRIZIONE
00	79062561	2	25B	BATTERY	BATTERIA
01	71416128	2	225S	BRACKET ASSEMBLY	STAFFA
01A	71416128	1	60T	BLOCK	TASSELLO
02	71416128	2	60T	BLOCK	TASSELLO
03	71405767	1	225S	BRACKET	STAFFA
04	71405768	1	225S	BRACKET	STAFFA
05	11106234	6	40V	SCREW 10 X1.5 X 25	VITE
06	10979334	24	40V	SCREW 10 X1.5 X 14	VITE
07	14496621	31	131R	WASHER	ROSETTA
08	04991458	2	105P	PLATE PRIOR TO S/N 0229	PIASTRA
	71406284	2	105P	PLATE S/N 0230 AND UP	PIASTRA
09	71403571	1	75I	SWITCH, MASTER	INTERRUTTORE
10	16043834	2	40V	SCREW 8 X 1.25 X 30	VITE
11	14496531	4	131R	WASHER	ROSETTA
12	79031103	1	122G	SEAL	GUARIZIONE
13	71403512	1	35I	INDICATOR, FUEL SENDER	INDICATORE
14	13272024	5	40V	SCREW	VITE
15	10571474	7	170R	LOCKWASHER	ROSETTA ELASTICA
17	13276124	1	40V	SCREW 6 X 1 X 14	VITE
18	10571574	1	131R	WASHER	ROSETTA
21	79081900	1	75I	SWITCH, AIR RESTRICTION	INTERRUTTORE
24	71403574	1	133S	SENSOR	SENSORE
25	10977834	3	40V	SCREW 5 X 0.8 X 16	VITE
26	14497821	3	131R	WASHER	ROSETTA
48	79056873	1	105A	HORN	AVVISATORE ACUSTICO
49	16043234	2	40V	SCREW 8 X 1.25 X 16 S/N 0051 AND UP	VITE
	16043234	2	40V	SCREW 8 X 1.25 X 16	VITE
50	10571774	2	170R	LOCKWASHER	ROSETTA ELASTICA
	10571774	2	170R	LOCKWASHER S/N 0051 AND UP	ROSETTA ELASTICA
53	71416132	1	65C	BOOT	CAPPUCCIO
54	71403531	2	188P	FUSE HOLDER	PORTA FUSIBLE
54A	71403532	1	110F	FUSE (50 AMP ALTERNATOR)	FUSIBILE
	71403533	1	110F	FUSE (30 AMP STARTER)	FUSIBILE
55	13272224	4	40V	SCREW 4 X 0.7 X 16	VITE
56	10571374	9	131R	WASHER	ROSETTA
57	71403661	3	231S	CLIP D=35 UP TO S/N 0051	STAFFETA
	71405745	7	231S	CLIP D=18 S/N 0051 & UP	STAFFETA
	71405770	1	231S	CLIP D=25 UP TO S/N 0051	STAFFETA
	71405770	1	231S	CLIP D=25	STAFFETA
	71405771	1	231S	CLIP D=22	STAFFETTA
	71405772	6	231S	CLIP D=19 UP TO S/N 0050	STAFFETTA
	71405773	1	231S	CLIP D=16 UP TO S/N 0050	STAFFETTA
	71405774	2	231S	CLIP D=6	STAFFETTA
	71415864	3	231S	CLIP D=28 S/N 0051 & UP	STAFFETTA
	71415899	6	231S	CLIP D=14	STAFFETTA

ELECTRIC SYSTEM
IMPIANTO ELETTRICO

INSTALLATION ELECTRIQUE
ELEKTRISCHE ANLAGE
INSTALACION ELECTRICA

1.220 TAV.2

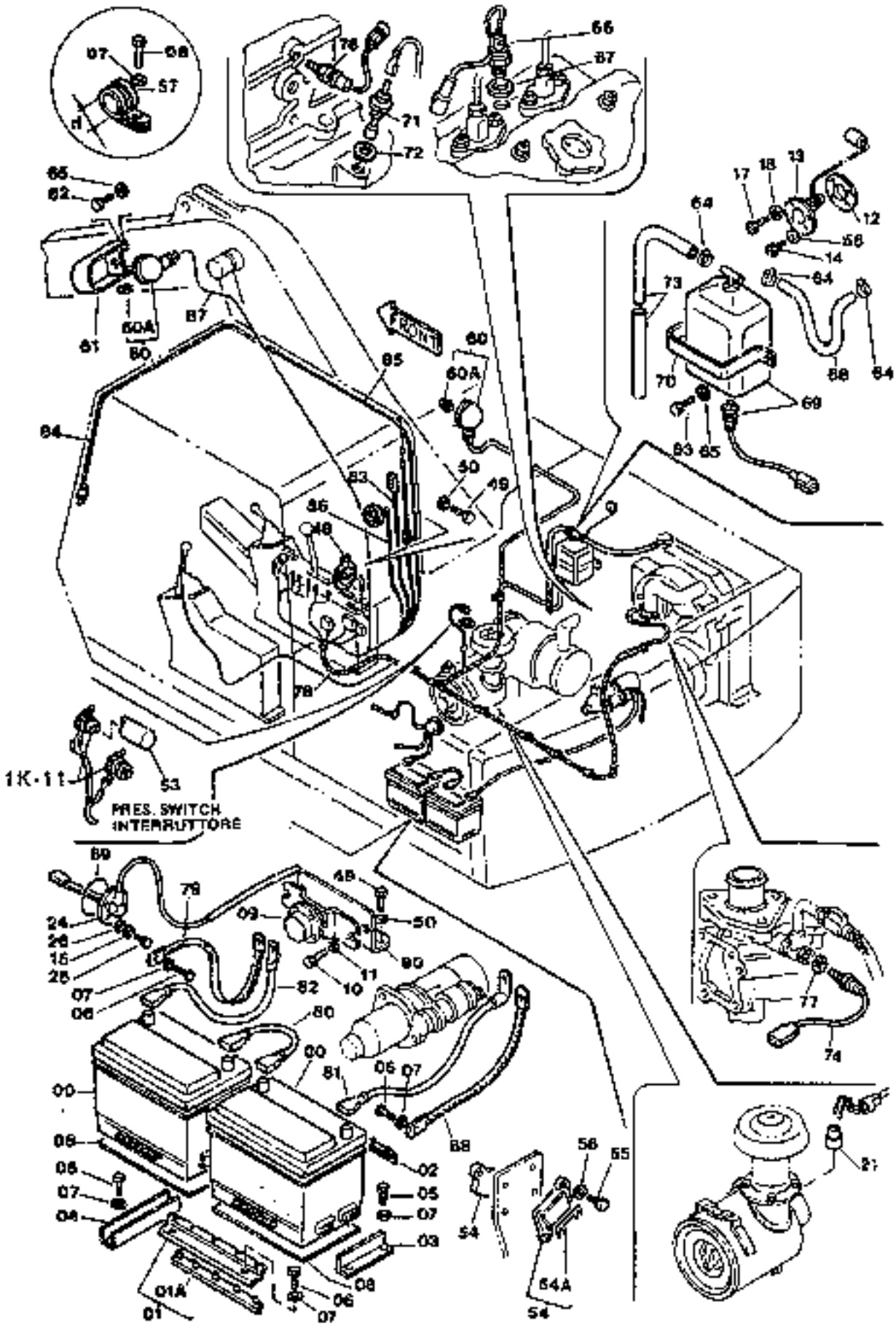

ELECTRIC SYSTEM
IMPIANTO ELETTRICO

INSTALLATION ELECTRIQUE
ELEKTRISCHE ANLAGE
INSTALACION ELECTRICA

1.220 TAV.2

ITEM	PART NUMBER	QTY	TR. CO.	DESCRIPTION	DESCRIZIONE
				C2515 UP TO S/N 0050	**C2515 FINO AL TELAIO 0050**
	71416130	1	231S	CLIP d=12mm	STAFFETTA d=12mm
60	79092952	2	220P	FLOODLIGHT -ASS.LY	PROIETTORE -COMPL.
60A	79069460	1	30L	LAMP	LAMPADA
61	71320133	1	70R	GUARD	RIPARO
62	15970321	4	40V	SCREW	VITE
				D2517 FROM S/N 0051	**D2517 DAL TELAIO 0051**
	15970621	4	40V	SCREW 10X1,25X22	VITE 10X1,25X22
				C2517 UP TO S/N 0050	**C2517 FINO AL TELAIO 0050**
63	10979234	2	40V	SCREW 10X1,5X16	VITE 10X1,5X16
64	79084752	3	180C	COLLAR	COLLARE
65	10571674	6	131R	WASHER	ROSETTA
66	79091137	1	75I	SWITCH	INTERRUTTORE
				ENGINE COOLANT TEMPERATURE	TEMPERATURA ACQUA MOTORE
67	10269460	1	120G	GASKET	GUARNIZIONE PIANA
68	19025186	1	265T	HOSE	TUBO FLESSIBILE
69	71406001	1	254C	CONTAINER	CONTENITORE
70	71406003	1	225S	BRACKET	STAFFA
71	79058190	1	133S	SENSOR	SENSORE
				ENGINE OIL LEVEL	LIVELLO OLIO MOTORE
72	10265060	1	120G	GASKET	GUARNIZIONE PIANA
73	71406004	1	265T	HOSE	TUBO FLESSIBILE
74	71403558	1	150T	SENDING UNIT	TRASMETTITORE
				ENGINE COOLANT TEMPERATURE	TEMPERATURA ACQUA MOTORE
76	71403595	1	75I	SWITCH	INTERRUTTORE
				ENGINE OIL PRESSURE	PRESSIONE OLIO MOTORE
77	10270660	1	120G	GASKET	GUARNIZIONE PIANA
78	71403559	1	111C	CABLE	CAVO
79	79019383	1	111C	CABLE	CAVO
80	46011273	1	111C	CABLE	CAVO
81	71403543	1	111C	CABLE	CAVO
82	71403562	1	111C	CABLE	CAVO
83	71403562	1	222P	EXTENSION	PROLUNGA
84	71403565	1	222P	EXTENSION	PROLUNGA
85	71403566	1	222P	EXTENSION	PROLUNGA
86	71403564	1	222P	EXTENSION	PROLUNGA
87	71403567	1	222P	EXTENSION	PROLUNGA
88	71403568	1	111C	CABLE	CAVO
89	70924775	1	158G	O-RING	GUARNIZIONE O-R
90	71406172	1	225S	BRACKET	STAFFA
				D2522 FROM S/N 0051	**D2522 DAL TELAIO 0051**

FH120

WINDSHIELD WASHER LAVACRISTALLO	LAVE-GLACE SCHEIBENWASCHER LAVADOR DEL PARABRISAS	1,220 TAV 3

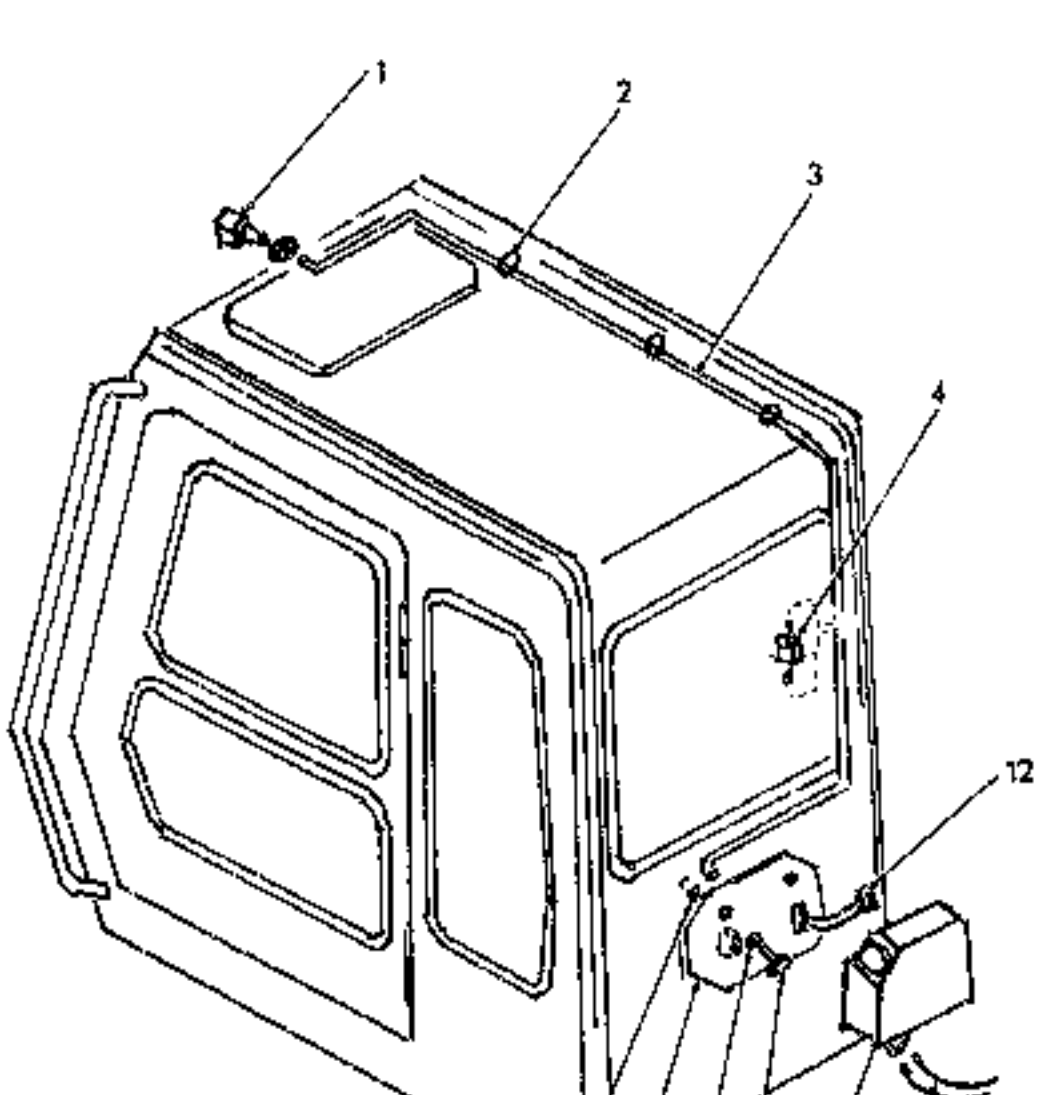

FH120

WINDSHIELD WASHER
LAVACRISTALLO

LAVE-GLACE
SCHEIBENWASCHER
LAVADOR DEL PARABRISAS

1.220 TAV 3

ITEM	PART NUMBER	QTY	TR. CO.	DESCRIPTION	DESCRIZIONE
01	79095451	1	148P	NOZZLE	POLVERIZZATORE
02	70925094	10	120M	TIE	MORSETTO COLLARE
	73125890	10	300S	TIE MOUNT	SUPPORTO
03	73158764	1	192T	HOSE	TUBO FLESSIBLE
04	79020844	1	10V	CHECK VALVE	VALVOLA
05	10615671	2	131R	WASHER	ROSETTA
06	73158763	1	80M	BRACKET	MENSOLA
07	12645031	2	131R	WASHER	ROSETTA
08	70925094	2	40V	SCREW	VITE
09	79088943	1	114S	CONTAINER & MOTOR	SERBATOIO
10	73074460	1	60F	WIRE	FILO
11	73158765	1	60F	WIRE	FILO
12	79030150	1	173C	STRAP	CINTURA

FH120

SAE BATTERY PROVISION 1.220 TAV 4

ITEM	PART NUMBER	QTY	TR. CO.	DESCRIPTION	DESCRIZIONE

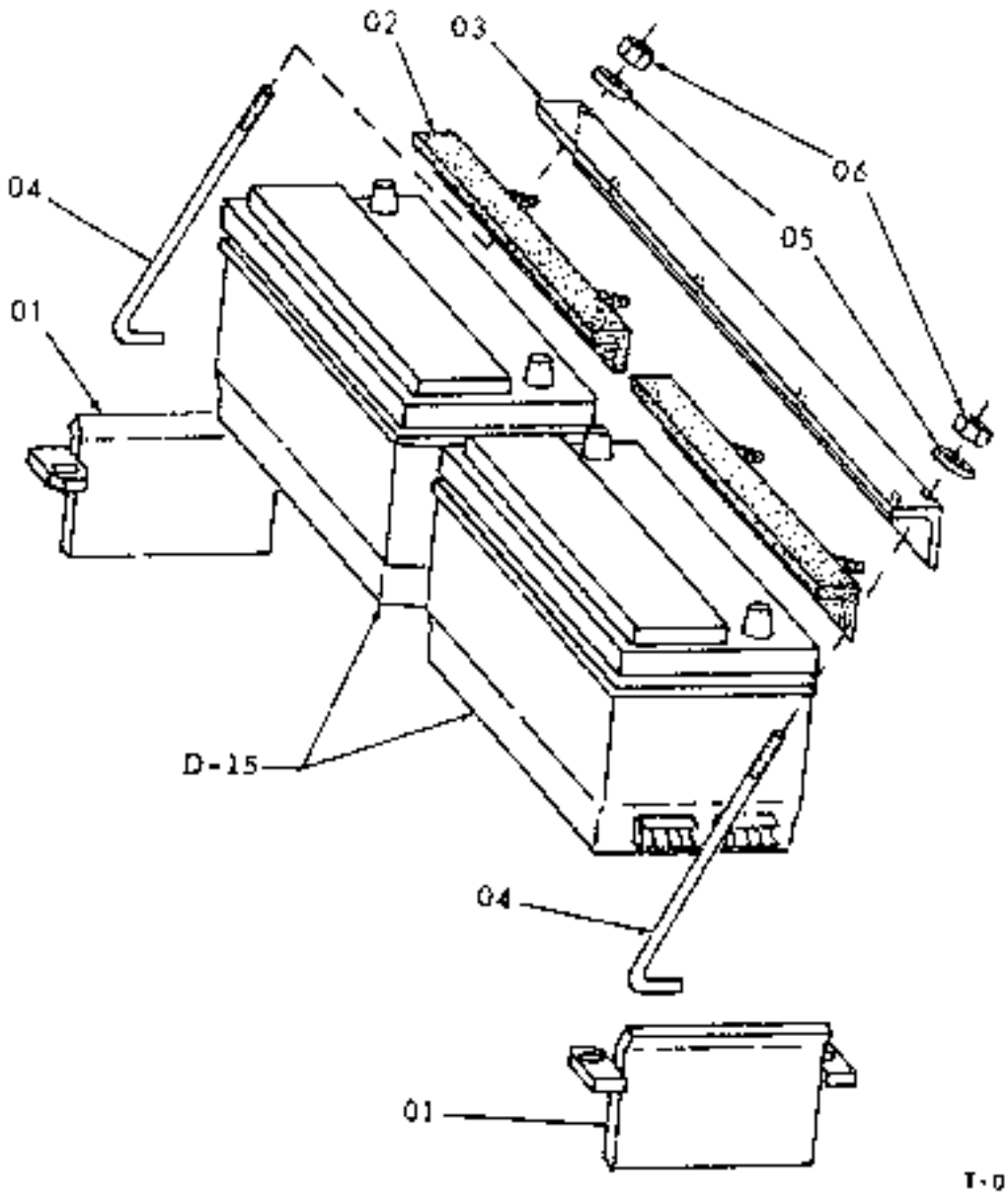

SAE BATTERY PROVISION

1.220 TAV 4

ITEM	PART NUMBER	QTY	TR. CO.	DESCRIPTION	DESCRIZIONE
01	73158782	2	60M	BRACKET	
			600T	REQUIRES WELDING	
02	04979701	4	74B	BLOCK	
03	76017021	2	60M	BRACKET	
04	76015770	4	90A	ROD	
05	14496431	4	131R	WASHER	
06	15896221	4	10D	NUT	

CAB-PLATFORM
CABINA-PIATTAFORMA

CABINE - PLATE-FORME
FAHRERHAUSE-TRITTBRETTER
CABINA-PISO

1.250 TAV.1

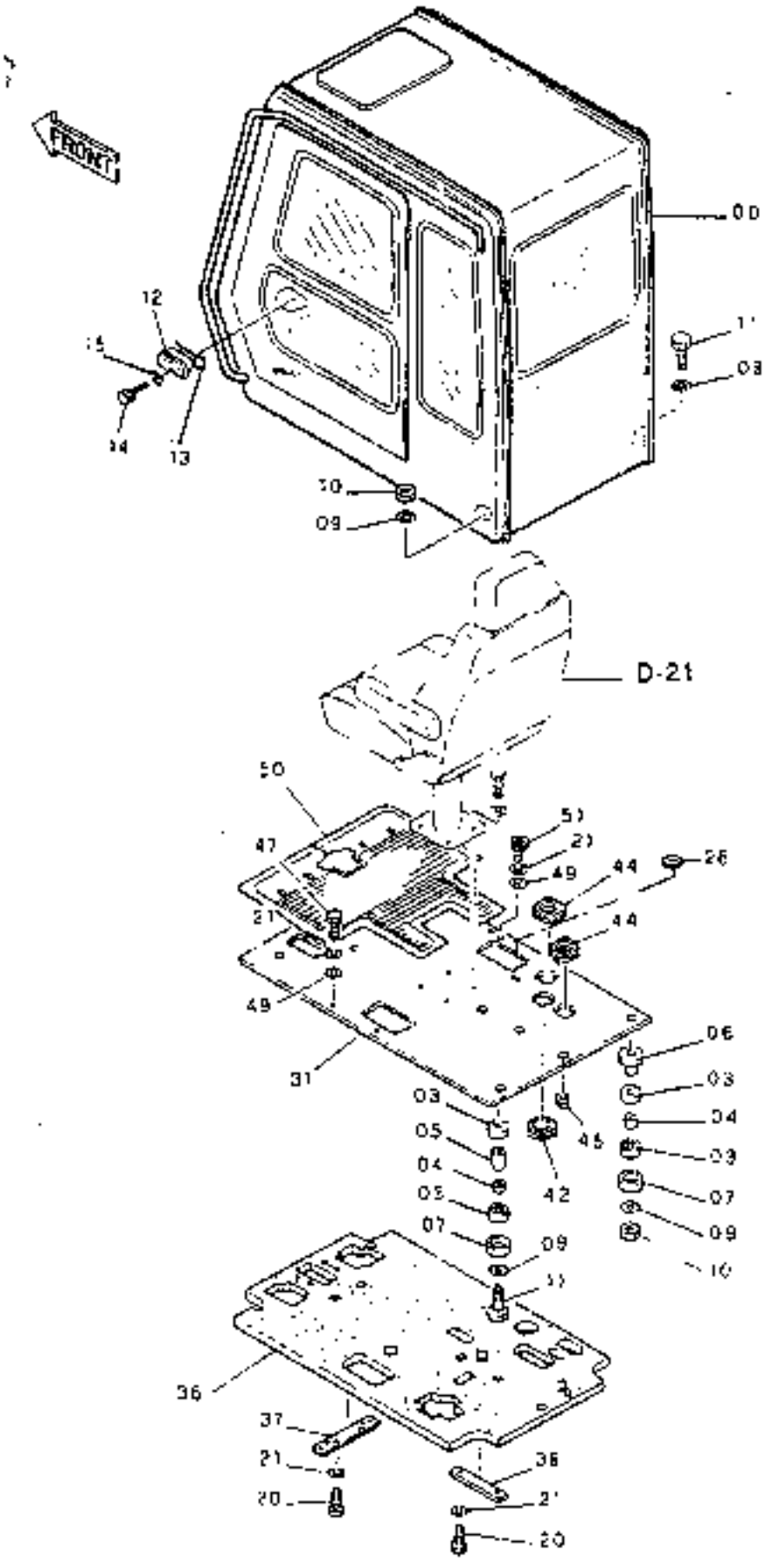

FH120

CAB-PLATFORM CABINA-PIATTAFORMA	CABINE - PLATE-FORME FAHRERHAUSE TRITTBRETTER CABINA-PISO	1,250	TAV 1

ITEM	PART NUMBER	QTY	TR CO	DESCRIPTION	DESCRIZIONE
00	71416857	1	8C	CAB-ASSY SEE E-3	CABINA -COMP VED TAV 4
03	71405699	8	60T	BLOCK	TASSELLO
04	71431182	4	45A	RING	ANELLO
05	71431181	3	75D	SPACER	DISTANZIALE
06	71405702	1	75D	SPACER	DISTANZIALE
07	71405705	4	131R	WASHER	ROSETTA
09	71405063	8	131R	WASHER	ROSETTA
10	12574921	4	10D	NUT	DADO
11	15238234	4	40V	SCREW 16X1,5X100	VITE 16X1,5X100
12	93911108	1	183P	ASHTRAY	PORTACENERE
13	71406337	1	231S	CLIP	STAFFETTA
14	13276014	1	40V	SCREW 6X1X12	VITE 6X1X12
15	14496431	1	131R	WASHER	ROSETTA
20	11106234	10	40V	SCREW 10X1,5X25	VITE 10X1,5X25
21	10571874	14	131R	WASHER	ROSETTA
25	14496631	1	131R	WASHER	ROSETTA
31	71405708	1	493P	PLATFORM	PIATTAFORMA
36	71405716	1	25P	PANEL	PANNELLO
37	71405717	1	14B	STRAP	BANDELLA
38	71405718	1	14B	STRAP	BANDELLA
42	71405719	1	50T	PLUG	TAPPO
44	71405721	2	145G	GUIDE	GUIDA
45	71405722	1	50T	PLUG	TAPPO
47	11106434	2	40V	SCREW 10X1,5X30	VITE 10X1,5X30
49	71415221	4	131R	WASHER	ROSETTA
50	71415030	1	30T	MAT	TAPPETO
51	14420234	2	40V	SCREW 10X1,5X30	VITE 10X1,5X30

FN120

OPERATOR'S SEAT SEDILE	SIEGE DE CONDUCTEUR FAHRERSITZ ASIENTO DE CONDUCTOR	1.250 TAV 2

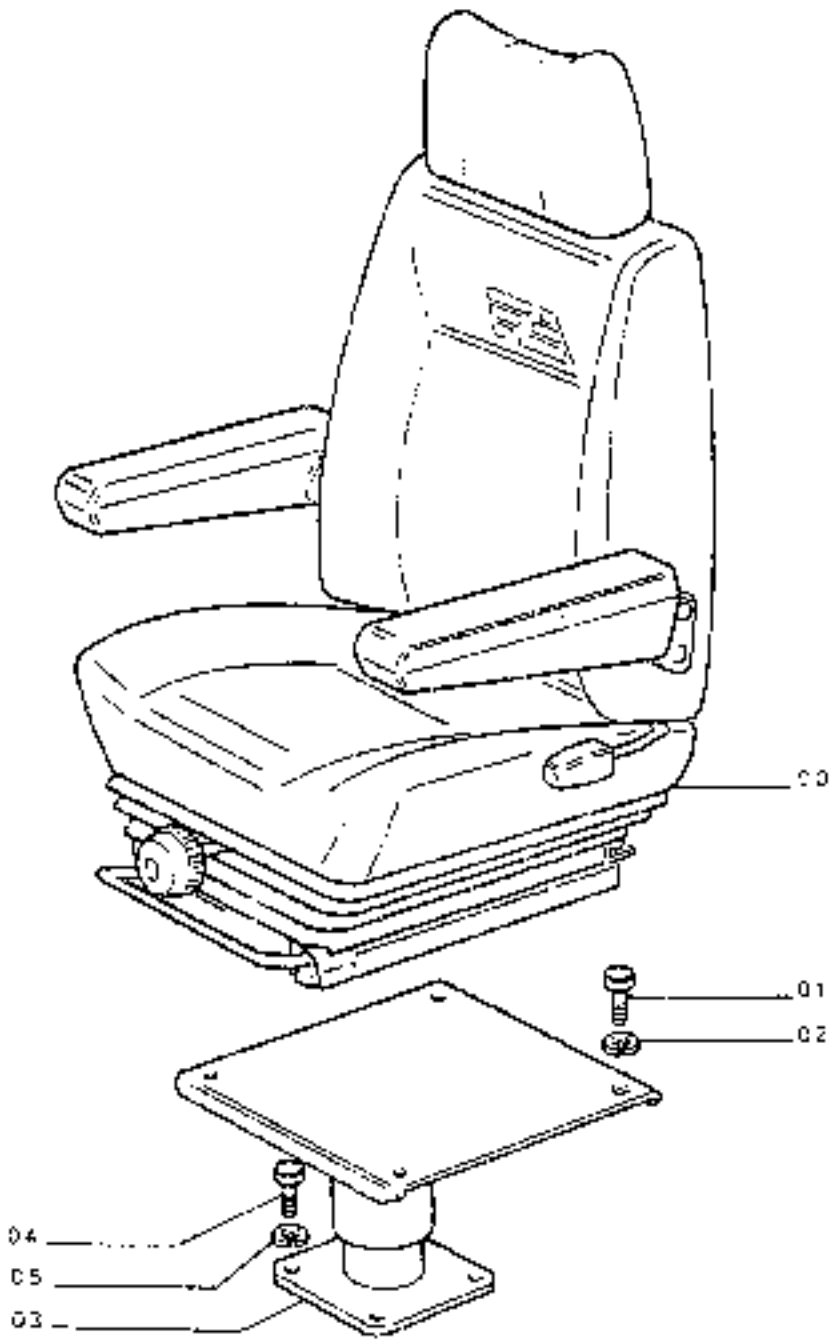

FH120

OPERATOR'S SEAT
SEDILE

SIÈGE DE CONDUCTEUR
FAHRERSITZ
ASIENTO DE CONDUCTOR

1.250 TAV.2

ITEM	PART NUMBER	QTY	TR CO.	DESCRIPTION	DESCRIZIONE
00	71406293	1	80S	SEAT BOSTROM SEE I-3	SEDILE BOSTROM VED. TAV.3
01	14761123	4	40V	SCREW 8X1,25X16	VITE 8X1,25X16
02	10571774	4	131R	WASHER	ROSETTA
03	71405707	1	300S	SUPPORT	SUPPORTO
04	11106234	4	40V	SCREW 10X1,5X25	VITE 10X1,5X25
05	10571874	4	131R	WASHER	ROSETTA

E-1

ALPHABETICAL INDEX

DESCRIPTION	SGR.	TAV	GRID
Accelerator controls	0.004	1	1C-23
Air Cleaner	0.001	1	1C-13
Alternator-Mounting	0.400	1	1H-9
Alternator (55 amp)	0.400	2	1H-11
Alternator (35 amp)	0.400	3	1H-13
Anti-Shock Valve (Hydr.)	1.082	3	1L-3
Application of Oil Hammer	5.0020	2	2H-13
Batteries	1.220	4	2D-19
Belts	0.340	1	1G-21
	0.345	1	1G-23
Boom Piping	2.030	1	2F-13
Brake Valve Components	3.010	4	2G-11
Bucket	2.020	1	2F-9
Bucket Cylinder	2.030	5	2F-21
Bull Gear	3.000	1	2G-3
Cab	1.250	1	2D-19
Cab Door	1.250	5	2E-7
Cab Heater-Components	1.290	2	2E-15
Cab Window-Left Side	1.250	6	2E-9
Cab-Frame	1.250	7	2E-11
Cab-Platform	1.250	1	2D-21
Camshaft	0.120	1	1E-19
Check Valve	1.081	2	1K-17
Cold Starting Aid	5.0025	1	2H-19
Connecting Rod	0.081	1	1E-10
Cont. Valve-Hydr. (Ass.Y)	1.050	1	1J-13
Control Valve-Hydr.	1.050	2	1J-17
	1.050	3	1J-19
	1.050	4	1J-21
	1.050	5	1J-23
Controls	1.070	1	1K-5
Counterweight	1.000	1	1I-3
Cowlings	1.300	1	2E-19
	1.300	2	2E-21
Crankshaft	0.080	1	1E-7
Crankshaft Pulley	0.084	1	1E-15
Cylinder Block	0.040	1	1D-5
	0.040	2	1D-7
	0.040	3	1D-9
Cylinder Block Covers	0.043	1	1D-13
	0.043	2	1D-15
Cylinder Head	0.060	1	1D-21
	0.060	2	1D-23
Dashboard (Left)	1.210	1	2D-9
Dashboard (Right)	1.200	1	2D-3
	1.200	3	2D-7
Data Monitor	1.200	2	2D-5
Decals	4.500	1	2H-9
Dipper Stick (2,1m)	5.0022	1	2H-15
Dipper Stick (2,5m) (STD.)	2.003	1	2F-5
Dipper Stick(2,5m)Links(Std.)	2.003	2	2F-7
Dipper Stick (3m)	5.0036	1	2H-21
	5.0036	2	2H-22
Dipper Stick cylinder	2.030	4	2F-19
Dipstick-Engine Oil	0.305	2	1G-7
Discharge Valve	1.040	4	1J-3
Discharge Valve Componen.	3.010	5	2G-13
Drive on Engine (Opt.)	0.350	1	1H-3
Electric System	1.220	2	2D-13
Elements-Engine Oil	0.001	1	1C-13
Elements-fuel	0.200	1	1F-11
Elements-Hydraulic	1.020	1	1E-19
Elements-Pilot	1.080	1	1K-11
Emergency Kits	4.000	1	2H-7
Engine	0.021	1	1D-3
Engine-Controls	0.004	1	1C-23
Engine-Suspensions	0.000	1	1C-11
Engine Breather	0.045	1	1D-17
	0.045	1A	1D-19
Engine Cooling Piping	0.323	1	1G-17
Engine Heat Exchanger	0.310	1	1G-9
	0.310	2	1G-11
Engine Lifting Eyes	0.450	1	1H-15
Engine Oil Filter	0.302	1	1G-3
Engine Oil Piping	0.305	1	1G-5
Engine Oil Pump	0.300	1	1F-23
Engine Oil Sump	0.042	1	1D-11
Engine Piston	0.082	1	1E-11
Engine Suspensions	0.000	1	1C-11
Exhaust Manifold	0.077	1	1E-5
Exhaust Valve	0.060	2	1D-23
Fan	0.345	1	1G-23
Fan Drive	0.345	1	1G-23
"Filter Care" Kit	21		1A-23
Filter-Pilot System	1.080	1	1K-11
Filters-Air	0.001	1	1C-13
Filters-Engine Oil	0.302	1	1G-3
Filters-Fuel	0.200	1	1F-11
Filters-Hydr. System	1.020	1	1I-7
Flywheel-Engine	0.083	1	1E-13
Fuel Filter	0.200	1	1F-11
Fuel Piping	0.203	1	1F-15
Fuel Pump	0.201	1	1F-13
Fuel Tank	1.010	1	1I-5
Fuses	1.200	3	2D-7
Guards	1.300	2	2E-21
Handle	1.300	3	2E-23
Heater	1.290	1	2E-15
Horn	1.220	2	2D-15
Hyd.Pump Drive	1.030	7	1I-21
Hyd.Pump Regulator Valve	1.030	6	1I-19
Hyd.Pump Regulator-Cover	1.030	4	1I-15
	1.030	5	1I-17
Hydr.Pump-Components	1.030	2	1I-11
Hydr.Pump Regulator-Comp.	1.050	3	1I-13

E-2

ALPHABETICAL INDEX

DESCRIPTION	SGR.	TAV.	GRID
Hydraulic Pump	1.030	1	1I-9
Idler	3.020	1	1G-15
Injection Nozzle-Lines	0.149	1	1F-9
Injection Pump	0.140	2	1E-23
	0.140	3	1F-3
	0.140	4	1F-5
	0.140	5	1F-7
Injection Pump-Piping	0.140	1	1E-21
Intake Manifold	0.071	1	1E-3
Intake Valve	0.060	2	1D-21
Lift Cylinder (Left)	2.030	3	1F-17
Lift Cylinder (Right)	2.030	2	2F-15
Lights	1.220	2	2D-15
Lower Frame	3.000	1	2G-3
Lubric. Fitting Piping	2.040	1	2F-23
Main Piping	1.060	1	1K-3
Mirror (Rear)	1.300	2	2E-21
Monobloc Boom	2.000	1	2F-3
Motor - Starter	0.360	2	1H-7
Motor - Swing	1.040	1	1J-3
Motor - Travel	3.010	1	12G-5
Motor - Wiper	1.220	1	2D-13
Muffler	0.002	1	1C-15
Oil Tank	1.020	1	1I-7
Operator's Seat	1.250	2	2D-23
OperatorsSeat(Bostrom)(Std.)	5.0151	1	2I-3
Pilot Gear Pump	1.030	8	1I-23
Pilot Piping(1)	1.080	1	1K-11
Pilot Piping(2)	1.081	1	1K-15
Pilot Piping(3)	1.082	1	1K-19
Pilot Piping (4)	1.083	1	1L-5
Pilot Piping (5)	1.084	1	1L-7
Pilot Valve	1.070	3	1K-9
Pilot Valve-components	1.070	2	1K-7
Pipin-Boom	2.030	1	2F-13
Piping-Engine Oil	0.350	1	1H-3
Piping-Injection	0.149	1	1F-9
Piping-Lube Fittings	2.040	1	2G-23
Piping-Main	1.060	1	1K-3
Piping-Pilot(1)	1.080	1	1K-11
Piping-Pilot(3)	1.082	1	1K-19
Piping-Pilot(4)	1.083	1	1L-5
Piping-Pilot(5)	1.084	1	1L-7
Piping-Pump Contr. Valve	1.050	1	1J-13
Piping-Travel (Lower)	3.070	1	2H-5
Piping-Turbocharger	0.241	1	1F-21
Pump-Engine Oil	0.300	1	1F-23
Pump-Fuel	0.201	1	1F-13
Pump-Hydraulic	1.030	1	1I-9
Pump-Injection	0.140	1	1E-21
Pump-Pilot	1.030	8	1I-23
Pump-Water	0.320	1	1G-19
Pump/Control Valve Piping	1.050	1	1J-13
Radiator	0.003	1	1C-17
Radiator-Components	0.003	2	1C-19
	0.003	3	1C-21
Rocker Arm	0.060	2	1D-23
Rotary Distr.-Components	3.060	2	2H-3
Rotary Distributor	3.060	1	2G-23
Seat Belt (Std.)	5.0536	1	2I-5
Sensors	1.220	2	2D-15
Solenoid Valve	1.080	2	1K-13
Starter	0.360	2	1H-7
Starter-Mounting	0.360	1	1H-5
Stop Valve	1.082	2	1K-23
Swing Motor-Components	1.040	3	1J-7
Swing Red.Unit-Components	1.040	2	1J-5
Swing Reduction Unit	1.040	1	1J-3
Thermostat & Housing	0.326	1	1G-19
Timing Control	0.100	1	1E-17
Tool Kit	5.0063	1	2I-9
Track Chain	3.050	1	2G-21
Track Roller	3.040	1	2G-19
Travel Motor-componen.	3.010	3	2G-9
Travel Piping (Lower)	3.070	1	2H-5
Travel Red.Unit-Componen.	3.010	2	2G-7
Travel Reduction Units	3.010	1	2G-5
Turbocharger	0.240	1	1F-17
	0.240	2	1F-19
Turbocharger Piping	0.241	1	1F-21
Upper Frame	1.000	1	1E-17
Upper Roller	3.030	1	2G-17
Valve-Anti-Shock(Hydr.)	1.082	3	1L-3
Valve-Check (Pilot)	1.081	2	1K-17
Valve-Exhaust	0.060	2	1D-23
Valve-Intake	0.060	2	1D-23
Valve-Pilot (Hydr.)	1.070	1	1K-5
Valve-Pilot(Travel)	1.070	1	1K-5
Valve-Solenoid	1.080	2	1K-13
Valve-Stop(Travel)	1.082	1	1K-21
Washer (windshield)	1.220	3	2D-17
Water Pump	0.320	1	1G-13
Water Pump Drive	0.340	1	1G-21
Water Pump-Components	0.320	2	1G-15
Wiper	1.220	1	2D-11

FH400

CAB CABINA 71415857	CABINE FAHRERHAUSE CABINA	1.250 TAV 4

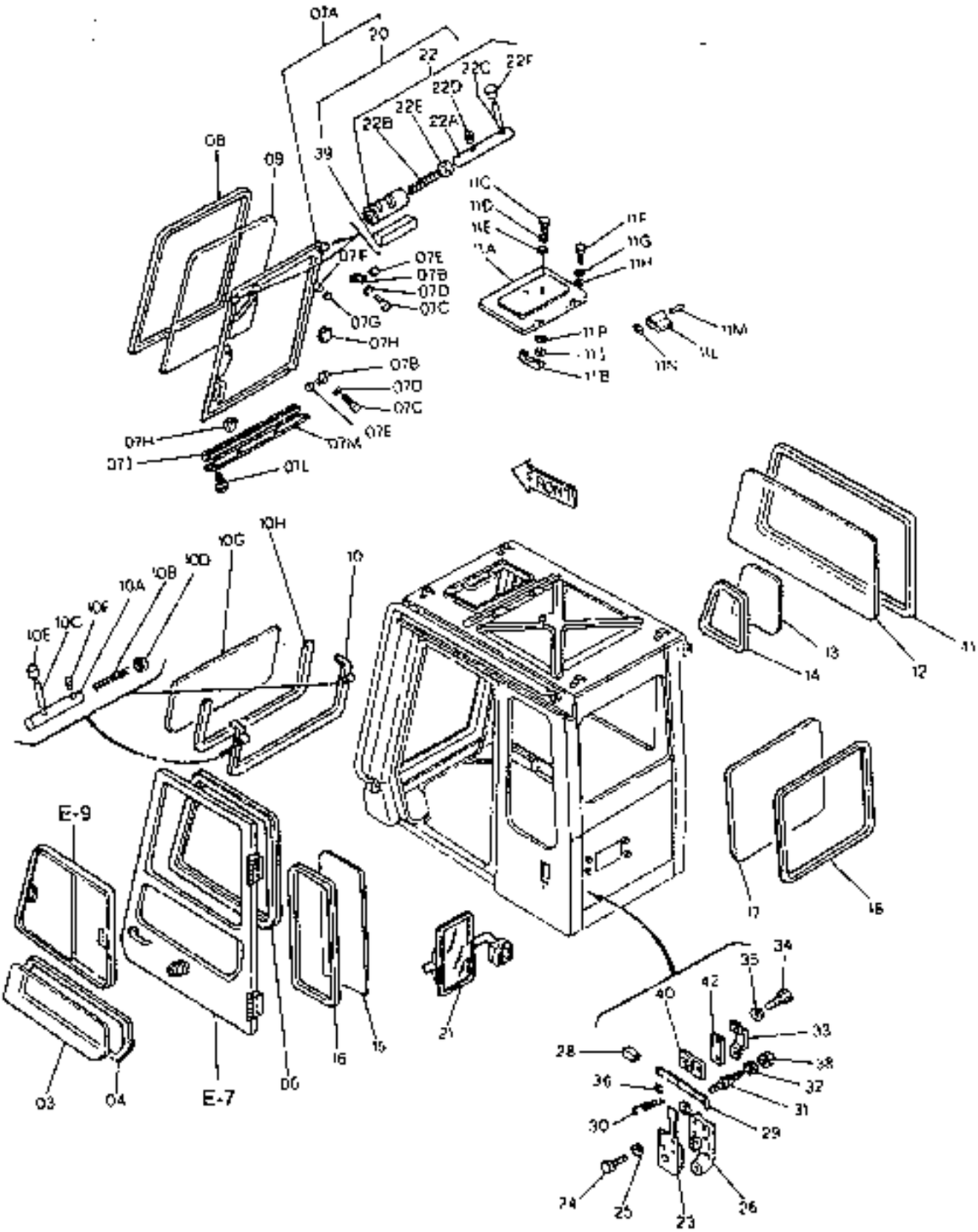

FH120

CABIN AMERICA
CABINA N AMERICA
71416057

CABINE N AMERICA
FAHRERHAUSE N AMERICA
CABINA N AMERICA

1.250 TAV 4

NTR 11CS * V-90 * UPDATE AGG 01

ITEM	PART NUMBER	QTY	TR CO	DESCRIPTION	DESCRIZIONE
03	71417102	1	315C	GLASS	CRISTALLO
04	71417103	1	122G	SEAL	GUARNIZIONE
06	71417190	1	122G	SEAL	GUARNIZIONE
07A	71416526	1	721	FRAME -ASS L Y	INTELAIATURA -COMPL
07B	71416547	2	305S	SUPPORT	SUPPORTO
07C	15043434	4	40V	SCREW 8X1,25X20	VITE 8X1,25X20
07D	10571774	4	131R	WASHER	ROSETTA
07E	71416549	4	95B	BUSHING	BOCCOLA
07F	71416550	1	95B	BUSHING	BOCCOLA
07G	15066071	1	187A	SNAP RING	ANELLO ELASTICO
07H	71416551	2	50T	PLUG	TAPPO
07I	71416552	1	122G	SEAL	GUARNIZIONE
07L	15901604	4	40V	SCREW	VITE
07M	71417254	1	143	STRAP	BANDELLA
08	71416553	1	122G	SEAL	GUARNIZIONE
09	71416554	1	315C	GLASS	CRISTALLO
10	71417255	1	721	FRAME	INTELAIATURA
10A	71416931	2	80P	PIN	PERNO
10B	71416564	2	100M	SPRING	MOLLA
10C	71416565	2	45L	LEVER	LEVA
10D	71416566	2	131R	WASHER	ROSETTA
10E	71416862	2	65C	BOOT	CAPPUCCIO
10F	71416568	2	80P	PIN	PERNO
10G	71417257	1	315C	GLASS	CRISTALLO
10H	71417258	1	122G	SEAL	GUARNIZIONE
11A	71416573	1	265C	COVER	COPERCHIO
11B	71416491	1	20M	HANDLE	MANIGLIA
11C	71416578	2	26T	BLOCK	TAMPONE
11D	71416579	2	122G	SEAL	GUARNIZIONE
11E	15896421	2	10D	NUT	DADO
11F	15043134	4	40V	SCREW 8X1,25X14	VITE 8X1,25X14
11G	10571774	4	131R	WASHER	ROSETTA
11H	14496531	4	131R	WASHER	ROSETTA
11I	14496331	2	131R	WASHER	ROSETTA
11L	71416580	2	413S	HALF HINGE	SEMICERNIERA
11M	71416581	2	80P	PIN	PERNO
11N	15067374	4	187A	SNAP RING	ANELLO ELASTICO
11P	12605274	2	131R	WASHER	ROSETTA
12	71417106	1	315C	GLASS	CRISTALLO
13	71417110	1	315C	GLASS	CRISTALLO
14	71416594	1	122G	SEAL	GUARNIZIONE
15	71417111	1	315C	GLASS	CRISTALLO
16	71417112	1	122G	SEAL	GUARNIZIONE
17	71416597	1	315C	GLASS	CRISTALLO
18	71416598	1	122G	SEAL	GUARNIZIONE
20	71416535	2	120S	LOCK -ASS L Y	SERRATURA -COMPL
21	71417035	1	185S	REAR VIEW MIRROR	SPECCHIO RETROVISORE
22	71416561	1	120S	LOCK -ASS L Y	SERRATURA -COMPL
22A	71416563	1	80P	PIN	PERNO
22B	71416564	1	100M	SPRING	MOLLA
22C	71416565	1	45L	LEVER	LEVA
22D	71416568	1	80P	PIN	PERNO
22E	71416566	1	131R	WASHER	ROSETTA

FH120

CAB	CABINE	T.250 Yay 4
CABINA	FAHRERHAUSE	
71416857	CABINA	

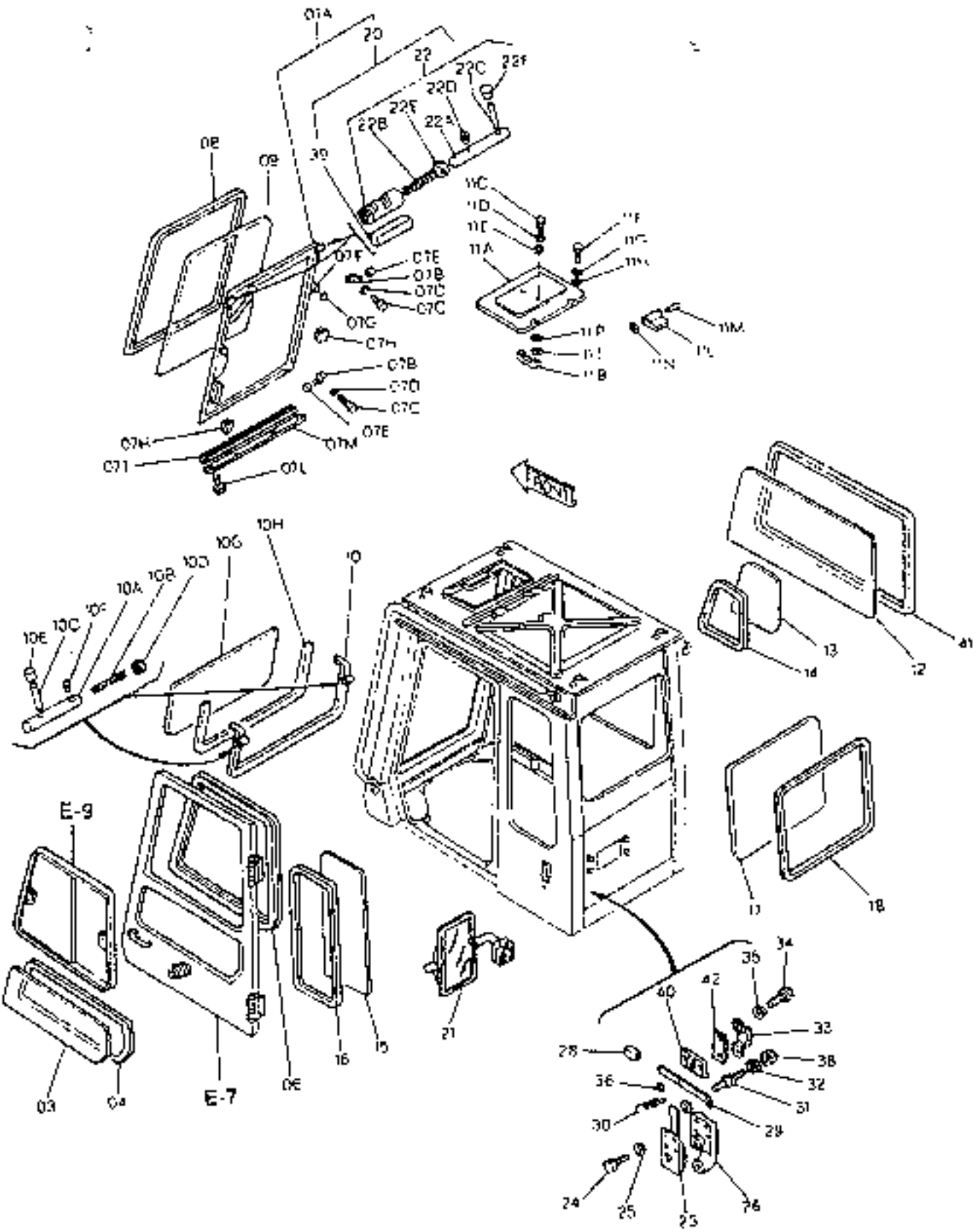

FH120

CAB N. AMERICA
CABINA N. AMERICA
71416857

CABINE N. AMERICA
FAHRERHAUSE N. AMERICA
CABINA N. AMERICA

1.250 TAV. 4

NTR 1105 * V-90 * UPDATE-AGG 01

ITEM	PART NUMBER	QTY	TR CO.	DESCRIPTION	DESCRIZIONE
22F	71416862	1	65C	BOOT	CAPPUCCIO
23	71416809	1	120S	LOCK	SERRATURA
24	13274014	4	40V	SCREW 5X0 8X12	VITE 5X0,8X12
25	10571474	4	131R	WASHER	ROSETTA
26	71416601	1	116R	COVERING	RIVESTIMENTO
28	71416603	1	25I	HANDGRIP	IMPUGNATURA
29	71416604	1	45L	LEVER	LEVA
30	71416605	1	100M	SPRING	MOLLA
31	71417025	1	80P	PIN	PERNO
32	71417026	1	131R	WASHER	ROSETTA
33	71416607	1	103C	RETAINER	CAVALLOTTO
34	10902234	2	40V	SCREW 6X1X16	VITE 6X1X16
35	10571574	2	131R	WASHER	ROSETTA
36	14496431	2	131R	WASHER	ROSETTA
38	16104421	1	10D	NUT	DADO
39	71416537	1	75D	SPACER	DISTANZIALE
40	71417083	2	75D	SPACER	DISTANZIALE
41	71417109	1	122G	SEAL	GUARNIZIONE
42	71417263	1	75D	SPACER	DISTANZIALE

FH120

CAB DOOR PORTA CABINA	PORTE DE LA CABINE FAHRERHAUS-TUER PUERTA DE LA CABINA	1.250 TAV 5

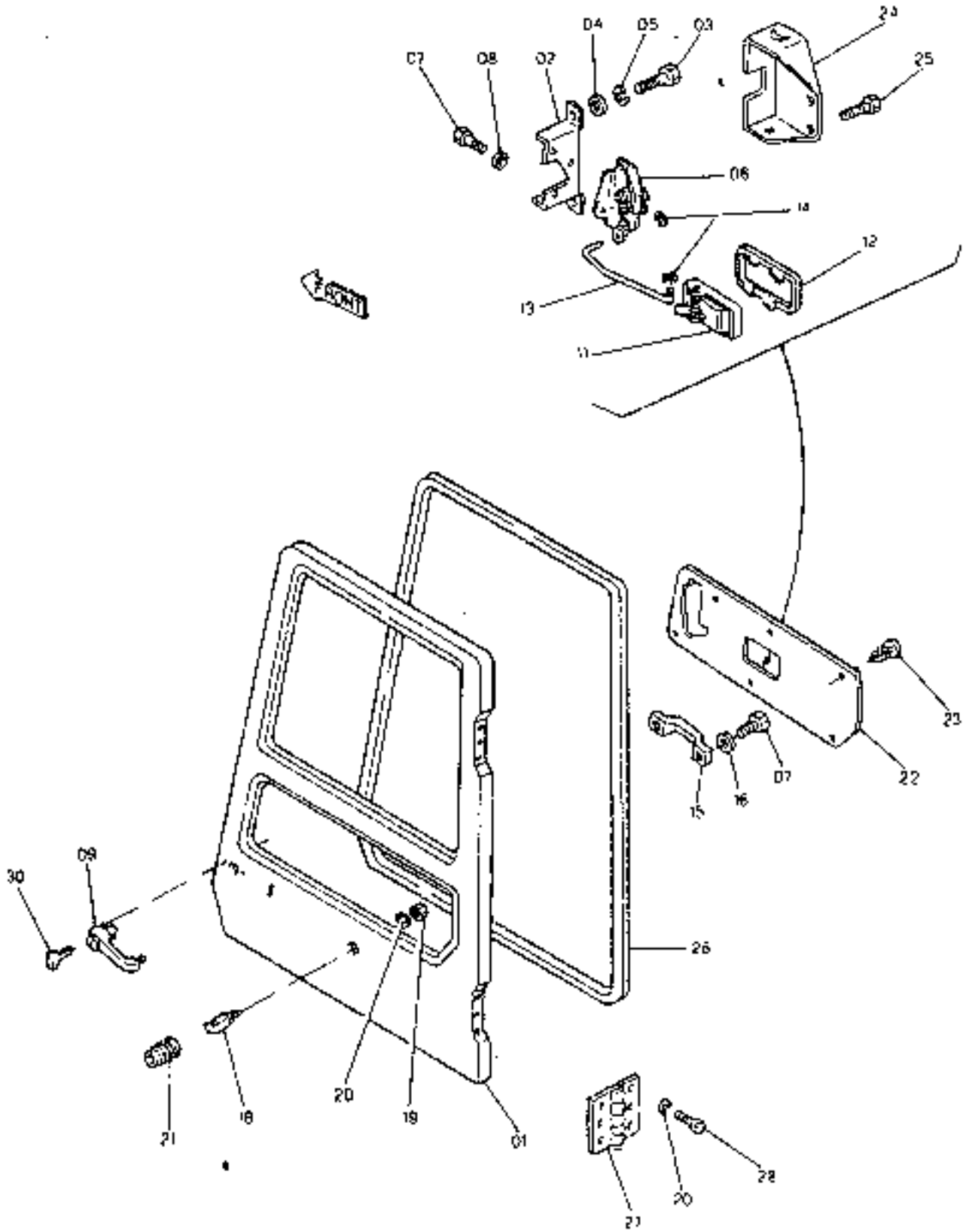

FN120

CAB DOOR N. AMERICA
PORTA CABINA N. AMERICA

PORTE DE CABINE N. AMER
FAHRERHAUS-TUER N. AMER
PUERTA DE CABINA N. AMER

1.250 TAV. 5

NTR 1105 V 90 UPDATE-AGG. 01

ITEM	PART NUMBER	QTY	TR. CO.	DESCRIPTION	DESCRIZIONE
01	71417222	1	721	FRAME	INTELAIATURA
02	71417239	1	35S	CASE	SCATOLA
03	15043234	2	40V	SCREW	VITE
04	14496531	2	131R	WASHER	ROSETTA
05	10571774	2	170R	LOCKWASHER	ROSETTA ELASTICA
06	71416490	1	120S	LOCK	SERRATURA
07	13276214	5	40V	SCREW 6X1X16	VITE 6X1X16
08	10571574	6	131R	WASHER	ROSETTA
09	71416867	1	20M	HANDLE	MANIGLIA
10	15806221	3	10D	NUT	DADO
11	5961723	1	20M	HANDLE	MANIGLIA
12	5981734	1	295C	BEZEL	CORNICE
13	71417242	1	142T	TIEROD	TIRANTE
14	71417066	2	167A	SNAP RING	ANELLO ELASTICO
15	71416491	1	20M	HANDLE	MANIGLIA
16	14496431	2	131R	WASHER	ROSETTA
18	71416492	1	80P	PIN	PERNO
19	11701721	1	10D	NUT	DADO
20	10571874	13	131R	WASHER	ROSETTA
21	71417064	1	166S	BELLOW	SOFFIETTO
22	71417241	1	25P	PANEL	PANNELLO
23	71416734	5	120B	BUTTON	BOTTONE
24	71417243	1	70R	GUARD	RIPARO
25	71416734	2	120B	BUTTON	BOTTONE
26	71416497	1	122G	SEAL	GUARNIZIONE
27	71416498	2	140C	HINGE	CERNIERA
28	11106234	12	40V	SCREW 10X1.5X25	VITE 10X1.5X25
30	79069292	1	150C	KEY	CHIAVE

FH120

CAB WINDOW-LEFT SIDE FINESTRA CABINA-SINISTRA	BAIE DE LA CABINE-GAUCHE FAHRERHAUS-LINK VENTANA DE CABINA-IZQUIE.	1.250	TAV 6

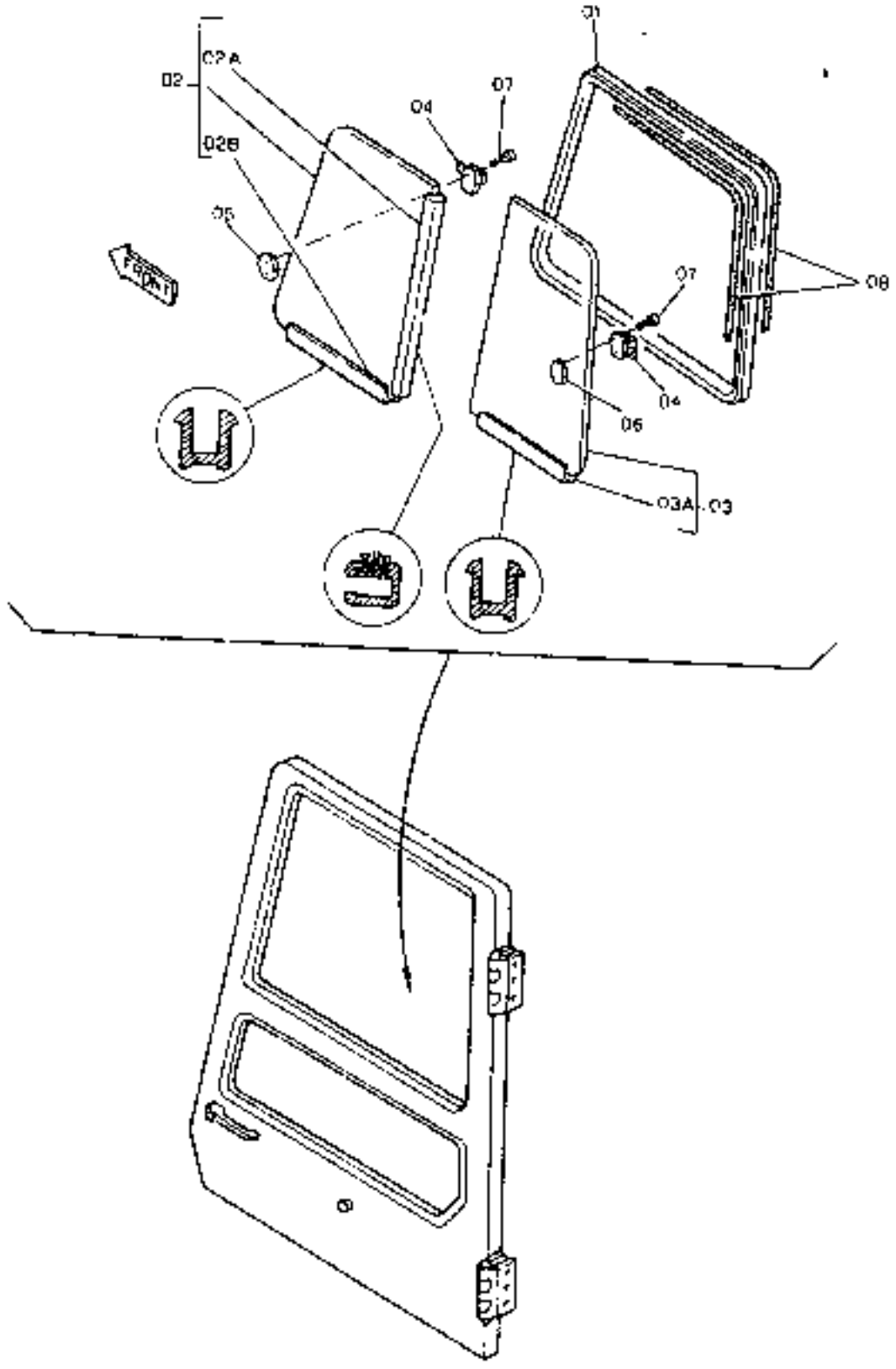

FH12B

CAB WINDOW - N. AMERICA
FINESTRA CABINA-N. AMER.

BAIE DE CABINE-N. AMERICA
FAHRERHAUSFENSTER-N. AMER
VENTANA DE CABINA-N.AMER.

1:2.5 TAV 6

NTR 1105 * V-90 * UPDATE-AGG.01

ITEM	PART NUMBER	QTY	TR CO.	DESCRIPTION	DESCRIZIONE
01	71417245	1	72I	FRAME	INTELAIATURA
02	71417247	1	315C	GLASS -ASS.LY	CRISTALLO -COMPL.
02A	71417250	1	122G	SEAL	GUARNIZIONE
02B	71417246	1	145G	GUIDE	GUIDA
03	71417251	1	315C	GLASS -ASS.LY	CRISTALLO -COMPL
03A	71417249	1	145G	GUIDE	GUIDA
04	71416515	2	120S	LOCK	SERRATURA
05	71416516	1	30G	HOOK	GANCIO
06	71416517	1	30G	HOOK	GANCIO
07	13299916	4	40V	SCREW 5X0,8X28	VITE 5X0,8X28
09	71417253	2	145G	GUIDE	GUIDA

E-11

FH120

CAB-FRAME CABINA-INTELAIATURA	CABINE-CHASSIS FAHRERHAUSE-RAHMEN CABINA-BASTIDOR	1 250 TAV.7

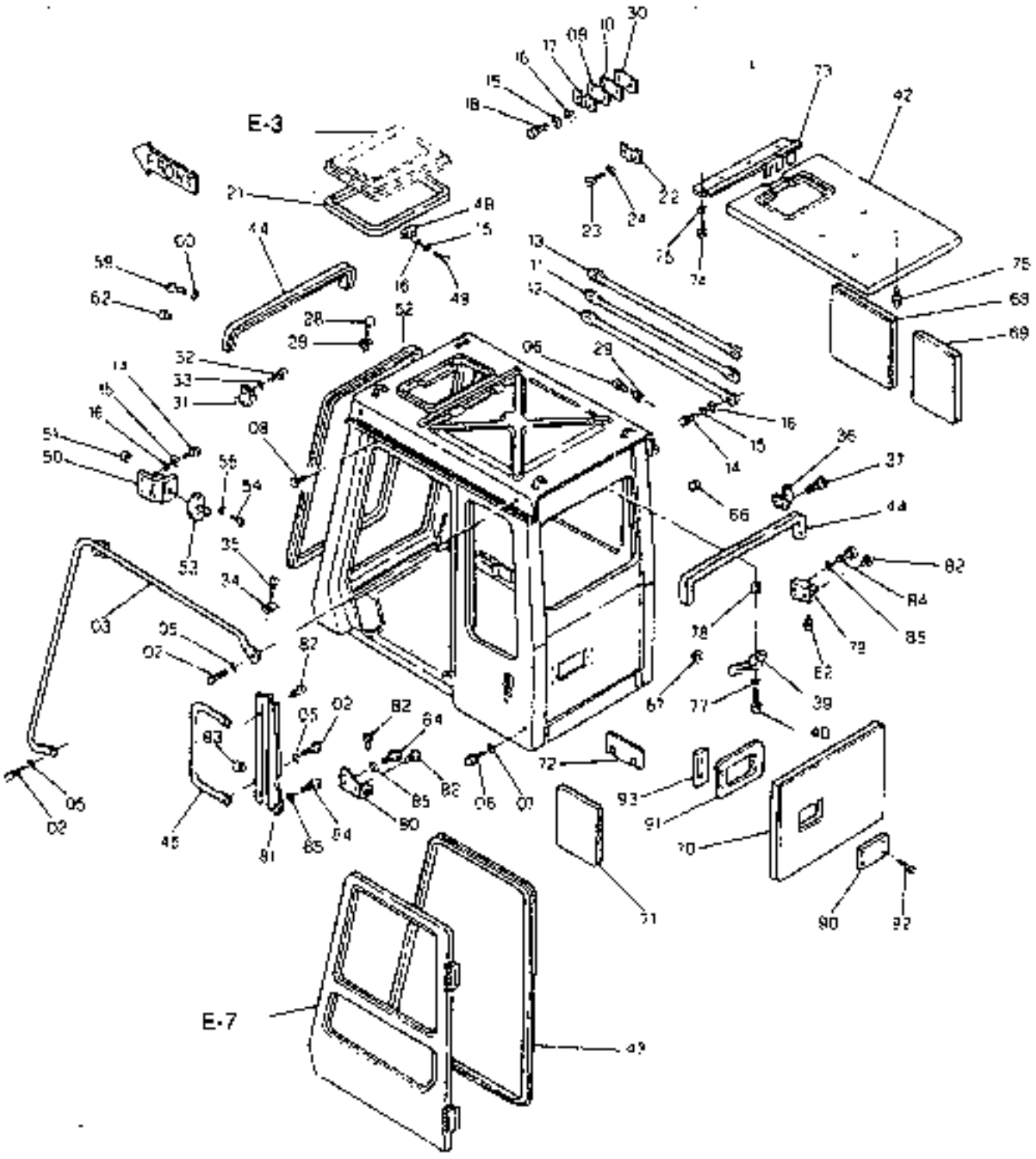

CAB N. AMERICA
CABINA N. AMERICA
71416857

CABINE N. AMERICA
FAHRERHAUSE N. AMERICA
CABINA N. AMERICA

1.250 FAV 7

NTR 1105 ' V-90 ' UPDATE-AGG 01

ITEM	PART NUMBER	QTY	TR CD.	DESCRIPTION	DESCRIZIONE
02	11106234	5	40V	SCREW 10X1.5X25	VITE 10X1.5X25
03	71417115	1	20M	HANDLE	MANIGLIA
05	10571874	5	131R	WASHER	ROSETTA
06	71416419	3	26T	BLOCK	TAMPONE
07	71416422	5	75D	SPACER	DISTANZIALE
08	71416423	1	26T	BLOCK	TAMPONE
09	71416424	1	198S	SHIM	SPESSORE
10	71416425	1	198S	SHIM	SPESSORE
11	71417116	1	70R	GUARD	RIPARO
12	71417117	1	70R	GUARD	RIPARO
13	71417118	1	70R	GUARD	RIPARO
14	13279414	6	40V	SCREW 8X1,25X20	VITE 8X1,25X20
15	10571774	14	131R	WASHER	ROSETTA
16	14496531	14	131R	WASHER	ROSETTA
17	71416429	2	26T	BLOCK	TAMPONE
18	16042234	6	40V	SCREW 6X1,25X16	VITE 6X1,25X16
21	71416434	1	122G	SEAL	GUARNIZIONE
22	71416436	1	110P	PLAQUE	PIASTRINA
23	13271914	2	40V	SCREW 4X0,7X10	VITE 4X0,7X10
24	10571374	2	131R	WASHER	ROSETTA
28	71416437	2	26T	BLOCK	TAMPONE
29	11690921	3	10D	NUT	DADO
30	71416440	1	198S	SHIM	SPESSORE
31	71416441	2	26T	BLOCK	TAMPONE
32	13276214	4	40V	SCREW 6X1X16	VITE 6X1X16
33	10571574	4	131R	WASHER	ROSETTA
34	71416444	2	122G	SEAL	GUARNIZIONE
35	13301311	2	40V	SCREW 6X1X16	VITE 6X1X16
36	71416445	1	30G	HOOK	GANCIO
37	13272214	2	40V	SCREW 4X0,7X16	VITE 4X0,7X16
39	71416446	1	120S	LOCK	SERRATURA
40	13274614	2	40V	SCREW	VITE
42	71417120	1	25P	PANEL	PANNELLO
43	71416448	1	122G	SEAL	GUARNIZIONE
44	71417121	2	122G	SEAL	GUARNIZIONE
45	71416450	2	20M	HANDLE	MANIGLIA
48	71416452	1	26T	BLOCK	TAMPONE
49	13276514	2	40V	SCREW	VITE
50	71417122	1	300S	SUPPORT	SUPPORTO
51	16100811	2	10D	NUT	DADO
52	71416455	1	122G	SEAL	GUARNIZIONE
53	71416456	1	74B	BLOCK	BLOCCHETTO
54	13303311	2	40V	SCREW	VITE
55	12606974	2	131R	WASHER	ROSETTA
59	13276014	2	40V	SCREW 6X1X12	VITE 6X1X12
60	14496431	2	131R	WASHER	ROSETTA
62	71416459	1	50T	PLUG	TAPPO
66	71416466	1	50T	PLUG	TAPPO
67	71416467	1	95B	BUSHING	BOCCOLA
68	71417124	1	25P	PANEL	PANNELLO
69	71417125	1	25P	PANEL	PANNELLO
70	71417126	1	25P	PANEL	PANNELLO
71	71417127	1	225S	BRACKET	STAFFA

FM130

CAB-FRAME CABINA-INTELAIATURA	CABINE-CHASSIS FAHRERHAUSE-RAHMEN CABINA-BASTIDOR	1 250 TAV 7

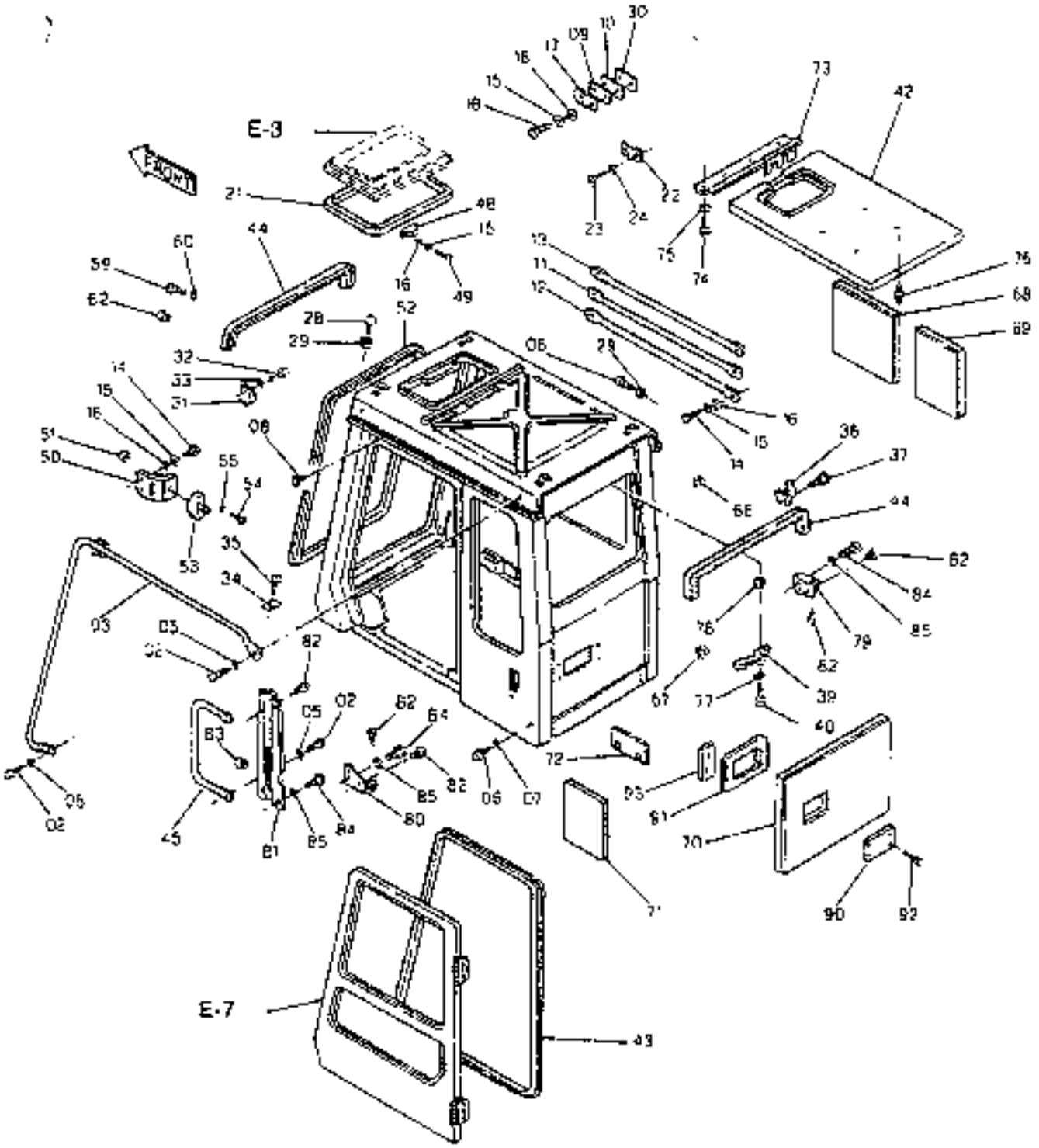

FH120

CABIN AMERICA
CABINA N. AMERICA
71416857

CABINE N. AMERICA
FAHRERHAUSE N. AMERICA
CABINA N. AMERICA

1.250 TAV.7

NTR 1105 * V-90 * UPDATE-AGG.01

ITEM	PART NUMBER	QTY	TR Cd.	DESCRIPTION	DESCRIZIONE
72	71417128	1	254C	CONTAINER -DECAL	CONTENITORE -DECAL
73	71417128	1	180T	CROSS BEAM	TRAVERSA
74	15645504	4	40V	SCREW	VITE
75	5136362	4	131R	WASHER	ROSETTA
76	71416734	4	120B	BUTTON	BOTTONE
77	10571474	2	131R	WASHER	ROSETTA
78	12574121	2	30D	NUT	DADO
79	71416461	1	225S	BRACKET	STAFFA
80	71416462	1	225S	BRACKET	STAFFA
81	71417219	1	225S	BRACKET	STAFFA
82	71416464	6	50T	PLUG	TAPPO
83	71416465	2	95B	BUSHING	BOCCOLA
84	15643234	7	40V	SCREW 8X1,25X16	VITE 8X1,25X16
85	10571774	7	131R	WASHER	ROSETTA
90	71417130	1	265C	COVER	COPERCHIO
91	71417131	1	265C	COVER	COPERCHIO
92	10902234	4	40V	SCREW	VITE
93	71417132	2	148	STRAP	BANDELLA

FH120

HEATER RISCALDATORE	RECHAUFFEUR HEIZGERAET CALORIFERO	1.290 TAV.1

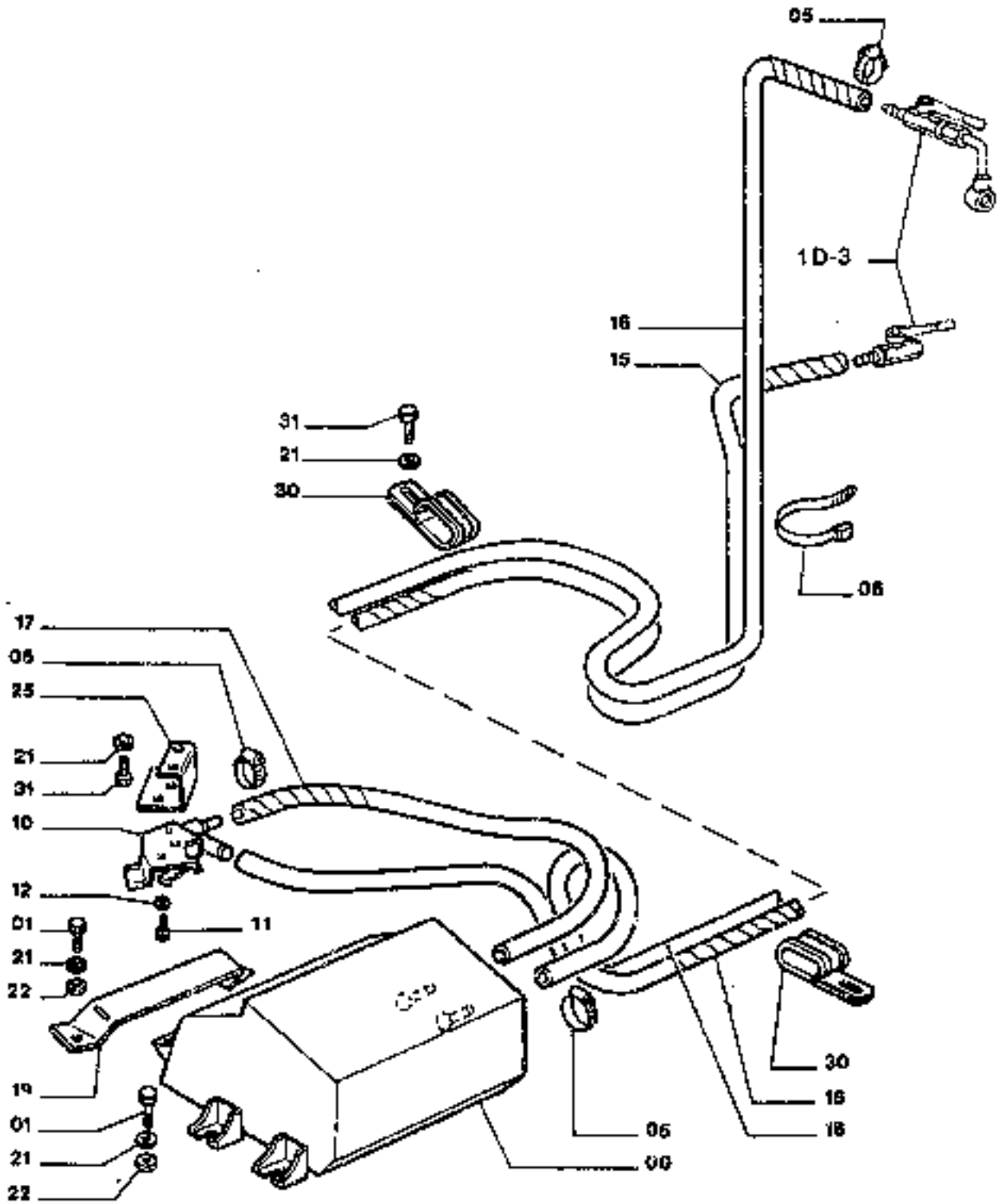

FH120

HEATER
RISCALDATORE

RECHAUFFEUR
HEIZGERAET
CALORIFERO

1.250 TAV.1

ITEM	PART NUMBER	QTY	TR. CO.	DESCRIPTION	DESCRIZIONE
00	71405938	1	105R	HEATER -ASSLY SEE E-17	RISCALDATORE -COMPL. VED. TAV.2
01	11106234	6	40V	SCREW 10X1,5X25	VITE 10X1,5X25
05	79083842	6	180C	COLLAR	COLLARE
06	4982514	6	31F	CLAMP	FASCETTA
10	71405939	1	150R	COCK	RUBINETTO
11	13272214	2	40V	SCREW 4X0,7X16	VITE 4X0,7X16
12	10571374	2	131R	WASHER	ROSETTA
15	71406000	1	285T	HOSE	TUBO FLESSIBILE
16	71405940	1	285T	HOSE	TUBO FLESSIBILE
17	71405941	1	285T	HOSE	TUBO FLESSIBILE
19	71405942	1	225S	BRACKET	STAFFA
21	10571874	10	131R	WASHER	ROSETTA
22	14496631	6	131R	WASHER	ROSETTA
25	71405943	1	225S	BRACKET	STAFFA
30	71405944	2	231S	CLIP	STAFFETTA
31	10978234	4	40V	SCREW 10X1,5X16	VITE 10X1,5X16

CAB HEATER-COMPONENTS RISCALDATORE CABINA-COMP. 21405938	RECHAUFFEUR-COMPOSANTS HEIZGERAET-EINZELTEILE CALORIFERO-COMPONENTES	1.290 TAV.2

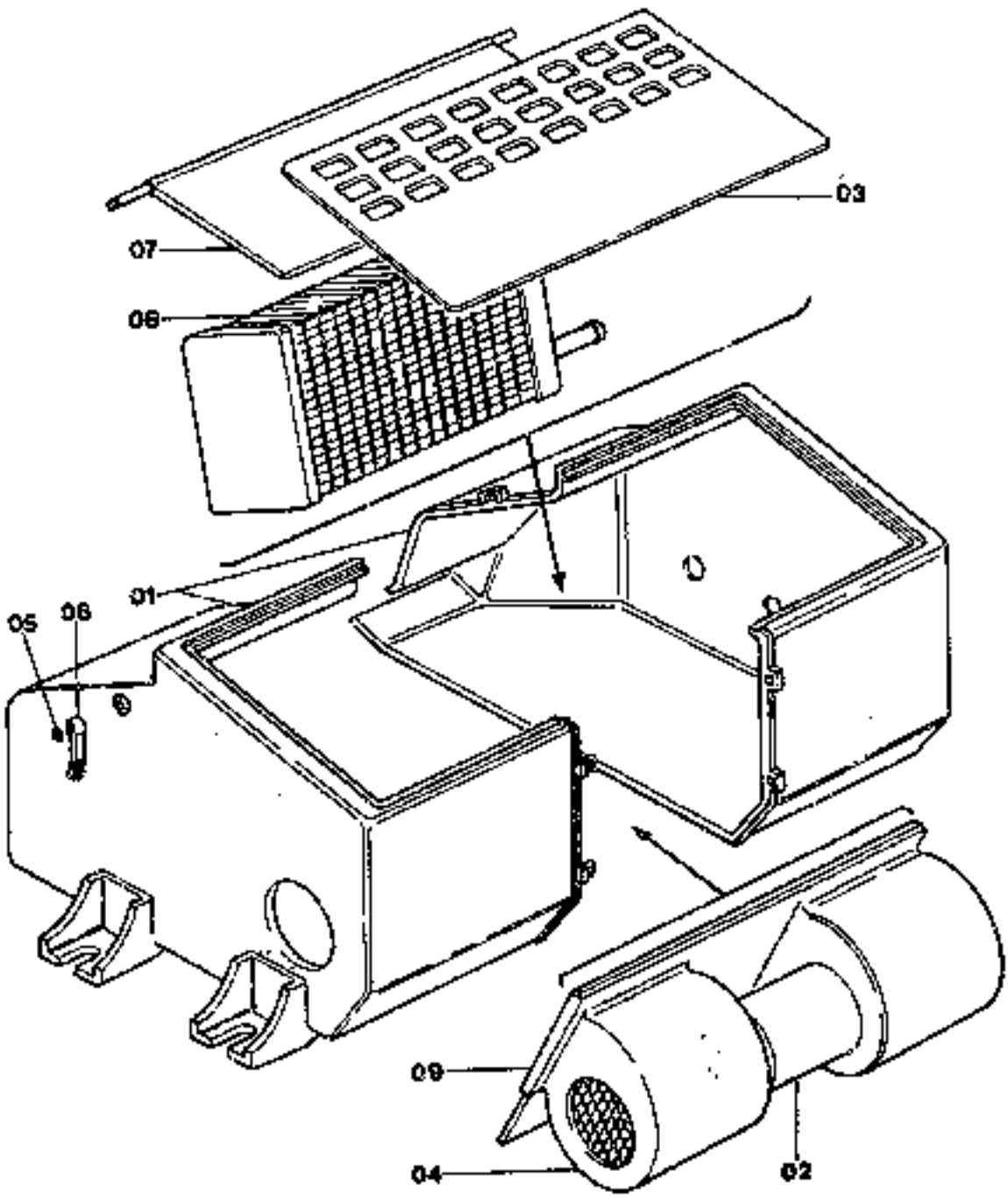

FH120

CAB HEATER-COMPONENTS — RÉCHAUFFEUR-COMPOSANTS — 1.280 TAV.2
RISCALDATORE CABINA-COMP. — HEIZGERAET-EINZELTEILE
71405236 — CALORIFERO-COMPONENTES

ITEM	PART NUMBER	QTY	TR CO.	DESCRIPTION	DESCRIZIONE
01	71403552	1	300C	BODY	CORPO
02	71403553	1	53D	DIODE	DIODO
03	71403554	1	265C	COVER	COPERCHIO
04	71403555	1	39E	ELECTRIC FAN	ELETTROVENTILATORE
05	71403556	1	45A	RING	ANELLO
06	71403557	1	20M	HANDLE	MANIGLIA
07	71403558	1	205S	DOOR	SPORTELLO
08	71403559	1	25R	RADIATOR	RADIATORE
09	71403560	1	105P	PLATE	PIASTRA

FH120

COWLINGS COFANI	CAPOTAGE HAUBE CAPOTS	1.300 TAV.1

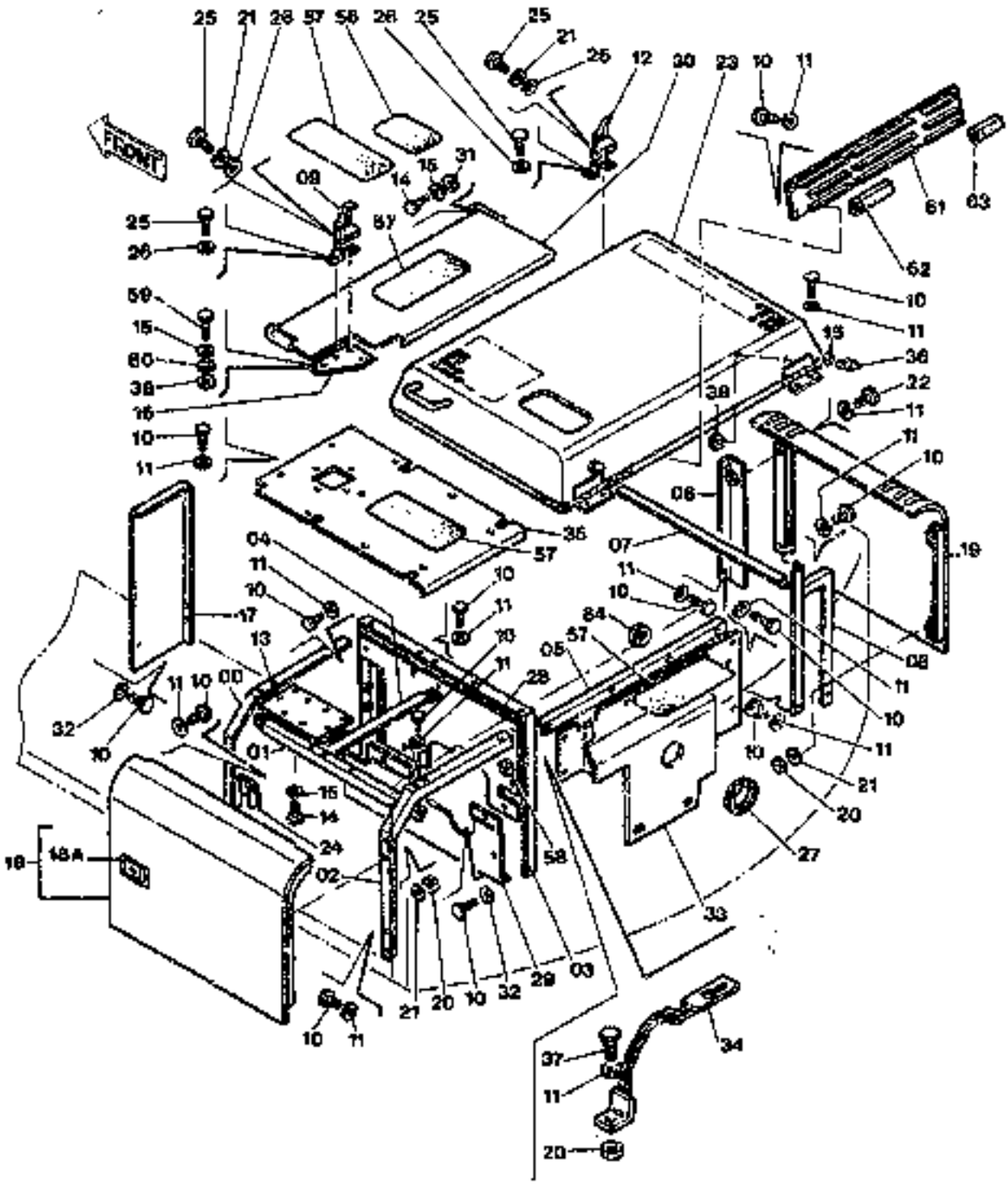

FH120

COWLINGS
COFANI
CAPOTAGE
HAUBE
CAPOTS

1.300 TAV.1

ITEM	PART NUMBER	QTY	TR. CO.	DESCRIPTION		DESCRIZIONE	
00	71405507	1	300S	SUPPORT		SUPPORTO	
01	71405508	1	300S	SUPPORT		SUPPORTO	
02	71405509	1	300S	SUPPORT		SUPPORTO	
03	71405510	1	300S	SUPPORT		SUPPORTO	
04	71405511	1	300S	SUPPORT		SUPPORTO	
05	71405512	1	300S	SUPPORT		SUPPORTO	
06	71405513	1	300S	SUPPORT		SUPPORTO	
07	71405514	1	300S	SUPPORT		SUPPORTO	
08	71405515	1	300S	SUPPORT		SUPPORTO	
09	71405516	1	20M	HANDLE		MANIGLIA	
10	11112234	66	40V	SCREW 12X1,75X25		VITE 12X1,75X25	
11	14496731	61	131R	WASHER 12X1,75X24		ROSETTA 12X1,75X24	
12	71405517	1	20M	HANDLE		MANIGLIA	
				C2572 UP TO S/N	0050	C2572 FINO AL TELAIO	0050
	71405238	1	20M	HANDLE		MANIGLIA	
				D2572 FROM S/N	0051	D2572 DAL TELAIO	0051
13	71405518	1	105P	PLATE		PIASTRA	
14	11106034	5	40V	SCREW 10X1,5X20		VITE 10X1,5X20	
15	10571674	9	131R	WASHER		ROSETTA	
16	71405519	1	225S	BRACKET		STAFFA	
17	71405520	1	265C	COVER		COPERCHIO	
18	71405521	1	205S	DOOR -ASS'LY		SPORTELLO -COMPL.	
18A	71405595	1	20M	HANDLE -SEE E-23		MANIGLIA -VED. TAV. 3	
19	71405522	1	205S	DOOR		SPORTELLO	
20	11702921	9	10D	NUT		DADO	
21	10571774	12	131R	WASHER		ROSETTA	
22	14432434	2	40V	SCREW 12X1,75X20		VITE 12X1,75X20	
23	71405523	1	176C	HOOD		COFANO	
24	71405524	1	225S	BRACKET		STAFFA	
25	10043233	8	40V	SCREW 8X1,25X16		VITE 8X1,25X16	
26	14496531	8	131R	WASHER 8X1,25X17		ROSETTA 8X1,25X17	
27	71405525	1	45A	RING		ANELLO	
28	71405526	1	265C	COVER		COPERCHIO	
29	71405527	1	265C	COVER		COPERCHIO	
30	71405528	1	265C	COVER		COPERCHIO	
31	12644321	1	131R	WASHER 10X35X3		ROSETTA 10X35X3	
32	4952483	20	131R	WASHER		ROSETTA	
33	71405529	1	265C	COVER		COPERCHIO	
34	71405530	1	95C	CHAIN		CATENA	
35	71405531	1	265C	COVER		COPERCHIO	
36	71416419	2	60T	BLOCK		TASSELLO	
37	11113034	1	40V	SCREW 12X1,75X45		VITE 12X1,75X45	
38	11701721	4	10D	NUT		DADO	
56	71405684	1	20N	BAND		NASTRO	
57	71405685	4	20N	BAND		NASTRO	
58	10396980	2	45A	RING		ANELLO	
59	11106434	2	40V	SCREW 10X1,5X30		VITE 10X1,5X30	
60	14496631	4	131R	WASHER		ROSETTA	
61	71405664	1	265C	COVER		COPERCHIO	
62	71405670	4	116R	COVERING		RIVESTIMENTO	
63	71405671	2	116R	COVERING		RIVESTIMENTO	
64	10400980	1	45A	RING		ANELLO	

FH120

COWLINGS	CAPOTAGE	1.300 TAV.2
COFANI	HAUBE	
	CAPOTS	

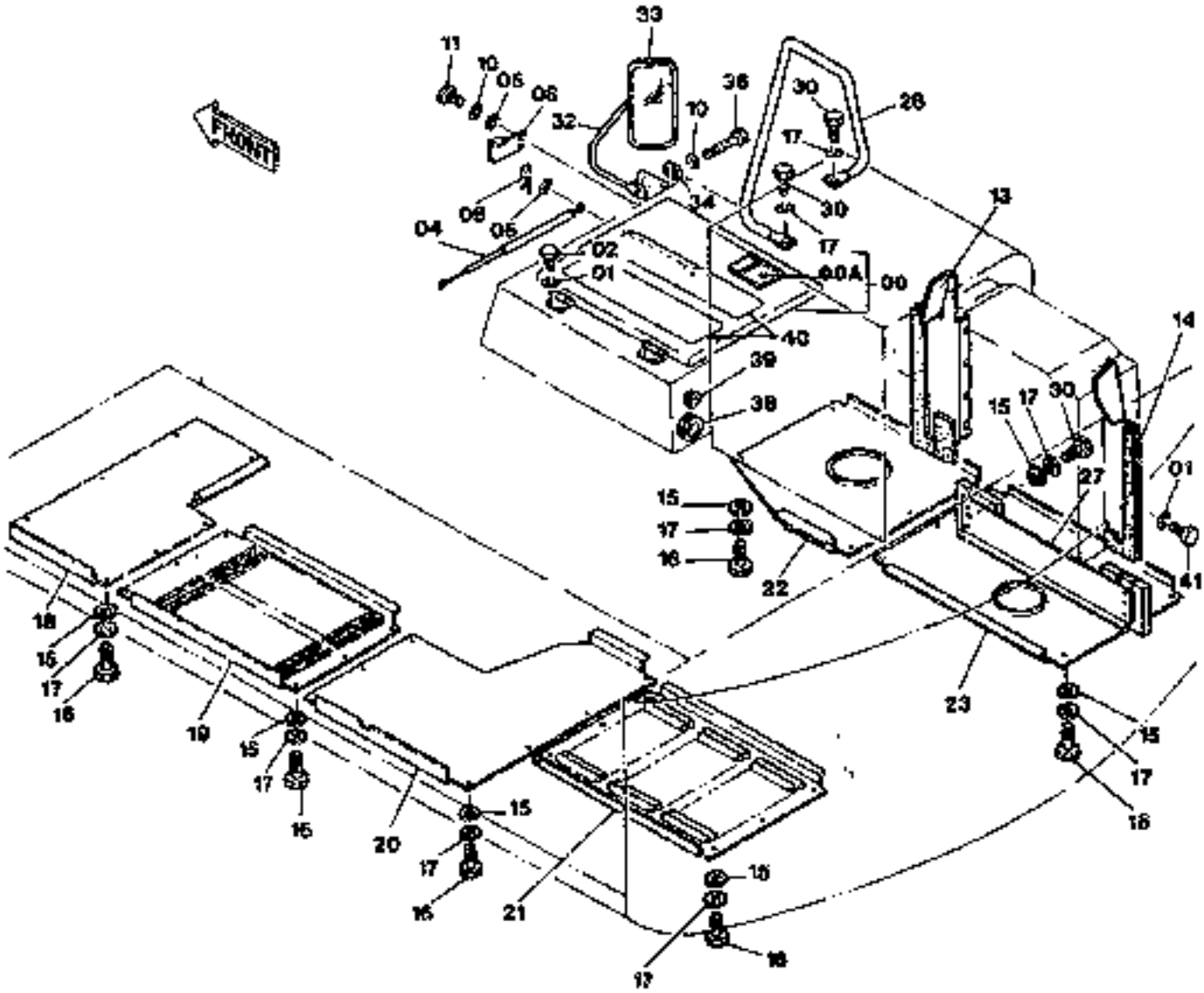

FH128

COWLINGS
COFANI

CAPOTAGE
HAUBE
CAPOTS

1.300 TAV.2

ITEM	PART NUMBER	QTY	TR. CO.	DESCRIPTION	DESCRIZIONE
00	71405532	1	265C	COVER -ASS.LY	COPERCHIO -COMPL.
00A	71405585	1	20M	HANDLE -SEE E-23	MANIGLIA -VED. TAV. 3
01	10571874	12	170R	LOCKWASHER	ROSETTA ELASTICA
02	11108034	4	40V	SCREW 10X1,5X20	VITE 10X1,5X20
04	71405533	1	167S	HYDRAULIC LIFT	SOLLEVATORE IDRAULICO
05	14498531	8	131R	WASHER 8X1,25X17	ROSETTA 8X1,25X17
08	71405534	1	225S	BRACKET	STAFFA
09	71415905	2	270C	COTTER PIN	COPIGLIA
10	10571774	4	170R	LOCKWASHER	ROSETTA ELASTICA
11	16043434	2	40V	SCREW	VITE
13	71405049	1	265C	COVER	COPERCHIO
14	71405054	1	265C	COVER	COPERCHIO
15	4952463	41	131R	WASHER	ROSETTA
16	11112434	37	40V	SCREW 12X1,75X30	VITE 12X1,75X30
17	10571974	49	131R	WASHER	ROSETTA
18	71405538	1	265C	COVER	COPERCHIO
19	71405539	1	265C	COVER	COPERCHIO
20	71405540	1	265C	COVER	COPERCHIO
21	71405541	1	265C	COVER	COPERCHIO
22	71405542	1	265C	COVER	COPERCHIO
23	71405543	1	265C	COVER	COPERCHIO
27	71405068	1	265C	COVER	COPERCHIO
28	71405545	1	20M	HANDLE	MANIGLIA
30	11112234	6	40V	SCREW 12X1,75X25	VITE 12X1,75X25
32	71405546	1	20M	HANDLE	MANIGLIA
33	71405547	1	185S	REAR VIEW MIRROR	SPECCHIO RETROVISORE
34	71405548	1	74B	BLOCK	BLOCCHETTO
36	16044034	2	40V	SCREW 8X1,25X40	VITE 8X1,25X40
38	71405609	1	45A	RING	ANELLO
39	10396180	1	45A	RING	ANELLO
40	71405688	2	20N	BAND	NASTRO
41	10876234	8	40V	SCREW 10X1,5X16	VITE 10X1,5X16

HANDLE	MANILLE	1.300 TAV.3
MANIGLIA	GRIFF	
71405585	MANIJA	

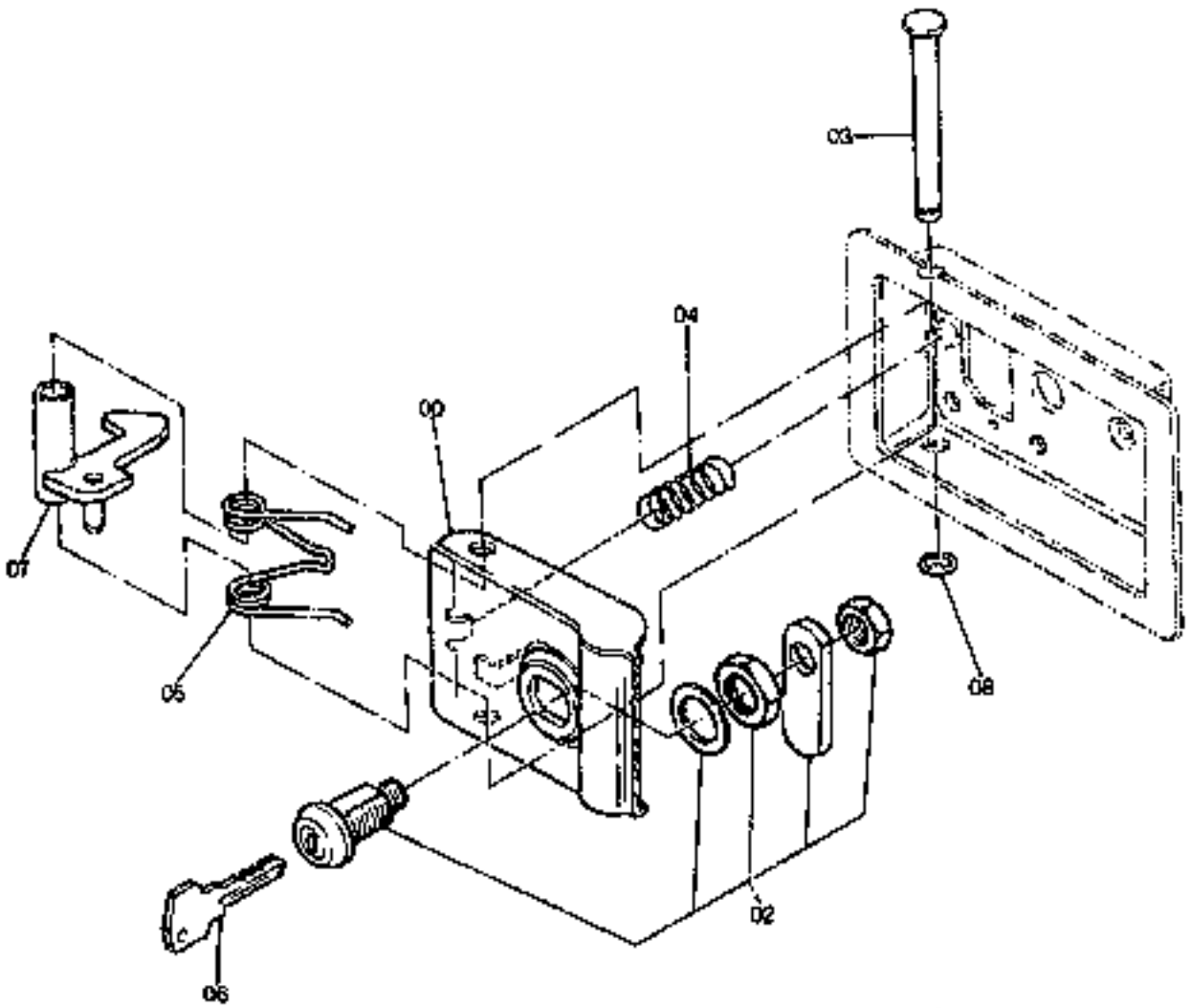

HANDLE
MANIGLIA
71405085

MANILLE
GRIFF
MANIJA

1:300 TAV.3

ITEM	PART NUMBER	QTY	TRL CO.	DESCRIPTION	DESCRIZIONE
00	71405001	1	20M	HANDLE	MANIGLIA
02	79075057	1	22B	LOCK CYLINDER	BLOCCHETTO SERRATURA
03	71405077	1	60P	PIN	PERNO
04	71405078	1	100M	SPRING	MOLLA
05	71405079	1	100M	SPRING	MOLLA
06	79069292	1	150C	KEY	CHIAVE
07	71405080	1	45L	LEVER	LEVA
08	11097776	1	187A	SNAP RING	ANELLO ELASTICO

F-1

ALPHABETICAL INDEX

DESCRIPTION	SGR.	TAV.	GRID
Accelerator controls	0.004	1	1C-23
Air Cleaner	0.001	1	1C-13
Alternator-Mounting	0.400	1	1H-9
Alternator (55 amp)	0.400	2	1H-11
Alternator (35 amp)	0.400	3	1H-13
Anti-Shock Valve (Hydr.)	1.092	3	1L-3
Application of Oil. Hammer	5.0020	2	2H-13
Batteries	1.220	4	2D-19
Belts	0.340	1	1G-21
	0.345	1	1G-23
Boom Piping	2.030	1	2F-13
Brake Valve Components	3.010	4	2G-11
Bucket	2.020	1	2F-9
Bucket Cylinder	2.030	5	2F-21
Bull Gear	3.000	1	2G-9
Cab	1.250	1	2D-19
Cab Door	1.250	5	2E-7
Cab Heater-Components	1.290	2	2E-15
Cab Window-Left Side	1.250	6	2E-9
Cab-Frame	1.250	7	2E-11
Cab-Platform	1.250	1	2D-21
Camshaft	0.120	1	1E-19
Check Valve	1.081	2	1K-17
Cold Starting Aid	5.0025	1	2H-19
Connecting Rod	0.081	1	1E-16
Cont. Valve-Hydr. (Ass.Y)	1.050	1	1J-13
Control Valve-Hydr.	1.050	2	1J-17
	1.050	3	1J-19
	1.050	4	1J-21
	1.050	5	1J-23
Controls	1.070	1	1K-5
Counterweight	1.000	1	1I-3
Coverings	1.300	1	2E-19
	1.300	2	2E-21
Crankshaft	0.080	1	1E-7
Crankshaft Pulley	0.084	1	1E-15
Cylinder Block	0.040	1	1D-5
	0.040	2	1D-7
	0.040	3	1D-9
Cylinder Block Covers	0.043	1	1D-13
	0.043	2	1D-15
Cylinder Head	0.060	1	1D-21
	0.060	2	1D-23
Dashboard (Left)	1.210	1	2D-9
Dashboard (Right)	1.200	1	2D-3
	1.200	3	2D-7
Data Monitor	1.200	2	2D-5
Decals	4.500	1	2H-9
Dipper Stick (2,1m)	5.0022	1	2H-15
Dipper Stick (2,5m) (STD.)	2.003	1	2F-5
Dipper Stick(2,5m)Links(Std.)	2.003	2	2F-7
Dipper Stick (3m)	5.0038	1	2H-21
	5.0038	2	2H-23
Dipper Stick cylinder	2.030	4	2F-19
Dipstick-Engine Oil	0.305	2	1G-7
Discharge Valve	1.040	4	1J-3
Discharge Valve Componen.	3.010	5	2G-13
Drive on Engine (Opt.)	0.350	1	1H-3
Electric System	1.220	2	2D-13
Elements-Engine Oil	0.001	1	1C-13
Elements-fuel	0.200	1	1F-11
Elements-Hydraulic	1.020	1	1E-19
Elements-Pilot	1.080	1	1K-11
Emergency Kits	4.000	1	2H-7
Engine	0.021	1	1D-3
Engine-Controls	0.004	1	1C-23
Engine-Suspensions	0.000	1	1C-11
Engine Breather	0.045	1	1D-17
	0.045	1A	1D-19
Engine Cooling Piping	0.323	1	1G-17
Engine Heat Exchanger	0.310	1	1G-9
	0.310	2	1G-11
Engine Lifting Eyes	0.450	1	1H-15
Engine Oil Filter	0.302	1	1G-3
Engine Oil Piping	0.305	1	1G-5
Engine Oil Pump	0.300	1	1F-23
Engine Oil Sump	0.042	1	1D-11
Engine Piston	0.082	1	1E-11
Engine Suspensions	0.000	1	1C-11
Exhaust Manifold	0.077	1	1E-5
Exhaust Valve	0.060	2	1D-23
Fan	0.345	1	1G-23
Fan Drive	0.345	1	1G-23
"Filter Care" Kit	21		1A-23
Filter-Pilot System	1.080	1	1K-11
Filters-Air	0.001	1	1C-13
Filters-Engine Oil	0.302	1	1G-3
Filters-Fuel	0.200	1	1F-11
Filters-Hydr. System	1.020	1	1I-7
Flywheel-Engine	0.063	1	1E-13
Fuel Filter	0..200	1	1F-11
Fuel Piping	0.203	1	1F-15
Fuel Pump	0.201	1	1F-13
Fuel Tank	1.010	1	1I-5
Fuses	1.200	3	2D-7
Guards	1.300	2	2E-21
Handle	1.300	3	2E-23
Heater	1.290	1	2E-15
Horn	1.220	2	2D-15
Hyd.Pump Drive	1.030	7	1I-21
Hyd.Pump Regulator Valve	1.030	6	1I-19
Hyd.Pump Regulator-Cover	1.030	4	1I-15
	1.030	5	1I-17
Hydr.Pump-Components	1.030	2	1I-11
Hydr.Pump Regulator-Comp.	1.. 0	3	1I-13

F-2

ALPHABETICAL INDEX

DESCRIPTION	SGR.	TAV.	GRID
Hydraulic Pump	1.030	1	1I-9
Idler	3.020	1	1G-15
Injection Nozzle-Lines	0.149	1	1F-9
Injection Pump	0.140	2	1E-23
	0.140	3	1F-3
	0.140	4	1F-5
	0.140	5	1F-7
Injection Pump-Piping	0.140	1	1E-21
Intake Manifold	0.071	1	1E-2
Intake Valve	0.060	2	1D-21
Lift Cylinder (Left)	2.030	3	1F-17
Lift Cylinder (Right)	2.030	2	2F-15
Lights	1.220	2	2D-15
Lower Frame	3.000	1	2G-3
Lubric. Fitting Piping	2.040	1	2F-23
Main Piping	1.060	1	1K-3
Mirror (Rear)	1.300	2	2E-21
Monobloc Boom	2.000	1	2F-3
Motor - Starter	0.360	2	1H-7
Motor - Swing	1.040	1	1J-3
Motor - Travel	3.010	1	12G-5
Motor - Wiper	1.220	1	2D-13
Muffler	0.002	1	1C-15
Oil Tank	1.020	1	1I-7
Operator's Seat	1.250	2	2D-23
OperatorsSeat(Bostrom)(Std.)	5.0151	1	2I-3
Pilot Gear Pump	1.030	8	1I-23
Pilot Piping(1)	1.080	1	1K-11
Pilot Piping(2)	1.081	1	1K-15
Pilot Piping(3)	1.082	1	1K-19
Pilot Piping (4)	1.083	1	1L-5
Pilot Piping (5)	1.084	1	1L-7
Pilot Valve	1.070	3	1K-9
Pilot Valve-components	1.070	2	1K-7
Pipin-Boom	2.030	1	2F-13
Piping-Engine Oil	0.350	1	1H-3
Piping-Injection	0.149	1	1F-9
Piping-Lube Fittings	2.040	1	2G-23
Piping-Main	1.060	1	1K-3
Piping-Pilot(1)	1.080	1	1K-11
Piping-Pilot(3)	1.082	1	1K-19
Piping-Pilot(4)	1.083	1	1L-5
Piping-Pilot(5)	1.084	1	1L-7
Piping-Pump Contr. Valve	1.050	1	1J-13
Piping-Travel (Lower)	3.070	1	2H-5
Piping-Turbocharger	0.241	1	1F-21
Pump-Engine Oil	0.300	1	1F-23
Pump-Fuel	0.201	1	1F-13
Pump-Hydraulic	1.030	1	1I-9
Pump-Injection	0.140	1	1E-21
Pump-Pilot	1.030	8	1I-23
Pump-Water	0.320	1	1G-13
Pump/Control Valve Piping	1.050	1	1J-13
Radiator	0.003	1	1C-17
Radiator-Components	0.003	2	1C-19
	0.003	3	1C-21
Rocker Arm	0.060	2	1D-23
Rotary Distr.-Components	3.060	2	2H-3
Rotary Distributor	3.060	1	2G-23
Seat Belt (Std.)	5.0536	1	2I-5
Sensors	1.220	2	2D-15
Solenoid Valve	1.080	2	1K-13
Starter	0.360	2	1H-7
Starter-Mounting	0.360	1	1H-5
Stop Valve	1.082	2	1K-23
Swing Motor-Components	1.040	3	1J-7
Swing Red.Unit-Components	1.040	2	1J-5
Swing Reduction Unit	1.040	1	1J-3
Thermostat & Housing	0.326	1	1G-19
Timing Control	0.100	1	1E-17
Tool Kit	5.0083	1	2I-9
Track Chain	3.050	1	2G-21
Track Roller	3.040	1	2G-19
Travel Motor-componen.	3.010	3	2G-9
Travel Piping (Lower)	3.070	1	2H-5
Travel Red.Unit-Componen.	3.010	2	2G-7
Travel Reduction Units	3.010	1	2G-5
Turbocharger	0.240	1	1F-17
	0.240	2	1F-19
Turbocharger Piping	0.241	1	1F-21
Upper Frame	1.000	1	1E-17
Upper Roller	3.030	1	2G-17
Valve-Anti-Shock(Hydr.)	1.082	3	1L-3
Valve-Check (Pilot)	1.081	2	1K-17
Valve-Exhaust	0.060	2	1D-23
Valve-Intake	0.060	2	1D-23
Valve-Pilot (Hydr.)	1.070	1	1K-5
Valve-Pilot(Travel)	1.070	1	1K-5
Valve-Solenoid	1.080	2	1K-13
Valve-Stop(Travel)	1.082	1	1K-21
Washer (windshield)	1.220	3	2D-17
Water Pump	0.320	1	1G-13
Water Pump Drive	0.340	1	1G-21
Water Pump-Components	0.320	2	1G-15
Wiper	1.220	1	2D-11

FH128

MONOBLOC BOOM BRACCIO MONOBLOCCO	BRAS MONOBLOCQUE MONOBLOCK-AUSLEGER BRAZO MONOBLOQUE	2.000 TAV.1

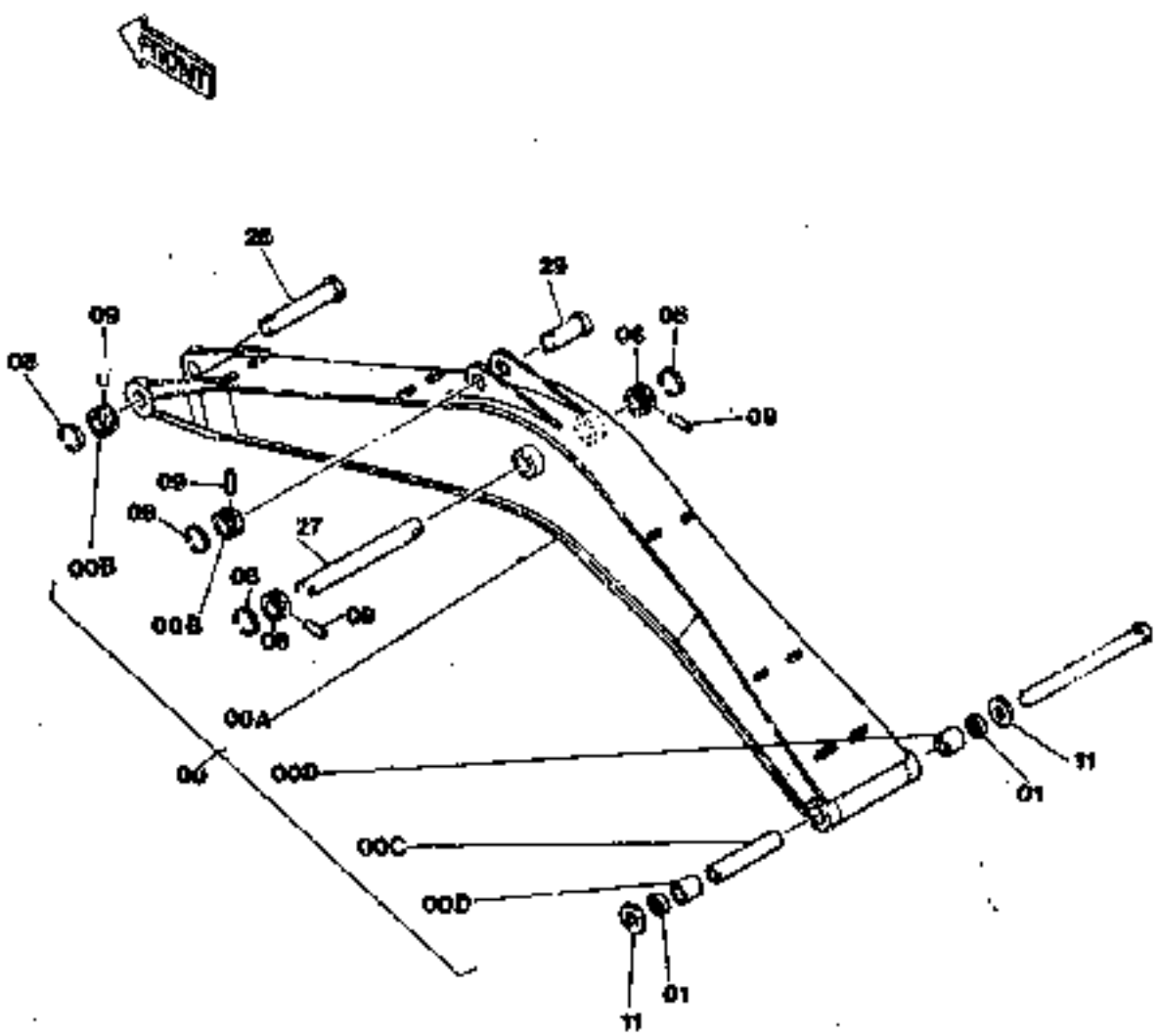

FH120

MONOBLOC BOOM
BRACCIO MONOBLOCCO

BRAS MONOBLOQUE
MONOBLOCK-AUSLEGER
BRAZO MONOBLOQUE

2.000 TAV.1

ITEM	PART NUMBER	QTY	TR CO.	DESCRIPTION		DESCRIZIONE	
00	71405107	1	130B	ARM-ASS'LY		BRACCIO -COMPL.	
00A	71405115	1	130B	ARM		BRACCIO	
00B	71405109	2	75D	SPACER		DISTANZIALE	
00C	71405117	1	75D	SPACER		DISTANZIALE	
00D	71405116	2	95B	BUSHING		BOCCOLA	
01	71405105	2	156G	O-RING		GUARNIZIONE O-R	
06	71405109	2	75D	SPACER		DISTANZIALE	
08	71405110	4	45A	RING		ANELLO	
09	10100220	4	80P	PIN		PERNO	
				C2523 UP TO S/N 10100220~10100230	0050	C2523 FINO AL TELAIO	0050
	10100230	4	80P	PIN		PERNO	
				D2523 FROM S/N	0051	D2523 DAL TELAIO	0051
11	71405172	2	131R	WASHER-THICK 1mm		ROSETTA-SPESS. 1mm	
27	71405113	1	80P	PIN		PERNO	
28	71405114	1	80P	PIN		PERNO	
29	71405115	1	80P	PIN		PERNO	

FH120

DIPPER STICK (2,5m) BRACCIO PEN. (2,5m)	BALANCIER (2,5m) LOEFFELSTIEL (2,5m) BRAZO TERMINAL (2,5m)	2.003 TAV.1

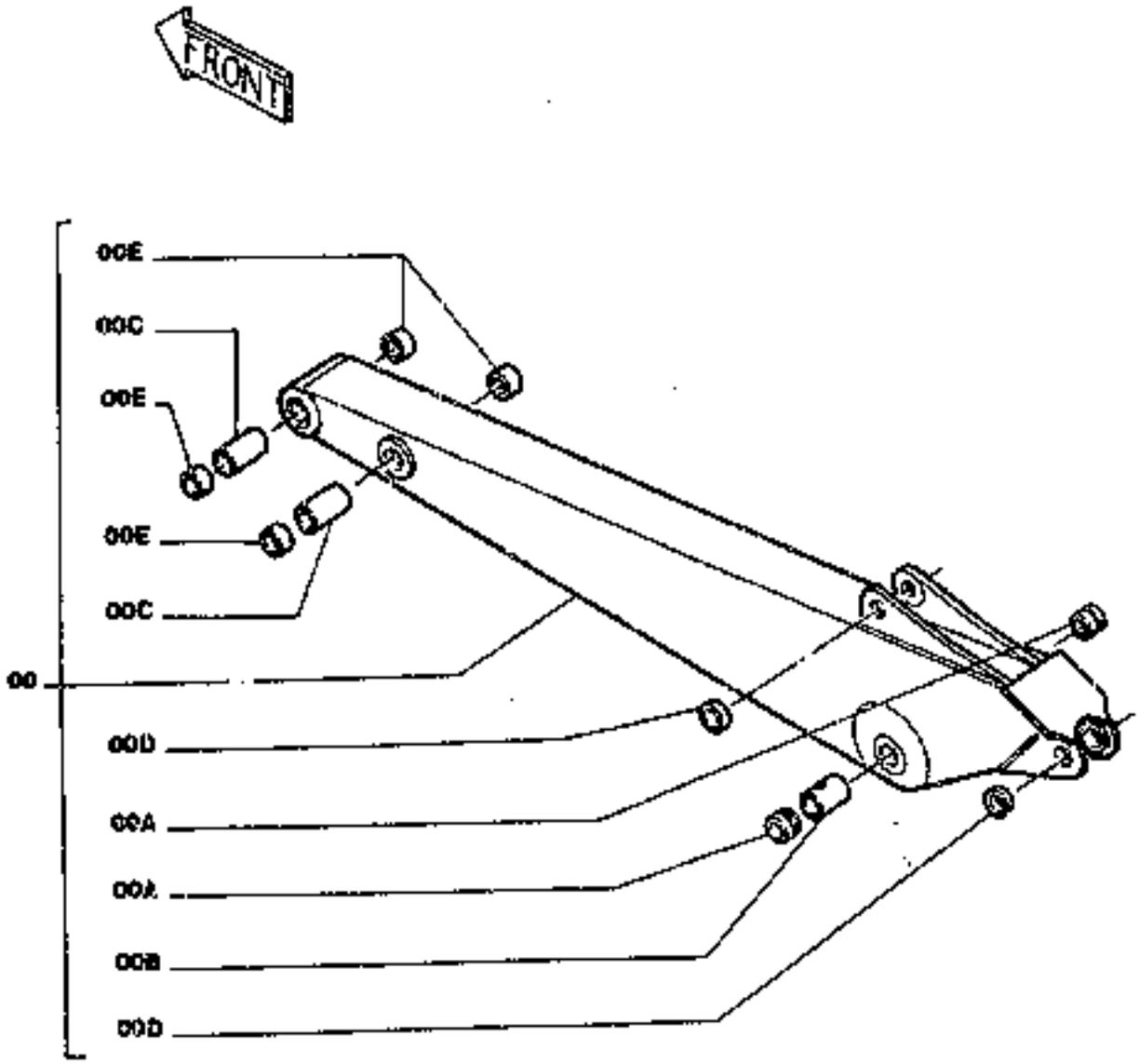

DIPPER STICK (2,5m) BALANCIER (2,5m) 2.003 TAV.1
BRACCIO PENETRAZ. (2,5m) LOEFFELSTIEL (2,5m)
BRAZO TERMINAL (2,5m)

ITEM	PART NUMBER	QTY	TR. CO.	DESCRIPTION	DESCRIZIONE
00	**71405151**	1	130B	ARM -ASS.LY	BRACCIO -COMPL.
00A	**71405174**	2	95B	BUSHING	BOCCOLA
00B	**71405175**	1	75D	SPACER	DISTANZIALE
00C	**71405176**	2	75D	SPACER	DISTANZIALE
00D	**71405109**	2	75D	SPACER -TO BE WELDED	DISTANZIALE -DA SALDARE
00E	**71405150**	4	95B	BUSHING	BOCCOLA

DIPPER STICK (2,5m) LINKS
BRACCIO PEN.(2,5m) LEVER.
BALANCIER N.3 (2,5m)
LOEFFELSTIEL (2,5m)
BRAZO ELEVACION 3 (2,5m)

2.003 TAV.2

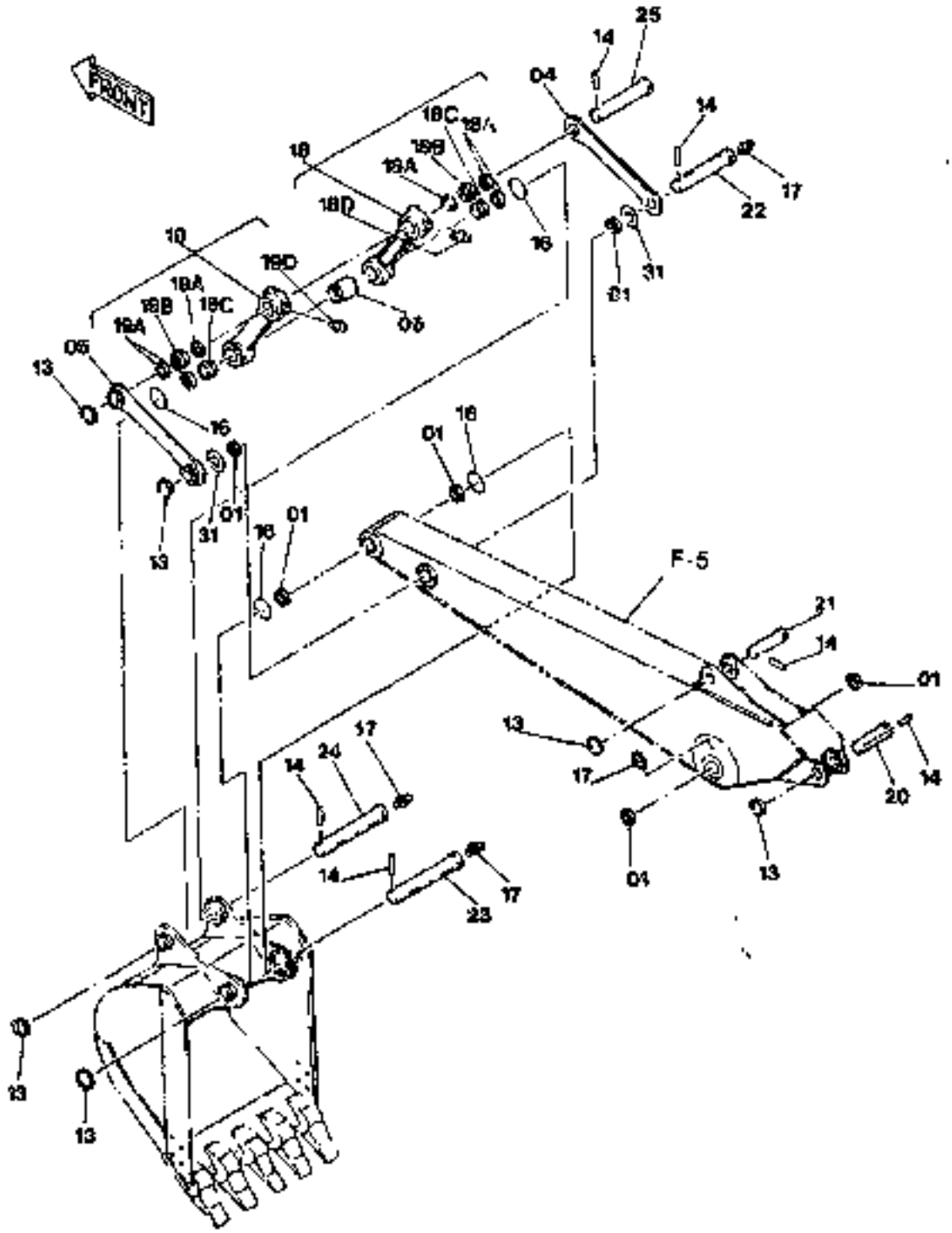

FH120

DIPPER STICK (2,5m) LINKS
BRACCIO PEN.(2,5m) LEVER.
BALANCIER N.3 (2,5m)
LOEFFELSTIEL (2,5m)
BRAZO E'LEVACION 3 (2,5m)

2.003 TAV.2

ITEM	PART NUMBER	QTY	TR. CO.	DESCRIPTION	DESCRIZIONE
01	71405108	6	122G	SEAL	GUARNIZIONE
04	71405152	1	50B	LINK ROD	BIELLA
05	71405153	1	50B	LINK ROD	BIELLA
06	71405158	1	75D	SPACER	DISTANZIALE
13	71405110	6	45A	RING	ANELLO
14	10100230	6	80P	PIN	PERNO
15	71403155	4	158G	O-RING	GUARNIZIONE O-R
17	13407211	5	60I	GREASE FITTING	INGRASSATORE
18	71405155	1	90A	ROD	ASTA
18A	71405108	3	122G	SEAL	GUARNIZIONE
18B	71405156	1	95B	BUSHING	BOCCOLA
18C	71405159	1	95B	BUSHING	BOCCOLA
18D	13407211	1	60I	GREASE FITTING	INGRASSATORE
19	71405160	1	90A	ROD	ASTA
19A	71405108	3	122G	SEAL	GUARNIZIONE
19B	71405156	1	95B	BUSHING	BOCCOLA
19C	71405159	1	95B	BUSHING	BOCCOLA
19D	13407211	1	60I	GREASE FITTING	INGRASSATORE
20	71405115	1	80P	PIN	PERNO
21	71405163	1	80P	PIN	PERNO
22	71405164	1	80P	PIN	PERNO
23	71405165	1	80P	PIN	PERNO
24	71405166	1	80P	PIN	PERNO
25	71405167	1	80P	PIN	PERNO
31	71405172	2	131R	WASHER	ROSETTA

BUCKET BENNA	GODET LADESCHAUFEL CUCHARA	2.020	TAV.1

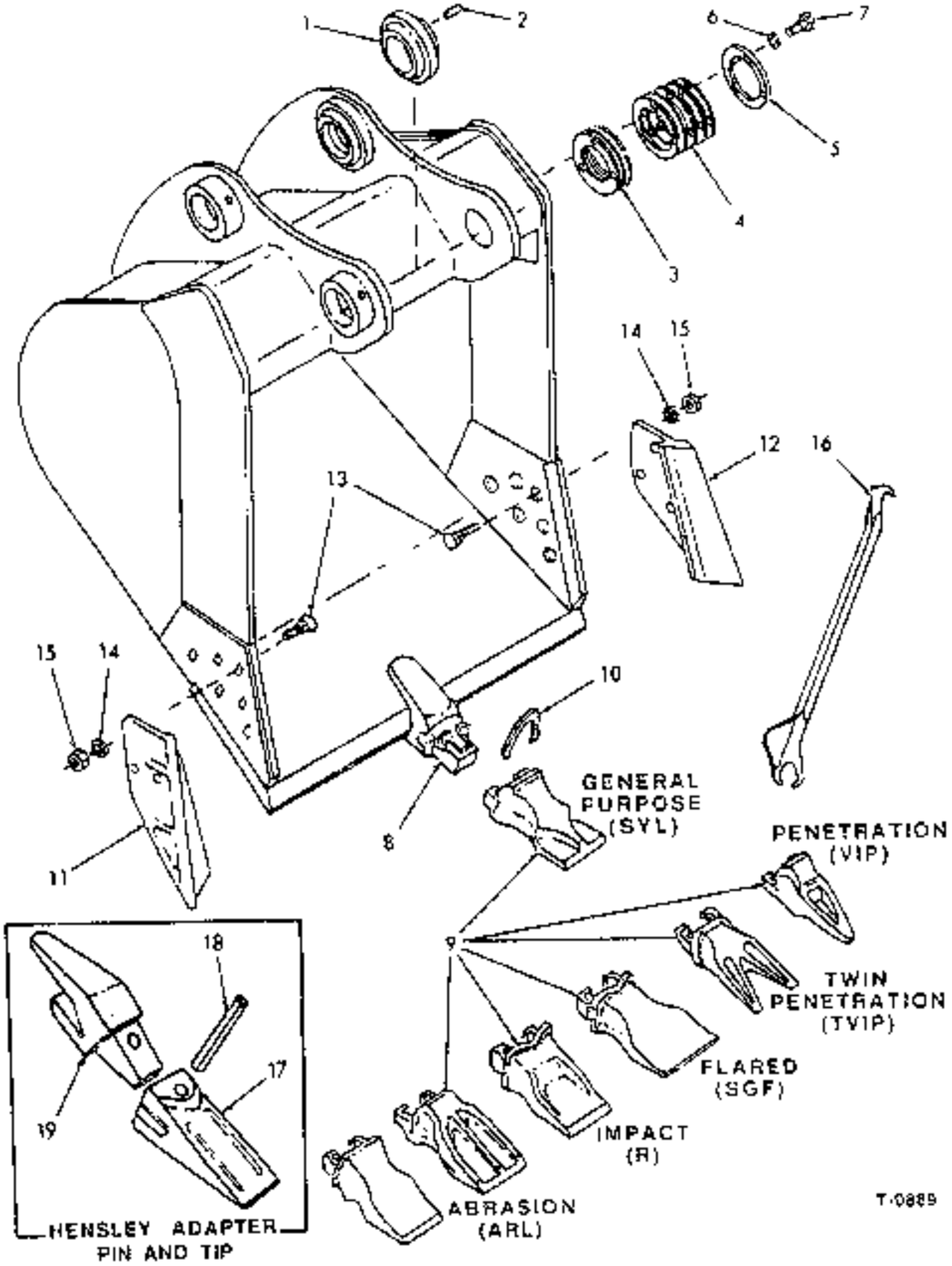

BUCKET
BENNA

GODET
LADESCHAUFEL
CUCHARA

2.020 TAV.1

ITEM	PART NUMBER	QTY	TR. CO.	DESCRIPTION	DESCRIZIONE
-	73158369	1	35B 600L	BUCKET GROUP,GENERAL PURPOSE,.5 CU YD. X 24" INCL ITEMS 00-10	
-	73158357	1	35B 600L	BUCKET GROUP, GENERAL PURPOSE, .64 CU.YD. X 30" INCL ITEMS 00-10	
-	73158371	1	35B 600L	BUCKET GROUP, GENERAL PURPOSE, .78 CU.YD. X 36" INCL ITEMS 00-10	
-	73158373	1	35B 600L	BUCKET GROUP, GENERAL PURPOSE, 1.06 CU.YD. X 48" INCL ITEMS 00-10	
-	73158375	1	35B 600L	BUCKET GROUP, SEVERE SERVICE, .5 CU.YD. X 24" INCL ITEMS 00-10	
-	73158377	1	35B 600L	BUCKET GROUP, SEVERE SERVICE, .64 CU.YD X 30" INCL ITEMS 00-10	
-	73158379	1	35B 600L	BUCKET GROUP, SEVERE SERVICE, .78 CU.YD. X 36" INCL ITEMS 00-10	
00	- - - - - - - -	1	35B 601C	BUCKET NOT SERVICED	
01	71405437	1	75D	SPACER	
02	10338930	1	80P	PIN	
03	71405438	3	198S	SHIM, .5mm	
04	71405439	7	198S	SHIM, 1.0mm	
05	71405440	1	105P	PLATE	
06	10572074	3	170R	LOCKWASHER	
07	11115834	3	40V	CAPSCREW,M14X2X40	
08	a73158483	-	55T 600T	ADAPTOR, GENERAL PURPOSE, 21 SERIES REQUIRES WELDING	
	a73158484	-	55T 600T	ADAPTOR, SEVERE SERVICE, 27 SERIES REQUIRES WELDING	
09	a73156110	-	242P	TIP,TOOTH, GENERAL PURPOSE, STD (21 SYL)	
	a73156111	-	242P	TIP,TOOTH, PENETRATION (21 VIP)	
	a73156112	-	242P	TIP,TOOTH, TWIN PENETRATION (21 TVIP)	
	a73156113	-	242P	TIP,TOOTH, FLARED (21 SSF)	
	a73158500	-	242P	TIP,TOOTH, SEVERE SERVICE, IMPACT, STD (27R)	
	a73158503	-	242P	TIP,TOOTH, SEVERE SERVICE, ABRASION, (27 ARL)	
10	a73156114	-	22B	LOCK (21 LK)	
	a73156121	-	2B	LOCK (27 LK)	
11	73158507	1	199C 600B	EDGE, BUCKET CUTTING RIGHT	
12	73158506	1	199C 600A	EDGE, BUCKET CUTTING LEFT	
13	70933052	6	140B	BOLT, PLOW, 7/8"NCX2-1/2"	
14	70919426	6	170R	LOCKWASHER	
15	70932930	6	10D	NUT,7/8"NC	
16	73156127	1		TOOL	

FH120

BUCKET BENNA	GODET LADESCHAUFEL CUCHARA	2.020 TAV 1 PG2

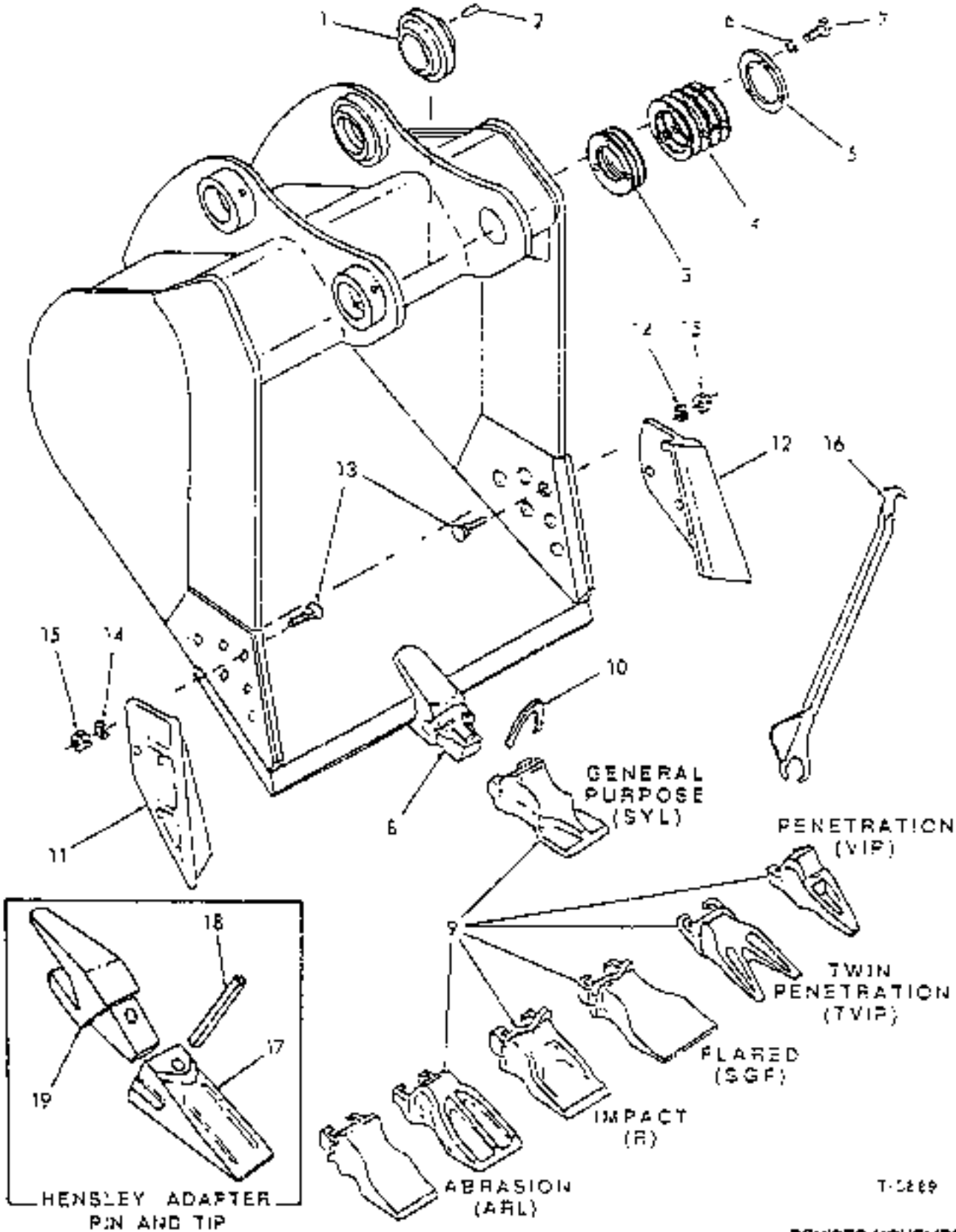

REVISED NOVEMBER 1991

FH120

BUCKET BENNA	GODET LADESCHAUFEL CUCHARA	2.020 TAV 1 PG2

ITEM	PART NUMBER	QTY	TR.	DESCRIPTION	DESCRIZIONE
17	a78100821	-	242P	TIP, TOOTH (HENSLEY X220)	
18	a78100834	-	80P	PIN, (HENSLEY P160)	
19	a73158540	-	55T	ADAPTOR HENSLEY 109 X 220)	
			600T	REQUIRES WELDING	

a. BUCKET SIZE	ADAPTOR, TIP & LOCK QTY.
0.5 CU YD X 24" GP	4
0.64 CU YD X 30" GP	5
0.64 CU YD X 30" SS	4
0.76 CU YD X 36" GP	6
0.78 CU YD X 36" SS	5
1.06 CU YD X 48" GP	8

BOOM PIPING
TUBAZIONI BRACCI

TUYAUTERIES AVANT
LEITUNGEN-VORDER
TUBERIAS ANTERIORES

2.030 TAV.1

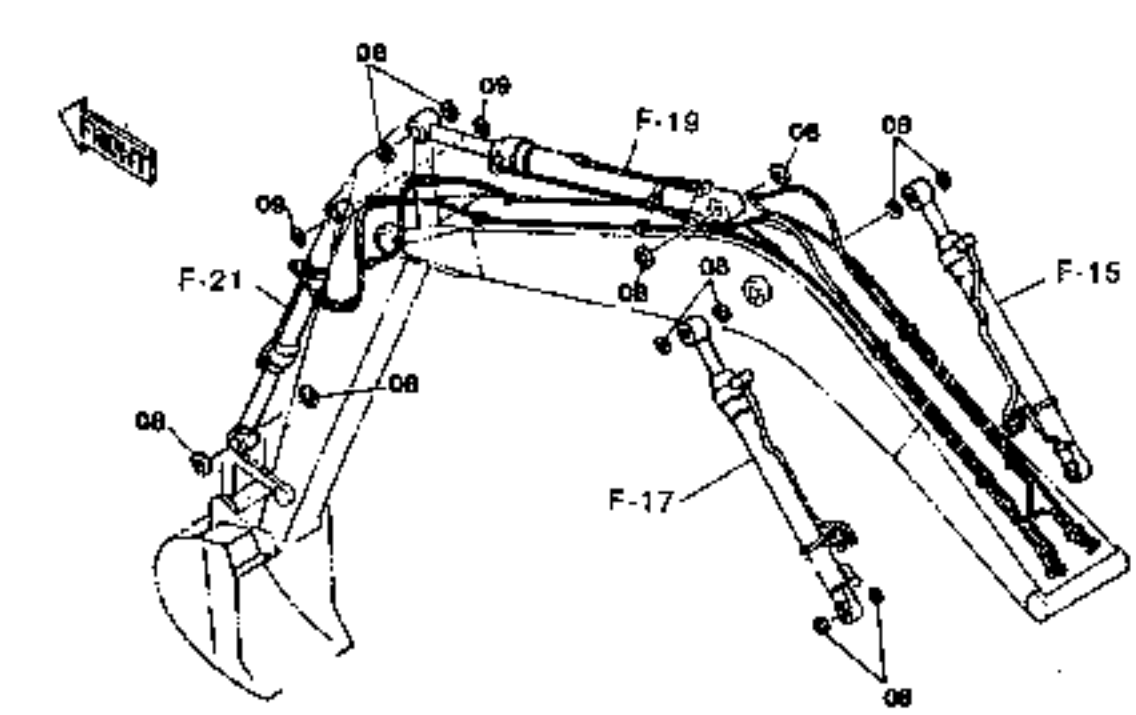

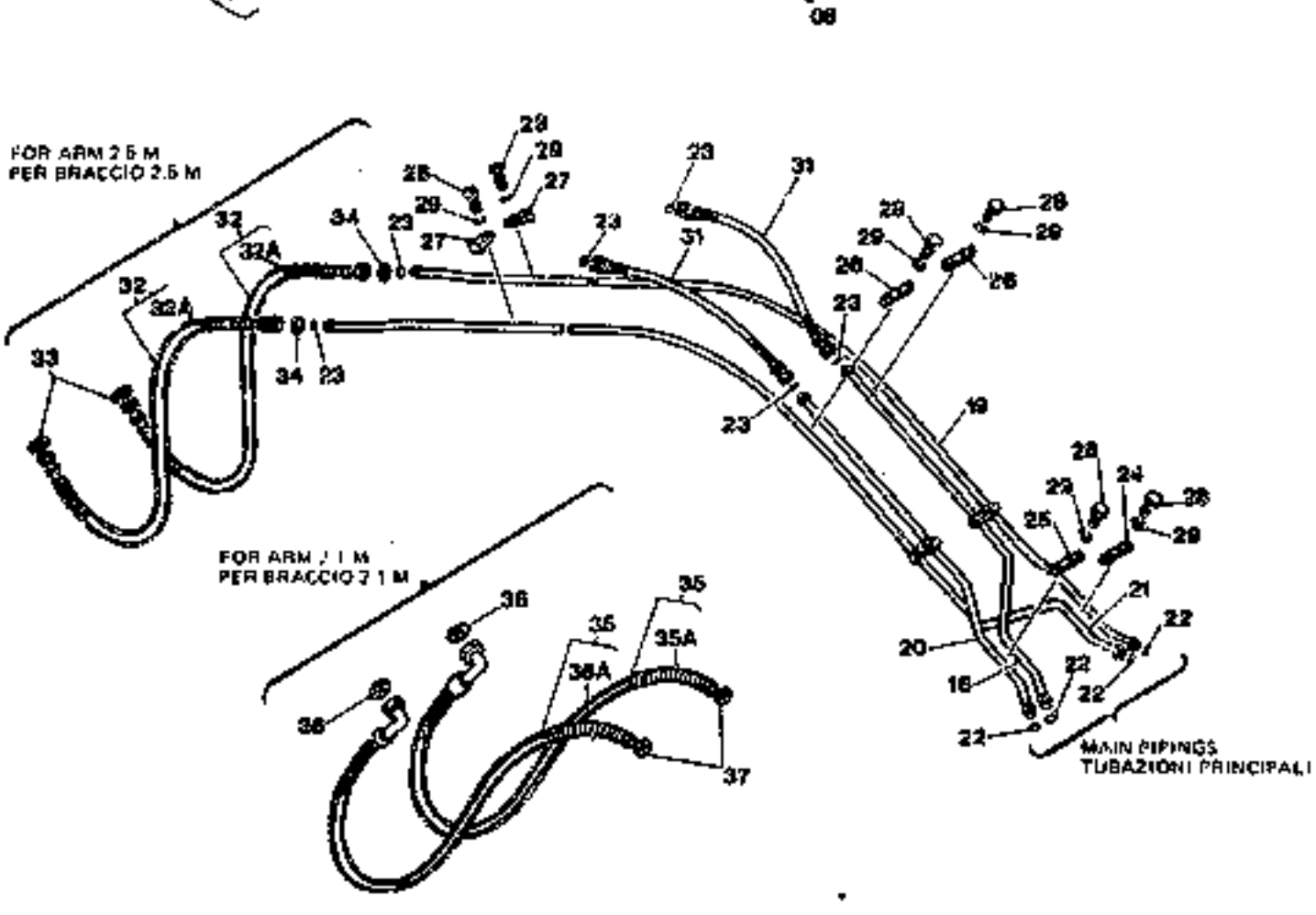

FH120

BOOM PIPING
TUBAZIONI BRACCI

TUYAUTERIES AVANT
LEITUNGEN-VORDER
TUBERIAS ANTERIORES

2.030 TAV.1

ITEM	PART NUMBER	QTY	TR. CO.	DESCRIPTION	DESCRIZIONE
08	71405108	14	122G	SEAL	GUARNIZIONE
09	9203408	2	122G	SEAL	GUARNIZIONE
				C2600 UP TO S/N 0086	C2600 FINO AL TELAIO 0086
	71406236	2	122G	SEAL	GUARNIZIONE
				D2600 FROM S/N 0087	D2600 DAL TELAIO 0087
18	71405863	1	193T	TUBE	TUBO RIGIDO
19	71405865	1	193T	TUBE	TUBO RIGIDO
20	71405867	1	193T	TUBE	TUBO RIGIDO
21	71405869	1	193T	TUBE	TUBO RIGIDO
22	70923841	4	158G	O-RING	GUARNIZIONE O-R
23	70923843	6	158G	O-RING	GUARNIZIONE O-R
24	71405760	1	231S	CLIP	STAFFETTA
25	71416069	1	231S	CLIP	STAFFETTA
26	71405871	4	225S	BRACKET	STAFFA
27	71415855	4	231S	CLIP	STAFFETTA
28	11113234	16	40V	SCREW 12X1,75X50	VITE 12X1,75X50
29	10517074	16	131R	WASHER	ROSETTA
31	71404059	2	285T	HOSE	TUBO FLESSIBILE
32	71404066	2	285T	HOSE	TUBO FLESSIBILE
32A	71404065	2	142G	SHEATH	GUAINA
33	70923841	2	158G	O-RING	GUARNIZIONE O-R
34	71405873	2	131R	WASHER	ROSETTA
35	71404172	2	285T	HOSE	TUBO FLESSIBILE
35A	71404065	2	142G	SHEATH	GUAINA
36	70923841	2	158G	O-RING	GUARNIZIONE O-R
37	71405873	2	131R	WASHER	ROSETTA

LIFT CYLINDER (RIGHT)
CILINDRO SOLLEV. (DESTRO)

VERIN DE RELEVAGE(DROIT)
HUBZYLINDER (RECHTS)
GATO ELEVACION (DERECHO)

2.030 TAV.2

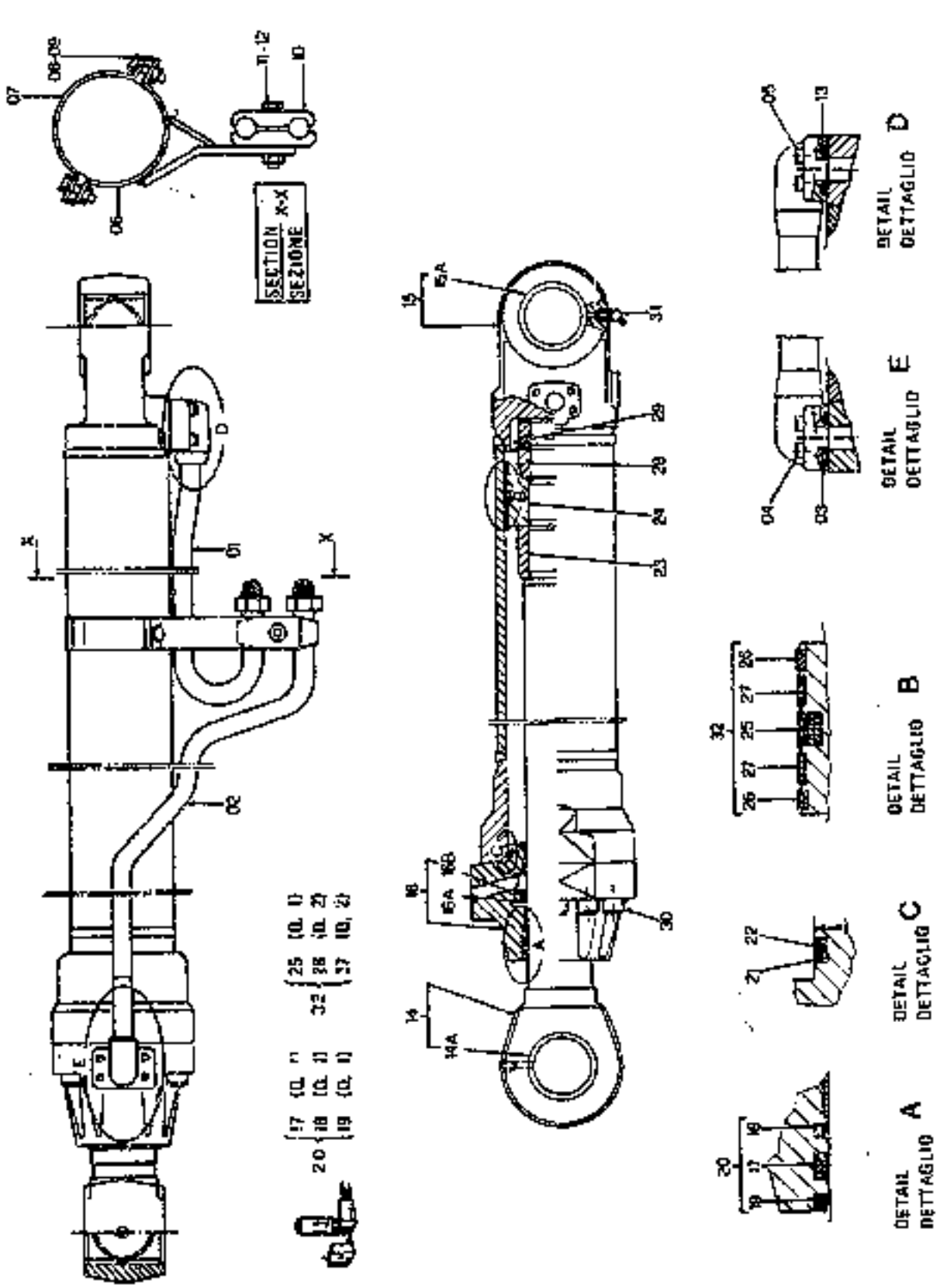

LIFT CYLINDER (RIGHT) — VERIN DE RELEVAGE(DROIT) — HUBZYLINDER (RECHTS) — GATO ELEVACION (DERECHO) — CILINDRO SOLLEV. (DESTRO) — 2.030 TAV.2

ITEM	PART NUMBER	QTY	TR. CO.	DESCRIPTION	DESCRIZIONE
01	71405840	1	193T	TUBE	TUBO RIGIDO
02	71405839	1	193T	TUBE	TUBO RIGIDO
03	70924191	1	158G	O-RING	GUARNIZIONE O-R
04	14306434	4	40V	SCREW 8X1,25X25	VITE 8X1,25X25
05	14420234	4	40V	SCREW 10X1,5X30	VITE 10X1,5X30
06	71405842	1	148	STRAP	BANDELLA
07	71405841	1	148	STRAP	BANDELLA
08	11020634	2	40V	SCREW 10X1,5X45	VITE 10X1,5X45
				D2513 FROM S/N 0051	D2513 DAL TELAIO 0051
	11106434	2	40V	SCREW 10X1,5X30	VITE 10X1,5X30
				C2513 UP TO S/N 0050	C2513 FINO AL TELAIO 0050
09	10516874	2	131R	WASHER	ROSETTA
10	71405845	2	225S	BRACKET	STAFFA
11	11113634	1	40V	SCREW 12X1,75X65	VITE 12X1,75X65
12	10517074	1	131R	WASHER	ROSETTA
13	70924110	1	158G	O-RING	GUARNIZIONE O-R
14-32	71400072	1	164C	CYLINDER -ASS.LY	CILINDRO -COMPL.
14	71400073	1	274S	ROD -ASS.LY	STELO -COMPL.
14A	71400074	1	95B	BUSHING	BOCCOLA
15	71400078	1	53C	TUBE -ASS.LY	CANNA CILINDRO -COMPL.
15A	71400079	1	95B	BUSHING	BOCCOLA
16	71400065	1	132F	HEAD -ASS.LY	FONDELLO ANT. -COMPL.
16A	71400067	1	95B	BUSHING	BOCCOLA
16B	71400068	1	187A	SNAP RING	ANELLO ELASTICO
17	71400085	1	122G	SEAL -K. 71400089	GUARNIZIONE -K. 71400089
18	71400086	1	45A	RING -K. 71400089	ANELLO -K. 71400089
19	71400084	1	45A	RING -K. 71400089	ANELLO -K. 71400089
20	71400088	1	K1	KIT-LIFT RIGHT CYL. SEALS FOR COMPONENTS, SEE A-21	KIT-GUARN.CILINDRO SOLL.DX VED. COMPONENTI PAG.
21	71400090	1	45A	RING	ANELLO
22	14472680	1	158G	O-RING	GUARNIZIONE O-R
23	71400093	1	95B	BUSHING	BOCCOLA
24	71400091	1	235S	PISTON	STANTUFFO
25	71400028	1	122G	SEAL -K. 71400092	GUARNIZIONE -K. 71400092
26	71400030	2	45A	RING -K. 71400092	ANELLO -K. 71400092
27	71400029	2	45A	RING -K. 71400092	ANELLO -K. 71400092
25	71400094	1	10D	NUT	DADO
29	71400070	1	90G	DOWEL	GRANO
30	14426631	6	40V	SCREW 16X2X60	VITE 16X2X60
31	13407811	1	82	GREASE FITTING	INGRASSATORE
32	71400092		K1	KIT-LIFT RIGHT CYL. SEALS FOR COMPONENTS, SEE A-21	KIT-GUARN.CILINDRO SOLL.DX VED. COMPONENTI PAG.

FH120

LIFT CYLINDER (LEFT) CILINDRO SOLLEV. (SIN.)	VERIN DE RELEVAGE(GAUCHE) HUBZYLINDER(LINK) GATO ELEVACION(IZQUIERDO)	2.030 TAV.3

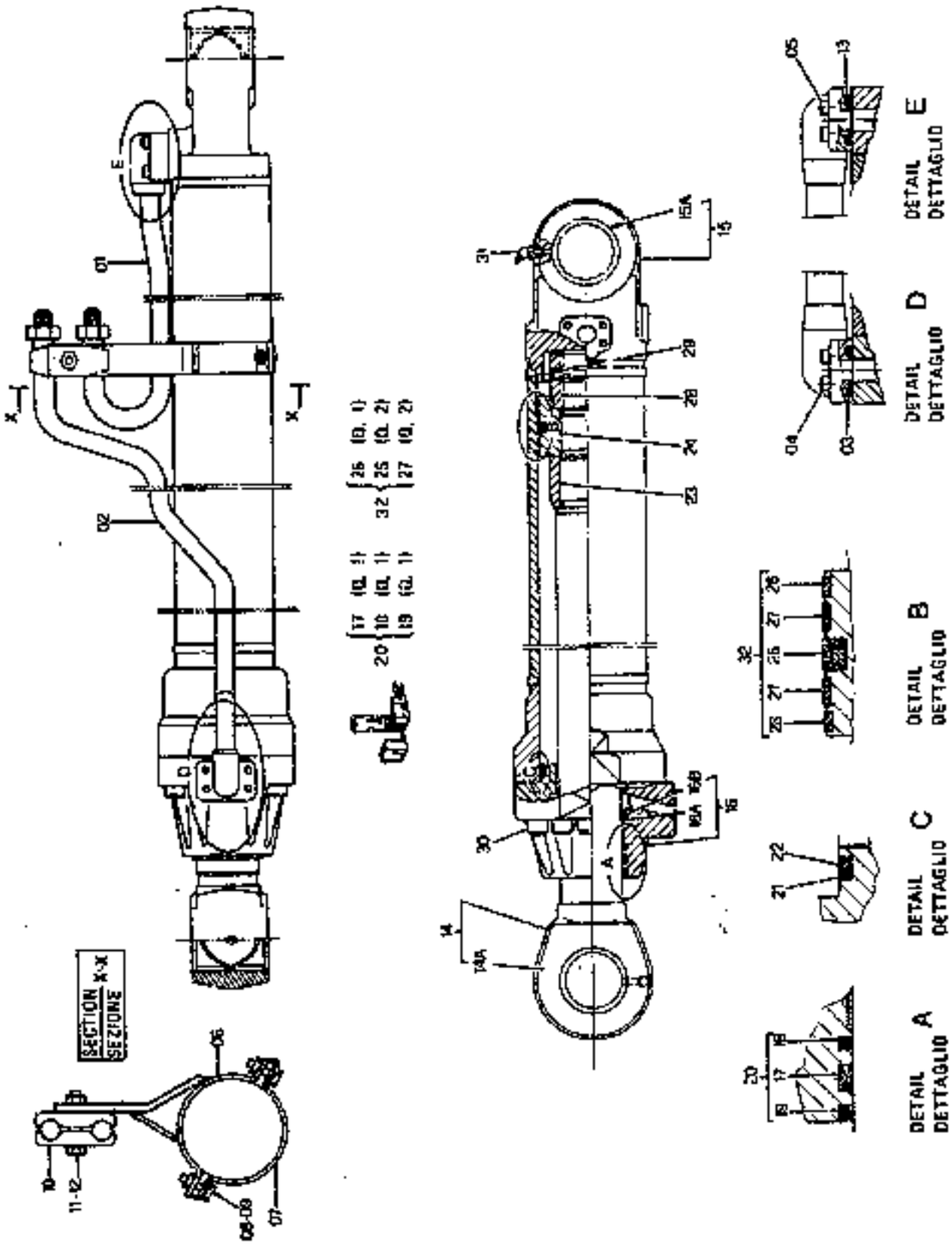

F9120

LIFT CYLINDER (LEFT) — VERIN DE RELEVAGE(GAUCHE) — 2.020 TAV.3
CILINDRO SOLLEV. (SIN.) — HUBZYLINDER(LINK)
GATO ELEVACION(IZQUIERDC)

ITEM	PART NUMBER	QTY	TR. CO.	DESCRIPTION	DESCRIZIONE
01	71405845	1	193T	TUBE	TUBO RIGIDO
02	71405848	1	193T	TUBE	TUBO RIGIDO
03	709/4101	1	156G	O-RING	GUARNIZIONE O-R
04	143-0434	4	40V	SCREW 8X1,25X25	VITE 8X1,25X25
05	14420234	4	40V	SCREW 10X1,5X30	VITE 10X1,5X30
06	71405842	1	14B	STRAP	BANDELLA
07	71405841	1	14B	STRAP	BANDELLA
08	11066634	2	40V	SCREW 10X1,5X45	VITE 10X1,5X45
				D2513 FROM S/N 0051	D2513 DAL TELAIO 0051
	11106434	2	40V	SCREW 10X1,5X30	VITE 10X1,5X30
				C2513 UP TO S/N 0050	C2513 FINO AL TELAIO 0050
09	10516874	2	131R	WASHER	ROSETTA
10	71405845	2	225S	BRACKET	STAFFA
11	11113934	1	40V	SCREW 12X1,75X65	VITE 12X1,75X65
12	10517074	1	131R	WASHER	ROSETTA
13	70824110	1	156G	O-RING	GUARNIZIONE O-R
14-32	71400046	1	164C	CYLINDER -ASS.LY	CILINDRO -COMPL.
14	71400073	1	274S	ROD -ASS.LY	STELO -COMPL.
14A	71400074	1	95B	BUSHING	BOCCOLA
15	71400047	1	63C	TUBE -ASS.LY	CANNA CILINDRO -COMPL.
15A	71400079	1	95B	BUSHING	BOCCOLA
16	71400085	1	132F	HEAD -ASS.LY	FONDELLO ANT. -COMPL.
16A	71400087	1	95B	BUSHING	BOCCOLA
16B	71400088	1	187A	SNAP RING	ANELLO ELASTICO
17	71400005	1	122G	SEAL -K. 71400089	GUARNIZIONE -K. 71400089
18	71400006	1	45A	RING -K. 71400089	ANELLO -K. 71400089
19	71400004	1	45A	RING -K. 71400089	ANELLO -K. 71400089
20	71400089	1	K2	LIFT LEFT CYL. SEAL KIT	KIT GUARN.CILINDRO SOLL.SX
				FOR COMPONENTS, SEE A - 21	VED. COMPONENTI PAG.
21	71400090	1	45A	RING	ANELLO
22	14472680	1	156G	O-RING	GUARNIZIONE O-R
23	71400093	1	95B	BUSHING	BOCCOLA
24	71400091	1	285S	PISTON	STANTUFFO
25	71400028	1	122G	SEAL -K. 71400092	GUARNIZIONE -K. 71400092
26	71400030	2	45A	RING -K. 71400092	ANELLO -K. 71400092
27	71400029	2	45A	RING -K. 71400092	ANELLO -K. 71400092
28	71400094	1	10D	NUT	DADO
29	71400070	1	90G	DOWEL	GRANO
30	14426631	8	40V	SCREW 16X2X50	VITE 16X2X50
31	13407611	1	80I	GREASE FITTING	INGRASSATORE
32	71400092	1	K2	LIFT LEFT CYL. SEAL KIT	KIT GUARN.CILINDRO SOLL.SX
				FOR COMPONENTS, SEE A - 21	VED. COMPONENTI PAG.

DIPPER STICK CYLINDER CILINDRO PENETRAZIONE	VERIN D'ENFONCEMENT LOEFFELSTIELZYLINDER GATO DE PENETRACION	2.030 TAV.4

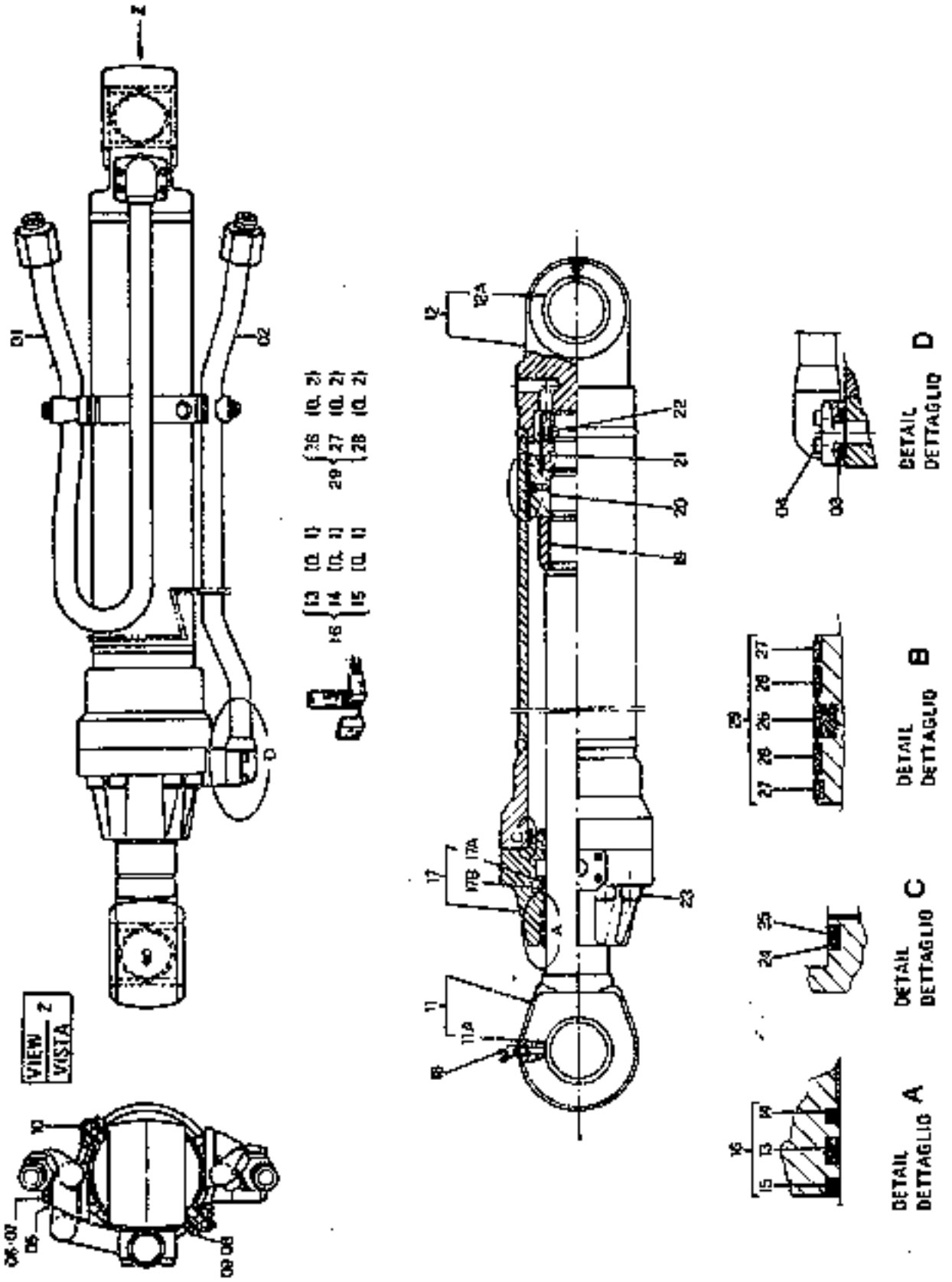

FH120

DIPPER STICK CYLINDER
CILINDRO PENETRAZIONE

VERIN D'ENFONCEMENT
LOEFFELSTIELZYLINDER
GATO DE PENETRACION

2.038 TAV.4

ITEM	PART NUMBER	QTY	TR. CO.	DESCRIPTION	DESCRIZIONE
01	71405849	1	193T	TUBE	TUBO RIGIDO
02	71405851	1	193T	TUBE	TUBO RIGIDO
03	70624110	2	156G	O-RING	GUARNIZIONE O-R
04	14420154	8	40V	SCREW 10X1,5X25	VITE 10X1,5X35
05	71416090	2	225S	BRACKET	STAFFA
06	11113234	2	40V	SCREW 12X1,75X50	VITE 12X1,75X50
				D2513 FROM S/N 0051	D2513 DAL TELAIO 0051
	11113334	2	40V	SCREW 12X1,75X55	VITE 12X1,75X55
				C2513 UP TO S/N 0050	C2513 FINO AL TELAIO 0050
07	10517074	2	131R	WASHER	ROSETTA
08	11106834	2	40V	SCREW M10X1,5X35	VITE M10X1,5X35
09	10571874	2	131R	WASHER	ROSETTA
10	71405853	2	14B	STRAP	BANDELLA
11-29	71400095	1	164C	CYLINDER -ASS.LY	CILINDRO -COMPL.
11	71400096	1	274S	ROD -ASS.LY	STELO -COMPL.
11A	71400074	1	95B	BUSHING	BOCCOLA
12	71400100	1	53C	TUBE -ASS.LY	CANNA CILINDRO -COMPL.
				C2511 UP TO CYLINDER 8G16/1988	C2511 FINO AL CILIN. 8G16/1988
	71400387	1	53C	TUBE	CANNA CILINDRO
				D2511 FROM CYLINDER 8G17/1988	D2511 DAL CILINDRO 8G17/1988
12A	71400074	1	95B	BUSHING	BOCCOLA
13	71400006	1	122G	SEAL -K. 71400106	GUARNIZIONE -K. 71400106
14	71400007	1	45A	RING -K. 71400106	ANELLO -K. 71400106
15	71400009	1	45A	RING -K. 71400106	ANELLO -K. 71400106
16	71400106	1	K3	KIT-DIPPER CYL. SEALS	KIT-GUARN. CILIN. PENETRAZIONE
17	71400107	1	132F	HEAD	FONDELLO ANT.
17A	71400110	1	187A	SNAP RING	ANELLO ELASTICO
17B	71400109	1	95B	BUSHING	BOCCOLA
18	13407211	1	60I	GREASE FITTING	INGRASSATORE
				C2512 UP TO S/N 0055	C2512 FINO AL TELAIO 0055
	13407811	1	60I	GREASE FITTING	INGRASSATORE
				D2512 FROM S/N 0056	D2512 DAL TELAIO 0056
19	71400111	1	95B	BUSHING	BOCCOLA
20	71400112	1	235S	PISTON	STANTUFFO
21	71400113	1	10D	NUT	DADO
22	71400114	1	90G	DOWEL	GRANO
23	71400551	8	40V	SCREW 16X2,5X65	VITE 16X2,5X65
				D2511 FROM CYLINDER 8G17/1988	D2511 DAL CILINDRO 8G17/1988
	71405098	8	40V	SCREW 16X2X60	VITE 16X2X60
				C2511 UP TO CYLINDER 8G16/1988	C2511 FINO AL CILIN. 8G16/1988
24	71400115	1	45A	RING	ANELLO
25	14472980	1	156G	O-RING	GUARNIZIONE O-R
26	71400031	1	122G	SEAL -K. 71400116	GUARNIZIONE -K. 71400116
27	71400033	2	45A	RING -K. 71400116	ANELLO -K. 71400116
28	71400032	2	45A	RING -K. 71400116	ANELLO -K. 71400116
29	71400116	1	K3	KIT-DIPPER CYL. SEALS	KIT-GUARN. CILIN. PENETRAZIONE
				FOR COMPONENTS, SEE A - 21	VED. COMPONENTI PAG.

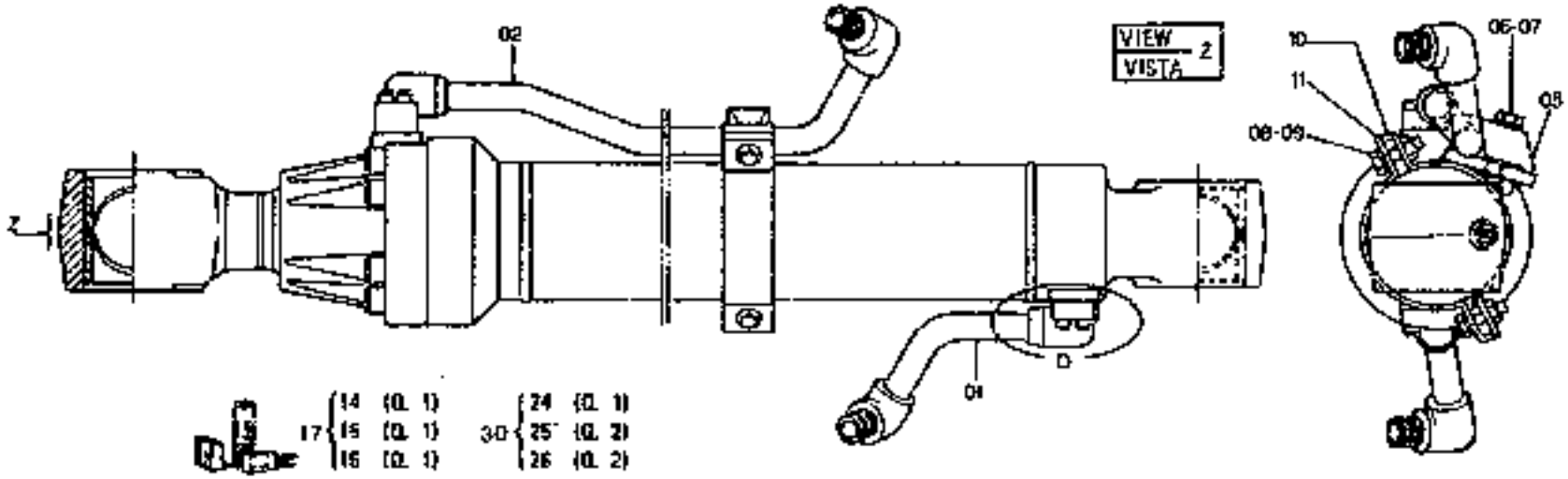

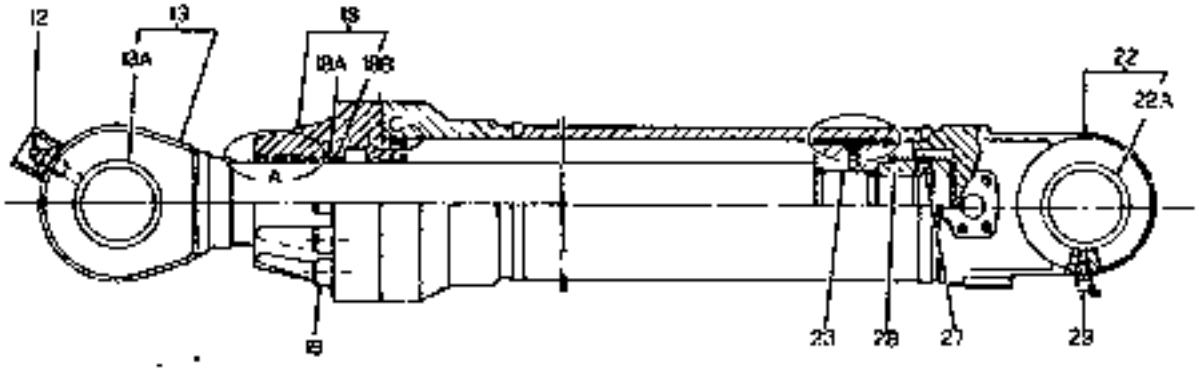



DETAIL A
DETTAGLIO



DETAIL C
DETTAGLIO

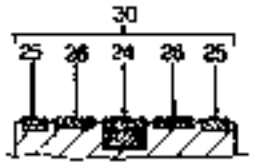

DETAIL B
DETTAGLIO



DETAIL D
DETTAGLIO

FH120

BUCKET CYLINDER CILINDRO BENNA	CYLINDRE DE GODET LOEFFELKIPPZYLINDER GATO DE CUCHARA	2.030 TAV.5

ITEM	PART NUMBER	QTY	TR. CO.	DESCRIPTION	DESCRIZIONE
01	71405855	1	193T	TUBE	TUBO RIGIDO
02	71405857	1	193T	TUBE	TUBO RIGIDO
03	70924191	2	158G	O-RING	GUARNIZIONE O-R
04	14305434	6	40V	SCREW 8X1,25X25	VITE 8X1,25X25
05	71405856	1	225S	BRACKET	STAFFA
06	11113034	1	40V	SCREW 12X1,75X45	VITE 12X1,75X45
				C2513 UP TO S/N 0050	C2513 FINO AL TELAIO 0050
	11113234	1	40V	SCREW 12X1,75X50	VITE 12X1,75X50
				D2513 FROM S/N 0051	D2513 DAL TELAIO 0051
07	10517074	1	131R	WASHER	ROSETTA
08	11106634	4	40V	SCREW M10X1,5X35	VITE M10X1,5X35
				C2513 UP TO S/N 0050	C2513 FINO AL TELAIO 0050
	11106834	2	40V	SCREW 10X1,5X40	VITE 10X1,5X40
				D2513 FROM S/N 0051	D2513 DAL TELAIO 0051
09	10516874	2	131R	WASHER	ROSETTA
10	71405900	1	14B	STRAP	BANDELLA
11	71405861	1	14B	STRAP	BANDELLA
12-30	71400049	1	164G	CYLINDER -ASS.LY	CILINDRO -COMPL.
12	13407211	1	60I	GREASE FITTING	INGRASSATORE
13	71400050	1	274S	ROD -ASS.LY	STELO -COMPL.
13A	71400074	1	95B	BUSHING	BOCCOLA
14	71400052	1	122G	SEAL -K. 71400056	GUARNIZIONE -K. 71400056
15	71400053	1	45A	RING -K. 71400056	ANELLO -K. 71400056
16	71400051	1	45A	RING -K. 71400056	ANELLO -K. 71400056
17	71400056	1	K4	KIT-BUCKET CYL. SEALS FOR COMPONENTS, SEE A-21	KIT-GUARN. CILIN. BENNA VED. COMPONENTI PAG.
18	71400057	1	132F	HEAD -ASS.LY	FONDELLO ANT. -COMPL.
18A	71400058	1	95B	BUSHING	BOCCOLA
18B	4871843	1	45A	RING	ANELLO
19	14426631	8	40V	SCREW 16X2X60	VITE 16X2X60
20	71400060	1	45A	RING	ANELLO
21	14472380	1	158G	O-RING	GUARNIZIONE O-R
22	71400061	1	53C	TUBE -ASS.LY	CANNA CILINDRO -COMPL.
22A	71400063	1	95D	BUSHING	BOCCOLA
23	71400059	1	235S	PISTON	STANTUFFO
24	71400025	1	122G	SEAL -K. 71400069	GUARNIZIONE -K. 71400069
25	71400027	2	45A	RING -K. 71400069	ANELLO -K. 71400069
26	71400026	2	45A	RING -K. 71400069	ANELLO -K. 71400069
27	71400070	1	80S	DOWEL	GRANO
28	71400071	1	10D	NUT	DADO
29	13407911	1	60I	GREASE FITTING	INGRASSATORE
30	71400068	1	K4	KIT-BUCKET CYL. SEALS FOR COMPONENTS, SEE A-21	KIT-GUARN. CILIN. BENNA VED. COMPONENTI PAG.

LUBRIC. FITTING PIPING TUBAZIONI INGRASSATORI	TUYAUTERIES DE GRAISSEURS LEITUNGEN-SCHMIERNIPPLER RUBERIAS DE ENGRASADORES	2.040 TAV.1

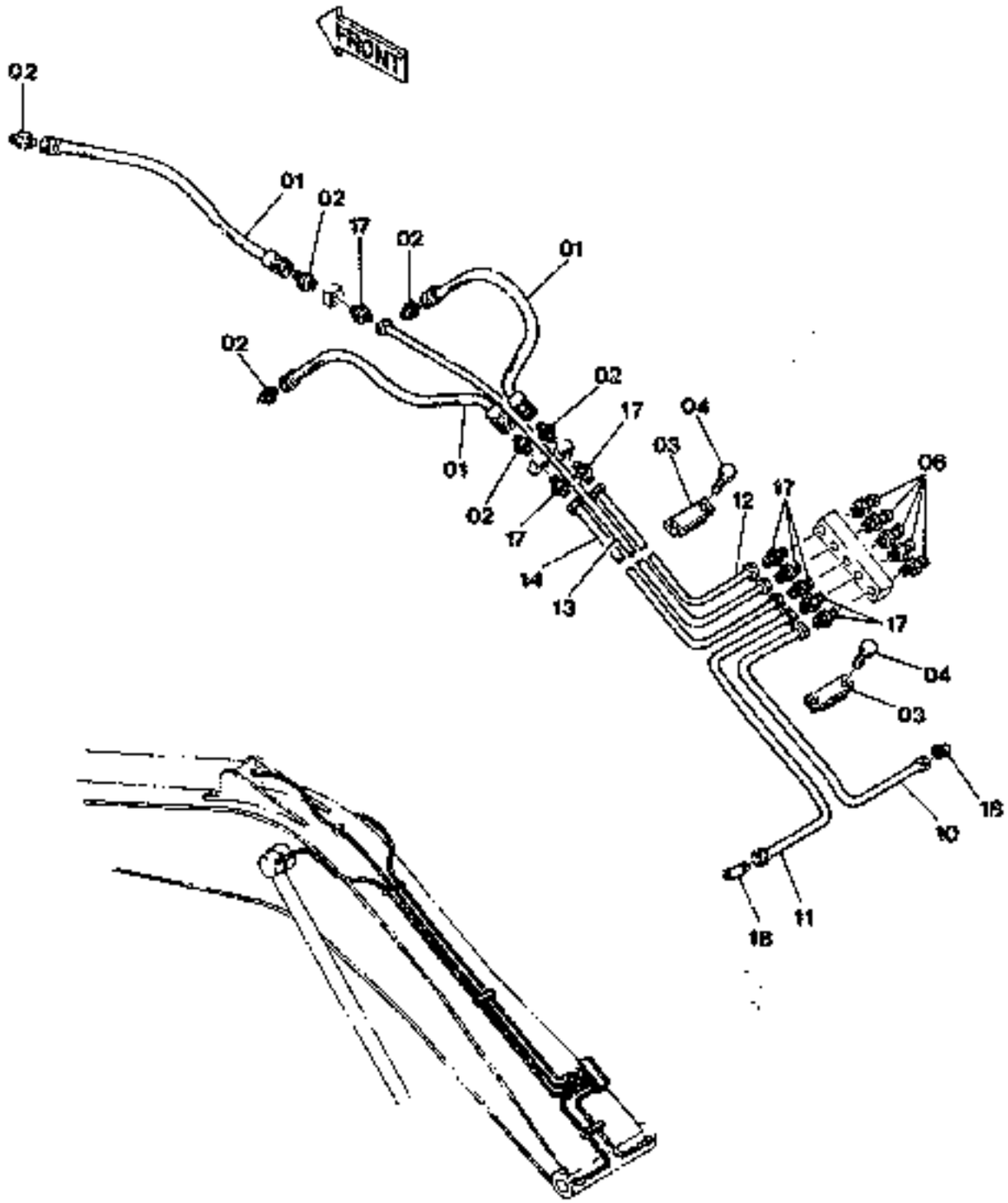

LUBRIC. FITTING PIPING
TUBAZIONI INGRASSATORI

TUYAUTERIES DE GRAISSEURS
LEITUNGEN-SCHMIERNIPPLER
RUBERIAS DE ENGRASADORES

2.040 TAV.1

ITEM	PART NUMBER	QTY	TR. CO.	DESCRIPTION	DESCRIZIONE
01	71404008	3	265T	HOSE	TUBO FLESSIBILE
02	71404363	6	20R	FITTING	RACCORDO
03	71415920	2	231S	CLIP	STAFFETTA
04	11106434	4	40V	SCREW 10X1,5X30	VITE 10X1,5X30
05	13407211	5	60I	GREASE FITTING	INGRASSATORE
10	71405778	1	193T	TUBE	TUBO RIGIDO
11	71405780	1	193T	TUBE	TUBO RIGIDO
12	71405782	1	193T	TUBE	TUBO RIGIDO
13	71405784	1	193T	TUBE	TUBO RIGIDO
14	71405786	1	193T	TUBE	TUBO RIGIDO
17	71404364	8	20R	FITTING	RACCORDO
18	71404384	2	20R	FITTING	RACCORDO

ALPHABETICAL INDEX

DESCRIPTION	SGR.	TAV.	GRID
Accelerator controls	0.004	1	1C-23
Air Cleaner	0.001	1	1C-13
Alternator-Mounting	0.400	1	1H-9
Alternator (55 amp)	0.400	2	1H-11
Alternator (35 amp)	0.400	3	1H-13
Anti-Shock Valve (Hydr.)	1.082	9	1L-3
Application of Ol. Hammer	5.0020	2	2H-13
Batteries	1.220	4	2D-19
Belts	0.340	1	1G-21
	0.345	1	1G-23
Boom Piping	2.030	1	2F-13
Brake Valve Components	3.010	4	2G-11
Bucket	2.020	1	2F-9
Bucket Cylinder	2.030	5	2F-21
Bull Gear	3.000	1	2G-3
Cab	1.250	1	2D-19
Cab Door	1.250	5	2E-7
Cab Heater-Components	1.290	2	2E-15
Cab Window-Left Side	1.250	6	2E-9
Cab-Frame	1.250	7	2E-11
Cab-Platform	1.250	1	2D-21
Camshall	0.120	1	1E-19
Check Valve	1.091	2	1K-17
Cold Starting Aid	5.0025	1	2H-19
Connecting Rod	0.081	1	1E-10
Cont. Valve-Hydr. (Ass.Y)	1.050	1	1J-13
Control Valve-Hydr.	1.050	2	1J-17
	1.050	3	1J-19
	1.050	4	1J-21
	1.050	5	1J-23
Controls	1.070	1	1K-5
Counterweight	1.000	1	1I-3
Coverings	1.300	1	2E-19
	1.300	2	2E-21
Crankshaft	0.080	1	1E-7
Crankshaft Pulley	0.084	1	1E-15
Cylinder Block	0.040	1	1D-5
	0.040	2	1D-7
	0.040	3	1D-9
Cylinder Block Covers	0.043	1	1D-13
	0.043	2	1D-15
Cylinder Head	0.060	1	1D-21
	0.060	2	1D-23
Dashboard (Left)	1.210	1	2D-9
Dashboard (Right)	1.200	1	2D-3
	1.200	3	2D-7
Data Monitor	1.200	2	2D-5
Decals	4.500	1	2H-9
Dipper Stick (2,1m)	5.0022	1	2H-15
Dipper Stick (2,5m) (STD.)	2.003	1	2F-5
Dipper Stick(2,5m)Links(Std.)	2.003	2	2F-7
Dipper Stick (3m)	5.0038	1	2H-21
	5.0038	2	2H-23
Dipper Stick cylinder	2.030	4	2F-19
Dipstick-Engine Oil	0.305	2	1G-7
Discharge Valve	1.040	4	1J-3
Discharge Valve Componen.	3.010	5	2G-13
Drive on Engine (Opt.)	0.350	1	1H-3
Electric System	1.220	2	2D-13
Elements-Engine Oil	0.001	1	1C-13
Elements-fuel	0.200	1	1F-11
Elements-Hydraulic	1.020	1	1E-19
Elements-Pilot	1.080	1	1K-11
Emergency Kits	4.000	1	2H-7
Engine	0.021	1	1D-3
Engine-Controls	0.004	1	1C-23
Engine-Suspensions	0.000	1	1C-11
Engine Breather	0.045	1	1D-17
	0.045	1A	1D-19
Engine Cooling Piping	0.323	1	1G-17
Engine Heat Exchanger	0.310	1	1G-9
	0.310	2	1G-11
Engine Lifting Eyes	0.450	1	1H-15
Engine Oil Filter	0.302	1	1G-3
Engine Oil Piping	0.305	1	1G-5
Engine Oil Pump	0.300	1	1F-23
Engine Oil Sump	0.042	1	1D-11
Engine Piston	0.082	1	1E-11
Engine Suspensions	0.000	1	1C-11
Exhaust Manifold	0.077	1	1E-5
Exhaust Valve	0.060	2	1D-23
Fan	0.345	1	1G-23
Fan Drive	0.345	1	1G-23
"Filter Care" Kit	21		1A-23
Filter-Pilot System	1.080	1	1K-11
Filters-Air	0.001	1	1C-13
Filters-Engine Oil	0.302	1	1G-3
Filters-Fuel	0.200	1	1F-11
Filters-Hydr. System	1.020	1	1I-7
Flywheel-Engine	0.083	1	1E-13
Fuel Filter	0.200	1	1F-11
Fuel Piping	0.203	1	1F-15
Fuel Pump	0.201	1	1F-13
Fuel Tank	1.010	1	1I-5
Fuses	1.200	3	2D-7
Guards	1.300	2	2E-21
Handle	1.300	3	2E-23
Heater	1.290	1	2E-15
Horn	1.220	2	2D-15
Hyd.Pump Drive	1.030	7	1I-21
Hyd.Pump Regulator Valve	1.030	6	1I-19
Hyd.Pump Regulator-Cover	1.030	4	1I-15
	1.030	5	1I-17
Hydr.Pump-Components	1.030	2	1I-11
Hydr.Pump Regulator-Comp.	1.030	3	1I-13

ALPHABETICAL INDEX

DESCRIPTION	SGR.	TAV.	GRID
Hydraulic Pump	1.030	1	1I-9
Idler	3.020	1	1G-15
Injection Nozzle-Lines	0.149	1	1F-9
Injection Pump	0.140	2	1E-23
	0.140	3	1F-3
	0.140	4	1F-5
	0.140	5	1F-7
Injection Pump-Piping	0.140	1	1E-21
Intake Manifold	0.071	1	1E-3
Intake Valve	0.060	2	1D-21
Lift Cylinder (Left)	2.030	3	1F-17
Lift Cylinder (Right)	2.030	2	2F-15
Lights	1.220	2	2D-15
Lower Frame	3.000	1	2G-3
Lubric. Fitting Piping	2.040	1	2F-23
Main Piping	1.060	1	1K-3
Mirror (Rear)	1.300	2	2E-21
Monobloc Boom	2.000	1	2F-3
Motor - Starter	0.360	2	1H-7
Motor - Swing	1.040	1	1J-3
Motor - Travel	3.010	1	12G-5
Motor - Wiper	1.220	1	2D-13
Muffler	0.002	1	1C-15
Oil Tank	1.020	1	1I-7
Operator's Seat	1.250	2	2D-23
OperatorsSeat(Bostrom)(Std.)	5.0151	1	2I-3
Pilot Gear Pump	1.030	8	1I-23
Pilot Piping(1)	1.080	1	1K-11
Pilot Piping(2)	1.081	1	1K-15
Pilot Piping(3)	1.082	1	1K-19
Pilot Piping (4)	1.083	1	1L-5
Pilot Piping (5)	1.084	1	1L-7
Pilot Valve	1.070	3	1K-9
Pilot Valve-components	1.070	2	1K-7
Pipin-Boom	2.030	1	2F-13
Piping-Engine Oil	0.350	1	1H-3
Piping-Injection	0.149	1	1F-9
Piping-Lube Fittings	2.040	1	2G-23
Piping-Main	1.060	1	1K-3
Piping-Pilot(1)	1.080	1	1K-11
Piping-Pilot(3)	1.082	1	1K-19
Piping-Pilot(4)	1.083	1	1L-5
Piping-Pilot(5)	1.084	1	1L-7
Piping-Pump Contr. Valve	1.050	1	1J-13
Piping-Travel (Lower)	3.070	1	2H-5
Piping-Turbocharger	0.241	1	1F-21
Pump-Engine Oil	0.300	1	1F-23
Pump-Fuel	0.201	1	1F-13
Pump-Hydraulic	1.030	1	1I-9
Pump-Injection	0.140	1	1E-21
Pump-Pilot	1.030	8	1I-23
Pump-Water	0.320	1	1G-13
Pump/Control Valve Piping	1.050	1	1J-13
Radiator	0.003	1	1C-17
Radiator-Components	0.003	2	1C-19
	0.003	3	1C-21
Rocker Arm	0.060	2	1D-23
Rotary Distr.-Components	3.060	2	2H-3
Rotary Distributor	3.060	1	2G-23
Seat Belt (Std.)	5.0536	1	2I-5
Sensors	1.220	2	2D-15
Solenoid Valve	1.080	2	1K-13
Starter	0.360	2	1H-7
Starter-Mounting	0.360	1	1H-5
Stop Valve	1.082	2	1K-23
Swing Motor-Components	1.040	3	1J-7
Swing Red.Unit-Components	1.040	2	1J-5
Swing Reduction Unit	1.040	1	1J-3
Thermostat & Housing	0.326	1	1G-19
Timing Control	0.100	1	1E-17
Tool Kit	5.0083	1	2I-9
track Chain	3.050	1	2G-21
Track Roller	3.040	1	2G-19
Travel Motor-componen.	3.010	3	2G-9
Travel Piping (Lower)	3.070	1	2H-5
Travel Red.Unit-Componen.	3.010	2	2G-7
Travel Reduction Units	3.010	1	2G-5
Turbocharger	0.240	1	1F-17
	0.240	2	1F-19
Turbocharger Piping	0.241	1	1F-21
Upper Frame	1.000	1	1E-17
Upper Roller	3.030	1	2G-17
Valve-Anti-Shock(Hydr.)	1.082	3	1L-3
Valve-Check (Pilot)	1.081	2	1K-17
Valve-Exhaust	0.060	2	1D-23
Valve-Intake	0.060	2	1D-23
Valve-Pilot (Hydr.)	1.070	1	1K-5
Valve-Pilot(Travel)	1.070	1	1K-5
Valve-Solenoid	1.080	2	1K-13
Valve-Stop(Travel)	1.082	1	1K-21
Washer (windshield)	1.220	3	2D-17
Water Pump	0.320	1	1G-13
Water Pump Drive	0.340	1	1G-21
Water Pump-Components	0.320	2	1G-15
Wiper	1.220	1	2D-11

FH120

LOWER FRAME TELAIO INFERIORE	CHASSIS INFERIEUR RAHMEN-UNTER CHASIS INFERIOR	3.000 TAV.1

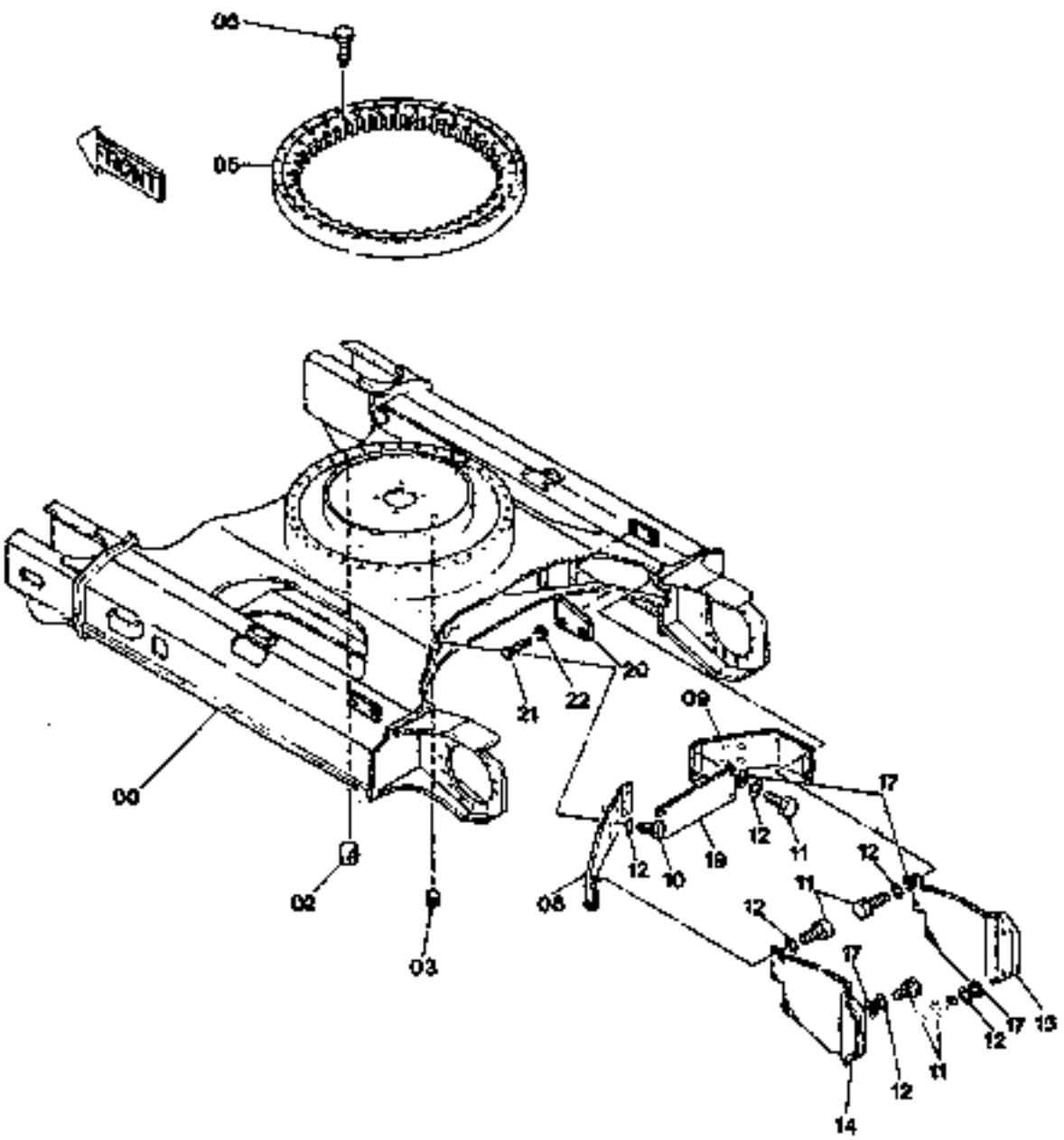

FH120

LOWER FRAME
TELAIO INFERIORE

CHASSIS INFERIEUR
RAHMEN-UNTER
CHASIS INFERIOR

3.000 TAV.1

ITEM	PART NUMBER	QTY	TR. CO.	DESCRIPTION	DESCRIZIONE
00	71405041	1	7211	LOWER FRAME	TELAIO INFERIORE
02	14325711	1	50T	PLUG	TAPPO
03	14326001	1	50T	PLUG	TAPPO
05	71401648	1	173R	BULL GEAR	RALLA ROTAZIONE
06	11119934	36	40V	SCREW 16X2X100	VITE 16X2X100
08	71405692	1	265C	COVER -LEFT	COPERCHIO -SIN.
09	71405693	1	265C	COVER -RIGHT	COPERCHIO -DEST.
10	11113334	4	40V	SCREW 12X1,75X55	VITE 12X1,75X55
11	11112234	14	40V	SCREW 12X1,75X25	VITE 12X1,75X25
12	4952483	18	131R	WASHER	ROSETTA
14	71405691	1	265C	COVER -LEFT	COPERCHIO -SIN.
15	71405690	1	265C	COVER -RIGHT	COPERCHIO -DEST.
17	10571974	18	170R	LOCKWASHER	ROSETTA ELASTICA
19	71405694	1	265C	COVER	COPERCHIO
20	71406087	2	225S	BRACKET	STAFFA
21	11113534	4	40V	SCREW 16X2X40	VITE 16X2X40
22	10517274	4	170R	LOCKWASHER	ROSETTA ELASTICA

TRAVEL REDUCTION UNITS MOTORIDUTTORI DI TRASLAZ.	MOTORED. TRANSLATION UNTERSETZUNG-FAHRANTRIEB REDUCTORES DE TRANSLACION	3.010 TAV.1

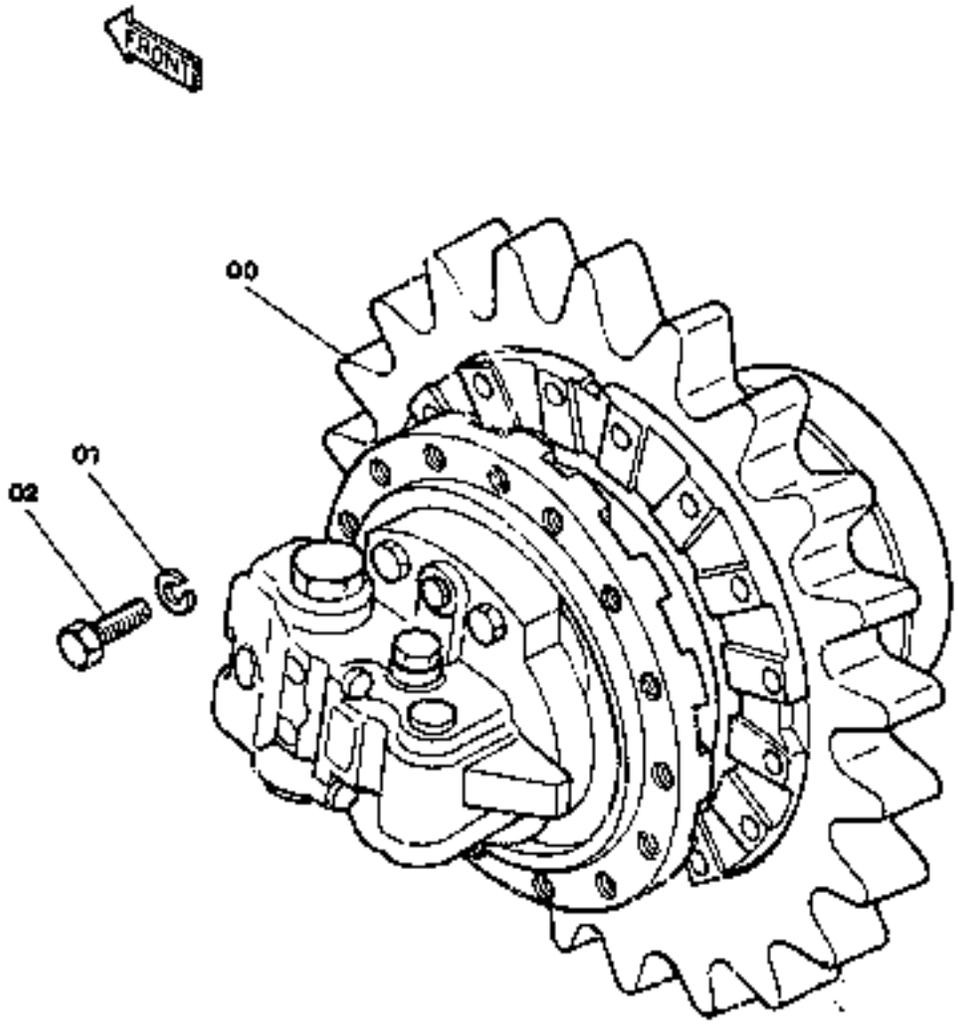

TRAVEL REDUCTION UNITS
MOTORIDUTTORI DI TRASLAZ.

MOTORED. TRANSLATION
UNTERSETZUNG-FAHRANTRIEB
REDUCTORES DE TRANSLACION

3.010 TAV.1

ITEM	PART NUMBER	QTY	TR. CO.	DESCRIPTION	DESCRIZIONE
00	71401621	2	7480	DRIVE MOTOREDUCTION SEE G-7	MOTORIDUTTORE TRASLAZIONE VED. TAV.2
01	10517274	28	131R	WASHER	ROSETTA
02	11116334	28	40V	SCREW 16X2X70	VITE 16X2X70

TRAVEL RED.UNIT-COMPONEN.
MOTORIDUTT.TRASLAZ.-COMP.
71401621

MOTORED.TRANS.-COMP.
UNTERSETZUNG-EINZELTEILE
REDUCTORES TRAS.-COMP.

3.010 TAV.2

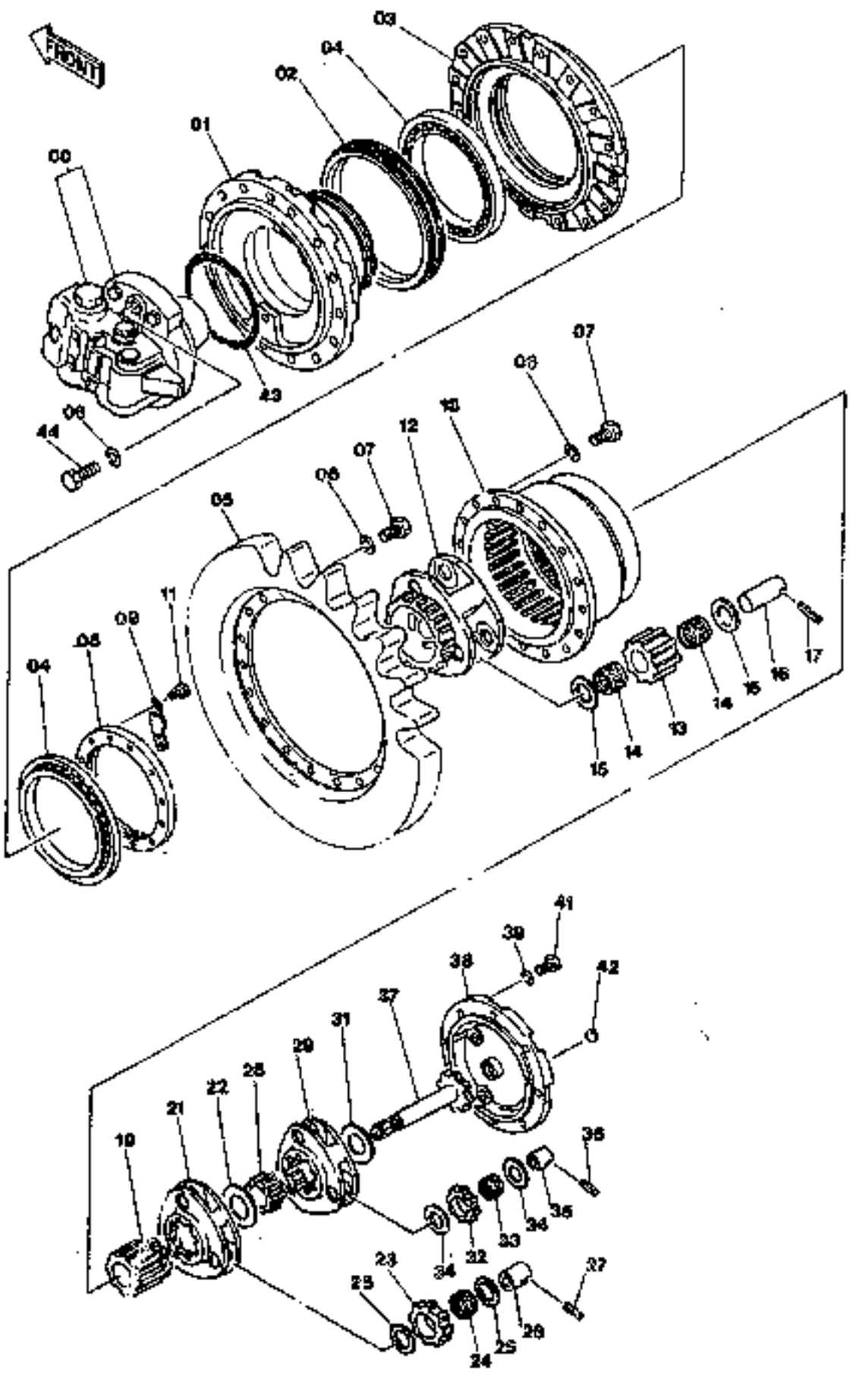

FH120

TRAVEL RED.UNIT-COMPONEN. MOTORE D.TRANS.-COMP. 3.015 TAV.2
MOTORIDUTT.TRASLAZ.-COMP. UNTERSETZUNG-EINZELTEILE
71401621 REDUCTORES TRAS.-COMP.

ITEM	PART NUMBER	QTY	TRL CO.	DESCRIPTION	DESCRIZIONE
00	71402007	1	127M	HYDRAULIC MOTOR -ASS.LY SEE G-9	MOTORE IDRAULICO -COMPL. VED. TAV.3
01	71402008	1	300C	BODY	CORPO
02	71402009	1	122G	SEAL	GUARNIZIONE
03	71402010	1	70F	FLANGE	FLANGIA
04	71402011	2	341C	BEARING	CUSCINETTO
05	71402012	1	163R	SPROCKET	RUOTA MOTRICE
06	71402013	34	170R	LOCKWASHER	ROSETTA ELASTICA
07	71402014	32	40V	SCREW	VITE
08	71402015	1	50G	RING NUT	GHIERA
09	71402016	1	113P	LOCKPLATE	PIASTRINA DI SICUREZZA
11	71402017	2	40V	SCREW	VITE
12	71402018	1	196P	PLANETARY CARRIER	PORTA-SATELLITI
13	71402019	3	145P	SUN GEAR	PLANETARIO
14	71402020	6	341C	BEARING	CUSCINETTO
15	71402021	6	45A	RING	ANELLO
16	71402022	3	80P	PIN	PERNO
17	71402023	3	202S	SPRING PIN	SPINA ELASTICA
18	71402024	1	35S	CASE	SCATOLA
19	71402025	1	50I	GEAR	INGRANAGGIO
21	71402026	1	196P	PLANETARY CARRIER	PORTA-SATELLITI
22	71402027	1	75D	SPACER	DISTANZIALE
23	71402028	3	145P	SUN GEAR	PLANETARIO
24	71402029	3	341C	BEARING	CUSCINETTO
25	71402030	6	60D	DISC	DISCO
26	71402031	3	80P	PIN	PERNO
27	71402032	3	202S	SPRING PIN	SPINA ELASTICA
28	71402033	1	50I	GEAR	INGRANAGGIO
29	71402006	1	196P	PLANETARY CARRIER	PORTA-SATELLITI
31	71402034	1	75D	SPACER	DISTANZIALE
32	71402035	3	145P	SUN GEAR	PLANETARIO
33	71402036	3	341C	BEARING	CUSCINETTO
34	71402037	6	60D	DISC	DISCO
35	71402038	3	80P	PIN	PERNO
36	71402039	3	202S	SPRING PIN	SPINA ELASTICA
37	71402040	1	15A	SHAFT	ALBERO
38	71402041	1	265C	COVER	COPERCHIO
39	71402042	8	170R	LOCKWASHER	ROSETTA ELASTICA
41	71402043	8	40V	SCREW	VITE
42	71402044	3	50T	PLUG	TAPPO
43	71402045	1	45A	RING	ANELLO
44	71402046	2	40V	SCREW	VITE

TRAVEL MOTOR-COMPONEN.
MOTORE IDR.TRASL.-COMPON.
71402007

MOTEUR HYDRAULIQUE-COMP.
HYDROMOTOR-EINZELTEILE
MOTOR HIDRAULICO-COMP.

3.010 TAV.3

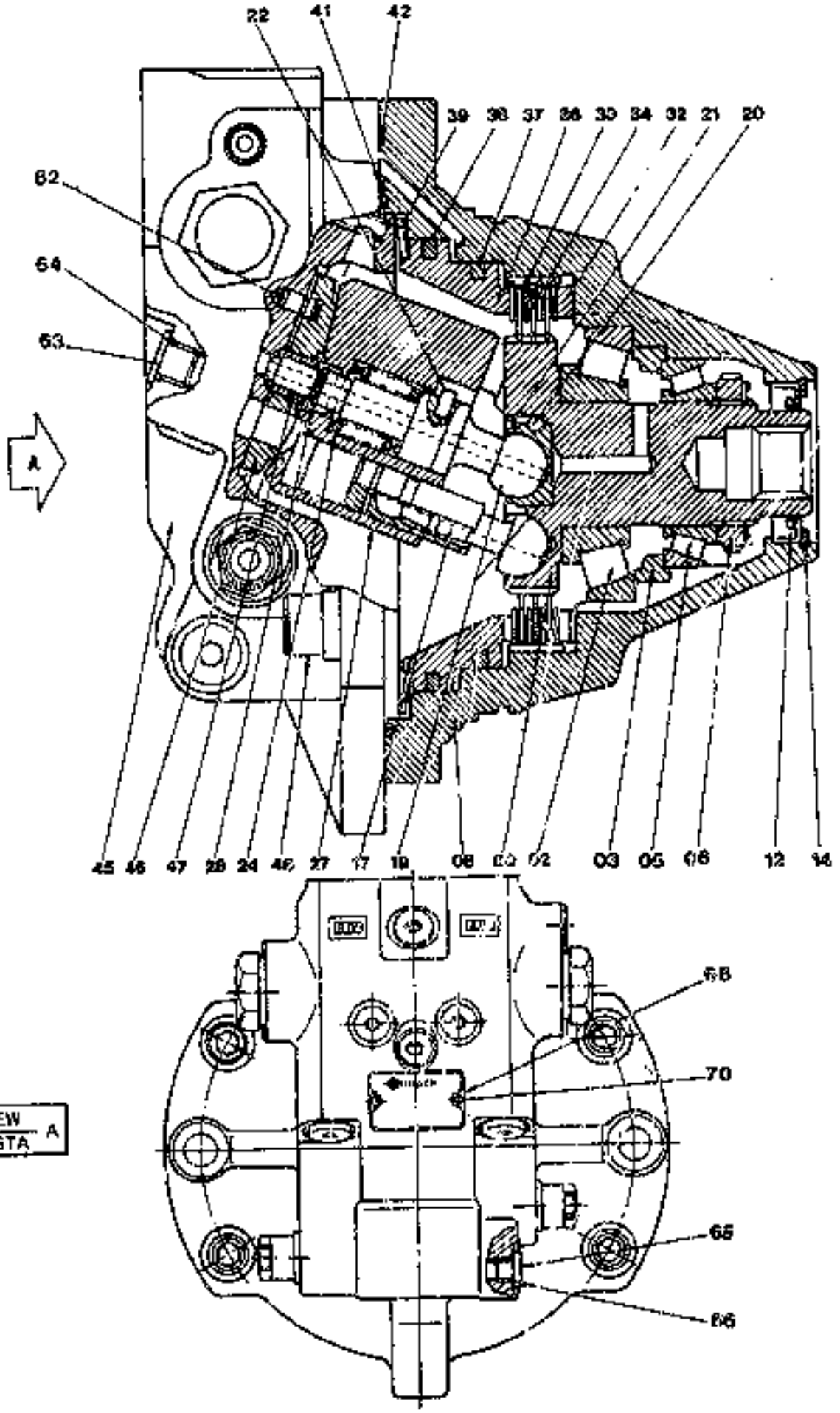

FH125

TRAVEL MOTOR-COMPONEN.	MOTEUR HYDRAULIQUE-COMP.	3.010 TAV.3
MOTORE IDR.TRASL.-COMPON.	HYDROMOTOR-EINZELTEILE	
71402097	MOTOR HIDRAULICO-COMP.	

ITEM	PART NUMBER	QTY	TR. CO.	DESCRIPTION	DESCRIZIONE
00	71402047	1	18A	CRANKSHAFT	ALBERO MOTORE
02	71402048	1	341C	BEARING	CUSCINETTO
03	71402049	1	75D	SPACER	DISTANZIALE
05	71402050	1	341C	BEARING	CUSCINETTO
06	71402051	1	50G	RING NUT	GHIERA
08	71402052	1	35S	CASE	SCATOLA
12	71402053	1	122G	SEAL	GUARNIZIONE
14	71402054	1	187A	SNAP RING	ANELLO ELASTICO
17	71402055	7	130P	PISTON	PISTONE
19	71402056	1	16A	SHAFT	ALBERO
20	71402057	1	140S	BALL	SFERA
21	71402058	1	187A	SNAP RING	ANELLO ELASTICO
22	71402059	1	80P	PIN	PERNO
24	71402060	1	100M	SPRING	MOLLA
27	71402061	1	145R	ROTOR	ROTORE
26	71402062	1	187A	SNAP RING	ANELLO ELASTICO
32	71402063	1	75D	SPACER	DISTANZIALE
33	71402064	4	105P	PLATE	PIASTRA
34	71402065	9	66D	CLUTCH DISC	DISCO FRIZ.
36	71402066	1	235S	PISTON	STANTUFFO
37	71402067	1	158G	O-RING	GUARNIZIONE O-R
38	71402068	1	158G	O-RING	GUARNIZIONE O-R
39	71402069	1	60D	DISC	DISCO
41	71402152	1	159G	O-RING	GUARNIZIONE O-R
42	71401602	1	158G	O-RING	GUARNIZIONE O-R
45	71402072	1	10V	VALVE -ASS.Y SEE. G-11	VALVOLA -COMP.VED.TAV. 4
46	71402073	1	60D	DISC	DISCO
47	71402074	1	56B	BUSHING	BOCCOLA
48	71402076	4	40V	SCREW	VITE
62	71402078	2	20OS	PIN	SPINA
63	71402098	1	50T	PLUG	TAPPO
64	71401688	1	158G	O-RING	GUARNIZIONE O-R
65	71402079	1	50T	PLUG	TAPPO
66	71401776	1	158G	O-RING	GUARNIZIONE O-R
68	71402081	1	65T	DECAL	TARGA
70	71402082	2	40V	SCREW	VITE

FH120

BRAKE VALVE-COMPONENTS VALVOLA FRENO-COMPONENTI 7140207/2	VALVE DE FREINAGE-COMPOS. BREMSVENTIL-EINZELTEILE VALVULA DE FRENO-COMP.	3.010 TAV.4

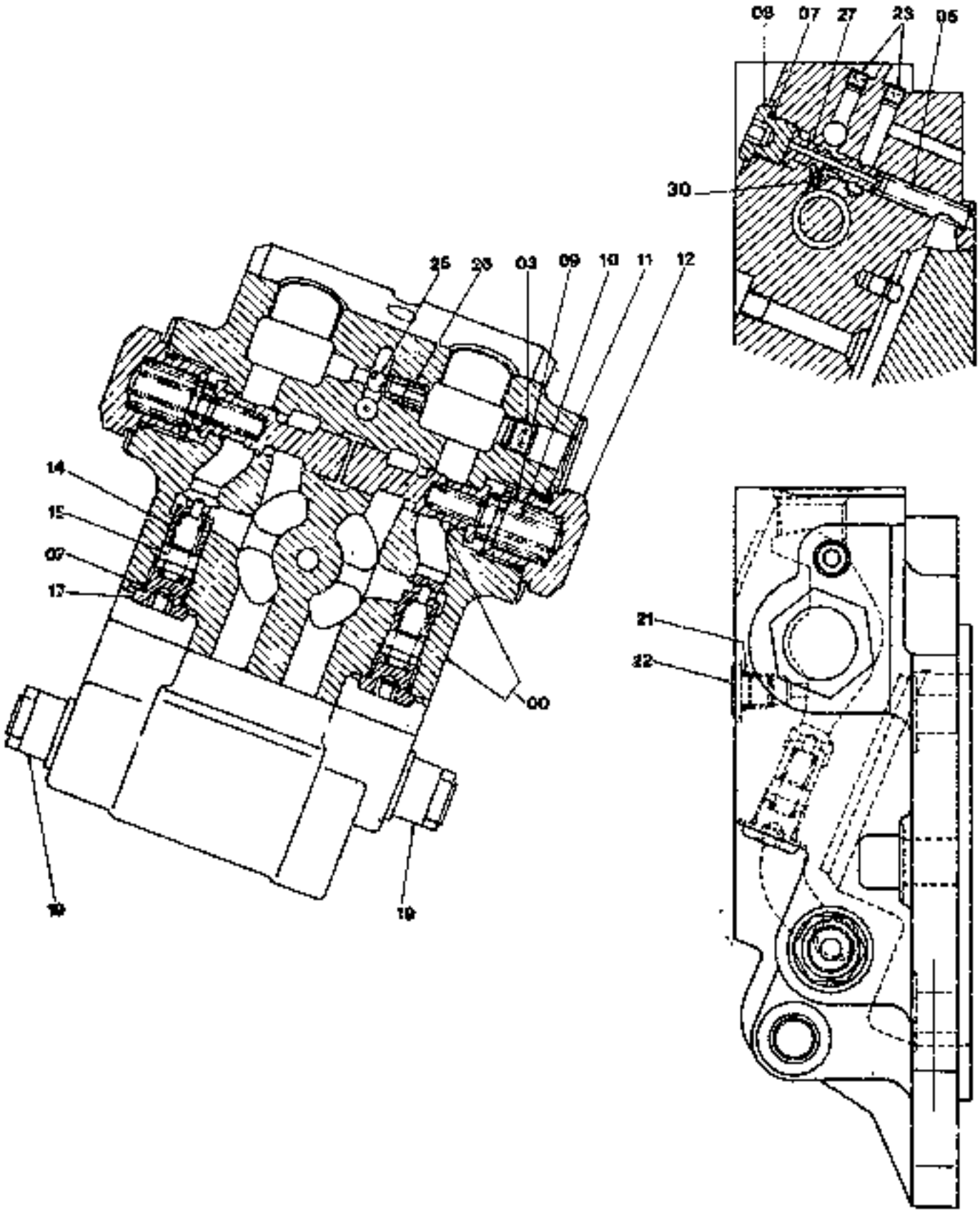

BRAKE VALVE-COMPONENTS — VALVE DE FREINAGE-COMPOS. — 3.010 TAV.4
VALVOLA FRENO-COMPONENTI — BREMSVENTIL-EINZELTEILE
71402072 — VALVULA DE FRENO-COMP.

ITEM	PART NUMBER	QTY	TR. CO.	DESCRIPTION	DESCRIZIONE
00	71402063	1	300C	BODY	CORPO
03	71402064	1	50T	PLUG	TAPPO
05	71402065	1	100M	SPRING	MOLLA
07	71401776	3	158G	O-RING	GUARNIZIONE O-R
09	71402067	1	50T	PLUG	TAPPO
09	71402068	2	100M	SPRING	MOLLA
10	71402069	2	100M	SPRING	MOLLA
11	71402050	2	165G	O-RING	GUARNIZIONE O-R
12	71402091	2	50T	PLUG	TAPPO
14	71402092	2	10V	VALVE	VALVOLA
15	71402093	2	100M	SPRING	MOLLA
17	71402095	2	50T	PLUG	TAPPO
19	71402096	2	10V	VALVE-ASS.Y SEE G-13	VALVOLA-COMPL.VED.TAV. 5
21	71401608	2	168G	O-RING	GUARNIZIONE O-R
22	71402098	2	50T	PLUG	TAPPO
23	71402099	2	50T	PLUG	TAPPO
25	71402100	1	140S	BALL	SFERA
26	71402101	1	69S	SEAT	SEDE
27	71402102	1	120R	REEL	ROCCHETTO
30	71402103	1	20U	JET	UGELLO

FH120

DISCHARGE VALVE-COMPONEN. VALVOLA SCARICO-COMPONEN. 71402096	VALVE DE DECHARGE AUSLASSVENTIL-EINZELTEILE VALVULA DE DESCARGA-COMP.	3.010 TAV.5

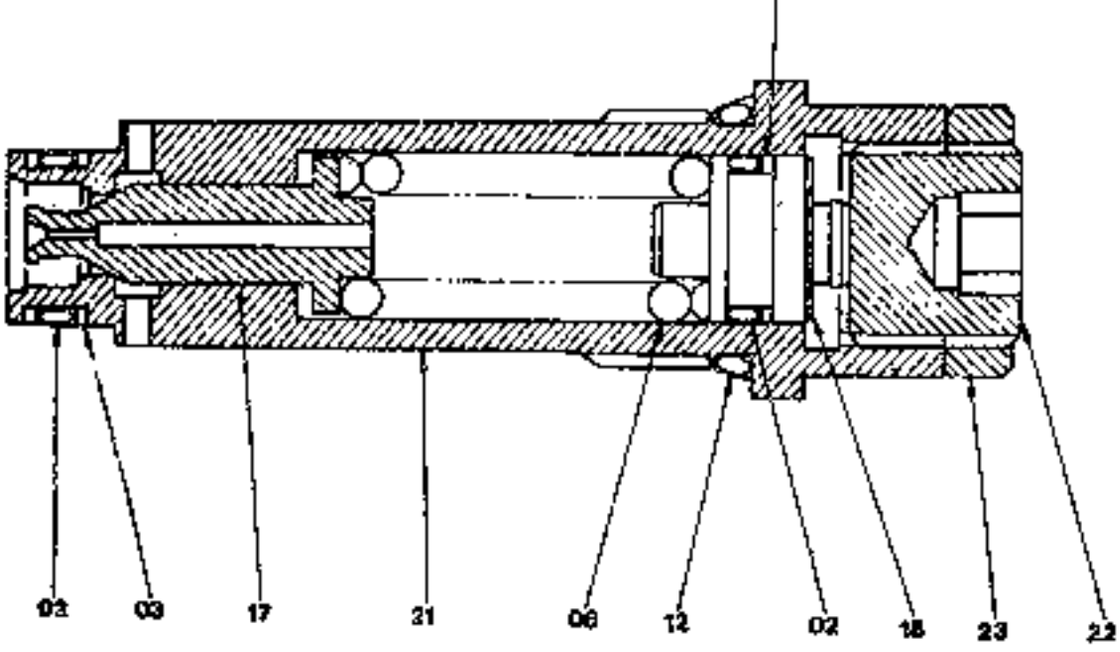

DISCHARGE VALVE-COMPONEN. VALVE DE DECHARGE 3.610 TAV.6
VALVOLA SCARICO-COMPONEN. AUSLASSVENTIL-EINZELTEILE
71402096 VALVULA DE DESCARGA-COMP.

ITEM	PART NUMBER	QTY	TRL CO.	DESCRIPTION	DESCRIZIONE
02	71402104	2	118G	O-RING	GUARNIZIONE O-R
03	71402105	2	45A	RING	ANELLO
06	71402106	1	100M	SPRING	MOLLA
12	71404164	1	158G	O-RING	GUARNIZIONE O-R
17	71402108	1	132P	PISTON	PISTONE
18	71402109	1	50N	PAWL	NOTTOLINO
21	71402111	1	300C	BODY	CORPO
22	71402112	1	40V	SCREW	VITE
23	71402113	1	50G	RING NUT	GHIERA

FH120

IDLER TENDICINGOLO	ROUE TENDEUSE RAUPENKETTENSPANNER RUEDA GUIADORA	9.020 TAV.1

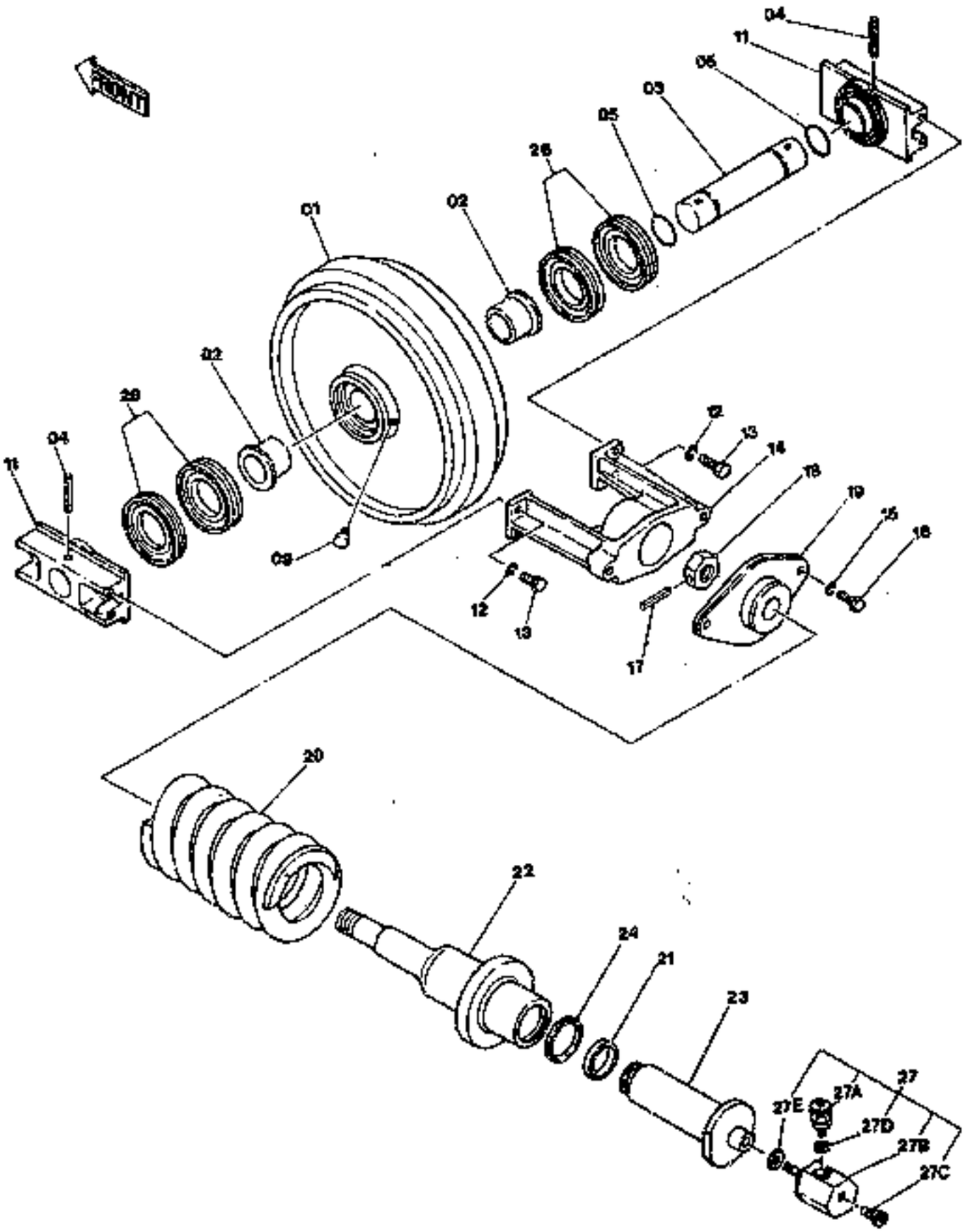

FH120

IDLER
TENDICINGOLO

ROUE TENDEUSE
RAUPENKETTENSPANNER
RUEDA GUIADORA

3.020 TAV.1

ITEM	PART NUMBER	QTY	TR CO.	DESCRIPTION	DESCRIZIONE
01	71400892	1	166R	TRACK IDLER	RUOTA TENDICINGOLO
01-28	71400891	2	50G2	TRACK IDLER -ASS.LY	TENDICINGOLO -COMPL.
02	71400893	2	95B	BUSHING	BOCCOLA
03	71400894	1	16A	SHAFT	ALBERO
04	14177570	2	202S	SPRING PIN	SPINA ELASTICA
05	45481893	2	122G	SEAL	GUARNIZIONE
09	45481895	1	50T	PLUG	TAPPO
11	71400896	2	300S	SUPPORT	SUPPORTO
12	10317979	4	170R	LOCKWASHER	ROSETTA ELASTICA
13	11112521	4	40V	SCREW 12X1,75X35	VITE 12X1,75X35
14	71400896	1	95F	YOKE	FORCELLA
15	10317270	2	170R	LOCKWASHER	ROSETTA ELASTICA
16	71118711	2	40V	SCREW 16X2X45	VITE 16X2X45
17	14169070	1	202S	SPRING PIN	SPINA ELASTICA
18	71400897	1	10D	NUT	DADO
19	71400898	1	105P	PLATE	PIASTRA
20	71400899	1	100M	SPRING	MOLLA
21	45482520	1	122G	SEAL	GUARNIZIONE
22	71400978	1	164C	CYLINDER	CILINDRO
23	71400901	1	132P	PISTON	PISTONE
24	45482527	1	122G	SEAL	GUARNIZIONE
26	71314412	2	122G	SEAL	GUARNIZIONE
27	71400903	2	10V	VALVE -ASS.LY	VALVOLA -COMPL.
27A	71400904	1	7V	RELIEF VALVE	VALVOLA SOVRAPRESSIONE
27B	71400905	1	222P	EXTENSION	PROLUNGA
27C	79043802	1	10V	VALVE	VALVOLA
27D	45481895	1	122G	SEAL	GUARNIZIONE
27E	45481893	1	122G	SEAL	GUARNIZIONE

UPPER ROLLER	GALET DE RETOUR CHENILLE	3.030 TAV.1
RULLO SOSTEGNO	STUETZROLLE OER RAUPENK.	
	RODILLO DE SOPORTE ORUGA	

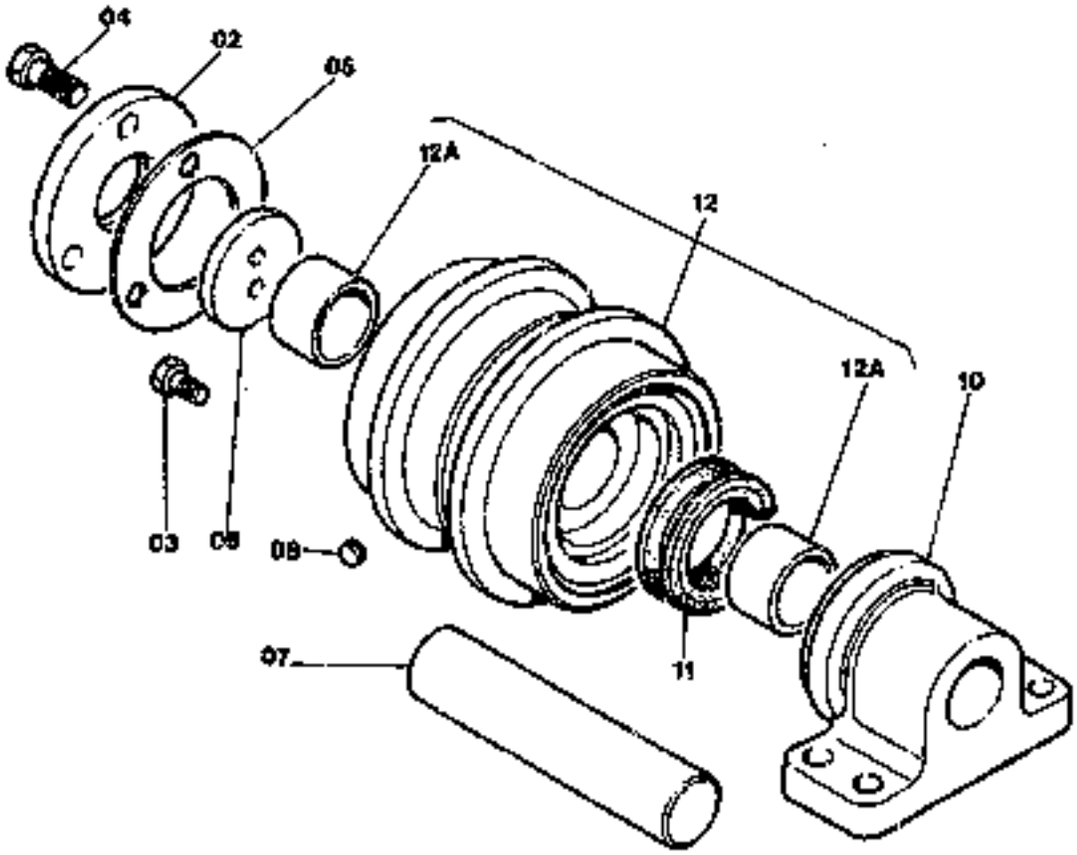

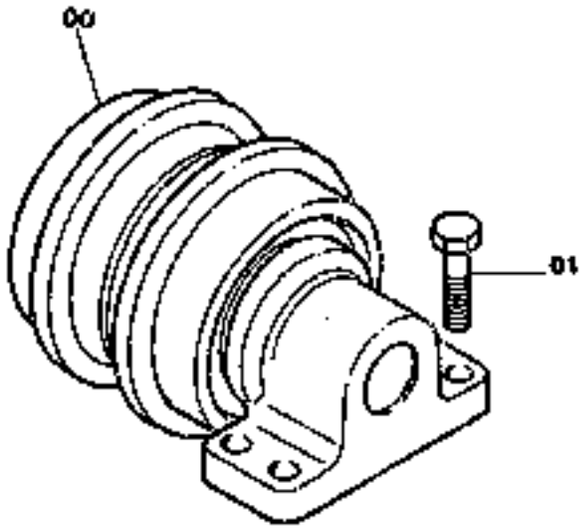

PH120

UPPER ROLLER
RULLO SOSTEGNO

GALET DE RETOUR CHENILLE
STUETZROLLE DER RAUPENK.
RODILLO DE SOPORTE ORUGA

3.030 TAV.1

ITEM	PART NUMBER	QTY	TR. CO.	DESCRIPTION		DESCRIZIONE	
00	71400947	2	157R	ROLLER -ASS.LY		RULLO -COMPL.	
01	11118534	8	40V	SCREW 16X2X40		VITE 16X2X40	
				D2516 FROM S/N	0081	D2516 DAL TELAIO	0081
	11127534	8	40V	SCREW 16X2X35		VITE 16X2X35	
				C2516 UP TO S/N	0080	C2516 FINO AL TELAIO	0080
02	71400948	1	265C	COVER		COPERCHIO	
03	71400949	2	40V	SCREW		VITE	
04	71400950	3	40V	SCREW		VITE	
05	71400951	1	198S	SHIM		SPESSORE	
06	71400952	1	131R	WASHER		ROSETTA	
07	71400953	1	16A	SHAFT		ALBERO	
08	71400954	1	50T	PLUG		TAPPO	
10	71400955	1	300S	SUPPORT		SUPPORTO	
11	71400956	1	122G	SEAL		GUARNIZIONE	
12	71400957	1	157R	ROLLER -ASS.LY		RULLO -COMPL.	
12A	71400958	2	95B	BUSHING		BOCCOLA	

TRACK ROLLER	GALET PORTEUR DE CHENILLE	3.040 TAV.1
RULLO CARRELLO CINGOLO	LAUFROLLE DER RAUPENKETTE	
	RODILLO DE APOYO ORUGA	

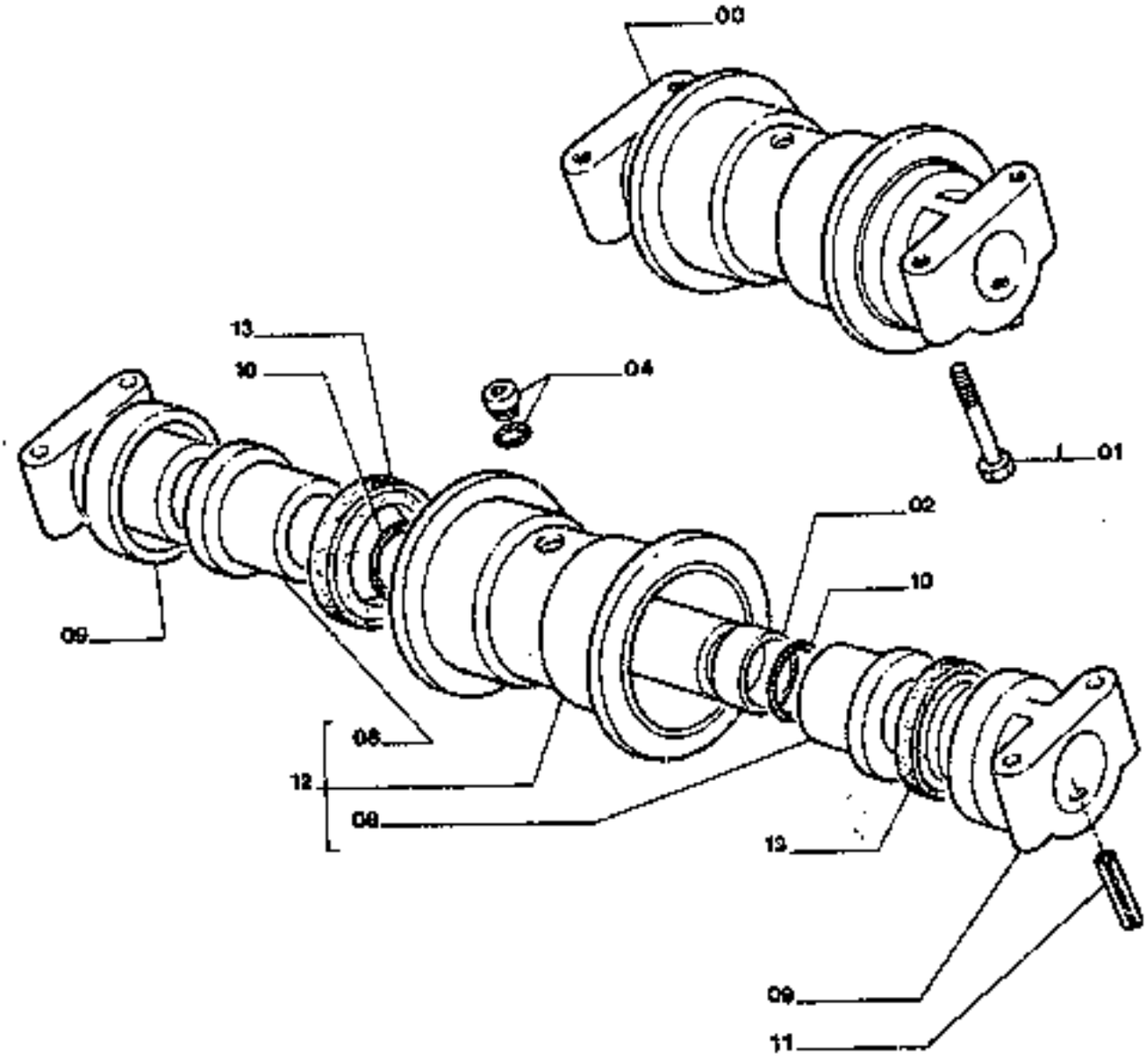

FH120

TRACK ROLLER
RULLO CARRELLO CINGOLO

GALET PORTEUR DE CHENILLE
LAUFROLLE DER RAUPENKETTE
RODILLO DE APOYO ORUGA

3.040 TAV.1

ITEM	PART NUMBER	QTY	TR. CO.	DESCRIPTION	DESCRIZIONE
00	45016639	14	157R	ROLLER -ASS.LY	RULLO -COMPL.
01	13116774	66	40V	SCREW 16X2X90	VITE 16X2X90
02	45461894	1	16A	SHAFT	ALBERO
04	45461895	1	50T	PLUG	TAPPO
05	45462871	2	95B	BUSHING	BOCCOLA
09	45462870	2	300S	SUPPORT	SUPPORTO
10	45461893	2	122G	SEAL	GUARNIZIONE
11	14176770	2	202S	SPRING PIN	SPINA ELASTICA
12	45462869	1	157R	ROLLER	RULLO
13	45462868	2	122G	SEAL	GUARNIZIONE

TRACK CHAIN CATENARIA	CHENILLE RAUPENKETTE ORUGA	3.050 TAV.1

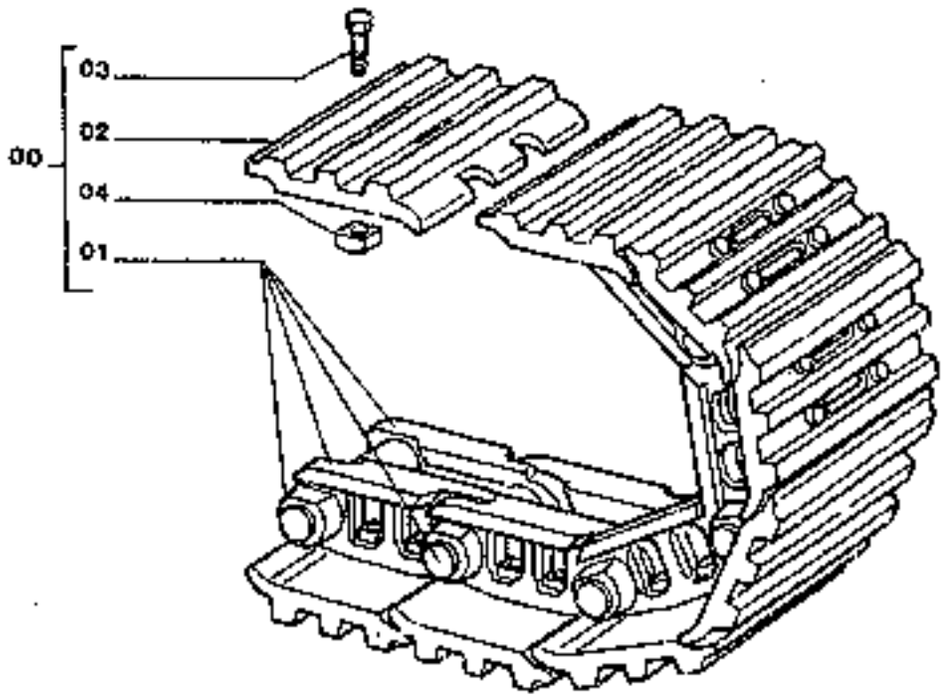

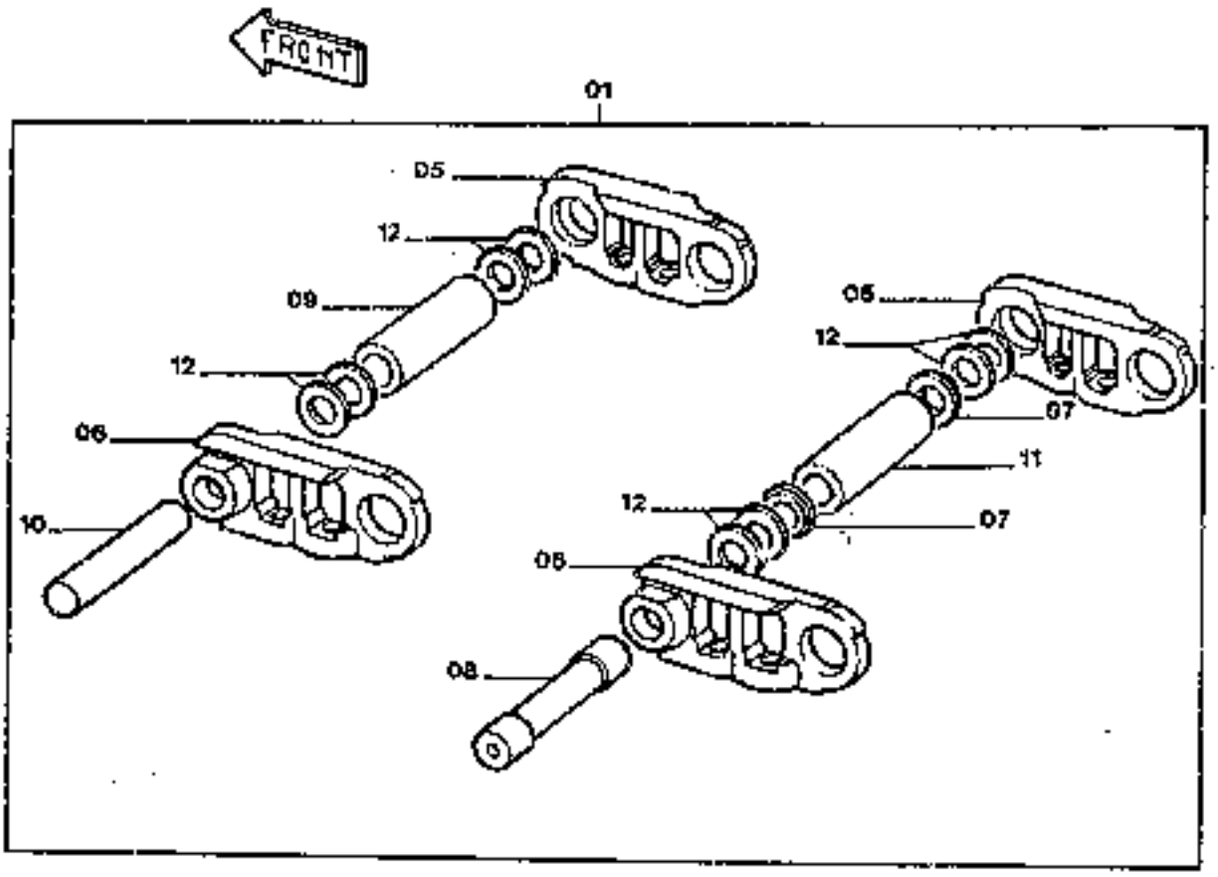

FH120

TRACK CHAIN CATENARIA	CHENILLE RAUPENKETTE ORUGA	3.050	TAV.1

ITEM	PART NUMBER	QTY	TR. CO.	DESCRIPTION	DESCRIZIONE
00	71400979	2	97C	TRACK CHAIN ASSY WITH 500mm SHOES	
	71400981	2	97C	TRACK CHAIN ASSY WITH 600mm SHOES	
	71400982	2	97C	TRACK CHAIN ASSY WITH 700mm SHOES	
	71400983	2	97C	TRACK CHAIN ASSY WITH 800mm SHOES	
01	71400980	1	97C	TRACK CHAIN ASSY	
02	71400796	43	295S	SHOE(500mm)	
	71307930	43	295S	SHOE(600mm)	
	71306858	43	295S	SHOE(700mm)	
	71400793	43	295S	SHOE(800mm)	
03	45482377	172	40V	CAPSCREW	
04	45482379	172	10D	NUT	
05	71318326	43	10M	LINK-RIGHT	
06	71318327	43	10M	LINK-LEFT	
07	71400785	2	75D	SPACER	
08	45482490	1	80P	PIN	
09	71400784	42	95B	BUSHING	
10	45001066	42	80P	PIN	
11	79005909	1	95B	BUSHING	
12	71400786	172	80D	DISC	

ROTARY DISTRIBUTOR DISTRIBUTORE ROTANTE	DISTRIBUTEUR ROTATIF DREHDURCHFUEHRUNG DISTRIBUIDOR ROTATIVO	3.060 TAV.1

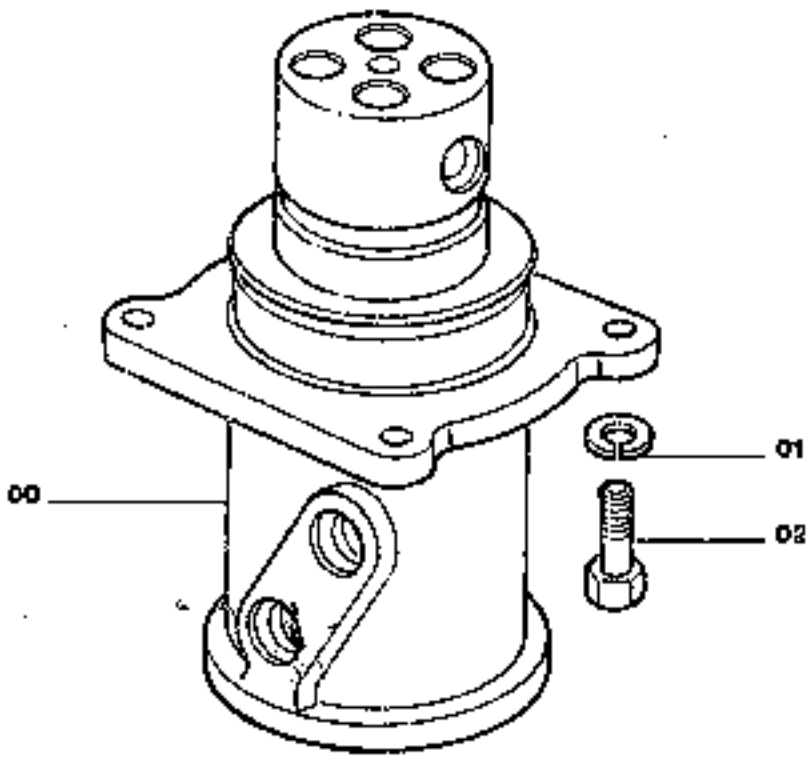

ROTARY DISTRIBUTOR
DISTRIBUTORE ROTANTE

DISTRIBUTEUR ROTATIF
DREHVERTEILER
DISTRIBUIDOR ROTATIVO

9.060 TAV.1

ITEM	PART NUMBER	QTY	TR. CO.	DESCRIPTION	DESCRIZIONE
00	71401622	1	67G	COUPLING -ASS.LY SEE H-3	GIUNTO -COMPL. VED. TAV.2
01	10517074	4	170R	LOCKWASHER	ROSETTA ELASTICA
02	11112434	4	40V	SCREW 12X1,75X30	VITE 12X1,75X30

ALPHABETICAL INDEX

DESCRIPTION	SGR.	TAV.	GRID
Accelerator controls	0.004	1	1C-23
Air Cleaner	0.001	1	1C-13
Alternator-Mounting	0.400	1	1H-9
Alternator (55 amp)	0.400	2	1H-11
Alternator (35 amp)	0.400	3	1H-13
Anti-Shock Valve (Hydr.)	1.082	3	1L-3
Application of Oil Hammer	5.0020	2	2H-13
Batteries	1.220	4	2D-19
Belts	0.340	1	1G-21
	0.345	1	1G-23
Boom Piping	2.030	1	2F-13
Brake Valve Components	3.010	4	2G-11
Bucket	2.020	1	2F-9
Bucket Cylinder	2.030	5	2F-21
Bull Gear	3.000	1	2G-3
Cab	1.250	1	2D-19
Cab Door	1.250	5	2E-7
Cab Heater-Components	1.290	2	2E-15
Cab Window-Left Side	1.250	6	2E-9
Cab-Frame	1.250	7	2E-11
Cab-Platform	1.250	1	2D-21
Camshaft	0.120	1	1E-19
Check Valve	1.081	2	1K-17
Cold Starting Aid	5.0025	1	2H-19
Connecting Rod	0.081	1	1E-10
Cont. Valve-Hydr. (Ass.Y)	1.050	1	1J-13
Control Valve-Hydr.	1.050	2	1J-17
	1.050	3	1J-19
	1.050	4	1J-21
	1.050	5	1J-23
Controls	1.070	1	1K-5
Counterweight	1.000	1	1I-3
Cowlings	1.300	1	2E-19
	1.300	2	2E-21
Crankshaft	0.080	1	1E-7
Crankshaft Pulley	0.084	1	1E-15
Cylinder Block	0.040	1	1D-5
	0.040	2	1D-7
	0.040	3	1D-9
Cylinder Block Covers	0.043	1	1D-13
	0.043	2	1D-15
Cylinder Head	0.060	1	1D-21
	0.060	2	1D-23
Dashboard (Left)	1.210	1	2D-9
Dashboard (Right)	1.200	1	2D-3
	1.200	3	2D-7
Data Monitor	1.200	2	2D-5
Decals	4.500	1	2H-9
Dipper Stick (2,1m)	5.0022	1	2H-15
Dipper Stick (2,5m) (STD.)	2.003	1	2F-5
Dipper Stick(2,5m)Links(Std.)	2.003	2	2F-7
Dipper Stick (3m)	5.0038	1	2H-21
	5.0038	2	2H-23
Dipper Stick cylinder	2.030	4	2F-19
Dipstick-Engine Oil	0.305	2	1G-7
Discharge Valve	1.040	4	1J-3
Discharge Valve Componen.	3.010	5	2G-13
Drive on Engine (Opt.)	0.350	1	1H-5
Electric System	1.220	2	2D-13
Elements-Engine Oil	0.001	1	1C-13
Elements-fuel	0.200	1	1F-11
Elements-Hydraulic	1.020	1	1E-19
Elements-Pilot	1.080	1	1K-11
Emergency Kits	4.000	1	2H-7
Engine	0.021	1	1D-3
Engine-Controls	0.004	1	1C--23
Engine-Suspensions	0.000	1	1C-11
Engine Breather	0.045	1	1D-17
	0.045	1A	1D-19
Engine Cooling Piping	0.323	1	1G-17
Engine Heat Exchanger	0.310	1	1G-9
	0.310	2	1G-11
Engine Lifting Eyes	0.450	1	1H-15
Engine Oil Filter	0.302	1	1G-3
Engine Oil Piping	0.305	1	1G-5
Engine Oil Pump	0.300	1	1F-23
Engine Oil Sump	0.042	1	1D-11
Engine Piston	0.082	1	1E-11
Engine Suspensions	0.000	1	1C-11
Exhaust Manifold	0.077	1	1E-5
Exhaust Valve	0.060	2	1D-23
Fan	0.345	1	1G-23
Fan Drive	0.345	1	1G-23
"Filter Care" Kit	21		1A-23
Filter-Pilot System	1.080	1	1K-11
Filters-Air	0.001	1	1C-13
Filters-Engine Oil	0.302	1	1G-3
Filters-Fuel	0.200	1	1F-11
Filters-Hydr. System	1.020	1	1I-7
Flywheel-Engine	0.083	1	1E-13
Fuel Filter	0..200	1	1F-11
Fuel Piping	0.203	1	1F-15
Fuel Pump	0.201	1	1F-13
Fuel Tank	1.010	1	1I-5
Fuses	1.200	3	2D-7
Guards	1.300	2	2E-21
Handle	1.300	3	2E-23
Heater	1.290	1	2E-15
Horn	1.220	2	2D-15
Hyd.Pump Drive	1.030	7	1I-21
Hyd.Pump Regulator Valve	1.030	6	1I-19
Hyd.Pump Regulator-Cover	1.030	4	1I-15
	1.030	5	1I-17
Hydr.Pump-Components	1.030	2	1I-11
Hydr.Pump Regulator-Comp.	1.030	3	1I-13

ALPHABETICAL INDEX

DESCRIPTION	SGR.	TAV.	GRID
Hydraulic Pump	1.030	1	1I-9
Idler	3.020	1	1G-15
Injection Nozzle-Lines	0.149	1	1F-9
Injection Pump	0.140	2	1E-23
	0.140	3	1F-3
	0.140	4	1F-5
	0.140	5	1F-7
Injection Pump-Piping	0.140	1	1E-21
Intake Manifold	0.071	1	1E-3
Intake Valve	0.060	2	1D-21
Lift Cylinder (Left)	2.030	3	1F-17
Lift Cylinder (Right)	2.030	2	2F-15
Lights	1.220	2	2D-15
Lower Frame	3.000	1	2G-3
Lubric. Fitting Piping	2.040	1	2F-23
Main Piping	1.060	1	1K-3
Mirror (Rear)	1.300	2	2E-21
Monobloc Boom	2.000	1	2F-3
Motor - Starter	0.360	2	1H-7
Motor - Swing	1.040	1	1J-3
Motor - Travel	3.010	1	12G-5
Motor - Wiper	1.220	1	2D-13
Muffler	0.002	1	1C-15
Oil Tank	1.020	1	1I-7
Operator's Seat	1.250	2	2D-23
OperatorsSeat(Bostrom)(Std.)	5.0151	1	2I-3
Pilot Gear Pump	1.030	8	1I-23
Pilot Piping(1)	1.060	1	1K-11
Pilot Piping(2)	1.081	1	1K-15
Pilot Piping(3)	1.082	1	1K-19
Pilot Piping (4)	1.083	1	1L-5
Pilot Piping (5)	1.084	1	1L-7
Pilot Valve	1.070	3	1K-9
Pilot Valve-components	1.070	2	1K-7
Pipin-Boom	2.030	1	2F-13
Piping-Engine Oil	0.350	1	1H-3
Piping-Injection	0.149	1	1F-9
Piping-Lube Fittings	2.040	1	2G-23
Piping-Main	1.060	1	1K-3
Piping-Pilot(1)	1.060	1	1K-11
Piping-Pilot(3)	1.082	1	1K-19
Piping-Pilot(4)	1.083	1	1L-5
Piping-Pilot(5)	1.084	1	1L-7
Piping-Pump Contr. Valve	1.050	1	1J-13
Piping-Travel (Lower)	3.070	1	2H-5
Piping-Turbocharger	0.241	1	1F-21
Pump-Engine Oil	0.300	1	1F-23
Pump-Fuel	0.201	1	1F-13
Pump-Hydraulic	1.030	1	1I-9
Pump-Injection	0.140	1	1E-21
Pump-Pilot	1.030	8	1I-23
Pump-Water	0.320	1	1G-13
Pump/Control Valve Piping	1.050	1	1J-13
Radiator	0.003	1	1C-17
Radiator-Components	0.003	2	1C-19
	0.003	3	1C-21
Rocker Arm	0.060	2	1D-23
Rotary Distr.-Components	3.060	2	2H-3
Rotary Distributor	3.060	1	2G-23
Seat Belt (Std.)	5.0536	1	2I-5
Sensors	1.220	2	2D-15
Solenoid Valve	1.060	2	1K-13
Starter	0.360	2	1H-7
Starter-Mounting	0.360	1	1H-5
Stop Valve	1.082	2	1K-23
Swing Motor-Components	1.040	3	1J-7
Swing Red.Unit-Components	1.040	2	1J-5
Swing Reduction Unit	1.040	1	1J-3
Thermostat & Housing	0.326	1	1G-19
Timing Control	0.100	1	1E-17
Tool Kit	5.0083	1	2I-9
Track Chain	3.050	1	2G-21
Track Roller	3.040	1	2G-19
Travel Motor-componen.	3.010	3	2G-9
Travel Piping (Lower)	3.070	1	2H-5
Travel Red.Unit-Componen.	3.010	2	2G-7
Travel Reduction Units	3.010	1	2G-5
Turbocharger	0.240	1	1F-17
	0.240	2	1F-19
Turbocharger Piping	0.241	1	1F-21
Upper Frame	1.000	1	1E-17
Upper Roller	3.030	1	2G-17
Valve-Anti-Shock(Hydr.)	1.082	3	1L-3
Valve-Check (Pilot)	1.081	2	1K-17
Valve-Exhaust	0.060	2	1D-23
Valve-Intake	0.060	2	1D-23
Valve-Pilot (Hydr.)	1.070	1	1K-5
Valve-Pilot(Travel)	1.070	1	1K-5
Valve-Solenoid	1.060	2	1K-13
Valve-Stop(Travel)	1.082	1	1K-21
Washer (windshield)	1.220	3	2D-17
Water Pump	0.320	1	1G-13
Water Pump Drive	0.340	1	1G-21
Water Pump-Components	0.320	2	1G-15
Wiper	1.220	1	2D-11

ROTARY DISTR.-COMPONENTS
DISTRIBUTORE ROTANTE-COMP
71401622

DISTRIBUTEUR ROT.-COMP.
DREHDURCHFUEHRUNG-EINZELT
DISTRIBUIDOR ROTAT.-COMP.

3.060 TAV.2

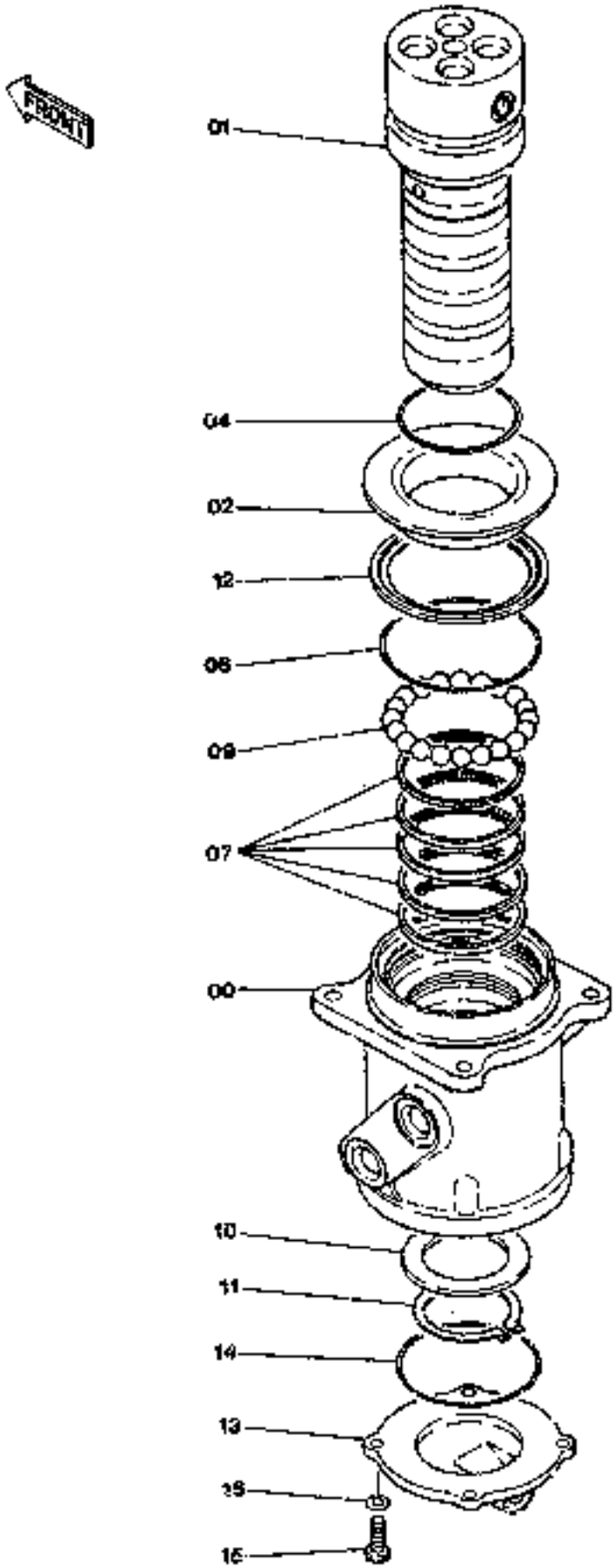

H-4

FH120

ROTARY DISTR.-COMPONENTS
DISTRIBUT.ROT.-COMPONENTI
71401622

DISTRIBUTEUR ROT.-COMP.
DREHDURCHFUEHRUNG-EINZELT
DISTRIBUIDOR ROTAT.-COMP.

3.050 TAV 2

ITEM	PART NUMBER	QTY	TR. CO.	DESCRIPTION	DESCRIZIONE
00	71401641	1	300C	BODY	CORPO
01	71401642	1	16A	SHAFT	ALBERO
02	71401644	1	265C	COVER	COPERCHIO
04	71401643	1	158G	O-RING	GUARNIZIONE O-R
06	71401645	1	158G	O-RING	GUARNIZIONE O-R
07	71401648	5	122G	SEAL	GUARNIZIONE
09	71401647	20	140S	BALL	SFERA
10	71401646	1	45A	RING	ANELLO
11	71401649	1	167A	SNAP RING	ANELLO ELASTICO
12	71401650	1	122G	SEAL	GUARNIZIONE
13	71401651	1	265C	COVER	COPERCHIO
14	71401652	1	158G	O-RING	GUARNIZIONE O-R
15	71401653	4	40V	SCREW	VITE
16	71401654	4	170R	LOCKWASHER	ROSETTA ELASTICA

H-5

FX120

TRAVEL PIPING (LOWER) TUBAZIONI TRASLAZ.(INF.)	TUYAUTERIES INFERIEURES LEITUNGEN-UNTER TUBERIAS INFERIORES	3.070 TAV.1

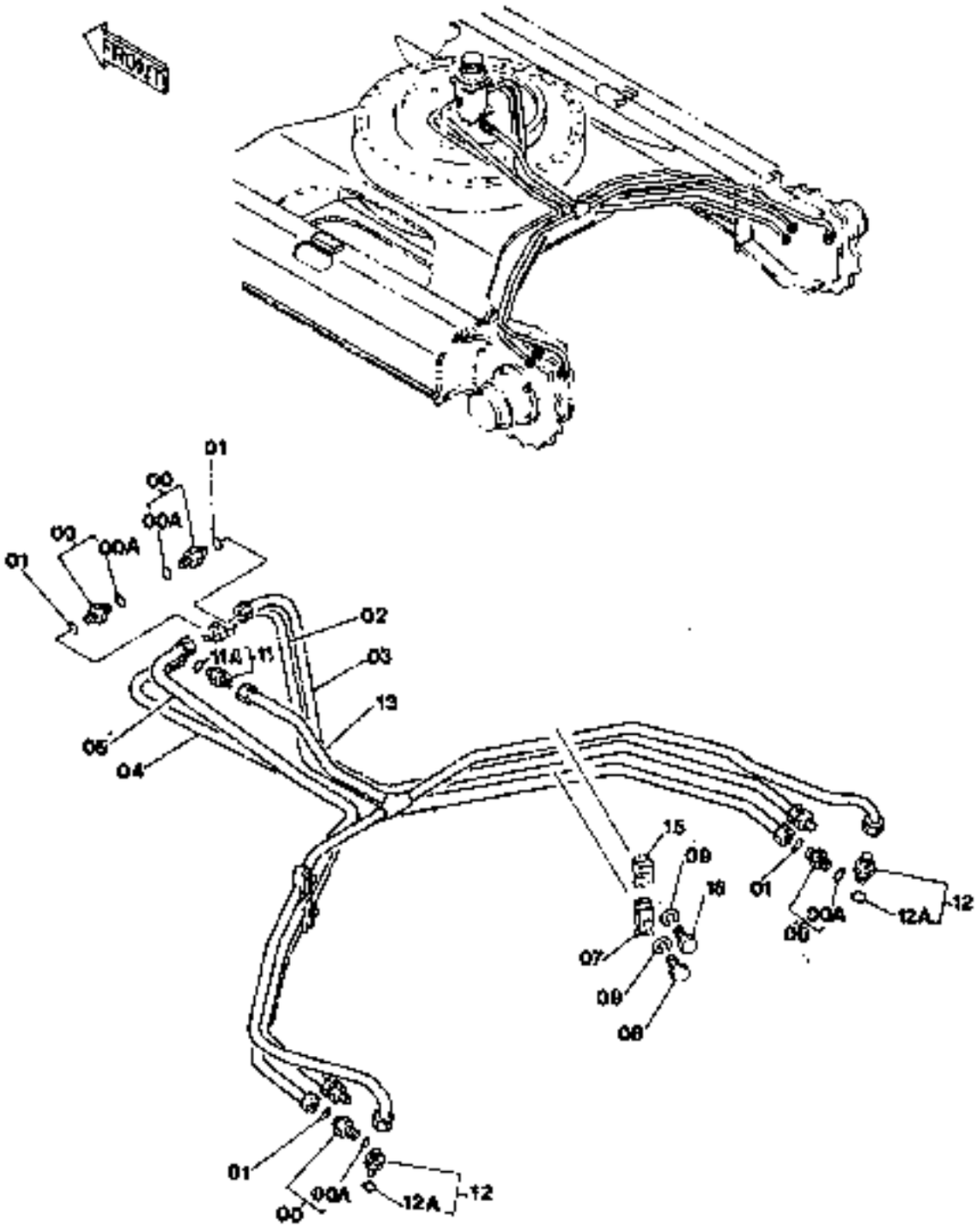

FH120

TRAVEL PIPING (LOWER)
TUBAZIONI TRASLAZ.(INF.)

TUYAUTERIES INFERIEURES
LEITUNGEN-UNTER
TUBERIAS INFERIORES

3.070 TAV.1

ITEM	PART NUMBER	QTY	TR. CO.	DESCRIPTION	DESCRIZIONE
00	71404414	8	20R	FITTING -ASS.LY	RACCORDO -COMPL.
00A	71404162	8	158G	O-RING	GUARNIZIONE O-R
01	70923843	8	158G	O-RING	GUARNIZIONE O-R
02	71405626	1	193T	TUBE	TUBO RIGIDO
03	71405628	1	193T	TUBE	TUBO RIGIDO
04	71405630	1	193T	TUBE	TUBO RIGIDO
05	71405632	1	193T	TUBE	TUBO RIGIDO
07	71416069	2	231S	CLIP	STAFFETTA
08	11113034	2	40V	SCREW 12X1,75X45	VITE 12X1,75X45
09	10517074	4	131R	WASHER	ROSETTA
11	71404436	1	20R	FITTING -ASS.LY	RACCORDO -COMPL.
11A	71404165	1	158G	O-RING	GUARNIZIONE O-R
12	71404357	2	20R	FITTING -ASS.LY	RACCORDO -COMPL.
12A	71404165	2	158G	O-RING	GUARNIZIONE O-R
13	71405634	1	193T	TUBE	TUBO RIGIDO
15	71415693	2	231S	CLIP	STAFFETTA
16	11112834	2	40V	SCREW 12X1,75X40	VITE 12X1,75X40

FH120

FITTINGS DOTAZIONI	LOT D'OUTILS WERKZEUGE HERRAMIENTAS	4.000 TAV.1

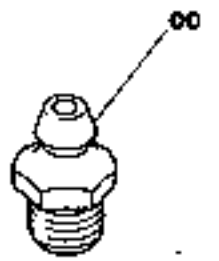

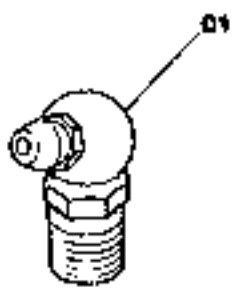



FH120

FITTINGS
DOTAZIONI

LOT D'OUTILS
WERKZEUGE
HERRAMIENTAS

4.000 TAV.1

ITEM	PART NUMBER	QTY	TR. CO.	DESCRIPTION	DESCRIZIONE
00	13407211	10	60I	GREASE FITTING (10x1)	INGRASSATORE (10x1)
01	13407811	5	60I	GREASE FITTING (10x1)	INGRASSATORE (10x1)
02	70923841	5	158G	O-RING 1,8X12,4	GUARNIZIONE O-R 1,8X12,4
	70923843	5	158G	O-RING 1,8X18,8	GUARNIZIONE O-R 1,8X18,8

DECALS TARGHE	PLAQUES KENNZEICHEN PLACAS	4.500 TAV.1

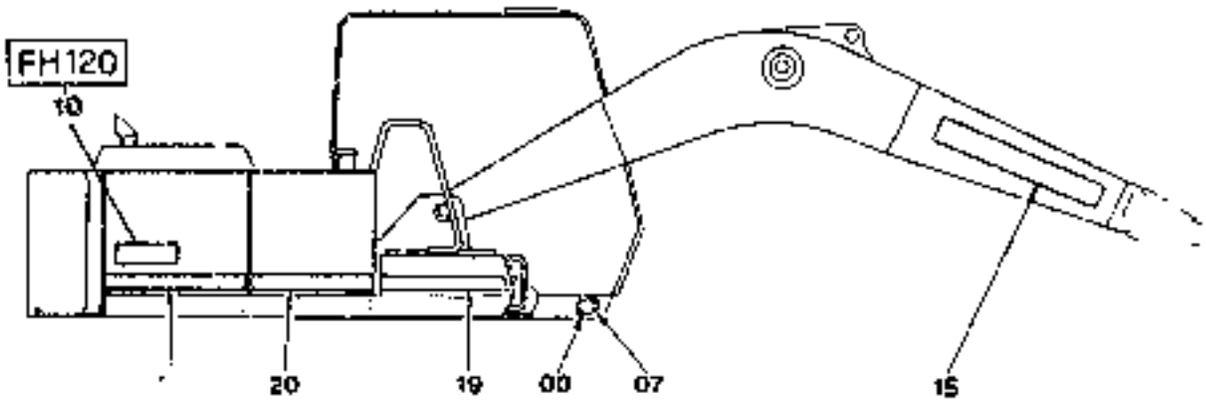

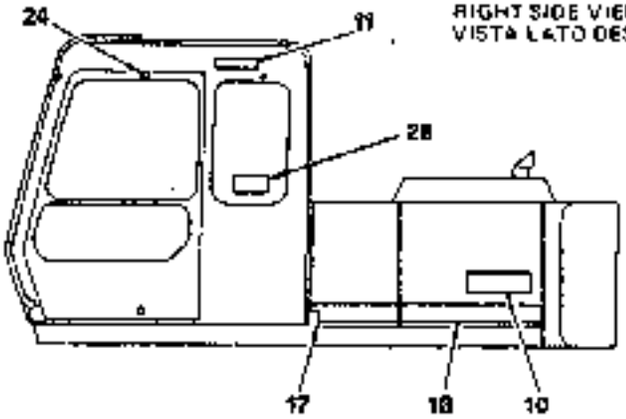

RIGHT SIDE VIEW
VISTA LATO DESTRO

LEFT SIDE VIEW
VISTA LATO SINISTRO

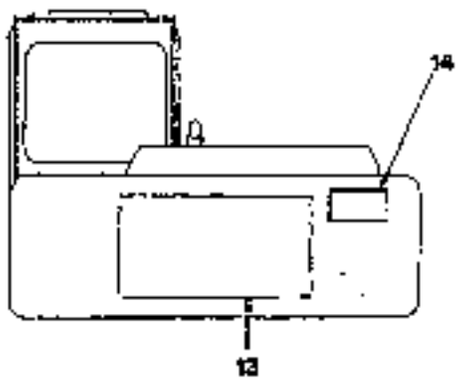

REAR VIEW
VISTA POSTERIORE

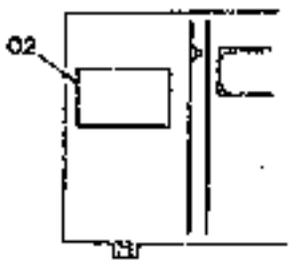

INSIDE VIEW OF TOOL BOX COVER
VISTA INTERNA COFANO "ZONA ATTREZZI"



FRONT VIEW OF CONTROL BOX (LI
VISTA FRONTALE MOBILETTO (Sn)

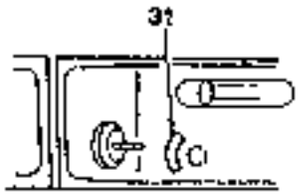

UPSIDE VIEW OF CONTROL BOX (R)
VISTA DA SOPRA MOBILETTO Ds

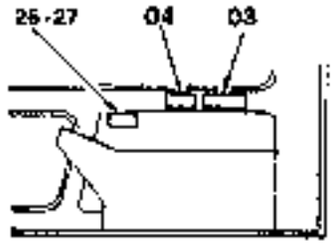

RIGHT INSIDE VIEW OF CAB
VISTA LATO DESTRO CABINA

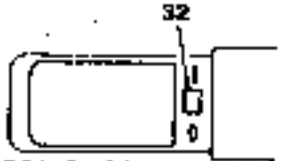

UPSIDE VIEW OF GAUGE PANEL
VISTA DA SOPRA PANNELLO CONTROLLO

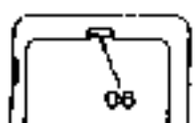

REAR INSIDE VIEW OF CAB
VISTA POST. INTERNO CABINA

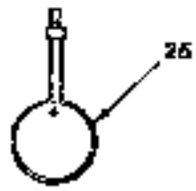

FH120

DECALS
TARGHE

PLAQUES
KENNZEICHEN
PLACAS

4.500 TAV.1

ITEM	PART NUMBER	QTY	TR. CO.	DESCRIPTION	DESCRIZIONE
00	79040883	1	283T	IDENTIFICATION PLATE	TARGHETTA IDENTIFICAZIONE
02	71406006	1	65TM	MAINTENANCE TAG (Ital.)	TARGA MANUTENZIONE (Ital.)
	73158654	1	65TM	MAINTENANCE TAG (Eng.)	TARGA MANUTENZIONE (Eng.)
	71406191	1	65TM	MAINTENANCE TAG (Fran.)	TARGA MANUTENZIONE (Fran.)
	71406253	1	65TM	MAINTENANCE TAG (Deut.)	TARGA MANUTENZIONE (Deut.)
03	71406007	1	65T	DECAL (Ital.)	TARGA (Ital.)
	71406073	1	65T	DECAL (Eng.)	TARGA (Eng.)
	71406192	1	65T	DECAL (Fran.)	TARGA (Fran.)
	71406254	1	65T	DECAL (Deut.)	TARGA (Deut.)
04	71406008	1	65T	DECAL (Ital.)	TARGA (Ital.)
	71406074	1	65T	DECAL (Eng.)	TARGA (Eng.)
	71406193	1	65T	DECAL (Fran.)	TARGA (Fran.)
	71406255	1	65T	DECAL (Deut.)	TARGA (Deut.)
05	71406009	1	65T	DECAL	TARGA
06	71406010	1	65T	DECAL (Ital.)	TARGA (Ital.)
	71406075	1	65T	DECAL (Eng.)	TARGA (Eng.)
	71406194	1	65T	DECAL (Fran.)	TARGA (Fran.)
	71406256	1	65T	DECAL (Deut.)	TARGA (Deut.)
07	13583701	4	40V	SCREW	VITE
10	71406011	2	150S	TRADE MARK (FH120)	SIGLA (FH120)
11		1	150S	TRADE MARK	SIGLA
13	71309704	1	150S	TRADE MARK	SIGLA
14	79060064	1	65T	DECAL (Ital.)	TARGA (Ital.)
	79060297	1	65T	DECAL (Fran.)	TARGA (Fran.)
	79060540	1	65T	DECAL (Eng.)	TARGA (Eng.)
	79060048	1	65T	DECAL (Deut.)	TARGA (Deut.)
15	71309807	2	150S	TRADE MARK	SIGLA
17	71406015	1	8D	DECAL	DECALCOMANIA
18	71406017	1	8D	DECAL	DECALCOMANIA
19	71406018	1	8D	DECAL	DECALCOMANIA
20	71406019	1	8D	DECAL	DECALCOMANIA
21	71406020	1	8D	DECAL	DECALCOMANIA
24	71406021	4	120P	PLATE	PIATTELO
25	71406022	1	65T	DECAL (Ital.)	TARGA (Ital.)
	71406076	1	65T	DECAL (Eng.)	TARGA (Eng.)
	71406195	1	65T	DECAL (Fran.)	TARGA (Fran.)
	71406257	1	65T	DECAL (Deut.)	TARGA (Deut.)
26	71415031	1	65T	DECAL	TARGA
27	71416836	1	65T	DECAL (Eng.)	TARGA (Eng.)
29	71320218	1	65T	DECAL	TARGA
31	71415670	1	65T	DECAL	TARGA
32	71415671	1	65T	DECAL	TARGA

APPLICATION OF OL HAMMER APPLICAZIONE MARTELLO ID. 71406171	MONTAGE DE MARTEAU OLEO'D. VERWENDUNG OELDHAMMERS APLICACION DE MARTILLO O.	5.0020 TAV.1

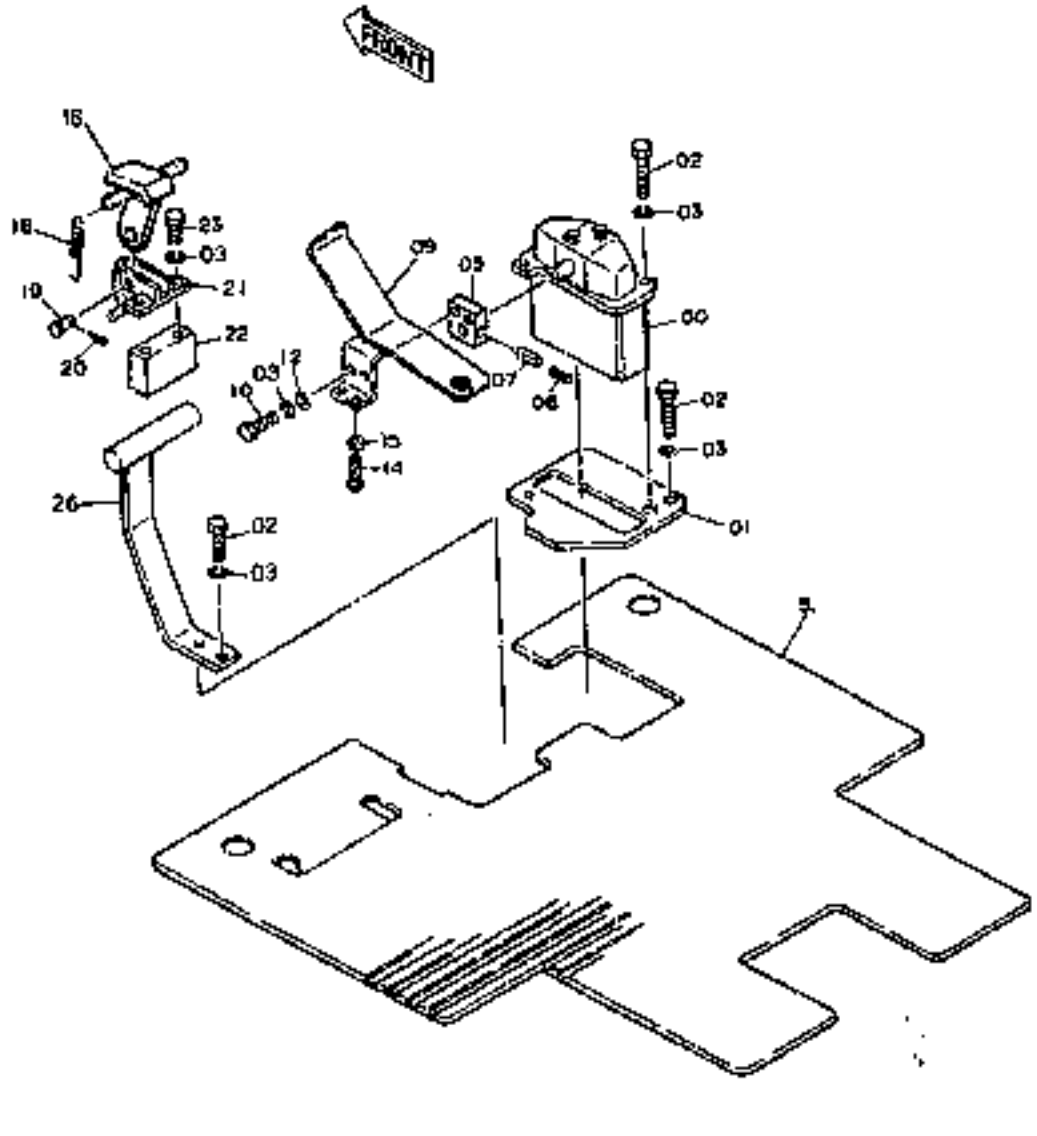

H-12

APPLICATION OF OL. HAMMER
APPLICAZIONE MARTE: LO ID.
7140617V

MONTAGE DE MARTEAU OLEOD.
VERWENDUNG OELD.HAMMERS
APLICACION DE MARTILLO O.

5.0020 TAV.1

ITEM	PART NUMBER	QTY	TR CO.	DESCRIPTION	DESCRIZIONE
00	71401658	1	10V	VALVE	VALVOLA
01	71416903	1	105P	PLATE	PIASTRA
02	11106634	6	40V	SCREW M10X1,5X35	VITE M10X1,5X35
03	10516974	10	131R	WASHER	ROSETTA
05	71416905	1	225S	BRACKET	STAFFA
06	14501470	1	202S	SPRING PIN	SPINA ELASTICA
07	14507070	1	202S	SPRING PIN	SPINA ELASTICA
09	71416919	1	60P	PEDAL	PEDALE
10	11106234	2	40V	SCREW 10X1,5X25	VITE 10X1,5X25
12	14496621	2	131R	WASHER	ROSETTA
14	15213334	1	40V	SCREW 8X1,25X35	VITE 8X1,25X35
15	15100921	1	10D	NUT	DADO
16	71416920	1	225S	BRACKET	STAFFA
18	71416906	1	100M	SPRING	MOLLA
19	10033470	1	60P	PIN	PERNO
20	11502506	1	270C	COTTER PIN	COPIGLIA
21	71416907	1	300S	SUPPORT	SUPPORTO
22	71416911	1	75D	SPACER	DISTANZIALE
23	11106234	2	40V	SCREW 10X1,5X100	VITE 10X1,5X100
26	71416912	1	78A	FOOTREST	APPOGGIAPIEDE
52	71416915	1	30T	MAT	TAPPETO

APPLICATION OF OIL HAMMER APPLICAZIONE MARTELLO ID. 73486171	MONTAGE DE MARTEAU OLEOD. VERWENDUNG OELDHAMMERS APLICACION DE MARTILLO O.	5.0020 TAV.2

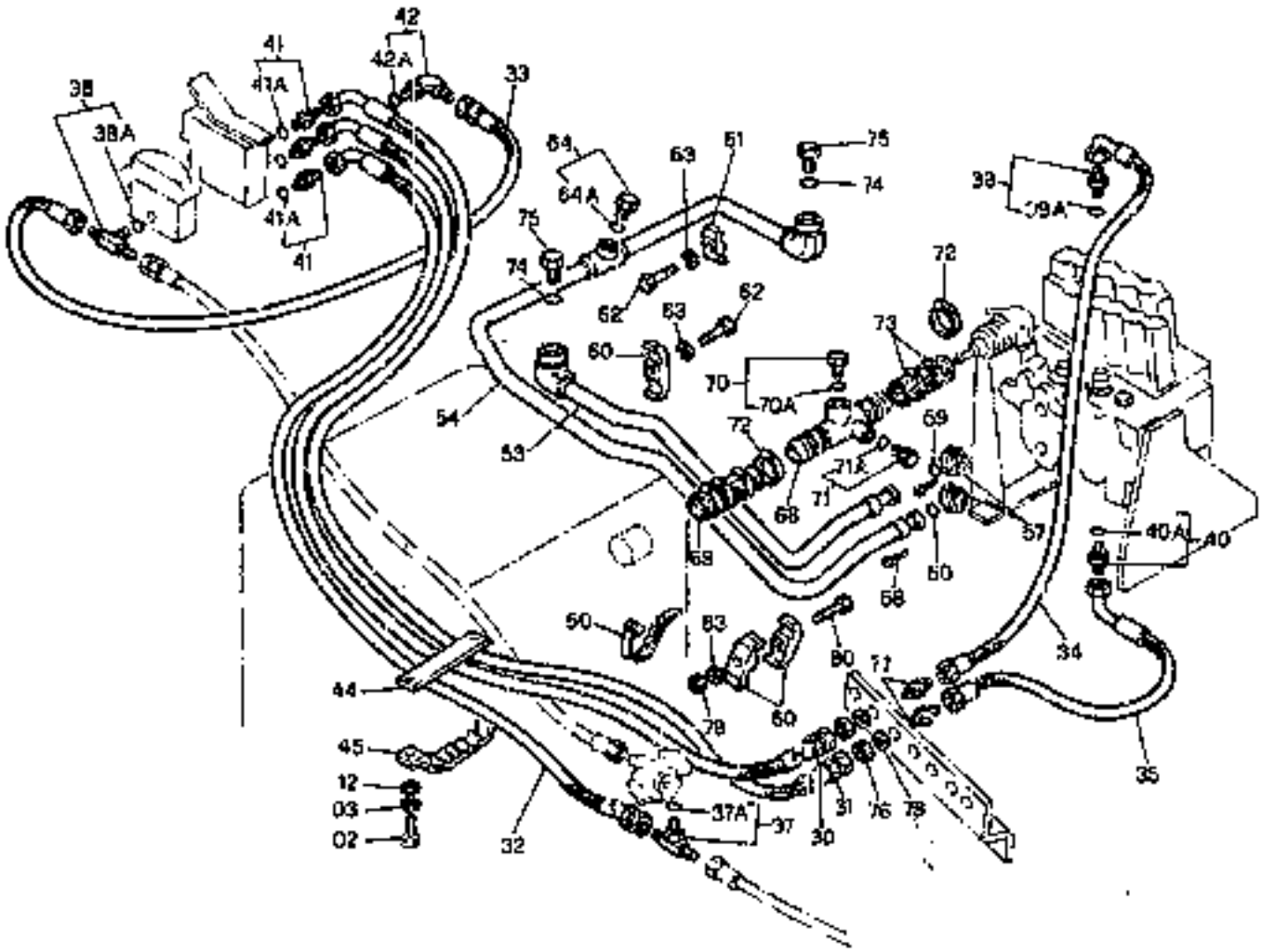

APPLICATION OF OL. HAMMER
APPLICAZIONE MARTELLO ID.
71406171

MONTAGE DE MARTEAU OLEOD.
VERWENDUNG OELD.HAMMERS
APLICACION DE MARTILLO O.

5.0020 TAV.2

ITEM	PART NUMBER	QTY	TRL CO.	DESCRIPTION	DESCRIZIONE
02	11105034	1	40V	SCREW M10X1,5X35	VITE M10X1,5X35
03	10516874	1	131R	WASHER	ROSETTA
12	14405631	2	131R	WASHER	ROSETTA
30	71404768	1	285T	HOSE	TUBO FLESSIBILE
31	71404769	1	285T	HOSE	TUBO FLESSIBILE
32	71404176	1	285T	HOSE	TUBO FLESSIBILE
33	71404177	1	285T	HOSE	TUBO FLESSIBILE
34	71404496	1	285T	HOSE	TUBO FLESSIBILE
35	71404494	1	285T	HOSE	TUBO FLESSIBILE
37	71404433	1	20R	FITTING -ASS.LY	RACCORDO -COMPL.
37A	71404165	1	158G	O-RING	GUARNIZIONE O-R
38	71404431	1	20R	FITTING -ASS.LY	RACCORDO -COMPL.
38A	71404163	1	158G	O-RING	GUARNIZIONE O-R
39	71404355	1	20R	FITTING -ASS.LY	RACCORDO -COMPL.
39A	71404160	1	158G	O-RING	GUARNIZIONE O-R
40	71404357	1	20R	FITTING -ASS.LY	RACCORDO -COMPL.
40A	71404165	1	158G	O-RING	GUARNIZIONE O-R
41	71404351	3	20R	FITTING -ASS.LY	RACCORDO -COMPL.
41A	71404163	1	158G	O-RING	GUARNIZIONE O-R
42	71404404	1	20R	FITTING -ASS.LY	RACCORDO -COMPL.
42A	71404163	1	158G	O-RING	GUARNIZIONE O-R
44	71415895	1	231S	CLIP	STAFFETTA
45	71415894	1	231S	CLIP	STAFFETTA
50	4982514	4	31F	CLAMP	FASCETTA
53	71405199	1	193T	TUBE	TUBO RIGIDO
54	71405201	1	193T	TUBE	TUBO RIGIDO
57	71404399	4	417S	HALF FLANGE	SEMIFLANGIA
58	14306434	8	40V	SCREW 8X1,25X25	VITE 8X1,25X25
59	70924191	2	158G	O-RING	GUARNIZIONE O-R
60	71416088	3	231S	CLIP	STAFFETTA
61	71416090	1	231S	CLIP	STAFFETTA
62	11113234	2	40V	SCREW 12X1,75X50	VITE 12X1,75X50
63	10517074	3	131R	WASHER	ROSETTA
64	71406271	1	50T	PLUG -ASS.LY	TAPPO -COMPL.
64A	71404162	1	158G	O-RING	GUARNIZIONE O-R
68	71416942	1	193T	TUBE	TUBO RIGIDO
69	71416944	2	30M	SLEEVE	MANICOTTO
70	71404515	1	50T	PLUG -ASS.LY	TAPPO -COMPL.
70A	70924192	1	158G	O-RING	GUARNIZIONE O-R
71	71404452	1	50T	PLUG -ASS.LY	TAPPO -COMPL.
71A	71404163	1	158G	O-RING	GUARNIZIONE O-R
72	70063949	4	180C	COLLAR	COLLARE
73	71404503	4	180C	COLLAR	COLLARE
74	70923843	2	158G	O-RING	GUARNIZIONE O-R
75	71404772	2	50T	PLUG	TAPPO
76	8272791	2	10D	NUT	DADO
77	71404396	2	20R	FITTING	RACCORDO
78	10517274	2	131R	WASHER	ROSETTA
79	11702921	1	10D	NUT	DADO
80	11113434	1	40V	SCREW 12X1,75X60	VITE 12X1,75X60

DIPPER STICK (2,1m) BRACCIO PENETRAZ. (2,1m) 71405699	BALANCIER (2,1m) LOEFFELSTIEL (2,1m) BRAZO TERMINAL (2,1m)	5.0922 TAV.1

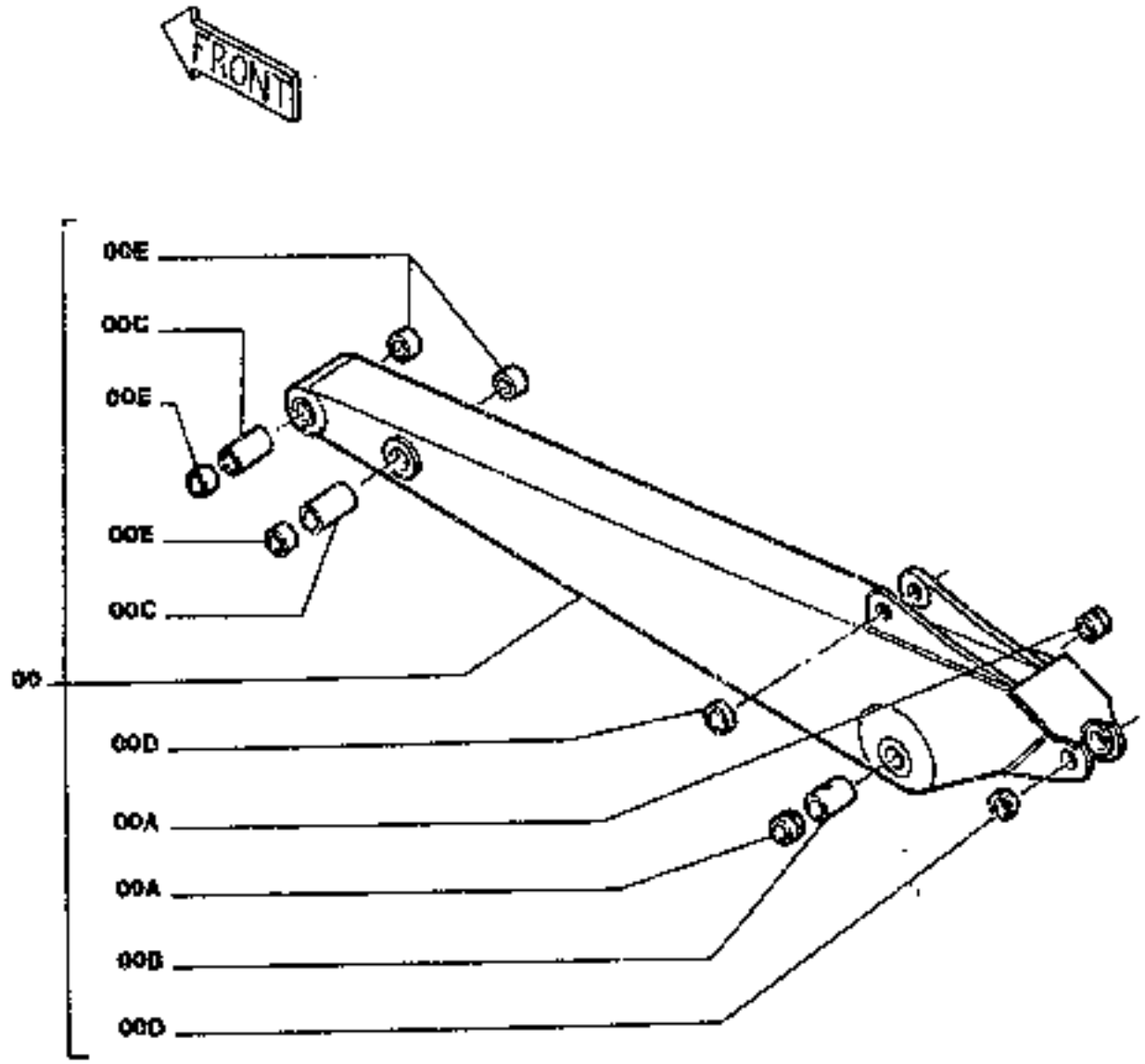

DIPPER STICK (2,1m) BALANCIER (2,1m) 5.0022 TAV.1
BRACCIO PENETRAZ. (2,1m) LOEFFELSTIEL (2,1m)
71405869 BRAZO TERMINAL (2,1m)

ITEM	PART NUMBER	QTY	TR. CO.	DESCRIPTION	DESCRIZIONE
00	71405949	1	130B	ARM ASS.LY	BRACCIO -COMPL.
00A	71405174	2	95B	BUSHING	BOCCOLA
00B	71405175	1	193T	TUBE	TUBO RIGIDO
00C	71405176	2	193T	TUBE	TUBO RIGIDO
00D	71405109	2	75D	SPACER -TO BE WELDED	DISTANZIALE -DA SALDARE
00E	71405159	4	95B	BUSHING	BOCCOLA

FH120

DIPPER STICK (2,1m)
BRACCIO PENETRAZ. (2,1m)
71405999

BALANCIER (2,1m)
LOEFFELSTIEL (2,1m)
BRAZO TERMINAL (2,1m)

5.6022 TAV.2

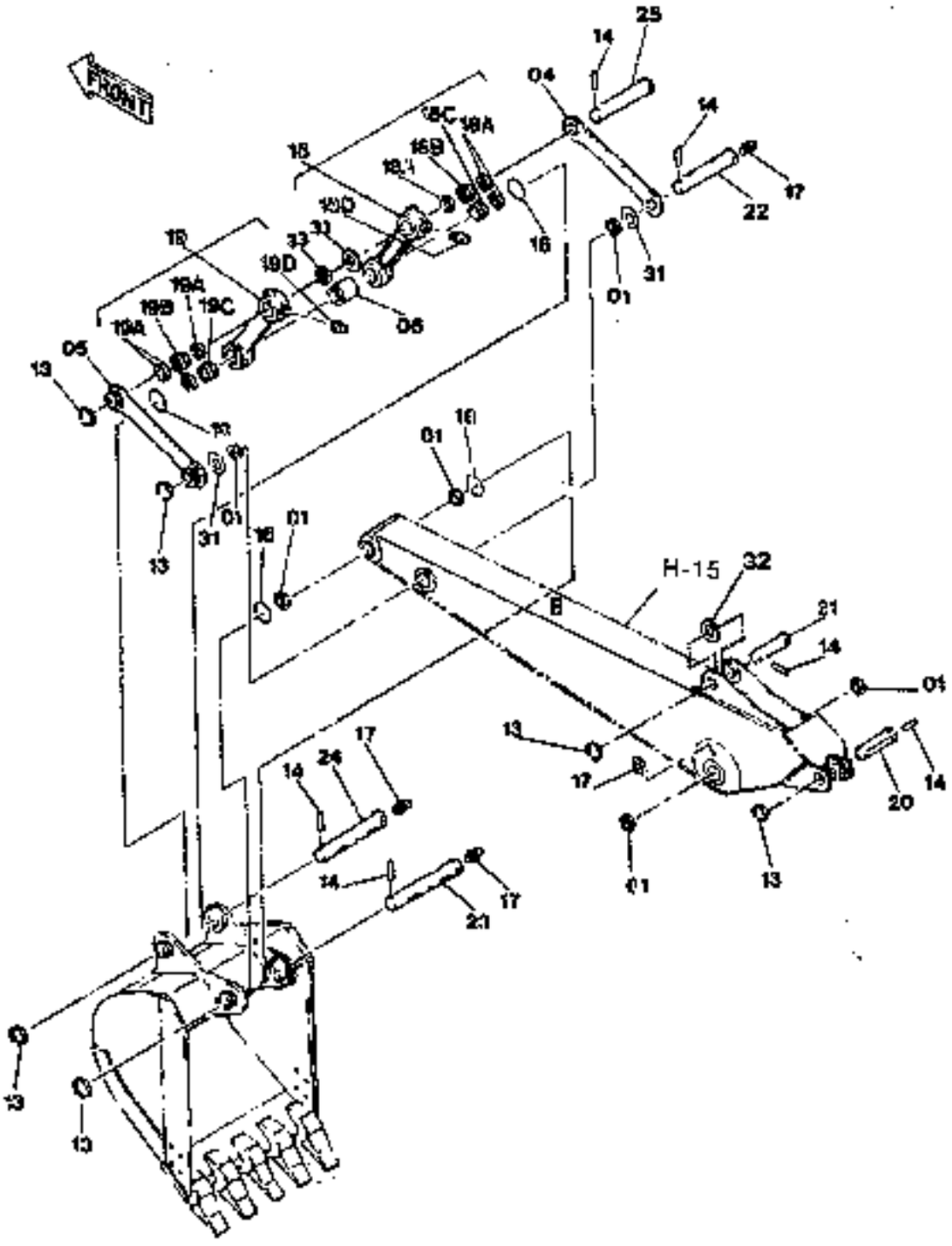

DIPPER STICK (2,1m)
BRACCIO PENETRAZ. (2,1m)
71405000

BALANCIER (2,1m)
LOEFFELSTIEL (2,1m)
BRAZO TERMINAL (2,1m)

5.0022 TAV.2

ITEM	PART NUMBER	QTY	TR. CO.	DESCRIPTION	DESCRIZIONE
01	71405168	6	122G	SEAL	GUARNIZIONE
04	71405152	1	50B	LINK ROD	BIELLA
05	71405153	1	50B	LINK ROD	BIELLA
06	71405158	1	75D	SPACER	DISTANZIALE
13	71405110	6	45A	RING	ANELLO
14	10100230	6	80P	PIN	PERNO
16	71405165	4	158G	O-RING	GUARNIZIONE O-R
17	13407211	5	60I	GREASE FITTING	INGRASSATORE
18	71405156	1	90A	ROD -ASS.Y RIGHT	ASTA -COMPL. DEST.
18A	71405108	3	122G	SEAL	GUARNIZIONE
18B	71405158	1	95B	BUSHING	BOCCOLA
18C	71405159	1	95B	BUSHING	BOCCOLA
18D	13407211	1	60I	GREASE FITTING	INGRASSATORE
19	71405160	1	90A	ROD -ASS.Y LEFT	ASTA -COMPL. SIN.
19A	71405109	3	122G	SEAL	GUARNIZIONE
19B	71405158	1	95B	BUSHING	BOCCOLA
19C	71405159	1	95B	BUSHING	BOCCOLA
19D	13407211	1	60I	GREASE FITTING	INGRASSATORE
20	71405115	1	80P	PIN	PERNO
21	71405163	1	80P	PIN	PERNO
22	71405164	1	80P	PIN	PERNO
23	71405165	1	80P	PIN	PERNO
24	71405166	1	80P	PIN	PERNO
25	71405167	1	80P	PIN	PERNO
31	71405172		131R	WASHER	ROSETTA
32	71435439		131R	WASHER	ROSETTA
				D2525 FROM S/N 0051	D2525 DAL TELAIO 0051
33	45015167		131R	WASHER	ROSETTA
				D2525 FROM S/N 0051	D2525 DAL TELAIO 0051

COLD STARTING AIDE DISP. AVVIAMENTO A FREDDO	DEMARRAGE A FROID KALTSTARTVORRICHTUNG DISPOSITIVO TERMOSTARTER	5.0025	TAV.1

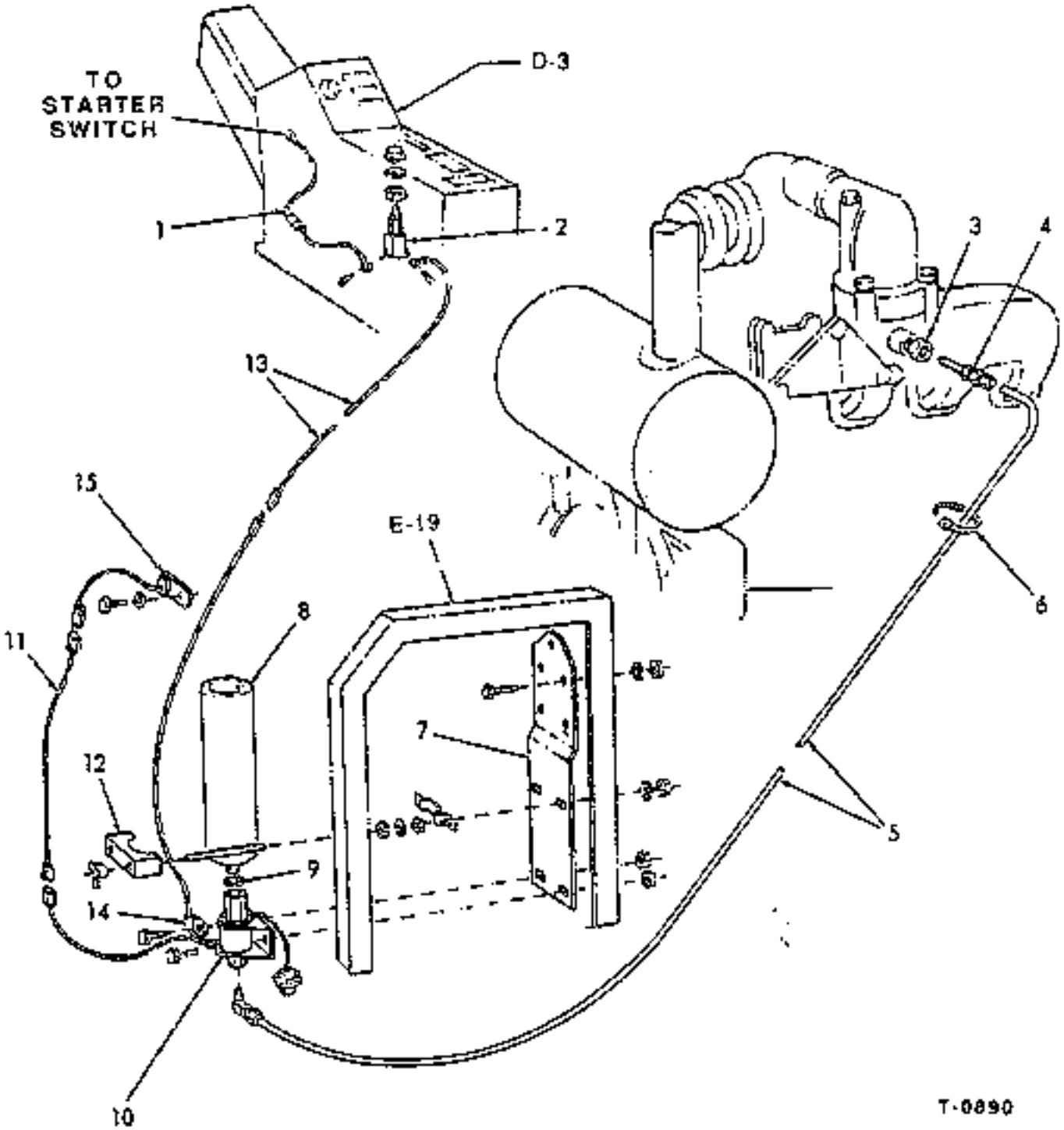

COLD STARTING AIDE
DISP. AVVIAMENTO A FREDDO

DEMARRAGE A FROID
KALTSTARTVORRICHTUNG
DISPOSITIVO TERMOSTARTER

5.0025 TAV.1

ITEM	PART NUMBER	QTY	TR. CO.	DESCRIPTION	DESCRIZIONE
1	73153879	1	111C	CABLE, INCLUDES FUSE	
2	73115559	1	75I	SWITCH	
3	70901825	1	95B	BUSHING	
4	73119442	1	550E	ATOMIZER	
5	73115566	1	206T	TUBE	
	73052086	1	85G	ELBOW	
	70911841	2	59C	SLEEVE	
	70912589	2	10D	NUT	
6	70198775	12	501H	TIE	
			600P	AS REQUIRED	
7	73138080	1	80M	BRACKET	
	70921566	2	40V	CAPSCREW,1/2"NCX2"	
	70904205	2	131R	WASHER	
	70911025	2	10D	NUT,1/2"NC	
8	73132158	1	164C	CYLINDER	
			500L	INCLUDES ITEM 9	
9	73070169	1	123G	GASKET.	
10	73075165	1	10V	VALVE	
	70828138	2	40V	CAPSCREW,1/4"NCX5/8"	
	70917730	2	10D	NUT	
11	73153877	1	111C	CABLE ELEC.	
12	70669359	1	120M	CLAMP	
			600R	INCLUD. HARDWARE	
13	73153878	1	111C	CABLE ELEC	
14	70639388	1	89G	CLIP	
15	73075166	1	500F	THERMOGUARD	

FH120

DIPPER STICK (3m)
BRACCIO PENETRAZIONE (3m)
71405936

BALANCIER (3m)
LOEFFELSTIEL (3m)
BRAZO TERMINAL (3m)

5.0038 TAV.1

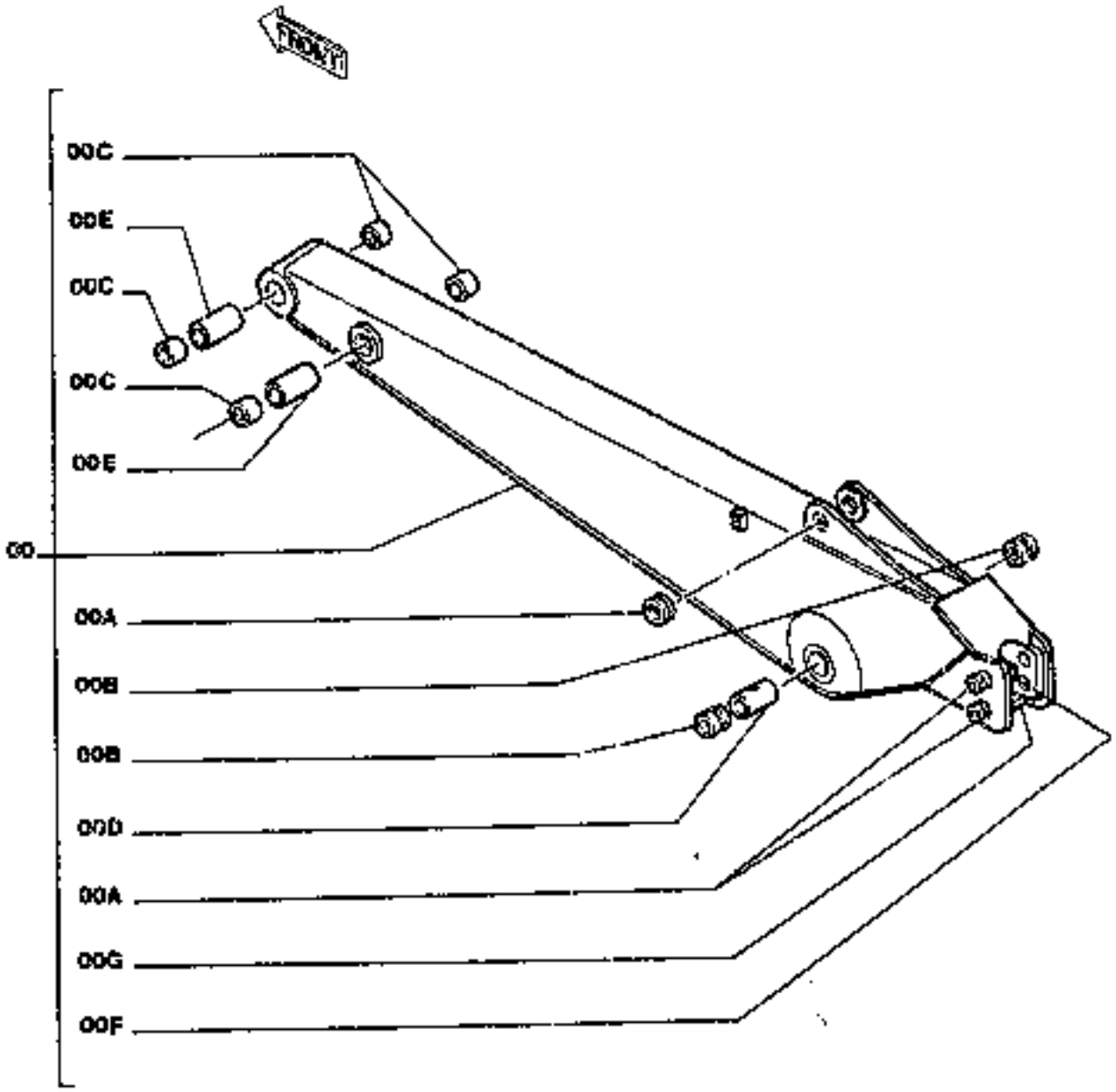

FH120

DIPPER STICK (3m)
BRACCIO PENETRAZIONE (3m)
71405938

BALANCIER (3m)
LOEFFELSTIEL (3m)
BRAZO TERMINAL (3m)

5.0038 TAV.1

ITEM	PART NUMBER	QTY	YR CO.	DESCRIPTION		DESCRIZIONE	
00	71405938	1	1308	ARM -ASS'LY		BRACCIO -COMPL.	
00A	71405109	3	75D	SPACER -TO BE WELDED		DISTANZIALE -DA SALDARE	
00B	71405174	2	95B	BUSHING		BOCCOLA	
00C	71405159	4	95B	BUSHING		BOCCOLA	
00D	71405175	1	75D	SPACER		DISTANZIALE	
00E	71405176	2	75D	SPACER		DISTANZIALE	
00F	71405901	2	74B	BLOCK		BLOCCHETTO	
				C2521 UP TO S/N	0050	C2521 FINO AL TELAIO	0050
00G	71405902	2	74B	BLOCK		BLOCCHETTO	
				C2521 UP TO S/N	0050	C2521 FINO AL TELAIO	0050

DIPPER STICK (3m) BRACCIO PENETRAZIONE (3m) 71405936	BALANCIER (3m) LOEFFELSTIEL (3m) BRAZO TERMINAL (3m)	5.0036 TAV.2

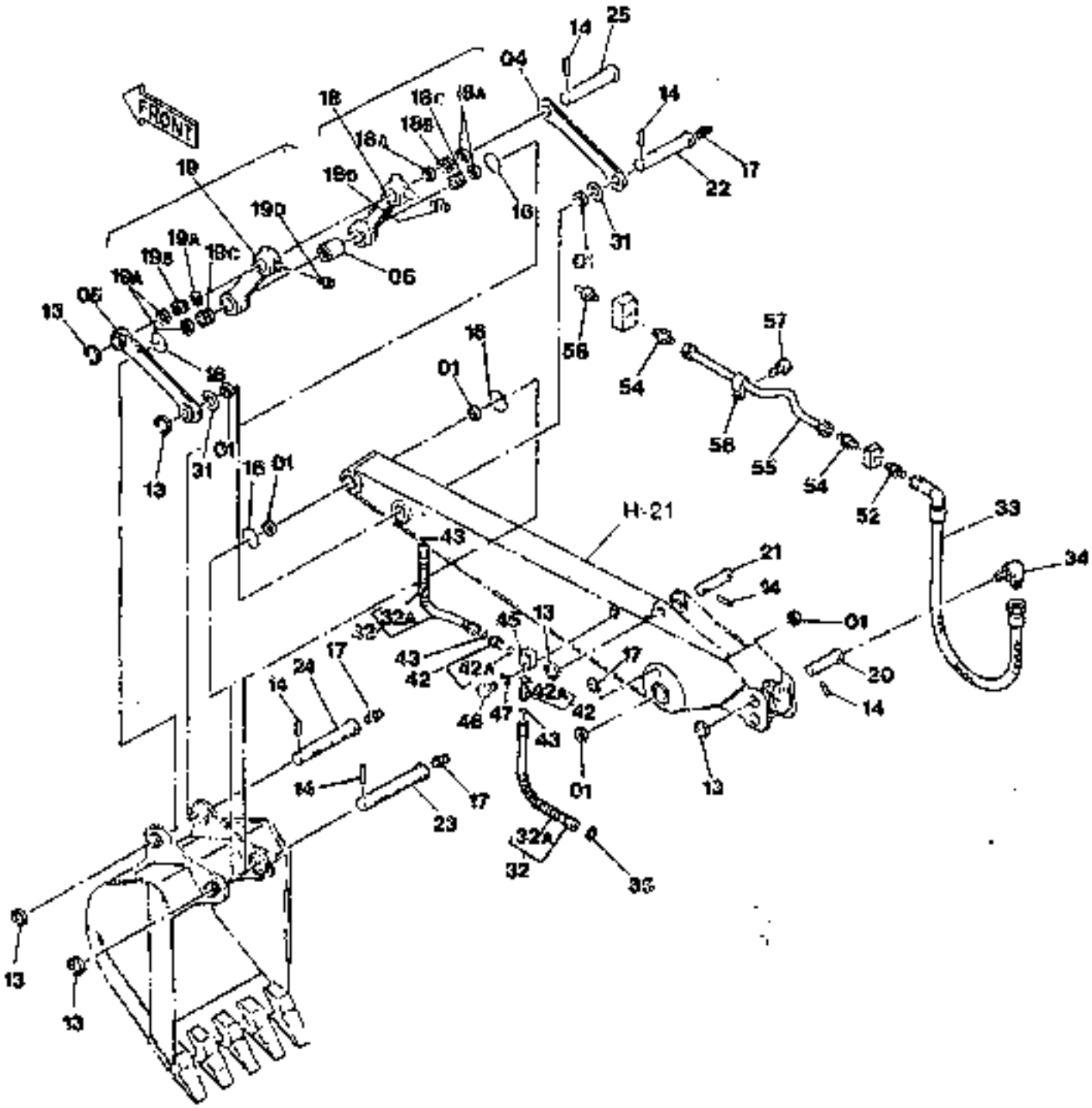

DIPPER STICK (3m)
BRACCIO PENETRAZIONE (3m)
71405936

BALANCIER (3m)
LOEFFELSTIEL (3m)
BRAZO TERMINAL (3m)

5.0038 TAV.2

ITEM	PART NUMBER	QTY	TP. CO.	DESCRIPTION	DESCRIZIONE
01	71405108	6	122G	SEAL	GUARNIZIONE
04	71405152	1	50B	LINK ROD	BIELLA
05	71405153	1	60B	LINK ROD	BIELLA
06	71405168	1	75D	SPACER	DISTANZIALE
13	71405110	6	45A	RING	ANELLO
16	71405155	4	158G	O-RING	GUARNIZIONE O-R
17	13407211	5	60I	GREASE FITTING	INGRASSATORE
18	71405156	1	90A	ROD -ASS.Y RIGHT	ASTA -COMPL. DEST
18A	71405109	3	122G	SEAL	GUARNIZIONE
18B	71405159	1	95B	BUSHING	BOCCOLA
18C	71405159	1	95B	BUSHING	BOCCOLA
18D	13407211	1	60I	GREASE FITTING	INGRASSATORE
19	71405160	1	90A	ROD -ASS.Y LEFT	ASTA -COMPL. SIN.
	71405160	1	90A	ROD -ASS.Y LEFT	ASTA -COMPL. SIN.
19A	71405109	3	122G	SEAL	GUARNIZIONE
19B	71405158	1	95B	BUSHING	BOCCOLA
19C	71405158	1	95B	BUSHING	BOCCOLA
19D	13407211	1	60I	GREASE FITTING	INGRASSATORE
20	71405929	1	80P	PIN	PERNO
21	71405163	1	80P	PIN	PERNO
22	71405164	1	80P	PIN	PERNO
23	71405165	1	80P	PIN	PERNO
24	71405166	1	80P	PIN	PERNO
25	71405167	1	80P	PIN	PERNO
31	71405172	2	131R	WASHER	ROSETTA
32	71404132	4	285T	HOSE -ASS.LY	TUBO FLESSIBILE -COMPL.
32A	71404118	4	142G	SHEATH	GUAINA
33	71404120	1	285T	HOSE	TUBO FLESSIBILE
34	71404406	1	20R	FITTING	RACCORDO
35	71405873	2	131R	WASHER	ROSETTA
42	71404361	4	20R	FITTING	RACCORDO
42A	71404168	4	158G	O-RING	GUARNIZIONE O-R
43	70923941	6	158G	O-RING	GUARNIZIONE O-R
45	71405900	2	74B	BLOCK	BLOCCHETTO
46	11107434	4	40V	SCREW 10X1,5X60	VITE 10X1,5X60
47	10516874	4	131R	WASHER	ROSETTA
52	71404363	1	20R	FITTING	RACCORDO
54	71404364	2	20R	FITTING	RACCORDO
55	71405932	1	193T	TUBE	TUBO RIGIDO
56	10418301	1	231S	CLIP	STAFFETTA
57	10979434	1	40V	SCREW 6X1X10	VITE 6X1X10
58	13407811	1	60I	GREASE FITTING	INGRASSATORE

I-1

ALPHABETICAL INDEX

DESCRIPTION	SGR.	TAV.	GRID
Accelerator controls	0.004	1	1C-23
Air Cleaner	0.001	1	1C-13
Alternator-Mounting	0.400	1	1H-9
Alternator (55 amp)	0.400	2	1H-11
Alternator (35 amp)	0.400	3	1H-13
Anti-Shock Valve (Hydr.)	1.082	3	1L-3
Application of Ol. Hammer	5.0020	2	2H-13
Batteries	1.220	4	2D-19
Belts	0.340	1	1G-21
	0.345	1	1G-23
Boom Piping	2.030	1	2F-13
Brake Valve Components	3.010	4	2G-11
Bucket	2.020	1	2F-9
Bucket Cylinder	2.030	5	2F-21
Bull Gear	3.000	1	2G-3
Cab	1.250	1	2D-19
Cab Door	1.250	5	2E-7
Cab Heater-Components	1.290	2	2E-15
Cab Window-Left Side	1.250	6	2E-9
Cab-Frame	1.250	7	2E-11
Cab-Platform	1.250	1	2D-21
Camshaft	0.120	1	1E-19
Check Valve	1.081	2	1K-17
Cold Starting Aid	5.0025	1	2H-19
Connecting Rod	0.081	1	1E-10
Cont. Valve-Hydr. (Ass.Y)	1.050	1	1J-13
Control Valve-Hydr.	1.050	2	1J-17
	1.050	3	1J-19
	1.050	4	1J-21
	1.050	5	1J-23
Controls	1.070	1	1K-5
Counterweight	1.000	1	1I-3
Cowlings	1.300	1	2E-19
	1.300	2	2E-21
Crankshaft	0.080	1	1E-7
Crankshaft Pulley	0.084	1	1E-15
Cylinder-Block [illegible]	0.040	1	1D-5
	0.040	2	1D-7
	0.040	3	1D-9
Cylinder Block Covers	0.043	1	1D-13
	0.043	2	1D-15
Cylinder Head	0.060	1	1D-21
	0.060	2	1D-23
Dashboard (L[illegible])	1.210	1	2D-9
Dashboard (R[illegible])	1.200	1	2D-3
	1.200	3	2D-7
Data Monitor	1.200	2	2D-5
Decals	4.500	1	2H-9
Dipper Stick (2.1m)	5.0022	1	2H-15
Dipper Stick (2,5m) (STD.)	2.003	1	2F-5
Dipper Stick(2,5m)Links(Std.)	2.003	2	2F-7
Dipper Stick (3m)	5.0038	1	2H-21
	5.0039	2	2H-23
Dipper Stick cylinder	2.030	4	2F-19
Dipstick-Engine Oil	0.305	2	1G-7
Discharge Valve	1.040	4	1J-3
Discharge Valve Componen.	3.010	5	2G-13
Drive on Engine (Opt.)	0.350	1	1H-3
Electric System	1.220	2	2D-13
Elements-Engine Oil	0.001	1	1C-13
Elements-fuel	0.200	1	1F-11
Elements-Hydraulic	1.020	1	1E-19
Elements-Pilot	1.080	1	1K-11
Emergency Kits	4.000	1	2H-7
Engine	0.021	1	1D-3
Engine-Controls	0.004	1	1C-23
Engine-Suspensions	0.000	1	1C-11
Engine Breather	0.045	1	1D-17
	0.045	1A	1D-19
Engine Cooling Piping	0.323	1	1G-17
Engine Heat Exchanger	0.310	1	1G-9
	0.310	2	1G-11
Engine Lifting Eyes	0.450	1	1H-15
Engine Oil Filter	0.302	1	1G-3
Engine Oil Piping	0.305	1	1G-5
Engine Oil Pump	0.300	1	1F-23
Engine Oil Sump	0.042	1	1D-11
Engine Piston	0.082	1	1E-11
Engine Suspensions	0.600	1	1C-11
Exhaust Manifold	0.077	1	1E-5
Exhaust Valve	0.060	2	1D-23
Fan	0.345	1	1G-23
Fan Drive	0.345	1	1G-23
"Filter Care" Kit	21		1A-23
Filter-Pilot System	1.080	1	1K-11
Filters-Air	0.001	1	1C-13
Filters-Engine Oil	0.302	1	1G-3
Filters-Fuel	0.200	1	1F-11
Filters-Hydr. System	1.020	1	1I-7
Flywheel-Engine	0.083	1	1E-13
Fuel Filter	0.200	1	1F-11
Fuel Piping	0.203	1	1F-15
Fuel Pump	0.201	1	1F-13
Fuel Tank	1.010	1	1I-5
Fuses	1.200	3	2D-7
Guards	1.300	2	2E-21
Handle	1.300	3	2E-23
Heater	1.290	1	2E-15
Horn	1.220	2	2D-15
Hyd.Pump Drive	1.030	7	1I-21
Hyd.Pump Regulator Valve	1.030	6	1I-19
Hyd.Pump Regulator-Cover	1.030	4	1I-15
	1.030	5	1I-17
Hydr.Pump-Components	1.030	2	1I-11
Hydr.Pump Regulator-Comp.	1.030	3	1I-13

ALPHABETICAL INDEX

DESCRIPTION	SGR.	TAV.	GRID
Hydraulic Pump	1.030	1	1I-9
Idler	3.020	1	1G-15
Injection Nozzle-Lines	0.149	1	1F-9
Injection Pump	0.140	2	1E-23
	0.140	3	1F-3
	0.140	4	1F-5
	0.140	5	1F-7
Injection Pump-Piping	0.140	1	1E-21
Intake Manifold	0.071	1	1E-3
Intake Valve	0.060	2	1D-21
Lift Cylinder (Left)	2.030	3	1F-17
Lift Cylinder (Right)	2.030	2	2F-15
Lights	1.220	2	2D-15
Lower Frame	3.000	1	2G-3
Lubric. Fitting Piping	2.040	1	2F-23
Main Piping	1.060	1	1K-3
Mirror (Rear)	1.300	2	2E-21
Monoblinc Boom	2.000	1	2F-3
Motor - Starter	0.360	2	1H-7
Motor - Swing	1.040	1	1J-3
Motor - Travel	3.010	1	12G-5
Motor - Wiper	1.220	1	2D-13
Muffler	0.002	1	1C-15
Oil Tank	1.020	1	1I-7
Operator's Seat	1.250	2	2D-23
OperatorsSeat(Bostrom)(Std.)	5.0151	1	2I-3
Pilot Gear Pump	1.030	8	1I-23
Pilot Piping(1)	1.080	1	1K-11
Pilot Piping(2)	1.081	1	1K-15
Pilot Piping(3)	1.082	1	1K-19
Pilot Piping (4)	1.083	1	1L-5
Pilot Piping (5)	1.084	1	1L-7
Pilot Valve	1.070	3	1K-9
Pilot Valve-components	1.070	2	1K-7
Pipin-Boom	2.030	1	2F-13
Piping-Engine Oil	0.350	1	1H-3
Piping-Injection	0.149	1	1F-9
Piping-Lube Fittings	2.040	1	2G-23
Piping-Main	1.060	1	1K-3
Piping-Pilot(1)	1.080	1	1K-11
Piping-Pilot(3)	1.082	1	1K-19
Piping-Pilot(4)	1.083	1	1L-5
Piping-Pilot(5)	1.084	1	1L-7
Piping-Pump Contr. Valve	1.050	1	1J-13
Piping-Travel (Lower)	3.070	1	2H-5
Piping-Turbocharger	0.241	1	1F-21
Pump-Engine Oil	0.300	1	1F-23
Pump-Fuel	0.201	1	1F-13
Pump-Hydraulic	1.030	1	1I-9
Pump-Injection	0.140	1	1E-21
Pump-Pilot	1.030	8	1I-23
Pump-Water	0.320	1	1G-13
Pump/Control Valve Piping	1.050	1	1J-13
Radiator	0.009	1	1C-17
Radiator-Components	0.009	2	1C-19
	0.009	3	1C-21
Rocker Arm	0.080	2	1D-23
Rotary Distr.-Components	3.060	2	2H-3
Rotary Distributor	3.060	1	2G-23
Seat Belt (Std.)	5.0536	1	2I-5
Sensors	1.220	2	2D-15
Solenoid Valve	1.080	2	1K-13
Starter	0.360	2	1H-7
Starter-Mounting	0.360	1	1H-5
Stop Valve	1.082	2	1K-23
Swing Motor-Components	1.040	3	1J-7
Swing Red.Unit-Components	1.040	2	1J-5
Swing Reduction Unit	1.040	1	1J-3
Thermostat & Housing	0.326	1	1G-19
Timing Control	0.100	1	1E-17
Tool Kit	5.0083	1	2I-9
track Chain	3.050	1	2G-21
Track Roller	3.040	1	2G-19
Travel Motor-componen.	3.010	3	2G-9
Travel Piping (Lower)	3.070	1	2H-5
Travel Red.Unit-Componen.	3.010	2	2G-7
Travel Reduction Units	3.010	1	2G-5
Turbocharger	0.240	1	1F-17
	0.240	2	1F-19
Turbocharger Piping	0.241	1	1F-21
Upper Frame	1.000	1	1E-17
Upper Roller	3.030	1	2G-17
Valve-Anti-Shock(Hydr.)	1.082	3	1L-3
Valve-Check (Pilot)	1.081	2	1K-17
Valve-Exhaust	0.060	2	1D-23
Valve-Intake	0.060	2	1D-23
Valve-Pilot (Hydr.)	1.070	1	1K-5
Valve-Relief(Travel)	1.070	1	1K-5
Valve-Solenoid	1.080	2	1K-13
Valve-Stop(Travel)	1.082	1	1K-21
Washer (windshield)	1.220	3	2D-17
Water Pump	0.320	1	1G-13
Water Pump Drive	0.340	1	1G-21
Water Pump-Components	0.320	2	1G-15
Wiper	1.220	1	2D-11

TOOL KIT
ACCESSORI MANUTENZIONE
71405986

ACCESSOIRES D'ENTRETIEN
BORDWERKZEUGE
HERRAMIENTAS

5.0063 TAV.1

NTR 105S VI-89 604 04 069.01 - 604 04 084.01

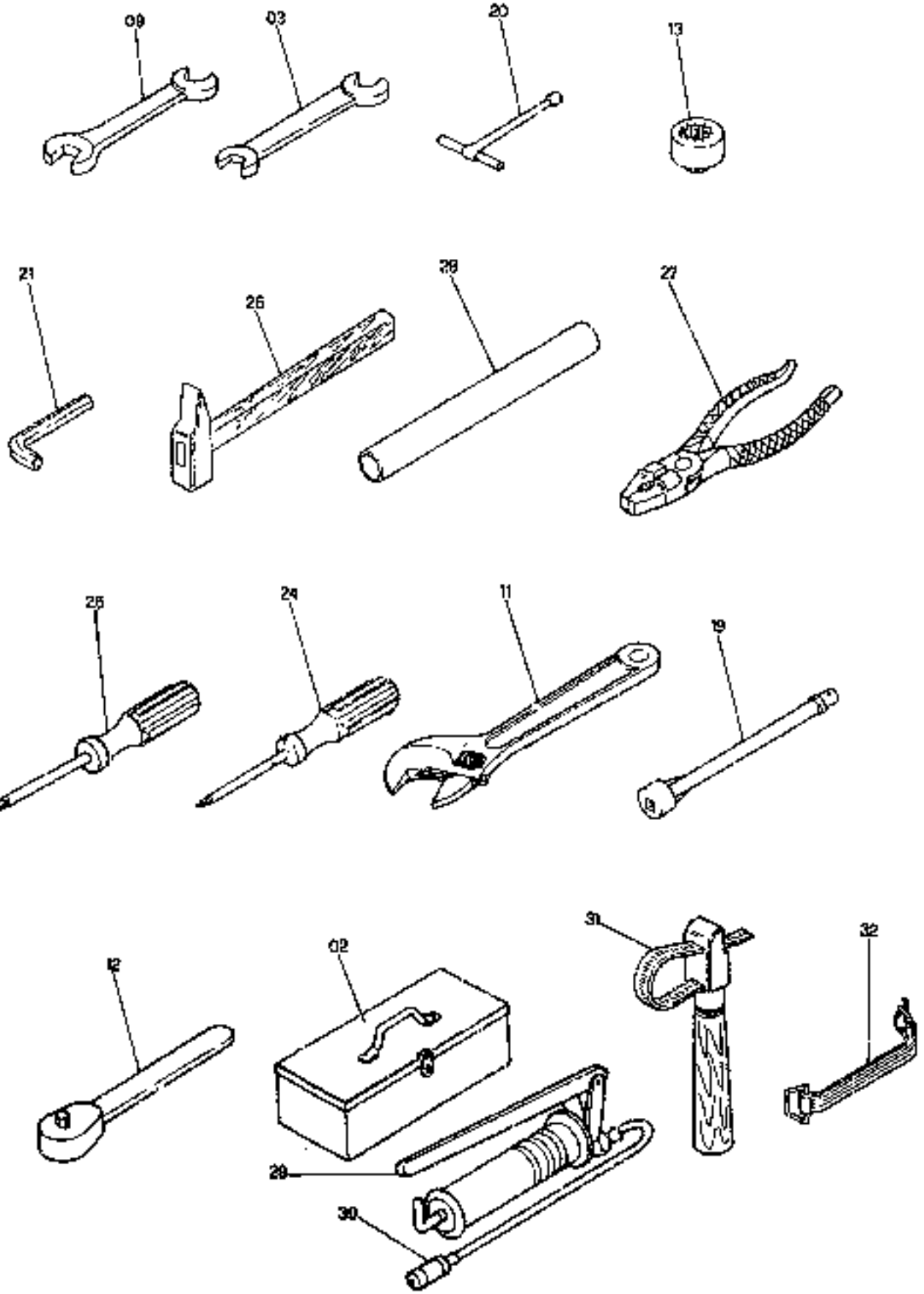

FH120

TOOL KIT ACCESSORI MANUTENZIONE 71405985	ACCESSOIRES D'ENTRETIEN BORDWERKZEUGE HERRAMIENTAS	5.0985 TAV.1 NTR 105S VI-89 604 04 069.01-604 04 084.01

ITEM	PART NUMBER	QTY	TR. CO.	DESCRIPTION	DESCRIZIONE
02	71405981	1	67C	TOOL BOX	CASSETTA ATTREZZI
03	14522421	1	150C	KEY 12x17	CHIAVE 13x17
	14525020	1	150C	KEY 8X10	CHIAVE 8X10
	14546079	1	150C	KEY 12X14	CHIAVE 12X14
	14546079	1	150C	KEY 19x22	CHIAVE 19x22
	14550079	1	150C	KEY 24x27	CHIAVE 24x27
09	71405982	1	150C	KEY 30x32	CHIAVE 30x32
	71405983	1	150C	KEY 36X41	CHIAVE 36X41
11	71405985	1	150C	KEY	CHIAVE
12	71405986	1	150C	KEY 1/2"	CHIAVE 1/2"
13	71405987	1	150C	KEY 17	CHIAVE 17
	71405988	1	150C	KEY 19	CHIAVE 19
	71405989	1	150C	KEY 22	CHIAVE 22
	71405990	1	150C	KEY 24	CHIAVE 24
	71405991	1	150C	KEY 27	CHIAVE 27
	71405992	1	150C	KEY 30	CHIAVE 30
19	71405993	1	222P	EXTENSION	PROLUNGA
20	71405994	1	150C	KEY 10	CHIAVE 10
21	14534079	1	150C	KEY 4	CHIAVE 4
	14534279	1	150C	KEY 6	CHIAVE 6
	14534379	1	150C	KEY 8	CHIAVE 8
	14534479	1	150C	KEY 10	CHIAVE 10
	14534579	1	150C	KEY 12	CHIAVE 12
24	14526090	1	10C	SCREWDRIVER	CACCIAVITE
25	14526290	1	10C	SCREWDRIVER	CACCIAVITE
26	14562790	1	51M	HAMMER 0,5 Kg.	MARTELLO 0,5 Kg.
27	14526671	1	125P	PLIERS	PINZA
28	71405995	1	193T	TUBE	TUBO RIGIDO
29	79029977	1	992	GREASING PUMP -IN ALTER.	POMPA INGRASSAGGIO -IN ALTER.
	79029978	1	992	GREASING PUMP -IN ALTER.	POMPA INGRASSAGGIO -IN ALTER.
	79029979	1	992	GREASING PUMP -IN ALTER.	POMPA INGRASSAGGIO -IN ALTER.
	79029980	1	992	GREASING PUMP -IN ALTER.	POMPA INGRASSAGGIO -IN ALTER.
30	79029981	1	265T	HOSE	TUBO FLESSIBILE
31	71304923	1	150C	KEY	CHIAVE
32	79030150	2	173C	BELT	CINGHIA

OPERATOR'S SEAT(Bostrom) SEDILE (Bostrom) 71406293	SIEGE DE CONDUC.(Bostrom) FAHRERSITZ (Bostrom) ASIENTO DE COND.(Bostrom)	5.2151 TAV.1

SEAT WHIT CLOTH COVERING
SEDILE CON RIVESTIMENTO IN PANNO

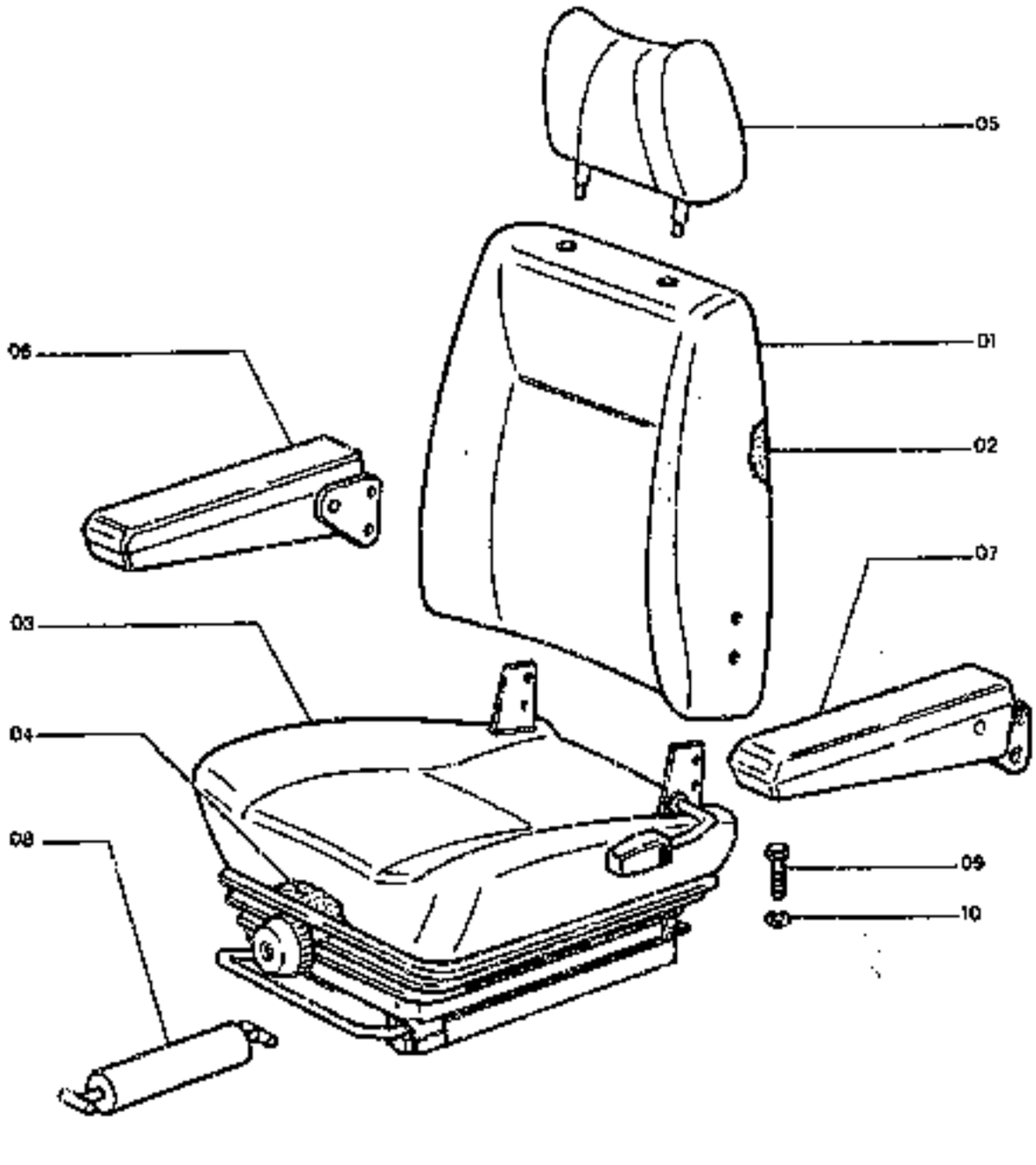

F4120

OPERATOR'S SEAT(Bostrom) SIEGE DE CONDUC.(Bostrom) S.0151 TAV.1
SEDILE (Bostrom) FAHRERSITZ (Bostrom)
71406293 ASIENTO DE COND.(Bostrom)

ITEM	PART NUMBER	QTY	TRL CO.	DESCRIPTION	DESCRIZIONE
0 1-08	71406294	1	80S	SEAT -ASS.LY	SEDILE -COMP.L.
01	71406295	1	50S	SEAT BACK	SCHIENALE
02	71406228	1	24I	PADDING	IMBOTTITURA
03	71406296	1	345C	CUSHION	CUSCINO
04	71406230	1	24I	PADDING	IMBOTTITURA
05	71406297	1	1A	HEAD-REST	APPOGGIATESTA
06	71406299	1	124B	ARMREST	BRACCIOLO
07	71406298	1	124B	ARMREST	BRACCIOLO
08	71406234	1	3SA	SHOCK ABSORBER	AMMORTIZZATORE
09	14308221	4	40V	SCREW 8X1,25X16	VITE 8X1,25X16
10	10571774	4	131R	WASHER	ROSETTA

FH120

SEAT BELT	CEINTURE DE SECURITE	5.0536 TAV 1
CINTURA DI SICUREZZA	SICHERHEITSGURT	
71406149	CINTURON DE SEGURANZA	

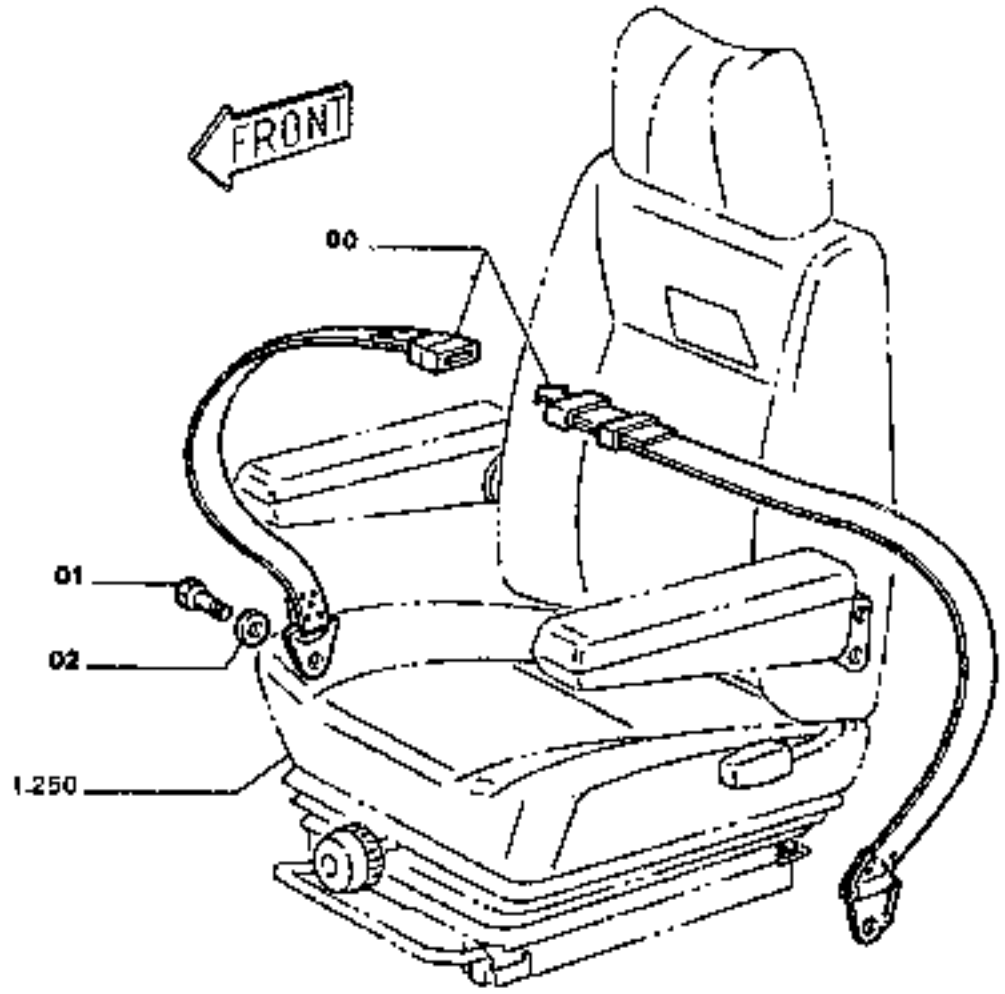

FH120

SEAT BELT CINTURA DI SICUREZZA 71406149	CEINTURE DE SECURITE SICHERHEITSGURT CINTURON DE SEGURANZA	5.053ö TAV 1

ITEM	PART NUMBER	QTY	TR.	DESCRIPTION	DESCRIZIONE
00	71406173	1	182C	SEAT BELT	CINTURA DI SICUREZZA
	73075858	1	182C	SEAT BELT	CINTURA DI SICUREZZA
			600J	SPECIAL EQUIPMENT	
01	70928280	2	40V	SCREW	VITE
02	14496731	2	131R	WASHER	ROSETTA

CAB VANDALISM

5.0540 TAV.1

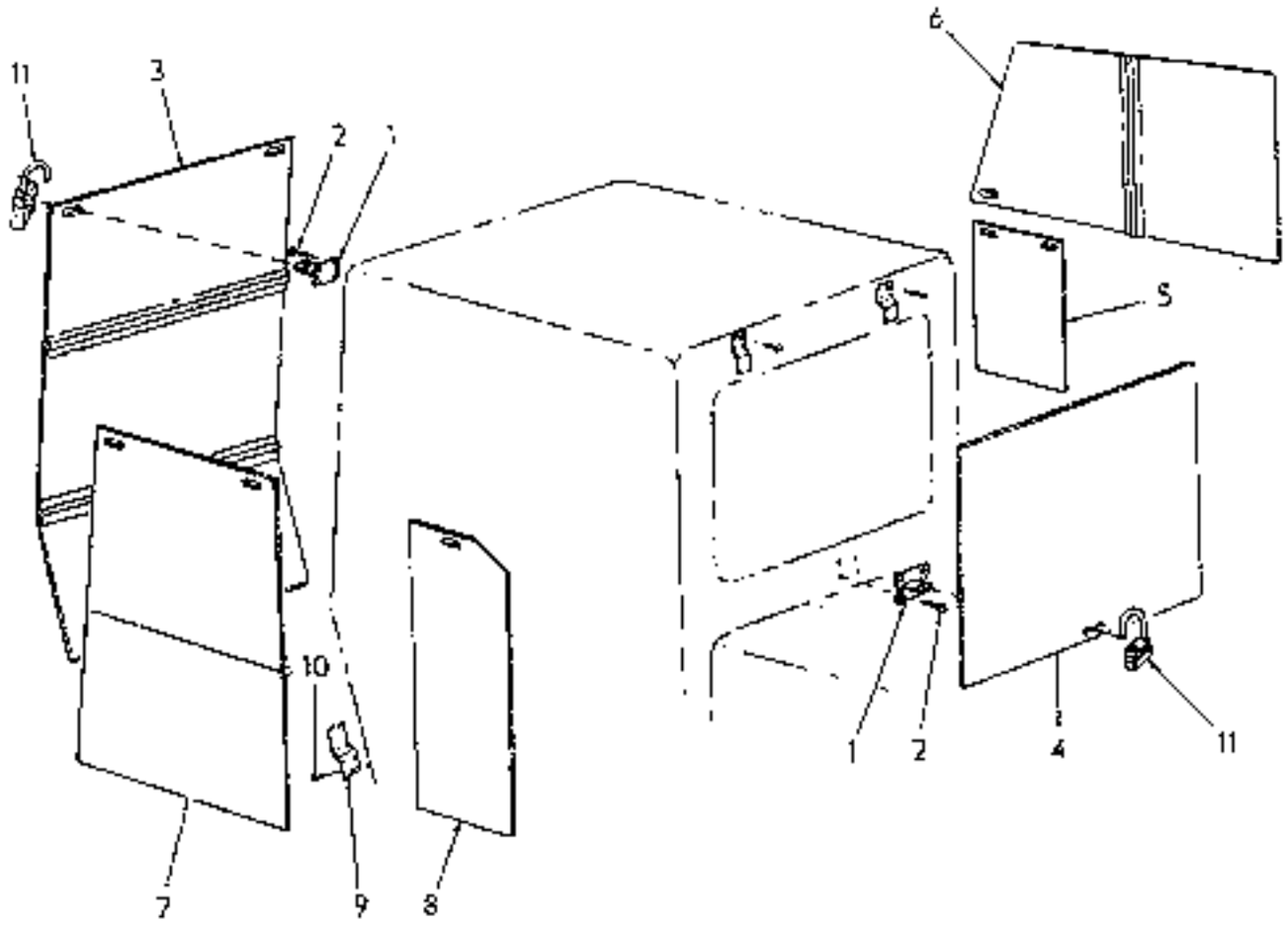

T-01050

CAB VANDALISM 5.0540 TAV. 1

ITEM	PART NUMBER	QTY	TR. CD.	DESCRIPTION	DESCRIZIONE
USAGE: SPECIAL EQUIPMENT					
01	73159185	9	103P	PLATE	
02	70901283	36	42P	SCREW	
03	73159173	1	265C	COVER, WINDSHIELD	
04	73159174	1	265C	COVER, REAR WINDOW	
05	73159175	1	265C	COVER, LOWER RIGHT WINDOW	
06	73159176	1	265C	COVER, UPPER RIGHT WINDOW	
07	73159177	1	265C	COVER, DOOR WINDOW	
08	73159178	1	265C	COVER, LEFT WINDOW	
09	73159179	13	80M	BRACKET	
10	70925160	39	55R	RIVET	
11	70928052	9	81L	PADLOCK	