JUNHO 1990

FH200LC FH200T

FIAT ALLIS

RUTHZIL TRATOR COMERCIAL DE PEÇAS LTDA 11 97083-6812 ROLANDO CITRANGULO

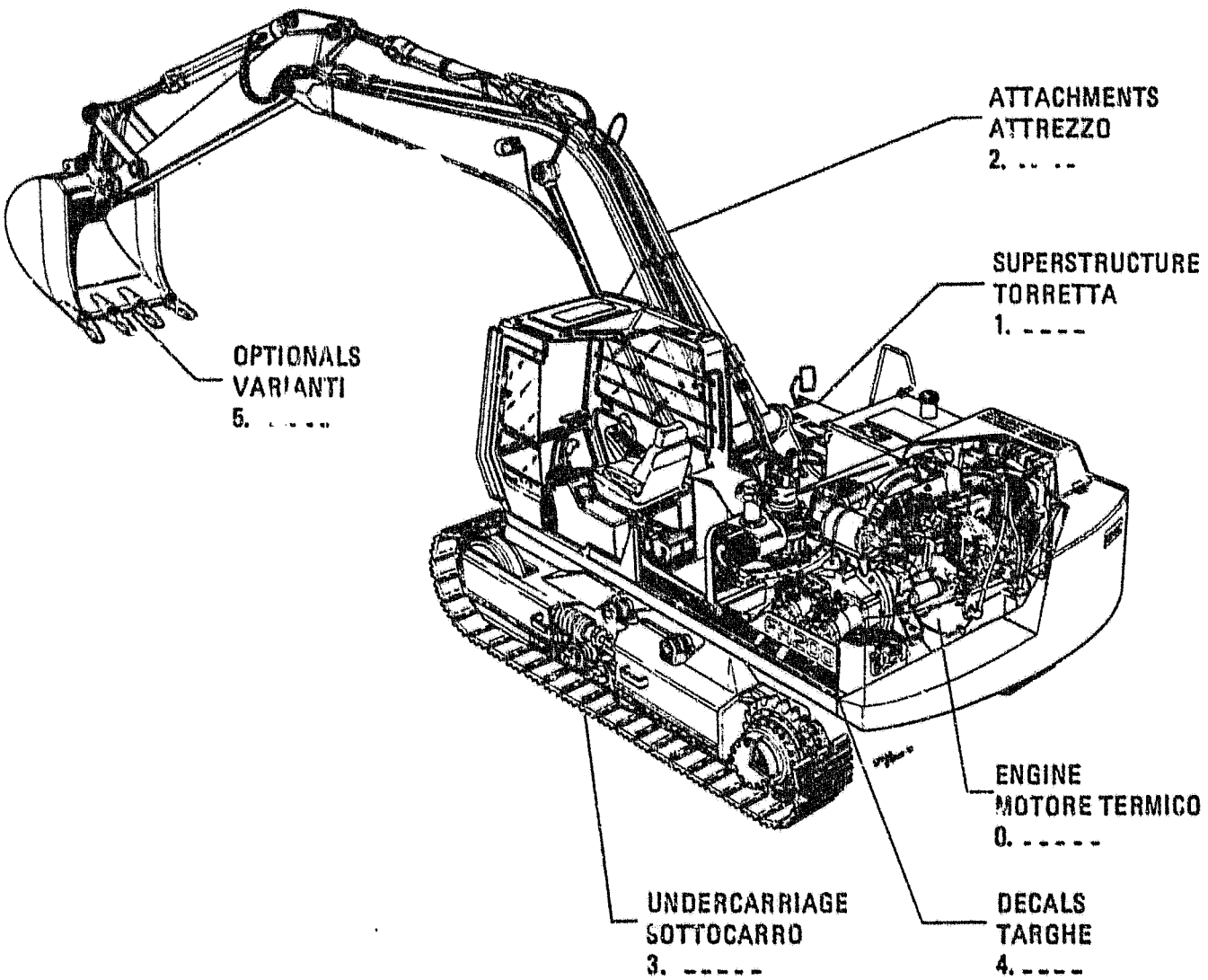

SPARE PARTS

Parti di Ricambio
Ersatzteile

Pièces détachées
Piezas de repuesto

IDENTIFICATION AND VERSION LIST
IDENTIFICAZIONE ED ELENCO DELLE VERSIONI
IDENTIFICATION ET LISTE DES VERSIONS
KENNZEICHEN UND VERZEICHNIS DER VERSIONEN
IDENTIFICACION Y LISTA DE VERSIONES

MODELS - MODELLI - MODELES MODELLE - MODELOS	ENGINEERING CODE - DENOMINAZIONE TECNICA DESIGNATION TECHNIQUE - TECHNISCHE BEZEICHUNG DESIGNACION TECNICA	NUMERICAL CODE CODICE NUMERICO CODE NUMERIQUE KENNUMMER CODIGO NUMERICO
FH 200 LC FH 200 T	71415002 71415791	02 03

MODEL SERIAL NUMBER NUMERO DI MATRICOLA DEL MODELLO NUMERO DE SERIE DU MODELE MODELL-SERIENNUMMER NUMERO DE SERIE DEL MODELO		
MODELS MODELLI MODELES MODELLE MODELOS	PRODUCT CODE CODICE PRODOTTO CODE DE PRODUCTION PRODUKT KODEX CODIGO DEL PRODUCTO	UNIT NO. TELAIO NUMER DE L'UNITE EINHEITS-NR. NUM. DE LA UNIDAD
FH 200 LC FH 200 T	20L 20T	0051 0051

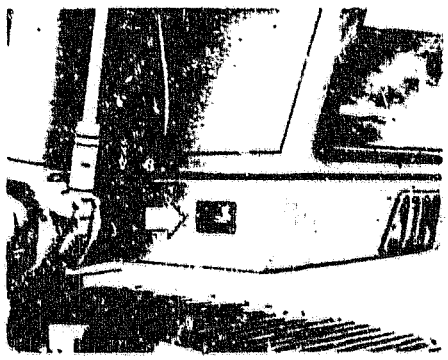

Machine serial number location
Posizione del numero di matricola della macchina
Emplacement du numéro de serie de la machine
Ort der Seriennummer der Maschine
Ubicación del número de serie de la maquina

ENGINE MODEL MODELLO DEL MOTORE MODELE DU MOTEUR MOTORBAUMUSTER MODELO DEL MOTOR
8065 SI 25 AII. 006

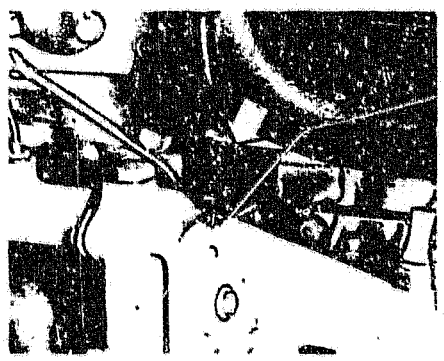

Engine serial number location
Posizione del numero di matricola del motore
Emplacement du numero de serie du moteur
Ort der Seriennummer des Motors
Ubicación del número de serie del motor

A-3

NOTICE

The right is reserved to change the construction or material of any parts where it seems desirable to do so without incurring the obligation of installing such changes on units already delivered.
Additional publications pertaining to this model and to all other products are available through the dealers. Publications are generally available in several languages.
Refer to Service Publications Index for all such publications; the index is available from the dealers.

INSTRUCTIONS FOR ORDERING PARTS

At the time this parts catalog was published the listed part numbers were current. It is our policy to constantly improve our machines and therefore, part numbers and design may change.
When ordering parts, verify part numbers through your dealer's microfiche and master numerical index which are up to date with all the latest part numbers.

ORDER PARTS FROM THE DEALER COVERING THE LOCAL TERRITORY

Orders for spare parts ust include the following data (see page 2):

- Model, Serial Number, Engine model, Engine serial number, marked on engine block.

- Specify the part number (shown on Spare Parts Catalog list), possibly completed by it description. If parts refer to an assembly which has a model or serial number, also include this information.

- Give post office address, town, county and state where parts are to be shipped.

- Also specify whether material is to be shipped by freight, express or parcel post.

- Confirm all telephone or telegraph orders in writing.

Parts can only be returned to/through the dealer from whom the parts were purchased and **must have prior written authorisation.** Each return will be treated individually.
Unless claims for shortages or errors are made immediately upon receipt of goods, they will not be considered.
When broken goods are received, a full description of the damage should be made by the carrier agent on the freight bill.
Manufacturer's responsibility is limited, and ceases upon completion of sale conditions provided for each delivery.

Fiatallis is not responsible for any liability arising from any damage resulting from defects caused by parts and/or components not approved by Fiatallis for use in maintaining and/or repairing products manufactured or merchandized by Fiatallis.

In any case, no warranty of any kind is made or shall be imposed with respect to products manufactured or merchandized by Fiatallis when failures are casued by the use of parts and/or components not approved by Fiatallis.

USE OF THE CATALOG

To locate the parts correctly, proceed as follows:
a) Consult the **version list** on page 2 to find the code of the version required; see following para 1 ⑥.
b) Consult the illustrations, the associated **spare parts lists** as directed below in 1 and 2.
c) To identify the component of the possible special equipment of the machine, consult the **optional equipment list** on page 20 to find the code number and subgroup.

1. **Illustrations.**
Illustrations show the parts of each subgroup. The parts illustrated are identified by a **reference number** (ITEM). This number may be replaced by other indications, for example:
1.000: Part shown only in subgroup **1.000**
Moreover, each illustration shows:
— **Subgroup number or optional equipment number** ① — **Illustration number** ② — **Updating indication** ③ , for example:
Suffix **06**, to print no. **604.01.046**, indicates that subgroup modification is shown in **6th** updating of the catalog dated **23-2-81**. When code ③, is missing, no changes were introduced. **Number of the Parts Technical Notice** (N.T.R.) reporting the 6th updating ④; subgroup title ⑤ — **version code** ⑥ with reference to previous point (a).

In lack of said codes, the illustration applies to all model versions covered by the catalog.
— **Indication of part kit** ⑦ , with associated part numbers and part kit symbol. (See page 22 for kit composition) — **number of assembly** ⑧.

2. **Spare parts lists**
They list the spare parts of each subgroup contained in the corresponding illustrations. The following is shown for each part:
⑨ ITEM: **number associating the part shown with the respective "part number".**
⑩ PART NUMBER: **spare part order number**
⑪ Q.TY: **total quantity of the part.**
⑫ TRANS. CODE:

⑬ DESCRIPTION/DENOMINAZIONE: **Description of the part in English and Italian.**
In case of modification, the description is completed with the following kinds of indication and directions for replacement if any.
⑭ 4606783 C 951 means that the part is valid up to modification 951.
⑮ 79021573 D 951 means that the part is valid after modification 951.
Effectiveness example:
Up to S/N 004652 ⑱: installed on machines with serial nos. up to 004652.
S/N 004653 and up ⑰: installed on machines with serial nos. from 004653.
Examples of direction for replacement:
4606783 = 79021573: ⑯ on exhaustion of stocks of part 4606783 fit part 79021573.
4606787 = 79021574 + 79021576 ⑲: on exhaustion of stocks of part 4606787 fit part 79021574 plus 79021576.
4606792 = 79021576 – 4606794 ⑳: on exhaustion of stocks of part 4606792 fit 79021576 and discard 4606794.
If no directions for replacement are given under effectiveness indication, this means that the old and new parts are not interchangeable and, hence, the former must be supplied as spare.
Other useful indications may be provided ㉑ under DESCRIPTION/DENOMINAZIONE after the sign
Terms RIGHT/DESTRO and LEFT/SINISTRO refer to the direction of machine forward travel.
Should the word WRONG appear next to a part name without the corresponding CORRECT on the line immediately below it means that the associated part was erroneously included at an earlier stage.
㉒ **Standard part dimensional data.**

3. **MODIFICATIONS SUMMARY**
This summary shows the modifications, the versions involved, the effective points, the subgroups affected and special directions for replacement as required.

A-5

FH200 01-02

LIFT CYLINDER (RIGHT)
CILINDRO SOLLEV. (DESTRO)
71405788

VERIN DE RELEVAGE(DROIT)
HUBZYLINDER (RECHTS)
GATO ELEVACION (DERECHO)

2.030 TAV.2

N.T.R. 63 - 23-2-81
604.01.046.06

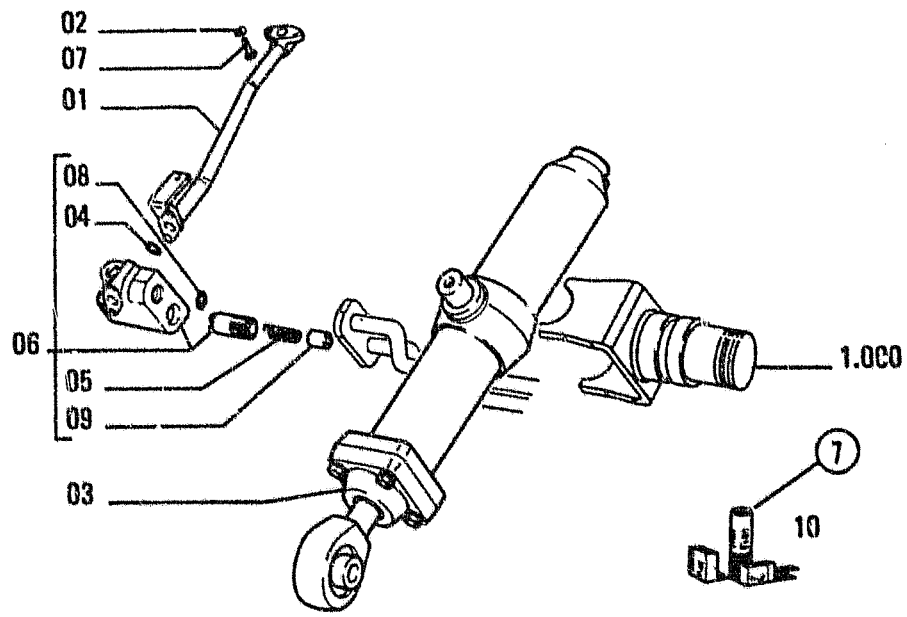

FH200

LIFT CYLINDER (RIGHT) CILINDRO SOLLEV. (DESTRO) 71405788	VERIN DE RELEVAGE(DROIT) HUBZYLINDER (RECHTS) GATO ELEVACION (DERECHO)	2.030 TAV.2 N.T.R. 63 - 23-2-81 604.01.046.06

ITEM	PART NUMBER	QTY	TR. CO.	DESCRIPTION	DESCRIZIONE
01	4318965	1	193T	TUBE -RIGHT	TUBO RIGIDO -DEST.
	4513436	1	193T	TUBE -RIGHT	TUBO RIGIDO -DEST.
	4606783	1	193T	TUBE -LEFT	TUBO RIGIDO -SIN.
				C951 UP TO S/N 004652	C951 FINO AL TELAIO 004652
				4606783=79021573	
	79021573	1	193T	TUBE -LEFT	TUBO RIGIDO -SIN.
				D951 FROM S/N 004653	D951 DAL TELAIO 004653
02	12638601	2	131R	WASHER	ROSETTA
03	4606786	1	164C	CYLINDER -ASS.Y RIGHT	CILINDRO -COMPL. DEST.
				SEE TAV.3	VED. TAV.3
	4606787	1	164C	CYLINDER -ASS.Y LEFT	CILINDRO -COMPL. SIN.
				C951 UP TO S/N 004652	C951 FINO AL TELAIO 004652
				4606787=79021574-79021576	
	79021574	1	164C	CYLINDER -ASS.Y LEFT	CILINDRO -COMPL. SIN.
				D951 FROM S/N 004653	D951 DAL TELAIO 004653
04	4606788	1	158G	O-RING -WRONG	GUARNIZIONE O-R -ERRATA
	4606789	1	158G	O-RING -CORRECT	GUARNIZIONE O-R -CORRIGE
05	4606790	1	100M	SPRING	MOLLA
06	4606791	1	10V	VALVE -ASS.Y RIGHT	VALVOLA -COMPL. DEST.
	4606792	1	10V	VALVE -ASS.Y LEFT	VALVOLA -COMPL. SIN.
				C951 UP TO S/N 004652	C951 FINO AL TELAIO 004652
				4606792=79021576-4606794	
	79021576	1	10V	VALVE -ASS.Y LEFT	VALVOLA -COMPL. SIN.
				D951 FROM S/N 004653	D951 DAL TELAIO 004653
07	11307021	2	40V	SCREW 8X1X20	VITE 8X1X20
08	14453381	1	158G	O-RING	GUARNIZIONE O-R
09	4606795	1	50T	PLUG	TAPPO
10	79021577		1K	KIT.-SEE PAG.32	KIT-VED. PAG.32

ATTENTION

Le constructeur se réserve le droit de modifier la construction ou le matériau de toute pièce, si cela se révèle nécessaire, sans devoir apporter ces modifications sur les pièces déjà livrées.
D'autres publications concernant ce modèle et tous les autres modèles sont disponibles auprès des Concessionnaires. En général, ces publications sont disponibles en plusieurs langues.
Pour trouver ces publications, se référer au catalogue des publications techniques. Des exemplaires du catalogue sont disponibles auprès des Concessionnaires.

INSTRUCTIONS POUR LA COMMANDE DES PIECES DE RECHANGE

Les numéros de commande indiqués sur ce catalogue sont mis à jour à la date de sortie de la publication. Nous nous efforçons constamment d'améliorer les machines et, par conséquent, les numéros de commande et les illustrations peuvent ne plus être à jour.
Au moment de passer commande des pièces de rechange, contrôler les numéros de commande au près de Votre Concessionnaire, qui despose des microfiches et de la liste générale des pièces de rechange.

PASSER COMMANDE DE PIECES DE RECHANGE CHEZ LE CONCESSIONNAIRE DE VOTRE ZONE

Les commandes de pièces de rechange doivent comporter les indications suivantes (voir page 2):

- Modèle de la machine, Numéro du chassis, Type du moteur, Numéro du moteur estampillé sur le bâti moteur.

- Indiquer le numéro de commande de la pièce désirée (indiquée sur les listes du catalogue), accompagné si possible de sa désignation.
Si les pièces se rapportent à un groupe possédant son propre numéro de modèle ou de série, indiquer aussi ce dernier.

- Indiquer dans l'adresse, le bureau de poste, la ville, la région et le pays où les pièces de rechange doivent être envoyées.

- Indiquer de plus les modalités d'expédition du matériel (par mer, par terre, exprès ou colis postal).

- Confirmer par écrit toutes les commandes anticipées par téléphone ou télégraphe.

En cas de renvois de pièces, ils pourront être effectués seulement à/ou par l'intermédiaire du Concessionnaire chez lequel les pièces ont été achetées et **ils devront être autorisés au préalable par écrit**. Tout renvoi sera examiné à la fois.
Les réclamations pour manques et défauts, qui ne seront pas présentées immédiatement à la réception de la marchandise, seront rejetées.
En cas de réception de marchandise endommagée, une description complète doit être présentée par l'agent transporteur sur le bordereau d'expédition.
La responsabilité du constructeur se limite et cesse au moment de l'exécution des conditions de vente prévues pour chaque fourniture.

REGLES POUR LA CONSULTATION DU CATALOGUE

En vue d'une recherche correcte des pièces de rechange, il est nécessaire de:
a) Consulter la **liste des versions** à page 2, pour repérer le code éventuel de la version concernée; voir paragraphe 1, point **(6)** ci-après.
b) Consulter les **planches illustrées**, et leurs **listes de pièces de rechange** comme indiqué aux paragraphes **1** et **2.**
c) Pour les modèles comportant des variantes, consulter la **liste des variantes** à page 20 où il est reporté, par ordre progressif, le sous-groupe et le numéro code correspondant.

1. **Illustrations**
Elles représentent les pièces de rechange de chaque groupe dans lesquels la machine est divisée.
Les pièces de rechange représentées sont repérées par le **numéro de référence** (ITEM). Le numéro de référence peut être remplacé par d'autres indications, par exemple:
1.000: pièce illustrée exclusivement au Sgr. **1.000.**
Chaque illustration reporte en outre:
Code de sous-groupe ou **code de la variante** ① — **numéro de planche** ② — **indications de mise à jour** ③, par exemple:
Le suffixe **06**, ajouté au numéro d'imprimé **604.01.046**, indique que le sous-groupe a été modifié avec la **6ème** mise à jour du catalogue, parue en date **23 février 1981**. Le manque de l'indication ③, signifie qu'aucune modification n'a été apportée. **Numéro du Bulletin Technique Rechanges** (N.T.R.) où la 6ème mise à jour ④ a paru — **désignation du sous-groupe** ⑤ — **code de la version** ⑥, avec référence au point **(a)** précédent. L'absence de codes veut dire que la planche est valable pour toutes les versions du modèle auquel se rapporte le catalogue — **Indication de l'existance de kits de rechange** ⑦, avec les numéros de référence correspondants (pour la composition des trousses voir page 32) — Numéro d'ensemble ⑧.

2. **Listes des pièces de rechange**
Ces listes énumèrent les pièces de rechange de chaque groupe, contenues dans les illustrations correspondantes, et elles reportent pour chaque pièce:
⑨ ITEM: **numéro d'appariage de la pièce représentée avec son "part number".**
⑩ PART NUMBER: **numéro de commande de la pièce de rechange.**
⑪ Q.TY: **quantité totale de la pièce**, rapportée à la planche.
⑫ TRANS. CODE:

⑬ DESCRIPTION/DENOMINAZIONE: **description de la pièce en anglais et en italien.** En cas de modification, la désignation est complétée par le types suivants d'indication et les INSTRUCTIONS DE RECHANGE éventuelles:
⑭ 4606783
C 951 = pièce valide jusqu'à la modification n° 951
⑮ 79021573
D 951 = pièce valide depuis à la modification n° 951.
Exemple d'indication d'effectuation d'une modification:
jusqu'au châssis n° 004652 **(16)** montées sur des machines avec n° de châssis jusqu'à 004652.
depuis le châssis n° 004653 ⑰: montées sur des machines avec n° de châssis à partir de 004653.
Exemple de consignes de rechange:
4606783 = 79021573 ⑱: dès l'épuisement des stocks de la pièce 4606783, monter la pièce 79021573.
4606787 = 79021574 + 79021576 ⑲: dès l'épuisement des stocks de la pièce 4606787, monter la pièce 79021574 plus la pièce 79021576;
4606792 = 79021576 – 4606794 ⑳: dès l'épuisement des stocks de la pièce 4606792, monter la pièce 79021576 en éliminant la pièce 4606794.
Si aucune consigne de rechange n'est reportée, cela veut dire que la pièce de l'ancien montage doit être toujours livrée de rechange, n'étant pas interchangeable avec celle du nouveau montage.
D'autres indications utiles ㉑ peuvent figurer dans la colonne DESCRIPTION/DENOMINAZIONE, après le signe — (pour la traduction de ces termes de l'anglais ou de l'italien en français, allemand et espagnol voir la liste des désignations supplémentaires au début du Glossaire Les termes RIGHT/DROIT et LEFT/GAUCHE se rapportent à la direction de roulement avant de l'engin. Si le terme WRONG/ERRATA figure à côté de la désignation sans le terme correspondant CORRECT/CORRIGEZ à la ligne suivante, cela veut dire que cette pièce avait été incluse par erreur.
㉒ Dimensions des pièces normalisées.

3. **RESUME DES MODIFICATIONS**
Enumération de toutes les modifications, les versions éventuelles, leurs effectuations, les sous-groupes concernés et les consignes pour les rechanges.

FH200 01-02

LIFT CYLINDER (RIGHT) — VERIN DE RELEVAGE(DROIT)
CILINDRO SOLLEV. (DESTRO) — HUBZYLINDER (RECHTS)
71405788 — GATO ELEVACION (DERECHO)

2.030 TAV.2

N.T.R. 63 - 23-2-81
604.01.046.06

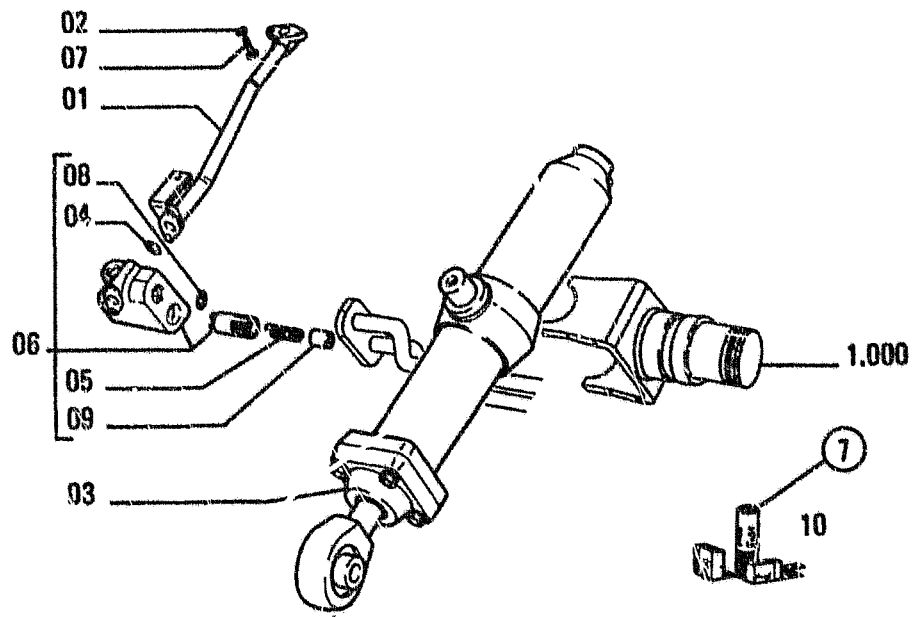

FH200

LIFT CYLINDER (RIGHT) — VERIN DE RELEVAGE(DROIT)
CILINDRO SOLLEV. (DESTRO) — HUBZYLINDER (RECHTS)
71405788 — GATO ELEVACION (DERECHO)

2.030 TAV.2

N.T.R. 63 - 23-2-81
604.01.046.06

ITEM	PART NUMBER	QTY	TR. CO.	DESCRIPTION	DESCRIZIONE
01	4316965	1	193T	TUBE -RIGHT	TUBO RIGIDO -DEST.
	4513436	1	193T	TUBE -RIGHT	TUBO RIGIDO -DEST.
	4606783	1	193T	TUBE -LEFT	TUBO RIGIDO -SIN.
				C951 UP TO S/N 004652	C951 FINO AL TELAIO 004652
				4606783=79021573	
	79021573	1	193T	TUBE -LEFT	TUBO RIGIDO -SIN.
				D951 FROM S/N 004653	D951 DAL TELAIO 004653
02	12638601	2	131R	WASHER	ROSETTA
03	4606786	1	164C	CYLINDER -ASS.Y RIGHT	CILINDRO -COMPL. DEST.
				SEE TAV.3	VED. TAV.3
	4606787	1	164C	CYLINDER -ASS.Y LEFT	CILINDRO -COMPL. SIN.
				C951 UP TO S/N 004652	C951 FINO AL TELAIO 004652
				4606787=79021574+79021576	
	79021574	1	164C	CYLINDER -ASS.Y LEFT	CILINDRO -COMPL. SIN.
				D951 FROM S/N 004653	D951 DAL TELAIO 004653
04	4606788	1	158G	O-RING -WRONG	GUARNIZIONE O-R -ERRATA
	4606789	1	158G	O-RING -CORRECT	GUARNIZIONE O-R -CORRIGE
05	4606790	1	100M	SPRING	MOLLA
06	4606791	1	10V	VALVE -ASS.Y RIGHT	VALVOLA -COMPL. DEST.
	4606792	1	10V	VALVE -ASS.Y LEFT	VALVOLA -COMPL. SIN.
				C951 UP TO S/N 004652	C951 FINO AL TELAIO 004652
				4606792=79021576-4606794	
	79021576	1	10V	VALVE -ASS.Y LEFT	VALVOLA -COMPL. SIN.
				D951 FROM S/N 004653	D951 DAL TELAIO 004653
07	11307021	2	40V	SCREW 8X1X20	VITE 8X1X20
08	14453381	1	158G	O-RING	GUARNIZIONE O-R
09	4606795	1	50T	PLUG	TAPPO
10	79021577		1K	KIT.-SEE PAG.32	KIT-VED. PAG.32

LISTE ALPHABETIQUE

DESIGNATION	SGR.	TAV.
ACCESSOIRES D'ENTRETIEN	5.0083	1
ALTERNATEUR	0.400	2
ARBRE A CAMES	0.120	1
ATTAQUES ALTERNATEUR	0.400	1
		1
BAIE DE LA CABINE-DROIT	1.250	7
BAIE DE LA CABINE-GAUCHE	1.250	6
BALANCIER (2,9m)	5.0013	1
BALANCIER (3,5m)	5.0038	1
BALANCIER N.3 (2m)	2.003	1
BIELLE	0.081	1
BLOC-CYKINDRES	0.040	1
	0.040	2
	0.040	3
BRAS MONOBLOQUE	2.000	1
CABINE	1.250	4
CABINE - PLATE-FORME	1.250	1
CABINE-CHASSIS	1.250	8
CAPOTAGE	1.300	1
	1.300	2
	1.300	3
CARTER D'HUILE	0.042	1
CEINTURE DE SECURITE	5.0536	1
CHASSIS INFERIEUR	3.000	1
	3.001	1
	3.002	1
CHASSIS SUPERIEUR	1.000	1
CHENILLE	3.051	1
	3.052	1
COLLECTEUR D'ADMISSION	0.071	1
COLLECTEUR D'ECHAPPEMENT	0.077	1
COMMANDE DE DISTRIBUTION	0.100	1
COMMANDE DE POMPE D'EAU	0.340	1
COMMANDE DE VENTILATEUR	0.345	1
COMMANDES	1.070	1
	1.071	1
COMMANDES D'ACCELERATEUR	0.004	1
	0.004	2
COMMANDES DIVERSES	0.350	1
COUVERCLES DE BLOC-CYL.	0.043	1
	0.043	2
CROCHETS DE LEVAGE MOT.	0.450	1
CULASSE DE CYLINDRE	0.060	1
	0.060	2
CYLINDRE DE GODET	2.030	5
DEMARREUR	0.360	2
DEMARREUR-FIXATIONS	0.360	1
DISTRIBUTEUR	1.050	2
	1.050	3
DISTRIBUTEUR	1.050	4
DISTRIBUTEUR ROTATIF	3.060	1
ECHANGEUR THERMIQUE	0.310	1
ELECTROVALVE	1.080	2
FILTRE A AIR	0.001	1
FILTRE A COMBUSTIBLE	0.200	1
FILTRE A HUILE DU MOTEUR	0.302	1
FLECHE	2.002	1
GALET DE RETOUR CHENILLE	3.030	1
GALET PORTEUR DE CHENILLE	3.040	1
GODET (L=500mm)	2.020	1
INJECTEURS	0.140	11
	0.140	12
INSTALLATION ELECTRIQUE	1.220	1
	1.220	2
JAUGE D'HUILE MOTEUR	0.270	1
KIT DE RECHANGE	4.000	1
MANILLE	1.300	4
MANIPULATEUR-COMPOSANTS	1.070	2
MODULE DE CONTROLE	1.200	2
MONTAGE DE MARTEAU OLEOD.	5.0020	2
MOTEUR HYDR.-COMPOSANTS	1.040	2
MOTEUR HYDRAULIQUE-COMP.	3.010	2
MOTEUR THERMIQUE	0.021	1
MOTORED. TRANSLATION	3.010	1
MOTOREDUCTOR ROTACION	1.040	1
PIED DE FLECHE	2.001	1
PISTON	0.082	1
PLAQUES	4.500	1
	4.501	1
POMPE A EAU	0.320	1
POMPE A HUILE DU MOTEUR	0.300	1
POMPE CIRCUT HYDR.	1.030	1
POMPE D'ALIMENTATION-COMP	0.140	8
POMPE D'INJECTION-COMM.	0.140	10
POMPE D'INJECTION-COMPOS.	0.140	6
	0.140	7
POMPE D'INJECTION-TUYAUT.	0.140	1
	0.140	9
POMPE EQUIP.-COMPOSANTS	1.030	2
PORTE DE LA CABINE	1.250	5
POULIE DE VILEBREQUIN	0.084	1
RADIATEUR	0.003	1
	0.003	3
RADIATEUR-COMPOSANTS	0.003	2
RECHAUFFEUR	1.290	1
RECHAUFFEUR-COMPOSANTS	1.290	2
REG. POMPE HYDR.-COMP.	1.030	3
REGULATEUR DE VITESSE	0.140	2

SUBGROUP	GRID
0.000	TAV1....1D-3
0.001	TAV1....1D-5
0.002	TAV1....1D-7
0.003	TAV1....1D-9
0.003	TAV2....1D-11
0.003	TAV3....1D-13
0.004	TAV1....1D-15
0.004	TAV2....1D-17
0.021	TAV1....1D-19
0.040	TAV1....1D-21
0.040	TAV2....1D-23
0.040	TAV3....1E-3
0.042	TAV1....1E-5
0.043	TAV1....1E-7
0.043	TAV2....1E-9
0.045	TAV1....1E-11
0.060	TAV1....1E-13
0.060	TAV2....1E-15
0.071	TAV1....1E-17
0.077	TAV1....1E-19
0.080	TAV1....1E-21
0.081	TAV1....1E-23
0.082	TAV1....1F-3
0.083	TAV1....1F-5
0.084	TAV1....1F-7
0.100	TAV1....1F-9
0.120	TAV1....1F-11
0.140	TAV1....1F-13
0.140	TAV2....1F-15
0.140	TAV3....1F-17
0.140	TAV4....1F-19
0.140	TAV5....1F-21
0.140	TAV6....1F-23
0.140	TAV7....1G-3
0.140	TAV8....1G-5
0.140	TAV9....1G-7
0.140	TAV10..1G-9
0.140	TAV11..1G-11
0.140	TAV12..1G-13
0.149	TAV1....1G-15
0.200	TAV1....1G-17
0.203	TAV1....1G-19
0.203	TAV2....1G-21
0.240	TAV1....1G-23
0.240	TAV2....1H-3
0.241	TAV1....1H-5
0.270	TAV1....1H-7
0.300	TAV1....1H-9
0.302	TAV1....1H-11
0.305	TAV1....1H-13
0.310	TAV1....1H-15
0.320	TAV1....1H-17
0.323	TAV1....1H-19
0.326	TAV1....1H-21
0.340	TAV1....1H-23
0.345	TAV1....1I-3
0.350	TAV1....1I-5
0.360	TAV1....1I-7
0.360	TAV2....1I-9
0.400	TAV1....1I-11
0.400	TAV2....1I-13
0.450	TAV1....1I-15
1.000	TAV1....1J-3
1.010	TAV1....1J-5
1.020	TAV1....1J-7
1.030	TAV1....1J-9
1.030	TAV2....1J-13
1.030	TAV3....1J-15
1.040	TAV1....1J-17
1.040	TAV2....1J-19
1.050	TAV1....1J-21
1.050	TAV2....1K-3
1.050	TAV3....1K-5
1.050	TAV4....1K-7
1.060	TAV1....1K-9
1.070	TAV1....1K-15
1.070	TAV2....1K-17
1.070	TAV3....1K-19
1.071	TAV1....1K-21
1.071	TAV2....1L-3
1.080	TAV1....1L-5
1.080	TAV2....1L-7
1.081	TAV1....1L-9
1.082	TAV1....1L-11
1.082	TAV2....1L-13
1.082	TAV3....1L-15
1.083	TAV1....1L-17
1.084	TAV1....1L-19
1.085	TAV1....1L-21
1.200	TAV1....2D-3
1.200	TAV2....2D-5
1.200	TAV3....2D-7
1.210	TAV1....2D-9
1.220	TAV1....2D-11
1.220	TAV2....2D-13
1.220	TAV3....2D-17
1.250	TAV1....2D-19
1.250	TAV2....2D-21
1.250	TAV4....2E-3
1.250	TAV5....2E-7
1.250	TAV6....2E-9
1.250	TAV7....2E-11
1.250	TAV7....2E-13
1.290	TAV1....2E-15
1.290	TAV2....2E-17
1.300	TAV1....2E-19
1.300	TAV2....2E-21
1.300	TAV3....2E-23
1.300	TAV4....2F-3
2.000	TAV1....2F-5
2.001	TAV1....2F-7
2.002	TAV1....2F-9
2.003	TAV1....2F-11
2.020	TAV1....2F-13
2.030	TAV1....2F-17
2.030	TAV2....2F-19
2.030	TAV3....2F-21
2.030	TAV4....2F-23
2.030	TAV5....2G-3
2.031	TAV1....2G-5
2.031	TAV2....2G-7
2.031	TAV3....2G-9
2.031	TAV4....2G-11
2.040	TAV1....2G-13
2.041	TAV1....2G-15
3.000	TAV1....2G-17
3.001	TAV1....2G-19
3.010	TAV1....2G-21
3.010	TAV2....2G-23
3.010	TAV3....2H-3
3.010	TAV4....2H-5
3.020	TAV1....2H-7
3.030	TAV1....2H-9
3.040	TAV1....2H-11
3.051	TAV1....2H-13
3.052	TAV1....2H-15
3.060	TAV1....2H-17
3.070	TAV1....2H-19
3.071	TAV1....2H-21
4.000	TAV1....2H-23
4.500	TAV1....2I-3
4.501	TAV1....2I-5
5.0013	TAV1..2J-3
5.0020	TAV1..2J-5
5.0020	TAV2..2J-7
5.0022	TAV1..2J-9
5.0025	TAV1..2J-11
5.0038	TAV1..2J-13
5.0080	TAV1..2J-15
5.0080	TAV2..2J-17
5.0083	TAV1..2J-19
5.0151	TAV1..2J-21
5.0536	TAV1..2J-23
5.0540	TAV1..2K-3

A-11

LISTE ALPHABETIQUE

DESIGNATION	SGR.	TAV.
REGULATEUR DE VITESSE	0.140	3
	0.140	4
	0.140	5
RENIFLARD DU MOTEUR	0.045	1
RESERVOIR COMBUSTIBLE	1.010	1
RESERVOIR D'HUILE	1.020	1
ROUE TENDEUSE	3.020	1
SIEGE DE CONDUC.(Bostrom)	5.0151	1
SIEGE DE CONDUCTEUR	1.250	2
SIEGE DE CONDUCTEUR-COMP.	1.250	3
SILENCIEUX	0.002	1
SUSPENSIONS DU MOTEUR	0.000	1
TABLIER DROIT	1.200	1
	1.200	3
TABLIER GAUCHE	1.210	1
THERMOSTAT ET TUYAUT.	0.326	1
TURBOCOMPRESSEUR	0.240	1
	0.240	2
TUYAUT. SERVOCOMMANDES(1)	1.080	1
TUYAUT. SERVOCOMMANDES(2)	1.081	1
TUYAUT. SERVOCOMMANDES(3)	1.082	1
TUYAUT. SERVOCOMMANDES(4)	1.083	1
TUYAUT. SERVOCOMMANDES(5)	1.084	1
TUYAUT. SERVOCOMMANDES(6)	1.085	1
TUYAUTERIE DU COMBUSTIBLE	0.203	1
	0.203	2
TUYAUTERIE ET INJECTEURS	0.149	1
TUYAUTERIES AVANT	2.030	1
	2.031	1
	2.031	2
TUYAUTERIES DE GRAISSEURS	2.040	1
	2.041	1
TUYAUTERIES HUILE MOTEUR	0.305	1
TUYAUTERIES INFERIEURES	3.070	1
	3.071	1
	3.072	1
TUYAUTERIES POMPE/DISTR.	1.050	1
TUYAUTERIES PRINCIPALES	1.060	1
	1.061	1
TUYAUTERIES REFROIDISS.	0.323	1
TUYAUTERIES TURBOCOMPR.	0.241	1
VALVE AMORTISSEUSE	1.082	3
VALVE DE BUTEE	1.082	2
VALVE DE DECHARGE	3.010	4
VALVE DE FREINAGE-COMPOS.	3.010	3
VALVE PILOTE	1.070	3
	1.071	2
VERIN D'ENFONCEMENT	2.030	4
	2.031	4
VERIN DE RELEVAGE(DROIT)	2.030	2
VERIN DE RELEVAGE(GAUCHE)	2.030	3
VERIN POSITIONNEUR	2.031	3
VILEBREQUIN	0.080	1
VOLANT DU MOTEUR	0.083	1

A-12

ADVERTENCIA

El Fabricante se reserva el derecho de modificar la construcción o el material de cualquier pieza, si ello resultase procedente, pero sin obligarse a aplicar tales modificaciones a las unidades ya en servicio.
Otras publicaciones referentes a este modelo, lo mismo que a todos los restantes modelos, son disponibles en los Concesionarios. Tales publicaciones, por lo general, son disponibles en diversas lenguas.
Para conocer tales publicaciones consúltese el catálogo de las publicaciones técnicas. Ejemplares de este catálogo obran en los Concesionarios.

COMO SE ENCARGAN LOS RECAMBIOS

Los números de catálogo de las piezas reseñadas en esta publicatión están al día hasta la fecha de salida a luz de la misma. Nuestra política estriba en el afán de mejorar constantemente las máquinas, y por lo tanto, los números de catálogo y los grabados a veces puede no sean más efectivos. .Con motivo, pues, de ir a encargar piezas de repuesto, verifique los números de catálogo con su Concesionario, el cual dispone de las microfichas y de la lista general de los recambios puesta al día.

ENCARGUENSE LOS RECAMBIOS AL CONCESIONARIO DE SU ZONA

Los encargos de piezas de repuesto tienen que incluir los datos siguientes (véase página 2):

• Modelo de la máquina, Número de fabricación del chasis, Modelo del motor, Número de fabricación del motor, punzonado en el bloque de cilindros.

• Indicar el número de catálogo de cada pieza encargada - tal cual figura en las listas del catálogo - posiblemente acompañado de la denominación que corresponde.
Si los recambios pertenecen a un conjunto que posee su propio número de modelo o de serie, indíquense incluso tales datos.

• En la dirección indíquense la oficina de correos, la ciudad, provincia y nación a donde han de remitirse los recambios.

• Además, indíquense las modalidades de expedición del material: transporte marítimo, terrestre, expreso, o paquete postal.

• Confirmar per escrito todos los encargos enunciados por teléfono y por cable.

Eventuales devoluciones de piezas podrán hacerse tan sólo al/o por conducto del Concesionario al cual se han comprado las piezas, y **deberán ser previamente autorizadas por escrito.** Cada devolución se tomará en cuenta según se merece.
Las reclamaciones por faltas o defectos no se tomarán en cuenta, a no ser que vengan efectuadas immediatamente después de recibir la mercancía.
En caso de que se reciba mercancía que ha sufrido daños, una completa descripción del daño debería ser efectuada por el agente del transportista en el mismo documento de expedición.
La responsabilidad del fabricante es limitada y cesa al complirse las condiciones de venta provistas para cada aprovisionamiento.

CÓMO SE MANEJA EL CATÁLOGO

Para buscar correctamente las piezas de repuesto, es preciso:
a) consultar **la lista de versiones** pág. 2, para identificar, en su caso, el código de la versión que interesa; véase el siguiente párrafo **1**, punto **6**.
b) consultar las **láminas**, y las respectivas **listas de piezas de repuesto** conforme se explica en los párrafos **1** y **2**;
c) para los modelos que comprenden variantes, consultar la **lista de variantes** pág.20, donde se indica, por orden progresivo, el subgrupo y el correspondiente número de código.

1. **Láminas**
Representan las piezas de repuesto de cada subgrupo en que se divide la máquina. Las piezas de repuesto representadas se designan mediante un **número de referencia** (ITEM), el cual puede ir sustituido por otras indicaciones; ejemplo:
1.000: pieza ilustrada únicamente en el Sgr. **1.000**
Además, en cada lámina figuran:
El código del subgrupo o código de la variante ① — **el número de la lámina** ② — **la indicación de su revisión** ③; ejemplo: el sufijo **06**, que se agrega al número de la publicación **604.01.045**, significa que el subgrupo ha sido modificado en la **6ª** revisión del catálogo, editado en fecha de **23 de febrero de 1981**; de carecer la indicación ③, significa que no ha habido modificaciones. **Número del Boletín Técnico de Recambios** (N.T.R.) en el cual se ha efectuado la 6ª revisión ④ — **la denominación del subgrupo** ⑤ — **el código de la versión** ⑥, con referencia al punto **(a)** que antecede; de faltar ese código, se entiende que la lámina es aplicable a todas las versiones del modelo de que se trata en el catálogo; — **la indicación de la existencia de fornituras de recambios** ⑦, con los respectivos números de referencia (véase en la pág. 32 la composición de las fornituras); — Número de conjunto ⑧.

2. **Listas de las piezas de repuesto**
En ellas se reseñan las piezas de repuesto de cada subgrupo representadas en las láminas correspondientes, indicando para cada pieza:
⑨ ITEM: **el número de cada pieza representada que se acompaña a su «part number»**.
⑩ PART NUMBER: **número de catálogo de cada pieza de repuesto**.
⑪ Q.TY: **número total de la pieza**, representada en la lámina.
⑫ TRANS. CODE:

⑬ DESCRIPTION/DENOMINAZIONE: **denominación de la pieza en inglés e italiano**. En caso de modificaciones, la denominación viene integrada por los tipos de indicación siguientes y, en su caso, por las NORMAS DE RECAMBIO.
⑭ 4606783 C 951 = pieza aplicable hasta la modificación 951;
⑮ 79021573 D 951 = pieza aplicable a partir de la modificación 951.
Ejemplo de indicación de aplicación de la modificación:
hasta el chasis nº 004652 ⑯: incorporada a las máquinas con chasis hasta el número 004652;
a partir del chasis nº 004653 ⑰: incorporada a las máquinas a partir del chasis con número 004653
Ejemplo de normas de recambio:
4606783 = 79021573 ⑱: al agotarse las reservas en almacén de la pieza 4606783, aplíquese la 79021573.
4606787 = 79021574 + 79021576 ⑲: al agotarse las reservas en almacén de la pieza 4606787, aplíquese la 79021574 más la 79021576;
4606792 = 79021576 − 4606794 ⑳: al agotarse las reservas en almacén de la pieza 4606792, aplíquese la 79021576 eliminando la 4606794. Suponiendo que a la indicación de incorporación no se acompañen normas de recambio, ello significa que siempre tiene que entregarse el recambio de la pieza ante-modificación, por no ser intercambiable con aquella post-modificación.
Otras indicaciones útiles ㉑ pueden consignarse en la columna DESCRIPTION/DENOMINAZIONE, después del signo — (la traducción de estas voces del inglés o italiano al francés, alemán y español, figura en la lista de voces suplementarias que precede el glosario. Las voces RIGHT/DERECHO y LEFT/IZQUIERDO se refieren al sentido de marcha de la máquina.
Suponiendo que a una denominación se acompañe la palabra WRONG/DONDE DICE, y en el renglón siguiente no aparezca la correspondiente CORRECT/LÉASE, significa que la pieza sobra, por un error.
㉒ Dimensiones de las piezas normalizadas.

3. **RESUMEN DE LAS MODIFICACIONES**
Este resumen sirve para sintetizar las modificaciones, eventuales versiones y relativas aplicaciones, los subgrupos afectados y las normas de recambio.

FH200 01-02

LIFT CYLINDER (RIGHT) — VERIN DE RELEVAGE(DROIT)
CILINDRO SOLLEV. (DESTRO) — HUBZYLINDER (RECHTS)
71405798 — GATO ELEVACION (DERECHO)

2.030 TAV.2

N.T.R. 63 - 23-2-81
604.01.046.06

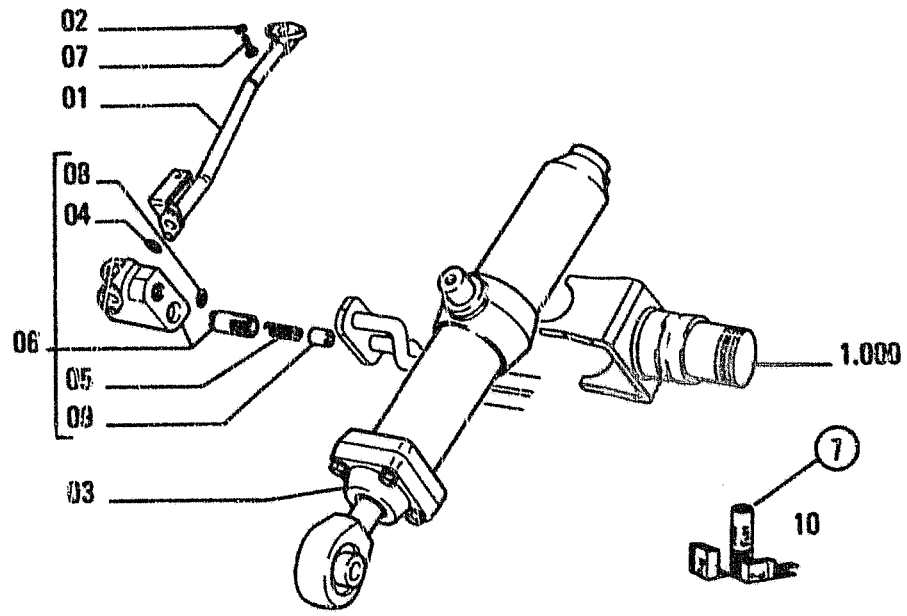

FH200

LIFT CYLINDER (RIGHT) — VERIN DE RELEVAGE(DROIT)
CILINDRO SOLLEV. (DESTRO) — HUBZYLINDER (RECHTS)
71405798 — GATO ELEVACION (DERECHO)

2.030 TAV.2

N.T.R. 63 - 23-2-81
604.01.046.06

ITEM	PART NUMBER	QTY	TR. CO	DESCRIPTION — DESCRIZIONE
01	4318965	1	193T	TUBE -RIGHT — TUBO RIGIDO -DEST.
	4513436	1	193T	TUBE -RIGHT — TUBO RIGIDO -DEST.
	4606783	1	193T	TUBE -LEFT — TUBO RIGIDO -SIN.
				C951 UP TO S/N 004652 — C951 FINO AL TELAIO 004652
				4606783=79021573
	79021573	1	193T	TUBE -LEFT — TUBO RIGIDO -SIN.
				D951 FROM S/N 004653 — D951 DAL TELAIO 004653
02	12638601	2	131R	WASHER — ROSETTA
03	4606786	1	164C	CYLINDER -ASS.Y RIGHT — CILINDRO -COMPL. DEST.
				SEE TAV.3 — VED. TAV.3
	4606787	1	164C	CYLINDER -ASS.Y LEFT — CILINDRO -COMPL. SIN.
				C951 UP TO S/N 004652 — C951 FINO AL TELAIO 004652
				4606787=79021574+79021576
	79021574	1	164C	CYLINDER -ASS.Y LEFT — CILINDRO -COMPL. SIN.
				D951 FROM S/N 004653 — D951 DAL TELAIO 004653
04	4606788	1	158G	O-RING -WRONG — GUARNIZIONE O-R -ERRATA
	4606789	1	158G	O-RING -CORRECT — GUARNIZIONE O-R -CORRIGE
05	4606790	1	100M	SPRING — MOLLA
06	4606791	1	10V	VALVE -ASS.Y RIGHT — VALVOLA -COMPL. DEST.
	4606792	1	10V	VALVE -ASS.Y LEFT — VALVOLA -COMPL. SIN.
				C951 UP TO S/N 004652 — C951 FINO AL TELAIO 004652
				4606792=79021576-4606794
	79021575	1	10V	VALVE -ASS.Y LEFT — VALVOLA -COMPL. SIN.
				D951 FROM S/N 004653 — D951 DAL TELAIO 004653
07	11307021	2	40V	SCREW 8X1X20 — VITE 8X1X20
08	14453381	1	158G	O-RING — GUARNIZIONE O-R
09	4606785	1	50T	PLUG — TAPPO
10	79021577		1K	KIT.-SEE PAG.32 — KIT-VED. PAG.32

A-15

INDICE ALFABETICO

DENOMINACIONES	SGR.	TAV.
ALTERNADOR	0.400	2
ANCLAJES MOTOR	0.000	1
APLICACION DE MARTILLO O.	5.0020	2
	5.0021	1
ARBOL DE LEVAS	0.120	1
ASIENTO DE COND.(Bostrom)	5.0151	1
ASIENTO DE CONDUCTOR	1.250	2
ASIENTO DE CONDUCTOR-COM.	1.250	3
BIELA	0.081	1
BLOQUE CILINDROS	0.040	1
	0 040	2
	0.040	3
BOMBA DE ACEITE DEL MOTOR	0.300	1
BOMBA DE AGUA	0.320	1
BOMBA DE ALIMENTACION-COM	0.140	8
BOMBA DE INYECC.-COMPON.	0.140	6
	0.140	7
BOMBA DE INYECCION-MANDO	0.140	10
BOMBA DE INYECCION-TUBER.	0.140	1
	0.140	9
BOMBA HIDR.-COMPONENTES	1.030	2
BOMBA HIDRAULICA	1.030	1
BRAZO CENTRAL	2.002	1
BRAZO DE ELEVACION	2.001	1
BRAZO ELEVACION 3 (2m)	2.003	1
BRAZO MONOBLOQUE	2.000	1
BRAZO TERMINAL (2,9m)	5.0013	1
BRAZO TERMINAL (3,5m)	5.0038	1
CABINA	1.250	4
CABINA-BASTIDOR	1.250	8
CABINA-PISO	1.250	1
CALORIFERO	1.290	1
CALORIFERO-COMPONENTES	1.290	2
CAMBIADOR DE CALOR	0.310	1
CANCAMOS DE LEVANTAMIENTO	0.450	1
CAPOTS	1.300	1
	1.300	2
	1.300	3
CARTER DE ACEITE	0.042	1
CHASIS INFERIOR	3.000	1
	3.001	1
	3.002	1
CHASIS SUPERIOR	1.000	1
CIGÜEÑAL	0.080	1
CILINDROPOSICIONADOR	2.031	3
COLECTOR DE ASPIRACION	0.071	1
COLECTOR DE ESCAPE	0.077	1
CUCHARA (L=500mm)	2.020	1
CULATA	0.060	1
	0.060	2
DEPOSITO DE ACEITE	1.020	1
DEPOSITO DE COMBUSTIBLE	1.010	1
DISTRIBUIDOR	1.050	2
	1.050	3
	1.050	4
DISTRIBUIDOR ROTATIVO	3.060	1
ELECTROVALVULA	1.080	2
EMBOLO	0.082	1
FILTRO DE ACEITE MOTOR	0.302	1
FILTRO DE AIRE	0.001	1
FILTRO DEL COMBUSTIBLE	0.200	1
GATO DE CUCHARA	2.030	5
GATO DE PENETRACION	2.030	4
	2.031	4
GATO ELEVACION (DERECHO)	2.030	2
GATO ELEVACION(IZQUIERDO)	2.030	3
HERRAMIENTAS	5.0083	1
INSTALACION ELECTRICA	1.220	1
	1.220	2
INYECTORES	0.140	11
	0.140	12
JUEGO DE RECAMBIOS	4.000	1
MANDOS	1.070	1
	1.071	1
MANDOS DEL ACELERADOR	0.004	1
	0.004	2
MANDOS VARIOS	0.350	1
MANIJA	1.300	4
MANIPULADOR-COMPONENTES	1.070	2
MOTOR	0.021	1
MOTOR DE ARRANQUE	0.360	2
MOTOR DE ARRANQUE-ANCLAJ.	0.360	1
MOTOR HIDR.-COMPONENTES	1.040	2
MOTOR HIDRAULICO-COMP.	3.010	2
ORUGA	3.051	1
	3.052	1
PANEL DE CONTROL	1.200	2
PIÑONES DE DISTRIBUCION	0.100	1
PLACAS	4.500	1
	4.501	1
POLEA DE LA BOMBA DE AGUA	0.340	1
POLEA DEL CIGÜEÑAL	0.084	1
POLEA DEL VENTILADOR	0.345	1
PUERTA DE LA CABINA	1.250	5
RADIADOR	0.003	1

SUBGROUP	GRID
0.000	TAV1....1D-3
0.001	TAV1....1D-5
0.002	TAV1....1D-7
0.003	TAV1....1D-9
0.003	TAV2....1D-11
0.003	TAV3....1D-13
0.004	TAV1....1D-15
0.004	TAV2....1D-17
0.021	TAV1....1D-19
0.040	TAV1....1D-21
0.040	TAV2....1D-23
0.040	TAV3....1E-3
0.042	TAV1.... 1E-5
0.043	TAV1....1E-7
0.043	TAV2....1E-9
0.045	TAV1....1E-11
0.060	TAV1....1E-13
0.060	TAV2....1E-15
0.071	TAV1....1E-17
0.077	TAV1....1E-19
0.080	TAV1....1E-21
0.081	TAV1....1E-23
0.082	TAV1....1F-3
0.083	TAV1....1F-5
0.084	TAV1....1F-7
0.100	TAV1....1F-9
0.120	TAV1....1F-11
0.140	TAV1....1F-13
0.140	TAV2....1F-15
0.140	TAV3....1F-17
0.140	TAV4....1F-19
0.140	TAV5....1F-21
0.140	TAV6....1F-23
0.140	TAV7....1G-3
0.140	TAV8....1G-5
0.140	TAV9....1G-7
0.140	TAV10..1G-9
0.140	TAV11..1G-11
0.140	TAV12..1G-13
0.149	TAV1....1G-15
0.200	TAV1....1G-17
0.203	TAV1....1G-19
0.203	TAV2....1G-21
0.240	TAV1....1G-23
0.240	TAV2....1H-3
0.241	TAV1....1H-5
0.270	TAV1....1H-7
0.300	TAV1....1H-9
0.302	TAV1....1H-11
0.305	TAV1....1H-13
0.310	TAV1....1H-15
0.320	TAV1....1H-17
0.323	TAV1....1H-19
0.326	TAV1....1H-21
0.340	TAV1....1H-23
0.345	TAV1....1I-3
0.350	TAV1....1I-5
0.360	TAV1....1I-7
0.360	TAV2....1I-9
0.400	TAV1....1I-11
0.400	TAV2....1I-13
0.450	TAV1....1I-15
1.000	TAV1....1J-3
1.010	TAV1....1J-5
1.020	TAV1....1J-7
1.030	TAV1....1J-9
1.030	TAV2....1J-13
1.030	TAV3....1J-15
1.040	TAV1....1J-17
1.040	TAV2....1J-19
1.050	TAV1....1J-21
1.050	TAV2....1K-3
1.050	TAV3....1K-5
1.050	TAV4....1K-7
1.060	TAV1....1K-9
1.070	TAV1....1K-15
1.070	TAV2....1K-17
1.070	TAV3....1K-19
1.071	TAV1....1K-21
1.071	TAV2....1L-3
1.080	TAV1....1L-5
1.080	TAV2....1L-7
1.081	TAV1....1L-9
1.082	TAV1....1L-11
1.082	TAV2....1L-13
1.082	TAV3....1L-15
1.083	TAV1....1L-17
1.084	TAV1....1L-19
1.085	TAV1....1L-21
1.200	TAV1....2D-3
1.200	TAV2....2D-5
1.200	TAV3....2D-7
1.210	TAV1....2D-9
1.220	TAV1....2D-11
1.220	TAV2....2D-13
1.220	TAV3....2D-17
1.250	TAV1....2D-19
1.250	TAV2....2D-21
1.250	TAV4....2E-3
1.250	TAV5....2E-7
1.250	TAV6....2E-9
1.250	TAV7....2E-11
1.250	TAV7....2E-13
1.290	TAV1....2E-15
1.290	TAV2....2E-17
1.300	TAV1....2E-19
1.300	TAV2....2E-21
1.300	TAV3....2E-23
1.300	TAV4....2F-3
2.000	TAV1....2F-5
2.001	TAV1....2F-7
2.002	TAV1....2F-9
2.003	TAV1....2F-11
2.020	TAV1....2F-13
2.030	TAV1....2F-17
2.030	TAV2....2F-19
2.030	TAV3....2F-21
2.030	TAV4....2F-23
2.030	TAV5....2G-3
2.031	TAV1....2G-5
2.031	TAV2....2G-7
2.031	TAV3....2G-9
2.031	TAV4....2G-11
2.040	TAV1....2G-13
2.041	TAV1....2G-15
3.000	TAV1....2G-17
3.001	TAV1....2G-19
3.010	TAV1....2G-21
3.010	TAV2....2G-23
3.010	TAV3....2H-3
3.010	TAV4....2H-5
3.020	TAV1....2H-7
3.030	TAV1....2H-9
3.040	TAV1....2H-11
3.051	TAV1....2H-13
3.052	TAV1....2H-15
3.060	TAV1....2H-17
3.070	TAV1....2H-19
3.071	TAV1....2H-21
4.000	TAV1....2H-23
4.500	TAV1....2I-3
4.501	TAV1....2I-5
5.0013	TAV1..2J-3
5.0020	TAV1..2J-5
5.0020	TAV2..2J-7
5.0022	TAV1..2J-9
5.0025	TAV1..2J-11
5.0038	TAV1..2J-13
5.0080	TAV1..2J-15
5.0080	TAV2..2J-17
5.0083	TAV1..2J-19
5.0151	TAV1..2J-21
5.0536	TAV1..2J-23
5.0540	TAV1..2K-3

SUBGROUP	GRID

INDICE ALFABETICO

DENOMINACIONES	SGR.	TAV.
RADIADOR	0.003	3
RADIADOR-COMPONENTES	0.003	2
REDUCTOR DE ROTACION	1.040	1
REDUCTORES DE TRANSLACION	3.010	1
REGULADOR DE BOMBA HIDR.	1.030	3
REGULADOR DE VELOCIDAD	0.140	2
	0.140	3
	0.140	4
	0.140	5
RESPIRADERO	0.045	1
RODILLO DE APOYO ORUGA	3.040	1
RODILLO DE SOPORTE ORUGA	3.030	1
RUBERIAS DE ENGRASADORES	2.040	1
	2.041	1
RUEDA GUIADORA	3.020	1
SILENCIADOR	0.002	1
SOPORTES DE ALTERNADOR	0.400	1
TABLERO DERECHO	1.200	1
	1.200	3
TABLIERO IZQUIERDO	1.210	1
TAPAS DEL BLOQUE	0.043	1
	0.043	2
TERMOSTATO Y TUBERIAS	0.326	1
TUBERIAS ACEITE MOTOR	0.305	1
TUBERIAS ANTERIORES	2.030	1
	2.031	1
	2.031	2
TUBERIAS BOMBA/DISTR.	1.050	1
TUBERIAS DE COMBUSTIBLE	0.203	1
	0.203	2
TUBERIAS DE REFRIGERACION	0.323	1
TUBERIAS INFERIORES	3.070	1
	3.071	1
	3.072	1
TUBERIAS PRINCIPALES	1.060	1
	1.061	1
TUBERIAS SERVOMANDOS (3)	1.082	1
TUBERIAS SERVOMANDOS (4)	1.083	1
TUBERIAS SERVOMANDOS (5)	1.084	1
TUBERIAS SERVOMANDOS (6)	1.085	1
TUBERIAS SERVOMANDOS(1)	1.080	1
TUBERIAS SERVOMANDOS.(2)	1.081	1
TUBERIAS TURBOCOMPRESOR	0.241	1
TUBERIAS Y INYECTORES	0.149	1
TURBOCOMPRESOR	0.240	1
	0.240	2
VALVULA AMORTIGUADORA	1.082	3
VALVULA DE DESCARGA-COMP.	3.010	4
VALVULA DE FRENO-COMP.	3.010	3
VALVULA DE RETENCION	1.082	2
VALVULA PILOTO	1.070	3
	1.071	2
VARILLA DE NIVEL	0.270	1
VENTANA DE CABINA-DERECHO	1.250	7
VENTANA DE CABINA-IZQUIE.	1.250	6
VOLANTE DEL CIGÜEÑAL	0.083	1

OPTIONAL EQUIPMENT - ELENCO DELLE VARIANTI - LISTE DES VARIANTES
LISTE DER VARIANTEN - LISTA DE VARIANTES

SGR.	CODE-CODICE-CODE KENNUMMER-CODIGO	DESCRIPTION-DENOMINAZIONE DESIGNATION-BENENNUNG-DENOMINAC.	VERSION-VERSIONE AUSFUHRUNGEN-VERSIONES
5.0013	71415145	DIPPER STICK (2.9M) BRACCIO PENETRAZ BALANCIER LOFEFFELSTIEL BRAZO TERMINAL	
5.0020	71416945	APPLICATION OF OL. HAMMER APPLICAZIONE MARTELLO ID. MONTAGE DE MARTEAU OLEOD. VERWENDUNG OELD.HAMMERS APLICACION DE MARTILLO O.	
5.0022	71416674	DIPPER STICK (2.4M) BRACCIO PENETRAZ BALANCIER LOEFFELSTIEL BRAZO TERMINAL	
5.0038	71416859	DIPPER STICK (3.5M) BRACCIO PENETR BALANCIER LOEFFELSTIEL BRAZO TERMINAL	
5.0083	71405996	TOOL KIT ACCESSORI MANUTENZIONE ACCESSOIRES D'ENTRETIEN BORDWERKZEUGE HERRAMIENTAS	
5.0151	71406293	OPERATOR'S SEAT SEDILE SIEGE DE CONDUC. FAHRESITZ ASIENTO DE COND.	
5.0536	71406149	SAFETY BELT CINTURA DI SICUREZZA CEINTURE DE SECURITE SICHERHEITSGURT CINTURON DE SEGURANZA	

"FILTER CARE" KIT
MODEL: FH200

500 HOUR KIT
PART NUMBER: 75127473

QUANTITY	PART NUMBER	DESCRIPTION
2	04787410	Lube Oil Filter
1	04788503	Fuel Filter
1	14467480	O-ring, Hydraulic Ret.
1	71416241	Hydraulic Ret. Filter

1000 HOUR KIT
PART NUMBER: 75127474

2	04787410	Lube Oil Filter
1	04788503	Fuel Filter
1	71416241	Hydraulic Ret. Filter
1	14467480	O-ring Hydraulic Ret.
1	71402469	Pilot Control Filter
1	71416994	Air Filter,inner
1	71420350	Air Filter,outer

EXTRA CARE KIT
BASE MACHINE
PART NUMBER: 75127475

10	04787410	Lube Oil Filter
3	04788503	Fuel Filter
2	71416241	Hydraulic Ret. Filter
2	14467480	O-ring, Hyd.Ret
1	71402469	Pilot Control Filter
1	71401954	O-ring, Pilot Filter
1	71415282	Air Filter ,outer
1	04843756	Water Pump Belt
1	08109714	Fan Belt
1	11054590	3A Fuse
1	11054690	4A Fuse
1	11054890	11.5A Fuse
4	45482377	Track Bolt
4	45482379	Track Nut
1	11054990	10A Fuse
1	71416994	Air Filter,inner

KIT INDEX - INDICE DEI KITS - LISTE DES KITS - VERZEICHNIS DER ERSATSTEILSETZE - INDICE DE FORNITURAS

KIT PART MUMBER	KIT COMPONENTS	TRAN. CODE	DESCRIPTION	DESCRIZIONE	SGR.	TAV.	ITEM	QTA'
1307188	1307188	K11	KIT - FOR ALTERNATOR	KIT - PER ALTERNATORE	0.400	3	01	1
1901385		K15A	KIT-CRANK.THRUST RINGS(+0,000)	KIT-ANELLI SPALLAM. (+0,000)				
	4707775	90S	HALF RING	SEMIANELLO	0.080	1	09	2
	4707779	90S	HALF RING	SEMIANELLO	0.080	1	08	2
1901386		K15B	KIT-CRANK.THRUST RINGS(+0,127)	KIT-ANELLI SPALLAM. (+0,127)				
	4707776	90S	HALF RING	SEMIANELLO	0.080	1	09	2
	4707780	90S	HALF RING	SEMIANELLO	0.080	1	08	2
1901387		K15C	KIT-CRANK.THRUST RINGS(+0,254)	KIT-ANELLI SPALLAM. (+0,254)				
	4708063	90S	HALF RING	SEMIANELLO	0.080	1	09	2
	4708069	90S	HALF RING	SEMIANELLO	0.080	1	08	2
1901388		K15D	KIT-CRANK.THRUST RINGS(+0,508)	KIT-ANELLI SPALLAM. (+0,508)				
	4708064	90S	HALF RING	SEMIANELLO	0.080	1	09	2
	4708070	90S	HALF RING	SEMIANELLO	0.080	1	08	2
1930176		K19A	KIT-CYL.BLOCK BEARINGS(-0,000)	KIT-SEMICUSC.DI BANCO (-0,000)				
	4754062	103S	HALF BEARING	SEMICUSCINETTO	0.080	1	06	1
	4754064	103S	HALF BEARING	SEMICUSCINETTO	0.080	1	07	1
1930177		K19B	KIT-CYL.BLOCK BEARINGS(-0,254)	KIT-SEMICUSC.DI BANCO (-0,254)				
	4771248	103S	HALF BEARING	SEMICUSCINETTO	0.080	1	06	1
	4771258	103S	HALF BEARING	SEMICUSCINETTO	0.080	1	07	1
1930178		K19C	KIT-CYL.BLOCK BEARINGS(-0,508)	KIT-SEMICUSC.DI BANCO (-0,508)				
	4771249	103S	HALF BEARING	SEMICUSCINETTO	0.080	1	06	1
	4771259	103S	HALF BEARING	SEMICUSCINETTO	0.080	1	07	1
1930179		K19D	KIT-CYL.BLOCK BEARINGS(-0,762)	KIT-SEMICUSC.DI BANCO (-0,762)				
	4771250	103S	HALF BEARING	SEMICUSCINETTO	0.080	1	06	1
	4771260	103S	HALF BEARING	SEMICUSCINETTO	0.080	1	07	1
1930180		K19E	KIT-CYL.BLOCK BEARINGS(-1,016)	KIT-SEMICUSC.DI BANCO (-1,016)				
	4771251	103S	HALF BEARING	SEMICUSCINETTO	0.080	1	06	1
	4771261	103S	HALF BEARING	SEMICUSCINETTO	0.080	1	07	1
1930201		K21A	KIT-CON. ROD BEARINGS (-0,000)	KIT-SEMICUSC. BIELLA (-0,000)				
	4780965	103S	HALF BEARING	SEMICUSCINETTO	0.081	1	04	2
1930202		K21B	KIT-CON. ROD BEARINGS (-0,254)	KIT-SEMICUSC. BIELLA (-0,254)				
	4780967	103S	HALF BEARING	SEMICUSCINETTO	0.081	1	04	2
1930203		K21C	KIT-CON. ROD BEARINGS (-0,508)	KIT-SEMICUSC. BIELLA (-0,508)				
	4780968	103S	HALF BEARING	SEMICUSCINETTO	0.081	1	04	2
1930204		K21D	KIT-CON. ROD BEARINGS (-0,762)	KIT-SEMICUSC. BIELLA (-0,762)				
	4780969	103S	HALF BEARING	SEMICUSCINETTO	0.081	1	04	2
1930205		K21E	KIT-CON. ROD BEARINGS (-1,016)	KIT-SEMICUSC. BIELLA (-1,016)				
	4780970	103S	HALF BEARING	SEMICUSCINETTO	0.081	1	04	2
1930206		K17A	KIT-FOR ONE PISTON (+0,0)	KIT-PER UNO STANTUFFO (+0,0)				
	4754400	45A	RING	ANELLO	0.082	1	05	1
	4754401	45A	RING	ANELLO	0.082	1	06	1
	4758713	45A	RING	ANELLO	0.082	1	04	1
	4770451	80P	PIN	PERNO	0.082	1	02	1
	4770452	187A	SNAP RING	ANELLO ELASTICO	0.082	1	03	2
	4770996	132P	PISTON	PISTONE	0.082	1	01	1
1930207		K17B	KIT-FOR ONE PISTON (+0,4)	KIT-PER UNO STANTUFFO (+0,4)				
	4770451	80P	PIN	PERNO	0.082	1	02	1
	4770452	187A	SNAP RING	ANELLO ELASTICO	0.082	1	03	2
	4770632	45A	RING	ANELLO	0.082	1	06	1
	4771788	45A	RING	ANELLO	0.082	1	04	1
	4771793	45A	RING	ANELLO	0.082	1	05	1
	4771827	132P	PISTON	PISTONE	0.082	1	01	1
1930208		K17C	KIT-FOR ONE PISTON (+0,8)	KIT-PER UNO STANTUFFO (+0,8)				
	4770451	80P	PIN	PERNO	0.082	1	02	1
	4770452	187A	SNAP RING	ANELLO ELASTICO	0.082	1	03	1
	4770634	45A	RING	ANELLO	0.082	1	06	1
	4771790	45A	RING	ANELLO	0.082	1	04	1
	4771795	45A	RING	ANELLO	0.082	1	05	1
	4771829	132P	PISTON	PISTONE	0.082	1	01	1
1930209		K18A	KIT-PISTON RINGS(+0,0)	KIT-ANELLI STANTUFFO (+0,0)				
	4754400	45A	RING	ANELLO	0.082	1	05	1
	4754401	45A	RING	ANELLO	0.082	1	06	1
	4758713	45A	RING	ANELLO	0.082	1	04	1

SUBGROUP	GRID
0.000	TAV1....1D-3
0.001	TAV1....1D-5
0.002	TAV1....1D-7
0.003	TAV1....1D-9
0.003	TAV2....1D-11
0.003	TAV3....1D-13
0.004	TAV1....1D-15
0.004	TAV2....1D-17
0.021	TAV1....1D-19
0.040	TAV1....1D-21
0.040	TAV2....1D-23
0.040	TAV3....1E-3
0.042	TAV1....1E-5
0.043	TAV1....1E-7
0.043	TAV2....1E-9
0.045	TAV1....1E-11
0.060	TAV1....1E-13
0.060	TAV2....1E-15
0.071	TAV1....1E-17
0.077	TAV1....1E-19
0.080	TAV1....1E-21
0.081	TAV1....1E-23
0.082	TAV1....1F-3
0.083	TAV1....1F-5
0.084	TAV1....1F-7
0.100	TAV1....1F-9
0.120	TAV1....1F-11
0.140	TAV1....1F-13
0.140	TAV2....1F-15
0.140	TAV3....1F-17
0.140	TAV4....1F-19
0.140	TAV5....1F-21
0.140	TAV6....1F-23
0.140	TAV7....1G-3
0.140	TAV8....1G-5
0.140	TAV9....1G-7
0.140	TAV10..1G-9
0.140	TAV11..1G-11
0.140	TAV12..1G-13
0.149	TAV1....1G-15
0.200	TAV1....1G-17
0.203	TAV1....1G-19
0.203	TAV2....1G-21
0.240	TAV1....1G-23
0.240	TAV2....1H-3
0.241	TAV1....1H-5
0.270	TAV1....1H-7
0.300	TAV1....1H-9
0.302	TAV1....1H-11
0.305	TAV1....1H-13
0.310	TAV1....1H-15
0.320	TAV1....1H-17
0.323	TAV1....1H-19
0.326	TAV1....1H-21
0.340	TAV1....1H-23
0.345	TAV1....1I-3
0.350	TAV1....1I-5
0.360	TAV1....1I-7
0.360	TAV2....1I-9
0.400	TAV1....1I-11
0.400	TAV2....1I-13
0.450	TAV1....1I-15
1.000	TAV1....1J-3
1.010	TAV1....1J-5
1.020	TAV1....1J-7
1.030	TAV1....1J-9
1.030	TAV2....1J-13
1.030	TAV3....1J-15
1.040	TAV1....1J-17
1.040	TAV2....1J-19
1.050	TAV1....1J-21
1.050	TAV2....1K-3
1.050	TAV3....1K-5
1.050	TAV4....1K-7
1.060	TAV1....1K-9
1.070	TAV1....1K-15
1.070	TAV2....1K-17
1.070	TAV3....1K-19
1.071	TAV1....1K-21
1.071	TAV2....1L-3
1.080	TAV1....1L-5
1.080	TAV2....1L-7
1.081	TAV1....1L-9
1.082	TAV1....1L-11
1.082	TAV2....1L-13
1.082	TAV3....1L-15
1.083	TAV1....1L-17
1.084	TAV1....1L-19
1.085	TAV1....1L-21
1.200	TAV1....2D-3
1.200	TAV2....2D-5
1.200	TAV3....2D-7
1.210	TAV1....2D-9
1.220	TAV1....2D-11
1.220	TAV2....2D-13
1.220	TAV3....2D-17
1.250	TAV1....2D-19
1.250	TAV2....2D-21
1.250	TAV4....2E-3
1.250	TAV5....2E-7
1.250	TAV6....2E-9
1.250	TAV7....2E-11
1.250	TAV7....2E-13
1.290	TAV1....2E-15
1.290	TAV2....2E-17
1.300	TAV1....2E-19
1.300	TAV2....2E-21
1.300	TAV3....2E-23
1.300	TAV4....2F-3
2.000	TAV1....2F-5
2.001	TAV1....2F-7
2.002	TAV1....2F-9
2.003	TAV1....2F-11
2.020	TAV1....2F-13
2.030	TAV1....2F-17
2.030	TAV2....2F-19
2.030	TAV3....2F-21
2.030	TAV4....2F-23
2.030	TAV5....2G-3
2.031	TAV1....2G-5
2.031	TAV2....2G-7
2.031	TAV3....2G-9
2.031	TAV4....2G-11
2.040	TAV1....2G-13
2.041	TAV1....2G-15
3.000	TAV1....2G-17
3.001	TAV1....2G-19
3.010	TAV1....2G-21
3.010	TAV2....2G-23
3.010	TAV3....2H-3
3.010	TAV4....2H-5
3.020	TAV1....2H-7
3.030	TAV1....2H-9
3.040	TAV1....2H-11
3.051	TAV1....2H-13
3.052	TAV1....2H-15
3.060	TAV1....2H-17
3.070	TAV1....2H-19
3.071	TAV1....2H-21
4.000	TAV1....2H-23
4.500	TAV1....2I-3
4.501	TAV1....2I-5
5.0013	TAV1..2J-3
5.0020	TAV1..2J-5
5.0020	TAV2..2J-7
5.0022	TAV1..2J-9
5.0025	TAV1..2J-11
5.0038	TAV1..2J-13
5.0080	TAV1..2J-15
5.0080	TAV2..2J-17
5.0083	TAV1..2J-19
5.0151	TAV1..2J-21
5.0536	TAV1..2J-23
5.0540	TAV1..2K-3

KIT INDEX - INDICE DEI KITS - LISTE DES KITS - VERZEICHNIS DER ERSATSTEILSETZE - INDICE DE FORNITURAS

KIT PART MUMBER	KIT COMPONENTS	TRAN. CODE	DESCRIPTION	DESCRIZIONE	SGR.	TAV.	ITEM	QTA'
1930210		K18B	KIT-PISTON RINGS(+0,4)	KIT-ANELLI STANTUFFO (+0,4)				
	4770632	45A	RING	ANELLO	0.082	1	06	1
	4771788	45A	RING	ANELLO	0.082	1	04	1
	4771793	45A	RING	ANELLO	0.082	1	05	1
1930211		K18C	KIT-PISTON RINGS(+0,8)	KIT-ANELLI STANTUFFO (+0,8)				
	4770634	45A	RING	ANELLO	0.082	1	06	1
	4771790	45A	RING	ANELLO	0.082	1	04	1
	4771795	45A	RING	ANELLO	0.082	1	05	1
71400106		K4	KIT-BUCKET CYL. SEALS	KIT-GUARN. CILIN. BENNA				
	71400007	45A	RING	ANELLO	2.030	5	15	1
	71400008	122G	SEAL	GUARNIZIONE	2.030	5	16	1
	71400009	45A	RING	ANELLO	2.030	5	17	1
71400152		2K	KIT	KIT				
	71400013	45A	RING	ANELLO	2.031	3	12	1
	71400014	122G	SEAL	GUARNIZIONE	2.031	3	13	1
	71400015	45A	RING	ANELLO	2.031	3	14	1
71400161		K3	KIT-DIPPER CYL. SEALS	KIT-GUARN. CILIN. PENETRAZIONE				
	71400040	122G	SEAL	GUARNIZIONE	2.030	4	17	1
	71400041	122G	SEAL	GUARNIZIONE	2.030	4	18	2
	71400042	45A	RING	ANELLO	2.030	4	19	1
71400161		K3	KIT-DIPPER CYL. SEALS	KIT-GUARN. CILIN. PENETRAZIONE				
	71400040	122G	SEAL	GUARNIZIONE	2.031	4	17	1
	71400041	45A	RING	ANELLO	2.031	4	18	2
	71400042	45A	RING	ANELLO	2.031	4	19	2
71400186		K3	KIT-DIPPER CYL. SEALS	KIT-GUARN. CILIN. PENETRAZIONE				
	71400016	45A	RING	ANELLO	2.030	4	14	1
	71400017	122G	SEAL	GUARNIZIONE	2.030	4	15	1
	71400018	45A	RING	ANELLO	2.030	4	16	1
71400186		K3	KIT-DIPPER CYL. SEALS	KIT-GUARN. CILIN. PENETRAZIONE				
	71400016	45A	RING	ANELLO	2.031	4	14	1
	71400017	122G	SEAL	GUARNIZIONE	2.031	4	15	1
	71400018	45A	RING	ANELLO	2.031	4	16	1
71400199		K1	KIT-LIFT RIGHT CYL. SEALS	KIT-GUARN.CILINDRO SOLL.DX				
	71400010	45A	RING	ANELLO	2.030	2	14	1
	71400011	122G	SEAL	GUARNIZIONE	2.030	2	15	1
	71400012	45A	RING	ANELLO	2.030	2	16	1
71400199		K2	LIFT LEFT CYL. SEAL KIT	KIT GUARN.CILINDRO SOLL.SX				
	71400010	45A	RING	ANELLO	2.030	3	14	1
	71400011	122G	SEAL	GUARNIZIONE	2.030	3	15	1
	71400012	45A	RING	ANELLO	2.030	3	16	1
71400214		K1	KIT-LIFT RIGHT CYL. SEALS	KIT-GUARN.CILINDRO SOLL.DX				
	71400037	122G	SEAL	GUARNIZIONE	2.030	2	17	1
	71400038	45A	RING	ANELLO	2.030	2	18	2
	71400039	45A	RING	ANELLO	2.030	2	19	2
71400214		K2	LIFT LEFT CYL. SEAL KIT	KIT GUARN.CILINDRO SOLL.SX				
	71400037	122G	SEAL	GUARNIZIONE	2.030	3	17	1
	71400038	45A	RING	ANELLO	2.030	3	18	2
	71400039	45A	RING	ANELLO	2.030	3	19	2
71400231		K4	KIT-BUCKET CYL. SEALS	KIT-GUARN. CILIN. BENNA				
	71400034	122G	SEAL	GUARNIZIONE	2.030	5	18	1
	71400035	45A	RING	ANELLO	2.030	5	19	2
	71400036	45A	RING	ANELLO	2.030	5	20	2
71400333		2K	KIT	KIT				
	71400334	45A	RING	ANELLO	2.031	3	17	2
	71400335	45A	RING	ANELLO	2.031	3	16	2
	71400336	122G	SEAL	GUARNIZIONE	2.031	3	15	1
71402469		2K	KIT	KIT				
	71401953	84C	FILTER ELEMENT	CARTUCCIA FILTRO	1.080	1	11B	1
	71401954	158G	O-RING	GUARNIZIONE O-R	1.080	1	11A	1
79062510		K22	KIT-MANIFOLD GASKETS	KIT-GUARNIZIONI COLLETTORI				1
	4632108	122G	SEAL	GUARNIZIONE	0.241	1	04	1
	4632123	122G	SEAL	GUARNIZIONE	0.240	1	27	1
	4636350	122G	SEAL	GUARNIZIONE	0.002	1	15	1

SUBGROUP	GRID
0.000	TAV1....1D-3
0.001	TAV1....1D-5
0.002	TAV1....1D-7
0.003	TAV1....1D-9
0.003	TAV2....1D-11
0.003	TAV3....1D-13
0.004	TAV1....1D-15
0.004	TAV2. ..1D-17
0.021	TAV1....1D-19
0.040	TAV1....1D-21
0.040	TAV2....1D-23
0.040	TAV3....1E-3
0.042	TAV1....1E-5
0.043	TAV1....1E-7
0.043	TAV2....1E-9
0.045	TAV1....1E-11
0.060	TAV1....1E-13
0.060	TAV2.. .1E-15
0.071	TAV1....1E-17
0.077	TAV1....1E-19
0.080	TAV1....1E-21
0.081	TAV1....1E-23
0.082	TAV1....1F-3
0.083	TAV1....1F-5
0.084	TAV1....1F-7
0.100	TAV1....1F-9
0.120	TAV1....1F-11
0.140	TAV1....1F-13
0.140	TAV2....1F-15
0.140	TAV3....1F-17
0.140	TAV4....1F-19
0.140	TAV5....1F-21
0.140	TAV6....1F-23
0.140	TAV7....1G-3
0.140	TAV8....1G-5
0.140	TAV9....1G-7
0.140	TAV10. 1G-9
0.140	TAV11..1G-11
0.140	TAV12..1G-13
0.149	TAV1....1G-15
0.200	TAV1....1G-17
0.203	TAV1....1G-19
0.203	TAV2....1G-21
0.240	TAV1....1G-23
0.240	TAV2....1H-3
0.241	TAV1....1H-5
0.270	TAV1....1H-7
0.300	TAV1....1H-9
0.302	TAV1....1H-11
0.305	TAV1....1H-13
0.310	TAV1....1H-15
0.320	TAV1....1H-17
0.323	TAV1....1H-19
0.326	TAV1....1H-21
0.340	TAV1....1H-23
0.345	TAV1....1I-3
0.350	TAV1....1I-5

SUBGROUP	GRID
0.360	TAV1....1I-7
0.360	TAV2....1I-9
0.400	TAV1....1I-11
0.400	TAV2....1I-13
0.450	TAV1....1I-15
1.000	TAV1....1J-3
1.010	TAV1....1J-5
1.020	TAV1....1J-7
1.030	TAV1....1J-9
1.030	TAV2....1J-13
1.030	TAV3....1J-15
1.040	TAV1....1J-17
1.040	TAV2....1J-19
1.050	TAV1....1J-21
1.050	TAV2....1K-3
1.050	TAV3....1K-5
1.050	TAV4....1K-7
1.060	TAV1....1K-9
1.070	TAV1....1K-15
1.070	TAV2....1K-17
1.070	TAV3....1K-19
1.071	TAV1....1K-21
1.071	TAV2....1L-3
1.080	TAV1....1L-5
1.080	TAV2....1L-7
1.081	TAV1....1L-9
1.082	TAV1....1L-11
1.082	TAV2....1L-13
1.082	TAV3....1L-15
1.083	TAV1....1L-17
1.084	TAV1....1L-19
1.085	TAV1....1L-21
1.200	TAV1....2D-3
1.200	TAV2....2D-5
1.200	TAV3.. .2D-7
1.210	TAV1....2D-9
1.220	TAV1....2D-11
1.220	TAV2....2D-13
1.220	TAV3....2D-17
1.250	TAV1....2D-19
1.250	TAV2....2D-21
1.250	TAV4....2E-3
1.250	TAV5....2E-7
1.250	TAV6....2E-9
1.250	TAV7....2E-11
1.250	TAV7....2E-13
1.290	TAV1....2E-15
1.290	TAV2....2E-17
1.300	TAV1....2E-19
1.300	TAV2....2E-21
1.300	TAV3....2E-23
1.300	TAV4....2F-3
2.000	TAV1....2F-5
2.001	TAV1....2F-7
2.002	TAV1....2F-9
2.003	TAV1....2F-11
2.020	TAV1....2F-13

SUBGROUP	GRID
2.030	TAV1....2F-17
2.030	TAV2....2F-19
2.030	TAV3....2F-21
2.030	TAV4....2F-23
2.030	TAV5....2G-3
2.031	TAV1....2G-5
2.031	TAV2....2G-7
2.031	TAV3....2G-9
2.031	TAV4....2G-11
2.040	TAV1....2G-13
2.041	TAV1....2G-15
3.000	TAV1....2G-17
3.001	TAV1....2G-19
3.010	TAV1....2G-21
3.010	TAV2....2G-23
3.010	TAV3....2H-3
3.010	TAV4....2H-5
3.020	TAV1....2H-7
3.030	TAV1....2H-9
3.040	TAV1....2H-11
3.051	TAV1....2H-13
3.052	TAV1....2H-15
3.060	TAV1....2H-17
3.070	TAV1....2H-19
3.071	TAV1....2H-21
4.000	TAV1....2H-23
4.500	TAV1....2I-3
4.501	TAV1....2I-5
5.0013	TAV1..2J-3
5.0020	TAV1..2J-5
5.0020	TAV2..2J-7
5.0022	TAV1..2J-9
5.0025	TAV1..2J-11
5.0038	TAV1..2J-13
5.0080	TAV1..2J-15
5.0080	TAV2..2J-17
5.0083	TAV1..2J-19
5.0151	TAV1..2J-21
5.0536	TAV1..2J-23
5.0540	TAV1..2K-3

SUBGROUP	GRID

KIT INDEX - INDICE DEI KITS - LISTE DES KITS - VERZEICHNIS DER ERSATSTEILSETZE - INDICE DE FORNITURAS

KIT PART NUMBER	KIT COMPONENTS	TRAN. CODE	DESCRIPTION	DESCRIZIONE	SGR.	TAV.	ITEM	QTA'
79062510	4770265	120G	GASKET	GUARNIZIONE PIANA	0.326	1	03	1
	4776544	122G	SEAL	GUARNIZIONE	0.071	1	09	3
	4813566	120G	GASKET	GUARNIZIONE PIANA	0.077	1	03	6
	4849997	122G	SEAL	GUARNIZIONE	0.240	1	02	1
	4850946	122G	SEAL	GUARNIZIONE	0.240	1	03	1
	14463281	158G	O-RING	GUARNIZIONE O-R	0.326	1	12	1
	16508260	131R	WASHER	ROSETTA	0.240	1	15	1
79062511		K13	KIT - CYLINDER BLOCK SEALS	KIT - GUARNIZ.BASAMENTO MOTORE				
	4031577	122G	SEAL	GUARNIZIONE	0.042	1	04	1
	4605564	122G	SEAL	GUARNIZIONE	0.043	2	09	1
	4607590	122G	SEAL	GUARNIZIONE	0.043	1	12	1
	4653283	122G	SEAL	GUARNIZIONE	0.040	2	05	1
	4781578	122G	SEAL	GUARNIZIONE	0.043	1	05	1
	4781579	122G	SEAL	GUARNIZIONE	0.043	1	18	1
	4782785	122G	SEAL	GUARNIZIONE	0.042	1	02	1
	4782786	122G	SEAL	GUARNIZIONE	0.042	1	03	1
	14463080	158G	O-RING	GUARNIZIONE O-R	0.043	2	16	1
79062512		K14	KIT - CYLINDER HEAD SEALS	KIT - GUARNIZ. TESTA CILINDRI				
	4754068	120G	GASKET	GUARNIZIONE PIANA	0.060	1	04	1
	4783241	120G	GASKET	GUARNIZIONE PIANA	0.060	1	03	1
79067586	79067856	2K	KIT	KIT	0.140	12	01	
79070385	79070385	2K	KIT	KIT	0.400	2	18	
79078926	79078926	K11	KIT - FOR ALTERNATOR	KIT - PER ALTERNATORE	0.400	3	18	
79081045	79081045	2K	KIT	KIT	0.360	2	05	
79081046	79081046	2K	KIT	KIT	0.360	2	06	
79094074		K16	KIT - WATER PUMP OVERHAUL	KIT - REVISIONE POMPA ACQUA				1
	4599560	122G	SEAL	GUARNIZIONE	0.320	1	08	1
	4599561	122G	SEAL	GUARNIZIONE	0.320	1	06	1
	4808080	16A	SHAFT	ALBERO	0.320	1	12	1
	4813442	60G	IMPELLER	GIRANTE	0.320	1	11	1
	4848840	120G	GASKET	GUARNIZIONE PIANA	0.326	1	13	1
	4854716	122G	SEAL	GUARNIZIONE	0.323	1	01	1
	7302756	122G	SEAL	GUARNIZIONE	0.320	1	10	1
	13739811	40V	SCREW	VITE	0.320	1	14	1
	14463281	158G	O-RING	GUARNIZIONE O-R	0.326	1	12	1
79097354	79097354	2K	KIT	KIT	0.140	6	16	
		2K	KIT	KIT	0.140	7	44	

NUMERICAL INDEX - INDICE NUMERICO - LISTE NUMERIQUE
NUMERISCHES ERSATZEILVERZEILVERZEICHNIS - INDICE NUMERICO

PART. N.	SGR.	TAV.	ITEM
561293	0.305	1	06
561353	0.140	9	01
563652	0.060	2	21
564530	0.350	1	08
586164	1.200	1	32
586164	1.210	1	34
759850	0.140	9	02
770243	0.140	6	09
771326	0.140	11	05
772051	0.140	12	02
772051	0.140	3	06
773026	0.140	7	10
773032	0.140	7	09
773039	0.140	6	07
773153	0.140	7	24
773218	0.140	7	07
773219	0.140	7	22
773221	0.140	7	20
773222	0.140	7	12
773223	0.140	7	38
773252	0.140	7	06
773254	0.140	7	25
773286	0.140	7	04
773287	0.140	7	05
773291	0.140	6	12
773321	0.140	7	35
773322	0.140	7	36
773323	0.140	7	43
773325	0.140	7	23
773326	0.140	7	23
773327	0.140	7	23
773328	0.140	7	23
773329	0.140	7	23
773330	0.140	7	23
773336	0.140	7	23
773348	0.140	7	28
773353	0.140	2	20
773354	0.140	4	13
773355	0.140	4	23
773445	0.140	7	33
774359	0.140	7	40
774360	0.140	7	41
1287773	0.140	8	10
1288074	0.140	6	04
1288319	0.140	7	10
1290550	0.140	8	07
1290570	0.140	8	11
1290590	0.140	8	06
1290593	0.140	8	09
1307188	0.400	3	01
1307838	0.140	5	09
1308399	0.400	3	09
1390713	0.140	9	12
1901385	0.080	1	10
1901386	0.080	1	10
1901387	0.080	1	10
1901388	0.080	1	10
1930176	0.080	1	10
1930177	0.080	1	10
1930178	0.080	1	10
1930179	0.080	1	10
1930180	0.080	1	10
1930201	0.081	1	05
1930202	0.081	1	05
1930203	0.081	1	05
1930204	0.081	1	05
1930205	0.081	1	05
1930206	0.082	1	07
1930207	0.082	1	07
1930208	0.082	1	07
1930209	0.082	1	07
1930210	0.082	1	07
1930211	0.082	1	07
4031577	0.042	1	04
4033229	0.240	1	01
4232606	0.060	1	21
4318965	0.345	1	15
4338920	0.060	2	23
4479391	0.400	2	01
4547718	0.345	1	05
4551493	0.203	1	11
4570798	0.060	2	14
4570799	0.060	2	14
4599398	0.120	1	04
4599557	0.320	1	07
4599560	0.320	1	08
4599561	0.320	1	06
4599562	0.323	1	01
4599607	0.040	2	01
4600128	0.400	1	01
4600189	0.084	1	05
4600190	0.084	1	04
4600893	0.040	2	16
4601295	0.060	2	20
4601296	0.060	2	07
4603448	0.040	1	15
4603449	0.040	1	04
4603450	0.040	1	05
4603451	0.040	1	06
4605220	0.043	1	22
4605564	0.043	2	09
4605853	0.320	1	03
4607590	0.043	1	12
4607590	0.350	1	09
4607786	0.043	2	08
4613353	0.300	1	13
4615276	0.043	1	13
4617482	0.305	1	02
4618309	0.200	1	06
4619405	0.350	1	06
4620944	0.040	3	06
4626465	0.200	1	03
4626466	0.200	1	05
4632108	0.241	1	04
4632123	0.240	1	27
4636339	0.002	1	15
4639661	0.060	2	13
4653282	0.040	2	04
4653283	0.040	2	05
4654154	0.320	1	17
4655844	0.080	1	02
4655847	0.084	1	03
4659217	0.203	1	12
4659218	0.203	1	13
4659219	0.203	1	14
4661543	0.326	1	08
4663081	0.071	1	02
4665029	0.040	2	02
4667452	0.100	1	06
4667452	0.350	1	13
4667498	0.140	10	09
4667612	0.270	1	03
4672842	0.300	1	10
4681251	0.060	2	16
4682937	0.060	2	17
4689881	0.120	1	07
4690509	0.120	1	07
4690510	0.120	1	07
4690511	0.120	1	07
4695922	0.450	1	04
4695923	0.450	1	08
4695783	0.060	2	22
4704106	0.083	1	02
4707775	0.080	1	09
4707776	0.080	1	09
4707779	0.080	1	08
4707780	0.080	1	08
4708063	0.080	1	09
4708064	0.080	1	09
4708069	0.080	1	08
4708070	0.080	1	08
4708213	0.140	10	14
4716471	0.345	1	01
4716734	0.040	2	18
4717026	0.400	1	03
4718129	0.240	1	26
4718740	0.043	2	19
4719705	0.305	1	08
4719706	0.305	1	09

SUBGROUP	GRID
0.000	TAV1....1D-3
0.001	TAV1....1D-5
0.002	TAV1....1D-7
0.003	TAV1....1D-9
0.003	TAV2....1D-11
0.003	TAV3....1D-13
0.004	TAV1....1D-15
0.004	TAV2....1D-17
0.021	TAV1....1D-19
0.040	TAV1....1D-21
0.040	TAV2....1D-23
0.040	TAV3....1E-3
0.042	TAV1....1E-5
0.043	TAV1....1E-7
0.043	TAV2....1E-9
0.045	TAV1....1E-11
0.060	TAV1....1E-13
0.060	TAV2....1E-15
0.071	TAV1....1E-17
0.077	TAV1....1E-19
0.080	TAV1....1E-21
0.081	TAV1....1E-23
0.082	TAV1....1F-3
0.083	TAV1....1F-5
0.084	TAV1....1F-7
0.100	TAV1....1F-9
0.120	TAV1....1F-11
0.140	TAV1....1F-13
0.140	TAV2....1F-15
0.140	TAV3....1F-17
0.140	TAV4....1F-19
0.140	TAV5....1F-21
0.140	TAV6....1F-23
0.140	TAV7....1G-3
0.140	TAV8....1G-5
0.140	TAV9....1G-7
0.140	TAV10..1G-9
0.140	TAV11..1G-11
0.140	TAV12..1G-13
0.149	TAV1....1G-15
0.200	TAV1....1G-17
0.203	TAV1....1G-19
0.203	TAV2....1G-21
0.240	TAV1....1G-23
0.240	TAV2....1H-3
0.241	TAV1....1H-5
0.270	TAV1....1H-7
0.300	TAV1....1H-9
0.302	TAV1....1H-11
0.305	TAV1....1H-13
0.310	TAV1....1H-15
0.320	TAV1....1H-17
0.323	TAV1....1H-19
0.326	TAV1....1H-21
0.340	TAV1....1H-23
0.345	TAV1....1I-3
0.350	TAV1....1I-5

SUBGROUP	GRID
0.360	TAV1....1I-7
0.360	TAV2....1I-9
0.400	TAV1....1I-11
0.400	TAV2....1I-13
0.450	TAV1....1I-15
1.000	TAV1....1J-3
1.010	TAV1....1J-5
1.020	TAV1....1J-7
1.030	TAV1....1J-9
1.030	TAV2....1J-13
1.030	TAV3....1J-15
1.040	TAV1....1J-17
1.040	TAV2....1J-19
1.050	TAV1....1J-21
1.050	TAV2....1K-3
1.050	TAV3....1K-5
1.050	TAV4....1K-7
1.060	TAV1....1K-9
1.070	TAV1....1K-15
1.070	TAV2....1K-17
1.070	TAV3....1K-19
1.071	TAV1....1K-21
1.071	TAV2....1L-3
1.080	TAV1....1L-5
1.080	TAV2....1L-7
1.081	TAV1....1L-9
1.082	TAV1....1L-11
1.082	TAV2....1L-13
1.082	TAV3....1L-15
1.083	TAV1. ..1L-17
1.084	TAV1....1L-19
1.085	TAV1....1L-21
1.200	TAV1....2D-3
1.200	TAV2....2D-5
1.200	TAV3....2D-7
1.210	TAV1....2D-9
1.220	TAV1....2D-11
1.220	TAV2....2D-13
1.220	TAV3....2D-17
1.250	TAV1....2D-19
1.250	TAV2....2D-21
1.250	TAV4....2E-3
1.250	TAV5....2E-7
1.250	TAV6....2E-9
1.250	TAV7....2E-11
1.250	TAV7....2E-13
1.290	TAV1....2E-15
1.290	TAV2....2E-17
1.300	TAV1....2E-19
1.300	TAV2....2E-21
1.300	TAV3....2E-23
1.300	TAV4....2F-3
2.000	TAV1....2F-5
2.001	TAV1....2F-7
2.002	TAV1....2F-9
2.003	TAV1....2F-11
2.020	TAV1....2F-13

SUBGROUP	GRID
2.030	TAV1....2F-17
2.030	TAV2....2F-19
2.030	TAV3....2F-21
2.030	TAV4....2F-23
2.030	TAV5....2G-3
2.031	TAV1....2G-5
2.031	TAV2....2G-7
2.031	TAV3....2G-9
2.031	TAV4....2G-11
2.040	TAV1....2G-13
2.041	TAV1....2G-15
3.000	TAV1....2G-17
3.001	TAV1....2G-19
3.010	TAV1....2G-21
3.010	TAV2....2G-23
3.010	TAV3....2H-3
3.010	TAV4....2H-5
3.020	TAV1....2H-7
3.030	TAV1....2H-9
3.040	TAV1....2H-11
3.051	TAV1....2H-13
3.052	TAV1....2H-15
3.060	TAV1....2H-17
3.070	TAV1....2H-19
3.071	TAV1....2H-21
4.000	TAV1....2H-23
4.500	TAV1....2I-3
4.501	TAV1....2I-5
5.0013	TAV1..2J-3
5.0020	TAV1..2J-5
5.0020	TAV2..2J-7
5.0022	TAV1..2J-9
5.0025	TAV1..2J-11
5.0038	TAV1..2J-13
5.0080	TAV1..2J-15
5.0080	TAV2..2J-17
5.0083	TAV1..2J-19
5.0151	TAV1..2J-21
5.0536	TAV1..2J-23
5.0540	TAV1..2K-3

SUBGROUP	GRID

NUMERICAL INDEX - INDICE NUMERICO - LISTE NUMERIQUE
NUMERISCHES ERSATZEILVERZEILVERZEICHNIS - INDICE NUMERICO

PART. N.	SGR.	TAV.	ITEM
4724015	0.203	1	06
4724223	0.310	1	12
4724588	0.310	1	13
4724747	0.323	1	02
4724814	0.323	1	05
4739148	0.203	2	04
4739213	0.305	1	05
4741072	0.203	1	02
4742848	0.200	1	04
4747164	0.345	1	18
4753563	0.071	1	04
4753563	0.203	1	08
4753719	0.042	1	01
4754062	0.080	1	06
4754064	0.080	1	07
4754068	0.060	1	09
4754153	0.240	1	04
4754155	0.240	1	05
4754400	0.082	1	05
4754401	0.082	1	06
4754495	0.241	1	03
4754566	0.077	1	09
4754672	0.077	1	01
4755010	0.310	1	14
4755435	0.240	1	08
4755436	0.240	1	09
4755894	0.084	1	01
4758243	0.345	1	03
4758713	0.082	1	04
4760284	0.450	1	03
4762764	0.323	1	04
4763099	0.310	1	05
4763439	0.040	3	01
4763440	0.040	3	02
4764577	0.040	3	03
4765377	0.241	1	05
4766126	0.043	1	14
4769187	0.043	1	01
4769412	0.120	1	02
4769414	0.100	1	01
4769416	0.100	1	03
4769417	0.100	1	02
4769419	0.100	1	04
4769420	0.100	1	05
4769424	0.140	10	08
4769427	0.140	10	06
4769429	0.140	10	05
4769432	0.140	10	03
4770208	0.310	1	15
4770253	0.300	1	05
4770254	0.300	1	04
4770255	0.080	1	05
4770259	0.300	1	01
4770262	0.300	1	03
4770265	0.326	1	03
4770451	0.082	1	02
4770452	0.082	1	03
4770452	0.140	10	13
4770454	0.120	1	08
4770623	0.040	1	02
4770624	0.040	1	02
4770632	0.082	1	06
4770634	0.082	1	06
4770859	0.060	1	10
4770996	0.082	1	01
4771242	0.350	1	01
4771247	0.080	1	06
4771248	0.080	1	06
4771249	0.080	1	06
4771250	0.080	1	06
4771251	0.080	1	06
4771257	0.080	1	07
4771258	0.080	1	07
4771259	0.080	1	07
4771260	0.080	1	07
4771261	0.080	1	07
4771788	0.082	1	04
4771790	0.082	1	04
4771793	0.082	1	05
4771795	0.082	1	05
4771827	0.082	1	01
4771829	0.082	1	01
4771872	0.081	1	02
4772231	0.345	1	17
4772706	0.140	9	10
4772720	0.240	1	06
4773064	0.305	1	12
4773265	0.305	1	13
4774405	0.326	1	11
4775329	0.203	2	05
4776380	0.200	1	10
4776544	0.071	1	09
4779122	0.083	1	03
4779689	0.305	1	01
4779773	0.240	1	07
4780108	0.060	2	03
4780206	0.240	1	16
4780558	0.060	2	04
4780559	0.060	2	05
4780612	0.140	11	04
4780627	0.081	1	03
4780965	0.081	1	04
4780967	0.081	1	04
4780968	0.081	1	04
4780969	0.081	1	04
4780970	0.081	1	04
4781342	0.081	1	01
4781578	0.043	1	05
4781579	0.043	1	18
4782452	0.040	2	14
4782453	0.302	1	02
4782472	0.240	1	22
4782785	0.042	1	02
4782786	0.042	1	03
4783070	0.203	1	01
4783241	0.060	1	03
4784008	0.320	1	09
4784432	0.350	1	12
4784885	0.060	1	19
4784886	0.060	1	19
4784887	0.060	1	19
4784890	0.060	2	02
4785076	0.140	10	01
4785077	0.140	10	04
4785107	0.080	1	01
4785501	0.305	1	21
4787154	0.043	2	18
4787410	0.302	1	01
4788070	0.203	2	01
4788084	0.350	1	05
4788086	0.350	1	02
4788086	0.350	1	14
4788087	0.350	1	02
4788087	0.350	1	14
4791113	0.302	1	01
4791124	0.140	11	02
4791125	0.149	1	08
4792169	0.040	1	03
4792661	0.149	1	02
4792662	0.149	1	03
4792663	0.149	1	04
4792664	0.149	1	05
4792665	0.149	1	06
4792666	0.149	1	07
4793794	0.080	1	09
4794193	0.080	1	08
4796457	0.060	1	06
4797374	0.040	1	01
4798845	0.140	10	02
4799481	0.140	1	05
4799482	0.140	1	05
4799483	0.140	1	05
4800030	0.140	11	01
4801518	0.310	1	01
4801917	0.203	1	03
4801919	0.203	1	04
4801922	0.071	1	08
4801923	0.200	1	09
4802126	0.060	1	05

NUMERICAL INDEX - INDICE NUMERICO - LISTE NUMERIQUE
NUMERISCHES ERSATZEILVERZEILVERZEICHNIS - INDICE NUMERICO

PART. N.	SGR.	TAV.	ITEM
4802127	0.060	1	05
4802609	0.300	1	16
4802611	0.300	1	12
4802613	0.300	1	11
4803361	0.340	1	01
4804122	0.140	9	11
4804219	0.043	1	10
4806133	0.400	1	14
4806611	0.149	1	01
4807219	0.200	1	01
4807379	0.360	1	01
4808080	0.320	1	12
4808268	0.400	1	02
4808519	0.400	1	02
4808603	0.400	1	13
4809425	0.140	10	07
4809524	0.080	1	04
4811892	0.040	2	15
4812047	0.060	1	20
4813001	0.077	1	04
4813370	0.320	1	01
4813442	0.320	1	11
4813566	0.077	1	03
4814180	0.400	1	13
4817495	0.077	1	02
4817522	0.077	1	07
4817998	0.077	1	09
4818862	0.060	1	17
4823210	0.326	1	06
4823212	0.326	1	07
4824221	0.120	1	01
4824416	0.060	2	01
4830623	0.323	1	08
4830631	0.240	1	28
4832023	0.060	1	08
4835762	0.060	1	04
4838482	0.326	1	14
4838680	0.060	2	15
4838844	0.060	2	18
4840138	0.345	1	10
4842031	0.084	1	02
4842033	0.345	1	14
4842338	0.345	1	02
4842339	0.345	1	04
4842710	0.326	1	01
4843487	0.270	1	06
4843490	0.270	1	02
4843492	0.270	1	01
4843493	0.323	1	06
4843541	0.140	1	01
4843756	0.340	1	04
4843951	0.323	1	10
4843995	0.043	2	13
4845281	0.083	1	01
4847102	0.042	1	14
4848840	0.326	1	13
4849997	0.240	1	02
4850946	0.240	1	03
4854716	0.323	1	01
4855756	0.140	9	05
4952483	1.060	1	09
4952483	1.061	1	09
4952483	1.300	1	84
4952483	1.300	3	11
4952483	3.000	1	06
4952483	3.001	1	06
4952483	3.002	1	06
4952483	5.0021	1	04
4976587	1.010	1	14
4982514	1.010	1	09
4982514	1.080	1	40
4982514	1.081	1	37
4982514	1.082	1	40
4982514	1.083	1	35
4982514	1.084	1	19
4982514	1.290	1	06
4982514	5.0021	1	36
4982514	5.0080	1	07
4982514	5.0081	1	24
4982514	5.0081	2	24
4991458	1.220	2	08
5136392	1.250	8	75
5961723	1.250	5	02A
5961734	1.250	5	02E
7302756	0.320	1	10
8110930	0.021	1	01
8110982	0.000	1	17
8111002	0.000	1	07
8111003	0.000	1	04
8111134	0.000	1	01
8111134	0.000	1	02
8111135	0.345	1	20
8111365	0.004	2	03
8111366	0.004	2	02
8111523	0.004	2	04
8111528	0.004	2	12
8111903	0.004	2	01
8112462	0.004	2	01
9001855	0.140	6	02
9001856	0.140	6	03
9001868	0.140	7	23
9007836	0.140	3	40
9007852	0.140	7	26
9009102	0.140	7	21
9009574	0.140	7	03
9009579	0.140	7	37
9009582	0.140	7	27
9927795	0.360	2	02
9929636	0.140	7	11
9930052	0.140	8	05
9930414	0.140	4	23
10033211	0.004	2	08
10033470	5.0020	1	19
10100530	2.003	1	11
10100530	5.0013	1	16
10100530	5.0022	1	16
10100530	5.0038	1	16
10100730	1.000	1	31
10100730	2.000	1	30
10100730	2.001	1	20
10100730	2.002	1	20
10100730	2.003	1	27
10100730	5.0013	1	38
10100730	5.0022	1	38
10100730	5.0038	1	38
10100830	1.000	1	27
10100830	2.001	1	16
10160401	0.345	1	06
10160701	0.040	1	07
10181717	0.140	9	06
10182811	0.203	1	10
10205910	0.120	1	03
10260060	0.310	1	16
10260160	0.071	1	01
10260160	0.071	1	05
10260160	0.140	9	13
10260160	0.140	9	09
10263160	0.310	1	07
10263360	0.326	1	17
10263460	1.220	2	67
10265060	0.042	1	13
10265060	1.220	2	72
10265460	0.040	2	03
10273111	0.310	1	06
10276111	0.042	1	12
10278660	0.323	1	15
10278660	0.326	1	20
10278660	1.220	2	77
10279560	0.241	1	08
10284460	5.0025	1	12
10296160	0.140	9	07
10297760	0.200	1	02
10298460	0.040	2	11
10300511	0.040	2	10
10305171	0.241	1	07
10376511	0.140	5	20
10376721	0.140	5	12
10377011	0.140	4	05
10377411	0.140	4	06

SUBGROUP	GRID
0.000	TAV1....1D-3
0.001	TAV1....1D-5
0.002	TAV1....1D-7
0.003	TAV1....1D-9
0.003	TAV2....1D-11
0.003	TAV3....1D-13
0.004	TAV1....1D-15
0.004	TAV2....1D-17
0.021	TAV1....1D-19
0.040	TAV1....1D-21
0.040	TAV2....1D-23
0.040	TAV3....1E-3
0.042	TAV1....1E-5
0.043	TAV1....1E-7
0.043	TAV2....1E-9
0.045	TAV1....1E-11
0.060	TAV1....1E-13
0.060	TAV2....1E-15
0.071	TAV1....1E-17
0.077	TAV1....1E-19
0.080	TAV1....1E-21
0.081	TAV1....1E-23
0.082	TAV1....1F-3
0.083	TAV1....1F-5
0.084	TAV1....1F-7
0.100	TAV1....1F-9
0.120	TAV1....1F-11
0.140	TAV1....1F-13
0.140	TAV2....1F-15
0.140	TAV3....1F-17
0.140	TAV4....1F-19
0.140	TAV5....1F-21
0.140	TAV6....1F-23
0.140	TAV7....1G-3
0.140	TAV8....1G-5
0.140	TAV9....1G-7
0.140	TAV10..1G-9
0.140	TAV11..1G-11
0.140	TAV12..1G-13
0.149	TAV1....1G-15
0.200	TAV1....1G-17
0.203	TAV1....1G-19
0.203	TAV2....1G-21
0.240	TAV1....1G-23
0.240	TAV2....1H-3
0.241	TAV1....1H-5
0.270	TAV1....1H-7
0.300	TAV1....1H-9
0.302	TAV1....1H-11
0.305	TAV1....1H-13
0.310	TAV1....1H-15
0.320	TAV1....1H-17
0.323	TAV1....1H-19
0.326	TAV1....1H-21
0.340	TAV1....1H-23
0.345	TAV1....1I-3
0.350	TAV1....1I-5
0.360	TAV1....1I-7
0.360	TAV2....1I-9
0.400	TAV1....1I-11
0.400	TAV2....1I-13
0.450	TAV1....1I-15
1.000	TAV1....1J-3
1.010	TAV1....1J-5
1.020	TAV1....1J-7
1.030	TAV1....1J-9
1.030	TAV2....1J-13
1.030	TAV3....1J-15
1.040	TAV1....1J-17
1.040	TAV2....1J-19
1.050	TAV1....1J-21
1.050	TAV2....1K-3
1.050	TAV3....1K-5
1.050	TAV4....1K-7
1.060	TAV1....1K-9
1.070	TAV1....1K-15
1.070	TAV2....1K-17
1.070	TAV3....1K-19
1.071	TAV1....1K-21
1.071	TAV2....1L-3
1.080	TAV1....1L-5
1.080	TAV2....1L-7
1.081	TAV1....1L-9
1.082	TAV1....1L-11
1.082	TAV2....1L-13
1.082	TAV3....1L-15
1.083	TAV1....1L-17
1.084	TAV1....1L-19
1.085	TAV1....1L-21
1.200	TAV1....2D-3
1.200	TAV2....2D-5
1.200	TAV3....2D-7
1.210	TAV1....2D-9
1.220	TAV1....2D-11
1.220	TAV2....2D-13
1.220	TAV3....2D-17
1.250	TAV1....2D-19
1.250	TAV2....2D-21
1.250	TAV4....2E-3
1.250	TAV5....2E-7
1.250	TAV6....2E-9
1.250	TAV7....2E-11
1.250	TAV7....2E-13
1.290	TAV1....2E-15
1.290	TAV2....2E-17
1.300	TAV1....2E-19
1.300	TAV2....2E-21
1.300	TAV3....2E-23
1.300	TAV4....2F-3
2.000	TAV1....2F-5
2.001	TAV1....2F-7
2.002	TAV1....2F-9
2.003	TAV1....2F-11
2.020	TAV1....2F-13
2.030	TAV1....2F-17
2.030	TAV2....2F-19
2.030	TAV3....2F-21
2.030	TAV4....2F-23
2.030	TAV5....2G-3
2.031	TAV1....2G-5
2.031	TAV2....2G-7
2.031	TAV3....2G-9
2.031	TAV4....2G-11
2.040	TAV1....2G-13
2.041	TAV1....2G-15
3.000	TAV1....2G-17
3.001	TAV1....2G-19
3.010	TAV1....2G-21
3.010	TAV2....2G-23
3.010	TAV3....2H-3
3.010	TAV4....2H-5
3.020	TAV1....2H-7
3.030	TAV1....2H-9
3.040	TAV1....2H-11
3.051	TAV1....2H-13
3.052	TAV1....2H-15
3.060	TAV1....2H-17
3.070	TAV1....2H-19
3.071	TAV1....2H-21
4.000	TAV1....2H-23
4.500	TAV1....2I-3
4.501	TAV1....2I-5
5.0013	TAV1..2J-3
5.0020	TAV1..2J-5
5.0020	TAV2..2J-7
5.0022	TAV1..2J-9
5.0025	TAV1..2J-11
5.0038	TAV1..2J-13
5.0080	TAV1..2J-15
5.0080	TAV2..2J-17
5.0083	TAV1..2J-19
5.0151	TAV1..2J-21
5.0536	TAV1..2J-23
5.0540	TAV1..2K-3

NUMERICAL INDEX - INDICE NUMERICO - LISTE NUMERIQUE
NUMERISCHES ERSATZEILVERZEILVERZEICHNIS - INDICE NUMERICO

PART. N.	SGR.	TAV.	ITEM
10397880	1.220	2	59
10399480	1.070	1	24
10399480	1.071	1	24
10399480	1.200	1	46
10418301	2.041	1	24
10445024	0.400	2	15
10450390	0.270	1	07
10450890	0.045	1	03
10493230	2.020	1	10
10493230	5.0100	1	10
10493230	5.0101	1	10
10493230	5.0102	1	10
10493230	5.0103	1	10
10493230	5.0104	1	10
10493230	5.0108	1	10
10493230	5.0110	1	10
10493230	5.0111	1	10
10516470	5.0160	1	13
10516874	1.070	1	35
10516874	1.070	1	63
10516874	1.071	1	35
10516874	1.071	1	53
10516874	1.081	1	03
10516874	1.085	1	03
10516874	1.210	1	51
10516874	2.031	3	27
10516874	3.000	1	21
10516874	3.001	1	21
10516874	3.002	1	21
10516874	5.0020	1	03
10516874	5.0020	2	03
10517074	0.001	1	06
10517074	1.050	1	57
10517074	1.061	1	07
10517074	1.081	1	19
10517074	2.030	1	20
10517074	2.030	2	32
10517074	2.030	3	32
10517074	2.030	4	26
10517074	2.030	5	24
10517074	2.031	1	40
10517074	2.031	2	40
10517074	2.031	4	26
10517074	3.060	1	18
10517074	3.070	1	23
10517074	3.071	1	23
10517074	3.072	1	23
10517074	5.0020	2	63
10517074	5.0021	1	03
10517270	3.020	1	12
10517274	1.050	1	30
10517474	1.040	1	72
10517474	3.000	1	12
10517474	3.001	1	12
10517474	3.002	1	12
10517474	3.010	1	52
10519421	5.0160	1	27
10519601	0.043	1	15
10519601	0.043	1	09
10519601	0.043	1	04
10519601	0.071	1	07
10519601	0.140	10	12
10519601	0.270	1	08
10519601	0.305	1	10
10519601	0.310	1	17
10519621	0.077	1	05
10519621	0.326	1	15
10519660	0.060	1	02
10571274	1.200	3	38
10571374	1.220	2	56
10571374	1.250	8	24
10571374	1.290	1	12
10571376	1.200	3	20
10571379	0.400	2	16
10571471	0.203	1	16
10571474	1.200	3	34
10571474	1.220	2	15
10571474	1.250	4	25
10571474	1.250	5	29
10571474	1.250	8	77
10571476	1.200	3	22
10571574	0.004	1	27
10571574	1.070	1	02
10571574	1.071	1	02
10571574	1.200	1	05
10571574	1.200	3	17
10571574	1.200	3	29
10571574	1.210	1	05
10571574	1.220	1	00
10571574	1.220	2	18
10571574	1.250	4	35
10571574	1.250	5	07
10571574	1.250	8	33
10571574	5.0021	1	15
10571576	1.200	1	42
10571576	1.210	1	41
10571579	0.140	2	25
10571579	0.140	5	11
10571774	0.002	1	14
10571774	0.003	3	10
10571774	0.004	1	18
10571774	1.070	1	86
10571774	1.070	1	66
10571774	1.071	1	66
10571774	1.071	1	86
10571774	1.200	2	43
10571774	1.220	2	50
10571774	1.250	2	02
10571774	1.250	4	06D
10571774	1.250	4	10G
10571774	1.250	8	85
10571774	1.250	8	15
10571774	1.300	1	43
10571774	1.300	2	19
10571774	5.0151	1	10
10571774	5.0152	1	08
10571774	5.0155	1	08
10571779	0.000	1	19
10571779	5.0025	1	07
10571870	5.0080	2	16
10571874	0.001	1	01
10571874	0.002	1	18
10571874	0.002	1	11
10571874	0.004	1	29
10571874	1.010	1	19
10571874	1.020	1	06
10571874	1.030	1	81
10571874	1.050	1	66
10571874	1.071	1	63
10571874	1.080	1	02
10571874	1.082	1	02
10571874	1.083	1	03
10571874	1.083	1	34
10571874	1.084	1	18
10571874	1.200	1	26
10571874	1.200	1	35
10571874	1.220	2	65
10571874	1.250	1	21
10571874	1.250	2	05
10571874	1.250	5	14
10571874	1.250	8	05
10571874	1.290	1	21
10571874	1.300	1	25
10571874	1.300	2	31
10571874	2.030	2	33
10571874	2.030	3	33
10571874	2.030	4	28
10571874	2.030	5	30
10571874	2.031	4	28
10571879	0.345	1	07
10571970	5.0080	2	23
10571974	1.060	1	07
10571974	1.080	1	22
10571974	1.300	1	11
10571974	1.300	2	03
10571974	1.300	3	12
10571974	3.000	1	07
10571974	3.001	1	07
10571974	3.002	1	07

NUMERICAL INDEX - INDICE NUMERICO - LISTE NUMERIQUE
NUMERISCHES ERSATZEILVERZEILVERZEICHNIS - INDICE NUMERICO

PART. N.	SGR.	TAV.	ITEM
10571979	5.0025	1	04
10572074	0.004	1	20
10572074	1.000	1	10
10572074	2.001	1	31
10572074	2.030	2	34
10572074	2.030	3	34
10572174	0.003	1	04
10572174	1.010	1	03
10572174	1.020	1	24
10572174	2.020	1	06
10572174	3.000	1	16
10572174	3.001	1	16
10572174	3.002	1	16
10572174	5.0100	1	06
10572174	5.0101	1	06
10572174	5.0102	1	06
10572174	5.0103	1	06
10572174	5.0104	1	06
10572174	5.0108	1	06
10572174	5.0110	1	09
10572174	5.0111	1	09
10725911	5.0160	1	19
10725940	5.0160	1	12
10734101	0.004	2	07
10791021	0.004	1	41
10791311	0.400	2	08
10802806	5.0020	1	20
10839610	0.040	2	08
10839610	0.043	1	20
10839610	0.300	1	06
10839710	0.043	2	01
10863190	1.220	1	02A
10902121	0.004	2	05
10902134	1.200	1	10
10902134	1.200	3	16
10902134	1.210	1	06
10902234	1.070	1	01
10902234	1.071	1	01
10902234	1.250	4	34
10902321	0.140	2	24
10902321	0.350	1	10
10902421	0.240	1	10
10902434	5.0021	1	14
10902734	5.0160	1	26
10977534	1.200	3	32
10977834	1.220	2	25
10978221	0.203	1	15
10979234	1.080	1	48
10979234	1.290	1	31
10979234	5.0160	1	36
10979334	1.070	1	81
10979334	1.071	1	81
10979334	1.082	1	60
10979334	1.220	2	06
10979440	5.0160	1	03
11054590	1.200	3	13
11054690	1.200	3	13
11054890	1.200	3	13
11054890	5.0021	1	33
11054990	1.200	3	13
11057576	0.300	1	09
11060476	1.050	1	38
11061576	0.345	1	16
11066071	1.250	4	06G
11066276	0.004	1	39
11066675	0.060	2	09
11087776	1.300	4	08
11087874	1.250	4	10N
11087974	1.070	1	76
11087974	1.071	1	76
11103034	0.004	1	32
11103034	1.010	1	20
11103034	1.082	1	41
11103034	1.083	1	33
11103034	1.084	1	20
11103034	1.220	2	58
11106034	1.000	1	16
11106034	1.081	1	28
11106034	1.082	1	12
11106034	1.200	1	34
11106034	1.210	1	36
11106034	1.300	1	24
11106034	2.031	3	29
11106034	3.000	1	20
11106034	3.001	1	20
11106034	3.002	1	20
11106134	1.020	1	05
11106231	5.0080	1	01
11106231	5.0080	2	37
11106234	0.001	1	14
11106234	0.002	1	10
11106234	0.004	1	30
11106234	1.071	1	50
11106234	1.200	1	25
11106234	1.210	1	50
11106234	1.220	2	05
11106234	1.250	1	20
11106234	1.250	2	04
11106234	1.250	5	20
11106234	1.250	6	02
11106234	1.290	1	01
11106234	5.0020	1	10
11106234	5.0081	1	33
11106431	5.0080	2	20
11106434	1.030	1	80
11106434	1.070	1	31
11106434	1.071	1	31
11106434	1.080	1	01
11106434	1.082	1	16
11106434	1.250	1	47
11106434	2.031	4	27
11106434	2.040	1	08
11106631	5.0080	2	15
11106634	1.070	1	58
11106634	1.071	1	58
11106634	1.071	1	52
11106634	1.083	1	02
11106634	1.085	1	02
11106634	2.030	2	26
11106634	2.030	3	26
11106634	2.030	4	27
11106634	2.030	5	29
11106634	2.031	3	26
11106634	2.031	4	27
11106634	5.0020	1	02
11106634	5.0020	2	02
11106834	0.002	1	16
11106834	1.070	1	40
11107034	1.071	1	40
11107234	1.081	1	02
11107431	5.0080	2	09
11107734	1.082	1	03
11108234	1.050	1	65
11108234	1.080	1	12
11108234	5.0020	1	23
11112134	5.0021	1	16
11112234	0.001	1	05
11112234	1.060	1	06
11112234	1.061	1	06
11112234	1.300	1	22
11112234	1.300	2	07
11112234	3.000	1	08
11112234	3.001	1	08
11112234	3.002	1	08
11112434	1.050	1	82
11112434	1.061	1	66
11112434	1.300	1	10
11112434	1.300	2	02
11112434	3.060	1	17
11112434	5.0020	2	67
11112434	5.0021	1	02
11112434	5.0025	1	03
11112634	1.050	1	60
11112634	1.300	3	10
11112834	1.300	2	26
11112834	3.070	1	20
11112834	3.071	1	20
11112834	3.072	1	20
11113034	1.081	1	18

SUBGROUP	GRID
0.000	TAV1....1D-3
0.001	TAV1....1D-5
0.002	TAV1....1D-7
0.003	TAV1....1D-9
0.003	TAV2....1D-11
0.003	TAV3....1D-13
0.004	TAV1....1D-15
0.004	TAV2....1D-17
0.021	TAV1....1D-19
0.040	TAV1....1D-21
0.040	TAV2....1D-23
0.040	TAV3....1E-3
0.042	TAV1....1E-5
0.043	TAV1....1E-7
0.043	TAV2....1E-9
0.045	TAV1....1E-11
0.060	TAV1....1E-13
0.060	TAV2....1E-15
0.071	TAV1....1E-17
0.077	TAV1....1E-19
0.080	TAV1....1E-21
0.081	TAV1....1E-23
0.082	TAV1....1F-3
0.083	TAV1....1F-5
0.084	TAV1....1F-7
0.100	TAV1....1F-9
0.120	TAV1....1F-11
0.140	TAV1....1F-13
0.140	TAV2....1F-15
0.140	TAV3....1F-17
0.140	TAV4....1F-19
0.140	TAV5....1F-21
0.140	TAV6....1F-23
0.140	TAV7....1G-3
0.140	TAV8....1G-5
0.140	TAV9....1G-7
0.140	TAV10..1G-9
0.140	TAV11..1G-11
0.140	TAV12..1G-13
0.149	TAV1....1G-15
0.200	TAV1....1G-17
0.203	TAV1....1G-19
0.203	TAV2....1G-21
0.240	TAV1....1G-23
0.240	TAV2....1H-3
0.241	TAV1....1H-5
0.270	TAV1....1H-7
0.300	TAV1....1H-9
0.302	TAV1....1H-11
0.305	TAV1....1H-13
0.310	TAV1....1H-15
0.320	TAV1....1H-17
0.323	TAV1....1H-19
0.326	TAV1....1H-21
0.340	TAV1....1H-23
0.345	TAV1....1I-3
0.350	TAV1....1I-5
0.360	TAV1....1I-7
0.360	TAV2....1I-9
0.400	TAV1....1I-11
0.400	TAV2....1I-13
0.450	TAV1....1I-15
1.000	TAV1....1J-3
1.010	TAV1....1J-5
1.020	TAV1....1J-7
1.030	TAV1....1J-9
1.030	TAV2....1J-13
1.030	TAV3....1J-15
1.040	TAV1....1J-17
1.040	TAV2....1J-19
1.050	TAV1....1J-21
1.050	TAV2....1K-3
1.050	TAV3....1K-5
1.050	TAV4....1K-7
1.060	TAV1....1K-9
1.070	TAV1....1K-15
1.070	TAV2....1K-17
1.070	TAV3....1K-19
1.071	TAV1....1K-21
1.071	TAV2....1L-3
1.080	TAV1....1L-5
1.080	TAV2....1L-7
1.081	TAV1....1L-9
1.082	TAV1....1L-11
1.082	TAV2....1L-13
1.082	TAV3....1L-15
1.083	TAV1....1L-17
1.084	TAV1....1L-19
1.085	TAV1....1L-21
1.200	TAV1....2D-3
1.200	TAV2....2D-5
1.200	TAV3....2D-7
1.210	TAV1....2D-9
1.220	TAV1....2D-11
1.220	TAV2....2D-13
1.220	TAV3....2D-17
1.250	TAV1....2D-19
1.250	TAV2....2D-21
1.250	TAV4....2E-3
1.250	TAV5....2E-7
1.250	TAV6....2E-9
1.250	TAV7....2E-11
1.250	TAV7....2E-13
1.290	TAV1....2E-15
1.290	TAV2....2E-17
1.300	TAV1....2E-19
1.300	TAV2....2E-21
1.300	TAV3....2E-23
1.300	TAV4....2F-3
2.000	TAV1....2F-5
2.001	TAV1....2F-7
2.002	TAV1....2F-9
2.003	TAV1....2F-11
2.020	TAV1....2F-13
2.030	TAV1....2F-17
2.030	TAV2....2F-19
2.030	TAV3....2F-21
2.030	TAV4....2F-23
2.030	TAV5....2G-3
2.031	TAV1....2G-5
2.031	TAV2....2G-7
2.031	TAV3....2G-9
2.031	TAV4....2G-11
2.040	TAV1..2G-13
2.041	TAV1....2G-15
3.000	TAV1....2G-17
3.001	TAV1....2G-19
3.010	TAV1....2G-21
3.010	TAV2....2G-23
3.010	TAV3....2H-3
3.010	TAV4....2H-5
3.020	TAV1....2H-7
3.030	TAV1....2H-9
3.040	TAV1....2H-11
3.051	TAV1....2H-13
3.052	TAV1....2H-15
3.060	TAV1....2H-17
3.070	TAV1....2H-19
3.071	TAV1....2H-21
4.000	TAV1....2H-23
4.500	TAV1....2I-3
4.501	TAV1....2I-5
5.0013	TAV1..2J-3
5.0020	TAV1..2J-5
5.0020	TAV2..2J-7
5.0022	TAV1..2J-9
5.0025	TAV1..2J-11
5.0038	TAV1..2J-13
5.0080	TAV1..2J-15
5.0080	TAV2..2J-17
5.0083	TAV1..2J-19
5.0151	TAV1..2J-21
5.0536	TAV1..2J-23
5.0540	TAV1..2K-3

NUMERICAL INDEX - INDICE NUMERICO - LISTE NUMERIQUE
NUMERISCHES ERSATZEILVERZEILVERZEICHNIS - INDICE NUMERICO

PART. N.	SGR.	TAV.	ITEM
11113034	1.300	1	83
11113234	1.080	1	21
11113234	2.030	2	31
11113234	2.030	3	31
11113234	2.030	5	23
11113334	1.061	1	58
11113334	2.030	4	25
11113334	2.031	4	25
11113334	3.070	1	22
11113334	3.071	1	22
11113334	3.072	1	22
11113431	5.0080	2	22
11113434	2.030	1	35
11113434	2.051	1	34
11113434	2.031	2	34
11113434	3.000	1	09
11113434	3.001	1	09
11113434	3.002	1	09
11113534	2.030	1	19
11113534	2.031	1	38
11113534	5.0020	2	62
11113634	1.050	1	56
11113634	1.060	1	10
11113634	1.061	1	10
11113834	2.031	4	32
11115631	0.000	1	06
11115634	1.000	1	09
11116834	2.030	2	28
11116834	2.030	3	28
11118534	1.010	1	02
11118534	1.020	1	23
11118534	3.030	1	01
11118711	3.020	1	13
11119274	3.000	1	14
11119274	3.001	1	14
11119274	3.002	1	14
11119774	3.040	1	01
11119774	3.040	1	01
11125334	3.010	1	51
11125734	1.000	1	05
11127334	0.003	1	03
11127534	1.050	1	29
11190571	0.320	1	05
11190571	0.345	1	13
11190579	0.004	2	11
11190579	0.360	1	02
11190579	0.400	1	16
11190579	0.400	1	05
11190579	0.450	1	02
11193871	0.040	2	07
11193871	0.040	3	05
11193871	0.043	2	15
11193871	0.043	2	11
11193871	0.120	1	06
11193871	0.240	1	12
11193871	0.300	1	17
11193871	0.305	1	04
11193871	0.305	1	19
11193871	0.320	1	13
11193871	0.323	1	17
11193871	0.323	1	07
11193871	0.340	1	02
11193871	0.350	1	03
11193871	0.450	1	05
11193874	0.270	1	05
11193874	0.326	1	10
11193879	0.300	1	07
11193879	0.400	1	04
11197771	0.043	1	11
11197771	0.240	1	11
11197771	0.350	1	11
11197779	0.004	2	06
11198071	0.060	2	11
11198071	0.241	1	02
11198071	0.300	1	14
11198371	0.042	1	09
11198371	0.043	2	06
11198371	0.084	1	06
11198371	0.140	9	03
11198371	0.240	1	13
11198371	0.305	1	16
11198371	0.345	1	08
11198374	0.326	1	05
11198671	0.310	1	10
11198679	0.400	1	06
11200171	0.043	2	04
11234721	0.140	9	04
11234721	0.310	1	11
11288024	0.345	1	12
11306921	0.043	2	05
11306924	0.042	1	06
11306924	0.360	1	03
11306934	0.083	1	04
11307024	0.042	1	05
11307024	0.326	1	04
11307024	0.345	1	11
11343721	0.084	1	07
11390531	0.000	1	03
11408321	0.043	2	02
11690921	1.250	8	29
11701711	1.300	2	30
11701721	0.002	1	02
11701721	0.004	1	10
11701721	1.071	1	54
11701721	1.250	5	13
11701721	1.300	1	51
11702921	0.002	1	07
11702921	1.080	1	23
11702921	1.300	1	13
11702921	1.300	2	27
11703221	0.000	1	13
11797821	0.040	2	12
11903011	0.071	1	03
11903817	0.140	9	08
12035571	0.400	2	09
12077086	0.323	1	03
12163221	1.070	1	10
12163221	1.071	1	10
12163321	0.004	1	06
12163521	0.000	1	11
12164011	0.043	2	03
12164021	0.004	1	21
12164711	0.345	1	09
12164711	0.400	1	11
12164711	0.400	1	17
12164714	0.200	1	08
12174790	0.241	1	06
12181390	0.240	1	17
12182190	0.323	1	13
12182590	0.203	1	18
12182590	0.203	2	02
12182990	0.045	1	02
12574121	1.250	8	78
12574211	5.0160	1	28
12574921	1.250	1	10
12604171	0.400	3	12
12604279	0.140	5	08
12605274	1.250	4	10P
12605374	1.250	5	02F
12606974	1.250	8	55
12642401	0.400	1	15
12643731	1.200	1	04
12644321	1.300	1	26
12646701	0.305	1	18
12646801	0.400	1	08
13270224	1.200	3	36
13271914	1.250	8	23
13271917	1.200	3	19
13272124	1.220	2	14
13272214	1.250	8	37
13272214	1.290	1	11
13272224	1.220	2	55
13273914	1.250	5	28
13274014	1.250	4	24
13274217	1.200	3	21
13274614	1.250	8	40
13275914	1.200	3	24
13275914	2.041	1	06
13275924	1.200	3	27

NUMERICAL INDEX - INDICE NUMERICO - LISTE NUMERIQUE
NUMERISCHES ERSATZEILVERZEILVERZEICHNIS - INDICE NUMERICO

PART. N.	SGR.	TAV.	ITEM
13276014	1.250	8	59
13276014	2.041	1	07
13276024	1.220	1	09
13276124	1.220	2	17
13276214	1.250	5	06
13276214	1.250	8	32
13276217	1.200	1	41
13276417	1.200	1	45
13276417	1.210	1	43
13277017	1.200	1	38
13277017	1.210	1	40
13279214	1.250	8	49
13279414	1.250	8	14
13279614	1.300	2	18
13296111	1.210	1	24
13299916	1.250	6	07
13299916	1.250	7	07
13301311	1.250	8	35
13303311	1.250	8	54
13312917	1.210	1	23
13404075	1.250	5	02D
13407211	2.003	1	23
13407211	2.003	1	33E
13407211	2.003	1	32E
13407211	2.030	4	13
13407211	2.030	5	13
13407211	2.031	4	13
13407211	2.040	1	10
13407211	2.041	1	05
13407211	4.000	1	00
13407211	5.0013	1	29
13407211	5.0013	1	44E
13407211	5.0013	1	45E
13407211	5.0022	1	45E
13407211	5.0022	1	44E
13407211	5.0022	1	29
13407211	5.0038	1	29
13407211	5.0038	1	45E
13407211	5.0038	1	44E
13407811	2.030	2	13
13407811	2.030	3	13
13407811	2.030	5	14
13407811	4.000	1	01
13421376	0.140	10	10
13516221	0.060	2	08
13517321	0.040	3	07
13517530	0.060	1	07
13517821	0.040	2	13
13517821	0.043	2	17
13526170	0.043	1	23
13543321	0.071	1	10
13543620	0.043	1	21
13543621	0.043	1	21
13546721	0.071	1	11
13683701	4.500	1	07
13683701	4.501	1	07
13739811	0.320	1	14
14048217	0.305	1	11
14048227	0.077	1	06
14084211	0.400	2	13
14165470	0.040	2	09
14169270	3.020	1	17
14180970	3.020	1	04
14196670	0.060	2	06
14282170	0.060	1	14
14282470	0.060	1	13
14282770	0.040	1	08
14282770	0.060	1	16
14282970	0.060	1	15
14303220	1.220	1	12
14306221	1.250	2	01
14306221	5.0151	1	09
14306221	5.0155	1	07
14311024	1.070	2	19
14323811	0.040	2	19
14323811	1.010	1	33
14323911	0.040	1	10
14323911	0.060	1	12
14324211	0.040	1	11
14325001	0.320	1	15
14325601	0.043	2	14
14326001	1.020	1	27
14326001	3.000	1	17
14326001	3.001	1	17
14326001	3.002	1	17
14327401	0.040	1	13
14328101	0.080	1	03
14328201	0.040	1	14
14328301	0.060	2	19
14328501	0.040	1	09
14329901	0.040	1	12
14420124	1.070	2	14
14420234	1.050	1	70
14420234	1.060	1	12
14420234	1.061	1	12
14420234	1.250	1	51
14420234	2.030	5	26
14420234	3.070	1	11
14420234	3.071	1	11
14420234	3.072	1	11
14420234	5.0020	2	58
14420334	1.050	1	44
14420834	1.050	1	33
14422034	1.050	1	03
14422234	2.030	2	29
14422234	2.030	3	29
14422234	2.030	4	23
14422234	2.031	3	20
14422234	2.031	4	23
14422334	1.050	1	21
14422334	1.061	1	70
14423234	5.0081	1	01
14423234	5.0081	2	01
14423434	1.200	1	33
14423434	1.210	1	35
14429674	2.030	2	04
14429674	2.030	3	04
14429674	2.030	5	07
14430774	2.030	4	07
14430774	2.031	4	07
14431631	2.031	3	11
14432334	1.050	1	34
14432424	1.300	1	45
14453589	0.140	11	03
14453981	0.060	1	11
14454381	0.400	2	12
14457481	0.310	1	08
14457581	0.310	1	02
14457680	0.042	1	15
14457681	0.305	1	14
14458281	0.310	1	18
14463281	0.326	1	12
14463880	0.043	2	21
14464880	3.040	1	10
14473180	2.030	5	06
14473280	2.030	2	06
14473280	2.030	3	06
14474480	2.030	4	06
14474480	2.031	4	06
14474880	2.031	3	05
14482580	1.020	1	30
14482780	1.020	1	18
14482980	1.020	1	13
14483080	0.043	2	16
14496201	0.400	2	14
14496321	1.200	3	33
14496331	1.250	4	101
14496401	0.140	2	23
14496406	1.200	1	43
14496406	1.210	1	42
14496421	1.200	3	28
14496421	1.220	1	01
14496431	1.200	1	08
14496431	1.210	1	04
14496431	1.250	4	36
14496431	1.250	5	11
14496431	1.250	8	60
14496531	1.070	1	71
14496531	1.071	1	71

SUBGROUP	GRID
0.000	TAV1....1D-3
0.001	TAV1....1D-5
0.002	TAV1....1D-7
0.003	TAV1....1D-9
0.003	TAV2....1D-11
0.003	TAV3....1D-13
0.004	TAV1....1D-15
0.004	TAV2....1D-17
0.021	TAV1....1D-19
0.040	TAV1....1D-21
0.040	TAV2....1D-23
0.040	TAV3....1E-3
0.042	TAV1....1E-5
0.043	TAV1....1E-7
0.043	TAV2....1E-9
0.045	TAV1....1E-11
0.060	TAV1....1E-13
0.060	TAV2....1E-15
0.071	TAV1....1E-17
0.077	TAV1....1E-19
0.080	TAV1....1E-21
0.081	TAV1....1E-23
0.082	TAV1....1F-3
0.083	TAV1....1F-5
0.084	TAV1....1F-7
0.100	TAV1....1F-9
0.120	TAV1....1F-11
0.140	TAV1....1F-13
0.140	TAV2....1F-15
0.140	TAV3....1F-17
0.140	TAV4....1F-19
0.140	TAV5....1F-21
0.140	TAV6....1F-23
0.140	TAV7....1G-3
0.140	TAV8....1G-5
0.140	TAV9....1G-7
0.140	TAV10..1G-9
0.140	TAV11..1G-11
0.140	TAV12..1G-13
0.149	TAV1....1G-15
0.200	TAV1....1G-17
0.203	TAV1....1G-19
0.203	TAV2....1G-21
0.240	TAV1....1G-23
0 240	TAV2....1H-3
0.241	TAV1....1H-5
0.270	TAV1....1H-7
0.300	TAV1....1H-9
0.302	TAV1....1H-11
0.305	TAV1....1H-13
0.310	TAV1....1H-15
0.320	TAV1....1H-17
0.323	TAV1....1H-19
0.326	TAV1....1H-21
0.340	TAV1....1H-23
0.345	TAV1....1I-3
0.350	TAV1....1I-5

SUBGROUP	GRID
0.360	TAV1....1I-7
0.360	TAV2....1I-9
0.400	TAV1....1I-11
0.400	TAV2....1I-13
0.450	TAV1....1I-15
1.000	TAV1....1J-3
1.010	TAV1....1J-5
1.020	TAV1....1J-7
1 030	TAV1....1J-9
1.030	TAV2....1J-13
1.030	TAV3....1J-15
1.040	TAV1....1J-17
1.040	TAV2....1J-19
1.050	TAV1....1J-21
1.050	TAV2....1K-3
1.050	TAV3....1K-5
1.050	TAV4....1K-7
1.060	TAV1....1K-9
1.070	TAV1....1K-15
1.070	TAV2....1K-17
1.070	TAV3....1K-19
1.071	TAV1....1K-21
1.071	TAV2....1L-3
1.080	TAV1....1L-5
1.080	TAV2....1L-7
1.081	TAV1....1L-9
1.082	TAV1....1L-11
1.082	TAV2....1L-13
1.082	TAV3....1L-15
1.083	TAV1....1L-17
1.084	TAV1....1L-19
1.085	TAV1....1L-21
1.200	TAV1....2D-3
1.200	TAV2....2D-5
1.200	TAV3....2D-7
1.210	TAV1....2D-9
1.220	TAV1....2D-11
1.220	TAV2....2D-13
1.220	TAV3....2D-17
1.250	TAV1....2D-19
1.250	TAV2....2D-21
1.250	TAV4....2E-3
1.250	TAV5....2E-7
1.250	TAV6....2E-9
1.250	TAV7....2E-11
1.250	TAV7....2E-13
1.290	TAV1....2E-15
1.290	TAV2....2E-17
1.300	TAV1....2E-19
1.300	TAV2....2E-21
1.300	TAV3....2E-23
1.300	TAV4....2F-3
2.000	TAV1....2F-5
2.001	TAV1....2F-7
2.002	TAV1....2F-9
2.003	TAV1....2F-11
2.020	TAV1....2F-13

SUBGROUP	GRID
2.030	TAV1....2F-17
2.030	TAV2....2F-19
2.030	TAV3....2F-21
2.030	TAV4....2F-23
2.030	TAV5....2G-3
2.031	TAV1....2G-5
2.031	TAV2....2G-7
2.031	TAV3....2G-9
2.031	TAV4....2G-11
2.040	TAV1....2G-13
2.041	TAV1....2G-15
3.000	TAV1....2G-17
3.001	TAV1....2G-19
3.010	TAV1....2G-21
3.010	TAV2....2G-23
3.010	TAV3....2H-3
3.010	TAV4....2H-5
3.020	TAV1....2H-7
3.030	TAV1....2H-9
3.040	TAV1....2H-11
3.051	TAV1....2H-13
3.052	TAV1....2H-15
3.060	TAV1....2H-17
3.070	TAV1....2H-19
3.071	TAV1....2H-21
4.000	TAV1....2H-23
4.500	TAV1....2I-3
4.501	TAV1....2I-5
5.0013	TAV1..2J-3
5.0020	TAV1..2J-5
5.0020	TAV2..2J-7
5.0022	TAV1..2J-9
5.0025	TAV1..2J-11
5.0038	TAV1..2J-13
5.0080	TAV1..2J-15
5.0080	TAV2..2J-17
5.0083	TAV1..2J-19
5.0151	TAV1..2J-21
5.0536	TAV1..2J-23
5.0540	TAV1..2K-3

SUBGROUP	GRID

B-12

NUMERICAL INDEX - INDICE NUMERICO - LISTE NUMERIQUE
NUMERISCHES ERSATZEILVERZEILVERZEICHNIS - INDICE NUMERICO

PART. N.	SGR.	TAV.	ITEM
14496531	1.200	2	42
14496531	1.220	2	11
14496531	1.250	4	10H
14496531	1.250	8	16
14496531	1.300	1	44
14496531	1.300	2	11
14496531	5.0025	1	08
14496601	5.0080	2	35
14496607	0.200	1	07
14496621	1.220	2	07
14496621	5.0160	1	37
14496631	0.001	1	13
14496631	0.002	1	19
14496631	0.004	1	28
14496631	1.000	1	15
14496631	1.070	1	82
14496631	1.070	1	36
14496631	1.071	1	82
14496631	1.081	1	05
14496631	1.082	1	17
14496631	1.083	1	19
14496631	1.085	1	48
14496631	1.200	1	27
14496631	1.210	1	37
14496631	1.250	4	32
14496631	1.250	8	04
14496631	1.290	1	22
14496631	1.300	1	31
14496631	5.0020	1	12
14496631	5.0020	2	12
14496701	0.400	1	18
14496731	0.001	1	10
14496731	1.050	1	61
14496731	1.200	1	31
14496731	1.210	1	33
14496731	1.300	1	12
14496731	1.300	2	04
14496731	5.0025	1	05
14496731	5.0536	1	02
14496831	0.004	1	38
14496931	1.070	1	80
14496931	1.071	1	80
14497131	1.300	1	27
14497621	1.250	4	06M
14497629	1.200	3	37
14497731	1.220	1	11
14497801	0.004	2	09
14497821	1.220	2	26
14499421	0.003	3	12
14522421	5.0083	1	03
14525021	5.0083	1	03
14534079	5.0083	1	21
14534279	5.0083	1	21
14534379	5.0083	1	21
14534479	5.0083	1	21
14534579	5.0083	1	21
14549579	5.0083	1	03
14549879	5.0083	1	03
14550079	5.0083	1	03
14582790	5.0083	1	26
14601470	1.070	1	42
14601470	1.071	1	42
14601470	5.0020	1	06
14607070	1.070	1	43
14607070	1.071	1	43
14607070	5.0020	1	07
14626090	5.0083	1	24
14626290	5.0083	1	25
14626671	5.0083	1	27
14761123	5.0152	1	07
15203034	0.000	1	14
15213334	1.071	1	18
15213334	5.0020	1	14
15215624	0.004	1	07
15215834	0.002	1	05
15224034	1.040	1	71
15238234	1.250	1	11
15540721	0.310	1	09
15541824	0.400	1	09
15645504	1.250	8	74
15687478	1.220	1	04
15888721	0.320	1	02
15896211	0.043	1	24
15896211	0.140	2	21
15896211	0.140	3	10
15896211	0.140	5	01
15896211	0.140	6	11
15896221	0.004	1	26
15896221	1.250	5	24
15896421	1.250	4	10E
15901604	1.250	4	06L
15970121	0.240	1	18
15970521	0.450	1	01
15970621	1.220	2	62
15970721	0.004	2	10
15970921	0.320	1	04
15970924	0.400	1	07
15970931	0.345	1	22
15971824	0.042	1	07
15972424	0.326	1	04
15972824	0.042	1	08
15987934	0.345	1	19
15988434	3.000	1	11
15988434	3.001	1	11
15988434	3.002	1	11
16038540	5.0160	1	08
16040824	0.004	1	12
16041834	0.000	1	10
16043030	1.300	1	81
16043134	1.250	4	10F
16043221	0.310	1	19
16043224	0.043	2	20
16043224	0.305	1	07
16043224	0.305	1	20
16043234	0.004	1	17
16043234	1.220	2	49
16043234	1.250	8	84
16043234	1.250	8	18
16043234	1.300	2	17
16043321	0.040	2	06
16043321	0.300	1	08
16043421	0.043	2	02
16043421	0.120	1	05
16043421	0.300	1	15
16043421	0.320	1	16
16043424	0.270	1	04
16043424	0.305	1	03
16043424	0.340	1	03
16043434	1.200	2	41
16043434	1.250	4	06C
16043434	1.300	1	29
16043521	0.043	1	16
16043531	0.000	1	18
16043534	0.002	1	13
16043621	0.040	3	04
16043621	0.071	1	06
16043621	0.140	10	11
16043621	0.240	1	20
16043621	0.241	1	01
16043621	0.310	1	04
16043621	0.323	1	11
16043624	0.003	3	09
16043624	0.326	1	09
16043634	5.0025	1	06
16043821	0.043	1	17
16043834	1.220	2	10
16043921	0.043	1	02
16043921	0.043	2	07
16043921	0.240	1	21
16043921	0.323	1	12
16043924	0.305	1	15
16044024	0.040	2	17
16044024	0.450	1	06
16044034	1.300	1	79
16044224	0.043	1	03
16044224	0.400	1	10
16044321	0.300	1	18
16044521	0.060	2	10
16044521	0.350	1	07

NUMERICAL INDEX - INDICE NUMERICO - LISTE NUMERIQUE
NUMERISCHES ERSATZEILVERZEILVERZEICHNIS - INDICE NUMERICO

PART. N.	SGR.	TAV.	ITEM
16044621	0.043	1	07
16044921	0.043	1	06
16045021	0.310	1	03
16100811	0.043	1	08
16100811	0.060	2	12
16100811	0.270	1	09
16100811	0.305	1	17
16100811	0.350	1	04
16100811	0.450	1	07
16100811	1.220	1	10
16100821	0.140	11	06
16100821	1.070	1	67
16100821	1.070	1	85
16100821	1.071	1	19
16100821	1.071	1	85
16100821	1.071	1	67
16100821	5.0020	1	15
16101511	0.400	1	12
16104111	0.060	1	01
16248934	2.001	1	32
16264434	0.003	1	09
16264434	2.020	1	08
16264434	5.0100	1	08
16264434	5.0101	1	08
16264434	5.0102	1	08
16264434	5.0103	1	08
16264434	5.0104	1	08
16264434	5.0108	1	08
16264434	5.0110	1	08
16264434	5.0111	1	08
16321021	0.100	1	07
16500311	0.240	1	14
16506911	0.240	1	23
16507611	0.240	1	24
16508160	0.203	1	07
16508160	0.203	2	06
16508260	0.240	1	15
16511311	0.203	1	05
16550760	0.203	1	09
17094914	0.323	1	17
19025186	1.220	2	68
19056787	1.010	1	05
19067687	0.203	1	17
19067687	0.203	2	03
24941650	0.400	3	07
24941660	0.400	3	03
28996480	0.400	3	11
40000011	0.043	1	19
40003800	0.043	2	12
45011273	1.220	2	80
45019640	3.040	1	00
45019640	3.040	1	00
45481895	3.020	1	09
45481895	3.040	1	03
45481993	3.020	1	27E
45481995	3.020	1	27D
45482236	3.040	1	02
45482248	3.020	1	05
45482314	5.0160	1	05
45482609	3.050	1	11
45482609	3.051	1	11
45482609	3.052	1	11
45482609	5.0002	1	11
45482609	5.0003	1	11
45482609	5.0004	1	11
45482609	5.0005	1	11
45482609	5.0006	1	11
45482609	5.0007	1	11
45482627	3.020	1	24
45482628	3.020	1	21
45482859	3.040	1	13
45482860	3.040	1	12
45482861	3.040	1	09
45482862	3.040	1	12A
70197810	0.001	1	00B
70197810	0.001	1	15A
70923841	1.082	1	57
70923841	1.082	1	07
70923843	1.050	1	73
70923843	1.060	1	17
70923843	1.061	1	17
70923843	1.080	1	36
70923843	2.030	1	13
70923843	2.030	1	45
70923843	2.030	1	48
70923843	2.030	1	49
70923843	2.031	1	11
70923843	2.031	2	47
70923843	2.031	2	46
70923843	2.031	2	43
70923843	3.070	1	17
70923843	3.071	1	17
70923843	3.072	1	17
70923843	4.000	1	02
70923843	5.0021	1	24
70923843	5.0080	2	11
70923843	5.0081	2	06
70924110	1.060	1	13
70924110	1.061	1	13
70924110	2.030	5	21
70924110	5.0020	2	59
70924111	5.0021	1	06A
70924111	5.0021	1	07A
70924192	5.0020	2	70A
70924192	5.0021	1	29A
70924193	1.050	1	45
70924200	1.050	1	19
70924200	1.061	1	71
70924776	1.220	2	39
70928280	5.0536	1	01
70931640	2.030	1	09
70931640	2.031	1	12
70931640	4.000	1	02
70931640	5.0020	2	74
70931640	5.0080	2	06
70931640	5.0081	2	04
71304372	5.0160	1	01
71304373	5.0160	1	06
71304374	5.0160	1	07
71304375	5.0160	1	04
71304377	5.0160	1	10
71304378	5.0160	1	11
71304379	5.0160	1	16
71304380	5.0160	1	17
71304381	5.0160	1	18
71304385	5.0160	1	20
71304388	5.0160	1	23
71304389	5.0160	1	02
71304923	5.0083	1	31
71313536	5.0160	1	32
71314509	3.020	1	26
71318365	3.040	1	11
71320138	1.220	2	61
71320138	1.220	2	61
71400007	2.030	5	15
71400008	2.030	5	16
71400009	2.030	5	17
71400010	2.030	2	14
71400010	2.030	3	14
71400011	2.030	2	15
71400011	2.030	3	15
71400012	2.030	2	16
71400012	2.030	3	16
71400013	2.031	3	12
71400014	2.031	3	13
71400015	2.031	3	14
71400016	2.030	4	14
71400016	2.031	4	14
71400017	2.030	4	15
71400017	2.031	4	15
71400018	2.030	4	16
71400018	2.031	4	16
71400034	2.030	5	18
71400035	2.030	5	19
71400036	2.030	5	20
71400037	2.030	2	17
71400037	2.030	3	17
71400038	2.030	2	18
71400038	2.030	3	18

SUBGROUP	GRID
0.000	TAV1....1D-3
0.001	TAV1....1D-5
0.002	TAV1....1D-7
0.003	TAV1....1D-9
0.003	TAV2....1D-11
0.003	TAV3....1D-13
0.004	TAV1....1D-15
0.004	TAV2....1D-17
0.021	TAV1....1D-19
0.040	TAV1....1D-21
0.040	TAV2....1D-23
0.040	TAV3....1E-3
0.042	TAV1....1E-5
0.043	TAV1....1E-7
0.043	TAV2....1E-9
0.045	TAV1....1E-11
0.060	TAV1....1E-13
0.060	TAV2....1E-15
0.071	TAV1....1E-17
0.077	TAV1....1E-19
0.080	TAV1....1E-21
0.081	TAV1....1E-23
0.082	TAV1....1F-3
0.083	TAV1....1F-5
0.084	TAV1....1F-7
0.100	TAV1....1F-9
0.120	TAV1....1F-11
0.140	TAV1....1F-13
0.140	TAV2....1F-15
0.140	TAV3....1F-17
0.140	TAV4....1F-19
0.140	TAV5....1F-21
0.140	TAV6....1F-23
0.140	TAV7....1G-3
0.140	TAV8....1G-5
0.140	TAV9....1G-7
0.140	TAV10..1G-9
0.140	TAV11..1G-11
0.140	TAV12..1G-13
0.149	TAV1....1G-15
0.200	TAV1....1G-17
0.203	TAV1....1G-19
0.203	TAV2....1G-21
0.240	TAV1....1G-23
0.240	TAV2....1H-3
0.241	TAV1....1H-5
0.270	TAV1....1H-7
0.300	TAV1....1H-9
0.302	TAV1....1H-11
0.305	TAV1....1H-13
0.310	TAV1....1H-15
0.320	TAV1....1H-17
0.323	TAV1....1H-19
0.326	TAV1....1H-21
0.340	TAV1....1H-23
0.345	TAV1....1I-3
0.350	TAV1....1I-5
0.360	TAV1....1I-7
0.360	TAV2....1I-9
0.400	TAV1....1I-11
0.400	TAV2....1I-13
0.450	TAV1....1I-15
1.000	TAV1....1J-3
1.010	TAV1....1J-5
1.020	TAV1....1J-7
1.030	TAV1....1J-9
1.030	TAV2....1J-13
1.030	TAV3....1J-15
1.040	TAV1....1J-17
1.040	TAV2....1J-19
1.050	TAV1....1J-21
1.050	TAV2....1K-3
1.050	TAV3....1K-5
1.050	TAV4....1K-7
1.060	TAV1....1K-9
1.070	TAV1....1K-15
1.070	TAV2....1K-17
1.070	TAV3....1K-19
1.071	TAV1....1K-21
1.071	TAV2....1L-3
1.080	TAV1....1L-5
1.080	TAV2....1L-7
1.081	TAV1....1L-9
1.082	TAV1....1L-11
1.082	TAV2....1L-13
1.082	TAV3....1L-15
1.083	TAV1....1L-17
1.084	TAV1....1L-19
1.085	TAV1....1L-21
1.200	TAV1....2D-3
1.200	TAV2....2D-5
1.200	TAV3....2D-7
1.210	TAV1....2D-9
1.220	TAV1....2D-11
1.220	TAV2....2D-13
1.220	TAV3....2D-17
1.250	TAV1....2D-19
1.250	TAV2....2D-21
1.250	TAV4....2E-3
1.250	TAV5....2E-7
1.250	TAV6....2E-9
1.250	TAV7....2E-11
1.250	TAV7....2E-13
1.290	TAV1....2E-15
1.290	TAV2....2E-17
1.300	TAV1....2E-19
1.300	TAV2....2E-21
1.300	TAV3....2E-23
1.300	TAV4....2F-3
2.000	TAV1....2F-5
2.001	TAV1....2F-7
2.002	TAV1....2F-9
2.003	TAV1....2F-11
2.020	TAV1....2F-13
2.030	TAV1....2F-17
2.030	TAV2....2F-19
2.030	TAV3....2F-21
2.030	TAV4....2F-23
2.030	TAV5....2G-3
2.031	TAV1....2G-5
2.031	TAV2....2G-7
2.031	TAV3....2G-9
2.031	TAV4....2G-11
2.040	TAV1....2G-13
2.041	TAV1....2G-15
3.000	TAV1....2G-17
3.001	TAV1....2G-19
3.010	TAV1....2G-21
3.010	TAV2....2G-23
3.010	TAV3....2H-3
3.010	TAV4....2H-5
3.020	TAV1....2H-7
3.030	TAV1....2H-9
3.040	TAV1....2H-11
3.051	TAV1 ...2H-13
3.052	TAV1....2H-15
3.060	TAV1....2H-17
3.070	TAV1....2H-19
3.071	TAV1....2H-21
4.000	TAV1....2H-23
4.500	TAV1....2I-3
4.501	TAV1....2I-5
5.0013	TAV1..2J-3
5.0020	TAV1..2J-5
5.0020	TAV2..2J-7
5.0022	TAV1..2J-9
5.0025	TAV1..2J-11
5.0038	TAV1..2J-13
5.0080	TAV1..2J-15
5.0080	TAV2..2J-17
5.0083	TAV1..2J-19
5.0151	TAV1..2J-21
5.0536	TAV1..2J-23
5.0540	TAV1..2K-3

B-15

NUMERICAL INDEX - INDICE NUMERICO - LISTE NUMERIQUE
NUMERISCHES ERSATZEILVERZEILVERZEICHNIS - INDICE NUMERICO

PART. N.	SGR.	TAV.	ITEM
71400039	2.030	2	19
71400039	2.030	3	19
71400040	2.030	4	17
71400040	2.031	4	17
71400041	2.030	4	18
71400041	2.031	4	18
71400042	2.030	4	19
71400042	2.031	4	19
71400106	2.030	5	32
71400109	2.030	5	04A
71400110	2.030	5	04B
71400111	2.030	5	08
71400113	2.030	2	11
71400113	2.030	3	11
71400113	2.030	5	11
71400114	2.030	2	12
71400114	2.030	3	12
71400114	2.030	4	12
71400114	2.030	5	12
71400114	2.031	3	09
71400114	2.031	4	12
71400152	2.031	3	30
71400155	2.031	3	03A
71400156	2.031	3	03B
71400159	2.031	3	10
71400160	2.030	4	05
71400160	2.031	4	05
71400161	2.030	4	31A
71400161	2.031	4	34A
71400175	2.030	4	0 1-19
71400175	2.031	4	0 1-19
71400176	2.030	4	01
71400176	2.031	4	01
71400178	2.030	4	01A
71400178	2.030	4	02A
71400178	2.031	4	02A
71400178	2.031	4	01A
71400181	2.030	4	02
71400181	2.031	4	02
71400186	2.030	4	31
71400186	2.031	4	34
71400187	2.030	4	04
71400187	2.031	4	04
71400189	2.030	4	04A
71400189	2.031	4	04A
71400190	2.030	4	04B
71400190	2.031	4	04B
71400191	2.030	4	08
71400191	2.031	4	08
71400192	2.030	4	10
71400192	2.031	4	10
71400193	2.030	4	11
71400193	2.031	4	11
71400194	2.030	2	0 1-19
71400195	2.030	2	01
71400195	2.030	3	01
71400199	2.030	2	35
71400199	2.030	3	35
71400200	2.030	2	03
71400200	2.030	3	03
71400202	2.030	2	03A
71400202	2.030	3	03A
71400203	2.030	2	03B
71400203	2.030	3	03B
71400204	2.030	2	05
71400204	2.030	3	05
71400205	2.030	2	07
71400206	2.030	2	07A
71400206	2.030	2	01A
71400206	2.030	3	01A
71400206	2.030	3	07A
71400206	2.030	5	01A
71400212	2.030	2	08
71400212	2.030	3	08
71400213	2.030	2	09
71400213	2.030	3	09
71400214	2.030	2	35A
71400214	2.030	3	35A
71400215	2.030	5	0 1-20
71400216	2.030	5	01
71400220	2.030	5	02
71400222	2.030	5	02A
71400227	2.030	5	04
71400229	2.030	5	05
71400230	2.030	5	09
71400231	2.030	5	32A
71400324	2.031	3	01A
71400324	2.031	3	06A
71400325	2.031	3	03
71400333	2.031	3	30A
71400334	2.031	3	17
71400335	2.031	3	16
71400336	2.031	3	15
71400337	2.031	3	08
71400338	2.031	3	0 1-17
71400339	2.031	3	01
71400342	2.031	3	06
71400350	2.030	3	0 1-19
71400351	2.030	3	07
71400820	3.050	1	10
71400820	3.051	1	10
71400820	3.052	1	10
71400820	5.0002	1	10
71400820	5.0003	1	10
71400820	5.0004	1	10
71400820	5.0005	1	10
71400820	5.0006	1	10
71400820	5.0007	1	10
71400821	3.050	1	09
71400821	3.051	1	09
71400821	3.052	1	09
71400821	5.0002	1	09
71400821	5.0003	1	09
71400821	5.0004	1	09
71400821	5.0005	1	09
71400821	5.0006	1	09
71400821	5.0007	1	09
71400822	3.050	1	07
71400822	3.051	1	07
71400822	3.052	1	07
71400822	5.0002	1	07
71400822	5.0003	1	07
71400822	5.0004	1	07
71400822	5.0005	1	07
71400822	5.0006	1	07
71400822	5.0007	1	07
71400823	3.050	1	12
71400823	3.051	1	12
71400823	3.052	1	12
71400823	5.0002	1	12
71400823	5.0003	1	12
71400823	5.0004	1	12
71400823	5.0005	1	12
71400823	5.0006	1	12
71400823	5.0007	1	12
71400824	3.051	1	02
71400824	3.052	1	02
71400827	5.0002	1	02
71400827	5.0005	1	02
71400830	5.0003	1	02
71400830	5.0006	1	02
71400833	3.050	1	02
71400901	3.020	1	23
71400903	3.020	1	27
71400904	3.020	1	27A
71400905	3.020	1	27B
71400911	3.020	1	01-26
71400912	3.020	1	01
71400913	3.020	1	02
71400914	3.020	1	03
71400915	3.020	1	11
71400916	3.020	1	14
71400917	3.020	1	18
71400918	3.020	1	19
71400919	3.020	1	20
71400948	3.030	1	02
71400949	3.030	1	03
71400950	3.030	1	04
71400951	3.030	1	05

B-16

NUMERICAL INDEX - INDICE NUMERICO - LISTE NUMERIQUE

NUMERISCHES ERSATZEILVERZEILVERZEICHNIS - INDICE NUMERICO

PART. N.	SGR.	TAV.	ITEM
71400952	3.030	1	06
71400953	3.030	1	07
71400954	3.030	1	08
71400955	3.030	1	10
71400956	3.030	1	11
71400959	3.030	1	12A
71400960	3.030	1	00
71400961	3.030	1	12
71400975	5.0004	1	02
71400975	5.0007	1	02
71400994	3.020	1	22
71400995	3.051	1	00
71400996	3.050	1	01
71400996	3.051	1	01
71400996	5.0002	1	01
71400996	5.0003	1	01
71400996	5.0004	1	01
71400997	3.050	1	05
71400997	3.051	1	05
71400997	3.052	1	05
71400997	5.0002	1	05
71400997	5.0003	1	05
71400997	5.0004	1	05
71400997	5.00[illegible]	1	05
71400997	5.0[illegible]	1	05
71400997	5.0007	1	05
71400998	3.050	1	06
71400998	3.051	1	06
71400998	3.052	1	06
71400998	5.0002	1	06
71400998	5.0003	1	06
71400998	5.0004	1	06
71400998	5.0005	1	06
71400998	5.0006	1	06
71400998	5.0007	1	06
71400999	3.050	1	08
71400999	3.051	1	08
71400999	3.052	1	08
71400999	5.0002	1	08
71400999	5.0003	1	08
71400999	5.0004	1	08
71400999	5.0005	1	08
71400999	5.0006	1	08
71400999	5.0007	1	08
71401000	5.0002	1	00
71401001	5.0003	1	00
71401002	5.0004	1	00
71401003	3.050	1	00
71401004	3.052	1	00
71401005	3.052	1	01
71401005	5.0005	1	01
71401005	5.0006	1	01
71401005	5.0007	1	01
71401006	5.0005	1	00
71401007	5.0006	1	00
71401008	5.0007	1	00
71401561	1.070	1	04
71401561	1.071	1	04
71401562	1.070	2	00
71401565	1.070	2	01
71401566	1.070	2	02
71401567	1.070	2	03
71401568	1.070	2	04
71401569	1.070	2	05
71401570	1.070	2	06
71401571	1.070	2	07
71401572	1.070	2	08
71401573	1.070	2	11
71401574	1.070	2	12A
71401574	1.070	2	11A
71401575	1.070	2	11B
71401575	1.070	2	12B
71401575	1.070	3	11B
71401575	1.071	2	11B
71401576	1.070	2	12C
71401576	1.070	2	11C
71401576	1.070	3	11C
71401576	1.071	2	11C
71401577	1.070	2	11D
71401578	1.070	2	11E
71401578	1.070	2	12E
71401578	1.070	3	11E
71401578	1.071	2	11E
71401579	1.070	2	12
71401580	1.070	2	12D
71401581	1.070	2	13
71401582	1.070	2	15
71401583	1.070	2	16
71401584	1.070	2	17
71401585	1.070	2	18
71401586	1.070	2	24
71401587	1.070	2	25
71401588	1.070	2	26
71401592	1.020	1	07
71401593	1.020	1	29
71401597	1.010	1	31
71401598	1.010	1	32
71401610	1.010	1	34A
71401610	1.020	1	29A
71401611	1.020	1	29B
71401620	1.070	1	64
71401620	1.071	1	64
71401622	3.060	1	0 0-16
71401625	1.081	1	08
71401627	1.082	1	00
71401628	1.050	1	52
71401630	1.082	1	04
71401631	1.070	1	65
71401631	1.071	1	65
71401632	1.080	1	26
71401633	1.080	1	11
71401634	1.081	1	00
71401635	1.030	1	0 1-79
71401636	1.040	1	00-70
71401637	1.050	1	26
71401638	3.010	1	00-50
71401639	1.082	1	11
71401640	1.050	1	39
71401646	1.010	1	34
71401647	1.010	1	34B
71401650	3.000	1	10
71401650	3.001	1	10
71401650	3.002	1	10
71401658	1.071	1	51
71401658	5.0020	1	00
71401688	1.030	1	83
71401688	1.030	1	57A
71401688	1.030	1	53A
71401688	1.030	1	51A
71401688	1.040	2	31
71401688	3.010	2	64
71401688	3.010	3	41
71401755	1.040	1	42
71401756	1.040	1	45
71401757	1.040	1	62
71401761	1.040	1	60
71401762	1.040	1	61
71401767	1.040	1	43
71401770	1.082	3	05
71401771	1.082	3	06
71401772	1.082	3	09
71401773	1.082	3	12
71401774	1.082	2	15
71401774	1.082	3	18
71401775	1.082	3	20
71401776	1.080	2	04
71401776	1.082	3	21
71401776	3.010	2	58
71401776	3.010	3	09
71401776	3.010	4	02
71401777	1.082	3	22
71401778	1.082	3	17
71401780	1.082	3	25
71401783	1.082	3	28
71401784	1.082	3	29
71401785	1.082	2	20
71401786	1.082	2	16
71401787	1.082	2	03
71401787	1.082	3	27

SUBGROUP	GRID
0.000	TAV1....1D-3
0.001	TAV1....1D-5
0.002	TAV1....1D-7
0.003	TAV1....1D-9
0.003	TAV2....1D-11
0.003	TAV3....1D-13
0.004	TAV1....1D-15
0.004	TAV2....1D-17
0.021	TAV1....1D-19
0.040	TAV1....1D-21
0.040	TAV2....1D-23
0.040	TAV3....1E-3
0.042	TAV1....1E-5
0.043	TAV1....1E-7
0.043	TAV2....1E-9
0.045	TAV1....1E-11
0.060	TAV1....1E-13
0.060	TAV2....1E-15
0.071	TAV1....1E-17
0.077	TAV1....1E-19
0.080	TAV1....1E-21
0.081	TAV1....1E-23
0.082	TAV1....1F-3
0.083	TAV1....1F-5
0.084	TAV1....1F-7
0.100	TAV1....1F-9
0.120	TAV1....1F-11
0.140	TAV1....1F-13
0.140	TAV2....1F-15
0.140	TAV3....1F-17
0.140	TAV4....1F-19
0.140	TAV5....1F-21
0.140	TAV6....1F-23
0.140	TAV7....1G-3
0.140	TAV8....1G-5
0.140	TAV9....1G-7
0.140	TAV10..1G-9
0.140	TAV11..1G-11
0.140	TAV12..1G-13
0.149	TAV1....1G-15
0.200	TAV1....1G-17
0.203	TAV1....1G-19
0.203	TAV2....1G-21
0.240	TAV1....1G-23
0.240	TAV2....1H-3
0.241	TAV1....1H-5
0.270	TAV1....1H-7
0.300	TAV1....1H-9
0.302	TAV1....1H-11
0.305	TAV1....1H-13
0.310	TAV1....1H-15
0.320	TAV1....1H-17
0.323	TAV1....1H-19
0.326	TAV1....1H-21
0.340	TAV1....1H-23
0.345	TAV1....1I-3
0.350	TAV1....1I-5
0.360	TAV1....1I-7
0.360	TAV2....1I-9
0.400	TAV1....1I-11
0.400	TAV2....1I-13
0.450	TAV1....1I-15
1.000	TAV1....1J-3
1.010	TAV1....1J-5
1.020	TAV1....1J-7
1.030	TAV1....1J-9
1.030	TAV2....1J-13
1.030	TAV3....1J-15
1.040	TAV1....1J-17
1.040	TAV2....1J-19
1.050	TAV1....1J-21
1.050	TAV2....1K-3
1.050	TAV3....1K-5
1.050	TAV4....1K-7
1.060	TAV1....1K-9
1.070	TAV1....1K-15
1.070	TAV2....1K-17
1.070	TAV3....1K-19
1.071	TAV1....1K-21
1.071	TAV2....1L-3
1.080	TAV1....1L-5
1.080	TAV2....1L-7
1.081	TAV1....1L-9
1.082	TAV1....1L-11
1.082	TAV2....1L-13
1.082	TAV3....1L-15
1.083	TAV1....1L-17
1.084	TAV1....1L-19
1.085	TAV1....1L-21
1.200	TAV1....2D-3
1.200	TAV2....2D-5
1.200	TAV3....2D-7
1.210	TAV1....2D-9
1.220	TAV1....2D-11
1.220	TAV2....2D-13
1.220	TAV3....2D-17
1.250	TAV1....2D-19
1.250	TAV2....2D-21
1.250	TAV4....2E-3
1.250	TAV5....2E-7
1.250	TAV6....2E-9
1.250	TAV7....2E-11
1.250	TAV7....2E-13
1.290	TAV1....2E-15
1.290	TAV2....2E-17
1.300	TAV1....2E-19
1.300	TAV2....2E-21
1.300	TAV3....2E-23
1.300	TAV4....2F-3
2.000	TAV1....2F-5
2.001	TAV1....2F-7
2.002	TAV1....2F-9
2.003	TAV1....2F-11
2.020	TAV1....2F-13
2.030	TAV1....2F-17
2.030	TAV2....2F-19
2.030	TAV3....2F-21
2.030	TAV4....2F-23
2.030	TAV5....2G-3
2.031	TAV1....2G-5
2.031	TAV2....2G-7
2.031	TAV3....2G-9
2.031	TAV4....2G-11
2.040	TAV1....2G-13
2.041	TAV1....2G-15
3.000	TAV1....2G-17
3.001	TAV1....2G-19
3.010	TAV1....2G-21
3.010	TAV2....2G-23
3.010	TAV3....2H-3
3.010	TAV4....2H-5
3.020	TAV1....2H-7
3.030	TAV1....2H-9
3.040	TAV1....2H-11
3.051	TAV1....2H-13
3.052	TAV1....2H-15
3.060	TAV1....2H-17
3.070	TAV1....2H-19
3.071	TAV1....2H-21
4.000	TAV1....2H-23
4.500	TAV1....2I-3
4.501	TAV1....2I-5
5.0013	TAV1..2J-3
5.0020	TAV1..2J-5
5.0020	TAV2..2J-7
5.0022	TAV1..2J-9
5.0025	TAV1..2J-11
5.0038	TAV1..2J-13
5.0080	TAV1..2J-15
5.0080	TAV2..2J-17
5.0083	TAV1..2J-19
5.0151	TAV1..2J-21
5.0536	TAV1..2J-23
5.0540	TAV1..2K-3

NUMERICAL INDEX - INDICE NUMERICO - LISTE NUMERIQUE
NUMERISCHES ERSATZEILVERZEILVERZEICHNIS - INDICE NUMERICO

PART. N.	SGR.	TAV	ITEM
71401788	1.082	2	04
71401789	1.082	2	07
71401790	1.082	2	18
71401792	1.082	2	19
71401794	1.082	2	14
71401796	1.080	1	00
71401797	1.080	1	37
71401798	1.080	2	05
71401802	3.010	2	42
71401804	1.030	3	14
71401806	1.082	3	19
71401841	3.060	1	00
71401842	3.060	1	01
71401843	3.060	1	04
71401844	3.060	1	02
71401845	3.060	1	06
71401846	3.060	1	07
71401847	3.060	1	09
71401848	3.060	1	10
71401849	3.060	1	11
71401850	3.060	1	12
71401851	3.060	1	13
71401852	3.060	1	14
71401853	3.060	1	15
71401854	1.050	4	52
71401854	3.060	1	16
71401883	1.080	2	01
71401886	1.082	2	17
71401887	1.030	3	08
71401891	1.082	3	14
71401892	1.082	3	15
71401938	1.050	3	25
71401938	1.050	4	25
71401939	1.050	3	23
71401940	1.050	3	24
71401940	1.050	4	24
71401953	1.080	1	11B
71401954	1.080	1	11A
71401955	1.070	3	00
71401956	1.070	3	01
71401957	1.070	3	03
71401957	1.071	2	03
71401958	1.070	3	05
71401958	1.071	2	05
71401959	1.070	3	06
71401959	1.071	2	06
71401960	1.070	3	08
71401960	1.071	2	08
71401961	1.070	3	11
71401961	1.071	2	11
71401962	1.070	3	11A
71401962	1.071	2	11A
71401963	1.080	2	02
71401964	1.080	2	02A
71401965	1.070	3	11D
71401965	1.071	2	11D
71401966	1.080	2	02B
71401967	1.070	3	15
71401967	1.071	2	15
71401968	1.070	3	16
71401968	1.071	2	16
71401969	1.070	3	17
71401969	1.071	2	17
71401970	1.070	3	24
71401971	1.070	3	25
71401972	1.070	3	26
71401973	1.070	3	27
71401973	1.071	2	27
71401974	1.070	3	28
71401974	1.071	2	28
71401975	1.070	3	29
71401975	1.071	2	29
71401976	1.070	3	31
71401977	1.070	3	35
71401977	1.071	2	35
71401978	1.070	3	39
71401979	1.070	3	37
71401980	1.070	3	30
71401980	1.071	2	30
71401981	1.080	2	02C
71401982	1.080	2	02D
71401983	1.080	2	02D
71401984	1.080	2	02D
71401985	1.080	2	02E
71401986	1.080	2	02F
71401987	1.080	2	03
71401988	3.010	1	02
71401989	3.010	1	03
71401990	1.080	2	06
71401991	1.080	2	08
71401992	1.080	2	09
71401993	1.080	2	10
71401994	1.080	2	11
71401995	1.080	2	12
71401996	1.080	2	13
71401997	1.080	2	14
71401998	1.080	2	15
71401999	1.080	2	16
71402000	1.080	2	17
71402002	1.080	2	19
71402003	1.080	2	20
71402004	1.080	2	25
71402005	1.080	2	26
71402006	1.080	2	27
71402013	1.030	1	37
71402013	3.010	1	23
71402017	3.010	1	12
71402032	3.010	1	40
71402037	3.010	1	38
71402042	1.040	1	32
71402043	3.010	1	46
71402044	3.010	1	47
71402057	1.030	2	17
71402057	3.010	2	20
71402059	1.030	2	21
71402059	3.010	2	23
71402068	3.010	2	37
71402071	3.010	1	04
71402076	3.010	2	44
71402077	3.010	1	05
71402078	3.010	1	06
71402079	1.030	2	65
71402079	3.010	2	57
71402080	3.010	1	07
71402082	1.030	1	68
71402082	1.030	2	70
71402082	3.010	2	52
71402084	3.010	3	17
71402085	3.010	3	07
71402087	3.010	3	13
71402094	3.010	1	08
71402097	3.010	1	10
71402098	3.010	2	65
71402098	3.010	3	42
71402099	1.071	2	36
71402099	3.010	3	11
71402100	3.010	3	15
71402102	3.010	3	08
71402110	3.010	1	11
71402121	0.003	2	01
71402122	3.010	1	14
71402123	3.010	1	15
71402124	3.010	1	16
71402125	3.010	1	17
71402126	3.010	1	18
71402127	3.010	1	19
71402128	3.010	1	20
71402129	3.010	1	22
71402130	0.003	2	02
71402131	3.010	1	24
71402132	3.010	1	26
71402133	3.010	1	27
71402134	3.010	1	28
71402135	3.010	1	29
71402136	3.010	1	30
71402137	3.010	1	31
71402138	3.010	1	32
71402139	3.010	1	33
71402140	3.010	1	35

NUMERICAL INDEX - INDICE NUMERICO - LISTE NUMERIQUE
NUMERISCHES ERSATZEILVERZEILVERZEICHNIS - INDICE NUMERICO

PART. N.	SGR.	TAV.	ITEM
71402141	3.010	1	44
71402142	3.010	1	36
71402142	3.010	1	45
71402143	3.010	1	37
71402144	0.003	2	03
71402145	3.010	1	39
71402146	0.003	2	04
71402147	3.010	1	41
71402148	3.010	1	43
71402149	0.003	2	05
71402150	0.003	2	06
71402152	3.010	1	49
71402153	3.010	1	50
71402154	3.010	1	00
71402155	0.003	2	07
71402156	0.003	2	08
71402157	0.003	2	09
71402158	0.003	2	10
71402159	0.003	2	11
71402160	0.003	2	12
71402161	0.003	2	13
71402162	0.003	2	14
71402163	0.003	2	15
71402164	0.003	2	16
71402165	1.030	1	32
71402166	1.030	2	01
71402167	1.030	2	04
71402168	1.030	2	06
71402169	1.030	2	07
71402170	1.030	2	08
71402171	1.030	2	09
71402171	3.010	2	06
71402172	1.030	2	12
71402172	3.010	2	17
71402173	1.030	2	14
71402173	3.010	2	27
71402174	1.030	2	10
71402174	3.010	2	22
71402175	1.030	2	18
71402175	3.010	2	21
71402176	1.030	2	19
71402176	3.010	2	24
71402177	1.030	2	20
71402177	3.010	2	29
71402179	1.030	2	22
71402179	3.010	2	12
71402180	1.030	2	23
71402181	1.030	2	24
71402182	1.030	2	25
71402183	1.030	2	29
71402183	3.010	2	47
71402184	1.030	2	31
71402185	1.030	2	32
71402186	1.030	2	34
71402187	1.030	2	35
71402188	1.030	2	37
71402189	1.030	2	38
71402190	1.030	2	39
71402191	1.030	2	41
71402192	1.030	2	42
71402193	1.030	2	43
71402194	1.030	2	46
71402195	1.030	2	28
71402196	1.030	2	48
71402197	1.030	2	49
71402198	1.030	2	50
71402199	1.030	2	51
71402200	1.030	2	52
71402201	1.030	2	54
71402202	1.030	2	55
71402203	1.050	3	03
71402204	1.050	3	04
71402205	1.030	2	60
71402206	1.030	2	63
71402207	1.030	2	64
71402208	1.050	3	05
71402209	1.030	2	69
71402210	1.030	3	00
71402211	1.030	3	02
71402212	1.030	3	03
71402213	1.030	3	05
71402214	1.030	3	06
71402215	1.030	3	07
71402216	1.030	3	10
71402217	1.030	3	11
71402218	1.030	3	12
71402219	1.030	3	13
71402220	1.030	3	15
71402221	1.030	3	16
71402222	1.050	3	06
71402223	1.030	3	19
71402224	1.030	3	20
71402225	1.030	3	21
71402226	1.030	3	22
71402227	1.030	3	23
71402228	1.030	3	24
71402229	1.030	3	25
71402230	1.030	3	27
71402231	1.030	3	28
71402232	1.030	3	30
71402233	1.030	3	31
71402234	1.030	3	32
71402235	1.030	3	33
71402236	1.030	3	34
71402237	1.030	3	35
71402238	1.030	3	36
71402239	1.030	2	56
71402239	1.030	3	37
71402240	1.030	2	57
71402240	1.030	3	38
71402241	1.030	3	40
71402244	1.030	3	43
71402245	1.050	3	07
71402246	1.050	3	08
71402247	1.030	1	01
71402248	1.030	1	04
71402249	1.030	1	03
71402250	1.030	1	08
71402251	1.030	1	09
71402252	1.030	1	10
71402253	1.030	1	11
71402254	1.030	1	12
71402255	1.030	1	13
71402256	1.030	1	14
71402257	1.030	1	17
71402258	1.030	1	19
71402259	1.030	1	20
71402259	1.030	3	44
71402260	1.030	1	21
71402261	1.030	1	23
71402262	1.030	1	25
71402263	1.030	1	29
71402264	1.030	1	73H
71402265	1.030	1	35
71402266	1.030	1	36
71402268	1.030	1	41
71402269	1.030	1	42
71402270	1.030	1	43
71402271	1.030	1	44
71402272	1.030	1	48
71402272	5.0080	1	12
71402273	1.030	1	50
71402274	1.030	1	51
71402275	1.050	3	09
71402276	1.030	1	52
71402277	1.030	1	53
71402278	1.030	1	55
71402279	1.030	1	56
71402280	1.030	1	57
71402281	1.030	1	59
71402282	1.030	1	60
71402283	1.030	1	61
71402283	1.030	3	17
71402284	1.030	1	67
71402285	1.050	3	10
71402286	1.030	1	73
71402287	1.030	1	73A
71402288	1.030	1	73B
71402289	1.030	1	73C

SUBGROUP	GRID
0.000	TAV1....1D-3
0.001	TAV1....1D-5
0.002	TAV1....1D-7
0.003	TAV1....1D-9
0.003	TAV2....1D-11
0.003	TAV3....1D-13
0.004	TAV1....1D-15
0.004	TAV2....1D-17
0.021	TAV1....1D-19
0.040	TAV1....1D-21
0.040	TAV2....1D-23
0.040	TAV3....1E-3
0.042	TAV1....1E-5
0.043	TAV1....1E-7
0.043	TAV2....1E-9
0.045	TAV1....1E-11
0.060	TAV1....1E-13
0.060	TAV2....1E-15
0.071	TAV1....1E-17
0.077	TAV1....1E-19
0.080	TAV1....1E-21
0.081	TAV1....1E-23
0.082	TAV1....1F-3
0.083	TAV1....1F-5
0.084	TAV1....1F-7
0.100	TAV1....1F-9
0.120	TAV1....1F-11
0.140	TAV1....1F-13
0.140	TAV2....1F-15
0.140	TAV3....1F-17
0.140	TAV4....1F-19
0.140	TAV5....1F-21
0.140	TAV6....1F-23
0.140	TAV7....1G-3
0.140	TAV8....1G-5
0.140	TAV9....1G-7
0.140	TAV10..1G-9
0.140	TAV11..1G-11
0.140	TAV12..1G-13
0.149	TAV1....1G-15
0.200	TAV1....1G-17
0.203	TAV1....1G-19
0.203	TAV2....1G-21
0.240	TAV1....1G-23
0.240	TAV2....1H-3
0.241	TAV1....1H-5
0.270	TAV1....1H-7
0.300	TAV1....1H-9
0.302	TAV1....1H-11
0.305	TAV1....1H-13
0.310	TAV1....1H-15
0.320	TAV1....1H-17
0.323	TAV1....1H-19
0.326	TAV1....1H-21
0.340	TAV1....1H-23
0.345	TAV1....1I-3
0.350	TAV1....1I-5
0.360	TAV1....1I-7
0.360	TAV2....1I-9
0.400	TAV1....1I-11
0.400	TAV2....1I-13
0.450	TAV1....1I-15
1.000	TAV1....1J-3
1.010	TAV1....1J-5
1.020	TAV1....1J-7
1.030	TAV1....1J-9
1.030	TAV2....1J-13
1.030	TAV3....1J-15
1.040	TAV1....1J-17
1.040	TAV2....1J-19
1.050	TAV1....1J-21
1.050	TAV2....1K-3
1.050	TAV3....1K-5
1.050	TAV4....1K-7
1.060	TAV1....1K-9
1.070	TAV1....1K-15
1.070	TAV2....1K-17
1.070	TAV3....1K-19
1.071	TAV1....1K-21
1.071	TAV2....1L-3
1.080	TAV1....1L-5
1.080	TAV2....1L-7
1.081	TAV1....1L-9
1.082	TAV1....1L-11
1.082	TAV2....1L-13
1.082	TAV3....1L-15
1.083	TAV1....1L-17
1.084	TAV1....1L-19
1.085	TAV1....1L-21
1.200	TAV1....2D-3
1.200	TAV2....2D-5
1.200	TAV3....2D-7
1.210	TAV1....2D-9
1.220	TAV1....2D-11
1.220	TAV2....2D-13
1.220	TAV3....2D-17
1.250	TAV1....2D-19
1.250	TAV2....2D-21
1.250	TAV4....2E-3
1.250	TAV5....2E-7
1.250	TAV6....2E-9
1.250	TAV7....2E-11
1.250	TAV7....2E-13
1.290	TAV1....2E-15
1.290	TAV2....2E-17
1.300	TAV1....2E-19
1.300	TAV2....2E-21
1.300	TAV3....2E-23
1.300	TAV4....2F-3
2.000	TAV1....2F-5
2.001	TAV1....2F-7
2.002	TAV1....2F-9
2.003	TAV1....2F-11
2.020	TAV1....2F-13
2.030	TAV1....2F-17
2.030	TAV2....2F-19
2.030	TAV3....2F-21
2.030	TAV4....2F-23
2.030	TAV5....2G-3
2.031	TAV1....2G-5
2.031	TAV2....2G-7
2.031	TAV3....2G-9
2.031	TAV4....2G-11
2.040	TAV1....2G-13
2.041	TAV1....2G-15
3.000	TAV1....2G-17
3.001	TAV1....2G-19
3.010	TAV1....2G-21
3.010	TAV2....2G-23
3.010	TAV3....2H-3
3.010	TAV4....2H-5
3.020	TAV1....2H-7
3.030	TAV1....2H-9
3.040	TAV1....2H-11
3.051	TAV1....2H-13
3.052	TAV1....2H-15
3.060	TAV1....2H-17
3.070	TAV1....2H-19
3.071	TAV1....2H-21
4.000	TAV1....2H-23
4.500	TAV1....2I-3
4.501	TAV1....2I-5
5.0013	TAV1..2J-3
5.0020	TAV1..2J-5
5.0020	TAV2..2J-7
5.0022	TAV1..2J-9
5.0025	TAV1..2J-11
5.0038	TAV1..2J-13
5.0080	TAV1..2J-15
5.0080	TAV2..2J-17
5.0083	TAV1..2J-19
5.0151	TAV1..2J-21
5.0536	TAV1..2J-23
5.0540	TAV1..2K-3

NUMERICAL INDEX - INDICE NUMERICO - LISTE NUMERIQUE
NUMERISCHES ERSATZEILVERZEILVERZEICHNIS - INDICE NUMERICO

PART. N.	SGR.	TAV.	ITEM
71402290	1.030	1	73D
71402291	1.030	1	73E
71402292	1.030	1	73F
71402293	1.030	1	73G
71402294	1.071	2	00
71402295	1.071	2	02
71402296	1.071	2	24
71402297	1.071	2	25
71402298	1.071	2	31
71402299	1.050	2	20
71402300	1.050	2	21
71402301	1.050	2	22
71402302	1.050	4	26
71402303	1.050	4	28
71402304	1.050	3	30
71402305	1.050	3	31
71402306	1.050	3	32
71402307	1.050	4	33
71402308	1.050	4	34
71402309	1.050	3	35
71402310	1.050	3	36
71402310	1.050	4	36
71402311	1.050	4	38
71402312	1.050	4	39
71402313	1.050	4	40
71402314	1.050	4	42
71402315	1.050	4	43
71402316	1.050	4	44
71402317	1.050	4	45
71402318	1.050	4	46
71402319	1.050	4	47
71402320	1.050	4	49
71402321	1.050	4	50
71402322	1.050	4	51
71402323	1.050	4	54
71402324	1.050	4	56
71402325	1.050	4	57
71402326	1.050	4	58
71402327	1.050	4	59
71402328	1.050	4	60
71402329	1.050	4	61
71402329	3.010	3	30
71402329	3.010	4	12
71402330	1.050	4	63
71402331	1.050	2	65
71402331	1.050	3	65
71402332	1.050	3	66
71402333	1.050	4	69
71402334	1.050	4	70
71402335	1.050	4	71
71402336	1.050	4	72
71402337	1.050	3	73
71402337	1.050	4	73
71402338	1.050	3	74
71402339	1.050	3	75
71402340	1.050	4	76
71402341	1.050	4	77
71402342	1.050	4	78
71402343	1.050	4	79
71402344	1.050	3	80
71402345	1.050	3	81
71402346	1.050	3	82
71402347	1.050	3	83
71402348	1.040	1	53
71402349	1.040	2	01
71402350	1.040	2	02
71402351	1.040	2	03
71402352	1.040	2	04
71402353	1.040	2	05
71402354	1.040	2	06
71402355	1.040	2	07
71402356	1.040	2	08
71402357	1.040	2	09
71402358	1.040	2	10
71402359	1.040	2	11
71402360	1.040	2	12
71402361	1.040	2	13
71402362	1.040	2	14
71402363	1.040	2	15
71402364	1.040	2	16
71402365	1.040	2	17
71402366	1.040	2	18
71402367	1.040	2	19
71402368	1.040	2	20
71402369	1.040	2	21
71402370	1.040	2	22
71402371	1.040	2	23
71402372	1.040	2	24
71402373	1.040	2	25
71402374	1.040	2	26
71402375	1.040	2	27
71402376	1.040	2	29
71402377	1.040	2	30
71402378	1.040	2	28
71402379	1.040	2	32
71402380	1.040	2	33
71402381	1.040	2	34
71402382	1.040	2	35
71402383	1.040	2	36
71402384	1.040	2	37
71402385	1.040	2	38
71402386	1.040	2	39
71402388	1.050	4	41
71402389	3.010	2	00
71402390	3.010	2	02
71402391	3.010	2	03
71402392	3.010	2	05
71402394	3.010	2	08
71402396	3.010	2	14
71402404	3.010	2	32
71402405	3.010	2	33
71402406	3.010	2	34
71402407	3.010	2	36
71402408	3.010	2	38
71402409	3.010	2	39
71402410	3.010	2	41
71402411	3.010	2	45
71402412	3.010	2	46
71402414	3.010	2	48
71402415	3.010	2	51
71402417	3.010	3	00
71402418	3.010	3	04
71402419	3.010	3	16
71402420	3.010	3	20
71402421	3.010	3	21
71402422	3.010	3	22
71402423	3.010	3	23
71402424	3.010	3	28
71402425	3.010	3	29
71402426	1.040	1	17
71402427	3.010	3	31
71402428	3.010	3	36
71402429	3.010	4	21
71402430	3.010	4	03
71402431	1.040	1	00
71402432	3.010	4	17
71402433	3.010	4	06
71402434	3.010	4	18
71402435	3.010	4	22
71402436	3.010	4	23
71402462	1.080	2	18
71402464	1.082	3	26
71402467	1.030	1	46
71402468	1.030	1	45
71402469	1.080	1	50
71402490	1.040	1	20
71402497	1.040	1	22
71402499	1.040	1	24
71402502	1.040	1	25
71402518	1.040	1	31
71402519	1.040	1	34
71402522	1.040	1	02
71402523	1.040	1	03
71402524	1.040	1	06
71402525	1.040	1	07
71402526	1.040	1	09
71402527	1.040	1	11
71402528	1.040	1	12
71402529	1.040	1	13

B-22

NUMERICAL INDEX - INDICE NUMERICO - LISTE NUMERIQUE

NUMERISCHES ERSATZEILVERZEILVERZEICHNIS - INDICE NUMERICO

PART. N.	SGR.	TAV.	ITEM
71402530	1.040	1	14
71402531	1.040	1	15
71402532	1.040	1	16
71402533	1.040	1	36
71402534	1.040	1	38
71402535	1.040	1	54
71402536	1.040	1	56
71402537	1.040	1	58
71402538	1.040	1	59
71402539	1.040	1	63
71402540	1.040	1	64
71402541	1.040	1	65
71402542	1.040	1	66
71402543	1.040	1	68
71402544	1.040	1	69
71402545	1.040	1	70
71402546	1.040	1	46
71402804	1.030	1	82
71402805	1.030	1	84
71402806	1.030	1	86
71402807	1.030	1	85
71402915	5.0021	1	10
71402916	5.0021	1	00
71403032	5.0081	1	09
71403033	5.0081	2	00
71403039	1.030	2	71
71403512	1.220	2	13
71403513	1.200	2	00
71403516	1.200	3	04
71403517	1.200	3	05
71403518	1.200	3	06
71403520	1.200	3	11
71403521	1.200	3	23
71403524	5.0321	1	01
71403528	1.200	3	35
71403529	1.220	1	03
71403531	1.220	2	54
71403533	1.220	2	54A
71403535	1.220	1	05
71403536	1.220	2	74
71403541	1.200	3	12
71403561	1.220	1	14
71403562	1.220	2	83
71403564	1.220	2	86
71403565	1.220	2	84
71403566	1.220	2	85
71403568	1.220	2	88
71403571	1.220	2	09
71403574	1.220	2	24
71403575	1.200	3	26
71403577	1.220	2	78
71403579	1.220	2	87
71403582	1.220	2	82
71403583	1.220	2	81
71403587	1.220	1	08
71403588	1.220	1	07
71403590	1.220	1	02
71403592	1.200	3	02
71403593	1.200	3	03
71403594	1.200	3	10
71403595	1.220	2	76
71403596	1.220	1	06
71403603	1.200	2	01
71403604	1.200	2	02
71403605	1.200	2	03
71403606	1.200	2	04
71403607	1.200	2	05
71403608	1.200	2	06
71403609	1.200	2	07
71403610	1.200	2	08
71403611	1.200	2	09
71403612	1.200	2	10
71403613	1.200	2	11
71403614	1.200	2	12
71403615	1.200	2	13
71403616	1.200	2	14
71403617	1.200	2	15
71403618	1.200	2	16
71403619	1.200	2	17
71403620	1.200	2	18
71403621	1.200	2	19
71403622	1.200	2	20
71403623	1.200	2	21
71403624	1.200	2	22
71403625	1.200	2	23
71403626	1.200	2	24
71403627	1.200	2	25
71403628	1.200	2	26
71403629	1.200	2	27
71403630	1.200	2	28
71403631	1.200	2	29
71403632	1.200	2	30
71403633	1.200	2	31
71403634	1.200	2	32
71403635	1.200	2	33
71403636	1.200	2	34
71403637	1.200	2	35
71403638	1.200	2	36
71403639	1.200	2	37
71403640	1.200	2	38
71403641	1.200	2	39
71403644	1.030	1	62
71403652	1.290	2	01
71403653	1.290	2	02
71403654	1.290	2	03
71403655	1.290	2	04
71403656	1.290	2	05
71403657	1.290	2	06
71403658	1.290	2	07
71403659	1.290	2	08
71403660	1.290	2	09
71403661	5.0160	1	35
71403683	5.0021	1	34
71403723	5.0021	1	32
71403724	5.0021	1	31
71403726	5.0025	1	02
71403776	5.0021	1	35
71403901	1.050	1	17
71403911	1.050	1	16
71403916	1.080	1	33
71403919	1.050	1	79
71403924	1.050	1	74
71403933	1.081	1	23
71403937	1.080	1	30
71403938	1.081	1	25
71403939	1.050	1	85
71403940	1.050	1	86
71403941	1.080	1	29
71403942	1.081	1	24
71403944	1.080	1	16
71403954	1.081	1	27
71403960	1.050	1	75
71403961	1.084	1	06
71403962	1.084	1	07
71403963	1.084	1	08
71403964	1.084	1	09
71403965	1.084	1	11
71403966	1.084	1	13
71403968	1.060	1	45
71403968	1.061	1	45
71403969	1.084	1	12
71403970	1.084	1	01
71403971	1.084	1	02
71403972	1.084	1	03
71403973	1.084	1	04
71403974	1.082	1	49
71403975	1.082	1	10
71403976	1.082	1	48
71403977	1.082	1	47
71403978	1.083	1	12
71403979	1.083	1	13
71403980	1.083	1	11
71403[illegible]	1.083	1	09
71403[illegible]	1.083	1	08
71403992	2.040	1	19
71403999	2.040	1	20
71403999	2.041	1	00
71404004	1.083	1	10
71404005	1.084	1	14

SUBGROUP	GRID
0.000	TAV1....1D-3
0.001	TAV1....1D-5
0.002	TAV1....1D-7
0.003	TAV1....1D-9
0.003	TAV2....1D-11
0.003	TAV3....1D-13
0.004	TAV1....1D-15
0.004	TAV2....1D-17
0.021	TAV1....1D-19
0.040	TAV1....1D-21
0.040	TAV2....1D-23
0.040	TAV3....1E-3
0.042	TAV1....1E-5
0.043	TAV1....1E-7
0.043	TAV2....1E-9
0.045	TAV1....1E-11
0.060	TAV1....1E-13
0.060	TAV2....1E-15
0.071	TAV1....1E-17
0.077	TAV1....1E-19
0.080	TAV1....1E-21
0.081	TAV1....1E-23
0.082	TAV1....1F-3
0.083	TAV1....1F-5
0.084	TAV1....1F-7
0.100	TAV1....1F-9
0.120	TAV1....1F-11
0.140	TAV1....1F-13
0.140	TAV2....1F-15
0.140	TAV3....1F-17
0.140	TAV4....1F-19
0.140	TAV5....1F-21
0.140	TAV6....1F-23
0.140	TAV7....1G-3
0.140	TAV8....1G-5
0.140	TAV9....1G-7
0.140	TAV10..1G-9
0.140	TAV11..1G-11
0.140	TAV12..1G-13
0.149	TAV1....1G-15
0.200	TAV1....1G-17
0.203	TAV1....1G-19
0.203	TAV2....1G-21
0.240	TAV1....1G-23
0.240	TAV2....1H-3
0.241	TAV1....1H-5
0.270	TAV1....1H-7
0.300	TAV1....1H-9
0.302	TAV1....1H-11
0.305	TAV1....1H-13
0.310	TAV1....1H-15
0.320	TAV1....1H-17
0.323	TAV1....1H-19
0.326	TAV1....1H-21
0.340	TAV1....1H-23
0.345	TAV1....1I-3
0.350	TAV1....1I-5

SUBGROUP	GRID
0.360	TAV1....1I-7
0.360	TAV2....1I-9
0.400	TAV1....1I-11
0.400	TAV2....1I-13
0.450	TAV1....1I-15
1.000	TAV1....1J-3
1.010	TAV1....1J-5
1.020	TAV1....1J-7
1.030	TAV1....1J-9
1.030	TAV2....1J-13
1.030	TAV3....1J-15
1.040	TAV1....1J-17
1.040	TAV2....1J-19
1.050	TAV1....1J-21
1.050	TAV2....1K-3
1.050	TAV3....1K-5
1.050	TAV4....1K-7
1.060	TAV1....1K-9
1.070	TAV1....1K-15
1.070	TAV2....1K-17
1.070	TAV3....1K-19
1.071	TAV1....1K-21
1.071	TAV2....1L-3
1.080	TAV1....1L-5
1.080	TAV2....1L-7
1.081	TAV1....1L-9
1.082	TAV1....1L-11
1.082	TAV2....1L-13
1.082	TAV3....1L-15
1.083	TAV1....1L-17
1.084	TAV1....1L-19
1.085	TAV1....1L-21
1.200	TAV1....2D-3
1.200	TAV2....2D-5
1.200	TAV3....2D-7
1.210	TAV1....2D-9
1.220	TAV1....2D-11
1.220	TAV2....2D-13
1.220	TAV3....2D-17
1.250	TAV1....2D-19
1.250	TAV2....2D-21
1.250	TAV4....2E-3
1.250	TAV5....2E-7
1.250	TAV6....2E-9
1.250	TAV7....2E-11
1.250	TAV7....2E-13
1.290	TAV1....2E-15
1.290	TAV2....2E-17
1.300	TAV1....2E-19
1.300	TAV2....2E-21
1.300	TAV3....2E-23
1.300	TAV4....2F-3
2.000	TAV1....2F-5
2.001	TAV1....2F-7
2.002	TAV1....2F-9
2.003	TAV1....2F-11
2.020	TAV1....2F-13

SUBGROUP	GRID
2.030	TAV1....2F-17
2.030	TAV2....2F-19
2.030	TAV3....2F-21
2.030	TAV4....2F-23
2.030	TAV5....2G-3
2.031	TAV1....2G-5
2.031	TAV2....2G-7
2.031	TAV3....2G-9
2.031	TAV4....2G-11
2.040	TAV1....2G-13
2.041	TAV1....2G-15
3.000	TAV1....2G-17
3.001	TAV1....2G-19
3.010	TAV1....2G-21
3.010	TAV2....2G-23
3.010	TAV3....2H-3
3.010	TAV4....2H-5
3.020	TAV1....2H-7
3.030	TAV1....2H-9
3.040	TAV1....2H-11
3.051	TAV1....2H-13
3.052	TAV1....2H-15
3.060	TAV1....2H-17
3.070	TAV1....2H-19
3.071	TAV1....2H-21
4.000	TAV1....2H-23
4.500	TAV1....2I-3
4.501	TAV1....2I-5
5.0013	TAV1..2J-3
5.0020	TAV1..2J-5
5.0020	TAV2..2J-7
5.0022	TAV1..2J-9
5.0025	TAV1..2J-11
5.0038	TAV1..2J-13
5.0080	TAV1..2J-15
5.0080	TAV2..2J-17
5.0083	TAV1..2J-19
5.0151	TAV1..2J-21
5.0536	TAV1..2J-23
5.0540	TAV1..2K-3

SUBGROUP	GRID

NUMERICAL INDEX - INDICE NUMERICO - LISTE NUMERIQUE
NUMERISCHES ERSATZEILVERZEILVERZEICHNIS - INDICE NUMERICO

PART. N.	SGR.	TAV.	ITEM
71404022	1.082	1	43
71404023	1.082	1	44
71404024	1.082	1	45
71404025	1.082	1	46
71404034	1.082	1	09
71404035	1.082	1	22
71404039	1.082	1	56
71404040	1.082	1	55
71404041	1.082	1	53
71404042	1.082	1	52
71404050	1.082	1	54
71404053	1.060	1	46
71404053	1.061	1	46
71404054	2.030	1	42
71404056	2.030	1	41
71404061	2.030	1	43
71404061	2.031	2	41
71404062	2.030	1	43A
71404062	2.031	2	41A
71404063	2.030	1	46A
71404063	2.031	2	44A
71404064	2.030	1	46
71404064	2.031	2	44
71404067	1.050	1	67
71404086	3.070	1	08
71404086	3.071	1	08
71404086	3.072	1	08
71404121	1.060	1	21
71404121	1.061	1	21
71404122	1.060	1	23
71404122	1.061	1	23
71404123	1.060	1	25
71404123	1.061	1	25
71404124	1.060	1	27
71404124	1.061	1	27
71404125	1.060	1	28
71404125	1.061	1	28
71404126	1.060	1	29
71404126	1.061	1	29
71404127	1.060	1	37
71404127	1.061	1	37
71404128	1.060	1	39
71404128	1.061	1	39
71404133	2.031	1	09
71404134	2.031	1	10
71404136	2.041	1	23
71404161	1.030	3	41
71404161	1.050	1	72A
71404161	5.0020	2	64A
71404161	5.0081	2	03A
71404162	1.050	1	80A
71404162	1.060	1	16A
71404162	1.060	1	34A
71404162	1.060	1	48A
71404162	1.061	1	48A
71404162	1.061	1	34A
71404162	1.061	1	16A
71404162	1.080	1	34A
71404162	1.080	1	35A
71404162	3.070	1	16A
71404162	3.071	1	16A
71404162	3.072	1	16A
71404162	5.0080	2	29
71404163	1.050	1	84A
71404163	1.080	1	07A
71404163	1.080	1	08A
71404163	1.081	1	04A
71404163	1.081	1	13A
71404163	1.083	1	01A
71404163	1.083	1	06A
71404163	1.084	1	00A
71404163	1.085	1	38A
71404163	1.085	1	41A
71404163	1.085	1	42A
71404163	5.0020	2	71A
71404163	5.0020	2	42A
71404163	5.0020	2	41A
71404163	5.0020	2	38A
71404163	5.0021	1	30A
71404163	5.0080	1	15
71404163	5.0080	2	33
71404165	1.030	1	48A
71404165	1.030	1	47
71404165	1.030	2	68
71404165	1.050	1	76A
71404165	1.050	1	68A
71404165	1.080	1	15A
71404165	1.081	1	12A
71404165	1.082	1	59A
71404165	1.082	1	28A
71404165	1.082	1	19A
71404165	1.082	1	08A
71404165	1.082	1	05A
71404165	1.083	1	07A
71404165	1.083	1	25A
71404165	1.084	1	22A
71404165	1.084	1	21A
71404165	1.085	1	39A
71404165	1.085	1	40A
71404165	3.070	1	15A
71404165	3.070	1	14A
71404165	3.071	1	14A
71404165	3.071	1	15A
71404165	3.072	1	14A
71404165	3.072	1	15A
71404165	5.0020	2	37A
71404165	5.0020	2	39A
71404165	5.0020	2	40A
71404165	5.0080	1	13
71404165	5.0080	2	30
71404165	5.0081	1	19A
71404165	5.0081	1	20A
71404165	5.0081	2	19A
71404166	1.030	1	24
71404166	1.050	1	93A
71404166	1.080	1	45A
71404166	1.080	1	43A
71404166	1.080	1	44A
71404166	1.080	1	05A
71404166	1.080	1	04A
71404166	1.082	1	06A
71404166	1.082	1	23A
71404166	5.0080	1	03
71404166	5.0081	1	30A
71404166	5.0081	1	31A
71404166	5.0081	2	21A
71404167	1.050	1	02
71404168	1.030	2	53
71404168	1.050	1	35
71404169	2.030	2	22
71404169	2.030	3	22
71404169	2.030	4	22
71404169	2.031	3	21
71404169	2.031	4	22
71404169	3.070	1	12
71404169	3.071	1	12
71404169	3.072	1	12
71404169	5.0080	2	03
71404169	5.0081	1	02
71404169	5.0081	2	02
71404173	1.085	1	34
71404173	5.0020	2	34
71404174	1.085	1	35
71404174	5.0020	2	35
71404175	1.085	1	30
71404175	5.0020	2	30
71404176	1.085	1	32
71404176	5.0020	2	32
71404177	1.085	1	33
71404177	5.0020	2	33
71404178	1.085	1	31
71404178	5.0020	2	31
71404196	1.080	1	27
71404200	1.080	1	28
71404201	1.080	1	17
71404202	1.081	1	22
71404203	1.081	1	43
71404252	1.060	1	37
71404252	1.061	1	37

C-1

NUMERICAL INDEX - INDICE NUMERICO - LISTE NUMERIQUE
NUMERISCHES ERSATZEILVERZEICHNIS - INDICE NUMERICO

PART. N.	SGR.	TAV.	ITEM
71404254	1.060	1	39
71404254	1.061	1	39
71404283	1.061	1	64
71404284	1.081	1	21
71404307	1.050	1	72
71404311	1.050	1	69
71404312	1.050	1	81
71404313	1.050	1	18
71404313	1.061	1	69
71404327	1.050	1	84
71404327	1.080	1	07
71404327	1.081	1	04
71404329	1.050	1	93
71404329	1.080	1	04
71404333	1.080	1	08
71404333	1.081	1	13
71404333	5.0080	2	32
71404337	1.080	1	35
71404341	1.080	1	43
71404341	5.0081	2	21
71404345	1.050	1	68
71404345	1.082	1	05
71404345	1.082	1	08
71404345	1.083	1	07
71404345	1.084	1	22
71404345	5.0081	1	19
71404345	5.0081	2	19
71404349	1.082	1	23
71404351	1.084	1	00
71404351	1.085	1	41
71404351	5.0020	2	41
71404353	1.080	1	44
71404355	1.082	1	28
71404355	1.085	1	39
71404355	5.0020	2	39
71404357	1.050	1	76
71404357	1.080	1	15
71404357	1.081	1	12
71404357	1.082	1	19
71404357	1.083	1	25
71404357	1.084	1	21
71404357	1.085	1	40
71404357	3.070	1	14
71404357	3.071	1	14
71404357	3.072	1	14
71404357	5.0020	2	40
71404361	1.082	1	06
71404363	2.040	1	17
71404363	2.041	1	02
71404364	2.040	1	04
71404364	2.041	1	21
71404367	2.040	1	12
71404367	2.041	1	01
71404374	2.030	5	25
71404384	2.040	1	03
71404384	2.041	1	20
71404395	1.080	1	05
71404395	1.080	1	45
71404406	2.041	1	03
71404407	1.060	1	11
71404407	1.061	1	11
71404407	5.0020	2	57
71404408	1.083	1	01
71404408	1.083	1	06
71404408	1.085	1	42
71404408	5.0020	2	42
71404408	5.0080	1	14
71404412	1.060	1	34
71404412	1.061	1	34
71404414	1.050	1	80
71404414	1.060	1	16
71404414	1.061	1	16
71404414	1.080	1	34
71404414	3.070	1	16
71404414	3.071	1	16
71404414	3.072	1	16
71404427	1.060	1	48
71404427	1.061	1	48
71404431	2.041	1	04
71404432	2.041	1	22
71404433	1.082	1	59
71404433	5.0020	2	37
71404435	1.085	1	38
71404435	5.0020	2	38
71404438	3.070	1	15
71404438	3.071	1	15
71404438	3.072	1	15
71404452	5.0020	2	71
71404452	5.0021	1	30
71404460	5.0081	2	05
71404503	5.0020	2	73
71404503	5.0021	1	26
71404507	2.030	1	51A
71404507	2.031	2	49A
71404509	2.030	1	51
71404509	2.031	2	49
71404600	5.0020	2	64
71404615	5.0020	2	70
71404615	5.0021	1	29
71404620	5.0020	2	75
71404641	5.0021	1	23
71404642	5.0021	1	22
71404650	5.0021	1	09
71404651	5.0021	1	19
71404652	5.0021	1	13
71404655	5.0021	1	20
71404655	5.0021	1	21
71404656	5.0021	1	18
71404657	5.0021	1	17
71404658	5.0021	1	12
71404659	5.0021	1	07
71404660	5.0021	1	06
71404661	5.0021	1	08
71404664	1.060	1	46
71404664	1.061	1	46
71404675	5.0081	1	20
71405003	0.003	1	06
71405003	1.010	1	04
71405003	1.020	1	25
71405003	1.250	1	09
71405003	3.000	1	15
71405003	3.001	1	15
71405003	3.002	1	15
71405040	1.020	1	16
71405204	1.010	1	36
71405228	1.010	1	11
71405229	1.010	1	12
71405480	0.004	1	25
71405484	0.004	1	37
71405485	0.004	1	40
71405486	0.004	1	42
71405513	1.300	1	05
71405516	1.300	2	15
71405517	1.300	2	14
71405524	1.300	1	37
71405530	1.300	2	22
71405534	1.300	1	52
71405545	1.300	1	61
71405546	1.300	1	77
71405547	1.300	1	65
71405548	1.300	1	78
71405595	1.300	1	48A
71405595	1.300	1	33A
71405600	1.300	1	87
71405601	1.300	4	00
71405684	1.300	1	85
71405685	1.300	1	86
71405699	1.250	1	03
71405700	1.250	1	04
71405701	1.250	1	05
71405702	1.250	1	06
71405705	1.250	1	07
71405706	1.250	2	00
71405707	1.250	2	03
71405708	1.250	1	31
71405716	1.250	1	36
71405717	1.250	1	37
71405718	1.250	1	38
71405719	1.250	1	42

C-2

SUBGROUP	GRID
0.000	TAV1....1D-3
0.001	TAV1....1D-5
0.002	TAV1....1D-7
0.003	TAV1....1D-9
0.003	TAV2....1D-11
0.003	TAV3....1D-13
0.004	TAV1....1D-15
0.004	TAV2....1D-17
0.021	TAV1....1D-19
0.040	TAV1....1D-21
0.040	TAV2....1D-23
0.040	TAV3....1E-3
0.042	TAV1....1E-5
0.043	TAV1....1E-7
0.043	TAV2....1E-9
0.045	TAV1....1E-11
0.060	TAV1....1E-13
0.060	TAV2....1E-15
0.071	TAV1....1E-17
0.077	TAV1....1E-19
0.080	TAV1....1E-21
0.081	TAV1....1E-23
0.082	TAV1....1F-3
0.083	TAV1....1F-5
0.084	TAV1....1F-7
0.100	TAV1....1F-9
0.120	TAV1....1F-11
0.140	TAV1....1F-13
0.140	TAV2....1F-15
0.140	TAV3....1F-17
0.140	TAV4....1F-19
0.140	TAV5....1F-21
0.140	TAV6....1F-23
0.140	TAV7....1G-3
0.140	TAV8....1G-5
0.140	TAV9....1G-7
0.140	TAV10..1G-9
0.140	TAV11..1G-11
0.140	TAV12..1G-13
0.149	TAV1....1G-15
0.200	TAV1....1G-17
0.203	TAV1....1G-19
0.203	TAV2....1G-21
0.240	TAV1....1G-23
0.240	TAV2....1H-3
0.241	TAV1....1H-5
0.270	TAV1....1H-7
0.300	TAV1....1H-9
0.302	TAV1....1H-11
0.305	TAV1....1H-13
0.310	TAV1....1H-15
0.320	TAV1....1H-17
0.323	TAV1....1H-19
0.326	TAV1....1H-21
0.340	TAV1....1H-23
0.345	TAV1....1I-3
0.350	TAV1....1I-5
0.360	TAV1....1I-7
0.360	TAV2....1I-9
0.400	TAV1....1I-11
0.400	TAV2....1I-13
0.450	TAV1....1I-15
1.000	TAV1....1J-3
1.010	TAV1....1J-5
1.020	TAV1....1J-7
1.030	TAV1....1J-9
1.030	TAV2....1J-13
1.030	TAV3....1J-15
1.040	TAV1....1J-17
1.040	TAV2....1J-19
1.050	TAV1....1J-21
1.050	TAV2....1K-3
1.050	TAV3....1K-5
1.050	TAV4....1K-7
1.060	TAV1....1K-9
1.070	TAV1....1K-15
1.070	TAV2....1K-17
1.070	TAV3....1K-19
1.071	TAV1....1K-21
1.071	TAV2....1L-3
1.080	TAV1....1L-5
1.080	TAV2....1L-7
1.081	TAV1....1L-9
1.082	TAV1....1L-11
1.082	TAV2....1L-13
1.082	TAV3....1L-15
1.083	TAV1....1L-17
1.084	TAV1....1L-19
1.085	TAV1....1L-21
1.200	TAV1....2D-3
1.200	TAV2....2D-5
1.200	TAV3....2D-7
1.210	TAV1....2D-9
1.220	TAV1....2D-11
1.220	TAV2....2D-13
1.220	TAV3....2D-17
1.250	TAV1....2D-19
1.250	TAV2....2D-21
1.250	TAV4....2E-3
1.250	TAV5....2E-7
1.250	TAV6....2E-9
1.250	TAV7....2E-11
1.250	TAV7....2E-13
1.290	TAV1....2E-15
1.290	TAV2....2E-17
1.300	TAV1....2E-19
1.300	TAV2....2E-21
1.300	TAV3....2E-23
1.300	TAV4....2F-3
2.000	TAV1....2F-5
2.001	TAV1....2F-7
2.002	TAV1....2F-9
2.003	TAV1....2F-11
2.020	TAV1....2F-13
2.030	TAV1....2F-17
2.030	TAV2....2F-19
2.030	TAV3....2F-21
2.030	TAV4....2F-23
2.030	TAV5....2G-3
2.031	TAV1....2G-5
2.031	TAV2....2G-7
2.031	TAV3....2G-9
2.031	TAV4....2G-11
2.040	TAV1....2G-13
2.041	TAV1....2G-15
3.000	TAV1....2G-17
3.001	TAV1....2G-19
3.010	TAV1....2G-21
3.010	TAV2....2G-23
3.010	TAV3....2H-3
3.010	TAV4....2H-5
3.020	TAV1....2H-7
3.030	TAV1....2H-9
3.040	TAV1....2H-11
3.051	TAV1....2H-13
3.052	TAV1....2H-15
3.060	TAV1....2H-17
3.070	TAV1....2H-19
3.071	TAV1....2H-21
4.000	TAV1....2H-23
4.500	TAV1....2I-3
4.501	TAV1....2I-5
5.0013	TAV1..2J-3
5.0020	TAV1..2J-5
5.0020	TAV2..2J-7
5.0022	TAV1..2J-9
5.0025	TAV1..2J-11
5.0038	TAV1..2J-13
5.0080	TAV1..2J-15
5.0080	TAV2..2J-17
5.0083	TAV1..2J-19
5.0151	TAV1..2J-21
5.0536	TAV1..2J-23
5.0540	TAV1..2K-3

C-3

NUMERICAL INDEX - INDICE NUMERICO - LISTE NUMERIQUE
NUMERISCHES ERSATZEILVERZEILVERZEICHNIS - INDICE NUMERICO

PART. N.	SGR.	TAV.	ITEM
71405720	1.250	1	43
71405721	1.250	1	44
71405722	1.250	1	45
71405736	1.020	1	14
71405740	1.050	1	67A
71405745	1.220	2	57
71405770	1.220	2	57
71405771	1.082	1	61
71405773	1.220	2	57
71405774	1.220	2	57
71405814	5.0020	2	61
71405815	5.0020	2	60
71405935	5.0152	1	0 1-06
71405938	1.290	1	00
71405939	1.290	1	10
71405941	1.290	1	17
71405942	1.290	1	19
71405944	1.290	1	30
71405981	5.0083	1	02
71405982	5.0083	1	03
71405983	1.300	2	10
71405983	5.0083	1	09
71405984	5.0083	1	09
71405985	5.0083	1	11
71405986	5.0083	1	12
71405987	5.0083	1	13
71405988	5.0083	1	13
71405989	5.0083	1	13
71405990	5.0083	1	13
71405991	5.0083	1	13
71405992	5.0083	1	13
71405993	5.0083	1	19
71405994	5.0083	1	20
71405995	5.0083	1	28
71406001	1.220	2	69
71406003	1.220	2	70
71406004	1.220	2	73
71406005	4.500	1	00
71406005	4.501	1	00
71406007	4.500	1	03
71406007	4.501	1	03
71406008	4.500	1	04
71406008	4.501	1	04
71406009	4.500	1	05
71406009	4.501	1	05
71406010	4.500	1	06
71406010	4.501	1	06
71406012	4.500	1	11
71406012	4.501	1	11
71406013	4.500	1	13
71406013	4.501	1	13
71406015	4.501	1	12
71406021	4.500	1	24
71406021	4.501	1	24
71406022	4.500	1	25
71406022	4.501	1	25
71406070	1.300	4	05
71406073	4.500	1	03
71406073	4.501	1	03
71406074	4.500	1	04
71406074	4.501	1	04
71406075	4.500	1	06
71406075	4.501	1	06
71406076	4.500	1	25
71406076	4.501	1	25
71406077	1.300	4	03
71406078	1.300	4	04
71406080	1.300	4	07
71406130	1.220	2	57
71406175	5.0160	1	29
71406177	5.0160	1	33
71406178	5.0160	1	34
71406192	4.500	1	03
71406192	4.501	1	03
71406193	4.500	1	04
71406193	4.501	1	04
71406194	4.500	1	06
71406194	4.501	1	06
71406195	4.500	1	25
71406195	4.501	1	25
71406227	1.250	3	01
71406228	1.250	3	02
71406228	5.0151	1	02
71406229	1.250	3	03
71406230	1.250	3	04
71406230	5.0151	1	04
71406231	1.250	3	05
71406232	1.250	3	06
71406233	1.250	3	07
71406234	1.250	3	08
71406234	5.0151	1	08
71406240	5.0152	1	01
71406241	5.0152	1	02
71406242	5.0152	1	03
71406243	5.0152	1	04
71406244	5.0152	1	05
71406245	5.0152	1	06
71406245	5.0155	1	06
71406254	4.500	1	03
71406254	4.501	1	03
71406255	4.500	1	04
71406255	4.501	1	04
71406256	4.500	1	06
71406256	4.501	1	06
71406257	4.500	1	25
71406257	4.501	1	25
71406282	5.0025	1	11
71406294	5.0151	1	0 1-08
71406295	5.0151	1	01
71406296	5.0151	1	03
71406297	5.0151	1	05
71406298	5.0151	1	07
71406299	5.0151	1	06
71406302	5.0155	1	0 1-06
71406303	5.0155	1	01
71406304	5.0155	1	02
71406305	5.0155	1	03
71406306	5.0155	1	04
71406307	5.0155	1	05
71406345	0.003	3	07
71406347	0.003	3	16
71406348	0.003	3	19
71410537	1.000	1	02
71415005	1.070	1	06
71415005	1.071	1	06
71415006	1.070	1	07
71415006	1.071	1	07
71415007	1.070	1	22
71415007	1.071	1	22
71415011	1.070	1	23
71415011	1.071	1	23
71415014	0.004	1	14
71415014	1.070	1	25
71415014	1.071	1	25
71415015	1.070	1	26
71415015	1.071	1	26
71415016	1.070	1	30
71415017	1.070	1	32
71415018	1.070	1	33
71415019	1.070	1	37
71415023	1.070	1	38
71415025	1.070	1	39
71415025	1.071	1	39
71415026	1.070	1	44
71415027	1.070	1	45
71415027	1.071	1	45
71415028	1.070	1	46
[illegible]415028	1.071	1	46
[illegible]029	1.200	1	48
[illegible]9	1.210	1	55
[illegible]30	1.250	1	50
[illegible]031	4.500	1	28
[illegible]033	1.070	1	78
[illegible]033	1.071	1	78
[illegible]415034	1.070	1	75
71415034	1.071	1	75
71415040	1.070	1	77
71415040	1.071	1	77
71415041	1.070	1	79

C-4

NUMERICAL INDEX - INDICE NUMERICO - LISTE NUMERIQUE

NUMERISCHES ERSATZEILVERZEILVERZEICHNIS - INDICE NUMERICO

PART. N.	SGR.	TAV.	ITEM
71415041	1.071	1	79
71415042	1.070	1	83
71415042	1.071	1	83
71415043	1.070	1	84
71415043	1.071	1	84
71415044	1.070	1	87
71415044	1.071	1	87
71415045	1.070	1	88
71415045	1.071	1	88
71415047	1.210	1	00
71415060	1.200	1	06
71415060	1.210	1	02
71415062	1.210	1	14
71415066	1.210	1	15
71415067	1.210	1	16
71415068	1.210	1	17
71415071	1.210	1	18
71415072	1.210	1	19
71415076	1.210	1	20
71415077	1.210	1	21
71415078	1.210	1	22
71415080	1.210	1	31
71415083	1.210	1	32
71415089	2.000	1	00
71415090	2.000	1	01
71415090	2.001	1	02
71415091	2.000	1	05
71415091	2.001	1	04
71415092	2.000	1	06
71415092	2.002	1	08
71415093	2.000	1	09
71415093	2.002	1	07
71415093	2.003	1	30
71415093	5.0013	1	41
71415093	5.0022	1	41
71415093	5.0038	1	41
71415094	1.000	1	32
71415094	2.000	1	14
71415094	2.001	1	22
71415094	2.002	1	22
71415094	2.003	1	15
71415094	5.0013	1	21
71415094	5.0022	1	21
71415094	5.0038	1	21
71415095	1.000	1	33
71415096	1.000	1	33
71415097	1.000	1	33
71415098	1.000	1	44
71415098	2.000	1	28
71415098	2.001	1	28
71415098	2.002	1	28
71415098	2.003	1	40
71415098	5.0013	1	51
71415098	5.0022	1	51
71415098	5.0038	1	51
71415099	1.000	1	44
71415099	2.000	1	29
71415099	2.001	1	29
71415099	2.002	1	29
71415099	2.003	1	41
71415099	5.0013	1	52
71415099	5.0022	1	52
71415099	5.0038	1	52
71415101	2.000	1	31
71415101	2.002	1	21
71415101	2.003	1	29
71415101	5.0013	1	40
71415101	5.0022	1	40
71415101	5.0038	1	40
71415102	2.000	1	32
71415102	2.000	1	00C
71415102	2.001	1	19
71415102	2.001	1	00D
71415102	2.002	1	01E
71415102	2.003	1	00H
71415102	5.0013	1	00E
71415102	5.0022	1	00H
71415102	5.0038	1	00E
71415103	2.000	1	00A
71415104	2.000	1	00B
71415104	2.001	1	00C
71415105	2.000	1	00D
71415105	2.002	1	01D
71415106	2.000	1	00E
71415106	2.001	1	00B
71415146	5.0013	1	00 A-I
71415147	2.003	1	03
71415147	5.0013	1	03
71415147	5.0022	1	03
71415147	5.0038	1	03
71415148	2.003	1	04
71415148	5.0013	1	04
71415148	5.0022	1	04
71415148	5.0038	1	04
71415149	2.003	1	06
71415149	5.0013	1	05
71415149	5.0022	1	05
71415149	5.0038	1	05
71415150	2.003	1	08
71415150	5.0013	1	06
71415150	5.0022	1	06
71415150	5.0038	1	06
71415151	2.003	1	09
71415151	5.0013	1	07
71415151	5.0022	1	07
71415151	5.0038	1	07
71415153	2.003	1	13
71415153	5.0013	1	19
71415153	5.0022	1	19
71415153	5.0038	1	19
71415154	2.003	1	14
71415154	5.0013	1	20
71415154	5.0022	1	20
71415154	5.0038	1	20
71415156	2.003	1	16
71415156	5.0013	1	22
71415156	5.0022	1	22
71415156	5.0038	1	22
71415157	2.003	1	18
71415157	5.0013	1	24
71415157	5.0022	1	24
71415157	5.0038	1	24
71415158	2.003	1	20
71415158	2.003	1	33D
71415158	2.003	1	32D
71415158	2.030	1	06
71415158	2.031	1	07
71415158	2.031	2	07
71415158	5.0013	1	26
71415158	5.0013	1	44D
71415158	5.0013	1	45D
71415158	5.0022	1	26
71415158	5.0022	1	44D
71415158	5.0022	1	45D
71415158	5.0038	1	44D
71415158	5.0038	1	45D
71415158	5.0038	1	26
71415159	2.003	1	21
71415159	2.030	1	05
71415159	2.031	2	06
71415159	5.0013	1	27
71415159	5.0022	1	27
71415159	5.0038	1	27
71415160	2.003	1	24
71415160	5.0013	1	31
71415160	5.0022	1	31
71415160	5.0038	1	31
71415161	2.003	1	25
71415161	5.0013	1	32
71415161	5.0022	1	32
71415161	5.0038	1	32
71415162	2.003	1	28
71415162	5.0013	1	39
71415162	5.0022	1	39
71415162	5.0038	1	39
71415163	2.003	1	31
71415163	5.0013	1	42
71415163	5.0022	1	42
71415163	5.0038	1	42

SUBGROUP	GRID
0.000	TAV1....1D-3
0.001	TAV1....1D-5
0.002	TAV1....1D-7
0.003	TAV1....1D-9
0.003	TAV2....1D-11
0.003	TAV3....1D-13
0.004	TAV1....1D-15
0.004	TAV2....1D-17
0.021	TAV1....1D-19
0.040	TAV1....1D-21
0.040	TAV2....1D-23
0.040	TAV3....1E-3
0.042	TAV1....1E-5
0.043	TAV1....1E-7
0.043	TAV2....1E-9
0.045	TAV1....1E-11
0.060	TAV1....1E-13
0.060	TAV2....1E-15
0.071	TAV1....1E-17
0.077	TAV1....1E-19
0.080	TAV1....1E-21
0.081	TAV1....1E-23
0.082	TAV1....1F-3
0.083	TAV1....1F-5
0.084	TAV1....1F-7
0.100	TAV1....1F-9
0.120	TAV1....1F-11
0.140	TAV1....1F-13
0.140	TAV2....1F-15
0.140	TAV3....1F-17
0.140	TAV4....1F-19
0.140	TAV5....1F-21
0.140	TAV6....1F-23
0.140	TAV7....1G-3
0.140	TAV8....1G-5
0.140	TAV9....1G-7
0.140	TAV10..1G-9
0.140	TAV11..1G-11
0.140	TAV12..1G-13
0.149	TAV1....1G-15
0.200	TAV1....1G-17
0.203	TAV1....1G-19
0.203	TAV2....1G-21
0.240	TAV1....1G-23
0.240	TAV2....1H-3
0.241	TAV1....1H-5
0.270	TAV1....1H-7
0.300	TAV1....1H-9
0.302	TAV1....1H-11
0.305	TAV1....1H-13
0.310	TAV1....1H-15
0.320	TAV1....1H-17
0.323	TAV1....1H-19
0.326	TAV1....1H-21
0.340	TAV1....1H-23
0.345	TAV1....1I-3
0.350	TAV1....1I-5
0.360	TAV1....1I-7
0.360	TAV2....1I-9
0.400	TAV1....1I-11
0.400	TAV2....1I-13
0.450	TAV1....1I-15
1.000	TAV1....1J-3
1.010	TAV1....1J-5
1.020	TAV1....1J-7
1.030	TAV1....1J-9
1.030	TAV2....1J-13
1.030	TAV3....1J-15
1.040	TAV1....1J-17
1.040	TAV2....1J-19
1.050	TAV1....1J-21
1.050	TAV2....1K-3
1.050	TAV3....1K-5
1.050	TAV4....1K-7
1.060	TAV1....1K-9
1.070	TAV1....1K-15
1.070	TAV2....1K-17
1.070	TAV3....1K-19
1.071	TAV1....1K-21
1.071	TAV2....1L-3
1.080	TAV1....1L-5
1.080	TAV2....1L-7
1.081	TAV1....1L-9
1.082	TAV1....1L-11
1.082	TAV2....1L-13
1.082	TAV3....1L-15
1.083	TAV1....1L-17
1.084	TAV1....1L-19
1.085	TAV1....1L-21
1.200	TAV1....2D-3
1.200	TAV2....2D-5
1.200	TAV3....2D-7
1.210	TAV1....2D-9
1.220	TAV1....2D-11
1.220	TAV2....2D-13
1.220	TAV3....2D-17
1.250	TAV1....2D-19
1.250	TAV2....2D-21
1.250	TAV4....2E-3
1.250	TAV5....2E-7
1.250	TAV6....2E-9
1.250	TAV7....2E-11
1.250	TAV7....2E-13
1.290	TAV1....2E-15
1.290	TAV2....2E-17
1.300	TAV1....2E-19
1.300	TAV2....2E-21
1.300	TAV3....2E-23
1.300	TAV4....2F-3
2.000	TAV1....2F-5
2.001	TAV1....2F-7
2.002	TAV1....2F-9
2.003	TAV1....2F-11
2.020	TAV1....2F-13
2.030	TAV1....2F-17
2.030	TAV2....2F-19
2.030	TAV3....2F-21
2.030	TAV4....2F-23
2.030	TAV5....2G-3
2.031	TAV1....2G-5
2.031	TAV2....2G-7
2.031	TAV3....2G-9
2.031	TAV4....2G-11
2.040	TAV1....2G-13
2.041	TAV1....2G-15
3.000	TAV1....2G-17
3.001	TAV1....2G-19
3.010	TAV1....2G-21
3.010	TAV2....2G-23
3.010	TAV3....2H-3
3.010	TAV4....2H-5
3.020	TAV1....2H-7
3.030	TAV1....2H-9
3.040	TAV1....2H-11
3.051	TAV1....2H-13
3.052	TAV1....2H-15
3.060	TAV1....2H-17
3.070	TAV1....2H-19
3.071	TAV1....2H-21
4.000	TAV1....2H-23
4.500	TAV1....2I-3
4.501	TAV1....2I-5
5.0013	TAV1..2J-3
5.0020	TAV1..2J-5
5.0020	TAV2..2J-7
5.0022	TAV1..2J-9
5.0025	TAV1..2J-11
5.0038	TAV1..2J-13
5.0080	TAV1..2J-15
5.0080	TAV2..2J-17
5.0083	TAV1..2J-19
5.0151	TAV1..2J-21
5.0536	TAV1..2J-23
5.0540	TAV1..2K-3

NUMERICAL INDEX - INDICE NUMERICO - LISTE NUMERIQUE
NUMERISCHES ERSATZEILVERZEILVERZEICHNIS - INDICE NUMERICO

PART. N.	SGR.	TAV.	ITEM
71415164	2.003	1	32 A-E
71415164	5.0013	1	44 A-E
71415164	5.0022	1	44 A-E
71415164	5.0038	1	44 A-E
71415165	2.003	1	33 A-E
71415165	5.0013	1	45 A-E
71415165	5.0022	1	45 A-E
71415165	5.0038	1	45 A-E
71415170	2.030	1	50
71415170	2.030	1	47
71415170	2.030	1	44
71415170	2.031		42
71415170	2.031	2	45
71415170	2.031	2	48
71415171	5.0013	1	00A
71415172	2.003	1	00C
71415172	5.0013	1	00B
71415172	5.0022	1	00C
71415172	5.0038	1	00B
71415173	2.003	1	00E
71415173	5.0013	1	00C
71415173	5.0022	1	00E
71415173	5.0038	1	00C
71415174	2.003	1	00G
71415174	5.0013	1	00D
71415174	5.0022	1	00G
71415174	5.0038	1	00D
71415175	2.003	1	00I
71415175	5.0013	1	00F
71415175	5.0022	1	00I
71415175	5.0038	1	00F
71415176	2.003	1	00B
71415176	5.0013	1	00G
71415176	5.0022	1	00B
71415176	5.0038	1	00G
71415177	2.003	1	00D
71415177	5.0013	1	00H
71415177	5.0022	1	00D
71415177	5.0038	1	00H
71415178	2.003	1	00F
71415178	5.0013	1	00I
71415178	5.0022	1	00F
71415178	5.0038	1	00K
71415181	2.003	1	33A
71415181	5.0013	1	44A
71415181	5.0022	1	44A
71415181	5.0038	1	44A
71415182	2.003	1	33B
71415182	2.003	1	32B
71415182	5.0013	1	45B
71415182	5.0013	1	44B
71415182	5.0022	1	44B
71415182	5.0022	1	45B
71415182	5.0038	1	45B
71415182	5.0038	1	44B
71415183	2.003	1	33C
71415183	2.003	1	32C
71415183	5.0013	1	45C
71415183	5.0013	1	44C
71415183	5.0022	1	44C
71415183	5.0022	1	45C
71415183	5.0038	1	45C
71415183	5.0038	1	44C
71415184	2.003	1	32A
71415184	5.0013	1	45A
71415184	5.0022	1	45A
71415184	5.0038	1	45A
71415213	0.002	1	06
71415214	0.000	1	08
71415215	0.000	1	05
71415216	0.000	1	09
71415218	0.000	1	12
71415219	0.000	1	15
71415220	0.000	1	16
71415221	0.002	1	17
71415221	1.250	1	49
71415222	0.002	1	03
71415223	0.002	1	01
71415224	0.002	1	00
71415225	0.002	1	12
71415226	0.001	1	04
71415227	0.001	1	00
71415228	0.001	1	07
71415229	0.002	1	04
71415231	0.002	1	08
71415232	0.002	1	09
71415235	0.001	1	12
71415265	1.020	1	08
71415266	1.020	1	00
71415282	0.001	1	00A
71415282	0.001	1	15D
71415286	1.020	1	01
71415291	0.083	1	05
71415295	3.000	1	00
71415364	3.002	1	00
71415383	1.010	1	10
71415384	1.010	1	15
71415385	1.010	1	16
71415386	1.010	1	30
71415406	2.020	1	13
71415406	5.0100	1	12
71415406	5.0101	1	12
71415406	5.0102	1	12
71415406	5.0103	1	12
71415406	5.0104	1	12
71415406	5.0108	1	12
71415407	2.020	1	12
71415407	5.0100	1	13
71415407	5.0101	1	13
71415407	5.0102	1	13
71415407	5.0103	1	13
71415407	5.0104	1	13
71415407	5.0108	1	13
71415408	2.020	1	00
71415408	5.0100	1	00
71415408	5.0101	1	00
71415408	5.0102	1	00
71415408	5.0103	1	00
71415408	5.0104	1	00
71415408	5.0108	1	00
71415408	5.0110	1	04
71415408	5.0111	1	04
71415409	2.020	1	03
71415409	5.0100	1	03
71415409	5.0101	1	03
71415409	5.0102	1	03
71415409	5.0103	1	03
71415409	5.0104	1	03
71415409	5.0108	1	03
71415409	5.0110	1	06
71415409	5.0111	1	06
71415410	2.020	1	02
71415410	5.0100	1	02
71415410	5.0101	1	02
71415410	5.0102	1	02
71415410	5.0103	1	02
71415410	5.0104	1	02
71415410	5.0108	1	02
71415410	5.0110	1	07
71415410	5.0111	1	07
71415411	2.020	1	09
71415411	5.0100	1	09
71415411	5.0101	1	09
71415411	5.0102	1	09
71415411	5.0103	1	09
71415411	5.0104	1	09
71415411	5.0108	1	09
71415411	5.0110	1	05
71415411	5.0111	1	05
71415413	5.0100	1	11
71415423	1.000	1	00
71415424	1.000	1	01
71415425	1.000	1	03
71415426	1.000	1	04
71415427	1.000	1	07
71415428	1.000	1	08
71415431	1.000	1	11
71415432	1.000	1	13
71415432	3.000	1	18

NUMERICAL INDEX - INDICE NUMERICO - LISTE NUMERIQUE

NUMERISCHES ERSATZEILVERZEILVERZEICHNIS - INDICE NUMERICO

PART. N.	SGR.	TAV.	ITEM
71415432	3.001	1	18
71415432	3.002	1	18
71415433	1.000	1	14
71415434	1.000	1	26
71415436	1.000	1	28
71415436	2.001	1	17
71415437	1.000	1	30
71415443	1.000	1	36
71415444	1.000	1	37
71415445	1.000	1	38
71415446	1.000	1	39
71415448	1.000	1	41
71415449	1.000	1	42
71415450	1.000	1	43
71415482	2.001	1	15
71415606	1.250	1	00
71415609	1.200	1	49
71415611	1.200	1	02
71415612	1.200	1	00
71415625	1.200	1	13
71415629	1.200	1	14
71415630	1.200	1	15
71415631	1.200	1	22
71415645	1.200	1	28
71415647	0.004	1	00
71415654	0.004	1	03
71415655	0.004	1	04
71415656	0.004	1	05
71415657	0.004	1	08
71415660	0.004	1	09
71415661	0.004	1	15
71415665	0.004	1	16
71415667	1.200	1	29
71415668	1.200	1	30
71415669	1.200	1	47
71415670	4.500	1	26
71415670	4.501	1	31
71415671	4.500	1	27
71415671	4.501	1	32
71415674	2.001	1	00
71415675	2.002	1	01
71415676	2.001	1	05
71415677	2.001	1	06
71415677	2.002	1	06
71415678	2.001	1	11
71415679	2.001	1	12
71415680	2.001	1	13
71415681	2.001	1	14
71415682	2.001	1	00A
71415684	2.001	1	00E
71415685	2.002	1	01A
71415686	2.002	1	01C
71415745	2.003	1	00 A-I
71415746	2.003	1	00A
71415771	3.001	1	00
71415796	2.020	1	11
71415797	5.0101	1	11
71415798	5.0102	1	11
71415799	5.0104	1	11
71415800	5.0103	1	11
71415801	5.0108	1	11
71415803	3.000	1	01
71415803	3.001	1	01
71415803	3.002	1	01
71415804	3.000	1	02
71415804	3.001	1	02
71415804	3.002	1	02
71415805	3.000	1	03
71415806	3.000	1	04
71415807	3.000	1	05
71415814	3.001	1	03
71415815	3.001	1	04
71415816	3.001	1	05
71415822	3.002	1	03
71415823	3.002	1	04
71415824	3.002	1	05
71415830	3.000	1	19
71415830	3.001	1	19
71415830	3.002	1	19
71415836	0.004	1	19
71415837	0.004	1	22
71415840	0.004	1	34
71415841	0.004	1	35
71415852	1.080	1	19
71415854	1.080	1	20
71415855	1.080	1	24
71415856	1.080	1	41
71415857	1.080	1	42
71415860	1.060	1	01
71415860	1.061	1	01
71415863	1.060	1	02
71415863	1.061	1	02
71415864	1.060	1	04
71415864	1.061	1	04
71415867	1.060	1	03
71415867	1.061	1	03
71415870	1.060	1	08
71415870	1.061	1	08
71415870	2.030	1	32
71415870	2.031	1	37
71415871	1.061	1	68
71415872	1.061	1	67
71415875	1.060	1	46A
71415875	1.060	1	28A
71415875	1.061	1	28A
71415875	1.061	1	46A
71415875	1.081	1	38
71415875	5.0080	1	04
71415875	5.0080	2	36
71415875	5.0081	1	28
71415880	1.081	1	01
71415881	1.081	1	16
71415883	1.081	1	17
71415883	3.070	1	19
71415883	3.071	1	19
71415883	3.072	1	19
71415884	1.081	1	29
71415887	1.081	1	34
71415887	1.220	2	57
71415888	1.081	1	39
71415890	1.082	1	15
71415892	1.082	1	27
71415894	1.082	1	31
71415894	1.083	1	15
71415894	1.085	1	45
71415894	5.0020	2	45
71415895	1.082	1	32
71415895	1.083	1	16
71415895	1.085	1	44
71415895	5.0020	2	44
71415896	1.082	1	36
71415898	1.070	1	61
71415898	1.071	1	61
71415899	1.083	1	21
71415899	1.220	2	57
71415900	1.083	1	24
71415901	1.070	1	70
71415901	1.071	1	70
71415903	1.070	1	68
71415903	1.071	1	68
71415904	1.070	1	69
71415904	1.071	1	69
71415906	1.070	1	72
71415906	1.071	1	72
71415906	1.300	1	59
71415906	1.300	2	12
71415908	1.084	1	16
71415908	1.085	1	50
71415908	5.0020	2	50
71415910	2.040	1	00
71415912	2.040	1	01
71415914	2.040	1	02
71415916	2.040	1	05
71415918	2.040	1	06
71415920	2.040	1	07
71415921	1.050	1	00
71415922	1.050	1	01
71415923	1.050	1	05
71415924	1.050	1	06

SUBGROUP	GRID
0.000	TAV1....1D-3
0.001	TAV1....1D-5
0.002	TAV1....1D-7
0.003	TAV1....1D-9
0.003	TAV2....1D-11
0.003	TAV3....1D-13
0.004	TAV1....1D-15
0.004	TAV2....1D-17
0.021	TAV1....1D-19
0.040	TAV1....1D-21
0.040	TAV2....1D-23
0.040	TAV3....1E-3
0.042	TAV1....1E-5
0.043	TAV1....1E-7
0.043	TAV2....1E-9
0.045	TAV1....1E-11
0.060	TAV1....1E-13
0.060	TAV2....1E-15
0.071	TAV1....1E-17
0.077	TAV1....1E-19
0.080	TAV1....1E-21
0.081	TAV1....1E-23
0.082	TAV1....1F-3
0.083	TAV1....1F-5
0.084	TAV1....1F-7
0.100	TAV1....1F-9
0.120	TAV1....1F-11
0.140	TAV1....1F-13
0.140	TAV2....1F-15
0.140	TAV3....1F-17
0.140	TAV4....1F-19
0.140	TAV5....1F-21
0.140	TAV6....1F-23
0.140	TAV7....1G-3
0.140	TAV8....1G-5
0.140	TAV9....1G-7
0.140	TAV10..1G-9
0.140	TAV11..1G-11
0.140	TAV12..1G-13
0.149	TAV1....1G-15
0.200	TAV1....1G-17
0.203	TAV1....1G-19
0.203	TAV2....1G-21
0.240	TAV1....1G-23
0.240	TAV2....1H-3
0.241	TAV1....1H-5
0.270	TAV1....1H-7
0.300	TAV1....1H-9
0.302	TAV1....1H-11
0.305	TAV1....1H-13
0.310	TAV1....1H-15
0.320	TAV1....1H-17
0.323	TAV1....1H-19
0.326	TAV1....1H-21
0.340	TAV1....1H-23
0.345	TAV1....1I-3
0.350	TAV1....1I-5

SUBGROUP	GRID
0.360	TAV1....1I-7
0.360	TAV2....1I-9
0.400	TAV1....1I-11
0.400	TAV2....1I-13
0.450	TAV1....1I-15
1.000	TAV1....1J-3
1.010	TAV1....1J-5
1.020	TAV1....1J-7
1.030	TAV1....1J-9
1.030	TAV2....1J-13
1.030	TAV3....1J-15
1.040	TAV1....1J-17
1.040	TAV2....1J-19
1.050	TAV1....1J-21
1.050	TAV2....1K-3
1.050	TAV3....1K-5
1.050	TAV4....1K-7
1.060	TAV1....1K-9
1.070	TAV1....1K-15
1.070	TAV2....1K-17
1.070	TAV3....1K-19
1.071	TAV1....1K-21
1.071	TAV2....1L-3
1.080	TAV1....1L-5
1.080	TAV2....1L-7
1.081	TAV1....1L-9
1.082	TAV1....1L-11
1.082	TAV2....1L-13
1.082	TAV3....1L-15
1.083	TAV1....1L-17
1.084	TAV1....1L-19
1.085	TAV1....1L-21
1.200	TAV1....2D-3
1.200	TAV2....2D-5
1.200	TAV3....2D-7
1.210	TAV1....2D-9
1.220	TAV1....2D-11
1.220	TAV2....2D-13
1.220	TAV3....2D-17
1.250	TAV1....2D-19
1.250	TAV2....2D-21
1.250	TAV4....2E-3
1.250	TAV5....2E-7
1.250	TAV6....2E-9
1.250	TAV7....2E-11
1.250	TAV7....2E-13
1.290	TAV1....2E-15
1.290	TAV2....2E-17
1.300	TAV1....2E-19
1.300	TAV2....2E-21
1.300	TAV3....2E-23
1.300	TAV4....2F-3
2.000	TAV1....2F-5
2.001	TAV1....2F-7
2.002	TAV1....2F-9
2.003	TAV1....2F-11
2.020	TAV1....2F-13

SUBGROUP	GRID
2.030	TAV1....2F-17
2.030	TAV2....2F-19
2.030	TAV3....2F-21
2.030	TAV4....2F-23
2.030	TAV5....2G-3
2.031	TAV1....2G-5
2.031	TAV2....2G-7
2.031	TAV3....2G-9
2.031	TAV4....2G-11
2.040	TAV1....2G-13
2.041	TAV1....2G-15
3.000	TAV1....2G-17
3.001	TAV1....2G-19
3.010	TAV1....2G-21
3.010	TAV2....2G-23
3.010	TAV3....2H-3
3.010	TAV4....2H-5
3.020	TAV1....2H-7
3.030	TAV1....2H-9
3.040	TAV1....2H-11
3.051	TAV1....2H-13
3.052	TAV1....2H-15
3.060	TAV1....2H-17
3.070	TAV1....2H-19
3.071	TAV1....2H-21
4.000	TAV1....2H-23
4.500	TAV1....2I-3
4.501	TAV1....2I-5
5.0013	TAV1..2J-3
5.0020	TAV1..2J-5
5.0020	TAV2..2J-7
5.0022	TAV1..2J-9
5.0025	TAV1..2J-11
5.0038	TAV1..2J-13
5.0080	TAV1..2J-15
5.0080	TAV2..2J-17
5.0083	TAV1..2J-19
5.0151	TAV1..2J-21
5.0536	TAV1..2J-23
5.0540	TAV1..2K-3

SUBGROUP	GRID

NUMERICAL INDEX - INDICE NUMERICO - LISTE NUMERIQUE
NUMERISCHES ERSATZEILVERZEILVERZEICHNIS - INDICE NUMERICO

PART. N.	SGR.	TAV.	ITEM
71415926	1.050	1	08
71415929	1.050	1	32
71415930	1.050	1	37
71415932	1.050	1	40
71415937	1.050	1	48
71415940	1.050	1	53
71415942	1.050	1	54
71415943	1.050	1	55
71415948	1.050	1	94
71415950	1.050	1	96
71415959	1.300	1	00
71415960	1.300	1	01
71415961	1.300	1	02
71415962	1.300	1	03
71415966	1.300	1	14
71415973	1.300	1	33
71415975	1.300	1	41
71415976	1.300	1	48
71415978	1.300	1	57
71415984	1.300	3	00
71415985	1.300	3	01
71415986	1.300	3	02
71415987	1.300	3	03
71415988	1.300	3	04
71416077	2.030	1	03
71416077	2.031	2	04
71416078	2.030	5	31
71416080	2.030	2	30
71416080	2.030	3	30
71416080	2.030	5	22
71416081	2.030	5	27
71416082	2.030	5	28
71416086	2.030	1	00
71416086	2.031	1	01
71416087	2.030	1	01
71416087	2.031	1	00
71416088	2.030	1	02
71416089	1.061	1	55
71416089	2.030	1	33
71416089	2.031	1	32
71416089	2.031	2	32
71416089	3.070	1	21
71416089	3.071	1	21
71416089	3.072	1	21
71416089	5.0080	2	21
71416090	1.061	1	56
71416090	2.030	1	34
71416090	2.031	2	33
71416091	2.030	1	37
71416093	2.030	1	38
71416095	2.030	1	39
71416097	2.030	1	40
71416100	2.030	3	20
71416102	2.030	3	21
71416104	2.030	2	23
71416104	2.030	3	23
71416108	2.030	2	24
71416108	2.030	3	24
71416109	2.030	2	25
71416109	2.030	3	25
71416112	2.030	2	27
71416112	2.030	3	27
71416113	2.030	2	20
71416114	2.030	2	21
71416115	2.030	4	20
71416117	2.030	4	21
71416119	2.030	4	30
71416119	2.031	4	30
71416120	2.030	4	29
71416120	2.031	4	29
71416121	2.030	4	24
71416121	2.031	4	24
71416125	1.082	1	58
71416126	1.220	2	01
71416128	1.220	2	01A
71416128	1.220	2	02
71416129	1.220	2	03
71416131	1.200	3	30
71416132	1.220	2	53
71416136	3.070	1	00
71416138	3.070	1	01
71416140	3.070	1	02
71416142	3.070	1	03
71416144	3.070	1	05
71416146	3.070	1	06
71416151	3.072	1	00
71416153	3.072	1	01
71416155	3.072	1	02
71416157	3.072	1	03
71416159	3.072	1	05
71416161	3.072	1	06
71416165	3.071	1	00
71416167	3.071	1	01
71416169	3.071	1	02
71416171	3.071	1	03
71416173	3.071	1	05
71416175	3.071	1	06
71416179	0.003	1	00
71416208	5.0022	1	00 A-I
71416209	5.0022	1	00A
71416221	4.500	1	21
71416228	1.200	3	18
71416240	1.020	1	09
71416241	1.020	1	09A
71416242	1.020	1	09B
71416243	1.020	1	09C
71416244	2.031	2	24
71416246	2.031	2	25
71416248	2.031	1	26
71416255	2.031	1	28
71416260	2.031	1	27
71416264	1.290	1	16
71416265	1.290	1	15
71416266	1.061	1	57
71416268	1.061	1	62
71416275	3.000	1	13
71416275	3.001	1	13
71416275	3.002	1	13
71416282	4.501	1	28
71416283	1.071	1	32
71416284	1.071	1	44
71416285	1.071	1	38
71416287	1.071	1	37
71416289	1.071	1	30
71416290	1.071	1	47
71416291	1.071	1	12
71416293	1.071	1	14
71416295	1.071	1	16
71416297	1.071	1	17
71416298	1.250	1	50
71416300	2.041	1	08
71416302	2.041	1	09
71416304	2.041	1	10
71416306	2.041	1	11
71416308	2.041	1	12
71416310	2.041	1	13
71416312	2.041	1	14
71416314	2.041	1	15
71416316	2.041	1	16
71416318	2.041	1	17
71416320	2.041	1	18
71416322	1.040	1	73
71416323	2.031	3	22
71416327	2.031	1	02
71416337	2.031	2	03
71416338	2.031	4	20
71416340	2.031	4	21
71416342	2.031	4	31
71416345	2.031	4	33
71416416	1.250	8	03
71416419	1.250	8	06
71416419	1.300	2	29
71416422	1.250	8	07
71416423	1.250	8	08
71416424	1.250	8	09
71416425	1.250	8	10
71416426	1.250	8	11
71416427	1.250	8	12
71416428	1.250	8	13

NUMERICAL INDEX - INDICE NUMERICO - LISTE NUMERIQUE
NUMERISCHES ERSATZEILVERZEILVERZEICHNIS - INDICE NUMERICO

PART. N.	SGR.	TAV.	ITEM
71416429	1.250	8	17
71416434	1.250	8	21
71416436	1.250	8	22
71416437	1.250	8	28
71416440	1.250	8	30
71416441	1.250	8	31
71416444	1.250	8	34
71416445	1.250	8	36
71416446	1.250	8	39
71416447	1.250	8	42
71416448	1.250	8	43
71416449	1.250	8	44
71416450	1.250	8	45
71416452	1.250	8	48
71416455	1.250	8	52
71416456	1.250	8	53
71416458	1.250	8	61
71416459	1.250	8	62
71416461	1.250	8	79
71416462	1.250	8	80
71416463	1.250	8	81
71416464	1.250	4	37
71416464	1.250	8	82
71416465	1.250	8	83
71416466	1.250	8	66
71416467	1.250	8	67
71416468	1.250	8	69
71416471	1.250	5	16A
71416472	1.250	8	70
71416473	1.250	8	71
71416474	1.250	4	02
71416475	1.250	5	01
71416488	1.250	5	02 A-F
71416489	1.250	5	02B
71416490	1.250	5	02C
71416491	1.250	4	10B
71416491	1.250	5	08
71416492	1.250	5	12
71416493	1.250	5	15
71416494	1.250	5	16
71416497	1.250	5	17
71416498	1.250	5	19
71416503	1.250	5	22
71416505	1.250	5	26
71416506	1.250	5	27
71416507	1.250	4	03
71416508	1.250	4	04
71416509	1.250	4	05
71416510	1.250	6	01
71416513	1.250	6	04
71416514	1.250	6	05
71416515	1.250	6	06
71416515	1.250	7	06
71416516	1.250	6	08
71416516	1.250	7	08
71416517	1.250	6	09
71416517	1.250	7	09
71416518	1.250	6	10 A-C
71416519	1.250	6	10A
71416520	1.250	6	10B
71416521	1.250	6	10C
71416522	1.250	6	11 A-B
71416523	1.250	6	11A
71416524	1.250	6	11B
71416525	1.250	4	06 A-M
71416526	1.250	4	06A
71416547	1.250	4	06B
71416549	1.250	4	06E
71416550	1.250	4	06F
71416551	1.250	4	06H
71416552	1.250	4	06I
71416553	1.250	4	07
71416554	1.250	4	08
71416555	1.250	4	09 A-C
71416556	1.250	4	09A
71416561	1.250	4	20 A-E
71416563	1.250	4	20A
71416564	1.250	4	20B
71416564	1.250	4	21B
71416564	1.250	4	22B
71416565	1.250	4	20C
71416565	1.250	4	21C
71416565	1.250	4	22C
71416566	1.250	4	22E
71416566	1.250	4	21D
71416566	1.250	4	20D
71416567	1.250	4	22 A-F
71416568	1.250	4	22D
71416569	1.250	4	09B
71416570	1.250	4	09C
71416572	1.250	4	10 A-P
71416573	1.250	4	10A
71416578	1.250	4	10C
71416579	1.250	4	10D
71416580	1.250	4	10L
71416581	1.250	4	10M
71416582	1.250	4	11
71416583	1.250	7	01
71416584	1.250	7	04
71416585	1.250	7	05
71416586	1.250	7	10 A-C
71416587	1.250	7	10A
71416588	1.250	7	10B
71416589	1.250	7	10C
71416590	1.250	7	11 A-B
71416591	1.250	7	11A
71416592	1.250	7	11B
71416593	1.250	4	12
71416594	1.250	4	13
71416595	1.250	4	14
71416596	1.250	4	15
71416597	1.250	4	16
71416598	1.250	4	17
71416600	1.250	4	23
71416601	1.250	4	26
71416602	1.250	4	27
71416603	1.250	4	28
71416604	1.250	4	29
71416605	1.250	4	30
71416606	1.250	4	31
71416607	1.250	4	33
71416613	4.500	1	02
71416613	4.501	1	02
71416614	4.500	1	08
71416614	4.501	1	08
71416615	4.500	1	10
71416615	4.501	1	10
71416616	4.500	1	12
71416617	4.500	1	17
71416617	4.501	1	17
71416618	4.500	1	18
71416618	4.501	1	18
71416619	4.500	1	19
71416619	4.501	1	19
71416620	4.500	1	20
71416620	4.501	1	20
71416621	4.501	1	21
71416633	4.500	1	02
71416633	4.501	1	02
71416634	4.500	1	08
71416634	4.501	1	08
71416635	1.050	1	63
71416636	1.050	1	97
71416657	5.0038	1	00A
71416690	0.001	1	03
71416692	0.003	1	07
71416693	0.003	1	08
71416694	1.050	1	46
71416696	1.050	1	47
71416698	1.050	1	51
71416700	1.050	1	59
71416702	1.060	1	23A
71416702	1.061	1	23A
71416731	1.080	1	47
71416734	1.250	8	76
71416763	0.001	1	02
71416764	0.001	1	08
71416769	0.003	1	01
71416770	0.003	1	02

SUBGROUP	GRID
0.000	TAV1....1D-3
0.001	TAV1....1D-5
0.002	TAV1....1D-7
0.003	TAV1....1D-9
0.003	TAV2....1D-11
0.003	TAV3....1D-13
0.004	TAV1....1D-15
0.004	TAV2....1D-17
0.021	TAV1....1D-19
0.040	TAV1....1D-21
0.040	TAV2....1D-23
0.040	TAV3....1E-3
0.042	TAV1....1E-5
0.043	TAV1....1E-7
0.043	TAV2....1E-9
0.045	TAV1....1E-11
0.060	TAV1....1E-13
0.060	TAV2....1E-15
0.071	TAV1....1E-17
0.077	TAV1....1E-19
0.080	TAV1....1E-21
0.081	TAV1....1E-23
0.082	TAV1....1F-3
0.083	TAV1....1F-5
0.084	TAV1....1F-7
0.100	TAV1....1F-9
0.120	TAV1....1F-11
0.140	TAV1....1F-13
0.140	TAV2....1F-15
0.140	TAV3....1F-17
0.140	TAV4....1F-19
0.140	TAV5....1F-21
0.140	TAV6....1F-23
0.140	TAV7....1G-3
0.140	TAV8....1G-5
0.140	TAV9....1G-7
0.140	TAV10..1G-9
0.140	TAV11..1G-11
0.140	TAV12..1G-13
0.149	TAV1....1G-15
0.200	TAV1....1G-17
0.203	TAV1....1G-19
0.203	TAV2....1G-21
0.240	TAV1....1G-23
0.240	TAV2....1H-3
0.241	TAV1....1H-5
0.270	TAV1....1H-7
0.300	TAV1....1H-9
0.302	TAV1....1H-11
0.305	TAV1....1H-13
0.310	TAV1....1H-15
0.320	TAV1....1H-17
0.323	TAV1....1H-19
0.326	TAV1....1H-21
0.340	TAV1....1H-23
0.345	TAV1....1I-3
0.350	TAV1....1I-5

SUBGROUP	GRID
0.360	TAV1....1I-7
0.360	TAV2....1I-9
0.400	TAV1....1I-11
0.400	TAV2....1I-13
0.450	TAV1....1I-15
1.000	TAV1....1J-3
1.010	TAV1....1J-5
1.020	TAV1....1J-7
1.030	TAV1....1J-9
1.030	TAV2....1J-13
1.030	TAV3....1J-15
1.040	TAV1....1J-17
1.040	TAV2....1J-19
1.050	TAV1....1J-21
1.050	TAV2....1K-3
1.050	TAV3....1K-5
1.050	TAV4....1K-7
1.060	TAV1....1K-9
1.070	TAV1....1K-15
1.070	TAV2....1K-17
1.070	TAV3....1K-19
1.071	TAV1....1K-21
1.071	TAV2....1L-3
1.080	TAV1....1L-5
1.080	TAV2....1L-7
1.081	TAV1....1L-9
1.082	TAV1....1L-11
1.082	TAV2....1L-13
1.082	TAV3....1L-15
1.083	TAV1....1L-17
1.084	TAV1....1L-19
1.085	TAV1....1L-21
1.200	TAV1....2D-3
1.200	TAV2....2D-5
1.200	TAV3....2D-7
1.210	TAV1....2D-9
1.220	TAV1....2D-11
1.220	TAV2....2D-13
1.220	TAV3....2D-17
1.250	TAV1....2D-19
1.250	TAV2....2D-21
1.250	TAV4....2E-3
1.250	TAV5....2E-7
1.250	TAV6....2E-9
1.250	TAV7....2E-11
1.250	TAV7....2E-13
1.290	TAV1....2E-15
1.290	TAV2....2E-17
1.300	TAV1....2E-19
1.300	TAV2....2E-21
1.300	TAV3....2E-23
1.300	TAV4....2F-3
2.000	TAV1....2F-5
2.001	TAV1....2F-7
2.002	TAV1....2F-9
2.003	TAV1....2F-11
2.020	TAV1....2F-13

SUBGROUP	GRID
2.030	TAV1....2F-17
2.030	TAV2....2F-19
2.030	TAV3....2F-21
2.030	TAV4....2F-23
2.030	TAV5....2G-3
2.031	TAV1....2G-5
2.031	TAV2....2G-7
2.031	TAV3....2G-9
2.031	TAV4....2G-11
2.040	TAV1....2G-13
2.041	TAV1....2G-15
3.000	TAV1....2G-17
3.001	TAV1....2G-19
3.010	TAV1....2G-21
3.010	TAV2....2G-23
3.010	TAV3....2H-3
3.010	TAV4....2H-5
3.020	TAV1....2H-7
3.030	TAV1....2H-9
3.040	TAV1....2H-11
3.051	TAV1....2H-13
3.052	TAV1....2H-15
3.060	TAV1....2H-17
3.070	TAV1....2H-19
3.071	TAV1....2H-21
4.000	TAV1....2H-23
4.500	TAV1....2I-3
4.501	TAV1....2I-5
5.0013	TAV1..2J-3
5.0020	TAV1..2J-5
5.0020	TAV2..2J-7
5.0022	TAV1..2J-9
5.0025	TAV1..2J-11
5.0038	TAV1..2J-13
5.0080	TAV1..2J-15
5.0080	TAV2..2J-17
5.0083	TAV1..2J-19
5.0151	TAV1..2J-21
5.0536	TAV1..2J-23
5.0540	TAV1..2K-3

SUBGROUP	GRID

NUMERICAL INDEX - INDICE NUMERICO - LISTE NUMERIQUE
NUMERISCHES ERSATZEILVERZEILVERZEICHNIS - INDICE NUMERICO

PART. N.	SGR.	TAV.	ITEM
71416773	0.004	1	24
71416774	1.020	1	02
71416777	1.300	3	05
71416790	1.300	1	07
71416792	1.300	1	82
71416793	1.300	1	18
71416801	1.300	1	06
71416802	1.300	1	19
71416807	1.300	1	04
71416809	1.300	1	15
71416810	1.300	1	17
71416814	1.300	1	16
71416823	1.300	2	06
71416824	1.300	2	00
71416849	1.061	1	49
71416851	1.061	1	50
71416855	2.031	3	19
71416860	5.0038	1	00 A-K
71416861	4.500	1	10
71416862	1.250	4	22F
71416862	1.250	4	21E
71416862	1.250	4	20E
71416866	4.500	1	10
71416866	4.501	1	10
71416867	1.250	5	23
71416869	5.0080	2	01
71416870	5.0080	2	02
71416871	5.0080	2	04
71416872	5.0080	2	05
71416873	5.0080	2	07
71416875	5.0080	2	08
71416878	5.0080	2	10
71416879	5.0080	2	12
71416881	5.0080	2	13
71416882	5.0080	2	19
71416884	5.0080	2	24
71416886	5.0080	2	25
71416887	5.0080	2	26
71416889	5.0080	2	27
71416890	5.0080	2	28
71416891	5.0080	1	02
71416892	5.0080	1	05
71416892	5.0081	1	23
71416894	5.0080	1	06
71416895	5.0080	2	31
71416896	5.0080	1	08
71416896	5.0081	1	32
71416897	5.0080	1	09
71416897	5.0081	1	34
71416899	5.0080	1	10
71416900	5.0080	1	11
71416901	5.0080	2	34
71416902	5.0080	1	16
71416903	5.0020	1	01
71416905	5.0020	1	05
71416906	5.0020	1	18
71416907	5.0020	1	21
71416911	5.0020	1	22
71416912	5.0020	1	26
71416915	5.0020	1	52
71416916	5.0020	1	09
71416920	5.0020	1	16
71416923	5.0020	2	54
71416926	5.0020	2	53
71416928	1.250	8	73
71416930	1.250	4	21 A-E
71416931	1.250	4	22A
71416931	1.250	4	21A
71416938	5.0020	2	65
71416942	5.0020	2	68
71416942	5.0021	1	28
71416944	5.0020	2	69
71416944	5.0021	1	27
71416947	4.500	1	02
71416947	4.501	1	02
71416948	4.500	1	08
71416948	4.501	1	08
71416951	5.0021	1	05
71416952	5.0021	1	01
71416956	4.500	1	02
71416956	4.501	1	02
71416957	4.500	1	08
71416957	4.501	1	08
71416959	0.001	1	15
71416964	5.0110	1	02
71416968	5.0110	1	13
71416968	5.0111	1	13
71416972	5.0110	1	01
71416973	5.0110	1	12
71416973	5.0111	1	12
71416974	5.0110	1	14
71416974	5.0111	1	14
71416975	5.0110	1	03
71416976	5.0111	1	02
71416977	5.0111	1	01
71416978	5.0111	1	03
71416981	5.0160	1	30
71416990	5.0025	1	01
71416992	5.0025	1	00
71416994	0.001	1	15B
71417018	5.0081	2	07
71417020	5.0081	2	08
71417055	0.003	3	01
71417056	0.003	3	02
71417057	0.003	3	03
71417058	0.003	3	04
71417059	0.003	3	05
71417060	0.003	3	06
71417061	0.003	3	13
71420064	2.002	1	01B
71420099	5.0110	1	11
71420099	5.0111	1	11
71420545	2.031	3	25
71420545	5.0080	2	14
71420546	5.0080	2	17
71420575	1.300	1	34
71420663	2.031	3	28
71420700	0.004	1	31
71420745	1.060	1	39A
71420745	1.060	1	37A
71420745	1.060	1	29A
71420745	1.060	1	27A
71420745	1.060	1	25A
71420745	1.060	1	21A
71420745	1.061	1	21A
71420745	1.061	1	25A
71420745	1.061	1	27A
71420745	1.061	1	29A
71420745	1.061	1	37A
71420745	1.061	1	39A
71420956	2.031	3	24
71421046	5.0021	1	11
71435133	2.001	1	30
71444027	5.0081	1	31
71444071	5.0081	1	30
71444073	5.0081	2	03
71444075	5.0081	1	25
71444076	5.0081	1	26
71444077	5.0081	1	27
71444078	5.0081	2	17
71444079	5.0081	2	18
71444080	5.0081	2	29
71932571	5.0021	1	12A
79001605	1.200	3	07
79004261	3.050	1	04
79004261	3.051	1	04
79004261	3.052	1	04
79004261	5.0002	1	04
79004261	5.0003	1	04
79004261	5.0004	1	04
79004261	5.0005	1	04
79004261	5.0006	1	04
79004261	5.0007	1	04
79006025	0.004	1	36
79011406	1.010	1	17
79013422	0.004	1	33
79013422	1.050	1	92
79013422	1.070	1	08
79013422	1.071	1	08

C-13

NUMERICAL INDEX - INDICE NUMERICO - LISTE NUMERIQUE
NUMERISCHES ERSATZEILVERZEILVERZEICHNIS - INDICE NUMERICO

PART. N.	SGR.	TAV.	ITEM
79013422	1.200	3	39
79013422	5.0025	1	13
79013599	5.0160	1	0 1-25
79019383	1.220	2	79
79022466	0.400	3	11
79022468	0.400	3	04
79022480	0.400	3	15
79022487	0.400	3	13
79022488	0.400	3	20
79024188	0.140	6	06
79024322	0.140	4	22
79024924	0.140	7	08
79025494	0.400	3	08
79025721	0.240	2	01
79028977	5.0083	1	29
79028978	5.0083	1	29
79028979	5.0083	1	29
79028980	5.0083	1	29
79028981	5.0083	1	30
79029975	0.140	2	18
79029975	0.140	3	35
79029975	0.140	6	10
79030150	5.0083	1	32
79031103	1.220	2	12
79032351	0.140	8	08
79032352	0.140	8	12
79033440	0.140	2	03
79033447	0.140	5	13
79033449	0.140	5	18
79033451	0.140	5	17
79033453	0.140	5	21
79033457	0.140	5	03
79033582	0.400	3	14
79035740	0.345	1	23
79038472	0.140	7	01
79039443	3.050	1	03
79039443	3.051	1	03
79039443	3.052	1	03
79039443	5.0002	1	03
79039443	5.0003	1	03
79039443	5.0004	1	03
79039443	5.0005	1	03
79039443	5.0006	1	03
79039443	5.0007	1	03
79043802	3.020	1	27C
79044796	0.323	1	16
79044796	0.326	1	19
79045922	0.140	3	34
79046212	0.140	5	10
79046213	0.140	5	02
79046272	0.140	3	37
79046274	0.140	3	36
79046299	0.140	5	15
79046301	0.140	5	07
79047098	0.140	7	13
79047754	0.140	6	05
79047816	0.140	7	29
79048248	0.140	5	16
79050756	0.140	7	19
79053146	0.345	1	21
79053316	0.140	3	42
79053316	0.140	4	25
79054407	0.042	1	10
79054463	0.042	1	11
79056873	1.220	2	48
79060064	4.500	1	14
79060064	4.501	1	14
79060297	4.500	1	14
79060297	4.501	1	14
79060540	4.500	1	14
79060540	4.501	1	14
79062510	0.002	1	20
79062510	0.071	1	12
79062510	0.077	1	10
79062510	0.240	1	25
79062510	0.241	1	09
79062510	0.326	1	21
79062511	0.040	2	20
79062511	0.042	1	16
79062511	0.043	1	25
79062511	0.043	2	22
79062512	0.060	1	22
79062584	1.220	2	00
79062701	0.001	1	15C
79062709	0.140	2	09
79064620	5.0536	1	00
79064661	5.0160	1	25
79065835	1.200	3	01
79066515	0.400	3	02
79067856	0.140	12	01
79068180	1.220	2	71
79068201	1.200	3	15
79069292	1.200	3	01A
79069292	1.250	5	30
79069292	1.300	4	06
79069460	1.220	2	60A
79070369	0.140	8	03
79070373	0.400	2	10
79070374	0.400	2	17
79070377	0.400	2	02
79070378	0.400	2	03
79070379	0.400	2	04
79070380	0.400	2	05
79070381	0.400	2	06
79070383	0.400	2	07
79070385	0.400	2	18
79070487	1.200	3	14
79072961	5.0025	1	09
79073139	5.0025	1	14
79074706	0.400	3	19
79075331	0.323	1	14
79075454	5.0025	1	10
79076129	2.031	3	04
79076867	1.300	4	02
79078781	0.400	3	05
79078921	0.400	3	06
79078922	0.400	3	10
79078923	0.400	3	16
79078924	0.400	3	17
79078925	0.400	3	21
79078926	0.400	3	18
79080373	0.360	2	04
79080375	0.360	2	07
79080376	0.360	2	08
79080376	0.360	2	03
79080898	0.326	1	16
79080899	0.326	1	02
79080922	0.326	1	18
79081044	0.360	2	01
79081045	0.360	2	05
79081046	0.360	2	06
79081900	1.220	2	21
79083312	1.200	3	40
79083842	1.290	1	05
79083844	5.0160	1	31
79083845	1.050	1	49
79083846	0.003	1	05
79083848	1.050	1	41
79083848	5.0020	2	72
79083848	5.0021	1	25
79083849	0.001	1	09
79083851	1.050	1	09
79083852	0.001	1	11
79084752	1.010	1	07
79084752	1.220	2	64
79086485	0.140	4	10
79086486	0.140	6	13
79088040	4.501	1	14
79088048	4.500	1	14
79091137	1.220	2	66
79092952	1.220	2	60
79092953	1.200	3	08
79092954	1.200	3	09
79092955	1.200	3	31
79094074	0.320	1	18
79094074	0.323	1	18
79094074	0.326	1	21
79094911	5.0160	1	09
79094912	5.0160	1	14

SUBGROUP	GRID
0.000	TAV1....1D-3
0.001	TAV1....1D-5
0.002	TAV1....1D-7
0.003	TAV1....1D-9
0.003	TAV2....1D-11
0.003	TAV3....1D-13
0.004	TAV1....1D-15
0.004	TAV2....1D-17
0.021	TAV1....1D-19
0.040	TAV1....1D-21
0.040	TAV2....1D-23
0.040	TAV3....1E-3
0.042	TAV1....1E-5
0.043	TAV1....1E-7
0.043	TAV2....1E-9
0.045	TAV1....1E-11
0.060	TAV1....1E-13
0.060	TAV2....1E-15
0.071	TAV1....1E-17
0.077	TAV1....1E-19
0.080	TAV1....1E-21
0.081	TAV1....1E-23
0.082	TAV1....1F-3
0.083	TAV1....1F-5
0.084	TAV1....1F-7
0.100	TAV1....1F-9
0.120	TAV1....1F-11
0.140	TAV1....1F-13
0.140	TAV2....1F-15
0.140	TAV3....1F-17
0.140	TAV4....1F-19
0.140	TAV5....1F-21
0.140	TAV6....1F-23
0.140	TAV7....1G-3
0.140	TAV8....1G-5
0.140	TAV9....1G-7
0.140	TAV10..1G-9
0.140	TAV11..1G-11
0.140	TAV12..1G-13
0.149	TAV1....1G-15
0.200	TAV1....1G-17
0.203	TAV1....1G-19
0.203	TAV2....1G-21
0.240	TAV1....1G-23
0.240	TAV2....1H-3
0.241	TAV1....1H-5
0.270	TAV1....1H-7
0.300	TAV1....1H-9
0.302	TAV1....1H-11
0.305	TAV1....1H-13
0.310	TAV1....1H-15
0.320	TAV1....1H-17
0.323	TAV1....1H-19
0.326	TAV1....1H-21
0.340	TAV1....1H-23
0.345	TAV1....1I-3
0.350	TAV1....1I-5

SUBGROUP	GRID
0.360	TAV1....1I-7
0.360	TAV2....1I-9
0.400	TAV1....1I-11
0.400	TAV2....1I-13
0.450	TAV1....1I-15
1.000	TAV1....1J-3
1.010	TAV1....1J-5
1.020	TAV1....1J-7
1.030	TAV1....1J-9
1.030	TAV2....1J-13
1.030	TAV3....1J-15
1.040	TAV1....1J-17
1.040	TAV2....1J-19
1.050	TAV1....1J-21
1.050	TAV2....1K-3
1.050	TAV3....1K-5
1.050	TAV4....1K-7
1.060	TAV1....1K-9
1.070	TAV1....1K-15
1.070	TAV2....1K-17
1.070	TAV3....1K-19
1.071	TAV1....1K-21
1.071	TAV2....1L-3
1.080	TAV1....1L-5
1.080	TAV2....1L-7
1.081	TAV1....1L-9
1.082	TAV1....1L-11
1.082	TAV2....1L-13
1.082	TAV3....1L-15
1.083	TAV1....1L-17
1.084	TAV1....1L-19
1.085	TAV1....1L-21
1.200	TAV1....2D-3
1.200	TAV2....2D-5
1.200	TAV3....2D-7
1.210	TAV1....2D-9
1.220	TAV1....2D-11
1.220	TAV2....2D-13
1.220	TAV3....2D-17
1.250	TAV1....2D-19
1.250	TAV2....2D-21
1.250	TAV4....2E-3
1.250	TAV5....2E-7
1.250	TAV6....2E-9
1.250	TAV7....2E-11
1.250	TAV7....2E-13
1.290	TAV1....2E-15
1.290	TAV2....2E-17
1.300	TAV1....2E-19
1.300	TAV2....2E-21
1.300	TAV3....2E-23
1.300	TAV4....2F-3
2.000	TAV1....2F-5
2.001	TAV1....2F-7
2.002	TAV1....2F-9
2.003	TAV1....2F-11
2.020	TAV1....2F-13

SUBGROUP	GRID
2.030	TAV1....2F-17
2.030	TAV2....2F-19
2.030	TAV3....2F-21
2.030	TAV4....2F-23
2.030	TAV5....2G-3
2.031	TAV1....2G-5
2.031	TAV2....2G-7
2.031	TAV3....2G-9
2.031	TAV4....2G-11
2.040	TAV1....2G-13
2.041	TAV1....2G-15
3.000	TAV1....2G-17
3.001	TAV1....2G-19
3.010	TAV1....2G-21
3.010	TAV2....2G-23
3.010	TAV3....2H-3
3.010	TAV4....2H-5
3.020	TAV1....2H-7
3.030	TAV1....2H-9
3.040	TAV1....2H-11
3.051	TAV1....2H-13
3.052	TAV1....2H-15
3.060	TAV1....2H-17
3.070	TAV1....2H-19
3.071	TAV1....2H-21
4.000	TAV1....2H-23
4.500	TAV1....2I-3
4.501	TAV1....2I-5
5.0013	TAV1..2J-3
5.0020	TAV1..2J-5
5.0020	TAV2..2J-7
5.0022	TAV1..2J-9
5.0025	TAV1..2J-11
5.0038	TAV1..2J-13
5.0080	TAV1..2J-15
5.0080	TAV2..2J-17
5.0083	TAV1..2J-19
5.0151	TAV1..2J-21
5.0536	TAV1..2J-23
5.0540	TAV1..2K-3

SUBGROUP	GRID

C-15

NUMERICAL INDEX - INDICE NUMERICO - LISTE NUMERIQUE
NUMERISCHES ERSATZEILVERZEILVERZEICHNIS - INDICE NUMERICO

PART. N.	SGR.	TAV.	ITEM
79097257	0.140	1	02
79097258	0.140	2	01
79097259	0.140	2	16
79097260	0.140	2	19
79097261	0.140	3	0 1-52
79097262	0.140	2	22
79097263	0.140	2	17
79097264	0.140	2	15
79097265	0.140	2	14
79097266	0.140	4	01
79097267	0.140	4	02
79097268	0.140	4	03
79097269	0.140	4	04
79097270	0.140	4	07
79097271	0.140	4	08
79097272	0.140	4	09
79097273	0.140	4	11
79097274	0.140	4	12
79097275	0.140	4	21
79097276	0.140	4	24
79097277	0.140	2	27
79097278	0.140	2	26
79097279	0.140	5	0 1-21
79097280	0.140	5	04
79097281	0.140	5	05
79097282	0.140	5	06
79097283	0.140	5	14
79097284	0.140	5	19
79097285	0.140	3	01
79097286	0.140	3	03
79097287	0.140	3	04
79097288	0.140	3	05
79097289	0.140	3	07
79097290	0.140	3	08
79097291	0.140	3	09
79097292	0.140	3	11
79097293	0.140	3	12
79097295	0.140	3	13
79097296	0.140	3	14
79097297	0.140	3	15
79097298	0.140	3	16
79097299	0.140	3	17
79097300	0.140	3	18
79097301	0.140	3	19
79097302	0.140	3	20
79097303	0.140	3	21
79097304	0.140	3	22
79097305	0.140	3	23
79097306	0.140	3	24
79097307	0.140	3	25
79097308	0.140	3	26
79097309	0.140	3	27
79097310	0.140	3	28
79097311	0.140	3	29
79097312	0.140	3	30
79097313	0.140	3	31
79097314	0.140	3	32
79097315	0.140	3	33
79097316	0.140	3	37
79097317	0.140	3	39
79097318	0.140	3	38
79097319	0.140	3	41
79097320	0.140	3	43
79097321	0.140	3	44
79097322	0.140	3	45
79097323	0.140	3	46
79097324	0.140	3	47
79097325	0.140	3	48
79097326	0.140	3	49
79097327	0.140	3	50
79097328	0.140	3	51
79097329	0.140	3	52
79097330	0.140	3	02
79097331	0.140	2	02
79097332	0.140	2	04
79097333	0.140	2	05
79097334	0.140	2	06
79097335	0.140	2	07
79097336	0.140	2	08
79097337	0.140	2	08
79097338	0.140	2	10
79097339	0.140	2	11
79097340	0.140	2	12
79097341	0.140	2	13
79097343	0.140	6	01
79097344	0.140	7	02
79097345	0.140	7	14
79097346	0.140	7	30
79097347	0.140	7	31
79097348	0.140	7	32
79097349	0.140	6	08
79097350	0.140	7	34
79097351	0.140	6	14
79097352	0.140	6	15
79097353	0.140	7	39
79097354	0.140	6	16
79097354	0.140	7	44
79097356	0.140	8	04
79097358	0.140	7	15
79097359	0.140	7	16
79097360	0.140	7	17
79097361	0.140	7	18
79097362	0.140	7	42
79097363	0.140	1	04
79097364	0.1	8	01
79097365	0.140	8	02
79097366	0.140	8	04
93911108	1.250	1	12
98400770	0.045	1	01
98401723	0.323	1	08

NUMERICAL INDEX - INDICE NUMERICO - LISTE NUMERIQUE
NUMERISCHES ERSATZEILVERZEILVERZEICHNIS - INDICE NUMERICO

PART. N.	SGR.	TAV.
04757193	0.400	2
10493230	2.020	1
10572174	2.020	1
14497821	0.400	2
16264434	2.020	1
24941650	0.400	2
24941660	0.400	2
70198775	5.0025	1
70639388	5.0025	1
70669359	5.0025	1
70901825	5.0025	1
70904205	5.0025	1
70911025	5.0025	1
70911841	5.0025	1
70912589	5.0025	1
70917730	5.0025	1
70918282	2.020	1
70919426	2.020	1
70921566	5.0025	1
70928138	5.0025	1
70932930	2.020	1
71415408	2.020	1
71415409	2.020	1
71415410	2.020	1
71415411	2.020	1
73052086	5.0025	1
73070169	5.0025	1
73075165	5.0025	1
73075166	5.0025	1
73115559	5.0025	1
73115566	5.0025	1
73119442	5.0025	1
73132158	5.0025	1
73138080	5.0025	1
73148905	2.020	1
73148907	2.020	1
73153877	5.0025	1
73153878	5.0025	1
73153879	5.0025	1
73156117	2.020	1
73156118	2.020	1
73156119	2.020	1
73156120	2.020	1
73156121	2.020	1
73156127	2.020	1
73156129	2.020	1
73156130	2.020	1
73156131	2.020	1
73156132	2.020	1
73158360	2.020	1
73158362	2.020	1
73158388	2.020	1
73158390	2.020	1
73158392	2.020	1
73158394	2.020	1
73158396	2.020	1
73158398	2.020	1
73158402	2.020	1
73158485	2.020	1
73158486	2.020	1
73158494	1.070	1
73158495	1.070	1
73158496	1.071	1
73158497	1.071	1
73158501	2.020	1
73158504	2.020	1
73158506	2.020	1
73158507	2.020	1
79022468	0.400	2
79022484	0.400	2
79025494	0.400	2
79074702	0.400	2
79074704	0.400	2
79074705	0.400	2
79074706	0.400	2
79074707	0.400	2
79074708	0.400	2
79074709	0.400	2
79074710	0.400	2
79074711	0.400	2
79074712	0.400	2
79074713	0.400	2
79074714	0.400	2
79074715	0.400	2
79075883	0.400	2

PART. N.	SGR.	TAV.

SUBGROUP	GRID
0.000	TAV1....1D-3
0.001	TAV1....1D-5
0.002	TAV1....1D-7
0.003	TAV1....1D-9
0.003	TAV2....1D-11
0.003	TAV3....1D-13
0.004	TAV1....1D-15
0.004	TAV2....1D-17
0.021	TAV1....1D-19
0.040	TAV1....1D-21
0.040	TAV2....1D-23
0.040	TAV3....1E-3
0.042	TAV1....1E-5
0.043	TAV1....1E-7
0.043	TAV2....1E-9
0.045	TAV1....1E-11
0.060	TAV1....1E-13
0.060	TAV2....1E-15
0.071	TAV1....1E-17
0.077	TAV1....1E-19
0.080	TAV1....1E-21
0.081	TAV1....1E-23
0.082	TAV1....1F-3
0.083	TAV1....1F-5
0.084	TAV1....1F-7
0.100	TAV1....1F-9
0.120	TAV1....1F-11
0.140	TAV1....1F-13
0.140	TAV2....1F-15
0.140	TAV3....1F-17
0.140	TAV4....1F-19
0.140	TAV5....1F-21
0.140	TAV6....1F-23
0.140	TAV7....1G-3
0.140	TAV8....1G-5
0.140	TAV9....1G-7
0.140	TAV10..1G-9
0.140	TAV11..1G-11
0.140	TAV12..1G-13
0.149	TAV1....1G-15
0.200	TAV1....1G-17
0.203	TAV1....1G-19
0.203	TAV2....1G-21
0.240	TAV1....1G-23
0.240	TAV2....1H-3
0.241	TAV1....1H-5
0.270	TAV1....1H-7
0.300	TAV1....1H-9
0.302	TAV1....1H-11
0.305	TAV1....1H-13
0.310	TAV1....1H-15
0.320	TAV1....1H-17
0.323	TAV1....1H-19
0.326	TAV1....1H-21
0.340	TAV1....1H-23
0.345	TAV1....1I-3
0.350	TAV1....1I-5
0.360	TAV1....1I-7
0.360	TAV2....1I-9
0.400	TAV1....1I-11
0.400	TAV2....1I-13
0.450	TAV1....1I-15
1.000	TAV1....1J-3
1.010	TAV1....1J-5
1.020	TAV1....1J-7
1.030	TAV1....1J-9
1.030	TAV2....1J-13
1.030	TAV3....1J-15
1.040	TAV1....1J-17
1.040	TAV2....1J-19
1.050	TAV1....1J-21
1.050	TAV2....1K-3
1.050	TAV3....1K-5
1.050	TAV4....1K-7
1.060	TAV1....1K-9
1.070	TAV1....1K-15
1.070	TAV2....1K-17
1.070	TAV3....1K-19
1.071	TAV1....1K-21
1.071	TAV2....1L-3
1.080	TAV1....1L-5
1.080	TAV2....1L-7
1.081	TAV1....1L-9
1.082	TAV1....1L-11
1.082	TAV2....1L-13
1.082	TAV3....1L-15
1.083	TAV1....1L-17
1.084	TAV1....1L-19
1.085	TAV1....1L-21
1.200	TAV1....2D-3
1.200	TAV2....2D-5
1.200	TAV3....2D-7
1.210	TAV1....2D-9
1.220	TAV1....2D-11
1.220	TAV2....2D-13
1.220	TAV3....2D-17
1.250	TAV1....2D-19
1.250	TAV2....2D-21
1.250	TAV4....2E-3
1.250	TAV5....2E-7
1.250	TAV6....2E-9
1.250	TAV7....2E-11
1.250	TAV7....2E-13
1.290	TAV1....2E-15
1.290	TAV2....2E-17
1.300	TAV1....2E-19
1.300	TAV2....2E-21
1.300	TAV3....2E-23
1.300	TAV4....2F-3
2.000	TAV1....2F-5
2.001	TAV1....2F-7
2.002	TAV1....2F-9
2.003	TAV1....2F-11
2.020	TAV1....2F-13
2.030	TAV1....2F-17
2.030	TAV2....2F-19
2.030	TAV3....2F-21
2.030	TAV4....2F-23
2.030	TAV5....2G-3
2.031	TAV1....2G-5
2.031	TAV2....2G-7
2.031	TAV3....2G-9
2.031	TAV4....2G-11
2.040	TAV1....2G-13
2.041	TAV1....2G-15
3.000	TAV1....2G-17
3.001	TAV1....2G-19
3.010	TAV1....2G-21
3.010	TAV2....2G-23
3.010	TAV3....2H-3
3.010	TAV4....2H-5
3.020	TAV1....2H-7
3.030	TAV1....2H-9
3.040	TAV1....2H-11
3.051	TAV1....2H-13
3.052	TAV1....2H-15
3.060	TAV1....2H-17
3.070	TAV1....2H-19
3.071	TAV1....2H-21
4.000	TAV1....2H-23
4.500	TAV1....2I-3
4.501	TAV1....2I-5
5.0013	TAV1..2J-3
5.0020	TAV1..2J-5
5.0020	TAV2..2J-7
5.0022	TAV1..2J-9
5.0025	TAV1..2J-11
5.0038	TAV1..2J-13
5.0080	TAV1..2J-15
5.0080	TAV2..2J-17
5.0083	TAV1..2J-19
5.0151	TAV1..2J-21
5.0536	TAV1..2J-23
5.0540	TAV1..2K-3

SUBGROUP	GRID

NUMERICAL INDEX (LATE ADDITIONS) - INDICE NUMERICO - LISTE NUMERIQUE
NUMERISCHES ERSATZEIL VERZEIL VERZEICHNIS - INDICE NUMERICO

PART. N.	SGR.	TAV.	ITEM	PART. N.	SGR.	TAV.	ITEM	PART. N.	SGR.	TAV.	ITEM
04814180	0.400	1	13	14420234	1.250	1	51	71416429	1.250	7	17
04979701	1.220	3	02	14496331	1.250	4	11I	71416434	1.250	7	21
05136392	1.250	7	75	14496431	1.250	1	15	71416436	1.250	7	22
05961723	1.250	5	11	14496431	1.250	4	36	71416437	1.250	7	28
05961734	1.250	5	12	14496431	1.250	5	16	71416440	1.250	7	30
10571374	1.250	7	24	14496431	1.250	7	60	71416441	1.250	7	31
10571474	1.250	4	25	14496531	1.250	4	11H	71416444	1.250	7	34
10571474	1.250	7	77	14496531	1.250	5	04	71416445	1.250	7	36
10571574	1.250	4	35	14496531	1.250	7	16	71416446	1.250	7	39
10571574	1.250	5	08	14496631	1.250	1	26	71416448	1.250	7	43
10571574	1.250	7	33	15238234	1.250	1	11	71416450	1.250	7	45
10571774	1.250	2	02	15645504	1.250	7	74	71416452	1.250	7	48
10571774	1.250	4	07D	15896221	1.250	5	10	71416455	1.250	7	52
10571774	1.250	4	11G	15896421	1.250	4	11E	71416456	1.250	7	53
10571774	1.250	5	05	15901604	1.250	4	07L	71416459	1.250	7	62
10571774	1.250	7	15	16043134	1.250	4	11F	71416461	1.250	7	79
10571774	1.250	7	85	16043234	1.250	5	03	71416462	1.250	7	80
10571874	1.250	1	21	16043234	1.250	7	18	71416464	1.250	7	82
10571874	1.250	2	05	16043234	1.250	7	84	71416465	1.250	7	83
10571874	1.250	5	20	16043434	1.250	4	07C	71416466	1.250	7	66
10571874	1.250	7	05	16100811	1.250	7	51	71416467	1.250	7	67
10902234	1.250	4	34	16104421	1.250	4	38	71416490	1.250	5	06
10902234	1.250	7	92	70901283	5.0540	1	02	71416491	1.250	4	11B
11066071	1.250	4	07G	70925160	5.0540	1	10	71416491	1.250	5	15
11087874	1.250	4	11N	70928052	5.0540	1	11	71416492	1.250	5	18
11106234	1.250	1	20	70932930	2.020	1	15	71416497	1.250	5	26
11106234	1.250	2	04	70933052	2.020	1	13	71416498	1.250	5	27
11106234	1.250	5	28	71403532	1.220	2	54A	71416515	1.250	6	04
11106234	1.250	7	02	71405003	1.250	1	09	71416516	1.250	6	05
11106434	1.250	1	47	71405699	1.250	1	03	71416517	1.250	6	06
11690921	1.250	7	29	71405702	1.250	1	06	71416526	1.250	4	07A
11701721	1.250	5	19	71405705	1.250	1	07	71416536	1.250	4	20
12574121	1.250	7	78	71405706	1.250	2	00	71416537	1.250	4	39
12574921	1.250	1	10	71405707	1.250	2	03	71416547	1.250	4	07B
12605274	1.250	4	11P	71405708	1.250	1	31	71416549	1.250	4	07E
12606974	1.250	7	55	71405716	1.250	1	36	71416550	1.250	4	07F
13271914	1.250	7	23	71405717	1.250	1	37	71416551	1.250	4	07H
13272214	1.250	7	37	71405718	1.250	1	38	71416552	1.250	4	07I
13274014	1.250	4	24	71405719	1.250	1	42	71416553	1.250	4	08
13274614	1.250	7	40	71405721	1.250	1	44	71416554	1.250	4	09
13276014	1.250	1	14	71405722	1.250	1	45	71416561	1.250	4	22
13276014	1.250	7	59	71405767	1.200	3	41	71416563	1.250	4	22A
13276214	1.250	5	07	71406337	1.250	1	13	71416564	1.250	4	10B
13276214	1.250	7	32	71415030	1.250	1	50	71416564	1.250	4	22B
13278914	1.250	7	49	71415221	1.250	1	49	71416565	1.250	4	10C
13279414	1.250	7	14	71416419	1.250	7	06	71416565	1.250	4	22C
13299916	1.250	6	07	71416422	1.250	7	07	71416566	1.250	4	10D
13301311	1.250	7	35	71416423	1.250	7	08	71416566	1.250	4	22E
13303311	1.250	7	54	71416424	1.250	7	09	71416568	1.250	4	10F
14306221	1.250	2	01	71416425	1.250	7	10	71416573	1.250	4	11A

NUMERICAL INDEX (LATE ADDITIONS) - INDICE NUMERICO - LISTE NUMERIQUE
NUMERISCHES ERSATZEIL VERZEIL VERZEICHNIS - INDICE NUMERICO

PART. N.	SGR.	TAV.	ITEM
71416578	1.250	4	11C
71416579	1.250	4	11D
71416580	1.250	4	11L
71416581	1.250	4	11M
71416588	1.250	4	22D
71416594	1.250	4	14
71416597	1.250	4	17
71416598	1.250	4	18
71416600	1.250	4	23
71416601	1.250	4	26
71416603	1.250	4	28
71416604	1.250	4	29
71416605	1.250	4	30
71416607	1.250	4	33
71416734	1.250	5	23
71416734	1.250	5	25
71416734	1.250	7	76
71416857	1.250	1	00
71416862	1.250	4	10E
71416862	1.250	4	22F
71416867	1.250	5	09
71416931	1.250	4	10A
71417025	1.250	4	31
71417026	1.250	4	32
71417035	1.250	4	21
71417064	1.250	5	21
71417066	1.250	5	14
71417083	1.250	4	40
71417102	1.250	4	03
71417103	1.250	4	04
71417108	1.250	4	12
71417109	1.250	4	41
71417110	1.250	4	13
71417111	1.250	4	15
71417112	1.250	4	16
71417115	1.250	7	03
71417116	1.250	7	11
71417117	1.250	7	12
71417118	1.250	7	13
71417120	1.250	7	42
71417121	1.250	7	44
71417122	1.250	7	50
71417124	1.250	7	68
71417125	1.250	7	69
71417126	1.250	7	70
71417127	1.250	7	71
71417128	1.250	7	72
71417129	1.250	7	73
71417130	1.250	7	90
71417131	1.250	7	91
71417132	1.250	7	93
71417190	1.250	4	06
71417219	1.250	7	81
71417222	1.250	5	01
71417239	1.250	5	02
71417241	1.250	5	22
71417242	1.250	5	13
71417243	1.250	5	24
71417245	1.250	6	01
71417247	1.250	6	02
71417249	1.250	6	02B
71417249	1.250	6	03A
71417250	1.250	6	02A
71417251	1.250	6	03
71417253	1.250	6	08
71417254	1.250	4	07M
71417255	1.250	4	10
71417257	1.250	4	10G
71417258	1.250	4	10H
71417263	1.250	4	42
71431181	1.250	1	05
71431182	1.250	1	04
73075858	5.0536	1	00
73158539	2.020	1	19
73158655	4.500	1	02
73158782	1.220	3	01
73159173	5.0540	1	03
73159174	5.0540	1	04
73159175	5.0540	1	05
73159176	5.0540	1	06
73159177	5.0540	1	07
73159178	5.0540	1	08
73159179	5.0540	1	09
73159185	5.0540	1	01
76015770	1.220	3	04
76017021	1.220	3	03
78100827	2.020	1	17
78100834	1.020	1	18
79040883	4.500	1	00
79069292	1.250	5	30
79074703	0.400	1	15
93911108	1.250	1	12

PART. N.	SGR.	TAV.	ITEM

SUBGROUP	GRID
0.000	TAV1....1D-3
0.001	TAV1....1D-5
0.002	TAV1....1D-7
0.003	TAV1....1D-9
0.003	TAV2....1D-11
0.003	TAV3....1D-13
0.004	TAV1....1D-15
0.004	TAV2....1D-17
0.021	TAV1....1D-19
0.040	TAV1....1D-21
0.040	TAV2....1D-23
0.040	TAV3....1E-3
0.042	TAV1....1E-5
0.043	TAV1....1E-7
0.043	TAV2....1E-9
0.045	TAV1....1E-11
0.060	TAV1....1E-13
0.060	TAV2....1E-15
0.071	TAV1....1E-17
0.077	TAV1....1E-19
0.080	TAV1....1E-21
0.081	TAV1....1E-23
0.082	TAV1....1F-3
0.083	TAV1....1F-5
0.084	TAV1....1F-7
0.100	TAV1....1F-9
0.120	TAV1....1F-11
0.140	TAV1....1F-13
0.140	TAV2....1F-15
0.140	TAV3....1F-17
0.140	TAV4....1F-19
0.140	TAV5....1F-21
0.140	TAV6....1F-23
0.140	TAV7....1G-3
0.140	TAV8....1G-5
0.140	TAV9....1G-7
0.140	TAV10..1G-9
0.140	TAV11..1G-11
0.140	TAV12..1G-13
0.149	TAV1....1G-15
0.200	TAV1....1G-17
0.203	TAV1....1G-19
0.203	TAV2....1G-21
0.240	TAV1....1G-23
0.240	TAV2....1H-3
0.241	TAV1....1H-5
0.270	TAV1....1H-7
0.300	TAV1....1H-9
0.302	TAV1....1H-11
0.305	TAV1....1H-13
0.310	TAV1....1H-15
0.320	TAV1....1H-17
0.323	TAV1....1H-19
0.326	TAV1....1H-21
0.340	TAV1....1H-23
0.345	TAV1....1I-3
0.350	TAV1....1I-5
0.360	TAV1....1I-7
0.360	TAV2....1I-9
0.400	TAV1....1I-11
0.400	TAV2....1I-13
0.450	TAV1....1I-15
1.000	TAV1....1J-3
1.010	TAV1....1J-5
1.020	TAV1....1J-7
1.030	TAV1....1J-9
1.030	TAV2....1J-13
1.030	TAV3....1J-15
1.040	TAV1....1J-17
1.040	TAV2....1J-19
1.050	TAV1....1J-21
1.050	TAV2....1K-3
1.050	TAV3....1K-5
1.050	TAV4....1K-7
1.060	TAV1....1K-9
1.070	TAV1....1K-15
1.070	TAV2....1K-17
1.070	TAV3....1K-19
1.071	TAV1....1K-21
1.071	TAV2....1L-3
1.080	TAV1....1L-5
1.080	TAV2....1L-7
1.081	TAV1....1L-9
1.082	TAV1....1L-11
1.082	TAV2....1L-13
1.082	TAV3....1L-15
1.083	TAV1....1L-17
1.084	TAV1....1L-19
1.085	TAV1....1L-21
1.200	TAV1....2D-3
1.200	TAV2....2D-5
1.200	TAV3....2D-7
1.210	TAV1....2D-9
1.220	TAV1....2D-11
1.220	TAV2....2D-13
1.220	TAV3....2D-17
1.250	TAV1....2D-19
1.250	TAV2....2D-21
1.250	TAV4....2E-3
1.250	TAV5....2E-7
1.250	TAV6....2E-9
1.250	TAV7....2E-11
1.250	TAV7....2E-13
1.290	TAV1....2E-15
1.290	TAV2....2E-17
1.300	TAV1....2E-19
1.300	TAV2....2E-21
1.300	TAV3....2E-23
1.300	TAV4....2F-3
2.000	TAV1....2F-5
2.001	TAV1....2F-7
2.002	TAV1....2F-9
2.003	TAV1....2F-11
2.020	TAV1....2F-13
2.030	TAV1....2F-17
2.030	TAV2....2F-19
2.030	TAV3....2F-21
2.030	TAV4....2F-23
2.030	TAV5....2G-3
2.031	TAV1....2G-5
2.031	TAV2....2G-7
2.031	TAV3....2G-9
2.031	TAV4....2G-11
2.040	TAV1....2G-13
2.041	TAV1....2G-15
3.000	TAV1....2G-17
3.001	TAV1....2G-19
3.010	TAV1....2G-21
3.010	TAV2....2G-23
3.010	TAV3....2H-3
3.010	TAV4....2H-5
3.020	TAV1....2H-7
3.030	TAV1....2H-9
3.040	TAV1....2H-11
3.051	TAV1....2H-13
3.052	TAV1....2H-15
3.060	TAV1....2H-17
3.070	TAV1....2H-19
3.071	TAV1....2H-21
4.000	TAV1....2H-23
4.500	TAV1....2I-3
4.501	TAV1....2I-5
5.0013	TAV1..2J-3
5.0020	TAV1..2J-5
5.0020	TAV2..2J-7
5.0022	TAV1..2J-9
5.0025	TAV1..2J-11
5.0038	TAV1..2J-13
5.0080	TAV1..2J-15
5.0080	TAV2..2J-17
5.0083	TAV1..2J-19
5.0151	TAV1..2J-21
5.0536	TAV1..2J-23
5.0540	TAV1..2K-3

D-1

ALPHABETICAL INDEX

DESCRIPTION	SGR.	TAV.	GRID
Accelerator controls	0.004	1	1D-21
Air Cleaner	0.001	1	1D-5
Alternator-Mounting	0.400	1	1I-11
Anti-Shock Valve (Hydr.)	1.082	3	1L-15
Application of Ol. Hammer	5.0020	2	2J-7
Batteries	1.220	2	2D-13
Belts	0.340	1	1H-23
	0.345	1	1I-3
Boom Piping	2.030	1	2F-17, 2G-3
	2.031	1	2G-5
	2.031	2	2G-7
Brake Valve Components	3.010	3	2H-3
Bucket	2.020	1	2F-13
Bucket Cylinder	2.030	5	2G-3
Bull Gear	3.000	1	2G-17
Cab	1.250	1	2D-19
Cab Door	1.250	5	2E-7
Cab Heater-Components	1.290	2	2E-15
Cab Window-Left Side	1.250	6	2E-9
Cab-Frame	1.250	7	2E-11
Cab-Platform	1.250	1	2D-19
Cab Vandalism	5.0540	1	2K-3
Camshaft	0.120	1	1F-11
Cold Starting Aid	5.0025	1	2J-11
Connecting Rod	0.081	1	1E-23
Cont. Valve-Hydr. (Ass.Y)	1.050	1	1J-21
Control Valve-Hydr.	1.050	2	2K-3
	1.050	3	2K-5
	1.050	4	2K-7
Controls	1.070	1	1J-20
	1.071	1	1K-21, 1L-3
Counterweight	1.000	1	1J-3
Cowlings	1.300	1	2E-19
	1.300	2	2E-21
	1.300	3	2E-23
Crankshaft	0.080	1	1E-21
Crankshaft Pulley	0.084	1	1F-7
Cylinder Block	0.040	1	1D-21
	0.040	2	1D-23
	0.040	3	1E-3
Cylinder Block Covers	0.043	1	1E-7
	0.043	2	1E-9
Cylinder Head	0.060	1	1E-13
	0.060	2	1E-15
Dashboard (Left)	1.210	1	2D-9
Dashboard (Right)	1.200	1	2D-3
	1.200	3	2D-7
Data Monitor	1.200	2	2D-5
Decals	4.500	1	2I-3
	4.501	1	2I-5
Dipper Stick (2,1m)	5.0022	1	2J-9
Dipper Stick (2,5m) (STD.)	2.003	1	2F-11
Dipper Stick (3m)	5.0038	1	2J-13
Dipper Stick Cylinder	2.030	4	2F-23
	2.031	4	2G-5
Dipstick-Engine Oil	0.270	1	1H-8
Discharge Valve Componen.	3.010	4	2H-5
Drive on Engine (Opt.)	0.350	1	1I-5
Electric System	1.220	1	2D-11
	1.220	2	2D-13
Elements-fuel	0.200	1	1G-17
Elements-Hydraulic	1.020	1	1J-7
Elements-Pilot	1.080	1	1L-5
Emergency Kits(Lub. Fittings)	4.000	1	2H-23
Engine	0.021	1	1D-19
Engine-Controls	0.004	1	1D-15
Engine-Suspensions	0.000	1	1D-3
Engine Breather	0.045	1	1E-11
Engine Cooling Piping	0.323	1	1H-19
Engine Heat Exchanger	0.310	1	1H-15
Engine Lifting Eyes	0.450	1	1I-15
Engine Oil Filter	0.302	1	1H-11
Engine Oil Piping	0.305	1	1H-13
Engine Oil Pump	0.300	1	1H-9
Engine Oil Sump	0.042	1	1E-5
Engine Piston	0.082	1	1F-3
Engine Suspensions	0.000	1	1D-3
Exhaust Manifold	0.077	1	1E-19
Exhaust Valve	0.060	2	1E-15
Fan	0.345	1	1I-3
Fan Drive	0.345	1	1I-3
"Filter Care" Kit	24		1A-24
Filter-Pilot System	1.080	1	1L-5
Filters-Air	0.001	1	1D-5
Filters-Engine Oil	0.302	1	1D-11
Filters-Fuel	0.200	1	1G-17
Filters-Hydr. System	1.020	1	1J-7
Flywheel-Engine	0.083	1	1L-17
Fuel Filter	0..200	1	1G-17
Fuel Piping	0.203	1	1G-19
Fuel Pump	0.203	2	1G-21
	0.140	8	1G-5
Fuel Tank	1.010	1	1J-5
Fuses	1.200	3	2D-7
Guards	1.300	2	2E-21
Handle	1.300	3	2E-23
	1.300	4	2F-3
Heater	1.290	1	2E-15
Horn	1.220	2	2D-15
Hydr.Pump-Components	1.030	2	1J-13
Hydr.Pump Regulator-Comp.	1.030	3	1J-15

D-2

ALPHABETICAL INDEX

DESCRIPTION	SGR.	TAV.	GRID
Hydraulic Pump	1.030	1	1J-9
Idler	3.020	1	1H-7
Injection Nozzle-Lines	0.149	1	1G-15
Injection Pump	0.140	6	1F-23
	0.140	7	1G-3
Injection Pump Drive	0.140	10	1G-9
Injection Pump-Piping	0.140	1	1F-13
	0.140	9	1G-7
Intake Manifold	0.071	1	1E-17
Intake Valve	0.060	2	1E-15
Lift Cylinder (Left)	2.030	3	1F-21
Lift Cylinder (Right)	2.030	2	2F-19
Lights	1.220	2	2D-13
Lower Frame	3.000	1	2G-17
Lubric. Fitting Piping	3.001	1	2G-19
	2.041	1	2G-15
	2.040	1	1G-13
Main Piping	1.060	1	1K-9
	1.061	1	1K-11
Mirror (Rear)	1.300	2	2E-21
Monobloc Boom	2.000	1	2F-5
Motor - Starter	0.360	2	1I-9
Motor - Swing	1.040	1	1J-17
Motor - Travel	3.010	1	2G-21
Motor - Wiper	1.220	1	2D-11
Muffler	0.002	1	1D-7
Oil Tank	1.020	1	1J-7
Operator's Seat	1.250	2	2D-21
OperatorsSeat(Bostrom)(Std.)	5.0151	1	2J-21
Pilot Piping(1)	1.080	1	1L-5
Pilot Piping(2)	1.081	1	1L-9
Pilot Piping(3)	1.082	1	1L-11
Pilot Piping(4)	1.083	1	1L-17
Pilot Piping(5)	1.084	1	1L-19
Pilot Piping(6)	1.085	1	1L-21
Pilot Valve	1.070	3	1K-19
	1.071	2	1L-3
Pilot Valve-components	1.070	2	1K-17
PipingBoom	2.030	1	2F-17
	2.031	1	2G-5
Piping-Injection	0.149	1	1G-15
Piping-Lube Fittings	2.040	1	2G-13
Piping-Main	1.060	1	1K-9
Piping-Pilot(1)	1.080	1	1L-5
Piping-Pilot(3)	1.082	1	1L-11
Piping-Pilot(4)	1.083	1	1L-17
Piping-Pilot(5)	1.084	1	1L-19
Piping-Pump Contr. Valve	1.050	1	1J-21
Piping-Travel (Lower)	3.070	1	2H-19
	3.071	1	2H-21
Piping-Turbocharger	0.241	1	1H-5
Pump-Engine Oil	0.300	1	1H-9
Pump-Hydraulic	1.030	1	1J-11
Pump-Injection	0.140	6	1F-23
Pump-Water	0.320	1	1H-17
Pump/Control Valve Piping	1.050	1	1J-23
Radiator	0.003	1	1D-9
Radiator-Components	0.003	2	1D-11
	0.003	3	1D-13
Rocker Arm	0.060	2	1E-15
Rotary Distributor	3.060	1	2H-17
SAE Battery Provision	1.220	3	2D-17
Seat Belt	5.0536	1	1J-23
Sensors	1.220	2	2D-13
Solenoid Valve	1.080	2	1L-7
Starter	0.360	2	1I-9
Starter-Mounting	0.360	1	1I-7
Stop Valve	1.082	2	1L-13
Swing Red.Unit-Components	1.040	2	1J-19
Swing Reduction Unit	1.040	1	1J-17
Thermostat & Housing	0.326	1	1H-21
Timing Control	0.100	1	1F-9
Tool Kit	5.0083	1	2J-19
Track Chain	3.051	1	2H-13
	3.052	1	2H-15
Track Roller	3.040	1	2H-11
Travel Motor-componen.	3.010	3	2H-3
Travel Piping (Lower)	3.070	1	2H-19
	3.071	1	2H-21
Travel Red.Unit-Componen.	3.010	2	2G-23
Travel Reduction Units	3.010	1	2G-21
Turbocharger	0.240	1	1G-23
	0.240	2	1H-3
Turbocharger Piping	0.241	1	1H-5
Upper Frame	1.000	1	1J-3
Upper Roller	3.030	1	2H-9
Valve-Anti-Shock(Hydr.)	1.082	3	1L-15
Valve-Exhaust	0.060	2	1E-15
Valve-Intake	0.060	2	1E-15
Valve-Pilot (Hydr.)	1.070	1	1K-15
Valve-Pilot(Travel)	1.070	1	1K-15
Valve-Solenoid	1.080	2	1L-7
Valve-Stop(Travel)	1.082	1	1L-11
Water Pump	0.320	1	1H-17
Water Pump Drive	0.340	1	1H-23
Water Pump-Components	0.320	2	1H-17
Wiper	1.220	1	2D-11

ENGINE SUSPENSIONS SOSPENSIONI MOTORE	SUSPENSIONS DU MOTEUR MOTORAUFHAENGUNG ANCLAJES MOTOR	0.000 TAV.1

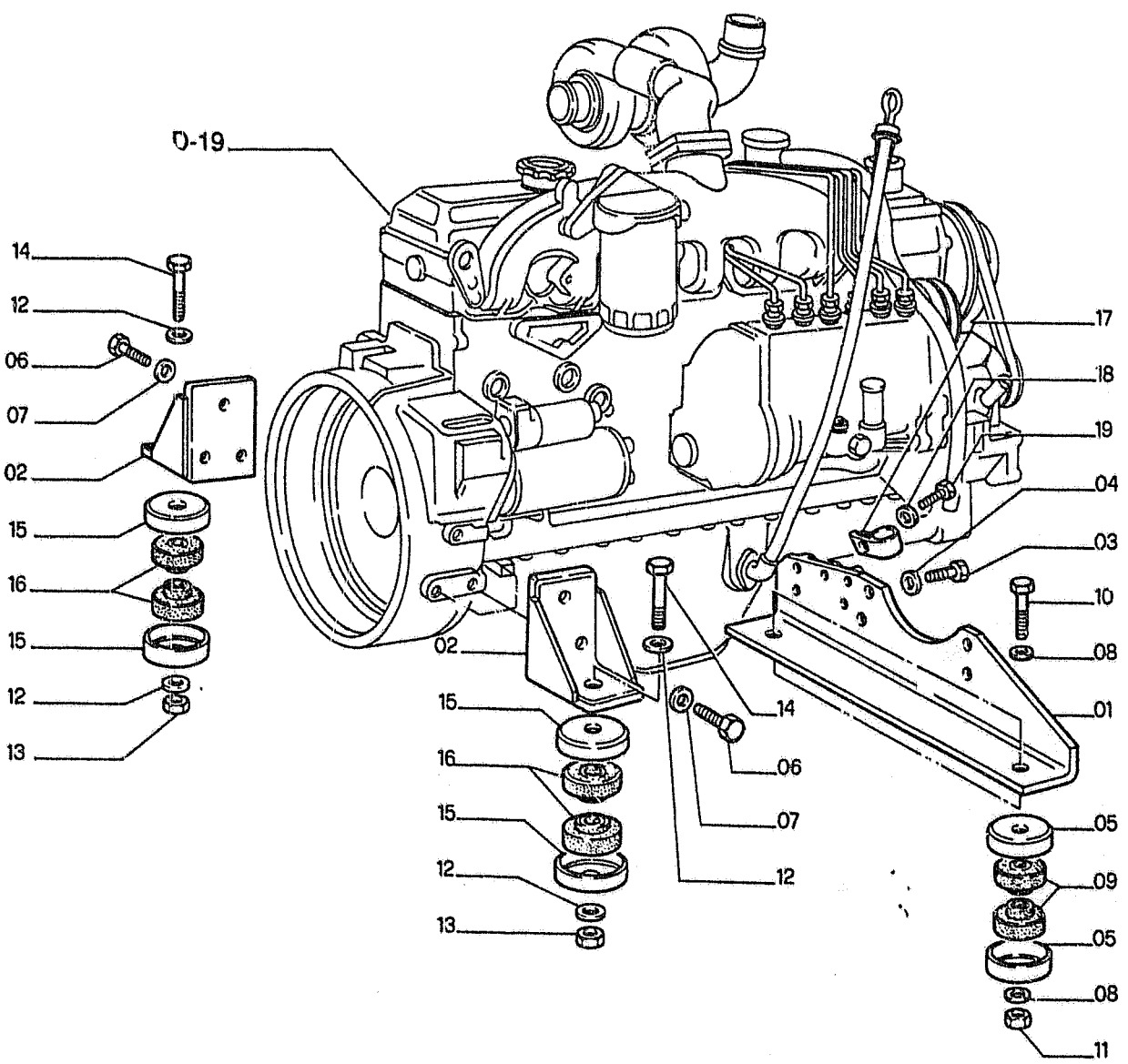

FH200

ENGINE SUSPENSIONS
SOSPENSIONI MOTORE

SUSPENSIONS DU MOTEUR
MOTORAUFHAENGUNG
ANCLAJES MOTOR

0.000 TAV.1

ITEM	PART NUMBER	QTY	TR. CO.	DESCRIPTION	DESCRIZIONE
01	8111134	1	225S	BRACKET -FRONT	STAFFA -ANT.
02	8111134	2	225S	BRACKET -REAR	STAFFA -POST.
03	11390531	4	40V	SCREW	VITE
04	8111003	4	131R	WASHER	ROSETTA
05	71415215	4	265C	COVER	COPERCHIO
06	11115631	6	40V	SCREW	VITE
07	8111002	6	131R	WASHER	ROSETTA
08	71415214	4	131R	WASHER	ROSETTA
09	71415216	4	60T	BLOCK	TASSELLO
10	16041834	2	40V	SCREW	VITE
11	12163521	2	10D	NUT	DADO
12	71415218	4	131R	WASHER	ROSETTA
13	11703221	2	10D	NUT	DADO
14	15203034	2	40V	SCREW	VITE
15	71415219	4	265C	COVER	COPERCHIO
16	71415220	4	60T	BLOCK	TASSELLO
17	8110982	1	180C	COLLAR	COLLARE
18	16043531	1	40V	SCREW	VITE
19	10571779	1	170R	LOCKWASHER	ROSETTA ELASTICA

AIR CLEANER FILTRO ARIA	FILTRE A AIR LUFTFILTER FILTRO DE AIRE	0.001 TAV.1 NTR 104S V-89

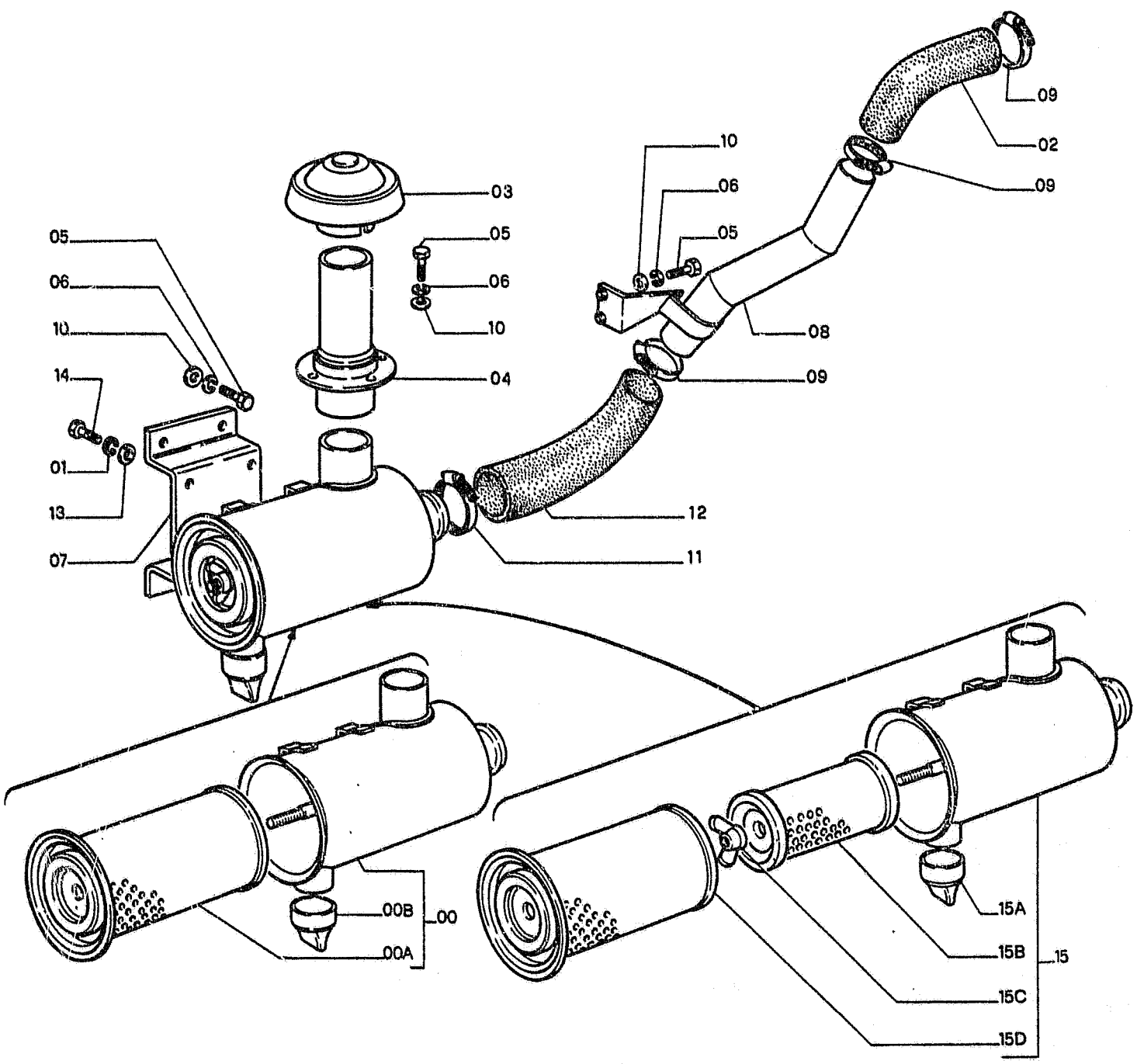

FH200

AIR CLEANER
FILTRO ARIA

FILTRE A AIR
LUFTFILTER
FILTRO DE AIRE

0.001 TAV.1

REVISED JULY 1990

ITEM	PART NUMBER	QTY	TR. CO.	DESCRIPTION		DESCRIZIONE	
00	71415227	1	66F	AIR CLEANER -ASS.LY		FILTRO ARIA -COMPL.	
				C2543 UP TO S/N		C2543 FINO AL TELAIO	
					0114 (02)		0114 (02)
					0076 (03)		0076 (03)
00A	71415282	1	84C	FILTER ELEMENT		CARTUCCIA FILTRO	
00B	70197810	1	10V	VALVE		VALVOLA	
01	10571874	4	170R	LOCKWASHER		ROSETTA ELASTICA	
02	71416763	1	285T	HOSE		TUBO FLESSIBILE	
03	71416690	1	204P	AIR INTAKE		PRESA ARIA	
04	71415226	1	193T	TUBE		TUBO RIGIDO	
05	11112234	10	40V	SCREW 12X1,75X25		VITE 12X1,75X25	
06	10517074	10	170R	LOCKWASHER		ROSETTA ELASTICA	
				C2878 UP TO S/N	0050	C2878 FINO AL TELAIO	0050
	10571974	10	170R	LOCKWASHER		ROSETTA ELASTICA	
				D2878 FROM S/N	0051	D2878 DAL TELAIO	0051
07	71415228	1	225S	BRACKET		STAFFA	
08	71416764	1	193T	TUBE		TUBO RIGIDO	
09	79083849	3	180C	COLLAR		COLLARE	
				C2865 UP TO S/N	0080	C2865 FINO AL TELAIO	0080
	71416949	3	180C	COLLAR		COLLARE	
				D2865 FROM S/N	0081	D2865 DAL TELAIO	0081
10	14496731	10	131R	WASHER		ROSETTA	
11	79083852	1	180C	COLLAR		COLLARE	
				C2865 UP TO S/N	0080	C2865 FINO AL TELAIO	0080
	71404521	1	180C	COLLAR		COLLARE	
				D2865 FROM S/N	0081	D2865 DAL TELAIO	0081
12	71415235	1	30M	SLEEVE		MANICOTTO	
13	14496631	4	131R	WASHER		ROSETTA	
14	11106234	4	40V	SCREW 10X1,5X25		VITE 10X1,5X25	
15	71416959	1	66F	AIR CLEANER -ASS.LY		FILTRO ARIA -COMPL.	
				D2543 FROM S/N		D2543 DAL TELAIO	
					0115 (02)		0115 (02)
					0077 (03)		0077 (03)
15A	70197810	1	10V	VALVE		VALVOLA	
15B	71416994	1	84C	FILTER ELEMENT		CARTUCCIA FILTRO	
15C	79062701	1	10D	NUT		DADO	
15D	71415282	1	84C	FILTER ELEMENT		CARTUCCIA FILTRO	

FH200

MUFFLER SILENZIATORE	SILENCIEUX SCHALLDAEMPFER SILENCIADOR	0.002 TAV.1 NTR 104S V-89

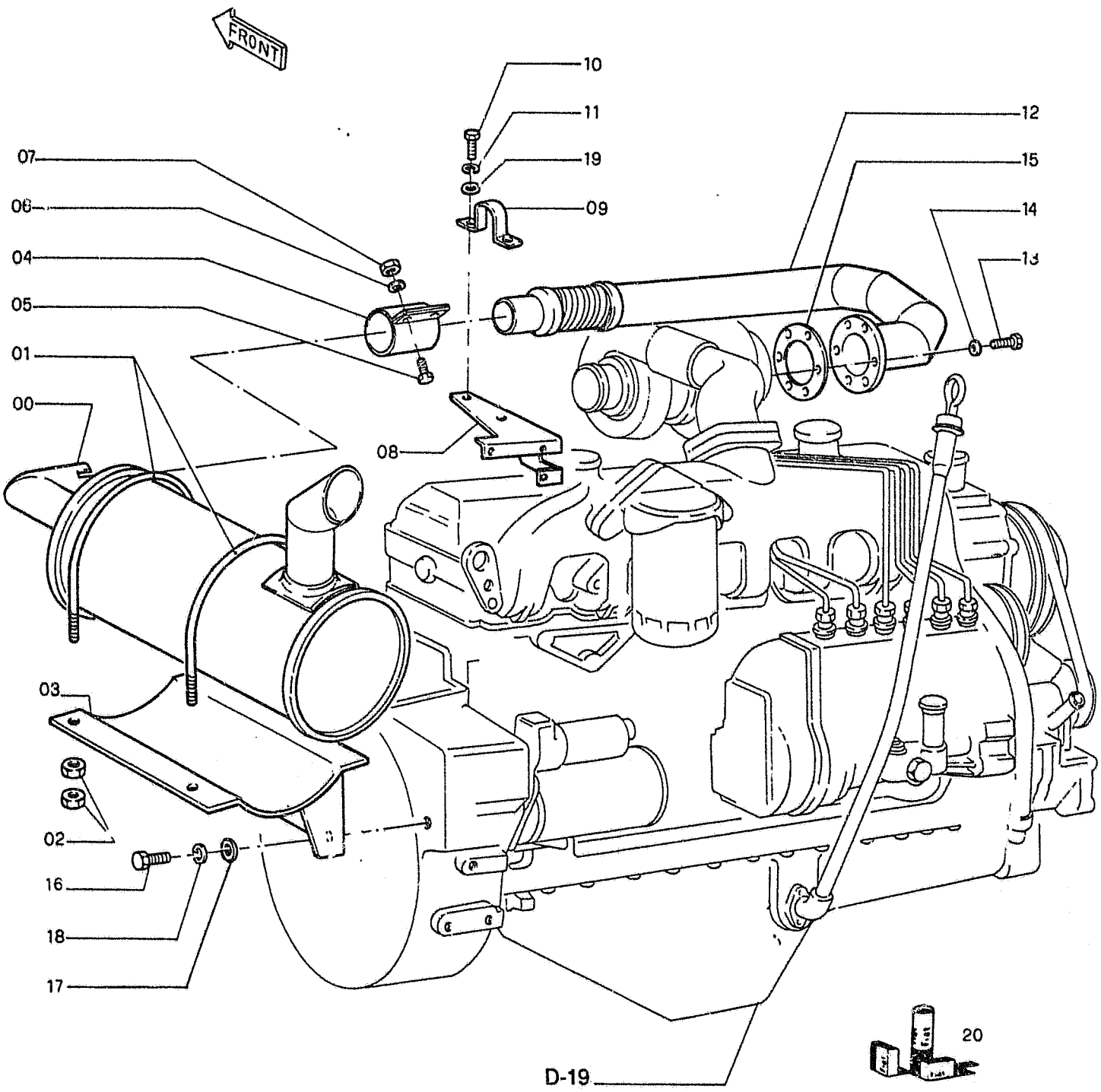

FH200

MUFFLER
SILENZIATORE

SILENCIEUX
SCHALLDAEMPFER
SILENCIADOR

0.002 TAV.1

REVISED JULY 1990

ITEM	PART NUMBER	QTY	TR. CO.	DESCRIPTION		DESCRIZIONE	
00	71415224	1	160S	MUFFLER		SILENZIATORE	
01	71415223	2	100C	RETAINER		CAVALLOTTO	
02	11701721	8	10D	NUT		DADO	
03	71415222	1	225S	BRACKET		STAFFA	
04	71416986	1	31F	CLAMP		FASCETTA	
05	15215834	2	40V	SCREW		VITE	
				C2878 UP TO S/N	0050	C2878 FINO AL TELAIO	0050
	11112834	2	40V	SCREW		VITE	
				D2878 FROM S/N	0051	D2878 DAL TELAIO	0051
06	71415213	4	131R	WASHER		ROSETTA	
				C2878 UP TO S/N	0050	C2878 FINO AL TELAIO	0050
	10571974	4	131R	WASHER		ROSETTA	
				D2878 FROM S/N	0051	D2878 DAL TELAIO	0051
07	11702921	2	10D	NUT		DADO	
08	71415231	1	225S	BRACKET		STAFFA	
09	71415232	1	231S	CLIP		STAFFETTA	
10	11106234	2	40V	SCREW 10X1,5X25		VITE 10X1,5X25	
11	10571874	2	170R	LOCKWASHER		ROSETTA ELASTICA	
12	71415225	1	193T	TUBE		TUBO RIGIDO	
13	16043534	6	40V	SCREW 8X1,25X22		VITE 8X1,25X22	
14	10571774	6	170R	LOCKWASHER		ROSETTA ELASTICA	
15	4636339	1	122G	SEAL -K. 79062510		GUARNIZIONE -K. 79062510	
16	11106834	3	40V	SCREW 10X1,5X40		VITE 10X1,5X40	
18	10571874	3	170R	LOCKWASHER		ROSETTA ELASTICA	
20	79062510	1	K22	KIT-MANIFOLD GASKETS		KIT-GUARNIZIONI COLLETTORI	
				FOR COMPONENTS, SEE A-22		VED. COMPONENTI PAG. 23	

FH200

RADIATOR RADIATORE	RADIATEUR KUEHLER RADIADOR	0.003 TAV.1 REVISED JULY 199070

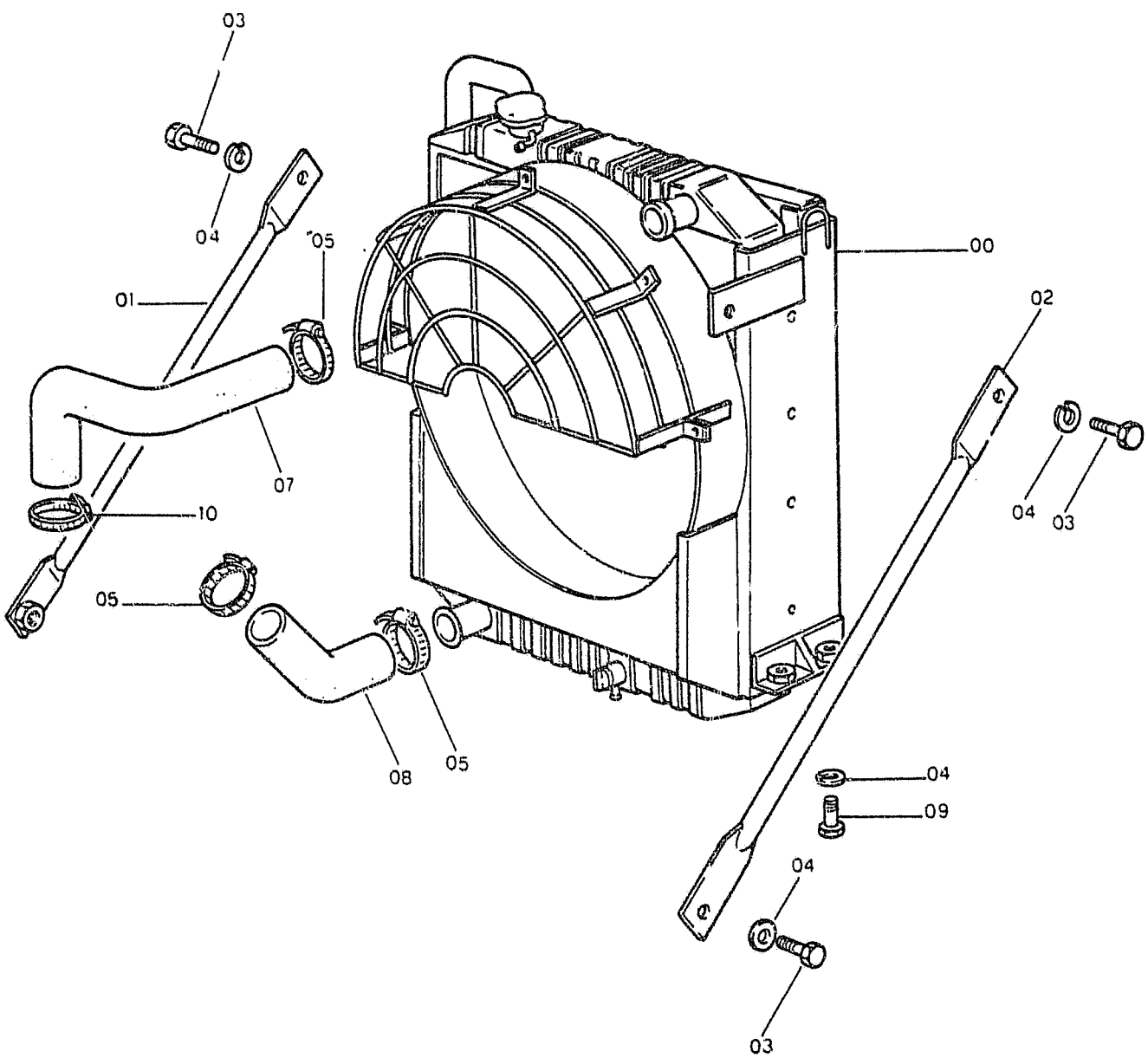

FH200

RADIATOR RADIATORE	RADIATEUR KUEHLER RADIADOR	0.003 TAV.1 REVISED JULY 1990

	ITEM	PART NUMBER	QTY	TR. CO.	DESCRIPTION		DESCRIZIONE	
*	00	71416179	1	25R	RADIATOR -ASS.Y SEE. D-11,13		RADIATORE -COMP.VED.TAV. 2-3	
	01	71416769	1	142T	TIEROD		TIRANTE	
	02	71416770	1	142T	TIEROD		TIRANTE	
	03	11127334	4	40V	SCREW		VITE	
	04	10572174	8	170R	LOCKWASHER		ROSETTA ELASTICA	
	05	79083846	4	180C	COLLAR		COLLARE	
					C2865 UP TO S/N	0080	C2865 FINO AL TELAIO	0080
		71406249	3	180C	COLLAR		COLLARE	
					D2865 FROM S/N	0081	D2865 DAL TELAIO	0081
	07	71416692	1	285T	HOSE		TUBO FLESSIBILE	
	08	71416693	1	285T	HOSE		TUBO FLESSIBILE	
	09	16264434	4	40V	SCREW 16X2X50		VITE 16X2X50	
					C2878 UP TO S/N	0050	C2878 FINO AL TELAIO	0050
		11127534	4	40V	SCREW		VITE	
					D2878 FROM S/N	0051	D2878 DAL TELAIO	0051
	10	71416864	1	180C	COLLAR		COLLARE	
					D2865 FROM S/N	0081	D2865 DAL TELAIO	0081

* Sulla macchina sono montati due radiatori completi (**Tipo A** e **Tipo B** con P/N 71416179) in alternativa tra loro e intercambiabili come complessivo.
Per ordinare i componenti è necessario individuare quale radiatore è montato sulla macchina.
Questo si fa ossevando il radiatore olio:
Tipo A (TAV. 2) radiatore olio in Ferro Altezza 720 mm.
Tipo B (TAV. 3) radiatore olio in Alluminio Altezza 460 mm.

One of two radiator assemblies (**Type A and Type B** P/N 71416179) can equip the machine. They are interchangeable as complete units.
To order component parts it is necessary to identify the type of radiator installed on the unit according to the following characteristics:
Type A (TAV. 2) Steel core 720 mm high (28 in).
Type B (TAV. 3) Aluminum core 460 mm high (22 in).

Les machines peuvent être équipées de deux types différentes de radiateurs complets (**Type A** et **Type B** avec P/N 71416179) en alternative entre eux et interchangeables comme ensembles.
Pour passer commande de leurs pièces, il faut repérer quel est le type de radiateur monté sur la machine.
Cela est obtenu en observant le radiateur d'huile:
Type A (Pl. 2) radiateur d'huile en fer Hauteur 720 mm.
Type B (Pl. 3) radiateur d'huile en aluminium Hauteur 460 mm.

Zwei vollständige Kühler (**Tip A und Tip B**, P/N 71416179), alternativ untereinander und auswechselbar als Aggregat, sind auf der Maschine montiert.
Bei der Bestellung der Teile muss der Kühler angegeben werden, der auf der Maschine montiert ist.
Dazu soll der Ölkühler abgelesen werden:
Typ A (Bild 2) Ölkühler aus Eisen Höle 720 mm.
Typ B (Bild 3) Ölkühler aus Aluminium Höbe 460 mm.

En la máquina se hallan instalados dos radiadores completos (**Tipo A** y **Typo B** con P/N 71416179) alternativos uno con otro e intercambiables en su conjunto.
Para encargar sus componentes hay que identificar el radiador instalado en la máquina, cosa que se hace observando el radiador para el aceite:
Tipo A (LÁMINA 2): radiador para el aceite de hierro - altura 720 mm.
Tipo B (LÁMINA 3): radiador para el aceite de aluminio - altura 460 mm.

RADIATOR-COMPONENTS RADIATORE-COMPONENTI 71416179	RADIATEUR-COMPOSANTS KUEHLER-EINZELTEILE RADIADOR-COMPONENTES	0.003 TAV.2

TIPO A

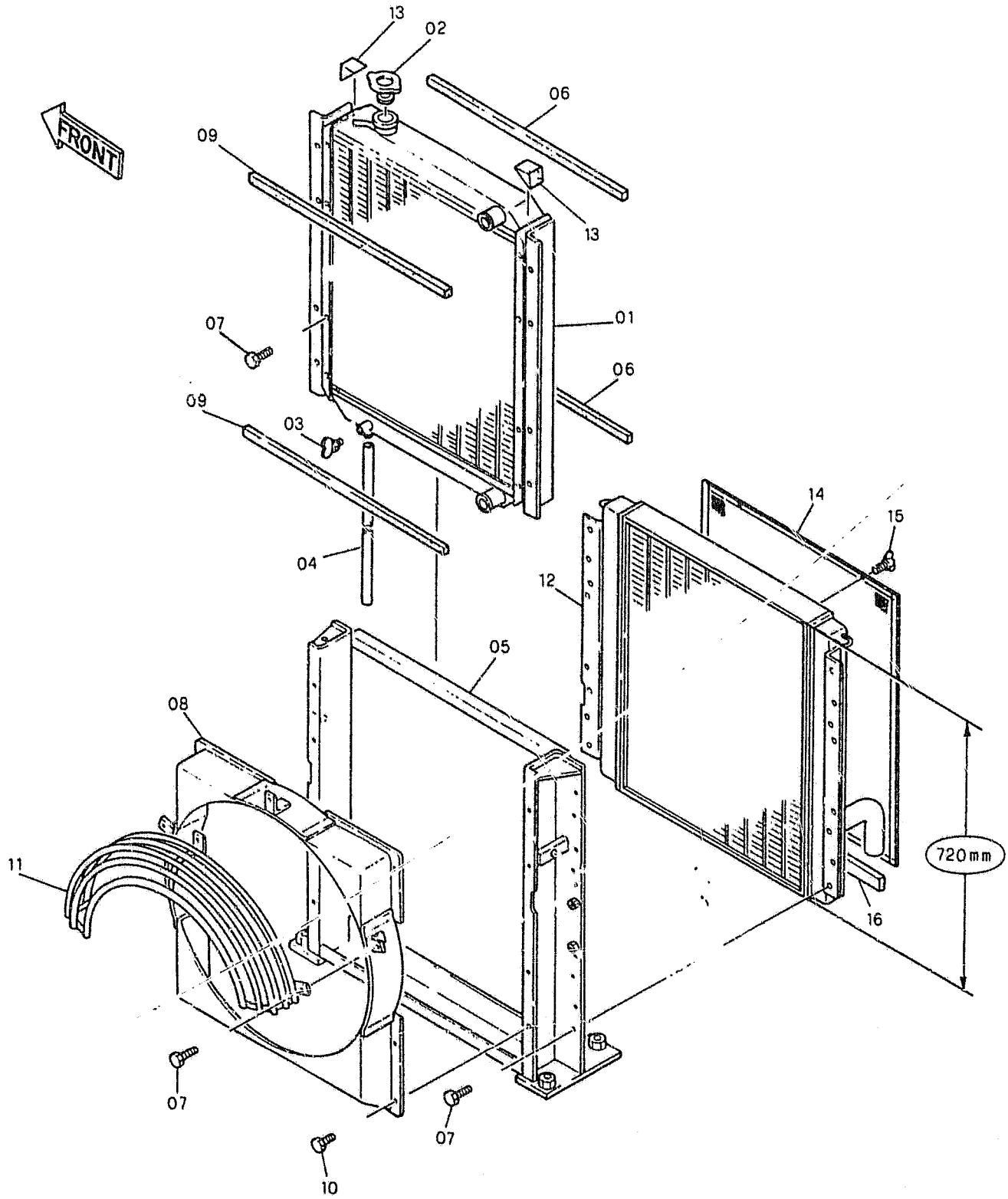

FH200

RADIATOR-COMPONENTS
RADIATORE-COMPONENTI
71416179

RADIATEUR-COMPOSANTS
KUEHLER-EINZELTEILE
RADIADOR-COMPONENTES

0.003 TAV.2

ITEM	PART NUMBER	QTY	TR. CO.	DESCRIPTION	DESCRIZIONE
01	71402121	1	167R	WATER RADIATOR	RADIATORE ACQUA
02	71402130	1	50T	PLUG	TAPPO
03	71402144	1	50T	PLUG	TAPPO
04	71402146	1	30M	SLEEVE	MANICOTTO
05	71402149	1	72I	FRAME	INTELAIATURA
06	71402150	2	122G	SEAL	GUARNIZIONE
07	71402155	19	40V	SCREW	VITE
08	71402156	1	70R	GUARD	RIPARO
09	71402157	2	122G	SEAL	GUARNIZIONE
10	71402158	6	40V	SCREW	VITE
11	71402159	1	70R	GUARD	RIPARO
12	71402160	1	168R	OIL RADIATOR	RADIATORE OLIO
13	71402161	2	122G	SEAL	GUARNIZIONE
14	71402162	1	25P	PANEL	PANNELLO
15	71402163	2	40V	SCREW	VITE
16	71402164	1	122G	SEAL	GUARNIZIONE

RADIATOR	RADIATEUR	0.003 TAV.3
RADIATORE	KUEHLER	
71416179	RADIADOR	NTR 104S V-89

TIPO B

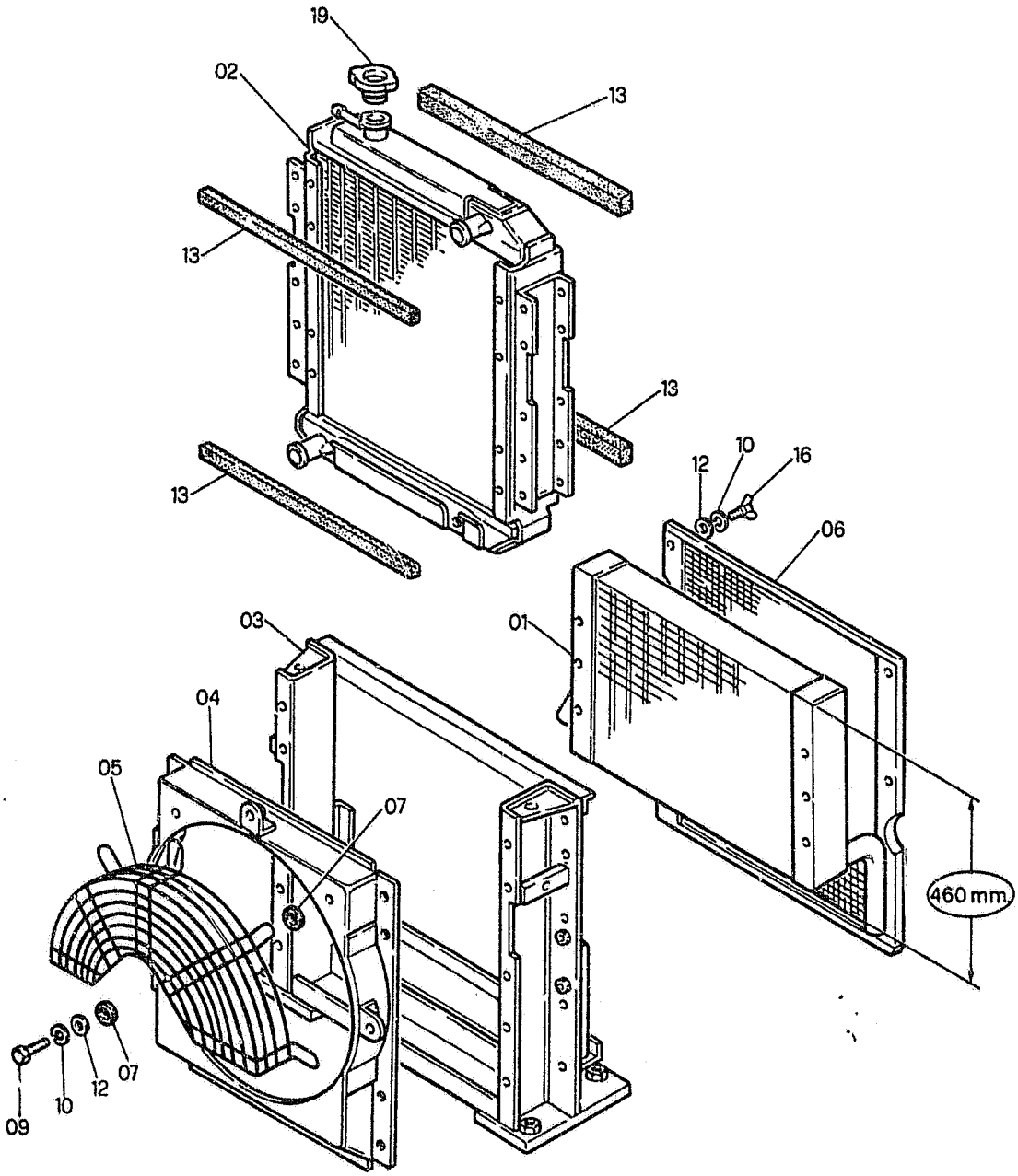

RADIATOR
RADIATORE
71416179

RADIATEUR
KUEHLER
RADIADOR

0.003 TAV.3

NTR 104S V-89

ITEM	PART NUMBER	QTY	TR. CO.	DESCRIPTION	DESCRIZIONE
01	**71417055**	1	168R	OIL RADIATOR	RADIATORE OLIO
02	**71417056**	1	167R	WATER RADIATOR	RADIATORE ACQUA
03	**71417057**	1	72I	FRAME	INTELAIATURA
04	**71417058**	1	70R	GUARD	RIPARO
05	**71417059**	1	70R	GUARD	RIPARO
06	**71417060**	1	70R	GUARD	RIPARO
07	**71406345**	10	60T	BLOCK	TASSELLO
09	**16043624**	5	40V	SCREW 8X1,25X25	VITE 8X1,25X25
10	**10571774**	9	170R	LOCKWASHER	ROSETTA ELASTICA
12	**14499421**	9	131R	WASHER	ROSETTA
13	**71417061**	4	122G	SEAL	GUARNIZIONE
16	**71405347**	4	40V	SCREW	VITE
19	**71406348**	1	50T	PLUG	TAPPO

ACCELERATOR CONTROLS COMANDI ACCELERATORE	COMMANDES D'ACCELERATEUR GASREGULIERUNG MANDOS DEL ACELERADOR	0.004 TAV.1

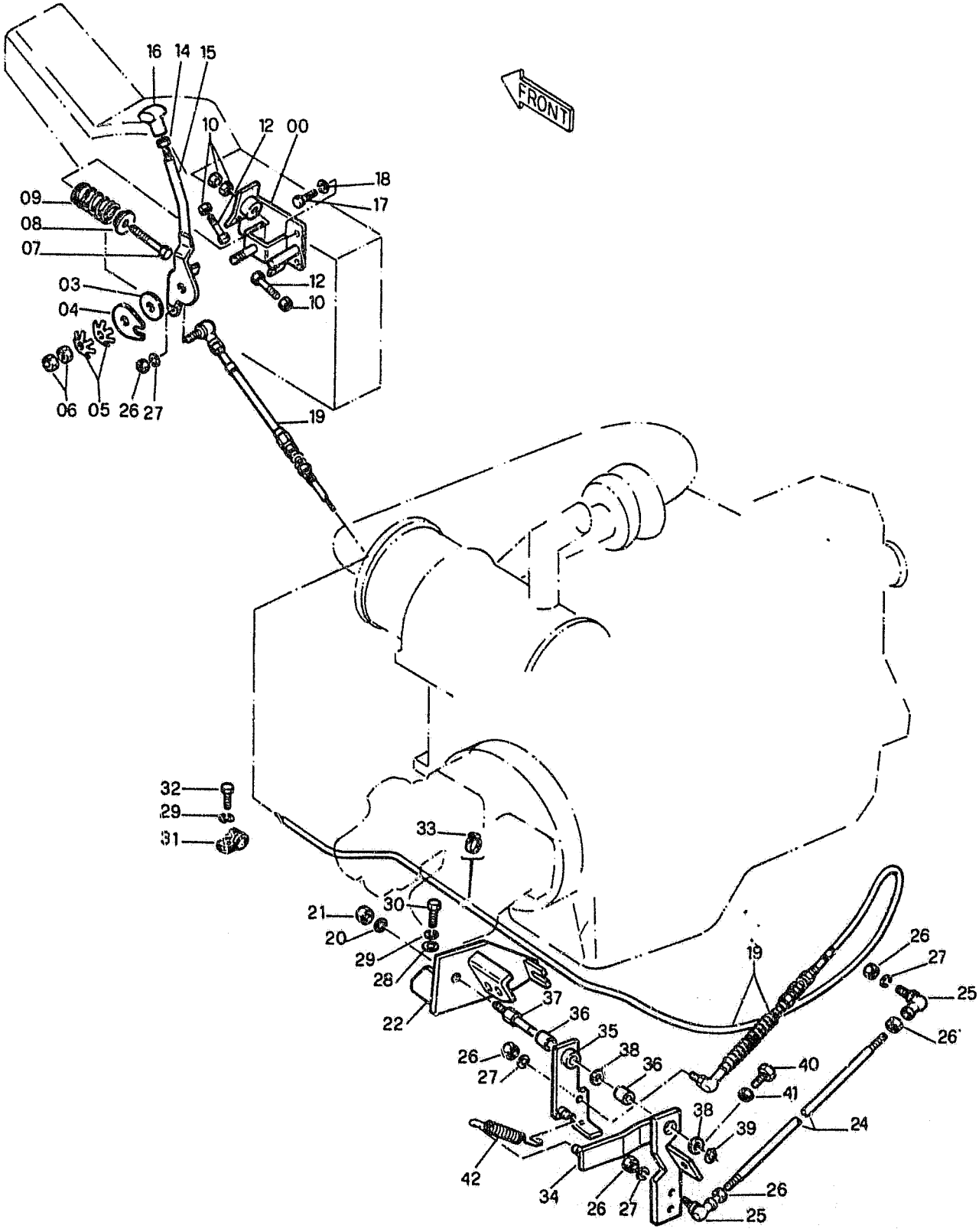

ACCELERATOR CONTROLS
COMANDI ACCELERATORE
COMMANDES D'ACCELERATEUR
GASREGULIERUNG
MANDOS DEL ACELERADOR

0.004 TAV.1

ITEM	PART NUMBER	QTY	TR. CO.	DESCRIPTION	DESCRIZIONE
00	71415647	1	225S	BRACKET	STAFFA
03	71415654	1	60D	DISC	DISCO
04	71415655	1	110P	PLAQUE	PIASTRINA
05	71415656	2	131R	WASHER	ROSETTA
06	12163321	2	10D	NUT	DADO
07	15215624	1	40V	SCREW 10X1,5X100	VITE 10X1,5X100
08	71415657	1	131R	WASHER	ROSETTA
09	71415660	1	100M	SPRING	MOLLA
10	11701721	4	10D	NUT	DADO
12	16040824	2	40V	SCREW 10X1,5X40	VITE 10X1,5X40
14	71415014	1	10D	NUT	DADO
15	71415661	1	45L	LEVER	LEVA
16	71415665	1	25I	HANDGRIP	IMPUGNATURA
17	16043234	3	40V	SCREW 8X1,25X16	VITE 8X1,25X16
18	10571774	3	131R	WASHER	ROSETTA
19	71415836	1	111C	CABLE	CAVO
20	10572074	1	170R	LOCKWASHER	ROSETTA ELASTICA
21	12164021	1	10D	NUT	DADO
22	71415837	1	300S	SUPPORT	SUPPORTO
24	71416773	1	142T	TIEROD	TIRANTE
25	71405480	2	165S	ARTICULATION	SNODO SFERICO
26	15896221	6	10D	NUT	DADO
27	10571574	4	131R	WASHER	ROSETTA
28	14496631	2	131R	WASHER	ROSETTA
29	10571874	4	131R	WASHER	ROSETTA
30	11106234	2	40V	SCREW 10X1,5X25	VITE 10X1,5X25
31	71420700	2	231S	CLIP	STAFFETTA
32	11103034	2	40V	SCREW 10X1,5X18	VITE 10X1,5X18
33	79013422	4	31F	CLAMP	FASCETTA
34	71415840	1	45L	LEVER	LEVA
35	71415841	1	45L	LEVER	LEVA
36	79006025	2	95B	BUSHING	BOCCOLA
37	71405484	1	80P	PIN	PERNO
38	14496831	2	131R	WASHER	ROSETTA
39	11066276	1	187A	SNAP RING	ANELLO ELASTICO
40	71405485	2	40V	SCREW	VITE
41	10791021	2	10D	NUT	DADO
42	71405486	1	100M	SPRING	MOLLA

ACCELERATOR CONTROLS
COMANDI ACCELERATORE

COMMANDES D'ACCELERATEUR
GASREGULIERUNG
MANDOS DEL ACELERADOR

0.004 TAV.2

NTR 104S V-89

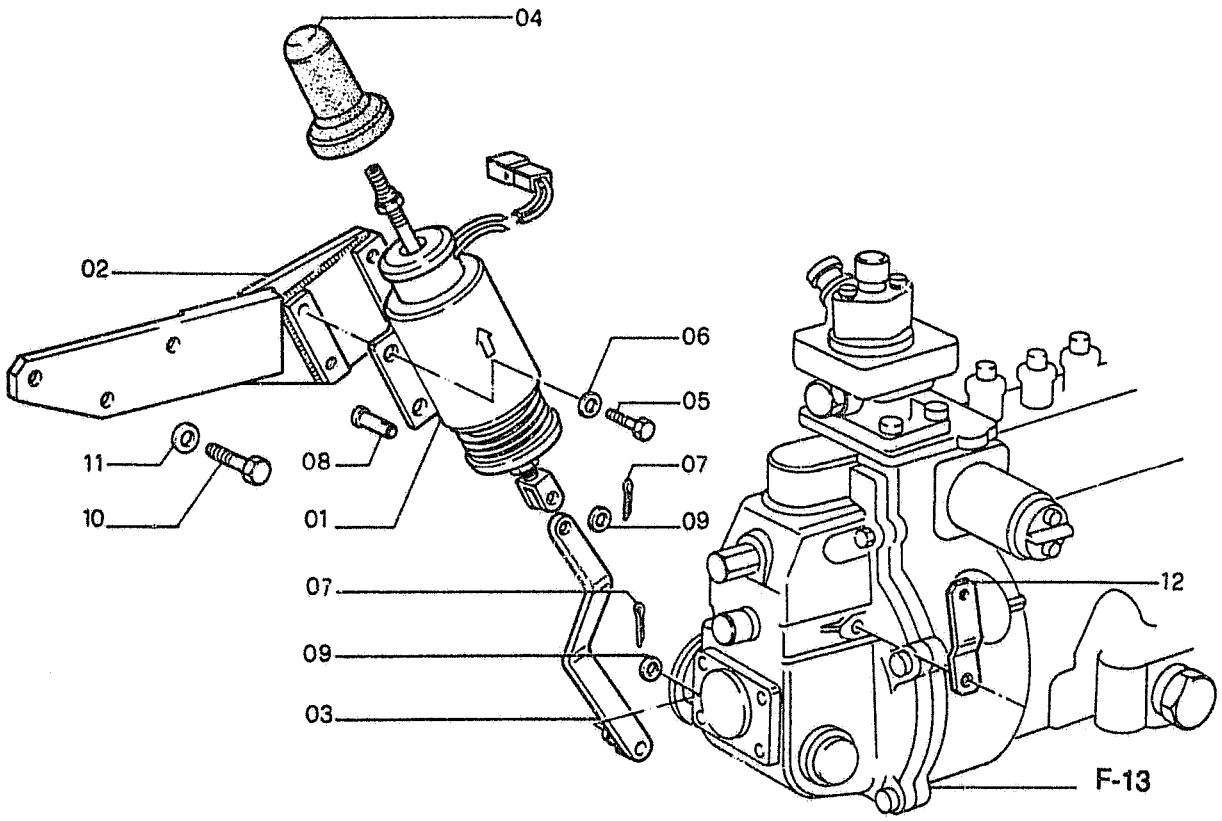

FH200

ACCELERATOR CONTROLS
COMANDI ACCELERATORE

COMMANDES D'ACCELERATEUR
GASREGULIERUNG
MANDOS DEL ACELERADOR

0.004 TAV.2

NTR 104S V-89

ITEM	PART NUMBER	QTY	TR. CO.	DESCRIPTION		DESCRIZIONE	
01	8111903	1	30E	SOLENOID		ELETTROMAGNETE	
				C2581 UP TO S/N	0050	**C2581** FINO AL TELAIO	0050
	8112462	1	30E	SOLENOID		ELETTROMAGNETE	
				D2581 FROM S/N	0051	**D2581** DAL TELAIO	0051
02	8111366	1	300S	SUPPORT		SUPPORTO	
03	8111365	1	45L	LEVER		LEVA	
04	8111523	1	334C	DUST BOOT		CUFFIA PARAPOLVERE	
05	10902121	4	40V	SCREW 6X1X14		VITE 6X1X14	
06	11197779	4	170R	LOCKWASHER		ROSETTA ELASTICA	
07	10734101	2	270C	COTTER PIN		COPIGLIA	
08	10033211	1	80P	PIN		PERNO	
09	14497801	2	131R	WASHER		ROSETTA	
10	15970721	3	40V	SCREW 10X1,25X25		VITE 10X1,25X25	
11	11190579	3	170R	LOCKWASHER		ROSETTA ELASTICA	
12	8111528	1	45L	LEVER		LEVA	

ENGINE MOTORE TERMICO	MOTEUR THERMIQUE MOTOR MOTOR	0.021 TAV.1

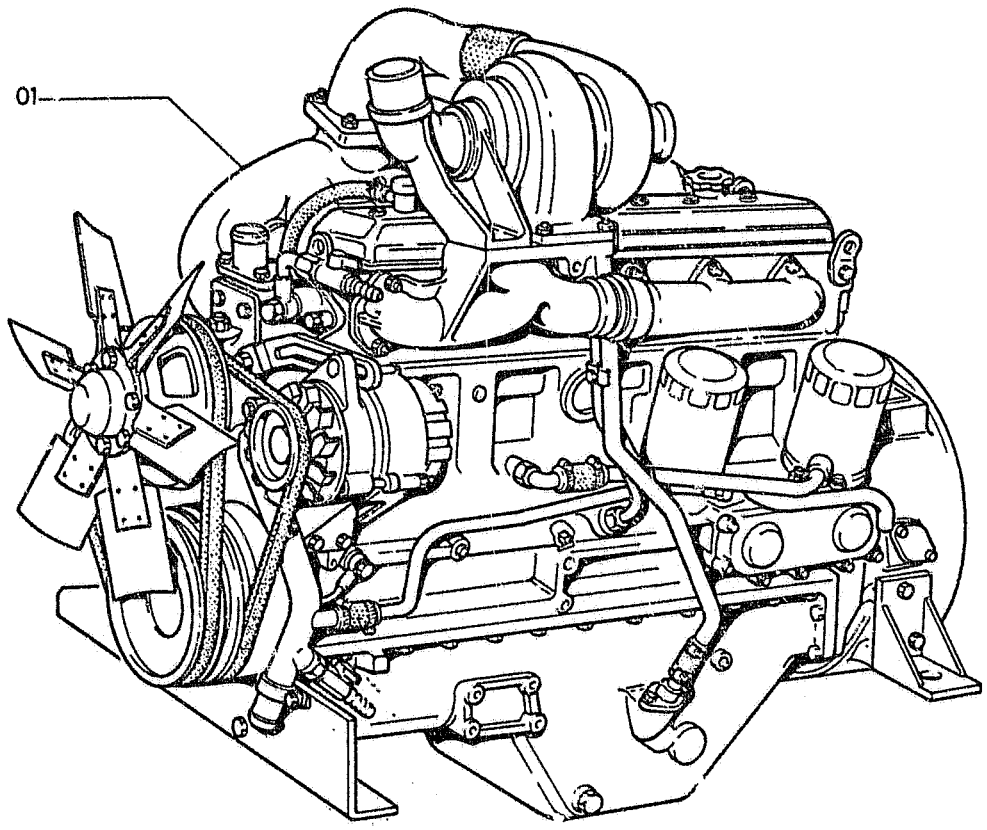

FH200

ENGINE MOTORE TERMICO	MOTEUR THERMIQUE MOTOR MOTOR	0.021 TAV.1

ITEM	PART NUMBER	QTY	TR. CO.	DESCRIPTION	DESCRIZIONE
01	**8110930**	1	130M	ENGINE -ASS.LY	MOTORE TERMICO -COMPL.

CYLINDER BLOCK
BASAMENTO MOTORE

BLOC-CYKINDRES
KURBELGEHAUSE
BLOQUE CILINDROS

0.040 TAV.1

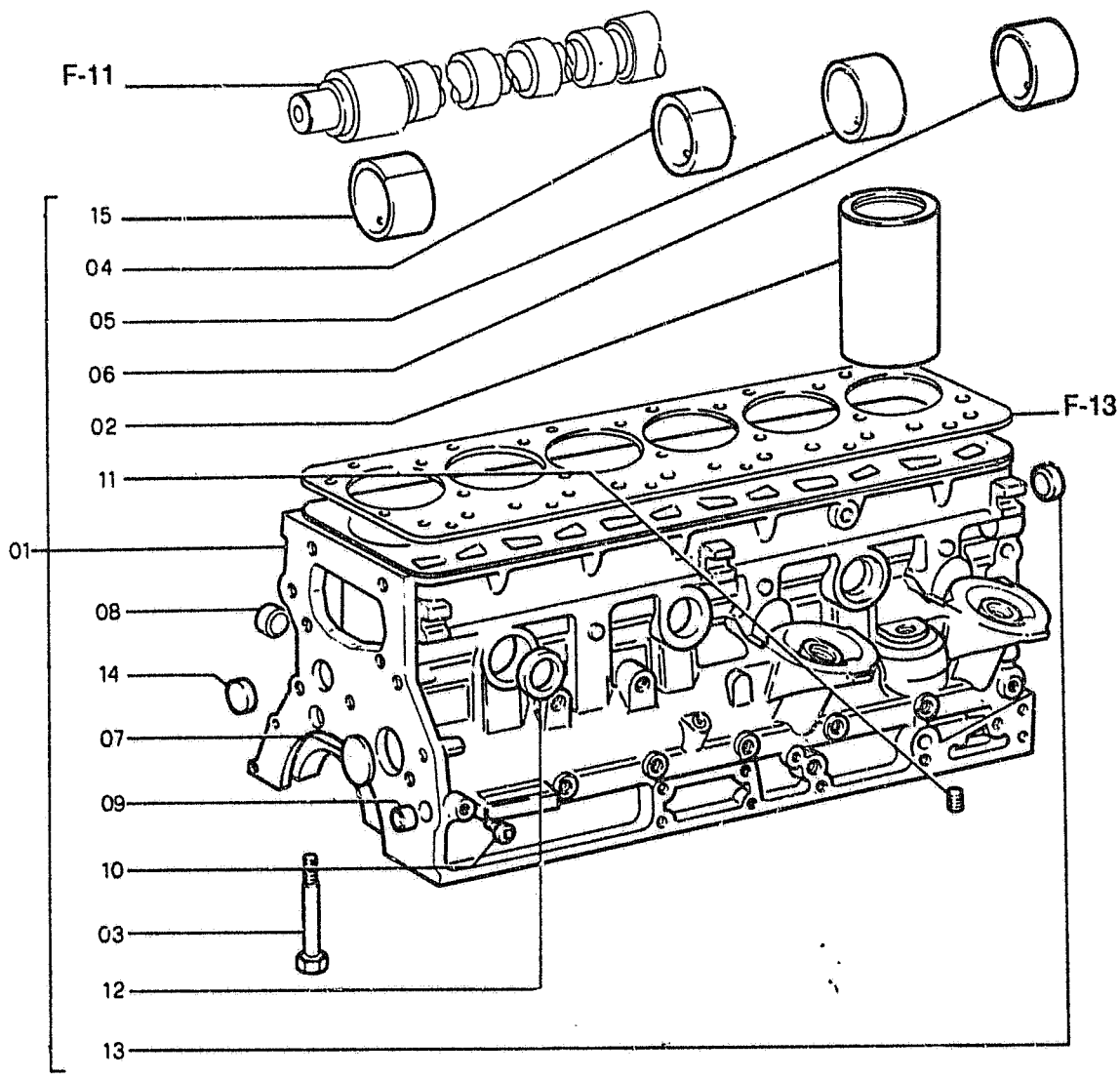

FH200

CYLINDER BLOCK
BASAMENTO MOTORE

BLOC-CYKINDRES
KURBELGEHAUSE
BLOQUE CILINDROS

0.040 TAV.1

ITEM	PART NUMBER	QTY	TR. CO.	DESCRIPTION	DESCRIZIONE
01	4797374	1	203	CYLINDER BLOCK	BASAMENTO MOTORE
02	4770623	6	35C	CYLINDER LINER +0,0	CAMICIA CIL. MOTORE +0,0
	4770624	6	35C	CYLINDER LINER +0,2	CAMICIA CIL. MOTORE +0,2
03	4792169	14	40V	SCREW	VITE
04	4603449	1	95B	BUSHING	BOCCOLA
05	4603450	1	95B	BUSHING	BOCCOLA
06	4603451	1	95B	BUSHING	BOCCOLA
07	10160701	1	50T	PLUG	TAPPO
08	14262770	6	50T	PLUG	TAPPO
09	14326501	2	50T	PLUG	TAPPO
10	14323911	5	50T	PLUG	TAPPO
11	14324211	2	50T	PLUG	TAPPO
12	14329901	2	50T	PLUG	TAPPO
13	14327401	1	50T	PLUG	TAPPO
14	14328201	1	50T	PLUG	TAPPO
15	4603448	1	95B	BUSHING	BOCCOLA

CYLINDER BLOCK BASAMENTO MOTORE	BLOC-CYKINDRES KURBELGEHAUSE BLOQUE CILINDROS	0.040 TAV.2 NTR 104S V-89

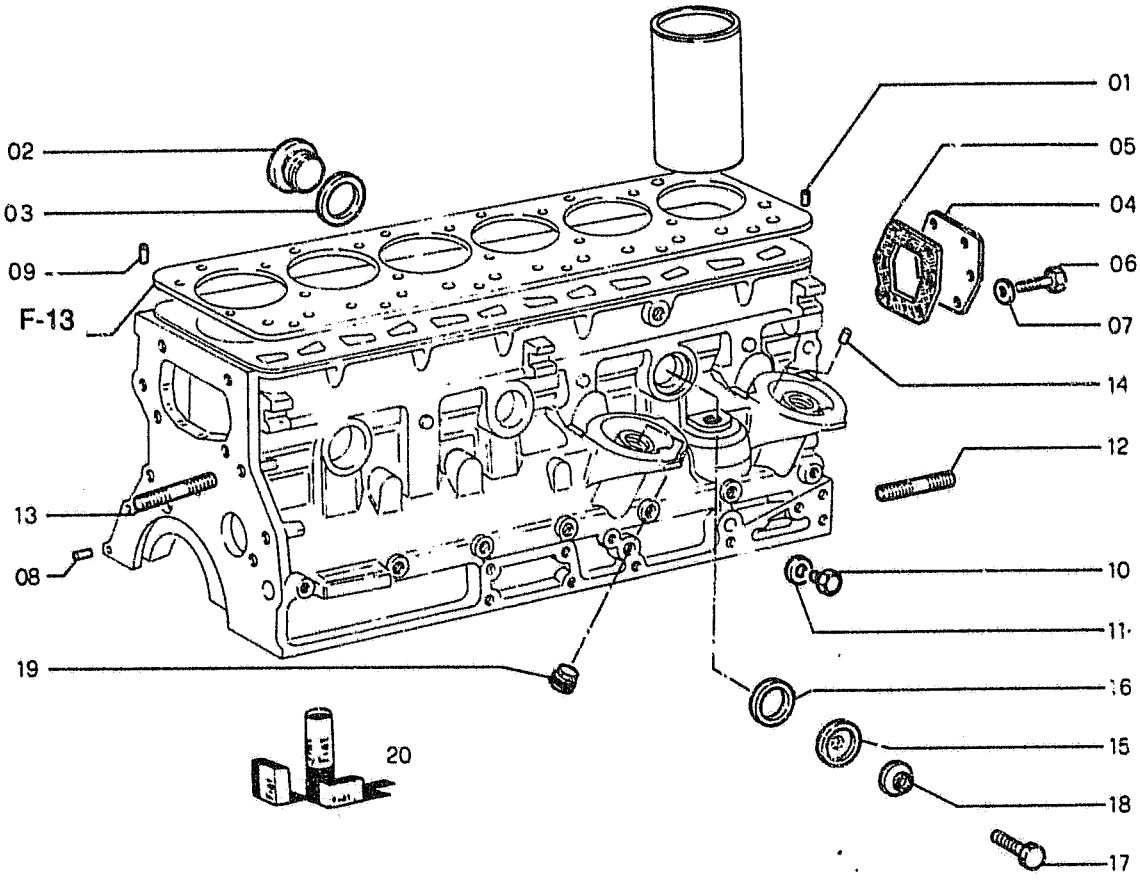

FH200

CYLINDER BLOCK
BASAMENTO MOTORE

BLOC-CYKINDRES
KURBELGEHAUSE
BLOQUE CILINDROS

0.040 TAV.2

NTR 104S V-89

ITEM	PART NUMBER	QTY	TR. CO.	DESCRIPTION	DESCRIZIONE
01	4599607	1	90G	DOWEL	GRANO
02	4665029	1	50T	PLUG	TAPPO
03	10265460	1	122G	SEAL	GUARNIZIONE
04	4653282	1	265C	COVER	COPERCHIO
05	4653283	1	122G	SEAL -K. 79062511	GUARNIZIONE -K. 79062511
06	16043321	6	40V	SCREW 8X1,25X18	VITE 8X1,25X18
07	11193871	6	170R	LOCKWASHER	ROSETTA ELASTICA
08	10839610	2	90G	DOWEL	GRANO
09	14165470	1	202S	SPRING PIN	SPINA ELASTICA
10	10300511	1	50T	PLUG	TAPPO
11	10298460	1	122G	SEAL	GUARNIZIONE
12	11797821	2	210P	STUD	PRIGIONIERO
13	13517821	1	210P	STUD	PRIGIONIERO
14	4782452	2	90G	DOWEL	GRANO
15	4811892	1	265C	COVER	COPERCHIO
16	4600893	1	122G	SEAL	GUARNIZIONE
17	16044024	1	40V	SCREW 8X1,25X40	VITE 8X1,25X40
18	4716734	1	131R	WASHER	ROSETTA
19	14323811	1	50T	PLUG	TAPPO
20	79062511	1	K13	KIT - CYLINDER BLOCK SEALS FOR COMPONENTS, SEE A-24	KIT - GUARNIZ.BASAMENTO MOTORE VED. COMPONENTI PAG. 24

E-1

ALPHABETICAL INDEX

DESCRIPTION	SGR.	TAV.	GRID
Accelerator controls	0.004	1	1D-21
Air Cleaner	0.001	1	1D-5
Alternator-Mounting	0.400	1	1I-11
Anti-Shock Valve (Hydr.)	1.082	3	1L-15
Application of Ol. Hammer	5.0020	2	2J-7
Batteries	1.220	2	2D-13
Belts	0.340	1	1H-23
	0.345	1	1I-3
Boom Piping	2.030	1	2F-17, 2G-3
	2.031	1	2G-5
	2.031	2	2G-7
Brake Valve Components	3.010	3	2H-3
Bucket	2.020	1	2F-13
Bucket Cylinder	2.030	5	2G-3
Bull Gear	3.000	1	2G-17
Cab	1.250	1	2D-19
Cab Door	1.250	5	2E-7
Cab Heater-Components	1.290	2	2E-15
Cab Window-Left Side	1.250	6	2E-9
Cab-Frame	1.250	7	2E-11
Cab-Platform	1.250	1	2D-19
Cab Vandalism	5.0540	1	2K-3
Camshaft	0.120	1	1F-11
Cold Starting Aid	5.0025	1	2J-11
Connecting Rod	0.081	1	1E-23
Cont. Valve-Hydr. (Ass.Y)	1.050	1	1J-21
Control Valve-Hydr.	1.050	2	2K-3
	1.050	3	2K-5
	1.050	4	2K-7
Controls	1.070	1	1J-20
	1.071	1	1K-21, 1L-3
Counterweight	1.000	1	1J-3
Cowlings	1.300	1	2E-19
	1.300	2	2E-21
	1.300	3	2E-23
Crankshaft	0.080	1	1E-21
Crankshaft Pulley	0.084	1	1F-7
Cylinder Block	0.040	1	1D-21
	0.040	2	1D-23
	0.040	3	1E-3
Cylinder Block Covers	0.043	1	1E-7
	0.043	2	1E-9
Cylinder Head	0.060	1	1E-13
	0.060	2	1E-15
Dashboard (Left)	1.210	1	2D-9
Dashboard (Right)	1.200	1	2D-3
	1.200	3	2D-7
Data Monitor	1.200	2	2D-5
Decals	4.500	1	2I-3
	4.501	1	2I-5
Dipper Stick (2,1m)	5.0022	1	2J-9
Dipper Stick (2,5m) (STD.)	2.003	1	2F-11
Dipper Stick (3m)	5.0038	1	2J-13
Dipper Stick Cylinder	2.030	4	2F-23
	2.031	4	2G-5
Dipstick-Engine Oil	0.270	1	1H-8
Discharge Valve Componen.	3.010	4	2H-5
Drive on Engine (Opt.)	0.350	1	1I-5
Electric System	1.220	1	2D-11
	1.220	2	2D-13
Elements-fuel	0.200	1	1G-17
Elements-Hydraulic	1.020	1	1J-7
Elements-Pilot	80	1	1L-5
Emergency Kits(Lub. Fittir	30	1	2H-23
Engine	.021	1	1D-19
Engine-Controls	0.004	1	1D-15
Engine-Suspensions	0.000	1	1D-3
Engine Breather	0.045	1	1E-11
Engine Cooling Piping	0.323	1	1H-19
Engine Heat Exchanger	0 310	1	1H-15
Engine Lifting Eyes	0.450	1	1I-15
Engine Oil Filter	0.302	1	1H-11
Engine Oil Piping	0.305	1	1H-13
Engine Oil Pump	0.300	1	1H-9
Engine Oil Sump	0.042	1	1E-5
Engine Piston	0.082	1	1F-3
Engine Suspensions	0.000	1	1D-3
Exhaust Manifold	0.077	1	1E-19
Exhaust Valve	0.060	2	1E-15
Fan	0.345	1	1I-3
Fan Drive	0.345	1	1I-3
"Filter Care" Kit	24		1A-24
Filter-Pilot System	1.080	1	1L-5
Filters-Air	0.001	1	1D-5
Filters-Engine Oil	0.302	1	1D-11
Filters-Fuel	0.200	1	1G-17
Filters-Hydr. System	1.020	1	1J-7
Flywheel-Engine	0.083	1	1L-17
Fuel Filter	0..200	1	1G-17
Fuel Piping	0.203	1	1G-19
Fuel Pump	0.203	2	1G-21
	0.140	8	1G-5
Fuel Tank	1.010	1	1J-5
Fuses	1.200	3	2D-7
Guards	1.300	2	2E-21
Handle	1.300	3	2E-23
	1.300	4	2F-3
Heater	1.290	1	2E-15
Horn	1.220	2	2D-15
Hydr.Pump-Components	1.030	2	1J-13
Hydr.Pump Regulator-Comp.	1.030	3	1J-15

E-2

ALPHABETICAL INDEX

DESCRIPTION	SGR.	TAV.	GRID
Hydraulic Pump	1.030	1	1J-9
Idler	3.020	1	1H-7
Injection Nozzle-Lines	0.149	1	1G-15
Injection Pump	0.140	6	1F-23
	0.140	7	1G-3
Injection Pump Drive	0.140	10	1G-9
Injection Pump-Piping	0.140	1	1F-13
	0.140	9	1G-7
Intake Manifold	0.071	1	1E-17
Intake Valve	0.060	2	1E-15
Lift Cylinder (Left)	2.030	3	1F-21
Lift Cylinder (Right)	2.030	2	2F-19
Lights	1.220	2	2D-13
Lower Frame	3.000	1	2G-17
Lubric. Fitting Piping	3.001	1	2G-19
	2.041	1	2G-15
	2.040	1	1G-13
Main Piping	1.060	1	1K-9
	1.061	1	1K-11
Mirror (Rear)	1.300	2	2E-21
Monobloc Boom	2.000	1	2F-5
Motor - Starter	0.360	2	1I-9
Motor - Swing	1.040	1	1J-17
Motor - Travel	3.010	1	2G-21
Motor - Wiper	1.220	1	2D-11
Muffler	0.002	1	1D-7
Oil Tank	1.020	1	1J-7
Operator's Seat	1.250	2	2D-21
OperatorsSeat(Bostrom)(Std.)	5.0151	1	2J-21
Pilot Piping(1)	1.080	1	1L-5
Pilot Piping(2)	1.081	1	1L-9
Pilot Piping(3)	1.082	1	1L-11
Pilot Piping(4)	1.083	1	1L-17
Pilot Piping(5)	1.084	1	1L-19
Pilot Piping(6)	1.085	1	1L-21
Pilot Valve	1.070	3	1K-19
	1.071	2	1L-3
Pilot Valve-components	1.070	2	1K-17
PipingBoom	2.030	1	2F-17
	2.031	1	2G-5
Piping-Injection	0.149	1	1G-15
Piping-Lube Fittings	2.040	1	2G-13
Piping-Main	1.060	1	1K-9
Piping-Pilot(1)	1.080	1	1L-5
Piping-Pilot(3)	1.082	1	1L-11
Piping-Pilot(4)	1.083	1	1L-17
Piping-Pilot(5)	1.084	1	1L-19
Piping-Pump Contr. Valve	1.050	1	1J-21
Piping-Travel (Lower)	3.070	1	2H-19
	3.071	1	2H-21
Piping-Turbocharger	0.241	1	1H-5
Pump-Engine Oil	0.300	1	1H-9
Pump-Hydraulic	1.030	1	1J-11
Pump-Injection	0.140	6	1F-23
Pump-Water	0.320	1	1H-17
Pump/Control Valve Piping	1.050	1	1J-23
Radiator	0.003	1	1D-9
Radiator-Components	0.003	2	1D-11
	0.003	3	1D-13
Rocker Arm	0.060	2	1E-15
Rotary Distributor	3.060	1	2H-17
SAE Battery Provision	1.220	3	2D-17
Seat Belt	5.0536	1	1J-23
Sensors	1.220	2	2D-13
Solenoid Valve	1.080	2	1L-7
Starter	0.360	2	1I-9
Starter-Mounting	0.360	1	1I-7
Stop Valve	1.082	2	1L-13
Swing Red.Unit Components	1.040	2	1J-19
Swing Reduction Unit	1.040	1	1J-17
Thermostat & Housing	0.326	1	1H-21
Timing Control	0.100	1	1F-9
Tool Kit	5.0083	1	2J-19
Track Chain	3.051	1	2H-13
	3.052	1	2H-15
Track Roller	3.040	1	2H-11
Travel Motor-componen.	3.010	3	2H-3
Travel Piping (Lower)	3.070	1	2H-19
	3.071	1	2H-21
Travel Red.Unit-Componen.	3.010	2	2G-23
Travel Reduction Units	3.010	1	2G-21
Turbocharger	0.240	1	1G-23
	0.240	2	1H-3
Turbocharger Piping	0.241	1	1H-5
Upper Frame	1.000	1	1J-3
Upper Roller	3.030	1	2H-9
Valve-Anti-Shock(Hydr.)	1.082	3	1L-15
Valve-Exhaust	0.060	2	1E-15
Valve-Intake	0.060	2	1E-15
Valve-Pilot (Hydr.)	1.070	1	1K-15
Valve-Pilot(Travel)	1.070	1	1K-15
Valve-Solenoid	1.080	2	1L-7
Valve-Stop(Travel)	1.082	1	1L-11
Water Pump	0.320	1	1H-17
Water Pump Drive	0.340	1	1H-23
Water Pump-Components	0.320	2	1H-17
Wiper	1.220	1	2D-11

CYLINDER BLOCK BASAMENTO MOTORE	BLOC-CYKINDRES KURBELGEHAUSE BLOQUE CILINDROS	0.040 TAV.3

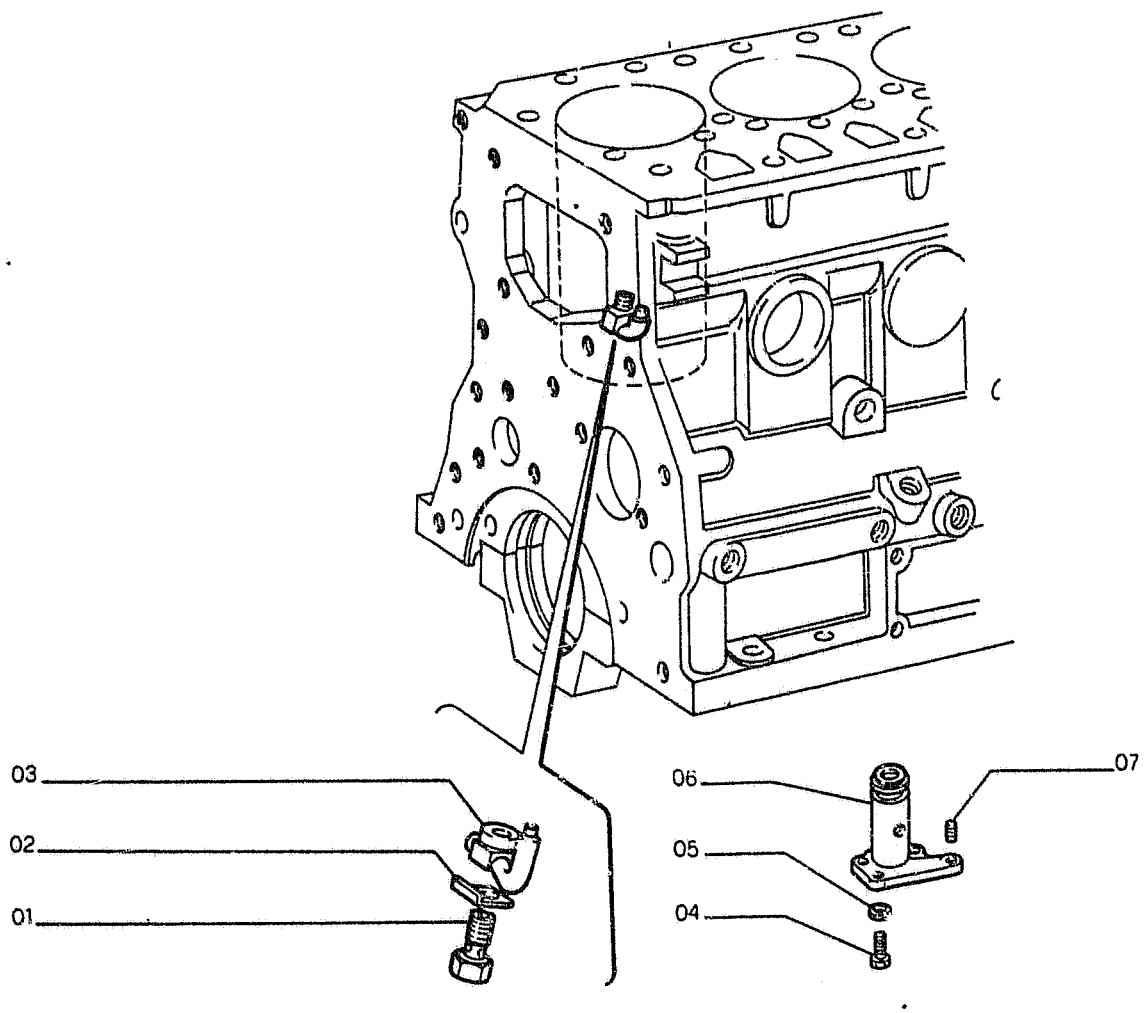

FH200

CYLINDER BLOCK
BASAMENTO MOTORE

BLOC-CYKINDRES
KURBELGEHAUSE
BLOQUE CILINDROS

0.040 TAV.3

ITEM	PART NUMBER	QTY	TR. CO.	DESCRIPTION	DESCRIZIONE
01	4763439	6	20R	FITTING	RACCORDO
02	4763440	6	113P	LOCKPLATE	PIASTRINA DI SICUREZZA
03	4764577	6	20U	JET	UGELLO
04	16043621	2	40V	SCREW 8X1,25X25	VITE 8X1,25X25
05	11193871	2	131R	WASHER	ROSETTA
06	4620944	1	300S	SUPPORT	SUPPORTO
07	13517321	2	210P	STUD	PRIGIONIERO

FH200

ENGINE OIL SUMP COPPA OLIO MOTORE	CARTER D'HUILE MOTOROELWANNE CARTER DE ACEITE	0.042 TAV.1 NTR 104S V-89

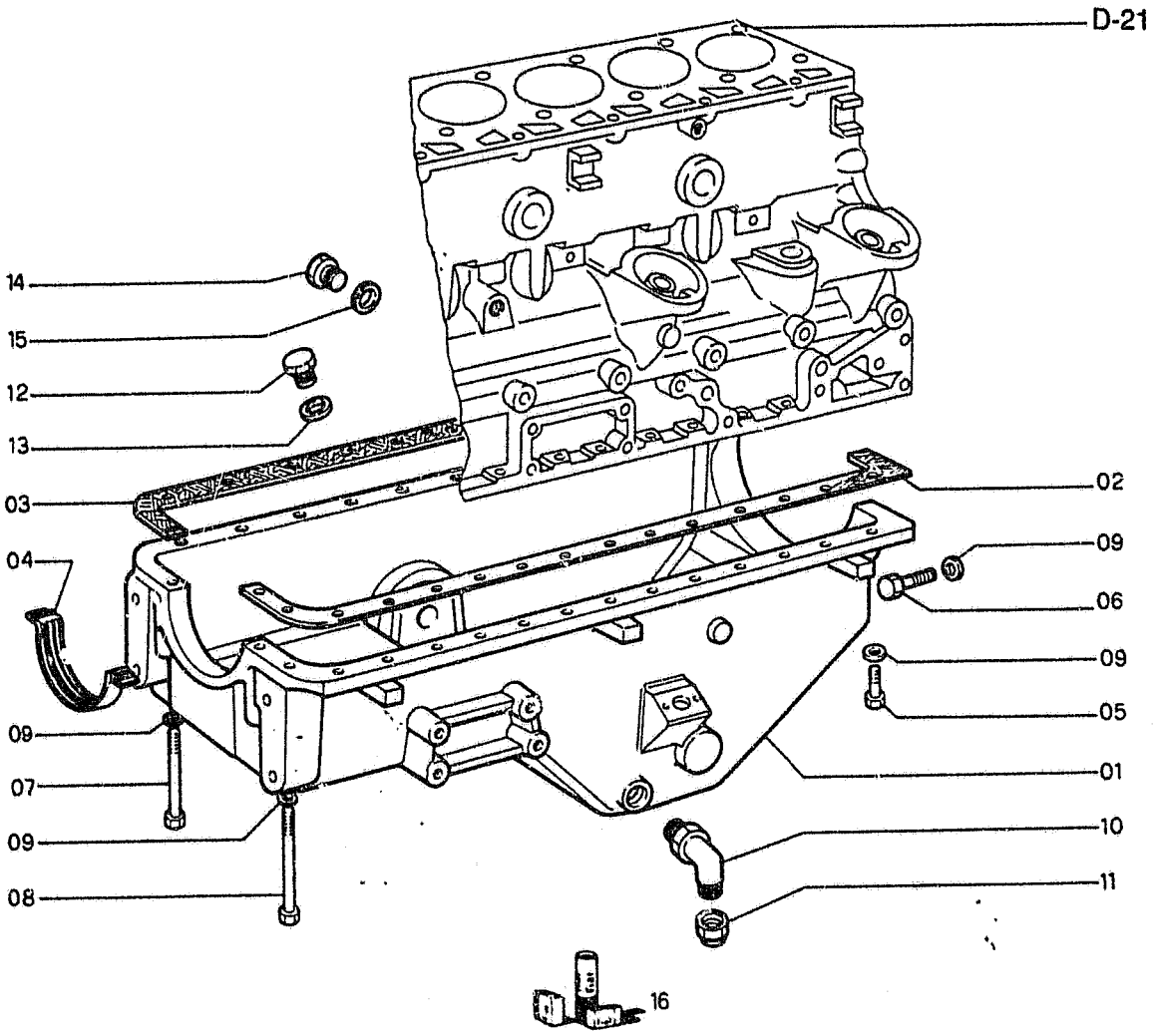

FH200

ENGINE OIL SUMP COPPA OLIO MOTORE	CARTER D'HUILE MOTOROELWANNE CARTER DE ACEITE	0.042 TAV.1 NTR 104S V-89

ITEM	PART NUMBER	QTY	TR. CO.	DESCRIPTION	DESCRIZIONE
01	4753719	1	C274	ENGINE OIL SUMP	COPPA OLIO MOTORE
02	4782785	1	122G	SEAL -K. 79062511	GUARNIZIONE -K. 79062511
03	4782786	1	122G	SEAL -K. 79062511	GUARNIZIONE -K. 79062511
04	4031577	1	122G	SEAL -K. 79062511	GUARNIZIONE -K. 79062511
05	11307024	26	40V	SCREW 10X1,25X40	VITE 10X1,25X40
06	11306924	6	40V	SCREW 10X1,25X30	VITE 10X1,25X30
07	15971824	2	40V	SCREW 10X1,25X100	VITE 10X1,25X100
08	15972824	1	40V	SCREW 10X1,25X150	VITE 10X1,25X150
09	11198371	35	131R	WASHER	ROSETTA
10	79054407	1	20R	FITTING	RACCORDO
11	79054463	1	50T	PLUG	TAPPO
12	10276111	1	50T	PLUG	TAPPO
13	10265060	1	120G	GASKET	GUARNIZIONE PIANA
14	4847102	1	50T	PLUG	TAPPO
15	14457680	1	158G	O-RING	GUARNIZIONE O-R
16	79062511	1	K13	KIT - CYLINDER BLOCK SEALS FOR COMPONENTS, SEE A-24	KIT - GUARNIZ.BASAMENTO MOTORE VED. COMPONENTI PAG. 24

FH200

CYLINDER BLOCK COVERS COPERCHI BASAMENTO	COUVERCLES DE BLOC-CYL. DECKEL DES KURBELGEHAUSES TAPAS DEL BLOQUE	0.043 TAV.1 NTR 104S V-89

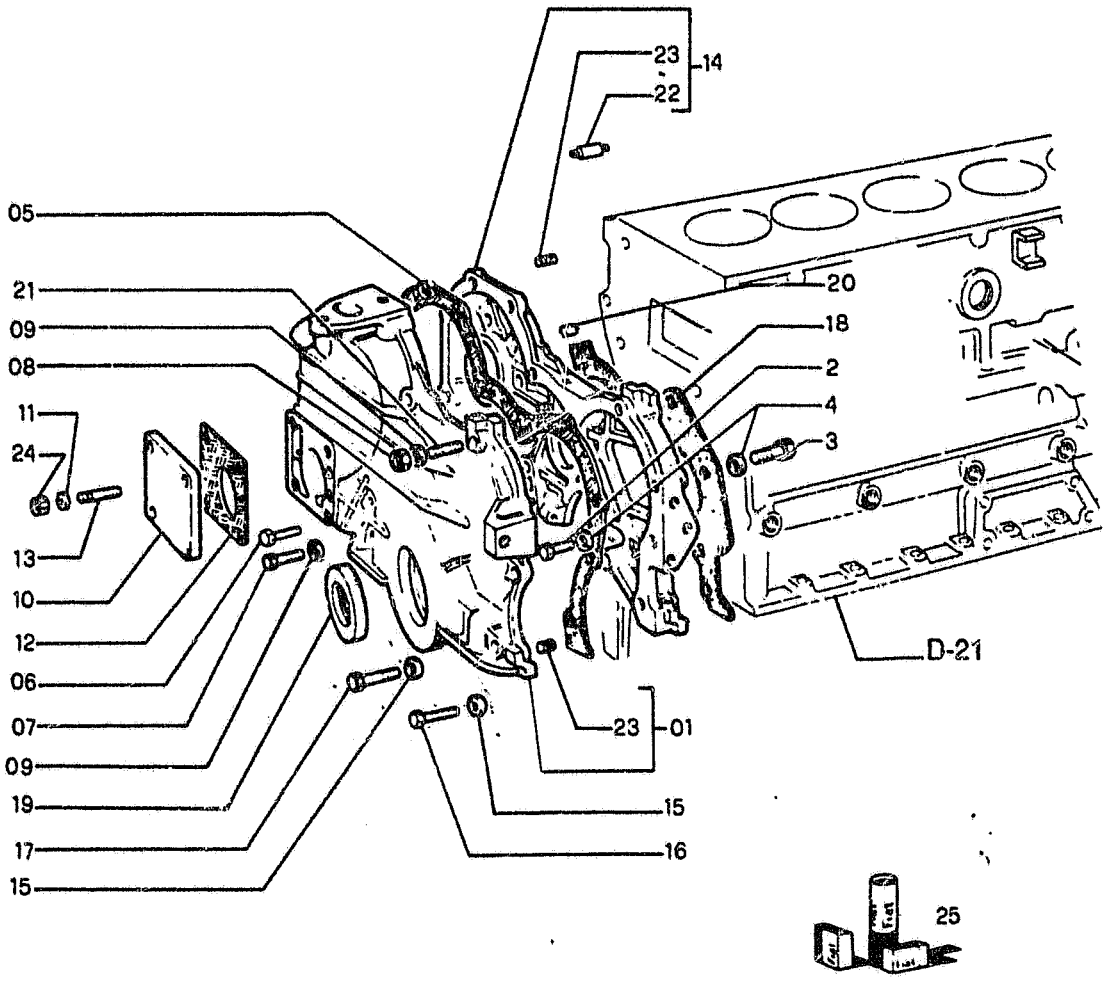

FH200

CYLINDER BLOCK COVERS
COPERCHI BASAMENTO

COUVERCLES DE BLOC-CYL.
DECKEL DES KURBELGEHAUSES
TAPAS DEL BLOQUE

0.043 TAV.1

REVISED JULY 1990

ITEM	PART NUMBER	QTY	TR. CO.	DESCRIPTION	DESCRIZIONE
01	4769187	1	265C	COVER -ASS.LY	COPERCHIO -COMPL.
02	16043921	6	40V	SCREW 8X1,25X35	VITE 8X1,25X35
03	16044224	1	40V	SCREW	VITE
04	10519601	7	131R	WASHER	ROSETTA
05	4781578	1	122G	SEAL -K. 79062511	GUARNIZIONE -K. 79062511
06	16044921	3	40V	SCREW 8X1,25X85	VITE 8X1,25X85
07	16044621	2	40V	SCREW 8X1,25X70	VITE 8X1,25X70
08	16100811	1	10D	NUT	DADO
09	10519601	6	131R	WASHER	ROSETTA
10	4804219	1	265C	COVER	COPERCHIO
11	11197771	4	131R	WASHER	ROSETTA
12	4607590	1	122G	SEAL -K. 79062511	GUARNIZIONE -K. 79062511
				C2897 UP TO ENGINE 349217	C2897 FINO AL MOTORE 349217
	4858082	1	122G	SEAL	GUARNIZIONE
				D2897 FROM ENGINE 349218	D2897 DAL MOTORE 349218
13	4615276	4	210P	STUD	PRIGIONIERO
14	4766126	1	35S	CASE -ASS.LY	SCATOLA -COMPL.
15	10519601	3	131R	WASHER	ROSETTA
16	16043521	2	40V	SCREW 8X1,25X22	VITE 8X1,25X22
17	16043821	1	40V	SCREW 8X1,25X30	VITE 8X1,25X30
18	4781579	1	122G	SEAL -K. 79062511	GUARNIZIONE -K. 79062511
19	40000011	1	122G	SEAL	GUARNIZIONE
20	10839610	2	90G	DOWEL	GRANO
21	13543620	3	210P	STUD	PRIGIONIERO
	13543621	1	210P	STUD	PRIGIONIERO
22	4605220	1	20U	JET	UGELLO
23	13526170	5	90G	DOWEL	GRANO
24	15896211	4	10D	NUT	DADO
25	79062511	1	K13	KIT - CYLINDER BLOCK SEALS FOR COMPONENTS, SEE A-24	KIT - GUARNIZ.BASAMENTO MOTORE VED. COMPONENTI PAG. 24

FH200

CYLINDER BLOCK COVERS COPERCHI BASAMENTO	COUVERCLES DE BLOC-CYL. DECKEL DES KURBELGEHAUSES TAPAS DEL BLOQUE	0.043 TAV.2 REVISED JULY 1990

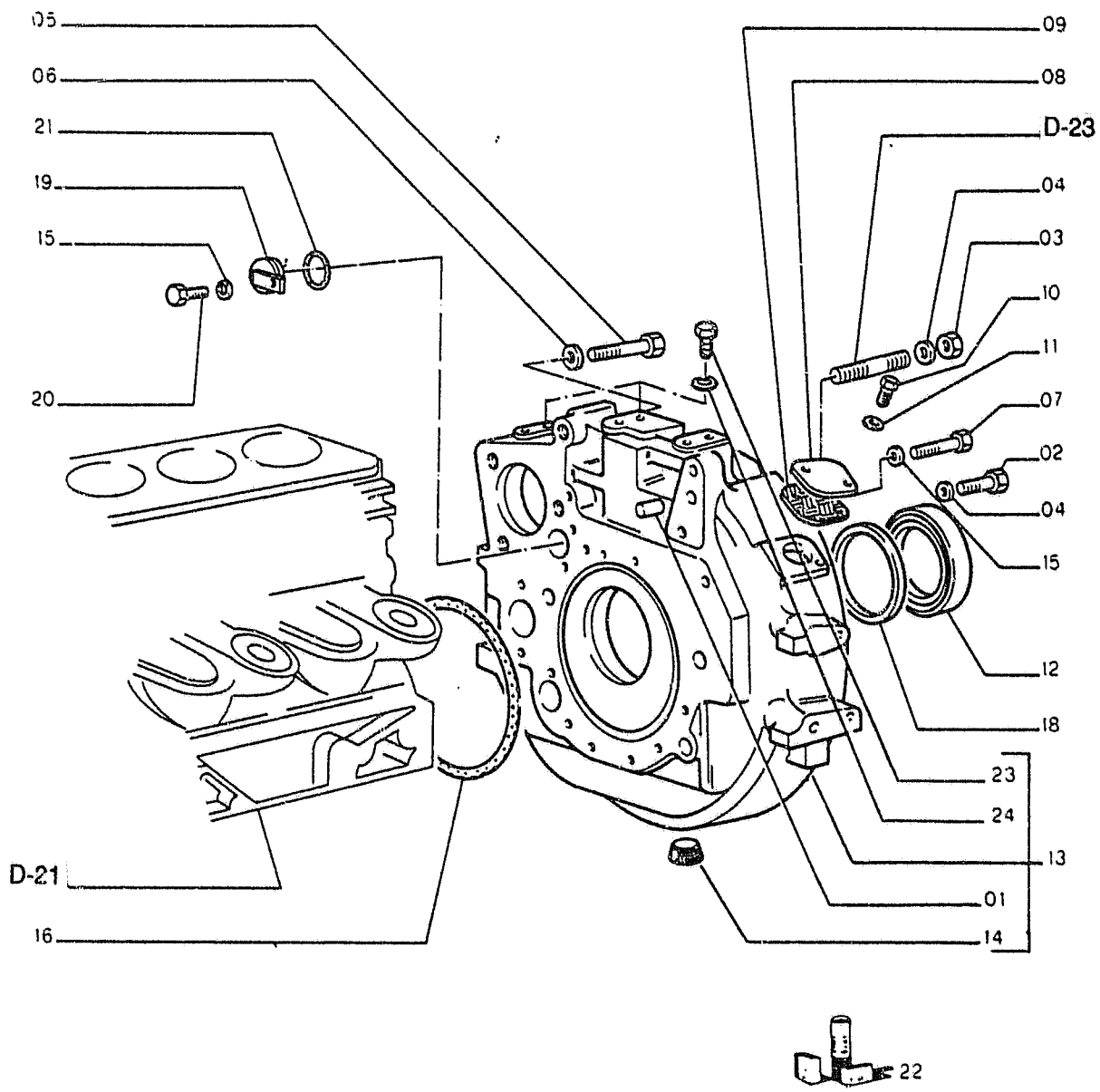

FH200

CYLINDER BLOCK COVERS
COPERCHI BASAMENTO
COUVERCLES DE BLOC-CYL.
DECKEL DES KURBELGEHAUSES
TAPAS DEL BLOQUE

0.043 TAV.2

REVISED JULY 1990

ITEM	PART NUMBER	QTY	TR. CO.	DESCRIPTION	DESCRIZIONE
01	10839710	2	90G	DOWEL	GRANO
02	11408321	2	40V	SCREW 14X1,5X35	VITE 14X1,5X35
03	12164011	2	10D	NUT	DADO
04	11200171	4	131R	WASHER	ROSETTA
05	11306921	4	40V	SCREW 10X1,25X30	VITE 10X1,25X30
06	11198371	4	131R	WASHER	ROSETTA
07	16043921	2	40V	SCREW 8X1,25X35	VITE 8X1,25X35
08	4607786	1	265C	COVER	COPERCHIO
09	4605564	1	122G	SEAL -K. 79062511	GUARNIZIONE -K. 79062511
10	16043421	2	40V	SCREW 8X1,25X20	VITE 8X1,25X20
11	11193871	2	131R	WASHER	ROSETTA
12	40003800	1	122G	SEAL	GUARNIZIONE
13	4843995	1	35S	CASE	SCATOLA
14	14325601	1	50T	PLUG	TAPPO
15	11193871	3	131R	WASHER	ROSETTA
16	14483080	1	158G	O-RING -K. 79062511	GUARNIZIONE O-R -K. 79062511
				C2901 UP TO ENGINE 382705	**C2901** FINO AL MOTORE 382705
	14483081	1	158G	O-RING	GUARNIZIONE O-R
				D2901 FROM ENGINE 382706	**D2901** DAL MOTORE 382706
17	13517821	1	210P	STUD	PRIGIONIERO
18	4787154	1	75D	SPACER	DISTANZIALE
19	4718740	1	50T	PLUG	TAPPO
20	16043224	1	40V	SCREW 8X1,25X16	VITE 8X1,25X16
21	14463880	1	158G	O-RING	GUARNIZIONE O-R
22	79062511	1	K13	KIT - CYLINDER BLOCK SEALS FOR COMPONENTS, SEE A-24	KIT - GUARNIZ.BASAMENTO MOTORE VED. COMPONENTI PAG. 24
23	16607424	4	40V	SCREW	VITE
				D2902 FROM ENGINE 388156	**D2902** DAL MOTORE 388156
24	10298360	4	158G	O-RING	GUARNIZIONE O-R
				D2902 FROM ENGINE 388156	**D2902** DAL MOTORE 388156

ENGINE BREATHER SFIATATOIO MOTORE	RENIFLARD DU MOTEUR ENTLUEFTER RESPIRADERO	0.045 TAV.1

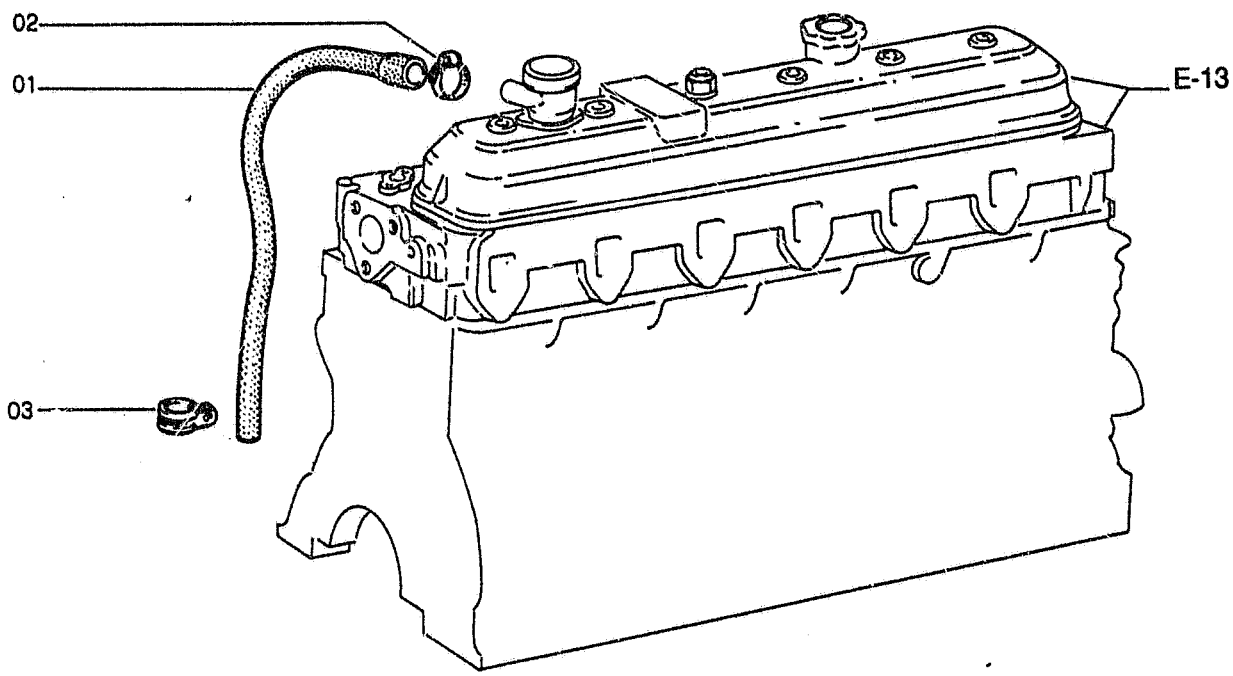

FH200

ENGINE BREATHER SFIATATOIO MOTORE	RENIFLARD DU MOTEUR ENTLUEFTER RESPIRADERO	0.045	TAV.1

ITEM	PART NUMBER	QTY	TR. CO.	DESCRIPTION	DESCRIZIONE
01	98400770	1	193T	TUBE	TUBO RIGIDO
02	12182990	1	180C	COLLAR	COLLARE
03	10450890	1	231S	CLIP	STAFFETTA

FH200

CYLINDER HEAD TESTA CILINDRI	CULASSE DE CYLINDRE ZYLINDERKOPF CULATA	0.060 TAV.1 NTR 104S V-89

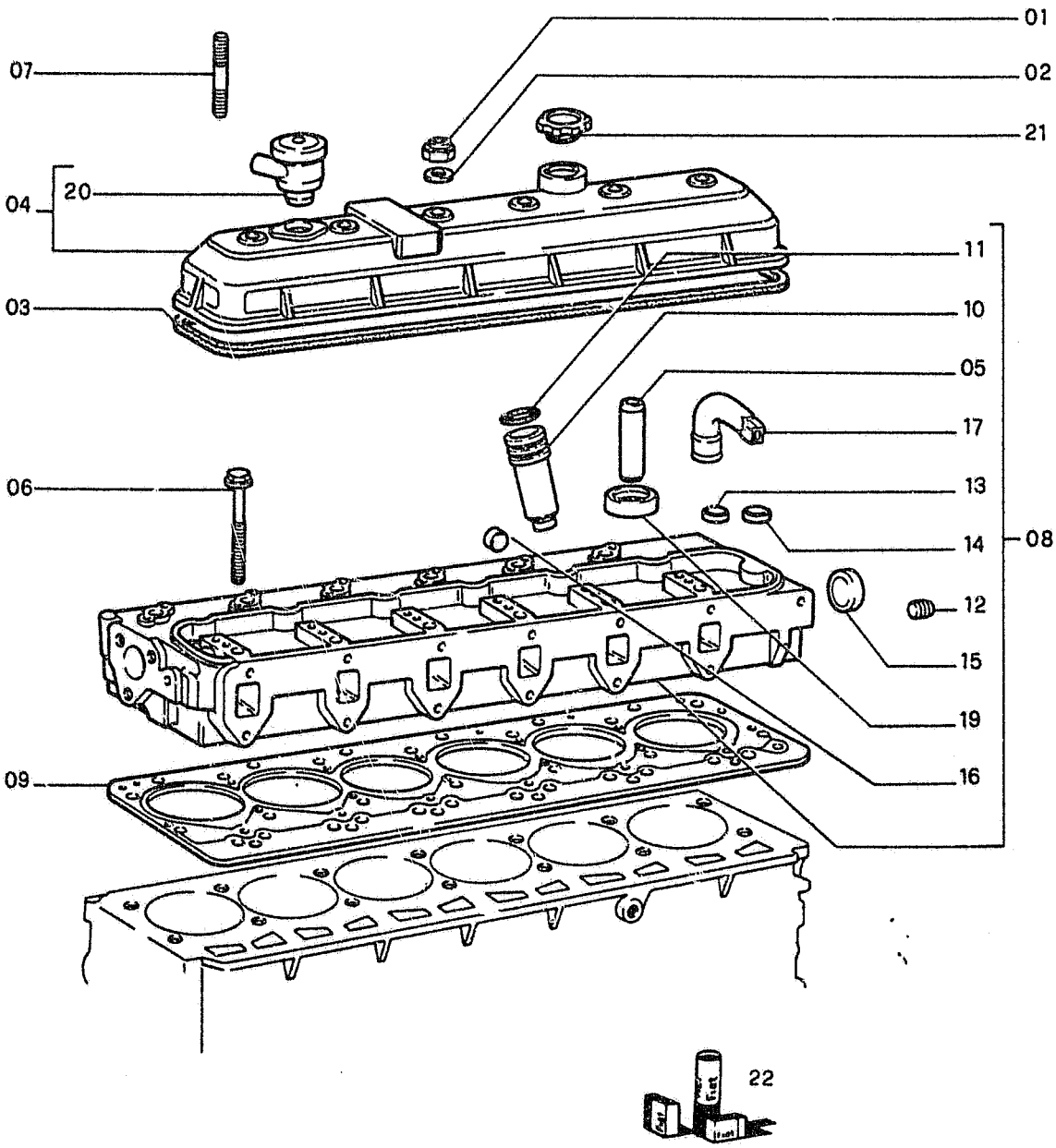

FH200

CYLINDER HEAD
TESTA CILINDRI

CULASSE DE CYLINDRE
ZYLINDERKOPF
CULATA

0.060 TAV.1

NTR 104S V-89

ITEM	PART NUMBER	QTY	TR. CO.	DESCRIPTION	DESCRIZIONE
01	16104111	6	10D	NUT	DADO
02	10519660	6	131R	WASHER	ROSETTA
03	4783241	1	120G	GASKET -K. 79062512	GUARNIZIONE PIANA -K. 79062512
04	4835762	1	265C	COVER -ASS.LY	COPERCHIO -COMPL.
05	4802126	12	145G	GUIDE +0,0	GUIDA +0,0
	4802127	12	145G	GUIDE +0,2	GUIDA +0,2
06	4796457	26	40V	SCREW	VITE
07	13517530	12	210P	STUD	PRIGIONIERO
08	4832023	1	113T	CYLINDER HEAD	TESTA CILINDRI
09	4754068	1	120G	GASKET -K. 79062512	GUARNIZIONE PIANA -K. 79062512
10	4770859	6	101A	CASING	ASTUCCIO
11	14453981	12	158G	O-RING	GUARNIZIONE O-R
12	14323911	1	50T	PLUG	TAPPO
13	14282470	12	50T	PLUG	TAPPO
14	14282170	1	50T	PLUG	TAPPO
15	14282970	1	50T	PLUG	TAPPO
16	14282770	1	50T	PLUG	TAPPO
17	4818862	6	20D	DEFLECTOR	DEFLETTORE
19	4784885	6	69S	SEAT +0,0	SEDE +0,0
	4784886	6	69S	SEAT +0,2	SEDE +0,2
	4784887	6	69S	SEAT +0,05	SEDE +0,05
20	4812047	1	145S	BREATHER	SFIATATOIO
21	4232606	1	50T	PLUG	TAPPO
22	79062512	1	K14	KIT - CYLINDER HEAD SEALS FOR COMPONENTS, SEE A-24	KIT - GUARNIZ. TESTA CILINDRI VED. COMPONENTI PAG. 24

CYLINDER HEAD TESTA CILINDRI	CULASSE DE CYLINDRE ZYLINDERKOPF CULATA	0.060 TAV.2 NTR 104S V-89

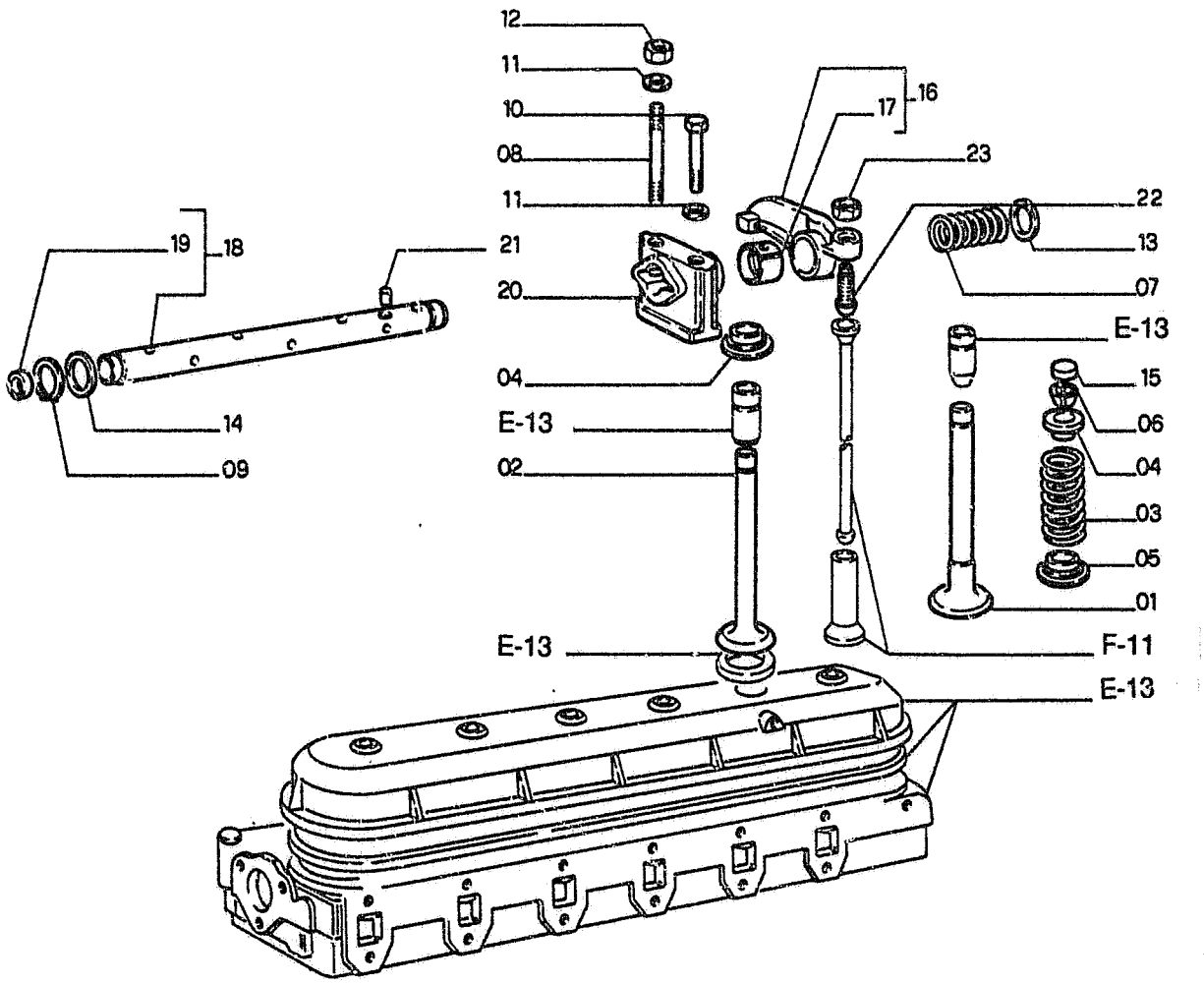

FH200

CYLINDER HEAD
TESTA CILINDRI
CULASSE DE CYLINDRE
ZYLINDERKOPF
CULATA

0.060 TAV.2

NTR 104S V-89

ITEM	PART NUMBER	QTY	TR. CO.	DESCRIPTION	DESCRIZIONE
01	4824416	6	111V	INTAKE VALVE	VALVOLA ASPIRAZ.
02	4784890	6	112V	EXHAUST VALVE	VALVOLA SCARICO
03	4780108	12	100M	SPRING	MOLLA
04	4780558	12	60S	CUP	SCODELLINO
05	4780559	12	60S	CUP	SCODELLINO
06	14196670	24	100S	DETENT	SEMICONO
07	4601296	5	100M	SPRING	MOLLA
08	13516221	6	210P	STUD	PRIGIONIERO
09	11066675	2	187A	SNAP RING	ANELLO ELASTICO
10	10044521	6	40V	SCREW	VITE
11	11198071	12	131R	WASHER	ROSETTA
12	16100811	6	10D	NUT	DADO
13	4639661	10	131R	WASHER -THICK 0,1	ROSETTA -SPESS. 0,1
14	4570798	4	131R	WASHER -THICK 0,7	ROSETTA -SPESS. 0,7
	4570799	4	131R	WASHER -THICK 0,5	ROSETTA -SPESS. 0,5
15	4838680	12	65C	BOOT	CAPPUCCIO
16	4681251	12	55B	ROCKER -ASS.LY	BILANCIERE -COMPL.
17	4682937	1	95B	BUSHING	BOCCOLA
18	4838844	1	16A	SHAFT -ASS.LY	ALBERO -COMPL.
19	14328301	2	50T	PLUG	TAPPO
20	4601295	6	300S	SUPPORT	SUPPORTO
21	563652	1	40V	SCREW	VITE
22	4699783	12	40V	SCREW	VITE
23	4338920	12	10D	NUT	DADO

FH200

INTAKE MANIFOLD COLLETTORE ASPIRAZIONE	COLLECTEUR D'ADMISSION ANSAUGROHR COLECTOR DE ASPIRACION	0.071 TAV.1 NTR 104S V-89

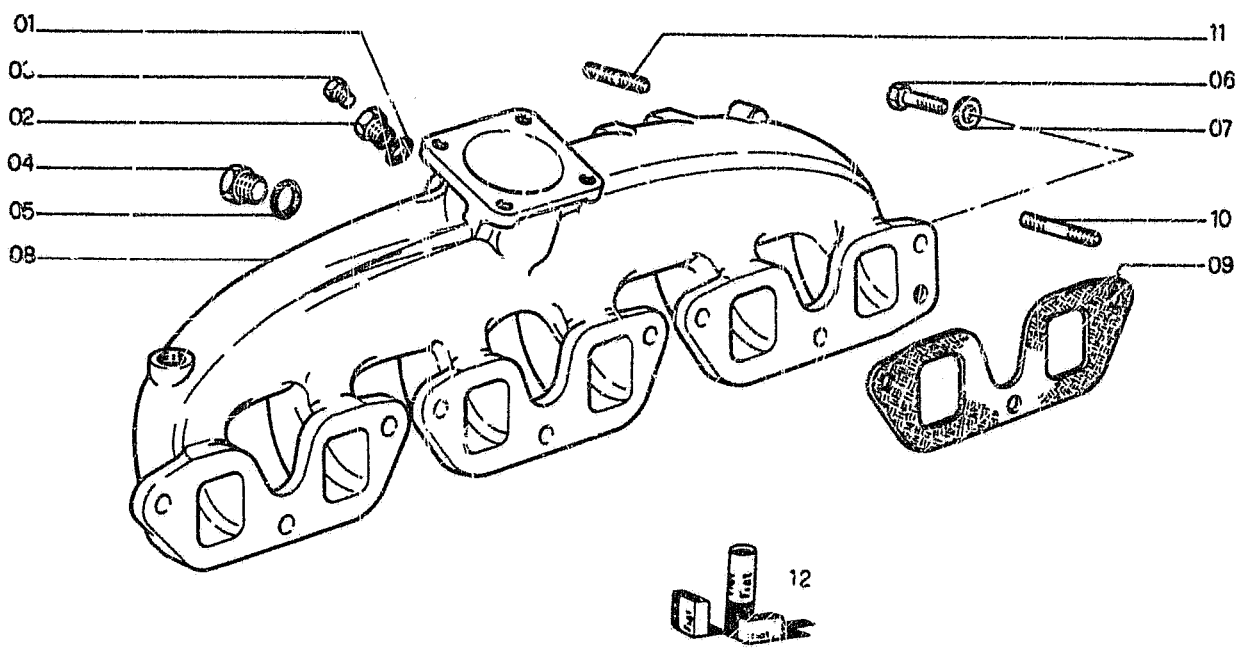

FH200

INTAKE MANIFOLD COLLETTORE ASPIRAZIONE	COLLECTEUR D'ADMISSION /ANSAUGROHR COLECTOR DE ASPIRACION	0.071 TAV.1 NTR 104S V-89

ITEM	PART NUMBER	QTY	TR. CO.	DESCRIPTION	DESCRIZIONE
01	10260160	1	122G	SEAL	GUARNIZIONE
02	4663081	1	20R	FITTING	RACCORDO
03	11909011	1	50T	PLUG	TAPPO
04	4753563	1	50T	PLUG	TAPPO
05	10260160	1	122G	SEAL	GUARNIZIONE
06	16043521	8	40V	SCREW 8X1,25X25	VITE 8X1,25X25
07	10519601	8	131R	WASHER	ROSETTA
08	4801922	1	225C	INTAKE MANIFOLD	COLLETTORE ASPIRAZIONE
09	4776544	3	122G	SEAL -K. 79062510	GUARNIZIONE -K. 79062510
10	13543321	1	210P	STUD	PRIGIONIERO
11	13546721	3	210P	STUD	PRIGIONIERO
12	79062510	1	K22	KIT-MANIFOLD GASKETS FOR COMPONENTS, SEE A-22	KIT-GUARNIZIONI COLLETTORI VED. COMPONENTI PAG. 23

FH200

EXHAUST MANIFOLD COLLETTORE DI SCARICO	COLLECTEUR D'ECHAPPEMENT AUSPUFFKRUEMMER COLECTOR DE ESCAPE	0.077 TAV.1 NTR 104S V-89

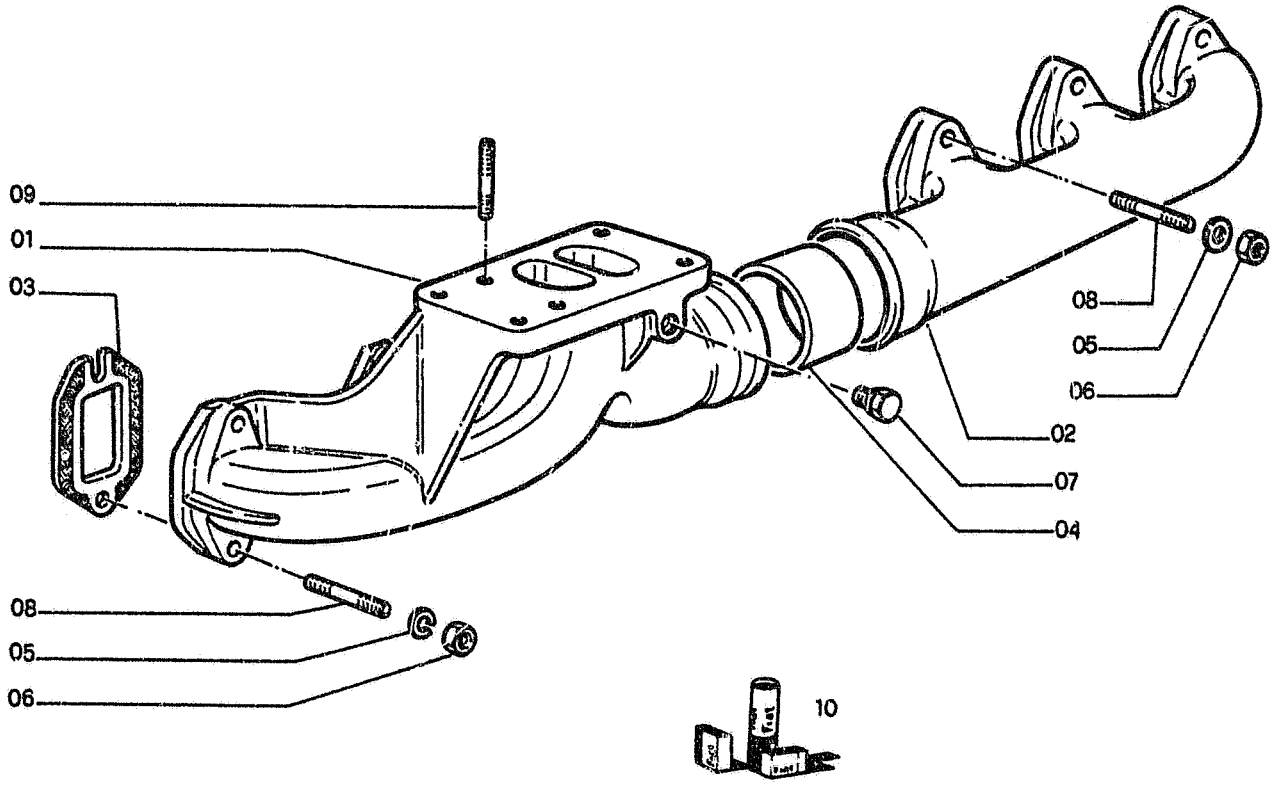

EXHAUST MANIFOLD
COLLETTORE DI SCARICO

COLLECTEUR D'ECHAPPEMENT
AUSPUFFKRUEMMER
COLECTOR DE ESCAPE

0.077 TAV.1

NTR 104S V-89

ITEM	PART NUMBER	QTY	TR. CO.	DESCRIPTION	DESCRIZIONE
01	4754672	1	230C	EXHAUST MANIFOLD	COLLETTORE DI SCARICO
02	4817495	1	230C	EXHAUST MANIFOLD	COLLETTORE DI SCARICO
03	4813566	6	120G	GASKET -K. 79062510	GUARNIZIONE PIANA -K. 79062510
04	4813001	1	30M	SLEEVE	MANICOTTO
05	10519621	12	131R	WASHER	ROSETTA
06	14048227	12	10D	NUT	DADO
07	4817522	12	50T	PLUG	TAPPO
08	4817998	12	210P	STUD	PRIGIONIERO
09	4754566	2	210P	STUD	PRIGIONIERO
10	79062510	1	K22	KIT-MANIFOLD GASKETS FOR COMPONENTS, SEE A-22	KIT-GUARNIZIONI COLLETTORI VED. COMPONENTI PAG. 23

FH200

CRANKSHAFT ALBERO MOTORE	VILEBREQUIN KURBELWELLE CIGÜEÑAL	0.080 TAV.1 NTR 104S V-89

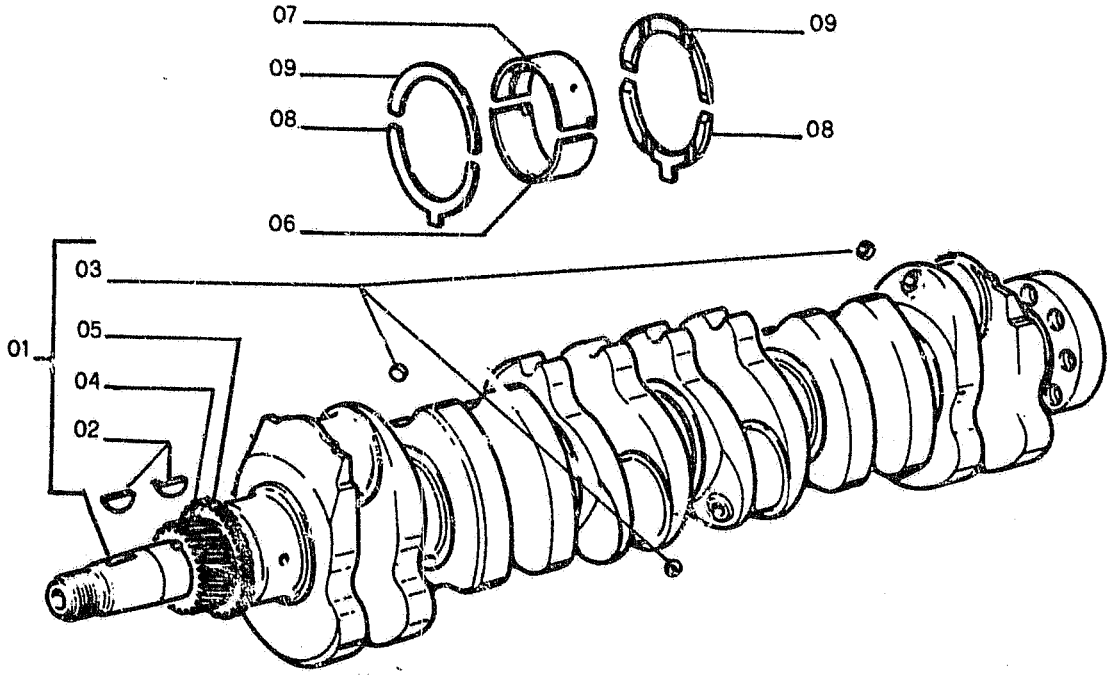



FH200

CRANKSHAFT
ALBERO MOTORE
VILEBREQUIN
KURBELWELLE
CIGÜEÑAL

0.080 TAV.1

NTR 104S V-89

ITEM	PART NUMBER	QTY	TR. CO.	DESCRIPTION	DESCRIZIONE
01	4785107	1	18A	CRANKSHAFT	ALBERO MOTORE
02	4655844	2	61L	WOODRUF KEY	LINGUETTA A DISCO
03	14328101	6	50T	PLUG	TAPPO
04	4809524	1	50I	GEAR	INGRANAGGIO
05	4770255	1	50I	GEAR	INGRANAGGIO
06	4754062	7	103S	HALF BEARING -0,000	SEMICUSCINETTO -0,000
	4771247	7	103S	HALF BEARING -0,127	SEMICUSCINETTO -0,127
	4771248	7	103S	HALF BEARING -0,254	SEMICUSCINETTO -0,254
	4771249	7	103S	HALF BEARING -0,508	SEMICUSCINETTO -0,508
	4771250	7	103S	HALF BEARING -0,762	SEMICUSCINETTO -0,762
	4771251	7	103S	HALF BEARING -1,016	SEMICUSCINETTO -1,016
07	4754064	7	103S	HALF BEARING -0,000	SEMICUSCINETTO -0,000
	4771257	7	103S	HALF BEARING -0,127	SEMICUSCINETTO -0,127
	4771258	7	103S	HALF BEARING -0,254	SEMICUSCINETTO -0,254
	4771259	7	103S	HALF BEARING -0,508	SEMICUSCINETTO -0,508
	4771260	7	103S	HALF BEARING -0,762	SEMICUSCINETTO -0,762
	4771261	7	103S	HALF BEARING -1,016	SEMICUSCINETTO -1,016
08	4707779	2	90S	HALF RING +0,000	SEMIANELLO +0,000
	4707780	2	90S	HALF RING +0,127	SEMIANELLO +0,127
	4708069	2	90S	HALF RING +0,254	SEMIANELLO +0,254
	4708070	2	90S	HALF RING +0,508	SEMIANELLO +0,508
	4794193	2	90S	HALF RING +0,381	SEMIANELLO +0,381
09	4707775	2	90S	HALF RING +0,000	SEMIANELLO +0,000
	4707776	2	90S	HALF RING +0,127	SEMIANELLO +0,127
	4708063	2	90S	HALF RING +0,254	SEMIANELLO +0,254
	4708064	2	90S	HALF RING +0,508	SEMIANELLO +0,508
	4793794	2	90S	HALF RING +0,381	SEMIANELLO +0,381
10	1901385	1	K15A	KIT-CRANK.THRUST RINGS(+0,000) FOR COMPONENTS, SEE A-20	KIT-ANELLI SPALLAM. (+0,000) VED. COMPONENTI PAG. 22
	1901386	1	K15B	KIT-CRANK.THRUST RINGS(+0,127) FOR COMPONENTS, SEE A-20	KIT-ANELLI SPALLAM. (+0,127) VED. COMPONENTI PAG. 22
	1901387	1	K15C	KIT-CRANK.THRUST RINGS(+0,254) FOR COMPONENTS, SEE A-20	KIT-ANELLI SPALLAM. (+0,254) VED. COMPONENTI PAG. 22
	1901388	1	K15D	KIT-CRANK.THRUST RINGS(+0,508) FOR COMPONENTS, SEE A-20	KIT-ANELLI SPALLAM. (+0,508) VED. COMPONENTI PAG. 22
	1930176	7	K19A	KIT-CYL.BLOCK BEARINGS(-0,000) FOR COMPONENTS, SEE A-20	KIT-SEMICUSC.DI BANCO (-0,000) VED. COMPONENTI PAG. 22
	1930177	7	K19B	KIT-CYL.BLOCK BEARINGS(-0,254) FOR COMPONENTS, SEE A-20	KIT-SEMICUSC.DI BANCO (-0,254) VED. COMPONENTI PAG. 22
	1930178	7	K19C	KIT-CYL.BLOCK BEARINGS(-0,508) FOR COMPONENTS, SEE A-20	KIT-SEMICUSC.DI BANCO (-0,508) VED. COMPONENTI PAG. 22
	1930179	7	K19D	KIT-CYL.BLOCK BEARINGS(-0,762) FOR COMPONENTS, SEE A-20	KIT-SEMICUSC.DI BANCO (-0,762) VED. COMPONENTI PAG. 22
	1930180	7	K19E	KIT-CYL.BLOCK BEARINGS(-1,016) FOR COMPONENTS, SEE A-20	KIT-SEMICUSC.DI BANCO (-1,016) VED. COMPONENTI PAG. 22

CONNECTING ROD
BIELLA MOTORE

BIELLE
PLEUEL
BIELA

0.081 TAV.1

NTR 104S V-89

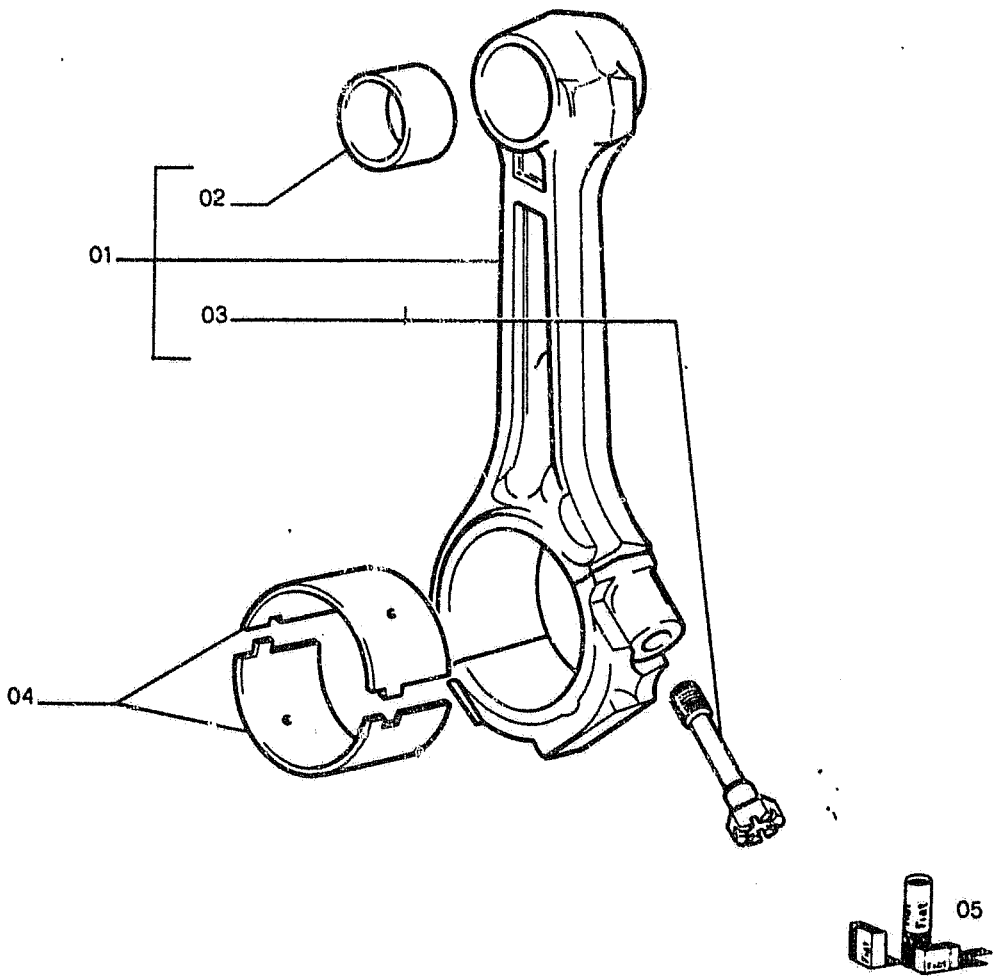

FH200

CONNECTING ROD — BIELLE — 0.081 TAV.1
BIELLA MOTORE — PLEUEL — BIELA — NTR 104S V-89

ITEM	PART NUMBER	QTY	TR. CO.	DESCRIPTION	DESCRIZIONE
01	4781342	6	51B	CONNECTING ROD	BIELLA MOTORE
02	4771872	1	95B	BUSHING	BOCCOLA
03	4780627	2	40V	SCREW	VITE
04	4780965	12	103S	HALF BEARING -0,000 -K 1930201	SEMICUSCINETTO -0,000 -K 1930201
	4780967	12	103S	HALF BEARING -0,254 -K 1930202	SEMICUSCINETTO -0,254 -K 1930202
	4780968	12	103S	HALF BEARING -0,508 -K 1930203	SEMICUSCINETTO -0,508 -K 1930203
	4780969	12	103S	HALF BEARING -0,762 -K 1930204	SEMICUSCINETTO -0,762 -K 1930204
	4780970	12	103S	HALF BEARING -1,016 -K 1930205	SEMICUSCINETTO -1,016 -K 1930205
05	1930201	6	K21A	KIT-CON. ROD BEARINGS (-0,000)	KIT-SEMICUSC. BIELLA (-0,000)
	1930202	6	K21B	KIT-CON. ROD BEARINGS (-0,254)	KIT-SEMICUSC. BIELLA (-0,254)
	1930203	6	K21C	KIT-CON. ROD BEARINGS (-0,508)	KIT-SEMICUSC. BIELLA (-0,508)
	1930204	6	K21D	KIT-CON. ROD BEARINGS (-0,762)	KIT-SEMICUSC. BIELLA (-0,762)
	1930205	6	K21E	KIT-CON. ROD BEARINGS (-1,016)	KIT-SEMICUSC. BIELLA (-1,016)

F-1

ALPHABETICAL INDEX

DESCRIPTION	SGR.	TAV.	GRID
Accelerator controls	0.004	1	1D-21
Air Cleaner	0.001	1	1D-5
Alternator-Mounting	0.400	1	1I-11
Anti-Shock Valve (Hydr.)	1.082	3	1L-15
Application of Ol. Hammer	5.0020	2	2J-7
Batteries	1.220	2	2D-13
Belts	0.340	1	1H-23
	0.345	1	1I-3
Boom Piping	2.030	1	2F-17, 2G-3
	2.031	1	2G-5
	2.031	2	2G-7
Brake Valve Components	3.010	3	2H-3
Bucket	2.020	1	2F-13
Bucket Cylinder	2.030	5	2G-3
Bull Gear	3.000	1	2G-17
Cab	1.250	1	2D-19
Cab Door	1.250	5	2E-7
Cab Heater-Components	1.290	2	2E-15
Cab Window-Left Side	1.250	6	2E-9
Cab-Frame	1.250	7	2E-11
Cab-Platform	1.250	1	2D-19
Cab Vandalism	5.0540	1	2K-3
Camshaft	0.120	1	1F-11
Cold Starting Aid	5.0025	1	2J-11
Connecting Rod	0.081	1	1E-23
Cont. Valve-Hydr. (Ass.Y)	1.050	1	1J-21
Control Valve-Hydr.	1.050	2	2K-3
	1.050	3	2K-5
	1.050	4	2K-7
Controls	1.070	1	1J-20
	1.071	1	1K-21, 1L-3
Counterweight	1.000	1	1J-3
Cowlings	1.300	1	2E-19
	1.300	2	2E-21
	1.300	3	2E-23
Crankshaft	0.080	1	1E-21
Crankshaft Pulley	0.084	1	1F-7
Cylinder Block	0.040	1	1D-21
	0.040	2	1D-23
	0.040	3	1E-3
Cylinder Block Covers	0.043	1	1E-7
	0.043	2	1E-9
Cylinder Head	0.060	1	1E-13
	0.060	2	1E-15
Dashboard (Left)	1.210	1	2D-9
Dashboard (Right)	1.200	1	2D-3
	1.200	3	2D-7
Data Monitor	1.200	2	2D-5
Decals	4.500	1	2I-3
	4.501	1	2I-5
Dipper Stick (2,1m)	5.0022	1	2J-9
Dipper Stick (2,5m) (STD.)	2.003	1	2F-11
Dipper Stick (3m)	5.0038	1	2J-13
Dipper Stick Cylinder	2.030	4	2F-23
	2.031	4	2G-5
Dipstick-Engine Oil	0.270	1	1H-8
Discharge Valve Componen.	3.010	4	2H-5
Drive on Engine (Opt.)	0.350	1	1I-5
Electric System	1.220	1	2D-11
	1.220	2	2D-13
Elements-fuel	0.200	1	1G-17
Elements-Hydraulic	1.020	1	1J-7
Elements-Pilot	1.080	1	1L-5
Emergency Kits(Lub. Fittings)	4.000	1	2H-23
Engine	0.021	1	1D-19
Engine-Controls	0.004	1	1D-15
Engine-Suspensions	0.000	1	1D-3
Engine Breather	0.045	1	1E-11
Engine Cooling Piping	0.323	1	1H-19
Engine Heat Exchanger	0.310	1	1H-15
Engine Lifting Eyes	0.450	1	1I-15
Engine Oil Filter	0.302	1	1H-11
Engine Oil Piping	0.305	1	1H-13
Engine Oil Pump	0.300	1	1H-9
Engine Oil Sump	0.042	1	1E-5
Engine Piston	0.082	1	1F-3
Engine Suspensions	0.000	1	1D-3
Exhaust Manifold	0.077	1	1E-19
Exhaust Valve	0.060	2	1E-15
Fan	0.345	1	1I-3
Fan Drive	0.345	1	1I-3
"Filter Care" Kit	24		1A-24
Filter-Pilot System	1.080	1	1L-5
Filters-Air	0.001	1	1D-5
Filters-Engine Oil	0.302	1	1D-11
Filters-Fuel	0.200	1	1G-17
Filters-Hydr. System	1.020	1	1J-7
Flywheel-Engine	0.083	1	1L-17
Fuel Filter	0..200	1	1G-17
Fuel Piping	0.203	1	1G-19
Fuel Pump	0.203	2	1G-21
	0.140	8	1G-5
Fuel Tank	1.010	1	1J-5
Fuses	1.200	3	2D-7
Guards	1.300	2	2E-21
Handle	1.300	3	2E-23
	1.300	4	2F-3
Heater	1.290	1	2E-15
Horn	1.220	2	2D-15
Hydr.Pump-Components	1.030	2	1J-13
Hydr.Pump Regulator-Comp.	1.030	3	1J-15

F-2

ALPHABETICAL INDEX

DESCRIPTION	SGR.	TAV.	GRID
Hydraulic Pump	1.030	1	1J-9
Idler	3.020	1	1H-7
Injection Nozzle-Lines	0.149	1	1G-15
Injection Pump	0.140	6	1F-23
	0.140	7	1G-3
Injection Pump Drive	0.140	10	1G-9
Injection Pump-Piping	0.140	1	1F-13
	0.140	9	1G-7
Intake Manifold	0.071	1	1E-17
Intake Valve	0.060	2	1E-15
Lift Cylinder (Left)	2.030	3	1F-21
Lift Cylinder (Right)	2.030	2	2F-19
Lights	1.220	2	2D-13
Lower Frame	3.000	1	2G-17
Lubric. Fitting Piping	3.001	1	2G-19
	2.041	1	2G-15
	2.040	1	1G-13
Main Piping	1.060	1	1K-9
	1.061	1	1K-11
Mirror (Rear)	1.300	2	2E-21
Monobloc Boom	2.000	1	2F-5
Motor - Starter	0.360	2	1I-9
Motor - Swing	1.040	1	1J-17
Motor - Travel	3.010	1	2G-21
Motor - Wiper	1.220	1	2D-11
Muffler	0.002	1	1D-7
Oil Tank	1.020	1	1J-7
Operator's Seat	1.250	2	2D-21
OperatorsSeat(Bostrom)(Std.)	5.0151	1	2J-21
Pilot Piping(1)	1.080	1	1L-5
Pilot Piping(2)	1.081	1	1L-9
Pilot Piping(3)	1.082	1	1L-11
Pilot Piping(4)	1.083	1	1L-17
Pilot Piping(5)	1.084	1	1L-19
Pilot Piping(6)	1.085	1	1L-21
Pilot Valve	1.070	3	1K-19
	1.071	2	1L-3
Pilot Valve-components	1.070	2	1K-17
PipingBoom	2.030	1	2F-17
	2.031	1	2G-5
Piping-Injection	0.149	1	1G-15
Piping-Lube Fittings	2.040	1	2G-13
Piping-Main	1.060	1	1K-9
Piping-Pilot(1)	1.080	1	1L-5
Piping-Pilot(3)	1.082	1	1L-11
Piping-Pilot(4)	1.083	1	1L-17
Piping-Pilot(5)	1.084	1	1L-19
Piping-Pump Contr. Valve	1.050	1	1J-21
Piping-Travel (Lower)	3.070	1	2H-19
	3.071	1	2H-21
Piping-Turbocharger	0.241	1	1H-5
Pump-Engine Oil	0.300	1	1H-9
Pump-Hydraulic	1.030	1	1J-11
Pump-Injection	0.140	6	1F-23
Pump-Water	0.320	1	1H-17
Pump/Control Valve Piping	1.050	1	1J-23
Radiator	0.003	1	1D-9
Radiator-Components	0.003	2	1D-11
	0.003	3	1D-13
Rocker Arm	0.060	2	1E-15
Rotary Distributor	3.060	1	2H-17
SAE Battery Provision	1.220	3	2D-17
Seat Belt	5.0536	1	1J-23
Sensors	1.220	2	2D-13
Solenoid Valve	1.080	2	1L-7
Starter	0.360	2	1I-9
Starter-Mounting	0.360	1	1I-7
Stop Valve	1.082	2	1L-13
Swing Red.Unit-Components	1.040	2	1J-19
Swing Reduction Unit	1.040	1	1J-17
Thermostat & Housing	0.326	1	1H-21
Timing Control	0.100	1	1F-9
Tool Kit	5.0083	1	2J-19
Track Chain	3.051	1	2H-13
	3.052	1	2H-15
Track Roller	3.040	1	2H-11
Travel Motor-componen.	3.010	3	2H-3
Travel Piping (Lower)	3.070	1	2H-19
	3.071	1	2H-21
Travel Red.Unit-Componen.	3.010	2	2G-23
Travel Reduction Units	3.010	1	2G-21
Turbocharger	0.240	1	1G-23
	0.240	2	1H-3
Turbocharger Piping	0.241	1	1H-5
Upper Frame	1.000	1	1J-3
Upper Roller	3.030	1	2H-9
Valve-Anti-Shock(Hydr.)	1.082	3	1L-15
Valve-Exhaust	0.060	2	1E-15
Valve-Intake	0.060	2	1E-15
Valve-Pilot (Hydr.)	1.070	1	1K-15
Valve-Pilot(Travel)	1.070	1	1K-15
Valve-Solenoid	1.080	2	1L-7
Valve-Stop(Travel)	1.082	1	1L-11
Water Pump	0.320	1	1H-17
Water Pump Drive	0.340	1	1H-23
Water Pump-Components	0.320	2	1H-17
Wiper	1.220	1	2D-11

ENGINE PISTON PISTONE MOTORE	PISTON KOLBEN EMBOLO	0.082 TAV.1 NTR 104S V-89

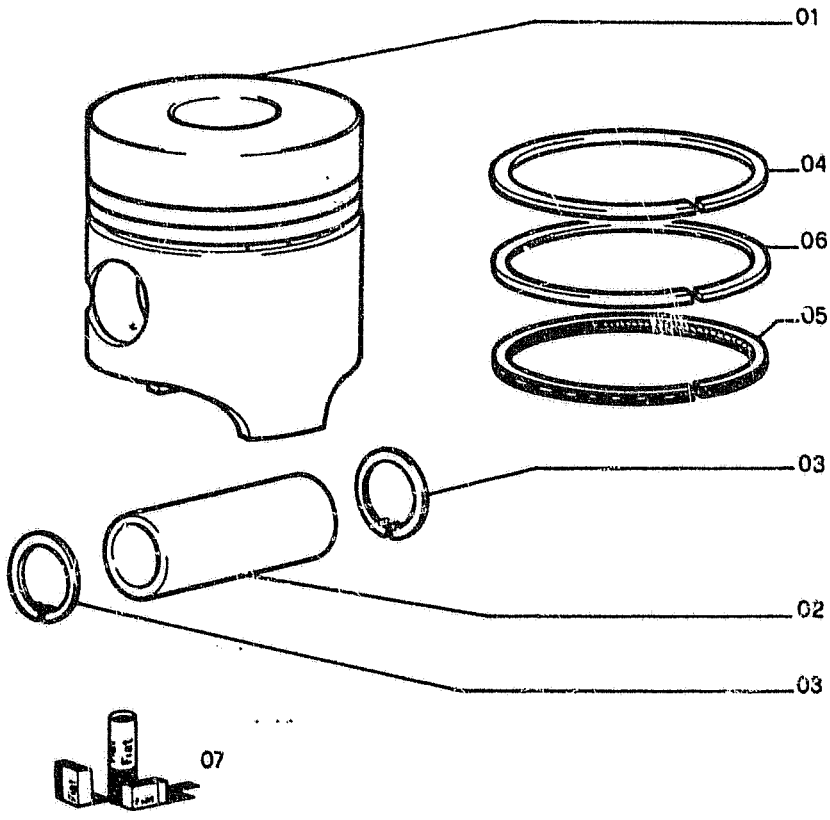

FH200

ENGINE PISTON
PISTONE MOTORE

PISTON
KOLBEN
EMBOLO

0.082 TAV.1

NTR 104S V-89

ITEM	PART NUMBER	QTY	TR. CO.	DESCRIPTION	DESCRIZIONE
01	4770996	6	132P	PISTON +0,0	PISTONE +0,0
	4771827	6	132P	PISTON +0,4	PISTONE +0,4
	4771829	6	132P	PISTON +0,8	PISTONE +0,8
02	4770451	6	80P	PIN	PERNO
03	4770452	12	187A	SNAP RING	ANELLO ELASTICO
04	4758713	6	45A	RING +0,0	ANELLO +0,0
	4771788	6	45A	RING +0,4	ANELLO +0,4
	4771790	6	45A	RING +0,8	ANELLO +0,8
05	4754400	6	45A	RING +0,0	ANELLO +0,0
	4771793	6	45A	RING +0,4	ANELLO +0,4
	4771795	6	45A	RING +0,8	ANELLO +0,8
06	4754401	6	45A	RING +0,0	ANELLO +0,0
	4770632	6	45A	RING +0,4	ANELLO +0,4
	4770634	6	45A	RING +0,8	ANELLO +0,8
07	1930206	6	K17A	KIT-FOR ONE PISTON (+0,0) FOR COMPONENTS, SEE A-20	KIT-PER UNO STANTUFFO (+0,0) VED. COMPONENTI PAG. 22
	1930207	6	K17B	KIT-FOR ONE PISTON (+0,4) FOR COMPONENTS, SEE A-20	KIT-PER UNO STANTUFFO (+0,4) VED. COMPONENTI PAG. 22
	1930208	6	K17C	KIT-FOR ONE PISTON (+0,8) FOR COMPONENTS, SEE A-20	KIT-PER UNO STANTUFFO (+0,8) VED. COMPONENTI PAG. 22
	1930209	6	K18A	KIT-PISTON RINGS(+0,0) FOR COMPONENTS, SEE A-20	KIT-ANELLI STANTUFFO (+0,0) VED. COMPONENTI PAG. 22
	1930210	6	K18B	KIT-PISTON RINGS(+0,4) FOR COMPONENTS, SEE A-22	KIT-ANELLI STANTUFFO (+0,4) VED. COMPONENTI PAG. 23
	1930211	6	K18C	KIT-PISTON RINGS(+0,8) FOR COMPONENTS, SEE A-22	KIT-ANELLI STANTUFFO (+0,8) VED. COMPONENTI PAG. 23

FLYWHEEL - ENGINE VOLANO MOTORE	VOLANT DU MOTEUR SCHWUNGRAD VOLANTE DEL CIGÜEÑAL	0.083 TAV.1

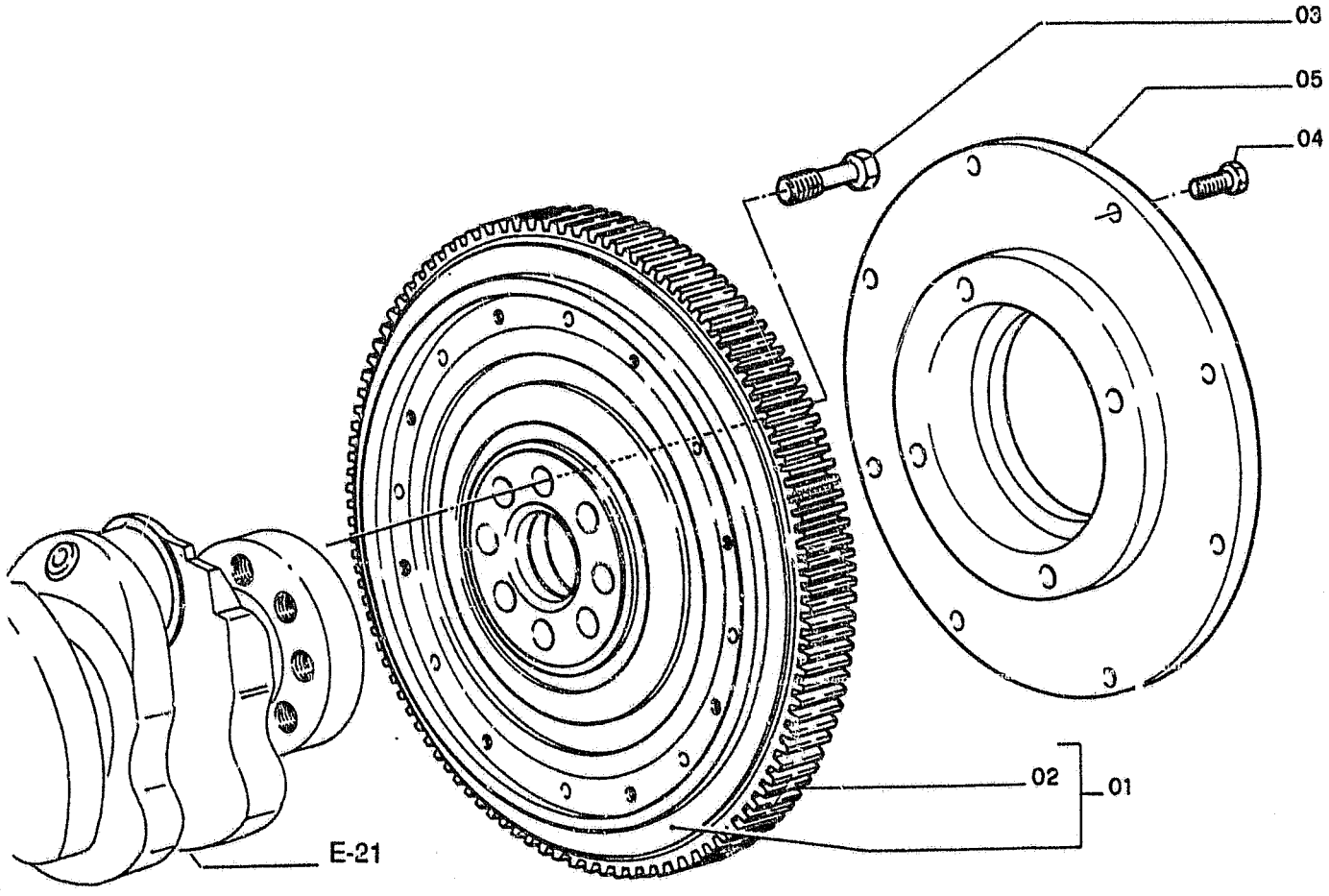

FLYWHEEL - ENGINE
VOLANO MOTORE

VOLANT DU MOTEUR
SCHWUNGRAD
VOLANTE DEL CIGÜEÑAL

0.083 TAV.1

ITEM	PART NUMBER	QTY	TR. CO.	DESCRIPTION	DESCRIZIONE
01	4845281	1	48V	FLYWHEEL -ASS.LY	VOLANO -COMPL.
02	4704106	1	297C	RING GEAR	CORONA DENTATA
03	4779122	7	40V	SCREW	VITE
04	11306934	8	40V	SCREW	VITE
05	71415291	1	70F	FLANGE	FLANGIA

CRANKSHAFT PULLEY PULEGGIA SU ALBERO MOTORE	POULIE DE VILEBREQUIN RIEMENSCHEIBE POLEA DEL CIGÜEÑAL	0.084 TAV.1

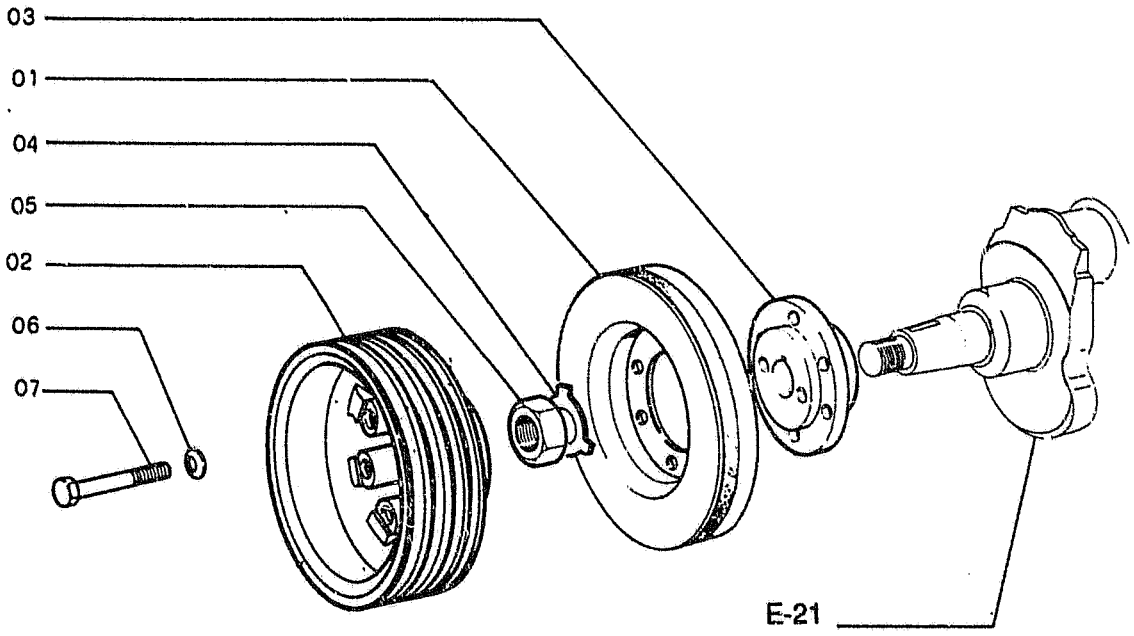

CRANKSHAFT PULLEY
PULEGGIA SU ALBERO MOTORE

POULIE DE VILEBREQUIN
RIEMENSCHEIBE
POLEA DEL CIGÜEÑAL

0.084 TAV.1

ITEM	PART NUMBER	QTY	TR. CO.	DESCRIPTION	DESCRIZIONE
01	4755894	1	164S	DAMPER	SMORZATORE
02	4842031	1	230P	PULLEY	PULEGGIA
03	4655847	1	135M	HUB	MOZZO
04	4600190	1	110P	PLAQUE	PIASTRINA
05	4600189	1	10D	NUT	DADO
06	11198371	6	131R	WASHER	ROSETTA
07	11343721	6	40V	SCREW	VITE

TIMING CONTROL COMANDO DISTRIBUZIONE	COMMANDE DE DISTRIBUTION STEUERUNGSANTRIEB PIÑONES DE DISTRIBUCION	0.100 TAV.1

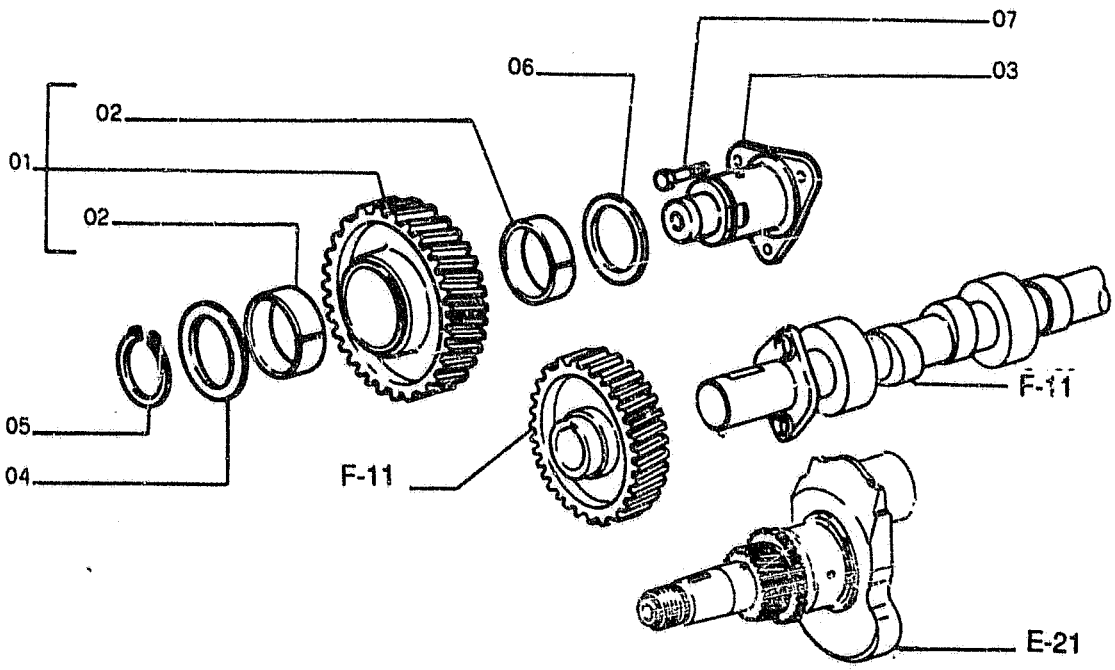

TIMING CONTROL
COMANDO DISTRIBUZIONE

COMMANDE DE DISTRIBUTION
STEUERUNGSANTRIEB
PIÑONES DE DISTRIBUCION

0.100 TAV.1

ITEM	PART NUMBER	QTY	TR. CO.	DESCRIPTION	DESCRIZIONE
01	4769414	1	50I	GEAR -ASS.LY	INGRANAGGIO -COMPL.
02	4769417	2	95B	BUSHING	BOCCOLA
03	4769416	1	80P	PIN	PERNO
04	4769419	1	131R	WASHER	ROSETTA
05	4769420	1	187A	SNAP RING	ANELLO ELASTICO
06	4667452	1	131R	WASHER	ROSETTA
07	16321021	3	40V	SCREW	VITE

FH200

CAMSHAFT ALBERO AD ECCENTRICI	ARBRE A CAMES EXZENTERWELLE ARBOL DE LEVAS	0.120 TAV.1

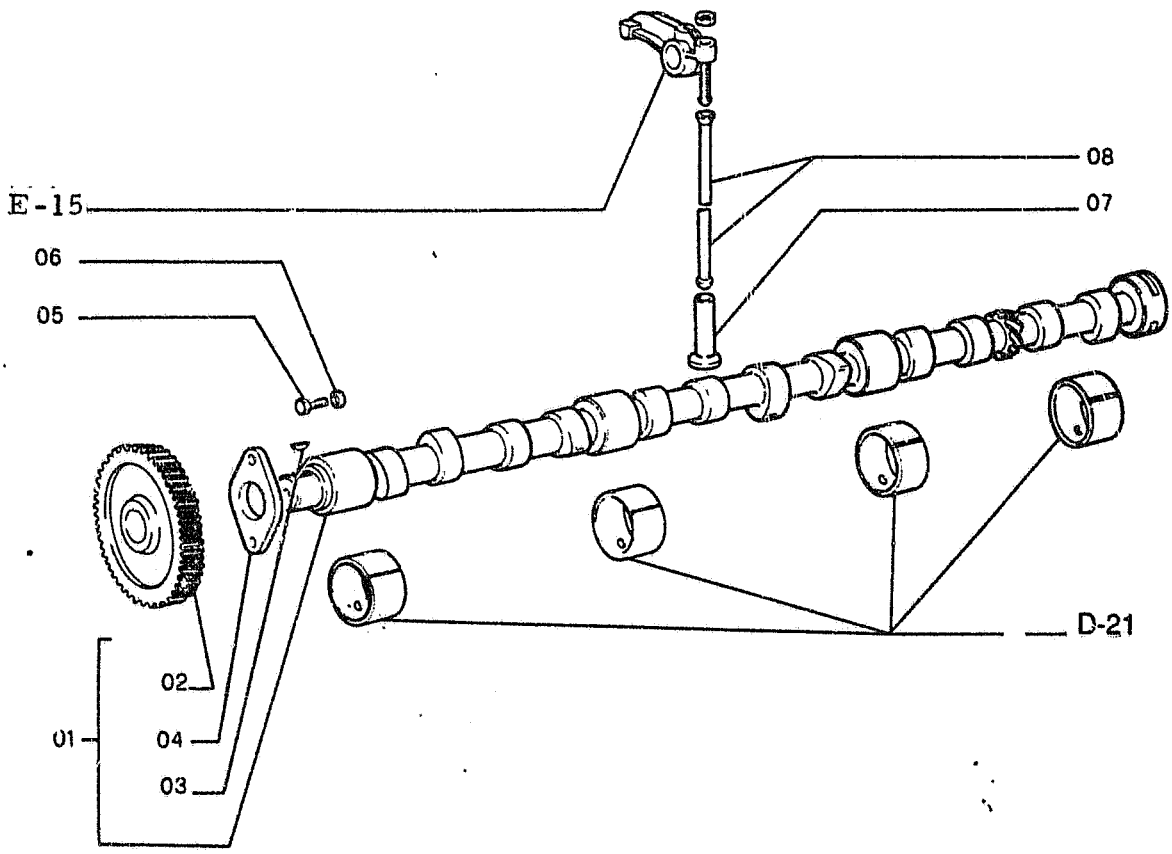

CAMSHAFT
ALBERO AD ECCENTRICI

ARBRE A CAMES
EXZENTERWELLE
ARBOL DE LEVAS

0.120 TAV.1

ITEM	PART NUMBER	QTY	TR. CO.	DESCRIPTION	DESCRIZIONE
01	4824221	1	17A	CAMSHAFT -ASS.LY	ALBERO AD ECCENTRICI -COMPL.
02	4769412	1	50I	GEAR	INGRANAGGIO
03	10205910	1	61L	WOODRUF KEY	LINGUETTA A DISCO
04	4699398	1	105P	PLATE	PIASTRA
05	10043421	2	40V	SCREW 8X1,25X20	VITE 8X1,25X20
06	11193871	2	131R	WASHER	ROSETTA
07	4689881	12	120P	PLATE +0,0	PIATTELO +0,0
	4690509	12	120P	PLATE +0,1	PIATTELO +0,1
	4690510	12	120P	PLATE +0,2	PIATTELO +0,2
	4690511	12	120P	PLATE +0,3	PIATTELO +0,3
08	4770454	12	90A	ROD	ASTA

INJECTION PUMP-PIPING POMPA INIEZIONE-TUBAZIONI	POMPE D'INJECTION-TUYAUT. EINSPRITZPUMPE-LEITUNGEN BOMBA DE INYECCION-TUBER.	0.140 TAV.1

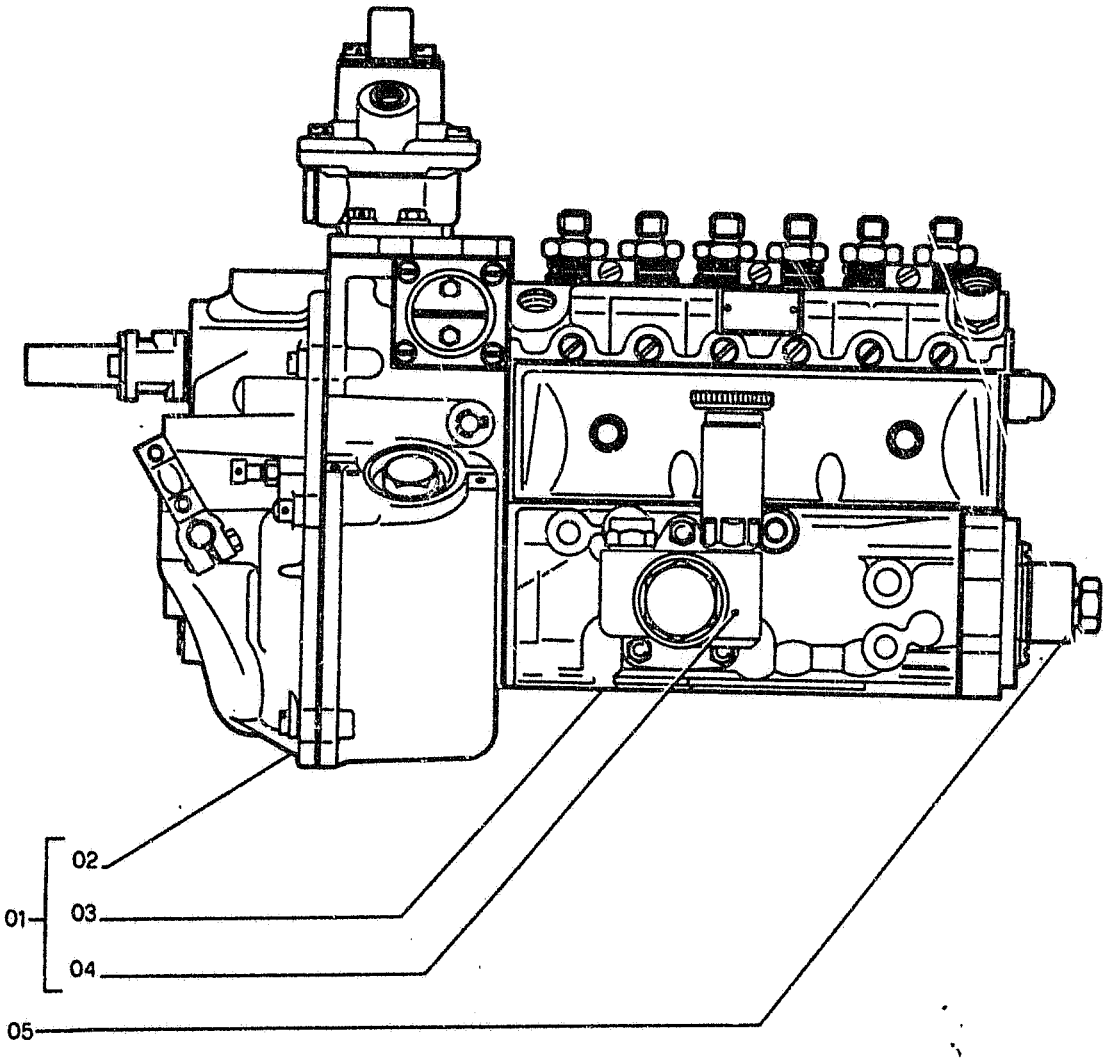

FH200

INJECTION PUMP-PIPING
POMPA INIEZIONE-TUBAZIONI

POMPE D'INJECTION-TUYAUT.
EINSPRITZPUMPE-LEITUNGEN
BOMBA DE INYECCION-TUBER.

0.14.0 TAV.1

ITEM	PART NUMBER	QTY	TR. CO.	DESCRIPTION	DESCRIZIONE
01	4843541	1	G109	INJECTION EQUIPMENT -ASS.Y	GRUPPO INIEZIONE -COMPL.
02	79097257	1	169R	REGULATOR -ASS.Y F-15-22	REGOLATORE -COMP.V.T. 2-5
03		1	158P	INJECTION PUMP -ASS.Y F-23,G-3 ONLY PARTS ARE SERVICED	POMPA INIEZIONE -COMP.V.T. 6-7 SI FORNISCONO SOLO LE PARTI
04	79097363	1	154P	FUEL PUMP -ASS.LY SEE G-5	POMPA ALIMENTAZIONE -COMPL. VED. TAV. 8
05	4799481	1	95B	BUSHING +0	BOCCOLA +0
	4799482	1	95B	BUSHING +3	BOCCOLA +3
	4799483	1	95B	BUSHING -3	BOCCOLA -3

SPEED GOVERNOR REGOLATORE DI VELOCITA' 79097257	REGULATEUR DE VITESSE DREHZAHLREGLES REGULADOR DE VELOCIDAD	0.140 TAV.2

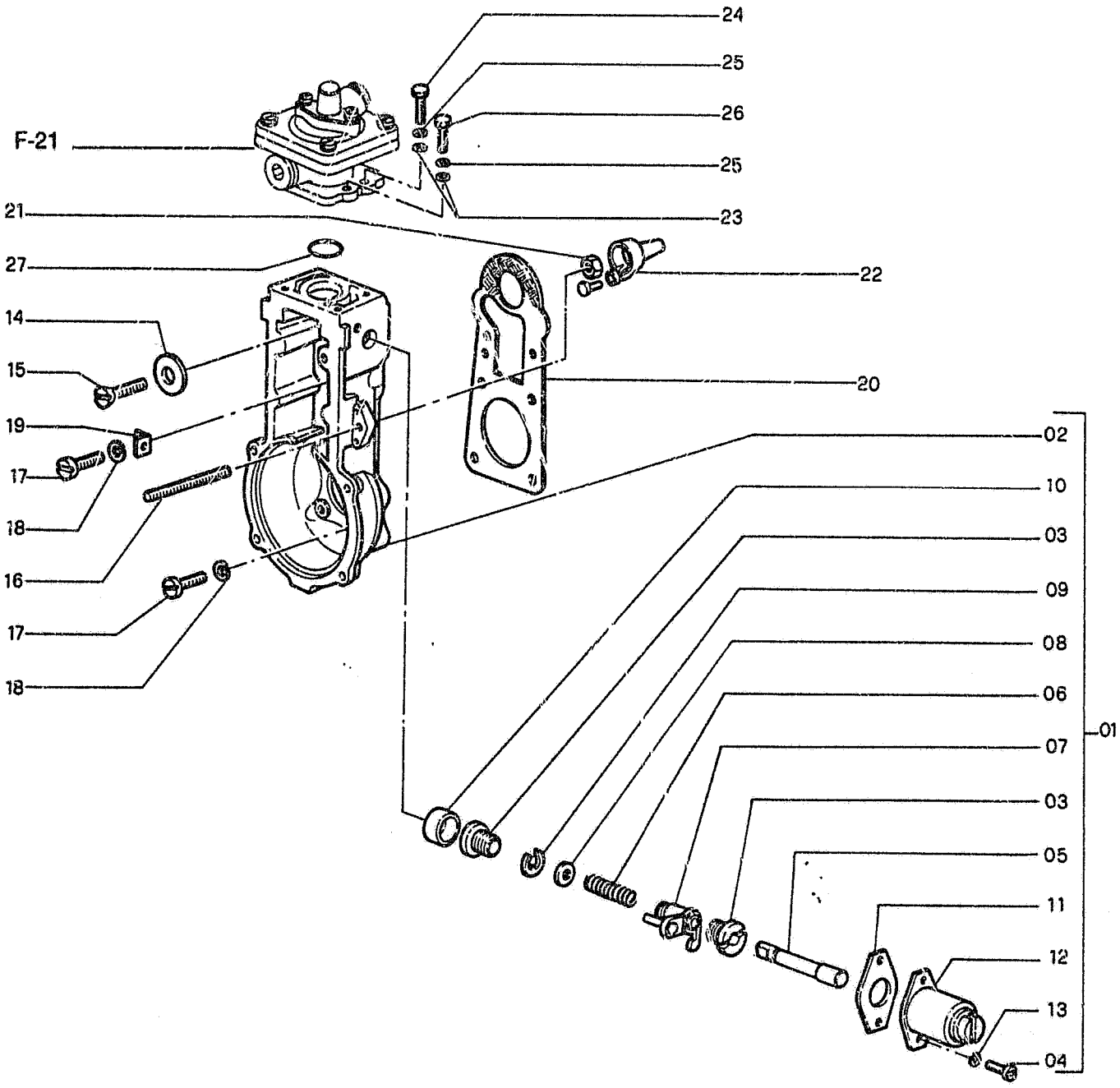

FH200

SPEED GOVERNOR REGOLATORE DI VELOCITA' 79097257	REGULATEUR DE VITESSE DREHZAHLREGLES REGULADOR DE VELOCIDAD	0.140 TAV.2 REVISED JULY 1990

ITEM	PART NUMBER	QTY	TR. CO.	DESCRIPTION	DESCRIZIONE
01	79097258	1	300C	BODY -ASS.LY	CORPO -COMPL.
02	79097331	1	300C	BODY	CORPO
03	79033440	2	95B	BUSHING	BOCCOLA
04	79097332	2	40V	SCREW	VITE
05	79097333	1	16A	SHAFT	ALBERO
06	79097334	1	100M	SPRING	MOLLA
07	79097335	1	45L	LEVER	LEVA
08	79097336		131R	WASHER -THICK 0,20mm	ROSETTA -SPESS. 0,20mm
	79097337		131R	WASHER -THICK 0,10mm	ROSETTA -SPESS. 0,10mm
09	79062709	1	131R	WASHER	ROSETTA
10	79097338	1	65C	BOOT	CAPPUCCIO
11	79097339	1	105P	PLATE	PIASTRA
12	79097340	1	30E	SOLENOID	ELETTROMAGNETE
13	79097341	2	170R	LOCKWASHER	ROSETTA ELASTICA
14	79097265	1	131R	WASHER	ROSETTA
15	79097264	1	40V	SCREW	VITE
16	79097259	1	40V	SCREW	VITE
17	79097263	6	40V	SCREW	VITE
				C2863 UP TO S/N 0050	**C2863** FINO AL TELAIO 0050
	79102498	6	40V	SCREW	VITE
				D2863 FROM S/N 0051	**D2863** DAL TELAIO 0051
18	79029975	6	131R	WASHER	ROSETTA
19	79097260	1	110P	PLAQUE	PIASTRINA
20	773353	1	122G	SEAL	GUARNIZIONE
				C2863 UP TO S/N 0050	**C2863** FINO AL TELAIO 0050
	79106758	1	122G	SEAL	GUARNIZIONE
				D2863 FROM S/N 0051	**D2863** DAL TELAIO 0051
21	15896211	1	10D	NUT	DADO
22	79097262	1	65C	BOOT	CAPPUCCIO
23	14496401	4	131R	WASHER	ROSETTA
24	10902321	2	40V	SCREW	VITE
25	10571579	4	170R	LOCKWASHER	ROSETTA ELASTICA
26	79097278	2	40V	SCREW	VITE
				C2863 UP TO S/N 0050	**C2863** FINO AL TELAIO 0050
	79104743	2	40V	SCREW	VITE
				D2863 FROM S/N 0051	**D2863** DAL TELAIO 0051
27	79097277	1	158G	O-RING	GUARNIZIONE O-R

SPEED GOVERNOR
REGOLATORE DI VELOCITA'
79097257

REGULATEUR DE VITESSE
DREHZAHLREGLES
REGULADOR DE VELOCIDAD

0.140 TAV.3

NTR 104S V-89

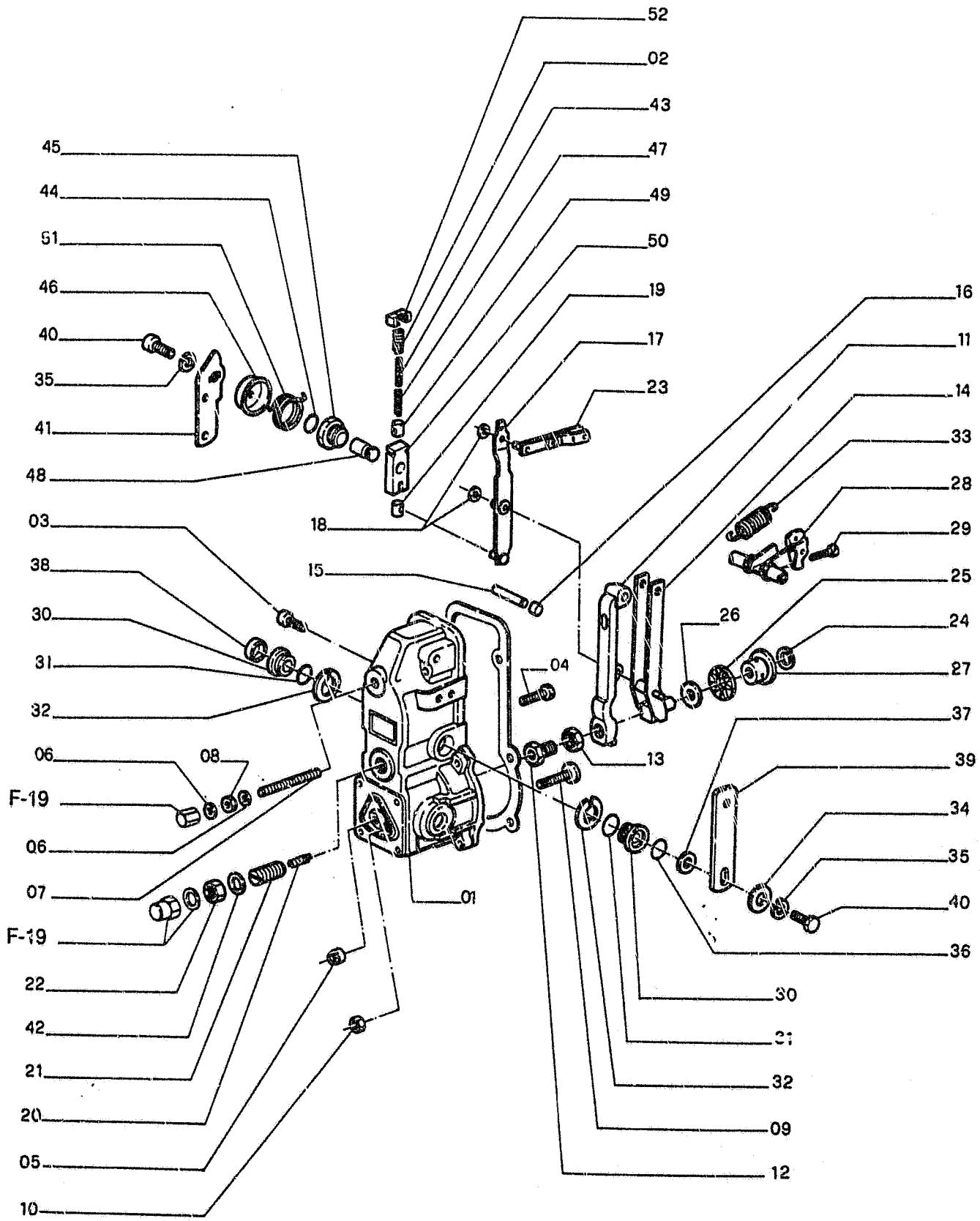

FH200

SPEED GOVERNOR
REGOLATORE DI VELOCITA'
79097257

REGULATEUR DE VITESSE
DREHZAHLREGLES
REGULADOR DE VELOCIDAD

0.140 TAV.3

NTR 104S V-89

ITEM	PART NUMBER	QTY	TR. CO.	DESCRIPTION	DESCRIZIONE
0 1-52	79097261	1	265C	COVER -ASS.LY	COPERCHIO -COMPL.
01	79097285	1	265C	COVER	COPERCHIO
02	79097330	1	100M	SPRING	MOLLA
03	79097286	4	40V	SCREW	VITE
04	79097287	1	40V	SCREW	VITE
05	79097288	1	10D	NUT	DADO
06	772051	2	131R	WASHER	ROSETTA
07	79097289	1	40V	SCREW	VITE
08	79097290	1	10D	NUT	DADO
09	79097291	1	40V	SCREW	VITE
10	15896211	1	10D	NUT	DADO
11	79097292	1	45L	LEVER	LEVA
12	79097293	1	65C	BOOT	CAPPUCCIO
13	79097295	1	10D	NUT	DADO
14	79097296	1	85F	YOKE	FORCELLA
15	79097297	1	16A	SHAFT	ALBERO
16	79097298	2	65C	BOOT	CAPPUCCIO
17	79097299	1	45L	LEVER	LEVA
18	79097300	2	131R	WASHER	ROSETTA
19	79097301	1	95B	BUSHING	BOCCOLA
20	79097302	1	100M	SPRING	MOLLA
21	79097303	1	40V	SCREW	VITE
22	79097304	1	10D	NUT	DADO
23	79097305	1	60B	SHACKLE	BISCOTTINO
24	79097306	1	45A	RING	ANELLO
25	79097307	1	341C	BEARING	CUSCINETTO
26	79097308	1	131R	WASHER	ROSETTA
27	79097309	1	30M	SLEEVE	MANICOTTO
28	79097310	1	45L	LEVER	LEVA
29	79097311	1	40V	SCREW	VITE
30	79097312	2	95B	BUSHING	BOCCOLA
31	79097313	2	158G	O-RING	GUARNIZIONE O-R
32	79097314	2	187A	SNAP RING	ANELLO ELASTICO
33	79097315	1	100M	SPRING	MOLLA
34	79045922	1	131R	WASHER	ROSETTA
35	79029975	2	131R	WASHER	ROSETTA
36	79046274	1	158G	O-RING	GUARNIZIONE O-R
37	79046272	2	131R	WASHER -THICK 1,00mm	ROSETTA -SPESS. 1,00mm
	79097316	2	131R	WASHER -THICK 0,50mm	ROSETTA -SPESS. 0,50mm
38	79097318	1	60S	CUP	SCODELLINO
39	79097317	1	45L	LEVER	LEVA
40	9007836	2	40V	SCREW	VITE
41	79097319	1	45L	LEVER	LEVA
42	79053316	1	45A	RING	ANELLO
43	79097320	1	100M	SPRING	MOLLA
44	79097321	1	158G	O-RING	GUARNIZIONE O-R
45	79097322	1	40V	SCREW	VITE
46	79097323	1	65C	BOOT	CAPPUCCIO
47	79097324	1	100M	SPRING	MOLLA
48	79097325	1	80P	PIN	PERNO
49	79097326	1	65C	BOOT	CAPPUCCIO
50	79097327	1	85F	YOKE	FORCELLA
51	79097328	1	100M	SPRING	MOLLA
52	79097329	1	225S	BRACKET	STAFFA

SPEED GOVERNOR REGOLATORE DI VELOCITA' 79097257	REGULATEUR DE VITESSE DREHZAHLREGLES REGULADOR DE VELOCIDAD	0.140 TAV.4

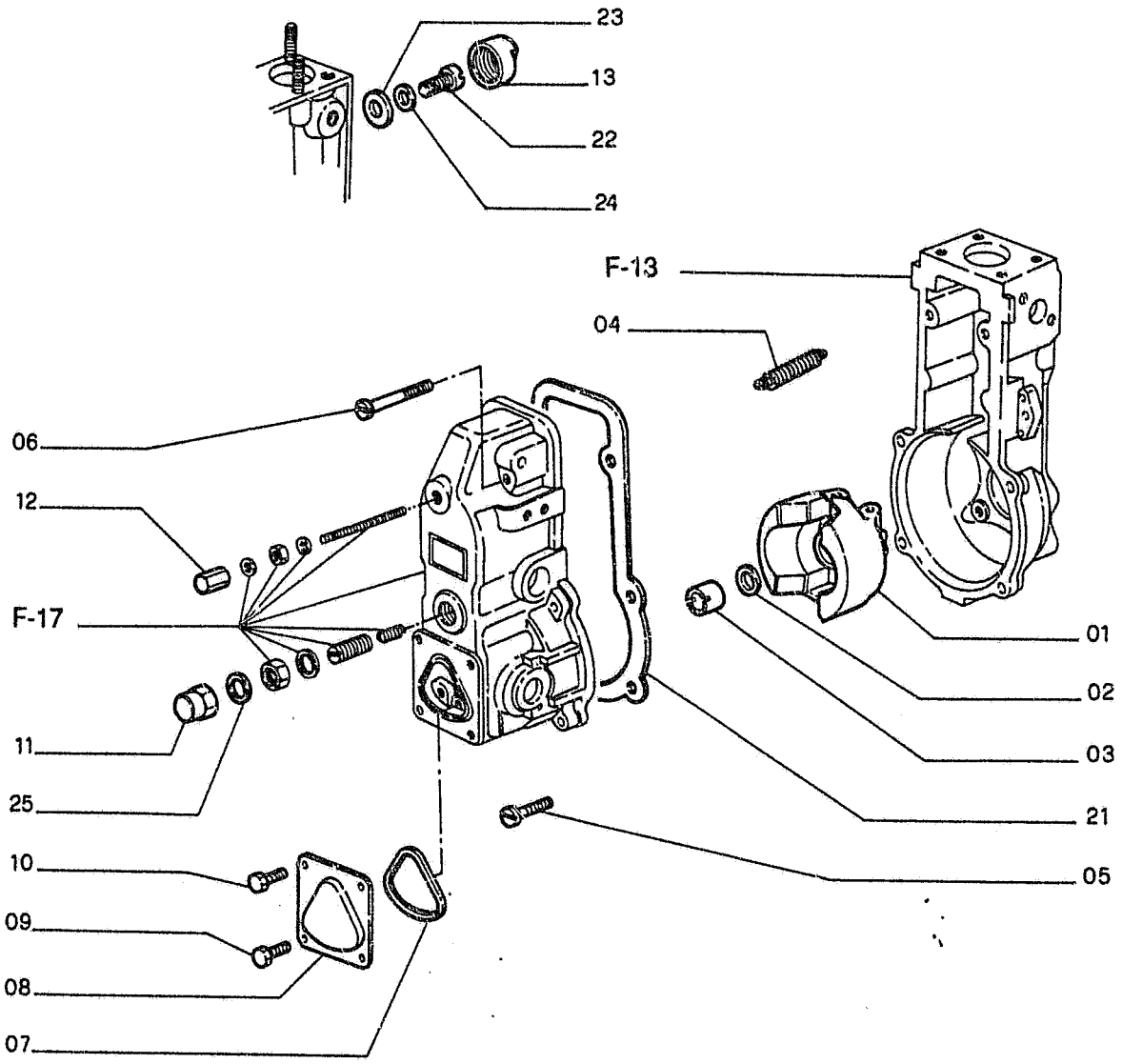

FH200

SPEED GOVERNOR — REGULATEUR DE VITESSE — 0.140 TAV.4
REGOLATORE DI VELOCITA' — DREHZAHLREGLES
79097257 — REGULADOR DE VELOCIDAD

ITEM	PART NUMBER	QTY	TR. CO.	DESCRIPTION	DESCRIZIONE
01	79097266	1	169R	REGULATOR	REGOLATORE
02	79097267	1	187A	SNAP RING	ANELLO ELASTICO
03	79097268	1	10D	NUT	DADO
04	79097269	1	100M	SPRING	MOLLA
05	10377011	4	40V	SCREW	VITE
06	10377411	2	40V	SCREW	VITE
07	79097270	1	55A	SEAL RING	ANELLO TENUTA
08	79097271	1	265C	COVER	COPERCHIO
09	79097272	2	40V	SCREW	VITE
10	79086485	2	40V	SCREW	VITE
11	79097273	1	10D	NUT	DADO
12	79097274	1	10D	NUT	DADO
13	773354	1	50T	PLUG	TAPPO
21	79097275	1	122G	SEAL	GUARNIZIONE
22	79024322	1	40V	SCREW	VITE
23	773355		131R	WASHER -THICK 0,3mm	ROSETTA -SPESS. 0,3mm
	9930414		131R	WASHER -THICK 0,50mm	ROSETTA -SPESS. 0,50mm
24	79097276	1	131R	WASHER	ROSETTA
25	79053316	1	45A	RING	ANELLO

FH200

SPEED GOVERNOR REGOLATORE DI VELOCITA' 76097257	REGULATEUR DE VITESSE DREHZAHLREGLES REGULADOR DE VELOCIDAD	0.140 TAV.5 NTR 104S V-89

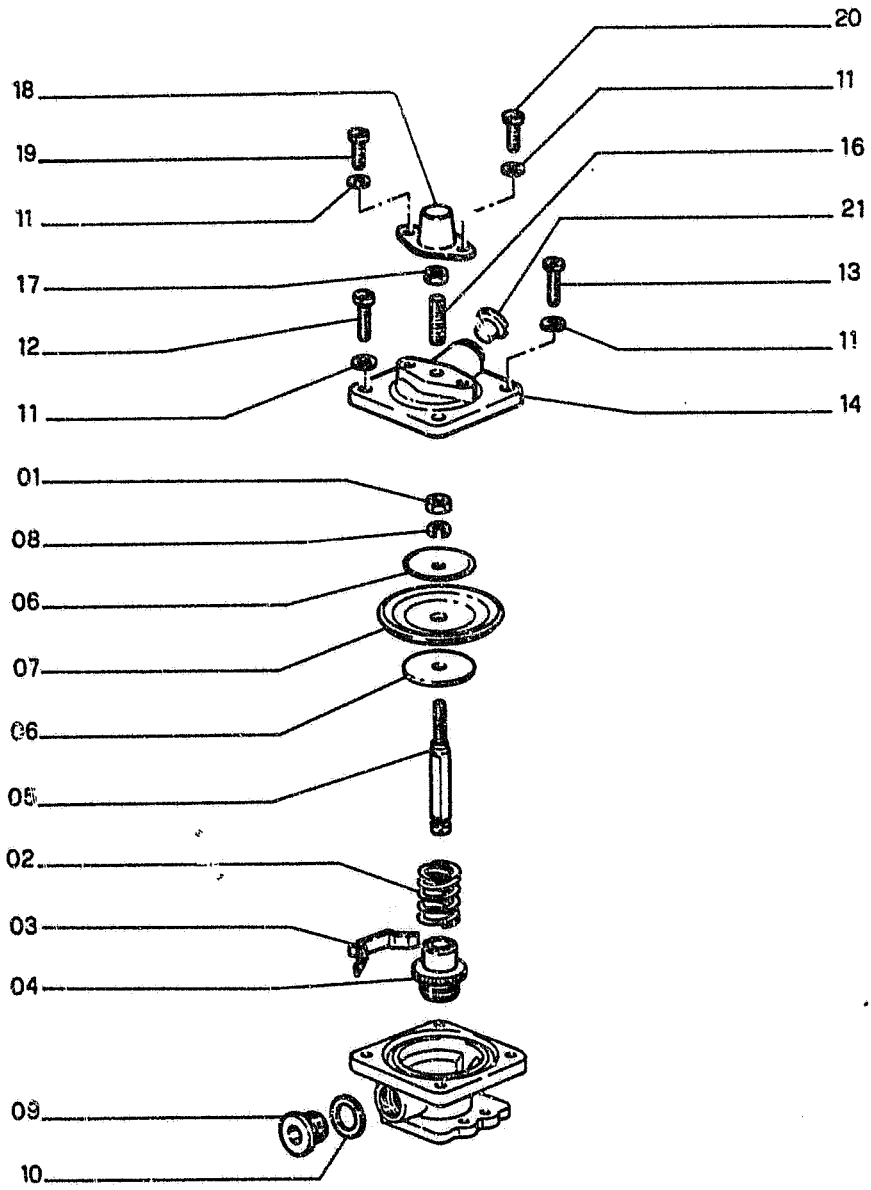

FH200

SPEED GOVERNOR REGOLATORE DI VELOCITA' 79097257	REGULATEUR DE VITESSE DREHZAHLREGLES REGULADOR DE VELOCIDAD	0.140 TAV.5 NTR 104S V-89

ITEM	PART NUMBER	QTY	TR. CO.	DESCRIPTION	DESCRIZIONE
0 1-21	79097279	1	190A	EXCESS FUEL CONTROL -ASS.LY	ARRICCHITORE -COMPL.
01	15896211	1	10D	NUT	DADO
02	79046213	1	100M	SPRING	MOLLA
03	79033457	1	100M	SPRING	MOLLA
04	79097280	1	95B	BUSHING	BOCCOLA
05	79097281	1	80P	PIN	PERNO
06	79097282	2	60D	DISC	DISCO
07	79046301	1	75M	DIAPHRAGM	MEMBRANA
08	12604279	1	170R	LOCKWASHER	ROSETTA ELASTICA
09	1307838	1	50T	PLUG	TAPPO
10	79046212	1	45A	RING	ANELLO
11	10571579	6	170R	LOCKWASHER	ROSETTA ELASTICA
12	10376721	3	40V	SCREW	VITE
13	79033447	1	40V	SCREW	VITE
14	79097283	1	265C	COVER	COPERCHIO
15	79046299	1	95B	BUSHING	BOCCOLA
16	79048248	1	210P	STUD	PRIGIONIERO
17	79033451	1	10D	NUT	DADO
18	79033449	1	65C	BOOT	CAPPUCCIO
19	79097284	1	40V	SCREW	VITE
20	10376511	1	40V	SCREW	VITE
21	79033453	1	95B	BUSHING	BOCCOLA

INJECTION PUMP-COMPONENTS POMPA INIEZ.-COMPONENTI	POMPE D'INJECTION-COMPOS. EINSPRITZPUMPE-EINZELT. BOMBA DE INYECC.-COMPON.	0.140 TAV.6

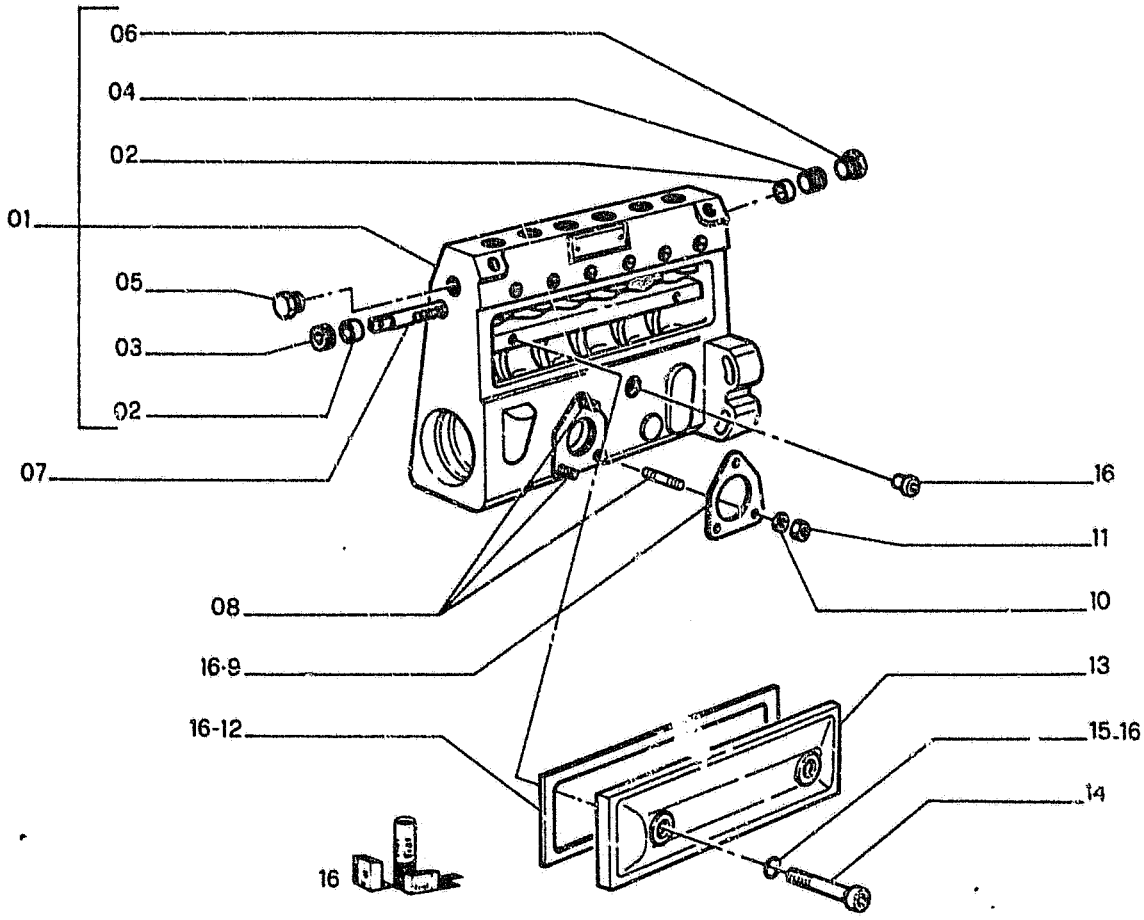

INJECTION PUMP-COMPONENTS
POMPA INIEZ.-COMPONENTI
POMPE D'INJECTION-COMPOS.
EINSPRITZPUMPE-EINZELT.
BOMBA DE INYECC.-COMPON

0.140 TAV.6

ITEM	PART NUMBER	QTY	TR. CO.	DESCRIPTION	DESCRIZIONE
01	79097343	1	300C	BODY -ASS.LY	CORPO -COMPL.
02	9001855	2	95B	BUSHING	BOCCOLA
03	9001856	1	95B	BUSHING	BOCCOLA
04	1288074	1	95B	BUSHING	BOCCOLA
05	79047754	1	50T	PLUG	TAPPO
06	79024188	1	50T	PLUG	TAPPO
07	773039	1	90A	ROD	ASTA
08	79097349	3	210P	STUD	PRIGIONIERO
09	770243	1	122G	SEAL	GUARNIZIONE
10	79029975	3	131R	WASHER	ROSETTA
11	15896211	3	10D	NUT	DADO
12	773291	1	122G	SEAL	GUARNIZIONE
13	79086486	1	265C	COVER	COPERCHIO
14	79097351	2	40V	SCREW	VITE
15	79097352	2	158G	O-RING	GUARNIZIONE O-R
16	79097354		2K	KIT	KIT

G-1

ALPHABETICAL INDEX

DESCRIPTION	SGR.	TAV.	GRID
Accelerator controls	0.004	1	1D-21
Air Cleaner	0.001	1	1D-5
Alternator-Mounting	0.400	1	1I-11
Anti-Shock Valve (Hydr.)	1.082	3	1L-15
Application of Ol. Hammer	5.0020	2	2J-7
Batteries	1.220	2	2D-13
Belts	0.340	1	1H-23
	0.345	1	1I-3
Boom Piping	2.030	1	2F-17, 2G-3
	2.031	1	2G-5
	2.031	2	2G-7
Brake Valve Components	3.010	3	2H-3
Bucket	2.020	1	2F-13
Bucket Cylinder	2.030	5	2G-3
Bull Gear	3.000	1	2G-17
Cab	1.250	1	2D-19
Cab Door	1.250	5	2E-7
Cab Heater-Components	1.290	2	2E-15
Cab Window-Left Side	1.250	6	2E-9
Cab-Frame	1.250	7	2E-11
Cab-Platform	1.250	1	2D-19
Cab Vandalism	5.0540	1	2K-3
Camshaft	0.120	1	1F-11
Cold Starting Aid	5.0025	1	2J-11
Connecting Rod	0.081	1	1E-23
Cont. Valve-Hydr. (Ass.Y)	1.050	1	1J-21
Control Valve-Hydr.	1.050	2	2K-3
	1.050	3	2K-5
	1.050	4	2K-7
Controls	1.070	1	1J-20
	1.071	1	1K-21, 1L-3
Counterweight	1.000	1	1J-3
Cowlings	1.300	1	2E-19
	1.300	2	2E-21
	1.300	3	2E-23
Crankshaft	0.080	1	1E-21
Crankshaft Puliey	0.084	1	1F-7
Cylinder Bllock	0.040	1	1D-21
	0.040	2	1D-23
	0.040	3	1E-3
Cylinder Block Covers	0.043	1	1E-7
	0.043	2	1E-9
Cylinder Head	0.060	1	1E-13
	0.060	2	1E-15
Dashboard (Left)	1.210	1	2D-9
Dashboard (Right)	1.200	1	2D-3
	1.200	3	2D-7
Data Monitor	1.200	2	2D-5
Decals	4.500	1	2I-3
	4.501	1	2I-5
Dipper Stick (2,1m)	5.0022	1	2J-9
Dipper Stick (2,5m) (STD.)	2.003	1	2F-11
Dipper Stick (3m)	5.0038	1	2J-13
Dipper Stick Cylinder	2.030	4	2F-23
	2.031	4	2G-5
Dipstick-Engine Oil	0.270	1	1H-8
Discharge Valve Componen.	3.010	4	2H-5
Drive on Engine (Opt.)	0.350	1	1I-5
Electric System	1.220	1	2D-11
	1.220	2	2D-13
Elements-fuel	0.200	1	1G-17
Elements-Hydraulic	1.020	1	1J-7
Elements-Pilot	1.080	1	1L-5
Emergency Kits(Lub. Fittings)	4.000	1	2H-23
Engine	0.021	1	1D-19
Engine-Controls	0.004	1	1D-15
Engine-Suspensions	0.000	1	1D-3
Engine Breather	0.045	1	1E-11
Engine Cooling Piping	0.323	1	1H-19
Engine Heat Exchanger	0.310	1	1H-15
Engine Lifting Eyes	0.450	1	1I-15
Engine Oil Filter	0.302	1	1H-11
Engine Oil Piping	0.305	1	1H-13
Engine Oil Pump	0.300	1	1H-9
Engine Oil Sump	0.042	1	1E-5
Engine Piston	0.082	1	1F-3
Engine Suspensions	0.000	1	1D-3
Exhaust Manifold	0.077	1	1E-19
Exhaust Valve	0.060	2	1E-15
Fan	0.345	1	1I-3
Fan Drive	0.345	1	1I-3
"Filter Care" Kit	24		1A-24
Filter-Pilot System	1.080	1	1L-5
Filters-Air	0.001	1	1D-5
Filters-Engine Oil	0.302	1	1D-11
Filters-Fuel	0.200	1	1G-17
Filters-Hydr. System	1.020	1	1J-7
Flywheel-Engine	0.083	1	1L-17
Fuel Filter	0..200	1	1G-17
Fuel Piping	0.203	1	1G-19
Fuel Pump	0.203	2	1G-21
	0.140	8	1G-5
Fuel Tank	1.010	1	1J-5
Fuses	1.200	3	2D-7
Guards	1.300	2	2E-21
Handle	1.300	3	2E-23
	1.300	4	2F-3
Heater	1.290	1	2E-15
Horn	1.220	2	2D-15
Hydr.Pump-Components	1.030	2	1J-13
Hydr.Pump Regulator-Comp.	1.030	3	1J-15

ALPHABETICAL INDEX

DESCRIPTION	SGR.	TAV.	GRID
Hydraulic Pump	1.030	1	1J-9
Idler	3.020	1	1H-7
Injection Nozzle-Lines	0.149	1	1G-15
Injection Pump	0.140	6	1F-23
	0.140	7	1G-3
Injection Pump Drive	0.140	10	1G-9
Injection Pump-Piping	0.140	1	1F-13
	0.140	9	1G-7
Intake Manifold	0.071	1	1E-17
Intake Valve	0.060	2	1E-15
Lift Cylinder (Left)	2.030	3	1F-21
Lift Cylinder (Right)	2.030	2	2F-19
Lights	1.220	2	2D-13
Lower Frame	3.000	1	2G-17
Lubric. Fitting Piping	3.001	1	2G-19
	2.041	1	2G-15
	2.040	1	1G-13
Main Piping	1.060	1	1K-9
	1.061	1	1K-11
Mirror (Rear)	1.300	2	2E-21
Monobloc Boom	2.000	1	2F-5
Motor - Starter	0.360	2	1I-9
Motor - Swing	1.040	1	1J-17
Motor - Travel	3.010	1	2G-21
Motor - Wiper	1.220	1	2D-11
Muffler	0.002	1	1D-7
Oil Tank	1.020	1	1J-7
Operator's Seat	1.250	2	2D-21
OperatorsSeat(Bostrom)(Std.)	5.0151	1	2J-21
Pilot Piping(1)	1.080	1	1L-5
Pilot Piping(2)	1.081	1	1L-9
Pilot Piping(3)	1.082	1	1L-11
Pilot Piping(4)	1.083	1	1L-17
Pilot Piping(5)	1.084	1	1L-19
Pilot Piping(6)	1.085	1	1L-21
Pilot Valve	1.070	3	1K-19
	1.071	2	1L-3
Pilot Valve-components	1.070	2	1K-17
PipingBoom	2.030	1	2F-17
	2.031	1	2G-5
Piping-Injection	0.149	1	1G-15
Piping-Lube Fittings	2.040	1	2G-13
Piping-Main	1.060	1	1K-9
Piping-Pilot(1)	1.080	1	1L-5
Piping-Pilot(3)	1.082	1	1L-11
Piping-Pilot(4)	1.083	1	1L-17
Piping-Pilot(5)	1.084	1	1L-19
Piping-Pump Contr. Valve	1.050	1	1J-21
Piping-Travel (Lower)	3.070	1	2H-19
	3.071	1	2H-21
Piping-Turbocharger	0.241	1	1H-5
Pump-Engine Oil	0.300	1	1H-9
Pump-Hydraulic	1.030	1	1J-11
Pump-Injection	0.140	6	1F-23
Pump-Water	0.320	1	1H-17
Pump/Control Valve Piping	1.050	1	1J-23
Radiator	0.003	1	1D-9
Radiator-Components	0.003	2	1D-11
	0.003	3	1D-13
Rocker Arm	0.060	2	1E-15
Rotary Distributor	3.060	1	2H-17
SAE Battery Provision	1.220	3	2D-17
Seat Belt	5.0536	1	1J-23
Sensors	1.220	2	2D-13
Solenoid Valve	1.080	2	1L-7
Starter	0.360	2	1I-9
Starter-Mounting	0.360	1	1I-7
Stop Valve	1.082	2	1L-13
Swing Red.Unit-Components	1.040	2	1J-19
Swing Reduction Unit	1.040	1	1J-17
Thermostat & Housing	0.326	1	1H-21
Timing Control	0.100	1	1F-9
Tool Kit	5.0083	1	2J-19
Track Chain	3.051	1	2H-13
	3.052	1	2H-15
Track Roller	3.040	1	2H-11
Travel Motor-componen.	3.010	3	2H-3
Travel Piping (Lower)	3.070	1	2H-19
	3.071	1	2H-21
Travel Red.Unit-Componen.	3.010	2	2G-23
Travel Reduction Units	3.010	1	2G-21
Turbocharger	0.240	1	1G-23
	0.240	2	1H-3
Turbocharger Piping	0.241	1	1H-5
Upper Frame	1.000	1	1J-3
Upper Roller	3.030	1	2H-9
Valve-Anti-Shock(Hydr.)	1.082	3	1L-15
Valve-Exhaust	0.060	2	1E-15
Valve-Intake	0.060	2	1E-15
Valve-Pilot (Hydr.)	1.070	1	1K-15
Valve-Pilot(Travel)	1.070	1	1K-15
Valve-Solenoid	1.080	2	1L-7
Valve-Stop(Travel)	1.082	1	1L-11
Water Pump	0.320	1	1H-17
Water Pump Drive	0.340	1	1H-23
Water Pump-Components	0.320	2	1H-17
Wiper	1.220	1	2D-11

INJECTION PUMP-COMPONENTS POMPA INIEZ.-COMPONENTI	POMPE D'INJECTION-COMPOS. EINSPRITZPUMPE-EINZELT BOMBA DE INYECC.-COM[illegible]	0.140 TAV.7

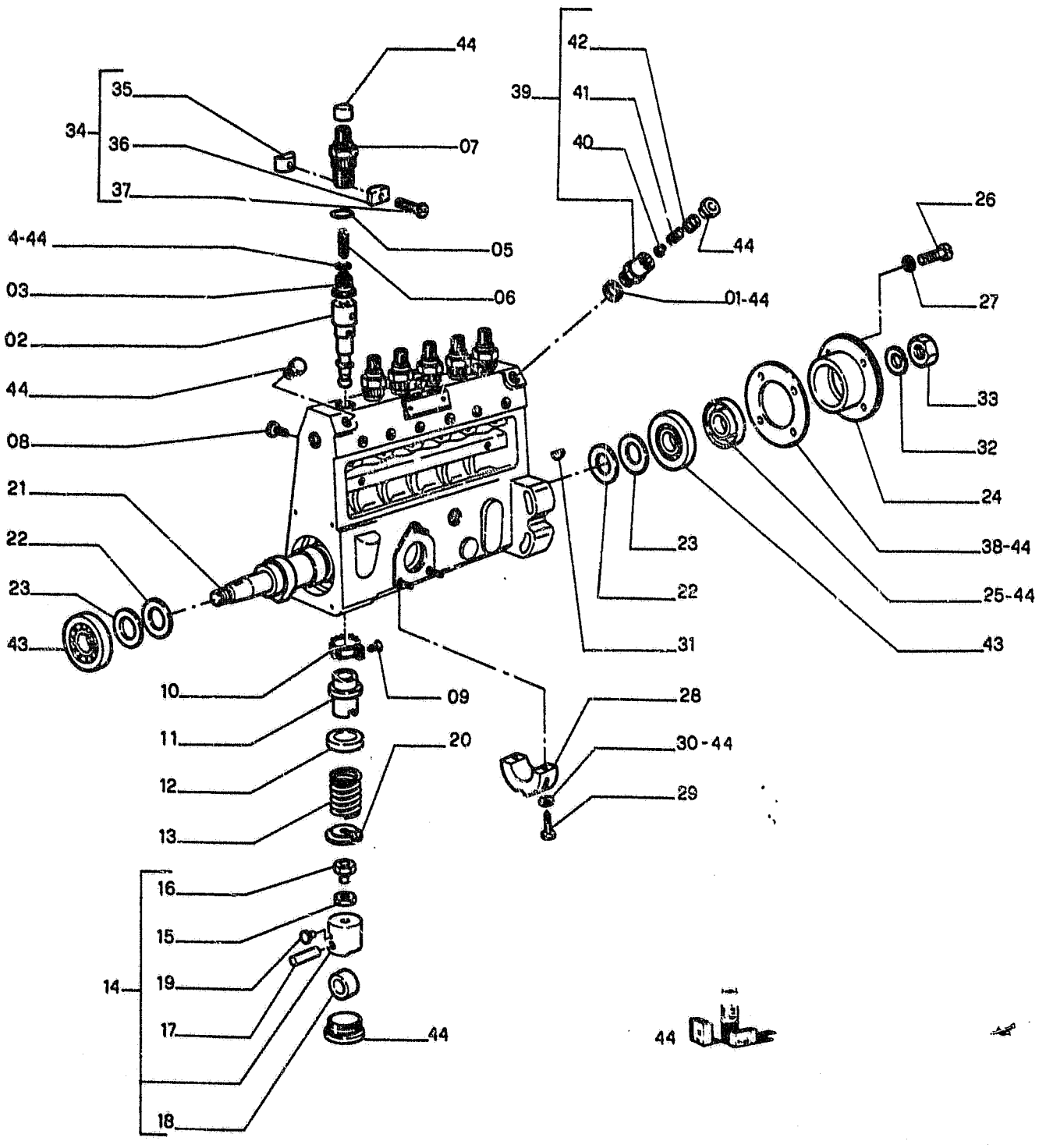

INJECTION PUMP-COMPONENTS
POMPA INIEZ.-COMPONENTI
POMPE D'INJECTION-COMPOS.
EINSPRITZPUMPE-EINZELT.
BOMBA DE INYECC.-COMPON.

0.140 TAV.7

ITEM	PART NUMBER	QTY	TR. CO.	DESCRIPTION	DESCRIZIONE
01	79038472	1	45A	RING	ANELLO
02	79097344	6	164C	CYLINDER	CILINDRO
03	9009574	6	10V	VALVE	VALVOLA
04	773286	6	122G	SEAL	GUARNIZIONE
05	773287	6	55A	SEAL RING	ANELLO TENUTA
06	773252	6	100M	SPRING	MOLLA
07	773218	6	20R	FITTING	RACCORDO
08	79024924	1	40V	SCREW	VITE
09	773032	6	40V	SCREW	VITE
10	773026	6	135S	TOOTHED SEGMENT Ø22,85	SETTORE DENTATO Ø22,85
	1288319	6	135S	TOOTHED SEGMENT Ø22,70	SETTORE DENTATO Ø22,70
11	9929636	6	95B	BUSHING	BOCCOLA
12	773222	6	120P	PLATE	PIATTELO
13	79047098	6	100M	SPRING	MOLLA
14	79097345	6	240P	TAPPET -ASS.LY	PUNTERIA -COMPL.
15	79097358	6	10D	NUT	DADO
16	79097359	6	40V	SCREW	VITE
17	79097360	6	202S	SPRING PIN	SPINA ELASTICA
18	79097361	6	157R	ROLLER	RULLO
19	79050756	6	45P	PAD	PATTINO
20	773221	6	120P	PLATE	PIATTELO
21	9009102	1	16A	SHAFT	ALBERO
22	773219	2	45A	RING	ANELLO
23	773325		131R	WASHER -THICK 0,10mm	ROSETTA -SPESS. 0,10mm
	773326		131R	WASHER -THICK 0,12mm	ROSETTA -SPESS. 0,12mm
	773327		131R	WASHER -THICK 0,14mm	ROSETTA -SPESS. 0,14mm
	773328		131R	WASHER -THICK 0,16mm	ROSETTA -SPESS. 0,16mm
	773329		131R	WASHER -THICK 0,18mm	ROSETTA -SPESS. 0,18mm
	773330		131R	WASHER -THICK 0,50mm	ROSETTA -SPESS. 0,50mm
	773336		131R	WASHER -THICK 0,50mm	ROSETTA -SPESS. 0,50mm
	9001868		131R	WASHER -THICK 1,00mm	ROSETTA -SPESS. 1,00mm
24	773153	1	265C	COVER	COPERCHIO
25	773254	1	122G	SEAL	GUARNIZIONE
26	9007652	4	40V	SCREW	VITE
27	9009582	4	131R	WASHER	ROSETTA
28	773348	1	103S	HALF BEARING	SEMICUSCINETTO
29	79047816	2	40V	SCREW	VITE
30	79097346	2	131R	WASHER	ROSETTA
31	79097347	1	60L	KEY	LINGUETTA
32	79097348	1	131R	WASHER	ROSETTA
33	773445	1	10D	NUT	DADO
34	79097350	3	74B	BLOCK -ASS.LY	BLOCCHETTO -COMPL.
35	773321	3	80P	PIN	PERNO
36	773322	3	80P	PIN	PERNO
37	9009579	3	40V	SCREW	VITE
38	773223	1	122G	SEAL	GUARNIZIONE
39	79097353	1	10V	VALVE -ASS.LY	VALVOLA -COMPL.
40	774359	1	7V	RELIEF VALVE	VALVOLA SOVRAPRESSIONE
41	774360	1	100M	SPRING	MOLLA
42	79097362	1	95B	BUSHING	BOCCOLA
43	773323	2	341C	BEARING	CUSCINETTO
44	79097354		2K	KIT	KIT

FUEL PUMP-COMPONENTS POMPA ALIMENTAZIONE-COMP. 79097363	POMPE D'ALIMENTATION-COMP KRAFTSTOFFPUMPE-EINZELT. BOMBA DE ALIMENTACION-COM	0.140 TAV.8

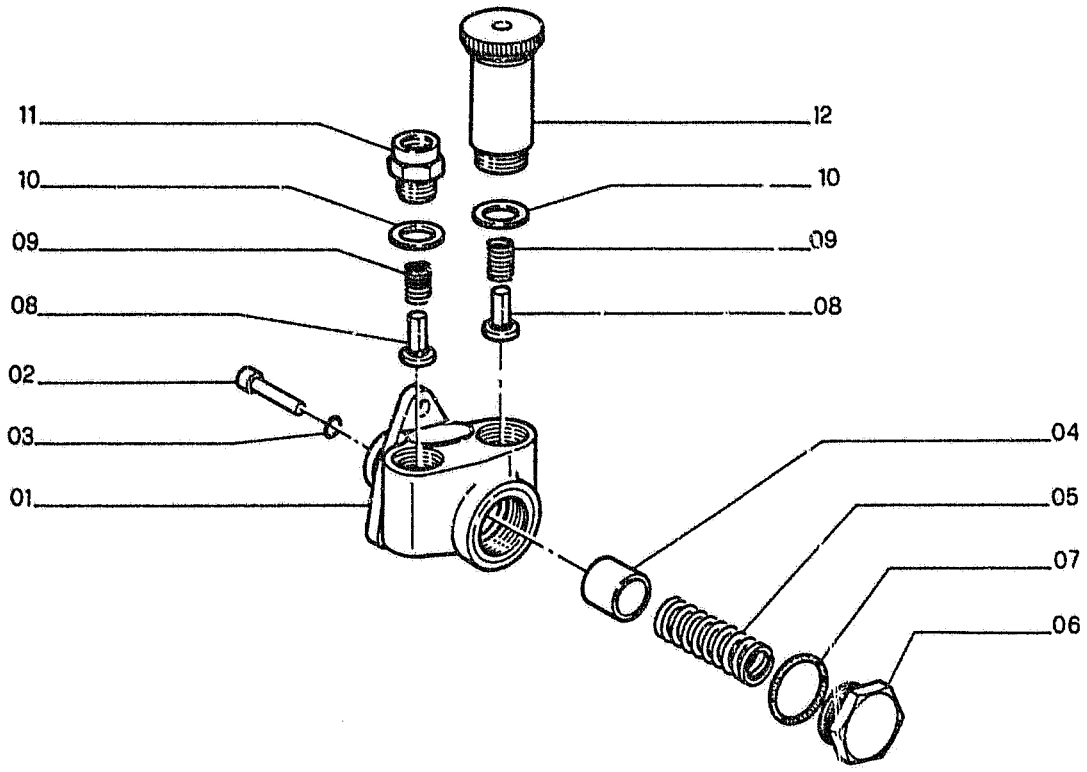

FUEL PUMP-COMPONENTS — POMPE D'ALIMENTATION-COMP — 0.140 — TAV.8
POMPA ALIMENTAZIONE-COMP. — KRAFTSTOFFPUMPE-EINZELT.
79097363 — BOMBA DE ALIMENTACION-COM

ITEM	PART NUMBER	QTY	TR. CO.	DESCRIPTION	DESCRIZIONE
01	79097364	1	300C	BODY	CORPO
02	79097365	1	240P	TAPPET	PUNTERIA
03	79070369	1	158G	O-RING	GUARNIZIONE O-R
04	79097356	1	235S	PISTON Ø=21,992	STANTUFFO Ø=21,992
	79097366	1	235S	PISTON Ø=21,982	STANTUFFO Ø=21,982
05	9930052	1	100M	SPRING	MOLLA
06	1290590	1	50T	PLUG	TAPPO
07	1290550	1	131R	WASHER	ROSETTA
08	79032351	2	10V	VALVE	VALVOLA
09	1290593	2	100M	SPRING	MOLLA
10	1287773	2	131R	WASHER	ROSETTA
11	1290570	1	20R	FITTING	RACCORDO
12	79032352	1	155P	PUMP	POMPA

INJECTION PUMP-PIPING POMPA INIEZIONE-TUBAZIONI	POMPE D'INJECTION-TUYAUT. EINSPRITZPUMPE-LEITUNGEN BOMBA DE INYECCION-TUBER.	0.140 TAV.9

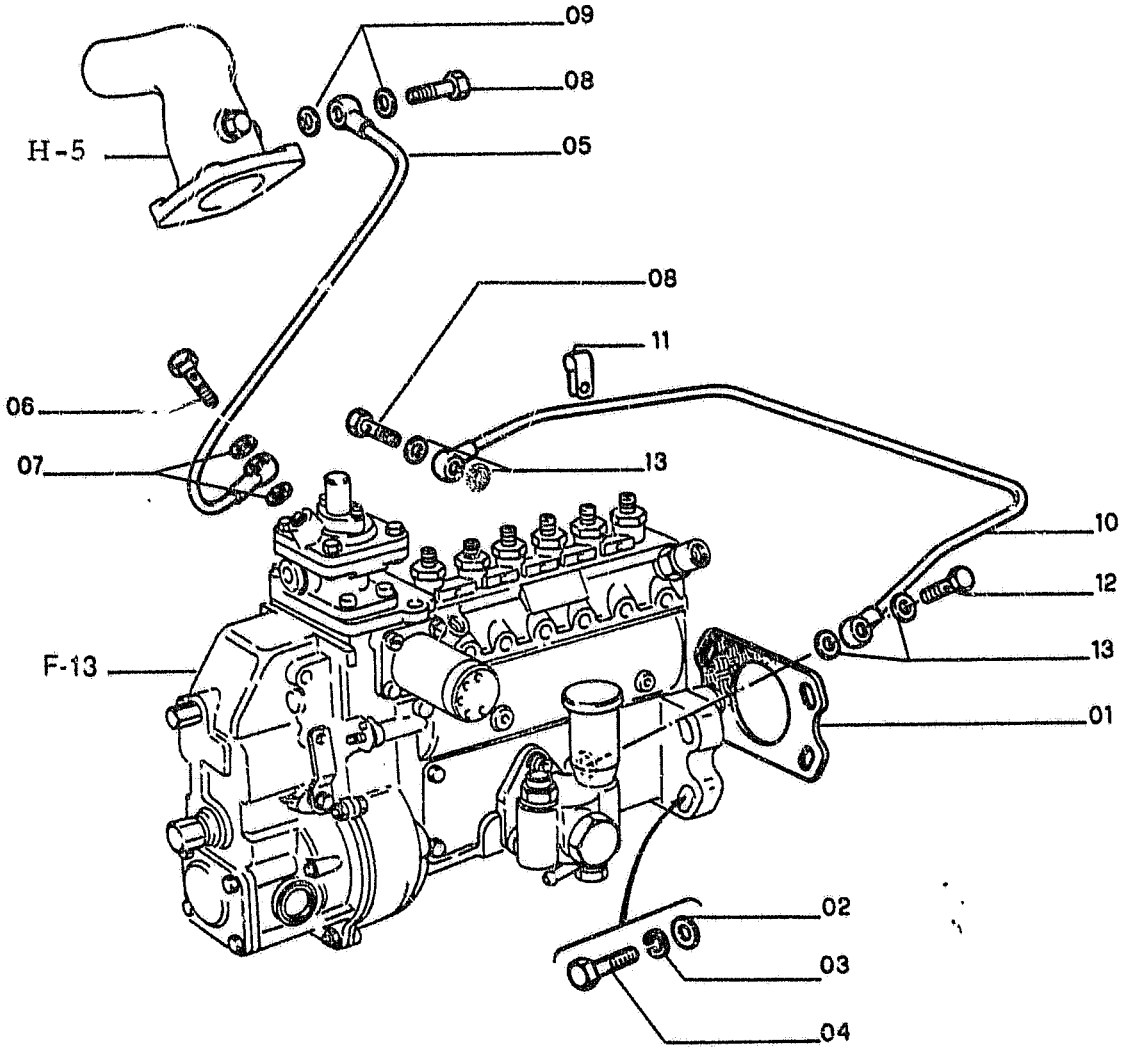

FH200

INJECTION PUMP-PIPING
POMPA INIEZIONE-TUBAZIONI
POMPE D'INJECTION-TUYAUT.
EINSPRITZPUMPE-LEITUNGEN
BOMBA DE INYECCION-TUBER.

0.140 TAV.9

REVISED JULY 1990

ITEM	PART NUMBER	QTY	TR. CO.	DESCRIPTION	DESCRIZIONE
01	561353	1	122G	SEAL **C2897** UP TO ENGINE 349217	GUARNIZIONE **C2897** FINO AL MOTORE 349217
	4858086	1	122G	SEAL **D2897** FROM ENGINE 349218	GUARNIZIONE **D2897** DAL MOTORE 349218
02	759850	4	131R	WASHER	ROSETTA
03	11198371	4	131R	WASHER	ROSETTA
04	11234721	4	40V	SCREW 10X1,25X45	VITE 10X1,25X45
05	4855756	1	193T	TUBE	TUBO RIGIDO
06	10181717	1	20R	FITTING	RACCORDO
07	10296160	2	122G	SEAL	GUARNIZIONE
08	11903817	2	20R	FITTING	RACCORDO
09	10260160	2	122G	SEAL	GUARNIZIONE
10	4772706	1	193T	TUBE	TUBO RIGIDO
11	4804122	1	231S	CLIP	STAFFETTA
12	1390713	1	20R	FITTING	RACCORDO
13	10260160	4	122G	SEAL	GUARNIZIONE

INJECTION PUMP-DRIVE POMPA INIEZIONE-COMANDO	POMPE D'INJECTION-COMM. EINSPRITZPUMPE-BETAETIG. BOMBA DE INYECCION-MANDO	0.140 TAV.10

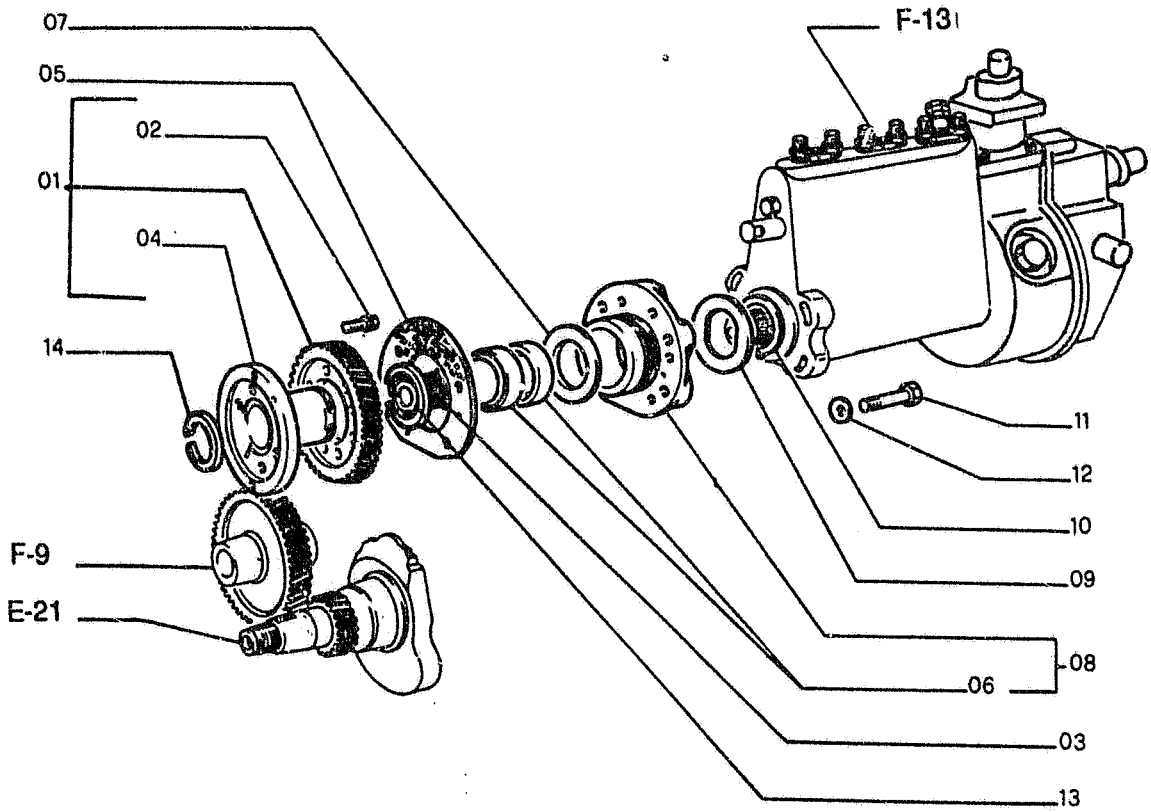

FH200

INJECTION PUMP-DRIVE POMPA INIEZIONE-COMANDO	POMPE D'INJECTION-COMM. EINSPRITZPUMPE-BETAETIG. BOMBA DE INYECCION-MANDO	0.140 TAV.10 REVISED JULY 1990

ITEM	PART NUMBER	QTY	TR. CO.	DESCRIPTION	DESCRIZIONE
01	4785076	1	50I	GEAR -ASS.LY	INGRANAGGIO -COMPL.
02	4798845	8	40V	SCREW	VITE
03	4769712	1	67G	COUPLING	GIUNTO
04	4785077	1	30M	SLEEVE	MANICOTTO
05	4769429	1	122G	SEAL	GUARNIZIONE
				C2897 UP TO ENGINE 349217	C2897 FINO AL MOTORE 349217
	4858092	1	122G	SEAL	GUARNIZIONE
				D2897 FROM ENGINE 349218	D2897 DAL MOTORE 349218
06	4769427	2	95B	BUSHING	BOCCOLA
07	4809425	1	131R	WASHER	ROSETTA
08	4769424	1	300S	SUPPORT	SUPPORTO
09	4667498	1	131R	WASHER	ROSETTA
10	13421376	1	187A	SNAP RING	ANELLO ELASTICO
11	16043621	6	40V	SCREW 8X1,25X25	VITE 8X1,25X25
12	10519601	6	170R	LOCKWASHER	ROSETTA ELASTICA
13	4770452	1	187A	SNAP RING	ANELLO ELASTICO
14	4708213	1	187A	SNAP RING	ANELLO ELASTICO

INJECTION NOZZLE INIETTORI	INJECTEURS DUESENSTOCK INYECTORES	0.180 TAV.11

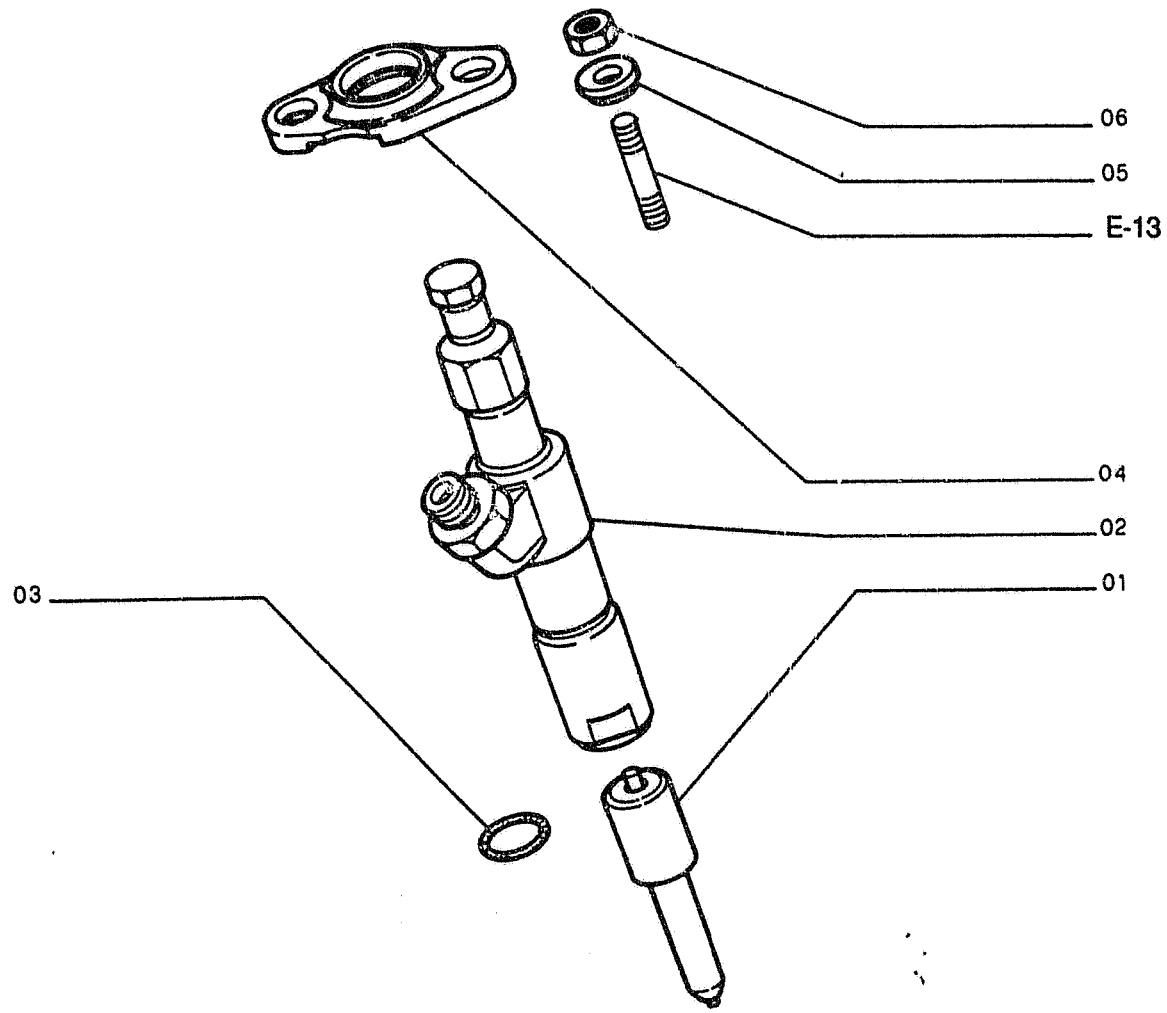

FH200

INJECTION NOZZLE INIETTORI	INJECTEURS DUESENSTOCK INYECTORES	0.140 TAV.11

ITEM	PART NUMBER	QTY	TR. CO.	DESCRIPTION	DESCRIZIONE
01	4800030	6	148P	NOZZLE	POLVERIZZATORE
02	4791124	6	195P	NOZZLE HOLDER SEE G-13	PORTAPOLVERIZZATORE VED. TAV.12
03	14453589	6	158G	O-RING	GUARNIZIONE O-R
04	4780512	6	231S	CLIP	STAFFETTA
05	771326	12	131R	WASHER	ROSETTA
06	16100821	12	10D	NUT	DADO

INJECTION NOZZLE INIETTORI 4701124	INJECTEURS DUESENSTOCK INYECTORES	0.140 TAV.12 NTR 104S V-89

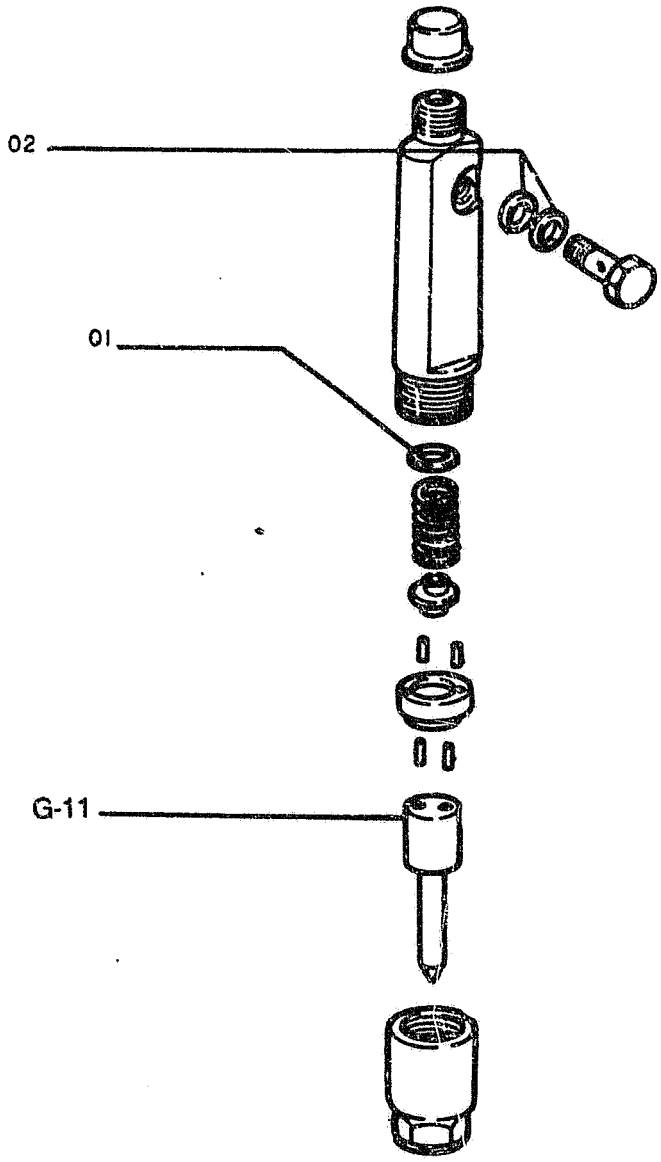

INJECTION NOZZLE
INIETTORI
4791124

INJECTEURS
DUESENSTOCK
INYECTORES

0.140 TAV.12

NTR 104S V-89

ITEM	PART NUMBER	QTY	TR. CO.	DESCRIPTION	DESCRIZIONE
01	79067856		2K	KIT	KIT
02	772051	2	131R	WASHER	ROSETTA

INJECTION NOZZLE-LINES
TUBAZIONI POMPA-INIETTORI

TUYAUTERIE ET INJECTEURS
LEITUNGEN - DUESENSTOCK
TUBERIAS Y INYECTORES

0.149 TAV.1

NTR 104S V-89

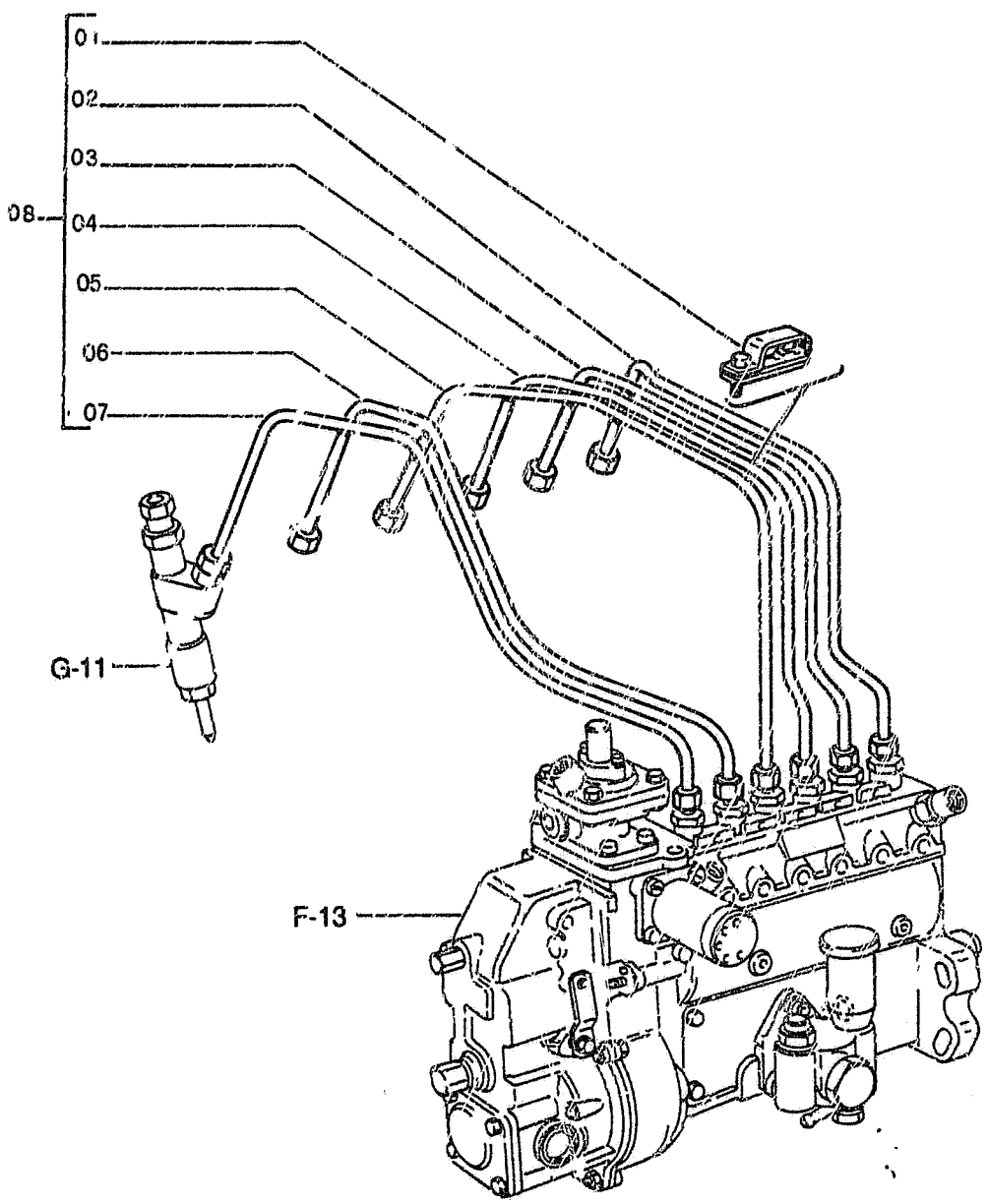

INJECTION NOZZLE-LINES
TUBAZIONI POMPA-INIETTORI

TUYAUTERIE ET INJECTEURS
LEITUNGEN - DUESENSTOCK
TUBERIAS Y INYECTORES

0.149 TAV.1

NTR 104S V-89

ITEM	PART NUMBER	QTY	TR. CO.	DESCRIPTION	DESCRIZIONE
01	4806611	3	225S	BRACKET	STAFFA
02	4792661	1	193T	TUBE	TUBO RIGIDO
03	4792662	1	193T	TUBE	TUBO RIGIDO
04	4792663	1	193T	TUBE	TUBO RIGIDO
05	4792664	1	193T	TUBE	TUBO RIGIDO
06	4792665	1	193T	TUBE	TUBO RIGIDO
07	4792666	1	193T	TUBE	TUBO RIGIDO
08	4791125	1	193T	TUBE-ASS.LY	TUBO RIGIDO -COMPL.

FUEL FILTER FILTRO COMBUSTIBILE	FILTRE A COMBUSTIBLE KRAFTSTOFFILTER FILTRO DEL COMBUSTIBLE	0.200 TAV.1

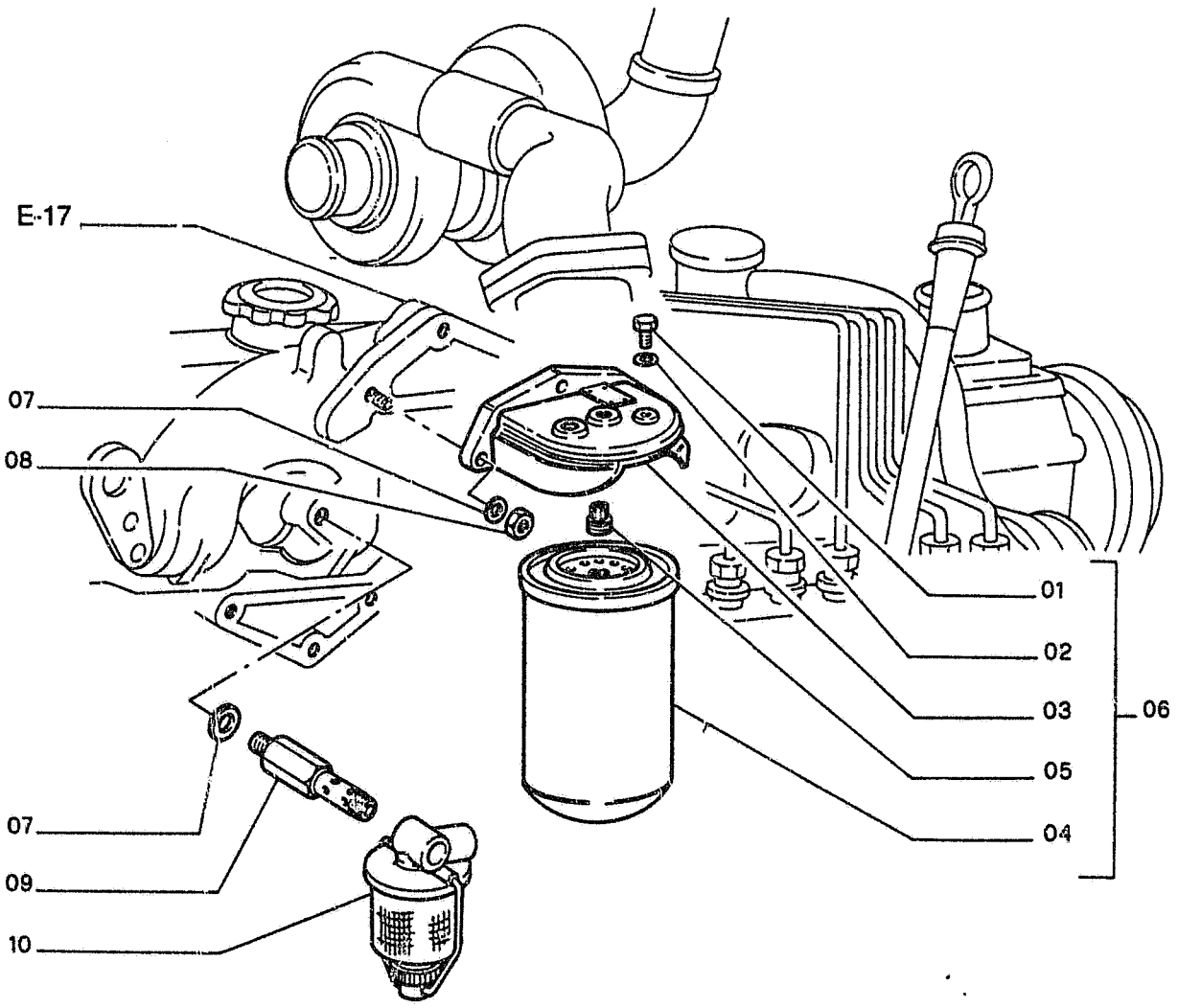

FUEL FILTER
FILTRO COMBUSTIBILE

FILTRE A COMBUSTIBLE
KRAFTSTOFFILTER
FILTRO DEL COMBUSTIBLE

0.200 TAV.1

ITEM	PART NUMBER	QTY	TR. CO.	DESCRIPTION	DESCRIZIONE
01	4807219	1	40V	SCREW	VITE
02	10297760	1	131R	WASHER	ROSETTA
03	4626465	1	300C	BODY	CORPO
04	4742848	1	20E	FILTER ELEMENT	ELEMENTO FILTRANTE
05	4626466	1	20R	FITTING	RACCORDO
06	4618309	1	64F	FUEL FILTER	FILTRO COMBUSTIBILE
07	14496607	4	131R	WASHER	ROSETTA
08	12164714	3	10D	NUT	DADO
09	4801923	1	20R	FITTING	RACCORDO
10	4776380	1	64F	FUEL FILTER	FILTRO COMBUSTIBILE

FUEL PIPING TUBAZIONI COMBUSTIBILE	TUYAUTERIE DU COMBUSTIBLE LEITUNGEN KRAFTSTOFF TUBERIAS DE COMBUSTIBLE	0.203 TAV.1

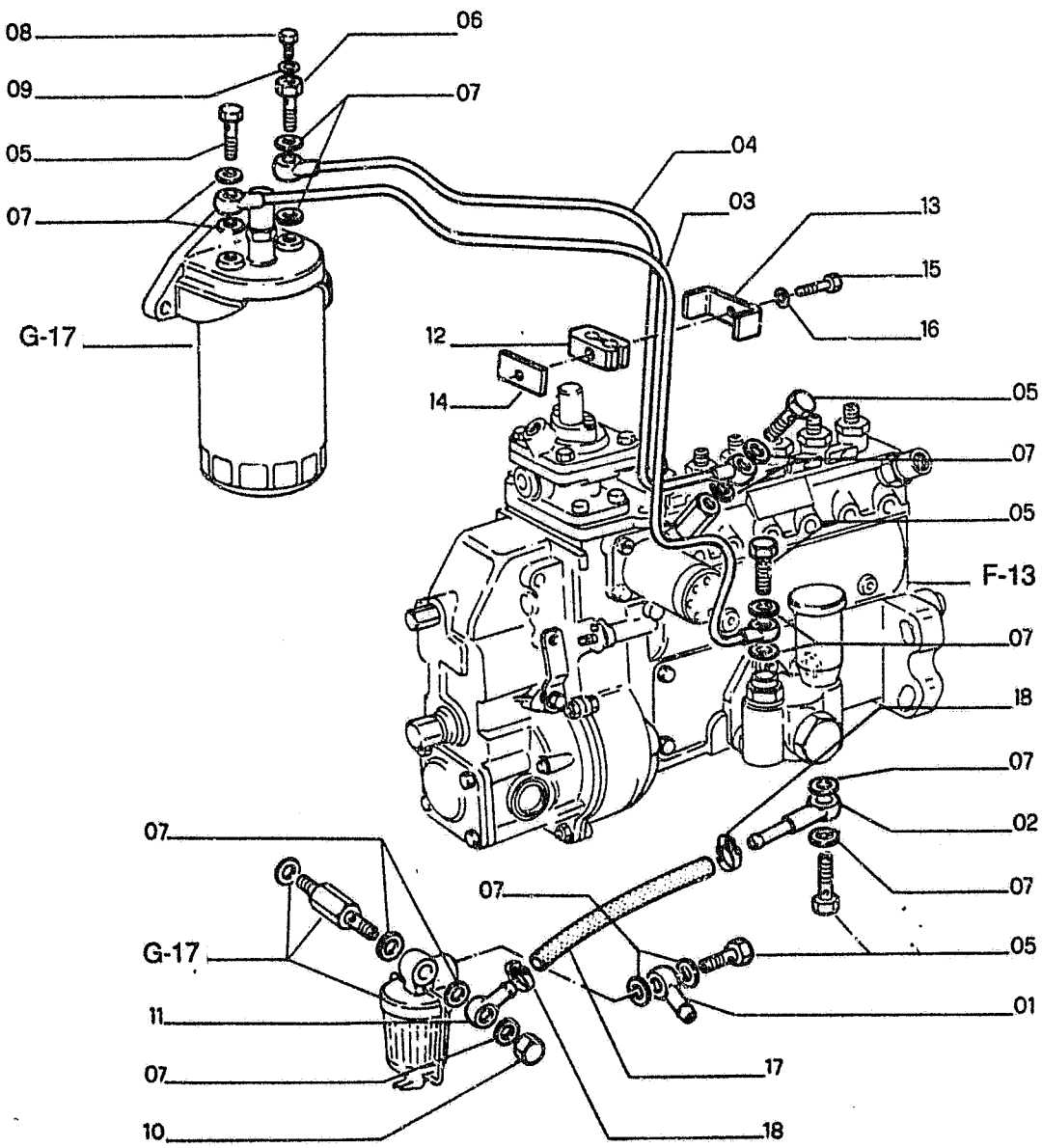

FUEL PIPING
TUBAZIONI COMBUSTIBILE

TUYAUTERIE DU COMBUSTIBLE
LEITUNGEN KRAFTSTOFF
TUBERIAS DE COMBUSTIBLE

0.203 TAV.1

ITEM	PART NUMBER	QTY	TR. CO.	DESCRIPTION	DESCRIZIONE
01	4783070	1	20R	FITTING	RACCORDO
02	4741072	1	20R	FITTING	RACCORDO
03	4801917	1	193T	TUBE	TUBO RIGIDO
04	4801919	1	193T	TUBE	TUBO RIGIDO
05	16511311	5	20R	FITTING	RACCORDO
06	4724015	1	20R	FITTING	RACCORDO
07	16508160	13	122G	SEAL	GUARNIZIONE
08	4753563	1	50T	PLUG	TAPPO
09	16550760	1	122G	SEAL	GUARNIZIONE
10	10182811	1	50T	PLUG	TAPPO
11	4551493	1	20R	FITTING	RACCORDO
12	4659217	2	74B	BLOCK	BLOCCHETTO
13	4659218	2	97S	HALF CONNECTOR	SEMIMORSETTO
14	4659219	2	110P	PLAQUE	PIASTRINA
15	10978221	2	40V	SCREW	VITE
16	10571471	2	170R	LOCKWASHER	ROSETTA ELASTICA
17	19067687	1	285T	HOSE	TUBO FLESSIBILE
18	12182590	2	180C	COLLAR	COLLARE

FUEL PIPING TUBAZIONI COMBUSTIBILE	TUYAUTERIE DU COMBUSTIBLE LEITUNGEN KRAFTSTOFF TUBERIAS DE COMBUSTIBLE	0.203 TAV.2

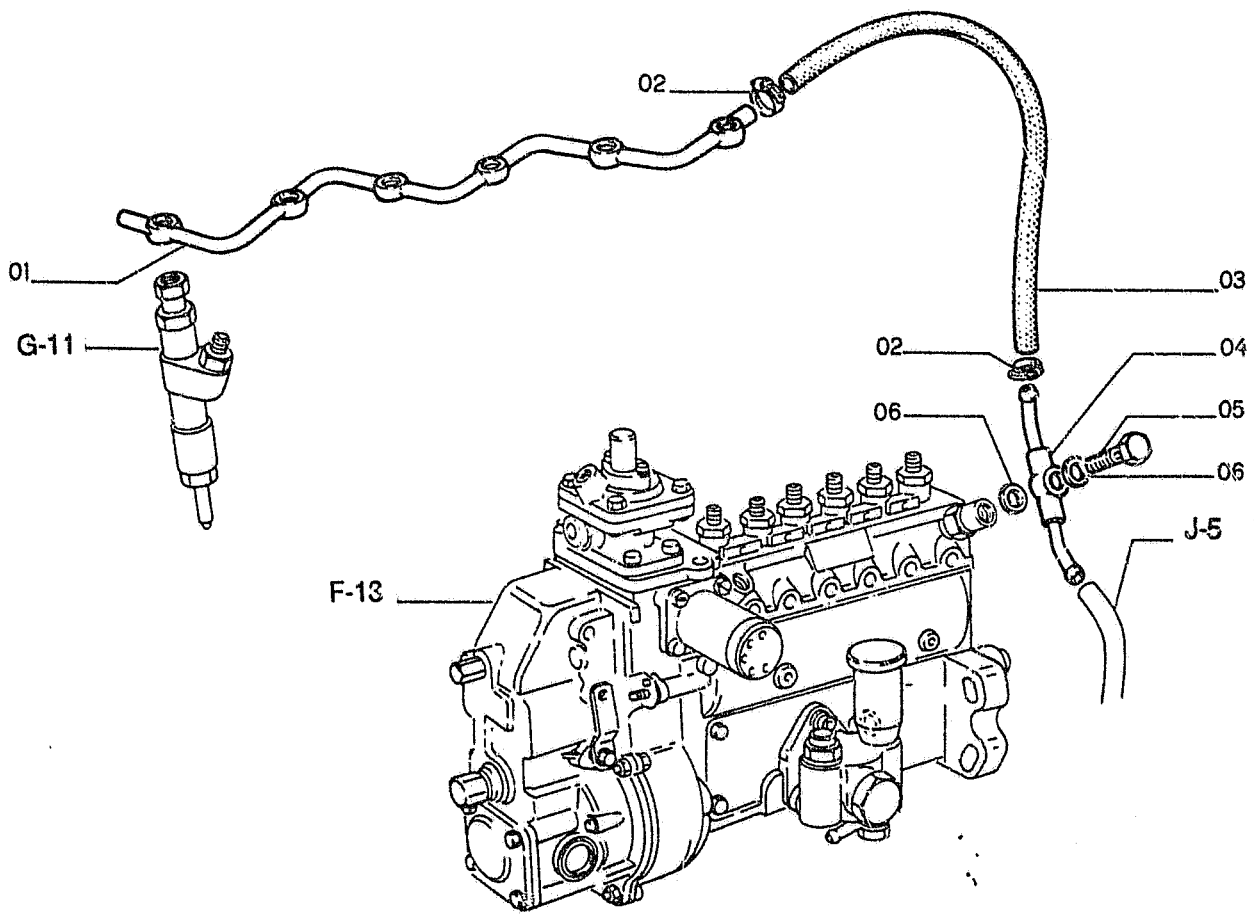

FH200

FUEL PIPING
TUBAZIONI COMBUSTIBILE

TUYAUTERIE DU COMBUSTIBLE
LEITUNGEN KRAFTSTOFF
TUBERIAS DE COMBUSTIBLE

0.203 TAV.2

ITEM	PART NUMBER	QTY	TR. CO.	DESCRIPTION	DESCRIZIONE
01	4788070	1	193T	TUBE	TUBO RIGIDO
02	12182590	2	180C	COLLAR	COLLARE
03	19067687	1	285T	HOSE	TUBO FLESSIBILE
04	4739148	1	20R	FITTING	RACCORDO
05	4775329	1	20R	FITTING	RACCORDO
06	16508160	2	122G	SEAL	GUARNIZIONE

TURBOCHARGER TURBOCOMPRESSORE	TURBOCOMPRESSEUR TURBOLADER TURBOCOMPRESOR	0.240 TAV.1 NTR 104S V-89

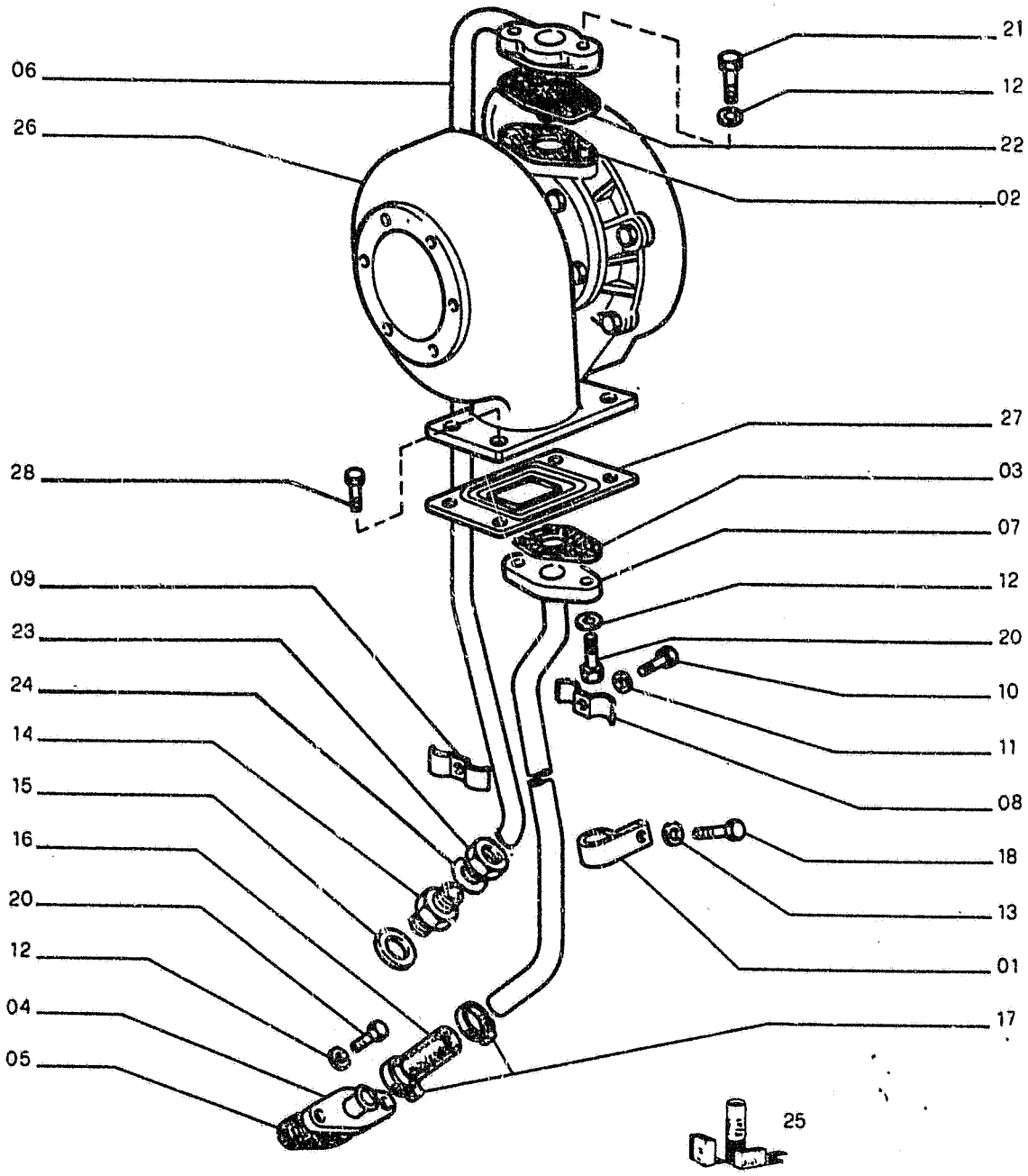

FH200

TURBOCHARGER
TURBOCOMPRESSORE

TURBOCOMPRESSEUR
TURBOLADER
TURBOCOMPRESOR

0.240 TAV.1

REVISED JULY 1990

ITEM	PART NUMBER	QTY	TR. CO.	DESCRIPTION	DESCRIZIONE
01	4033229	1	225S	BRACKET	STAFFA
02	4849997	1	122G	SEAL -K. 79062510	GUARNIZIONE -K. 79062510
03	4850946	1	122G	SEAL -K. 79062510	GUARNIZIONE -K. 79062510
04	4754153	1	70F	FLANGE	FLANGIA
05	4754155	1	122G	SEAL	GUARNIZIONE
				C2897 UP TO ENGINE 349217	C2897 FINO AL MOTORE 349217
	4858077	1	122G	SEAL	GUARNIZIONE
				D2897 FROM ENGINE 349218	D2897 DAL MOTORE 349218
06	4772720	1	193T	TUBE	TUBO RIGIDO
07	4779773	1	193T	TUBE	TUBO RIGIDO
08	4755435	1	97S	HALF CONNECTOR	SEMIMORSETTO
09	4755436	1	97S	HALF CONNECTOR	SEMIMORSETTO
10	10902421	1	40V	SCREW 6X1X20	VITE 6X1X20
11	11197771	1	170R	LOCKWASHER	ROSETTA ELASTICA
12	11193871	6	170R	LOCKWASHER	ROSETTA ELASTICA
13	11198371	1	170R	LOCKWASHER	ROSETTA ELASTICA
14	16500311	1	20R	FITTING	RACCORDO
15	16508260	1	131R	WASHER -K. 79062510	ROSETTA -K. 79062510
16	4780206	1	30M	SLEEVE	MANICOTTO
17	12181390	2	180C	COLLAR	COLLARE
18	15970121	1	40V	SCREW	VITE
20	16043621	4	40V	SCREW 8X1,25X25	VITE 8X1,25X25
21	16043921	2	40V	SCREW 8X1,25X35	VITE 8X1,25X35
22	4782472	1	65F	FILTER	FILTRO
23	16506911	1	10D	NUT	DADO
24	16507611	1	45A	RING	ANELLO
25	79062510	1	K22	KIT-MANIFOLD GASKETS	KIT-GUARNIZIONI COLLETTORI
				FOR COMPONENTS, SEE A-22	VED. COMPONENTI PAG. 23
26	4718129	1	210T	TURBOCHARGER -ASS.LY SEE TAV.2	TURBOCOMPRESSORE -COMPL. VED. TAV.2
27	4632123	1	122G	SEAL -K. 79062510	GUARNIZIONE -K. 79062510
28	4830631	4	40V	SCREW	VITE

ALPHABETICAL INDEX

DESCRIPTION	SGR.	TAV.	GRID
Accelerator controls	0.004	1	1D-21
Air Cleaner	0.001	1	1D-5
Alternator-Mounting	0.400	1	1I-11
Anti-Shock Valve (Hydr.)	1.082	3	1L-15
Application of Ol. Hammer	5.0020	2	2J-7
Batteries	1.220	2	2D-13
Belts	0.340	1	1H-23
	0.345	1	1I-3
Boom Piping	2.030	1	2F-17, 2G-3
	2.031	1	2G-5
	2.031	2	2G-7
Brake Valve Components	3.010	3	2H-3
Bucket	2.020	1	2F-13
Bucket Cylinder	2.030	5	2G-3
Bull Gear	3.000	1	2G-17
Cab	1.250	1	2D-19
Cab Door	1.250	5	2E-7
Cab Heater-Components	1.290	2	2E-15
Cab Window-Left Side	1.250	6	2E-9
Cab-Frame	1.250	7	2E-11
Cab-Platform	1.250	1	2D-19
Cab Vandalism	5.0540	1	2K-3
Camshaft	0.120	1	1F-11
Cold Starting Aid	5.0025	1	2J-11
Connecting Rod	0.081	1	1E-23
Cont. Valve-Hydr. (Ass.Y)	1.050	1	1J-21
Control Valve-Hydr.	1.050	2	2K-3
	1.050	3	2K-5
	1.050	4	2K-7
Controls	1.070	1	1J-20
	1.071	1	1K-21, 1L-3
Counterweight	1.000	1	1J-3
Cowlings	1.300	1	2E-19
	1.300	2	2E-21
	1.300	3	2E-23
Crankshaft	0.080	1	1E-21
Crankshaft Pulley	0.084	1	1F-7
Cylinder Block	0.040	1	1D-21
	0.040	2	1D-23
	0.040	3	1E-3
Cylinder Block Covers	0.043	1	1E-7
	0.043	2	1E-9
Cylinder Head	0.060	1	1E-13
	0.060	2	1E-15
Dashboard (Left)	1.210	1	2D-9
Dashboard (Right)	1.200	1	2D-3
	1.200	3	2D-7
Data Monitor	1.200	2	2D-5
Decals	4.500	1	2I-3
	4.501	1	2I-5
Dipper Stick (2,1m)	5.0022	1	2J-9
Dipper Stick (2,5m) (STD.)	2.003	1	2F-11
Dipper Stick (3m)	5.0038	1	2J-13
Dipper Stick Cylinder	2.030	4	2F-23
	2.031	4	2G-5
Dipstick-Engine Oil	0.270	1	1H-8
Discharge Valve Componen.	3.010	4	2H-5
Drive on Engine (Opt.)	0.350	1	1I-5
Electric System	1.220	1	2D-11
	1.220	2	2D-13
Elements-fuel	0.200	1	1G-17
Elements-Hydraulic	1.020	1	1J-7
Elements-Pilot	1.080	1	1L-5
Emergency Kits(Lub. Fittings)	4.000	1	2H-23
Engine	0.021	1	1D-19
Engine-Controls	0.004	1	1D-15
Engine-Suspensions	0.000	1	1D-3
Engine Breather	0.045	1	1E-11
Engine Cooling Piping	0.323	1	1H-19
Engine Heat Exchanger	0.310	1	1H-15
Engine Lifting Eyes	0.450	1	1I-15
Engine Oil Filter	0.302	1	1H-11
Engine Oil Piping	0.305	1	1H-13
Engine Oil Pump	0.300	1	1H-9
Engine Oil Sump	0.042	1	1E-5
Engine Piston	0.082	1	1F-3
Engine Suspensions	0.000	1	1D-3
Exhaust Manifold	0.077	1	1E-19
Exhaust Valve	0.060	2	1E-15
Fan	0.345	1	1I-3
Fan Drive	0.345	1	1I-3
"Filter Care" Kit	24		1A-24
Filter-Pilot System	1.080	1	1L-5
Filters-Air	0.001	1	1D-5
Filters-Engine Oil	0.302	1	1D-11
Filters-Fuel	0.200	1	1G-17
Filters-Hydr. System	1.020	1	1J-7
Flywheel-Engine	0.083	1	1L-17
Fuel Filter	0.200	1	1G-17
Fuel Piping	0.203	1	1G-19
Fuel Pump	0.203	2	1G-21
	0.140	8	1G-5
Fuel Tank	1.010	1	1J-5
Fuses	1.200	3	2D-7
Guards	1.300	2	2E-21
Handle	1.300	3	2E-23
	1.300	4	2F-3
Heater	1.290	1	2E-15
Horn	1.220	2	2D-15
Hydr.Pump-Components	1.030	2	1J-13
Hydr.Pump Regulator-Comp.	1.030	3	1J-15

H-2

ALPHABETICAL INDEX

DESCRIPTION	SGR.	TAV.	GRID
Hydraulic Pump	1.030	1	1J-9
Idler	3.020	1	1H-7
Injection Nozzle-Lines	0.149	1	1G-15
Injection Pump	0.140	6	1F-23
	0.140	7	1G-3
Injection Pump Drive	0.140	10	1G-9
Injection Pump-Piping	0.140	1	1F-13
	0.140	9	1G-7
Intake Manifold	0.071	1	1E-17
Intake Valve	0.060	2	1E-15
Lift Cylinder (Left)	2.030	3	1F-21
Lift Cylinder (Right)	2.030	2	2F-19
Lights	1.220	2	2D-13
Lower Frame	3.000	1	2G-17
Lubric. Fitting Piping	3.001	1	2G-19
	2.041	1	2G-15
	2.040	1	1G-13
Main Piping	1.060	1	1K-9
	1.061	1	1K-11
Mirror (Rear)	1.300	2	2E-21
Monobloc Boom	2.000	1	2F-5
Motor - Starter	0.360	2	1I-9
Motor - Swing	1.040	1	1J-17
Motor - Travel	3.010	1	2G-21
Motor - Wiper	1.220	1	2D-11
Muffler	0.002	1	1D-7
Oil Tank	1.020	1	1J-7
Operator's Seat	1.250	2	2D-21
OperatorsSeat(Bostrom)(Std.)	5.0151	1	2J-21
Pilot Piping(1)	1.080	1	1L-5
Pilot Piping(2)	1.081	1	1L-9
Pilot Piping(3)	1.082	1	1L-11
Pilot Piping(4)	1.083	1	1L-17
Pilot Piping(5)	1.084	1	1L-19
Pilot Piping(6)	1.085	1	1L-21
Pilot Valve	1.070	3	1K-19
	1.071	2	1L-3
Pilot Valve-components	1.070	2	1K-17
PipingBoom	2.030	1	2F-17
	2.031	1	2G-5
Piping-Injection	0.149	1	1G-15
Piping-Lube Fittings	2.040	1	2G-13
Piping-Main	1.060	1	1K-9
Piping-Pilot(1)	1.080	1	1L-5
Piping-Pilot(3)	1.082	1	1L-11
Piping-Pilot(4)	1.083	1	1L-17
Piping-Pilot(5)	1.084	1	1L-19
Piping-Pump Contr. Valve	1.050	1	1J-21
Piping-Travel (Lower)	3.070	1	2H-19
	3.071	1	2H-21
Piping-Turbocharger	0.241	1	1H-5
Pump-Engine Oil	0.300	1	1H-9
Pump-Hydraulic	1.030	1	1J-11
Pump-Injection	0.140	6	1F-23
Pump-Water	0.320	1	1H-17
Pump/Control Valve Piping	1.050	1	1J-23
Radiator	0.003	1	1D-9
Radiator-Components	0.003	2	1D-11
	0.003	3	1D-13
Rocker Arm	0.060	2	1E-15
Rotary Distributor	3.060	1	2H-17
SAE Battery Provision	1.220	3	2D-17
Seat Belt	5.0536	1	1J-23
Sensors	1.220	2	2D-13
Solenoid Valve	1.080	2	1L-7
Starter	0.360	2	1I-9
Starter-Mounting	0.360	1	1I-7
Stop Valve	1.082	2	1L-13
Swing Red.Unit-Components	1.040	2	1J-19
Swing Reduction Unit	1.040	1	1J-17
Thermostat & Housing	0.326	1	1H-21
Timing Control	0.100	1	1F-9
Tool Kit	5.0083	1	2J-19
Track Chain	3.051	1	2H-13
	3.052	1	2H-15
Track Roller	3.040	1	2H-11
Travel Motor-componen.	3.010	3	2H-3
Travel Piping (Lower)	3.070	1	2H-19
	3.071	1	2H-21
Travel Red.Unit-Componen.	3.010	2	2G-23
Travel Reduction Units	3.010	1	2G-21
Turbocharger	0.240	1	1G-23
	0.240	2	1H-3
Turbocharger Piping	0.241	1	1H-5
Upper Frame	1.000	1	1J-3
Upper Roller	3.030	1	2H-9
Valve-Anti-Shock(Hydr.)	1.082	3	1L-15
Valve-Exhaust	0.060	2	1E-15
Valve-Intake	0.060	2	1E-15
Valve-Pilot (Hydr.)	1.070	1	1K-15
Valve-Pilot(Travel)	1.070	1	1K-15
Valve-Solenoid	1.080	2	1L-7
Valve-Stop(Travel)	1.082	1	1L-11
Water Pump	0.320	1	1H-17
Water Pump Drive	0.340	1	1H-23
Water Pump-Components	0.320	2	1H-17
Wiper	1.220	1	2D-11

TURBOCHARGER TURBOCOMPRESSORE 471812\	TURBOCOMPRESSEUR TURBOLADER TURBOCOMPRESOR	0.240 TAV.2 NTR 104S V-89

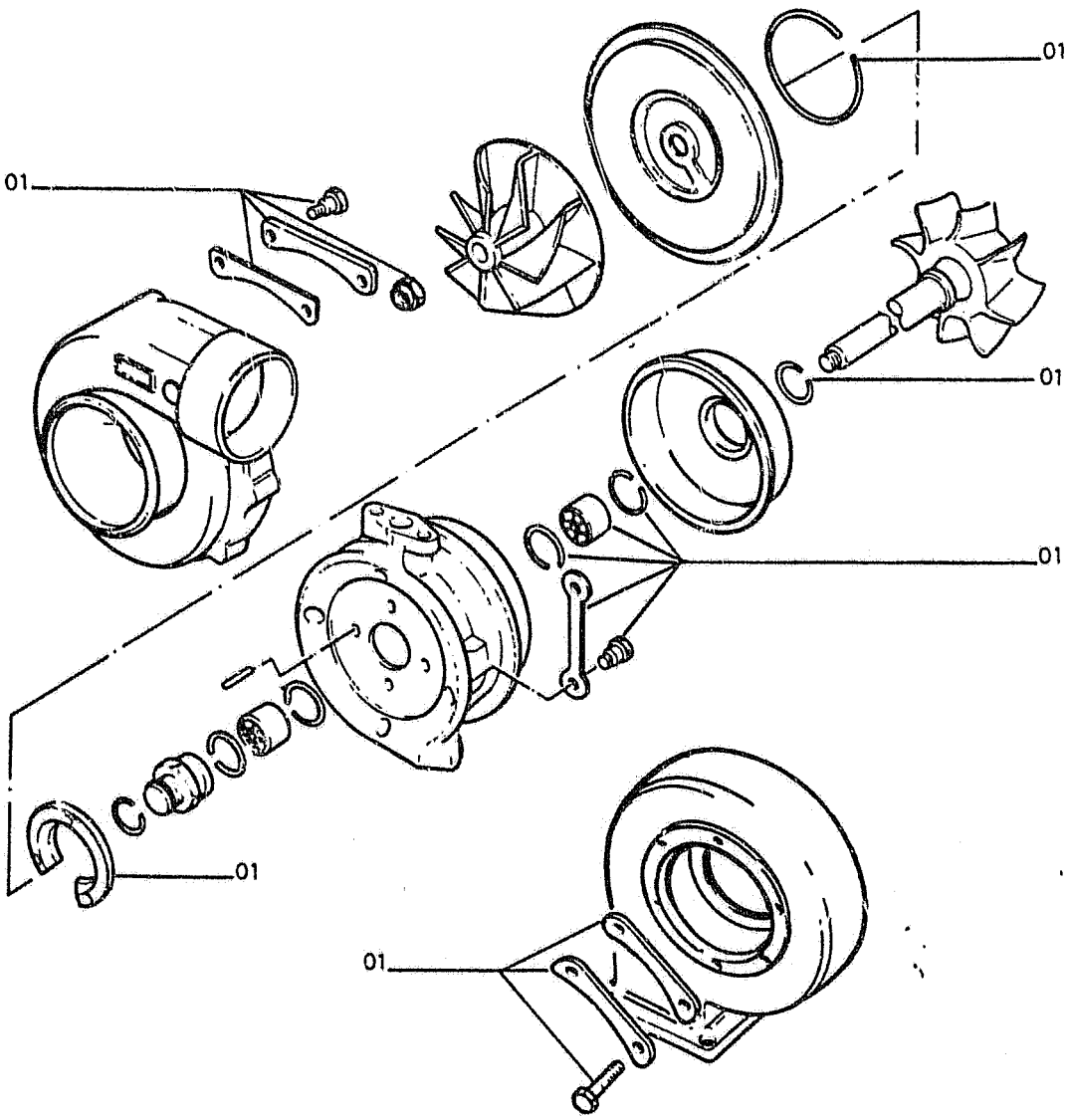

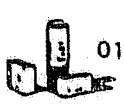

FH200

TURBOCHARGER TURBOCOMPRESSORE 4718129	TURBOCOMPRESSEUR TURBOLADER TURBOCOMPRESOR	0.240 TAV.2 NTR 104S V-89

ITEM	PART NUMBER	QTY	TR. CO.	DESCRIPTION	DESCRIZIONE
01	79025721	1	2K	KIT	KIT

TURBOCHARGER PIPING TUBAZIONI TURBOCOMPRESS.	TUYAUTERIES TURBOCOMPR. LEITUNGEN-TURBOLADER TUBERIAS TURBOCOMPRESOR	0.241 TAV.1 NTR 104S V-89

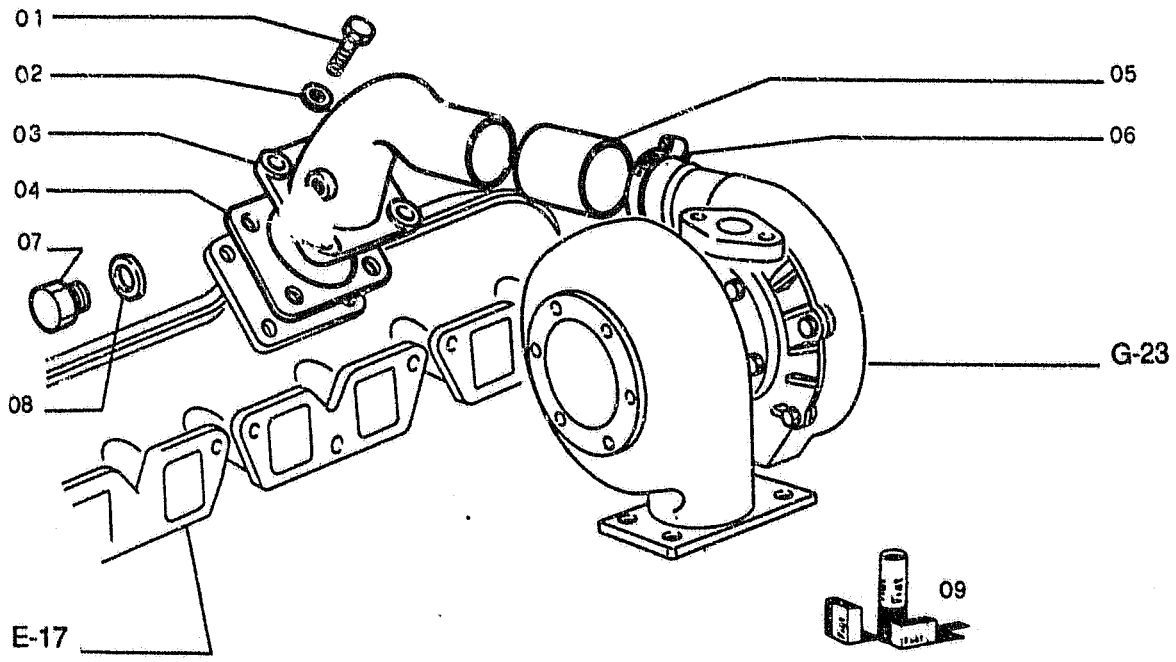

FH200

TURBOCHARGER PIPING
TUBAZIONI TURBOCOMPRESS.
TUYAUTERIES TURBOCOMPR.
LEITUNGEN-TURBOLADER
TUBERIAS TURBOCOMPRESOR

0.241 TAV.1

REVISED JULY 1990

ITEM	PART NUMBER	QTY	TR. CO.	DESCRIPTION	DESCRIZIONE
01	16043621	4	40V	SCREW 8X1,25X25	VITE 8X1,25X25
02	11198071	4	131R	WASHER	ROSETTA
03	4754495	1	85G	ELBOW	GOMITO
04	4632108	1	122G	SEAL -K. 79062510	GUARNIZIONE -K. 79062510
				C2897 UP TO ENGINE 349217	C2897 FINO AL MOTORE 349217
	4858085	1	122G	SEAL	GUARNIZIONE
				D2897 FROM ENGINE 349218	D2897 DAL MOTORE 349218
05	4765377	1	30M	SLEEVE	MANICOTTO
06	12174790	2	180C	COLLAR	COLLARE
07	10305171	1	50T	PLUG	TAPPO
08	10279560	1	122G	SEAL	GUARNIZIONE
09	79062510	1	K22	KIT-MANIFOLD GASKETS	KIT-GUARNIZIONI COLLETTORI
				FOR COMPONENTS, SEE A-22	VED. COMPONENTI PAG. 23

DIPSTICK-ENGINE OIL
ASTA LIVELLO OLIO MOTORE

JAUGE D'HUILE MOTEUR
OELMESSTAB-MTOR
VARILLA DE NIVEL

0.270 TAV.1

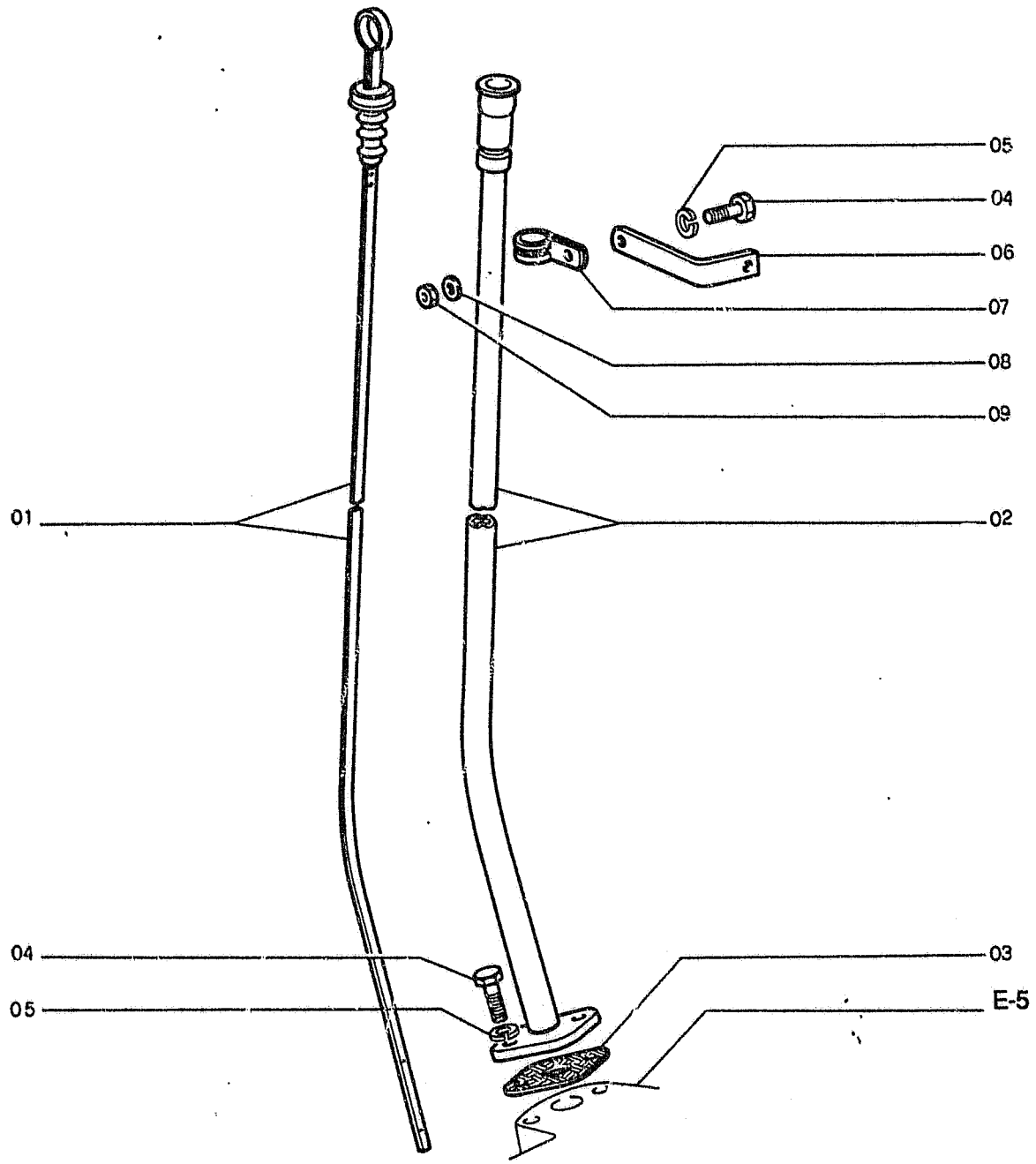

FH200

DIPSTICK-ENGINE OIL
ASTA LIVELLO OLIO MOTORE

JAUGE D'HUILE MOTEUR
OELMESSTAB-MTOR
VARILLA DE NIVEL

0.270 TAV.1

REVISED JULY 1990

ITEM	PART NUMBER	QTY	TR. CO.	DESCRIPTION	DESCRIZIONE
01	4843492	1	91A	DIPSTICK	ASTA LIVELLO
02	4843490	1	193T	TUBE	TUBO RIGIDO
03	4667612	1	122G	SEAL	GUARNIZIONE
				C2897 UP TO ENGINE 349217	**C2897** FINO AL MOTORE 349217
	4858080	1	122G	SEAL	GUARNIZIONE
				D2897 FROM ENGINE 349218	**D2897** DAL MOTORE 349218
04	16043424	3	40V	SCREW 8X1,25X20	VITE 8X1.25X20
05	11193874	3	170R	LOCKWASHER	ROSETTA ELASTICA
06	4843487	1	225S	BRACKET	STAFFA
07	10450390	1	231S	CLIP	STAFFETTA
08	10519601	1	131R	WASHER	ROSETTA
09	16100811	1	10D	NUT	DADO

ENGINE OIL PUMP POMPA OLIO MOTORE	POMPE A HUILE DU MOTEUR OELPUMPE - MOTOR BOMBA DE ACEITE DEL MOTOR	0.300 TAV.1

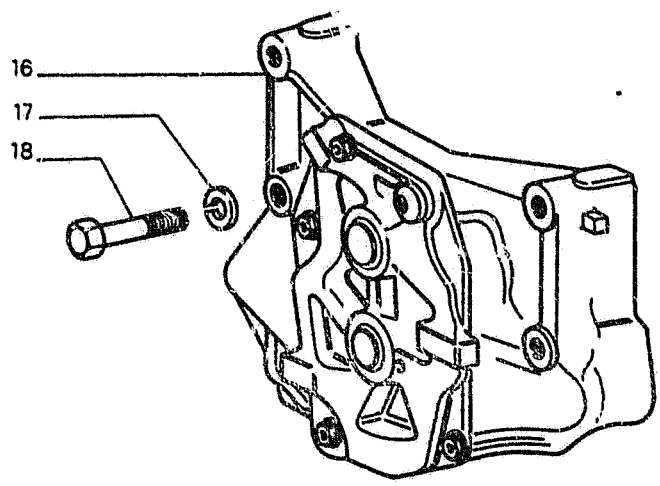

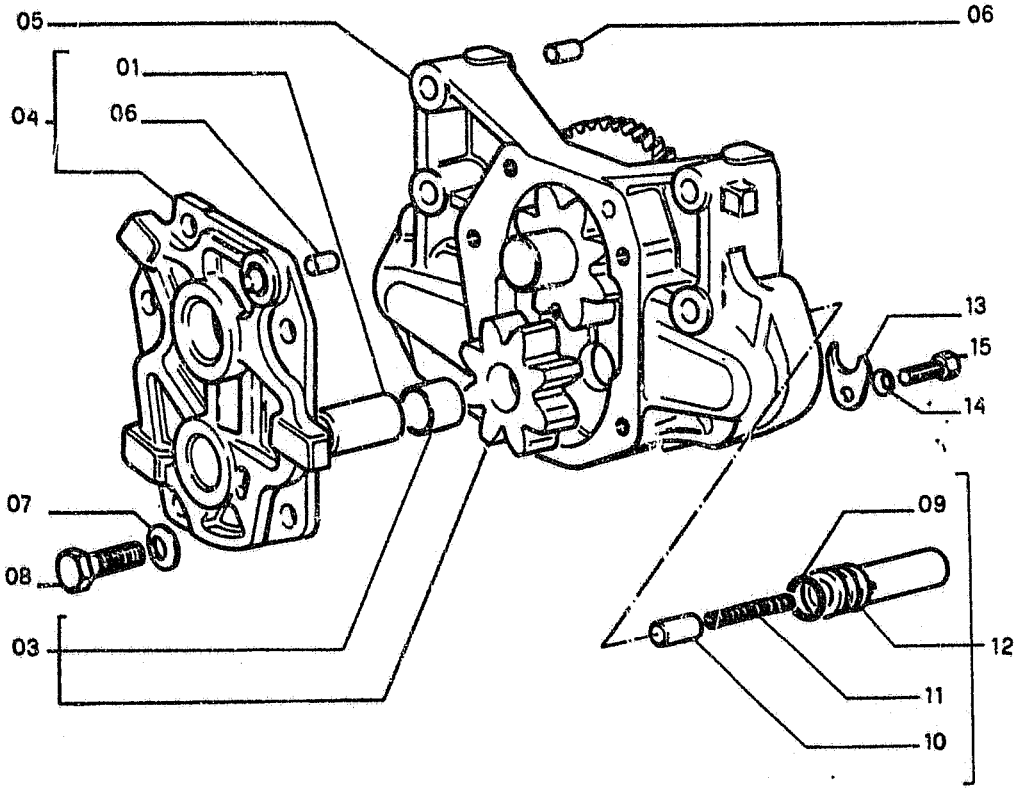

ENGINE OIL PUMP
POMPA OLIO MOTORE

POMPE A HUILE DU MOTEUR
OELPUMPE - MOTOR
BOMBA DE ACEITE DEL MOTOR

0.300 TAV.1

ITEM	PART NUMBER	QTY	TR. CO.	DESCRIPTION	DESCRIZIONE
01	4770259	1	80P	PIN	PERNO
03	4770262	1	50I	GEAR	INGRANAGGIO
04	4770254	1	265C	COVER	COPERCHIO
05	4770253	1	300C	BODY	CORPO
06	10839610	3	90G	DOWEL	GRANO
07	11193879	5	170R	LOCKWASHER	ROSETTA ELASTICA
08	16043321	5	40V	SCREW 8X1,25X18	VITE 8X1,25X18
09	11057576	1	158G	O-RING	GUARNIZIONE O-R
10	4672842	1	10V	VALVE	VALVOLA
11	4802613	1	100M	SPRING	MOLLA
12	4802611	1	10V	VALVE	VALVOLA
13	4613353	1	85F	YOKE	FORCELLA
14	11198071	1	131R	WASHER	ROSETTA
15	16043421	1	40V	SCREW 8X1,25X20	VITE 8X1,25X20
16	4802509	1	P153	OIL PUMP -ASS. Y	POMPA OLIO -COMPL.
17	11193871	4	131R	WASHER	ROSETTA
18	16044321	4	40V	SCREW 8X1,25X55	VITE 8X1,25X55

ENGINE OIL FILTER FILTRO OLIO MOTORE	FILTRE A HUILE DU MOTEUR MOTOROELFILTER FILTRO DE ACEITE MOTOR	0.302 TAV.1 NTR 104S V-89

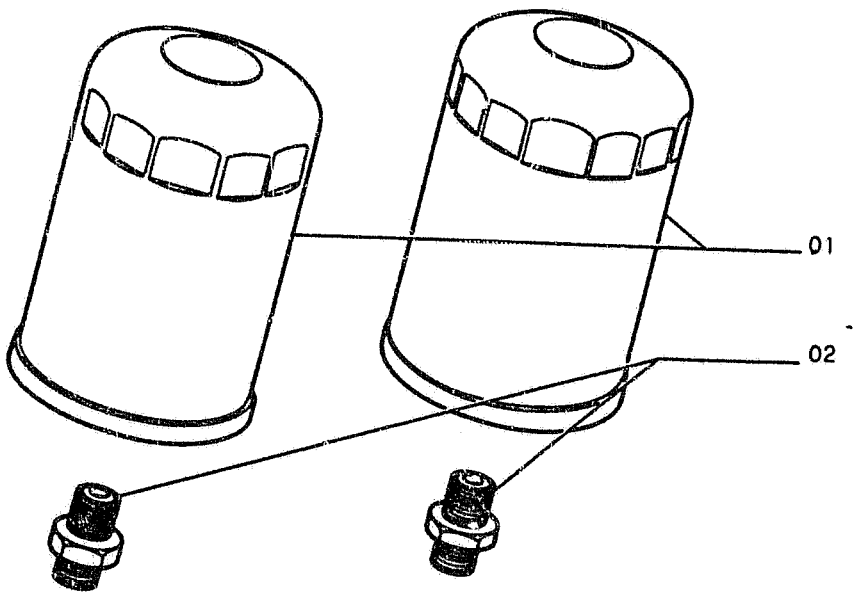

FH200

ENGINE OIL FILTER FILTRO OLIO MOTORE	FILTRE A HUILE DU MOTEUR MOTOROELFILTER FILTRO DE ACEITE MOTOR	0.302 TAV.1 NTR 104S V-89

ITEM	PART NUMBER	QTY	TR. CO.	DESCRIPTION	DESCRIZIONE
01	4787410	2	20E	FILTER ELEMENT	ELEMENTO FILTRANTE
	4791113	2	20E	FILTER ELEMENT -IN ALTER.	ELEMENTO FILTRANTE -IN ALTER.
02	4782453	2	20R	FITTING	RACCORDO

ENGINE OIL PIPING TUBAZIONI OLIO MOTORE	TUYAUTERIES HUILE MOTEUR LEITUNGEN-OEL TUBERIAS ACEITE MOTOR	0.305 TAV.1

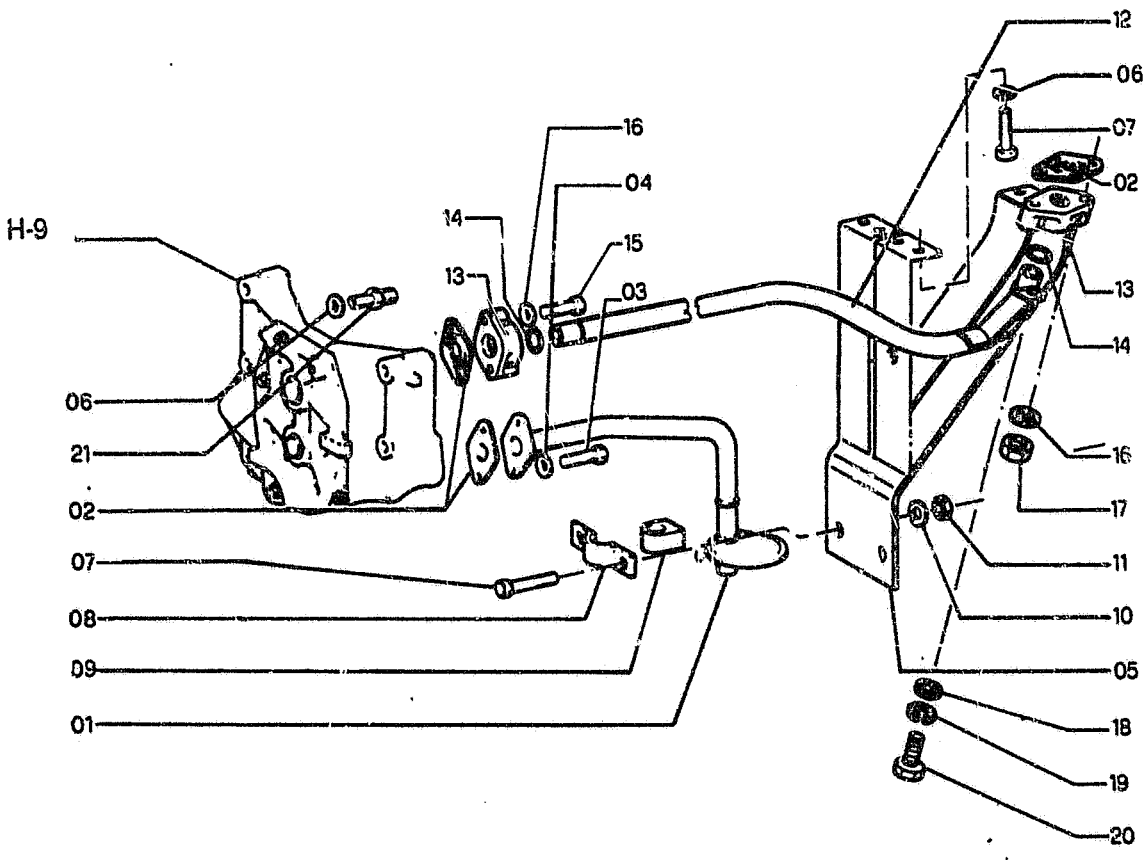

FH200

ENGINE OIL PIPING TUBAZIONI OLIO MOTORE	TUYAUTERIES HUILE MOTEUR LEITUNGEN-OEL TUBERIAS ACEITE MOTOR	0.305 TAV.1 REVISED JULY 1990

ITEM	PART NUMBER	QTY	TR. CO.	DESCRIPTION	DESCRIZIONE
01	4779689	1	193T	TUBE	TUBO RIGIDO
02	4617482	3	122G	SEAL	GUARNIZIONE
				C2897 UP TO ENGINE 349217	C2897 FINO AL MOTORE 349217
	4850083	3	122G	SEAL	GUARNIZIONE
				D2897 FROM ENGINE 349218	D2897 DAL MOTORE 349218
03	16043424	2	40V	SCREW 8X1,25X20	VITE 8X1,25X20
04	11193871	6	170R	LOCKWASHER	ROSETTA ELASTICA
05	4739213	1	231S	CLIP	STAFFETTA
06	561293	1	158G	O-RING	GUARNIZIONE O-R
07	16043224	6	40V	SCREW 8X1,25X16	VITE 8X1,25X16
08	4719705	1	231S	CLIP	STAFFETTA
09	4719706	1	30M	SLEEVE	MANICOTTO
10	10519601	2	131R	WASHER	ROSETTA
11	14048217	2	10D	NUT	DADO
12	4773064	1	193T	TUBE	TUBO RIGIDO
13	4773265	2	20R	FITTING	RACCORDO
14	14457681	4	158G	O-RING	GUARNIZIONE O-R
15	16043924	2	40V	SCREW 8X1,25X35	VITE 8X1,25X35
16	11198371	4	131R	WASHER	ROSETTA
17	16100811	2	10D	NUT	DADO
18	12646701	1	131R	WASHER	ROSETTA
19	11193871	1	131R	WASHER	ROSETTA
20	16043224	1	40V	SCREW 8X1,25X16	VITE 8X1,25X16
21	4785501	1	20R	FITTING	RACCORDO

ENGINE HEAT EXCHANGER — ECHANGEUR THERMIQUE
SCAMBIATORE CALORE MOTORE — WAERMETAUSCHER
CAMBIADOR DE CALOR

0.310 TAV.1

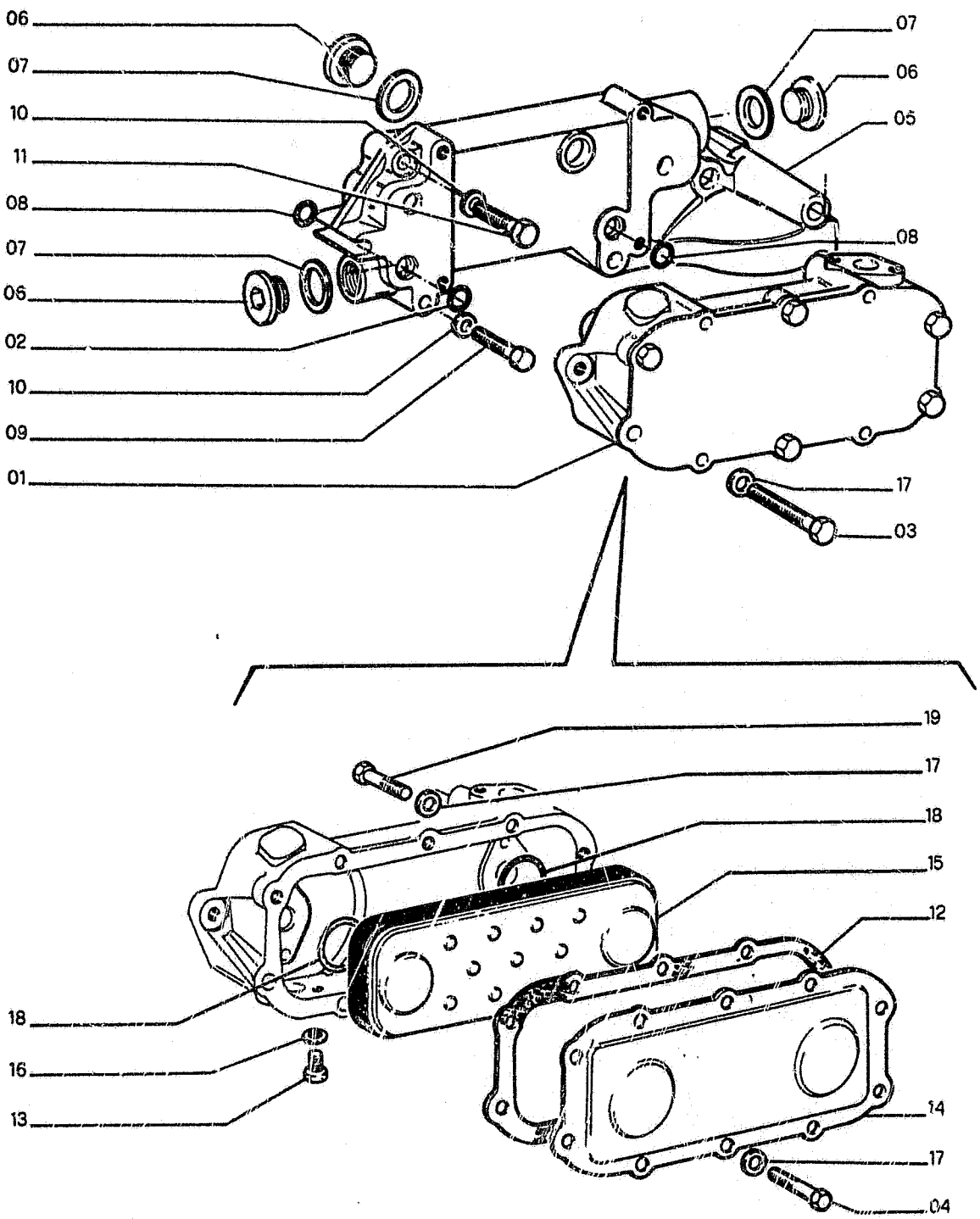

FH200

ENGINE HEAT EXCHANGER — ECHANGEUR THERMIQUE — **0.310** TAV.1
SCAMBIATORE CALORE MOTORE — WAERMETAUSCHER
CAMBIADOR DE CALOR

REVISED JULY 1990

ITEM	PART NUMBER	QTY	TR. CO.	DESCRIPTION	DESCRIZIONE
01	4801518	1	25S	HEAT EXCHANGER -ASS.LY	SCAMBIATORE DI CALORE -COMPL.
02	14457581	2	158G	O-RING	GUARNIZIONE O-R
03	16045021	4	40V	SCREW	VITE
04	16043621	5	40V	SCREW 8X1,25X25	VITE 8X1,25X25
05	4763099	1	300S	SUPPORT	SUPPORTO
06	10273111	4	50T	PLUG	TAPPO
07	10263160	4	122G	SEAL	GUARNIZIONE
08	14457481	3	158G	O-RING	GUARNIZIONE O-R
09	15540721	3	40V	SCREW 12X1,25X45	VITE 12X1,25X45
10	11198671	3	131R	WASHER	ROSETTA
11	11234721	1	40V	SCREW 10X1,25X45	VITE 10X1,25X45
12	4724223	1	122G	SEAL	GUARNIZIONE
				C2897 UP TO ENGINE 349217	**C2897** FINO AL MOTORE 349217
	4858089	1	122G	SEAL	GUARNIZIONE
				D2897 FROM ENGINE 349218	**D2897** DAL MOTORE 349218
13	4724588	1	50T	PLUG	TAPPO
14	4755010	1	265C	COVER	COPERCHIO
15	4770208	1	300C	BODY	CORPO
16	10260060	1	131R	WASHER	ROSETTA
17	10519601	13	170R	LOCKWASHER	ROSETTA ELASTICA
18	14458281	2	158G	O-RING	GUARNIZIONE O-R
19	16043221	4	40V	SCREW 8X1,25X16	VITE 8X1,25X16

FH200

WATER PUMP POMPA ACQUA	POMPE A EAU WASSERPUMPE BOMBA DE AGUA	0.320 TAV.1 NTR 104S V-89

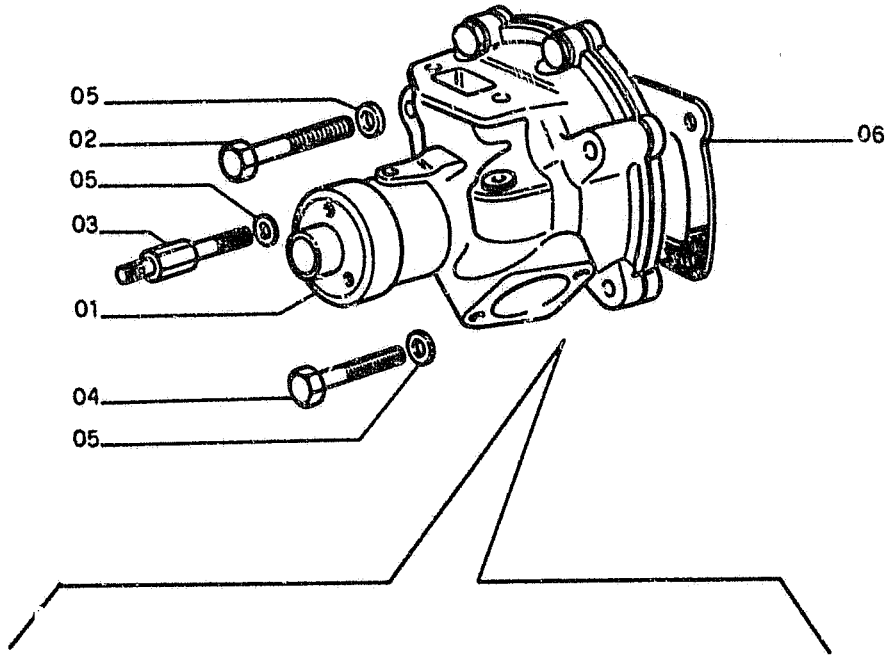

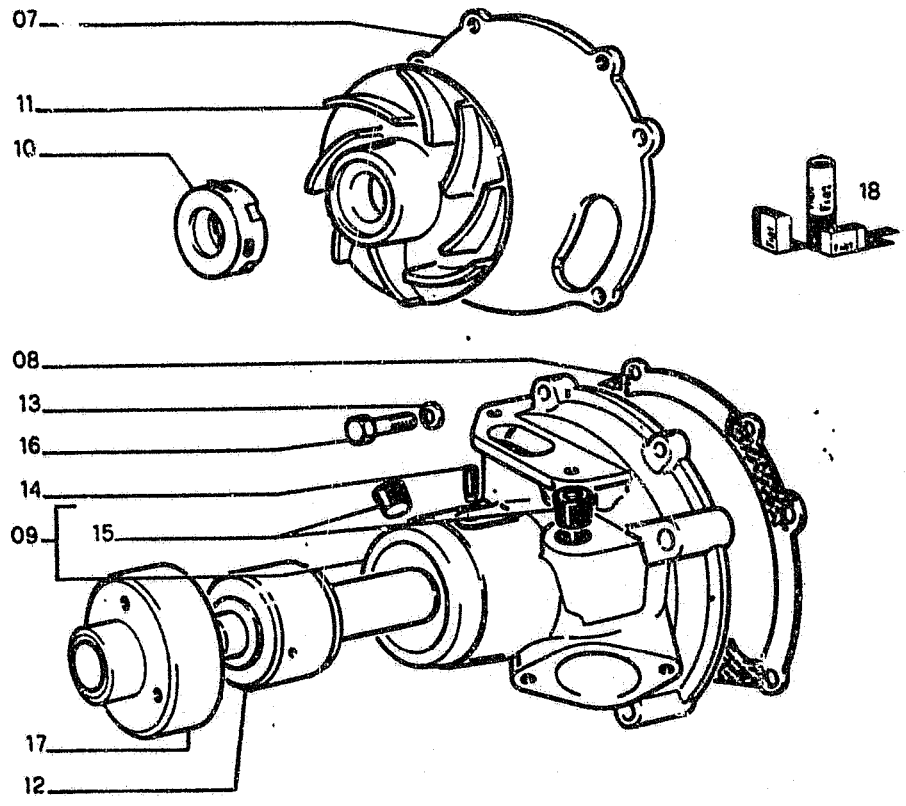

WATER PUMP POMPA ACQUA	POMPE A EAU WASSERPUMPE BOMBA DE AGUA	0.320 TAV.1 NTR 104S V-89

ITEM	PART NUMBER	QTY	TR. CO.	DESCRIPTION	DESCRIZIONE
01	4813370	1	P152	WATER PUMP -ASS.LY	POMPA ACQUA -COMPL.
02	15888721	2	40V	SCREW 10X1,25X55	VITE 10X1,25X55
03	4605853	1	40V	SCREW	VITE
04	15970921	1	40V	SCREW 10X1,25X35	VITE 10X1,25X35
05	11100571	4	131R	WASHER	ROSETTA
06	4599561	1	122G	SEAL -K. 79094074	GUARNIZIONE -K. 79094074
07	4599557	1	265C	COVER	COPERCHIO
08	4599560	1	122G	SEAL -K. 79094074	GUARNIZIONE -K. 79094074
09	4784008	1	300C	BODY	CORPO
10	7302756	1	122G	SEAL -K. 79094074	GUARNIZIONE -K. 79094074
11	4813442	1	60G	IMPELLER -K. 79094074	GIRANTE -K. 79094074
12	4808080	1	16A	SHAFT -K. 79094074	ALBERO -K. 79094074
13	11193871	2	170R	LOCKWASHER	ROSETTA ELASTICA
14	13739811	1	40V	SCREW -K. 79094074	VITE -K. 79094074
15	14325001	2	50T	PLUG	TAPPO
16	16043421	2	40V	SCREW 8X1,25X20	VITE 8X1,25X20
17	4654154	1	135M	HUB	MOZZO
18	79094074	1	K16	KIT - WATER PUMP OVERHAUL FOR COMPONENTS, SEE A-24	KIT - REVISIONE POMPA ACQUA VED. COMPONENTI PAG. 24

FH200

ENGINE COOLING PIPING
TUBAZIONI RAFFREDD.MOTORE
TUYAUTERIES REFROIDISS.
KUEHLROHRE
TUBERIAS DE REFRIGERACION

0.323 TAV.1

NTR 104S V-89

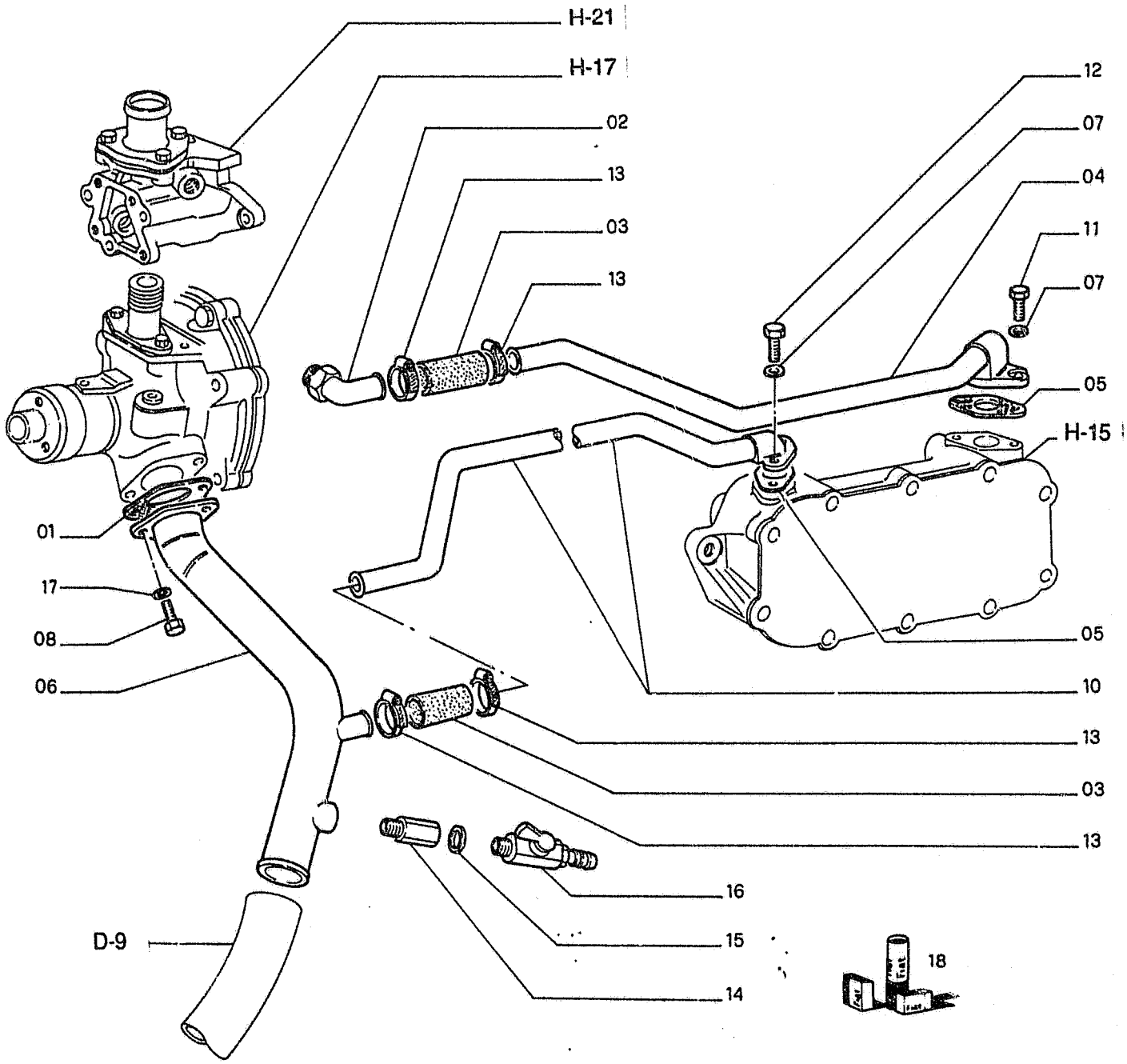

FH200

ENGINE COOLING PIPING
TUBAZIONI RAFFREDD.MOTORE

TUYAUTERIES REFROIDISS.
KUEHLROHRE
TUBERIAS DE REFRIGERACION

0.323 TAV.1

REVISED JULY 1990

ITEM	PART NUMBER	QTY	TR. CO	DESCRIPTION	DESCRIZIONE
01	4599562	1	122G	SEAL	GUARNIZIONE
				C2576 UP TO ENGINE 363591	C2576 FINO AL MOTORE 363591
	4854716	1	122G	SEAL -K. 79094074	GUARNIZIONE -K. 79094074
				D2576 FROM ENGINE 363592	D2576 DAL MOTORE 363592
02	4724747	1	20R	FITTING	RACCORDO
03	12077086	2	30M	SLEEVE	MANICOTTO
04	4762764	1	193T	TUBE	TUBO RIGIDO
05	4724814	2	122G	SEAL	GUARNIZIONE
				C2897 UP TO ENGINE 349217	C2897 FINO AL MOTORE 349217
	4858087	2	122G	SEAL	GUARNIZIONE
				D2897 FROM ENGINE 349218	D2897 DAL MOTORE 349218
06	4843493	1	193T	TUBE	TUBO RIGIDO
07	11193871	4	170R	LOCKWASHER	ROSETTA ELASTICA
08	4830623	2	40V	SCREW	VITE
				C2577 UP TO ENGINE 401966	C2577 FINO AL MOTORE 401966
	98401723	2	40V	SCREW	VITE
				D2577 FROM ENGINE 401967	D2577 DAL MOTORE 401967
10	4843951	1	193T	TUBE	TUBO RIGIDO
11	16043621	2	40V	SCREW 8X1,25X25	VITE 8X1,25X25
12	16043921	2	40V	SCREW 8X1,25X35	VITE 8X1,25X35
13	12182190	4	180C	COLLAR	COLLARE
14	79075331	1	20R	FITTING	RACCORDO
15	10278660	1	131R	WASHER	ROSETTA
16	79044796	1	150R	COCK	RUBINETTO
17	11193871	2	170R	LOCKWASHER	ROSETTA ELASTICA
				C2577 UP TO ENGINE 401966	C2577 FINO AL MOTORE 401966
	17094914	2	131R	WASHER	ROSETTA
				D2577 FROM ENGINE 401967	D2577 DAL MOTORE 401967
18	79094074	1	K16	KIT - WATER PUMP OVERHAUL FOR COMPONENTS, SEE A-24	KIT - REVISIONE POMPA ACQUA VED. COMPONENTI PAG. 24

THERMOSTAT & HOUSING
TERMOSTATO E TUBAZIONI

THERMOSTAT.ET TUYAUT.
THERMOSTAT-MOTOR
TERMOSTATO Y TUBERIAS

0.326 TAV.1

NTR 104S V-89

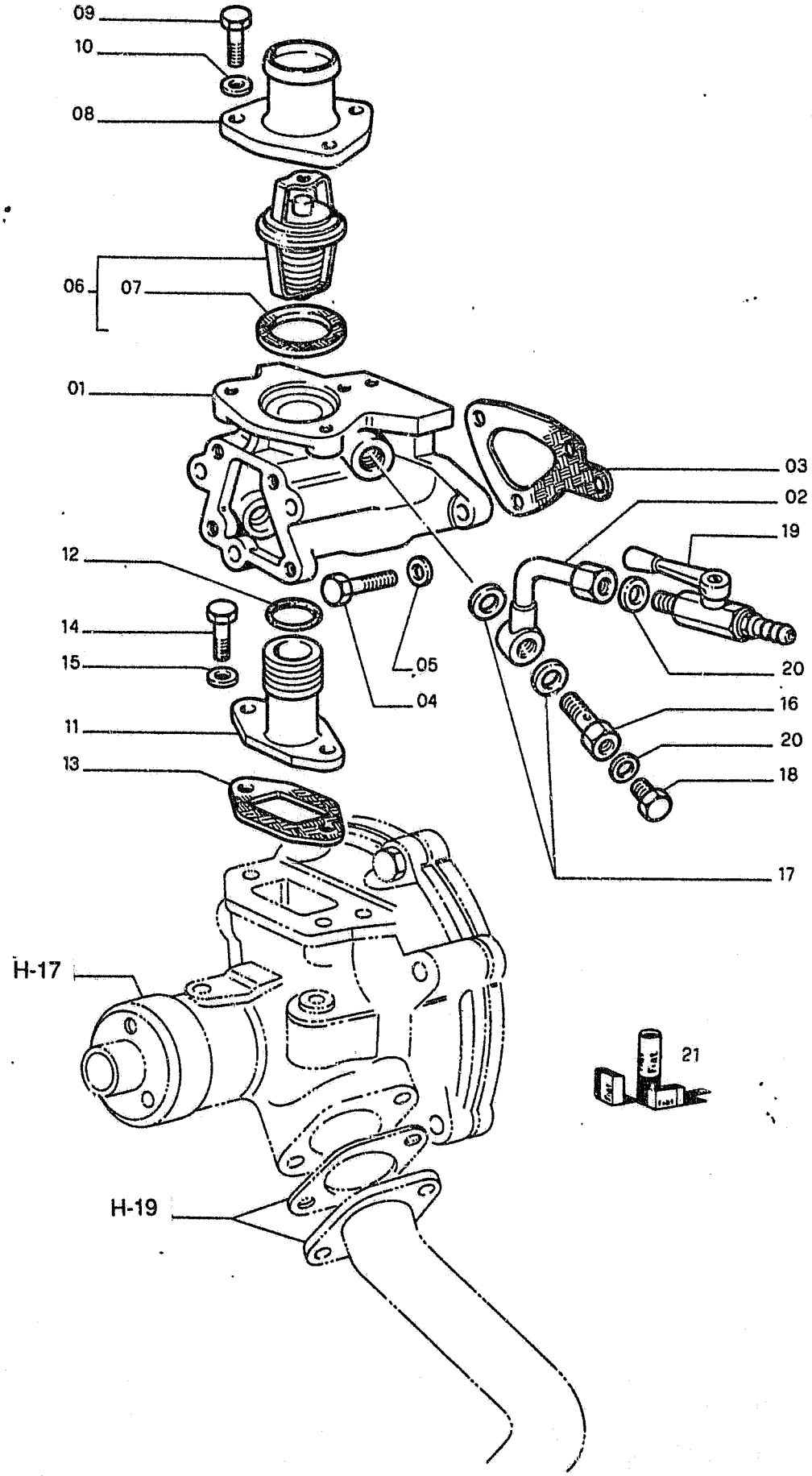

FH200

THERMOSTAT & HOUSING
TERMOSTATO E TUBAZIONI

THERMOSTAT ET TUYAUT.
THERMOSTAT-MOTOR
TERMOSTATO Y TUBERIAS

0.326 TAV.1

REVISED JULY 1990

ITEM	PART NUMBER	QTY	FR. CO.	DESCRIPTION	DESCRIZIONE
01	4842710	1	300S	SUPPORT -ASS.LY	SUPPORTO -COMPL.
02	79080899	1	193T	TUBE	TUBO RIGIDO
03	4770265	1	120G	GASKET	GUARNIZIONE PIANA
				C2896 UP TO ENGINE 351016	C2896 FINO AL MOTORE 351016
	4858560	1	120G	GASKET	GUARNIZIONE PIANA
				D2896 FROM ENGINE 351017	D2896 DAL MOTORE 351017
04	11307024	1	40V	SCREW 10X1,25X40	VITE 10X1,25X40
	15972424	3	40V	SCREW 10X1,25X130	VITE 10X1,25X130
05	11198374	4	170R	LOCKWASHER	ROSETTA ELASTICA
06	4823210	1	96T	THERMOSTAT -ASS.LY	TERMOSTATO -COMPL.
07	4823212	1	120G	GASKET	GUARNIZIONE PIANA
08	4661543	1	265C	COVER	COPERCHIO
09	16043624	3	40V	SCREW 8X1,25X25	VITE 8X1,25X25
10	11193874	3	170R	LOCKWASHER	ROSETTA ELASTICA
11	4774405	1	193T	TUBE	TUBO RIGIDO
12	14463281	1	158G	O-RING -K. 79094074 -K.79062510	GUARNIZIONE O-R -K. 79094074 -K.79062510
13	4848840	1	120G	GASKET -K. 79094074	GUARNIZIONE PIANA -K. 79094074
14	4838482	2	40V	SCREW	VITE
15	10519621	2	131R	WASHER	ROSETTA
16	79080898	1	20R	FITTING	RACCORDO
17	10263360	2	122G	SEAL	GUARNIZIONE
18	79080922	1	50T	PLUG	TAPPO
19	79044796	1	150R	COCK	RUBINETTO
20	10278660	2	122G	SEAL	GUARNIZIONE
21	79094074	1	K16	KIT - WATER PUMP OVERHAUL FOR COMPONENTS, SEE A-24	KIT - REVISIONE POMPA ACQUA VED. COMPONENTI PAG. 24

WATER PUMP DRIVE COMANDO POMPA ACQUA	COMMANDE DE POMPE D'EAU WASSERPUMPENANTRIEB POLEA DE LA BOMBA DE AGUA	0.340 TAV.1

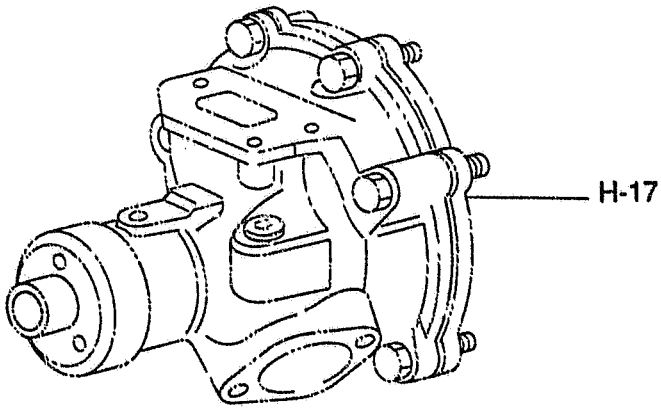

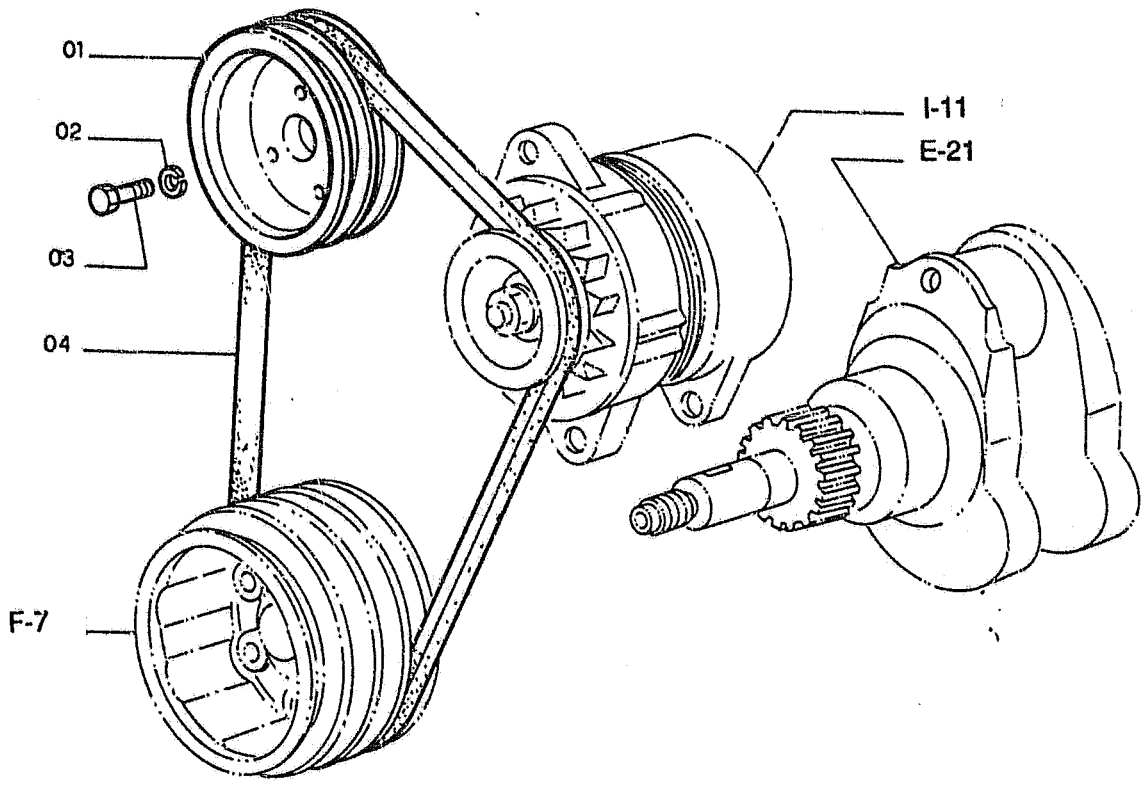

FH200

WATER PUMP DRIVE
COMANDO POMPA ACQUA

COMMANDE DE POMPE D'EAU
WASSERPUMPENANTRIEB
POLEA DE LA BOMBA DE AGUA

0.340 TAV.1

REVISED JULY 1990

ITEM	PART NUMBER	QTY	TR. CO.	DESCRIPTION	DESCRIZIONE
01	4803361	1	230P	PULLEY	PULEGGIA
02	11193871	3	131R	WASHER	ROSETTA
03	16043424	3	40V	SCREW 8X1,25X20	VITE 8X1,25X20
04	4843756	1	173C	BELT	CINGHIA
				C2903 UP TO ENGINE 399607	C2903 FINO AL MOTORE 399607
	4855030	1	173C	BELT	CINGHIA
				D2903 FROM ENGINE 399608	D2903 DAL MOTORE 399608

I-1

ALPHABETICAL INDEX

DESCRIPTION	SGR.	TAV.	GRID
Accelerator controls	0.004	1	1D-21
Air Cleaner	0.001	1	1D-5
Alternator-Mounting	0.400	1	1I-11
Anti-Shock Valve (Hydr.)	1.082	3	1L-15
Application of Oi. Hammer	5.0020	2	2J-7
Batteries	1.220	2	2D-13
Belts	0.340	1	1H-23
	0.345	1	1I-3
Boom Piping	2.030	1	2F-17, 2G-3
	2.031	1	2G-5
	2.031	2	2G-7
Brake Valve Components	3.010	3	2H-3
Bucket	2.020	1	2F-13
Bucket Cylinder	2.030	5	2G-3
Bull Gear	3.000	1	2G-17
Cab	1.250	1	2D-19
Cab Door	1.250	5	2E-7
Cab Heater-Components	1.290	2	2E-15
Cab Window-Left Side	1.250	6	2E-9
Cab-Frame	1.250	7	2E-11
Cab-Platform	1.250	1	2D-19
Cab Vandalism	5.0540	1	2K-3
Camshaft	0.120	1	1F-11
Cold Starting Aid	5.0025	1	2J-11
Connecting Rod	0.081	1	1E-23
Cont. Valve-Hydr. (Ass.Y)	1.050	1	1J-21
Control Valve-Hydr.	1.050	2	2K-3
	1.050	3	2K-5
	1.050	4	2K-7
Controls	1.070	1	1J-20
	1.071	1	1K-21, 1L-3
Counterweight	1.000	1	1J-3
Cowlings	1.300	1	2E-19
	1.300	2	2E-21
	1.300	3	2E-23
Crankshaft	0.080	1	1E-21
Crankshaft Pulley	0.084	1	1F-7
Cylinder Block	0.040	1	1D-21
	0.040	2	1D-23
	0.040	3	1E-3
Cylinder Block Covers	0.043	1	1E-7
	0.043	2	1E-9
Cylinder Head	0.060	1	1E-13
	0.060	2	1E-15
Dashboard (Left)	1.210	1	2D-9
Dashboard (Right)	1.200	1	2D-3
	1.200	3	2D-7
Data Monitor	1.200	2	2D-5
Decals	4.500	1	2I-3
	4.501	1	2I-5
Dipper Stick (2,1m)	5.0022	1	2J-9
Dipper Stick (2,5m) (STD.)	2.003	1	2F-11
Dipper Stick (3m)	5.0038	1	2J-13
Dipper Stick Cylinder	2.030	4	2F-23
	2.031	4	2G-5
Dipstick-Engine Oil	0.270	1	1H-8
Discharge Valve Componen.	3.010	4	2H-5
Drive on Engine (Opt.)	0.350	1	1I-5
Electric System	1.220	1	2D-11
	1.220	2	2D-13
Elements-fuel	0.200	1	1G-17
Elements-Hydraulic	1.020	1	1J-7
Elements-Pilot	1.080	1	1L-5
Emergency Kits(Lub. Fittings)	4.000	1	2H-23
Engine	0.021	1	1D-19
Engine-Controls	0.004	1	1D-15
Engine-Suspensions	0.000	1	1D-3
Engine Breather	0.045	1	1E-11
Engine Cooling Piping	0.323	1	1H-19
Engine Heat Exchanger	0.310	1	1H-15
Engine Lifting Eyes	0.450	1	1I-15
Engine Oil Filter	0.302	1	1H-11
Engine Oil Piping	0.305	1	1H-13
Engine Oil Pump	0.300	1	1H-9
Engine Oil Sump	0.042	1	1E-5
Engine Piston	0.082	1	1F-3
Engine Suspensions	0.000	1	1D-3
Exhaust Manifold	0.077	1	1E-19
Exhaust Valve	0.060	2	1E-15
Fan	0.345	1	1I-3
Fan Drive	0.345	1	1I-3
"Filter Care" Kit	24		1A-24
Filter-Pilot System	1.080	1	1L-5
Filters-Air	0.001	1	1D-5
Filters-Engine Oil	0.302	1	1D-11
Filters-Fuel	0.200	1	1G-17
Filters-Hydr. System	1.020	1	1J-7
Flywheel-Engine	0.083	1	1L-17
Fuel Filter	0..200	1	1G-17
Fuel Piping	0.203	1	1G-19
Fuel Pump	0.203	2	1G-21
	0.140	8	1G-5
Fuel Tank	1.010	1	1J-5
Fuses	1.200	3	2D-7
Guards	1.300	2	2E-21
Handle	1.300	3	2E-23
	1.300	4	2F-3
Heater	1.290	1	2E-15
Horn	1.220	2	2D-15
Hydr.Pump-Components	1.030	2	1J-13
Hydr.Pump Regulator-Comp.	1.030	3	1J-15

I-2

ALPHABETICAL INDEX

DESCRIPTION	SGR.	TAV.	GRID
Hydraulic Pump	1.030	1	1J-9
Idler	3.020	1	1H-7
Injection Nozzle-Lines	0.149	1	1G-15
Injection Pump	0.140	6	1F-23
	0.140	7	1G-3
Injection Pump Drive	0.140	10	1G-9
Injection Pump-Piping	0.140	1	1F-13
	0.140	9	1G-7
Intake Manifold	0.071	1	1E-17
Intake Valve	0.060	2	1E-15
Lift Cylinder (Left)	2.030	3	1F-21
Lift Cylinder (Right)	2.030	2	2F-19
Lights	1.220	2	2D-13
Lower Frame	3.000	1	2G-17
Lubric. Fitting Piping	3.001	1	2G-19
	2.041	1	2G-15
	2.040	1	1G-13
Main Piping	1.060	1	1K-9
	1.061	1	1K-11
Mirror (Rear)	1.300	2	2E-21
Monobloc Boom	2.000	1	2F-5
Motor - Starter	0.360	2	1I-9
Motor - Swing	1.040	1	1J-17
Motor - Travel	3.010	1	2G-21
Motor - Wiper	1.220	1	2D-11
Muffler	0.002	1	1D-7
Oil Tank	1.020	1	1J-7
Operator's Seat	1.250	2	2D-21
OperatorsSeat(Bostrom)(Std.)	5.0151	1	2J-21
Pilot Piping(1)	1.080	1	1L-5
Pilot Piping(2)	1.081	1	1L-9
Pilot Piping(3)	1.082	1	1L-11
Pilot Piping(4)	1.083	1	1L-17
Pilot Piping(5)	1.084	1	1L-19
Pilot Piping(6)	1.085	1	1L-21
Pilot Valve	1.070	3	1K-19
	1.071	2	1L-3
Pilot Valve-components	1.070	2	1K-17
PipingBoom	2.030	1	2F-17
	2.031	1	2G-5
Piping-Injection	0.149	1	1G-15
Piping-Lube Fittings	2.040	1	2G-13
Piping-Main	1.060	1	1K-9
Piping-Pilot(1)	1.080	1	1L-5
Piping-Pilot(3)	1.082	1	1L-11
Piping-Pilot(4)	1.083	1	1L-17
Piping-Pilot(5)	1.084	1	1L-19
Piping-Pump Contr. Valve	1.050	1	1J-21
Piping-Travel (Lower)	3.070	1	2H-19
	3.071	1	2H-21
Piping-Turbocharger	0.241	1	1H-5
Pump-Engine Oil	0.300	1	1H-9
Pump-Hydraulic	1.030	1	1J-11
Pump-Injection	0.140	6	1F-23
Pump-Water	0.320	1	1H-17
Pump/Control Valve Piping	1.050	1	1J-23
Radiator	0.003	1	1D-9
Radiator-Components	0.003	2	1D-11
	0.003	3	1D-13
Rocker Arm	0.060	2	1E-15
Rotary Distributor	3.060	1	2H-17
SAE Battery Provision	1.220	3	2D-17
Seat Belt	5.0536	1	1J-23
Sensors	1.220	2	2D-13
Solenoid Valve	1.080	2	1L-7
Starter	0.360	2	1I-9
Starter-Mounting	0.360	1	1I-7
Stop Valve	1.082	2	1L-13
Swing Red.Unit-Components	1.040	2	1J-19
Swing Reduction Unit	1.040	1	1J-17
Thermostat & Housing	0.326	1	1H-21
Timing Control	0.100	1	1F-9
Tool Kit	5.0083	1	2J-19
Track Chain	3.051	1	2H-13
	3.052	1	2H-15
Track Roller	3.040	1	2H-11
Travel Motor-componen.	3.010	3	2H-3
Travel Piping (Lower)	3.070	1	2H-19
	3.071	1	2H-21
Travel Red.Unit-Componen.	3.010	2	2G-23
Travel Reduction Units	3.010	1	2G-21
Turbocharger	0.240	1	1G-23
	0.240	2	1H-3
Turbocharger Piping	0.241	1	1H-5
Upper Frame	1.000	1	1J-3
Upper Roller	3.030	1	2H-9
Valve-Anti-Shock(Hydr.)	1.082	3	1L-15
Valve-Exhaust	0.060	2	1E-15
Valve-Intake	0.060	2	1E-15
Valve-Pilot (Hydr.)	1.070	1	1K-15
Valve-Pilot(Travel)	1.070	1	1K-15
Valve-Solenoid	1.080	2	1L-7
Valve-Stop(Travel)	1.082	1	1L-11
Water Pump	0.320	1	1H-17
Water Pump Drive	0.340	1	1H-23
Water Pump-Components	0.320	2	1H-17
Wiper	1.220	1	2D-11

FH200

FAN DRIVE COMANDO VENTILATORE	COMMANDE DE VENTILATEUR LUEFTERANTRIEB POLEA DEL VENTILADOR	0.345 TAV.1 NTR 104S V-89

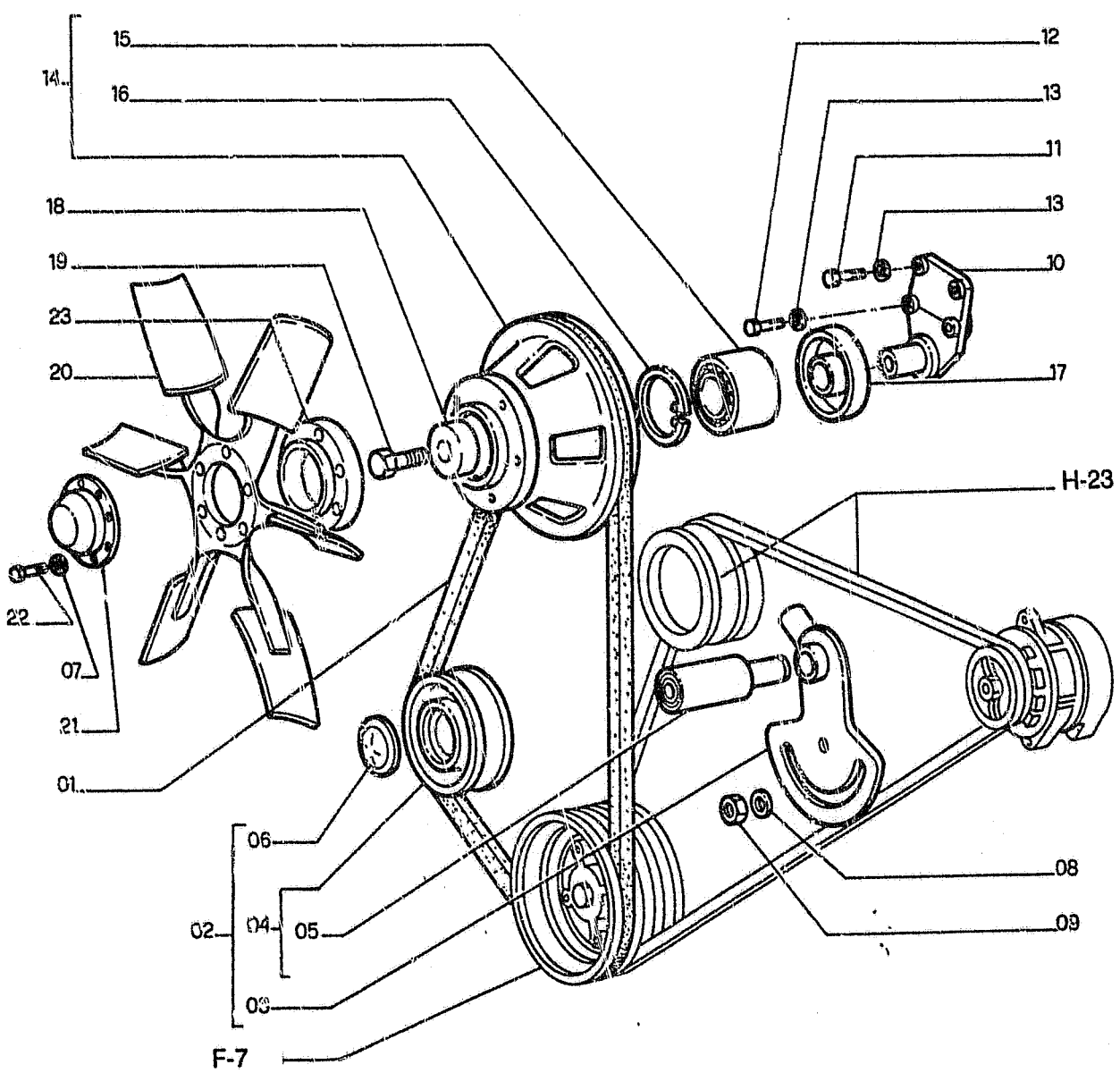

FH200

FAN DRIVE
COMANDO VENTILATORE

COMMANDE DE VENTILATEUR
LUEFTERANTRIEB
POLEA DEL VENTILADOR

0.345 TAV.1

REVISED JULY 1990

ITEM	PART NUMBER	QTY	TR. CO.	DESCRIPTION	DESCRIZIONE
01	4716471	1	173C	BELT	CINGHIA
				C2903 UP TO ENGINE 399607	**C2903** FINO AL MOTORE 399607
	4855027	1	173C	BELT	CINGHIA
				D2903 FROM ENGINE 399608	**D2903** DAL MOTORE 399608
02	4842338	1	87T	BELT STRETCHER -ASS.LY	TENDICINGHIA -COMPL.
				C2904 UP TO ENGINE 402785	**C2904** FINO AL MOTORE 402785
	98403371	1	87T	BELT STRETCHER	TENDICINGHIA
				D2904 FROM ENGINE 402786	**D2904** DAL MOTORE 402786
03	4758243	1	87T	BELT STRETCHER	TENDICINGHIA
				C2904 UP TO ENGINE 402785	**C2904** FINO AL MOTORE 402785
	98403378	1	87T	BELT STRETCHER	TENDICINGHIA
				D2904 FROM ENGINE 402786	**D2904** DAL MOTORE 402786
04	4842339	1	230P	PULLEY -ASS.LY	PULEGGIA -COMPL.
05	4547718	1	341C	BEARING	CUSCINETTO
06	10160401	1	50T	PLUG	TAPPO
07	10571879	6	170R	LOCKWASHER	ROSETTA ELASTICA
08	11198371	2	170R	LOCKWASHER	ROSETTA ELASTICA
09	12164711	2	10D	NUT	DADO
10	4840138	1	300S	SUPPORT	SUPPORTO
11	11307024	2	40V	SCREW 10X1,25X40	VITE 10X1,25X40
12	11288024	2	40V	SCREW 10X1,25X60	VITE 10X1,25X60
13	1119057	4	170R	LOCKWASHER	ROSETTA ELASTICA
14	4842033	1	230P	PULLEY -ASS.LY	PULEGGIA -COMPL.
15	4318965	1	341C	BEARING	CUSCINETTO
16	11061576	1	187A	SNAP RING	ANELLO ELASTICO
17	4772231	1	45A	RING	ANELLO
18	4747164	1	131R	WASHER	ROSETTA
19	15987934	1	40V	SCREW 20X1,5X40	VITE 20X1,5X40
20	8111135	1	30V	FAN	VENTILATORE
21	79053146	1	265C	COVER	COPERCHIO
22	15970931	6	40V	SCREW 10X1,25X35	VITE 10X1,25X35
23	79035740	1	75D	SPACER	DISTANZIALE

DRIVE ON ENGINE(OPT.)
COMANDO AUSIL. SU MOTORE

COMMANDES DIVERSES
VERSCHIEDENE ANTRIEBE
MANDOS VARIOS

0.350 TAV.1

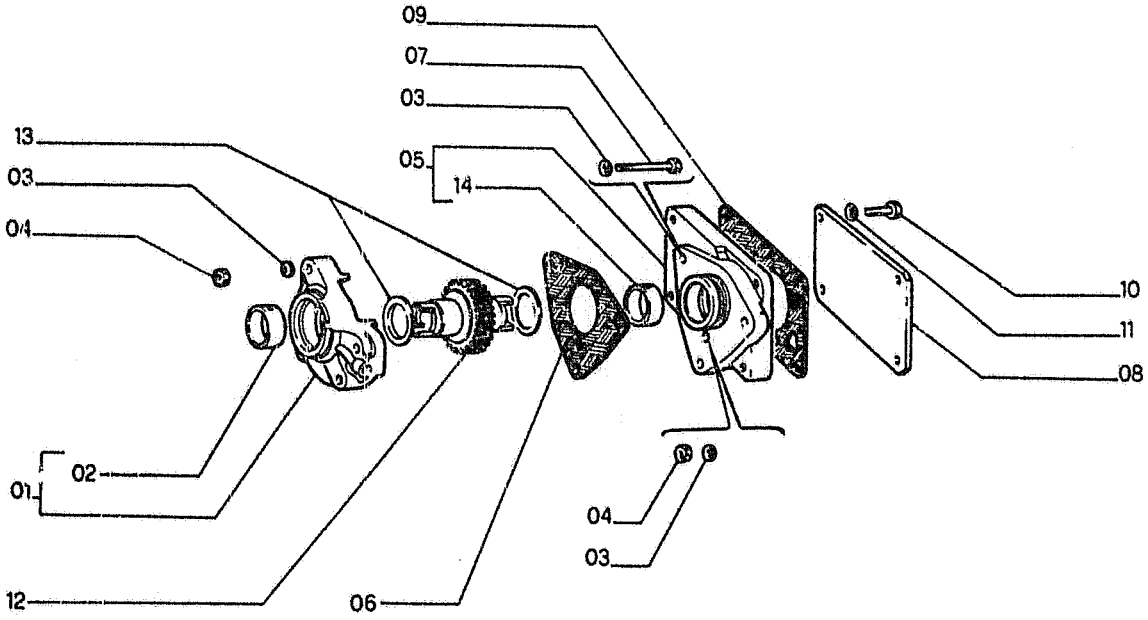

FH200

DRIVE ON ENGINE(OPT.)
COMANDO AUSIL. SU MOTORE

COMMANDES DIVERSES
VERSCHIEDENE ANTRIEBE
MANDOS VARIOS

0.350 TAV.1

REVISED JULY 1990

ITEM	PART NUMBER	QTY	TR. CO.	DESCRIPTION	DESCRIZIONE
01	4771242	1	300S	SUPPORT -ASS.LY	SUPPORTO -COMPL.
02	4788086	1	95B	BUSHING -IN ALTER.	BOCCOLA -IN ALTER.
	4788087	1	95B	BUSHING -IN ALTER.	BOCCOLA -IN ALTER.
03	11193871	6	131R	WASHER	ROSETTA
04	16100811	4	10D	NUT	DADO
05	4788084	1	300S	SUPPORT -ASS.LY	SUPPORTO -COMPL.
06	4619405	1	120G	GASKET	GUARNIZIONE PIANA
				C2897 UP TO ENGINE 349217	C2897 FINO AL MOTORE 349217
	4858091	1	120G	GASKET	GUARNIZIONE PIANA
				D2897 FROM ENGINE 349218	D2897 DAL MOTORE 349218
07	15044521	2	40V	SCREW 8X1,25X65	VITE 8X1,25X65
08	564530	1	265C	COVER	COPERCHIO
09	4607590	1	120G	GASKET	GUARNIZIONE PIANA
10	10902321	4	40V	SCREW 6X1X18	VITE 6X1X18
11	11197771	4	131R	WASHER	ROSETTA
12	4784432	1	16A	SHAFT	ALBERO
13	4667452	2	131R	WASHER	ROSETTA
14	4788086	1	95B	BUSHING -IN ALTER.	BOCCOLA -IN ALTER.
	4788087	1	95B	BUSHING -IN ALTER.	BOCCOLA -IN ALTER.

STARTER-MOUNTING
MOTORINO AVVIAM.-FISSAGGI

DEMARREUR-FIXATIONS
ANLASSER-BEFESTIGUNG
MOTOR DE ARRANQUE-ANCLAJ.

0.360 TAV.1

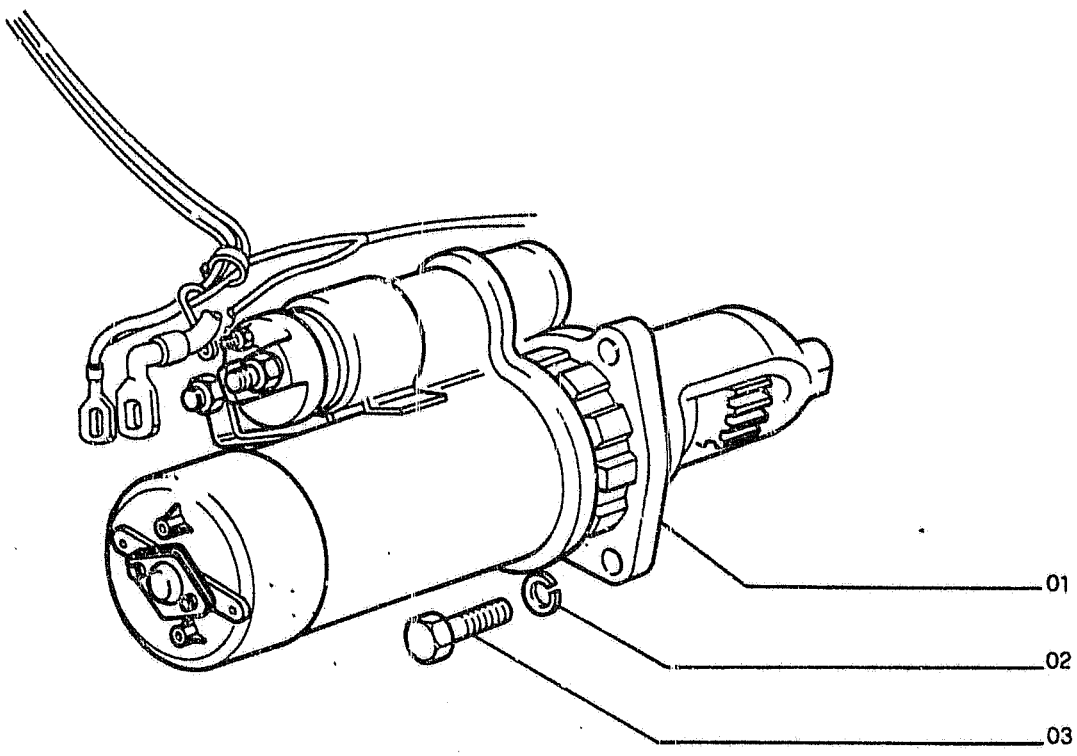

FH200

STARTER-MOUNTING MOTORINO AVVIAM.-FISSAGGI	DEMARREUR-FIXATIONS ANLASSER-BEFESTIGUNG MOTOR DE ARRANQUE-ANCLAJ.	0.360 TAV.1

ITEM	PART NUMBER	QTY	TR. CO.	DESCRIPTION	DESCRIZIONE
01	4807379	1	133M	STARTER -ASS.LY SEE I-9	MOTORINO AVV. -COMPL. VED. TAV.2
02	11190579	3	131R	WASHER	ROSETTA
03	11306924	3	40V	SCREW 10X1,25X30	VITE 10X1,25X30

STARTER	DEMARREUR	0.360 TAV.2
MOTORINO AVVIAMENTO	ANLASSER	
4807379	MOTOR DE ARRANQUE	

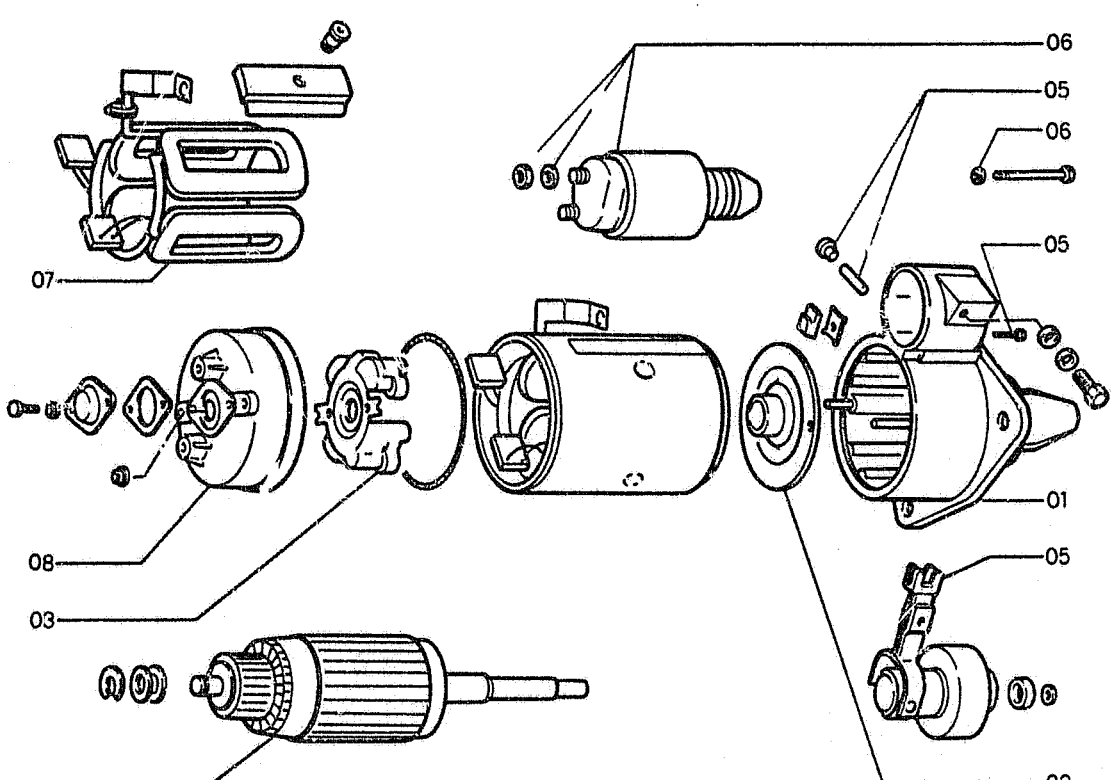

STARTER
MOTORINO AVVIAMENTO
4807379

DEMARREUR
ANLASSER
MOTOR DE ARRANQUE

0.360 TAV.2

ITEM	PART NUMBER	QTY	TR. CO.	DESCRIPTION	DESCRIZIONE
01	79081044	1	300S	SUPPORT	SUPPORTO
02	9927795	1	300S	SUPPORT	SUPPORTO
03	79080376	1	197P	BRUSH HOLDER	PORTASPAZZOLE
04	79080373	1	401	ARMATURE	INDOTTO
05	79081045		2K	KIT	KIT
06	79081046		2K	KIT	KIT
07	79080375	1	83B	COIL	BOBINA
08	79080376	1	265C	COVER	COPERCHIO

FH200

ALTERNATOR-MOUNTING ALTERNATORE-FISSAGGIO	ATTACHES ALTERNATEUR DREHSTROMLICHTMASCHINE SOPORTES DE ALTENADOR	0.400 TAV 1

ITEM	PART NUMBER	QTY	TR. CO.	DESCRIPTION	DESCRIZIONE

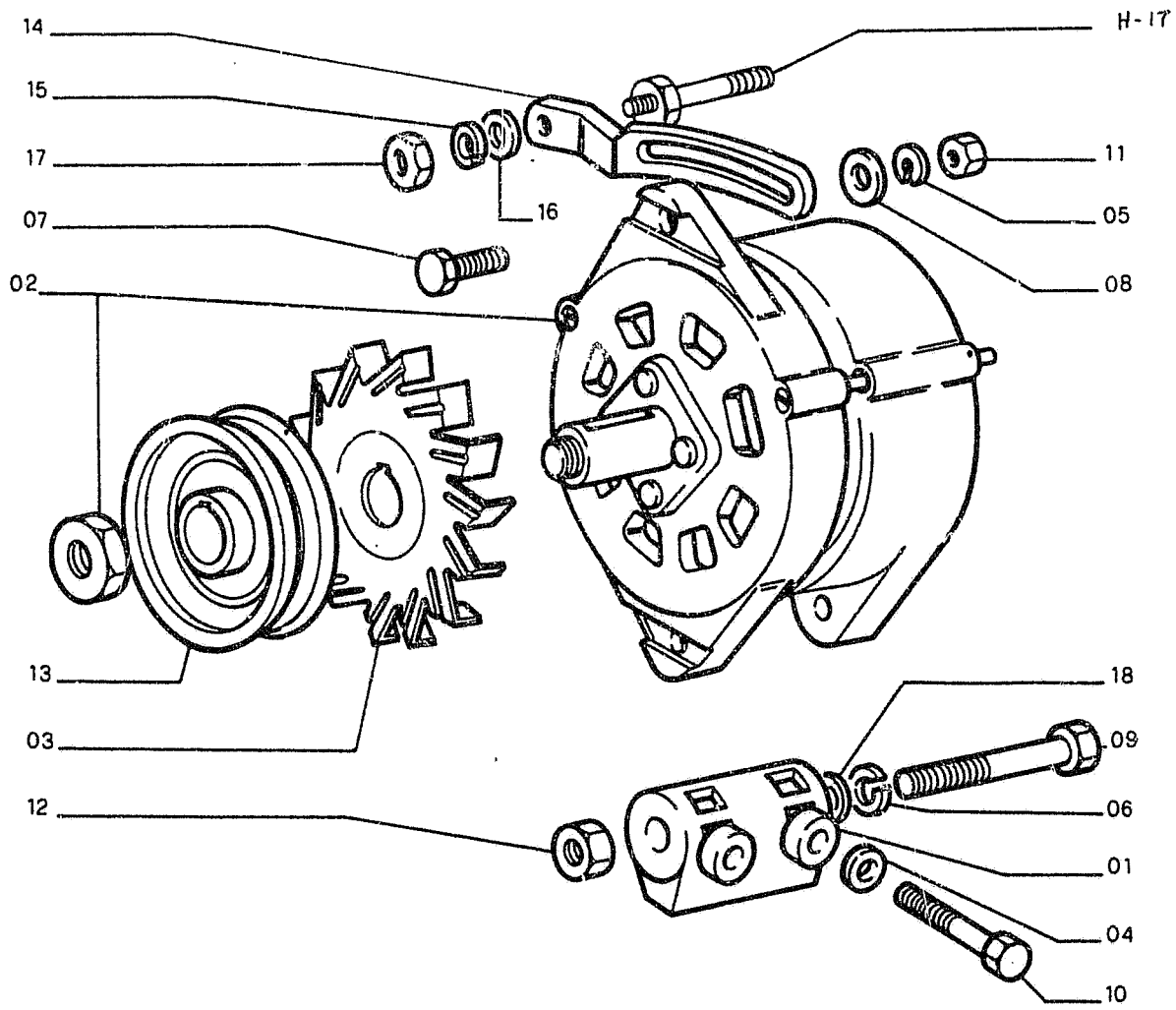

ALTERNATOR-MOUNTING
ALTERNATORE-FISSAGGIO
ATTAQUES ALTERNATEUR
DREHSTROMLICHTMASCHINE
SOPORTES DE ALTENADOR

0.400 TAV 1

ITEM	PART NUMBER	QTY	TR. CO.	DESCRIPTION	DESCRIZIONE
01	04600128	1	300S	SUPPORT	SUPPORTO
02	04757193	1	25A	ALTERNATOR 55 AMP	ALTERNATORE
	04808519	1	25A	ALTERNATOR 35 AMP	ALTERNATORE
03	79074703	1	36V	BLOWER FOR 04757193	VENTOLA
04	11193879	2	170R	LOCK WASHER	ROSETTA ELASTICA
05	11190579	1	170R	LOCK WASHER	ROSETTA ELASTICA
06	11198679	1	170R	LOCK WASHER	ROSETTA ELASTICA
07	15970924	1	40V	SCREW 10X1.25X35	VITE
08	12646801	1	131R	WASHER	ROSETTA
09	15541824	1	40V	SCREW	VITE
10	16044224	2	40V	SCREW	VITE
11	12164711	1	10D	NUT	DADO
12	16101511	1	10D	NUT	DADO
13	04814180	1	230P	PULLEY	PULEGGIA
14	04806133	1	87T	BELT STRETCHER	TENDICINGHIA
15	04717026	1	36V	BLOWER FOR 04808519	VENTOLA
16	11190579	1	170R	LOCK WASHER	ROSETTA ELASTICA
17	12164711	1	10D	NUT	DADO
18	14496701	1	131R	WASHER	ROSETTA

ALTERNATOR (MARELLI) ALTERNATORE (MARELLI) 04757193	ALTERNATEUR (MARELLI) DREHSTROMLICHTMASCHINE ALTERNADOR (MARELLI)	0.400 TAV 2

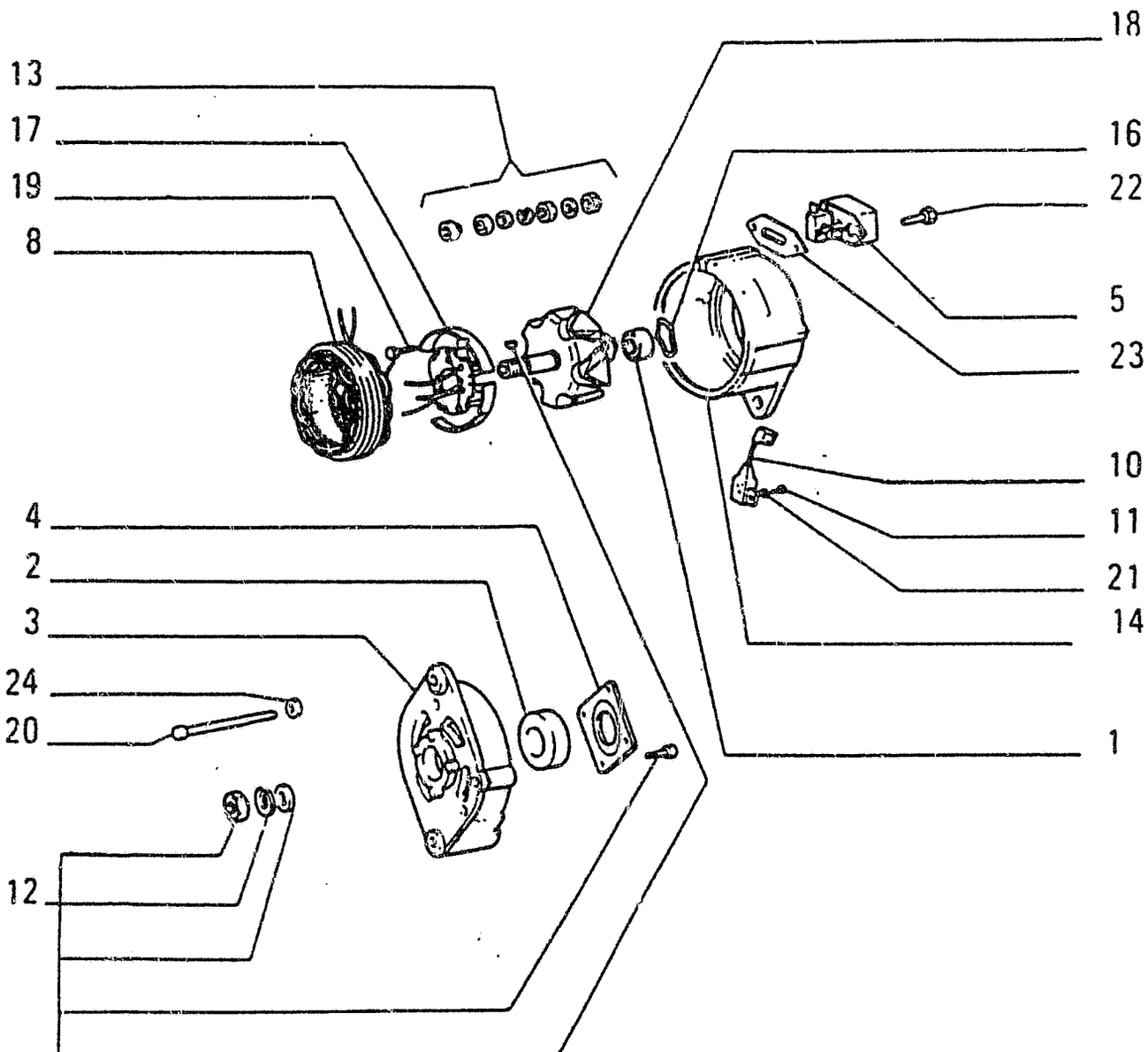

ALTERNATOR (MARELLI)
ALTERNATORE (MARELLI)
04757193

ALTERNATEUR (MARELLI)
DREHSTROMLICHTMASCHINE
ALTERNADOR (MARELLI)

0.400 TAV 2

ITEM	PART NUMBER	QTY	TR. CO.	DESCRIPTION	DESCRIZIONE
00	04757193	1	25A	ALTERNATOR INCLUDES ITEMS 01-24	
01	24941650	1	341C	BEARING 12 X32	
02	24941660	1	341C	BEARING 17 X47	
03	79074704	1	300S	SUPPORT	
04	79022468	1	105P	PLATE	
05	79074715	1	111G	REGULATOTR	
08	79074705	1	271S	STATOR	
10	79074709	1	220C	CONDENSER	
11	79074711	1	40V	SCREW	
12	79022484	1	129S	KIT	
13	79074707	1	129S	KIT	
14	79074708	1	300S	SUPPORT	
16	79025494	1	55A	O-RING	
17	79074712	1	32RF	RECTIFIER	
18	79074713	1	145R	ROTOR	
19	79074706	2	40V	SCREW	
20	79074702	4	40V	SCREW	
21	79074710	3	132R	LOCKWASHER	
22	79075883	2	40V	SCREW	
23	79074714	1	105P	PLATE	
24	14497821	4	131R	WASHER	

ALTERNATOR (MARELLI)	ALTERNATEUR (MARELLI)	0.400 TAV 3
ALTERNATORE (MARELLI)	DREHSTROMLICHTMASCHINE	
4808519	ALTERNADOR (MARELLI)	

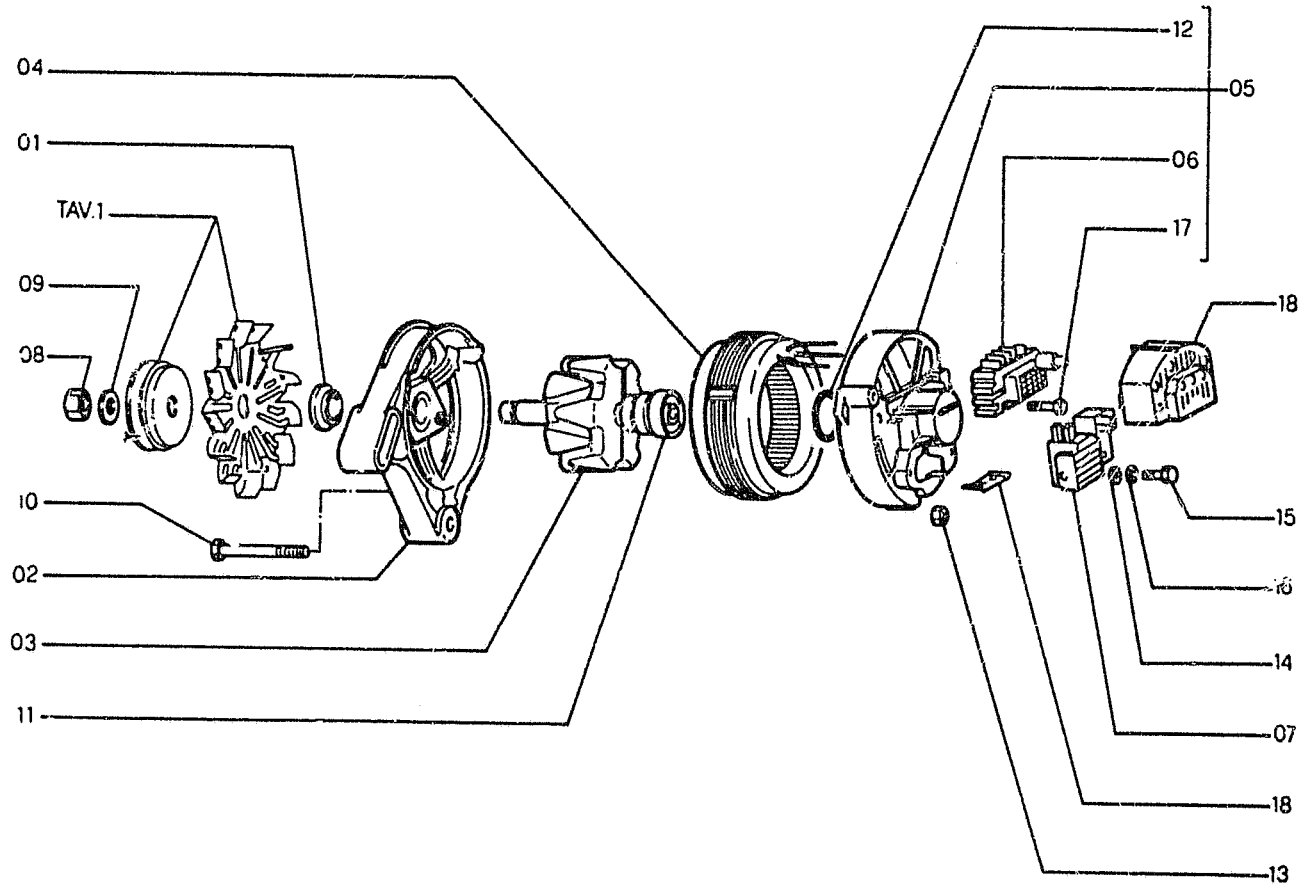

ALTERNATOR (MARELLI)
ALTERNATORE (MARELLI)
4808519

ALTERNATEUR (MARELLI)
DREHSTROMLICHTMASCHINE
ALTERNADOR (MARELLI)

0.400 TAV 3

ITEM	PART NUMBER	QTY	TR. CO.	DESCRIPTION	DESCRIZIONE
01	04479391	1	45A	RING	ANELLO
02	79070377	1	300S	SUPPORT	SUPPORTO
03	79070378	1	145R	ROTOR	ROTORE
04	79070379	1	271S	STATOR	STATORE
05	79070380	1	300S	SUPPORT	SUPPORTO
06	79070381	1	32R	RECTIFIER	RADDRIZZATORE
07	79070383	1	169R	REGULATOR	REGOLATORE
08	10791311	1	10D	NUT	DADO
09	12035571	1	170R	LOCKWASHER	ROSETTA ELASTICA
10	79070373	3	40V	SCREW	VITE
11	28996480	1	341C	BEARING	CUSCINETTO
12	14454381	1	158G	O-RING	GURNIZIONE O-R
13	14084211	3	10D	NUT	DADO
14	14496201	2	131R	WASHER	ROSETTA
15	10445024	2	40V	SCREW	VITE
16	10571379	2	170R	LOCKWASHER	ROSETTA ELASTICA
17	79070374	1	40V	SCREW	VITE
18	79070385	1	K11	KIT-FOR ALTERNATOR	KIT-PER ALTERNATORE

ENGINE LIFTING EYES GANCI SOLLEVAMENTO MOTORE	CROCHETS DE LEVAGE MOT. HARKEN FUER HEBEB CANCAMOS DE LEVANTAMIENTO	0.450 TAV.1

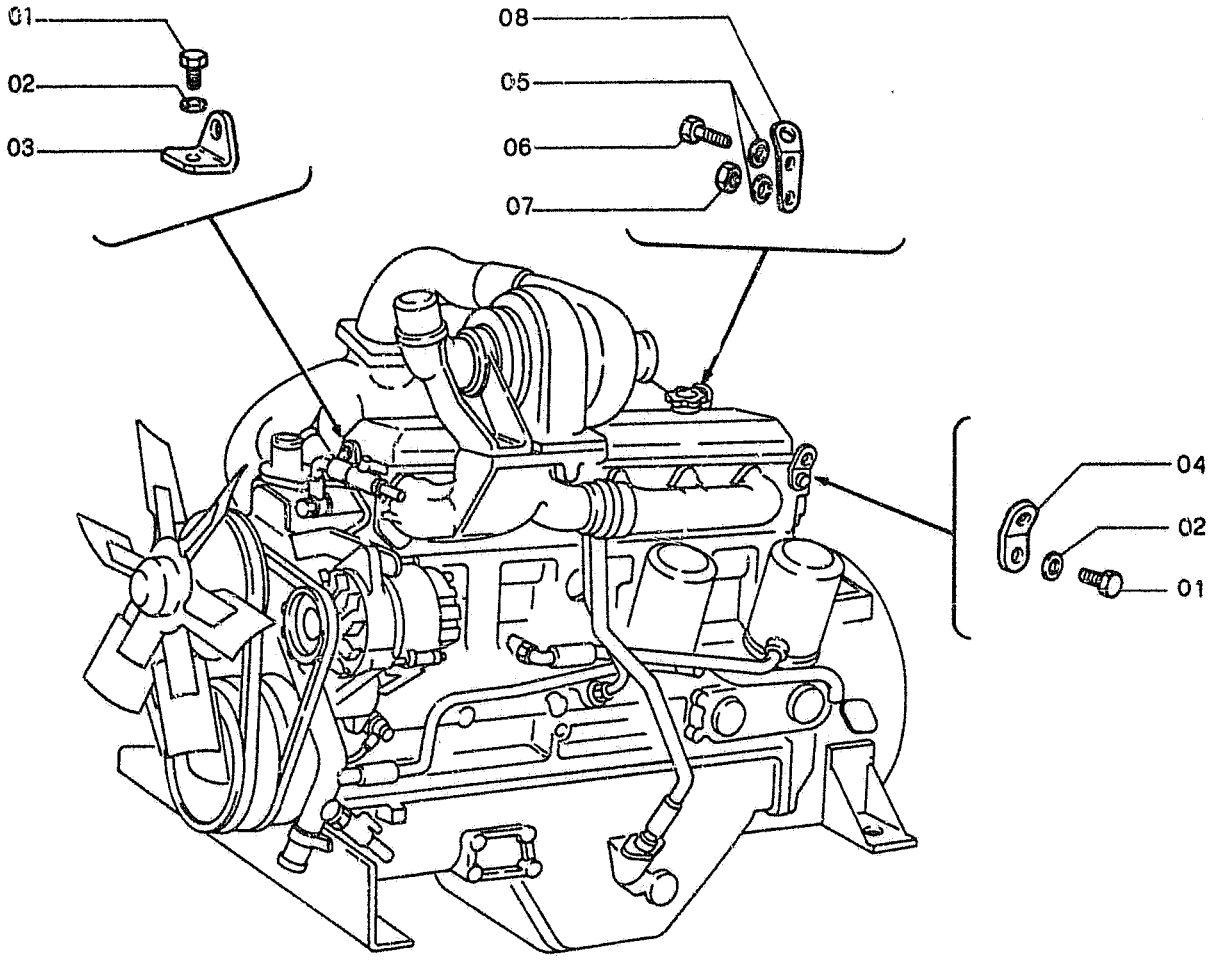

ENGINE LIFTING EYES
GANCI SOLLEVAMENTO MOTORE

CROCHETS DE LEVAGE MOT.
HARKEN FUER HEBEB
CANCAMOS DE LEVANTAMIENTO

0.450 TAV.1

ITEM	PART NUMBER	QTY	TR. CO.	DESCRIPTION	DESCRIZIONE
01	15970521	3	40V	SCREW	VITE
02	11190579	3	131R	WASHER	ROSETTA
03	4760284	1	30G	HOOK	GANCIO
04	4695922	1	30G	HOOK	GANCIO
05	11193871	2	131R	WASHER	ROSETTA
06	16044024	1	40V	SCREW 8X1,25X40	VITE 8X1,25X40
07	16100811	1	10D	NUT	DADO
08	4695923	1	30G	HOOK	GANCIO

J-1

ALPHABETICAL INDEX

DESCRIPTION	SGR.	TAV.	GRID
Accelerator controls	0.004	1	1D-21
Air Cleaner	0.001	1	1D-5
Alternator-Mounting	0.400	1	1I-11
Anti-Shock Valve (Hydr.)	1.082	3	1L-15
Application of Oi. Hammer	5.0020	2	2J-7
Batteries	1.220	2	2D-13
Belts	0.340	1	1H-23
	0.345	1	1I-3
Boom Piping	2.030	1	2F-17, 2G-3
	2.031	1	2G-5
	2.031	2	2G-7
Brake Valve Components	3.010	3	2H-3
Bucket	2.020	1	2F-13
Bucket Cylinder	2.030	5	2G-3
Bull Gear	3.000	1	2G-17
Cab	1.250	1	2D-19
Cab Door	1.250	5	2E-7
Cab Heater-Components	1.290	2	2E-15
Cab Window-Left Side	1.250	6	2E-9
Cab-Frame	1.250	7	2E-11
Cab-Platform	1.250	1	2D-19
Cab Vandalism	5.0540	1	2K-3
Camshaft	0.120	1	1F-11
Cold Starting Aid	5.0025	1	2J-11
Connecting Rod	0.081	1	1E-23
Cont. Valve-Hydr. (Ass.Y)	1.050	1	1J-21
Control Valve-Hydr.	1.050	2	2K-3
	1.050	3	2K-5
	1.050	4	2K-7
Controls	1.070	1	1J-20
	1.071	1	1K-21, 1L-3
Counterweight	1.000	1	1J-3
Cowlings	1.300	1	2E-19
	1.300	2	2E-21
	1.300	3	2E-23
Crankshaft	0.080	1	1E-21
Crankshaft Pulley	0.084	1	1F-7
Cylinder Block	0.040	1	1D-21
	0.040	2	1D-23
	0.040	3	1E-3
Cylinder Block Covers	0.043	1	1E-7
	0.043	2	1E-9
Cylinder Head	0.060	1	1E-13
	0.060	2	1E-15
Dashboard (Left)	1.210	1	2D-9
Dashboard (Right)	1.200	1	2D-3
	1.200	3	2D-7
Data Monitor	1.200	2	2D-5
Decals	4.500	1	2I-3
	4.501	1	2I-5
Dipper Stick (2,1m)	5.0022	1	2J-9
Dipper Stick (2,5m) (STD.)	2.003	1	2F-11
Dipper Stick (3m)	5.0038	1	2J-13
Dipper Stick Cylinder	2.030	4	2F-23
	2.031	4	2G-5
Dipstick-Engine Oil	0.270	1	1H-8
Discharge Valve Componen.	3.010	4	2H-5
Drive on Engine (Opt.)	0.350	1	1I-5
Electric System	1.220	1	2D-11
	1.220	2	2D-13
Elements-fuel	0.200	1	1G-17
Elements-Hydraulic	1.020	1	1J-7
Elements-Pilot	1.080	1	1L-5
Emergency Kits(Lub. Fittings)	4.000	1	2H-23
Engine	0.021	1	1D-19
Engine-Controls	0.004	1	1D-15
Engine-Suspensions	0.000	1	1D-3
Engine Breather	0.045	1	1E-11
Engine Cooling Piping	0.323	1	1H-19
Engine Heat Exchanger	0.310	1	1H-15
Engine Lifting Eyes	0.450	1	1I-15
Engine Oil Filter	0.302	1	1H-11
Engine Oil Piping	0.305	1	1H-13
Engine Oil Pump	0.300	1	1H-9
Engine Oil Sump	0.042	1	1E-5
Engine Piston	0.082	1	1F-3
Engine Suspensions	0.000	1	1D-3
Exhaust Manifold	0.077	1	1E-19
Exhaust Valve	0.060	2	1E-15
Fan	0.345	1	1I-3
Fan Drive	0.345	1	1I-3
"Filter Care" Kit	24		1A-24
Filter-Pilot System	1.080	1	1L-5
Filters-Air	0.001	1	1D-5
Filters-Engine Oil	0.302	1	1D-11
Filters-Fuel	0.200	1	1G-17
Filters-Hydr. System	1.020	1	1J-7
Flywheel-Engine	0.083	1	1L-17
Fuel Filter	0.200	1	1G-17
Fuel Piping	0.203	1	1G-19
Fuel Pump	0.203	2	1G-21
	0.140	8	1G-5
Fuel Tank	1.010	1	1J-5
Fuses	1.200	3	2D-7
Guards	1.300	2	2E-21
Handle	1.300	3	2E-23
	1.300	4	2F-3
Heater	1.290	1	2E-15
Horn	1.220	2	2D-15
Hydr.Pump-Components	1.030	2	1J-13
Hydr.Pump Regulator-Comp.	1.030	3	1J-15

J-2

ALPHABETICAL INDEX

DESCRIPTION	SGR.	TAV.	GRID
Hydraulic Pump	1.030	1	1J-9
Idler	3.020	1	1H-7
Injection Nozzle-Lines	0.149	1	1G-15
Injection Pump	0.140	6	1F-23
	0.140	7	1G-3
Injection Pump Drive	0.140	10	1G-9
Injection Pump-Piping	0.140	1	1F-13
	0.140	9	1G-7
Intake Manifold	0.071	1	1E-17
Intake Valve	0.060	2	1E-15
Lift Cylinder (Left)	2.030	3	1F-21
Lift Cylinder (Right)	2.030	2	2F-19
Lights	1.220	2	2D-13
Lower Frame	3.000	1	2G-17
Lubric. Fitting Piping	3.001	1	2G-19
	2.041	1	2G-15
	2.040	1	1G-13
Main Piping	1.060	1	1K-9
	1.061	1	1K-11
Mirror (Rear)	1.300	2	2E-21
Monobloc Boom	2.000	1	2F-5
Motor - Starter	0.360	2	1I-9
Motor - Swing	1.040	1	1J-17
Motor - Travel	3.010	1	2G-21
Motor - Wiper	1.220	1	2D-11
Muffler	0.002	1	1D-7
Oil Tank	1.020	1	1J-7
Operator's Seat	1.250	2	2D-21
OperatorsSeat(Bostrom)(Std.)	5.0151	1	2J-21
Pilot Piping(1)	1.080	1	1L-5
Pilot Piping(2)	1.081	1	1L-9
Pilot Piping(3)	1.082	1	1L-11
Pilot Piping(4)	1.083	1	1L-17
Pilot Piping(5)	1.084	1	1L-19
Pilot Piping(6)	1.085	1	1L-21
Pilot Valve	1.070	3	1K-19
	1.071	2	1L-3
Pilot Valve-components	1.070	2	1K-17
PipingBoom	2.030	1	2F-17
	2.031	1	2G-5
Piping-Injection	0.149	1	1G-15
Piping-Lube Fittings	2.040	1	2G-13
Piping-Main	1.060	1	1K-9
Piping-Pilot(1)	1.080	1	1L-5
Piping-Pilot(3)	1.082	1	1L-11
Piping-Pilot(4)	1.083	1	1L-17
Piping-Pilot(5)	1.084	1	1L-19
Piping-Pump Contr. Valve	1.050	1	1J-21
Piping-Travel (Lower)	3.070	1	2H-19
	3.071	1	2H-21
Piping-Turbocharger	0.241	1	1H-5
Pump-Engine Oil	0.300	1	1H-9
Pump-Hydraulic	1.030	1	1J-11
Pump-Injection	0.140	6	1F-23
Pump-Water	0.320	1	1H-17
Pump/Control Valve Piping	1.050	1	1J-23
Radiator	0.003	1	1D-9
Radiator-Components	0.003	2	1D-11
	0.003	3	1D-13
Rocker Arm	0.060	2	1E-15
Rotary Distributor	3.060	1	2H-17
SAE Battery Provision	1.220	3	2D-17
Seat Belt	5.0536	1	1J-23
Sensors	1.220	2	2D-13
Solenoid Valve	1.080	2	1L-7
Starter	0.360	2	1I-9
Starter-Mounting	0.360	1	1I-7
Stop Valve	1.082	2	1L-13
Swing Red.Unit-Components	1.040	2	1J-19
Swing Reduction Unit	1.040	1	1J-17
Thermostat & Housing	0.326	1	1H-21
Timing Control	0.100	1	1F-9
Tool Kit	5.0083	1	2J-19
Track Chain	3.051	1	2H-13
	3.052	1	2H-15
Track Roller	3.040	1	2H-11
Travel Motor-componen.	3.010	3	2H-3
Travel Piping (Lower)	3.070	1	2H-19
	3.071	1	2H-21
Travel Red.Unit-Componen.	3.010	2	2G-23
Travel Reduction Units	3.010	1	2G-21
Turbocharger	0.240	1	1G-23
	0.240	2	1H-3
Turbocharger Piping	0.241	1	1H-5
Upper Frame	1.000	1	1J-3
Upper Roller	3.030	1	2H-9
Valve-Anti-Shock(Hydr.)	1.082	3	1L-15
Valve-Exhaust	0.060	2	1E-15
Valve-Intake	0.060	2	1E-15
Valve-Pilot (Hydr.)	1.070	1	1K-15
Valve-Pilot(Travel)	1.070	1	1K-15
Valve-Solenoid	1.080	2	1L-7
Valve-Stop(Travel)	1.082	1	1L-11
Water Pump	0.320	1	1H-17
Water Pump Drive	0.340	1	1H-23
Water Pump-Components	0.320	2	1H-17
Wiper	1.220	1	2D-11

FH200

UPPER FRAME
TELAIO SUPERIORE

CHASSIS SUPERIEUR
RAHMENOBEN
CHASIS SUPERIOR

1.000 TAV.1

REVISED JULY 1990

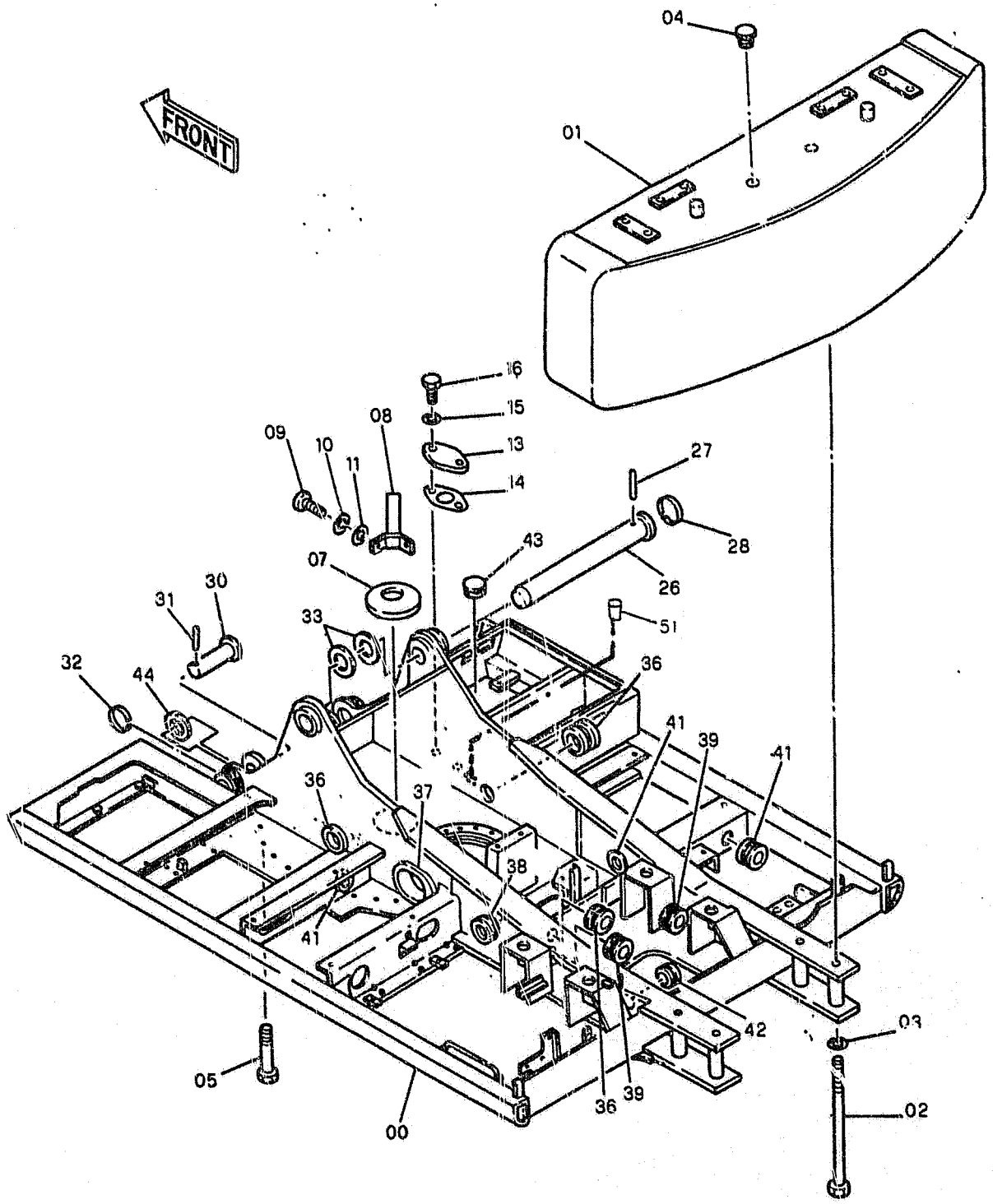

FH200

UPPER FRAME
TELAIO SUPERIORE

CHASSIS SUPERIEUR
RAHMENOBEN
CHASIS SUPERIOR

1.200 TAV.1

REVISED JULY 1990

ITEM	PART NUMBER	QTY	TR. CO.	DESCRIPTION	DESCRIZIONE
00	71415423	1	7215	UPPER FRAME	TELAIO SUPERIORE
01	71415424	1	10Z	COUNTERWEIGHT C2876 UP TO S/N 0262 (02) 0086 (03)	ZAVORRA C2876 FINO AL TELAIO 0262 (02) 0086 (03)
	71416993	1	10Z	COUNTERWEIGHT D2876 FROM S/N 0263 (02) 0087 (03)	ZAVORRA D2876 DAL TELAIO 0263 (02) 0087 (03)
02	71410537	4	40V	SCREW C2876 UP TO S/N 0262 (02) 0086 (03)	VITE C2876 FINO AL TELAIO 0262 (02) 0086 (03)
	71410667	4	40V	SCREW D2876 FROM S/N 0263 (02) 0087 (03)	VITE D2876 DAL TELAIO 0263 (02) 0087 (03)
03	71415425	4	131R	WASHER	ROSETTA
04	71415426	2	50T	PLUG	TAPPO
05	11125734	30	40V	SCREW 20X2,5X100	VITE 20X2,5X100
07	71415427	1	265C	COVER	COPERCHIO
08	71415428	1	26N	RIB	NERVATURA
09	11115634	2	40V	SCREW 14X2X35	VITE 14X2X35
10	10572074	2	170R	LOCKWASHER	ROSETTA ELASTICA
11	71415431	2	131R	WASHER	ROSETTA
13	71415432	1	70F	FLANGE	FLANGIA
14	71415433	1	122G	SEAL	GUARNIZIONE
15	14496631	2	131R	WASHER	ROSETTA
16	11106034	2	40V	SCREW 10X1,5X20	VITE 10X1,5X20
26	71415434	1	80P	PIN	PERNO
27	10100830	1	80P	PIN	PERNO
28	71415436	1	45A	RING	ANELLO
30	71415437	2	80P	PIN	PERNO
31	10100730	2	80P	PIN	PERNO
32	71415094	2	45A	RING	ANELLO
33	71415095	1	131R	WASHER -THICK 3mm	ROSETTA -SPESS. 3mm
	71415096	1	131R	WASHER -THICK 2,5mm	ROSETTA -SPESS. 2,5mm
	71415097	1	131R	WASHER -THICK 1,2mm	ROSETTA -SPESS. 1,2mm
36	71415443	3	85I	INSULATOR	ISOLANTE
37	71415444	1	85I	INSULATOR	ISOLANTE
38	71415445	1	85I	INSULATOR	ISOLANTE
39	71415446	2	85I	INSULATOR	ISOLANTE
41	71415448	3	85I	INSULATOR	ISOLANTE
42	71415449	1	85I	INSULATOR	ISOLANTE
43	71415450	1	85I	INSULATOR	ISOLANTE
44	71415098	2	131R	WASHER -THICK 2mm	ROSETTA -SPESS. 2mm
	71415099	2	131R	WASHER -THICK 1mm	ROSETTA -SPESS. 1mm
51	71420188	1	50T	PLUG D2876 FROM S/N 0263 (02) 0087 (03)	TAPPO D2876 DAL TELAIO 0263 (02) 0087 (03)

FUEL TANK
SERBATOIO COMBUSTIBILE
RESERVOIR COMBUSTIBLE
KRAFTSTOFFTANK
DEPOSITO DE COMBUSTIBLE

1.010 TAV.1

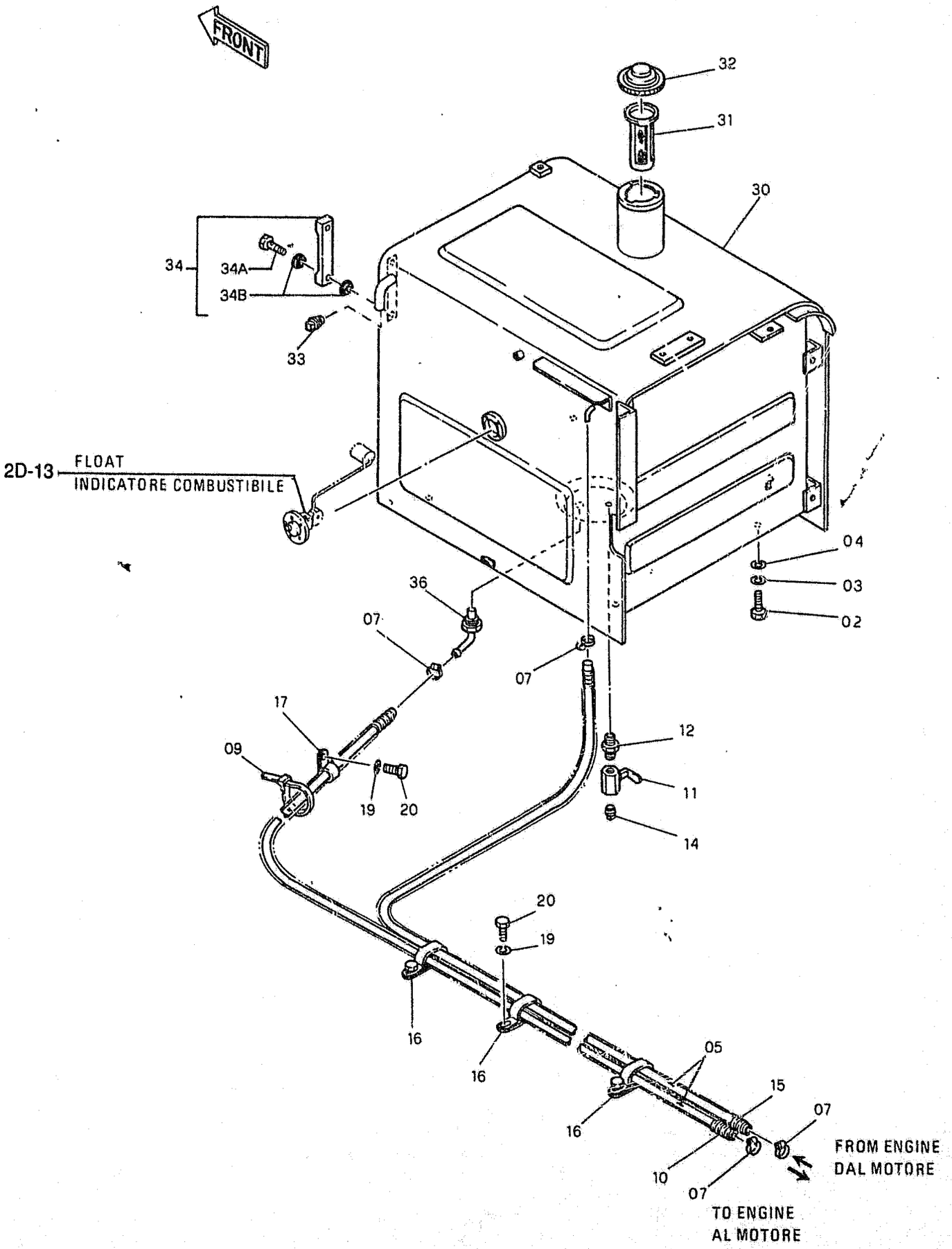

FH200

FUEL TANK
SERBATOIO COMBUSTIBILE

RESERVOIR COMBUSTIBLE
KRAFTSTOFFTANK
DEPOSITO DE COMBUSTIBLE

1.010 TAV.1

REVISED JULY 1990

ITEM	PART NUMBER	QTY	TR. CO.	DESCRIPTION		DESCRIZIONE	
02	11118534	4	40V	SCREW 16X2X40		VITE 16X2X40	
03	10572174	4	170R	LOCKWASHER		ROSETTA ELASTICA	
04	71405003	4	131R	WASHER		ROSETTA	
05	19056787	2	285T	HOSE		TUBO FLESSIBILE	
				C2883 UP TO S/N		C2883 FINO AL TELAIO	
					0336 (02)		0336 (02)
					0095 (03)		0095 (03)
	71417027	2	285T	HOSE		TUBO FLESSIBILE	
				D2883 FROM S/N		D2883 DAL TELAIO	
					0337 (02)		0337 (02)
					0096 (03)		0096 (03)
07	79084752	4	180C	COLLAR		COLLARE	
				C2868 UP TO S/N		C2868 FINO AL TELAIO	
					0204 (02)		0204 (02)
					0080 (03)		0080 (03)
	13000290	4	180C	COLLAR		COLLARE	
				D2868 FROM S/N		D2868 DAL TELAIO	
					0205 (02)		0205 (02)
					0081 (03)		0081 (03)
09	4982514	1	31F	CLAMP		FASCETTA	
10	71415383	1	285T	HOSE		TUBO FLESSIBILE	
				C2883 UP TO S/N		C2883 FINO AL TELAIO	
					0336 (02)		0336 (02)
					0095 (03)		0095 (03)
	71415384	1	285T	HOSE		TUBO FLESSIBILE	
				D2883 FROM S/N		D2883 DAL TELAIO	
					0337 (02)		0337 (02)
					0096 (03)		0096 (03)
11	71405228	1	150R	COCK		RUBINETTO	
12	71405229	1	20R	FITTING		RACCORDO	
14	4976587	1	50T	PLUG		TAPPO	
15	71415384	1	285T	HOSE		TUBO FLESSIBILE	
16	71415385	3	231S	CLIP		STAFFETTA	
17	79011406	1	231S	CLIP		STAFFETTA	
19	10571874	4	131R	WASHER		ROSETTA	
20	11103034	4	40V	SCREW 10X1,5X18		VITE 10X1,5X18	
30	71415386	1	114S	FUEL TANK		SERBATOIO COMBUSTIBILE	
31	71401597	1	65F	FILTER		FILTRO	
32	71401598	1	50T	PLUG		TAPPO	
33	14323811	1	50T	PLUG		TAPPO	
34	71401646	1	351	INDICATOR -ASS.LY		INDICATORE -COMPL.	
34A	71401610	2	20R	FITTING		RACCORDO	
34B	71401647	4	158G	O-RING		GUARNIZIONE O-R	
36	71405204	1	193T	TUBE		TUBO RIGIDO	

OIL TANK SERBATOIO OLIO	RESERVOIR D'HUILE OELTANK DEPOSITO DE ACEITE	1.020 TAV.1 NTR 104S V-89

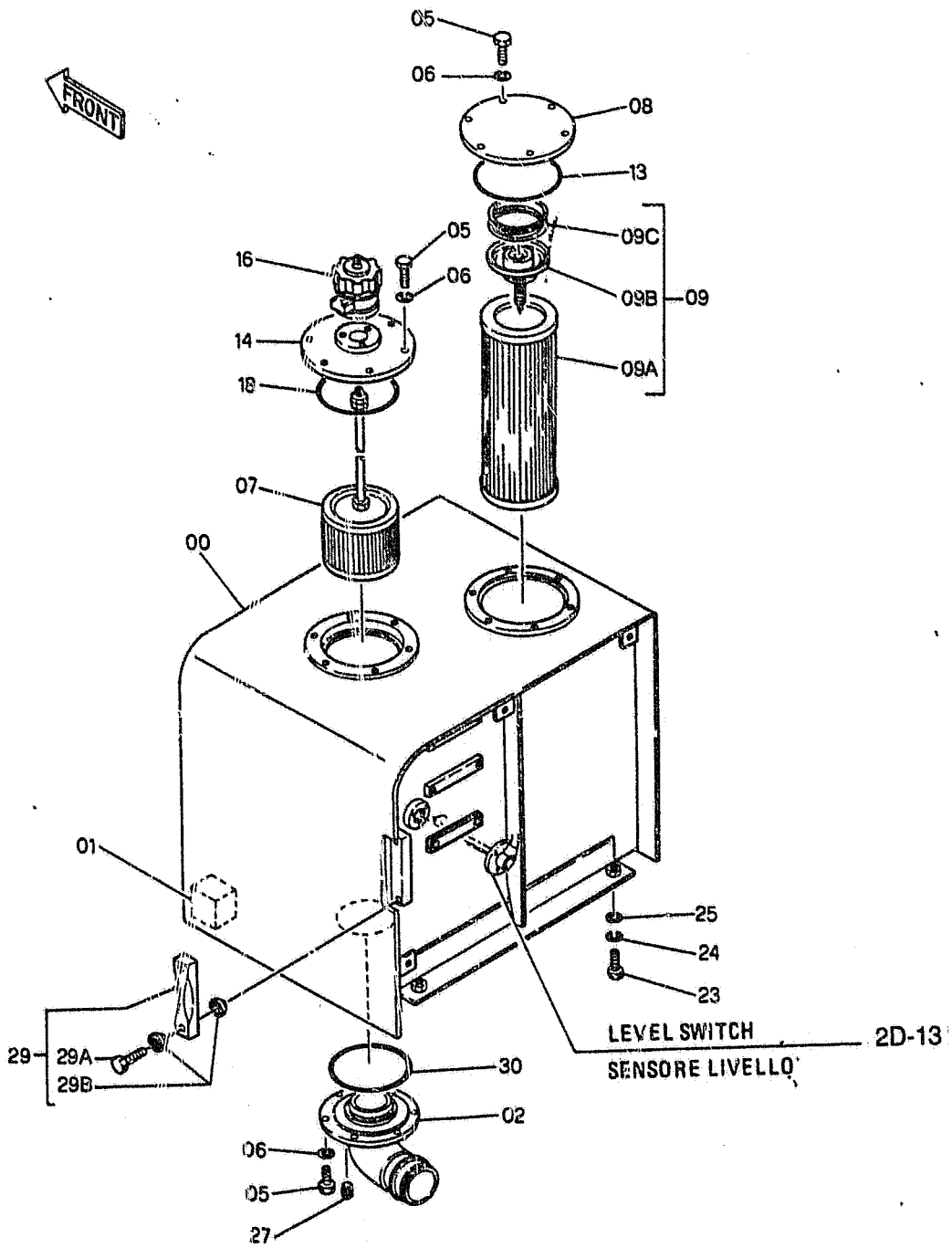

OIL TANK
SERBATOIO OLIO

RESERVOIR D'HUILE
OELTANK
DEPOSITO DE ACEITE

1.020 TAV.1

NTR 104S V-89

ITEM	PART' NUMBER	QTY	TR. CO.	DESCRIPTION	DESCRIZIONE
00	71415266	1	113S	OIL RESERVOIR	SERBATOIO OLIO
01	71415286	1	60T	BLOCK	TASSELLO
02	71416774	1	70F	FLANGE	FLANGIA
05	11105134	18	40V	SCREW 10X1,5X22	VITE 10X1,5X22
06	10571874	18	131R	WASHER	ROSETTA
07	71401592	1	65F	FILTER	FILTRO
08	71415265	1	265C	COVER	COPERCHIO
09	71416240	1	65F	FILTER -ASS.LY	FILTRO -COMPL.
09A	71416241	1	65F	FILTER	FILTRO
09B	71416242	1	10V	VALVE	VALVOLA
09C	71416243	1	100M	SPRING	MOLLA
13	14482980	1	158G	O-RING	GUARNIZIONE O-R
14	71405736	1	265C	COVER	COPERCHIO
16	71405040	1	50T	PLUG	TAPPO
18	14482780	1	158G	O-RING	GUARNIZIONE O-R
23	11118534	4	40V	SCREW 16X2X40	VITE 16X2X40
24	10572174	4	170R	LOCKWASHER	ROSETTA ELASTICA
25	71405003	4	131R	WASHER	ROSETTA
27	14326001	1	50T	PLUG	TAPPO
29	71401593	1	35I	INDICATOR -ASS.LY	INDICATORE -COMPL.
29A	71401610	2	20R	FITTING	RACCORDO
29B	71401611	4	158G	O-RING	GUARNIZIONE O-R
30	14482580	1	158G	O-RING	GUARNIZIONE O-R

HYDRAULIC PUMP POMPA IMPIANTO IDRAULICO	POMPE CIRCUT HYDR. HYDRAULIKPUMPE BOMBA HIDRAULICA	1.030 TAV.1
		NTR 104S V-89

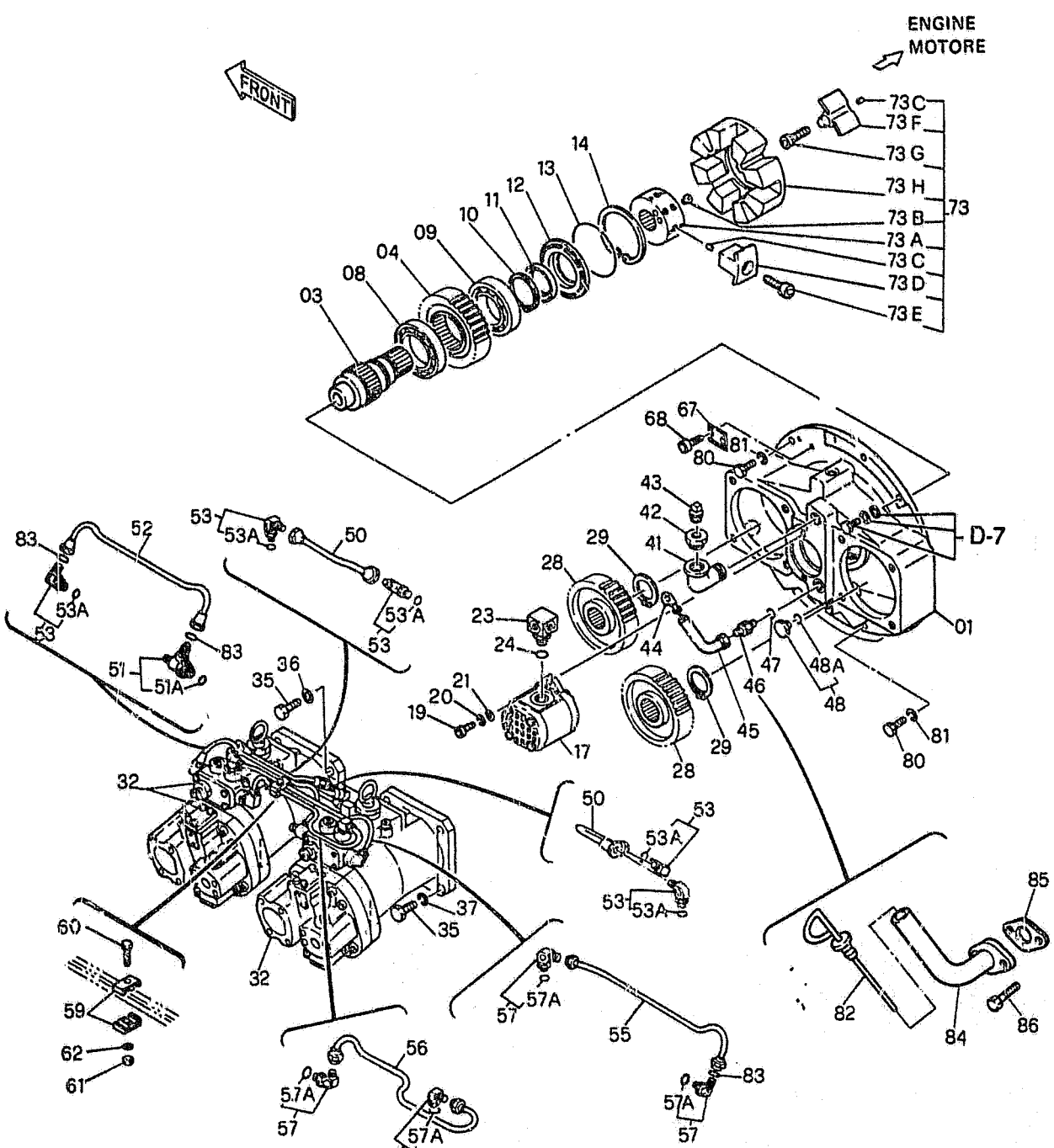

FH200

HYDRAULIC PUMP
POMPA IMPIANTO IDRAULICO

POMPE CIRCUT HYDR.
HYDRAULIKPUMPE
BOMBA HIDRAULICA

1.030 TAV.1

NTR 104S V-89

ITEM	PART NUMBER	QTY	TR. CO.	DESCRIPTION	DESCRIZIONE
0 1-79	71401635	1	155P	PUMP -ASS.LY	POMPA -COMPL.
01	71402247	1	35S	CASE	SCATOLA
03	71402249	1	16A	SHAFT	ALBERO
04	71402248	1	297C	RING GEAR	CORONA DENTATA
08	71402250	1	341C	BEARING	CUSCINETTO
09	71402251	1	341C	BEARING	CUSCINETTO
10	71402252	1	187A	SNAP RING	ANELLO ELASTICO
11	71402253	1	122G	SEAL	GUARNIZIONE
12	71402254	1	265C	COVER	COPERCHIO
13	71402255	1	158G	O-RING	GUARNIZIONE O-R
14	71402256	1	187A	SNAP RING	ANELLO ELASTICO
17	71402257	1	155P	PUMP -ASS.Y	POMPA -COMP.VED.TAV. 4
19	71402258	2	40V	SCREW	VITE
20	71402259	2	170R	LOCKWASHER	ROSETTA ELASTICA
21	71402260	2	131R	WASHER	ROSETTA
23	71402261	1	20R	FITTING	RACCORDO
24	71404166	1	158G	O-RING	GUARNIZIONE O-R
28	71402262	2	50I	GEAR	INGRANAGGIO
29	71402263	2	187A	SNAP RING	ANELLO ELASTICO
32	71402165	2	155P	PUMP -ASS.LY SEE J-13	POMPA -COMPL. VED. TAV.2
35	71402265	8	40V	SCREW	VITE
36	71402266	4	131R	WASHER	ROSETTA
37	71402013	4	170R	LOCKWASHER	ROSETTA ELASTICA
41	71402268	1	85G	ELBOW	GOMITO
42	71402269	1	20R	FITTING	RACCORDO
43	71402270	1	50T	PLUG	TAPPO
44	71402271	1	91A	DIPSTICK	ASTA LIVELLO
45	71402468	1	193T	C2575 UP TO HYD. PUM236 TUBE	C2575 FINO ALLA POMPA236 TUBO RIGIDO
46	71402467	1	20R	C2575 UP TO HYD. PUM236 FITTING	C2575 FINO ALLA POMPA236 RACCORDO
47	71404165	1	158G	C2575 UP TO HYD. PUM236 O-RING	C2575 FINO ALLA POMPA236 GUARNIZIONE O-R
48	71402272	1	50T	C2575 UP TO HYD. PUM236 PLUG	C2575 FINO ALLA POMPA236 TAPPO
48A	71404165	1	158G	O-RING	GUARNIZIONE O-R
50	71402273	2	193T	TUBE	TUBO RIGIDO
51	71402274	1	20R	FITTING -ASS.LY	RACCORDO -COMPL.
51A	71401688	1	158G	O-RING	GUARNIZIONE O-R
52	71402276	1	193T	TUBE	TUBO RIGIDO
53	71402277	5	20R	FITTING -ASS.LY	RACCORDO -COMPL.
53A	71401688	5	158G	O-RING	GUARNIZIONE O-R
55	71402278	1	193T	TUBE	TUBO RIGIDO
56	71402279	1	193T	TUBE	TUBO RIGIDO
57	71402280	4	20R	FITTING -ASS.LY	RACCORDO -COMPL.
57A	71401688	4	158G	O-RING	GUARNIZIONE O-R
59	71402281	2	225S	BRACKET	STAFFA
60	71402282	1	40V	SCREW	VITE
61	71402283	1	10D	NUT	DADO
62	71403644	1	170R	LOCKWASHER	ROSETTA ELASTICA
67	71402284	1	105P	PLATE	PIASTRA
68	71402082	2	40V	SCREW	VITE
73	71402286	1	67G	COUPLING -ASS.LY	GIUNTO -COMPL.

HYDRAULIC PUMP POMPA IMPIANTO IDRAULICO	POMPE CIRCUT HYDR. HYDRAULIKPUMPE BOMBA HIDRAULICA	1.030 TAV.1 NTR 104S V-89

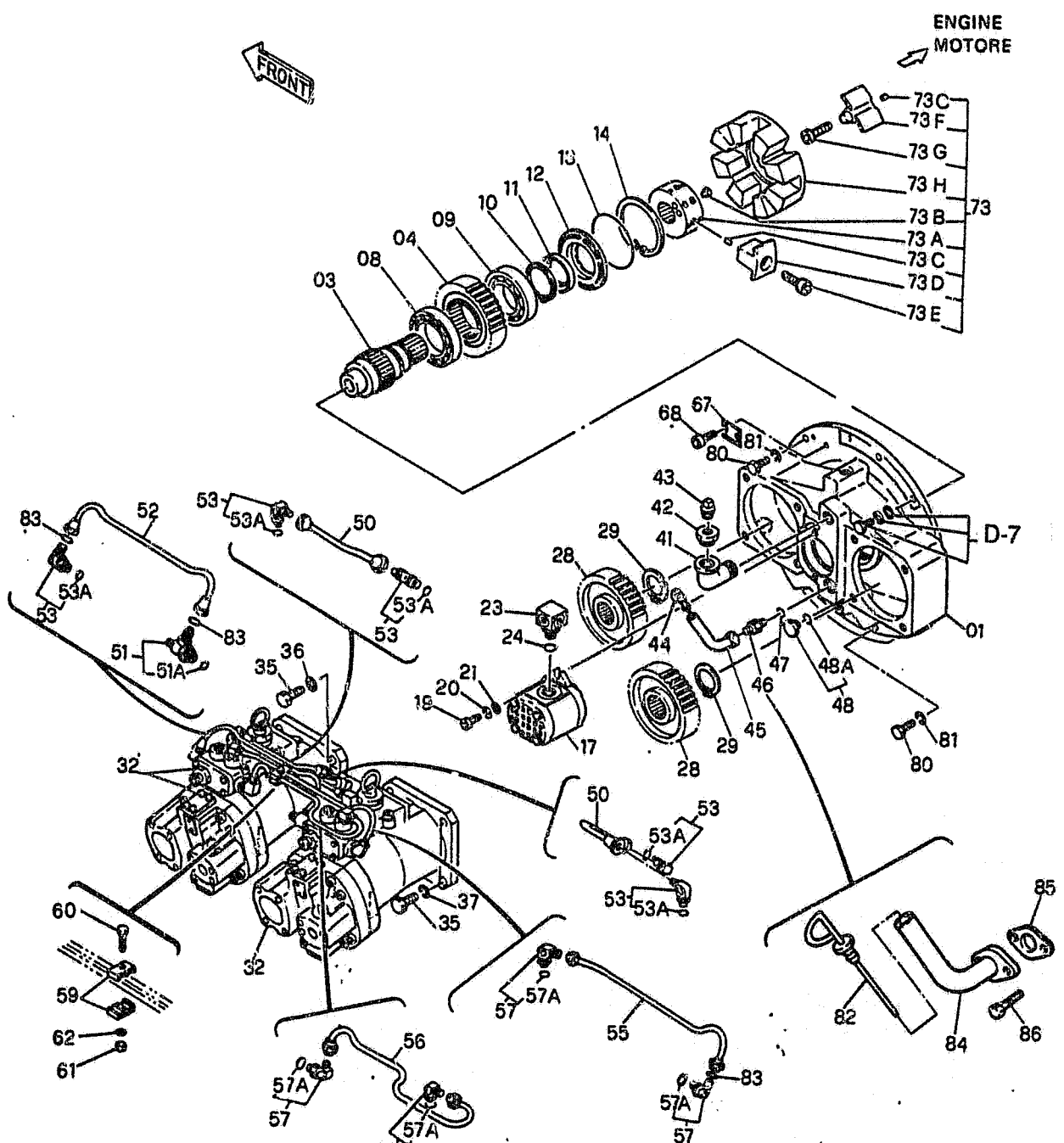

HYDRAULIC PUMP — POMPE CIRCUT HYDR. — 1.030 TAV.1
POMPA IMPIANTO IDRAULICO — HYDRAULIKPUMPE
BOMBA HIDRAULICA — NTR 104S V-89

ITEM	PART NUMBER	QTY	TR. CO.	DESCRIPTION	DESCRIZIONE
73A	71402287	1	135M	HUB	MOZZO
73B	71402288	2	40V	SCREW	VITE
73C	71402289	12	202S	SPRING PIN	SPINA ELASTICA
73D	71402290	4	54I	INSERT	INSERTO
73E	71402291	4	40V	SCREW	VITE
73F	71402292	4	54I	INSERT	INSERTO
73G	71402293	4	40V	SCREW	VITE
73H	71402264	1	67G	COUPLING	GIUNTO
80	11106434	5	40V	SCREW 10X1,5X30	VITE 10X1,5X30
81	10571874	5	170R	LOCKWASHER	ROSETTA ELASTICA
82	71402804	1	91A	DIPSTICK	ASTA LIVELLO
				D2575 FROM HYD. PUMP 237	D2575 DALLA POMPA 237
83	71401688	3	158G	O-RING	GUARNIZIONE O-R
84	71402805	1	193T	TUBE	TUBO RIGIDO
				D2575 FROM HYD. PUMP 237	D2575 DALLA POMPA 237
85	71402807	1	120G	GASKET	GUARNIZIONE PIANA
				D2575 FROM HYD. PUMP 237	D2575 DALLA POMPA 237
86	71402806	2	40V	SCREW	VITE
				D2575 FROM HYD. PUMP 237	D2575 DALLA POMPA 237

HYDR. PUMP-COMPONENTS POMPA ATTREZZ.-COMPONENTI 71402165	POMPE EQUIP.-COMPOSANTS HYDRAULIKPUMPE-EINZELT. BOMBA HIDR.-COMPONENTES	1.030 TAV.2 NTR 104S V-89

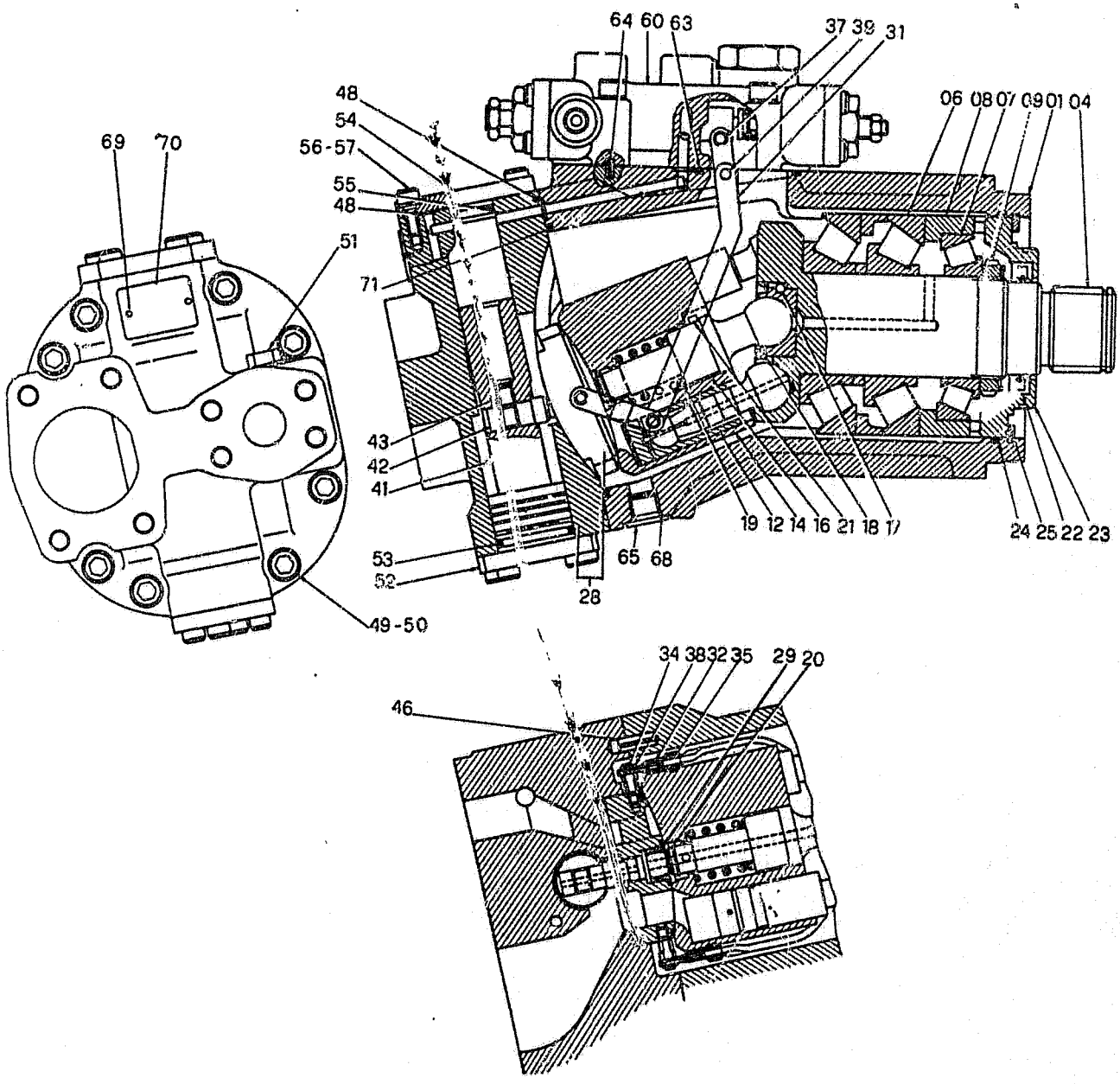

HYDR. PUMP-COMPONENTS | POMPE EQUIP.-COMPOSANTS | 1.030 TAV.2
POMPA ATTREZZ.-COMPONENTI | HYDRAULIKPUMPE-EINZELT.
71402165 | BOMBA HIDR.-COMPONENTES | NTR 104S V-89

ITEM	PART NUMBER	QTY	TR. CO.	DESCRIPTION	DESCRIZIONE
01	71402166	1	300C	BODY	CORPO
04	71402167	1	16A	SHAFT	ALBERO
06	71402168	1	341C	BEARING	CUSCINETTO
07	71402169	1	341C	BEARING	CUSCINETTO
08	71402170	1	75D	SPACER	DISTANZIALE
09	71402171	1	50G	RING NUT	GHIERA
12	71402172	7	132P	PISTON	PISTONE
14	71402173	1	145R	ROTOR	ROTORE
16	71402174	1	16A	SHAFT	ALBERO
17	71402057	1	140S	BALL	SFERA
18	71402175	1	187A	SNAP RING	ANELLO ELASTICO
19	71402176	1	100M	SPRING	MOLLA
20	71402177	1	187A	SNAP RING	ANELLO ELASTICO
21	71402059	1	80P	PIN	PERNO
22	71402179	1	122G	SEAL	GUARNIZIONE
23	71402180	1	265C	COVER	COPERCHIO
24	71402181	1	158G	O-RING	GUARNIZIONE O-R
25	71402182	1	187A	SNAP RING	ANELLO ELASTICO
28	71402195	1	119T	HEAD	TESTA
29	71402183	1	95B	BUSHING	BOCCOLA
31	71402184	1	45L	LEVER	LEVA
32	71402185	2	45L	LEVER	LEVA
34	71402186	2	80P	PIN	PERNO
35	71402187	2	80P	PIN	PERNO
37	71402188	1	80P	PIN	PERNO
38	71402189	6	187A	SNAP RING	ANELLO ELASTICO
39	71402190	1	80P	PIN	PERNO
41	71402191	1	132P	PISTON	PISTONE
42	71402192	1	80P	PIN	PERNO
43	71402193	1	40V	SCREW	VITE
46	71402194	2	202S	SPRING PIN	SPINA ELASTICA
48	71402196	10	158G	O-RING	GUARNIZIONE O-R
49	71402197	8	40V	SCREW	VITE
50	71402198	8	170R	LOCKWASHER	ROSETTA ELASTICA
51	71402199	1	50T	PLUG	TAPPO
52	71402200	1	265C	COVER	COPERCHIO
53	71404168	1	158G	O-RING	GUARNIZIONE O-R
54	71402201	1	265C	COVER	COPERCHIO
55	71402202	1	158G	O-RING	GUARNIZIONE O-R
56	71402239	8	40V	SCREW	VITE
57	71402240	8	170R	LOCKWASHER	ROSETTA ELASTICA
60	71402205	1	169R	REGULATOR -ASS.LY SEE J-15	REGOLATORE -COMPL. VED. TAV.3
63	71402206	1	158G	O-RING	GUARNIZIONE O-R
64	71402207	2	202S	SPRING PIN	SPINA ELASTICA
65	71402079	1	50T	PLUG	TAPPO
68	71404165	1	158G	O-RING	GUARNIZIONE O-R
69	71402209	1	110P	PLAQUE	PIASTRINA
70	71402082	2	40V	SCREW	VITE
71	71403039	1	158G	O-RING	GUARNIZIONE O-R

HYDR.PUMP REGULATOR-COMP. REG.POMPA IDRAULICA-COMP. 71402205	REG. POMPE HYDR.-COMP. HYDRAULIKPUMPE-REGLER REGULADOR DE BOMBA HIDR.	1.030 TAV.3 NTR 104S V-89

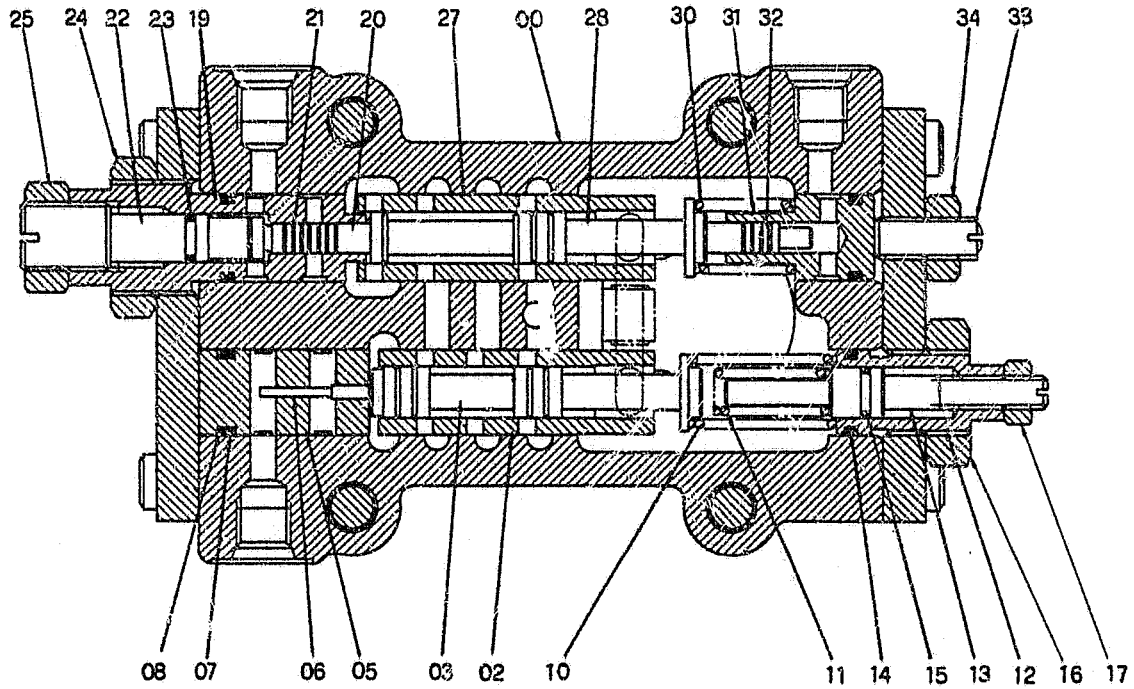

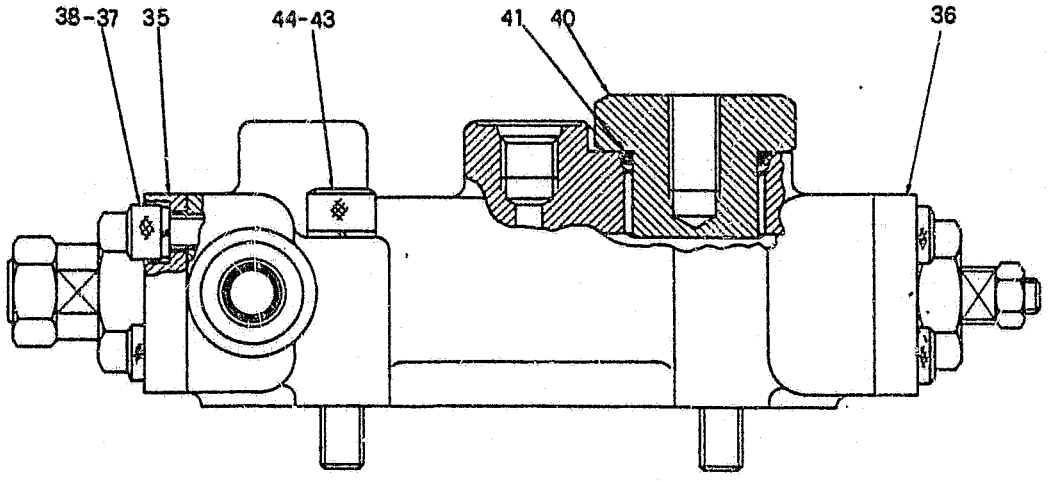

HYDR.PUMP REGULATOR-COMP. REG. POMPE HYDR.-COMP. 1.030 TAV.3
REG.POMPA IDRAULICA-COMP. HYDRAULIKPUMPE-REGLER
71402205 REGULADOR DE BOMBA HIDR. NTR 104S V-89

ITEM	PART NUMBER	QTY	TR. CO.	DESCRIPTION	DESCRIZIONE
00	71402210	1	300C	BODY	CORPO
02	71402211	1	101A	CASING	ASTUCCIO
03	71402212	1	130P	PLUNGER	PISTONCINO
05	71402213	1	164C	CYLINDER	CILINDRO
06	71402214	1	130P	PLUNGER	PISTONCINO
07	71402215	1	158G	O-RING	GUARNIZIONE O-R
08	71401887	1	45A	RING	ANELLO
10	71402216	1	100M	SPRING	MOLLA
11	71402217	1	100M	SPRING	MOLLA
12	71402218	1	26T	BLOCK	TAMPONE
13	71402219	1	26T	BLOCK	TAMPONE
14	71401804	3	158G	O-RING	GUARNIZIONE O-R
15	71402220	1	158G	O-RING	GUARNIZIONE O-R
16	71402221	1	10D	NUT	DADO
17	71402283	1	10D	NUT	DADO
19	71402223	1	164C	CYLINDER	CILINDRO
20	71402224	1	130P	PLUNGER	PISTONCINO
21	71402225	1	130P	PLUNGER	PISTONCINO
22	71402226	1	26T	BLOCK	TAMPONE
23	71402227	1	158G	O-RING	GUARNIZIONE O-R
24	71402228	1	10D	NUT	DADO
25	71402229	1	10D	NUT	DADO
27	71402230	1	101A	CASING	ASTUCCIO
28	71402231	1	130P	PLUNGER	PISTONCINO
30	71402232	1	100M	SPRING	MOLLA
31	71402233	1	164C	CYLINDER	CILINDRO
32	71402234	1	130P	PLUNGER	PISTONCINO
33	71402235	1	40V	SCREW	VITE
34	71402236	1	10D	NUT	DADO
35	71402237	1	265C	COVER	COPERCHIO
36	71402238	1	265C	COVER	COPERCHIO
37	71402239	8	40V	SCREW	VITE
38	71402240	8	170R	LOCKWASHER	ROSETTA ELASTICA
40	71402241	1	50T	PLUG	TAPPO
41	71404161	1	158G	O-RING	GUARNIZIONE O-R
43	71402244	4	40V	SCREW	VITE
44	71402259	4	170R	LOCKWASHER	ROSETTA ELASTICA

SWING REDUCTION UNIT MOTORIDUTTORE DI ROTAZ.	MOTOREDUCTOR ROTACION UNTERSETZUNGGETRIEBE REDUCTOR DE ROTACION	1.040 TAV.1

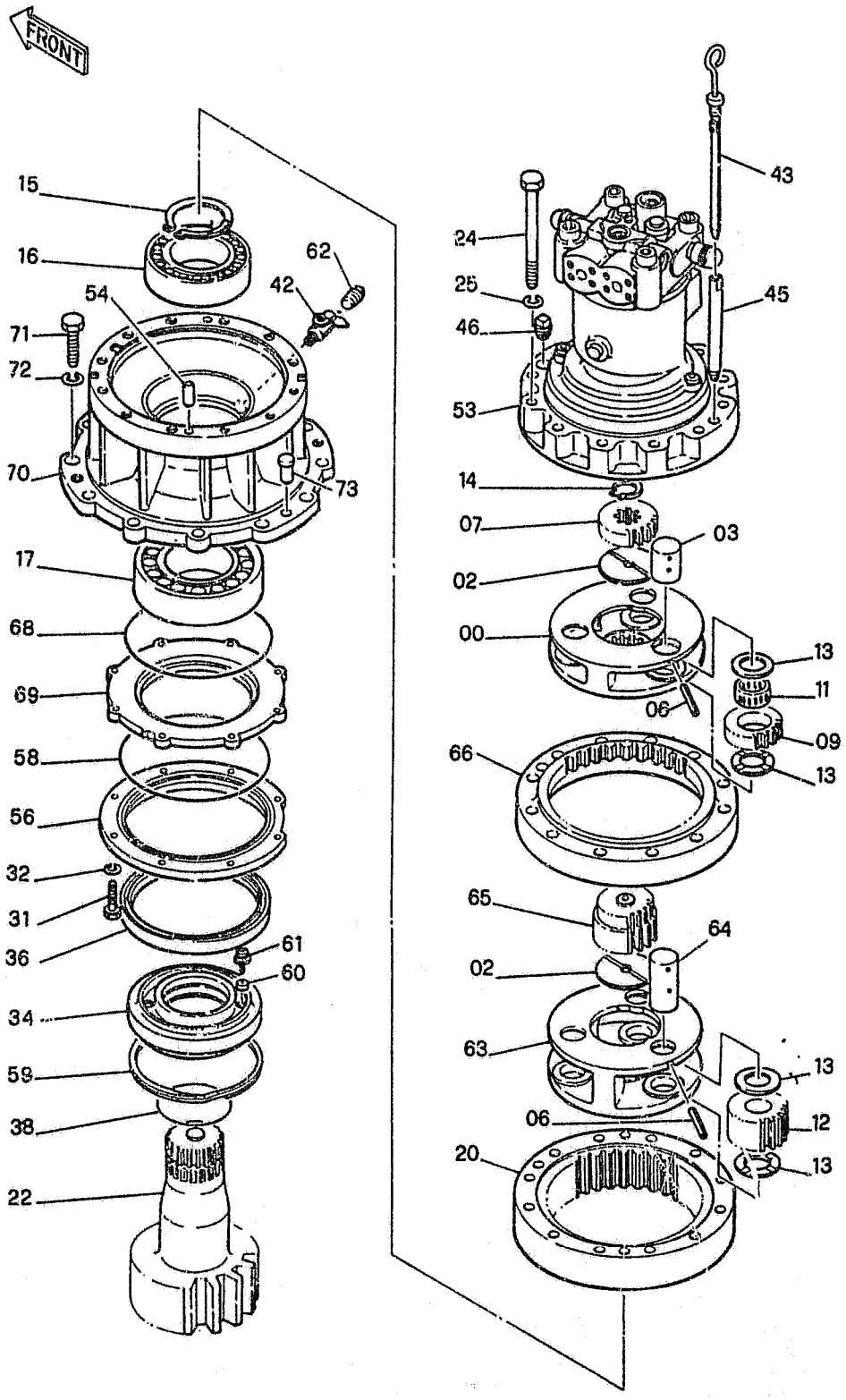

FH200

SWING REDUCTION UNIT
MOTORIDUTTORE DI ROTAZ.
MOTOREDUCTOR ROTACION
UNTERSETZUNGGETRIEBE
REDUCTOR DE ROTACION

1.040 TAV.1

ITEM	PART NUMBER	QTY	TR. CO.	DESCRIPTION	DESCRIZIONE
00	71402431	1	196P	PLANETARY CARRIER	PORTA-SATELLITI
00-70	71401636	1	7482	SWING MOTOREDUCTION -ASS.LY	MOTORIDUTT.ROTAZIONE -COMPL.
02	71402522	2	45A	RING	ANELLO
03	71402523	3	80P	PIN	PERNO
06	71402524	6	202S	SPRING PIN	SPINA ELASTICA
07	71402525	1	50I	GEAR	INGRANAGGIO
09	71402526	3	145P	SUN GEAR	PLANETARIO
11	71402527	3	341C	BEARING	CUSCINETTO
12	71402528	3	145P	SUN GEAR	PLANETARIO
13	71402529	12	45A	RING	ANELLO
14	71402530	1	187A	SNAP RING	ANELLO ELASTICO
15	71402531	1	187A	SNAP RING	ANELLO ELASTICO
16	71402532	1	341C	BEARING	CUSCINETTO
17	71402426	1	341C	BEARING	CUSCINETTO
20	71402490	1	297C	RING GEAR	CORONA DENTATA
22	71402497	1	16A	SHAFT	ALBERO
24	71402499	12	40V	SCREW	VITE
25	71402502	12	170R	LOCKWASHER	ROSETTA ELASTICA
31	71402518	8	40V	SCREW	VITE
32	71402042	8	170R	LOCKWASHER	ROSETTA ELASTICA
34	71402519	1	101A	CASING	ASTUCCIO
36	71402533	1	122G	SEAL	GUARNIZIONE
38	71402534	1	158G	O-RING	GUARNIZIONE O-R
42	71401755	1	150R	COCK	RUBINETTO
43	71401767	1	91A	DIPSTICK	ASTA LIVELLO
45	71401756	1	193T	TUBE	TUBO RIGIDO
46	71402546	1	50T	PLUG	TAPPO
53	71402348	1	127M	HYDRAULIC MOTOR -ASS.LY SEE J-19	MOTORE IDRAULICO -COMPL. VED. TAV.2
54	71402535	2	200S	PIN	SPINA
56	71402536	1	265C	COVER	COPERCHIO
58	71402537	1	158G	O-RING	GUARNIZIONE O-R
59	71402538	1	187A	SNAP RING	ANELLO ELASTICO
60	71401761	2	58C	MAGNET	CALAMITA
61	71401762	2	40V	SCREW	VITE
62	71401757	1	50T	PLUG	TAPPO
63	71402539	1	196P	PLANETARY CARRIER	PORTA-SATELLITI
64	71402540	3	80P	PIN	PERNO
65	71402541	1	50I	GEAR	INGRANAGGIO
66	71402542	1	297C	RING GEAR	CORONA DENTATA
68	71402543	1	158G	O-RING	GUARNIZIONE O-R
69	71402544	1	265C	COVER	COPERCHIO
70	71402545	1	35S	CASE	SCATOLA
71	15224034	12	40V	SCREW 20X2,5X65	VITE 20X2,5X65
72	10517474	12	131R	WASHER	ROSETTA
73	71416322	2	200S	PIN	SPINA

FH200

SWING RED.UNIT-COMPONENTS RIDUTTORE ROT.-COMPONENTI 71402348	REDUCTEUR-COMPOSANTS UNTERSETZUNG.-EINZELTEILE REDUCTOR-COMPONENTS	1.040 TAV.2

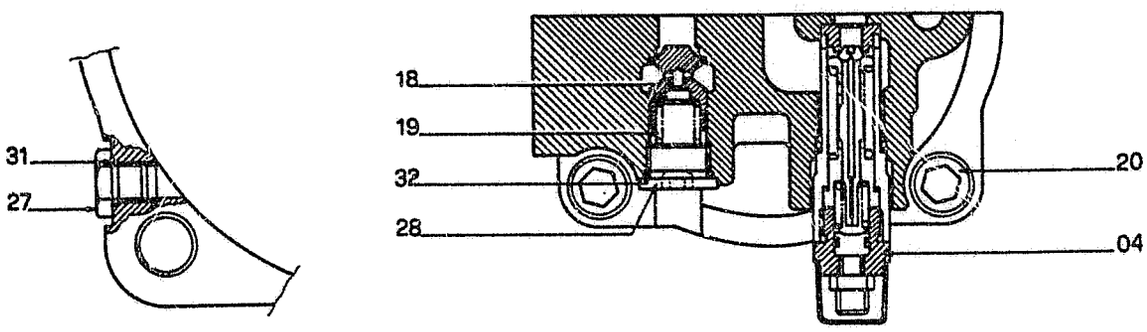

SECTION
SEZIONE A-A

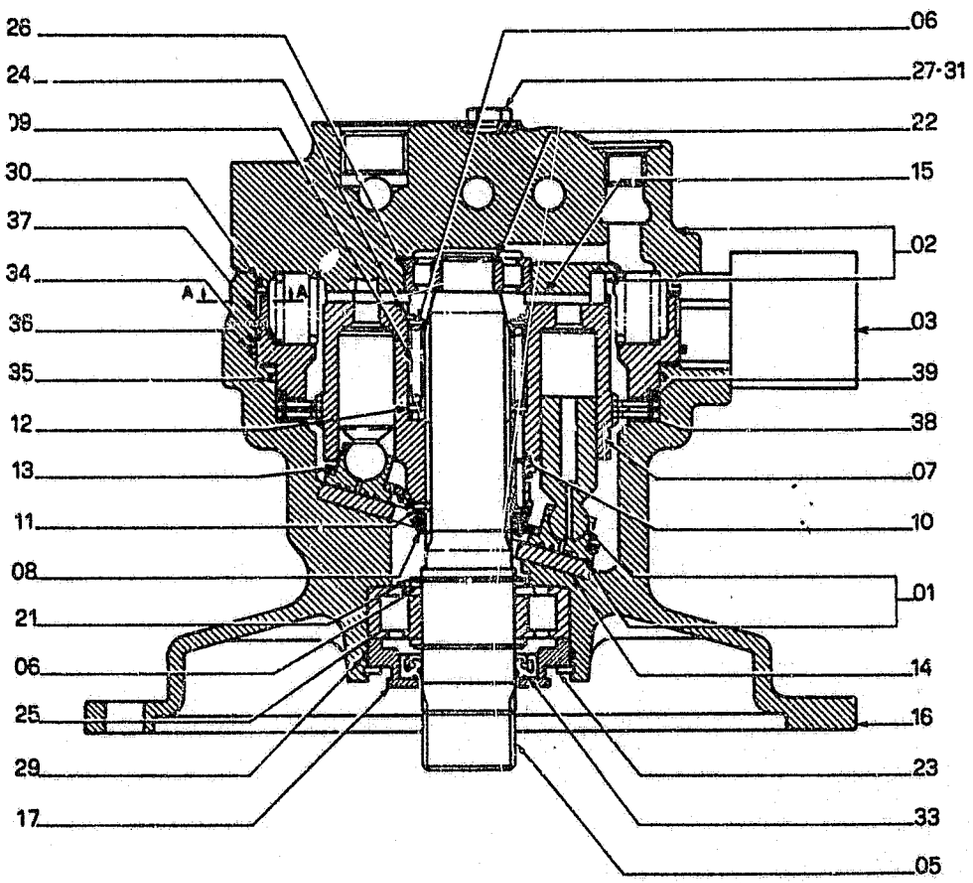

SWING RED.UNIT-COMPONENTS | REDUCTEUR-COMPOSANTS | 1.040 TAV.2
RIDUTTORE ROT.-COMPONENTI | UNTERSETZUNG.-EINZELTEILE
71402348 | REDUCTOR-COMPONENTS

ITEM	PART NUMBER	QTY	TR. CO.	DESCRIPTION	DESCRIZIONE
01	71402349	9	132P	PISTON	PISTONE
02	71402350	1	300C	BODY	CORPO
03	71402351	1	10V	VALVE	VALVOLA
04	71402352	2	10V	VALVE	VALVOLA
05	71402353	1	16A	SHAFT	ALBERO
06	71402354	3	75D	SPACER	DISTANZIALE
07	71402355	1	164C	CYLINDER	CILINDRO
08	71402356	1	95B	BUSHING	BOCCOLA
09	71402357	1	100M	SPRING	MOLLA
10	71402358	12	90A	ROD	ASTA
11	71402359	1	75D	SPACER	DISTANZIALE
12	71402360	1	75D	SPACER	DISTANZIALE
13	71402361	1	105P	PLATE	PIASTRA
14	71402362	1	105P	PLATE	PIASTRA
15	71402363	1	105P	PLATE	PIASTRA
16	71402364	1	300C	BODY	CORPO
17	71402365	1	265C	COVER	COPERCHIO
18	71402366	2	235S	PISTON	STANTUFFO
19	71402367	2	100M	SPRING	MOLLA
20	71402368	4	40V	SCREW	VITE
21	71402369	2	187A	SNAP RING	ANELLO ELASTICO
22	71402370	1	187A	SNAP RING	ANELLO ELASTICO
23	71402371	1	187A	SNAP RING	ANELLO ELASTICO
24	71402372	1	187A	SNAP RING	ANELLO ELASTICO
25	71402373	1	341C	BEARING	CUSCINETTO
26	71402374	1	341C	BEARING	CUSCINETTO
27	71402375	3	50T	PLUG	TAPPO
28	71402378	2	50T	PLUG	TAPPO
29	71402376	1	158G	O-RING	GUARNIZIONE O-R
30	71402377	1	158G	O-RING	GUARNIZIONE O-R
31	71401688	3	158G	O-RING	GUARNIZIONE O-R
32	71402379	2	158G	O-RING	GUARNIZIONE O-R
33	71402380	1	122G	SEAL	GUARNIZIONE
34	71402381	1	74B	BLOCK	BLOCCHETTO
35	71402382	1	158G	O-RING	GUARNIZIONE O-R
36	71402383	1	158G	O-RING	GUARNIZIONE O-R
37	71402384	20	74B	BLOCK	BLOCCHETTO
38	71402385	2	105P	PLATE	PIASTRA
39	71402386	3	105P	PLATE	PIASTRA

FH200

PUMP/CONTROL VALVE PIPING TUBAZ.POMPA/DISTRIBUTORE	TUYAUTERIES POMPE/DISTR. LEITUNGEN-PUMPE/STEUERG. TUBERIAS BOMBA/DISTR.	1.050 TAV.1 REVISED JULY 1990

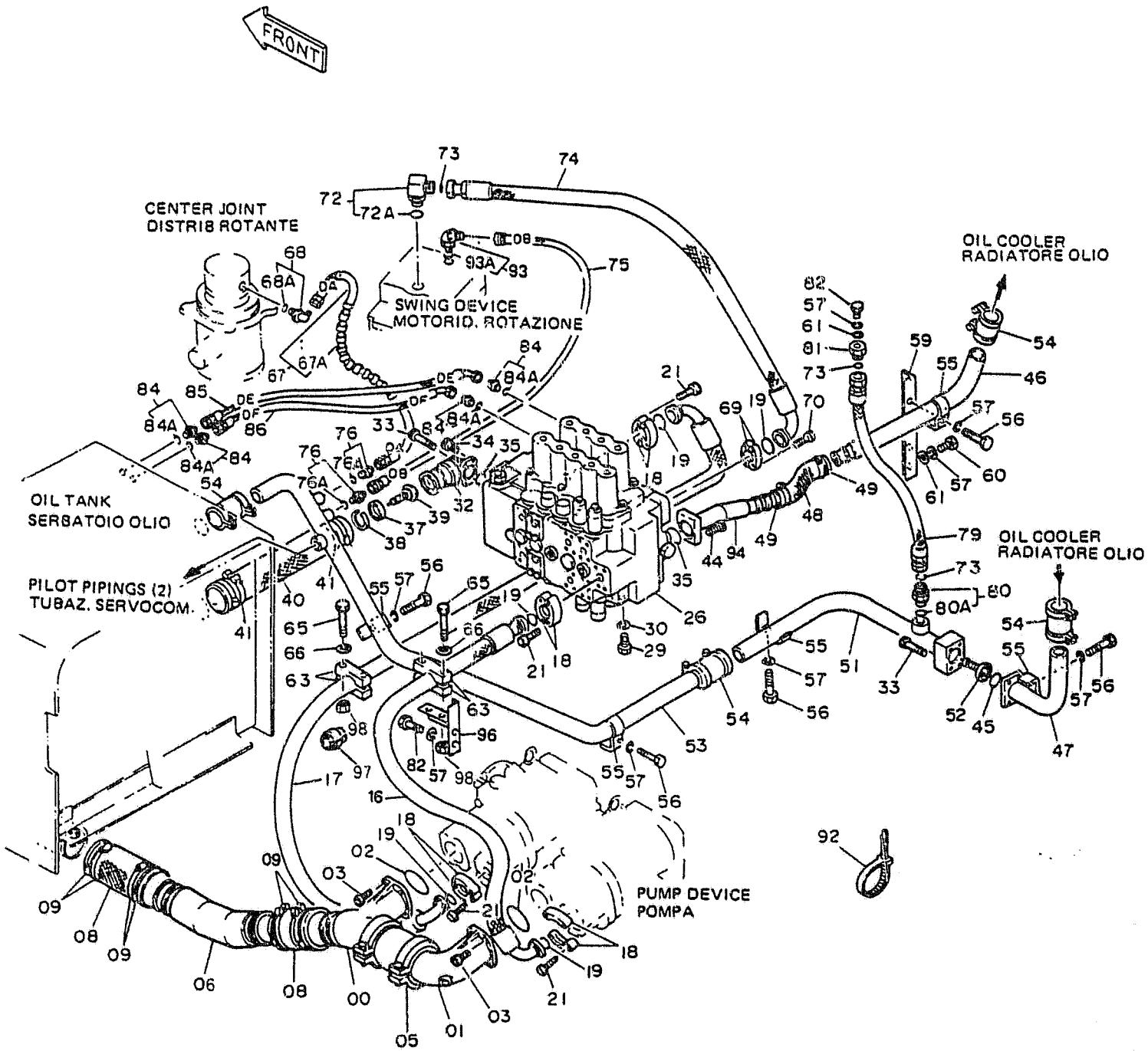

FH200

PUMP/CONTROL VALVE PIPING — TUYAUTERIES POMPE/DISTR. — 1.050 TAV.1
TUBAZ.POMPA/DISTRIBUTORE — LEITUNGEN-PUMPE/STEUERG.
TUBERIAS BOMBA/DISTR. — REVISED JULY 1990

ITEM	PART NUMBER	QTY	TR. CO.	DESCRIPTION	DESCRIZIONE
00	71415921	1	188C	MANIFOLD	COLLETTORE
01	71415922	1	188C	MANIFOLD	COLLETTORE
02	71404167	2	158G	O-RING	GUARNIZIONE O-R
03	14422034	8	40V	SCREW 12X1,75X28	VITE 12X1,75X28
05	71415923	1	67G	COUPLING	GIUNTO
06	71415924	1	193T	TUBE	TUBO RIGIDO
08	71415926	2	30M	SLEEVE	MANICOTTO
09	79083851	8	180C	COLLAR	COLLARE
				C2867 UP TO S/N	C2867 FINO AL TELAIO
				0165 (02)	0165 (02)
				0077 (03)	0077 (03)
	71404505	8	180C	COLLAR	COLLARE
				D2867 FROM S/N	D2867 DAL TELAIO
				0166 (02)	0166 (02)
				0078 (03)	0078 (03)
16	71403911	1	285T	HOSE	TUBO FLESSIBILE
17	71403901	1	285T	HOSE	TUBO FLESSIBILE
18	71404313	8	417S	HALF FLANGE	SEMIFLANGIA
19	70924200	5	158G	O-RING	GUARNIZIONE O-R
21	14422334	16	40V	SCREW 12X1,75X45	VITE 12X1,75X45
26	71401637	1	83D	CONTROL VALVE -ASS.LY	DISTRIBUTORE -COMPL.
				SEE TAV.2-3-4	VED. TAV.2-3-4
29	11127534	4	40V	SCREW 16X2X35	VITE 16X2X35
30	10517274	4	131R	WASHER	ROSETTA
32	71415929	1	180C	MANIFOLD	COLLETTORE
33	14420834	6	40V	SCREW 10X1,5X60	VITE 10X1,5X60
34	14432334	2	40V	SCREW 10X1,5X22	VITE 10X1,5X22
35	71404168	2	158G	O-RING	GUARNIZIONE O-R
37	71415930	1	120P	PLATE	PIATTELO
38	11060476	1	187A	SNAP RING	ANELLO ELASTICO
39	71401640	1	10V	VALVE	VALVOLA
40	71415932	1	30M	SLEEVE	MANICOTTO
41	79083848	4	180C	COLLAR	COLLARE
				C2867 UP TO S/N	C2867 FINO AL TELAIO
				0165 (02)	0165 (02)
				0077 (03)	0077 (03)
	71404503	4	180C	COLLAR	COLLARE
				D2867 FROM S/N	D2867 DAL TELAIO
				0166 (02)	0166 (02)
				0078 (03)	0078 (03)
44	14420334	4	40V	SCREW 10X1,5X35	VITE 10X1,5X35
45	70924193	1	158G	O-RING	GUARNIZIONE O-R
46	71416694	1	193T	TUBE	TUBO RIGIDO
47	71416696	1	193T	TUBE	TUBO RIGIDO
48	71415937	1	30M	SLEEVE	MANICOTTO

→

FH200

PUMP/CONTROL VALVE PIPING TUBAZ.POMPA/DISTRIBUTORE	TUYAUTERIES POMPE/DISTR. LEITUNGEN-PUMPE/STEUERG. TUBERIAS BOMBA/DISTR.	1.050 TAV.1 REVISED JULY 1990

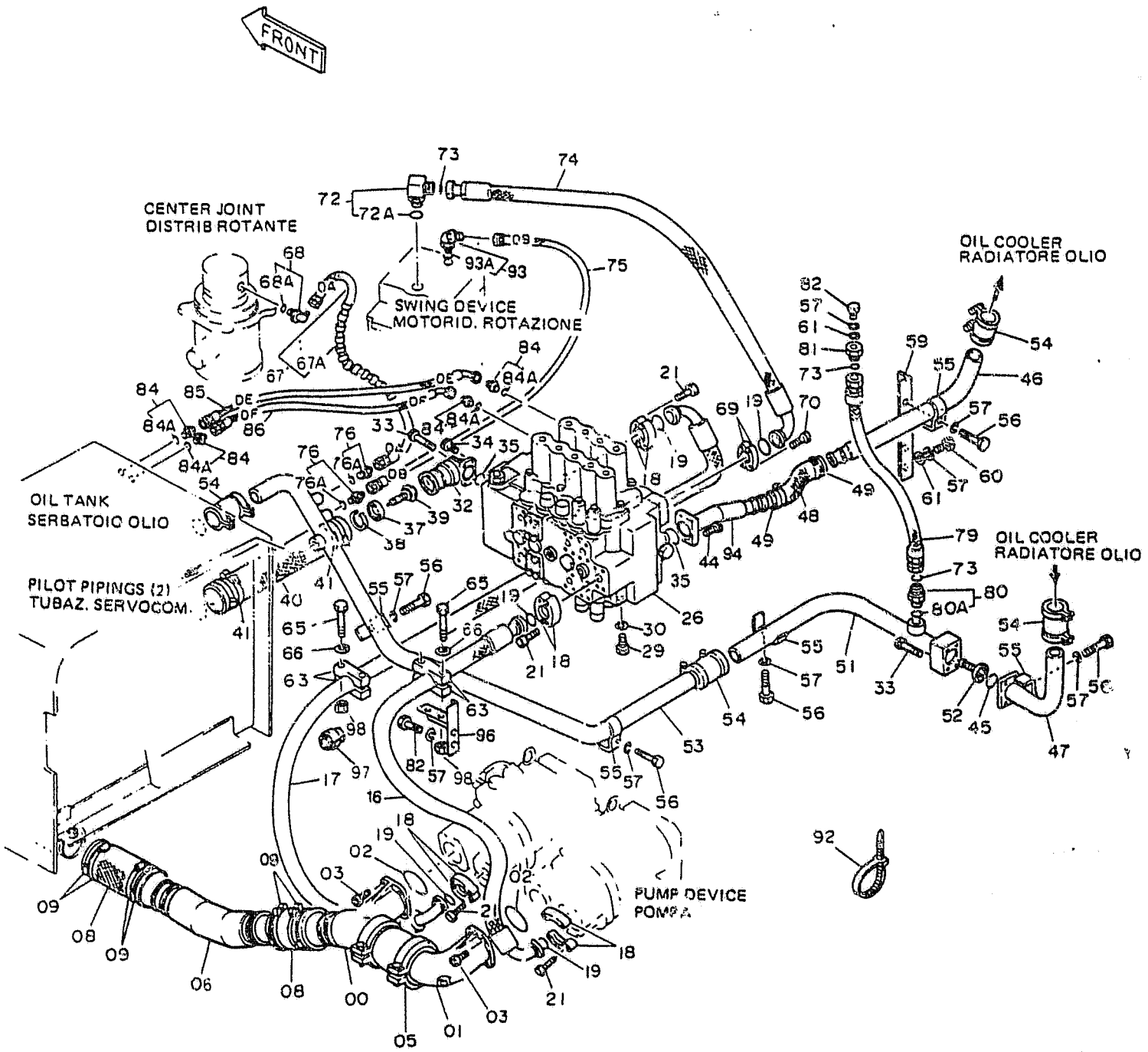

FH200

PUMP/CONTROL VALVE PIPING — TUYAUTERIES POMPE/DISTR. — TUBAZ.POMPA/DISTRIBUTORE — LEITUNGEN-PUMPE/STEUERG. — TUBERIAS BOMBA/DISTR.

1.050 TAV.1

REVISED JULY 1990

ITEM	PART NUMBER	QTY	TR. CO.	DESCRIPTION		DESCRIZIONE	
49	79083845	4	180C	COLLAR **C2867** UP TO S/N	0165 (02) 0077 (03)	COLLARE **C2867** FINO AL TELAIO	0165 (02) 0077 (03)
	71404506	4	180C	COLLAR **D2867** FROM S/N	0166 (02) 0078 (03)	COLLARE **D2867** DAL TELAIO	0166 (02) 0078 (03)
51	71416698	1	193T	TUBE		TUBO RIGIDO	
52	71401628	1	10V	VALVE		VALVOLA	
53	71415940	1	193T	TUBE		TUBO RIGIDO	
54	71415942	4	67G	COUPLING		GIUNTO	
55	71415943	5	231S	CLIP		STAFFETTA	
56	11113634	5	40V	SCREW 12X1,75X70		VITE 12X1,75X70	
57	10517074	10	131R	WASHER		ROSETTA	
59	71416700	1	300S	SUPPORT		SUPPORTO	
60	11112634	2	40V	SCREW 12X1,75X35		VITE 12X1,75X35	
61	14496731	3	131R	WASHER		ROSETTA	
63	71416635	4	225S	BRACKET		STAFFA	
65	11108234	4	40V	SCREW 10X1,5X100		VITE 10X1,5X100	
66	10571874	4	131R	WASHER		ROSETTA	
67	71404067	1	285T	HOSE		TUBO FLESSIBILE	
67A	71405740	1	142G	SHEATH		GUAINA	
68	71404345	1	20R	FITTING -ASS.LY		RACCORDO -COMPL.	
68A	71404165	1	158G	O-RING		GUARNIZIONE O-R	
69	71404311	2	417S	HALF FLANGE		SEMIFLANGIA	
70	14420234	4	40V	SCREW 10X1,5X30		VITE 10X1,5X30	
72	71404307	1	20R	FITTING -ASS.LY		RACCORDO -COMPL.	
72A	71404161	1	158G	O-RING		GUARNIZIONE O-R	
73	70923843	3	158G	O-RING		GUARNIZIONE O-R	
74	71403924	1	285T	HOSE		TUBO FLESSIBILE	
75	71403960	1	285T	HOSE		TUBO FLESSIBILE	
76	71404357	2	20R	FITTING -ASS.LY		RACCORDO -COMPL.	
76A	71404165	2	158G	O-RING		GUARNIZIONE O-R	
79	71403919	1	285T	HOSE		TUBO FLESSIBILE	
80	71404414	1	20R	FITTING -ASS.LY		RACCORDO -COMPL.	
80A	71404162	1	158G	O-RING		GUARNIZIONE O-R	
81	71404312	1	50T	PLUG		TAPPO	
82	11112434	3	40V	SCREW 12X1,75X30 **C2866** UP TO S/N	0050	VITE 12X1,75X30 **C2866** FINO AL TELAIO	0050
	11112134	3	40V	SCREW 12X1,75X20 **D2866** FROM S/N	0051	VITE 12X1,75X20 **D2866** DAL TELAIO	0051
84	71404327	4	20R	FITTING -ASS.LY		RACCORDO -COMPL.	
84A	71404163	4	158G	O-RING		GUARNIZIONE O-R	
85	71403939	1	285T	HOSE		TUBO FLESSIBILE	
86	71403940	1	285T	HOSE		TUBO FLESSIBILE	
92	79013422	3	31F	CLAMP		FASCETTA	
93	71404329	1	20R	FITTING -ASS.LY		RACCORDO -COMPL.	
93A	71404166	1	158G	O-RING		GUARNIZIONE O-R	
94	71415948	1	193T	TUBE		TUBO RIGIDO	
96	71415950	1	300S	SUPPORT		SUPPORTO	
97	71416636	2	95B	BUSHING		BOCCOLA	
98	11701721	4	10D	NUT		DADO	

ALPHABETICAL INDEX

DESCRIPTION	SGR.	TAV.	GRID
Accelerator controls	0.004	1	1D-21
Air Cleaner	0.001	1	1D-5
Alternator-Mounting	0.400	1	1I-11
Anti-Shock Valve (Hydr.)	1.082	3	1L-15
Application of Ol. Hammer	5.0020	2	2J-7
Batteries	1.220	2	2D-13
Belts	0.340	1	1H-23
	0.345	1	1I-3
Boom Piping	2.030	1	2F-17, 2G-3
	2.031	1	2G-5
	2.031	2	2G-7
Brake Valve Components	3.010	3	2H-3
Bucket	2.020	1	2F-13
Bucket Cylinder	2.030	5	2G-3
Bull Gear	3.000	1	2G-17
Cab	1.250	1	2D-19
Cab Door	1.250	5	2E-7
Cab Heater-Components	1.290	2	2E-15
Cab Window-Left Side	1.250	6	2E-9
Cab-Frame	1.250	7	2E-11
Cab-Platform	1.250	1	2D-19
Cab Vandalism	5.0540	1	2K-3
Camshaft	0.120	1	1F-11
Cold Starting Aid	5.0025	1	2J-11
Connecting Rod	0.081	1	1E-23
Cont. Valve-Hydr. (Ass.Y)	1.050	1	1J-21
Control Valve-Hydr.	1.050	2	2K-3
	1.050	3	2K-5
	1.050	4	2K-7
Controls	1.070	1	1J-20
	1.071	1	1K-21, 1L-3
Counterweight	1.000	1	1J-3
Cowlings	1.300	1	2E-19
	1.300	2	2E-21
	1.300	3	2E-23
Crankshaft	0.080	1	1E-21
Crankshaft Pulley	0.084	1	1F-7
Cylinder Block	0.040	1	1D-21
	0.040	2	1D-23
	0.040	3	1E-3
Cylinder Block Covers	0.043	1	1E-7
	0.043	2	1E-9
Cylinder Head	0.060	1	1E-13
	0.060	2	1E-15
Dashboard (Left)	1.210	1	2D-9
Dashboard (Right)	1.200	1	2D-3
	1.200	3	2D-7
Data Monitor	1.200	2	2D-5
Decals	4.500	1	2I-3
	4.501	1	2I-5
Dipper Stick (2,1m)	5.0022	1	2J-9
Dipper Stick (2,5m) (STD.)	2.003	1	2F-11
Dipper Stick (3m)	5.0038	1	2J-13
Dipper Stick Cylinder	2.030	4	2F-23
	2.031	4	2G-5
Dipstick-Engine Oil	0.270	1	1H-8
Discharge Valve Componen.	3.010	4	2H-5
Drive on Engine (Opt.)	0.350	1	1I-5
Electric System	1.220	1	2D-11
	1.220	2	2D-13
Elements-fuel	0.200	1	1G-17
Elements-Hydraulic	1.020	1	1J-7
Elements-Pilot	1.080	1	1L-5
Emergency Kits(Lub. Fittings)	4.000	1	2H-23
Engine	0.021	1	1D-19
Engine-Controls	0.004	1	1D-15
Engine-Suspensions	0.000	1	1D-3
Engine Breather	0.045	1	1E-11
Engine Cooling Piping	0.323	1	1H-19
Engine Heat Exchanger	0.310	1	1H-15
Engine Lifting Eyes	0.450	1	1I-15
Engine Oil Filter	0.302	1	1H-11
Engine Oil Piping	0.305	1	1H-13
Engine Oil Pump	0.300	1	1H-9
Engine Oil Sump	0.042	1	1E-5
Engine Piston	0.082	1	1F-3
Engine Suspensions	0.000	1	1D-3
Exhaust Manifold	0.077	1	1E-19
Exhaust Valve	0.060	2	1E-15
Fan	0.345	1	1I-3
Fan Drive	0.345	1	1I-3
"Filter Care" Kit	24		1A-24
Filter-Pilot System	1.080	1	1L-5
Filters-Air	0.001	1	1D-5
Filters-Engine Oil	0.302	1	1D-11
Filters-Fuel	0.200	1	1G-17
Filters-Hydr. System	1.020	1	1J-7
Flywheel-Engine	0.083	1	1L-17
Fuel Filter	0..200	1	1G-17
Fuel Piping	0.203	1	1G-19
Fuel Pump	0.203	2	1G-21
	0.140	8	1G-5
Fuel Tank	1.010	1	1J-5
Fuses	1.200	3	2D-7
Guards	1.300	2	2E-21
Handle	1.300	3	2E-23
	1.300	4	2F-3
Heater	1.290	1	2E-15
Horn	1.220	2	2D-15
Hydr.Pump-Components	1.030	2	1J-13
Hydr.Pump Regulator-Comp.	1.030	3	1J-15

ALPHABETICAL INDEX

DESCRIPTION	SGR.	TAV.	GRID
Hydraulic Pump	1.030	1	1J-9
Idler	3.020	1	1H-7
Injection Nozzle-Lines	0.149	1	1G-15
Injection Pump	0.140	6	1F-23
	0.140	7	1G-3
Injection Pump Drive	0.140	10	1G-9
Injection Pump-Piping	0.140	1	1F-13
	0.140	9	1G-7
Intake Manifold	0.071	1	1E-17
Intake Valve	0.060	2	1E-15
Lift Cylinder (Left)	2.030	3	1F-21
Lift Cylinder (Right)	2.030	2	2F-19
Lights	1.220	2	2D-13
Lower Frame	3.000	1	2G-17
Lubric. Fitting Piping	3.001	1	2G-19
	2.041	1	2G-15
	2.040	1	1G-13
Main Piping	1.060	1	1K-9
	1.061	1	1K-11
Mirror (Rear)	1.300	2	2E-21
Monobloc Boom	2.000	1	2F-5
Motor - Starter	0.360	2	1I-9
Motor - Swing	1.040	1	1J-17
Motor - Travel	3.010	1	2G-21
Motor - Wiper	1.220	1	2D-11
Muffler	0.002	1	1D-7
Oil Tank	1.020	1	1J-7
Operator's Seat	1.250	2	2D-21
OperatorsSeat(Bostrom)(Std.)	5.0151	1	2J-21
Pilot Piping(1)	1.080	1	1L-5
Pilot Piping(2)	1.081	1	1L-9
Pilot Piping(3)	1.082	1	1L-11
Pilot Piping(4)	1.083	1	1L-17
Pilot Piping(5)	1.084	1	1L-19
Pilot Piping(6)	1.085	1	1L-21
Pilot Valve	1.070	3	1K-19
	1.071	2	1L-3
Pilot Valve-components	1.070	2	1K-17
PipingBoom	2.030	1	2F-17
	2.031	1	2G-5
Piping-Injection	0.149	1	1G-15
Piping-Lube Fittings	2.040	1	2G-13
Piping-Main	1.060	1	1K-9
Piping-Pilot(1)	1.080	1	1L-5
Piping-Pilot(3)	1.082	1	1L-11
Piping-Pilot(4)	1.083	1	1L-17
Piping-Pilot(5)	1.084	1	1L-19
Piping-Pump Contr. Valve	1.050	1	1J-21
Piping-Travel (Lower)	3.070	1	2H-19
	3.071	1	2H-21
Piping-Turbocharger	0.241	1	1H-5
Pump-Engine Oil	0.300	1	1H-9
Pump-Hydraulic	1.030	1	1J-11
Pump-Injection	0.140	6	1F-23
Pump-Water	0.320	1	1H-17
Pump/Control Valve Piping	1.050	1	1J-23
Radiator	0.003	1	1D-9
Radiator-Components	0.003	2	1D-11
	0.003	3	1D-13
Rocker Arm	0.060	2	1E-15
Rotary Distributor	3.060	1	2H-17
SAE Battery Provision	1.220	3	2D-17
Seat Belt	5.0536	1	1J-23
Sensors	1.220	2	2D-13
Solenoid Valve	1.080	2	1L-7
Starter	0.360	2	1I-9
Starter-Mounting	0.360	1	1I-7
Stop Valve	1.082	2	1L-13
Swing Red.Unit-Components	1.040	2	1J-19
Swing Reduction Unit	1.040	1	1J-17
Thermostat & Housing	0.326	1	1H-21
Timing Control	0.100	1	1F-9
Tool Kit	5.0083	1	2J-19
Track Chain	3.051	1	2H-13
	3.052	1	2H-15
Track Roller	3.040	1	2H-11
Travel Motor-componen.	3.010	3	2H-3
Travel Piping (Lower)	3.070	1	2H-19
	3.071	1	2H-21
Travel Red.Unit-Componen.	3.010	2	2G-23
Travel Reduction Units	3.010	1	2G-21
Turbocharger	0.240	1	1G-23
	0.240	2	1H-3
Turbocharger Piping	0.241	1	1H-5
Upper Frame	1.000	1	1J-3
Upper Roller	3.030	1	2H-9
Valve-Anti-Shock(Hydr.)	1.082	3	1L-15
Valve-Exhaust	0.060	2	1E-15
Valve-Intake	0.060	2	1E-15
Valve-Pilot (Hydr.)	1.070	1	1K-15
Valve-Pilot(Travel)	1.070	1	1K-15
Valve-Solenoid	1.080	2	1L-7
Valve-Stop(Travel)	1.082	1	1L-11
Water Pump	0.320	1	1H-17
Water Pump Drive	0.340	1	1H-23
Water Pump-Components	0.320	2	1H-17
Wiper	1.220	1	2D-11

CONTROL VALVE - HYDR.
DISTRIBUTORE IDRAULICO
71401637

DISTRIBUTEUR
STEUERGERAET
DISTRIBUIDOR

1.050 TAV.2

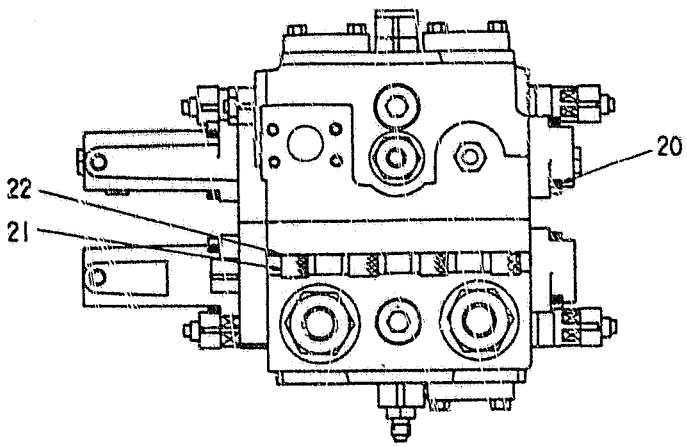

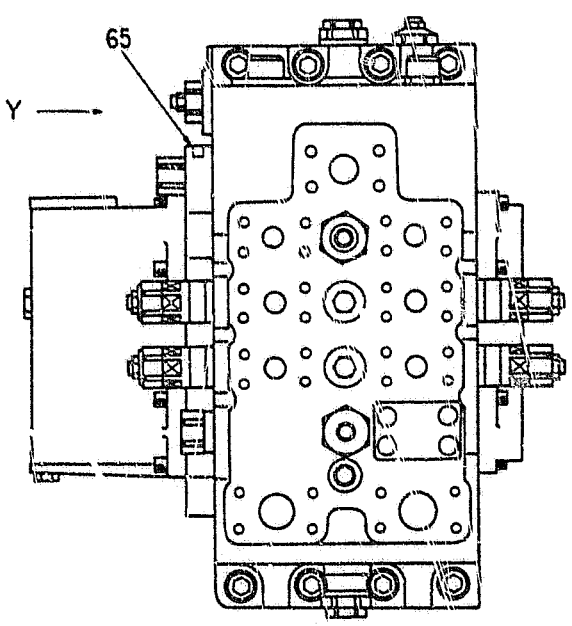

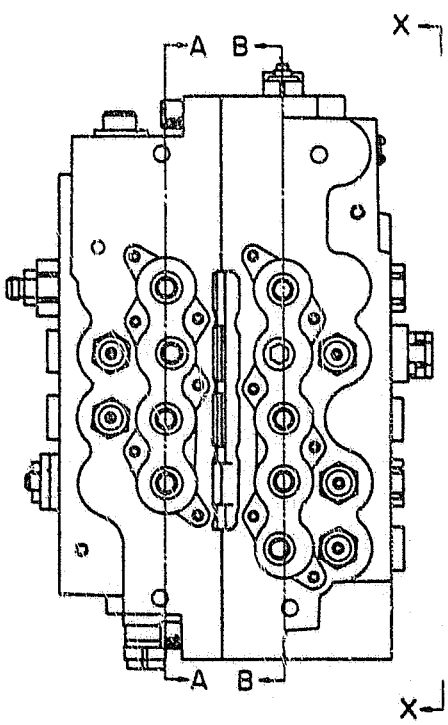

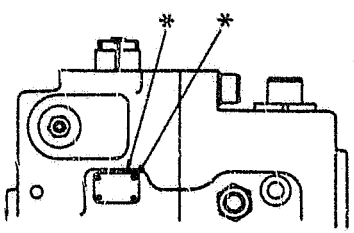

VISTA / VIEW Y

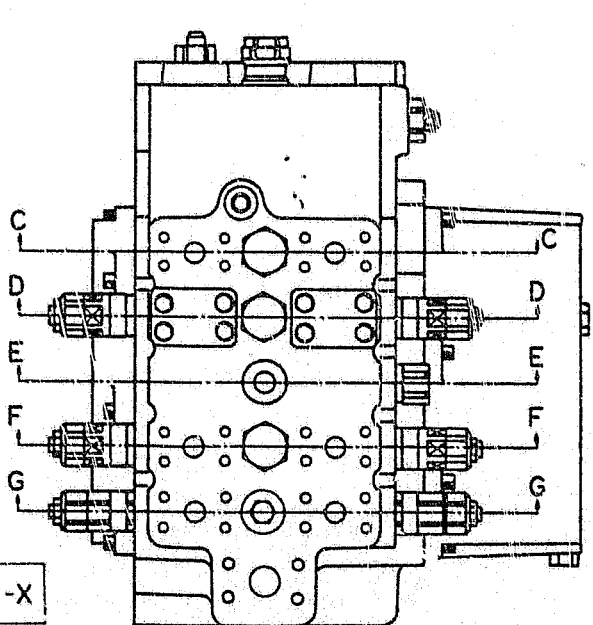

VISTA / VIEW X-X

I PARTICOLARI CONTRASSEGNATI DA *
NON VENGONO FORNITI A RICAMBIO

PARTS MARKED * ARE NOT SUPPLIED AS SPARES

CONTROL VALVE - HYDR. | DISTRIBUTEUR | 1.050 TAV.2
DISTRIBUTORE IDRAULICO | STEUERGERAET
71401637 | DISTRIBUIDOR

ITEM	PART NUMBER	QTY	TR. CO.	DESCRIPTION	DESCRIZIONE
20	71402299	24	40V	SCREW	VITE
21	71402300	8	40V	SCREW	VITE
22	71402301	8	131R	WASHER	ROSETTA
65	71402331	1	50T	PLUG	TAPPO

FH200

CONTROL VALVE - HYDR. DISTRIBUTORE IDRAULICO 71401637	DISTRIBUTEUR STEUERGERAET DISTRIBUIDOR	1.050 TAV.3

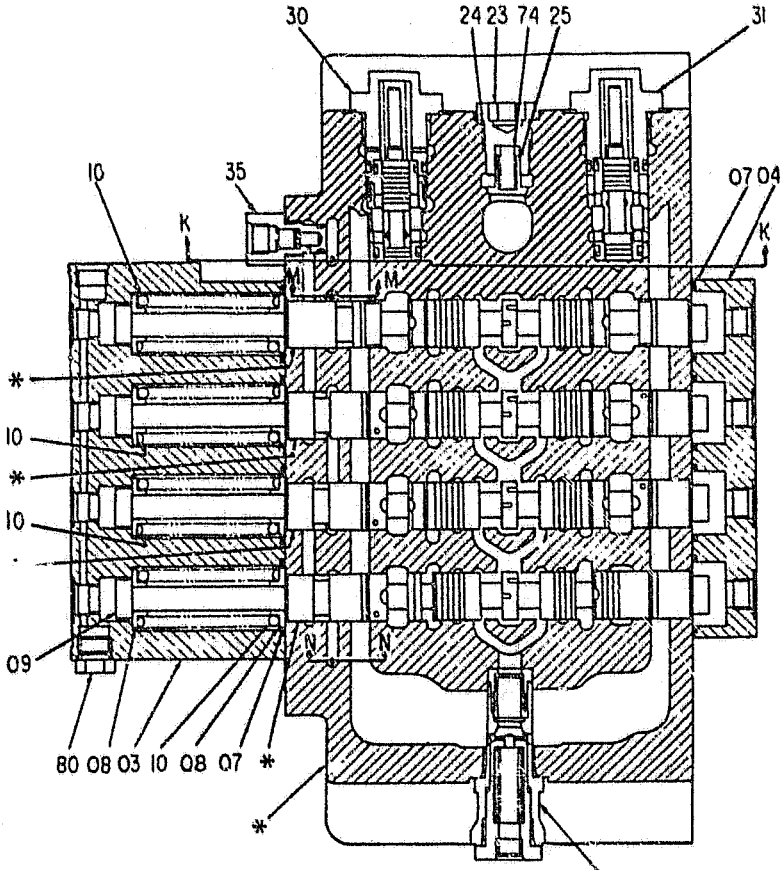

SEZ. SECTION A-A

Ved.- See K-3

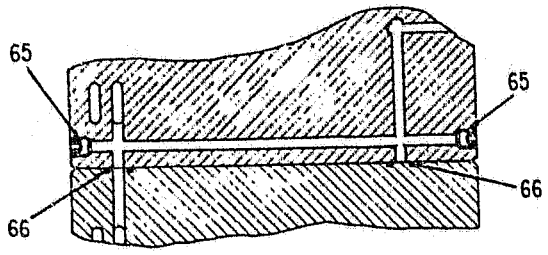

SEZ. SECTION K-K

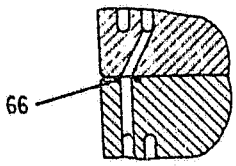

SEZ. SECTION M-M

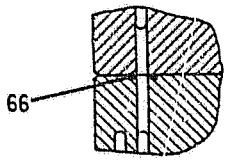

SEZ. SECTION N-N

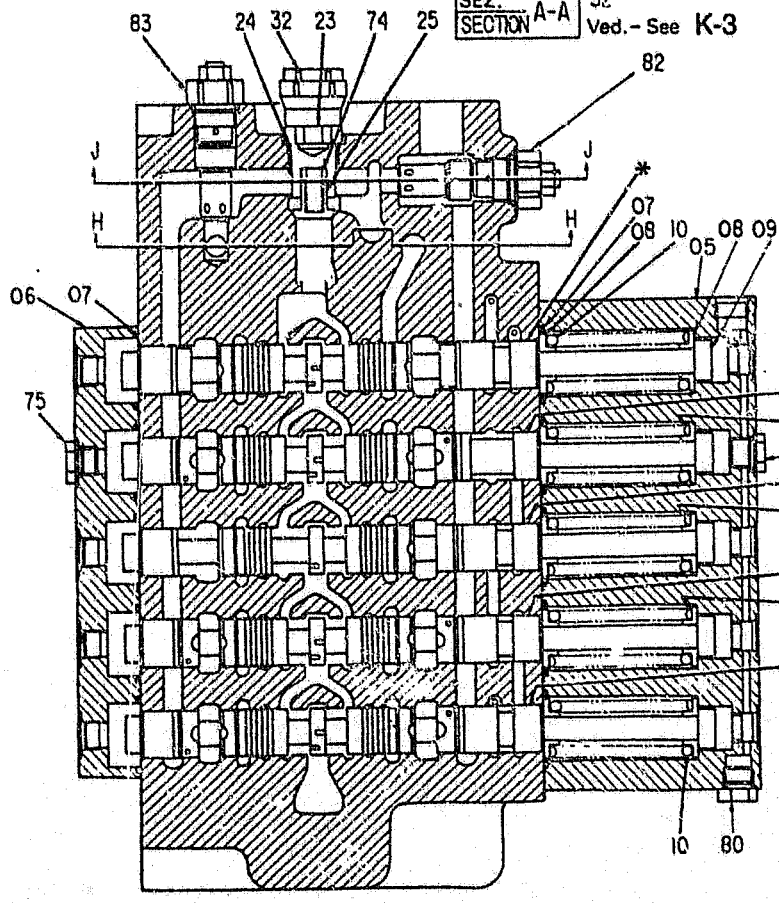

SEZ. SECTION B-B

Ved.- See K-3

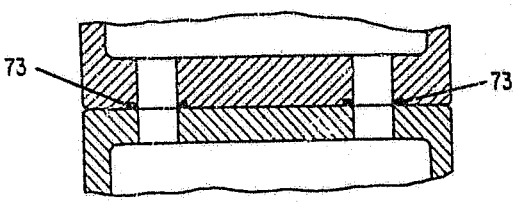

SEZ. SECTION J-J

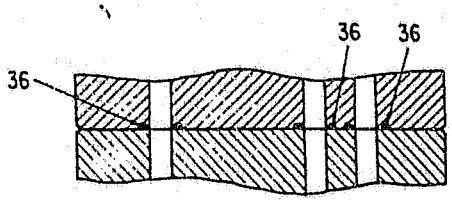

SEZ. SECTION H-H

I PARTICOLARI CONTRADDISTINTI CON * NON SONO FORNITI A RICAMBIO
PARTS MARKED * ARE NOT SUPPLIED AS SPARES

FH200

CONTROL VALVE - HYDR. | DISTRIBUTEUR | 1.050 TAV.3
DISTRIBUTORE IDRAULICO | STEUERGERAET
71401637 | DISTRIBUIDOR

ITEM	PART NUMBER	QTY	TR. CO.	DESCRIPTION	DESCRIZIONE
03	71402203	1	265C	COVER	COPERCHIO
04	71402204	1	265C	COVER	COPERCHIO
05	71402208	1	265C	COVER	COPERCHIO
06	71402222	1	265C	COVER	COPERCHIO
07	71402245	18	187A	SNAP RING	ANELLO ELASTICO
08	71402246	18	69S	SEAT	SEDE
09	71402275	9	61E	END	ESTREMITA'
10	71402285	9	100M	SPRING	MOLLA
23	71401939	6	50T	PLUG	TAPPO
24	71401940	2	45A	RING	ANELLO
25	71401938	2	10V	VALVE	VALVOLA
30	71402304	1	10V	VALVE	VALVOLA
31	71402305	1	10V	VALVE	VALVOLA
32	71402306	2	10V	VALVE	VALVOLA
35	71402309	1	50T	PLUG	TAPPO
36	71402310	3	187A	SNAP RING	ANELLO ELASTICO
65	71402331	2	50T	PLUG	TAPPO
66	71402332	4	187A	SNAP RING	ANELLO ELASTICO
73	71402337	2	187A	SNAP RING	ANELLO ELASTICO
74	71402338	2	100M	SPRING	MOLLA
75	71402339	1	50T	PLUG	TAPPO
80	71402344	2	50T	PLUG	TAPPO
81	71402345	1	50T	PLUG	TAPPO
82	71402346	1	10V	VALVE	VALVOLA
83	71402347	1	10V	VALVE	VALVOLA

CONTROL VALVE - HYDR.
DISTRIBUTORE IDRAULICO
7140167

DISTRIBUTEUR
STEUERGERAET
DISTRIBUIDOR

1.050 TAV.4

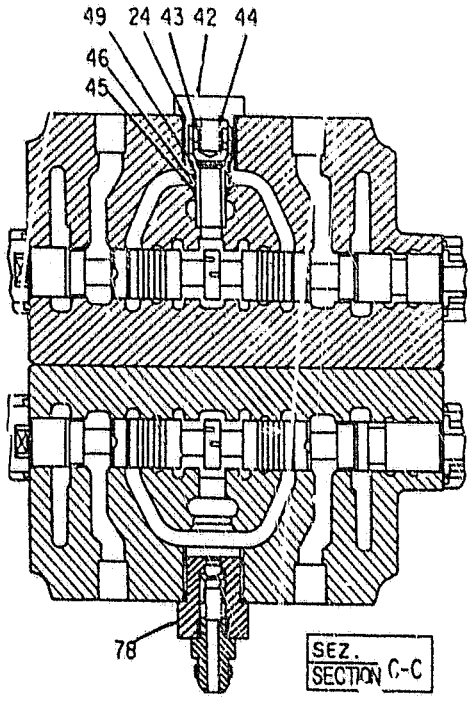

SEZ. / SECTION C-C

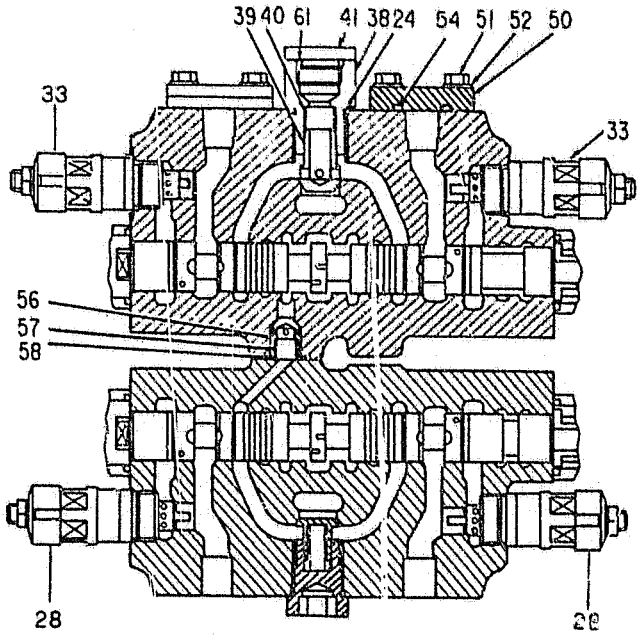

SEZ. / SECTION D-D

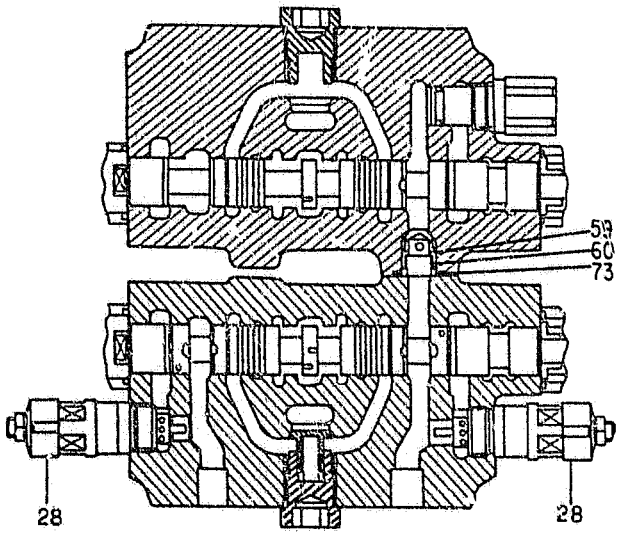

SEZ. / SECTION E-E

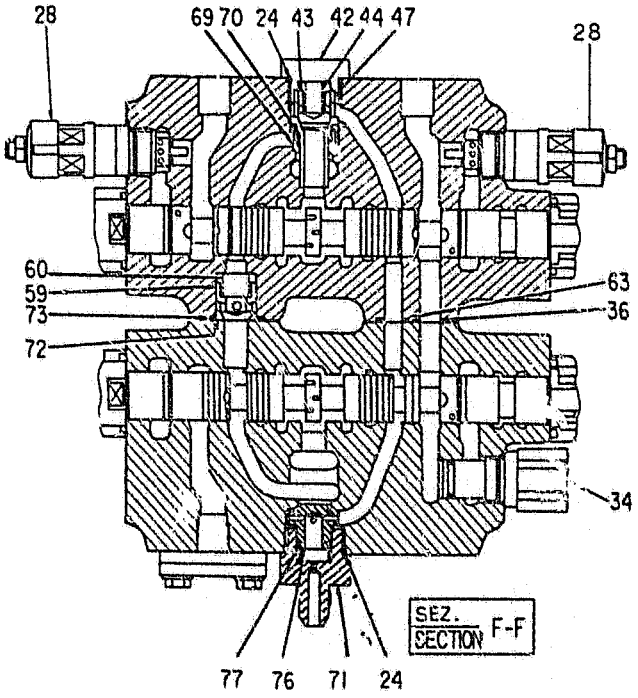

SEZ. / SECTION F-F

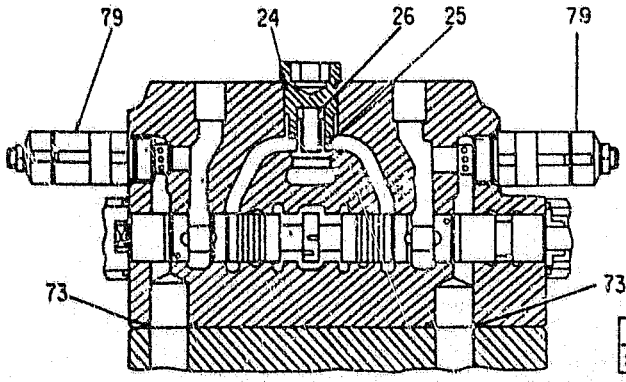

SEZ / SECTION G-G

CONTROL VALVE - HYDR. | DISTRIBUTEUR | 1.050 TAV.4
DISTRIBUTORE IDRAULICO | STEUERGERAET
71401637 | DISTRIBUIDOR

ITEM	PART NUMBER	QTY	TR. CO.	DESCRIPTION	DESCRIZIONE
24	71401940	8	45A	RING	ANELLO
25	71401938	3	10V	VALVE	VALVOLA
26	71402302	3	100M	SPRING	MOLLA
28	71402303	6	10V	VALVE	VALVOLA
33	71402307	2	10V	VALVE	VALVOLA
34	71402308	2	50T	PLUG	TAPPO
36	71402310	1	187A	SNAP RING	ANELLO ELASTICO
38	71402311	1	50T	PLUG	TAPPO
39	71402312	1	10V	VALVE	VALVOLA
40	71402313	1	100M	SPRING	MOLLA
41	71402388	1	50T	PLUG	TAPPO
42	71402314	2	50T	PLUG	TAPPO
43	71402315	2	10V	VALVE	VALVOLA
44	71402316	2	100M	SPRING	MOLLA
45	71402317	1	10V	VALVE	VALVOLA
46	71402318	1	100M	SPRING	MOLLA
47	71402319	1	101A	CASING	ASTUCCIO
49	71402320	1	101A	CASING	ASTUCCIO
50	71402321	3	105P	PLATE	PIASTRA
51	71402322	12	40V	SCREW	VITE
52	71401854	12	176R	LOCKWASHER	ROSETTA ELASTICA
54	71402323	3	187A	SNAP RING	ANELLO ELASTICO
56	71402324	1	10V	VALVE	VALVOLA
57	71402325	1	100M	SPRING	MOLLA
58	71402326	1	187A	SNAP RING	ANELLO ELASTICO
59	71402327	2	10V	VALVE	VALVOLA
60	71402328	2	100M	SPRING	MOLLA
61	71402329	1	187A	SNAP RING	ANELLO ELASTICO
63	71402330	1	187A	SNAP RING	ANELLO ELASTICO
69	71402333	1	10V	VALVE	VALVOLA
70	71402334	1	100M	SPRING	MOLLA
71	71402335	1	50T	PLUG	TAPPO
72	71402336	1	69S	SEAT	SEDE
73	71402337	4	187A	SNAP RING	ANELLO ELASTICO
76	71402340	1	10V	VALVE	VALVOLA
77	71402341	1	100M	SPRING	MOLLA
78	71402342	1	10V	VALVE	VALVOLA
79	71402343	2	10V	VALVE	VALVOLA

MAIN PIPING TUBAZIONI PRINCIPALI	TUYAUTERIES PRINCIPALES HAUPTLEITUNGEN TUBERIAS PRINCIPALES	1.060 TAV.1 NTR 104S V-89

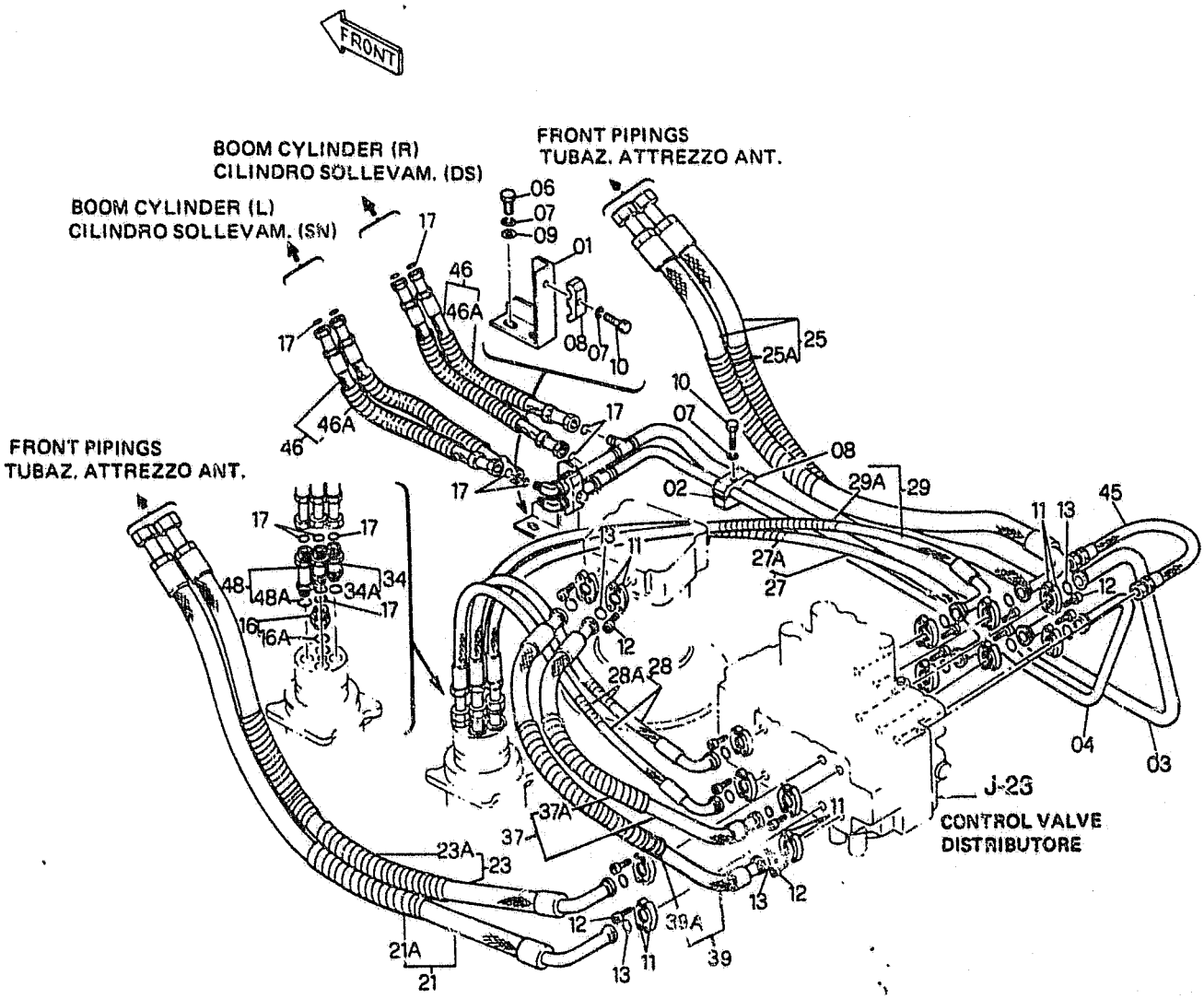

FH200 02

MAIN PIPING
TUBAZIONI PRINCIPALI

TUYAUTERIES PRINCIPALES
HAUPTLEITUNGEN
TUBERIAS PRINCIPALES

1.060 TAV.1

NTR 104S V-89

ITEM	PART NUMBER	QTY	TR. CO.	DESCRIPTION	DESCRIZIONE
01	71415860	1	225S	BRACKET	STAFFA
02	71415863	1	74B	BLOCK	BLOCCHETTO
03	71415867	1	193T	TUBE	TUBO RIGIDO
04	71415864	1	193T	TUBE	TUBO RIGIDO
06	11112234	2	40V	SCREW 12X1,75X25	VITE 12X1,75X25
07	10571974	4	131R	WASHER	ROSETTA
08	71415870	2	225S	BRACKET	STAFFA
09	4952483	2	131R	WASHER	ROSETTA
10	11113634	2	40V	SCREW 12X1,75X70	VITE 12X1,75X70
11	71404407	28	417S	HALF FLANGE	SEMIFLANGIA
12	14420234	56	40V	SCREW 10X1,5X30	VITE 10X1,5X30
13	70924110	14	158G	O-RING	GUARNIZIONE O-R
16	71404414	1	20R	FITTING -ASS.LY	RACCORDO -COMPL.
16A	71404162	1	158G	O-RING	GUARNIZIONE O-R
17	70923843	12	158G	O-RING	GUARNIZIONE O-R
21	71404121	1	285T	HOSE -ASS.LY	TUBO FLESSIBILE -COMPL.
21A	71420745	1	142G	SHEATH	GUAINA
23	71404122	1	285T	HOSE -ASS.LY	TUBO FLESSIBILE -COMPL.
23A	71416702	1	142G	SHEATH	GUAINA
25	71404123	2	285T	HOSE -ASS.LY	TUBO FLESSIBILE -COMPL.
25A	71420745	2	142G	SHEATH	GUAINA
27	71404124	1	285T	HOSE -ASS.LY	TUBO FLESSIBILE -COMPL.
27A	71420745	1	142G	SHEATH	GUAINA
28	71404125	2	285T	HOSE -ASS.LY	TUBO FLESSIBILE -COMPL.
28A	71415875	2	142G	SHEATH	GUAINA
29	71404126	1	285T	HOSE -ASS.LY	TUBO FLESSIBILE -COMPL.
29A	71420745	1	142G	SHEATH	GUAINA
34	71404412	2	20R	FITTING -ASS.LY	RACCORDO -COMPL.
34A	71404162	2	158G	O-RING	GUARNIZIONE O-R
37	71404127	1	285T	HOSE	TUBO FLESSIBILE
				D2574 FROM S/N 0141	D2574 DAL TELAIO 0141
	71404252	1	285T	HOSE -ASS.LY	TUBO FLESSIBILE -COMPL.
				C2574 UP TO S/N 0140	C2574 FINO AL TELAIO 0140
37A	71420745	1	142G	SHEATH	GUAINA
39	71404128	1	285T	HOSE	TUBO FLESSIBILE
				D2574 FROM S/N 0141	D2574 DAL TELAIO 0141 (01)
	71404254	1	285T	HOSE -ASS.LY	TUBO FLESSIBILE -COMPL.
				C2574 UP TO S/N 0140	C2574 FINO AL TELAIO 0140 (01)
39A	71420745	1	142G	SHEATH	GUAINA
45	71403968	1	285T	HOSE	TUBO FLESSIBILE
46	71404053	4	285T	HOSE	TUBO FLESSIBILE
				C2527 UP TO S/N 0050	C2527 FINO AL TELAIO 0050
	71404684	4	285T	HOSE	TUBO FLESSIBILE
				D2527 FROM S/N 0051	D2527 DAL TELAIO 0051
46A	71415875	4	142G	SHEATH	GUAINA
				D2527 FROM S/N 0051	D2527 DAL TELAIO 0051
48	71404427	1	20R	FITTING -ASS.LY	RACCORDO -COMPL.
48A	71404162	1	158G	O-RING	GUARNIZIONE O-R

MAIN PIPING
TUBAZIONI PRINCIPALI

TUYAUTERIES PRINCIPALES
HAUPTLEITUNGEN
TUBERIAS PRINCIPALES

1.061 TAV.1

NTR 104S V-89

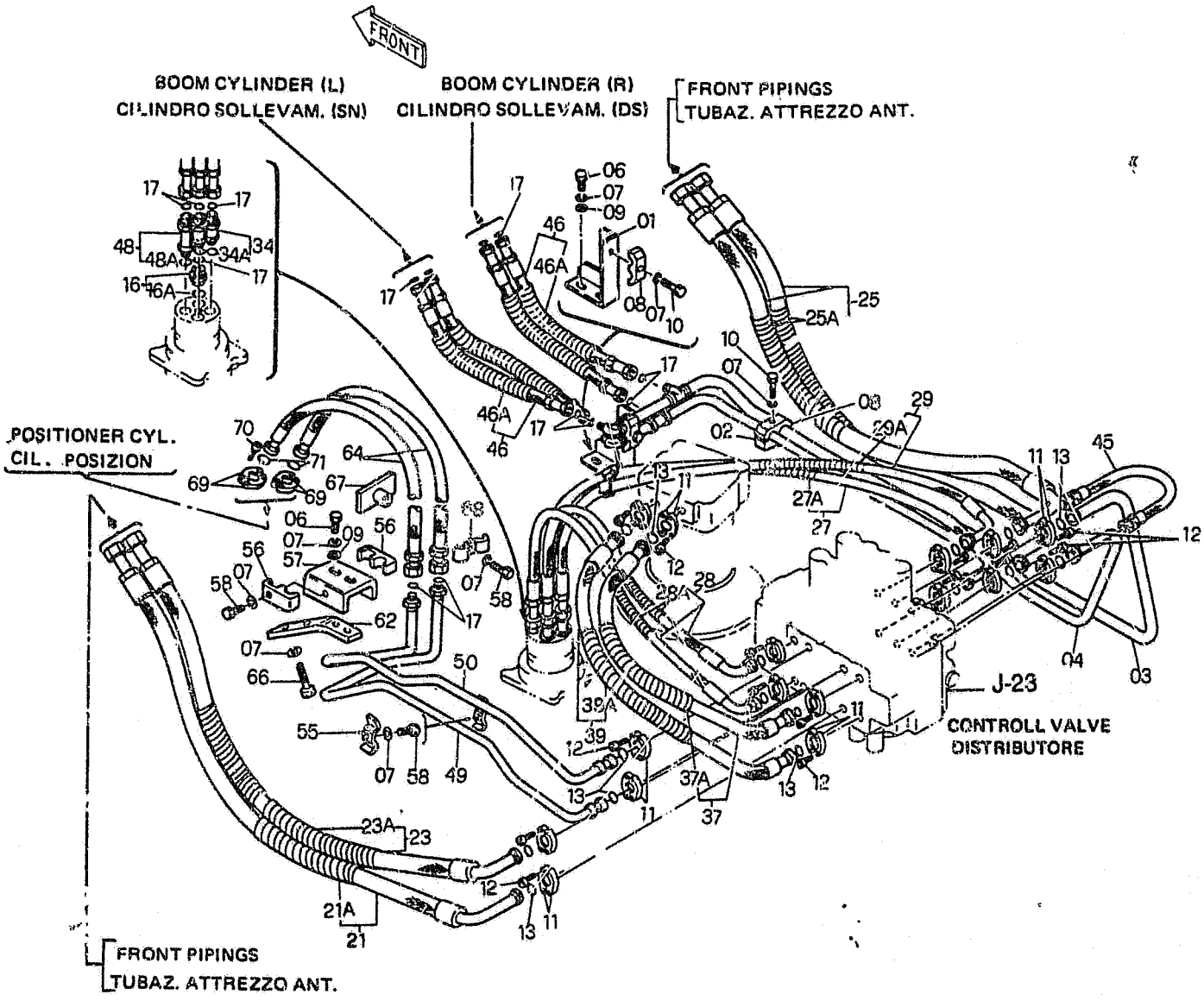

MAIN PIPING
TUBAZIONI PRINCIPALI

TUYAUTERIES PRINCIPALES
HAUPTLEITUNGEN
TUBERIAS PRINCIPALES

1.061 TAV.1

NTR 104S V-89

ITEM	PART NUMBER	QTY	TR. CO.	DESCRIPTION		DESCRIZIONE	
01	71415860	1	225S	BRACKET		STAFFA	
02	71415863	1	74B	BLOCK		BLOCCHETTO	
03	71415867	1	193T	TUBE		TUBO RIGIDO	
04	71415864	1	193T	TUBE		TUBO RIGIDO	
06	11112234	4	40V	SCREW 12X1,75X25		VITE 12X1,75X25	
07	10517074	12	131R	WASHER		ROSETTA	
08	71415870	2	225S	BRACKET		STAFFA	
09	4952483	4	131R	WASHER		ROSETTA	
10	11113634	2	40V	SCREW 12X1,75X70		VITE 12X1,75X70	
11	71404407	32	417S	HALF FLANGE		SEMIFLANGIA	
12	14420234	64	40V	SCREW 10X1,5X30		VITE 10X1,5X30	
13	70924110	16	158G	O-RING		GUARNIZIONE O-R	
16	71404414	1	20R	FITTING -ASS.LY		RACCORDO -COMPL.	
16A	71404162	1	158G	O-RING		GUARNIZIONE O-R	
17	70923843	14	158G	O-RING		GUARNIZIONE O-R	
21	71404121	1	285T	HOSE -ASS.LY		TUBO FLESSIBILE -COMPL.	
21A	71420745	1	142G	SHEATH		GUAINA	
23	71404122	1	285T	HOSE -ASS.LY		TUBO FLESSIBILE -COMPL.	
23A	71416702	1	142G	SHEATH		GUAINA	
25	71404123	2	285T	HOSE -ASS.LY		TUBO FLESSIBILE -COMPL.	
25A	71420745	2	142G	SHEATH		GUAINA	
27	71404124	1	285T	HOSE -ASS.LY		TUBO FLESSIBILE -COMPL.	
27A	71420745	1	142G	SHEATH		GUAINA	
28	71404125	2	285T	HOSE -ASS.LY		TUBO FLESSIBILE -COMPL.	
28A	71415875	2	142G	SHEATH		GUAINA	
29	71404126	1	285T	HOSE -ASS.LY		TUBO FLESSIBILE -COMPL.	
29A	71420745	1	142G	SHEATH		GUAINA	
34	71404412	2	20R	FITTING -ASS.LY		RACCORDO -COMPL.	
34A	71404162	2	158G	O-RING		GUARNIZIONE O-R	
37	71404127	1	285T	HOSE		TUBO FLESSIBILE	
				D2583 FROM S/N	0077	D2583 DAL TELAIO	0077
	71404252	1	285T	HOSE -ASS.LY		TUBO FLESSIBILE -COMPL.	
				C2583 UP TO S/N	0076	C2583 FINO AL TELAIO	0076
37A	71420745	1	142G	SHEATH		GUAINA	
39	71404128	1	285T	HOSE		TUBO FLESSIBILE	
				D2583 FROM S/N	0077	D2583 DAL TELAIO	0077
	71404254	1	285T	HOSE -ASS.LY		TUBO FLESSIBILE -COMPL.	
				C2583 UP TO S/N	0076	C2583 FINO AL TELAIO	0076
39A	71420745	1	142G	SHEATH		GUAINA	
45	71403968	1	285T	HOSE		TUBO FLESSIBILE	
46	71404053	4	285T	HOSE		TUBO FLESSIBILE	
				C2527 UP TO S/N	0050	C2527 FINO AL TELAIO	0050
	71404664	4	285T	HOSE		TUBO FLESSIBILE	
				D2527 FROM S/N	0051	D2527 DAL TELAIO	0051
46A	71415875	4	142G	SHEATH		GUAINA	
				D2527 FROM S/N	0051	D2527 DAL TELAIO	0051
48	71404427	1	20R	FITTING -ASS.LY		RACCORDO -COMPL.	
48A	71404162	1	158G	O-RING		GUARNIZIONE O-R	
49	71416849	1	193T	TUBE		TUBO RIGIDO	
50	71416851	1	193T	TUBE		TUBO RIGIDO	

MAIN PIPING TUBAZIONI PRINCIPALI	TUYAUTERIES PRINCIPALES HAUPTLEITUNGEN TUBERIAS PRINCIPALES	1.061 TAV.1 NTR 104S V-89

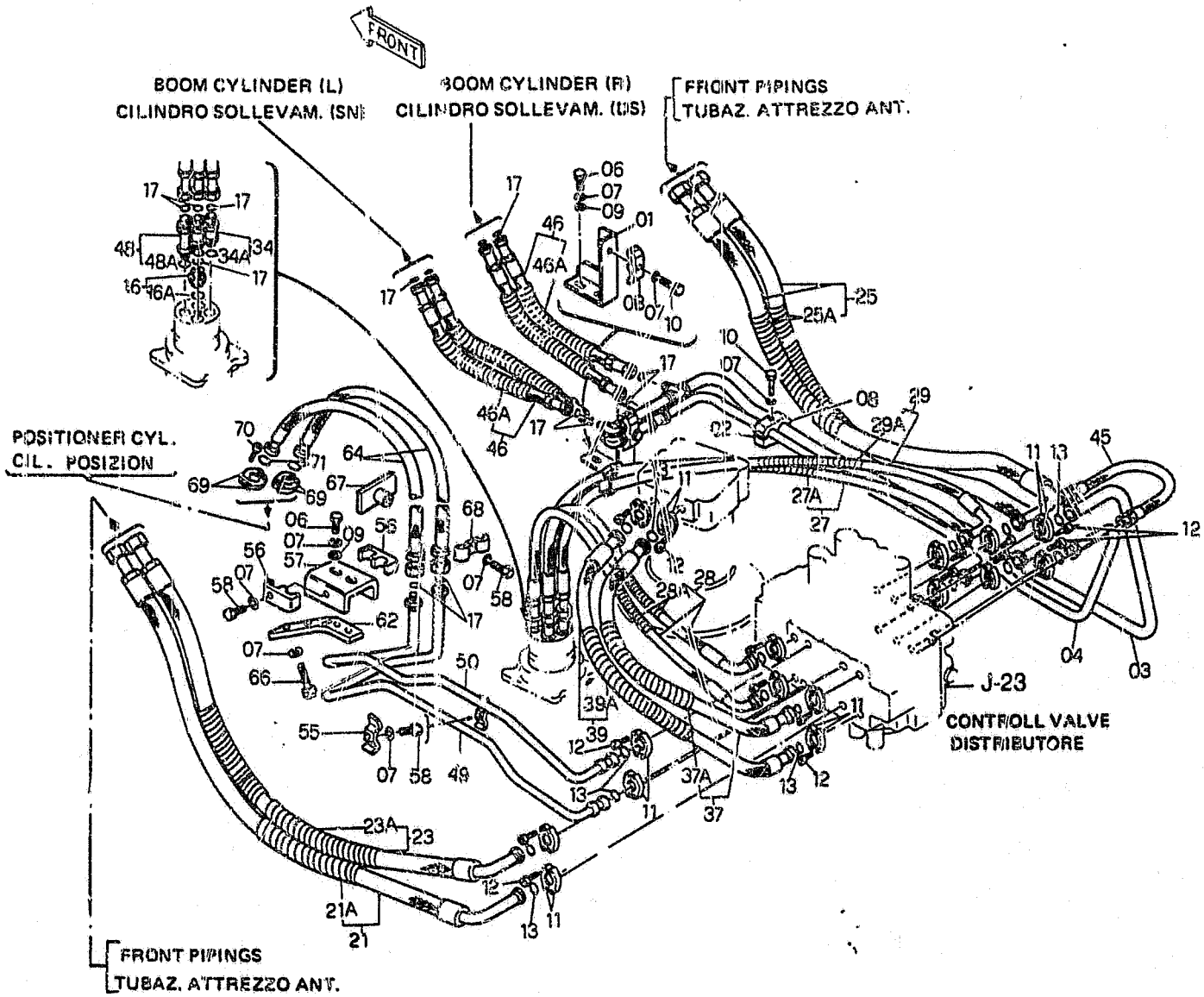

FH200 03

MAIN PIPING
TUBAZIONI PRINCIPALI

TUYAUTERIES PRINCIPALES
HAUPTLEITUNGEN
TUBERIAS PRINCIPALES

1.061 TAV.1

NTR 104S V-89

ITEM	PART NUMBER	QTY	TR. CO.	DESCRIPTION	DESCRIZIONE
55	71416089	1	231S	CLIP	STAFFETTA
56	71416090	2	231S	CLIP	STAFFETTA
57	71416266	1	300S	SUPPORT	SUPPORTO
58	11113334	4	40V	SCREW 12X1,75X55	VITE 12X1,75X55
62	71416268	1	231S	CLIP	STAFFETTA
64	71404283	2	285T	HOSE	TUBO FLESSIBILE
66	11112434	2	40V	SCREW 12X1,75X30	VITE 12X1,75X30
67	71415872	1	231S	CLIP	STAFFETTA
68	71415871	1	231S	CLIP	STAFFETTA
69	71404313	4	417S	HALF FLANGE	SEMIFLANGIA
70	14422334	8	40V	SCREW 12X1,75X45	VITE 12X1,75X45
71	70924200	2	158G	O-RING	GUARNIZIONE O-R

CONTROLS COMANDI	COMMANDES GERAETEBETAETIGUNG MANDOS	1.070 TAV.1 NTR 104S V-89

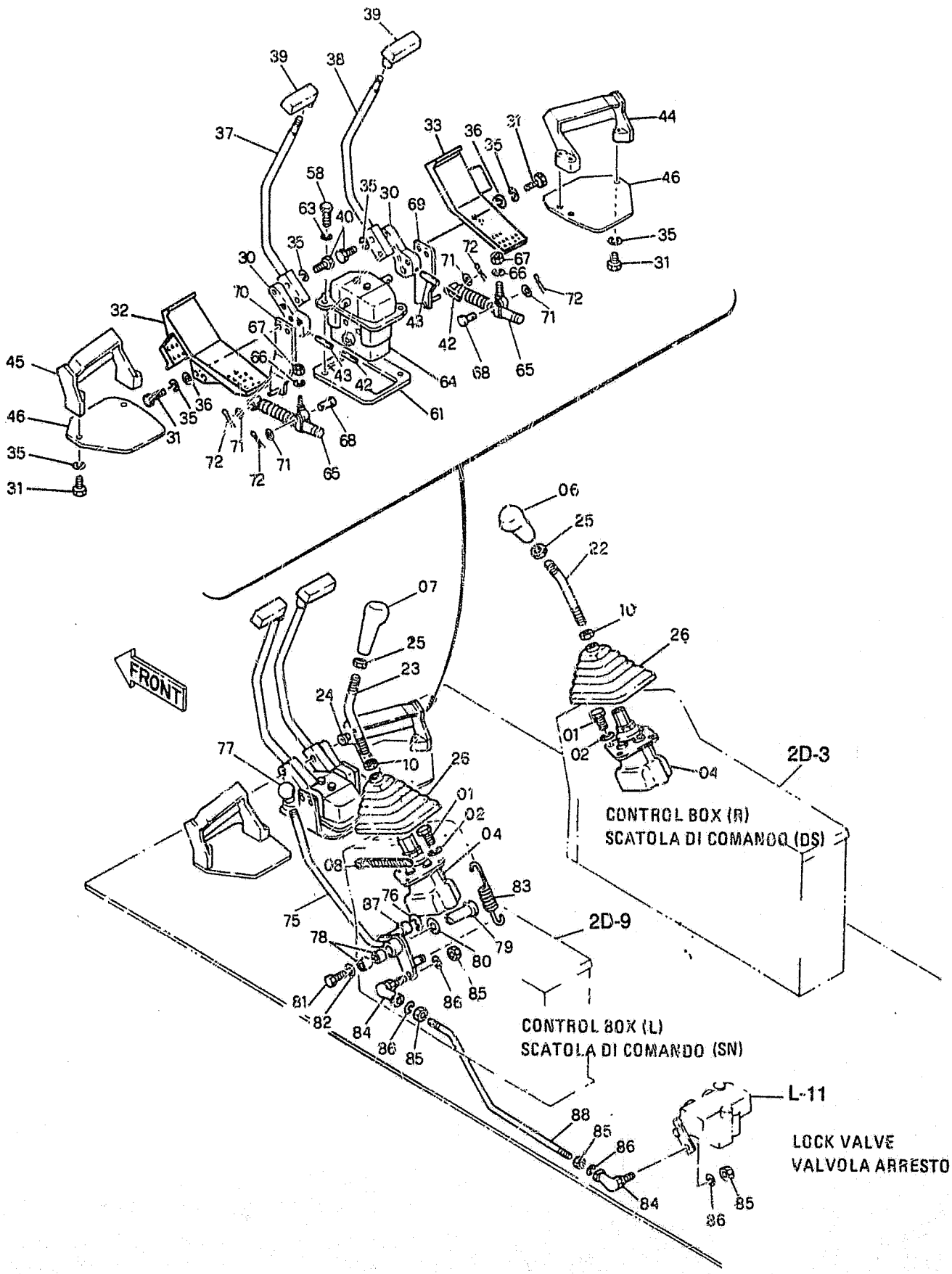

CONTROLS
COMANDI

COMMANDES
GERAETEBETAETIGUNG
MANDOS

1.070 TAV.1

NTR 104S V-89

ITEM	PART NUMBER	QTY	TR. CO.	DESCRIPTION	DESCRIZIONE
01	10902234	8	40V	SCREW 6X1X16	VITE 6X1X16
02	10571574	8	131R	WASHER	ROSETTA
04	71401561	2	144M	PILOT VALVE -ASS.Y SEE. K-17	MANIPOLATORE -COMP.VED.TAV. 2
06	71415005	1	25I	HANDGRIP	IMPUGNATURA
07	71415006	1	25I	HANDGRIP	IMPUGNATURA
08	79013422	1	31F	CLAMP	FASCETTA
10	12163221	1	10D	NUT	DADO
22	71415007	1	45L	LEVER	LEVA
23	71415011	1	45L	LEVER	LEVA
24	10399480	1	45A	RING	ANELLO
25	71415014	2	10D	NUT	DADO
26	71415015	2	166S	BELLOW	SOFFIETTO
30	71415016	2	225S	BRACKET	STAFFA
31	11106434	10	40V	SCREW 10X1,5X30	VITE 10X1,5X30
32	71415017	1	60P	PEDAL	PEDALE
33	71415018	1	60P	PEDAL	PEDALE
35	10516874	14	170R	LOCKWASHER	ROSETTA ELASTICA
36	14496631	4	131R	WASHER	ROSETTA
37	73158494	1	45L	LEVER	LEVA
38	73158495	1	45L	LEVER	LEVA
39	71415025	2	25I	HANDGRIP	IMPUGNATURA
40	11106834	4	40V	SCREW 10X1,5X40	VITE 10X1,5X40
42	14601470	2	202S	SPRING PIN	SPINA ELASTICA
43	14607070	2	202S	SPRING PIN	SPINA ELASTICA
44	71415026	1	78A	FOOTREST	APPOGGIAPIEDE
45	71415027	1	78A	FOOTREST	APPOGGIAPIEDE
46	71415028	2	105P	PLATE	PIASTRA
53	11106634	2	40V	SCREW M10X1,5X35	VITE M10X1,5X35
61	71415098	1	105P	PLATE	PIASTRA
63	10516874	2	170R	LOCKWASHER	ROSETTA ELASTICA
64	71401620	1	10V	VALVE -ASS.Y SEE. K-19	VALVOLA -COMP.VED.TAV. 3
65	71401631	2	36A	SHOCK ABSORBER	AMMORTIZZATORE
66	10571774	2	170R	LOCKWASHER	ROSETTA ELASTICA
67	16100821	2	10D	NUT	DADO
68	71415903	2	80P	PIN	PERNO
69	71415904	1	225S	BRACKET	STAFFA
70	71415901	1	225S	BRACKET	STAFFA
71	14496531	4	131R	WASHER	ROSETTA
72	71415905	4	270C	COTTER PIN	COPIGLIA
75	71415034	1	45L	LEVER	LEVA
76	11087874	1	187A	SNAP RING	ANELLO ELASTICO
77	71415040	1	150P	KNOB	POMELLO
78	71415033	2	95B	BUSHING	BOCCOLA
79	71415041	1	80P	PIN	PERNO
80	14496931	1	131R	WASHER	ROSETTA
81	10979334	1	40V	SCREW 10X1,5X14	VITE 10X1,5X14
82	14496631	1	131R	WASHER	ROSETTA
83	71415042	1	100M	SPRING	MOLLA
84	71415043	2	165S	ARTICULATION	SNODO SFERICO
85	16100821	4	10D	NUT	DADO
86	10571774	4	131R	WASHER	ROSETTA
87	71415044	1	95B	BUSHING	BOCCOLA
88	71415045	1	90A	ROD	ASTA

PILOT VALVE-COMPONENTS
MANIPOLATORE-COMPONENTI
71401561

MANIPULATEUR-COMPOSANTS
STEUERHEBEL-EINZELTEILE
MANIPULADOR-COMPONENTES

1.070 TAV.2

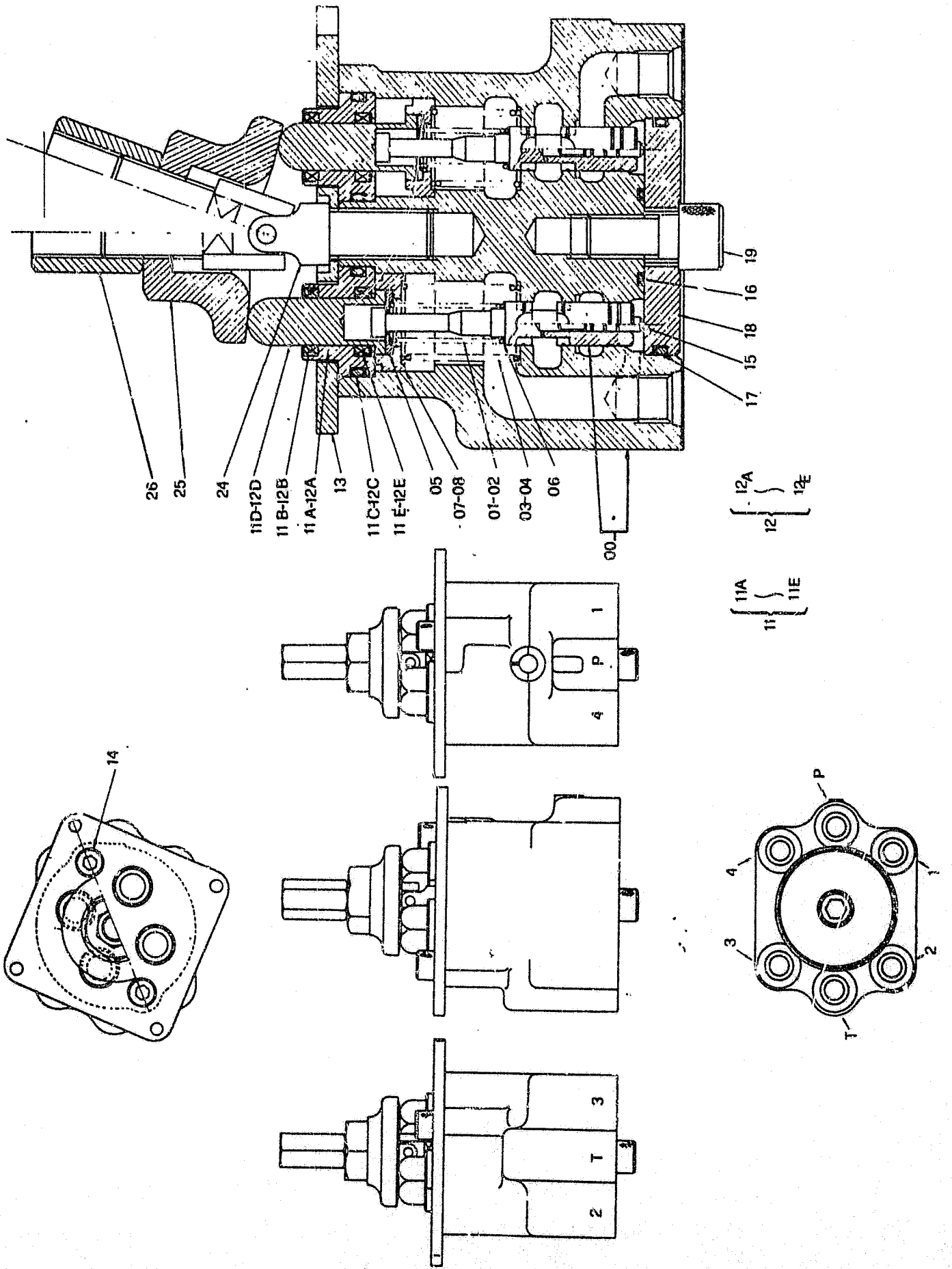

PILOT VALVE-COMPONENTS
MANIPOLATORE-COMPONENTI
71401561

MANIPULATEUR-COMPOSANTS
STEUERHEBEL-EINZELTEILE
MANIPULADOR-COMPONENTES

1.070 TAV.2

ITEM	PART NUMBER	QTY	TR. CO.	DESCRIPTION	DESCRIZIONE
00	71401562	1	300C	BODY	CORPO
01	71401565	2	100M	SPRING	MOLLA
02	71401566	2	100M	SPRING	MOLLA
03	71401567	2	100M	SPRING	MOLLA
04	71401568	2	100M	SPRING	MOLLA
05	71401569	4	75D	SPACER	DISTANZIALE
06	71401570	20	198S	SHIM	SPESSORE
07	71401571	2	145G	GUIDE -PORT 1-3	GUIDA -SEDE 1-3
08	71401572	2	145G	GUIDE -PORT 2-4	GUIDA -SEDE 2-4
11	71401573	2	130P	PLUNGER -PORT 1-3 ASSEMBLY	PISTONCINO -SEDE 1-3 COMPLESSIVO
11A	71401574	1	95B	BUSHING	BOCCOLA
11B	71401575	1	122G	SEAL	GUARNIZIONE
11C	71401576	1	55A	SEAL RING	ANELLO TENUTA
11D	71401577	1	130P	PLUNGER	PISTONCINO
11E	71401578	1	122G	SEAL	GUARNIZIONE
12	71401579	2	130P	PLUNGER -PORT 2-4 ASSEMBLY	PISTONCINO -SEDE 2-4 COMPLESSIVO
12A	71401574	1	95B	BUSHING	BOCCOLA
12B	71401575	1	122G	SEAL	GUARNIZIONE
12C	71401576	1	55A	SEAL RING	ANELLO TENUTA
12D	71401580	1	130P	PLUNGER	PISTONCINO
12E	71401578	1	122G	SEAL	GUARNIZIONE
13	71401581	1	105P	PLATE	PIASTRA
14	14420124	2	40V	SCREW 10X1,5X25	VITE 10X1,5X25
15	71401582	4	132P	PISTON	PISTONE
16	71401583	1	158G	O-RING	GUARNIZIONE O-R
17	71401584	1	158G	O-RING	GUARNIZIONE O-R
18	71401585	1	105P	PLATE	PIASTRA
19	14311024	1	40V	SCREW 12X1,75X25	VITE 12X1,75X25
24	71401586	1	65G	UNIVERSAL JOINT	GIUNTO CARDANICO
25	71401587	1	10E	CAM	ECCENTRICO
26	71401588	1	10D	NUT	DADO

FH200

PILOT VALVE VALVOLA PILOTA 71401620	VALVE PILOTE VORSTEUERVENTIL VALVULA PILOTO	1.070 TAV.3

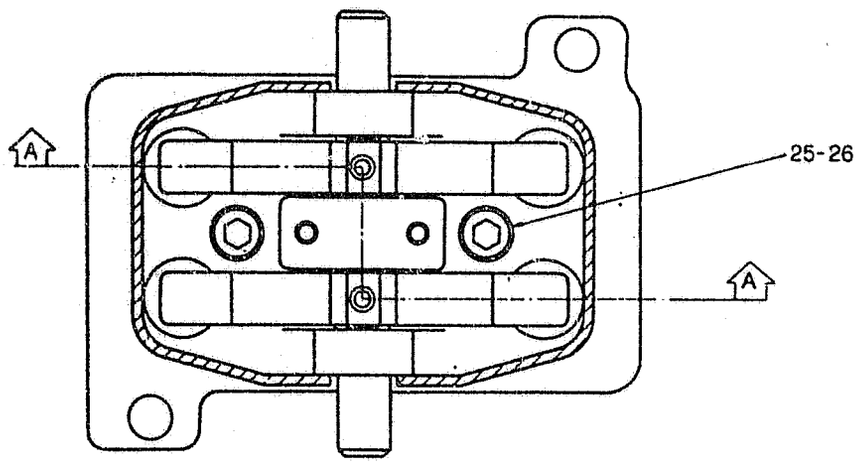

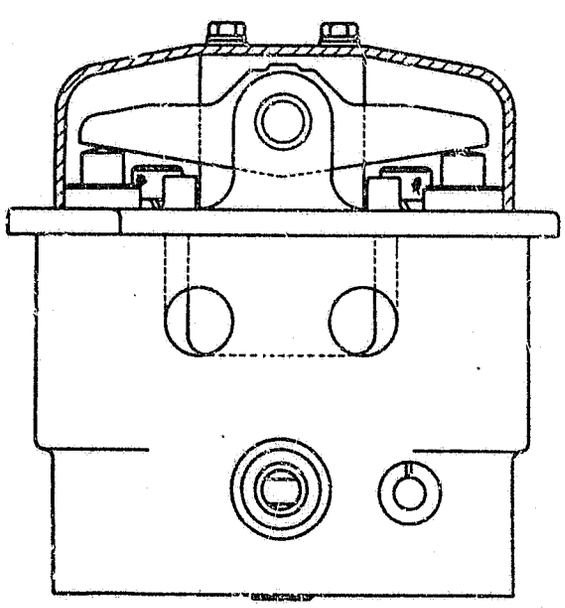

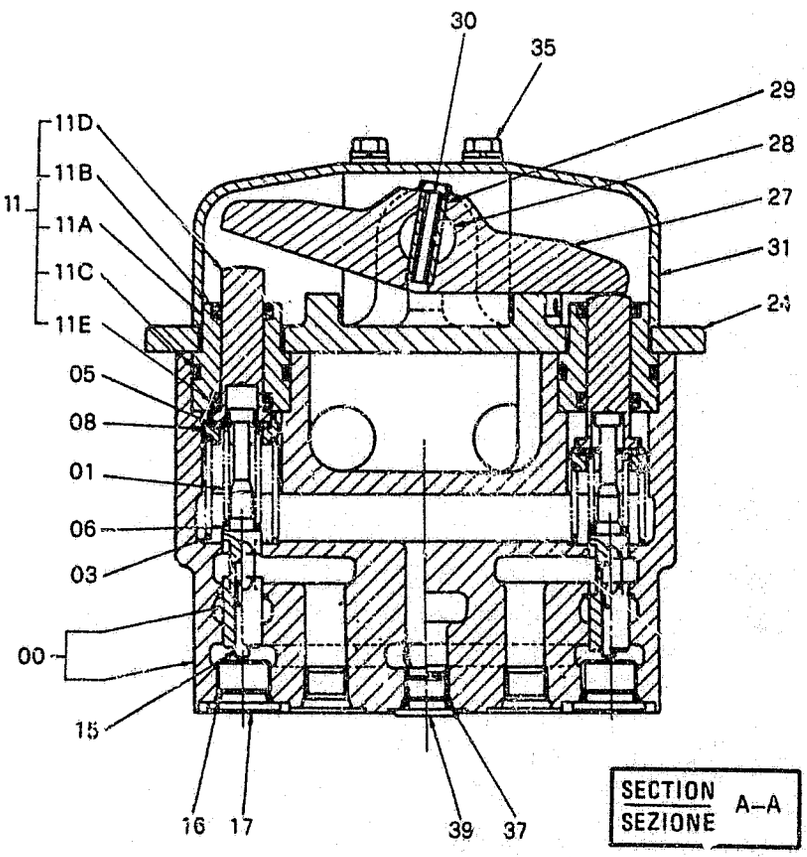

FH200

PILOT VALVE
VALVOLA PILOTA
71401620

VALVE PILOTE
VORSTEUERVENTIL
VALVULA PILOTO

1.070 TAV.3

ITEM	PART NUMBER	QTY	TR. CO.	DESCRIPTION	DESCRIZIONE
00	71401955	1	300C	BODY	CORPO
01	71401956	4	100M	SPRING	MOLLA
03	71401957	4	100M	SPRING	MOLLA
05	71401958	4	75D	SPACER	DISTANZIALE
06	71401959	20	198S	SHIM	SPESSORE
08	71401960	4	145G	GUIDE	GUIDA
11	71401961	4	130P	PLUNGER -ASS.LY	PISTONCINO -COMPL.
11A	71401962	1	95B	BUSHING	BOCCOLA
11B	71401575	1	122G	SEAL	GUARNIZIONE
11C	71401576	1	158G	O-RING	GUARNIZIONE O-R
11D	71401965	1	235S	PISTON	STANTUFFO
11E	71401578	1	122G	SEAL	GUARNIZIONE
15	71401967	4	130P	PLUNGER	PISTONCINO
16	71401968	4	158G	O-RING	GUARNIZIONE O-R
17	71401969	4	50T	PLUG	TAPPO
24	71401970	1	60D	DISC	DISCO
25	71401971	2	40V	SCREW	VITE
26	71401972	2	170R	LOCKWASHER	ROSETTA ELASTICA
27	71401973	2	55B	ROCKER	BILANCIERE
28	71401974	2	80P	PIN	PERNO
29	71401975	2	202S	SPRING PIN	SPINA ELASTICA
30	71401980	2	202S	SPRING PIN	SPINA ELASTICA
31	71401976	1	265C	COVER	COPERCHIO
35	71401977	2	40V	SCREW	VITE
37	71401979	2	158G	O-RING	GUARNIZIONE O-R
39	71401978	2	50T	PLUG	TAPPO

CONTROLS COMANDI	COMMANDES GERAETEBETAETIGUNG MANDOS	1.071 TAV.1

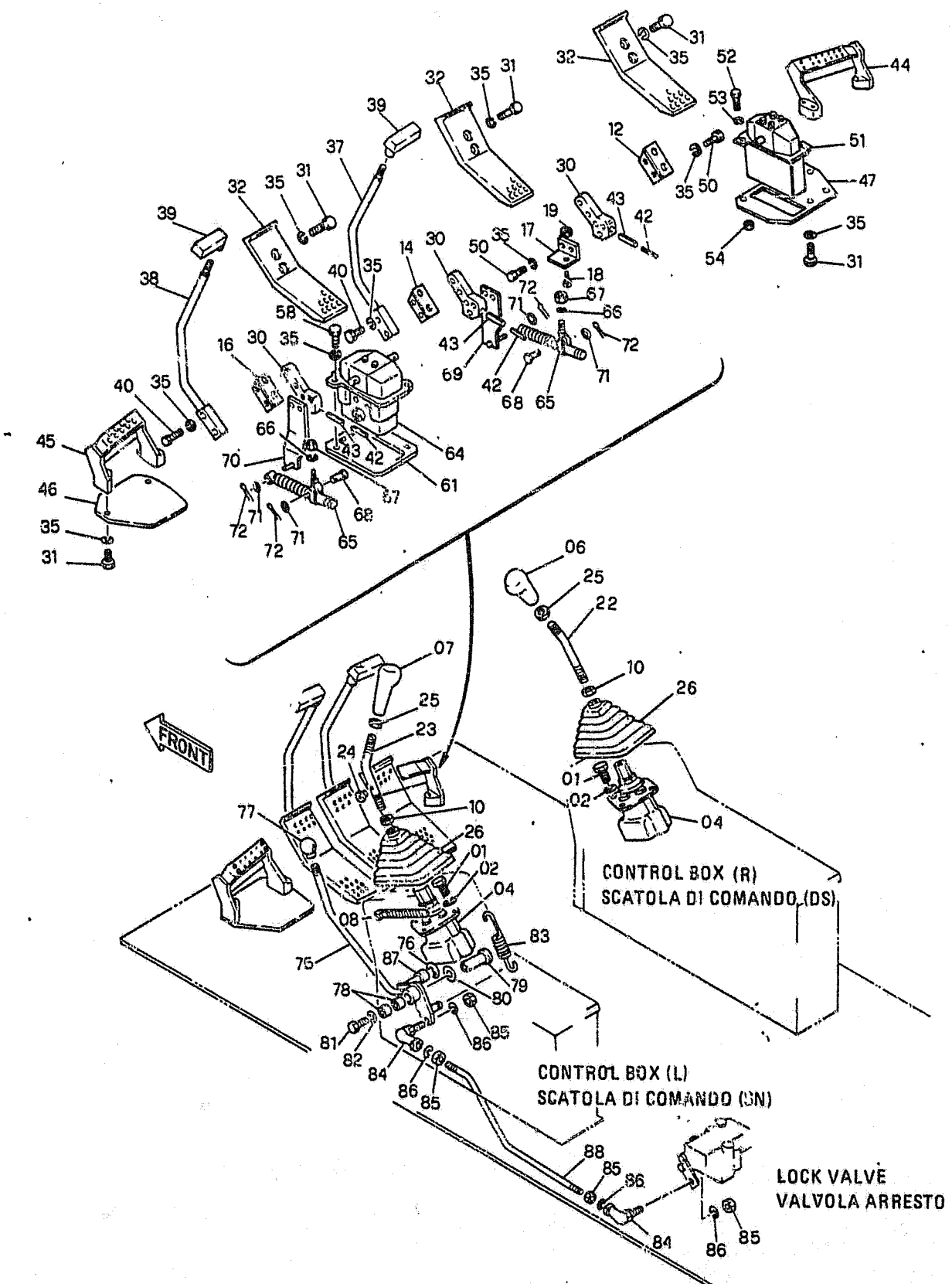

FH200 03

CONTROLS COMANDI	COMMANDES GERAETEBETAETIGUNG MANDOS	1.071 TAV.1

ITEM	PART NUMBER	QTY	TR. CO.	DESCRIPTION	DESCRIZIONE
01	10902234	8	40V	SCREW 6X1X16	VITE 6X1X16
02	10571574	8	131R	WASHER	ROSETTA
04	71401561	2	144M	PILOT VALVE -ASS.LY SEE K-15	MANIPOLATORE -COMPL. VED. SGR. 1.070
06	71415005	1	25I	HANDGRIP	IMPUGNATURA
07	71415006	1	25I	HANDGRIP	IMPUGNATURA
08	79013422	1	31F	CLAMP	FASCETTA
10	12163221	1	10D	NUT	DADO
12	71416291	1	225S	BRACKET	STAFFA
14	71416293	1	225S	BRACKET	STAFFA
16	71416295	1	225S	BRACKET	STAFFA
17	71416297	1	225S	BRACKET	STAFFA
18	15213334	1	40V	SCREW 8X1,25X35	VITE 8X1,25X35
19	16100821	1	10D	NUT	DADO
22	71415007	1	45L	LEVER	LEVA
23	71415011	1	45L	LEVER	LEVA
24	10399480	1	45A	RING	ANELLO
25	71415014	2	10D	NUT	DADO
26	71415015	2	166S	BELLOW	SOFFIETTO
30	71416289	3	225S	BRACKET	STAFFA
31	11106434	12	40V	SCREW 10X1,5X30	VITE 10X1,5X30
32	71416283	3	60P	PEDAL	PEDALE
35	10516874	20	170R	LOCKWASHER	ROSETTA ELASTICA
37	73158497	1	45L	LEVER -RIGHT	LEVA -DEST.
38	73158496	1	45L	LEVER -LEFT	LEVA -SIN.
39	71415025	2	25I	HANDGRIP	IMPUGNATURA
40	11107034	4	40V	SCREW 10X1,5X45	VITE 10X1,5X45
42	14601470	2	202S	SPRING PIN	SPINA ELASTICA
43	14607070	2	202S	SPRING PIN	SPINA ELASTICA
44	71416284	1	78A	FOOTREST	APPOGGIAPIEDE
45	71415027	1	78A	FOOTREST	APPOGGIAPIEDE
46	71415028	2	105P	PLATE	PIASTRA
47	71416290	1	105P	PLATE	PIASTRA
50	11106234	4	40V	SCREW 10X1,5X25	VITE 10X1,5X25
51	71401658	1	10V	VALVE -ASS.Y SEE L-3	VALVOLA -COMPL.VED.TAV. 2
52	11106634	3	40V	SCREW M10X1,5X35 2	VITE M10X1,5X35 2
53	10516874	3	170R	LOCKWASHER	ROSETTA ELASTICA
54	11701721	1	10D	NUT	DADO
58	11106634	2	40V	SCREW M10X1,5X35	VITE M10X1,5X35
61	71415898	1	105P	PLATE	PIASTRA
63	10571874	2	170R	LOCKWASHER	ROSETTA ELASTICA
64	71401620	1	10V	VALVE -ASS.Y SEE K-13	VALVOLA -COMPL.VED.SGR. 1.070
65	71401631	2	36A	SHOCK ABSORBER	AMMORTIZZATORE
66	10571774	2	170R	LOCKWASHER	ROSETTA ELASTICA
67	16100821	2	10D	NUT	DADO
68	71415903	2	80P	PIN	PERNO
69	71415904	1	225S	BRACKET	STAFFA
70	71415901	1	225S	BRACKET	STAFFA
71	14496531	4	131R	WASHER	ROSETTA
72	71415906	4	270C	COTTER PIN	COPIGLIA
75	71415034	1	45L	LEVER	LEVA
76	11087974	1	187A	SNAP RING	ANELLO ELASTICO
77	71415040	1	150P	KNOB	POMELLO
78	71415033	2	95B	BUSHING	BOCCOLA

CONTROLS COMANDI	COMMANDES GERAETEBETAETIGUNG MANDOS	1.071 TAV.1

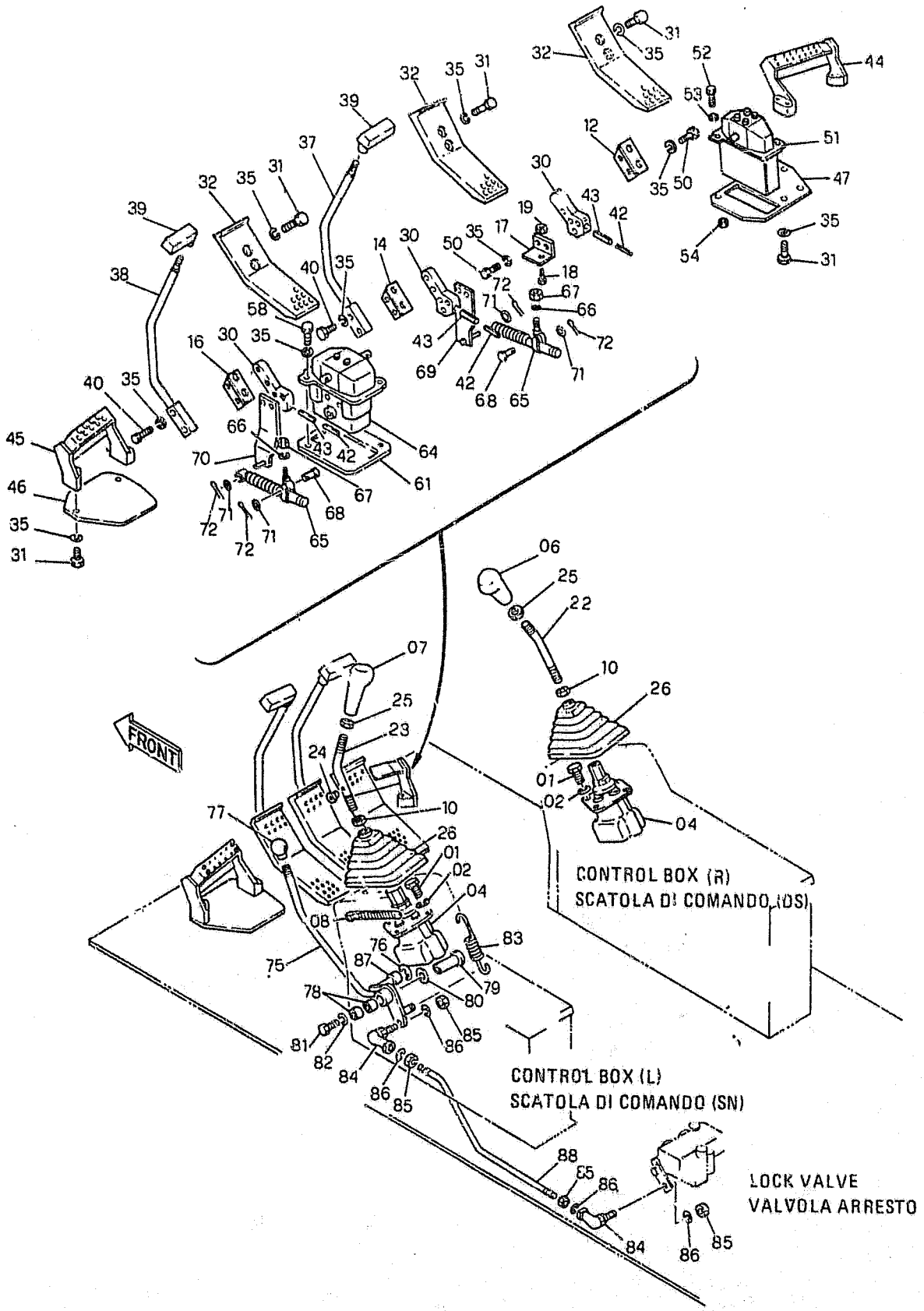

CONTROLS
COMANDI

COMMANDES
GERAETEBETAETIGUNG
MANDOS

1.071 TAV.1

ITEM	PART NUMBER	QTY	TR. CO.	DESCRIPTION	DESCRIZIONE
79	71415041	1	80P	PIN	PERNO
80	14496931	1	131R	WASHER	ROSETTA
81	10979334	1	40V	SCREW 10X1,5X14	VITE 10X1,5X14
82	14496631	1	131R	WASHER	ROSETTA
83	71415042	1	100M	SPRING	MOLLA
84	71415043	2	165S	ARTICULATION	SNODO SFERICO
85	16100821	4	10D	NUT	DADO
86	10571774	4	131R	WASHER	ROSETTA
87	71415044	1	95B	BUSHING	BOCCOLA
88	71415045	1	90A	ROD	ASTA

L-1

ALPHABETICAL INDEX

DESCRIPTION	SGR.	TAV.	GRID
Accelerator controls	0.004	1	1D-21
Air Cleaner	0.001	1	1D-5
Alternator-Mounting	0.400	1	1I-11
Anti-Shock Valve (Hydr.)	1.082	3	1L-15
Application of Oi. Hammer	5.0020	2	2J-7
Batteries	1.220	2	2D-13
Belts	0.340	1	1H-23
	0.345	1	1I-3
Boom Piping	2.030	1	2F-17, 2G-3
	2.031	1	2G-5
	2.031	2	2G-7
Brake Valve Components	3.010	3	2H-3
Bucket	2.020	1	2F-13
Bucket Cylinder	2.030	5	2G-3
Bull Gear	3.000	1	2G-17
Cab	1.250	1	2D-19
Cab Door	1.250	5	2E-7
Cab Heater-Components	1.290	2	2E-15
Cab Window-Left Side	1.250	6	2E-9
Cab-Frame	1.250	7	2E-11
Cab-Platform	1.250	1	2D-19
Cab Vandalism	5.0540	1	2K-3
Camshaft	0.120	1	1F-11
Cold Starting Aid	5.0025	1	2J-11
Connecting Rod	0.081	1	1E-23
Cont. Valve-Hydr. (Ass.Y)	1.050	1	1J-21
Control Valve-Hydr.	1.050	2	2K-3
	1.050	3	2K-5
	1.050	4	2K-7
Controls	1.070	1	1J-20
	1.071	1	1K-21, 1L-3
Counterweight	1.000	1	1J-3
Cowlings	1.300	1	2E-19
	1.300	2	2E-21
	1.300	3	2E-23
Crankshaft	0.080	1	1E-21
Crankshaft Pulley	0.084	1	1F-7
Cylinder Block	0.040	1	1D-21
	0.040	2	1D-23
	0.040	3	1E-3
Cylinder Block Covers	0.043	1	1E-7
	0.043	2	1E-9
Cylinder Head	0.060	1	1E-13
	0.060	2	1E-15
Dashboard (Left)	1.210	1	2D-9
Dashboard (Right)	1.200	1	2D-3
	1.200	3	2D-7
Data Monitor	1.200	2	2D-5
Decals	4.500	1	2I-3
	4.501	1	2I-5
Dipper Stick (2,1m)	5.0022	1	2J-9
Dipper Stick (2,5m) (STD.)	2.003	1	2F-11
Dipper Stick (3m)	5.0038	1	2J-13
Dipper Stick Cylinder	2.030	4	2F-23
	2.031	4	2G-5
Dipstick-Engine Oil	0.270	1	1H-8
Discharge Valve Componen.	3.010	4	2H-5
Drive on Engine (Opt.)	0.350	1	1I-5
Electric System	1.220	1	2D-11
	1.220	2	2D-13
Elements-fuel	0.200	1	1G-17
Elements-Hydraulic	1.020	1	1J-7
Elements-Pilot	1.080	1	1L-5
Emergency Kits(Lub. Fittings)	4.000	1	2H-23
Engine	0.021	1	1D-19
Engine-Controls	0.004	1	1D-15
Engine-Suspensions	0.000	1	1D-3
Engine Breather	0.045	1	1E-11
Engine Cooling Piping	0.323	1	1H-19
Engine Heat Exchanger	0.310	1	1H-15
Engine Lifting Eyes	0.450	1	1I-15
Engine Oil Filter	0.302	1	1H-11
Engine Oil Piping	0.305	1	1H-13
Engine Oil Pump	0.300	1	1H-9
Engine Oil Sump	0.042	1	1E-5
Engine Piston	0.082	1	1F-3
Engine Suspensions	0.000	1	1D-3
Exhaust Manifold	0.077	1	1E-19
Exhaust Valve	0.060	2	1E-15
Fan	0.345	1	1I-3
Fan Drive	0.345	1	1I-3
"Filter Care" Kit	24		1A-24
Filter-Pilot System	1.080	1	1L-5
Filters-Air	0.001	1	1D-5
Filters-Engine Oil	0.302	1	1D-11
Filters-Fuel	0.200	1	1G-17
Filters-Hydr. System	1.020	1	1J-7
Flywheel-Engine	0.083	1	1L-17
Fuel Filter	0..200	1	1G-17
Fuel Piping	0.203	1	1G-19
Fuel Pump	0.203	2	1G-21
	0.140	8	1G-5
Fuel Tank	1.010	1	1J-5
Fuses	1.200	3	2D-7
Guards	1.300	2	2E-21
Handle	1.300	3	2E-23
	1.300	4	2F-3
Heater	1.290	1	2E-15
Horn	1.220	2	2D-15
Hydr.Pump-Components	1.030	2	1J-13
Hydr.Pump Regulator-Comp.	1.030	3	1J-15

ALPHABETICAL INDEX

DESCRIPTION	SGR.	TAV.	GRID
Hydraulic Pump	1.030	1	1J-9
Idler	3.020	1	1H-7
Injection Nozzle-Lines	0.149	1	1G-15
Injection Pump	0.140	6	1F-23
	0.140	7	1G-3
Injection Pump Drive	0.140	10	1G-9
Injection Pump-Piping	0.140	1	1F-13
	0.140	9	1G-7
Intake Manifold	0.071	1	1E-17
Intake Valve	0.060	2	1E-15
Lift Cylinder (Left)	2.030	3	1F-21
Lift Cylinder (Right)	2.030	2	2F-19
Lights	1.220	2	2D-13
Lower Frame	3.000	1	2G-17
Lubric. Fitting Piping	3.001	1	2G-19
	2.041	1	2G-15
	2.040	1	1G-13
Main Piping	1.060	1	1K-9
	1.061	1	1K-11
Mirror (Rear)	1.300	2	2E-21
Monobloc Boom	2.000	1	2F-5
Motor - Starter	0.360	2	1I-9
Motor - Swing	1.040	1	1J-17
Motor - Travel	3.010	1	2G-21
Motor - Wiper	1.220	1	2D-11
Muffler	0.002	1	1D-7
Oil Tank	1.020	1	1J-7
Operator's Seat	1.250	2	2D-21
OperatorsSeat(Bostrom)(Std.)	5.0151	1	2J-21
Pilot Piping(1)	1.080	1	1L-5
Pilot Piping(2)	1.081	1	1L-9
Pilot Piping(3)	1.082	1	1L-11
Pilot Piping(4)	1.083	1	1L-17
Pilot Piping(5)	1.084	1	1L-19
Pilot Piping(6)	1.085	1	1L-21
Pilot Valve	1.070	3	1K-19
	1.071	2	1L-3
Pilot Valve-components	1.070	2	1K-17
PipingBoom	2.030	1	2F-17
	2.031	1	2G-5
Piping-Injection	0.149	1	1G-15
Piping-Lube Fittings	2.040	1	2G-13
Piping-Main	1.060	1	1K-9
Piping-Pilot(1)	1.080	1	1L-5
Piping-Pilot(3)	1.082	1	1L-11
Piping-Pilot(4)	1.083	1	1L-17
Piping-Pilot(5)	1.084	1	1L-19
Piping-Pump Contr. Valve	1.050	1	1J-21
Piping-Travel (Lower)	3.070	1	2H-19
	3.071	1	2H-21
Piping-Turbocharger	0.241	1	1H-5
Pump-Engine Oil	0.300	1	1H-9
Pump-Hydraulic	1.030	1	1J-11
Pump-Injection	0.140	6	1F-23
Pump-Water	0.320	1	1H-17
Pump/Control Valve Piping	1.050	1	1J-23
Radiator	0.003	1	1D-9
Radiator-Components	0.003	2	1D-11
	0.003	3	1D-13
Rocker Arm	0.060	2	1E-15
Rotary Distributor	3.060	1	2H-17
SAE Battery Provision	1.220	3	2D-17
Seat Belt	5.0536	1	1J-23
Sensors	1.220	2	2D-13
Solenoid Valve	1.080	2	1L-7
Starter	0.360	2	1I-9
Starter-Mounting	0.360	1	1I-7
Stop Valve	1.082	2	1L-13
Swing Red.Unit-Components	1.040	2	1J-19
Swing Reduction Unit	1.040	1	1J-17
Thermostat & Housing	0.326	1	1H-21
Timing Control	0.100	1	1F-9
Tool Kit	5.0083	1	2J-19
Track Chain	3.051	1	2H-13
	3.052	1	2H-15
Track Roller	3.040	1	2H-11
Travel Motor-componen.	3.010	3	2H-3
Travel Piping (Lower)	3.070	1	2H-19
	3.071	1	2H-21
Travel Red.Unit-Componen.	3.010	2	2G-23
Travel Reduction Units	3.010	1	2G-21
Turbocharger	0.240	1	1G-23
	0.240	2	1H-3
Turbocharger Piping	0.241	1	1H-5
Upper Frame	1.000	1	1J-3
Upper Roller	3.030	1	2H-9
Valve-Anti-Shock(Hydr.)	1.082	3	1L-15
Valve-Exhaust	0.060	2	1E-15
Valve-Intake	0.060	2	1E-15
Valve-Pilot (Hydr.)	1.070	1	1K-15
Valve-Pilot(Travel)	1.070	1	1K-15
Valve-Solenoid	1.080	2	1L-7
Valve-Stop(Travel)	1.082	1	1L-11
Water Pump	0.320	1	1H-17
Water Pump Drive	0.340	1	1H-23
Water Pump-Components	0.320	2	1H-17
Wiper	1.220	1	2D-11

PILOT VALVE VALVOLA PILOTA 71401658	VALVE PILOTE VORSTEUERVENTIL VALVULA PILOTO	1.071 TAV.2

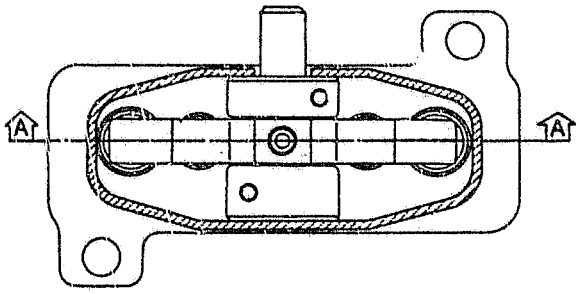

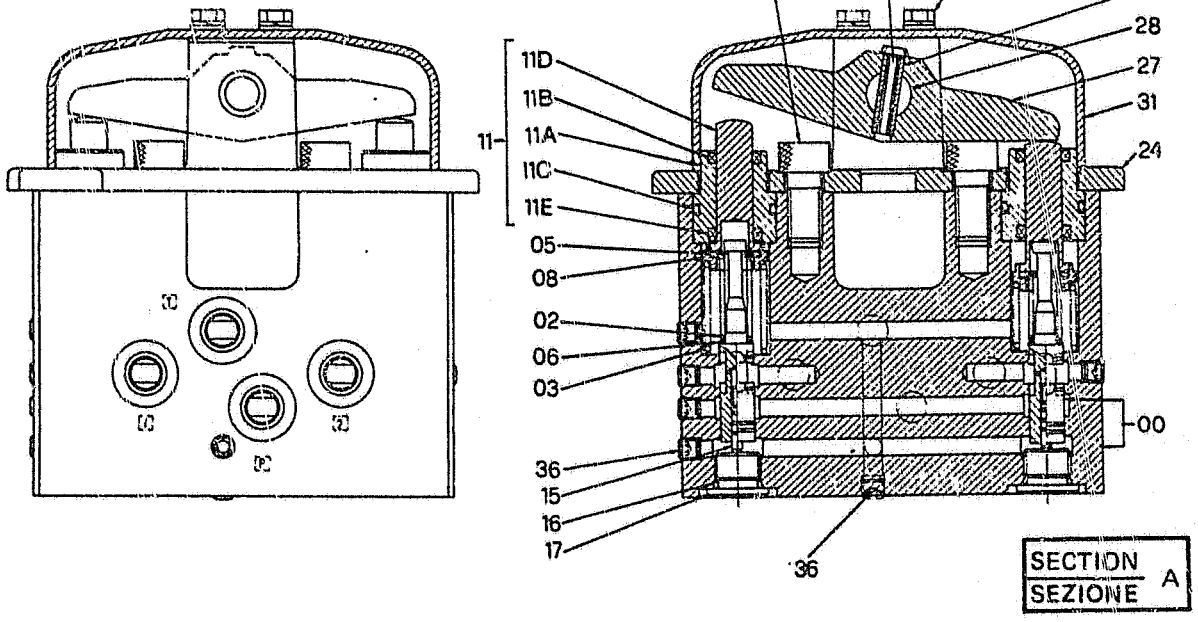

FH200 03

PILOT VALVE VALVOLA PILOTA 71401658	VALVE PILOTE VORSTEUERVENTIL VALVULA PILOTO	1.071 TAV.2

ITEM	PART NUMBER	QTY	TR. CO.	DESCRIPTION	DESCRIZIONE
00	71402294	1	300C	BODY	CORPO
02	71402295	2	100M	SPRING	MOLLA
03	71401957	2	100M	SPRING	MOLLA
05	71401958	2	75D	SPACER	DISTANZIALE
06	71401959	10	198S	SHIM	SPESSORE
08	71401960	2	145G	GUIDE	GUIDA
11	71401961	2	130P	PLUNGER	PISTONCINO
11A	71401962	1	95B	BUSHING	BOCCOLA
11B	71401575	1	122G	SEAL	GUARNIZIONE
11C	71401576	1	158G	O-RING	GUARNIZIONE O-R
11D	71401965	1	235S	PISTON	STANTUFFO
11E	71401578	1	122G	SEAL	GUARNIZIONE
15	71401967	2	130P	PLUNGER	PISTONCINO
16	71401968	2	158G	O-RING	GUARNIZIONE O-R
17	71401969	2	50T	PLUG	TAPPO
24	71402296	1	60D	DISC	DISCO
25	71402297	2	40V	SCREW	VITE
27	71401973	1	55B	ROCKER	BILANCIERE
28	71401974	1	60P	PIN	PERNO
29	71401975	1	202S	SPRING PIN	SPINA ELASTICA
30	71401980	1	202S	SPRING PIN	SPINA ELASTICA
31	71402298	1	265C	COVER	COPERCHIO
35	71401977	2	40V	SCREW	VITE
36	71402099	6	50T	PLUG	TAPPO

PILOT PIPING (1)
TUBAZIONI SERVOCOMANDI(1)

TUYAUT. SERVOCOMMANDES(1)
LEITUNGEN-SERVOSTEU. (1)
TUBERIAS SERVOMANDOS(1)

1.080 TAV.1

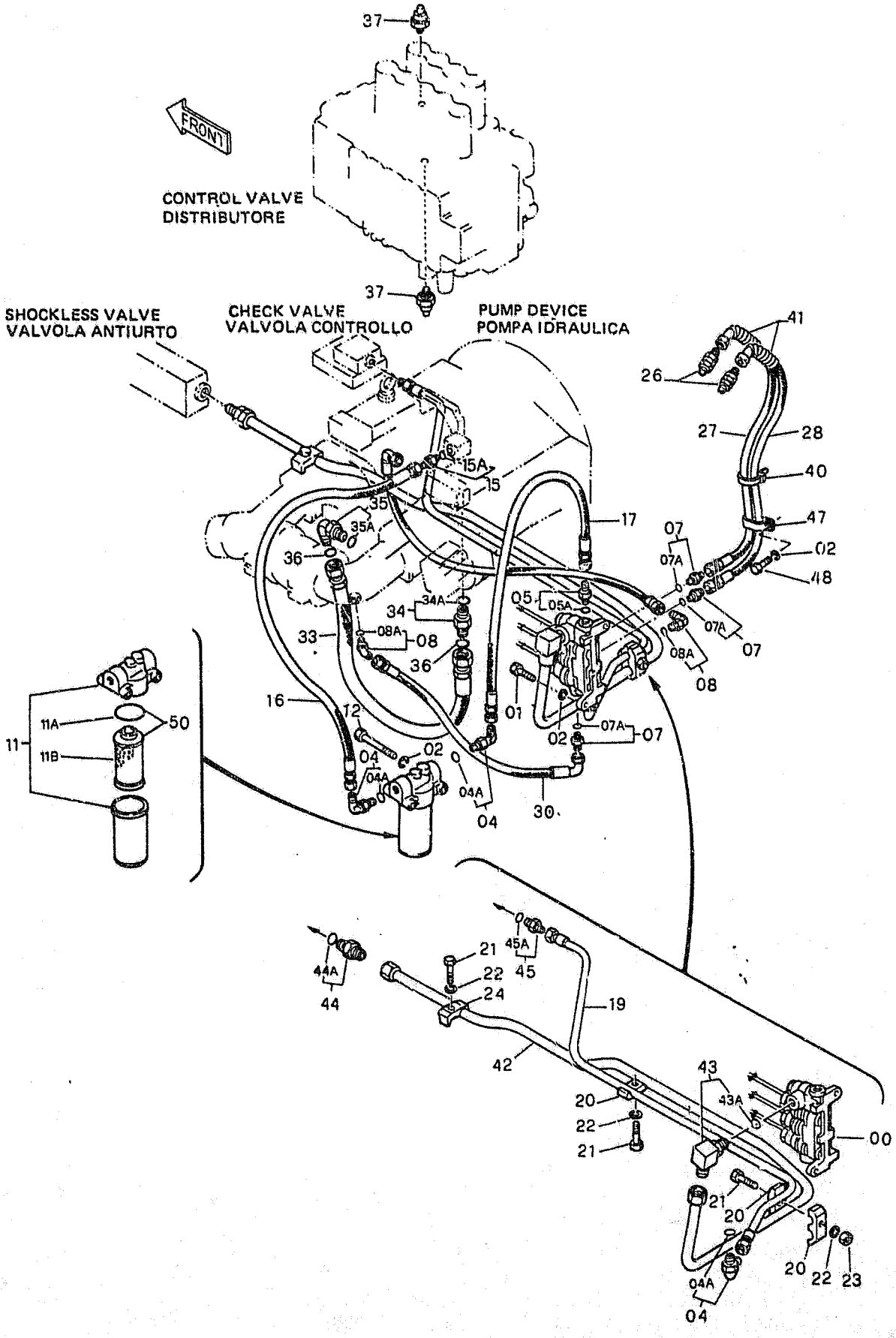

FH200

PILOT PIPING (1) | TUYAUT. SERVOCOMMANDES(1) | 1.080 TAV.1
TUBAZIONI SERVOCOMANDI(1) | LEITUNGEN-SERVOSTEU. (1)
TUBERIAS SERVOMANDOS(1)

ITEM	PART NUMBER	QTY	TR. CO.	DESCRIPTION	DESCRIZIONE
00	71401796	1	10V	VALVE -ASS.Y SEE L-7	VALVOLA -COMPL.VED.TAV. 2
01	11106434	2	40V	SCREW 10X1,5X30	VITE 10X1,5X30
02	10571874	5	131R	WASHER	ROSETTA
04	71404329	3	20R	FITTING -ASS.LY	RACCORDO -COMPL.
04A	71404166	3	158G	O-RING	GUARNIZIONE O-R
05	71404395	1	20R	FITTING -ASS.LY	RACCORDO -COMPL.
05A	71404166	1	158G	O-RING	GUARNIZIONE O-R
07	71404327	3	20R	FITTING -ASS.LY	RACCORDO -COMPL.
07A	71404163	3	158G	O-RING	GUARNIZIONE O-R
08	71404333	2	20R	FITTING -ASS.LY	RACCORDO -COMPL.
08A	71404163	2	158G	O-RING	GUARNIZIONE O-R
11	71401633	1	65F	FILTER	FILTRO
11A	71401954	1	158G	O-RING -K. 71402469	GUARNIZIONE O-R -K. 71402469
11B	71401953	1	84C	FILTER ELEMENT -K. 71402469	CARTUCCIA FILTRO -K. 71402469
12	11108234	2	40V	SCREW 10X1,5X100	VITE 10X1,5X100
15	71404357	1	20R	FITTING -ASS.LY	RACCORDO -COMPL.
15A	71404165	1	158G	O-RING	GUARNIZIONE O-R
16	71403944	1	285T	HOSE	TUBO FLESSIBILE
17	71404201	1	285T	HOSE	TUBO FLESSIBILE
19	71415852	1	193T	TUBE	TUBO RIGIDO
20	71415854	3	231S	CLIP	STAFFETTA
21	11113234	3	40V	SCREW 12X1,75X50	VITE 12X1,75X50
22	10571974	3	131R	WASHER	ROSETTA
23	11702921	1	10D	NUT	DADO
24	71415855	1	231S	CLIP	STAFFETTA
26	71401632	2	164C	CYLINDER	CILINDRO
27	71404199	1	285T	HOSE	TUBO FLESSIBILE
28	71404200	1	285T	HOSE	TUBO FLESSIBILE
29	71403941	1	285T	HOSE	TUBO FLESSIBILE
30	71403937	1	285T	HOSE	TUBO FLESSIBILE
33	71403916	1	285T	HOSE	TUBO FLESSIBILE
34	71404414	1	20R	FITTING -ASS.LY	RACCORDO -COMPL.
34A	71404162	1	158G	O-RING	GUARNIZIONE O-R
35	71404337	1	20R	FITTING -ASS.LY	RACCORDO -COMPL.
35A	71404162	1	158G	O-RING	GUARNIZIONE O-R
36	70923843	2	158G	O-RING	GUARNIZIONE O-R
37	71401797	2	75I	SWITCH	INTERRUTTORE
40	4982514	2	31F	CLAMP	FASCETTA
41	71415856	2	166S	BELLOW	SOFFIETTO
42	71415857	1	193T	TUBE	TUBO RIGIDO
43	71404341	1	20R	FITTING -ASS.LY	RACCORDO -COMPL.
43A	71404166	1	158G	O-RING	GUARNIZIONE O-R
44	71404353	1	20R	FITTING -ASS.LY	RACCORDO -COMPL.
44A	71404166	1	158G	O-RING	GUARNIZIONE O-R
45	71404395	1	20R	FITTING -ASS.LY	RACCORDO -COMPL.
45A	71404166	1	158G	O-RING	GUARNIZIONE O-R
47	71416731	1	231S	CLIP	STAFFETTA
48	10979234	1	40V	SCREW 10X1,5X16	VITE 10X1,5X16
50	71402469	1	1K	KIT.-SEE A-22	KIT-VED. PAG.

FH200

SOLENOID VALVE VALVOLA SOLENOIDE 71401796	ELECTROVALVE MAGNETVENTIL ELECTROVALVULA	1.080 TAV.2

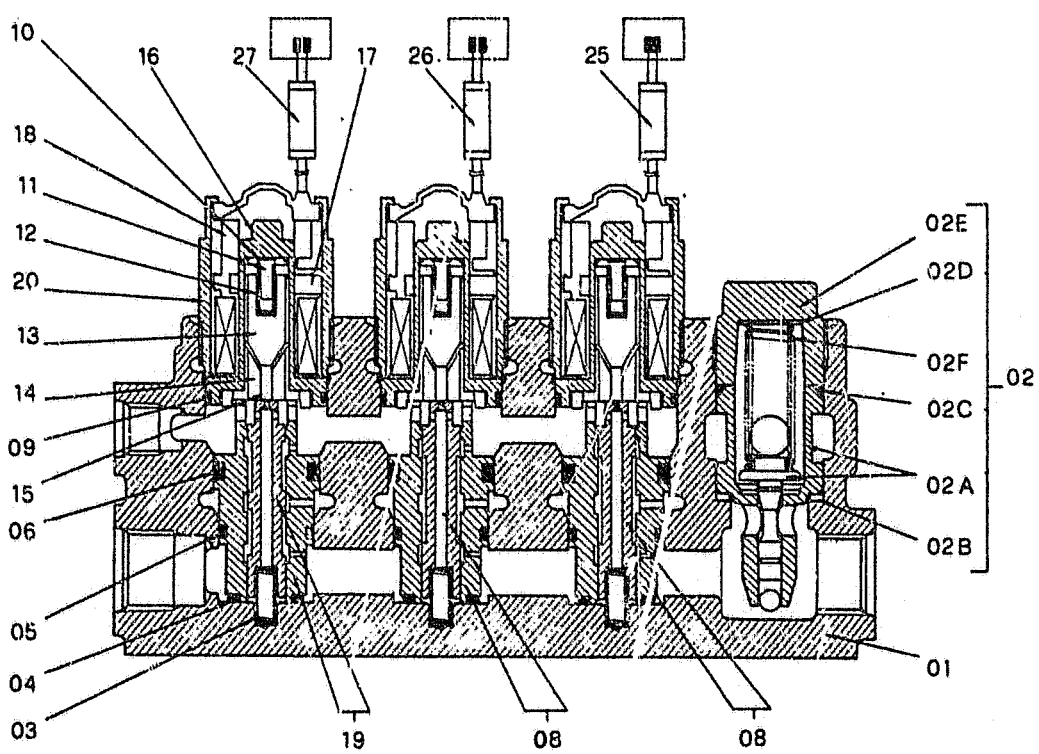

SOLENOID VALVE
VALVOLA SOLENOIDE
71401786

ELECTROVALVE
MAGNETVENTIL
ELECTROVALVULA

1.080 TAV.2

ITEM	PART NUMBER	QTY	TR. CO.	DESCRIPTION	DESCRIZIONE
01	71401883	1	300C	BODY	CORPO
02	71401963	1	10V	VALVE -ASS.LY	VALVOLA -COMPL.
02A	71401964	1	10V	VALVE	VALVOLA
02B	71401966	1	122G	SEAL	GUARNIZIONE
02C	71401981	1	158G	O-RING	GUARNIZIONE O-R
02D	71401982	1	198S	SHIM	SPESSORE
	71401983	1	198S	SHIM	SPESSORE
	71401984	1	198S	SHIM	SPESSORE
02E	71401985	1	50T	PLUG	TAPPO
02F	71401986	1	100M	SPRING	MOLLA
03	71401987	3	100M	SPRING	MOLLA
04	71401776	3	158G	O-RING	GUARNIZIONE O-R
05	71401798	3	158G	O-RING	GUARNIZIONE O-R
06	71401990	3	158G	O-RING	GUARNIZIONE O-R
08	71401991	2	130P	PLUNGER	PISTONCINO
09	71401992	3	158G	O-RING	GUARNIZIONE O-R
10	71401993	3	193T	TUBE	TUBO RIGIDO
11	71401994	3	69S	SEAT	SEDE
12	71401995	3	100M	SPRING	MOLLA
13	71401996	3	132P	PISTON	PISTONE
14	71401997	3	26T	BLOCK	TAMPONE
15	71401998	3	90A	ROD	ASTA
16	71401999	3	300C	BODY	CORPO
17	71402000	3	75D	SPACER	DISTANZIALE
18	71402462	3	83B	COIL	BOBINA
19	71402002	1	130P	PLUNGER	PISTONCINO
20	71402003	3	300C	BODY	CORPO
25	71402004	1	20N	BAND	NASTRO
26	71402005	1	20N	BAND	NASTRO
27	71402006	1	20N	BAND	NASTRO

PILOT PIPING (2)
TUBAZIONI SERVOCOMANDI(2)

TUYAUT. SERVOCOMMANDES(2)
LEITUNGEN-SERVOSTEU. (2)
TUBERIAS SERVOMANDOS.(2)

1.081 TAV.1

NTR 104S V-89

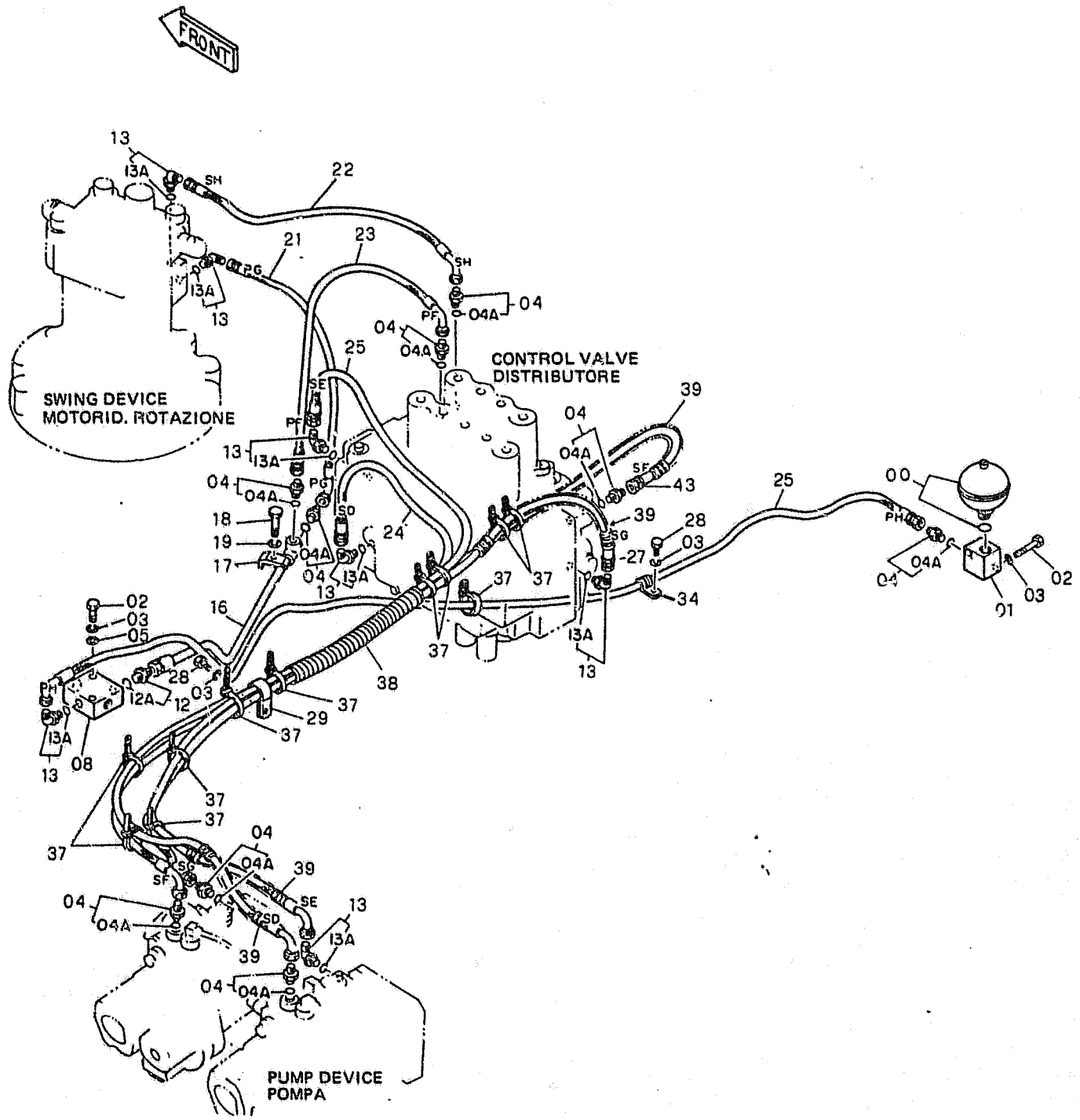

FH200

PILOT PIPING (2)
TUBAZIONI SERVOCOMANDI(2)
TUYAUT. SERVOCOMMANDES(2)
LEITUNGEN-SERVOSTEU. (2)
TUBERIAS SERVOMANDOS.(2)

1.081 TAV.1

REVISED JULY 1990

ITEM	PART NUMBER	QTY	TR. CO.	DESCRIPTION	DESCRIZIONE
00	71401634	1	33A	HYDRAULIC ACCUMULATOR	ACCUMULATORE IDRAULICO
01	71415880	1	74B	BLOCK	BLOCCHETTO
02	11107234	4	40V	SCREW 10X1,5X50	VITE 10X1,5X50
				C2890 UP TO S/N 0204 (02) 0080 (03)	C2890 FINO AL TELAIO 0204 (02) 0080 (03)
	11107334	4	40V	SCREW M10X55	VITE M10X55
				D2890 FROM S/N 0205 (02) 0081 (03)	D2890 DAL TELAIO 0205 (02) 0081 (03)
03	10516874	6	131R	WASHER	ROSETTA
04	71404327	9	20R	FITTING -ASS.LY	RACCORDO -COMPL.
04A	71404163	9	158G	O-RING	GUARNIZIONE O-R
05	14496631	2	131R	WASHER	ROSETTA
08	71401625	1	10V	VALVE	VALVOLA
12	71404357	1	20R	FITTING -ASS.LY	RACCORDO -COMPL.
12A	71404165	1	158G	O-RING	GUARNIZIONE O-R
13	71404333	7	20R	FITTING -ASS.LY	RACCORDO -COMPL.
13A	71404163	7	158G	O-RING	GUARNIZIONE O-R
16	71415881	1	193T	TUBE	TUBO RIGIDO
17	71415883	1	231S	CLIP	STAFFETTA
18	11113034	1	40V	SCREW 12X1,75X45	VITE 12X1,75X45
19	10517074	1	131R	WASHER	ROSETTA
21	71404284	1	285T	HOSE	TUBO FLESSIBILE
22	71404202	1	285T	HOSE	TUBO FLESSIBILE
23	71403933	1	285T	HOSE	TUBO FLESSIBILE
24	71403942	1	285T	HOSE	TUBO FLESSIBILE
25	71403938	2	285T	HOSE	TUBO FLESSIBILE
27	71403954	1	285T	HOSE	TUBO FLESSIBILE
28	11106034	2	40V	SCREW 10X1,5X20	VITE 10X1,5X20
29	71415884	1	231S	CLIP	STAFFETTA
34	71415887	1	231S	CLIP	STAFFETTA
37	4982514	11	31F	CLAMP	FASCETTA
38	71415875	1	142G	SHEATH	GUAINA
39	71415888	4	142G	SHEATH	GUAINA
43	71404203	1	285T	HOSE	TUBO FLESSIBILE

PILOT PIPING (3) TUBAZIONI SERVOCOMANDI(3)	TUYAUT. SERVOCOMMANDES(3) LEITUNGEN-SERVOSTEU. (3) TUBERIAS SERVOMANDOS (3)	1.082 TAV.1 NTR 104S V-89

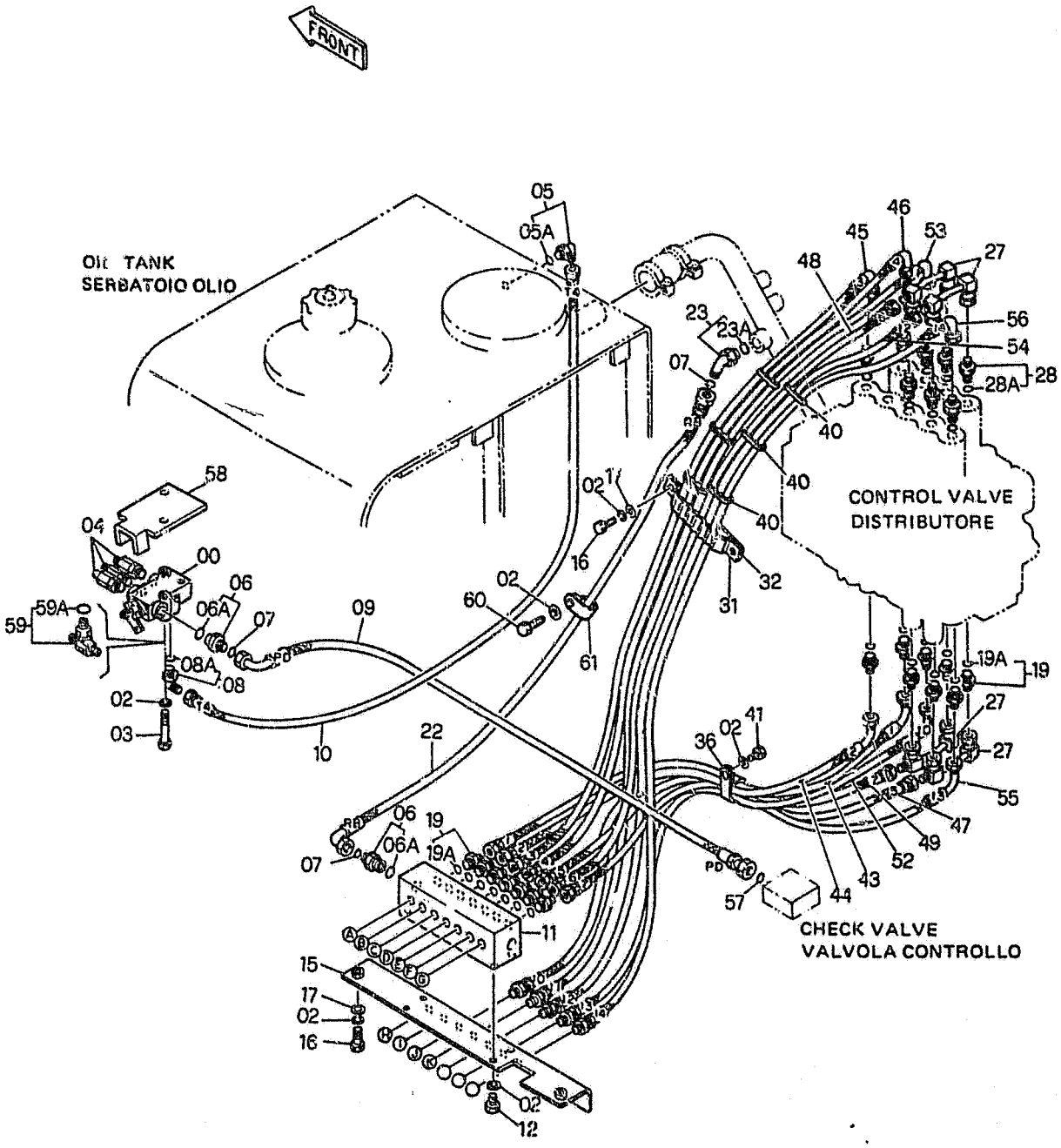

FH200

PILOT PIPING (3)
TUBAZIONI SERVOCOMANDI(3)
TUYAUT. SERVOCOMMANDES(3)
LEITUNGEN-SERVOSTEU. (3)
TUBERIAS SERVOMANDOS (3)

1.082 TAV.1

NTR 104S V-89

ITEM	PART NUMBER	QTY	TR. CO.	DESCRIPTION	DESCRIZIONE
00	71401827	1	10V	VALVE -ASS.Y SEE. L-13	VALVOLA -COMP.VED.TAV. 2
02	10571874	12	131R	WASHER	ROSETTA
03	11107734	2	40V	SCREW 10X1,5X75	VITE 10X1,5X75
04	71401630	3	65F	FILTER	FILTRO
05	71404345	1	20R	FITTING -ASS.LY	RACCORDO -COMPL.
05A	71404165	1	158G	O-RING	GUARNIZIONE O-R
06	71404361	2	20R	FITTING -ASS.LY	RACCORDO -COMPL.
06A	71404166	2	158G	O-RING	GUARNIZIONE O-R
07	70923841	3	158G	O-RING	GUARNIZIONE O-R
08	71404345	1	20R	FITTING -ASS.LY (02)	RACCORDO -COMPL. (01-02)
08A	71404165	1	158G	O-RING (02)	GUARNIZIONE O-R (01-02)
09	71404034	1	285T	HOSE	TUBO FLESSIBILE
10	71403975	1	285T	HOSE	TUBO FLESSIBILE
11	71401639	1	10V	VALVE -ASS.Y SEE. L-15	VALVOLA -COMP.VED.TAV. 3
12	11106034	4	40V	SCREW 10X1,5X20	VITE 10X1,5X20
15	71415890	1	60A	ANGLE 10X1,5X20	ANGOLARE 10X1,5X20
16	11106434	4	40V	SCREW 10X1,5X30	VITE 10X1,5X30
17	14496631	4	131R	WASHER	ROSETTA
19	71404357	15	20R	FITTING -ASS.LY	RACCORDO -COMPL.
19A	71404165	15	158G	O-RING	GUARNIZIONE O-R
22	71404035	1	285T	HOSE	TUBO FLESSIBILE
23	71404349	1	20R	FITTING -ASS.LY	RACCORDO -COMPL.
23A	71404166	1	158G	O-RING	GUARNIZIONE O-R
27	71415892	4	193T	TUBE	TUBO RIGIDO
28	71404355	8	20R	FITTING -ASS.LY	RACCORDO -COMPL.
28A	71404165	8	158G	O-RING	GUARNIZIONE O-R
31	71415894	1	231S	CLIP	STAFFETTA
34	71415895	1	231S	CLIP	STAFFETTA
36	71415896	1	231S	CLIP	STAFFETTA
40	4982514	6	31F	CLAMP	FASCETTA
41	11103034	1	40V	SCREW 10X1,5X18	VITE 10X1,5X18
43	71404022	1	285T	HOSE	TUBO FLESSIBILE
44	71404023	1	285T	HOSE	TUBO FLESSIBILE
45	71404024	1	285T	HOSE	TUBO FLESSIBILE
46	71404025	1	285T	HOSE	TUBO FLESSIBILE
47	71403977	1	285T	HOSE	TUBO FLESSIBILE
48	71403976	1	285T	HOSE	TUBO FLESSIBILE
49	71403974	1	285T	HOSE	TUBO FLESSIBILE
52	71404042	1	285T	HOSE	TUBO FLESSIBILE
53	71404041	1	285T	HOSE	TUBO FLESSIBILE
54	71404050	1	285T	HOSE	TUBO FLESSIBILE
55	71404040	1	285T	HOSE	TUBO FLESSIBILE
56	71404039	1	285T	HOSE	TUBO FLESSIBILE
57	70923841	1	158G	O-RING	GUARNIZIONE O-R
58	71416125	1	105P	PLATE	PIASTRA
59	71404433	1	20R	FITTING -ASS.LY (03)	RACCORDO -COMPL. (03-04)
59A	71404165	1	158G	O-RING (03)	GUARNIZIONE O-R (03-04)
60	10979334	1	40V	SCREW 10X1,5X14	VITE 10X1,5X14
61	71405771	1	231S	CLIP	STAFFETTA

STOP VALVE VALVOLA ARRESTO 71401627	VALVE DE BUTEE SPERRVENTIL VALVULA DE RETENCION	1.082 TAV.2

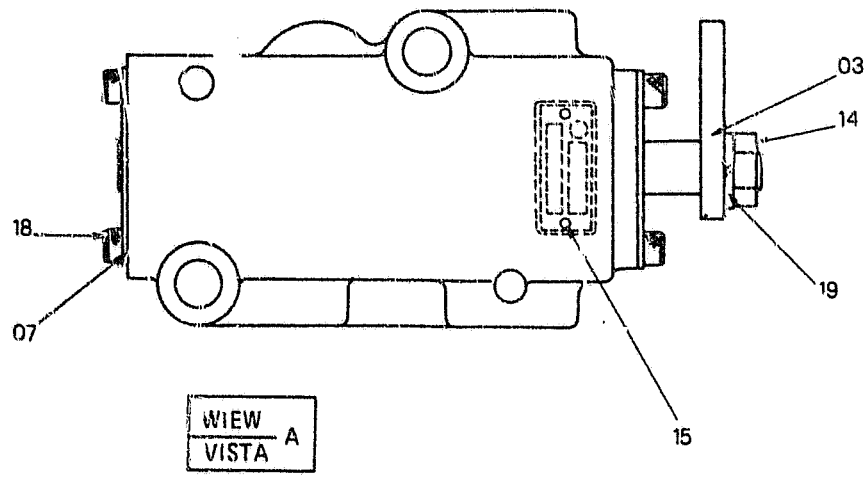

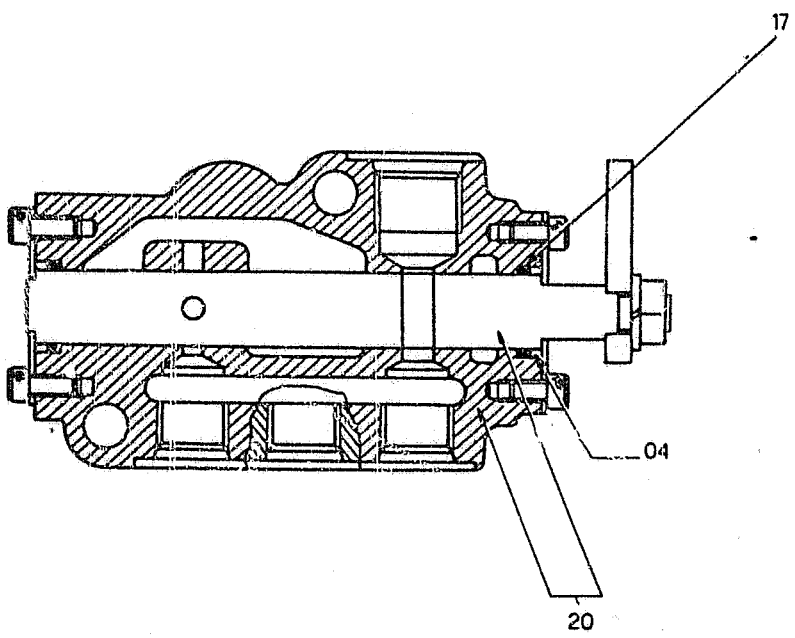

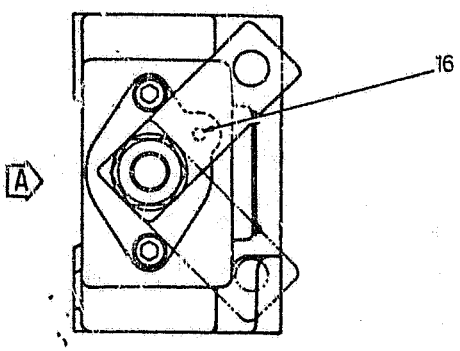

STOP VALVE
VALVOLA ARRESTO
71401627

VALVE DE BUTEE
SPERRVENTIL
VALVULA DE RETENCION

1.082 TAV.2

ITEM	PART NUMBER	QTY	TR. CO.	DESCRIPTION	DESCRIZIONE
03	71401787	1	45L	LEVER	LEVA
04	71401788	2	45A	RING	ANELLO
07	71401789	2	225S	BRACKET	STAFFA
14	71401794	1	10D	NUT	DADO
15	71401774	2	40V	SCREW	VITE
16	71401785	1	140S	BALL	SFERA
17	71401886	2	158G	O-RING	GUARNIZIONE O-R
18	71401799	4	40V	SCREW	VITE
19	71401792	1	170R	LOCKWASHER	ROSETTA ELASTICA
20	71401785	1	300C	BODY	CORPO

ANTI-SHOCK VALVE (HYDR.) VALVOLA ANTIURTO 71401639	VALVE AMORTISSEUSE DAEMPFUNGSVENTIL VALVULA AMORTIGUADORA	1.082 TAV.3

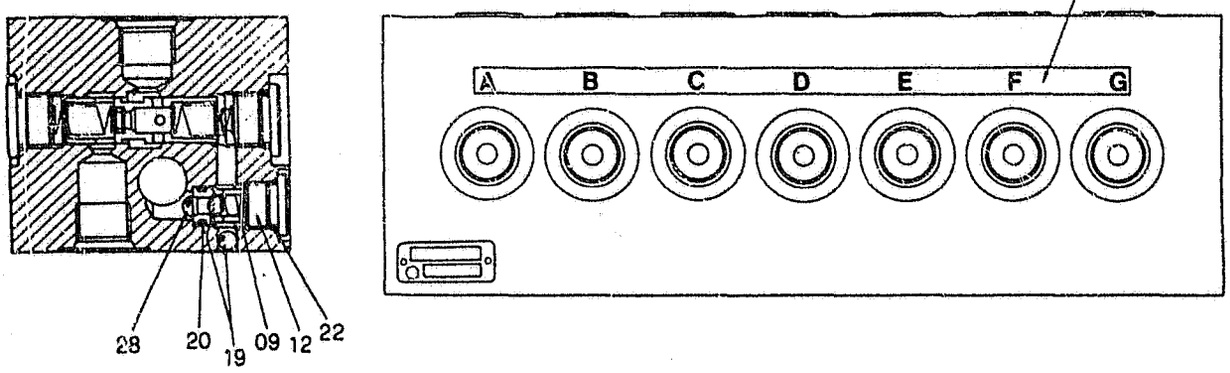

SECTION X
SEZIONE

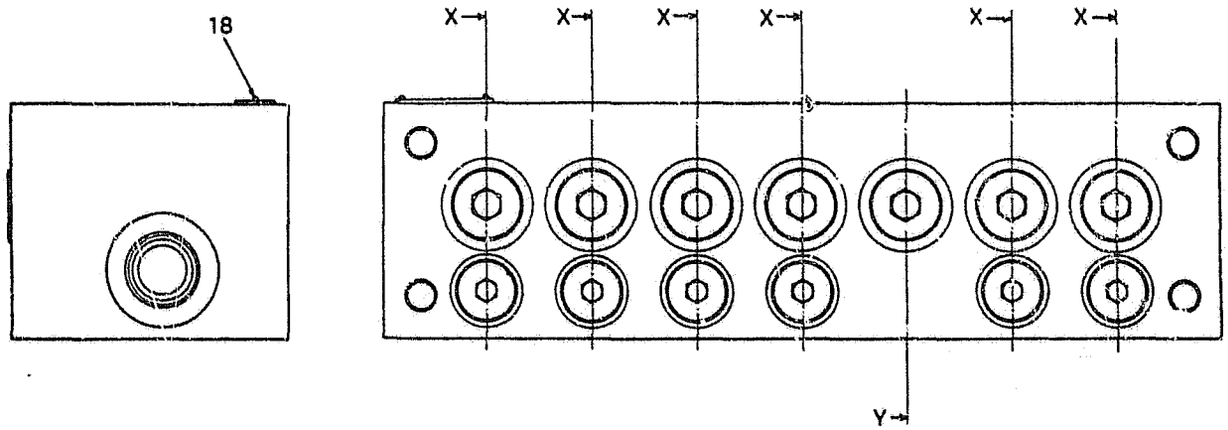

26 (6-7 PORT)-(VANO N. 5-6)
27 (5 PORT)-(VANO N. 7)
25 (1-2-3-4 PORT)-(VANO N. 1-2-3-4)

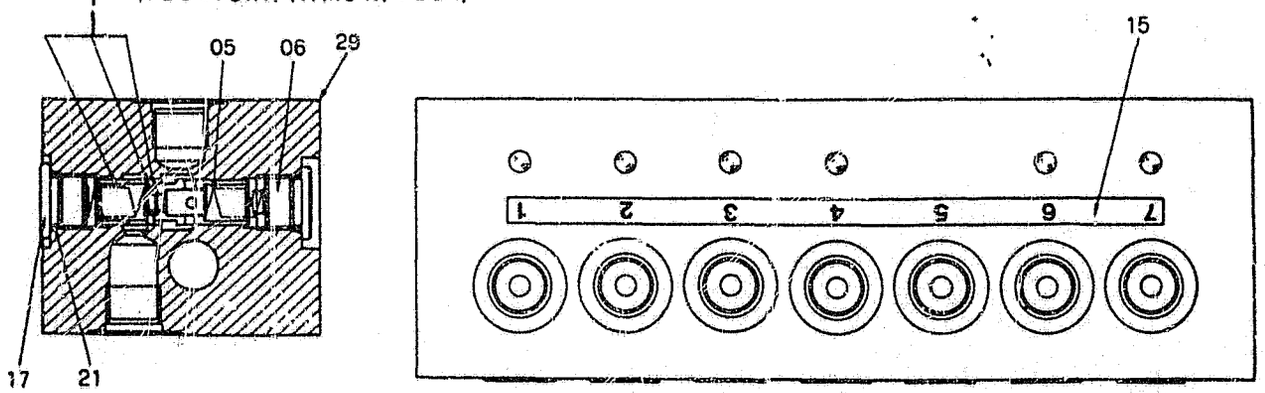

SECTION Y
SEZIONE

ANTI-SHOCK VALVE (HYDR.) | VALVE AMORTISSEUSE | 1.082 TAV.3
VALVOLA ANTIURTO | DAEMPFUNGSVENTIL
71401639 | VALVULA AMORTIGUADORA

ITEM	PART NUMBER	QTY	TR. CO.	DESCRIPTION	DESCRIZIONE
05	71401770	14	100M	SPRING	MOLLA
06	71401771	7	50T	PLUG	TAPPO
09	71401772	6	100M	SPRING	MOLLA
12	71401773	6	50T	PLUG	TAPPO
14	71401891	1	65T	DECAL	TARGA
15	71401892	1	65T	DECAL	TARGA
17	71401778	7	50T	PLUG	TAPPO
18	71401774	2	40V	SCREW	VITE
19	71401806	12	140S	BALL	SFERA
20	71401775	6	158G	O-RING	GUARNIZIONE O-R
21	71401776	14	158G	O-RING	GUARNIZIONE O-R
22	71401777	6	158G	O-RING	GUARNIZIONE O-R
25	71401780	4	235S	PISTON -ASS.LY	STANTUFFO -COMPL.
26	71402464	2	235S	PISTON -ASS.LY	STANTUFFO -COMPL.
27	71401787	1	235S	PISTON -ASS.LY	STANTUFFO -COMPL.
28	71401783	6	65F	FILTER	FILTRO
29	71401784	1	300C	BODY	CORPO

PILOT PIPING (4)	TUYAUT. SERVOCOMMANDES(4)	1.083 TAV.1
TUBAZIONI SERVOCOMANDI(4)	LEITUNGEN-SERVOSTEU. (4)	
	TUBERIAS SERVOMANDOS (4)	NTR 104S V-89

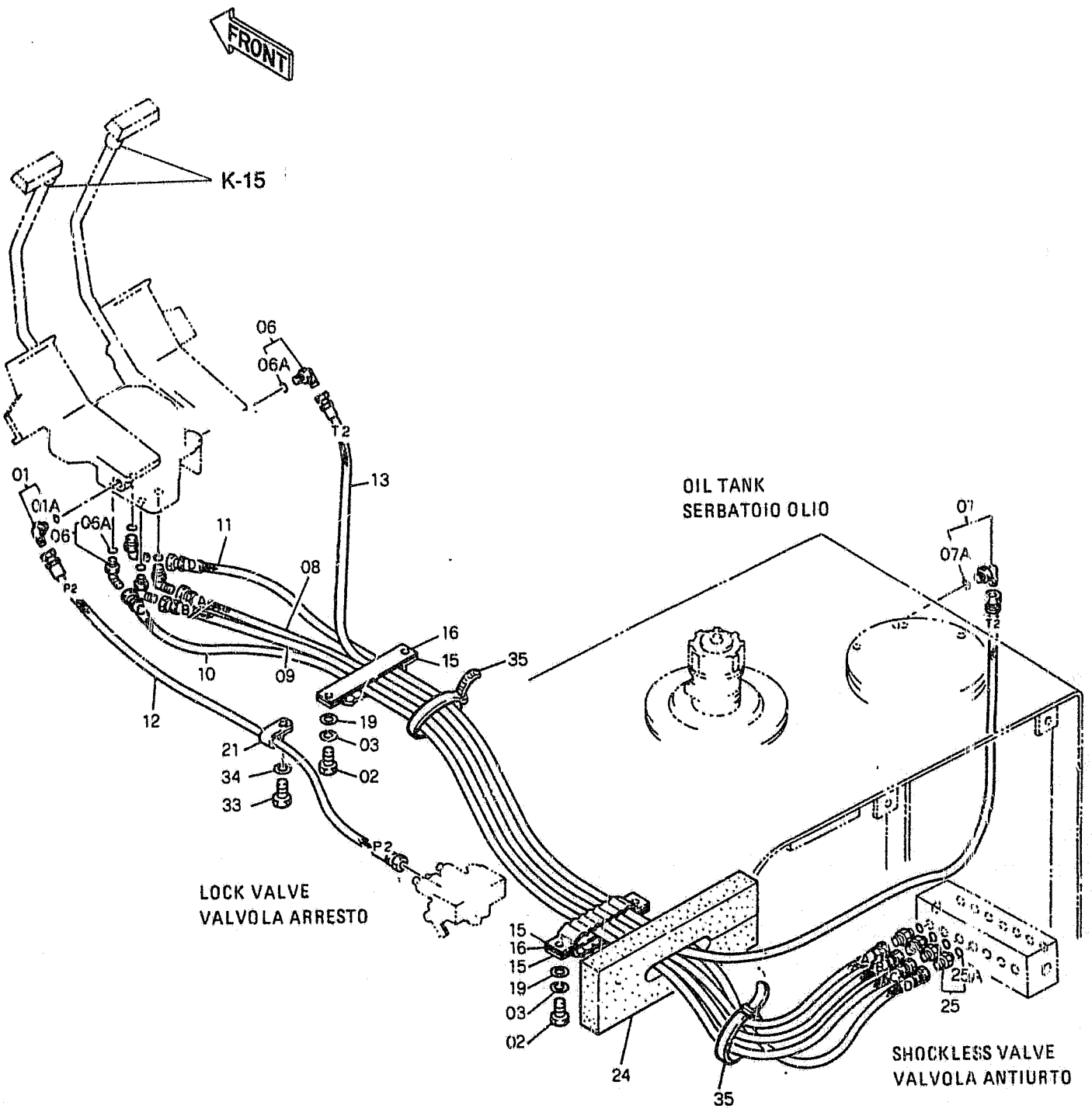

FH200

PILOT PIPING (4)
TUBAZIONI SERVOCOMANDI(4)
TUYAUT. SERVOCOMMANDES(4)
LEITUNGEN-SERVOSTEU. (4)
TUBERIAS SERVOMANDOS (4)

1.083 TAV.1

NTR 104S V-89

ITEM	PART NUMBER	QTY	TR. CO.	DESCRIPTION	DESCRIZIONE
01	7140 [illegible]	1	20R	FITTING -ASS.LY (02)	RACCORDO -COMPL. (01-02)
01A	71404163	1	158G	O-RING (02)	GUARNIZIONE O-R (01-02)
02	11106634	4	40V	SCREW M10X1,5X35	VITE M10X1,5X35
03	10571874	4	131R	WASHER	ROSETTA
06	71404408	5	20R	FITTING -ASS.LY	RACCORDO -COMPL.
06A	71404163	5	158G	O-RING	GUARNIZIONE O-R
07	71404345	1	20R	FITTING -ASS.LY	RACCORDO -COMPL.
07A	71404165	1	158G	O-RING	GUARNIZIONE O-R
08	71403982	1	285T	HOSE	TUBO FLESSIBILE
09	71403981	1	285T	HOSE	TUBO FLESSIBILE
10	71404004	1	285T	HOSE	TUBO FLESSIBILE
11	71403980	1	285T	HOSE	TUBO FLESSIBILE
12	71403978	1	285T	HOSE	TUBO FLESSIBILE
13	71403979	1	285T	HOSE	TUBO FLESSIBILE
15	71415894	3	231S	CLIP	STAFFETTA
16	71415895	2	231S	CLIP	STAFFETTA
19	14496631	4	131R	WASHER	ROSETTA
21	71415899	1	231S	CLIP (02)	STAFFETTA (01-02)
24	71415900	1	70R	GUARD	RIPARO
25	71404357	4	20R	FITTING -ASS.LY	RACCORDO -COMPL.
25A	71404165	4	158G	O-RING	GUARNIZIONE O-R
33	11103034	1	40V	SCREW 10X1,5X18 (02)	VITE 10X1,5X18 (01-02)
34	10571874	1	170R	LOCKWASHER (02)	ROSETTA ELASTICA (01-02)
35	4982514	2	31F	CLAMP	FASCETTA

PILOT PIPING (5) TUBAZIONI SERVOCOMANDI(5)	TUYAUT. SERVOCOMMANDES(5) LEITUNGEN-SERVOSTEU. (5) TUBERIAS SERVOMANDOS (5)	1.084 TAV.1

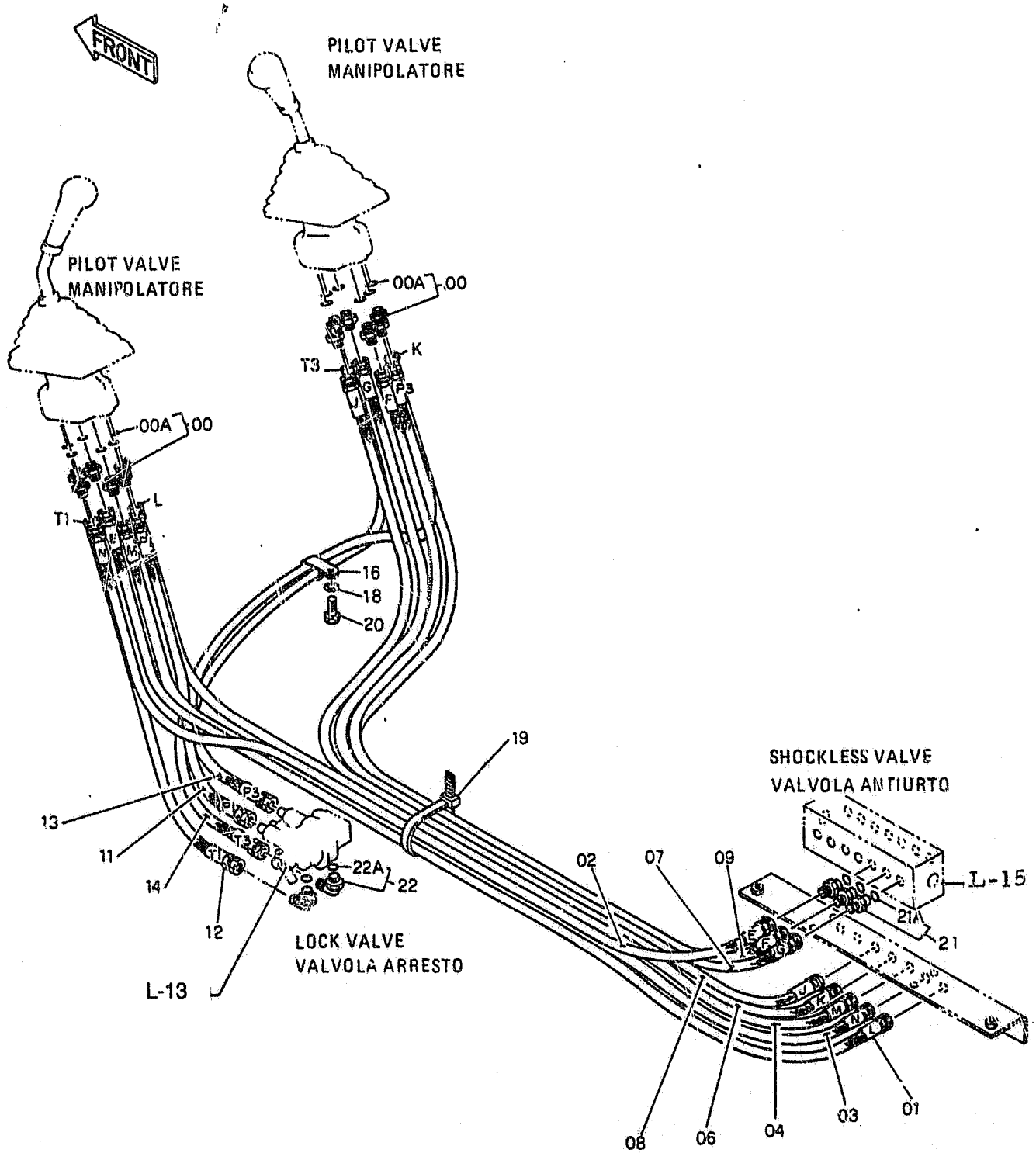

PILOT PIPING (5)
TUBAZIONI SERVOCOMANDI(5)

TUYAUT. SERVOCOMM/ANDES(5)
LEITUNGEN-SERVOSTEU. (5)
TUBERIAS SERVOMANDOS (5)

1.084 TAV.1

ITEM	PART NUMBER	QTY	TR. CO.	DESCRIPTION	DESCRIZIONE
00	71404351	12	20R	FITTING -ASS.LY	RACCORDO -COMPL.
00A	71404163	12	158G	O-RING	GUARNIZIONE O-R
01	71403970	1	285T	HOSE	TUBO FLESSIBILE
02	71403971	1	285T	HOSE	TUBO FLESSIBILE
03	71403972	1	285T	HOSE	TUBO FLESSIBILE
04	71403973	1	285T	HOSE	TUBO FLESSIBILE
06	71403961	1	285T	HOSE	TUBO FLESSIBILE
07	71403962	1	285T	HOSE	TUBO FLESSIBILE
08	71403963	1	285T	HOSE	TUBO FLESSIBILE
09	71403964	1	285T	HOSE	TUBO FLESSIBILE
11	71403965	1	285T	HOSE	TUBO FLESSIBILE
12	71403969	1	285T	HOSE	TUBO FLESSIBILE
13	71403966	1	285T	HOSE	TUBO FLESSIBILE
14	71404006	1	285T	HOSE	TUBO FLESSIBILE
16	71415908	1	231S	CLIP	STAFFETTA
18	10571874	1	131R	WASHER	ROSETTA
19	4982514	1	31F	CLAMP	FASCETTA
20	11103034	1	40V	SCREW 10X1,5X18	VITE 10X1,5X18
21	71404357	3	20R	FITTING -ASS.LY	RACCORDO -COMPL.
21A	71404165	3	158G	O-RING	GUARNIZIONE O-R
22	71404345	2	20R	FITTING -ASS.LY	RACCORDO -COMPL.
22A	71404165	2	158G	O-RING	GUARNIZIONE O-R

PILOT PIPING (6) TUBAZIONI SERVOCOMANDI(6)	TUYAUT. SERVOCOMMANDES(6) LEITUNGEN-SERVOSTEU. (6) TUBERIAS SERVOMANDOS (6)	1.085 TAV.1

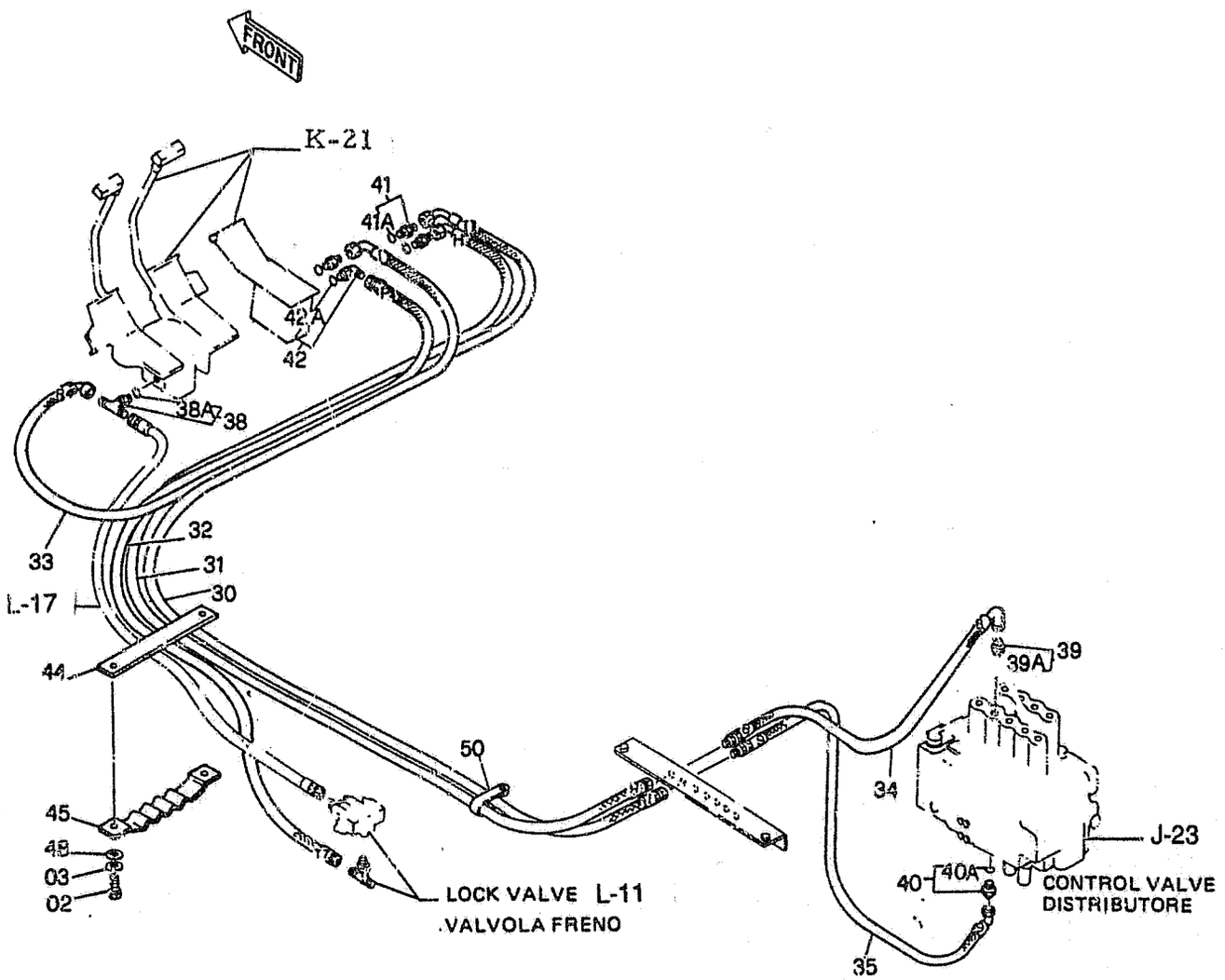

PILOT PIPING (6) TUYAUT. SERVOCOMMANDES(6) 1.085 TAV.1
TUBAZIONI SERVOCOMANDI(6) LEITUNGEN-SERVOSTEU. (6)
TUBERIAS SERVOMANDOS (6)

ITEM	PART NUMBER	QTY	TR. CO.	DESCRIPTION	DESCRIZIONE
02	11106634	2	40V	SCREW M10X1,5X35	VITE M10X1,5X35
03	10516874	2	131R	WASHER	ROSETTA
30	71404175	1	285T	HOSE	TUBO FLESSIBILE
31	71404178	1	285T	HOSE	TUBO FLESSIBILE
32	71404176	1	285T	HOSE	TUBO FLESSIBILE
33	71404177	1	285T	HOSE	TUBO FLESSIBILE
34	71404173	1	285T	HOSE	TUBO FLESSIBILE
35	71404174	1	285T	HOSE	TUBO FLESSIBILE
38	71404435	1	20R	FITTING -ASS.LY	RACCORDO -COMPL.
38/A	71404163	1	158G	O-RING	GUARNIZIONE O-R
39	71404355	1	20R	FITTING -ASS.LY	RACCORDO -COMPL.
39/A	71404165	1	158G	O-RING	GUARNIZIONE O-R
40	71404357	1	20R	FITTING -ASS.LY	RACCORDO -COMPL.
40/A	71404165	1	158G	O-RING	GUARNIZIONE O-R
41	71404351	3	20R	FITTING -ASS.LY	RACCORDO -COMPL.
41/A	71404163	3	158G	O-RING	GUARNIZIONE O-R
42	71404408	1	20R	FITTING -ASS.LY	RACCORDO -COMPL.
42/A	71404163	1	158G	O-RING	GUARNIZIONE O-R
44	71415895	1	231S	CLIP	STAFFETTA
45	71415894	1	231S	CLIP	STAFFETTA
48	14496631	2	131R	WASHER	ROSETTA
50	71415908	1	231S	CLIP	STAFFETTA

ALPHABETICAL INDEX

DESCRIPTION	SGR.	TAV.	GRID
Accelerator controls	0.004	1	1D-21
Air Cleaner	0.001	1	1D-5
Alternator-Mounting	0.400	1	1I-11
Anti-Shock Valve (Hydr.)	1.082	3	1L-15
Application of Ol. Hammer	5.0020	2	2J-7
Batteries	1.220	2	2D-13
Belts	0.340	1	1H-23
	0.345	1	1I-3
Boom Piping	2.030	1	2F-17, 2G-3
	2.031	1	2G-5
	2.031	2	2G-7
Brake Valve Components	3.010	3	2H-3
Bucket	2.020	1	2F-13
Bucket Cylinder	2.030	5	2G-3
Bull Gear	3.000	1	2G-17
Cab	1.250	1	2D-19
Cab Door	1.250	5	2E-7
Cab Heater-Components	1.290	2	2E-15
Cab Window-Left Side	1.250	6	2E-9
Cab-Frame	1.250	7	2E-11
Cab-Platform	1.250	1	2D-19
Cab Vandalism	5.0540	1	2K-3
Camshaft	0.120	1	1F-11
Cold Starting Aid	5.0025	1	2J-11
Connecting Rod	0.081	1	1E-23
Cont. Valve-Hydr. (Ass.Y)	1.050	1	1J-21
Control Valve-Hydr.	1.050	2	2K-3
	1.050	3	2K-5
	1.050	4	2K-7
Controls	1.070	1	1J-20
	1.071	1	1K-21, 1L-3
Counterweight	1.000	1	1J-3
Cowlings	1.300	1	2E-19
	1.300	2	2E-21
	1.300	3	2E-23
Crankshaft	0.080	1	1E-21
Crankshaft Pulley	0.084	1	1F-7
Cylinder Block	0.040	1	1D-21
	0.040	2	1D-23
	0.040	3	1E-3
Cylinder Block Covers	0.043	1	1E-7
	0.043	2	1E-9
Cylinder Head	0.060	1	1E-13
	0.060	2	1E-15
Dashboard (Left)	1.210	1	2D-9
Dashboard (Right)	1.200	1	2D-3
	1.200	3	2D-7
Data Monitor	1.200	2	2D-5
Decals	4.500	1	2I-3
	4.501	1	2I-5
Dipper Stick (2,1m)	5.0022	1	2J-9
Dipper Stick (2,5m) (STD.)	2.003	1	2F-11
Dipper Stick (3m)	5.0038	1	2J-13
Dipper Stick Cylinder	2.030	4	2F-23
	2.031	4	2G-5
Dipstick-Engine Oil	0.270	1	1H-8
Discharge Valve Componen.	3.010	4	2H-5
Drive on Engine (Opt.)	0.350	1	1I-5
Electric System	1.220	1	2D-11
	1.220	2	2D-13
Elements-fuel	0.200	1	1G-17
Elements-Hydraulic	1.020	1	1J-7
Elements-Pilot	1.080	1	1L-5
Emergency Kits(Lub. Fittings)	4.000	1	2H-23
Engine	0.021	1	1D-19
Engine-Controls	0.004	1	1D-15
Engine-Suspensions	0.000	1	1D-3
Engine Breather	0.045	1	1E-11
Engine Cooling Piping	0.323	1	1H-19
Engine Heat Exchanger	0.310	1	1H-15
Engine Lifting Eyes	0.450	1	1I-15
Engine Oil Filter	0.302	1	1H-11
Engine Oil Piping	0.305	1	1H-13
Engine Oil Pump	0.300	1	1H-9
Engine Oil Sump	0.042	1	1E-5
Engine Piston	0.082	1	1F-3
Engine Suspensions	0.000	1	1D-3
Exhaust Manifold	0.077	1	1E-19
Exhaust Valve	0.060	2	1E-15
Fan	0.345	1	1I-3
Fan Drive	0.345	1	1I-3
"Filter Care" Kit	24		1A-24
Filter-Pilot System	1.080	1	1L-5
Filters-Air	0.001	1	1D-5
Filters-Engine Oil	0.302	1	1D-11
Filters-Fuel	0.200	1	1G-17
Filters-Hydr. System	1.020	1	1J-7
Flywheel-Engine	0.083	1	1L-17
Fuel Filter	0..200	1	1G-17
Fuel Piping	0.203	1	1G-19
Fuel Pump	0.203	2	1G-21
	0.140	8	1G-5
Fuel Tank	1.010	1	1J-5
Fuses	1.200	3	2D-7
Guards	1.300	2	2E-21
Handle	1.300	3	2E-23
	1.300	4	2F-3
Heater	1.290	1	2E-15
Horn	1.220	2	2D-15
Hydr.Pump-Components	1.030	2	1J-13
Hydr.Pump Regulator-Comp.	1.030	3	1J-15

D-2

ALPHABETICAL INDEX

DESCRIPTION	SGR.	TAV.	GRID
Hydraulic Pump	1.030	1	1J-9
Idler	3.020	1	1H-7
Injection Nozzle-Lines	0.149	1	1G-15
Injection Pump	0.140	6	1F-23
	0.140	7	1G-3
Injection Pump Drive	0.140	10	1G-9
Injection Pump-Piping	0.140	1	1F-13
	0.140	9	1G-7
Intake Manifold	0.071	1	1E-17
Intake Valve	0.060	2	1E-15
Lift Cylinder (Left)	2.030	3	1F-21
Lift Cylinder (Right)	2.030	2	2F-19
Lights	1.220	2	2D-13
Lower Frame	3.000	1	2G-17
Lubric. Fitting Piping	3.001	1	2G-19
	2.041	1	2G-15
	2.040	1	1G-13
Main Piping	1.060	1	1K-9
	1.061	1	1K-11
Mirror (Rear)	1.300	2	2E-21
Monobloc Boom	2.000	1	2F-5
Motor - Starter	0.360	2	1I-9
Motor - Swing	1.040	1	1J-17
Motor - Travel	3.010	1	2G-21
Motor - Wiper	1.220	1	2D-11
Muffler	0.002	1	1D-7
Oil Tank	1.020	1	1J-7
Operator's Seat	1.250	2	2D-21
OperatorsSeat(Bostrom)(Std.)	5.0151	1	2J-21
Pilot Piping(1)	1.080	1	1L-5
Pilot Piping(2)	1.081	1	1L-9
Pilot Piping(3)	1.082	1	1L-11
Pilot Piping(4)	1.083	1	1L-17
Pilot Piping(5)	1.084	1	1L-19
Pilot Piping(6)	1.085	1	1L-21
Pilot Valve	1.070	3	1K-19
	1.071	2	1L-3
Pilot Valve-components	1.070	2	1K-17
PipingBoom	2.030	1	2F-17
	2.031	1	2G-5
Piping-Injection	0.149	1	1G-15
Piping-Lube Fittings	2.040	1	2G-13
Piping-Main	1.060	1	1K-9
Piping-Pilot(1)	1.080	1	1L-5
Piping-Pilot(3)	1.082	1	1L-11
Piping-Pilot(4)	1.083	1	1L-17
Piping-Pilot(5)	1.084	1	1L-19
Piping-Pump Contr. Valve	1.050	1	1J-21
Piping-Travel (Lower)	3.070	1	2H-19
	3.071	1	2H-21
Piping-Turbocharger	0.241	1	1H-5
Pump-Engine Oil	0.300	1	1H-9
Pump-Hydraulic	1.030	1	1J-11
Pump-Injection	0.140	6	1F-23
Pump-Water	0.320	1	1H-17
Pump/Control Valve Piping	1.050	1	1J-23
Radiator	0.003	1	1D-9
Radiator-Components	0.003	2	1D-11
	0.003	3	1D-13
Rocker Arm	0.060	2	1E-15
Rotary Distributor	3.060	1	2H-17
SAE Battery Provision	1.220	3	2D-17
Seat Belt	5.0536	1	1J-23
Sensors	1.220	2	2D-13
Solenoid Valve	1.080	2	1L-7
Starter	0.360	2	1I-9
Starter-Mounting	0.360	1	1I-7
Stop Valve	1.082	2	1L-13
Swing Red.Unit-Components	1.040	2	1J-19
Swing Reduction Unit	1.040	1	1J-17
Thermostat & Housing	0.326	1	1H-21
Timing Control	0.100	1	1F-9
Tool Kit	5.0063	1	2J-19
Track Chain	3.051	1	2H-13
	3.052	1	2H-15
Track Roller	3.040	1	2H-11
Travel Motor-componen.	3.010	3	2H-3
Travel Piping (Lower)	3.070	1	2H-19
	3.071	1	2H-21
Travel Red.Unit-Componen.	3.010	2	2G-23
Travel Reduction Units	3.010	1	2G-21
Turbocharger	0.240	1	1G-23
	0.240	2	1H-3
Turbocharger Piping	0.241	1	1H-5
Upper Frame	1.000	1	1J-3
Upper Roller	3.030	1	2H-9
Valve-Anti-Shock(Hydr.)	1.082	3	1L-15
Valve-Exhaust	0.060	2	1E-15
Valve-Intake	0.060	2	1E-15
Valve-Pilot (Hydr.)	1.070	1	1K-15
Valve-Pilot(Travel)	1.070	1	1K-15
Valve-Solenoid	1.080	2	1L-7
Valve-Stop(Travel)	1.082	1	1L-11
Water Pump	0.320	1	1H-17
Water Pump Drive	0.340	1	1H-23
Water Pump-Components	0.320	2	1H-17
Wiper	1.220	1	2D-11

FH200

DASHBOARD (RIGHT) CRUSCOTTO (DESTRO)	TABLIER DROIT STIRNWAND-RECHTS TABLERO DERECHO	1.200 TAV.1

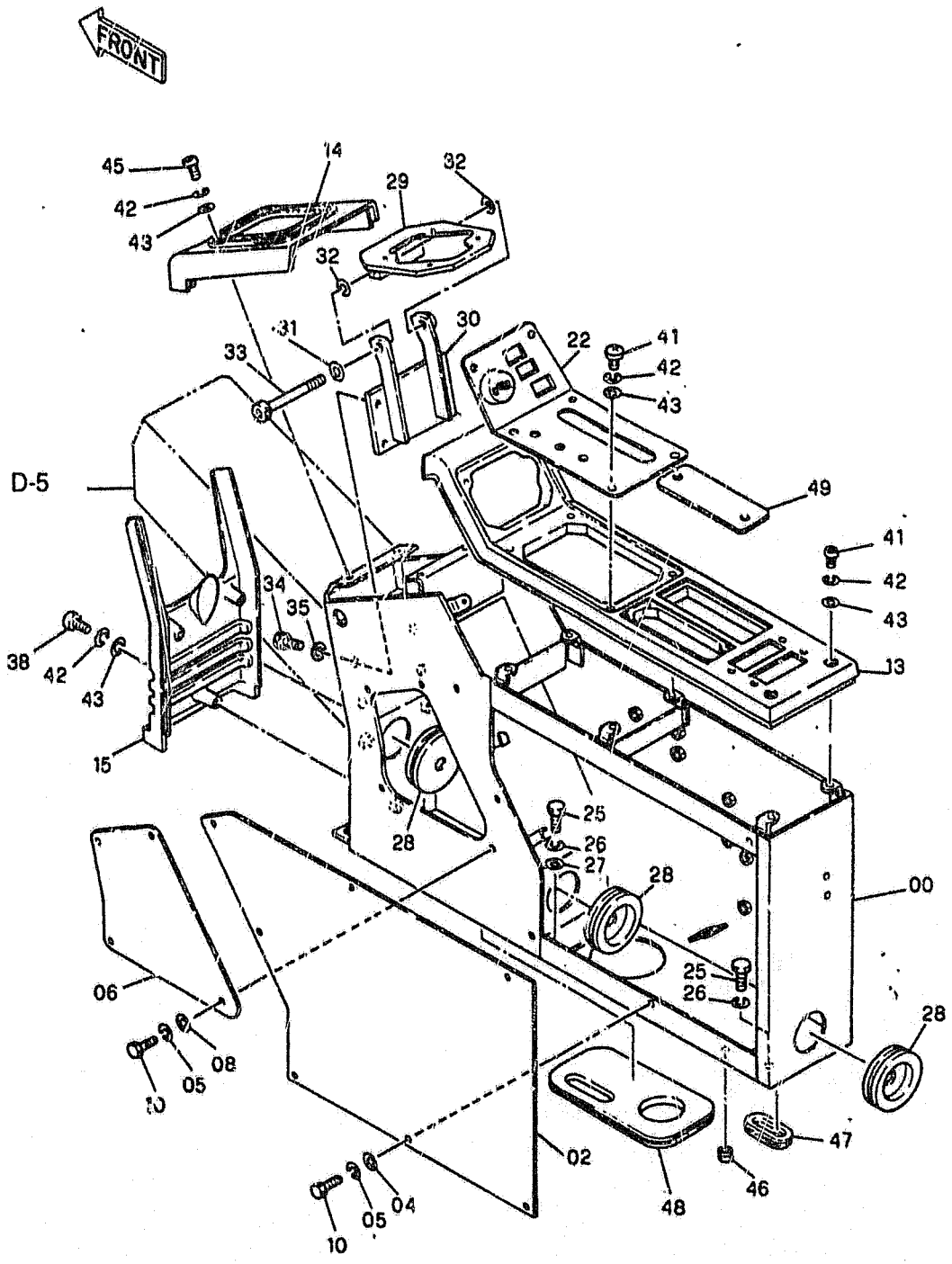

FH200

DASHBOARD (RIGHT) | TABLIER DROIT | 1.200 TAV.1
CRUSCOTTO (DESTRO) | STIRNWAND-RECHTS
TABLERO DERECHO

ITEM	PART NUMBER	QTY	TR. CO.	DESCRIPTION	DESCRIZIONE
00	71415612	1	115M	PILLAR	MONTANTE
02	71415611	1	265C	COVER	COPERCHIO
04	12643731	7	131R	WASHER	ROSETTA
05	10571574	11	131R	WASHER	ROSETTA
06	71415060	1	265C	COVER	COPERCHIO
08	14496431	4	131R	WASHER	ROSETTA
10	10902134	11	40V	SCREW 6X1X14	VITE 6X1X14
13	71415625	1	25P	PANEL	PANNELLO
14	71415629	1	265C	COVER	COPERCHIO
15	71415630	1	265C	COVER	COPERCHIO
22	71415631	1	141P	INSTRUMENT PANEL	PLANCIA PORTASTRUMENTI
25	11106234	6	40V	SCREW 10X1,5X25	VITE 10X1,5X25
26	10571874	6	131R	WASHER	ROSETTA
27	14496631	1	131R	WASHER	ROSETTA
28	71415645	3	145G	GUIDE	GUIDA
29	71415667	1	225S	BRACKET	STAFFA
30	71415668	1	105P	PLATE	PIASTRA
31	14496731	1	131R	WASHER	ROSETTA
32	586164		131R	WASHER	ROSETTA
33	14423434	1	40V	SCREW 12X1,75X100	VITE 12X1,75X100
34	11106034	4	40V	SCREW 10X1,5X20	VITE 10X1,5X20
35	10571874	4	131R	WASHER	ROSETTA
38	13277017	3	40V	SCREW 6X1X40	VITE 6X1X40
41	13276217	8	40V	SCREW 6X1X16	VITE 6X1X16
42	10571576	15	170R	LOCKWASHER	ROSETTA ELASTICA
43	14496406	15	131R	WASHER	ROSETTA
45	13276417	4	40V	SCREW	VITE
46	10399480	1	45A	RING	ANELLO
47	71415669	1	145G	GUIDE	GUIDA
48	71415029	1	265C	COVER	COPERCHIO
49	71415609	1	50T	PLUG	TAPPO

DATA MONITOR
MODULO DI CONTROLLO

MODULE DE CONTROLE
INSTRUMENTE
PANEL DE CONTROL

1.200 TAV.2

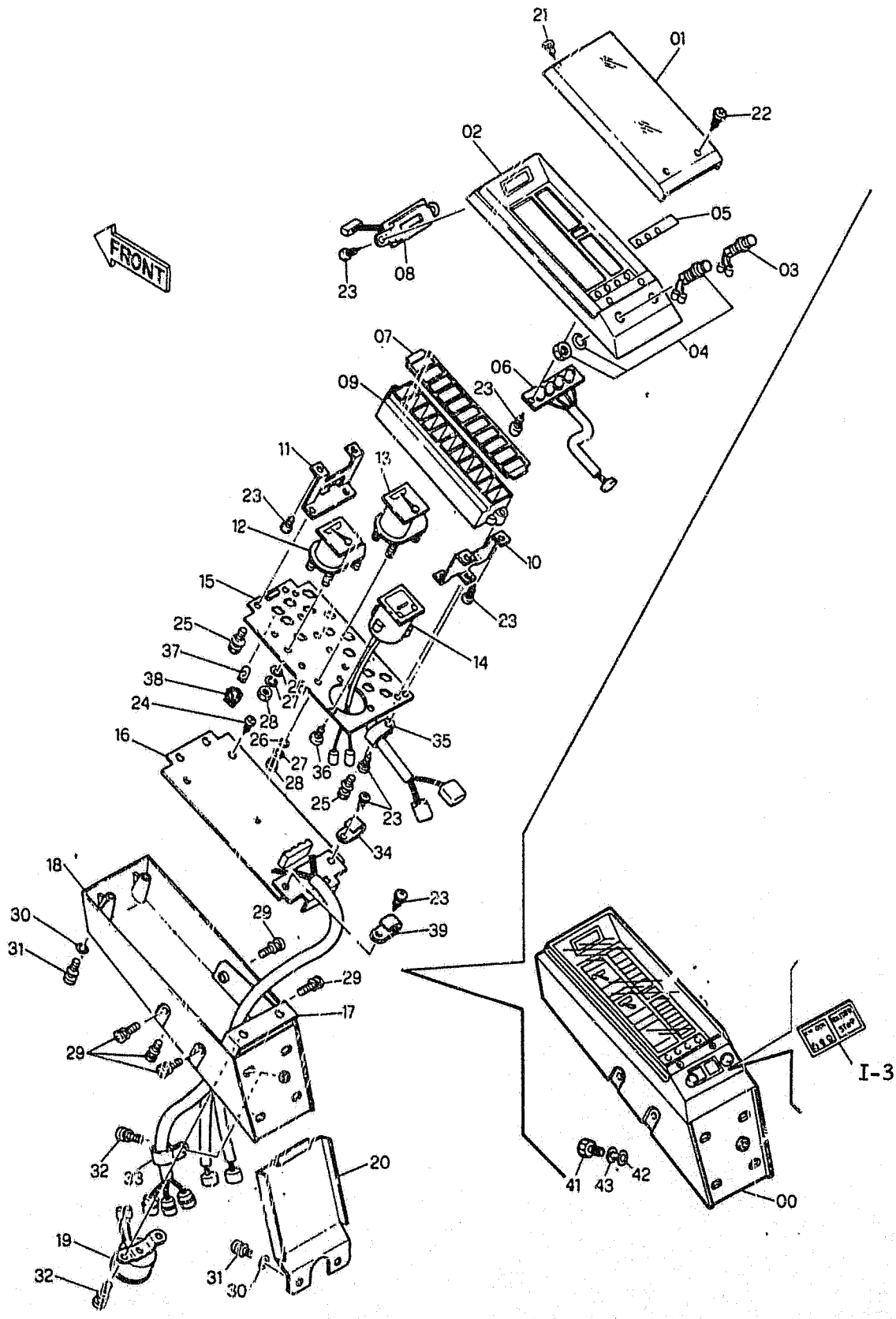

DATA MONITOR
MODULO DI CONTROLLO

MODULE DE CONTROLE
INSTRUMENTE
PANEL DE CONTROL

1.200 TAV.2

ITEM	PART NUMBER	QTY	TR. CO.	DESCRIPTION	DESCRIZIONE
00	71403513	1	25P	PANEL	PANNELLO
01	71403603	1	265C	COVER	COPERCHIO
02	71403604	1	35S	CASE	SCATOLA
03	71403605	1	236P	PUSH BUTTON	PULSANTE
04	71403606	1	236P	PUSH BUTTON	PULSANTE
05	71403607	1	70L	SIDE RAIL	LONGHERINA
06	71403608	1	25P	PANEL	PANNELLO
07	71403609	1	35I	FUEL LEVEL INDICATOR	INDICATORE LIVELLO COMB.
08	71403610	1	24O	CLOCK	OROLOGIO
09	71403611	1	35S	CASE	SCATOLA
10	71403612	1	225S	BRACKET	STAFFA
11	71403613	1	225S	BRACKET	STAFFA
12	71403614	1	95T	TEMPERATURE GAUGE	TERMOMETRO ACQUA
13	71403615	1	35I	FUEL LEVEL INDICATOR	INDICATORE LIVELLO COMB.
14	71403616	1	248C	HOURMETER	CONTAORE
15	71403617	1	25P	PANEL	PANNELLO
16	71403618	1	25P	PANEL	PANNELLO
17	71403619	1	225S	BRACKET	STAFFA
18	71403620	1	35S	CASE	SCATOLA
19	71403621	1	105A	HORN	AVVISATORE ACUSTICO
20	71403622	1	265C	COVER	COPERCHIO
21	71403623	2	40V	SCREW	VITE
22	71403624	2	40V	SCREW	VITE
23	71403625	12	40V	SCREW	VITE
24	71403626	2	40V	SCREW	VITE
25	71403627	5	40V	SCREW	VITE
26	71403628	8	131R	WASHER	ROSETTA
27	71403629	8	170R	LOCKWASHER	ROSETTA ELASTICA
28	71403630	8	10D	NUT	DADO
29	71403631	6	40V	SCREW	VITE
30	71403632	6	131R	WASHER	ROSETTA
31	71403633	6	40V	SCREW	VITE
32	71403634	3	40V	SCREW	VITE
33	71403635	1	231S	CLIP	STAFFETTA
34	71403636	1	231S	CLIP	STAFFETTA
35	71403637	1	231S	CLIP	STAFFETTA
36	71403638	3	40V	SCREW	VITE
37	71403639	15	87L	BULB	LAMPADINA
38	71403640	15	193P	BULB HOLDER	PORTALAMPADA
39	71403641	1	231S	CLIP	STAFFETTA
41	16043434	4	40V	SCREW 8X1,25X20	VITE 8X1,25X20
42	14496531	4	131R	WASHER	ROSETTA
43	10571774	4	170R	LOCKWASHER	ROSETTA ELASTICA

DASHBOARD (RIGHT)
CRUSCOTTO (DESTRO)

TABLIER DROIT
STIRNWAND-RECHTS
TABLERO DERECHO

1.200 TAV.3

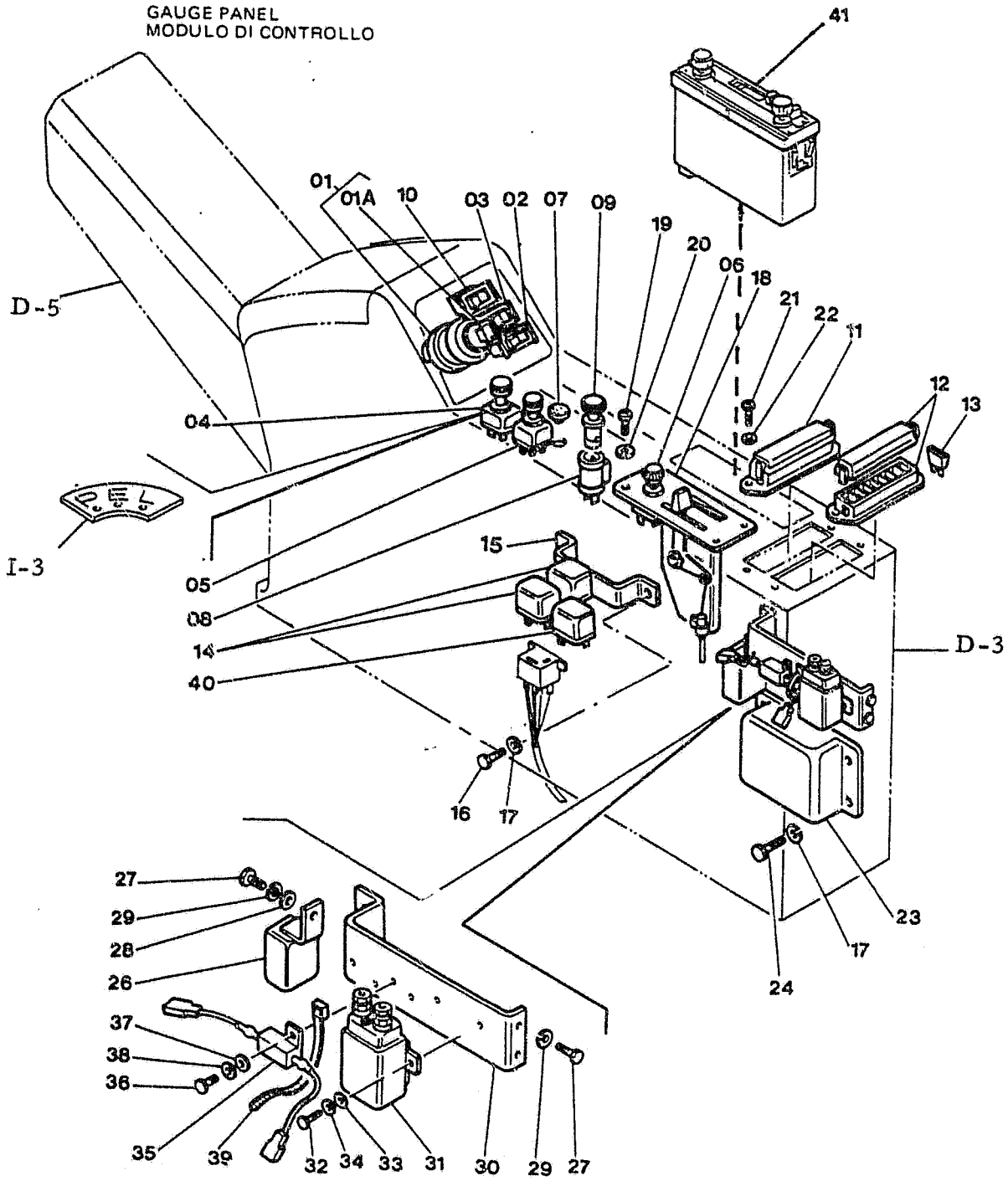

DASHBOARD (RIGHT) | TABLIER DROIT | 1.200 TAV.3
CRUSCOTTO (DESTRO) | STIRNWAND-RECHTS
TABLERO DERECHO

ITEM	PART NUMBER	QTY	TR. CO.	DESCRIPTION	DESCRIZIONE
01	79065835	1	210C	SWITCH STARTER	COMMUTATORE AVVIAMENTO
01A	79069292	1	150C	KEY	CHIAVE
02	71403592	1	210C	SWITCH SPEED VARIATOR	COMMUTATORE VAR. VELOCITA'
03	71403593	1	210C	SWITCH GAS DECREASE	COMMUTATORE MINIMO AUTOMATICO
04	71403516	1	210C	SWITCH MODE	COMMUTATORE SELEZIONE MODO OPERATIVO
05	71403517	1	210C	SWITCH LIGHTS	COMMUTATORE PROIETTORI
06	71403518	1	210C	SWITCH ELECTROFAN	COMMUTATORE ELETTROVENTILATORE
07	79001605	1	50T	PLUG	TAPPO
08	79092953	1	205P	RECEPTACLE	PRESA DI CORRENTE
09	79092954	1	5A	CIGARETTE LIGHTER	ACCENDISIGARI
10	71403594	1	210C	SWITCH WIPER	COMMUTATORE TERGICRISTALLO
11	71403520	1	35S	CASE -LEFT	SCATOLA -SIN.
12	71403541	1	35S	CASE -RIGHT	SCATOLA -DEST.
13	11054590	3	110F	FUSE 3A	FUSIBILE 3A
	11054690	1	110F	FUSE 4A	FUSIBILE 4A
	11054890	9	110F	FUSE 7,5A	FUSIBILE 7,5A
	11054990	3	110F	FUSE 10A	FUSIBILE 10A
14	79070487	2	85T	RELAY	TELERUTTORE
15	79068201	1	225S	BRACKET	STAFFA
16	10902134	2	40V	SCREW 6X1X14	VITE 6X1X14
17	10571574	6	131R	WASHER	ROSETTA
18	71416228	1	C189	CONTROL	COMANDO
19	13271917	4	40V	SCREW 4X0,7X10	VITE 4X0,7X10
20	10571376	4	131R	WASHER	ROSETTA
21	13274217	4	40V	SCREW 5X0,8X16	VITE 5X0,8X16
22	10571476	4	131R	WASHER	ROSETTA
23	71403521	1	130C	CONTROL UNIT	CENTRALINA
24	13275914	4	40V	SCREW 6X1X10	VITE 6X1X10
26	71403575	1	85T	RELAY	TELERUTTORE
27	13275924	5	40V	SCREW 6X1X10	VITE 6X1X10
28	14496421	1	131R	WASHER	ROSETTA
29	10571574	5	170R	LOCKWASHER	ROSETTA ELASTICA
30	71416131	1	225S	BRACKET	STAFFA
31	79092955	1	85T	RELAY	TELERUTTORE
32	10977534	2	40V	SCREW	VITE
33	14496321	2	131R	WASHER	ROSETTA
34	10571474	2	170R	LOCKWASHER	ROSETTA ELASTICA
35	71403528	1	40R	RESISTANCE	RESISTENZA
36	13270224	2	40V	SCREW 3X0,5X6	VITE 3X0,5X6
37	14497629	2	131R	WASHER	ROSETTA
38	10571274	2	170R	LOCKWASHER	ROSETTA ELASTICA
39	79013422	2	31F	CLAMP	FASCETTA
40	79083312	1	254C	CONTAINER	CONTENITORE
41	71405767	1		DIODES RADIO	DIODI

FH200

DASHBOARD (LEFT) CRUSCOTTO (SINISTRO)	TABLIER GAUCHE STIRNWAND-LINK TABLIERO IZQUIERDO	1.210 TAV.1 NTR 104S V-89

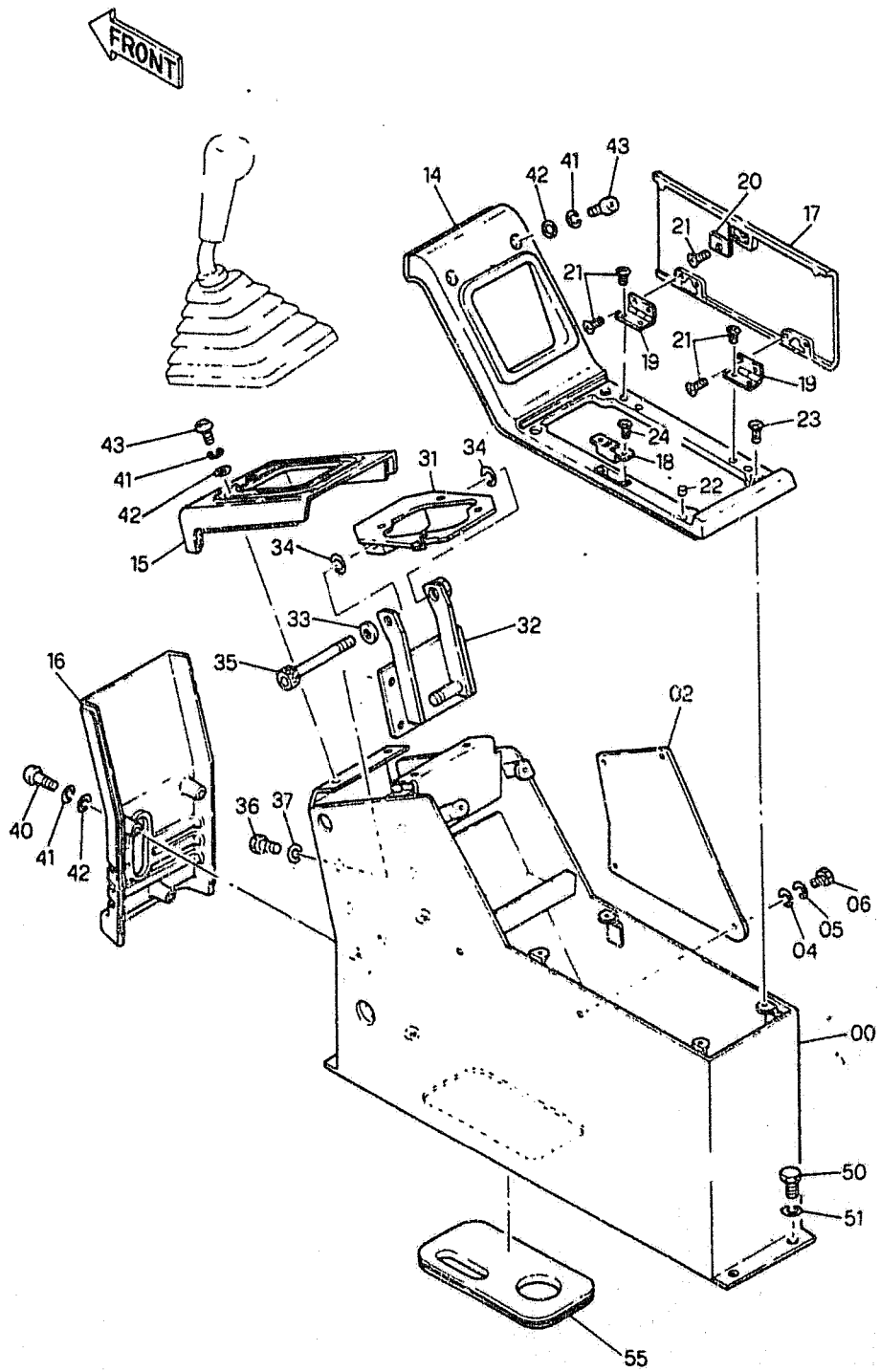

FH200

DASHBOARD (LEFT) — TABLIER GAUCHE — 1.210 TAV.1
CRUSCOTTO (SINISTRO) — STIRNWAND-LINK
TABLIERO IZQUIERDO — NTR 104S V-89

ITEM	PART NUMBER	QTY	TR. CO	DESCRIPTION	DESCRIZIONE
00	71415047	1	115M	PILLAR	MONTANTE
02	71415060	1	265C	COVER	COPERCHIO
04	14496431	4	131R	WASHER	ROSETTA
05	10571574	4	131R	WASHER	ROSETTA
06	10702134	4	40V	SCREW 6X1X14	VITE 6X1X14
14	71415062	1	265C	COVER	COPERCHIO
15	71415066	1	265C	COVER	COPERCHIO
16	71415067	1	265C	COVER	COPERCHIO
17	71415063	1	265C	COVER	COPERCHIO
18	71415071	1	58C	MAGNET	CALAMITA
19	71415072	2	140C	HINGE	CERNIERA
20	71415076	1	110P	PLAQUE	PIASTRINA
21	71415077	9	40V	SCREW	VITE
22	71415078	2	60T	BLOCK	TASSELLO
23	13312917	4	40V	SCREW 6X1X14	VITE 6X1X14
24	13296111	2	40V	SCREW 3X0,5X10	VITE 3X0,5X10
31	71415080	1	300S	SUPPORT	SUPPORTO
32	71415083	1	300S	SUPPORT	SUPPORTO
33	14496731	1	131R	WASHER 12X1,75X24	ROSETTA 12X1,75X24
34	586164		131R	WASHER	ROSETTA
35	14423434	1	40V	SCREW 12X1,75X100	VITE 12X1,75X100
36	11106034	4	40V	SCREW 10X1,5X20	VITE 10X1,5X20
37	14496631	4	131R	WASHER	ROSETTA
40	13277017	3	40V	SCREW 6X1X40	VITE 6X1X40
41	10571576	9	170R	LOCKWASHER	ROSETTA ELASTICA
42	14496406	9	131R	WASHER	ROSETTA
43	13276417	6	40V	SCREW 6X1X20	VITE 6X1X20
50	11106234	4	40V	SCREW 10X1,5X25	VITE 10X1,5X25
51	10516874	4	170R	LOCKWASHER	ROSETTA ELASTICA
55	71415029	1	265C	COVER	COPERCHIO

ELECTRIC SYSTEM
IMPIANTO ELETTRICO

INSTALLATION ELECTRIQUE
ELEKTRISCHE ANLAGE
INSTALACION ELECTRICA

1.220 TAV.1

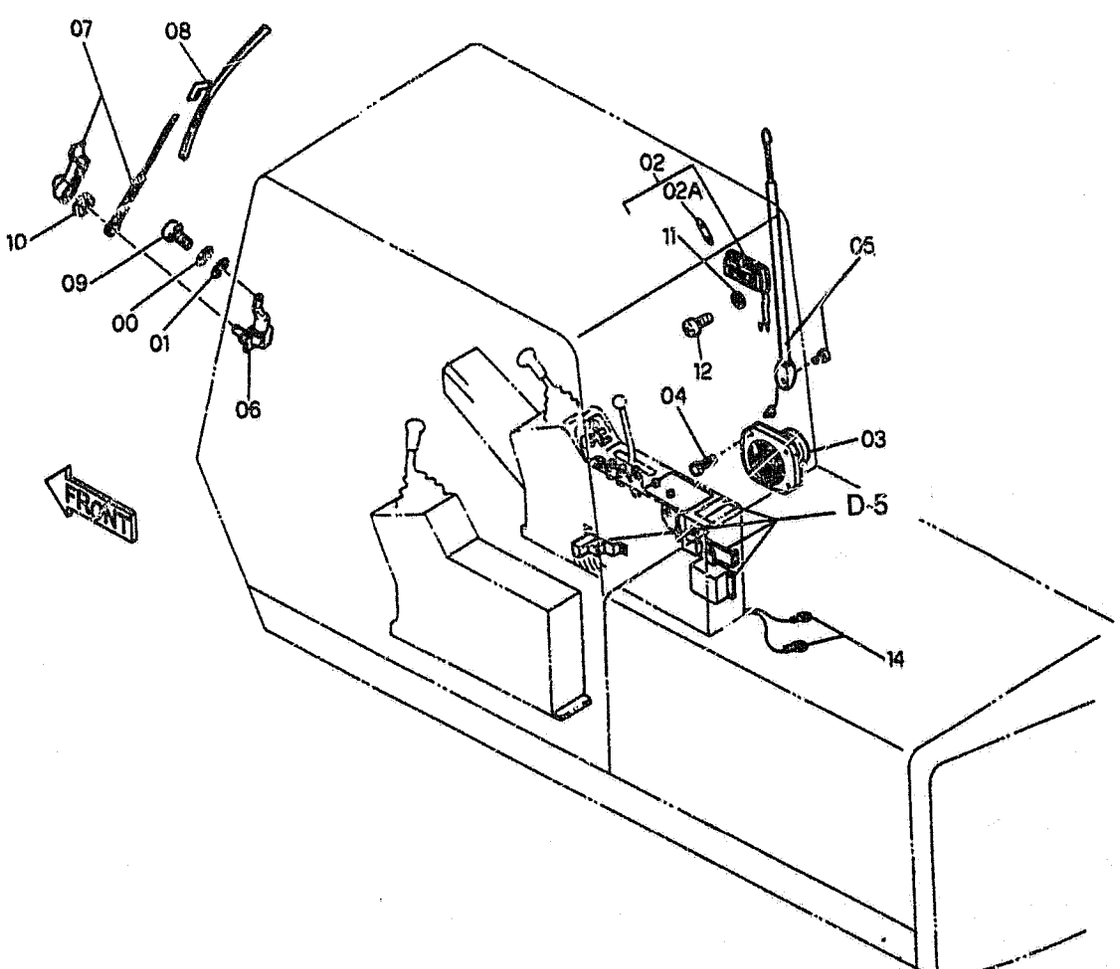

ELECTRIC SYSTEM
IMPIANTO ELETTRICO

INSTALLATION ELECTRIQUE
ELEKTRISCHE ANLAGE
INSTALACION ELECTRICA

1.220 TAV.1

ITEM	PART NUMBER	QTY	TR. CO.	DESCRIPTION	DESCRIZIONE
00	**10571574**	3	170R	LOCKWASHER	ROSETTA ELASTICA
01	**14496421**	3	131R	WASHER	ROSETTA
02	**71403590**	1	135P	CEILING LIGHT -ASS.LY	PLAFONIERA -COMPL.
02A	**10863190**	1	30L	LAMP	LAMPADA
03	**71403529**	1	45D	DIFFUSEUR	DIFFUSORE
04	**15687476**	4	40V	SCREW 6X1X25	VITE 6X1X25
05	**71403535**	1	90A	ROD	ASTA
06	**71403596**	1	58R	REDUCTION GEAR	RIDUTTORE
07	**71403583**	1	130B	ARM	BRACCIO
08	**71403587**	1	177S	BRUSH	SPAZZOLA
09	**13276024**	3	40V	SCREW 6X1X12	VITE 6X1X12
10	**16100811**	1	10D	NUT	DADO
11	**14497731**	2	131R	WASHER	ROSETTA
12	**14303220**	4	40V	SCREW	VITE
14	**71403561**	1	111C	CABLE	CAVO

FH200

ELECTRIC SYSTEM IMPIANTO ELETTRICO	INSTALLATION ELECTIQUE ELEKTRISCHE ANLAGE INSTALACION ELECTRICA	1.220 TAV 2

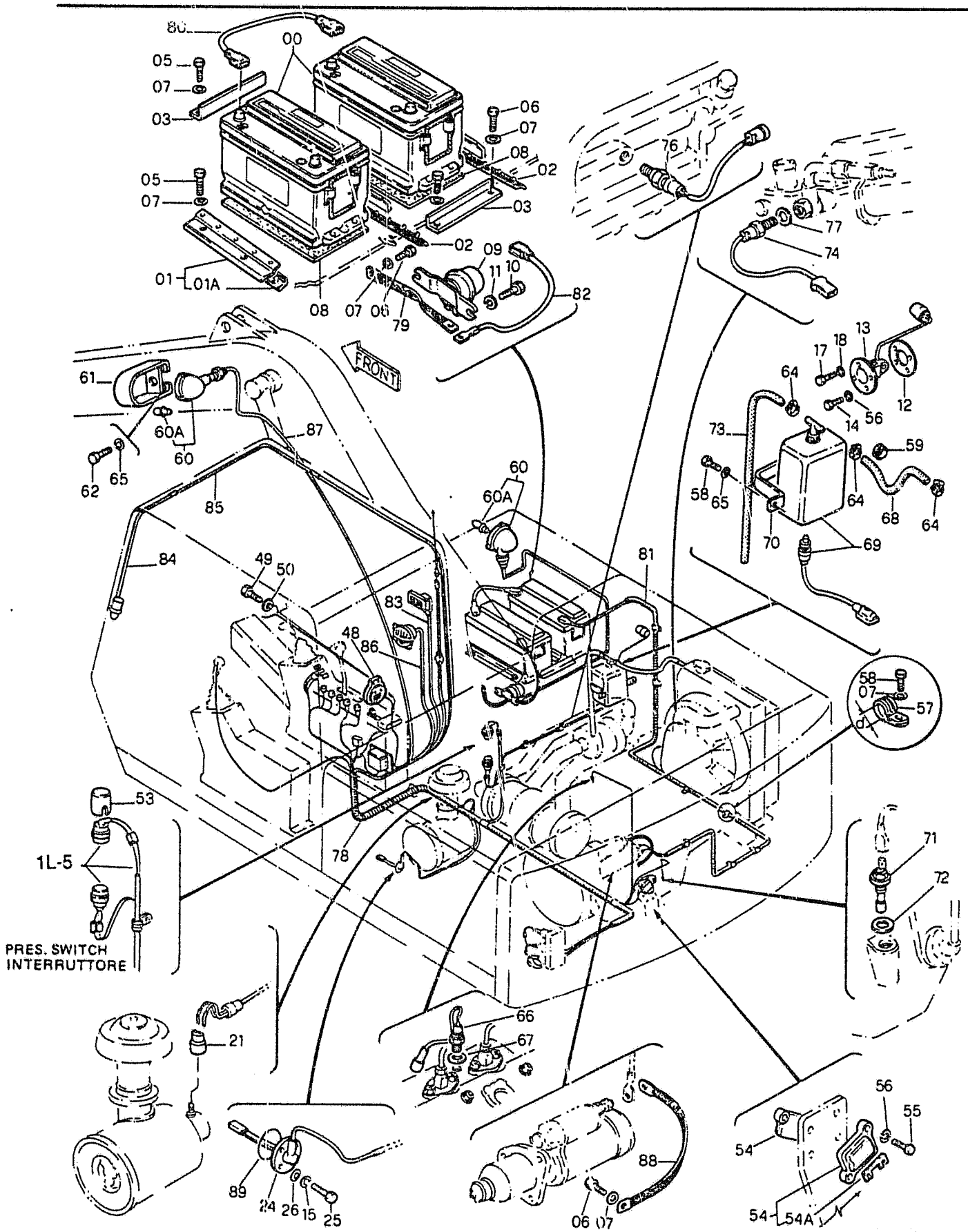

REVISED MARCH 1992

FH200

ELECTRIC SYSTEM
IMPIANTO ELETTRICO

INSTALLATION ELECTIQUE
ELEKTRISCHE ANLAGE
INSTALACION ELECTRICA

1.220 TAV 2

ITEM	PART NUMBER	QTY	TR. CO.	DESCRIPTION	DESCRIZIONE
00	79062584	2	25B	BATTERY	BATTERIA
01	71416126	2	225S	BRACKET ASSEMBLY	STAFFA
01A	71416128	1	60T	BLOCK	TASSELLO
02	71416128	2	60T	BLOCK	TASSELLO
03	71406129	1	225S	BRACKET	STAFFA
04	71405768	1	225S	BRACKET	STAFFA
05	11106234	6	40V	SCREW 10 X1.5 X 25	VITE
06	10979334	24	40V	SCREW 10 X1.5 X 14	VITE
07	14496621	31	131R	WASHER	ROSETTA
08	04991458	2	105P	PLATE PRIOR TO S/N 0229	PIASTRA
	71406284	2	105P	PLATE S/N 0230 AND UP	PIASTRA
09	71403571	1	75I	SWITCH, MASTER	INTERRUTTORE
10	16043834	2	40V	SCREW 8 X 1.25 X 30	VITE
11	14496531	4	131R	WASHER	ROSETTA
12	79031103	1	122G	SEAL	GUARIZIONE
13	71403512	1	35I	INDICATOR, FUEL SENDER	INDICATORE
14	13272024	5	40V	SCREW	VITE
15	10571474	7	170R	LOCKWASHER	ROSETTA ELASTICA
17	13276124	1	40V	SCREW 6 X 1 X 14	VITE
18	10571574	1	131R	WASHER	ROSETTA
21	79081900	1	75I	SWITCH, AIR RESTRICTION	INTERRUTTORE
24	71403574	1	133S	SENSOR	SENSORE
25	10977634	3	40V	SCREW 5 X 0.8 X 16	VITE
26	14497821	3	131R	WASHER	ROSETTA
48	79056873	1	105A	HORN	AVVISATORE ACUSTICO
49	16043234	2	40V	SCREW 8 X 1.25 X 16 S/N 0051 AND UP	VITE
	16043234	2	40V	SCREW 8 X 1.25 X 16	VITE
50	10571774	2	170R	LOCKWASHER	ROSETTA ELASTICA
	10571774	2	170R	LOCKWASHER S/N 0051 AND UP	ROSETTA ELASTICA
53	71416132	1	65C	BOOT	CAPPUCCIO
54	71403531	2	188P	FUSE HOLDER	PORTA FUSIBLE
54A	71403532	1	110F	FUSE (50 AMP ALTERNATOR)	FUSIBILE
	71403534	1	110F	FUSE (30 AMP STARTER)	FUSIBILE
55	13272224	4	40V	SCREW 4 X 0.7 X 16	VITE
56	10571374	9	131R	WASHER	ROSETTA
57	71405745	5	231S	CLIP D=18 S/N 0051 & UP	STAFFETA
	71405770	7	231S	CLIP D=25 UP TO S/N 0051	STAFFETA
	71405773	1	231S	CLIP D=16 UP TO S/N 0050	STAFFETTA
	71405774	2	231S	CLIP D=6	STAFFETTA
	71415887	4	231S	CLIP D=28 S/N 0051 & UP	STAFFETTA
	71415899	1	231S	CLIP D=14	STAFFETTA
	71406130	4	231S	CLIP D=12	STAFFETTA
58	11103034	21	40V	SCREW 10X1.5X18	VITE
59	10397880	1	45A	RING	ANELLO
60	79092952	2	220P	FLOODLIGHT ASS'Y	PROIETTORE
60A	79069460	2	30L	LAMP	LAMPIDA

FH200

ELECTRIC SYSTEM IMPIANTO ELETTRICO	INSTALLATION ELECTIQUE ELEKTRISCHE ANLAGE INSTALACION ELECTRICA	**1.220 TAV 2**

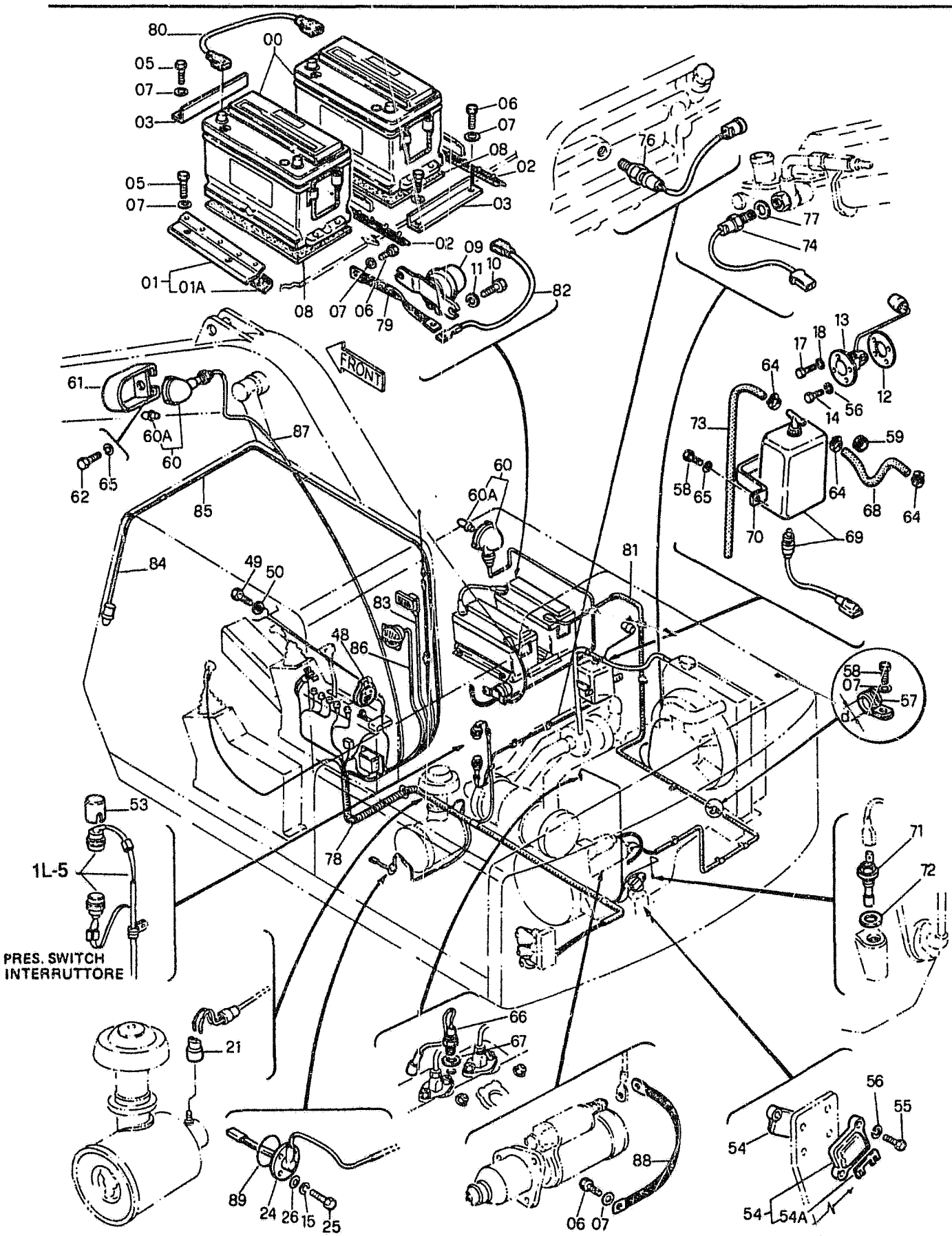

REVISED MARCH 1992

FH200

ELECTRIC SYSTEM
IMPIANTO ELETTRICO

INSTALLATION ELECTIQUE
ELEKTRISCHE ANLAGE
INSTALACION ELECTRICA

1.220 TAV 2

ITEM	PART NUMBER	QTY	TR. CO.	DESCRIPTION	DESCRIZIONE
61	71320138	1	70R	GUARD (02)	RIPARO
62	15970621	4	40V	SCREW 10X1.25X22	VITE
64	79084752	3	180C	COLLAR	COLLARE
65	10571874	6	131R	WASHER	ROSETTA
66	79091137	1	75I	SWITCH ENGINE COOLANT TEMP	INTERRUTTORE TEMP ACQUA MOTORE
67	10263460	1	120G	GASKET	GUARNIZIONE PIANA
68	19025186	1	285T	HOSE	TUBO FLESSIBILE
69	71406001	1	254C	CONTAINER	CONTENITORE
70	71406003	1	225S	BRACKET	STAFFA
71	79068180	1	133S	SENSOR ENGINE OIL LEVEL	SENSORE LIVELLO OLIO MOTORE
72	10265060	1	120G	GASKET	GUARNIZIONE PIANA
73	71406004	1	285T	HOSE	TUBO FLESSIBILE
74	71403536	1	160T	SENDING UNIT ENGINE COOLANT TEMP	TRASMETTITORE TEMP. ACQUA MOTORE
76	71403595	1	75I	SWITCH ENGINE OIL PRESSURE	INTERRUTTORE PRESSIONE OLIO MOTORE
77	10278660	1	120G	GASKET	GUANIZIONE PIANA
78	71403577	1	111C	CABLE	CAVO
79	79019383	1	111C	CABLE	CAVO
80	45011273	1	111C	CABLE	CAVO
81	71403583	1	111C	CABLE	CAVO
82	71403582	1	111C	CABLE	CAVO
83	71403562	1	222P	EXTENSION	PROLUNGA
84	71403565	1	222P	EXTENSION	PROLUNGA
85	71403566	1	222P	EXTENSION	PROLUNGA
86	71403564	1	222P	EXTENSION	PROLUNGA
87	71403579	1	222P	EXTENSION	PROLUNGA
88	71403560	1	111C	CABLE	CAVO
89	70924776	1	158G	O-RING	GUARNIZIONE O-R

FH200

WINDSHIELD WASHER LAVACRISTALLO	LAVE-GLACE SCHEIBENWASCHER LAVADOR DEL PARABRISAS	1.220 TAV 3

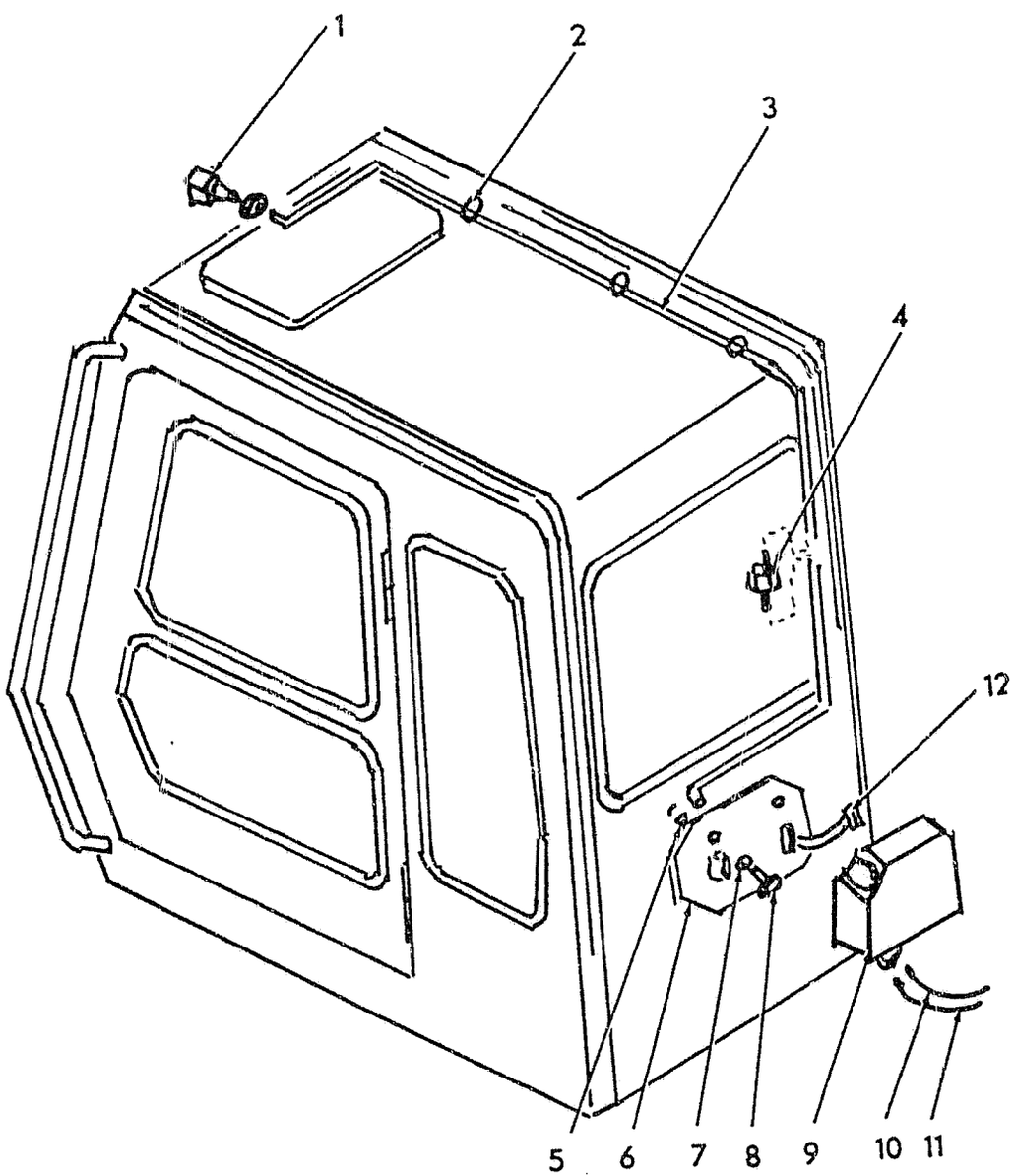

WINDSHIELD WASHER
LAVACRISTALLO
73158762

LAVE-GLACE
SCHEIBENWASCHER
LAVADOR DEL PARABRISAS

1.220 TAV 3

ITEM	PART NUMBER	QTY	TR. CO.	DESCRIPTION	DESCRIZIONE
01	79095451	1	148P	NOZZLE	POLVERIZZATORE
02	70925094	10	120M	TIE	MORSETTO COLLARE
	73125890	10	300S	TIE MOUNT	SUPPORTO
03	73158764	1	192T	HOSE	TUBO FLESSIBLE
04	79020844	1	10V	CHECK VALVE	VALVOLA
05	10615671	2	131R	WASHER	ROSETTA
06	73158763	1	80M	BRACKET	MENSOLA
07	12645031	2	131R	WASHER	ROSETTA
08	70925094	2	40V	SCREW	VITE
09	79088943	1	114S	CONTAINER & MOTOR	SERBATOIO
10	73074460	1	60F	WIRE	FILO
11	73158765	1	60F	WIRE	FILO
12	79030150	1	173C	STRAP	CINTURA
	70923730	1	40V	SCREW	VITE

SAE BATTERY PROVISION

1.220 TAV 4

ITEM	PART NUMBER	QTY	TR. CO.	DESCRIPTION	DESCRIZIONE

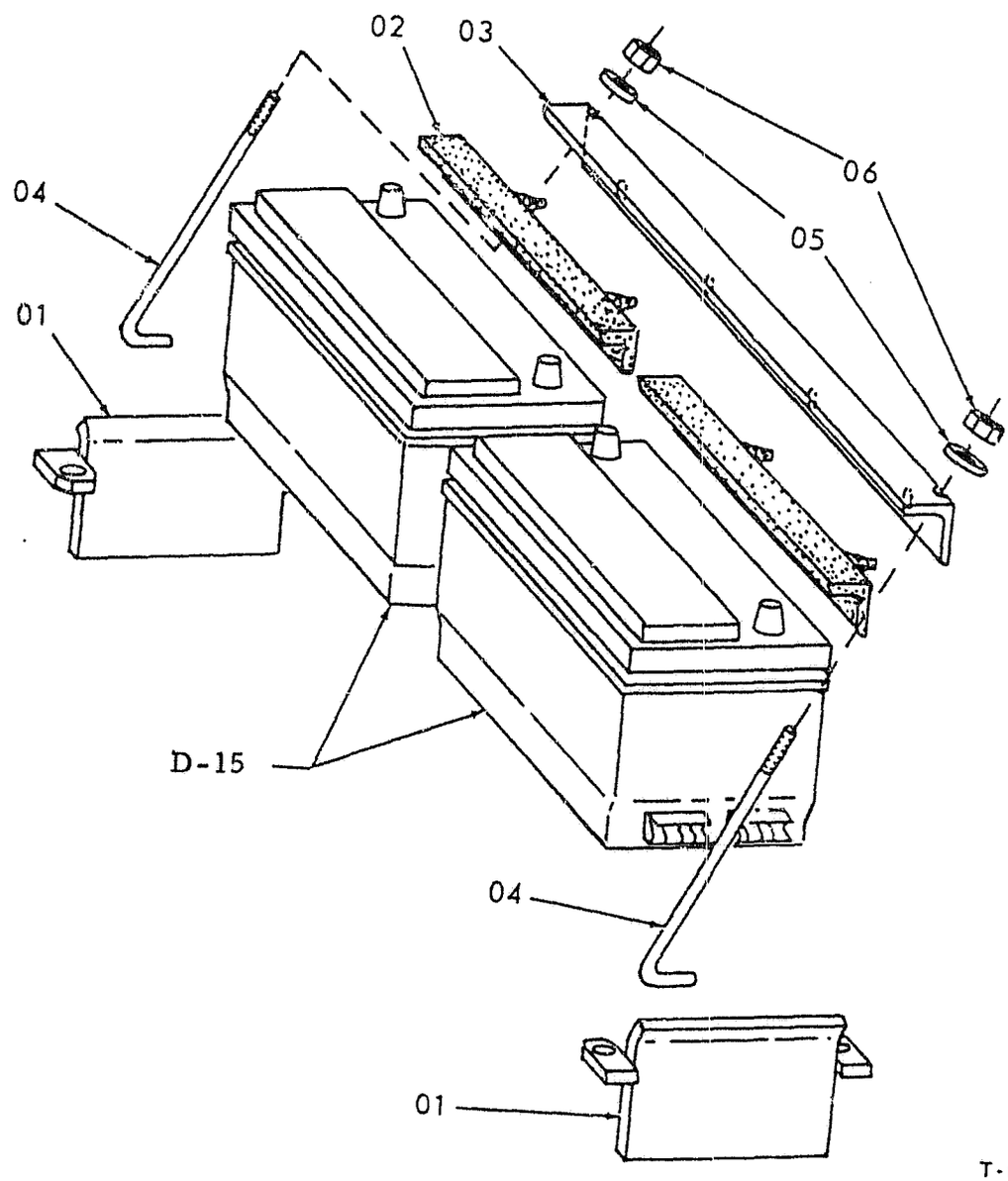

FH200

SAE BATTERY PROVISION

1.220 TAV 4

ITEM	PART NUMBER	QTY	TR. CO.	DESCRIPTION	DESCRIZIONE
01	73158782	2	80M	BRACKET	
			600T	REQUIRES WELDING	
02	04979701	4	74B	BLOCK	
03	76017021	2	80M	BRACKET	
04	76015770	4	90A	ROD	
05	14496431	4	131R	WASHER	
06	15896221	4	10D	NUT	

CAB-PLATFORM
CABINA-PIATTAFORMA

CABINE - PLATE-FORME
FAHRERHAUSE-TRITTBRETTER
CABINA-PISO

1.250 TAV 1

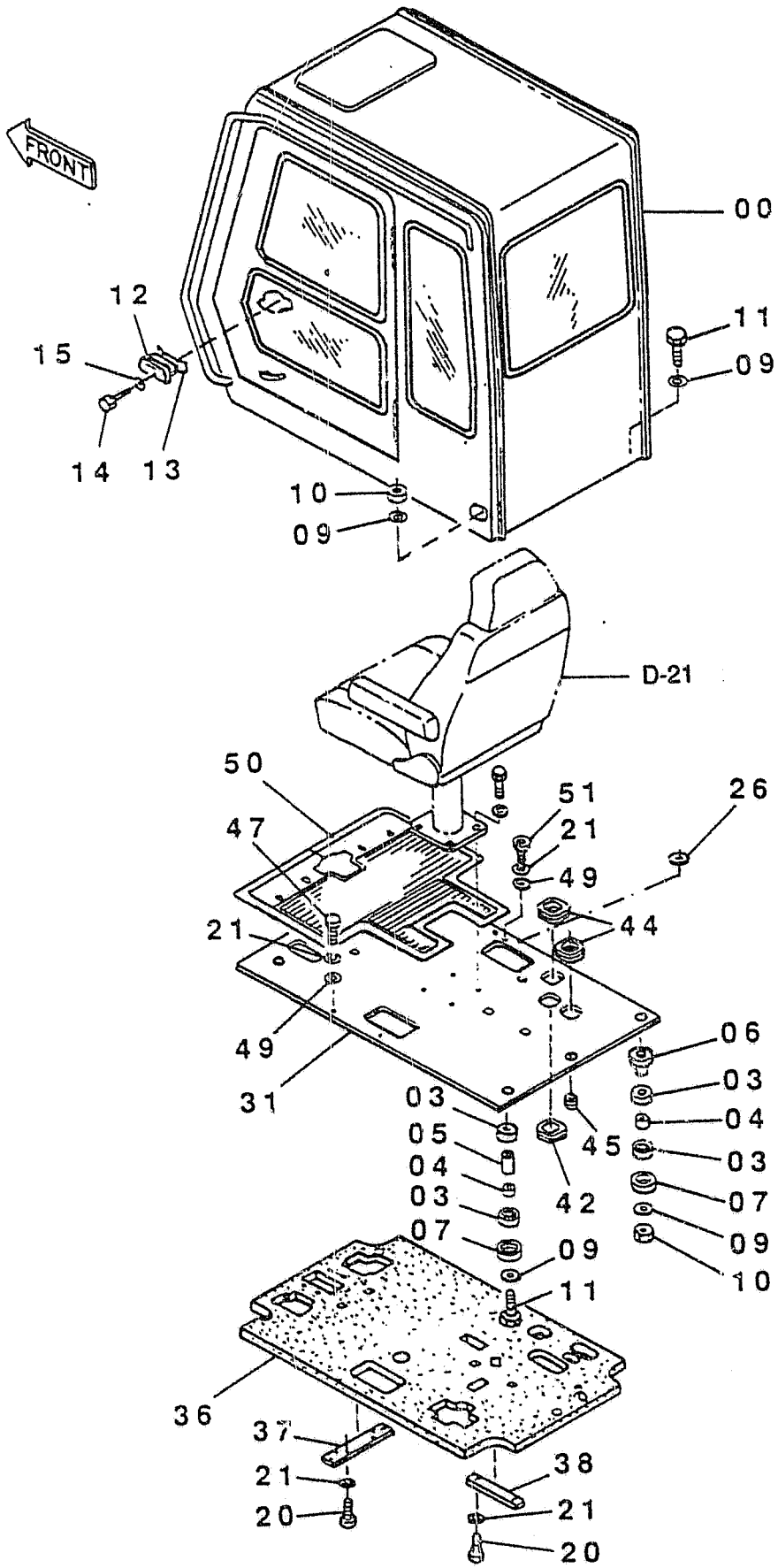

T-01111

REVISED JUNE 1990

FH200

CAB-PLATFORM
CABINA-PIATTAFORMA

CABINE - PLATE-FORME
FAHRERHAUSE-TRITTBRETTER
CABINA-PISO

1.250 TAV.1

ITEM	PART NUMBER	QTY	TR. CO.	DESCRIPTION	DESCRIZIONE
00	71416857	1	8C	CAB -ASS.Y SEE. E-3	CABINA -COMP.VED.TAV. 4
03	71405699	8	60T	BLOCK	TASSELLO
04	71431182	4	45A	RING	ANELLO
05	71431181	3	75D	SPACER	DISTANZIALE
06	71405702	1	75D	SPACER	DISTANZIALE
07	71405705	4	131R	WASHER	ROSETTA
09	71405003	8	131R	WASHER	ROSETTA
10	12574921	4	10D	NUT	DADO
11	15238234	4	40V	SCREW 16X1,5X100	VITE 16X1,5X100
12	93911108	1	183P	ASHTRAY	PORTACENERE
13	71406337	1	231S	CLIP	STAFFETTA
14	13276014	1	40V	SCREW 6X1X12	VITE 6X1X12
15	14496431	1	131R	WASHER	ROSETTA
20	11106234	10	40V	SCREW 10X1,5X25	VITE 10X1,5X25
21	10571874	14	131R	WASHER	ROSETTA
26	14496631	1	131R	WASHER	ROSETTA
31	71405708	1	493P	PLATFORM	PIATTAFORMA
36	71405716	1	25P	PANEL	PANNELLO
37	71405717	1	14B	STRAP	BANDELLA
38	71405718	1	14B	STRAP	BANDELLA
42	71405719	1	50T	PLUG	TAPPO
44	71405721	2	145G	GUIDE	GUIDA
45	71405722	1	50T	PLUG	TAPPO
47	11106434	2	40V	SCREW 10X1,5X30	VITE 10X1,5X30
49	71415221	4	131R	WASHER	ROSETTA
50	71415030	1	30T	MAT	TAPPETO
51	14420234	2	40V	SCREW 10X1,5X30	VITE 10X1,5X30

OPERATOR'S SEAT SEDILE	SIEGE DE CONDUCTEUR FAHRERSITZ ASIENTO DE CONDUCTOR	1.250 TAV.2 NTR 104S V-89

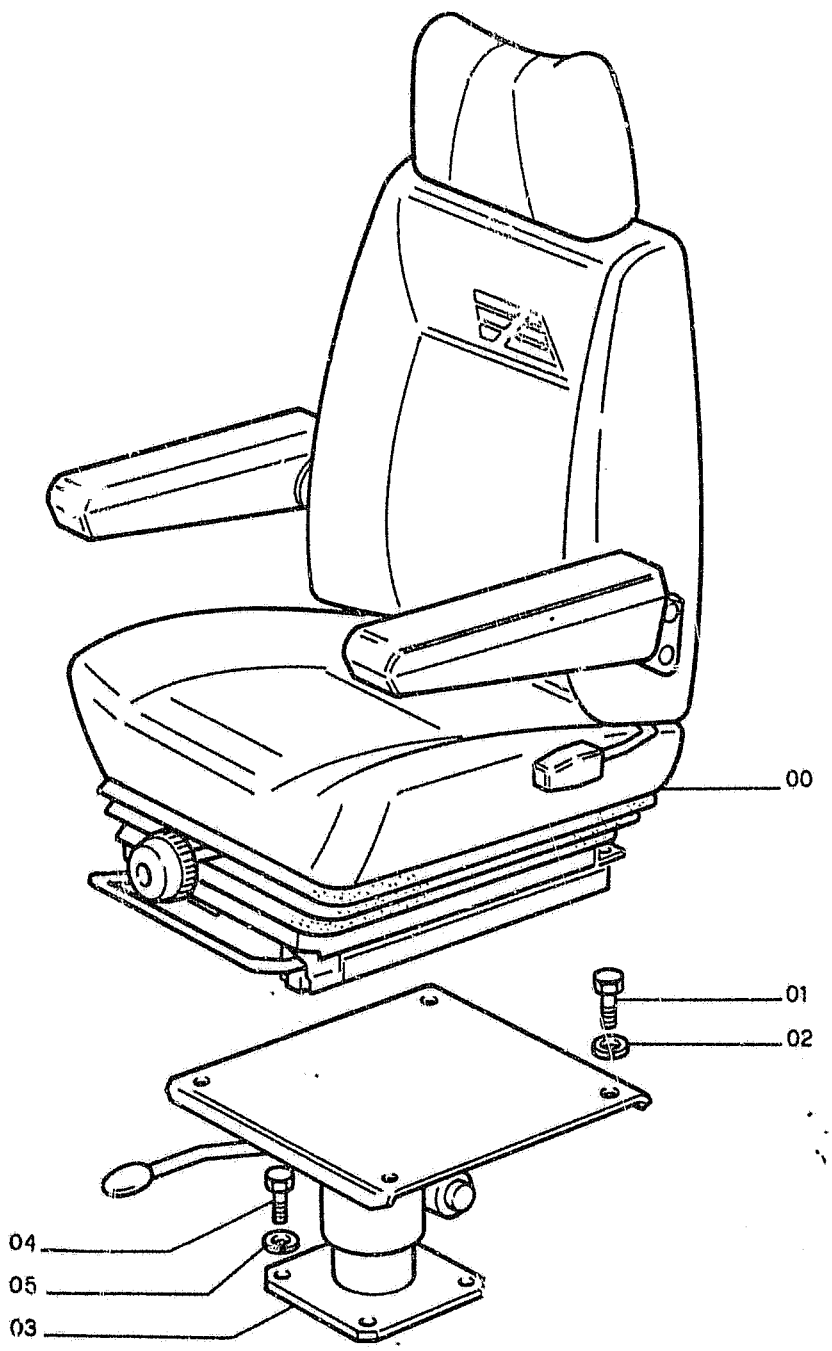

FH200

OPERATOR'S SEAT SEDILE	SIEGE DE CONDUCTEUR FAHRERSITZ ASIENTO DE CONDUCTOR	1.250 TAV.2 NTR 104S V-89 60404070.01 - 60404077.01

ITEM	PART NUMBER	QTY	TR. CO.	DESCRIPTION	DESCRIZIONE
00	71406293	1	80S	SEAT BOSTROM SEE J-21	SEDILE BOSTROM VED. TAV.3
01	14306221	4	40V	SCREW 8X1,25X16	VITE 8X1,25X16
02	10571774	4	131R	WASHER	ROSETTA
03	71405707	1	300S	SUPPORT	SUPPORTO
04	11106234	4	40V	SCREW 10X1,5X25	VITE 10X1,5X25
05	10571874	4	131R	WASHER	ROSETTA

E-1

ALPHABETICAL INDEX

DESCRIPTION	SGR.	TAV.	GRID
Accelerator controls	0.004	1	1D-21
Air Cleaner	0.001	1	1D-5
Alternator-Mounting	0.400	1	1I-11
Anti-Shock Valve (Hydr.)	1.082	3	1L-15
Application of Oil. Hammer	5.0020	2	2J-7
Batteries	1.220	2	2D-13
Belts	0.340	1	1H-23
	0.345	1	1I-3
Boom Piping	2.030	1	2F-17, 2G-3
	2.031	1	2G-5
	2.031	2	2G-7
Brake Valve Components	3.010	3	2H-3
Bucket	2.020	1	2F-13
Bucket Cylinder	2.030	5	2G-3
Bull Gear	3.000	1	2G-17
Cab	1.250	1	2D-19
Cab Door	1.250	5	2E-7
Cab Heater-Components	1.290	2	2E-15
Cab Window-Left Side	1.250	6	2E-9
Cab-Frame	1.250	7	2E-11
Cab-Platform	1.250	1	2D-19
Cab Vandalism	5.0540	1	2K-3
Camshaft	0.120	1	1F-11
Cold Starting Aid	5.0025	1	2J-11
Connecting Rod	0.081	1	1E-23
Cont. Valve-Hydr. (Ass.Y)	1.050	1	1J-21
Control Valve-Hydr.	1.050	2	2K-3
	1.050	3	2K-5
	1.050	4	2K-7
Controls	1.070	1	1J-20
	1.071	1	1K-21, 1L-3
Counterweight	1.000	1	1J-3
Cowlings	1.300	1	2E-19
	1.300	2	2E-21
	1.300	3	2E-23
Crankshaft	0.080	1	1E-21
Crankshaft Pulley	0.084	1	1F-7
Cylinder Block	0.040	1	1D-21
	0.040	2	1D-23
	0.040	3	1E-3
Cylinder Block Covers	0.043	1	1E-7
	0.043	2	1E-9
Cylinder Head	0.060	1	1E-13
	0.060	2	1E-15
Dashboard (Left)	1.210	1	2D-9
Dashboard (Right)	1.200	1	2D-3
	1.200	3	2D-7
Data Monitor	1.200	2	2D-5
Decals	4.500	1	2I-3
	4.501	1	2I-5
Dipper Stick (2,1m)	5.0022	1	2J-9
Dipper Stick (2,5m) (STD.)	2.003	1	2F-11
Dipper Stick (3m)	5.0038	1	2J-13
Dipper Stick Cylinder	2.030	4	2F-23
	2.031	4	2G-5
Dipstick-Engine Oil	0.270	1	1H-8
Discharge Valve Componen.	3.010	4	2H-5
Drive on Engine (Opt.)	0.350	1	1I-5
Electric System	1.220	1	2D-11
	1.220	2	2D-13
Elements-fuel	0.200	1	1G-17
Elements-Hydraulic	1.020	1	1J-7
Elements-Pilot	1.080	1	1L-5
Emergency Kits(Lub. Fittings)	4.000	1	2H-23
Engine	0.021	1	1D-19
Engine-Controls	0.004	1	1D-15
Engine-Suspensions	0.000		1D-3
Engine Breather	0.04.		1E-11
Engine Cooling Piping	0.323	1	1H-19
Engine Heat Exchanger	0.310	1	1H-15
Engine Lifting Eyes	0.450	1	1I-15
Engine Oil Filter	0.302	1	1H-11
Engine Oil Piping	0.305	1	1H-13
Engine Oil Pump	0.300	1	1H-9
Engine Oil Sump	0.042	1	1E-5
Engine Piston	0.082	1	1F-3
Engine Suspensions	0.000	1	1D-3
Exhaust Manifold	0.077	1	1E-19
Exhaust Valve	0.060	2	1E-15
Fan	0.345	1	1I-3
Fan Drive	0.345	1	1I-3
"Filter Care" Kit	24		1A-24
Filter-Pilot System	1.080	1	1L-5
Filters-Air	0.001	1	1D-5
Filters-Engine Oil	0.302	1	1D-11
Filters-Fuel	0.200	1	1G-17
Filters-Hydr. System	1.020	1	1J-7
Flywheel-Engine	0.083	1	1L-17
Fuel Filter	0..200	1	1G-17
Fuel Piping	0.203	1	1G-19
Fuel Pump	0.203	2	1G-21
	0.140	8	1G-5
Fuel Tank	1.010	1	1J-5
Fuses	1.200	3	2D-7
Guards	1.300	2	2E-21
Handle	1.300	3	2E-23
	1.300	4	2F-3
Heater	1.290	1	2E-15
Horn	1.220	2	2D-15
Hydr.Pump-Components	1.030	2	1J-13
Hydr.Pump Regulator-Comp.	1.030	3	1J-15

E-2

ALPHABETICAL INDEX

DESCRIPTION	SGR.	TAV.	GRID
Hydraulic Pump	1.030	1	1J-9
Idler	3.020	1	1H-7
Injection Nozzle-Lines	0.149	1	1G-15
Injection Pump	0.140	6	1F-23
	0.140	7	1G-3
Injection Pump Drive	0.140	10	1G-9
Injection Pump-Piping	0.140	1	1F-13
	0.140	9	1G-7
Intake Manifold	0.071	1	1E-17
Intake Valve	0.060	2	1E-15
Lift Cylinder (Left)	2.030	3	1F-21
Lift Cylinder (Right)	2.030	2	2F-19
Lights	1.220	2	2D-13
Lower Frame	3.000	1	2G-17
Lubric. Fitting Piping	3.001	1	2G-19
	2.041	1	2G-15
	2.040	1	1G-13
Main Piping	1.060	1	1K-9
	1.061	1	1K-11
Mirror (Rear)	1.300	2	2E-21
Monobloc Boom	2.000	1	2F-5
Motor - Starter	0.360	2	1I-9
Motor - Swing	1.040	1	1J-17
Motor - Travel	3.010	1	2G-21
Motor - Wiper	1.220	1	2D-11
Muffler	0.002	1	1D-7
Oil Tank	1.020	1	1J-7
Operator's Seat	1.250	2	2D-21
OperatorsSeat(Bostrom)(Std.)	5.0151	1	2J-21
Pilot Piping(1)	1.080	1	1L-5
Pilot Piping(2)	1.081	1	1L-9
Pilot Piping(3)	1.082	1	1L-11
Pilot Piping(4)	1.083	1	1L-17
Pilot Piping(5)	1.084	1	1L-19
Pilot Piping(6)	1.085	1	1L-21
Pilot Valve	1.070	3	1K-19
	1.071	2	1L-3
Pilot Valve-components	1.070	2	1K-17
PipingBoom	2.030	1	2F-17
	2.031	1	2G-5
Piping-Injection	0.149	1	1G-15
Piping-Lube Fittings	2.040	1	2G-13
Piping-Main	1.060	1	1K-9
Piping-Pilot(1)	1.080	1	1L-5
Piping-Pilot(3)	1.082	1	1L-11
Piping-Pilot(4)	1.083	1	1L-17
Piping-Pilot(5)	1.084	1	1L-19
Piping-Pump Contr. Valve	1.050	1	1J-21
Piping-Travel (Lower)	3.070	1	2H-19
	3.071	1	2H-21
Piping-Turbocharger	0.241	1	1H-5
Pump-Engine Oil	0.300	1	1H-9
Pump-Hydraulic	1.030	1	1J-11
Pump-Injection	0.140	6	1F-23
Pump-Water	0.320	1	1H-17
Pump/Control Valve Piping	1.050	1	1J 23
Radiator	0.003	1	1D-9
Radiator-Components	0.003	2	1D-11
	0.003	3	1D-13
Rocker Arm	0.060	2	1E-15
Rotary Distributor	3.060	1	2H-17
SAE Battery Provision	1.220	3	2D-17
Seat Belt	5.0536	1	1J-23
Sensors	1.220	2	2D-13
Solenoid Valve	1.080	2	1L-7
Starter	0.360	2	1I-9
Starter-Mounting	0.360	1	1I-7
Stop Valve	1.082	2	1L-13
Swing Red.Unit-Components	1.040	2	1J-19
Swing Reduction Unit	1.040	1	1J-17
Thermostat & Housing	0.326	1	1H-21
Timing Control	0.100	1	1F-9
Tool Kit	5.0083	1	2J-19
Track Chain	3.051	1	2H-13
	3.052	1	2H-15
Track Roller	3.040	1	2H-11
Travel Motor-componen.	3.010	3	2H-3
Travel Piping (Lower)	3.070	1	2H-19
	3.071	1	2H-21
Travel Red.Unit-Componen.	3.010	2	2G-23
Travel Reduction Units	3.010	1	2G-21
Turbocharger	0.240	1	1G-23
	0.240	2	1H-3
Turbocharger Piping	0.241	1	1H-5
Upper Frame	1.000	1	1J-3
Upper Roller	3.030	1	2H-9
Valve-Anti-Shock(Hydr.)	1.082	3	1L-15
Valve-Exhaust	0.060	2	1E-15
Valve-Intake	0.060	2	1E-15
Valve-Pilot (Hydr.)	1.070	1	1K-15
Valve-Pilot(Travel)	1.070	1	1K-15
Valve-Solenoid	1.080	2	1L-7
Valve-Stop(Travel)	1.082	1	1L-11
Water Pump	0.320	1	1H-17
Water Pump Drive	0.340	1	1H-23
Water Pump-Components	0.320	2	1H-17
Wiper	1.220	1	2D-11

FH200

CAB	CABINE	1.250 TAV.4
CABINA	FAHRERHAUSE	
71416857	CABINA	

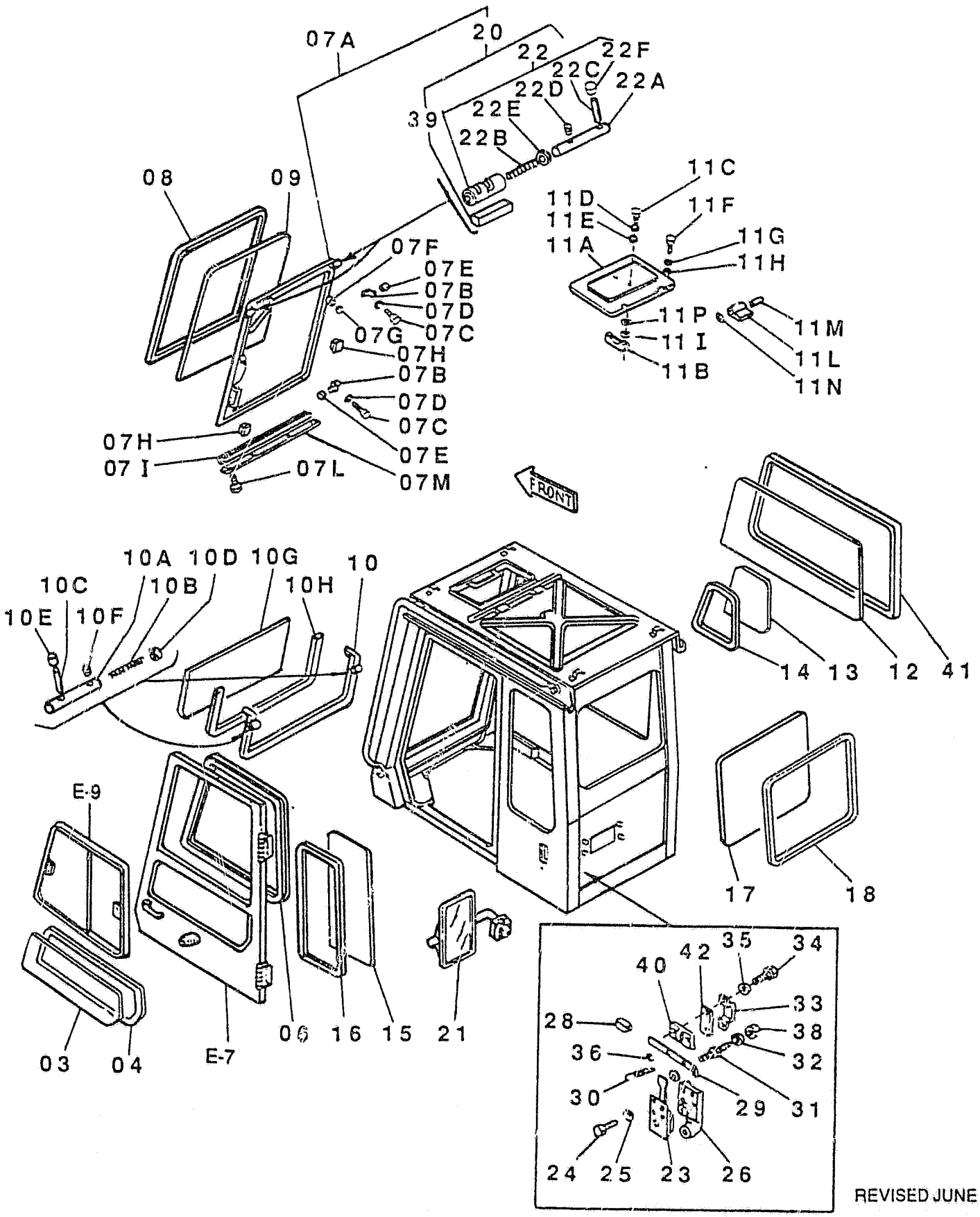

REVISED JUNE 1990

T-01109

FH200

CAB N. AMERICA
CABINA N. AMERICA
71416857

CABINE N. AMERICA
FAHRERHAUSE N. AMERICA
CABINA N. AMERICA

1.250 TAV.4

NTR 110S * V-90 * UPDATE-AGG 01

ITEM	PART NUMBER	QTY	TR. CO.	DESCRIPTION	DESCRIZIONE
03	71417102	1	315C	GLASS	CRISTALLO
04	71417103	1	122G	SEAL	GUARNIZIONE
06	71417190	1	122G	SEAL	GUARNIZIONE
07A	71416526	1	72I	FRAME -ASS.LY	INTELAIATURA -COMPL.
07B	71416547	2	300S	SUPPORT	SUPPORTO
07C	16043434	4	40V	SCREW 8X1,25X20	VITE 8X1,25X20
07D	10571774	4	131R	WASHER	ROSETTA
07E	71416549	4	95B	BUSHING	BOCCOLA
07F	71416550	1	95B	BUSHING	BOCCOLA
07G	11066071	1	187A	SNAP RING	ANELLO ELASTICO
07H	71416551	2	50T	PLUG	TAPPO
07I	71416552	1	122G	SEAL	GUARNIZIONE
07L	15901604	4	40V	SCREW	VITE
07M	71417254	1	14B	STRAP	BANDELLA
08	71416553	1	122G	SEAL	GUARNIZIONE
09	71416554	1	315C	GLASS	CRISTALLO
10	71417255	1	72I	FRAME	INTELAIATURA
10A	71416931	2	80P	PIN	PERNO
10B	71416564	2	100M	SPRING	MOLLA
10C	71416565	2	45L	LEVER	LEVA
10D	71416566	2	131R	WASHER	ROSETTA
10E	71416862	2	65C	BOOT	CAPPUCCIO
10F	71416568	2	80P	PIN	PERNO
10G	71417257	1	315C	GLASS	CRISTALLO
10H	71417258	1	122G	SEAL	GUARNIZIONE
11A	71416573	1	265C	COVER	COPERCHIO
11B	71416491	1	20M	HANDLE	MANIGLIA
11C	71416578	2	26T	BLOCK	TAMPONE
11D	71416579	2	122G	SEAL	GUARNIZIONE
11E	15896421	2	10D	NUT	DADO
11F	16043134	4	40V	SCREW 8X1,25X14	VITE 8X1,25X14
11G	10571774	4	131R	WASHER	ROSETTA
11H	14496531	4	131R	WASHER	ROSETTA
11I	14496331	2	131R	WASHER	ROSETTA
11L	71416580	2	413S	HALF HINGE	SEMICERNIERA
11M	71416581	2	80P	PIN	PERNO
11N	11087874	4	187A	SNAP RING	ANELLO ELASTICO
11P	12605274	2	131R	WASHER	ROSETTA
12	71417108	1	315C	GLASS	CRISTALLO
13	71417110	1	315C	GLASS	CRISTALLO
14	71416594	1	122G	SEAL	GUARNIZIONE
15	71417111	1	315C	GLASS	CRISTALLO
16	71417112	1	122G	SEAL	GUARNIZIONE
17	71416597	1	315C	GLASS	CRISTALLO
18	71416598	1	122G	SEAL	GUARNIZIONE
20	71416536	2	120S	LOCK -ASS.LY	SERRATURA -COMPL.
21	71417035	1	185S	REAR VIEW MIRROR	SPECCHIO RETROVISORE
22	71416561	1	120S	LOCK -ASS.LY	SERRATURA -COMPL.
22A	71416563	1	80P	PIN	PERNO
22B	71416564	1	100M	SPRING	MOLLA
22C	71416565	1	45L	LEVER	LEVA
22D	71416568	1	80P	PIN	PERNO
22E	71416566	1	131R	WASHER	ROSETTA

FH200

CAB CABINA 71416857	CABINE FAHRERHAUSE CABINA	1.250 TAV.4

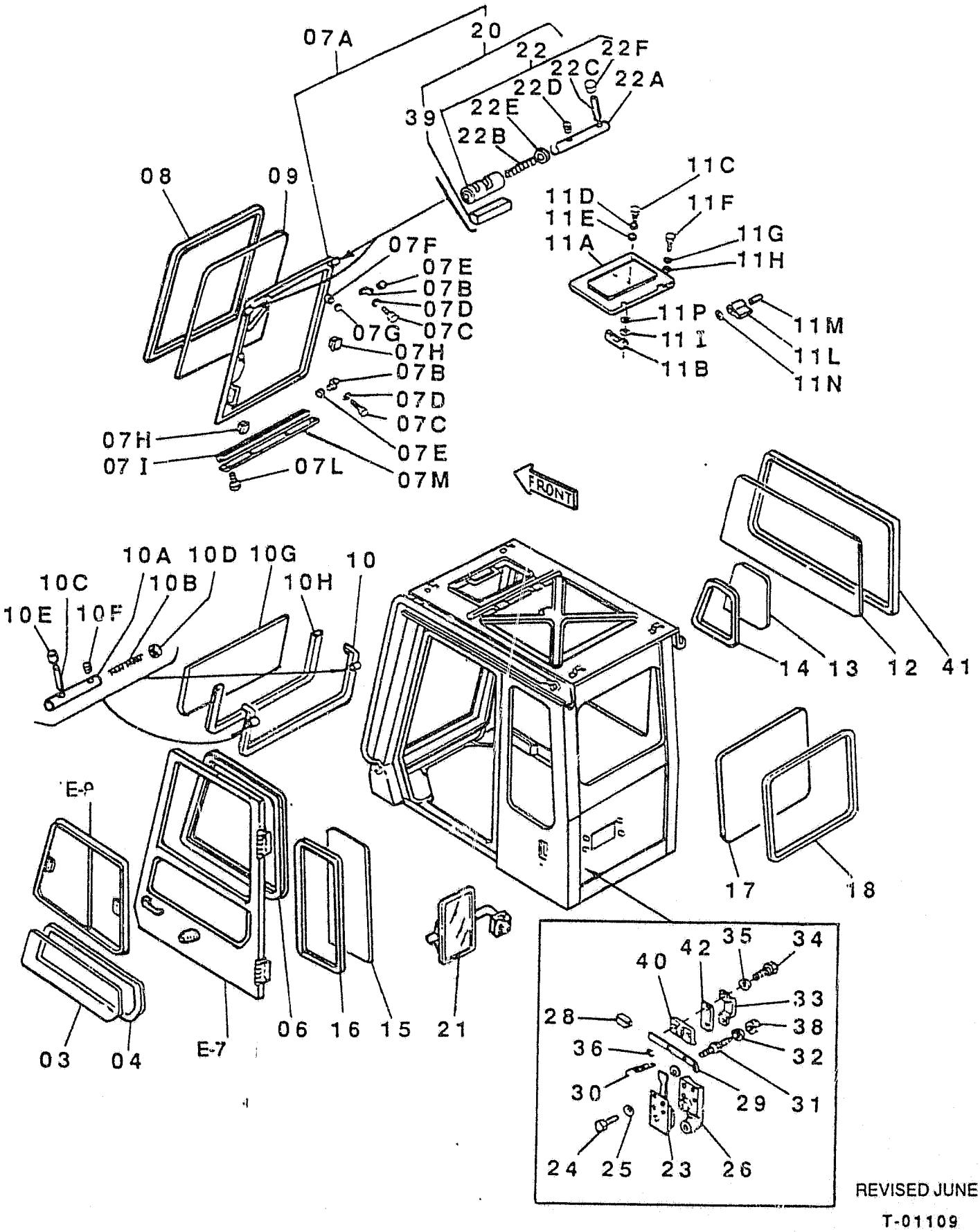

REVISED JUNE 1990

T-01109

FH200

CAB N. AMERICA
CABINA N. AMERICA
71416857

CABINE N. AMERICA
FAHRERHAUSE N. AMERICA
CABINA N. AMERICA

1.250 TAV. 4

NTR 110S * V-90 * UPDATE-AGG.01

ITEM	PART NUMBER	QTY	TR. CO.	DESCRIPTION	DESCRIZIONE
22F	71416862	1	65C	BOOT	CAPPUCCIO
23	71416600	1	120S	LOCK	SERRATURA
24	13274014	4	40V	SCREW 5X0,8X12	VITE 5X0,8X12
25	10571474	4	131R	WASHER	ROSETTA
26	71416601	1	116R	COVERING	RIVESTIMENTO
28	71416603	1	25I	HANDGRIP	IMPUGNATURA
29	71416604	1	45L	LEVER	LEVA
30	71416605	1	100M	SPRING	MOLLA
31	71417025	1	80P	PIN	PERNO
32	71417026	1	131R	WASHER	ROSETTA
33	71416607	1	100C	RETAINER	CAVALLOTTO
34	10902234	2	40V	SCREW 6X1X16	VITE 6X1X16
35	10571574	2	131R	WASHER	ROSETTA
36	14496431	2	131R	WASHER	ROSETTA
38	16104421	1	10D	NUT	DADO
39	71416537	1	75D	SPACER	DISTANZIALE
40	71417083	2	75D	SPACER	DISTANZIALE
41	71417109	1	122G	SEAL	GUARNIZIONE
42	71417263	1	75D	SPACER	DISTANZIALE

FH200

CAB DOOR PORTA CABINA	PORTE DE LA CABINE FAHRERHAUS-TUER PUERTA DE LA CABINA	1.250 TAV.5

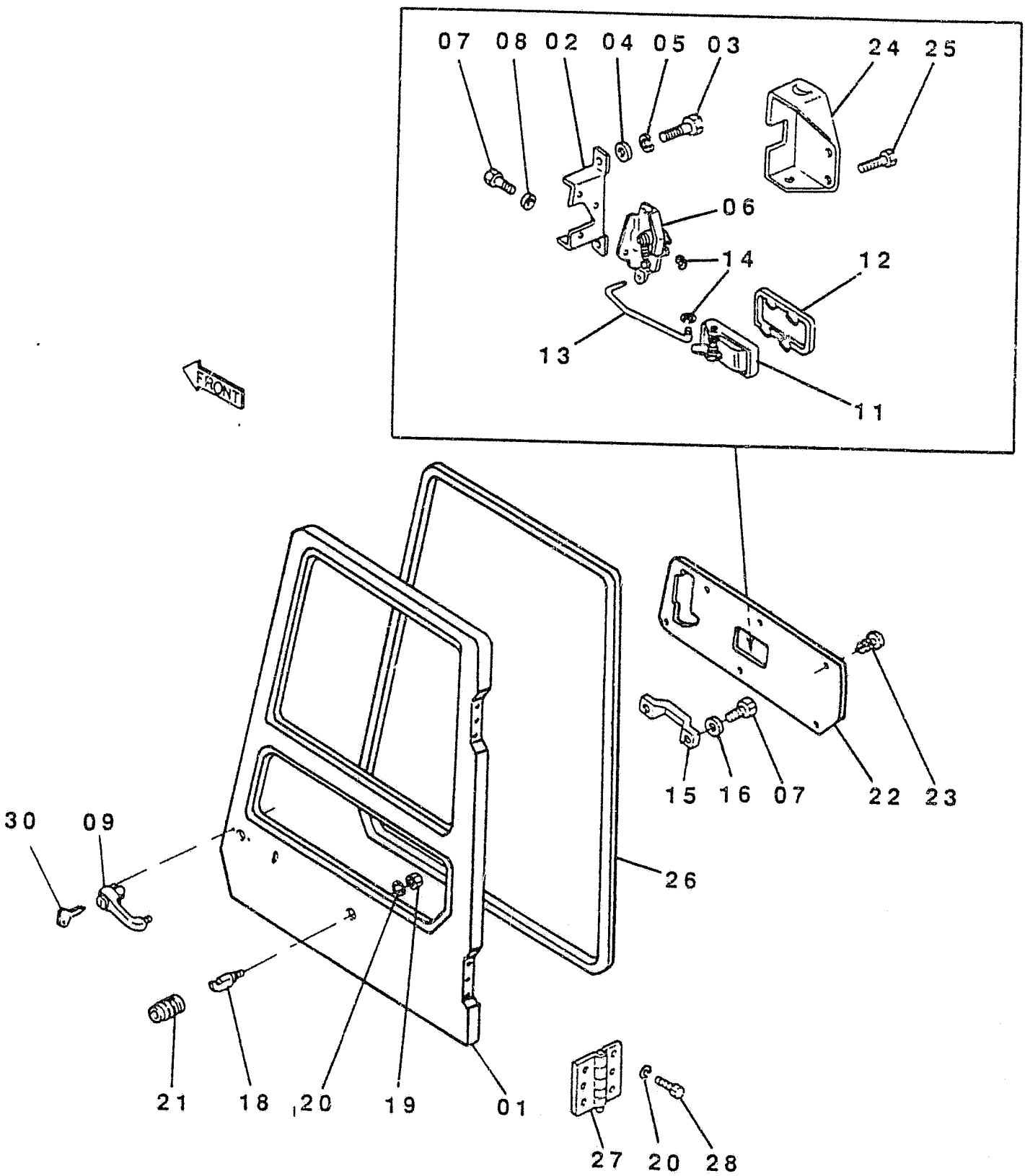

FH200

CAB DOOR N. AMERICA
PORTA CABINA N. AMERICA

PORTE DE CABINE N. AMER.
FAHRERHAUS-TUER N. AMER.
PUERTA DE CABINA N. AMER.

1.250 TAV.5

NTR 110S * V-90 * UPDATE-AGG.01

ITEM	PART NUMBER	QTY	TR. CO.	DESCRIPTION	DESCRIZIONE
01	71417222	1	72I	FRAME	INTELAIATURA
02	71417239	1	35S	CASE	SCATOLA
03	16043234	2	40V	SCREW	VITE
04	14496531	2	131R	WASHER	ROSETTA
05	10571774	2	170R	LOCKWASHER	ROSETTA ELASTICA
06	71416490	1	120S	LOCK	SERRATURA
07	13276214	5	40V	SCREW 6X1X16	VITE 6X1X16
08	10571574	6	131R	WASHER	ROSETTA
09	71416867	1	20M	HANDLE	MANIGLIA
10	15896221	3	10D	NUT	DADO
11	5961723	1	20M	HANDLE	MANIGLIA
12	5961734	1	295C	BEZEL	CORNICE
13	71417242	1	142T	TIEROD	TIRANTE
14	71417066	2	187A	SNAP RING	ANELLO ELASTICO
15	71416491	1	20M	HANDLE	MANIGLIA
16	14496431	2	131R	WASHER	ROSETTA
18	71416492	1	80P	PIN	PERNO
19	11701721	1	10D	NUT	DADO
20	10571874	13	131R	WASHER	ROSETTA
21	71417064	1	166S	BELLOW	SOFFIETTO
22	71417241	1	25P	PANEL	PANNELLO
23	71416734	5	120B	BUTTON	BOTTONE
24	71417243	1	70R	GUARD	RIPARO
25	71416734	2	120B	BUTTON	BOTTONE
26	71416497	1	12 YG	SEAL	GUARNIZIONE
27	71416498	2	140C	HINGE	CERNIERA
28	11106234	12	40V	SCREW 10X1,5X25	VITE 10X1,5X25
30	79069292	1	150C	KEY	CHIAVE

FH200

CAB WINDOW-LEFT SIDE FINESTRA CABINA-SINISTRA	BAIE DE LA CABINE-GAUCHE FAHRERHAUS-LINK VENTANA DE CABINA-IZQUIE.	1.250 TAV.6

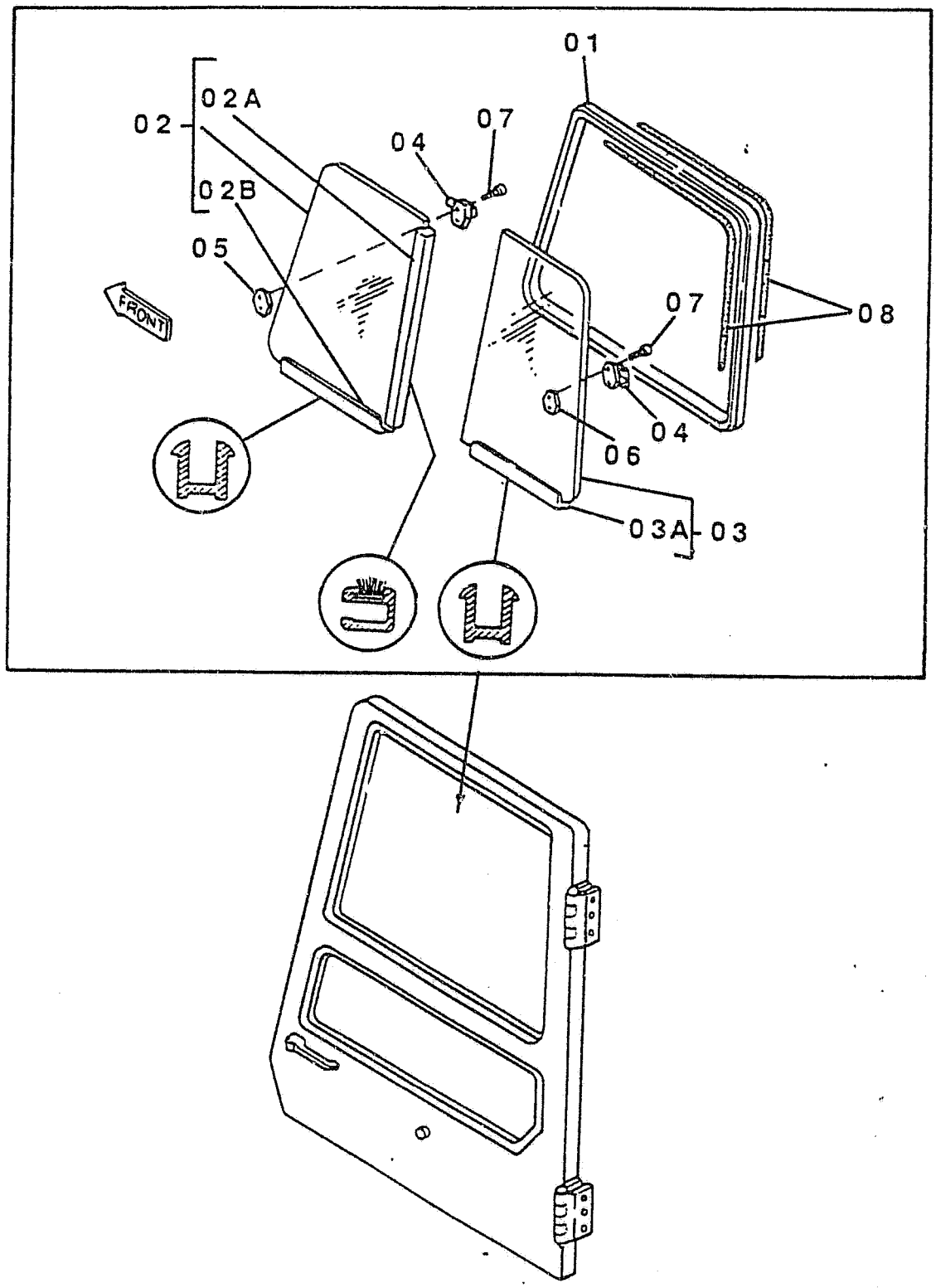

T-01108

CAB WINDOW - N. AMERICA
FINESTRA CABINA-N. AMER.

BAIE DE CABINE-N. AMERICA
FAHRERHAUSFENSTER-N. AMER
VENTANA DE CABINA-N.AMER.

1.250 TAV.6

NTR 110S * V-90 * UPDATE-AGG.01

ITEM	PART NUMBER	QTY	TR. CO.	DESCRIPTION	DESCRIZIONE
01	71417245	1	72I	FRAME	INTELAIATURA
02	71417247	1	315C	GLASS -ASS.LY	CRISTALLO -COMPL.
02A	71417250	1	122G	SEAL	GUARNIZIONE
02B	71417249	1	145G	GUIDE	GUIDA
03	71417251	1	315C	GLASS -ASS.LY	CRISTALLO -COMPL.
03A	71417249	1	145G	GUIDE	GUIDA
04	71416515	2	120S	LOCK	SERRATURA
05	71416516	1	30G	HOOK	GANCIO
06	71416517	1	30G	HOOK	GANCIO
07	13299916	4	40V	SCREW 5X0,8X28	VITE 5X0,8X28
08	71417253	2	145G	GUIDE	GUIDA

CAB-FRAME
CABINA-INTELAIATURA

CABINE-CHASSIS
FAHRERHAUSE-RAHMEN
CABINA-BASTIDOR

1.250 TAV.7

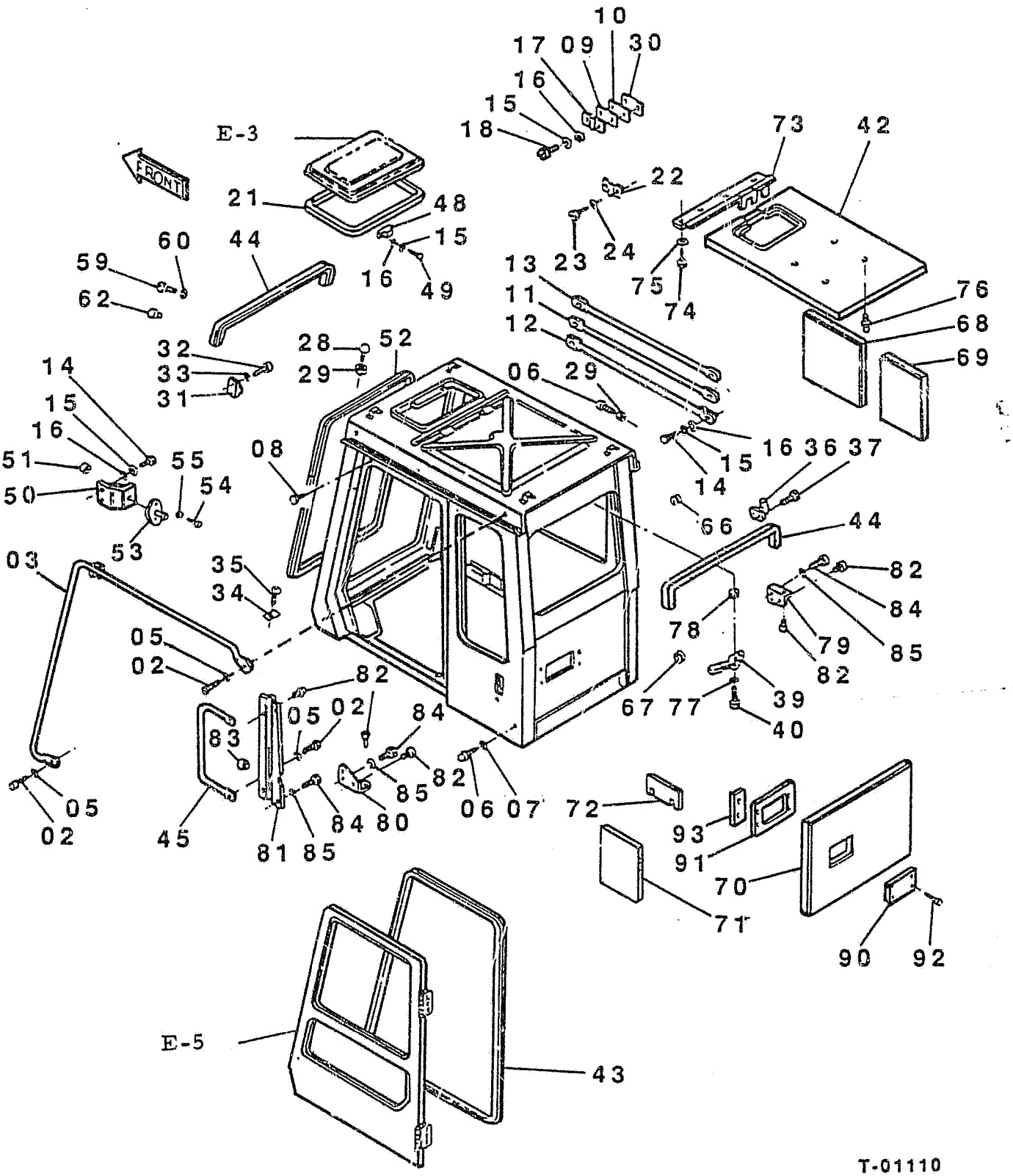

T-01110

FH200

CAB N. AMERICA CABINA N. AMERICA 71416857	CABINE N. AMERICA FAHRERHAUSE N. AMERICA CABINA N. AMERICA	1.250 TAV.7 NTR 110S * V-90 * UPDATE-AGG.01

ITEM	PART NUMBER	QTY	TR. CO.	DESCRIPTION	DESCRIZIONE
02	11106234	5	40V	SCREW 10X1,5X25	VITE 10X1,5X25
03	71417115	1	20M	HANDLE	MANIGLIA
05	10571874	5	131R	WASHER	ROSETTA
06	71416419	3	26T	BLOCK	TAMPONE
07	71416422	5	75D	SPACER	DISTANZIALE
08	71416423	1	26T	BLOCK	TAMPONE
09	71416424	1	198S	SHIM	SPESSORE
10	71416425	1	198S	SHIM	SPESSORE
11	71417116	1	70R	GUARD	RIPARO
12	71417117	1	70R	GUARD	RIPARO
13	71417118	1	70R	GUARD	RIPARO
14	13279414	6	40V	SCREW 8X1,25X20	VITE 8X1,25X20
15	10571774	14	131R	WASHER	ROSETTA
16	14496531	14	131R	WASHER	ROSETTA
17	71416429	2	26T	BLOCK	TAMPONE
18	16043234	6	40V	SCREW 8X1,25X16	VITE 8X1,25X16
21	71416434	1	122G	SEAL	GUARNIZIONE
22	71416436	1	110P	PLAQUE	PIASTRINA
23	13271914	2	40V	SCREW 4X0,7X10	VITE 4X0,7X10
24	10571374	2	131R	WASHER	ROSETTA
28	71416437	2	26T	BLOCK	TAMPONE
29	11690921	3	10D	NUT	DADO
30	71416440	1	198S	SHIM	SPESSORE
31	71416441	2	26T	BLOCK	TAMPONE
32	13276214	4	40V	SCREW 6X1X16	VITE 6X1X16
33	10571574	4	131R	WASHER	ROSETTA
34	71416444	2	122G	SEAL	GUARNIZIONE
35	13301311	2	40V	SCREW 6X1X16	VITE 6X1X16
36	71416445	1	30G	HOOK	GANCIO
37	13272214	2	40V	SCREW 4X0,7X16	VITE 4X0,7X16
39	71416446	1	120S	LOCK	SERRATURA
40	13274614	2	40V	SCREW	VITE
42	71417120	1	25P	PANEL	PANNELLO
43	71416448	1	122G	SEAL	GUARNIZIONE
44	71417121	2	122G	SEAL	GUARNIZIONE
45	71416450	1	20M	HANDLE	MANIGLIA
48	71416452	1	26T	BLOCK	TAMPONE
49	13278914	2	40V	SCREW	VITE
50	71417122	1	300S	SUPPORT	SUPPORTO
51	16100811	2	10D	NUT	DADO
52	71416455	1	122G	SEAL	GUARNIZIONE
53	71416456	1	74B	BLOCK	BLOCCHETTO
54	13303311	2	40V	SCREW	VITE
55	12606974	2	131R	WASHER	ROSETTA
59	13276014	2	40V	SCREW 6X1X12	VITE 6X1X12
60	14496431	2	131R	WASHER	ROSETTA
62	71416459	1	50T	PLUG	TAPPO
66	71416466	1	50T	PLUG	TAPPO
67	71416467	1	95B	BUSHING	BOCCOLA
68	71417124	1	25P	PANEL	PANNELLO
69	71417125	1	25P	PANEL	PANNELLO
70	71417126	1	25P	PANEL	PANNELLO
71	71417127	1	225S	BRACKET	STAFFA

CAB-FRAME CABINA-INTELAIATURA	CABINE-CHASSIS FAHRERHAUSE-RAHMEN CABINA-BASTIDOR	1.250 TAV.7

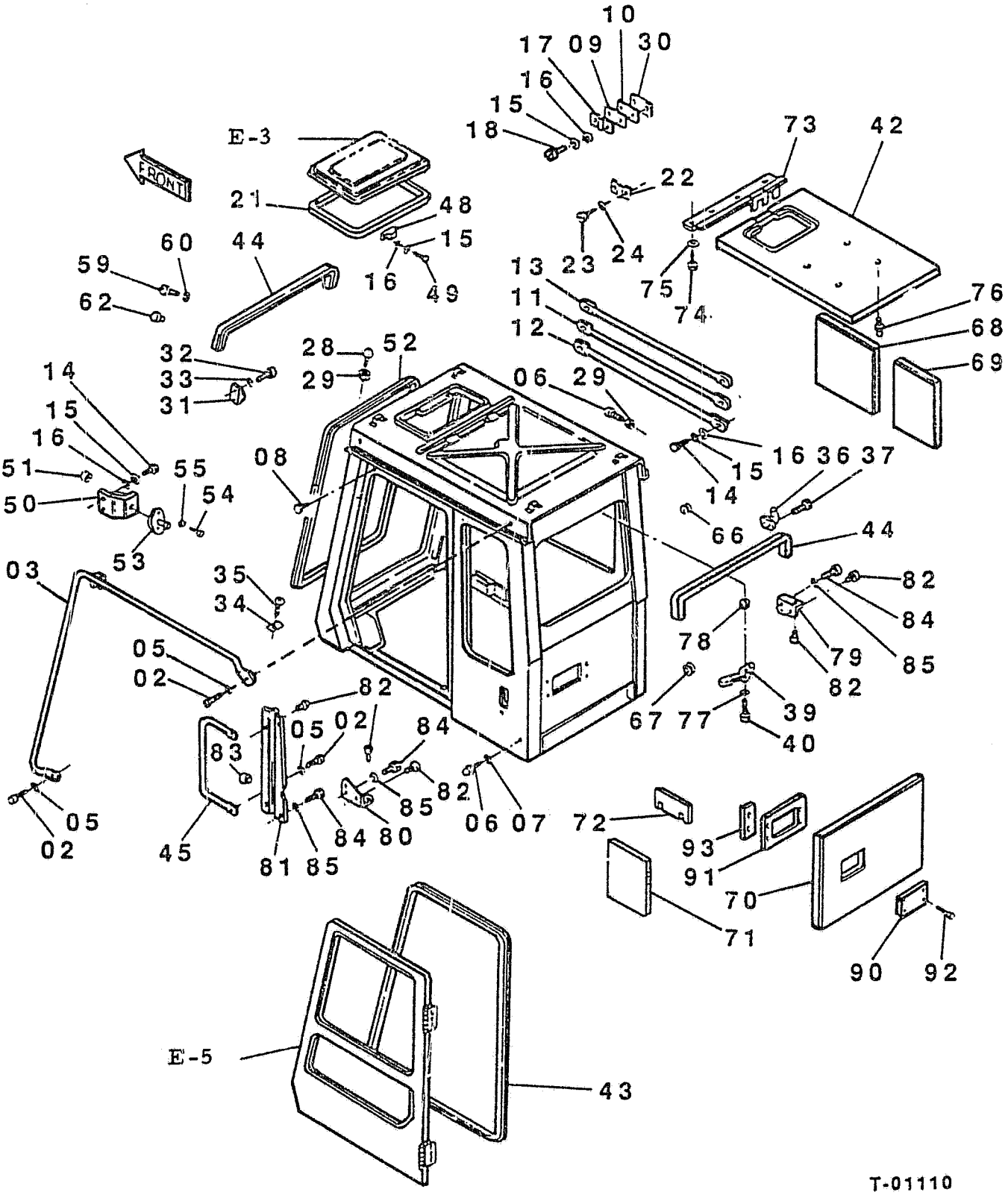

T-01110

CAB N. AMERICA
CABINA N. AMERICA
71416857

CABINE N. AMERICA
FAHRERHAUSE N. AMERICA
CABINA N. AMERICA

1.250 TAV.7

NTR 110S * V-90 * UPDATE-AGG.01

ITEM	PART NUMBER	QTY	TR. CO.	DESCRIPTION	DESCRIZIONE
72	71417128	1	254C	CONTAINER -DECAL	CONTENITORE -DECAL
73	71417129	1	180T	CROSS BEAM	TRAVERSA
74	15645504	4	40V	SCREW	VITE
75	5136392	4	131R	WASHER	ROSETTA
76	71416734	4	120B	BUTTON	BOTTONE
77	10571474	2	131R	WASHER	ROSETTA
78	12574121	2	10D	NUT	DADO
79	71416461	1	225S	BRACKET	STAFFA
80	71416462	1	225S	BRACKET	STAFFA
81	71417219	1	225S	BRACKET	STAFFA
82	71416464	6	50T	PLUG	TAPPO
83	71416465	2	95B	BUSHING	BOCCOLA
84	16043234	7	40V	SCREW 8X1,25X16	VITE 8X1,25X16
85	10571774	7	131R	WASHER	ROSETTA
90	71417130	1	265C	COVER	COPERCHIO
91	71417131	1	265C	COVER	COPERCHIO
92	10902234	4	40V	SCREW	VITE
93	71417132	2	14B	STRAP	BANDELLA

HEATER
RISCALDATORE

RECHAUFFEUR
HEIZGERAET
CALORIFERO

1.290 TAV.1

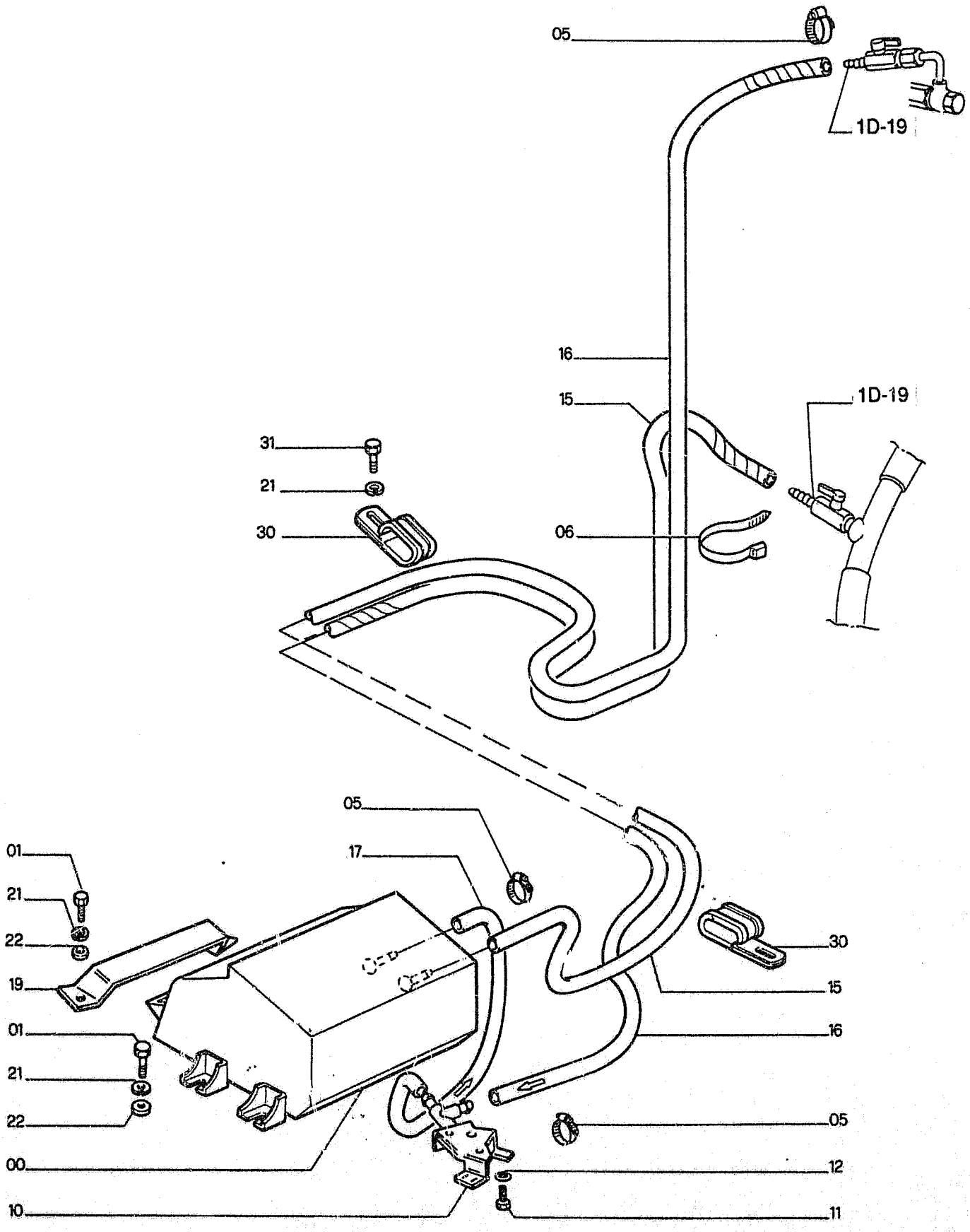

FH200

HEATER RISCALDATORE	RECHAUFFEUR HEIZGERAET CALORIFERO	1.290 TAV.1 REVISED JULY 1990

ITEM	PART NUMBER	QTY	TR. CO.	DESCRIPTION		DESCRIZIONE	
00	71405938	1	105R	HEATER -ASS.LY SEE E-17		RISCALDATORE -COMPL. VED. TAV.2	
01	11106234	6	40V	SCREW 10X1,5X25		VITE 10X1,5X25	
05	79083842	6	180C	COLLAR C2868 UP TO S/N		COLLARE C2868 FINO AL TELAIO	
					0204 (02) 0080 (03)		0204 (02) 0080 (03)
	13000390	6	180C	COLLAR D2868 FROM S/N		COLLARE D2868 DAL TELAIO	
					0205 (02) 0081 (03)		0205 (02) 0081 (03)
06	4982514	6	31F	CLAMP		FASCETTA	
10	71405939	1	150R	COCK		RUBINETTO	
11	13272214	2	40V	SCREW 4X0,7X16		VITE 4X0,7X16	
12	10571374	2	131R	WASHER		ROSETTA	
15	71416265	1	285T	HOSE		TUBO FLESSIBILE	
16	71416264	1	285T	HOSE		TUBO FLESSIBILE	
17	71405941	1	285T	HOSE		TUBO FLESSIBILE	
19	71405942	1	225S	BRACKET		STAFFA	
21	10571374	10	131R	WASHER		ROSETTA	
22	14496631	6	131R	WASHER		ROSETTA	
30	71405944	2	231S	CLIP		STAFFETTA	
31	10979234	4	40V	SCREW 10X1,5X16		VITE 10X1,5X16	

CAB HEATER-COMPONENTS
RISCALDATORE CABINA-COMP.
RECHAUFFEUR-COMPOSANTS
HEIZGERAET-EINZELTEILE
CALORIFERO-COMPONENTES

1.290 TAV.2

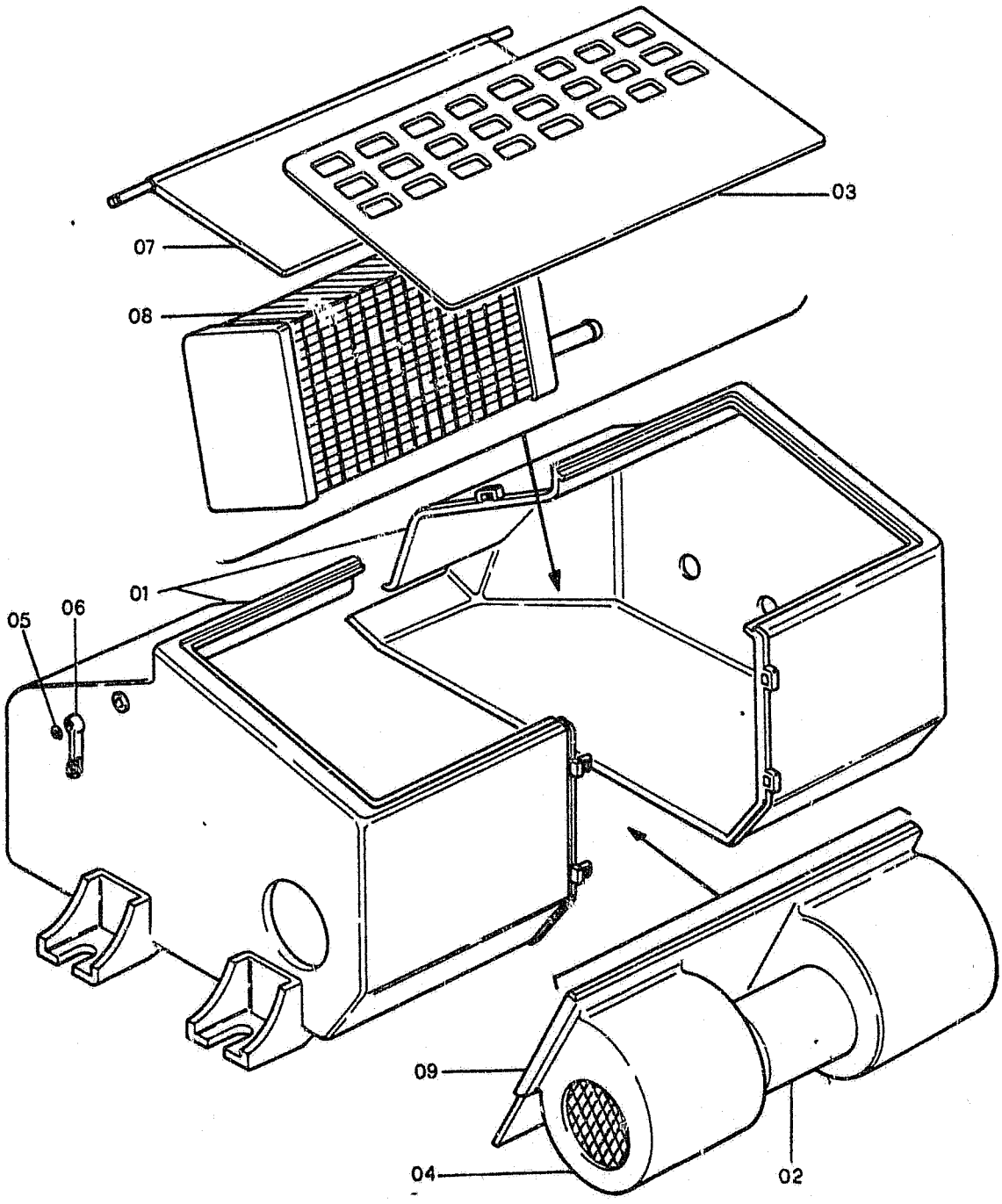

FH200

CAB HEATER-COMPONENTS RISCALDATORE CABINA-COMP. 71405938	RECHAUFFEUR-COMPOSANTS HEIZGEARAET-EINZELTEILE CALORIFERO-COMPONENTES	1.290 TAV.2

ITEM	PART NUMBER	QTY	TR. CO.	DESCRIPTION	DESCRIZIONE
01	71403652	1	300C	BODY	CORPO
02	71403653	1	53D	DIODE	DIODO
03	71403654	1	265C	COVER	COPERCHIO
04	71403655	1	33E	ELECTRIC FAN	ELETTROVENTILATORE
05	71403656	1	45A	RING	ANELLO
06	71403657	1	20M	HANDLE	MANIGLIA
07	71403658	1	205S	DOOR	SPORTELLO
08	71403659	1	25R	RADIATOR	RADIATORE
09	71403660	1	105P	PLATE	PIASTRA

COWLINGS
COFANI

CAPOTAGE
HAUBE
CAPOTS

1.300 TAV.1

REVISED JULY 1990

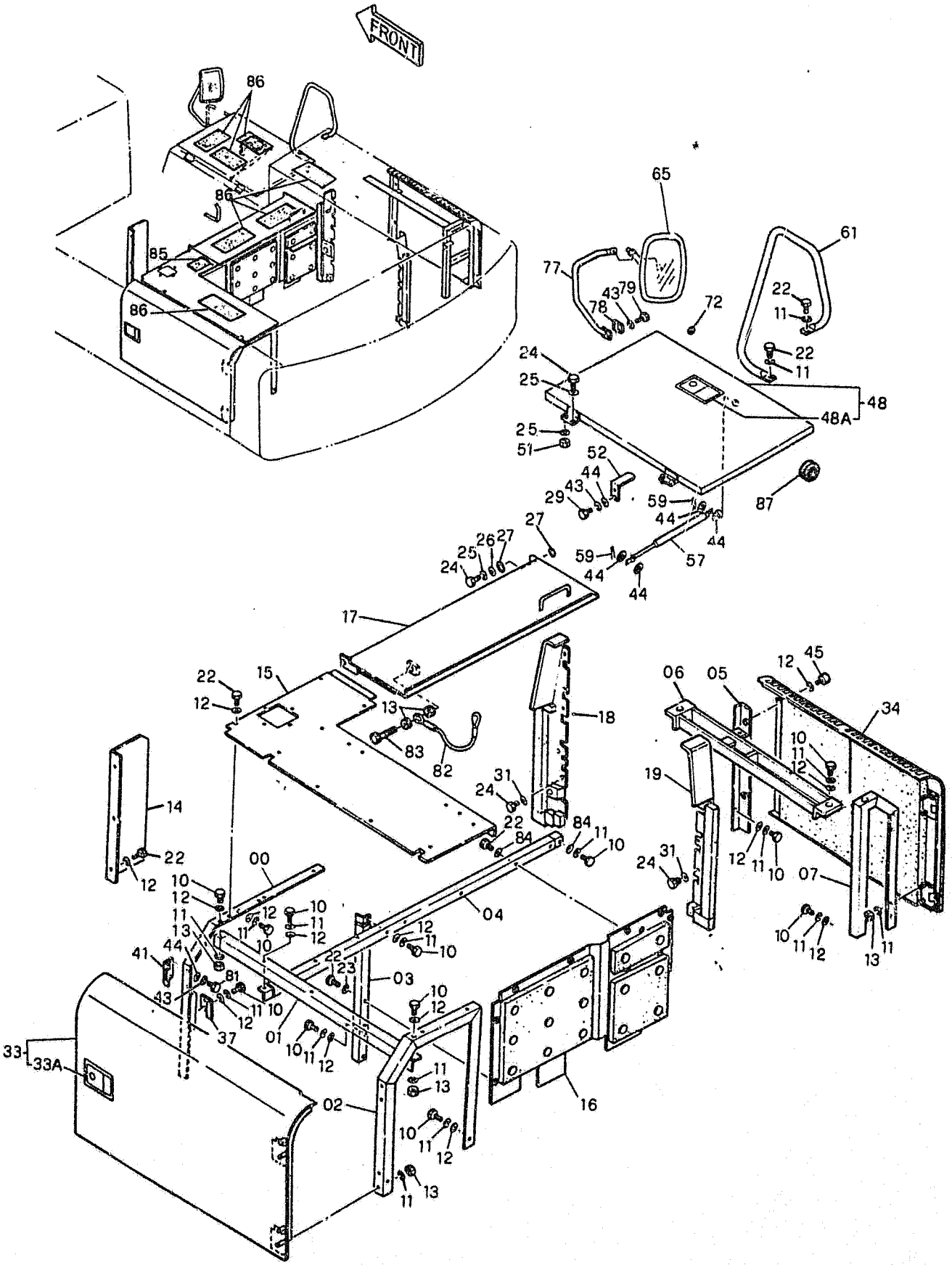

COWLINGS
COFANI

CAPOTAGE
HAUBE
CAPOTS

1.300 TAV.1

REVISED JULY 1990

ITEM	PART NUMBER	QTY	TR. CO.	DESCRIPTION	DESCRIZIONE
00	71415959	1	300S	SUPPORT	SUPPORTO
01	71415960	1	300S	SUPPORT	SUPPORTO
02	71415961	1	300S	SUPPORT	SUPPORTO
03	71415962	1	300S	SUPPORT	SUPPORTO
04	71416807	1	300S	SUPPORT	SUPPORTO
05	71405513	1	300S	SUPPORT	SUPPORTO
06	71416801	1	70R	GUARD	RIPARO
07	71416790	1	300S	SUPPORT	SUPPORTO
10	11112434	20	40V	SCREW 12X1,75X30	VITE 12X1,75X30
11	10571974	30	131R	WASHER	ROSETTA
12	14496731	39	131R	WASHER	ROSETTA
13	11702921	14	10D	NUT	DADO
14	71415966	1	105P	PLATE	PIASTRA
15	71416809	1	265C	COVER	COPERCHIO
16	71416814	1	105P	PLATE	PIASTRA
17	71416810	1	265C	COVER	COPERCHIO
18	71416793	1	265C	COVER	COPERCHIO
19	71416802	1	265C	COVER	COPERCHIO
22	11112234	22	40V	SCREW 12X1,75X25	VITE 12X1,75X25
24	11106034	13	40V	SCREW 10X1,5X20	VITE 10X1,5X20
25	10571874	5	131R	WASHER	ROSETTA
26	12644321	1	131R	WASHER	ROSETTA
27	14497131	2	131R	WASHER	ROSETTA
29	16043434	2	40V	SCREW 8X1,25X20	VITE 8X1,25X20
31	14496631	9	131R	WASHER	ROSETTA
33	71415973	1	205S	DOOR	SPORTELLO
33A	71405595	1	20M	HANDLE -ASS.LY SEE F-3	MANIGLIA -COMPL. VED. TAV.4
34	71420575	1	205S	DOOR	SPORTELLO
37	71405524	1	225S	BRACKET	STAFFA
41	71415975	1	225S	BRACKET	STAFFA
43	10571774	6	131R	WASHER	ROSETTA
44	14496531	10	131R	WASHER	ROSETTA
45	14432424	2	40V	SCREW 12X1,75X20	VITE 12X1,75X20
48	71415976	1	205S	DOOR	SPORTELLO
48A	71405595	1	20M	HANDLE -ASS.LY SEE F-3	MANIGLIA -COMPL. VED. TAV.4
51	11701721	2	10D	NUT	DADO
52	71405534	1	225S	BRACKET	STAFFA
57	71415978	1	167S	HYDRAULIC LIFT	SOLLEVATORE IDRAULICO
59	71415906	2	270C	COTTER PIN	COPIGLIA
61	71405545	1	20M	HANDLE	MANIGLIA
65	71405547	1	185S	REAR VIEW MIRROR	SPECCHIO RETROVISORE
77	71405545	1	20M	HANDLE	MANIGLIA
78	71405548	1	74B	BLOCK	BLOCCHETTO
79	16044034	2	40V	SCREW 8X1,25X40	VITE 8X1,25X40
81	16043030	2	40V	SCREW	VITE
82	71416792	1	105F	CABLE	FUNE
83	11113034	2	40V	SCREW 12X1,75X45	VITE 12X1,75X45
84	4952483	3	131R	WASHER	ROSETTA
85	71405684	1	407S	ANTI-SKID	STRISCIA ANTISDRUCCIOLO
86	71405685	7	407S	ANTI-SKID	STRISCIA ANTISDRUCCIOLO
87	71405600	1	122G	SEAL C2881 UP TO S/N 0291 (02) 0089 (03)	GUARNIZIONE C2881 FINO AL TELAIO 0291 (02) 0089 (03)
	71406259	1	122G	SEAL D2881 FROM S/N 0292 (02) 0090 (03)	GUARNIZIONE D2881 DAL TELAIO 0292 (02) 0090 (03)

COWLINGS COFANI	CAPOTAGE HAUBE CAPOTS	1.300 TAV.2

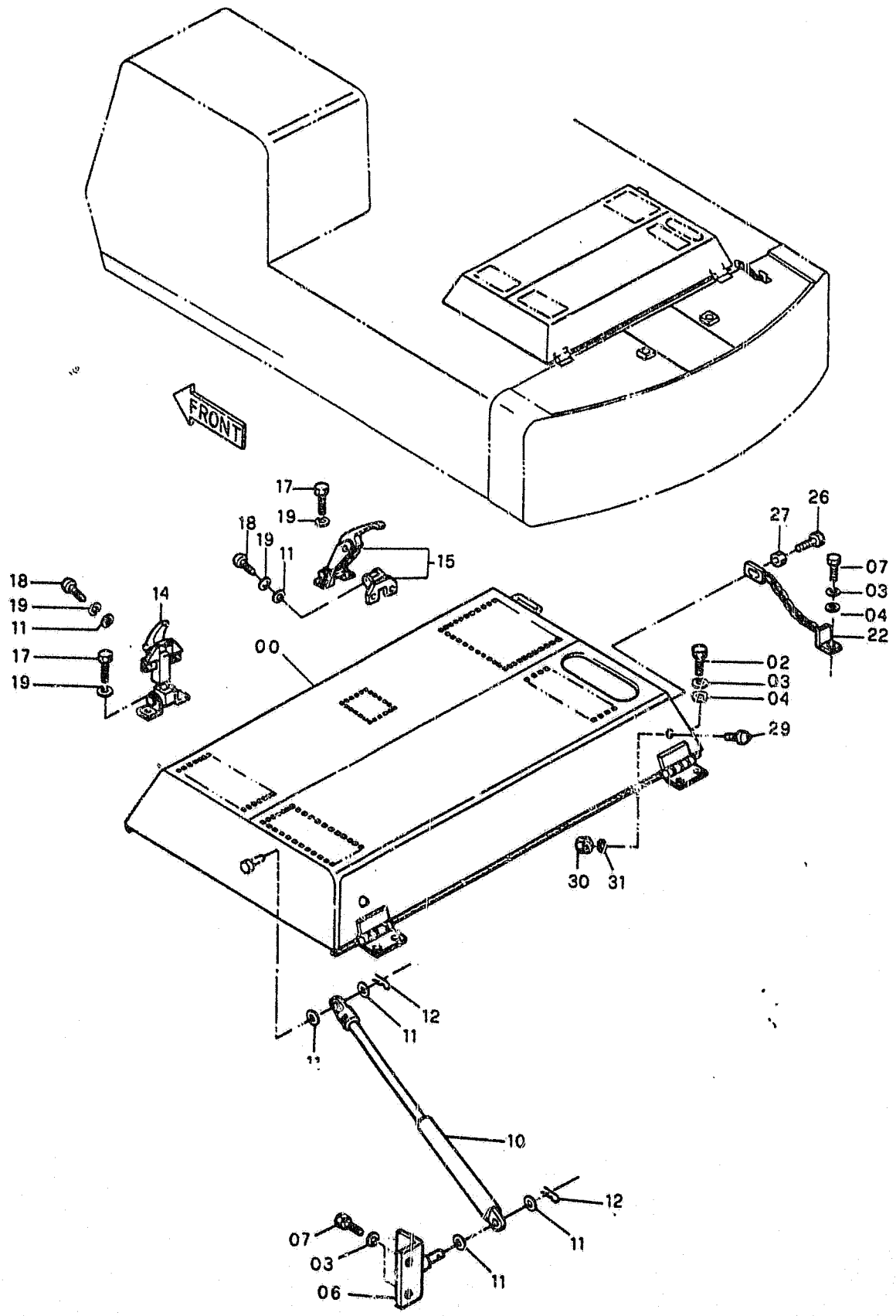

FH200

COWLINGS
COFANI

CAPOTAGE
HAUBE
CAPOTS

1.300 TAV.2

ITEM	PART NUMBER	QTY	TR. CO.	DESCRIPTION	DESCRIZIONE
00	71416824	1	176C	HOOD	COFANO
02	11112434	4	40V	SCREW 12X1,75X30	VITE 12X1,75X30
03	10571974	7	131R	WASHER	ROSETTA
04	14496731	5	131R	WASHER	ROSETTA
06	71416823	1	80M	BRACKET	MENSOLA
07	11112234	3	40V	SCREW 12X1,75X25	VITE 12X1,75X25
10	71405983	1	167S	HYDRAULIC LIFT	SOLLEVATORE IDRAULICO
11	14496531	6	131R	WASHER	ROSETTA
12	71415906	2	270C	COTTER PIN	COPIGLIA
14	71405517	1	20M	HANDLE	MANIGLIA
15	71405516	1	20M	HANDLE	MANIGLIA
17	16043234	4	40V	SCREW 8X1,25X16	VITE 8X1,25X16
18	13279614	4	40V	SCREW 8X1,25X25	VITE 8X1,25X25
19	10571774	8	131R	WASHER	ROSETTA
22	71405530	1	95C	CHAIN	CATENA
26	11112834	2	40V	SCREW 12X1,75X40	VITE 12X1,75X40
27	11702921	2	10D	NUT	DADO
29	71416419	2	60T	BLOCK	TASSELLO
30	11701711	2	10D	NUT	DADO
31	10571874	2	131R	WASHER	ROSETTA

COWLINGS COFANI	CAPOTAGE HAUBE CAPOTS	1.300 TAV.3

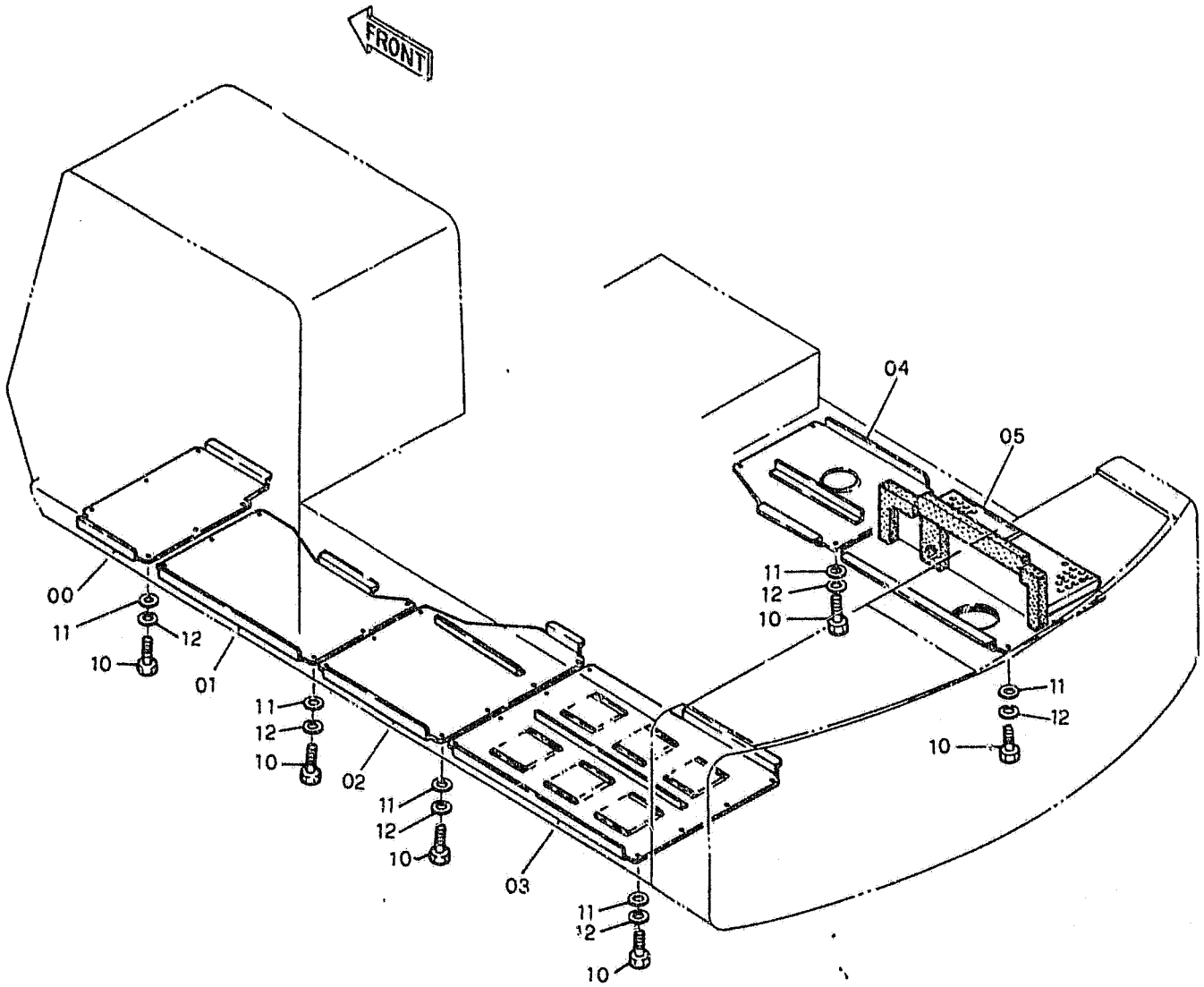

FH200

COWLINGS COFANI	CAPOTAGE HAUBE CAPOTS	1.300 TAV.3

ITEM	PART NUMBER	QTY	TR. CO.	DESCRIPTION	DESCRIZIONE
00	71415984	1	265C	COVER	COPERCHIO
01	71415985	1	265C	COVER	COPERCHIO
02	71415986	1	265C	COVER	COPERCHIO
03	71415987	1	265C	COVER	COPERCHIO
04	71415988	1	265C	COVER	COPERCHIO
05	71416777	1	265C	COVER	COPERCHIO
10	11112634	36	40V	SCREW 12X1,75X35	VITE 12X1,75X35
11	4952483	36	131R	WASHER	ROSETTA
12	10571974	36	131R	WASHER	ROSETTA

ALPHABETICAL INDEX

DESCRIPTION	SGR.	TAV.	GRID
Accelerator controls	0.004	1	1D-21
Air Cleaner	0.001	1	1D-5
Alternator-Mounting	0.400	1	1I-11
Anti-Shock Valve (Hydr.)	1.082	3	1L-15
Application of Ol. Hammer	5.0020	2	2J-7
Batteries	1.220	2	2D-13
Belts	0.340	1	1H-23
	0.345	1	1I-3
Boom Piping	2.030	1	2F-17, 2G-3
	2.031	1	2G-5
	2.031	2	2G-7
Brake Valve Components	3.010	3	2H-3
Bucket	2.020	1	2F-13
Bucket Cylinder	2.030	5	2G-3
Bull Gear	3.000	1	2G-17
Cab	1.250	1	2D-19
Cab Door	1.250	5	2E-7
Cab Heater-Components	1.290	2	2E-15
Cab Window-Left Side	1.250	6	2E-9
Cab-Frame	1.250	7	2E-11
Cab-Platform	1.250	1	2D-19
Cab Vandalism	5.0540	1	2K-3
Camshaft	0.120	1	1F-11
Cold Starting Aid	5.0025	1	2J-11
Connecting Rod	0.081	1	1E-23
Cont. Valve-Hydr. (Ass.Y)	1.050	1	1J-21
Control Valve-Hydr.	1.050	2	2K-3
	1.050	3	2K-5
	1.050	4	2K-7
Controls	1.070	1	1J-20
	1.071	1	1K-21, 1L-3
Counterweight	1.000	1	1J-3
Cowlings	1.300	1	2E-19
	1.300	2	2E-21
	1.300	3	2E-23
Crankshaft	0.080	1	1E-21
Crankshaft Pulley	0.084	1	1F-7
Cylinder Block	0.040	1	1D-21
	0.040	2	1D-23
	0.040	3	1E-3
Cylinder Block Covers	0.043	1	1E-7
	0.043	2	1E-9
Cylinder Head	0.060	1	1E-13
	0.060	2	1E-15
Dashboard (Left)	1.210	1	2D-9
Dashboard (Right)	1.200	1	2D-3
	1.200	3	2D-7
Data Monitor	1.200	2	2D-5
Decals	4.500	1	2I-3
	4.501	1	2I-5
Dipper Stick (2,1m)	5.0022	1	2J-9
Dipper Stick (2,5m) (STD.)	2.003	1	2F-11
Dipper Stick (3m)	5.0038	1	2J-13
Dipper Stick Cylinder	2.030	4	2F-23
	2.031	4	2G-5
Dipstick-Engine Oil	0.270	1	1H-8
Discharge Valve Componen.	3.010	4	2H-5
Drive on Engine (Opt.)	0.350	1	1I-5
Electric System	1.220	1	2D-11
	1.220	2	2D-13
Elements-fuel	0.200	1	1G-17
Elements-Hydraulic	1.020	1	1J-7
Elements-Pilot	1.080	1	1L-5
Emergency Kits(Lub. Fittings)	4.000	1	2H-23
Engine	0.021	1	1D-19
Engine-Controls	0.004	1	1D-15
Engine-Suspensions	0.000	1	1D-3
Engine Breather	0.045	1	1E-11
Engine Cooling Piping	0.323	1	1H-19
Engine Heat Exchanger	0.310	1	1H-15
Engine Lifting Eyes	0.450	1	1I-15
Engine Oil Filter	0.302	1	1H-11
Engine Oil Piping	0.305	1	1H-13
Engine Oil Pump	0.300	1	1H-9
Engine Oil Sump	0.042	1	1E-5
Engine Piston	0.082	1	1F-3
Engine Suspensions	0.000	1	1D-3
Exhaust Manifold	0.077	1	1E-19
Exhaust Valve	0.060	2	1E-15
Fan	0.345	1	1I-3
Fan Drive	0.345	1	1I-3
"Filter Care" Kit	24		1A-24
Filter-Pilot System	1.080	1	1L-5
Filters-Air	0.001	1	1D-5
Filters-Engine Oil	0.302	1	1D-11
Filters-Fuel	0.200	1	1G-17
Filters-Hydr. System	1.020	1	1J-7
Flywheel-Engine	0.083	1	1L-17
Fuel Filter	0..200	1	1G-17
Fuel Piping	0.203	1	1G-19
Fuel Pump	0.203	2	1G-21
	0.140	8	1G-5
Fuel Tank	1.010	1	1J-5
Fuses	1.200	3	2D-7
Guards	1.300	2	2E-21
Handle	1.300	3	2E-23
	1.300	4	2F-3
Heater	1.290	1	2E-15
Horn	1.220	2	2D-15
Hydr.Pump-Components	1.030	2	1J-13
Hydr.Pump Regulator-Comp.	1.030	3	1J-15

F-2

ALPHABETICAL INDEX

DESCRIPTION	SGR.	TAV.	GRID
Hydraulic Pump	1.030	1	1J-9
Idler	3.020	1	1H-7
Injection Nozzle-Lines	0.149	1	1G-15
Injection Pump	0.140	6	1F-23
	0.140	7	1G-3
Injection Pump Drive	0.140	10	1G-9
Injection Pump-Piping	0.140	1	1F-13
	0.140	9	1G-7
Intake Manifold	0.071	1	1E-17
Intake Valve	0.060	2	1E-15
Lift Cylinder (Left)	2.030	3	1F-21
Lift Cylinder (Right)	2.030	2	2F-19
Lights	1.220	2	2D-13
Lower Frame	3.000	1	2G-17
Lubric. Fitting Piping	3.001	1	2G-19
	2.041	1	2G-15
	2.040	1	1G-13
Main Piping	1.060	1	1K-9
	1.061	1	1K-11
Mirror (Rear)	1.300	2	2E-21
Monobloc Boom	2.000	1	2F-5
Motor - Starter	0.360	2	1I-9
Motor - Swing	1.040	1	1J-17
Motor - Travel	3.010	1	2G-21
Motor - Wiper	1.220	1	2D-11
Muffler	0.002	1	1D-7
Oil Tank	1.020	1	1J-7
Operator's Seat	1.250	2	2D-21
OperatorsSeat(Bostrom)(Std.)	5.0151	1	2J-21
Pilot Piping(1)	1.080	1	1L-5
Pilot Piping(2)	1.081	1	1L-9
Pilot Piping(3)	1.082	1	1L-11
Pilot Piping(4)	1.083	1	1L-17
Pilot Piping(5)	1.084	1	1L-19
Pilot Piping(6)	1.085	1	1L-21
Pilot Valve	1.070	3	1K-19
	1.071	2	1L-3
Pilot Valve-components	1.070	2	1K-17
PipingBoom	2.030	1	2F-17
	2.031	1	2G-5
Piping-Injection	0.149	1	1G-15
Piping-Lube Fittings	2.040	1	2G-13
Piping-Main	1.060	1	1K-9
Piping-Pilot(1)	1.080	1	1L-5
Piping-Pilot(3)	1.082	1	1L-11
Piping-Pilot(4)	1.083	1	1L-17
Piping-Pilot(5)	1.084	1	1L-19
Piping-Pump Contr. Valve	1.050	1	1J-21
Piping-Travel (Lower)	3.070	1	2H-19
	3.071	1	2H-21
Piping-Turbocharger	0.241	1	1H-5
Pump-Engine Oil	0.300	1	1H-9
Pump-Hydraulic	1.030	1	1J-11
Pump-Injection	0.140	6	1F-23
Pump-Water	0.320	1	1H-17
Pump/Control Valve Piping	1.050	1	1J-23
Radiator	0.003	1	1D-9
Radiator-Components	0.003	2	1D-11
	0.003	3	1D-13
Rocker Arm	0.060	2	1E-15
Rotary Distributor	3.060	1	2H-17
SAE Battery Provision	1.220	3	2D-17
Seat Belt	5.0536	1	1J-23
Sensors	1.220	2	2D-13
Solenoid Valve	1.080	2	1L-7
Starter	0.360	2	1I-9
Starter-Mounting	0.360	1	1I-7
Stop Valve	1.082	2	1L-13
Swing Red.Unit-Components	1.040	2	1J-19
Swing Reduction Unit	1.040	1	1J-17
Thermostat & Housing	0.326	1	1H-21
Timing Control	0.100	1	1F-9
Tool Kit	5.0083	1	2J-19
Track Chain	3.051	1	2H-13
	3.052	1	2H-15
Track Roller	3.040	1	2H-11
Travel Motor-componen.	3.010	3	2H-3
Travel Piping (Lower)	3.070	1	2H-19
	3.071	1	2H-21
Travel Red.Unit-Componen.	3.010	2	2G-23
Travel Reduction Units	3.010	1	2G-21
Turbocharger	0.240	1	1G-23
	0.240	2	1H-3
Turbocharger Piping	0.241	1	1H-5
Upper Frame	1.000	1	1J-3
Upper Roller	3.030	1	2H-9
Valve-Anti-Shock(Hydr.)	1.082	3	1L-15
Valve-Exhaust	0.060	2	1E-15
Valve-Intake	0.060	2	1E-15
Valve-Pilot (Hydr.)	1.070	1	1K-15
Valve-Pilot(Travel)	1.070	1	1K-15
Valve-Solenoid	1.080	2	1L-7
Valve-Stop(Travel)	1.082	1	1L-11
Water Pump	0.320	1	1H-17
Water Pump Drive	0.340	1	1H-23
Water Pump-Components	0.320	2	1H-17
Wiper	1.220	1	2D-11

FH200

HANDLE MANIGLIA 71405595	MANILLE GRIFF MANIJA	1.300 TAV.4 NTR 104S V-89

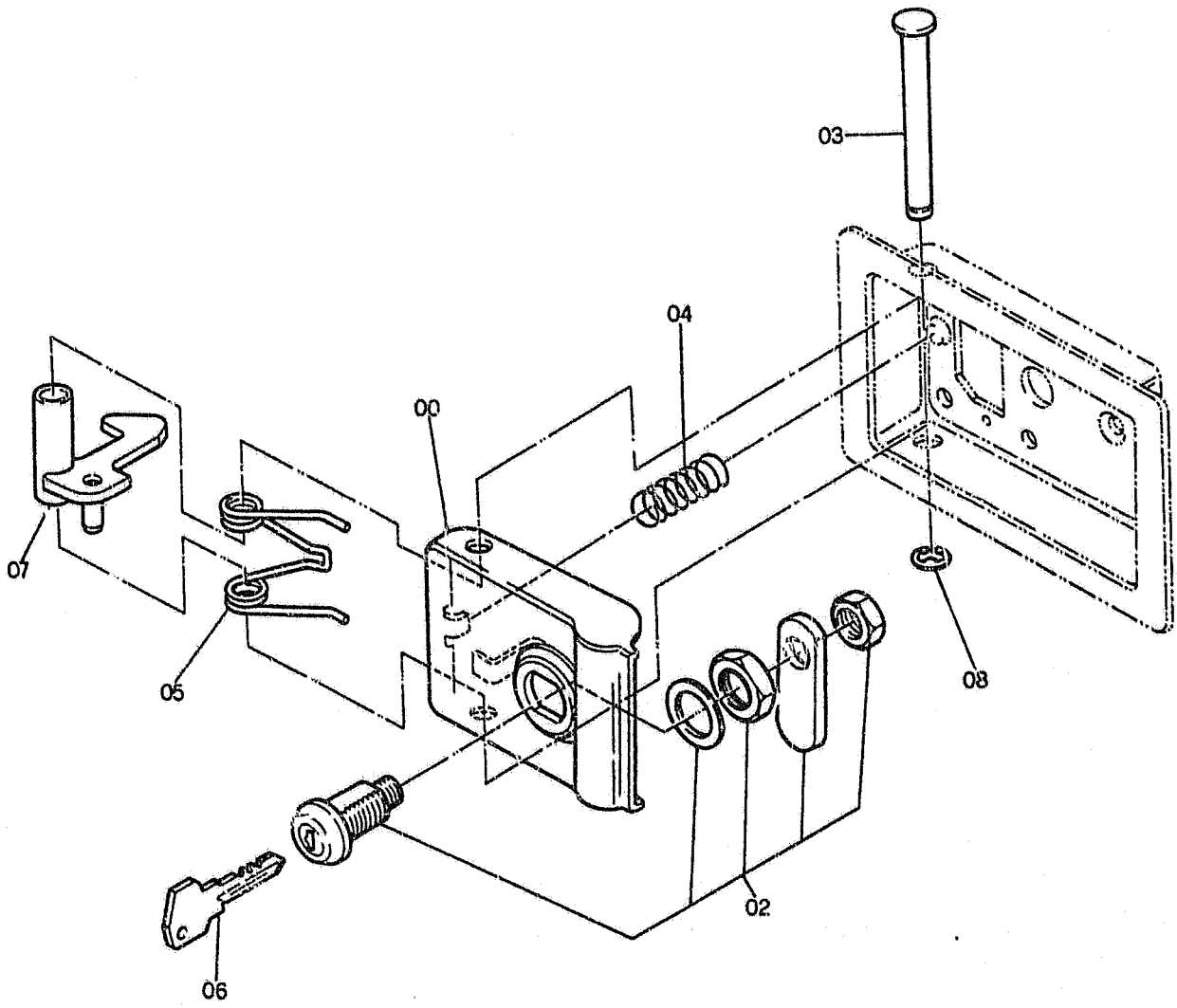

FH200

HANDLE
MANIGLIA
71405595

MANILLE
GRIFF
MANIJA

1.300 TAV.4

NTR 104S V-89

ITEM	PART NUMBER	QTY	TR. CO.	DESCRIPTION	DESCRIZIONE
00	71405601	1	20M	HANDLE	MANIGLIA
02	79076867	1	82B	LOCK CYLINDER	BLOCCHETTO SERRATURA
03	71406077	1	80P	PIN	PERNO
04	71406078	1	100M	SPRING	MOLLA
05	71406070	1	100M	SPRING	MOLLA
06	79069282	1	150C	KEY	CHIAVE
07	71406080	1	45L	LEVER	LEVA
08	11087776	1	187A	SNAP RING	ANELLO ELASTICO

MONOBLOC BOOM BRACCIO MONOBLOCCO	BRAS MONOBLOQUE MONOBLOCK-AUSLEGER BRAZO MONOBLOQUE	2.000 TAV.1 NTR 104S V-89

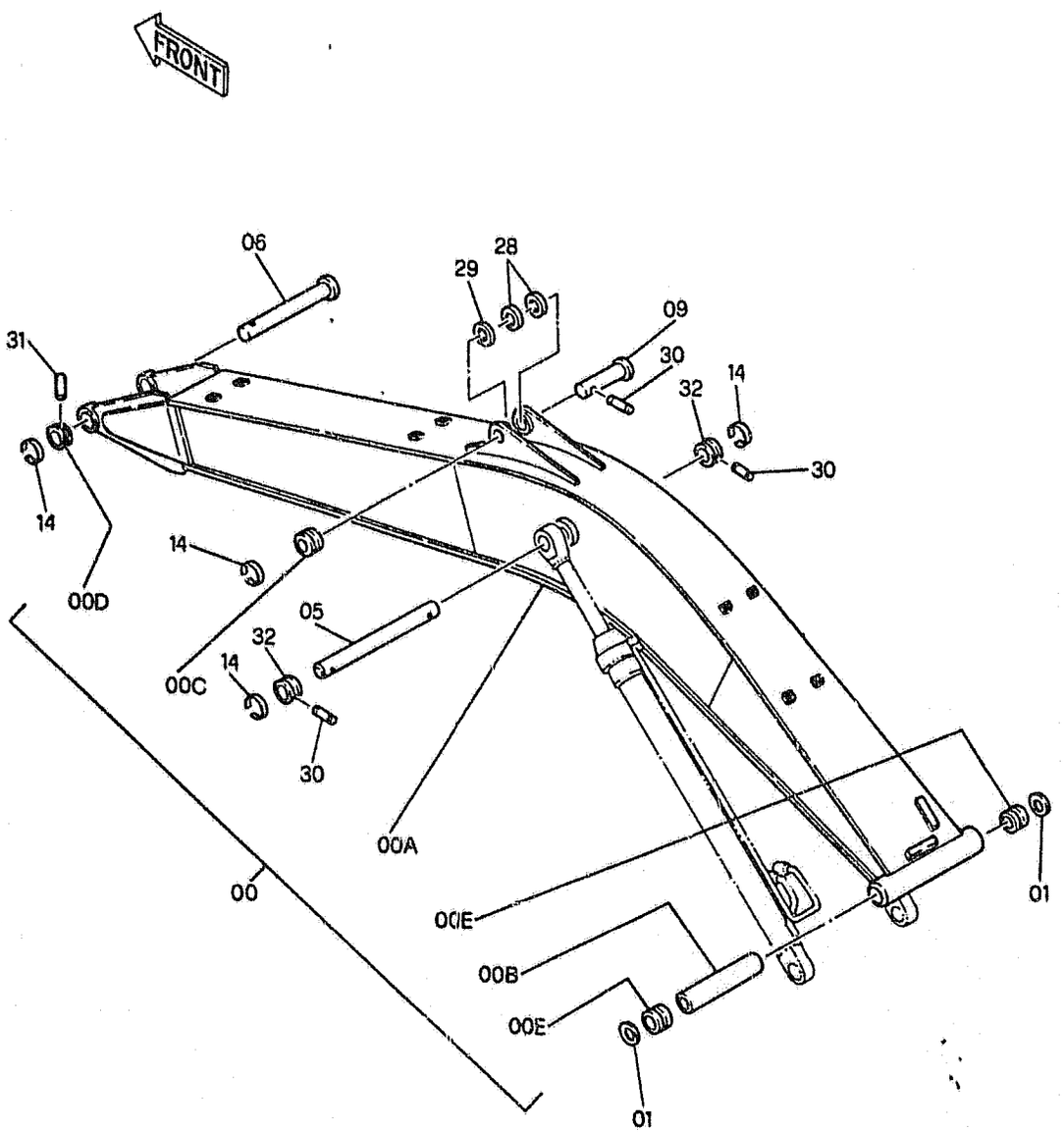

FH200 02

MONOBLOC BOOM BRACCIO MONOBLOCCO	BRAS MONOBLOQUE MONOBLOCK-AUSLEGER BRAZO MONOBLOQUE	2.000 TAV.1 NTR 104S V-89

ITEM	PART NUMBER	QTY	TR. CO.	DESCRIPTION	DESCRIZIONE
00	**71415089**	1	130B	ARM -ASS.LY	BRACCIO -COMPL.
00A	**71415103**	1	130B	ARM	BRACCIO
00B	**71415104**	1	75D	SPACER	DISTANZIALE
00C	**71415102**	1	75D	SPACER -TO BE WELDED	DISTANZIALE -DA SALDARE
00D	**71415105**	1	75D	SPACER -TO BE WELDED	DISTANZIALE -DA SALDARE
00E	**71415106**	2	95B	BUSHING	BOCCOLA
01	**71415090**	2	122G	SEAL	GUARNIZIONE
05	**71415091**	1	80P	PIN	PERNO
06	**71415092**	1	80P	PIN	PERNO
09	**71415093**	1	80P	PIN	PERNO
14	**71415094**	4	45A	RING	ANELLO
28	**71415098**	4	131R	WASHER -THICK 2mm	ROSETTA -SPESS. 2mm
29	**71415099**	3	131R	WASHER -THICK 1mm	ROSETTA -SPESS. 1mm
30	**10100730**	3	80P	PIN	PERNO
31	**71415101**	1	80P	PIN	PERNO
32	**71415102**	2	75D	SPACER	DISTANZIALE

LIFT BOOM BRACCIO SOLLEVAMENTO	PIED DE FLECHE GRUNDAUSLEGER BRAZO DE ELEVACION	2.001 TAV.1 NTR 104S V-89

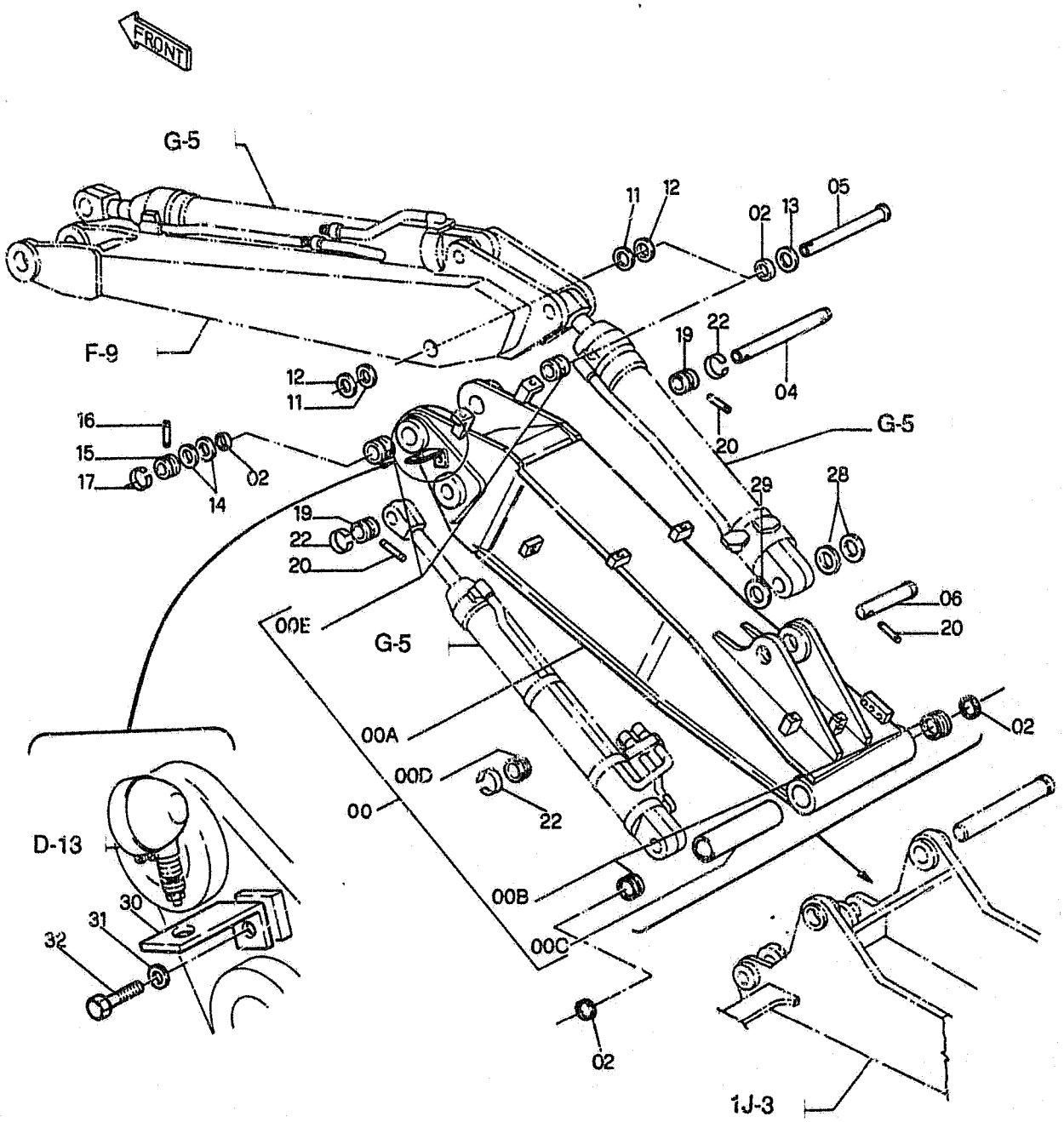

LIFT BOOM
BRACCIO SOLLEVAMENTO

PIED DE FLECHE
GRUNDAUSLEGER
BRAZO DE ELEVACIÓN

2.001 TAV.1

NTR 104S V-89

ITEM	PART NUMBER	QTY	TR. CO.	DESCRIPTION	DESCRIZIONE
00	71415674	1	B161	LIFT BOOM -ASS.LY	BRACCIO SOLLEVAMENTO -COMPL.
00A	71415682	1	B161	LIFT BOOM	BRACCIO SOLLEVAMENTO
00B	71415106	2	95B	BUSHING	BOCCOLA
00C	71415104	1	75D	SPACER	DISTANZIALE
00D	71415102	1	75D	SPACER -TO BE WELDED	DISTANZIALE -DA SALDARE
00E	71415684	2	95B	BUSHING	BOCCOLA
02	71415090	4	122G	SEAL	GUARNIZIONE
04	71415091	1	80P	PIN	PERNO
05	71415676	1	80P	PIN	PERNO
06	71415677	1	80P	PIN	PERNO
11	71415678	2	75D	SPACER	DISTANZIALE
12	71415679	3	131R	WASHER	ROSETTA
13	71415680	1	131R	WASHER	ROSETTA
14	71415681	6	131R	WASHER	ROSETTA
15	71415482	1	75D	SPACER	DISTANZIALE
16	10100830	1	80P	PIN	PERNO
17	71415436	1	45A	RING	ANELLO
19	71415102	2	75D	SPACER	DISTANZIALE
20	10100730	3	80P	PIN	PERNO
22	71415094	3	45A	RING	ANELLO
28	71415098	3	131R	WASHER -THICK 2mm	ROSETTA -SPESS. 2mm
29	71415099	3	131R	WASHER -THICK 1mm	ROSETTA -SPESS. 1mm
30	71435133	1	225S	BRACKET	STAFFA
31	10572074	1	170R	LOCKWASHER	ROSETTA ELASTICA
32	16248934	1	40V	SCREW	VITE

POSITIONER ARM BRACCIO POSIZIONATORE	FLECHE AUSLEGERORBERTEIL BRAZO CENTRAL	2.002 TAV.1 NTR 104S V-89

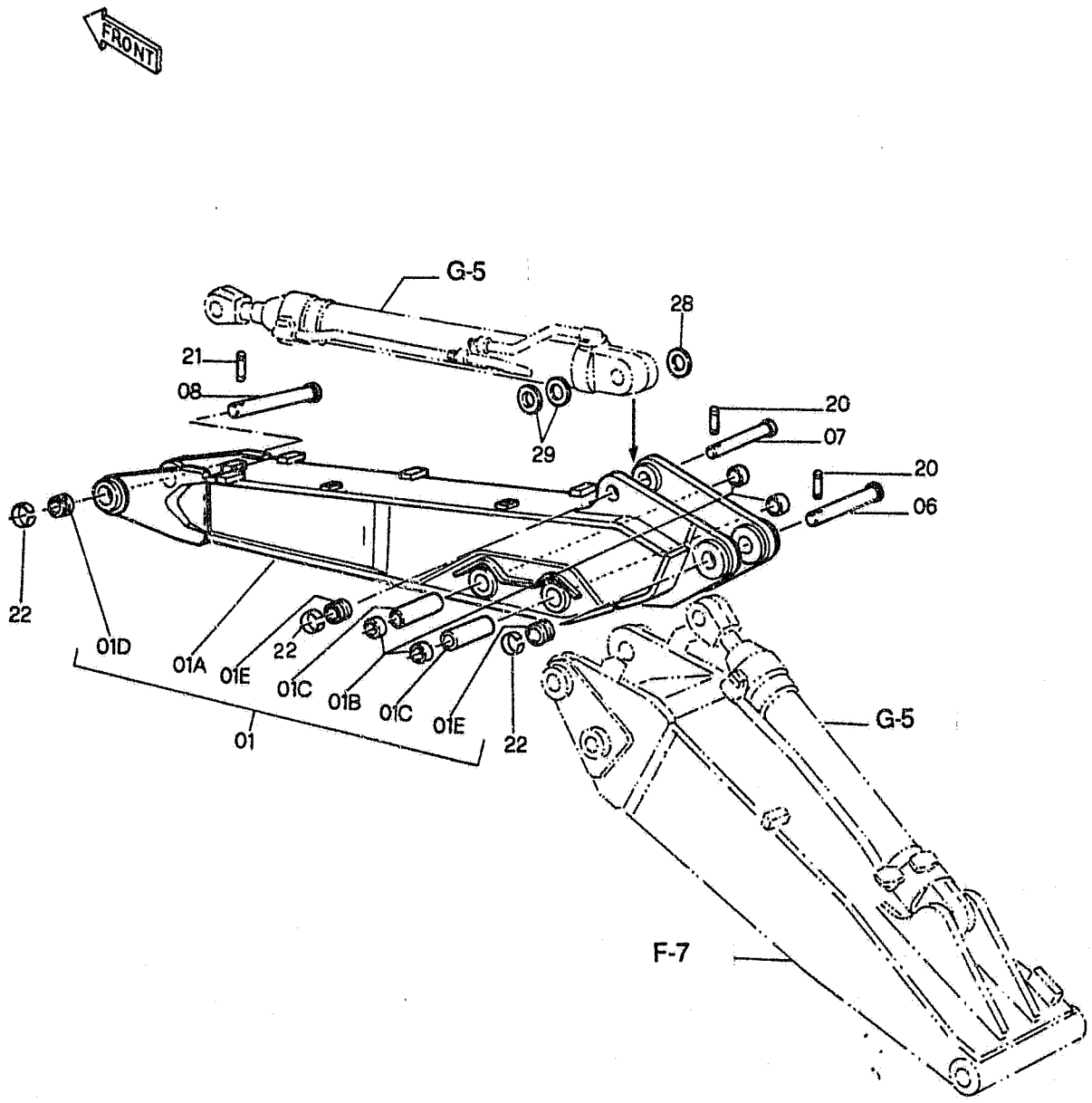

FH200 03

POSITIONER ARM
BRACCIO POSIZIONATORE

FLECHE
AUSLEGERORBERTEIL
BRAZO CENTRAL

2.002 TAV.1

NTR 104S V-89

ITEM	PART NUMBER	QTY	TR. CO.	DESCRIPTION	DESCRIZIONE
01	71415675	1	B162	POSITIONER ARM -ASS.LY	BRACCIO POSIZIONATORE -COMPL.
01A	71415685	1	B162	POSITIONER ARM	BRACCIO POSIZIONATORE
01B	71420064	4	95B	BUSHING	BOCCOLA
01C	71415686	2	75D	SPACER	DISTANZIALE
01D	71415105	1	75D	SPACER	DISTANZIALE
01E	71415102	2	75D	SPACER	DISTANZIALE
06	71415677	1	80P	PIN	PERNO
07	71415093	1	80P	PIN	PERNO
08	71415092	1	80P	PIN	PERNO
20	10100730	2	80P	PIN	PERNO
21	71415101	1	80P	PIN	PERNO
22	71415094	3	45A	RING	ANELLO
28	71415098	3	131R	WASHER -THICK 2mm	ROSETTA -SPESS. 2mm
29	71415099	3	131R	WASHER -THICK 1mm	ROSETTA -SPESS. 1mm

DIPPER STICK (2m)-LINKS
BRACCIO PEN.(2m)-LEVER.

BALANCIER N.3 (2m)
LOEFFELSTIEL (2m)
BRAZO ELEVACION 3 (2m)

2.003 TAV.1

NTR 104S V-89

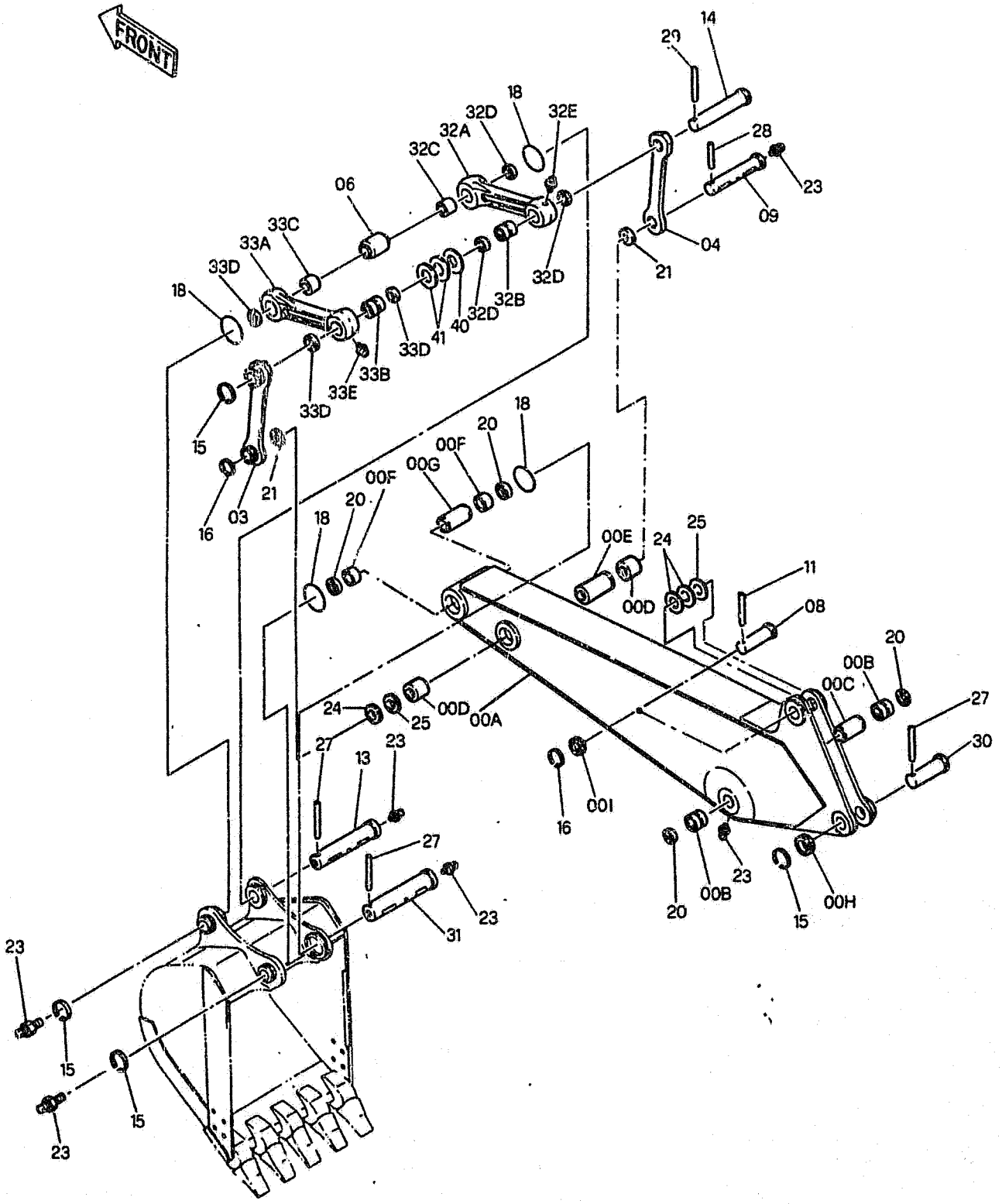

FH200

DIPPER STICK (2m)-LINKS
BRACCIO PEN.(2m)-LEVER.
BALANCIER N.3 (2m)
LOEFFELSTIEL (2m)
BRAZO ELEVACION 3 (2m)

2.003 TAV.1

NTR 104S V-89

ITEM	PART NUMBER	QTY	TR. CO.	DESCRIPTION	DESCRIZIONE
00 A-I	71415745	1	B163	DIPPER STICK -ASS.LY	BRACCIO PENETRAZIONE -COMPL.
00A	71415746	1	B163	DIPPER STICK	BRACCIO PENETRAZIONE
00B	71415176	2	95B	BUSHING	BOCCOLA
00C	71415172	1	75D	SPACER	DISTANZIALE
00D	71415177	2	95B	BUSHING	BOCCOLA
00E	71415173	1	75D	SPACER	DISTANZIALE
00F	71415178	2	95B	BUSHING	BOCCOLA
00G	71415174	1	75D	SPACER	DISTANZIALE
00H	71415102	1	75D	SPACER -TO BE WELDED	DISTANZIALE -DA SALDARE
00I	71415175	1	75D	SPACER -TO BE WELDED	DISTANZIALE -DA SALDARE
03	71415147	1	50B	LINK ROD	BIELLA
04	71415148	1	50B	LINK ROD	BIELLA
06	71415149	1	75D	SPACER	DISTANZIALE
08	71415150	1	80P	PIN	PERNO
09	71415151	1	80P	PIN	PERNO
11	10100530	1	80P	PIN	PERNO
13	71415153	1	80P	PIN	PERNO
14	71415154	1	80P	PIN	PERNO
15	71415094	4	45A	RING	ANELLO
16	71415156	2	45A	RING	ANELLO
18	71415157	4	158G	O-RING	GUARNIZIONE O-R
20	71415158	4	122G	SEAL	GUARNIZIONE
21	71415159	2	122G	SEAL	GUARNIZIONE
23	13407211	7	60I	GREASE FITTING	INGRASSATORE
24	71415160	3	198S	SHIM 1mm	SPESSORE 1mm
25	71415161	2	198S	SHIM 2,5mm	SPESSORE 2,5mm
27	10100730	3	80P	PIN	PERNO
28	71415162	1	80P	PIN	PERNO
29	71415101	1	80P	PIN	PERNO
30	71415093	1	80P	PIN	PERNO
31	71415163	1	80P	PIN	PERNO
32 A-E	71415164	1	90A	ROD -ASS.LY	ASTA -COMPL.
32A	71415184	1	90A	ROD	ASTA
32B	71415182	1	95B	BUSHING	BOCCOLA
32C	71415183	1	95B	BUSHING	BOCCOLA
32D	71415158	3	122G	SEAL	GUARNIZIONE
32E	13407211	1	60I	GREASE FITTING	INGRASSATORE
33 A-E	71415165	1	90A	ROD -ASS.LY	ASTA -COMPL.
33A	71415181	1	90A	ROD	ASTA
33B	71415182	1	95B	BUSHING	BOCCOLA
33C	71415183	1	95B	BUSHING	BOCCOLA
33D	71415158	3	122G	SEAL	GUARNIZIONE
33E	13407211	1	60I	GREASE FITTING	INGRASSATORE
40	71415098	1	131R	WASHER -THICK 2mm	ROSETTA -SPESS. 2mm
41	71415099	2	131R	WASHER -THICK 1mm	ROSETTA -SPESS. 1mm

BUCKET BENNA	GODET LADESCHAUFEL CUCHARA	2.020 TAV 1

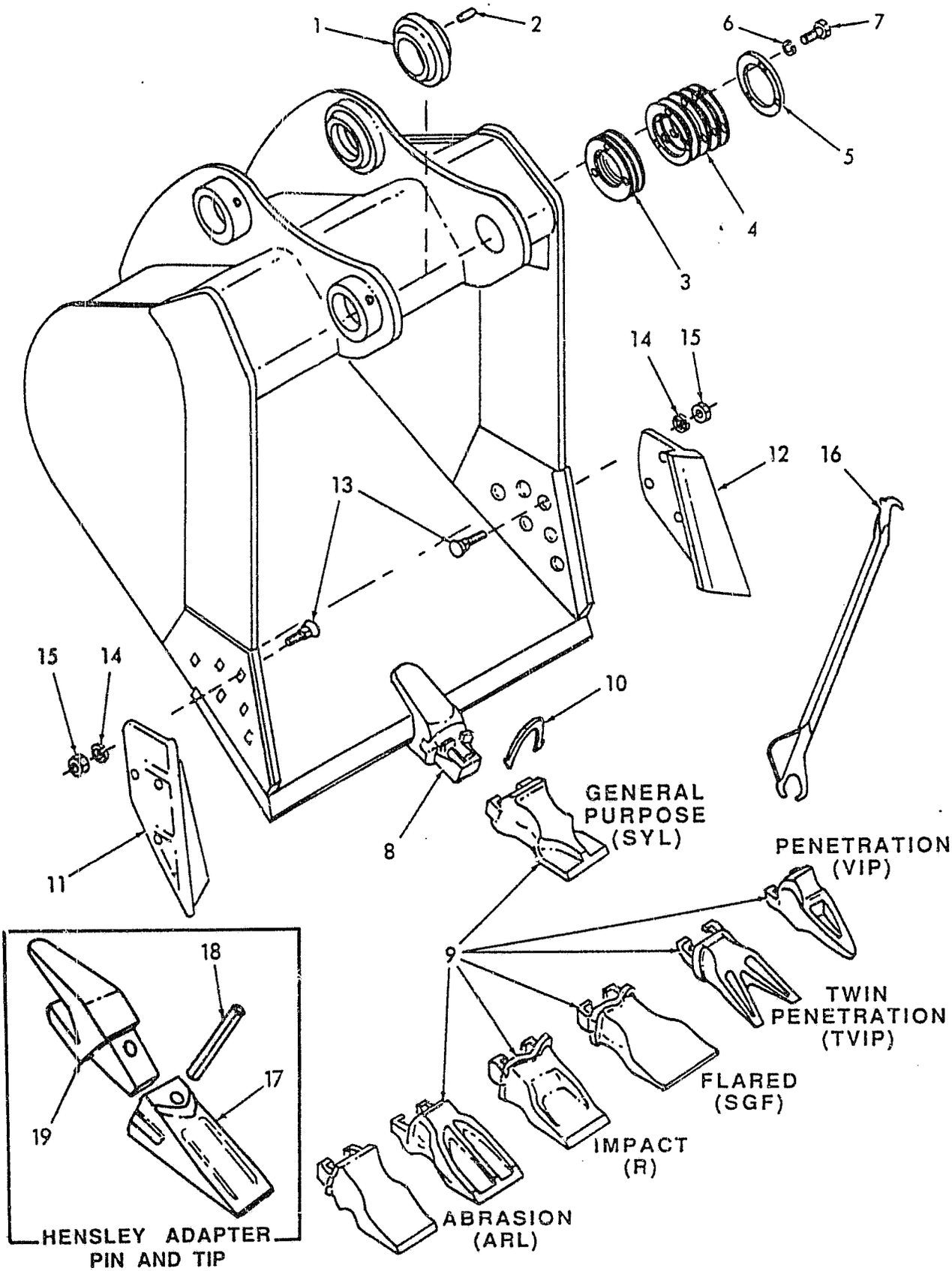

REVISED MARCH 1992

FH200

BUCKET BENNA	GODET LADESCHAUFEL CUCHARA	2.020 TAV 1

ITEM	PART NUMBER	QTY	TR. CO.	DESCRIPTION	DESCRIZIONE
-	73158388	1	35B 600L	BUCKET, GENERAL PURPOSE .6 CU YD X 24" INCLUDES ITEMS 00-10	
-	73158392	1	35B 600L	BUCKET, GENERAL PURPOSE .74 CU YD X 30" INCLUDES ITEMS 00-10	
-	73158360	1	35B 600L	BUCKET, GENERAL PURPOSE .9 CU YD X 30" INCLUDES ITEMS 00-10	
-	73158394	1	35B 600L	BUCKET, GENERAL PURPOSE 1.06 CU YD X 42" INCLUDES ITEMS 00-10	
-	73158362	1	35B 600L	BUCKET, GENERAL PURPOSE 1.2 CU YD X 36" INCLUDES ITEMS 00-10	
-	73158390	1	35B 600L	BUCKET, GENERAL PURPOSE 1.34 CU YD X 42" INCLUDES ITEMS 00-10	
-	73158396	1	35B 600L	BUCKET, SEVERE SERVICE .74 CU YD X 30" INCLUDES ITEMS 00-10	
-	73158398	1	35B 600L	BUCKET, SEVERE SERVICE .9 CU YD X 36" INCLUDES ITEMS 00-10	
-	73160556	1	35B 600L	BUCKET, SEVERE SERVICE 1.06 CU YD X 42" INCLUDES ITEMS 00-10	
-	731588402	1	35B 600L	BUCKET, SEVERE SERVICE 1.2 CU YD X 36" INCLUDES ITEMS 00-10	
00	--------	1	35B 601C	BUCKET NOT SERVICED	
01	71415408	1	75D	SPACER	
02	10493230	1	80P	PIN	
03	71415410	3	198S	SHIM	
04	71415409	7	198S	SHIM	
05	71415411	1	105P	PLATE	
06	10572174	3	170R	LOCKWASHER	
07	16264434	3	40V	SCREW, 16X2X50	
08	a73158485	-	55T 600T	ADAPTOR, GENRAL PURPOSE, 27 SERIES REQUIRES WELDING	
	a73158486	-	55T 600T	ADAPTOR, GENRAL PURPOSE, 37 SERIES REQUIRES WELDING	
09	a73156117	-	242P	TIP, TOOTH, GENERAL PURPOSE, STD (27 SYL)	
	a73156118	-	242P	TIP, TOOTH, PENETRATION,GENERAL PURPOSE, (27VIP)	
	a73156119	-	242P	TIP, TOOTH, TWIN PENETRATION, G. P. (27 TVIP)	
	a73156120	-	242P	TIP, TOOTH, FLARED, GENERAL PURPOSE (27S6F)	
	a73148905	-	242P	TIP, TOOTH, SEVERE SERVICE (37 SYL)	
	a73156129	-	242P	TIP, TOOTH, PENETRATION, SEVERE SERVICE (37 TVIP)	
	a73156130	-	242P	TIP, TOOTH, TWIN PENETRATION, SEV. SERVICE (37 TVIP)	
	a73156131	-	242P	TIP, TOOTH, FLARED, SEVERE SERVICE (37 S7F)	
	a73158501	-	242P	TIP, TOOTH, SEVERE SERVICE, IMPACT STD (37R)	
	a73158504	-	242P	TIP, TOOTH, SEVERE SERVICE, ABRASION(37ARL)	
10	a73156121	-	22B	LOCK, GENERAL PURPOSE (27LK)	
	a73156132	-	22B	LOCK, SEVERE SERVICE (37LK)	

BUCKET BENNA	GODET LADESCHAUFEL CUCHARA	2.020 TAV.1

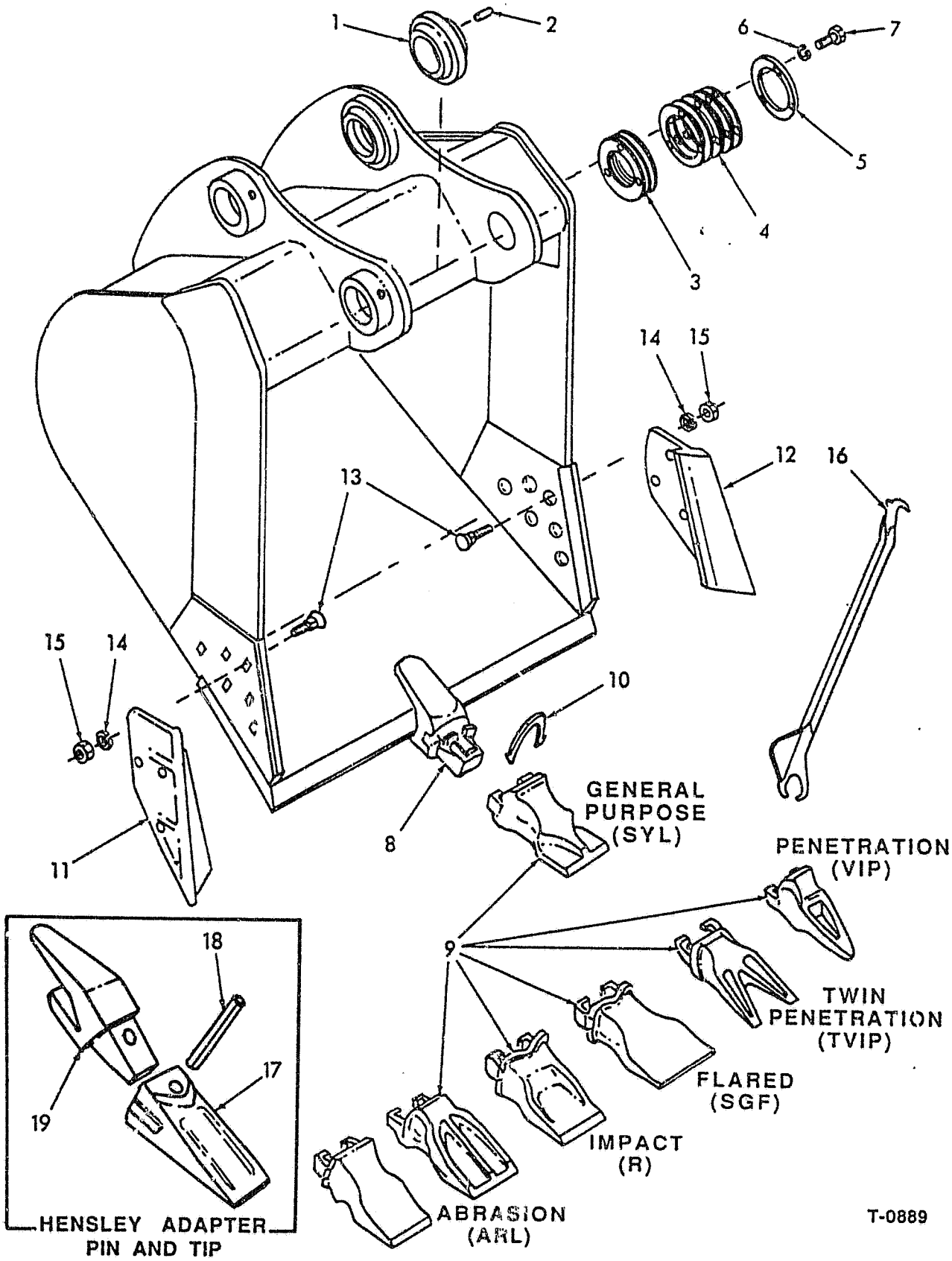

REVISED JUNE 1990

BUCKET
BENNA

GODET
LADESCHAUFEL
CUCHARA

2.020 TAV.1

ITEM	PART NUMBER	QTY	TR. CO.	DESCRIPTION	DESCRIZIONE
11	73158507	1	199C 600B	EDGE, BUCKET CUTTING RIGHT	
12	73158506	1	199C 600A	EDGE, BUCKET CUTTING LEFT	
13	70918282	6	140B	BOLT, PLOW, 7/8"NCX3"	
14	70919426	6	170R	LOCKWASHER	
15	70932930	6	10D	NUT,7/8"NC	
16	73148907	1		TOOL (37 SERIES)	
	73156127	1		TOOL (27 SERIES)	
17	a.78100827	-	242P	TIP,TOOTH (HENSLEY X310)	
18	a.78100834	-	80P	PIN (HENSLEY P160)	
19	a.73158539	-	55T 600T	ADAPTOR (HENSLEY 153X310) REQUIRES WELDING	

a. BUCKET SIZE	ADAPTER, TIP & LOCK QTY.
.6 CU.YD X 24"GP	4
.74 CU.YD X 30"SS	4
.9 CU.YD X 30"GP	4
.9 CU.YD X 36"SS	4
1.2 CU.YD X 36"SS	4
1.06 CU.YD. X 42"GP	5
1.34 CU.YD X 42"GP	5

BOOM PIPING
TUBAZIONI BRACCI

TUYAUTERIES AVANT
LEITUNGEN-VORDER
TUBERIAS ANTERIORES

2.030 TAV.1

NTR 104S V-89

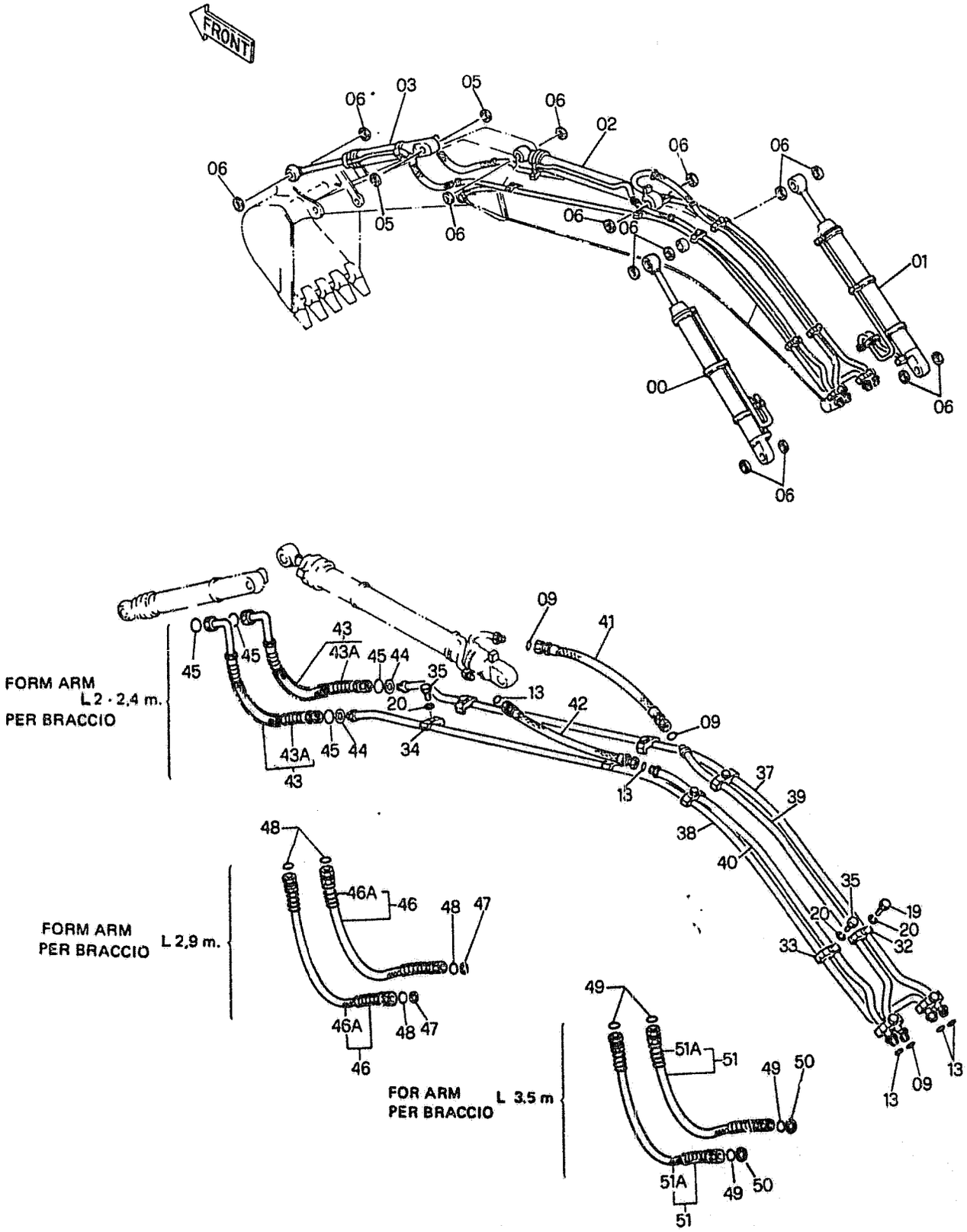

FH200 02

BOOM PIPING
TUBAZIONI BRACCI

TUYAUTERIES AVANT
LEITUNGEN-VORDER
TUBERIAS ANTERIORES

2.030 TAV.1

NTR 104S V-89

ITEM	PART NUMBER	QTY	TR. CO.	DESCRIPTION	DESCRIZIONE
00	71416086	1	11G1	LIFT CYLINDER -ASS.Y LEFT SEE F-21	CILINDRO SOLLEV. -COMPL. SIN. VED. TAV.3
01	71416087	1	11G1	LIFT CYLINDER -ASS.Y RIGHT SEE F-19	CILINDRO SOLLEV. -COMPL. DEST. VED. TAV.2
02	71416088	1	3G44	DIPPER CYLINDER -ASS.LY SEE F-23	CILINDRO PENETRAZIONE -COMPL. VED. TAV.4
03	71416077	1	11G2	BUCKET CYLINDER -ASS.LY SEE G-3	CILINDRO BENNA -COMPL. VED. TAV.5
05	71415159	2	122G	SEAL	GUARNIZIONE
06	71415158	14	122G	SEAL	GUARNIZIONE
09	70931640	3	158G	O-RING	GUARNIZIONE O-R
13	70923843	5	158G	O-RING	GUARNIZIONE O-R
19	11113534	3	40V	SCREW 12X1,75X65	VITE 12X1,75X65
20	10517074	10	131R	WASHER	ROSETTA
32	71415870	3	225S	BRACKET	STAFFA
33	71416089	3	231S	CLIP	STAFFETTA
34	71416090	4	231S	CLIP	STAFFETTA
35	11113434	7	40V	SCREW 12X1,75X60	VITE 12X1,75X60
37	71416091	1	193T	TUBE	TUBO RIGIDO
38	71416093	1	193T	TUBE	TUBO RIGIDO
39	71416095	1	193T	TUBE	TUBO RIGIDO
40	71416097	1	193T	TUBE	TUBO RIGIDO
41	71404056	1	285T	HOSE	TUBO FLESSIBILE
42	71404054	1	285T	HOSE	TUBO FLESSIBILE
43	71404061	2	285T	HOSE -ASS.LY	TUBO FLESSIBILE -COMPL.
43A	71404062	2	142G	SHEATH	GUAINA
44	71415170	2	131R	WASHER	ROSETTA
45	70923843	4	158G	O-RING	GUARNIZIONE O-R
46	71404064	2	285T	HOSE -ASS.LY	TUBO FLESSIBILE -COMPL.
46A	71404063	2	142G	SHEATH	GUAINA
47	71415170	2	131R	WASHER	ROSETTA
48	70923843	4	158G	O-RING	GUARNIZIONE O-R
49	70923843	4	158G	O-RING	GUARNIZIONE O-R
50	71415170	2	131R	WASHER	ROSETTA
51	71404509	2	285T	HOSE -ASS.LY	TUBO FLESSIBILE -COMPL.
51A	71404507	1	142G	SHEATH	GUAINA

LIFT CYLINDER (RIGHT)
CILINDRO SOLLEV. (DESTRO)
71416087

VERIN DE RELEVAGE(DROIT)
HUBZYLINDER (RECHTS)
GATO ELEVACION (DERECHO)

2.030 TAV.2

NTR 104S V-89

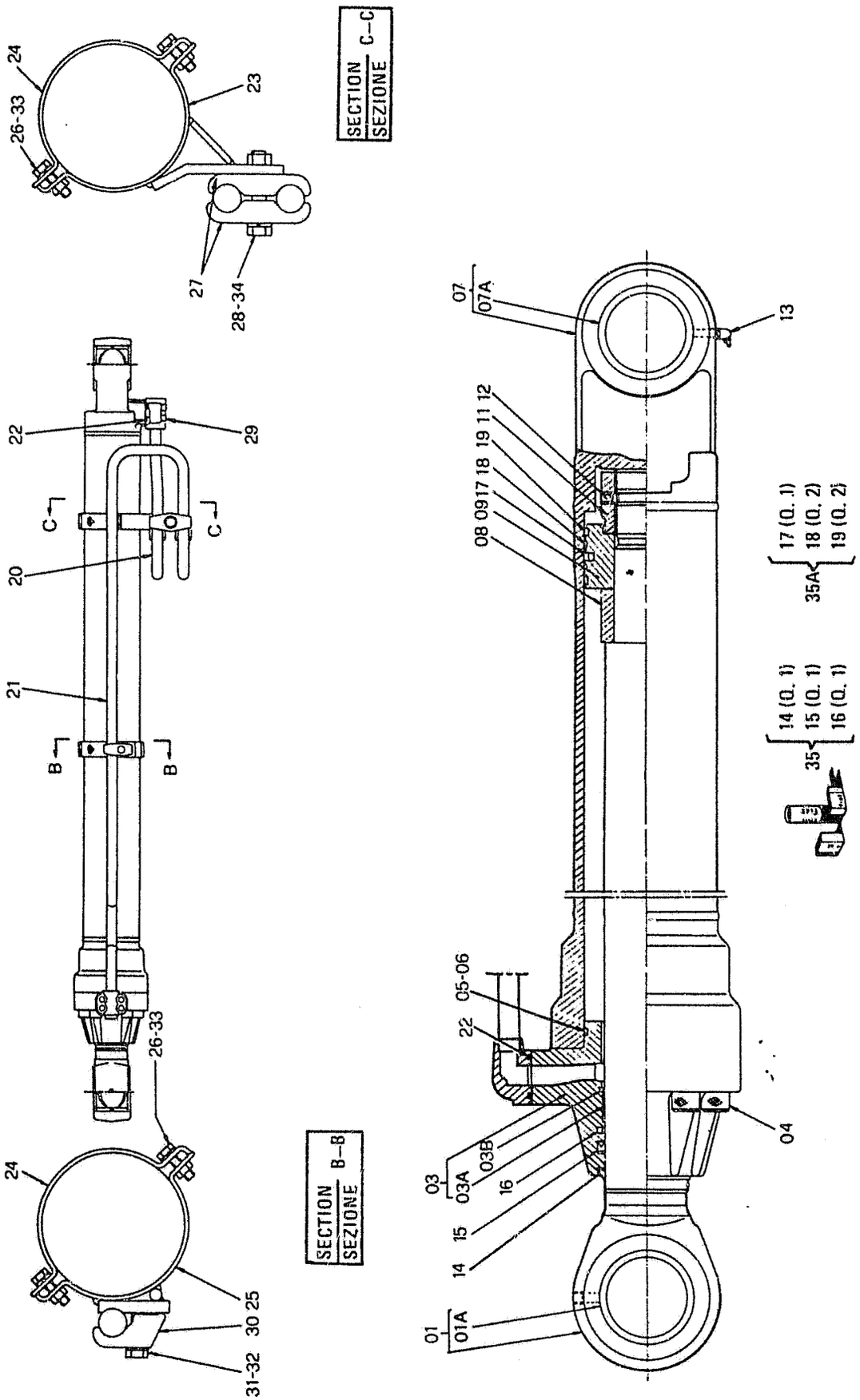

LIFT CYLINDER (RIGHT) | VERIN DE RELEVAGE(DROIT) | 2.030 TAV.2
CILINDRO SOLLEV. (DESTRO) | HUBZYLINDER (RECHTS)
71416087 | GATO ELEVACION (DERECHO) | NTR 104S V-89

ITEM	PART NUMBER	QTY	TR. CO.	DESCRIPTION	DESCRIZIONE
01-19	71400194	1	164C	CYLINDER -ASS.LY	CILINDRO -COMPL.
01	71400195	1	274S	ROD -ASS.LY	STELO -COMPL.
01A	71400206	1	95B	BUSHING	BOCCOLA
03	71400200	1	132F	HEAD -ASS.LY	FONDELLO ANT. -COMPL.
03A	71400202	1	95B	BUSHING	BOCCOLA
03B	71400203	1	187A	SNAP RING	ANELLO ELASTICO
04	14429674	8	40V	SCREW 20X2,5X65	VITE 20X2,5X65
05	71400204	1	45A	RING	ANELLO
06	14473280	1	158G	O-RING	GUARNIZIONE O-R
07	71400205	1	53C	TUBE -ASS.LY	CANNA CILINDRO -COMPL.
07A	71400206	1	95B	BUSHING	BOCCOLA
08	71400212	1	95B	BUSHING	BOCCOLA
09	71400213	1	235S	PISTON	STANTUFFO
11	71400113	1	10D	NUT	DADO
12	71400114	1	90G	DOWEL	GRANO
13	13407811	1	60I	GREASE FITTING	INGRASSATORE
14	71400010	1	45A	RING -K. 71400199	ANELLO -K. 71400199
15	71400011	1	122G	SEAL -K. 71400199	GUARNIZIONE -K. 71400199
16	71400012	1	45A	RING -K. 71400199	ANELLO -K. 71400199
17	71400037	1	122G	SEAL -K. 71400214	GUARNIZIONE -K. 71400214
18	71400038	2	45A	RING -K. 71400214	ANELLO -K. 71400214
19	71400039	2	45A	RING -K. 71400214	ANELLO -K. 71400214
20	71416113	1	193T	TUBE	TUBO RIGIDO
21	71416114	1	193T	TUBE	TUBO RIGIDO
22	71404169	2	158G	O-RING	GUARNIZIONE O-R
23	71416104	1	14B	STRAP	BANDELLA
24	71416108	2	14B	STRAP	BANDELLA
25	71416109	1	14B	STRAP	BANDELLA
26	11106634	4	40V	SCREW M10X1,5X35	VITE M10X1,5X35
27	71416112	2	225S	BRACKET	STAFFA
28	11116834	1	40V	SCREW 14X2X80	VITE 14X2X80
29	14422234	8	40V	SCREW 12X1,75X40	VITE 12X1,75X40
30	71416080	1	225S	BRACKET	STAFFA
31	11113234	1	40V	SCREW 12X1,75X50	VITE 12X1,75X50
32	10517074	1	131R	WASHER	ROSETTA
33	10571874	4	131R	WASHER	ROSETTA
34	10572074	1	170R	LOCKWASHER	ROSETTA ELASTICA
35	71400199	1	K1	KIT-LIFT RIGHT CYL. SEALS FOR COMPONENTS, SEE A-22	KIT-GUARN.CILINDRO SOLL.DX VED. COMPONENTI PAG. 23
35A	71400214	1	K1	KIT-LIFT RIGHT CYL. SEALS FOR COMPONENTS, SEE A-22	KIT-GUARN.CILINDRO SOLL.DX VED. COMPONENTI PAG. 23

LIFT CYLINDER (LEFT) CILINDRO SOLLEV. (SIN.) 71416086	VERIN DE RELEVAGE(GAUCHE) HUBZYLINDER(LINK) GATO ELEVACION(IZQUIERDO)	2.030 TAV.3 NTR 104S V-89

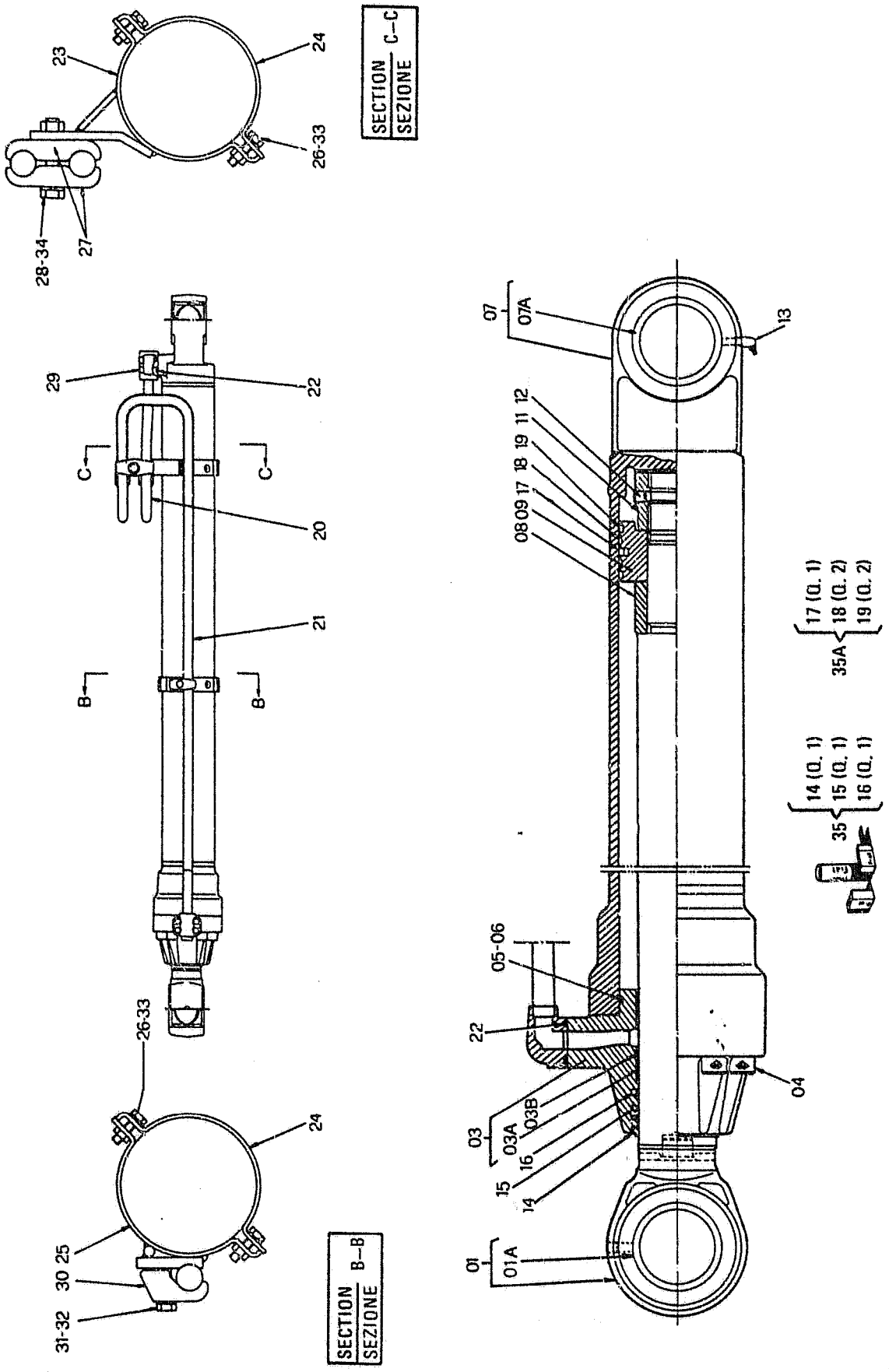

FH200

LIFT CYLINDER (LEFT) | VERIN DE RELEVAGE(GAUCHE) | 2.030 TAV.3
CILINDRO SOLLEV. (SIN.) | HUBZYLINDER(LINK)
71416086 | GATO ELEVACION(IZQUIERDO) | NTR 104S V-89

ITEM	PART NUMBER	QTY	TR. CO.	DESCRIPTION	DESCRIZIONE
0 1-19	71400350	1	164C	CYLINDER -ASS.LY	CILINDRO -COMPL.
01	71400195	1	274S	ROD -ASS.LY	STELO -COMPL.
01A	71400206	1	95B	BUSHING	BOCCOLA
03	71400200	1	132F	HEAD -ASS.LY	FONDELLO ANT. -COMPL.
03A	71400202	1	95B	BUSHING	BOCCOLA
03B	71400203	1	187A	SNAP RING	ANELLO ELASTICO
04	14429674	8	40V	SCREW 20X2,5X65	VITE 20X2,5X65
05	71400204	1	45A	RING	ANELLO
06	14473280	1	158G	O-RING	GUARNIZIONE O-R
07	71400351	1	53C	TUBE	CANNA CILINDRO
07A	71400206	1	95B	BUSHING	BOCCOLA
08	71400212	1	95B	BUSHING	BOCCOLA
09	71400213	1	235S	PISTON	STANTUFFO
11	71400113	1	10D	NUT	DADO
12	71400114	1	90G	DOWEL	GRANO
13	13407811	1	60I	GREASE FITTING	INGRASSATORE
14	71400010	1	45A	RING -K. 71400199	ANELLO -K. 71400199
15	71400011	1	122G	SEAL -K. 71400199	GUARNIZIONE -K. 71400199
16	71400012	1	45A	RING -K. 71400199	ANELLO -K. 71400199
17	71400037	1	122G	SEAL -K. 71400214	GUARNIZIONE -K. 71400214
18	71400038	2	45A	RING -K. 71400214	ANELLO -K. 71400214
19	71400039	2	45A	RING -K. 71400214	ANELLO -K. 71400214
20	71416100	1	193T	TUBE	TUBO RIGIDO
21	71416102	1	193T	TUBE	TUBO RIGIDO
22	71404169	2	158G	O-RING	GUARNIZIONE O-R
23	71416104	1	14B	STRAP	BANDELLA
24	71416108	2	14B	STRAP	BANDELLA
25	71416109	1	14B	STRAP	BANDELLA
26	11106634	4	40V	SCREW M10X1,5X35	VITE M10X1,5X35
27	71416112	2	225S	BRACKET	STAFFA
28	11116834	1	40V	SCREW 14X2X80	VITE 14X2X80
29	14422234	8	40V	SCREW 12X1,75X40	VITE 12X1,75X40
30	71416080	1	225S	BRACKET	STAFFA
31	11113234	1	40V	SCREW 12X1,75X50	VITE 12X1,75X50
32	10517074	1	131R	WASHER	ROSETTA
33	10571874	4	131R	WASHER	ROSETTA
34	10572074	1	170R	LOCKWASHER	ROSETTA ELASTICA
35	71400199	1	K2	LIFT LEFT CYL. SEAL KIT FOR COMPONENTS, SEE A-22	KIT GUARN.CILINDRO SOLL.SX VED. COMPONENTI PAG. 23
35A	71400214	1	K2	LIFT LEFT CYL. SEAL KIT FOR COMPONENTS, SEE A-22	KIT GUARN.CILINDRO SOLL.SX VED. COMPONENTI PAG. 23

DIPPER STICK CYLINDER
CILINDRO PENETRAZIONE
71416088

VERIN D'ENFONCEMENT
LOEFFELSTIELZYLINDER
GATO DE PENETRACION

2.030 TAV.4

NTR 104S V-89

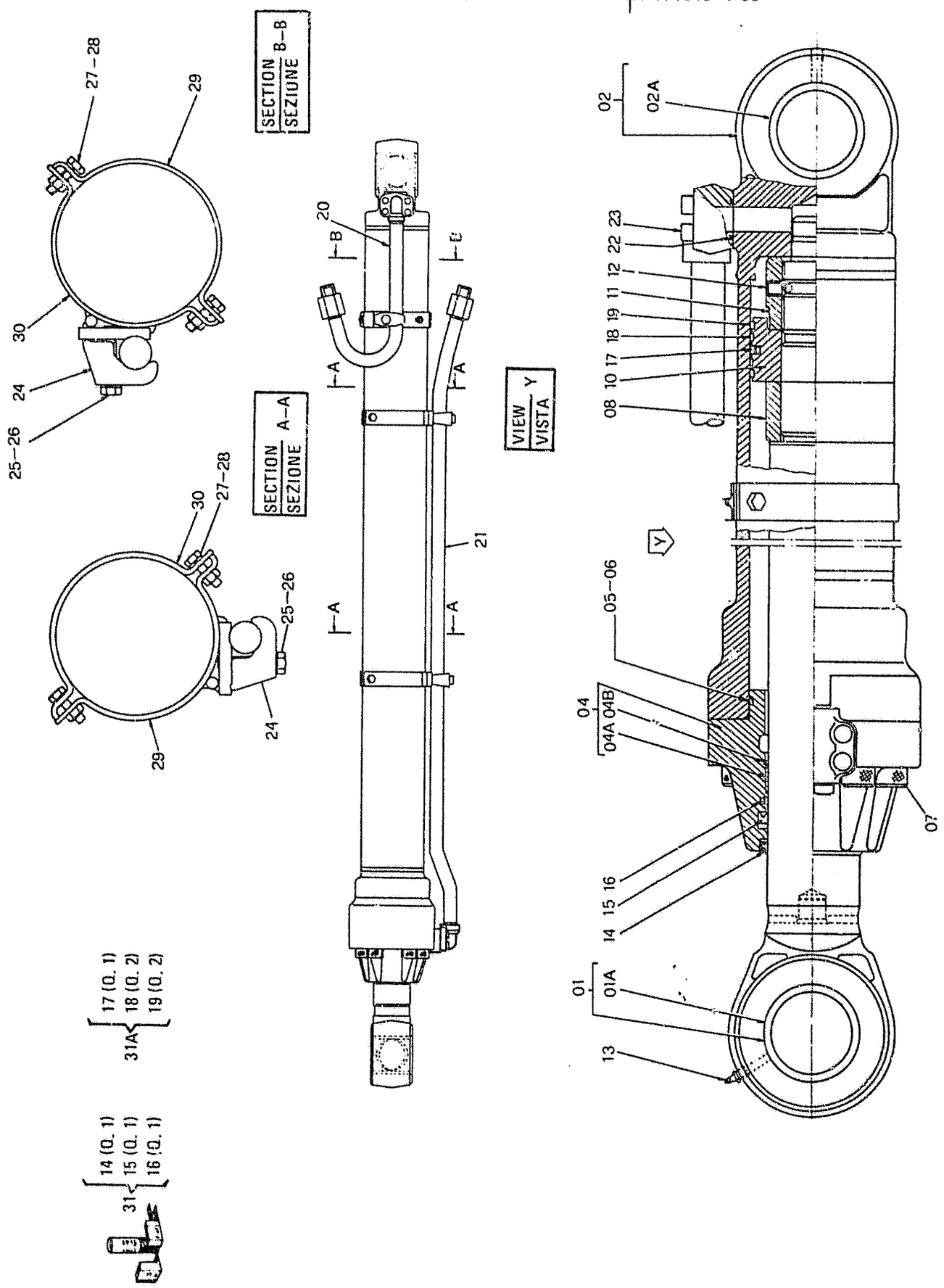

FH200 (02)

DIPPER STICK CYLINDER CILINDRO PENETRAZIONE 71416088	VERIN D'ENFONCEMENT LOEFFELSTIELZYLINDER GATO DE PENETRACION	2.030 TAV.4 NTR 104S 1/-89

ITEM	PART NUMBER	QTY	TR. CO.	DESCRIPTION	DESCRIZIONE
0 1-19	71400175	1	3G44	DIPPER CYLINDER -ASS.LY	CILINDRO PENETRAZIONE -COMPL.
01	71400176	1	274S	ROD -ASS.LY	STELO -COMPL.
01A	71400178	1	95B	BUSHING	BOCCOLA
02	71400181	1	53C	TUBE -ASS.LY	CANNA CILINDRO -COMPL.
02A	71400178	1	95B	BUSHING	BOCCOLA
04	71400187	1	132F	HEAD -ASS.LY	FONDELLO ANT. -COMPL.
04A	71400189	1	95B	BUSHING	BOCCOLA
04B	71400190	1	187A	SNAP RING	ANELLO ELASTICO
05	71400160	1	45A	RING	ANELLO
06	14474480	1	158G	O-RING	GUARNIZIONE O-R
07	14430774	8	40V	SCREW 22X2,5X80	VITE 22X2,5X80
08	71400191	1	95B	BUSHING	BOCCOLA
10	71400192	1	235S	PISTON	STANTUFFO
11	71400193	1	10D	NUT	DADO
12	71400114	1	90G	DOWEL	GRANO
13	13407211	1	60I	GREASE FITTING	INGRASSATORE
14	71400016	1	45A	RING -K. 71400186	ANELLO -K. 71400186
15	71400017	1	122G	SEAL -K. 71400186	GUARNIZIONE -K. 71400186
16	71400018	1	45A	RING -K. 71400186	ANELLO -K. 71400186
17	71400040	1	122G	SEAL -K. 71400161	GUARNIZIONE -K. 71400161
18	71400041	2	122G	SEAL -K. 71400161	GUARNIZIONE -K. 71400161
19	71400042	1	45A	RING -K. 71400161	ANELLO -K. 71400161
20	71416115	1	193T	TUBE	TUBO RIGIDO
21	71416117	1	193T	TUBE	TUBO RIGIDO
22	71404169	2	158G	O-RING	GUARNIZIONE O-R
23	14422234	8	40V	SCREW 12X1,75X40	VITE 12X1,75X40
24	71416121	3	225S	BRACKET	STAFFA
25	11113334	3	40V	SCREW 12X1,75X55	VITE 12X1,75X55
26	10517074	3	131R	WASHER	ROSETTA
27	11106634	6	40V	SCREW M10X1,5X35	VITE M10X1,5X35
28	10571874	6	131R	WASHER	ROSETTA
29	71416120	3	14R	STRAP	BANDELLA
30	71416119	3	14B	STRAP	BANDELLA
31	71400186	1	K3	KIT-DIPPER CYL. SEALS FOR COMPONENTS, SEE A-22	KIT-GUARN. CILIN. PENETRAZIONE VED. COMPONENTI PAG. 23
31A	71400161	1	K3	KIT-DIPPER CYL. SEALS FOR COMPONENTS, SEE A-22	KIT-GUARN. CILIN. PENETRAZIONE VED. COMPONENTI PAG. 23

ALPHABETICAL INDEX

DESCRIPTION	SGR.	TAV.	GRID
Accelerator controls	0.004	1	1D-21
Air Cleaner	0.001	1	1D-5
Alternator-Mounting	0.400	1	1I-11
Anti-Shock Valve (Hydr.)	1.082	3	1L-15
Application of Ol. Hammer	5.0020	2	2J-7
Batteries	1.220	2	2D-13
Belts	0.340	1	1H-23
	0.345	1	1I-3
Boom Piping	2.030	1	2F-17, 2G-3
	2.031	1	2G-5
	2.031	2	2G-7
Brake Valve Components	3.010	3	2H-3
Bucket	2.020	1	2F-13
Bucket Cylinder	2.030	5	2G-3
Bull Gear	3.000	1	2G-17
Cab	1.250	1	2D-19
Cab Door	1.250	5	2E-7
Cab Heater-Components	1.290	2	2E-15
Cab Window-Left Side	1.250	6	2E-9
Cab-Frame	1.250	7	2E-11
Cab-Platform	1.250	1	2D-19
Cab Vandalism	5.0540	1	2K-3
Camshaft	0.120	1	1F-11
Cold Starting Aid	5.0025	1	2J-11
Connecting Rod	0.081	1	1E-23
Cont. Valve-Hydr. (Ass.Y)	1.050	1	1J-21
Control Valve-Hydr.	1.050	2	2K-3
	1.050	3	2K-5
	1.050	4	2K-7
Controls	1.070	1	1J-20
	1.071	1	1K-21, 1L-3
Counterweight	1.000	1	1J-3
Cowlings	1.300	1	2E-19
	1.300	2	2E-21
	1.300	3	2E-23
Crankshaft	0.080	1	1E-21
Crankshaft Pulley	0.084	1	1F-7
Cylinder Block	0.040	1	1D-21
	0.040	2	1D-23
	0.040	3	1E-3
Cylinder Block Covers	0.043	1	1E-7
	0.043	2	1E-9
Cylinder Head	0.060	1	1E-13
	0.060	2	1E-15
Dashboard (Left)	1.210	1	2D-9
Dashboard (Right)	1.200	1	2D-3
	1.200	3	2D-7
Data Monitor	1.200	2	2D-5
Decals	4.500	1	2I-3
	4.501	1	2I-5
Dipper Stick (2,1m)	5.0022	1	2J-9
Dipper Stick (2,5m) (STD.)	2.003	1	2F-11
Dipper Stick (3m)	5.0038	1	2J-13
Dipper Stick Cylinder	2.030	4	2F-23
	2.031	4	2G-5
Dipstick-Engine Oil	0.270	1	1H-8
Discharge Valve Componen.	3.010	4	2H-5
Drive on Engine (Opt.)	0.350	1	1I-5
Electric System	1.220	1	2D-11
	1.220	2	2D-13
Elements-fuel	0.200	1	1G-17
Elements-Hydraulic	1.020	1	1J-7
Elements-Pilot	1.080	1	1L-5
Emergency Kits(Lub. Fittings)	4.000	1	2H-23
Engine	0.021	1	1D-19
Engine-Controls	0.004	1	1D-15
Engine-Suspensions	0.000	1	1D-3
Engine Breather	0.045	1	1E-11
Engine Cooling Piping	0.323	1	1H-19
Engine Heat Exchanger	0.310	1	1H-15
Engine Lifting Eyes	0.450	1	1I-15
Engine Oil Filter	0.302	1	1H-11
Engine Oil Piping	0.305	1	1H-13
Engine Oil Pump	0.300	1	1H-9
Engine Oil Sump	0.042	1	1E-5
Engine Piston	0.082	1	1F-3
Engine Suspensions	0.000	1	1D-3
Exhaust Manifold	0.077	1	1E-19
Exhaust Valve	0.060	2	1E-15
Fan	0.345	1	1I-3
Fan Drive	0.345	1	1I-3
"Filter Care" Kit	24		1A-24
Filter-Pilot System	1.080	1	1L-5
Filters-Air	0.001	1	1D-5
Filters-Engine Oil	0.302	1	1D-11
Filters-Fuel	0.200	1	1G-17
Filters-Hydr. System	1.020	1	1J-7
Flywheel-Engine	0.083	1	1L-17
Fuel Filter	0..200	1	1G-17
Fuel Piping	0.203	1	1G-19
Fuel Pump	0.203	2	1G-21
	0.140	8	1G-5
Fuel Tank	1.010	1	1J-5
Fuses	1.200	3	2D-7
Guards	1.300	2	2E-21
Handle	1.300	3	2E-23
	1.300	4	2F-3
Heater	1.290	1	2E-15
Horn	1.220	2	2D-15
Hydr.Pump-Components	1.030	2	1J-13
Hydr.Pump Regulator-Comp.	1.030	3	1J-15

G-2

ALPHABETICAL INDEX

DESCRIPTION	SGR.	TAV.	GRID
Hydraulic Pump	1.030	1	1J-9
Idler	3.020	1	1H-7
Injection Nozzle-Lines	0.149	1	1G-15
Injection Pump	0.140	6	1F-23
	0.140	7	1G-3
Injection Pump Drive	0.140	10	1G-9
Injection Pump-Piping	0.140	1	1F-13
	0.140	9	1G-7
Intake Manifold	0.071	1	1E-17
Intake Valve	0.060	2	1E-15
Lift Cylinder (Left)	2.030	3	1F-21
Lift Cylinder (Right)	2.030	2	2F-19
Lights	1.220	2	2D-13
Lower Frame	3.000	1	2G-17
Lubric. Fitting Piping	3.001	1	2G-19
	2.041	1	2G-15
	2.040	1	1G-13
Main Piping	1.060	1	1K-9
	1.061	1	1K-11
Mirror (Rear)	1.300	2	2E-21
Monobloc Boom	2.000	1	2F-5
Motor - Starter	0.360	2	1I-9
Motor - Swing	1.040	1	1J-17
Motor - Travel	3.010	1	2G-21
Motor - Wiper	1.220	1	2D-11
Muffler	0.002	1	1D-7
Oil Tank	1.020	1	1J-7
Operator's Seat	1.250	2	2D-21
OperatorsSeat(Bostrom)(Std.)	5.0151	1	2J-21
Pilot Piping(1)	1.080	1	1L-5
Pilot Piping(2)	1.081	1	1L-9
Pilot Piping(3)	1.082	1	1L-11
Pilot Piping(4)	1.083	1	1L-17
Pilot Piping(5)	1.084	1	1L-19
Pilot Piping(6)	1.085	1	1L-21
Pilot Valve	1.070	3	1K-19
	1.071	2	1L-3
Pilot Valve-components	1.070	2	1K-17
PipingBoom	2.030	1	2F-17
	2.031	1	2G-5
Piping-Injection	0.149	1	1G-15
Piping-Lube Fittings	2.040	1	2G-13
Piping-Main	1.060	1	1K-9
Piping-Pilot(1)	1.080	1	1L-5
Piping-Pilot(3)	1.082	1	1L-11
Piping-Pilot(4)	1.083	1	1L-17
Piping-Pilot(5)	1.084	1	1L-19
Piping-Pump Contr. Valve	1.050	1	1J-21
Piping-Travel (Lower)	3.070	1	2H-19
	3.071	1	2H-21
Piping-Turbocharger	0.241	1	1H-5
Pump-Engine Oil	0.300	1	1H-9
Pump-Hydraulic	1.030	1	1J-11
Pump-Injection	0.140	6	1F-23
Pump-Water	0.320	1	1H-17
Pump/Control Valve Piping	1.050	1	1J-23
Radiator	0.003	1	1D-9
Radiator-Components	0.003	2	1D-11
	0.003	3	1D-13
Rocker Arm	0.060	2	1E-15
Rotary Distributor	3.060	1	2H-17
SAE Battery Provision	1.220	3	2D-17
Seat Belt	5.0536	1	1J-23
Sensors	1.220	2	2D-13
Solenoid Valve	1.080	2	1L-7
Starter	0.360	2	1I-9
Starter-Mounting	0.360	1	1I-7
Stop Valve	1.082	2	1L-13
Swing Red.Unit-Components	1.040	2	1J-19
Swing Reduction Unit	1.040	1	1J-17
Thermostat & Housing	0.326	1	1H-21
Timing Control	0.100	1	1F-9
Tool Kit	5.0083	1	2J-19
Track Chain	3.051	1	2H-13
	3.052	1	2H-15
Track Roller	3.040	1	2H-11
Travel Motor-componen.	3.010	3	2H-3
Travel Piping (Lower)	3.070	1	2H-19
	3.071	1	2H-21
Travel Red.Unit-Componen.	3.010	2	2G-23
Travel Reduction Units	3.010	1	2G-21
Turbocharger	0.240	1	1G-23
	0.240	2	1H-3
Turbocharger Piping	0.241	1	1H-5
Upper Frame	1.000	1	1J-3
Upper Roller	3.030	1	2H-9
Valve-Anti-Shock(Hydr.)	1.082	3	1L-15
Valve-Exhaust	0.060	2	1E-15
Valve-Intake	0.060	2	1E-15
Valve-Pilot (Hydr.)	1.070	1	1K-15
Valve-Pilot(Travel)	1.070	1	1K-15
Valve-Solenoid	1.080	2	1L-7
Valve-Stop(Travel)	1.082	1	1L-11
Water Pump	0.320	1	1H-17
Water Pump Drive	0.340	1	1H-23
Water Pump-Components	0.320	2	1H-17
Wiper	1.220	1	2D-11

BUCKET CYLINDER CILINDRO BENNA 71416077	CYLINDRE DE GODET LOEFFELKIPPZILINDER GATO DE CUCHARA	2.030 TAV.5 NTR 104S V-89

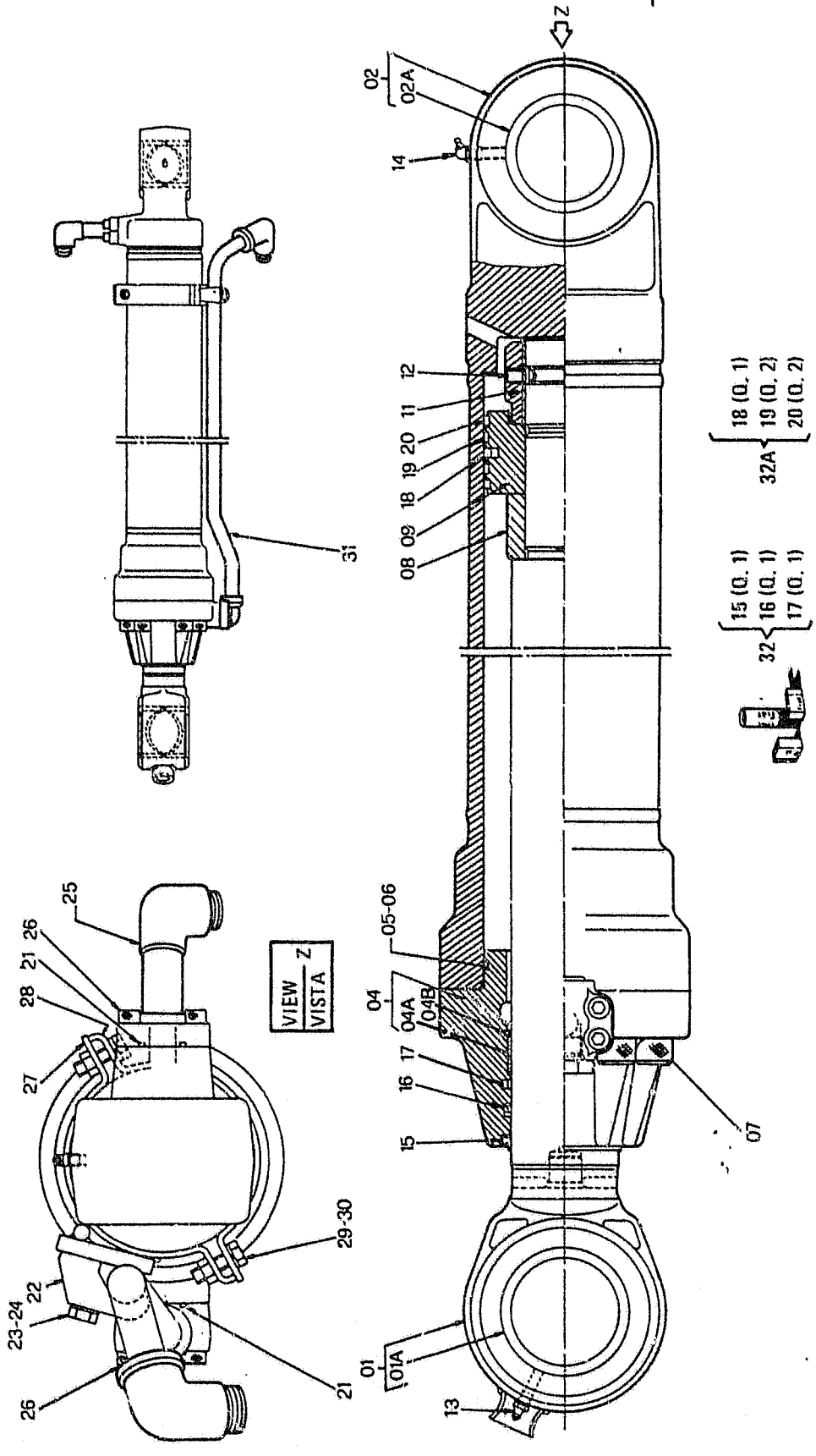

FH200

BUCKET CYLINDER CILINDRO BENNA 71416077	CYLINDRE DE GODET LOEFFELKIPPZILINDER GATO DE CUCHARA	2.030 TAV.5 NTR 104S V-89

ITEM	PART NUMBER	QTY	TR. CO.	DESCRIPTION	DESCRIZIONE
0 1-20	71400215	1	164C	CYLINDER -ASS.LY	CILINDRO -COMPL.
01	71400216	1	274S	ROD -ASS.LY	STELO -COMPL.
01A	71400206	1	95B	BUSHING	BOCCOLA
02	71400220	1	53C	TUBE -ASS.LY	CANNA CILINDRO -COMPL.
02A	71400222	1	95B	BUSHING	BOCCOLA
04	71400227	1	132F	HEAD -ASS.LY	FONDELLO ANT. -COMPL.
04A	71400109	1	95B	BUSHING	BOCCOLA
04B	71400110	1	187A	SNAP RING	ANELLO ELASTICO
05	71400229	1	45A	RING	ANELLO
06	14473180	1	158G	O-RING	GUARNIZIONE O-R
07	14429674	8	40V	SCREW 20X2,5X65	VITE 20X2,5X65
08	71400111	1	95B	BUSHING	BOCCOLA
09	71400230	1	235S	PISTON	STANTUFFO
11	71400113	1	10D	NUT	DADO
12	71400114	1	90G	DOWEL	GRANO
13	13407211	1	60I	GREASE FITTING	INGRASSATORE
14	13407811	1	60I	GREASE FITTING	INGRASSATORE
15	71400007	1	45A	RING -K. 71400106	ANELLO -K. 71400106
16	71400008	1	122G	SEAL -K. 71400106	GUARNIZIONE -K. 71400106
17	71400009	1	45A	RING -K. 71400106	ANELLO -K. 71400106
18	71400034	1	122G	SEAL -K. 71400231	GUARNIZIONE -K. 71400231
19	71400035	2	45A	RING -K. 71400231	ANELLO -K. 71400231
20	71400036	2	45A	RING -K. 71400231	ANELLO -K. 71400231
21	70924110	2	158G	O-RING	GUARNIZIONE O-R
22	71416080	1	225S	BRACKET	STAFFA
23	11113234	1	40V	SCREW 12X1,75X50	VITE 12X1,75X50
24	10517074	1	131R	WASHER	ROSETTA
25	71404374	1	20R	FITTING	RACCORDO
26	14420234	8	40V	SCREW 10X1,5X30	VITE 10X1,5X30
27	71416081	1	14B	STRAP	BANDELLA
28	71416082	1	14B	STRAP	BANDELLA
29	11106634	2	40V	SCREW M10X1,5X35	VITE M10X1,5X35
30	10571874	2	131R	WASHER	ROSETTA
31	71416078	1	193T	TUBE	TUBO RIGIDO
32	71400106	1	K4	KIT-BUCKET CYL. SEALS FOR COMPONENTS, SEE A-22	KIT-GUARN. CILIN. BENNA VED. COMPONENTI PAG. 23
32A	71400231	1	K4	KIT-BUCKET CYL. SEALS FOR COMPONENTS, SEE A-22	KIT-GUARN. CILIN. BENNA VED. COMPONENTI PAG. 23

FH200 03

BOOM PIPING TUBAZIONI BRACCI	TUYAUTERIES AVANT LEITUNGEN-VORDER TUBERIAS ANTERIORES	2.031 TAV.1 NTR 104S V-89

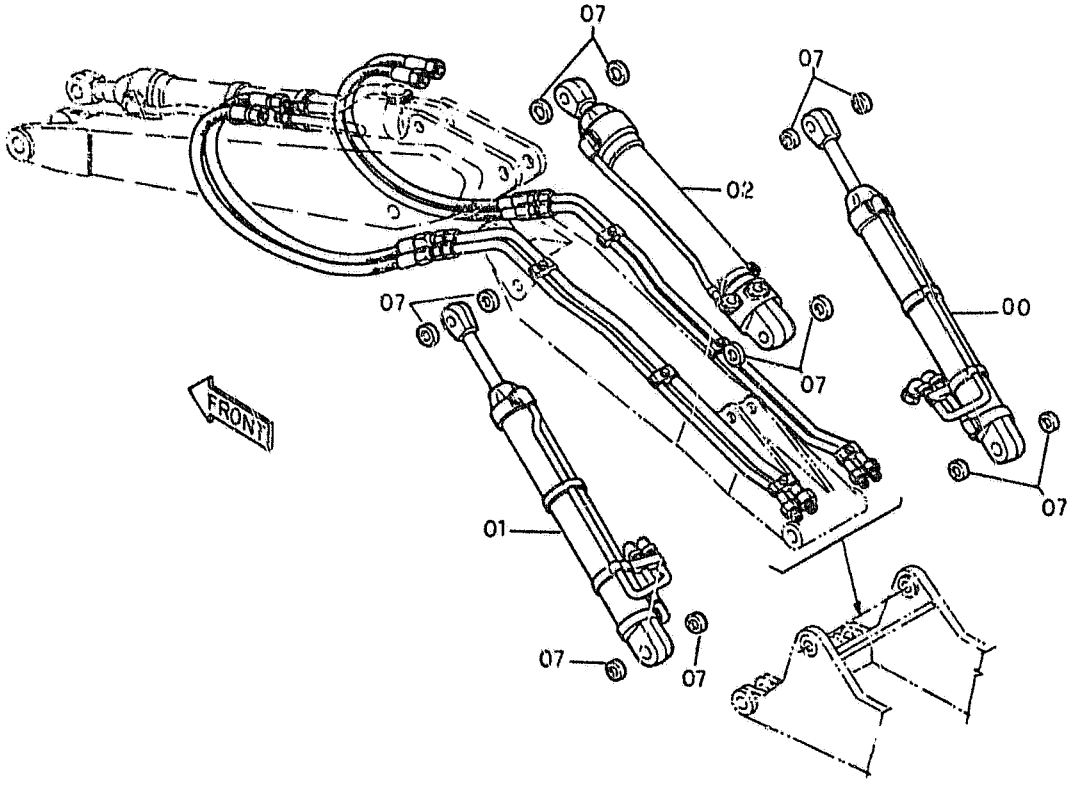

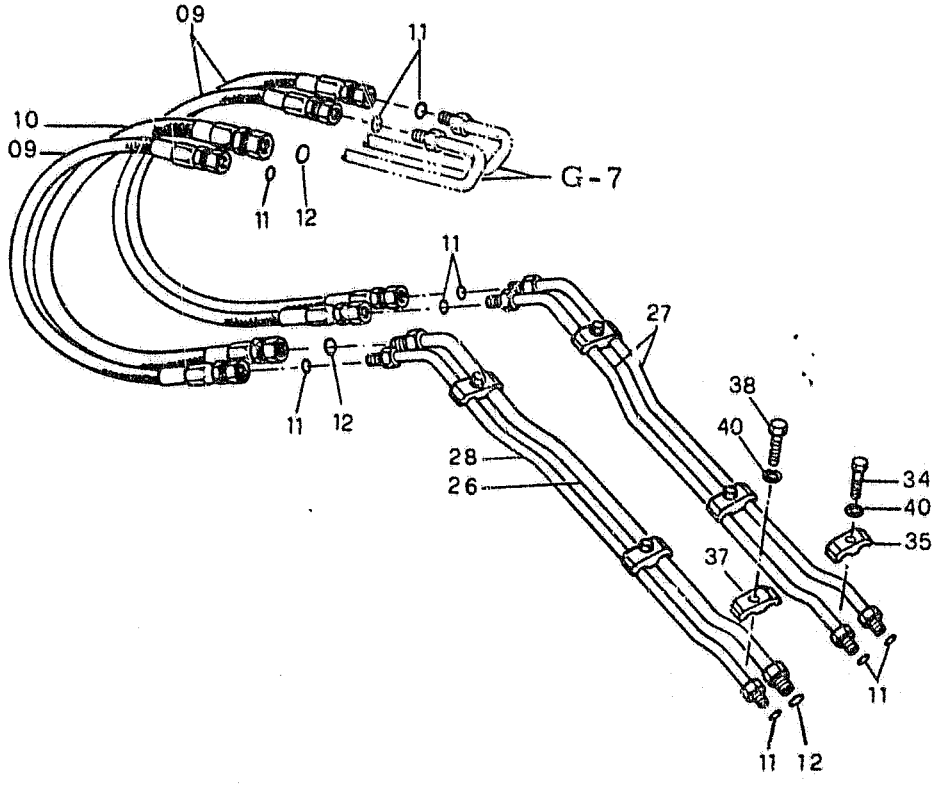

FH200 03

BOOM PIPING
TUBAZIONI BRACCI

TUYAUTERIES AVANT
LEITUNGEN-VORDER
TUBERIAS ANTERIORES

2.031 TAV.1

NTR 104S V-89

ITEM	PART NUMBER	QTY	TR. CO.	DESCRIPTION	DESCRIZIONE
00	**71416087**	1	11G1	LIFT CYLINDER -ASS.Y RIGHT SEE SGR. 2.030 F-19	CILINDRO SOLLEV. -COMPL. DEST. VED. SGR. 2.030 TAV.2
01	**71416086**	1	11G1	LIFT CYLINDER -ASS.Y LEFT SEE SGR. 2.030 F-21	CILINDRO SOLLEV. -COMPL. SIN. VED. SGR. 2.030 TAV.3
02	**71416327**	1	3G42	POSITIONER CYLINDER -ASS.LY SEE F-21	CILINDRO POSIZIONATORE -COMPL. VED. TAV.3
07	**71415158**	12	122G	SEAL	GUARNIZIONE
09	**71404133**	3	285T	HOSE	TUBO FLESSIBILE
10	**71404134**	1	285T	HOSE	TUBO FLESSIBILE
11	**70923843**	9	158G	O-RING	GUARNIZIONE O-R
12	**70931640**	3	158G	O-RING	GUARNIZIONE O-R
26	**71416248**	1	193T	TUBE	TUBO RIGIDO
27	**71416260**	2	193T	TUBE	TUBO RIGIDO
28	**71416255**	1	193T	TUBE	TUBO RIGIDO
32	**71416089**	3	231S	CLIP	STAFFETTA
34	**11113434**	3	40V	SCREW 12X1,75X60	VITE 12X1,75X60
37	**71415870**	3	225S	BRACKET	STAFFA
38	**11113534**	3	40V	SCREW 12X1,75X65	VITE 12X1,75X65
40	**10517074**	6	131R	WASHER	ROSETTA

BOOM PIPING
TUBAZIONI BRACCI

TUYAUTERIES AVANT
LEITUNGEN-VORDER
TUBERIAS ANTERIORES

2.031 TAV.2

NTR 104S V-89

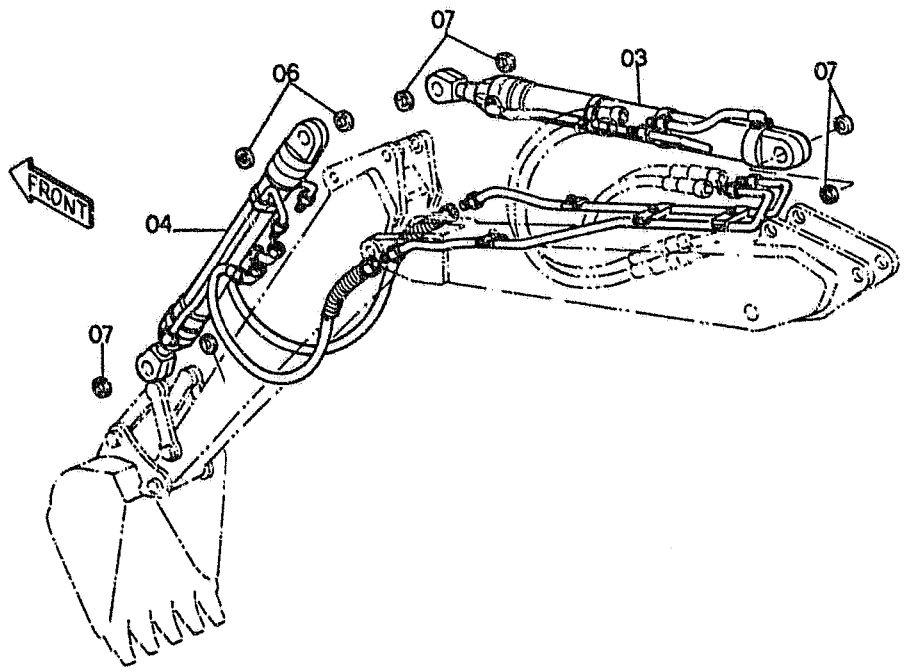

FOR ARM
PER BRACCIO L 2 - 2,4 m

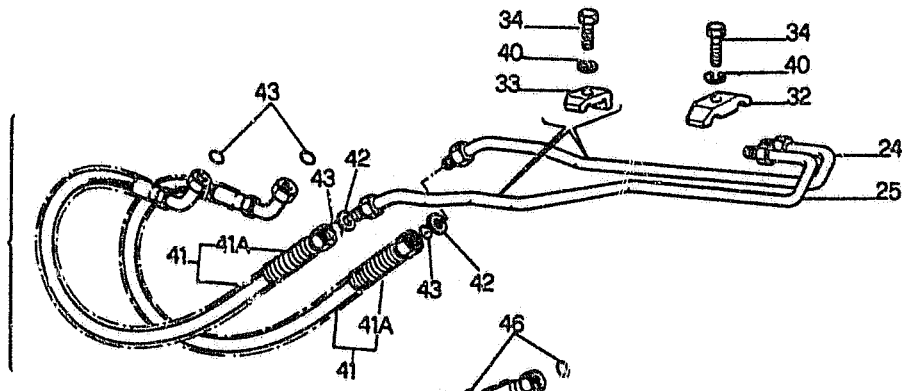

FOR ARM
PER BRACCIO L 2,9 m.

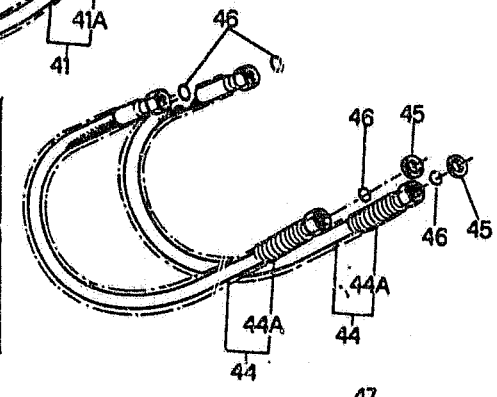

FOR ARM
PER BRACCIO L 3.5 m

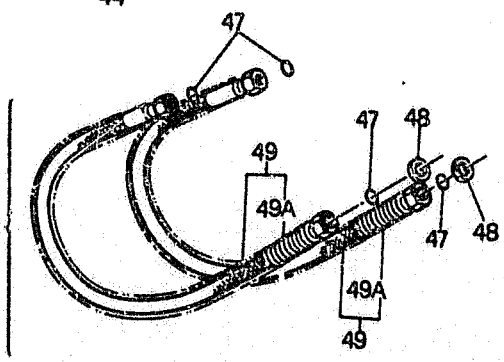

FH200 03

BOOM PIPING
TUBAZIONI BRACCI

TUYAUTERIES AVANT
LEITUNGEN-VORDER
TUBERIAS ANTERIORES

2.031 TAV.2

NTR 104S V-89

ITEM	PART NUMBER	QTY	TR. CO.	DESCRIPTION	DESCRIZIONE
03	71416337	1	3G44	DIPPER CYLINDER -ASS.LY SEE G-11	CILINDRO PENETRAZIONE -COMPL. VED. TAV.4
04	71416077	1	11G2	BUCKET CYLINDER -ASS.LY SEE G-3	CILINDRO BENNA -COMPL. VED. SGR. 2.030 TAV.5
06	71415159	2	122G	SEAL	GUARNIZIONE
07	71415158	6	122G	SEAL	GUARNIZIONE
24	71416244	1	193T	TUBE	TUBO RIGIDO
25	71416246	1	193T	TUBE	TUBO RIGIDO
32	71416089	2	231S	CLIP	STAFFETTA
33	71416090	2	231S	CLIP	STAFFETTA
34	11113434	4	40V	SCREW 12X1,75X60	VITE 12X1,75X60
40	10517074	4	131R	WASHER	ROSETTA
41	71404061	2	285T	HOSE -ASS.LY	TUBO FLESSIBILE -COMPL.
41A	71404062	2	142G	SHEATH	GUAINA
42	71415170	2	131R	WASHER	ROSETTA
43	70923843	4	158G	O-RING	GUARNIZIONE O-R
44	71404064	2	285T	HOSE -ASS.LY	TUBO FLESSIBILE -COMPL.
44A	71404063	2	142G	SHEATH	GUAINA
45	71415170	2	131R	WASHER	ROSETTA
46	70923843	4	158G	O-RING	GUARNIZIONE O-R
47	70923843	4	158G	O-RING	GUARNIZIONE O-R
48	71415170	2	131R	WASHER	ROSETTA
49	71404509	2	285T	HOSE -ASS.LY	TUBO FLESSIBILE -COMPL.
49A	71404507	1	142G	SHEATH	GUAINA

POSITIONER CYLINDER	VERIN POSITIONNEUR	2.031 TAV.3
CILINDRO POSIZIONATORE	STELLZYLINDER	
71416327	CILINDROPOSICIONADOR	NTR 104S V-89

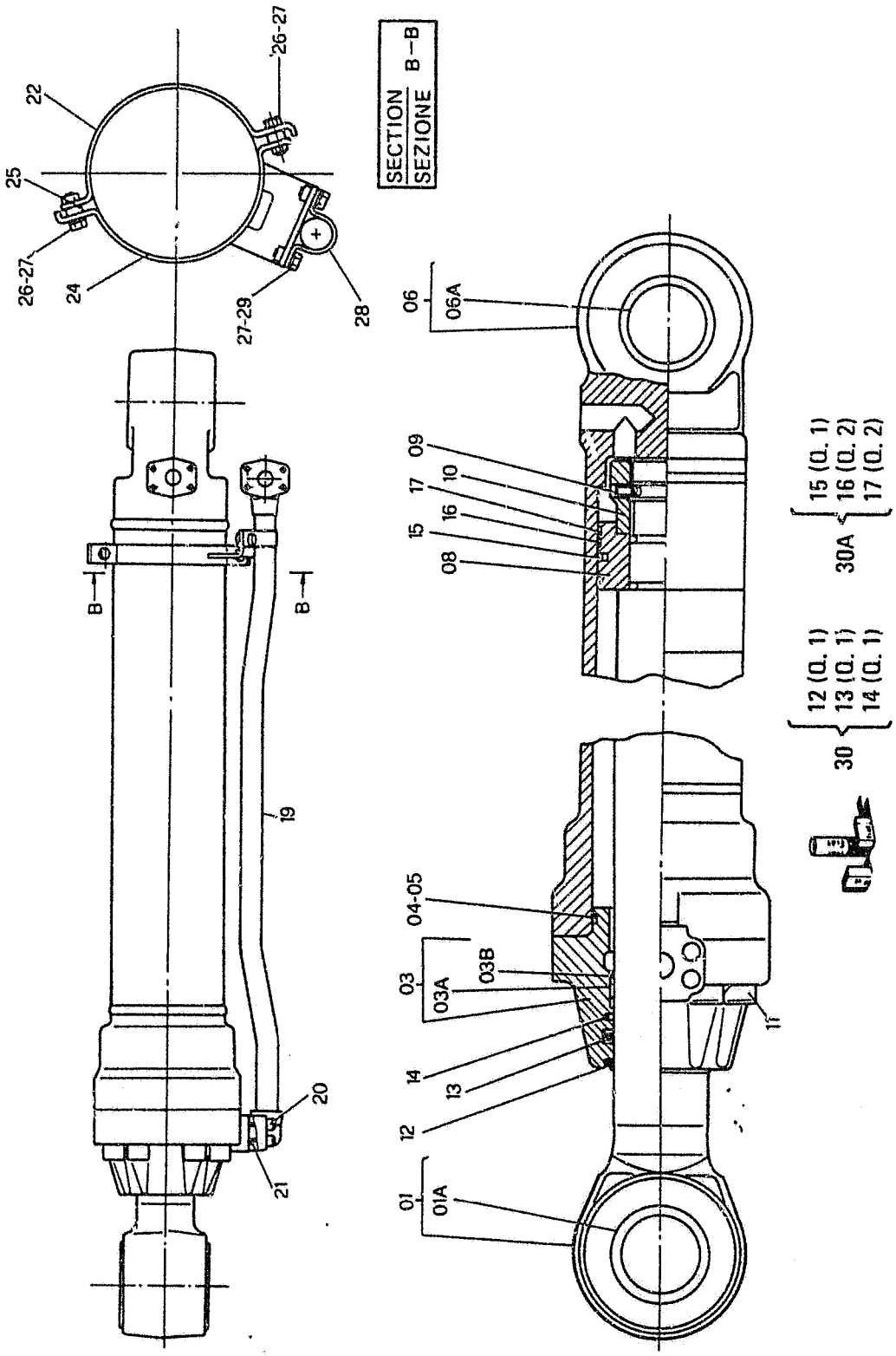

FH200 03

POSITIONER CYLINDER — VERIN POSITIONNEUR — 2.031 TAV.3
CILINDRO POSIZIONATORE — STELLZYLINDER
71416327 — CILINDROPOSICIONADOR — NTR 104S V-89

ITEM	PART NUMBER	QTY	TR. CO.	DESCRIPTION	DESCRIZIONE
0 1-17	71400338	1	3G42	POSITIONER CYLINDER -ASS.LY	CILINDRO POSIZIONATORE -COMPL.
01	71400339	1	274S	ROD -ASS.LY	STELO -COMPL.
01A	71400324	1	95B	BUSHING	BOCCOLA
03	71400325	1	132F	HEAD -ASS.LY	FONDELLO ANT. -COMPL.
03A	71400155	1	95B	BUSHING	BOCCOLA
03B	71400156	1	187A	SNAP RING	ANELLO ELASTICO
04	79076129	1	45A	RING	ANELLO
05	14474880	1	158G	O-RING	GUARNIZIONE O-R
06	71400342	1	53C	TUBE -ASS.LY	CANNA CILINDRO -COMPL.
06A	71400324	1	95B	BUSHING	BOCCOLA
08	71400337	1	235S	PISTON	STANTUFFO
09	71400114	1	90G	DOWEL	GRANO
10	71400159	1	10D	NUT	DADO
11	14431631	8	40V	SCREW 24X3X90	VITE 24X3X90
12	71400013	1	45A	RING -K. 71400152	ANELLO -K. 71400152
13	71400014	1	122G	SEAL -K. 71400152	GUARNIZIONE -K. 71400152
14	71400015	1	45A	RING -K. 71400152	ANELLO -K. 71400152
15	71400336	1	122G	SEAL -K. 71400333	GUARNIZIONE -K. 71400333
16	71400335	2	45A	RING -K. 71400333	ANELLO -K. 71400333
17	71400334	2	45A	RING -K. 71400333	ANELLO -K. 71400333
19	71416855	1	193T	TUBE	TUBO RIGIDO
20	14422234	4	40V	SCREW 12X1,75X40	VITE 12X1,75X40
21	71404169	1	158G	O-RING	GUARNIZIONE O-R
22	71416323	1	14B	STRAP	BANDELLA
24	71420956	1	14B	STRAP	BANDELLA
25	71420545	2	75D	SPACER	DISTANZIALE
26	11106634	2	40V	SCREW M10X1,5X35	VITE M10X1,5X35
27	10516874	4	131R	WASHER	ROSETTA
28	71420663	1	14B	STRAP	BANDELLA
29	11106034	1	40V	SCREW 10X1,5X20	VITE 10X1,5X20
30	71400152		1K	KIT.-SEE A-22	KIT-VED. PAG.23
30A	71400333		1K	KIT.-SEE A-22	KIT-VED. PAG.23

DIPPER STICK CYLINDER
CILINDRO PENETRAZIONE
71416337

VERIN D'ENFONCEMENT
LOEFFELSTIELZYLINDER
GATO DE PENETRACION

2.031 TAV.4

NTR 104S V-89

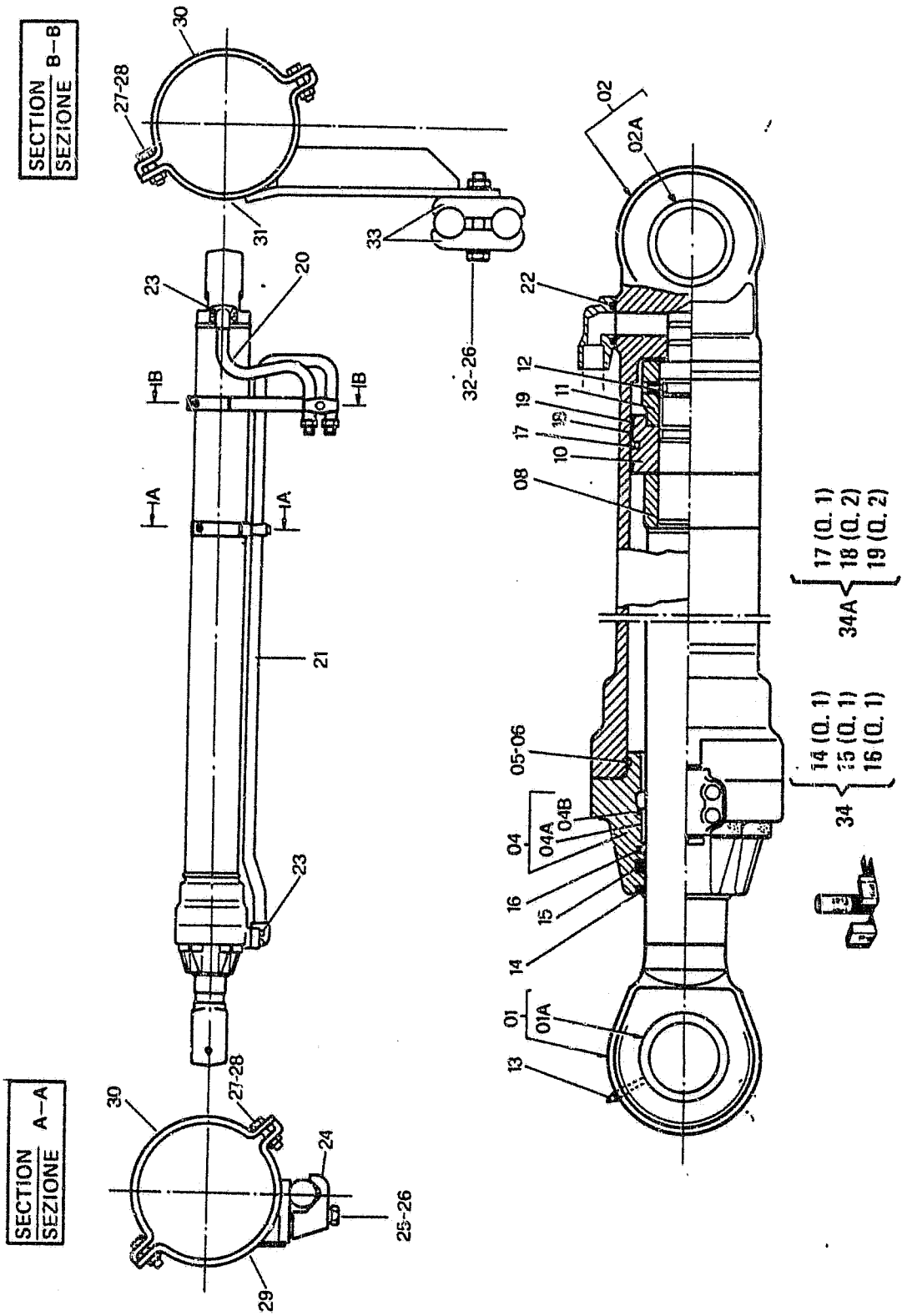

DIPPER STICK CYLINDER
CILINDRO PENETRAZIONE
71416337

VERIN D'ENFONCEMENT
LOEFFELSTIELZYLINDER
GATO DE PENETRACION

2.031 TAV.4

NTR 104S V-89

ITEM	PART NUMBER	QTY	TR. CO.	DESCRIPTION	DESCRIZIONE
0 1-19	71400175	1	3G44	DIPPER CYLINDER	CILINDRO PENETRAZIONE
01	71400176	1	274S	ROD -ASS.LY	STELO -COMPL.
01A	71400178	1	95B	BUSHING	BOCCOLA
02	71400181	1	59C	TUBE	CANNA CILINDRO
02A	71400178	1	95B	BUSHING	BOCCOLA
04	71400187	1	132F	HEAD -ASS.LY	FONDELLO ANT. -COMPL.
04A	71400189	1	95B	BUSHING	BOCCOLA
04B	71400190	1	187A	SNAP RING	ANELLO ELASTICO
05	71400160	1	45A	RING	ANELLO
06	14474480	1	158G	O-RING	GUARNIZIONE O-R
07	14430774	8	40V	SCREW 22X2,5X80	VITE 22X2,5X80
08	71400191	1	95B	BUSHING	BOCCOLA
10	71400192	1	235S	PISTON	STANTUFFO
11	71400193	1	10D	NUT	DADO
12	71400114	1	90G	DOWEL	GRANO
13	13407211	1	60I	GREASE FITTING	INGRASSATORE
14	71400016	1	45A	RING -K. 71400186	ANELLO -K. 71400186
15	71400017	1	122G	SEAL -K. 71400186	GUARNIZIONE -K. 71400186
16	71400018	1	45A	RING -K. 71400186	ANELLO -K. 71400186
17	71400040	1	122G	SEAL -K. 71400161	GUARNIZIONE -K. 71400161
18	71400041	2	45A	RING -K. 71400161	ANELLO -K. 71400161
19	71400042	2	45A	RING -K. 71400161	ANELLO -K. 71400161
20	71416338	1	193T	TUBE	TUBO RIGIDO
21	71416340	1	193T	TUBE	TUBO RIGIDO
22	71404169	2	158G	O-RING	GUARNIZIONE O-R
23	14422234	6	40V	SCREW 12X1,75X40	VITE 12X1,75X40
24	71416121	1	225S	BRACKET	STAFFA
25	11113334	1	40V	SCREW 12X1,75X55	VITE 12X1,75X55
26	10517074	2	131R	WASHER	ROSETTA
27	11106434	4	40V	SCREW 10X1,5X30	VITE 10X1,5X30
				C2526 UP TO S/N 0050	**C2526** FINO AL TELAIO 0050
	11106634	4	40V	SCREW M10X1,5X35	VITE M10X1,5X35
				D2526 FROM S/N 0051	**D2526** DAL TELAIO 0051
28	10571874	4	131R	WASHER	ROSETTA
29	71416120	1	14B	STRAP	BANDELLA
30	71416119	2	14B	STRAP	BANDELLA
31	71416342	1	14B	STRAP	BANDELLA
32	11113834	1	40V	SCREW 12X1,75X80	VITE 12X1,75X80
33	71416345	2	231S	CLIP	STAFFETTA
34	71400186	1	K3	KIT-DIPPER CYL. SEALS	KIT-GUARN. CILIN. PENETRAZIONE
				FOR COMPONENTS, SEE A-22	VED. COMPONENTI PAG. 23
34A	71400161	1	K3	KIT-DIPPER CYL. SEALS	KIT-GUARN. CILIN. PENETRAZIONE
				FOR COMPONENTS, SEE A-22	VED. COMPONENTI PAG. 23

LUBRIC. FITTING PIPING
TUBAZIONI INGRASSATORI

TUYAUTERIES DE GRAISSEURS
LEITUNGEN-SCHMIERNIPPLER
RUBERIAS DE ENGRASADORES

2.040 TAV.1

NTR 104S V-89

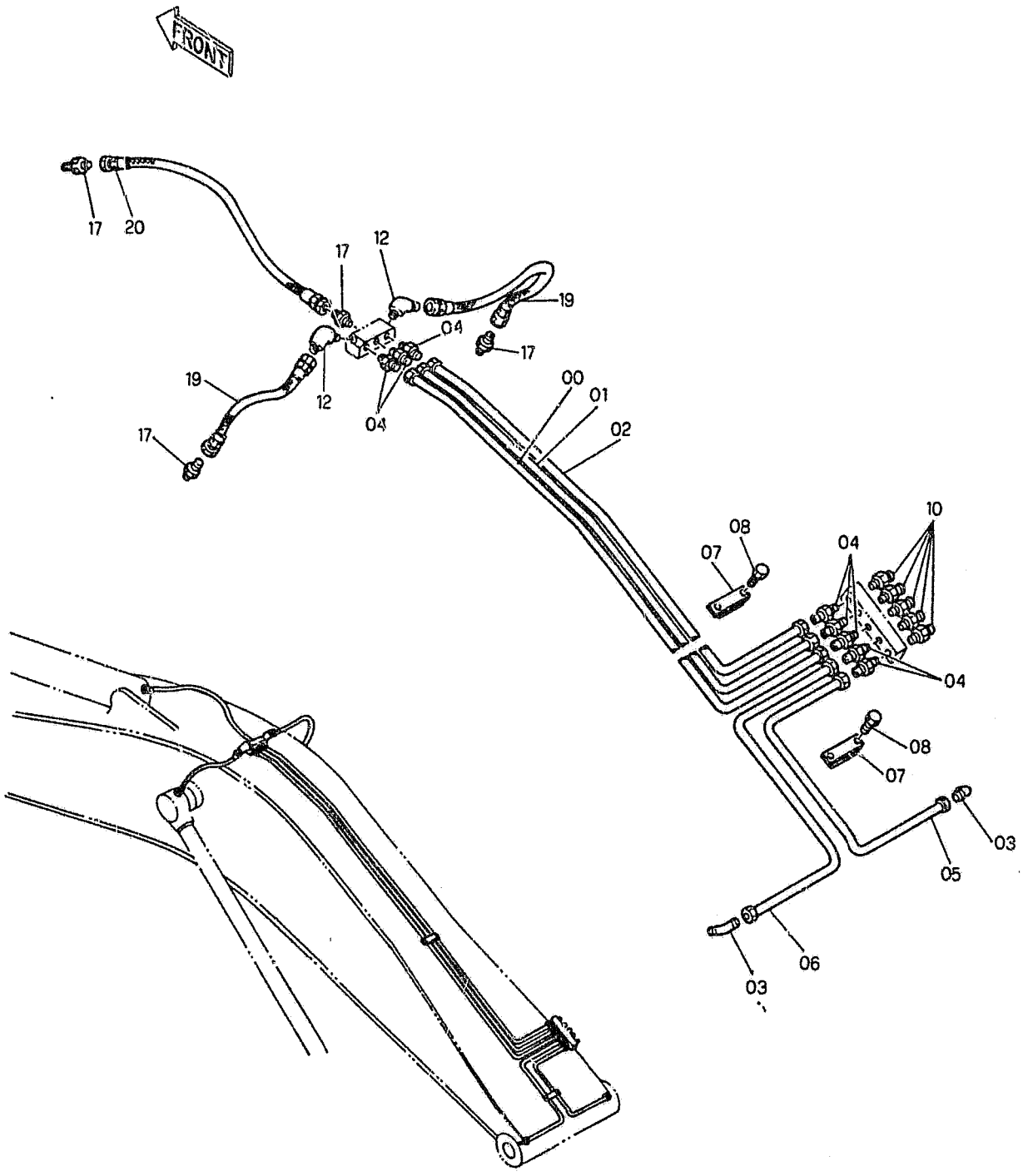

FH200 02

LUBRIC. FITTING PIPING
TUBAZIONI INGRASSATORI

TUYAUTERIES DE GRAISSEURS
LEITUNGEN-SCHMIERNIPPLER
RUBERIAS DE ENGRASADORES

2.040 TAV.1

NTR 104S V-89

ITEM	PART NUMBER	QTY	TR. CO.	DESCRIPTION	DESCRIZIONE
00	71415910	1	193T	TUBE	TUBO RIGIDO
01	71415912	1	193T	TUBE	TUBO RIGIDO
02	71415914	1	193T	TUBE	TUBO RIGIDO
03	71404384	2	20R	FITTING	RACCORDO
04	71404364	8	20R	FITTING	RACCORDO
05	71415916	1	193T	TUBE	TUBO RIGIDO
06	71415918	1	193T	TUBE	TUBO RIGIDO
07	71415920	2	231S	CLIP	STAFFETTA
08	11106434	4	40V	SCREW 10X1,5X30	VITE 10X1,5X30
10	13407211	5	60I	GREASE FITTING	INGRASSATORE
12	71404367	2	20R	FITTING	RACCORDO
17	71404363	4	20R	FITTING	RACCORDO
19	71403992	2	285T	HOSE	TUBO FLESSIBILE
20	71403999	1	285T	HOSE	TUBO FLESSIBILE

LUBRIC. FITTING PIPING TUBAZIONI INGRASSATORI	TUYAUTERIES DE GRAISSEURS LEITUNGEN-SCHMIERNIPPLER RUBERIAS DE ENGRASADORES	2.041 TAV.1

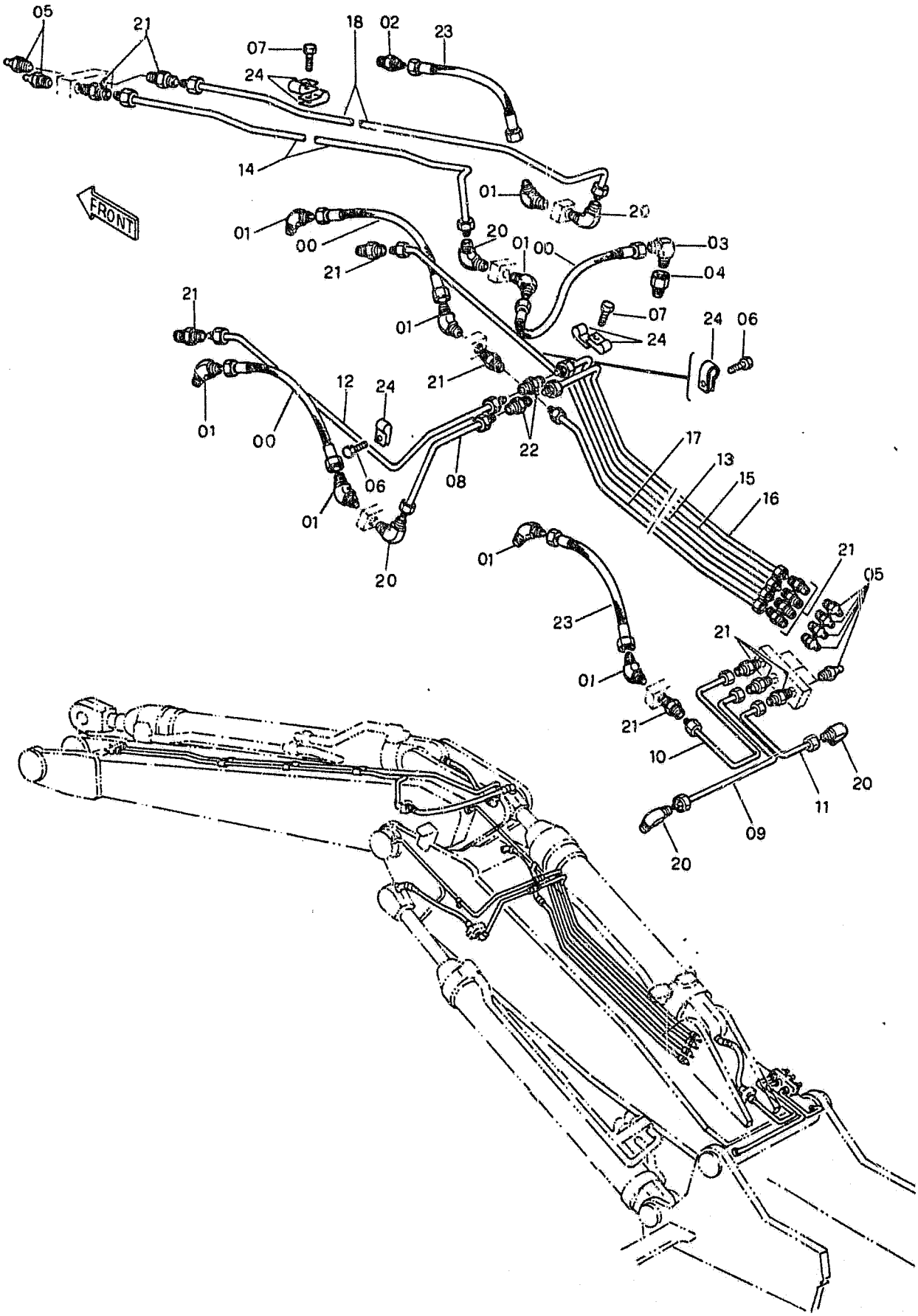

FH200 .03

LUBRIC. FITTING PIPING
TUBAZIONI INGRASSATORI

TUYAUTERIES DE GRAISSEURS
LEITUNGEN-SCHMIERNIPPLER
RUBERIAS DE ENGRASADORES

2.041 TAV.1

ITEM	PART NUMBER	QTY	TR. CO.	DESCRIPTION	DESCRIZIONE
00	71403999	3	285T	HOSE	TUBO FLESSIBILE
01	71404367	8	20R	FITTING	RACCORDO
02	71404363	1	20R	FITTING	RACCORDO
03	71404406	1	20R	FITTING	RACCORDO
04	71404431	1	20R	FITTING	RACCORDO
05	13407211	9	60I	GREASE FITTING	INGRASSATORE
06	13275914	2	40V	SCREW 6X1X10	VITE 6X1X10
07	13276014	4	40V	SCREW 6X1X12	VITE 6X1X12
08	71416300	1	193T	TUBE	TUBO RIGIDO
09	71416302	1	193T	TUBE	TUBO RIGIDO
10	71416304	1	193T	TUBE	TUBO RIGIDO
11	71416306	1	193T	TUBE	TUBO RIGIDO
12	71416308	1	193T	TUBE	TUBO RIGIDO
13	71416310	1	193T	TUBE	TUBO RIGIDO
14	71416312	1	193T	TUBE	TUBO RIGIDO
15	71416314	1	193T	TUBE	TUBO RIGIDO
16	71416316	1	193T	TUBE	TUBO RIGIDO
17	71416318	1	193T	TUBE	TUBO RIGIDO
18	71416320	1	193T	TUBE	TUBO RIGIDO
20	71404384	5	20R	FITTING	RACCORDO
21	71404364	13	20R	FITTING	RACCORDO
22	71404432	2	20R	FITTING	RACCORDO
23	71404136	2	285T	HOSE	TUBO FLESSIBILE
24	10418301	10	231S	CLIP	STAFFETTA

LOWER FRAME TELAIO INFERIORE	CHASSIS INFERIEUR RAHMEN-UNTER CHASIS INFERIOR	3.000 TAV.1

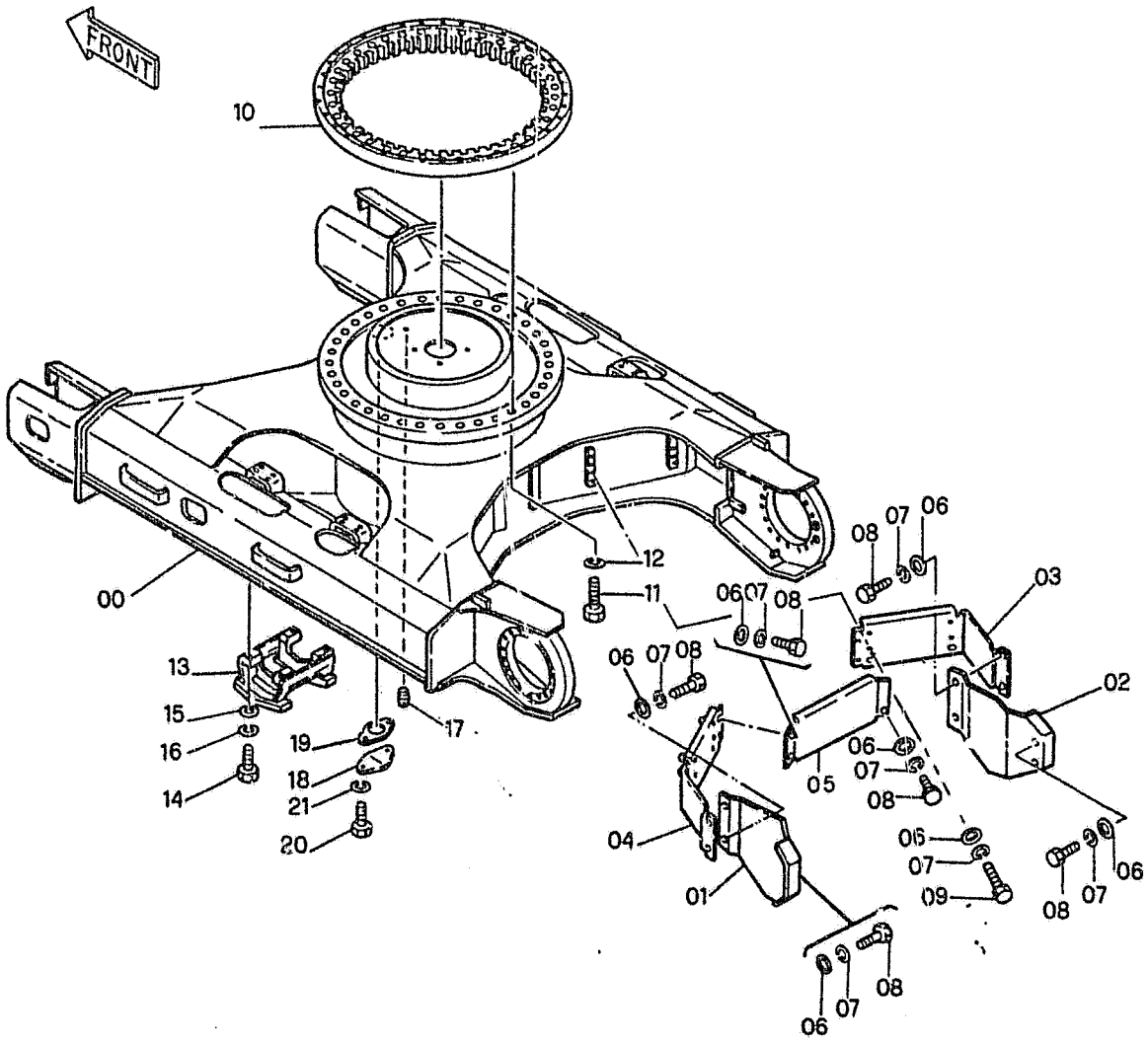

FH200 -03

LOWER FRAME
TELAIO INFERIORE

CHASSIS INFERIEUR
RAHMEN-UNTER
CHASIS INFERIOR

3.000 TAV.1

ITEM	PART NUMBER	QTY	TR. CO.	DESCRIPTION	DESCRIZIONE
00	71415295	1	7211	LOWER FRAME	TELAIO INFERIORE
01	71415803	1	265C	COVER	COPERCHIO
02	71415804	1	265C	COVER	COPERCHIO
03	71415805	1	265C	COVER	COPERCHIO
04	71415806	1	265C	COVER	COPERCHIO
05	71415807	1	265C	COVER	COPERCHIO
06	4952483	20	131R	WASHER	ROSETTA
07	10571974	20	131R	WASHER	ROSETTA
08	11112234	12	40V	SCREW 12X1,75X25	VITE 12X1,75X25
09	11113434	8	40V	SCREW 12X1,75X60	VITE 12X1,75X60
10	71401650	1	173R	BULL GEAR	RALLA ROTAZIONE
11	15988434	36	40V	SCREW 20X1,5X65	VITE 20X1,5X65
12	10517474	36	131R	WASHER	ROSETTA
13	71416275	2	145G	GUIDE	GUIDA
14	11119274	8	40V	SCREW 16X1,5X65	VITE 16X1,5X65
15	71405003	8	131R	WASHER	ROSETTA
16	10572174	8	131R	WASHER	ROSETTA
17	14326001	1	50T	PLUG	TAPPO
18	71415432	1	70F	FLANGE	FLANGIA
19	71415830	1	122G	SEAL	GUARNIZIONE
20	11106034	2	40V	SCREW 10X1,5X20	VITE 10X1,5X20
21	10516874	2	131R	WASHER	ROSETTA

LOWER FRAME
TELAIO INFERIORE

CHASSIS INFERIEUR
RAHMEN-UNTER
CHASIS INFERIOR

3.001 TAV.1

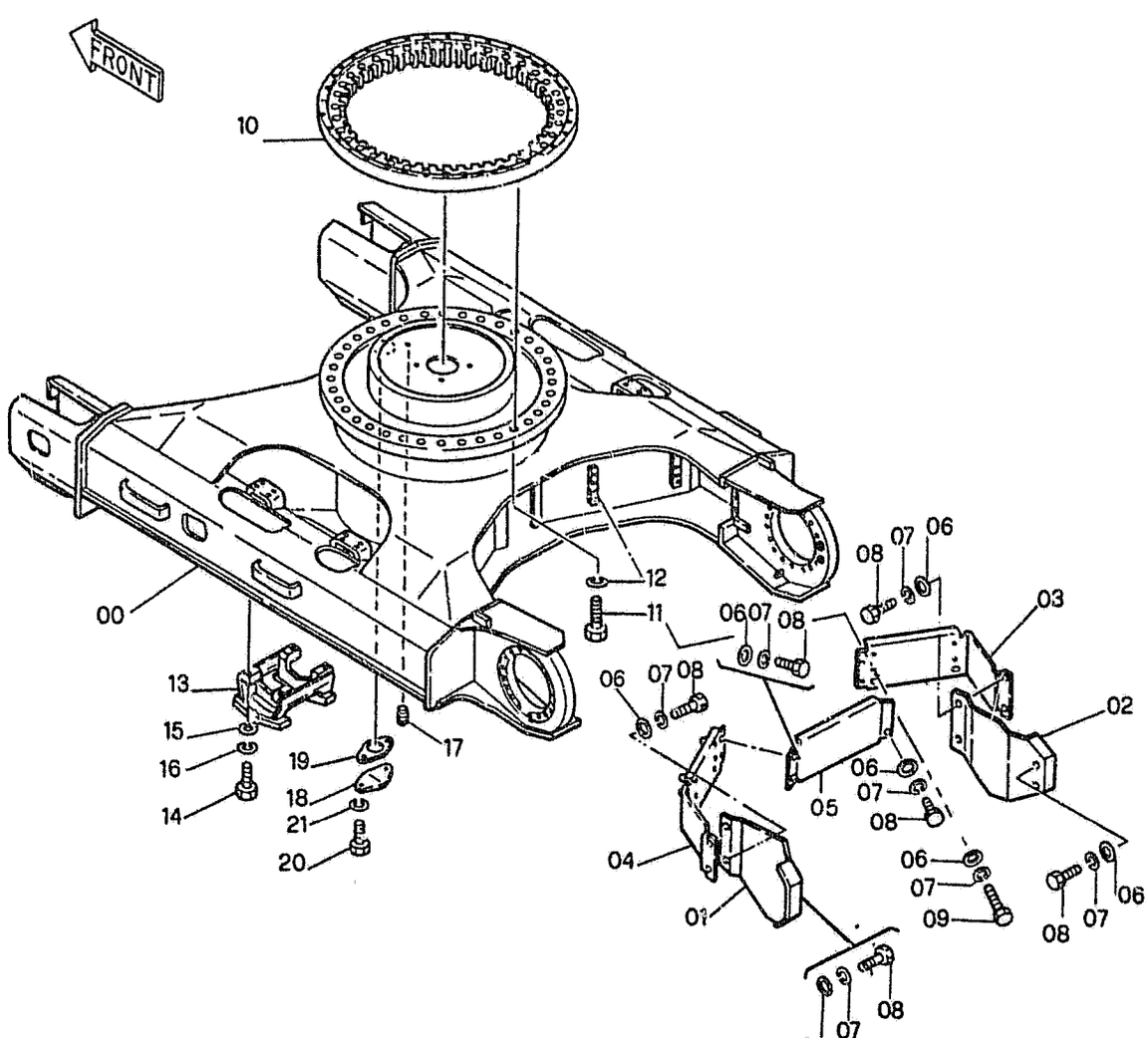

FH200 .02

LOWER FRAME
TELAIO INFERIORE

CHASSIS INFERIEUR
RAHMEN-UNTER
CHASIS INFERIOR

3.001 TAV.1

ITEM	PART NUMBER	QTY	TR. CO.	DESCRIPTION	DESCRIZIONE
00	71415771	1	7211	LOWER FRAME	TELAIO INFERIORE
01	71415803	1	265C	COVER	COPERCHIO
02	71415804	1	265C	COVER	COPERCHIO
03	71415814	1	265C	COVER	COPERCHIO
04	71415815	1	265C	COVER	COPERCHIO
05	71415816	1	265C	COVER	COPERCHIO
06	4952483	20	131R	WASHER	ROSETTA
07	10571974	20	131R	WASHER	ROSETTA
08	11112234	12	40V	SCREW 12X1,75X25	VITE 12X1,75X25
09	11113434	8	40V	SCREW 12X1,75X60	VITE 12X1,75X60
10	71401650	1	173R	BULL GEAR	RALLA ROTAZIONE
11	15988434	36	40V	SCREW 20X1,5X65	VITE 20X1,5X65
12	10517474	36	131R	WASHER	ROSETTA
13	71416275	2	145G	GUIDE	GUIDA
14	11119274	8	40V	SCREW 16X1,5X65	VITE 16X1,5X65
15	71405003	8	131R	WASHER	ROSETTA
16	10572174	8	131R	WASHER	ROSETTA
17	14326001	1	50T	PLUG	TAPPO
18	71415432	1	70F	FLANGE	FLANGIA
19	71415830	1	122G	SEAL	GUARNIZIONE
20	11106034	2	40V	SCREW 10X1,5X20	VITE 10X1,5X20
21	10516374	2	131R	WASHER	ROSETTA

TRAVEL REDUCTION UNITS
MOTORIDUTTORI DI TRASLAZ.

MOTORED. TRANSLATION
UNTERSETZUNG-FAHRANTRIEB
REDUCTORES DE TRANSLACION

3.010 TAV.1

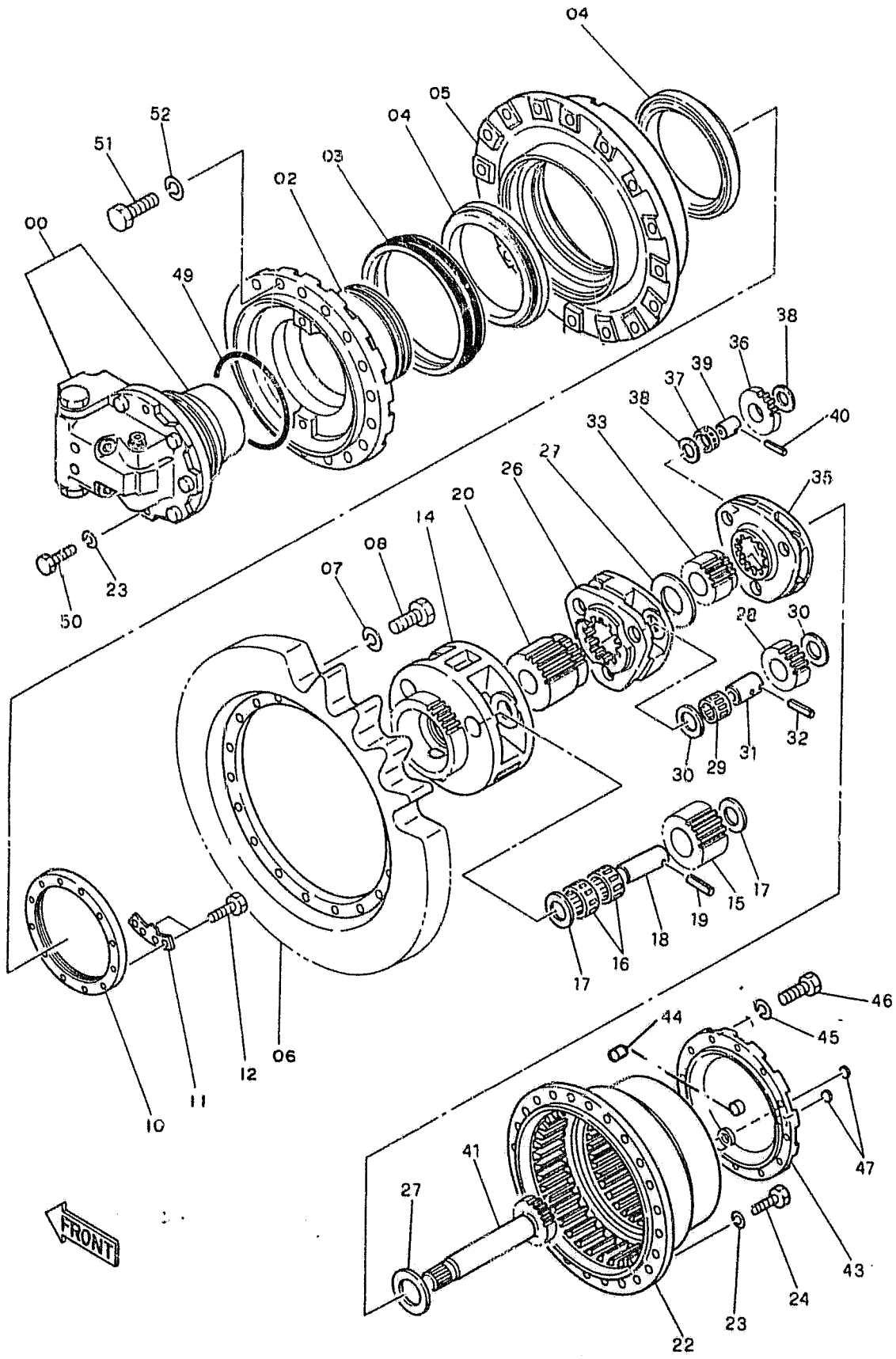

TRAVEL REDUCTION UNITS
MOTORIDUTTORI DI TRASLAZ.

MOTORED. TRANSLATION
UNTERSETZUNG-FAHRANTRIEB
REDUCTORES DE TRANSLACION

3.010 TAV.1

ITEM	PART NUMBER	QTY	TR. CO.	DESCRIPTION	DESCRIZIONE
00	71402154	1	127M	HYDRAULIC MOTOR -ASS.LY SEE G-23	MOTORE IDRAULICO -COMPL. VED. TAV.2
00-50	71401638	2	7480	DRIVE MOTOREDUCTION -ASS.LY	MOTORIDUTTORE TRASLAZIONE -COM
02	71401988	1	300C	BODY	CORPO
03	71401989	1	122G	SEAL	GUARNIZIONE
04	71402071	2	341C	BEARING	CUSCINETTO
05	71402077	1	70F	FLANGE	FLANGIA
06	71402078	1	163R	SPROCKET	RUOTA MOTRICE
07	71402080	16	170R	LOCKWASHER	ROSETTA ELASTICA
08	71402094	16	40V	SCREW	VITE
10	71402097	1	50G	RING NUT	GHIERA
11	71402110	1	131R	WASHER	ROSETTA
12	71402017	2	40V	SCREW	VITE
14	71402122	1	196P	PLANETARY CARRIER	PORTA-SATELLITI
15	71402123	3	145P	SUN GEAR	PLANETARIO
16	71402124	6	341C	BEARING	CUSCINETTO
17	71402125	6	45A	RING	ANELLO
18	71402126	3	80P	PIN	PERNO
19	71402127	3	202S	SPRING PIN	SPINA ELASTICA
20	71402128	1	50I	GEAR	INGRANAGGIO
22	71402129	1	35S	CASE	SCATOLA
23	71402013	26	170R	LOCKWASHER	ROSETTA ELASTICA
24	71402131	24	40V	SCREW	VITE
26	71402132	1	145P	SUN GEAR	PLANETARIO
27	71402133	2	75D	SPACER	DISTANZIALE
28	71402134	3	145P	SUN GEAR	PLANETARIO
29	71402135	3	341C	BEARING	CUSCINETTO
30	71402136	6	60D	DISC	DISCO
31	71402137	3	80P	PIN	PERNO
32	71402138	3	202S	SPRING PIN	SPINA ELASTICA
33	71402139	1	50I	GEAR	INGRANAGGIO
35	71402140	1	196P	PLANETARY CARRIER	PORTA-SATELLITI
36	71402142	3	145P	SUN GEAR	PLANETARIO
37	71402143	3	341C	BEARING	CUSCINETTO
38	71402037	6	60D	DISC	DISCO
39	71402145	3	80P	PIN	PERNO
40	71402032	3	202S	SPRING PIN	SPINA ELASTICA
41	71402147	1	16A	SHAFT	ALBERO
43	71402148	1	265C	COVER	COPERCHIO
44	71402141	1	60S	CUP	SCODELLINO
45	71402142	12	170R	LOCKWASHER	ROSETTA ELASTICA
46	71402043	12	40V	SCREW	VITE
47	71402044	3	50T	PLUG	TAPPO
49	71402152	1	45A	RING	ANELLO
50	71402153	2	40V	SCREW	VITE
51	11125334	28	40V	SCREW	VITE
52	10517474	28	131R	WASHER	ROSETTA

FH200

TRAVEL MOTOR-COMPONEN. MOTORE IDR.TRASL.-COMPON. 71402154	MOTEUR HYDRAULIQUE-COMP. HYDROMOTOR-EINZELTEILE MOTOR HIDRAULICO-COMP.	3.010 TAV.2 NTR 104S V-89

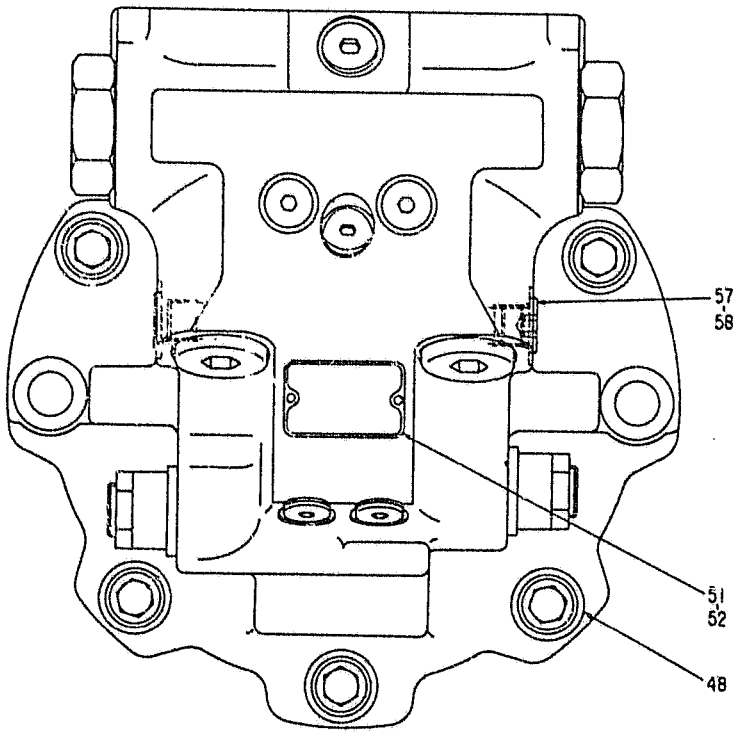

VIEW A
VISTA A

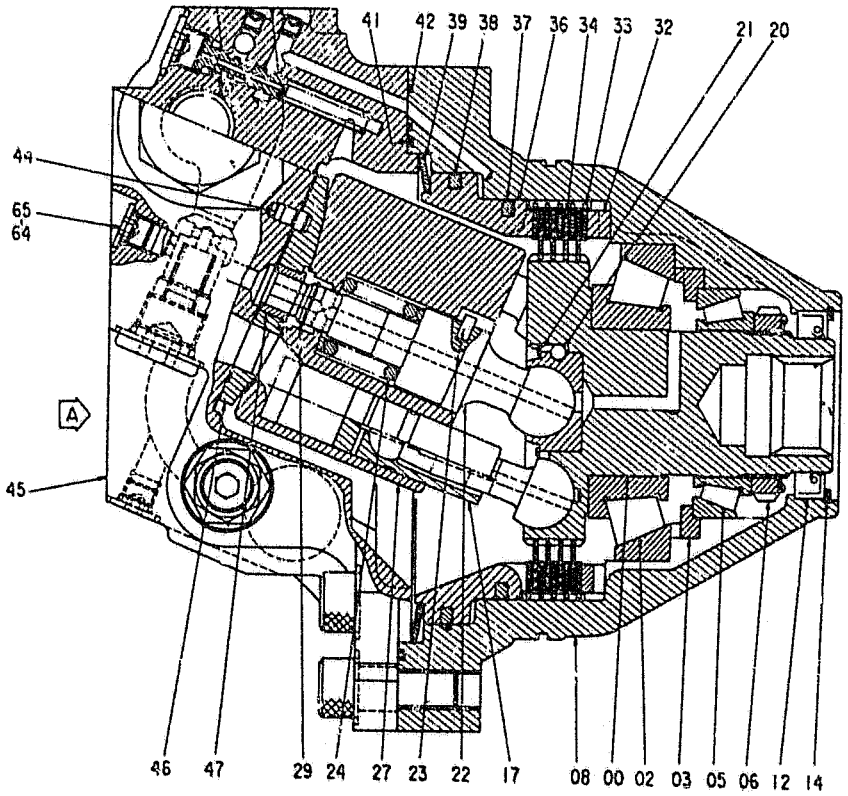

FH200

TRAVEL MOTOR-COMPONEN. MOTEUR HYDRAULIQUE-COMP. 3.010 TAV.2
MOTORE IDR.TRASL.-COMPON. HYDROMOTOR-EINZELTEILE
71402154 MOTOR HIDRAULICO-COMP. NTR 104S V-89

ITEM	PART NUMBER	QTY	TR. CO.	DESCRIPTION	DESCRIZIONE
00	71402389	1	18A	CRANKSHAFT	ALBERO MOTORE
02	71402390	1	341C	BEARING	CUSCINETTO
03	71402391	1	75D	SPACER	DISTANZIALE
05	71402392	1	341C	BEARING	CUSCINETTO
06	71402171	1	50G	RING NUT	GHIERA
08	71402394	1	35S	CASE	SCATOLA
12	71402179	1	122G	SEAL	GUARNIZIONE
14	71402396	1	122G	SEAL	GUARNIZIONE
17	71402172	7	132P	PISTON	PISTONE
20	71402057	1	140S	BALL	SFERA
21	71402175	1	187A	SNAP RING	ANELLO ELASTICO
22	71402174	1	16A	SHAFT	ALBERO
23	71402059	1	80P	PIN	PERNO
24	71402176	1	100M	SPRING	MOLLA
27	71402173	1	145R	ROTOR	ROTORE
29	71402177	1	187A	SNAP RING	ANELLO ELASTICO
32	71402404	1	75D	SPACER	DISTANZIALE
33	71402405	5	105P	PLATE	PIASTRA
34	71402406	4	65D	CLUTCH DISC	DISCO FRIZ.
36	71402407	1	132P	PISTON	PISTONE
37	71402068	1	158G	O-RING	GUARNIZIONE O-R
38	71402408	1	158G	O-RING	GUARNIZIONE O-R
39	71402409	1	100M	SPRING	MOLLA
41	71402410	1	158G	O-RING	GUARNIZIONE O-R
42	71401802	1	158G	O-RING	GUARNIZIONE O-R
44	71402076	2	200S	PIN	SPINA
45	71402411	1	10V	VALVE -ASS.LY SEE H-3	VALVOLA -COMPL. VED. TAV.3
46	71402412	1	60D	DISC	DISCO
47	71402183	1	95B	BUSHING	BOCCOLA
48	71402414	5	40V	SCREW	VITE
51	71402415	1	65T	DECAL	TARGA
52	71402082	2	40V	SCREW	VITE
57	71402079	1	50T	PLUG	TAPPO
58	71401776	1	158G	O-RING	GUARNIZIONE O-R
64	71401688	1	158G	O-RING	GUARNIZIONE O-R
65	71402096	1	50T	PLUG	TAPPO

ALPHABETICAL INDEX

DESCRIPTION	SGR.	TAV.	GRID
Accelerator controls	0.004	1	1D-21
Air Cleaner	0.001	1	1D-5
Alternator-Mounting	0.400	1	1I-11
Anti-Shock Valve (Hydr.)	1.082	3	1L-15
Application of Ol. Hammer	5.0020	2	2J-7
Batteries	1.220	2	2D-13
Belts	0.340	1	1H-23
	0.345	1	1I-3
Boom Piping	2.030	1	2F-17, 2G-3
	2.031	1	2G-5
	2.031	2	2G-7
Brake Valve Components	3.010	3	2H-3
Bucket	2.020	1	2F-13
Bucket Cylinder	2.030	5	2G-3
Bull Gear	3.000	1	2G-17
Cab	1.250	1	2D-19
Cab Door	1.250	5	2E-7
Cab Heater-Components	1.290	2	2E-15
Cab Window-Left Side	1.250	6	2E-9
Cab-Frame	1.250	7	2E-11
Cab-Platform	1.250	1	2D-19
Cab Vandalism	5.0540	1	2K-3
Camshaft	0.120	1	1F-11
Cold Starting Aid	5.0025	1	2J-11
Connecting Rod	0.081	1	1E-23
Cont. Valve-Hydr. (Ass.Y)	1.050	1	1J-21
Control Valve-Hydr.	1.050	2	2K-3
	1.050	3	2K-5
	1.050	4	2K-7
Controls	1.070	1	1J-20
	1.071	1	1K-21, 1L-3
Counterweight	1.000	1	1J-3
Cowlings	1.300	1	2E-19
	1.300	2	2E-21
	1.300	3	2E-23
Crankshaft	0.080	1	1E-21
Crankshaft Pulley	0.084	1	1F-7
Cylinder Block	0.040	1	1D-21
	0.040	2	1D-23
	0.040	3	1E-3
Cylinder Block Covers	0.043	1	1E-7
	0.043	2	1E-9
Cylinder Head	0.060	1	1E-13
	0.060	2	1E-15
Dashboard (Left)	1.210	1	2D-9
Dashboard (Right)	1.200	1	2D-3
	1.200	3	2D-7
Data Monitor	1.200	2	2D-5
Decals	4.500	1	2I-3
	4.501	1	2I-5
Dipper Stick (2,1m)	5.0022	1	2J-9
Dipper Stick (2,5m) (STD.)	2.003	1	2F-11
Dipper Stick (3m)	5.0038	1	2J-13
Dipper Stick Cylinder	2.030	4	2F-23
	2.031	4	2G-5
Dipstick-Engine Oil	0.270	1	1H-8
Discharge Valve Componen.	3.010	4	2H-5
Drive on Engine (Opt.)	0.350	1	1I-5
Electric System	1.220	1	2D-11
	1.220	2	2D-13
Elements-fuel	0.200	1	1G-17
Elements-Hydraulic	1.020	1	1J-7
Elements-Pilot	1.080	1	1L-5
Emergency Kits(Lub. Fittings)	4.000	1	2H-23
Engine	0.021	1	1D-19
Engine-Controls	0.004	1	1D-15
Engine-Suspensions	0.000	1	1D-3
Engine Breather	0.045	1	1E-11
Engine Cooling Piping	0.323	1	1H-19
Engine Heat Exchanger	0.310	1	1H-15
Engine Lifting Eyes	0.450	1	1I-15
Engine Oil Filter	0.302	1	1H-11
Engine Oil Piping	0.305	1	1H-13
Engine Oil Pump	0.300	1	1H-9
Engine Oil Sump	0.042	1	1E-5
Engine Piston	0.082	1	1F-3
Engine Suspensions	0.000	1	1D-3
Exhaust Manifold	0.077	1	1E-19
Exhaust Valve	0.060	2	1E-15
Fan	0.345	1	1I-3
Fan Drive	0.345	1	1I-3
"Filter Care" Kit	24		1A-24
Filter-Pilot System	1.080	1	1L-5
Filters-Air	0.001	1	1D-5
Filters-Engine Oil	0.302	1	1D-11
Filters-Fuel	0.200	1	1G-17
Filters-Hydr. System	1.020	1	1J-7
Flywheel-Engine	0.083	1	1E-17
Fuel Filter	0..200	1	1G-17
Fuel Piping	0.203	1	1G-19
Fuel Pump	0.203	2	1G-21
	0.140	8	1G-5
Fuel Tank	1.010	1	1J-5
Fuses	1.200	3	2D-7
Guards	1.300	2	2E-21
Handle	1.300	3	2E-23
	1.300	4	2F-3
Heater	1.290	1	2E-15
Horn	1.220	2	2D-15
Hydr.Pump-Components	1.030	2	1J-13
Hydr.Pump Regulator-Comp.	1.030	3	1J-15

H-2

ALPHABETICAL INDEX

DESCRIPTION	SGR.	TAV.	GRID
Hydraulic Pump	1.030	1	1J-9
Idler	3.020	1	1H-7
Injection Nozzle-Lines	0.149	1	1G-15
Injection Pump	0.140	6	1F-23
	0.140	7	1G-3
Injection Pump Drive	0.140	10	1G-9
Injection Pump-Piping	0.140	1	1F-13
	0.140	9	1G-7
Intake Manifold	0.071	1	1E-17
Intake Valve	0.060	2	1E-15
Lift Cylinder (Left)	2.030	3	1F-21
Lift Cylinder (Right)	2.030	2	2F-19
Lights	1.220	2	2D-13
Lower Frame	3.000	1	2G-17
Lubric. Fitting Piping	3.001	1	2G-19
	2.041	1	2G-15
	2.040	1	1G-13
Main Piping	1.060	1	1K-9
	1.061	1	1K-11
Mirror (Rear)	1.300	2	2E-21
Monobloc Boom	2.000	1	2F-5
Motor - Starter	0.360	2	1I-9
Motor - Swing	1.040	1	1J-17
Motor - Travel	3.010	1	2G-21
Motor - Wiper	1.220	1	2D-11
Muffler	0.002	1	1D-7
Oil Tank	1.020	1	1J-7
Operator's Seat	1.250	2	2D-21
OperatorsSeat(Bostrom)(Std.)	5.0151	1	2J-21
Pilot Piping(1)	1.080	1	1L-5
Pilot Piping(2)	1.081	1	1L-9
Pilot Piping(3)	1.082	1	1L-11
Pilot Piping(4)	1.083	1	1L-17
Pilot Piping(5)	1.084	1	1L-19
Pilot Piping(6)	1.085	1	1L-21
Pilot Valve	1.070	3	1K-19
	1.071	2	1L-3
Pilot Valve-components	1.070	2	1K-17
PipingBoom	2.030	1	2F-17
	2.031	1	2G-5
Piping-Injection	0.149	1	1G-15
Piping-Lube Fittings	2.040	1	2G-13
Piping-Main	1.060	1	1K-9
Piping-Pilot(1)	1.080	1	1L-5
Piping-Pilot(3)	1.082	1	1L-11
Piping-Pilot(4)	1.083	1	1L-17
Piping-Pilot(5)	1.084	1	1L-19
Piping-Pump Contr. Valve	1.050	1	1J-21
Piping-Travel (Lower)	3.070	1	2H-19
	3.071	1	2H-21
Piping-Turbocharger	0.241	1	1H-5
Pump-Engine Oil	0.300	1	1H-9
Pump-Hydraulic	1.030	1	1J-11
Pump-Injection	0.140	6	1F-23
Pump-Water	0.320	1	1H-17
Pump/Control Valve Piping	1.050	1	1J-23
Radiator	0.003	1	1D-9
Radiator-Components	0.003	2	1D-11
	0.003	3	1D-13
Rocker Arm	0.060	2	1E-15
Rotary Distributor	3.060	1	2H-17
SAE Battery Provision	1.220	3	2D-17
Seat Belt	5.0536	1	1J-23
Sensors	1.220	2	2D-13
Solenoid Valve	1.080	2	1L-7
Starter	0.360	2	1I-9
Starter-Mounting	0.360	1	1I-7
Stop Valve	1.082	2	1L-13
Swing Red.Unit-Components	1.040	2	1J-19
Swing Reduction Unit	1.040	1	1J-17
Thermostat & Housing	0.326	1	1H-21
Timing Control	0.100	1	1F-9
Tool Kit	5.0083	1	2J-19
Track Chain	3.051	1	2H-13
	3.052	1	2H-15
Track Roller	3.040	1	2H-11
Travel Motor-componen.	3.010	3	2H-3
Travel Piping (Lower)	3.070	1	2H-19
	3.071	1	2H-21
Travel Red.Unit-Componen.	3.010	2	2G-23
Travel Reduction Units	3.010	1	2G-21
Turbocharger	0.240	1	1G-23
	0.240	2	1H-3
Turbocharger Piping	0.241	1	1H-5
Upper Frame	1.000	1	1J-3
Upper Roller	3.030	1	2H-9
Valve-Anti-Shock(Hydr.)	1.082	3	1L-15
Valve-Exhaust	0.060	2	1E-15
Valve-Intake	0.060	2	1E-15
Valve-Pilot (Hydr.)	1.070	1	1K-15
Valve-Pilot(Travel)	1.070	1	1K-15
Valve-Solenoid	1.080	2	1L-7
Valve-Stop(Travel)	1.082	1	1L-11
Water Pump	0.320	1	1H-17
Water Pump Drive	0.340	1	1H-23
Water Pump-Components	0.320	2	1H-17
Wiper	1.220	1	2D-11

BRAKE VALVE-COMPONENTS VALVOLA FRENO-COMPONENTI 71402411	VALVE DE FREINAGE-COMPOS. BREMSVENTIL-EINZELTEILE VALVULA DE FRENO-COMP.	3.010 TAV.3 NTR 104S V-89

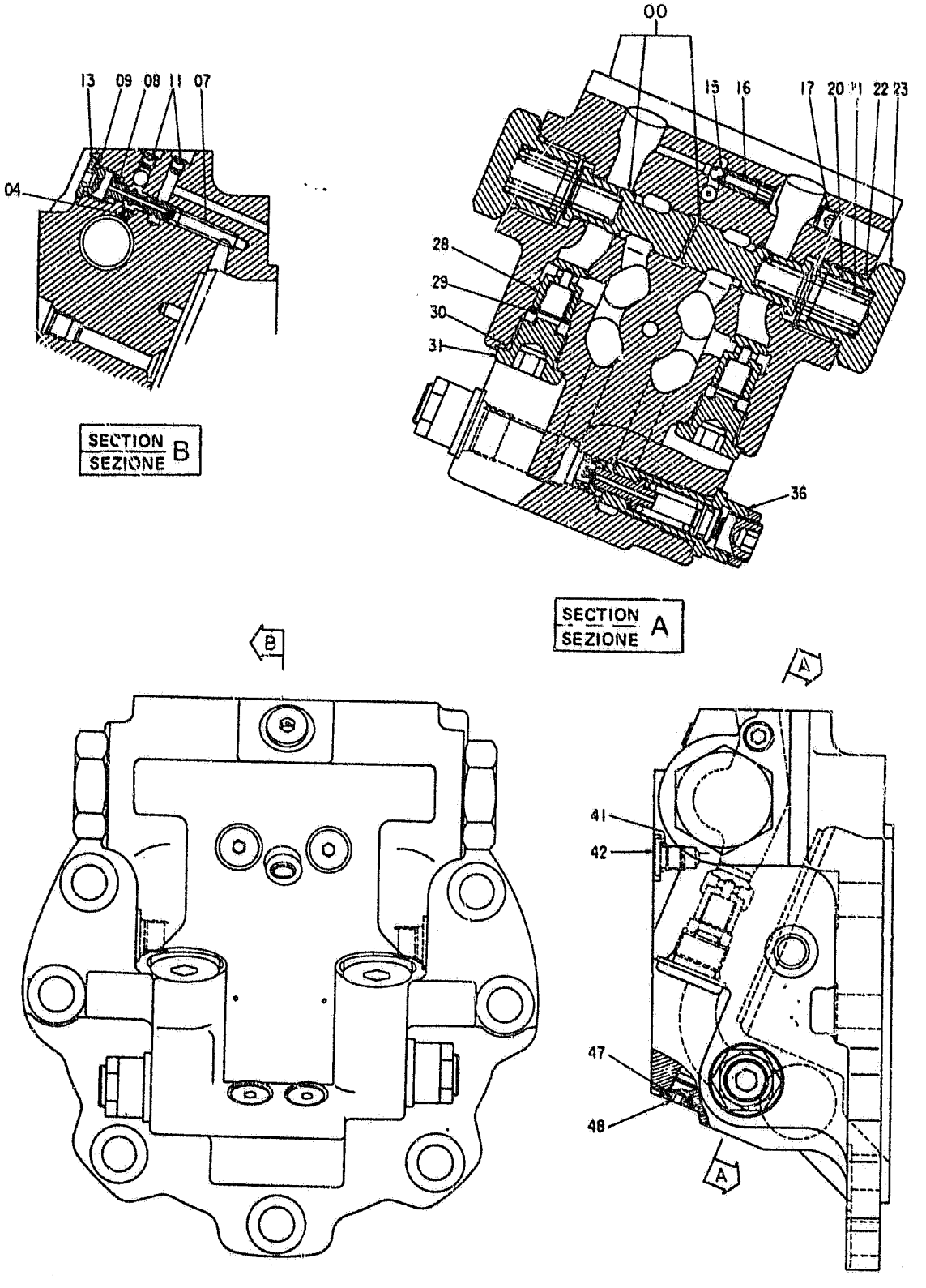

FH200

BRAKE VALVE-COMPONENTS — VALVE DE FREINAGE-COMPOS. — 3.010 TAV.3
VALVOLA FRENO-COMPONENTI — BREMSVENTIL-EINZELTEILE
71402411 — VALVULA DE FRENO-COMP. — NTR 104S V-89

ITEM	PART NUMBER	QTY	TR. CO.	DESCRIPTION	DESCRIZIONE
00	71402417	1	300C	BODY	CORPO
04	71402418	1	20U	JET	UGELLO
07	71402085	1	100M	SPRING	MOLLA
08	71402102	1	120R	REEL	ROCCHETTO
09	71401776	1	158G	O-RING	GUARNIZIONE O-R
11	71402099	2	50T	PLUG	TAPPO
13	71402087	1	50T	PLUG	TAPPO
15	71402100	1	140S	BALL	SFERA
16	71402419	1	69S	SEAT	SEDE
17	71402084	1	50T	PLUG	TAPPO
20	71402420	2	100M	SPRING	MOLLA
21	71402421	2	100M	SPRING	MOLLA
22	71402422	2	158G	O-RING	GUARNIZIONE O-R
23	71402423	2	50T	PLUG	TAPPO
28	71402424	2	10V	VALVE	VALVOLA
29	71402425	2	100M	SPRING	MOLLA
30	71402329	2	158G	O-RING	GUARNIZIONE O-R
31	71402427	2	50T	PLUG	TAPPO
36	71402428	2	10V	VALVE -ASS.LY SEE H-5	VALVOLA -COMPL. VED. TAV.4
41	71401688	4	158G	O-RING	GUARNIZIONE O-R
42	71402098	4	50T	PLUG	TAPPO

DISCHARGE VALVE-COMPONEN. VALVOLA SCARICO-COMPONEN. 71402428	VALVE DE DECHARGE AUSLASSVENTIL-EINZELTEILE VALVULA DE DESCARGA-COMP.	3.010 TAV.4

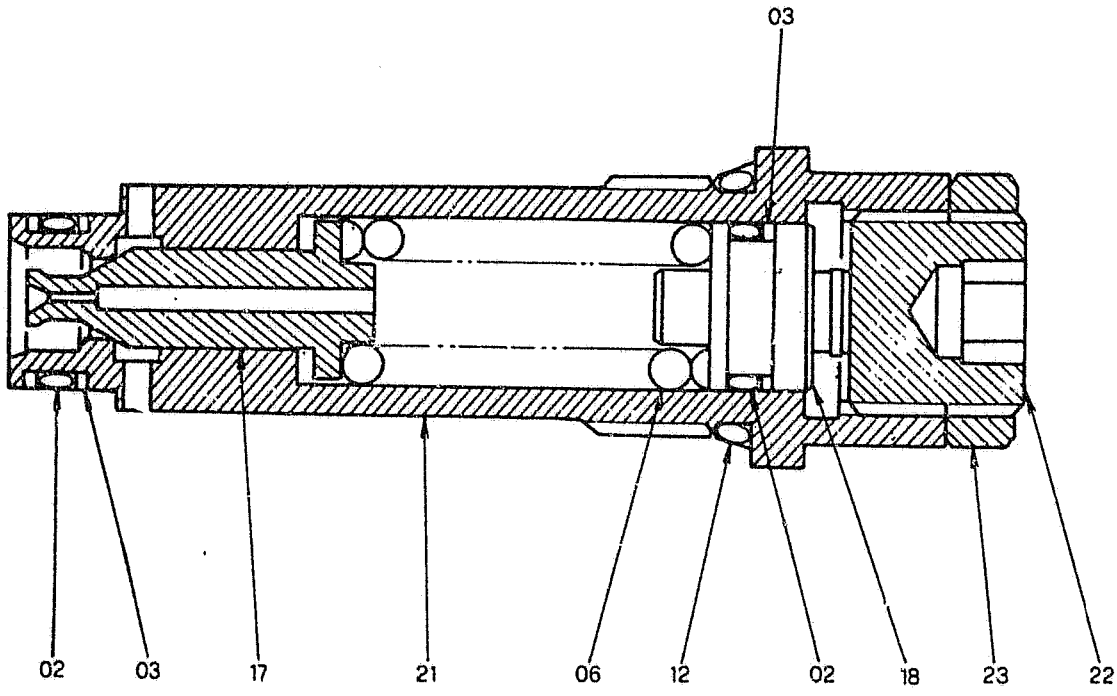

DISCHARGE VALVE-COMPONEN. VALVE DE DECHARGE
VALVOLA SCARICO-COMPONEN. AUSLASSVENTIL-EINZELTEILE
71402428 VALVULA DE DESCARGA-COMP.

3.010 TAV.4

ITEM	PART NUMBER	QTY	TR. CO.	DESCRIPTION	DESCRIZIONE
02	71401776	2	158G	O-RING	GUARNIZIONE O-R
03	71402430	3	45A	RING	ANELLO
06	71402433	1	100M	SPRING	MOLLA
12	71402329	1	158G	O-RING	GUARNIZIONE O-R
17	71402432	1	132P	PISTON	PISTONE
18	71402434	1	50N	PAWL	NOTTOLINO
21	71402429	1	300C	BODY	CORPO
22	71402435	1	40V	SCREW	VITE
23	71402436	1	50G	RING NUT	GHIERA

IDLER TENDICINGOLO	ROUE TENDEUSE RAUPENKETTENSPANNER RUEDA GUIADORA	3.020 TAV.1

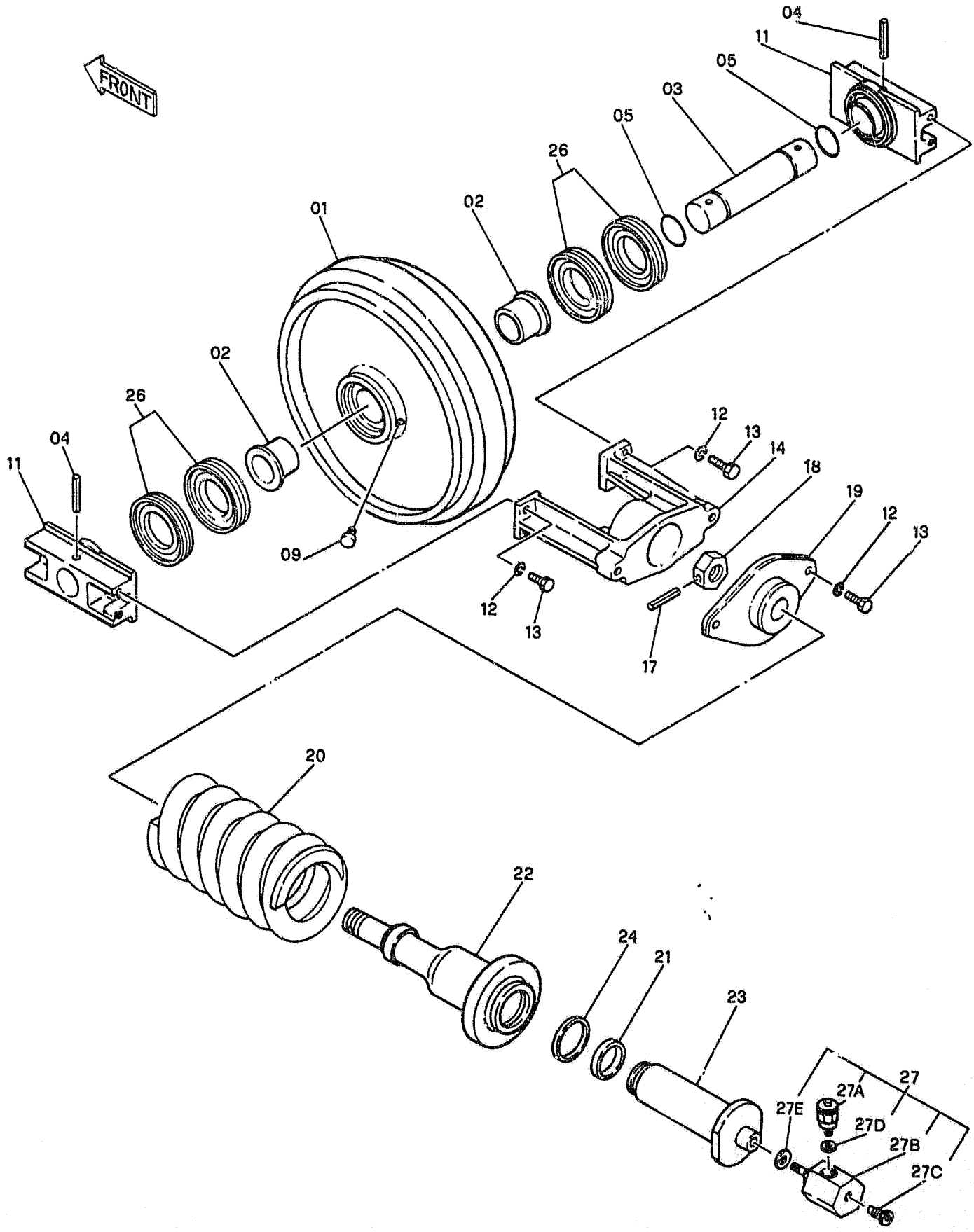

IDLER
TENDICINGOLO

ROUE TENDEUSE
RAUPENKETTENSPANNER
RUEDA GUIADORA

3.020 TAV.1

ITEM	PART NUMBER	QTY	TR. CO.	DESCRIPTION	DESCRIZIONE
01	71400912	1	166R	TRACK IDLER	RUOTA TENDICINGOLO
01-26	71400911	2	50G2	TRACK IDLER -ASS.LY	TENDICINGOLO -COMPL.
02	71400913	2	95B	BUSHING	BOCCOLA
03	71400914	1	16A	SHAFT	ALBERO
04	14180970	2	202S	SPRING PIN	SPINA ELASTICA
05	45482248	2	122G	SEAL	GUARNIZIONE
09	45481895	1	50T	PLUG	TAPPO
11	71400915	2	300S	SUPPORT	SUPPORTO
12	10517270	6	170R	LOCKWASHER	ROSETTA ELASTICA
13	11118711	6	40V	SCREW 16X2X45	VITE 16X2X45
14	71400916	1	85F	YOKE	FORCELLA
17	14169270	1	202S	SPRING PIN	SPINA ELASTICA
18	71400917	1	10D	NUT	DADO
19	71400918	1	105P	PLATE	PIASTRA
20	71400919	1	100M	SPRING	MOLLA
21	45482628	1	122G	SEAL	GUARNIZIONE
22	71400994	1	164C	CYLINDER	CILINDRO
23	71400901	1	132P	PISTON	PISTONE
24	45482627	1	122G	SEAL	GUARNIZIONE
26	71314509	2	122G	SEAL	GUARNIZIONE
27	71400903	2	10V	VALVE -ASS.LY	VALVOLA -COMPL.
27A	71400904	1	7V	RELIEF VALVE	VALVOLA SOVRAPRESSIONE
27B	71400905	1	222P	EXTENSION	PROLUNGA
27C	79043802	1	10V	VALVE	VALVOLA
27D	45481995	1	122G	SEAL	GUARNIZIONE
27E	45481993	1	122G	SEAL	GUARNIZIONE

UPPER ROLLER RULLO SOSTEGNO	GALET DE RETOUR CHENILLE STUETZROLLE DER RAUPENK. RODILLO DE SOPORTE ORUGA	3.030 TAV.1

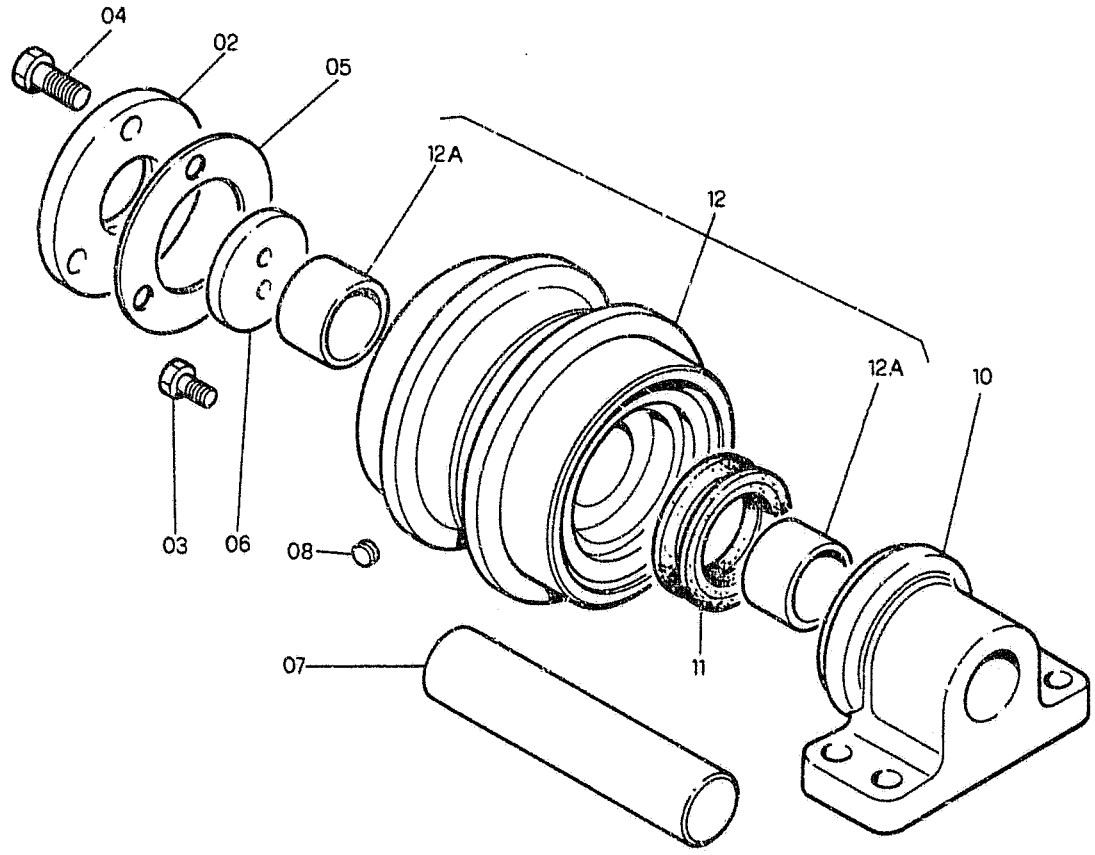

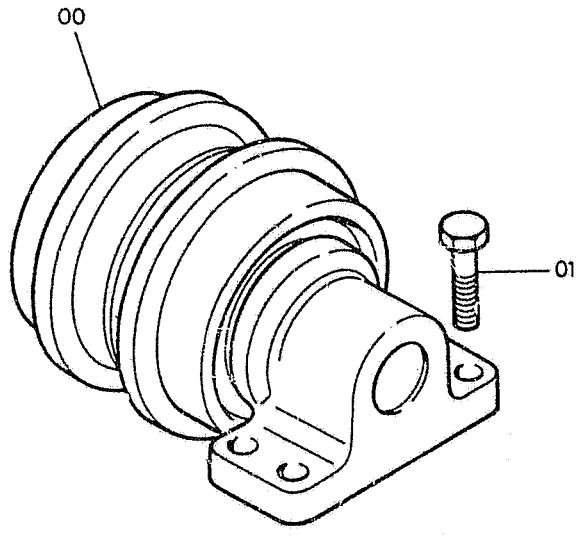

UPPER ROLLER
RULLO SOSTEGNO

GALET DE RETOUR CHENILLE
STUETZROLLE DER RAUPENK.
RODILLO DE SOPORTE ORUGA

3.030 TAV.1

ITEM	PART NUMBER	QTY	TR. CO.	DESCRIPTION	DESCRIZIONE
00	71400960	4	157R	ROLLER -ASS.LY	RULLO -COMPL.
01	11118534	16	40V	SCREW 16X2X40	VITE 16X2X40
02	71400948	1	265C	COVER	COPERCHIO
03	71400949	2	40V	SCREW	VITE
04	71400950	3	40V	SCREW	VITE
05	71400951	1	198S	SHIM	SPESSORE
06	71400952	1	131R	WASHER	ROSETTA
07	71400953	1	16A	SHAFT	ALBERO
08	71400954	1	50T	PLUG	TAPPO
10	71400955	1	300S	SUPPORT	SUPPORTO
11	71400956	1	122G	SEAL	GUARNIZIONE
12	71400961	1	157R	ROLLER -ASS.LY	RULLO -COMPL.
12A	71400959	2	95B	BUSHING	BOCCOLA

TRACK ROLLER	GALET PORTEUR DE CHENILLE	3.040 TAV 1
RULLO CARRELLO CINGOLO	LAUFROLLE DER RAUPENKETTE	
	RODILLO DE APOYO ORUGA	

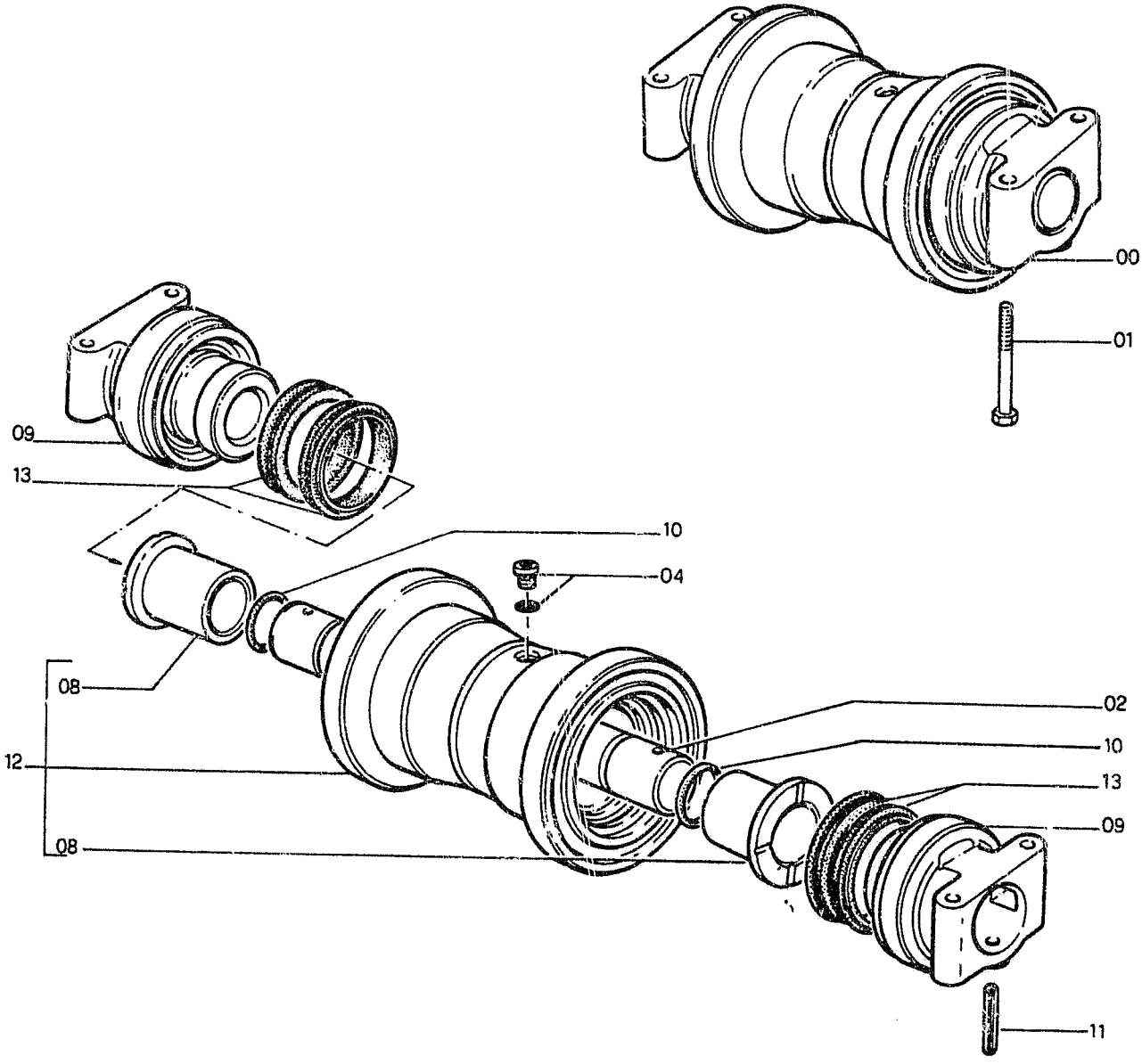

TRACK ROLLER RULLO CARRELLO CINGOLO	GALET PORTEUR DE CHENILLE LAUFROLLE DER RAUPENKETTE RODILLO DE APOYO ORUGA	3.040 TAV 1

ITEM	PART NUMBER	QTY	TR. CO.	DESCRIPTION	DESCRIZIONE
00	45019640	14	157R	ROLLER ASSEMBLY (03)	RULLO- COMPLESSIVO (03)
	45019640	16	157R	ROLLER ASSEMBLY (02)	RULLO COMPLESSIVO (02)
01	11119774	56	40V	SCREW (03)	VITE (03)
	11119774	64	40V	SCREW (02)	VITE (02)
02	45482236	1	16A	SHAFT	ALBERO
03	45481895	1	50T	PLUG	TAPPO
09	45482861	2	300S	SUPPORT	SUPPORTO
10	14464880	2	158C	O-RING	GUANIZIONE O-R
11	71318385	2	202S	SPRING PIN	SPINA ELASTICA
12	45482860	1	157R	ROLLER ASSEMBLY	RULLO COMPLESSIVO
12A	45482862	2	95B	BUSHING	BOCCOLA
13	45482859	2	158G	O-RING	GUARNIZIONE O-R

FH200 (03)

TRACK CHAIN CATENARIA	CHENILLE RAUPENKETTE ORUGA	3.051	TAV.1

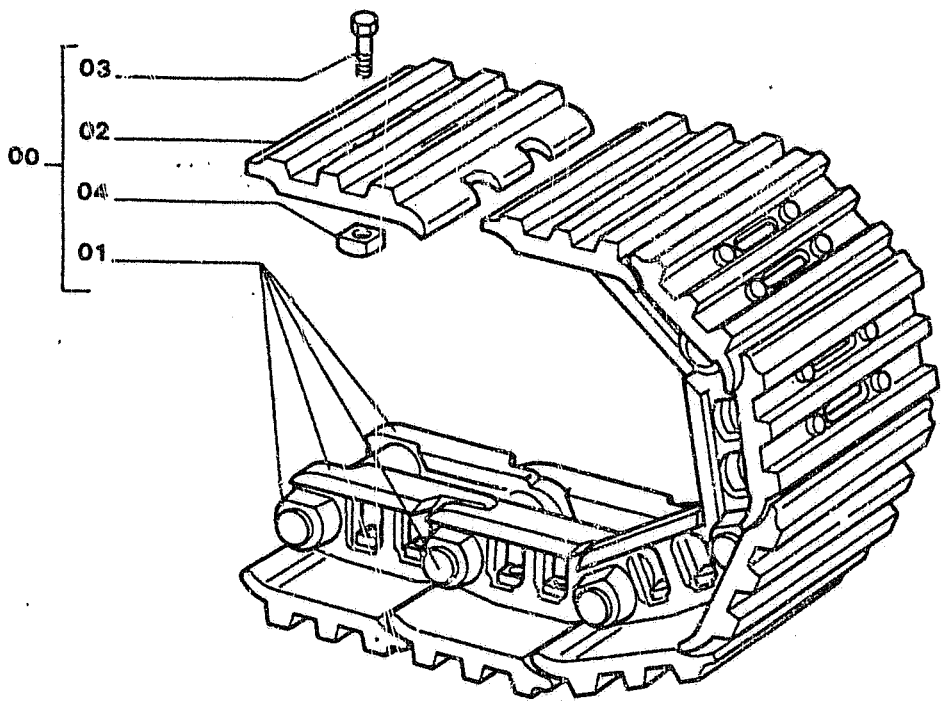

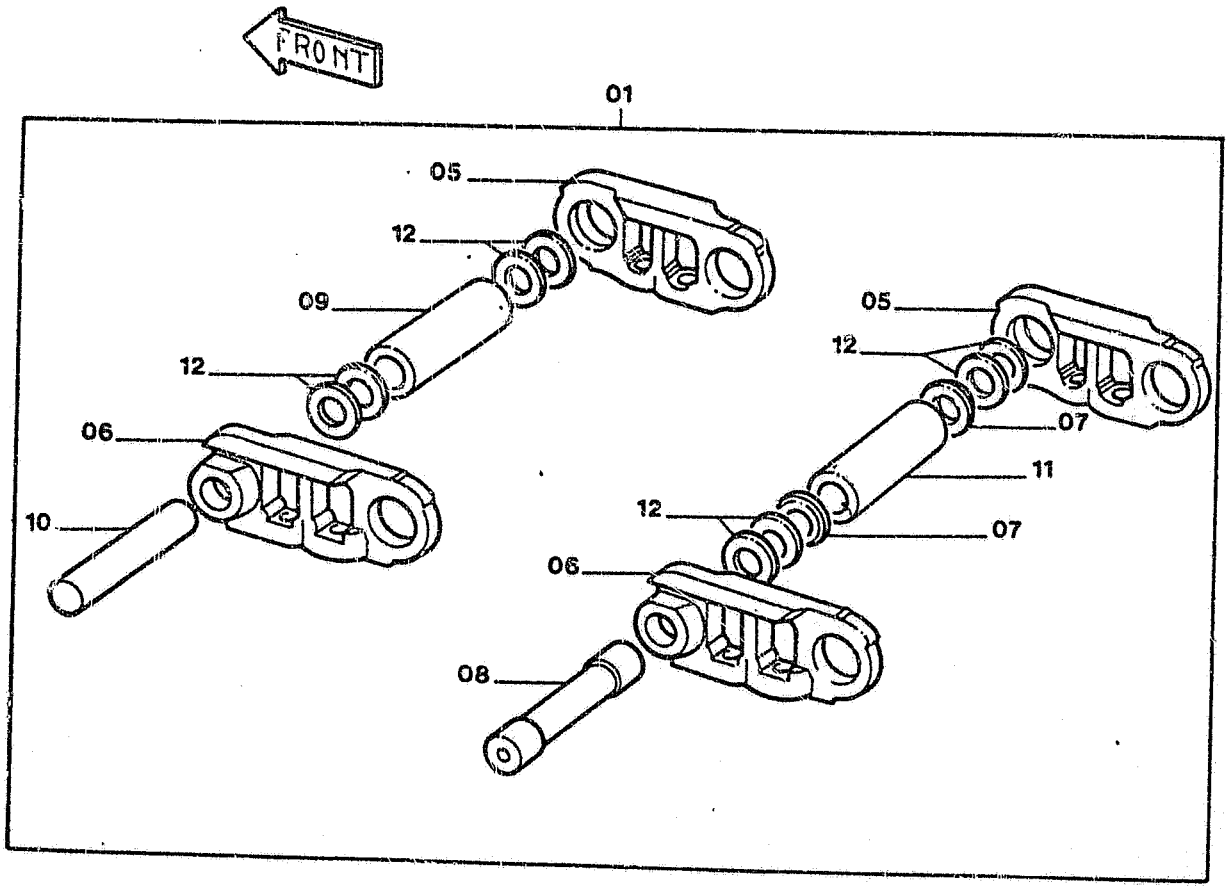

FH200 (03)

TRACK CHAIN CATENARIA	CHENILLE RAUPENKETTE ORUGA	3.051	TAV.1

ITEM	PART NUMBER	QTY	TR. CO.	DESCRIPTION	DESCRIZIONE
00	71400995	2	97C	TRACK CHAIN ASSY WITH 600mm SHOES	
	71401000	2	97C	TRACK CHAIN ASSY WITH 700mm SHOES	
	71401002	2	97C	TRACK CHAIN ASSY WITH 800mm SHOES	
	71401001	2	97C	TRACK CHAIN ASSY WITH 900mm SHOES	
01	71400996	1	97C	TRACK CHAIN ASSY	
02	71400824	48	295S	SHOE(600mm)	
	71400827	48	295S	SHOE(700mm)	
	71400975	48	295S	SHOE(800mm)	
	71400830	48	295S	SHOE(900mm)	
03	79039443	192	40V	CAPSCREW	
04	79004261	192	10D	NUT	
05	71400997	48	10M	LINK-RIGHT	
06	71400998	48	10M	LINK-LEFT	
07	71400822	2	75D	SPACER	
08	71400999	1	80P	PIN	
09	71400821	47	95B	BUSHING	
10	71400820	47	80P	PIN	
11	45482609	1	95B	BUSHING	
12	71400823	192	60D	DISC	

TRACK CHAIN CATENARIA	CHENILLE RAUPENKETTE ORUGA	3.052	TAV.1

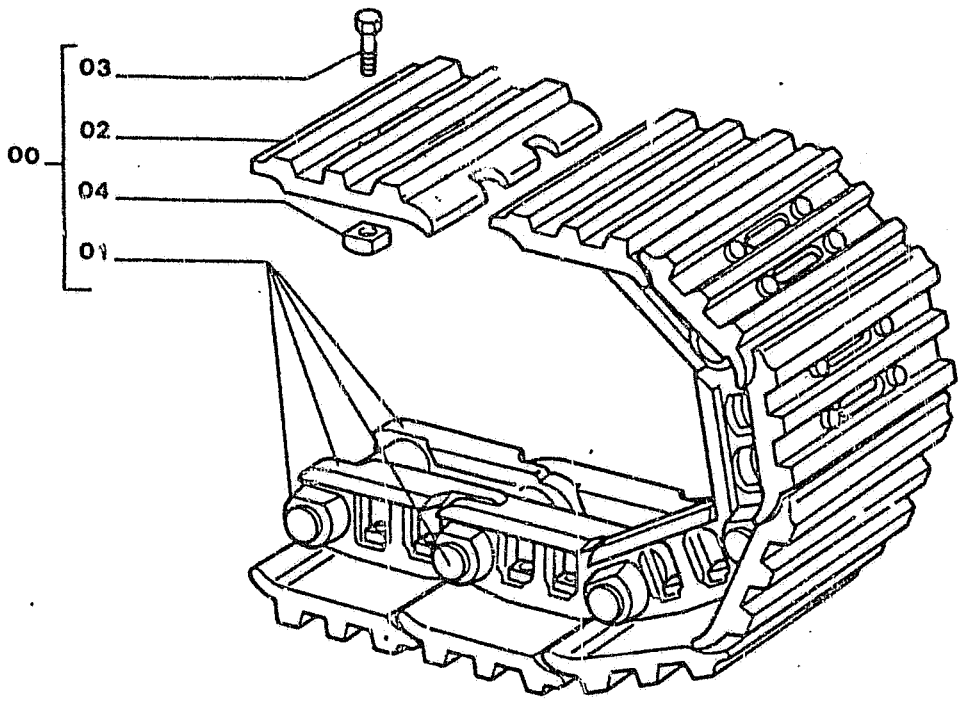

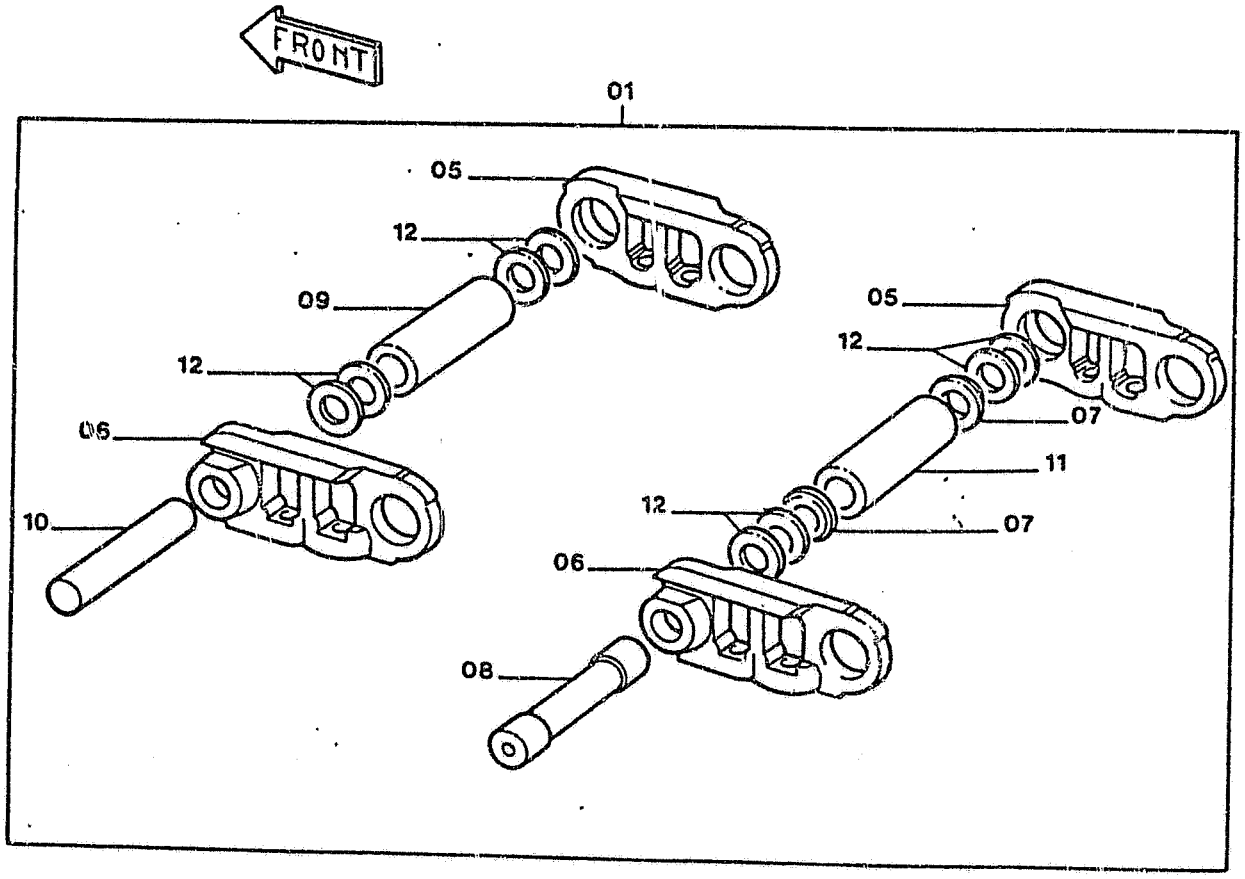

FH200 (02)

TRACK CHAIN CATENARIA	CHENILLE RAUPENKETTE ORUGA	3.052	TAV.1

ITEM	PART NUMBER	QTY	TR. CO.	DESCRIPTION	DESCRIZIONE
00	71401004	2	97C	TRACK CHAIN ASSY WITH 600mm SHOES	
	71401006	2	97C	TRACK CHAIN ASSY WITH 700mm SHOES	
	71401008	2	97C	TRACK CHAIN ASSY WITH 800mm SHOES	
	71401007	2	97C	TRACK CHAIN ASSY WITH 900mm SHOES	
01	71401005	1	97C	TRACK CHAIN ASSY	
02	71400824	52	295S	SHOE(600mm)	
	71400827	52	295S	SHOE(700mm)	
	71400975	52	295S	SHOE(800mm)	
	71400830	52	295S	SHOE(900mm)	
03	79039443	208	40V	CAPSCREW	
04	79004261	208	10D	NUT	
05	71400997	52	10M	LINK-RIGHT	
06	71400998	52	10M	LINK-LEFT	
07	71400822	2	75D	SPACER	
08	71400999	1	80P	PIN	
09	71400821	51	95B	BUSHING	
10	71400820	51	80P	PIN	
11	45482609	1	95B	BUSHING	
12	71400823	208	60D	DISC	

ROTARY DISTRIBUTOR
DISTRIBUTORE ROTANTE

DISTRIBUTEUR ROTATIF
DREHDURCHFUEHRUNG
DISTRIBUIDOR ROTATIVO

3.060 TAV.1

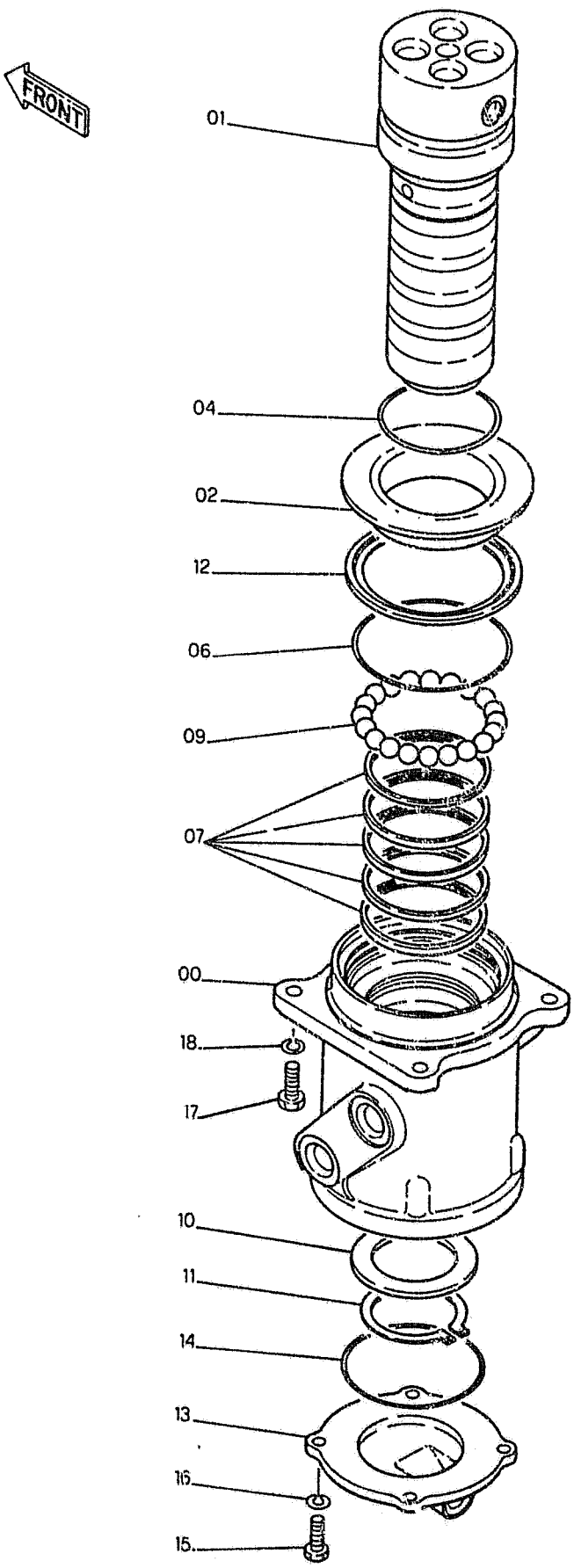

FH200

ROTARY DISTRIBUTOR
DISTRIBUTORE ROTANTE

DISTRIBUTEUR ROTATIF
DREHDURCHFUEHRUNG
DISTRIBUIDOR ROTATIVO

3.060 TAV.1

ITEM	PART NUMBER	QTY	TR. CO.	DESCRIPTION	DESCRIZIONE
00	71401841	1	300C	BODY	CORPO
00-16	71401622	1	81D	ROTARY DISTRIBUTOR -ASS.LY	DISTRIBUTORE ROTANTE -COMPL.
01	71401842	1	16A	SHAFT	ALBERO
02	71401844	1	265C	COVER	COPERCHIO
04	71401843	1	158G	O-RING	GUARNIZIONE O-R
06	71401845	1	158G	O-RING	GUARNIZIONE O-R
07	71401846	5	122G	SEAL	GUARNIZIONE
09	71401847	20	140S	BALL	SFERA
10	71401848	1	45A	RING	ANELLO
11	71401849	1	187A	SNAP RING	ANELLO ELASTICO
12	71401850	1	122G	SEAL	GUARNIZIONE
13	71401851	1	265C	COVER	COPERCHIO
14	71401852	1	158G	O-RING	GUARNIZIONE O-R
15	71401853	4	40V	SCREW	VITE
16	71401854	4	170R	LOCKWASHER	ROSETTA ELASTICA
17	11112434	4	40V	SCREW 12X1,75X30	VITE 12X1,75X30
18	10517074	4	170R	LOCKWASHER	ROSETTA ELASTICA

TRAVEL PIPING (LOWER)
TUBAZIONI TRASLAZ.(INF.)

TUYAUTERIES INFERIEURES
LEITUNGEN-UNTER
TUBERIAS INFERIORES

3.070 TAV.1

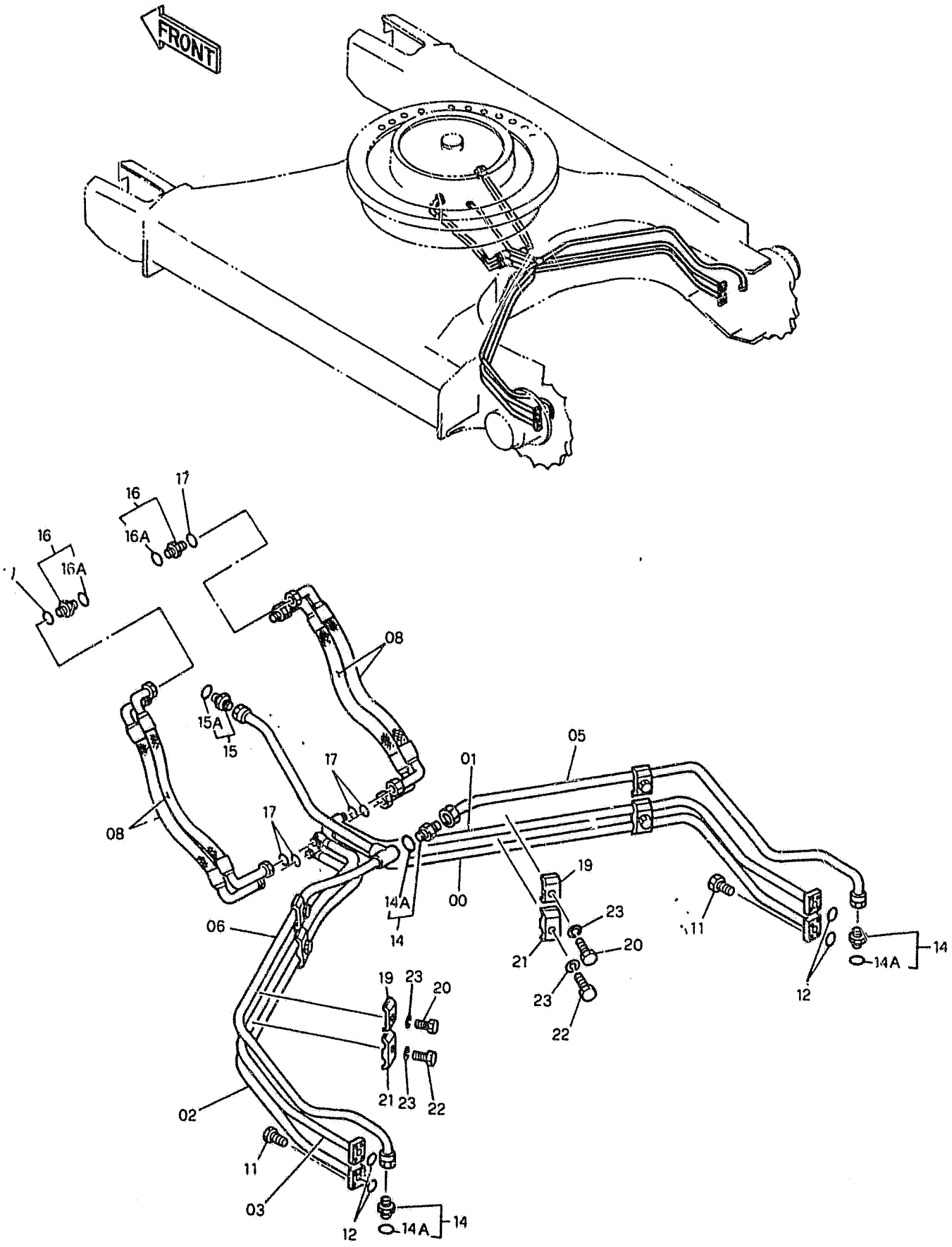

TRAVEL PIPING (LOWER) | TUYAUTERIES INFERIEURES | 3.070 TAV.1
TUBAZIONI TRASLAZ.(INF.) | LEITUNGEN-UNTER
TUBERIAS INFERIORES

ITEM	PART NUMBER	QTY	TR. CO.	DESCRIPTION	DESCRIZIONE
00	71416136	1	193T	TUBE	TUBO RIGIDO
01	71416138	1	193T	TUBE	TUBO RIGIDO
02	71416140	1	193T	TUBE	TUBO RIGIDO
03	71416142	1	193T	TUBE	TUBO RIGIDO
05	71416144	1	193T	TUBE	TUBO RIGIDO
06	71416146	1	193T	TUBE	TUBO RIGIDO
08	71404086	4	285T	HOSE	TUBO FLESSIBILE
11	14420234	16	40V	SCREW 10X1,5X30	VITE 10X1,5X30
12	71404169	4	158G	O-RING	GUARNIZIONE O-R
14	71404357	3	20R	FITTING -ASS.LY	RACCORDO -COMPL.
14A	71404165	3	158G	O-RING	GUARNIZIONE O-R
15	71404438	1	20R	FITTING -ASS.LY	RACCORDO -COMPL.
15A	71404165	1	158G	O-RING	GUARNIZIONE O-R
16	71404414	4	20R	FITTING -ASS.LY	RACCORDO -COMPL.
16A	71404162	4	158G	O-RING	GUARNIZIONE O-R
17	70923843	8	158G	O-RING	GUARNIZIONE O-R
19	71415883	4	231S	CLIP	STAFFETTA
20	11112834	4	40V	SCREW 12X1,75X40	VITE 12X1,75X40
21	71416089	4	231S	CLIP	STAFFETTA
22	11113334	4	40V	SCREW 12X1,75X55	VITE 12X1,75X55
23	10517074	8	131R	WASHER	ROSETTA

TRAVEL PIPING (LOWER) TUBAZIONI TRASLAZ.(INF.)	TUYAUTERIES INFERIEURES LEITUNGEN-UNTER TUBERIAS INFERIORES	3.071 TAV.1

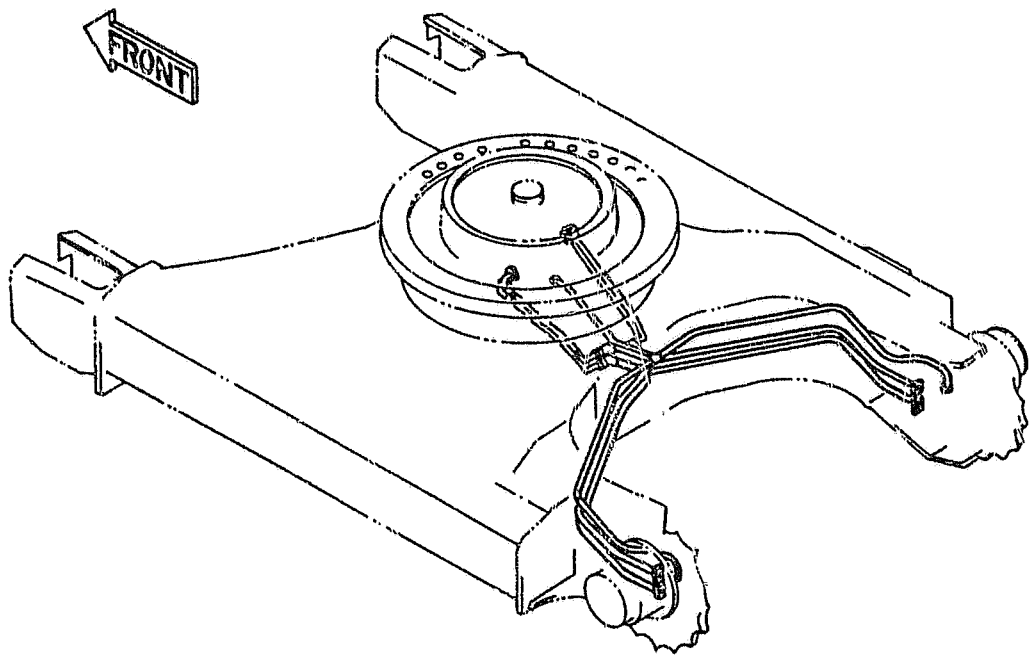

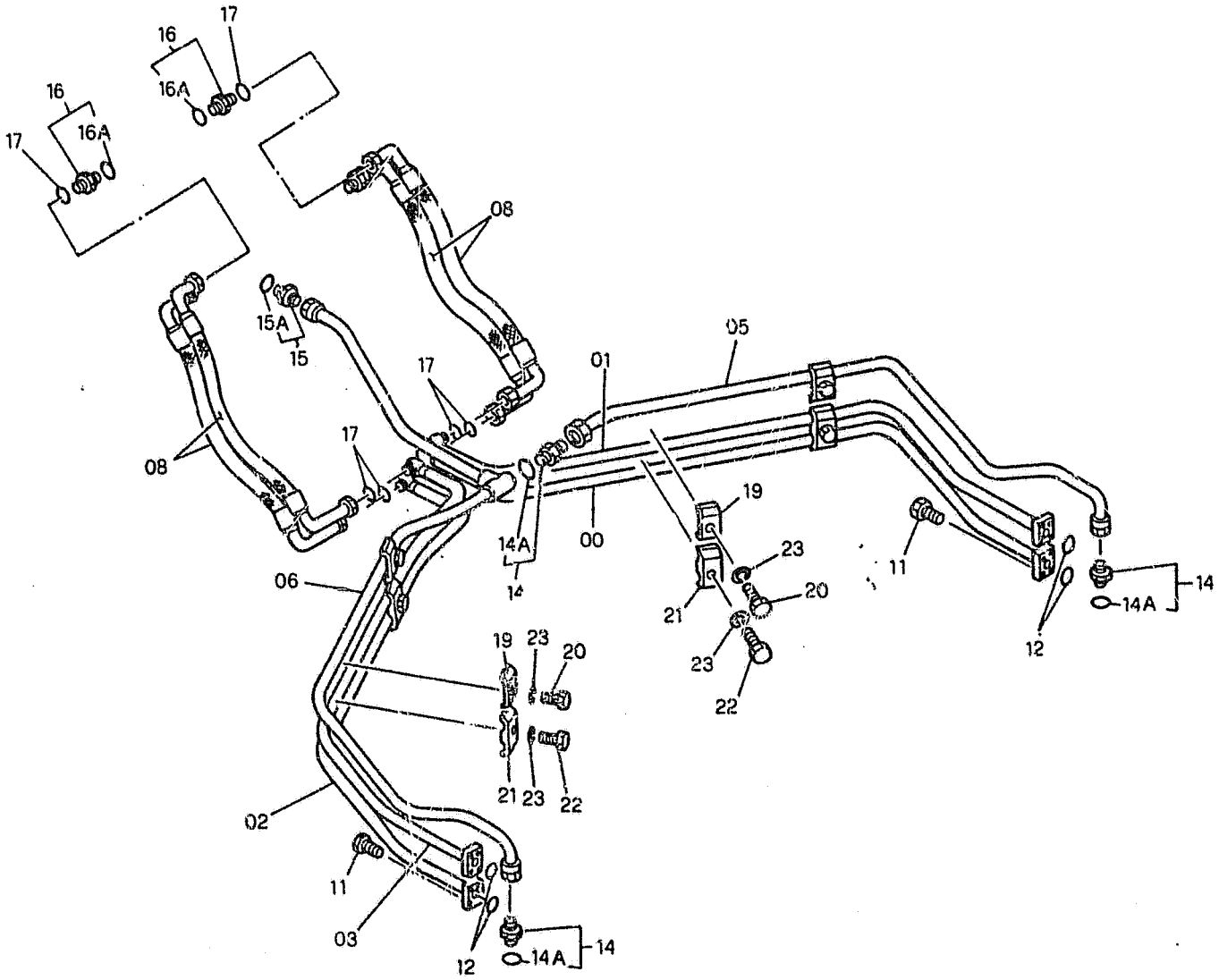

TRAVEL PIPING (LOWER) | TUYAUTERIES INFERIEURES | 3.071 TAV.1
TUBAZIONI TRASLAZ.(INF.) | LEITUNGEN-UNTER
TUBERIAS INFERIORES

ITEM	PART NUMBER	QTY	TR. CO.	DESCRIPTION	DESCRIZIONE
00	71416165	1	193T	TUBE	TUBO RIGIDO
01	71416167	1	193T	TUBE	TUBO RIGIDO
02	71416169	1	193T	TUBE	TUBO RIGIDO
03	71416171	1	193T	TUBE	TUBO RIGIDO
05	71416173	1	193T	TUBE	TUBO RIGIDO
06	71416175	1	193T	TUBE	TUBO RIGIDO
08	71404086	4	285T	HOSE	TUBO FLESSIBILE
11	14420234	16	40V	SCREW 10X1,5X30	VITE 10X1,5X30
12	71404169	4	158G	O-RING	GUARNIZIONE O-R
14	71404357	3	20R	FITTING -ASS.LY	RACCORDO -COMPL.
14A	71404165	3	158G	O-RING	GUARNIZIONE O-R
15	71404438	1	20R	FITTING -ASS.LY	RACCORDO -COMPL.
15A	71404165	1	158G	O-RING	GUARNIZIONE O-R
16	71404414	4	20R	FITTING -ASS.LY	RACCORDO -COMPL.
16A	71404162	4	158G	O-RING	GUARNIZIONE O-R
17	70923843	8	158G	O-RING	GUARNIZIONE O-R
19	71415883	4	231S	CLIP	STAFFETTA
20	11112834	4	40V	SCREW 12X1,75X40	VITE 12X1,75X40
21	71416089	4	231S	CLIP	STAFFETTA
22	11113334	4	40V	SCREW 12X1,75X55	VITE 12X1,75X55
23	10517074	8	131R	WASHER	ROSETTA

EMERGENCY KITS
DOTAZIONI RICAMBI

KIT DE RECHANGE
KIT-ERSATZTEILE
JUEGO DE RECAMBIOS

4.000 TAV.1

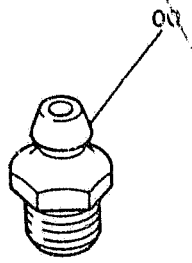

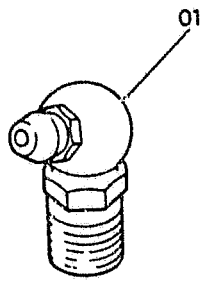

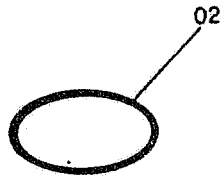

EMERGENCY KITS
DOTAZIONI RICAMBI

KIT DE RECHANGE
KIT-ERSATZTEILE
JUEGO DE RECAMBIOS

4.000 TAV.1

ITEM	PART NUMBER	QTY	TR. CO.	DESCRIPTION	DESCRIZIONE
00	13407211	10	60I	GREASE FITTING 10X1	INGRASSATORE 10X1
01	13407811	5	60I	GREASE FITTING 10X1	INGRASSATORE 10X1
02	70923843	5	158G	O-RING 1,8X12,4	GUARNIZIONE O-R 1,8X12,4
	70931640	5	158G	O-RING 1,8X18,8	GUARNIZIONE O-R 1,8X18,8

ALPHABETICAL INDEX

DESCRIPTION	SGR.	TAV.	GRID
Accelerator controls	0.004	1	1D-21
Air Cleaner	0.001	1	1D-5
Alternator-Mounting	0.400	1	1I-11
Anti-Shock Valve (Hydr.)	1.082	3	1L-15
Application of Ol. Hammer	5.0020	2	2J-7
Batteries	1.220	2	2D-13
Belts	0.340	1	1H-23
	0.345	1	1I-3
Boom Piping	2.030	1	2F-17, 2G-3
	2.031	1	2G-5
	2.031	2	2G-7
Brake Valve Components	3.010	3	2H-3
Bucket	2.020	1	2F-13
Bucket Cylinder	2.030	5	2G-3
Bull Gear	3.000	1	2G-17
Cab	1.250	1	2D-19
Cab Door	1.250	5	2E-7
Cab Heater-Components	1.290	2	2E-15
Cab Window-Left Side	1.250	6	2E-9
Cab-Frame	1.250	7	2E-11
Cab-Platform	1.250	1	2D-19
Cab Vandalism	5.0540	1	2K-3
Camshaft	0.120	1	1F-11
Cold Starting Aid	5.0025	1	2J-11
Connecting Rod	0.081	1	1E-23
Cont. Valve-Hydr. (Ass.Y)	1.050	1	1J-21
Control Valve-Hydr.	1.050	2	2K-3
	1.050	3	2K-5
	1.050	4	2K-7
Controls	1.070	1	1J-20
	1.071	1	1K-21, 1L-3
Counterweight	1.000	1	1J-3
Cowlings	1.300	1	2E-19
	1.300	2	2E-21
	1.300	3	2E-23
Crankshaft	0.080	1	1E-21
Crankshaft Pulley	0.084	1	1F-7
Cylinder Block	0.040	1	1D-21
	0.040	2	1D-23
	0.040	3	1E-3
Cylinder Block Covers	0.043	1	1E-7
	0.043	2	1E-9
Cylinder Head	0.060	1	1E-13
	0.060	2	1E-15
Dashboard (Left)	1.210	1	2D-9
Dashboard (Right)	1.200	1	2D-3
	1.200	3	2D-7
Data Monitor	1.200	2	2D-5
Decals	4.500	1	2I-3
	4.501	1	2I-5
Dipper Stick (2,1m)	5.0022	1	2J-9
Dipper Stick (2,5m) (STD.)	2.003	1	2F-11
Dipper Stick (3m)	5.0038	1	2J-13
Dipper Stick Cylinder	2.030	4	2F-23
	2.031	4	2G-5
Dipstick-Engine Oil	0.270	1	1H-8
Discharge Valve Componen.	3.010	4	2H-5
Drive on Engine (Opt.)	0.350	1	1I-5
Electric System	1.220	1	2D-11
	1.220	2	2D-13
Elements-fuel	0.200	1	1G-17
Elements-Hydraulic	1.020	1	1J-7
Elements-Pilot	1.080	1	1L-5
Emergency Kits(Lub. Fittings)	4.000	1	2H-23
Engine	0.021	1	1D-19
Engine-Controls	0.004	1	1D-15
Engine-Suspensions	0.000	1	1D-3
Engine Breather	0.045	1	1E-11
Engine Cooling Piping	0.323	1	1H-19
Engine Heat Exchanger	0.310	1	1H-15
Engine Lifting Eyes	0.450	1	1I-15
Engine Oil Filter	0.302	1	1H-11
Engine Oil Piping	0.305	1	1H-13
Engine Oil Pump	0.300	1	1H-9
Engine Oil Sump	0.042	1	1E-5
Engine Piston	0.082	1	1F-3
Engine Suspensions	0.000	1	1D-3
Exhaust Manifold	0.077	1	1E-19
Exhaust Valve	0.060	2	1E-15
Fan	0.345	1	1I-3
Fan Drive	0.345	1	1I-3
"Filter Care" Kit	24		1A-24
Filter-Pilot System	1.080	1	1L-5
Filters-Air	0.001	1	1D-5
Filters-Engine Oil	0.302	1	1D-11
Filters-Fuel	0.200	1	1G-17
Filters-Hydr. System	1.020	1	1J-7
Flywheel-Engine	0.083	1	1L-17
Fuel Filter	0..200	1	1G-17
Fuel Piping	0.203	1	1G-19
Fuel Pump	0.203	2	1G-21
	0.140	8	1G-5
Fuel Tank	1.010	1	1J-5
Fuses	1.200	3	2D-7
Guards	1.300	2	2E-21
Handle	1.300	3	2E-23
	1.300	4	2F-3
Heater	1.290	1	2E-15
Horn	1.220	2	2D-15
Hydr.Pump-Components	1.030	2	1J-13
Hydr.Pump Regulator-Comp.	1.030	3	1J-15

ALPHABETICAL INDEX

DESCRIPTION	SGR.	TAV.	GRID
Hydraulic Pump	1.030	1	1J-9
Idler	3.020	1	1H-7
Injection Nozzle-Lines	0.149	1	1G-15
Injection Pump	0.140	6	1F-23
	0.140	7	1G-3
Injection Pump Drive	0.140	10	1G-9
Injection Pump-Piping	0.140	1	1F-13
	0.140	9	1G-7
Intake Manifold	0.071	1	1E-17
Intake Valve	0.060	2	1E-15
Lift Cylinder (Left)	2.030	3	1F-21
Lift Cylinder (Right)	2.030	2	2F-19
Lights	1.220	2	2D-13
Lower Frame	3.000	1	2G-17
Lubric. Fitting Piping	3.001	1	2G-19
	2.041	1	2G-15
	2.040	1	1G-13
Main Piping	1.060	1	1K-9
	1.061	1	1K-11
Mirror (Rear)	1.300	2	2E-21
Monobloc Boom	2.000	1	2F-5
Motor - Starter	0.360	2	1I-9
Motor - Swing	1.040	1	1J-17
Motor - Travel	3.010	1	2G-21
Motor - Wiper	1.220	1	2D-11
Muffler	0.002	1	1D-7
Oil Tank	1.020	1	1J-7
Operator's Seat	1.250	2	2D-21
OperatorsSeat(Bostrom)(Std.)	5.0151	1	2J-21
Pilot Piping(1)	1.080	1	1L-5
Pilot Piping(2)	1.081	1	1L-9
Pilot Piping(3)	1.082	1	1L-11
Pilot Piping(4)	1.083	1	1L-17
Pilot Piping(5)	1.084	1	1L-19
Pilot Piping(6)	1.085	1	1L-21
Pilot Valve	1.070	3	1K-19
	1.071	2	1L-3
Pilot Valve-components	1.070	2	1K-17
PipingBoom	2.030	1	2F-17
	2.031	1	2G-5
Piping-Injection	0.149	1	1G-15
Piping-Lube Fittings	2.040	1	2G-13
Piping-Main	1.060	1	1K-9
Piping-Pilot(1)	1.080	1	1L-5
Piping-Pilot(3)	1.082	1	1L-11
Piping-Pilot(4)	1.083	1	1L-17
Piping-Pilot(5)	1.084	1	1L-19
Piping-Pump Contr. Valve	1.050	1	1J-21
Piping-Travel (Lower)	3.070	1	2H-19
	3.071	1	2H-21
Piping-Turbocharger	0.241	1	1H-5
Pump-Engine Oil	0.300	1	1H-9
Pump-Hydraulic	1.030	1	1J-11
Pump-Injection	0.140	6	1F-23
Pump-Water	0.320	1	1H-17
Pump/Control Valve Piping	1.050	1	1J-23
Radiator	0.003	1	1D-9
Radiator-Components	0.003	2	1D-11
	0.003	3	1D-13
Rocker Arm	0.060	2	1E-15
Rotary Distributor	3.060	1	2H-17
SAE Battery Provision	1.220	3	2D-17
Seat Belt	5.0536	1	1J-23
Sensors	1.220	2	2D-13
Solenoid Valve	1.080	2	1L-7
Starter	0.360	2	1I-9
Starter-Mounting	0.360	1	1I-7
Stop Valve	1.082	2	1L-13
Swing Red.Unit-Components	1.040	2	1J-19
Swing Reduction Unit	1.040	1	1J-17
Thermostat & Housing	0.326	1	1H-21
Timing Control	0.100	1	1F-9
Tool Kit	5.0083	1	2J-19
Track Chain	3.051	1	2H-13
	3.052	1	2H-15
Track Roller	3.040	1	2H-11
Travel Motor-componen.	3.010	3	2H-3
Travel Piping (Lower)	3.070	1	2H-19
	3.071	1	2H-21
Travel Red.Unit-Componen.	3.010	2	2G-23
Travel Reduction Units	3.010	1	2G-21
Turbocharger	0.240	1	1G-23
	0.240	2	1H-3
Turbocharger Piping	0.241	1	1H-5
Upper Frame	1.000	1	1J-3
Upper Roller	3.030	1	2H-9
Valve-Anti-Shock(Hydr.)	1.082	3	1L-15
Valve-Exhaust	0.060	2	1E-15
Valve-Intake	0.060	2	1E-15
Valve-Pilot (Hydr.)	1.070	1	1K-15
Valve-Pilot(Travel)	1.070	1	1K-15
Valve-Solenoid	1.080	2	1L-7
Valve-Stop(Travel)	1.082	1	1L-11
Water Pump	0.320	1	1H-17
Water Pump Drive	0.340	1	1H-23
Water Pump-Components	0.320	2	1H-17
Wiper	1.220	1	2D-11

DECALS
TARGHE

PLAQUES
KENNZEICHEN
PLACAS

4.500 TAV.1

NTR 104S V-89

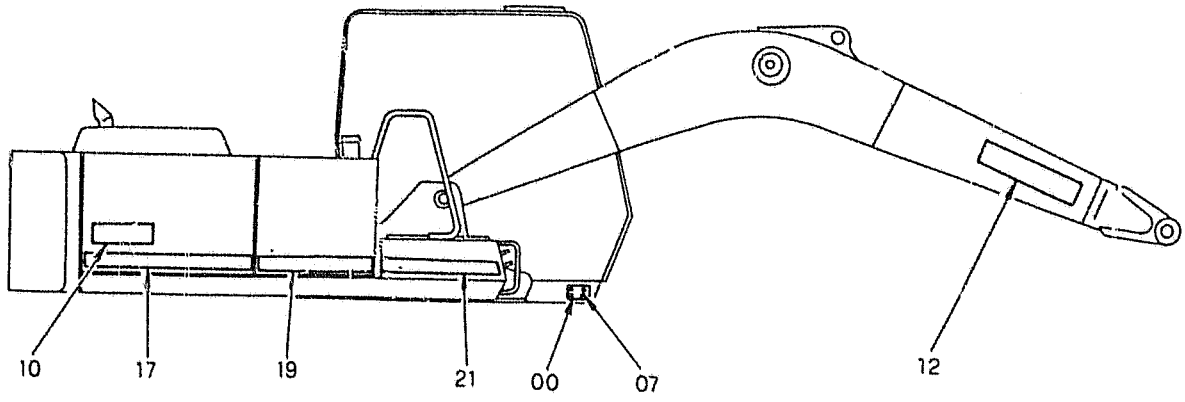

RIGHT SIDE VIEW
VISTA LATO DESTRO

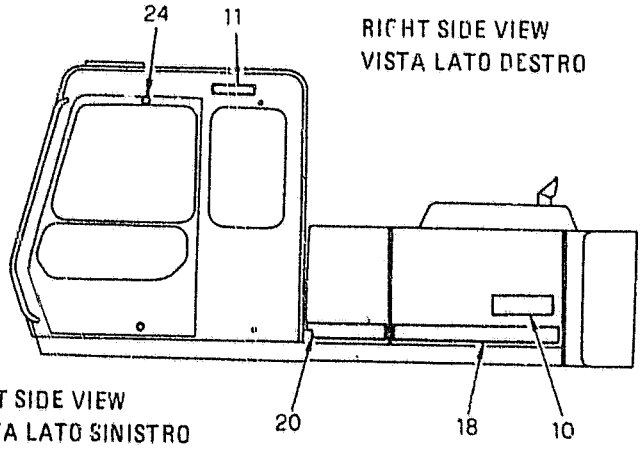

LEFT SIDE VIEW
VISTA LATO SINISTRO

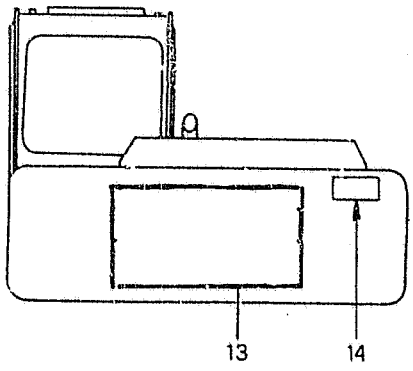

REAR VIEW
VISTA POSTERIORE

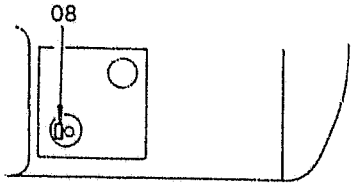

UPSIDE VIEW OF OIL TANK
VISTA DALL'ALTO SERBATOIO OLIO

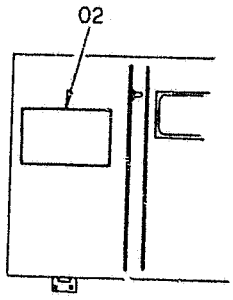

INSIDE VIEW OF TOOL BOX COVER
VISTA INTERNA COFANO "ZONA ATTREZZI"

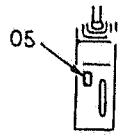

FRONT VIEW OF CONTROL (L)
VISTA FRONTALE MOBILETTO (SN)

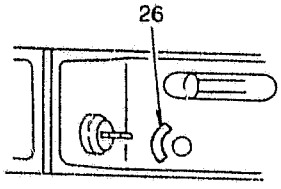

UPSIDE VIEW OF CONTROL BOX (R)
VISTA DALL'ALTO MOBILETTO (DS)

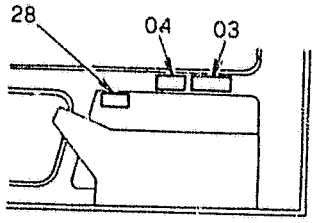

RIGHT INSIDE VIEW OF CAB
VISTA INTERNA LATO DS CABINA

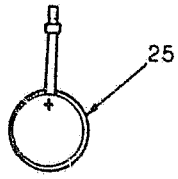

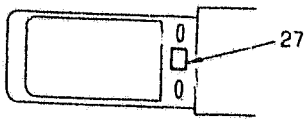

UPSIDE VIEW OF GAUGE PANEL
VISTA DALL'ALTO PANNELLO CONTROLLO

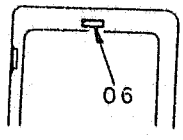

REAR INSIDE VIEW OF CAB
VISTA INTERNA LATO POST. CABINA

DECALS
TARGHE

PLAQUES
KENNZEICHEN
PLACAS

4.500 TAV.1

NTR 104S V-89

ITEM	PART NUMBER	QTY	TR. CO.	DESCRIPTION	DESCRIZIONE
00	79040883	1	283T	IDENTIFICATION PLATE	TARGHETTA IDENTIFICAZIONE
02	71416613	1	65TM	MAINTENANCE TAG (Ital.)	TARGA MANUTENZIONE (Ital.)
	73158655	1	65TM	MAINTENANCE TAG (Eng.)	TARGA MANUTENZIONE (Eng.)
	71416947	1	65T	DECAL (Fran.)	TARGA (Fran.)
	71416956	1	65T	DECAL (Deut.)	TARGA (Deut.)
03	71406007	1	65T	DECAL (Ital.)	TARGA (Ital.)
	71406073	1	65T	DECAL (Eng.)	TARGA (Eng.)
	71406192	1	65T	DECAL (Fran.)	TARGA (Fran.)
	71406254	1	65T	DECAL (Deut.)	TARGA (Deut.)
04	71406008	1	65T	DECAL (Ital.)	TARGA (Ital.)
	71406074	1	65T	DECAL (Eng.)	TARGA (Eng.)
	71406193	1	65T	DECAL (Fran.)	TARGA (Fran.)
	71406255	1	65T	DECAL (Deut.)	TARGA (Deut.)
05	71406009	1	65T	DECAL	TARGA
06	71406010	1	65T	DECAL (Ital.)	TARGA (Ital.)
	71406075	1	65T	DECAL (Eng.)	TARGA (Eng.)
	71406194	1	65T	DECAL (Fran.)	TARGA (Fran.)
	71406256	1	65T	DECAL (Deut.)	TARGA (Deut.)
07	13683701	4	40V	SCREW	VITE
08	71416614	1	65T	DECAL (Ital.)	TARGA (Ital.)
	71416634	1	65T	DECAL (Eng.)	TARGA (Eng.)
	71416948	1	65T	DECAL (Fran.)	TARGA (Fran.)
	71416957	1	65T	DECAL (Deut.)	TARGA (Deut.)
					TARGA FH200
10	71416861	2	65T	DECAL FH200 LC	TARGA FH200 LC
					TARGA FH200 E
11		1	65T	DECAL	TARGA
12	71309807	2	65T	DECAL	TARGA FIAT-HITACHI
13	71309704	1	65T	DECAL	TARGA FIAT-HITACHI
14	79060064	1	65T	DECAL (Ital.)	TARGA (Ital.)
	79060297	1	65T	DECAL (Fran.)	TARGA (Fran.)
	79060540	1	65T	DECAL (Eng.)	TARGA (Eng.)
	79088048	1	65T	DECAL (Deut.)	TARGA (Deut.)
17	71416617	1	65T	DECAL	TARGA
18	71416618	1	65T	DECAL	TARGA
19	71416619	1	65T	DECAL	TARGA
20	71416620	1	65T	DECAL	TARGA
21	71416221	1	65T	DECAL	TARGA
24	71406021	4	120P	PLATE	PIATTELO
25	71406022	1	65T	DECAL (Ital.)	TARGA (Ital.)
	71406076	1	65T	DECAL (Eng.)	TARGA (Eng.)
	71406195	1	65T	DECAL (Fran.)	TARGA (Fran.)
	71406257	1	65T	DECAL (Deut.)	TARGA (Deut.)
26	71415670	1	65T	DECAL	TARGA
27	71415671	1	65T	DECAL	TARGA
28	71415031	1	65T	DECAL	TARGA

DECALS
TARGHE

PLAQUES
KENNZEICHEN
PLACAS

4.501 TAV.1

NTR 104S V-89

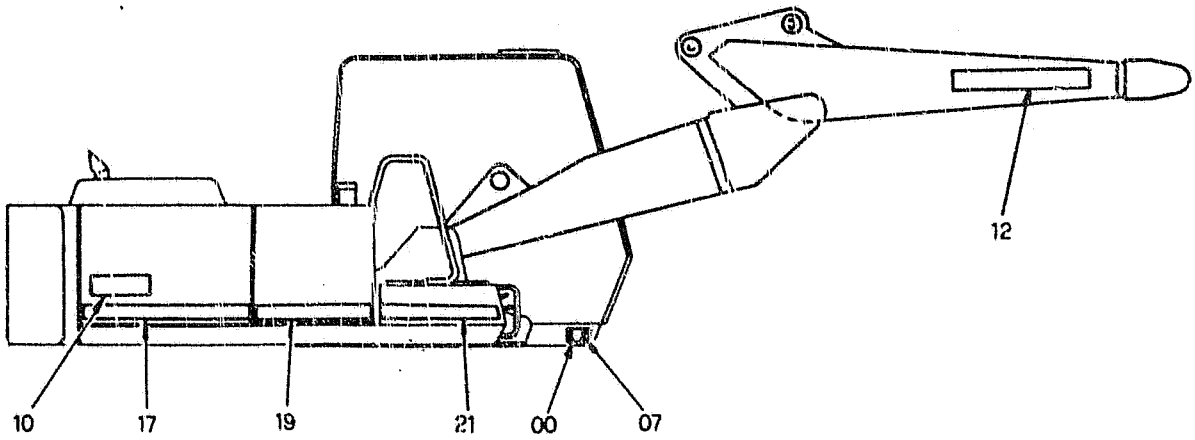

RIGHT SIDE VIEW
VISTA LATO DESTRO

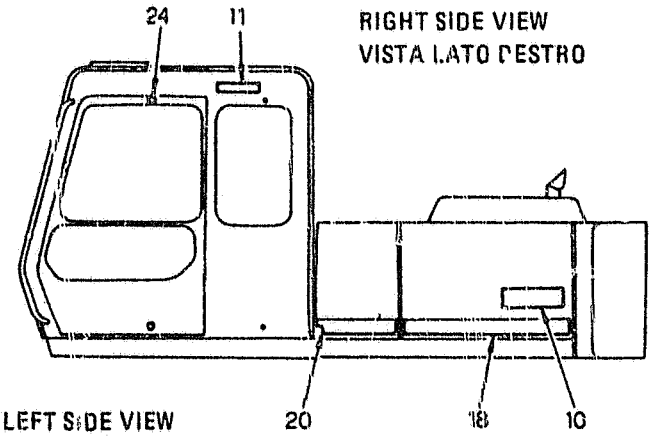

LEFT SIDE VIEW
VISTA LATO SINISTRO

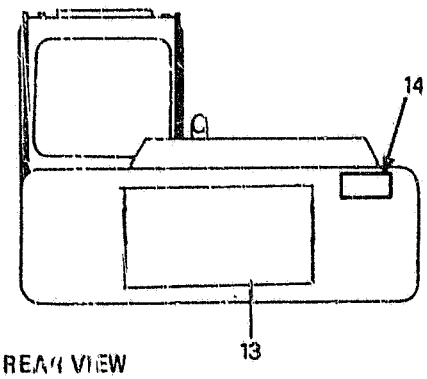

REAR VIEW
VISTA POSTERIORE

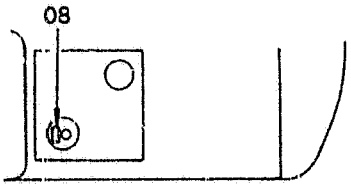

UPSIDE VIEW OF OIL TANK
VISTA DALL'ALTO SERBATOIO OLIO

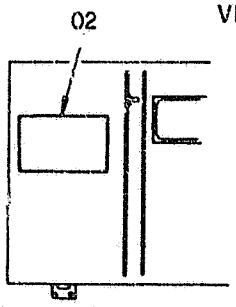

INSIDE VIEW
VISTA INTERNA COFANO "ZONA ATTREZZI"

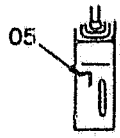

FRONT VIEW OF CONTROL BOX (L)
VISTA FRONTALE MOBILETTO SN

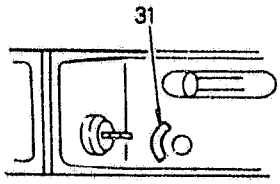

UPSIDE VIEW OF CONTROL BOX (R)
VISTA DALL'ALTO MOBILETTO (DS)

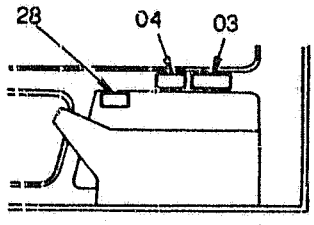

RIGHT INSIDE VIEW OF CAB
VISTA INTERNA LATO DESTRO CABINA

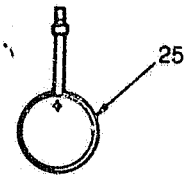

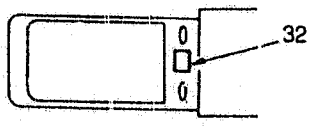

UPSIDE VIEW OF GAUGE PANEL
VISTA DALL'ALTO PANNELLO CONTROLLO

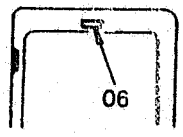

REAR INSIDE VIEW OF CAB
VISTA INTERNA LATO POSTERIORE CABINA

FH200 03

DECALS
TARGHE

PLAQUES
KENNZEICHEN
PLACAS

4.501 TAV.1

NTR 104S V-89 60404070.01 - 60404077.01

ITEM	PART NUMBER	QTY	TR. CO.	DESCRIPTION	DESCRIZIONE
00	79040883	1	283T	IDENTIFICATION PLATE	TARGHETTA IDENTIFICAZIONE
02	71416613	1	65TM	MAINTENANCE TAG (Ital.)	TARGA MANUTENZIONE (Ital.)
	73158655	1	65T	DECAL (Eng.)	TARGA (Eng.)
	71416947	1	65T	DECAL (Fran.)	TARGA (Fran.)
	71416956	1	65T	DECAL (Deut.)	TARGA (Deut.)
03	71406007	1	65T	DECAL (Ital.)	TARGA (Ital.)
	71406073	1	65T	DECAL (Eng.)	TARGA (Eng.)
	71406192	1	65T	DECAL (Fran.)	TARGA (Fran.)
	71406254	1	65T	DECAL (Deut.)	TARGA (Deut.)
04	71406008	1	65T	DECAL (Ital.)	TARGA (Ital.)
	71406074	1	65T	DECAL (Eng.)	TARGA (Eng.)
	71406193	1	65T	DECAL (Fran.)	TARGA (Fran.)
	71406255	1	65T	DECAL (Deut.)	TARGA (Deut.)
05	71406009	1	65T	DECAL	TARGA
06	71406010	1	65T	DECAL (Ital.)	TARGA (Ital.)
	71406075	1	65T	DECAL (Eng.)	TARGA (Eng.)
	71406194	1	65T	DECAL (Fran.)	TARGA (Fran.)
	71406256	1	65T	DECAL (Deut.)	TARGA (Deut.)
07	13683701	4	40V	SCREW	VITE
08	71416614	1	65T	DECAL (Ital.)	TARGA (Ital.)
	71416634	1	65T	DECAL (Eng.)	TARGA (Eng.)
	71416948	1	65T	DECAL (Fran.)	TARGA (Fran.)
	71416957	1	65T	DECAL (Deut.)	TARGA (Deut.)
					TARGA FH200
					TARGA FH200 E
11		1	65T	DECAL	TARGA FIAT-HITACHI
12	71309807	2	65T	DECAL	TARGA FIAT-HITACHI
13	71309704	1	65T	DECAL	TARGA FIAT-HITACHI
14	79060064	1	65T	DECAL (Ital.)	TARGA (Ital.)
	79060297	1	65T	DECAL (Fran.)	TARGA (Fran.)
	79060540	1	65T	DECAL (Eng.)	TARGA (Eng.)
	79088040	1	65T	DECAL (Deut.)	TARGA (Deut.)
17	71416617	1	65T	DECAL	TARGA
18	71416618	1	65T	DECAL	TARGA
19	71416619	1	65T	DECAL	TARGA
20	71416620	1	65T	DECAL	TARGA
21	71416621	1	65T	DECAL	TARGA
24	71406021	4	120P	PLATE	PIATTELO
25	71406022	1	65T	DECAL (Ital.)	TARGA (Ital.)
	71406076	1	65T	DECAL (Eng.)	TARGA (Eng.)
	71406195	1	65T	DECAL (Fran.)	TARGA (Fran.)
	71406257	1	65T	DECAL (Deut.)	TARGA (Deut.)
28	71416282	1	65T	DECAL	TARGA
31	71415670	1	65T	DECAL	TARGA
32	71415671	1	65T	DECAL	TARGA

J-1

ALPHABETICAL INDEX

DESCRIPTION	SGR.	TAV.	GRID
Accelerator controls	0.004	1	1D-21
Air Cleaner	0.001	1	1D-5
Alternator-Mounting	0.400	1	1I-11
Anti-Shock Valve (Hydr.)	1.082	3	1L-15
Application of Ol. Hammer	5.0020	2	2J-7
Batteries	1.220	2	2D-13
Belts	0.340	1	1H-23
	0.345	1	1I-3
Boom Piping	2.030	1	2F-17, 2G-3
	2.031	1	2G-5
	2.031	2	2G-7
Brake Valve Components	3.010	3	2H-3
Bucket	2.020	1	2F-13
Bucket Cylinder	2.030	5	2G-3
Bull Gear	3.000	1	2G-17
Cab	1.250	1	2D-19
Cab Door	1.250	5	2E-7
Cab Heater-Components	1.290	2	2E-15
Cab Window-Left Side	1.250	6	2E-9
Cab-Frame	1.250	7	2E-11
Cab-Platform	1.250	1	2D-19
Cab Vandalism	5.0540	1	2K-3
Camshaft	0.120	1	1F-11
Cold Starting Aid	5.0025	1	2J-11
Connecting Rod	0.081	1	1E-23
Cont. Valve-Hydr. (Ass.Y)	1.050	1	1J-21
Control Valve-Hydr.	1.050	2	2K-3
	1.050	3	2K-5
	1.050	4	2K-7
Controls	1.070	1	1J-20
	1.071	1	1K-21, 1L-3
Counterweight	1.000	1	1J-3
Cowlings	1.300	1	2E-19
	1.300	2	2E-21
	1.300	3	2E-23
Crankshaft	0.080	1	1E-21
Crankshaft Pulley	0.084	1	1F-7
Cylinder Block	0.040	1	1D-21
	0.040	2	1D-23
	0.040	3	1E-3
Cylinder Block Covers	0.043	1	1E-7
	0.043	2	1E-9
Cylinder Head	0.060	1	1E-13
	0.060	2	1E-15
Dashboard (Left)	1.210	1	2D-9
Dashboard (Right)	1.200	1	2D-3
	1.200	3	2D-7
Data Monitor	1.200	2	2D-5
Decals	4.500	1	2I-3
	4.501	1	2I-5
Dipper Stick (2,1m)	5.0022	1	2J-9
Dipper Stick (2,5m) (STD.)	2.003	1	2F-11
Dipper Stick (3m)	5.0038	1	2J-13
Dipper Stick Cylinder	2.030	4	2F-23
	2.031	4	2G-5
Dipstick-Engine Oil	0.270	1	1H-8
Discharge Valve Componen.	3.010	4	2H-5
Drive on Engine (Opt.)	0.350	1	1I-5
Electric System	1.220	1	2D-11
	1.220	2	2D-13
Elements-Fuel	0.200	1	1G-17
Elements-Hydraulic	1.020	1	1J-7
Elements-Pilot	1.080	1	1L-5
Emergency Kits(Lub. Fittings)	4.000	1	2H-23
Engine	0.021	1	1D-19
Engine-Controls	0.004	1	1D-15
Engine-Suspensions	0.000	1	1D-3
Engine Breather	0.045	1	1E-11
Engine Cooling Piping	0.323	1	1H-19
Engine Heat Exchanger	0.310	1	1H-15
Engine Lifting Eyes	0.450	1	1I-15
Engine Oil Filter	0.302	1	1H-11
Engine Oil Piping	0.305	1	1H-13
Engine Oil Pump	0.300	1	1H-9
Engine Oil Sump	0.042	1	1E-5
Engine Piston	0.082	1	1F-3
Engine Suspensions	0.000	1	1D-3
Exhaust Manifold	0.077	1	1E-19
Exhaust Valve	0.060	2	1E-15
Fan	0.345	1	1I-3
Fan Drive	0.345	1	1I-3
"Filter Care" Kit	24		1A-24
Filter-Pilot System	1.080	1	1L-5
Filters-Air	0.001	1	1D-5
Filters-Engine Oil	0.302	1	1D-11
Filters-Fuel	0.200	1	1G-17
Filters-Hydr. System	1.020	1	1J-7
Flywheel-Engine	0.083	1	1L-17
Fuel Filter	0..200	1	1G-17
Fuel Piping	0.203	1	1G-19
Fuel Pump	0.203	2	1G-21
	0.140	8	1G-5
Fuel Tank	1.010	1	1J-5
Fuses	1.200	3	2D-7
Guards	1.300	2	2E-21
Handle	1.300	3	2E-23
	1.300	4	2F-3
Heater	1.290	1	2E-15
Horn	1.220	2	2D-15
Hydr.Pump-Components	1.030	2	1J-13
Hydr.Pump Regulator-Comp.	1.050	3	1J-15

ALPHABETICAL INDEX

DESCRIPTION	SGR.	TAV.	GRID
Hydraulic Pump	1.030	1	1J-9
Idler	3.020	1	1H-7
Injection Nozzle-Lines	0.149	1	1G-15
Injection Pump	0.140	6	1F-23
	0.140	7	1G-3
Injection Pump Drive	0.140	10	1G-9
Injection Pump-Piping	0.140	1	1F-13
	0.140	9	1G-7
Intake Manifold	0.071	1	1E-17
Intake Valve	0.060	2	1E-15
Lift Cylinder (Left)	2.030	3	1F-21
Lift Cylinder (Right)	2.030	2	2F-19
Lights	1.220	2	2D-13
Lower Frame	3.000	1	2G-17
Lubric. Fitting Piping	3.001	1	2G-19
	2.041	1	2G-15
	2.040	1	1G-13
Main Piping	1.060	1	1K-9
	1.061	1	1K-11
Mirror (Rear)	1.300	2	2E-21
Monobloc Boom	2.000	1	2F-5
Motor - Starter	0.360	2	1I-9
Motor - Swing	1.040	1	1J-17
Motor - Travel	3.010	1	2G-21
Motor - Wiper	1.220	1	2D-11
Muffler	0.002	1	1D-7
Oil Tank	1.020	1	1J-7
Operator's Seat	1.250	2	2D-21
OperatorsSeat(Bostrom)(Std.)	5.0151	1	2J-21
Pilot Piping(1)	1.080	1	1L-5
Pilot Piping(2)	1.081	1	1L-9
Pilot Piping(3)	1.082	1	1L-11
Pilot Piping(4)	1.083	1	1L-17
Pilot Piping(5)	1.084	1	1L-19
Pilot Piping(6)	1.085	1	1L-21
Pilot Valve	1.070	3	1K-19
	1.071	2	1L-3
Pilot Valve-components	1.070	2	1K-17
PipingBoom	2.030	1	2F-17
	2.031	1	2G-5
Piping-Injection	0.149	1	1G-15
Piping-Lube Fittings	2.040	1	2G-13
Piping-Main	1.060	1	1K-9
Piping-Pilot(1)	1.080	1	1L-5
Piping-Pilot(3)	1.082	1	1L-11
Piping-Pilot(4)	1.083	1	1L-17
Piping-Pilot(5)	1.084	1	1L-19
Piping-Pump Contr. Valve	1.050	1	1J-21
Piping-Travel (Lower)	3.070	1	2H-19
	3.071	1	2H-21
Piping-Turbocharger	0.241	1	1H-5
Pump-Engine Oil	0.300	1	1H-9
Pump-Hydraulic	1.030	1	1J-11
Pump Injection	0.140	6	1F-23
Pump-Water	0.320	1	1H-17
Pump/Control Valve Piping	1.050	1	1J-23
Radiator	0.003	1	1D-9
Radiator-Components	0.003	2	1D-11
	0.003	3	1D-13
Rocker Arm	0.060	2	1E-15
Rotary Distributor	3.060	1	2H-17
SAE Battery Provision	1.220	3	2D-17
Seat Belt	5.0536	1	1J-23
Sensors	1.220	2	2D-13
Solenoid Valve	1.080	2	1L-7
Starter	0.360	2	1I-9
Starter-Mounting	0.360	1	1I-7
Stop Valve	1.082	2	1L-13
Swing Red.Unit-Components	1.040	2	1J-19
Swing Reduction Unit	1.040	1	1J-17
Thermostat & Housing	0.326	1	1H-21
Timing Control	0.100	1	1F-9
Tool Kit	5.0083	1	2J-19
Track Chain	3.051	1	2H-13
	3.052	1	2H-15
Track Roller	3.040	1	2H-11
Travel Motor-componen.	3.010	3	2H-3
Travel Piping (Lower)	3.070	1	2H-19
	3.071	1	2H-21
Travel Red.Unit-Componen.	3.010	2	2H-23
Travel Reduction Units	3.010	1	2G-21
Turbocharger	0.240	1	1G-23
	0.240	2	1H-3
Turbocharger Piping	0.241	1	1H-5
Upper Frame	1.000	1	1J-3
Upper Roller	3.030	1	2H-9
Valve-Anti-Shock(Hydr.)	1.082	3	1L-15
Valve-Exhaust	0.060	2	1E-15
Valve-Intake	0.060	2	1E-15
Valve-Pilot (Hydr.)	1.070	1	1K-15
Valve-Pilot(Travel)	1.070	1	1K-15
Valve-Solenoid	1.080	2	1L-7
Valve-Stop(Travel)	1.082	1	1L-11
Water Pump	0.320	1	1H-17
Water Pump Drive	0.340	1	1H-23
Water Pump-Components	0.320	2	1H-17
Wiper	1.220	1	2D-11

DIPPER STICK (2,9m)
BRACCIO PENETRAZ. (2,9m)
71415145

BALANCIER (2,9m)
LOEFFELSTIEL (2,9m)
BRAZO TERMINAL (2,9m)

5.9013 TAV.1

NTR 104S V-89

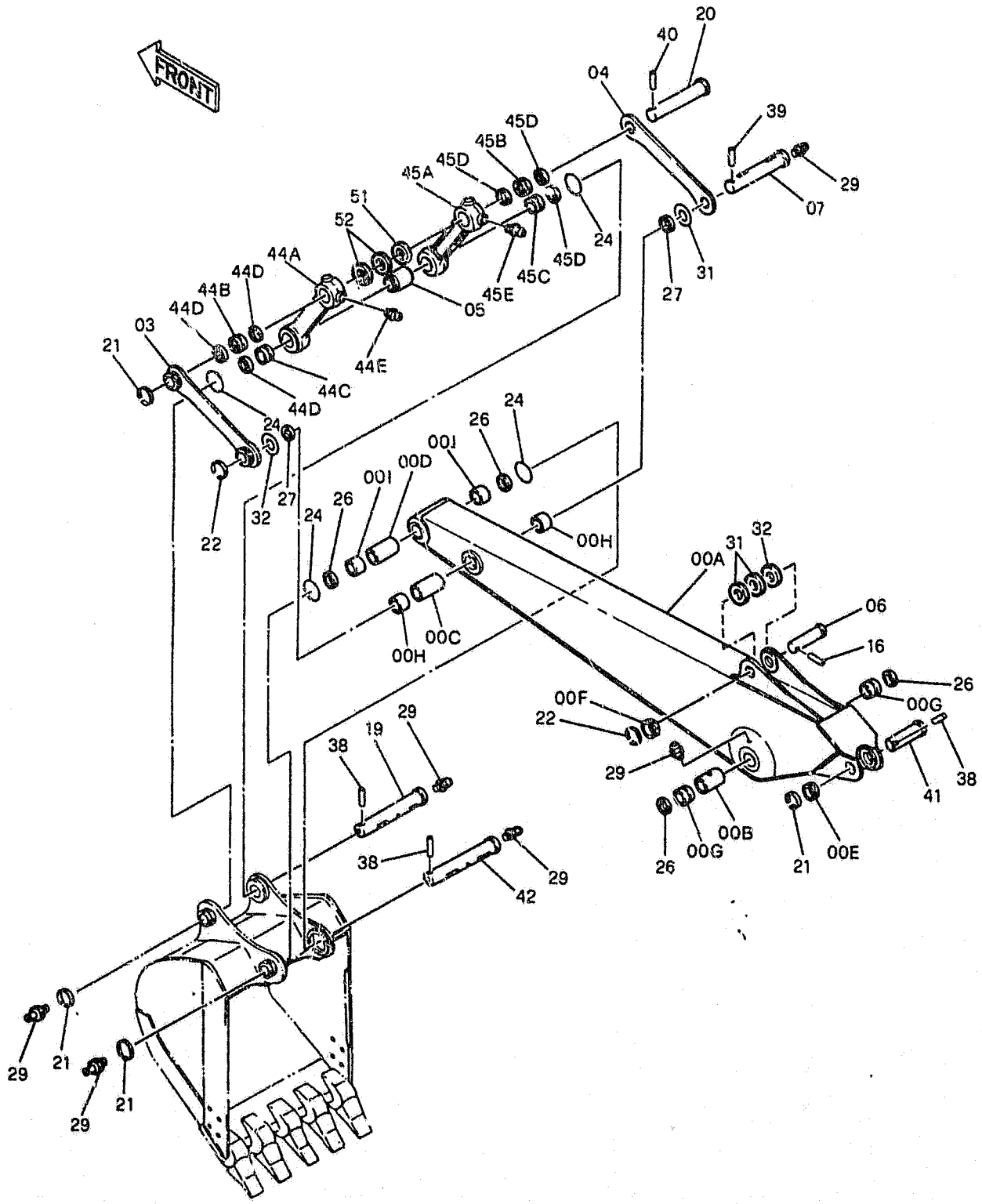

FH200

DIPPER STICK (2,9m) | BALANCIER (2,9m) | 5.0013 TAV.1
BRACCIO PENETRAZ. (2,9m) | LOEFFELSTIEL (2,9m)
71415145 | BRAZO TERMINAL (2,9m) | NTR 104S V-89

ITEM	PART NUMBER	QTY	TR. CO.	DESCRIPTION	DESCRIZIONE
00 A-I	71415146	1	B163	DIPPER STICK -ASS.LY	BRACCIO PENETRAZIONE -COMPL.
00A	71415171	1	B163	DIPPER STICK	BRACCIO PENETRAZIONE
00B	71415172	1	75D	SPACER	DISTANZIALE
00C	71415173	1	75D	SPACER	DISTANZIALE
00D	71415174	1	75D	SPACER	DISTANZIALE
00E	71415102	1	75D	SPACER -TO BE WELDED	DISTANZIALE -DA SALDARE
00F	71415175	1	75D	SPACER -TO BE WELDED	DISTANZIALE -DA SALDARE
00G	71415176	2	95B	BUSHING	BOCCOLA
00H	71415177	2	95B	BUSHING	BOCCOLA
00I	71415178	2	95B	BUSHING	BOCCOLA
03	71415147	1	50B	LINK ROD	BIELLA
04	71415148	1	50B	LINK ROD	BIELLA
05	71415149	1	75D	SPACER	DISTANZIALE
06	71415150	1	80P	PIN	PERNO
07	71415151	1	80P	PIN	PERNO
16	10100530	1	80P	PIN	PERNO
19	71415153	1	80P	PIN	PERNO
20	71415154	1	80P	PIN	PERNO
21	71415094	4	45A	RING	ANELLO
22	71415156	2	45A	RING	ANELLO
24	71415157	4	158G	O-RING	GUARNIZIONE O-R
26	71415158	4	122G	SEAL	GUARNIZIONE
27	71415159	2	122G	SEAL	GUARNIZIONE
29	13407211	7	60I	GREASE FITTING	INGRASSATORE
31	71415160	3	198S	SHIM -THICK 1mm	SPESSORE -SPESS. 1mm
32	71415161	2	198S	SHIM -THICK 2,5mm	SPESSORE -SPESS. 2,5mm
38	10100730	3	80P	PIN	PERNO
39	71415162	1	80P	PIN	PERNO
40	71415101	1	80P	PIN	PERNO
41	71415093	1	80P	PIN	PERNO
42	71415163	1	80P	PIN	PERNO
44 A-E	71415164	1	90A	ROD -ASS.LY	ASTA -COMPL.
44A	71415181	1	90A	ROD	ASTA
44B	71415182	1	95B	BUSHING	BOCCOLA
44C	71415183	1	95B	BUSHING	BOCCOLA
44D	71415158	3	122G	SEAL	GUARNIZIONE
44E	13407211	1	60I	GREASE FITTING	INGRASSATORE
45 A-E	71415165	1	90A	ROD -ASS.LY	ASTA -COMPL.
45A	71415184	1	90A	ROD	ASTA
45B	71415182	1	95B	BUSHING	BOCCOLA
45C	71415183	1	95B	BUSHING	BOCCOLA
45D	71415158	3	122G	SEAL	GUARNIZIONE
45E	13407211	1	60I	GREASE FITTING	INGRASSATORE
51	71415098	1	131R	WASHER	ROSETTA
52	71415099	2	131R	WASHER	ROSETTA

APPLICATION OF OL. HAMMER
APPLICAZIONE MARTELLO ID.
71416945

MONTAGE DE MARTEAU OLEOD.
VERWENDUNG OELD.HAMMERS
APLICACION DE MARTILLO O.

5.0020 TAV.1

NTR 104S V-89

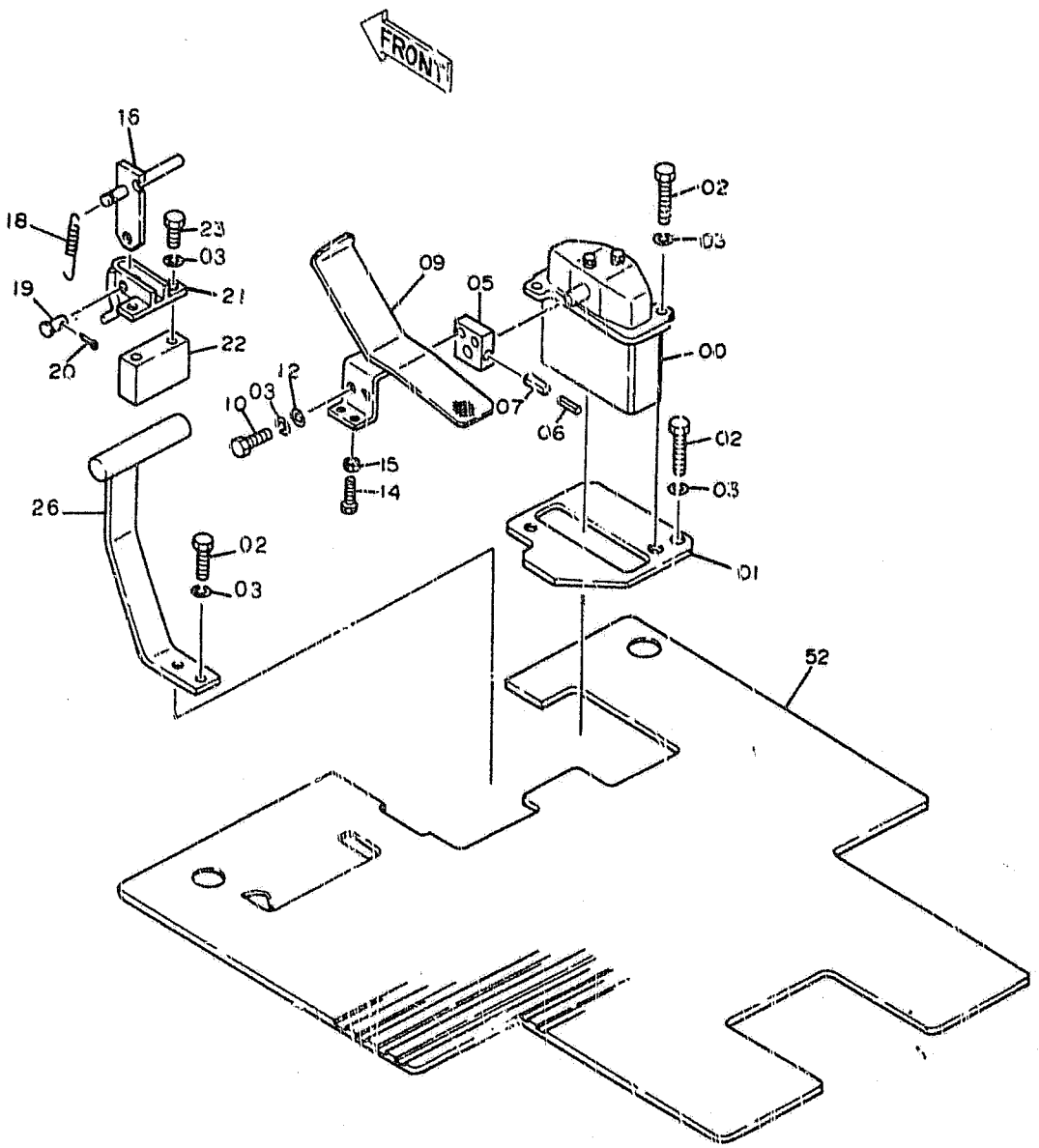

FH200

APPLICATION OF OL. HAMMER
APPLICAZIONE MARTELLO ID.
71416945

MONTAGE DE MARTEAU OLEOD.
VERWENDUNG OELD.HAMMERS
APLICACION DE MARTILLO O.

S.0020 TAV.1

NTR 104S V-89

ITEM	PART NUMBER	QTY	TR. CO.	DESCRIPTION	DESCRIZIONE
00	71401659	1	10V	VALVE -ASS.LY SEE 1L-3	VALVOLA -COMPL. VED. SGR. 1.071 TAV.2
01	71416903	1	105P	PLATE	PIASTRA
02	11106634	5	40V	SCREW M10X1,5X35	VITE M10X1,5X35
03	10516878	9	131R	WASHER	ROSETTA
05	71416905	1	225S	BRACKET	STAFFA
06	14601470	1	202S	SPRING PIN	SPINA ELASTICA
07	14607070	1	202S	SPRING PIN	SPINA ELASTICA
09	71416916	1	60P	PEDAL	PEDALE
10	11106234	2	40V	SCREW 10X1,5X25	VITE 10X1,5X25
12	14496631	2	131R	WASHER	ROSETTA
14	15213304	1	40V	SCREW 8X1,25X35	VITE 8X1,25X35
15	16100821	1	10D	NUT	DADO
16	71416920	1	225S	BRACKET	STAFFA
18	71416906	1	100M	SPRING	MOLLA
19	10033470	1	80P	PIN	PERNO
20	10802806	1	270C	COTTER PIN	COPIGLIA
21	71416907	1	300S	SUPPORT	SUPPORTO
22	71416911	1	75D	SPACER	DISTANZIALE
23	11108234	2	40V	SCREW 10X1,5X100	VITE 10X1,5X100
26	71416912	1	78A	FOOTREST	APPOGGIAPIEDE
32	71415915	1	30T	MAT	TAPPETO

FH200 02

APPLICATION OF OL. HAMMER APPLICAZIONE MARTELLO ID. 71416945	MONTAGE DE MARTEAU OLEOD. VERWENDUNG OELD.HAMMERS APLICACION DE MARTILLO O.	5.0020 TAV.2 REVISED JULY 1990

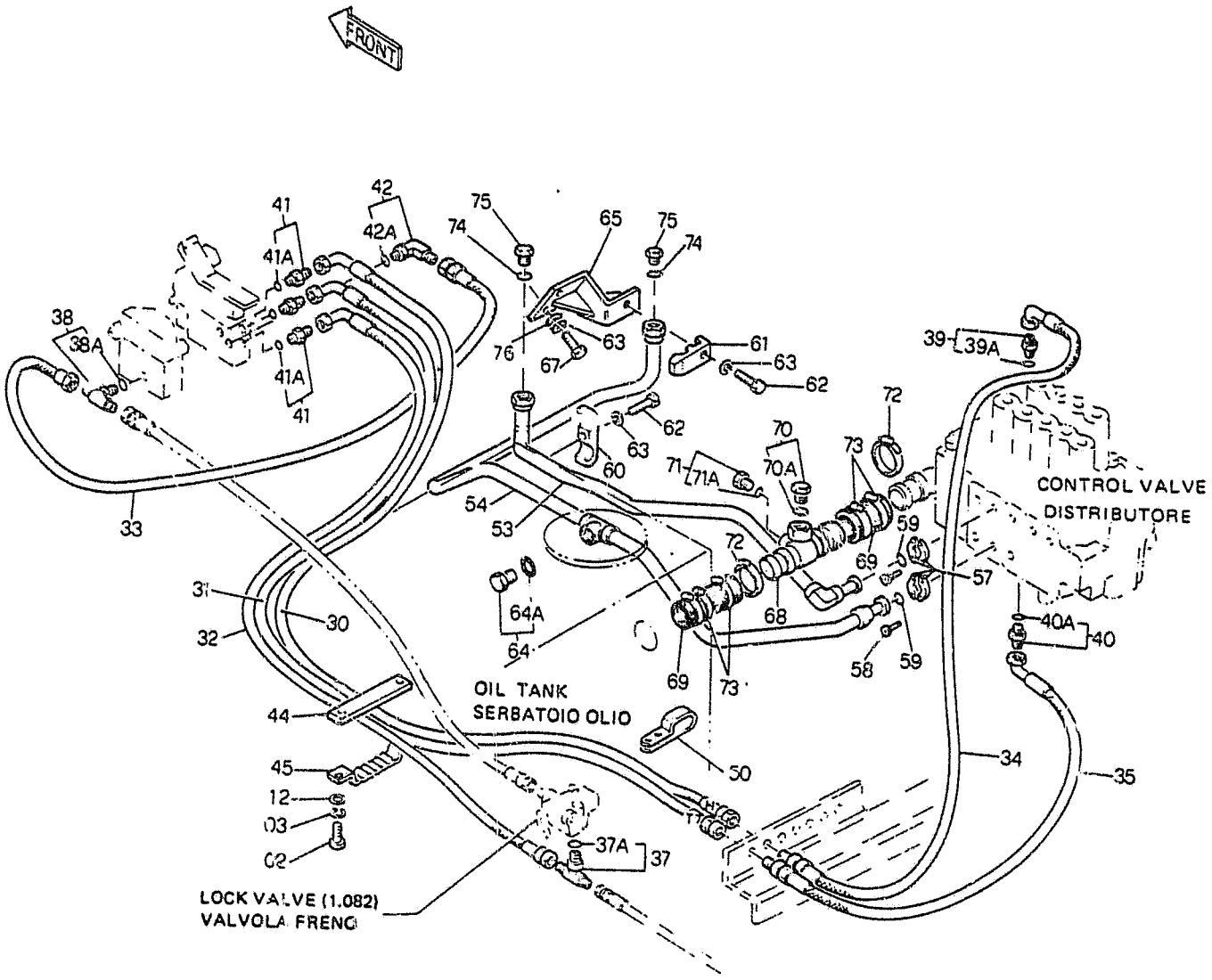

FH200 02

APPLICATION OF OL. HAMMER
APPLICAZIONE MARTELLO ID.
71416945

MONTAGE DE MARTEAU OLEOD.
VERWENDUNG OELD.HAMMERS
APLICACION DE MARTILLO O.

5.0020 TAV.2

REVISED JULY 1990

ITEM	PART NUMBER	QTY	TR. CO.	DESCRIPTION		DESCRIZIONE	
02	11106634	2	40V	SCREW M10X1,5X35		VITE M10X1,5X35	
03	10516874	2	170R	LOCKWASHER		ROSETTA ELASTICA	
12	14496631	2	131R	WASHER		ROSETTA	
30	71404175	1	285T	HOSE		TUBO FLESSIBILE	
31	71404178	1	285T	HOSE		TUBO FLESSIBILE	
32	71404176	1	285T	HOSE		TUBO FLESSIBILE	
33	71404177	1	285T	HOSE		TUBO FLESSIBILE	
34	71404173	1	285T	HOSE		TUBO FLESSIBILE	
35	71404174	1	285T	HOSE		TUBO FLESSIBILE	
37	71404433	1	20R	FITTING -ASS.LY		RACCORDO -COMPL.	
37A	71404165	1	158G	O-RING		GUARNIZIONE O-R	
38	71404435	1	20R	FITTING -ASS.LY		RACCORDO -COMPL.	
38A	71404163	1	158G	O-RING		GUARNIZIONE O-R	
39	71404355	1	20R	FITTING -ASS.LY		RACCORDO -COMPL.	
39A	71404165	1	158G	O-RING		GUARNIZIONE O-R	
40	71404357	1	20R	FITTING -ASS.LY		RACCORDO -COMPL.	
40A	71404165	1	158G	O-RING		GUARNIZIONE O-R	
41	71404351	3	20R	FITTING -ASS.LY		RACCORDO -COMPL.	
41A	71404163	3	158G	O-RING		GUARNIZIONE O-R	
42	71404408	1	20R	FITTING -ASS.LY		RACCORDO -COMPL.	
42A	71404163	1	158G	O-RING		GUARNIZIONE O-R	
44	71415895	1	231S	CLIP		STAFFETTA	
45	71415894	1	231S	CLIP		STAFFETTA	
50	71415908	1	31F	CLAMP		FASCETTA	
53	71416926	1	193T	TUBE		TUBO RIGIDO	
54	71416923	1	193T	TUBE		TUBO RIGIDO	
57	71404407	4	417S	HALF FLANGE		SEMIFLANGIA	
58	14420234	8	40V	SCREW 10X1,5X30		VITE 10X1,5X30	
59	70924110	2	158G	O-RING		GUARNIZIONE O-R	
60	71405815	1	231S	CLIP		STAFFETTA	
61	71405814	1	231S	CLIP		STAFFETTA	
62	11113534	2	40V	SCREW 12X1,75X65		VITE 12X1,75X65	
63	10517074	4	131R	WASHER		ROSETTA	
64	71404500	1	50T	PLUG -ASS.LY		TAPPO -COMPL.	
64A	71404161	1	158G	O-RING		GUARNIZIONE O-R	
65	71416938	1	225S	BRACKET		STAFFA	
67	11112434	2	40V	SCREW 12X1,75X30		VITE 12X1,75X30	
				C2864 UP TO S/N	0050	C2864 FINO AL TELAIO	0050
	11112234	2	40V	SCREW 12X1,75X25		VITE 12X1,75X25	
				D2864 FROM S/N	0051	D2864 DAL TELAIO	0051
68	71416942	1	193T	TUBE		TUBO RIGIDO	
69	71416944	2	30M	SLEEVE		MANICOTTO	
70	71404615	1	50T	PLUG -ASS.LY		TAPPO -COMPL.	
70A	70924192	1	158G	O-RING		GUARNIZIONE O-R	
71	71404452	1	50T	PLUG -ASS.LY		TAPPO -COMPL.	
71A	71404163	1	158G	O-RING		GUARNIZIONE O-R	
72	79083848	4	180C	COLLAR		COLLARE	
73	71404503	4	180C	COLLAR		COLLARE	
74	70931640	2	158G	O-RING		GUARNIZIONE O-R	
75	71404620	2	50T	PLUG		TAPPO	
76	14496731	2	131R	WASHER		ROSETTA	
				D2864 FROM S/N	0051	D2864 DAL TELAIO	0051

DIPPER STICK (2,4m)
BRACCIO PENETRAZ. (2,4m)
71416674

BALANCIER (2,4m)
LOEFFELSTIEL (2,4m)
BRAZO TERMINAL (2,4m)

5.0022 TAV.1

NTR 104S V-89

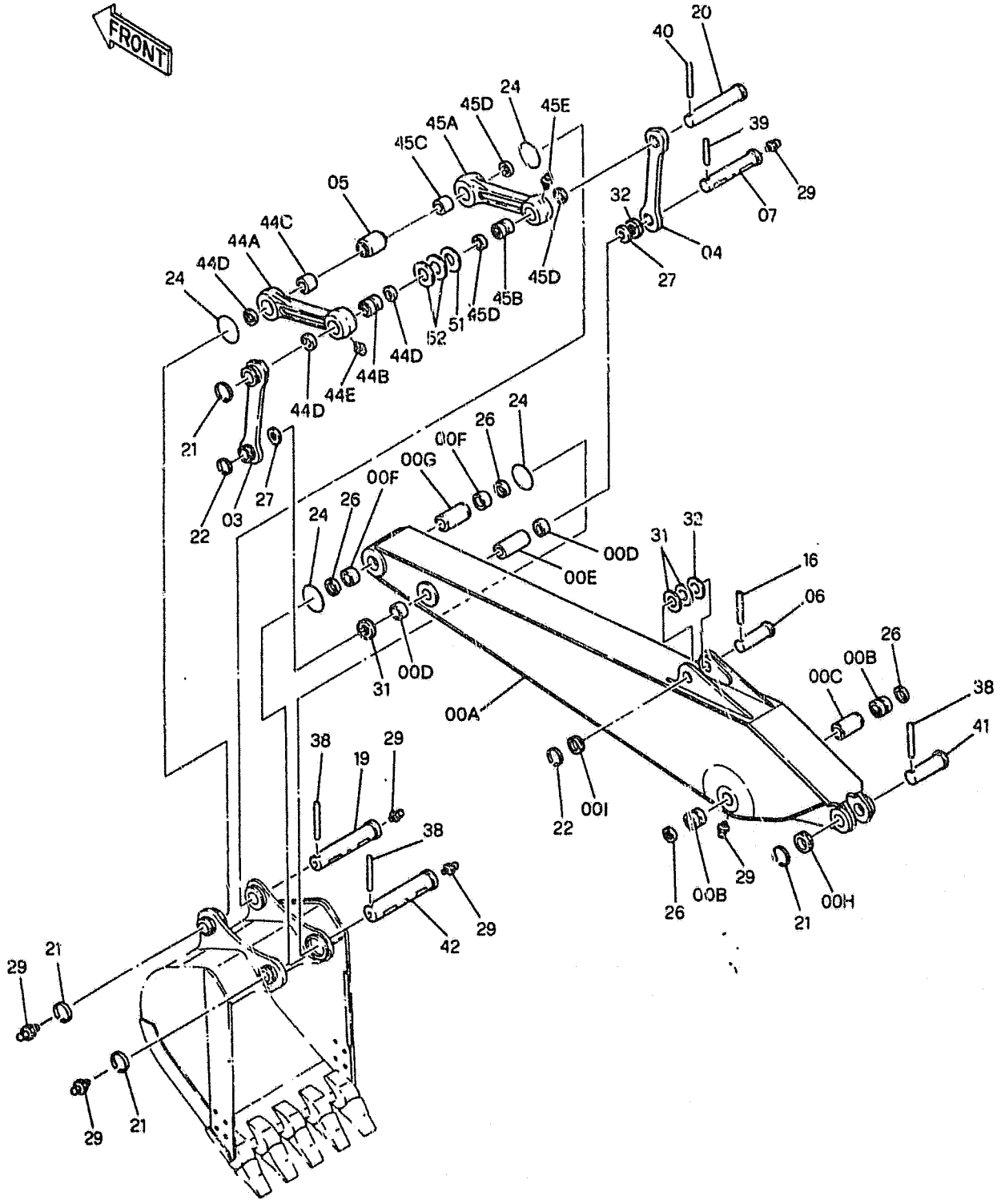

FH200

DIPPER STICK (2,4m) | BALANCIER (2,4m) | 5.0022 TAV.1
BRACCIO PENETRAZ. (2,4m) | LOEFFELSTIEL (2,4m)
71416674 | BRAZO TERMINAL (2,4m) | NTR 104S V-89

ITEM	PART NUMBER	QTY	TR. CO.	DESCRIPTION	DESCRIZIONE
00 A-I	71416208	1	B163	DIPPER STICK -ASS.LY	BRACCIO PENETRAZIONE -COMPL.
00A	71416209	1	B163	DIPPER STICK	BRACCIO PENETRAZIONE
00B	71415176	2	95B	BUSHING	BOCCOLA
00C	71415172	1	75D	SPACER	DISTANZIALE
00D	71415177	2	95B	BUSHING	BOCCOLA
00E	71415173	1	75D	SPACER	DISTANZIALE
00F	71415178	2	95B	BUSHING	BOCCOLA
00G	71415174	1	75D	SPACER	DISTANZIALE
00H	71415102	1	75D	SPACER	DISTANZIALE
00I	71415175	1	75D	SPACER	DISTANZIALE
03	71415147	1	50B	LINK ROD	BIELLA
04	71415148	1	50B	LINK ROD	BIELLA
05	71415149	1	75D	SPACER	DISTANZIALE
06	71415150	1	80P	PIN	PERNO
07	71415151	1	80P	PIN	PERNO
16	10100530	1	80P	PIN	PERNO
19	71415153	1	80P	PIN	PERNO
20	71415154	1	80P	PIN	PERNO
21	71415094	4	45A	RING	ANELLO
22	71415156	2	45A	RING	ANELLO
24	71415157	4	158G	O-RING	GUARNIZIONE O-R
26	71415158	4	122G	SEAL	GUARNIZIONE
27	71415159	2	122G	SEAL	GUARNIZIONE
29	13407211	7	60I	GREASE FITTING	INGRASSATORE
31	71415160	3	198S	SHIM -THICK 1mm	SPESSORE -SPESS. 1mm
32	71415161	2	198S	SHIM -THICK 2,5mm	SPESSORE -SPESS. 2,5mm
38	10100730	3	80P	PIN	PERNO
39	71415162	1	80P	PIN	PERNO
40	71415101	1	80P	PIN	PERNO
41	71415093	1	80P	PIN	PERNO
42	71415163	1	80P	PIN	PERNO
44 A-E	71415164	1	90A	ROD -ASS.LY	ASTA -COMPL.
44A	71415181	1	90A	ROD	ASTA
44B	71415182	1	95B	BUSHING	BOCCOLA
44C	71415183	1	95B	BUSHING	BOCCOLA
44D	71415158	3	122G	SEAL	GUARNIZIONE
44E	13407211	1	60I	GREASE FITTING	INGRASSATORE
45 A-E	71415165	1	90A	ROD -ASS.LY	ASTA -COMPL.
45A	71415184	1	90A	ROD	ASTA
45B	71415182	1	95B	BUSHING	BOCCOLA
45C	71415183	1	95B	BUSHING	BOCCOLA
45D	71415158	3	122G	SEAL	GUARNIZIONE
45E	13407211	1	60I	GREASE FITTING	INGRASSATORE
51	71415098	1	131R	WASHER	ROSETTA
52	71415099	2	131R	WASHER	ROSETTA

COLD STARTING AIDE DISP. AVVIAMENTO A FREDDO	DEMARRAGE A FROID KALTSTARTVORRICHTUNG DISPOSITIVO TERMOSTARTER	5.0025	TAV.1

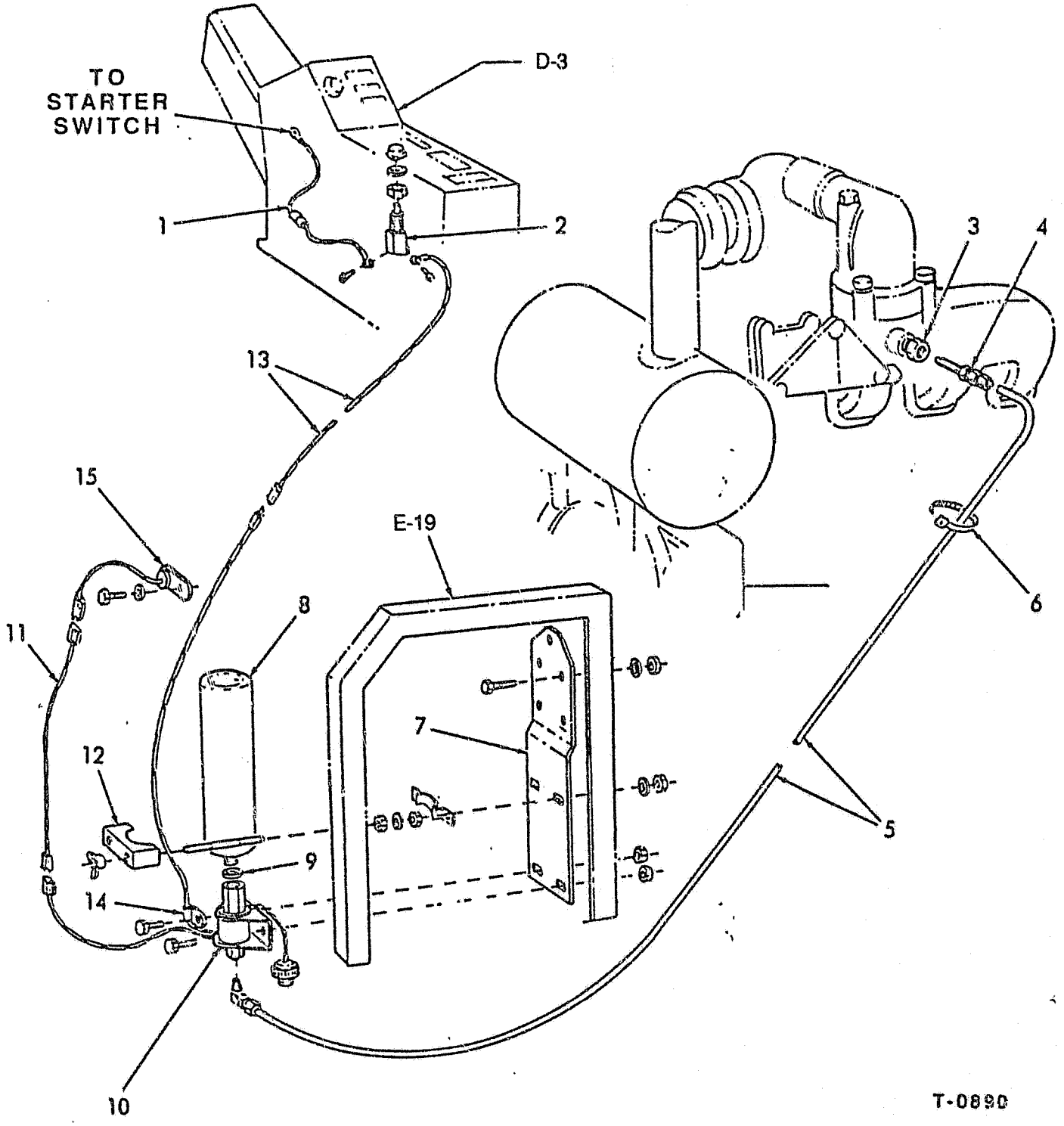

COLD STARTING AIDE
DISP. AVVIAMENTO A FREDDO

DEMARRAGE A FROID
KALTSTARTVORRICHTUNG
DISPOSITIVO TERMOSTARTER

5.0025 TAV.1

ITEM	PART NUMBER	QTY	TR. CO.	DESCRIPTION	DESCRIZIONE
1	73153879	1	111C	CABLE, INCLUDES FUSE	
2	73115559	1	75I	SWITCH	
3	70901825	1	95B	BUSHING	
4	73119442	1	550E	ATOMIZER	
5	73115566	1	206T	TUBE	
	73052086	1	85G	ELBOW	
	70911841	2	59C	SLEEVE	
	70912589	2	10D	NUT	
6	70198775	12	501H	TIE	
			600P	AS REQUIRED	
7	73138080	1	80M	BRACKET	
	70921566	2	40V	CAPSCREW,1/2"NCX2"	
	70904205	2	131R	WASHER	
	70911025	2	10D	NUT,1/2"NC	
8	73132158	1	164C	CYLINDER	
			500L	INCLUDES ITEM 9	
9	73070169	1	123G	GASKET	
10	73075165	1	10V	VALVE	
	70928138	2	40V	CAPSCREW,1/4"NCX5/8"	
	70917730	2	10D	NUT	
11	73153877	1	111C	CABLE ELEC.	
12	70669359	1	120M	CLAMP	
			600R	INCLUD. HARDWARE	
13	73153878	1	111C	CABLE ELEC	
14	70639388	1	89G	CLIP	
15	73075166	1	500F	THERMOGUARD	

FH200

DIPPER STICK (3,5m) BRACCIO PENETR. (3,5m) 71416859	BALANCIER (3,5m) LOEFFELSTIEL (3,5m) BRAZO TERMINAL (3,5m)	5.0038 TAV.1 NTR 104S V-89

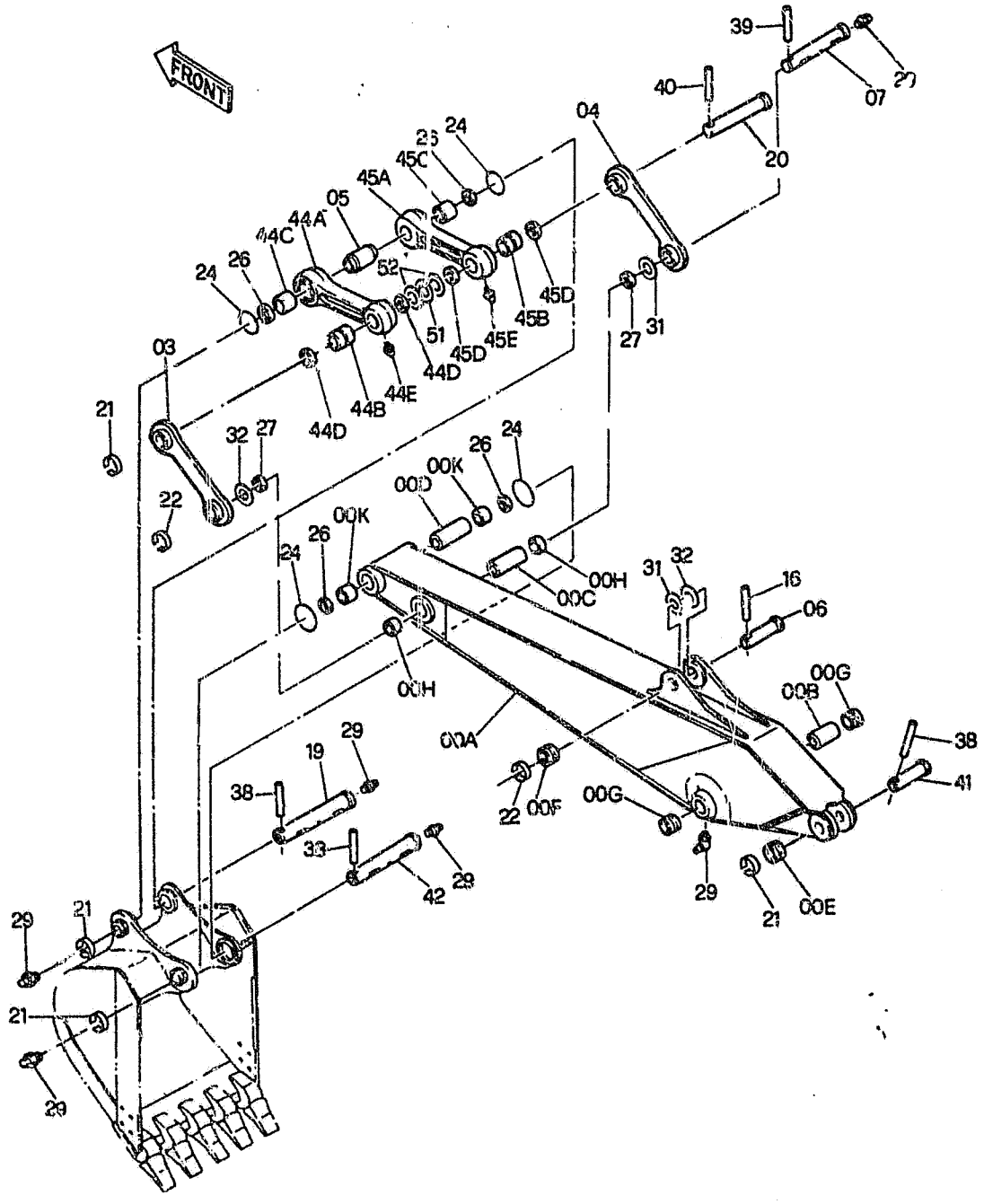

DIPPER STICK (3,5m) | BALANCIER (3,5m) | 5.0038 TAV.1
BRACCIO PENETR. (3,5m) | LOEFFELSTIEL (3,5m)
71416859 | BRAZO TERMINAL (3,5m) | NTR 104S V-89

ITEM	PART NUMBER	QTY	TR. CO.	DESCRIPTION	DESCRIZIONE
00 A-K	71416860	1	B163	DIPPER STICK -ASS.LY	BRACCIO PENETRAZIONE -COMPL.
00A	71416657	1	B163	DIPPER STICK	BRACCIO PENETRAZIONE
00B	71415172	1	75D	SPACER	DISTANZIALE
00C	71415173	1	75D	SPACER	DISTANZIALE
00D	71415174	1	75D	SPACER	DISTANZIALE
00E	71415102	1	75D	SPACER -TO BE WELDED	DISTANZIALE -DA SALDARE
00F	71415175	1	75D	SPACER -TO BE WELDED	DISTANZIALE -DA SALDARE
00G	71415176	2	95B	BUSHING	BOCCOLA
00H	71415177	2	95B	BUSHING	BOCCOLA
00K	71415178	2	95B	BUSHING	BOCCOLA
03	71415147	1	50B	LINK ROD	BIELLA
04	71415148	1	50B	LINK ROD	BIELLA
05	71415149	1	75D	SPACER	DISTANZIALE
06	71415150	1	80P	PIN	PERNO
07	71415151	1	80P	PIN	PERNO
16	10100530	1	80P	PIN	PERNO
19	71415153	1	80P	PIN	PERNO
20	71415154	1	80P	PIN	PERNO
21	71415094	4	45A	RING	ANELLO
22	71415155	2	45A	RING	ANELLO
24	71415157	4	158G	O-RING	GUARNIZIONE O-R
26	71415158	4	122G	SEAL	GUARNIZIONE
27	71415159	2	122G	SEAL	GUARNIZIONE
29	13407211	7	60I	GREASE FITTING	INGRASSATORE
31	71415160	3	198S	SHIM 1mm	SPESSORE 1mm
32	71415161	2	198S	SHIM 2,5mm	SPESSORE 2,5mm
38	10100730	3	80P	PIN	PERNO
39	71415162	1	80P	PIN	PERNO
40	71415101	1	80P	PIN	PERNO
41	71415093	1	80P	PIN	PERNO
42	71415163	1	80P	PIN	PERNO
44 A-E	71415164	1	90A	ROD -ASS.LY	ASTA -COMPL.
44A	71415181	1	90A	ROD	ASTA
44B	71415182	1	95B	BUSHING	BOCCOLA
44C	71415183	1	95B	BUSHING	BOCCOLA
44D	71415158	3	122G	SEAL	GUARNIZIONE
44E	13407211	1	60I	GREASE FITTING	INGRASSATORE
45 A-E	71415165	1	90A	ROD -ASS.LY	ASTA -COMPL.
45A	71415184	1	90A	ROD	ASTA
45B	71415182	1	95B	BUSHING	BOCCOLA
45C	71415183	1	95B	BUSHING	BOCCOLA
45D	71415158	3	122G	SEAL	GUARNIZIONE
45E	13407211	1	60I	GREASE FITTING	INGRASSATORE
51	71415098	1	131R	WASHER	ROSETTA
52	71415099	2	131R	WASHER	ROSETTA

BOOM SAFETY VALVE VALVOLA ANTICAD. SOLLEV. 71417051	VALVE ANTI-CHUTE 1er BRAS GRUNDAUSLEGERGEGENFALLV. VALV.ANTICAIDA BR.ELEV.	5.0080 TAV.1 NTR 104S V-89

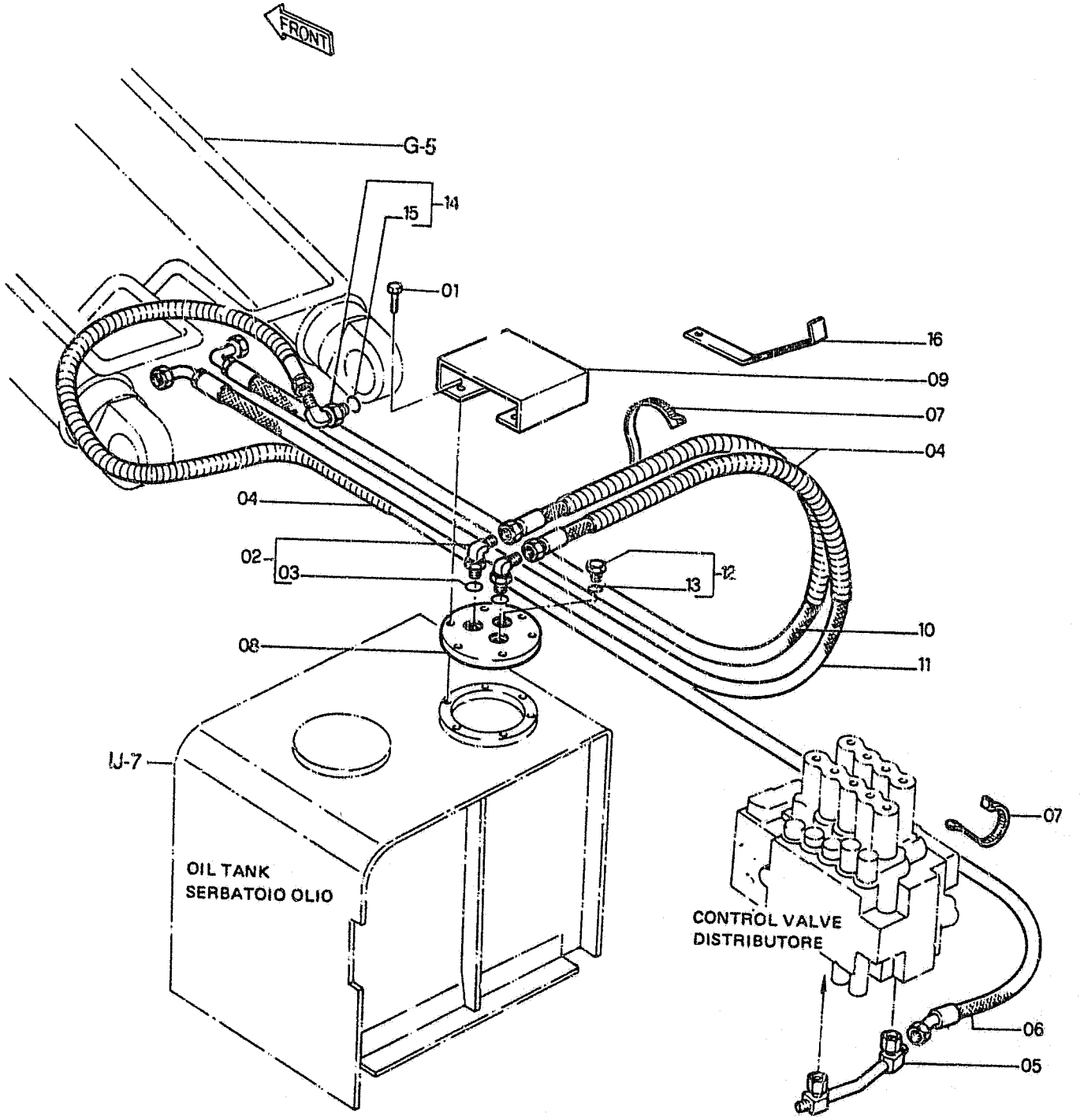

BOOM SAFETY VALVE
VALVOLA ANTICAD. SOLLEV.
71417051

VALVE ANTI-CHUTE 1er BRAS
GRUNDAUSLEGERGEGENFALLV.
VALV.ANTICAIDA BR.ELEV.

5.0080 TAV.1

NTR 104S V-89

ITEM	PART NUMBER	QTY	TR. CO.	DESCRIPTION	DESCRIZIONE
01	11106231	4	40V	SCREW	VITE
02	71416891	2	20R	FITTING	RACCORDO
03	71404166	1	158G	O-RING	GUARNIZIONE O-R
04	71415975	10	142G	SHEATH	GUAINA
05	71416892	1	193T	TUBE	TUBO RIGIDO
06	71416894	1	285T	HOSE	TUBO FLESSIBILE
07	4982514	11	31F	CLAMP	FASCETTA
08	71416896	1	265C	COVER	COPERCHIO
09	71416897	1	265C	COVER	COPERCHIO
10	71416899	1	285T	HOSE	TUBO FLESSIBILE
11	71416900	1	285T	HOSE	TUBO FLESSIBILE
12	71402272	1	50T	PLUG	TAPPO
13	71404165	1	156G	O-RING	GUARNIZIONE O-R
14	71404408	1	20R	FITTING	RACCORDO
15	71404163	1	158G	O-RING	GUARNIZIONE O-R
16	71416902	1	225S	BRACKET	STAFFA

BOOM SAFETY VALVE VALVOLA ANTICAD. SOLLEV. 71417051	VALVE ANTI-CHUTE 1er BRAS GRUNDAUSLEGERGEGENFALLV. VALV.ANTICAIDA BR.ELEV.	5.0080 TAV.2 NTR 104S V-89

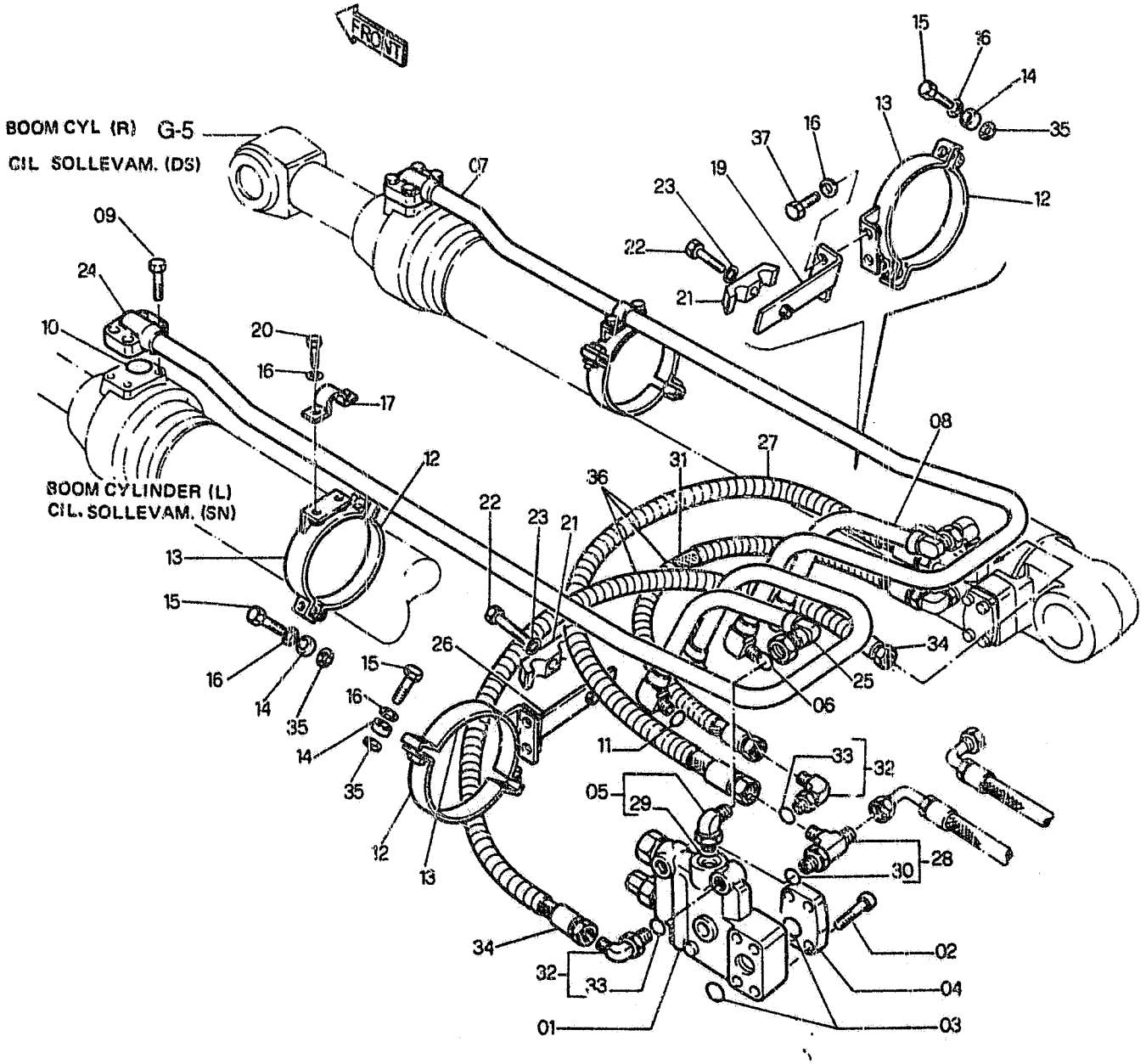

BOOM SAFETY VALVE
VALVOLA ANTICAD. SOLLEV.
71417051

VALVE ANTI-CHUTE 1er BRAS
GRUNDAUSLEGERGEGENFALLV.
VALV.ANTICAIDA BR.ELEV.

5.0080 TAV.2

NTR 104S V-89

ITEM	PART NUMBER	QTY	TR. CO.	DESCRIPTION	DESCRIZIONE
01	71416869	2	10V	VALVE	VALVOLA
02	71416870	8	40V	SCREW	VITE
03	71404169	4	158G	O-RING	GUARNIZIONE O-R
04	71416871	2	20R	FITTING	RACCORDO
05	71416872	2	20R	FITTING	RACCORDO
06	70931640	2	158G	O-RING	GUARNIZIONE O-R
07	71416873	1	193T	TUBE	TUBO RIGIDO
08	71416875	1	193T	TUBE	TUBO RIGIDO
09	11107431	8	40V	SCREW	VITE
10	71416878	2	122G	SEAL	GUARNIZIONE
11	70923843	4	158G	O-RING	GUARNIZIONE O-R
12	71416879	4	98S	HALF BRACKET	SEMISTAFFA
13	71416881	4	98S	HALF BRACKET	SEMISTAFFA
14	71420545	8	75D	SPACER	DISTANZIALE
15	11106631	8	40V	SCREW	VITE
16	10571870	16	170R	LOCKWASHER	ROSETTA ELASTICA
17	71420546	2	14B	STRAP	BANDELLA
19	71416882	1	225S	BRACKET	STAFFA
20	11108431	4	40V	SCREW	VITE
21	71416089	2	231S	CLIP	STAFFETTA
22	11113431	2	40V	SCREW	VITE
23	10571970	2	170R	LOCKWASHER	ROSETTA ELASTICA
24	71416884	1	193T	TUBE	TUBO RIGIDO
25	71416886	1	193T	TUBE	TUBO RIGIDO
26	71416887	1	225S	BRACKET	STAFFA
27	71416889	1	285T	HOSE	TUBO FLESSIBILE
28	71416890	2	20R	FITTING	RACCORDO
29	71404162	1	158G	O-RING	GUARNIZIONE O-R
30	71404165	1	158G	O-RING	GUARNIZIONE O-R
31	71416895	1	285T	HOSE	TUBO FLESSIBILE
32	71404339	4	20R	FITTING	RACCORDO
33	71404163	1	158G	O-RING	GUARNIZIONE O-R
34	71416901	1	285T	HOSE	TUBO FLESSIBILE
35	14496601	8	131R	WASHER	ROSETTA
36	71415875	8	142G	SHEATH	GUAINA
37	11106231	4	40V	SCREW	VITE

TOOL KIT ACCESSORI MANUTENZIONE 71405996	ACCESSOIRES D'ENTRETIEN BORDWERKZEUGE HERRAMIENTAS	5.0083 TAV.1 N'TR 104S V-89

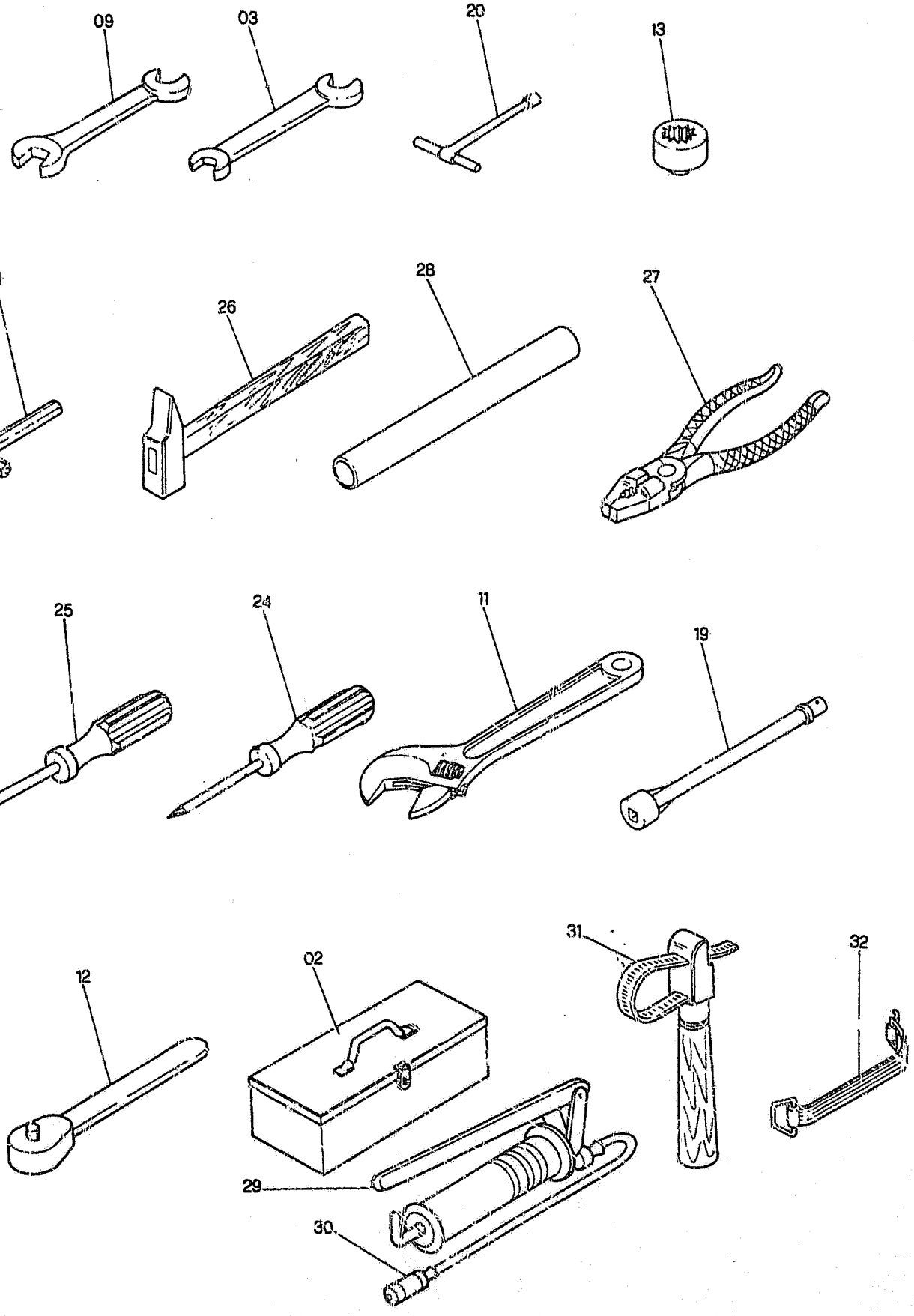

TOOL KIT
ACCESSORI MANUTENZIONE
71405996

ACCESSOIRES D'ENTRETIEN
BORDWERKZEUGE
HERRAMIENTAS

5.0083 TAV.1

NTR 104S V-89

ITEM	PART NUMBER	QTY	TR. CO.	DESCRIPTION	DESCRIZIONE
02	71405981	1	87C	TOOL BOX	CASSETTA ATTREZZI
03	14522421	1	150C	KEY 13x17	CHIAVE 13x17
	14525021	1	150C	KEY 8X10	CHIAVE 8X10
	14549579	1	150C	KEY 12X14	CHIAVE 12X14
	14549879	1	150C	KEY 19x22	CHIAVE 19x22
	14550079	1	150C	KEY 24x27	CHIAVE 24x27
	71405982	1	150C	KEY 30x32	CHIAVE 30x32
09	71405983	1	150C	KEY 36X41	CHIAVE 36X41
	71405984	1	150C	KEY 41	CHIAVE 41
11	71405985	1	150C	KEY	CHIAVE
12	71405986	1	150C	KEY 1/2"	CHIAVE 1/2"
13	71405987	1	150C	KEY 17	CHIAVE 17
	71405988	1	150C	KEY 19	CHIAVE 19
	71405989	1	150C	KEY 22	CHIAVE 22
	71405990	1	150C	KEY 24	CHIAVE 24
	71405991	1	150C	KEY 27	CHIAVE 27
	71405992	1	150C	KEY 30	CHIAVE 30
19	71405993	1	222P	EXTENSION	PROLUNGA
20	71405994	1	150C	KEY 10	CHIAVE 10
21	14534079	1	150C	KEY 4	CHIAVE 4
	14534279	1	150C	KEY 6	CHIAVE 6
	14534379	1	150C	KEY 8	CHIAVE 8
	14534479	1	150C	KEY 10	CHIAVE 10
	14534579	1	150C	KEY 12	CHIAVE 12
24	14626090	1	10C	SCREWDRIVER	CACCIAVITE
25	14626290	1	10C	SCREWDRIVER	CACCIAVITE
26	14582790	1	51M	HAMMER 0,5 Kg.	MARTELLO 0,5 Kg.
27	14626671	1	125P	PLIERS	PINZA
28	71405995	1	193T	TUBE	TUBO RIGIDO
29	79028977	1	992	GREASING PUMP -IN ALTER.	POMPA INGRASSAGGIO -IN ALTER.
	79028978	1	992	GREASING PUMP -IN ALTER.	POMPA INGRASSAGGIO -IN ALTER.
	79028979	1	992	GREASING PUMP -IN ALTER.	POMPA INGRASSAGGIO -IN ALTER.
	79028980	1	992	GREASING PUMP -IN ALTER.	POMPA INGRASSAGGIO -IN ALTER.
30	79028981	1	285T	HOSE	TUBO FLESSIBILE
31	71304923	1	150C	KEY	CHIAVE
32	79030150	2	173C	BELT	CINGHIA

OPERATOR'S SEAT(Bostrom) SEDILE (Bostrom) 71406293	SIEGE DE CONDUC.(Bostrom) FAHRERSITZ (Bostrom) ASIENTO DE COND.(Bostrom)	5.0151 TAV.1 NTR 104S V-89

SEAT WHIT CLOTH COVERING
SEDILE CON RIVESTIMENTO IN PANNO

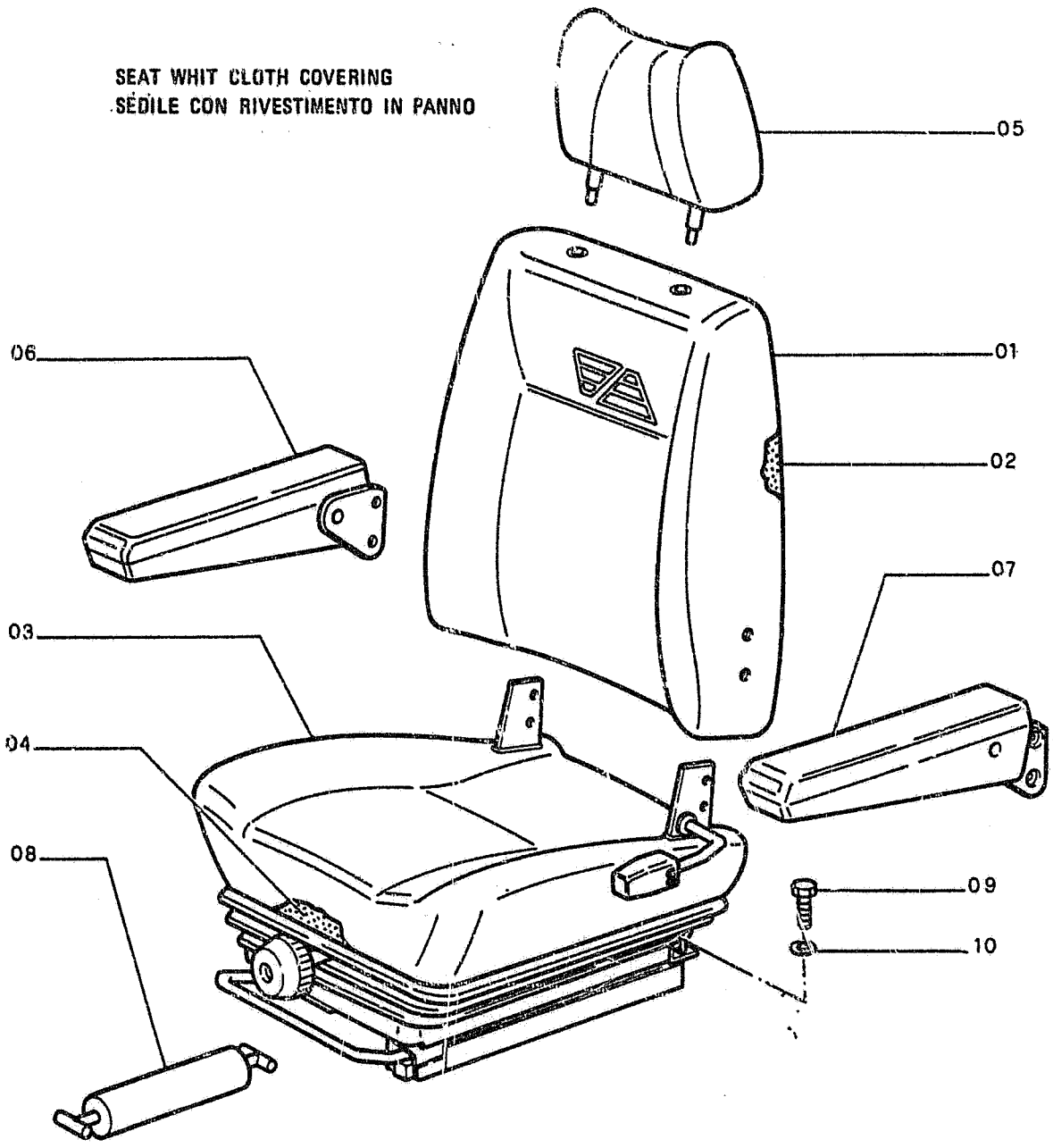

OPERATOR'S SEAT(Bostrom) | SIEGE DE CONDUC.(Bostrom) | 5.0151 TAV.1
SEDILE (Bostrom) | FAHRERSITZ (Bostrom)
71406293 | ASIENTO DE COND.(Bostrom) | NTR 104S V-89

ITEM	PART NUMBER	QTY	TR. CO.	DESCRIPTION	DESCRIZIONE
0 1-09	71406294	1	80S	SEAT -ASS.LY	SEDILE -COMPL.
01	71406295	1	50S	SEAT BACK	SCHIENALE
02	71406228	1	24I	PADDING	IMBOTTITURA
03	71406296	1	345C	CUSHION	CUSCINO
04	71406230	1	24I	PADDING	IMBOTTITURA
05	71406297	1	1A	HEAD-REST	APPOGGIATESTA
06	71406299	1	124B	ARMREST	BRACCIOLO
07	71406298	1	124B	ARMREST	BRACCIOLO
08	71406234	1	36A	SHOCK ABSORBER	AMMORTIZZATORE
09	14306221	4	40V	SCREW 8X1,25X16	VITE 8X1,25X16
10	10571774	4	131R	WASHER	ROSETTA

SEAT BELT CINTURA DI SICUREZZA 7140/6149	CEINTURE DE SECURITE SICHERHEITSGURT CINTURON DE SEGURANZA	5.0536 TAV.1

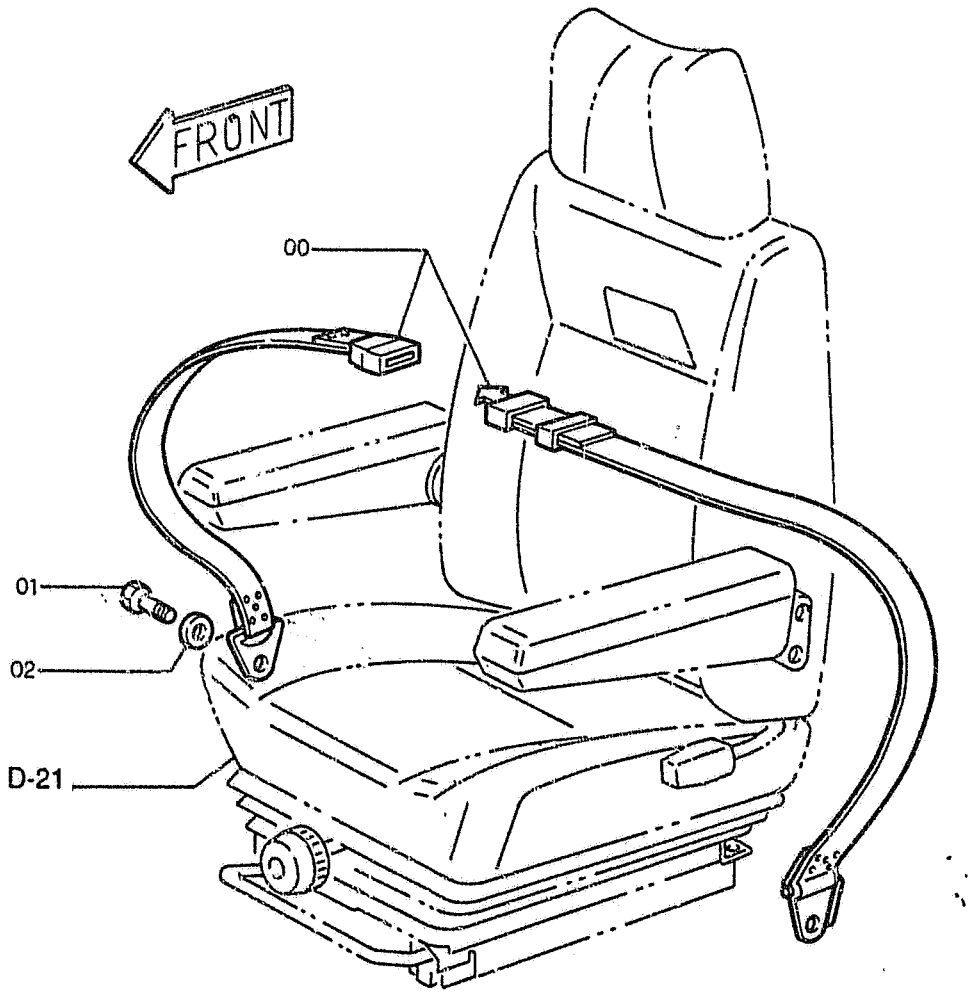

SEAT BELT
CINTURA DI SICUREZZA
71406149

CEINTURE DE SECURITE
SICHERHEITSGURT
CINTURON DE SEGURANZA

5.0536 TAV.1

ITEM	PART NUMBER	QTY	TR CO.	DESCRIPTION	DESCRIZIONE
00	71406173	1	182C	SEAT BELT	CINTURA DI SICUREZZA
	73075858	1	182C	SEAT BELT ,3"	CINTURA DI SICUREZZA
			600J	SPECIAL EQUIPMENT	
01	70928280	2	40V	SCREW	VITE
02	14496731	2	131R	WASHER	ROSETTA

ALPHABETICAL INDEX

DESCRIPTION	SGR.	TAV.	GRID
Accelerator controls	0.004	1	1D-21
Air Cleaner	0.001	1	1D-5
Alternator-Mounting	0.400	1	1I-11
Anti-Shock Valve (Hydr.)	1.082	3	1L-15
Application of Ol. Hammer	5.0020	2	2J-7
Batteries	1.220	2	2D-13
Belts	0.340	1	1H-23
	0.345	1	1I-3
Boom Piping	2.030	1	2F-17, 2G-3
	2.031	1	2G-5
	2.031	2	2G-7
Brake Valve Components	3.010	3	2H-3
Bucket	2.020	1	2F-13
Bucket Cylinder	2.030	5	2G-3
Bull Gear	3.000	1	2G-17
Cab	1.250	1	2D-19
Cab Door	1.250	5	2E-7
Cab Heater-Components	1.290	2	2E-15
Cab Window-Left Side	1.250	6	2E-9
Cab-Frame	1.250	7	2E-11
Cab-Platform	1.250	1	2D-19
Cab Vandalism	5.0540	1	2K-3
Camshaft	0.120	1	1F-11
Cold Starting Aid	5.0025	1	2J-11
Connecting Rod	0.081	1	1E-23
Cont. Valve-Hydr. (Ass.Y)	1.050	1	1J-21
Control Valve-Hydr.	1.050	2	2K-3
	1.050	3	2K-5
	1.050	4	2K-7
Controls	1.070	1	1J-20
	1.071	1	1K-21, 1L-3
Counterweight	1.000	1	1J-3
Cowlings	1.300	1	2E-19
	1.300	2	2E-21
	1.300	3	2E-23
Crankshaft	0.080	1	1E-21
Crankshaft Pulley	0.084	1	1F-7
Cylinder Block	0.040	1	1D-21
	0.040	2	1D-23
	0.040	3	1E-3
Cylinder Block Covers	0.043	1	1E-7
	0.043	2	1E-9
Cylinder Head	0.060	1	1E-13
	0.060	2	1E-15
Dashboard (Left)	1.210	1	2D-9
Dashboard (Right)	1.200	1	2D-3
	1.200	3	2D-7
Data Monitor	1.200	2	2D-5
Decals	4.500	1	2I-3
	4.501	1	2I-5
Dipper Stick (2,1m)	5.0022	1	2J-9
Dipper Stick (2,5m) (STD.)	2.003	1	2F-11
Dipper Stick (3m)	5.0033	1	2J-13
Dipper Stick Cylinder	2.030	4	2F-23
	2.031	4	2G-5
Dipstick-Engine Oil	0.270	1	1H-8
Discharge Valve Componen.	3.010	4	2H-5
Drive on Engine (Opt.)	0.350	1	1I-5
Electric System	1.220	1	2D-11
	1.220	2	2D-13
Elements-fuel	0.200	1	1G-17
Elements-Hydraulic	1.020	1	1J-7
Elements-Pilot	1.080	1	1L-5
Emergency Kits(Lub. Fittings)	4.000	1	2H-23
Engine	0.021	1	1D-19
Engine-Controls	0.004	1	1D-15
Engine-Suspensions	0.000	1	1D-3
Engine Breather	0.045	1	1E-11
Engine Cooling Piping	0.323	1	1H-19
Engine Heat Exchanger	0.310	1	1H-15
Engine Lifting Eyes	0.450	1	1I-15
Engine Oil Filter	0.302	1	1H-11
Engine Oil Piping	0.305	1	1H-13
Engine Oil Pump	0.300	1	1H-9
Engine Oil Sump	0.042	1	1E-5
Engine Piston	0.082	1	1F-3
Engine Suspensions	0.000	1	1D-3
Exhaust Manifold	0.077	1	1E-19
Exhaust Valve	0.060	2	1E-15
Fan	0.345	1	1I-3
Fan Drive	0.345	1	1I-3
"Filter Care" Kit	24		1A-24
Filter-Pilot System	1.080	1	1L-5
Filters-Air	0.001	1	1D-5
Filters-Engine Oil	0.302	1	1D-11
Filters-Fuel	0.200	1	1G-17
Filters-Hydr. System	1.020	1	1J-7
Flywheel-Engine	0.083	1	1L-17
Fuel Filter	0.200	1	1G-17
Fuel Piping	0.203	1	1G-19
Fuel Pump	0.203	2	1G-21
	0.140	8	1G-5
Fuel Tank	1.010	1	1J-5
Fuses	1.200	3	2D-7
Guards	1.300	2	2E-21
Handle	1.300	3	2E-23
	1.300	4	2F-3
Heater	1.290	1	2E-15
Horn	1.220	2	2D-15
Hydr.Pump-Components	1.030	2	1J-13
Hydr.Pump Regulator-Comp.	1.030	3	1J-15

K-2

ALPHABETICAL INDEX

DESCRIPTION	SGR.	TAV.	GRID
Hydraulic Pump	1.030	1	1J-9
Idler	3.020	1	1H-7
Injection Nozzle-Lines	0.149	1	1G-15
Injection Pump	0.140	6	1F-23
	0.140	7	1G-3
Injection Pump Drive	0.140	10	1G-9
Injection Pump-Piping	0.140	1	1F-13
	0.140	9	1G-7
Intake Manifold	0.071	1	1E-17
Intake Valve	0.060	2	1E-15
Lift Cylinder (Left)	2.030	3	1F-21
Lift Cylinder (Right)	2.030	2	2F-19
Lights	1.220	2	2D-13
Lower Frame	3.000	1	2G-17
Lubric. Fitting Piping	3.001	1	2G-19
	2.041	1	2G-15
	2.040	1	1G-13
Main Piping	1.060	1	1K-9
	1.061	1	1K-11
Mirror (Rear)	1.300	2	2E-21
Monobloc Boom	2.000	1	2F-5
Motor - Starter	0.360	2	1I-9
Motor - Swing	1.040	1	1J-17
Motor - Travel	3.010	1	2G-21
Motor - Wiper	1.220	1	2D-11
Muffler	0.002	1	1D-7
Oil Tank	1.020	1	1J-7
Operator's Seat	1.250	2	2D-21
OperatorsSeat(Bostrom)(Std.)	5.0151	1	2J-21
Pilot Piping(1)	1.080	1	1L-5
Pilot Piping(2)	1.081	1	1L-9
Pilot Piping(3)	1.082	1	1L-11
Pilot Piping(4)	1.083	1	1L-17
Pilot Piping(5)	1.084	1	1L-19
Pilot Piping(6)	1.085	1	1L-21
Pilot Valve	1.070	3	1K-19
	1.071	2	1L-3
Pilot Valve-components	1.070	2	1K-17
PipingBoom	2.030	1	2F-17
	2.031	1	2G-5
Piping-Injection	0.149	1	1G-15
Piping-Lube Fittings	2.040	1	2G-13
Piping-Main	1.060	1	1K-9
Piping-Pilot(1)	1.080	1	1L-5
Piping-Pilot(3)	1.082	1	1L-11
Piping-Pilot(4)	1.083	1	1L-17
Piping-Pilot(5)	1.084	1	1L-19
Piping-Pump Contr. Valve	1.050	1	1J-21
Piping-Travel (Lower)	3.070	1	2H-19
	3.071	1	2H-21
Piping-Turbocharger	0.241	1	1H-5
Pump-Engine Oil	0.300	1	1H-9
Pump-Hydraulic	1.030	1	1J-11
Pump-Injection	0.140	6	1F-23
Pump-Water	0.320	1	1H-17
Pump/Control Valve Piping	1.050	1	1J-23
Radiator	0.003	1	1D-9
Radiator-Components	0.003	2	1D-11
	0.003	3	1D-13
Rocker Arm	0.060	2	1E-15
Rotary Distributor	3.060	1	2H-17
SAE Battery Provision	1.220	3	2D-17
Seat Belt	5.0536	1	1J-23
Sensors	1.220	2	2D-13
Solenoid Valve	1.080	2	1L-7
Starter	0.360	2	1I-9
Starter-Mounting	0.360	1	1I-7
Stop Valve	1.082	2	1L-13
Swing Red.Unit-Components	1.040	2	1J-19
Swing Reduction Unit	1.040	1	1J-17
Thermostat & Housing	0.326	1	1H-21
Timing Control	0.100	1	1F-9
Tool Kit	5.0083	1	2J-19
Track Chain	3.051	1	2H-13
	3.052	1	2H-15
Track Roller	3.040	1	2H-11
Travel Motor-componen.	3.010	3	2H-3
Travel Piping (Lower)	3.070	1	2H-19
	3.071	1	2H-21
Travel Red.Unit-Componen.	3.010	2	2G-23
Travel Reduction Units	3.010	1	2G-21
Turbocharger	0.240	1	1G-23
	0.240	2	1H-3
Turbocharger Piping	0.241	1	1H-5
Upper Frame	1.000	1	1J-3
Upper Roller	3.030	1	2H-9
Valve-Anti-Shock(Hydr.)	1.082	3	1L-15
Valve-Exhaust	0.060	2	1E-15
Valve-Intake	0.060	2	1E-15
Valve-Pilot (Hydr.)	1.070	1	1K-15
Valve-Pilot(Travel)	1.070	1	1K-15
Valve-Solenoid	1.080	2	1L-7
Valve-Stop(Travel)	1.082	1	1L-11
Water Pump	0.320	1	1H-17
Water Pump Drive	0.340	1	1H-23
Water Pump-Components	0.320	2	1H-17
Wiper	1.220	1	2D-11

CAB VANDALISM

5.0540 TAV.1

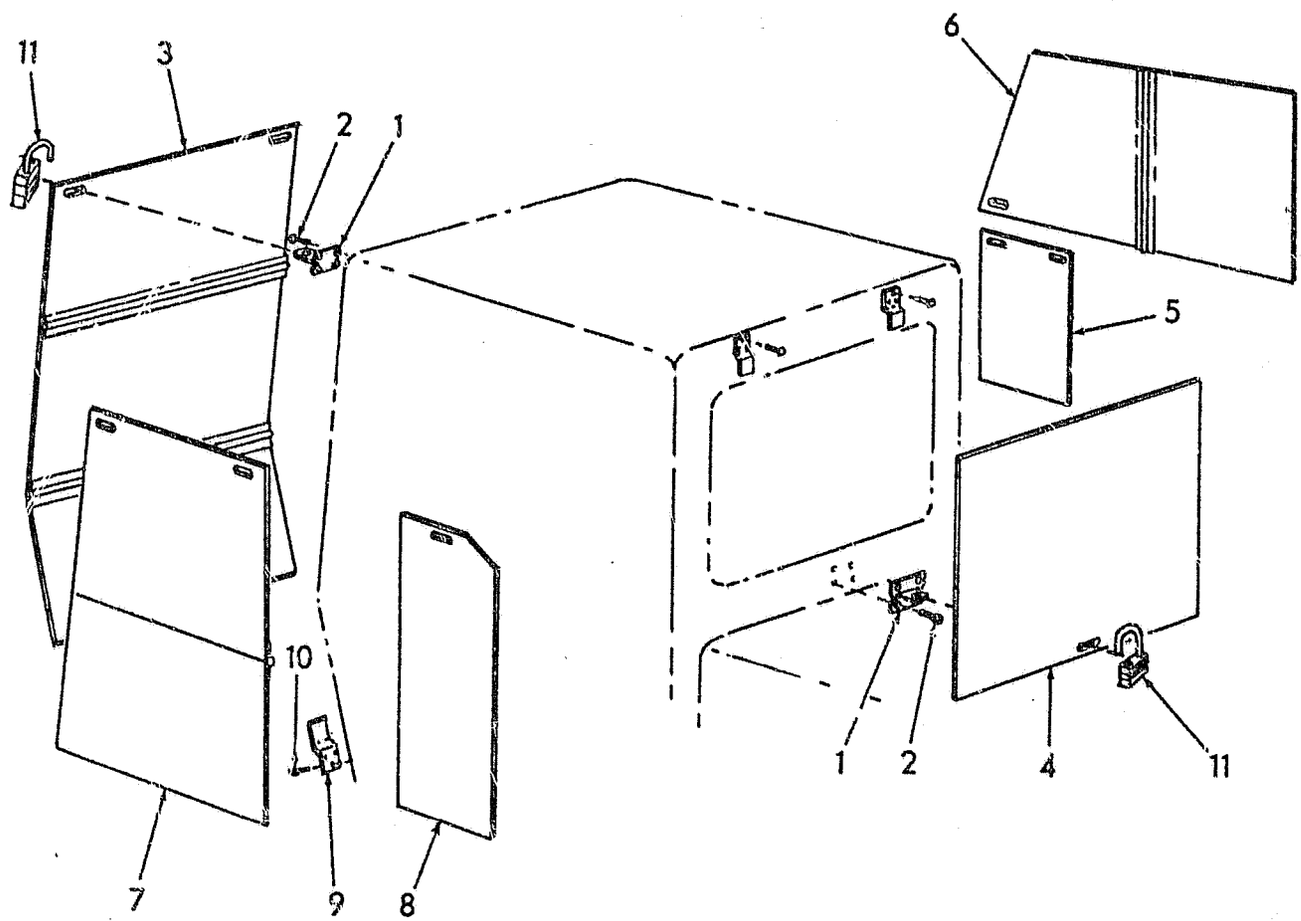

T-01090

CAB VANDALISM 5.0540 TAV. 1

ITEM	PART NUMBER	QTY	TR. CO.	DESCRIPTION	DESCRIZIONE
USAGE; SPECIAL EQUIPMENT					
01	73159185	9	105P	PLATE	
02	70901283	36	42P	SCREW	
03	73159173	1	265C	COVER, WINDSHIELD	
04	73159174	1	265C	COVER, REAR WINDOW	
05	73159175	1	265C	COVER, LOWER RIGHT WINDOW	
06	73159176	1	265C	COVER, UPPER RIGHT WINDOW	
07	73159177	1	265C	COVER, DOOR WINDOW	
08	73159178	1	265C	COVER, LEFT WINDOW	
09	73159179	13	80M	BRACKET	
10	70925160	39	55R	RIVET	
11	70928052	9	81L	PADLOCK	

ADDED JUNE 1990