RUTHZIL TRATOR COMERCIAL DE PEÇAS LTDA 11 97083-6812 ROLANDO CITRANGULO

FX600 FIAT ALLIS

AVOID ACCIDENTS

Most accidents, whether they occur in industry, on the farm, at home or on the highway, are caused by the failure of some individuals to follow simple and fundamental safety rules or precautions. For this reason MOST ACCIDENTS CAN BE PREVENTED by recognizing the real cause and doing something about it before the accident occurs. Regardless of the care used in the design and construction of any type of equipment there are conditions that cannot be completely safeguarded against without interfering with reasonable accessibility and efficient operation.

Carefully read instructions, cautions and safety warning quoted in the "**SAFETY RULES**" section.

A careful operator is the best insurance against an accident.

The complete observance of one simple rule would prevent many thousand serious injuries each year.

The rule is:

Never attempt to clean, oil or adjust a machine while it is in motion.

WARNING

On machines having hydraulically, or mechanically, controlled equipment be certain the equipment is lowered to the ground before servicing, adjusting and/or repairing. If it is necessary to have the controlled equipment partially or fully raised to gain access to certain items, be sure the equipment is suitably supported by means of proper devices other than those used for controlling the equipment.

CALIFORNIA
Proposition 65 Warning
Diesel engine exhaust and some of its constituents are known to the State of California to cause cancer, birth defects, and other reproductive harm.

COPYRIGHT BY FIATALLIS

All rights reserved. Reproduction of text and illustrations in whole or in part, is strictly prohibited.

73177712 ISSUE 1 SEPTEMBER 1998

Structure of spare-parts list

- The table of contents includes type-related overview illustrations and lists of sub-assemblies.
- A sub-assembly is composed of an illustration of the part and the individual parts list. Illustration and parts list are identified by the same sub-assembly and parts numbers.
  In the example, the sub-assembly "driver's seat" has sub-assembly no. 34.500 and parts no. 2 281 157 with modification indesx S 00.

Individual spare-parts list

- The list of individual spare-parts contains the item, quantity, part number and designation of the spare part. The item number permits to determine the pertaining part number from the individual spare-parts list. The quantity indicated (piece, length, set) refers to the sub-assembly represented. The number of sub-assemblies present in the machine is not mentioned. If the quantity indicated is 0, the number of pieces - respectively the length - are to be determined by the ordering party. For spare-parts ordering, the part number is binding.
- The illustration of spare part is not always representative of the part itself. The list is subject to modifications in the interests of technical progress.

Illustration of spare part

The spare-part illustration may contain the following indications:

(1)	The item number in a circle represents a sub-assembly which can be ordered completely.
(1) 2 - 8	The upper item number includes the item numbers below. These items can, however, also be delivered separately.
3	The item number designates the spare part.
(10)	The complete sub-assembly can be found in the individual spare-parts list under the item with the pertaining part number.
2 - 6	The parts following the first item number are delivered together with this item. They can, however, also be ordered separately.
34.500	The sub-assembly number indicates where the spare parts can be found.

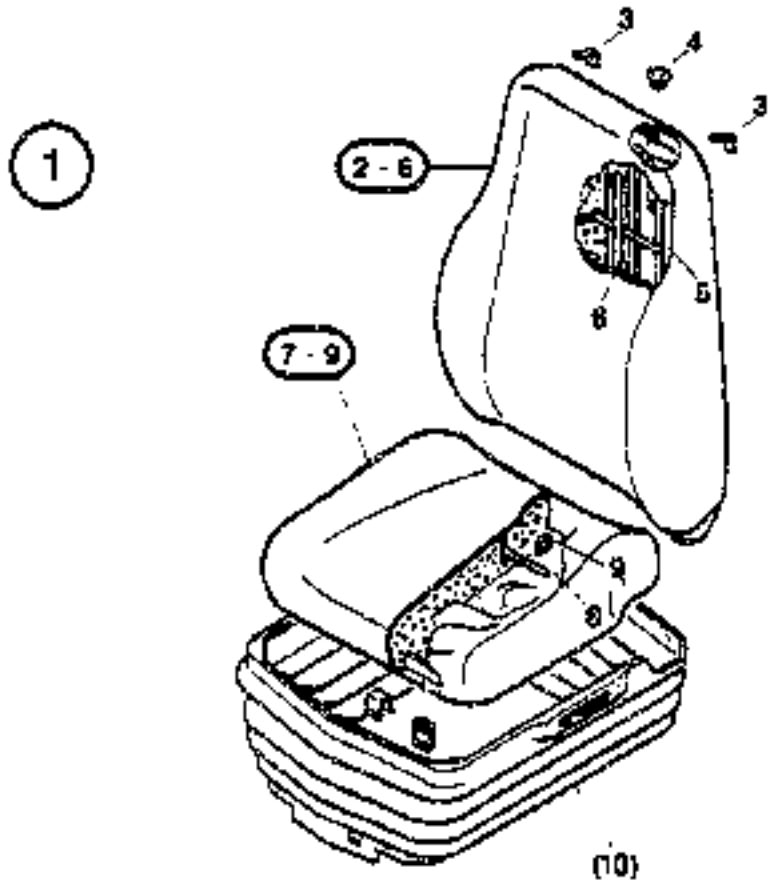

2 281 157.000

34.500 · 000

OPERATOR'S SEAT

T 2281157 · 000
B 2281157 · 000

Item	Quan.	ME	Part No.	Description
001	1	00	72157883	OPERATOR'S SEAT
002	1	00	73485490	BACKREST CUSHION
003	2	00	71425315	CLAMP
004	2	00	77302409	CAP
005	1	00	72685697	BAR
006	1	00	72686698	BAR
007	1	00	71463180	SEAT CUSHION
008	2	00	77302410	WIRE
009	1	00	77302411	CLAMP
010	1	00		34.500 2280364 OPERATOR'S SEAT

ME: 00 = piece 10=m 20=m² 30=m³ 40=kg 50=l(litre)

3219401

NOTES

Ordering information

For spare-part orders we need the following indications:

- Type of machine and machine number (if applicable, also the number of the unit/installation)
- Part number
- Quantity (unit, length, set)
- Delivery address (consignee, railway station, airport)
- Mode of dispatch (post, express, air-freight)
- Invoicing address (if not identical with delivery address)

For a fast delivery of spare parts, the indications must be complete.

FIATALLIS®

List of machine types

2 732 935.00 us

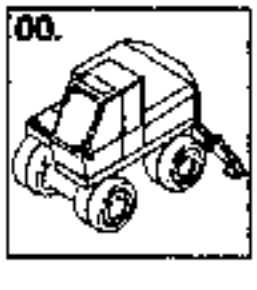
00.


00.

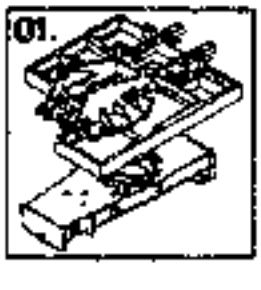
01.

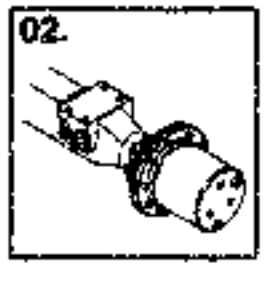
02.

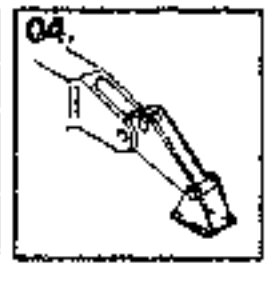
04.


05.

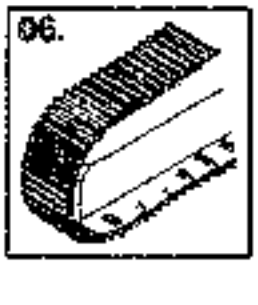
06.

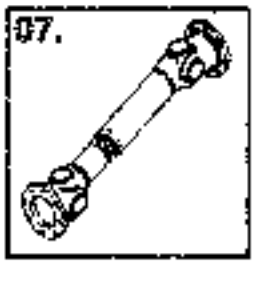
07.

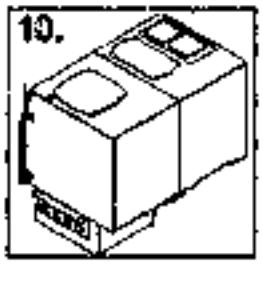
10.

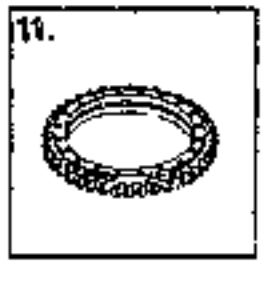
11.

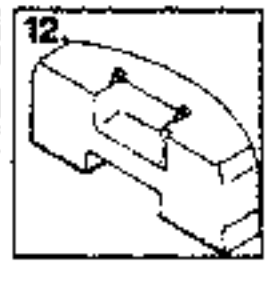
12.

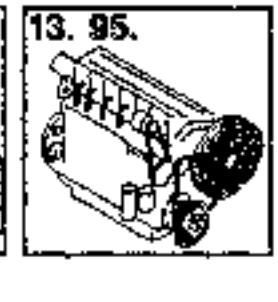
13. 95.

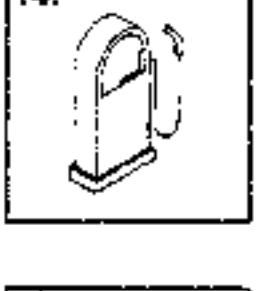
14.

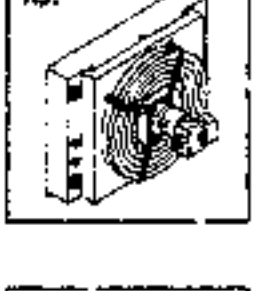
15.

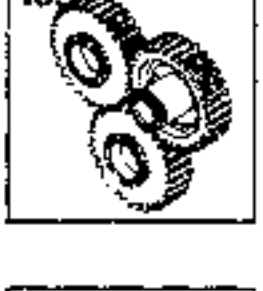
16.

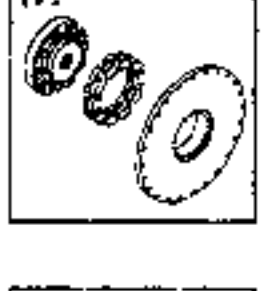
17.

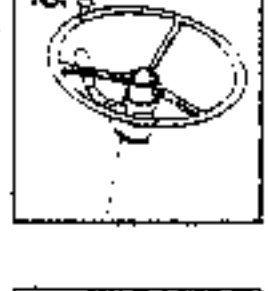
18.


19.


20.


22.

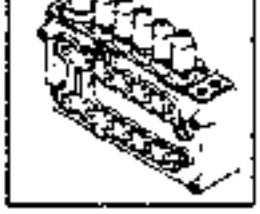
23.

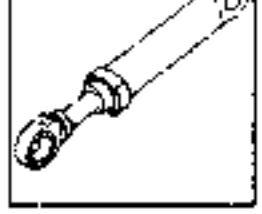
24.

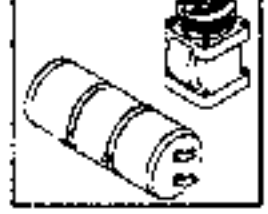
25.


26.

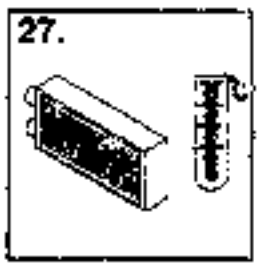
27.

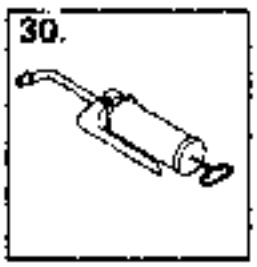
30.


31.-33.

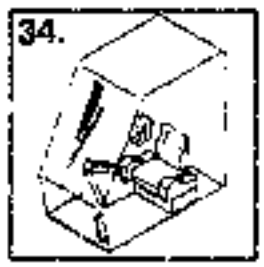
34.


35.

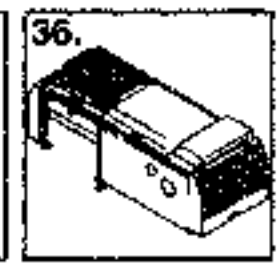
36.

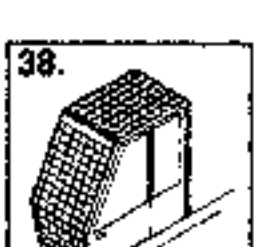
38.

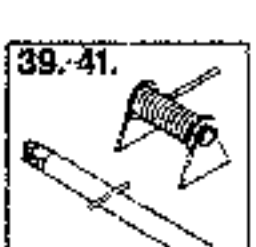
39.-41.

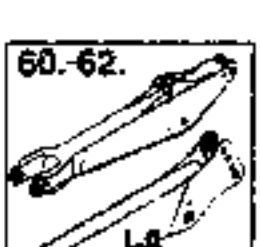
60.-62.

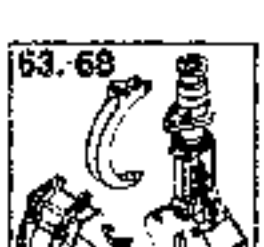
63.-68

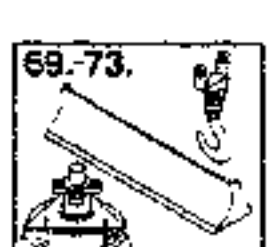
69.-73.

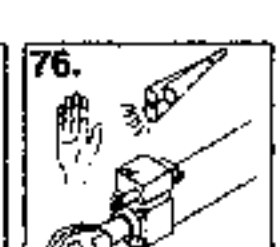
76.

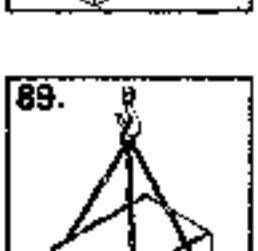
89.

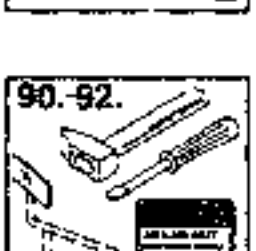
90.-92.

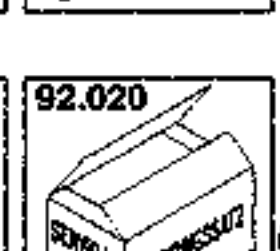
92.020

TABLE OF CONTENTS / HYDRAULIC EXCAVATOR

Assembly Group	Description	Assembly Group	Description
00 ...	Survey	38 ...	Protect. coachwork
01 ...	Artic-joint comp.	39 ...	Towing device
02 ...	Axles	40 ...	Loading coachwork
04 ...	Support	41 ...	Winches
05 ...	Wheel chassis	42 ...	Special equipment
06 ...	Crawler chassis	60 ...	Work.equip. - load-bearing
07 ...	Prop shaft	61 ...	Work.equip. - receiving
10 ...	Container	62 ...	Work.equip. - bearing
11 ...	Swivel connection	63 ...	Work.equip. - backhoe
12 ...	Ballast	64 ...	Work.equip. - bucket
13 ...	Motor	66 ...	Work.equip. - grab
14 ...	Fuelling system	67 ...	Work.equip. - pliers/hammer
15 ...	Cooling system	68 ...	Work.equip. - ripper
16 ...	Transmission gear	69 ...	Work.equip. - leveling
17 ...	Coupling, converter	70 ...	Work.equip. - load bearing
18 ...	Steering	71 ...	Work.equip. - option
19 ...	Brake system	73 ...	Attachment / other
20 ...	Hydr.syst., basic machine	76 ...	Safety devices
22 ...	Hydr.syst., components	89 ...	Loading / transp. / ass.devic.
23 ...	Hydr.syst., valves	90 ...	Paint-finish-preservation
24 ...	Hydr.syst., cylinder	91 ...	Plates
25 ...	Comp.-air syst., basic machine	92 ...	Tools
26 ...	Comp.-air syst., components	93 ...	Packaging
27 ...	Heating/ventilat./air conditioning	94 ...	Consumables
30 ...	Greasing system	95 ...	Motor spare parts
31 ...	Electr.syst., basic machine		
32 ...	Electr.syst., addition		
33 ...	Electr.drive, components		
34 ...	Cab module		
35 ...	Equipment		
36 ...	Paneling / cover, insulation mat		


00.


00.

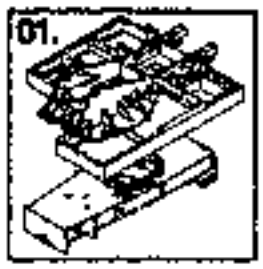
01.

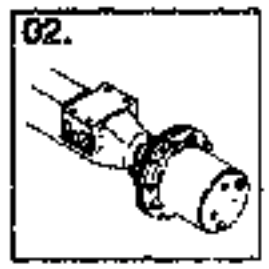
02.

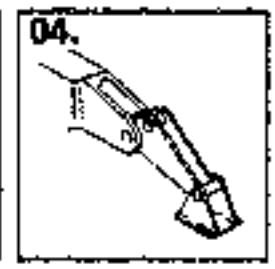
04.


05.

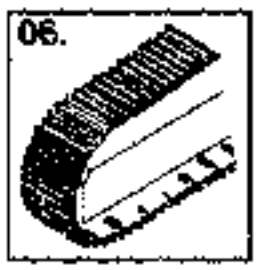
06.


07.

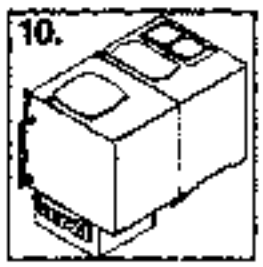
10.

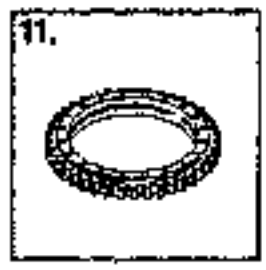
11.

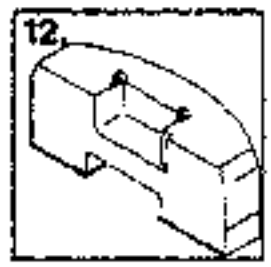
12.

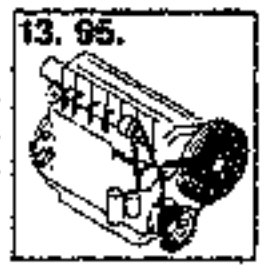
13. 95.


14.

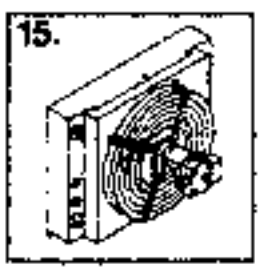
15.


16.

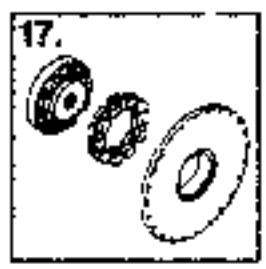
17.

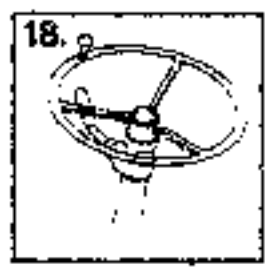
18.


19.


20.

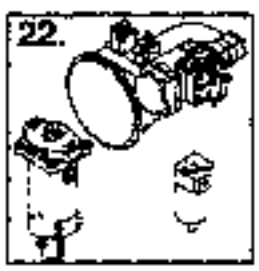
22.

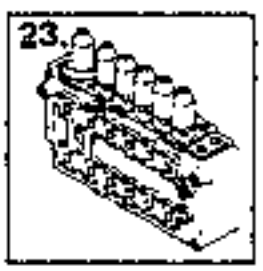
23.

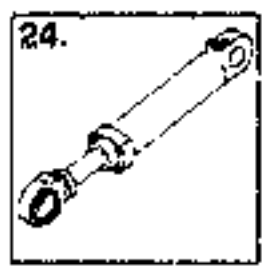
24.

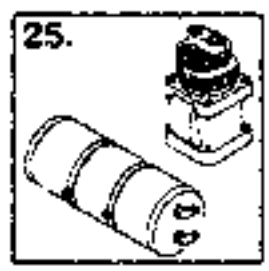
25.


26.

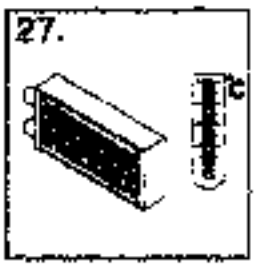
27.

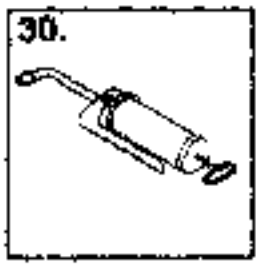
30.


31.-33.

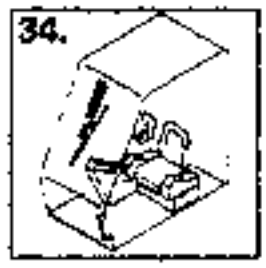
34.


35.


36.

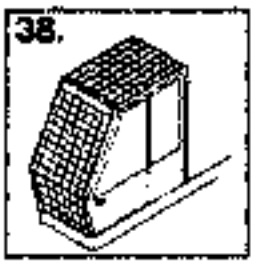
38.

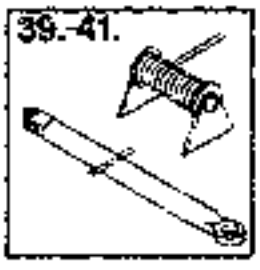
39.-41.

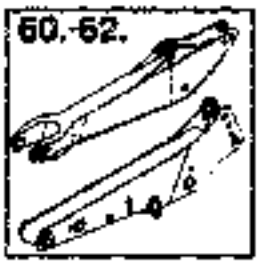
60.-62.

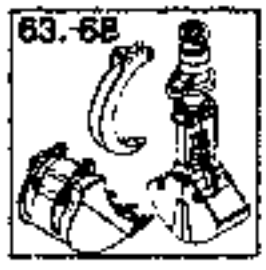
63.-68.

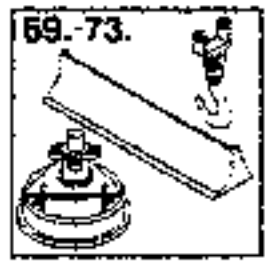
69.-73.

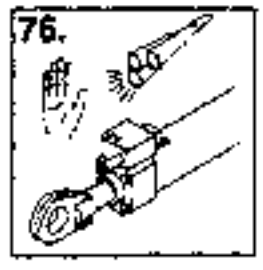
76.

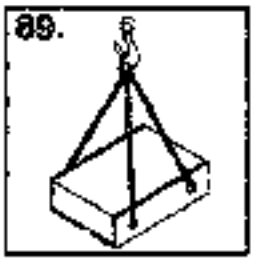
89.


90.-92.


92.020
SERVICE KIT
WARTUNGSSATZ

291943

TABLE OF CONTENTS / HYDRAULIC EXCAVATOR

Assembly Group	Description	Assembly Group	Description
01 ...	Artic-joint comp.	91 ...	Plates
73 ...	Attachment / other	07 ...	Prop shaft
02 ...	Axles	38 ...	Protect. coachwork
12 ...	Ballast	78 ...	Safety devices
19 ...	Brake system	42 ...	Special equipment
34 ...	Cab module	18 ...	Steering
25 ...	Comp.-air syst., basic machine	04 ...	Support
26 ...	Comp.-air syst., components	00 ...	Survey
94 ...	Consumables	11 ...	Swivel connection
10 ...	Container	92 ...	Tools
15 ...	Cooling system	39 ...	Towing device
17 ...	Coupling, converter	16 ...	Transmission gear
06 ...	Crawler chassis	05 ...	Wheel chassis
33 ...	Electr.drive, components	41 ...	Winches
32 ...	Electr.syst., addition	63 ...	Work.equip. - backhoe
31 ...	Electr.syst., basic machine	62 ...	Work.equip. - bearing
35 ...	Equipment	64 ...	Work.equip. - bucket
14 ...	Fueling system	66 ...	Work.equip. - grab
30 ...	Greasing system	69 ...	Work.equip. - leveling
27 ...	Heating / ventilat. / air conditioning	60 ...	Work.equip. - load-bearing
20 ...	Hydr.syst., basic machine	70 ...	Work.equip. - load bearing
22 ...	Hydr.syst., components	71 ...	Work.equip. - option
24 ...	Hydr.syst., cylinder	67 ...	Work.equip. - pliers/hammer
23 ...	Hydr.syst., valves	61 ...	Work.equip. - receiving
40 ...	Loading coachwork	68 ...	Work.equip. - ripper
89 ...	Loading / transp. / ass.devic.		
13 ...	Motor		
95 ...	Motor spare parts		
93 ...	Packaging		
90 ...	Paint-finish-preservation		
36 ...	Paneling / cover, insulation mat		

Table of contents

SURVEY	Machine type FX600	Machine no.

No. assembly	Description
23.050 - 2495629	ADDING VALVE
13.500 - 2215820	AIR FILTER INSTALL.MATERIAL
13.501 - 2175501	AIR FILTER MOUNTING PARTS
22.510 - 2496819	ARRESTOR ROTOR
22.110 - 2496812	AXIAL PISTON MOTOR
22.110 - 2495217	AXIAL PISTON MOTOR
24.052 - 2495307	BACKHOE CYLINDER
24.050 - 2495222	BACKHOE CYLINDER INSTALL.MATERIAL
12.010 - 2782083	BALLAST INSTALL.MATERIAL
12.010 - 2496776	BALLAST INSTALL.MATERIAL
31.300 - 2443932	BATTERY INSTALL.MATERIAL
01.670 - 2443601	BEARING BOOM
01.650 - 2443600	BEARING FRAME
13.020 - 2495261	BEARING MOTOR
34.300 - 2444897	BEARING OPERATOR'S CAB
23.122 - 2141669	BLOCKING VALVE
23.122 - 1593293	BLOCKING VALVE
24.022 - 2495403	BOOM CYLINDERS
24.020 - 2495404	BOOM CYLINDERS INSTALL.MATERIAL
34.140 - 2782774	BRACKET INSTALL.MATERIAL
34.140 - 2444887	BRACKET INSTALL.MATERIAL
34.140 - 2782774	BRACKET INSTALL.MATERIAL
34.141 - 2444877	BRACKET MOUNTING PARTS
34.141 - 2444874	BRACKET MOUNTING PARTS
34.141 - 2444877	BRACKET MOUNTING PARTS
34.141 - 2444874	BRACKET MOUNTING PARTS
34.220 - 2444896	CAB DOOR
34.220 - 2496873	CAB DOOR
34.010 - 2496800	CAB MODULE INSTALL.MATERIAL
34.210 - 2443232	CAB ROOF
30.040 - 2782656	CENTRAL LUBE SYST.
23.152 - 2495870	CHECK VALVE
06.200 - 2141764	CLAMPING CYLINDER GREASE FILLING
13.400 - 2782790	COLD-START SYSTEM
15.120 - 2496872	COMB. COOL. SYST. WATER/OIL INSTALL.MATERIAL
15.121 - 2782175	COMB. COOL. SYST. WATER/OIL MOUNTING PARTS
15.122 - 2496856	COMBINED COOLER WATER/OIL
10.010 - 2782700	CONTAINER INSTALL.MATERIAL
23.612 - 2283064	CONTROL BLOCK
23.610 - 2496814	CONTROL BLOCK INSTALL.MATERIAL
23.610 - 2444673	CONTROL BLOCK INSTALL.MATERIAL
23.610 - 2496814	CONTROL BLOCK INSTALL.MATERIAL
23.611 - 2283063	CONTROL BLOCK MOUNTING PARTS
23.611 - 2246564	CONTROL BLOCK MOUNTING PARTS

Table of contents

SURVEY	Machine type FX600	Machine no.

No. of assembly	Description
23.511 - 2283063	CONTROL BLOCK MOUNTING PARTS
34.130 - 2496286	CONTROL COLUMN INSTALL.MATERIAL
34.131 - 2444691	CONTROL COLUMN MOUNTING PARTS
23.182 - 2141195	CONTROL VALVE
23.182 - 1707400	CONTROL VALVE
23.182 - 2141196	CONTROL VALVE
23.180 - 2283060	CONTROL VALVE INSTALL.MATERIAL
17.102 - 2444158	COUPLING/CLUTCH
36.512 - 2495247	COVER SWING BEARING
36.540 - 2496907	COVER TRAVEL GEAR
36.500 - 2782741	COVER UPPER CARRIAGE
36.500 - 2782702	COVER UPPER CARRIAGE
06.010 - 2496890	CRAWLER CHASSIS INSTALL.MATERIAL
31.600 - 2782775	DASHBOARD INSTALL.MATERIAL
91.010 - 2782250	DECAL KIT
91.010 - 2782884	DECAL KIT
91.010 - 2782250	DECAL KIT
91.010 - 2782884	DECAL KIT
22.402 - 2444968	DISTRIBUTOR
22.400 - 1708496	DISTRIBUTOR INSTALL.MATERIAL
22.020 - 2496846	DOUBLEPUMP
06.102 - 2443903	DRIVING CHAIN
31.050 - 1267263	ELECTRICAL COMPON. /CIRCUIT DIAGRAMM
32.999 - 2782749	ELECTRICAL SYSTEM ADDITION OTHER
13.220 - 2495258	EXHAUST SYSTEM INSTALL.MATERIAL
22.202 - 2248164	FILTER
22.200 - 2444371	FILTER INSTALL.MATERIAL
22.200 - 2444372	FILTER INSTALL.MATERIAL
22.200 - 2444371	FILTER INSTALL.MATERIAL
34.105 - 2495303	FOOT REST PLATFORM
01.200 - 2496943	FRAME LOWER CARRIAGE WITH MOUNT. PARTS
01.300 - 2782703	FRAME UPPER CARRIAGE WITH MOUNT. PARTS
01.300 - 2782740	FRAME UPPER CARRIAGE WITH MOUNT. PARTS
01.300 - 2496775	FRAME UPPER CARRIAGE WITH MOUNT. PARTS
01.300 - 2782082	FRAME UPPER CARRIAGE WITH MOUNT. PARTS
13.300 - 2443690	FUEL SYSTEM
10.202 - 2782698	FUEL TANK
22.052 - 2496846	GEARED PUMP
34.230 - 2495011	GLAZING OPERATOR'S CAB
34.230 - 2495010	GLAZING OPERATOR'S CAB
34.230 - 2444012	GLAZING OPERATOR'S CAB
34.230 - 2782255	GLAZING OPERATOR'S CAB
34.230 - 2495010	GLAZING OPERATOR'S CAB
34.230 - 2782254	GLAZING OPERATOR'S CAB

Table of contents

SURVEY	Machine type FX600	Machine no.

No. disassembly		Description
30.200 -	2444234	GREASING SYSTEM MONO
06.162 -	2176026	GUIDE WHEEL
06.160 -	2249284	GUIDE WHEEL INSTALL.MATERIAL
27.012 -	2496799	HEATING
27.010 -	2496798	HEATING INSTALL.MATERIAL
10.102 -	2443385	HYD. OIL TANK
20.642 -	2496464	HYDRAULIC SYSTEM CASCADE
20.640 -	2782182	HYDRAULIC SYSTEM CASCADE INSTALL.MATEPIAL
20.641 -	2782161	HYDRAULIC SYSTEM CASCADE MOUNTING PARTS
20.641 -	2782747	HYDRAULIC SYSTEM CASCADE MOUNTING PARTS
20.641 -	2782181	HYDRAULIC SYSTEM CASCADE MOUNTING PARTS
20.310 -	2496823	HYDRAULIC SYSTEM HIGH PRESSURE
20.320 -	2496832	HYDRAULIC SYSTEM LOW PRESSURE
20.020 -	2496909	HYDRAULIC SYSTEM LOWER CARRIAGE
60.160 -	2495032	HYDRAULIC SYSTEM MONOBLOC BOOM
60.160 -	2495031	HYDRAULIC SYSTEM MONOBLOC BOOM
60.160 -	2496850	HYDRAULIC SYSTEM MONOBLOC BOOM
60.160 -	2443421	HYDRAULIC SYSTEM MONOBLOC BOOM
20.290 -	2496788	HYDRAULIC SYSTEM OIL COOLER
20.280 -	2496868	HYDRAULIC SYSTEM PUMP GOVERNING
20.610 -	2496797	HYDRAULIC SYSTEM SERVO CONTROL
61.032 -	2496859	HYDRAULIC SYSTEM STICK
20.030 -	2782183	HYDRAULIC SYSTEM UPPER CARRIAGE
06.150 -	2443681	IDLER ROLLER
13.230 -	2782549	INTAKE SYSTEM INSTALL.MATERIAL
90.100 -	2496594	LINING ARRANGEMENT
00.200 -	2496540	LOWER CARRIAGE EXCAVATOR
92.020 -	2782033	MAINTENANCE MATERL
35.060 -	2443940	MIRROR SUPPORT INSTALL.MATERIAL
35.060 -	1907741	MIRROR SUPPORT INSTALL.MATERIAL
35.060 -	2443940	MIRROR SUPPORT INSTALL.MATERIAL
35.060 -	1907741	MIRROR SUPPORT INSTALL.MATERIAL
35.060 -	2284173	MIRROR SUPPORT INSTALL.MATERIAL
60.161 -	2444419	MONOBLOC BOOM MOUNTING PARTS
22.100 -	2496886	MOTOR INSTALL.MATERIAL
13.010 -	2496874	MOTOR INSTALL.MATERIAL
13.011 -	2496855	MOTOR MOUNTING PARTS
20.260 -	2782179	OIL SUCTION SYSTEM
34.022 -	2444904	OPERATOR'S CAB
34.022 -	2782256	OPERATOR'S CAB
34.020 -	2782257	OPERATOR'S CAB INSTALL.MATERIAL
34.020 -	2782262	OPERATOR'S CAB INSTALL.MATERIAL
34.021 -	2496857	OPERATOR'S CAB MOUNTING PARTS
34.021 -	2782263	OPERATOR'S CAB MOUNTING PARTS

Table of contents

SURVEY	Machine type **FX600**	Machine no.

No. of assembly	Description
36.010 - 2443764	PANELING INSTALL.MATERIAL
36.010 - 2495254	PANELING INSTALL.MATERIAL
36.010 - 2443764	PANELING INSTALL.MATERIAL
36.010 - 2495254	PANELING INSTALL.MATERIAL
62.210 - 2249912	PIN NO.1
34.100 - 1908540	PLATFORM PLATE INSTALL.MATERIAL
34.101 - 2444880	PLATFORM PLATE MOUNTING PARTS
23.312 - 2216823	PROPORTIONAL VALVE
22.010 - 2496849	PUMP INSTALL.MATERIAL
16.042 - 2443685	PUMP DRIVE
31.510 - 2496871	RADIO INSTALL.MATERIAL
22.520 - 2444775	RODS TREADLE VALVE
22.502 - 2443610	ROTOR
22.500 - 2496820	ROTOR INSTALL.MATERIAL
22.501 - 2496818	ROTOR MOUNTING PARTS
11.020 - 2495246	SEAL GASKET SWIVEL CONNECTION
34.502 - 2782536	SEAT
34.502 - 2444945	SEAT
34.500 - 2444944	SEAT INSTALL.MATERIAL
34.500 - 2782534	SEAT INSTALL.MATERIAL
23.272 - 2496570	SERVO VALVE
23.270 - 2496571	SERVO VALVE INSTALL.MATERIAL
23.270 - 2496569	SERVO VALVE INSTALL.MATERIAL
23.270 - 2496571	SERVO VALVE INSTALL.MATERIAL
23.271 - 2782554	SERVO VALVE MOUNTING PARTS
23.271 - 2496568	SERVO VALVE MOUNTING PARTS
23.271 - 2782554	SERVO VALVE MOUNTING PARTS
23.212 - 2444920	SHIFT VALVE
31.530 - 2782746	SIGNAL GENERAL
31.530 - 2782748	SIGNAL GENERAL
16.032 - 2496807	SLEWING GEAR COMPLETE
16.031 - 2496806	SLEWING GEAR MOUNTING PARTS
16.031 - 2496809	SLEWING GEAR MOUNTING PARTS
16.031 - 2496805	SLEWING GEAR MOUNTING PARTS
16.031 - 2496808	SLEWING GEAR MOUNTING PARTS
23.232 - 2249696	SOLENOID VALVE
23.232 - 2496293	SOLENOID VALVE
23.232 - 2249696	SOLENOID VALVE
23.232 - 1996158	SOLENOID VALVE
23.230 - 2495367	SOLENOID VALVE INSTALL.MATERIAL
23.231 - 2496366	SOLENOID VALVE MOUNTING PARTS
06.170 - 2141753	SPRING GUIDE WHEEL
01.810 - 2495632	STEPS INSTALL.MATERIAL
61.011 - 2495220	STICK MOUNTING PARTS

Table of contents

SURVEY	Machine type FX600	Machine no.

No. of assembly		Description
24.032 -	2495225	STICK CYLINDER
24.030 -	2495219	STICK CYLINDER INSTALL.MATERIAL
23.142 -	2443928	STOP VALVE
23.141 -	2444879	STOP VALVE MOUNTING PARTS
06.180 -	2496891	SUPPORT ROLLER
19.400 -	2496811	SWING BRAKE INSTALL.MATERIAL
22.080 -	2496947	SWING PUMP
11.010 -	2495245	SWIVEL CONNECTION INSTALL.MATERIAL
11.010 -	2495248	SWIVEL CONNECTION INSTALL.MATERIAL
11.010 -	2496910	SWIVEL CONNECTION INSTALL.MATERIAL
11.010 -	2495245	SWIVEL CONNECTION INSTALL.MATERIAL
06.190 -	2496889	TENSIONING DEVICE
62.012 -	2496906	TOGGLE & LINKAGE
92.010 -	2782496	TOOL SET
19.502 -	2496921	TRACK BRAKE
16.023 -	2496820	TRAVEL GEAR BASE
16.022 -	2496922	TRAVEL GEAR COMPLETE
16.020 -	2496886	TRAVEL GEAR INSTALL.MATERIAL
16.021 -	2496887	TRAVEL GEAR MOUNTING PARTS
23.292 -	2782655	TREADLE VALVE
23.292 -	2496572	TREADLE VALVE
23.292 -	2782655	TREADLE VALVE
23.290 -	2496573	TREADLE VALVE INSTALL.MATERIAL
23.291 -	2444789	TREADLE VALVE MOUNTING PARTS
00.300 -	2782201	UPPER CARRIAGE EXCAVATOR
00.300 -	2496539	UPPER CARRIAGE EXCAVATOR
06.210 -	2496893	VALVE CHAIN TENSIONER GREASE FILLING
23.242 -	2783875	VALVE INTERCONN.
23.240 -	2783334	VALVE INTERCONN. INSTALL.MATERIAL
23.241 -	2783333	VALVE INTERCONN. MOUNTING PARTS
34.642 -	2463302	WATER RESERVOIR WINDSCREEN WASHER
34.640 -	2444662	WINDSCREEN WASHER INSTALL.MATERIAL
34.630 -	2444916	WINDSCREEN WIPER INSTALL.MATERIAL
31.410 -	2444808	WORKING HEADLIGHT INSTALL.MATERIAL

Table of contents

SURVEY	Machine type FX800	Machine no.

No. assembly		Description
00.200 -	2496540	LOWER CARRIAGE EXCAVATOR
00.300 -	2496538	UPPER CARRIAGE EXCAVATOR
00.300 -	2782201	UPPER CARRIAGE EXCAVATOR
01.200 -	2496943	FRAME LOWER CARRIAGE WITH MOUNT. PARTS
01.300 -	2496775	FRAME UPPER CARRIAGE WITH MOUNT. PARTS
01.300 -	2782082	FRAME UPPER CARRIAGE WITH MOUNT. PARTS
01.300 -	2782703	FRAME UPPER CARRIAGE WITH MOUNT. PARTS
01.300 -	2782740	FRAME UPPER CARRIAGE WITH MOUNT. PARTS
01.650 -	2443600	BEARING FRAME
01.670 -	2443601	BEARING BOOM
01.810 -	2495632	STEPS INSTALL.MATERIAL
06.010 -	2496890	CRAWLER CHASSIS INSTALL.MATERIAL
06.102 -	2443903	DRIVING CHAIN
06.150 -	2443691	IDLER ROLLER
06.160 -	2249284	GUIDE WHEEL INSTALL.MATERIAL
06.162 -	2176026	GUIDE WHEEL
06.170 -	2141753	SPRING GUIDE WHEEL
06.180 -	2496891	SUPPORT ROLLER
06.190 -	2496889	TENSIONING DEVICE
06.200 -	2141764	CLAMPING CYLINDER GREASE FILLING
06.210 -	2496893	VALVE CHAIN TENSIONER GREASE FILLING
10.010 -	2782700	CONTAINER INSTALL.MATERIAL
10.102 -	2443385	HYD. OIL TANK
10.202 -	2782698	FUEL TANK
11.010 -	2495245	SWIVEL CONNECTION INSTALL.MATERIAL
11.010 -	2496910	SWIVEL CONNECTION INSTALL.MATERIAL
11.010 -	2496248	SWIVEL CONNECTION INSTALL.MATERIAL
11.020 -	2495246	SEAL GASKET SWIVEL CONNECTION
12.010 -	2496776	BALLAST INSTALL.MATERIAL
12.010 -	2782083	BALLAST INSTALL.MATERIAL
13.010 -	2496874	MOTOR INSTALL.MATERIAL
13.011 -	2496855	MOTOR MOUNTING PARTS
13.020 -	2495261	BEARING MOTOR
13.220 -	2495258	EXHAUST SYSTEM INSTALL.MATERIAL
13.230 -	2782549	INTAKE SYSTEM INSTALL.MATERIAL
13.300 -	2443698	FUEL SYSTEM
13.400 -	2782790	COLD-START SYSTEM
13.500 -	2215820	AIR FILTER INSTALL.MATERIAL
13.501 -	2175501	AIR FILTER MOUNTING PARTS
15.120 -	2496872	COMB. COOL. SYST. WATER/OIL INSTALL.MATERIAL
15.121 -	2782176	COMB. COOL. SYST. WATER/OIL MOUNTING PARTS
15.122 -	2496858	COMBINED COOLER WATER/OIL
16.020 -	2496886	TRAVEL GEAR INSTALL.MATERIAL
16.021 -	2496887	TRAVEL GEAR MOUNTING PARTS
16.022 -	2496922	TRAVEL GEAR COMPLETE
16.023 -	2496920	TRAVEL GEAR BASE
16.031 -	2496808	SLEWING GEAR MOUNTING PARTS
16.031 -	2496806	SLEWING GEAR MOUNTING PARTS
16.032 -	2496807	SLEWING GEAR COMPLETE
16.042 -	2443685	PUMP DRIVE
17.102 -	2444158	COUPLING/CLUTCH
19.400 -	2496811	SWING BRAKE INSTALL.MATERIAL

Table of contents

SURVEY	Machine type FX600	Machine no.

No. utassembly	Description
19.502 - 2496921	TRACK BRAKE
20.020 - 2496909	HYDRAULIC SYSTEM LOWER CARRIAGE
20.030 - 2782183	HYDRAULIC SYSTEM UPPER CARRIAGE
20.260 - 2782173	OIL SUCTION SYSTEM
20.280 - 2496865	HYDRAULIC SYSTEM PUMP GOVERNING
20.290 - 2496788	HYDRAULIC SYSTEM OIL COOLER
20.310 - 2496823	HYDRAULIC SYSTEM HIGH PRESSURE
20.320 - 2496832	HYDRAULIC SYSTEM LOW PRESSURE
20.610 - 2496797	HYDRAULIC SYSTEM SERVO CONTROL
20.640 - 2782182	HYDRAULIC SYSTEM CASCADE INSTALL.MATERIAL
20.641 - 2782747	HYDRAULIC SYSTEM CASCADE MOUNTING PARTS
20.641 - 2782181	HYDRAULIC SYSTEM CASCADE MOUNTING PARTS
20.642 - 2496464	HYDRAULIC SYSTEM CASCADE
22.010 - 2496849	PUMP INSTALL.MATERIAL
22.020 - 2496846	DOUBLEPUMP
22.030 - 2496847	SWING PUMP
22.052 - 2496849	GEARED PUMP
22.100 - 2496868	MOTOR INSTALL.MATERIAL
22.110 - 2495217	AXIAL PISTON MOTOR
22.110 - 2496812	AXIAL PISTON MOTOR
22.200 - 2444371	FILTER INSTALL.MATERIAL
22.200 - 2444372	FILTER INSTALL.MATERIAL
22.202 - 2248164	FILTER
22.400 - 1708496	DISTRIBUTOR INSTALL.MATERIAL
22.402 - 2444968	DISTRIBUTOR
22.500 - 2496820	ROTOR INSTALL.MATERIAL
22.501 - 2496818	ROTOR MOUNTING PARTS
22.502 - 2443510	ROTOR
22.510 - 2496819	ARRESTOR ROTOR
22.520 - 2444775	RODS TREADLE VALVE
23.050 - 2495629	ADDING VALVE
23.122 - 2141859	BLOCKING VALVE
23.122 - 1599293	BLOCKING VALVE
23.141 - 2444879	STOP VALVE MOUNTING PARTS
23.142 - 2443928	STOP VALVE
23.152 - 2485870	CHECK VALVE
23.180 - 2283060	CONTROL VALVE INSTALL.MATERIAL
23.182 - 1707400	CONTROL VALVE
23.182 - 2141196	CONTROL VALVE
23.212 - 2444920	SHIFT VALVE
23.230 - 2495357	SOLENOID VALVE INSTALL.MATERIAL
23.231 - 2495356	SOLENOID VALVE MOUNTING PARTS
23.232 - 1998158	SOLENOID VALVE
23.232 - 2248696	SOLENOID VALVE
23.232 - 2495293	SOLENOID VALVE
23.240 - 2783334	VALVE INTERCONN. INSTALL.MATERIAL
23.241 - 2783333	VALVE INTERCONN. MOUNTING PARTS
23.242 - 2783675	VALVE INTERCONN.
23.270 - 2496569	SERVO VALVE INSTALL.MATERIAL
23.270 - 2496571	SERVO VALVE INSTALL.MATERIAL
23.271 - 2496568	SERVO VALVE MOUNTING PARTS
23.271 - 2782654	SERVO VALVE MOUNTING PARTS

Table of contents

SURVEY	Machine type FX600	Machine no.

No. ofassembly	Description
23.272 - 2495570	SERVO VALVE
23.290 - 2496573	TREADLE VALVE INSTALL.MATERIAL
23.291 - 2444789	TREADLE VALVE MOUNTING PARTS
23.292 - 2496572	TREADLE VALVE
23.292 - 2762656	TREADLE VALVE
23.312 - 2216823	PROPORTIONAL VALVE
23.610 - 2444673	CONTROL BLOCK INSTALL.MATERIAL
23.610 - 2496814	CONTROL BLOCK INSTALL.MATERIAL
23.611 - 2248584	CONTROL BLOCK MOUNTING PARTS
23.611 - 2263063	CONTROL BLOCK MOUNTING PARTS
23.612 - 2263084	CONTROL BLOCK
24.020 - 2496404	BOOM CYLINDERS INSTALL.MATERIAL
24.022 - 2495403	BOOM CYLINDERS
24.030 - 2495219	STICK CYLINDER INSTALL.MATERIAL
24.032 - 2495225	STICK CYLINDER
24.050 - 2495222	BACKHOE CYLINDER INSTALL.MATERIAL
24.052 - 2495307	BACKHOE CYLINDER
27.010 - 2496788	HEATING INSTALL.MATERIAL
27.012 - 2496799	HEATING
30.040 - 2762656	CENTRAL LUBE SYST.
30.200 - 2444234	GREASING SYSTEM MONO
31.050 - 1287263	ELECTRICAL COMPON. I.CIRCUIT DIAGRAMM
31.300 - 2443932	BATTERY INSTALL.MATERIAL
31.410 - 2444808	WORKING HEADLIGHT INSTALL.MATERIAL
31.510 - 2496871	RADIO INSTALL.MATERIAL
31.530 - 2762746	SIGNAL GENERAL
31.530 - 2762748	SIGNAL GENERAL
31.600 - 2762775	DASHBOARD INSTALL.MATERIAL
32.999 - 2762749	ELECTRICAL SYSTEM ADDITION OTHER
34.010 - 2496860	CAB MODULE INSTALL.MATERIAL
34.020 - 2762257	OPERATOR'S CAB INSTALL.MATERIAL
34.020 - 2762262	OPERATOR'S CAB INSTALL.MATERIAL
34.021 - 2762263	OPERATOR'S CAB MOUNTING PARTS
34.021 - 2496867	OPERATOR'S CAB MOUNTING PARTS
34.022 - 2762256	OPERATOR'S CAB
34.022 - 2444904	OPERATOR'S CAB
34.100 - 1908540	PLATFORM PLATE INSTALL.MATERIAL
34.101 - 2444880	PLATFORM PLATE MOUNTING PARTS
34.105 - 2495303	FOOT REST PLATFORM
34.130 - 2496286	CONTROL COLUMN INSTALL.MATERIAL
34.131 - 2444891	CONTROL COLUMN MOUNTING PARTS
34.140 - 2444887	BRACKET INSTALL.MATERIAL
34.140 - 2762774	BRACKET INSTALL.MATERIAL
34.141 - 2444874	BRACKET MOUNTING PARTS
34.141 - 2444877	BRACKET MOUNTING PARTS
34.210 - 2443232	CAB ROOF
34.220 - 2444896	CAB DOOR
34.220 - 2496873	CAB DOOR
34.230 - 2495011	GLAZING OPERATOR'S CAB
34.230 - 2762255	GLAZING OPERATOR'S CAB
34.230 - 2444012	GLAZING OPERATOR'S CAB
34.230 - 2495010	GLAZING OPERATOR'S CAB

Table of contents

SURVEY	Machine type FX800	Machine no.

No. ofassembly		Description
34.230 -	2762254	GLAZING OPERATOR'S CAB
34.300 -	2444897	BEARING OPERATOR'S CAB
34.500 -	2444944	SEAT INSTALL.MATERIAL
34.500 -	2762534	SEAT INSTALL.MATERIAL
34.502 -	2444945	SEAT
34.502 -	2762535	SEAT
34.630 -	2444916	WINDSCREEN WIPER INSTALL.MATERIAL
34.640 -	2444852	WINDSCREEN WASHER INSTALL.MATERIAL
34.642 -	2463302	WATER RESERVOIR WINDSCREEN WASHER
35.060 -	2284173	MIRROR SUPPORT INSTALL.MATERIAL
35.060 -	2443940	MIRROR SUPPORT INSTALL.MATERIAL
35.060 -	1907741	MIRROR SUPPORT INSTALL.MATERIAL
36.010 -	2443764	PANELING INSTALL.MATERIAL
36.010 -	2495254	PANELING INSTALL.MATERIAL
36.500 -	2762702	COVER UPPER CARRIAGE
36.500 -	2762741	COVER UPPER CARRIAGE
36.512 -	2495247	COVER SWING BEARING
36.540 -	2496907	COVER TRAVEL GEAR
60.151 -	2444419	MONOBLOC BOOM MOUNTING PARTS
60.160 -	2443421	HYDRAULIC SYSTEM MONOBLOC BOOM
60.160 -	2495032	HYDRAULIC SYSTEM MONOBLOC BOOM
60.160 -	2496850	HYDRAULIC SYSTEM MONOBLOC BOOM
60.160 -	2495031	HYDRAULIC SYSTEM MONOBLOC BOOM
61.011 -	2495220	STICK MOUNTING PARTS
61.032 -	2496859	HYDRAULIC SYSTEM STICK
62.012 -	2498905	TOGGLE & LINKAGE
62.210 -	2249912	PIN NO.1
90.100 -	2496594	LINING ARRANGEMENT
91.010 -	2762250	DECAL KIT
91.010 -	2762864	DECAL KIT
92.010 -	2762496	TOOL SET
92.020 -	2762033	MAINTENANCE MATER.

Cross reference

SURVEY | Machine type **FX600** | Machine no.

Part No.	No. of assembly	Item	Part No.	No. of assembly	Item
73170000	00.200 - 2496540	020	73170051	10.102 - 2443385	040
73170001	00.200 - 2496640	201	73170051	16.023 - 2496920	122
73170002	00.200 - 2496540	205	73170051	22.502 - 2443610	009
73170003	01.200 - 2496943	004	73170051	23.212 - 2444920	005
73170004	01.200 - 2496943	005	73170051	23.612 - 2283064	042
73170005	01.200 - 2496943	006	73170052	16.023 - 2496920	127
73170006	01.200 - 2496943	007	73170053	16.023 - 2496920	128
73170007	01.200 - 2496943	008	73170054	16.023 - 2496920	131
73170008	01.200 - 2496943	009	73170055	16.023 - 2496920	201
73170009	06.190 - 2496869	013	73170056	16.023 - 2496920	202
73170010	06.010 - 2496890	008	73170058	16.023 - 2496920	203
73170010	06.160 - 2249284	017	73170059	16.023 - 2496920	204
73170010	06.190 - 2496869	019	73170060	16.023 - 2496920	301
73170012	06.160 - 2249284	003	73170061	16.023 - 2496920	302
73170013	06.160 - 2249284	009	73170062	16.023 - 2496920	303
73170014	01.810 - 2495632	003	73170062	19.502 - 2496921	010
73170014	06.160 - 2249284	011	73170063	16.023 - 2496920	304
73170014	20.260 - 2782173	010	73170064	16.023 - 2496920	403
73170015	06.160 - 2249284	012	73170065	16.023 - 2496920	404
73170016	22.010 - 2496849	009	73170066	16.023 - 2496920	506
73170017	06.160 - 2243284	018	73170067	16.023 - 2496920	507
73170019	06.010 - 2496890	005	73170068	16.023 - 2496920	508
73170020	06.010 - 2496890	006	73170069	16.023 - 2496920	510
73170020	13.020 - 2496261	009	73170070	16.023 - 2496920	511
73170022	06.010 - 2496890	007	73170071	16.023 - 2496920	514
73170022	13.010 - 2496874	014	73170072	16.023 - 2496920	515
73170023	06.102 - 2443903	001	73170073	16.023 - 2496920	516
73170024	06.102 - 2443903	101	73170074	16.023 - 2496920	517
73170025	06.102 - 2443903	102	73170075	16.023 - 2496920	518
73170026	06.102 - 2443903	103	73170076	16.023 - 2496920	519
73170027	06.102 - 2443903	104	73170077	16.021 - 2496887	002
73170028	06.102 - 2443903	401	73170078	16.021 - 2496887	003
73170029	06.102 - 2443903	402	73170079	16.020 - 2496886	005
73170030	06.102 - 2443903	403	73170080	16.020 - 2496886	009
73170031	06.102 - 2443903	404	73170081	16.020 - 2496886	015
73170032	06.102 - 2443903	405	73170082	06.150 - 2443691	001
73170033	06.102 - 2443903	406	73170083	06.150 - 2443691	002
73170034	06.102 - 2443903	407	73170084	06.150 - 2443691	003
73170035	06.102 - 2443903	409	73170085	06.150 - 2443691	006
73170036	06.102 - 2443903	409	73170087	06.150 - 2443691	007
73170037	19.502 - 2496921	001	73170088	06.150 - 2443691	008
73170038	16.022 - 2496922	001	73170090	06.150 - 2443691	009
73170039	16.022 - 2496922	102	73170091	06.150 - 2443691	010
73170040	16.022 - 2496922	104	73170092	06.150 - 2443691	011
73170041	16.022 - 2496922	105	73170094	06.150 - 2496891	001
73170042	16.022 - 2496922	202	73170095	06.150 - 2496891	003
73170043	16.022 - 2496922	203	73170096	06.150 - 2496891	004
73170044	16.023 - 2496920	003	73170097	06.150 - 2496891	006
73170045	16.023 - 2496920	115	73170098	06.150 - 2496891	007
73170046	16.023 - 2496920	116	73170099	06.150 - 2496891	008
73170047	16.023 - 2496920	117	73170100	06.150 - 2496891	009
73170048	16.023 - 2496920	120	73170101	06.150 - 2496891	010
73170050	16.023 - 2496920	121	73170102	06.150 - 2496891	011

Cross reference

SURVEY | Machine type **FX600** | Machine no.

Part No.	No. of assembly	Item	Part No.	No. of assembly	Item
73170103	06.180 - 2496891	013	73170144	06.200 - 2141764	004
73170104	06.180 - 2496891	014	73170145	06.200 - 2141764	008
73170105	06.180 - 2496891	015	73170146	06.200 - 2141764	009
73170107	06.180 - 2496891	016	73170147	00.300 - 2496538	005
73170108	06.180 - 2496891	017	73170147	00.300 - 2782201	005
73170109	06.162 - 2176026	001	73170150	13.010 - 2496874	013
73170110	06.162 - 2176026	002	73170151	36.010 - 2443764	002
73170111	06.162 - 2176026	003	73170152	36.010 - 2443764	003
73170112	06.162 - 2176026	005	73170153	10.010 - 2782700	141
73170113	06.162 - 2176026	006	73170153	36.010 - 2443764	004
73170114	06.162 - 2176026	008	73170154	36.010 - 2443764	007
73170115	06.162 - 2176026	010	73170157	36.010 - 2443764	011
73170116	06.162 - 2176026	011	73170158	36.010 - 2443764	012
73170117	06.162 - 2176026	012	73170159	36.010 - 2443764	013
73170118	06.162 - 2176026	103	73170159	36.010 - 2495254	017
73170119	06.162 - 2176026	502	73170160	10.010 - 2782700	125
73170120	06.170 - 2141753	008	73170160	10.010 - 2782700	135
73170121	06.170 - 2141753	002	73170160	10.102 - 2443385	014
73170122	06.170 - 2141753	003	73170160	20.260 - 2782173	018
73170123	06.170 - 2141753	004	73170160	23.050 - 2496629	009
73170124	06.170 - 2141753	005	73170160	23.290 - 2496573	006
73170125	06.170 - 2141753	006	73170160	30.200 - 2444234	015
73170126	06.170 - 2141753	007	73170160	30.200 - 2444411	016
73170127	22.100 - 2496888	001	73170160	31.530 - 2782748	003
73170128	01.810 - 2495632	001	73170160	34.101 - 2444880	003
73170129	01.810 - 2495632	004	73170160	34.220 - 2444866	155
73170130	22.500 - 2495820	005	73170160	34.220 - 2496673	155
73170130	34.630 - 2444915	043	73170160	34.230 - 2495010	061
73170130	36.540 - 2496907	005	73170160	34.640 - 2444852	004
73170131	36.540 - 2496907	006	73170160	36.010 - 2443764	014
73170132	36.540 - 2496907	101	73170160	36.010 - 2495254	031
73170133	36.540 - 2496907	102	73170161	01.300 - 2495775	207
73170134	36.540 - 2496907	103	73170161	01.300 - 2782082	207
73170135	36.540 - 2496907	104	73170161	10.010 - 2782700	126
73170136	36.540 - 2496907	105	73170161	10.010 - 2782700	136
73170137	06.210 - 2496893	001	73170161	23.292 - 2496572	007
73170138	06.210 - 2496893	002	73170161	34.021 - 2495867	194
73170138	24.022 - 2495403	024	73170161	34.022 - 2444904	194
73170139	24.032 - 2495225	014	73170161	34.101 - 2444880	129
73170139	24.032 - 2495226	306	73170161	34.630 - 2444916	219
73170139	24.052 - 2495307	013	73170161	36.010 - 2443764	015
73170139	24.052 - 2495307	306	73170161	36.010 - 2495254	037
73170139	60.150 - 2495218	105	73170162	10.102 - 2443986	027
73170139	60.151 - 2444419	106	73170162	13.230 - 2782549	006
73170139	61.010 - 2444197	112	73170162	15.120 - 2496872	018
73170139	61.011 - 2495220	112	73170162	20.310 - 2496823	027
73170139	62.012 - 2496305	219	73170162	36.010 - 2443764	017
73170139	06.210 - 2496893	003	73170162	60.150 - 2495218	203
73170140	06.210 - 2496893	004	73170162	60.161 - 2444419	203
73170141	06.210 - 2496893	005	73170163	36.010 - 2443764	018
73170142	06.210 - 2496893	006	73170164	31.050 - 1287269	134
73170142	22.110 - 2496812	092	73170164	36.010 - 2443764	019
73170149	06.200 - 2141764	001	73170164	36.010 - 2495254	020

Cross reference

SURVEY | Machine type FX600 | Machine no.

Part No.	No. of assembly	Item	Part No.	No. of assembly	Item
73170165	36.010 - 2443764	020	73170184	36.010 - 2443764	035
73170167	01.300 - 2496775	208	73170184	36.010 - 2495254	036
73170167	01.300 - 2782082	208	73170185	10.010 - 2782700	123
73170167	34.021 - 2496867	212	73170185	10.010 - 2782700	133
73170167	34.022 - 2444904	212	73170185	10.202 - 2782698	010
73170167	35.060 - 1907741	003	73170185	13.400 - 2782790	003
73170167	36.010 - 2443764	021	73170185	16.031 - 2496808	108
73170167	36.010 - 2495254	039	73170185	23.290 - 2496957	004
73170168	34.101 - 2444880	144	73170185	32.999 - 2782749	007
73170169	13.230 - 2782549	007	73170185	34.021 - 2496867	180
73170169	22.510 - 2496819	005	73170185	34.022 - 2444904	180
73170169	34.100 - 1908540	005	73170185	34.230 - 2496010	048
73170169	36.010 - 2443764	022	73170186	36.010 - 2443764	036
73170169	60.160 - 2444410	037	73170185	36.010 - 2495254	030
73170169	60.180 - 2495031	037	73170185	36.512 - 2496247	007
73170170	36.010 - 2443764	023	73170186	36.010 - 2495254	001
73170171	36.010 - 2443764	024	73170187	36.010 - 2495254	002
73170172	36.010 - 2443764	025	73170188	36.010 - 2495254	003
73170173	36.010 - 2443764	026	73170189	36.010 - 2495254	004
73170174	36.010 - 2443764	027	73170190	36.010 - 2495254	005
73170175	10.010 - 2782700	113	73170191	36.010 - 2495254	006
73170175	13.230 - 2782549	012	73170192	36.010 - 2495254	007
73170175	20.290 - 2496789	015	73170193	36.010 - 2495254	009
73170175	34.300 - 2444897	004	73170194	36.010 - 2495254	010
73170175	36.010 - 2443764	028	73170195	36.010 - 2495254	011
73170176	20.260 - 2782173	017	73170196	36.010 - 2495254	012
73170176	23.291 - 2444789	012	73170197	36.010 - 2495254	013
73170176	34.101 - 2444880	002	73170198	36.010 - 2495254	014
73170176	34.105 - 2495303	019	73170200	10.010 - 2782700	128
73170176	36.010 - 2443764	029	73170200	10.010 - 2782700	138
73170177	36.010 - 2443764	030	73170200	36.010 - 2495254	018
73170178	20.310 - 2496823	028	73170201	10.010 - 2782700	124
73170178	36.010 - 2443764	031	73170201	10.010 - 2782700	134
73170178	60.160 - 2495218	204	73170201	36.010 - 2495254	019
73170178	60.151 - 2444419	204	73170202	32.999 - 2782749	006
73170180	22.200 - 2444371	005	73170202	36.010 - 2495254	021
73170180	22.200 - 2444372	003	73170203	16.031 - 2496808	104
73170180	35.030 - 2443940	004	73170203	36.010 - 2495254	022
73170180	36.010 - 2443764	032	73170204	36.010 - 2495254	023
73170180	36.010 - 2495254	029	73170205	23.290 - 2496573	005
73170182	10.010 - 2782700	143	73170205	27.010 - 2496798	004
73170182	10.102 - 2443385	012	73170205	30.200 - 2444234	014
73170182	10.202 - 2782698	014	73170205	30.200 - 2444411	014
73170182	13.300 - 2443699	007	73170205	34.130 - 2496280	002
73170182	30.040 - 2782556	028	73170205	34.640 - 2444352	003
73170182	31.300 - 2443932	004	73170205	35.060 - 1907741	004
73170182	36.010 - 2443764	033	73170205	35.060 - 2284173	002
73170183	10.010 - 2782700	142	73170205	36.010 - 2495254	024
73170183	22.510 - 2496819	004	73170206	22.402 - 2444969	011
73170183	36.010 - 2443764	034	73170206	30.010 - 2495254	025
73170184	16.031 - 2496808	105	73170206	01.300 - 2496775	206
73170184	34.101 - 2444880	128	73170206	01.300 - 2782082	208
73170184	34.141 - 2444877	028	73170206	36.010 - 2495254	027

Cross reference

SURVEY | Machine type FX800 | Machine no.

Part No.	No. of assembly	Item	Part No.	No. of assembly	Item
73170210	11.020 - 2495246	003	73170227	36.010 - 2495254	301
73170210	15.120 - 2496672	007	73170228	36.010 - 2495254	302
73170210	22.200 - 2444371	007	73170229	36.010 - 2495254	303
73170210	22.200 - 2444372	004	73170230	36.010 - 2495254	401
73170210	35.060 - 2443940	002	73170231	36.010 - 2495254	402
73170210	36.010 - 2495254	026	73170232	36.010 - 2495254	501
73170211	36.010 - 2495254	032	73170233	36.010 - 2495254	502
73170212	22.291 - 2444789	013	73170234	36.010 - 2495254	503
73170212	27.010 - 2496798	005	73170235	31.600 - 2782775	103
73170212	34.101 - 2444880	004	73170236	36.010 - 2495254	601
73170212	34.130 - 2496286	003	73170237	36.010 - 2495254	602
73170212	34.600 - 2444944	004	73170238	13.011 - 2496865	007
73170212	34.500 - 2782534	102	73170239	13.011 - 2496855	009
73170212	36.010 - 2495254	033	73170240	20.260 - 2782173	001
73170213	10.010 - 2782700	114	73170241	20.260 - 2782173	002
73170213	11.020 - 2495246	004	73170243	20.260 - 2782173	004
73170213	13.220 - 2495258	007	73170244	20.260 - 2782173	005
73170213	13.230 - 2782549	014	73170245	20.260 - 2782173	006
73170213	20.290 - 2496788	014	73170246	20.260 - 2782173	007
73170213	34.300 - 2444897	002	73170247	20.260 - 2782173	008
73170213	36.010 - 2495254	034	73170248	20.260 - 2782173	009
73170214	15.121 - 2782175	005	73170249	10.102 - 2443385	016
73170214	36.010 - 2495254	035	73170249	20.260 - 2782173	011
73170215	13.220 - 2495258	008	73170250	10.102 - 2443385	015
73170215	13.230 - 2782549	013	73170250	20.260 - 2782173	012
73170216	13.300 - 2443698	006	73170252	20.260 - 2782173	013
73170215	20.290 - 2496788	013	73170253	20.260 - 2782173	014
73170215	20.320 - 2496832	059	73170254	20.260 - 2782173	015
73170215	23.180 - 2263050	004	73170255	20.610 - 2495797	062
73170215	30.040 - 2782656	027	73170255	23.611 - 2248584	011
73170215	31.300 - 2443932	003	73170256	20.260 - 2782173	018
73170215	34.022 - 2444804	005	73170257	20.260 - 2782173	023
73170215	35.060 - 2443940	003	73170258	20.260 - 2782173	024
73170216	36.010 - 2495254	038	73170262	20.260 - 2782173	273
73170216	36.010 - 2495254	040	73170262	20.260 - 2782173	276
73170217	36.010 - 2495254	041	73170263	20.260 - 2782173	278
73170217	36.010 - 2495254	042	73170264	20.260 - 2782173	277
73170217	36.010 - 2495254	043	73170265	20.260 - 2782173	279
73170218	36.010 - 2495254	044	73170268	20.260 - 2782173	100
73170218	36.010 - 2495254	045	73170268	92.020 - 2782033	022
73170218	36.010 - 2495254	046	73170270	20.260 - 2782173	255
73170219	36.010 - 2495254	048	73170271	20.260 - 2782173	258
73170220	36.010 - 2495254	049	73170272	10.102 - 2443385	001
73170221	36.010 - 2495254	101	73170273	10.102 - 2443385	002
73170222	36.010 - 2495254	102	73170274	10.102 - 2443385	003
73170223	36.010 - 2495254	103	73170275	10.102 - 2443385	004
73170223	36.010 - 2495254	204	73170276	10.102 - 2443385	005
73170223	36.010 - 2495254	304	73170276	10.102 - 2443385	101
73170223	36.010 - 2495254	404	73170277	10.102 - 2443385	006
73170223	36.010 - 2495254	503	73170277	92.020 - 2782033	024
73170224	36.010 - 2495254	201	73170278	10.102 - 2443385	007
73170225	36.010 - 2495254	202	73170279	10.102 - 2443385	008
73170226	36.010 - 2495254	203	73170279	10.202 - 2782698	003

Cross reference

SURVEY | Machine type **FX600** | Machine no.

Part No.	No. of assembly	Item	Part No.	No. of assembly	Item
73170280	10.102 - 2443385	009	73170302	60.180 - 2495031	026
73170280	92.020 - 2782033	015	73170303	10.010 - 2782700	009
73170281	10.102 - 2443385	010	73170304	10.010 - 2782700	010
73170282	10.102 - 2443385	011	73170304	13.011 - 2496855	177
73170282	10.202 - 2782698	013	73170304	15.120 - 2496872	077
73170283	10.102 - 2443385	013	73170305	10.102 - 2443385	102
73170283	15.120 - 2496872	010	73170306	10.102 - 2443385	103
73170283	34.220 - 2444696	153	73170307	10.102 - 2443385	104
73170283	34.220 - 2496873	153	73170307	92.020 - 2782033	016
73170284	10.102 - 2443385	017	73170308	10.102 - 2443386	105
73170286	10.102 - 2443385	020	73170308	92.020 - 2782033	017
73170286	10.102 - 2443385	021	73170309	10.102 - 2443385	106
73170286	92.020 - 2782033	018	73170309	92.020 - 2782033	014
73170287	10.102 - 2443385	022	73170310	10.102 - 2443386	107
73170288	10.102 - 2443385	023	73170312	13.230 - 2782549	003
73170289	10.102 - 2443385	024	73170314	13.230 - 2782549	004
73170290	92.020 - 2782033	025	73170316	13.230 - 2782540	005
73170291	10.102 - 2443385	025	73170317	13.230 - 2782549	008
73170292	10.102 - 2443385	026	73170318	13.230 - 2782549	009
73170293	10.102 - 2443385	028	73170319	13.230 - 2782549	010
73170294	10.102 - 2443385	029	73170320	13.230 - 2782549	011
73170295	10.102 - 2443385	030	73170322	13.500 - 2215820	002
73170295	22.030 - 2496847	020	73170323	13.500 - 2215820	003
73170296	10.102 - 2443385	031	73170324	22.501 - 2496818	003
73170296	15.121 - 2782175	015	73170325	15.121 - 2782175	014
73170296	16.031 - 2496806	010	73170325	22.501 - 2496818	004
73170296	20.020 - 2496909	014	73170326	22.501 - 2496818	010
73170296	20.642 - 2496464	026	73170327	20.310 - 2496823	015
73170296	22.501 - 2496818	005	73170327	20.320 - 2496832	015
73170296	23.050 - 2495629	003	73170327	22.501 - 2496818	011
73170296	23.160 - 2283060	104	73170327	23.152 - 2495870	003
73170296	23.231 - 2496356	003	73170327	23.610 - 2496814	008
73170296	23.240 - 2783334	002	73170327	23.611 - 2248584	008
73170298	23.610 - 2496814	014	73170327	23.611 - 2283063	007
73170296	30.040 - 2782656	026	73170327	60.160 - 2444410	022
73170298	10.102 - 2443385	032	73170327	60.180 - 2495031	022
73170298	10.202 - 2782698	012	73170328	20.310 - 2496823	016
73170298	15.120 - 2496872	028	73170328	22.501 - 2496818	012
73170298	15.121 - 2782176	013	73170328	23.611 - 2248564	007
73170299	16.031 - 2496806	011	73170328	60.160 - 2444410	033
73170298	23.610 - 2496814	030	73170328	60.180 - 2495031	033
73170300	10.102 - 2443385	033	73170330	22.502 - 2443610	001
73170300	20.180 - 2496866	029	73170331	22.502 - 2443610	004
73170300	20.290 - 2495798	003	73170332	22.502 - 2443610	005
73170301	10.102 - 2443385	034	73170333	22.502 - 2443610	006
73170301	15.121 - 2782175	018	73170334	22.502 - 2443610	011
73170301	16.031 - 2496806	012	73170335	22.502 - 2443610	012
73170301	22.400 - 1709496	005	73170336	22.502 - 2443610	013
73170301	23.610 - 2496814	035	73170337	22.502 - 2443610	017
73170302	10.102 - 2443385	035	73170338	20.310 - 2496823	003
73170302	20.280 - 2496866	022	73170339	20.310 - 2496829	005
73170302	20.320 - 2495832	040	73170340	20.310 - 2495823	005
73170302	C0.100 - 2444410	026	73170341	20.310 - 2496829	012

Cross reference

SURVEY | Machine type FX600 | Machine no.

Part No.	No. of assembly	Item	Part No.	No. of assembly	Item
73170342	20.310 - 2496823	013	73170373	20.310 - 2496823	314
73170343	20.310 - 2496823	017	73170374	20.310 - 2496823	317
73170344	20.020 - 2496909	022	73170374	20.310 - 2496823	319
73170344	20.310 - 2496823	018	73170374	20.310 - 2496823	320
73170345	20.310 - 2496823	019	73170374	20.310 - 2496823	321
73170346	20.020 - 2496909	023	73170375	20.310 - 2496823	318
73170346	20.310 - 2496823	020	73170375	20.310 - 2496823	322
73170346	22.402 - 2444968	016	73170376	20.310 - 2496823	331
73170346	23.122 - 1593293	007	73170377	20.310 - 2496823	332
73170346	23.810 - 2496814	005	73170378	20.310 - 2496823	351
73170346	23.611 - 2283063	103	73170376	20.310 - 2496823	352
73170345	60.160 - 2444410	024	73170379	20.310 - 2496823	353
73170346	60.160 - 2496850	024	73170379	20.310 - 2496823	354
73170346	60.160 - 2783776	024	73170380	16.032 - 2496807	344
73170346	60.180 - 2495031	024	73170380	20.020 - 2496909	017
73170346	61.032 - 2496859	003	73170380	20.280 - 2496866	020
73170346	61.092 - 2496882	003	73170380	23.270 - 2496569	003
73170347	20.020 - 2496909	025	73170380	23.270 - 2496571	003
73170347	20.310 - 2496823	021	73170380	23.290 - 2496573	003
73170347	60.160 - 2444410	030	73170382	20.280 - 2496866	021
73170347	60.180 - 2495031	030	73170383	20.280 - 2496866	023
73170347	61.032 - 2496859	005	73170383	23.050 - 2495629	005
73170347	61.092 - 2496882	005	73170384	20.280 - 2496866	025
73170348	20.310 - 2496823	022	73170385	20.280 - 2496866	026
73170349	20.310 - 2496823	023	73170387	20.280 - 2496866	027
73170350	20.310 - 2496823	024	73170388	20.280 - 2496866	028
73170350	20.320 - 2496932	024	73170389	20.280 - 2496866	031
73170351	20.310 - 2496823	025	73170391	20.280 - 2496866	032
73170352	15.120 - 2496872	016	73170392	20.280 - 2496866	033
73170352	20.310 - 2496823	026	73170392	20.610 - 2496797	060
73170353	15.121 - 2782175	011	73170392	20.642 - 2496464	008
73170353	20.310 - 2496823	029	73170392	22.200 - 2444371	005
73170356	20.310 - 2496823	032	73170392	23.610 - 2496814	021
73170357	20.310 - 2496823	034	73170393	20.020 - 2496909	018
73170359	10.202 - 2782698	018	73170393	20.280 - 2496866	034
73170359	16.032 - 2496807	345	73170393	22.200 - 2444371	004
73170359	22.020 - 2496846	016	73170394	20.280 - 2496866	036
73170359	22.020 - 2496846	062	73170395	20.280 - 2496866	201
73170359	22.030 - 2496847	021	73170396	20.280 - 2496866	261
73170359	23.122 - 1593293	008	73170398	20.280 - 2496866	263
73170359	23.142 - 2443928	006	73170399	20.280 - 2496866	264
73170360	20.310 - 2496823	035	73170400	20.280 - 2496866	265
73170361	20.310 - 2496823	036	73170402	20.280 - 2496866	267
73170363	20.290 - 2496788	020	73170403	20.290 - 2496866	272
73170364	20.290 - 2496788	021	73170406	20.280 - 2496866	260
73170366	20.290 - 2496788	022	73170407	20.280 - 2496866	284
73170367	20.310 - 2496823	301	73170408	20.280 - 2496866	285
73170368	20.310 - 2496823	302	73170409	20.280 - 2496866	287
73170370	20.310 - 2496823	306	73170410	20.280 - 2496866	288
73170371	20.310 - 2496823	307	73170411	20.280 - 2496866	289
73170372	20.310 - 2496823	311	73170412	23.180 - 2283060	003
73170372	20.310 - 2496823	313	73170413	23.180 - 2282080	102
73170373	20.310 - 2496823	312	73170414	15.121 - 2782175	010

Cross reference

SURVEY | Machine type **FX600** | Machine no.

Part No.	No. of assembly	Item	Part No.	No. of assembly	Item
73170414	23.180 - 2283060	103	73170462	23.612 - 2283064	402
73170414	23.610 - 2496814	024	73170462	23.612 - 2283064	502
73170415	23.241 - 2783333	014	73170462	23.612 - 2283064	602
73170416	23.241 - 2783333	016	73170463	23.612 - 2283064	203
73170417	23.122 - 1593293	001	73170463	23.612 - 2283064	303
73170418	23.122 - 1593293	002	73170463	23.612 - 2283064	403
73170419	23.122 - 1593293	003	73170463	23.612 - 2283064	503
73170420	23.122 - 1593293	004	73170463	23.612 - 2283064	603
73170421	23.122 - 1593293	005	73170464	23.612 - 2283064	204
73170422	23.122 - 1593293	006	73170464	23.612 - 2283064	304
73170423	23.122 - 1593293	010	73170464	23.612 - 2283064	404
73170424	23.122 - 1593293	011	73170464	23.612 - 2283064	504
73170425	23.122 - 1593293	012	73170464	23.612 - 2283064	604
73170426	23.122 - 1593293	013	73170465	23.612 - 2283064	205
73170428	23.122 - 1593293	014	73170465	23.612 - 2283064	305
73170429	23.122 - 1593293	015	73170465	23.612 - 2283064	405
73170431	23.122 - 1593293	016	73170465	23.612 - 2283064	505
73170433	23.122 - 1593293	017	73170465	23.612 - 2283064	605
73170436	22.030 - 2496847	347	73170466	23.612 - 2283064	206
73170436	23.212 - 2444920	170	73170466	23.612 - 2283064	306
73170438	23.122 - 2141659	001	73170466	23.612 - 2283064	406
73170439	23.122 - 2141659	002	73170466	23.612 - 2283064	506
73170440	15.121 - 2782175	027	73170466	23.612 - 2283064	606
73170440	16.042 - 2443685	300	73170467	20.320 - 2496832	045
73170440	23.122 - 2141659	003	73170467	23.610 - 2496814	019
73170440	34.022 - 2444904	122	73170468	20.320 - 2496832	040
73170441	23.612 - 2283064	001	73170469	20.320 - 2496832	042
73170443	23.612 - 2283064	007	73170470	20.320 - 2496832	043
73170444	23.612 - 2283064	008	73170471	20.320 - 2496832	047
73170445	23.612 - 2283064	014	73170471	60.160 - 2444410	027
73170446	23.612 - 2283064	015	73170471	60.180 - 2495031	027
73170447	23.612 - 2283064	016	73170473	20.320 - 2496832	048
73170448	23.612 - 2283064	017	73170473	23.610 - 2496814	018
73170449	23.612 - 2283064	019	73170474	20.320 - 2496832	049
73170450	23.612 - 2283064	030	73170475	20.320 - 2496832	054
73170451	23.612 - 2283064	031	73170476	20.320 - 2496832	250
73170453	23.612 - 2283064	032	73170477	20.320 - 2496832	251
73170454	23.612 - 2283064	033	73170478	20.320 - 2496832	252
73170455	23.612 - 2283064	034	73170479	20.320 - 2496832	253
73170456	23.612 - 2283064	035	73170480	20.320 - 2496832	270
73170457	23.240 - 2783334	011	73170481	20.320 - 2496832	280
73170457	23.612 - 2283064	037	73170482	20.320 - 2496832	281
73170458	23.612 - 2283064	038	73170483	20.320 - 2496832	282
73170459	22.030 - 2496847	032	73170484	20.320 - 2496832	283
73170459	22.030 - 2496847	312	73170485	20.320 - 2496832	291
73170459	23.292 - 2496572	022	73170486	22.400 - 1708496	001
73170459	23.612 - 2283064	040	73170488	22.402 - 2444968	006
73170460	23.612 - 2283064	049	73170489	22.400 - 1708496	003
73170461	22.402 - 2444966	013	73170490	22.400 - 1708496	007
73170461	23.610 - 2496814	023	73170492	23.312 - 2216823	001
73170461	23.612 - 2283064	050	73170493	23.312 - 2216823	101
73170462	23.612 - 2283064	202	73170494	22.020 - 2496846	111
73170462	23.612 - 2283064	302	73170494	22.020 - 2496846	311

Cross reference

SURVEY | Machine type **FX800** | Machine no.

Part No.	No. of assembly	Item	Part No.	No. of assembly	Item
73170494	22.030 - 2496847	384	73170551	23.152 - 2495870	209
73170494	23.212 - 2444920	033	73170552	22.110 - 2496812	001
73170496	22.030 - 2496847	326	73170553	23.141 - 2444879	002
73170496	23.232 - 1998159	004	73170554	11.020 - 2495246	005
73170496	23.232 - 2249696	013	73170556	16.031 - 2496808	101
73170500	23.232 - 2495293	001	73170558	16.031 - 2496808	005
73170501	23.232 - 2495293	002	73170559	13.020 - 2495261	001
73170502	23.232 - 2495293	003	73170560	13.020 - 2495261	002
73170503	23.232 - 2495293	004	73170561	13.020 - 2495261	003
73170504	23.610 - 2496814	006	73170562	13.020 - 2495261	004
73170505	23.610 - 2496814	009	73170563	13.020 - 2495261	005
73170506	23.610 - 2496814	015	73170565	13.020 - 2495261	006
73170509	23.610 - 2496814	017	73170566	13.020 - 2495261	007
73170510	23.240 - 2783334	005	73170567	13.020 - 2495261	008
73170510	23.610 - 2496814	020	73170568	13.020 - 2495261	010
73170511	23.610 - 2496814	033	73170569	13.020 - 2495261	011
73170512	23.610 - 2496814	102	73170570	13.020 - 2495261	012
73170513	23.610 - 2496814	275	73170572	19.400 - 2496811	001
73170514	23.182 - 1707400	001	73170573	19.400 - 2496811	002
73170515	23.182 - 1707400	002	73170574	19.400 - 2496811	003
73170516	23.182 - 1707400	003	73170575	19.400 - 2496811	004
73170517	23.182 - 1707400	005	73170576	16.032 - 2496807	001
73170518	23.182 - 1707400	006	73170577	16.032 - 2496807	010
73170519	23.182 - 1707400	007	73170578	22.010 - 2496849	010
73170521	23.182 - 1707400	008	73170579	16.032 - 2496807	012
73170523	23.182 - 2141196	001	73170579	22.010 - 2496849	007
73170524	23.182 - 2141196	002	73170581	16.032 - 2496807	201
73170525	23.182 - 2141196	003	73170582	16.032 - 2496807	202
73170526	23.611 - 2248584	006	73170583	16.032 - 2496807	203
73170527	23.611 - 2283063	002	73170584	16.032 - 2496807	221
73170528	23.611 - 2283063	003	73170585	16.032 - 2496807	222
73170529	23.611 - 2283063	006	73170586	16.032 - 2496807	251
73170530	23.611 - 2283063	008	73170587	16.032 - 2496807	252
73170532	10.202 - 2782698	016	73170588	16.032 - 2496807	253
73170532	23.611 - 2283063	102	73170589	16.032 - 2496807	223
73170533	23.142 - 2443928	001	73170590	16.032 - 2496807	224
73170534	23.142 - 2443928	003	73170591	16.032 - 2496807	225
73170535	23.142 - 2443928	004	73170592	16.032 - 2496807	227
73170536	23.142 - 2443928	005	73170593	16.032 - 2496807	340
73170537	23.142 - 2443928	007	73170595	16.032 - 2496807	343
73170538	23.142 - 2443928	008	73170596	16.032 - 2496807	347
73170539	23.142 - 2443928	011	73170597	16.032 - 2496807	348
73170540	23.152 - 2495870	001	73170598	16.032 - 2496807	349
73170541	23.152 - 2495870	002	73170599	16.032 - 2496807	551
73170542	23.152 - 2495870	201	73170600	16.032 - 2496807	552
73170543	22.030 - 2496847	047	73170601	16.032 - 2496807	553
73170544	23.152 - 2495870	202	73170602	16.032 - 2496807	554
73170545	23.152 - 2495870	203	73170603	16.032 - 2496807	556
73170546	23.152 - 2495870	204	73170604	16.032 - 2496807	557
73170547	23.152 - 2495870	205	73170605	16.032 - 2496807	558
73170548	23.152 - 2495870	206	73170606	16.032 - 2496807	559
73170549	23.152 - 2495870	207	73170607	16.032 - 2496807	560
73170550	23.152 - 2495870	208	73170608	16.032 - 2496807	561

Cross reference

SURVEY | Machine type **FX600** | Machine no.

Part No.	No. of assembly	Item	Part No.	No. of assembly	Item
73170610	16.032 - 2496807	562	73170669	22.202 - 2248164	005
73170612	16.032 - 2496807	563	73170669	92.020 - 2782033	020
73170613	16.032 - 2496807	564	73170670	22.202 - 2248164	006
73170614	10.202 - 2782698	015	73170671	22.202 - 2248164	007
73170614	16.032 - 2496807	565	73170671	92.020 - 2782033	021
73170615	16.032 - 2496807	573	73170672	22.200 - 2444371	002
73170616	36.512 - 2495247	001	73170674	22.200 - 2444372	002
73170617	36.512 - 2495247	002	73170675	13.501 - 2175501	001
73170618	36.512 - 2495247	003	73170676	13.501 - 2175501	101
73170619	36.512 - 2495247	004	73170676	92.020 - 2782033	013
73170620	36.512 - 2495247	005	73170677	13.501 - 2175501	102
73170621	34.101 - 2444880	132	73170678	92.020 - 2782033	012
73170621	36.512 - 2495247	006	73170679	13.501 - 2175501	103
73170622	36.512 - 2495247	008	73170681	13.501 - 2175501	105
73170623	24.022 - 2495403	001	73170682	13.501 - 2175501	106
73170624	24.022 - 2495403	002	73170683	13.300 - 2443698	001
73170626	24.022 - 2495403	003	73170684	13.300 - 2443698	002
73170628	24.022 - 2495403	302	73170685	13.300 - 2443698	004
73170629	24.022 - 2495403	303	73170685	20.020 - 2496909	040
73170630	24.022 - 2495403	304	73170685	34.640 - 2444852	008
73170631	24.022 - 2495403	305	73170686	30.200 - 2444234	012
73170632	24.022 - 2495403	006	73170687	13.300 - 2443698	005
73170634	24.022 - 2495403	402	73170690	10.202 - 2782698	004
73170635	24.022 - 2495403	403	73170691	10.202 - 2782698	005
73170636	24.022 - 2495403	404	73170693	10.202 - 2782698	006
73170637	24.022 - 2495403	405	73170694	10.202 - 2782698	007
73170639	24.022 - 2495403	407	73170696	10.202 - 2782698	009
73170640	24.022 - 2495403	408	73170695	13.400 - 2782790	002
73170642	24.022 - 2495403	008	73170696	23.292 - 2496572	009
73170643	24.022 - 2495403	011	73170699	10.202 - 2782698	011
73170643	24.052 - 2495307	008	73170699	15.121 - 2782175	030
73170644	24.022 - 2495403	019	73170706	10.202 - 2782698	022
73170645	24.022 - 2495403	023	73170707	15.120 - 2496872	026
73170646	24.022 - 2495403	025	73170708	10.202 - 2782698	023
73170647	24.022 - 2495403	202	73170709	10.202 - 2782698	024
73170648	24.022 - 2495403	203	73170710	10.202 - 2782698	025
73170649	24.022 - 2495403	204	73170711	22.010 - 2496949	006
73170650	24.022 - 2495403	406	73170712	22.010 - 2496849	008
73170651	24.022 - 2495403	800	73170713	22.010 - 2496849	011
73170652	23.240 - 2783334	003	73170714	22.010 - 2496849	012
73170653	22.200 - 2444371	003	73170714	24.032 - 2495225	009
73170653	23.240 - 2783334	004	73170715	22.010 - 2496849	013
73170656	23.270 - 2496569	004	73170717	22.010 - 2496949	014
73170656	23.270 - 2496571	004	73170720	22.010 - 2496849	017
73170658	23.240 - 2783334	010	73170722	22.010 - 2496849	018
73170659	23.240 - 2783334	012	73170724	22.010 - 2496849	019
73170664	23.232 - 1998158	002	73170725	22.010 - 2496849	020
73170664	23.232 - 2249696	002	73170728	17.102 - 2444158	001
73170664	23.242 - 2783875	120	73170729	17.102 - 2444158	002
73170665	23.242 - 2783875	130	73170730	17.102 - 2444158	003
73170667	22.202 - 2248164	001	73170731	17.102 - 2444158	004
73170668	22.202 - 2248164	003	73170732	22.020 - 2496846	001
73170668	92.020 - 2782033	019	73170733	22.020 - 2496846	006

Cross reference

SURVEY | Machine type FX600 | Machine no.

Part No.	No. of assembly	Item	Part No.	No. of assembly	Item
73170734	22.020 - 2496845	011	73170794	22.110 - 2495217	001
73170735	22.020 - 2496846	017	73170795	22.110 - 2495217	004
73170736	22.020 - 2496846	022	73170796	22.110 - 2495217	005
73170736	22.100 - 2496888	018	73170797	22.110 - 2495217	007
73170737	22.020 - 2496846	024	73170799	22.110 - 2495217	010
73170738	22.020 - 2496846	032	73170800	22.110 - 2495217	014
73170739	16.042 - 2443685	280	73170802	22.110 - 2495217	015
73170739	22.020 - 2496848	037	73170803	10.010 - 2782700	004
73170740	22.020 - 2496845	038	73170804	01.300 - 2496775	104
73170742	22.020 - 2496845	039	73170804	01.300 - 2782082	104
73170744	22.020 - 2496846	040	73170804	10.010 - 2782700	005
73170748	22.020 - 2496846	041	73170804	11.010 - 2496910	001
73170749	22.020 - 2496846	053	73170805	10.010 - 2782700	006
73170749	22.030 - 2496847	511	73170806	10.010 - 2782700	008
73170750	22.020 - 2496846	054	73170807	10.010 - 2782700	110
73170751	22.020 - 2496846	061	73170808	10.010 - 2782700	111
73170753	22.020 - 2496846	112	73170809	10.010 - 2782700	112
73170753	22.020 - 2496846	212	73170810	10.010 - 2782700	115
73170754	23.212 - 2444920	011	73170811	10.010 - 2782700	122
73170755	22.020 - 2496846	213	73170811	10.010 - 2782700	132
73170755	22.030 - 2496847	358	73170812	10.010 - 2782700	127
73170757	22.020 - 2496846	312	73170812	10.010 - 2782700	137
73170758	22.020 - 2496846	313	73170813	10.010 - 2782700	129
73170759	16.042 - 2443685	080	73170813	10.010 - 2782700	139
73170760	16.042 - 2443685	090	73170814	22.500 - 2496820	004
73170761	16.042 - 2443685	100	73170815	22.510 - 2496819	001
73170762	16.042 - 2443685	110	73170816	30.040 - 2782656	005
73170763	16.042 - 2443685	120	73170819	30.040 - 2782656	009
73170764	16.042 - 2443685	130	73170819	30.200 - 2444234	008
73170765	16.042 - 2443685	140	73170819	30.200 - 2444411	008
73170766	16.042 - 2443685	150	73170820	30.040 - 2782656	010
73170767	16.042 - 2443685	160	73170820	30.200 - 2444234	009
73170768	16.042 - 2443685	170	73170820	30.200 - 2444411	009
73170769	16.042 - 2443685	180	73170822	30.040 - 2782656	011
73170769	16.042 - 2443685	190	73170822	30.200 - 2444234	010
73170770	16.042 - 2443685	200	73170822	30.200 - 2444411	010
73170771	16.042 - 2443685	210	73170823	30.040 - 2782656	012
73170772	16.042 - 2443685	220	73170823	30.200 - 2444234	011
73170773	16.042 - 2443685	230	73170823	30.200 - 2444411	011
73170774	16.042 - 2443685	240	73170825	30.040 - 2782656	013
73170775	16.042 - 2443685	250	73170826	30.040 - 2782656	016
73170776	16.042 - 2443685	260	73170826	30.200 - 2444234	021
73170777	16.042 - 2443685	270	73170826	30.200 - 2444411	021
73170778	16.042 - 2443685	290	73170827	30.040 - 2782656	017
73170779	16.042 - 2443685	310	73170829	30.040 - 2782656	018
73170780	16.042 - 2443685	320	73170831	30.040 - 2782656	020
73170780	22.030 - 2496847	408	73170831	30.200 - 2444234	018
73170781	16.042 - 2443685	330	73170831	30.200 - 2444411	018
73170782	16.042 - 2443685	350	73170833	30.040 - 2782656	023
73170783	16.042 - 2443685	360	73170833	30.200 - 2444234	015
73170784	16.042 - 2443685	370	73170833	30.200 - 2444411	016
73170785	16.042 - 2443685	380	73170834	22.520 - 2444775	259
73170793	13.400 - 2782790	001	73170834	30.040 - 2782656	024

Cross reference

SURVEY | Machine type **FX600** | Machine no.

Part No.	No. of assembly	Item	Part No.	No. of assembly	Item
73170997	35.060 - 2443940	001	73171041	34.022 - 2444904	025
73170998	34.300 - 2444897	001	73171042	34.021 - 2496867	026
73170998	36.500 - 2782741	013	73171043	34.021 - 2496867	031
73170999	34.230 - 2495010	020	73171043	34.022 - 2444904	031
73170999	34.300 - 2444897	003	73171044	34.021 - 2496867	032
73171000	01.300 - 2496775	103	73171044	34.022 - 2444904	032
73171000	01.300 - 2782082	103	73171045	34.021 - 2496867	033
73171001	01.300 - 2496775	203	73171045	34.022 - 2444904	033
73171001	01.300 - 2782082	203	73171046	34.021 - 2496867	037
73171002	01.300 - 2496775	204	73171046	34.022 - 2444904	037
73171002	01.300 - 2782082	204	73171047	34.021 - 2496867	040
73171003	11.010 - 2495248	001	73171047	34.022 - 2444904	040
73171004	11.010 - 2495248	002	73171047	34.220 - 2444896	037
73171005	11.010 - 2495248	004	73171047	34.220 - 2496873	037
73171007	11.010 - 2496910	003	73171048	34.021 - 2496867	043
73171012	92.010 - 2782496	114	73171048	34.022 - 2444904	043
73171013	92.010 - 2782496	126	73171049	34.021 - 2496867	044
73171014	92.010 - 2782496	002	73171049	34.022 - 2444904	044
73171015	92.010 - 2782496	003	73171050	34.021 - 2496867	050
73171016	92.010 - 2782496	004	73171050	34.022 - 2444904	050
73171017	92.010 - 2782496	005	73171051	34.021 - 2496867	055
73171019	92.010 - 2782496	201	73171051	34.022 - 2444904	055
73171020	92.010 - 2782496	202	73171052	34.021 - 2496867	056
73171021	92.010 - 2782496	006	73171052	34.022 - 2444904	056
73171022	92.010 - 2782496	204	73171053	34.021 - 2496867	075
73171023	92.010 - 2782496	205	73171053	34.022 - 2444904	075
73171024	34.640 - 2444852	002	73171054	34.021 - 2496867	077
73171025	34.630 - 2444916	014	73171054	34.022 - 2444904	077
73171025	34.640 - 2444852	005	73171055	34.021 - 2496867	107
73171025	34.640 - 2444852	006	73171055	34.022 - 2444904	107
73171026	34.640 - 2444852	007	73171056	34.021 - 2496867	115
73171027	34.640 - 2444852	009	73171056	34.022 - 2444904	115
73171028	34.640 - 2444852	010	73171058	34.021 - 2496867	128
73171029	34.640 - 2444852	015	73171058	34.022 - 2444904	128
73171030	31.510 - 2495871	012	73171059	34.021 - 2496867	130
73171030	31.510 - 2496871	021	73171059	34.022 - 2444904	130
73171030	34.131 - 2444891	004	73171060	34.021 - 2496867	195
73171030	34.140 - 2444887	013	73171060	34.022 - 2444904	195
73171030	34.140 - 2782774	013	73171061	34.021 - 2496867	218
73171030	34.640 - 2444852	016	73171061	34.022 - 2444904	218
73171032	34.640 - 2444852	017	73171062	34.021 - 2496867	250
73171033	27.010 - 2496798	006	73171062	34.022 - 2444904	250
73171033	34.021 - 2496867	052	73171064	34.021 - 2496867	400
73171033	34.022 - 2444904	052	73171065	34.021 - 2496867	410
73171034	27.010 - 2496798	007	73171065	34.022 - 2444904	410
73171034	34.021 - 2496867	078	73171066	34.502 - 2444945	001
73171034	34.022 - 2444904	078	73171067	34.502 - 2444945	005
73171035	27.010 - 2496798	009	73171067	34.502 - 2782535	005
73171039	34.021 - 2496867	017	73171068	34.502 - 2444945	012
73171039	34.022 - 2444904	017	73171068	34.502 - 2782535	012
73171040	34.021 - 2496867	022	73171069	34.502 - 2444945	019
73171040	34.022 - 2444904	022	73171069	34.502 - 2782535	019
73171041	34.021 - 2496867	025	73171070	34.502 - 2444945	021

Cross reference

SURVEY | Machine type FX800 | Machine no.

Part No.	No. of assembly	Item	Part No.	No. of assembly	Item
73171070	34.502 - 2782535	021	73171103	34.630 - 2444916	101
73171071	34.502 - 2444945	023	73171104	34.630 - 2444916	102
73171071	34.502 - 2782535	022	73171105	34.630 - 2444916	103
73171072	34.502 - 2444945	040	73171106	34.630 - 2444916	004
73171072	34.502 - 2782535	040	73171108	34.630 - 2444916	006
73171073	34.502 - 2444945	051	73171109	34.630 - 2444916	007
73171073	34.502 - 2782535	051	73171110	34.630 - 2444916	008
73171074	34.502 - 2444945	053	73171111	34.630 - 2444916	011
73171075	34.502 - 2444945	055	73171112	34.630 - 2444916	012
73171075	34.502 - 2782535	055	73171113	34.630 - 2444916	017
73171076	34.502 - 2444945	056	73171114	34.630 - 2444916	020
73171076	34.502 - 2782535	056	73171115	34.630 - 2444916	025
73171077	34.502 - 2444945	057	73171116	34.630 - 2444916	044
73171077	34.502 - 2782535	057	73171117	34.630 - 2444916	045
73171078	34.502 - 2444945	070	73171119	34.630 - 2444916	100
73171078	34.502 - 2782535	070	73171120	34.630 - 2444916	201
73171080	34.502 - 2444945	071	73171121	34.630 - 2444916	220
73171080	34.502 - 2782535	071	73171124	34.230 - 2495010	002
73171081	34.502 - 2444945	072	73171125	34.230 - 2495010	004
73171081	34.502 - 2782535	072	73171126	34.230 - 2495010	005
73171083	34.502 - 2444945	090	73171127	34.230 - 2495010	007
73171083	34.502 - 2782535	090	73171128	34.230 - 2495010	008
73171084	34.502 - 2444945	091	73171129	34.230 - 2495010	009
73171084	34.502 - 2782535	091	73171131	34.230 - 2495010	011
73171085	34.220 - 2496873	001	73171132	34.230 - 2495010	012
73171086	34.220 - 2444896	010	73171133	34.230 - 2495010	013
73171086	34.220 - 2496873	010	73171134	34.230 - 2495010	014
73171087	34.220 - 2444896	011	73171136	34.230 - 2495010	016
73171087	34.220 - 2496873	011	73171137	34.230 - 2495010	017
73171088	34.220 - 2444896	013	73171138	34.230 - 2495010	018
73171088	34.220 - 2496873	013	73171139	34.230 - 2495010	019
73171089	34.220 - 2444896	019	73171140	34.230 - 2495010	021
73171089	34.220 - 2496873	019	73171141	34.230 - 2495010	022
73171090	34.220 - 2496873	036	73171142	34.230 - 2495010	023
73171091	34.220 - 2496873	040	73171143	34.230 - 2495010	024
73171092	34.220 - 2444896	047	73171144	34.230 - 2495010	025
73171092	34.220 - 2496873	047	73171145	34.230 - 2495010	026
73171093	34.131 - 2444891	007	73171146	34.230 - 2495010	027
73171093	34.220 - 2444896	049	73171147	34.230 - 2495010	028
73171093	34.220 - 2496873	049	73171148	34.230 - 2495010	029
73171095	34.220 - 2444896	056	73171149	34.230 - 2495010	030
73171095	34.220 - 2496873	056	73171150	34.230 - 2495010	031
73171096	34.220 - 2444896	059	73171151	34.230 - 2495010	032
73171096	34.220 - 2496873	059	73171151	34.230 - 2495010	035
73171096	34.230 - 2495010	050	73171152	34.230 - 2495010	033
73171097	34.220 - 2444896	100	73171153	34.230 - 2495010	034
73171097	34.220 - 2496873	100	73171154	34.230 - 2495010	036
73171098	34.220 - 2444896	150	73171156	34.230 - 2495010	038
73171098	34.220 - 2496873	150	73171157	34.230 - 2495010	039
73171099	34.220 - 2444896	152	73171159	34.230 - 2495010	040
73171099	34.220 - 2496873	152	73171159	34.230 - 2495010	041
73171101	34.630 - 2444916	001	73171160	34.230 - 2495010	042
73171102	34.630 - 2444916	003	73171161	34.230 - 2495010	043

Cross reference

SURVEY | Machine type FX600 | Machine no.

Part No.	No. of assembly	Item	Part No.	No. of assembly	Item
73171162	34.230 - 2495010	044	73171214	34.101 - 2444880	122
73171163	34.230 - 2495010	045	73171215	34.101 - 2444880	124
73171165	34.230 - 2495010	046	73171215	34.101 - 2444880	130
73171166	34.230 - 2495010	047	73171217	34.101 - 2444880	131
73171168	34.230 - 2495010	049	73171218	34.101 - 2444880	133
73171169	31.510 - 2496871	001	73171219	34.101 - 2444880	134
73171170	31.510 - 2496871	002	73171220	34.101 - 2444880	136
73171171	31.510 - 2496871	003	73171221	34.101 - 2444880	138
73171172	31.510 - 2496871	005	73171222	34.101 - 2444880	139
73171173	31.510 - 2496871	007	73171223	34.101 - 2444880	140
73171173	31.510 - 2496871	032	73171224	34.101 - 2444880	141
73171174	31.510 - 2496871	020	73171225	34.101 - 2444880	142
73171175	31.510 - 2496871	031	73171226	34.101 - 2444880	143
73171176	31.510 - 2496871	035	73171227	34.101 - 2444880	145
73171177	90.100 - 2496594	001	73171228	34.140 - 2444887	001
73171178	90.100 - 2496594	002	73171229	34.140 - 2444887	010
73171179	90.100 - 2496594	003	73171230	34.140 - 2444887	011
73171180	90.100 - 2496594	005	73171231	34.140 - 2444887	012
73171181	34.210 - 2443232	001	73171231	34.140 - 2782774	012
73171182	34.210 - 2443232	006	73171232	34.140 - 2444887	014
73171183	34.100 - 1908540	001	73171232	34.140 - 2782774	014
73171184	34.100 - 1908540	002	73171233	23.270 - 2496569	005
73171186	34.100 - 1908540	003	73171233	23.270 - 2496571	006
73171187	34.100 - 1908540	004	73171233	34.140 - 2444887	016
73171188	34.140 - 2444887	003	73171233	34.140 - 2782774	016
73171188	34.140 - 2782774	003	73171234	34.140 - 2782774	001
73171188	34.500 - 2444944	003	73171235	34.140 - 2782774	011
73171188	34.500 - 2782534	101	73171236	34.022 - 2444904	607
73171189	34.105 - 2495303	018	73171239	31.600 - 2782775	001
73171190	34.130 - 2496286	001	73171240	31.600 - 2782775	002
73171191	34.131 - 2444891	001	73171243	31.600 - 2782775	202
73171192	34.131 - 2444891	006	73171245	31.600 - 2782775	012
73171193	34.131 - 2444891	101	73171245	31.600 - 2782775	017
73171194	34.131 - 2444891	102	73171245	31.600 - 2782775	022
73171195	34.101 - 2444880	001	73171245	31.600 - 2782775	027
73171196	34.101 - 2444880	101	73171245	31.600 - 2782775	032
73171197	34.101 - 2444880	102	73171245	31.600 - 2782775	042
73171198	34.101 - 2444880	103	73171246	31.600 - 2782775	101
73171199	34.101 - 2444880	104	73171247	31.600 - 2782775	102
73171200	34.101 - 2444880	105	73171249	34.141 - 2444874	001
73171201	34.101 - 2444880	107	73171250	34.141 - 2444877	027
73171202	34.101 - 2444880	108	73171251	23.232 - 1998158	001
73171203	34.101 - 2444880	109	73171252	23.232 - 1998158	003
73171204	34.101 - 2444880	111	73171253	23.232 - 2249696	001
73171205	34.101 - 2444880	112	73171254	23.232 - 2249696	008
73171206	34.101 - 2444880	113	73171255	23.232 - 2249696	009
73171207	34.101 - 2444880	114	73171256	23.232 - 2249696	014
73171208	34.101 - 2444880	115	73171257	23.212 - 2444920	107
73171209	34.101 - 2444880	116	73171257	23.232 - 2249696	015
73171210	34.101 - 2444880	117	73171258	23.232 - 2249696	016
73171211	31.060 - 1287263	080	73171259	23.232 - 2249696	017
73171212	34.101 - 2444880	118	73171260	23.232 - 2249696	018
73171213	34.101 - 2444880	119	73171261	23.232 - 2249696	019

Cross reference

SURVEY | Machine type **FX600** | Machine no.

Part No.	No. of assembly	Item	Part No.	No. of assembly	Item
73171352	60.180 - 2495031	009	73171390	61.011 - 2495220	104
73171353	60.180 - 2495031	016	73171391	61.010 - 2444197	105
73171354	60.160 - 2444410	016	73171391	61.011 - 2495220	105
73171354	60.180 - 2495031	016	73171392	61.010 - 2444197	106
73171355	60.160 - 2444410	017	73171392	61.011 - 2495220	106
73171355	60.180 - 2495031	017	73171393	61.010 - 2444197	107
73171356	60.160 - 2444410	018	73171393	61.011 - 2495220	107
73171356	60.180 - 2495031	018	73171394	61.010 - 2444197	108
73171357	60.160 - 2444410	019	73171394	61.011 - 2495220	108
73171357	60.180 - 2495031	019	73171395	61.032 - 2496859	008
73171358	60.180 - 2495031	021	73171395	61.032 - 2496882	009
73171362	60.180 - 2495031	028	73171396	61.032 - 2496859	010
73171363	60.160 - 2444410	036	73171396	61.032 - 2496882	010
73171363	60.180 - 2495031	036	73171397	61.032 - 2496882	012
73171364	60.160 - 2444410	700	73171403	62.012 - 2496906	104
73171364	60.180 - 2495031	700	73171404	62.012 - 2496906	105
73171365	60.180 - 2495031	701	73171406	62.012 - 2496906	110
73171366	60.160 - 2496850	004	73171407	62.012 - 2496906	111
73171366	60.160 - 2783776	004	73171408	62.012 - 2496906	114
73171366	61.032 - 2496859	013	73171409	62.012 - 2496905	213
73171366	61.032 - 2496882	013	73171410	24.052 - 2495307	010
73171367	60.160 - 2496850	029	73171410	24.052 - 2495307	303
73171367	60.160 - 2783776	029	73171410	62.012 - 2496906	216
73171367	61.032 - 2496859	014	73171411	24.032 - 2495225	001
73171367	61.032 - 2496882	014	73171412	24.032 - 2495225	008
73171368	60.160 - 2496850	703	73171413	24.032 - 2495225	010
73171369	22.402 - 2444968	001	73171413	24.032 - 2495225	302
73171370	22.402 - 2444968	002	73171414	24.032 - 2495225	011
73171371	22.402 - 2444968	005	73171414	24.032 - 2495225	303
73171372	22.402 - 2444968	007	73171415	24.032 - 2495225	202
73171374	22.402 - 2444968	008	73171416	24.032 - 2495225	203
73171375	22.402 - 2444968	009	73171417	24.032 - 2495225	204
73171376	22.402 - 2444968	010	73171418	24.032 - 2495225	304
73171377	22.402 - 2444968	014	73171419	24.032 - 2495225	305
73171379	30.200 - 2444234	007	73171419	24.052 - 2495307	305
73171379	30.200 - 2444411	007	73171420	24.032 - 2495225	402
73171380	30.200 - 2444234	551	73171421	24.032 - 2495225	403
73171381	30.200 - 2444234	552	73171422	24.032 - 2495225	404
73171381	30.200 - 2444411	552	73171423	24.032 - 2495225	405
73171382	30.200 - 2444234	553	73171425	24.032 - 2495225	406
73171382	30.200 - 2444411	553	73171426	24.032 - 2495225	407
73171383	30.200 - 2444234	554	73171427	24.032 - 2495225	408
73171384	30.200 - 2444234	555	73171428	24.032 - 2495225	800
73171384	30.200 - 2444411	555	73171434	24.052 - 2495307	001
73171385	30.200 - 2444234	556	73171435	24.052 - 2495307	002
73171386	61.011 - 2495220	001	73171436	24.052 - 2495307	003
73171387	61.010 - 2444197	101	73171437	24.052 - 2495307	004
73171387	61.011 - 2495220	101	73171439	24.052 - 2495307	402
73171388	61.010 - 2444197	102	73171440	24.052 - 2495307	403
73171388	61.011 - 2495220	102	73171441	24.052 - 2495307	404
73171389	61.010 - 2444197	103	73171442	24.052 - 2495307	405
73171389	61.011 - 2495220	103	73171443	24.052 - 2495307	406
73171390	61.010 - 2444197	104	73171444	24.052 - 2495307	407

Cross reference

SURVEY | Machine type FX800 | Machine no.

Part No.	No. of assembly	Item	Part No.	No. of assembly	Item
73171445	24.052 - 2495307	408	73172009	34.022 - 2444904	502
73171445	24.052 - 2495307	009	73172010	34.022 - 2444904	503
73171446	24.052 - 2496307	302	73172011	34.022 - 2444904	501
73171447	24.052 - 2495307	202	73172012	34.022 - 2444904	602
73171448	24.052 - 2496307	203	73172013	34.022 - 2444904	604
73171449	24.052 - 2495307	304	73172014	34.022 - 2444904	606
73171450	24.052 - 2496307	800	73172015	34.220 - 2444896	001
73171461	62.210 - 2249912	001	73172017	34.220 - 2444896	036
73171452	62.210 - 2249912	002	73172018	34.220 - 2444896	040
73171453	62.210 - 2249912	007	73172063	62.012 - 2496908	212
73171454	27.012 - 2496799	001	73172160	30.200 - 2444411	012
73171455	31.050 - 1287263	062	73172203	20.260 - 2782173	272
73171465	34.642 - 2463302	001	73172242	19.502 - 2496921	003
73171456	34.642 - 2463302	002	73172243	19.502 - 2496921	004
73171457	34.642 - 2463302	003	73172245	19.400 - 2496811	306
73171458	34.642 - 2463302	004	73172245	19.502 - 2496921	005
73171459	34.642 - 2463302	005	73172246	19.400 - 2496811	305
73171502	20.020 - 2496909	026	73172246	19.502 - 2496921	006
73171557	10.010 - 2782700	007	73172248	19.502 - 2496921	008
73171558	15.122 - 2496856	001	73172249	19.502 - 2496921	009
73171559	22.030 - 2496847	001	73172250	19.502 - 2496921	011
73171560	20.290 - 2496798	004	73172251	19.502 - 2496921	012
73171561	20.290 - 2496798	005	73172252	19.502 - 2496921	013
73171562	20.290 - 2496798	006	73172253	19.502 - 2496921	014
73171563	20.290 - 2496798	007	73172254	19.502 - 2496921	015
73171564	22.052 - 2496848	001	73172257	36.010 - 2496264	026
73171565	36.010 - 2443764	008	73172288	36.010 - 2495254	016
73171567	20.020 - 2496909	015	73172305	20.260 - 2782173	003
73171664	31.050 - 1287263	068	73172322	20.310 - 2496823	065
73171665	10.202 - 2782698	020	73172324	20.310 - 2496823	067
73171665	22.030 - 2496847	022	73172334	20.320 - 2496832	056
73171665	22.030 - 2496847	335	73172335	20.320 - 2496832	057
73171665	22.030 - 2496847	519	73172358	22.110 - 2496812	015
73171741	16.031 - 2496808	002	73172360	23.292 - 2496572	010
73171742	16.031 - 2496808	004	73172445	22.100 - 2496868	120
73171751	22.030 - 2496847	137	73172457	22.030 - 2496847	048
73171805	20.641 - 2782181	105	73172457	22.030 - 2496847	518
73171805	20.641 - 2782181	107	73172459	22.030 - 2496847	025
73171805	20.641 - 2782181	125	73172466	22.030 - 2496847	307
73171805	20.641 - 2782181	127	73172470	22.030 - 2496847	360
73171806	20.641 - 2782181	108	73172471	22.030 - 2496847	365
73171806	20.641 - 2782181	123	73172486	20.020 - 2496909	016
73171833	22.030 - 2496847	313	73172487	13.011 - 2496855	171
73171883	23.240 - 2783334	006	73172489	12.010 - 2782083	001
73171993	23.240 - 2783334	007	73172506	31.410 - 2444808	001
73171996	30.040 - 2782656	029	73172507	31.410 - 2444808	005
73172000	31.050 - 1287263	126	73172508	31.050 - 1287263	127
73172001	31.050 - 1287263	030	73172508	31.410 - 2444808	101
73172003	31.050 - 1287263	004	73172509	31.050 - 1287263	009
73172005	34.022 - 2444904	018	73172509	31.050 - 1287263	011
73172006	34.022 - 2444904	060	73172509	31.050 - 1287263	013
73172007	34.022 - 2444904	400	73172509	31.050 - 1287263	015
73172008	34.022 - 2444904	501	73172509	31.050 - 1287263	017

Cross reference

SURVEY | Machine type FX600 | Machine no.

Part No.	No. of assembly	Item	Part No.	No. of assembly	Item
73172509	31.050 - 1287263	018	73172633	31.050 - 1287263	121
73172509	31.410 - 2444808	103	73172634	31.050 - 1287263	122
73172510	31.050 - 1287263	010	73172635	31.050 - 1287263	123
73172510	31.050 - 1287263	012	73172636	31.050 - 1287263	124
73172510	31.050 - 1287263	014	73172640	31.050 - 1287263	135
73172510	31.050 - 1287263	016	73172641	31.050 - 1287263	139
73172510	31.050 - 1287263	018	73172642	31.050 - 1287263	140
73172510	31.050 - 1287263	020	73172785	06.170 - 2141753	001
73172510	31.410 - 2444808	104	73172847	24.032 - 2495225	002
73172511	31.050 - 1287263	151	73172848	24.032 - 2495225	003
73172511	31.410 - 2444808	105	73173010	24.032 - 2495225	004
73172512	31.050 - 1287263	070	73173011	10.102 - 2443364	036
73172512	31.410 - 2444808	106	73173012	22.400 - 1708496	002
73172513	34.140 - 2782774	101	73173016	13.501 - 2175501	104
73172514	34.140 - 2782774	102	73173027	31.050 - 1287263	117
73172516	31.050 - 1287263	078	73173031	31.050 - 1287263	126
73172516	31.600 - 2782775	037	73173064	16.031 - 2496808	003
73172527	27.012 - 2496799	090	73173305	31.050 - 1287263	001
73172586	22.030 - 2496847	359	73173305	31.050 - 1287263	005
73172587	22.030 - 2496847	302	73173305	31.050 - 1287263	007
73172588	31.050 - 1287263	002	73173305	31.050 - 1287263	008
73172589	31.050 - 1287263	003	73173305	31.050 - 1287263	045
73172594	13.011 - 2496855	176	73173305	31.050 - 1287263	046
73172594	15.120 - 2496872	076	73173305	31.050 - 1287263	047
73172604	31.050 - 1287263	021	73173305	31.050 - 1287263	050
73172605	31.050 - 1287263	022	73173305	31.050 - 1287263	059
73172606	31.050 - 1287263	026	73173305	31.050 - 1287263	060
73172606	31.050 - 1287263	031	73173305	31.050 - 1287263	061
73172606	31.050 - 1287263	032	73173305	31.050 - 1287263	063
73172606	31.050 - 1287263	033	73173305	31.050 - 1287263	065
73172606	31.050 - 1287263	034	73173305	31.050 - 1287263	066
73172606	31.050 - 1287263	038	73173305	31.050 - 1287263	067
73172606	31.050 - 1287263	041	73173305	31.050 - 1287263	075
73172606	31.050 - 1287263	043	73173305	31.050 - 1287263	079
73172606	31.050 - 1287263	044	73173305	31.050 - 1287263	081
73172606	32.999 - 2782749	004	73173305	31.050 - 1287263	082
73172607	31.050 - 1287263	035	73173305	31.050 - 1287263	083
73172607	31.050 - 1287263	039	73173305	31.050 - 1287263	084
73172608	31.050 - 1287263	040	73173305	31.050 - 1287263	087
73172611	31.050 - 1287263	045	73173305	31.050 - 1287263	088
73172618	31.050 - 1287263	094	73173305	31.050 - 1287263	097
73172618	31.050 - 1287263	095	73173305	31.050 - 1287263	099
73172618	31.050 - 1287263	096	73173305	31.050 - 1287263	100
73172618	31.050 - 1287263	102	73173305	31.050 - 1287263	101
73172618	31.050 - 1287263	107	73173305	31.050 - 1287263	103
73172620	31.050 - 1287263	098	73173305	31.050 - 1287263	104
73172624	31.050 - 1287263	089	73173305	31.050 - 1287263	105
73172625	31.050 - 1287263	090	73173305	31.050 - 1287263	106
73172626	31.050 - 1287263	091	73173305	31.050 - 1287263	108
73172627	31.050 - 1287263	092	73173305	31.050 - 1287263	152
73172628	31.050 - 1287263	093	73173305	31.050 - 1287263	153
73172631	31.050 - 1287263	119	73173305	31.050 - 1287263	154
73172632	31.050 - 1287263	120	73173305	31.050 - 1287263	155

Cross reference

SURVEY | Machine type FX600 | Machine no.

Part No.	No. of assembly	Item	Part No.	No. of assembly	Item
73173305	31.050 - 1287263	156	73175203	20.310 - 2496823	038
73173305	31.050 - 1287263	157	73175204	20.310 - 2496823	308
73173305	31.050 - 1287263	158	73175211	20.290 - 2496788	010
73173305	31.050 - 1287263	159	73175212	20.290 - 2496788	011
73173305	31.050 - 1287263	160	73175213	20.290 - 2496788	012
73173305	31.050 - 1287263	161	73175214	20.290 - 2496788	023
73173305	31.050 - 1287263	162	73175215	20.290 - 2496788	254
73173305	31.050 - 1287263	163	73175216	20.290 - 2496788	256
73173305	31.050 - 1287263	164	73175217	20.290 - 2496788	257
73173305	31.050 - 1287263	165	73175221	31.050 - 1287263	071
73173305	31.050 - 1287263	166	73175223	34.022 - 2782256	001
73173305	31.050 - 1287263	167	73175224	34.230 - 2496011	003
73173305	31.050 - 1287263	168	73175224	34.230 - 2782255	003
73173564	22.100 - 2496888	009	73175225	34.230 - 2495011	004
73173826	20.310 - 2496823	066	73175225	34.230 - 2782255	004
73174128	31.050 - 1287263	052	73175226	34.230 - 2495011	005
73174128	31.050 - 1287263	053	73175226	34.230 - 2782255	005
73174128	31.050 - 1287263	054	73175227	34.230 - 2782254	001
73174128	31.050 - 1287263	055	73175228	34.230 - 2495010	001
73174128	32.998 - 2782749	005	73175229	34.230 - 2495010	006
73174165	31.050 - 1287263	056	73175230	34.230 - 2495010	010
73174165	31.050 - 1287263	058	73175231	34.230 - 2495010	015
73174171	31.050 - 1287263	150	73175232	34.230 - 2495010	037
73174352	22.030 - 2496847	219	73175233	20.610 - 2496797	124
73174521	92.010 - 2782496	124	73175233	20.610 - 2496797	125
73174524	92.010 - 2782496	120	73175239	62.012 - 2496906	001
73175137	31.050 - 1287263	023	73175240	62.012 - 2496906	101
73175137	31.050 - 1287263	024	73175241	62.012 - 2496906	102
73175137	31.050 - 1287263	025	73175242	62.012 - 2496906	103
73175140	31.050 - 1287263	072	73175243	62.012 - 2496906	106
73175141	31.050 - 1287263	073	73175248	27.012 - 2496799	030
73175142	31.050 - 1287263	074	73175249	27.012 - 2496799	060
73175147	31.050 - 1287263	125	73175250	27.012 - 2496799	070
73175148	31.050 - 1287263	129	73175251	27.012 - 2496799	080
73175153	31.050 - 1287263	027	73175253	27.012 - 2496799	100
73175164	31.050 - 1287263	028	73175254	27.012 - 2496799	110
73175155	31.050 - 1287263	029	73175255	27.012 - 2496799	120
73175156	31.050 - 1287263	042	73175260	31.050 - 1287263	006
73175157	31.050 - 1287263	051	73175261	31.050 - 1287263	035
73175158	31.050 - 1287263	113	73175262	31.050 - 1287263	037
73175159	31.050 - 1287263	114	73175263	31.050 - 1287263	076
73175160	31.050 - 1287263	115	73175264	31.050 - 1287263	130
73175162	31.050 - 1287263	118	73175267	31.050 - 1287263	077
73175169	22.100 - 2496806	112	73175267	31.600 - 2782775	036
73175170	22.100 - 2496868	149	73175268	31.050 - 1287263	085
73175172	22.100 - 2496888	124	73175268	31.600 - 2782775	005
73175174	22.100 - 2496888	125	73175269	31.050 - 1287263	086
73175175	22.100 - 2496888	126	73175269	31.600 - 2782775	006
73175176	22.100 - 2496888	127	73175270	31.050 - 1287263	109
73175180	22.100 - 2496868	192	73175270	31.050 - 1287263	110
73175181	22.100 - 2496868	210	73175270	31.050 - 1287263	111
73175182	22.100 - 2496868	205	73175270	31.050 - 1287263	112
73175202	20.310 - 2496823	037	73175271	31.050 - 1287263	141

Cross reference

SURVEY | Machine type FX600 | Machine no.

Part No.	No. of assembly	Item	Part No.	No. of assembly	Item
73175272	31.050 - 1287263	142	73175399	34.230 - 2444012	001
73175273	31.050 - 1287263	143	73175400	34.230 - 2444012	002
73175274	31.050 - 1287263	144	73175400	34.230 - 2782254	004
73175275	31.050 - 1287263	145	73175401	34.230 - 2444012	003
73175294	15.120 - 2496872	054	73175402	34.230 - 2444012	004
73175295	15.121 - 2782175	008	73175402	34.230 - 2782254	005
73175296	15.121 - 2782175	251	73175403	34.230 - 2444012	005
73175297	16.020 - 2496886	008	73175403	34.230 - 2782264	006
73175298	19.400 - 2496811	301	73175404	34.230 - 2444012	006
73175299	19.400 - 2496811	303	73175404	34.230 - 2782254	007
73175300	19.400 - 2496811	308	73175405	34.230 - 2444012	007
73175301	19.400 - 2496811	309	73175406	34.230 - 2444012	008
73175302	19.400 - 2496811	310	73175406	34.230 - 2782264	008
73175303	19.400 - 2496811	311	73175446	22.110 - 2496812	004
73175304	19.400 - 2496811	312	73175447	22.110 - 2496812	014
73175305	20.020 - 2496909	006	73175448	22.110 - 2496812	061
73175306	20.020 - 2496909	007	73175759	13.400 - 2782790	004
73175307	20.020 - 2496909	019	73175766	31.050 - 1287263	049
73175308	20.020 - 2496909	020	73175766	31.530 - 2782748	001
73175310	20.020 - 2496909	021	73175769	34.502 - 2782535	001
73175312	20.020 - 2496909	030	73175808	22.052 - 2496848	002
73175313	20.020 - 2496909	450	73175810	22.100 - 2496886	010
73175314	20.020 - 2496909	451	73175811	22.100 - 2496886	012
73175315	20.020 - 2496909	452	73175812	22.100 - 2496886	013
73175316	20.020 - 2496909	453	73175813	22.100 - 2496886	014
73175317	20.020 - 2496909	454	73175814	22.100 - 2496886	025
73175318	20.020 - 2496909	500	73175815	22.100 - 2496886	110
73175319	20.020 - 2496909	501	73175816	22.100 - 2496886	122
73175321	20.260 - 2782173	256	73175817	22.100 - 2496886	130
73175322	20.260 - 2782173	271	73175818	22.100 - 2496886	150
73175323	20.280 - 2496866	024	73175819	22.100 - 2496886	201
73175324	20.280 - 2496866	262	73175820	22.100 - 2496886	202
73175325	20.280 - 2496866	266	73175822	22.100 - 2496886	211
73175325	20.280 - 2496866	276	73175823	13.230 - 2782549	002
73175326	20.280 - 2496866	273	73175824	22.030 - 2496847	004
73175326	20.280 - 2496866	274	73175827	22.030 - 2496847	403
73175327	20.310 - 2496823	014	73175827	22.030 - 2496847	409
73175328	20.310 - 2496823	030	73175828	22.030 - 2496847	005
73175329	20.310 - 2496823	031	73175831	22.030 - 2496847	136
73175330	20.310 - 2496823	303	73175832	22.030 - 2496847	217
73175331	20.310 - 2496823	304	73175834	22.030 - 2496847	220
73175332	20.320 - 2496832	055	73175835	22.030 - 2496847	301
73175333	20.320 - 2496832	056	73175836	22.030 - 2496847	303
73175334	20.641 - 2782181	224	73175837	22.030 - 2496847	309
73175335	20.641 - 2782181	225	73175838	22.030 - 2496847	351
73175336	92.020 - 2782033	001	73175839	22.030 - 2496847	513
73175337	92.020 - 2782033	003	73175840	22.052 - 2496848	016
73175338	92.020 - 2782033	004	73175841	22.052 - 2496848	800
73175339	92.020 - 2782033	005	73175904	30.040 - 2782656	006
73175342	10.202 - 2782698	002	73175905	30.040 - 2782656	008
73175344	10.202 - 2782698	008	73175906	30.040 - 2782656	014
73175395	22.052 - 2496848	801	73175907	30.040 - 2782656	552
73175396	34.021 - 2782263	001	73175908	30.040 - 2782656	562

Cross reference

SURVEY | Machine type **FX600** | Machine no.

Part No.	No. of assembly	Item	Part No.	No. of assembly	Item
73175910	10.202 - 2782698	001	73176060	23.292 - 2782656	007
73175911	36.500 - 2782702	001	73176061	31.050 - 1287263	146
73175970	92.020 - 2782033	006	73176063	31.050 - 1287263	147
73175971	92.020 - 2782033	009	73176064	31.050 - 1287263	148
73175973	92.020 - 2782033	008	73176065	31.050 - 1287263	149
73176010	20.641 - 2782747	002	73176122	34.502 - 2782535	002
73176011	20.641 - 2782747	003	73176123	34.502 - 2782535	006
73176012	31.530 - 2782748	002	73176124	34.502 - 2782535	013
73176014	31.600 - 2782775	003	73176125	34.502 - 2782535	015
73176024	36.500 - 2782741	014	73176126	34.502 - 2782535	016
73176032	23.271 - 2496568	004	73176127	34.502 - 2782535	017
73176033	23.271 - 2496568	050	73176128	34.502 - 2782535	018
73176033	23.271 - 2782654	050	73176129	34.502 - 2782535	023
73176034	23.271 - 2496568	051	73176130	34.502 - 2782535	041
73176034	23.271 - 2782654	051	73176131	34.502 - 2782535	050
73176035	23.271 - 2496568	105	73176132	34.502 - 2782535	053
73176035	23.271 - 2782654	106	73176133	34.502 - 2782535	080
73176036	23.271 - 2496568	203	73176153	92.010 - 2782496	001
73176036	23.271 - 2782654	203	73176154	92.010 - 2782496	101
73176037	23.271 - 2496568	205	73176155	92.010 - 2782496	102
73176037	23.271 - 2782654	205	73176156	92.010 - 2782496	103
73176038	23.271 - 2496568	206	73176157	92.010 - 2782496	104
73176038	23.271 - 2782654	206	73176158	92.010 - 2782496	105
73176039	23.271 - 2496568	210	73176159	92.010 - 2782496	106
73176039	23.271 - 2782654	210	73176160	92.010 - 2782496	107
73176040	23.271 - 2782654	004	73176161	92.010 - 2782496	108
73176041	23.272 - 2496570	001	73176162	92.010 - 2782496	110
73176042	23.272 - 2496570	003	73176163	92.010 - 2782496	111
73176042	23.292 - 2782655	003	73176164	92.010 - 2782496	112
73176043	23.272 - 2496570	004	73176165	92.010 - 2782496	115
73176043	23.292 - 2782655	004	73176166	92.010 - 2782496	116
73176044	23.272 - 2496570	006	73176167	92.010 - 2782496	117
73176044	23.292 - 2782655	006	73176168	92.010 - 2782496	118
73176045	23.272 - 2496570	007	73176169	92.010 - 2782496	121
73176046	23.272 - 2496570	010	73176170	92.010 - 2782496	122
73176046	23.292 - 2782655	010	73176171	92.010 - 2782496	123
73176047	23.272 - 2496570	011	73176173	92.020 - 2782033	007
73176047	23.292 - 2782655	011	73176175	23.271 - 2496568	100
73176048	23.272 - 2496570	012	73176176	23.271 - 2782654	100
73176048	23.292 - 2782655	012	73176180	36.500 - 2782741	001
73176049	23.272 - 2496570	013	73176181	36.500 - 2782741	002
73176049	23.292 - 2782655	013	73176182	36.500 - 2782741	003
73176050	23.272 - 2496570	014	73176183	36.500 - 2782741	004
73176050	23.292 - 2782655	014	73176184	36.500 - 2782741	005
73176051	23.292 - 2496572	002	73176185	36.500 - 2782741	006
73176052	23.292 - 2496572	003	73176186	36.500 - 2782741	007
73176053	23.292 - 2496572	004	73176187	36.500 - 2782741	008
73176054	23.292 - 2496572	005	73176188	36.500 - 2782741	009
73176055	23.292 - 2496572	006	73176189	36.500 - 2782741	010
73176056	23.292 - 2496572	008	73176190	36.500 - 2782741	011
73176057	23.292 - 2496572	011	73176191	36.500 - 2782741	012
73176058	23.292 - 2496572	012	73176428	91.010 - 2782250	105
73176059	23.292 - 2782655	001	73176429	91.010 - 2782250	104

Cross reference

SURVEY | Machine type FX600 | Machine no.

Part No.	No. of assembly	Item	Part No.	No. of assembly	Item
73176430	91.010 - 2782884	001	73177533	23.242 - 2783875	001
73176431	91.010 - 2782884	002	73177832	92.020 - 2782093	002
73176432	91.010 - 2782884	003	73177873	20.260 - 2782173	257
73176433	91.010 - 2782884	004	73177874	31.050 - 1287263	116
73176434	91.010 - 2782884	005	73177875	31.050 - 1287263	133
73176435	91.010 - 2782884	007	73177876	61.010 - 2444197	001
73176436	91.010 - 2782884	008	73177877	31.600 - 2782775	205
73176437	91.010 - 2782884	011			
73176438	91.010 - 2782884	012			
73176439	91.010 - 2782884	013			
73176440	91.010 - 2782884	016			
73176441	91.010 - 2782884	017			
73176442	91.010 - 2782884	020			
73176443	91.010 - 2782884	021			
73176444	91.010 - 2782884	022			
73176445	91.010 - 2782884	023			
73176446	91.010 - 2782884	027			
73176866	23.240 - 2783334	008			
73177266	92.010 - 2782496	127			
73177290	31.050 - 1287263	064			
73177290	31.600 - 2782775	201			
73177291	31.050 - 1287263	132			
73177292	31.050 - 1287263	135			
73177293	31.050 - 1287263	137			
73177294	31.050 - 1287263	138			
73177318	32.999 - 2782749	010			
73177319	32.999 - 2782749	011			
73177354	31.050 - 1287263	057			
73177354	32.999 - 2782749	008			
73177355	31.050 - 1287263	131			
73177377	23.292 - 2496572	032			
73177384	34.230 - 2782254	002			
73177385	34.230 - 2782254	003			
73177386	13.011 - 2496855	175			
73177419	30.200 - 2444411	551			
73177420	30.200 - 2444411	554			
73177421	30.200 - 2444411	556			
73177422	60.150 - 2495218	001			
73177423	60.160 - 2444410	005			
73177424	60.160 - 2444410	006			
73177425	60.160 - 2444410	007			
73177426	60.160 - 2444410	008			
73177427	60.160 - 2444410	009			
73177428	60.160 - 2444410	014			
73177429	60.160 - 2444410	021			
73177430	60.160 - 2444410	023			
73177431	60.160 - 2444410	701			
73177432	60.160 - 2783776	709			
73177433	91.010 - 2782250	101			
73177434	91.010 - 2782250	109			
73177502	61.032 - 2496892	011			
73177513	61.032 - 2496859	011			
73177514	61.032 - 2496859	012			

Cross reference

SURVEY | Machine type FX800 | Machine no.

Part No.	No. of assembly	Item	Part No.	No. of assembly	Item
73170138	60.150 - 2495218	106	73171372	22.402 - 2444968	007
73170138	61.010 - 2444197	112	73171374	22.402 - 2444968	008
73170160	30.200 - 2444411	015	73171375	22.402 - 2444968	009
73170162	60.150 - 2495218	203	73171376	22.402 - 2444968	010
73170169	60.160 - 2444410	037	73171377	22.402 - 2444968	014
73170178	60.150 - 2495218	204	73171379	30.200 - 2444411	007
73170205	30.200 - 2444411	014	73171381	30.200 - 2444411	552
73170206	22.402 - 2444968	011	73171382	30.200 - 2444411	553
73170302	60.160 - 2444410	026	73171384	30.200 - 2444411	555
73170327	60.160 - 2444410	022	73171387	61.010 - 2444197	101
73170329	60.160 - 2444410	033	73171388	61.010 - 2444197	102
73170346	22.402 - 2444968	016	73171389	61.010 - 2444197	103
73170346	60.160 - 2444410	024	73171390	61.010 - 2444197	104
73170346	60.160 - 2783776	024	73171391	61.010 - 2444197	105
73170346	61.032 - 2496882	003	73171392	61.010 - 2444197	106
73170347	60.160 - 2444410	030	73171393	61.010 - 2444197	107
73170347	61.032 - 2496882	005	73171394	61.010 - 2444197	108
73170461	22.402 - 2444968	013	73171395	61.032 - 2496882	008
73170471	60.160 - 2444410	027	73171396	61.032 - 2496882	010
73170488	22.402 - 2444968	006	73171397	61.032 - 2496882	012
73170819	30.200 - 2444411	008	73172150	30.200 - 2444411	012
73170820	30.200 - 2444411	009	73177419	30.200 - 2444411	551
73170822	30.200 - 2444411	010	73177420	30.200 - 2444411	554
73170823	30.200 - 2444411	011	73177421	30.200 - 2444411	556
73170826	30.200 - 2444411	021	73177422	60.150 - 2495218	001
73170831	30.200 - 2444411	018	73177423	60.160 - 2444410	005
73170833	30.200 - 2444411	016	73177424	60.160 - 2444410	006
73170979	60.150 - 2495218	108	73177425	60.160 - 2444410	007
73170979	61.010 - 2444197	109	73177426	60.160 - 2444410	008
73170981	60.150 - 2495218	110	73177427	60.160 - 2444410	009
73170981	61.010 - 2444197	110	73177428	60.160 - 2444410	014
73171339	60.150 - 2495218	101	73177429	60.160 - 2444410	021
73171340	60.150 - 2495218	102	73177430	60.160 - 2444410	023
73171341	60.150 - 2495218	103	73177431	60.160 - 2444410	701
73171342	60.150 - 2495218	104	73177432	60.160 - 2783776	703
73171343	60.150 - 2495218	105	73177602	61.032 - 2496882	011
73171344	60.150 - 2495218	107	73177876	61.010 - 2444197	001
73171345	60.150 - 2495218	111			
73171345	61.010 - 2444197	111			
73171346	60.150 - 2495218	202			
73171354	60.160 - 2444410	016			
73171355	60.160 - 2444410	017			
73171356	60.160 - 2444410	018			
73171357	60.160 - 2444410	019			
73171363	60.160 - 2444410	036			
73171364	60.160 - 2444410	700			
73171366	60.160 - 2783776	004			
73171366	61.032 - 2496882	013			
73171367	60.160 - 2783776	029			
73171367	61.032 - 2496882	014			
73171369	22.402 - 2444968	001			
73171370	22.402 - 2444968	002			
73171371	22.402 - 2444968	005			

Cross reference

SURVEY | Machine type **FX600** | Machine no.

Part No.	No. of assembly	Item	Part No.	No. of assembly	Item
73171262	20.610 - 2496797	016	73171309	20.641 - 2782181	218
73171262	20.610 - 2496797	017	73171310	20.641 - 2782181	219
73171264	20.610 - 2496797	061	73171311	20.641 - 2782181	220
73171265	20.610 - 2496797	066	73171312	20.641 - 2782181	221
73171265	20.642 - 2496464	023	73171313	20.641 - 2782181	222
73171266	20.610 - 2496797	067	73171314	20.641 - 2782181	223
73171266	20.641 - 2782747	001	73171317	20.641 - 2782181	230
73171266	20.642 - 2496464	018	73171318	20.641 - 2782181	241
73171266	20.642 - 2496464	022	73171319	20.641 - 2782181	242
73171267	20.610 - 2496797	104	73171320	23.050 - 2495629	002
73171267	20.610 - 2496797	105	73171321	23.050 - 2495629	004
73171268	20.610 - 2496797	115	73171322	23.050 - 2495629	007
73171268	20.610 - 2496797	116	73171323	23.292 - 2496572	001
73171269	20.610 - 2496797	117	73171324	23.291 - 2444789	003
73171269	20.610 - 2496797	118	73171325	23.291 - 2444789	016
73171270	20.610 - 2496797	119	73171326	23.212 - 2444920	001
73171270	20.610 - 2496797	122	73171327	23.212 - 2444920	002
73171271	20.610 - 2496797	120	73171328	23.212 - 2444920	034
73171272	20.610 - 2496797	121	73171329	23.212 - 2444920	145
73171273	20.640 - 2782182	009	73171330	23.212 - 2444920	150
73171274	20.640 - 2782182	004	73171331	23.212 - 2444920	180
73171275	20.642 - 2496464	001	73171333	23.212 - 2444920	190
73171276	20.642 - 2496464	002	73171334	23.212 - 2444920	200
73171277	20.642 - 2496464	003	73171335	23.230 - 2495357	003
73171278	20.642 - 2496464	004	73171336	23.271 - 2496568	001
73171279	20.642 - 2496464	005	73171337	23.271 - 2782654	001
73171280	20.642 - 2496464	007	73171338	60.151 - 2444419	001
73171281	20.642 - 2496464	009	73171339	60.150 - 2495218	101
73171282	20.642 - 2496464	010	73171339	60.151 - 2444419	101
73171283	20.642 - 2496464	012	73171340	60.150 - 2495218	102
73171284	20.642 - 2496464	013	73171340	60.151 - 2444419	102
73171285	20.642 - 2496464	014	73171341	60.150 - 2495218	103
73171286	20.642 - 2496464	015	73171341	60.151 - 2444419	103
73171287	20.642 - 2496464	016	73171342	60.150 - 2495218	104
73171288	20.642 - 2496464	017	73171342	60.151 - 2444419	104
73171289	20.642 - 2496464	020	73171343	60.150 - 2495218	105
73171290	20.642 - 2496464	027	73171343	60.151 - 2444419	105
73171291	20.642 - 2496464	136	73171344	60.150 - 2495218	107
73171292	20.642 - 2496464	137	73171344	60.151 - 2444419	107
73171293	20.642 - 2496464	201	73171345	60.150 - 2495218	111
73171297	20.641 - 2782181	128	73171345	60.151 - 2444419	111
73171298	20.641 - 2782181	111	73171345	61.010 - 2444197	111
73171298	20.641 - 2782181	112	73171345	61.011 - 2495220	111
73171298	20.641 - 2782181	113	73171345	62.012 - 2496906	109
73171298	20.641 - 2782181	114	73171345	62.210 - 2249812	003
73171301	20.641 - 2782181	203	73171346	20.310 - 2496823	058
73171302	20.641 - 2782181	212	73171346	60.150 - 2495218	202
73171303	20.641 - 2782181	211	73171346	60.151 - 2444419	202
73171304	20.641 - 2782181	214	73171347	60.160 - 2443421	702
73171305	20.641 - 2782181	213	73171348	60.180 - 2495031	005
73171306	20.641 - 2782181	215	73171349	60.180 - 2495031	006
73171307	20.641 - 2782181	216	73171350	60.180 - 2495031	007
73171308	20.641 - 2782181	217	73171351	60.180 - 2495031	008

Cross reference

SURVEY | Machine type **FX600** | Machine no.

Part No.	No. of assembly	Item	Part No.	No. of assembly	Item
73170834	31.050 - 1297263	069	73170945	15.120 - 2496872	075
73170834	31.510 - 2496871	023	73170946	15.121 - 2782175	006
73170834	34.140 - 2444887	015	73170947	15.121 - 2782175	007
73170834	34.140 - 2782774	015	73170949	15.121 - 2782175	012
73170835	30.040 - 2782656	025	73170950	15.121 - 2782175	020
73170838	30.040 - 2782656	550	73170951	15.121 - 2782175	021
73170849	30.040 - 2782656	553	73170952	15.121 - 2782175	022
73170850	30.040 - 2782656	555	73170954	15.121 - 2782175	253
73170851	30.040 - 2782656	556	73170955	15.121 - 2782175	258
73170852	30.040 - 2782656	558	73170956	15.121 - 2782175	259
73170853	30.040 - 2782656	559	73170957	22.520 - 2444775	001
73170856	30.040 - 2782656	563	73170960	22.520 - 2444775	002
73170901	13.220 - 2495258	001	73170961	22.520 - 2444775	256
73170902	13.220 - 2495258	002	73170962	22.520 - 2444775	257
73170903	13.220 - 2495258	003	73170982	34.131 - 2444891	103
73170904	13.220 - 2495258	004	73170963	22.520 - 2444775	258
73170906	13.220 - 2495258	005	73170963	31.510 - 2496871	022
73170907	13.220 - 2495258	006	73170964	22.520 - 2444775	260
73170909	15.120 - 2496872	006	73170965	12.010 - 2496776	001
73170910	15.120 - 2496872	006	73170966	12.010 - 2496776	002
73170911	15.120 - 2496872	008	73170966	12.010 - 2782083	002
73170912	15.120 - 2496872	009	73170967	12.010 - 2496776	003
73170913	15.120 - 2496872	011	73170967	12.010 - 2782083	003
73170915	15.120 - 2496872	012	73170978	01.650 - 2443600	001
73170916	15.120 - 2496872	013	73170979	01.650 - 2443600	002
73170918	15.120 - 2496872	014	73170979	60.150 - 2495218	108
73170919	15.120 - 2496872	015	73170979	60.151 - 2444419	108
73170920	15.120 - 2496872	017	73170979	61.010 - 2444197	109
73170921	15.120 - 2496872	019	73170979	61.011 - 2495220	109
73170922	15.120 - 2496872	020	73170979	62.012 - 2496906	108
73170923	15.120 - 2496872	021	73170979	62.210 - 2249912	004
73170924	15.120 - 2496872	022	73170980	01.650 - 2443600	003
73170925	15.120 - 2496872	027	73170981	01.650 - 2443600	004
73170926	15.120 - 2496872	030	73170981	60.150 - 2495218	110
73170927	15.120 - 2496872	040	73170981	60.151 - 2444419	110
73170928	15.120 - 2496872	041	73170981	61.010 - 2444197	110
73170929	15.120 - 2496872	042	73170981	61.011 - 2495220	110
73170930	15.120 - 2496872	043	73170981	62.012 - 2496906	112
73170931	15.120 - 2496872	044	73170981	62.210 - 2249912	005
73170932	15.120 - 2496872	045	73170983	01.650 - 2443600	005
73170932	15.120 - 2496872	046	73170984	01.650 - 2443600	006
73170932	15.120 - 2496872	047	73170985	01.670 - 2443601	001
73170932	15.120 - 2496872	049	73170986	01.670 - 2443601	002
73170934	15.120 - 2496872	048	73170987	01.670 - 2443601	003
73170935	15.120 - 2496872	050	73170988	31.300 - 2443932	001
73170936	15.120 - 2496872	051	73170989	31.300 - 2443932	002
73170936	27.010 - 2496798	008	73170990	31.300 - 2443932	101
73170937	15.120 - 2496872	052	73170991	31.300 - 2443932	102
73170938	15.120 - 2496872	053	73170992	35.060 - 1907741	201
73170940	15.120 - 2496872	055	73170993	35.060 - 1907741	202
73170941	15.120 - 2496872	060	73170993	35.060 - 2284179	001
73170942	15.120 - 2496872	061	73170994	35.060 - 1907741	205
73170944	15.120 - 2496872	068	73170996	35.060 - 2284173	004

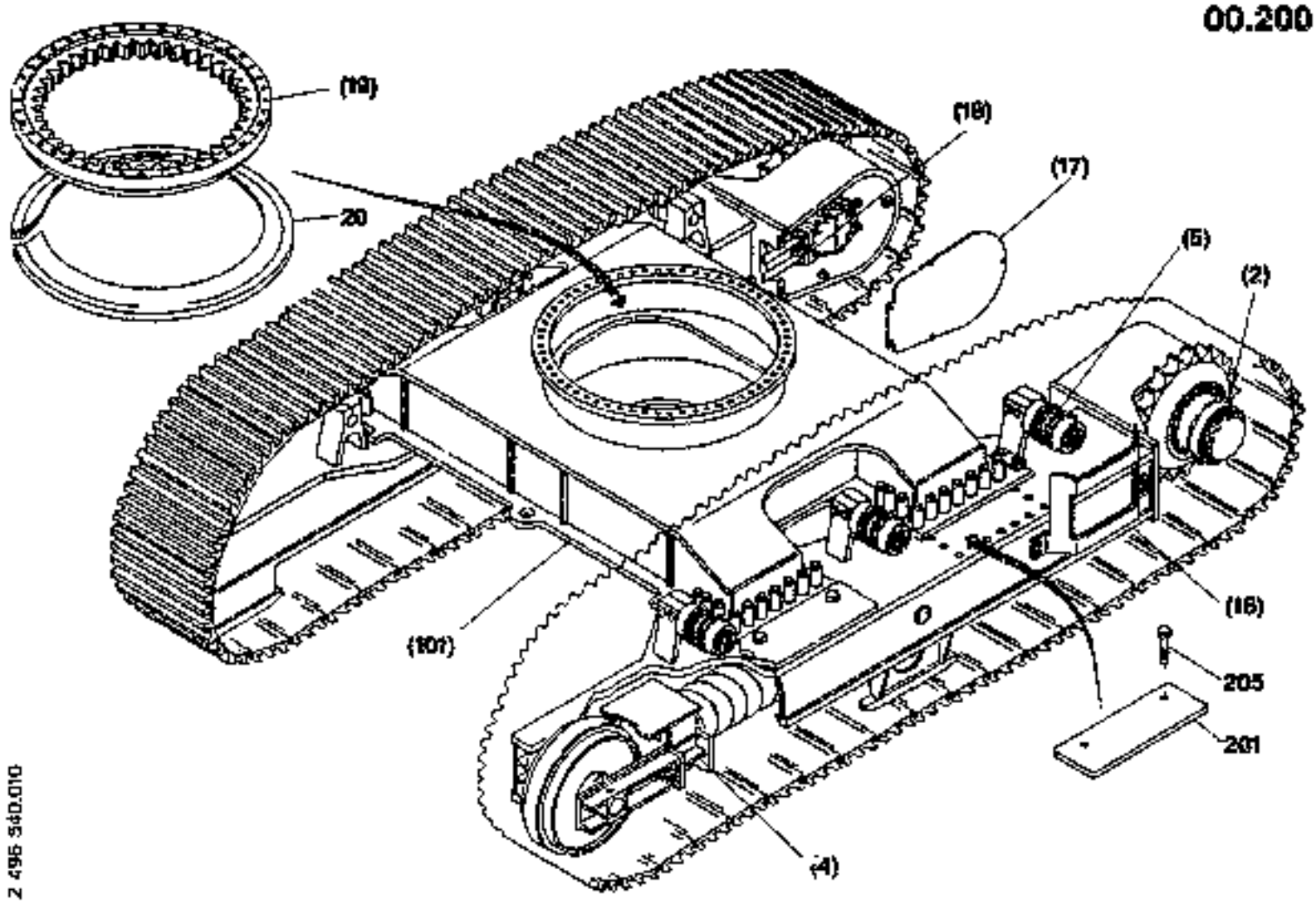

Z 496 540.010

LOWER CARRIAGE EXCAVATOR

00.200

FX600 / 106101 - .....

T 2496540 - 000
B 2496540 - 010

Item	Quan.	ME	Part No.	Description
002	2	00		**16.020 2496866** TRAVEL GEAR INSTALL.MATERIAL
004	2	00		**06.190 2496869** TENSIONING DEVICE
005	2	00		**06.010 2496890** CRAWLER CHASSIS INSTALL.MATERIAL
016	1	00		**01.810 2495632** STEPS INSTALL.MATERIAL
017	1	00		**36.540 2496907** COVER TRAVEL GEAR
018	1	00		**20.020 2496909** HYDRAULIC SYSTEM LOWER CARRIAGE

ME: 00 = Stück/piece 13 = m 26 = m^2 39 = m^3 43 = kg 50 = l (litre)

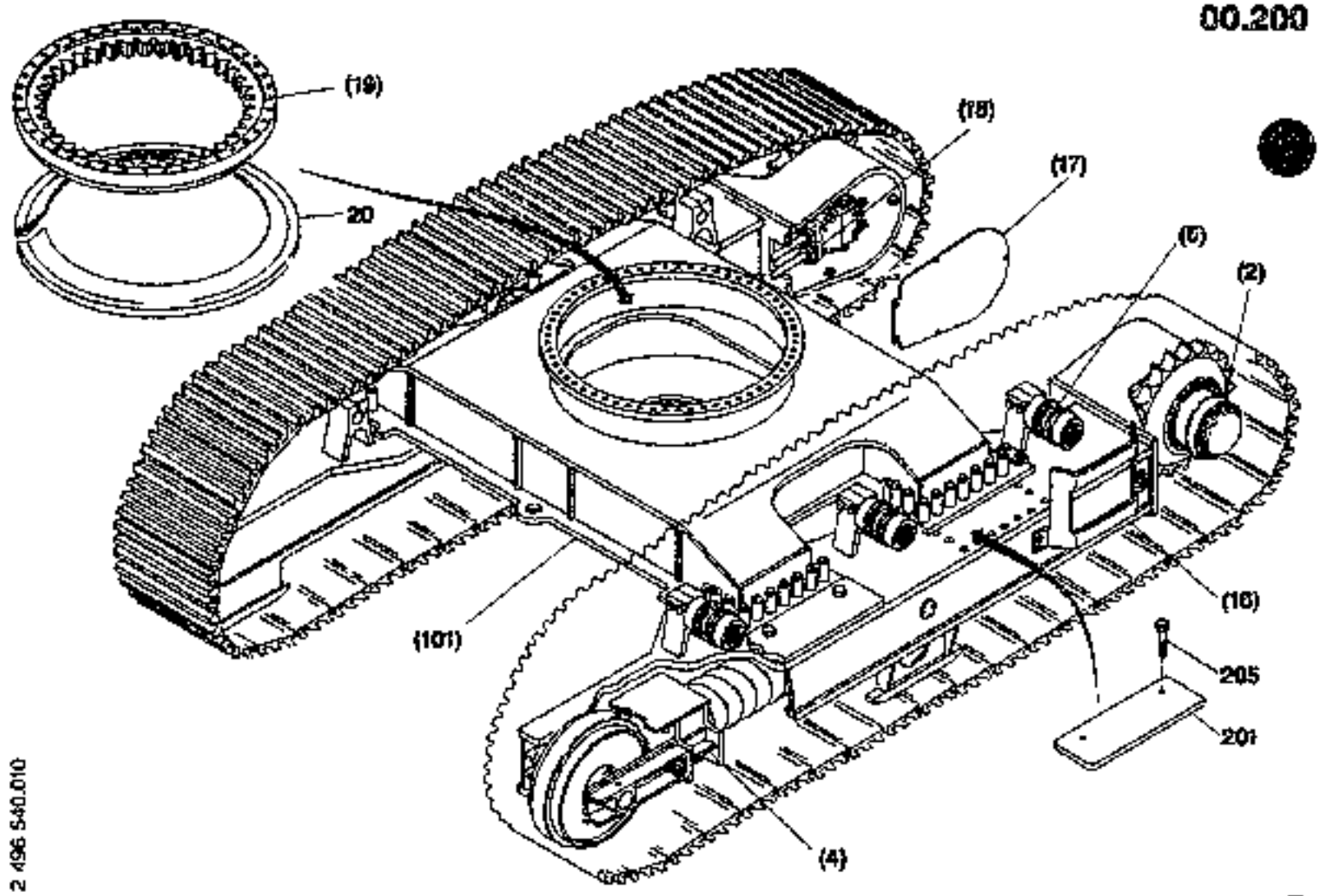

2 496 540.010

LOWER CARRIAGE EXCAVATOR

00.200

FIATALLIS

FX600 / 106101 - .....

T 2496540 - 000
B 2496540 - 010

Item	Quan.	ME	Part No.	Description
019	1	00		**11.010 2496910** SWIVEL CONNECTION INSTALL.MATERIAL
020	4,46	13	73170000	GASKET
101	1	00		**01.200 2496943** FRAME LOWER CARRIAGE WITH MOUNT. PARTS
201	4	00	73170001	COVER PLATE
205	8	00	73170002	HEXAGON BOLT

ME: 00 = Stück/piece 13 = m 26 = m^2 39 = m^3 43 = kg 50 = l (litre)

1998-09-10

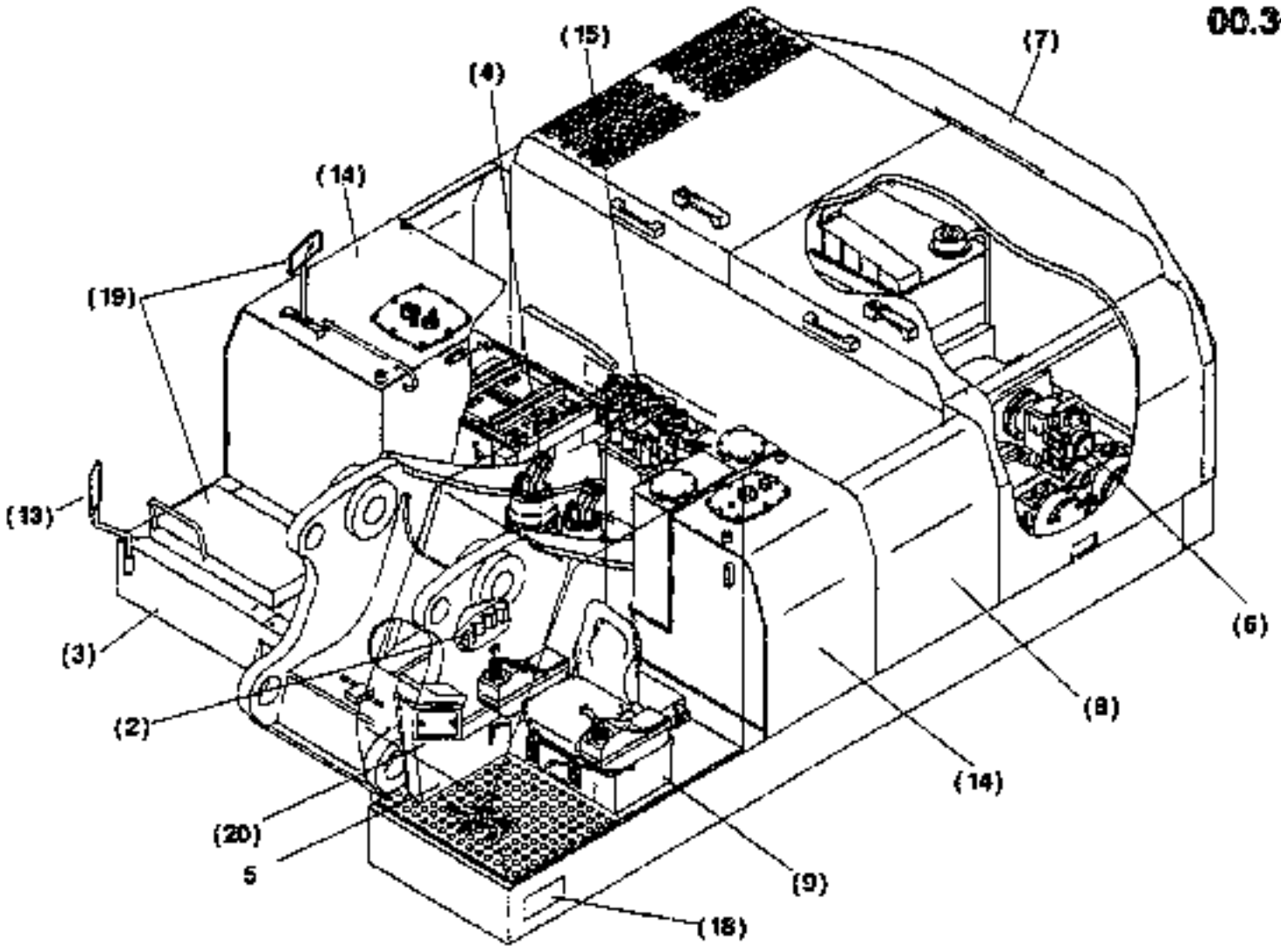

2 496 539.010

UPPER CARRIAGE EXCAVATOR

00.300

FIATALLIS

FX600 / 76027 - 76027

T 2496538 - 001
B 2496538 - 010

Item	Quan.	ME	Part No.	Description
001	1	00		**92.020 2782033** MAINTENANCE MATER. FX600
002	1	00		**11.010 2495245** SWIVEL CONNECTION INSTALL.MATERIAL
003	1	00		**01.300 2496775** FRAME UPPER CARRIAGE WITH MOUNT. PARTS
004	2	00		**18.031 2496808** SLEWING GEAR MOUNTING PARTS
005	1	00	73170147	REGULATOR
006	1	00		**13.010 2496874** MOTOR INSTALL.MATERIAL
007	1	00		**12.010 2496776** BALLAST INSTALL.MATERIAL

ME: 00 = Stück/piece 10 = m 20 = m² 30 = m³ 40 = kg 50 = l (litre)

1998-09-10

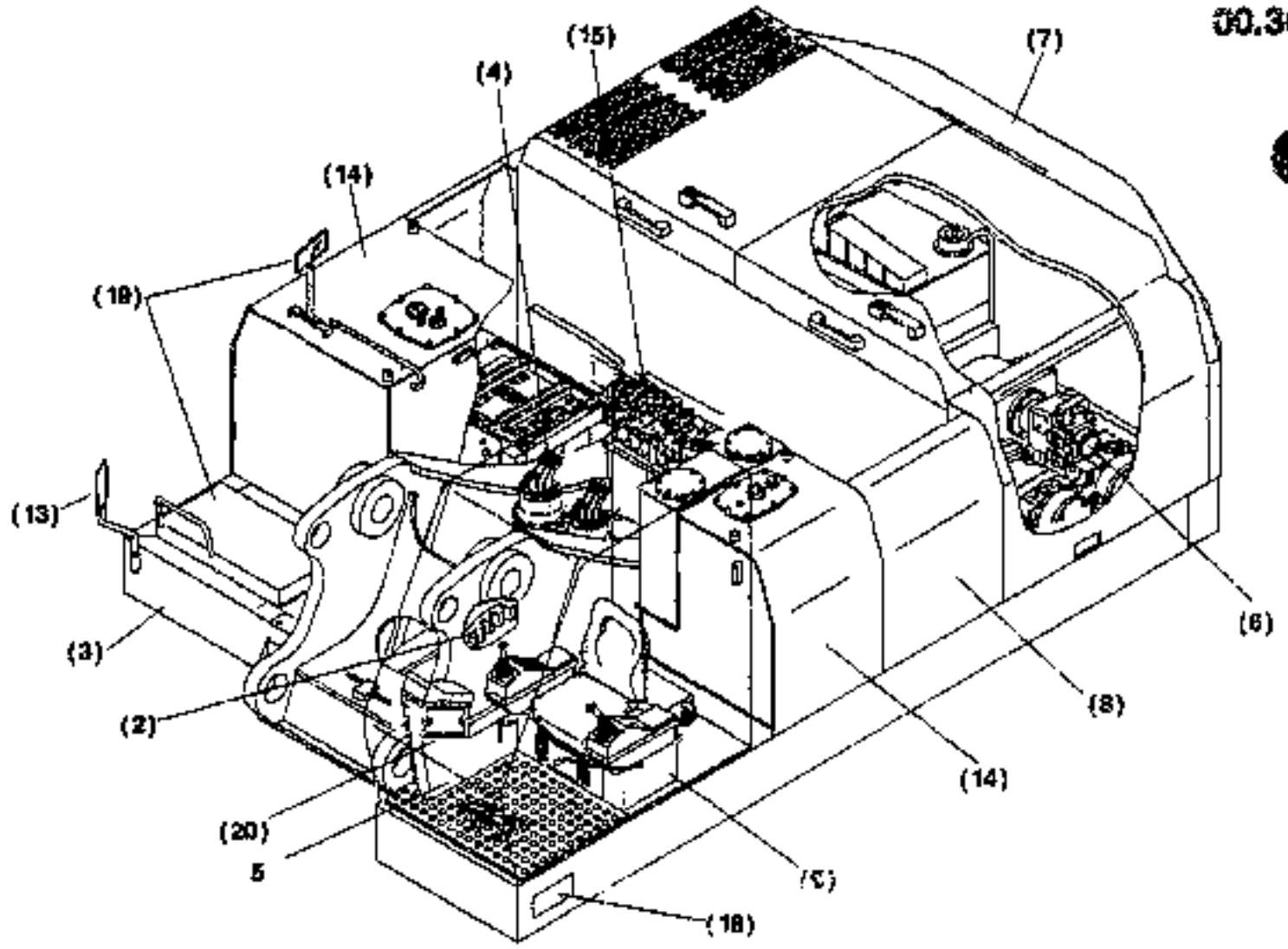

2 496 539.010

UPPER CARRIAGE EXCAVATOR

00.300

FX600 / 76027 - 76027

Γ 2496538 - 001
B 2496538 - 010

Item	Quan.	ME	Part No.	Description
008	1	00		**36.010 2443764** PANELING INSTALL.MATERIAL
009	1	00		**34.010 2496800** CAB MODULE INSTALL.MATERIAL
013	1	00		**01.300 2762703** FRAME UPPER CARRIAGE WITH MOUNT. PARTS
014	1	00		**10.010 2762700** CONTAINER INSTALL.MATERIAL
015	1	00		**20.030 2762183** HYDRAULIC SYSTEM UPPER CARRIAGE
018	1	00		**91.010 2762250** DECAL KIT

ME: 00 = Stück/piece 10 = m 20 = m² 30 = m³ 40 = kg 50 = l (litre)

1998-09-10

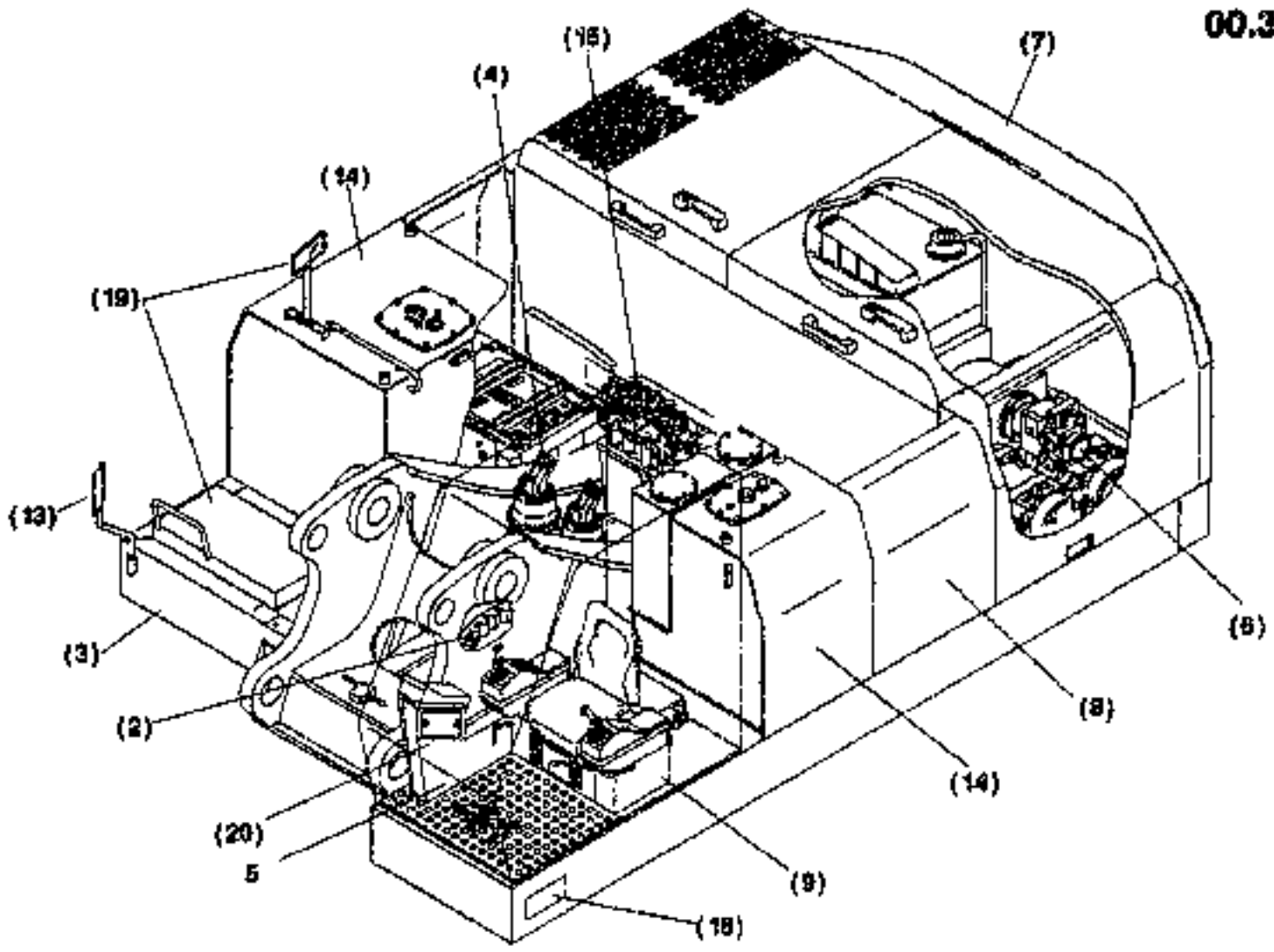

2 466 538.010

UPPER CARRIAGE EXCAVATOR

00.300

FX600 / 76027 - 76027

T 2466538 - 001
B 2466538 - 010

Item	Quan.	ME	Part No.	Description
019	1	00		**92.010 2782496** TOOL SET
020	1	00		**31.050 1287283** ELECTRICAL COMPON. I.CIRCUIT DIAGRAM

ME: 00 = Stück/piece 13 = m 20 = m^2 39 = m^3 43 = kg 50 = l (litre)

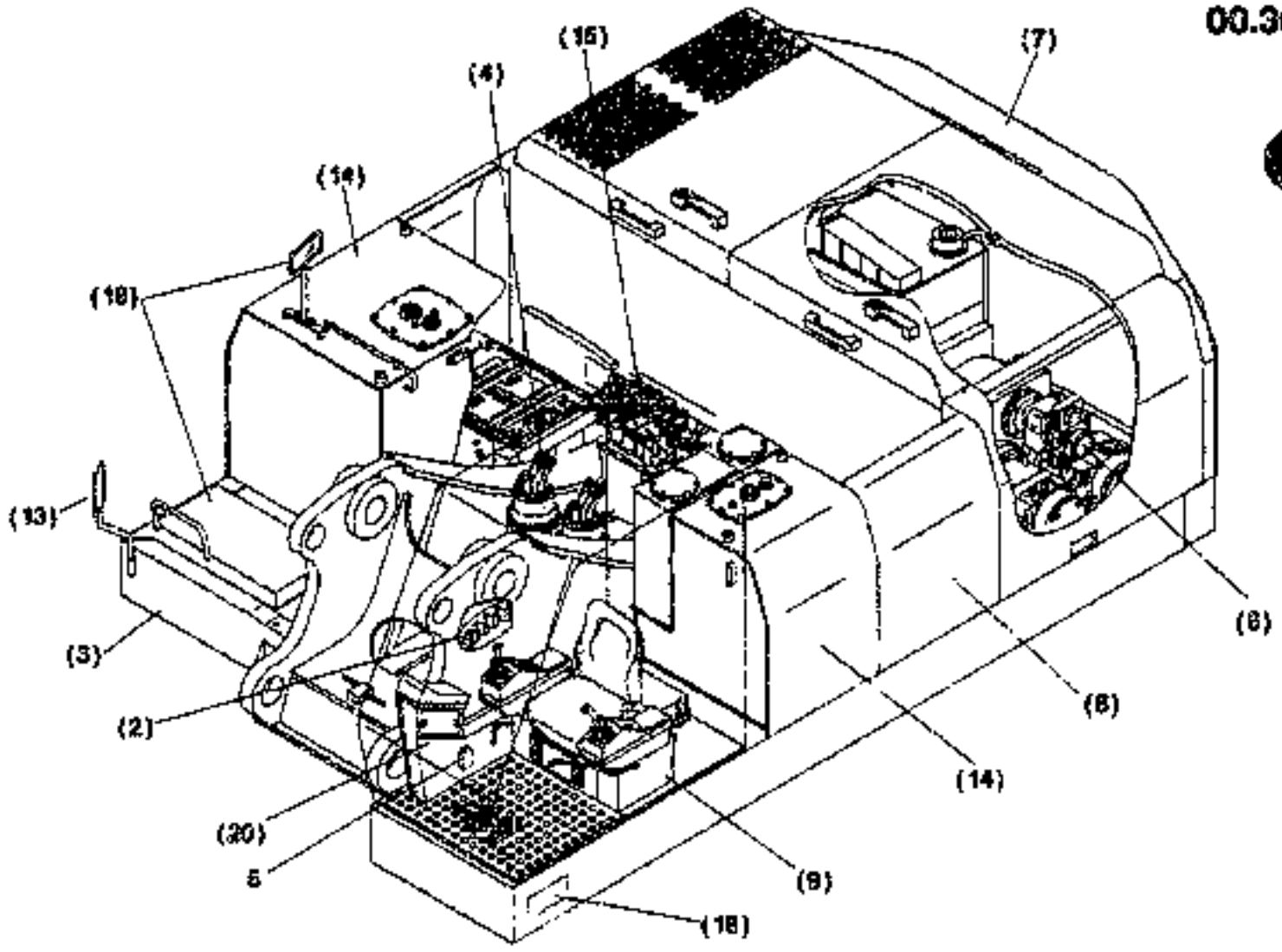

2 782 201.010

UPPER CARRIAGE EXCAVATOR

00.300

FIATALLIS

T 2782201 - 001
B 2782201 - 010

FX600 / 106101 - .....

Item	Quan.	ME	Part No.	Description
000	1	00		**02.020 2782033** MAINTENANCE MATER. FX600
002	1	00		**11.010 2495245** SWIVEL CONNECTION INSTALL.MATERIAL
003	1	00		**01.300 2782082** FRAME UPPER CARRIAGE WITH MOUNT. PARTS
004	1	00		**16.031 2496808** SLEWING GEAR MOUNTING PARTS
005	1	00	73170147	REGULATOR
006	1	00		**13.010 2496874** MOTOR INSTALL.MATERIAL
007	1	00		**12.01 2782083** BALLAST INSTALL.MATERIAL

ME: 00 = Stück/piece 13 = m 26 = m² 39 = m³ 43 = kg 50 = l (litre)

1998-09-10

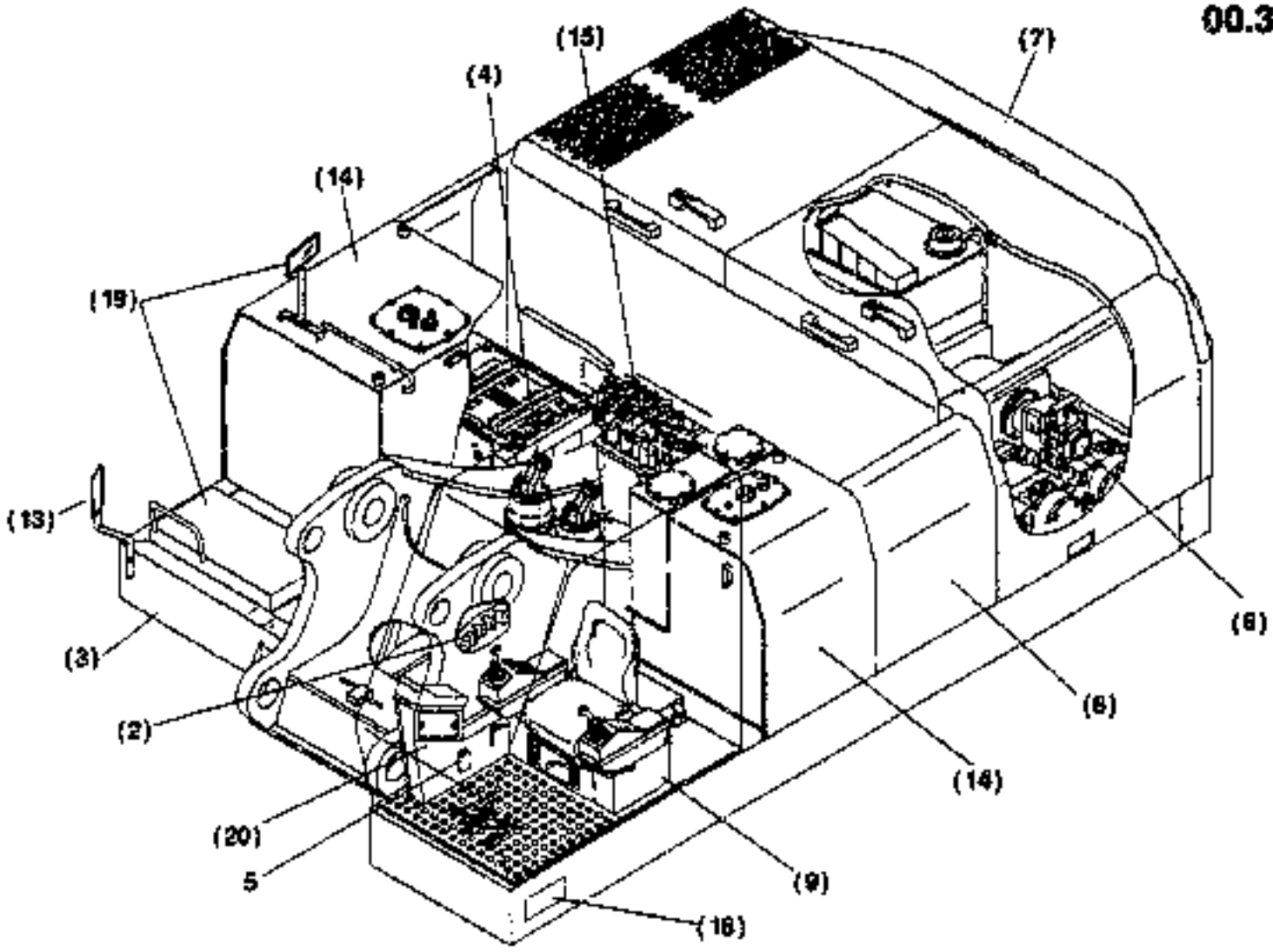

UPPER CARRIAGE EXCAVATOR

00.300

FIATALLIS

FX600 / 106101 - .....

T 2782201 - 001
B 2782201 - 010

Item	Quan.	ME	Part No.	Description
008	1	00		**38.010 2443764** PANELING INSTALL.MATERIAL
009	1	00		**34.010 2496800** CAB MODULE INSTALL.MATERIAL
013	1	00		**01.300 2782740** FRAME UPPER CARRIAGE WITH MOUNT. PARTS
014	1	00		**10.010 2782700** CONTAINER INSTALL.MATERIAL
015	1	00		**20.030 2782183** HYDRAULIC SYSTEM UPPER CARRIAGE
018	1	00		**91.010 2782250** DECAL KIT

ME: 00 = Stück/piece 13 = m 26 = m^2 39 = m^3 43 = kg 50 = l (litre)

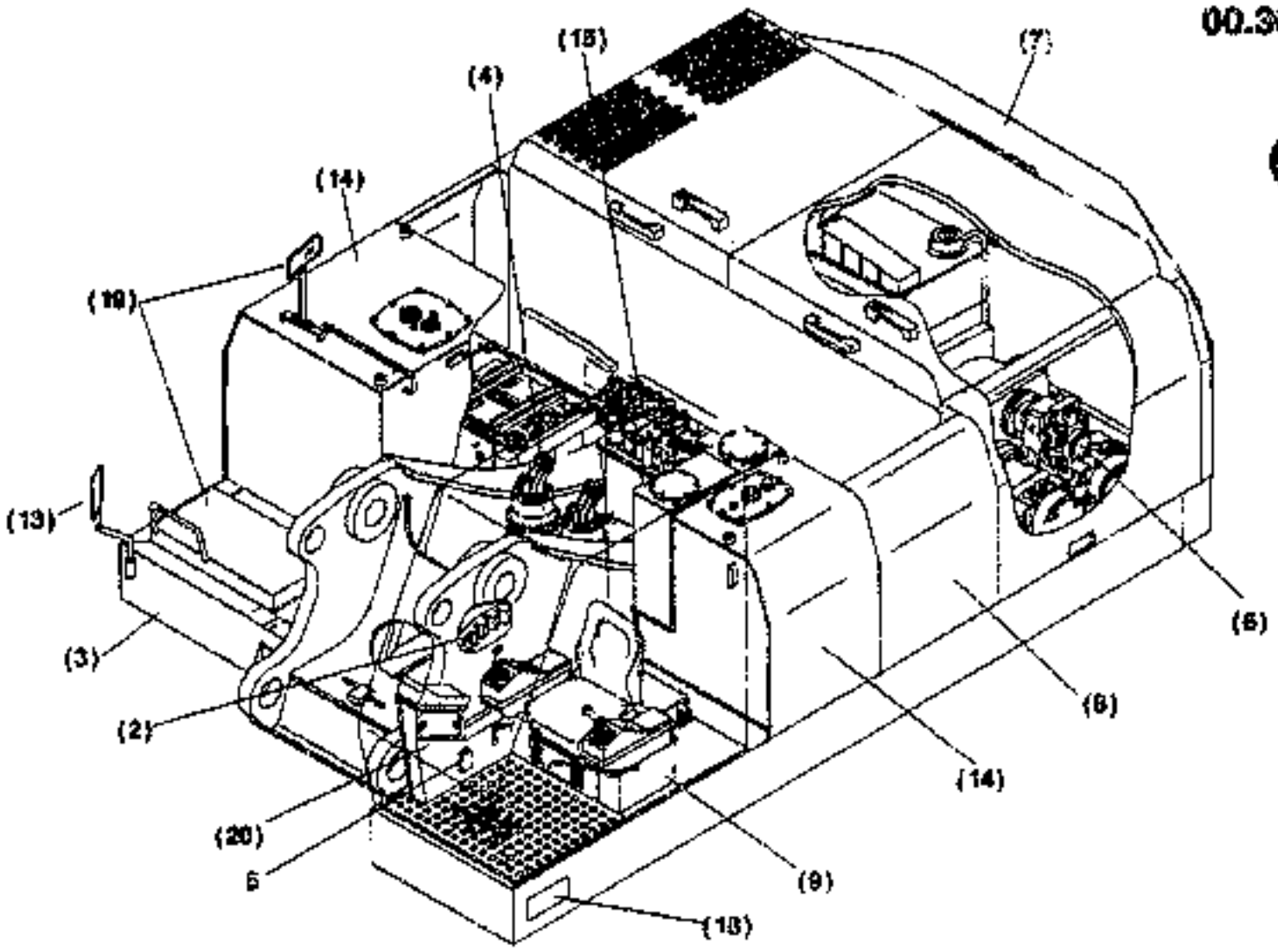

2 782 201 010

UPPER CARRIAGE EXCAVATOR

00.300

FX600 / 106101 - .....

T 2782201 - 001
B 2782201 - 010

Item	Quan.	ME	Part No.	Description
019	1	00		**92.010 2782496** TOOL SET
020	1	00		**31.050 1287263** ELECTRICAL COMPON. I.CIRCUIT DIAGRAM

ME: 00 = Stück/piece 13 = m 25 = m² 29 = m³ 43 = kg 50 = l (litre)

1998-09-10

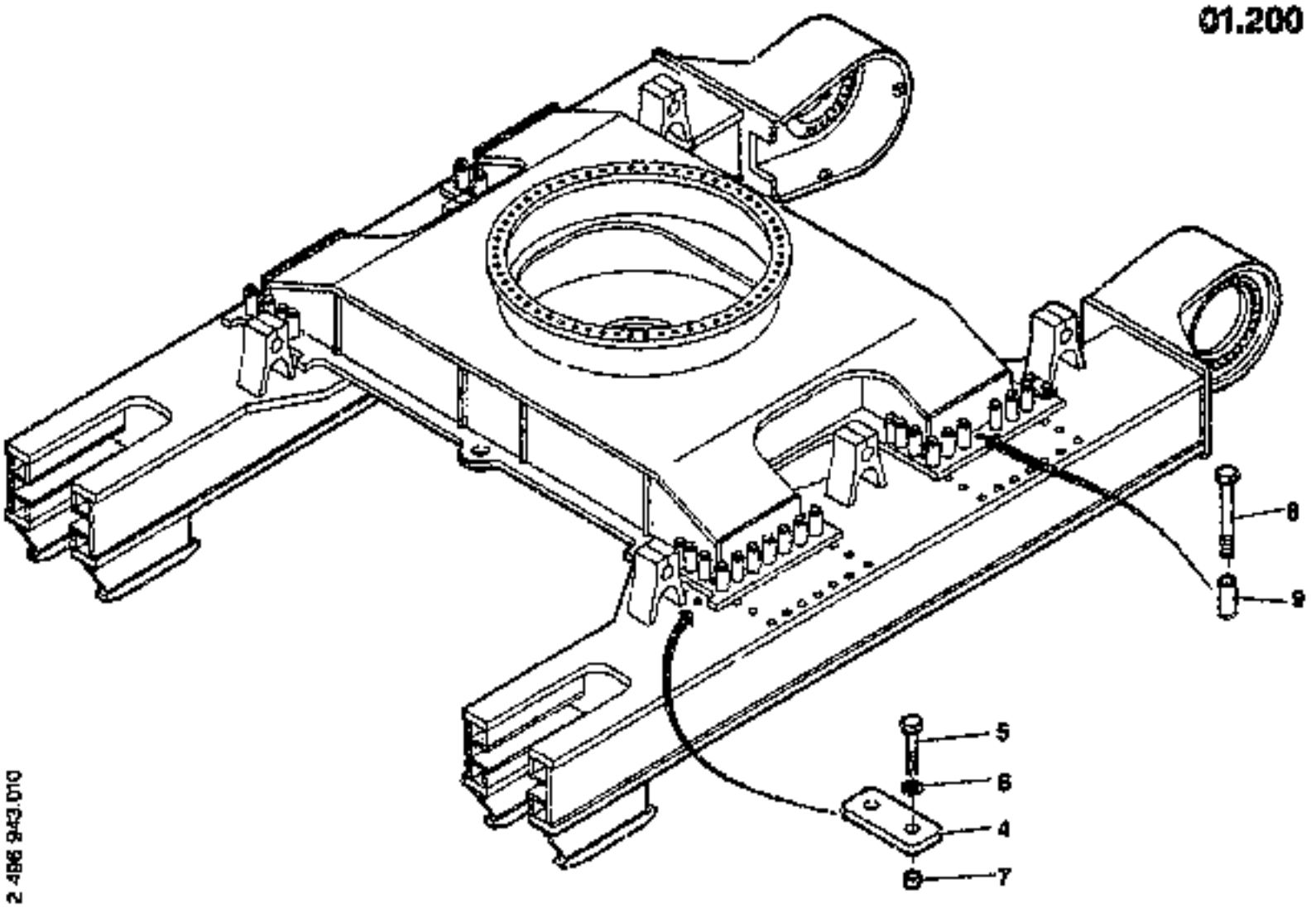

2 496 943.010

01.200

FRAME LOWER CARRIAGE WITH MOUNT. PARTS

T 2496943 - 000
B 2496943 - 010

FX600 / 106101 - .....

Item	Quan.	ME	Part No.	Description
004	4	00	73170003	PLATE
005	8	00	73170004	HEXAGON BOLT
006	8	00	73170005	DISK/WASHER
007	8	00	73170006	BUSHING
008	52	00	73170007	HEXAGON BOLT
009	52	00	73170008	SLEEVE

ME: 00 = Stück/piece 13 = m 26 = m² 39 = m³ 43 = kg 50 = l (litre)

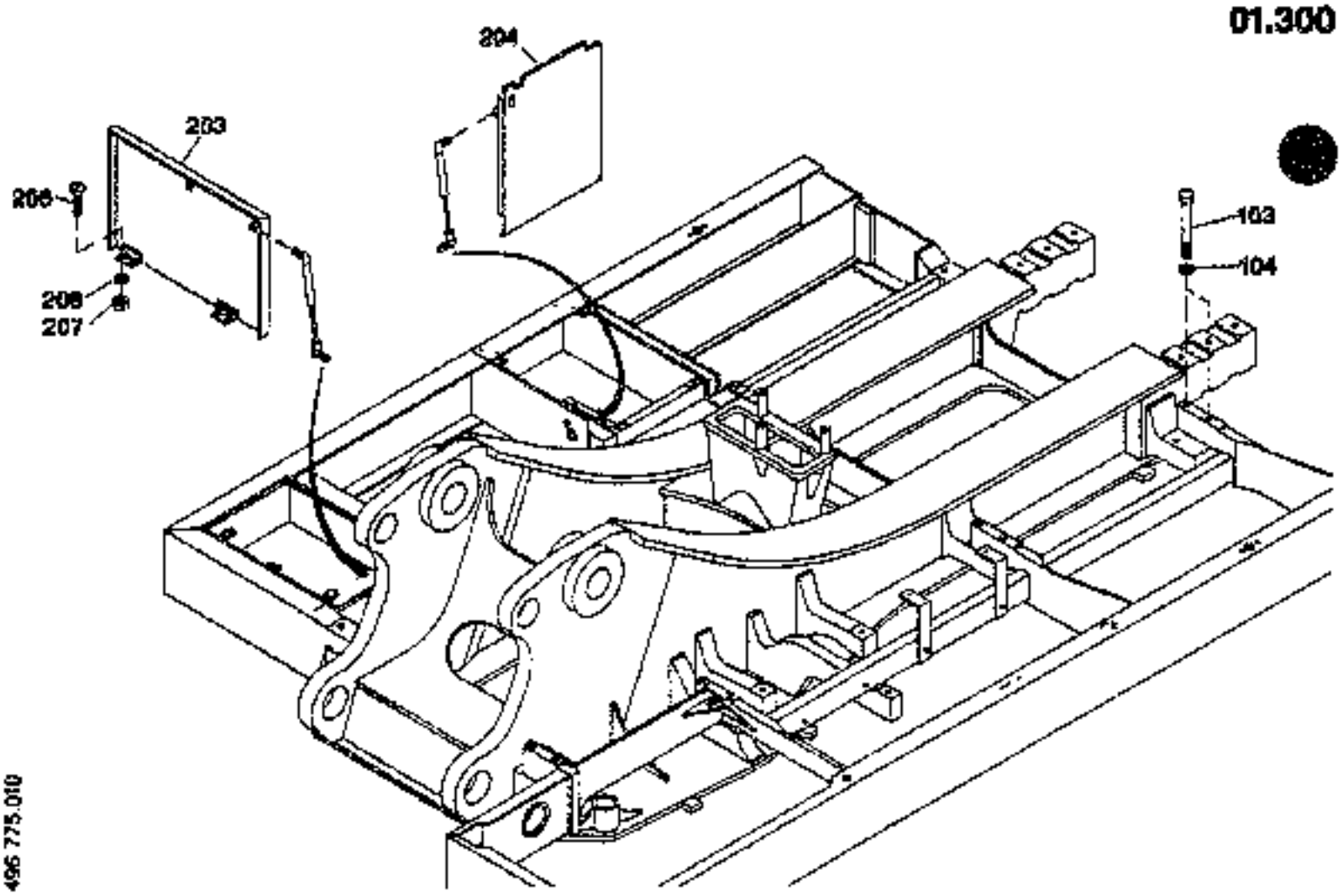

2 496 775.010

FRAME UPPER CARRIAGE WITH MOUNT. PARTS

FX600 / 76027 - 76027

T 2496775 - 000
B 2496775 - 010

Item	Quan.	ME	Part No.	Description
103	16	00	73171000	HEXAGON BOLT
104	16	00	73170604	DISK/WASHER
203	1	00	73171001	COVER
204	1	00	73171002	COVER
206	8	00	73170208	CONTER-SUNK SCREW
207	8	00	73170161	HEXAGON NUT
208	8	00	73170167	LOCK WASHER

ME: 00 = Stück/piece 13 = m 26 = m² 39 = m³ 43 = kg 50 = l (litre)

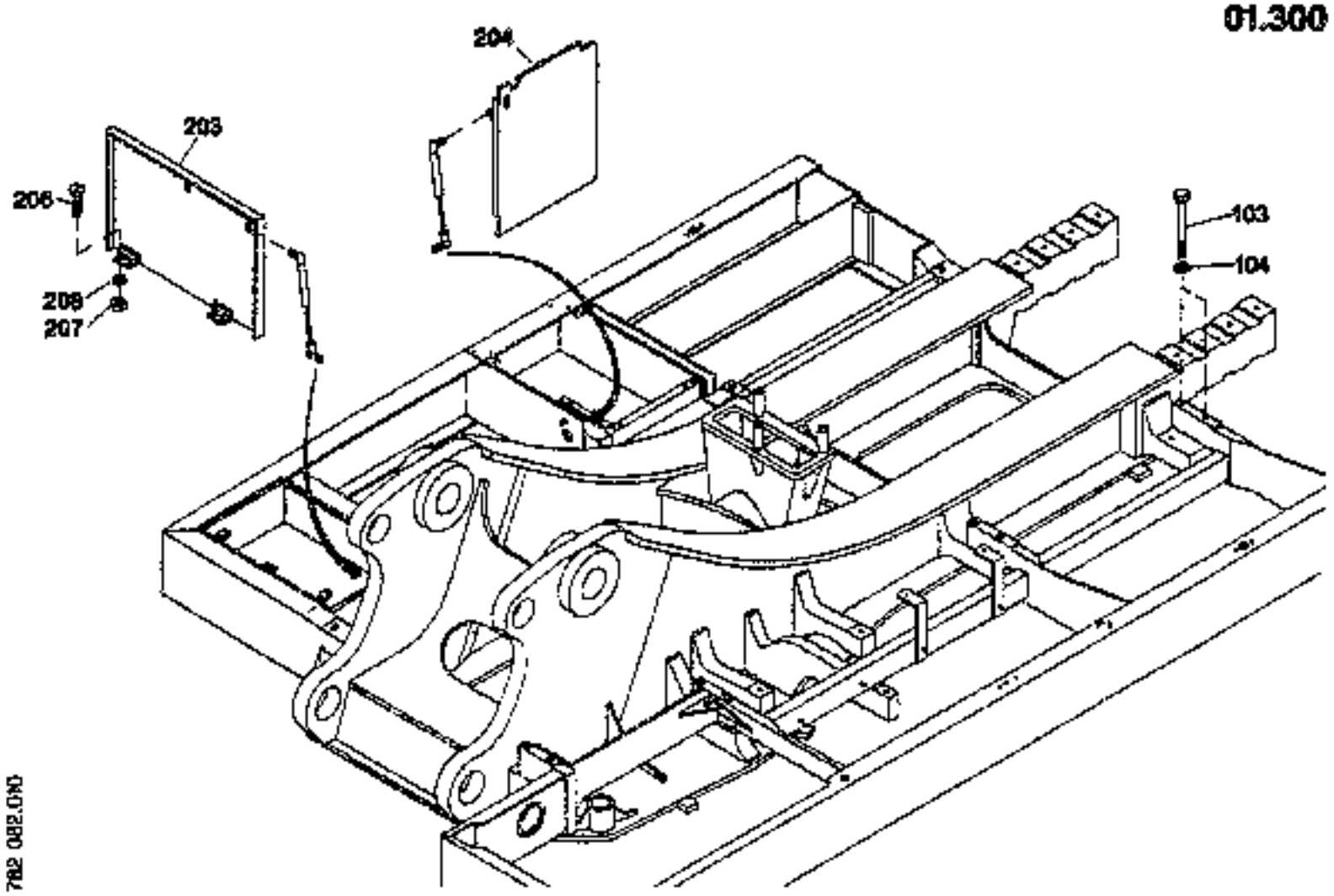

2 782 082.010

FRAME UPPER CARRIAGE WITH MOUNT. PARTS

FX600 / 105101 - .....

T 2782082 - 000
B 2782082 - 010

Item	Quan.	ME	Part No.	Description
103	16	00	73171000	HEXAGON BOLT
104	16	00	73170804	DISK/WASHER
203	1	00	73171001	COVER
204	1	00	73171002	COVER
206	8	00	73170208	CONTER-SUNK SCREW
207	8	00	73170161	HEXAGON NUT
208	8	00	73170167	LOCK WASHER

ME: 00 = Stück/piece 13 = m 26 = m^2 39 = m^3 43 = kg 50 = l (litre)

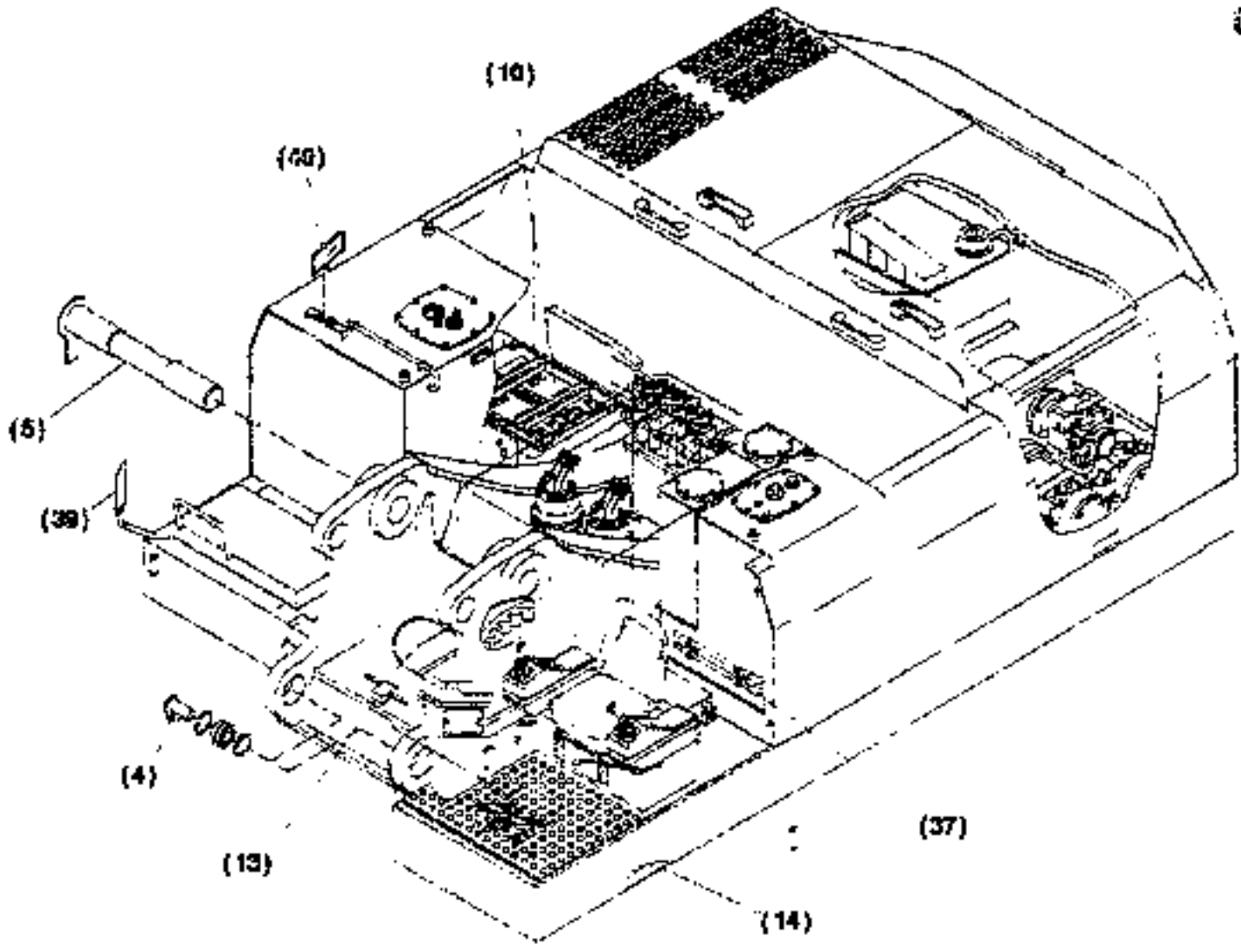

01.300

FRAME UPPER CARRIAGE WITH MOUNT. PARTS

T 2782703 - 000
2782703 - 010

FX600 / 76027 - 76027

Item	Quan.	ME	Part No.	Description
004	2	00		**01.650 2443600** BEARING FRAME
005	1	00		**01.670 2443601** BEARING BOOM
010	1	00		**31.300 2443932** BATTERY INSTALL.MATERIAL
013	1	00		**30.040 2782656** CENTRAL LUBE SYST.
014	1	00		**36.500 2782702** COVER UPPER CARRIAGE
037	1	00		**22.520 2444775** RODS TREADLE VALVE

ME: 00 = Stück/piece 13 = m 26 = m² 39 = m³ 43 = kg 50 = l (litre)

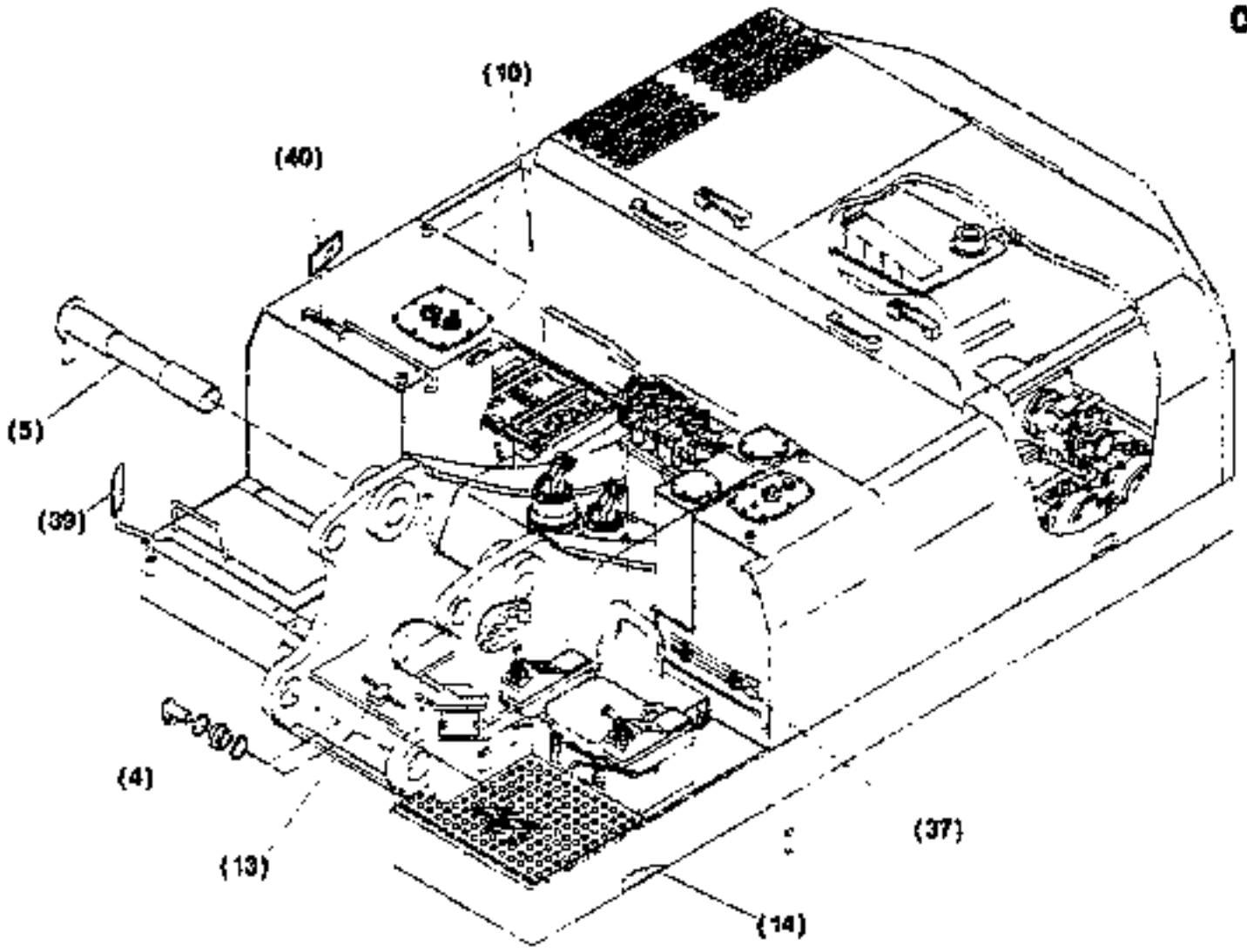

2 782 703.010

FRAME UPPER CARRIAGE WITH MOUNT. PARTS

FX600 / 76027 - 76027

T 2782703 - 000
B 2782703 - 010

Item	Quan.	ME	Part No.	Description
039	1	00		**35.060 2284173** MIRROR SUPPORT INSTALL.MATERIAL
040	1	00		**35.060 2443940** MIRROR SUPPORT INSTALL.MATERIAL

ME: 00 = Stück/piece 13 = m 25 = m^2 39 = m^3 43 = kg 50 = l (litre)

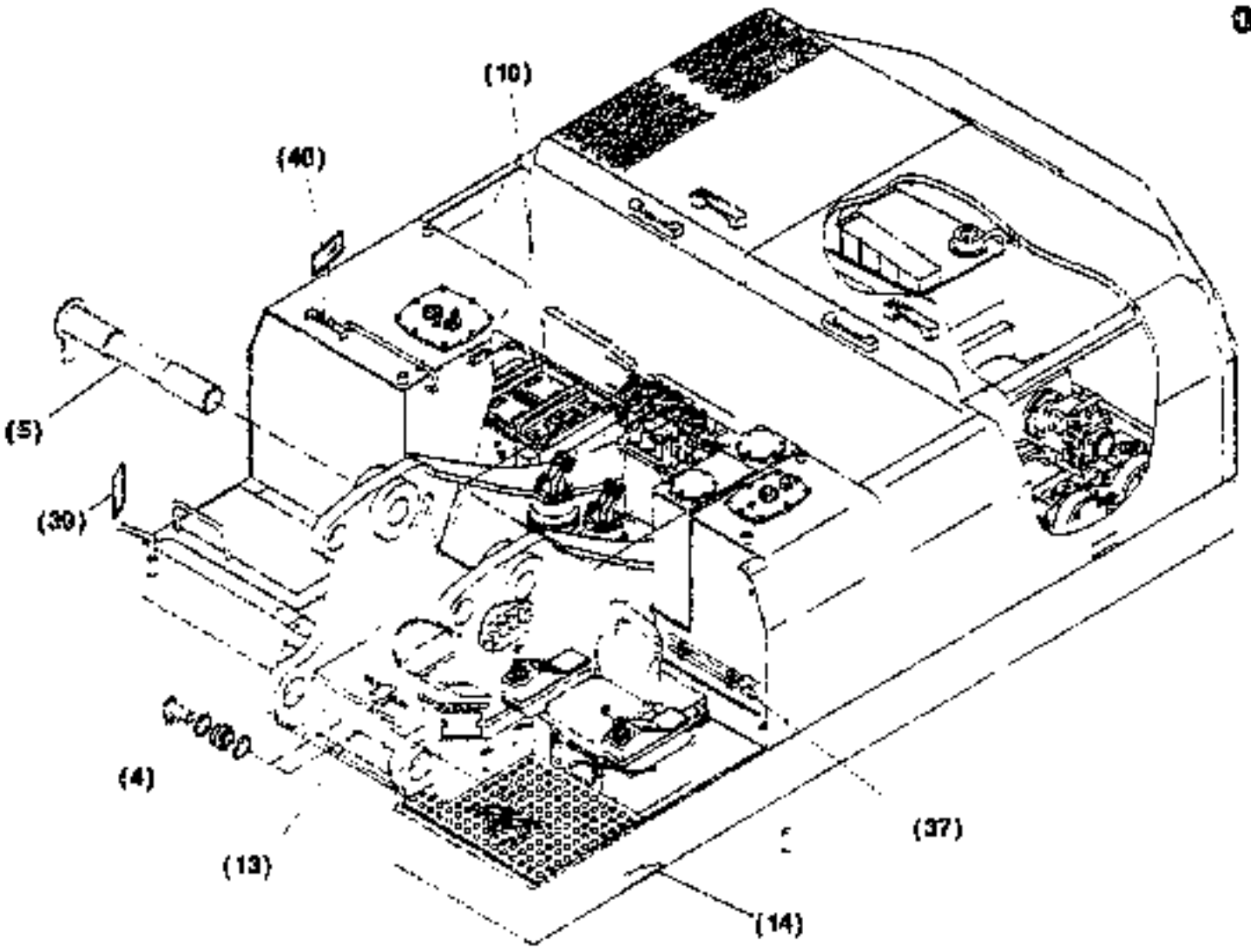

FRAME UPPER CARRIAGE WITH MOUNT. PARTS

T 2782740 - 000
B 2782740 - 010

FX500 / 106101 - .....

Item	Quan.	ME	Part No.	Description
004	2	00		**01.650 2443800** BEARING FRAME
006	1	00		**01.670 2443801** BEARING BOOM
010	1	00		**31.300 2443932** BATTERY INSTALL.MATERIAL
013	1	00		**30.040 2782650** CENTRAL LUBE SYST.
014	1	00		**38.500 2782741** COVER UPPER CARRIAGE
037	1	00		**22.520 2444775** RODS TREADLE VALVE

ME: 00 = Stück/piece 13 = m 26 = m² 39 = m³ 43 = kg 50 = l (litre)

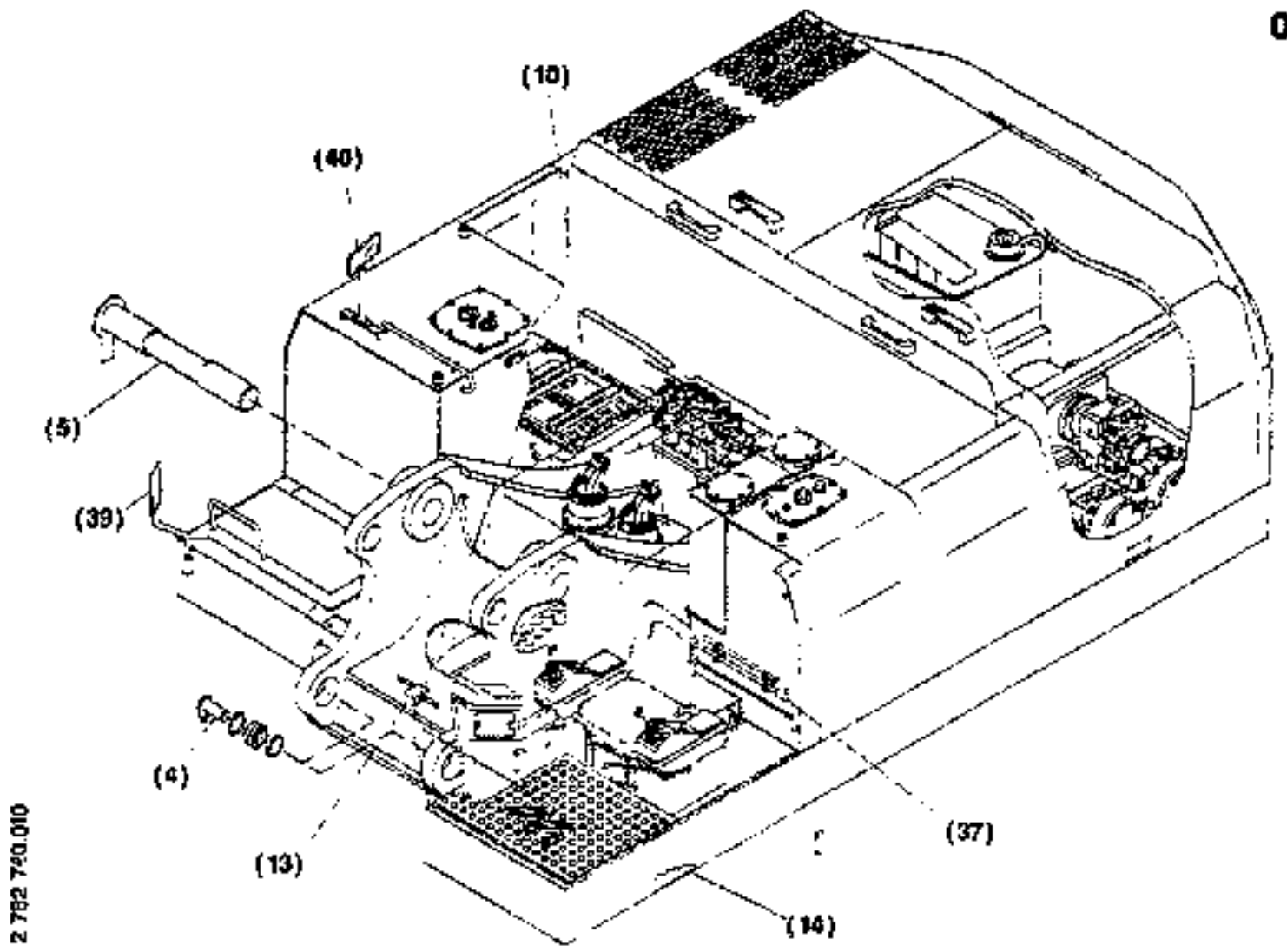

FRAME UPPER CARRIAGE WITH MOUNT. PARTS

T 2782740 - 000
B 2782740 - 010

FX600 / 106101 - .....

Item	Quan.	ME	Part No.	Description
039	1	00		35.060 2204173 MIRROR SUPPORT INSTALL.MATERIAL
040	1	00		35.060 2443640 MIRROR SUPPORT INSTALL.MATERIAL

ME: 00 = Stück/piece 13 = m 28 = m^2 39 = m^3 43 = kg 50 = l (litre)

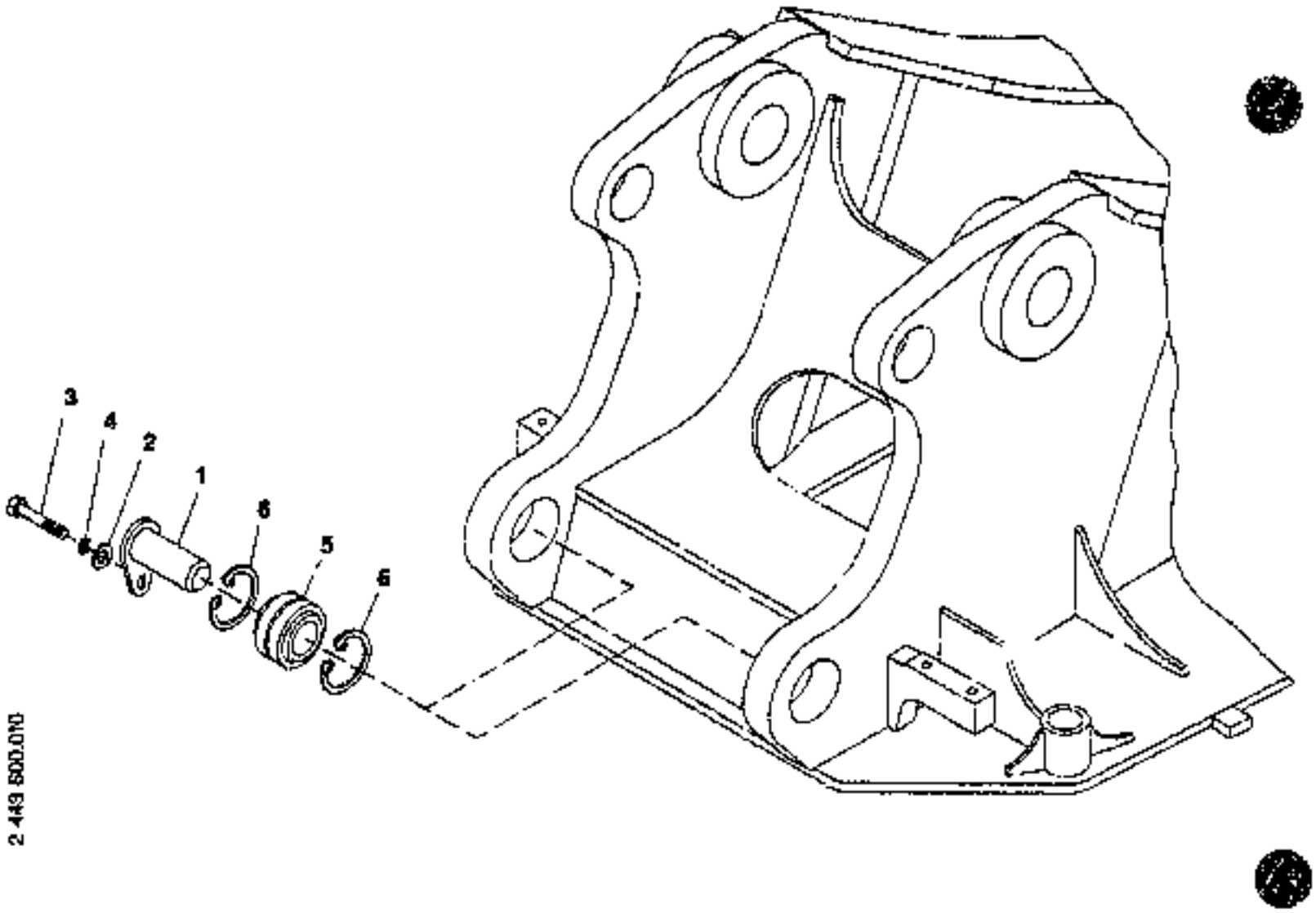

BEARING FRAME

FX600 / 106101 - .....

T 2443600 - 000
B 2443600 - 010

Item	Quan.	ME	Part No.	Description
001	1	00	73170978	HITCH PIN
002	1	00	73170979	DISK/WASHER
003	1	00	73170980	HEXAGON BOLT
004	1	00	73170981	LOCK WASHER
005	1	00	73170983	JOINT BEARING
006	2	00	73170984	CIRCLIP

ME: 00 = Stück/piece 10 = m 20 = m² 30 = m³ 40 = kg 50 = l (litre)

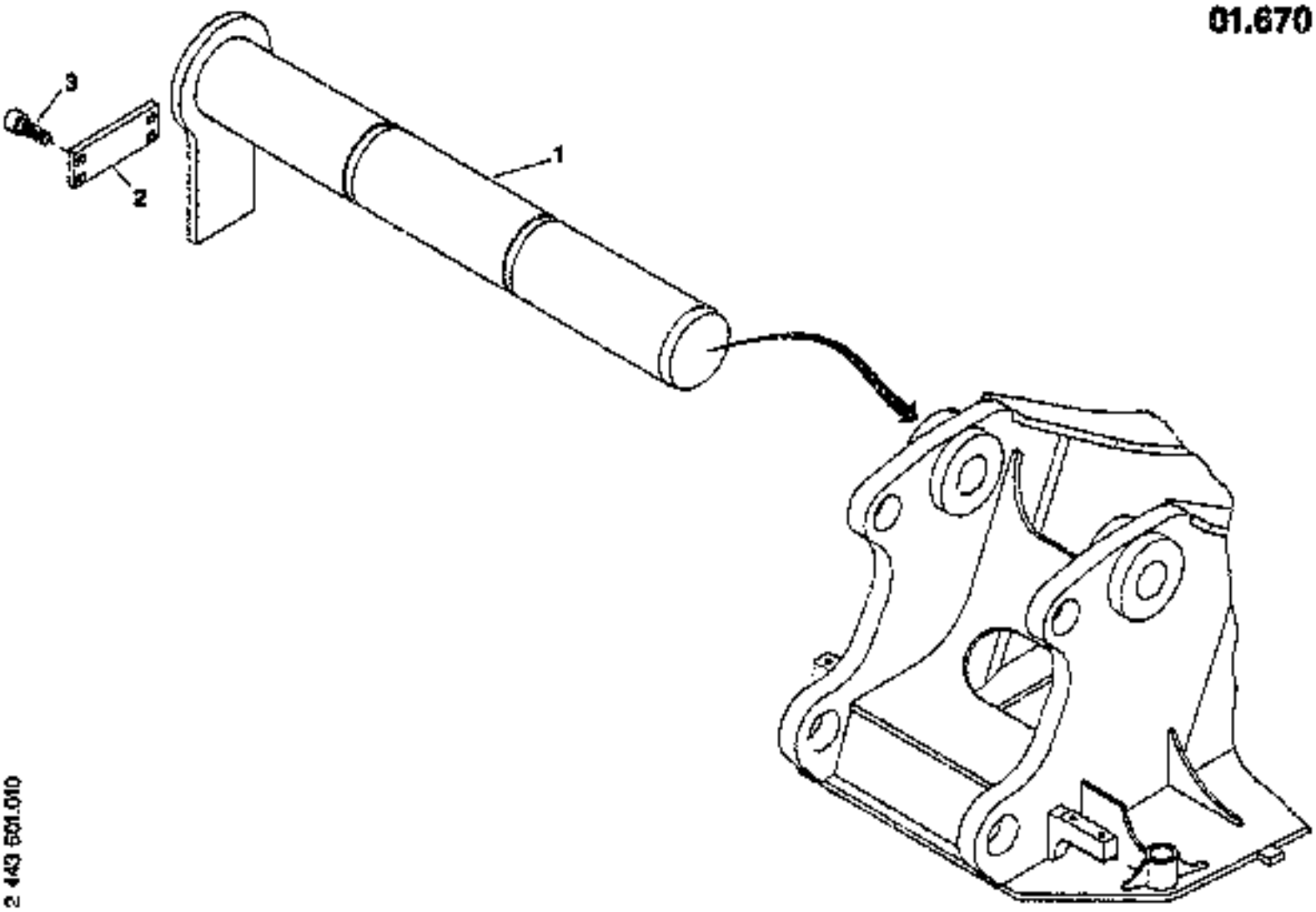

2 443 601.010

BEARING BOOM

FIATALLIS

FX600 / 106101 - .....

T 2443601 - 000
B 2443601 - 010

Item	Quan.	ME	Part No.	Description
001	1	00	73170985	PIN
002	1	00	73170986	PLATE
003	4	00	73170987	CYL.HEAD SCREW

ME: 00 = Stück/piece 13 = m 26 = m² 39 = m³ 43 = kg 50 = l (litre)

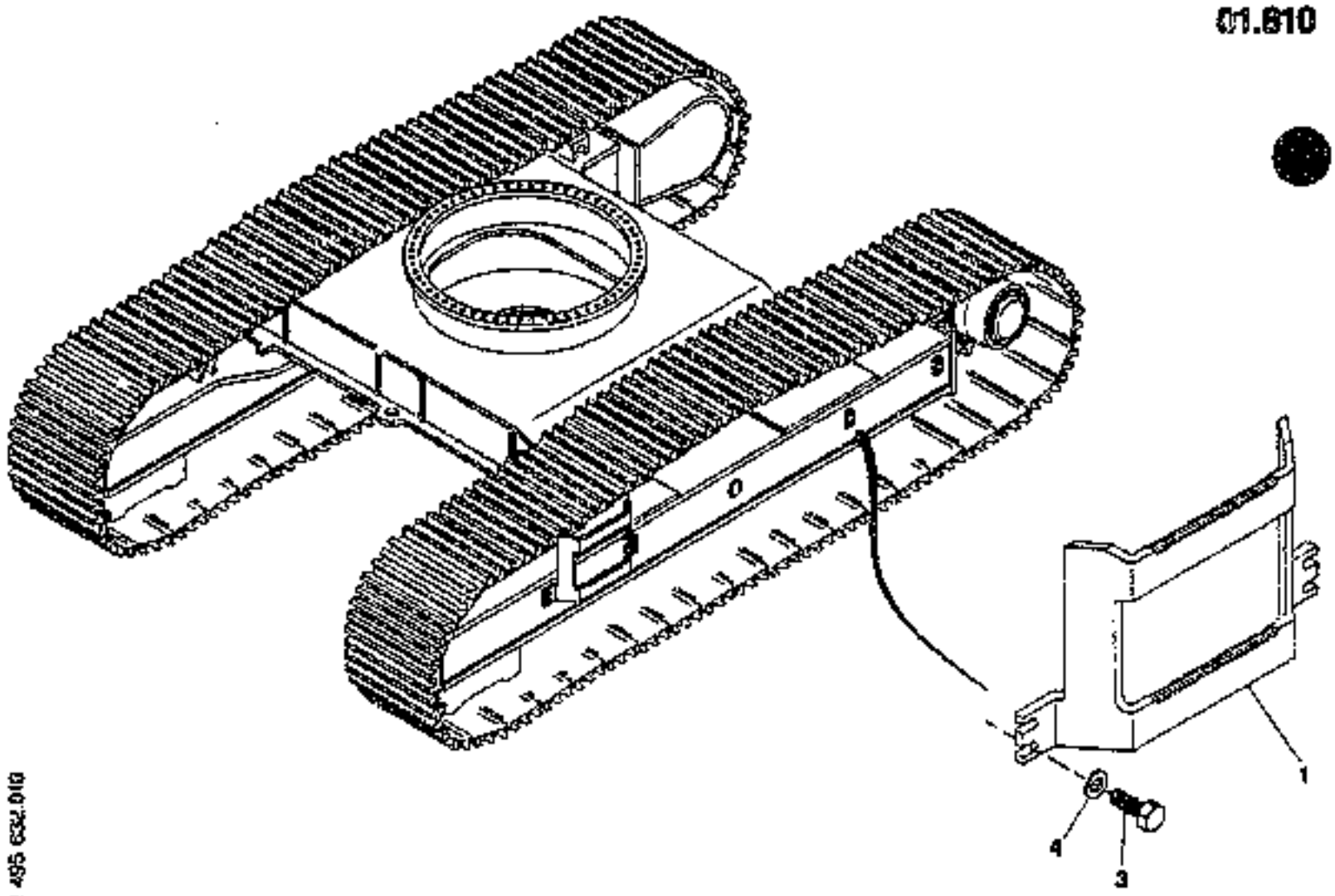

2 495 632.010

STEPS INSTALL.MATERIAL

01.810

T 2495632 - 000
B 2495632 - 010

FX600 / 106101 - .....

Item	Quan.	ME	Part No.	Description
001	4	00	73170128	STEP
003	16	00	73170014	HEXAGON BOLT
004	16	00	73170129	DISK/WASHER

ME: 00 = Stück/piece 13 = m 26 = m² 39 = m³ 43 = kg 50 = l (litre)

1998-09-10

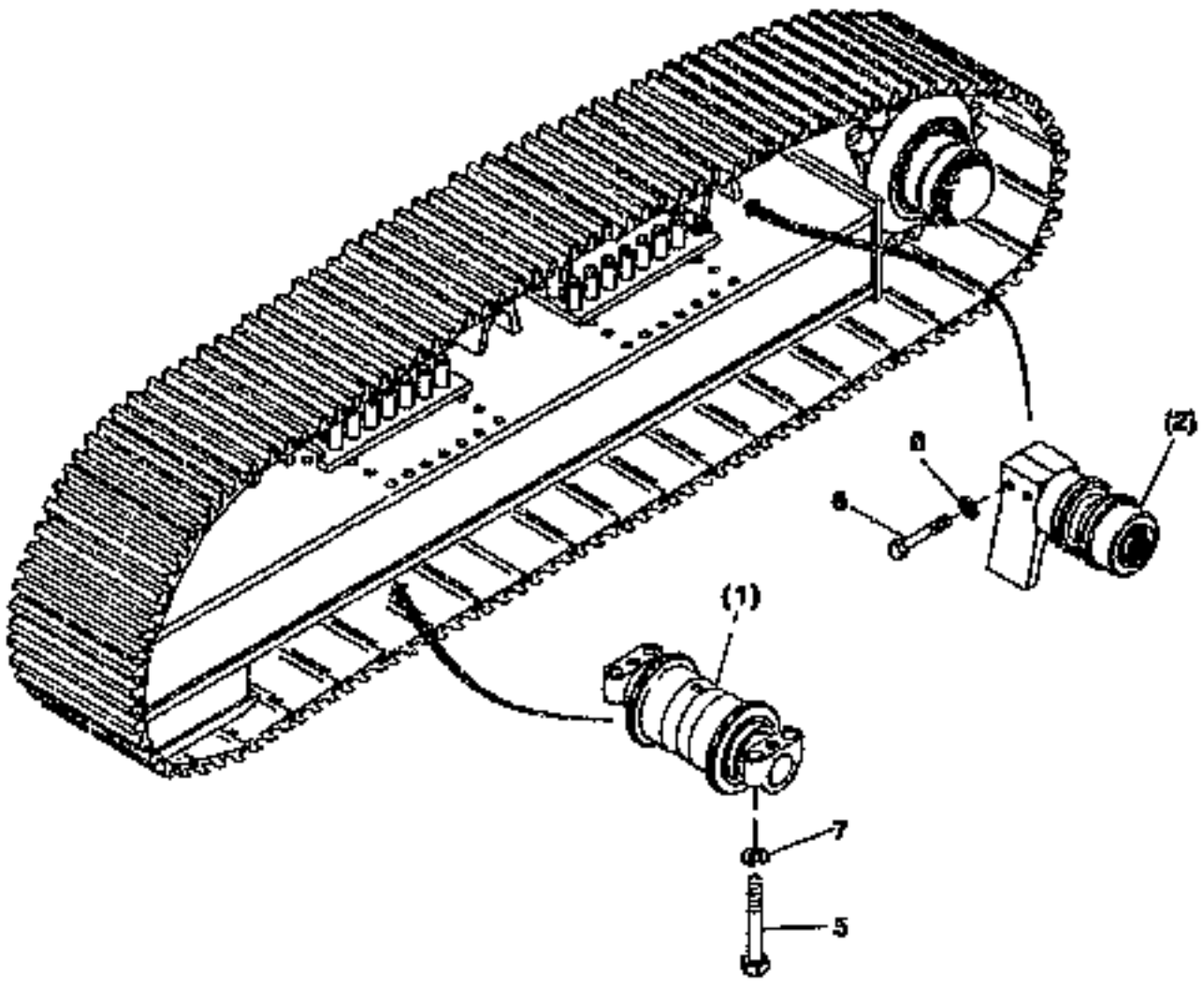

2 496 690.010

CRAWLER CHASSIS INSTALL.MATERIAL

06.010

T 2496890 - 000
B 2496890 - 010

FX600 / 108101 - .....

Item	Quan.	ME	Part No.	Description
001	6	00		06.150 2443691 IDLER ROLLER
002	3	00		06.190 2496891 SUPPORT ROLLER
005	32	00	73170019	HEXAGON BOLT
006	6	00	73170020	HEXAGON BOLT
007	32	00	73170023	DISK/WASHER
008	6	00	73170010	DISK/WASHER

ME: 00 = Stück/piece 10 = m 20 = m² 30 = m³ 40 = kg 50 = l (litre)

1998-02-10

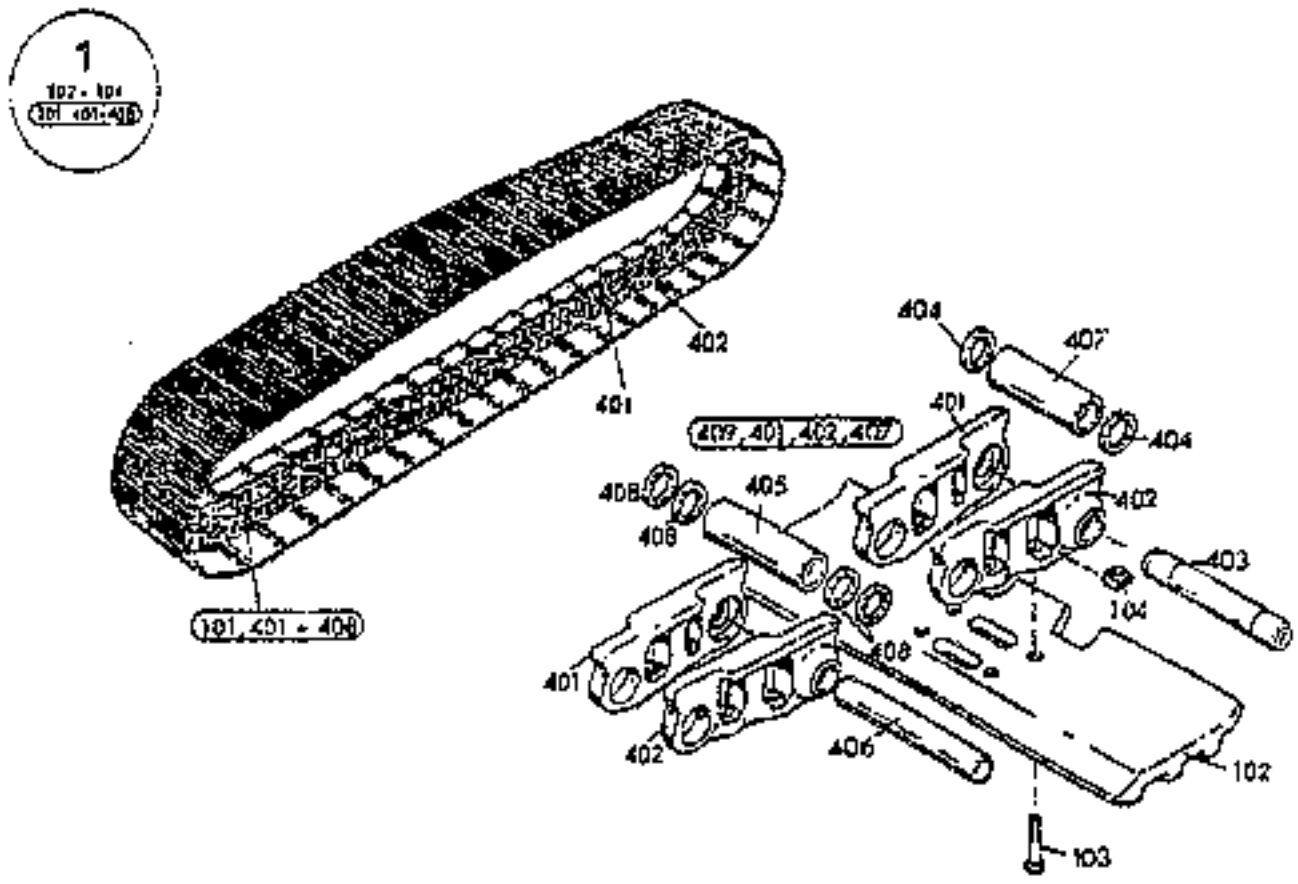

2 443 903.010

DRIVING CHAIN

T 2443903 - 000
B 2443903 - 010

FX600 / 106101 - .....

Item	Quan.	ME	Part No.	Description
001	2	00	73170023	DRIVING CHAIN
101	1	00	73170024	DRIVING CHAIN
102	53	00	73170025	BASEPLATE
103	212	00	73170026	HEXAGON BOLT
104	212	00	73170027	NUT
401	53	00	73170028	CHAIN LINK
402	53	00	73170029	CHAIN LINK
403	1	00	73170030	PIN
404	2	00	73170031	END PLATE
405	53	00	73170032	BUSHING
406	53	00	73170033	PIN
407	1	00	73170034	ENDBUSHING
408	212	00	73170035	CUP SPRING
409	0	00	73170036	SEGMENT

ME: 00 = Stück/piece 13 = m 26 = m² 39 = m³ 43 = kg 50 = l (litre)

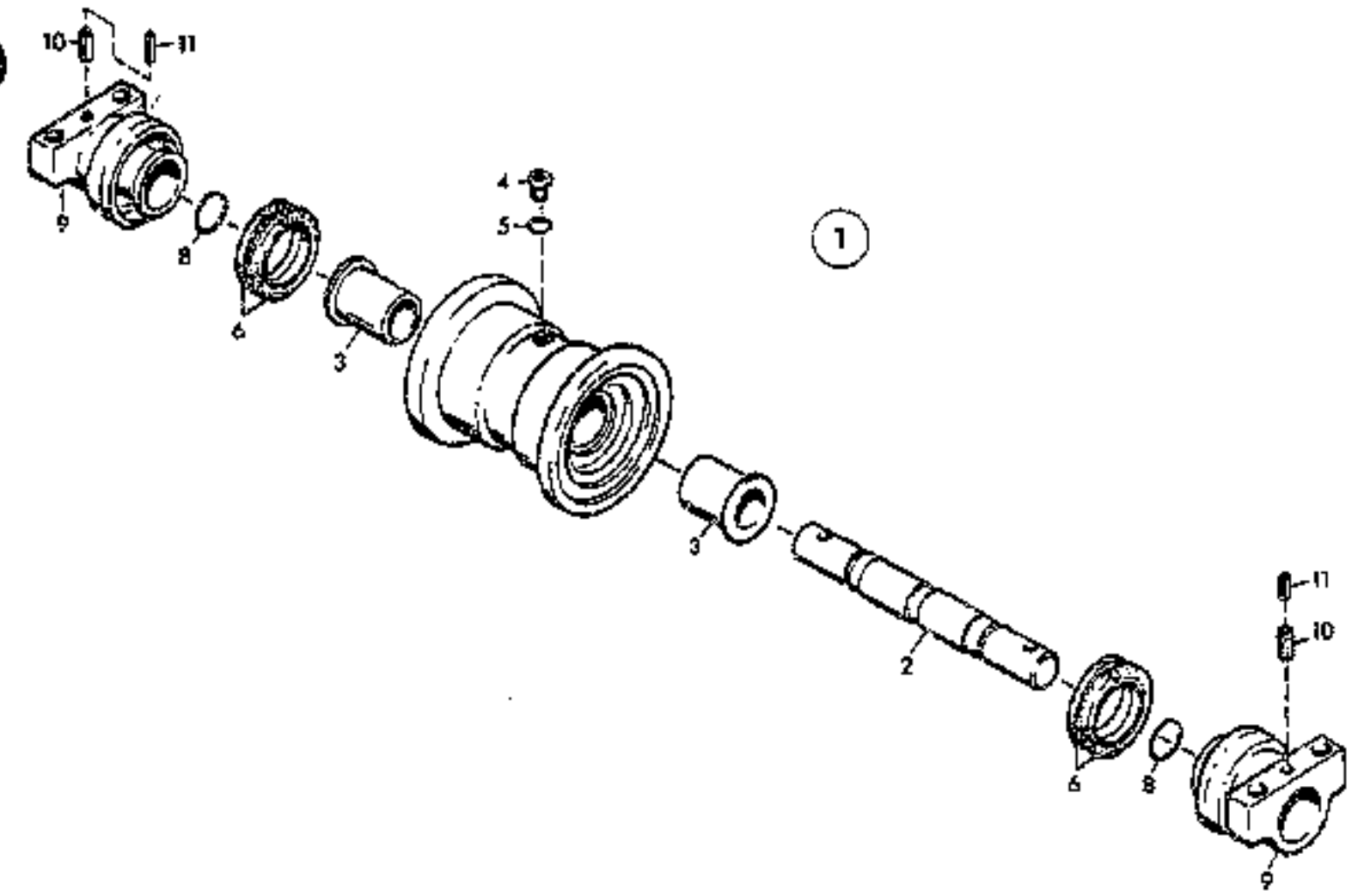

J 691.010

IDLER ROLLER

T 2443691 - 000
B 2443691 - 010

FX600 / 106101 - .....

Item	Quan.	ME	Part No.	Description
001	1	00	73170082	IDLER ROLLER
002	1	00	73170083	AXLE
003	2	00	73170084	FLANGED BUSH
006	2	00	73170085	DUO-CONE SEAL
007	2	00	73170087	BEARING
008	2	00	73170088	O-RING
009	2	00	73170089	MOUNT
010	2	00	73170091	LOCKING PIN
011	2	00	73170092	LOCKING PIN

ME: 00 = Stück/piece 10 = m 25 = m² 39 = m³ 45 = kg 60 = l (litre)

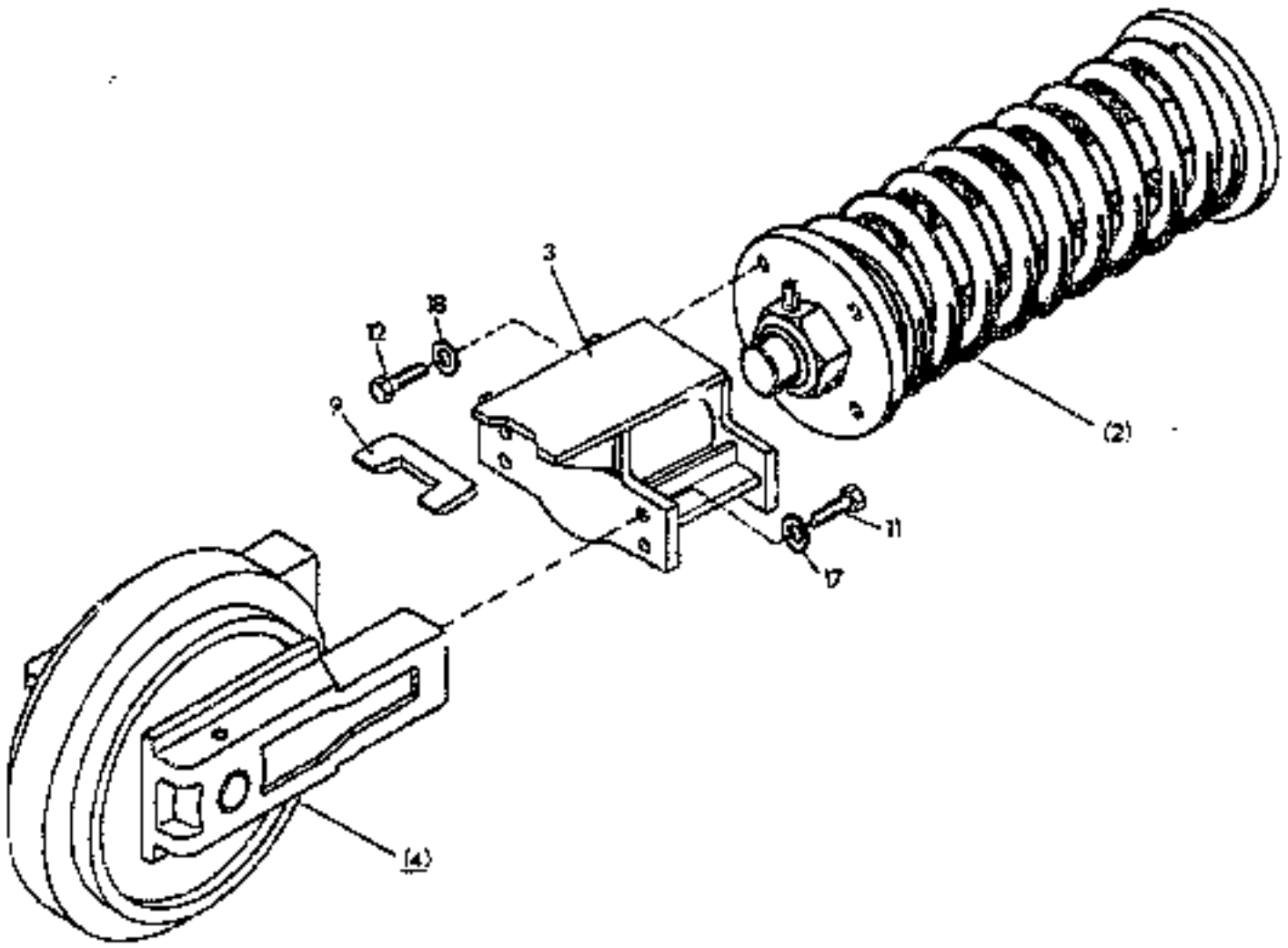

2 249 264.010

GUIDE WHEEL INSTALL.MATERIAL

06.160

FX600 / 106101 - .....

T 2249264 - 000
B 2249264 - 010

Item	Quan.	ME	Part No.	Description
002	1	00		**06.170 2141753** SPRING GUIDE WHEEL
003	1	00	73170012	SPACER PIECE
004	1	00		**06.162 2176026** GUIDE WHEEL
009	1	00	73170013	SCRAPER
011	4	00	73170014	HEXAGON BOLT
012	4	00	73170015	HEXAGON BOLT
017	4	00	73170010	DISK/WASHER
016	4	00	73170017	RETAINING WASHER

ME: 00 = Stück/piece 13 = m 28 = m^2 39 = m^3 43 = kg 50 = l (litre)

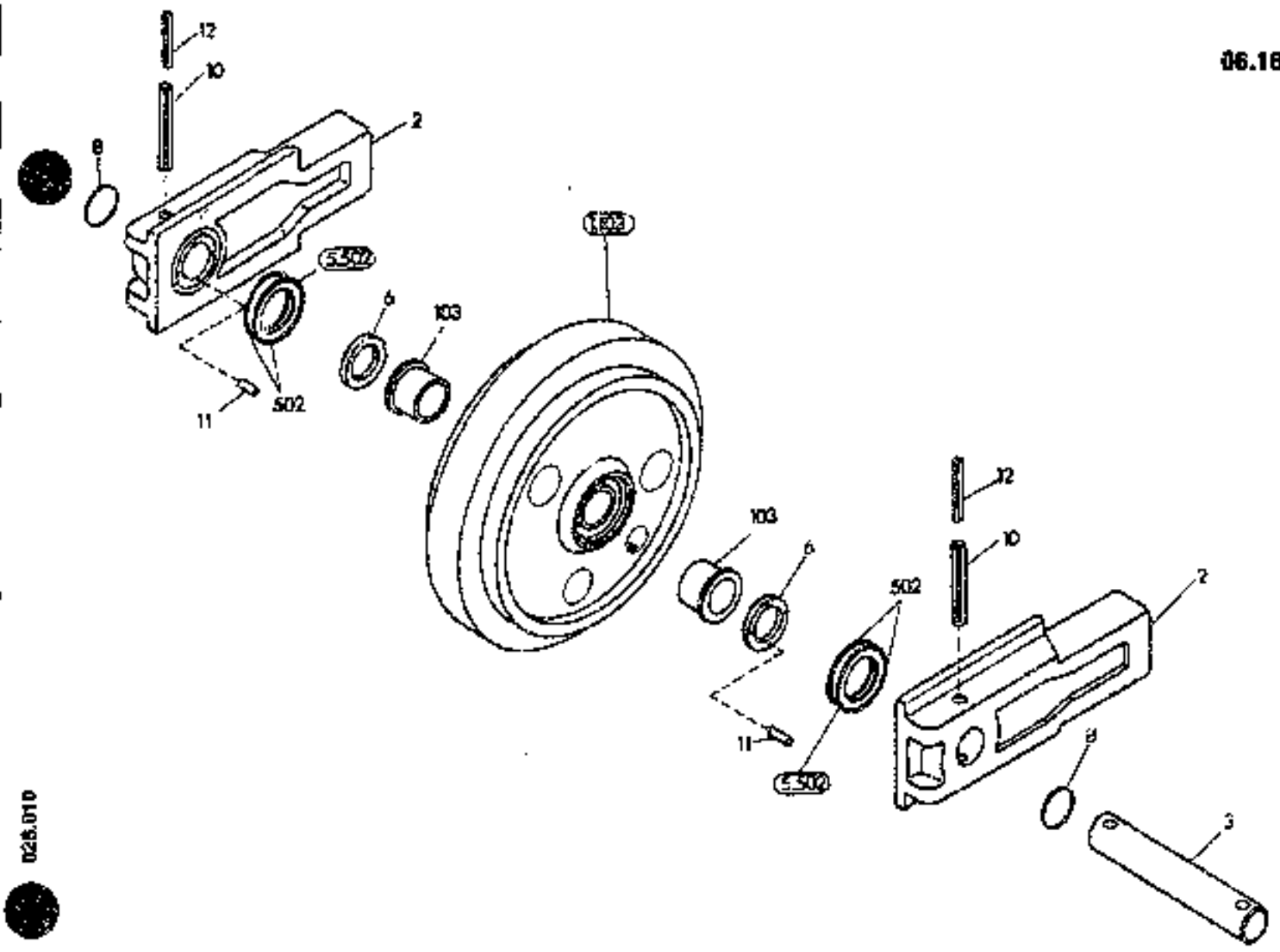

GUIDE WHEEL

FX600 / 106101 - .....

T 2176026 - 000
B 2176026 - 010

Item	Quan.	ME	Part No.	Description
001	1	00	**73170109**	GUIDE WHEEL
002	2	00	**73170110**	SLIDING PIECE
003	1	00	**73170111**	AXLE
005	2	00	**73170112**	DUO-CONE SEAL
006	2	00	**73170113**	STOP RING
008	2	00	**73170114**	ROUND SEALING RING
010	2	00	**73170115**	LOCKING PIN
011	8	00	**73170116**	STRAIGHT PIN
012	2	00	**73170117**	LOCKING PIN
103	2	00	**73170118**	FLANGED BUSH
502	2	00	**73170119**	ROUND SEALING RING

ME: 00 = Stück/piece 10 = m; 25 = m² 30 = m³ 40 = kg 50 = l (litre)

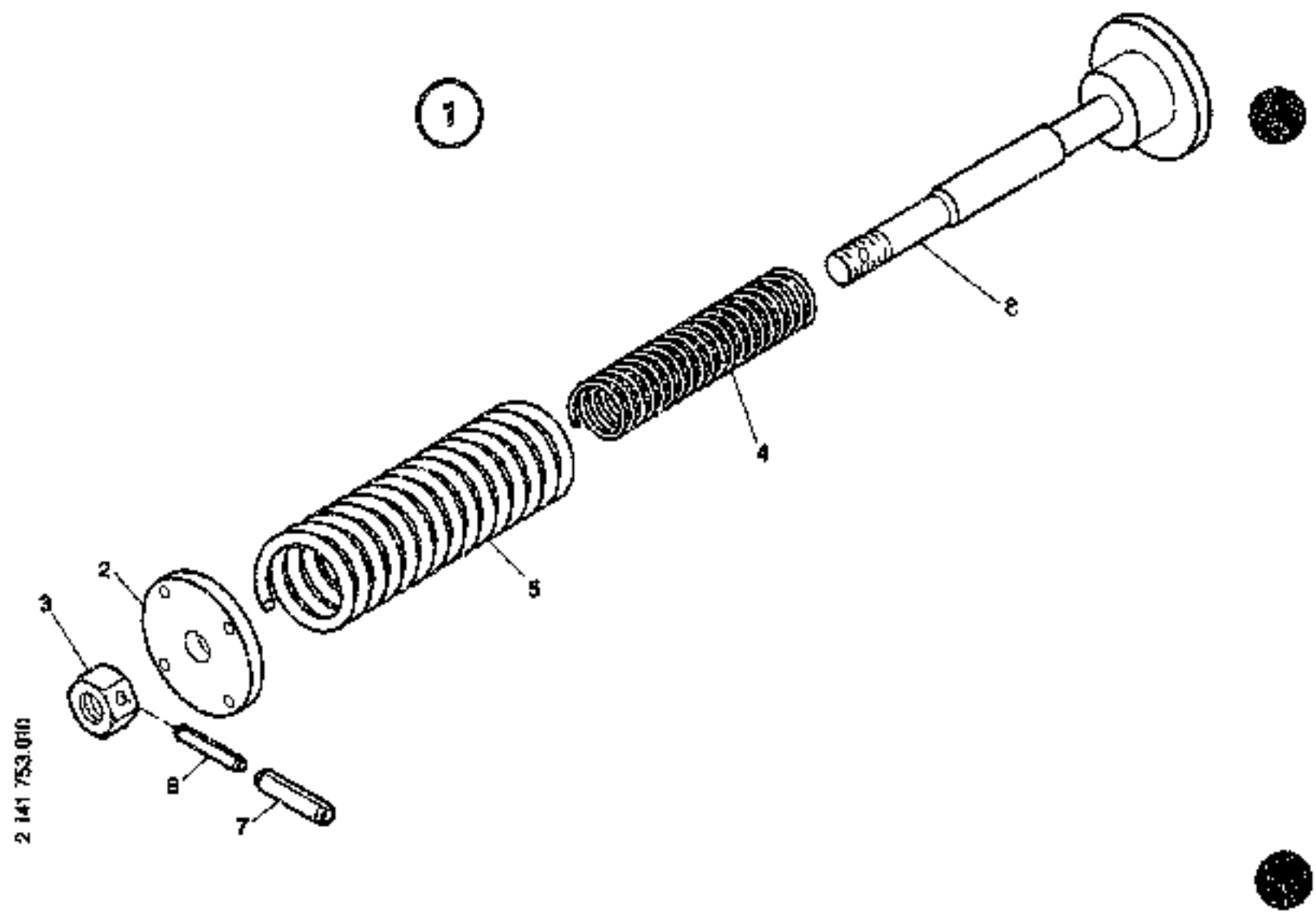

SPRING GUIDE WHEEL

06.170

FIATALLIS

T 2141753 - 001
B 2141753 - 010

FX600 / 106101 - .....

Item	Quan.	ME	Part No.	Description
001	1	00	73172785	SPRING
002	1	00	73170121	PLATE
003	1	00	73170122	NUT
004	1	00	73170123	SPRING
005	1	00	73170124	SPRING
006	1	00	73170125	LOCKING PIN
007	1	00	73170126	LOCKING PIN
008	1	00	73170120	SPRING SEAT

ME: 00 = Stück/piece 13 = m 26 = m² 39 = m³ 43 = kg 50 = l (litre)

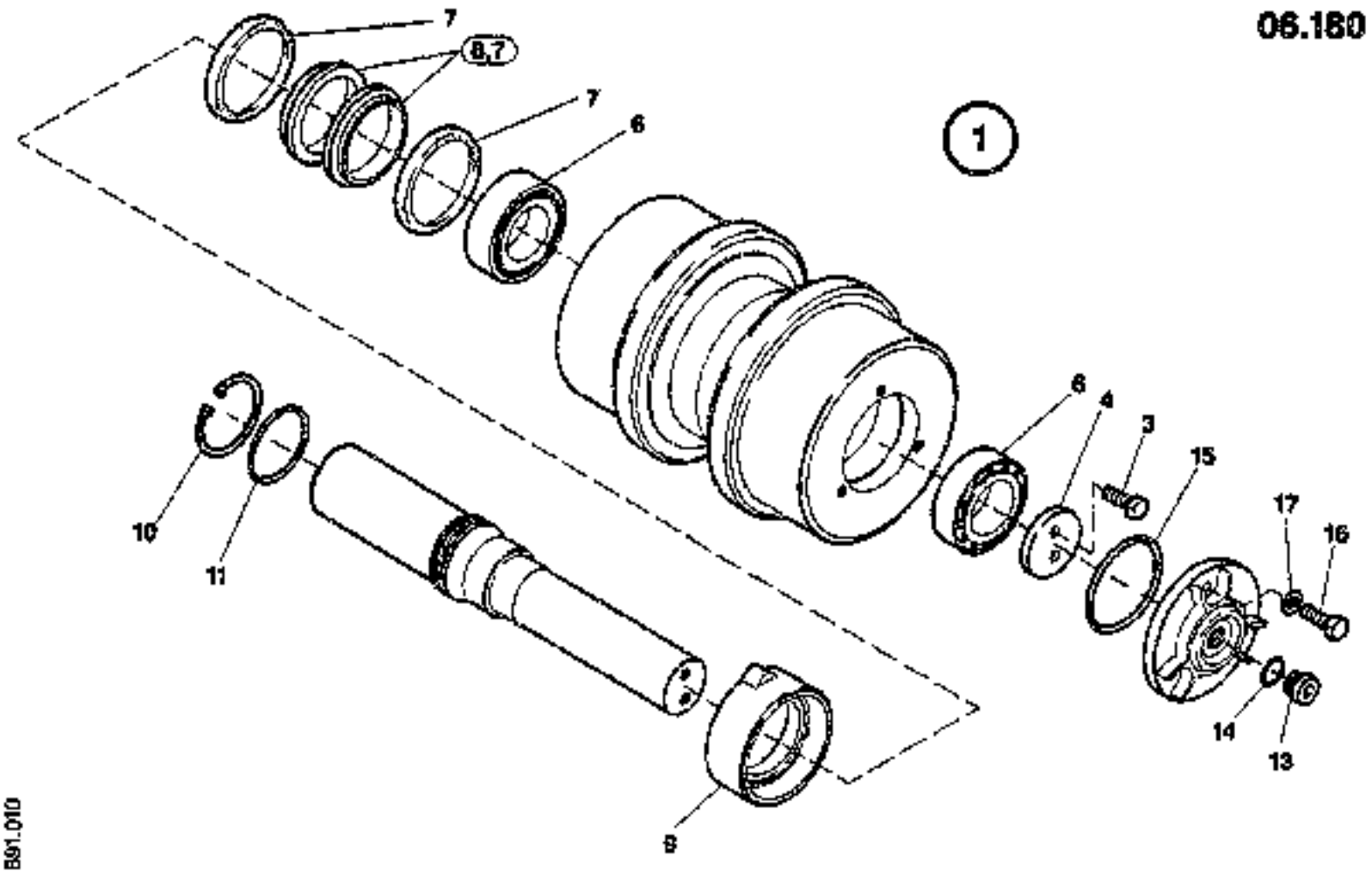

2 486 891.010

SUPPORT ROLLER

T 2496891 - 000
B 2496891 - 010

FX600 / 106101 - .....

Item	Quan.	ME	Part No.	Description
001	1	00	73170094	SUPPORT ROLLER
003	2	00	73170095	HEXAGON BOLT
004	1	00	73170096	DISK/WASHER
006	2	00	73170097	TAP.ROLLER BEARING
007	2	00	73170098	O-RING
008	2	00	73170099	GASKET SET
009	1	00	73170100	BEARING
010	1	00	73170101	CIRCLIP
011	1	00	73170102	O-RING
013	1	00	73170103	SCREW PLUG
014	1	00	73170104	O-RING
015	1	00	73170105	O-RING
016	3	00	73170107	HEX.HD.SCREW
017	3	00	73170108	DISK/WASHER

ME: 00 = Stück/piece 13 = m 28 = m² 39 = m³ 43 = kg 50 = l (litre)

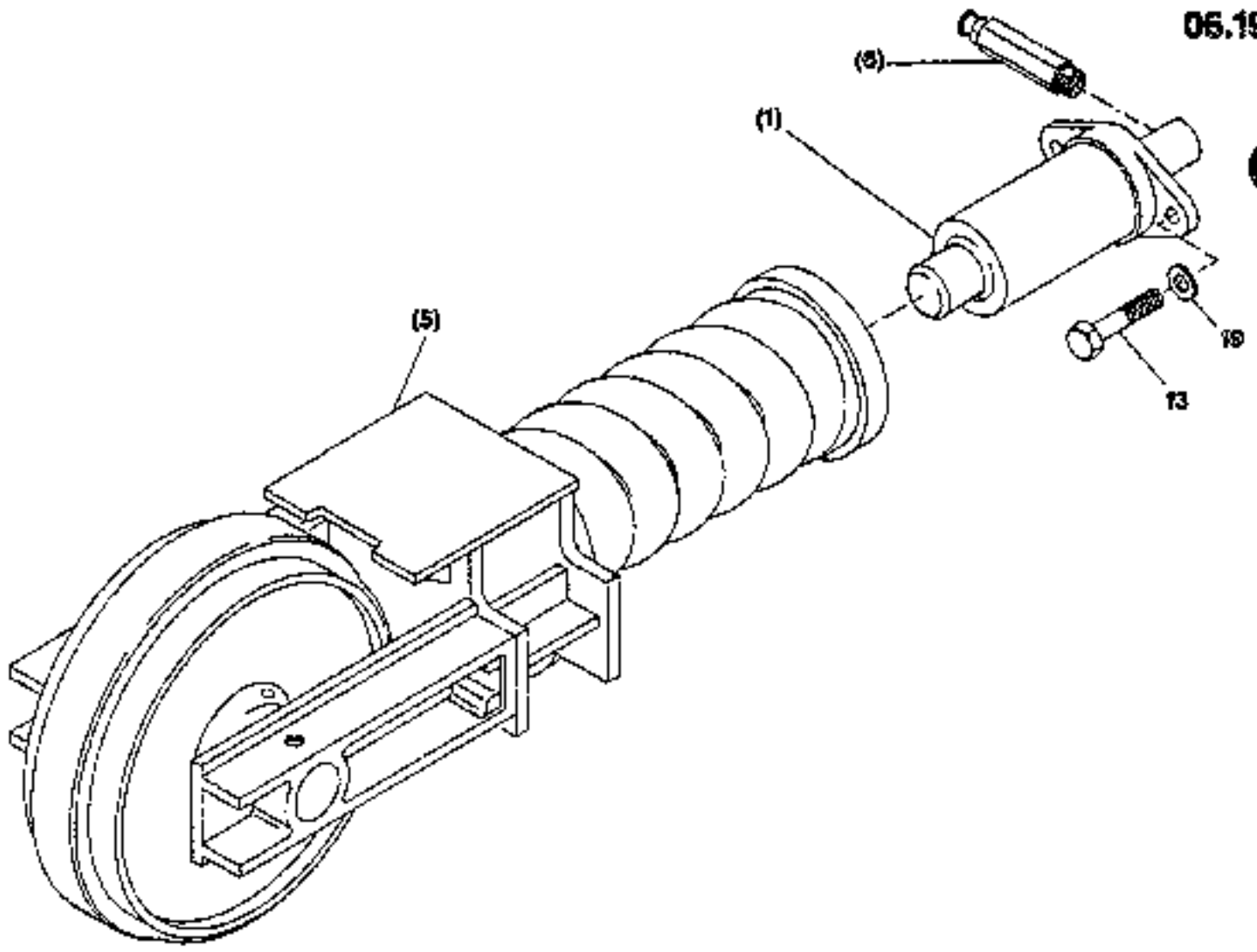

TENSIONING DEVICE

06.190

T 2496889 - 000
B 2496889 - 010

FX500 / 106101 - .....

Item	Quan.	ME	Part No.	Description
001	1	00		**06.200 2141764** CLAMPING CYLINDER GREASE FILLING
005	1	00		**06.160 2249284** GUIDE WHEEL INSTALL.MATERIAL
006	1	00		**06.210 2496893** VALVE CHAIN TENSIONER GREASE FILLING
013	2	00	**73170008**	HEXAGON BOLT
019	2	00	**73170010**	DISK/WASHER

ME: 00 = Stück/piece 13 = m 26 = m^2 39 = m^3 43 = kg 50 = l (litre)

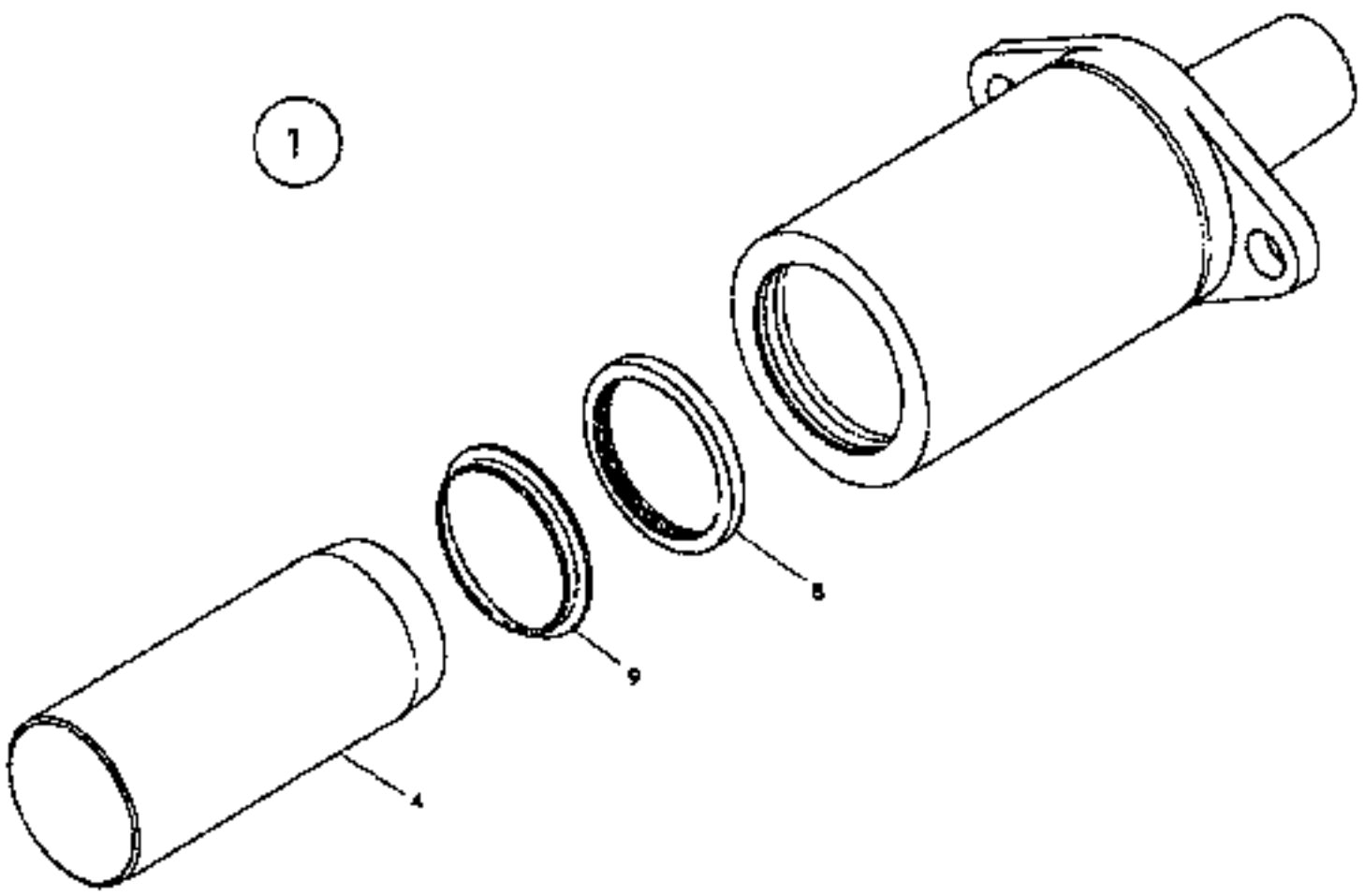

2 141 764.090

06.200

CLAMPING CYLINDER GREASE FILLING

T 2141764 - 000
B 2141764 - 010

FX600 / 106101 - .....

Item	Quan.	ME	Part No.	Description
001	1	00	**73170143**	CYLINDER
004	1	00	**73170144**	PISTON
008	1	00	**73170145**	GROOVED RING
009	1	00	**73170146**	SCRAPER

ME: 00 = Stück/piece 18 = m 28 = m² 39 = m³ 43 = kg 50 = l (litre)

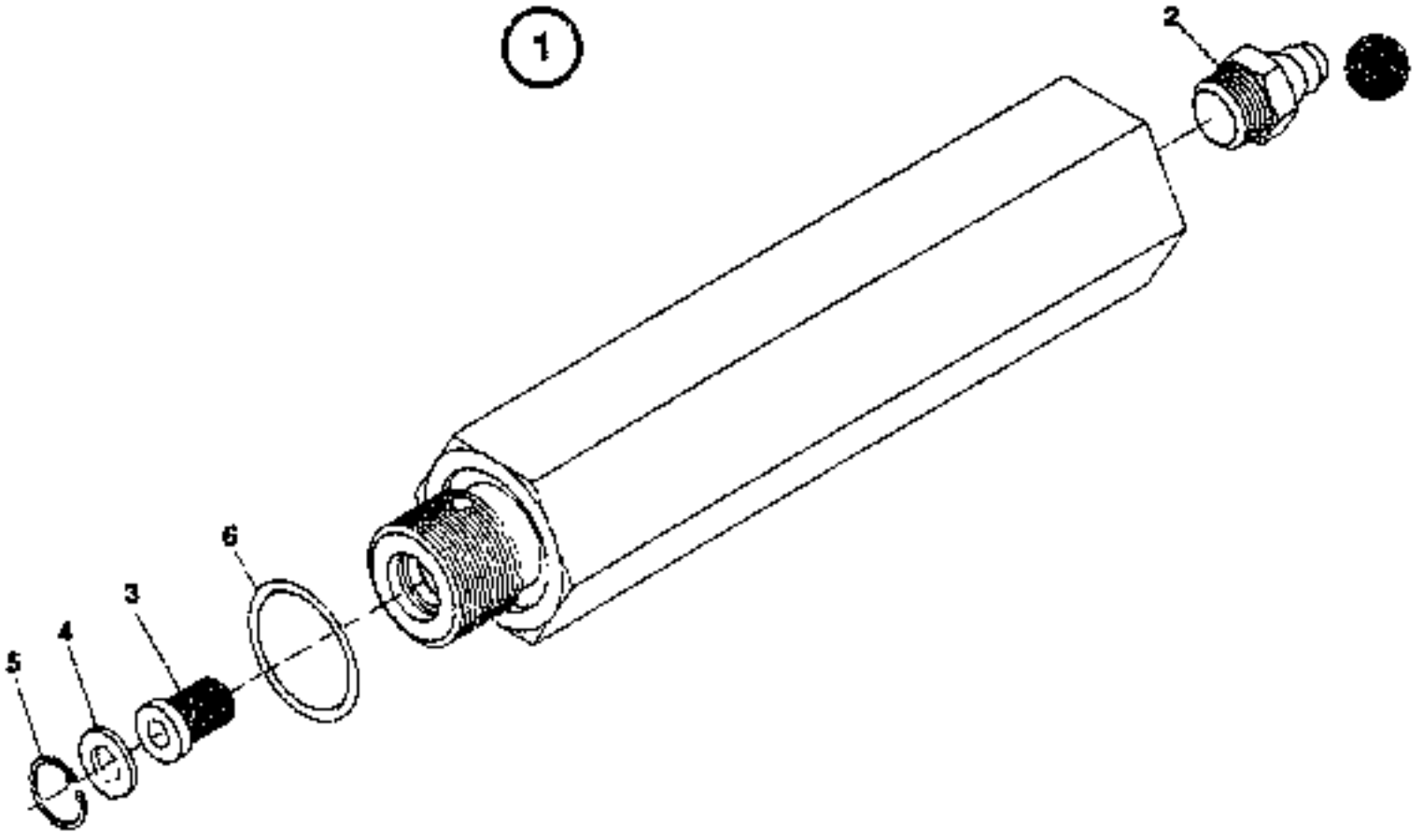

2 496 893.010

VALVE CHAIN TENSIONER GREASE FILLING

06.210

FIATALLIS

T 2496893 - 000
B 2496893 - 010

FX600 / 106101 - .....

Item	Quan.	ME	Part No.	Description
001	1	00	73170137	CHECK VALVE
002	1	00	73170136	GREASE NIPPLE
003	1	00	73170139	VALVE
004	1	00	73170140	DISK/WASHER
005	1	00	73170141	CIRCLIP
006	1	00	73170142	SEALING RING

ME: 00 = Stück/piece 13 = m 26 = m^2 39 = m^3 43 = kg 50 = l (litre)

1998-09-10

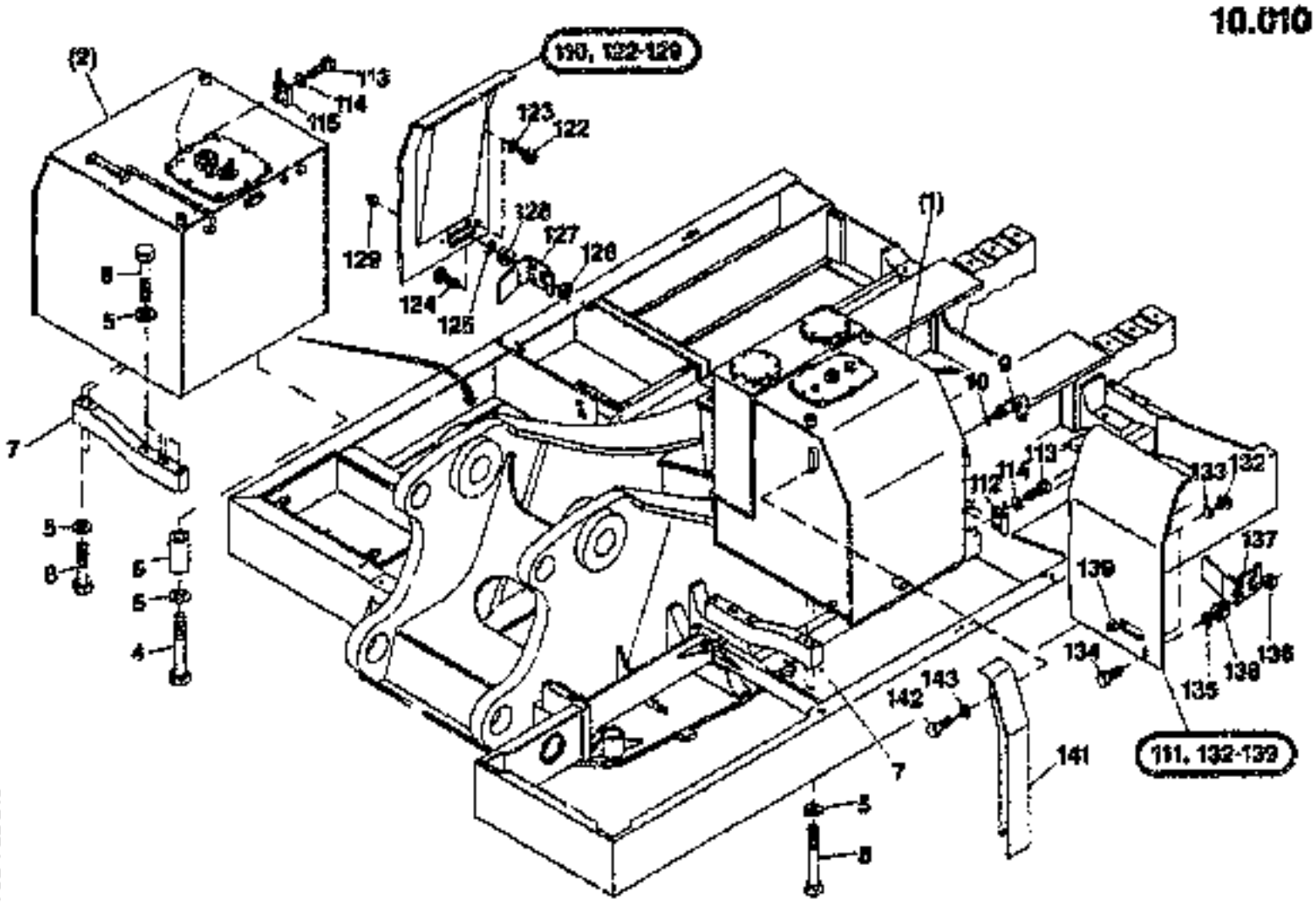

CONTAINER INSTALL.MATERIAL

10.010

FX600 / 106101 - .....

T 2782700 - 000
B 2782700 - 010

Item	Quan.	ME	Part No.	Description
001	1	00		**10.102 2443385** HYD. OIL TANK
002	1	00		**10.202 2782598** FUEL TANK
004	1	00	**73170003**	HEXAGON BOLT
005	10	00	**73170604**	DISK/WASHER
006	1	00	**73170605**	SPACER
007	2	00	**73171557**	BRACKET
008	9	00	**73170606**	HEXAGON BOLT
009	1	00	**73170303**	LEVEL SWITCH
010	1	00	**73170304**	SEALING RING
110	1	00	**73170607**	DOOR
111	1	00	**73170608**	DOOR
112	2	00	**73170609**	HINGE
113	8	00	**73170175**	HEXAGON BOLT
114	8	00	**73170213**	DISK/WASHER
115	2	00	**73170610**	HINGE

ME: 00 = Stück/piece 13 = m 26 = m² 39 = m³ 43 = kg 50 = l (litre)

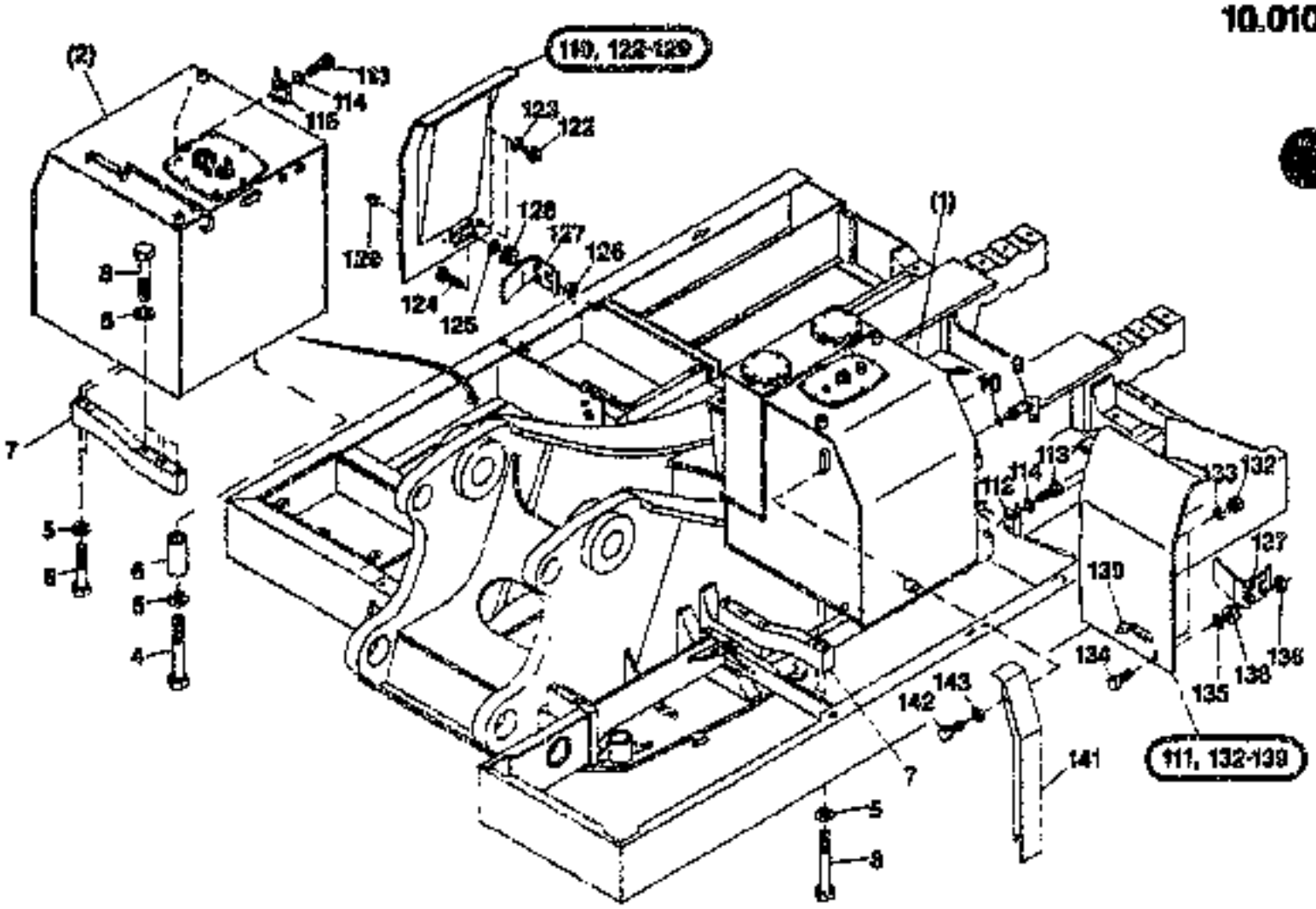

CONTAINER INSTALLMATERIAL

10.010

T 2782700 - 000
B 2782700 - 010

FX800 (106101 - .....

Item	Quan.	ME	Part No.	Description
122	2	00	73170611	RUBBER STOP
123	6	00	73170165	DISK/WASHER
124	2	00	73170201	HEXAGON BOLT
125	2	00	73170160	DISK/WASHER
126	2	00	73170161	HEXAGON NUT
127	1	00	73170612	LOCKING BAR
128	2	00	73170200	BUMPER
129	1	00	73170613	ARRESTOR
132	2	00	73170611	RUBBER STOP
133	6	00	73170165	DISK/WASHER
134	2	00	73170201	HEXAGON BOLT
135	2	00	73170160	DISK/WASHER
136	2	00	73170161	HEXAGON NUT
137	1	00	73170612	LOCKING BAR
138	2	00	73170200	BUMPER
139	1	00	73170613	ARRESTOR
141	1	00	73170153	PANELING
142	2	00	73170163	HEXAGON BOLT

ME: 00 = Stück/piece 10 = m 20 = m² 30 = m³ 40 = kg 50 = l (litre)

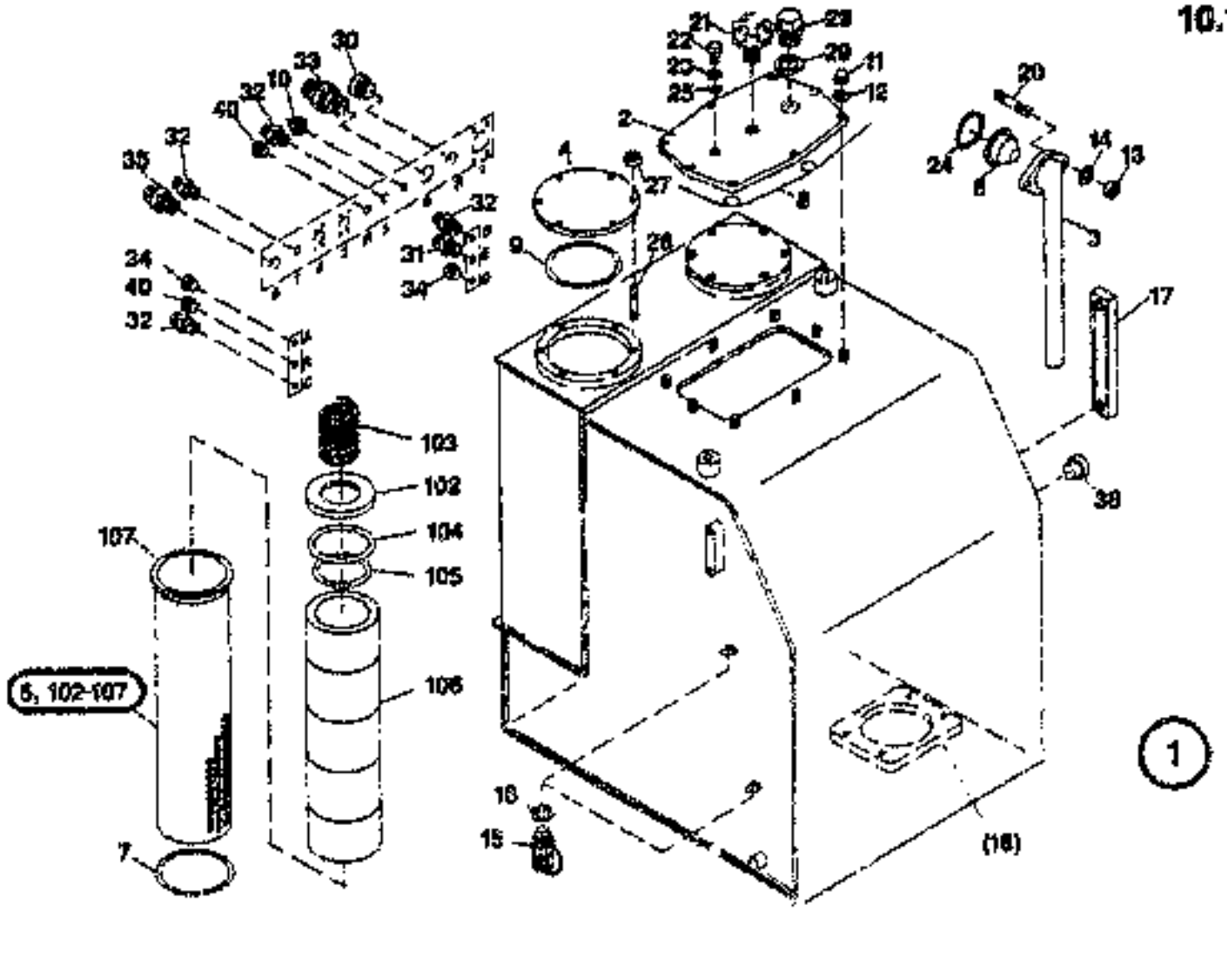

10.102

HYD. OIL TANK

T 2443385 - 003
S 2443385 - 010

FX500 / 106101 - .....

Item	Quan.	ME	Part No.	Description
001	1	00	73170272	HYD. OIL TANK
002	1	00	73170273	LID
003	3	00	73170274	HOUSING
004	2	00	73170275	LID
005	2	00	73170276	FILTER
006	3	00	73170277	VALVE
007	2	00	73170278	O-RING
008	1.60	13	73170279	RUBBER PIPING
009	2	00	73170280	O-RING
010	1	00	73170281	SWITCH
011	8	00	73170282	CAP NUT
012	8	00	73170182	DISK/WASHER
013	6	00	73170283	LOCKING NUT
014	6	00	73170180	DISK/WASHER
015	2	00	73170250	SCREW

ME: 00 = Stück/piece 13 = m 26 = m² 39 = m³ 43 = kg 50 = l (litre)

1998-09-10

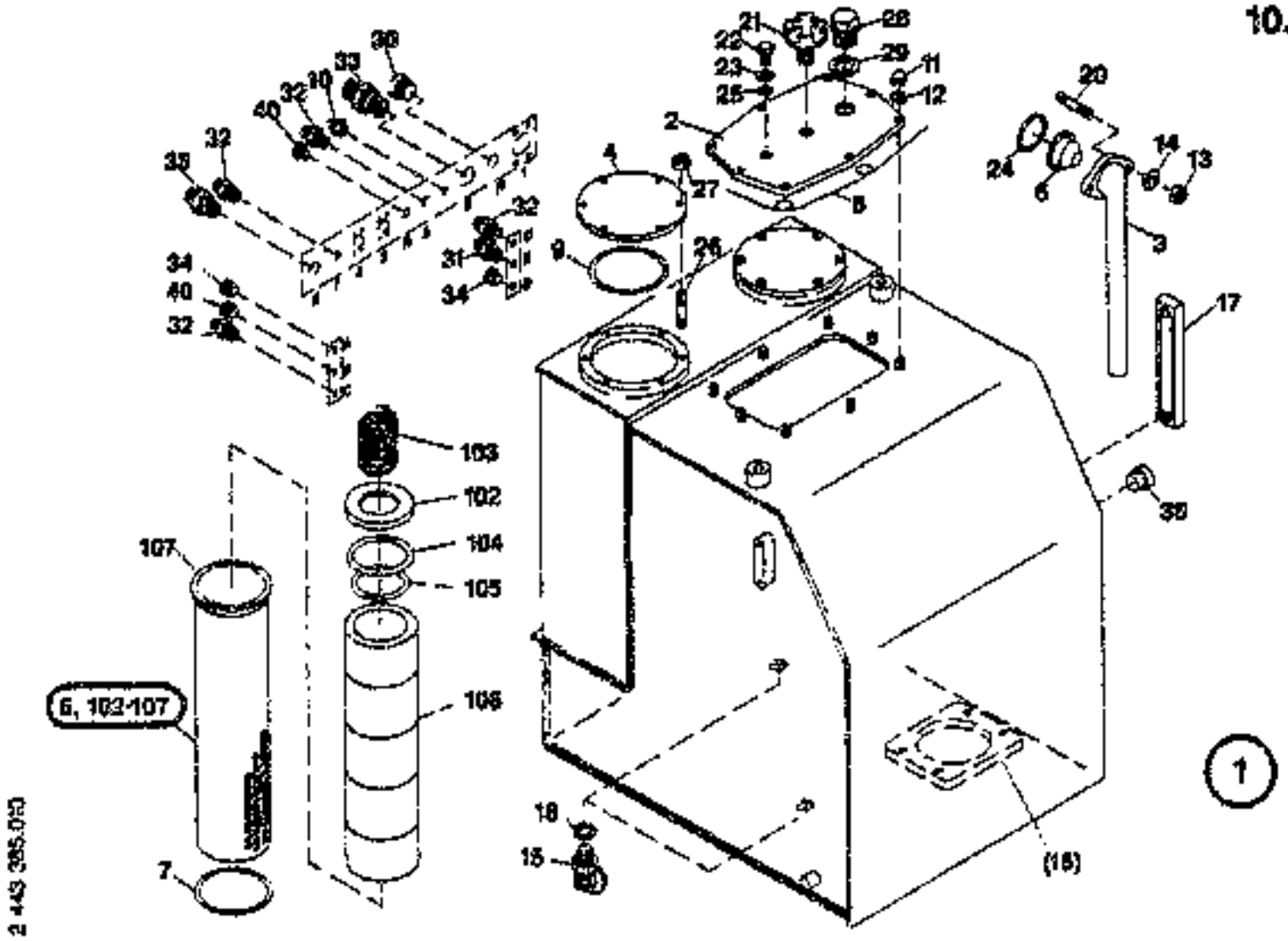

HYD. OIL TANK

10.102

T 2443385 - 003
B 2443385 - 010

FX600 / 106101 - .....

Item	Quan.	ME	Part No.	Description
034	2	00	73170301	SCREW PLUG
035	1	00	73170302	SOCKET
038	1	00	73173011	PROTECTIVE PLUG
040	2	00	73170061	SCREW PLUG
101	2	00	73170278	FILTER
102	2	00	73170305	PRESS PART
103	2	00	73170306	SPRING
104	2	00	73170307	ROUND SEALING RING
105	2	00	73170308	O-RING
106	2	00	73170309	ELEMENT
107	2	00	73170310	BEAM

ME: 00 = Stück/piece 12 = m 25 = m² 30 = m³ 43 = kg 50 = l (litre)

1998-09-10

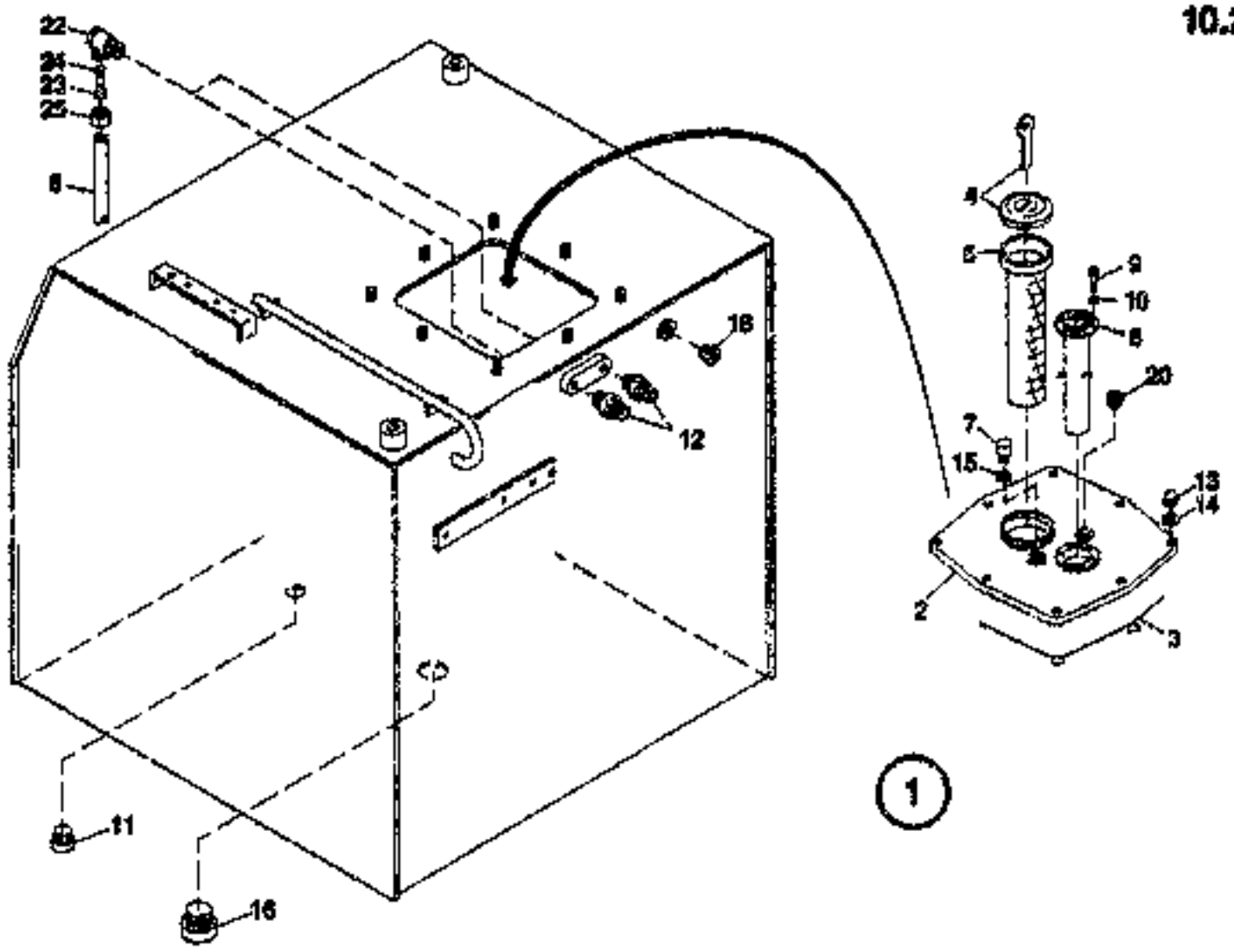

2 782 688.010

FUEL TANK

FIATALLIS

FX800 / 105101 - .....

T 2782698 - 000
B 2782698 - 010

Item	Quan.	ME	Part No.	Description
001	1	00	73175919	FUEL TANK
002	1	00	73175342	LID
003	1,37	13	73170272	RUBBER PIPING
004	1	00	73170690	CAP
005	1	00	73170691	SIEVE
006	1,01	13	73170693	PIPE
007	1	00	73170694	FILTER
008	1	00	73175344	FUEL LEVEL SENDER
009	6	00	73170696	HEXAGON BOLT
010	6	00	73170185	DISK/WASHER
011	1	00	73170699	SCREW PLUG
012	2	00	73170298	SOCKET
013	8	00	73170282	CAP NUT
014	8	00	73170182	DISK/WASHER
015	1	00	73170614	SEALING RING
016	1	00	73170532	SCREW PLUG
018	1	00	73170359	SCREW PLUG
020	1	00	73171855	SCREW PLUG

ME: 00 = Stück/piece 13 = m 26 = m² 39 = m³ 43 = kg 50 = l (ltrs)

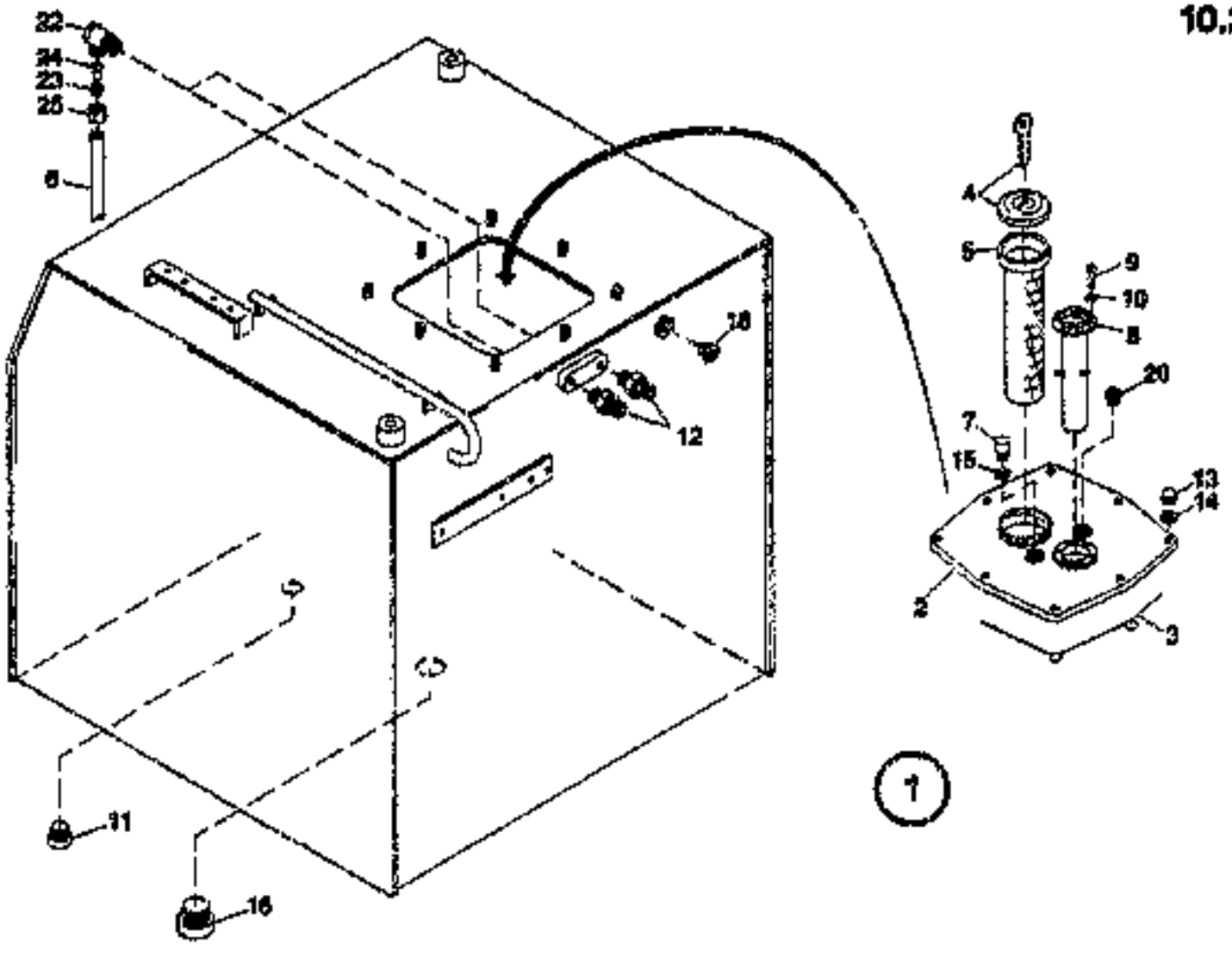

FUEL TANK

10.202

FIATALLIS

T 2782698 - 000
B 2782698 - 010

FX600 / 106101 - .....

Item	Quan.	ME	Part No.	Description
022	2	00	73170706	SCREWING
023	2	00	73170706	CLAMPING RING
024	2	00	73170709	SUPPORT RING
025	2	00	73170710	CONN.NUT

ME: 00 = Stück/piece 13 = m 26 = m² 39 = m³ 43 = kg 60 = l (litre)

1698-09-10

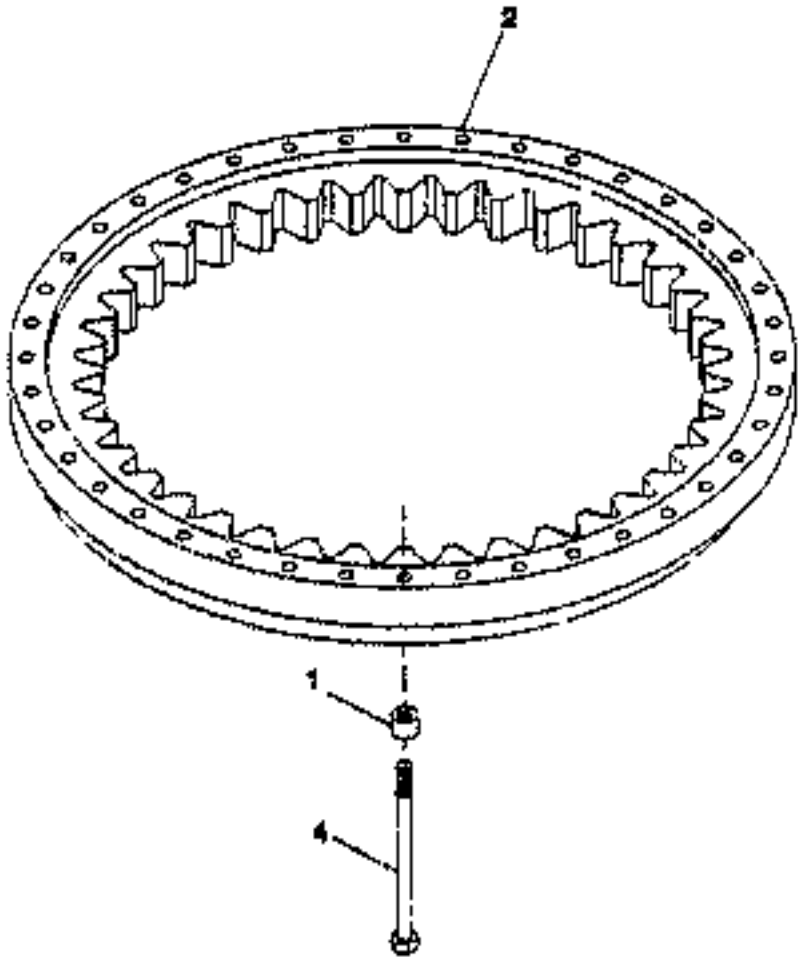

2 495 248 GHD

11.010

SWIVEL CONNECTION INSTALL.MATERIAL

T 2495248 - 000
B 2495248 - 010

FX600 / 106101 - .....

Item	Quan.	ME	Part No.	Description
001	60	00	73171003	SPACER
002	1	00	73171004	SWIVEL CONNECTION
004	60	00	73171005	HEXAGON BOLT

ME: 00 = Stück/piece 10 = m 20 = m² 30 = m³ 40 = kg 50 = l (litre)

1998-09-10

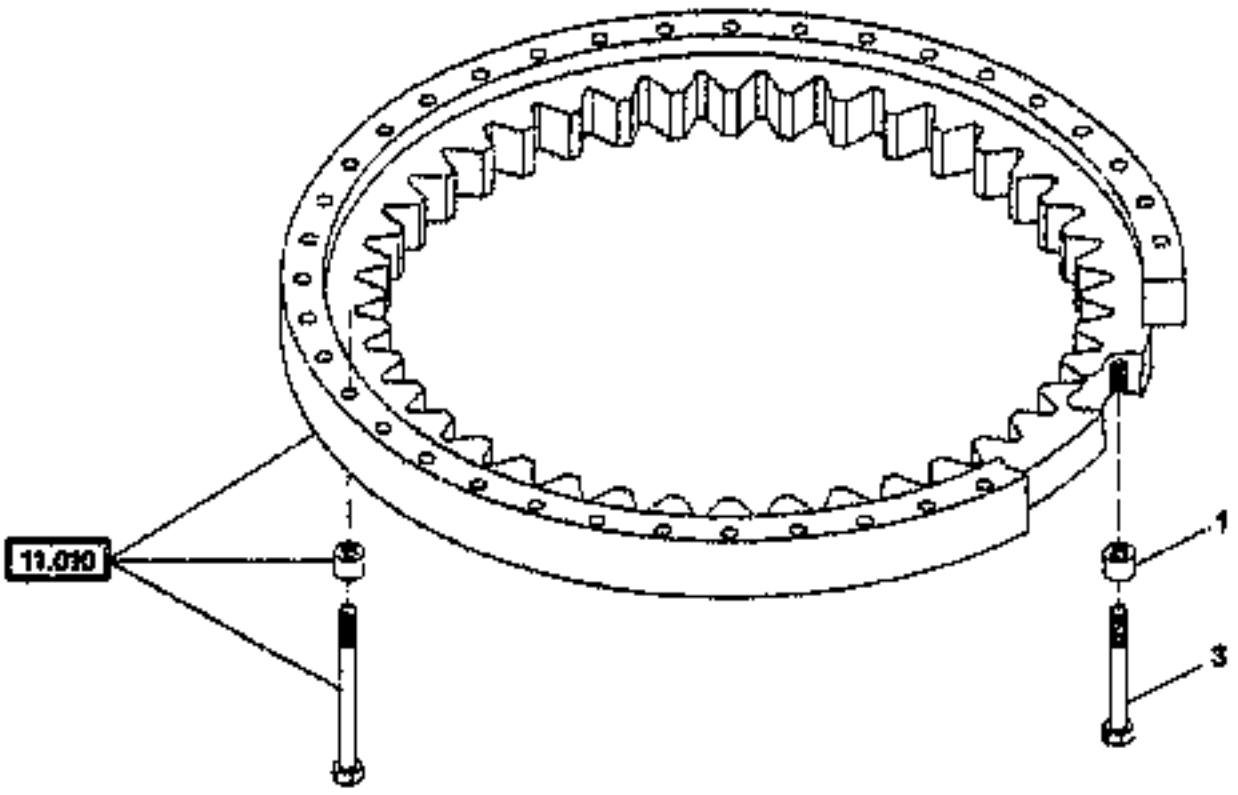

2 496 910 010

11.010

SWIVEL CONNECTION INSTALL.MATERIAL

T 2496910 - 000
B 2496910 - 010

FX600 / 105101 - .....

Item	Quan.	ME	Part No.	Description
001	60	00	73170604	DISK/WASHER
003	60	00	73171007	HEXAGON BOLT

ME: 00 = Stück/piece 13 = m 28 = m² 30 = m³ 43 = kg 50 = l (litre)

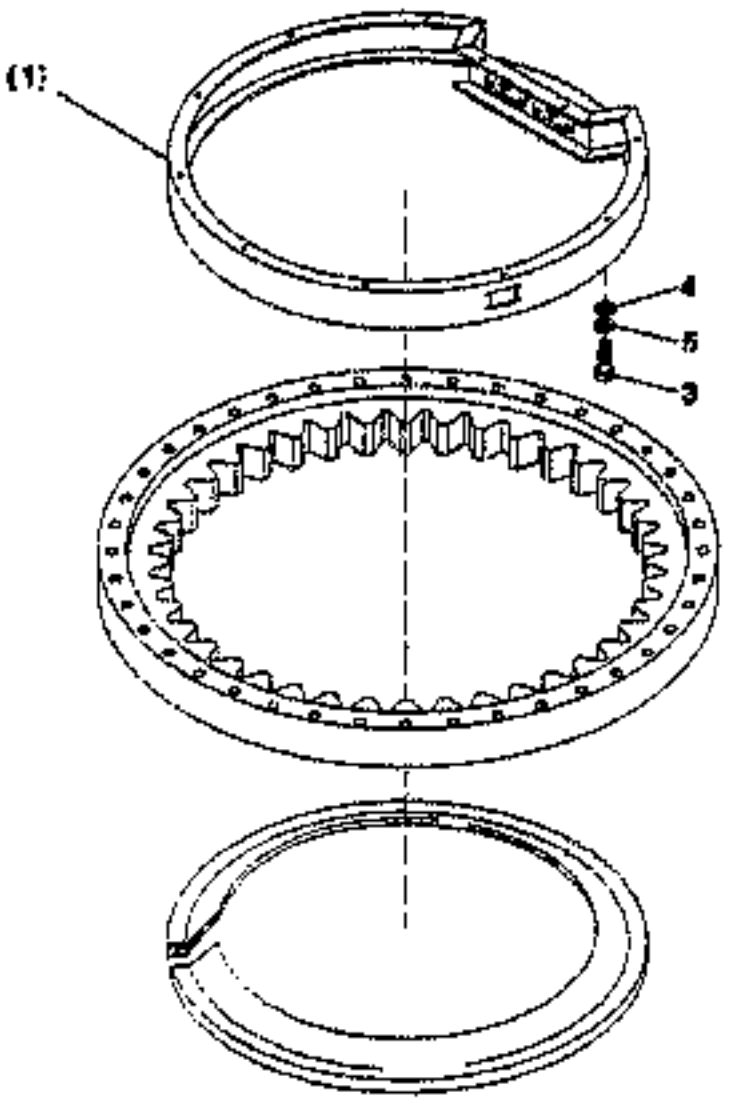

2 495 248.010

SEAL GASKET SWIVEL CONNECTION

FX600 / 106101 - .....

♀ 2495246 - 000
♂ 2495346 - 010

Item	Quan.	ME	Part No.	Description
001	1	00		38.512 2495247 COVER SWING BEARING
003	11	00	73170210	HEXAGON BOLT
004	11	00	73170213	DISK/WASHER
005	11	00	73170564	FANSHAPED WASHER

ME: 00 = Stück/piece 13 = m 26 = m² 39 = m³ 43 = kg 50 = l (litre)

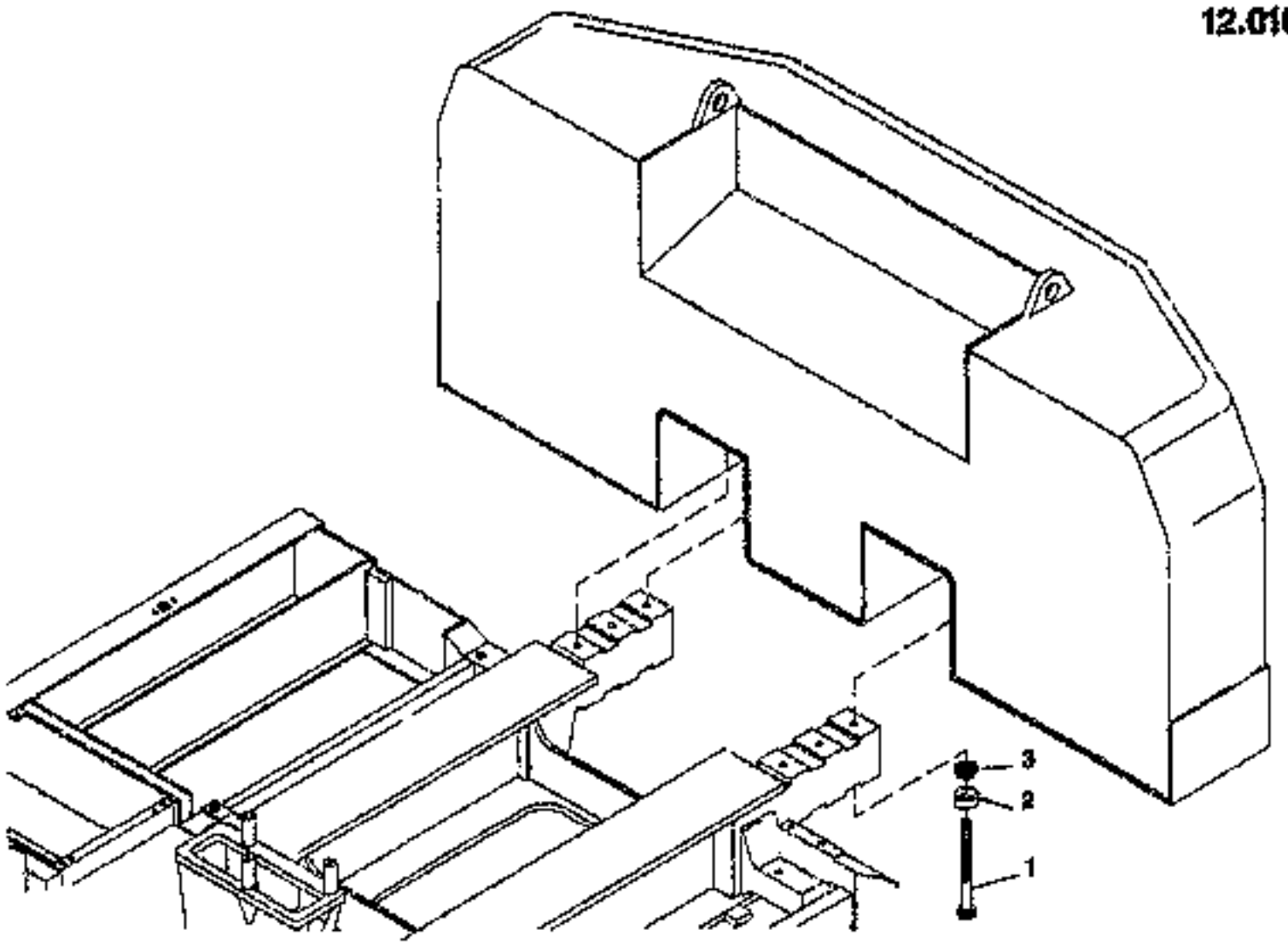

2 496 776.010

BALLAST INSTALL.MATERIAL

T 2496776 - 000
B 2496776 - 010

FX600 / 76027 - 76027

Item	Quan.	ME	Part No.	Description
001	6	00	73170965	HEXAGON BOLT
002	6	00	73170966	BALL SOCKET
003	6	00	73170967	DISK/WASHER

ME: 00 = Anzahl/piece 13 = m 26 = m² 39 = m³ 43 = kg 50 = l (litre)

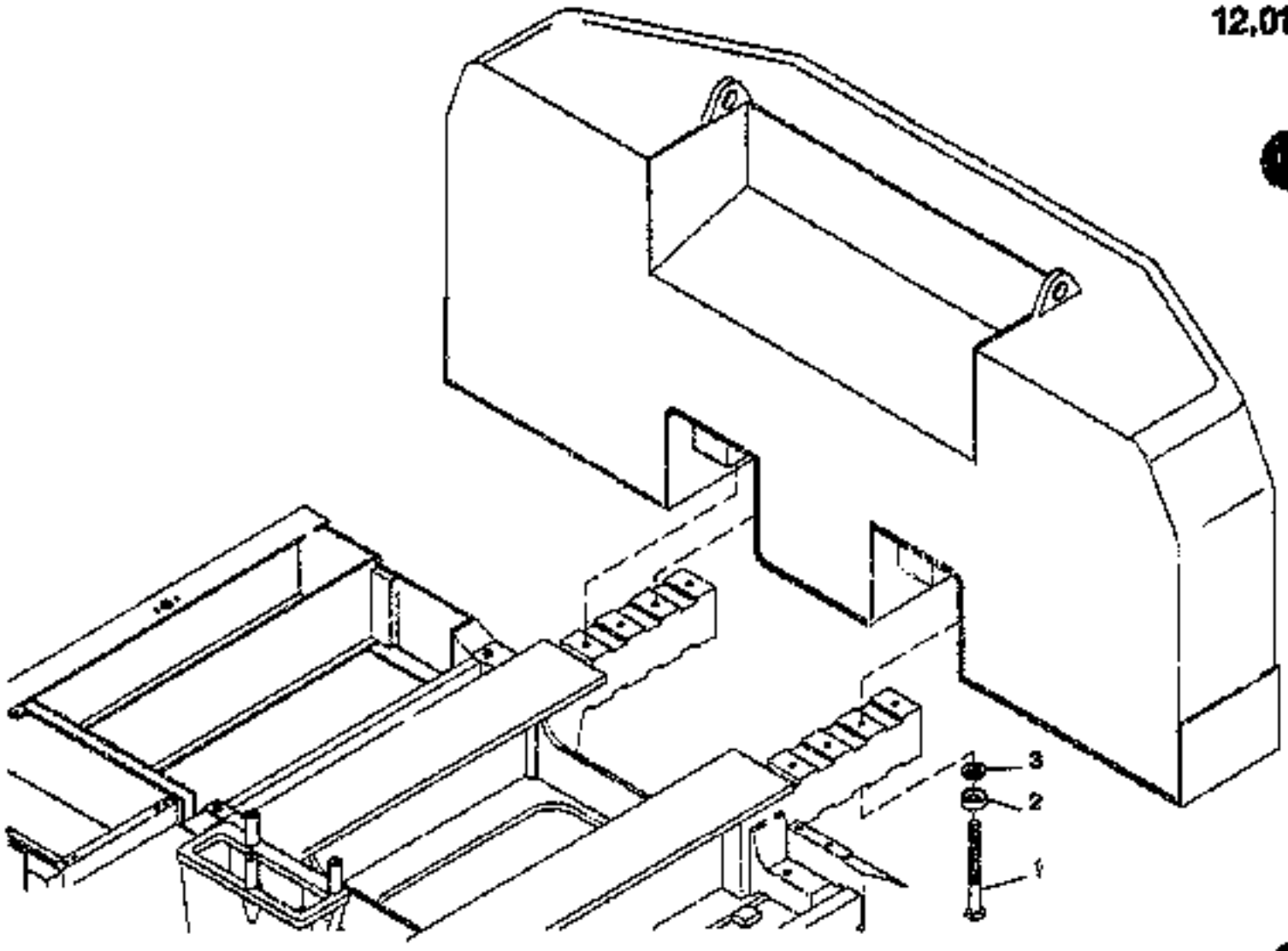

BALLAST INSTALL.MATERIAL

T 2782063 - 000
B 2782063 - 010

FX600 / 106101 - .....

Item	Quan.	ME	Part No.	Description
001	6	00	73172489	HEXAGON BOLT
002	6	00	73170988	BALL SOCKET
003	6	00	73170987	DISK/WASHER
				ANZIEHDREHMOMENT 3000NM

ME: 00 = Stück/piece 13 = m 26 = m² 39 = m³ 43 = kg 50 = l (litre)

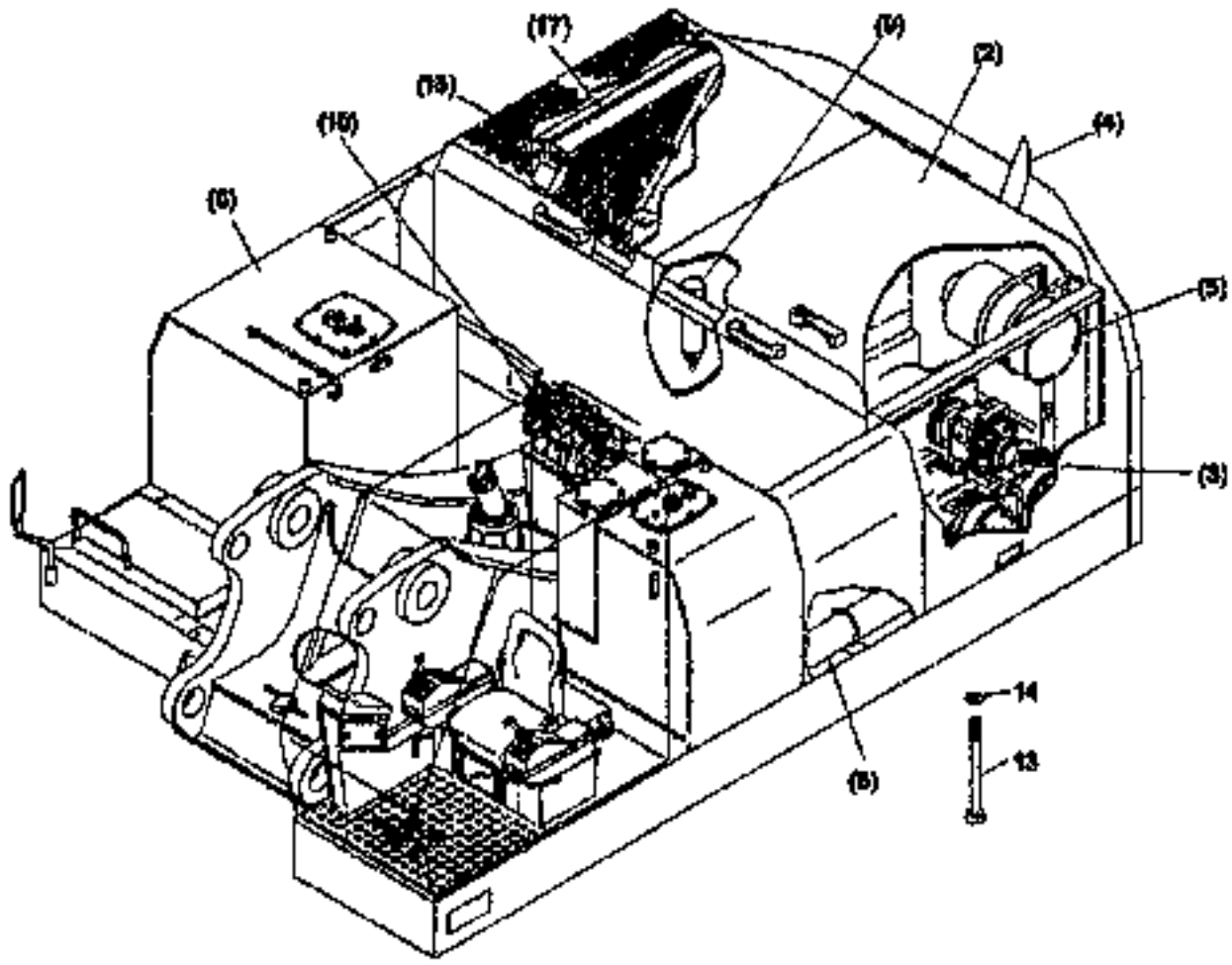

2 486 874.010

13.010

MOTOR INSTALL.MATERIAL

T 2486874 - 001
B 2486874 - 010

FX600 / 106101 - .....

Item	Quan.	ME	Part No.	Description
002	1	00		**36.010 2495254** PANELING INSTALL.MATERIAL
003	1	00		**13.011 2486855** MOTOR MOUNTING PARTS
004	1	00		**13.220 2486268** EXHAUST SYSTEM INSTALL.MATERIAL
005	1	00		**13.230 2782549** INTAKE SYSTEM INSTALL.MATERIAL
006	1	00		**13.300 2443698** FUEL SYSTEM
008	1	00		**20.260 2702173** OIL SUCTION SYSTEM

ME: 00 = Stück/piece 10 = m 20 = m² 30 = m³ 40 = kg 50 = l (litre)

1998-02-10

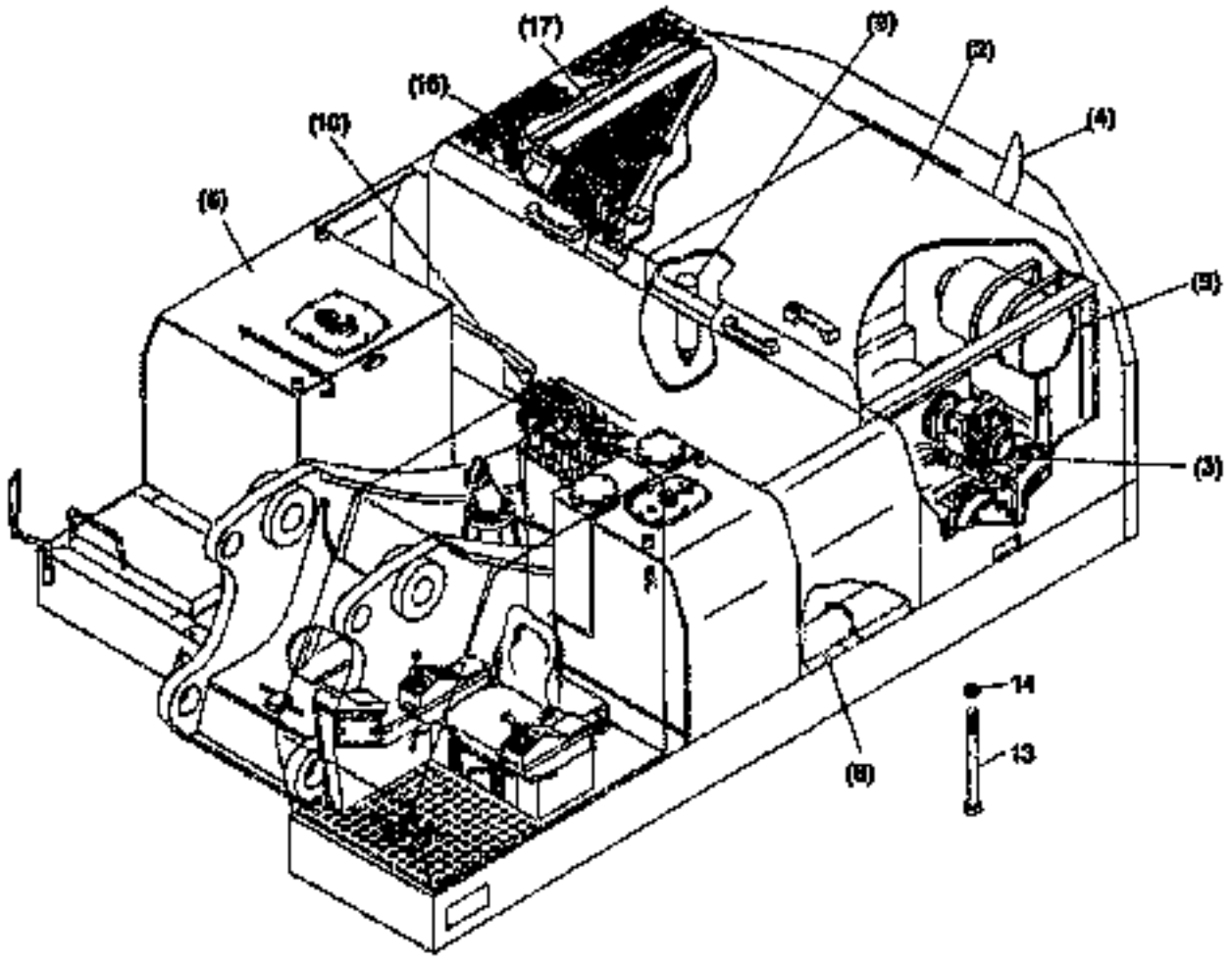

2 496 874.010

13.010

MOTOR INSTALL.MATERIAL

T 2496974 - 001
B 2496874 - 010

FX600 / 106101 - .....

Item	Quan.	ME	Part No.	Description
009	1	00		**13.400 2782780** COLD-START SYSTEM
010	1	00		**20.260 2496866** HYDRAULIC SYSTEM PUMP GOVERNING
013	4	00	73170150	HEXAGON BOLT
014	4	00	73170022	DISK/WASHER
016	1	00		**20.290 2496788** HYDRAULIC SYSTEM OIL COOLER
017	1	00		**15.120 2496872** COMB. COOL. SYST. WATER/OIL INSTALL.MATERIAL

ME: 00 = Stück/piece 13 = m 28 = m² 30 = m³ 43 = kg 50 = l (litre)

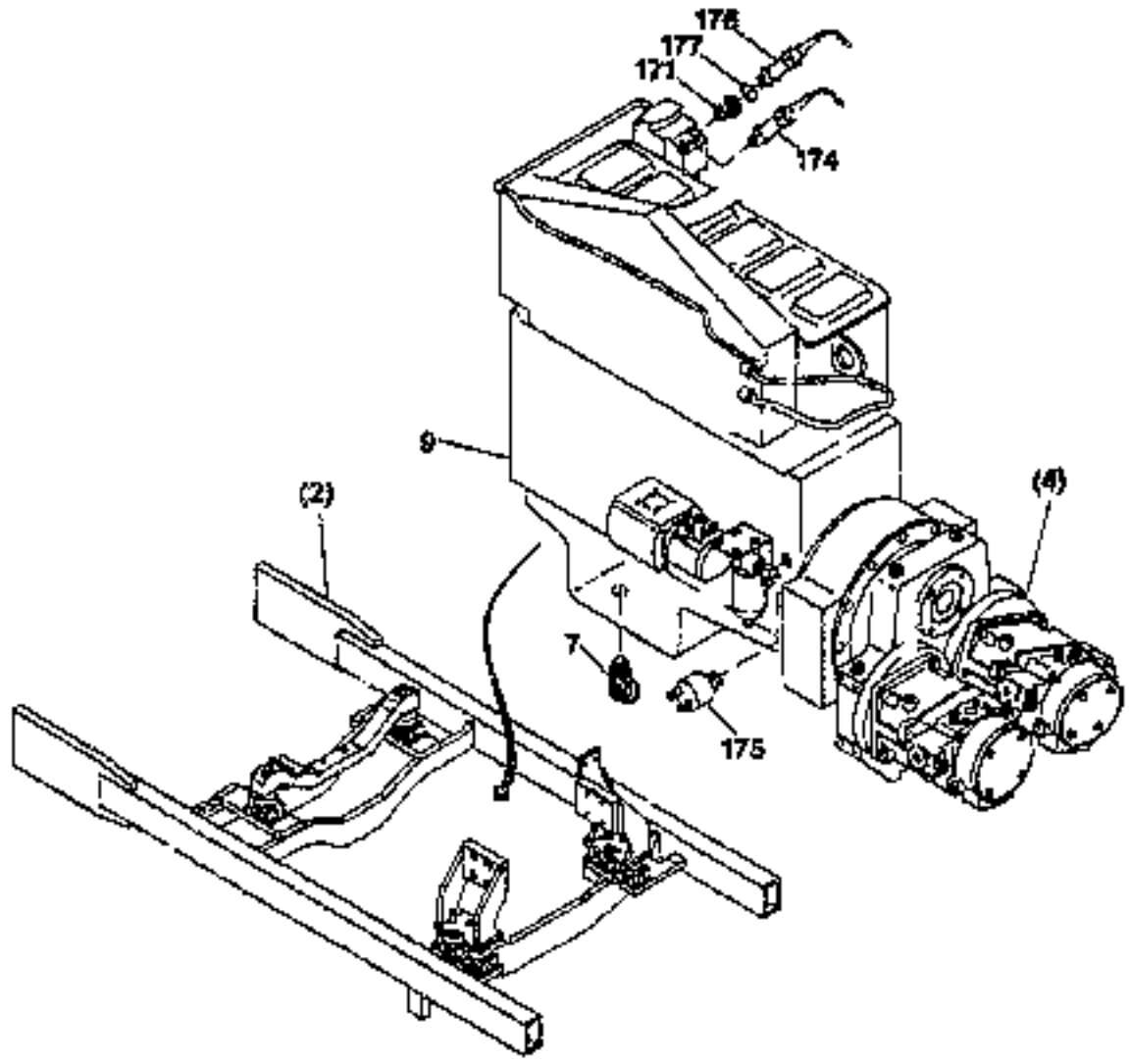

2-486 BES.011

13.011

MOTOR MOUNTING PARTS

T 2496855 - 001
B 2496855 - 011

FX600 / 106101 - .....

Item	Quan.	ME	Part No.	Description
002	1	00		**13.020 2495261** BEARING MOTOR
004	1	00		**22.010 2496849** PUMP INSTALL.MATERIAL
007	1	00	73170239	DRAIN VALVE
009	1	00	73170239	DIESEL ENGINE
171	1	00	73172487	ADAPTER
175	1	00	73177388	PRESSUR.SWITCH
176	1	00	73172594	TEMP.TRANSMITTER
177	1	00	73170304	SEALING RING
178	1	00	73176174	BELT, ENGINE
179	1	00	73146075	BELT, ENGINE NOT ILLUSTRATED

ME: 00 = Stück/piece 10 = m 20 = m² 30 = m³ 40 = kg 50 = l (litre)

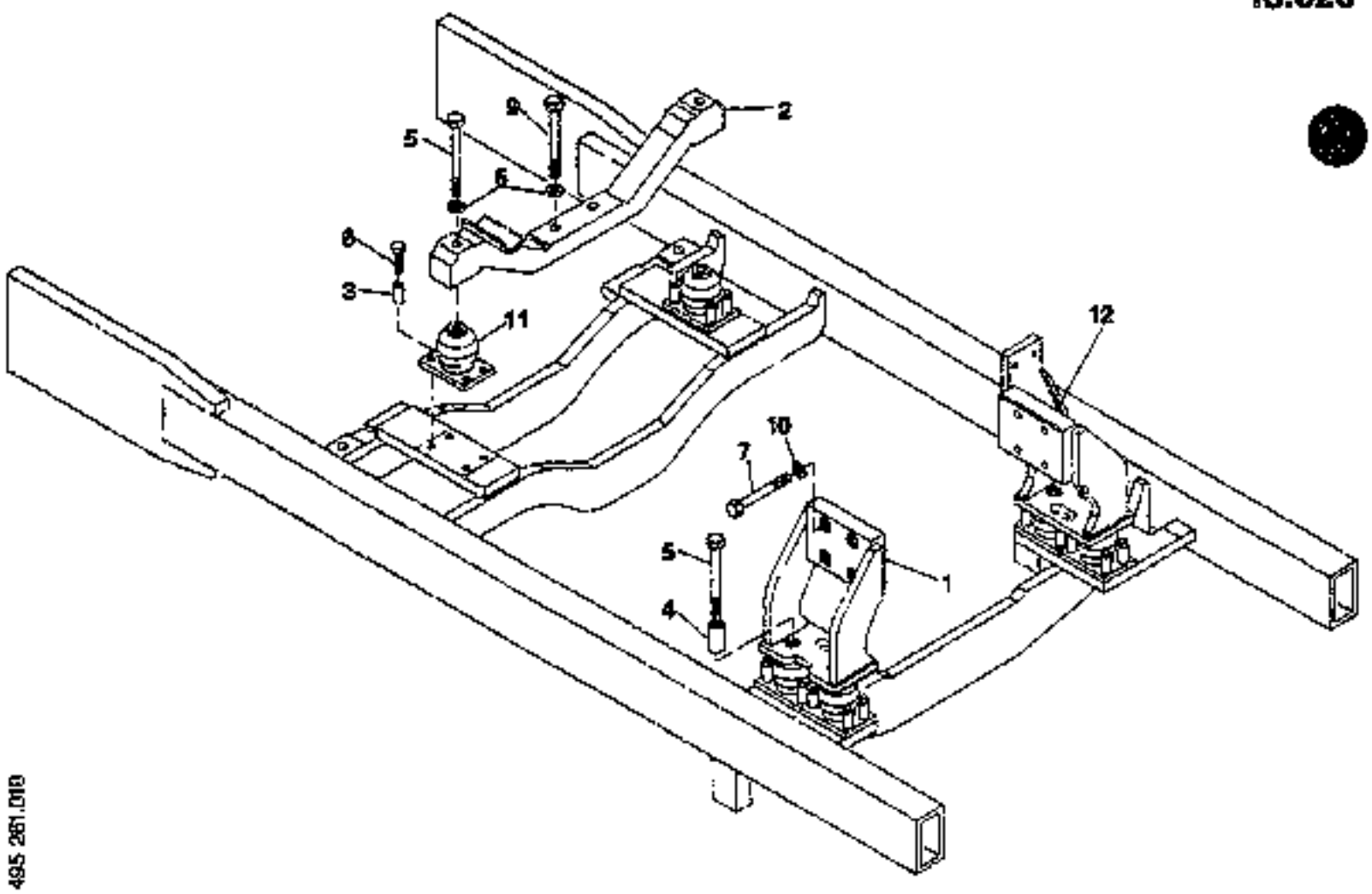

2 495 261.010

BEARING MOTOR

FIATALLIS

T 2495261 - 000
B 2495261 - 010

FX600 / 106101 - .....

Item	Quan.	ME	Part No.	Description
001	1	00	73170559	MOUNT
002	1	00	73170560	CROSS MEMBER
003	24	00	73170561	SPACER SLEEVE
004	4	00	73170562	SLEEVE
005	6	00	73170563	HEXAGON BOLT
006	4	00	73170565	DISK/WASHER
007	8	00	73170566	HEXAGON BOLT
008	24	00	73170567	HEXAGON BOLT
009	2	00	73170020	HEXAGON BOLT
010	8	00	73170568	DISK/WASHER
011	6	00	73170569	BEARING
012	1	00	73170570	MOUNT

ME: 00 = Stück/piece 13 = m 23 = m² 38 = m³ 43 = kg 60 = l (litre)

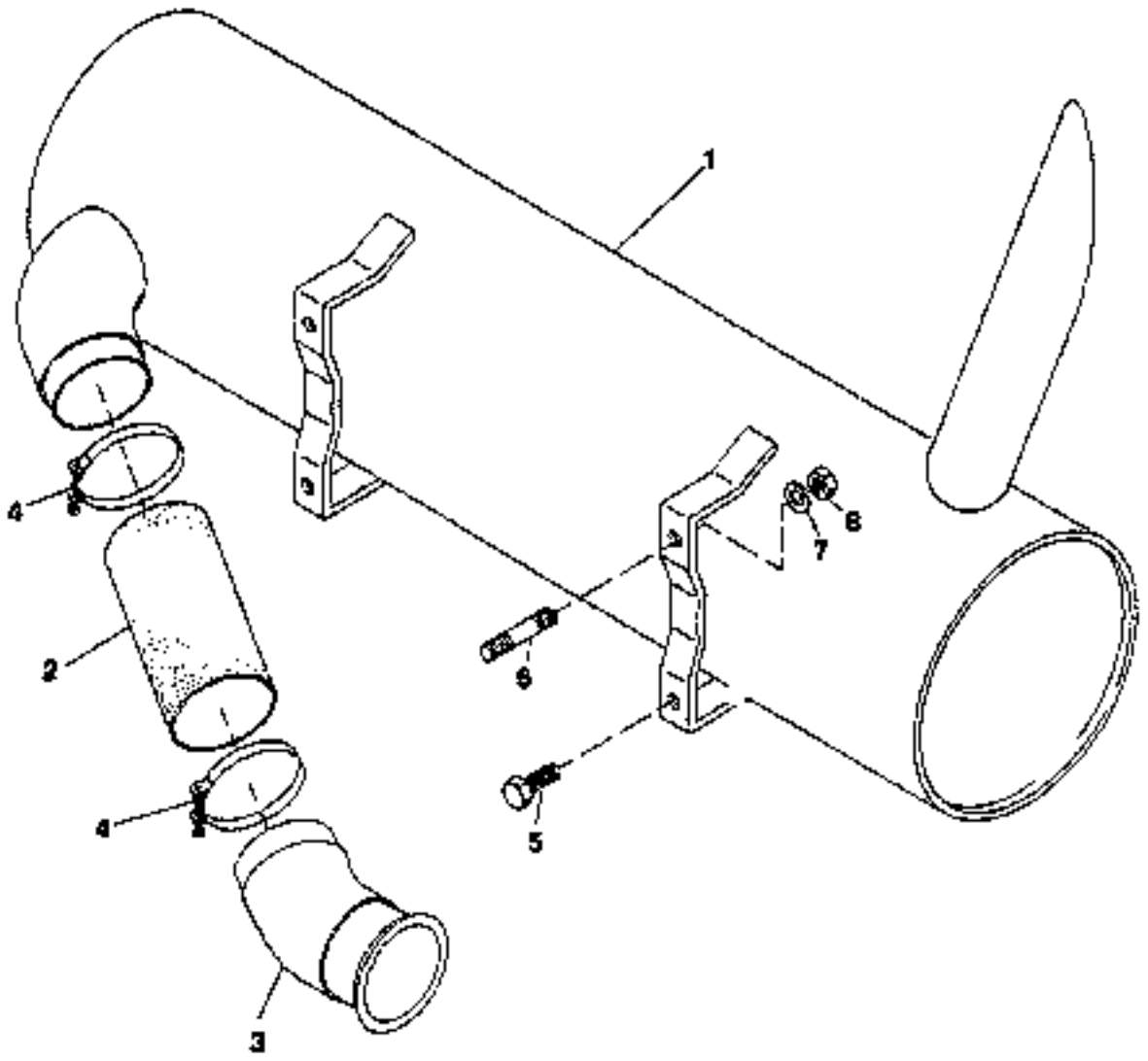

2 495 258.010

13.220

EXHAUST SYSTEM INSTALL.MATERIAL

T 2495258 - 000
B 2495258 - 010

FX600 / 106101 - .....

Item	Quan.	ME	Part No.	Description
001	1	00	73170901	MUFFLER
002	1	00	73170902	METAL HOSE
003	1	00	73170903	LINE
004	2	00	73170904	CLIP
005	2	00	73170906	HEXAGON BOLT
006	2	00	73170907	STUD
007	2	00	73170213	DISK/WASHER
008	2	00	73170215	HEXAGON NUT

ME: 00 = Stück/piece 13 = m 25 = m² 39 = m³ 48 = kg 50 = l (litre)

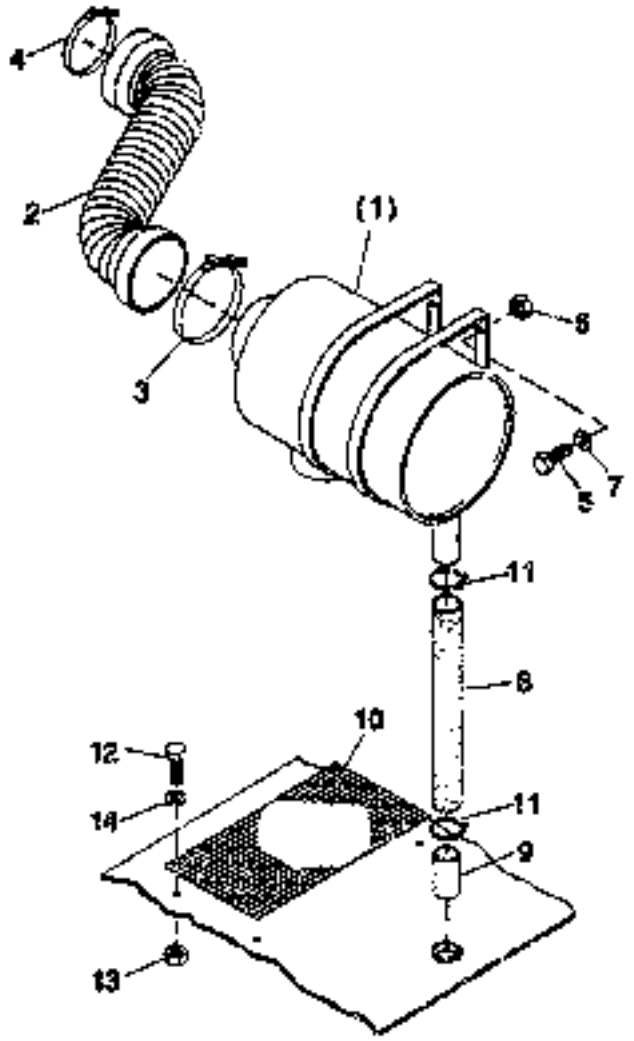

2 782 549.010

13.230

INTAKE SYSTEM INSTALL.MATERIAL

FIATALLIS

T 2782549 - 001
B 2782549 - 010

FX600 / 106101 - .....

Item	Quan.	ME	Part No.	Description
001	1	00		13.600 2215920 AIR FILTER INSTALL.MATERIAL
002	1	00	73175823	INLET PIPE
003	1	00	73170312	CLIP
004	1	00	73170314	CLIP
005	4	00	73170316	HEXAGON BOLT
006	4	00	73170162	HEXAGON NUT
007	4	00	73170169	DISK/WASHER
008	0,66	13	73170317	HOSE
009	1	00	73170318	LINE
010	1	00	73170319	WIRE MESH ONLY FOR 76027 .
011	2	00	73170320	CLIP
012	4	00	73170175	HEXAGON BOLT
013	4	00	73170215	HEXAGON NUT ONLY FOR 76027 .

ME: 00 = Stück/pcs 13 = m 26 = m² 39 = m³ 42 = kg 50 = l (litre)

1998-09-10

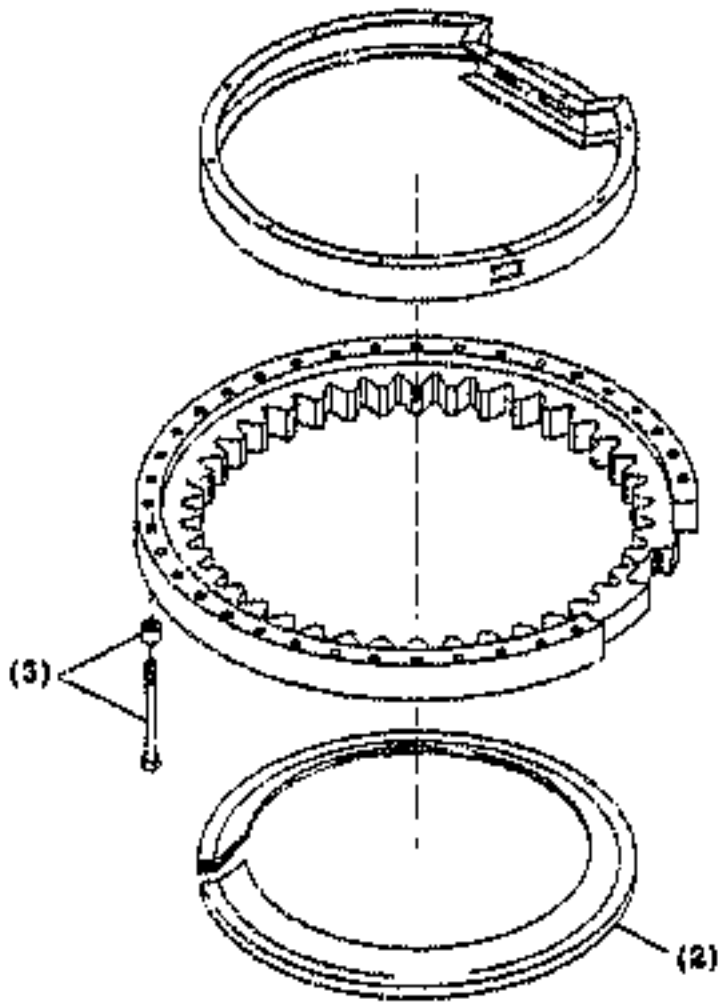

2 485 245.011

11.010

SWIVEL CONNECTION INSTALL.MATERIAL

T 2485245 - 002
B 2485245 - 011

FX600 / 106101 - .....

Item	Quan.	ME	Part No.	Description
002	1	00		**11.020 2485246** SEAL GASKET SWIVEL CONNECTION
003	1	00		**11.010 2485246** SWIVEL CONNECTION INSTALL.MATERIAL

ME: 00 = Stück/piece 10 = m 25 = m² 30 = m³ 40 = kg 50 = l (litre)

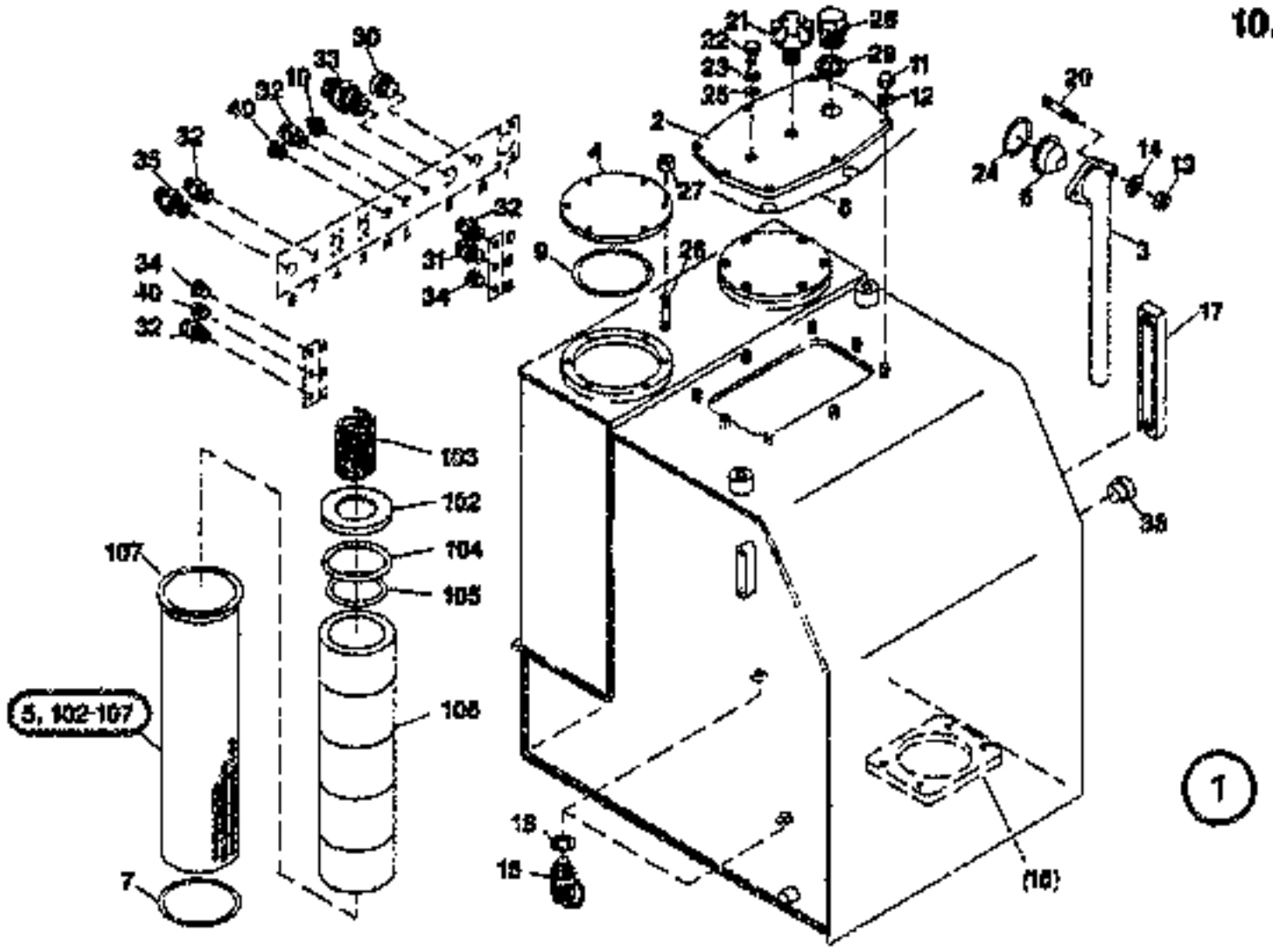

HYD. OIL TANK

FIATALLIS

FX600 / 106101 - .....

T 2443385 - 003
B 2443385 - 010

Item	Quan.	ME	Part No.	Description
016	1	00		23.122 2141659 BLOCKING VALVE
017	1	00	73170294	INDICATOR
018	2	00	73170249	SEALING RING
020	6	00	73170295	STUD
021	1	00	73170288	FILTER
022	1	00	73170287	HOLLOW SCREW
023	1	00	73170286	PRESSURE RING
024	3	00	73170289	O-RING
025	1	00	73170291	O-RING
026	12	00	73170292	STUD
027	12	00	73170162	HEXAGON NUT
028	1	00	73170293	SCREW PLUG
029	1	00	73170284	SEALING RING
030	1	00	73170285	SCREW PLUG
031	1	00	73170296	SOCKET
032	4	00	73170298	SOCKET
033	1	00	73170300	SOCKET

ME: 00 = Stck/piece 10 = m 25 = m² 39 = m³ 43 = kg 50 = l (litre)

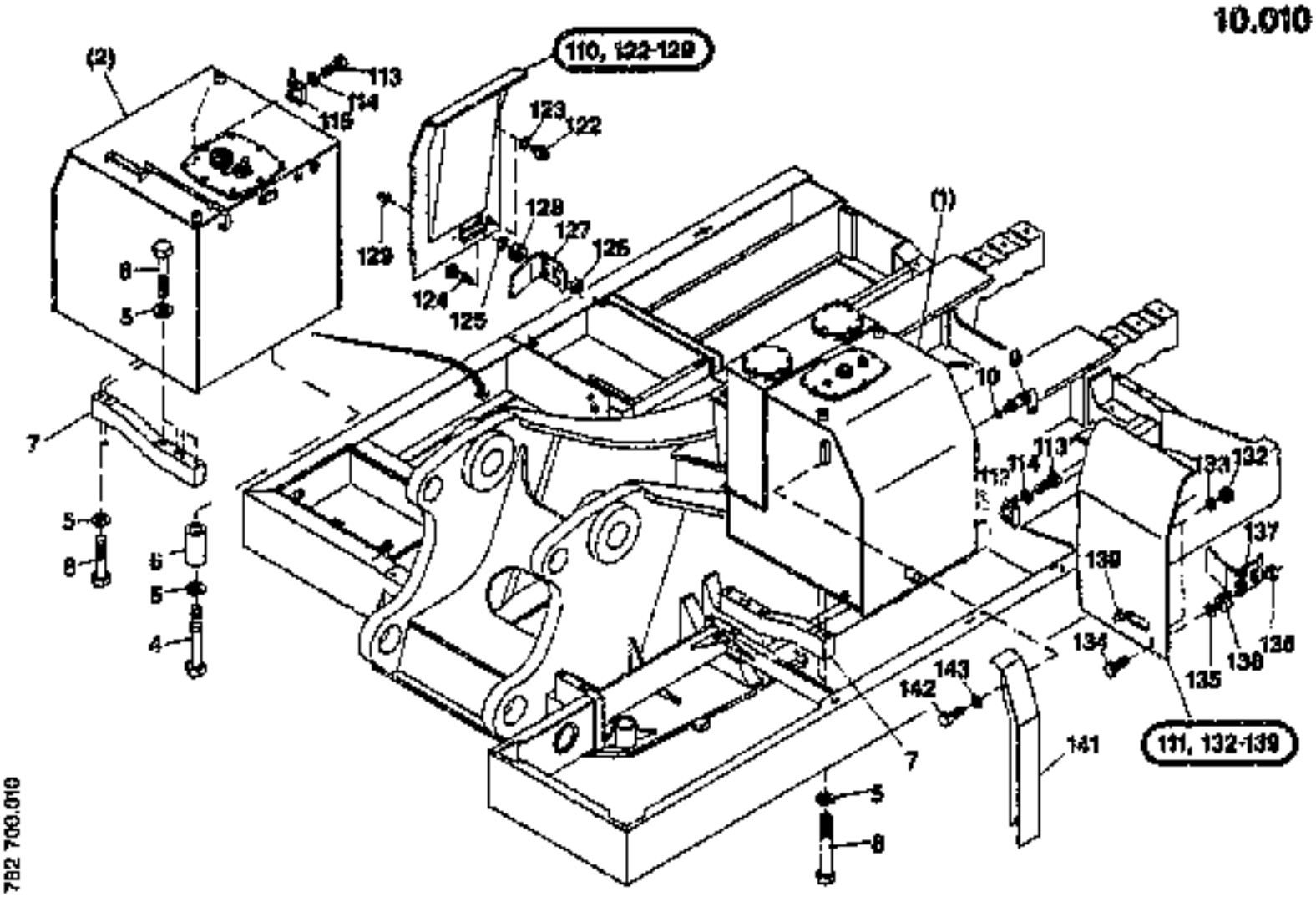

CONTAINER INSTALL.MATERIAL

10.010

T 2782700 - 000
B 2782700 - 010

FX600 / 105101 - .....

Item	Quan.	ME	Part No.	Description
143	2	00	73170102	DISK/WASHER

ME: 00 = Stück/piece 10 = m 20 = m² 30 = m³ 40 = kg 50 = l (litre)

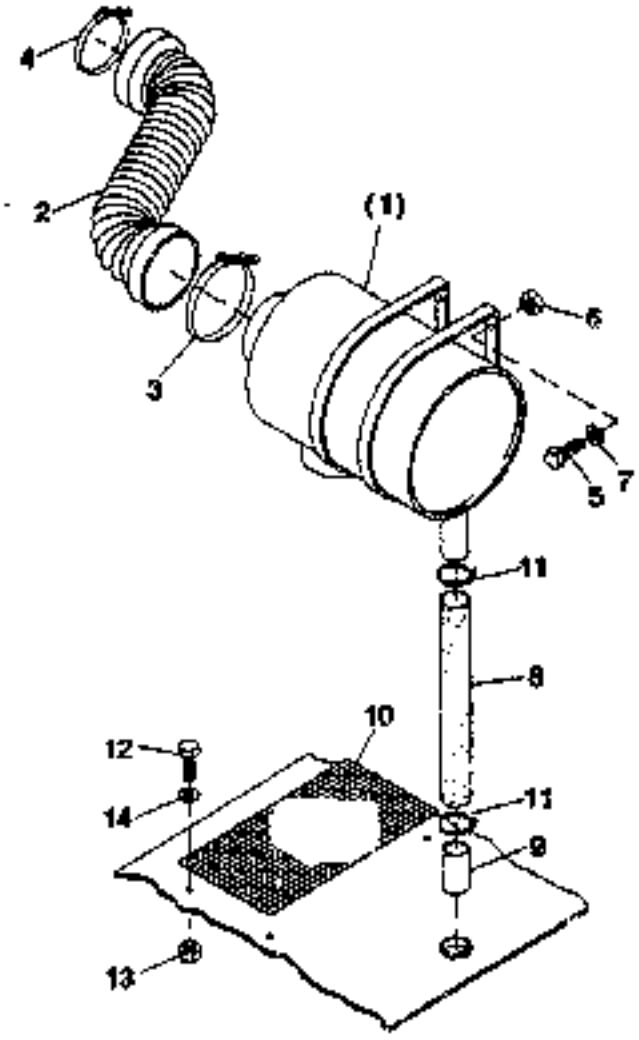

2 782 549.010

13.230

INTAKE SYSTEM INSTALL.MATERIAL

T 2782549 - 001
B 2782549 - 010

FX600 / 106101 - .....

Item	Quan.	ME	Part No.	Description
014	8	00	73170213	DISK/WASHER ONLY FOR 76027

ME: 00 = Stück/piece 13 = m 26 = m² 39 = m³ 43 = kg 50 = l (litre)

1998-08-10

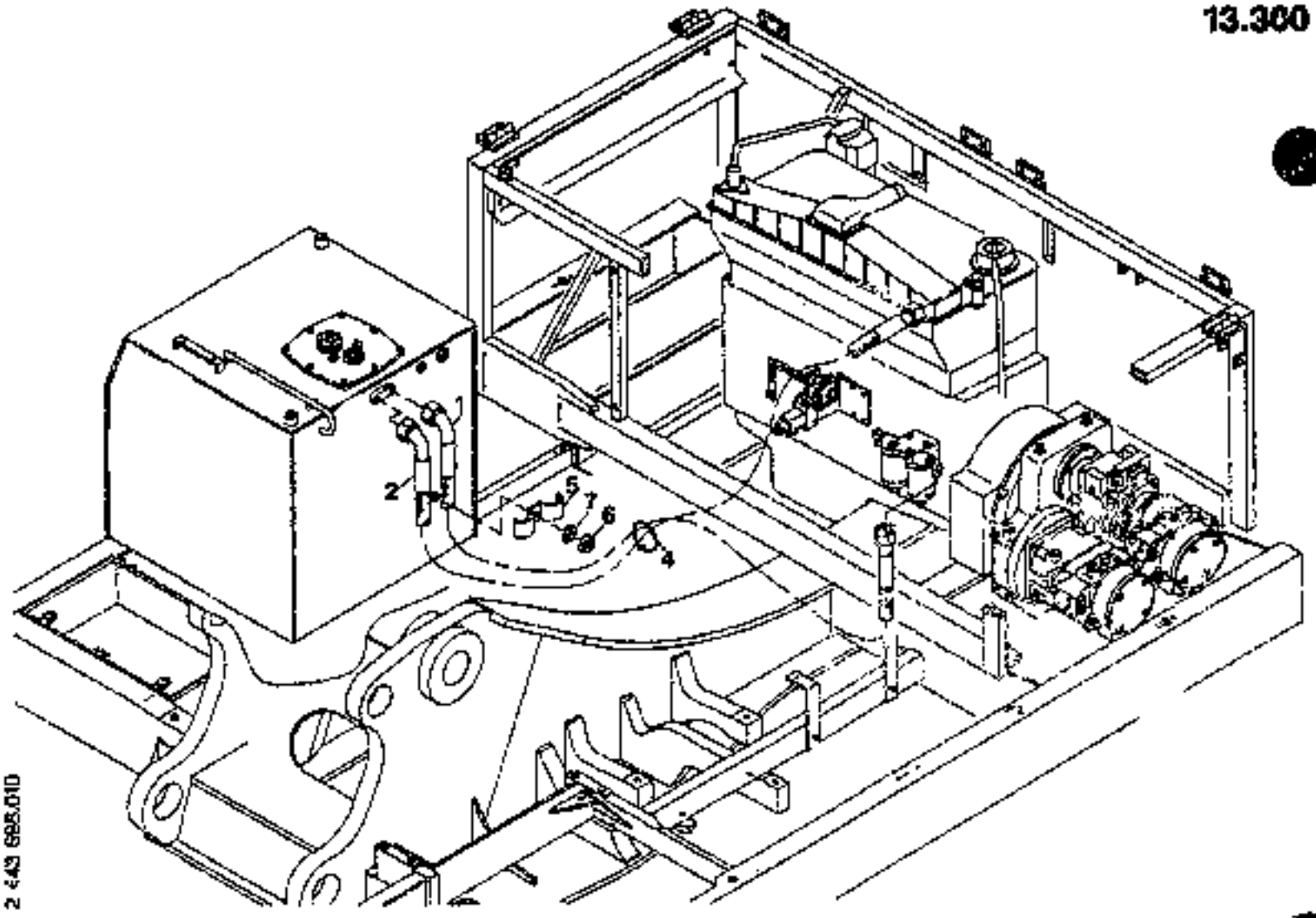

2 443 695.010

FUEL SYSTEM

FX600 / 106101 - .....

T 2443698 - 000
B 2443698 - 010

Item	Quan.	ME	Part No.	Description
001	1	00	73170683	HOSE
002	1	00	73170684	HOSE
004	5	00	73170685	RIBBON
005	2	00	73170687	HOSE CLIP
006	1	00	73170215	HEXAGON NUT
007	1	00	73170162	DISK/WASHER

ME: 00 = St0ck/piece 13 = m 26 = m^2 39 = m^3 43 = kg 50 = l (litre)

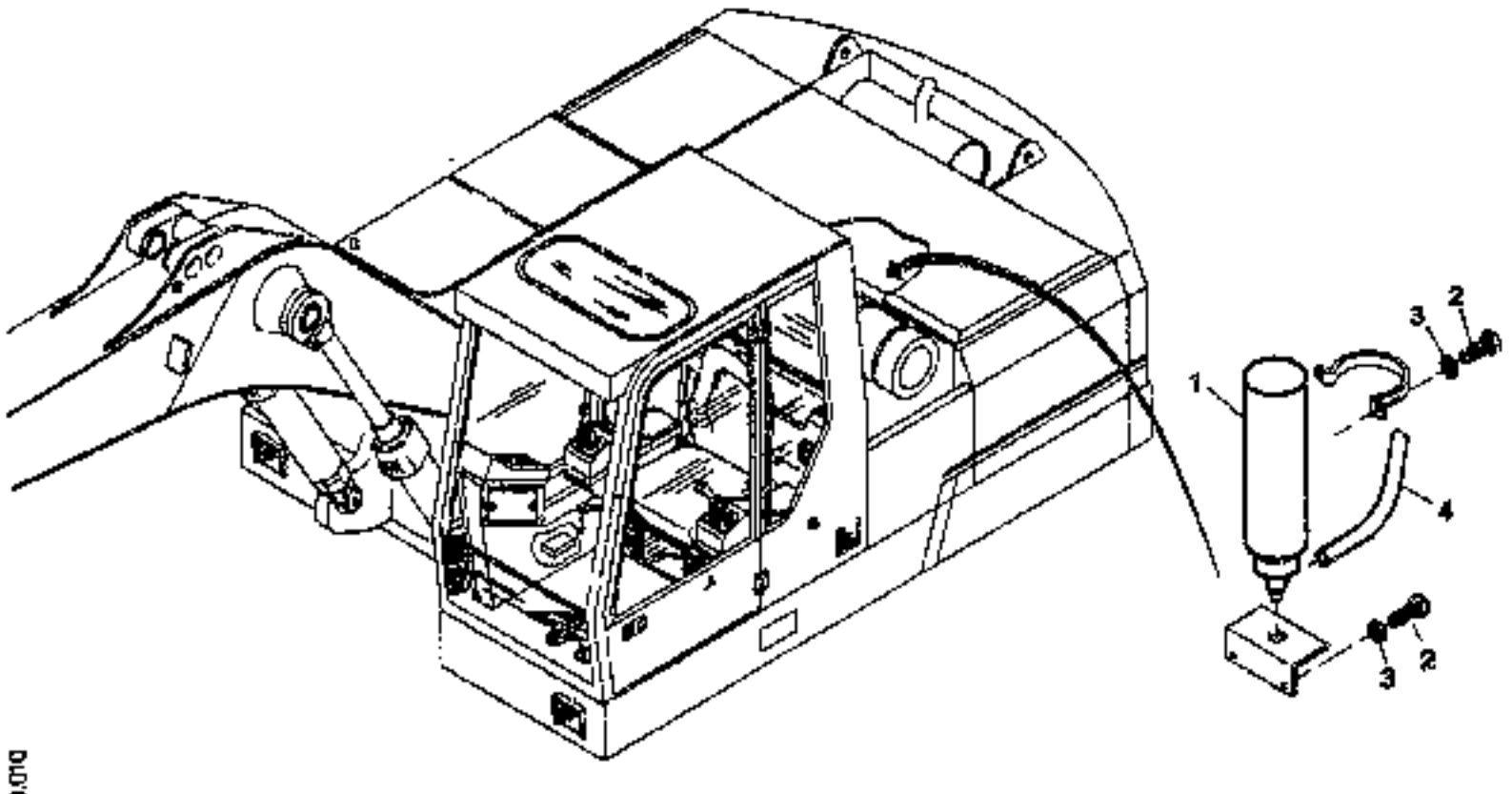

2 782 790.010

COLD-START SYSTEM

FIATALLIS

T 2782790 - 000
B 2782790 - 010

FX600 / 106101 - .....

Item	Quan.	ME	Part No.	Description
001	1	00	73170783	BOTTLE
002	4	00	73170696	HEXAGON BOLT
003	4	00	73170185	DISK/WASHER
004	1,50	13	73175759	PIPE

ME: 00 = Stück/piece 13 = m 26 = m² 39 = m³ 43 = kg 50 = l (litre)

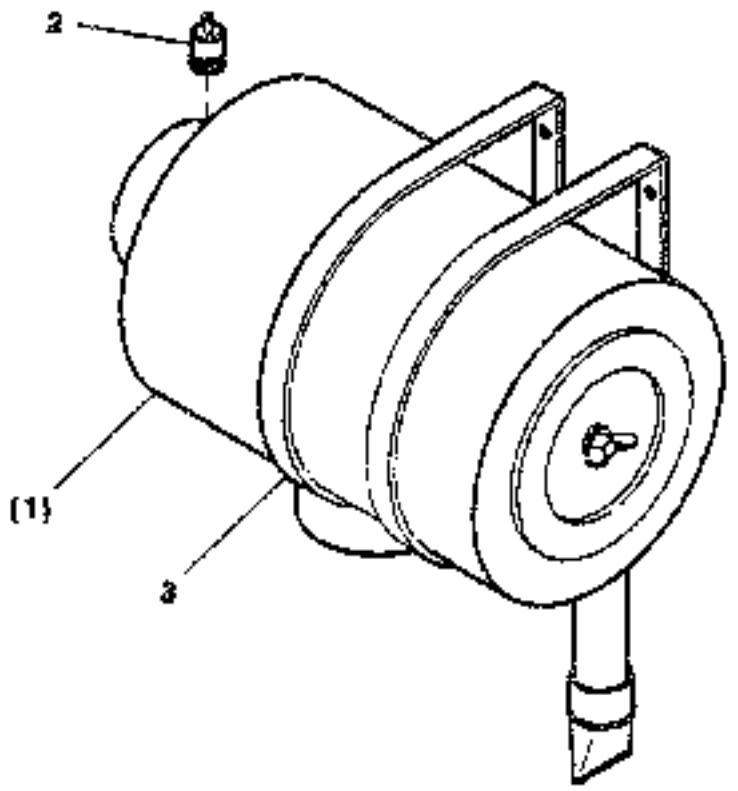

2 215 520.010

AIR FILTER INSTALL.MATERIAL

T 2215520 - 000
B 2215520 - 010

FX600 / 105101 - .....

Item	Quan.	ME	Part No.	Description
001	1	00		13.501 2175501 AIR FILTER MOUNTING PARTS FTG 18
002	1	00	73170322	INDICATOR
003	2	00	73170323	CLIP

ME: 00 = Stück/piece 13 = m 26 = m² 39 = m³ 43 = kg 50 = l (litre)

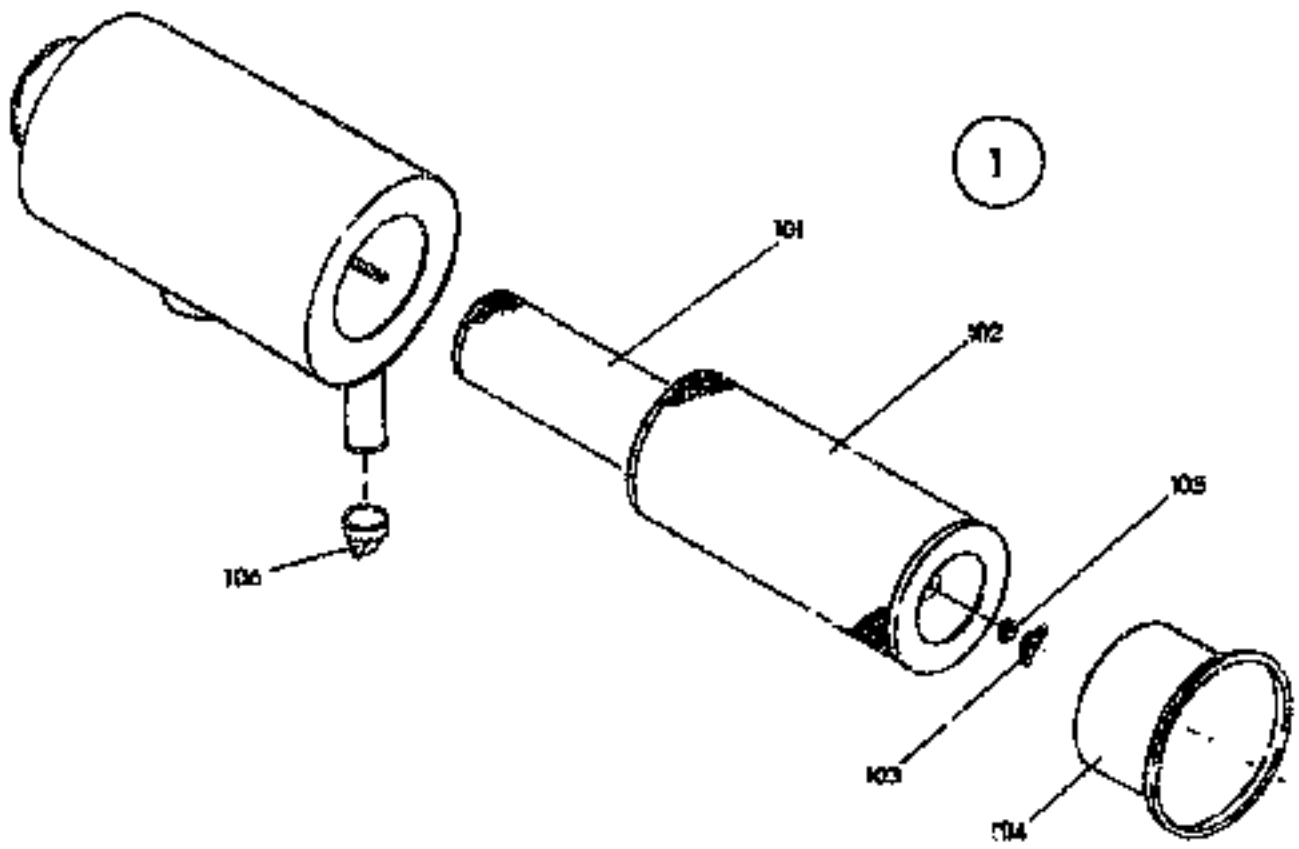

2 175 901.010

13.501

AIR FILTER MOUNTING PARTS FTG 18

T 2175501 - 000
B 2175501 - 010

FX600 / 106101 - .....

Item	Quan.	ME	Part No.	Description
001	1	00	73170675	AIR FILTER
101	1	00	73170676	FILTER INSERT
102	1	00	73170677	FILTER INSERT
103	1	00	73170678	WING NUT
104	1	00	73173016	GASKET
105	1	00	73170681	DISK/WASHER
106	1	00	73170682	VALVE

ME: 00 = Stück/piece 13 = m 26 = m² 39 = m³ 43 = kg 50 = l (litre)

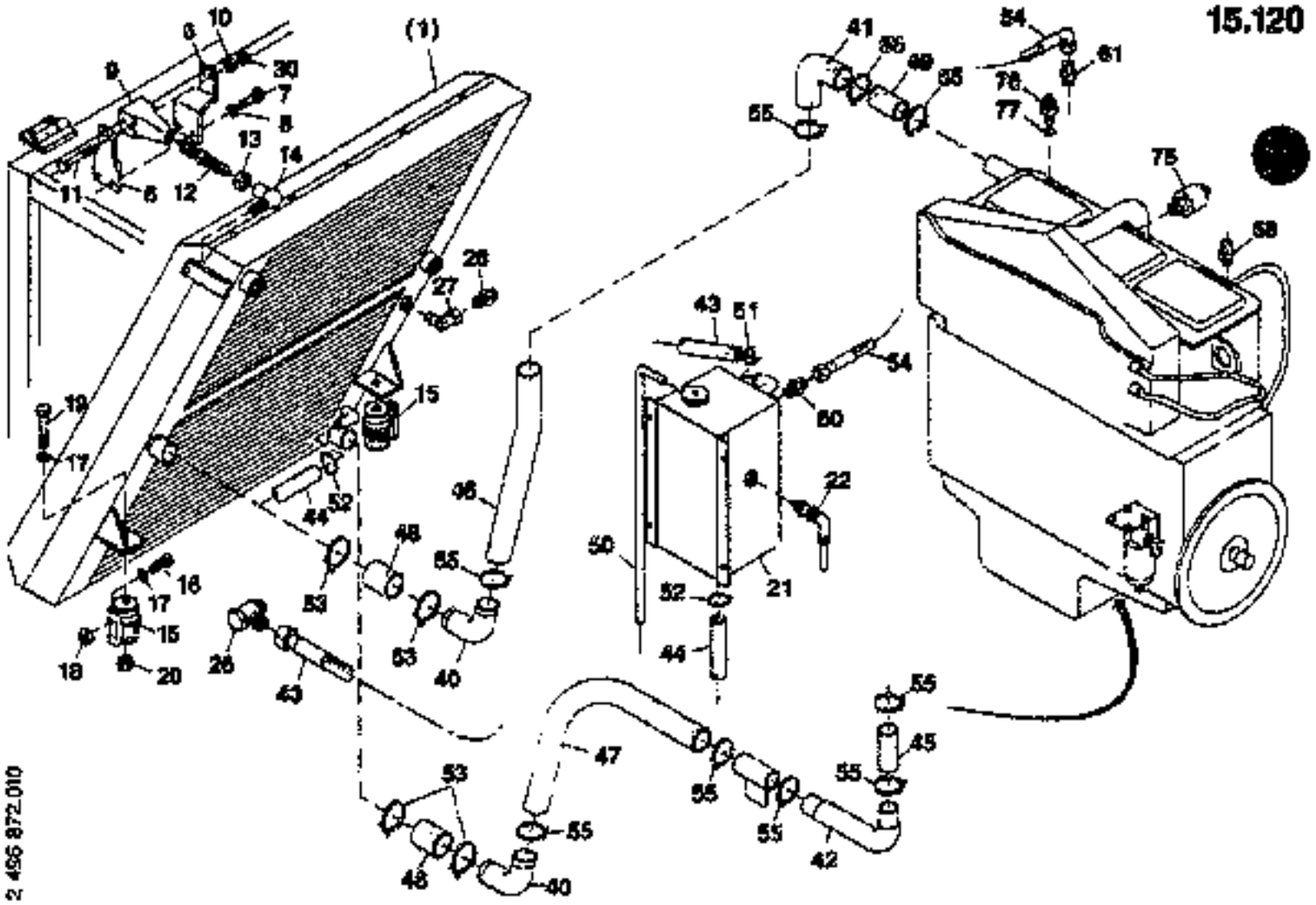

COMB. COOL. SYST. WATER/OIL INSTALL.MATERIAL

15.120

FX600 / 106101 • .....

T 2496872 - 001
B 2496872 - 010

Item	Quan.	ME	Part No.	Description
001	1	00		15.121 2782175 COMB. COOL. SYST. WATER/OIL MOUNTING PARTS
005	2	00	73170909	BRACKET
006	2	00	73170910	PLATE
007	4	00	73170210	HEXAGON BOLT
008	4	00	73170911	DISK/WASHER
009	2	00	73170912	HEAD
010	4	00	73170263	LOCKING NUT
011	4	00	73170913	HEXAGON BOLT
012	2	00	73170915	TENSIONING SCREW
013	2	00	73170916	HEXAGON NUT
014	2	00	73170918	JOINT
015	2	00	73170919	MOUNTING FOOT
016	4	00	73170352	HEXAGON BOLT
017	10	00	73170920	DISK/WASHER
018	4	00	73170162	HEXAGON NUT
019	2	00	73170921	HEXAGON BOLT
020	2	00	73170922	LOCKING NUT

ME: 00 = St/ck/piece 13 = m 26 = m² 39 = m² 43 = kg 50 = l (litre)

1998-09-10

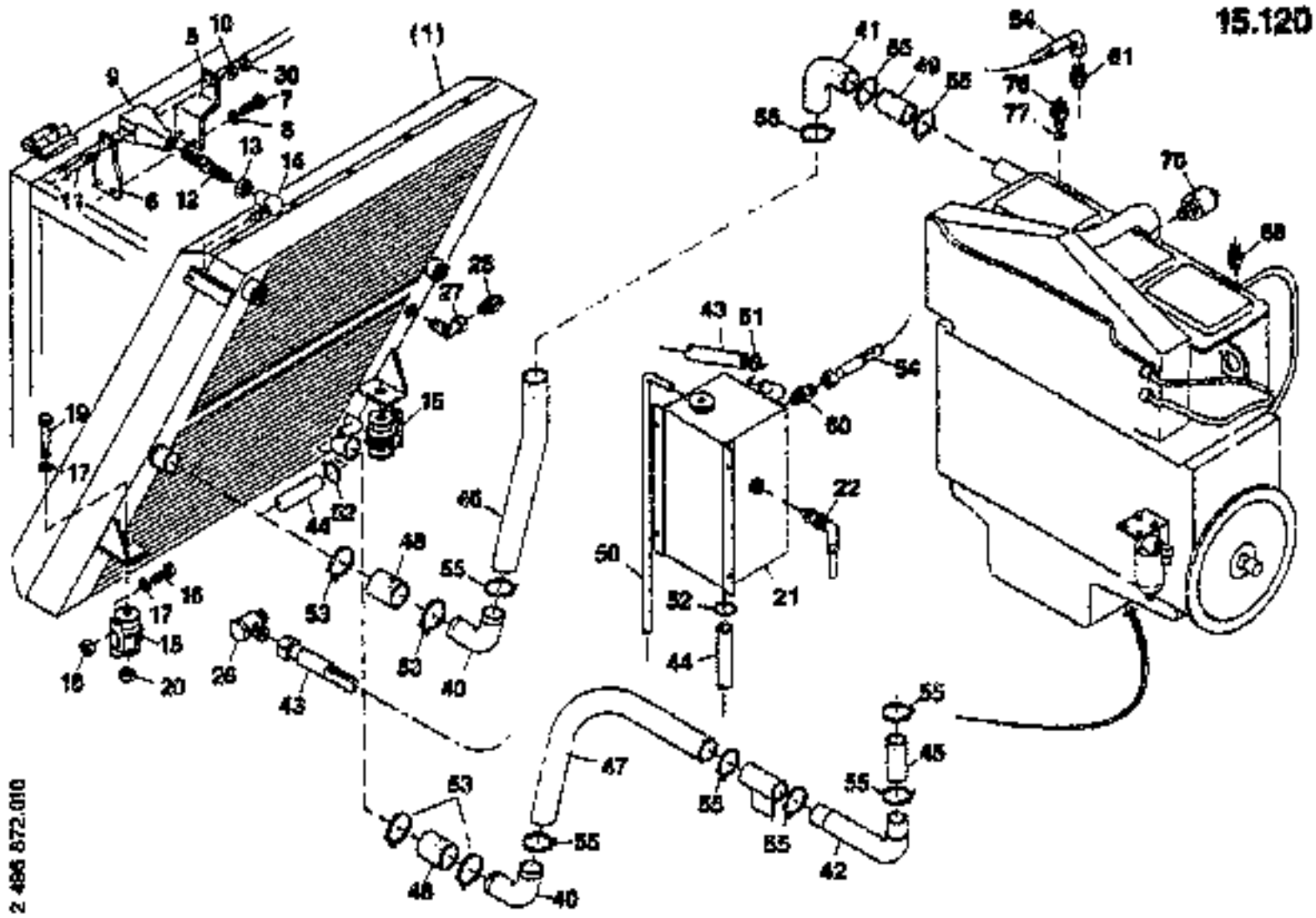

15.120

COMB. COOL. SYST. WATER/OIL INSTALL.MATERIAL

T 2496872 - 001
B 2496872 - 010

FX600 / 106101 - .....

Item	Quan.	ME	Part No.	Description
021	0	00	73170923	CONTAINER
022	1	00	73170924	LEVEL SWITCH
026	1	00	73170707	TUBE FITTING
027	1	00	73170925	SOCKET
028	1	00	73170296	SOCKET
030	2	00	73170926	HEXAGON NUT
040	2	00	73170927	COOLANT TUBE
041	1	00	73170928	COOLANT TUBE
042	1	00	73170929	COOLANT TUBE
043	1	00	73170930	HOSE
044	2,10	13	73170931	SUCTION HOSE
045	0,12	13	73170932	HOSE
046	1,30	13	73170932	HOSE
047	0,70	13	73170932	HOSE
048	0,12	13	73170934	HOSE
049	0,10	13	73170932	HOSE
050	1	13	73170935	HOSE
051	1	00	73170936	CLIP

ME: 00 = Stück/piece 13 = m 26 = m² 39 = m³ 43 = kg 50 = l (litre)

1998-09-10

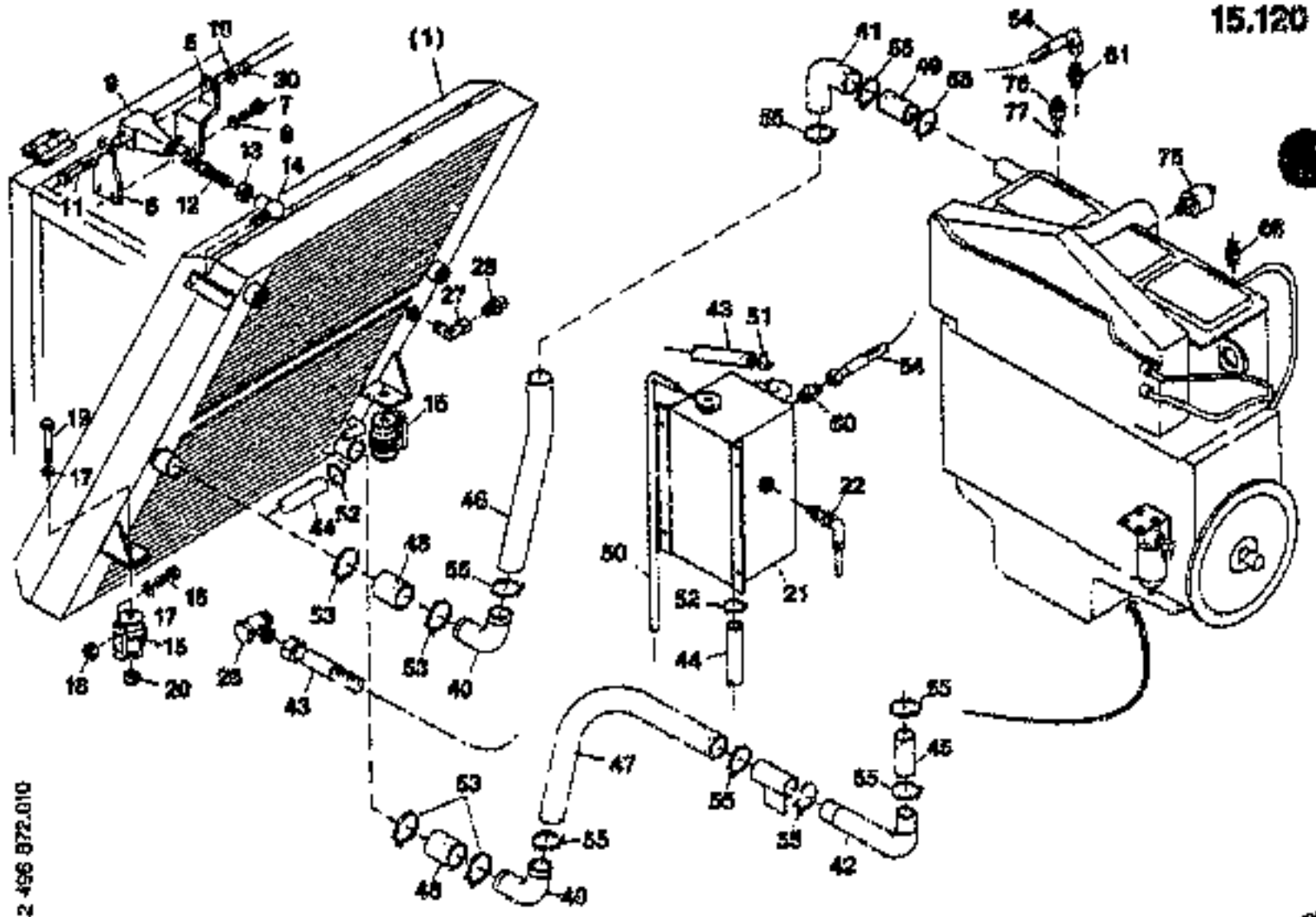

COMB. COOL. SYST. WATER/OIL INSTALL.MATERIAL

T 2496872 - 001
B 2496872 - 010

FX600 / 106101 - .....

Item	Quan.	ME	Part No.	Description
052	2	00	73170937	HOSE CLIP
053	4	00	73170938	HOSE CLIP
054	1	00	73175294	HOSE
055	9	00	73170940	HOSE CLIP
060	1	00	73170941	SOCKET
061	1	00	73170942	SOCKET
068	1	00	73170944	SCREWING
075	1	00	73170945	
076	1	00	73172594	TEMP.TRANSMITTER
077	1	00	73170304	SEALING RING

ME: 00 = Stück/piece 13 = m 28 = m² 39 = m³ 43 = kg 50 = l (lt/le)

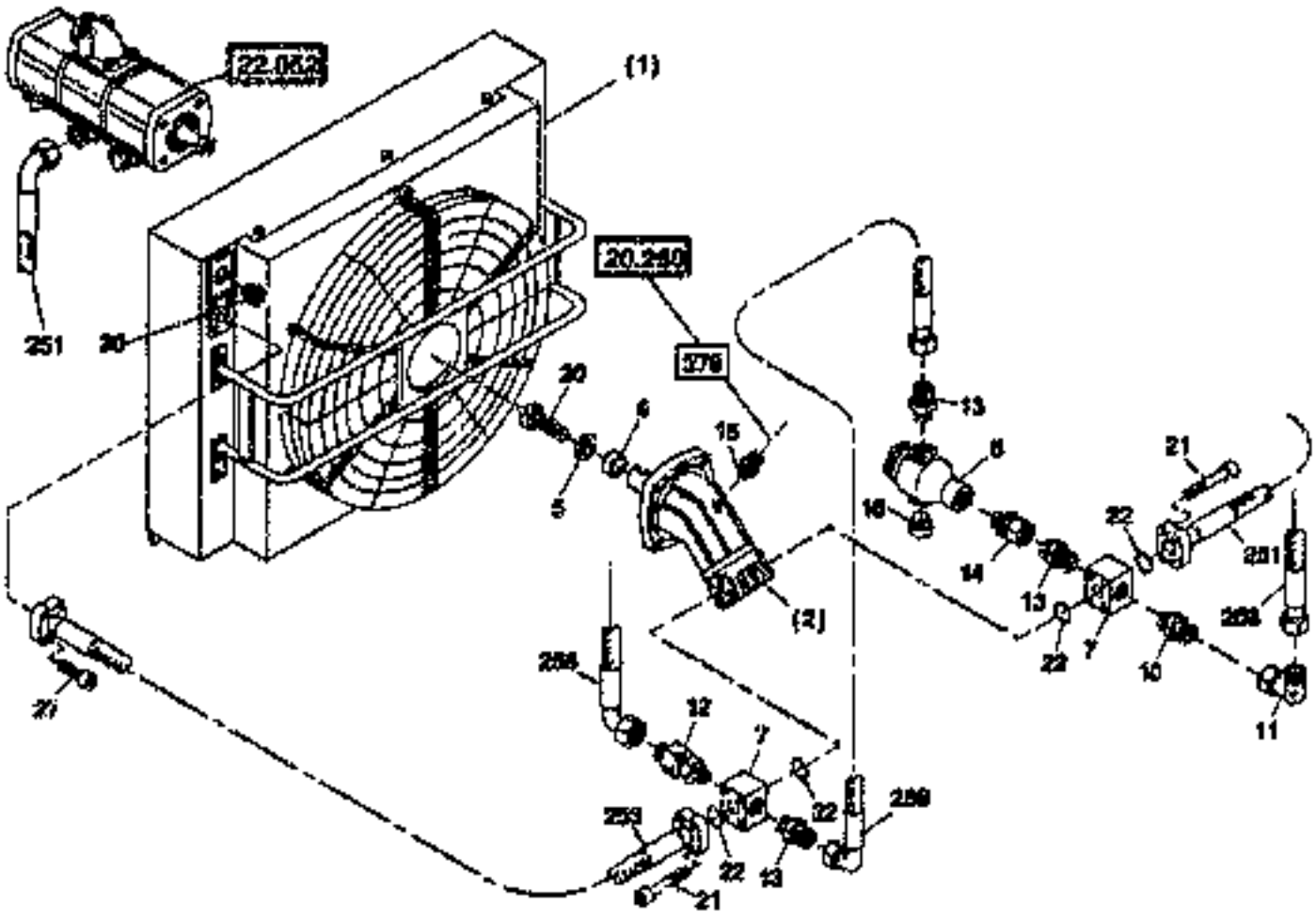

2 782 175.010

COMB. COOL. SYST. WATER/OIL MOUNTING PARTS

15.121

T 2782175 - 000
B 2782175 - 010

FX600 / 106101 - .....

Item	Quan.	ME	Part No.	Description
001	1	00		**15.122 2495656** COMBINED COOLER WATER/OIL
002	1	00		**22.110 2495217** AXIAL PISTON MOTOR
005	1	00	73170214	DISK/WASHER
006	1	00	73170948	SLEEVE
007	2	00	73170947	FLANGE
008	1	00	73175295	
010	1	00	73170414	SOCKET
011	1	00	73170353	SOCKET
012	1	00	73170949	CHECK VALVE
013	3	00	73170298	SOCKET
014	1	00	73170325	SOCKET/ADAPTER
015	1	00	73170296	SOCKET
016	1	00	73170301	SCREW PLUG
020	1	00	73170950	HEXAGON BOLT
021	8	00	73170951	CYL.HEAD SCREW

ME: 00 = Stück/piece 15 = m 25 = m² 30 = m³ 45 = kg 50 = l (litre)

1995-09-10

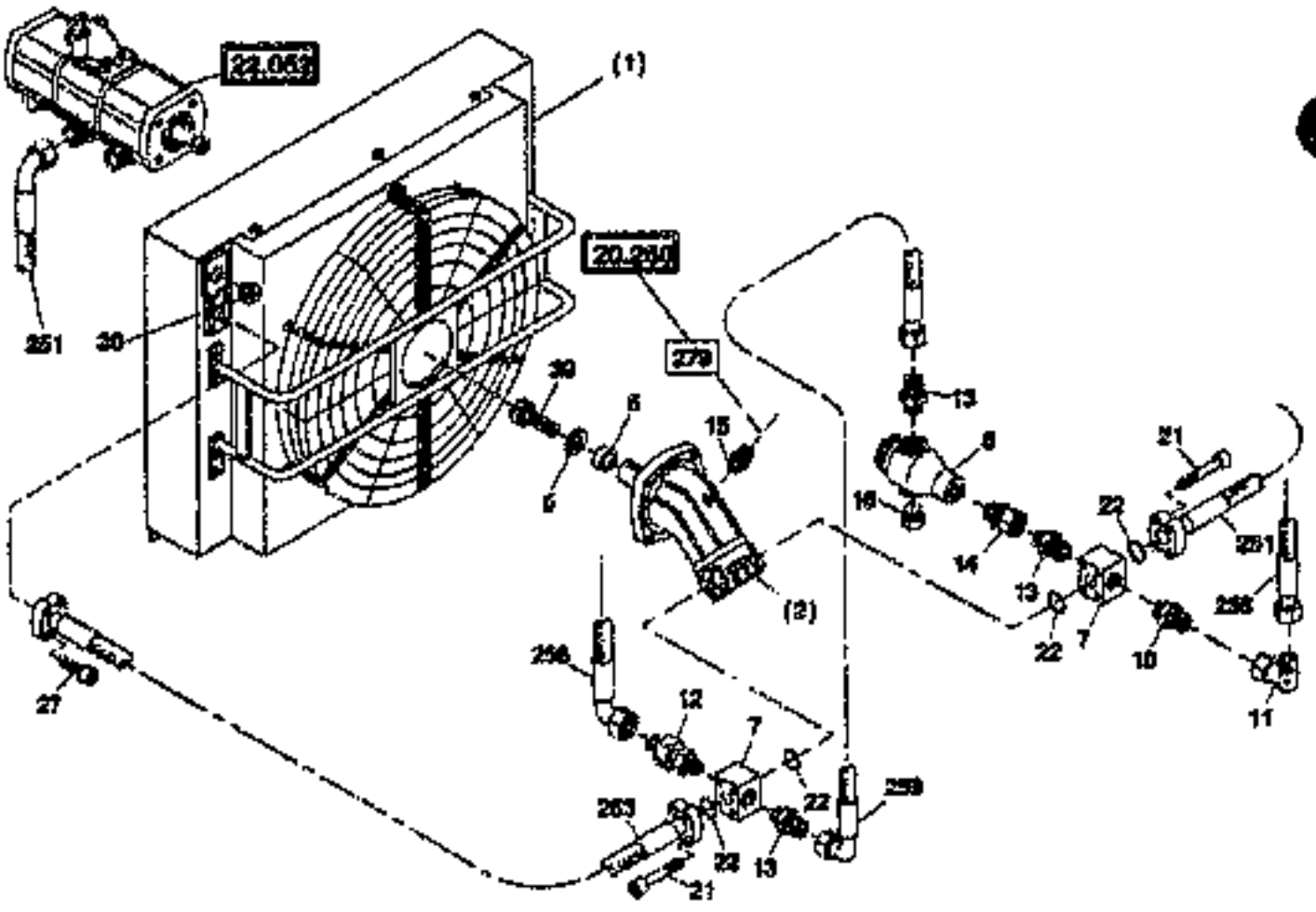

2 782 175.010

COMB. COOL. SYST. WATER/OIL MOUNTING PARTS

T 2782175 - 000
B 2782175 - 010

FX500 / 106101 - .....

Item	Quan.	ME	Part No.	Description
022	4	00	73170952	SEALING RING
027	4	00	73170440	CYL.HEAD SCREW
030	1	00	73170899	SCREW PLUG
251	1	00	73175296	HOSE
253	1	00	73170954	HOSE
256	1	00	73170955	HOSE
259	1	00	73170956	HOSE

ME: 00 = Stück/piece 13 = m 26 = m² 39 = m² 43 = kg 50 = l (litre)

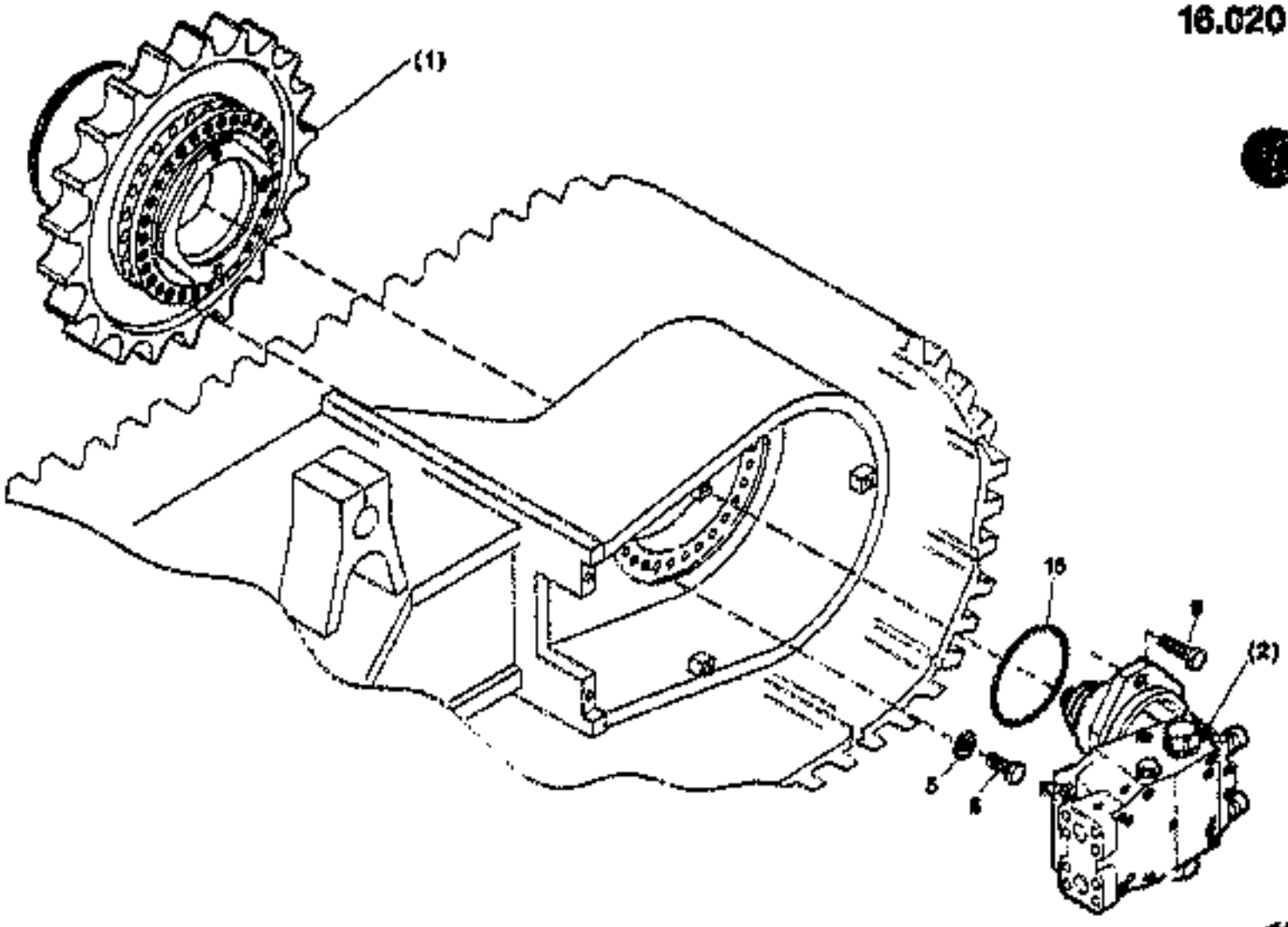

GB0398 96+ 2

TRAVEL GEAR INSTALL.MATERIAL

T 2496586 - 000
B 2496586 - 010

FX600 / 108101 - .....

Item	Quan.	ME	Part No.	Description
001	1	00		16.021 2496587 TRAVEL GEAR MOUNTING PARTS
002	1	00		22.100 2496585 MOTOR INSTALL.MATERIAL
005	30	00	73170079	DISK/WASHER
006	30	00	73175297	HEXAGON BOLT
009	2	00	73170060	HEXAGON BOLT
016	1	00	73170061	O-RING

ME: 00 = Stück/piece 13 = m 26 = m² 39 = m³ 43 = kg 50 = l (litre)

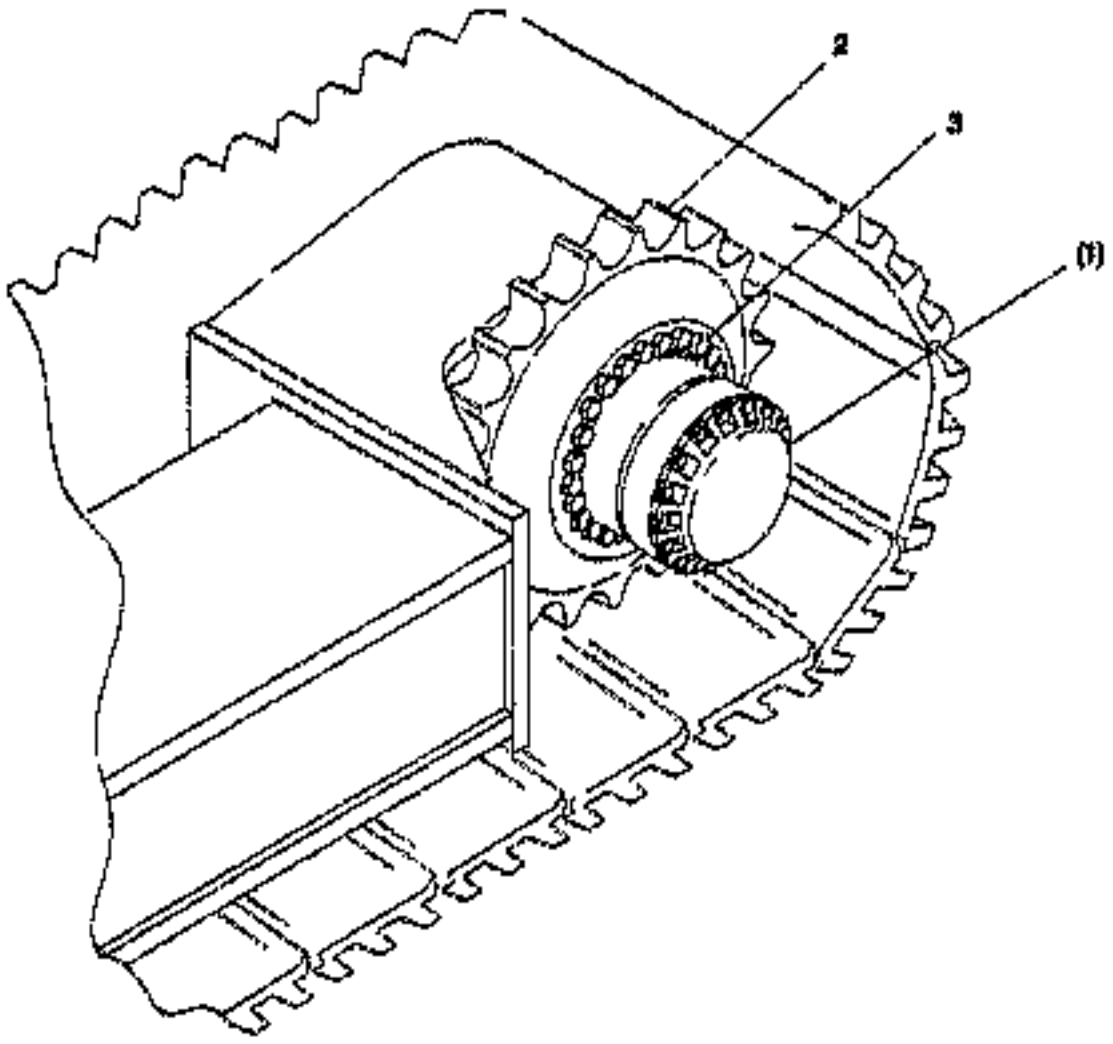

2 496 887.GN0

16.021

TRAVEL GEAR MOUNTING PARTS

7 2496887 - 000
S 2496887 - 010

FX600 / 106101 - .....

Item	Quan.	ME	Part No.	Description
001	1	00		**16.022 2496922** TRAVEL GEAR COMPLETE
002	1	00	73170077	SPROCKET
003	24	00	73170078	HEXAGON BOLT

ME: 00 = Stück/piece 10 = m 20 = m² 30 = m³ 40 = kg 50 = l (ltr/lt)

1998-09-10

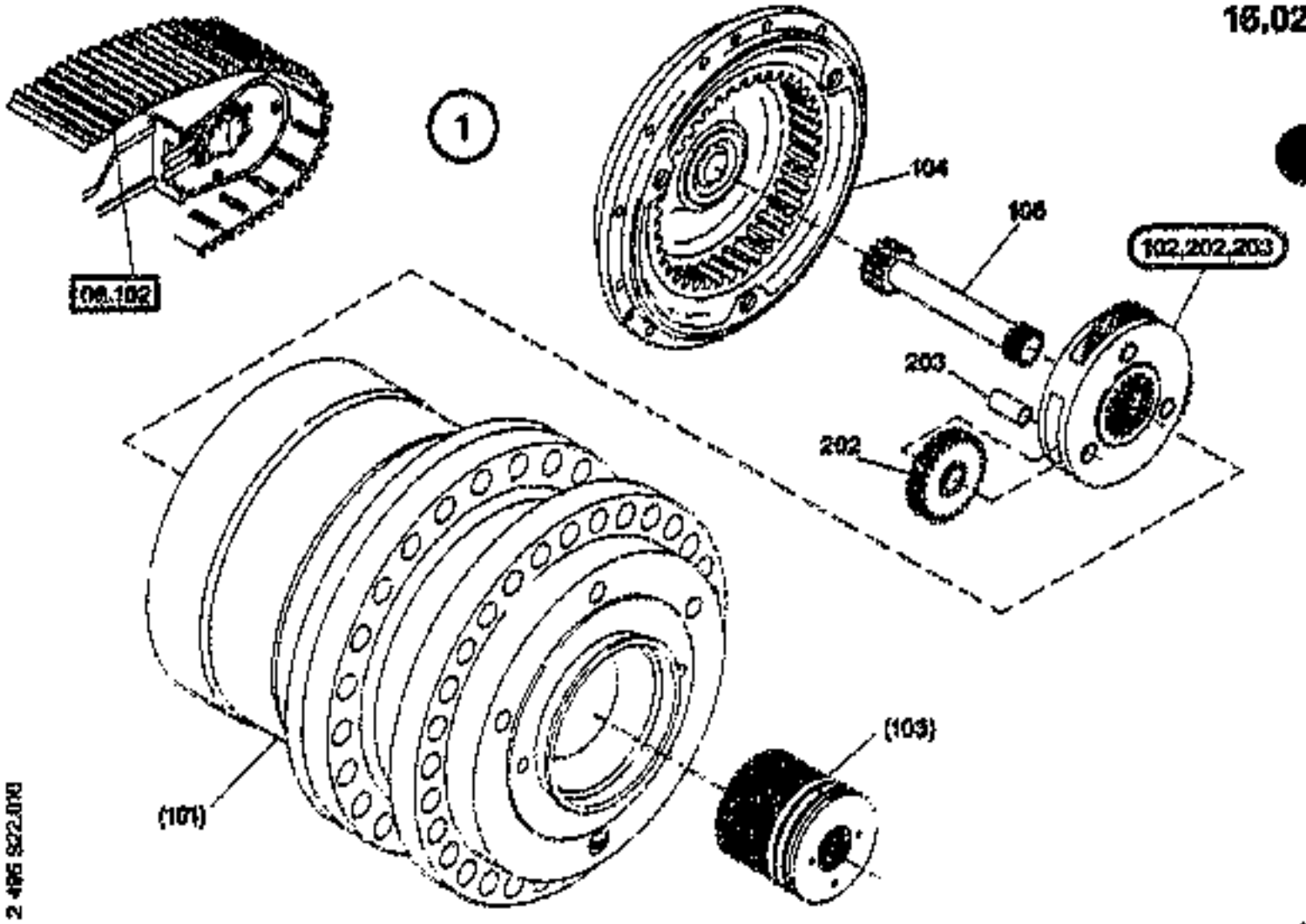

2 496 922.010

16.022

TRAVEL GEAR COMPLETE

T 2496922 - 000
B 2496922 - 010

FX600 / 106101 - .....

Item	Quan.	ME	Part No.	Description
001	1	00	73170038	TRANSMISSION GEAR
101	1	00		**16.023 2496920** TRAVEL GEAR BASE
102	1	00	73170039	BEAM
103	1	00		**16.502 2496921** TRACK BRAKE
104	1	00	73170040	LID
105	1	00	73170041	GEAR PINION
202	3	00	73170042	SPUR GEAR
203	3	00	73170043	PIN

ME: 00 = Stück/piece 13 = m 26 = m² 39 = m³ 43 = kg 50 = l (litre)

1995-09-10

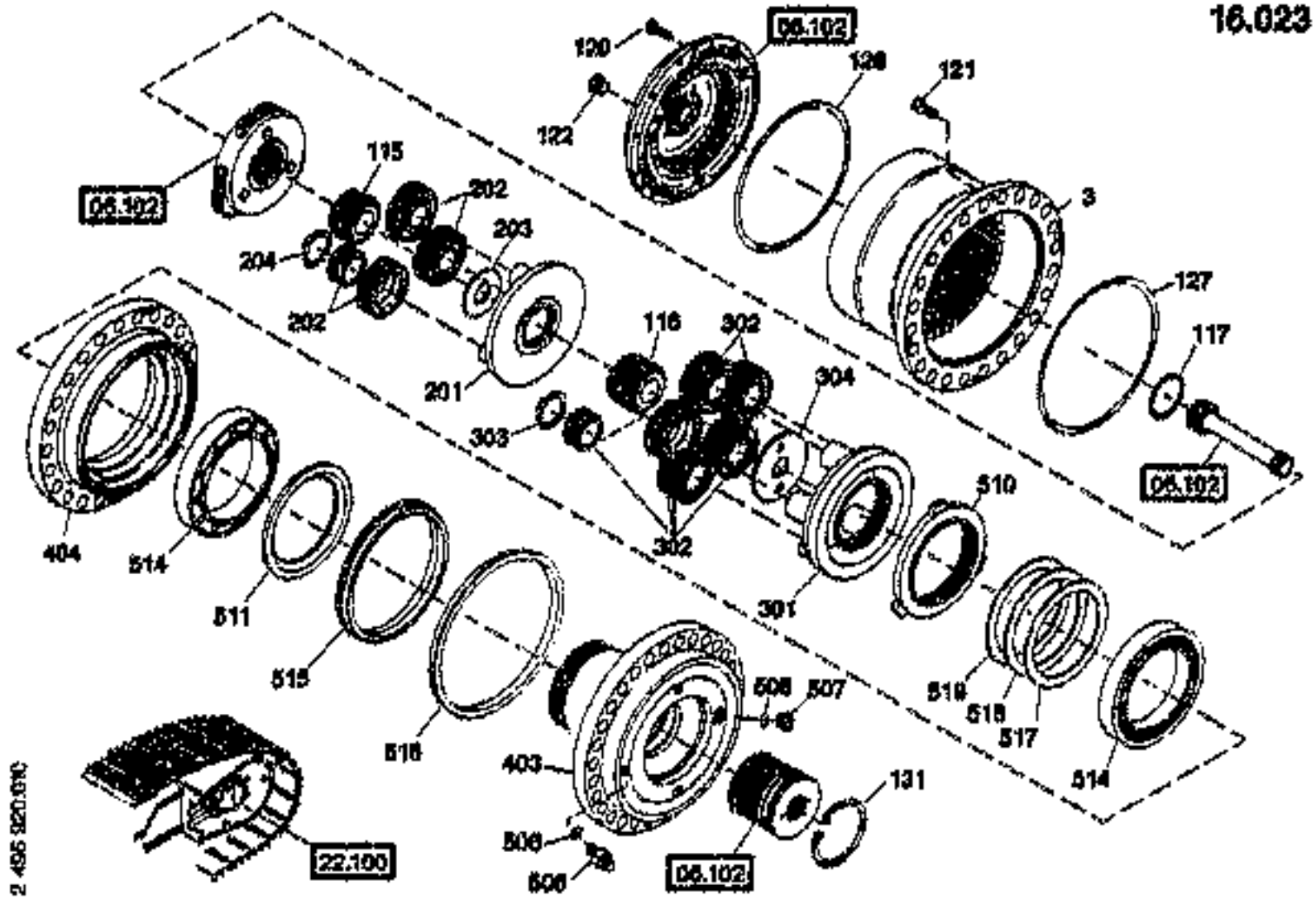

TRAVEL GEAR BASE

16.023

T 2496920 - 000
B 2496920 - 010

FX600 / 108101 - .....

Item	Quant.	ME	Part No.	Description
003	1	00	73170044	HOLLOW WHEEL
115	1	00	73170045	SPUR GEAR
116	1	00	73170046	SPUR GEAR
117	1	00	73170047	DISK/WASHER
120	12	00	73170048	HEXAGON BOLT
121	2	00	73170050	CYL.HEAD SCREW
122	2	00	73170051	SCREW PLUG
127	1	00	73170052	O-RING
128	1	00	73170053	ROUND SEALING RING
131	1	00	73170054	CIRCLIP
201	1	00	73170055	PLANETARY CARRIER
202	3	00	73170056	SPUR GEAR
203	3	00	73170058	DISK/WASHER
204	3	00	73170059	CIRCLIP
301	1	00	73170060	PLANETARY CARRIER
302	5	00	73170061	SPUR GEAR
303	5	00	73170062	CIRCLIP
304	1	00	73170063	DISK/WASHER

ME: 00 = Stück/piece 13 = m 28 = m² 38 = m² 43 = kg 50 = l (litre)

1998-09-10

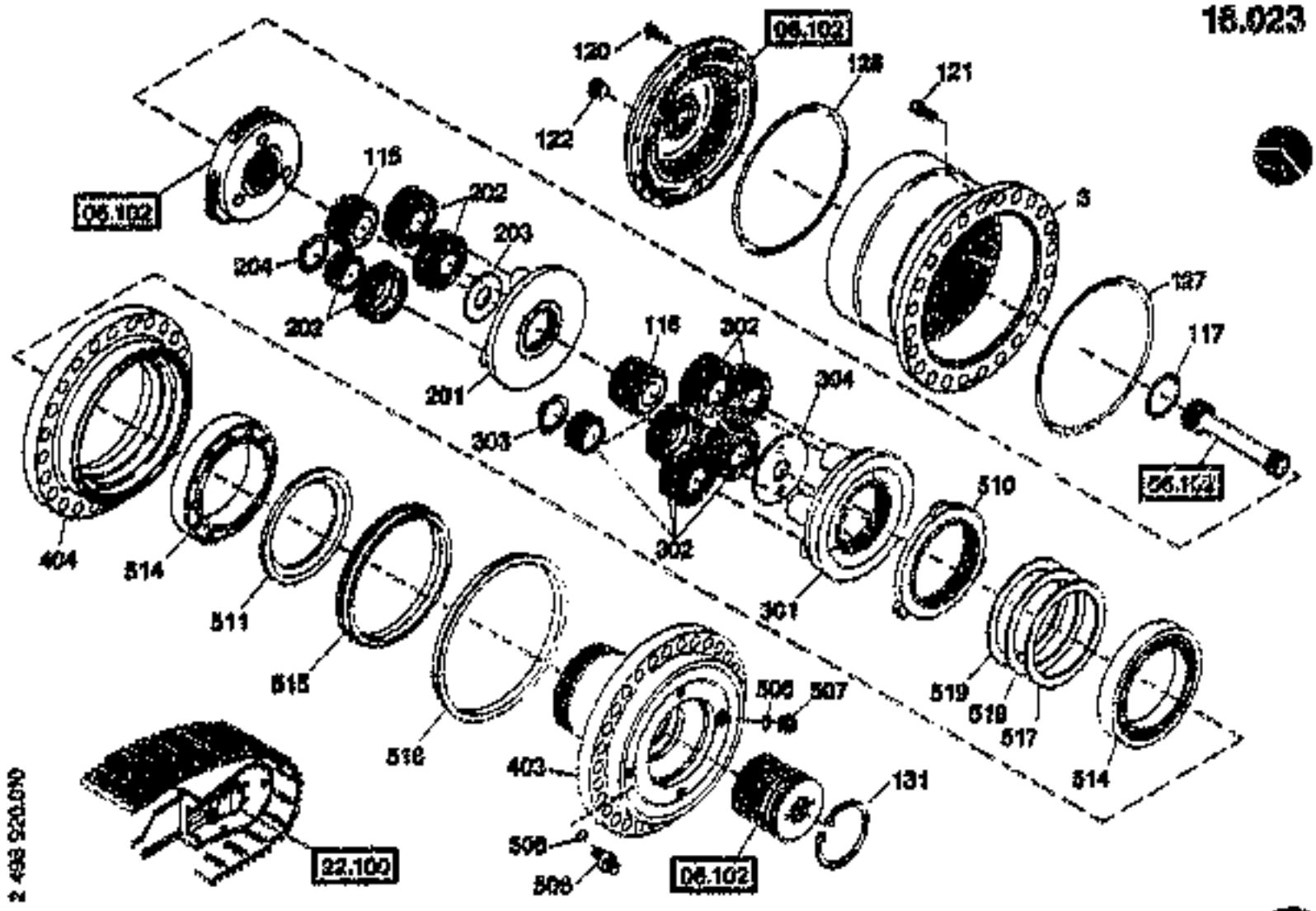

TRAVEL GEAR BASE

T 2498920 - 000
B 2498920 - 010

FX600 / 105101 - .....

Item	Quan.	ME	Part No.	Description
403	1	00	73170064	CARRIER
404	1	00	73170065	HUB
506	1	00	73170066	BREATHER VALVE
507	2	00	73170067	SCREW PLUG
508	3	00	73170068	SEALING RING
510	1	00	73170069	NUT
511	1	00	73170070	RING
514	2	00	73170071	TAP.ROLLER BEARING
515	1	00	73170072	DUO-CONE SEAL
516	1	00	73170073	ROT.SHAFT LIP SEAL
517	1	00	73170074	ADJUSTMENT RING
518	1	00	73170075	ADJUSTMENT RING
519	1	00	73170076	ADJUSTMENT RING

ME: 00 = Stück/piece 13 = m 20 = m² 39 = m³ 43 = kg 50 = l (litre)

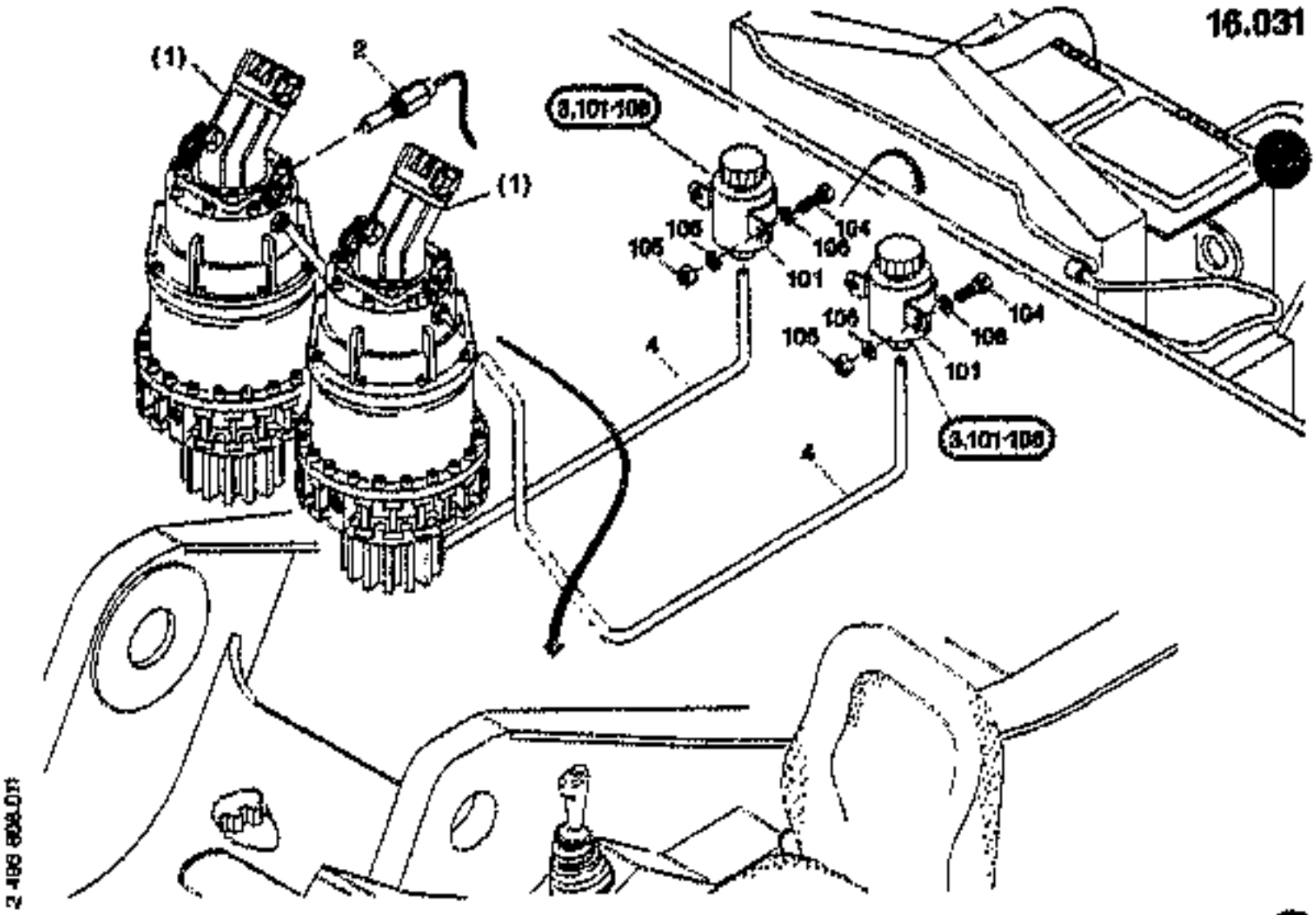

SLEWING GEAR MOUNTING PARTS

T 2496606 - 002
B 2496606 - 011

FX600 / 108101 - .....

Item	Quan.	ME	Part No.	Description
001	2	00		16.031 2496606 SLEWING GEAR MOUNTING PARTS
002	1	00	73171741	SPEED SENSOR
003	2	00	73173064	CONTAINER
004	4,60	13	73171742	HOSE 2 X 2,4M
101	1	00	73170568	CONTAINER
104	2	00	73170203	HEXAGON BOLT
105	2	00	73170184	HEXAGON NUT
106	4	00	73170185	DISK/WASHER

ME: 00 = Stück/piece 13 = m 26 = m² 39 = m³ 43 = kg 60 = l (litre)

1998-09-10

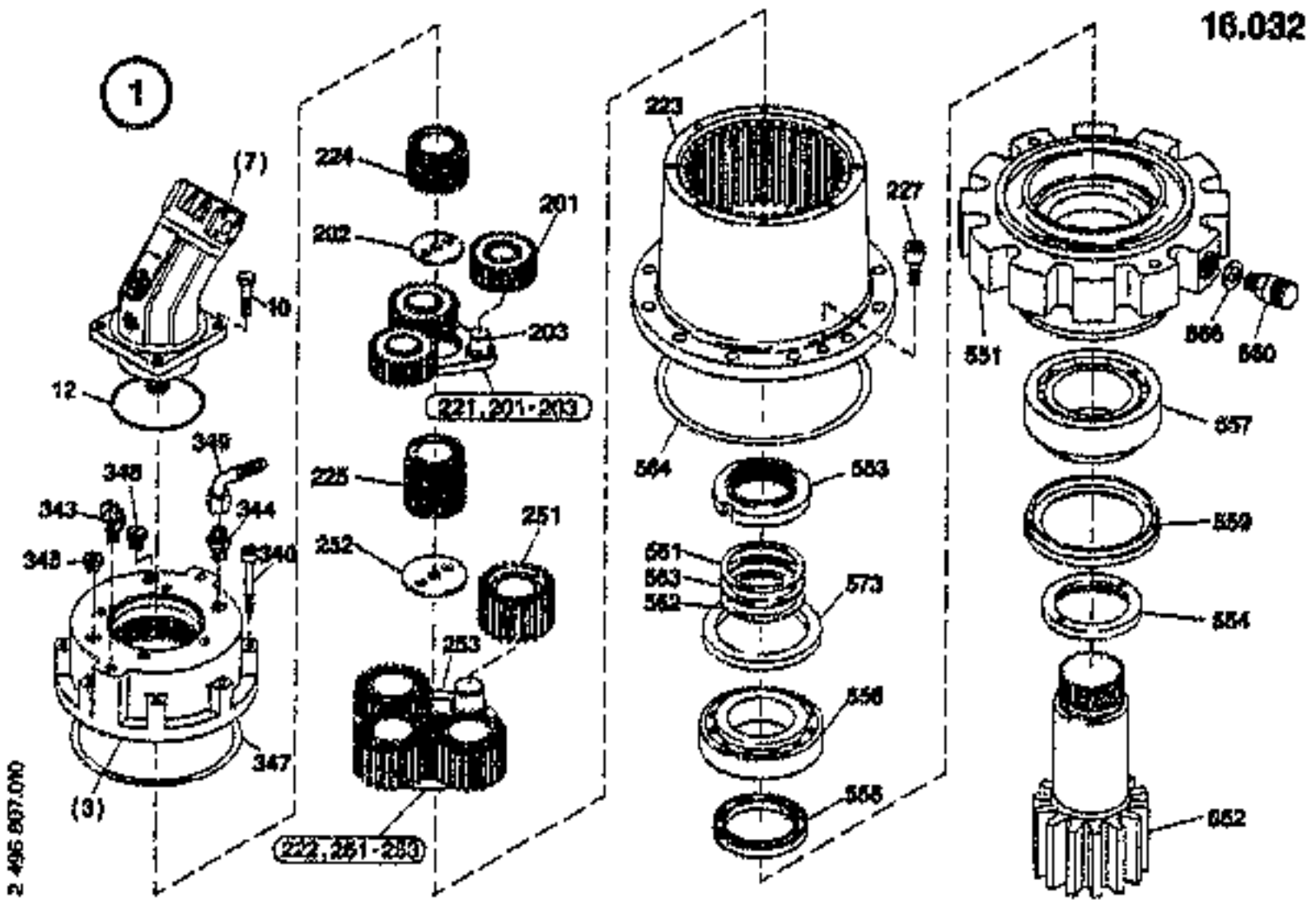

16.032

SLEWING GEAR COMPLETE

T 2496807 - 000
B 2496807 - 010

FX600 / 106101 - .....

Item	Quan.	ME	Part No.	Description
001	1	00	73170576	SLEWING GEAR
003	1	00		19.400 2496811 SWING BRAKE INSTALL.MATERIAL
007	1	00		22.110 2496812 AXIAL PISTON MOTOR SLEWING GEAR
010	4	00	73170577	HEXAGON BOLT
012	1	00	73170578	RDR
201	1	00	73170581	SET OF SPUR GEARS
202	1	00	73170582	DISK/WASHER
203	1	00	73170583	PLANETARY CARRIER
221	1	00	73170584	PLANETARY CARRIER
222	1	00	73170585	PLANETARY CARRIER
223	1	00	73170589	HOLLOW WHEEL
224	1	00	73170590	GEAR PINION
225	1	00	73170591	GEAR PINION
227	2	00	73170592	CYL.HEAD SCREW
251	1	00	73170586	SET OF SPUR GEARS

ME: 00 = Stück/piece 13 = m 25 = m² 39 = m³ 43 = kg 50 = l (litre)

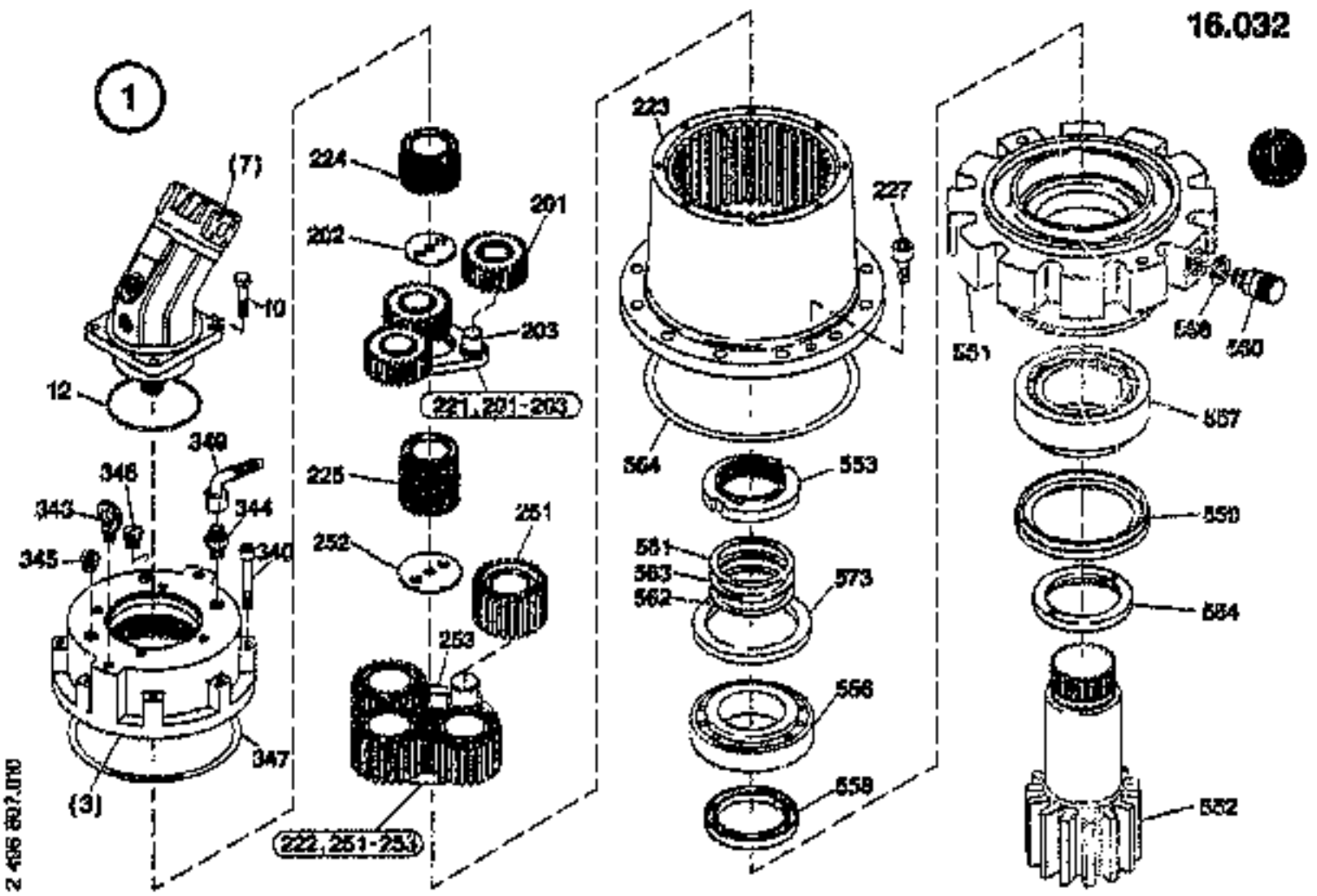

SLEWING GEAR COMPLETE

16.032

T 2496807 - 000
B 2496807 - 010

FX600 / 106101 - .....

Item	Quan.	ME	Part No.	Description
252	1	00	73170587	DISK/WASHER
253	1	00	73170588	PLANETARY CARRIER
340	12	00	73170593	CYL.HEAD SCREW
343	2	00	73170595	SCREW
344	1	00	73170380	SOCKET
346	1	00	73170359	SCREW PLUG
347	0,77	13	73170596	ROUND STEEL
348	1	00	73170597	SCREW PLUG
349	1	00	73170598	PIPE BEND
551	1	00	73170599	HOUSING
552	1	00	73170600	GEAR PINION
553	1	00	73170601	NUT
554	1	00	73170602	RING
556	1	00	73170603	TAP.ROLLER BEARING
557	1	00	73170604	TAP.ROLLER BEARING
558	1	00	73170605	ROT.SHAFT LIP SEAL
559	1	00	73170606	SEALING RING
560	1	00	73170607	SCREW PLUG

ME: 00 = Stück/piece 13 = m 26 = m² 39 = m³ 43 = kg 52 = l (litre)

1998-09-10

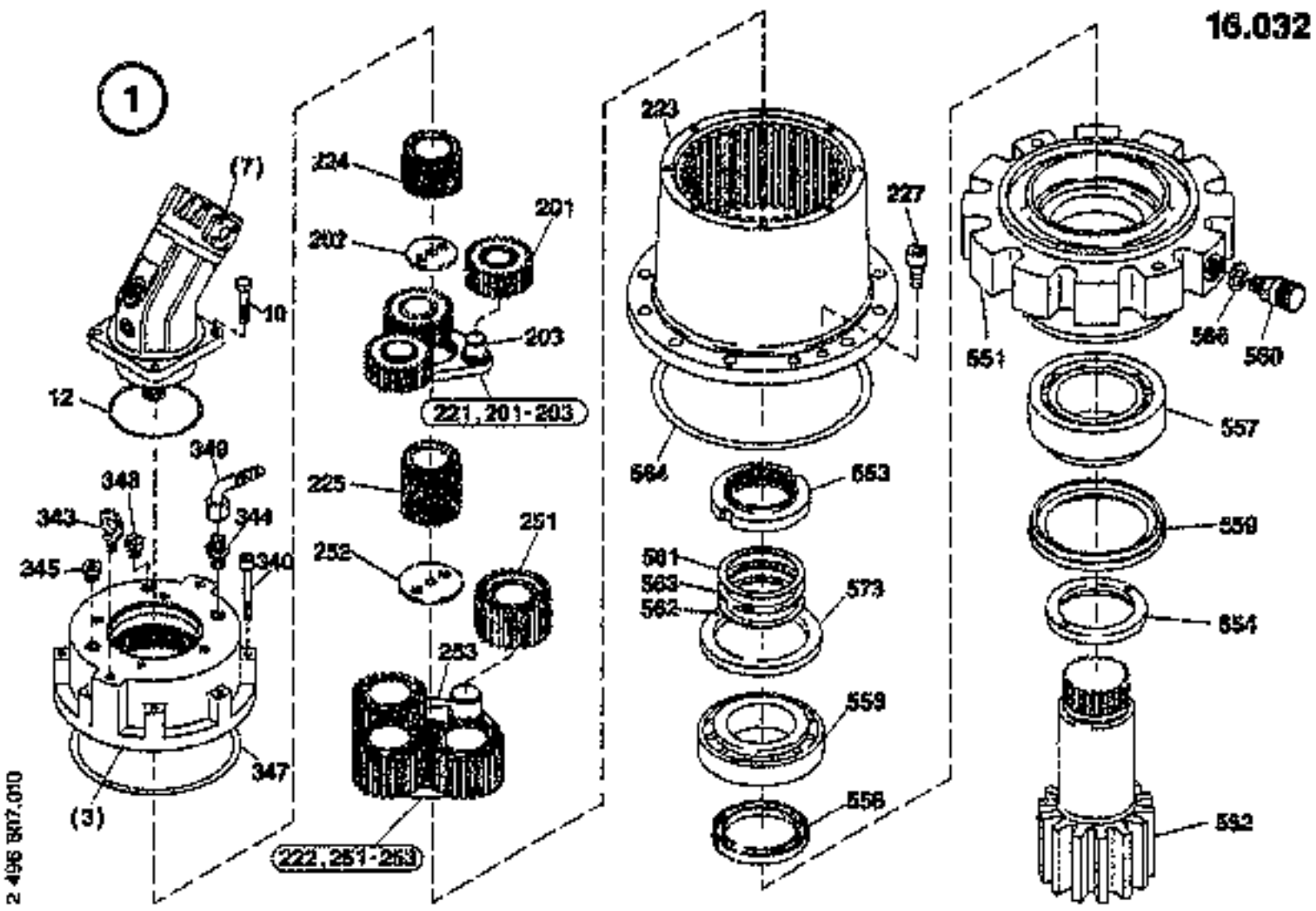

SLEWING GEAR COMPLETE

16.032

FIATALLIS

T 2496807 - 000
B 2496807 - 010

FX600 / 106101 - .....

Item	Quan.	ME	Part No.	Description
561	1	00	73170609	SHIM RING
562	1	00	73170610	SHIM RING
563	1	00	73170612	SHIM RING
564	1	00	73170613	ROUND SEALING RING
566	1	00	73170614	SEALING RING
573	1	00	73170615	SEALING RING

ME: 00 = Stück/piece 18 = m 28 = m² 39 = m³ 43 = kg 50 = l (litre)

1990-08-10

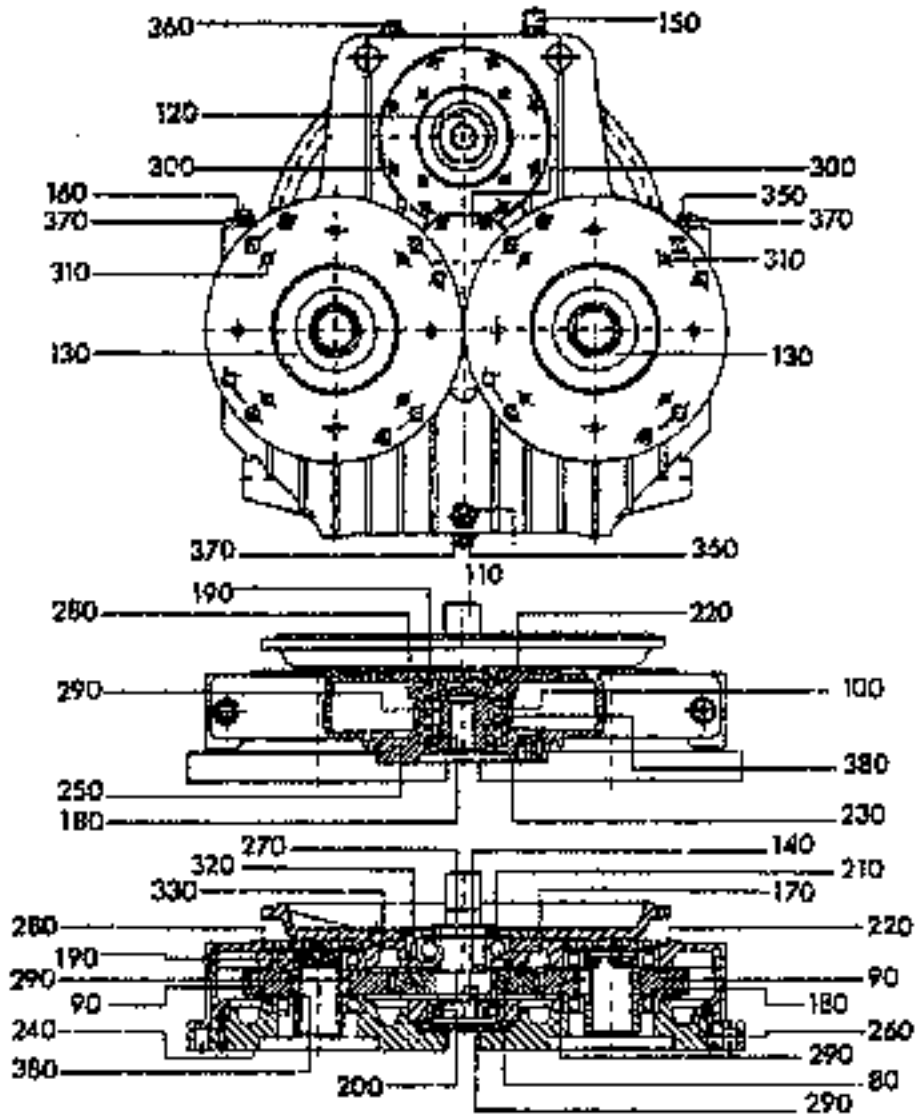

2 443 885.010

PUMP DRIVE

15.042

T 2443686 - 000
B 2443685 - 010

FX800 / 106101 - .....

Item	Quan.	ME	Part No.	Description
080	1	00	73170759	SPUR GEAR
090	2	00	73170760	SPUR GEAR
100	1	00	73170761	GEARSHIFT LEVER
110	1	00	73170762	SERRATED SHAFT
120	1	00	73170763	HOLLOW SHAFT
130	2	00	73170764	HOLLOW SHAFT
140	1	00	73170765	SPACER RING
150	1	00	73170766	BREATHER FILTER
160	1	00	73170767	DIPSTICK
170	1	00	73170768	GROOVE BALL BEAR.
180	3	00	73170769	GROOVE BALL BEAR.
190	3	00	73170769	GROOVE BALL BEAR.
200	1	00	73170770	OUTER RACE
210	1	00	73170771	ROT.SHAFT LIP SEAL
220	9	00	73170772	O-RING
230	1	00	73170773	ROUND SEALING RING
240	2	00	73170774	O-RING
250	1	00	73170775	ROUND SEALING RING

ME: 00 = Stück/piece 13 = m 26 = m² 39 = m³ 43 = kg 50 = l (litre)

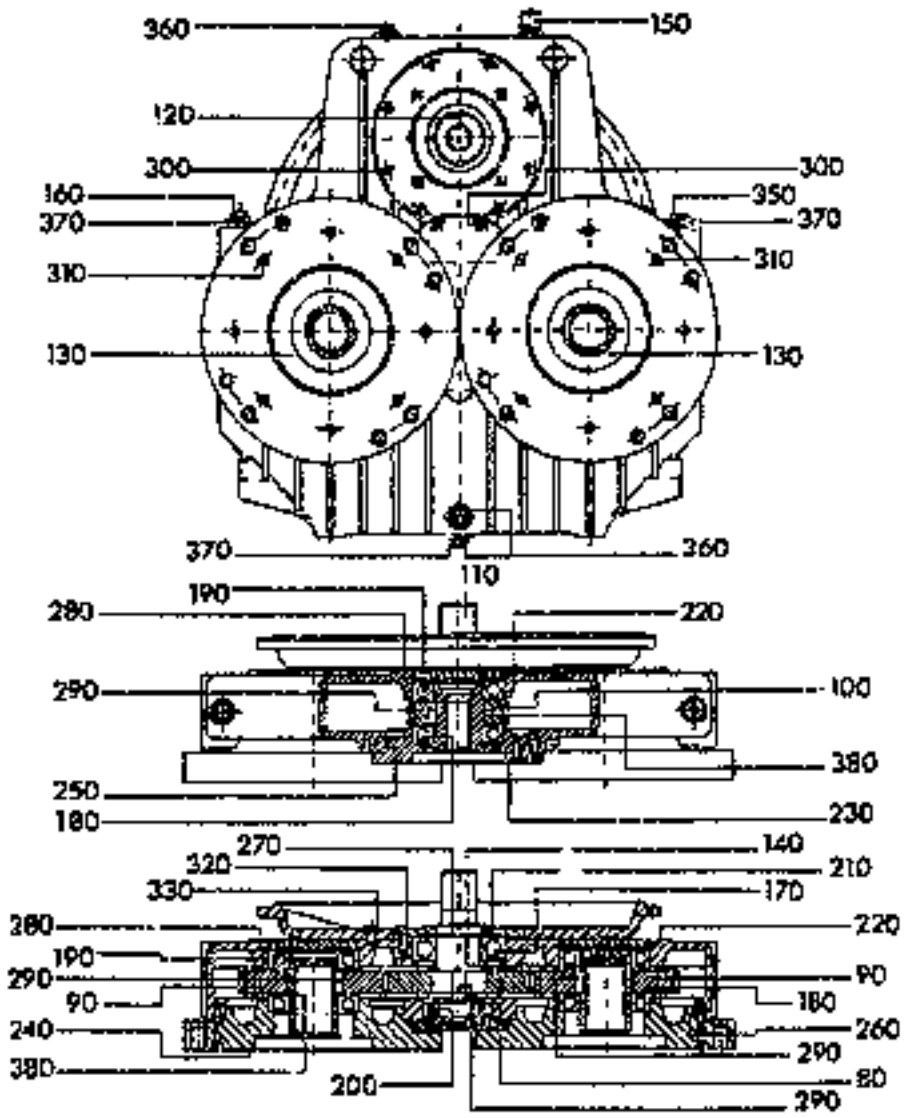

685.010

PUMP DRIVE

FX600 / 106101 - .....

T 2443685 - 000
B 2443685 - 010

Item	Quan.	ME	Part No.	Description
260	2	00	73170776	O-RING
270	1	00	73170777	CIRCLIP
280	3	00	73170778	CIRCLIP
290	8	00	73170776	FEATHER KEY
300	14	00	73170440	CYL.HEAD SCREW
310	16	00	73170779	CYL.HEAD SCREW
320	6	00	73170780	CYL.HEAD SCREW
330	17	00	73170781	HEXAGON BOLT
350	1	00	73170782	
360	3	00	73170783	SCREW PLUG
370	5	00	73170784	SEALING RING
380	3	00	73170785	SHIM RING

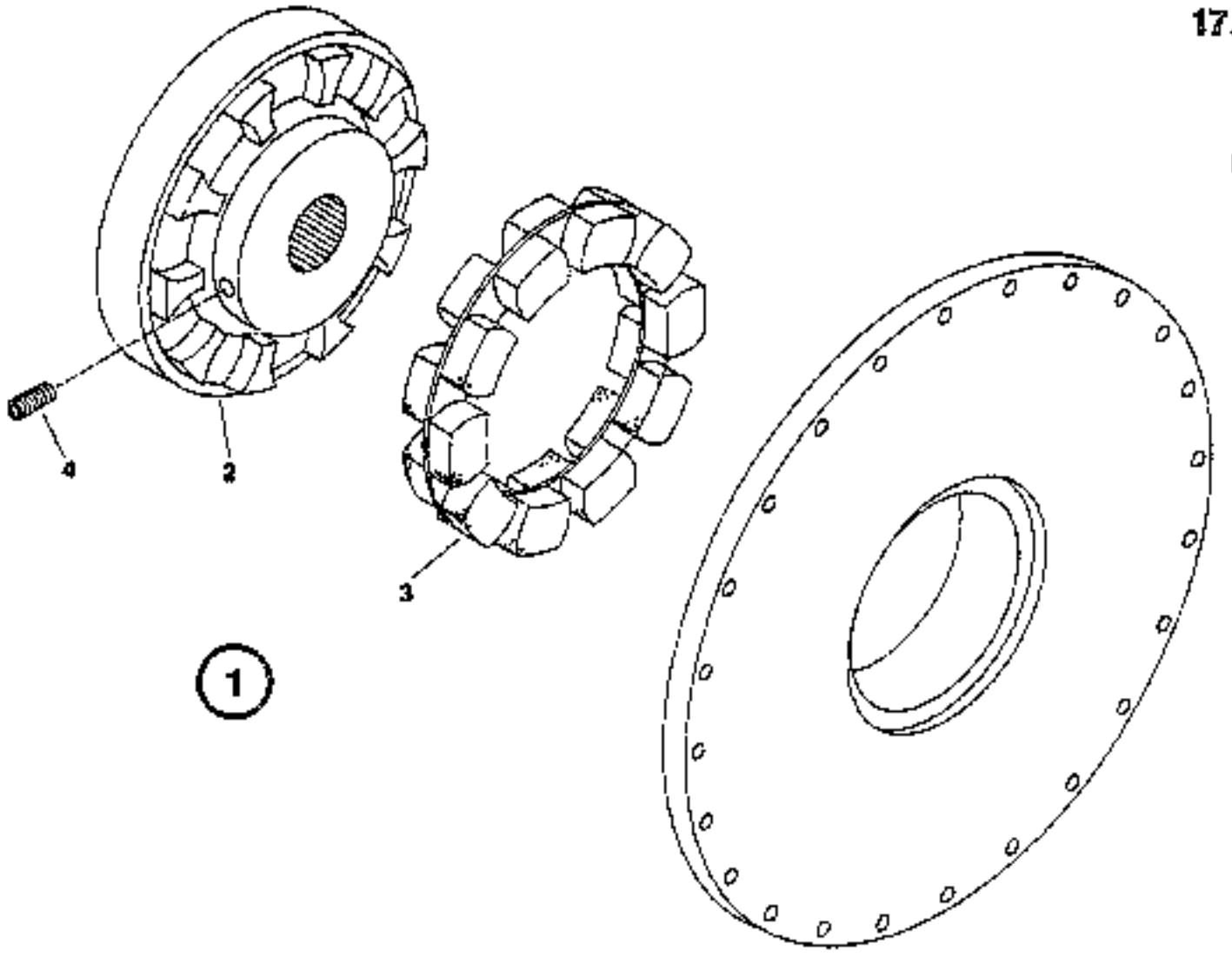

2 444 158.010

COUPLING/CLUTCH

17.102

FX600 / 106101 - .....

T 2444158 - 000
B 2444158 - 010

Item	Quan.	ME	Part No.	Description
001	1	00	73170728	COUPLING/CLUTCH
002	1	00	73170729	CLUTCH HUB
003	1	00	73170730	RING
004	1	00	73170731	GRUB SCREW

ME: 00 = Stück/piece 13 = m 26 = m^2 39 = m^3 43 = kg 50 = l (litre)

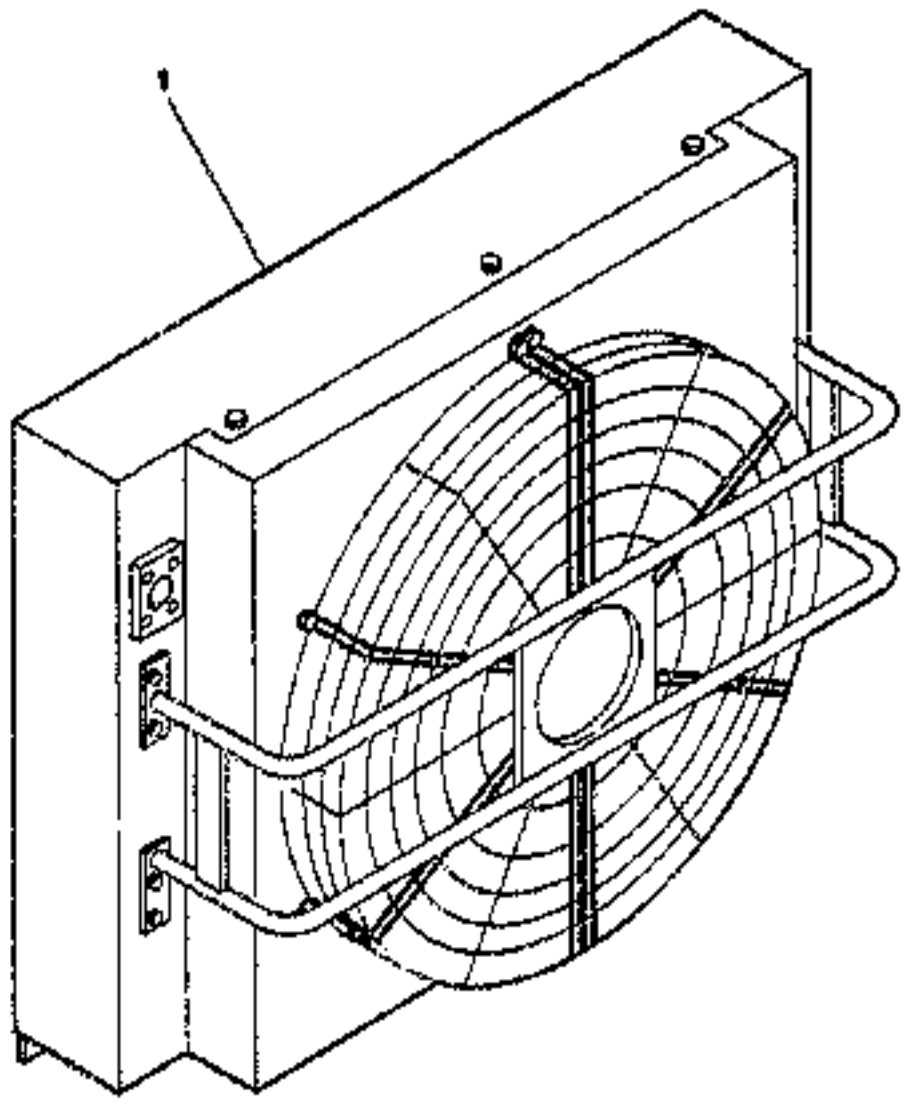

2 496 855.010

COMBINED COOLER WATER/OIL

15.122

FIATALLIS

FX600 / 106101 - .....

T 2496856 - 000
B 2496856 - 010

Item	Quan.	ME	Part No.	Description
001	1	00	73171559	RADIATOR

ME: 00 = Stück/piece 13 = m 26 = m² 39 = m³ 43 = kg 50 = l (litre)

1996-09-10

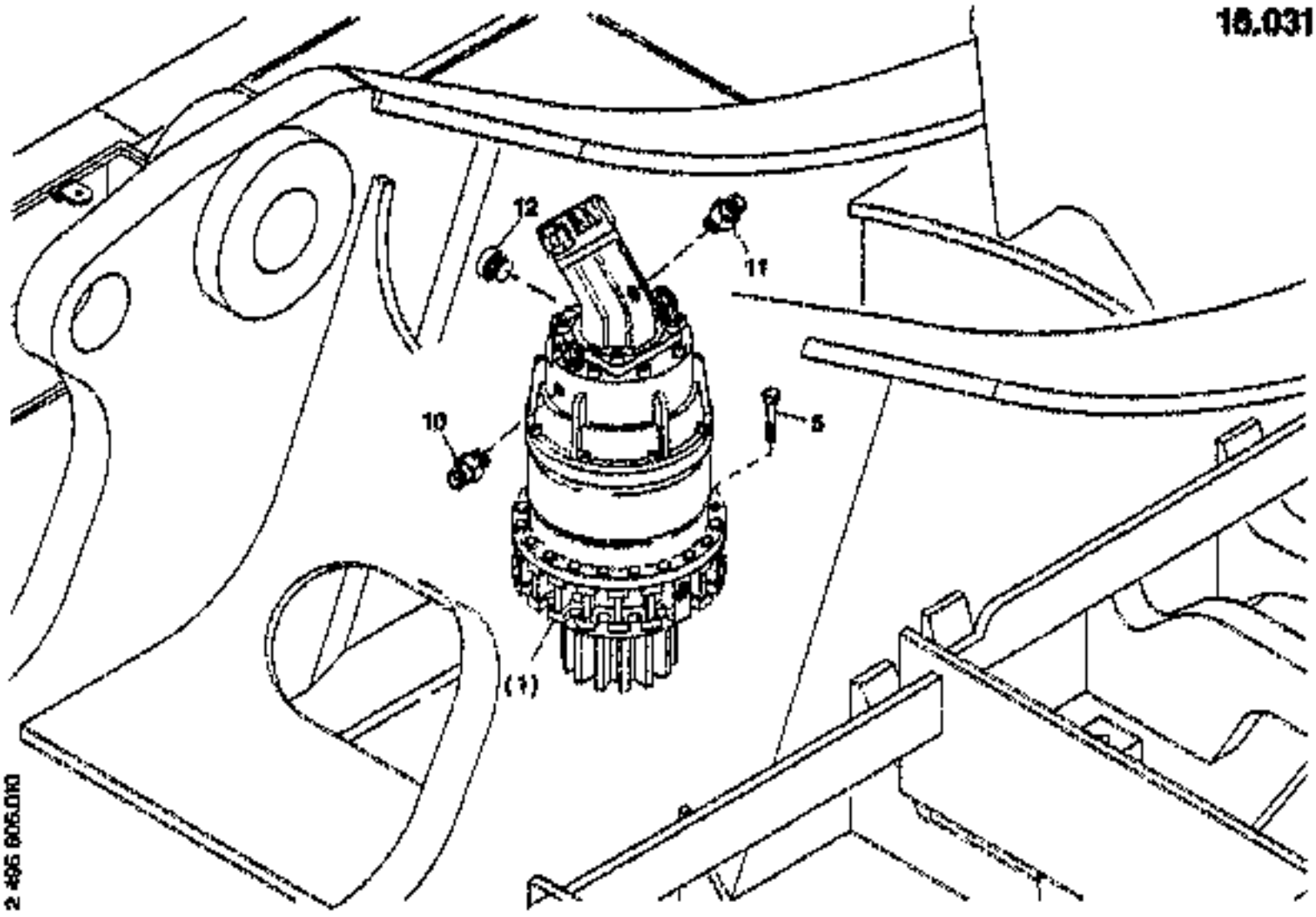

18.031

SLEWING GEAR MOUNTING PARTS

T 2496606 - 000
B 2496606 - 010

FX600 / 106101 - .....

Item	Quan.	ME	Part No.	Description
001	1	00		18.032 2496607 SLEWING GEAR COMPLETE
005	16	00	73170656	HEXAGON BOLT
010	1	00	73170296	SOCKET
011	1	00	73170296	SOCKET
012	1	00	73170301	SCREW PLUG

ME: 00 = Stückpiece 13 = m 25 = m² 39 = m³ 43 = kg 50 = l (litre)

1998-09-10

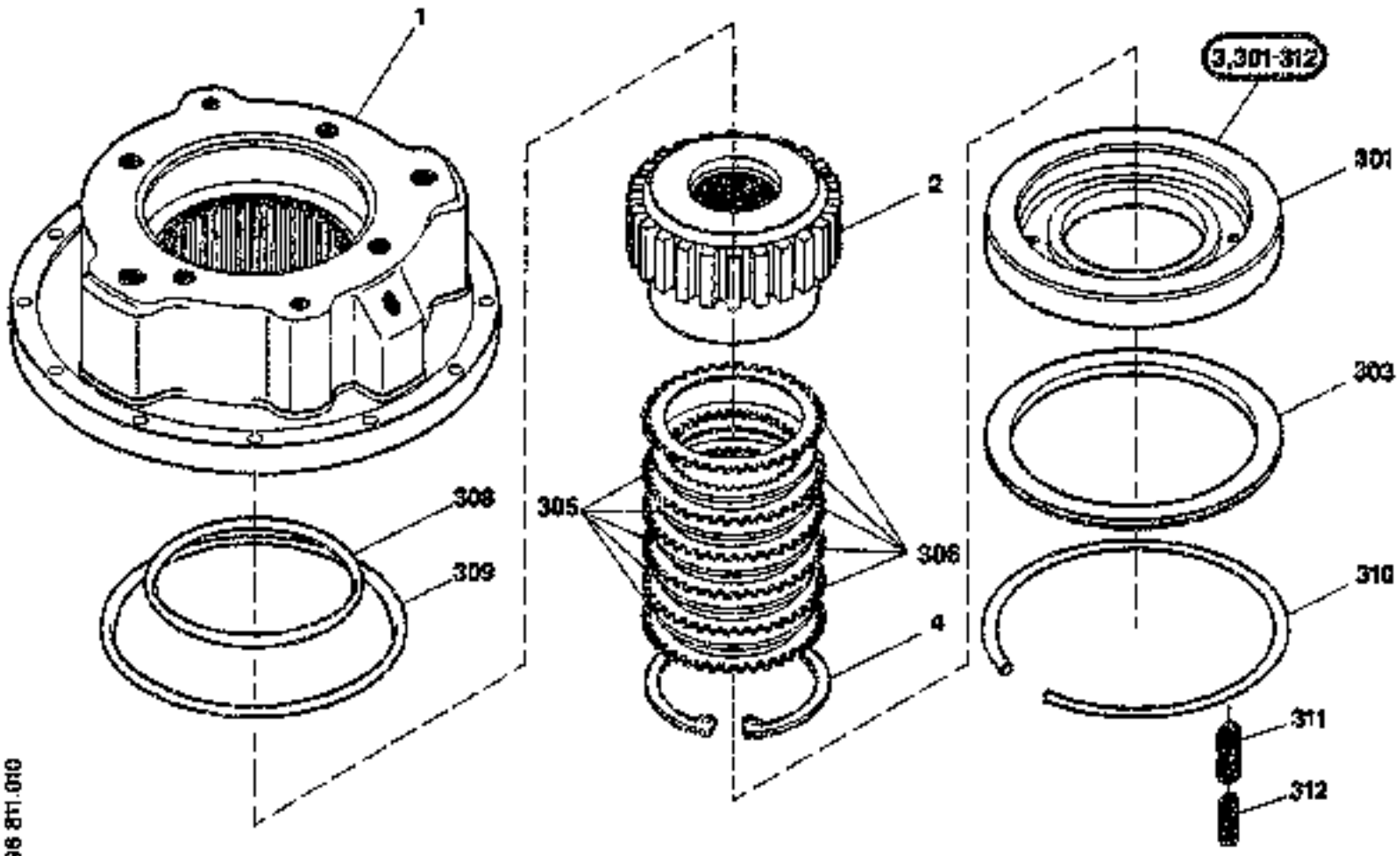

2 496 811.010

SWING BRAKE INSTALL.MATERIAL

T 2496811 - 000
S 2496811 - 010

FX600 / 108101 - .....

Item	Quan.	ME	Part No.	Description
001	1	00	73170572	HOUSING
002	1	00	73170573	INTERNAL CASING
003	1	00	73170574	BRAKE
004	1	00	73170575	CIRCLIP
301	1	00	73175298	PISTON
303	1	00	73175299	CYLINDER/COVER
305	5	00	73172248	INTERNAL DISK
306	6	00	73172245	EXTERNAL DISK
308	1	00	73175300	GASKET
309	1	00	73175301	GASKET
310	1	00	73178302	SNAP RING
311	30	00	73175303	SPRING
312	30	00	73175304	SPRING

ME: 00 = Stück/piece 13 = m 25 = m^2 39 = m^3 43 = kg 50 = l (litre)

1998-09-10

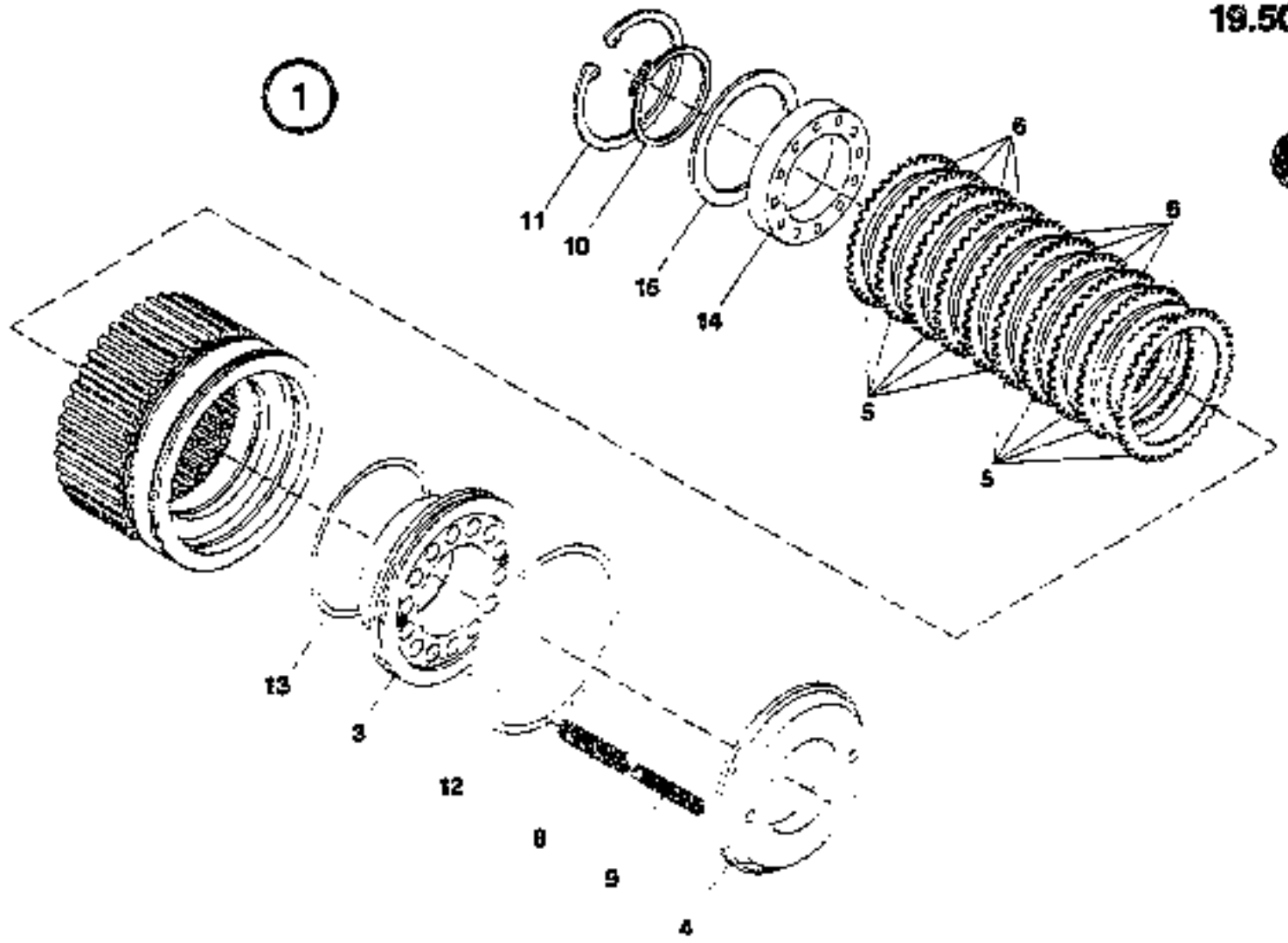

19.502

TRACK BRAKE

T 2496921 - 001
B 2496921 - 010

FX600 / 106101 - .....

Item	Quan.	ME	Part No.	Description
001	1	00	73170037	BRAKE
003	1	00	73172242	PISTON
004	1	00	73172243	CYLINDER/COVER
005	10	00	73172245	EXTERNAL DISK
006	9	00	73172246	INTERNAL DISK
008	14	00	73172248	SPRING
009	14	00	73172249	SPRING
010	1	00	73170062	CIRCLIP
011	1	00	73172250	CIRCLIP
012	1	00	73172251	GASKET
013	1	00	73172252	GASKET
014	1	00	73172253	GROOVE BALL BEAR.
015	2	00	73172254	SUPPORTING RING

ME: 00 = Stück/piece 10 = m 20 = m² 30 = m³ 40 = kg 50 = l (litre)

1998-09-10

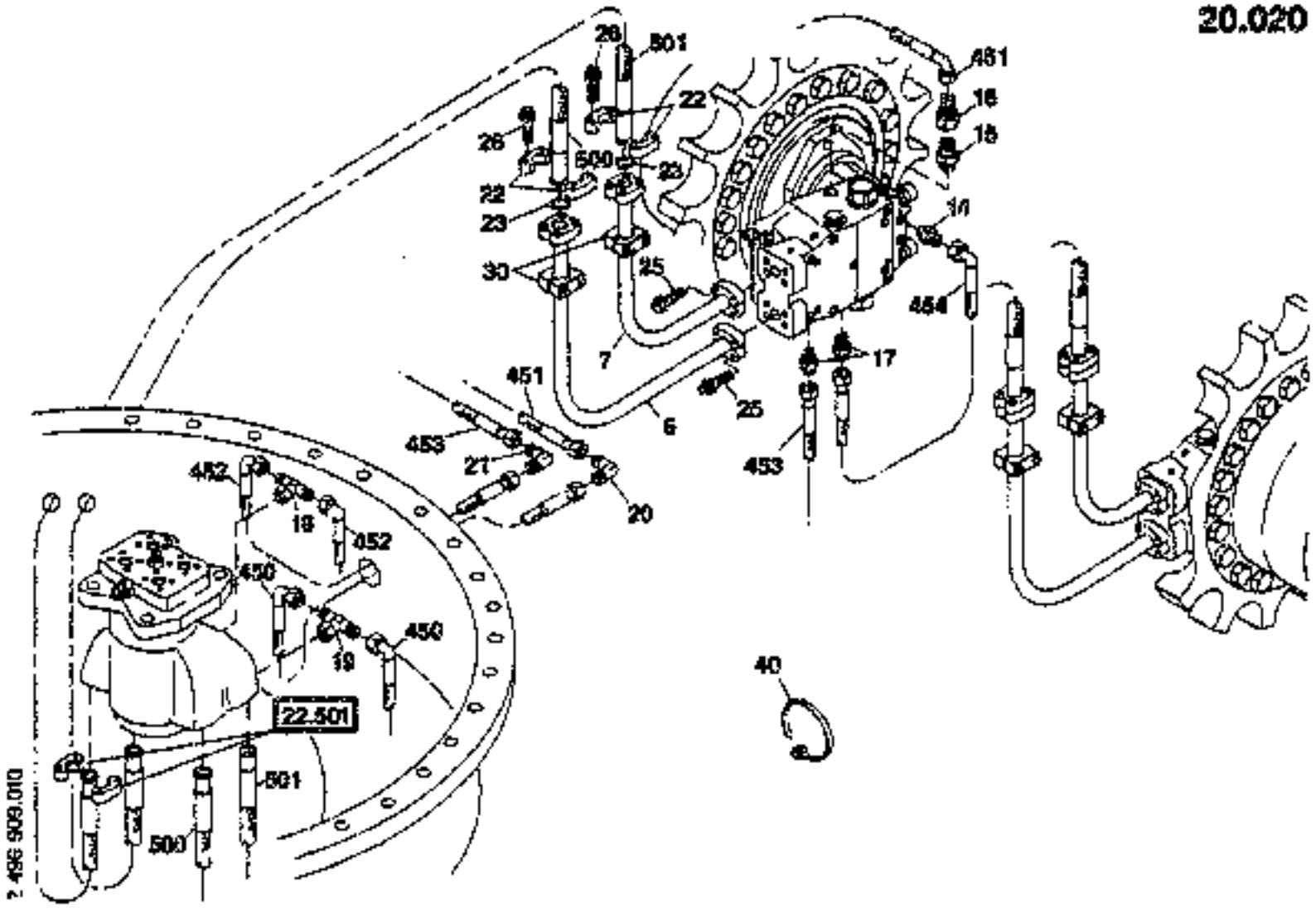

HYDRAULIC SYSTEM LOWER CARRIAGE

T 2496909 - 000
B 2496909 - 010

FX600 / 106101 - .....

Item	Quan.	ME	Part No.	Description
006	2	00	73175305	LINE
007	2	00	73175306	LINE
014	2	00	73170296	SOCKET
015	2	00	73171657	SOCKET
016	2	00	73172466	SCREWING
017	4	00	73170350	SOCKET
018	1	00	73170393	SOCKET
019	1	00	73176307	SOCKET
020	2	00	73175308	TUBE FITTING
021	2	00	73176310	TUBE FITTING
022	8	00	73170344	SAE-FLANGE HALF
023	4	00	73170346	SEALING RING
025	16	00	73170347	12-POINT SCREW
026	16	00	73171502	12-POINT SCREW
030	4	00	73175312	CLIP
040	20	00	73170885	RIBBON
450	2	00	73175313	HOSE
451	2	00	73175314	HOSE

ME: 00 = Stück/piece 13 = m 25 = m² 39 = m³ 43 = kg 50 = l (litre)

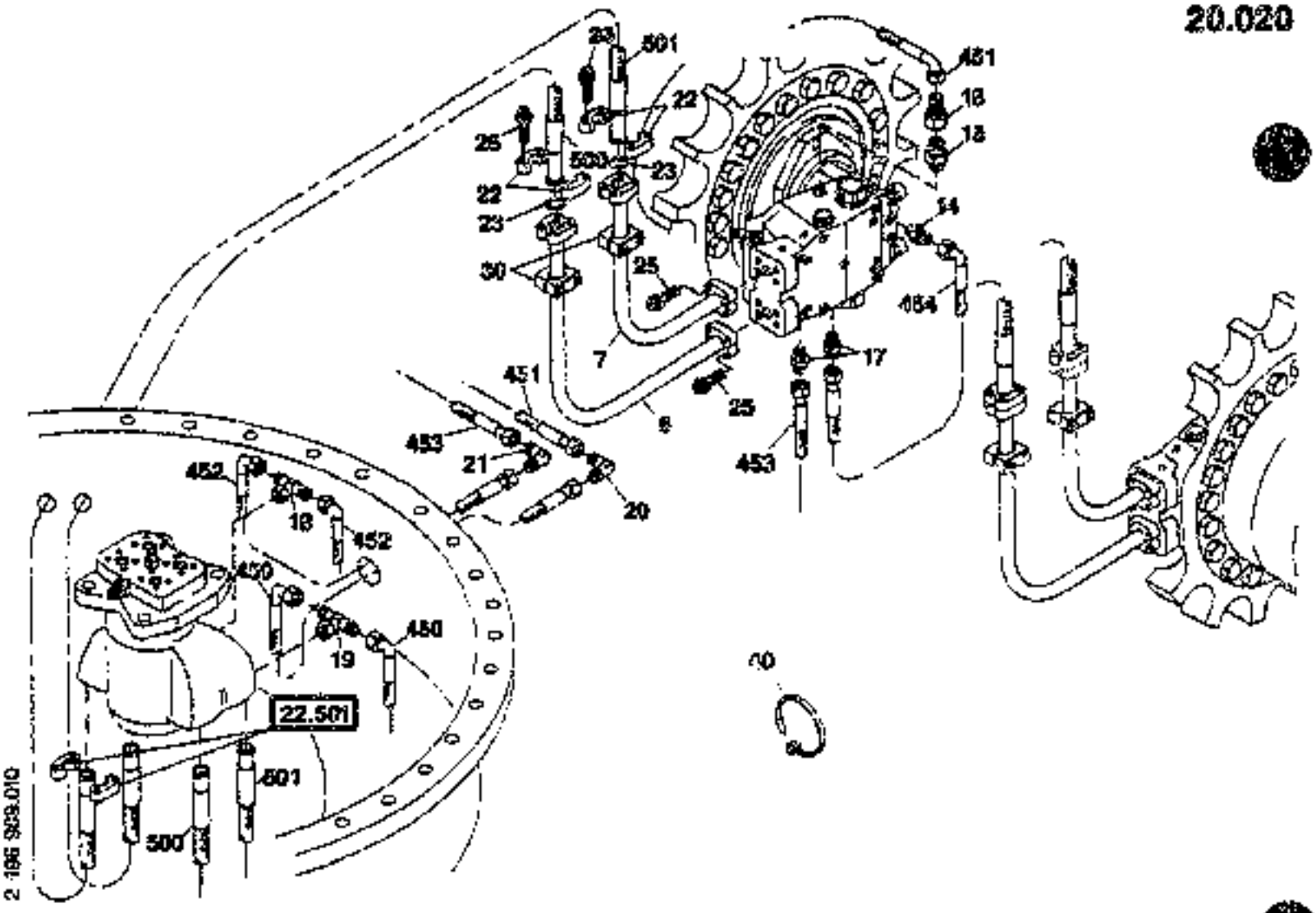

HYDRAULIC SYSTEM LOWER CARRIAGE

FX500 / 106101 - .....

T 2496906 - 000
B 2496909 - 010

Item	Quan.	ME	Part No.	Description
452	2	00	73175315	HOSE
453	2	00	73175316	HOSE
454	2	00	73175317	HOSE
500	2	00	73175318	HOSE
501	2	00	73175319	HOSE

ME: 00 = Stück/piece 13 = m 26 = m² 39 = m³ 43 = kg 50 = l (litre)

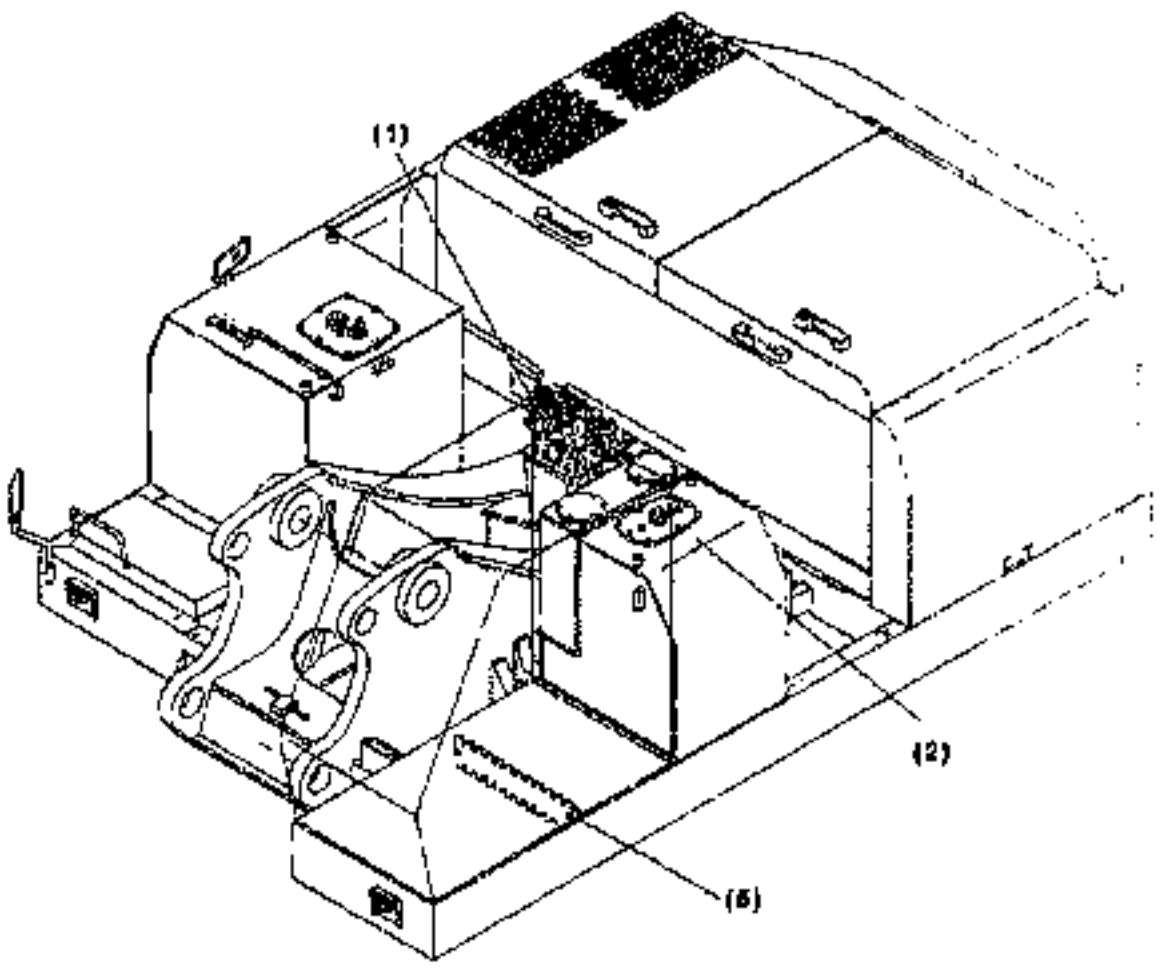

2 792 183 010

HYDRAULIC SYSTEM UPPER CARRIAGE

20.030

FX600 / 106101 - .....

T 2782183 - 000
B 2782183 - 010

Item	Quan.	ME	Part No.	Description
001	1	00		**20.310 2456823** HYDRAULIC SYSTEM HIGH PRESSURE
002	1	00		**20.320 2456832** HYDRAULIC SYSTEM LOW PRESSURE
005	1	00		**20.640 2782182** HYDRAULIC SYSTEM CASCADE INSTALL.MATERIAL

ME: 00 = Stück/piece 13 = m 26 = m² 39 = m³ 43 = kg 50 = l (litre)

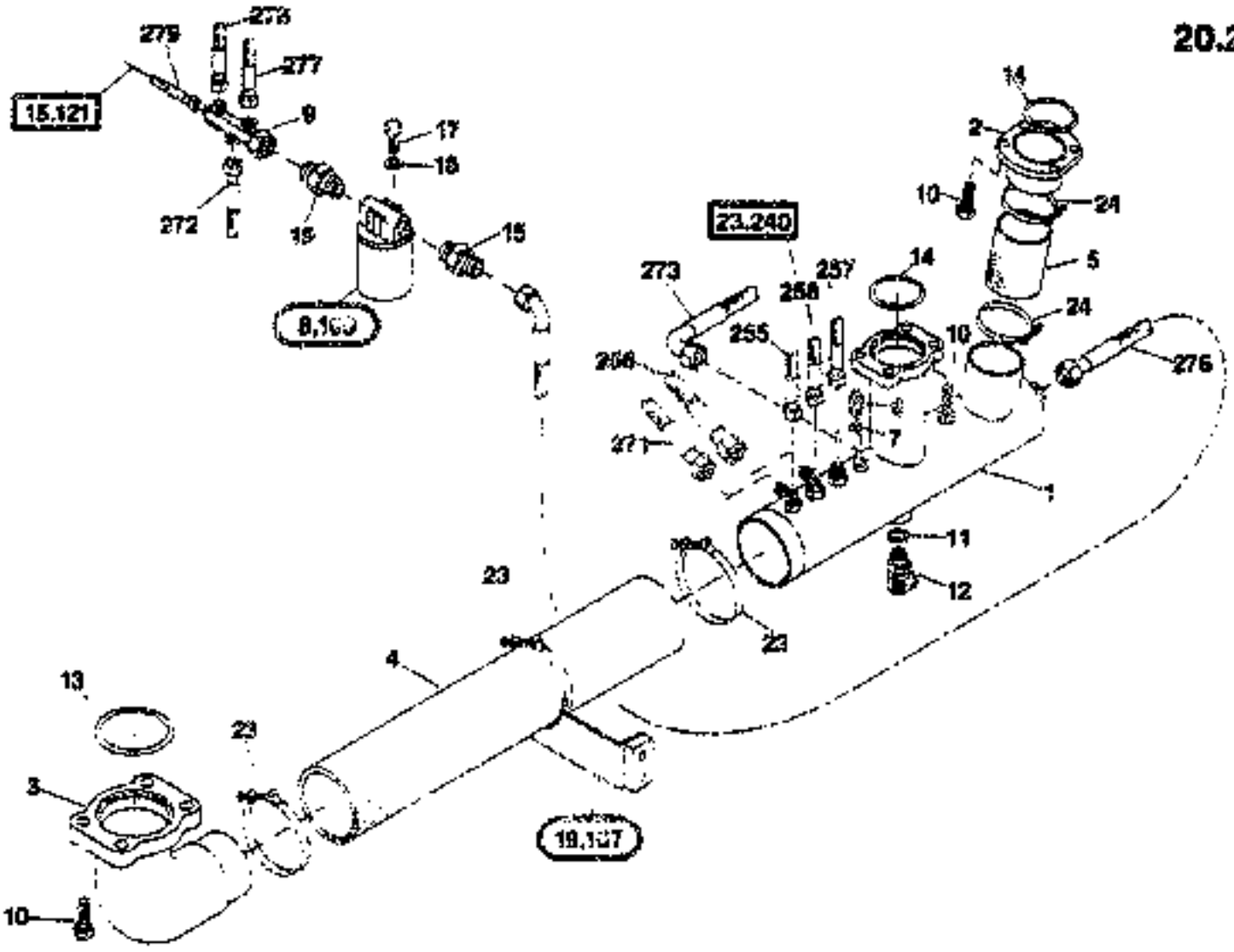

OIL SUCTION SYSTEM

20.260

FIATALLIS

T 2782173 - 002
B 2782173 - 011

FX500 : 106101 - .....

Item	Quan.	ME	Part No.	Description
001	1	00	73170240	LINE
002	1	00	73170241	FLANGE
003	1	00	73172306	ELBOW
004	0,90	13	73170243	SUCTION HOSE
005	0,16	00	73170244	SUCTION HOSE
006	1	00	73170245	TEMP.TRANSMITTER
007	1	00	73170246	SEALING RING
008	1	00	73170247	FILTER
009	1	00	73170248	MANIFOLD
010	12	00	73170014	HEXAGON BOLT
011	1	00	73170249	SEALING RING
012	1	00	73170250	SCREW
013	1	00	73170252	O-RING
014	2	00	73170253	O-RING
015	2	00	73170254	SOCKET
017	4	00	73170178	HEXAGON BOLT
018	8	00	73170160	DISK/WASHER
019	1	00	73170258	MOUNTING

ME: 00 = Stück/piece 13 = m 26 = m² 39 = m³ 43 = kg 50 = l (litre)

1998-09-10

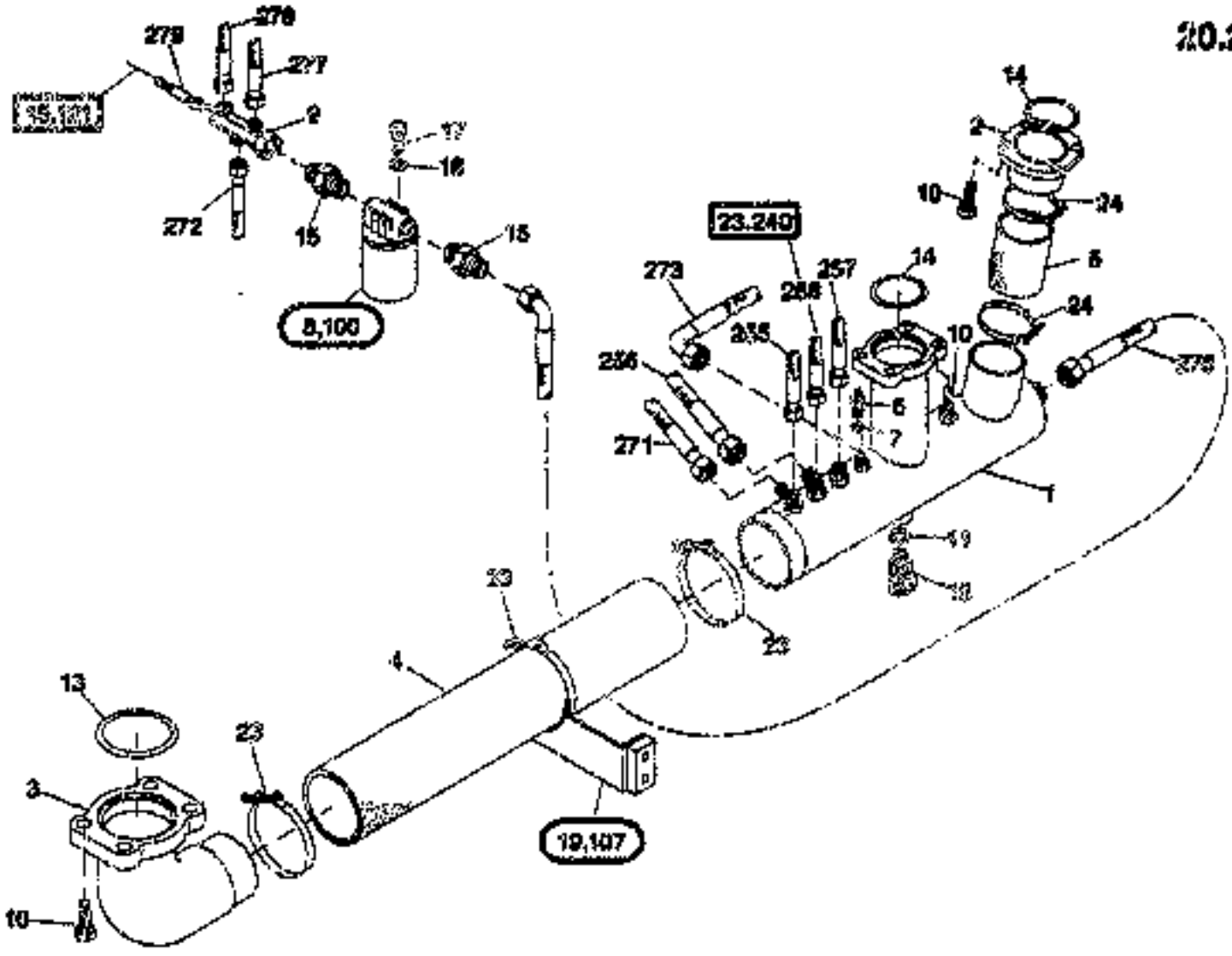

OIL SUCTION SYSTEM

20.260

FX600 / 106101 - .....

T 2762173 - 002
B 2762173 - 011

Item	Quan.	ME	Part No.	Description
023	3	00	73170257	CLIP
024	2	00	73170258	CLIP
100	1	00	73170268	FILTER INSERT
255	1	00	73170270	HOSE
256	1	00	73176321	HOSE
257	1	00	73177673	HOSE
258	1	00	73170271	HOSE
271	1	00	73176322	HOSE
272	1	00	73172203	HOSE
273	1	00	73170262	HOSE
276	1	00	73170262	HOSE
277	1	00	73170264	HOSE
278	1	00	73170263	HOSE
279	1	00	73170265	HOSE

ME: 00 = Stück/piece 10 = m 25 = m² 30 = m³ 40 = kg 50 = l (litre)

1998-09-10

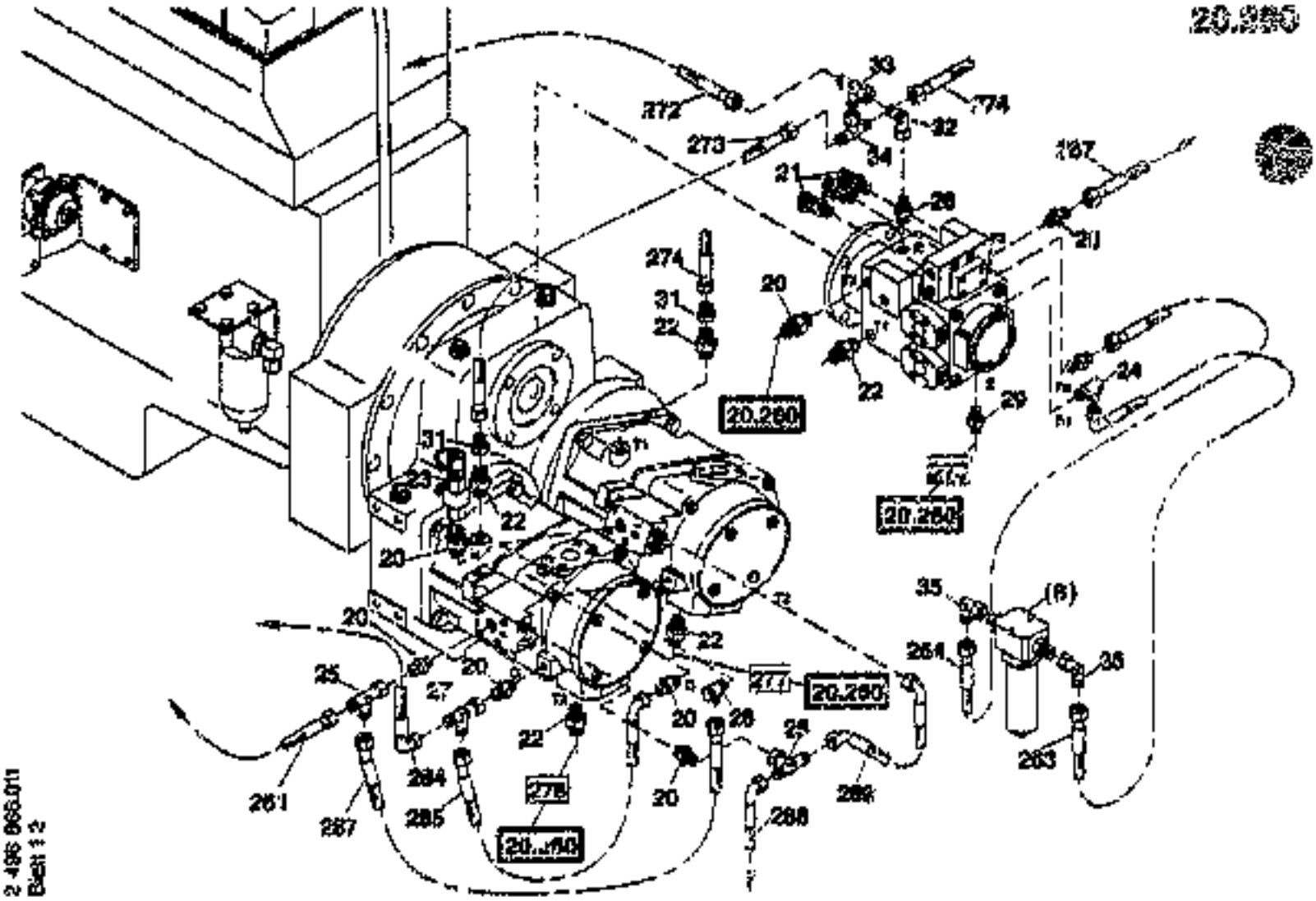
272
273
274
31
22
20
20.260
21
187
24
29
35
(6)
264
36
263
271
20.260
25
27
261
267
284
285
276
20...40
26
286
288
2 495 865.011
Blatt 1 2

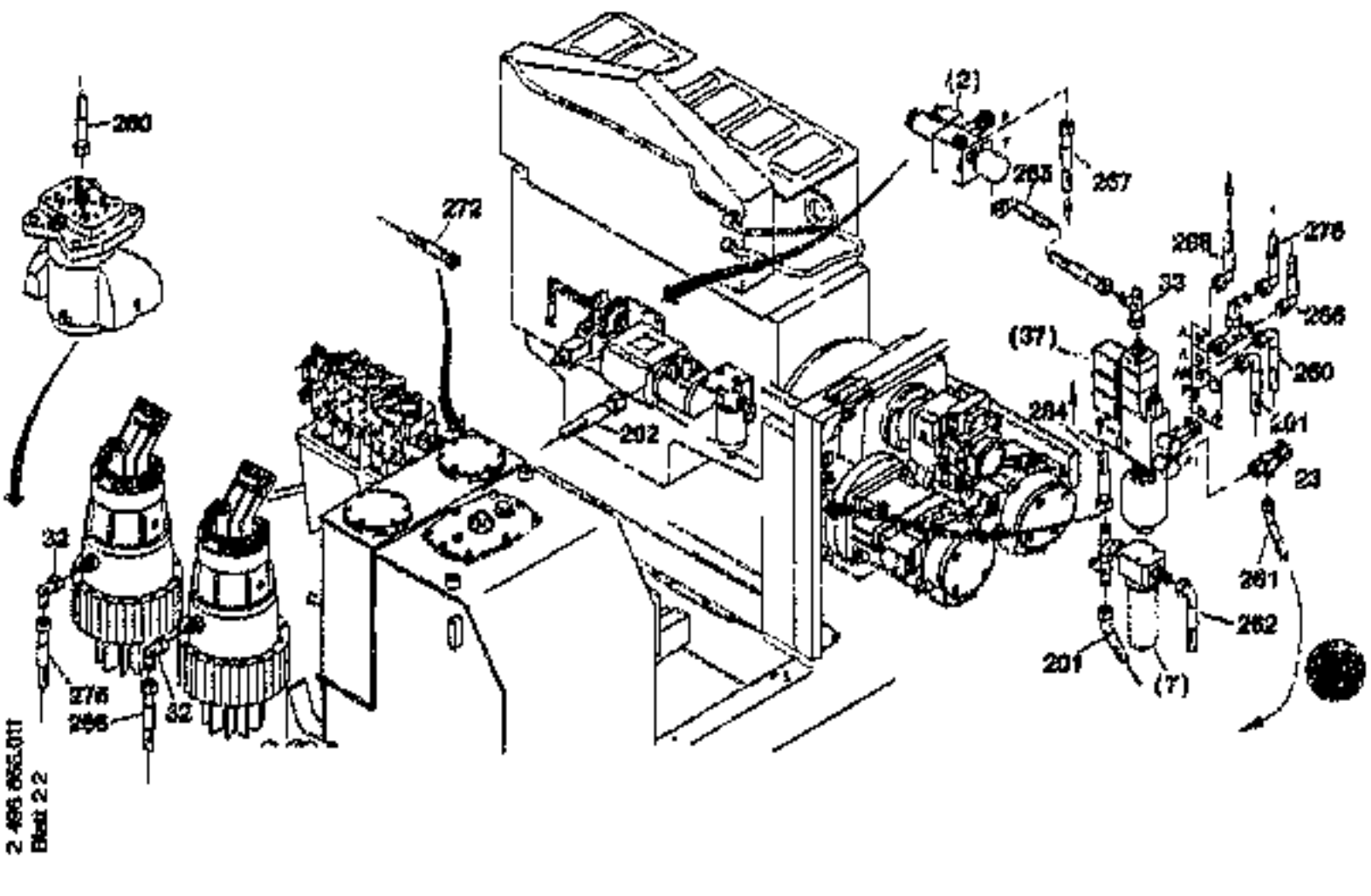
280
272
(2)
265
267
202
(37)
284
268
276
266
260
201
23
261
262
(7)
33
32
276
266

HYDRAULIC SYSTEM PUMP GOVERNING

T 2496966 - 003
B 2496966 - 011

FX600 / 198101 - .....

Item	Quan.	ME	Part No.	Description
002	1	00		23.060 2495629 ADDING VALVE
007	1	00		22.200 2444371 FILTER INSTALL.MATERIAL
008	1	00		22.200 2444372 FILTER INSTALL.MATERIAL
020	5	00	73170385	SOCKET
021	2	00	73170382	TUBE FITTING
022	4	00	73170302	SOCKET
023	3	00	73170383	DISTRIBUTOR
024	1	00	73175323	SWING FIXTURE
025	2	00	73170384	SOCKET
026	2	00	73170385	TUBE FITTING
027	1	00	73170387	SOCKET
028	1	00	73170388	NIPPLE
029	1	00	73170390	SOCKET
031	2	00	73170389	SCREWING
032	3	00	73170391	SOCKET
033	3	00	73170392	SOCKET
034	1	00	73170393	SOCKET
035	2	00	73170394	SOCKET
037	1	00		23.240 2783354 VALVE INTERCONN. INSTALL.MATERIAL
201	1	00	73170396	HOSE
260	1	00	73170406	HOSE
261	1	00	73170396	HOSE
262	1	00	73175324	HOSE
263	1	00	73170399	HOSE
264	1	00	73170399	HOSE
265	1	00	73170400	HOSE
266	1	00	73175325	HOSE
267	1	00	73170402	HOSE
272	1	00	73170403	HOSE
273	1	00	73175326	HOSE
274	1	00	73175326	HOSE
276	1	00	73175325	HOSE
284	1	00	73170407	HOSE
286	1	00	73170408	HOSE
287	1	00	73170409	HOSE
288	1	00	73170410	HOSE
289	1	00	73170411	HOSE

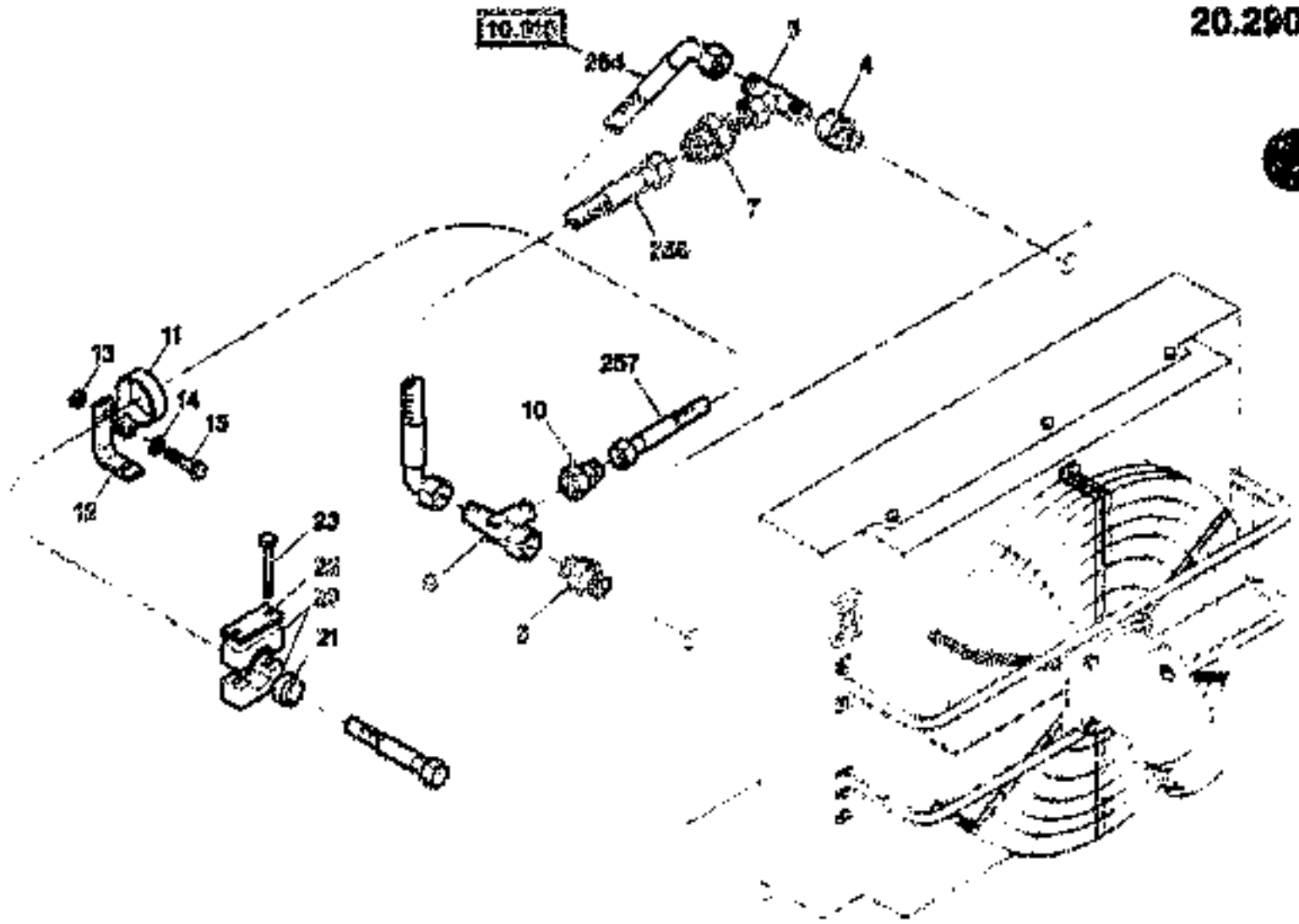

HYDRAULIC SYSTEM OIL COOLER

FX800 / 106101 - .....

T 2496789 - 001
B 2496789 - 010

Item	Quan.	ME	Part No.	Description
003	1	00	73170300	SOCKET
004	1	00	73171560	SOCKET/ADAPTER
005	1	00	73171561	SOCKET
006	1	00	73171562	SOCKET
007	1	00	73171563	VALVE
010	1	00	73175211	SCREWING
011	1	00	73175212	HOSE CLIP
012	1	00	73175213	BRACKET
013	2	00	73170215	HEXAGON NUT
014	2	00	73170213	DISK/WASHER
015	1	00	73170175	HEXAGON BOLT
020	2	00	73170363	CLIP HALF
021	1	00	73170364	INSERT
022	1	00	73170366	COVER PLATE
023	2	00	73175214	HEXAGON BOLT
264	1	00	73175215	HOSE
256	1	00	73175216	HOSE
257	1	00	73175217	HOSE

ME: 00 = Stück/piece 13 = m 25 = m² 39 = m³ 43 = kg 50 = l (litre)

20.310

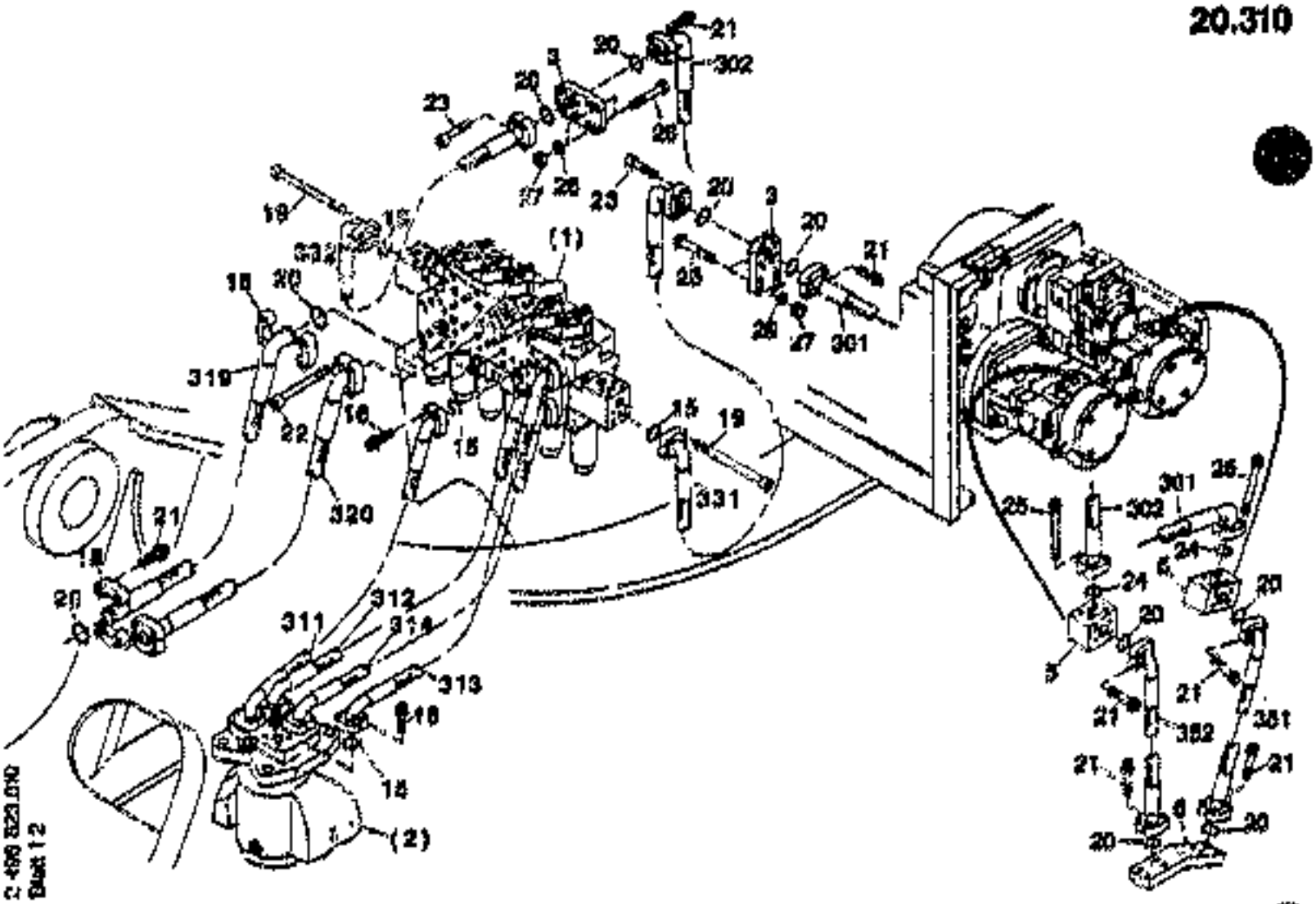

20.310

29.310

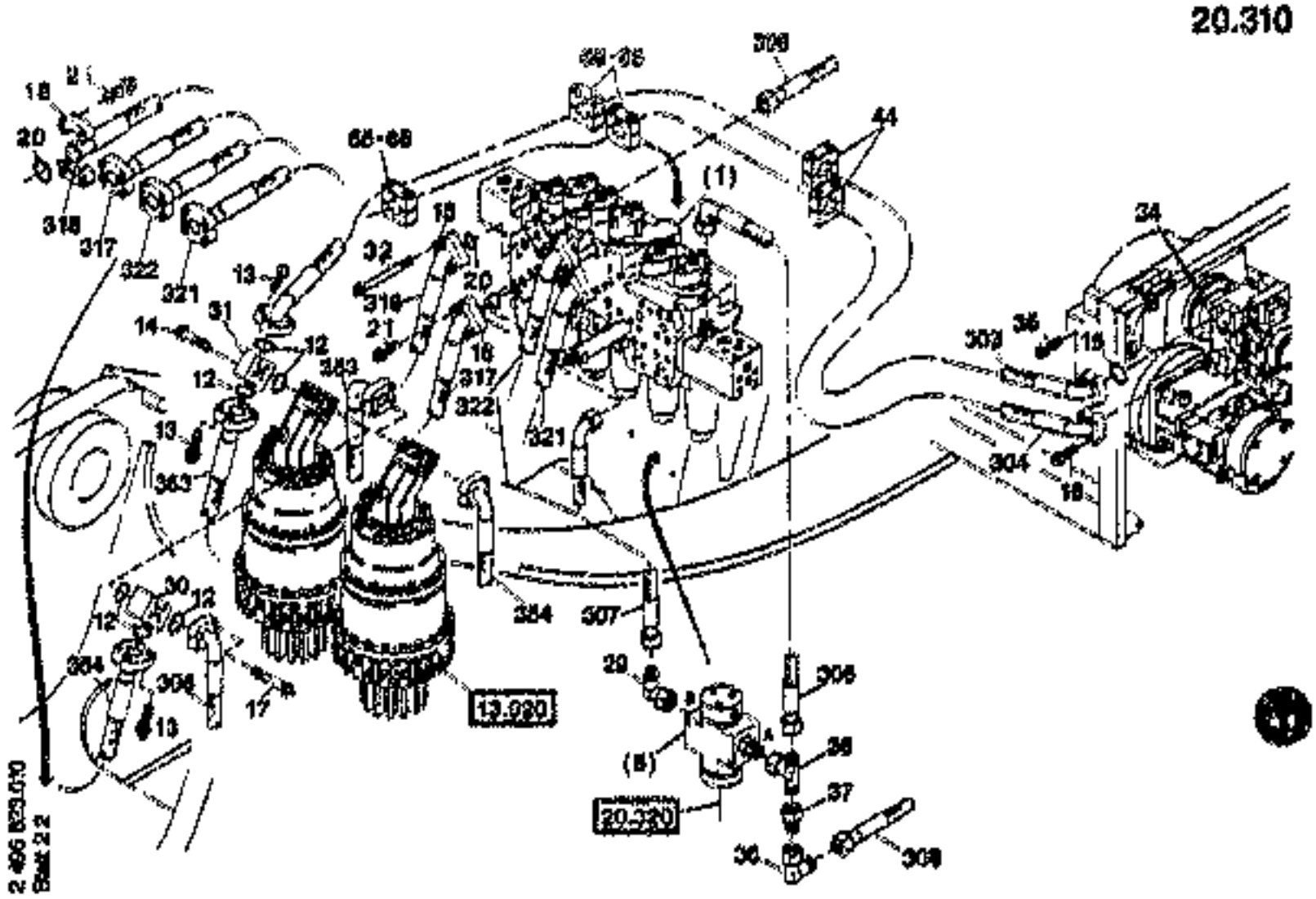

HYDRAULIC SYSTEM HIGH PRESSURE

T 2496823 - 000
B 2496823 - 010

FX800 / 106101 - .....

Item	Quan.	ME	Part No.	Description
001	1	00		23.610 2496814 CONTROL BLOCK INSTALL.MATERIAL
002	1	00		22.600 2496826 ROTOR INSTALL.MATERIAL
003	2	00	73170338	PLATE
005	2	00	73170[illegible]8	FLANGE
006	1	00	73170340	BRACKET
008	1	00		23.160 2252990 CONTROL VALVE INSTALL.MATERIAL
012	8	00	73170341	SEALING RING
013	36	00	73170342	12-POINT SCREW
014	4	00	7317F327	HEXAGON BOLT
016	14	00	73170327	SEALING RING
018	40	00	73170328	12-POINT SCREW
017	4	00	73170343	12-POINT SCREW
018	24	00	73170344	SAE-FLANGE HALF
019	8	00	73170345	CYL.HEAD SCREW
020	20	00	73170346	SEALING RING
021	8	00	73170347	12-POINT SCREW
022	4	00	73170348	CYL.HEAD SCREW
023	8	00	73170349	CYL.HEAD SCREW
024	4	00	73170350	SEALING RING
025	8	00	73170351	12-POINT SCREW
026	4	00	73170352	HEXAGON BOLT
027	4	00	73170162	HEXAGON NUT
028	4	00	73170179	LOCK WASHER
029	1	00	73170353	SOCKET
030	1	00	73176328	FLANGE
031	1	00	73176329	FLANGE
032	8	00	73170356	12-POINT SCREW
034	2	00	73170357	FLANGE
035	8	00	73170360	HEXAGON BOLT
036	1	00	73170361	SOCKET
037	1	00	73176202	SCREWING
038	1	00	73176203	SOCKET
055	6	00	73172322	CLIP
056	6	00	73173826	INSERT
057	6	00	73172324	COVER PLATE
058	10	00	73171346	HEXAGON BOLT
301	1	00	73170367	HOSE
302	1	00	73170368	HOSE
303	1	00	73176330	HOSE
304	1	00	73176331	HOSE
306	1	00	73170370	HOSE
307	1	00	73170371	HOSE
308	1	00	73176204	HOSE
311	1	00	73176372	HOSE

HYDRAULIC SYSTEM HIGH PRESSURE

T 2496823 - 000
B 2496823 - 010

FX300 / 105101 - .....

Item	Quan.	ME	Part No.	Description
312	1	00	73170373	HOSE
313	1	00	73170372	HOSE
314	1	00	73170373	HOSE
317	1	00	73170374	HOSE
318	1	00	73170375	HOSE
319	1	00	73170374	HOSE
320	1	00	73170374	HOSE
321	1	00	73170374	HOSE
322	1	00	73170375	HOSE
331	1	00	73170378	HOSE
332	1	00	73170377	HOSE
351	1	00	73170378	HOSE
352	1	00	73170376	HOSE
353	1	00	73170379	HOSE
354	1	00	73170379	HOSE

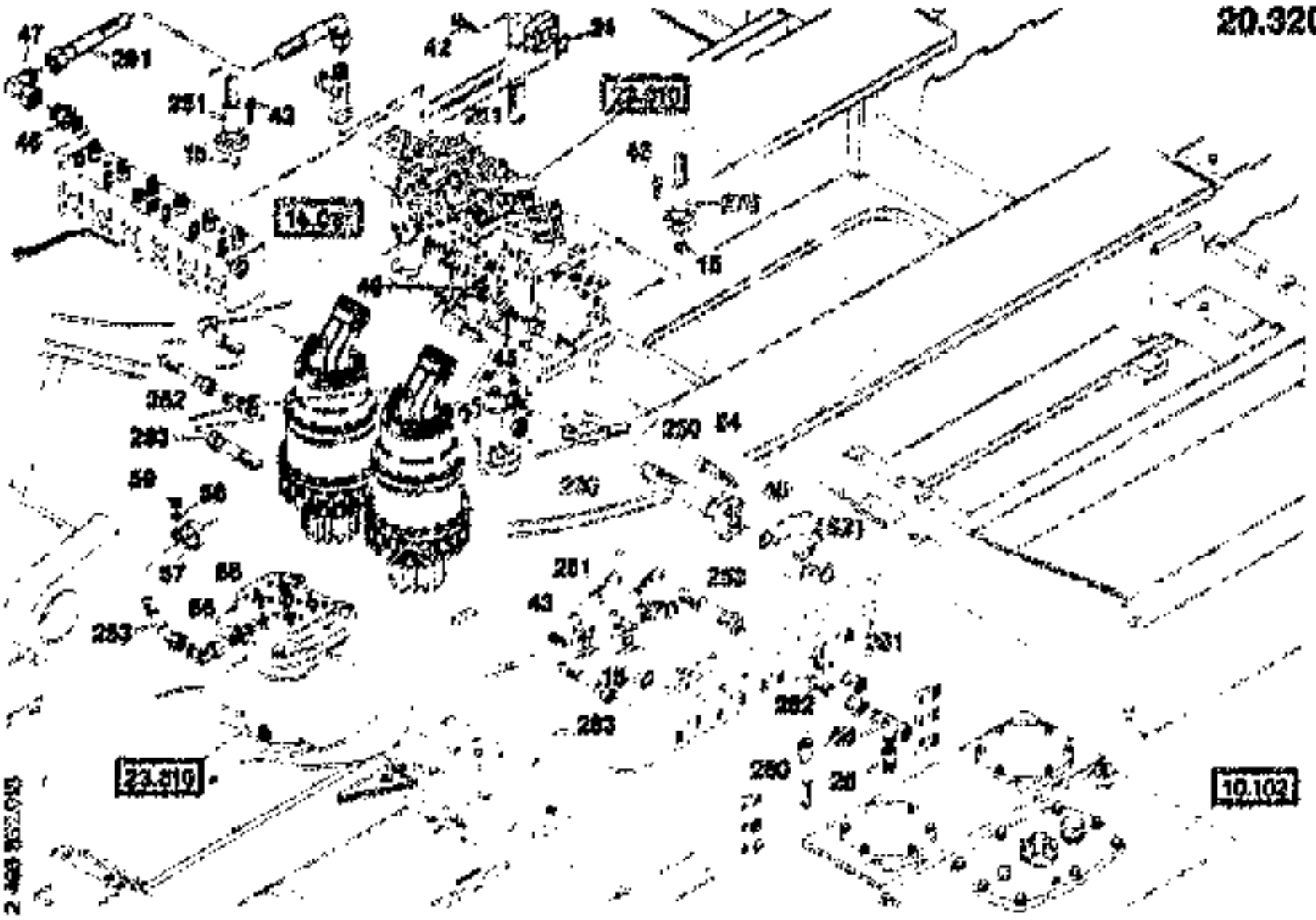

20.320

HYDRAULIC SYSTEM LOW PRESSURE

T 2498832 - 000
B 2498832 - 010

FX800 / 106101 - .....

Item	Quan.	ME	Part No.	Description
015	4	00	73170327	SEALING RING
024	1	00	73170350	SEALING RING
040	1	00	73170466	SEALING RING
042	4	00	73170469	12-POINT SCREW
043	16	00	73170470	12-POINT SCREW
045	1	00	73170467	SCREWING
046	1	00	73170302	SOCKET
047	1	00	73170471	SOCKET
048	1	00	73170473	SOCKET
049	1	00	73170474	SOCKET
052	1	00		23.141 2444879 STOP VALVE MOUNTING PARTS
054	4	00	73170475	CYL.HEAD SCREW
055	1	00	73175232	REDUCTION
056	1	00	73172334	SOCKET
057	1	00	73172336	HOSE CLIP
058	1	00	73175333	DISK/WASHER
059	1	00	73170215	HEXAGON NUT

ME: 00=Stück/piece 10=m 20=m² 30=m³ 40=kg 50=l (litre)

1994-09-10

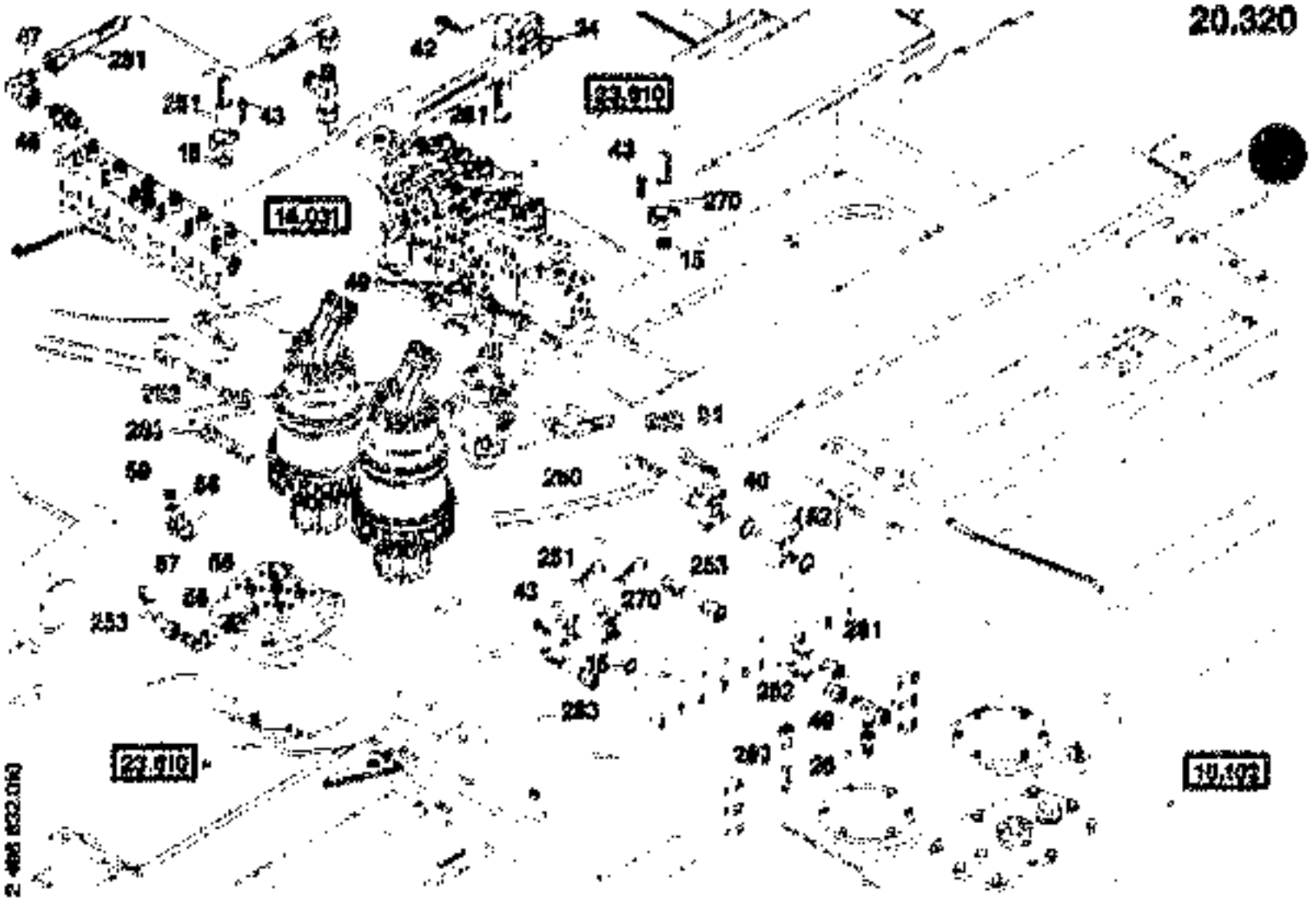

HYDRAULIC SYSTEM LOW PRESSURE

T 2496632 - 000
B 2496632 - 010

FX500 / 106101 - .....

Item	Quan.	ME	Part No.	Description
250	1	00	73170476	HOSE
251	1	00	73170477	HOSE
252	1	00	73170478	HOSE
253	1	00	73170479	HOSE
270	1	00	73170480	HOSE
280	1	00	73170481	HOSE
281	1	00	73170482	HOSE
282	1	00	73170483	HOSE
283	1	00	73170484	HOSE
291	1	00	73170485	HOSE

ME: 00 = Stück/piece 10 = m 25 = m² 30 = m³ 45 = kg 60 = l (ltrs)

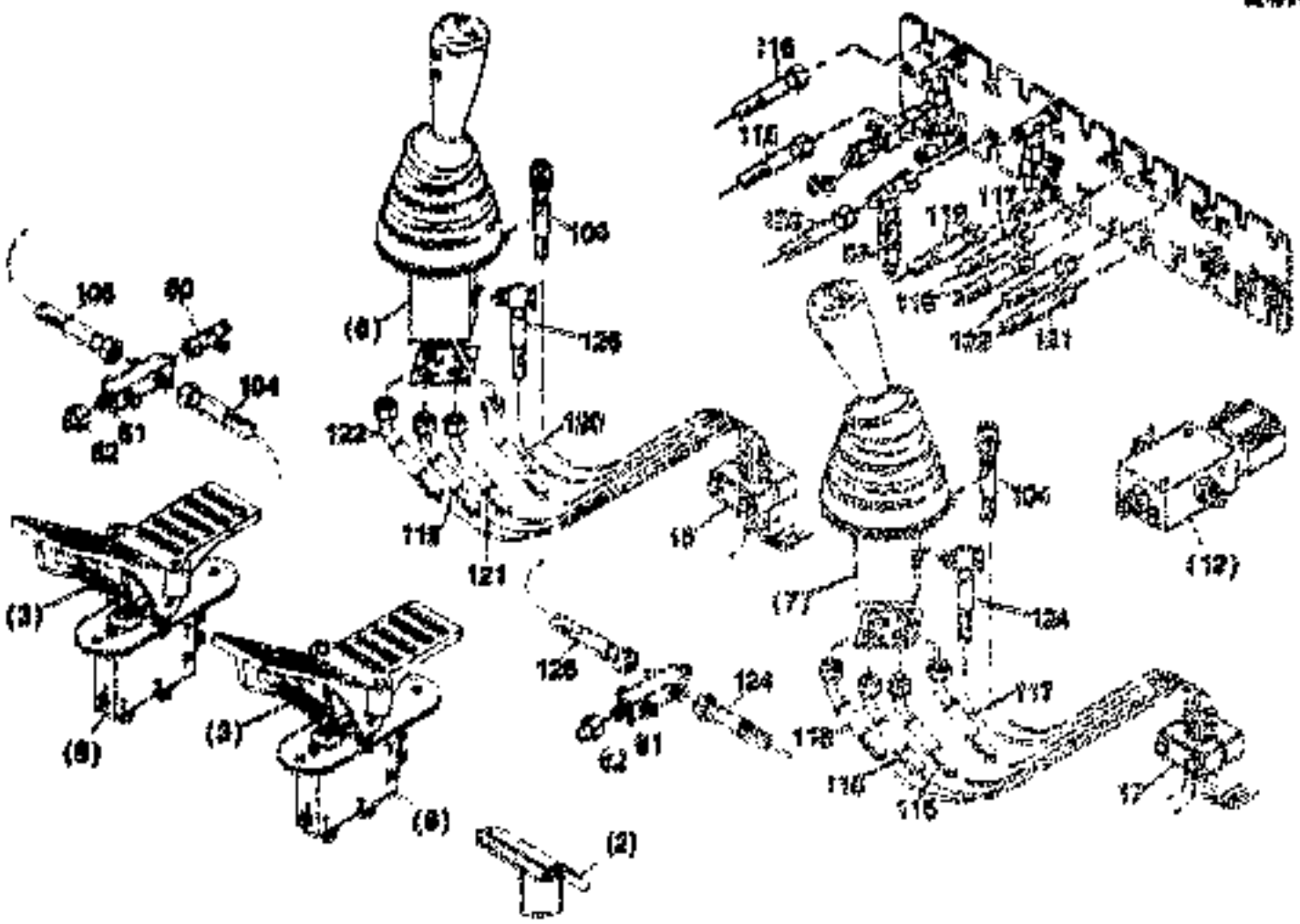

2 495 787 000

20.610

HYDRAULIC SYSTEM SERVO CONTROL

T 2495787 - 000
S 2495787 - 010

FX600 / 106101 - .....

Item	Quan.	ME	Part No.	Description
002	2	00		34.105 2495303 FOOT REST PLATFORM
003	2	00		23.291 2444789 TREADLE VALVE MOUNTING PARTS
006	1	00		23.270 2495571 SERVO VALVE INSTALL.MATERIAL
007	1	00		23.270 2495569 SERVO VALVE INSTALL.MATERIAL
008	2	00		23.290 2495573 TREADLE VALVE INSTALL.MATERIAL
012	1	00		23.230 2495567 SOLENOID VALVE INSTALL.MATERIAL
016	1	00	73171282	CLIP
017	1	00	73171282	CLIP
060	1	00	73170392	SOCKET

ME: 00 = Stück/piece 15 = m 20 = m² 30 = m³ 40 = kg 50 = l (litre)

1998-09-10

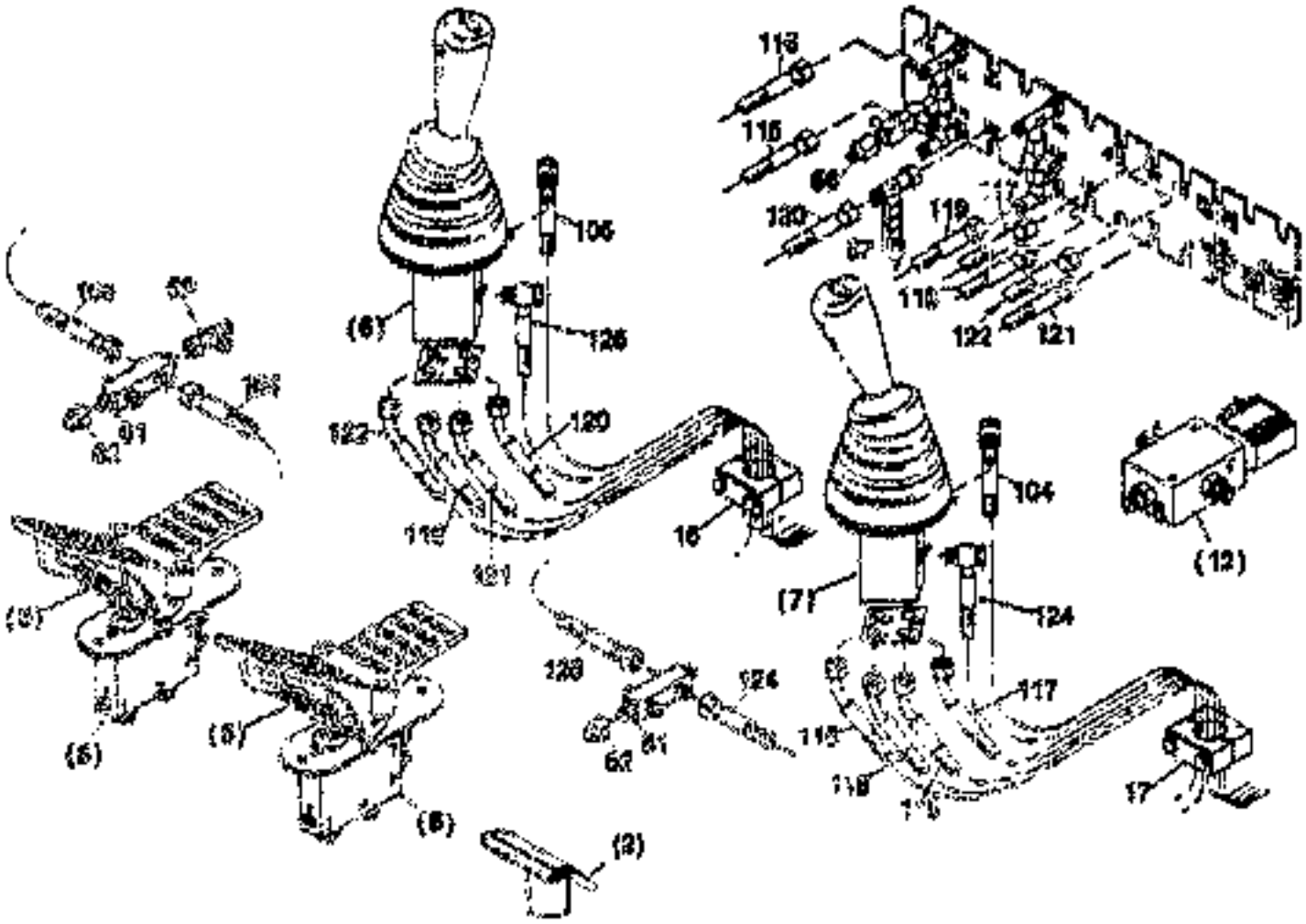

2456797/05

HYDRAULIC SYSTEM SERVO CONTROL

20.610

T 2456797 - 000
B 2456797 - 010

FX800 / 106101 - .....

Item	Quan.	ME	Part No.	Description
061	2	00	73171264	DISTRIBUTOR
062	2	00	73170255	NIPPLE
066	1	00	73171266	PRESSUR.SWITCH
067	1	00	73171265	SWITCH
104	1	00	73171267	HOSE
106	1	00	73171267	HOSE
115	1	00	73171268	HOSE
116	1	00	73171268	HOSE
117	1	00	73171269	HOSE
118	1	00	73171269	HOSE
119	1	00	73171270	HOSE
120	1	00	73171271	HOSE
121	1	00	73171272	HOSE
122	1	00	73171270	HOSE
124	1	00	73176233	HOSE
126	1	00	73176233	HOSE

ME: 00 = Stück/piece 13 = m 25 = m² 39 = m² 43 = kg 50 = l (litre)

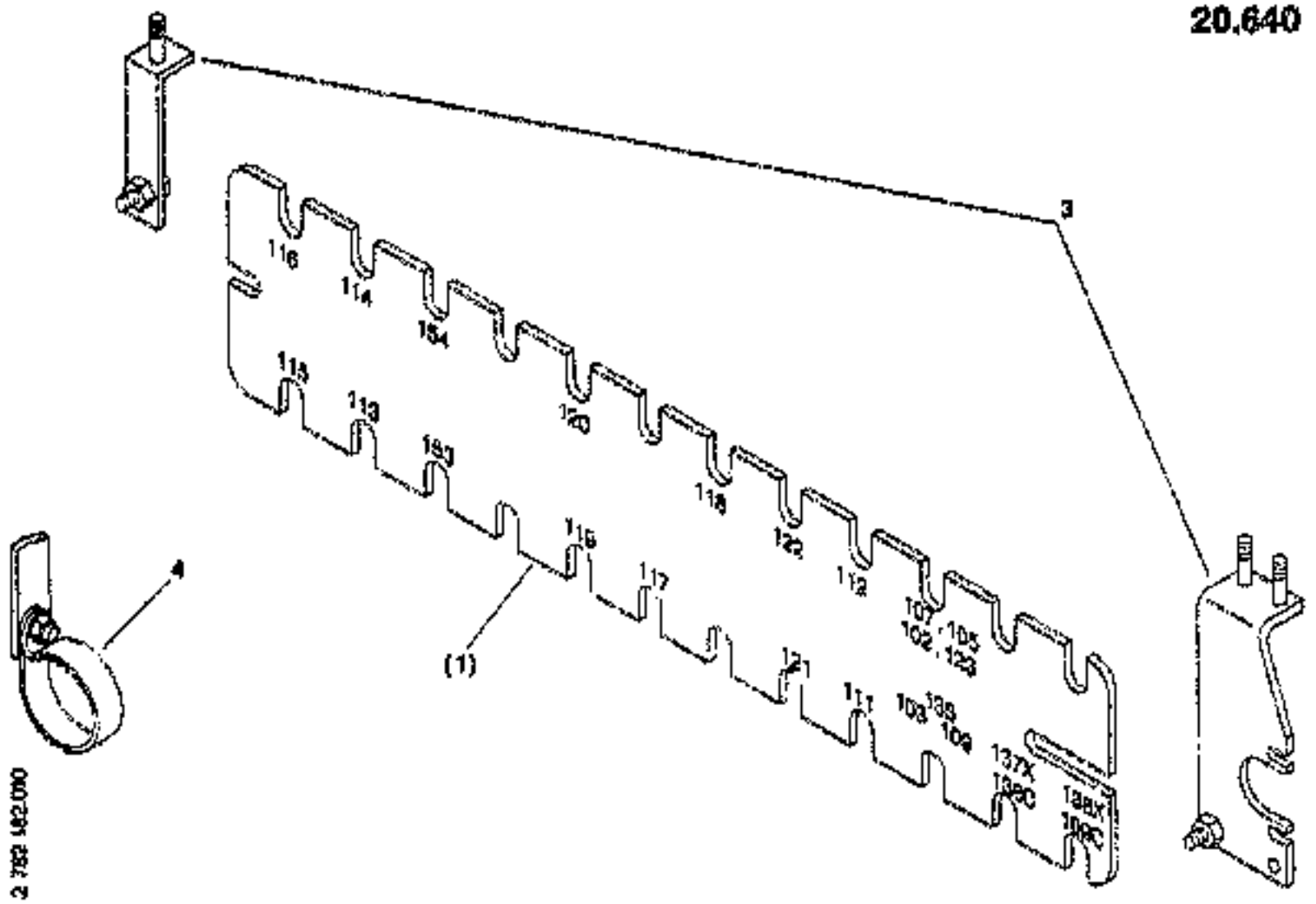

20.640

HYDRAULIC SYSTEM CASCADE INSTALL.MATERIAL

T 2782182 - 000
B 2782182 - 010

FX600 / 106101 - .....

Item	Quan.	ME	Part No.	Description
001	1	00		20.641 2782181 HYDRAULIC SYSTEM CASCADE MOUNTING PARTS
003	1	00	73171273	FASTENING
004	1	00	73171274	FASTENING

ME: 00 = Stück/piece 10 = m 20 = m² 30 = m³ 40 = kg 50 = l (l/l/g)

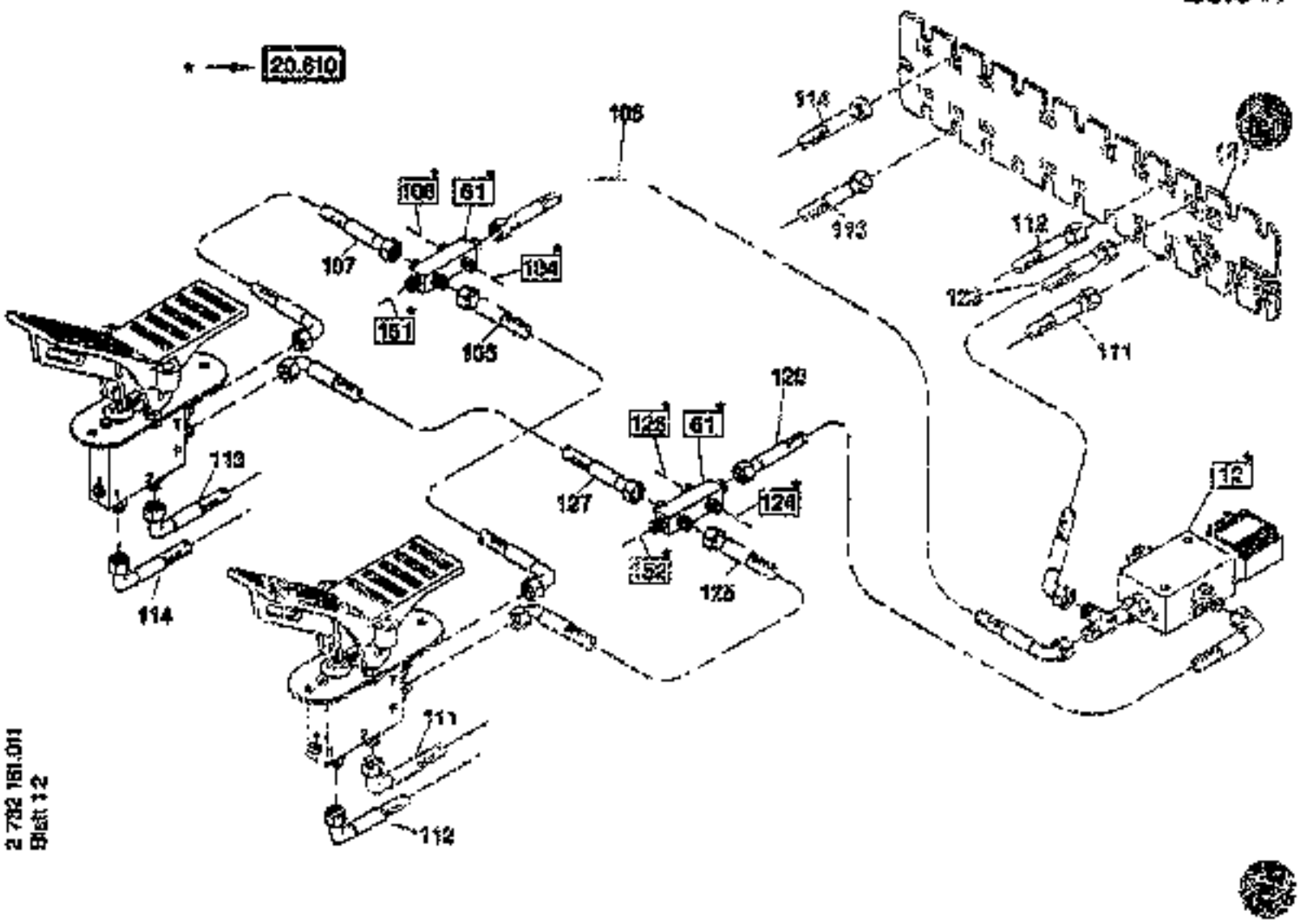
20.610
106
108
61
107
104
151
105
114
113
111
112
127
128
123
61
124
125
52
12
193
112
123
111
2 732 151.011
Blatt 12

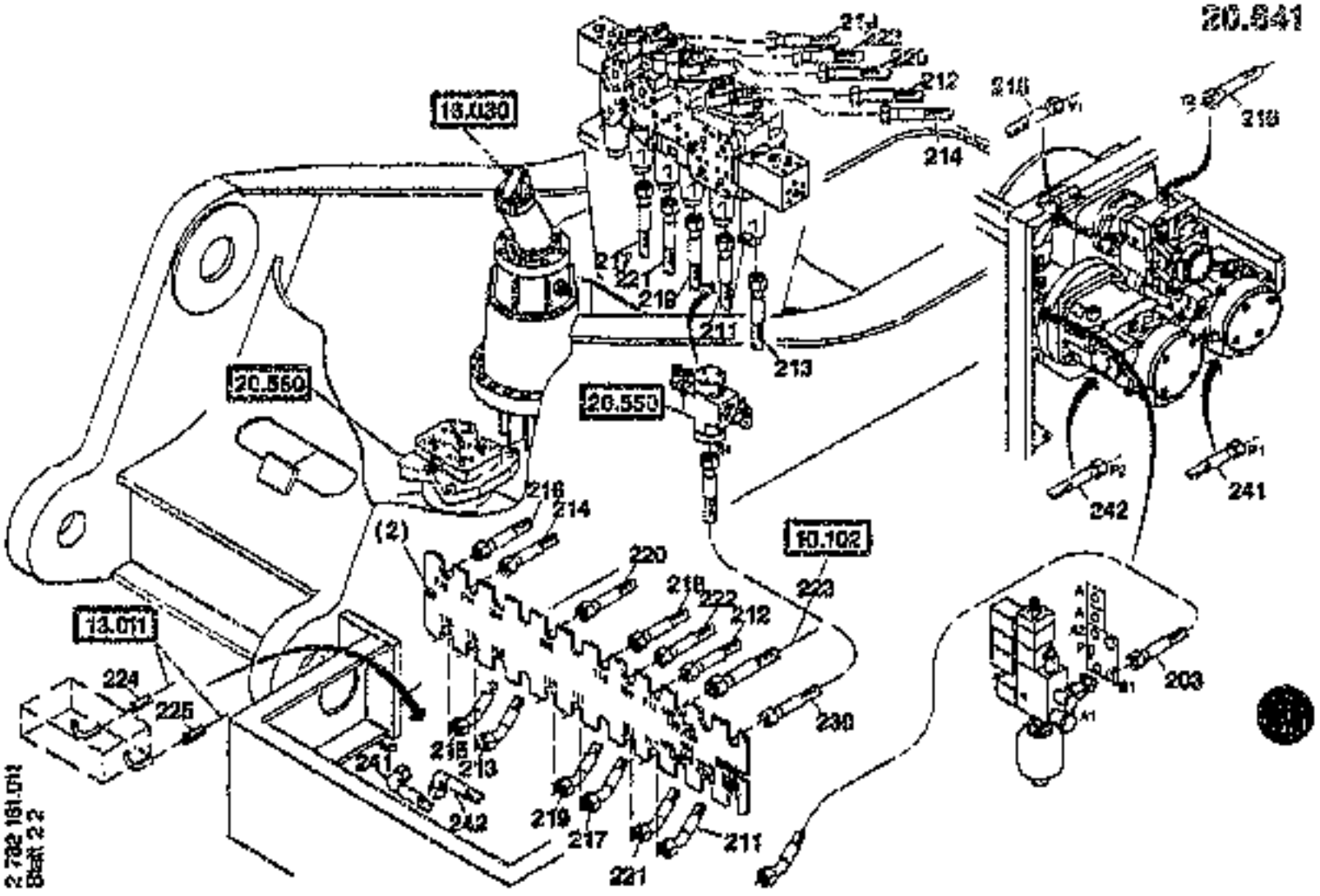
13.030
214
215
216
211
213
20.550
20.550
(2)
216
214
220
218
222
212
223
10.102
13.011
224
225
241
215
213
242
219
217
211
221
230
203
215
216
241
242
2 732 151.011
Blatt 22

HYDRAULIC SYSTEM CASCADE MOUNTING PARTS

T 2782181 - 001
B 2782181 - 011

FX600 / 106101 - .....

Item	Quan.	ME	Part No.	Description
002	1	00		20.842 2490484 HYDRAULIC SYSTEM CASCADE
105	1	00	73171305	HOSE
107	1	00	73171305	HOSE
109	1	00	73171306	HOSE
111	1	00	73171296	HOSE
112	1	00	73171296	HOSE
113	1	00	73171296	HOSE
114	1	00	73171296	HOSE
123	1	00	73171306	HOSE
125	1	00	73171305	HOSE
127	1	00	73171305	HOSE
128	1	00	73171297	HOSE
203	1	00	73171301	HOSE
211	1	00	73171303	HOSE
212	1	00	73171302	HOSE
213	1	00	73171302	HOSE
214	1	00	73171304	HOSE
215	1	00	73171306	HOSE
216	1	00	73171307	HOSE
217	1	00	73171309	HOSE
218	1	00	73171309	HOSE
219	1	00	73171310	HOSE
220	1	00	73171311	HOSE
221	1	00	73171312	HOSE
222	1	00	73171313	HOSE
223	1	00	73171314	HOSE
224	1	00	73176334	HOSE
225	1	00	73175335	HOSE
230	1	00	73171317	HOSE
241	1	00	73171318	HOSE
242	1	00	73171319	HOSE

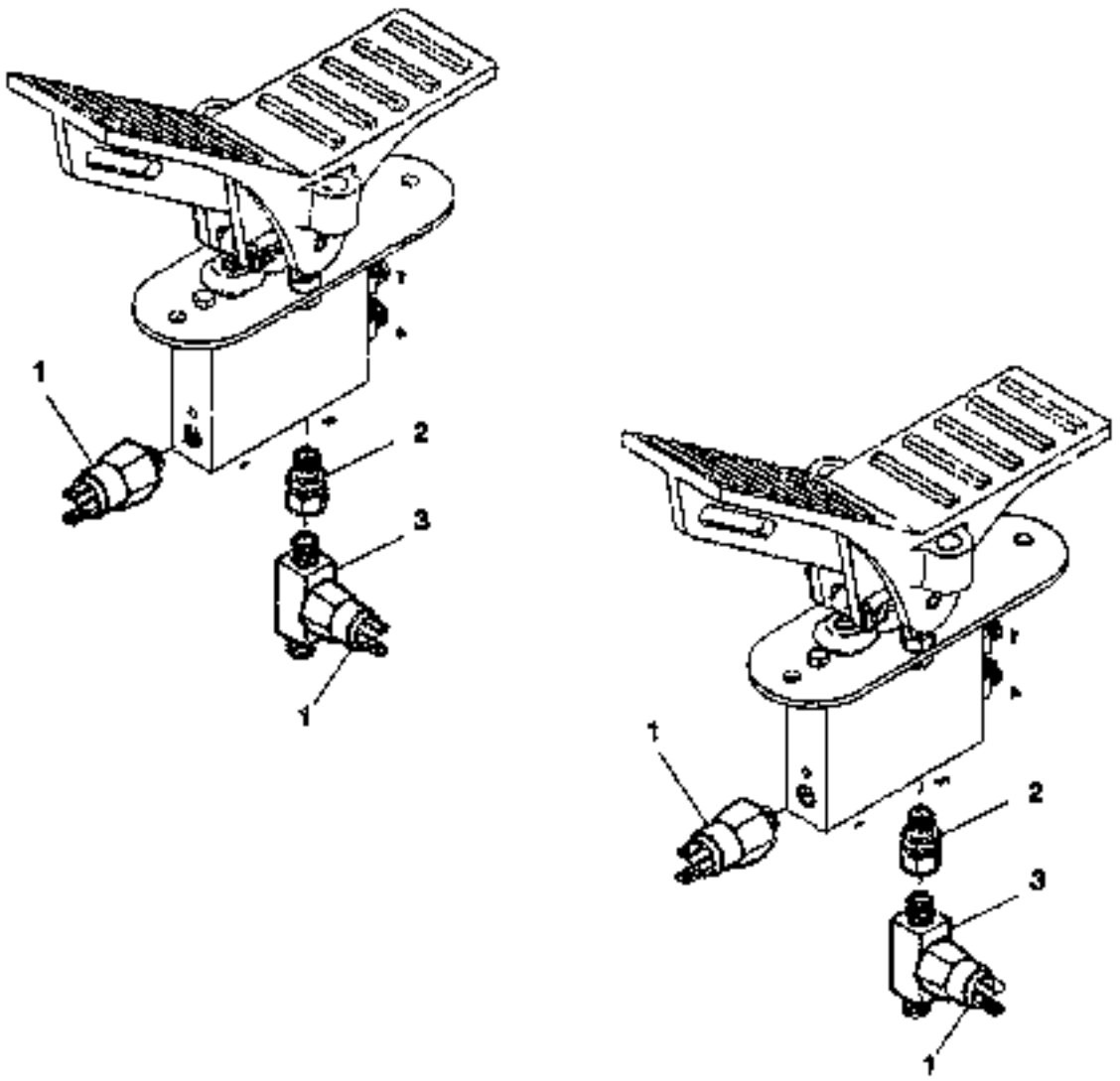

2 782 747.010

HYDRAULIC SYSTEM CASCADE MOUNTING PARTS

T 2782747 - 000
B 2782747 - 010

FX600 / 106101 - .....

Item	Quan.	ME	Part No.	Description
001	4	00	73171266	SWITCH
002	2	00	73176010	SOCKET/ADAPTER
003	2	00	73176011	DISTRIBUTOR

ME: 00 = Stück/piece 13 = m 26 = m² 39 = m³ 43 = kg 50 = l (litre)

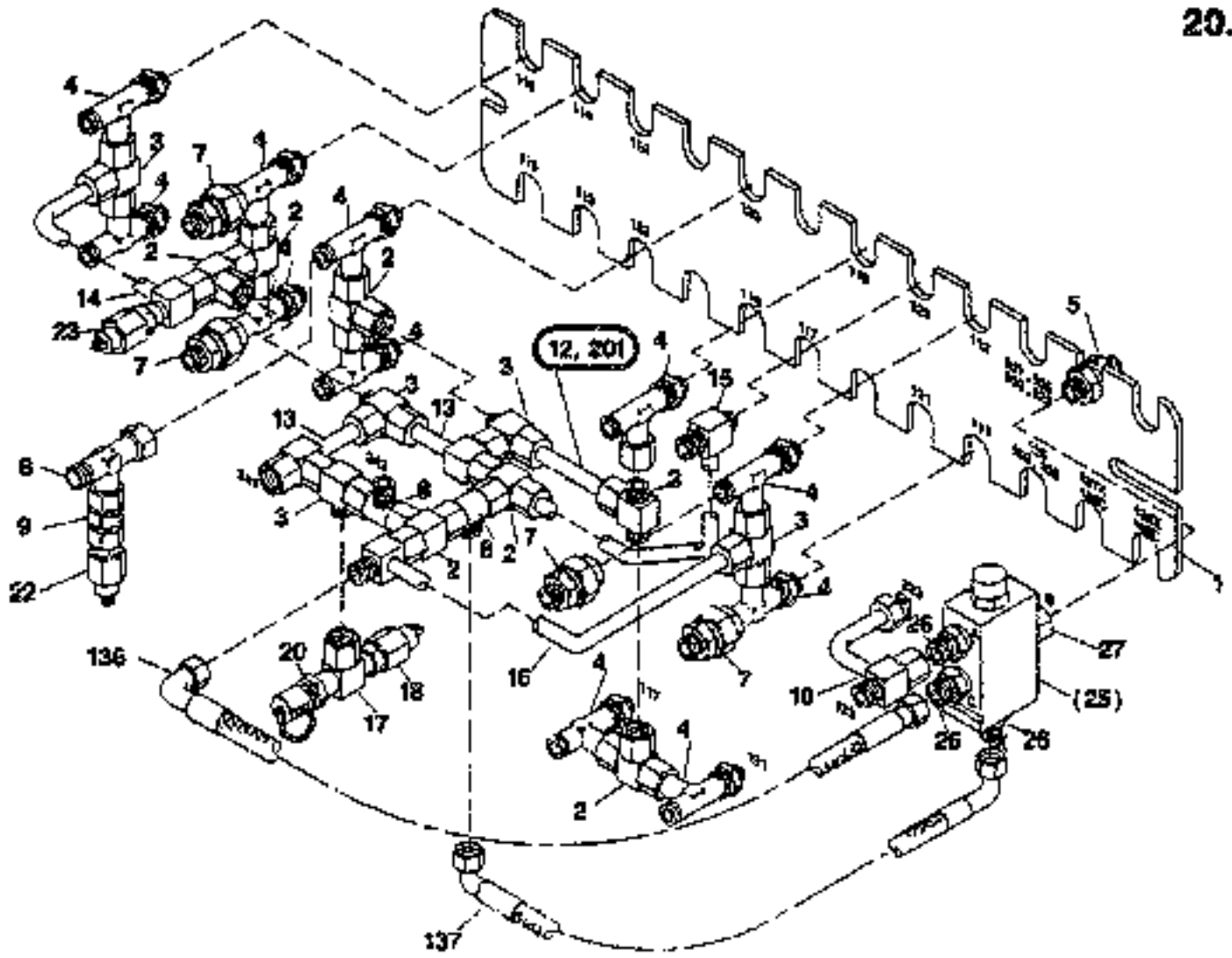

2 496 464.010

HYDRAULIC SYSTEM CASCADE

20.542

FX600 / 106101 - .....

T 2496464 - 000
B 2496464 - 010

Item	Quan.	ME	Part No.	Description
001	1	00	73171275	BRACKET
002	6	00	73171276	VALVE
003	6	00	73171277	VALVE
004	11	00	73171278	TUBE FITTING
005	1	00	73171279	SCREWING
007	4	00	73171280	ONE-WAY RESTRICTOR
008	3	00	73170352	SOCKET
009	1	00	73171281	SOCKET
010	1	00	73171282	PIPE SOCKET
012	1	00	73171283	LINE
013	2	00	73171284	DISTRIBUTOR
014	1	00	73171285	DISTRIBUTOR
015	1	00	73171286	DISTRIBUTOR
016	1	00	73171287	PIPE SOCKET
017	1	00	73171288	SOCKET
018	0	00	73171266	SWITCH
020	1	00	73171289	TUBE FITTING
022	0	00	73171266	SWITCH

ME: 00 = Stück/piece 13 = m 26 = m² 39 = m³ 43 = kg 50 = l (litre)

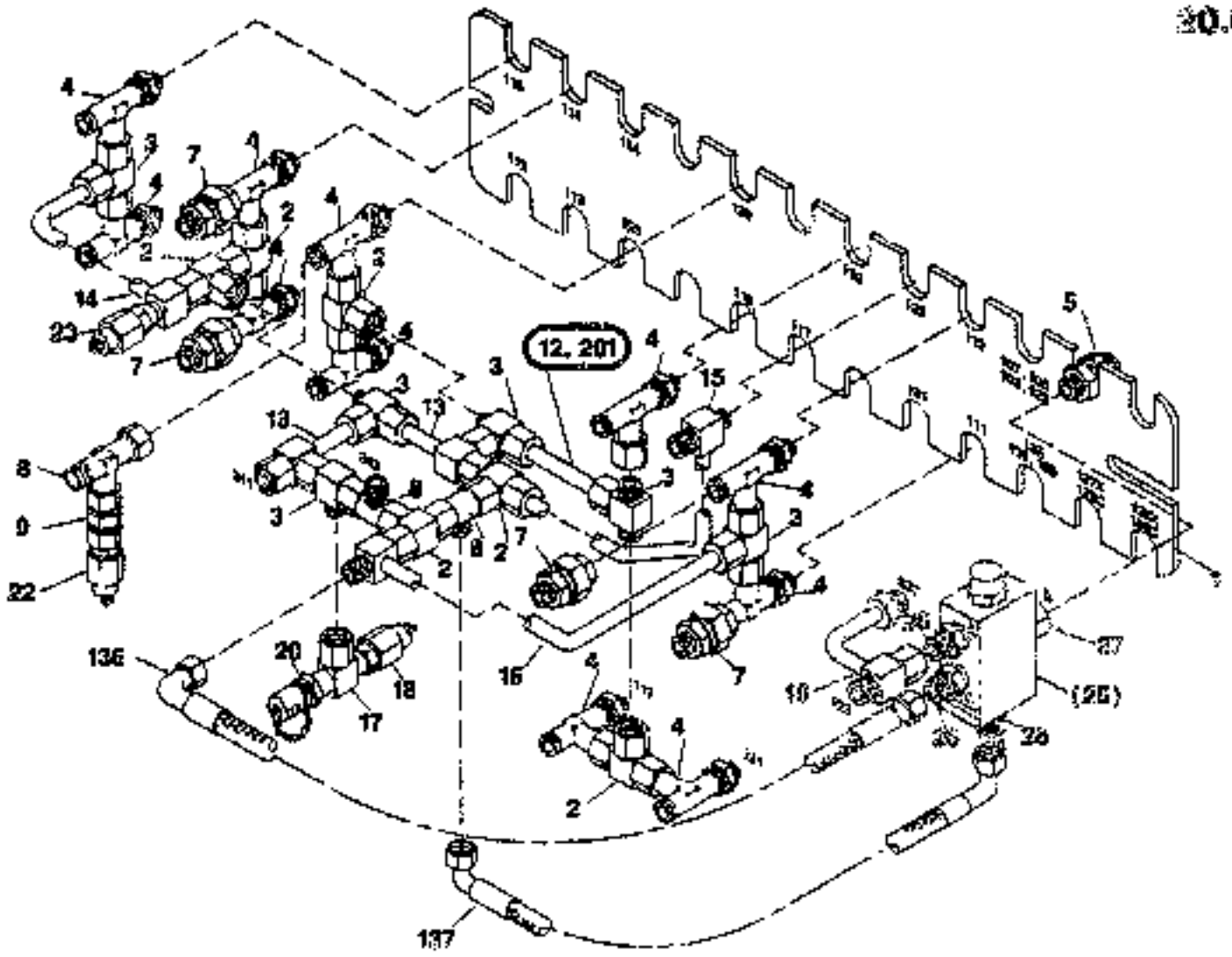

HYDRAULIC SYSTEM CASCADE

20.642

FX600 / 106101 - .....

Y 2496464 - 000
B 2496464 - 010

Item	Quan.	ME	Part No.	Description
023	0	00	73171285	PRESSUR.SWITCH
025	1	00		23.182 2141186 CONTROL VALVE
026	3	00	73170286	SOCKET
027	1	00	73171290	SOCKET/ADAPTER
136	1	00	73171291	HOSE
137	1	00	73171292	HOSE
201	2	00	73171293	ROUND SEALING RING

ME: 00 = Stück/piece 13 = m 26 = m² 39 = m³ 43 = kg 50 = l (litre)

1382-09-10

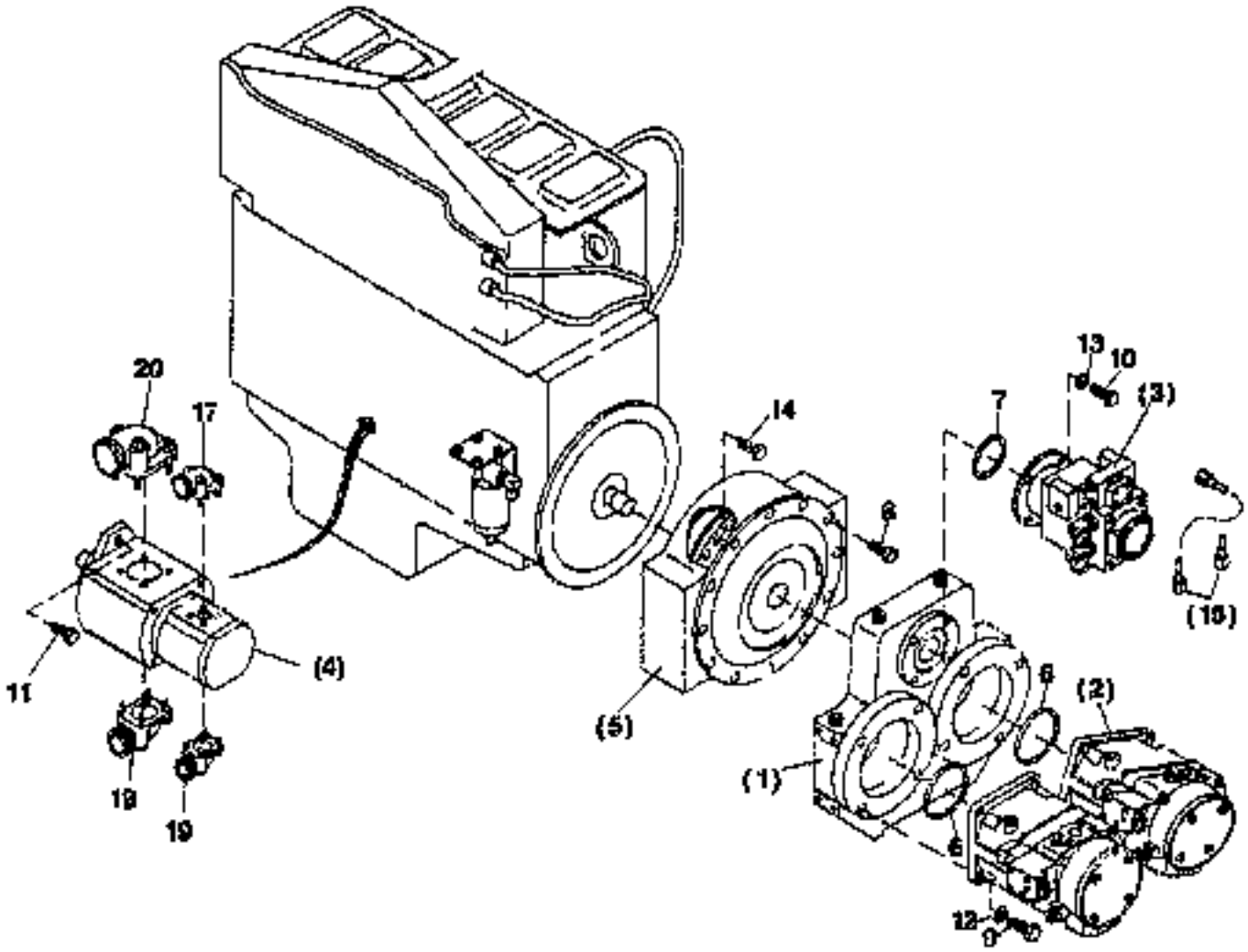

2 496 849.010

PUMP INSTALL.MATERIAL

FX600 / 106101 - .....

T 2496849 - 000
B 2496849 - 010

Item	Quan.	ME	Part No.	Description
001	1	00		**16.042 2443585** PUMP DRIVE
002	2	00		**22.020 2496846** DOUBLEPUMP
003	1	00		**22.030 2496847** SWING PUMP
004	1	00		**22.052 2496849** GEARED PUMP
005	1	00		**17.102 2444158** COUPLING/CLUTCH
006	2	00	**73170711**	O-RING
007	1	00	**73170579**	RDR
008	12	00	**73170712**	HEXAGON BOLT
009	6	00	**73170016**	HEXAGON BOLT
010	4	00	**73170578**	HEXAGON BOLT
011	2	00	**73170713**	HEXAGON BOLT

ME: 00 = Stück/piece 13 = m 26 = m² 39 = m³ 43 = kg 50 = l (litre)

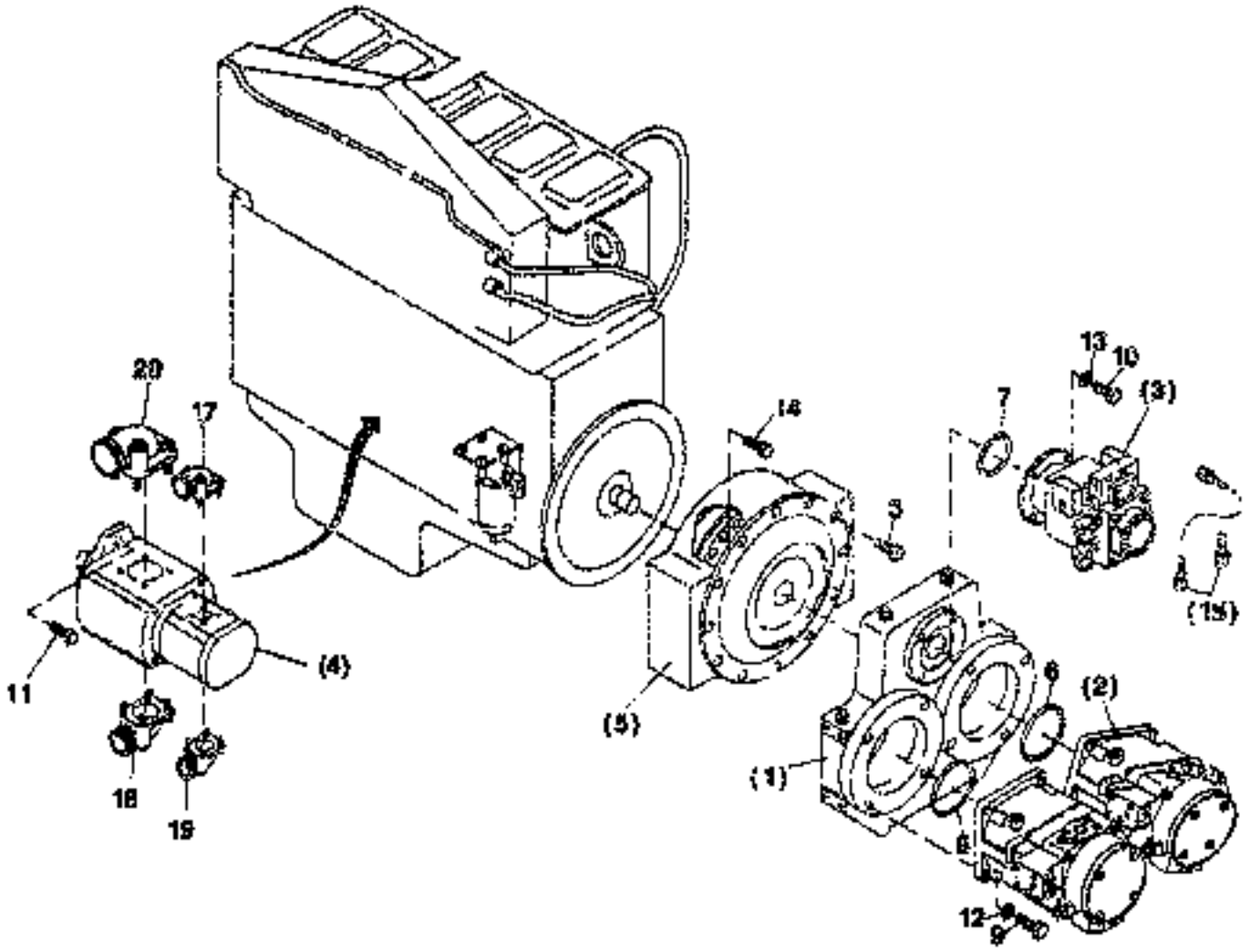

22.010

PUMP INSTALL.MATERIAL

FX600 / 106101 - .....

T 2496849 - 000
B 2496849 - 010

Item	Quan.	ME	Part No.	Description
012	8	00	73170714	DISK/WASHER
013	4	00	73170715	DISK/WASHER
014	24	00	73170717	HEXAGON BOLT
017	1	00	73170720	SCREWING
018	1	00	73170722	SCREWING
019	1	00	73170724	SCREWING
020	1	00	73170726	SCREWING

ME: 00 = Stck/piece 13 = m 26 = m² 39 = m³ 43 = kg 50 = l (litre)

1998-03-10

(1)

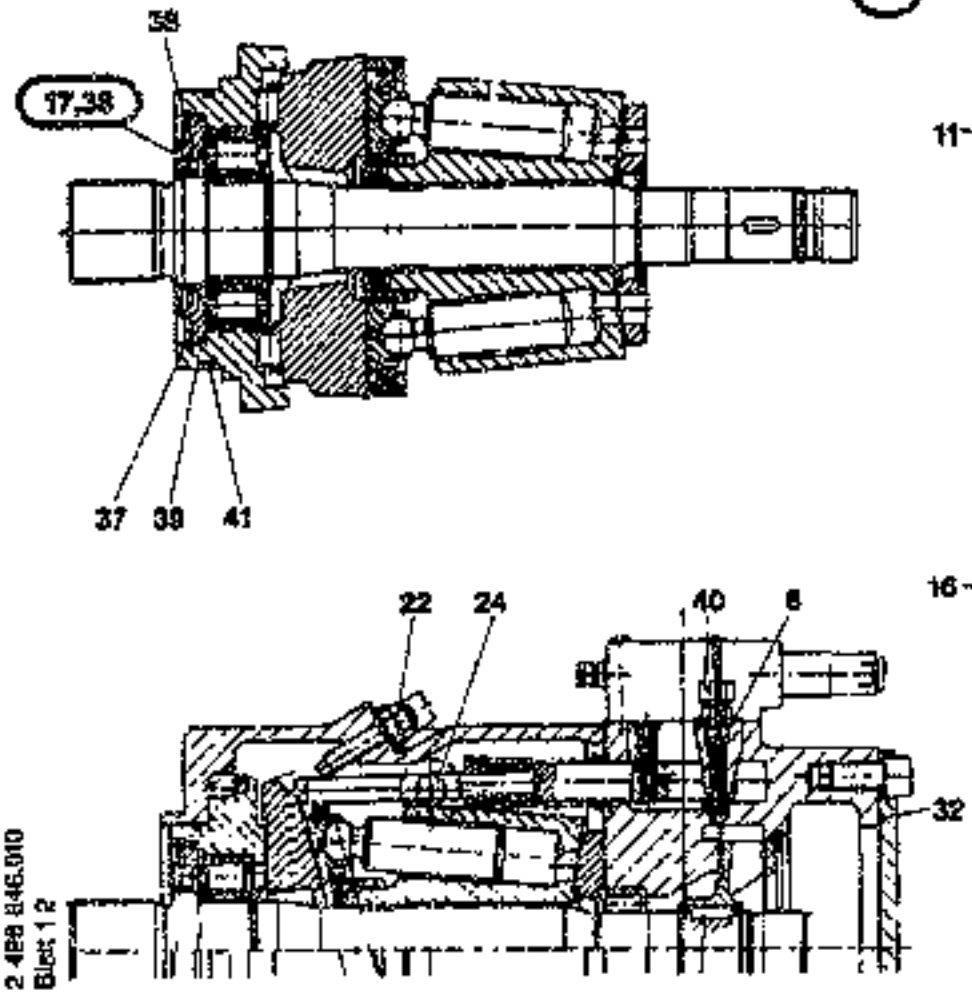
38
17,36
37
39
41
22
24
40
6
32
11
16
2 499 846.010
Blatt 1 2

22.020

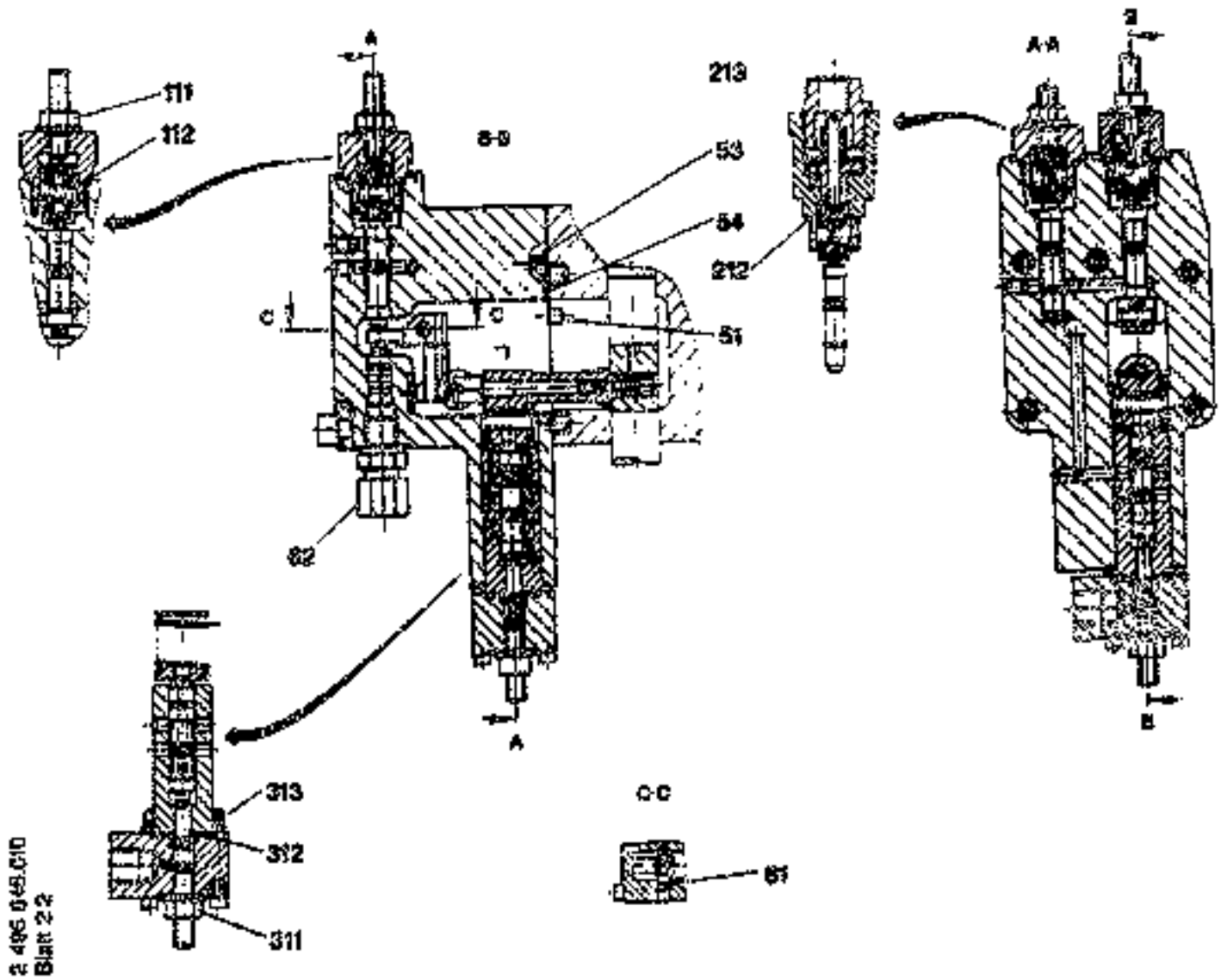
111
112
B-B
53
54
212
213
51
62
A
A-A
B
313
312
311
C-C
61
2 495 845.010
Blatt 2 2

DOUBLEPUMP

FX500 / 105101 - .....

T 2496846 - 000
B 2496846 - 010

Item	Quan.	ME	Part No.	Description
001	1	00	73170732	VARIABLE PUMP
006	1	00	73170733	SHUTTLE VALVE
011	1	00	73170734	O-RING
016	1	00	73170359	SCREW PLUG
017	1	00	73170735	RING
022	2	00	73170736	COLLAR NUT
024	1	00	73170737	SCREW PLUG
032	1	00	73170738	ROUND SEALING RING
037	1	00	73170739	CIRCLIP
038	1	00	73170740	ROT.SHAFT LIP SEAL
039	1	00	73170742	O-RING
040	1	00	73170744	SCREWING
041	1	00	73170748	ROUND SEALING RING
053	3	00	73170749	O-RING
054	1	00	73170750	O-RING
061	1	00	73170751	O-RING
062	1	00	73170359	SCREW PLUG
111	1	00	73170494	HEXAGON NUT
112	1	00	73170753	O-RING
212	1	00	73170753	O-RING
213	1	00	73170755	O-RING
311	1	00	73170494	HEXAGON NUT
312	1	00	73170757	O-RING
313	1	00	73170758	ROUND SEALING RING

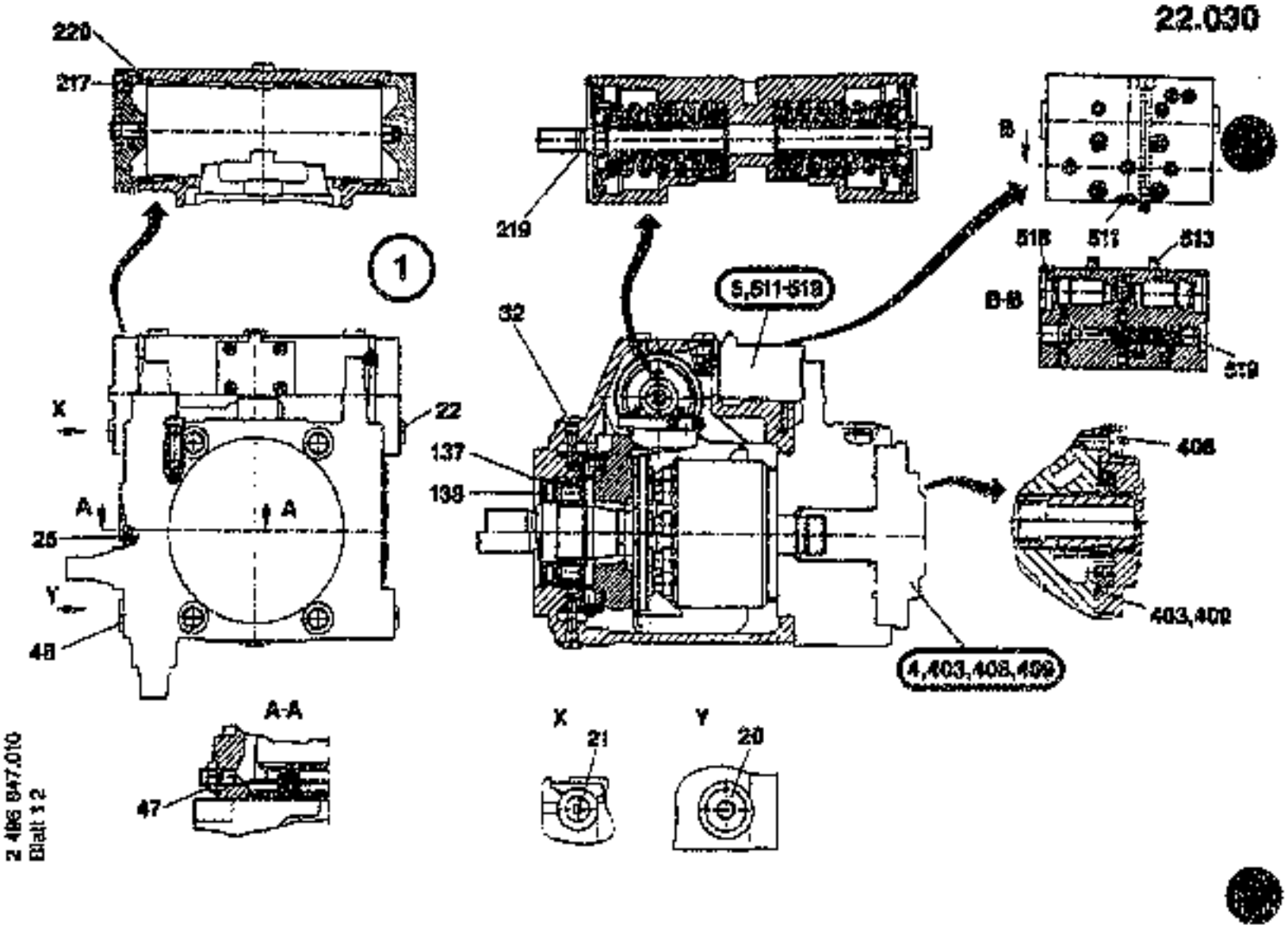

2 486 847.010
Blatt 1 2

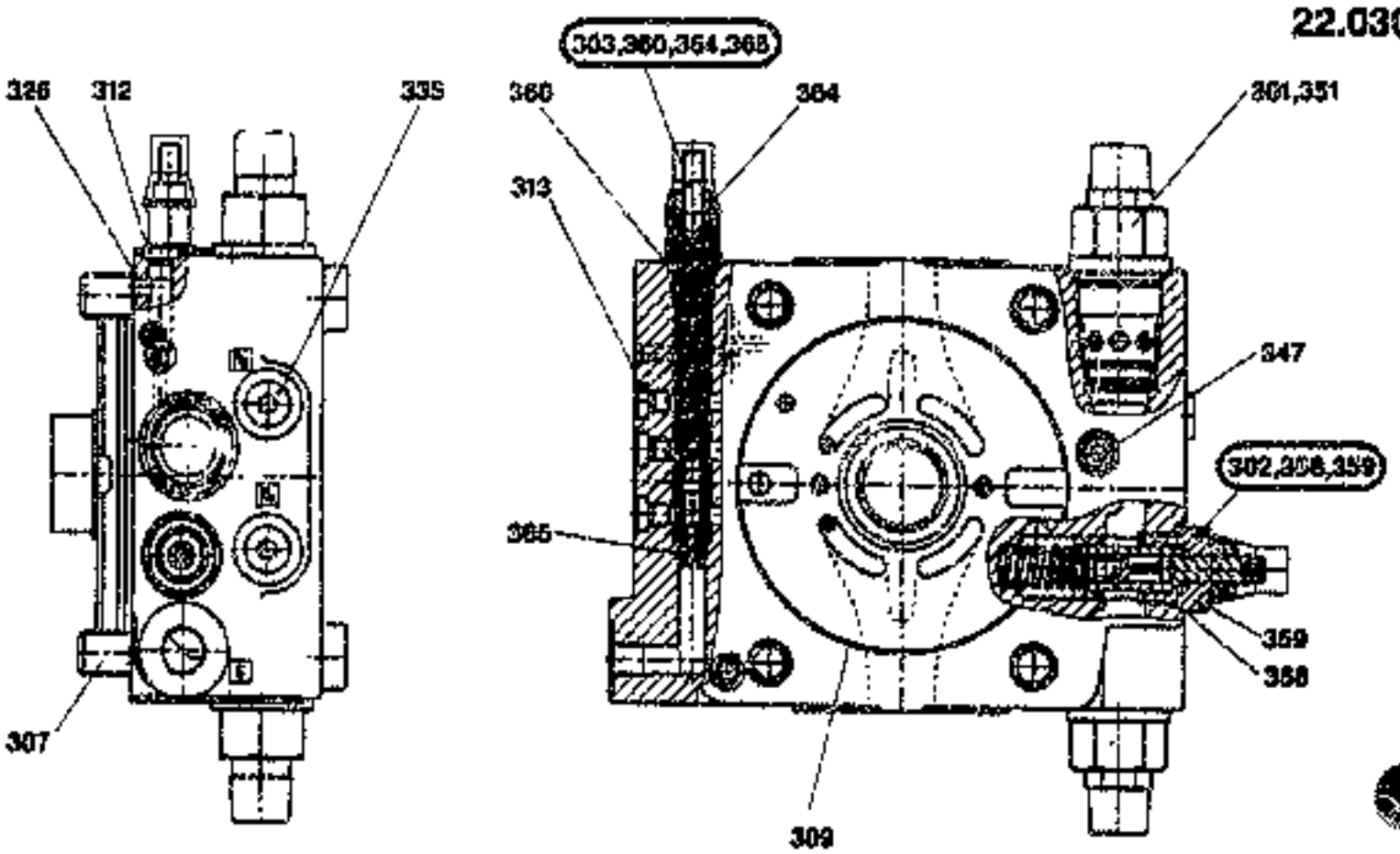

2 486 847.010
Blatt 2 2

SWING PUMP

T 2496847 - 001
B 2496847 - 010

FX600 / 108101 - .....

Item	Quan.	ME	Part No.	Description
001	1	00	73171559	VARIABLE PUMP
004	1	00	73175624	INTERNAL GEAR PUMP
005	1	00	73175628	DRIVING UNIT
020	1	00	73170295	SCREW PLUG
021	1	00	73170359	SCREW PLUG
022	4	00	73171685	SCREW PLUG
025	1	00	73172469	O-RING
032	2	00	73170469	SCREW PLUG
047	1	00	73170543	COLLAR NUT
048	1	00	73172467	SCREW PLUG
137	2	00	73171751	CIRCLIP
138	1	00	73175631	ROT.SHAFT LIP SEAL
217	6	00	73175632	CYL.HEAD SCREW
219	1	00	73174352	O-RING
220	2	00	73175634	O-RING
301	2	00	73175635	PRESS.REL.VALVE
302	1	00	73172587	PRESS.REL.VALVE
303	1	00	73175636	SHUT-OFF VALVE
307	4	00	73172466	CYL.HEAD SCREW
309	1	00	73175637	O-RING
312	1	00	73170409	SCREW PLUG
313	3	00	73171633	SCREW PLUG
326	2	00	73170495	O-RING
335	2	00	73171686	SCREW PLUG
347	2	00	73170531	O-RING
351	1	00	73173632	GASKET SET
358	1	00	73170755	O-RING
359	1	00	73172396	NUT
360	1	00	73172470	O-RING
364	1	00	73170494	HEXAGON NUT
366	1	00	75172471	O-RING
403	1	00	73175627	O-RING
406	4	00	73170766	CYL.HEAD SCREW
409	1	00	73175627	O-RING
511	1	00	73170743	O-RING
513	4	00	73170228	CYL.HEAD SCREW
518	4	00	73172467	SCREW PLUG
519	1	00	73171595	SCREW PLUG

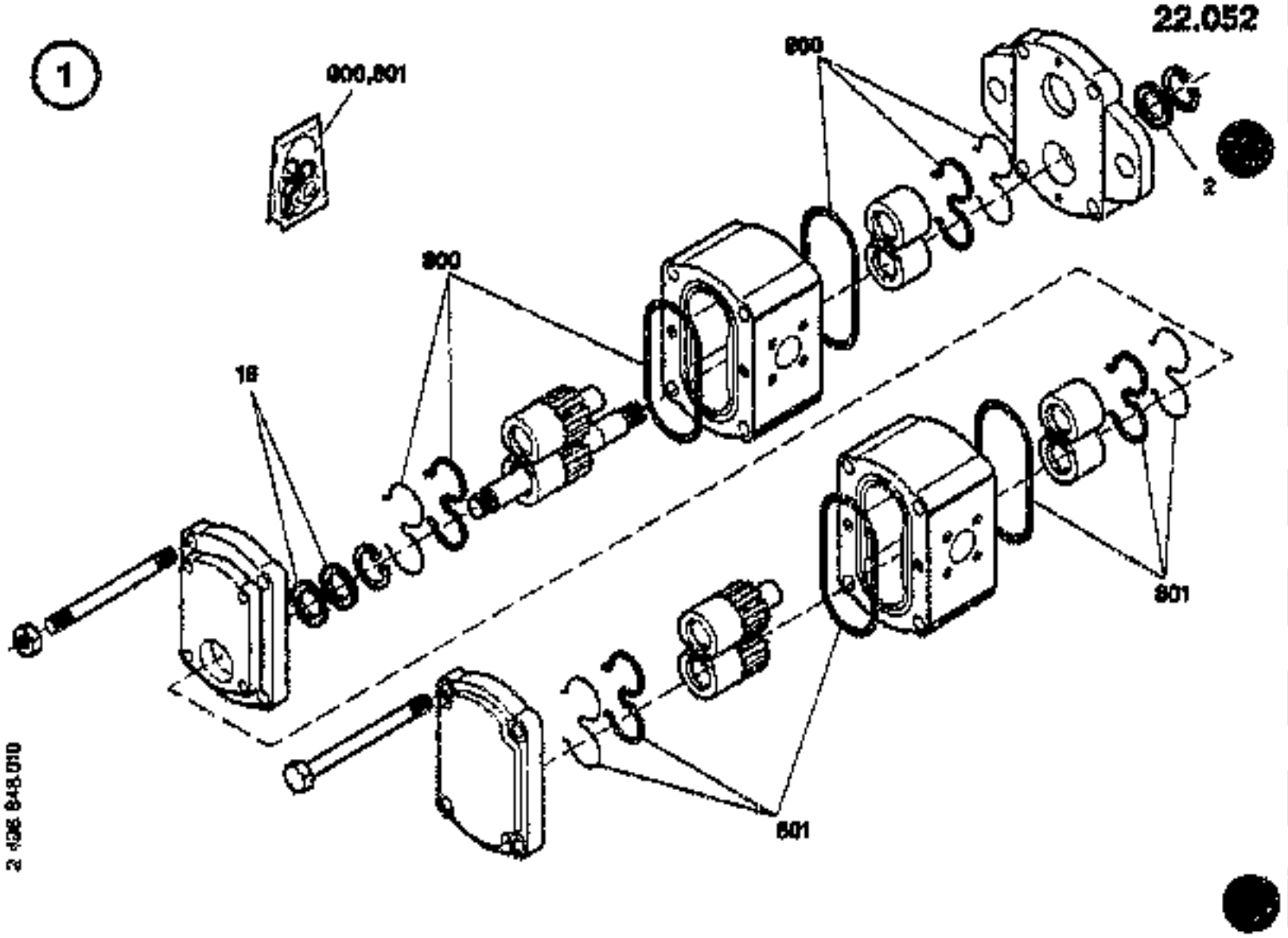

GEARED PUMP

FX600 / 106101 - .....

T 2436848 - 001
B 2436848 - 010

Item	Quan.	ME	Part No.	Description
001	1	00	73171594	GEARED PUMP
002	1	00	73175606	ROT.SHAFT LIP SEAL
016	2	00	73175240	ROTARY SHAFT SEAL
800	1	00	73175241	SET OF PIST. RINGS
801	1	00	73175395	SET OF PIST. RINGS

ME: 00 = Stück/piece 13 = m 28 = m² 39 = m³ 43 = kg 50 = l (litre)

1996-09-10

2 496 868.010
Stell 2:2

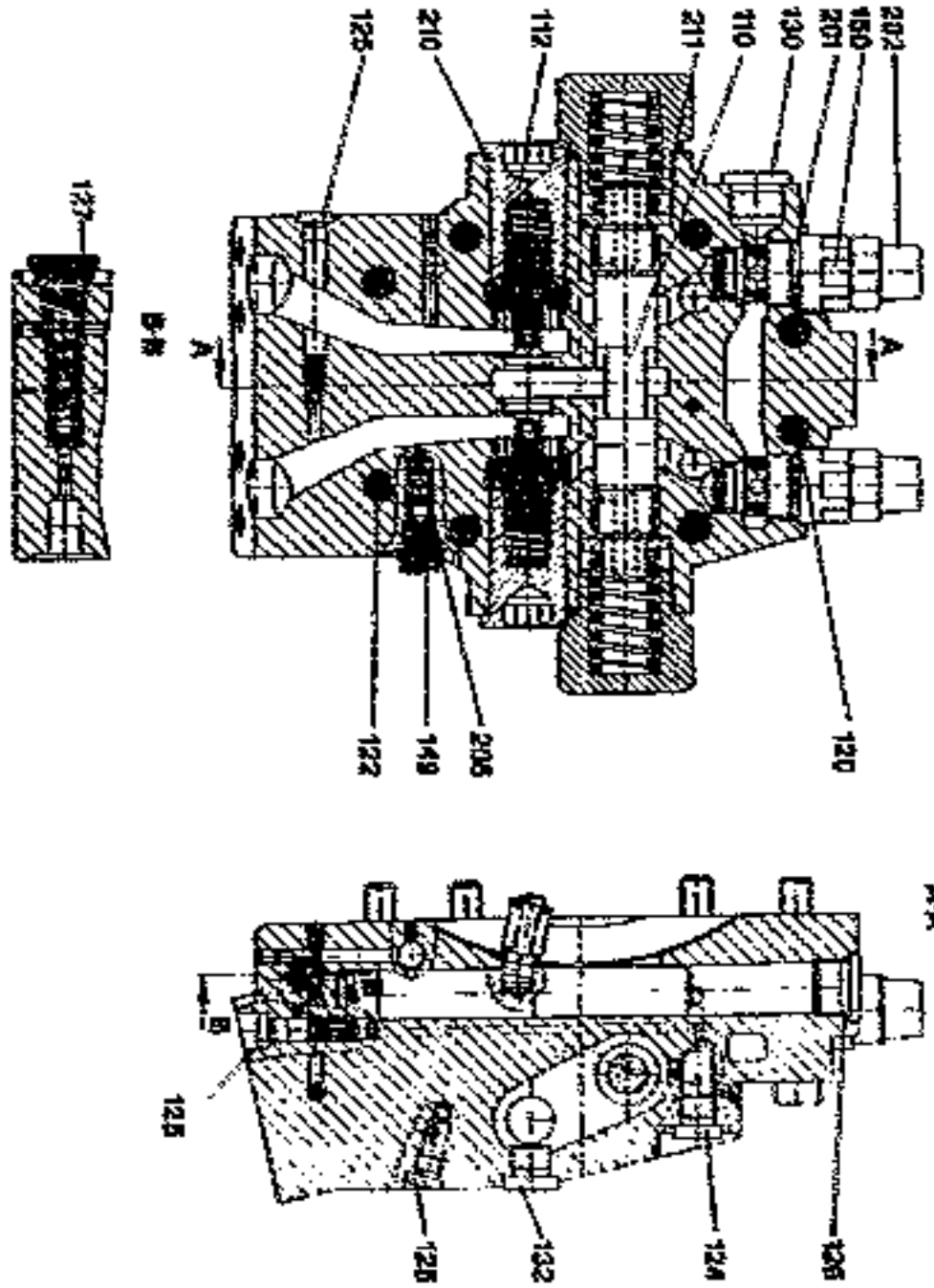

2 496 868.010
Stell 1:2

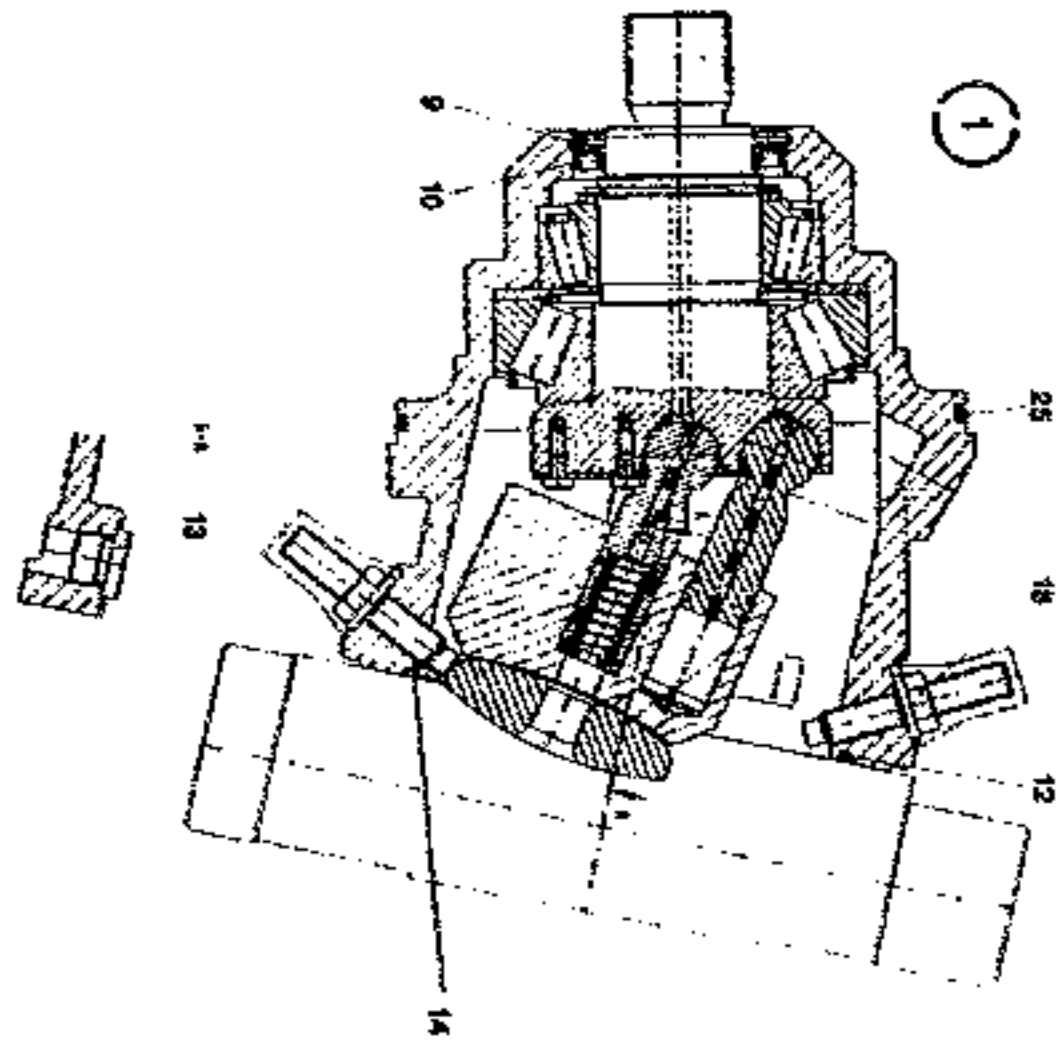

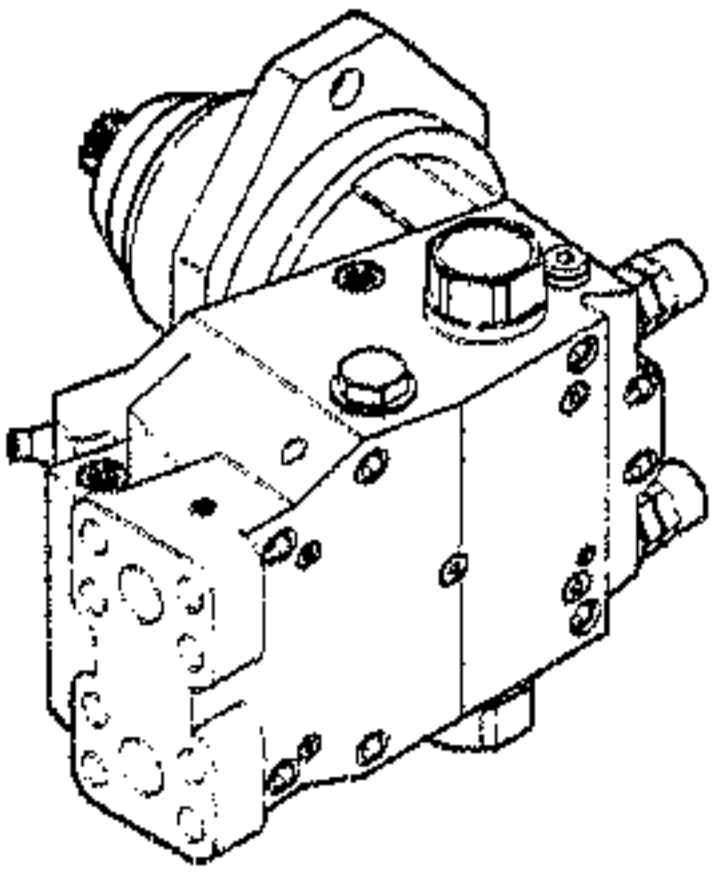

2 496 888.010

22.100

MOTOR INSTALL.MATERIAL

T 2496888 - 001
B 2496888 - 010

FX000 / 106101 - .....

Item	Quan.	ME	Part No.	Description
001	1	00	73170127	VAR.DISPL.MOTOR
009	1	00	73173664	CIRCLIP
010	1	00	73175810	ROT.SHAFT LIP SEAL
012	1	00	73175811	O-RING
013	1	00	73175812	SCREW PLUG
014	1	00	73175813	O-RING
018	2	00	73170736	COLLAR NUT
025	1	00	73173814	O RING
110	1	00	73175815	BRAKE VALVE
112	2	00	73175166	VALVE
120	2	00	73172448	CYL.HEAD SCREW
122	4	00	73175818	CYL.HEAD SCREW
124	3	00	73175172	SCREW PLUG
125	4	00	73175174	SCREW PLUG
126	1	00	73175175	O-RING
127	1	00	73175176	O-RING
130	1	00	73175817	SCREW PLUG
132	1	00	73175166	SCREW PLUG

ME: 00 = Stck/piece 10 = m 20 = m² 30 = dm³ 40 = kg 50 = l (litre)

1998-02-16

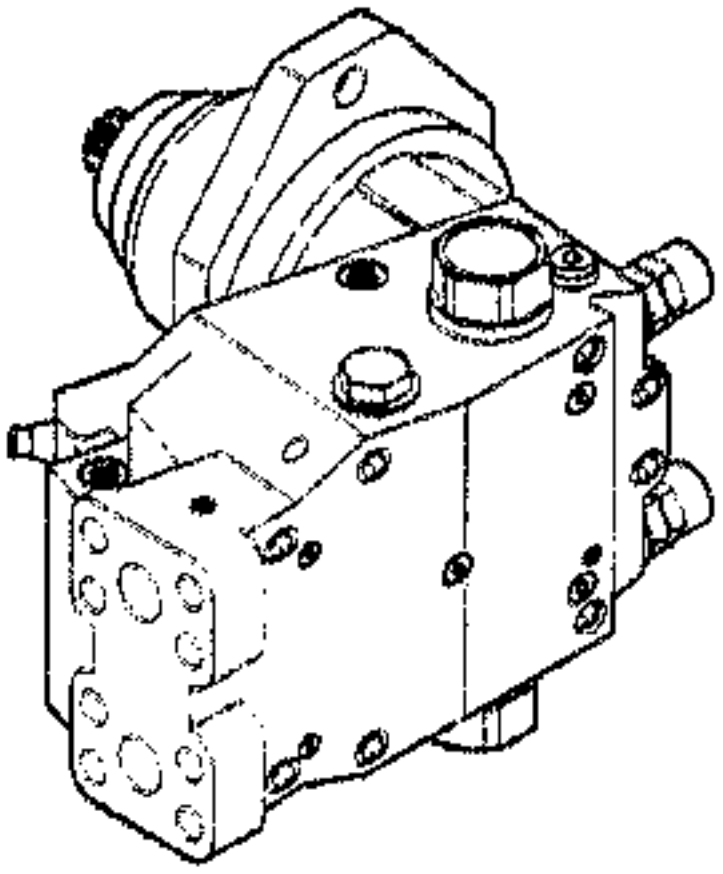

2 496 868.010

MOTOR INSTALL.MATERIAL

FX600 / 106101 - .....

T 2496936 - 001
B 2496868 - 010

Item	Quan.	ME	Part No.	Description
140	1	00	73175170	PRESS. REG. VALVE
160	2	00	73175810	PRESS.REL.VALVE
201	1	00	73175819	GASKET SET
202	1	00	73175820	CAP
205	1	00	73175182	O-RING
210	1	00	73175181	O-RING
211	2	00	73175822	O-RING

ME 00 = Stückliste 10 = m 20 = m² 30 = m³ 40 = kg 50 = l (litre)

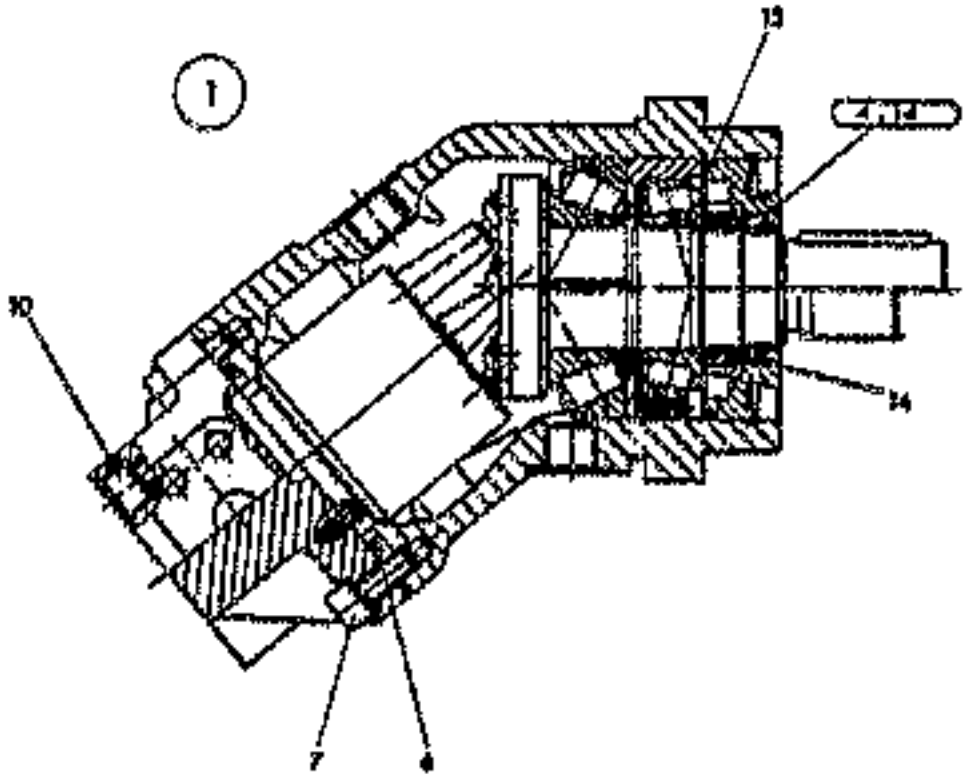

2 495 217.010

22.110

AXIAL PISTON MOTOR

FX600 / 106101 - .....

T 2495217 - 000
B 2495217 - 010

Item	Quan.	ME	Part No.	Description
001	1	00	73170794	HYDRAULIC MOTOR
004	1	00	73170795	RING
006	1	00	73170796	O-RING
007	2	00	73170797	CYL.HEAD SCREW
010	4	00	73170799	CYL.HEAD SCREW
014	1	00	73170800	ROT.SHAFT LIP SEAL
015	1	00	73170802	ROUND SEALING RING

ME: 00 = Stück/piece 10 = m 20 = m² 30 = m³ 40 = kg 50 = l (litre)

1998-09-10

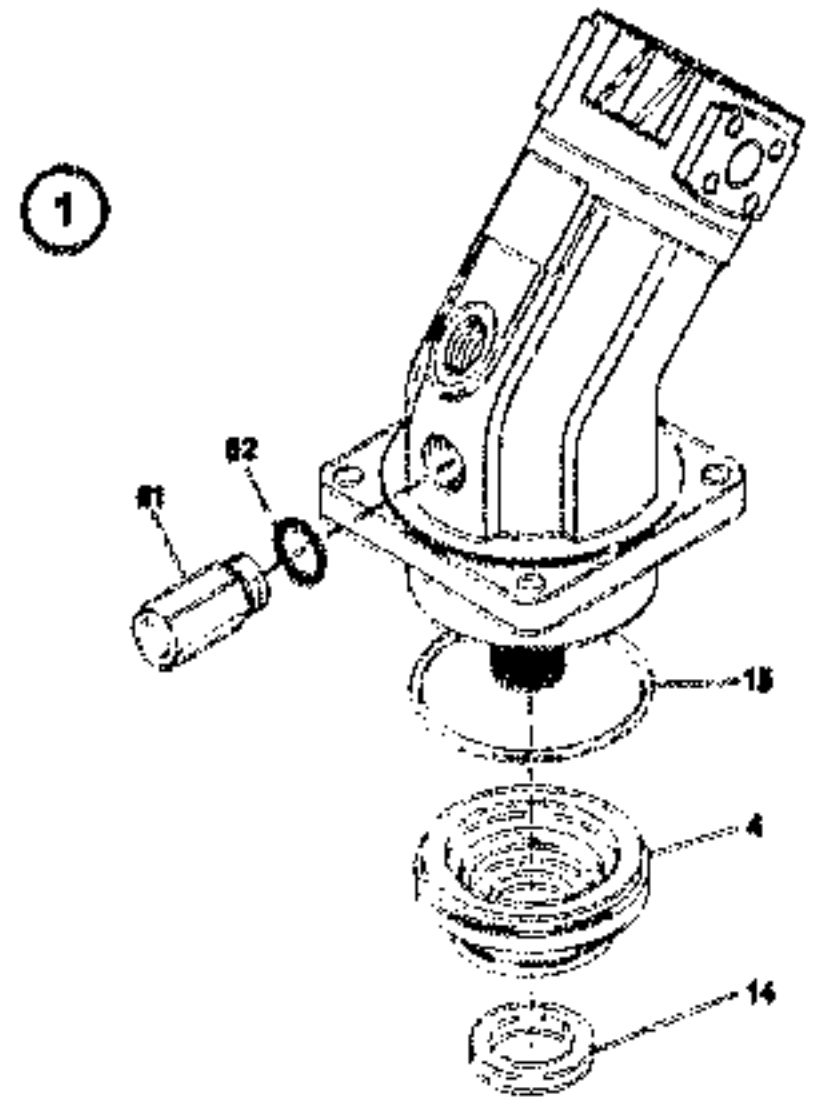

2 498 812/010

22.110

AXIAL PISTON MOTOR SLEWING GEAR

T 2498812 - 001
B 2498812 - 010

FX800 / 105101 - .....

Item	Quan.	ME	Part No.	Description
001	1	00	73170482	HYDRAULIC MOTOR
004	1	00	73173448	RING
014	1	00	73176447	ROT.SHAFT LIP SEAL
015	1	00	73172368	O-RING
061	1	00	73176448	CONNECTOR
062	1	00	73170142	SEALING RING

ME: 00= 02:10pcs 10= 20= 30= 40= kg 60= l (gal)

1998-09-10

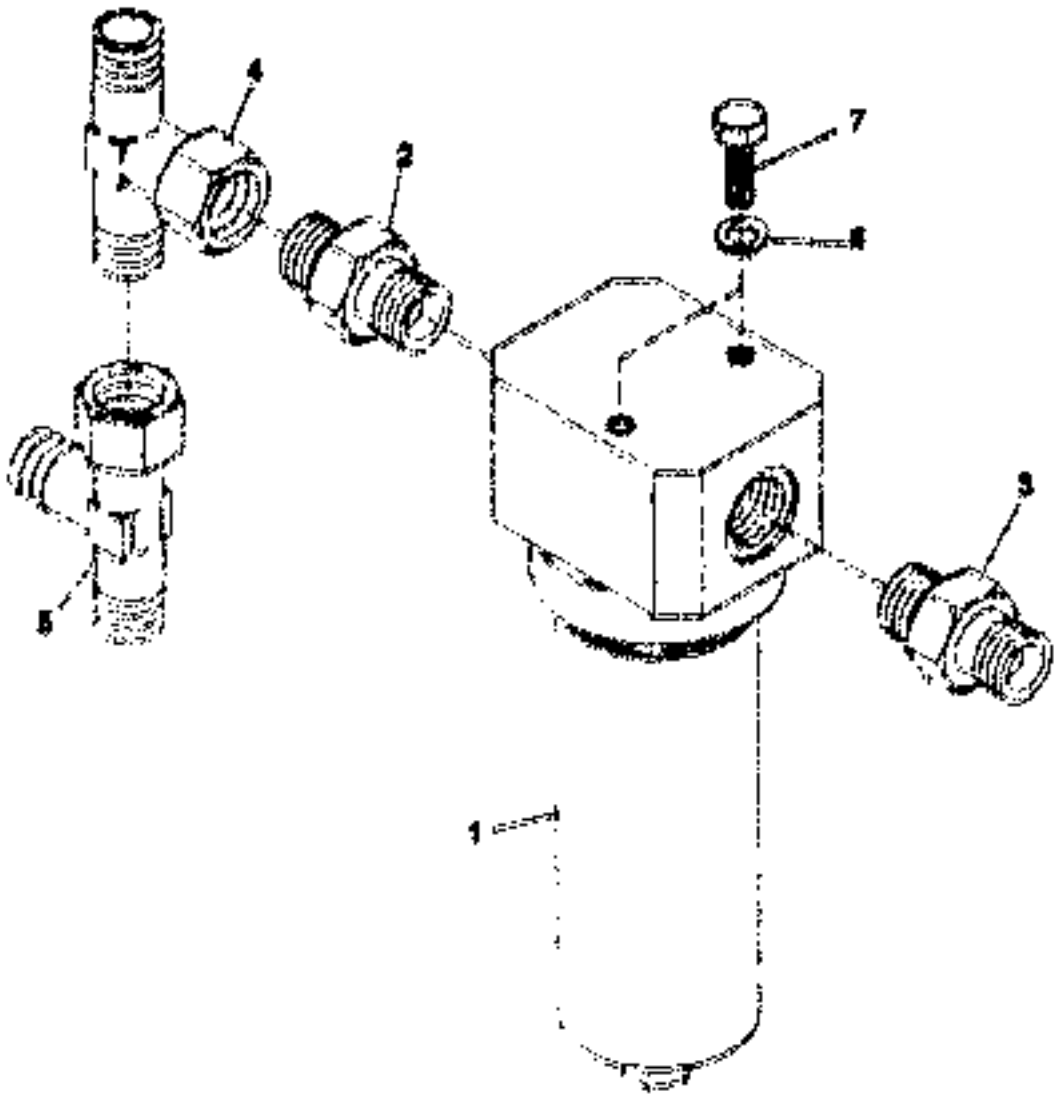

2444371050

22.200 FILTER INSTALL.MATERIAL

T 2444371 - 000
B 2444371 - 010

FX500 / 106101 - .....

Item	Quan	ME	Part No.	Description
001	1	00		22.202 2246194 FILTER
002	1	00	73170872	SOCKET
003	1	00	73170863	SOCKET
004	1	00	73170383	SOCKET
005	1	00	73170382	SOCKET
006	2	00	73170180	LOCK WASHER
007	2	00	73170210	HEXAGON BOLT

ME: 00 = Stck/piece 12 = m 28 = m² 39 = m³ 43 = kg 60 = l (litre)

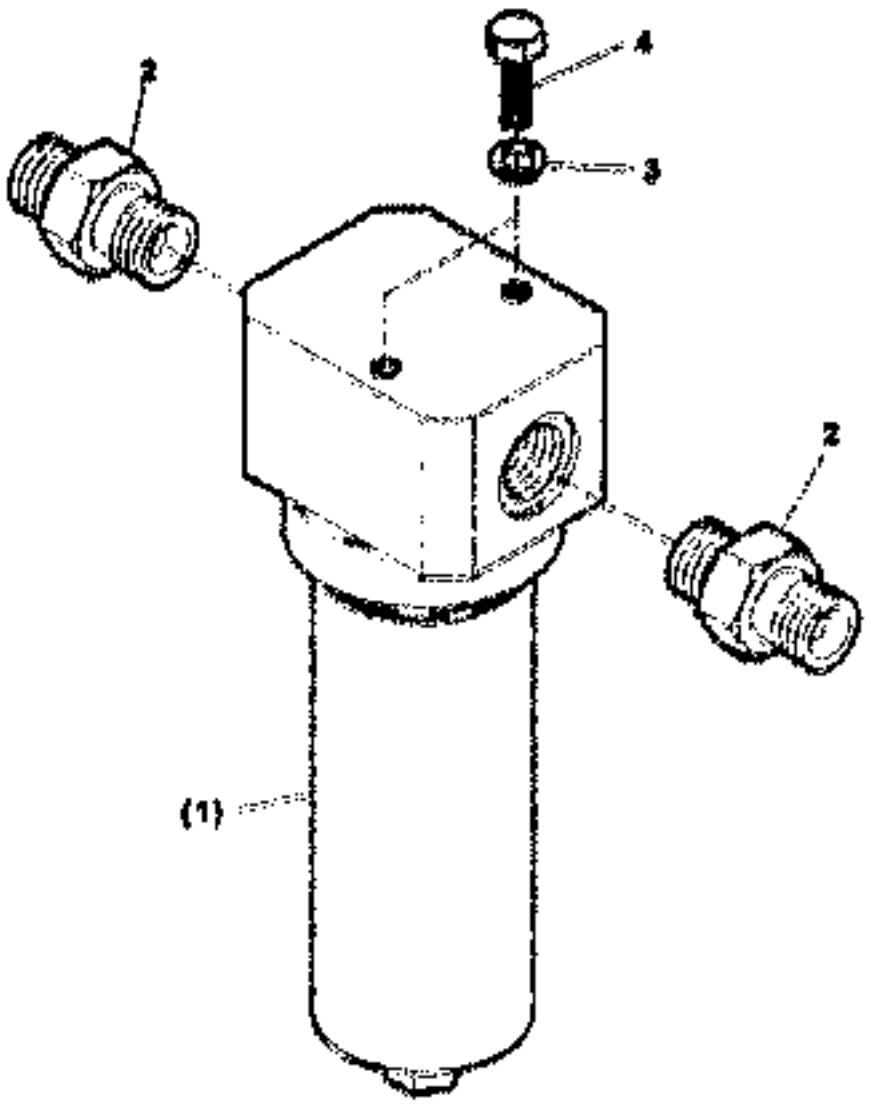

2444372/00

FILTER INSTALL.MATERIAL

22.200

T 2444372 - 000
B 2444372 - 010

FX600 / 106101 - .....

Item	Quan.	ME	Part No.	Description
001	1	00		22.202 2448184 FILTER
002	2	00	73170674	SOCKET
003	2	00	73170180	LOCK WASHER
004	2	00	73170210	HEXAGON BOLT

ME: 00 = Stück/piece 10 = m 30 = m² 39 = m³ 43 = kg 60 = l (litre)

1998-09-10

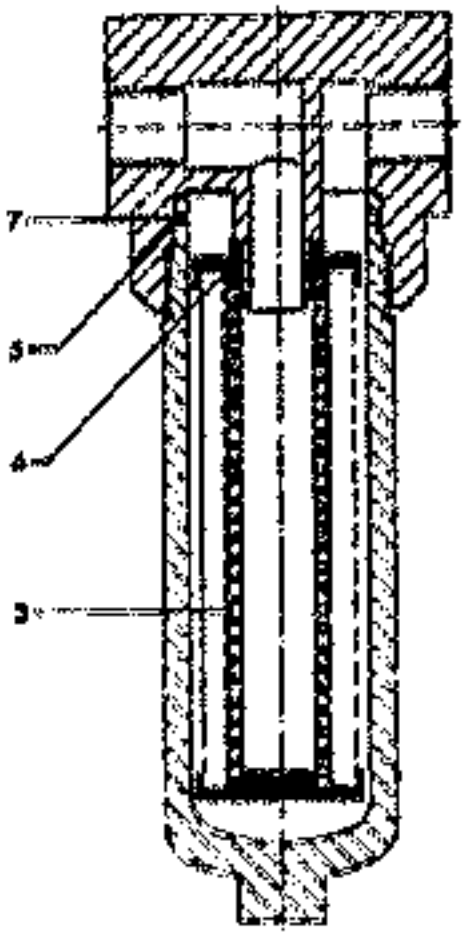

1

2246 8420

FILTER

FX600 / 108101 >

P 2246184 - 001
B 2246184 - 010

IND	QUAN.	ME	P.NO.	DESIGN
001	1	00	73170667	FILTER
003	1	00	73170668	FILTER ASSAY
005	1	00	73170669	O-RING
006	1	00	73170670	O-RING
007	1	00	73170671	SUPPORT RING

ME. 00=SUCH/BIEN 10=m 25=m² 39=m³ 43=kg 80=l (litre)

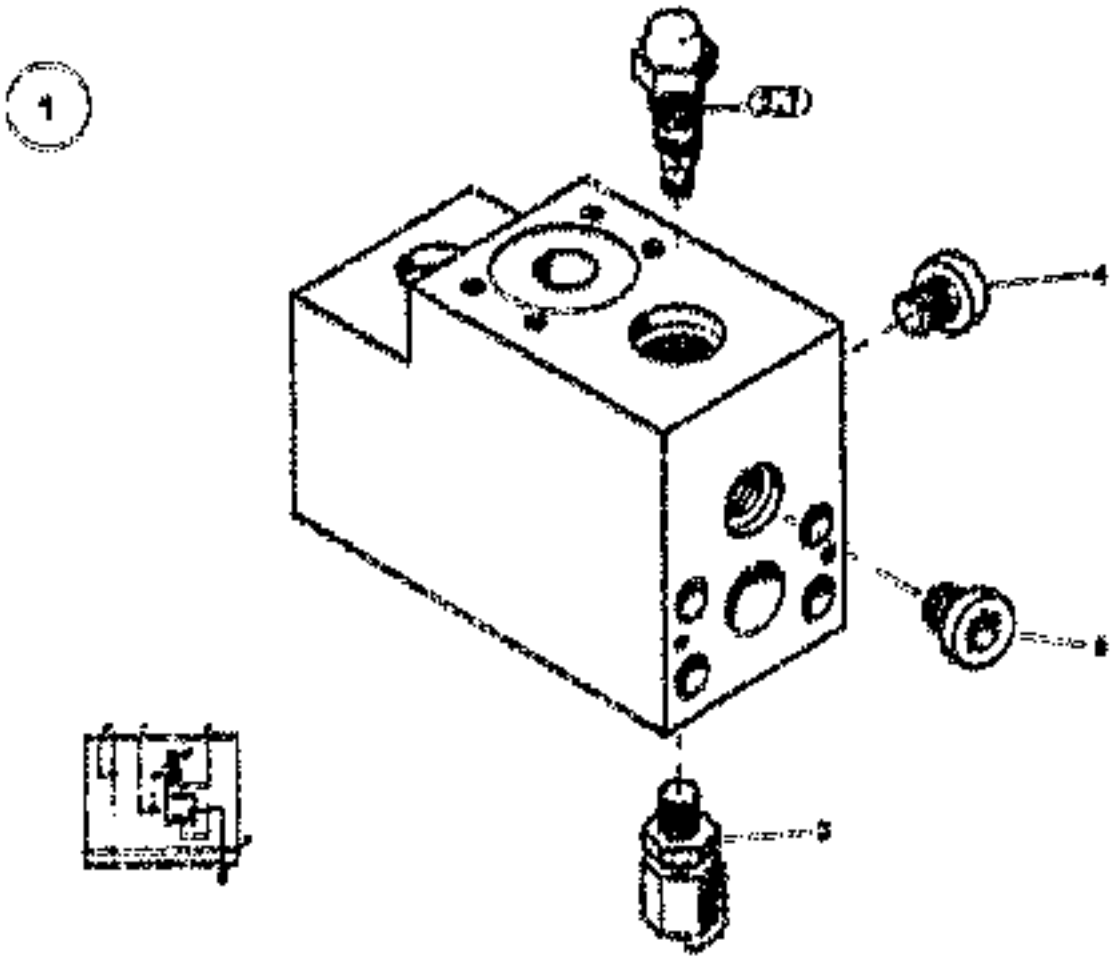

T 1708496.000

22.400

DISTRIBUTOR INSTALL.MATERIAL

T 1708496 - 001
B 1708496 - 010

P6300 / 106101 - .....

Num	Quan.	ME	Part No.	Descripton
001	1	00	73170462	VALVE
002	1	00	73173012	VALVE
003	1	00	73170429	TUBE FITTING
005	1	00	73170131	SCREW PLUG
007	2	00	73170490	GASKET SET

ME: 00=Stück/pezzi 10=m 21=m² 36=mm² 43=kg 60=l (litri)

1998-09-10

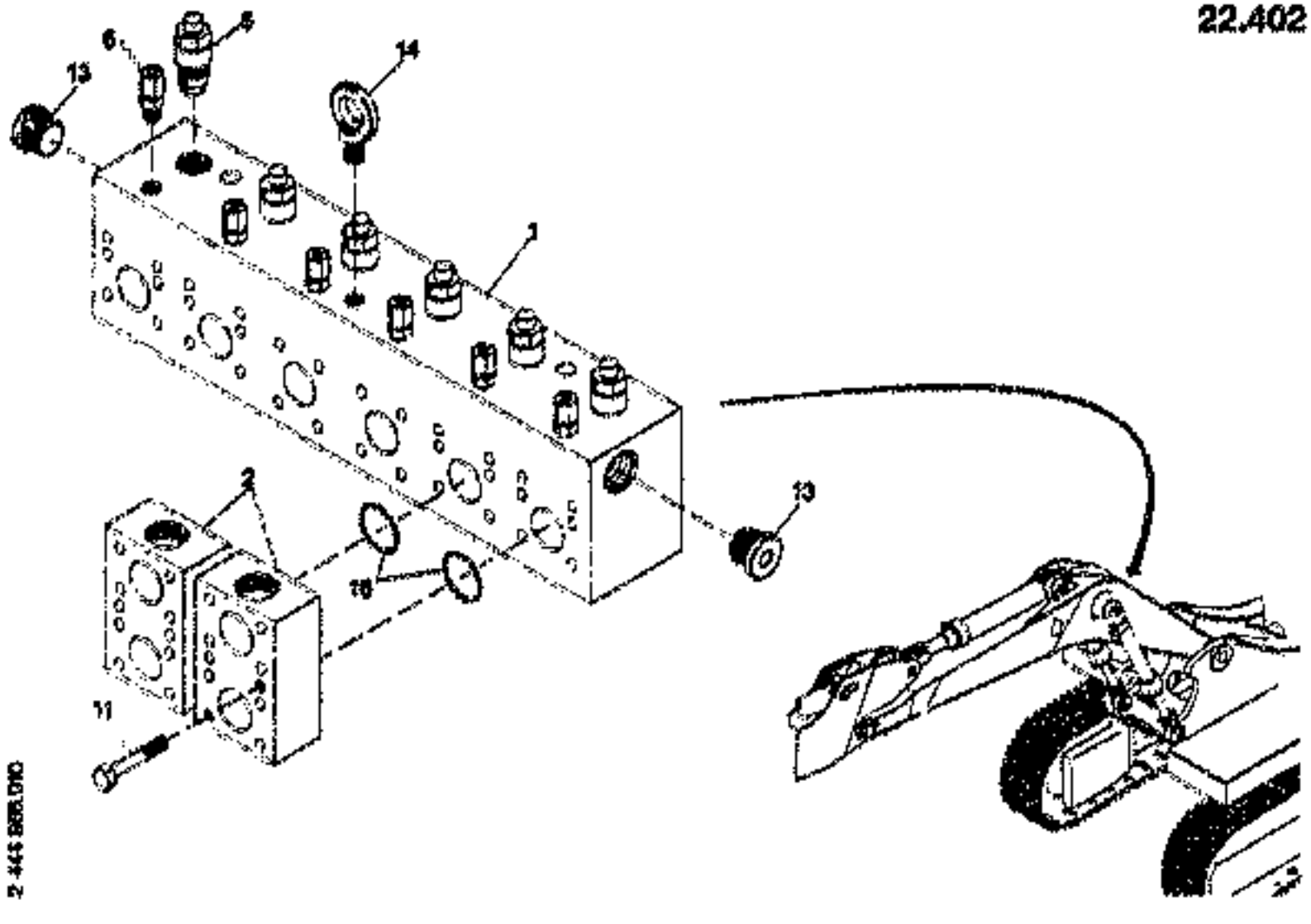

DISTRISUTOR

22.402

T 2444966 - 000
B 2444966 - 010

PX600 / 106101 - .....

Item	Quan.	ME	Part No.	Description
001	1	00	73171369	STRIP
002	2	00	73171370	
005	5	00	73171371	VALVE
006	6	00	73170488	COUPLING/CLUTCH
007	6	00	73171372	COVER
008	8	00	73171374	PLATE
009	2	00	73171375	PLUG
010	16	00	73171376	PROTECTIVE PLUG
011	6	00	73170306	HEXAGON BOLT
013	2	00	73170491	BREW PLUG
014	1	00	73171377	EYE BOLT
016	2	00	73170346	SEALING RING

ME: 00 = Stück/piece 10 = m 20 = m² 30 = m³ 40 = kg 50 = l (litre)

1998-09-10

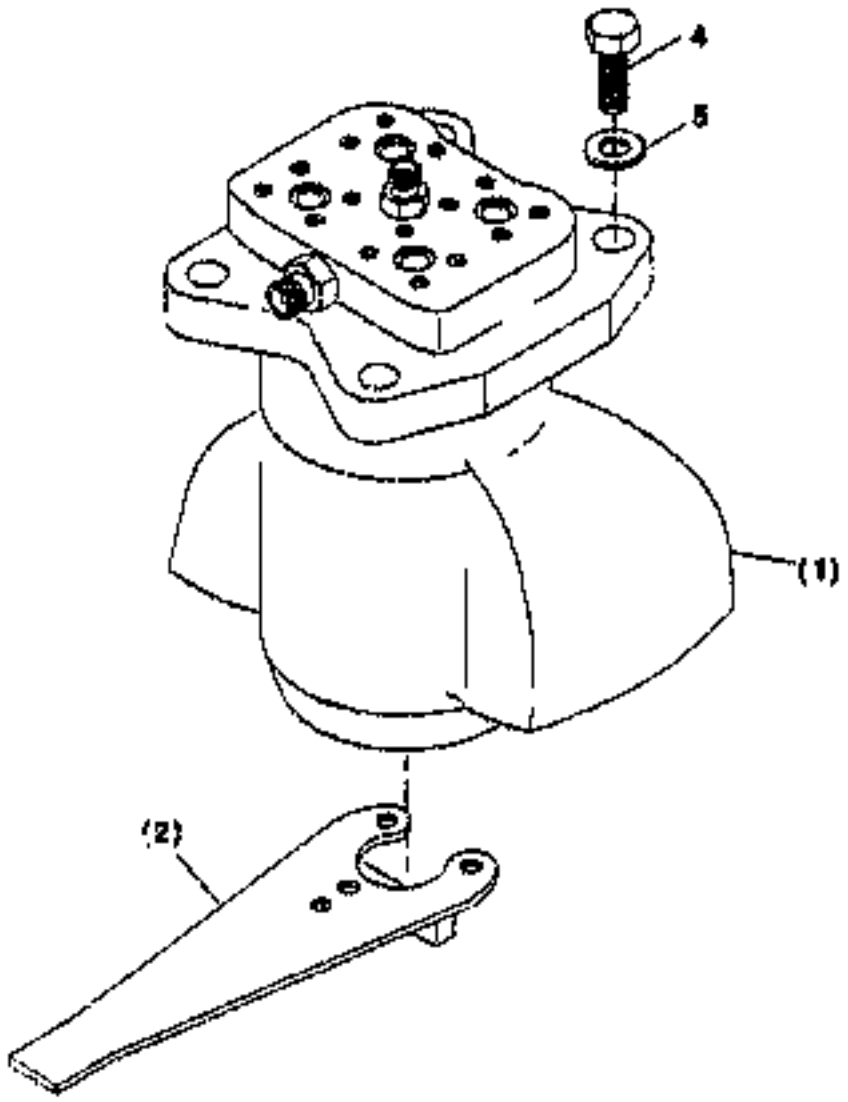

2 436 923.010

22.500 ROTOR INSTALL.MATERIAL

T 2436625 - 000
B 2436625 - 010

FX600 / 156101 - .....

Item	Quan.	Iss	Part No.	Description
001	1	00		22.501 2468818 ROTOR MOUNTING PARTS
002	1	00		22.510 2468819 ARRESTOR ROTOR
004	4	00	73170814	HEXAGON BOLT
005	4	00	73170130	DISKWASHER

VE: 00 = Standard 13 = m 23 = m² 30 = m³ 43 = kg 50 = l (qty)

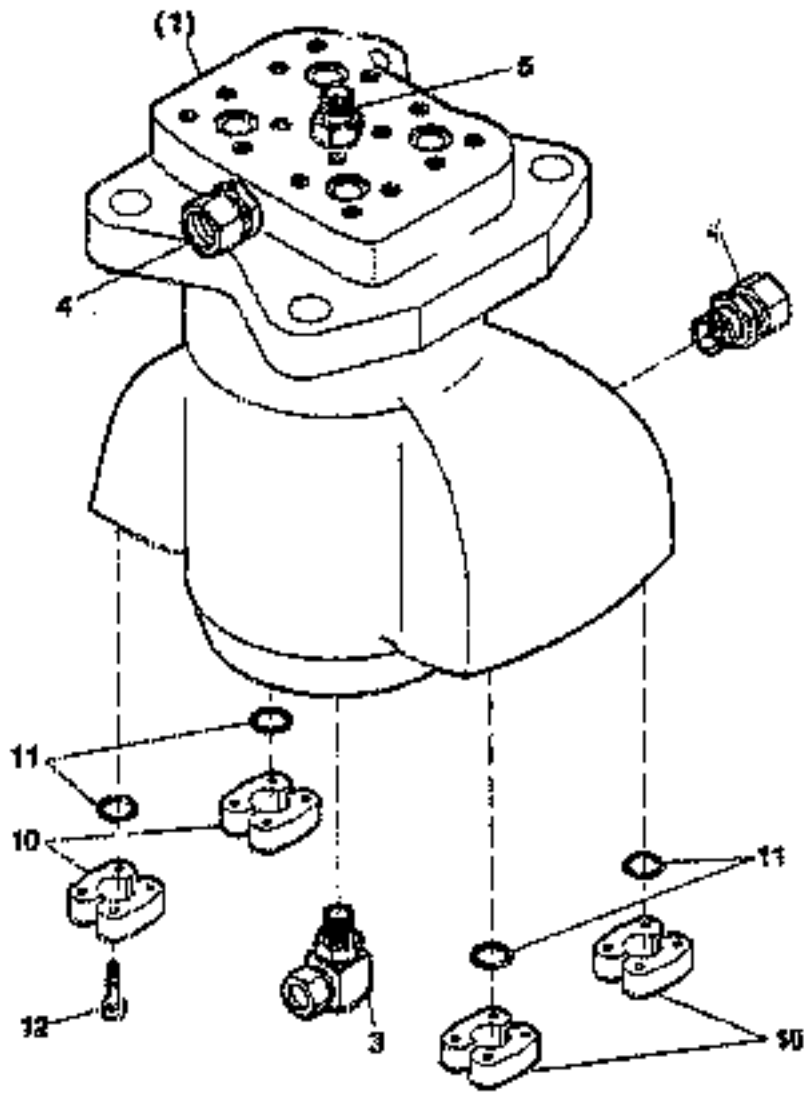

2 495 618.010

ROTOR MOUNTING PARTS

T 2496616 - 000
B 2496616 - 010

FX600 / 106101 - .....

Item	Quan.	ME	Part No.	Description
001	1	00		22.502 2443610 ROTOR
003	1	00	73170324	TUBE FITTING
004	2	00	73170325	SOCKET/ADAPTER
005	1	00	73170326	SOCKET
010	8	00	73170326	SAE-FLANGE HALF
011	4	00	73170327	SEALING RING
012	16	00	73170328	12-POINT SCREW

ME: 00 = 810ck/piece 13 = m 28 = m² 38 = m³ 43 = kg 50 = l (litre)

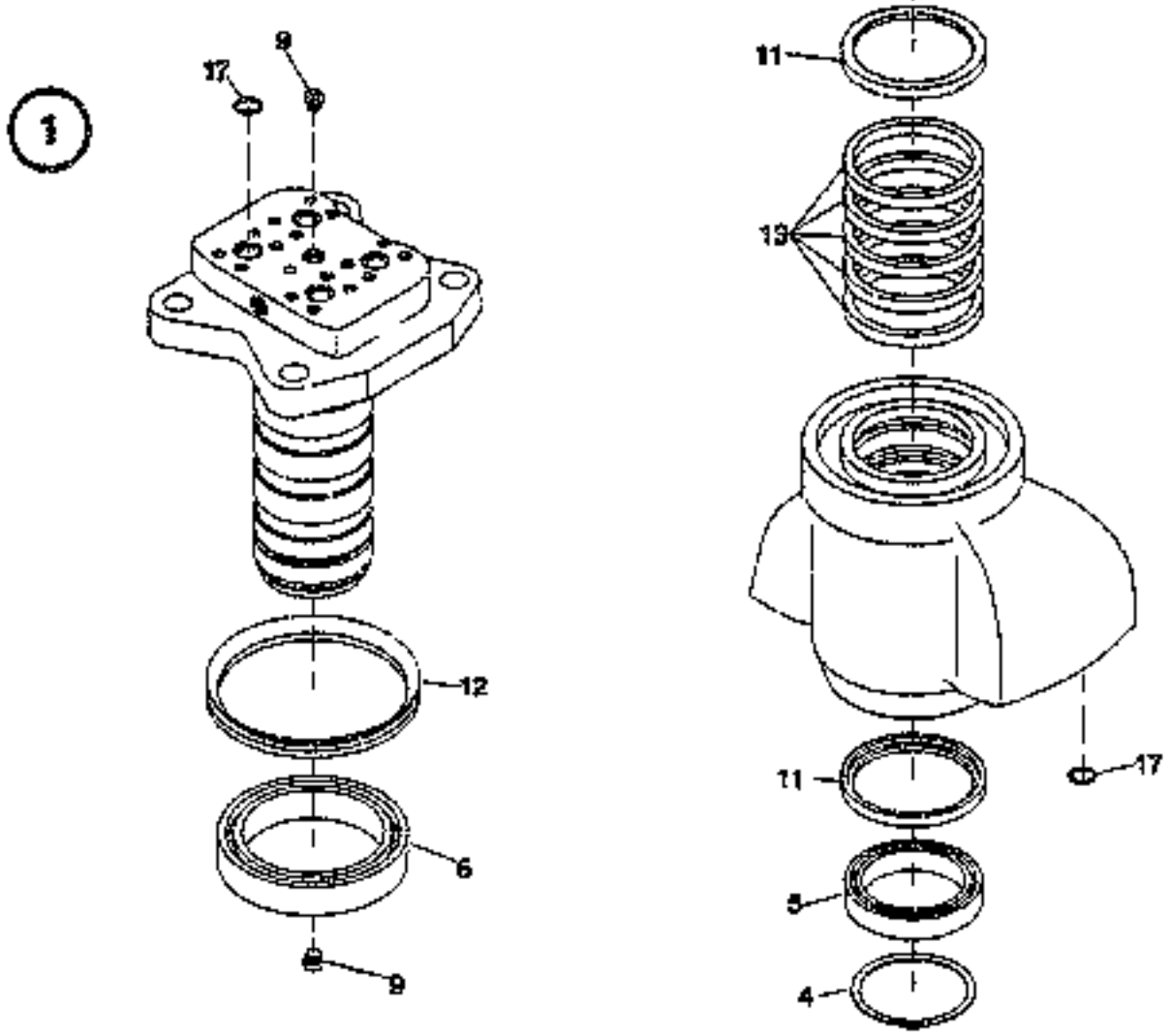

2 443 610.010

ROTOR

22.502

FIATALLIS

T 2443610 - 000
B 2443610 - 010

FX600 / 106101 - .....

Item	Quan.	ME	Part No.	Description
001	1	00	73170330	ROTOR
004	1	00	73170331	CIRCLIP
005	1	00	73170332	GROOVE BALL BEAR.
006	1	00	73170333	GROOVE BALL BEAR.
009	2	00	73170051	SCREW PLUG
011	2	00	73170334	GASKET
012	1	00	73170335	ROT SHAFT LIP SEAL
013	5	00	73170336	GASKET
017	6	00	73170337	GASKET

ME: 00 = Stück/piece 13 = m 28 = m² 39 = m³ 43 = kg 50 = l (litre)

1998-08-10

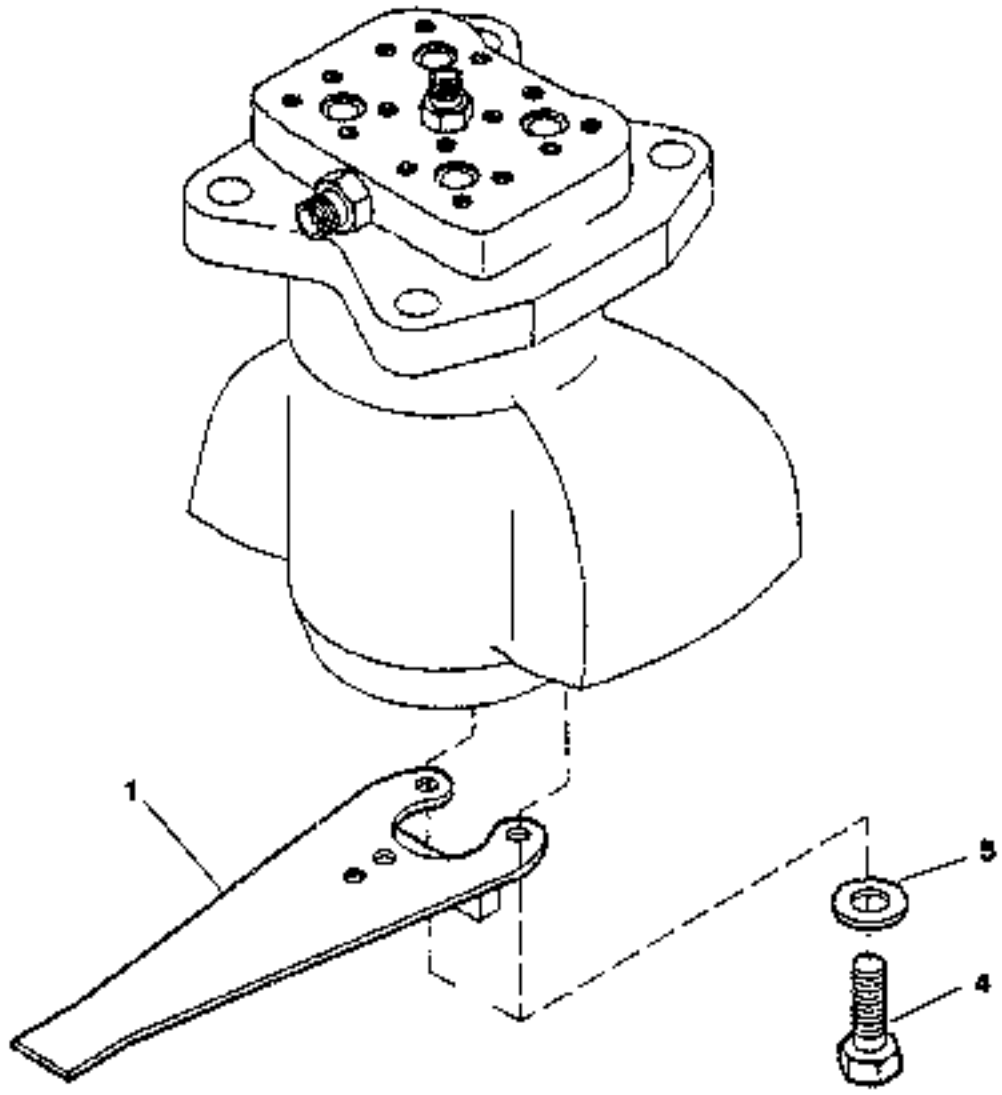

2 496 819-010

ARRESTOR ROTOR

22.510

FX600 / 108101 - .....

T 2496818 - 000
B 2496819 - 010

Item	Quan.	ME	Part No.	Description
001	1	00	73170815	BRACKET
004	3	00	73170183	HEXAGON BOLT
005	3	00	73170169	DISK/WASHER

ME: 00 = Stück/piece 13 = m 25 = m² 39 = m³ 48 = kg 50 = l (litre)

1998-09-10

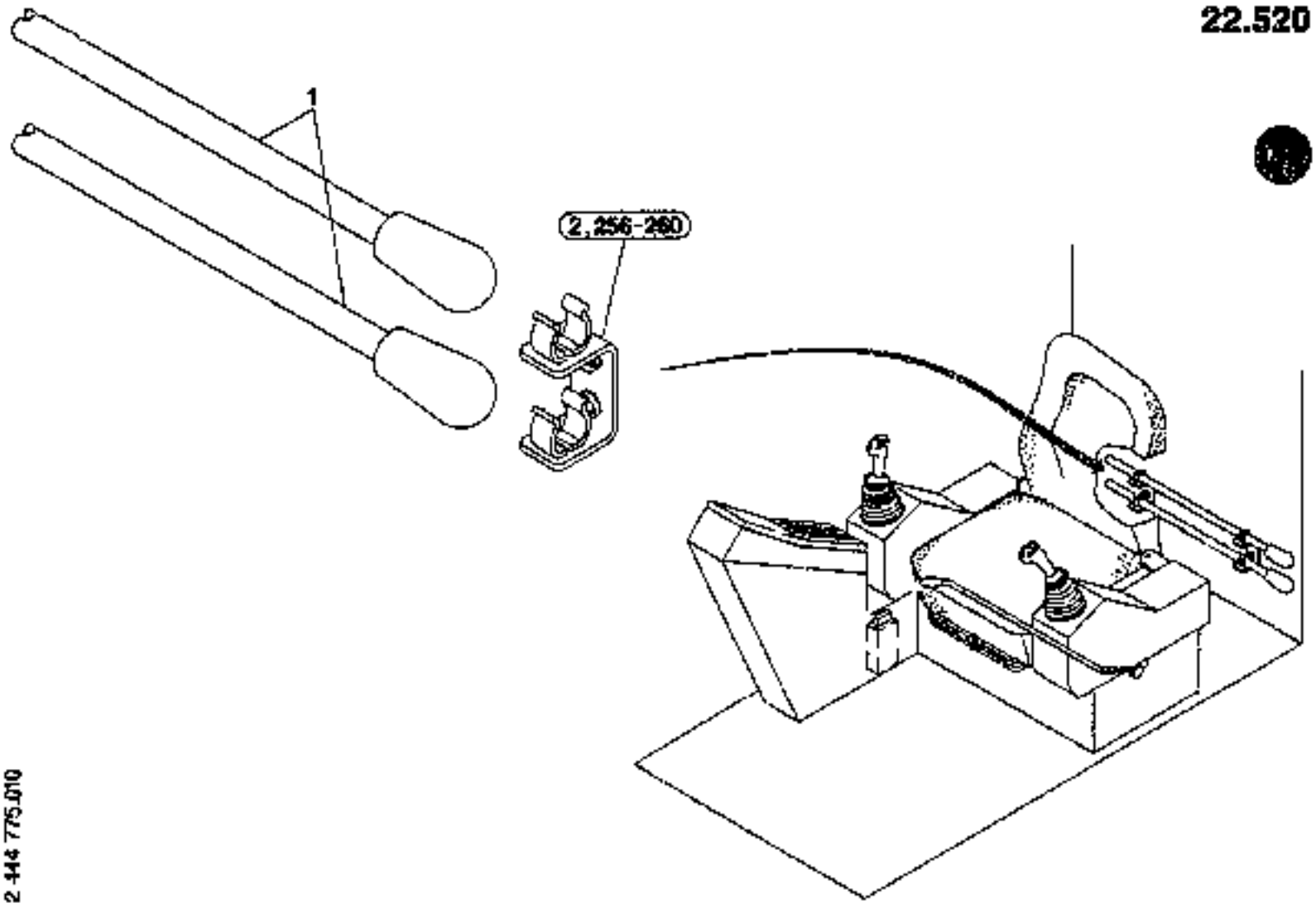

2 444 775.010

RODS TREADLE VALVE

22.520

T 2444775 - 000
B 2444775 - 010

FX600 / 106101 - .....

Item	Quan.	ME	Part No.	Description
001	2	00	73170957	ROD
002	1	00	73170960	MOUNTING
256	2	00	73170961	BRACKET
257	4	00	73170962	CLAMPING SCREW
258	4	00	73170963	HEXAGON NUT
259	4	00	73170834	DISK/WASHER
260	4	00	73170964	CLIP

ME: 00 = Stück/piece 13 = m 26 = m² 29 = m³ 43 = kg 50 = l (litre)

1998-09-10

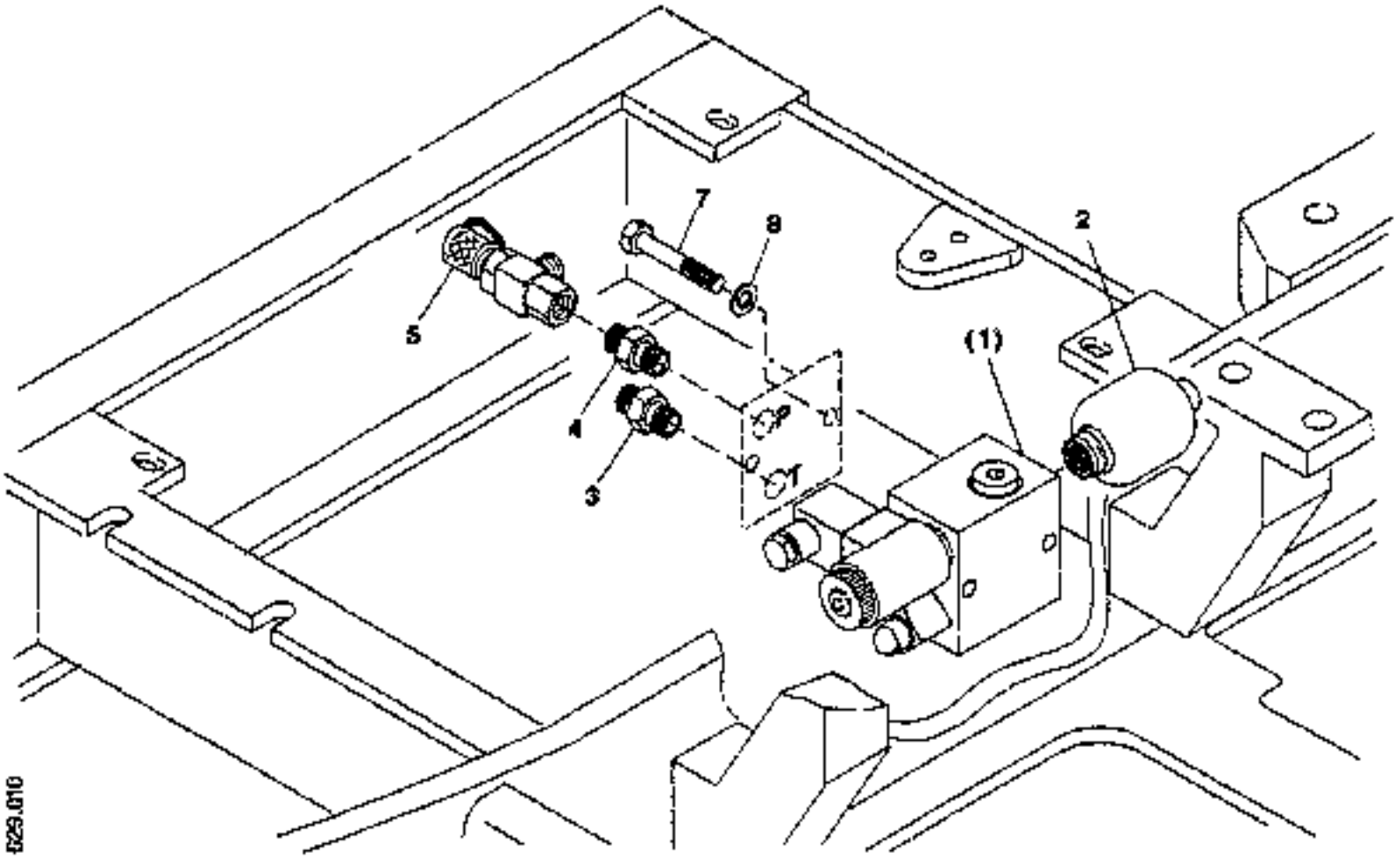

2 495 029.010

ADDING VALVE

23.050

FX600 / 106101 - .....

T 2495629 - 000
B 2495629 - 010

Item	Quan.	ME	Part No.	Description
001	1	00		23.212 2444920 SHIFT VALVE
002	1	00	73171320	MEMBRANE RESERVOIR
003	1	00	73170296	SOCKET
004	1	00	73171321	SOCKET
005	1	00	73170393	DISTRIBUTOR
007	2	00	73171322	HEXAGON BOLT
008	2	00	73170160	DISK/WASHER

ME: 00 = Stück/piece 10 = m 20 = m^2 30 = m^3 40 = kg 50 = l (litre)

1996-09-10

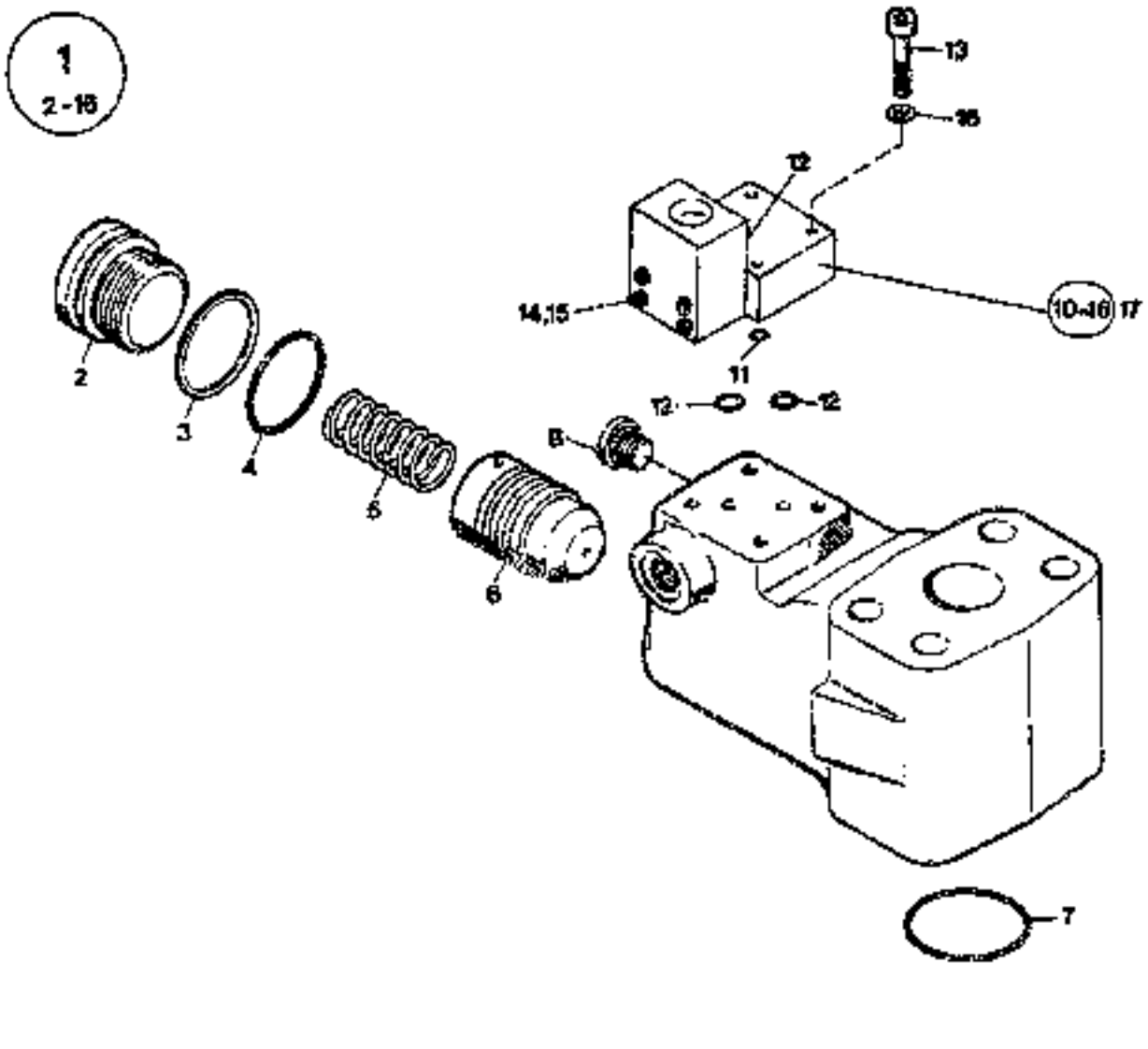

1 593 293.010

BLOCKING VALVE

FX600 / 106101 - .....

T 1693293 - 003
B 1593293 - 010

Item	Quan.	ME	Part No.	Description
001	1	00	73170417	VALVE
002	1	00	73170418	SCREW PLUG
003	1	00	73170419	SUPPORT RING
004	1	00	73170420	O-RING
005	1	00	73170421	SPRING
006	1	00	73170422	VALVE
007	1	00	73170346	SEALING RING
008	1	00	73170359	SCREW PLUG
010	1	00	73170423	VALVE
011	1	00	73170424	ROUND SEALING RING
012	3	00	73170425	O-RING
013	4	00	73170426	CYL.HEAD SCREW
014	4	00	73170428	CYL.HEAD SCREW
015	4	00	73170429	LOCK WASHER
016	4	00	73170431	DISK/WASHER
017	1	00	73170433	GASKET SET

ME: 00 = Stück/piece 13 = m 26 = m^2 39 = m^3 43 = kg 50 = l (litre)

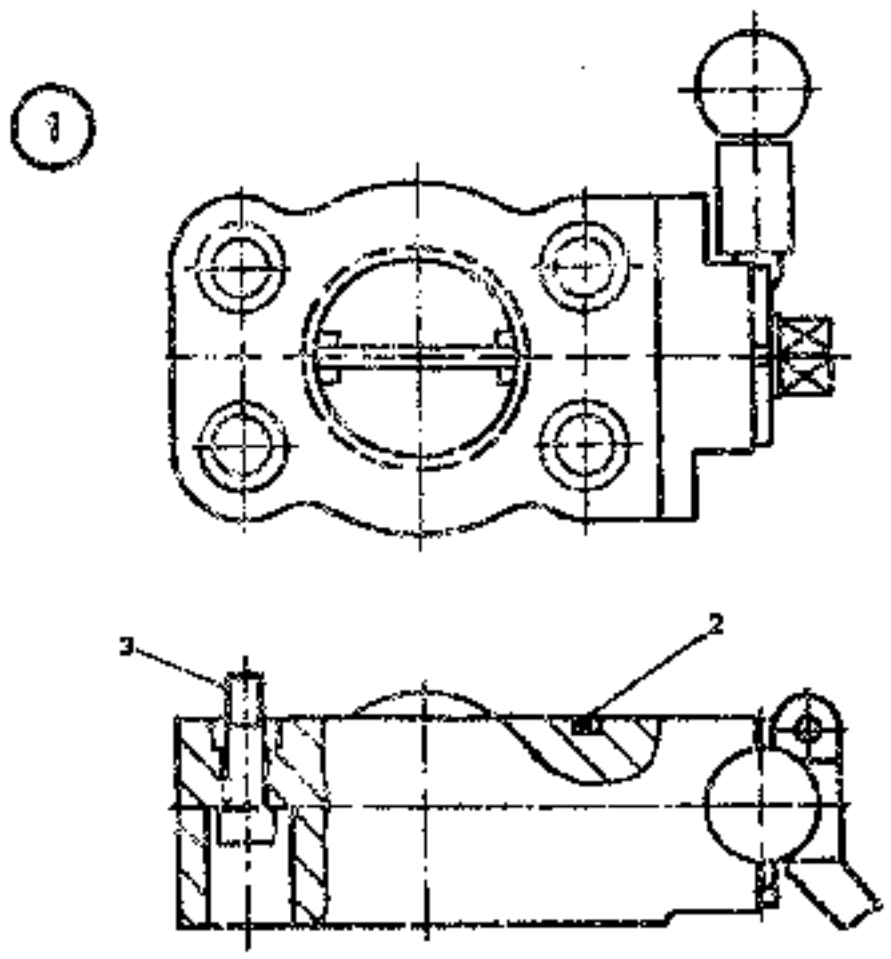

2 141 858.010

BLOCKING VALVE

23.122

FX600 / 106101 - .....

T 2141858 - 001
B 2141858 - 010

Item	Quan.	ME	Part No.	Description
001	1	00	73170433	VALVE
002	1	00	73170439	ROUND SEALING RING
003	4	00	73170440	CYLHEAD SCREW

ME: 00 = Stück/piece 13 = m 20 = m² 30 = m³ 40 = kg 50 = l (ltrs)

1998-09-10

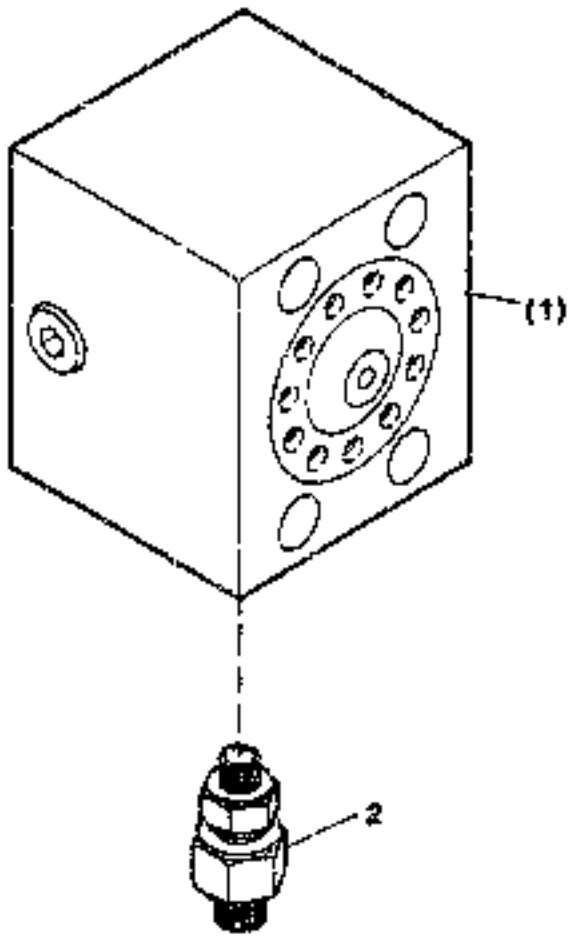

2 444 879.050

STOP VALVE MOUNTING PARTS

23.141

T 2444879 - 000
B 2444879 - 010

FX600 / 105101 - .....

Item	Quan.	ME	Part No.	Description
001	1	00		22.142 2443928 STOP VALVE
002	1	00	73170553	CHECK VALVE

ME 00 = Stück/piece 13 = m 29 = m² 39 = m³ 43 = l/g 50 = l (litre)

1996-09-10

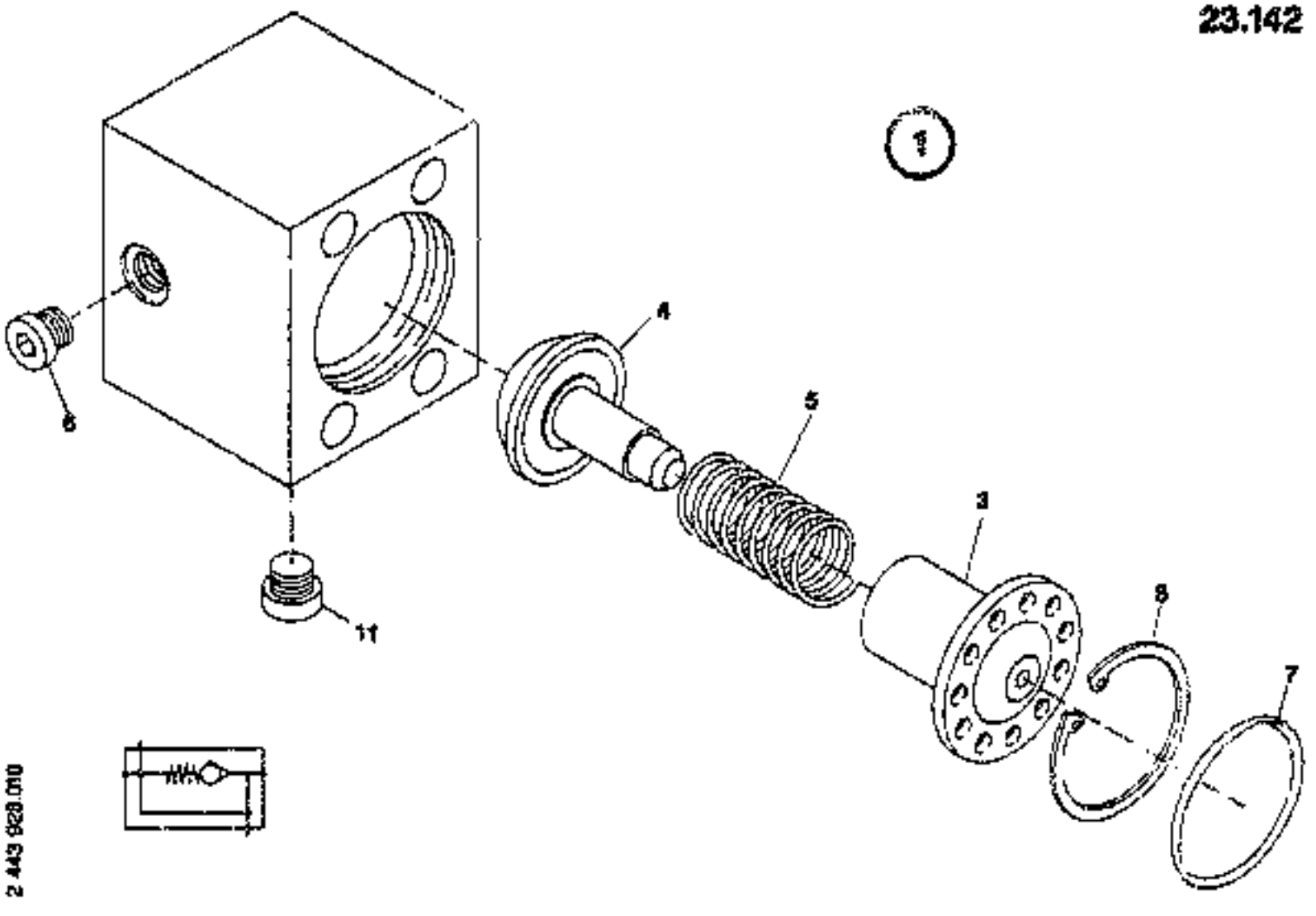

STOP VALVE

T 2443928 - 001
B 2443928 - 010

FX800 / 106101 - .....

Item	Quan.	ME	Part No.	Description
001	1	00	73170533	VALVE
003	1	00	73170534	GUIDE
004	1	00	73170535	TAPPET
005	1	00	73170536	SPRING
006	1	00	73170369	SCREW PLUG
007	1	00	73170537	O-RING
008	1	00	73170538	CIRCLIP
011	1	00	73170539	SCREW PLUG

ME: 00 = Stück/piece 13 = m 25 = m² 39 = m³ 43 = kg 50 = l (litre)

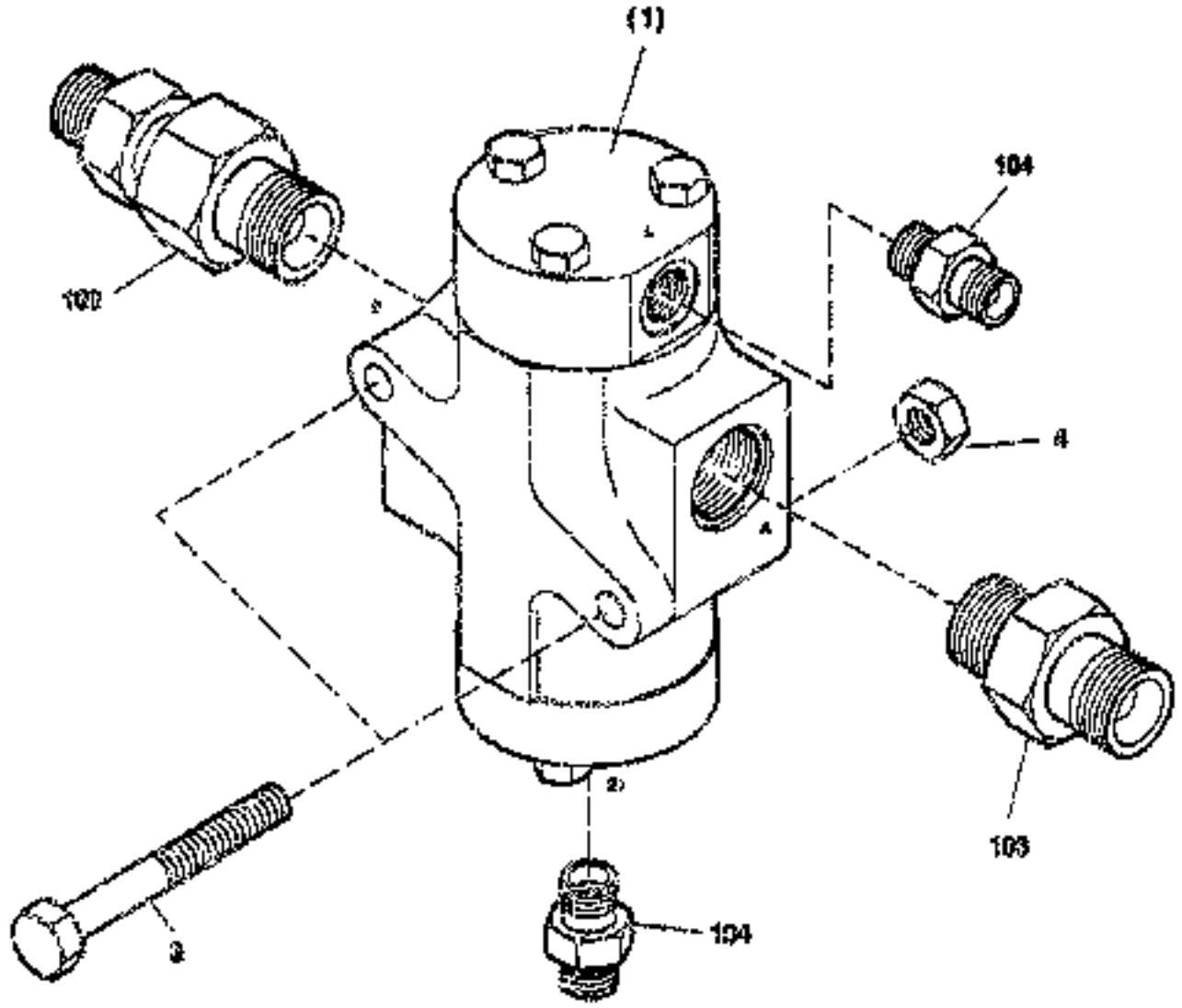

2 263 060.010

23.160

CONTROL VALVE INSTALL.MATERIAL

FIATALLIS

1' 2263060 - 002
B 2263060 - 010

FX800 / 108101 - .....

Item	Quan.	ME	Part No.	Description
001	1	00		23.162 1707400 CONTROL VALVE
003	2	00	73170412	HEXAGON BOLT
004	2	00	73170215	HEXAGON NUT
102	1	00	73170413	VALVE
103	1	00	73170414	SOCKET
104	2	00	73170296	SOCKET

ME: 00 = Stück/piece 13 = m 25 = m² 39 = m³ 43 = kg 50 = l (litre)

1995-09-10

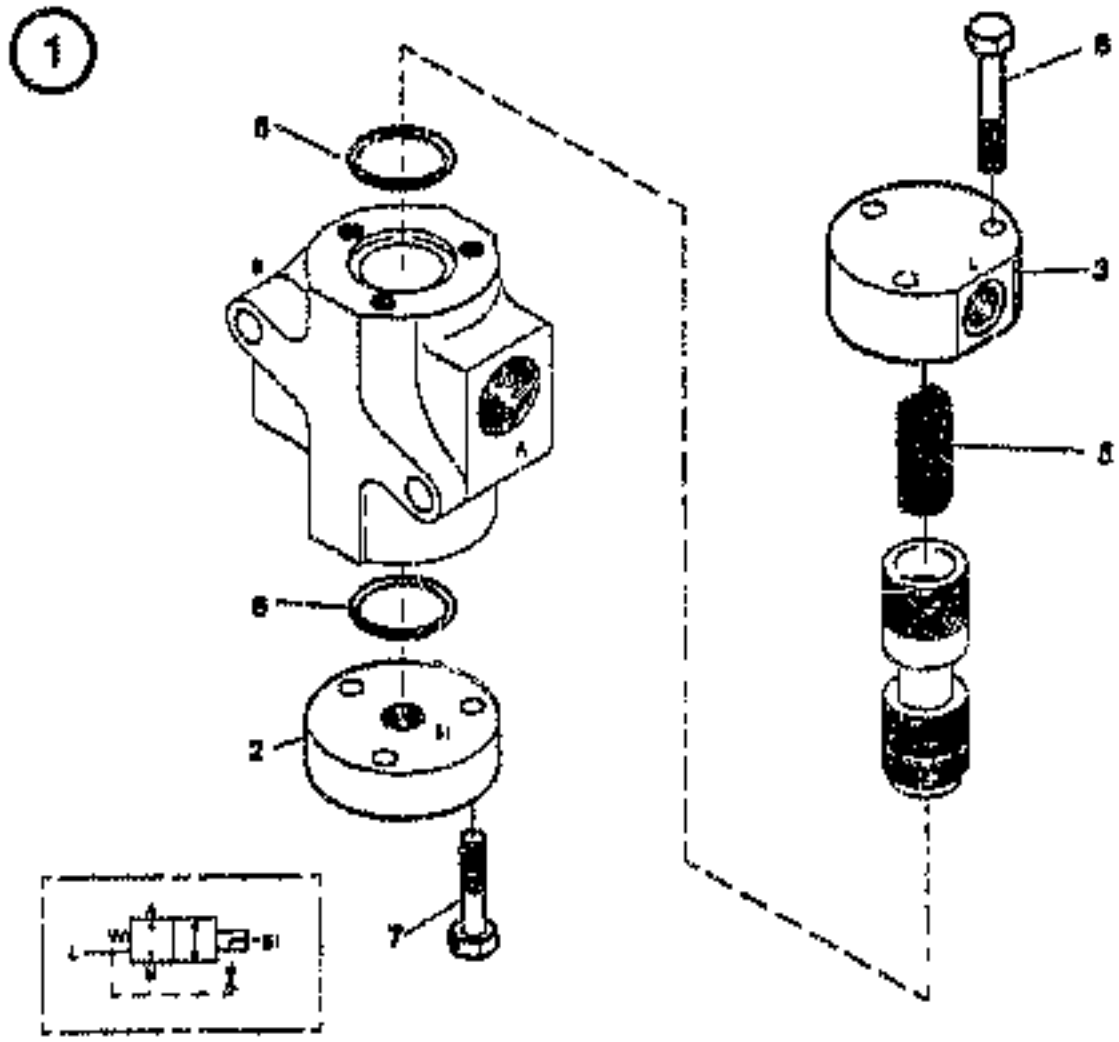

23.182

CONTROL VALVE

T 1707400 - 002
B 1707400 - 010

FX600 / 108101 - .....

Item	Quan.	ME	Part No.	Description
001	1	00	73170514	VALVE
002	1	00	73170515	LID
003	1	00	73170516	LID
005	1	00	73170517	SPRING
006	2	00	73170518	ROUND SEALING RING
007	3	00	73170519	HEXAGON BOLT
008	3	00	73170521	HEXAGON BOLT

ME: 00 = Stück/piece 10 = m 20 = m² 30 = m³ 40 = kg 50 = l (litre)

1998-09-10

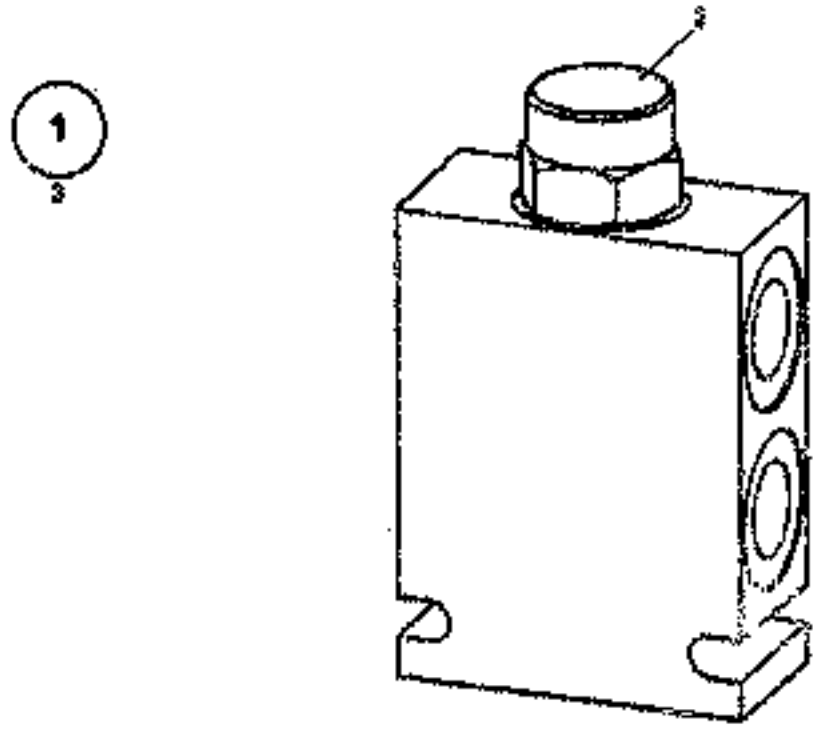

2141195.010

CONTROL VALVE

23.182

T 2141196 - 001
B 2141196 - 010

FX800 / 196101 - .....

Item	Quan.	ME	Part No.	Description
001	1	00	73170523	VALVE BLOCK
002	1	00	73170524	VALVE
003	1	00	73170525	SET OF PIST. RINGS

ME: 00 = Stück/piece 13 = m 25 = m² 39 = m³ 43 = kg 50 = l (litre)

1298-09-10

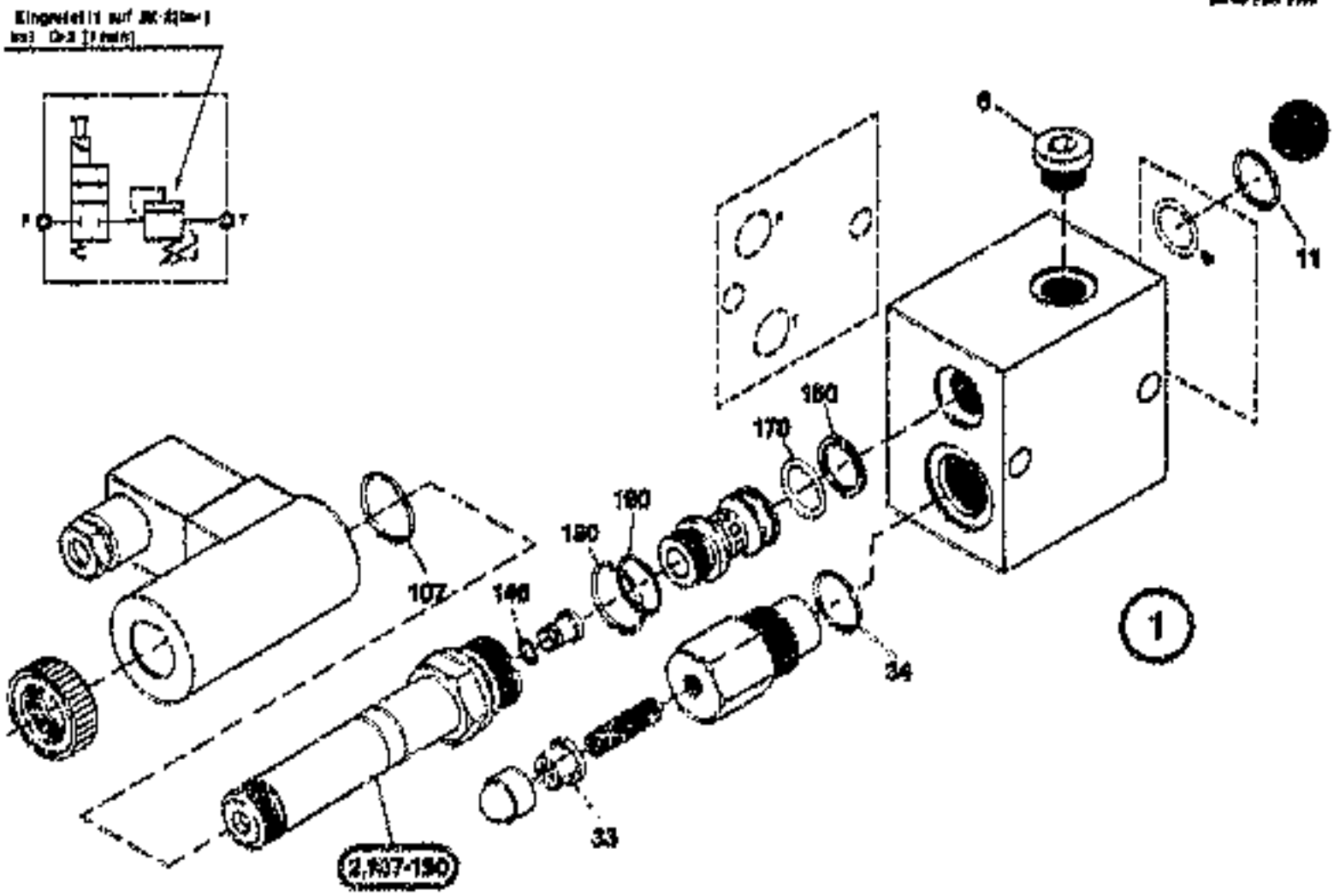

23.212

SHIFT VALVE

T 2444920 - 001
B 2444920 - 010

FX300 / 106101 - .....

Item	Quan.	ME	Part No.	Description
001	1	00	73171326	PRESSU.CONTRLVALVE
002	1	00	73171327	CARTRIDGE
006	1	00	73170061	SCREW PLUG
011	1	00	73170754	O-RING
033	1	00	73170494	HEXAGON NUT
034	1	00	73171328	O-RING
107	2	00	73171257	O-RING
146	1	00	73171329	O-RING
150	1	00	73171330	SUPPORT RING
170	1	00	73170438	O-RING
180	1	00	73171331	O-RING
190	1	00	73171333	O-RING
200	1	00	73171334	VALVE

ME: 00 = Stück/piece 13 = m 28 = m^2 39 = m^3 40 = kg 50 = l (litre)

1998-09-10

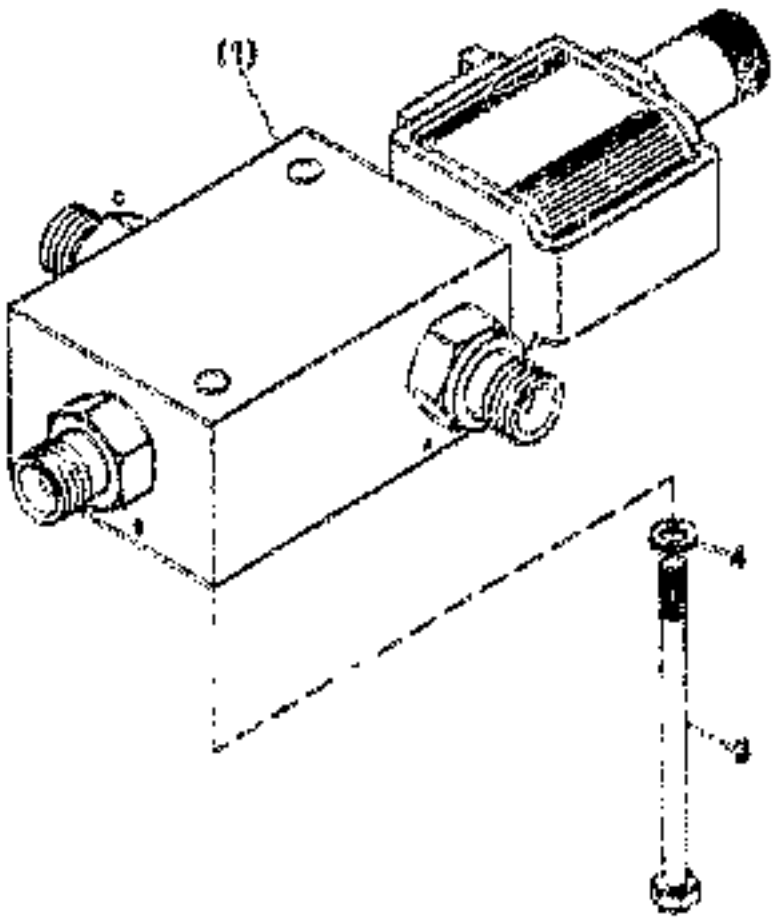

2 495 357/50

SOLENOID VALVE INSTALL.MATERIAL

23.230

T 2495357 - 000
B 2495357 - 010

FX800 / 106101 - .....

Item	Quan.	ME	Part No.	Description
001	1	00		22.231 2495359 SOLENOID VALVE MOUNTING PARTS
003	2	00	73171335	HEXAGON BOLT
004	4	00	73170186	DISK/WASHER

ME: 00 = Stück/pcs 10 = m 20 = m² 30 = m³ 40 = kg 50 = l (litre)

1999-09-10

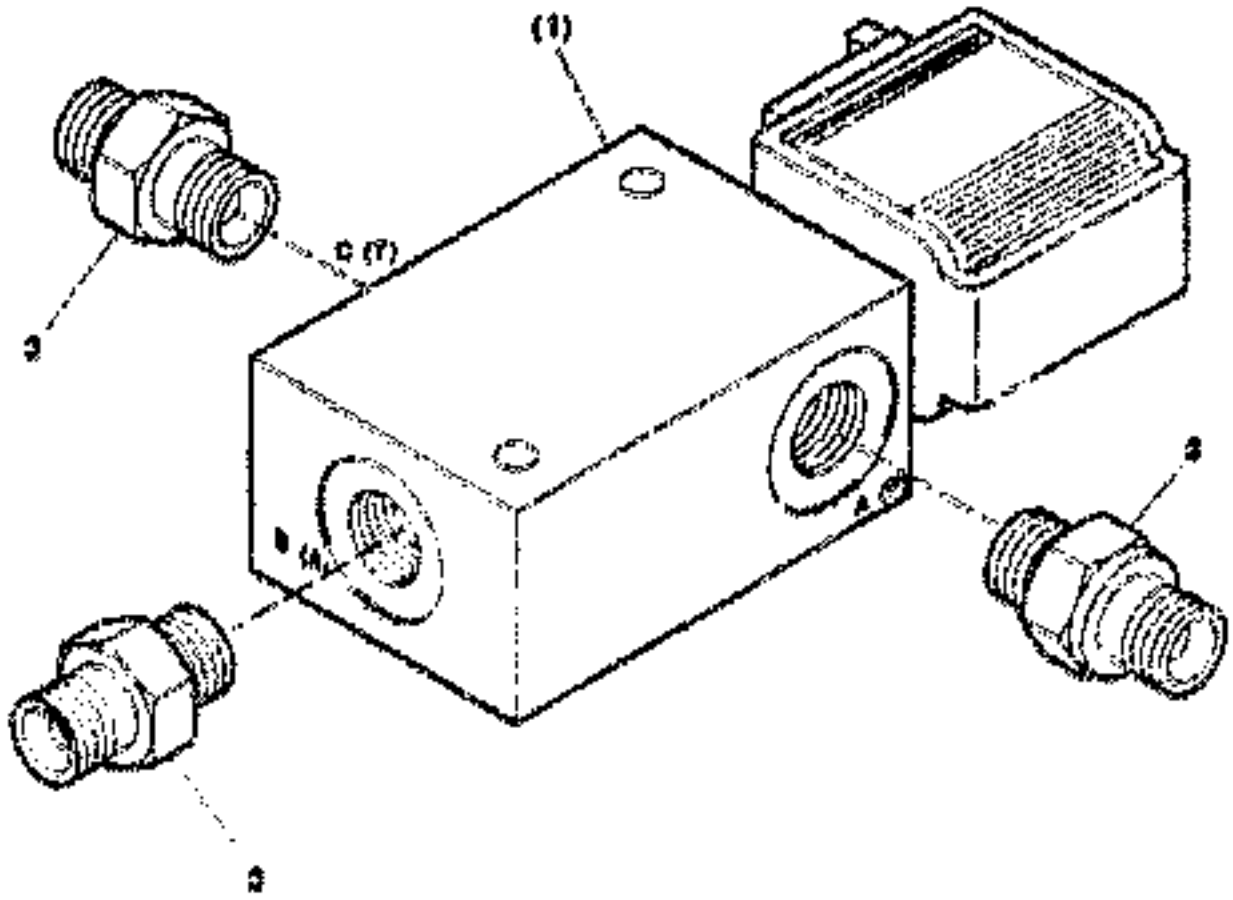

23.231

SOLENOID VALVE MOUNTING PARTS

T 2496366 - 000
B 2496356 - 010

FX500 / 106101 - .....

Item	Quan.	ME	Part No	Description
001	1	00		23.232 2496293 SOLENOID VALVE
003	3	00	73170298	SOCKET

ME: 00 = Stück/piece 10 = m 20 = m² 30 = m³ 40 = kg 50 = l (litre)

1996-08-10

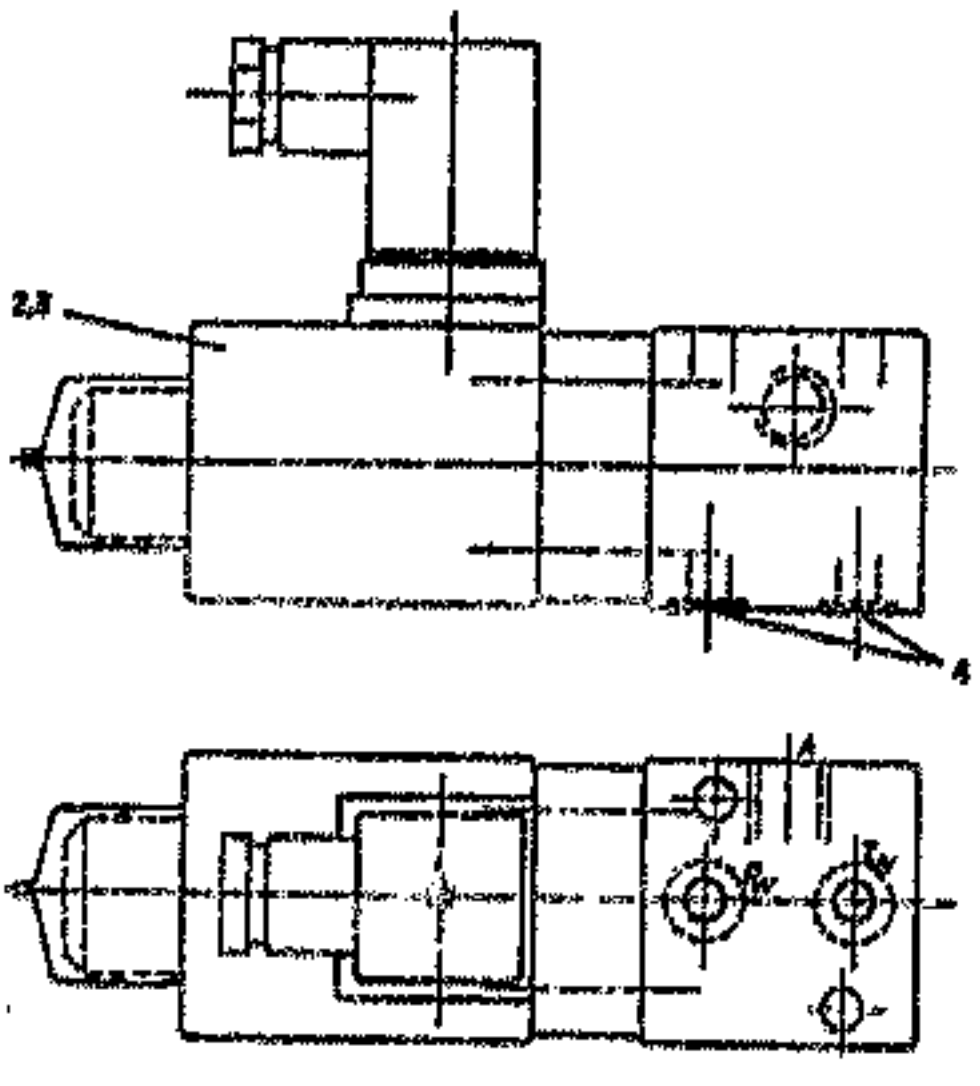

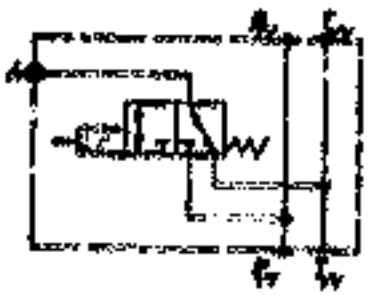

SOLENOID VALVE

FX800 / 106101 - .....

T 1998156 - 002
B 1998156 - 010

Item	Quan.	Mfr	Part No.	Description
001	1	00	73171251	VALVE
002	1	00	73170664	SOLENOID VALVE
003	1	00	73171252	SET OF PIST. RINGS
004	2	00	73170499	O-RING

Mfr. 00 = Stück/piece 10 = m 20 = m² 30 = m³ 40 = kg 50 = l (litre)

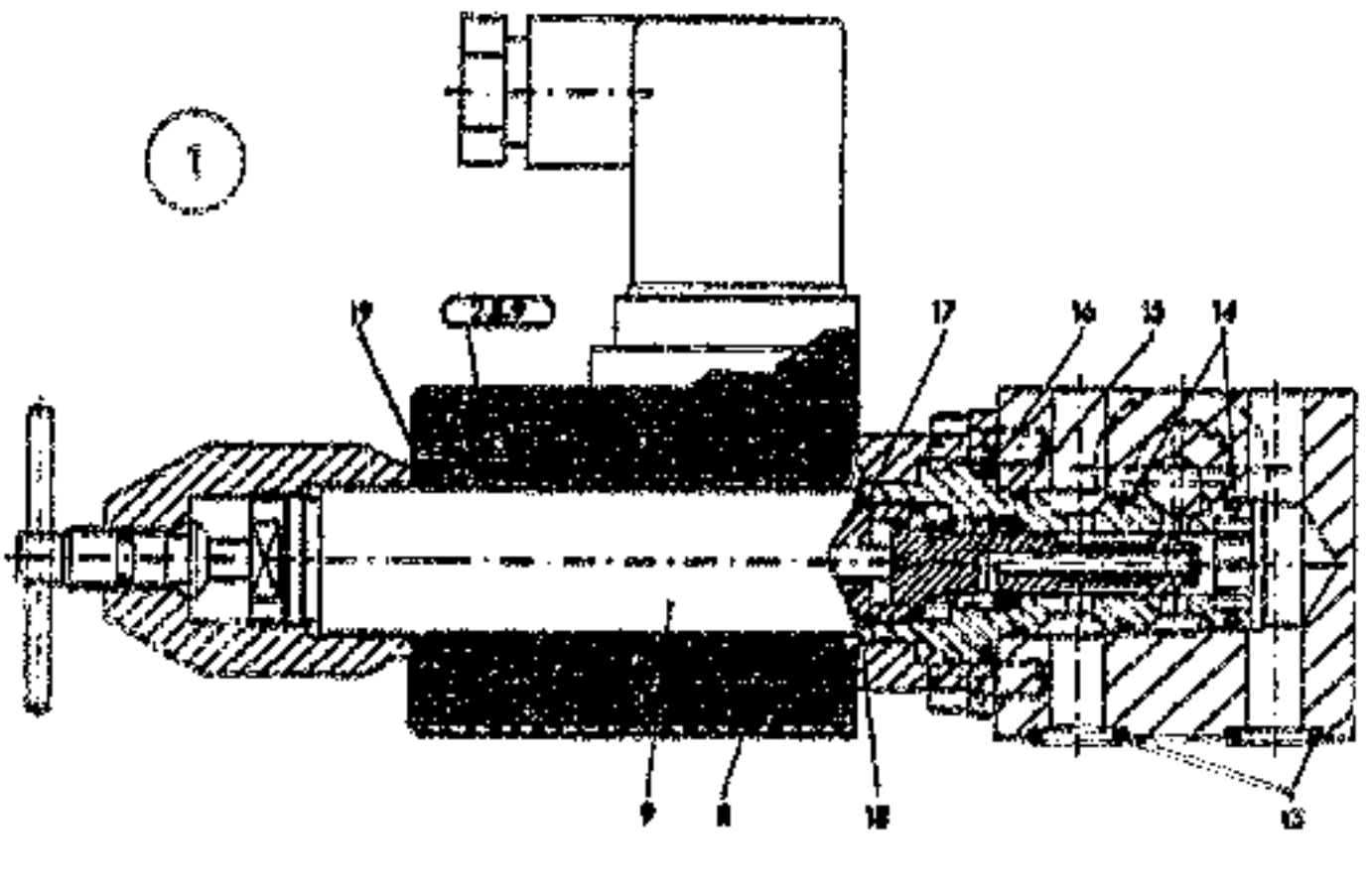

23.232

SOLENOID VALVE

FX800 / 106101 ▫ .....

T 2340995 - 000
B 2340996 - 010

Item	Quan.	ME	Part No	Description
001	1	00	73171263	VALVE
002	1	00	73170664	SOLENOID VALVE
008	1	00	73171264	SOLENOID COIL
009	1	00	73171256	PIPE
013	2	00	73170496	O-RING
014	2	00	73171256	O-RING
016	1	00	73171257	O-RING
018	1	00	73171266	O-RING
017	1	00	73171269	ROUND SEALING RING
018	1	00	73171260	O-RING
019	1	00	73171261	O-RING

ME: 00 = Stückpreis 10 = m 20 = m² 30 = m³ 40 = kg 50 = l (litre)

1996-09-10

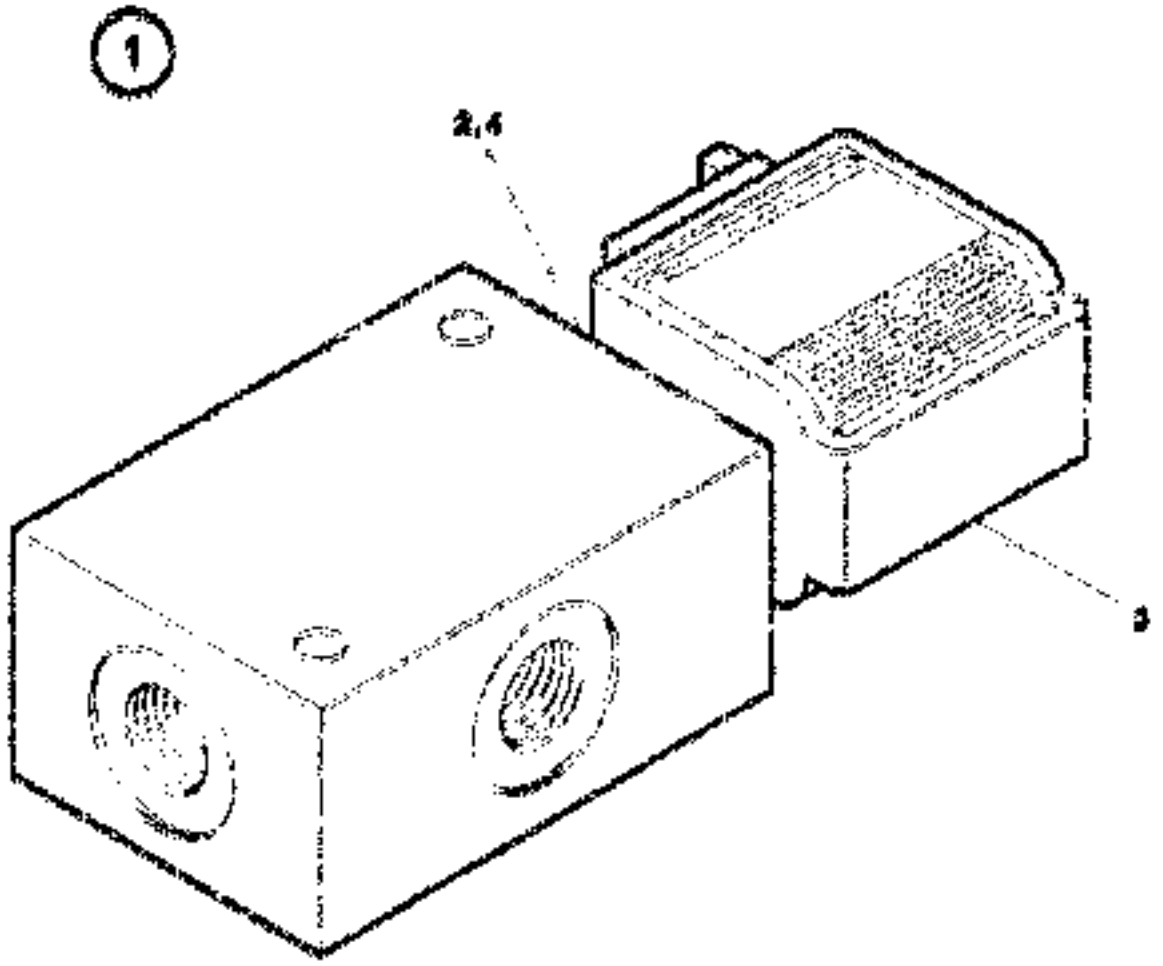

2 495 000 GB

SOLENOID VALVE

23.232

DX500 / 105101 - ....

T 2495293 - 000
B 2495293 - 010

Item	Quan	ME	Part No.	Description
001	1	00	73170600	CONTROL BLOCK
002	1	00	73170601	SOLENOID VALVE
003	1	00	73170602	MAGNET
004	1	00	73170603	SET OF PIST. RINGS

ME: 00 = Stück/piece 10 = m 20 = m² 30 = m³ 40 = kg 50 = l (litre)

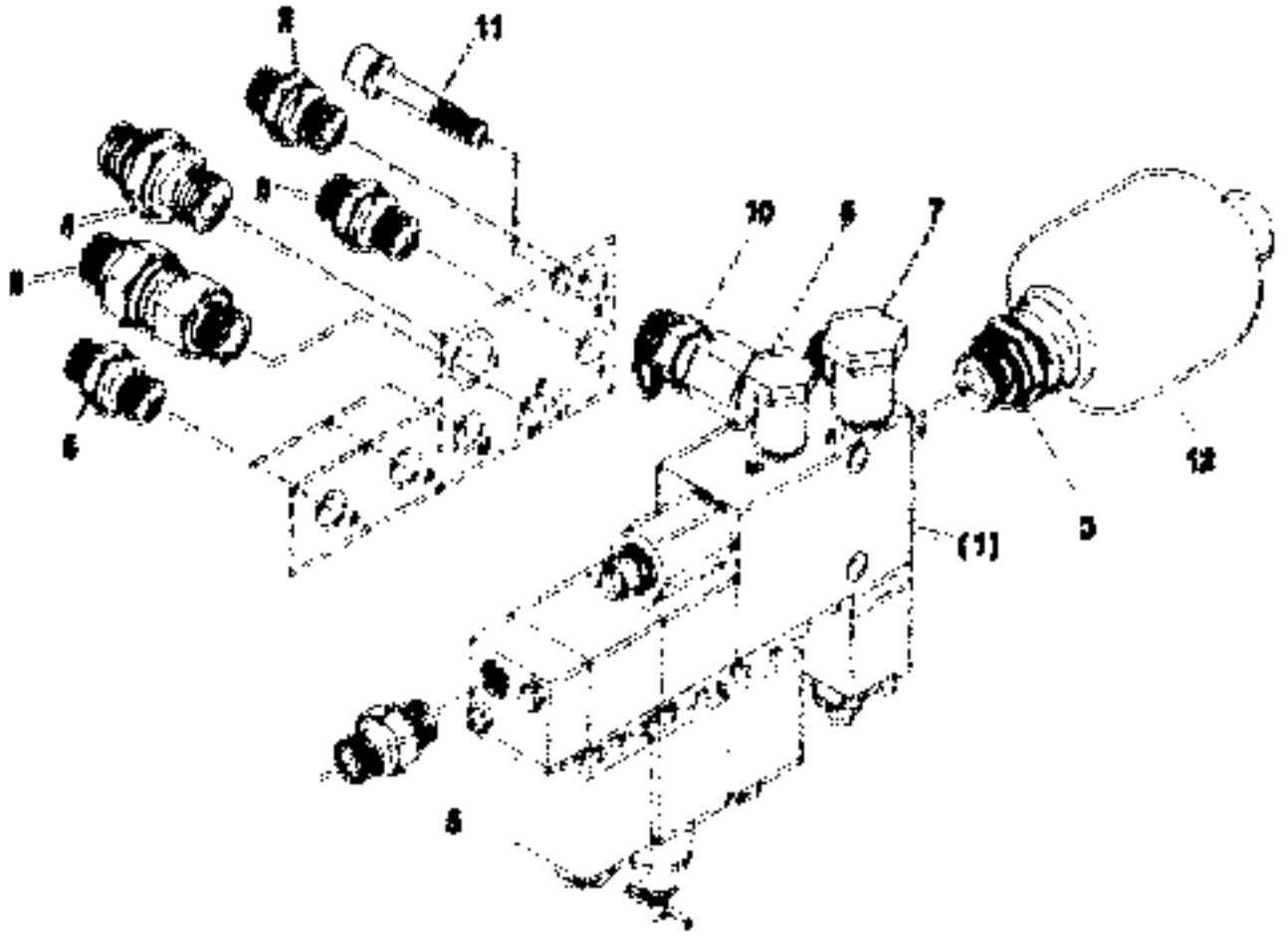

23.240

VALVE INTERCONN. INSTALL.MATERIAL

T 2783324 - 000
B 2783324 - 010

FX650 : 1061/01 - .....

Item	Quan.	ME	Part No	Description
001	1	00		23.241 2783323 VALVE INTERCONN. MOUNTING PARTS
002	1	00	73170286	SOCKET
003	1	00	73170462	SOCKET
004	1	00	73170463	SOCKET
005	5	00	73170510	SOCKET
006	1	00	73171883	TUBE FITTING
007	1	00	73171893	SWING FIXTURE
008	1	00	73170886	CHECK VALVE
010	1	00	73170888	TUBE FITTING
011	2	00	73170457	CYL.HEAD SCREW
012	1	00	73170868	RESERVOIR

ME 00=Stck/pces 10=m 20=m² 30=m³ 40=kg 50=l (litre)

1996-09-10

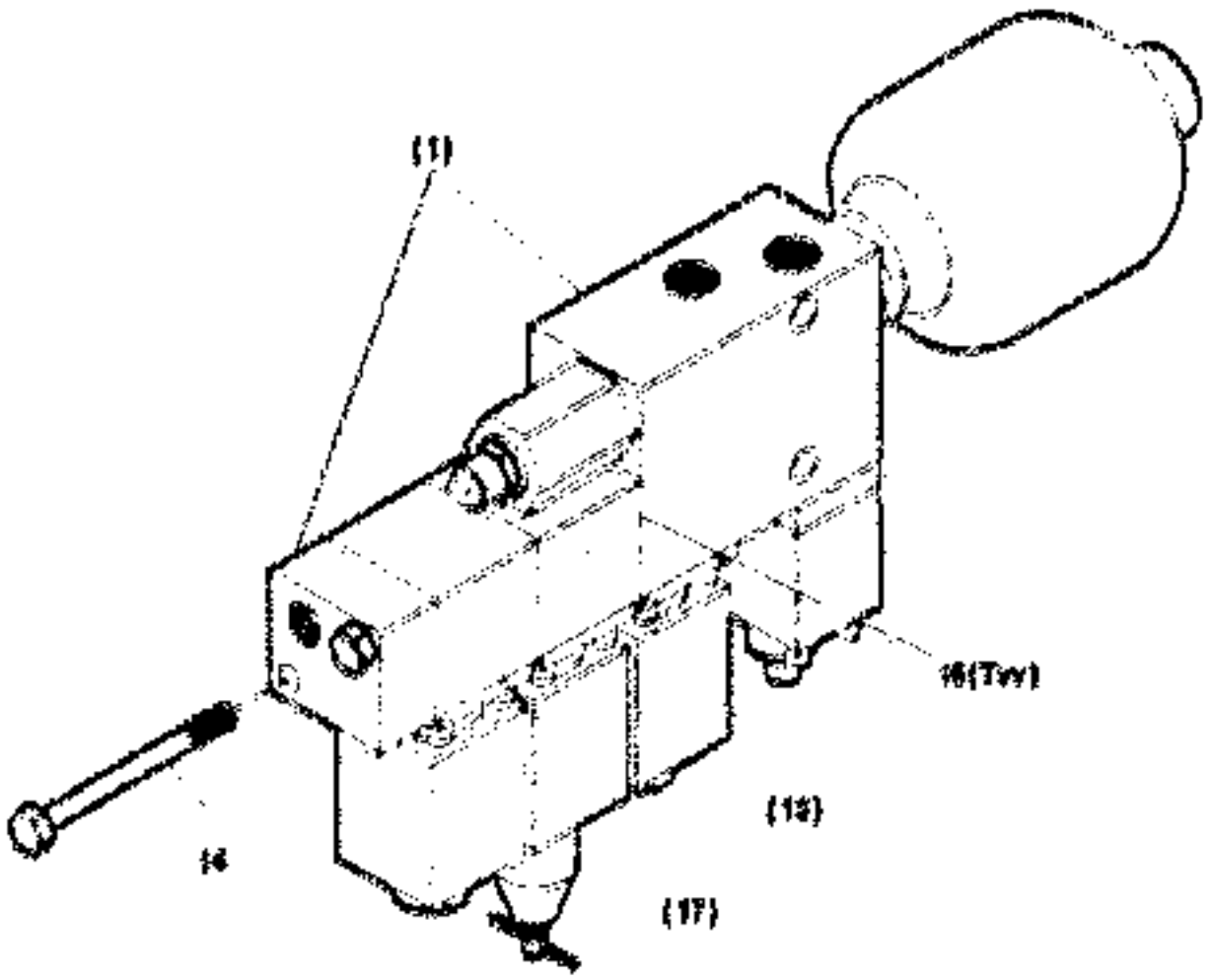

VALVE INTERCONN. MOUNTING PARTS

DX800 / 106101 / ....

Y 2764432 - 001
B 2763533 - 010

RNP	Quan.	ME	Part No.	Description
001	1	00		23.243 2763515 VALVE INTERCONN.
013	1	00		23.238 2245696 SOLENOID VALVE
014	2	00	73170416	HEXAGON BOLT
016	1	00	73170416	INSERT
017	1	00		23.232 1996160 SOLENOID VALVE

ME: 00=Basic/none 15=m 36=m² 08=m³ 43=kg 50=l (litre)

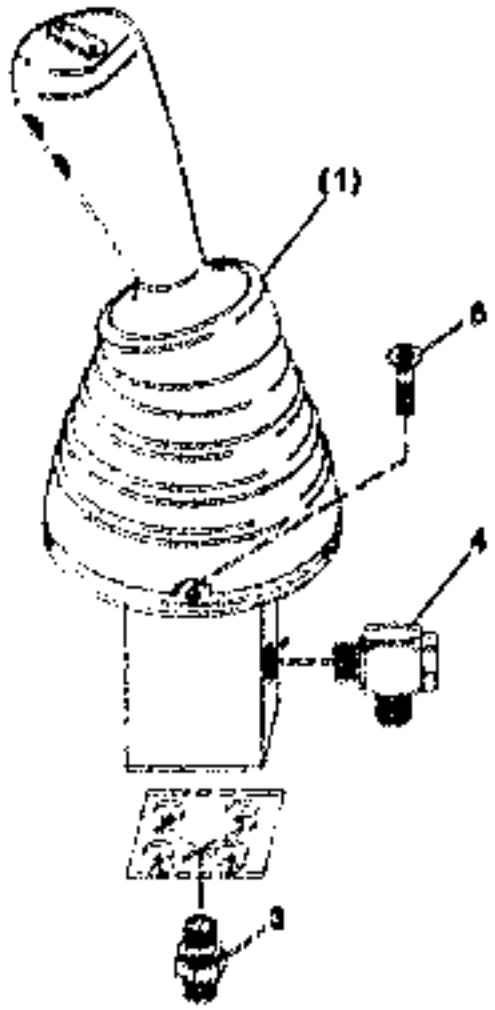

SERVO VALVE INSTALL.MATERIAL

T 2496569 - 002
B 2496569 - 010

FX600 / 105101 - .....

Item	Quan.	ME	Part No.	Description
001	1	00		23.271 2496568 SERVO VALVE MOUNTING PARTS
003	4	00	73170380	SOCKET
004	2	00	73170868	SWING FIXTURE
006	4	00	73171233	CONTER-SUNK SCREW

ME. 00 = Stück/piece 15 = h 05 = m² 20 = m³ 42 = kg 50 = l (litre)

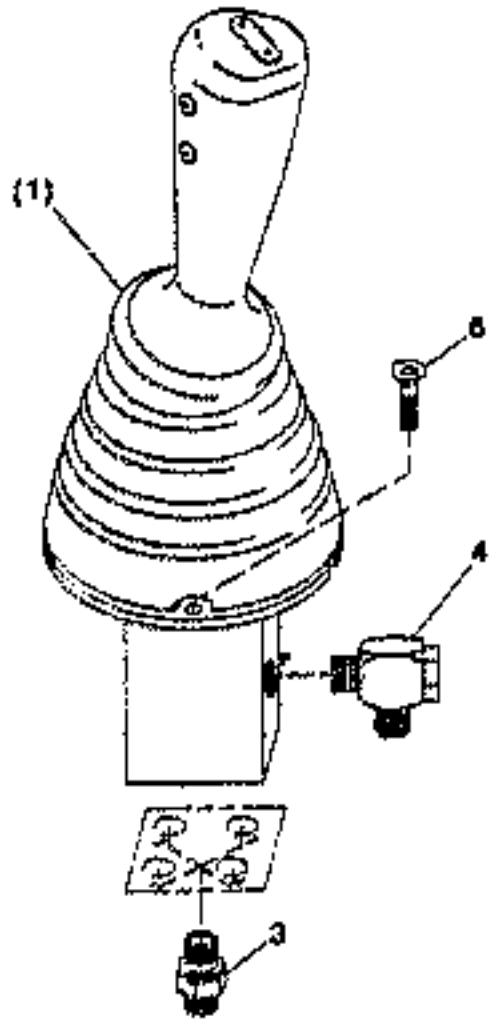

2 496 571-010

23.270 SERVO VALVE INSTALL.MATERIAL

FX600 / 106101 - .....

1' 2496571 - 002
B 2496571 - 010

Item	Quan.	ME	Part No.	Description
001	1	00		23.271 2792554 SERVO VALVE MOUNTING PARTS
003	4	00	73170360	SOCKET
004	2	00	73170656	SWING FIXTURE
005	4	00	73171233	CONTER-SUNK SCREW

ME: 00 = Stück/piece 13 = m 25 = m² 39 = m³ 43 = kg 50 = l (litre)

1998-09-10

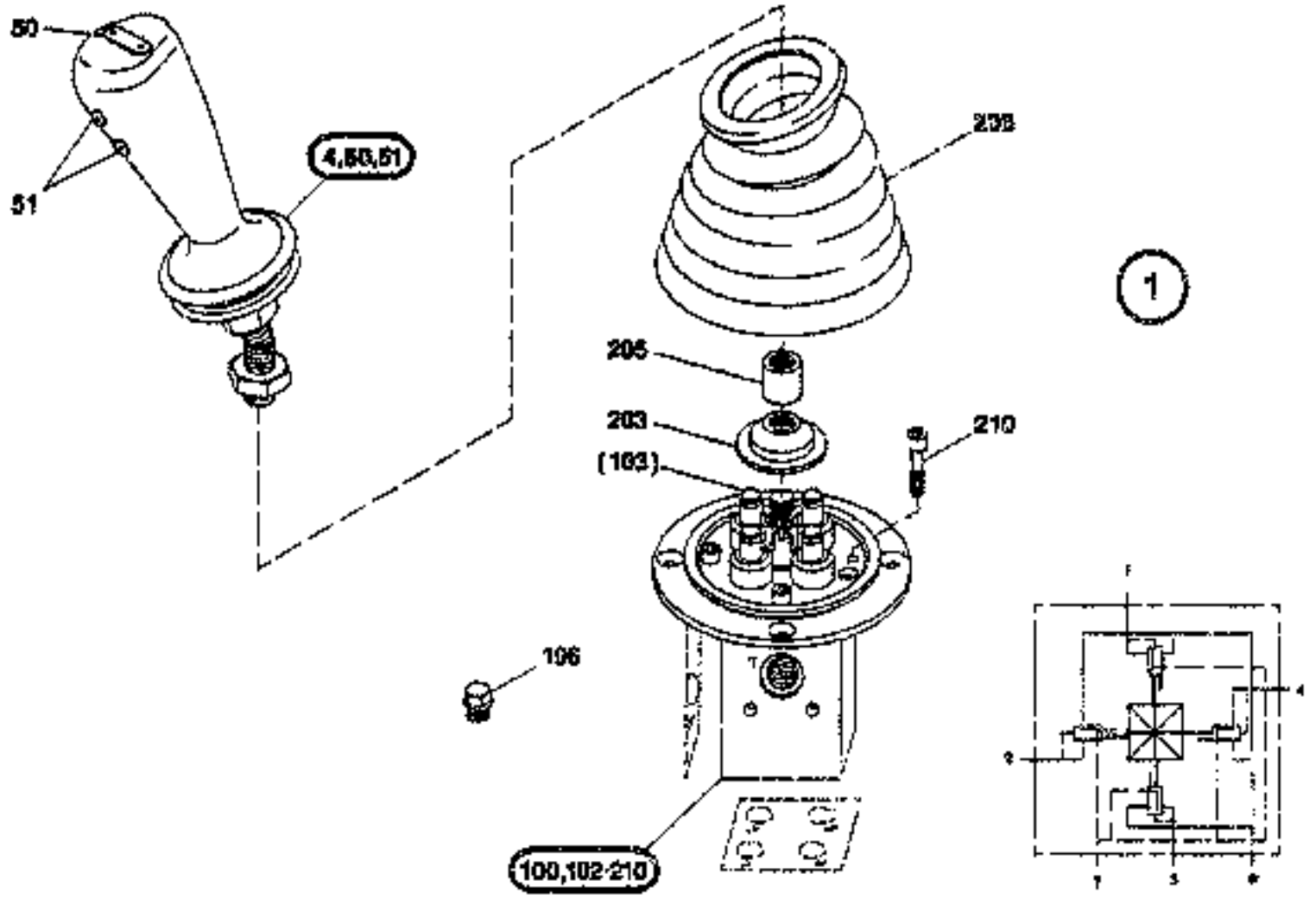

SERVO VALVE MOUNTING PARTS

T 2496568 - 002
B 2496568 - 011

FX600 / 106101 - .....

Item	Quan.	ME	Part No.	Description
001	1	00	73171336	SERVO VALVE
004	1	00	73176032	HANDLE
050	1	00	73176033	RUBBER CAP
051	1	00	73176034	RUBBER CAP
100	1	00	73176176	VALVE BODY
103	4	00		23.272 2496570 SERVO VALVE
106	1	00	73176035	SCREW PLUG
203	1	00	73176036	SWITCH
205	1	00	73176037	EXTENSION
206	1	00	73176038	BELLOWS
210	1	00	73176039	CYL.HEAD SCREW

ME: 00 = Stück/piece 10 = m 20 = m² 30 = m³ 40 = kg 50 = l (litre)

1998-09-10

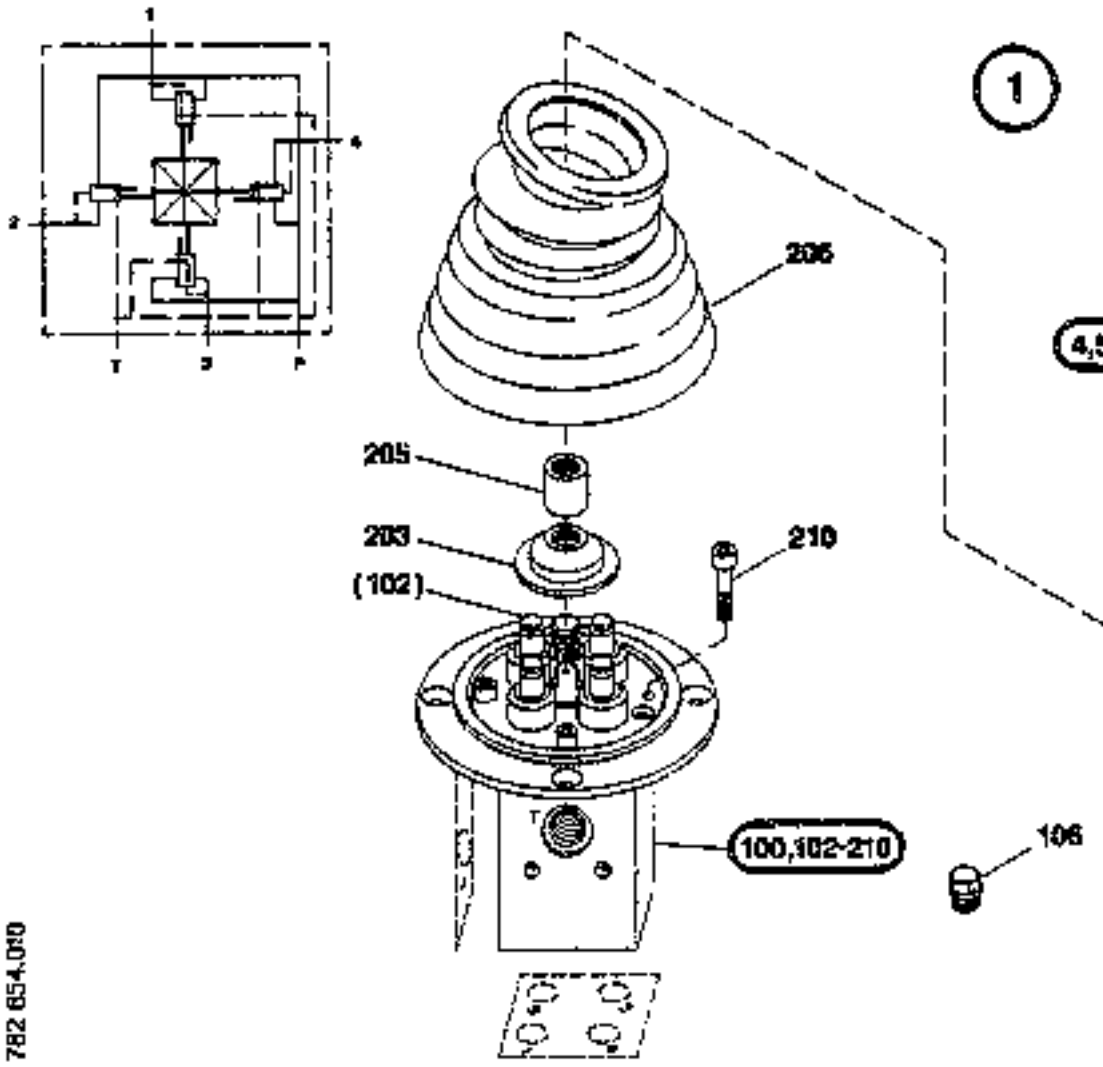

2 782 654.010

SERVO VALVE MOUNTING PARTS

T 2782654 - 001
B 2782654 - 010

FX500 / 106101 - .....

Item	Quan.	ME	Part No.	Description
001	1	00	73171337	SERVO VALVE
004	1	00	73176040	HANDLE
050	1	00	73176033	RUBBER CAP
051	2	00	73176034	RUBBER CAP
100	1	00	73176176	VALVE BODY
102	4	00		23.272 2496670 SERVO VALVE
106	1	00	73176035	SCREW PLUG
203	1	00	73176036	SWITCH
205	1	00	73176037	EXTENSION
206	1	00	73176038	BELLOWS
210	1	00	73176039	CYL.HEAD SCREW

ME: 00 = Stück/piece 13 = m 26 = m^2 39 = m^3 43 = kg 50 = l (litre)

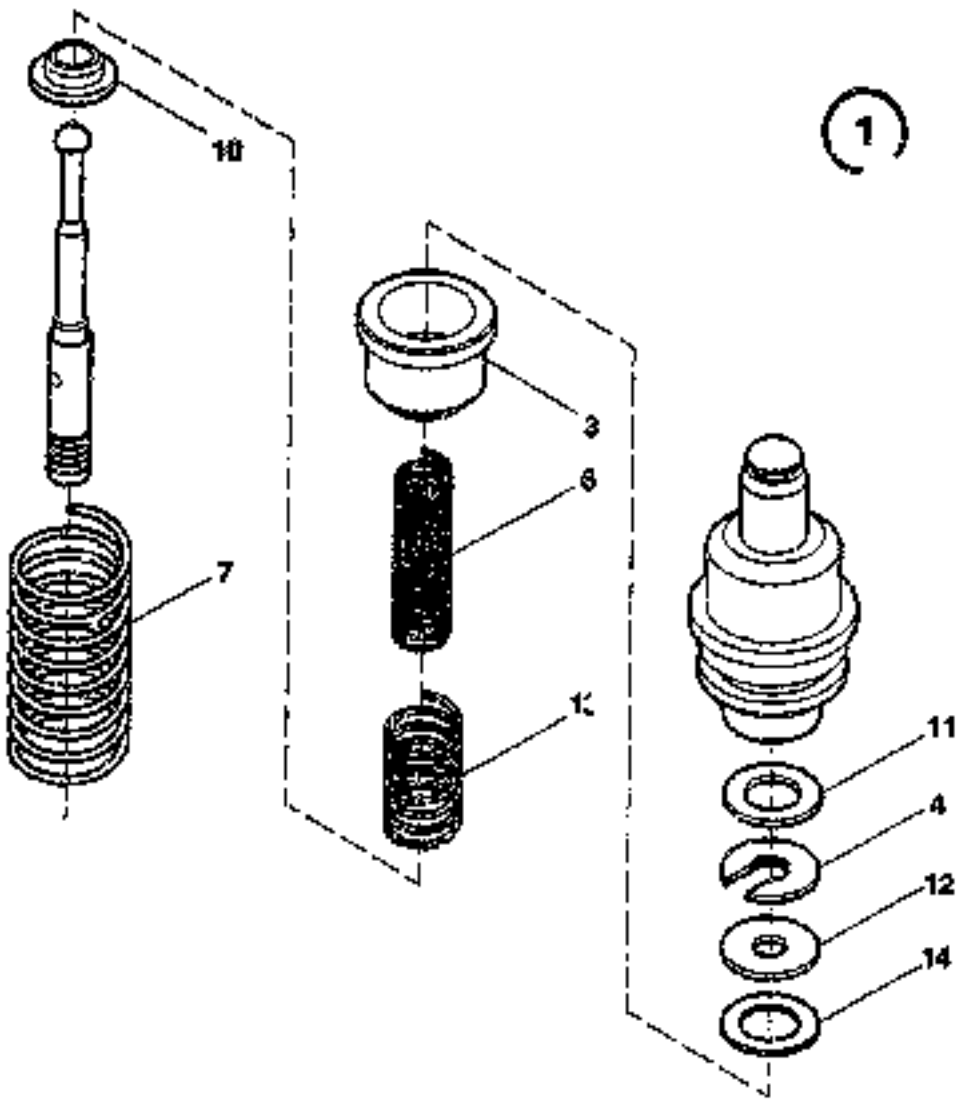

2 466 570.010

SERVO VALVE

23.272

FX600 / 106101 - .....

T 2466570 - 001
B 2466570 - 010

Item	Quan.	ME	Part No.	Description
001	1	00	73176041	VALVE INSERT
003	1	00	73176042	STOP BUSH
004	1	00	73176043	DISK/WASHER
006	1	00	73176044	SPRING
007	1	00	73176045	SPRING
010	1	00	73176046	SPRING SEAT
011	1	00	73176047	DISK/WASHER
012	1	00	73176048	DISK/WASHER
013	1	00	73176049	SPRING
014	1	00	73176050	SHIM RING

ME: 00 = Stück/piece 13 = m 26 = m² 39 = m³ 43 = kg 50 = l (litre)

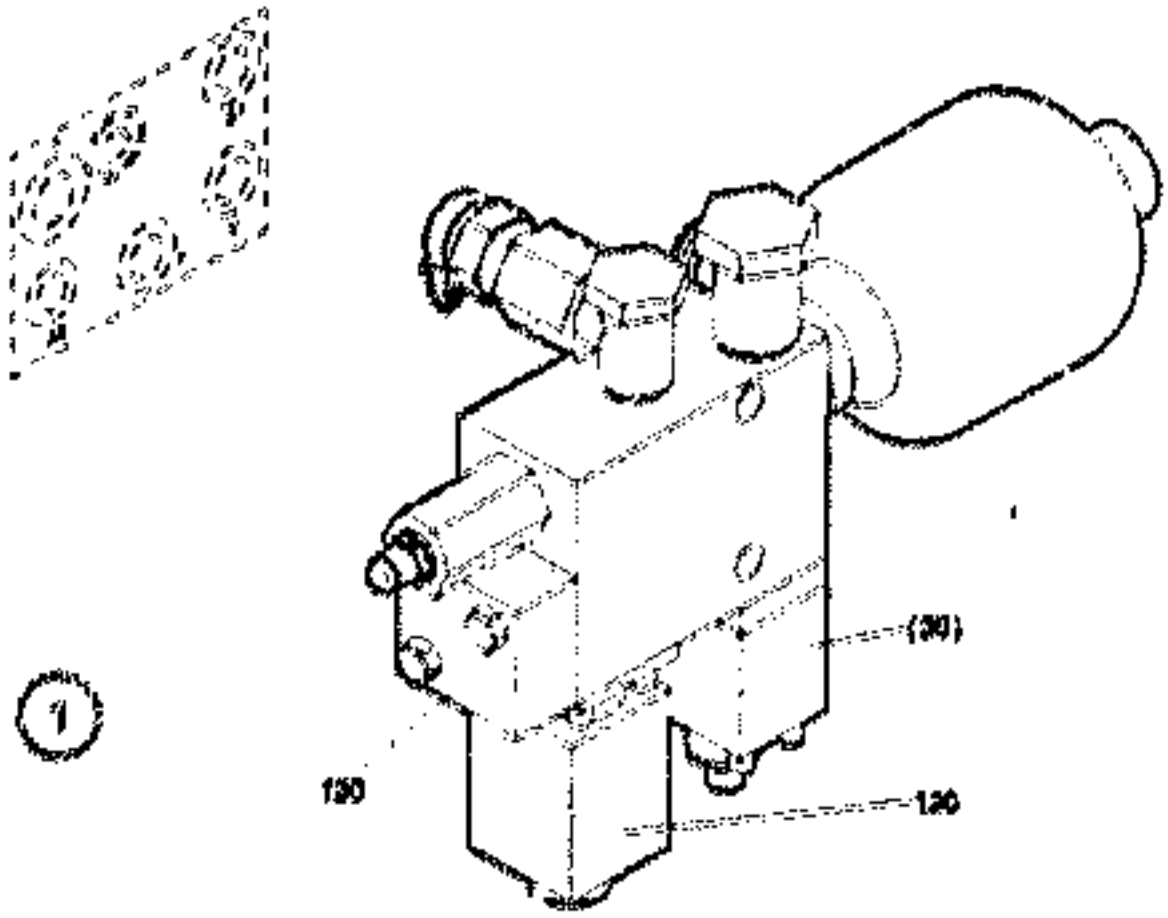

2783675.000

VALVE INTERCONN.

FX400 - 109101 - ...

T 2783675 - 000
B 2783675 - 000

Item	Quan.	MS	Part No.	Description
001	1	00	73177633	CONTROL SYSTEM
030	1	00		23.313 2219823 PROPORTIONAL VALVE
120	1	00	73170864	SOLENOID VALVE
130	1	00	73170866	PLATE

MS: 00=Stck/piece 13=m 26=m² 59=m³ 43=kg 90=l (litre)

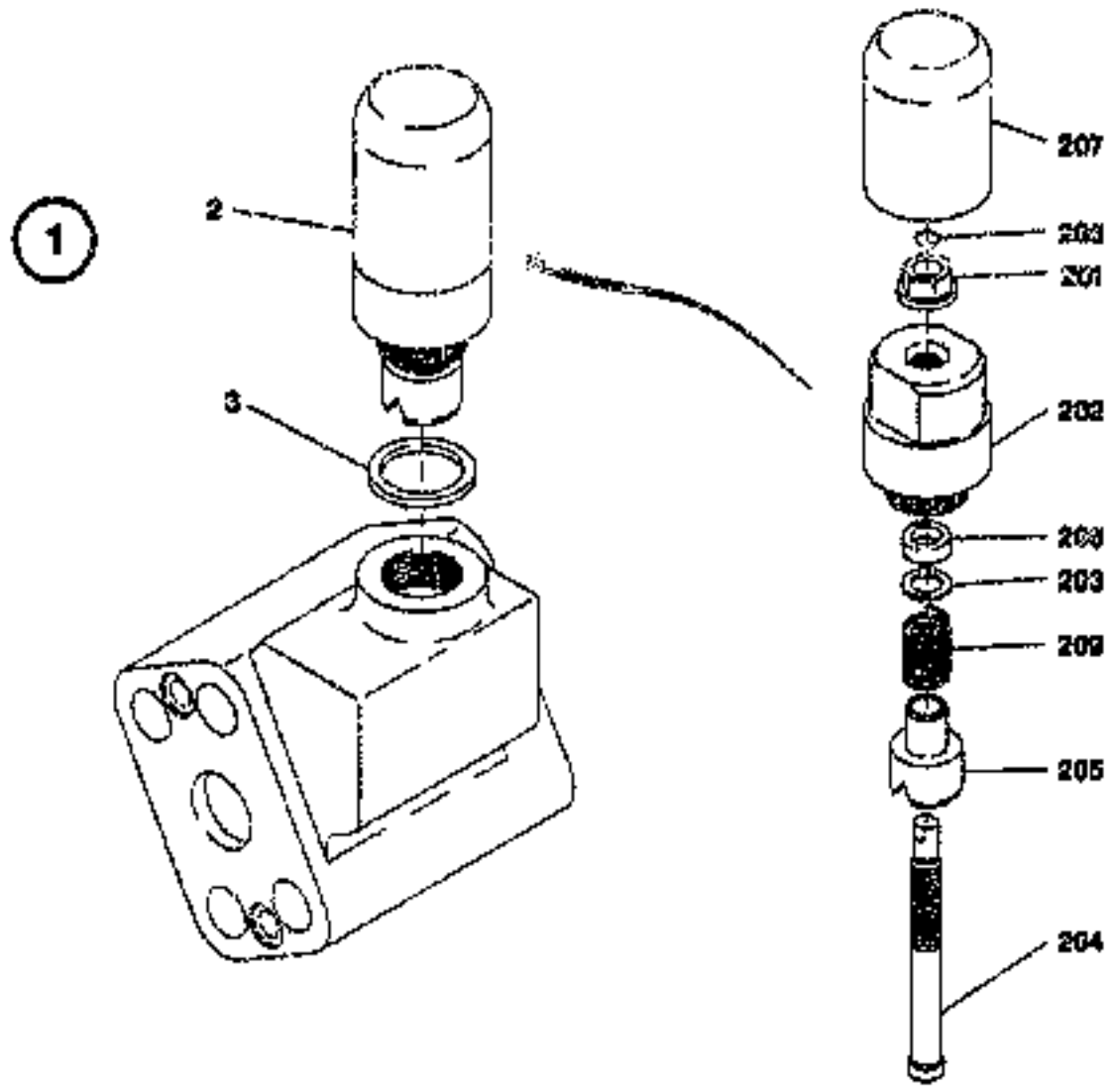

2 495 870 010

CHECK VALVE

23.152

FIATALLIS

T 2495870 - 000
B 2495870 - 010

FX600 / 106101 - .....

Item	Quan.	ME	Part No.	Description
001	1	00	73170540	ONE-WAY RESTRICTOR
002	1	00	73170541	VALVE
003	1	00	73170327	SEALING RING
201	1	00	73170542	SEALING NUT
202	1	00	73170544	VALVE BODY
203	1	00	73170545	DISK/WASHER
204	1	00	73170546	SCREW
205	1	00	73170547	INSERT
206	1	00	73170548	SNAP RING
207	1	00	73170549	CAP
208	1	00	73170550	GROOVED RING
209	1	00	73170551	SPRING

ME: 00 = Stück/piece 13 = m 26 = m² 39 = m³ 43 = kg 50 = l (litre)

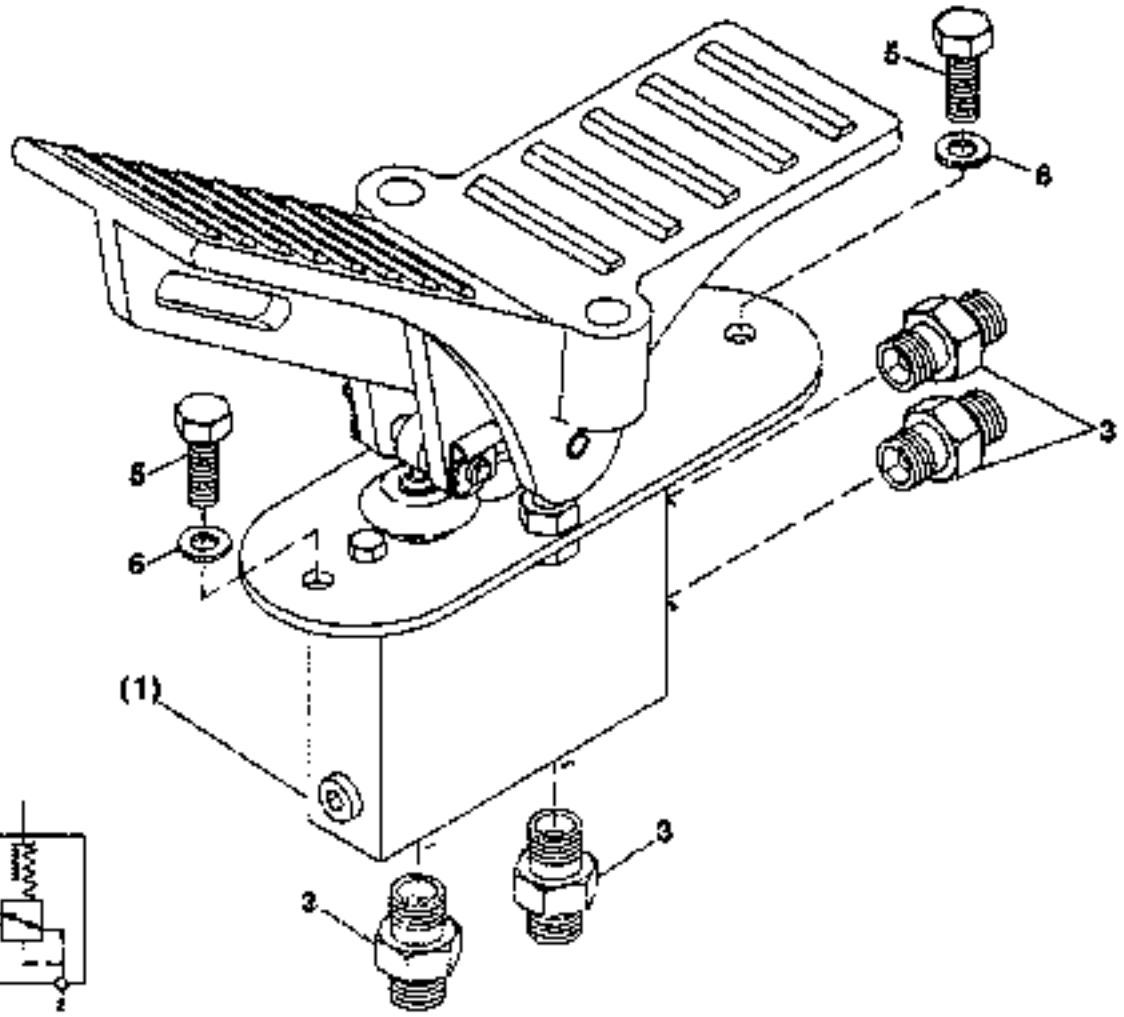

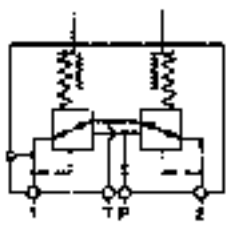

2 496 573.010

23.290 TREADLE VALVE INSTALL.MATERIAL

FIATALLIS

T 2496573 - 000
B 2496573 - 010

FX500 / 105101 - .....

Item	Quan.	ME	Part No.	Description
001	1	00		23.292 2496572 TREADLE VALVE
003	4	00	73170380	SOCKET
005	2	00	73170205	HEXAGON BOLT
006	2	00	73170160	DISK/WASHER

ME: 00 = Stück/piece 10 = m 25 = m^2 28 = m^3 43 = kg 50 = l (litro)

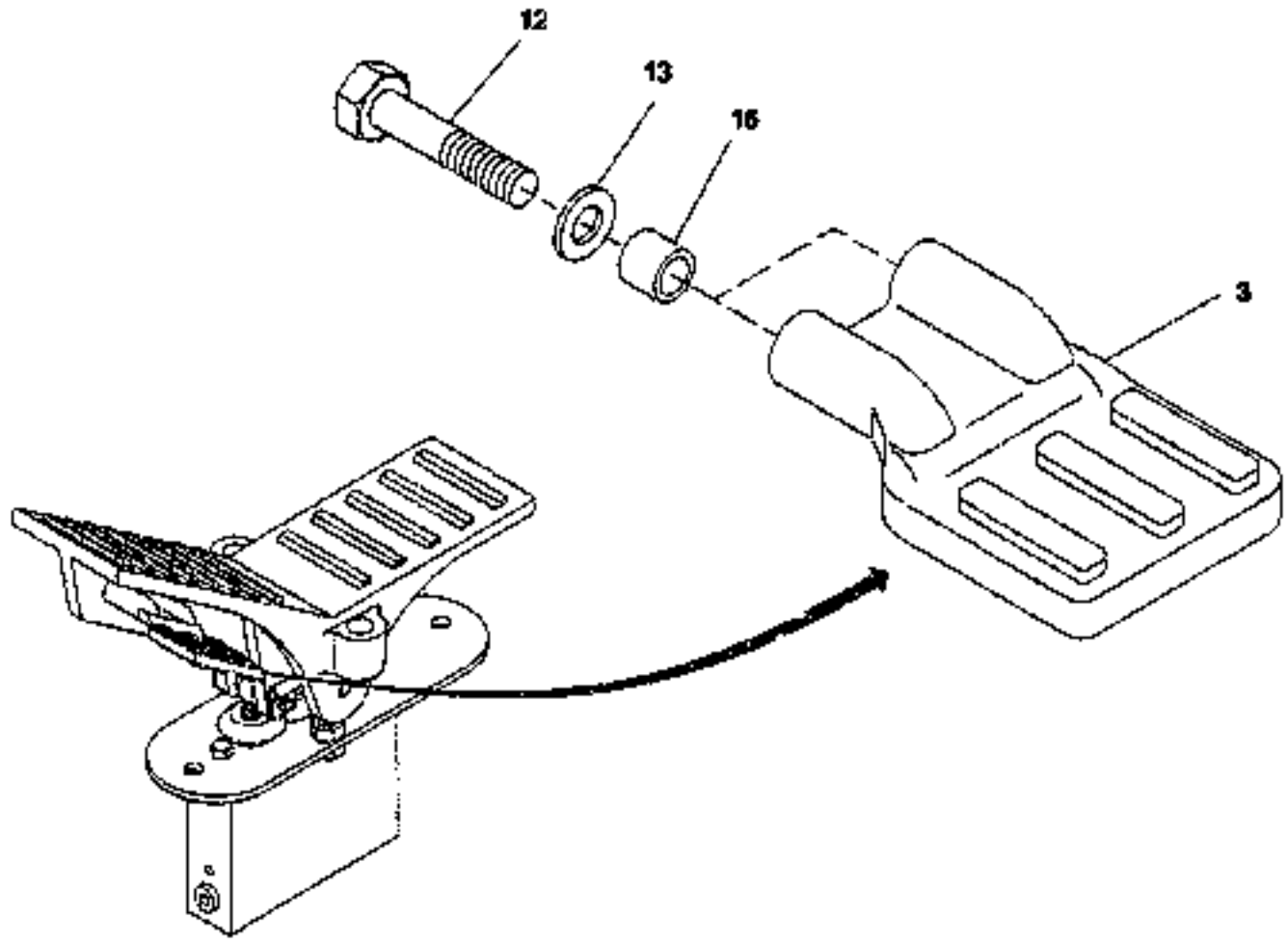

2 444 789.010

23.291

TREADLE VALVE MOUNTING PARTS

T 2444789 - 000
B 2444789 - 010

FX600 / 106101 - .....

Item	Quan.	ME	Part No.	Description
003	1	00	73171324	PEDAL
012	2	00	73170176	HEXAGON BOLT
013	2	00	73170212	DISK/WASHER
016	2	00	73171326	BUSHING

ME: 00 = Stck/piece 13 = m 26 = m² 39 = m³ 43 = kg 50 = l (litre)

1996-09-10

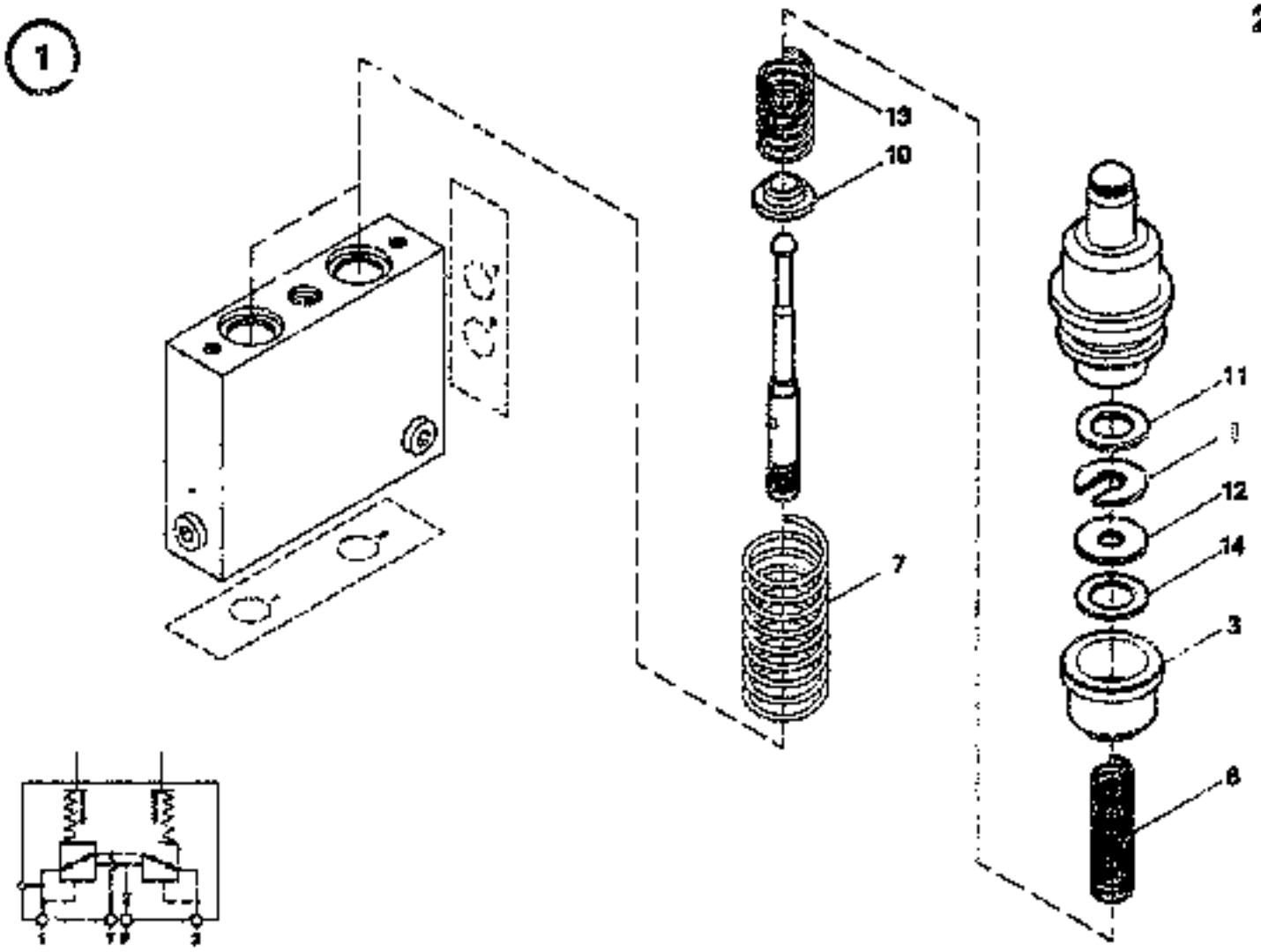

TREADLE VALVE

23.292

FX600 / 106101 - .....

T 2782655 - 001
B 2782655 - 011

Item	Quan.	ME	Part No.	Description
001	1	00	73176039	VALVE INSERT
002	1	00	73176042	STOP BUSH
004	1	00	73176043	DISK/WASHER
005	1	00	73176044	SPRING
007	1	00	73176050	SPRING
010	1	00	73176046	SPRING SEAT
011	1	00	73176047	DISK/WASHER
012	1	00	73176048	DISK/WASHER
013	1	00	73176049	SPRING
014	1	00	73176050	SHIM RING

ME: 00 = Stck/piece 10 = m 25 = m² 30 = m³ 42 = kg 50 = l (liter)

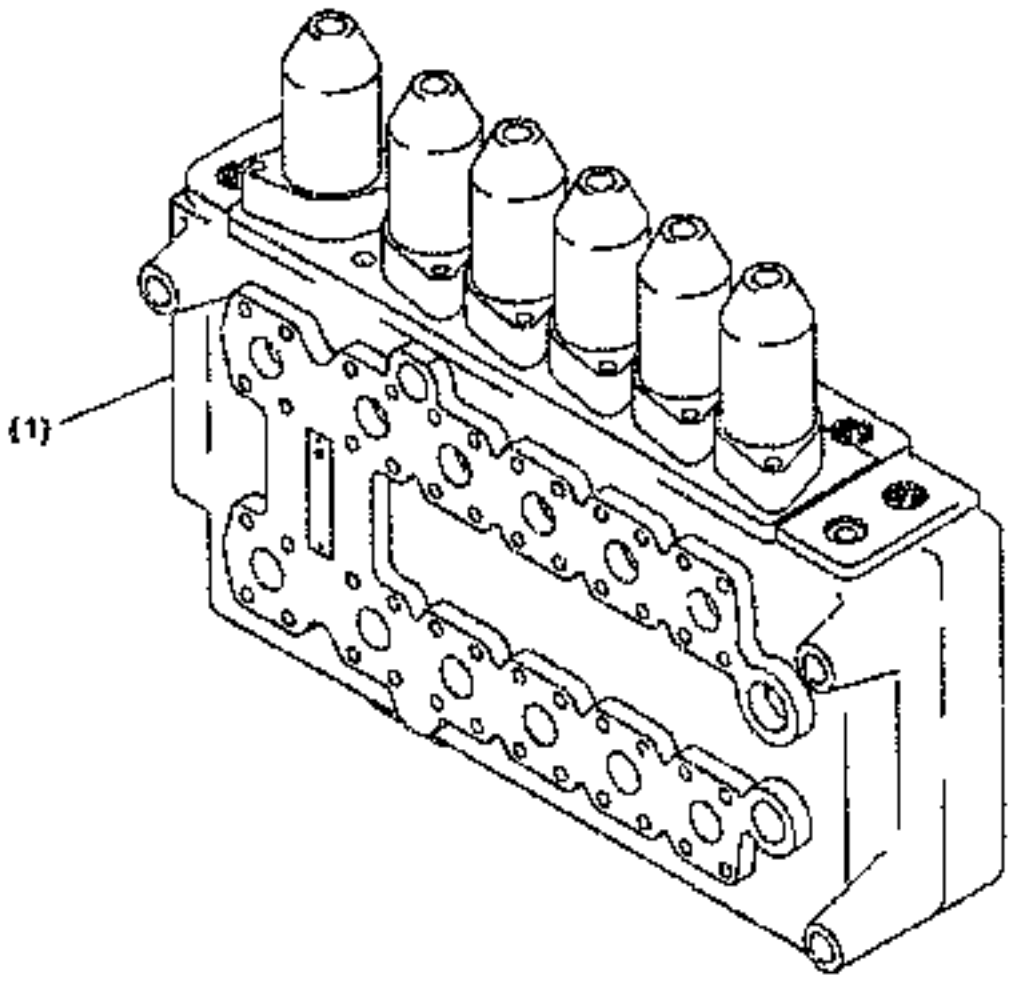

2 444 673.010

23.610 CONTROL BLOCK INSTALL.MATERIAL

FIATALLIS

FX800 / 106101 - .....

T 2444673 - 000
B 2444673 - 010

Item	Quan.	ME	Part No.	Description
001	1	00		**23.611 2248594** CONTROL BLOCK MOUNTING PARTS

ME: 00 = Stück/piece 13 = m 26 = m² 39 = m³ 43 = kg 60 = l (litre)

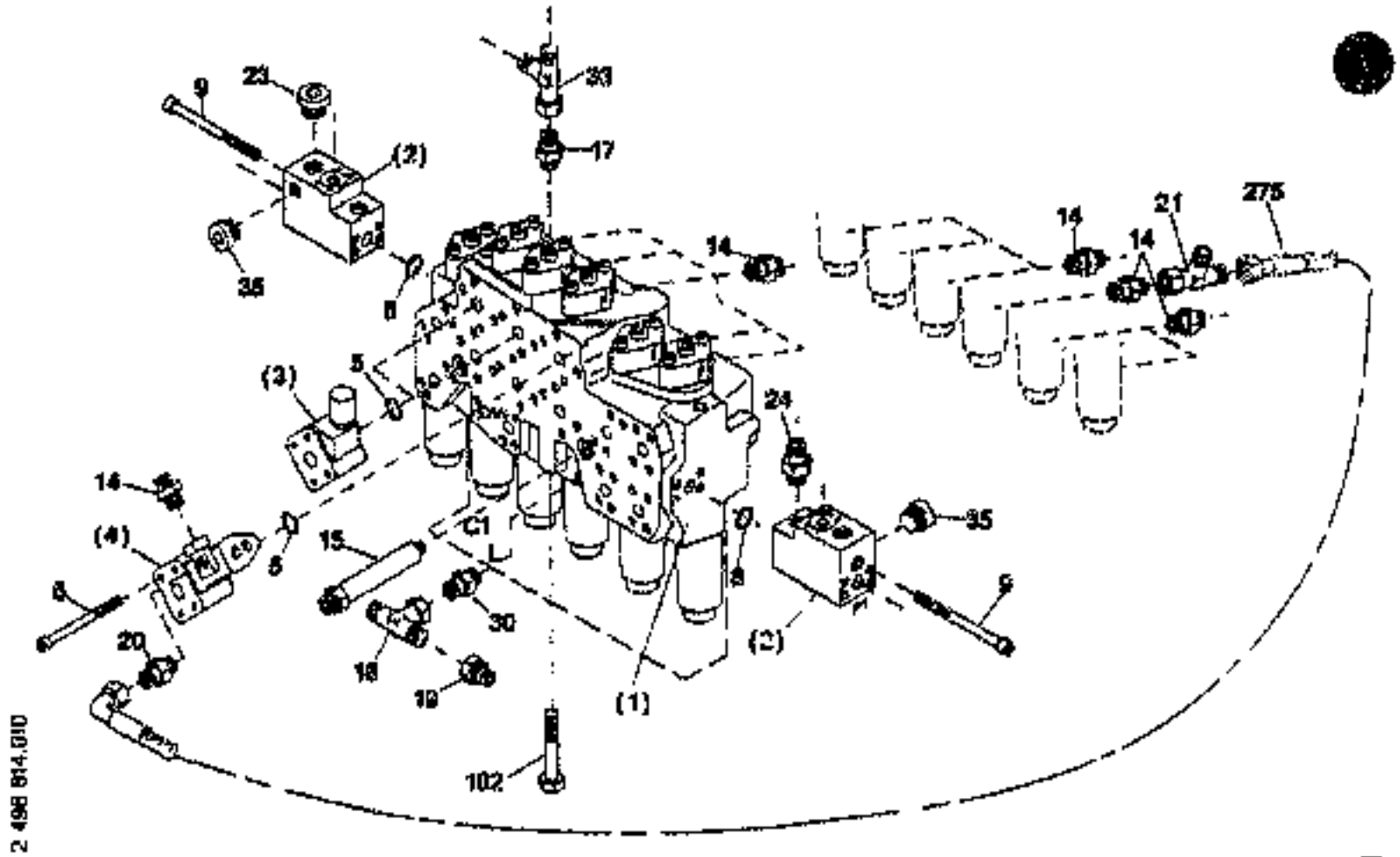

CONTROL BLOCK INSTALL.MATERIAL

23.610

T 2496814 - 000
B 2496814 - 010

FX600 / 106101 - .....

Item	Quan.	ME	Part No.	Description
001	1	00		23.611 2202662 CONTROL BLOCK MOUNTING PARTS
002	2	00		22.400 1706496 DISTRIBUTOR INSTALL.MATERIAL
003	2	00		23.152 2496870 CHECK VALVE
004	1	00		23.122 1692293 SLOCKING VALVE
005	2	00	73170346	SEALING RING
006	2	00	73170504	CYL.HEAD SCREW
008	2	00	73170327	SEALING RING
009	4	00	73170506	CYL.HEAD SCREW
014	13	00	73170298	SOCKET
015	1	00	73170506	NIPPLE
017	1	00	73170509	SOCKET
018	1	00	73170473	SOCKET

ME: 00 = Stück/piece 13 = m 25 = m² 39 = m² 43 = kg 50 = l (kit)

1998-09-10

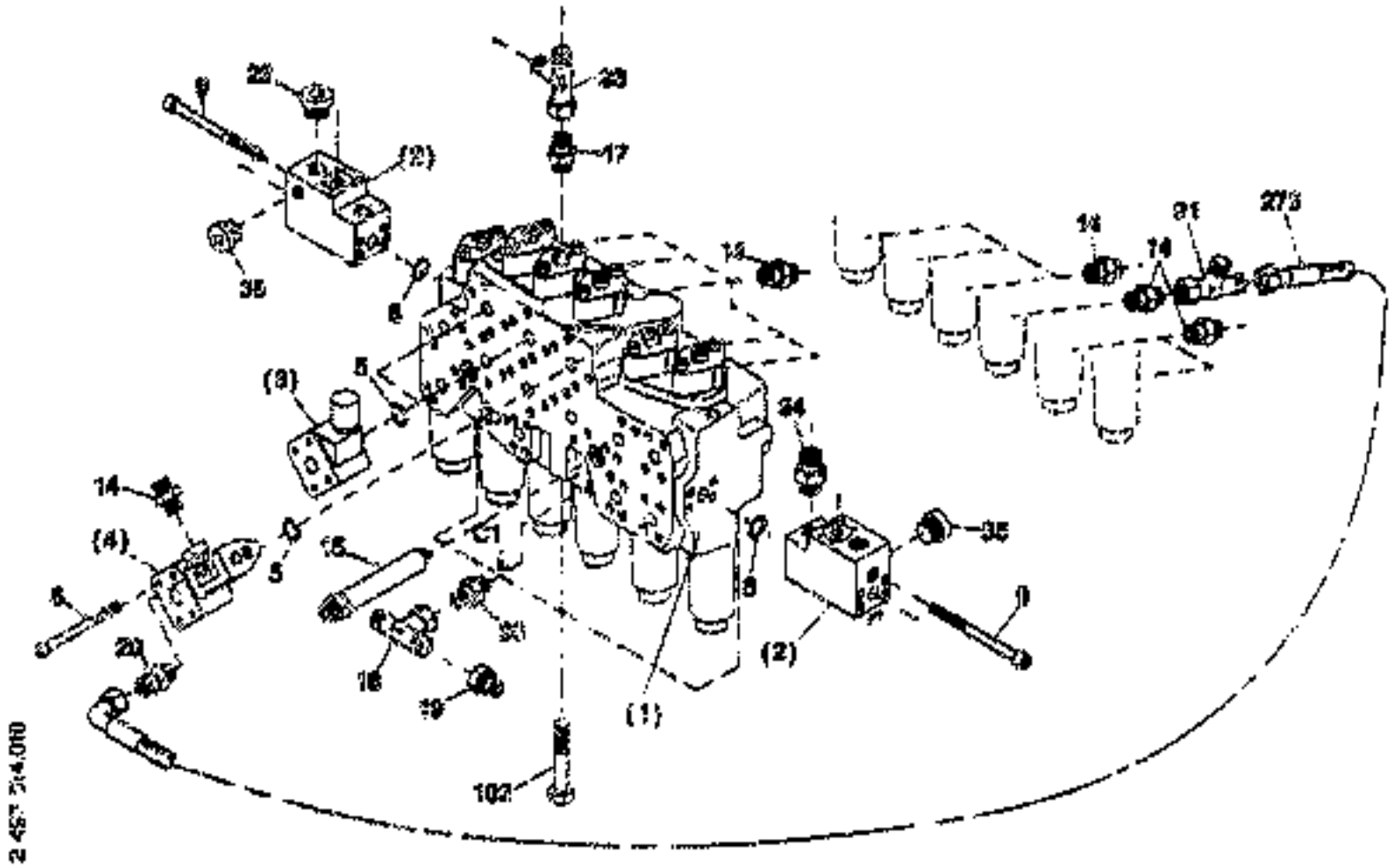

23.610

CONTROL BLOCK INSTALL MATERIAL

T 2426614 - 000
B 2496614 - 010

FX800 / 106101 - .....

Item	Quan.	ME	Part No.	Description
019	1	00	73170467	SCREWING
020	1	00	73170510	SOCKET
021	1	00	73170392	SOCKET
023	1	00	73170481	SREW PLUG
024	1	00	73170414	SOCKET
030	1	00	73170290	SOCKET
033	1	00	73170511	SOCKET
035	2	00	73170301	SCREW PLUG
102	3	00	73170512	HEXAGON BOLT
275	1	00	73170513	HOSE

ME: 00 = Stück/piece 13 = m 26 = m² 29 = m³ 43 = kg 50 = l (litre)

1996-09-10

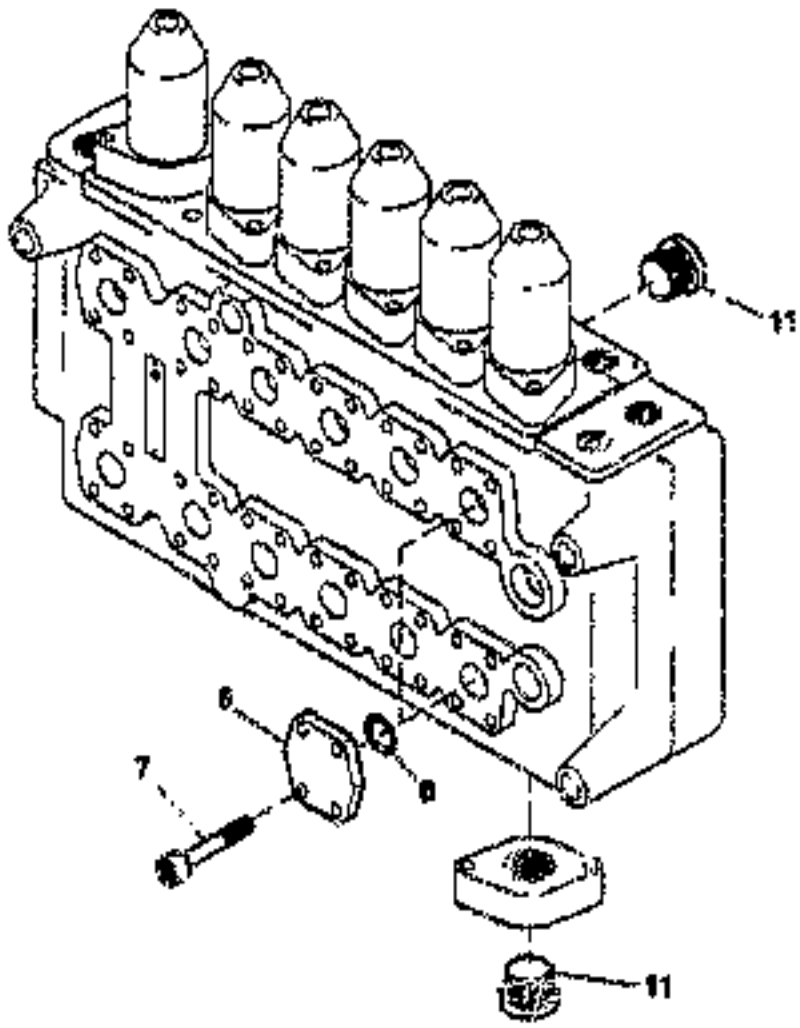

2 249 584.0IC

CONTROL BLOCK MOUNTING PARTS

23.611

T 2249584 - 001
B 2249584 - 010

FX600 / 106101 - .....

Item	Quan.	ME	Part No.	Description
006	2	00	73170526	OVAL FLANGE
007	8	00	73170328	12-POINT SCREW
008	2	00	73170327	SEALING RING
011	2	00	73170256	NIPPLE

ME: 00 = Stück/piece 10 = m 20 = m² 30 = m³ 40 = kg 50 = l (liter)

1/05-99-10

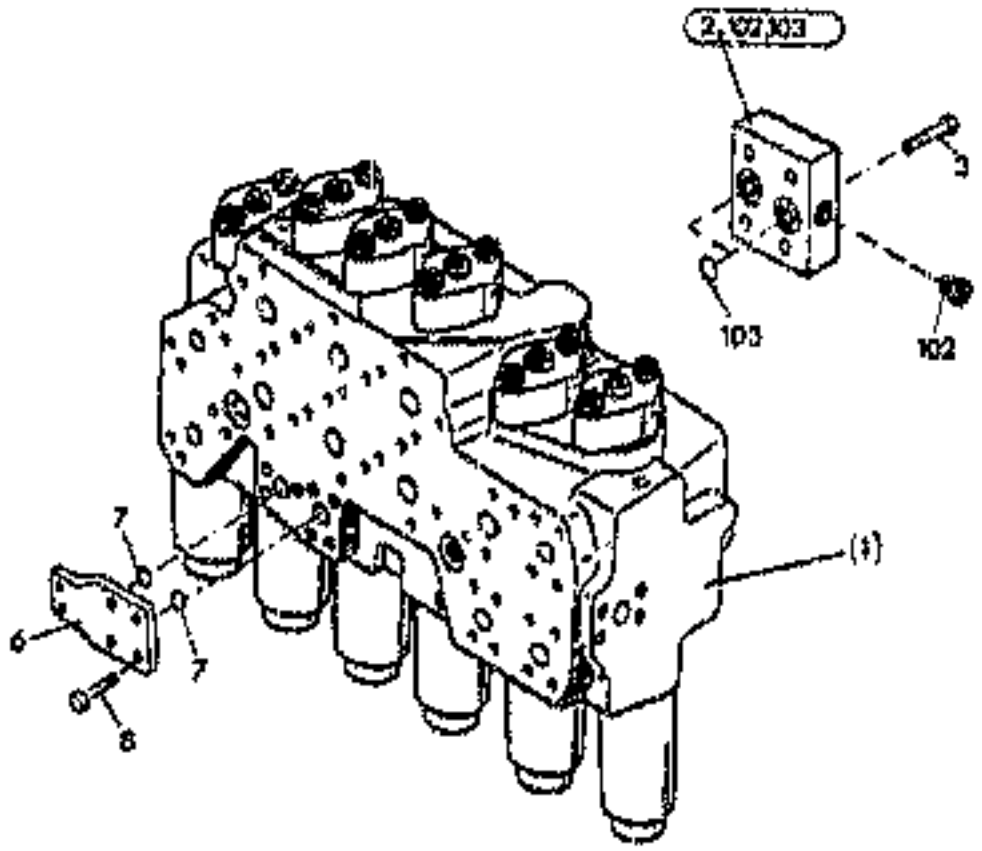

CONTROL BLOCK MOUNTING PARTS

T 2263003 - 001
B 2263003 - 010

FX600 / 106101 - .....

Item	Quan.	ME	Part No.	Description
001	1	00		23.612 2263004 CONTROL BLOCK
002	1	00	73170527	PLATE
003	4	00	73170528	HEXAGON BOLT
006	1	00	73170529	PLATE
007	2	00	73170327	SEALING RING
008	6	00	73170530	HEXAGON BOLT
102	1	00	73170532	SCREW PLUG
103	2	00	73170348	SEALING RING

ME: 00 = Standard parts 15 = m 26 = m² 39 = m³ 43 = kg 50 = l (gas)

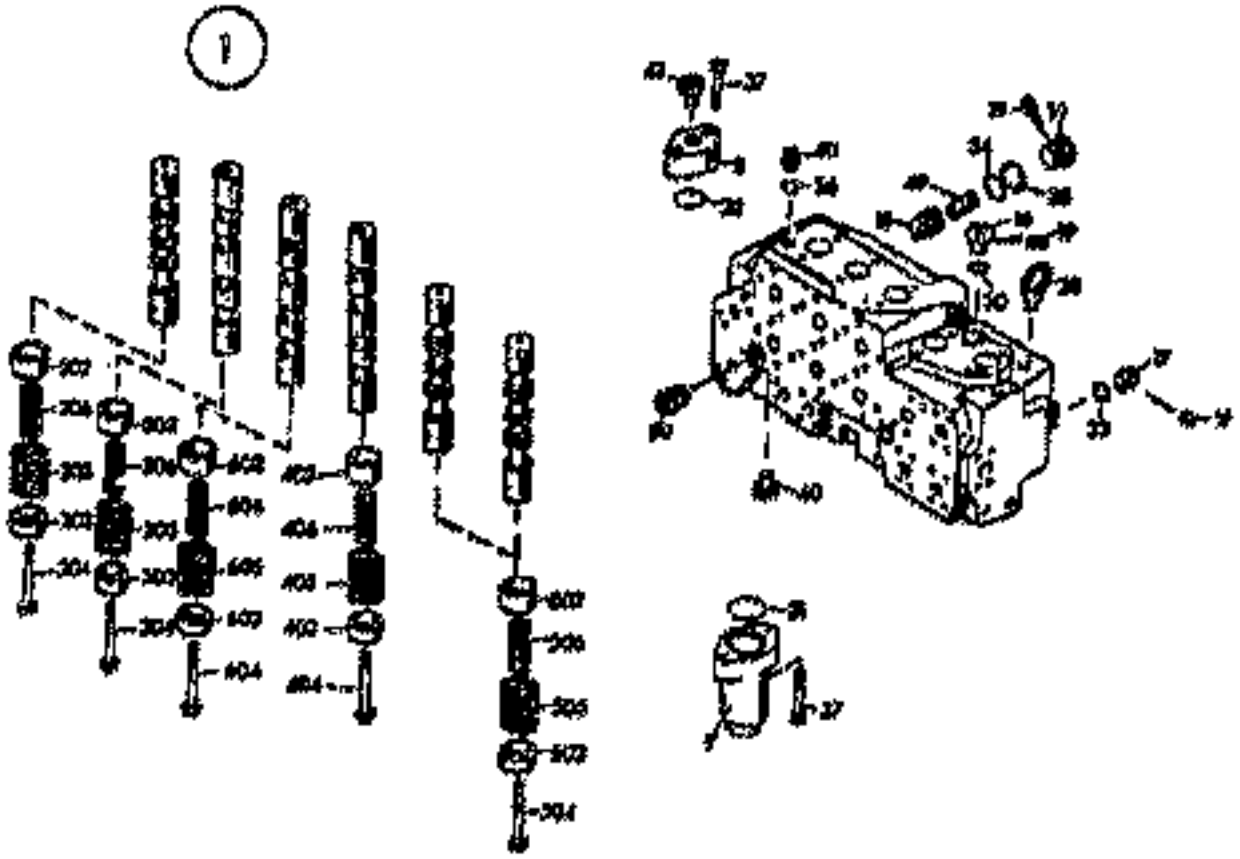

CONTROL BLOCK

T 2263064 - 001
B 2263064 - 010

FX600 / 108101 - .....

Item	Quan.	ME	Part No.	Description
001	1	00	73170441	VALVE
007	6	00	73170443	BONNET
008	6	00	73170444	BONNET
014	8	00	73170445	SCREW PLUG
015	8	00	73170446	CONE
016	1	00	73170447	SCREW PLUG
017	5	00	73170448	SCREW PLUG
019	16	00	73170449	SAFETY PIN
030	1	00	73170450	O-RING
031	8	00	73170451	O-RING
032	6	00	73170453	O-RING
033	8	00	73170454	SEALING RING
034	6	00	73170455	O-RING
035	8	00	73170456	BACK RING
037	24	00	73170457	CYL.HEAD SCREW
038	2	00	73170458	EYE BOLT
040	2	00	73170459	SCREW PLUG
042	6	00	73170061	SCREW PLUG

ME: 00 = Stück/piece 10 = m 20 = m² 30 = m³ 40 = kg 50 = l (litre)

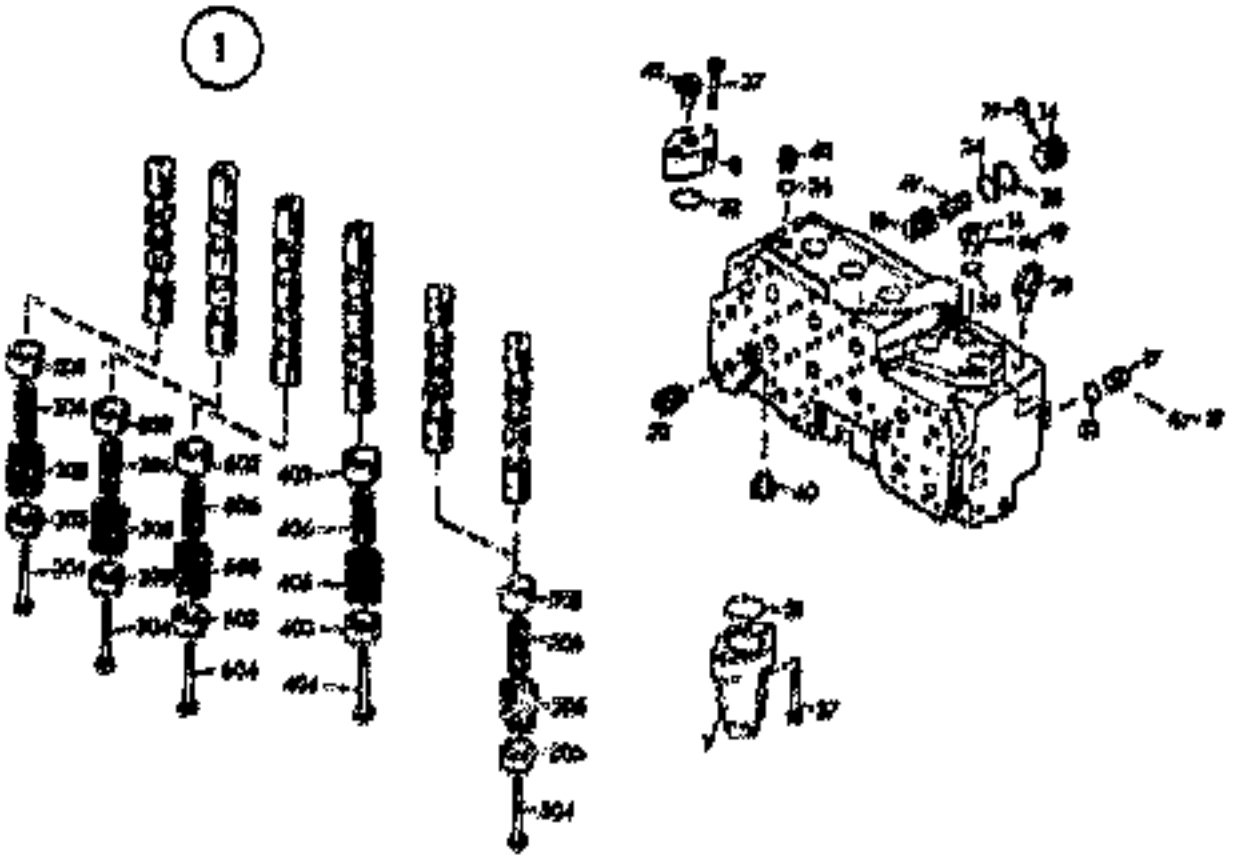

2 283 064-570

CONTROL BLOCK

FX500 / 106101 - .....

T 2283064 - 001
B 2283064 - 010

Item	Quan.	Mfr	Part No.	Description
049	6	00	73170460	SPRING
050	1	00	73170461	SREW PLUG
202	1	00	73170462	SPRING SEAT
203	1	00	73170463	SPRING SEAT
204	1	00	73170464	SCREW
205	1	00	73170465	SPRING
206	1	00	73170466	SPRING
302	1	00	73170462	SPRING SEAT
303	1	00	73170463	SPRING SEAT
304	1	00	73170464	SCREW
305	1	00	73170465	SPRING
306	1	00	73170466	SPRING
402	1	00	73170462	SPRING SEAT
403	1	00	73170463	SPRING SEAT
404	1	00	73170464	SCREW
405	1	00	73170465	SPRING
406	1	00	73170466	SPRING
602	2	00	73170462	SPRING SEAT

Mfr: 00 = Stock/piece 12 = m 26 = m² 36 = m³ 43 = kg 50 = l (litre)

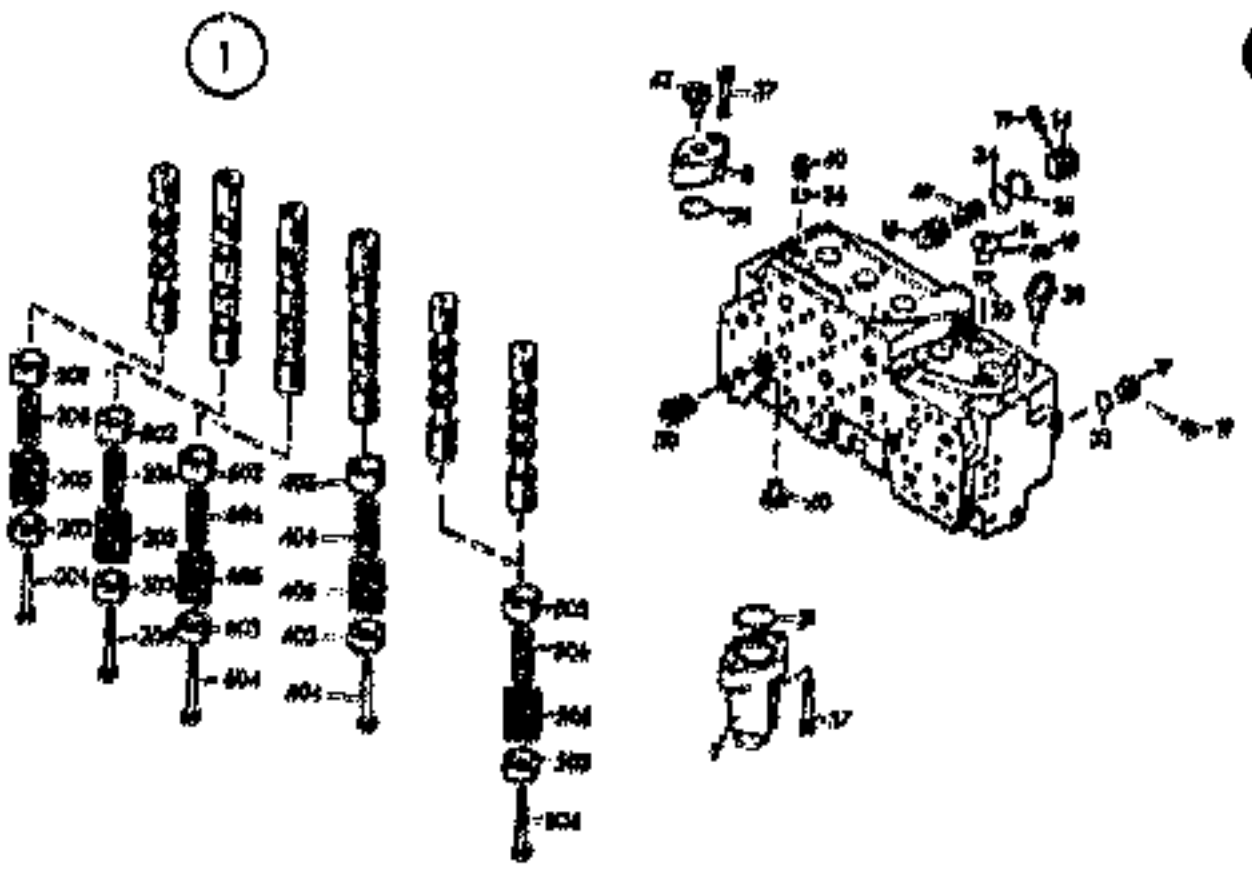

T 2253064 - 001
S 2253064 - 010

23.612

CONTROL BLOCK

FX500 / 106101 - .....

Item	Quan.	ME	Part No.	Description
503	2	00	73170463	SPRING SEAT
504	2	00	73170464	SCREW
505	2	00	73170465	SPRING
506	2	00	73170466	SPRING
602	1	00	73170462	SPRING SEAT
603	1	00	73170463	SPRING SEAT
604	1	00	73170464	SCREW
605	1	00	73170465	SPRING
606	1	00	73170466	SPRING

ME: 00 = Block/piece 15 = m 35 = m² 39 = m³ 43 = kg 80 = l (litre)

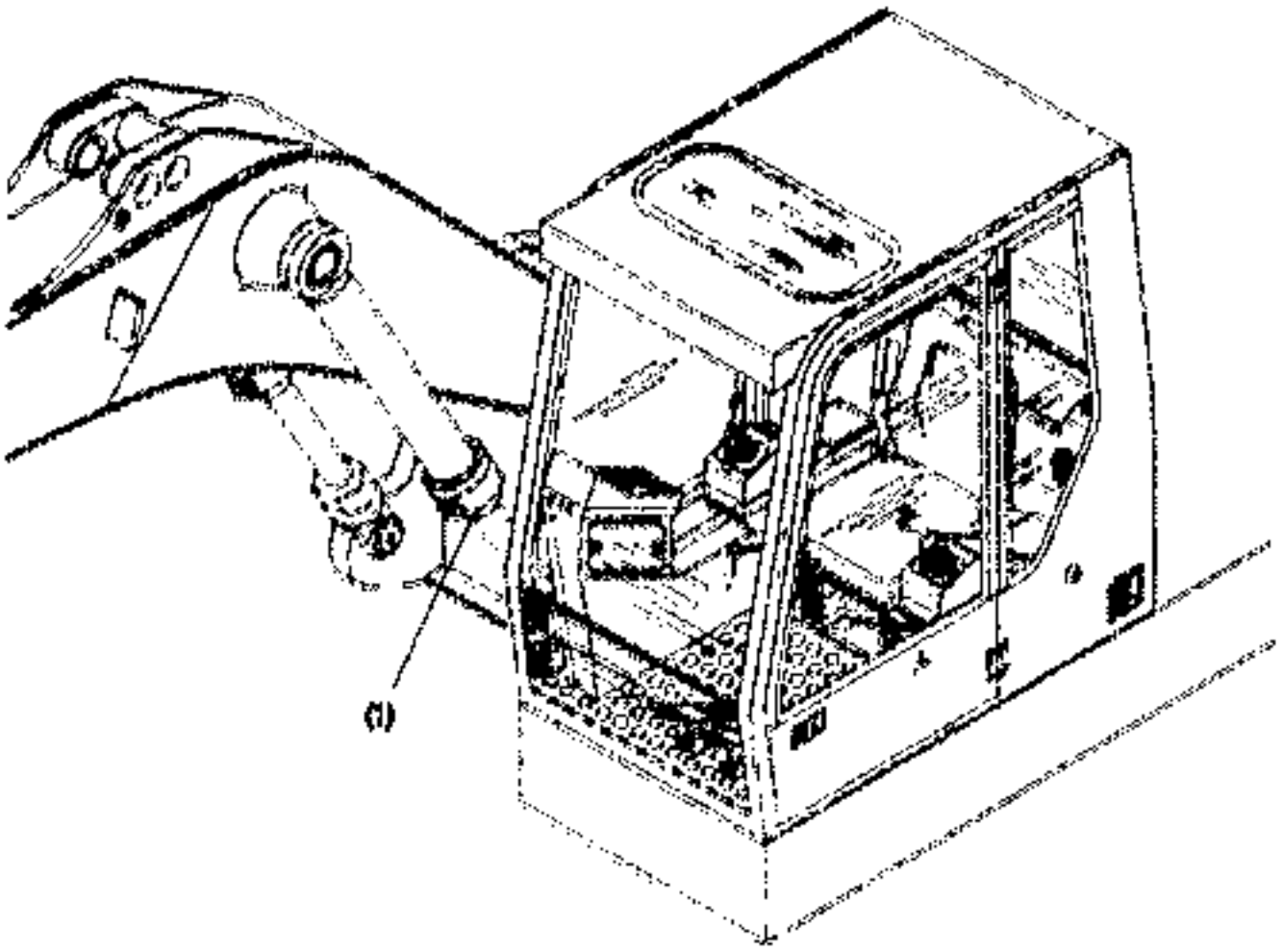

2 495 634-30

24.020

BOOM CYLINDERS INSTALL.MATERIAL

T 2495404 - 000
B 2495404 - 010

FX200 - 105101 -

Item	Quan.	ME	Part No.	Description
001	1	00		24.022 2495403 BOOM CYLINDERS

ME: 00 = Stck/each

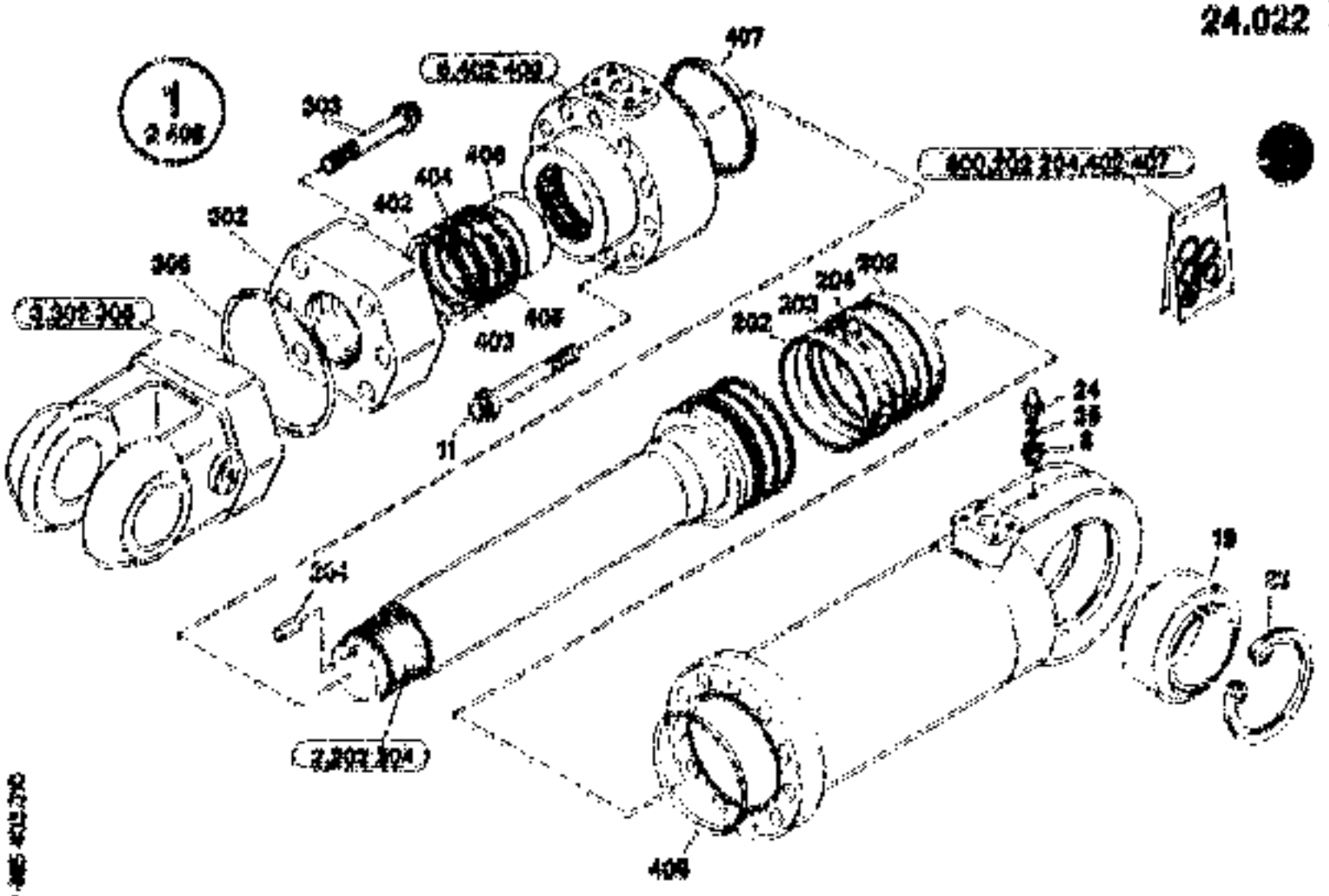

BOOM CYLINDERS

24.022

FX500 / 106101 - .....

T 2486403 - 000
B 2486403 - 010

Item	Quan	MP	Part No.	Designation
001	1	00	73170627	CYLINDER
002	1	00	73170634	PISTON ROD
003	1	00	73170632	FORK
006	1	00	73170633	GUIDE
008	1	00	73170642	REDUCING NIPPLE
011	11	00	73170643	SCREW
019	1	00	73170644	JOINT BEARING
023	1	00	73170645	CIRCLIP
024	2	00	73170126	GREASE NIPPLE
025	1	00	73170646	SEALING RING
202	2	00	73170647	PISTON GUIDE RING
203	1	00	73170648	GASKET SET
204	1	00	73170649	PISTON GUIDE RING
302	1	00	73170635	FLANGE
303	8	00	73170629	12-POINT SCREW
304	1	00	73170630	STRAIGHT PIN
306	1	00	73170631	O-RING
402	1	00	73170636	SCRAPER

MP: 00 = Standard/Spare 13 = m 36 = m³ 39 = m² 43 = kg 50 = t (tons)

1884-99-10

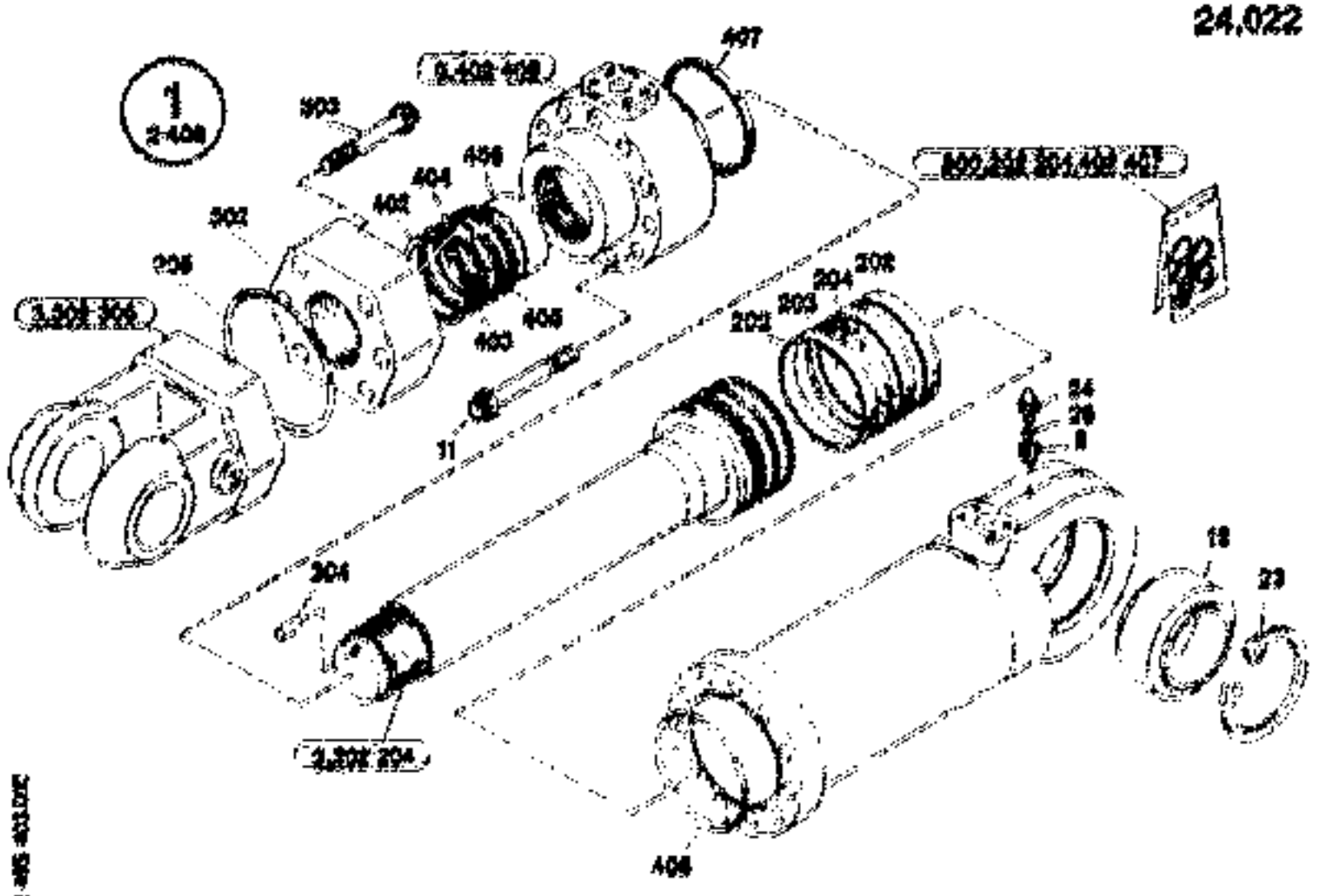

BOOM CYLINDERS

T 2499403 - 000
B 2499403 - 010

FX400 / 106101 - .....

Item	Quan	ME	Part No.	Description
400	1	00	73170636	SCRAPER
404	1	00	73170638	SEALING RING
405	1	00	73170637	SEALING RING
406	1	00	731[illegible]	PISTON GUIDE RING
407	1	00	73170639	SUPPORT RING
408	1	00	73170640	O-RING
800	0	00	73170641	GASKET SET

ME 00 = Stck/Unit 13 = m 26 = m² 56 = m³ 43 = kg 59 = l (US)

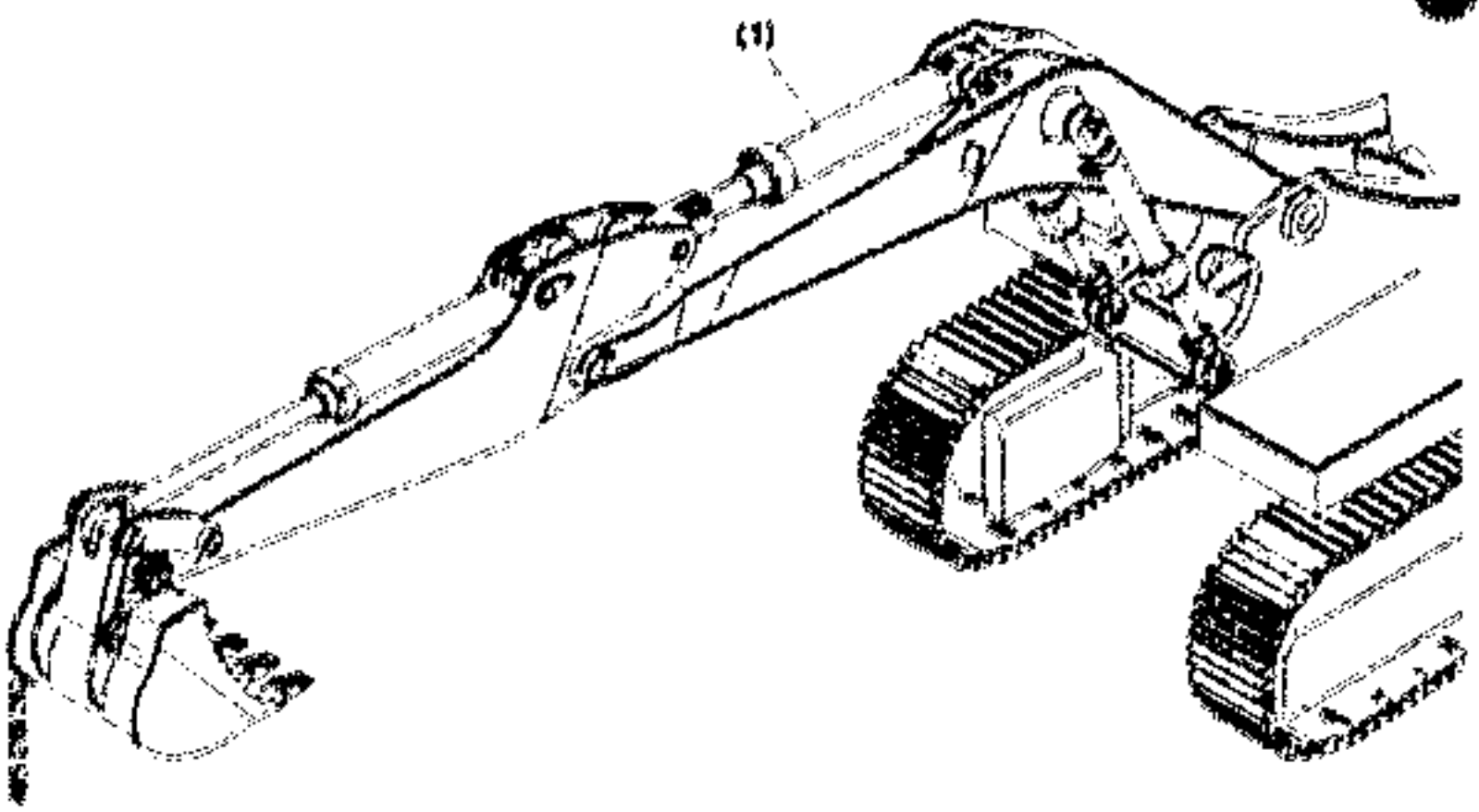

STICK CYLINDER INSTALL MATERIAL

7 3498218 - 000
9 2496219 - 010

FX800 / 106101 - ( )

Item	Quan.	ME	Part No.	Description
001	1	30		24.032 2496226 STICK CYLINDER

ME 00 = Standard 13 = m 29 = m² 39 = m³ 49 = kg 59 = t (US)

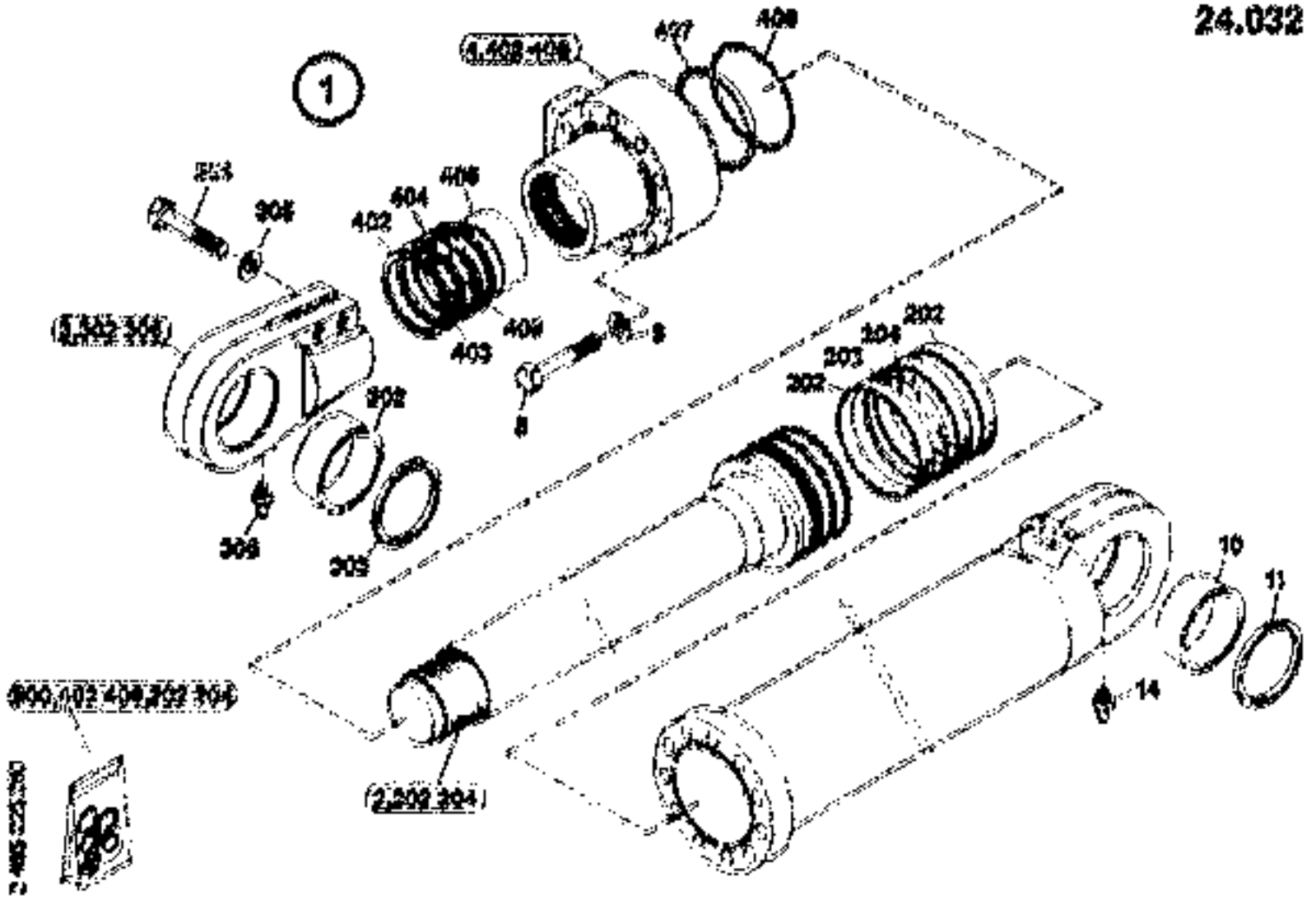

STICK CYLINDER

FX800 (108101 -)

T 2495225 - 000
B 2495225 - 010

Item	Quan	ME	Part No.	Description
001	1	00	73171411	CYLINDER
002	1	00	73172647	PISTON ROD
003	1	00	73172648	DYE
004	1	00	73173310	GUIDE
009	16	00	73171412	HEXAGON BOLT
009	16	00	73170714	DISK WASHER
010	1	00	73171413	BUSHING
011	2	00	73171414	SCRAPER
014	1	00	73170136	GREASE NIPPLE
202	2	00	73171415	PISTON GUIDE RING
203	1	00	73171416	GASKET SET
204	1	00	73171417	PISTON GUIDE RING
302	1	00	73171418	BUSHING
303	2	00	73171419	SCRAPER
304	2	00	73171420	HEXAGON BOLT
305	2	00	73171421	DISK WASHER
309	1	00	73170139	GREASE NIPPLE
402	1	00	73171422	SCRAPER

ME: 00=Standard 13=m 28=m² 38=m³ 43=kg 60=l(litre)

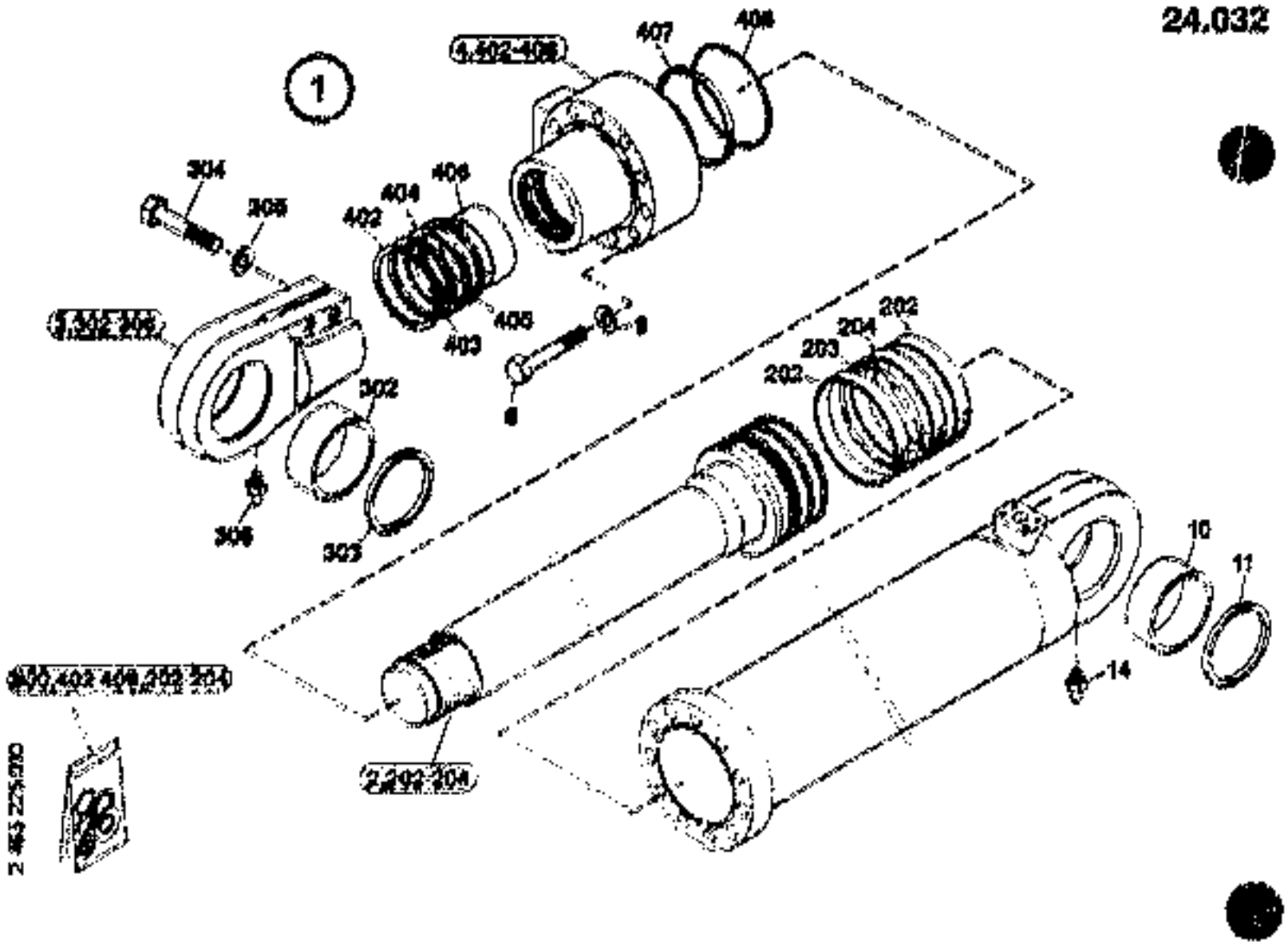

STICK CYLINDER

24.032

T 2495225 - 000
B 2495225 - 010

FX500 / 106101 - .....

Item	Quan.	ME	Part No.	Description
403	1	00	73171421	SCRAPER
404	1	00	73171422	SEALING RING
406	1	00	73171423	SEALING RING
405	1	00	73171424	PISTON GUIDE RING
407	1	00	73171426	SUPPORT RING
408	1	00	73171427	O-RING
400	0	00	73171428	SET OF PIST. RINGS

ME: 00 = (Metric) 13 = m 28 = m² 08 = m³ 43 = kg 80 = l (litre)

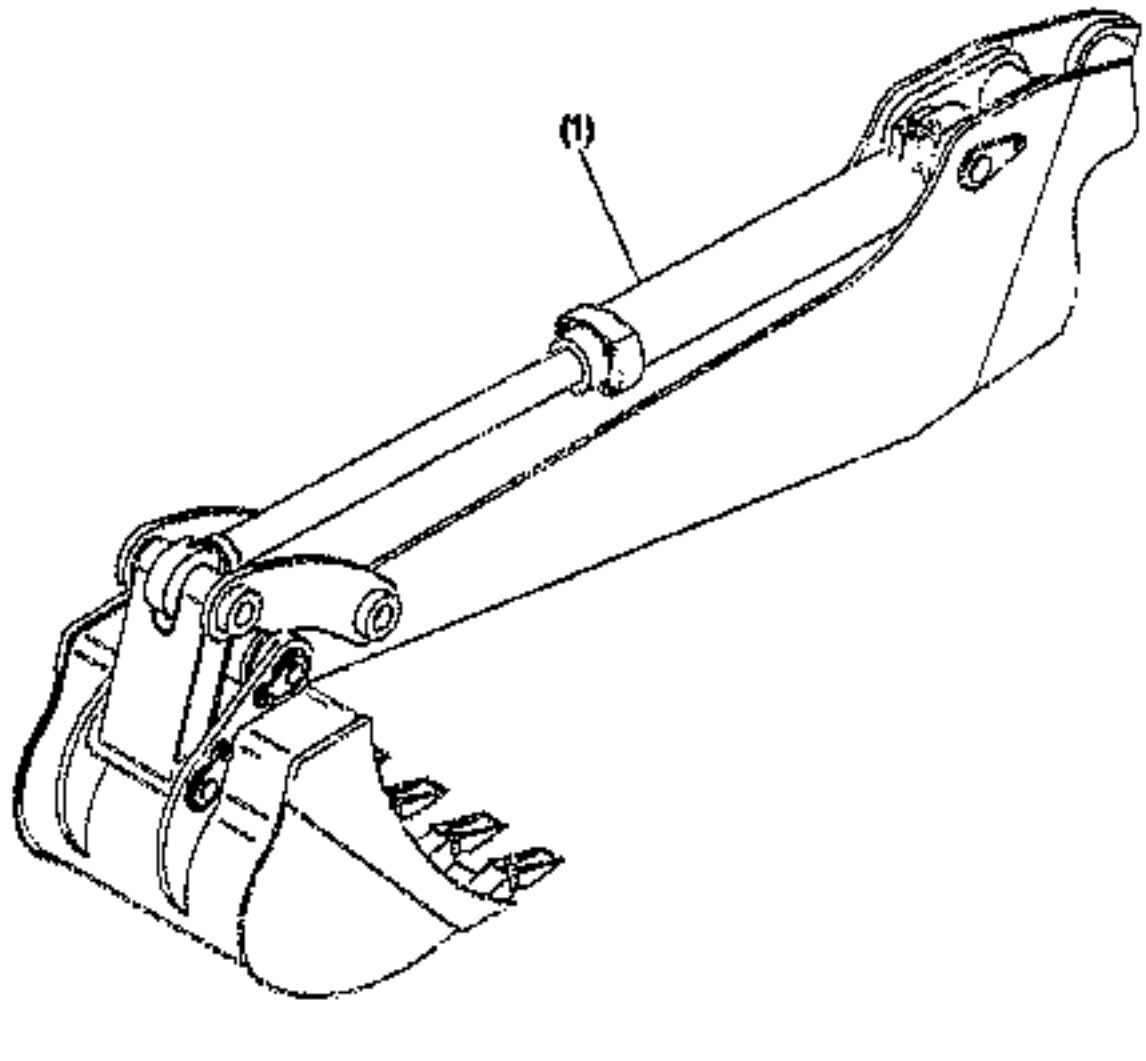

2 495 222 010

BACKHOE CYLINDER INSTALL.MATERIAL

FX600 / 106101 - .....

T 2495222 - 000
B 2495222 - 010

Item	Quan	ME	Part No.	Description
001	1	00		24.062 2495307 BACKHOE CYLINDER

ME: 00 = Stück/piece 10 = m 20 = m² 30 = m³ 40 = kg 50 = l (litre)

1999-09-10

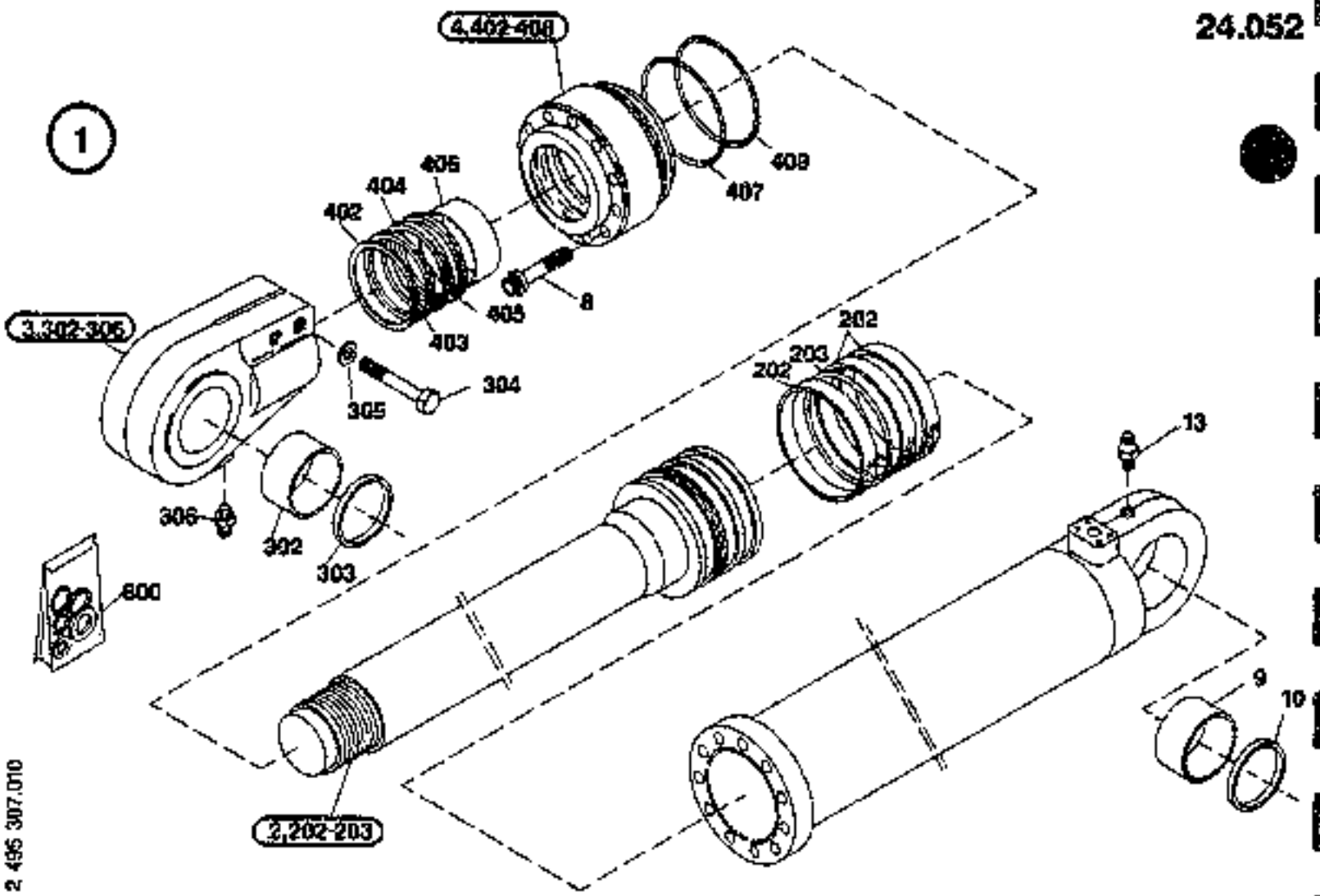

BACKHOE CYLINDER

24.052

T 2495307 - 001
B 2495307 - 010

FX600 / 106101 - .....

Item	Quan.	ME	Part No.	Description
001	1	00	73171434	CYLINDER
002	1	00	73171435	PISTON ROD
003	1	00	73171436	EYE
004	1	00	73171437	GUIDE
008	11	00	73170643	SCREW
009	1	00	73171446	BUSHING
010	2	00	73171410	SCRAPER
013	1	00	73170138	GREASE NIPPLE
202	3	00	73171447	PISTON GUIDE RING
203	1	00	73171448	GASKET SET
302	1	00	73171446	BUSHING
303	2	00	73171410	SCRAPER
304	2	00	73171449	HEXAGON BOLT
305	2	00	73171419	DISK/WASHER
306	1	00	73170138	GREASE NIPPLE
402	1	00	73171439	SCRAPER
403	1	00	73171440	SCRAPER
404	1	00	73171441	SEALING RING

ME: 00 = Stück/piece 13 = m 26 = m² 39 = m³ 43 = kg 60 = l (litre)

1999-09-10

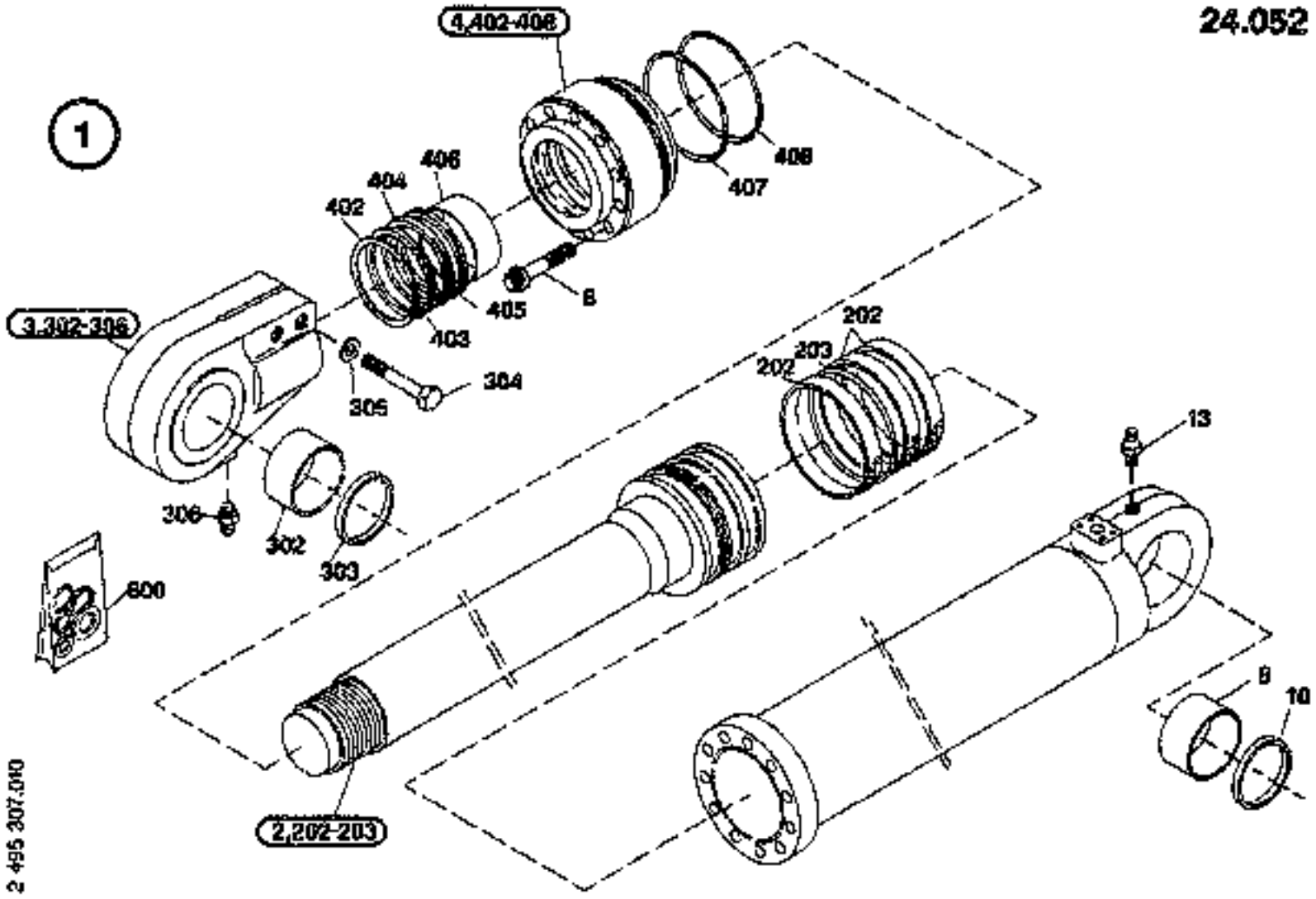

BACKHOE CYLINDER

24.052

T 2495307 - 001
B 2495307 - 010

FX600 / 106101 - .....

Item	Quan.	ME	Part No.	Description
405	1	00	73171442	SEALING RING
406	1	00	73171443	PISTON GUIDE RING
407	1	00	73171444	SUPPORT RING
408	1	00	73171445	O-RING
800	0	00	73171450	SET OF PIST. RINGS
				(INCLUDES ITEMS 202-203, 402-408)

ME: 00 = Stück/pece 13 = m 26 = m² 39 = m³ 43 = kg 50 = l (litre)

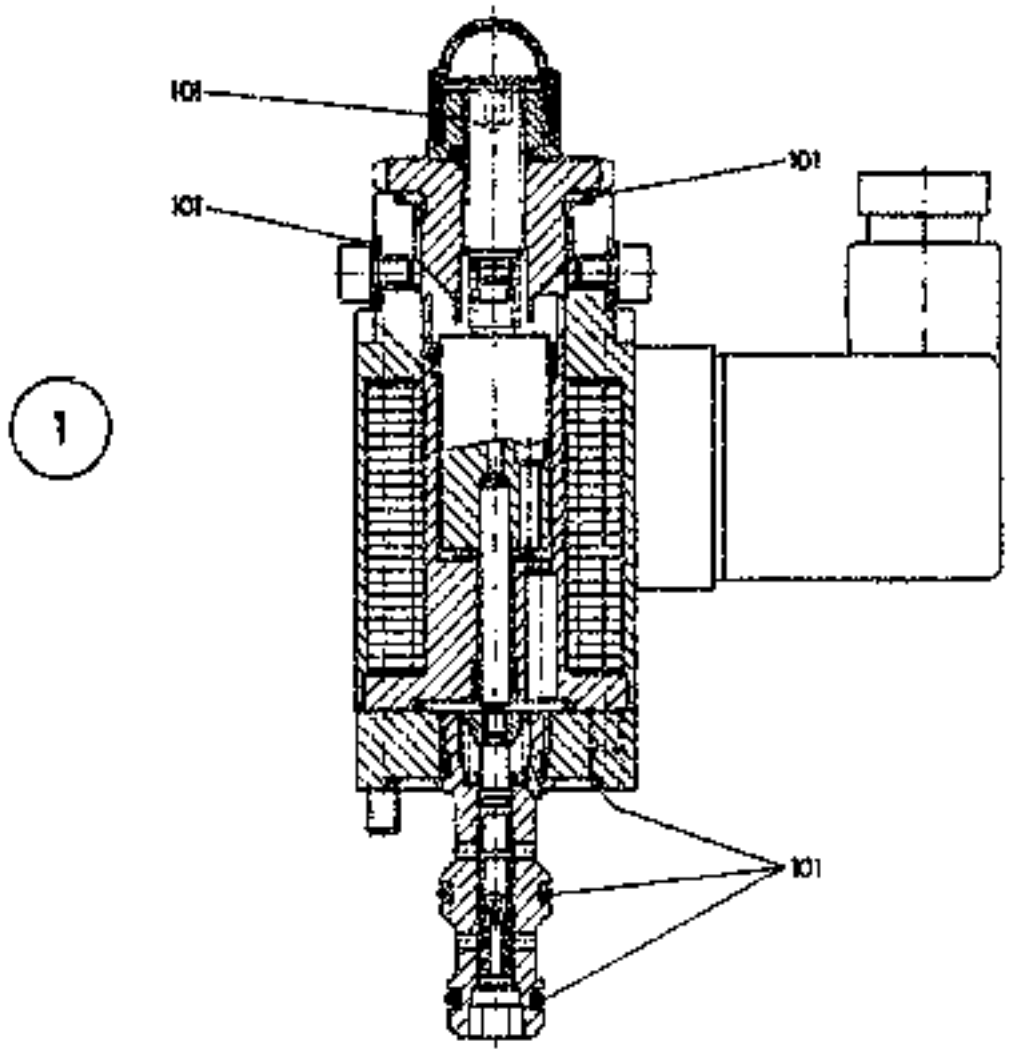

1

2 216 623.018

PROPORTIONAL VALVE

23.312

T 2216823 - 000
B 2216823 - 010

FX600 / 106101 - .....

Item	Quan.	ME	Part No.	Description
001	1	00	73170432	VALVE
101	1	00	73170433	GASKET SET

ME: 00 = Stückpiece 13 = m 26 = m² 39 = m³ 43 = kg 50 = l (litre)

1998-09-10

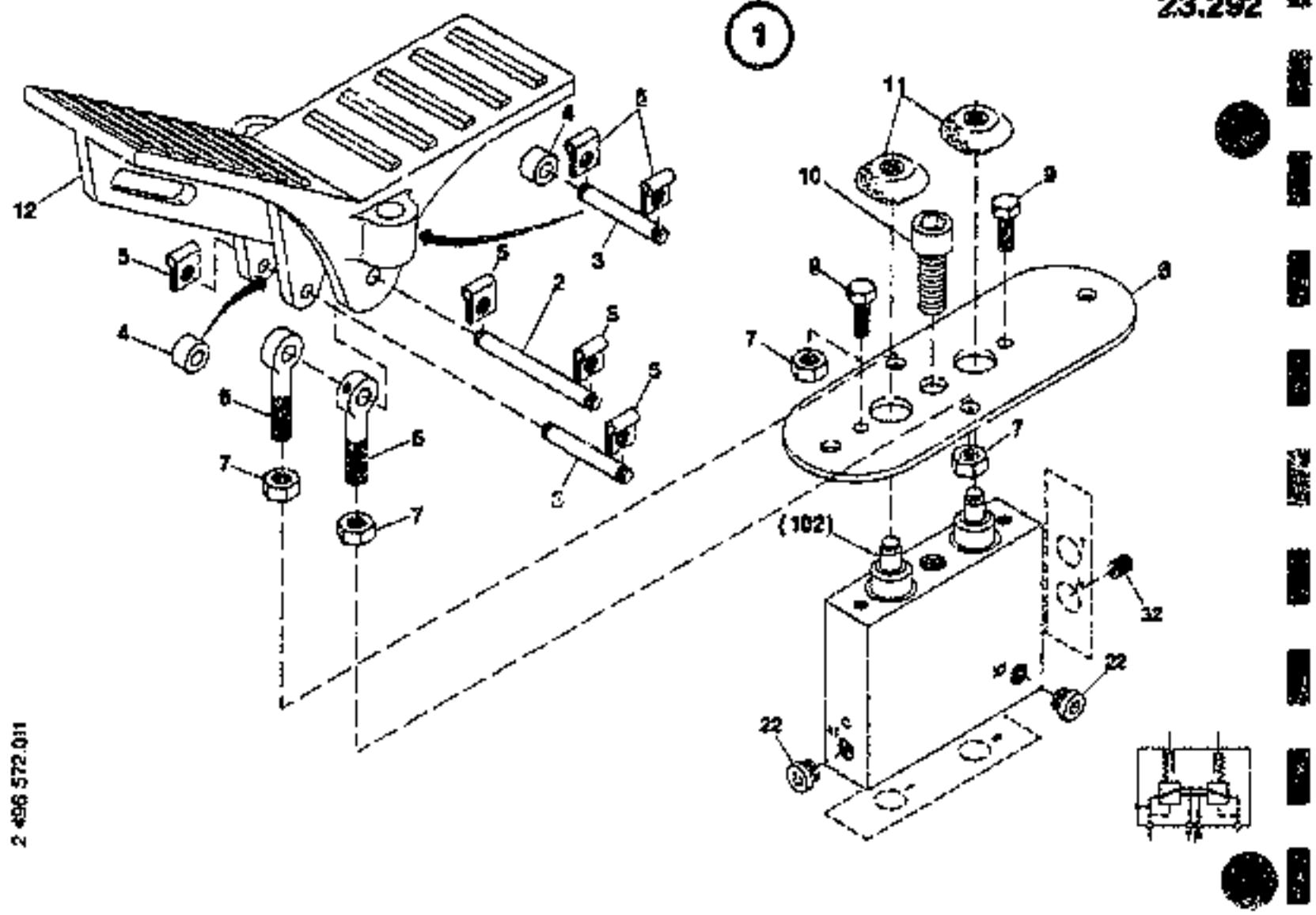

TREADLE VALVE

FX600 / 106101 - .....

T 2496572 - 001
B 2496572 - 011

Item	Quan.	ME	Part No.	Description
001	1	00	73171323	SERVO VALVE
002	1	00	73178061	PIN
003	2	00	73178052	PIN
004	2	00	73178053	BUSHING
005	6	00	73178054	FUSE
006	2	00	73178055	EYE BOLT
007	4	00	73170181	HEXAGON NUT
008	1	00	73178056	PLATE
009	2	00	73170686	HEXAGON BOLT
010	1	00	73172360	CYL.HEAD SCREW
011	2	00	73178057	BELLOWS
012	1	00	73178058	PEDAL
022	2	00	73170469	SCREW PLUG
032	1	00	73177377	INJECTOR
102	2	00		23.292 2782655 TREADLE VALVE

ME: 00 = Stück/piece 10 = m 20 = m² 30 = m³ 40 = kg 50 = l (litre)

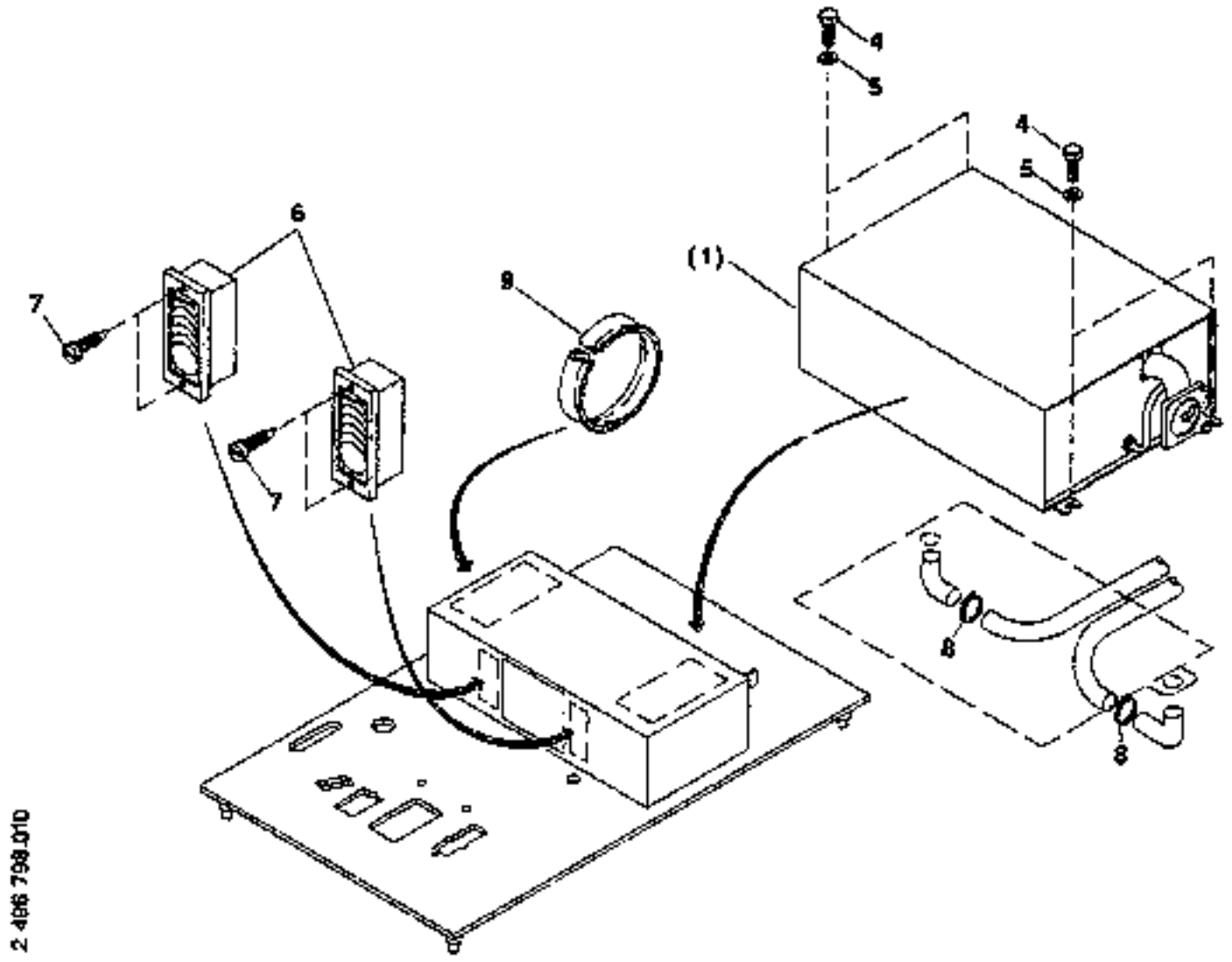

27.010

HEATING INSTALL.MATERIAL

T 2496798 - 000
B 2496798 - 010

FX600 / 106101 - .....

Item	Quan.	ME	Part No.	Description
001	1	00		**27.012 2495799** HEATING
004	4	00	**73170205**	HEXAGON BOLT
005	4	00	**73170212**	DISK/WASHER
006	2	00	**73171033**	INJECTOR
007	4	00	**73171034**	SELF-TAPPING SCREW
008	2	00	**73170936**	CLIP
009	0,35	13	**73171036**	EDGE PROTECTION

ME: 00 = Stück/piece 13 = m 25 = m^2 39 = m^3 43 = kg 60 = l (litre)

1998-09-10

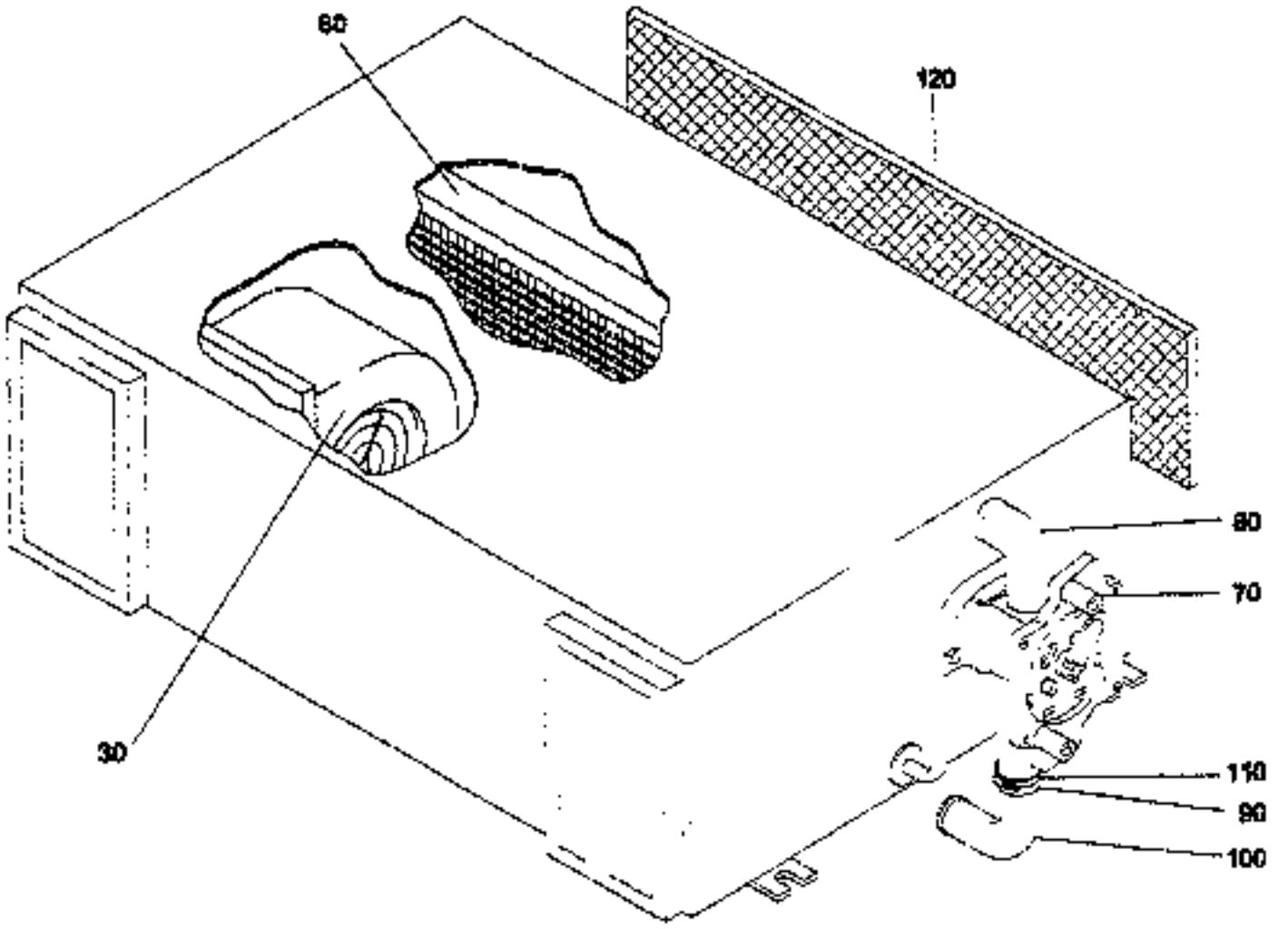

2 496 789.010

27.012

HEATING

CATALOG

T 2496789 - 000
B 2496789 - 010

FX600 / 105101 - .....

Item	Quan.	ME	Part No.	Description
001	1	00	73171464	HEATER
030	1	00	73175249	FAN MOTOR
060	1	00	73175249	HEAT EXCHANGER
070	1	00	73175250	VALVE
080	1	00	73175251	MANIFOLD
090	1	13	73172527	RUBBER HOSE
100	1	00	73175253	PIPE BEND
110	1	00	73175254	HOSE CLIP
120	1	00	73175255	FILTER

ME: 00 = Stück/piece 13 = m 26 = m² 39 = m³ 43 = kg 50 = l (litre)

1998-09-10

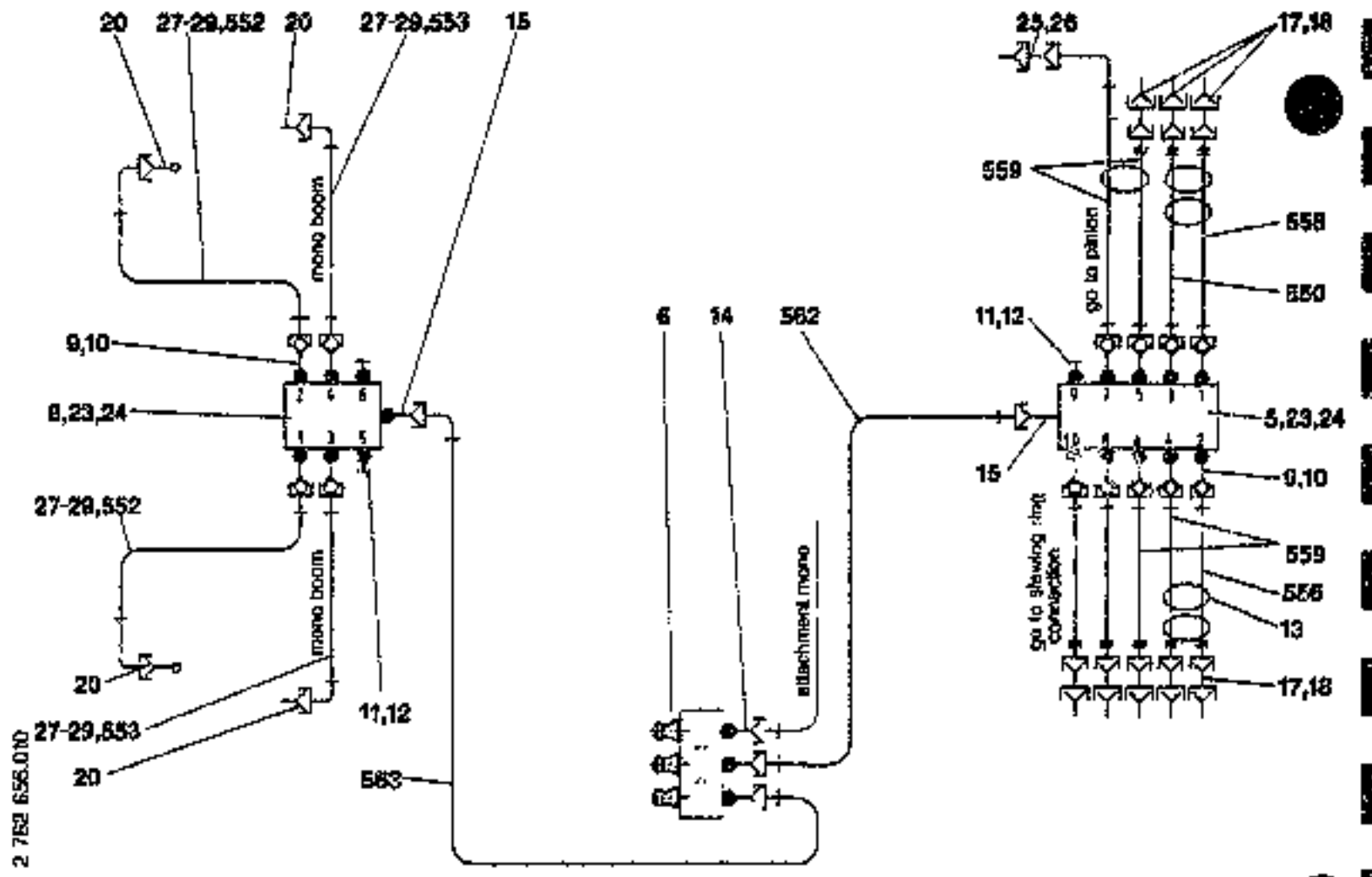

30.040

CENTRAL LUBE SYST.

T 2782656 - 000
B 2782656 - 010

FX600 / 106101 - .....

Item	Quan.	ME	Part No.	Description
005	1	00	73170818	DISTRIBUTOR
006	3	00	73175904	GREASE NIPPLE
008	1	00	73175905	DISTRIBUTOR
009	13	00	73170819	HOUSING
010	13	00	73170820	SEALING RING
011	3	00	73170822	SCREW PLUG
012	3	00	73170823	SEALING RING
013	5	00	73170825	HOSE BRACKET
014	3	00	73175906	SOCKET
015	2	00	73170826	SOCKET
017	6	00	73170827	SOCKET
018	8	00	73170829	SCREWING
020	4	00	73170831	SOCKET
023	4	00	73170833	CYL.HEAD SCREW
024	4	00	73170834	DISK/WASHER
025	1	00	73170835	SCREWING
026	1	00	73170296	SOCKET
027	6	00	73170215	HEXAGON NUT

ME: 00 = Stück/piece 10 = m 20 = m² 30 = m³ 40 = kg 50 = l (litre)

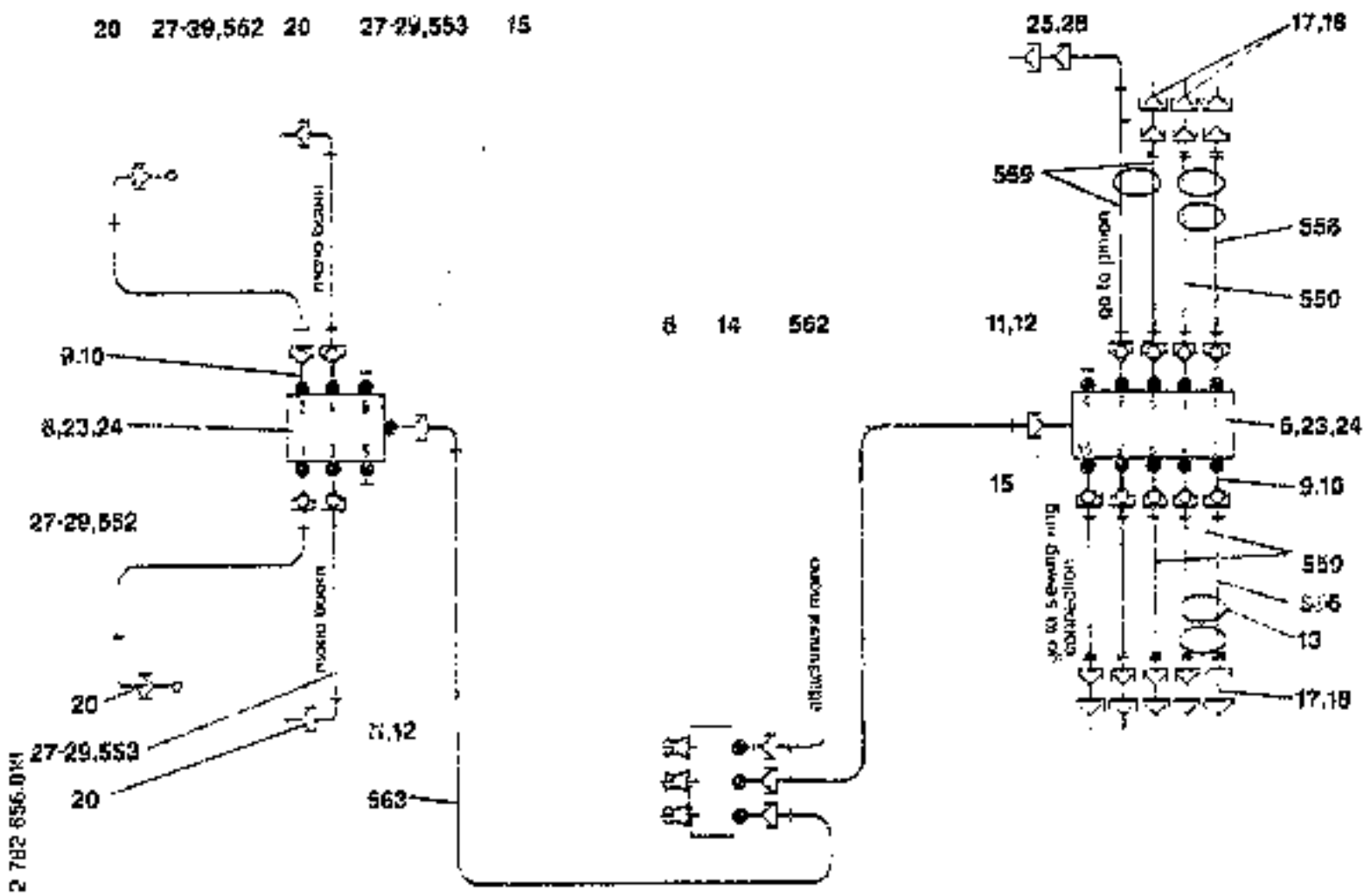

CENTRAL LUBE SYST.

T 2782656 - 000
B 2782656 - 010

FX600 106101 - .....

Item	Quan	ME	Part No.	Description
028	6	00	73170182	DISK/WASHER
029	6	00	73171988	HOSE CLIP
030	1	00	73170038	HOSE
552	2	00	73175807	HOSE
553	2	00	73170648	HOSE
556	2	00	73170650	HOSE
556	1	00	73170651	HOSE
558	1	00	73170652	HOSE
559	4	00	73170653	HOSE
562	1	00	73175909	HOSE
563	1	00	73170655	HOSE

ME: 00 = Stück/piece 13 = m 26 = m² 39 = m³ 43 = kg 50 = l (litre)

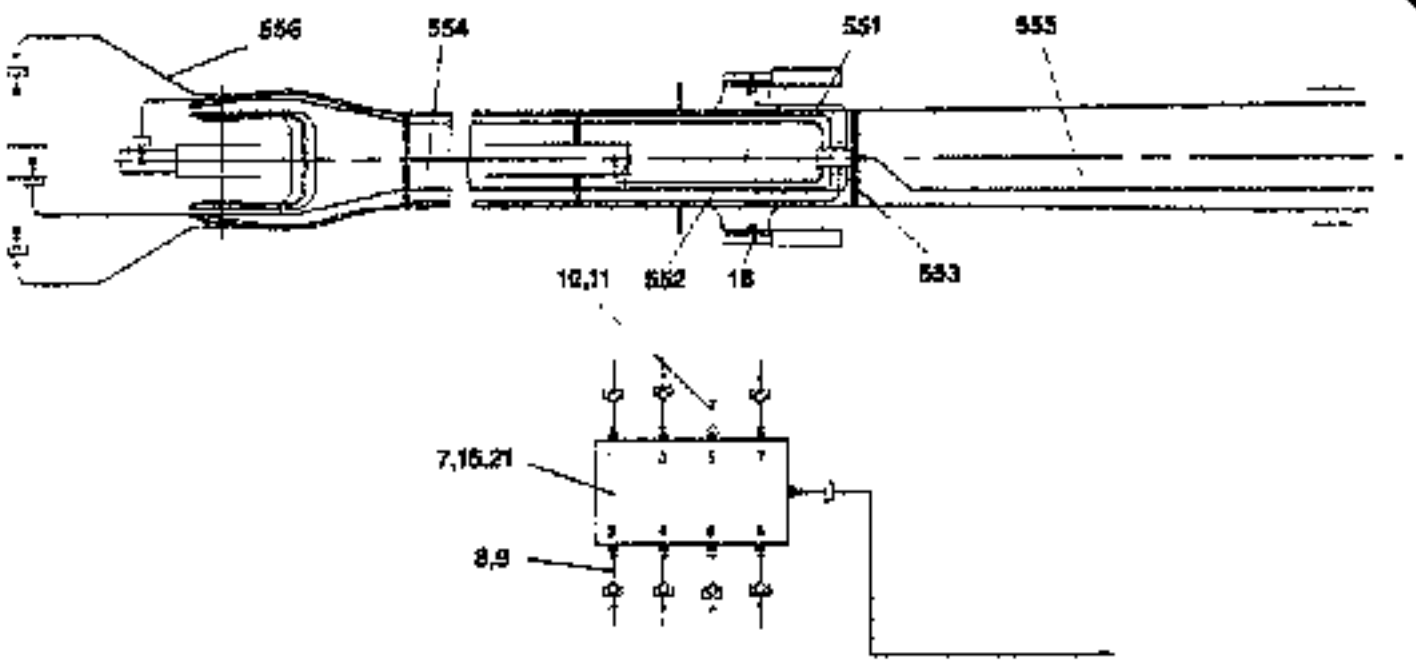

2 444 234 010

GREASING SYSTEM MONO 6.7M

FIATALLIS

T 2444234 - 002
B 2444234 - 010

FX600 106101 - .....

Item	Quan	ME	Part No.	Description
007	1	00	73171379	DISTRIBUTOR
008	7	00	73170819	HOUSING
009	7	00	73170820	SEALING RING
010	1	00	73170822	SCREW PLUG
011	1	00	73170823	SEALING RING
012	28	00	73170886	CABLE TIE
014	18	00	73170205	HEXAGON BOLT
015	18	00	73170160	DISK/WASHER
016	2	00	73170833	CYL.HEAD SCREW
018	7	00	73170831	SOCKET
021	1	00	73170826	SOCKET
551	1	00	73171380	HOSE
552	1	00	73171381	HOSE
553	2	00	73171382	HOSE
554	1	00	73171383	HOSE
555	1	00	73171384	HOSE
556	2	00	73171385	HOSE

ME: 00 = Stück/piece 13 = m 26 = m² 39 = m³ 43 = kg 50 = l (litre)

List of contents

Sheet	Description	Remarks	Date	Written	K
1	List of contents	02 AM 640 23.05.00 Sch	12.11.97	Seelin	
2	MOTOR - ABSCHALTUNG VORSTEUERUNG	02 AM 640 23.05.00 Sch	12.11.97	Seelin	
3	POWER-SYSTEM	02 AM 640 23.05.00 Sch	12.11.97	Seelin	
4	CENTRY: POWER SUPPLY	02 AM 640 23.05.00 Sch	12.11.97	Seelin	
5	CENTRY REVOLUTION-ADJUSTMENT	02 AM 640 23.05.00 Sch	12.11.97	Seelin	
6	SWITCH / INITIATOR	02 AM 640 23.05.00 Sch	12.11.97	Seelin	
7	DIAGNOSTIC PINS - DEEP ENGINE	02 AM 640 23.05.00 Sch	12.11.97	Seelin	
8	CAB	02 AM 640 23.05.00 Sch	12.11.97	Seelin	
9	LIGHTING / FAULT INDICATION CENTRY	02 AM 640 23.05.00 Sch	12.11.97	Seelin	
10	VALVES - GREASING PUMP	02 AM 640 23.05.00 Sch	12.11.97	Seelin	
11	SPECIAL EQUIPMENT	02 AM 640 23.05.00 Sch	12.11.97	Seelin	
12	TRAVEL-ALARM / CAB ROTATOR	02 AM 640 23.05.00 Sch	12.11.97	Seelin	
13	A100X1 - A100X2	02 AM 640 23.05.00 Sch	12.11.97	Seelin	
14	A100X3 - A10X4	02 AM 640 23.05.00 Sch	12.11.97	Seelin	
15	X100 - X101	02 AM 640 23.05.00 Sch	12.11.97	Seelin	
16	X100A - X102	02 AM 640 23.05.00 Sch	12.11.97	Seelin	
17	X104 - X106	02 AM 640 23.05.00 Sch	12.11.97	Seelin	
18	X107 - X108	02 AM 640 23.05.00 Sch	12.11.97	Seelin	
19	X115 - X116	02 AM 640 23.05.00 Sch	12.11.97	Seelin	
20	X117 - X12	02 AM 640 23.05.00 Sch	12.11.97	Seelin	
21	X17 - X18	02 AM 640 23.05.00 Sch	12.11.97	Seelin	
22	XM10 - XF8 - XF13 - XF20 - X87.1	02 AM 640 23.05.00 Sch	12.11.97	Seelin	
23	OVERVIEW-CABLE HARNESSES	02 AM 640 23.05.00 Sch	12.11.97	Seelin	
24	LAYOUT PLAN FUSES	02 AM 640 23.05.00 Sch	12.12.97	Seelin	

917	31	052	50								
				02	AM 640	23.05.00	Sch				
FX500				01	AM 451	20.05.98	Sch				
				No.							

Benennung/Description
WIRING DIAGRAM
List of contents

Zeichn-Nr./Drawing No. 1207252-12

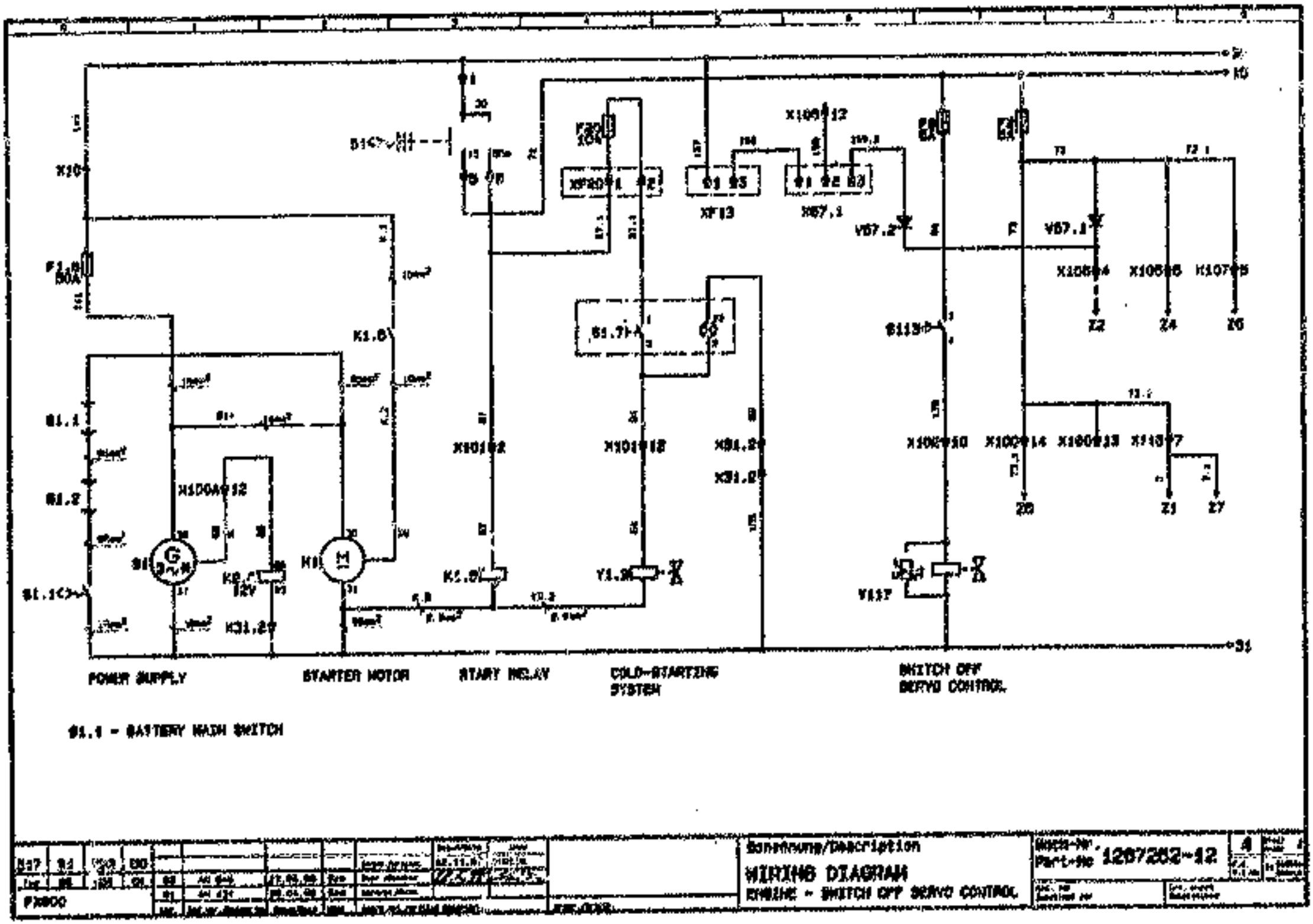
X10
F1.0
50A
K1.0
X100A12
X100B12
X100412
X100B10
X100414
X100413
X11317
X10
X10
X10

30
15
CENTRAL ELECTRONIC UNIT
DISPLAY MODULE
BAR-GRAPH DISPLAY
COOLANT TEMPERATURE
KEY MODULE
ECONOMY
AUTO IDLE
CONTROL LAMP MODULE
HYDRAULIC OIL TEMPERATURE
COOLANT TEMPERATURE
CAN+
CAN-
LOAD LIMIT SOLENOID
PROPORTIONAL VALVE
COOLANT TEMPERATURE
IDLE AUTO RPM MIN
PRESSURESWITCH SERVO PRESSURE
PRESSURESWITCH TRAVEL
HYDRAULIC OIL TEMPERATURE
HIGH-UP
Manufacturer/Description
WIRING DIAGRAM
POWER-SYSTEM
Part-No 12B7202-12
A

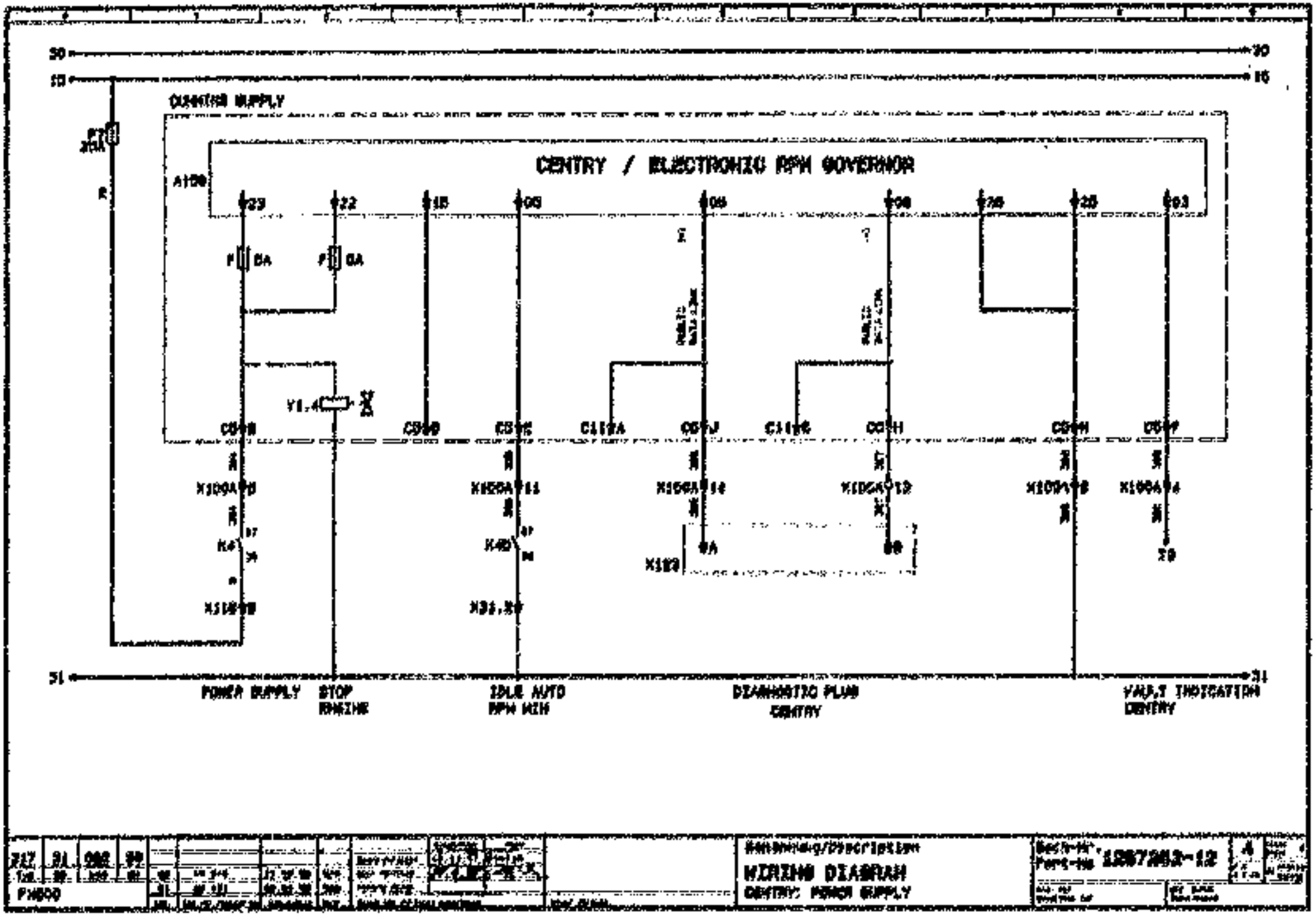
CENTRY / ELECTRONIC RPM GOVERNOR
POWER SUPPLY
STOP ENGINE
IDLE AUTO RPM MIN
DIAGNOSTIC PLUG CENTRY
FAULT INDICATION CENTRY

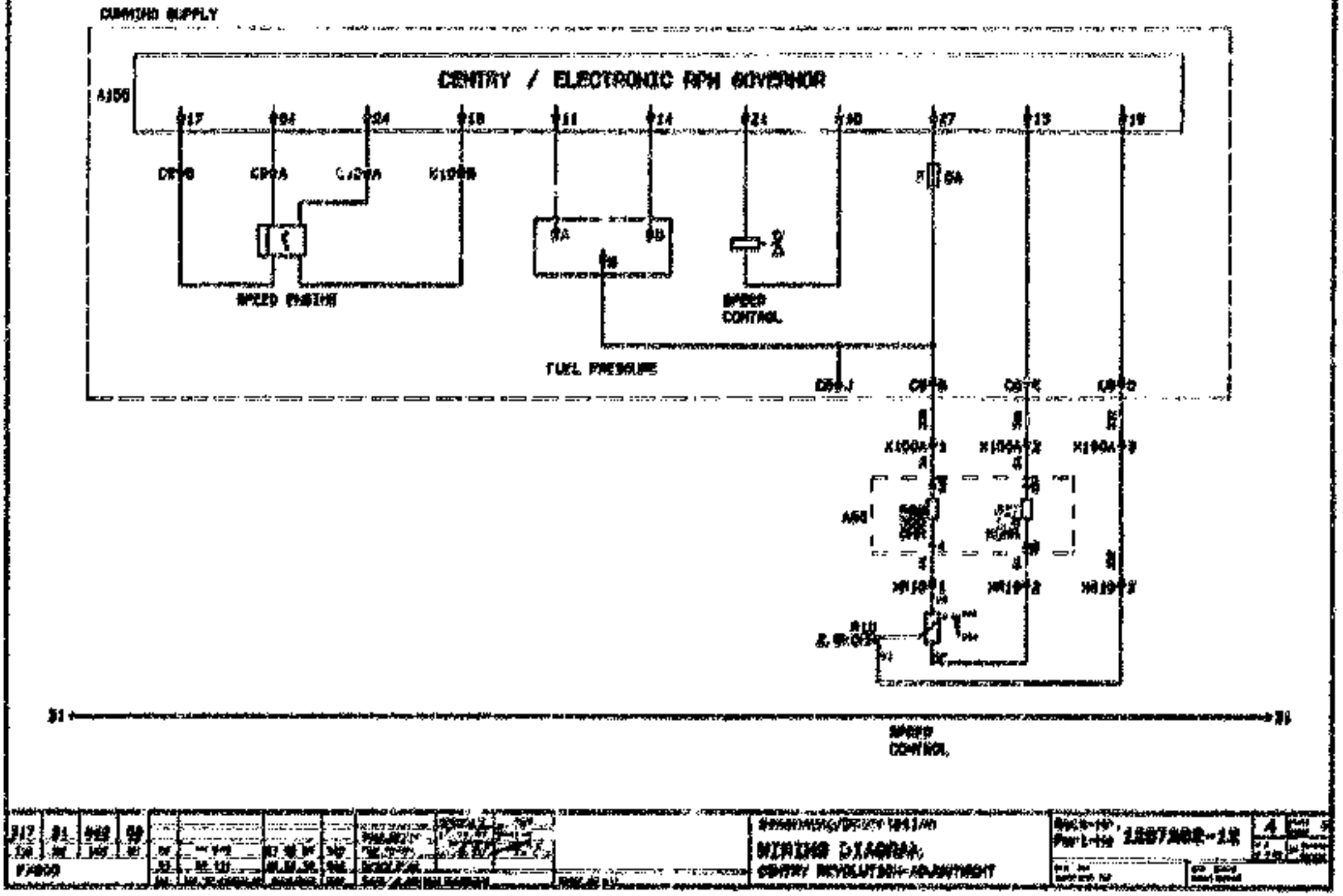
CUMMINS SUPPLY
CENTRY / ELECTRONIC RPH GOVERNOR
A150
17
24
18
11
14
21
10
7
13
19
6A
9A
9B
8
SPEED CONTROL
FUEL PRESSURE
SPEED CONTROL

CENTRAL ELECTRONIC UNIT

CONTROL LAMP MODULE

DISPLAY MODULE

MIN. HYDRAULIC OIL

ENGINE OIL PRESSURE

AIR FILTER

BATTERY CHARGE

PARKING BRAKE SWITCH

CONTINUOUS WATER LEVEL MIN.

ENGINE OIL TEMPERATURE

(OPTIONAL)

HYDRAULIC FILTER

PARKING BRAKE

BRAKE RELEASING UNIT

VHB ACTIVATOR

HYDRAULIC OIL LEVEL MINIMUM

| | | |

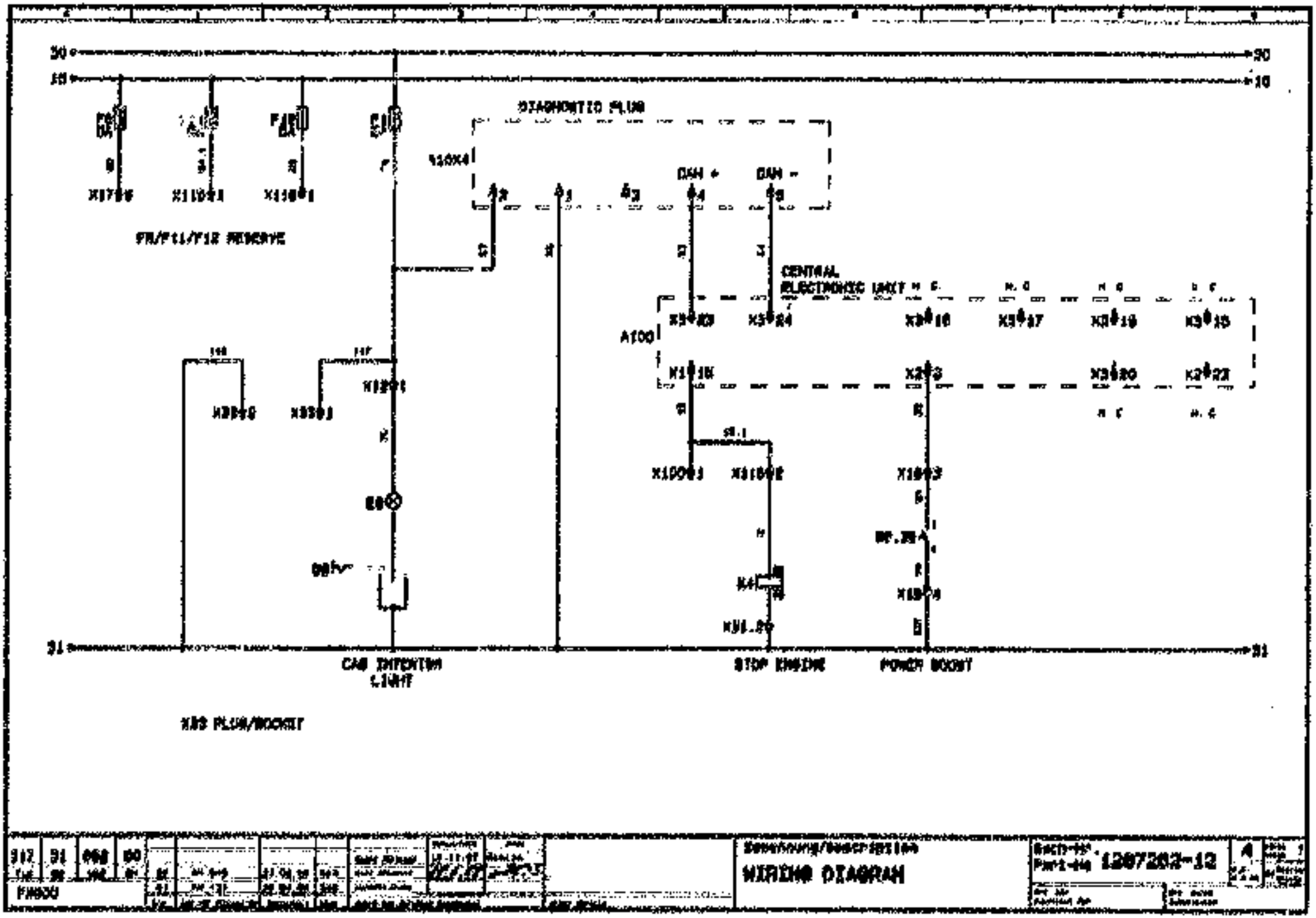
30
15
DIAGNOSTIC PLUG
DAH +
DAH -
CENTRAL ELECTRONIC UNIT
A100
X3 PLUG/SOCKET
CAR INTERIOR LIGHT
STOP ENGINE
POWER SOCKET
31

| | | |

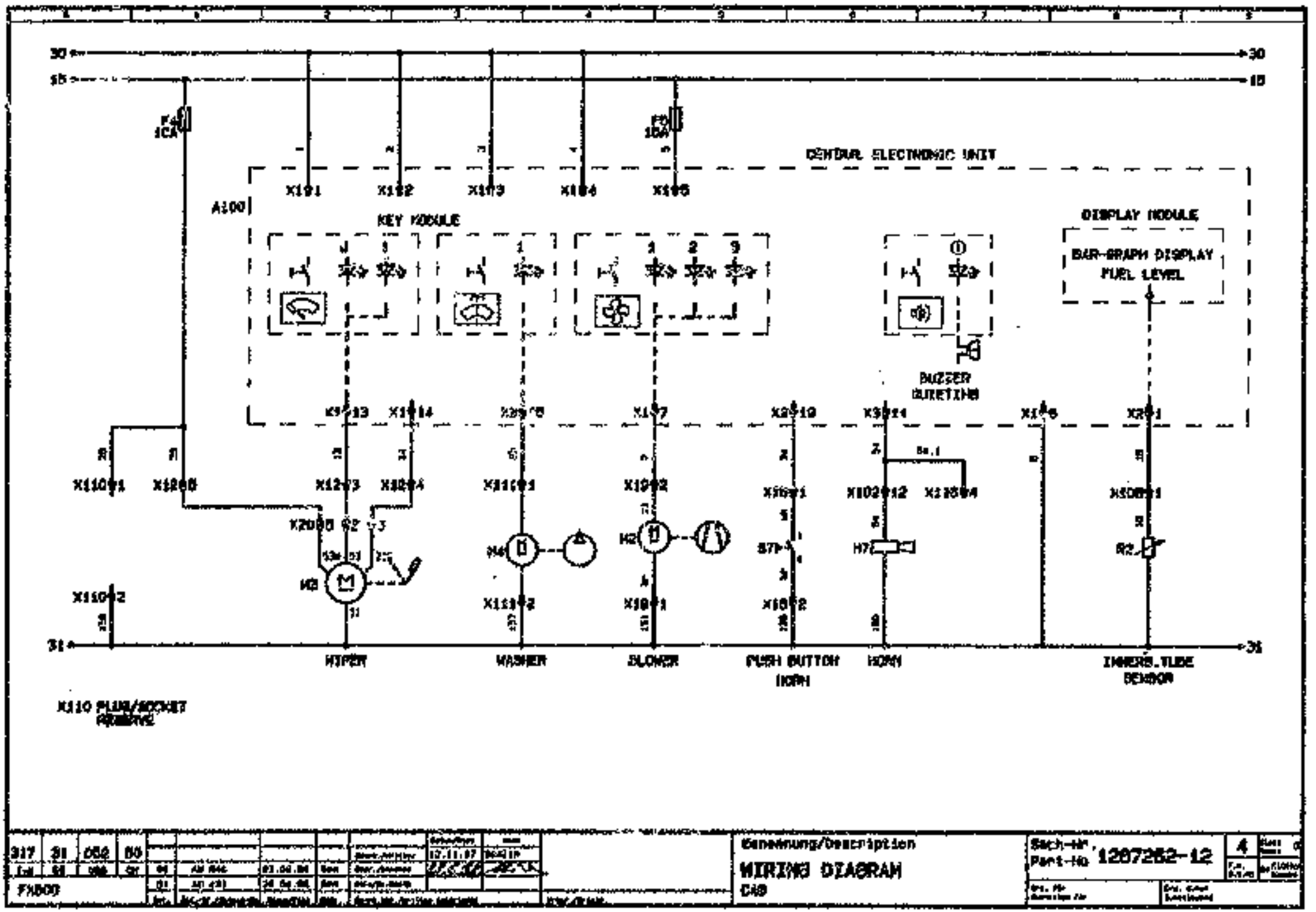

317	31	052	00						12.11.97		
Teil	Bl	Var.	Ctr	04							
FX800				01							

Benennung/Description
WIRING DIAGRAM
C49

Sach-Nr./Part-No. 1287252-12

4

CENTRAL ELECTRONIC UNIT

A100

KEY MODULE

1 2 3

X10791 X1158/10 X10807 X1158/13 X1158/11 X10813 X1158/11

X1282

E3.4 70W E4.4 70W E4.2 70W E5.2 70W E3.3 70W E4.3 70W

31

WORKING LIGHTS CAB FRONT LEFT RIGHT

WORKING LIGHT TANK RIGHT LEFT

WORKING LIGHTS COUNTERWEIGHT LEFT RIGHT

V1563 V1592 V1541 X207 X12073 V1565 X207 X31.20

28

FAULT INDICATION OFF

ACTIVATE FAULT STORAGE

FAULT INDICATION CENTRY

337	31	052	89							17.10.97	Hmf		
Typ	BR	ab/b	Ort	03	[illegible]	23.06.98	Bea	[illegible]		[illegible]			
FH800				01	[illegible]	29.01.99	Jeh	[illegible]					
				2n	[illegible]	[illegible]	Datum	[illegible]					

Benennung/Description

WIRING DIAGRAM

LIGHTING / FAULT INDICATION CENTRY

Bach-Nr. Part-No 1257262-12

4

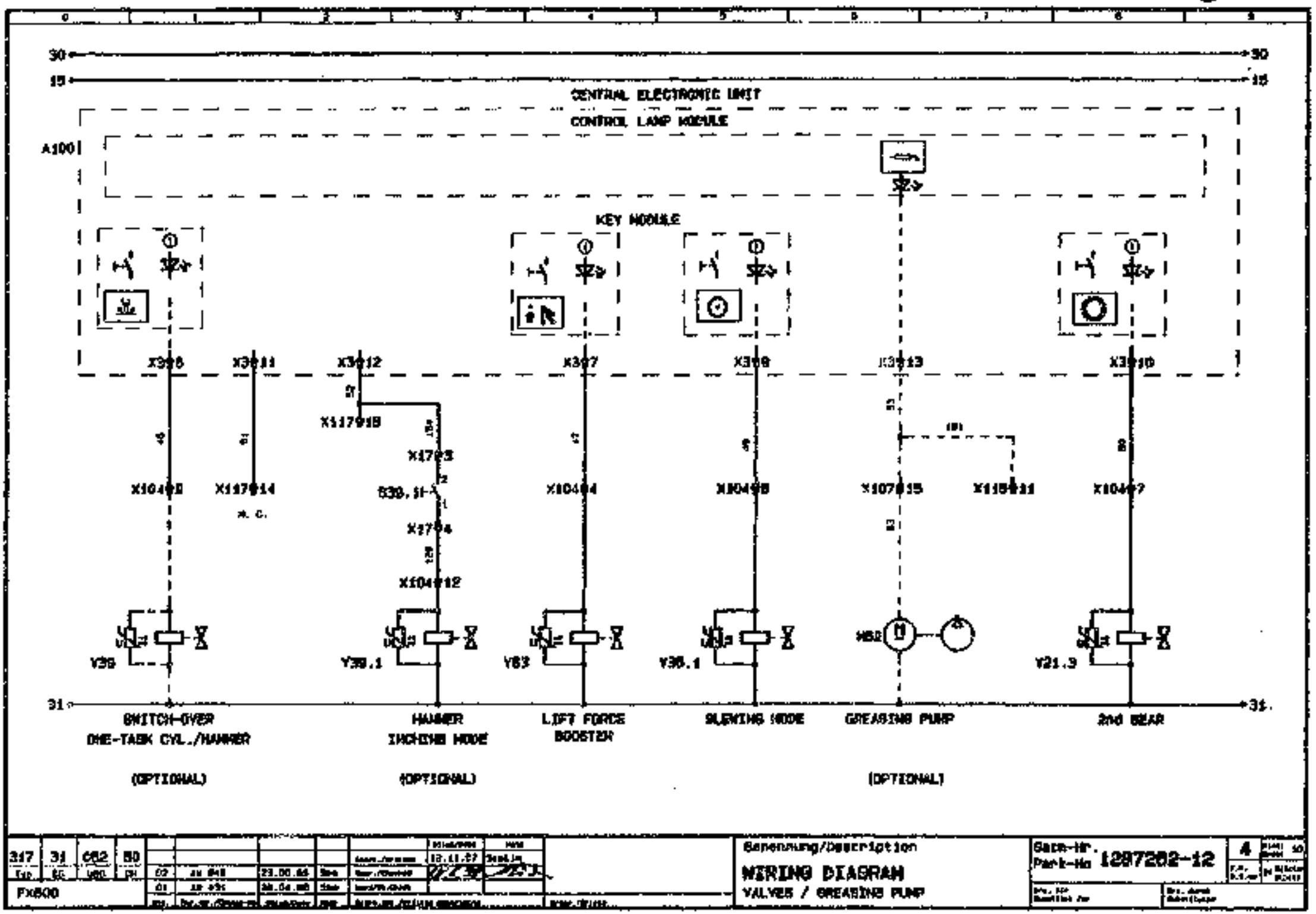

317	31	062	80							
FX800				02		23.08.95				
				01		30.04.96				

Benennung/Description
WIRING DIAGRAM
VALVES / GREASING PUMP

Sach-Nr.
Part-No 1287282-12

4

30

15

CENTRAL ELECTRONIC UNIT

A100

CONTROL LAMP MODULE

KEY MODULE

1 2

X2/2 X2/3 X2/4 X2/5 X2/6 X2/7 X2/9 X2/18 X2/21 X2/24

X107/14 X106/15 X117/13 X107/12 X107/13 X102/9 X107/3 X11785 X10190

Z2

B10

846.2 (Gn/ri) 846.3 (Bl/sw) 886

M. C.

M. C.

Z8

31

30

TRAVEL PRESSURE BOOSTER (OPTIONAL)

INPUT PRESSURE SENSOR OVERLOAD (OPTIONAL)

INPUT TOGGLE SWITCH HILL (OPTIONAL)

OVERLOAD 1 (OPTIONAL)

OVERLOAD 2 (OPTIONAL)

PRESSURE SWITCH LIFT BOOM

INPUT TOGGLE SWITCH BREAKS (OPTIONAL)

INPUT FAULT INDICATION CENTRAL

317	31	052	00							
Ltr.	00	000	01	02	AP 840	23.08.99	Sch.	Ausgabedatum	23.11.07	Name
FX800				01	AP 421	28.04.99	Sch.	Ersatz für:		
				Ltr.	Änderungsindex	Datum	Name	Ersatz durch:		

Benennung/Description

WIRING DIAGRAM
SPECIAL EQUIPMENT

Bestell-Nr. / Part-No 1287262-12

4

30

15

F6 5A

F10 5A

K7

K7.3

87.1

87.2

87.3

87.4

X7.7#1

X7.7#2

X10211

X7.1

X10419

X10411

S37.1

S37.2

X1[illegible]6

X1[illegible]7

X1[illegible]8

X1[illegible]9

X1[illegible]10

Y37.1

Y37.2

31

31

PRESSURE SWITCH TRAVEL-ALARM

HORN TRAVEL-ALARM

GRAB ROTATOR

(OPTIONAL)

317	31	052	50						13.11.97	5H114	
Ind.	30	060	CH	07	Air 840	03.06.98	Date	Name/Abteil			
FX600				01	Air 121	20.04.99	Date	name/U.Zeichn			
				Ind.	Ind. dr./Änderung	Intention	Ref.	Änderung/Zeichnung			

Benennung/Description

MIRING DIAGRAM

TRAVEL-ALARM / GRAB ROTATOR

Sach-Nr. Part-No 1287252-12

4

END POINT	CABLE NO.	a mm²	NO.	b mm²	CABLE NO.	END POINT
CENTRAL ELECTRONIC UNIT			1	2.5	1	X10 (B+ DISTRIBUTE)
CENTRAL ELECTRONIC UNIT			2	2.5	2	X10 (B+ DISTRIBUTE)
CENTRAL ELECTRONIC UNIT			3	2.5	3	X10 (B+ DISTRIBUTE)
CENTRAL ELECTRONIC UNIT			4	2.5	4	X10 (B+ DISTRIBUTE)
CENTRAL ELECTRONIC UNIT			5	2.5	5	F6 (15)
CENTRAL ELECTRONIC UNIT			6	2.5	6	GROUND (-)
CENTRAL ELECTRONIC UNIT			7	1	7	X19: 2
CENTRAL ELECTRONIC UNIT			8	0.75	8	X107: 1
CENTRAL ELECTRONIC UNIT			9	0.75	9	X106: 7
CENTRAL ELECTRONIC UNIT			10	0.75	10	X100: 11
CENTRAL ELECTRONIC UNIT			11			N. C.
CENTRAL ELECTRONIC UNIT			12			N. C.
CENTRAL ELECTRONIC UNIT			13	0.75	13	X12: 3
CENTRAL ELECTRONIC UNIT			14	0.75	14	X12: 4
CENTRAL ELECTRONIC UNIT			15	1	15	X102: 1

CONNECTION TABLE
PLUG/SOCKET A100X1 CONTROL PANEL

END POINT	CABLE NO.	a mm²	NO.	b mm²	CABLE NO.	END POINT
CENTRAL ELECTRONIC UNIT			1	0.5	16	X108: 1
CENTRAL ELECTRONIC UNIT			2	0.5	17	X107: 14
CENTRAL ELECTRONIC UNIT			3	0.5	18	X108: 15
CENTRAL ELECTRONIC UNIT			4	0.5	19	X117: 2*
CENTRAL ELECTRONIC UNIT			5			N. C.
CENTRAL ELECTRONIC UNIT			6	0.5	21	X107: 12
CENTRAL ELECTRONIC UNIT			7	0.5	22	X107: 13
CENTRAL ELECTRONIC UNIT			8	0.5	23	X16: 3
CENTRAL ELECTRONIC UNIT			9	0.5	24	X102: 9
CENTRAL ELECTRONIC UNIT			10	0.5	25	X100: 2
CENTRAL ELECTRONIC UNIT			11	0.5	26	X101: 9
CENTRAL ELECTRONIC UNIT			12	0.5	27	X100: 4
CENTRAL ELECTRONIC UNIT			13	0.5	28	X100: 5
CENTRAL ELECTRONIC UNIT			14	0.5	29	X100: 6
CENTRAL ELECTRONIC UNIT			15	0.5	30	X106: 2
CENTRAL ELECTRONIC UNIT			16	0.5	31	X101: 8
CENTRAL ELECTRONIC UNIT			17	0.5	32	(V56: A) X107: 4
CENTRAL ELECTRONIC UNIT			18	0.5	33	(V41.1: A) X107: 5
CENTRAL ELECTRONIC UNIT			19	0.5	34	X16: 1
CENTRAL ELECTRONIC UNIT			20	0.5	35	X100: 8
CENTRAL ELECTRONIC UNIT			21	0.5	36	X117: 5
CENTRAL ELECTRONIC UNIT			22	0.5	37	X106: 5
CENTRAL ELECTRONIC UNIT			23			N. C.
CENTRAL ELECTRONIC UNIT			24	0.5	39	X101: 6
CENTRAL ELECTRONIC UNIT			25			N. C.

CONNECTION TABLE
PLUG/SOCKET A100X2 CONTROL PANEL

317	21	032	00					
Ind.	21	032	01	02	02.11.87			
FIXED				01	21.06.84			

Benennung/Description
WIRING DIAGRAM
A100X1 - A100X2

Sach-Nr./Part-No. 1267262-12

4

END POINT	CABLE NO.	C mm²	NO.	a mm²	CABLE NO.	END POINT
CENTRAL ELECTRONIC UNIT			1			N. C.
CENTRAL ELECTRONIC UNIT			2			N. C.
CENTRAL ELECTRONIC UNIT			3		43	X107: 8
CENTRAL ELECTRONIC UNIT			4	0.5	44	X117: 11
CENTRAL ELECTRONIC UNIT			5	0.5		N. C.
CENTRAL ELECTRONIC UNIT			6	0.5	46	X104: 3
CENTRAL ELECTRONIC UNIT			7	0.5	47	X104: 4
CENTRAL ELECTRONIC UNIT			8	0.5	48	X104: C
CENTRAL ELECTRONIC UNIT			9	0.5	49	X104: 6
CENTRAL ELECTRONIC UNIT			10	0.5	50	X104: 7
CENTRAL ELECTRONIC UNIT			11	0.5	51	X117: 14
CENTRAL ELECTRONIC UNIT			12	0.5	52	X117: 15
CENTRAL ELECTRONIC UNIT			13	0.5	53	(V52.1: A) X107: 16
CENTRAL ELECTRONIC UNIT			14	0.5	54	X102: 12
CENTRAL ELECTRONIC UNIT			15	0.5	55	X111: 1
CENTRAL ELECTRONIC UNIT			16	0.5		N. C.
CENTRAL ELECTRONIC UNIT			17	0.5		N. C.
CENTRAL ELECTRONIC UNIT			18	0.5		N. C.
CENTRAL ELECTRONIC UNIT			19	0.5		N. C.
CENTRAL ELECTRONIC UNIT			20	0.5		N. C.
CENTRAL ELECTRONIC UNIT			21	0.5	61	A10X1: 21
CENTRAL ELECTRONIC UNIT			22	0.5	62	A10X1: 22
CENTRAL ELECTRONIC UNIT			23	0.5	63	A10X4: 4
CENTRAL ELECTRONIC UNIT			24	0.5	64	A10X4: 5
CENTRAL ELECTRONIC UNIT			25	0.5	65	X100: 12

CONNECTION TABLE
PLUG/SOCKET A100X3 CONTROL PANEL

END POINT	CABLE NO.	a mm²	NO.	2 mm²	CABLE NO.	END POINT
LOAD LIMIT GOVERNOR			1	0.5	74	F3 (10)
LOAD LIMIT GOVERNOR			2	0.5	103	X104: 1
LOAD LIMIT GOVERNOR			3	0.5	68	X101: 5
LOAD LIMIT GOVERNOR			4	0.5	104	X104: 13
LOAD LIMIT GOVERNOR			5	0.5	69	X101: 6
LOAD LIMIT GOVERNOR			6	0.5		N. C.
LOAD LIMIT GOVERNOR			7	0.5	99	X100: 8
LOAD LIMIT GOVERNOR			8	0.5	90	X100: 11
LOAD LIMIT GOVERNOR			9			N. C.
LOAD LIMIT GOVERNOR			10			N. C.
LOAD LIMIT GOVERNOR			11			N. C.
LOAD LIMIT GOVERNOR			12			N. C.
LOAD LIMIT GOVERNOR			13	0.5	107	X102: 2
LOAD LIMIT GOVERNOR			14	0.75	97	X102: 1
LOAD LIMIT GOVERNOR			15	0.5	117	X117: 8
LOAD LIMIT GOVERNOR			16			N. C.
LOAD LIMIT GOVERNOR			17	0.5	123	X117: 7
LOAD LIMIT GOVERNOR			18			N. C.
LOAD LIMIT GOVERNOR			19			N. C.
LOAD LIMIT GOVERNOR			20	0.5	108	X117: 9
LOAD LIMIT GOVERNOR			21	0.5	81	A100X3: 21
LOAD LIMIT GOVERNOR			22	0.5	82	A100X3: 22
LOAD LIMIT GOVERNOR			23			N. C.
LOAD LIMIT GOVERNOR			24	0.5	84	X101: 1
LOAD LIMIT GOVERNOR			25	0.5	110	GROUND (-)

CONNECTION TABLE
PLUG/SOCKET A10X1 LOAD LIMIT GOVERNOR

| | | |

END POINT	CABLE NO.	C mm²	NO.	D mm²	CABLE NO.	END POINT
A100X1: 15	15	1	1			N. C.
K115: 2	15.1	1				
A100X2: 10	25	0,5	2	1	25	B12: NK
K100: 11	10.1	0,75	3	1	10	E4,3/E3.3
K110: 11	10.2	0,75				
A100X2: 12	27	0,5	4	1	27	S15: 1
A100X2: 13	26	0.5	5	1	26	S13.2: 3
A100X2: 20	30	0,5	6			N. C.
			7			
			8			
			9			
			10			
			11			
A100X2: 25	65	0.5	12			N. C.
X115: 5	65.1	0.5				
X115: 7	73.1	0.75	13			N. C.
X100: 14		0.75				
X100: 13		0.75	14	1	73.1	S13.2: 1
F2 (15)	73	0.75				
			15			ENCODING PIN

CONNECTION TABLE PLUG/SOCKET X100 CABLE SET MOTOR

END POINT	CABLE NO.	C mm²	NO.	D mm²	CABLE NO.	END POINT
A1001: 24	85	0.5	1	1	60	S10.1: A
S1: 5 (100)	87	2.5	2	2.5	87	K1: 5
XF20: 1	87.1	1.5				
A100X2: 11	20	0,5	3			S13: 1 (OPTIONAL)
X117: 12	20.1	0,5				
			4			
A100X1: 3	58	0,5	5			N. C.
X132: 6	60.1	0,5				
A20X1: 5	59	0.5	6	1	60	R10.2
			7			
A100X2: 24	39	0.5	8			N. C.
X118: 3	92	0.5				
A100X2: 16	32	0.5	9			N. C.
			10			
K7.1: 17	341	0,5	11	1	341	K7.1
B1.2: 6	94	1.5	12	2.5	94	Y1: 3
X112: 2	95	0.5	13			N. C.
			14			ENCODING PIN
X12: 1	96	0.5	15	1		

CONNECTION TABLE PLUG/SOCKET X101 CABLE SET MOTOR

| | | | |

END POINT	CABLE NO.	C mm²	NO.	a mm²	CABLE NO.	END POINT
A90: 3 (R24)	3A	1	1	1	350	CENTRY CS: B
A84: 3 R27)	6A	1	2	1	931	CENTRY CS: E
X910: 6	322	1	3	1	932	CENTRY CS: D
S307: 10	328	1	4	1	329	CENTRY CS: F
K5: 87	324	2.5	5	2.5	324	CENTRY CS: B
			6			
			7			
GROUND (-)	328	2.5	8	2.5	358	CENTRY CS: H
			9			
			10			
K44: 87	328	1.5	11	1.5	326	CENTRY CS: G
K2.0: 60	60	1.5	12	1.5	60	61.R
X123: 8	327	0.75	13	1	327	CENTRY CS: H
X102: A	328	0.75	14	1	328	CENTRY CS: J
			15			

CONNECTION TABLE
PLUG/SOCKET X100A CABLE SET MOTOR

END POINT	CABLE NO.	C mm²	NO.	a mm²	CABLE NO.	END POINT
A10X1: 14	87	0.75	1	1	80	810.2
X117: 3	96	0.75				
A10X1: 13	107	0.5	2	1	107	810 1
X117: 1	107.1	0.5				
X107: 6	72.2	0.75	3			H. P.
			4			
			5			
A100X2: 14	29	0.5	6	1	29	830.1
K7: 60	335	0.5	7	1	335	87.1
			8			
A100X2: 9	24	0.5	9	1	24	856
811: 4	179	0.5	10	0.75		Y119
A10X1: 9	90	0.5	11			H. G.
A100X2: 14	64	0.5	12	1	64	H7
X116: 4	64.1	0.5				
			13			DECODING PDI
X117: 2	300	0.75	14			H. C.
X117: 4	307	0.75	15			H. G.

CONNECTION TABLE
PLUG/SOCKET X102 CABLE SET PLATFORM

| | | | |

END POINT	CABLE NO.	C mm²	NO.	a mm²	CABLE NO.	END POINT
A100X1: 2	103	0.5	1	1		710
			2			
A100X2: 8	48	0.5	3			Y30 (OPTIONAL)
A100X2: 7	47	0.5	4	0.75		Y03
A100X2: 6	46	0.5	5	0.75		Y30
A100X2: 9	49	0.5	6	0.75		Y30.1
A100X2: 10	50	0.5	7	0.75		Y24.3
			8			
X18: 7	127	0.5	9	0.75		Y37.1
			10			ENCODING PIN
X18: 10	128	0.5	11	0.75		Y37.2
X17: 4	129	0.5	12	0.75		Y38.1
A100X1: 4	104	0.5	13			N. C.
X117: 5	104.1	0.5				
			14			
			15			

CONNECTION TABLE
PLUG/SOCKET X104 CABLE SET VALVES

END POINT	CABLE NO.	C mm²	NO.	a mm²	CABLE CABLE	END POINT
A100X6: 1	15	0.5	1	1	10	R2
A100X2: 15	30	0.5	2	1	20	X15
A100X1: 7	99	0.5	3	1	99	P14: 1
X97.1: 3	199.2	0.75	4	1	102	B10: 2 (OPTIONAL)
F2 (10)	72	0.75				B97. 1: 1 (OPTIONAL)
X107: 6	72.1	0.75	6	1	72	X30.2: 1
A100X2: 22	37	0.5	6	1	37	X31.2: 2
A100X1: 9	9	0.75	7	1	9	B3.2/B4.2
X116: 13	9.1	0.75				
X121: 8	100	0.75	8			N. C.
			9			ENCODING PIN
X12: 7	149	0.75	10			N. C.
A100X1: 10	10	0.75	11			N. C.
X100: 3	10.1	0.75				
X12: 2	101	0.75	12	1	0.2	X107: 1
X97.1: 2	199	0.5	13	2.5	104	H97 (OPTIONAL)
X116: 10	300	0.5	14	0.75		X97.1: 8 (OPTIONAL)
A100X2: 3	18	0.5	15			N. C.

CONNECTION TABLE
PLUG/SOCKET X105 SUPERSTRUCTURE CABLE SET

| | | | |

END POINT	CABLE NO.	ζ mm²	NO.	⌀ mm²	CABLE NO.	END POINT
A100X1: 8	6	0.75	1	1	6.2	X100: 12
X116: 15	6.1	0.75				
			2			
A100X2: 16 (W41.1:K)	39	0.5	3	1	33	W41.1:3
A100X2: 17 (W39:K)	32	0.5	4			N. C.
X105: 5	72.1	0.75	5	1	73	W41.1:1
X102: 1	72.2	0.75				
			6			
			7			
A100X2: 3	43	0.5	8			N. C.
X117: 10	43.1	0.5				
			9			
			10			
			11			
A100X2: 6	21	0.5	12	1	23	840.2 (OPTIONAL)
A100X2: 7	52	0.5	13	1	22	846.3 (OPTIONAL)
A100X2: 2	17	0.5	14	1	17	B10: 1 (OPTIONAL)
A100X2: 13 (V38.1:K)	63	1.5	15	1	63	M56 (OPTIONAL)
X116: 11	101	0.5				

CONNECTION TABLE
PLUG/SOCKET X107 SUPERSTRUCTURE CABLE SET

END POINT	CABLE NO.	ζ mm²	NO.	⌀ mm²	CABLE NO.	END POINT
			1			
			2			
			3			
X17: 7	115	0.75	4			N. C.
X17: 10	115	0.5	5			N. C.
			6			
X116: 11	311	0.75	7			N. C.
			8			
			9			
			10			
			11			
X116: 13	321	0.5	12			N. C.
X116: 15	322	0.5	13			N. C.
X116: 12	315	0.5	14			N. C.
X116: 14	316	0.5	15			N. C.

CONNECTION TABLE
PLUG/SOCKET X108 SPECIAL EQUIPMENT

| | | | |

END POINT	CABLE NO.	C mm²	NO.	N mm²	CABLE NO.	END POINT
F11 (13)	84.1	1,5	1			N. C.
X101: 12	95	0,5	2			N. C.
X12: 9	166	0,75	3			N. C.
X12: 10	167	0,75	4			N. C.
X17: 1	152	0,5	5			N. C.
X17: 2	153	0,5	6			N. C.
X17: 11	156	0,5	7			N. C.
X17: 12	158	0,5	8			N. C.
X18.11	139	0,5	9			N. C.
X18.12	140	0,5	10			N. C.
X107.10	011	0,5	11			N. C.
X108.14	315	0,5	12			N. C.
X108.13	321	0,5	13			N. C.
X108.15	318	0,5	14			N. C.
X109.13	322	0,5	15			N. C.
CONNECTION TABLE PLUG/SOCKET		X115				RESERVE

END POINT	CABLE NO.	S mm²	NO.	d mm²	CABLE NO.	END POINT
F12 (15)	80	1,5	1			N. C.
X100: 1	15.1	1	2	0,75	2	K4: 86
X101: 8	82	0,5	3	0,5		V159: K
X102: 12	54.1	0,5	4			N. C.
X100: 12	65.1	0,5	5	0,75	5	X2.6: 30
X101: 5	85.1	0,5	6	0,75	6	K45: 86
X100: 13	73.1	0,75	7	0,75	7	K3.6: 87
				0,75	7.1	X107: 1
X12: 11	169	0,75	8			N. C.
F7 (16)	72	2,5	9	2,5	9	K5: 30
X108: 14	309	0,5	10	0,5	309.1	RESERVE X87.1: 901
X100: 9	10.2	0,75	11			N. C.
X108: 7	311	0,75	12			N. C.
X108: 7	9.1	0,75	13			N. C.
F16 (10)	313	1,5	14			N. C.
X107: 1	6.1	0,75	15			N. C.
CONNECTION TABLE PLUG/SOCKET		X116				RESERVE

| | | | |

END POINT	CABLE NO.	C mm²	NO.	R mm²	CABLE NO.	END POINT
X102: 2	107.1	0.75	1			N. C.
X102: 14	306	0.75	2			N. C.
X102: 1	66	0.75	3			N. C.
X102: 15	307	0.75	4			N. C.
A100X2: 21	36	0.5	5			N. C.
X104: 13	104.1	0.5	6			N. C.
A100X1: 17	135	0.5	7			N. C.
A10X1: 16	317	0.5	8			N. C.
A100X1: 20	108	0.5	9			N. C.
X107: 8	43.1	0.5	10			N. C.
A100X2: 4	44	0.5	11			N. C.
X100: 13	26.1	0.5	12			N. C.
A100X2: 6	10	0.5	13			N. C.
A100X2: 11	51	0.5	14			N. C.
A100X2: 12	52	0.5	15			N. C.
X17: 3	154	0.5				

CONNECTION TABLE
PLUG/SOCKET X117 RESERVE

END POINT	CABLE NO.	C mm²	NO.	R mm²	CABLE NO.	END POINT
F2 (30) /X33.1	70/147	1.5	1	1	70	E8
X100: 12	101	0.75	2	1	101	E3.4/E4.4
A100X1: 13	13	0.75	3	1	13	M3 (53)
A100X1: 14	14	0.75	4	1	14	M3 (31)
F4 (12)	70	0.75	5	1	70	M3 (55a)
X100: 8	100	0.75	6	1	100	RESERVE / X15
X100: 10	149	0.75	7	1	149	RESERVE / X15.1
N. C.			8	1	150	RESERVE / FRONT
X115: 3	155	0.75	9	1	156	RESERVE / FRONT
X115: 4	157	0.75	10	1	157	RESERVE / E35
X115: 6	159	0.75	11	1	158	RESERVE / E3.6/E4.6
			12	1	159	RESERVE / REAR

CONNECTION TABLE
PLUG/SOCKET X12 CAB

| | | | | | |

END POINT	CABLE NO.	∈ mm²	NO.	∈ mm²	CABLE NO.	END POINT
X115: 8	102	0.5	1	0.35	wh	PUSH BUTTON DOWN (1)
X116: 8	103	0.5	2	0.35	br	PUSH BUTTON DOWN (4)
X117: 15	104	0.5	3	0.35	gn	PUSH BUTTON TOP (1)
X104: 12	126	0.5	4	0.35	ye	PUSH BUTTON TOP (2)
			5	0.35	gy	PUSH BUTTON TOP (4)
FR (15)	80	0.5	6	0.35	pi	PUSH BUTTON LEFT (1)
X109: 4	116	0.5	7	0.35	bl	PUSH BUTTON LEFT (4)
X17: 9		0.5	8	0.35	rd	PUSH BUTTON LEFT (2)
X17: 8		0.5	9	0.35	bl	PUSH BUTTON RIGHT (1)
X109: 5	115	0.5	10	0.35	vi	PUSH BUTTON RIGHT (4)
X103: 7	105	0.5	11			RESERVE
X105: 8	106	0.5	12			RESERVE

CONNECTION TABLE
PLUG/SOCKET X17 PILOT CONTROL LEVER LEFT

END POINT	CABLE NO.	∈ mm²	NO.	∈ mm²	CABLE NO.	END POINT
A100X2: 13	94	0.5	1	0.35	wh	PUSH BUTTON DOWN (1)
GROUND (-)	130	0.5	2	0.35	br	PUSH BUTTON DOWN (4)
A100X2: 8	23	0.5	3	0.35	gn	PUSH BUTTON TOP (1)
GROUND (-)	127	0.5	4	0.35	ye	PUSH BUTTON TOP (2)
		0.5	5	0.35	gy	PUSH BUTTON TOP (4)
F10 (15)	83	0.5	6	0.35	pi	PUSH BUTTON LEFT (1)
X104: 9	127	0.5	7	0.35	bl	PUSH BUTTON LEFT (4)
X18: 9		0.5	8	0.35	rd	PUSH BUTTON LEFT (2)
X18: 8		0.5	9	0.35	bl	PUSH BUTTON RIGHT (1)
X104: 11	128	0.5	10	0.35	vi	PUSH BUTTON RIGHT (4)
X103: 9	138	0.5	11			RESERVE
X105: 10	140	0.5	12			RESERVE

CONNECTION TABLE
PLUG/SOCKET X18 PILOT CONTROL LEVER RIGHT

317	31	052	00					12.10.87	Seidler
Typ	00	0305	Ch	CH	AM 840	22.05.90	Sew		
FX500				DE	AM 436	25.04.86	Sew		
				ZE					

Benennung/Description
WIRING DIAGRAM
X17 - X18

Sach-Nr. / Part-No 1287282-12

4

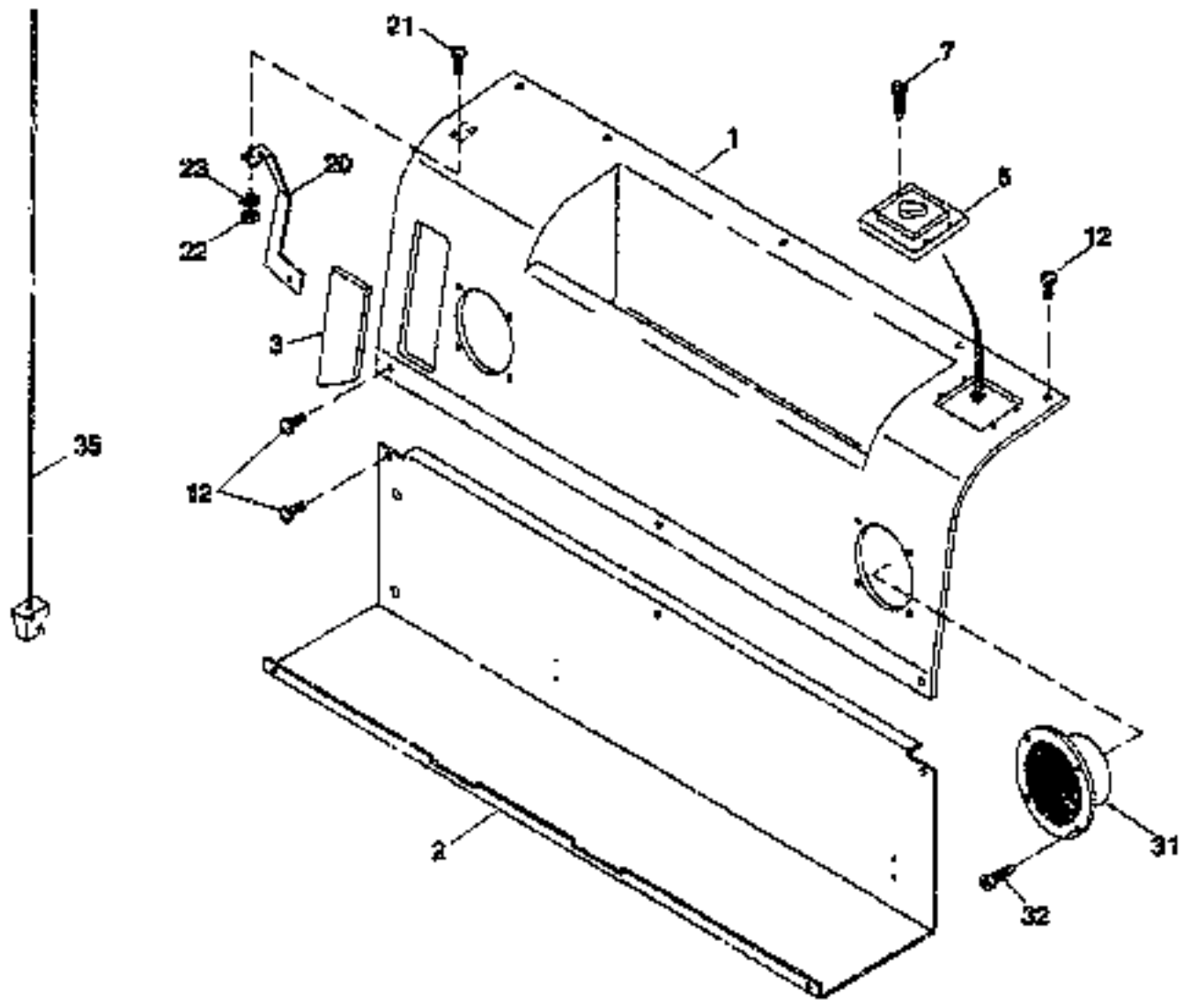

2 496 871.010

RADIO INSTALLMATERIAL

T 2496871 - 000
B 2496871 - 010

FX500 / 106101 - .....

Item	Quan.	ME	Part No.	Description
001	1	00	73171169	COMPUTER HOLDER
002	1	00	73171170	COVER
003	1	00	73171171	BLIND
005	1	00	73171172	CONTROL ELEMENT
007	4	00	73171173	SELF-TAPPING SCREW
012	10	00	73171030	CLAMPING SCREW
020	1	00	73171174	BRACKET
021	2	00	73171030	CLAMPING SCREW
022	3	00	73170983	HEXAGON NUT
023	3	00	73170834	DISK/WASHER
031	2	00	73171175	BLIND
032	8	00	73171173	SELF-TAPPING SCREW
035	1	00	73171176	ANTENNA
				OPTIONAL
100	1	00	73176567	RADIO
101	1	00	73176568	LOUDSPEAKERS (2 PCS)
102	2	00	73176579	CABLE
				NOT ILLUSTRATED

ME: 00 = Stück/piece 13 = m 25 = m² 39 = m² 43 = kg 50 = l (litre)

Electrical components in circuit diagram

FX600 | Circuit diagram No. | T 1287283 - 001 / B 1287282 - 010

Part	Quantity	Description and function	Curr. Path	Location	Part no.
R2	1,000	IMMERSED TUBE SENSOR	8 - 8/81 -	FUEL TANK	
R2	6,000	HEXAGON BOLT	8 - 8/81 -	FUEL TANK	73171664
R2	6,000	DISK/WASHER	8 - 8/81 -	FUEL TANK	73170834
R2	1,000	SLEEVE	8 - 8/81 -	FUEL TANK	73172512
R2	1,000	PLUG-IN SLEEVE	8 - 8/81 -	FUEL TANK	73175221
R25	1,000	BASE-LOAD RESISTOR FOR PMS OUTPUT	3 - 3/91 -	SEAT CONSOLE,RH	73175140
R26	1,000	PROTECTIVE RESISTOR - SPEED VARIATION	5 - 5/79 -	SEAT CONSOLE,RH	73175141
R27	1,000	PROTECTIVE RESISTOR - SPEED VARIATION	5 - 7/79 -	SEAT CONSOLE,RH	73175142
S1	1,000	START BUTTON	2 - 2/18 -	SEAT CONSOLE,RH	
S1.1	1,000	BATTERY ISOLATOR	2 - 0/86 -	SUPERSTRUCTURE	73175263
S1.7	1,000	PUSHBUTTON COLD STARTING	2 - 4/47 -	SEAT CONSOLE,RH	73175267
S1.7	1,000	SNAP-ON PANEL	2 - 4/47 -	SEAT CONSOLE,RH	73172516
S10.1	1,000	PRESSURE SWITCH - SERVO	3 - 4/91 -	PLATFORM PLATE	
S113	1,000	LIMIT SWITCH PILOT PRESSURE CUT-OFF	2 - 7/47 -	SEAT CONSOLE,LH	73171211
S12	1,000	OIL PRESSURE SWITCH	6 - 0/85 -	ENGINE	
S13.2	1,000	LEVEL SWITCH - WATER MIN	6 - 7/84 -	ENGINE COMPARTMENT	
S15	1,000	FILTER SWITCH	6 - 3/86 -	HYD.OIL TANK	
S15.1	1,000	SWITCH - AIR FILTER CONTAMINATED	5 - 2/86 -	ENGINE AIR FILTER	
S207	1,000	PUSHBUTTON - FAULT STORAGE ACTIVATION	9 - 8/52 -	SEAT CONSOLE,RH	73175268
S207	1,000	SNAP-ON PANEL	9 - 8/52 -	SEAT CONSOLE,RH	73175269
S35.1	1,000	PUSHBUTTON SWITCH - SLEWING-GEAR BRAKE	6 - 5/86 -	PLATFORM PLATE	
S35.2	1,000	SPEED SENSOR - SLEWING-GEAR BRAKE	6 - 6/84 -	SUPERSTRUCTURE	
S35.2	1,000	SOCKET	6 - 6/84 -	SUPERSTRUCTURE	73172624
S35.2	1,000	HOUSING	6 - 6/84 -	SUPERSTRUCTURE	73172625
S35.2	1,000	PIN	6 - 6/84 -	SUPERSTRUCTURE	73172626
S35.2	2,000	BUSHING	6 - 6/84 -	SUPERSTRUCTURE	73172627
S35.2	1,000	CLAMP	6 - 6/84 -	SUPERSTRUCTURE	73172628
S37.1	1,000	BUTTON - ROTATE GRAB LEFT	12 - 6/48 -	JOYSTICK,TOP RH	73172616
S37.2	1,000	BUTTON - ROTATE GRAB RIGHT	12 - 7/49 -	JOYSTICK,TOP RH	73172618
S39.1	1,000	BUTTON HYDRAULIC CONTROL, DOUBLE FRONT	10 - 3/72 -	JOYSTICK,BOTTOM LH	73172616

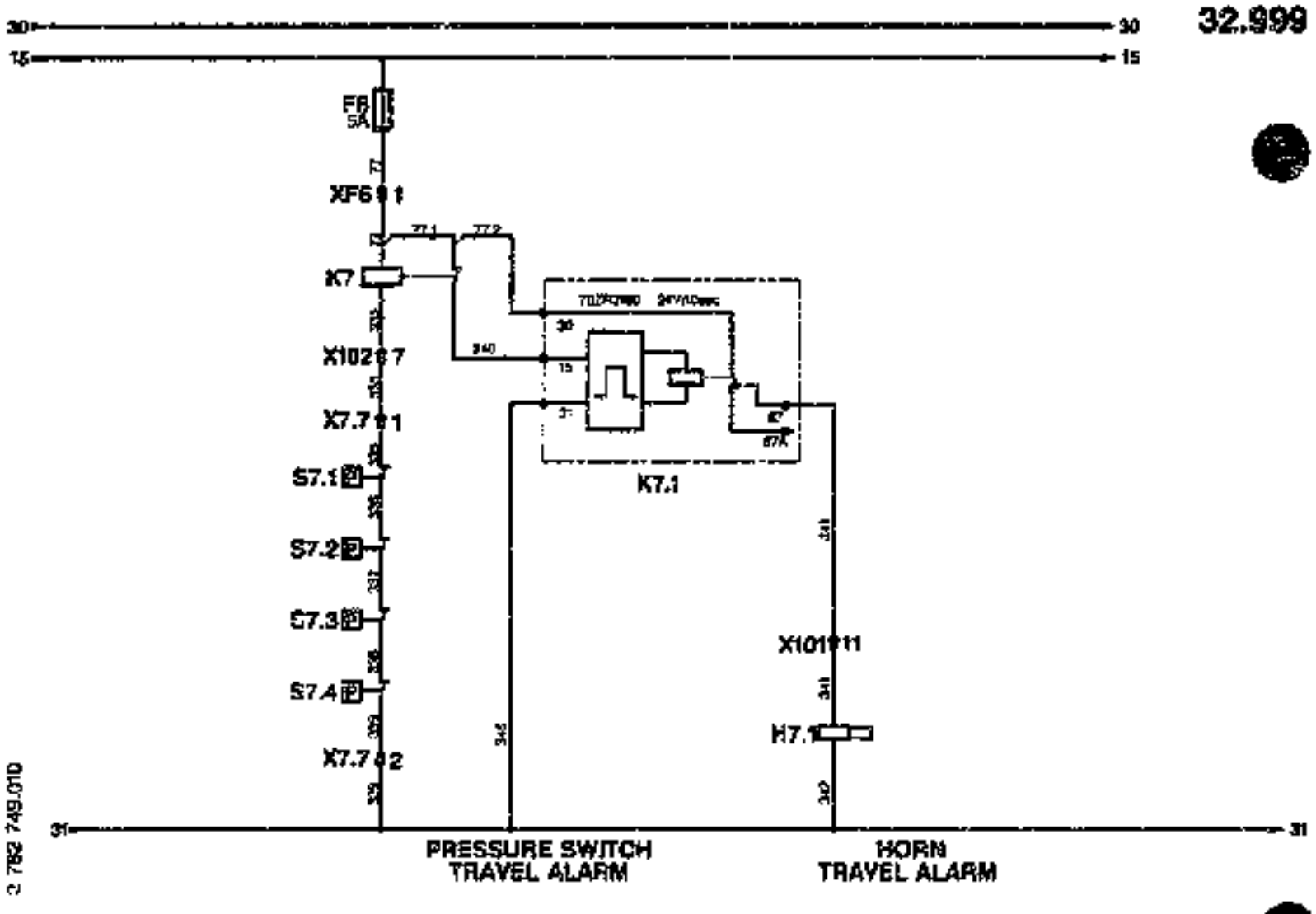

2 782 749.010

ELECTRICAL SYSTEM ADDITION OTHER

T 2782749 - 001
B 2782749 - 010

FX600 / 106101 - .....

Item	Quan.	ME	Part No.	Description
004	1	00	73172606	FUSE INSERT
005	1	00	73174128	RELAY
006	2	00	73170202	HEXAGON BOLT
007	2	00	73170195	DISK/WASHER
008	1	00	73177354	RELAY
010	1	00	73177318	CABLE SET
011	2	00	73177319	CABLE SET

ME: 00 = Stück/piece 13 = m 26 = m² 39 = m³ 43 = kg 50 = l (litre)

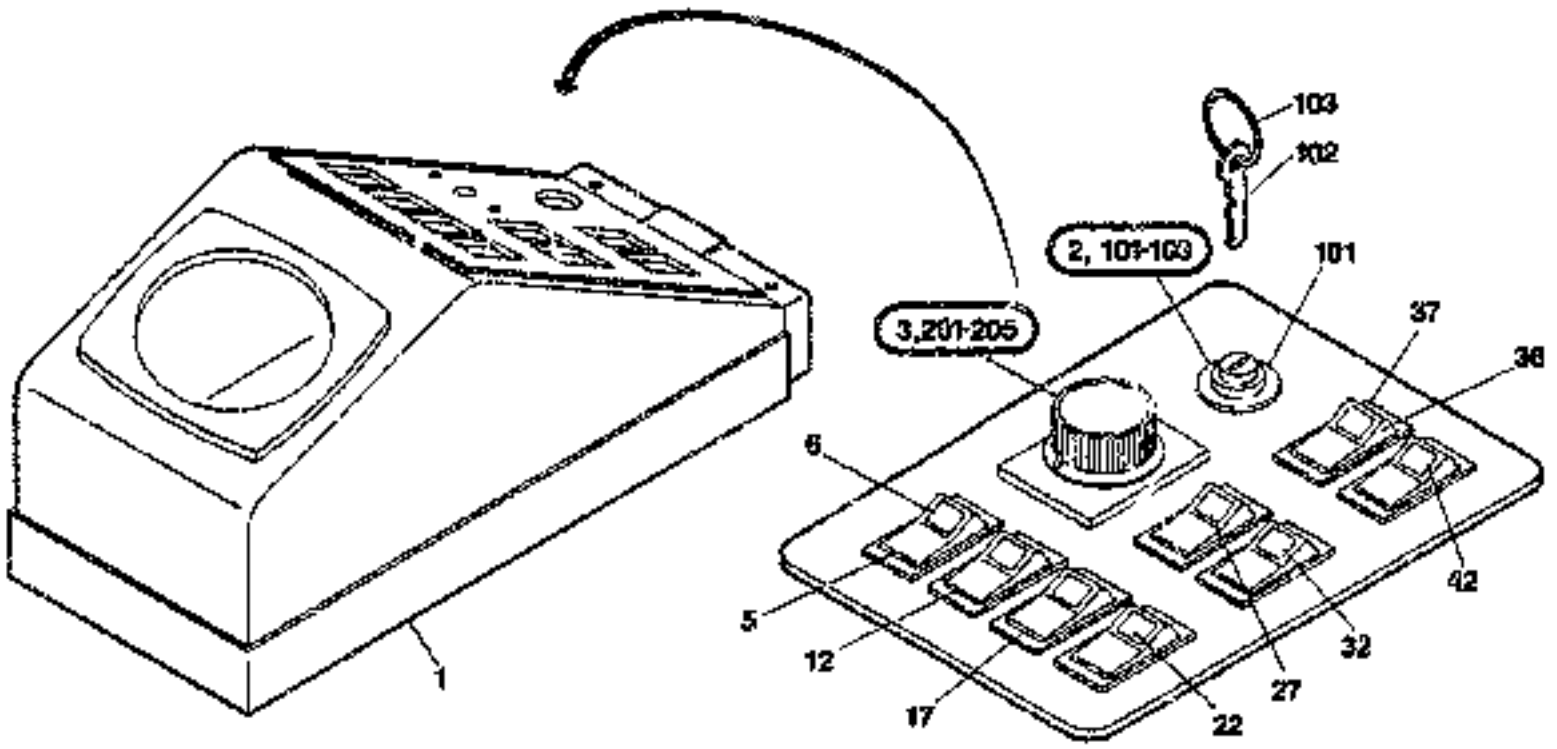

2 782 773.01!

DASHBOARD INSTALL.MATERIAL

T 2782775 - 002
B 2782775 - 011

FX600

Item	Quan.	ME	Part No.	Description
205	2	00	73177877	CONTER-SUNK SCREW

ME: 00 = Stück/piece 13 = m 26 = m² 39 = m³ 43 = kg 50 = l (litre)

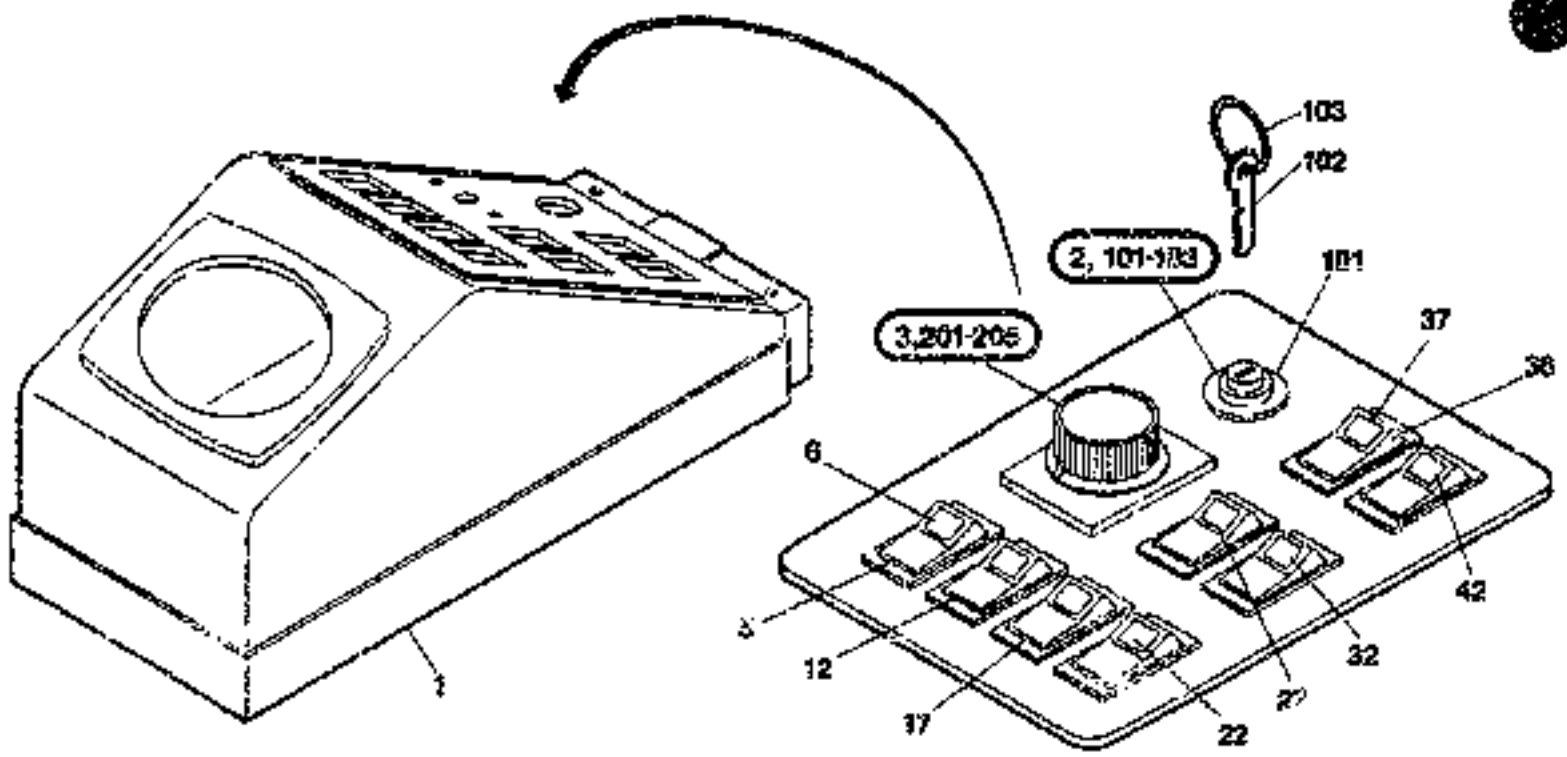

2 782 775.011

DASHBOARD INSTALL.MATERIAL

T 2782775 - 002
FX600 S 2782775 - 011

Item	Quan.	ME	Part No.	Description
001	1	00	73171239	TOP
002	1	00	73171240	SWITCH
003	1	00	73176014	POTENTIOMETER
005	1	00	73175288	ROCKER SWITCH
006	1	00	73175289	SNAP-ON PANEL
012	1	00	73171245	BLIND
017	1	00	73171245	BLIND
022	1	00	73171245	BLIND
027	1	00	73171245	BLIND
032	1	00	73171245	BLIND
036	1	00	73175287	SWITCH
037	1	00	73172516	SNAP-ON PANEL
042	1	00	73171245	BLIND
101	1	00	73171246	SWITCH
102	2	00	73171247	KEY
103	1	00	73170235	RING
201	1	00	73177290	POTENTIOMETER
202	1	00	73171243	PLATE

ME: 00 = Stück/piece 13 = m 26 = m² 39 = m³ 43 = kg 50 = l (litre)

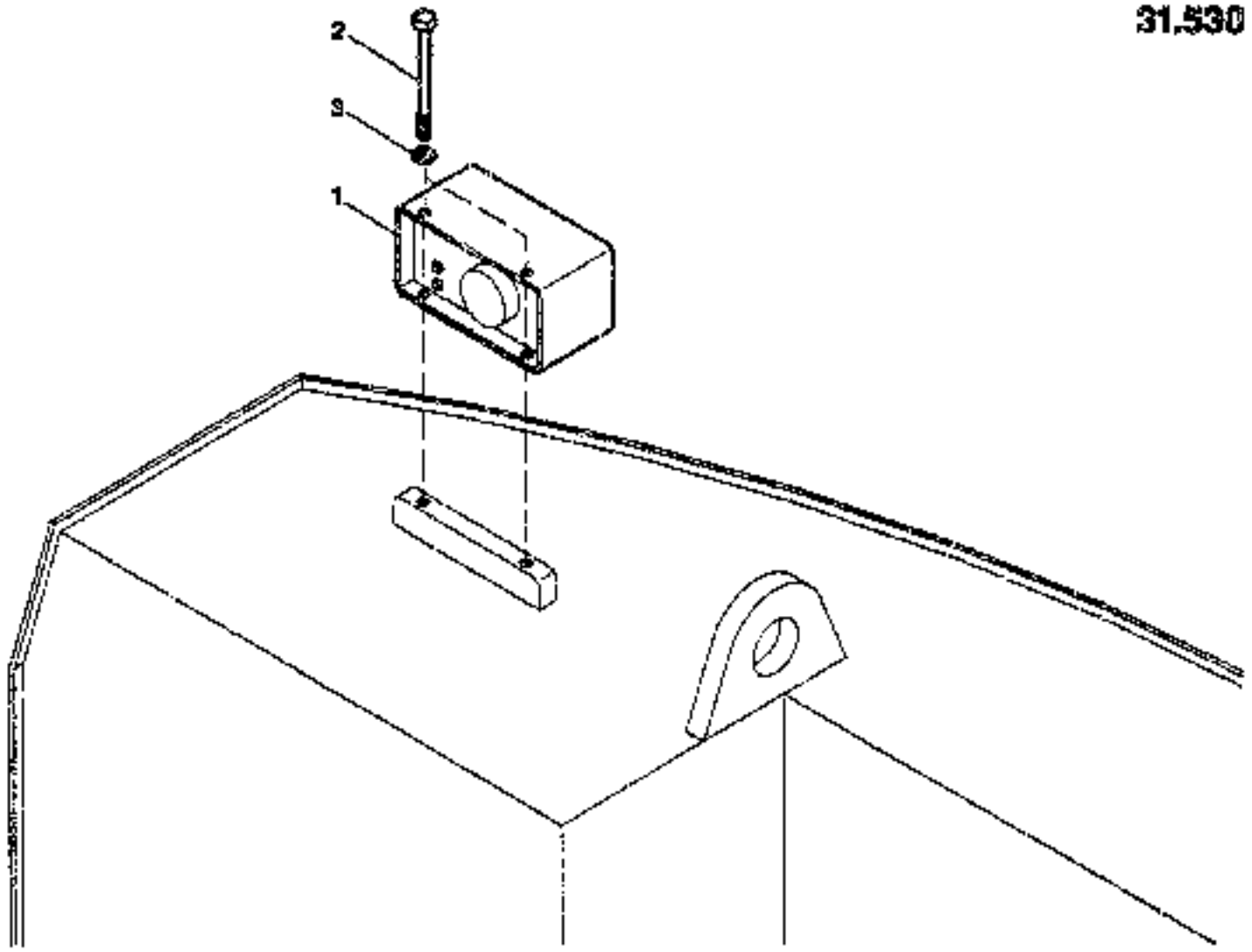

2 782 748.010

SIGNAL GENERAL

T 2782748 - 000
B 2782748 - 010

FX600 / 106101 - .....

Item	Quan.	ME	Part No.	Description
001	1	00	73175786	HORN
002	2	00	73176012	HEXAGON BOLT
003	2	00	73170160	DISK/WASHER

ME: 00 = Stück/piece 13 = m 28 = m² 39 = m³ 43 = kg 50 = l (litre)

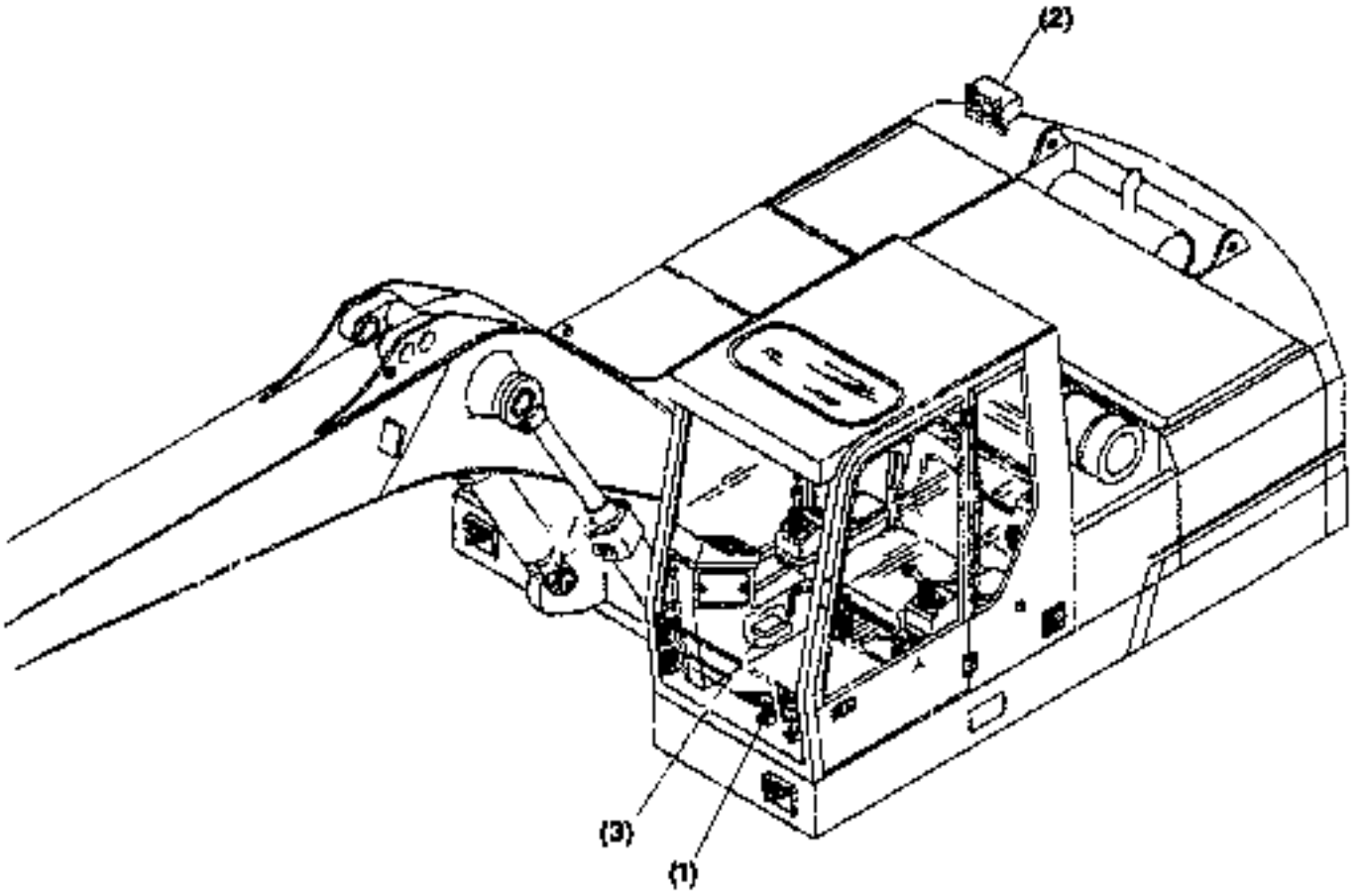

2 782 746.010

31.530

SIGNAL GENERAL

T 2782746 - 000
B 2782746 - 010

FX600 / 106101 - .....

Item	Quan.	ME	Part No.	Description
001	1	00		20.641 *2782747* HYDRAULIC SYSTEM CASCADE MOUNTING PARTS
002	1	00		31.530 *2782748* SIGNAL GENERAL
003	1	00		32.999 *2782749* ELECTRICAL SYSTEM ADDITION OTHER

ME: 00 = Stück/piece 10 = m 25 = m² 30 = m³ 40 = kg 50 = l (litre)

1998-09-10

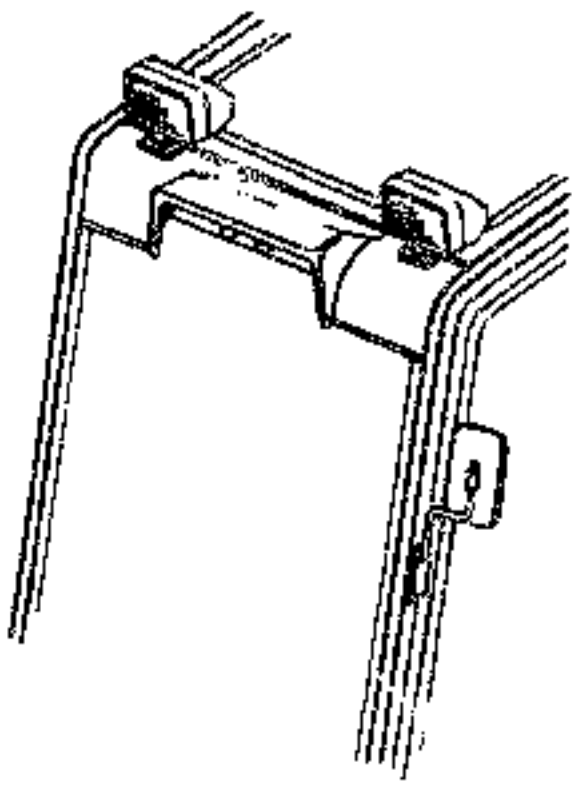

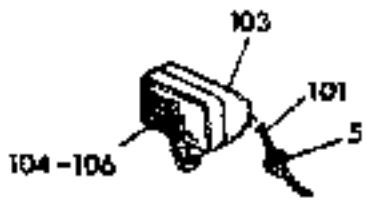

2 444 B08.010

WORKING HEADLIGHT INSTALL.MATERIAL

T 2444608 - 000
B 2444608 - 010

FX600 / 106101 - .....

Item	Quan.	ME	Part No.	Description
001	2	00	73172506	ELECTRICAL SYSTEM
005	2	00	73172507	NOZZLE/GROMMET
101	2	00	73172508	CABLE
103	2	00	73172509	WORKING HEADLIGHT
104	2	00	73172510	BULB
105	4	00	73172511	PLUG-IN SLEEVE
106	4	00	73172512	SLEEVE

ME: 00 = Stück/piece 10 = m 20 = m² 30 = m³ 40 = kg 50 = l (litre)

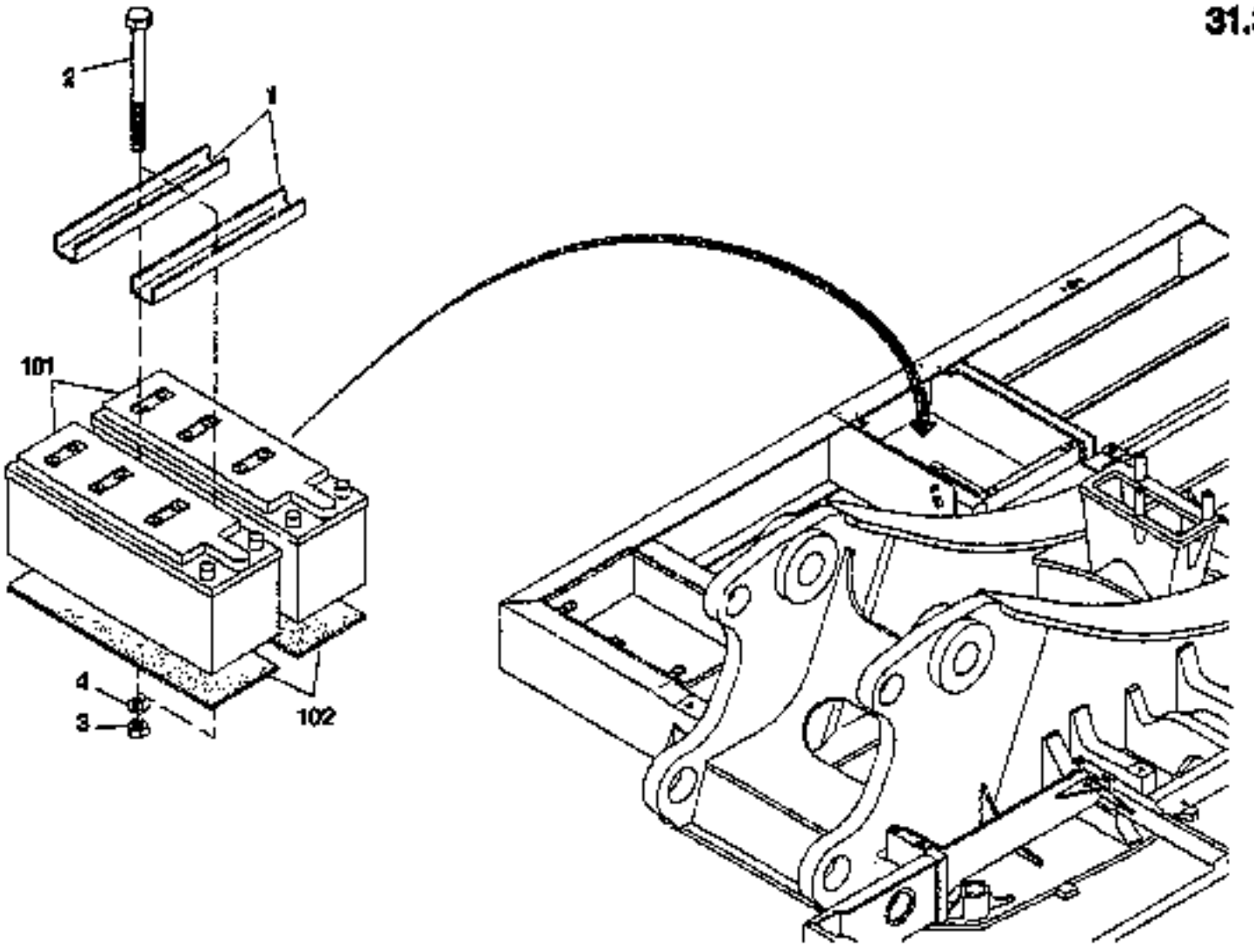

2 443 932-010

31.300

BATTERY INSTALL.MATERIAL

FIATALLIS

FX600 / 105101 - .....

T 2443932 - 000
B 2443932 - 010

Item	Quan.	ME	Part No.	Description
001	2	00	73170988	BRACKET
002	2	00	73170989	HEXAGON BOLT
003	2	00	73170215	HEXAGON NUT
004	2	00	73170182	DISK/WASHER
101	2	00	73170990	BATTERY
102	2	00	73170991	MAT

ME: 00 = Stückware 13 = m 26 = m² 32 = m³ 43 = kg 50 = l (litre)

1996-09-10

Electrical components in circuit diagram

FX600	Circuit diagram No.	T 1287283 - 001 B 1287262 - 010

Part	Quantity	Description and function	Curr. Path	Location	Part no.
Y39.1	1,000	SOLENOID VALVE - HAMMER	10 - 3/94	SUPERSTRUCTURE	
Y63	1,000	POWER BOOSTER	10 - 4/94	VALVE BLOCK	
Y37.1	1,000	SOLENOID VALVE - GRAB ROTATOR	12 - 5/85	SUPERSTRUCTURE	
Y37.2	1,000	SOLENOID VALVE - GRAB ROTATOR	12 - 8/85	SUPERSTRUCTURE	
Y39	1,000	SOLENOID VALVE - SWITCHINGONE TASK CYLINDER / HAMMER	10 - 1/94	VALVE BLOCK	
Y39.1	1,000	SOLENOID VALVE - HAMMER	10 - 3/94	VALVE BLOCK	
Y63	1,000	POWER BOOSTER	10 - 4/94	VALVE BLOCK	

Electrical components in circuit diagram

FX800	Circuit diagram No.	T 1287263 - 001 B 1287262 - 010

Part	Quantity	Description and function	Curr. Path	Location	Part no.
W81	1,000	CABLE - BATTERY MAIN SWITCH/EARTH	23 - 7/15 -	SUPERSTRUCTURE	73175264
W82	1,000	CABLE - BATTERY MINUS/BATTERY MAIN SWITCH	23 - 7/20 -	SUPERSTRUCTURE	73177355
W90	1,000	CABLE SET FUSE COLD STARTING	23 - 7/25 -	CONTROL PANEL	73177291
W93	1,000	CABLE SET SIDE CONSOLE RIGHT	23 - 7/30 -	SEAT CONSOLE,RH	73177875
X10	2,000	B + DISTRIBUTOR	- 0/ 0 -		73170164
X10	1,000	CLIP	- 0/ 0 -		73172640
X123	1,000	DIAGNOSTIC PLUG CENTRY	4 - 5/79 -	CONTROL PANEL	73177292
X123	2,000	PLUG-IN SLEEVE	4 - 5/79 -	CONTROL PANEL	73177293
X129	2,000	GASKET	4 - 5/79 -	CONTROL PANEL	73177294
X20	1,000	CONNECTOR SCREEN WIPER MOTOR	- 0/ 0 -		73172641
X20	3,000	PLUG-IN SLEEVE	- 0/ 0 -		73172642
X31.2	2,000	GROUND TERMINAL SIDE CONSOLE	- 0/ 0 -		73175271
XF20	1,000	PLUG/SOCKET COLD START	- 0/ 0 -		73175272
XF20	1,000	HOUSING	- 0/ 0 -		73175273
XF20	2,000	BUSHING	- 0/ 0 -		73175274
XF20	2,000	MALE CONNECTOR	- 0/ 0 -		73175275
XF6	1,000	PLUG/SOCKET TRAVEL ALARM	- 0/ 0 -		73176061
XF6	1,000	PLUG-IN SLEEVE	- 0/ 0 -		73176063
XF6	1,000	RECEPTACLE HOUSING	- 0/ 0 -		73176064
XF6	1,000	HOUSING	- 0/ 0 -		73176065
XR10	0,300	PLUG/SOCKET SPEED CONTROL	- 0/ 0 -		73174171
XR10	6,000	PLUG-IN SLEEVE	- 0/ 0 -		73172511
Y1.3	1,000	SOLENOID VALVE COLD START	2 - 4/84 -	ENGINE COMPARTMENT	
Y1.4	1,000	LIFTING MAGNET MOTOR STOP	4 - 2/69 -	ENGINE	
Y10	1,000	PROPOTIONAL VALVE	3 - 0/91 -	VALVE BLOCK	
Y118	1,000	SOLENOID FOR PILOT CONTROL PRESSURE	2 - 8/84 -	PLATFORM PLATE	
Y21.3	1,000	SOLENOID VALVE - 2ND GEAR	10 - 8/94	VALVE BLOCK	
Y35	1,000	SOLENOID - SLEWING-GEAR BRAKE	6 - 4/88 -	VALVE BLOCK	
Y35.1	1,000	SOLENOID VALVE - SLEWING	10 - 5/94	SUPERSTRUCTURE	
Y37.1	1,000	SOLENOID VALVE - GRAB ROTATOR	12 - 6/85	SUPERSTRUCTURE	
Y37.2	1,000	SOLENOID VALVE - GRAB ROTATOR	12 - 6/85	SUPERSTRUCTURE	
Y39	1,000	SOLENOID VALVE - SWITCHINGONE TASK CYLINDER / HAMMER	10 - 1/94	SUPERSTRUCTURE	

Electrical components in circuit diagram

FX600	Circuit diagram No.	T 1287263 - 001 B 1287262 - 010

Part	Quantity	Description and function	Curr. Path	Location	Part no.
S41.1	1,000	HYDRAULIC OIL LEVEL SWITCH	6 - 8/84 -	SUPERSTRUCTURE	
S41.1	1,000	RIGHT ANGLE PLUG	6 - 8/84 -	SUPERSTRUCTURE	73172620
S46.2	1,000	PRESSURE SWITCH - HYDRAULICS	11 - 4/85	SUPERSTRUCTURE	
S46.3	1,000	PRESSURE SWITCH - HYDRAULICS	11 - 5/85	SUPERSTRUCTURE	
S66	1,000	PRESSURE SWITCH - BOOM	11 - 6/85	PLATFORM PLATE	
S7	1,000	HORN BUTTON	8 - 6/81 -	JOYSTICK,TOP RH	73172618
S7.1	1,000	TRAVEL ALARM	12 - 2/56	PLATFORM PLATE	
S7.2	1,000	TRAVEL ALARM	12 - 2/64	PLATFORM PLATE	
S7.3	1,000	TRAVEL ALARM	12 - 2/72	PLATFORM PLATE	
S7.4	1,000	TRAVEL ALARM	12 - 2/80	PLATFORM PLATE	
S8.3	1,000	BUTTON BOOSTER	7 - 7/79 -	JOYSTICK,TOP RH	73172618
S9	1,000	SWITCH - INTERIOR LIGHT	7 - 2/84 -	CAB	
V153	1,000	RELEASING DIODE	9 - 7/52 -	SEAT CONSOLE,RH	73175270
V154	1,000	RELEASING DIODE	9 - 7/62 -	SEAT CONSOLE,RH	73175270
V155	1,000	RELEASING DIODE	9 - 6/89 -	SEAT CONSOLE,RH	73175270
V156	1,000	RELEASING DIODE	9 - 6/52 -	SEAT CONSOLE,RH	73175270
W01	1,000	CABLE HARNESS, CONTROL PANEL	23 - 1/10	CONTROL PANEL	73175158
W03	1,000	CABLE HARNESS, ENGINE	23 - 1/15	ENGINE	73175159
W04	1,000	CABLE HARNESS, VALVES	23 - 1/20	SUPERSTRUCTURE	73175160
W05	1,000	MAIN CABLE SET	23 - 1/25	SUPERSTRUCTURE	73177874
W06	1,000	CABLE HARNESS, PLATFORM	23 - 1/30	PLATFORM PLATE	73173027
W08	1,000	CABLE BATTERY PLUS	23 - 1/35	SUPERSTRUCTURE	73175162
W09	1,000	CABLE HARNESS, STANDARD CAB	23 - 1/40	CAB	7317259[illegible]
W09	1,000	PIPE CLAMP	23 - 1/40	CAB	73172632
W09	1,000	SELF-TAPPING SCREW	23 - 1/40	CAB	73172633
W15	1,000	CABLE FOR JOYSTICK	23 - 4/10	JOYSTICK	73172634
W15	1,000	RECEPTACLE HOUSING	23 - 4/10	JOYSTICK	73172635
W15	10,000	MALE CONNECTOR	23 - 4/10	JOYSTICK	73172636
W16	1,000	CABLE BATTERY	23 - 4/15	BATTERY BOX	73176147
W17	1,000	PLATFORM EARTH CABLE	23 - 4/20	PLATFORM	73172000
W19	8,000	HEADLIGHT EARTH CABLE	23 - 4/25	SUPERSTRUCTURE	73172509
W23	1,000	ENGINE EARTH	23 - 4/30	ENGINE	73173031
W80	1,000	CABLE - STARTER/EARTH	23 - 7/10	ENGINE COMPARTMENT	73175148

Electrical components in circuit diagram

FX600 | Circuit diagram No. | T 1287263 - 001
B 1287262 - 010

Part	Quantity	Description and function	Corr. Path	Location	Part no.
F2	1,000	FUSE	2 - 7/16 -	CONTROL PANEL	73172606
F20	1,000	FUSE: COLD STARTING SYSTEM	2 - 4/16 -	CONTROL PANEL	73172607
F20	1,000	FUSE HOLDER	2 - 4/16 -	CONTROL PANEL	73175261
F20	2,000	CONTACT SLEEVE	2 - 4/16 -	CONTROL PANEL	73175262
F3	1,000	FUSE	3 - 0/16	CONTROL PANEL	73172606
F4	1,000	FUSE	8 - 1/16 -	CONTROL PANEL	73172607
F5	1,000	FUSE	8 - 5/16	CONTROL PANEL	73172608
F6	1,000	FUSE	12 - 2/16	CONTROL PANEL	73172609
F7	1,000	FUSE	4 - 0/18 -	CONTROL PANEL	73175156
F8	1,000	FUSE	7 - 0/16 -	CONTROL PANEL	73172605
F9	1,000	FUSE	2 - 7/16 -	CONTROL PANEL	73172606
G1	1,000	ALTERNATOR	2 - 1/80 -	ENGINE	
G1.1	1,000	BATTERY	2 - 0/55 -	BATTERY BOX	
G1.2	1,000	BATTERY	2 - 0/70 -	BATTERY BOX	
H7	1,000	HORN	8 - 6/81 -	PLATFORM PLATE	73172611
H7.1	1,000	HORN	12 - 4/85	MOTOR MODULE	73175766
K1.5	1,000	POWER RELAY	2 - 3/84 -	ENGINE	
K2.6	1,000	CHARGE-CONTROL RELAY	2 - 2/84 -	SEAT CONSOLE,RH	73175157
K207	1,000	FAULT-MESSAGE OFF RELAY	9 - 7/82 -	SEAT CONSOLE,RH	73174128
K4	1,000	RELAY-ENGINE SHUT-DOWN	7 - 5/85 -	SEAT CONSOLE,RH	73174128
K45	1,000	RELAY REV.ADJUSTMENT	3 - 2/91 -	SEAT CONSOLE,RH	73174128
K7	1,000	RELAY HORN	12 - 2/74	CONTROL PANEL	73174128
K7	1,000	PLUG BASE	12 - 2/34	CONTROL PANEL	73174166
K7.1	1,000	RELAY HORN	12 - 2/36	CONTROL PANEL	73177354
K7.1	1,000	PLUG BASE	12 - 2/36	CONTROL PANEL	73174165
M1	1,000	STARTER	2 - 2/80 -	ENGINE	
M2	1,000	FAN	8 - 5/73 -	CAB	
M3	1,000	WINDSCREEN WIPER MOTOR	8 - 2/63 -	CAB	
M4	1,000	W/S WASHER PUMP	8 - 4/80 -	CAB	73171455
M52	1,000	LUBE PUMP MOTOR	10 - 6/92	SUPERSTRUCTURE	
R10	1,000	SPEED CONTROL	5 - 5/95 -	CONTROL PANEL	73177290
R10.2	1,000	WATER TEMPERATURE SENSOR	3 - 1/91 -	ENGINE	
R14	1,000	TEMPERATURE PROBE - HYDRAULIC OIL	3 - 7/91 -	SUPERSTRUCTURE	

Electrical components in circuit diagram

FX600	Circuit diagram No.	T 1287263 - 001 B 1287262 - 010

Part	Quantity	Description and function	Curr. Path	Location	Part no.
A10	1,000	LOAD LIMIT GOVERNOR	3 - 0/58 -	CONTROL PANEL	
A10X4	1,000	DIAGNOSTIC UNIT CONNECTOR	7 - 3/18 -	CONTROL PANEL	73172588
A10X4	1,000	FLANGE	7 - 3/18 -	CONTROL PANEL	73172589
A100	1,000	CENTRAL ELECTRONIC UNIT	3 - 1/16 -	CONTROL PANEL	73172003
A158	1,000	ELECTRONIC SPEED CONTROL	4 - 1/21 -	ENGINE	
A66	1,000	RESISTANCE MODULE	3 - 2/66 -	SEAT CONSOLE,RH	73175260
B10	1,000	PRESSURE SENSOR - TRAVEL	11 - 0/64 -	SUPERSTRUCTURE	
B10.1	1,000	SPEED SENSOR	3 - 9/69 -	ENGINE	
E3.2	1,000	WORKING LIGHT, TANK MODULE LEFT	9 - 3/87 -	FUEL TANK	73172509
E3.2	1,000	BULB	9 - 3/87 -	FUEL TANK	73172510
E3.3	1,000	WORKING LIGHT, COUNTERWEIGHT LEFT	9 - 4/87 -	COUNTERWEIGHT	73172509
E3.3	1,000	BULB	9 - 4/87 -	COUNTERWEIGHT	73172510
E3.4	1,000	WORKING LIGHT CAB L.H.(UP-AND DOWN)	9 - 1/87 -	CAB ROOF	73172509
E3.4	1,000	BULB	9 - 1/87 -	CAB ROOF	73172510
E4.2	1,000	WORKING LIGHT, TANK MODULE RIGHT	9 - 2/87 -	FUEL TANK	73172509
E4.2	1,000	BULB	9 - 2/87 -	FUEL TANK	73172510
E4.3	1,000	WORKING LIGHT, COUNTERWEIGHT RIGHT	9 - 5/87 -	COUNTERWEIGHT	73172509
E4.3	1,000	BULB	9 - 5/87 -	COUNTERWEIGHT	73172510
E4.4	1,000	WORKING LIGHT CAB R.H.(UP-AND-DOWN)	9 - 1/87 -	CAB ROOF	73172509
E4.4	1,000	BULB	9 - 1/87 -	CAB ROOF	73172510
E9	1,000	INTERIOR LICHT	7 - 3/74 -	CAB	73172604
E9	2,000	BULB	7 - 3/74 -	CAB	73172605
F	1,000	FUSE	4 - 1/37 -	ENGINE	73175137
F	1,000	FUSE INSERT	4 - 2/37 -	ENGINE	73175137
F	1,000	FUSE INSERT	5 - 6/30 -	ENGINE	73175137
F1	1,000	FUSE	7 - 3/16 -	CONTROL PANEL	73172606
F1.8	1,000	MAIN FUSE	2 - 0/36 -	CONTROL PANEL	73175163
F1.8	1,000	FUSE HOLDER	2 - 0/36 -	CONTROL PANEL	73175164
F1.8	1,000	LID	2 - 0/36 -	CONTROL PANEL	73175165
F1.8	1,000	BRACKET PLATE	2 - 0/26 -	CONTROL PANEL	73172001
F10	1,000	FUSE	12 - 5/17 -	CONTROL PANEL	73172606
F11	1,000	FUSE	7 - 1/16 -	CONTROL PANEL	73172606
F12	1,000	FUSE	7 - 2/16 -	CONTROL PANEL	73172606

F1.6

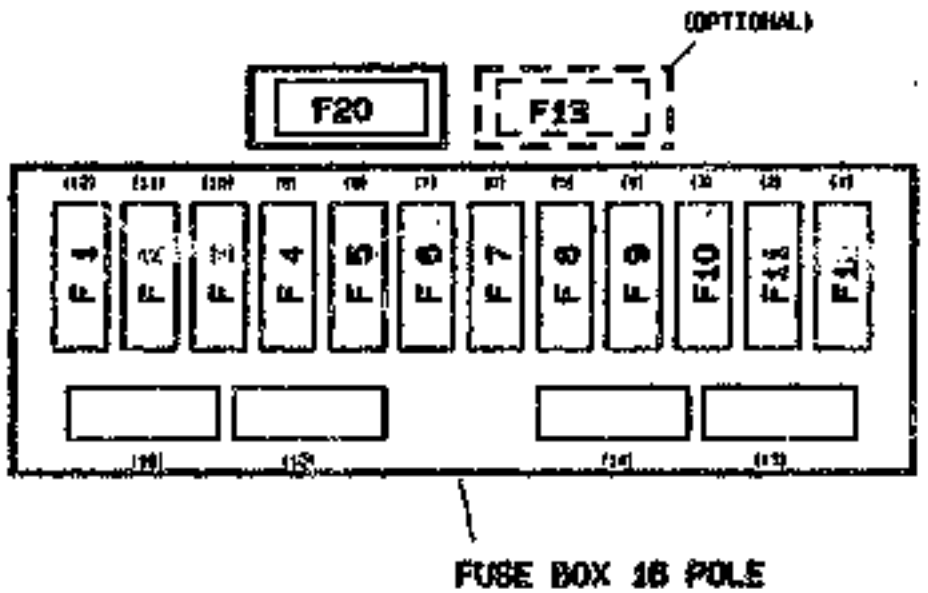

FUSE BOX 16 POLE

317	31	052	00						12.01.97	Seelin		Benennung/Description: WIRING DIAGRAM LAYOUT PLAN FUSES
Div.	PG	UBG	SPR	02	AM 040	23.00.00	Sem					Bach-Nr. Part-No: 1237202-12
FX500				03	AM 051	09.04.96	Sem					4

Copyright

OVERVIEW-CABLE HARNESSES

W01 → CABLE HARNESS CONTROL PANEL

W02 → CABLE SET MOTOR

W04 → CABLE SET VALVES

W05 → SUPERSTRUCTURE CABLE SET

W06 → CABLE SET PLATFORM

W08 → CABLE STARTER

W09 → CABLE SET CAB

W10 → CABLE FOR JOYSTICK

W16 → BATTERY CABLE

W17 → PLATFORM EARTH

W18 → WORKING LIGHT EARTH

W23 → ENGINE EARTH

W50 → CABLE STARTER - GROUND

W51 → CABLE
BATTERY MAIN SWITCH - GROUND

W52 → CABLE
BATTERY MAIN SWITCH - BATTERY

W90 → CABLE
SET
FUSE COLD-STARTING

W99 → CABLE
SET
SIDE CONSOLE RIGHT

917	32	052	00						10.11.97	Kaslin		
Typ	90	180	01	02	AK 648	23.03.98	Abt.	Appr. Standard				
FH600				01	AK 491	26.04.96	Spv.	Approved Assembly				
				00	Release Construction	Modification	Init.	Date and Initials Modification			Issue / Status	

Benennung/Description
WIRING DIAGRAM
OVERVIEW-CABLE HARNESSES

Bach-Nr.
Part-No 2267252-12

4

END POINT	CABLE NO.	€ mm²	NO.	● mm²	CABLE NO.	END POINT
R10	br	1	1	0.75	4A	ASS: 4 (R28)
R10	wh	1	2	0.75	8A	ASS: 8 (R27)
R10	bl	1	3	0.75	832	X100A: 3

CONNECTION TABLE
PLUG/SOCKET XR10 SPEED CONTROL

END POINT	CABLE NO.	€ mm²	NO.	● mm²	CABLE NO.	END POINT
F8	77	0.5	1	0.5	77	K7: 86
			2			

CONNECTION TABLE
PLUG/SOCKET XF8 TRAVEL-ALARM

END POINT	CABLE NO.	€ mm²	NO.	● mm²	CABLE NO.	END POINT
X10 (30)	137	2.5	1			N. C.
			2			
X87.1: 1	198	2.5	3			N. C.

CONNECTION TABLE
PLUG/SOCKET XF13 ADDITIONAL FUSE

END POINT	CABLE NO.	€ mm²	NO.	● mm²	CABLE NO.	END POINT
X101: 2	87.1	1.5	1	1.5		F20
31.7: 1	82.1	1.5	2	1.5		F20

CONNECTION TABLE
PLUG/SOCKET XF20 COLD-STARTING

END POINT	CABLE NO.	€ mm²	NO.	● mm²	CABLE NO.	END POINT
XF13: 3	198	2.5	1			N. C.
X100: 13	199	2.5	2			N. C.
X100: 4	199.2	2.5	3			N. C.

CONNECTION TABLE
PLUG/SOCKET X67.1 FUELLING SYSTEM

317	31	082	90						23.11.87	
Tab.	89	089	01	02	AK 843	23.06.88	Sedl			
930CC				01	AK 435	28.04.88	Stg			

Benennung/Description
WIRING DIAGRAM
XR10 - XF8 - XF13 - XF20 - X67.1

Sach-Nr. / Part-No **1287262-12**

4

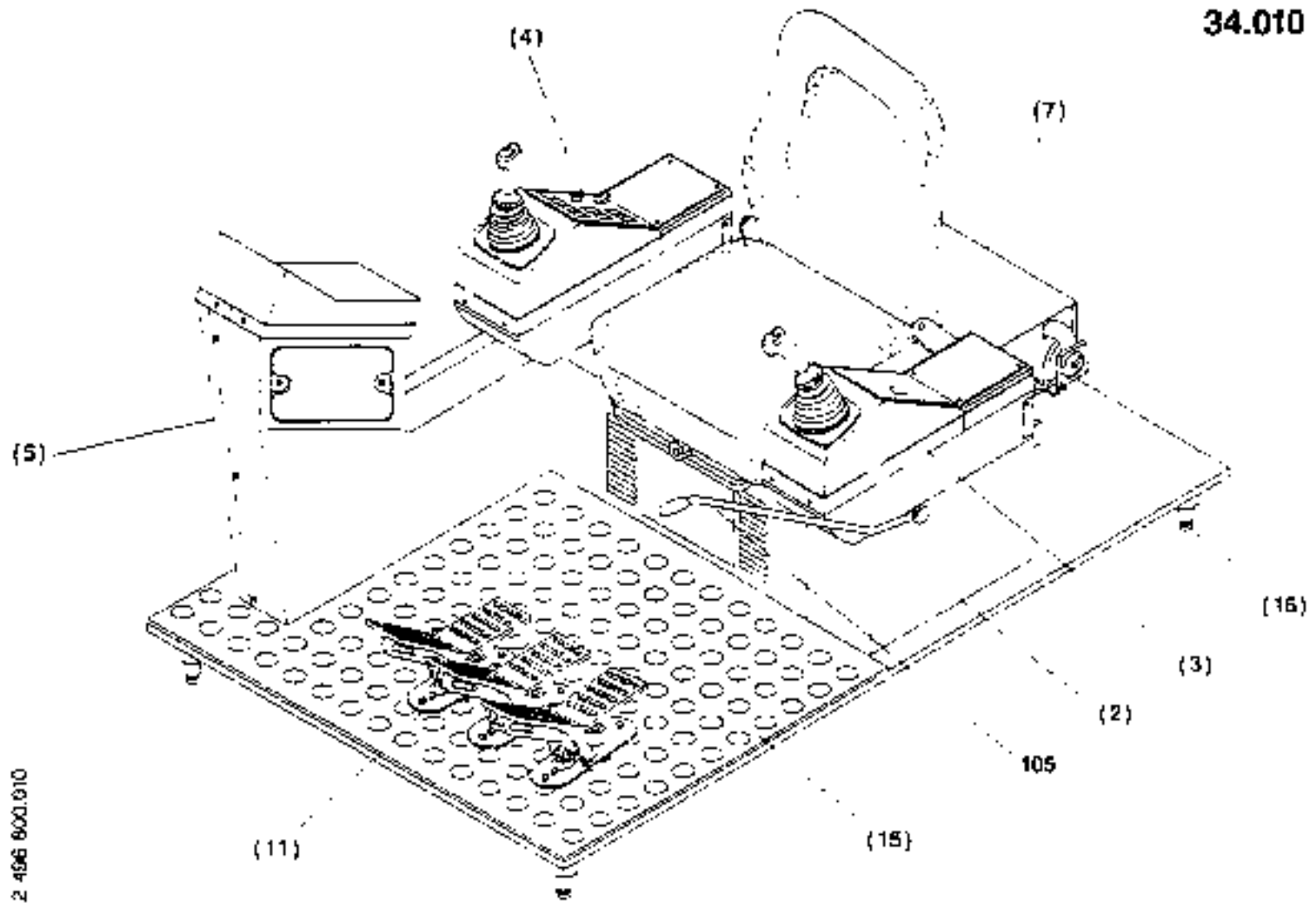

CAB MODULE INSTALL.MATERIAL

FIATALLIS

FX600 106101 - .....

T 2496800 - 002
B 2496800 - 010

Item	Quan.	ME	Part No.	Description
002	1	00		**34.101 2444880** PLATFORM PLATE MOUNTING PARTS
003	1	00		**34.140 2444887** BRACKET INSTALL.MATERIAL
004	1	00		**34.140 2782774** BRACKET INSTALL.MATERIAL
005	1	00		**34.130 2496286** CONTROL COLUMN INSTALL.MATERIAL
007	1	00		**27.010 2496798** HEATING INSTALL.MATERIAL
011	1	00		**20.610 2496797** HYDRAULIC SYSTEM SERVO CONTROL

ME: 00 = Stück/pieces 13 = m 26 = m² 39 = m³ 45 = kg 50 = l (litre)

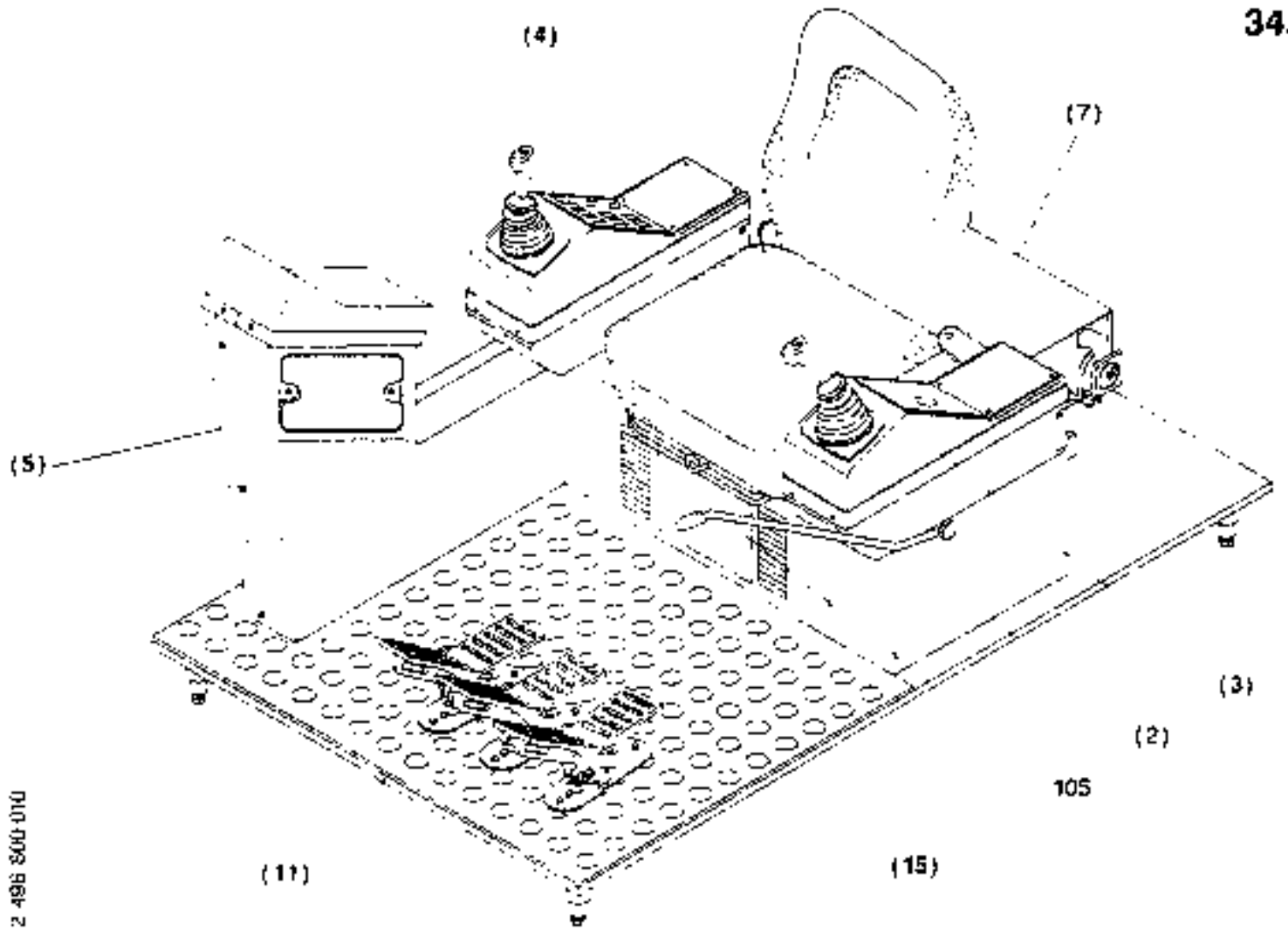

2 496 800-010

34.010

CAB MODULE INSTALL.MATERIAL

T 2496800 - 002
B 2496800 - 010

FX600 106101 - .... .

Item	Quan.	ME	Part No	Description
015	1	00		**90.100 2496594** LINING ARRANGEMENT
016	1	00		**34.100 1908540** PLATFORM PLATE INSTALL.MATERIAL
105	1	00		**34.640 2444852** WINDSCREEN WASHER INSTALL.MATERIAL

ME 00 = Stück/piece 13 = m 26 = m² 39 = m³ 43 = kg 50 = l (litre)

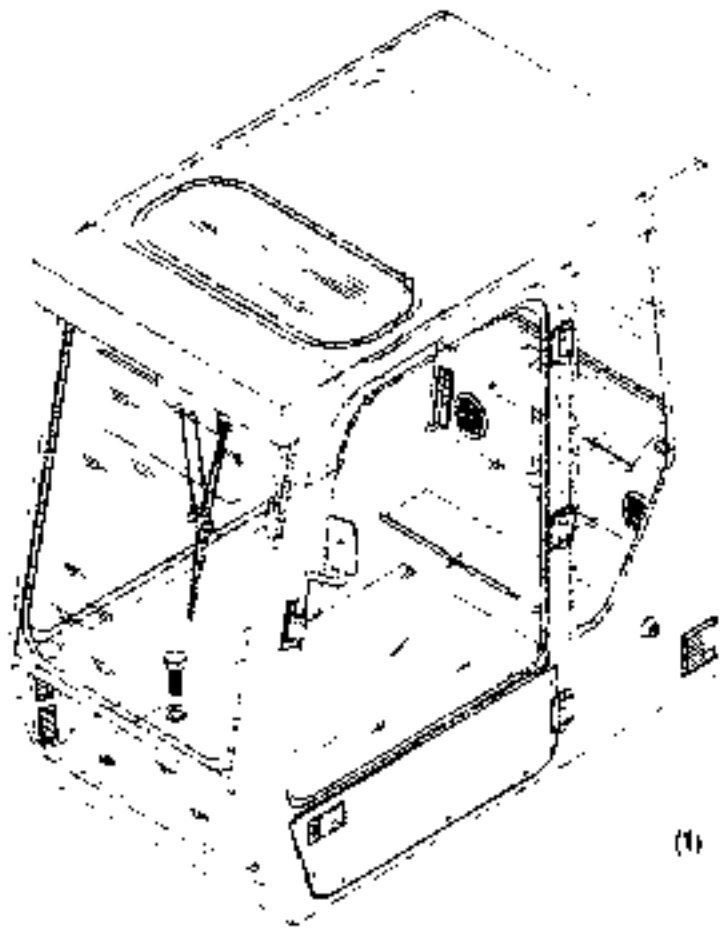

2 782 257 010

34.020

OPERATOR'S CAB INSTALL.MATERIAL

T 2782257 - 000
B 2782257 - 010

FX600 106102 - .....

Item	Quan	ME	Part No	Description
001	1	00		**34.022 2782256** OPERATOR'S CAB
002	1	00		**34.300 2444897** BEARING OPERATOR'S CAB

ME: 00 = Stück/piece 13 = m 26 = m² 39 = m³ 43 = kg 50 = l (litre)

1998-09-10

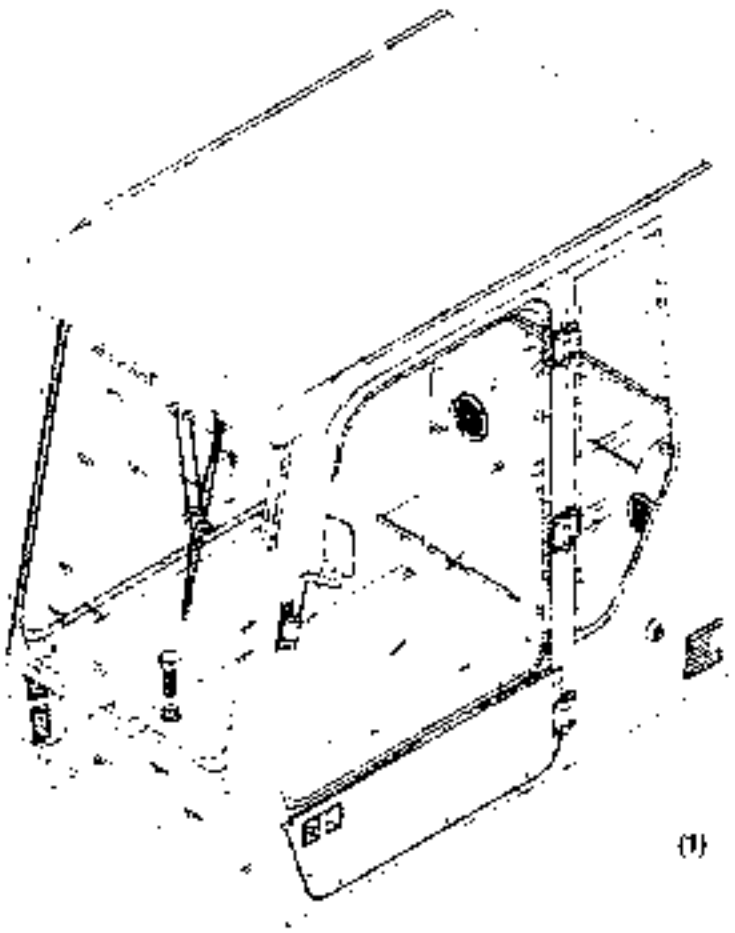

2 7B2 262 010

34.020

OPERATOR'S CAB INSTALL.MATERIAL

T 2782262 - 000
B 2782262 - 010

FX600 106101 - 106101

Item	Quan	ME	Part No	Description
001	1	00		**34.021 2782263** OPERATOR'S CAB MOUNTING PARTS
002	1	00		**34.300 2444897** BEARING OPERATOR'S CAB

ME 00 = Stückgeld 13 = m 26 = m² 39 = m² 43 = kg 50 = l (litre)

1998-09-10

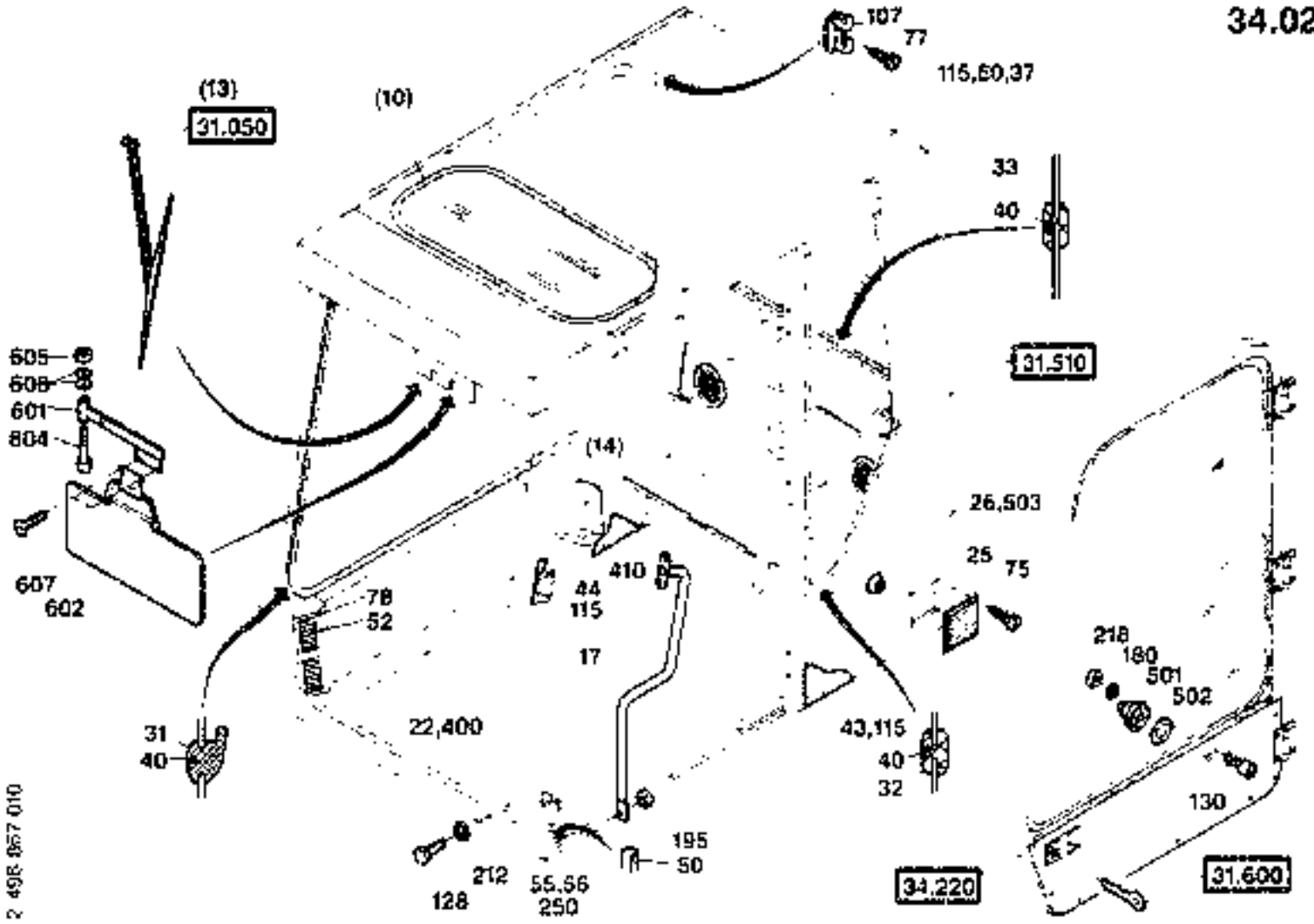

OPERATOR'S CAB MOUNTING PARTS

34.021

FIATALLIS

FX600 106102 - .. ..

T 2496867 - 000
B 2496867 - 010

Item	Quan	ME	Part No	Description
010	1	00		**34.210 2443232** CAB ROOF
013	1	00		**34.630 2444916** WINDSCREEN WIPER INSTALL.MATERIAL
014	1	00		**35.060 1907741** MIRROR SUPPORT INSTALL.MATERIAL
017	1	00	**73171039**	HANDLE
022	1	00	**73171040**	AIR DUCT
025	1	00	**73171041**	GRID
026	1	00	**73171042**	BUMPER
031	1	00	**73171043**	WINDOW STRIP
032	1	00	**73171044**	WINDOW STRIP
033	1	00	**73171045**	WINDOW STRIP
037	1	00	**73171046**	PANELING
040	10.5	13	**73171047**	PROFILE
043	1	00	**73171048**	PANELING
044	1	00	**73171049**	PANELING

ME 00 = Stück/piece 13 = m 26 = m² 39 = m³ 43 = kg 50 = l (litre)

1998-09-10

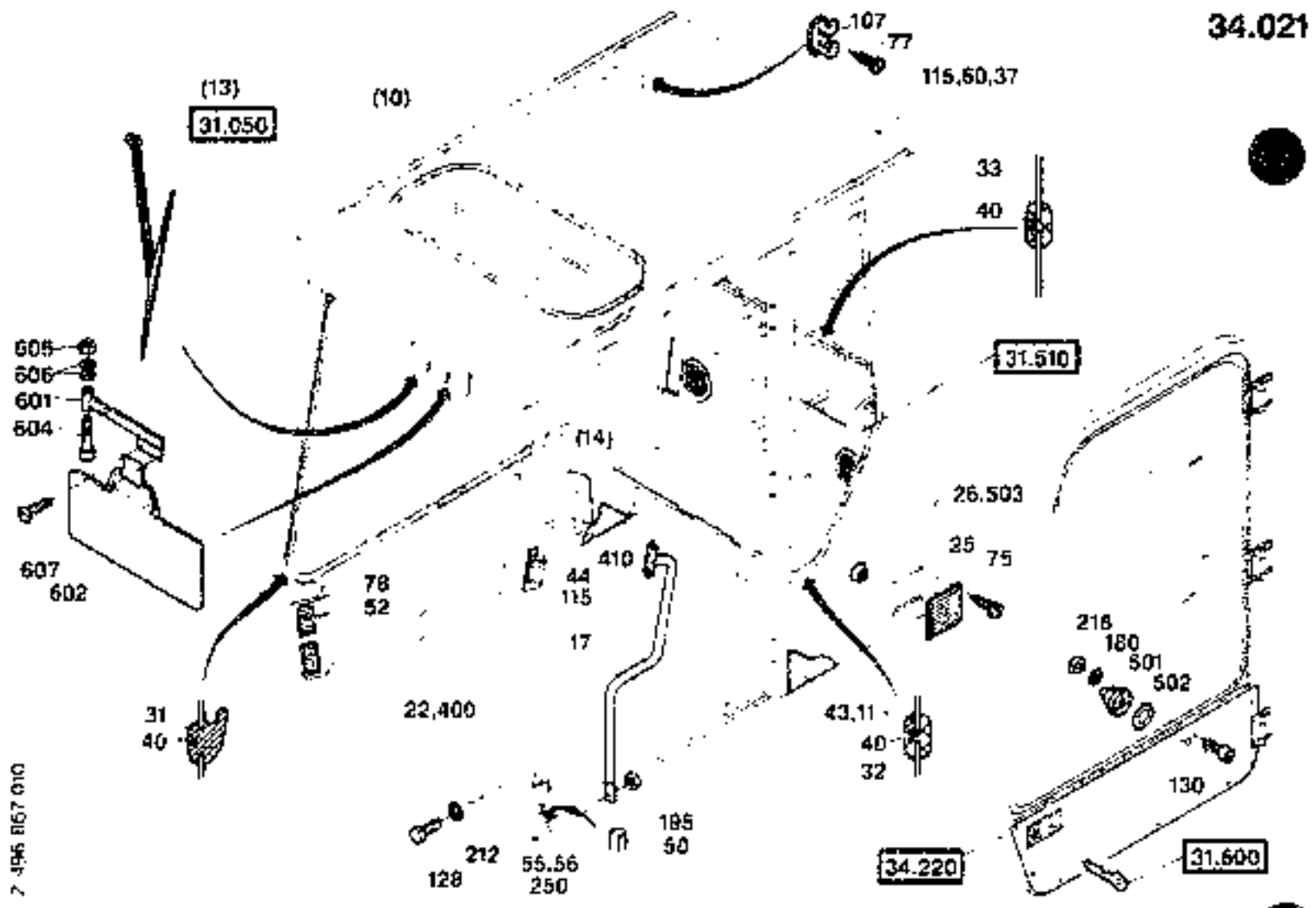

OPERATOR'S CAB MOUNTING PARTS

34.021

T 2496867 - 000
B 2496867 - 010

FX600 106102 . . .

Item	Quan	ME	Part No	Description
050	5	13	**73171050**	SEAL
052	2	00	**73171033**	INJECTOR
055	1	00	**73171051**	PIN
056	1	00	**73171052**	STRAP
075	4	00	**73171053**	SELF-TAPPING SCREW
077	2	00	**73171054**	SELF-TAPPING SCREW
078	4	00	**73171034**	SELF-TAPPING SCREW
107	1	00	**73171055**	HOOK
115	5	13	**73171056**	RIBBON
128	7	00	**73171058**	HEXAGON BOLT
130	3	00	**73171059**	CYL.HEAD SCREW
180	6	00	**73170185**	DISK WASHER
194	1	00	**73170181**	HEXAGON NUT
195	1	00	**73171060**	HEXAGON NUT
212	9	00	**73170187**	LOCK WASHER
218	3	00	**73171061**	HEXAGON NUT
250	2	00	**73171062**	CUP SPRING
400	0,50	13	**73171064**	ADHESIVE TAPE

ME 00 = Stück-piece 13 = m 26 = m² 39 = m³ 43 = kg 50 = l-litre

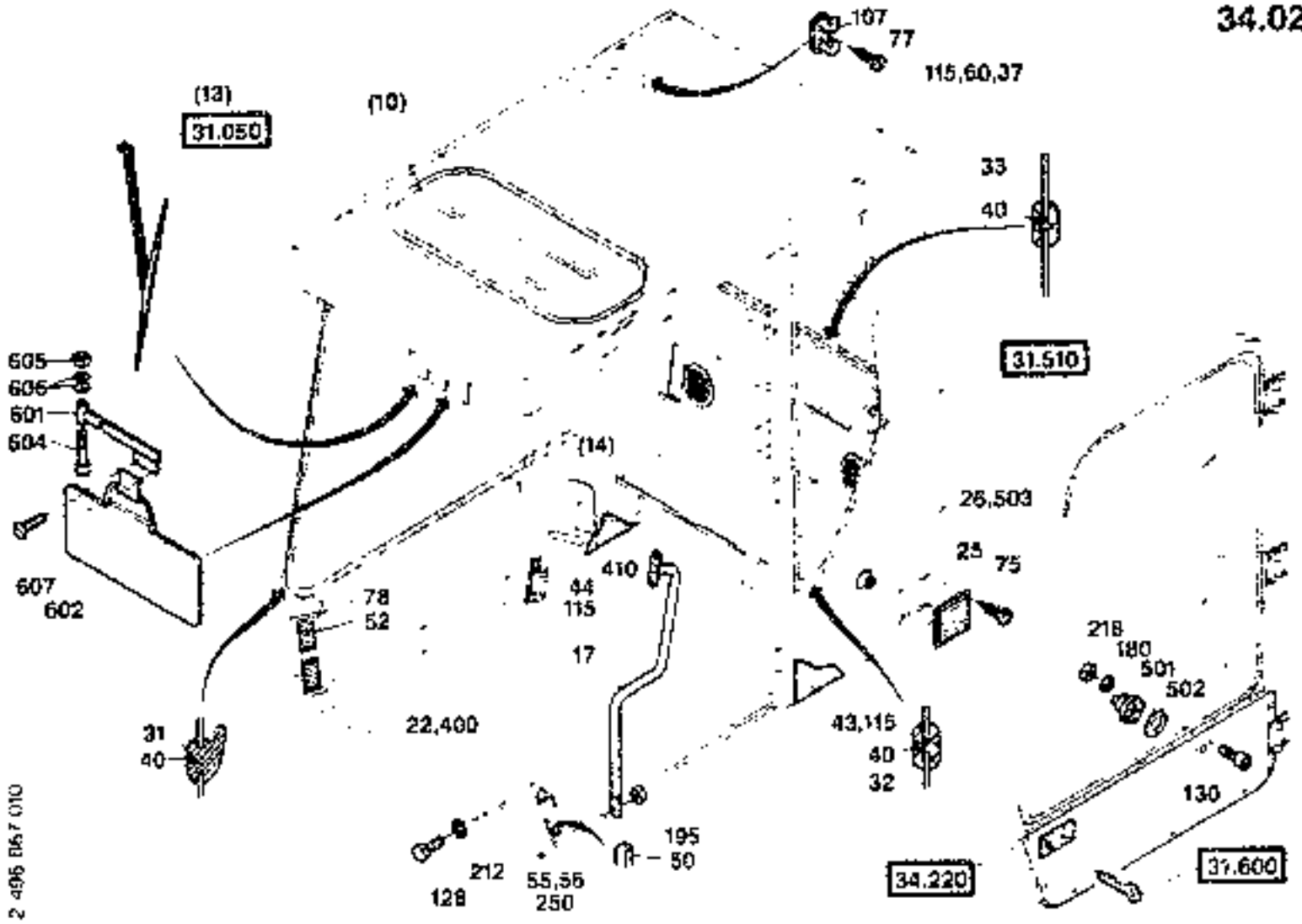

OPERATOR'S CAB MOUNTING PARTS

T 2496867 - 000
B 2496867 - 010

FX600 106102 - .....

Item	Quan	ME	Part No	Description
410	0,50	13	**73171065**	SECTIONAL RUBBER

ME 00 = Stück-piece 13 = m 25 = m² 39 = m³ 43 = kg 50 = l (litre)

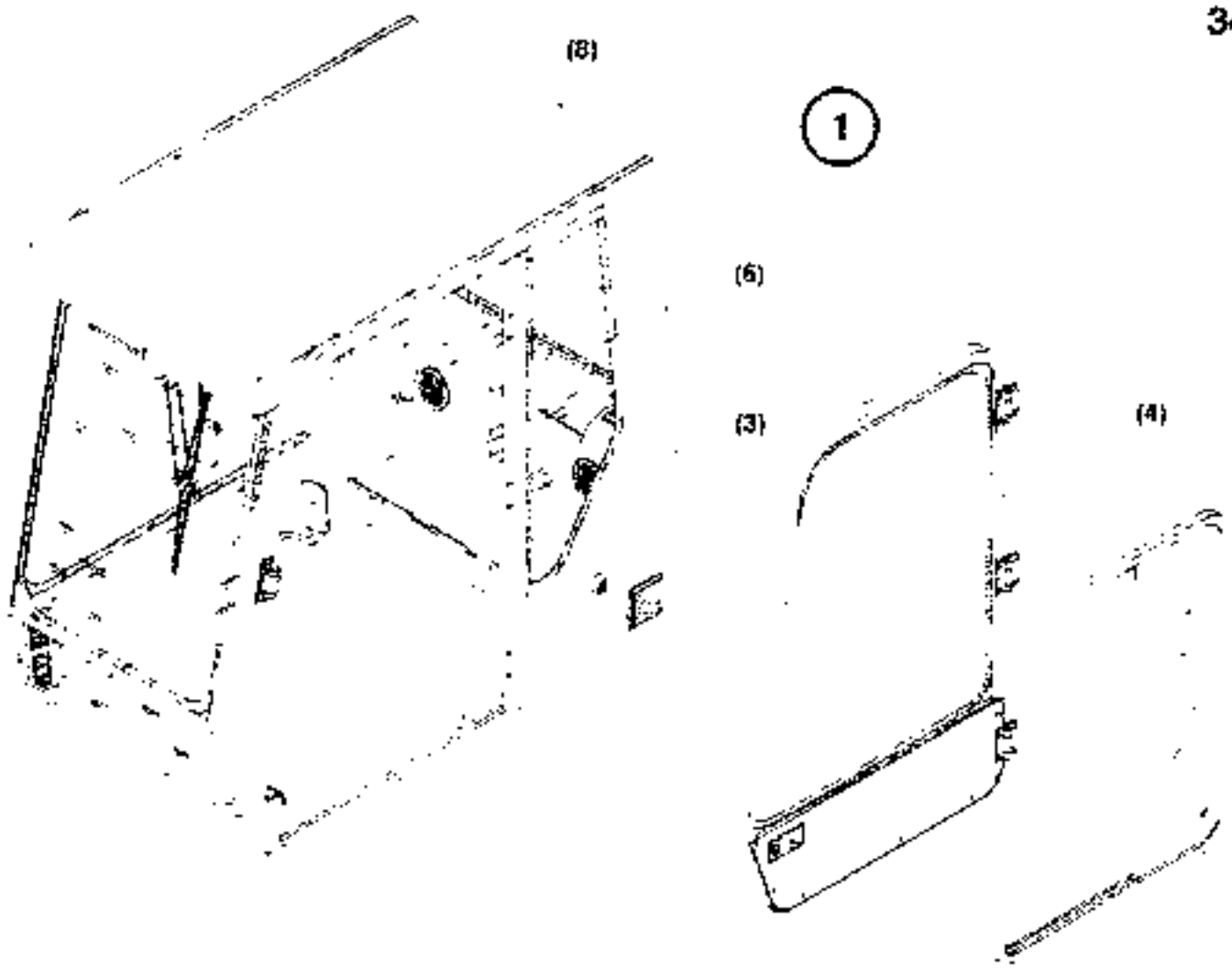

2 782 263 010

OPERATOR'S CAB MOUNTING PARTS

T 2782263 - 000
B 2782263 - 010

FX600 *06101 - 106*01

Item	Quan	ME	Part No	Description
001	1	00	73175398	OPERATOR'S CAB
003	1	00		**34.022 2444904** OPERATOR'S CAB
004	1	00		**34.220 2444896** CAB DOOR
006	1	00		**34.230 2495011** GLAZING OPERATOR'S CAB
008	1	00		**31.510 2496871** RADIO INSTALL.MATERIAL

ME 00 = Stuck/piece 13 = m 26 = m² 39 = m³ 43 = kg 50 = l (litre)

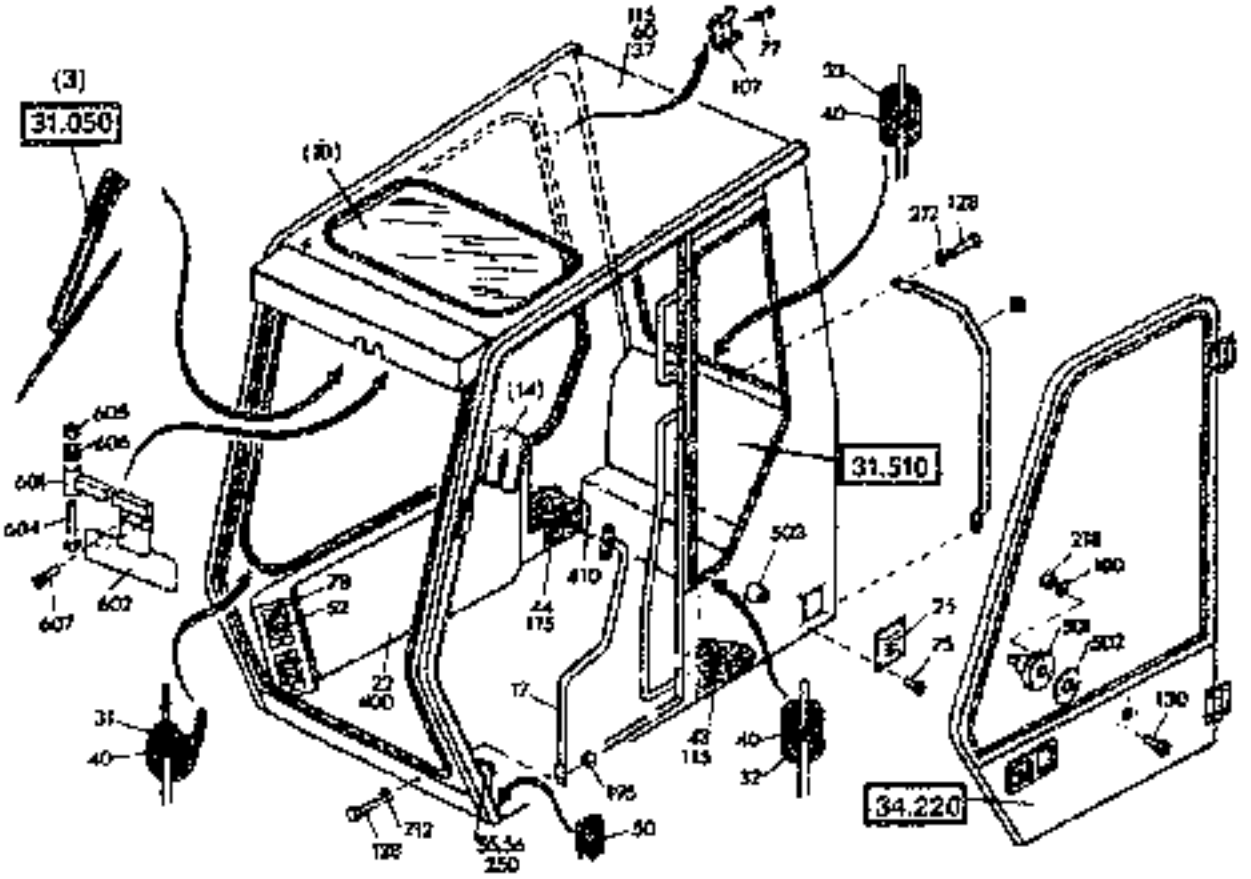

OPERATOR'S CAB

34.022

FX600 106101 - 106101

T 2444804 - 000
B 2444804 - 010

Item	Quan	ME	Part No	Description
010	1	00		**34.210 2443232** CAB ROOF
013	1	00		**34.630 2444916** WINDSCREEN WIPER INSTALL.MATERIAL
014	1	00		**35.060 1907741** MIRROR SUPPORT INSTALL.MATERIAL
017	1	00	**73171039**	HANDLE
018	1	00	**73172005**	HANDLE
022	1	00	**73171040**	AIR DUCT
025	1	00	**73171041**	GRID
031	1	00	**73171043**	WINDOW STRIP
032	1	00	**73171044**	WINDOW STRIP
033	1	00	**73171045**	WINDOW STRIP
037	1	00	**73171046**	PANELING
040	10.5	13	**73171047**	PROFILE
043	1	00	**73171048**	PANELING
044	1	00	**73171049**	PANELING

ME 00 = Stück/piece 13 = m 26 = m² 39 = m² 43 = kg 50 = l (fuel)

1998-08-10

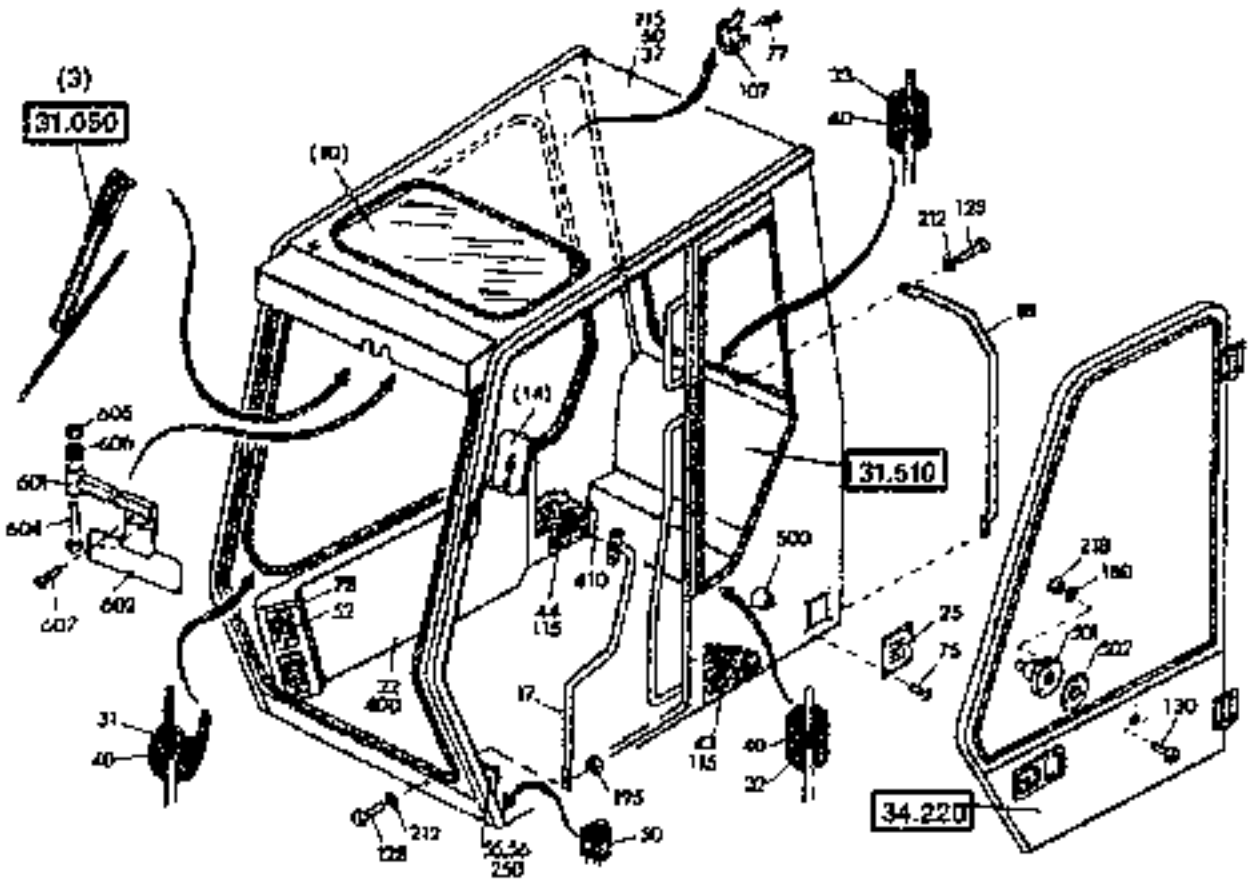

2 444 904 010

OPERATOR'S CAB

34.022

FIATALLIS

T 2444904 - 000
B 2444904 - 010

FX600 106101 - 106101

Item	Quan	ME	Part No	Description
050	5	13	**73171050**	SEAL
052	2	00	**73171033**	INJECTOR
055	1	00	**73171051**	PIN
056	1	00	**73171052**	STRAP
060	8	00	**73172006**	CLIP
075	4	00	**73171053**	SELF-TAPPING SCREW
077	2	00	**73171054**	SELF-TAPPING SCREW
078	4	00	**73171034**	SELF-TAPPING SCREW
107	1	00	**73171055**	HOOK
115	5	13	**73171056**	RIBBON
122	2	00	**73170440**	CYL.HEAD SCREW
128	9	00	**73171058**	HEXAGON BOLT
130	3	00	**73171059**	CYL.HEAD SCREW
180	6	00	**73170185**	DISK.WASHER
194	1	00	**73170161**	HEXAGON NUT
195	1	00	**73171060**	HEXAGON NUT
212	11	00	**73170167**	LOCK WASHER
218	3	00	**73171061**	HEXAGON NUT

ME 00 = Stück/piece 13 = m 26 = m² 39 = m³ 43 = kg 50 = l (litre)

1998-09-10

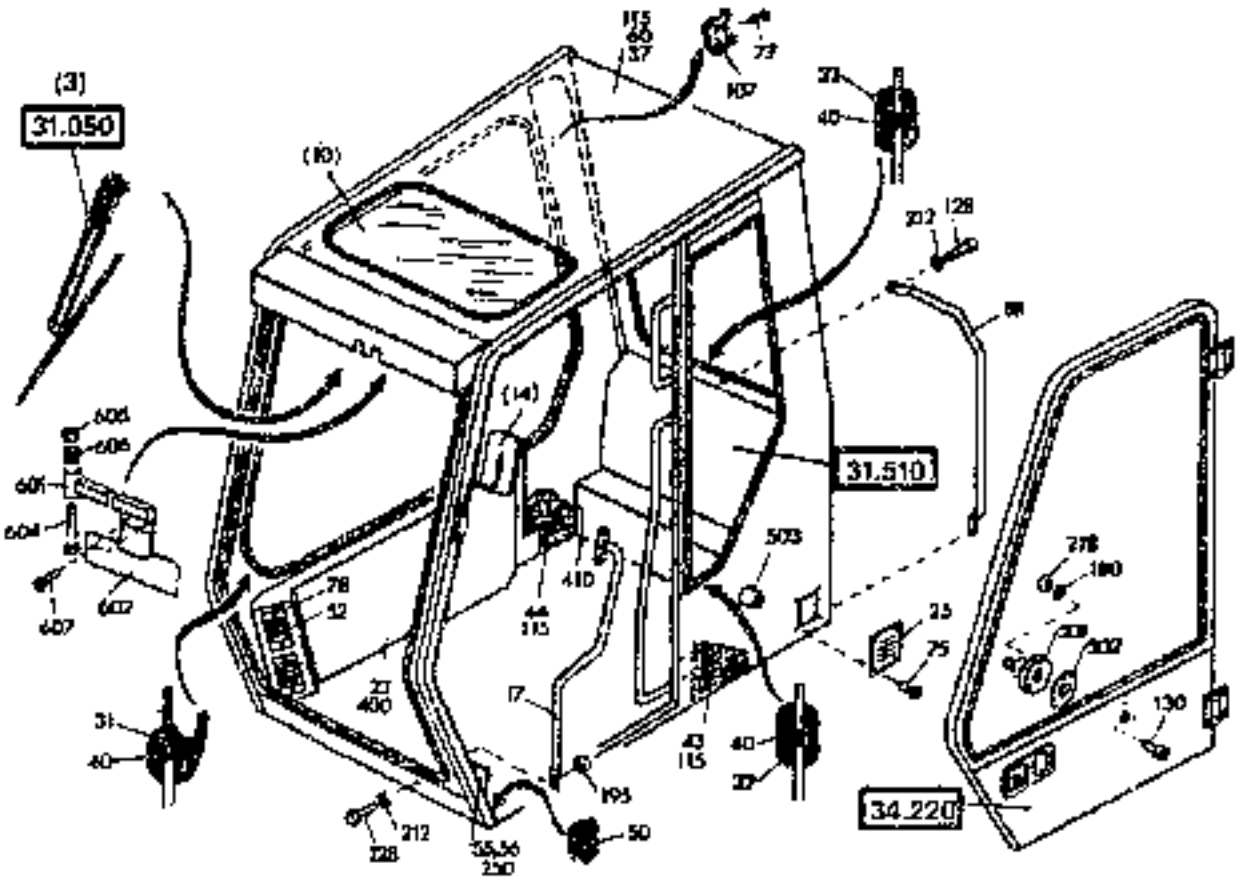

2 444 904 010

OPERATOR'S CAB

34.022

FIATALLIS

FX600 106101 - 106101

T 2444904 - 000
B 2444904 - 010

Item	Quan	ME	Part No	Description
250	2	00	**73171062**	CUP SPRING
400	0,50	13	**73172007**	RIBBON
410	0,50	13	**73171065**	SECTIONAL RUBBER
501	1	00	**73172008**	ARRESTOR
502	1	00	**73172009**	SUPPORT PLATE PAD
503	1	00	**73172010**	PIN
601	1	00	**73172011**	MOUNTING
602	1	00	**73172012**	SUN SHADE
604	1	00	**73172013**	CYL.HEAD SCREW
605	1	00	**73170215**	HEXAGON NUT
606	3	00	**73172014**	CUP SPRING
607	2	00	**73171236**	CONTER-SUNK SCREW

ME 00 = Stuck/piece 13 = m 26 = m² 39 = m³ 43 = kg 50 = l (litre)

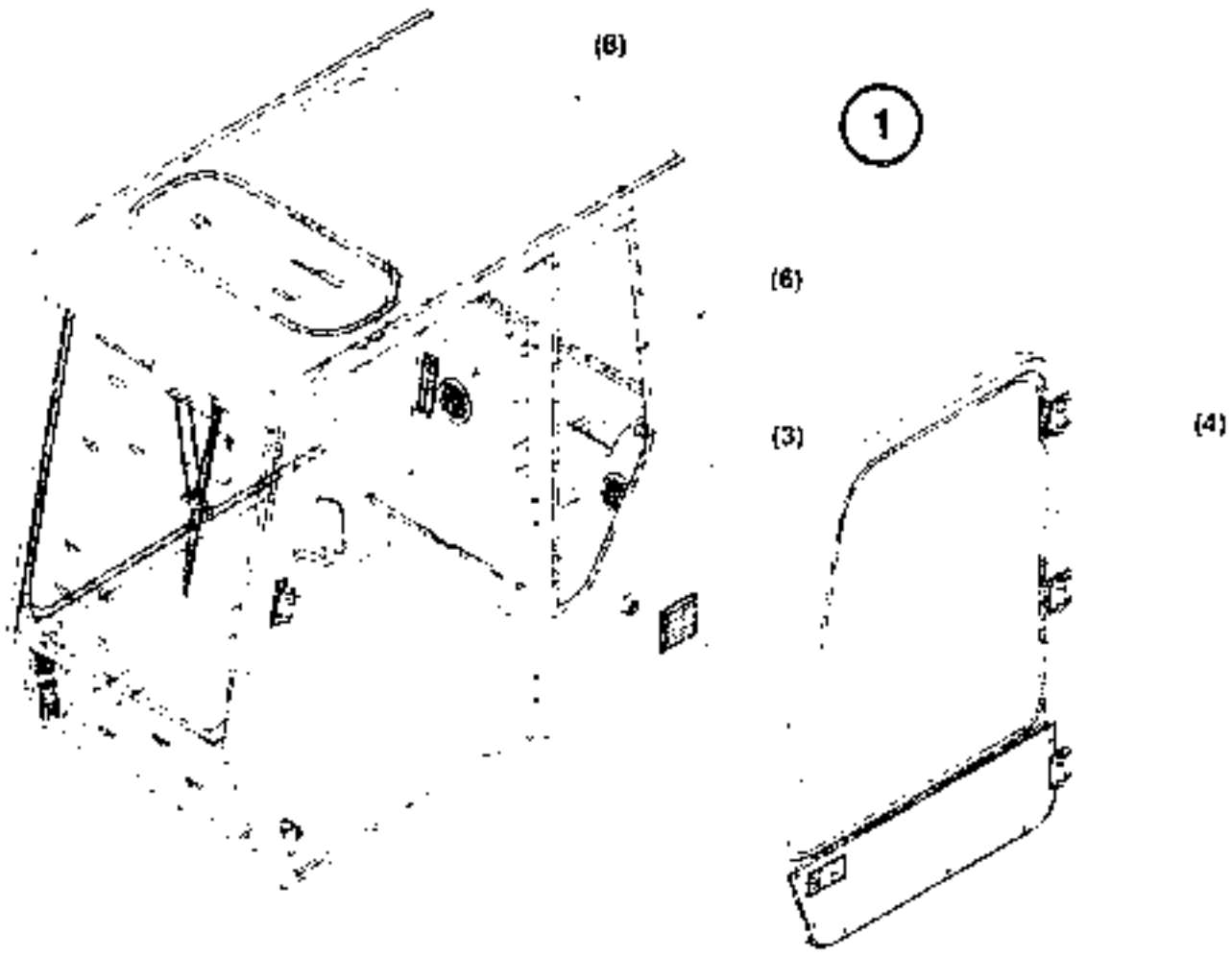

T 2782 256 010

34.022

OPERATOR'S CAB

T 2782256 - 000
B 2782256 - 010

FX600 106102 - ...

Item	Quan.	ME	Part No	Descriptor
001	1	00	73175223	OPERATOR'S CAB
003	1	00		**34.021 2496867** OPERATOR'S CAB MOUNTING PARTS
004	1	00		**34.220 2496573** CAB DOOR
005	1	00		**34.230 2782255** GLAZING OPERATOR'S CAB
008	1	00		**31.510 2496871** RADIO INSTALL.MATERIAL

ME 00 = Stück/piece 13 = m 26 = m² 39 = m³ 43 = kg 60 = l (litre)

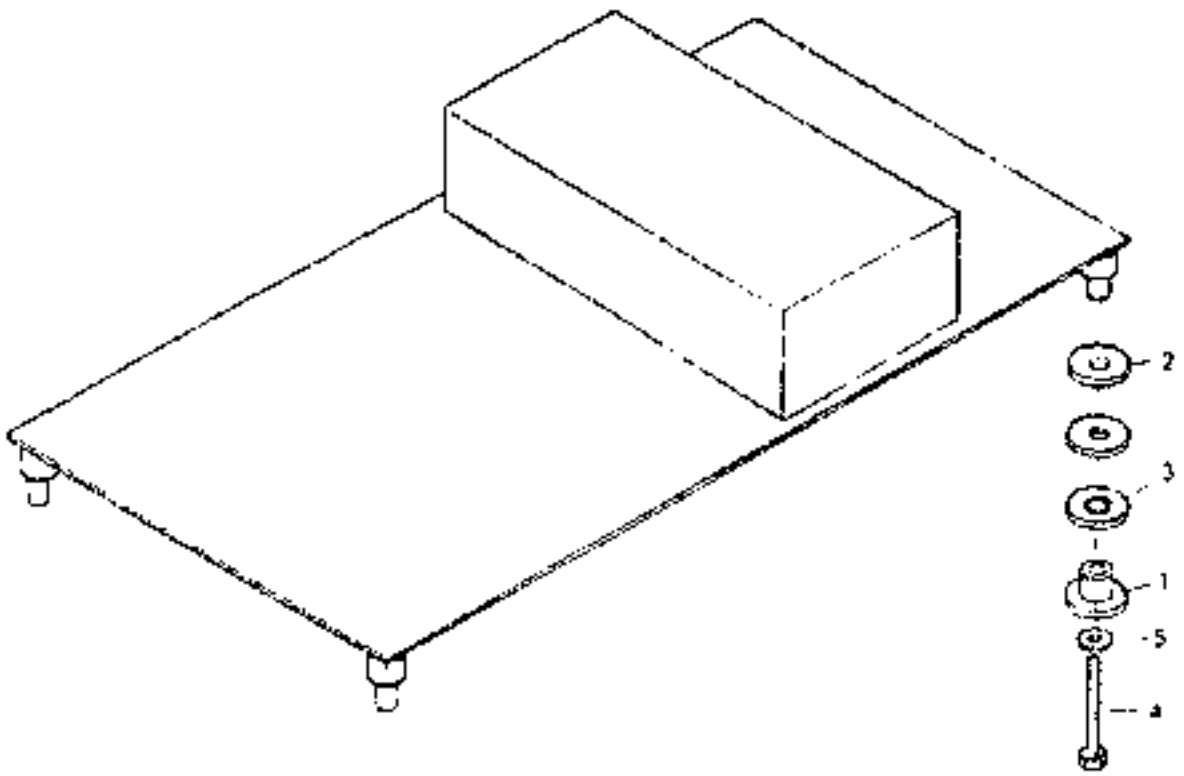

B 1908540 010

34.100

PLATFORM PLATE INSTALL.MATERIAL

T 1908540 - 000
B 1908540 - 010

FX600 106101 - ...

Item	Quar	ME	Part No	Description
001	4	00	73171183	SLEEVE
002	4	00	73171184	DISK WASHER
003	6	00	73171186	BUMPER
004	4	00	73171187	HEXAGON BOLT
005	4	00	73170169	DISK WASHER

ME 00 = Stuckgoods 13 = m 26 = m² 39 = m³ 43 = kg 50 = l (litre)

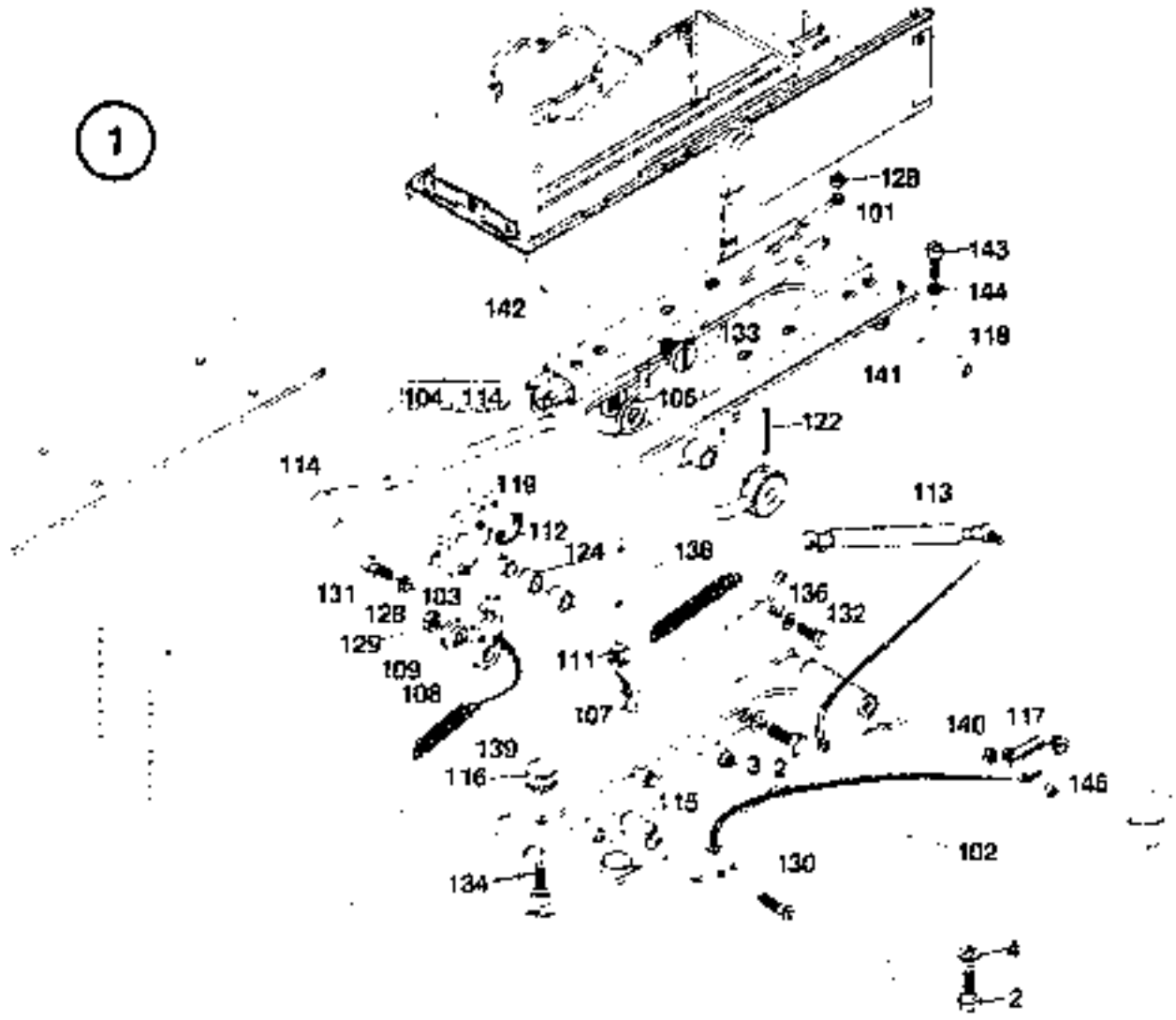

T 2444880 (10)

PLATFORM PLATE MOUNTING PARTS

T 2444880 - 002
B 2444880 010

FX600 106101 - .

Item	Qtyn	ME	Part No	Description
001	1	00	73171195	BRACKET
002	4	00	73170176	HEXAGON BOLT
003	2	00	73170160	DISKWASHER
004	2	00	73170212	DISKWASHER
101	1	00	73171196	LID
102	1	00	73171197	WALL
103	1	00	73171198	PAWL
104	1	00	73171199	LEVER
105	1	00	73171200	ROLLER
107	1	00	73171201	LEVER
108	1	00	73171202	LOCKING BAR
109	1	00	73171203	ECCENTRIC
111	1	00	73171204	ROPE
112	1	00	73171205	CLIP
113	1	00	73171206	DAMPER
114	1	00	73171207	HANDLE
115	0.04	00	73171208	RUBBER HOSE
116	2	00	73171209	BUMPER

ME 00 = Stuckpiece 13 = m 26 = m² 39 = m³ 43 = kg 60 = l (Litre)

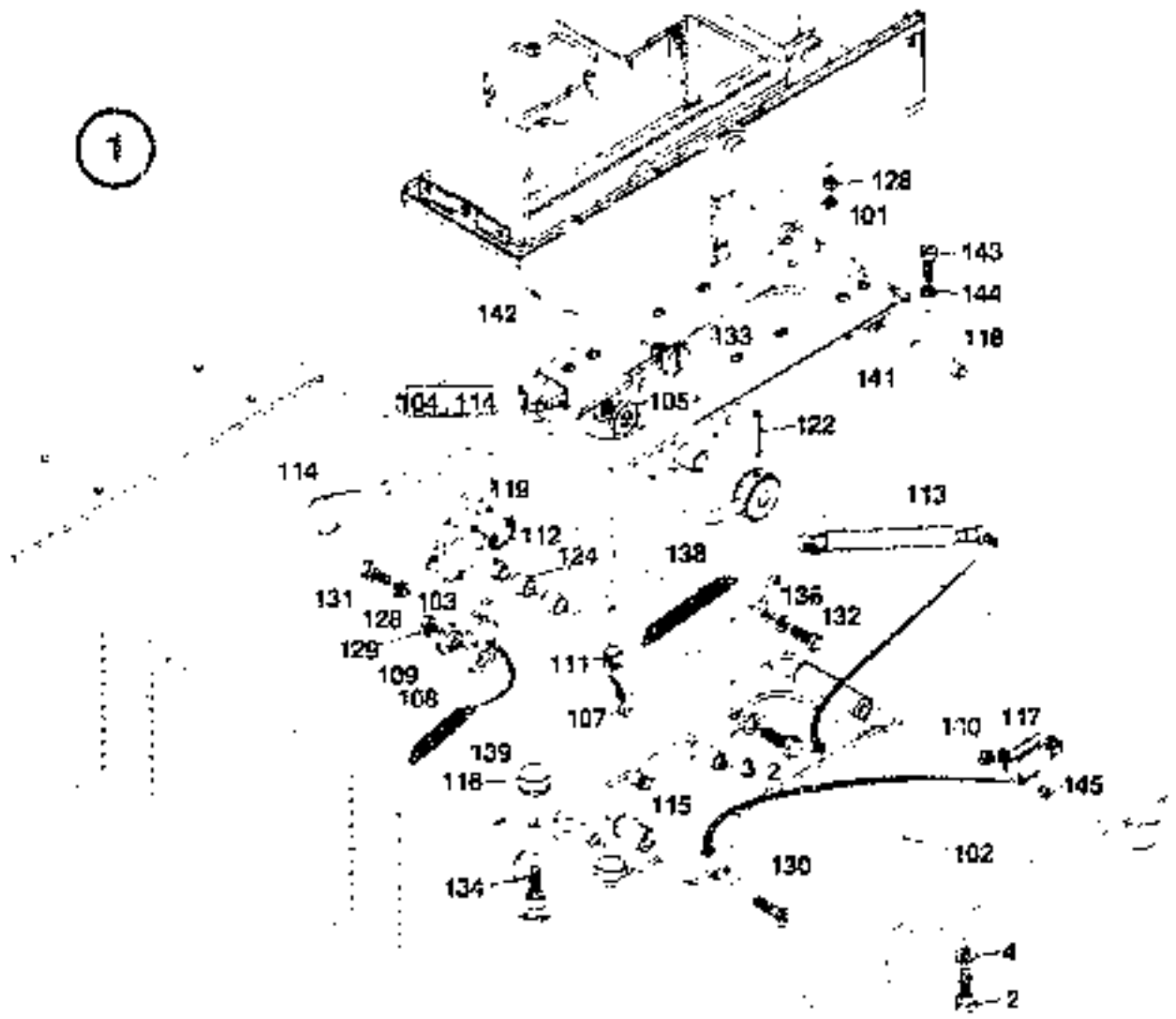

2 444 880 010

PLATFORM PLATE MOUNTING PARTS

34.101

FIATALLIS

FX600 106101 - .....

T 2444880 - 002
B 2444880 - 010

Item	Quan	ME	Part No	Description
117	1	00	**73171210**	SWITCH
118	1	00	**73171212**	PIN
119	1	00	**73171213**	STRAIGHT PIN
122	1	00	**73171214**	LOCKING PIN
124	2	00	**73171215**	BUSHING
128	1	00	**73170184**	HEXAGON NUT
129	1	00	**73170161**	HEXAGON NUT
130	2	00	**73171216**	CONTER-SUNK SCREW
131	1	00	**73171217**	HEXAGON BOLT
132	1	00	**73170621**	HEXAGON BOLT
133	1	00	**73171218**	SHOULDER BOLT
134	2	00	**73171219**	CYL.HEAD SCREW
136	1	00	**73171220**	DISK/WASHER
138	1	00	**73171221**	CONTROL SPRING
139	1	00	**73171222**	SPRING
140	2	00	**73171223**	HEXAGON NUT
141	1	00	**73171224**	RAIL
142	1	00	**73171225**	RAIL

ME 00 = Stück/piece 13 = m 26 = m² 39 = m³ 43 = kg 50 = l (litre)

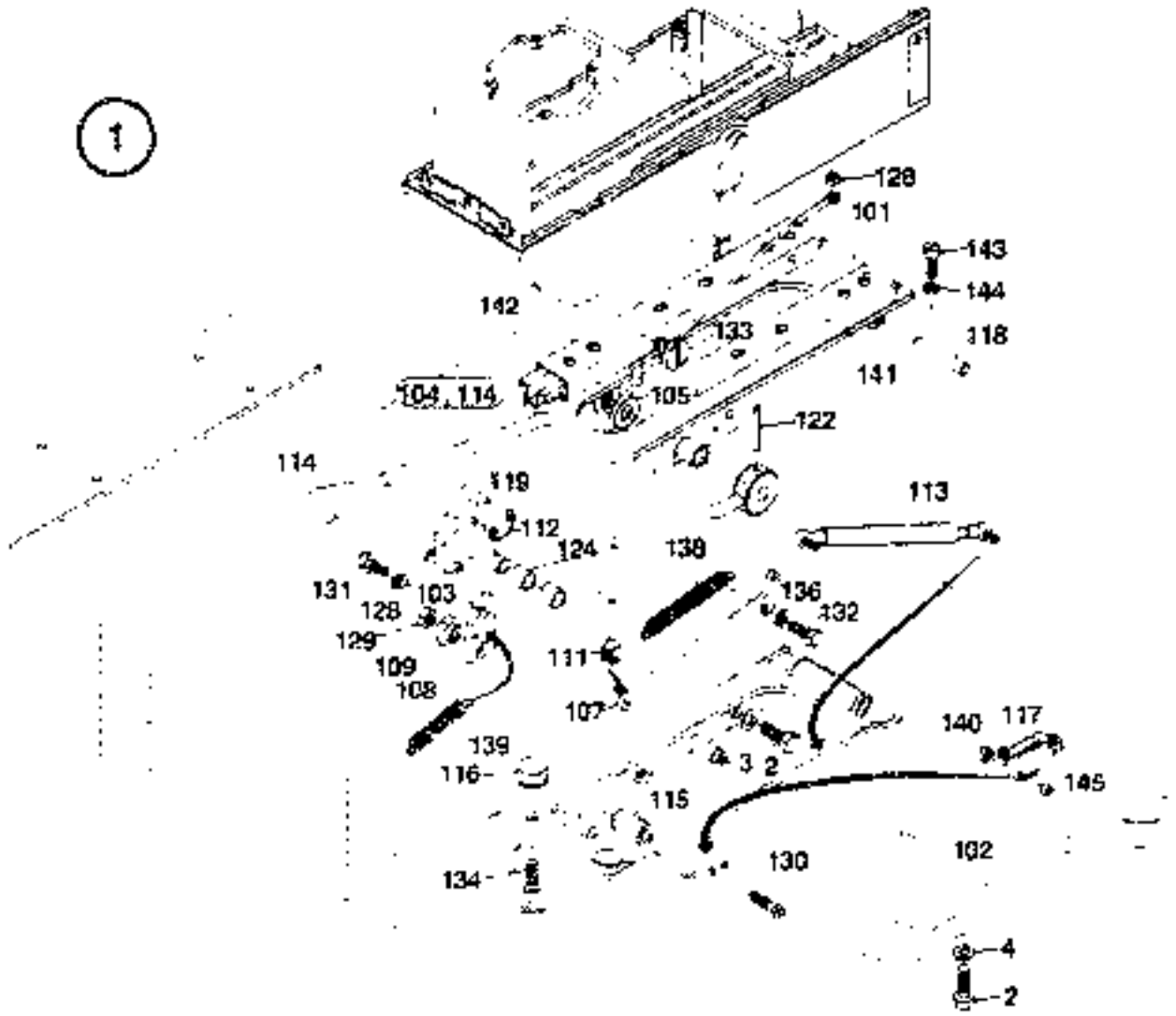

2 444 880 010

PLATFORM PLATE MOUNTING PARTS

34.101

FIATALLIS

T 2444880 - 002
B 2444880 - 010

FX600 106101 - . ...

Item	Quan	ME	Part No	Description
143	4	00	**73171226**	CYL HEAD SCREW
144	4	00	**73170168**	LOCK WASHER
145	2	00	**73171227**	BUSHING

ME: 00 = Stuck/piece 13 = m 26 = m² 39 = m³ 43 = kg 50 = l (litre)

1998-09-10

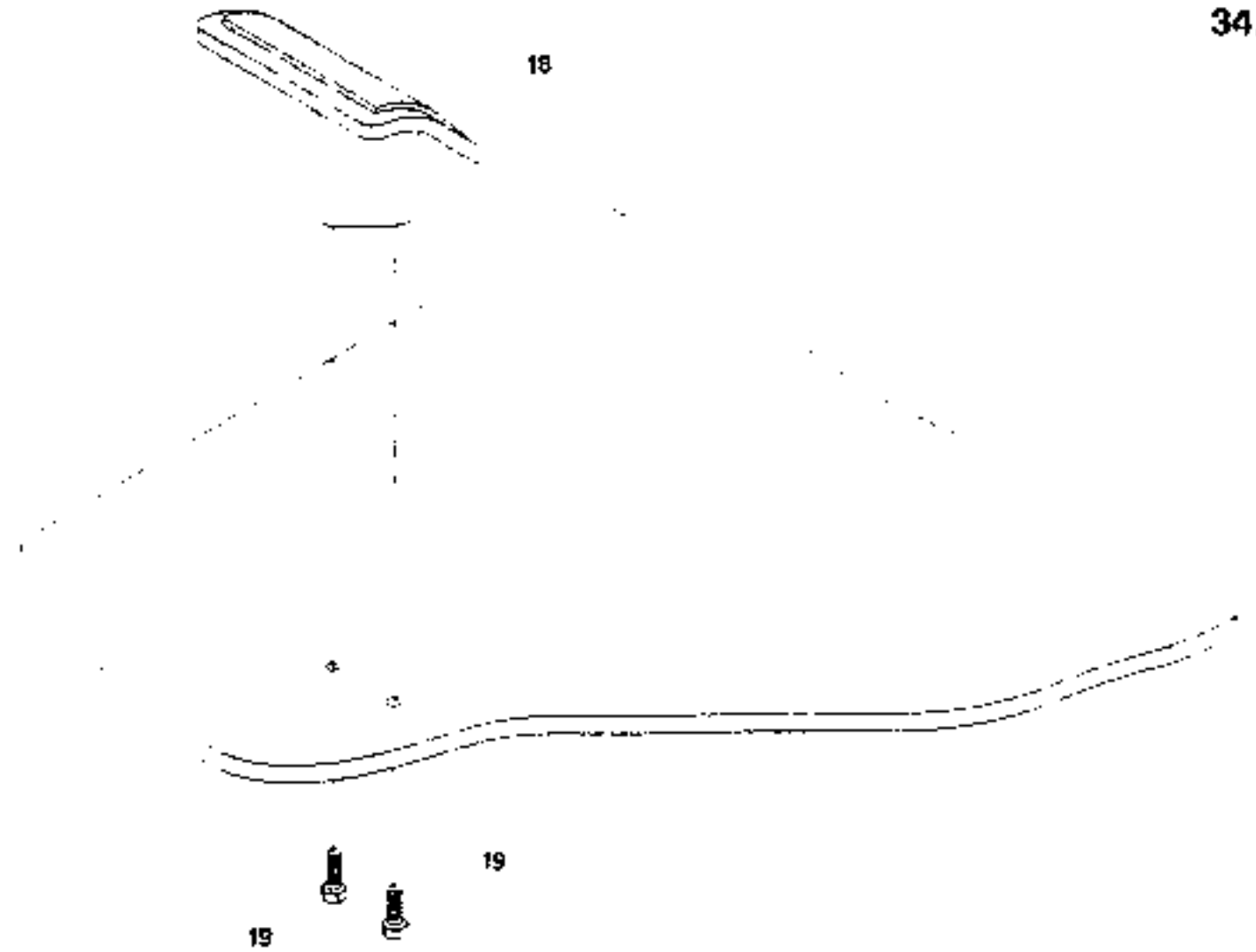

FOOT REST PLATFORM

34.105

FIATALLIS

T 2495303 - 000
B 2495303 - 010

FX600 106101 - .....

Item	Quan.	ME	Part No.	Description
018	1	00	**73171189**	BRACKET
019	2	00	**73170176**	HEXAGON BOLT

ME 00 = Stuk/pièce 13 = m 26 = m² 39 = m³ 43 = kg 50 = l (litre)

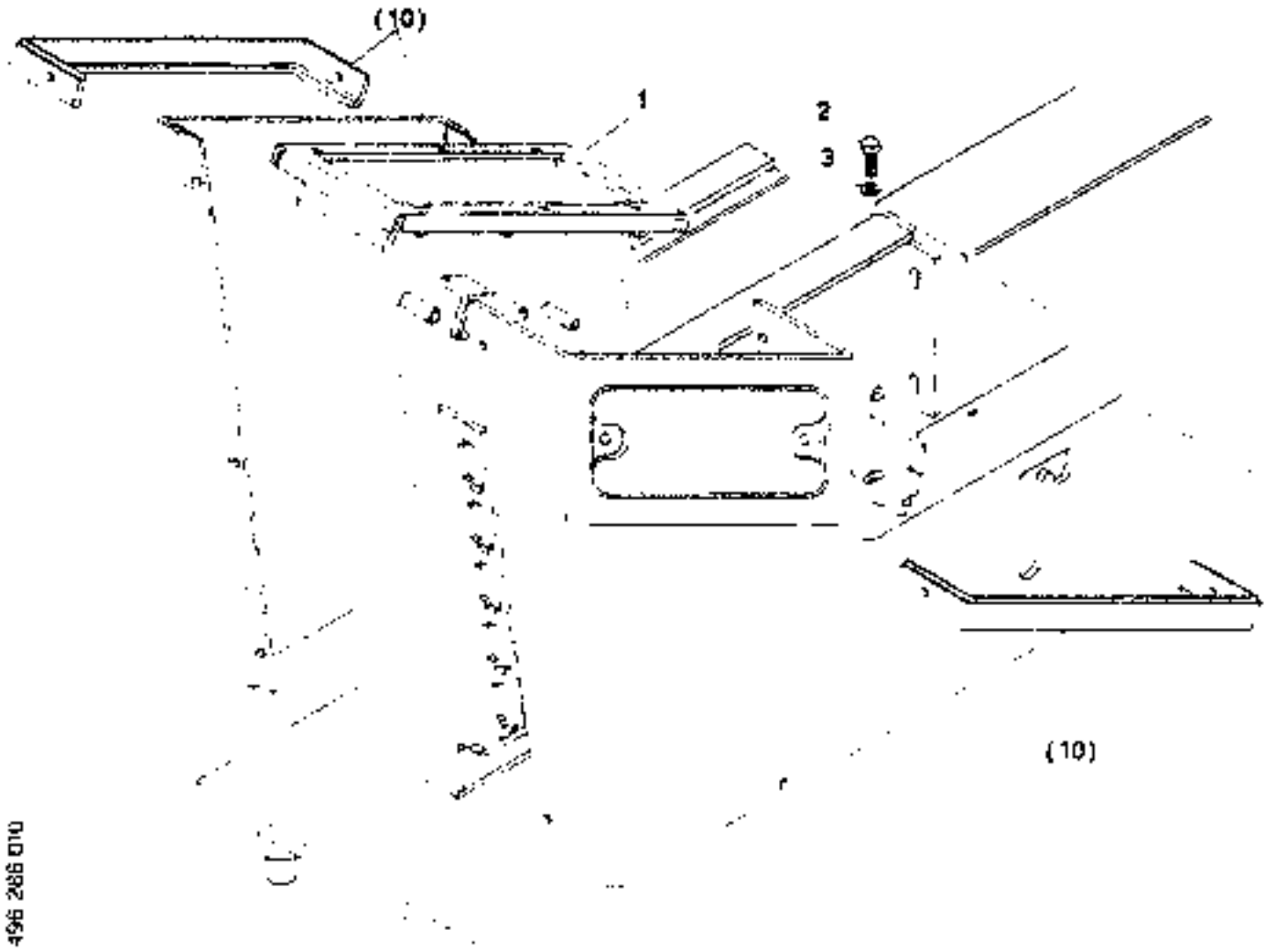

2 496 286 010

34.130

CONTROL COLUMN INSTALL.MATERIAL

T 2496286 - 000
B 2496286 - 010

FX600 106101 - .....

Item	Quan.	ME	Part No	Descriptor
001	1	00	**73171190**	STAND
002	6	00	**73170205**	HEXAGON BOLT
003	6	00	**73170212**	DISK WASHER
010	1	00		**34.131 2444891** CONTROL COLUMN MOUNTING PARTS

ME. 00 = Stuck/piece 13 = m 26 = m² 39 = m³ 43 = kg 50 = l (litre)

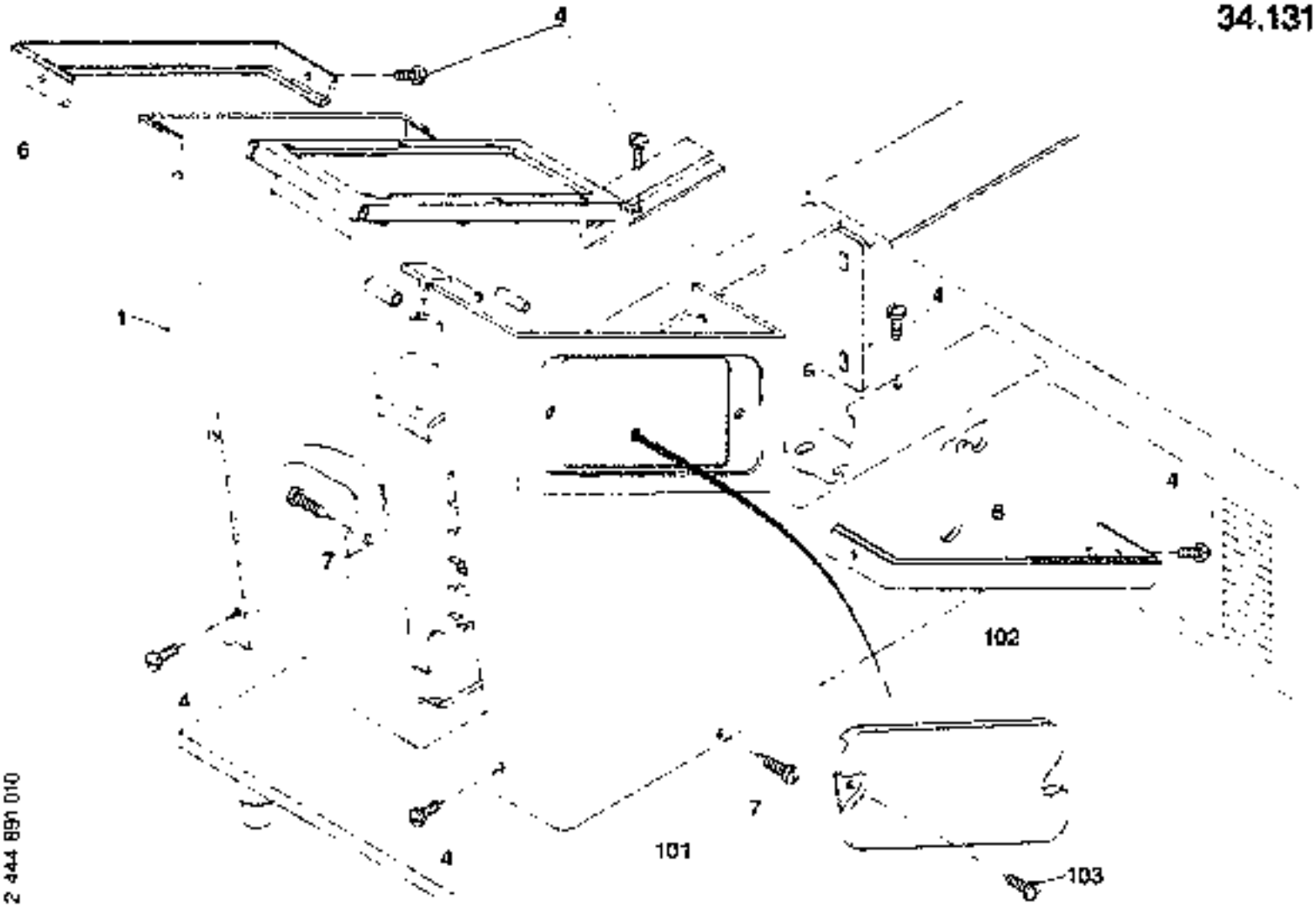

CONTROL COLUMN MOUNTING PARTS

T 2444891 - 000
B 2444891 - 010

FX60C 106101 - .....

Item	Quar	ME	Part No	Description
001	1	00	73171191	PANELING
004	10	00	73171030	CLAMPING SCREW
006	2	00	73171192	BLIND
007	4	00	73171093	SELF-TAPPING SCREW
101	1	00	73171193	PANELING
102	1	00	73171194	LID
103	2	00	73170962	CLAMPING SCREW

ME 00 = Stuck/pieces 13 = m 26 = m^2 39 = m^3 43 = kg 50 = l (litre)

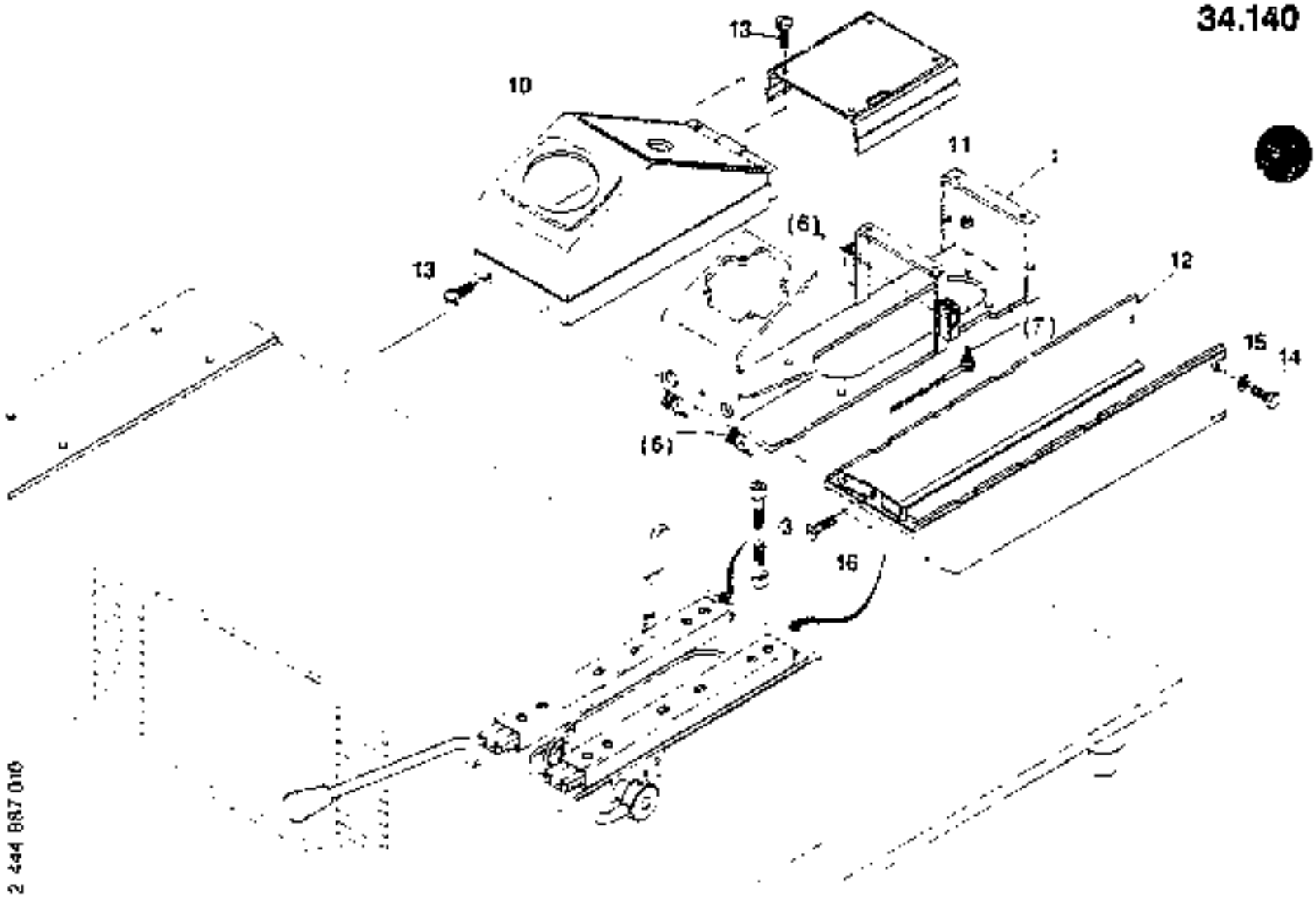

BRACKET INSTALL.MATERIAL

FIATALLIS

T 2444887 - 001
B 2444887 - 010

FX500 105101 - .....

Item	Quan	ME	Part No.	Description
001	1	00	**73171228**	BRACKET
003	4	00	**73171186**	CYL.HEAD SCREW
006	1	00		**34.141 2444874** BRACKET MOUNTING PARTS
007	1	00		**34.141 2444877** BRACKET MOUNTING PARTS
010	1	00	**73171229**	TOP
011	1	00	**73171230**	TOP
012	1	00	**73171231**	BRACKET
013	6	00	**73171030**	CLAMPING SCREW
014	2	00	**73171232**	HEXAGON BOLT
015	2	00	**73170834**	DISK/WASHER
016	1	00	**73171233**	CONTER-SUNK SCREW

ME: 00 = Stück/piece 13 = m 26 = m² 39 = m³ 43 = kg 50 = l (litre)

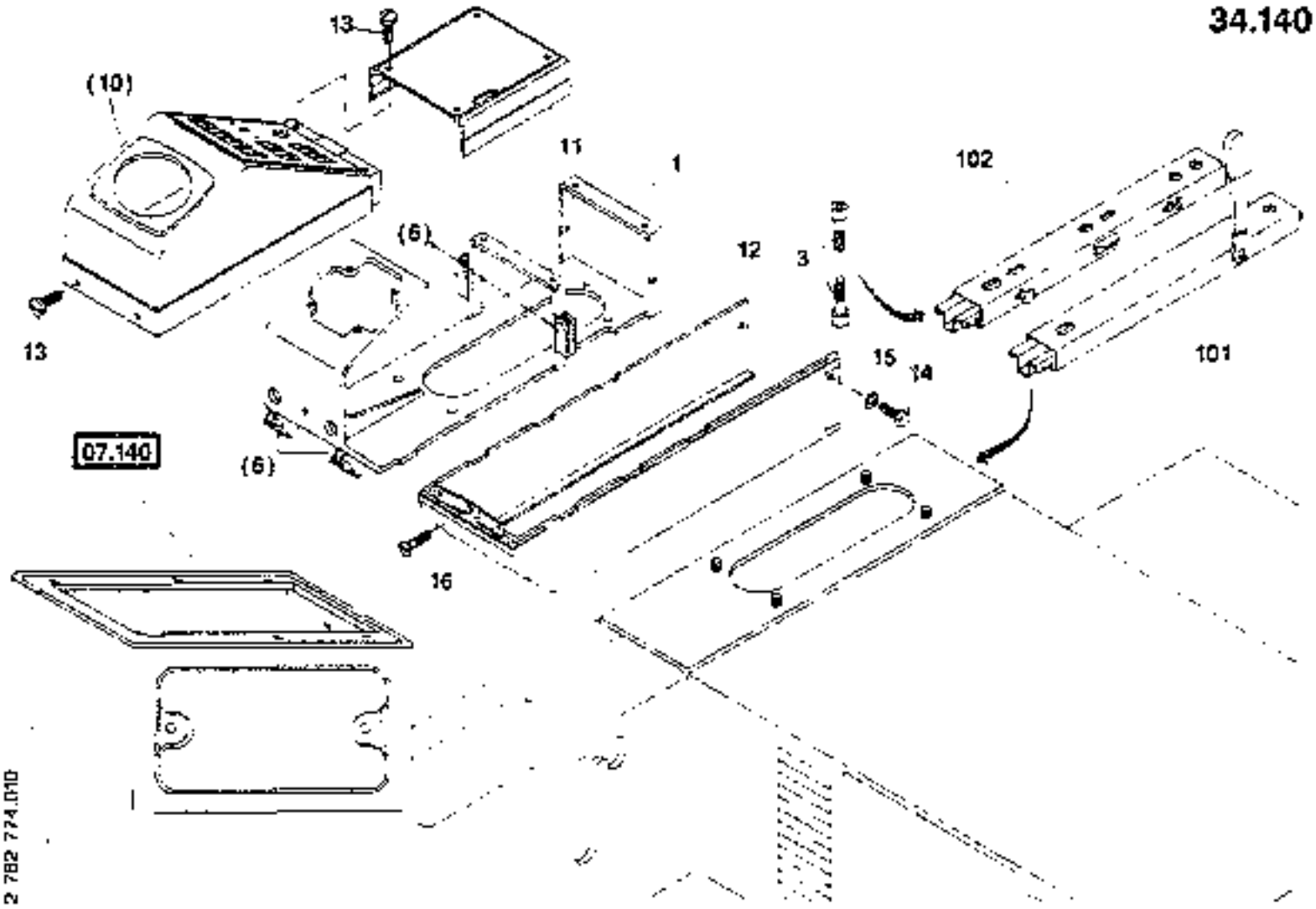

34.140

BRACKET INSTALL.MATERIAL

PIATALLIS

T 2782774 - 000
B 2782774 - 010

FX600 106101 - .....

Item	Quan.	ME	Part No.	Description
001	1	00	**73171234**	BRACKET
003	8	00	**73171188**	CYL.HEAD SCREW
006	1	00		**34.141 2444874** BRACKET MOUNTING PARTS
010	1	00		**31.600 2782775** DASHBOARD INSTALL.MATERIAL
011	1	00	**73171235**	TOP
012	1	00	**73171231**	BRACKET
013	6	00	**73171030**	CLAMPING SCREW
014	2	00	**73171232**	HEXAGON BOLT
015	2	00	**73170834**	DISK/WASHER
016	1	00	**73171233**	CONTER-SUNK SCREW
101	1	00	**73172513**	REWORK
102	1	00	**73172514**	GUIDE

ME 00 = Stück/piece 13 = m 26 = m^2 39 = m^3 43 = kg 50 = l (litre)

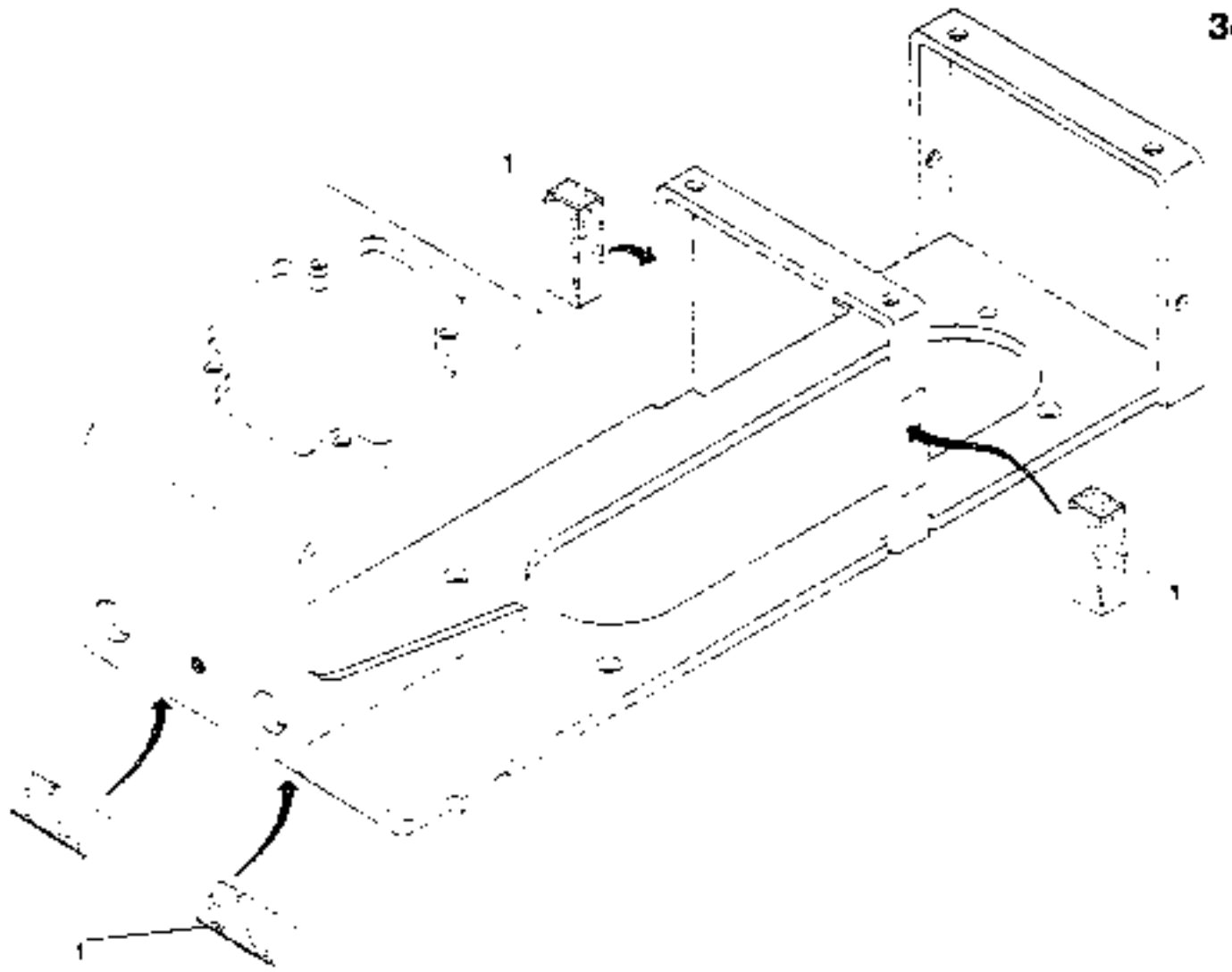

BRACKET MOUNTING PARTS

34.141

T 2444874 - 000
B 2444874 - 010

FX600 106101 - .....

Item	Quan.	ME	Part No.	Description
001	0,05	13	73171249	SEALING BAND

ME: 00 = Stück/piece 13 = m 26 = m² 39 = m³ 43 = kg 50 = l (litre)

1998-09-16

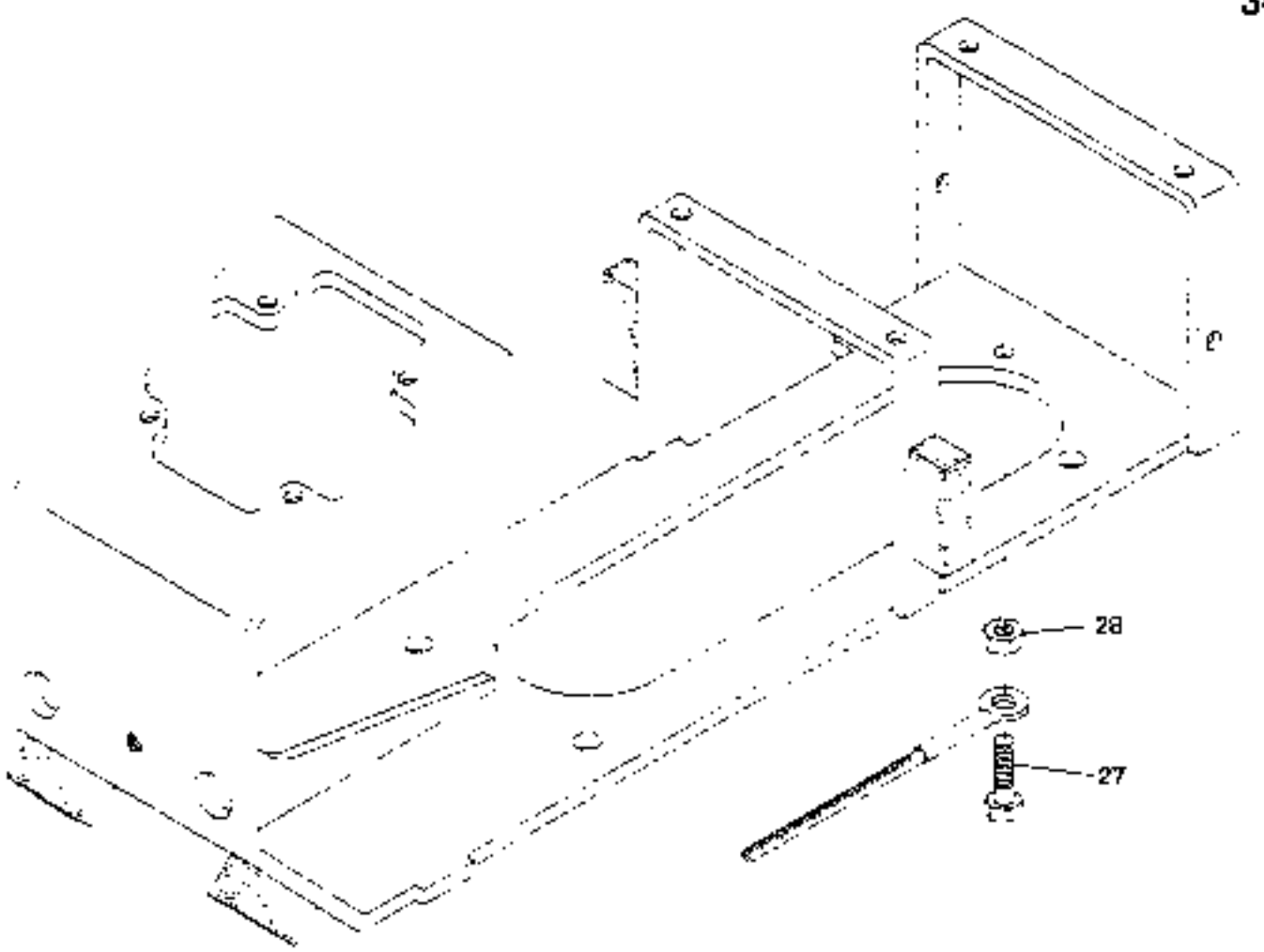

2 444 877 010

BRACKET MOUNTING PARTS

FIATALLIS

FX600 105101 - .....

T 2444877 - 001
B 2444877 - 010

Item	Quan	ME	Part No.	Description
027	1	00	**73171250**	HEXAGON BOLT
028	1	00	**73170184**	HEXAGON NUT

ME: 00 = Stück/piece 13 = m 26 = m² 39 = m³ 43 = kg 50 = l (litre)

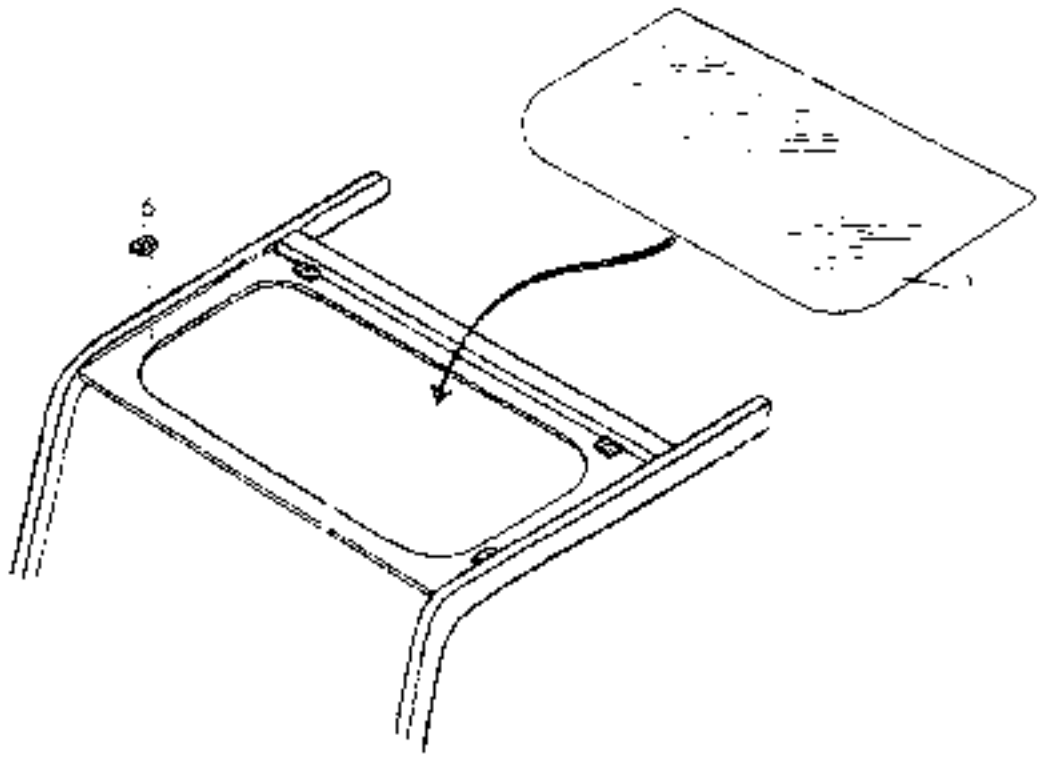

CAB ROOF

34.210

FX600 106101 - .....

T 2443232 - 000
B 2443232 - 010

Item	Quan	ME	Part No	Description
001	1	00	**73171181**	PANE
006	0.01	13	**73171182**	RIBBON

ME 00 = Stück/pieco 13 = m 26 = m² 39 = m³ 43 = kg 50 = l (litre)

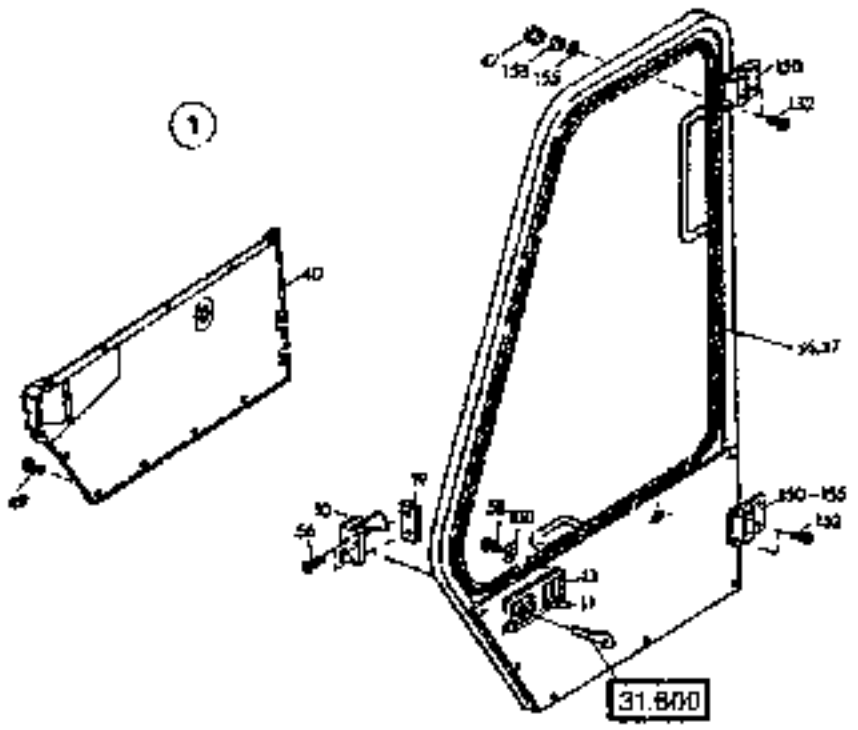

2 444 695 010

34.220

CAB DOOR

FIATALLIS

T 2444696 - 001
B 2444696 - 010

FX600 106101 - 106101

Item	Quan	ME	Part No.	Description
001	1	00	73172015	DOOR
010	1	00	73171086	LOCK
011	1	00	73171087	HANDLE
013	1	00	73171088	SUPPORT PLATE/PAD
019	1	00	73171089	BRACKET
036	1	00	73172017	WINDOW STRIP
037	3,70	13	73171047	PROFILE
040	1	00	73172018	PANELING
047	4	00	73171092	CAP
049	12	00	73171093	SELF-TAPPING SCREW
056	2	00	73171095	CONTER-SUNK SCREW
058	3	00	73171096	CONTER-SUNK SCREW
100	3	00	73171097	TOOTHED WASHER
150	2	00	73171098	HINGE
152	4	00	73171099	CONTER-SUNK SCREW
153	4	00	73170283	LOCKING NUT
155	4	00	73170160	DISK-WASHER

ME: 00 = Stück/piece 13 = m 26 = m² 39 = m³ 43 = kg 50 = l (litre)

1998-09-10

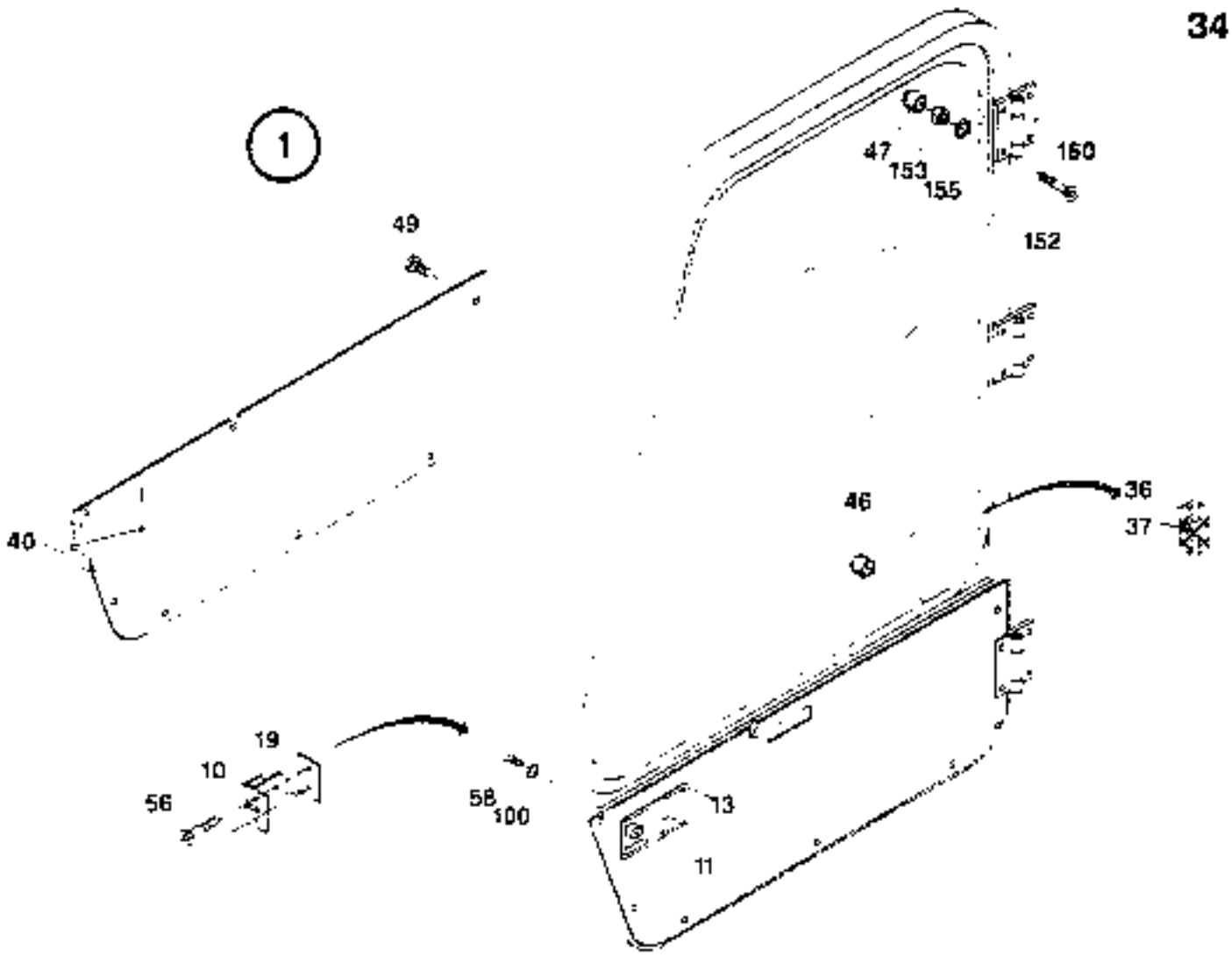

2 496 673 010

34.220

CAB DOOR

FIATALLIS

T 2496873 - 000
B 2496873 - 010

FX600 106102 - .....

Item	Quan.	ME	Part No	Description
001	1	00	**73171085**	DOOR
010	1	00	**73171086**	LOCK
011	1	00	**73171087**	HANDLE
013	1	00	**73171088**	SUPPORT PLATE PAD
019	1	00	**73171089**	BRACKET
036	1	00	**73171090**	WINDOW STRIP
037	3,70	13	**73171047**	PROFILE
040	1	00	**73171091**	PANELING
047	6	00	**73171092**	CAP
049	13	00	**73171093**	SELF-TAPPING SCREW
056	2	00	**73171095**	CONTER-SUNK SCREW
058	3	00	**73171096**	CONTER-SUNK SCREW
100	3	00	**73171097**	TOOTHED WASHER
150	3	00	**73171098**	HINGE
152	6	00	**73171099**	CONTER-SUNK SCREW
153	6	00	**73170283**	LOCKING NUT
155	6	00	**73170160**	DISK-WASHER

ME: 00 = Stuckpiece 13 = m 26 = m^2 39 = m^3 43 = kg 50 = l (litre)

1995-09-10

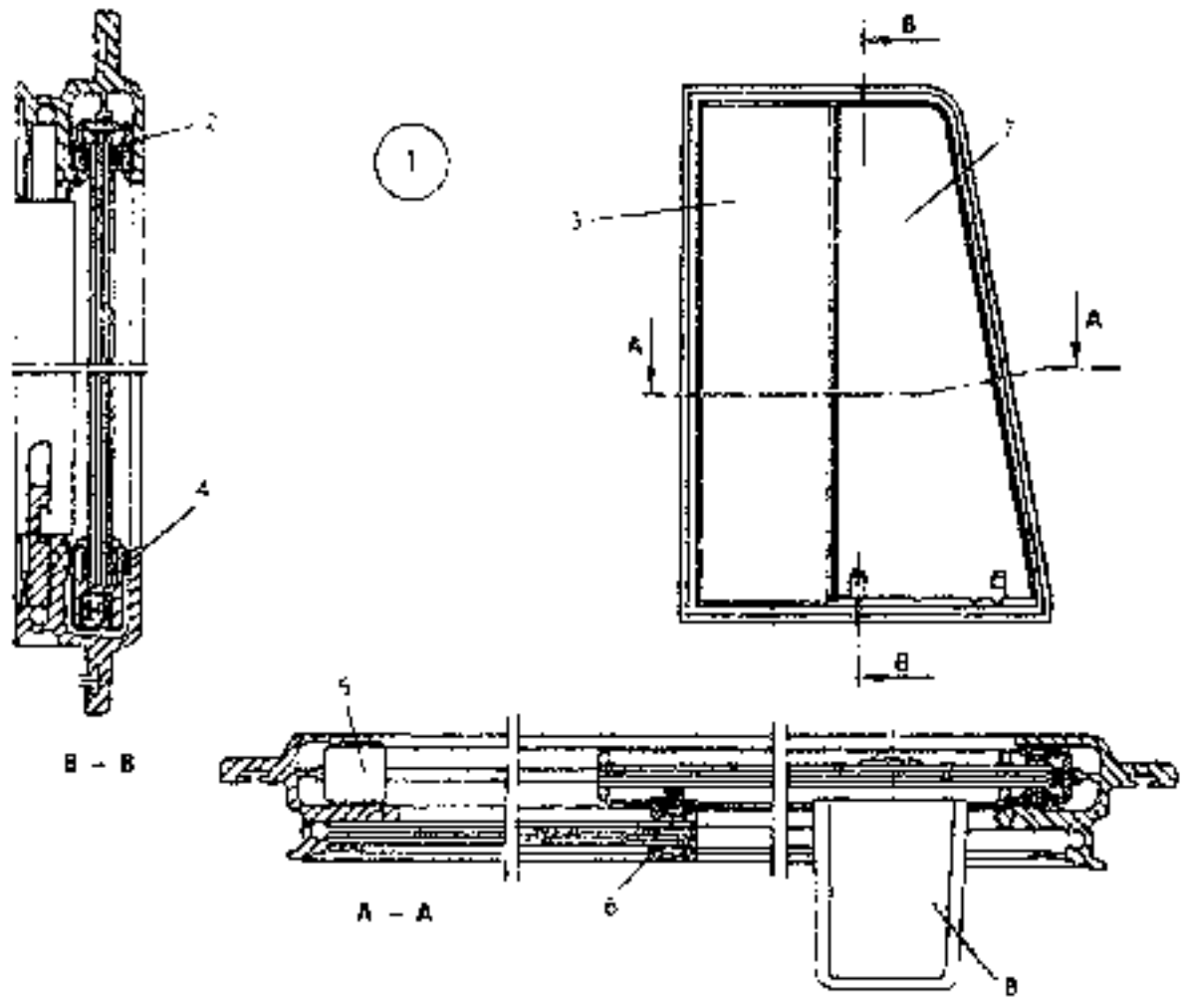

2 444 012 010

34.230

GLAZING OPERATOR'S CAB SLIDING WINDOW

T 2444012 - 000
B 2444012 - 010

FX600 106101 - 106101

Item	Quan	ME	Part No	Description
001	1	00	**73175399**	SLIDING WINDOW
002	1	00	**73175400**	PROFILE
003	1	00	**73175401**	PANE
004	1	00	**73175402**	SLIDING PIECE
005	1	00	**73175403**	RUBBER STOP
006	1	00	**73175404**	WEB
007	1	00	**73175405**	PANE
008	1	00	**73175406**	HANDLE

ME: 00 = Stück/piece 13 = m 26 = m² 39 = m³ 43 = kg 50 = l (litre)

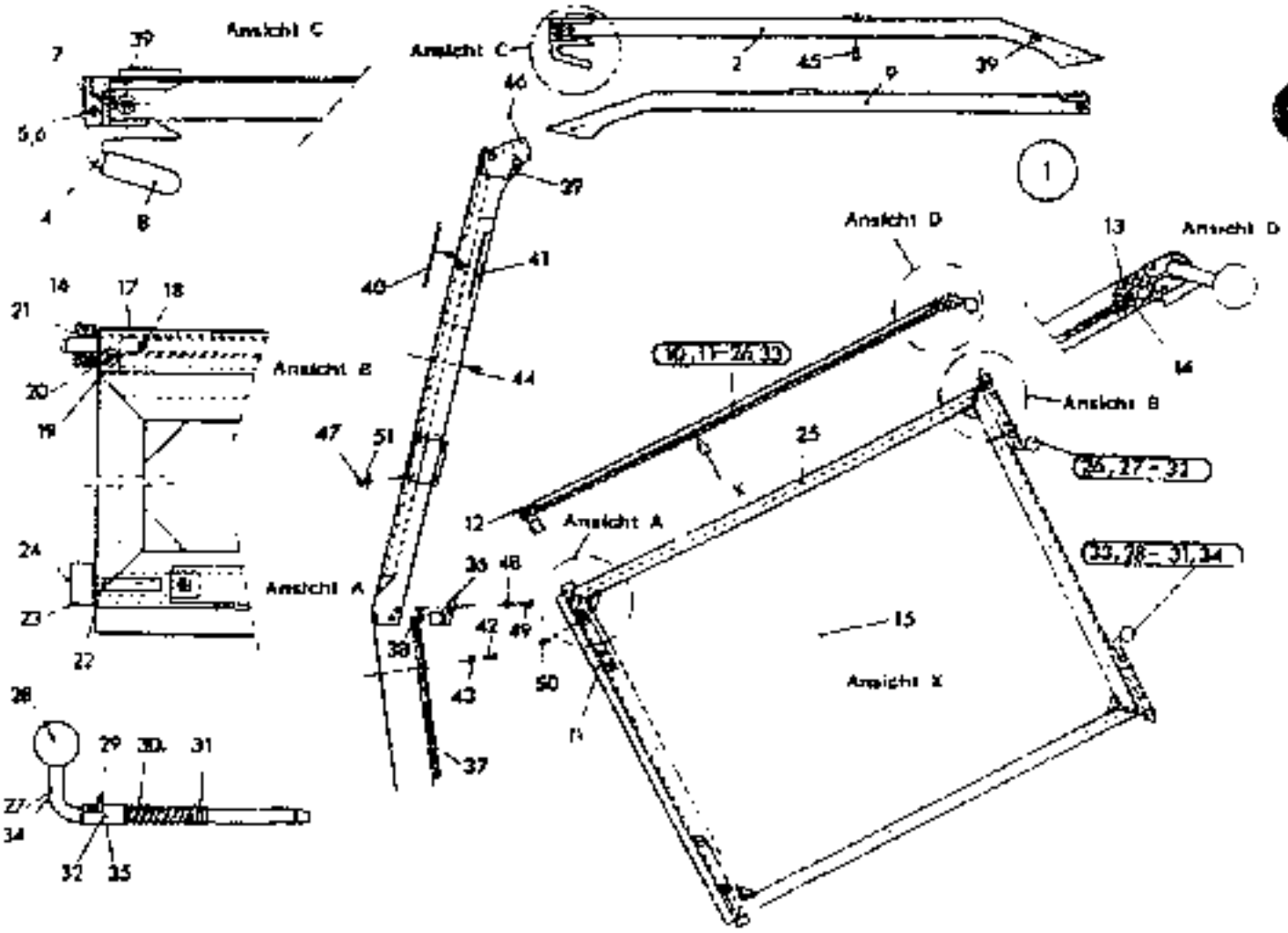

GLAZING OPERATOR'S CAB ESG-GRÜN

34.230

T 2495010 - 000
B 2495010 - 010

FX600 106101 - .....

Item	Quan	ME	Part No	Descriptor
001	1	00	**73175228**	WINDOW
002	1	00	**73171124**	BRACKET
004	1	00	**73171125**	HANDLE
005	1	00	**73171126**	PIN
006	2	00	**73175229**	CIRCLIP
007	1	00	**73171127**	SPRING
008	1	00	**73171128**	HANDLE
009	1	00	**73171129**	BRACKET
010	1	00	**73175230**	WINDOW
011	2	00	**73171131**	HANDLE
012	0,82	13	**73171132**	SEAL
013	3,60	13	**73171133**	SEAL
014	3,60	13	**73171134**	SEAL
015	1	00	**73175231**	PANE
016	2	00	**73171136**	ROLLER
017	2	00	**73171137**	PIPE
018	4	00	**73171138**	GRUB SCREW
019	1	00	**73171139**	PAWL

ME 00 = Stückzahl 13 = m 26 = m² 39 = m³ 43 = kg 50 = l (litre)

1998-09-10

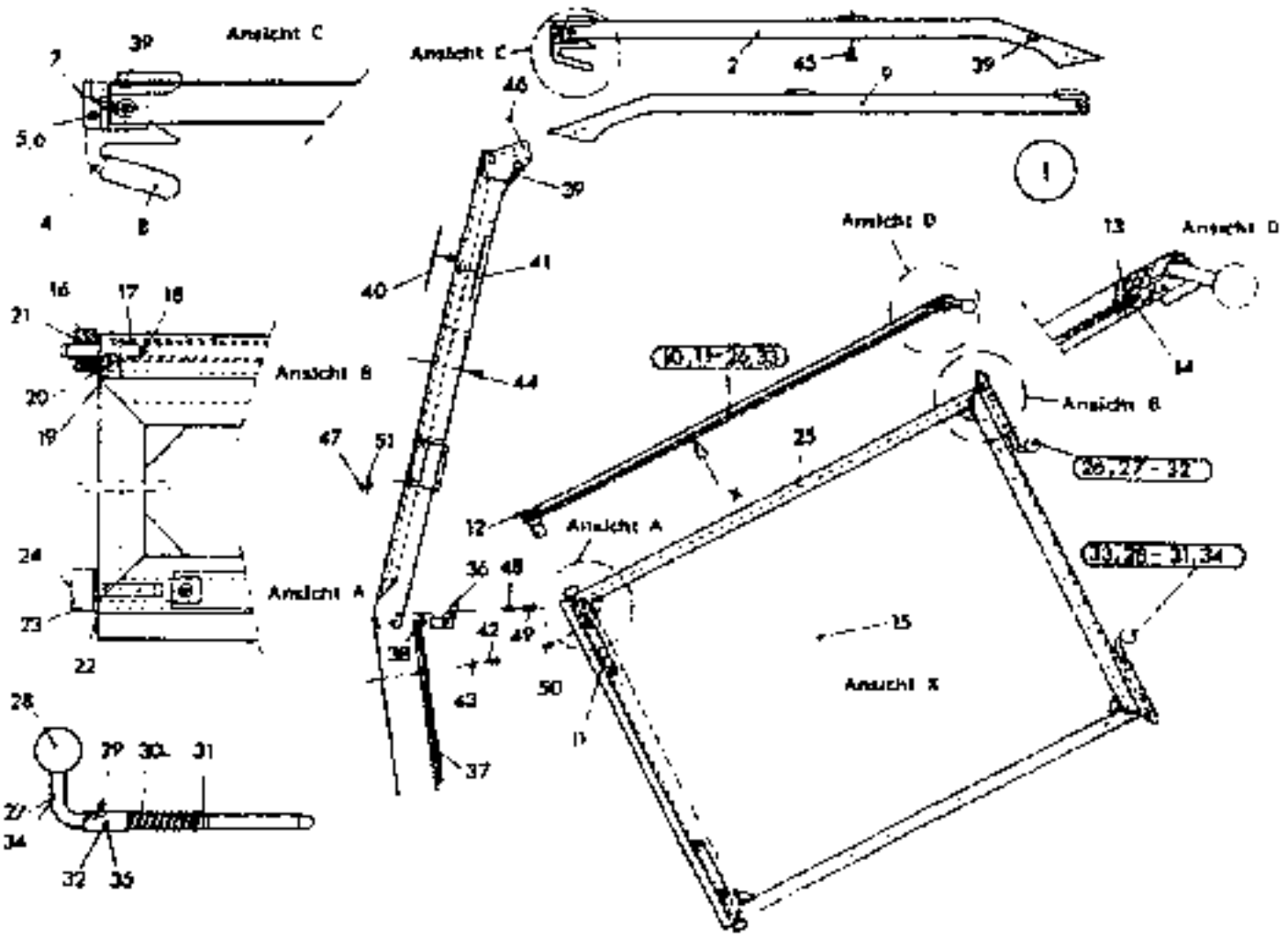

2 495 010 010

GLAZING OPERATOR'S CAB ESG-GRDN

FIATALLIS

T 2495010 - 000
B 2495010 - 010

FX600 106101 - ..

Item	Quan	ME	Part No	Description
020	1	00	73170999	CONTER-SUNK SCREW
021	4	00	73171140	CIRCLIP
022	1	00	73171141	PIN
023	1	00	73171142	ROLLER
024	4	00	73171143	CIRCLIP
025	1	00	73171144	FRAME
026	1	00	73171145	LOCKING BAR
027	1	00	73171146	ROD
028	2	00	73171147	BUTTON
029	2	00	73171148	LOCKING PIN
030	2	00	73171149	SPRING
031	2	00	73171150	CUTTING RING
032	1	00	73171151	PIPE
033	1	00	73171152	LOCKING BAR
034	1	00	73171153	ROD
035	1	00	73171151	PIPE
036	2	00	73171154	WEDGE
037	1	00	73175232	WINDOW

ME 00 = Stuck/piece 13 = m 26 = m² 39 = m³ 43 = kg 50 = (liter)

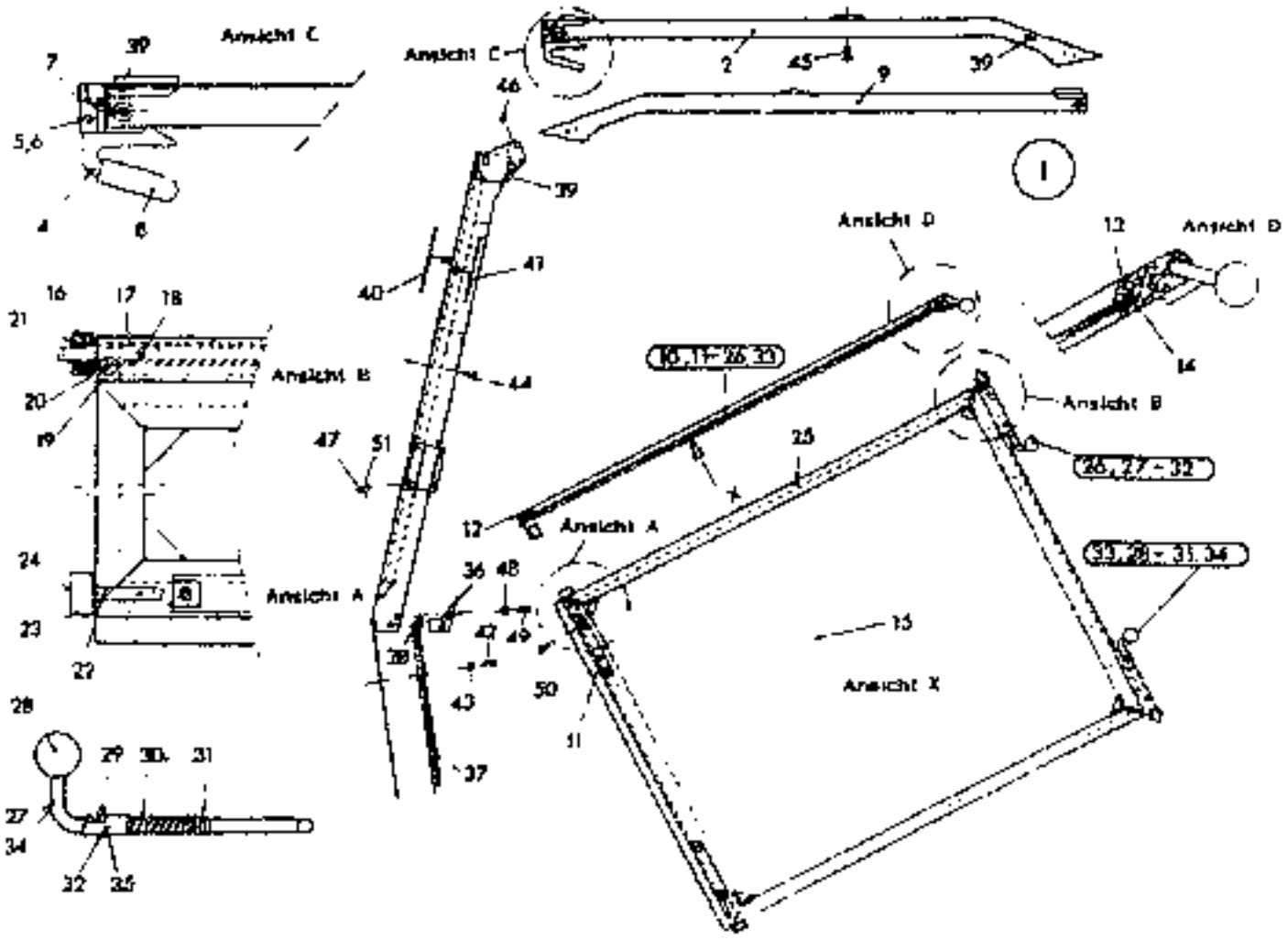

2 495 (1E) (1E)

34.230

GLAZING OPERATOR'S CAB ESG-GRÜN

T 2495010 - 000
B 2495D10 - D10

FX60C 1D61D1 - ...

Item	Quan	ME	Part No	Description
038	1	00	**73171156**	PROFILE
039	8	00	**73171157**	NIPPLE
040	10	13	**73171158**	SEALING BAND
041	4,20	13	**73171159**	SEALING BAND
042	4	00	**73171160**	CYL.HEAD SCREW
043	9	00	**73171161**	DISK WASHER
044	13	00	**73171162**	CYL.HEAD SCREW
045	4	00	**73171163**	CYL HEAD SCREW
046	4	00	**73171165**	CONTER-SUNK SCREW
047	2	00	**73171166**	CYL.HEAD SCREW
048	4	00	**73170185**	DISK WASHER
049	4	00	**73171188**	CYL HEAD SCREW
050	4	00	**73171096**	CONTER-SUNK SCREW
051	2	00	**73170160**	DISK WASHER

ME 00 = Stück,pece 13 = m 26 = m² 39 = m³ 43 = kg 50 = (litre)

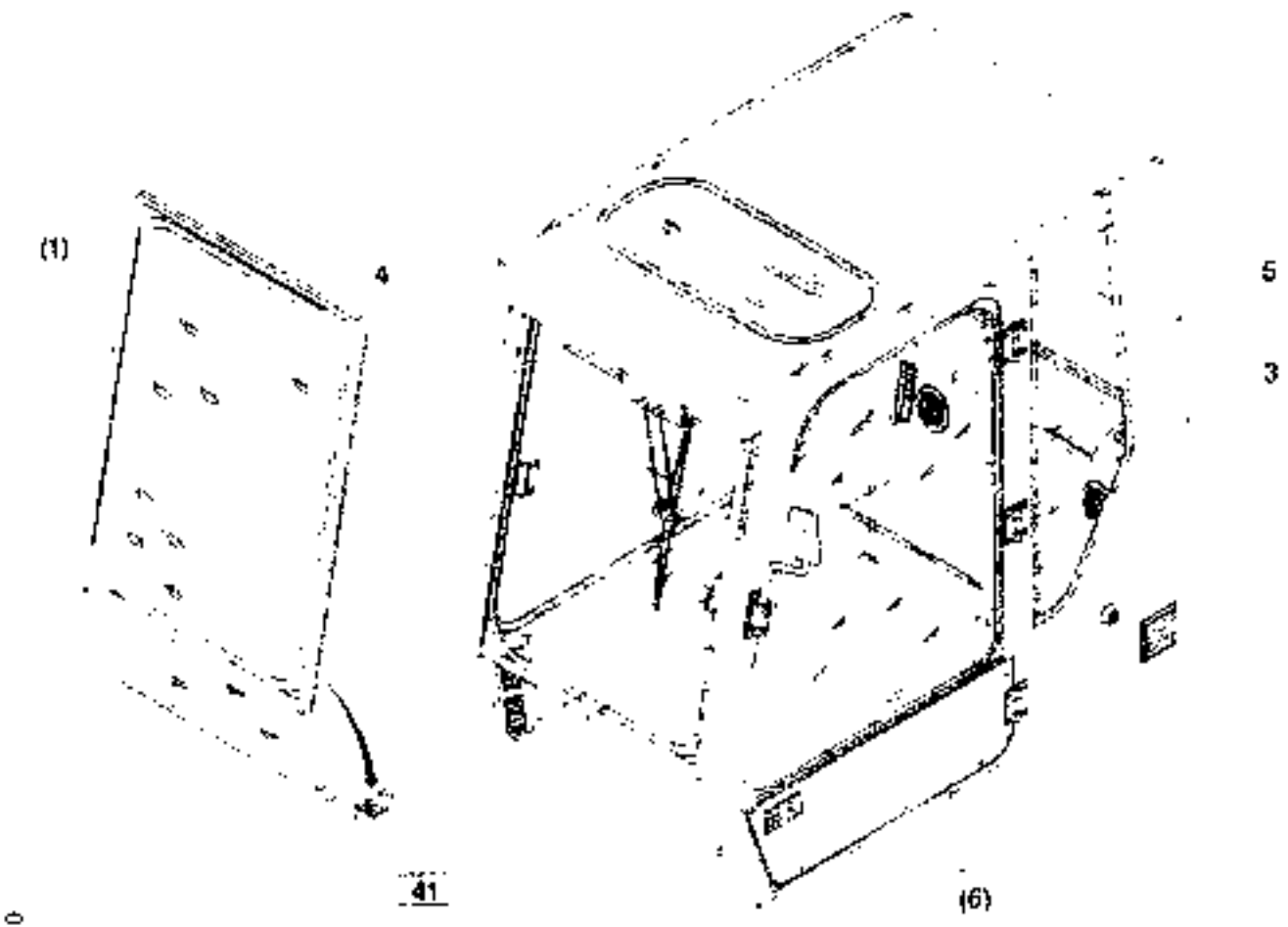

34.230

2 495 011 010

GLAZING OPERATOR'S CAB

FX500 106101 - 106101

T 2495011 - 000
B 2495011 - 010

Item	Quan	ME	Part No	Description
001	1	00		**34.230 2495010** GLAZING OPERATOR'S CAB ESG-GRUN
003	1	00	73175224	PANE
004	1	00	73175225	PANE
005	1	00	73175226	PANE
006	1	00		**34.230 2444012** GLAZING OPERATOR'S CAB SLIDING WINDOW

ME 00 = Stück/piece 13 = m 26 = m² 39 = m² 43 = kg 50 = l (litre)

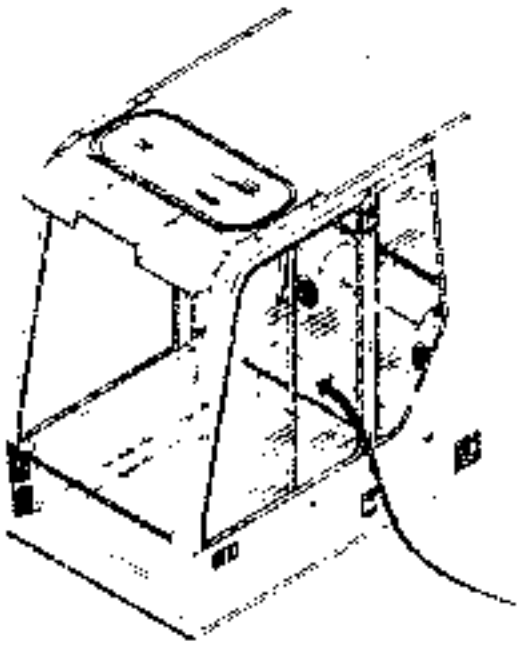

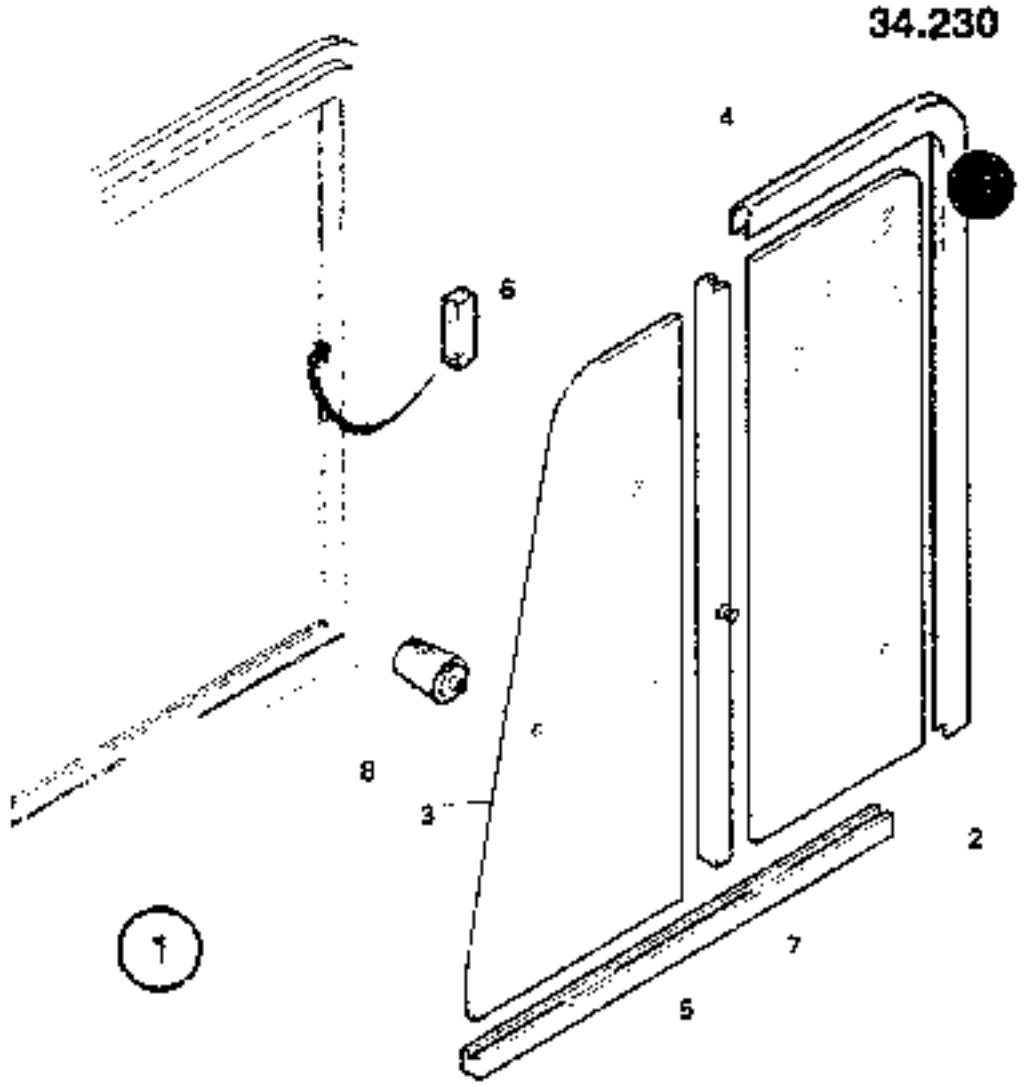

2 782 254 010

GLAZING OPERATOR'S CAB

FIATALLIS

FX800 106102 - ..

T 2782254 - 001
B 2782254 - 010

Item	Quan	ME	Part No	Description
001	1	00	73175227	SLIDING WINDOW
002	1	00	73177384	PANE
003	1	00	73177385	PANE
004	1,80	00	73175400	PROFILE
005	1	00	73175402	SLIDING PIECE
006	1,50	00	73175403	RUBBER STOP
007	1	00	73175404	WEB
008	1	00	73175406	HANDLE

ME 00 = Stuck/piece 13 = m 26 = m² 39 = m³ 43 = kg 50 = l (litre)

1086 09-10

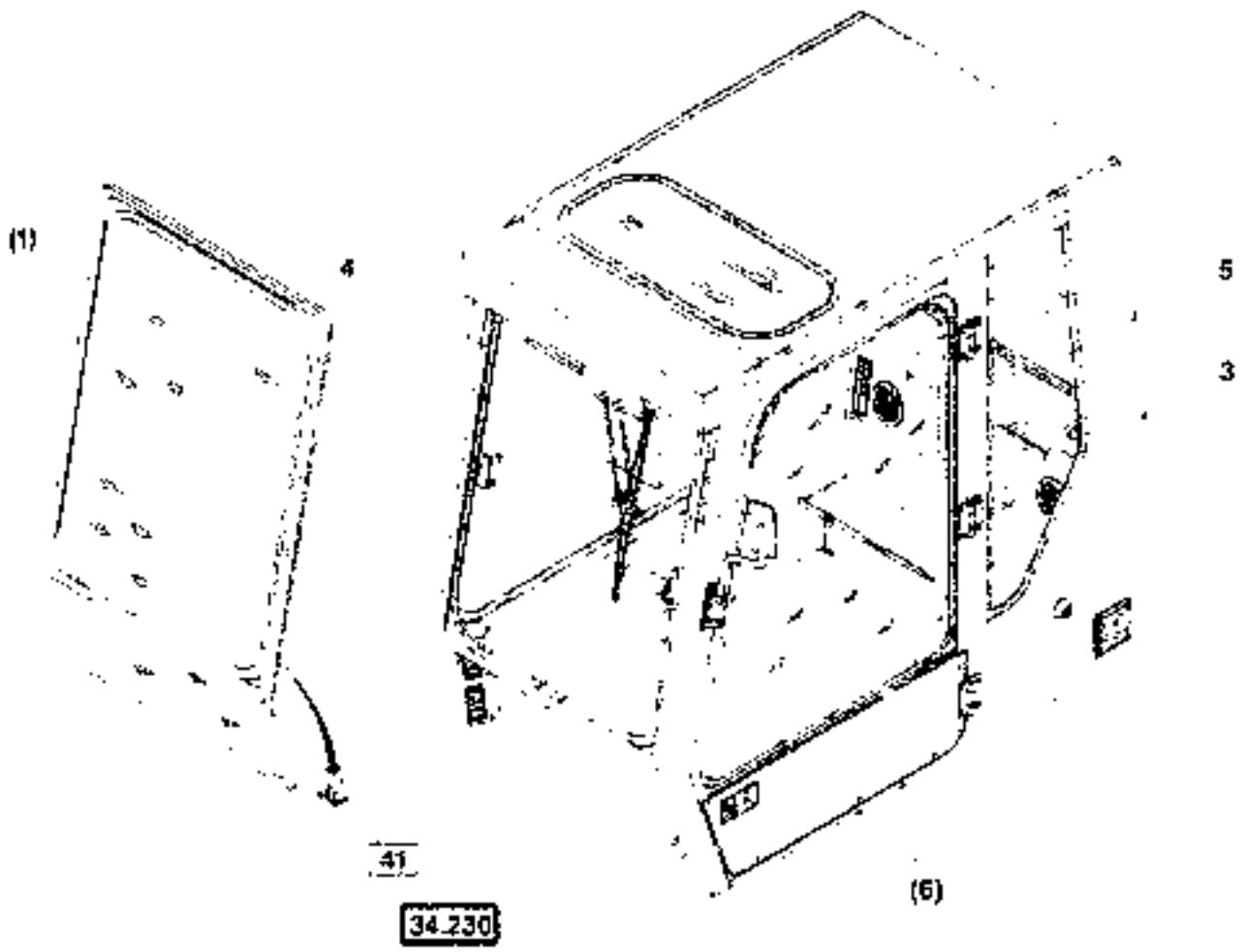

2 782 255 010

GLAZING OPERATOR'S CAB

34.230

FIATALLIS

FX600 106102 - ...

T 2782255 - 000
B 2782255 - 010

Item	Quan	ME	Part No	Description
001	1	00		**34.230 2495010** GLAZING OPERATOR'S CAB ESG-GRuN
003	1	00	**73175224**	PANE
004	1	00	**73175225**	PANE
005	1	00	**73175226**	PANE
006	1	00		**34.230 2782254** GLAZING OPERATOR'S CAB

ME 00 = Stückpiece 13 = m 26 = m² 39 = m³ 43 = kg 50 = l (litre)

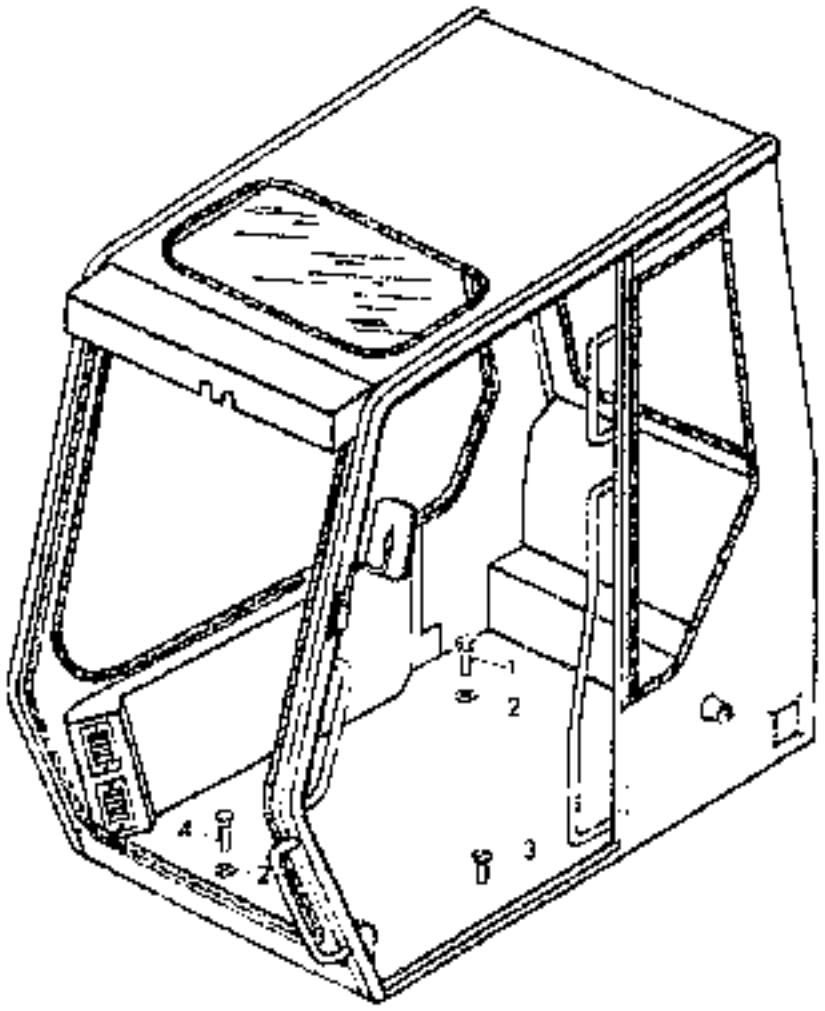

2 444 697.010

34.300

BEARING OPERATOR'S CAB

FIATALLIS

FX600 106101 - .....

T 2444697 - 000
B 2444697 - 010

Item	Quan	ME	Part No	Description
001	8	00	73170998	HEXAGON BOLT
002	11	00	73170213	DISK WASHER
003	1	00	73170999	CONTER-SUNK SCREW
004	3	00	73170175	HEXAGON BOLT

ME 00 = Stück/pcs 1 = m 26 = m² 39 = m³ 43 = kg 50 = l (litre)

1995-09-10

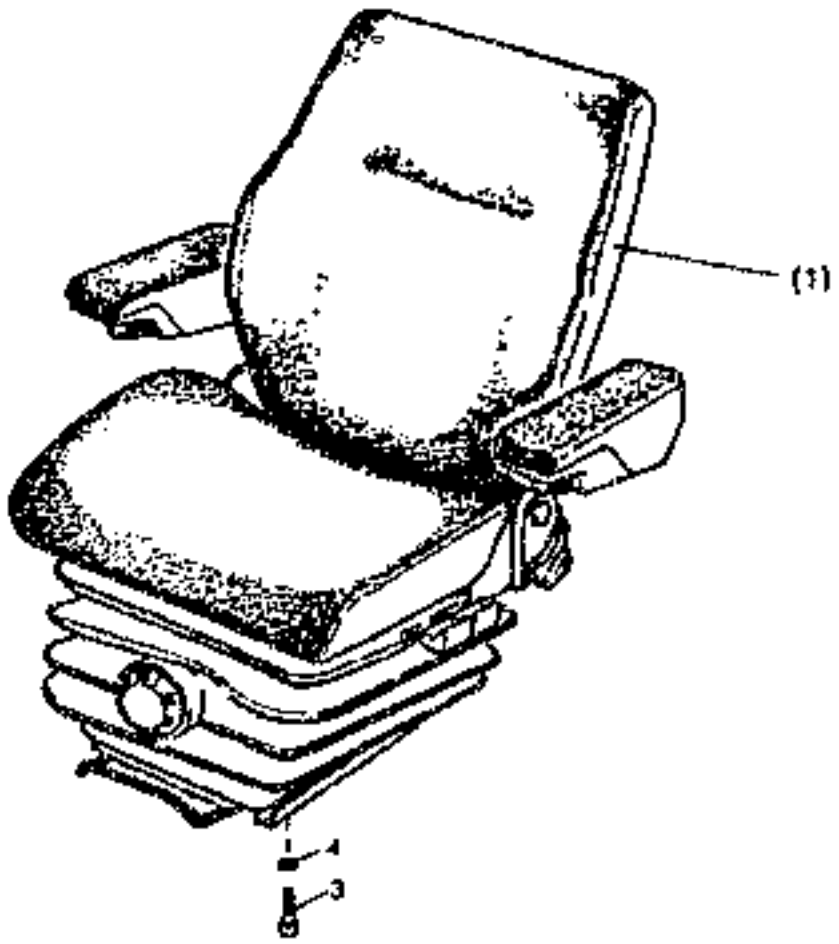

T 444 944 011

34.500

SEAT INSTALL.MATERIAL

T 2444944 - 000
B 2444944 - 010

FX800 75027 - 78027

Iter	Quan	ME	Part No	Descriptor
001	1	00		34.502 2444945 SEAT
003	4	00	73171168	CYL HEAD SCREW
004	4	00	73170212	DISK-WASHER

ME 00 = Stück/pieces 10 = m 20 = m² 30 = m³ 40 = kg 50 = l (litre)



T 2782534 000

SEAT INSTALL.MATERIAL

FIATALLIS

FX600 196101 .

T 2782534 - 000
B 2782534 - 010

Item	Quan	ME	Part No	Description
001	1	00		**34.502 2782535** SEAT
101	4	00	**73171188**	CYL HEAD SCREW
102	4	00	**73170212**	DISK WASHER

ME 00 = Stückpiece 13 = m 20 = m² 30 = m³ 43 = kg 60 = l (litre)

1998 09 10

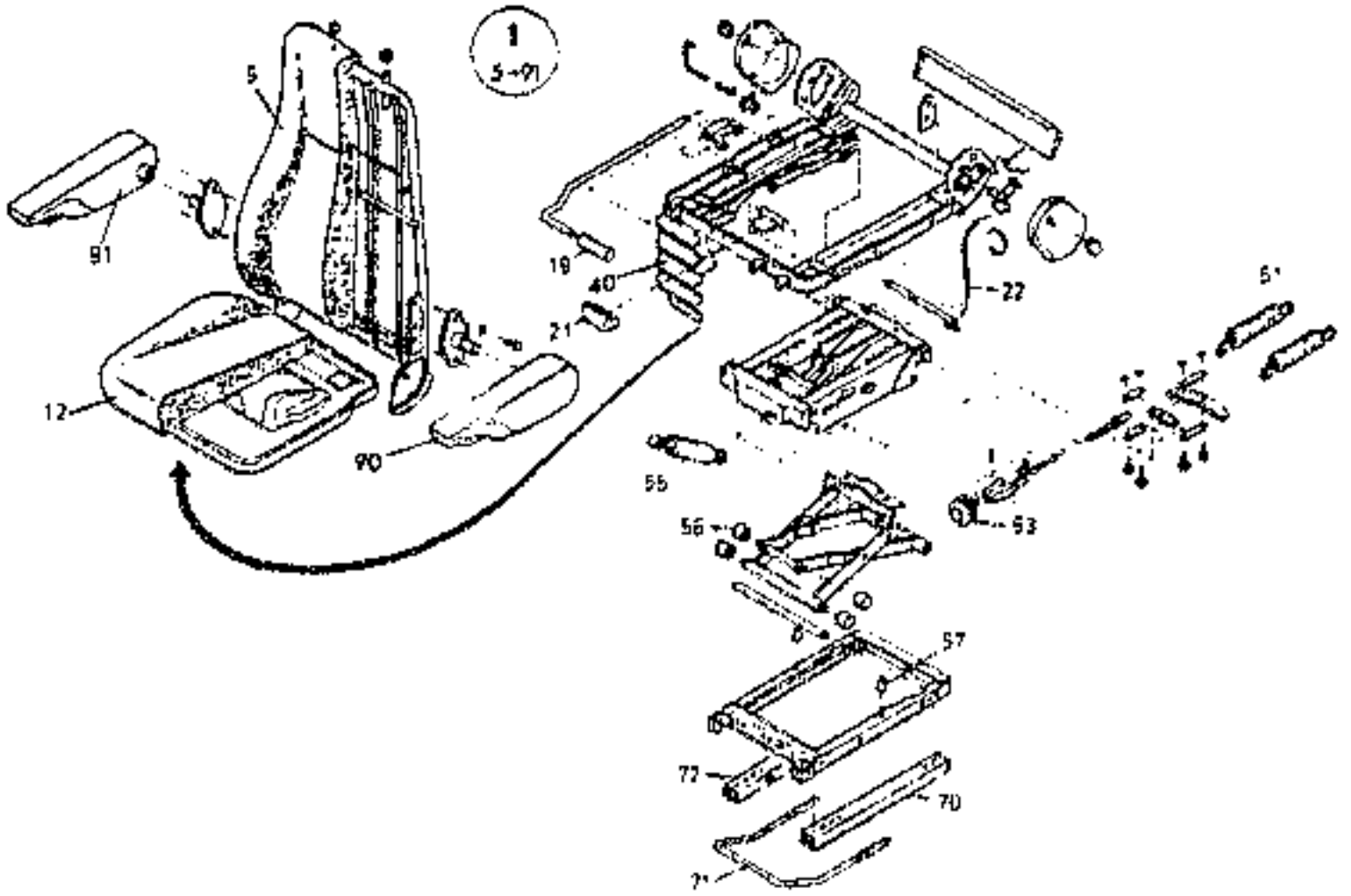

SEAT

FIATALLIS

T 2444945 - 000
B 2444945 - 010

FX600 76027 - 76027

Item	Quan	ME	Part No	Description
001	1	00	73171066	OPERATOR'S SEAT
005	1	00	73171067	BACKREST CUSHION
012	1	00	73171068	SEAT CUSHION
019	1	00	73171069	BUTTON
021	1	00	73171070	HANDLE
023	1	00	73171071	CONTROL CABLE
040	1	00	73171072	BELLOWS
051	2	00	73171073	CONTROL SPRING
053	1	00	73171074	HAND WHEEL
055	1	00	73171075	SHOCK ABSORBER
056	4	00	73171076	IDLER ROLLER
057	2	00	73171077	BUMPER
070	1	00	73171078	RAIL
071	1	00	73171080	STRAP
072	1	00	73171081	RAIL
090	1	00	73171083	ARM REST.LEFT
091	1	00	73171084	ARM REST.RIGHT

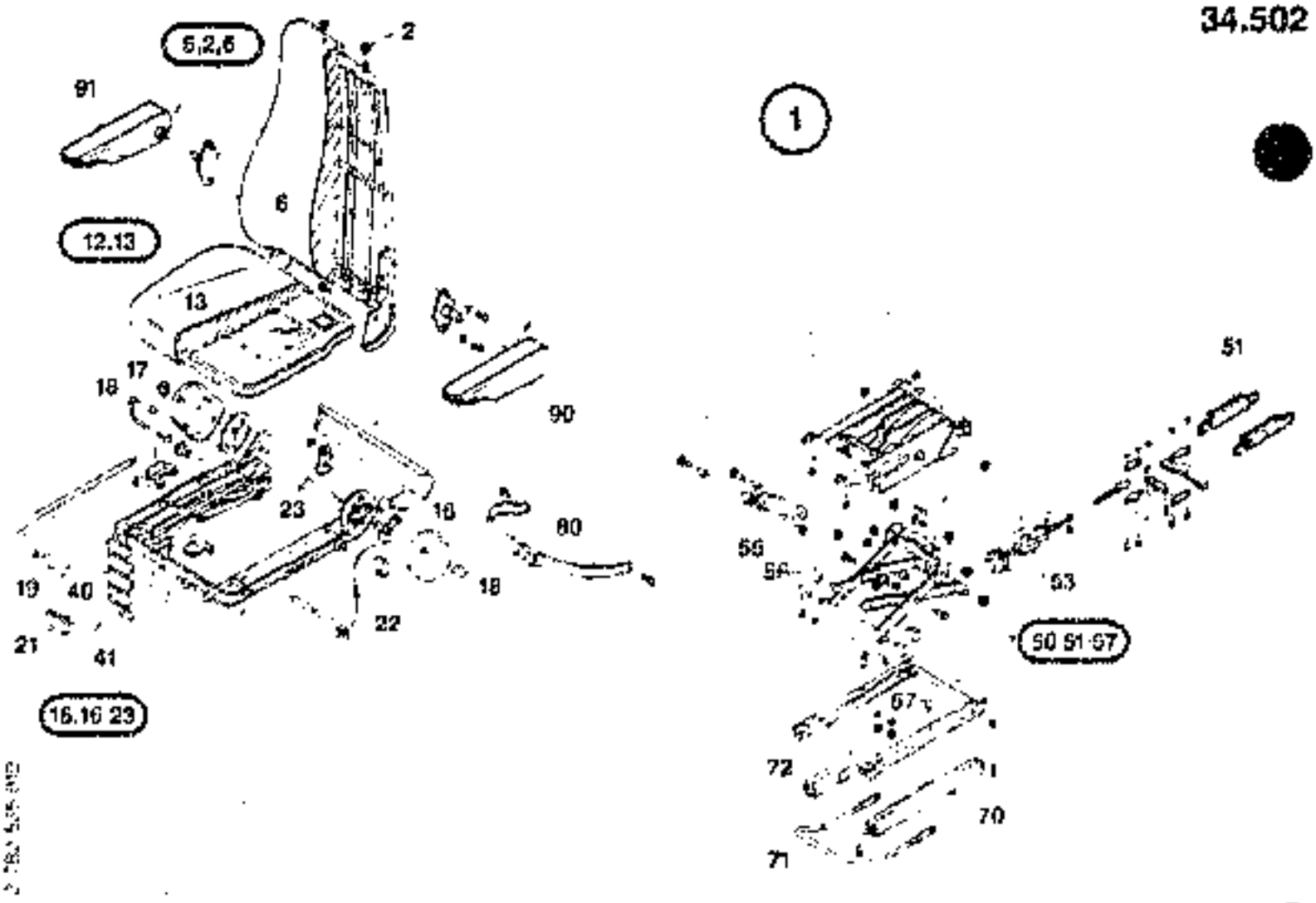

34.502

SEAT

FIATALLIS

T 2762535 - 000
Ø 2762535 - 010

FX600 106101 - ..

Item	Quan.	ME	Part No	Description
001	1	00	73176789	SEAT
002	2	00	73176122	CAP
005	1	00	73171067	BACKREST CUSHION
006	1	00	73176123	SEAT COVER
012	1	00	73171068	SEAT CUSHION
013	1	00	73176124	SEAT COVER
015	1	00	73176125	FRAME
016	1	00	73176126	CAP
017	1	00	73176127	CAP
018	2	00	73176128	COVER
019	1	00	73171069	BUTTON
021	1	00	73171070	HANDLE
022	1	00	73171071	CONTROL CABLE
023	1	00	73176129	LEVER
040	1	00	73171072	BELLOWS
041	1	00	73176130	FASTENING PARTS
050	1	00	73176131	SEAT BOTTOM
051	2	00	73171073	CONTROL SPRING

ME 00 = Stock piece 10 = m 20 = m² 30 = m³ 43 = kg 50 = litres

1998 09 10

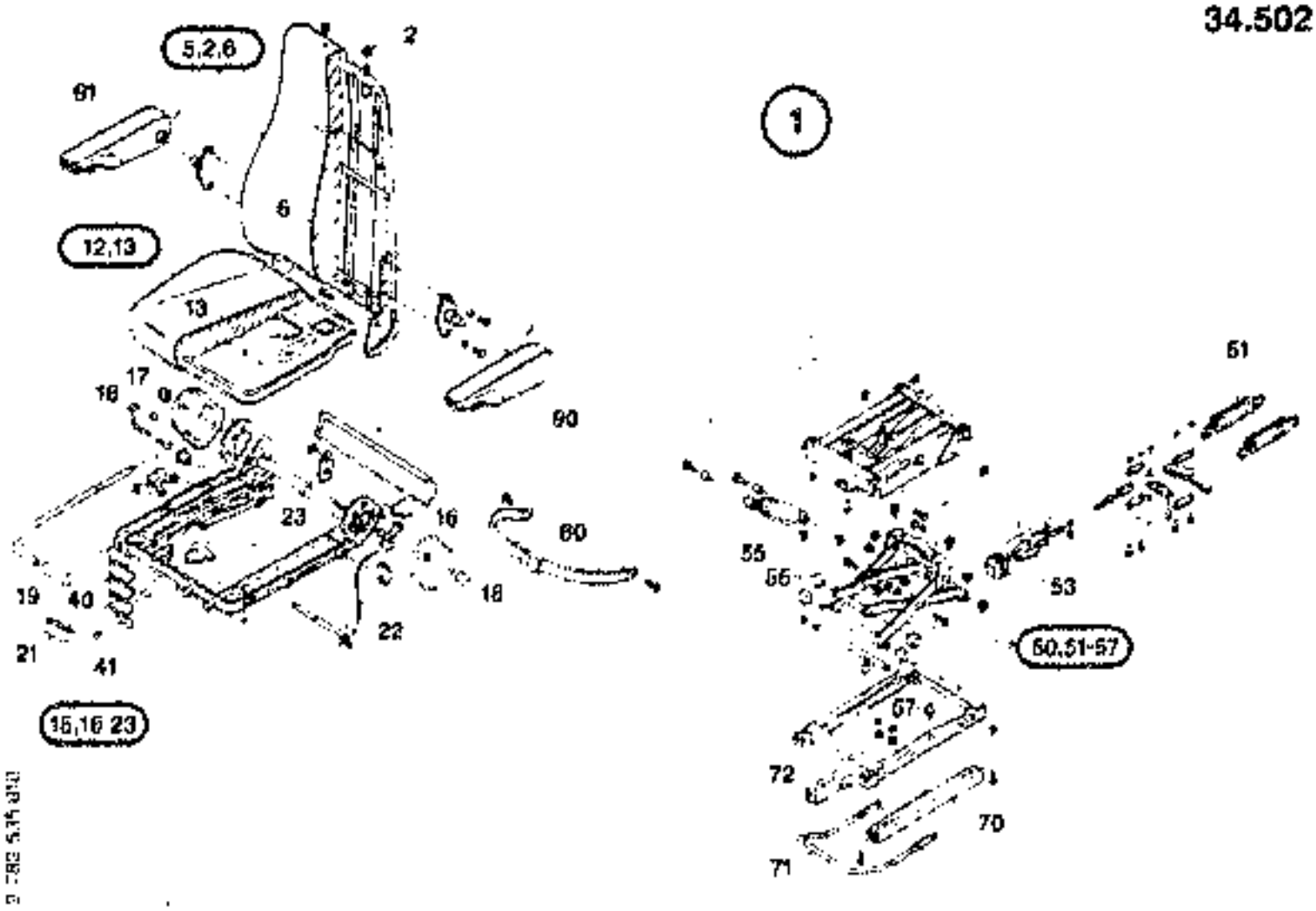

34.502

SEAT

FIATALLIS

T 2782535 - 000
B 2782535 - 010

FX600 106101 - .....

Item	Quan	ME	Part No	Description
053	1	00	73176132	HAND WHEEL
055	1	00	73171075	SHOCK ABSORBER
056	4	00	73171076	IDLER ROLLER
057	2	00	73171077	BUMPER
070	1	00	73171078	RAIL
071	1	00	73171080	STRAP
072	1	00	73171081	RAIL
080	1	00	73176133	SAFETY BELT
090	1	00	73171083	ARM REST.LEFT
091	1	00	73171084	ARM REST.RIGHT

ME 00 = Stock/spare 10 = m 20 = m² 30 = m³ 40 = kg 50 = l (litre)

1998-03-10

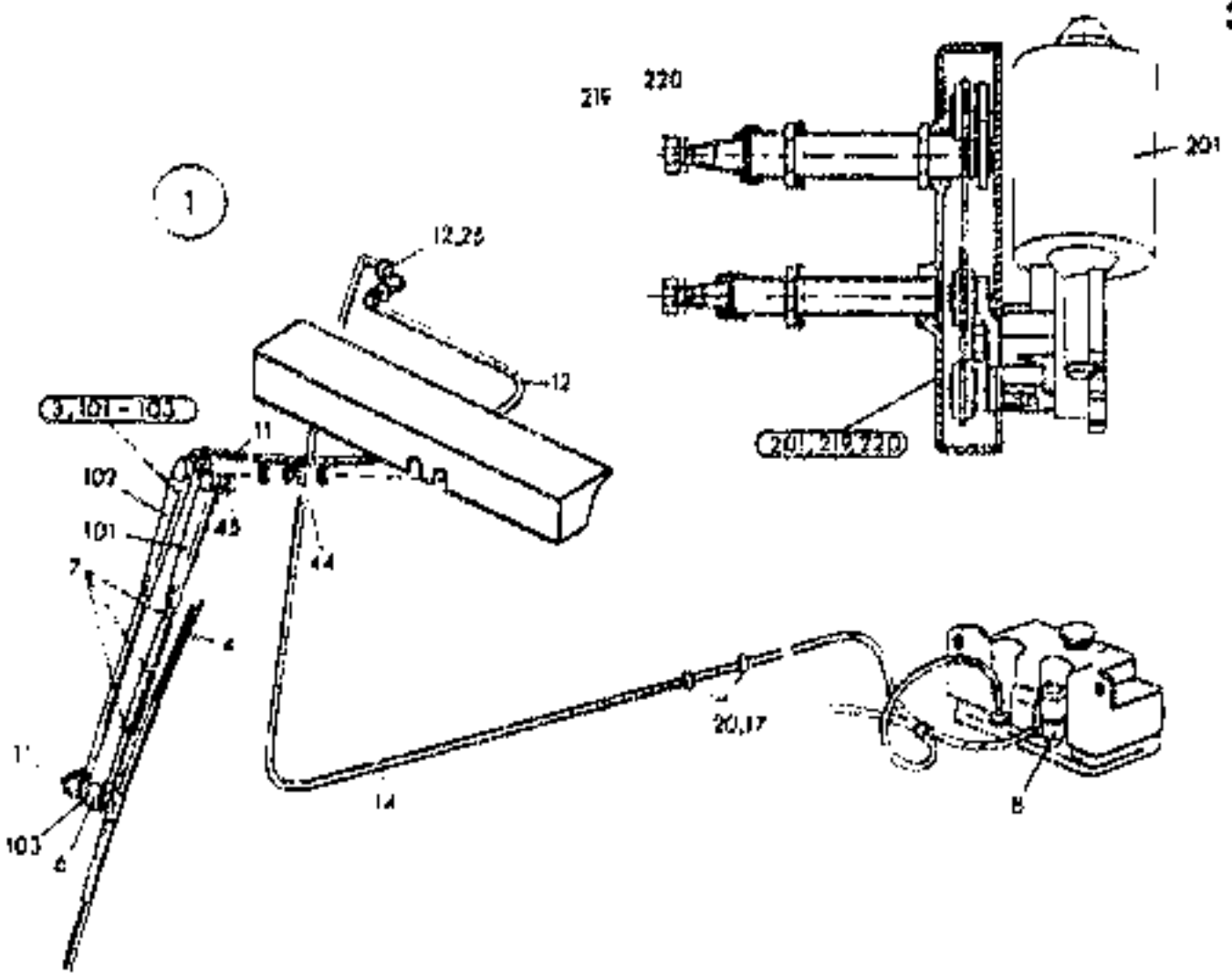

2 344 916 (03)

WINDSCREEN WIPER INSTALL.MATERIAL

34.630

FIATALLIS

T 2444916 - 001
B 2444916 - 010

FX600 100101 -

Item	Quan.	ME	Part No.	Description
001	1	00	**73171101**	WINDSCREEN WIPER
003	1	00	**73171102**	LEVER
004	1	00	**73171106**	WIPER BLADE
005	1	00	**73171108**	INJECTOR
007	3	00	**73171109**	CLAMP
008	1	00	**73171110**	CHECK VALVE
011	1	00	**73171111**	RUBBER HOSE
012	3	00	**73171112**	SOCKET
014	5.50	13	**73171025**	HOSE
017	8	00	**73171113**	PLATE
020	7	00	**73171114**	NOZZLE GROMMET
025	1	00	**73171115**	SCREWING
043	2	00	**73170130**	DISK WASHER
044	2	00	**73171116**	DISK WASHER
045	1	00	**73171117**	LOCKING PIN
100	1	00	**73171118**	WIPER SYSTEM
101	1	00	**73171103**	WIPER ARM
102	1	00	**73171104**	LEVER

ME 00 = Stück/pcs. 13 = m 26 = m² 30 = m³ 43 = kg 50 = Liter

1999-03 10

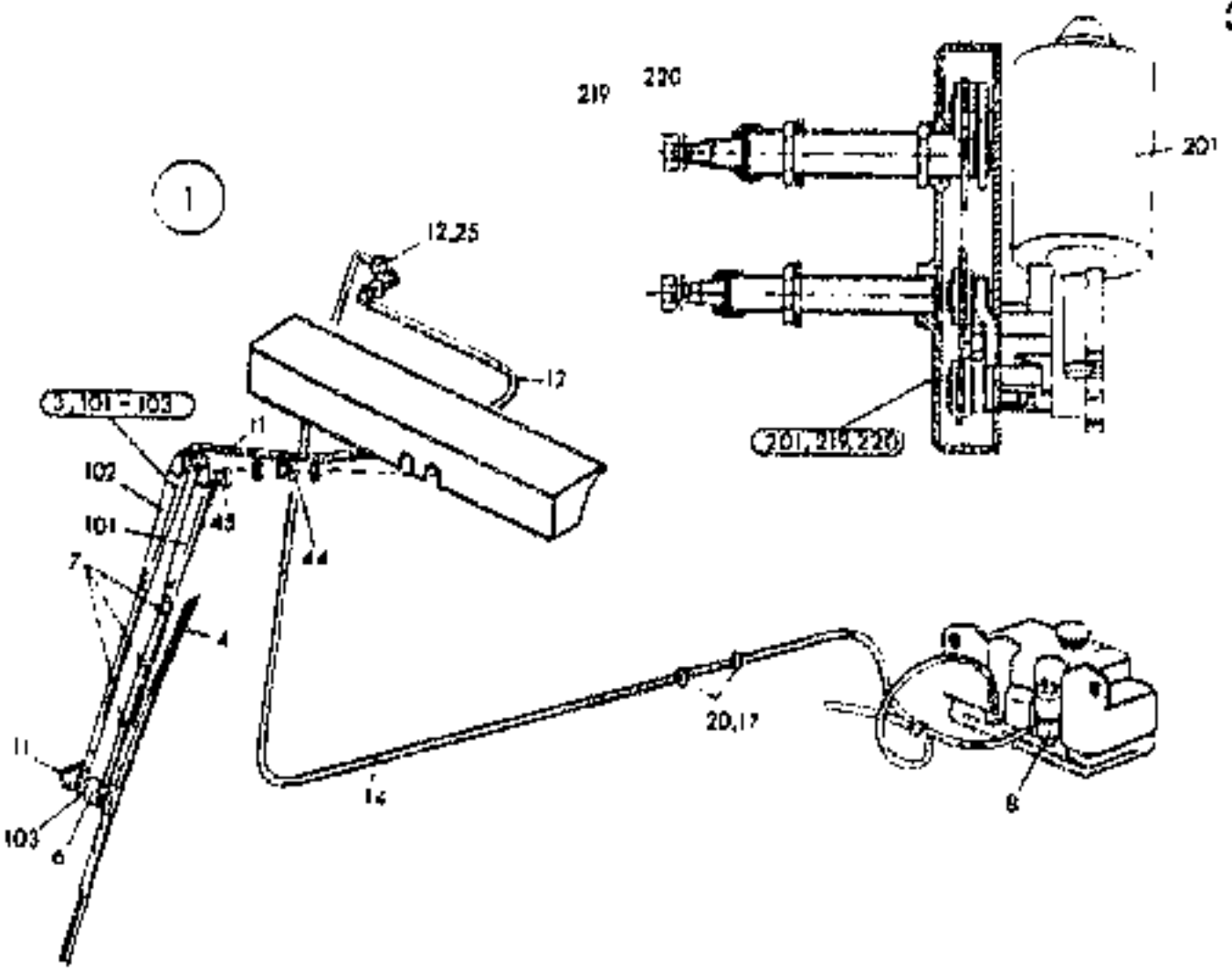

34.630

WINDSCREEN WIPER INSTALL.MATERIAL

T 2444916 - 001
B 2444916 - 010

FX600 106101 - .. ..

Item	Quan	ME	Part No	Description
103	1	00	73171105	BEARING
201	1	00	73171120	WIPER MOTOR
219	2	00	73170151	HEXAGON NUT
220	2	00	73171121	SPRING WASHER

ME 00 = Stück/piece 13 = m 26 = m² 33 = m³ 43 = kg 50 = l (litre)

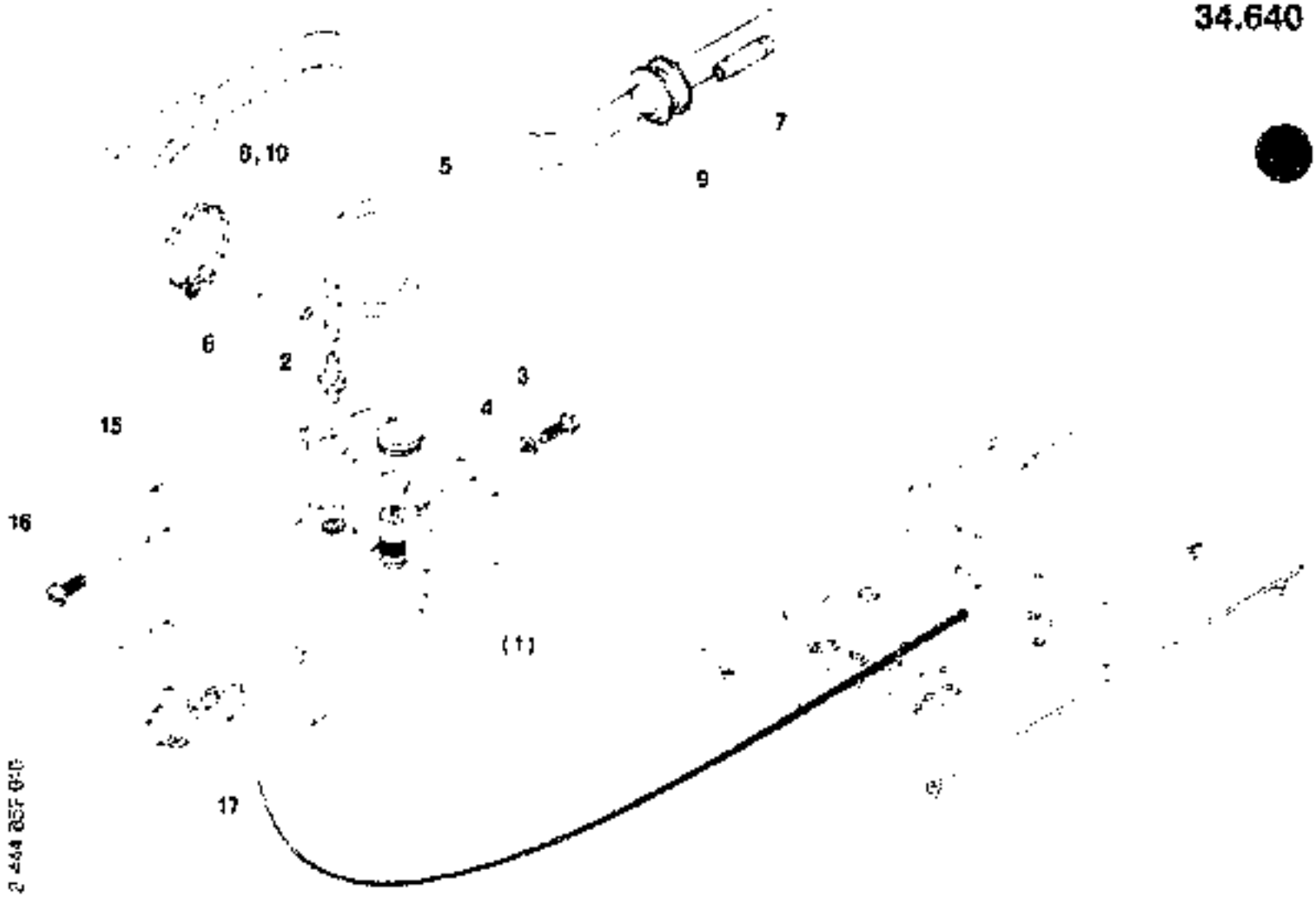

2 444 BSF 0-B

34.640

WINDSCREEN WASHER INSTALL.MATERIAL

T 2444852 - 000
B 2444852 - 070

FX600 106101 - ...

Item	Quan.	ME	Part No.	Description
001	1	00		34.642 2463302 WATER RESERVOIR WINDSCREEN WASHER
002	1	00	73171024	SOCKET
003	2	00	73170205	HEXAGON BOLT
004	2	00	73170160	DISK WASHER
005	1,60	13	73171026	HOSE
006	1,70	13	73171025	HOSE
007	1	00	73171026	CONNECTION
008	3	00	73170685	RIBBON
009	1	00	73171027	BULKH. CABLE GLAND
010	2	00	73171028	FASTENING PARTS
015	1	00	73171029	COVER
016	2	00	73171030	CLAMPING SCREW
017	1	00	73171032	FASTENING

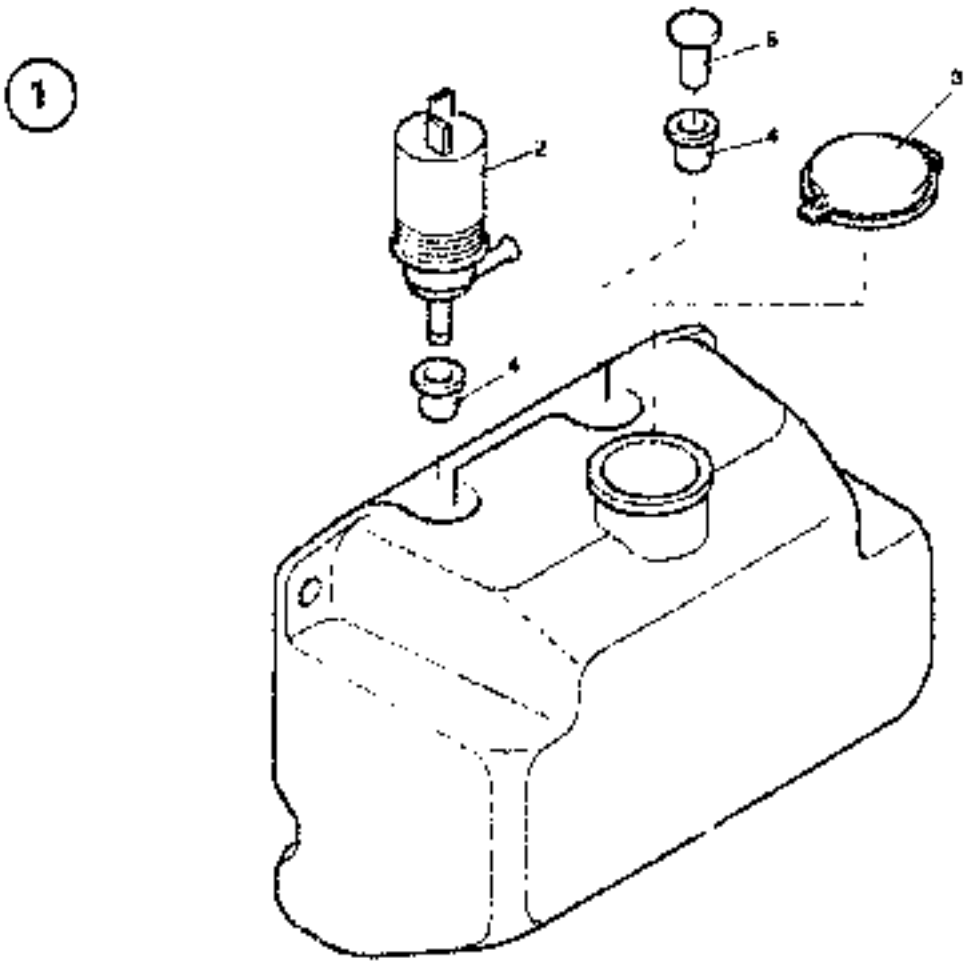

2 463 392 001
Blatt 1 1

34.642

WATER RESERVOIR WINDSCREEN WASHER

FIATALLIS

T 2463302 - 000
B 2463302 - 001

FX600 106101 - ....

Item	Quan.	ME	Part No	Description
001	1	00	**73171455**	WATER RESERVOIR
002	1	00	**73171456**	PUMP
003	1	00	**73171457**	LID
004	2	00	**73171458**	NOZZLE GROMMET
005	1	00	**73171459**	PLUG

ME 00 = Quickpiece 13 = m 20 = m² 30 = m³ 43 = kg 60 = l (litre)

1995-03-10

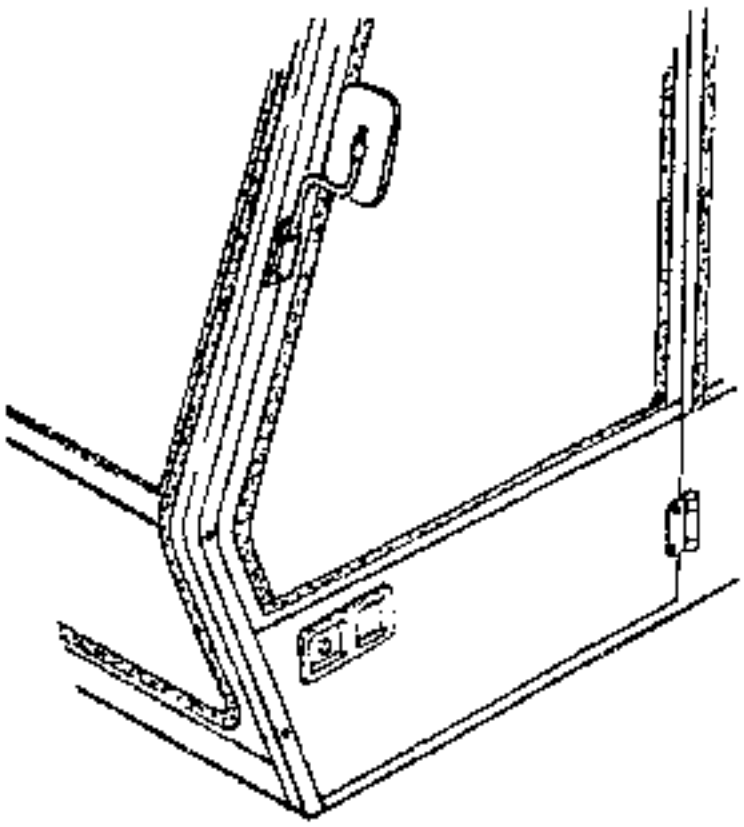

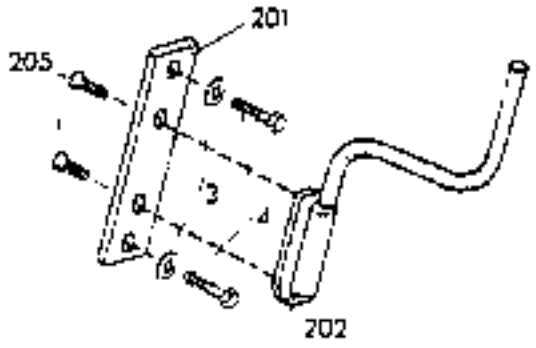

1 807 741.010

MIRROR SUPPORT INSTALL.MATERIAL

T 1907741 - 003
B 1907741 - 010

FX800 106101 - ....

Item	Quan	ME	Part No	Description
003	2	00	73170167	LOCK WASHER
004	2	00	73170205	HEXAGON BOLT
201	1	00	73170992	PLATE
202	1	00	73170993	BRACKET
205	2	00	73170994	CONTER-SUNK SCREW

ME: 00 = Stück/pieco 13 = m 26 = m² 39 = m³ 43 = kg 50 = l (litro)

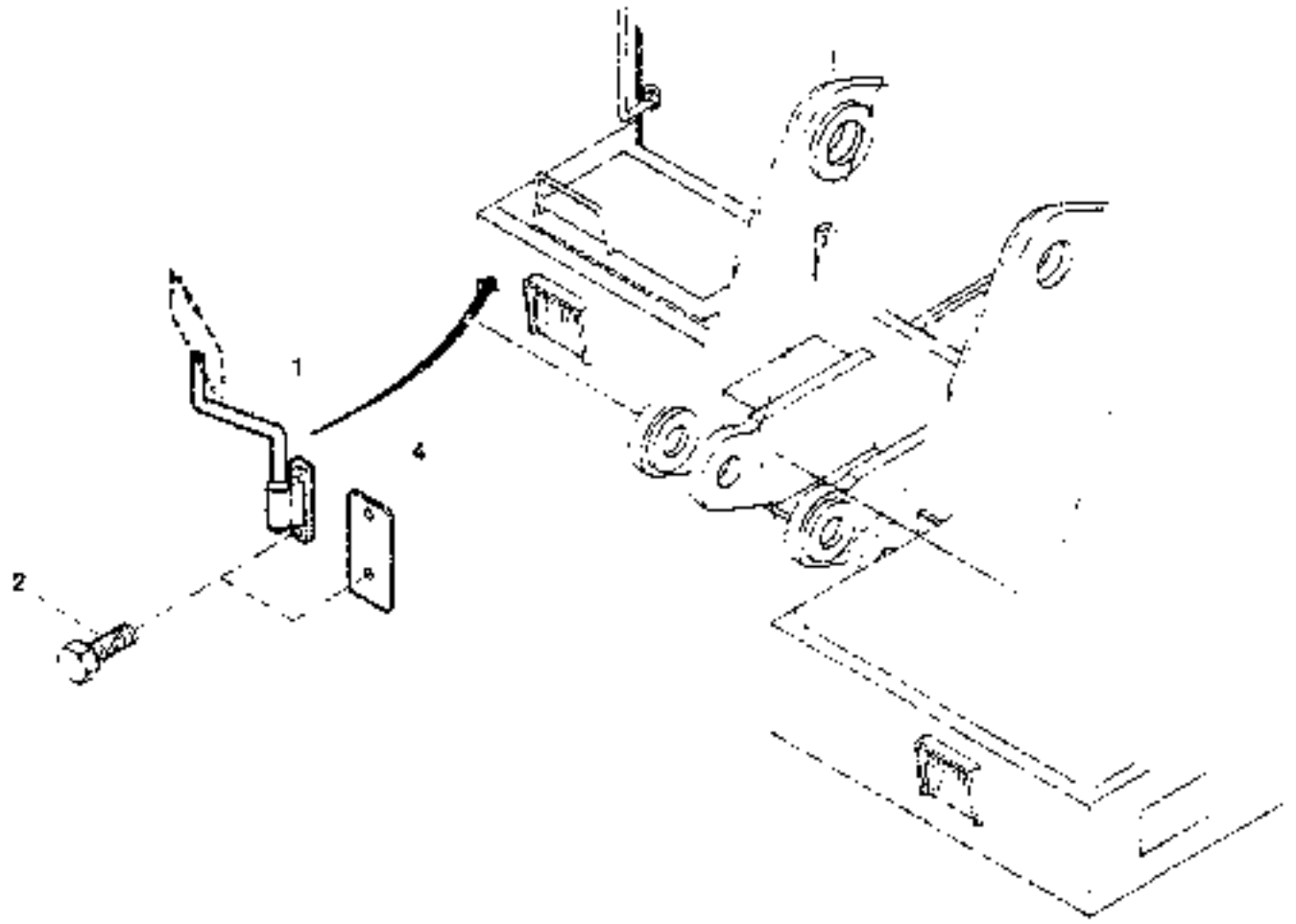

2 284 173 011

35.060

MIRROR SUPPORT INSTALL.MATERIAL

T 2284173 - 001
B 2284173 - D11

FX600 106101 - .....

Item	Quan	ME	Part No	Description
J1	1	00	73170993	BRACKET
002	4	00	73170205	HEXAGON BOLT
004	1	00	73170998	COVER PLATE

ME: 00 = Stück/piece 13 = m 28 = m^2 39 = m^3 43 = kg 50 = l (litre)

1998-09-10



2 443 940.010

35.060

MIRROR SUPPORT INSTALL.MATERIAL

T 2443940 - 000
B 2443940 - 010

FX600 196101 - .. ...

Item	Quan	ME	Part No	Description
001	1	00	**73170997**	MIRROR SUPPORT
002	2	00	**73170210**	HEXAGON BOLT
003	2	00	**73170215**	HEXAGON NUT
004	2	00	**73170180**	LOCK WASHER

ME. 00 = Stuckpiece 10 = m 20 = m^2 30 = m^3 40 = kg 50 = (litre)

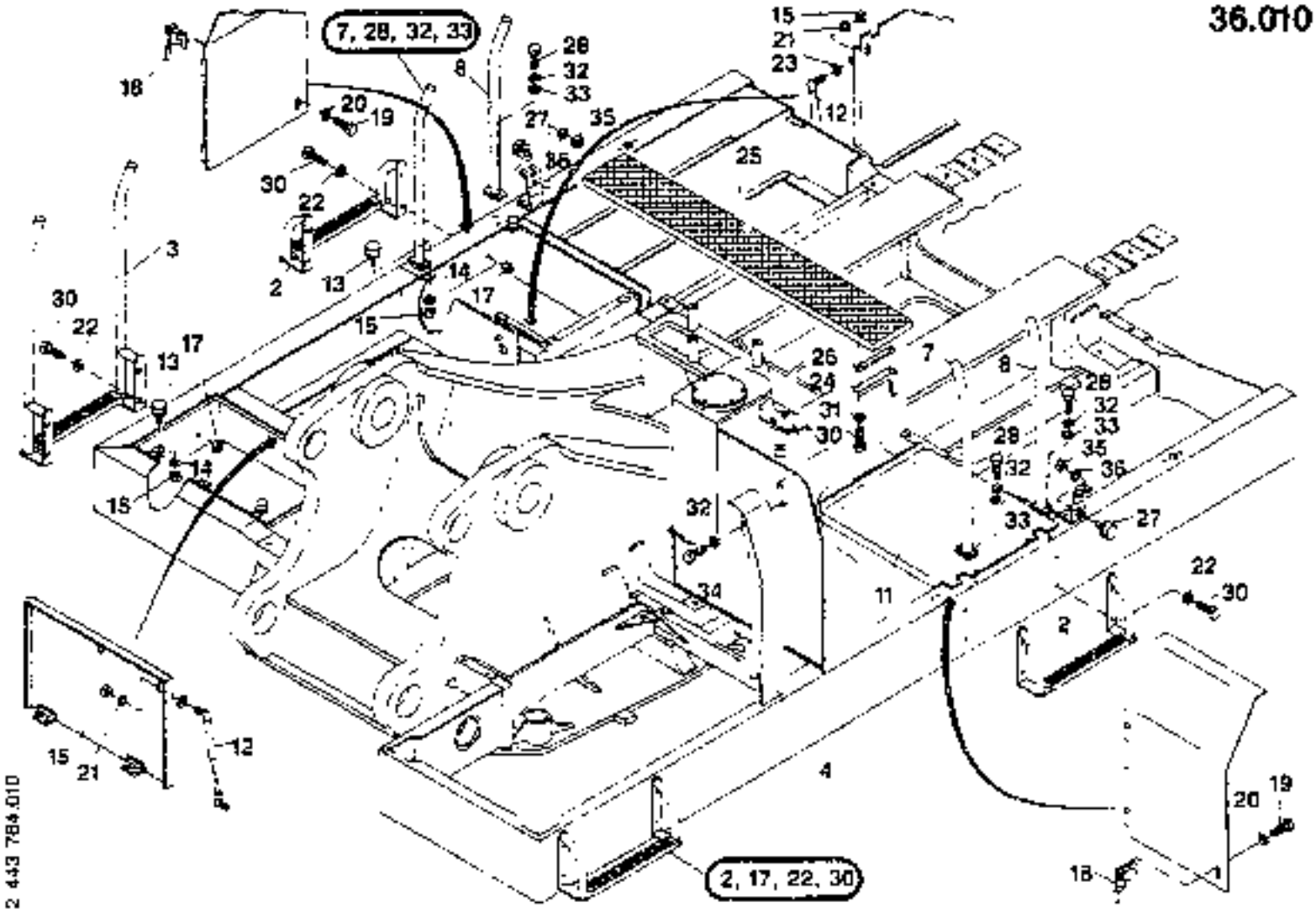

PANELING INSTALL.MATERIAL

FX600 106101 - .....

T 2443764 - 001
B 2443764 - 010

Item	Quan.	ME	Part No.	Description
002	3	00	**73170151**	STEPS
003	1	00	**73170152**	STEPS
004	1	00	**73170153**	PANELING
007	2	00	**73170154**	HANDLE
008	2	00	**73171565**	HANDLE
011	1	00	**73170157**	COVER
012	2	00	**73170158**	GAS SPRING
013	4	00	**73170159**	BUMPER
014	4	00	**73170160**	DISK/WASHER
015	8	00	**73170161**	HEXAGON NUT
017	16	00	**73170162**	HEXAGON NUT
018	4	00	**73170163**	FASTENING
019	12	00	**73170164**	HEXAGON BOLT
020	12	00	**73170165**	LOCK WASHER
021	4	00	**73170167**	LOCK WASHER
022	16	00	**73170168**	DISK/WASHER
023	4	00	**73170170**	DISK/WASHER
024	2	00	**73170171**	BRACKET

ME: 00 = Stück/piece 13 = m 26 = m² 39 = m³ 43 = kg 50 = l (litre)

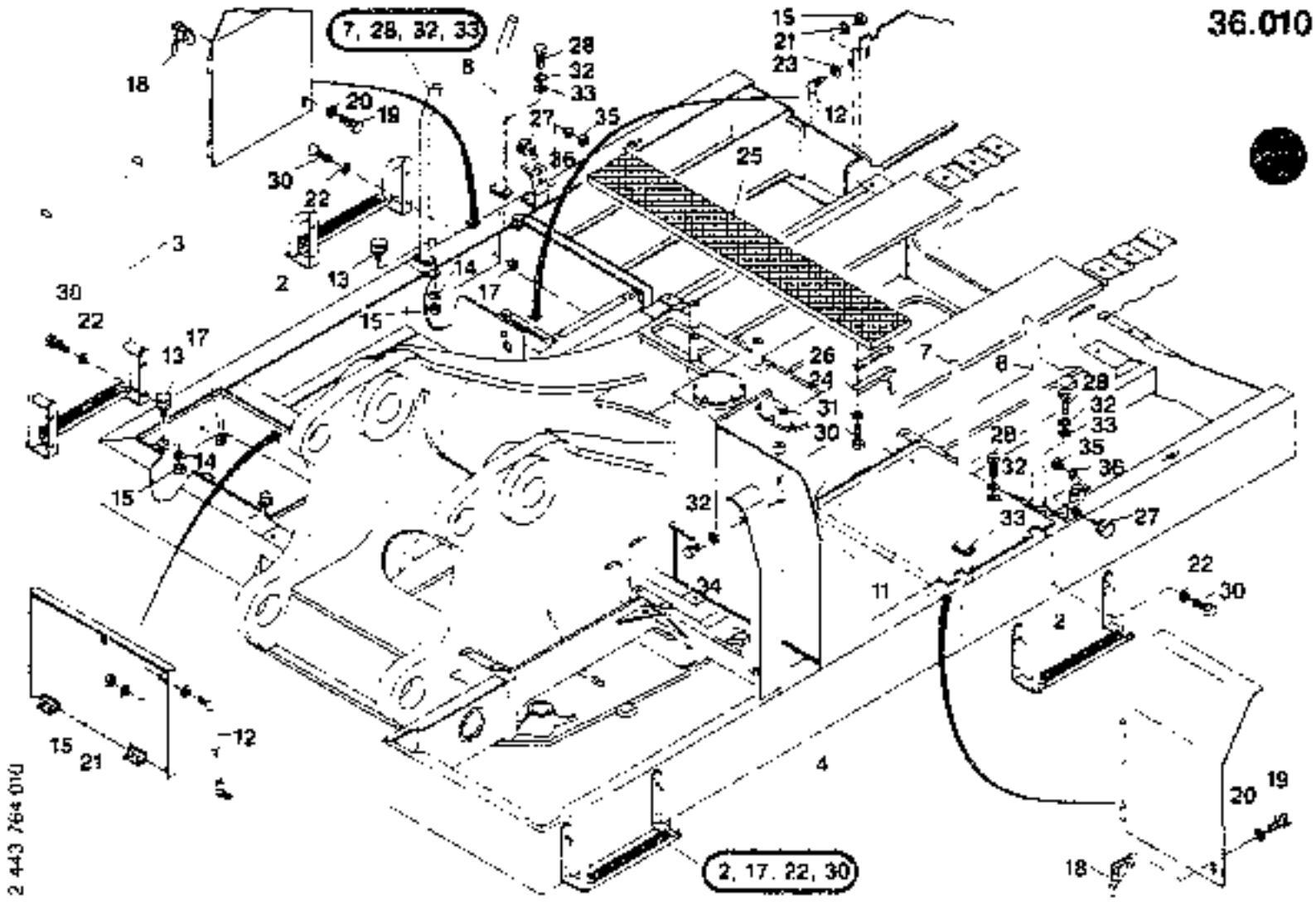

PANELING INSTALL.MATERIAL

FIATALLIS

T 2443764 - 001
B 2443764 - 010

FX600 106101 - .....

Item	Quan.	ME	Part No	Description
025	1	00	**73170172**	SAFETY GRILL
026	2	00	**73170173**	BRACKET
027	4	00	**73170174**	BUMPER
028	8	00	**73170175**	HEXAGON BOLT
029	4	00	**73170176**	HEXAGON BOLT
030	24	00	**73170177**	HEXAGON BOLT
031	27	00	**73170178**	LOCK WASHER
032	8	00	**73170180**	LOCK WASHER
033	8	00	**73170182**	DISK-WASHER
034	3	00	**73170183**	HEXAGON BOLT
035	4	00	**73170184**	HEXAGON NUT
036	12	00	**73170185**	DISK-WASHER

ME: 00 = Stück/piece 13 = m 26 = m² 39 = m³ 43 = kg 50 = l (litre)

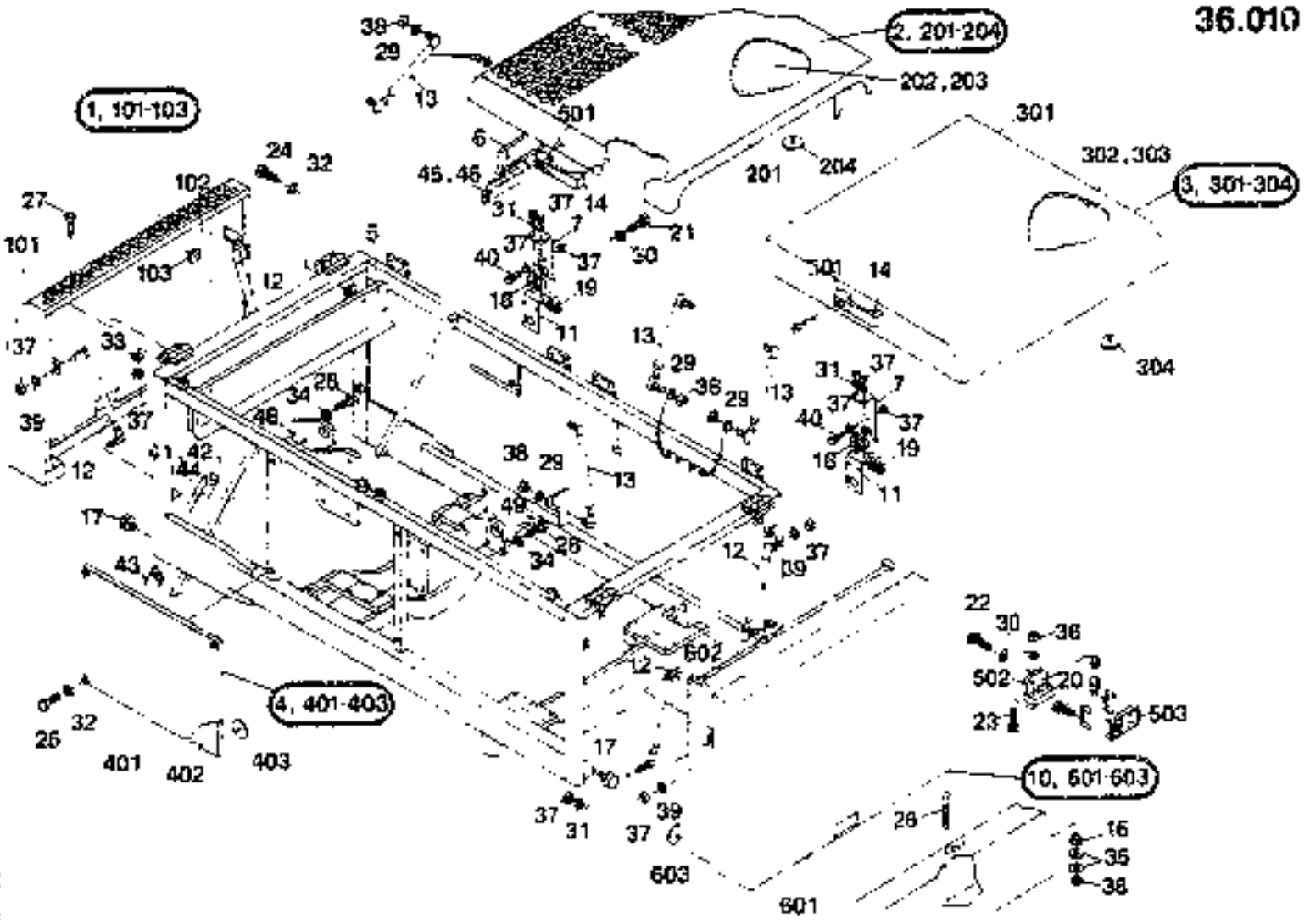

PANELING INSTALL.MATERIAL

36.010

FIATALLIS

T 2 195254 - 000
B 2 455254 - 010

FX600 · 106101 · .....

Item	Quan.	ME	Part No.	Description
001	1	00	**73170186**	BONNET
002	1	00	**73170187**	LID
003	1	00	**73170188**	LID
004	1	00	**73170189**	WALL
005	1	00	**73170190**	WALL
006	1	00	**73170191**	WALL
007	2	00	**73170192**	STRAP
009	4	00	**73170193**	STRAP
010	1	00	**73170194**	BONNET
011	2	00	**73170195**	HOOK
012	4	00	**73170196**	GAS SPRING
013	4	00	**73170197**	SPRING
014	2	00	**73170198**	HANDLE
016	2	00	**73172289**	BUMPER
017	8	00	**73170159**	BUMPER
018	4	00	**73170200**	BUMPER
019	4	00	**73170201**	HEXAGON BOLT
020	6	00	**73170164**	HEXAGON BOLT

ME. 00 = Stück/piece 13 = m 26 = m² 39 = m³ 43 = kg 50 = l (litre)

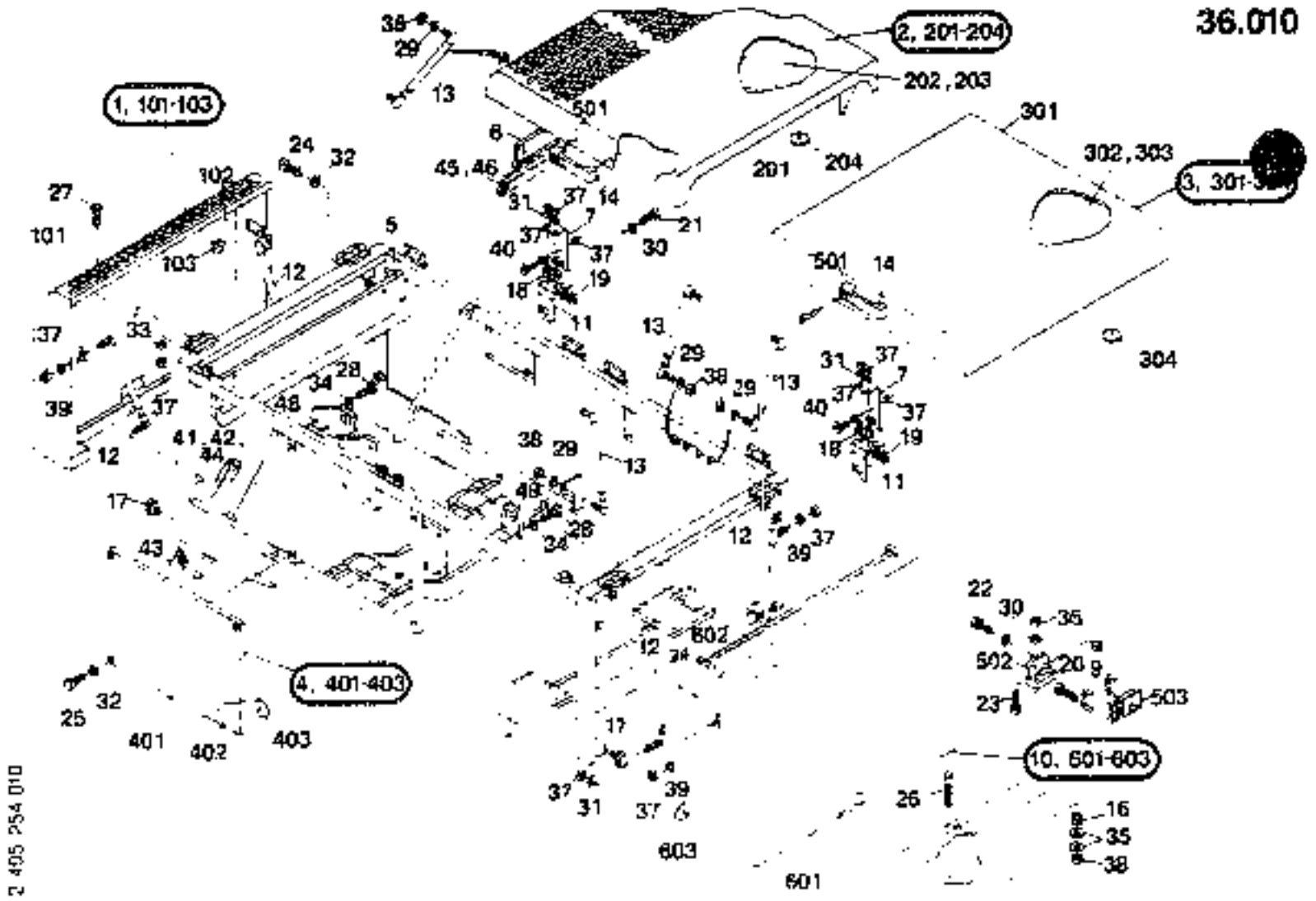

PANELING INSTALL.MATERIAL

36.010

FIATALLIS

T 2495254 - 000
B 2495254 - 010

FX600 106101 - .....

Item	Quan.	ME	Part No	Description
021	6	00	73170202	HEXAGON BOLT
022	8	00	73170203	HEXAGON BOLT
023	8	00	73170204	HEXAGON BOLT
024	9	00	73170205	HEXAGON BOLT
025	4	00	73170206	HEXAGON BOLT
026	2	00	73172267	PIN
027	16	00	73170208	CONTER-SUNK SCREW
028	4	00	73170210	HEXAGON BOLT
029	8	00	73170180	LOCK WASHER
030	22	00	73170185	DISK WASHER
031	28	00	73170160	DISK WASHER
032	13	00	73170211	DISK WASHER
033	16	00	73170212	DISK WASHER
034	6	00	73170213	DISK WASHER
035	2	00	73170214	DISK WASHER
036	12	00	73170184	HEXAGON NUT
037	32	00	73170161	HEXAGON NUT
038	12	00	73170215	HEXAGON NUT

ME 00 = Stück/piece 13 = 28 = m^2 39 = m^3 43 = kg 50 = l (litre)

1998-09-10

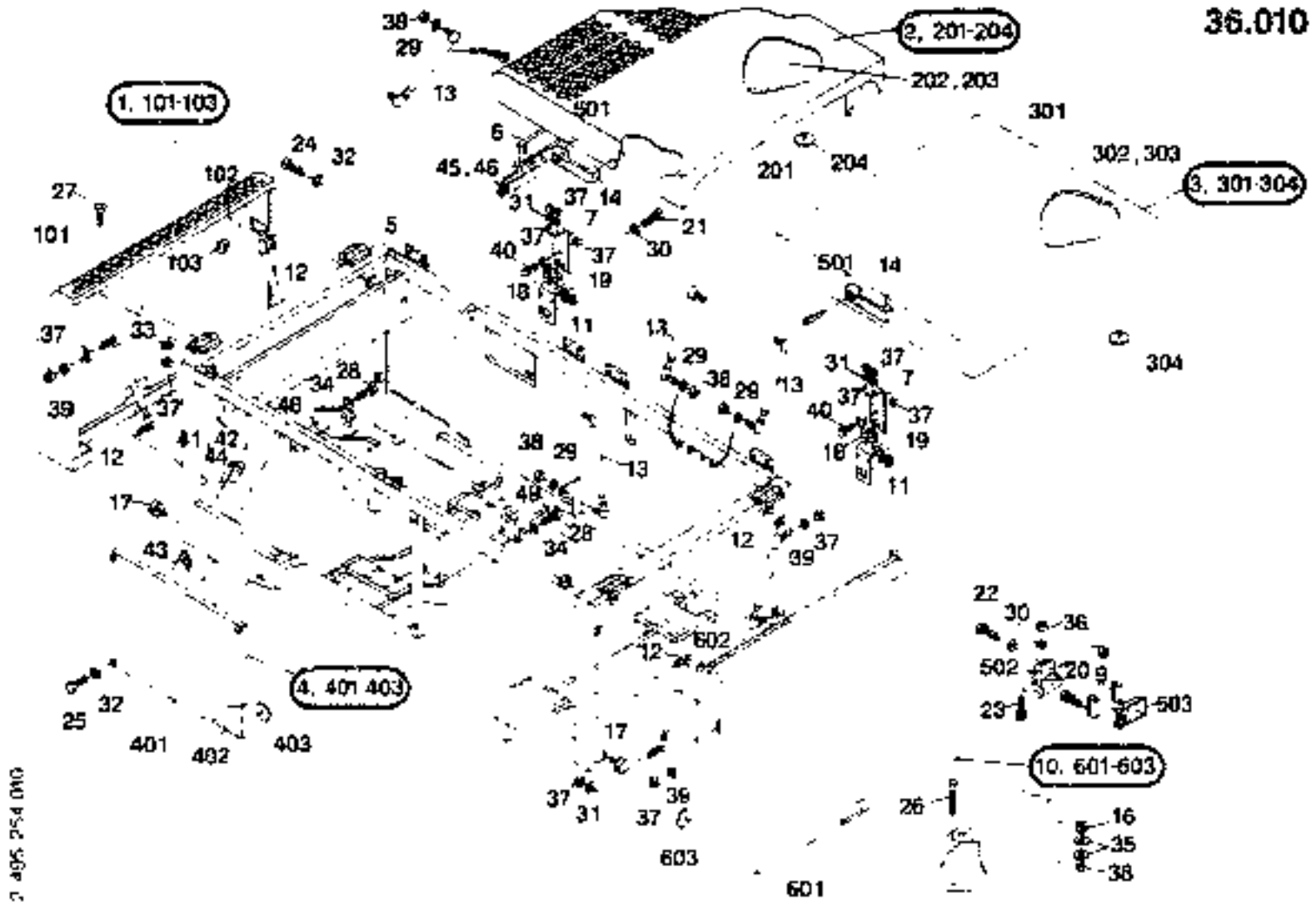

PANELING INSTALL.MATERIAL

FIATALLIS

FX600 106101 - .....

T 2495254 - 000
B 2495254 - 010

Item	Quan	ME	Part No	Description
039	4	00	73170167	LOCK WASHER
040	2	00	73170216	HEXAGON BOLT
041	1.36	13	73170217	PROFILE
042	1.17	13	73170217	PROFILE
043	1.25	13	73170217	PROFILE
044	0.19	13	73170218	PROFILE
045	0.07	13	73170218	PROFILE
046	1.31	13	73170218	PROFILE
048	1	00	73170219	PLATE
049	1	00	73170220	PLATE
101	1	00	73170221	BONNET
102	1	00	73170222	INSULATION
103	14	00	73170223	CLAMP
201	1	00	73170224	LID
202	1	00	73170225	INSULATION KIT
203	1	00	73170226	INSULATION
204	9	00	73170223	CLAMP
301	1	00	73170227	BONNET

ME 00 = Stück/piece 13 = m 26 = m² 39 = m³ 43 = kg 50 = l (litre)

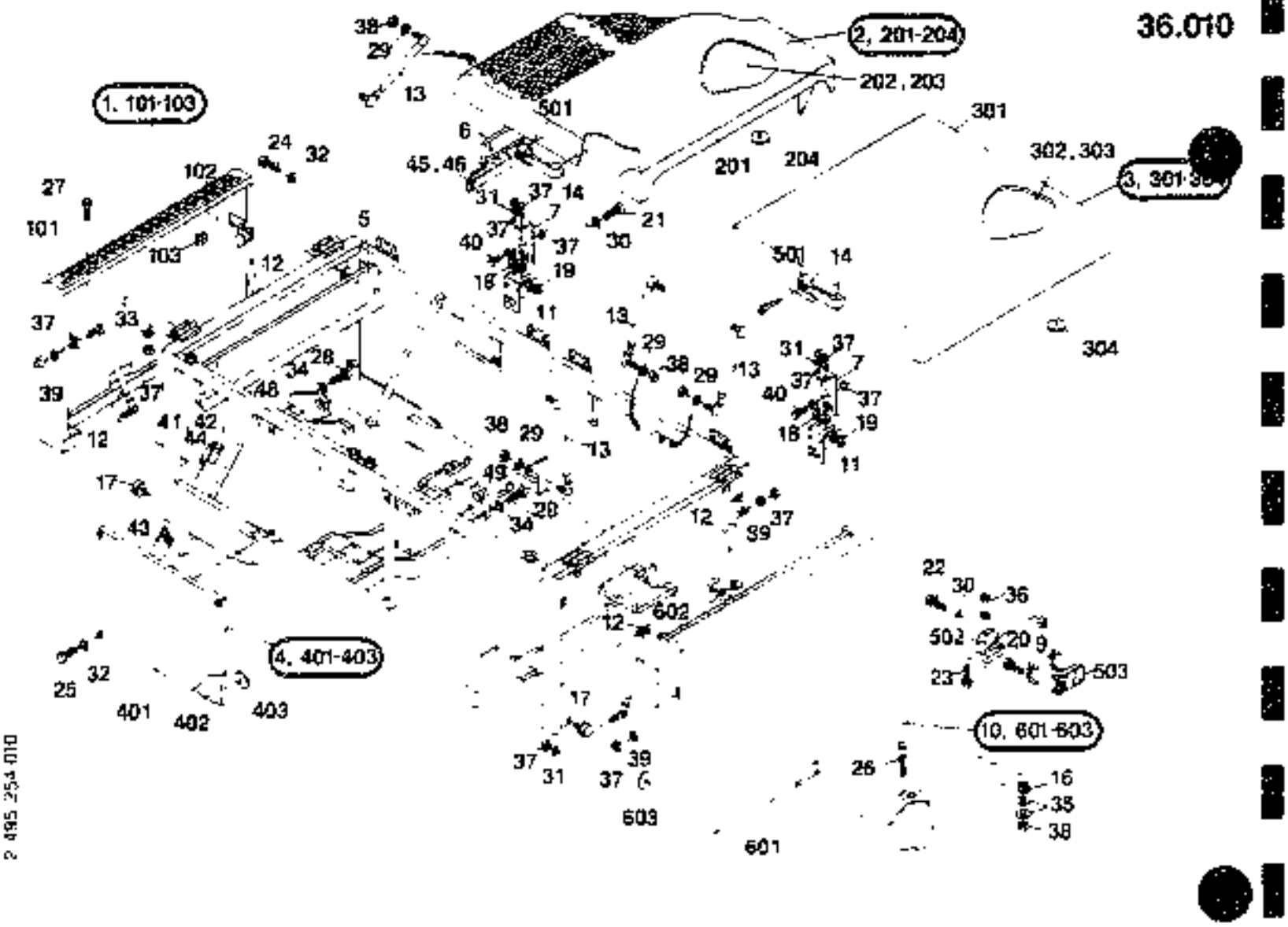

PANELING INSTALL.MATERIAL

FIATALLIS

FX600 106101 - . . .

T 2495254 - 000
B 2495254 - 010

Item	Quan	ME	Part No	Description
302	1	00	73170228	INSULATION KIT
303	1	00	73170229	INSULATION KIT
304	22	00	73170223	CLAMP
401	1	00	73170230	WALL
402	1	00	73170231	INSULATION
403	5	00	73170223	CLAMP
501	2	00	73170232	HANDLE
502	4	00	73170233	LOCK
503	2	00	73170234	HANDLE
601	1	00	73170236	BONNET
602	1	00	73170237	INSULATION
603	17	00	73170223	CLAMP

ME 00 = Each/piece 13 = m 26 = m² 39 = m³ 43 = kg 50 = l (litre)

COVER UPPER CARRIAGE

FIATALLIS

FX600 76027 - 76027

T 2782702 - 000
B 2782702 - 010

Item	Quan.	ME	Part No.	Description
001	0	00	**73175911**	COVER

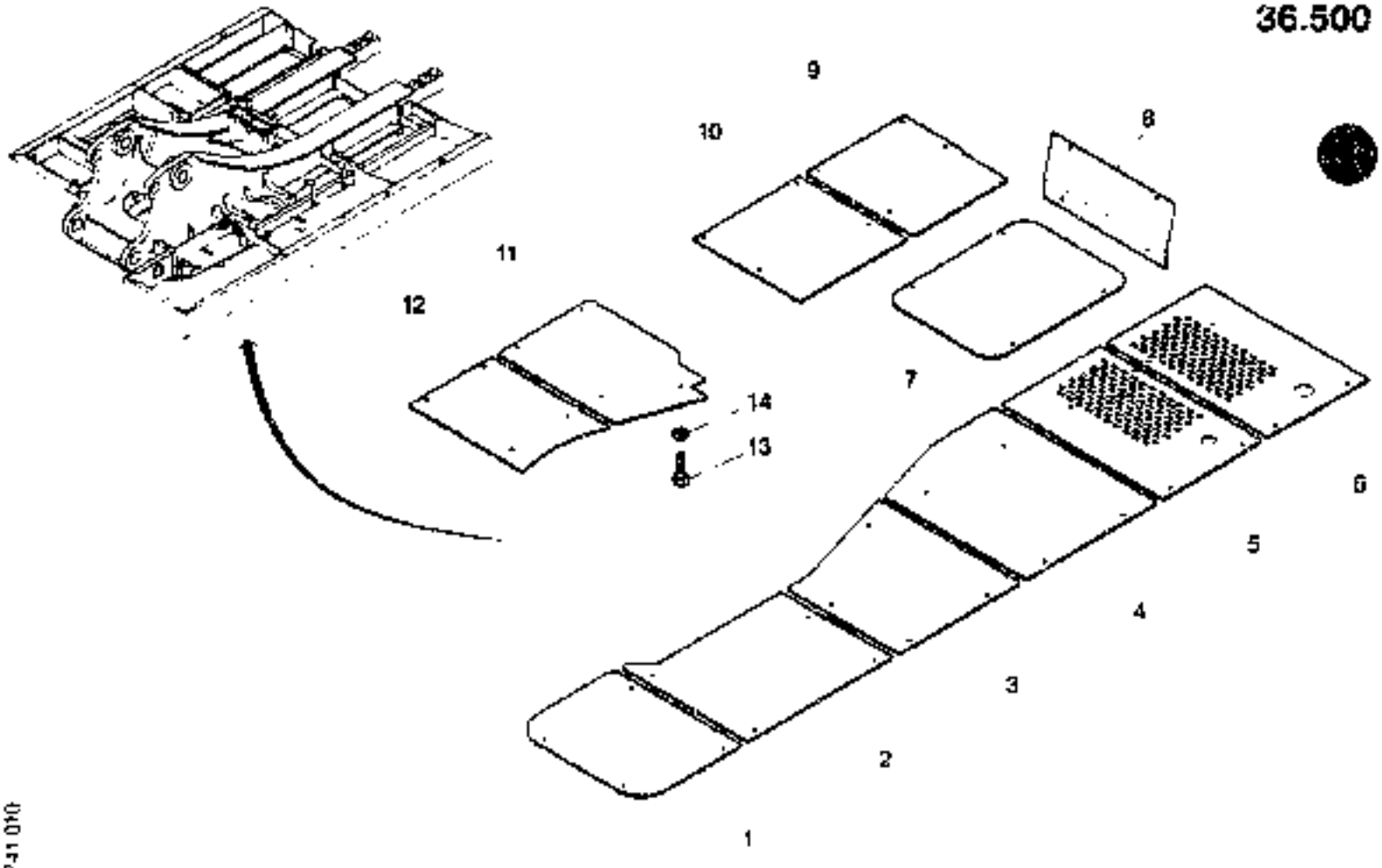

2 782 741 010

COVER UPPER CARRIAGE

T 2782741 - 000
B 2782741 - 010

FX600 106101 - ...

Item	Quan	ME	Part No	Descriptor
001	1	00	73176180	PLATE
002	1	00	73176181	PLATE
003	1	00	73176182	PLATE
004	1	00	73176183	PLATE
005	1	00	73176184	PLATE
006	1	00	73176185	PLATE
007	1	00	73176186	PLATE
008	1	00	73176187	PLATE
009	1	00	73176188	PLATE
010	1	00	73176189	PLATE
011	1	00	73176190	PLATE
012	1	00	73176191	PLATE
013	48	00	73170998	HEXAGON BOLT
014	48	00	73176024	DISK WASHER

ME 00 = Stuck/piece 10 = m 20 = m^2 30 = m^3 40 = kg 50 = Liter

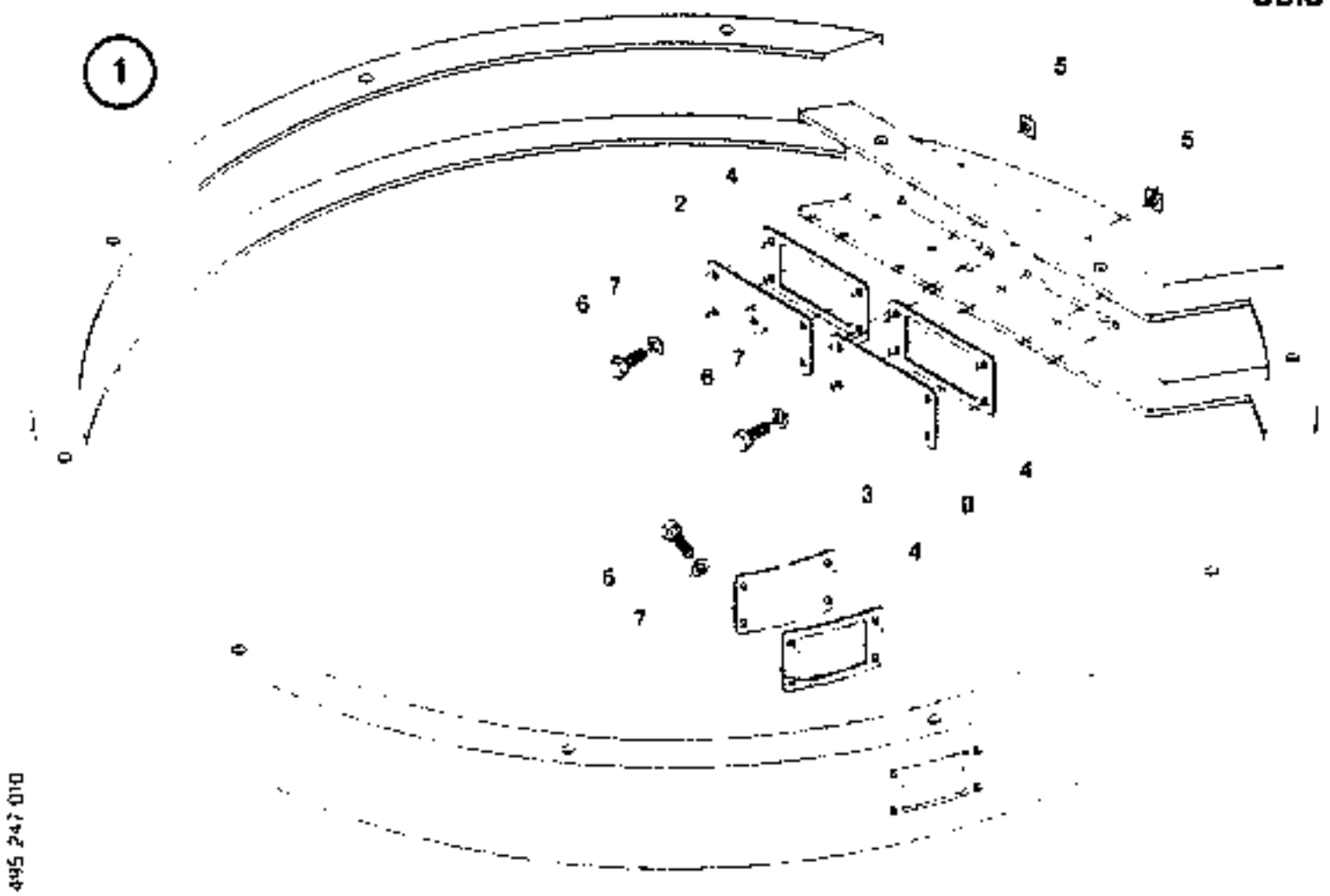

36.512

COVER SWING BEARING

FIATALLIS

FX600 108101 - ..

T 2495247 - 000
B 2495247 - 010

Item	Quan	ME	Part No	Description
001	1	00	**73170616**	COVER
002	1	00	**73170617**	LID
003	1	00	**73170618**	LID
004	3	00	**73170619**	GASKET
005	12	00	**73170620**	DUMMY NUT
006	12	00	**73170621**	HEXAGON BOLT
007	12	00	**73170185**	DISKWASHER
008	1	00	**73170622**	LID

ME 00 = Stück/pece 13 = m 25 = m² 39 = m³ 43 = kg 50 = l (litre)

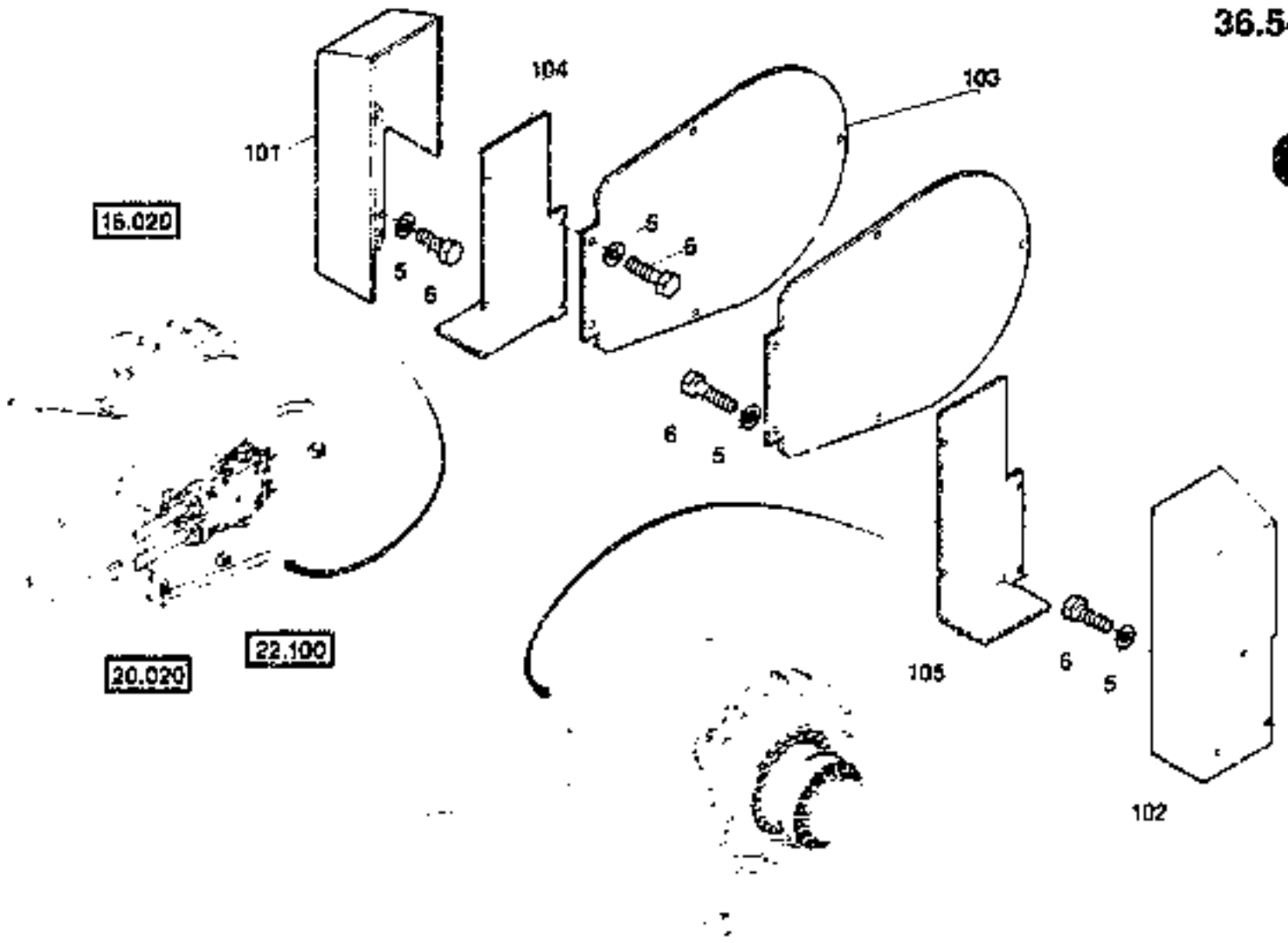

COVER TRAVEL GEAR

FX600 106101 -

T 2496907 - 000
B 2496907 - 010

Item	Quan	ME	Part No	Description
005	20	00	73170130	DISK WASHER
006	20	00	73170131	HEXAGON BOLT
101	1	00	73170132	FRAME
102	1	00	73170133	FRAME
103	2	00	73170134	LID
104	1	00	73170135	LID
105	1	00	73170136	LID

ME: 00 = Stück/piece 13 = m 25 = m² 39 = m³ 43 = kg 50 = l (litre)

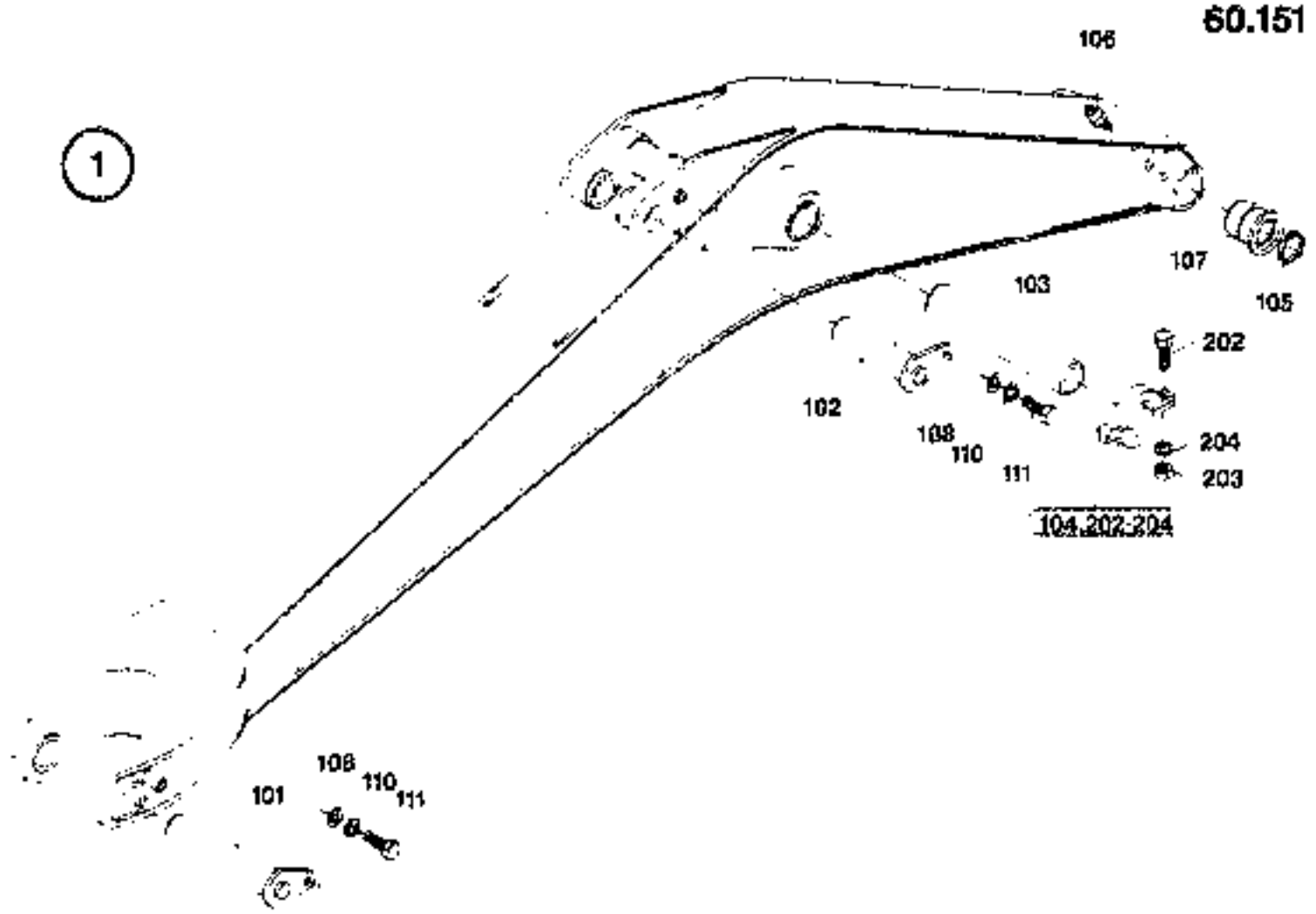

2 444 419 DED

MONOBLOC BOOM MOUNTING PARTS

T 2444419 - 000
B 2444419 - 010

FX600 105101 - .....

Item	Quan	ME	Part No	Description
001	1	00	73171338	MONOBLOC BOOM
101	1	00	73171339	PIN
102	1	00	73171340	PIN
103	1	00	73171341	PIN
104	2	00	73171342	RING
105	2	00	73171343	SCRAPER
106	2	00	73170138	GREASE NIPPLE
107	2	00	73171344	BUSHING
108	2	00	73170979	DISK WASHER
110	2	00	73170981	LOCK WASHER
111	2	00	73171345	HEXAGON BOLT
202	2	00	73171346	HEXAGON BOLT
203	2	00	73170162	HEXAGON NUT
204	2	00	73170178	LOCK WASHER

ME 00 = Stück/piece 13 = m 26 = m² 39 = m³ 43 = kg 50 = l (litre)

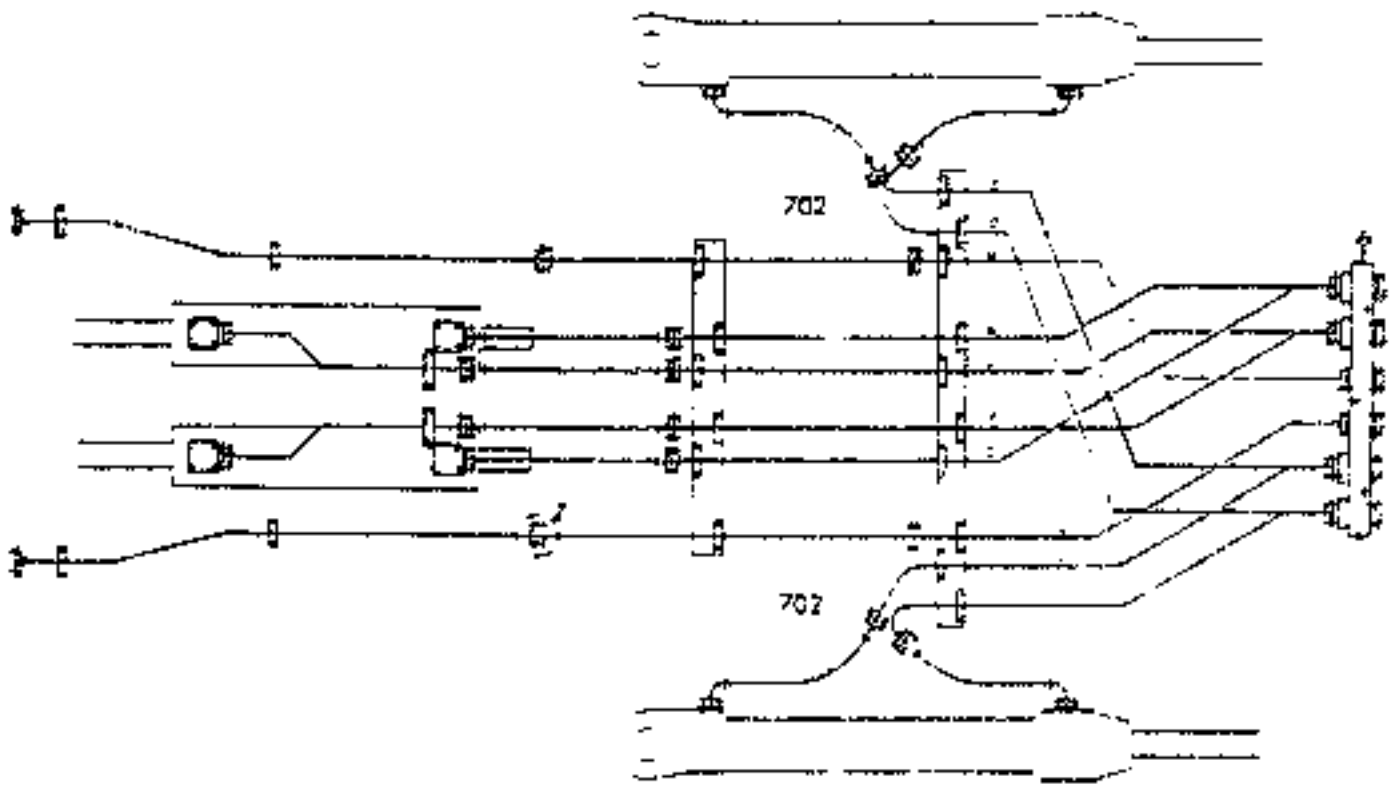

2 443 421 010

HYDRAULIC SYSTEM MONOBLOC BOOM O.RBS

60.160

T 2443421 - 000
B 2443421 - 010

FX600 106101 - . . .

Item	Quan	ME	Part No	Description
702	2	00	73171347	HOSE

ME 00 = Stück/piece 13 = m 20 = m² 30 = m³ 43 = kg 50 = l (litre)

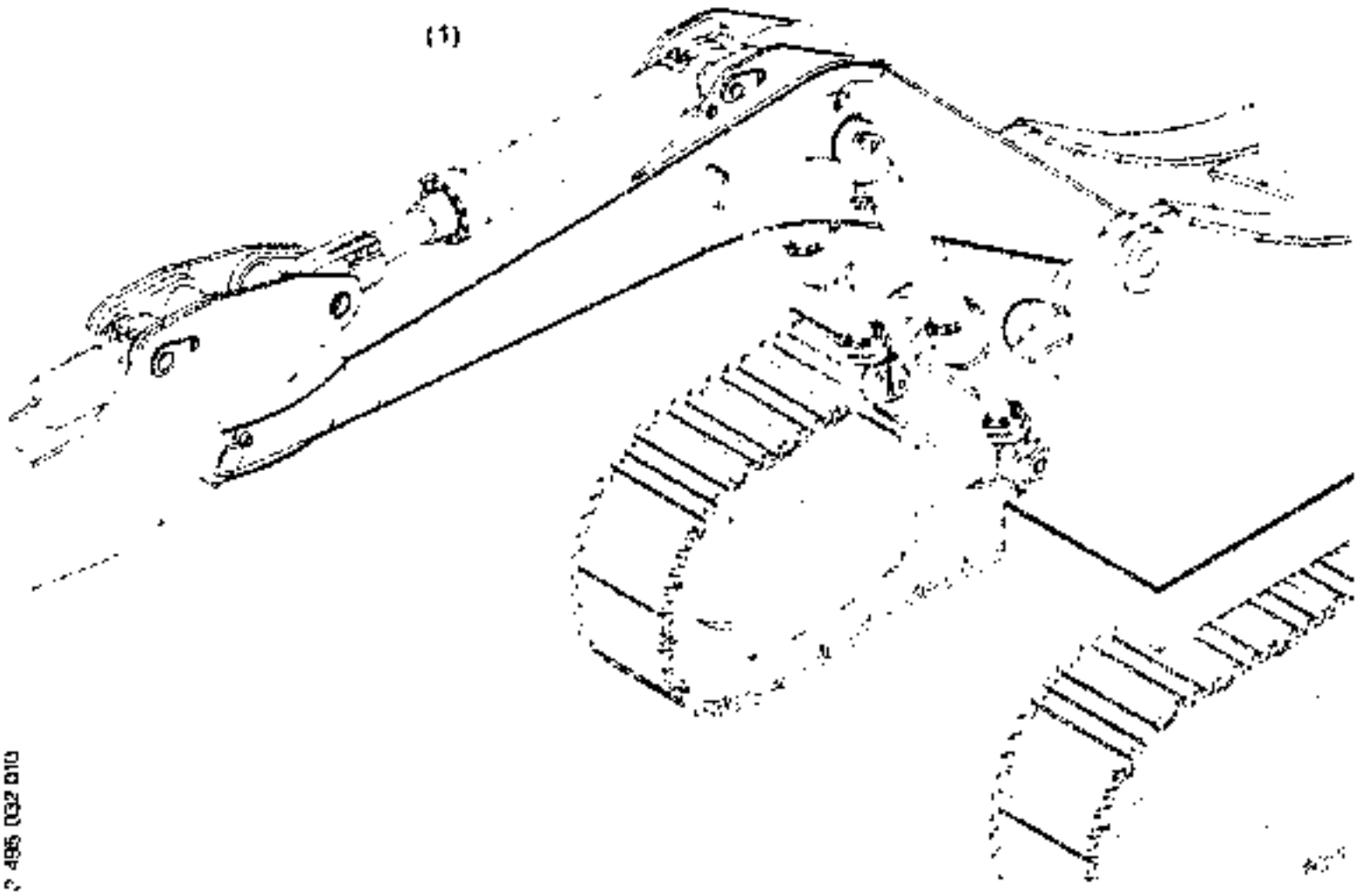

60.160

HYDRAULIC SYSTEM MONOBLOC BOOM 6,7M

T 2495032 - 000
B 2495032 - 010

FX600 106101 - .....

Item	Quan	ME	Part No	Description
001	1	00		**60.180 2495031** HYDRAULIC SYSTEM MONOBLOC BOOM
002	1	00		**30.200 2444234** GREASING SYSTEM MONO 6,7M

ME 00 = Giudizionico 10 = m 20 = m² 30 = m³ 40 = kg 50 = l (litri)

1002-09-10

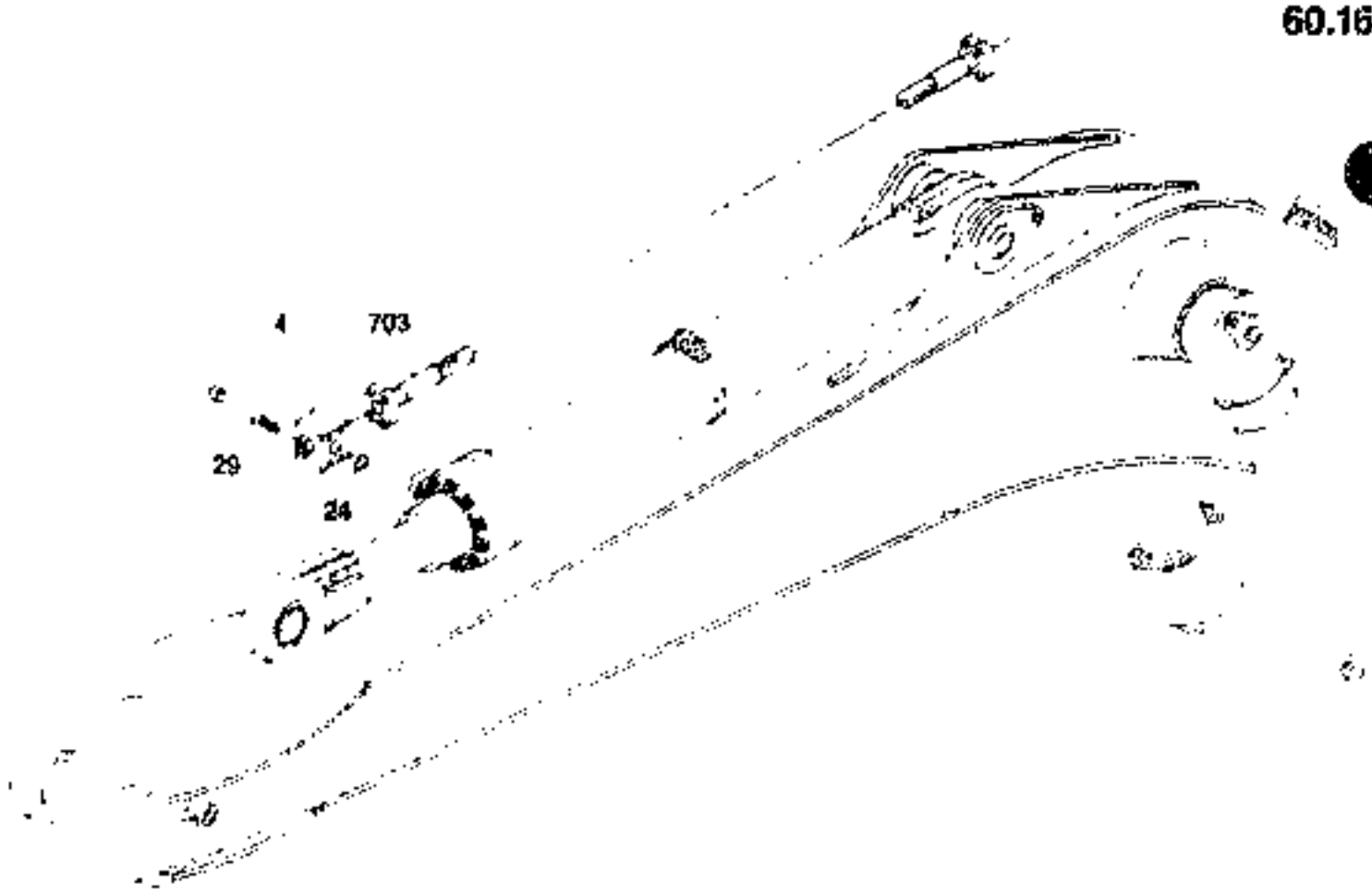

2 496 850 012

HYDRAULIC SYSTEM MONOBLOC BOOM 6.7M

T 2496850 - 000
B 2496850 - 010

FX600 106101 - .... ..

Item	Quan	ME	Part No	Description
004	1	00	73171366	FLANGE
024	1	00	73170346	SEALING RING
029	4	00	73171367	HEXAGON BOLT
703	1	00	73171369	HOSE

ME 00 = Stück/pcs 13 = m 20 = m² 39 = m³ 43 = kg 80 = l (litre)

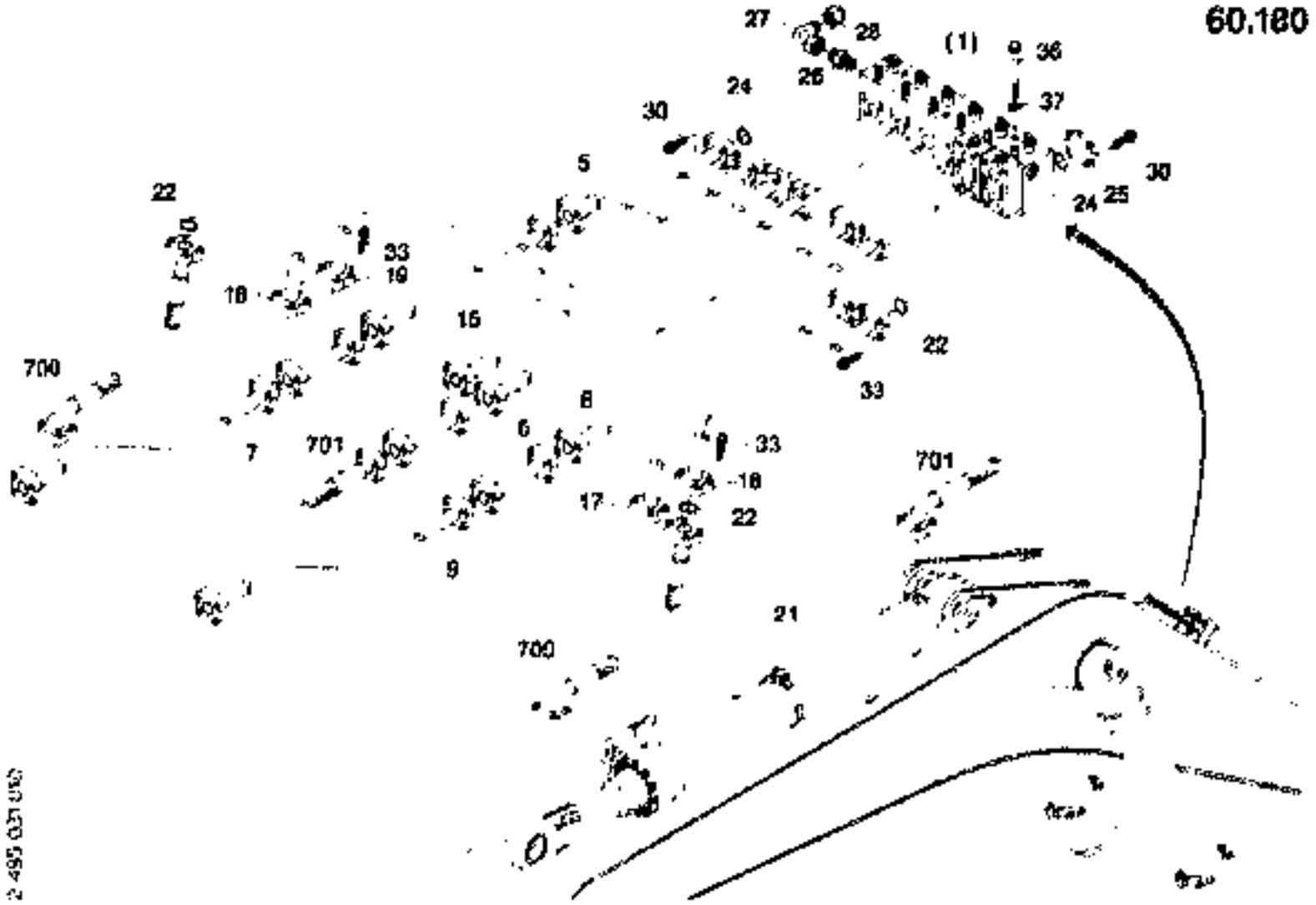

HYDRAULIC SYSTEM MONOBLOC BOOM

FIATALLIS

FX600 from 108101 - ... ..

T 2495031 - 001
B 2495031 - 010

Item	Quan	ME	Part No	Description
001	1	00		**22.402 2444089** DISTRIBUTOR
005	1	00	**73171348**	LINE
006	1	00	**73171349**	LINE
007	1	00	**73171350**	LINE
008	1	00	**73171351**	LINE
009	1	00	**73171352**	LINE
015	1	00	**73171353**	LINE
016	1	00	**73171354**	LINE
017	1	00	**73171355**	LINE
018	1	00	**73171356**	LINE
019	1	00	**73171357**	LINE
021	1	00	**73171358**	CLIP
022	8	00	**73170327**	SEALING RING
024	20	00	**73170346**	SEALING RING
026	1	00	**73170302**	SOCKET
027	1	00	**73170471**	SOCKET
028	1	00	**73171362**	PLUG

ME 00 = Standard 13 = m 26 = m² 30 = m³ 43 = kg 60 = l (litre)

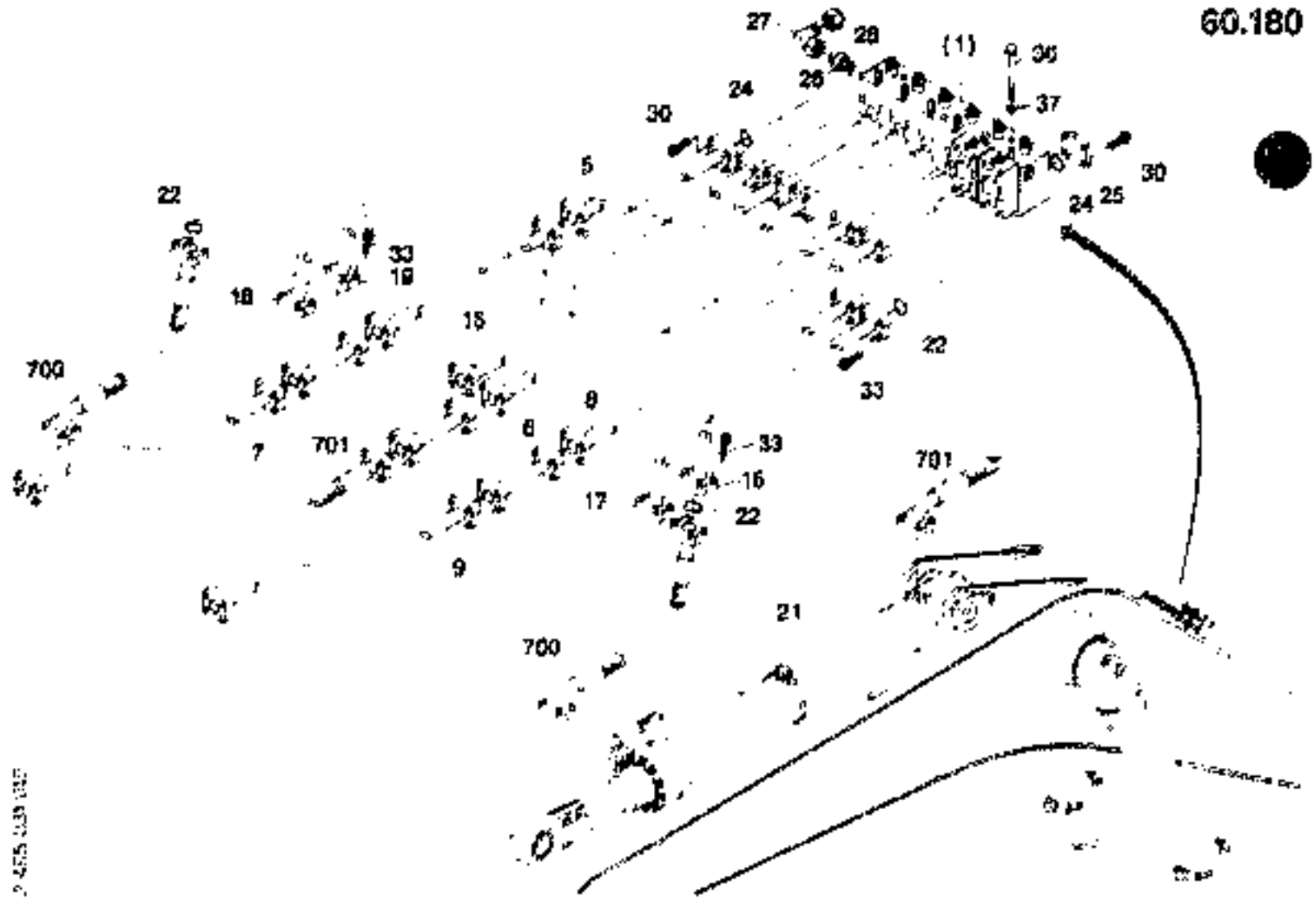

HYDRAULIC SYSTEM MONOBLOC BOOM

60.180

T 2495031 - 001
B 2495031 - 019

FX600 106101 - ...

Item	Quan	ME	Part No	Designation
030	80	00	73170347	12-POINT SCREW
033	32	00	73170328	12-POINT SCREW
036	3	00	73171363	HEXAGON BOLT
037	3	00	73170180	DISKWASHER
700	2	00	73171364	HOSE
701	1	00	73171365	HOSE

ME: 00 = Stückpers. 13 = m 25 = m² 33 = m³ 43 = kg 50 = Liter

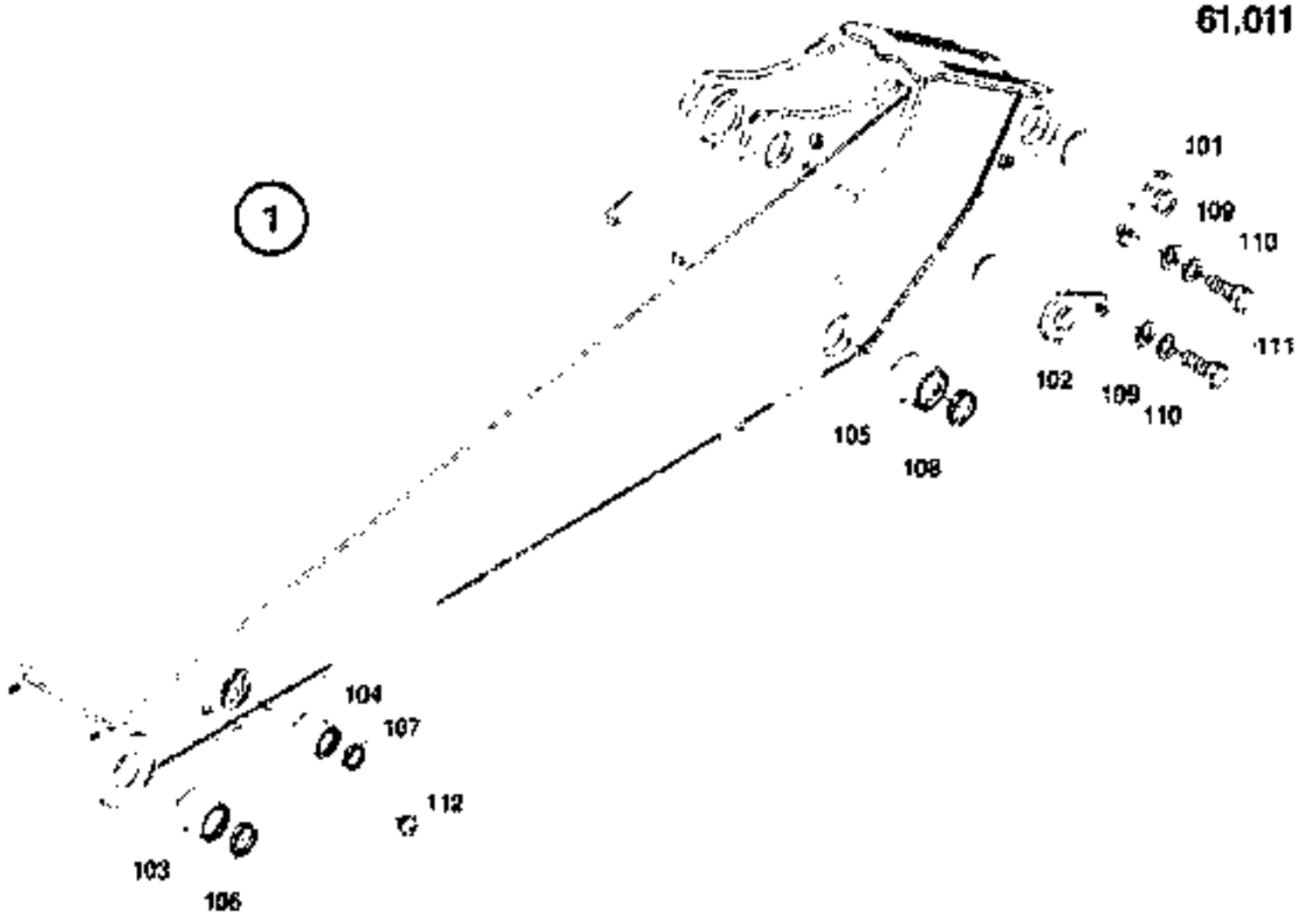

P 455 000 000

STICK MOUNTING PARTS

FIATALLIS

T 2495220 - 001
@ 2495220 - 010

FX600 100101 - .....

Item	Quan	MC	Part No	Description
001	1	00	73171386	STICK
101	1	00	73171387	PIN
102	1	00	73171388	PIN
103	2	00	73171389	BUSHING
104	2	00	73171390	BUSHING
105	2	00	73171391	BUSHING
106	2	00	73171392	SCRAPER
107	2	00	73171393	SCRAPER
108	2	00	73171394	SCRAPER
109	2	00	73170979	DISK WASHER
110	2	00	73170961	LOCK WASHER
111	2	00	73171345	HEXAGON BOLT
112	6	00	73170136	GREASE NIPPLE

MC 00 = Stock/piece 10 = m 20 = m² 30 = m³ 40 = kg 50 = Liter

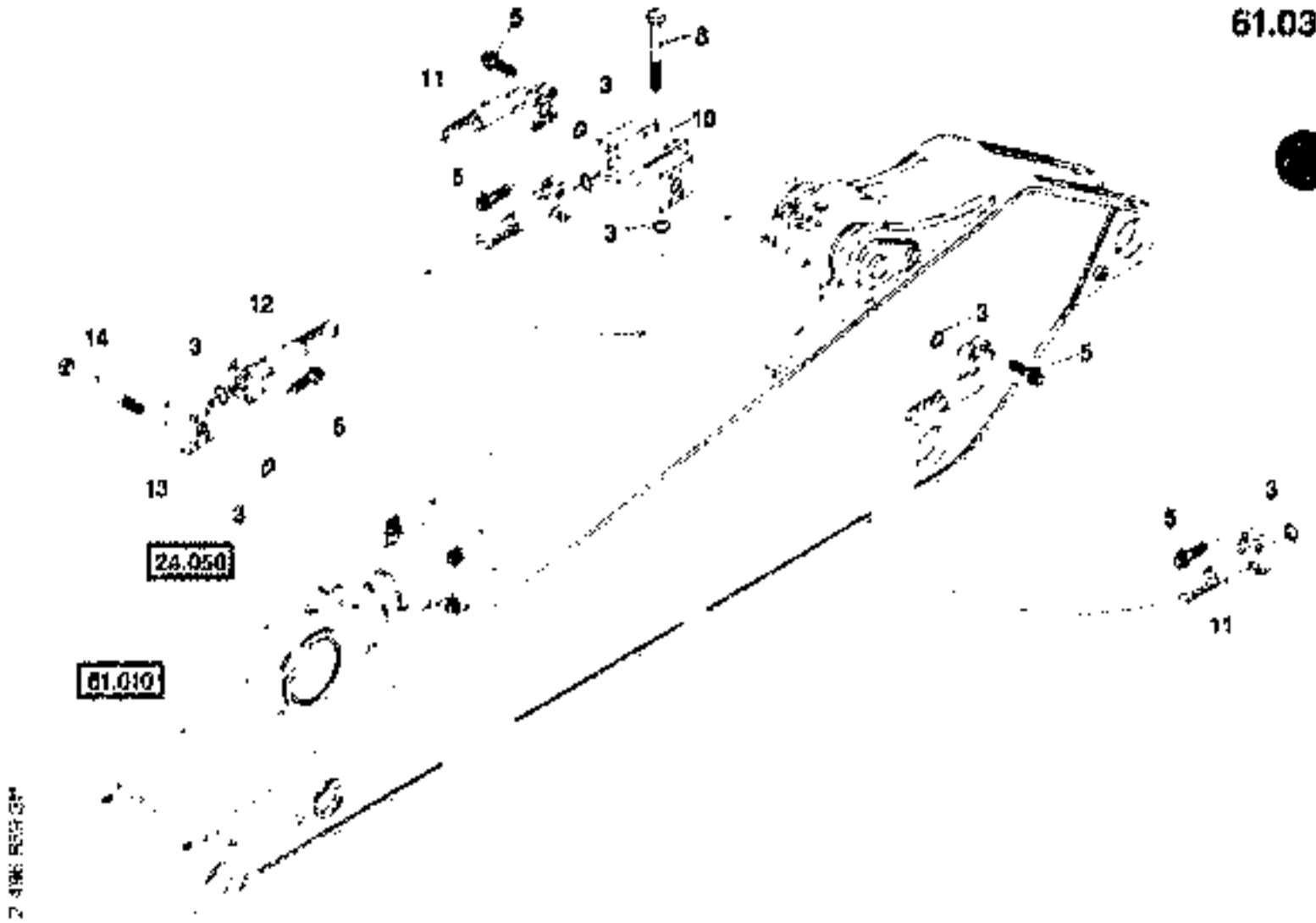

HYDRAULIC SYSTEM STICK 3,4M

61.032

FIATALLIS

T 2496859 - 001
B 2496863 - 011

FX600 106101 - .

Item	Quan.	ME	Part No	Description
003	7	00	73170346	SEALING RING
009	24	00	73170347	12-POINT SCREW
008	4	00	73171395	HEXAGON BOLT
010	1	00	73171396	DISTRIBUTOR
011	2	00	73177613	HOSE
012	1	00	73177614	HOSE
013	1	00	73171366	FLANGE
014	4	00	73171367	HEXAGON BOLT

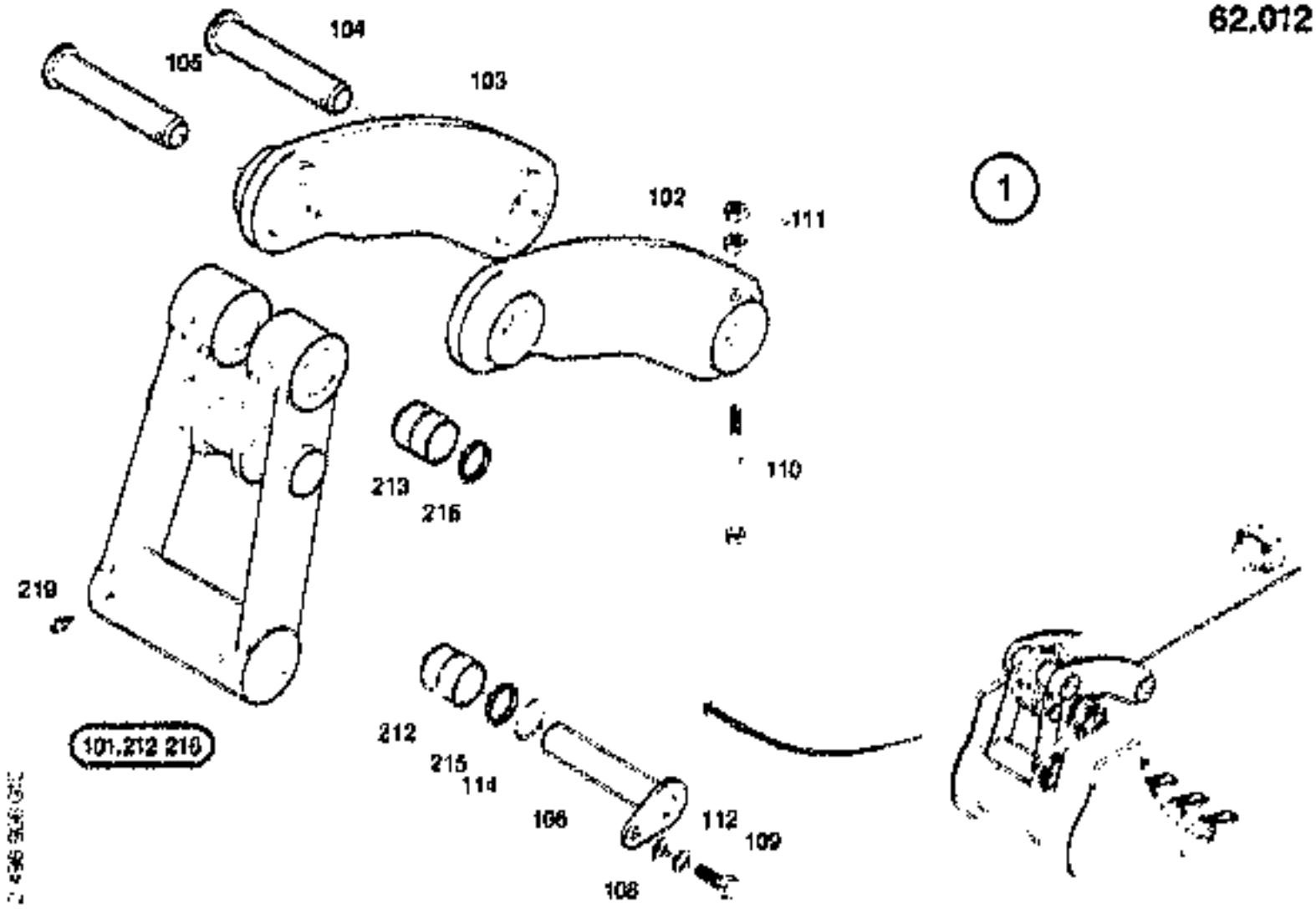

62.012

TOGGLE & LINKAGE

FIATALLIS

T 2498906 - 000
D 2498906 - 010

FX000 106101 - . .

Item	Quan.	ME	Part No.	Description
001	1	00	73175239	TOGGLE LINKAGE
101	1	00	73175240	TOGGLE ARM
102	1	00	73175241	LINKAGE
103	1	00	73175242	LINKAGE
104	1	00	73171403	PIN
105	1	00	73171404	PIN
106	1	00	73175243	PIN
108	1	00	73170979	DISK WASHER
109	1	00	73171345	HEXAGON BOLT
110	2	00	73171406	HEXAGON BOLT
111	4	00	73171407	HEXAGON NUT
112	1	00	73170961	LOCK WASHER
114	2	00	73171408	ROUND SEALING RING
212	2	00	73172063	BUSHING
213	2	00	73171409	BUSHING
216	6	00	73171410	SCRAPER
219	4	00	73170139	GREASE NIPPLE

ME 00 = Standard 13 = 25 m² 31 = m² 43 = kg 59 = (500)

1998-02-10

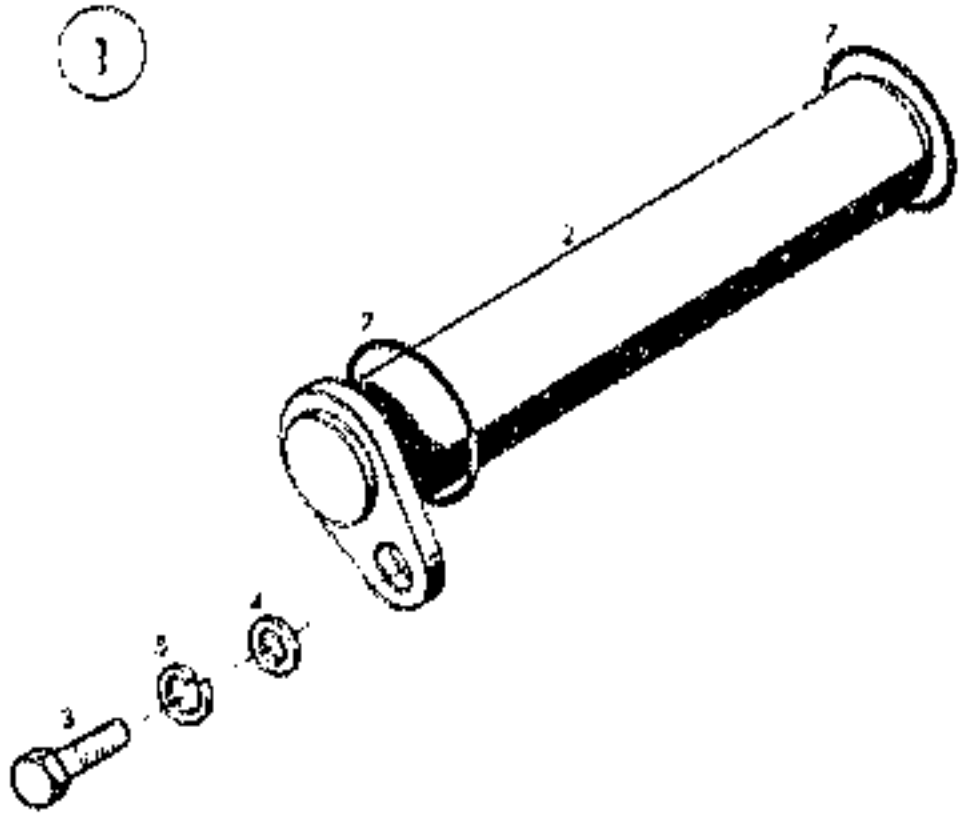

2 249 912 010

PIN NO.1

T 2249912 - 000
B 2249912 - 010

FX000 100101 -

Item	Quan	MF	Part No.	Description
001	1	00	**73171451**	BEARING
002	1	00	**73171452**	PIN
003	1	00	**73171345**	HEXAGON BOLT
004	1	00	**73170978**	DISK WASHER
005	1	00	**73170981**	LOCK WASHER
007	2	00	**73171453**	O-RING

MF: 00 = Quick spare 10 = m 20 = m² 30 = m³ 40 = kg 50 = l (litre)

1208 69-10

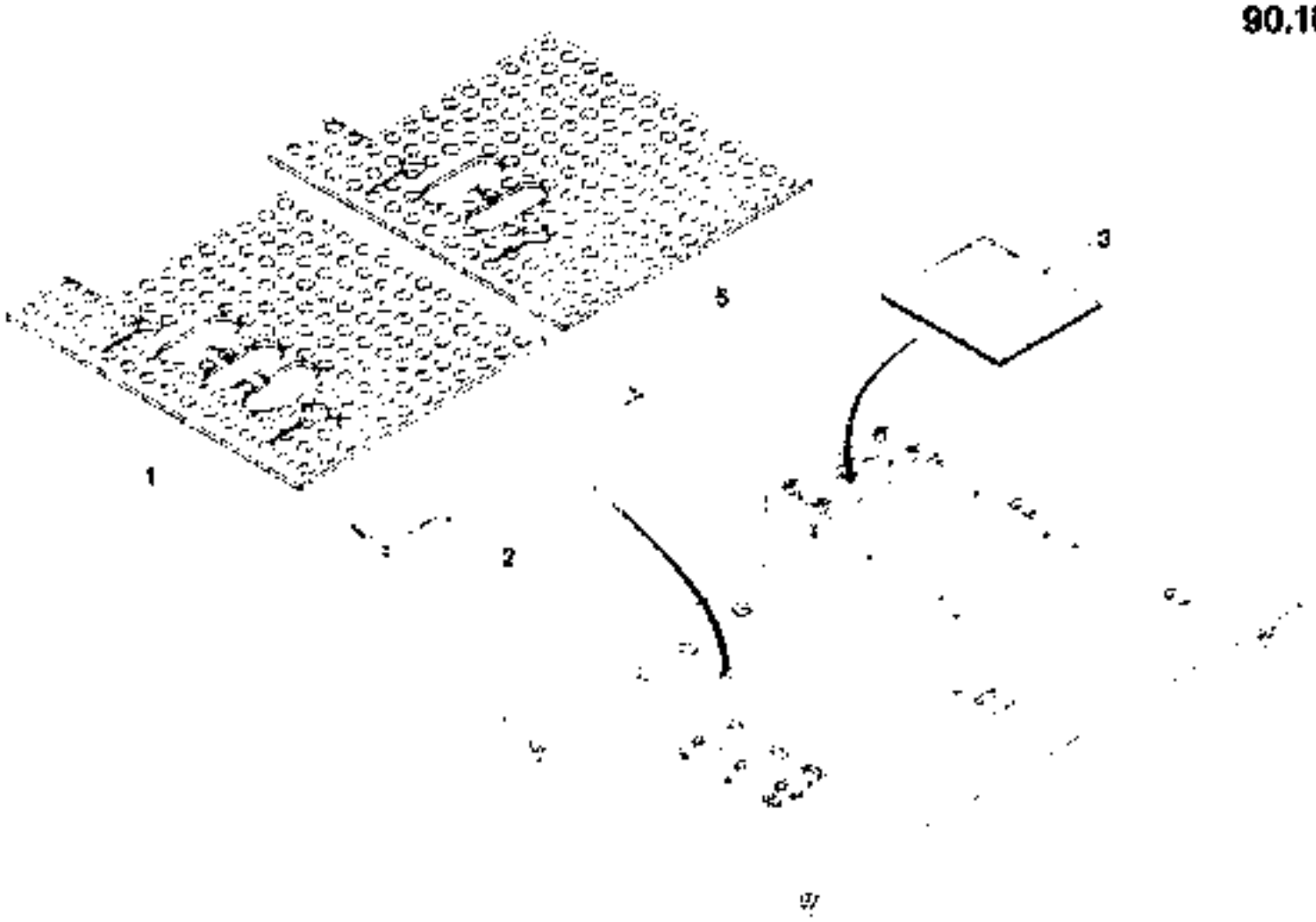

5 496 594 010

LINING ARRANGEMENT

FIATALLIS

FX600 106101 - .....

T 2496594 - 000
B 2496594 - 010

Item	Class	MF	Part No	Description
001	1	00	73171177	MAT
002	1	00	73171178	WEDGE
003	1	00	73171179	MAT
005	1	00	73171180	MAT

MF 00 = Standard 13 = m 20 = m² 30 = m³ 42 = kg 50 = l (litre)

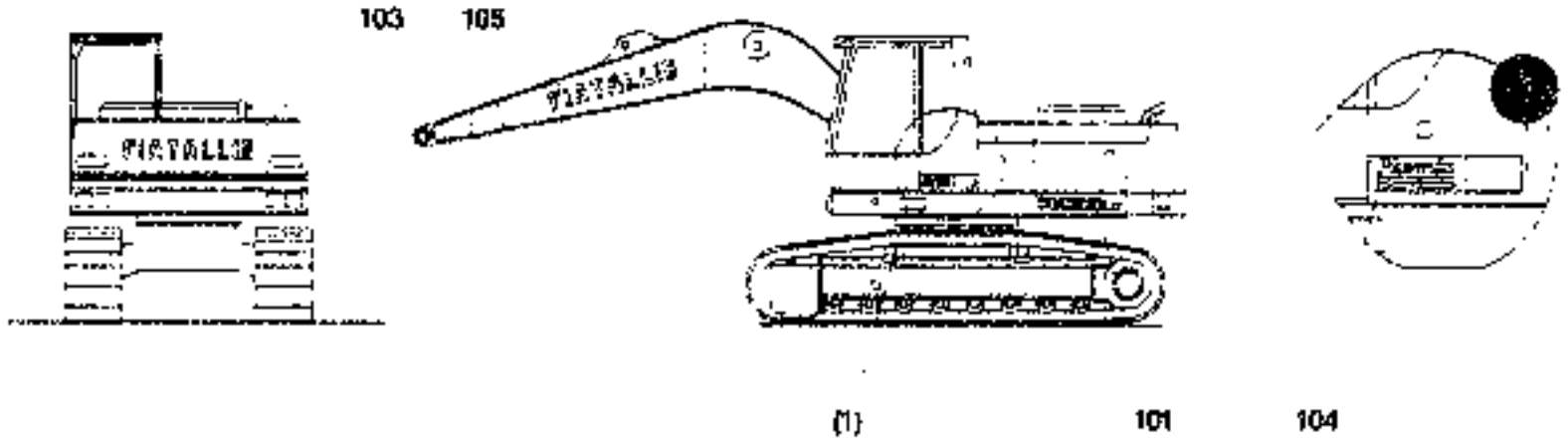

2 782 250 010

91.010

DECAL KIT

T 2782250 - 001
B 2782250 - 010

FX600 106101 - .....

Item	Quan	ME	Part No	Description
001	0	00		91.010 2782884 DECAL KIT SAME PARTS
101	2	00	73177433	PLATE FOR "N" UW CUT THE PLATE (LC N A)
103	1	00	73177434	PLATE
104	1	00	73176429	PLATE
105	2	00	73176428	PLATE

ME. 00 = Stück/pièce 13 = m 26 = m² 39 = m³ 43 = kg 50 = l (litre)

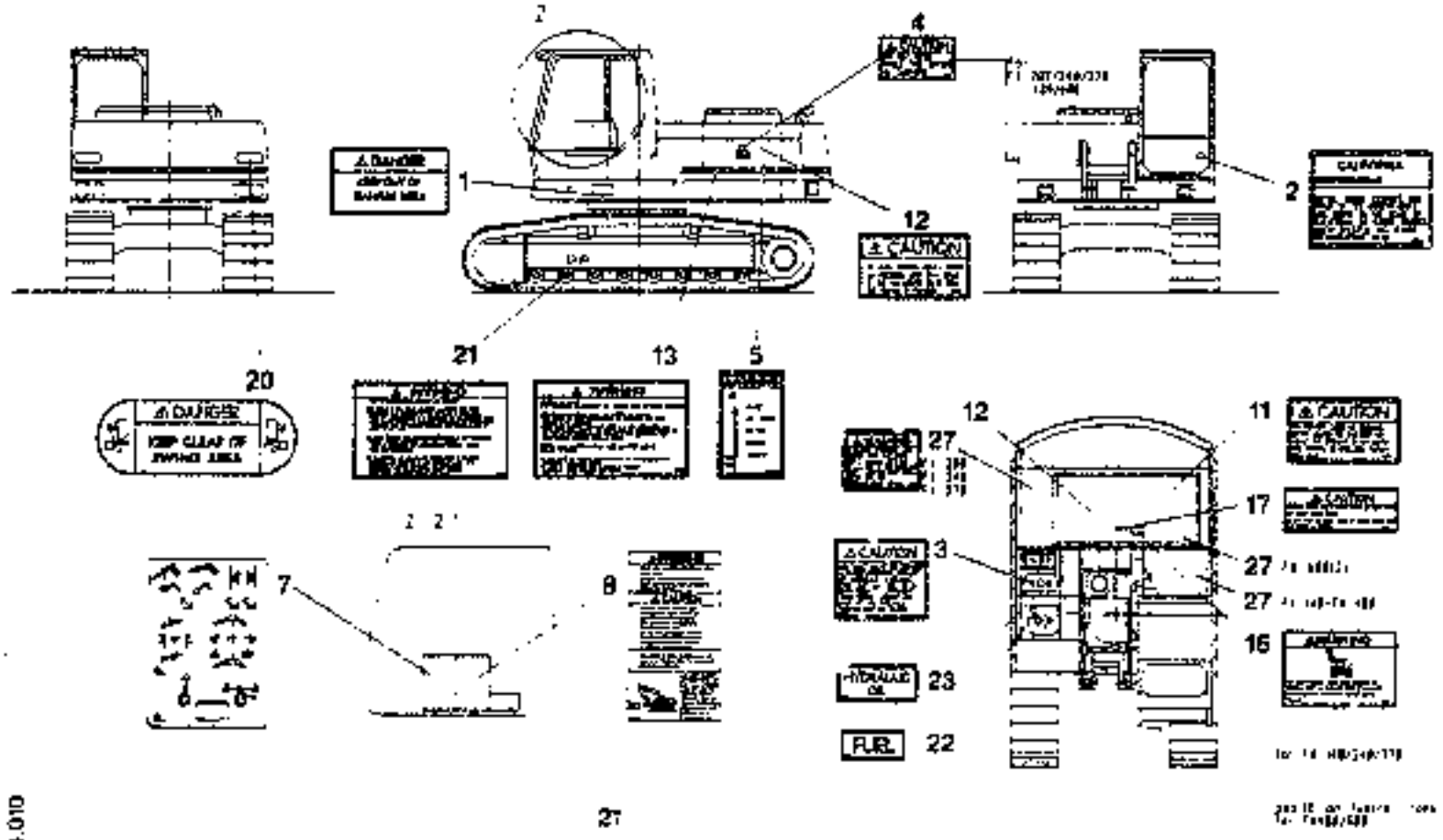

2 782 884.010

DECAL KIT SAME PARTS

FIATALLIS

FX600 106101 - .....

T 2782884 - 000
B 2782884 - 010

Item	Quan.	ME	Part No	Description
001	2	00	73176430	DANGER SIGN
002	1	00	73176431	DANGER SIGN
003	1	00	73176432	INDICATOR PLATE
004	2	00	73176433	INDICATOR PLATE
005	1	00	73176434	DANGER SIGN
007	1	00	73176435	PLATE
008	1	00	73176436	INSTRUCTION LABEL
011	1	00	73176437	INDICATOR PLATE
012	2	00	73176438	INDICATOR PLATE
013	1	00	73176439	DANGER SIGN
016	1	00	73176440	DANGER SIGN
017	1	00	73176441	INDICATOR PLATE
020	2	00	73176442	DANGER SIGN
021	3	00	73176443	DANGER SIGN
022	1	00	73176444	PLATE
023	1	00	73176445	PLATE
027	2	00	73176446	DANGER SIGN

ME: 00 = Stück/piece 13 = m 20 = m² 39 = m³ 43 = kg 50 = l (litre)

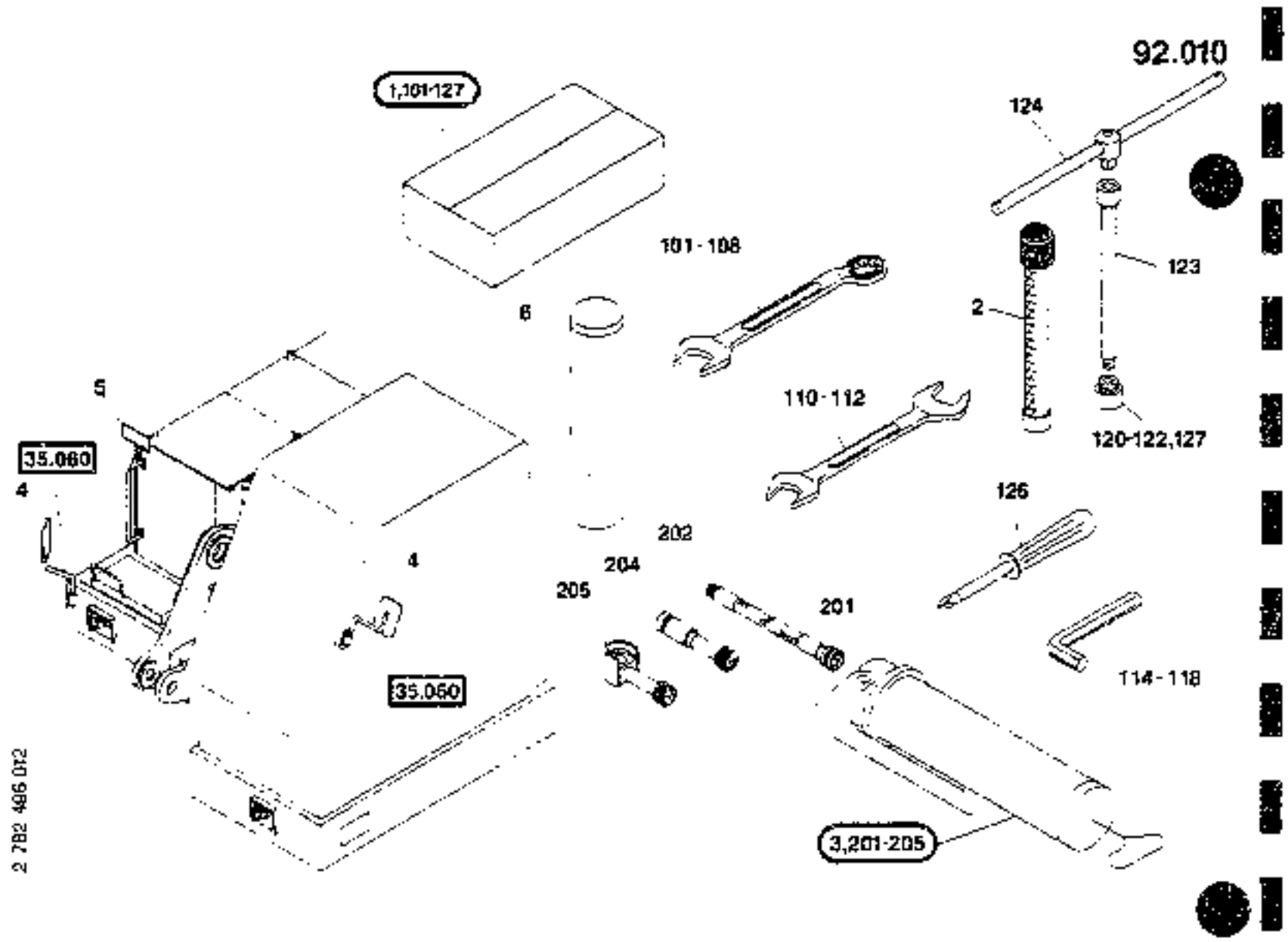

92.010

TOOL SET

FIATALLIS

T 2782496 - 001
B 2782496 - 012

FX600 106101 - .....

Item	Quan.	ME	Part No.	Description
001	1	00	73176153	TOOL SET
002	1	00	73171014	CONNECTION
003	1	00	73171015	GREASE GUN
004	2	00	73171016	MIRROR
005	1	00	73171017	MIRROR
006	1	00	73171021	GREASE CARTRIDGE
101	1	00	73176154	KEY 10 .
102	1	00	73176155	KEY 11 .
103	1	00	73176156	KEY 13 .
104	1	00	73176157	KEY 15 .

ME: 00 = Stück/piece 13 = m 26 = m² 39 = m³ 43 = kg 50 = l (litre)

1995-09-10

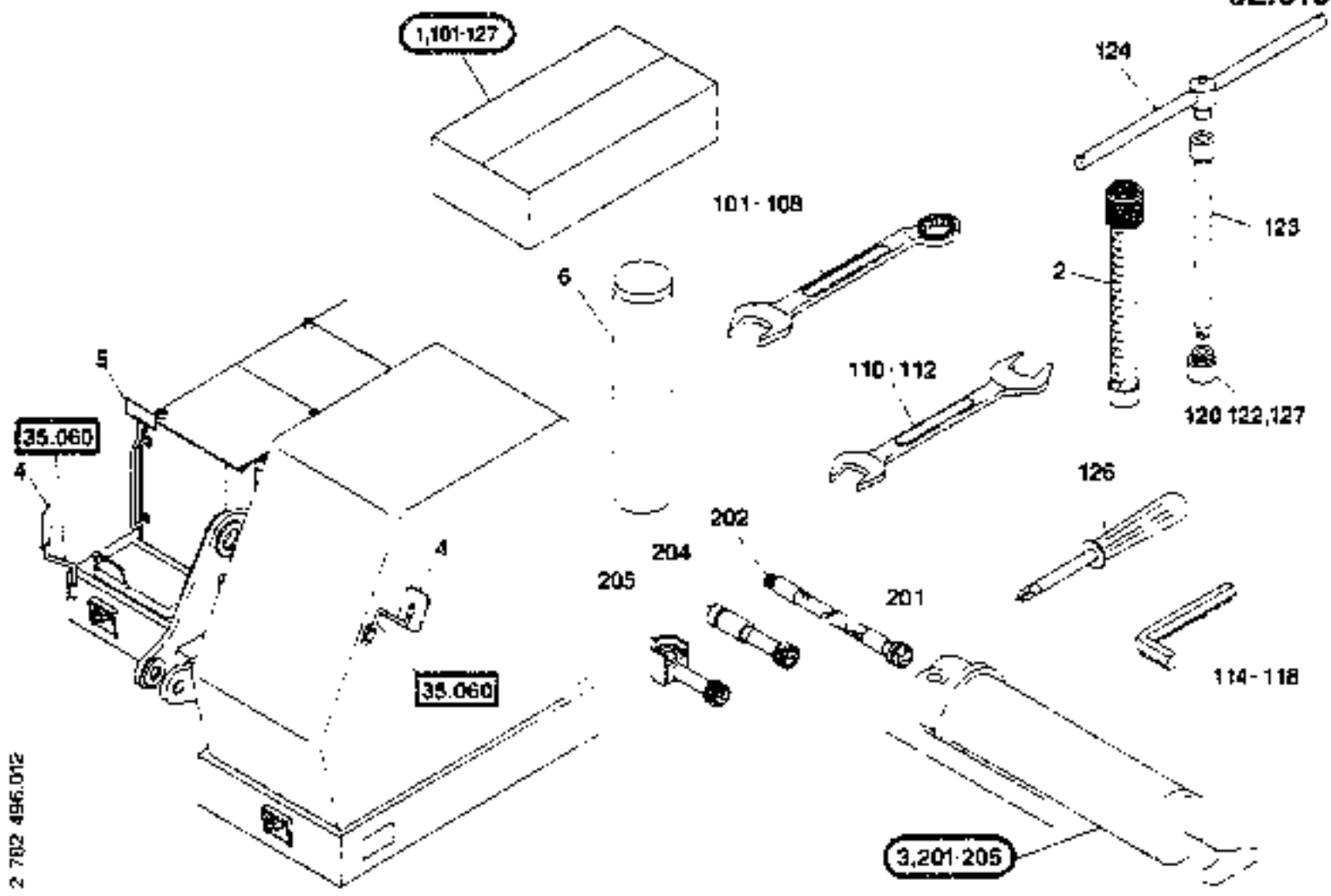

92.010

TOOL SET

FIATALLIS

T 2782496 - 001
B 2782496 - 012

FX600 - 106101 - .....

Item	Quan.	ME	Part No.	Description
105	1	00	**73176158**	KEY 16 .
106	1	00	**73176159**	KEY 17 .
107	1	00	**73176160**	KEY 18 .
108	1	00	**73176161**	KEY 19 .
110	1	00	**73176162**	KEY 22X24 .
111	1	00	**73176163**	KEY 27X30 .

ME: 00 = Stück/piece 13 = m 26 = m² 39 = m³ 43 = kg 50 = l (litre)

1998-09-10

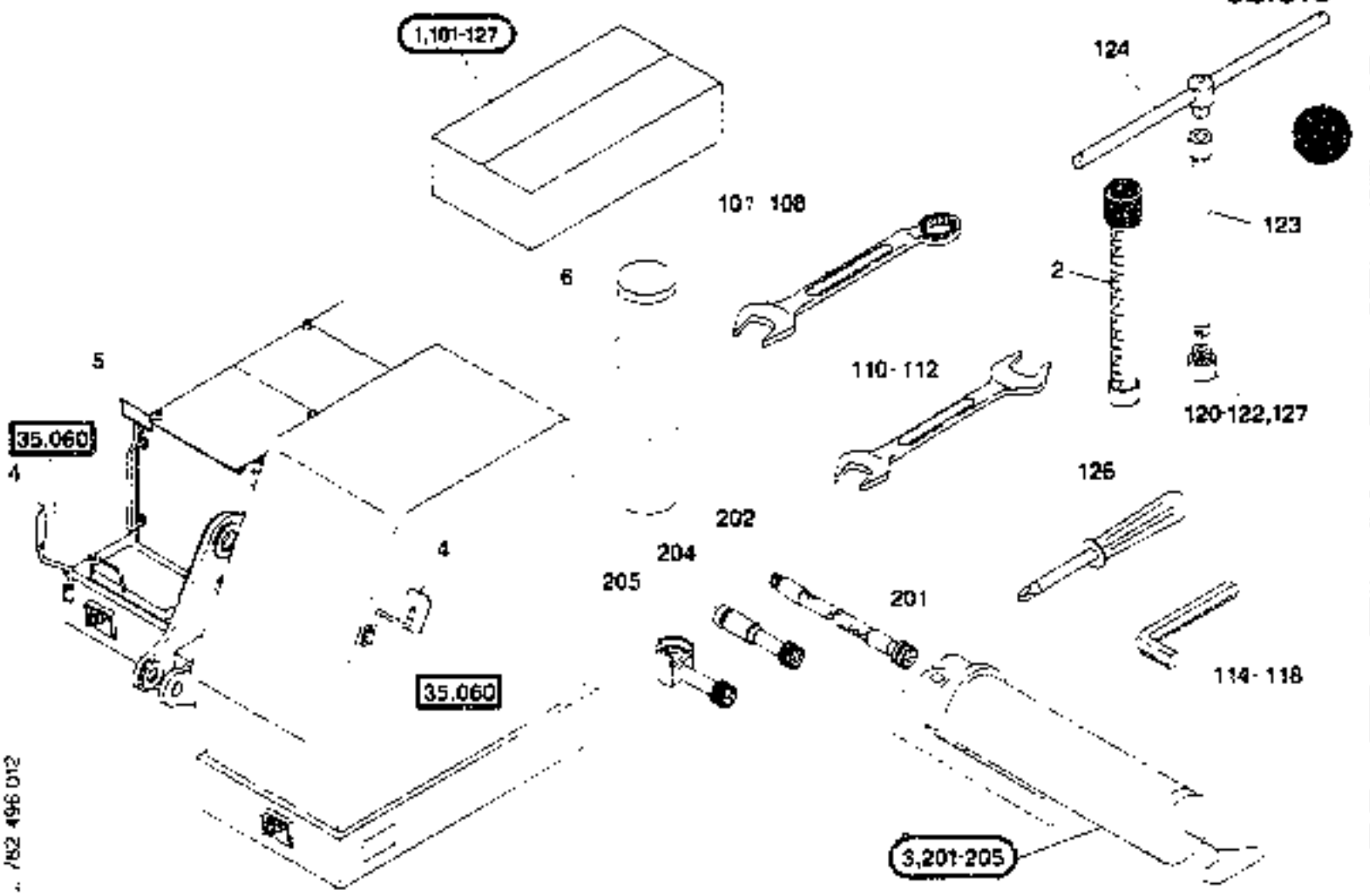

92.010

TOOL SET

FIATALLIS

FX600 106101 - .....

T 2782496 - 001
B 2782496 - 012

Item	Quan.	ME	Part No.	Description
112	1	00	**73176164**	KEY 32X36 .
114	1	00	**73171012**	SCREW DRIVER 4 .
115	1	00	**73176165**	SCREW DRIVER 5 .
116	1	00	**73176166**	SCREW DRIVER 6 .
117	1	00	**73176167**	SCREW DRIVER 8 .
118	1	00	**73176168**	SCREW DRIVER 10 .

ME: 00 = Stück/piece 13 = m 26 = m² 39 = m³ 43 = kg 50 = litre

1998-09-10

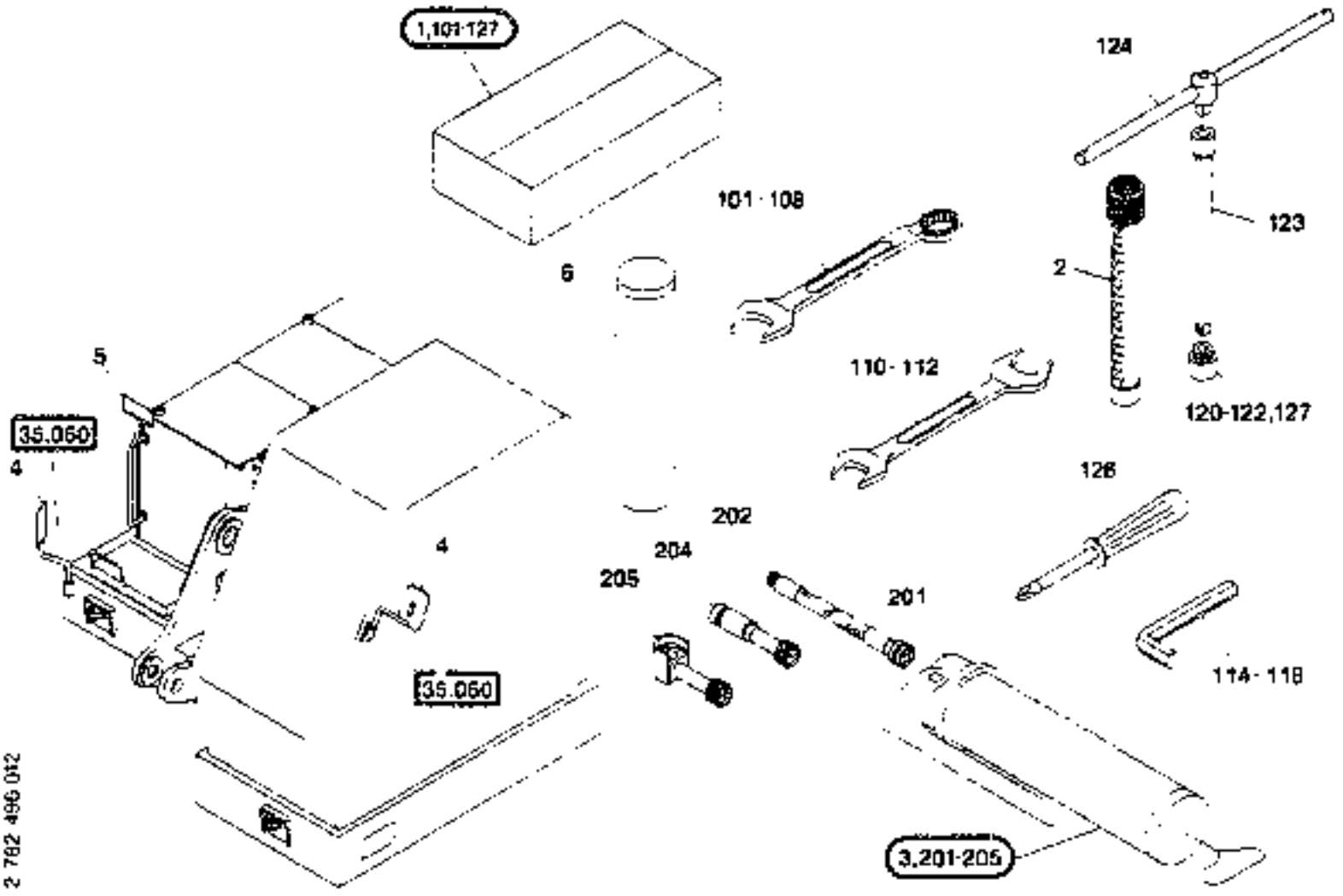

92.010

TOOL SET

FIATALLIS

T 2782496 - 001
B 2782496 - 012

FX600 106101 - .....

Item.	Quan.	ME	Part No	Description
120	1	00	**73174524**	INSERT 11X12,5 .
121	1	00	**73176169**	INSERT 13X12,5 .
122	1	00	**73176170**	INSERT 16X12,5 .
123	1	00	**73176171**	EXTENSION 12,5X250 .
124	1	00	**73174521**	HANDLE
125	1	00	**73171013**	SCREW DRIVER B2 .

ME. 00 = Stück/piece 13 = m 26 = m² 39 = m³ 43 = kg 50 = l (litre)

1998-09-10

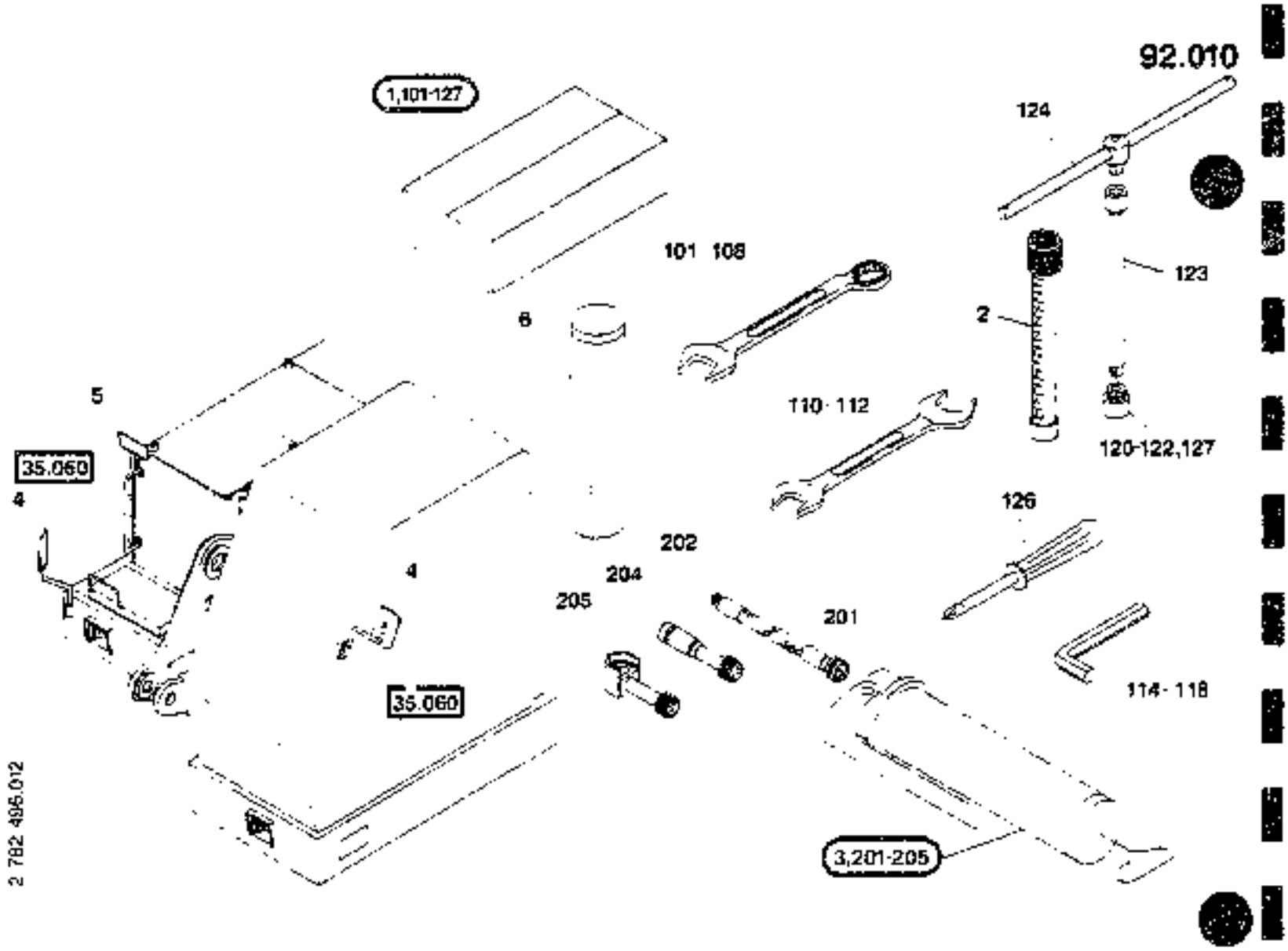

92.010

TOOL SET

T 2782496 - 001
B 2782496 - 012

FX600 106101 - .....

Item	Quan	ME	Part No	Description
127	1	00	**73177266**	INSERT 27X12.5
201	1	00	**73171019**	GRAESE GUN
202	1	00	**73171020**	HOSE
204	1	00	**73171022**	ORIFICE
205	1	00	**73171023**	ORIFICE

ME 00 = Stück/pcs 13 = m 26 = m^2 39 = m^3 43 = kg 50 = l (litre)

1998-09-10

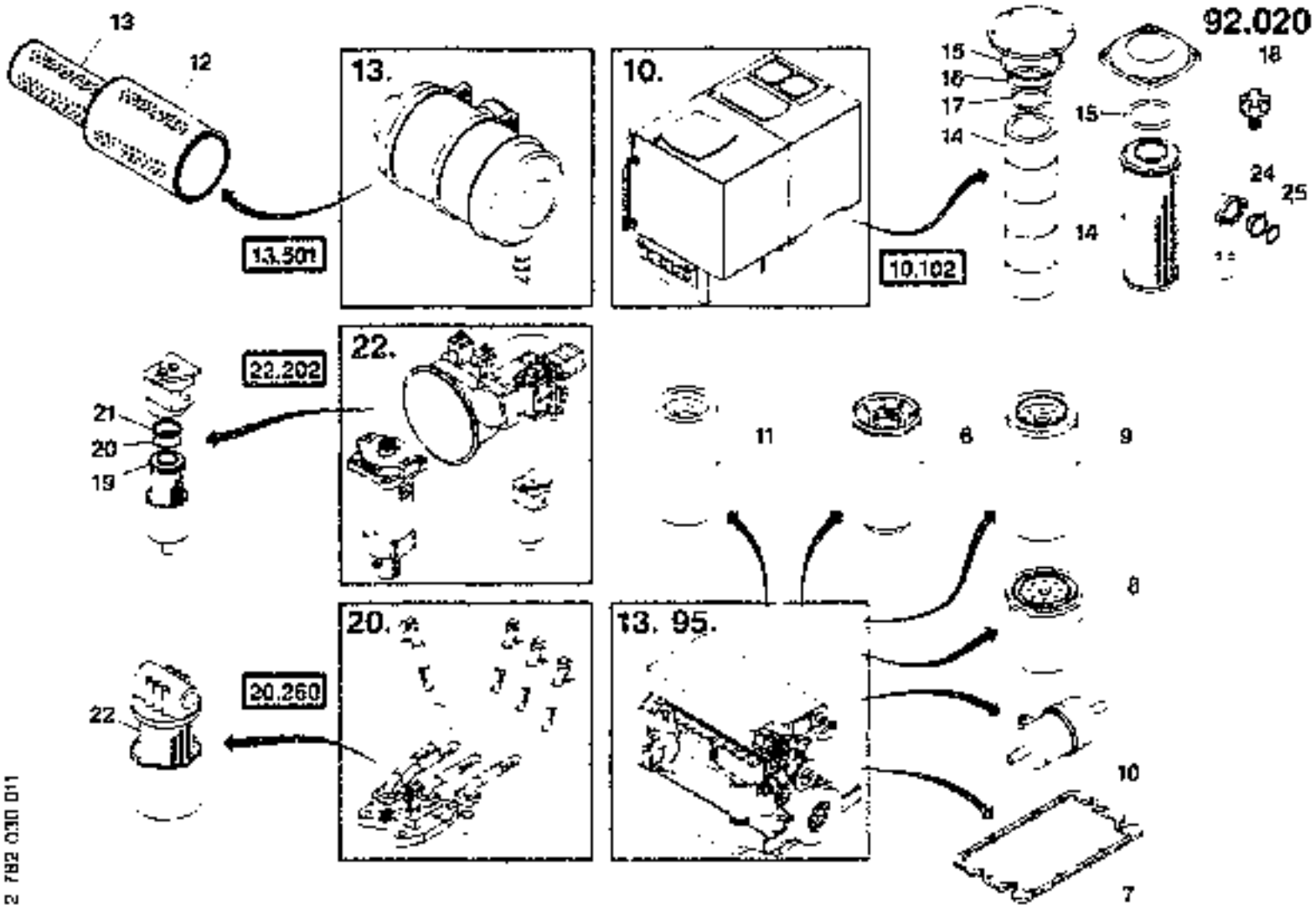

92.020

MAINTENANCE MATER. FX600

T 2782033 - 001
B 2782030 - 011

FX600 106101 - .....

Item	Quan	ME	Part No	Description
001	1	00	73175336	MAINTENANCE MATER. 30-50 BH POS ITM: 14-17 .
002	1	00	73177832	MAINTENANCE MATER. 250 BH POS ITM: 6,8 .
003	1	00	73175337	MAINTENANCE MATER. 500 BH POS ITM: 6,8,9,12,14-18,20,21 .
004	1	00	73175338	MAINTENANCE MATER. 1000 BH POS ITM: 6-9,12-18,20,21 .

ME 00 = Stück/pezzi 13 = m 26 = m² 39 = m³ 43 = kg 50 = l (litre)

1998-09-10

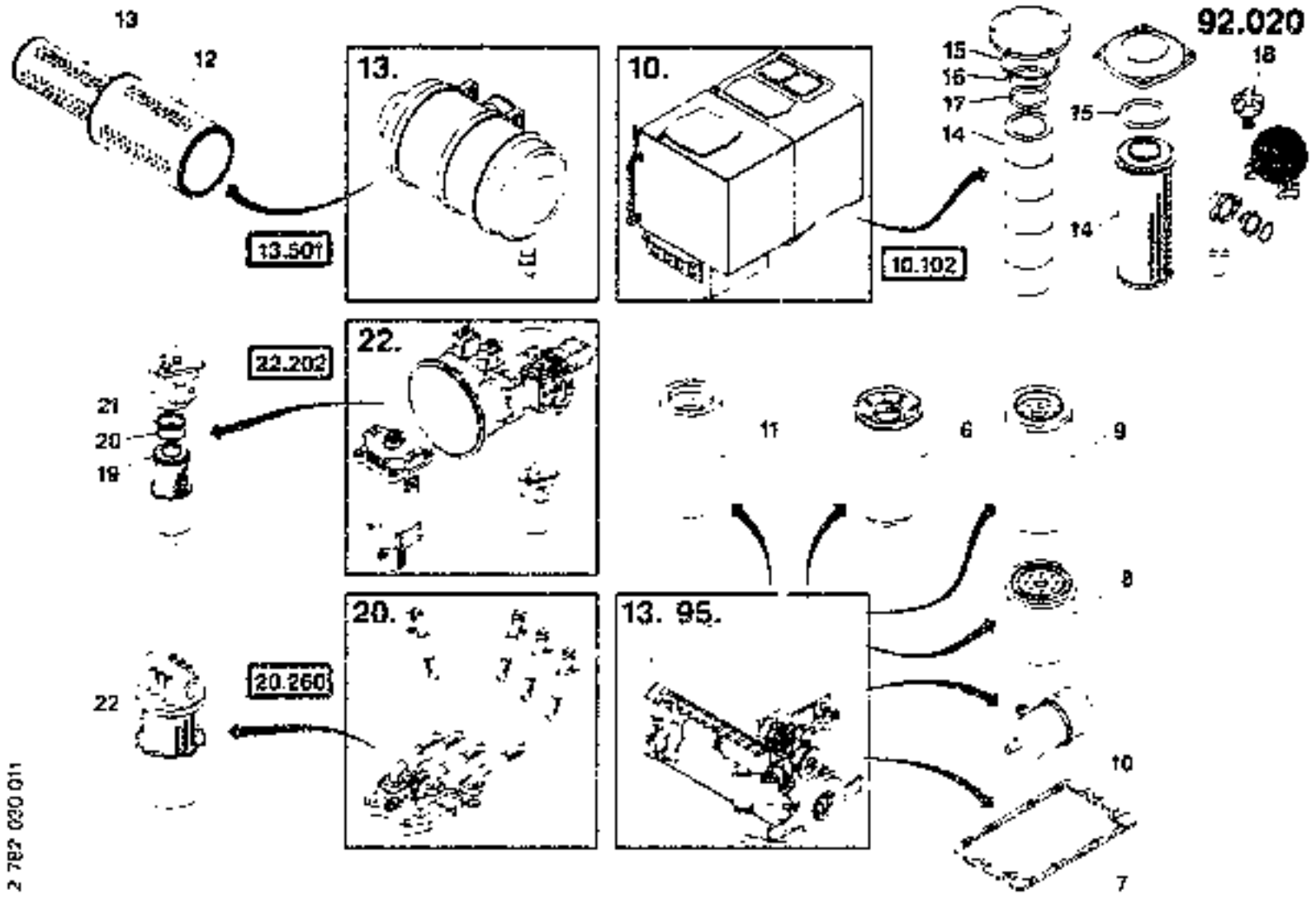

92.020

MAINTENANCE MATER. FX600

T 2782033 - 001
B 2782030 - 011

FX600 106101 - ..

Item	Quan	ME	Part No	Description
005	1	00	**73175339**	MAINTENANCE MATER 3000 BH POS ITM 6-9.12-25
006	1	00	**73175970**	ENGINE OIL FILTER
007	1	00	**73176173**	VALVE COVER SEAL
008	1	00	**73175973**	THROW-AWAY FILTER
009	1	00	**73175971**	FUEL-FILTER ELE
012	1	00	**73170678**	FILTER INSERT
013	1	00	**73170676**	FILTER INSERT
014	2	00	**73170309**	ELEMENT
015	2	00	**73170280**	O-RING
016	2	00	**73170307**	ROUND SEALING RING
017	2	00	**73170308**	O-RING
018	1	00	**73170286**	FILTER
019	2	00	**73170668**	FILTER INSERT
020	2	00	**73170669**	O-RING
021	2	00	**73170671**	SUPPORT RING

ME 00 = Stuckware 13 = m 26 = m² 39 = m³ 43 = kg 50 = Liter

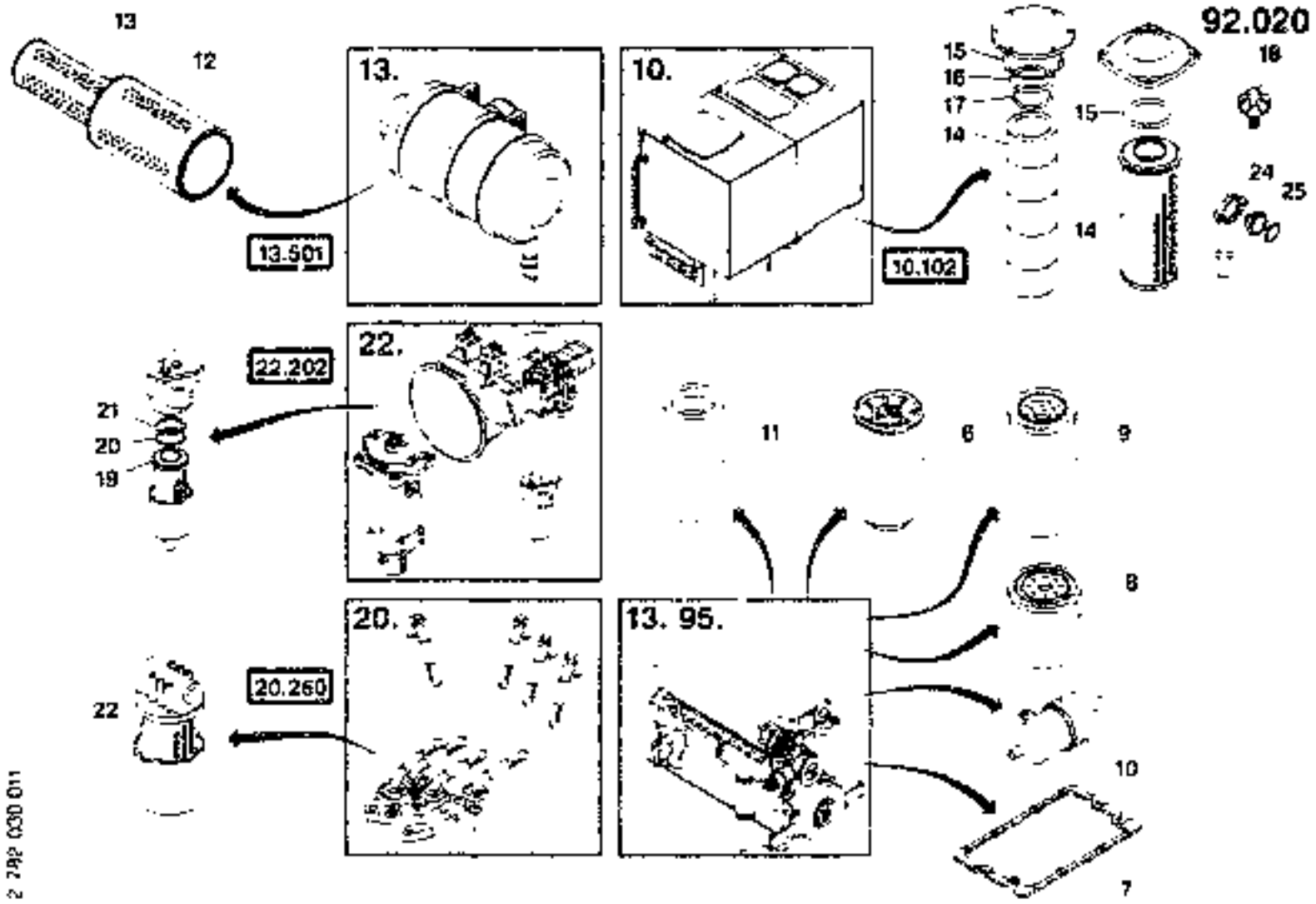

92.020

MAINTENANCE MATER. FX600

T 2782033 - 001

FX600 106101 - ....

B 2782030 - 011

Item	Quan	ME	Part No	Description
022	1	00	**73170268**	FILTER INSERT
024	3	00	**73170277**	VALVE
025	3	00	**73170290**	O-RING

ME: 00 = Stück/piece 13 = m 26 = m² 99 = m³ 43 = kg 50 = l (litre)

1998-09-10

Dictionary / Diccionario / Wörterbuch / Dictionnaire / Dizionario

SURVEY	Machine type **FX600**	Machine no.

English	German	Italian	French	Spanish
ADAPTER	ADAPTER	ADATTATORE	ADAPTEUR	ADAPTADOR
ADDING VALVE	ZUSCHALTVENTIL	VALV.ALLACCIAMENTO	SOUPAPE CIRCUIT	VALV.DE EMERGENCIA
ADDITION	ZUSATZ	SUPPLEMENTO	SUPPLEMENT	ADICIONAL
ADHESIVE TAPE	KLEBEBAND	NASTRO ADESIVO	RUBAN ADHÉSIF	CINTA ADHESIVA
ADJUSTMENT RING	EINSTELLRING	ANELLO	ANNEAU	ANILLO
AIR DUCT	LUFTFUEHRUNG	CONDUZIONE ARIA	CONDUITE D'AIR	CONDUCCION DE AIRE
AIR FILTER	LUFTFILTER	FILTRO ARIA	FILTRE A AIR	FILTRO DE AIRE
ANTENNA	ANTENNE	ANTENNA	ANTENNE	ANTENA
ARM REST,LEFT	ARMLEHNE,LINKS	BRACCIOLO,SINISTRA	APPUI-COUDE,GAUCHE	BRAZO,IZQUIERDO
ARM REST,RIGHT	ARMLEHNE,RECHTS	BRACCIOLO,DESTRA	APPUI-COUDE,DROITE	BRAZO,DERECHO
ARRANGEMENT	ANORDNUNG	ANORDNUNG	ANORDNUNG	ANORDNUNG
ARRESTOR	ARRETIERUNG	ARRESTO	ARRETOIR	FIJADOR
ARRESTOR	FESTSTELLER	ARRESTO	BLOCAGE	FIJADOR
AXIAL PISTON MOTOR	AXIALKOLBENMOTOR	MOTORE STANTUF ASS	MOTEUR DE PIST.AX	MOT. PIST. AXIALES
AXLE	ACHSE	ASSALE	ESSIEU	EJE
BACK RING	BACKRING	ANELLO	BAGUE DE SUPPORT	ANILLO DESLIZAMIE
BACKHOE CYLINDER	LOEFFELZYLINDER	CIL.RIBALT.CUCCH	VERIN BASC.GODET	CIL.VUELCO CUCHARA
BACKREST CUSHION	RUECKENPOLSTER	IMBOTT SPIENALE	COUSSIN DE DOSSIER	ACOLCH.RESPALDO
BALL SOCKET	PFANNE	SCODELLINO	CUVE	CUCHARA
BALLAST	BALLAST	ZAVORRA	CONTRE-POIDS	LASTRE
BASE	BASIS	BASE	BASE	BASE
BASEPLATE	BODENPLATTE	PIASTRA DI BASE	PATIN DE CHENILLE	PLACA BASE
BATTERY	BATTERIE	BATTERIA	BATTERIE	BATERIA
BEAM	TRAEGER	TRAVE	SUPPORT	VIGA
BEARING	LAGER	CUSCINETTO	PALIER	COJINETE
BEARING	LAGERUNG	SUPPORTO	PALIER	SUSPENCION
BELLOWS	BALG	MANTICE	SOUFFLET	FUELLE
BELLOWS	FALTENBALG	SOFFIETTO	SOUFFLET	ACORDEON
BLIND	BLENDE	DIAFRAMMA	ECRAN	PANTALLA
BLOCKING VALVE	SPERRVENTIL	VALV.DI RITEGNO	CLAPET DE BLOCAGE	VALVULA DE BLOQUEO
BONNET	HAUBE	COFANO	CAPOT	CAPOT
BOOM	AUSLEGER	BRACCIO	FLECHE	PLUMA
BOOM CYLINDERS	AUSLEGERZYLINDER	CILINDRO BRACCIO	VERINS DE FLECHE	CILINDROS PLUMA
BOTTLE	FLASCHE	BOMBOLA	BOUTEILLE	BOTELLA
BRACKET	HALTER	SUPPORTO	SUPPORT	SOPORTE
BRACKET	KONSOLE	MENSOLA	SUPPORT	CONSOLA
BRACKET	STUETZE	SUPPORTO	SUPPORT	APOYO
BRAKE	BREMSE	FRENO	FREIN	FRENO
BRAKE VALVE	BREMSVENTIL	VALVOLA FRENAGGIO	CLAPET DE FREIN	VALVULA DE FRENO
BREATHER FILTER	ENTLUEFTUNGSFILTER	FILTRO DI SPURGO	FILTRE VENTILATION	FILTRO PURGA AIRE
BREATHER VALVE	ENTLUEFTUNGSVENTIL	VALVOLA DI SPURGO	RENIFLARD	VALVULA PURGA AIRE
BULB	GLUEHLAMPE	LAMP ADINA	AMPOULE	BOMBILLA
BULKH. CABLE GLAND	KABELDURCHFUEHRUNG	PASSACAVO	PASA CABLES	TRASPASO CABLE
BUMPER	PUFFER	RESPINGENTE	TAMPON	TOPE
BUSHING	BUCHSE	BOSSOLO	BAGUE	CASQUILLO
BUTTON	KNOPF	BOTTONE	BOUTON	BOTON
CAB DOOR	FAHRERHAUSTUER	PORTA CABINA	PORTE DE CABINE	PUERTA DE LA CAB.
CAB MODULE	FAHRERHAUSMODUL	MODULO CABIN GUIDA	MODULE CAB.COND.	MODULO DE CABINA
CAB ROOF	FAHRERHAUSDACH	TETTO CABINA	PLAFOND CAB.COND	TECHO CABINA
CABLE	KABEL	CAVO	CABLE	CABLE
CABLE SET	KABELSATZ	SERIE CAVI	JEU DE CABLES	JUEGO DE CABLES
CABLE TIE	KABELBINDER	CFMMESSOPME CAVO	CONNEX.CABLES	ELEM UNION CABLES
CAP	KAPPE	CALOTTA	CAPUCHON	CAPERUZA
CAP	SCHUTZKAPPE	CAPPUCCIO	COIFFE	CAPERUZA PROLECT
CAP NUT	HUTMUTTER	DADO A CAPPELLO	ECROU A CHAPEAU	TUERCA CAPERUZA
CARRIER	TRAGROHR	MOZZO	TUBE SUPPORT	TUBO DE SOPORTE
CARTRIDGE	PATRONE	CARTUCCIA	CARTOUCHE	CARTUCHO
CASCADE	KASKADE	CASCATA	CASCADE	CASCADA
CENTRAL LUBE SYST	ZENTRALSCHMIERUNG	LUBRIFICAZ.CENTR.	GRAISSAGE CENTRAL	LUBR. CENTRAL
CHAIN LINK	KETTENGLIED	MAGLIA CATENA	MAILLON DE CHAINE	ESLABON DE CADENA
CHAIN TENSIONER	KETTENSPANNUNG	TENDITORE CATENA	TENDEUR DE CHAINE	TENSION DE CADENAS
CHECK VALVE	RUECKSCHLAGVENTIL	VALV.DI RITEGNO	CLAPET ANTI-RETOUR	VALVULA RETENCION
CIRCLIP	SICHERUNGSRING	ANELLO SICUREZZA	ANNEAU DE SECURITE	ANILLO SEGURIDAD

Dictionary / Diccionario / Wörterbuch / Dictionnaire / Dizionario

SURVEY	Machine type **FX600**	Machine no.

English	German	Italian	French	Spanish
CLAMP	KLAMMER	MORSETTO	ATTACHE	ABRAZADERA
CLAMPING CYLINDER	SPANNZYLINDER	CILINDRO TENDITORE	VERIN TENDEUR	CILIN DRO TENSOR
CLAMPING RING	KLEMMRING	ANELLO SERRAGGIO	BAGUE DE SERRAGE	ANILLO OPRESOR
CLAMPING SCREW	LINSENSCHRB	VITE TESTA BOMBATA	VIS DE SERRAGE	TORNILLO D.APRIETE
CLIP	KLEMME	MORSETTO	ATTACHE	BORNE
CLIP	SCHELLE	FASCETTA	COLLIER	ABRAZADERA
CLIP	SPANNSCHELLE	FASCETTA SERRAGGIO	COLLIER SERRAGE	ABRAZADERA RUAC
CLIP HALF	SCHELLENHAELFTE	SEMI-FASCETTA	MOITIE DE COLLIER	MITAD ABRAZADERA
CLUTCH HUB	KUPPLUNGSNABE	MOZZO DIACCOPP.	MOYEU D'ACCOUPL	CUBO ACOPLAMIENTO
COLD-START SYSTEM	KALTSTARTANLAGE	DISP.AVVIAM.FREDDO	DEMAR.A FROID	INST ARR.FRIO
COLLAR NUT	BUNDMUTTER	DADO A COLLETTO	ECROU A BRIDE	TUERCA CON COLLAR
COMB. COOL. SYST	KOMBIKUEHLANLAGE	IMP RAFFR.COMBIN	SYST REFR.COMBINE	INST.REFR. COMBIN.
COMBINED COOLER	KOMBIKUEHLER	RADIATORE COMBIN	RADIATEUR COMBINE	RADIADOR COMB.
COMPLETE	KOMPLETT	COMPLETA	COMPLET	COMPLETO
COMPUTER HOLDER	ABLAGE	SUPPORTO COMPUTER	PORTE ORDINATEUR	PORTAORDINADOR
CONE	KEGEL	CONO	CONE	CONO
CONN NUT	UEBERWURFMUTTER	TUERCA DE RACOR	ECROU CHAPEAU	TUERCA DE RECOR
CONNECTION	ANSCHLUSS	RACCORDO	RACCORDEMENT	EMPALME
CONNECTION	VERBINDUNG	COLLEGAMENTO	CONNEXION	EMPALME
CONNECTOR	ANSCHLUSSSTUECK	RACCORDO	PIECE RACCORDEMENT	PZA. ACOPLAMIENTO
CONTAINER	BEHAELTER	SERBATOIO	RESERVOIR	DEPOSITO
CONTAINER	VORRATSBEHAELTER	SERBATOIO	RESERVOIR	DEPOSITO
CONTER-SUNK SCREW	SENKSCHRB	VITE A TESTA PIANA	VIS NOYEE	TORNILLO AVELLANAD
CONTROL BLOCK	STEUERBLOCK	DISTRIBUTORE	BLOC DISTRIBUTEUR	BLOQUE DE MANDO
CONTROL CABLE	BOWDENZUG	CAVO BOWDEN	TRANSMISS BOWDEN	CABLE DE BOWDEN
CONTROL COLUMN	BEDIENSAEULE	COLANNA DI COMANDI	COLONNE COMMANDE	COLUMNA DE MANDO
CONTROL ELEMENT	BEDIENELEMENT	COMANDO	ELEM. DE COMMANDE	ELEMENTO DE MANDO
CONTROL SPRING	ZUGFEDER	MOLLA DI TRAZIONE	RESSORT DE REGULAT	RESORTE REGULADOR
CONTROL SYSTEM	STEUERUNG	COMANDO	DIRECTION	MANDO
CONTROL VALVE	WEGEVENTIL	VALVOLA A PIU VIE	DISTRIBUTEUR	VALVULA DE PASO
COOLANT TUBE	KUEHLWASSERROHR	TUBO ACQUA RAFFRED	COND EAU REFROID	TUBO AGUA REFRIGER
COUPLING/CLUTCH	KUPPLUNG	FRIZIONE	ACCOUPLE/EMBRAYAGE	EMBRAGUE
COVER	ABDECKUNG	COPERCHIO	REVETMENT	PROTECCION
COVER PLATE	ABDECKBLECH	LAM DI COPERTURA	TOLE RECOUVREM	CHAPA COBERTERA
COVER PLATE	DECKPLATTE	PIASTRA	PLAQUE	PLACA
CRAWLER CHASSIS	RAUPENFAHRWERK	AUTOTELAIO CINGOL	TRAIN CHENILLE	CH SOBRE ORUGAS
CROSS MEMBER	TRAVERSE	TRAVERSA	TRAVERSE	TRAVESANO
CUP SPRING	TELLERFEDER	MOLLA A DISCO	RESSORT BELLEVILLE	RESORTE D PLATILLO
CUTTING RING	SCHNEIDRING	ANELLO	BAGUE D CISAILLEM.	ANILLO CORTANTE
CYLHEAD SCREW	ZYL.SCHRB	VITE TESTA CILIND	VIS TETE CYLINDR	TORN.CABEZA CIL
CYLINDER	ZYLINDER	CILINDRI	VERIN	CILINDRO
CYLINDER/COVER	ZYLINDERDECKEL	COPERCHIO CILINDRI	COUVERCLE DE CYL	TAPA DE CILINDRO
DAMPER	DAEMPFER	AMMORTIZZATORE	AMORTISSEUR	AMORTIGUADOR
DANGER SIGN	WARNSCHILD	TARGA AVVERTIMENTO	PANNEAU D AVERTISS	LETRE AVIS PELIGRO
DASHBOARD	INSTRUMENTENTAFEL	CRUSCOTTO STRUMENT	TABLEAU DE BORD	CAJA INSTRUMENTOS
DECAL KIT	SCHILDERSATZ	SERIE TARGHE	JEU DE PLAQUES	JUEGO DE PLACAS
DIESEL ENGINE	DIESELMOTOR	MOTORE DIESEL	MOTEUR DIESEL	MOTOR DIESEL
DIPSTICK	OELMESSTAB	ASTA LIVELLO OLIO	JAUGE D PROFONDEUR	SONDA DE ACEITE
DISK/WASHER	SCHEIBE	DISCO	RONDELLE	DISCO
DISTRIBUTOR	VERTEILER	DISTRIBUTORE	DISTRIBUTEUR	DISTRIBUIDOR
DOOR	TUER	PORTA	PORTE	PUERTA
DOUBLEPUMP	DOPPELPUMPE	POMPA DOPPIA	POMPE DOUBLE	BOMBA DOBLE
DRAIN VALVE	ABLASSVENTIL	VALVOLA DI SCARICO	VALVE DE VIDANGE	VALVULA DE SALIDA
DRIVING CHAIN	FAHRKETTE	CATENARIA	CHAINE D ROULEMENT	CADENA PROPULSORA
DRIVING UNIT	ANSTEUERGERAET	DISP. DI COMANDO	APPAREIL D'AMORC	APARATO DE MANDO
DRUCKBEGR.-VENTIL	DRUCKBEGR.-VENTIL	DRUCKBEGR.-VENTIL	DRUCKBEGR.-VENTIL	DRUCKBEGR.-VENTIL
DUMMY NUT	BLINDNIETMUTTER	DADO	ECROU	TUERCA
DUO-CONE SEAL	GLEITRINGDICHTUNG	GIUNTO ANELLO SCOR	JOINT DUO-CONE	RETEN FRONTAL
ECCENTRIC	EXZENTER	ECCENTRICO	EXENTRIQUE	EXCENTRICA
EDGE PROTECTION	KANTENSCHUTZ	PROTEZIONE SPIGOLI	PROTECTION DE COIN	CANTONERA
ELBOW	KRUEMMER	RACCORDO A GOMITO	COUDE	CODO
ELECTRICAL COMPON	ELEKTROTEILE	COMPON.ELEKTRICI	COMPOS. LECTRIQUES	PIEZAS EL CTRICAS
ELECTRICAL SYSTEM	ELEKTROANLAGE	SISTEMA ELETTRICO	EQUIP.ELECTRIQUE	INSTAL.ELECTRICA

Dictionary / Diccionario / Wörterbuch / Dictionnaire / Dizionario

SURVEY	Machine type **FX600**	Machine no.

English	German	Italian	French	Spanish
ELEMENT	ELEMENT	ELEMENTO	ELEMENT	ELEMENTO
END PLATE	ENDSCHEIBE	DISCO	RONDELLE	DISCO
ENDBUSHING	ENDBUCHSE	BUSSOLA FINALE	DOUILLE EXTREMITE	CASQUILLO FINAL
ENGINE OIL FILTER	MOTOROELFILTER	FILTRO OLIO MOT	FILTRE HUILE MOTEU	FILTRO ACEITE MOT
EXCAVATOR	BAGGER	ESCAVATORE	PELLE	EXCAVADORA
EXHAUST SYSTEM	ABGASANLAGE	IMPIANTO SCARICO	SYST ECHAPPEMENT	INST GASES ESCAPE
EXTENSION	VERLAENGERUNG	PROLUNGAMENTO	EXTENSION	ALARGAMIENTO
EXTERNAL DISK	AUSSENLAMELLE	DISCO ESTERNO	DISQUE EXTERIEUR	DISCO EXTERIOR
EYE	LAGERAUGE	ANELLO CUSCINETTO	OEILLET	OJO DE COJINETE
EYE BOLT	AUGENSCHRAUBE	OCCHIO A VITE	BOULON A OEILLET	ARMELLA
EYE BOLT	RINGSCHRB	VITE ANULAREM	VIS A OEILLET	TORNILLO DE ANILLO
FAN MOTOR	LUEFTERMOTOR	MOT VENTILATORE	MOTEUR VENTILATEUR	MOTOR VENTILADOR
FANSHAPED WASHER	FAECHERSCHEIBE	DISCO A VENTAGLIO	RONDELLE EVENTAIL	ARANDELA DENTADA
FASTENING	BEFESTIGUNG	FISSAGGIO	FIXATION	SUJECION
FASTENING	VERSCHLUSS	CHIUSURA	FERMETURE	CIERRE
FASTENING PARTS	BEFESTIGUNGSTEILE	PARTI FISSAGGIO	PIECES DE FIXATION	PARTES DE FIJACION
FEATHER KEY	PASSFEDER	LINGUETTA	CLAVETTE	CHAVETA DE AJUSTE
FILTER	BELUEFTUNGSFILTER	FILTRO VENTILAZ	FILTRE D VENTILANT	FILTRO VENTILACION
FILTER	FILTER	FILTRO	FILTRE	FILTRO
FILTER INSERT	FILTEREINSATZ	CARTUCCIA FILTRO	CARTOUCHE D FILTRE	ELEMENTO DE FILTRO
FLANGE	FLANSCH	FLANGIA	FLASQUE	BRIDA
FLANGED BUSH	BUNDBUCHSE	BUSSOLA FLANGIATA	DOUILLE A COLLET	CASQUILLO C VALONA
FOOT REST	FUSSSTUETZE	SUPPORTO	REPOSE-PIEDS	REPOSAPIES
FORK	GABEL	FORCELLA	FOURCHETTE	HORQUILLA
FRAME	GESTELL	CULLA	CHASSIS	BASTIDOR
FRAME	RAHMEN	TELAIO	CADRE	BASTIDOR
FUEL LEVEL SENDER	VORRATSGEBER	INDICATORE RISERVA	PUITS DE JAUGE	TRANSM NIVEL ALIME
FUEL SYSTEM	KRAFTSTOFFANLAGE	IMPIA ALIMENT COMB	SYST ALIMENT CARBU	INSTALA COMBUSTIBL
FUEL TANK	KRAFTSTOFFTANK	SERBATOIO CARB	RESERV CARBURANT	DEPOSITO COMBUST
FUEL-FILTER ELE	KRAFTST FILT ELEM	ELEM FILTRO CARBUR	ELE FILTRE A CARB	ELM FLTR COMBAST
FUSE	SICHERUNG	DISPOS SICUREZZA	SECURITE	FUSIBLE
FUSE INSERT	SICHERUNGSEINSATZ	FUSIBILE	CARTOUCHE FUSIBLE	CARTUCHO FUSIBLE
GAS SPRING	GASFEDER	MOLLA A GAS	RESSORT A GAZ	MUELLE A PR GAS
GASKET	DICHTUNG	GIUNTO	JOINT	JUNTA
GASKET SET	DICHTUNG SATZ	GRUPPO DI GIUNTO	JEU DE JOINTS	JUEGO JUNTAS
GASKET SET	DICHTUNGSSATZ	GRUPPO DI GIUNTO	JEU DE JOINTS	JUEGO JUNTAS
GEAR PINION	RITZEL	PIGNONE	PIGNON	PINON
GEARED PUMP	ZAHNRADPUMPE	POMPA A INGRANAGGI	POMPE A ENGRENAGES	BOMBA D ENGRANAJES
GEARSHIFT LEVER	SCHALTHEBEL	LEVA DI COMANDI	LEVIER COMMANDE	PALANCA DE MANDO
GENERAL	ALLGEMEIN	GENERALE	GENERAL	GENERAL
GLAZING	VERGLASUNG	VETRAGGIO	VITRAGE	ACRISTALDO
GREASE GUN	SCHMIERPRESSE	PRESSA PER GRASSO	PRESSE D.GRAISSAGE	BOMBA DE ENGRASE
GREASE CARTRIDGE	FETTPATRONE	BUSSOLA INGRASS	CARTOUCHE GRAISSE	CARTUCHO DE GRASA
GREASE FILLING	FETTFUELLUNG	RIFORN GRASSO	REMPLISS GRAISSE	CONT GRASA
GREASE GUN	FETTPRESSE	POMPA LUBRIFICANTE	POMPE A GRAISSE	BOMBA DE ENGRASE
GREASE NIPPLE	SCHMIERNIPPEL	NIPPLO INGRASS	GRAISSEUR	ENGRASADOR
GREASING SYSTEM	SCHMIERANLAGE	DISP.INGRASSAGIO	INST.DE GRAISSAGE	INST.LUBRIFICACION
GRID	GITTER	GRIGLIA	GRILLE	REGILLA
GROOVE BALL BEAR	RILLENKUGELLAGER	CUSC.SFERE GOLA PR	ROUL BILLES RAIN	ROD RANURADO BOLAS
GROOVED RING	NUTRING	ANELLO SCANALATO	JOINT A GORGE	ANILLO RANURADO
GRUB SCREW	GEWINDESTIFT	VITE DI ARRESTO	TIGE FILETEE	ESPARRAGO
GRUPPE-FOLGT	GRUPPE-FOLGT	GRUPPE-FOLGT	GRUPPE-FOLGT	GRUPPE-FOLGT
GUIDE	FUEHRUNG	GUIDA	GUIDE	GUIDA
GUIDE WHEEL	LEITRAD	RUOTA DI GUIDA	ROUE FOLLE	RUEDA GUIA
HAND WHEEL	HANDRAD	VOLANTINO A MANO	VOLANT	RUEDA DE MANIOBRA
HANDLE	GRIFF	MANIGLIA	POIGNEE	MANGO
HANDLE	HANDGRIFF	MANIGLIA	POIGNEE	MANGO
HEAD	KOPF	TESTA	TETE	CABEZA
HEAT EXCHANGER	WAERMETAUSCHER	SCAMBIATORE CALORE	ECHANGEUR DE CHALE	INTERCAMBI TERMICO
HEATER	HEIZGERAET	RISCALDAMENTO	RADIATEUR	APARATO DE CALEF
HEATING	HEIZUNG	RISCALDAMENTO	CHAUFFAGE	CALEFACCION
HEX HD SCREW	SECHSKANTSCHRAUBE	VITE ESAGONALE	VIS A 6 PANS	TORNILLO EXAGONAL
HEXAGON BOLT	SKT-SCHRB	VITE TESTA ESAGON	VIS TETE HEXAGONAL	TORN.DE CABE.EXAG.

Dictionary / Diccionario / Wörterbuch / Dictionnaire / Dizionario

SURVEY	Machine type FX600	Machine no.

English	German	Italian	French	Spanish
HEXAGON NUT	6KT-MUTTER	DADO ESAGONALE	ECROU HEXAGONAL	TUERCA EXAGONAL
HIGH PRESSURE	HOCHDRUCK	ALTA PRESSIONE	HAUTE PRESSION	ALTA PRESION
HINGE	SCHARNIER	CERNIERA	CHARNIERE	BISAGRA
HITCH PIN	STECKBOLZEN	PERNO	AXE DEBROCHABLE	BULON QUITA Y PON
HOLLOW SCREW	HOHLSCHRAUBE	VITE CAVA	VIS CREUSE	TORNILLO HUECO
HOLLOW SHAFT	HOHLWELLE	ALBERO CAVO	ARBRE CREUX	EJE HUECO
HOLLOW WHEEL	HOHLRAD	RUOTA CAVA	PIGNON A DENT INTE	RUEDA DENTADA INT
HOOK	HAKEN	GANCIO	CROCHET	GANCHO
HORN	HORN	TROMBA	KLAXON	BOCINA
HOSE	SCHLAUCH	TUBO FLESSIBILE	DURITE	MANGUERA
HOSE	SCHLAUCHLEITUNG	FLESSIBILE	FLEXIBLE	TUBO FLEXIBLE
HOSE BRACKET	SCHLAUCHHALTER	SUPPORTO TUBI	PORTE-FLEXIBLE	SOPORTE TUBOS FLEX
HOSE CLIP	SCHLAUCHSCHELLE	FASCETTA PER TUBI	COLLIER DE SERRAGE	ABRAZADER MANGUERA
HOUSING	GEHAEUSE	CARTER	BOITIER	CARCASA
HUB	NABE	MOZZO	MOYEU	CUBO
HYD OIL TANK	HYDRAULIKTANK	SERBAT OLIO IDRAUL	RESERVOR HYDR	DEPOSITO HIDR
HYDRAULIC MOTOR	HYDRAULIKMOTOR	MOTORE IDRAULICO	MOTEUR HYDRAULIQUE	MOTOR HIDRAULICO
HYDRAULIC SYSTEM	HYDRAULIKANLAGE	SISTEMA IDRAULICO	SYSTEM HIDRAULIQUE	SISTEMA HIDRAULICO
I CIRCUIT DIAGRAMM	ZUM STROMLAUFPLAN	NEL SCHE ELECTRICO	D.L SCH D CONNEX	E E PLA D CIRCUITO
IDLER ROLLER	LAUFROLLE	ROTELLA PORTANTE	GALET DE ROULEMENT	RODILLO
INDICATOR	ANZEIGER	INDICADORE	INDICATEUR	INDICADOR
INDICATOR PLATE	HI -SCHILD	TARGA INDICAT	PLAQUE INDICATRICE	ROTULO INDICADOR
INJECTOR	DUESE	UGELLO	INJECTEUR	INYECTOR
INLET PIPE	ANSAUGLEITUNG	TUBO ASPIRAZIONE	TUBUL D ADMISSION	TUBERIA ASPIRATION
INSERT	EINSATZ	ATTACCO	INSERTION	SUPLEMENTO
INSTALL.MATERIAL	EINBAU	MONTAGGIO	MATERIEL MONTAGE	MONTAJE
INSTRUCTION LABEL	BE -SCHILD	CARTELLO	PLAQUE DE SERVICE	ROTULO DE MANEJO
INSULATION	ISOLIERUNG	ISOLAZIONE	ISOLANT	AISLAMIENTO
INSULATION KIT	ISOLIERUNGSSATZ	JUEGO DE AISLANTES	JEU ISOLATION	GIOCO INSOLAZIONE
INTAKE SYSTEM	ANSAUGANLAGE	SIST DI ASPIR	SYST ASPIRATION	INST ASPIRATION
INTERNAL CASING	INNENKOERPER	CORPO INTERNO	CARTER INTERIEUR	CUERPO INTERIOR
INTERNAL DISK	INNENLAMELLE	DISCO INTERNO	DISQUE INTERIEUR	DISCO INTERIOR
INTERNAL GEAR PUMP	INNENZAHNRADPUMPE	POMPA INGRAN INTER	POMPE ROUE DEN INT	BOMBA R DENT INT
JOINT	GELENK	SNODO	ARTICULATION	ARTICULACION
JOINT BEARING	GELENKLAGER	SUPPORTO SNODATO	ROTULE	COJINETE ARTICULA
KEY	SCHLUESSEL	CHIAVE	CLE	LLAVE
LEVEL SWITCH	NIVEAUSCHALTER	INTERR A LIVELLO	INTERR NIVEAU	CONMUTADOR NIVEL
LEVER	HEBEL	LEVA	LEVIER	PALANCA
LEVER	UMLENKHEBEL	LEVA DI RINVIO	LEVIER DE RENVOI	PALANCA INVERSION
LID	DECKEL	COPERCHIO	COUVERCLE	TAPA
LINE	LEITUNG	TUBAZIONE	TUYAU	TUBERIA
LINING	BELAG	GUARNIZIONE	GARNITURE	REVESTIMIENTO
LINKAGE	SCHWINGE	BRACCIO OSCILLANTE	BIELLETTE	BALANCIM
LOCK	SCHLOSS	SERRATURA	SERRURE	CERRADURA
LOCK WASHER	FEDERRING	ANELLO A MOLLA	ANNEAU RESSORT	ANILLO ELASTICO
LOCK WASHER	SICHERUNGSCHEIBE	DISCO	RONDELLE	DISCO
LOCKING BAR	RIEGEL	ARRESTO	VERROU	CERROJO
LOCKING NUT	SICHERUNGSMUTTER	DADO FUSIBILE	ECROU DE SECURITE	TUERCA SEGURIDAD
LOCKING PIN	SPANNSTIFT	PERNO TENDITORE	GOUPILLE D.SERRAGE	PASADOR ELASTICO
LOW PRESSURE	NIEDERDRUCK	BASSA PRESSIONE	BASSE PRESSION	BAJA PRESION
LOWER CARRIAGE	UNTERWAGEN	SOTTOCARRO	CHASSIS INFERIEUR	CHASIS INFERIOR
MAGNET	MAGNET	MAGNETE	AIMANT	IMAN
MAINTENANCE MATER	WARTUNGSMATERIAL	MATERIALE DI MANT	MATERIEL DE MAINT	MATERIAL DE MANT
MANIFOLD	SAMMELLEITUNG	LINEA CONVOGLIATR	CONDUITE COLLECTR	TUBERIA COLECTORA
MANIFOLD	SCHLAUCHBOGEN	CURVA TUBO FLESS	COUDE	CODO
MAT	MATTE	TAPETTO	NATTE	ESTERA
MEMBRANE RESERVOIR	MEMBRANSPEICHER	ACCUMULAT DIAFRAM	RESERVOIR MEMBRANE	ACUMULADOR MEMBRAN
METAL HOSE	METALLSCHLAUCH	TUBO METALLICO	FLEXIBLE METALLIQ	TUBO FL METALICO
MIRROR	SPIEGEL	ESPETO	RETROVISEUR	ESPEJO
MIRROR SUPPORT	SPIEGELHALTER	SUPPORTO SPECCHIO	SUPPORT MIROIR	PORTAESPEJO
MONO	MONO	MONO	MONO	MONO
MONOBLOC BOOM	MONOAUSLEGER	BRACCIO MONO	FLECHE MONOBLOC	MONOPLUMA
MOTOR	MOTOR	MOTORE	MOTEUR	MOTOR

Dictionary / Diccionario / Wörterbuch / Dictionnaire / Dizionario

SURVEY	Machine type **FX600**	Machine no.

English	German	Italian	French	Spanish
MOUNT	LAGERBOCK	SUPPORTO CUSCINET	SUPPORT DE PALLIER	SOPORTE COJINETE
MOUNTING	HALTERUNG	FISSAGGIO	FIXATION	SUJETADOR
MOUNTING FOOT	ELAST	ELAST	PIED DE FIXATION	PIE DE FIJACION
MOUNTING PARTS	ANBAUTEILE	SERIE DI MONTAGGIO	JEU DE MONTAGE	ELEMENTOS ACOPL
MUFFLER	SCHALLDAEMPFER	SILENZIATORE	SILENCIEUX	SILENCIADOR
NIPPLE	NIPPEL	RACCORDO	RACCORD	ENGRASADOR
NIPPLE	VERSCHLUSSTOPFEN	TAPPO	BOUCHON	TAPON
NOZZLE-GROMMET	TUELLE	BECUCCIO	PASSE-CABLE	BOQUILLA
NUT	MUTTER	DADO	ECROU	TUERCA
O-RING	O-RING	ANELLO OR	JOINT TORIQUE	ANILLO REDOND
O-RING	RUNDSCHNURRING	GUARNIZIONE OR	JOINT TORIQUE	ANILLO OBTURADOR
OIL COOLER	OELKUEHLER	RADIATORE OLIO	REFROID HUILE	REFRIG.ACEITE
OIL SUCTION SYSTEM	OELANSAUGANLAGE	IMP ASPIRAZ OLIO	ASPIRATION HUILE	INST ASP ACEITE
ONE-WAY RESTRICTOR	DROSSELRUECK VENT	VALV NON RIT FARF	CLAP A -R ETR	VALV LIM PRES ESTR
OPERATOR'S CAB	FAHRERHAUS	CABINA	CABINE	CABINA DE MANDO
OPERATOR'S SEAT	FAHRERSITZ	SEDILE DI GUIDA	SIEGE DU CONDUCT	ASIENTO CONDUCTOR
ORIFICE	MUNDSTUECK	BOCCHELLO	EMBOUT	BOQUILLA
OTHER	SONSTIGE	ALTRO	AUTRE	OTROS
OUTER RACE	ZYL.ROLLENLAGER	CUSCIN.RULLI CIL	BAGUE EXTERIEURE	ARO EXTERIOR
OVAL FLANGE	BLINDFLANSCH	FLANGIA CIECA	BRIDE OBTUR OVALE	BRIDA OVALAD CIEGA
PANE	GLASSCHEIBE	LASTRA DI VETRO	VITRE	LUNA DE VIDRIO
PANELING	VERKLEIDUNG	RIVESTIMENTO	COUVERTURE	REVESTIMIENTO
PAWL	RASTE	CREMAGLIERA	CLIQUET	MUESCA
PEDAL	PEDAL	PEDALE	PEDALE	PEDAL
PIN	BOLZEN	BULLONE	BOULON	PERNO
PIN	STIFT	SPINA	CHEVILLE	PASADOR
PIN NO 1	LAGERUNG NR 1	PERNO N 1	AXE FIXATION NO1	BUTON FIJACION NO1
PIPE	RO	TUBO	TUYAU	TUBO
PIPE	ROHR	TUBO	TUYAU	TUBO
PIPE BEND	ROHRBOGEN	CURVA	ARC DE TUYAU	CODO
PIPE SOCKET	ROHRSTUTZEN	TRONCHETTO DI TUBO	TUBULURE	ACOPLAM TUBULAR
PISTON	KOLBEN	PISTONE	PISTON	PISTON
PISTON GUIDE RING	FUEHRUNGSRING	ANELLO DI GUIDA	BAGUE DE GUIDAGE	ANILLO GUIA
PISTON ROD	KOLBENSTANGE	BIELLA	TIGE DE PISTON	VASTAGO DEL PISTON
PLANETARY CARRIER	PLANETENTRAEGER	PORTASATELLITI	PORTE SATELLITE	PORTAPLANETARIO
PLATE	PLATTE	PIASTRA	PLAQUE	PLACA
PLATE	SCHILD	TARGA	PLAQUE	PLACA
PLATE	TELLER	SCODELLINO	PLATEAU	PLATO
PLATFORM	PODEST	PIEDESTALLO	PLATE-FORME	PEDESTAL
PLATFORM PLATE	PODESTPLATTE	LASTRA D PAVIMENTO	PLATE-FORME	PLANCHA PEDESTAL
PLUG	STOPFEN	TAPPO	BOUCHON	TAPON
PLUG	VERSCHLUSSBUTZEN	TAPPO	OBTURATEUR	OBTURADOR
PLUG-IN SLEEVE	STECKHUELSE	BUSSOLA A INNESTO	DOUILE ENFICHABLE	CASQUILLO ENCHUFE
POTENTIOMETER	POTENTIOMETER	POTENZIOMETRO	POTENTIOMETRE	POTENCIOMETRO
PRESS PART	ANPRESSTUECK	ELEMENTO CONTATTO	PIECE DE SERRAGE	PZA DE APRIETE
PRESS REG VALVE	DRUCKREGELVENTIL	VALV REGOL PRESS	CLAPET REGL PRESS	VALV REG PRESION
PRESS REL VALVE	DRUCKBEGR VENTIL	VALV LIMIT PRESS	CL.LIMIT PRES	VALV LIMIT PRES
PRESSU CONTR VALVE	DRUCKVENTIL	VALVOLA PRESSIONE	SOUPAPE REFOULEM	VALVULA DE PRESION
PRESSUR.SWITCH	DRUCKSCHALTER	INTERRUTTORE	MANO-CONTACTEUR	INTERR PRES ACEITE
PRESSURE RING	DRUCKRING	ANELLO DI COMP	ANNEAU DE PRESSION	ANILLO DE PRESION
PROFILE	PROFIL	PROFILO	PROFIL	PERFIL
PROPORTIONAL VALVE	PROPORTIONALVENTIL	VALVOLA PROPORZ	CLAPET PROPORT	VALVULA PROPORC
PROTECTIVE PLUG	SCHUTZSTOPFEN	TAPPO	BOUCHON	TAPON
PUMP	PUMPE	POMPA	POMPE	BOMBA
PUMP DRIVE	PUMPENANTRIEB	AZIONAMENTO POMPE	COMMANDE DE POMPE	ACCION DE LA BOMBA
PUMP GOVERNING	PUMPENSTEUERUNG	COMANDO POMPE	COMMANDE POMPES	MANDO BOMBAS
RADIATOR	KUEHLER	RADIATORE	REFROIDISSEUR	RADIADOR
RADIO	RADIO	RADIO	AUTO-RADIO	RADIO
RAIL	SCHIENE	ROTAIA	RAIL	CARRIL
RDR	RDR	ANELLO TENUTA	B D-ETANCH.RONDE	JUNTA RORICA
REDUCING NIPPLE	REDUZIERNIPPEL	NIPPLO RIDUTTORE	RACCORD REDUCTEUR	NIPLE DE REDUCCION
REDUCTION	REDUZIERUNG	RIDUZIONE	REDUCTION	REDUCCION
REGULATOR	REGLER	REGOLATORE	REGULATEUR	REGULADOR

FIATALLIS	Dictionary / Diccionario / Wörterbuch / Dictionnaire / Dizionario		
	SURVEY	Machine type **FX600**	Machine no.

English	German	Italian	French	Spanish
RELAY	RELAIS	RELAIS	RELAIS	RELE
RESERVOIR	SPEICHER	MAGGAZINO	RESERVOIR	ACUMULADOR
RETAINING WASHER	SICHERUNGSSCHEIBE	ROSETTA DI SICUREZ	BAGUE DE FREIN	ARANDELA SEGURIDAD
REWORK	NACHARBEIT	STRAORDINARIO	RETOUCHE	MECANIZADO POSTER
RIBBON	BAND	FASCIA	RUBAN	CINTA
RING	RING	ANELLO	ANNEAU	ANILLO
ROCKER SWITCH	WIPPSCHALTER	INTERR A BILICO	INTERR A BASCULE	INTERR BASCULANTE
ROD	STANGE	ASTA	TIGE	VASTAGO
RODS	STANGEN	BARRE	TIGES	BARRAS
ROLLER	ROLLE	RULLO	ROULEAU	RODILLO
ROPE	SEIL	FUNE	CABLE	CUERDA
ROT SHAFT LIP SEAL	V-RING	GUARNIZ AD ANELLO	JOINT A LEVRE	RETEN
ROT SHAFT LIP SEAL	WDR	GUARNIZ AD ANELLO	JOINT A LEVRE	RETEN
ROT SHAFT LIP SEAL	WELLENDICHTRING	GUARNIZ AD ANELLO	JOINT A LEVRE	RETEN
ROTARY SHAFT SEAL	RADIALDICHTRING	GUARNIZIONE RADIAL	BAGUE JOINT RADIAL	ANIL.JUNTA RADIAL
ROTOR	ROTOR	ROTORE	ROTOR	ROTOR
ROUND SEALING RING	RUNDDICHTRING	ANELLO TENUTA	B D ETANCH RONDE	JUNTA RORICA
ROUND STEEL	RD	TONDO	ACIER ROND	REDONDO
RUBBER CAP	GUMMIKAPPE	CAPPUCCIO IN GOMMA	CAPUCH EN CAOUTCH	CAPERUZA DE GOMA
RUBBER HOSE	GUMMISCHLAUCH	TUBI DI GOMMA	TUYAU CAOUTCHOUC	MANGUERA DE CAUCHO
RUBBER PIPING	DICHTSCHNUR	CORDONE DI TENUTA	CORD D'ETANCHEITE	CORDON DE JUNTA
RUBBER STOP	GUMMIPUFFER	TAMPONE IN GOMMA	TAMPON CAOUTCHOUC	TOPE DE GOMA
SAE-FLANGE HALF	SAE-FLANSCHHAELFTE	FLANGIA	FLASQUE	BRIDA
SAFETY BELT	SICHERHEITSGURT	CINTURA DI SICUREZ	CEINTURE SECURITE	CINTURON DE SEGUND
SAFETY GRILL	SICHERHEITSROST	GRIGLIA SICUREZZA	GRILLAGE SECURITE	REJILLON SECURIDAD
SAFETY PIN	SICHERUNGSSTIFT	SPINA SICUREZZA	AXE DE SECURITE	CLAVIJA DE SEG
SAME PARTS	GLEICHTEILE	INGRANAGGIO	TRANSMISSION	PIEZAS IGUALES
SCRAPER	ABSTREIFER	PARAPOLVERE	RACLEUR	RECOJEDOR
SCREW	SCHRAUBE	VITE	VIS	TORNILLO
SCREW DRIVER	SCHRAUBENDREHER	CACCIAVITE	TOURNEVIS	ATORNILLADOR
SCREW PLUG	SCHRAUBSTOPFEN	TAPPO A VITE	BOUCHON FILETE	TAPON TOSCADO
SCREW PLUG	VERSCHLUSSCHRAUBE	TAPPO A VITE	VIS DE FERMETURE	TORNILLO DE CIERRE
SCREW PLUG	VERSCHLUSSSCHRAUBE	TAPPO A VITE	VIS DE FERMETURE	TORNILLO DE CIERRE
SCREWING	VERSCHRB	AVVITATURA	ASSEMBLAGE VISSE	UNION ROSCADA
SEAL	DICHTPROFIL	PROFILO DI TENUTA	PROFILE ETANCHEITE	PERFIL ESTANQUEIZ
SEAL GASKET	ABDICHTUNG	GUARNIZIONE TENUTA	JOINT ETANCHEITE	JUNTA HERMETIZANTE
SEALING BAND	DICHTBAND	PASTRO DI TENUTA	BANDE D'ETANCHEITE	CINTA ESTANCA
SEALING BAND	DICHTUNGSBAND	FASCIA	RUBAN	CINTA
SEALING NUT	DICHTMUTTER	DADO DI TENUTA	ECROU ETANCHEITE	TUERCA HERMETIZ
SEALING RING	DICHTRING	ANELLO DI TENUTA	BAGUE D'ETANCHEITE	ANILLO JUNTA
SEALING RING	NILOSRING	ANELLO DI TENUTA	BAGUE D'ETANCHEITE	ANILLO JUNTA
SEAT	SITZ	SEDILE	SIEGE	ASIENTO
SEAT BOTTOM	SITZUNTERTEIL	PARTE INF SEDILE	PARTE INF SIEGE	PARTE INF ASIENTO
SEAT COVER	BEZUG	RIVESTIMENTO	REVETEMENT	FUNDA
SEAT CUSHION	SITZKISSEN	CUSCINO SEDILE	COUSSIN	COJIN ASIENTO
SECTIONAL RUBBER	RECHTECKPROFIL	PROFILO RETTANGOL	PROFILE CAOUTCHOUC	PERFIL DE GOMA
SEGMENT	SEGMENT	SEGMENTO	SEGMENT	SEGMENTO
SELF-TAPPING SCREW	BLECHSCHRB	VITE DI LAMIERA	VIS	TORNILLO CHAPA
SERRATED SHAFT	ZAHNWELLE	ALBERO DENTATO	ARBRE CANNELE	EJE DENTADO
SERVO CONTROL	VORSTEUERUNG	PILOTAGGIO	PILOTAGE	SERVOMANDO
SERVO VALVE	SERVOVENTIL	VALV SERVOCOMANDO	CLAPET SERVO	SERVOVALVULA
SERVO VALVE	VORSTEUERVENTIL	VALV DI PILOTAGGIO	CLAPET PILOTAGE	SERVOVALVULA
SET OF PIST RINGS	DICHTSATZ	SERIE GUARNIZIONI	JEU DES SEGMENTS	JUEGO AROS PISTON
SET OF SPUR GEARS	STIRNRADSATZ	G D RUOTE CILINDRI	JEU ROUES DENTEES	J D RUEDA DENT RE
SHIFT VALVE	SCHALTVENTIL	VALVOLA CAMBIO	CLAPET DE COMMANDE	VALVULA MANOBRA
SHIM RING	PASS-SCHEIBE	SPESSORE RASAMENTO	RONDELLE AJUSTEE	ARANDELA DE AJUSTE
SHOCK ABSORBER	STOSSDAEMPFER	AMMORTIZZATORE	AMORTISSEUR	AMORTIGUADOR
SHOULDER BOLT	BUNDSCHRAUBE	VITE A CALLETTO	VIS A COLLERETTE	TORNILLO C/COLLAR
SHUT-OFF VALVE	ABSCHALTVENTIL	VALVOLA INTERRUZ	CLAPET D'ARRET	VALV DESCONEXION
SHUTTLE VALVE	WECHSELVENTIL	VALVOLA	CLAPET	VALVULA
SIEVE	SIEB	SETACCIO	TAMIS	CRIBA
SIGNAL	SIGNAL	SEGNALE	SIGNAL	SENAL
SLEEVE	HUELSE	BUSSOLA	DOUILLE	CAPSULA

Dictionary / Diccionario / Wörterbuch / Dictionnaire / Dizionario

SURVEY | Machine type **FX800** | Machine no.

English	German	Italian	French	Spanish
SLEWING GEAR	SCHWENKGETRIEBE	RIDUT DI ROTAZIONE	REDUC.D'ORIENTAT	REDUCTOR ROTACION
SLIDING PIECE	GLEITSTUECK	PEZZO SCORREVOLE	PIECE COULISSANTE	PIEZA DESLIZANTE
SLIDING WINDOW	SCHIEBEFENSTER	FINESTRA SCORREVOL	FENETRE COULISS	VENTANILLA CORREDI
SNAP RING	SPRENGRING	ANELLO ELASTICO	CIRCLIP	ANILLO DE SUJECION
SNAP-ON PANEL	STECKBLENDE	MASCHERA A INNESTO	PANNEAU EMBOITABLE	CUBIERTA ENCHUFAB
SOCKET	STUTZEN	BUSSOLA	MANCHON	PITON
SOCKET-ADAPTER	EINSCHRAUBSTUTZEN	MANICOTTO A VITE	TUBULURE/RACCORD	RACOR
SOLENOID COIL	MAGNETSPULE	BOBINA MAGNETICA	BOBINE EXCITATRICE	BOBINA DE DISPARO
SOLENOID VALVE	MAGNETVENTIL	VALVOLA MAGNETICA	ELECTRO-VALVE	VALVULA ACC.MAGNET
SPACER	DISTANZSTUECK	DISTANZIATORE	ENTRETOISE	PIEZA DISTANC
SPACER PIECE	ZWISCHENSTUECK	PEZZO INTERMEDIO	ENTRETOISE	PIEZA INTERMEDIA
SPACER RING	DISTANZRING	ANELLO DISTANZIALE	BAGUE ENTRETOISE	ANILLO DISTANCIADO
SPACER SLEEVE	DISTANZBUCHSE	BOSSOLO DISTANZIAT	BAGUE ENTRETOISE	CASQUILLO DISTANC
SPEED SENSOR	DREHZAHLSENSOR	SENSORE	PALPEUR	SENSOR
SPRING	DRUCKFEDER	MOLLA A PRESSIONE	RESSORT PRESSION	MUELLE A COMPRES
SPRING	FEDER	MOLLA	RESSORT	RESORTE
SPRING SEAT	FEDERTELLER	SIODELLINO MOLLA	ASSIETTE D RESSORT	PLATILLO RESORTE
SPRING WASHER	FEDERSCHEIBE	DISCO ELASTICO	RONDELLE ELASTIQUE	ARANDELA ELASTICA
SPROCKET	KETTENRAD	RUOTA PER CATENA	BARBOTIN	RUEDA DE CADENA
SPUR GEAR	STIRNRAD	RUOTA CILINDRICA	PIGNON	RUEDA RECTA
SREW PLUG	VERSCHLUSSSCHRB	TAPPO A VITE	VIS DE FERMETURE	TORNILLO DE CIERRE
STAND	STAENDER	CAVALETTO	SUPPORT	SOPORTE
STEP	TRITT	PREDELLINO	MARCHE	ESTRIBO
STEPS	AUFSTIEG	SCALETTA	ECHELLE	ASCENSO (SUBIDA)
STICK	STIEL	MONTANTE	BRAS	MANGO
STICK CYLINDER	STIELZYLINDER	CIL AVAMBRACCIO	VERIN DE BRAS	CILINDRO DEL MANGO
STOP BUSH	FEDERHUELSE	BUSSOLA A MOLLA	DOUILLE DE BUTEE	CASQUILLO TOPE
STOP RING	ANLAUFRING	ANELLO AVVIAMENTO	BAGUE DE BUTEE	ANILLO DE ATAQUE
STOP VALVE	HALTEVENTIL	VALVOLA DI RITEGNO	SOUPAPE RETENUE	VALV RETENCION
STRAIGHT PIN	ZYLINDERSTIFT	PERNO CIL	GOUPILLE CYL	PASADOR CILINDRICO
STRAP	BUEGEL	STAFFA	ETRIER	SOPORTE
STRIP	LEISTE	LISTELLO	LISTEL	REGLETA
STUD	STIFTSCHRB	PRIGIONIERO	GOUJON	ESPARRAGO
SUCTION HOSE	ANSAUGSCHLAUCH	TUBO ASPIRAZIONE	FLEXIBLE ASPIRAT	TUBO ASPIRACION
SUCTION HOSE	SAUGSCHLAUCH	TUBO ASPIRAZIONE	FLEXIBLE D'ASPIR	MANGUERA ASPIRAC
SUN SHADE	SONNENBLENDE	PARASOLE	PARE SOLEIL	VISERA
SUPPORT PLATEPAD	UNTERLAGE	SUPERFICIE	BASE	BASE DE ASIENTO
SUPPORT RING	STUETZRING	ANELLO D'APPOGGIO	BAGUE DE SUPPORT	ANILLO DE APOYO
SUPPORT ROLLER	STUETZROLLE	RULLO DI SOSTEGNO	GALET DE GUIDAGE	RODILLO DE APOYO
SUPPORT ROLLER	TRAGROLLE	RULLI DI SOSTEGNO	GALET DE ROULEMENT	RODILLO PORTADOR
SUPPORTING RING	STUETZSCHEIBE	ROSETTA D'APPOGGIO	RONDELLE D'APPUI	ARANDELA DE APOYO
SWING BEARING	DREHKRANZ	RALLA	COURONNE DRIENT	CORONA GIRATORIA
SWING BRAKE	SCHWENKBREMSE	FRENO DI ROTAZ	FREIN ORIENTATION	FRENO DE GIRO
SWING FIXTURE	SCHWENKVERSCHRB	RACCORDO GIREVOLE	RACCORD PIVOTANT	ATORNILLAD GIRO
SWING PUMP	SCHWENKPUMPE	POMPA DI ROTAZ	POMPE MEC	BOMBA MECAN GIRO
SWITCH	SCHALTELEMENT	ELEMENTO COMMUTAZ	ELEMENT COMMUTAT	ELEMENTO COMMUTAC
SWITCH	SCHALTER	INTERRUTTORE	INTERRUPTEUR	INTERRUPTOR
SWIVEL CONNECTION	DREHVERBINDUNG	GIUNTO ROTATIVO	CONNEX.ORIENTABLE	ENLACE GIRATORIO
TAP ROLLER BEARING	KEGELROLLENLAGER	CUSC RULLI CONICI	ROULEM.ROUL CONIQ	RODAM RODILL CONIC
TAPPET	STOESSEL	ASTA DI SPINTA	POUSSOIR	TAQUE
TEMP TRANSMITTER	TEMPERATURGEBER	TRANSMETT TEMPER	TRANSMETTEUR TEMP	TRANSMISOR TEMPER
TENSIONING DEVICE	SPANNVORRICHTUNG	DISP DI TENSIONE	DISP DE SERRAGE	DISPOSITIVO TENSOR
TENSIONING SCREW	SPANNSCHRAUBE	TIRANTE A VITE	VIS TENDEUSE	TORNILLO TENSOR
THROW-AWAY FILTER	WECHSELFILTER	FILTRO D' SCAMBIO	FILTRE A JETER	FILTRO DE CAMBIO
TOGGLE & LINKAGE	KOPPEL U SCHWINGE	PANTOGRAFO	BIELLE/BALANCIER	BIELA Y BALANCIN
TOGGLE ARM	KOPPEL	ASA PANTOGRAFO	BARRE D'ACCOUPLEM	BIELA
TOGGLE/LINKAGE	KOPPEL - SCHWINGE	PANTOGRAFO	BIELLE/BALANCIER	BIELA/BALANCIN
TOOL SET	WERKZEUGSATZ	GIOCO DI UTENSILI	JEU D'OUTILLAGE	JUEGO HERRAMIENTAS
TOOTHED WASHER	ZAHNSCHEIBE	DISCO DENTATO	DISQUE DENTE	ARANDELA DENTADO
TOP	OBERTEIL	PARTE SUPERIORE	BATI SUPERIEUR	PARTE SUPERIOR
TRACK BRAKE	FAHRWERKSBREMSE	FRENO TRASLAZIONE	FREIN TRAIN ROUL	FRENO MEC TRASL
TRANSMISSION GEAR	GETRIEBE	INGRANAGGIO	TRANSMISSION	ENGRANAJE
TRAVEL GEAR	FAHRGETRIEBE	TRASMISSIONE	REDUCT TRANSLAT	REDUCT DE TRANSL

Dictionary / Diccionario / Wörterbuch / Dictionnaire / Dizionario

SURVEY	Machine type **FX600**	Machine no.

English	German	Italian	French	Spanish
TREADLE VALVE	TRITTPLATTENVENTIL	VALVOLA A PEDALE	CLAPET A PEDALE	VALVULA DE PEDAL
TUBE FITTING	VERSCHRAUBUNG	RACCORDO	RACCORD	RACOR
UPPER CARRIAGE	OBERWAGEN	PARTE SUP	CHASSIS TOURELLE	CHASIS SUPERIOR
VALVE	VENTIL	VALVOLA	CLAPET	VALVULA
VALVE	VENTILKEGEL	CONO VALVOLA	SOUPAPE/ROBINET	VALVULA
VALVE BLOCK	VENTILBLOCK	BLOCCO VALVOLE	BLOC DE CLAPETS	BLOQUE DE VALVULAS
VALVE BODY	VENTILKOERPER	CORPO VALVOLA	CORPS DE SOUPAPE	CUERPO DE VALVULA
VALVE COVER SEAL	VENTILDECKELDICHT	GUARNIZ COPER VAL.	JOINT COUVERC.CLAP	JUNTA SAMBRE.VALV
VALVE INSERT	VENTILEINSATZ	INSERTO VALVOLA	INSERTION DE VALVE	OBUS DE VALVULA
VALVE INTERCONN	VENTILVERKETTUNG	CONCATENAM VALVOLE	ENCHAIN SOUPAPES	ENCADENACION VALV
VAR.DISPL.MOTOR	VERSTELLMOTOR	SERVOMOTORE	MOT D'AJUSTAGE	MOTOR DE DESPL
VARIABLE PUMP	VERSTELLPUMPE	POMPA PORT VARIAB	POMPE CYL VARIABLE	BOMBA DESPL VARIA
VERSCHLUSSCHRB	VERSCHLUSSCHRB	VERSCHLUSSCHRB	VERSCHLUSSCHRB	VERSCHLUSSCHRB
VERTEILERKLOTZ	VERTEILERKLOTZ	VERTEILERKLOTZ	VERTEILERKLOTZ	VERTEILERKLOTZ
WALL	WAND	MURO	PAROI	PARED
WATER RESERVOIR	WASSERBEHAELTER	SERBATOIO ACQUA	RESERVOIR D'EAU	DEPOSITO DE AGUA
WATER/OIL	WASSER/OEL	ACQUA OLIO	EAU/HUILE	AGUA/ACEITE
WEB	STEG	STELO	REGLETTE	NERVADURA
WEDGE	KEIL	CUNEO	CLAVETTE	CUNA
WINDOW	FENSTER	FINESTRA	FENETRE	VENTANILLA
WINDOW STRIP	KLEMMPROFIL	MORSETTIERA	JOINT DE SERRAGE	PERF. DE FIJACION
WINDSCREEN WASHER	SCHEIBENWASCHANLAG	LAVO CRISTALLI	LAVE-GLACE	DISP LAVA LUNAS
WINDSCREEN WIPER	SCHEIBENWISCHER	TERGICRISTALLO	ESSUIE GLACE	LIMPIAPARABRISAS
WING NUT	FLUEGELMUTTER	DADO AD ALETTE	ECROU PAPILLON	TUERCA MARIPOSA
WIPER ARM	WISCHARM	BRACCIO TERGITORE	BRAS D ESSUITE GL	BRAZO LIMPIAPARABR
WIPER BLADE	WISCHBLATT	SPAZZ TERGICRIST	RACLETTE ESSUIE	EXCOBILLAS
WIPER MOTOR	WISCHERMOTOR	MOTORE TERGICRIST	MOTEUR ES GLACE	MOTOR LIMPIAPARABR
WIPER SYSTEM	WISCHERANLAGE	IMP TERGICRISTALLI	DISP ESSUI GL	INSTALAC PARABRIS
WIRE MESH	DRAHTGEWEBE	RETE METALLICA	TREILLIS DE FIL	TRENZA DE ALAMBRE
WITH MOUNT PARTS	MIT ANBAUTEILEN	SERIE MONTAGGIO	AV PIECES MONT	C PIEZAS DE MONT
WORKING HEADLIGHT	ARBEITSSCHEINWERF	FARO DI LAVORO	PROJECT DE TRAVAIL	FARO DE TRABAJO
12-POINT SCREW	12KT SCHRB	VITE POLIGONALE	VIS BIHEXAGONALE	TORN BIHEXAGONAL

OPTIONAL EQUIPMENT SECTION

Table of contents

SURVEY	Machine type FX600	Machine no.

No. assembly	Description
22.402 - 2444968	DISTRIBUTOR
30.200 - 2444411	GREASING SYSTEM MONO
60.160 - 2444409	HYDRAULIC SYSTEM MONOBLOC BOOM
60.160 - 2444410	HYDRAULIC SYSTEM MONOBLOC BOOM
60.160 - 2783776	HYDRAULIC SYSTEM MONOBLOC BOOM
61.032 - 2496882	HYDRAULIC SYSTEM STICK
60.150 - 2496218	MONOBLOC BOOM INSTALL.MATERIAL
61.010 - 2444197	STICK INSTALL.MATERIAL

FIATALLIS

Table of contents

SURVEY	Machine type FX500	Machine no.

No. of assembly	Description
22.402 - 2444968	DISTRIBUTOR
30.200 - 2444411	GREASING SYSTEM MONO
60.150 - 2495218	MONOBLOC BOOM INSTALL.MATERIAL
60.160 - 2444409	HYDRAULIC SYSTEM MONOBLOC BOOM
60.160 - 2783776	HYDRAULIC SYSTEM MONOBLOC BOOM
60.160 - 2444410	HYDRAULIC SYSTEM MONOBLOC BOOM
61.010 - 2444197	STICK INSTALL.MATERIAL
61.032 - 2496982	HYDRAULIC SYSTEM STICK

List of assemblies

SURVEY	Machine type FX600	Machine no.

No. of assembly	No. of assembly	Item	No. of assembly	Nr. of assembly	Item	No. of assembly	Nr. of assembly	Item
22.462 ·	60 160 -	0010						
30.200 ·	60 160 -	0020						
60.160 ·	2782236 - *	5001						
60.160 ·	2782236 - *	6011						
60.160 ·	2782236 - *	6021						
60 160 ·	60 160 -	0010						
61.010 ·	2782236 - *	6101						
61.032 ·	2782236 - *	6111						

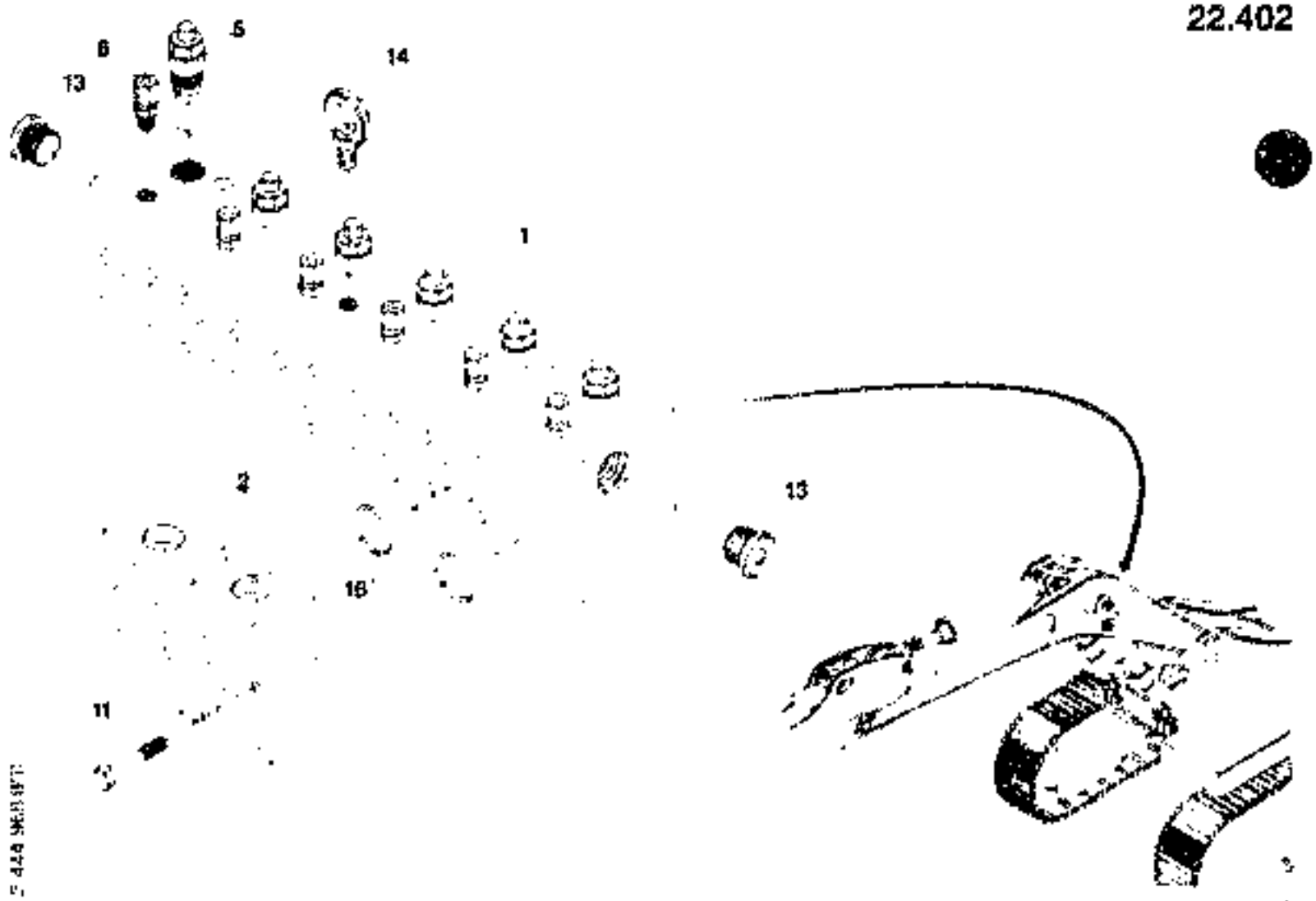

DISTRIBUTOR

T 2444966 - 000
B 2444966 - 010

FX600 106101 -

Item	Quan	Mf	Part No	Description
001	1	00	73171369	STRIP
002	2	00	73171370	
005	6	00	73171371	VALVE
006	6	00	73170466	COUPLING CLUTCH
007	6	00	73171372	COVER
008	8	00	73171374	PLATE
009	2	00	73171375	PLUG
010	16	00	73171376	PROTECTIVE PLUG
011	4	00	73170206	HEXAGON BOLT
013	2	00	73170461	SREW PLUG
014	1	00	73171377	EYE BOLT
016	2	00	73170346	SEALING RING

Mf: 00 = Common 13 = m 28 = m² 30 = m³ 43 = kg 50 = l (litre)

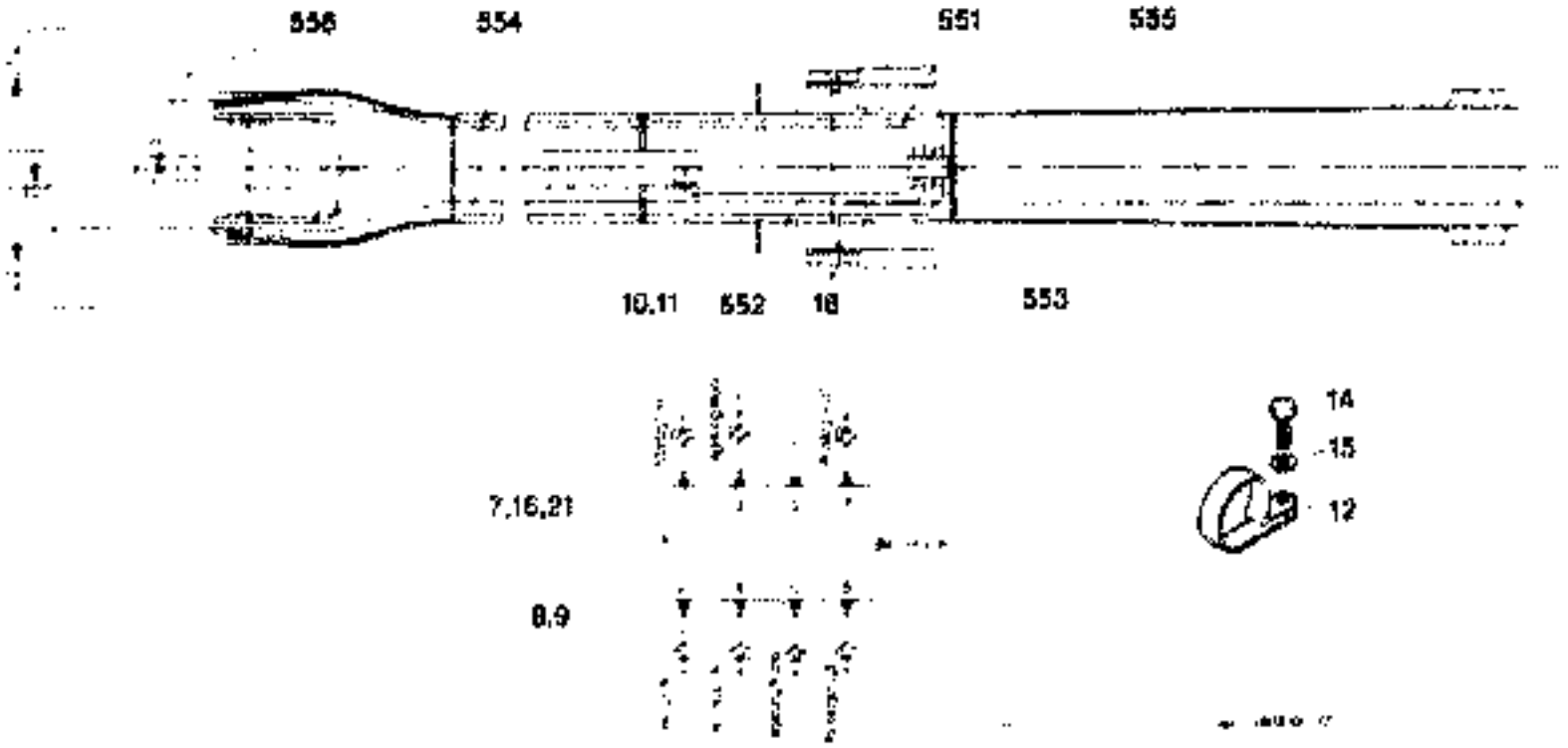

GREASING SYSTEM MONO 7.7M

PIATALLIE

FXC00 100101 -

T 2444411 - 002
B 2444411 - 010

Item	Qtdy	ME	Part No.	Description
007	1	00	**73171379**	DISTRIBUTON
008	7	00	**73170619**	HOUSING
009	7	00	**73170620**	SEALING RING
010	7	00	**73170622**	SCREW PLUG
011	1	00	**73170623**	SEALING RING
012	28	00	**73172150**	CLIP
014	18	00	**73170295**	HEXAGON BOLT
015	18	00	**73170150**	DISK WASHER
016	2	00	**73170833**	CYL HEAD SCREW
018	7	00	**73170831**	SOCKET
021	1	00	**73170826**	SOCKET
551	1	00	**73177419**	HOSE
552	2	00	**73171381**	HOSE
553	2	00	**73171382**	HOSE
554	1	00	**73177420**	HOSE
555	1	00	**73171384**	HOSE
556	2	00	**73177421**	HOSE

ME 00 = Dimensionless 10 = m 20 = m² 30 = m³ 40 = kg 50 = l (litre)

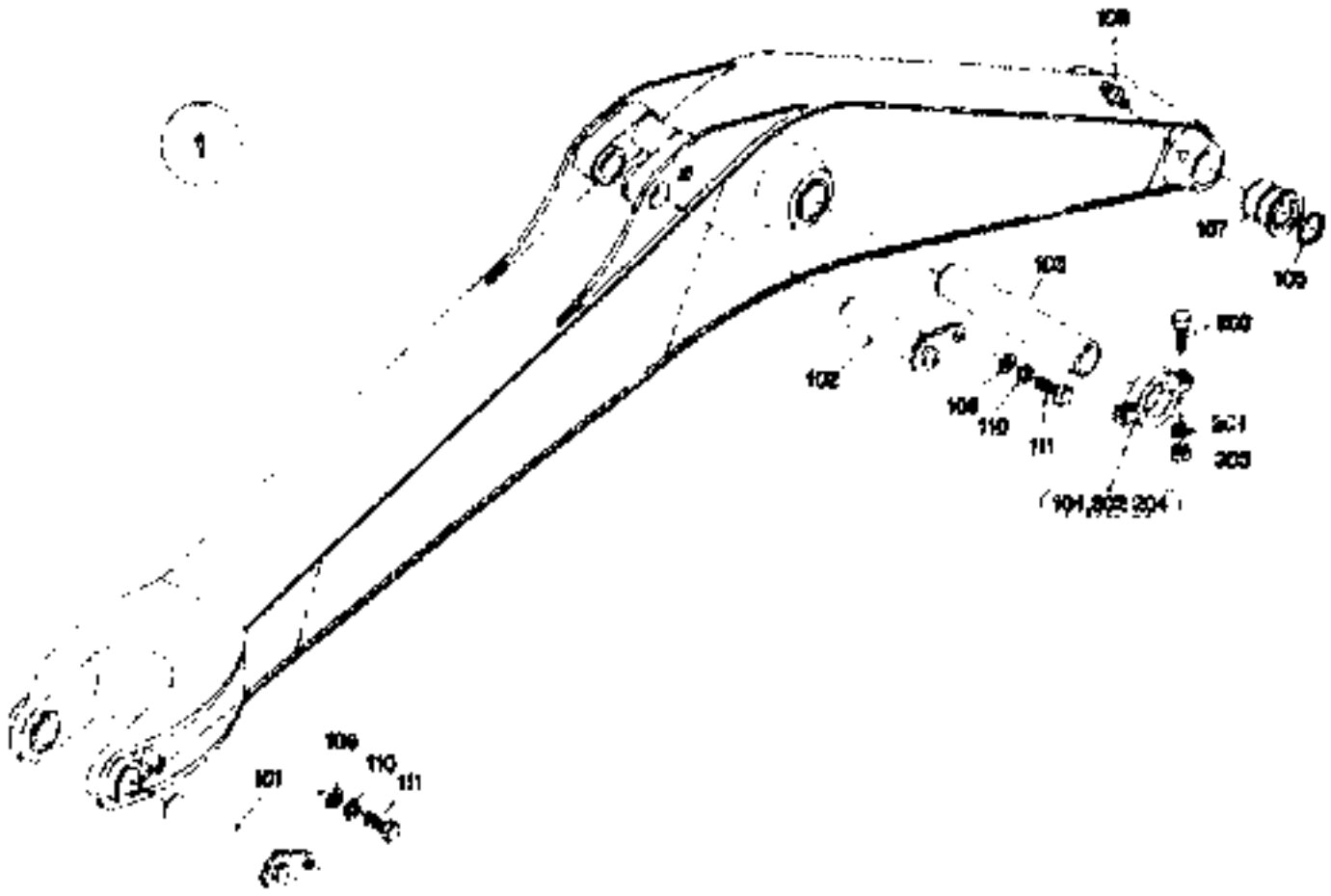

MONOBLOC BOOM INSTALL.MATERIAL 7,7M

T 2495218 - 000
B 2495218 - 010

FX60 109101 - . . .

Item	Quan	MF	Part No.	Description
001	1	00	73177422	MONOBLOC BOOM
101	1	00	73171339	PIN
102	1	00	73171340	PIN
103	1	00	73171341	PIN
104	2	00	73171342	RING
105	2	00	73171343	SCRAPER
106	2	00	73170136	GREASE NIPPLE
107	2	00	73171344	BUSHING
108	2	00	73170879	DISK WASHER
110	2	00	73170961	LOCK WASHER
111	2	00	73171345	HEXAGON BOLT
202	2	00	73171346	HEXAGON BOLT
203	2	00	73170162	HEXAGON NUT
204	2	00	73170178	LOCK WASHER

MF 00=Standard 10=m 20=m² 21=m³ 43=kg 67=l/min

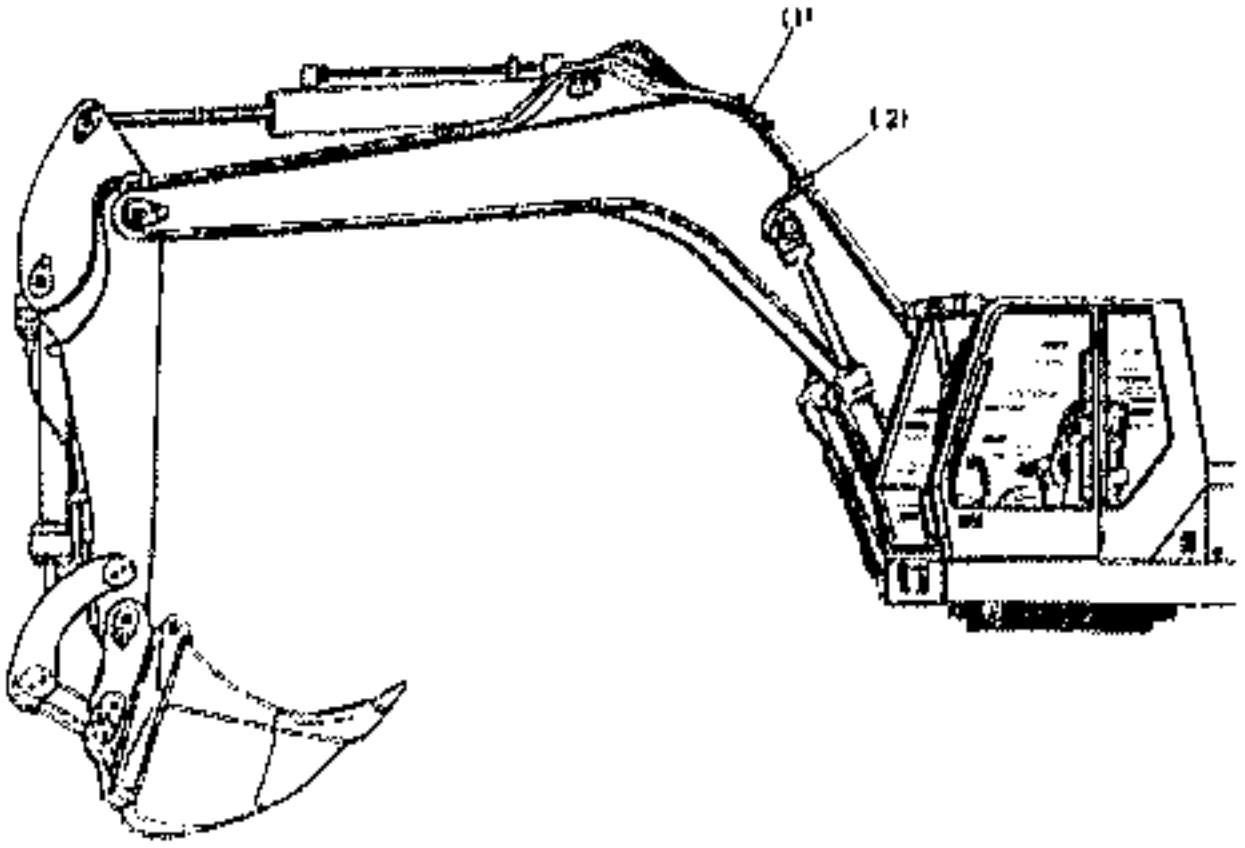

HYDRAULIC SYSTEM MONOBLOC BOOM 7.7M

60.160

T 2444409 - 000

F4660 100101 -

G 2444409 010

Item	Qnty	MF	Part No	Description
001	1	00		**60.160 2444410** HYDRAULIC SYSTEM MONOBLOC BOOM 7.7M
002	1	00		**30.200 2444411** GREASING SYSTEM MONO 7.7M

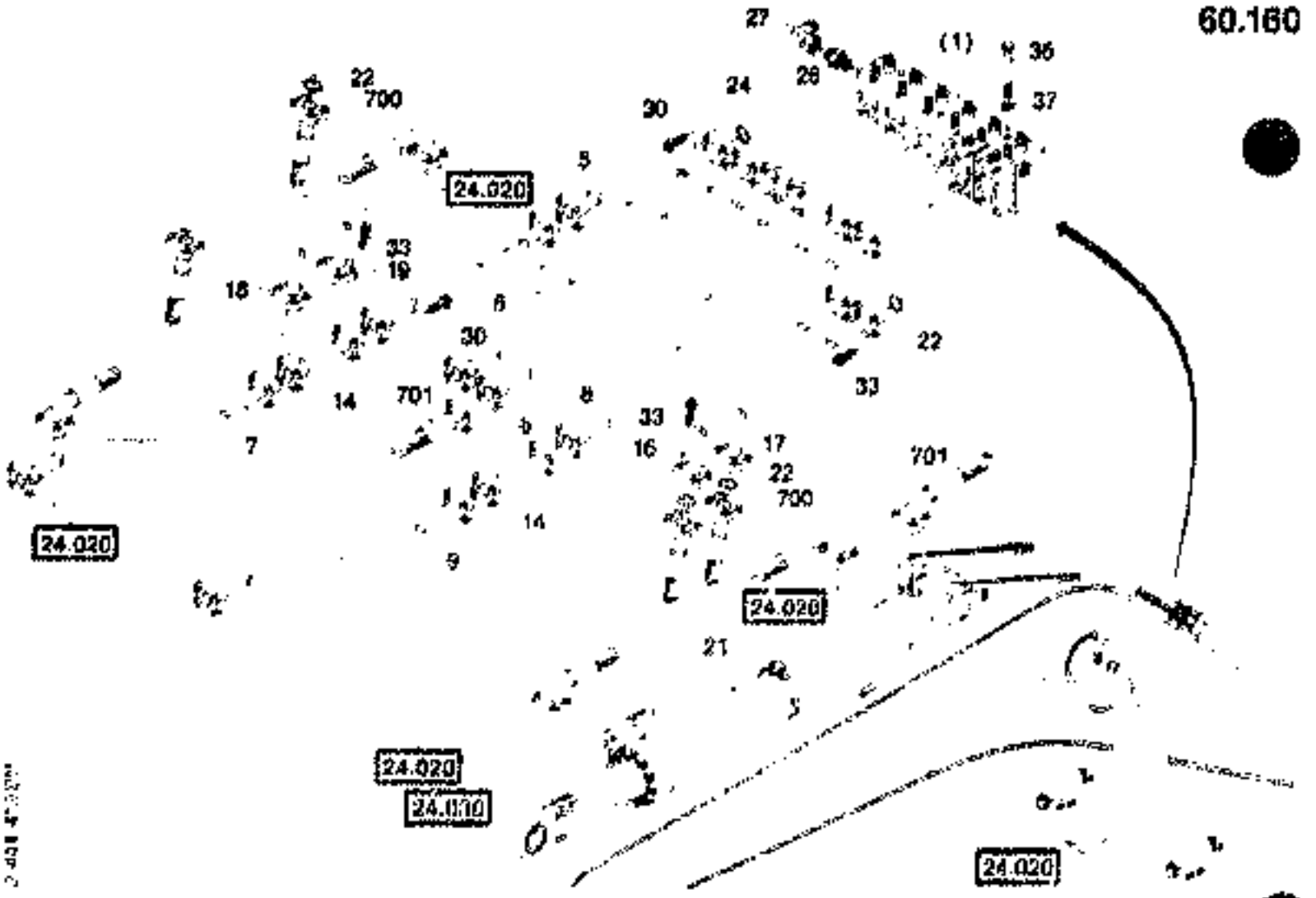

HYDRAULIC SYSTEM MONOBLOC BOOM 7,7 M

T 2444410 - 002
6 2444419 - 011

PX660 10C101 -

ITEM	QUAN	MF	PART NO	DESCRIPTION
001	1	00		**22.402 2444958** DISTRIBUTOR
005	1	00	**73177423**	LINE
006	2	00	**73177424**	LINE
007	1	00	**73177425**	LINE
008	1	00	**73177426**	LINE
009	1	00	**73177427**	LINE
014	2	00	**73177428**	LINE
015	1	00	**73171354**	LINE
017	1	00	**73171355**	LINE
018	1	00	**73171356**	LINE
019	1	00	**73171357**	LINE
021	1	00	**73177429**	CLIP
023	8	00	**73170327**	SEALING RING
023	1	00	**73177430**	CLIP
024	32	00	**73170346**	SEALING RING
026	1	00	**73170302**	SOCKET
027	1	00	**73170471**	SOCKET

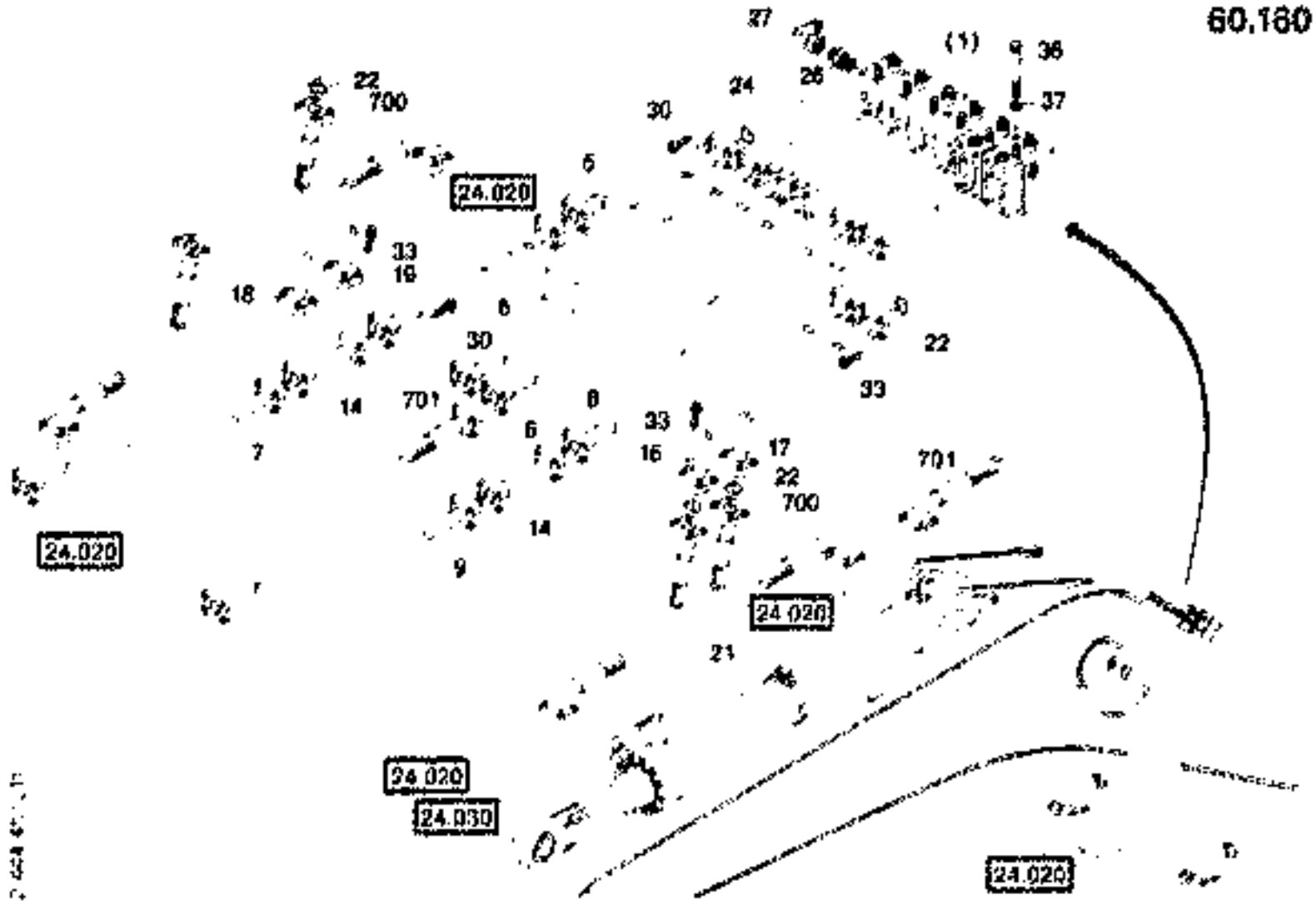

HYDRAULIC SYSTEM MONOBLOC BOOM 7,7 M

T 2444410 - 002

FX600 105101 -

Item	Qty.	MF	Part No.	Description
696	80	00	73170347	12-POINT SCREW
699	32	00	73170328	12-POINT SCREW
836	2	00	73171363	HEXAGON BOLT
897	5	00	73170169	DISKWASHER
700	2	00	73171364	HOSE
701	1	00	73177431	HOSE

MF 00 = Unclassified 10 = 7 20 = 12 30 = 21 40 = 30 50 = Other

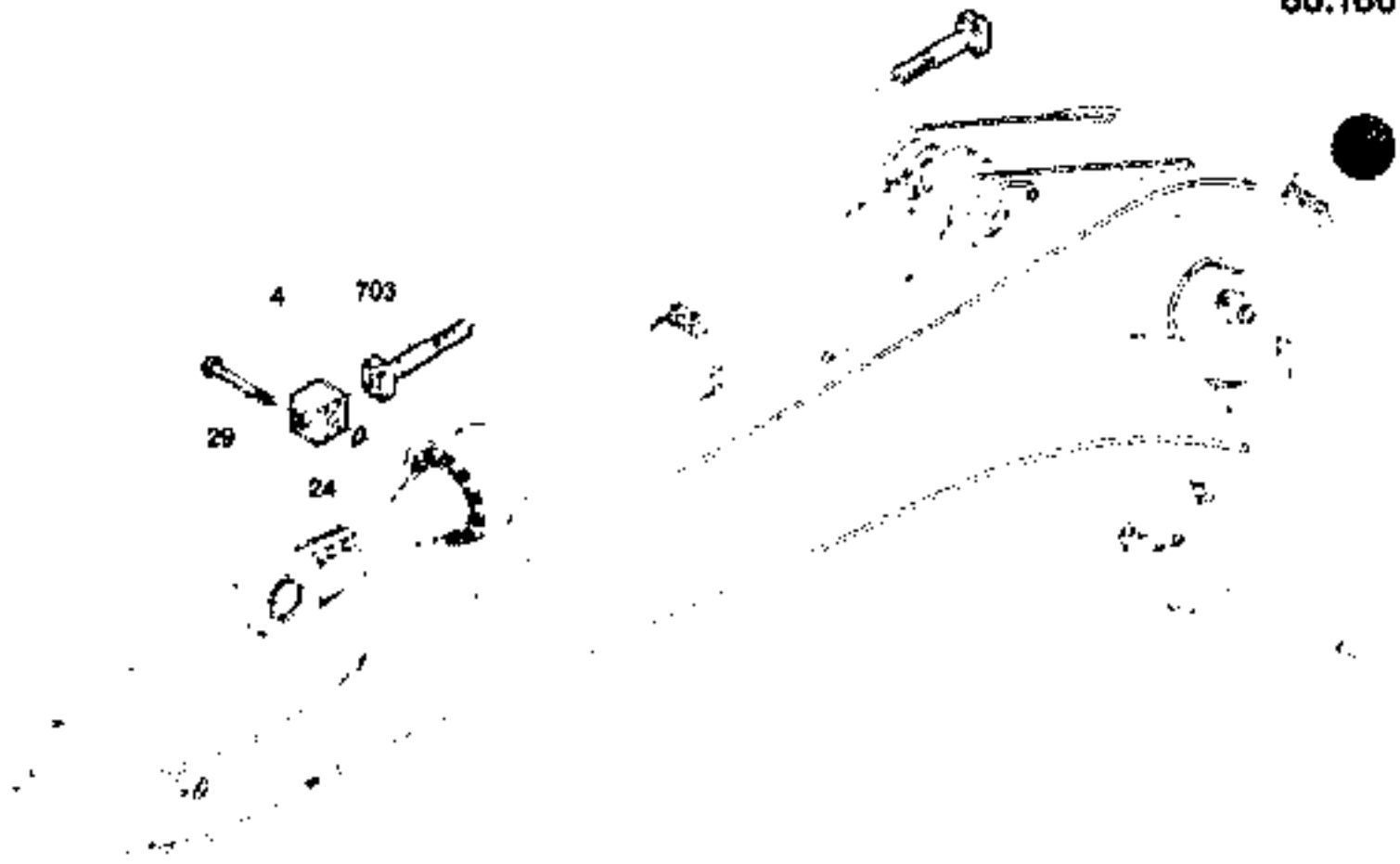

HYDRAULIC SYSTEM MONOBLOC BOOM 7,7M

60.160

T 2783776 - 000
S 2783776 - 000

FXD90 109161 . . .

Item	Quan	ME	Part No	Description
024	1	00	73170346	SEALING RING
029	4	00	73171367	HEXAGON BOLT
703	1	00	73177432	HOSE

ME 10=Standard 15=0.5 20=1 25=1.5 30=2 40=3 50=4 (mm)

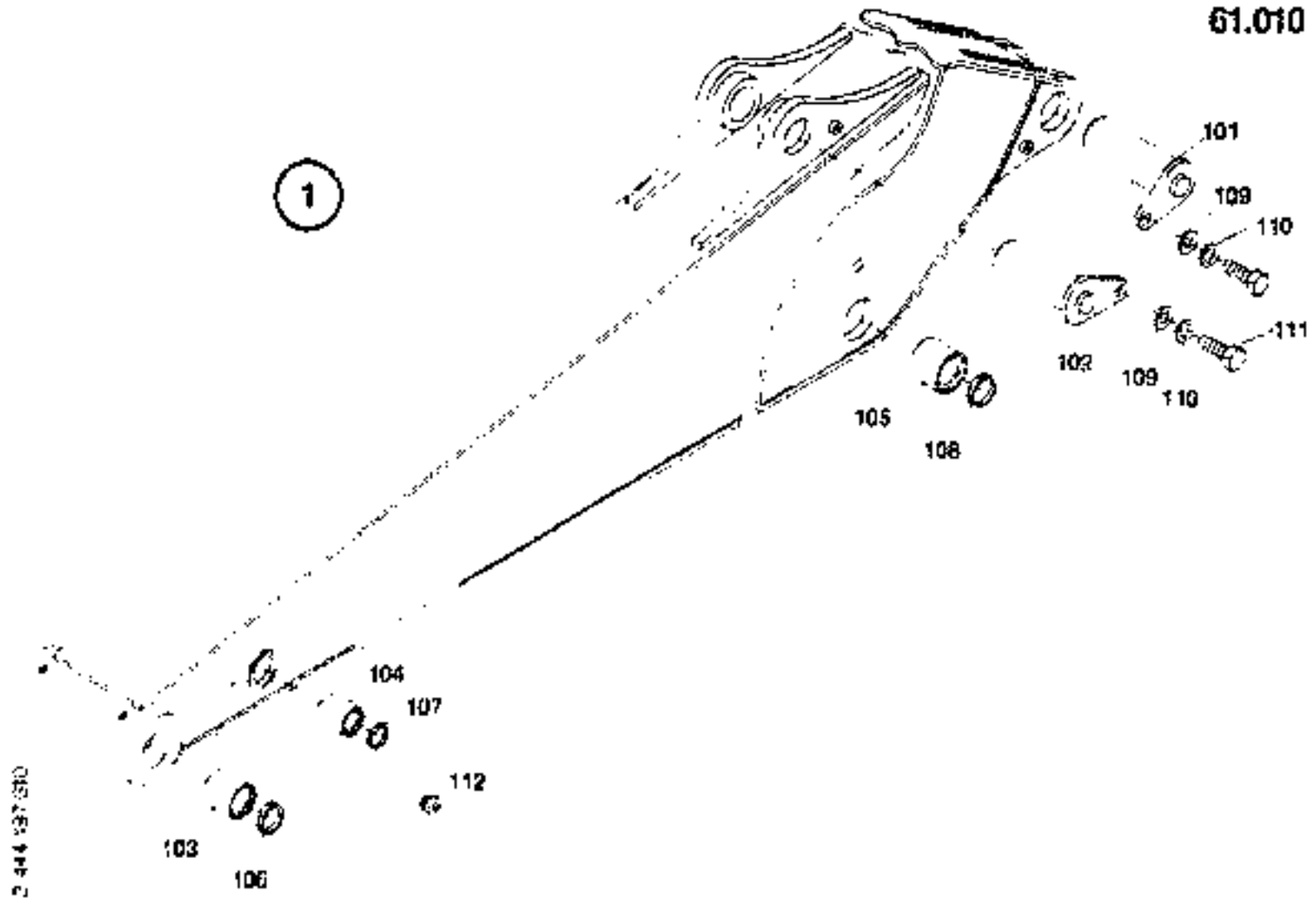

STICK INSTALL.MATERIAL 2,6M

T 2444197 - 001
B 2444197 - 010

FX600 106101 - .....

Item	Quan	ME	Part No.	Description
001	1	00	73177876	STICK
101	1	00	73171387	PIN
102	1	00	73171388	PIN
103	2	00	73171389	BUSHING
104	2	00	73171390	BUSHING
105	2	00	73171391	BUSHING
106	2	00	73171392	SCRAPER
107	2	00	73171393	SCRAPER
108	2	00	73171394	SCRAPER
109	2	00	73170979	DISK WASHER
110	2	00	73170981	LOCK WASHER
111	2	00	73171345	HEXAGON BOLT
112	6	00	73170138	GREASE NIPPLE

ME 00 = Quantity 10 = l 20 = m² 30 = m³ 40 = kg 50 = l (gal)

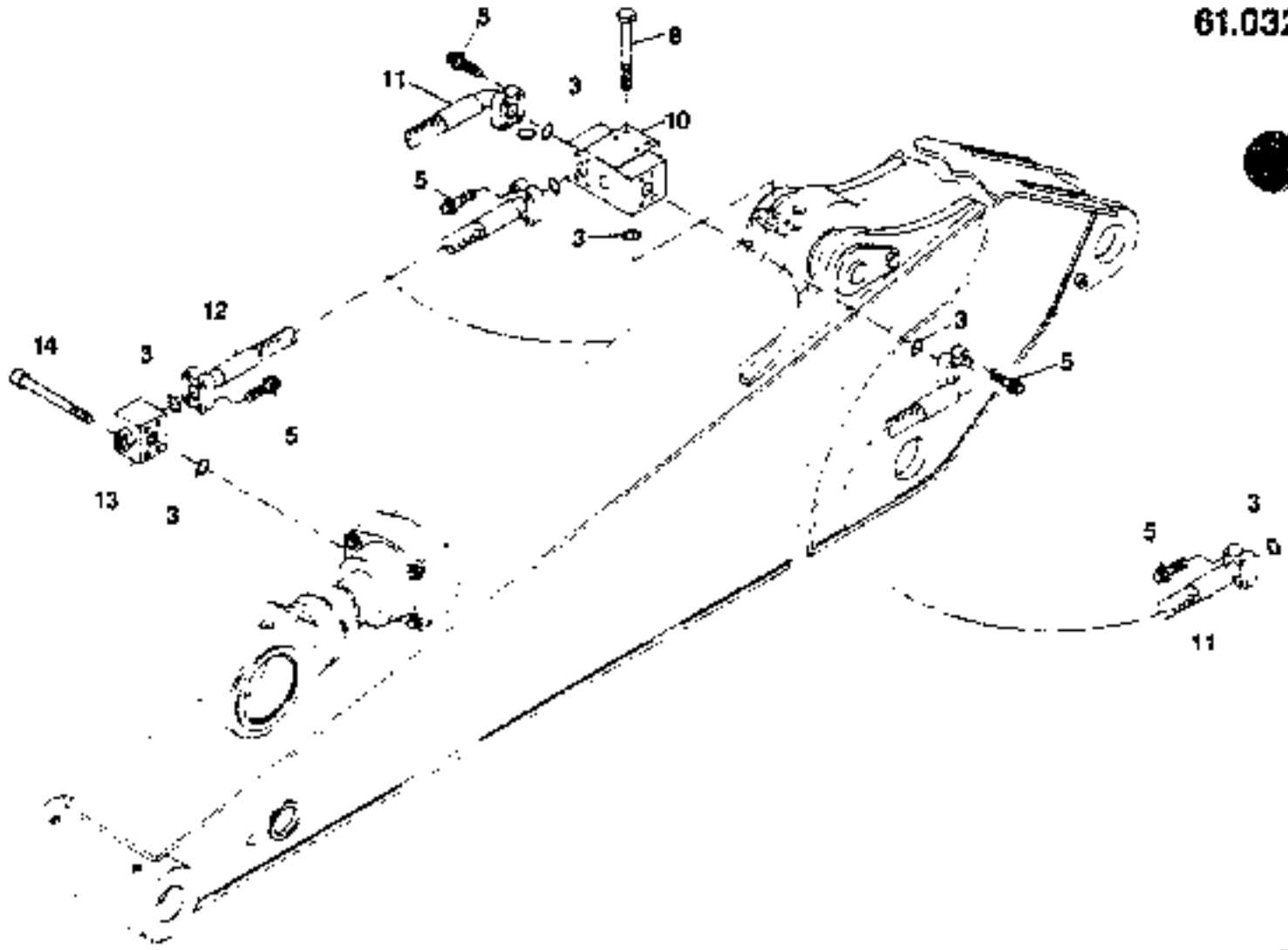

2 496 882 010

HYDRAULIC SYSTEM STICK 2,6M

FIATALLIS

FX600 106101 - .....

T 2496882 - 000
B 2496882 - 010

Item	Quan	ME	Part No	Description
003	7	00	73170346	SEALING RING
005	24	00	73170347	12-POINT SCREW
008	4	00	73171395	HEXAGON BOLT
010	1	00	73171396	DISTRIBUTOR
011	2	00	73177502	HOSE
012	1	00	73171397	HOSE
013	1	00	73171369	FLANGE
014	4	00	73171387	HEXAGON BOLT

ME 00 = Stück/pieco 13 = m 26 = m² 39 = m³ 43 = kg 50 = l (litro)

Dictionary / Diccionario / Wörterbuch / Dictionnaire / Dizionario

SURVEY	Machine type FX500	Machine no.

English	German	Italian	French	Spanish
BUSHING	BUCHSE	BOSSOLO	BAGUE	CASQUILLO
CLIP	SCHELLE	FASCETTA	COLLIER	ABRAZADERA
COUPLING/CLUTCH	KUPPLUNG	FRIZIONE	ACCOUPLE/EMBRAYAGE	EMBRAGUE
COVER	ABDECKUNG	COPERCHIO	REVETMENT	PROTECCION
CYL.HEAD SCREW	ZYL-SCHRB	VITE TESTA CILIND.	VIS TETE CYLINDR.	TORN.CABEZA CIL.
DISK/WASHER	SCHEIBE	DISCO	RONDELLE	DISCO
DISTRIBUTOR	VERTEILER	DISTRIBUTORE	DISTRIBUTEUR	DISTRIBUIDOR
EYE BOLT	RINGSCHRB	VITE ANULAREM	VIS A OEILLET	TORNILLO DE ANILLO
FLANGE	FLANSCH	FLANGIA	FLASQUE	BRIDA
GREASE NIPPLE	SCHMIERNIPPEL	NIPPLO INGRASS.	GRAISSEUR	ENGRASADOR
GREASING SYSTEM	SCHMIERANLAGE	DISP.INGRASSAGIO	INST.DE GRAISSAGE	INST._UBRIFICACION
HEXAGON BOLT	SKT-SCHRB	VITE TESTA ESAGON	VIS TETE HEXAGONAL	TORN.DE CABE.EXAG.
HEXAGON NUT	SKT-MUTTER	DADO ESAGONALE	ECROU HEXAGONAL	TUERCA EXAGONAL
HOSE	SCHLAUCHLEITUNG	FLESSIBILE	FLEXIBLE	TUBO FLEXIBLE
HOUSING	GEHAEUSE	CARTER	BOITIER	CARCASA
HYDRAULIC SYSTEM	HYDRAULIKANLAGE	SISTEMA IDRAULICO	SYSTEM HIDRAULIQUE	SISTEMA HIDRAULICO
INSTALL.MATERIAL	EINBAU	MONTAGGIO	MATERIEL MONTAGE	MONTAJE
LINE	LEITUNG	TUBAZIONE	TUYAU	TUBERIA
LOCK WASHER	FEDERRING	ANELLO A MOLLA	ANNEAU RESSORT	ANILLO ELASTICO
MONO	MONO	MONO	MONO	MONO
MONOBLOC BOOM	MONOAUSLEGER	BRACCIO MONO	FLECHE MONOBLOC	MONOPLUMA
PIN	BOLZEN	BULLONE	BOULON	PERNO
PLATE	PLATTE	PIASTRA	PLAQUE	PLACA
PLUG	STOPFEN	TAPPO	BOUCHON	TAPON
PROTECTIVE PLUG	SCHUTZSTOPFEN	TAPPO	BOUCHON	TAPON
RING	RING	ANELLO	ANNEAU	ANILLO
SCRAPER	ABSTREIFER	PARAPOLVERE	RACLEUR	RECOJEDOR
SCREW PLUG	VERSCHLUSSSCHRAUBE	TAPPO A VITE	VIS DE FERMETURE	TORNILLO DE CIERRE
SEALING RING	DICHTRING	ANELLO DI TENUTA	BAGUE D'ETANCHEITE	ANILLO JUNTA
SOCKET	STUTZEN	BUSSOLA	MANCHON	PITON
SREW PLUG	VERSCHLUSSSCHRB	TAPPO A VITE	VIS DE FERMETURE	TORNILLO DE CIERRE
STICK	STIEL	MONTANTE	BRAS	MANGO
STRIP	LEISTE	LISTELLO	LISTEL	REGLETA
VALVE	VENTIL	VALVOLA	CLAPET	VALVULA
VERTEILERKLOTZ	VERTEILERKLOTZ	VERTEILERKLOTZ	VERTEILERKLOTZ	VERTEILERKLOTZ
12-POINT SCREW	12KT-SCHRB	VITE POLIGONALE	VIS BIHEXAGONALE	TORN. BIHEXAGONAL
12-POINT SCREW	12KT-SCHRB	VITE POLIGONALE	VIS BIHEXAGONALE	TORN. BIHEXAGONAL