RUTHZIL TRATOR COMERCIAL DE PEÇAS LTDA 11 97083-6812 ROLANDO CITRANGULO

JANEIRO 2001

PARTS CATALOG

G700 MODELS

VOLVO

G710
G720
G730
G740
G780
G716VHP
G726VHP
G736VHP

SERIAL NO. 33000 -

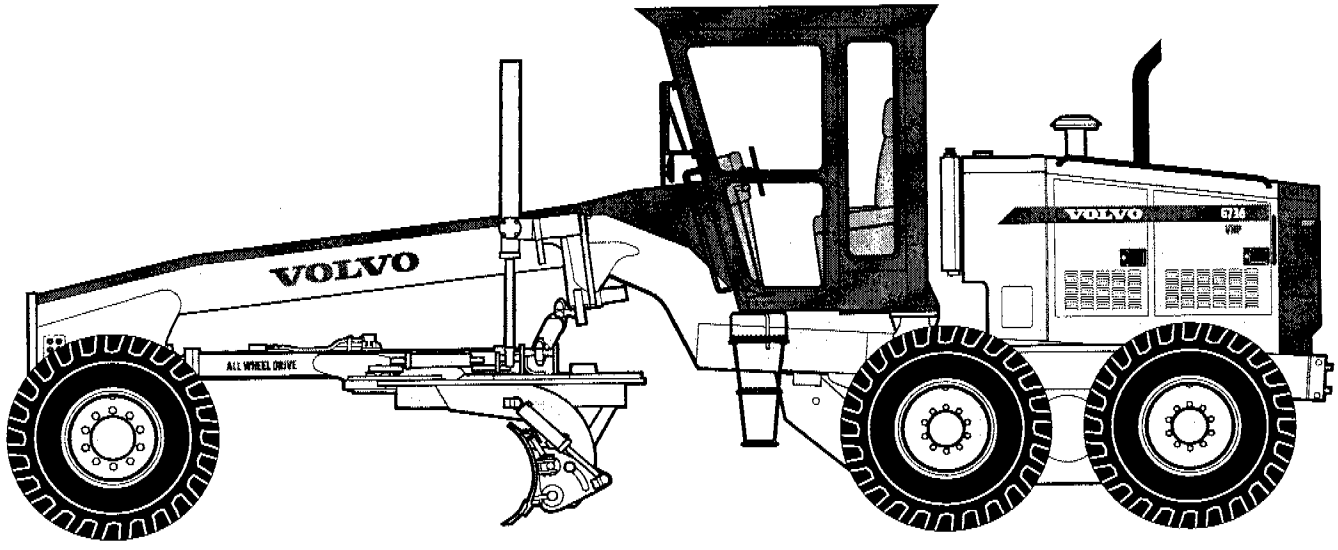

Volvo Motor Graders Limited
160 Maitland Road,
Goderich, Ontario, Canada N7A 3Y6
Tel: 519-524-2601
Fax: 519-524-3017
www.volvograders.com

©2001 **Volvo Motor Graders Limited**
Publ. no. 21 3 434 6013
Printed in Canada

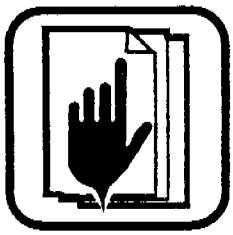

100 Preface, instructions and quick reference chart

600 Steering





200 Engine

700 Frame and wheels

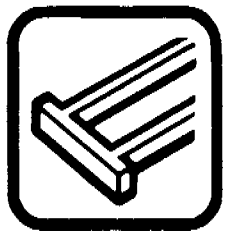

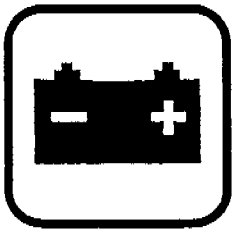

300 Electrical

800 Cab

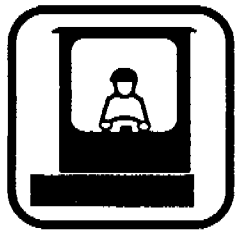

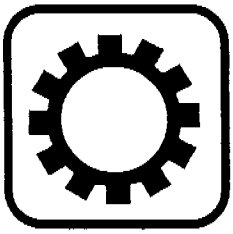

400 Power transmission

900 Hydraulics, attachments and grading unit



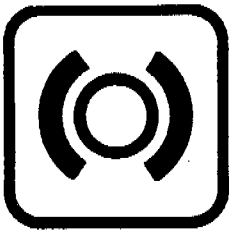

500 Brakes

Product plates

The following illustrations and text show which product plates are installed on the machine. These numbers are recorded at the factory.

When ordering spare parts, and in all telephone inquiries or correspondence, always quote the motor grader Model Number and the Product Identification Number.

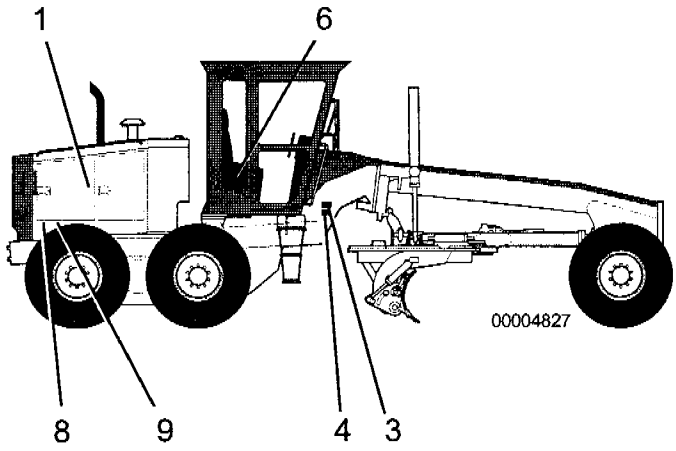

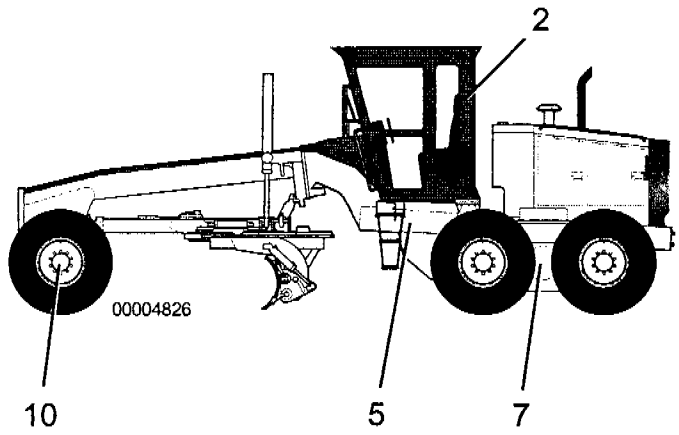

1 Engine

Cummins 6BT and 6CT engines – models G710 to G736 – located on fan end of engine, right-hand side of grader.
Cummins M11 engine – models G740 to G780 – located on top, center, right-hand side of engine.

2 Cab

The ROPS serial number plate is found inside the cab on the left-hand post behind the operator's seat. It states the ROPS model and serial number, specification, maximum machine mass, and bolt torque.

3 Product identification plate

This plate is found on the right-hand side of the frame in front of the cab. It has the Model Number and Product Identification Number (PIN) stamped on it. The Model Number is broken down as follows: the first digit designates 700 Models; the next two digits indicate weight and horsepower range. Some models will have the suffix "VHP" indicating Variable Horsepower.
The Model Number and PIN must be used in conjunction with the parts manual to order correct replacement parts.

4 Product identification plate (EU/EEA countries)

In addition to the above information, this plate shows machine weight, engine power, year of manufacture and has a space for the CE mark. It also is positioned on the right-hand side of the frame in front of the cab.

5 Transmission

The transmission serial number is located on the lower front of the housing.

6 Transmission/AWD ECU

The transmission/AWD ECU is located inside the console to the right of the operator seat. The serial number sticker is on the plug-end of the ECU unit.

7 Final drive

The final drive serial number is found on the right-hand side on the rear of the final drive on models G710 to G740. On G780 models it is found on the top of the center housing.

All wheel drive (AWD) models

8 AWD gearbox

The AWD gearbox is in the engine compartment at the rear of the grader. The serial number is found on the gearbox housing.

9 AWD hydraulic pumps

The AWD pumps are accessible in the engine compartment on the right-hand side of the grader. The serial number is found on the pump case housing.

10 AWD hydraulic motors

One motor is found at each front wheel. The serial number plate is found on the motor housing on the inside of the wheel.

Foreword

Only genuine parts are presented in this catalog. These parts have been subjected to the necessary function and endurance tests, and they comply with the high quality and safety requirements that have been set for Volvo Construction Equipment. You should note that warranties do not cover damage that is caused or aggravated by the fact that a non-genuine part was fitted.

The illustrations shown in the catalog should not be used as assembly or workshop instructions. Separate literature for the various specific subject areas is available for that purpose.

The owner of the machine or equipment should state the model designation, serial number, part number, quantity and the description of the part when ordering parts.

For location of the product plates for model and engine designations, etc., see Page 4.

For instructions on how to use the parts catalog, see **Parts catalog instructions**, Page 6.

See Page 7 for the list of abbreviations.

This parts catalog has been produced by Volvo Construction Equipment. If you have any difficulty obtaining parts or service for your motor grader, please contact us at the following address:

Volvo Motor Graders Limited.
160 Maitland Road
Goderich, Ontario
Canada, N7A 3Y6

Telephone: (519) 524-2601 – International dialling code 1
Telefax: (519) 524-3017 – International dialling code 1

This catalog lists the spare parts for the following Volvo G700 Model motor graders starting at serial (PIN) number **33000**:

- **G710, G720, G730, G740, G780** – Machines without All Wheel Drive or Variable Horsepower features.
- **G710 VHP, G720 VHP, G730 VHP, G740 VHP, G780 VHP** – Machines without All Wheel Drive but featuring Variable Horsepower.
- **G716 VHP, G726 VHP, G736 VHP** – Machines with All Wheel Drive and Variable Horsepower features.

Parts catalog instructions

In addition to part numbers, the Parts Catalog also includes a vast amount of essential information which you, the operator, should be acquainted with.

With the **Parts catalog instructions**, we want to show clearly how the catalog pages are arranged and what sort of information is presented therein.

Group 100 – Preface and instructions

Here you can find the following information:

- Title page and publication number
- Contents – Function group codes
- Product plates
- Foreword
- Parts catalog instructions
- Custom fitted equipment & accessories
- Ordering O-rings
- 700 model grader numbers
- List of abbreviations
- Quick reference chart for filters and belts

Group 200 to 900 – Text and illustration pages

The table of contents shows the division of the main groups into sub-groups, with reference to the page numbers

Text and illustration pages contain the following:

1 Issue number
2 Page number
3 Group number
4 Illustration number
5 Remarks
6 Quantity
7 Title
8 Part Description
9 Part number
10 Serial number range
11 Item number of the appropriate part in the illustration

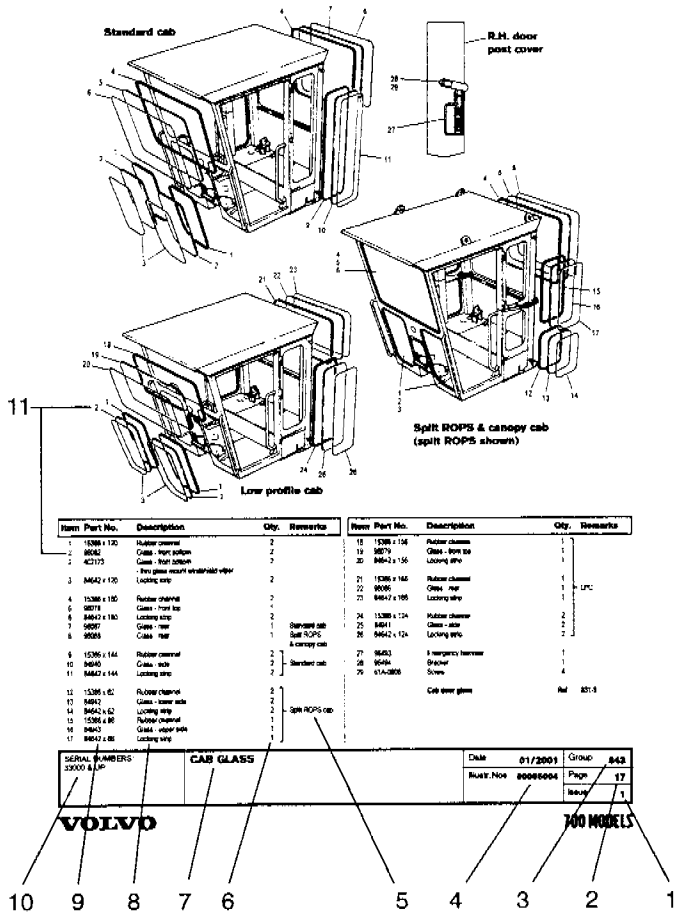

Using the text and illustration pages

- The parts illustration shows either assembled or exploded views of components identified by **Item numbers** (11).
- The motor grader is divided into logical arrangements that are identified by **Group numbers** (3) and **Title** (7).
- Product changes and improvements cause either a revision to the current issue or a new issue to be published. Revisions to issues are identified by the addition of a letter suffix after the **Issue number** (1), e.g., **843-1A**. Revisions generally are corrections or additional information to an existing issue. A new issue is identified by the next higher number, e.g., **843-2**. The next new issue will be **843-3** and so on.
- To find the part you need, turn to the **Page** (2) that includes your motor grader serial number within the applicable **Serial number range** (10). Locate the part in the illustration and note its **Item number** (11).
- Go to the parts list and locate the item number in the **Item** column. For example: **2**.
- In the same row, the **Part number** (9) column shows the Volvo part number, which for item 2 is **96082**.
- In the same row, the **Part description** (8) column shows a brief description of the part, which for item 5 is **Glass - front bottom**.
- In the same row, the **Quantity** (6) column shows the quantity of the part, which for item 2 is **2**.
- Specific information concerning the part: for example, actual model designation(s) and serial number applications, are found in the **Remarks** (5) column. In this case there are no remarks for item 2.

Continued design improvements could result in modifications to your equipment that are not covered in this publication. The Parts Catalog is revised when required to included these modifications in later issues. For more information, contact Volvo Motor Graders Limited.

Unauthorized reproduction of this document is prohibited and any violators will be prosecuted to the fullest extent allowed by law. We reserve the right to make changes without prior notice.

Abbreviations

Abbreviations used throughout the Parts Catalog are as follows:

A.R.	-	As required
Artic.	-	Articulation
Amp	-	Amperes
Aux.	-	Auxiliary
AWD	-	All Wheel Drive
c/w	-	Complete With
Cyl.	-	Cylinder
DIA.	-	Diameter
EEC	-	European Economic Commission
Gn	-	Galvanized
HMBCS	-	Heavy duty Moveable Blade Control System
hp	-	Horsepower
L.H.	-	Left-hand
LPC	-	Low Profile Cab
MBCS	-	Moveable Blade Control System
mm	-	Millimeters
OD	-	Outside Diameter
P/N	-	Part Number
Ph	-	Phosphorus
R.H.	-	Right-hand
Ref.	-	Reference
ROPS	-	Rollover Protective Structure
S/N	-	Serial Number
Std.	-	Standard
SS	-	Stainless Steel
UP	-	Unplated
V	-	Volt
VHP	-	Variable Horsepower
Zi	-	Zinc

Custom-fitted Equipment and Accessories

Occasionally, graders are manufactured at the factory incorporating "Custom-fitted Equipment and Accessories" ordered by the customer. These custom options, along with their replacement parts are not identified in the Volvo Parts Manual. However, the grader's "Order Specification Sheet" includes information about the custom options. Contact the Volvo Motor Graders Parts Department and provide the **Grader Product Identification Number (Serial Number).**

Ordering O-rings

Order replacement 37°J.I.C. flare, ORFS and Standard SAE O-rings using the following charts:

37°J.I.C. flare O-rings

Fitting size	O-ring P/N
1/4"	42229
5/16"	42230
3/8"	42231
1/2"	42232
5/8"	42233
3/4"	12A-016
1"	12A-020
1-1/4"	12A-024
1-1/2"	12A-028
2"	12A-032

Standard SAE O-rings

Order standard SAE O-rings using part number **116A-** followed by the last two digits of the fitting part number.

Fitting Part Number	O-ring Part Number
118A-08**10**	116A-**10**
111H-**08**	116A-**08**
111E-08**08**	116A-**08**

ORFS (O-ring Face Seal)

Fitting size	O-ring P/N
3/8"	12A-012
1/2"	12A-014
5/8"	12A-016
3/4"	12A-018
1"	12A-021

Convert fitting part numbers to tube size by taking the first two digits of fitting size and dividing by 1/16".

Fitting Part Number
127E-**12**12
127C-**06**
128F-**06**04

A/C O-ring Bulk Packs

P/N **12723728** #6 A/C O-RING - R134a
P/N **12723729** #8 A/C O-RING - R134a
P/N **12723730** #10 A/C O-RING - R134a

Volvo G700 Model Grader Numbers are:

G710	G720	G730	G740	G780
G710 VHP	G720 VHP	G730 VHP	G740 VHP	G780 VHP
G716 VHP	G726 VHP	G736 VHP		

Volvo manufactures only Articulated Graders.

Model numbers listed in the **REMARKS** column of the **Parts List**, **Parts Illustrations** and in the **Title**, together with the word **to** or an **ampersand (&)**, indicate a range of models.

Examples are shown below:

1. **G710 to G726**
   This range includes all models in ascending numerical order beginning with model G710 and includes all Variable Horsepower (VHP) models. inclusive of model G726 VHP.
   i.e. G710, G710 VHP, G716 VHP, G720, G720 VHP and G726 VHP.

2. **G710 VHP to G736 VHP**
   This range is specific to Variable Horsepower (VHP) models in ascending numerical order beginning with Model G710 VHP.
   i.e. G710 VHP, G716 VHP, G720 VHP, G726 VHP, G730 VHP & G736 VHP.

3. **G710 to G780**
   This range covers the entire range of models in ascending numerical order beginning with model G710, inclusive of model G780

4. **G710 to G716**
   This range includes all graders in ascending numerical order beginning with model G710 and includes all Variable Horsepower (VHP) models. inclusive of model G716 VHP.
   i.e. G710, G710 VHP and G716 VHP.

Volvo manufactures three models equipped with All Wheel Drive (AWD). They are Models **G716 VHP, G726 VHP** and **G736 VHP**. Any assemblies or components specific to these graders appear in **group 400**, or in isolated cases throughout the manual and identified as AWD or by their model numbers in the **REMARKS** column.

Quick reference chart for filters and belts - S/N 33000 & up

GRADER MODEL NUMBERS	G710 G710 VHP G716 VHP	G720 G720 VHP G726 VHP	G730	G730 VHP G736 VHP	G740 G740 VHP	G780 G780 VHP
CUMMINS ENGINE MODEL NUMBERS	**6BT5.9**	**6CT8.3**	**6CT8.3**	**6CT8.3**	**M11**	**M11**
ITEM	**P/N**	**P/N**	**P/N**	**P/N**	**P/N**	**P/N**
Hydraulic Oil Filter - (Element)	49076	49076	49076	49076	49076	49076
Hydraulic Oil Filter - (Element) All Wheel Drive	97710	97710	N/A	97710	N/A	N/A
Transmission Oil Filter	49076	49076	49076	49076	49076	49076
Air Filter Element - Primary	28120	28120	28120	37398	37398	37398
Air Filter Element - Safety	28121	28121	28121	63288	63288	63288
Engine Oil Filter	36844	54429	54429	54429	54429	54429
Fuel Filter	36845	36845	36845	36845	N/A	N/A
Fuel Filter with Drain	36846	36846	36846	36846	36849	36849
Fuel Filter - In-line	59115	59115	59115	59115	N/A	N/A
Fuel Filter - Racor Option	36107	36107	36107	36107	36107	36107
Air Conditioner Fresh Air Filter	96912	96912	96912	96912	96912	96912
Air Conditioner Recirculating Air Filter	96913	96913	96913	96913	96913	96913
Coolant Filter	N/A	45674	45674	45674	45674	45674
Coolant Filter - Pre-charge	N/A	34654	34654	34654	34654	34654
Fan/Alternator Belt	86854	95248	95248	95248	N/A	N/A
Fan Belt	N/A	N/A	N/A	N/A	63419	63419
Alternator Belt	N/A	N/A	N/A	N/A	51467	51467
Air Conditioner Belt	86800	95448	95448	95448	44213	44213

NOTE: All Wheel Drive (AWD) grader models are G716 VHP, G726 VHP & G736 VHP

P/N - Part Number

N/A - Not Applicable

S/N - Serial Number

Group	Page

Numerical

217 Oil Drain Valve 3
218 Engine Mounts - Models G710 to G736 4
Engine Mounts - Models G740 to G780 5
233 Fuel Filter / Water Separator 6
234 Fuel Tank 7
235 Fuel Circuit - Models G710 to G736 8
Fuel Circuit - Models G740 to G780 9
252 Exhaust Stack & Rain Cap Installations 10
Muffler Installation - Models G710 to G716 11
Muffler Installation - Models G720 to G736 12
Muffler Installation - Models G740 to G780 13
256 Air Cleaner & Inlet Assembly 14
Air Cleaner Installation - Non VHP 15
Air Cleaner Installation - Models G710 VHP to G780 VHP 16
261 Radiator Installation - Models G710 to G716 ..... 17, 18
Radiator Installation - Models G720 to G736 ..... 19, 20
Radiator Installation - Models G740 to G780 ..... 21, 22
Radiator Shutter 23, 24
263 Radiator Fan Shrouds - Sucker 25
Radiator Fan Shrouds - Blower 26
Fans & Fan Guard - Models G710 to G716 27
Fans & Fan Guard - Models G720 to 736 28
Fans & Fan Guard - Models G740 to 780 29
269 Recirculating Coolant Heater Installation 30
Engine Heater 31
270 Throttle Controls 32
274 Cold Start 33
278 Variable Horsepower - Models G710 VHP to G780 VHP 34

Group	Page

Alphabetical

256 Air Cleaner & Inlet Assembly 14
Air Cleaner Installation - Models G710 VHP to G780 VHP 16
Air Cleaner Installation - Non VHP 15
274 Cold Start 33
269 Engine Heater 31
218 Engine Mounts - Models G710 to G736 4
Engine Mounts - Models G740 to G780 5
252 Exhaust Stack & Rain Cap Installations 10
263 Fans & Fan Guard - Models G710 to G716 27
Fans & Fan Guard - Models G720 to 736 28
Fans & Fan Guard - Models G740 to 780 29
235 Fuel Circuit - Models G710 to G736 8
Fuel Circuit - Models G740 to G780 9
233 Fuel Filter / Water Separator 6
234 Fuel Tank 7
252 Muffler Installation - Models G710 to G716 11
Muffler Installation - Models G720 to G736 12
Muffler Installation - Models G740 to G780 13
217 Oil Drain Valve 3
263 Radiator Fan Shrouds - Blower 26
Radiator Fan Shrouds - Sucker 25
261 Radiator Installation - Models G710 to G716 ..... 17, 18
Radiator Installation - Models G720 to G736 ..... 19, 20
Radiator Installation - Models G740 to G780 ..... 21, 22
Radiator Shutter 23, 24
269 Recirculating Coolant Heater Installation 30
270 Throttle Controls 32
278 Variable Horsepower - Models G710 VHP to G780 VHP 34

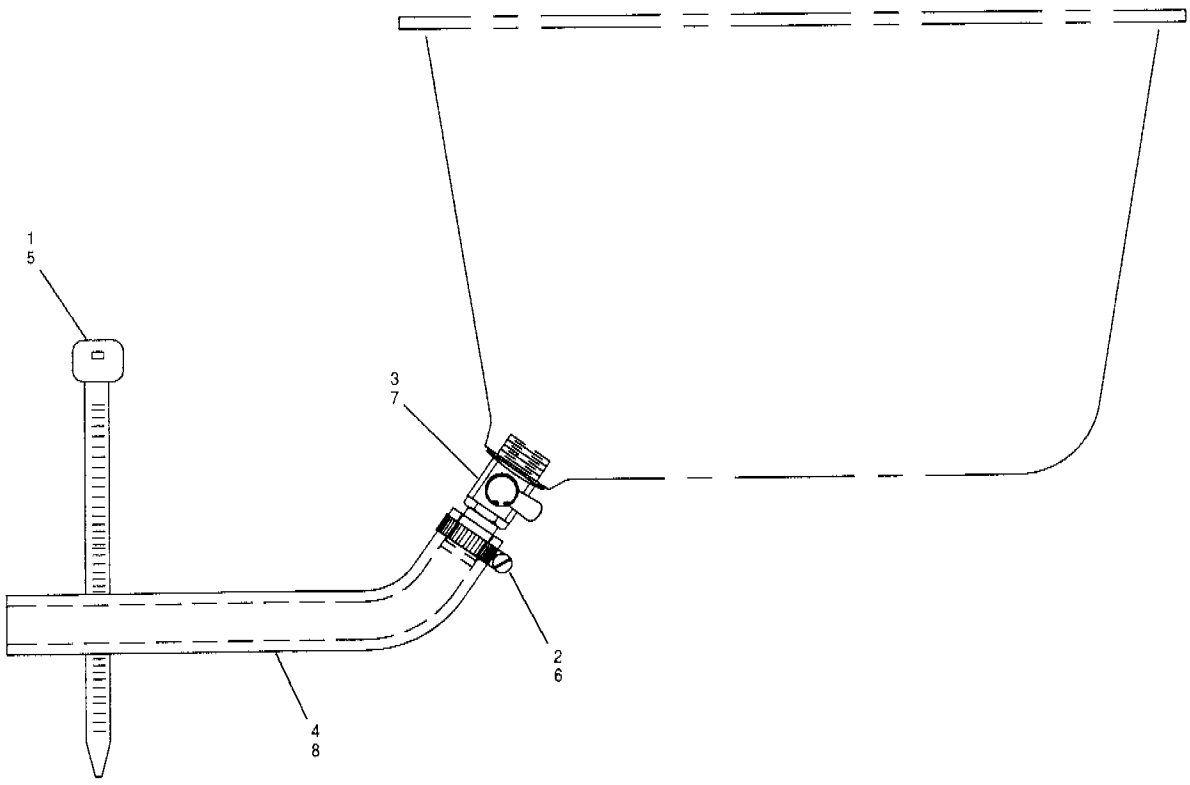

Item	Part No.	Description	Qty.	Remarks
		Oil drain valve installation		**G710 to G736**
1	15774	Tie wrap	1	
2	22D-06	Clamp	1	
3	48253	Valve	1	
4	48335 x 12	Hose	1	
		Oil drain valve installation		**G740 to G780**
5	15774	Tie wrap	1	
6	22C-12	Clamp	1	
7	48252	Valve	1	
8	48336 x 12	Hose	1	

Item	Part No.	Description	Qty.	Remarks

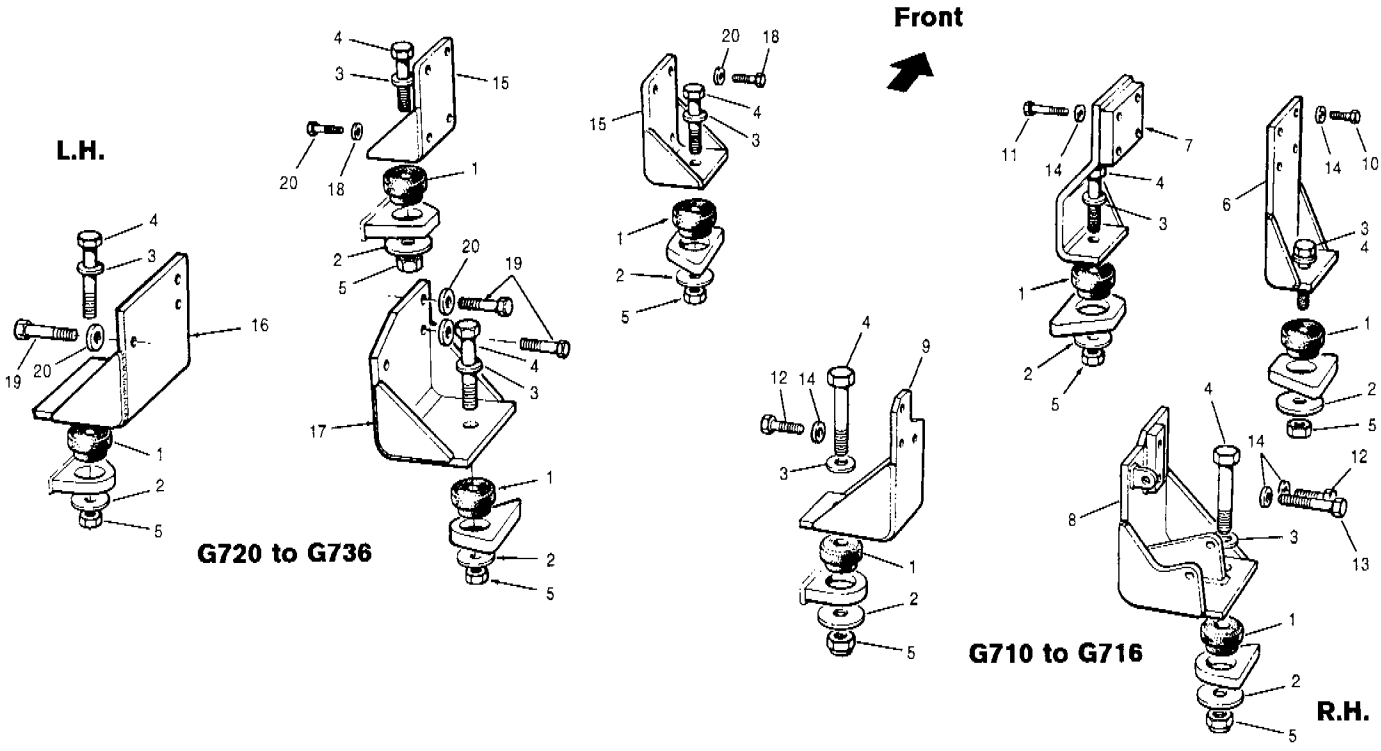

Item	Part No.	Description	Qty.	Remarks
1	11970	Rubber mount	4	
2	30075	Washer	4	
3	69360	Washer	4	
4	50A-1232 Zi	Bolt	4	
5	36N-12 Zi	Locknut	4	
		Models G710 to G716		
6	86456	Support - front - R.H.	1	
7	86452	Support - front - L.H.	1	
8	95319	Support - rear - R.H.	1	
9	86622	Support - rear - L.H.	1	
10	350AA-12040 Zi	Bolt	4	
11	350AA-12075 Zi	Bolt	4	
12	350AA-12035 Zi	Bolt	4	
13	350AA-12060 Zi	Bolt	2	
14	314C-12 Zi	Flatwasher	14	
		Models G720 to G736		
15	86461	Support - front	2	
16	405044	Support - rear - L.H.	1	
17	406013	Support - rear - R.H.	1	
18	350AA-12040 Zi	Bolt	8	
19	350AA-12035 Zi	Bolt	6	
20	314C-12 Zi	Flatwasher	14	

Item	Part No.	Description	Qty.	Remarks

SERIAL NUMBERS: 33000 & UP	**ENGINE MOUNTS** **- Models G710 to G736**	Date **01/2001** Illustr. Nos **00004884**	Group **218** Page **4** Issue **1**

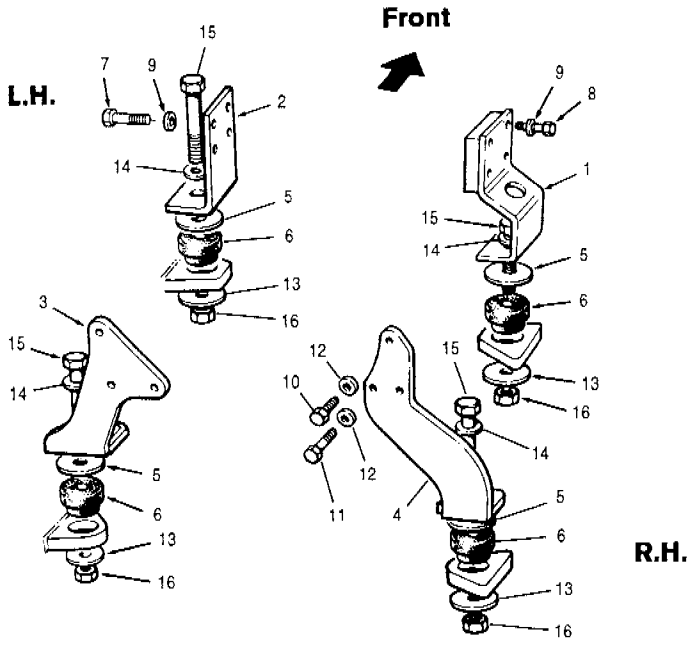

Item	Part No.	Description	Qty.	Remarks
1	87790	Support - front - R.H.	1	
2	86468	Support - front - L.H.	1	
3	86463	Support - rear - L.H.	1	
4	86465	Support - rear - R.H.	1	
5	11968	Washer	4	
6	30081	Rubber mount	4	
7	50A-1012 Zi	Bolt	4	
8	50A-1024 Zi	Bolt	4	
9	69361	Hardened washer	8	
10	350AA-10035 Zi	Bolt	1	
11	350AA-10100 Zi	Bolt	5	
12	314C-10 Zi	Flatwasher	6	
13	30075	Washer	4	
14	69360	Washer	4	
15	50A-1232 Zi	Bolt	4	
16	36N-12 Zi	Locknut	4	

Item	Part No.	Description	Qty.	Remarks

SERIAL NUMBERS: 33000 & UP	**ENGINE MOUNTS - Models G740 to G780**	Date 01/2001	Group 218
		Illustr. Nos 00004885	Page 5
			Issue 1

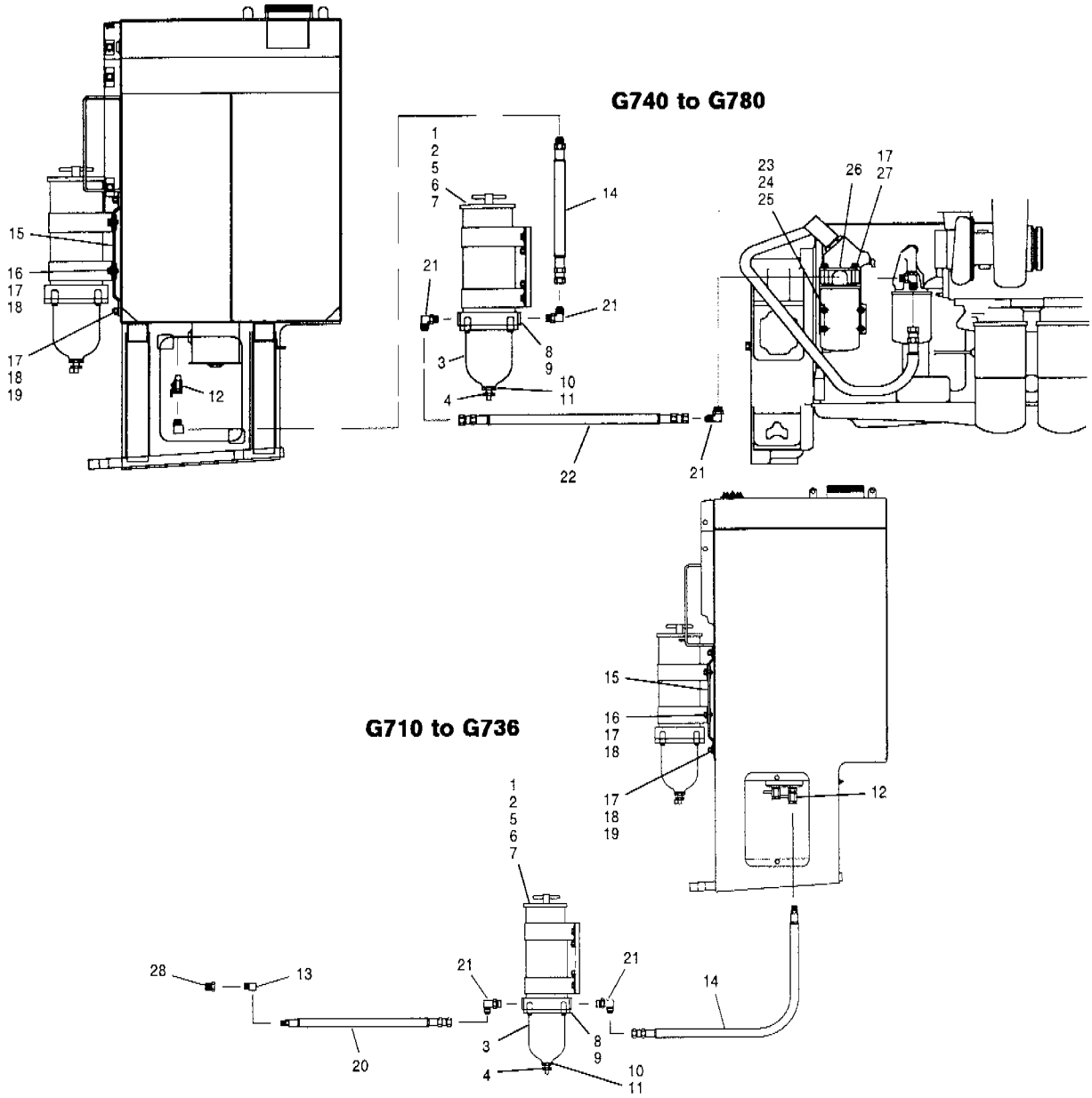

Item	Part No.	Description	Qty.	Remarks
	43097	**Water separator assembly - heated** - includes items 1 to 6	1	Optional
	32546	**Water separator assembly** - includes items 1 to 4	1	Optional
	63312	**Repair kit for 43097 & 32546 - water separators** - includes items 7 to 11	1	
1	36107	Element	1	
2	63310	Lid	1	
3	63313	Clear bowl & plug	1	
4	63311	Drain valve	1	
5	63386	Relay - heater	1	
6	63387	Heater	1	
7		Gasket - lid & bowl	2	
8		Gasket & check ball	1	
9		Bolt	4	
10		Gasket & O-ring	3	
11		Seal - drain valve	1	

Item	Part No.	Description	Qty.	Remarks
12	104E-06	Valve	1	
13	103P-06	Elbow	1	G710 to G736
14	14373 x 28	Hose	1	
15	89196	Bracket	1	
16	50A-0606 Zi	Bolt	4	
17	14A-06 Zi	Lockwasher	7 - 11	
18	14C-06 Zi	Flatwasher	7	
19	30A-06 Zi	Nut	3	
20	14373 x 38	Hose	1	G710 to G736
21	111B-0810	Connector	2	G710 to G736
			3	G740 to G780
22	9313 x 18	Hose	1	
23	59912	Spacer	4	
24	350A-10065 Zi	Bolt	4	G740 to G780
25	314A-10 Zi	Lockwasher	4	
26	84420	Bracket	1	
27	50A-0608 Zi	Bolt	4	
28	115B-0806	Connector	1	G710 to G736

SERIAL NUMBERS: 33000 & UP	**FUEL FILTER / WATER SEPARATOR**	Date **01/2001**	Group **233**
		Illustr. Nos **00003515**	Page **6**
			Issue **1**

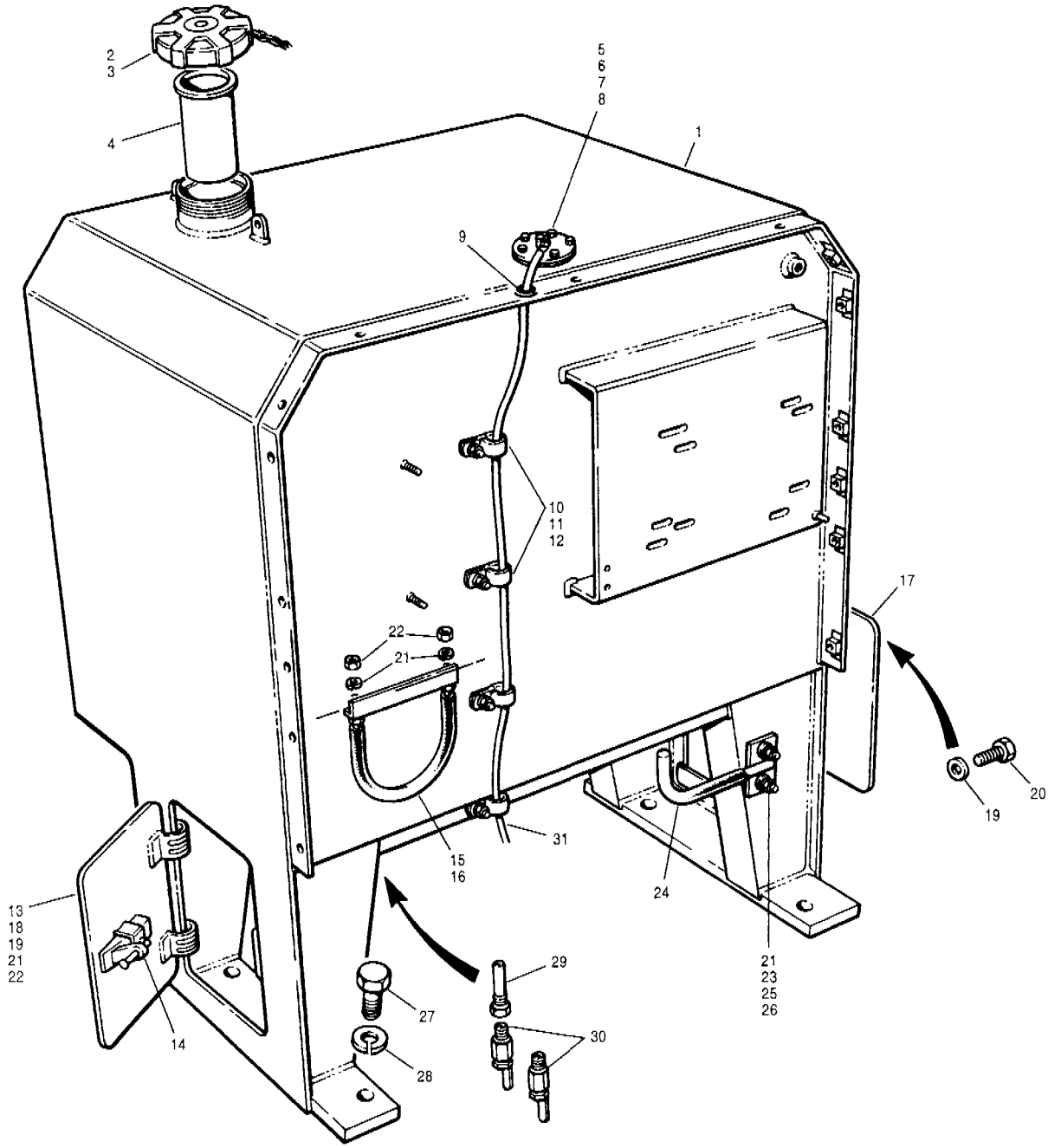

Item	Part No.	Description	Qty.	Remarks
1	96878	Fuel tank	1	
1	96879	Fuel tank	1	AWD
2	81884	Filler cap	1	
3	62A-0604	Screw	1	
4	95532	Screen	1	
5	95562	Gasket	1	
6	96183	Sending unit	1	
7	14F-10 Zi	Lockwasher	5	
8	32A-10	Nut	5	
9	41710	Grommet	1	
10	32320	Clamp	4	
11	14A-04 Zi	Lockwasher	4	
12	30A-04 Zi	Nut	4	
13	89396	Door - L.H.	1	
14	84612	Latch	1	
15	9480 x 14.5	Hose protector	1	
16	400101	U-bolt	1	
17	89398	Cover - R.H.	1	

Item	Part No.	Description	Qty.	Remarks
18	40G-0508 Zi	Bolt	2	
19	14C-05 Zi	Flatwasher	4	
20	50A-0508 Zi	Bolt	2	
21	14A-05 Zi	Lockwasher	8	
22	30A-05 Zi	Nut	6	
23	406009	Hose support	1	
24	41539 x 9	Hose protector	1	
25	14C-05 Zi	Flatwasher	2	
26	30A-05 Zi	Nut	2	
27	50A-1216 Zi	Bolt	4	
28	14A-12 Zi	Hardened washer	4	
29	89399	Tube bushing	1	
30	104E-06	Valve	2	
31		**Harness - rear chassis & engine**	Ref.	371-29

SERIAL NUMBERS: 33000 & UP	**FUEL TANK**	Date **01/2001**	Group **234**
		Illustr. Nos **00006065**	Page **7**
			Issue **1**

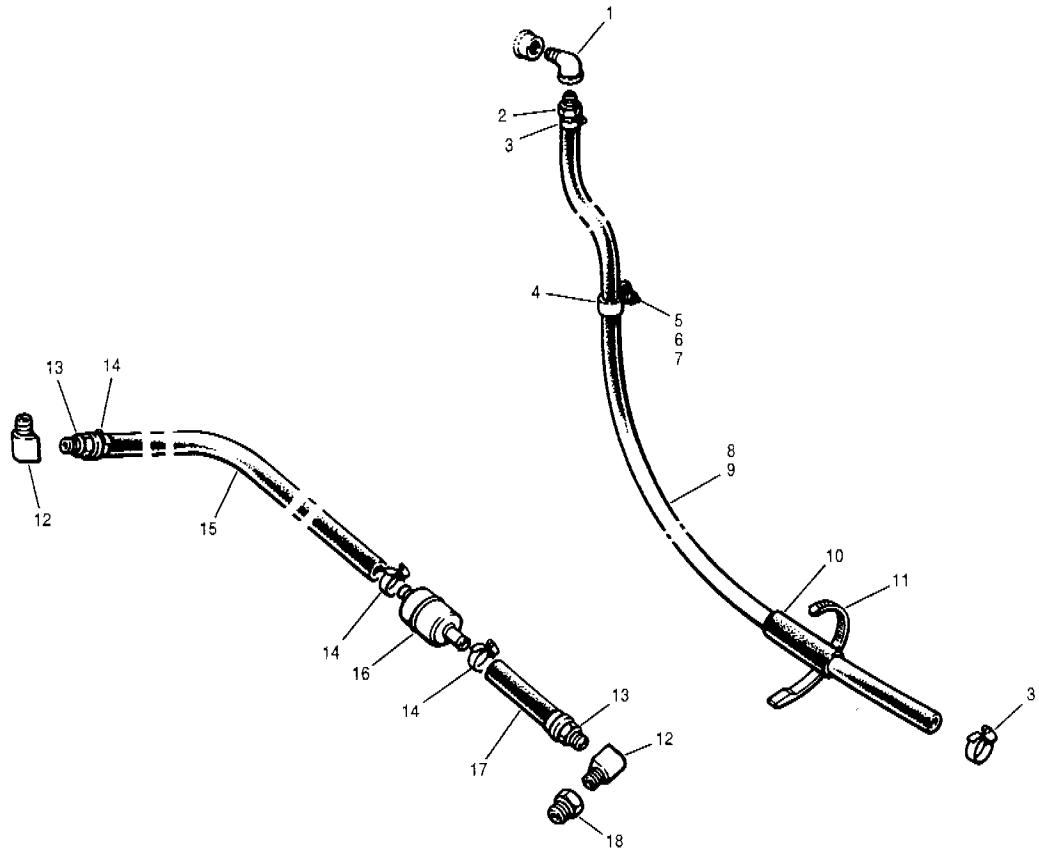

Item	Part No.	Description	Qty.	Remarks
1	115J-0404	Elbow	1	
2	106A-0404	Connector	1	
3	22D-04	Clamp	2	
4	32317	Clamp	1	
5	14C-04 Zi	Flatwasher	2	
6	14A-04 Zi	Lockwasher	1	
7	30A-04 Zi	Nut	1	
8	16741 x 44	Hose	1	G710 to G716
9	16741 x 57	Hose	1	G720 to G736
10	55294	Hose protector	4	G720 to G736
11	15774	Tie wrap	3	G720 to G736
12	100J-0606	Elbow	2	
13	106D-0606	Connector	2	
14	22D-06	Clamp	4	
15	9480 x 33	Hose	1	
16	59115	Filter	1	
17	9480 x 4	Hose	1	
18	115B-0806	Connector	1	
		Fuel filter/water separator	Ref.	233-6

Note: see quick reference chart for fuel filters

Item	Part No.	Description	Qty.	Remarks

SERIAL NUMBERS: 33000 & UP	**FUEL CIRCUIT - Models G710 to G736**	Date	**01/2001**	Group **235**
		Illustr. Nos	**00004886**	Page **8**
				Issue **1**

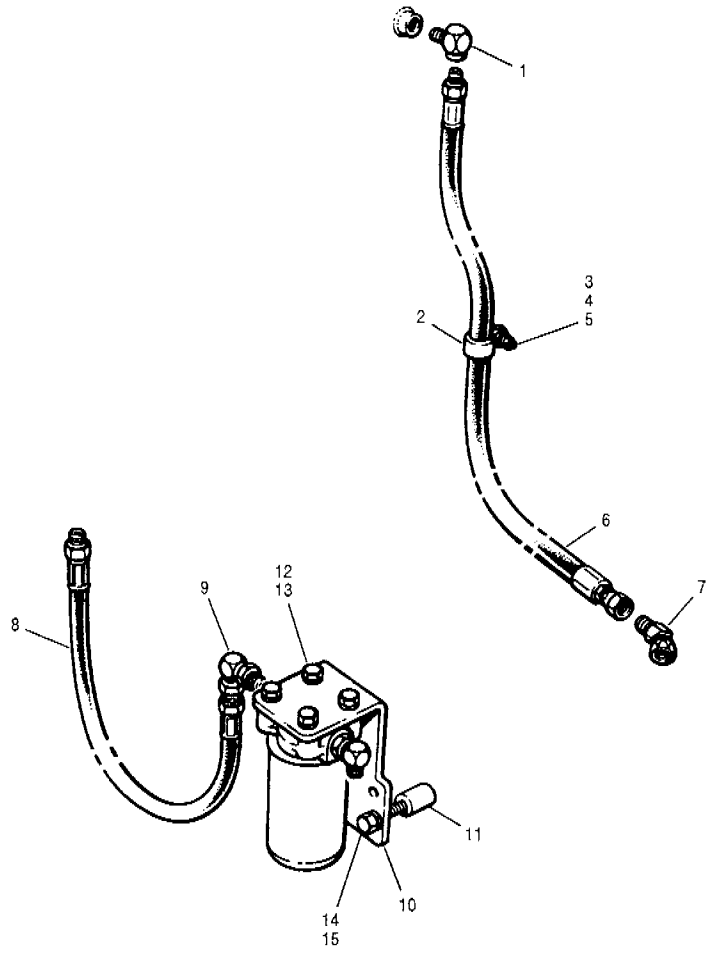

Item	Part No.	Description	Qty.	Remarks
1	115J-0406	Elbow	1	
2	32319	Clamp	1	
3	14C-04 Zi	Flatwasher	1	
4	14A-04 Zi	Lockwasher	1	
5	30A-04 Zi	Nut	1	
6	14373 x 38	Hose	1	
7	112A-08	Elbow	1	
8	14373 x 28	Hose	1	
9	111B-0810	Connector	1	
10	84420	Bracket	1	
11	59912	Spacer	4	
12	50A-0608 Zi	Bolt	4	
13	14A-06 Zi	Lockwasher	4	
14	350A-10065 Zi	Bolt	4	
15	314A-10 Zi	Lockwasher	4	
		Fuel filter/water separator	Ref.	233-6
		Note: see quick reference chart for fuel filters		

Item	Part No.	Description	Qty.	Remarks

SERIAL NUMBERS: 33000 & UP	**FUEL CIRCUIT - Models G740 to G780**	Date	**01/2001**	Group **235**
		Illustr. Nos	**00004887**	Page **9**
				Issue **1**

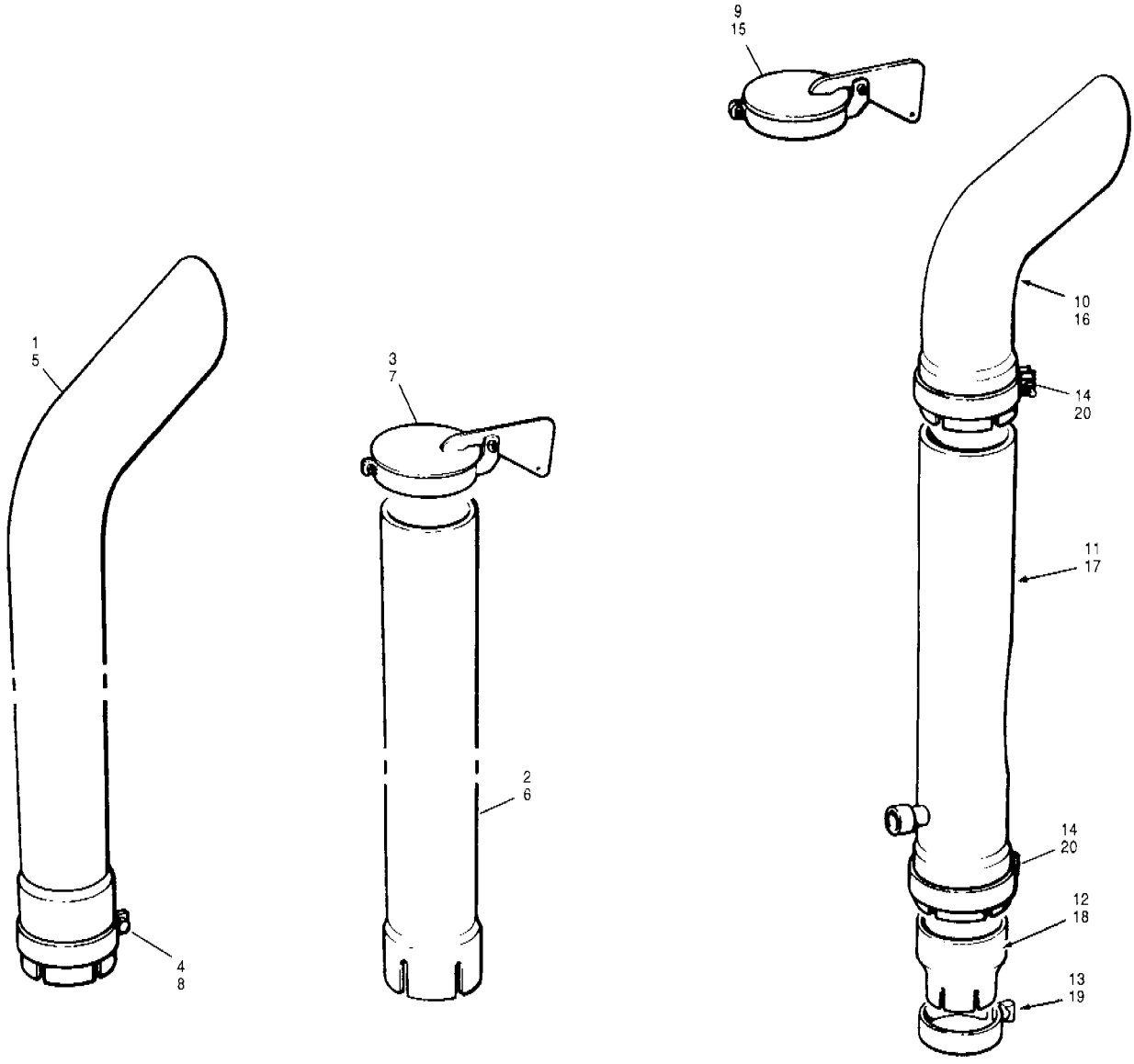

Item	Part No.	Description	Qty.	Remarks
		Exhaust stacks & rain caps		
1	96249	Exhaust stack - 3" - 45°	1	G710 to G716
2	57774	Exhaust stack - 3"	1	
3	48756	Rain cap - 3"	1	
4	57283	Clamp	1	
5	96250	Exhaust stack - 4" - 45°	1	G720 to G780
6	52788	Exhaust stack - 4"	1	
7	23642	Rain cap - 4"	1	
8	57284	Clamp	1	
		Exhaust stack installation - exhaust aspirated pre-cleaner		**G710 & G716**
9	23642	Rain cap	1	
10	96247	Exhaust extension	1	
11	84964	Ejector stack - straight	1	
12	84971	Reducer	1	
13	57283	Clamp	1	
14	57284	Clamp	1-2	

Item	Part No.	Description	Qty.	Remarks
		Exhaust stack & rain cap installation - exhaust aspirated pre-cleaner		**G720 & G780**
15	55098	Rain cap	1	Optional
16	96246	Exhaust extension	1	
17	84963	Ejector stack - straight	1	
18	57783	Reducer	1	
19	57284	Clamp	1	
20	57285	Clamp	1-2	

Note: Refer to 256-15 & 256-16 for air intake parts

SERIAL NUMBERS: 33000 & UP	**EXHAUST STACK & RAIN CAP INSTALLATIONS**	Date **01/2001**	Group **252**
		Illustr. Nos **00002567**	Page **10**
			Issue **1**

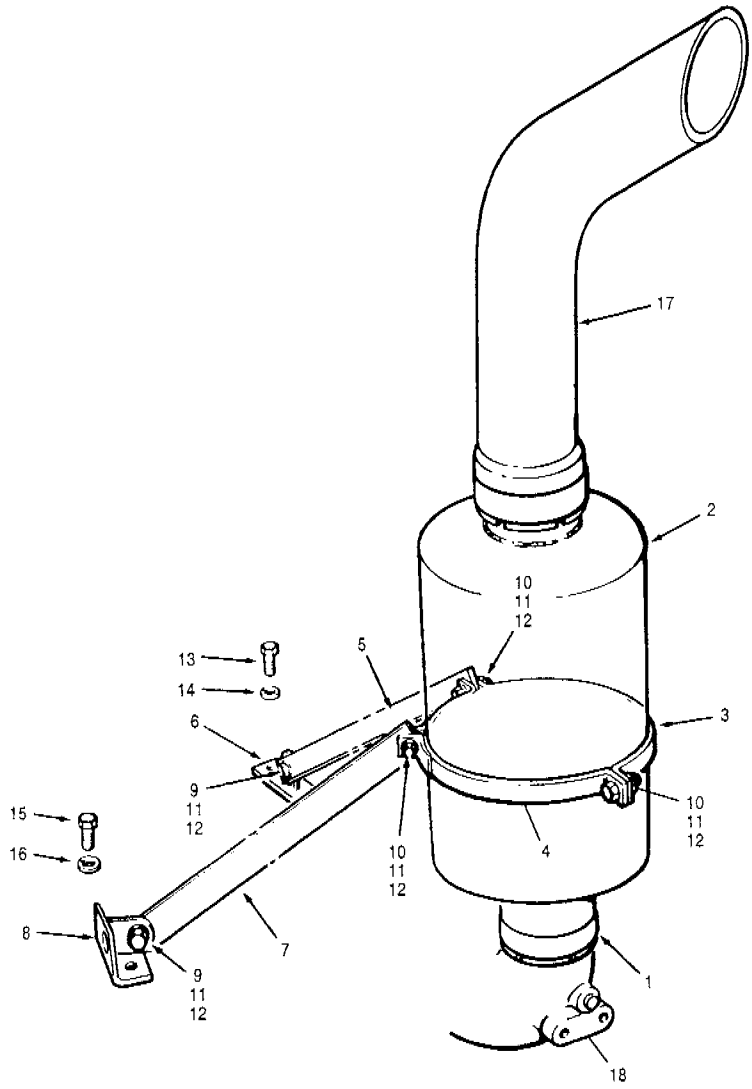

Item	Part No.	Description	Qty.	Remarks
1	57283	Clamp	1	
2	95543	Muffler	1	
3	96287	Clamp	1	
4	96292	Clamp	1	
5	95548	Brace	1	
6	52962	Spacer block	1	
7	95549	Brace	1	
8	95326	Bracket	1	
9	50A-0610 Zi	Bolt	2	
10	50A-0612 Zi	Bolt	3	
11	14A-06 Zi	Lockwasher	5	
12	30A-06 Zi	Nut	5	
13	350AA-10035 Zi	Bolt	2	
14	314A-10 Zi	Lockwasher	2	
15	350AA-12030 Zi	Bolt	2	
16	314A-12 Zi	Lockwasher	2	
17		**Exhaust stack**	Ref.	252-10
18		**Exhaust elbow**	Ref.	Engine parts manual

Item	Part No.	Description	Qty.	Remarks

SERIAL NUMBERS: 33000 & UP	**MUFFLER INSTALLATION** **- Models G710 to G716**	Date **01/2001**	Group	**252**
		Illustr. Nos **00004888**	Page	**11**
			Issue	**1**

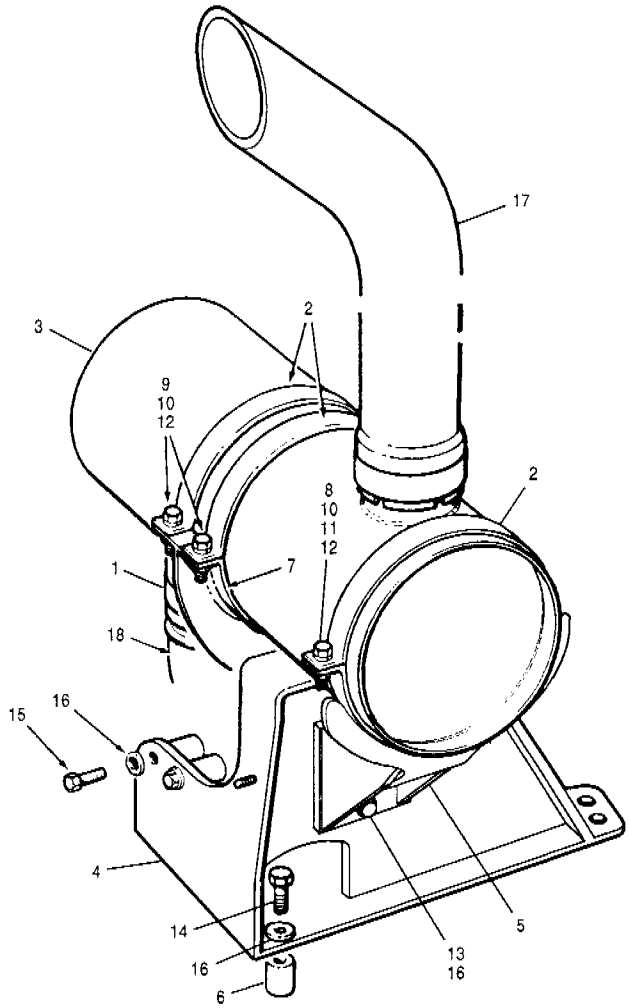

Item	Part No.	Description	Qty.	Remarks
1	57284	Clamp	1	
2	96287	Clamp	3	
3	57514	Muffler	1	
4	96146	Bracket	1	
5	79084	Support bracket	1	
6	96145	Spacer	2	
7	96289	Clamp	1	
8	50A-0610 Zi	Bolt	4	
9	50A-0612 Zi	Bolt	6	
10	14A-06 Zi	Lockwasher	10	
11	14C-06 Zi	Flatwasher	4	
12	30A-06 Zi	Nut	10	
13	350AA-10030 Zi	Bolt	4	
14	350AA-10065 Zi	Bolt	2	
15	350AA-10070 Zi	Bolt	2	
16	314C-10 Zi	Flatwasher	8	
17		**Exhaust stack**	Ref.	252-10
18		**Exhaust elbow**	Ref.	Engine parts manual

Item	Part No.	Description	Qty.	Remarks

SERIAL NUMBERS: 33000 & UP	**MUFFLER INSTALLATION - Models G720 to G736**	Date	**01/2001**	Group **252**
		Illustr. Nos	**00004889**	Page **12**
				Issue **1**

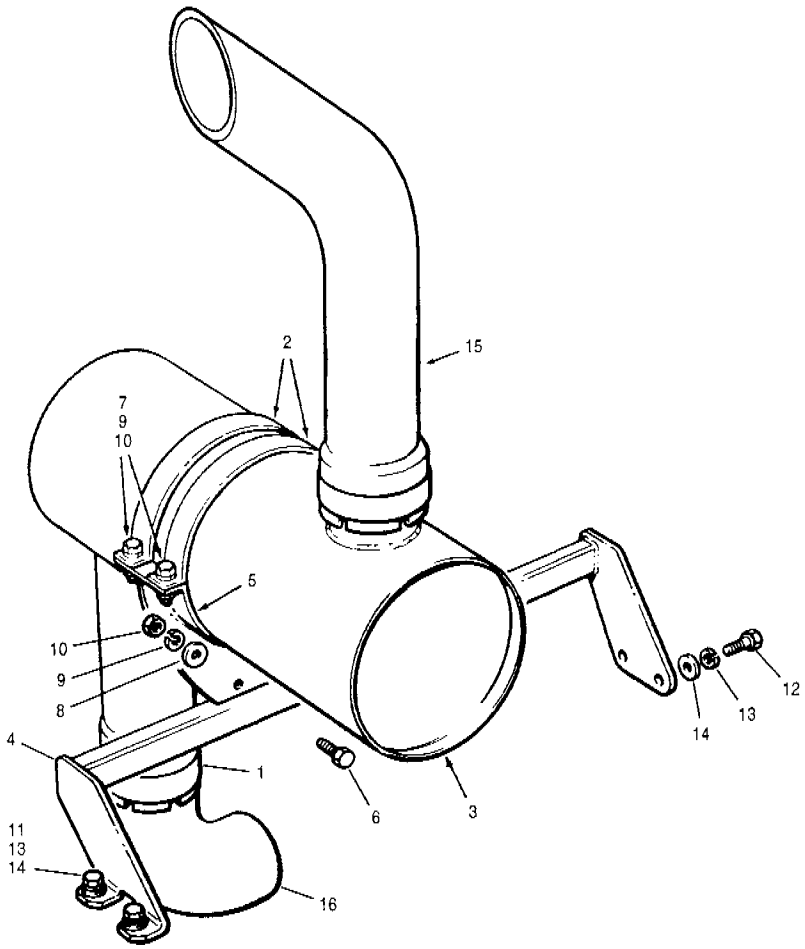

Item	Part No.	Description	Qty.	Remarks
1	57284	Clamp	1	
2	96287	Clamp	2	
3	68110	Muffler	1	
4	86473	Bracket	1	
5	96289	Clamp	1	
6	50A-0608 Zi	Bolt	2	
7	50A-0612 Zi	Bolt	4	
8	14C-06 Zi	Flatwasher	4	
9	14A-06 Zi	Lockwasher	6	
10	30A-06 Zi	Nut	6	
11	350AA-12035 Zi	Bolt	2	
12	350AA-12040 Zi	Bolt	2	
13	314A-12 Zi	Lockwasher	4	
14	314C-12 Zi	Flatwasher	4	
15		**Exhaust stack**	Ref.	252-10
16		**Exhaust elbow**	Ref.	Engine parts manual

Item	Part No.	Description	Qty.	Remarks

SERIAL NUMBERS: 33000 & UP	**MUFFLER INSTALLATION - Models G740 to G780**	Date **01/2001**	Group	**252**
		Illustr. Nos **00004890**	Page	**13**
			Issue	**1**

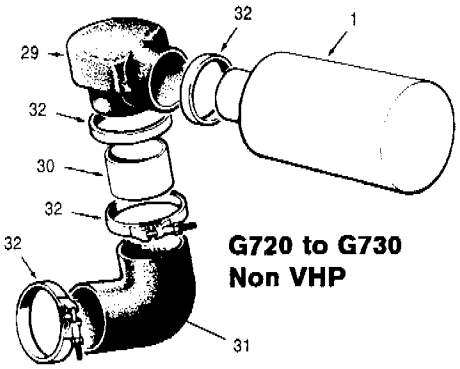

G720 to G730
Non VHP

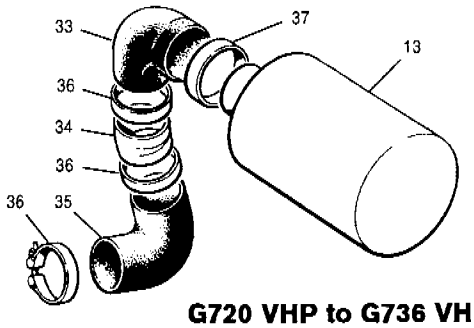

G720 VHP to G736 VHP

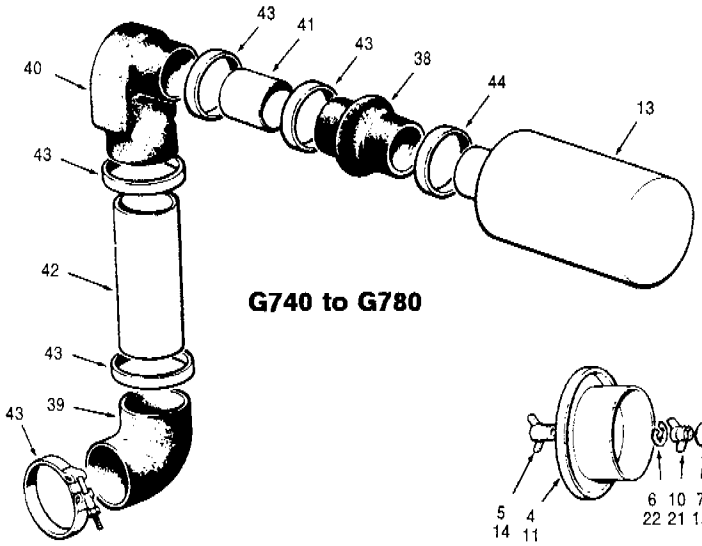

G740 to G780

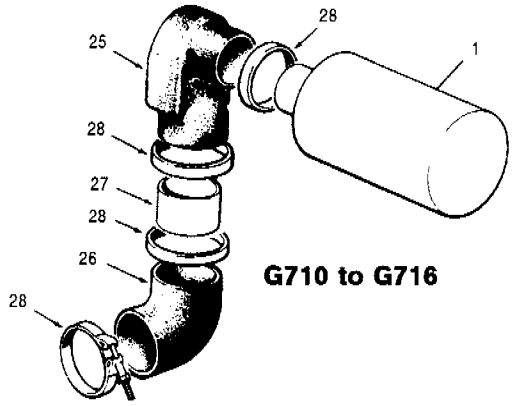

G710 to G716

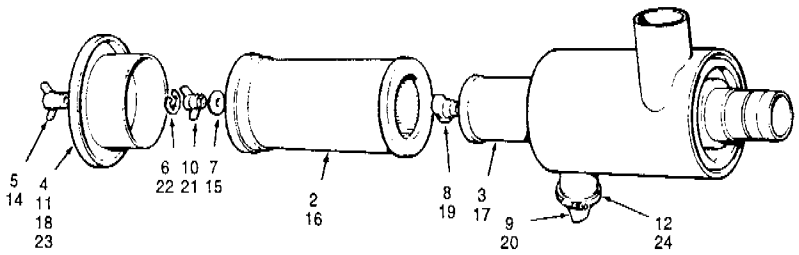

Item	Part No.	Description	Qty.	Remarks
1	**87741**	**Air cleaner assembly** - includes items 2 to 11	1	**G710 to G730**
2	28120	Element - primary	1	
3	28121	Element - safety	1	
4	28122	Cover	1	
5	28123	Wing nut	1	
6	28124	Nut clip	1	
7	34119	Gasket	1	
8	11562	Nut assembly	1	
9	37402	Vacuator valve	1	
10	37401	Wing nut	1	
11	45476	Gasket	1	
12	22B-48	Clamp	1	
13	**87742**	**Air cleaner assembly** - includes items 14 to 23	1	**G730 VHP, G736 VHP & G740 to G780**
14	28123	Wing nut	1	
15	34119	Gasket	1	
16	37398	Element - primary	1	
17	63288	Element - safety	1	
18	37400	Cover	1	
19	11562	Nut assembly	1	
20	37402	Vacuator valve	1	
21	37401	Wing nut	1	
22	37405	Nut clip	1	
23	37406	Gasket	1	
24	22B-48	Clamp	1	

Item	Part No.	Description	Qty.	Remarks
		Air cleaner inlet		**G710 to G716**
25	40192	Elbow	1	
26	95051	Elbow	1	
27	52865	Tube	1	
28	22A-450	Clamp	4	
		Air cleaner inlet		**G720 to G730 Non VHP**
29	40192	Elbow	1	
30	52865	Connecting pipe	1	
31	81921	Elbow	1	
32	22A-450	Clamp	4	
		Air cleaner inlet		**G720 VHP to G736 VHP**
33	86836	Elbow	1	
34	86837	Elbow	1	
35	81921	Elbow	1	
36	22A-450	Clamp	3	
37	22A-550	Clamp	1	
		Air cleaner inlet		**G740 to G780**
38	9246	Hump hose	1	
39	16280	Elbow	1	
40	40192	Elbow	1	
41	52871	Connecting tube	1	
42	68023	Connecting tube	1	
43	22A-450	Clamp	5	
44	22A-550	Clamp	1	

SERIAL NUMBERS: 33000 & UP	**AIR CLEANER & INLET ASSEMBLY**	Date **09/2001**	Group **256**
		Illustr. Nos **00002495**	Page **14**
			Issue **1 A**

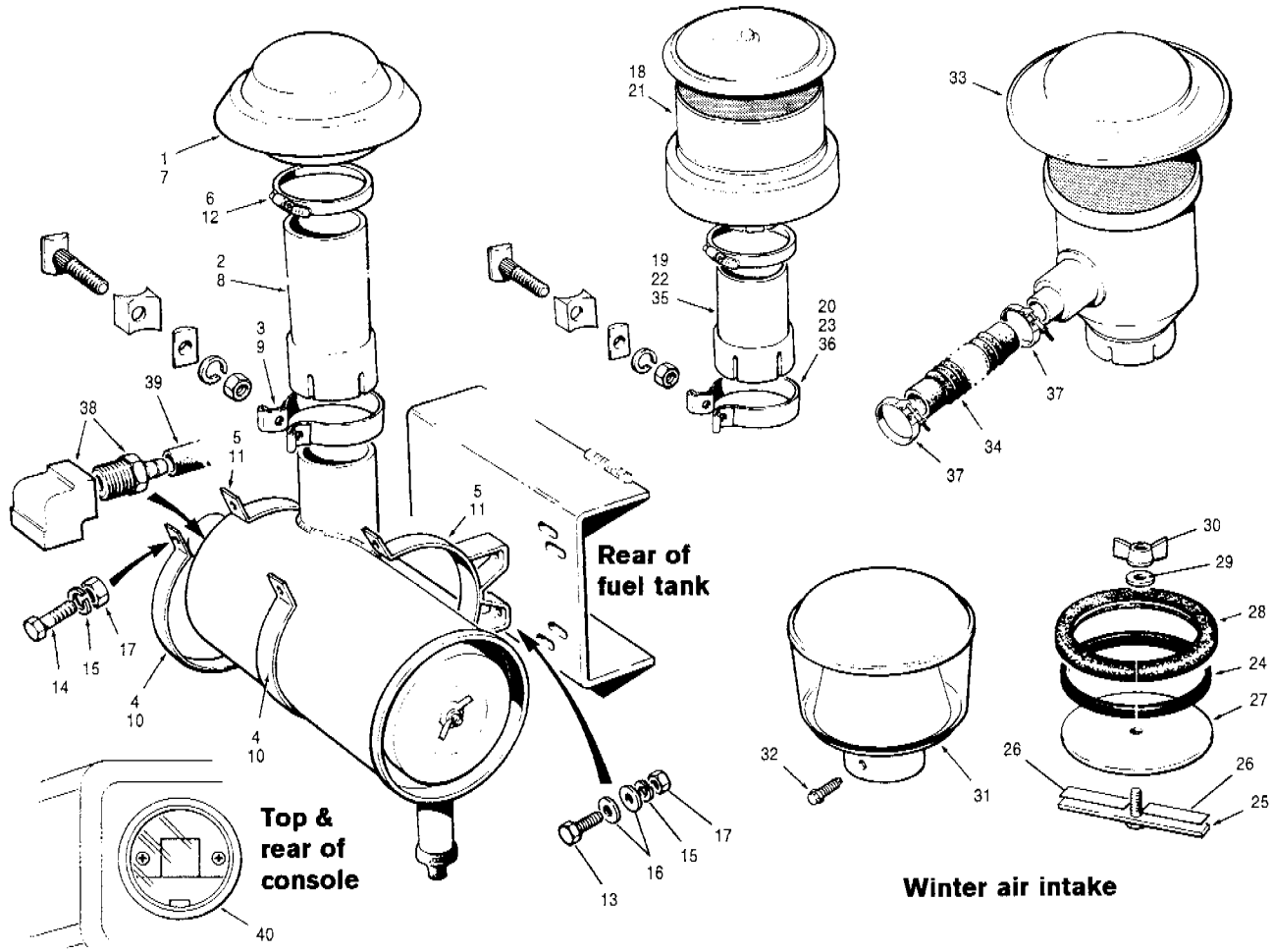

Item	Part No.	Description	Qty.	Remarks
		Air cleaner installation		**G710 to G736**
1	87786	Rain cap	1	
2	87779	Stack	1	
3	57285	Clamp - includes hardware	1	
4	68131	Half bracket	2	
5	68087	Mounting band	2	
6	22B-84	Clamp	1	
		Air cleaner installation		**G740 to G780**
7	87787	Rain cap	1	
8	87782	Stack	1	
9	57286	Clamp - includes hardware	1	
10	68075	Half bracket	2	
11	86832	Mounting band	2	
12	22B-104	Clamp	1	
13	50A-0608 Zi	Bolt	4	
14	50A-0612 Zi	Bolt	4	
15	14A-06 Zi	Lockwasher	8	
16	14C-06 Zi	Flatwasher	8	
17	30A-06 Zi	Nut	8	
		Turbo II pre-cleaner installation		
18	33782	Pre-cleaner - includes clamp	1	G710 to G736
19	87781	Stack	1	
20	57285	Clamp - includes hardware	1	
21	46498	Pre-cleaner - includes clamp	1	G740 to G780
22	57286	Clamp - includes hardware	1	
23	87783	Stack	1	
		Winter air intake installation		
24	19176 x 33	Tape sealant	1	
25	57915	Clamping bar	1	

Item	Part No.	Description	Qty.	Remarks
26	12736 x 4	Tape sealant	2	
27	57916	Hood	1	
28	40839 x 33	Trim	1	
29	14C-05 Zi	Flatwasher	1	
30	36T-06	Locknut	1	
		Pre-cleaner installation		
31	8601	Pre-cleaner - 5" - use with item 2	1	G710 to G736
31	43332	Pre-cleaner - 6" - use with item 8	1	G740 to G780
32	62A-1006	Screw	2	
		Pre-cleaner installation - exhaust aspirated		**Optional**
33	38361	Pre-cleaner	1	G710 to G716
33	56110	Pre-cleaner	1	G740 to G780
33	54629	Pre-cleaner	1	G720 to G736
34	53752 x 22	Hose	1	G710 to G736
34	53752 x 24	Hose	1	G740 to G780
35	87780	Stack	1	G710 to G736
35	87783	Stack	1	G740 to G780
36	57285	Clamp - includes hardware	1	G710 to G736
36	57286	Clamp - includes hardware	1	G740 to G780
37	22A-163	Clamp	2	
		Air restriction indicator		
38	96074	Fittings	2	
39	53081 x 156	Hose	1	
40		**Air restriction gauge**	Ref.	386-33
		Air cleaner installation - VHP	Ref.	256-16

SERIAL NUMBERS: 33000 & UP	**AIR CLEANER INSTALLATION - Non VHP**	Date **01/2001**	Group **256**
		Illustr. Nos **00003499**	Page **15**
			Issue **1**

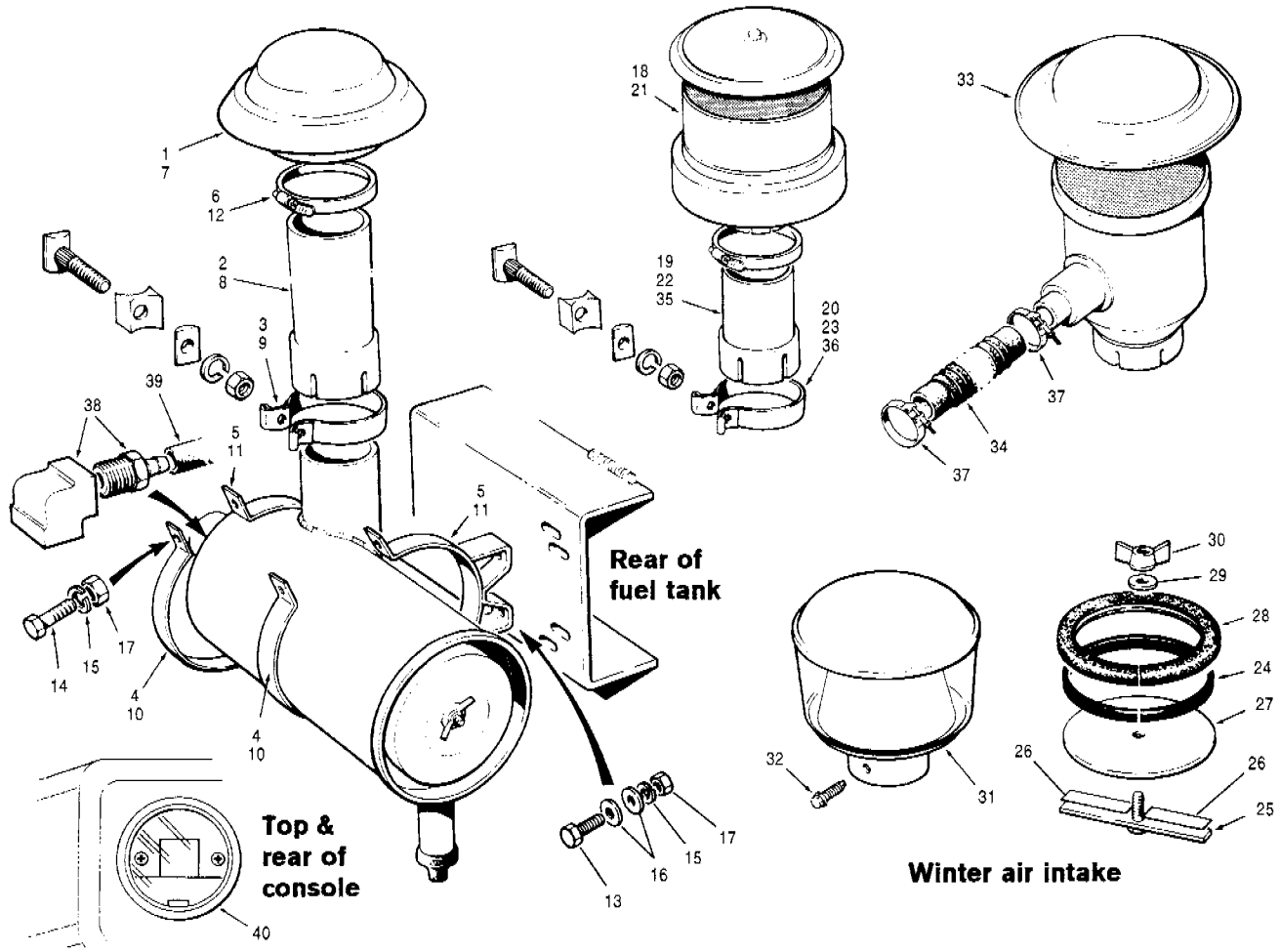

Item	Part No.	Description	Qty.	Remarks
		Air cleaner installation		**G710 to G726**
1	87786	Rain cap	1	
2	87779	Stack	1	
3	57285	Clamp - includes hardware	1	
4	68131	Half bracket	2	
5	68087	Mounting band	2	
6	22B-84	Clamp	1	
		Air cleaner installation		**G730 to G780**
7	87787	Rain cap	1	
8	87785	Stack	1	G730 & G736
8	87782	Stack	1	G740 to G780
9	57286	Clamp - includes hardware	1	
10	68075	Half bracket	2	
11	86832	Mounting band	2	G730 to G780
12	22B-104	Clamp	1	
13	50A-0608 Zi	Bolt	4	
14	50A-0612 Zi	Bolt	4	
15	14A-06 Zi	Lockwasher	8	
16	14C-06 Zi	Flatwasher	8	
17	30A-06 Zi	Nut	8	
		Turbo II pre-cleaner installation		
18	33782	Pre-cleaner - includes clamp	1	
19	87781	Stack	1	G710 to G726
20	57285	Clamp - includes hardware	1	
21	46498	Pre-cleaner - includes clamp	1	G730 to G780
22	87784	Stack	1	G730 & G736
22	87783	Stack	1	G740 to G780
23	57286	Clamp - includes hardware	1	G730 to G780

Item	Part No.	Description	Qty.	Remarks
		Winter air intake installation		
24	19176 x 33	Tape sealant	1	
25	57915	Clamping bar	1	
26	12736 x 4	Tape sealant	2	
27	57916	Hood	1	
28	40839 x 33	Trim	1	
29	14C-05 Zi	Flatwasher	1	
30	36T-06	Locknut	1	
		Pre-cleaner installation		
31	8601	Pre-cleaner - 5" - use with item 2	1	G710 to G736
31	43332	Pre-cleaner - 6" - use with item 8	1	G730 to G780
32	62A-1006	Screw	2	
		Pre-cleaner installation - exhaust aspirated		**Optional**
33	38361	Pre-cleaner	1	G710 to G716
33	54629	Pre-cleaner	1	G720 to G736
33	56110	Pre-cleaner	1	G740 to G780
34	53752 x 22	Hose	1	G710 to G726
34	53752 x 24	Hose	1	G730 to G780
35	87780	Stack	1	G710 to G726
35	87784	Stack	1	G730 to G736
35	87783	Stack	1	G740 to G780
36	57285	Clamp - includes hardware	1	G710 to G726
36	57286	Clamp - includes hardware	1	G730 to G780
37	22A-163	Clamp	2	
		Air restriction indicator		
38	96074	Fittings	2	
39	53081 x 156	Hose	1	
40		**Air restriction gauge**	Ref.	386-33

SERIAL NUMBERS: 33000 & UP	**AIR CLEANER INSTALLATION - VHP**	Date **01/2001**	Group **256**
		Illustr. Nos **00003502**	Page **16**
			Issue **1**

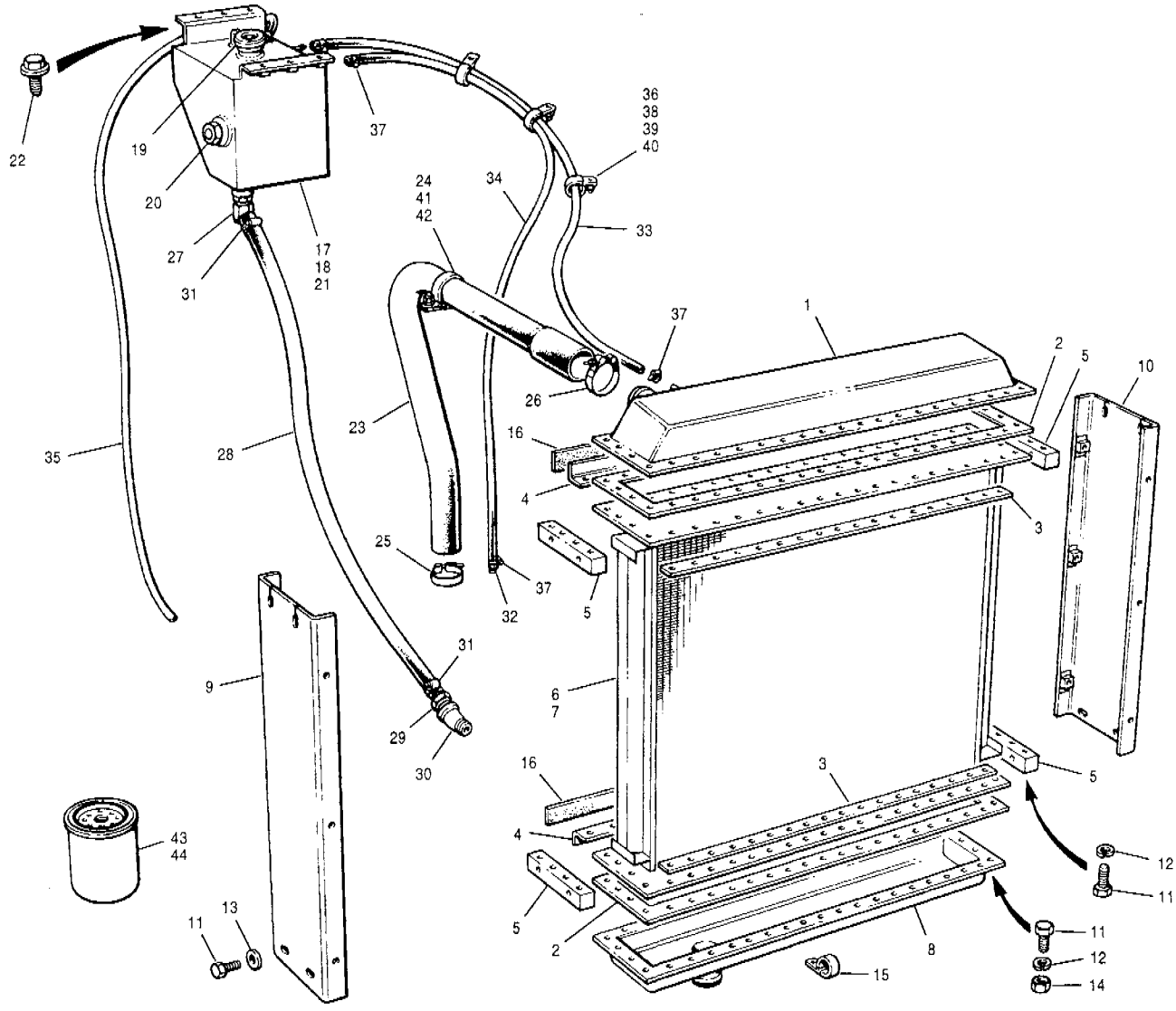

Item	Part No.	Description	Qty.	Remarks
	89450	**Radiator assembly** - includes items 1 to 6 & 8 to 14	1	Non VHP
	95303	**Radiator assembly** - includes items 1 to 5 & 7 to 14	1	VHP
1	86867	Tank - top	1	
2	17664	Gasket	2	
3	17636	Bar	2	
4	95208	Angle	2	
5	86893	Mounting bar	4	
6	51171	Radiator core - 3 row	1	Non-VHP
7	86150	Radiator core	1	VHP
8	65044	Tank - lower	1	
9	89452	Side member - L.H.	1	
10	89453	Side member - R.H.	1	
11	50A-0508 Zi	Bolt	96	
12	14A-05 Zi	Lockwasher	88	
13	14C-05 Zi	Flatwasher	8	
14	30A-05 Zi	Nut	72	
15	32316	Clamp	3	
16	28344 x 35	Tape sealant	2	

Item	Part No.	Description	Qty.	Remarks
	86728	**Auxiliary tank assembly** - includes items 17, 19 & 20	1	
	95306	**Auxiliary tank assembly** - includes items 17 to 20	1	Optional
17	95256	Tank	1	
18	95306	Tank - engine shutdown	1	
19	86727	Cap	1	
20	85755	Sight gauge	1	
		Radiator installation **- models G710 to G716 - continued**	Ref.	261-18
		Engine shutdown	Ref.	388-36
		Lower radiator hose	Ref.	491-55

SERIAL NUMBERS: 33000 & UP	**RADIATOR INSTALLATION** **- Models G710 to G716**	Date **01/2001**	Group **261**
		Illustr. Nos **00002478**	Page **17**
			Issue **1**

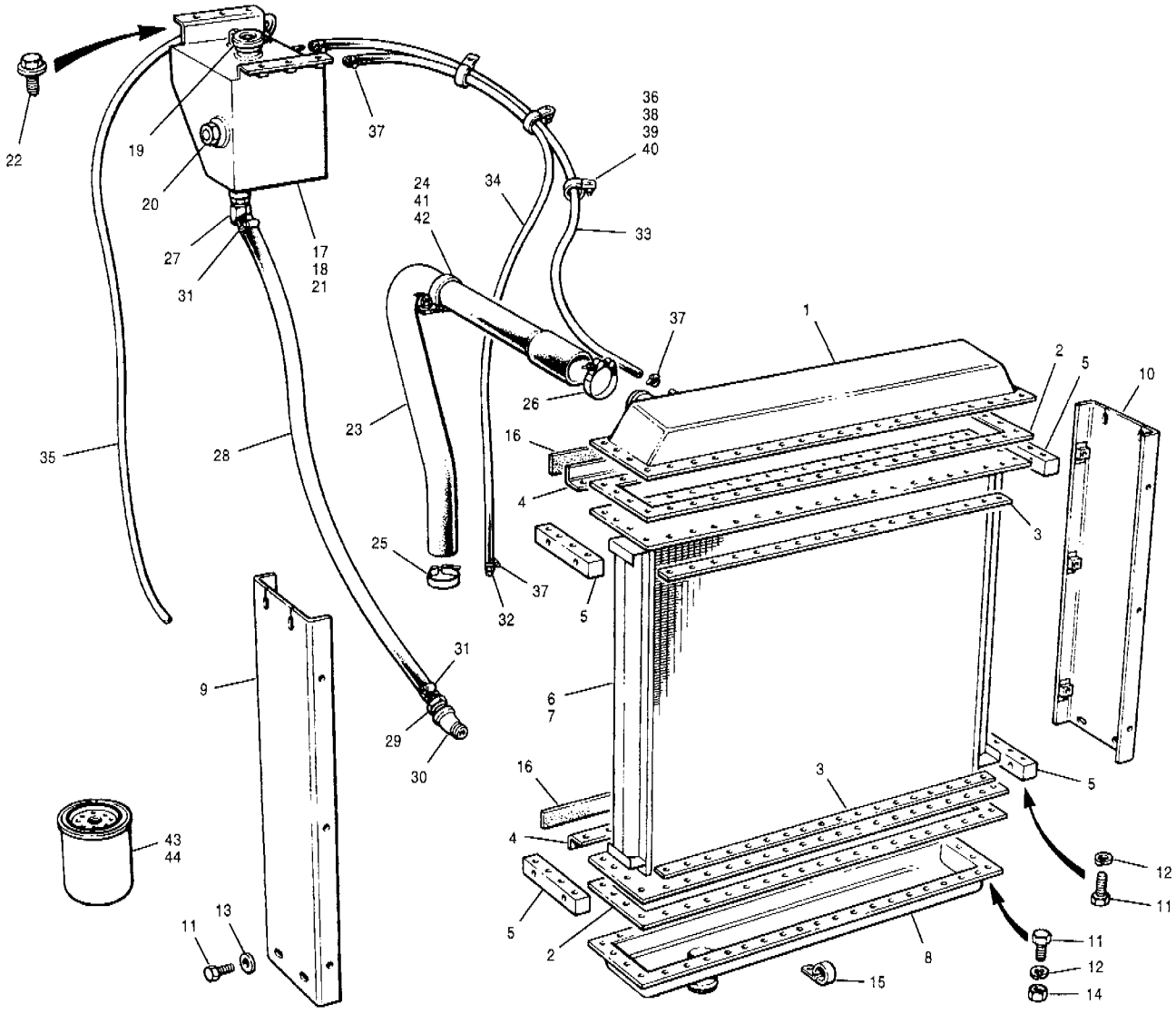

Item	Part No.	Description	Qty.	Remarks
21	115C-04	Plug	1	
22	78460	Screw	6	
23	86745	Hose - upper	1	
24	95103	Clamp	1	
25	22A-212	Clamp	1	
26	22A-256	Clamp	1	
27	108B-1212	Connector	1	
28	9513 x 40	Hose	1	
29	108D-1208	Hose fitting	1	
30	115H-08	Elbow	1	
31	22C-12	Clamp	2	
32	106A-0402	Connector	1	
33	52807 x 63	Hose	1	
34	52807 x 73	Hose	1	
35	27429 x 88	Hose	1	
36	32319	Clamp	3	
37	22D-04	Clamp	4	
38	14C-05 Zi	Flatwasher	3	
39	14A-05 Zi	Lockwasher	3	
40	30A-05 Zi	Nut	3	
41	14A-06 Zi	Lockwasher	1	
42	30A-06 Zi	Nut	1	

Item	Part No.	Description	Qty.	Remarks
43	45674	Coolant conditioning filter	1	
44	34654	Coolant pre-charge filter **- use only where the cooling system is flushed and filled with new coolant**	1	
		Radiator installation - models G710 to G716 - continued	Ref.	261-17
		Engine shutdown	Ref.	388-36
		Lower radiator hose	Ref.	491-55

SERIAL NUMBERS: 33000 & UP	**RADIATOR INSTALLATION** **- Models G710 to G716**	Date	**01/2001**	Group	**261**
		Illustr. Nos	**00002478**	Page	**18**
				Issue	**1**

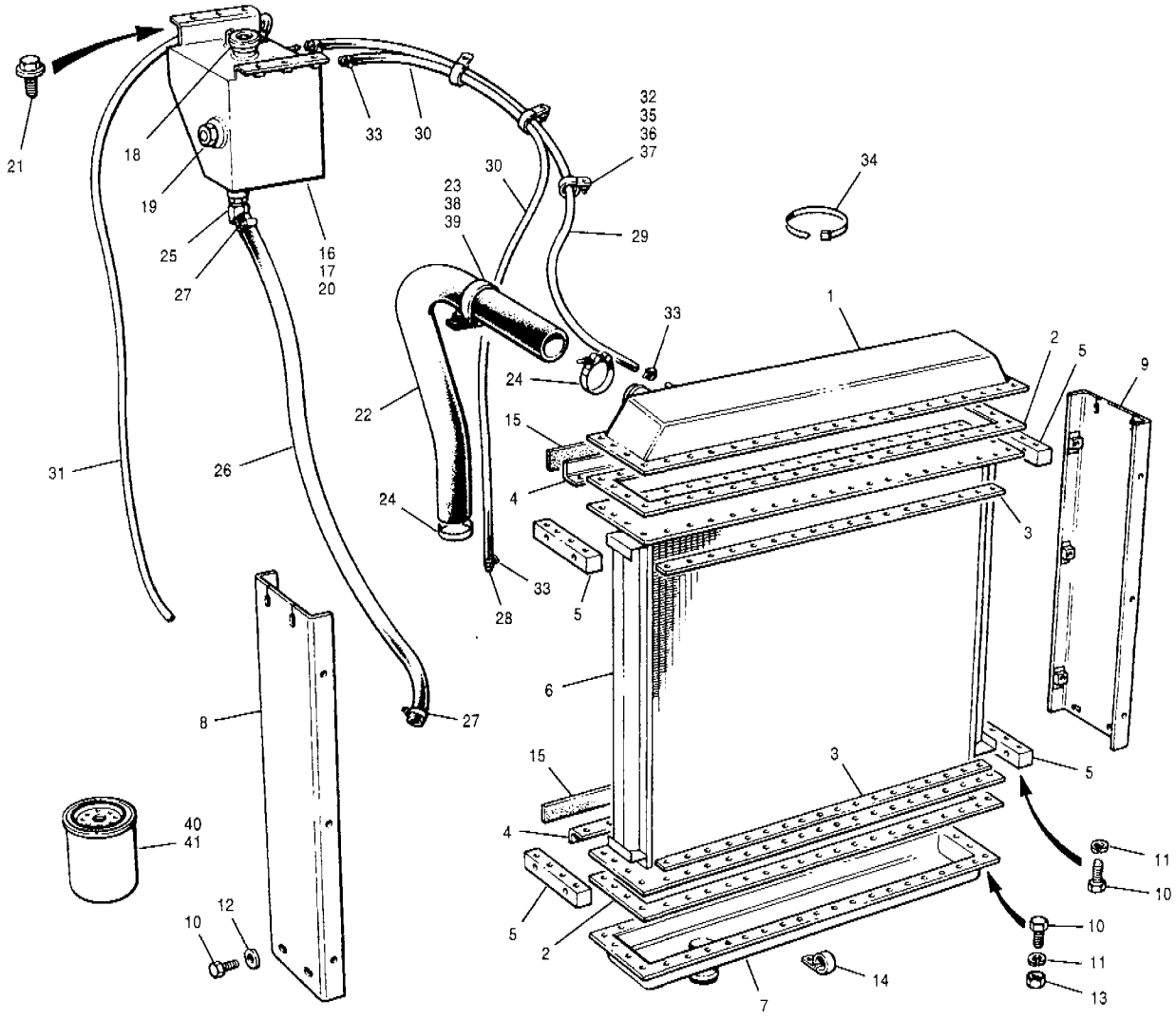

Item	Part No.	Description	Qty.	Remarks
	89451	**Radiator assembly** - includes items 1 to 13	1	
1	86867	Tank - top	1	
2	17664	Gasket	2	
3	17636	Bar	2	
4	95208	Angle	2	
5	86893	Mounting bar	4	
6	86496	Radiator core - 5 row	1	
7	65044	Tank - lower	1	
8	89475	Side member - L.H.	1	
9	89476	Side member - R.H.	1	
10	50A-0508 Zi	Bolt	96	
11	14A-05 Zi	Lockwasher	88	
12	14C-05 Zi	Flatwasher	8	
13	30A-05 Zi	Nut	72	
14	32316	Clamp	3	
15	28344 x 35	Tape sealant	2	

Item	Part No.	Description	Qty.	Remarks
	86728	**Auxiliary tank assembly** - includes items 16, 18 & 19	1	
	95306	**Auxiliary tank assembly** - includes items 17 to 20	1	**Optional**
16	95256	Tank	1	
17	95306	Tank - engine shutdown	1	
18	86727	Cap	1	
19	85755	Sight gauge	1	
20	115C-04	Plug	1	
		Radiator installation **- models G720 to G736 - continued**	Ref.	261-20
		Engine shutdown	Ref.	388-36
		Lower radiator hose	Ref.	491-56

SERIAL NUMBERS: 33000 & UP	**RADIATOR INSTALLATION** **- Models G720 to G736**	Date **01/2001**	Group	**261**
		Illustr. Nos **00002541**	Page	**19**
			Issue	**1**

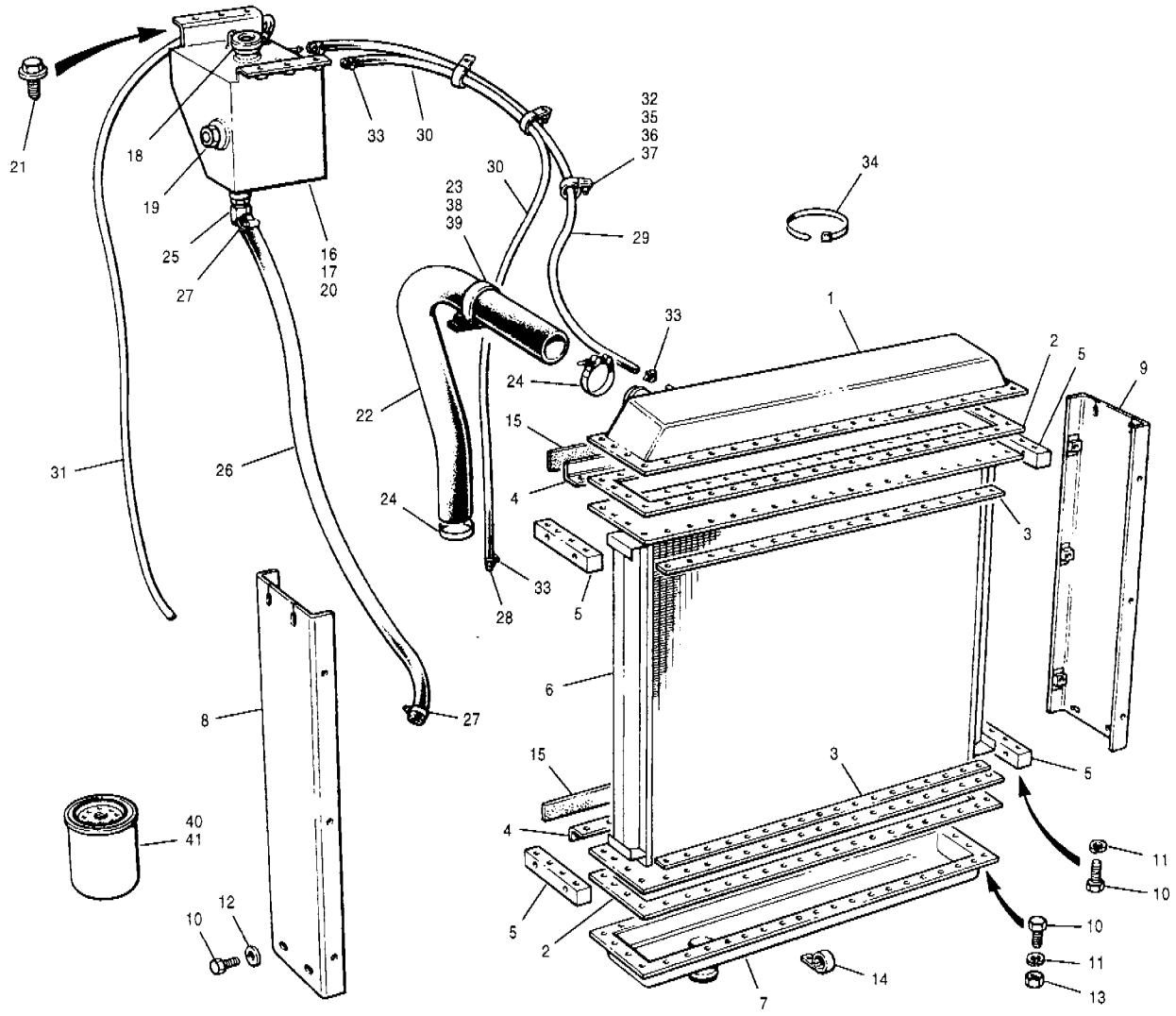

Item	Part No.	Description	Qty.	Remarks
21	78460	Screw	6	
22	86940	Hose - upper	1	
23	95240	Clamp	1	
24	22A-256	Clamp	2	
25	108B-1212	Connector	1	
26	9513 x 60	Hose	1	
27	22C-12	Clamp	2	
28	106A-0402	Connector	1	
29	52807 x 63	Hose	1	
30	52807 x 73	Hose	1	
31	27429 x 88	Hose	1	
32	32319	Clamp	3	
33	22D-04	Clamp	5	
34	15774	Tie wrap	3	
35	14C-05 Zi	Flatwasher	3	
36	14A-05 Zi	Lockwasher	3	
37	30A-05 Zi	Nut	3	
38	14A-06 Zi	Lockwasher	1	
39	30A-06 Zi	Nut	1	

Item	Part No.	Description	Qty.	Remarks
40	45674	Coolant conditioning filter	1	
41	34654	Coolant pre-charge filter **- use only where the cooling system is flushed and filled with new coolant**	1	
		Radiator installation - models G720 to G736 - continued	Ref.	261-19
		Engine shutdown	Ref.	388-36
		Lower radiator hose	Ref.	491-56

SERIAL NUMBERS: 33000 & UP	**RADIATOR INSTALLATION - Models G720 to G736**	Date **01/2001**	Group **261**
		Illustr. Nos **00002541**	Page **20**
			Issue **1**

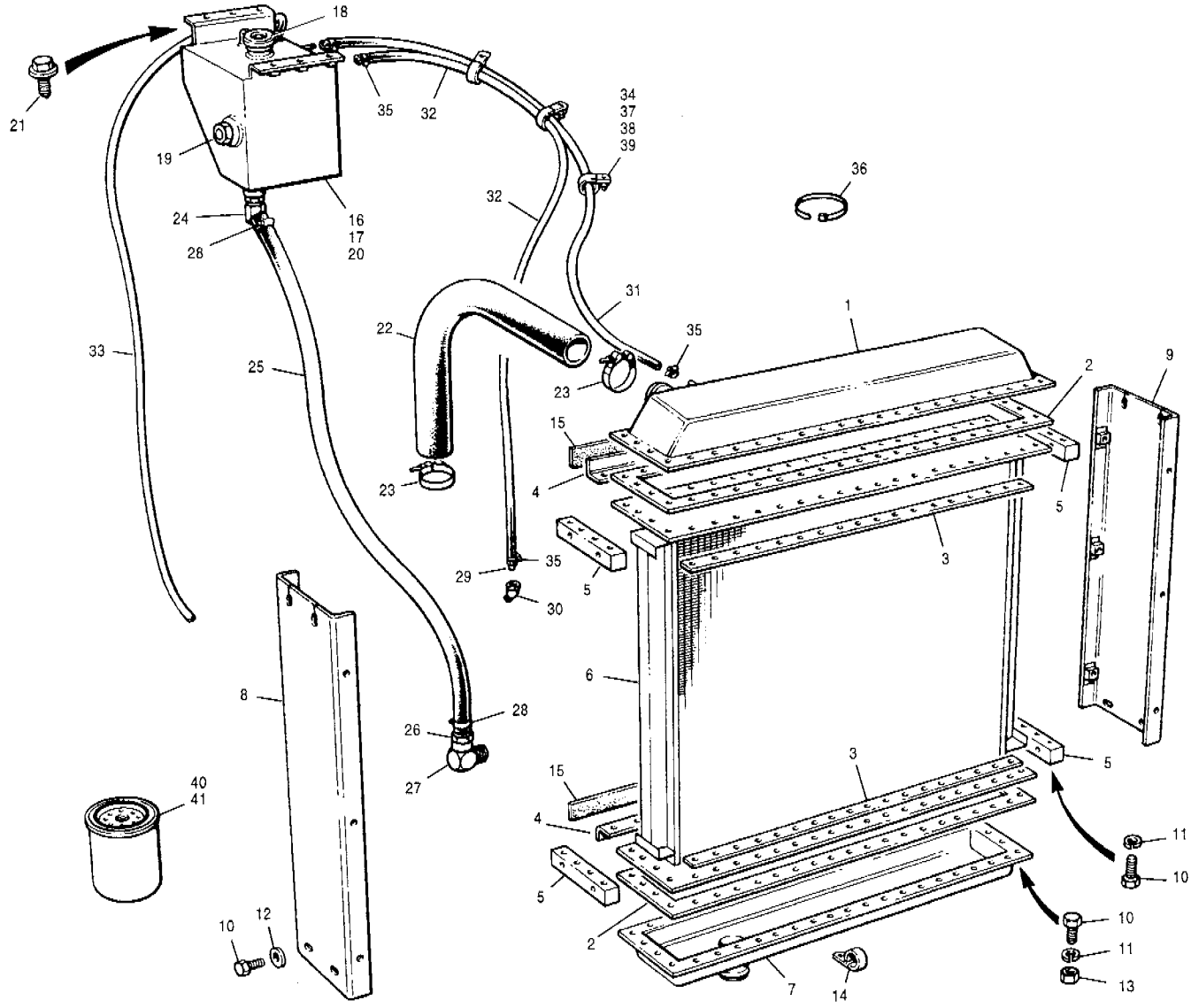

Item	Part No.	Description	Qty.	Remarks
	89451	**Radiator assembly** - includes items 1 to 13	1	
1	86867	Tank - top	1	
2	17664	Gasket	2	
3	17636	Bar	2	
4	95208	Angle	2	
5	86893	Mounting bar	4	
6	86496	Radiator core - 5 row	1	
7	65044	Tank - lower	1	
8	89457	Side member - L.H.	2	
9	89476	Side member - R.H.	1	
10	50A-0508 Zi	Bolt	96	
11	14A-05 Zi	Lockwasher	88	
12	14C-05 Zi	Flatwasher	8	
13	30A-05 Zi	Nut	72	
14	32316	Clamp	3	
15	28344 x 35	Tape sealant	2	

Item	Part No.	Description	Qty.	Remarks
	86728	**Auxiliary tank assembly** - includes items 16, 18 & 19	1	
	95306	**Auxiliary tank assembly** - includes items 17 to 20	1	**Optional**
16	95256	Tank	1	
17	95306	Tank - engine shutdown	1	
18	86727	Cap	1	
19	85755	Sight gauge	1	
20	115C-04	Plug	1	
		Radiator installation **- models G740 to G780 - continued**	Ref.	261-22
		Engine shutdown	Ref.	388-36
		Lower radiator hose	Ref.	491-57

SERIAL NUMBERS: 33000 & UP	**RADIATOR INSTALLATION** **- Models G740 to G780**	Date	**01/2001**	Group **261**
		Illustr. Nos	**00002522**	Page **21**
				Issue **1**

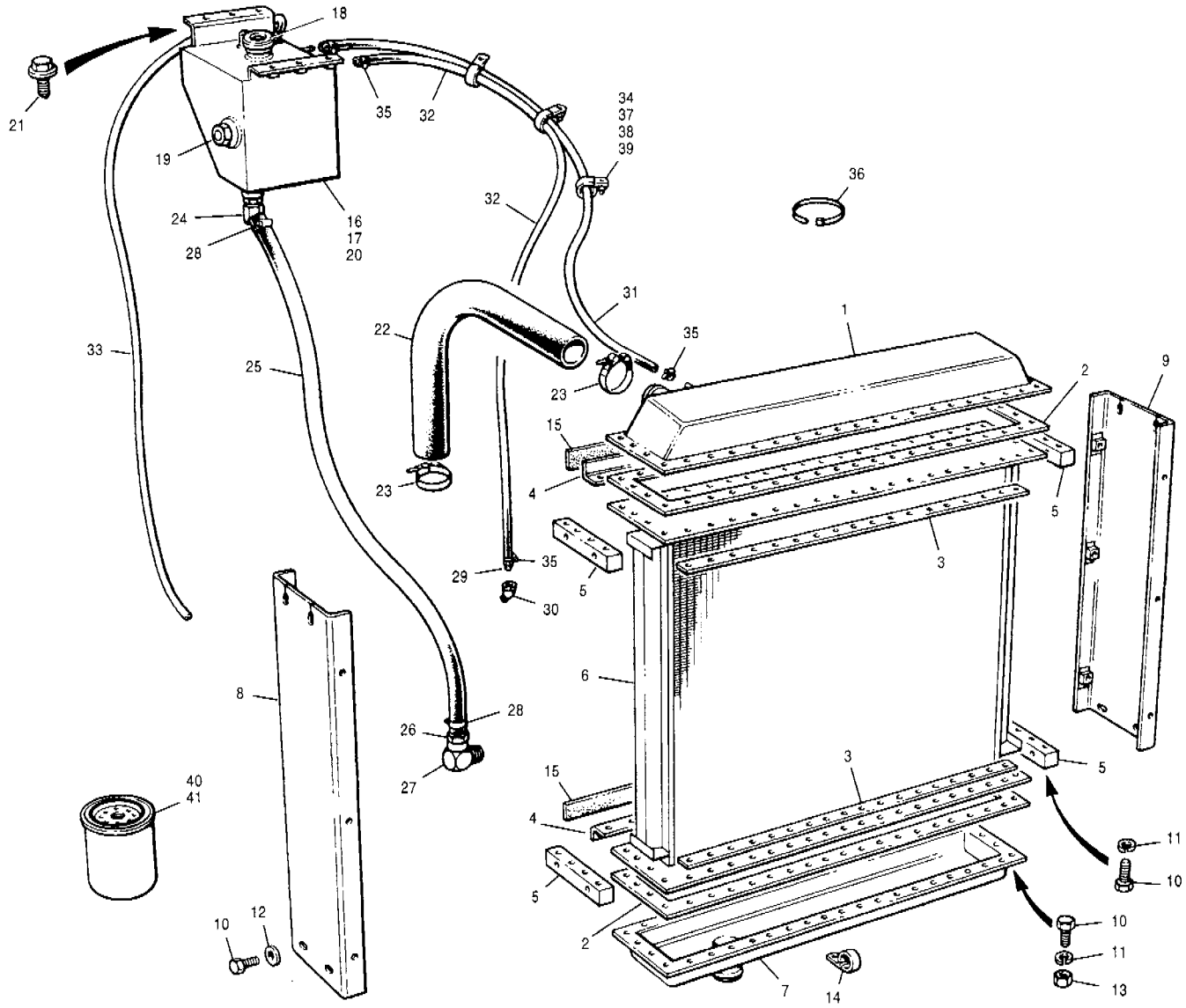

Item	Part No.	Description	Qty.	Remarks
21	78460	Screw	6	
22	95375	Hose - upper	1	
23	22A-256	Clamp	2	
24	108B-1212	Connector	1	
25	9513 x 60	Hose	1	
26	108D-1216	Connector	1	
27	115J-1616	Elbow	1	
28	22C-12	Clamp	2	
29	106A-0402	Connector	1	
30	115H-02	Elbow	1	
31	52807 x 63	Hose	1	
32	52807 x 73	Hose	1	
33	27429 x 88	Hose	1	
34	32319	Clamp	3	
35	22D-04	Clamp	5	
36	15774	Tie wrap	1	
37	14C-05 Zi	Flatwasher	3	
38	14A-05 Zi	Lockwasher	3	
39	30A-05 Zi	Nut	3	

Item	Part No.	Description	Qty.	Remarks
40	45674	Coolant conditioning filter	1	
41	34654	Coolant pre-charge filter **- use only where the cooling system is flushed and filled with new coolant**	1	
		Radiator installation - models G740 to G780 - continued	Ref.	261-21
		Engine shutdown	Ref.	388-36
		Lower radiator hose	Ref.	491-57

SERIAL NUMBERS: 33000 & UP	**RADIATOR INSTALLATION** **- Models G740 to G780**	Date **01/2001**	Group **261**
		Illustr. Nos **00002522**	Page **22**
			Issue **1**

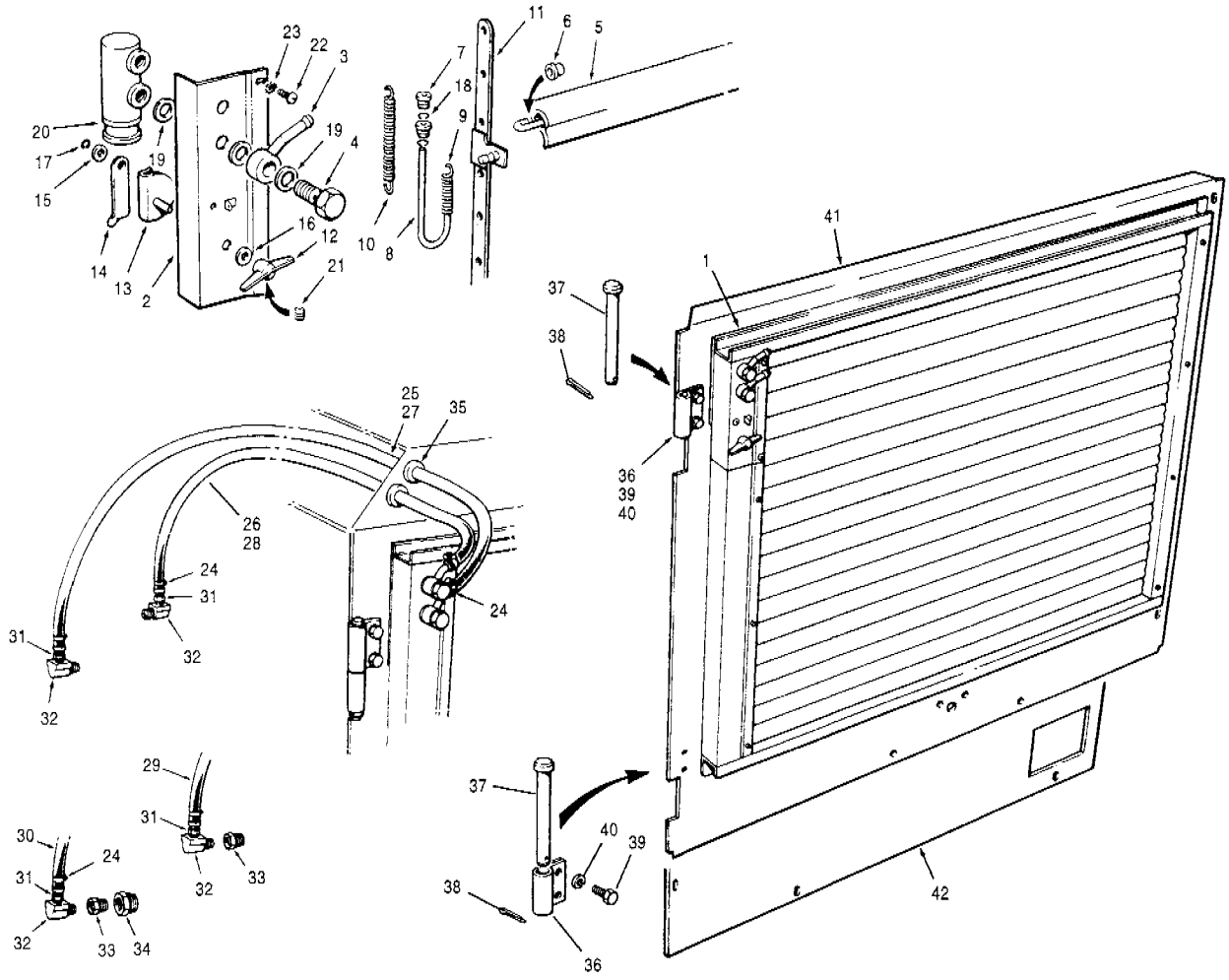

G740 to G780

Item	Part No.	Description	Qty.	Remarks
	68186	**Shutter assembly** - includes items 1 to 23	1	
1	**63325**	**Shutter frame assembly**	1	
2	24428	Thermostat cover	1	
3	24429	Connector	2	
4	24431	Bolt - special	2	
5	**24432**	**Vane assembly**	18	
6	24433	Bushing	54	
7	24434	Bushing	2	
8	24435	Drive rod	1	
9	24436	Spring	1	
10	24437	Spring	1	
11	24438	Tie bar	1	

Item	Part No.	Description	Qty.	Remarks
	24439	**Manual control** - includes items 12 to 17	1	
12	24440	Knob	1	
13	24441	Cam	1	
14	24446	Latch	1	
15	24447	Flatwasher	1	
16	24448	Flatwasher	1	
17	24450	Retaining ring	1	
18	24451	Retaining ring	1	
19	24455	Gasket	6	
20	65781	Sealed thermostat - 180°F	1	
20	25383	Sealed thermostat - 170°F	1	AWD
21	72E-1004	Setscrew	1	
22	52L-1004	Screw	3	
23	14H-10	Starwasher	3	
41		**Radiator grille frame**	Ref.	823-7
42		**Cover plate**	Ref.	823-7
		Radiator shutter - continued	Ref.	261-24

SERIAL NUMBERS: 33000 & UP	**RADIATOR SHUTTER**	Date **06/2001**	Group	**261**
		Illustr. Nos **00005329**	Page	**23**
			Issue	**1A**

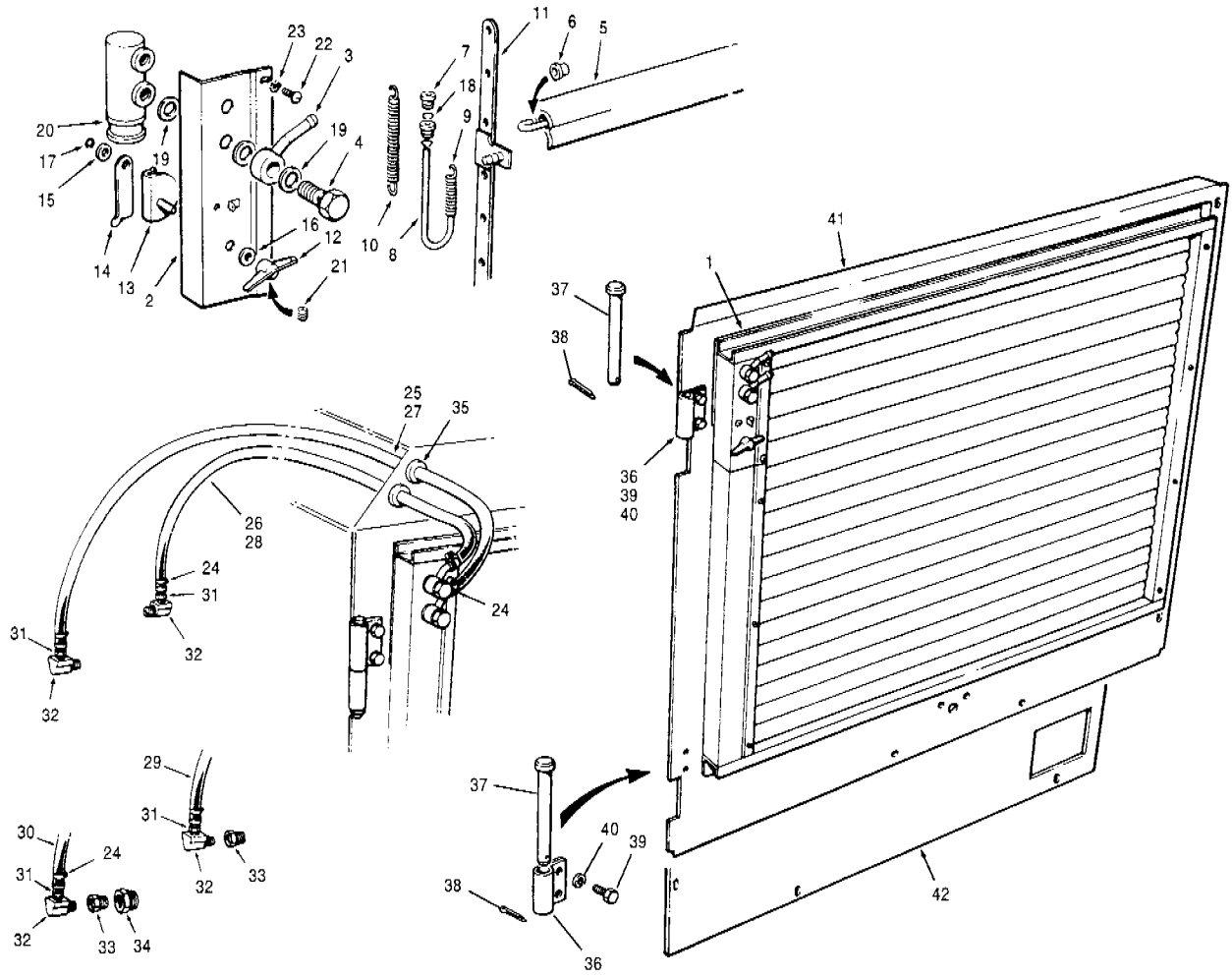

G740 to G780

Item	Part No.	Description	Qty.	Remarks
24	22D-06	Clamp	4	
25	9480 x 67	Hose	1	G710 to G716
26	9480 x 74	Hose	1	G710 to G716
27	9480 x 76	Hose	1	G720 to G736
28	* 9480 x 108	Hose	1	G720 to G736
29	9480 x 66	Hose	1	G740 to G780
30	9480 x 78	Hose	1	G740 to G780
31	106D-0606	Hose end	2	
32	100J-0604	Elbow	2	
33	115B-0804	Reducer	2	G740 to G780
34	115B-1208	Reducer	2	G740 to G780
35	57740	Grommet	2	

Item	Part No.	Description	Qty.	Remarks
36	65936	Hinge	2	
37	10A-0864	Pin	2	
38	13A-0412	Cotter pin	2	
39	50A-0506 Zi	Bolt	4	
40	14A-05 Zi	Lockwasher	4	
41		**Radiator grille frame**	Ref.	823-7
42		**Cover plate**	Ref.	823-7
		Radiator shutter - continued	Ref.	261-23

SERIAL NUMBERS: 33000 & UP	**RADIATOR SHUTTER**	Date **06/2001**	Group **261**
		Illustr. Nos **00005329**	Page **24**
			Issue **1A**

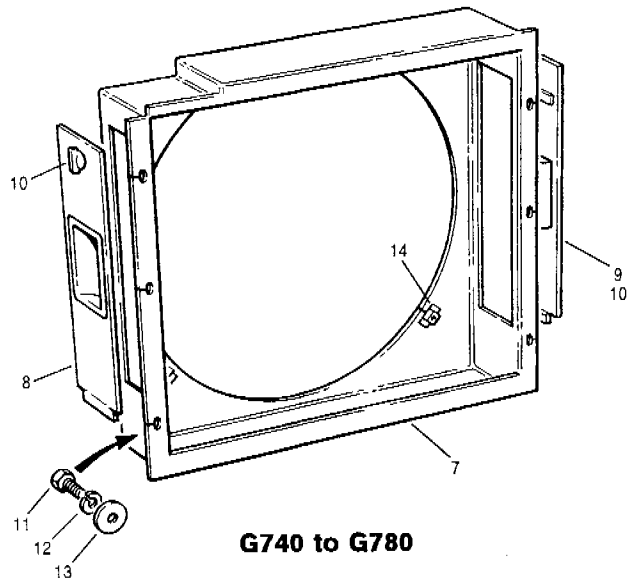

G740 to G780

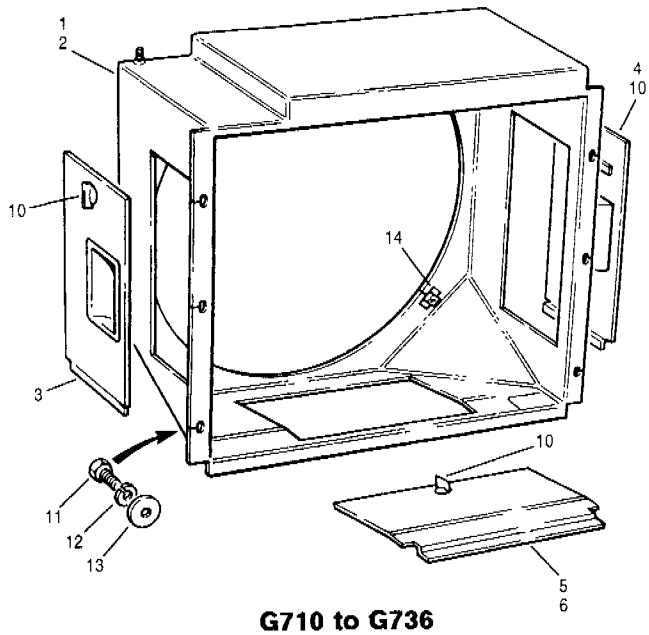

G710 to G736

Item	Part No.	Description	Qty.	Remarks
1	* 12725592	Shroud	1	G710 to G716
2	* 12725590	Shroud	1	G720 to G736
3	95443	Cover - L.H. - includes item 10	1	G710 to G736
4	95442	Cover - R.H. - includes item 10	1	G710 to G736
5	404304	Cover - bottom - includes item 10	1	G710 to G716
6	404303	Cover - bottom - includes item 10	1	G720 to G736
7	95429	Shroud	1	G740 to G780
8	95413	Cover - L.H. - includes item 10	1	G740 to G780
9	95412	Cover - R.H. - includes item 10	1	G740 to G780
10	* 95414	Handle	3	

Item	Part No.	Description	Qty.	Remarks
11	50A-0608 Zi	Bolt	6	
12	14A-06 Zi	Lockwasher	6	
13	14C-06 Zi	Flatwasher	6	
14	38B-06	Cage nut	4	
		Fans & fan guard	Ref.	263-27 263-28 263-29

SERIAL NUMBERS: 33000 & UP	**RADIATOR FAN SHROUDS - SUCKER**	Date **06/2001**	Group **263**
		Illustr. Nos **00006147**	Page **25**
			Issue **1A**

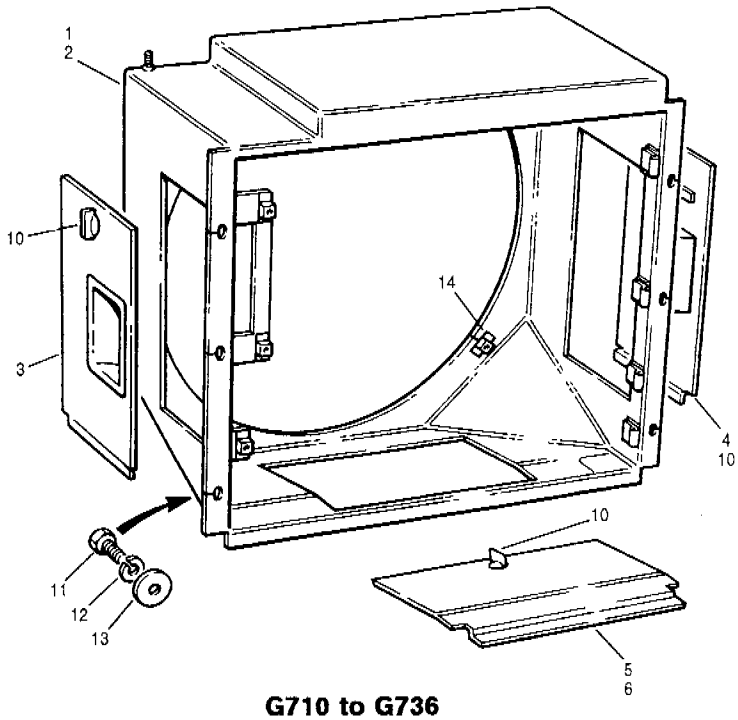

G710 to G736

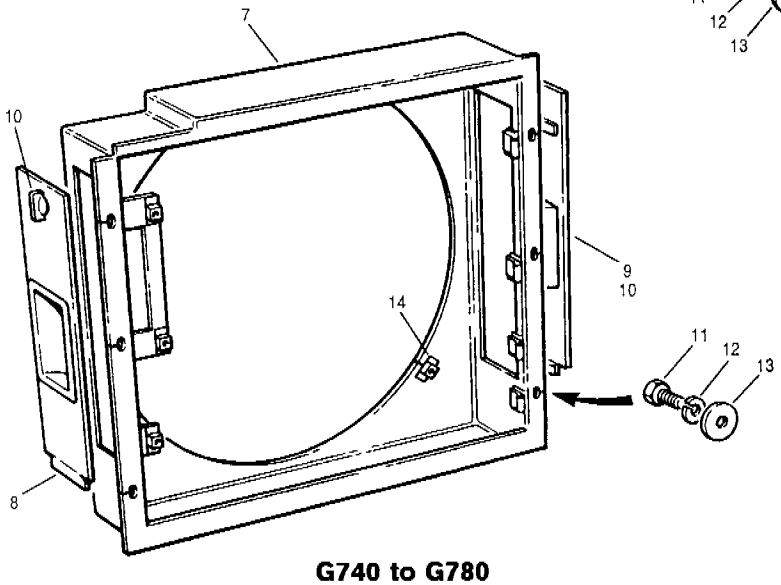

G740 to G780

Item	Part No.	Description	Qty.	Remarks
1	* 12725587	Shroud	1	G710 to G716
2	* 12725583	Shroud	1	G720 to G736
3	95443	Cover - L.H. - includes item 10	1	G710 to G736
4	95442	Cover - R.H. - includes item 10	1	G710 to G736
5	404304	Cover - bottom - includes item 10	1	G710 to G716
6	404303	Cover - bottom - includes item 10	1	G720 to G736
7	95428	Shroud	1	G740 to G780
8	95413	Cover - L.H. - includes item 10	1	G740 to G780
9	95412	Cover - R.H. - includes item 10	1	G740 to G780

Item	Part No.	Description	Qty.	Remarks
10	95414	Handle	3	
11	50A-0608 Zi	Bolt	6	
12	14A-06 Zi	Lockwasher	6	
13	14C-06 Zi	Flatwasher	6	
14	38B-06	Cage nut	4	
		Fans & fan guard	Ref.	263-27 263-28 263-29

SERIAL NUMBERS: 33000 & UP	**RADIATOR FAN SHROUDS - BLOWER**	Date **06/2001**	Group **263**
		Illustr. Nos **00006148**	Page **26**
			Issue **1 A**

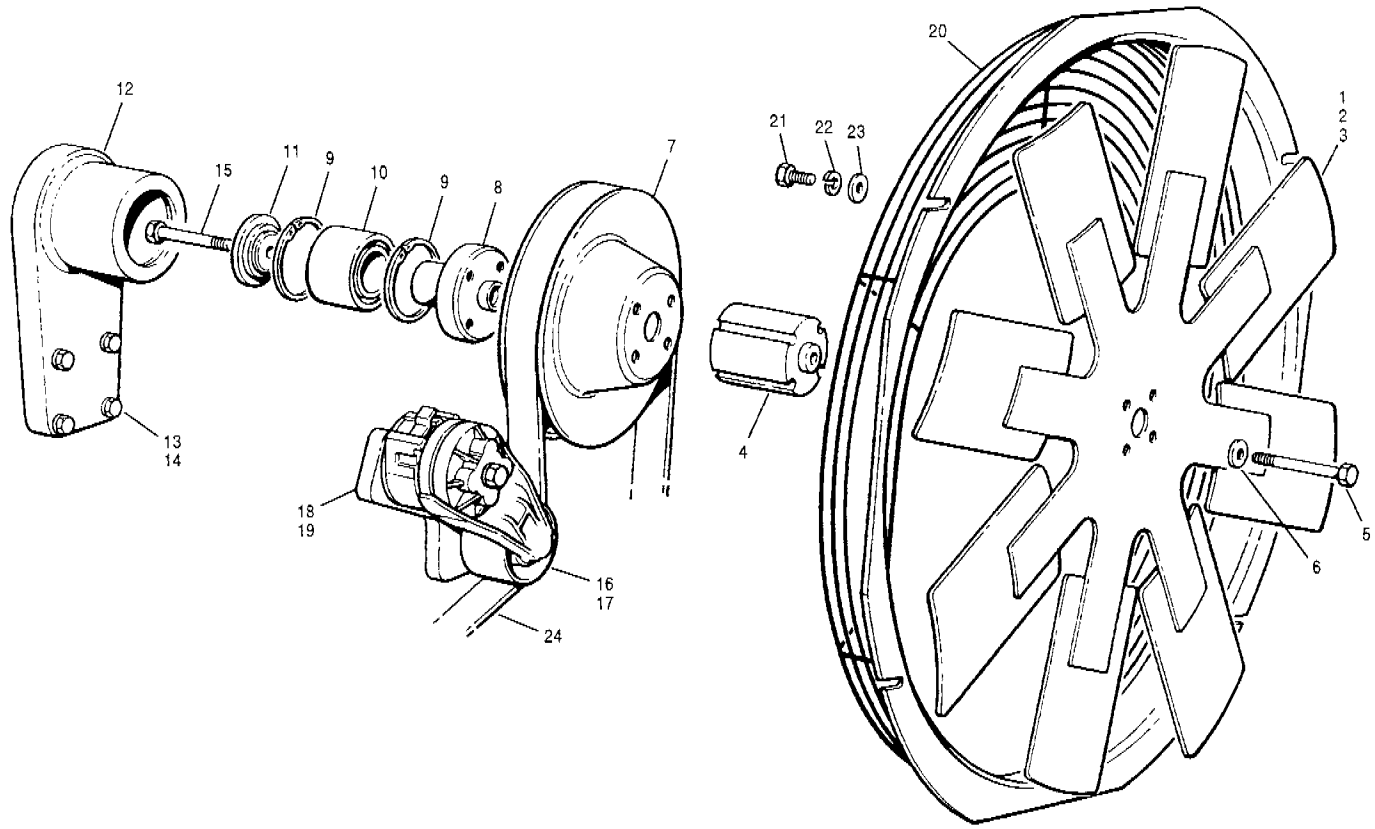

Item	Part No.	Description	Qty.	Remarks
1	86534	Fan - sucker - 8 blade - 30"	1	G710 & G710 VHP
2	86537	Fan - sucker - 8 blade - 30"	1	G716 VHP
3	84496	Fan - blower - 8 blade - 30"	1	
4	65810	Spacer	1	
5	350AA-10110 Zi	Bolt	4	
6	314C-10 Zi	Flatwasher	4	
7	86699	Pulley	1	
8	86683	Hub	1	
9	19B-250	Snap ring	2	
10	86686	Bearing	1	
11	86943	Retainer	1	
12	86708	Adapter plate	1	
13	350AA-08040 Zi	Bolt	4	
14	314C-08 Zi	Flatwasher	4	
15	350AA-10080 Zi	Bolt	1	

Item	Part No.	Description	Qty.	Remarks
16	95546	Belt tensioner	1	
17	350AC-10070 Zi	Bolt	1	
18	86809	Mounting plate	1	
19	350AC-08025 Zi	Bolt	2	
20	86956	Fan guard	1	
21	50A-0608 Zi	Bolt	4	
22	14A-06 Zi	Lockwasher	4	
23	14C-06 Zi	Flatwasher	4	
24	86854	Belt - fan/alternator	1	

SERIAL NUMBERS: 33000 & UP	**FANS & FAN GUARD - Models G710 to G716**	Date **01/2001**	Group **263**
		Illustr. Nos **00002539**	Page **27**
			Issue **1**

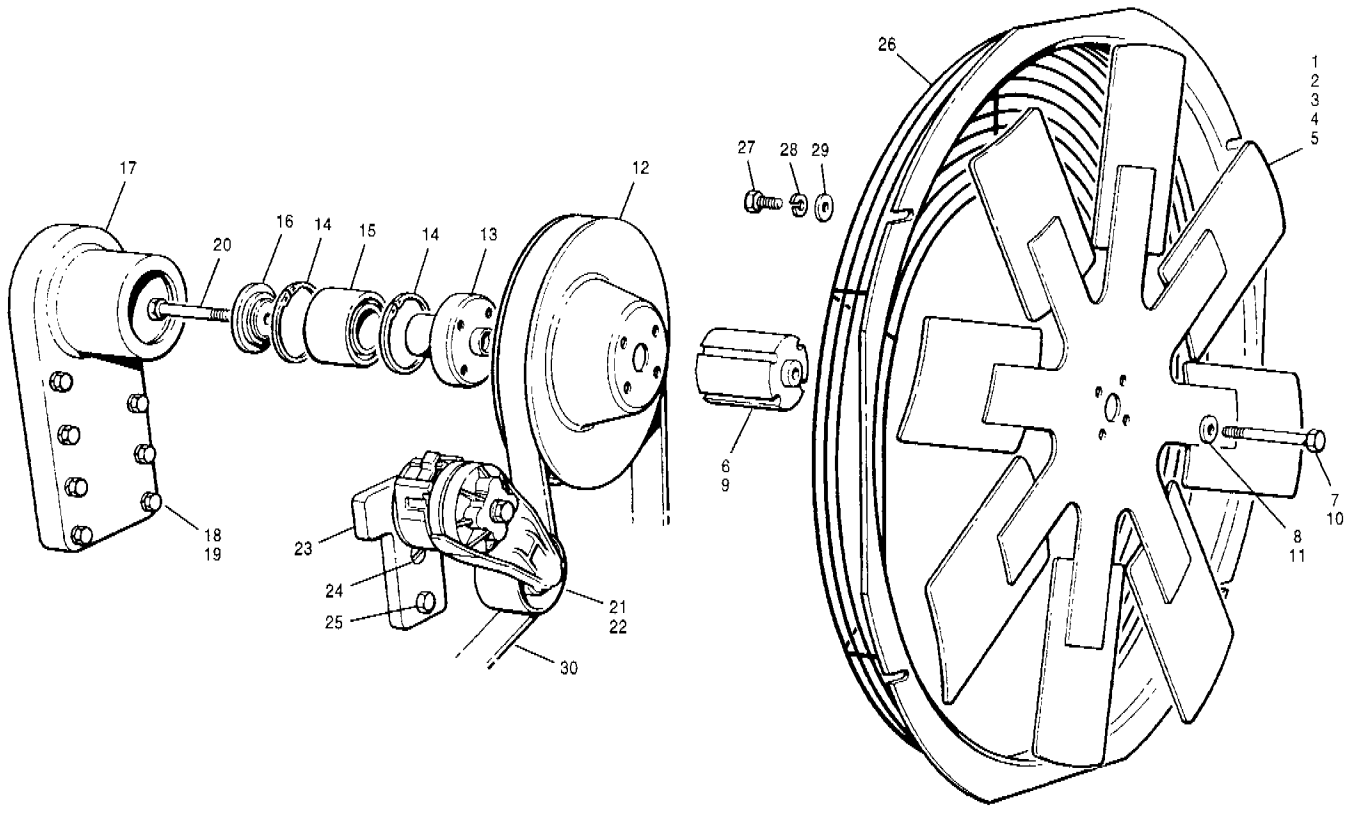

Item	Part No.	Description	Qty.	Remarks
1	86534	Fan - sucker - 8 blade - 30"	1	G720, G720 VHP & G730
2	86535	Fan - sucker - 8 blade - 30"	1	G730 VHP
3	86537	Fan - sucker - 8 blade - 30"	1	G726 VHP & G736 VHP
4	84496	Fan - blower - 8 blade - 30"	1	G720, G720 VHP & G730
5	84498	Fan - blower - 8 blade - 30"	1	G730 VHP
6	65810	Spacer	1	G720, G720 VHP
7	350AA-10110 Zi	Bolt	4	G730 &
8	314C-10 Zi	Flatwasher	4	G730 VHP
9	86141	Spacer - sucker	1	G726 VHP &
10	350AA-10120 Zi	Bolt - sucker	4	G736 VHP
11	314C-10 Zi	Flatwasher - sucker	4	
12	86681	Pulley	1	

Item	Part No.	Description	Qty.	Remarks
13	86683	Hub	1	
14	19B-250	Snap ring	2	
15	86686	Bearing	1	
16	86943	Retainer	1	
17	86679	Adapter plate	1	
18	350AA-08045 Zi	Bolt	8	
19	314C-08 Zi	Flatwasher	8	
20	350AA-10080 Zi	Bolt	1	
21	95546	Belt tensioner	1	
22	350AC-10070 Zi	Bolt	1	
23	95260	Mounting plate	1	
24	95261	Screw	1	
25	350AC-08025 Zi	Bolt	1	
26	86938	Fan guard	1	
27	50A-0608 Zi	Bolt	4	
28	14A-06	Lockwasher	4	
29	14C-06	Flatwasher	4	
30	95248	Belt - fan/alternator	1	

SERIAL NUMBERS: 33000 & UP	**FANS & FAN GUARD - Models G720 to G736**	Date **01/2001**	Group **263**
		Illustr. Nos **00002523**	Page **28**
			Issue **1**

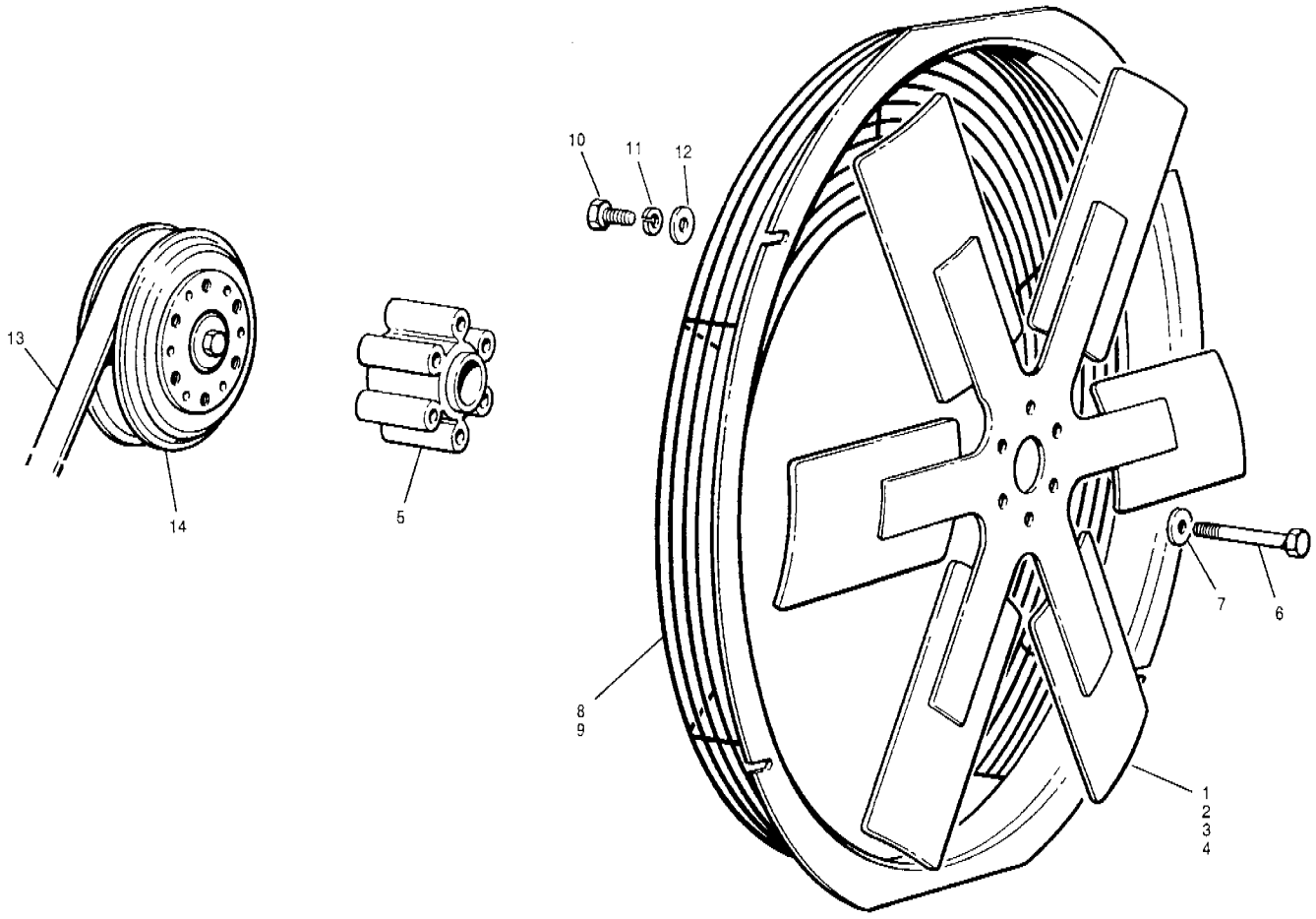

Item	Part No.	Description	Qty.	Remarks
1	86090	Fan - sucker - 6 blade - 28"	1	
2	86857	Fan - sucker - 6 blade - 29"	1	VHP
3	86218	Fan - blower - 8 blade - 28"	1	
4	84646	Fan - blower - 8 blade - 29"	1	VHP
5	86843	Spacer	1	
6	50A-0632 Zi	Bolt	6	
7	14C-06 Zi	Flatwasher	6	
8	86919	Fan guard - 28" fan	1	
9	86918	Fan guard - 29" fan	1	VHP
10	50A-0608 Zi	Bolt	4	
11	14A-06 Zi	Lockwasher	4	
12	14C-06 Zi	Flatwasher	4	
13	63419	Fan belt	1	
14		**Pulley**	Ref.	Engine parts manual

Item	Part No.	Description	Qty.	Remarks

SERIAL NUMBERS: 33000 & UP	**FANS & FAN GUARD** **- Models G740 to G780**	Date	**01/2001**	Group **263**
		Illustr. Nos	**00002524**	Page **29**
				Issue **1**

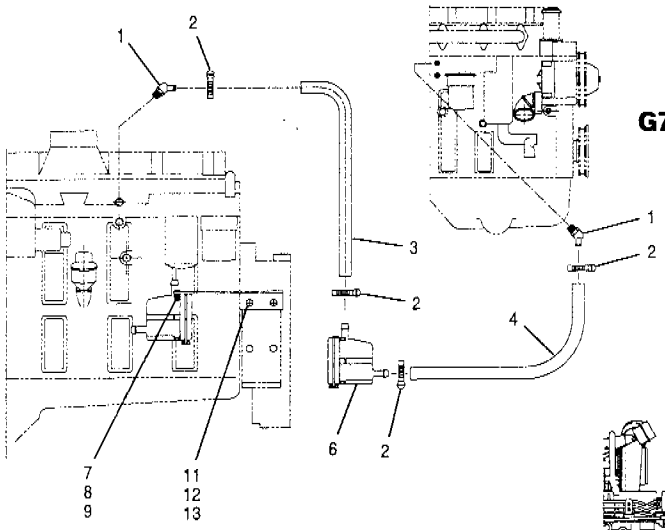

G720 to G736

G710 to G716

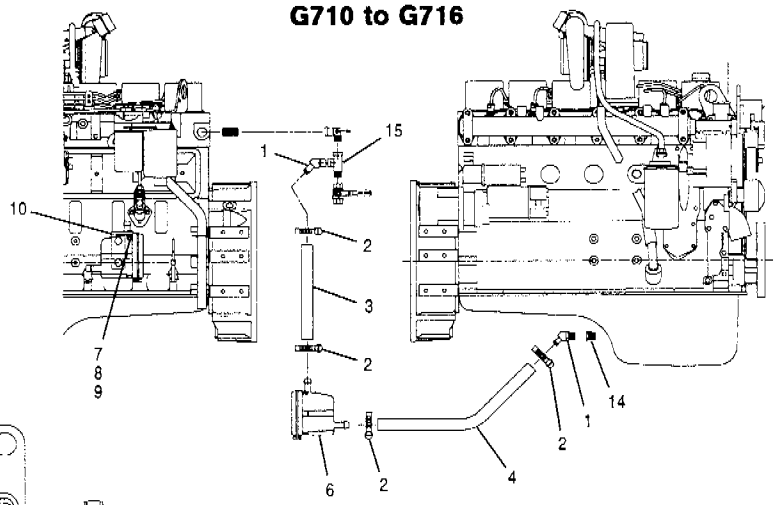

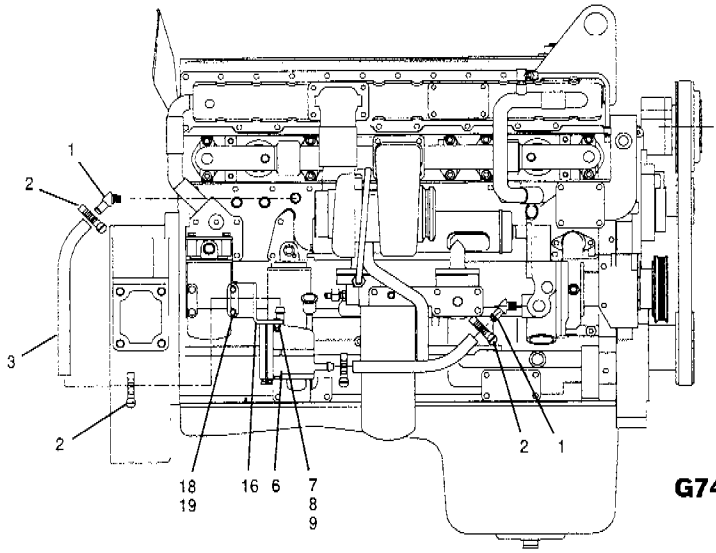

G740 to G780

Item	Part No.	Description	Qty.	Remarks
1	108F-1008	Connector	2	
2	* 22B-12	Clamp	4	
3	56651 x 18	Hose	1	
4	56651 x 60	Hose	1	G710 to G736
5	56651 x 36	Hose	1	G740 to G780
6	93323	Water heater	1	
7	50A-0408 Zi	Bolt	2	
8	* 955893	Hardened washer	2	
9	30A-04 Zi	Nut	2	
10	95454	Bracket	1	G710 to G716
11	95453	Bracket	1	G720 to G736
12	350A-12020 Zi	Bolt	2	G720 to G736
13	14F-08	Lockwasher	2	G720 to G736
14	115B-0808	Connector	1	G710 to G716
15	115V-0808	Tee	1	G710 to G716

Item	Part No.	Description	Qty.	Remarks
		G740 to G780		
16	400389	Bracket	1	
17	350A-10070 Zi	Bolt	2	
18	314A-08 Zi	Lockwasher	2	

SERIAL NUMBERS: 33000 & UP	**RECIRCULATING COOLANT HEATER INSTALLATION**	Date 06/2001	Group 269
		Illustr. Nos 00005250	Page 30
			Issue 1A

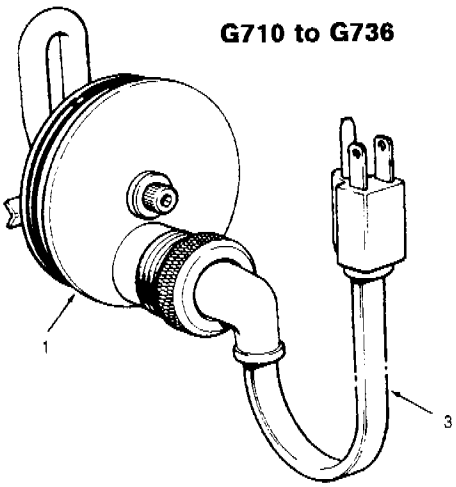

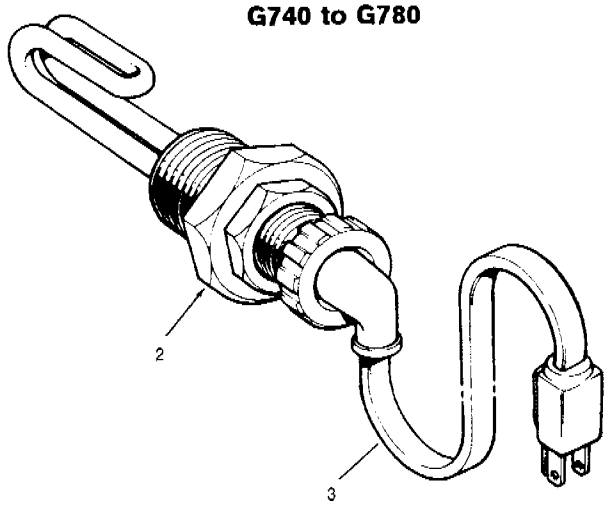

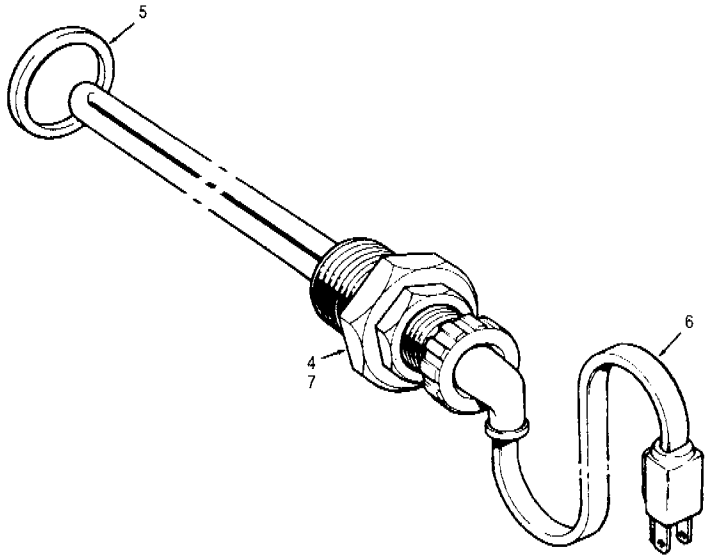

Item	Part No.	Description	Qty.	Remarks
		Block heater installation		
1	57563	Immersion heater	1	G710 to G736
2	36808	Immersion heater	1	G740 to G780
3	57564	Cord	1	
		Oil pan heater installation		
4	44007	Immersion heater	1	G710 to G736
5	43838	Seal	1	
6	57564	Cord	1	
7	15828	Immersion heater c/w cord	1	G740 to G780

Item	Part No.	Description	Qty.	Remarks

SERIAL NUMBERS: 33000 & UP	**ENGINE HEATER**	Date	**01/2001**	Group **269**
		Illustr. Nos	**00006149**	Page **31**
				Issue **1**

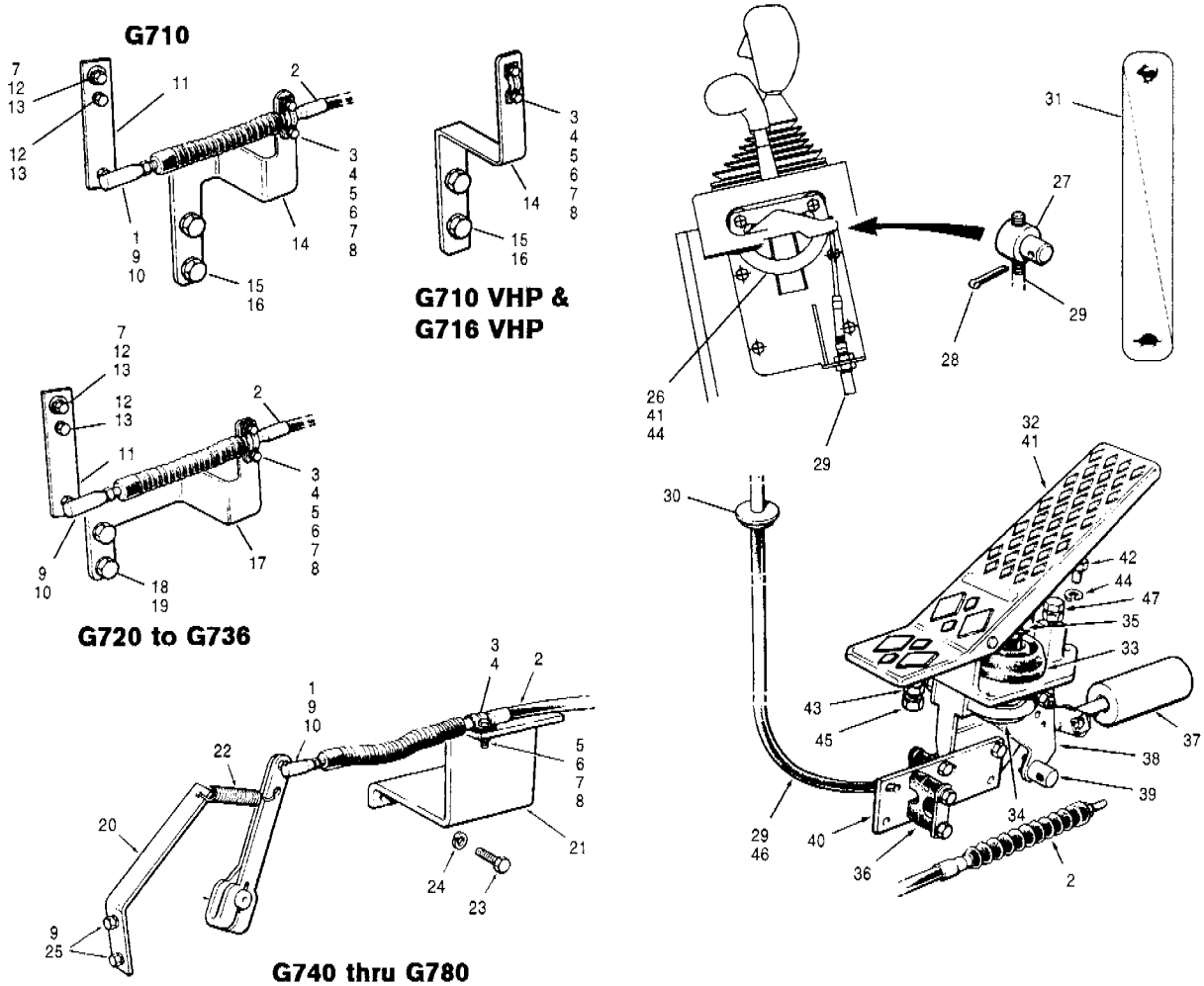

Item	Part No.	Description	Qty.	Remarks
		Throttle installation		
1	1759	Joint	1	
2	57641	Cable	1	
3	42207	Shim	1	
4	42208	Clamp	1	
5	350A-05025 Zi	Bolt	2	
6	314A-05 Zi	Lockwasher	2	
7	314C-06 Zi	Flatwasher	2-3	
8	330A-05 Zi	Nut	2	
9	14A-04 Zi	Lockwasher	1-3	
10	31A-04 Zi	Nut	1	
11	86161	Lever	1	G710 to G736
12	350A-06016	Bolt	2	G710 to G736
13	314A-06 Zi	Lockwasher	2	G710 to G736
14	95540	Bracket	1	G710 VHP & G716 VHP
14	86617	Bracket	1	G710
15	350A-12030 Zi	Bolt	2	
16	314A-12 Zi	Lockwasher	2	
17	86162	Bracket	1	G720 to G736
18	350A-10025 Zi	Bolt	2	G720 to G736
19	314A-10 Zi	Lockwasher	2	G720 to G736
20	23293	Anchor	1	G740 to G780
21	73976	Bracket	1	G740 to G780
22	401004	Spring	1	G740 to G780
23	350A-10025 Zi	Bolt	2	G740 to G780
24	314A-10 Zi	Lockwasher	2	G740 to G780
25	50A-0410 Zi	Bolt	2	G740 to G780

Item	Part No.	Description	Qty.	Remarks
		Accelerator/decelerator installation		
26	**84663**	**Handle assembly**	1	
27	84162	Spigot	1	
28	13A-0312	Cotter pin	1	
29	84710	Cable	1	
30	65558	Grommet	1	
31	84962	Decal - hand throttle	1	
32	**36748**	**Pedal assembly** - includes items 33 to 40		
33	23542	Bellows	1	
34	26098	U-bolt	1	
35	37066	Linkage	1	
36	**37067**	**Anchor assembly**	1	
37	37068	Cannister	1	
38	**37069**	**Rod assembly**	1	
39	37070	Terminal kit	1	
40	37071	Bracket	1	
41	50A-0406 Zi	Bolt	4	
42	50A-0608 Zi	Bolt	1	
43	50A-0410 Zi	Bolt	1	
44	14A-04 Zi	Lockwasher	5	
45	30A-04 Zi	Nut	1	
46	31A-04 Zi	Nut	1	
47	84632	Bolt - adjuster	1	G740 to G780
		Variable horsepower - throttle control	Ref.	278-34

SERIAL NUMBERS: 33000 & UP	**THROTTLE CONTROLS**	Date **01/2001**	Group **270**
		Illustr. Nos **00003542**	Page **32**
			Issue **1**

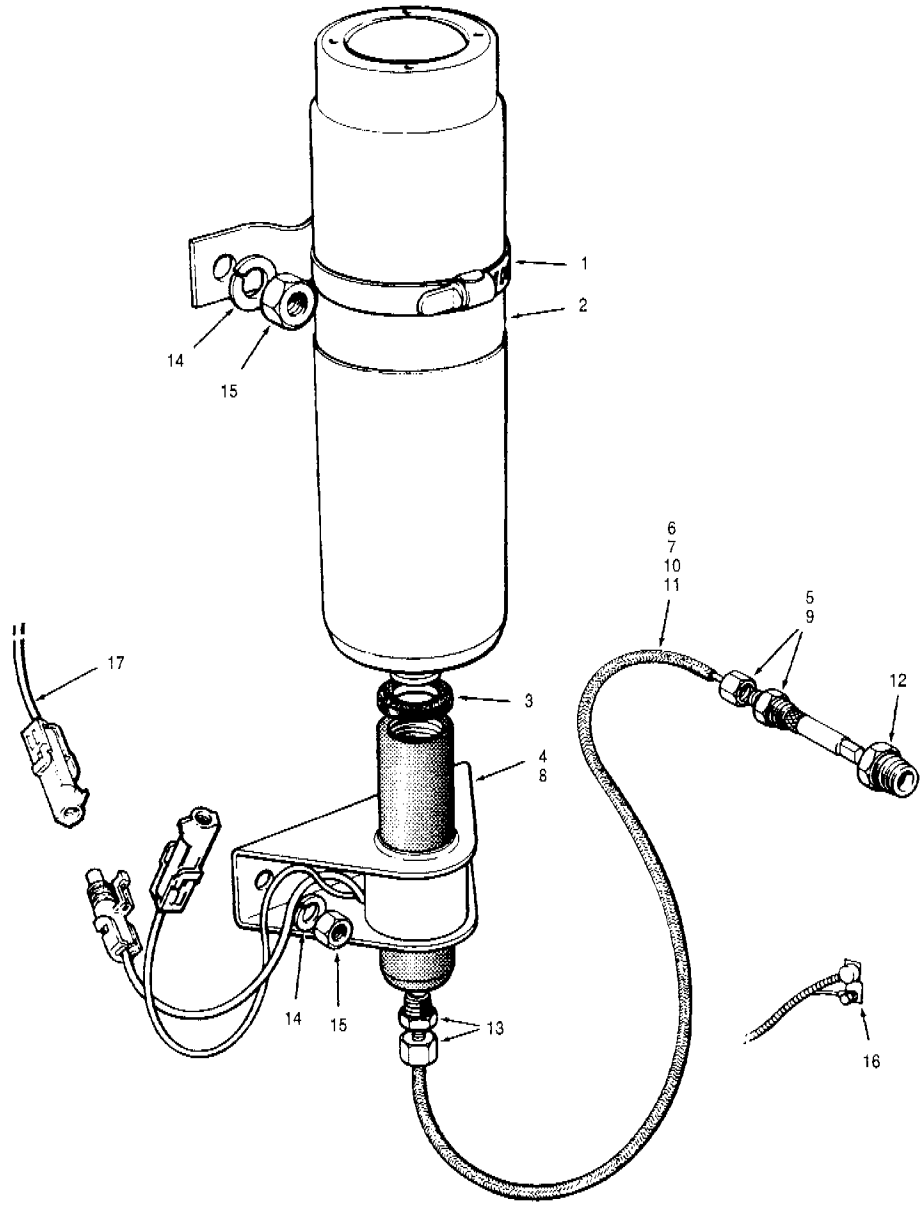

Item	Part No.	Description	Qty.	Remarks
	73952	**Cold start kit** - includes items 1, 2, 4 & 5	1	**G710 to G736**
	73951	**Cold start kit** - includes items 1, 2, 8 & 9	1	**G740 to G780**
1	16865	Clamp	1	
2	16910	Cylinder	1	
3	32406	Gasket	1	
4	73944	Valve	1	G710 to G736
5	43589	Atomizer	1	G710 to G736
6	15320 x 48	Tube	1	G710 to G736
7	17536 x 48	Conduit	1	G710 to G736

Item	Part No.	Description	Qty.	Remarks
8	73943	Valve	1	G740 to G780
9	37156	Atomizer	1	G740 to G780
10	15320 x 36	Tube	1	G740 to G780
11	17536 x 36	Conduit	1	G740 to G780
12	115B-0402	Reducer	1	G720 to G736
13	120B-0202	Connector	1	
14	14A-04 Zi	Lockwasher	4	
15	30A-04 Zi	Nut	4	
16	73953	Thermo-guard	1	
17		**Harness - rear chassis & engine**	Ref.	371-29

SERIAL NUMBERS: 33000 & UP	**COLD START**	Date **01/2001**	Group **274**
		Illustr. Nos **00002417**	Page **33**
			Issue **1**

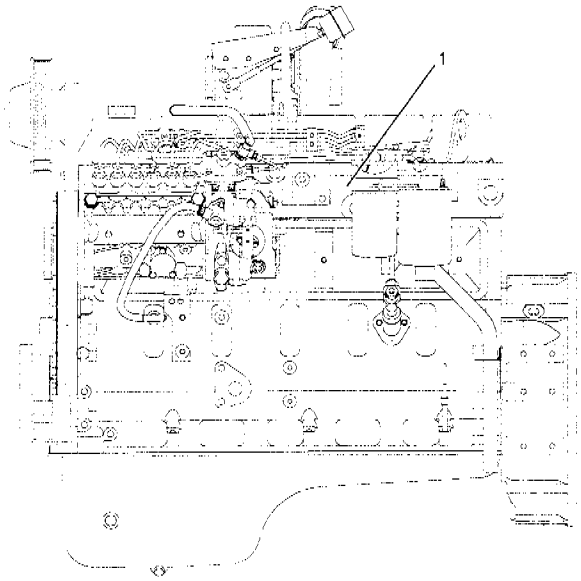

G710 VHP to G736 VHP

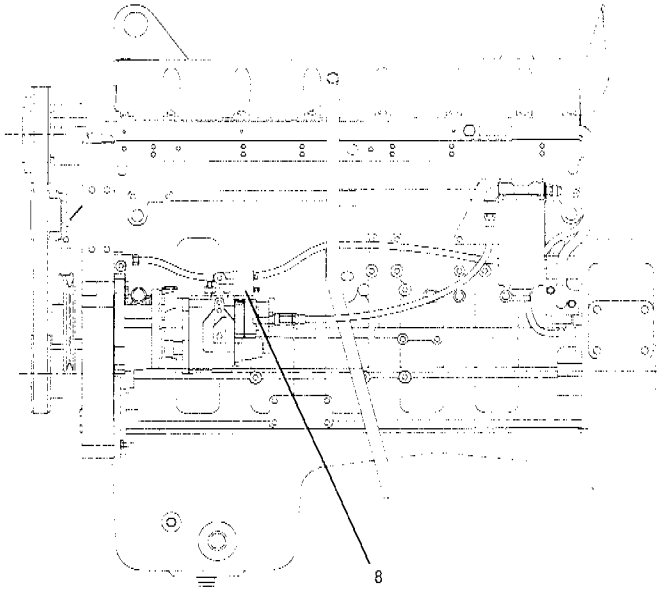

G740 VHP to G780 VHP

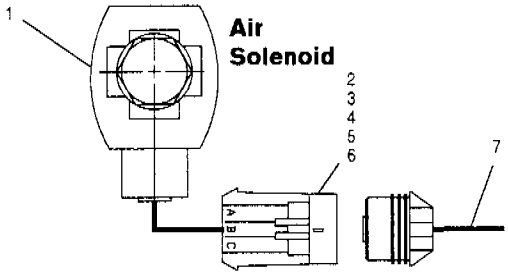

G710 VHP to G736 VHP

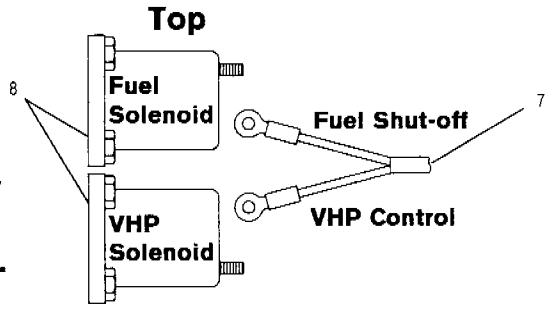

G740 VHP to G780 VHP

Item	Part No.	Description	Qty.	Remarks
1	63328	Air solenoid	1	
	96107	**Connector kit for 63328** - air solenoid - includes items 2 to 6	1 per	**G710 VHP to G736 VHP**
2	39730	Receptacle - 3 pin	1	
3	59512	Lock clip	1	
4	59513	Pin	2	
5	59514	Seal	2	
6	59515	Plug	1	
7		**Harnesses - rear chassis & engine**	Ref.	371-29
8		**VHP & fuel solenoids**	Ref.	Engine parts manual

Item	Part No.	Description	Qty.	Remarks

SERIAL NUMBERS: 33000 & UP	**VARIABLE HORSEPOWER** **- Models G710 VHP to G780 VHP**	Date **01/2001**	Group	**278**
		Illustr. Nos **00002526**	Page	**34**
			Issue	**1**

Group	Page

Numerical

311 Battery 3
313 Battery Box 4
321 Alternator 5
331 Starter Motor 6
352 Lights - Front 7
Lights - Front - EEC 8
353 Lights - Rear 9
Lights - Rear - EEC 10
356 Extra Lights - Front 11
Extra Lights - Rear 12
361 Direction Indicator 13
362 Horn & Back-Up Warning 14
Rotating Beacon 15
363 Windshield Wiper - Standard Cab 16
Windshield Wiper - Low Profile Cab 17
Window Wiper - Rear - Standard Cab 18
Window Wiper - Rear - Low Profile Cab 19
Washer 20
Lower Front Window Wipers - Fixed Window 21
Lower Front Window Wipers - Vent Window 22
Defroster Fan - Front & Rear 23
364 Switches 24
366 Electric Float Controls 25
371 Wiring Harness - Front 26
Wiring Harness - Cab 27
Wiring Harness - Cab 28
Wiring Harness - Rear 29
Battery Cable & Isolation Switch 30
372 Electrical Distribution Box 31
383 Trip Meter & Hour Meter 32
386 Gauges 33
Senders 34
387 Display Unit - M4/M44 35
388 Automatic Override Engine Shut-Down System 36
393 Radio/Cassette Player 37
Converters - 24 Volt to 12 Volt 38

Group	Page

Alphabetical

321 Alternator 5
388 Automatic Override Engine Shut-Down System 36
311 Battery 3
313 Battery Box 4
371 Battery Cable & Isolation Switch 30
393 Converters - 24 Volt to 12 Volt 38
363 Defroster Fan - Front & Rear 23
361 Direction Indicator 13
387 Display Unit - M4/M44 35
366 Electric Float Controls 25
372 Electrical Distribution Box 31
356 Extra Lights - Front 11
Extra Lights - Rear 12
386 Gauges 33
362 Horn & Back-Up Warning 14
352 Lights - Front 7
Lights - Front - EEC 8
353 Lights - Rear 9
Lights - Rear - EEC 10
363 Lower Front Window Wipers - Fixed Window 21
Lower Front Window Wipers - Vent Window 22
393 Radio/Cassette Player 37
362 Rotating Beacon 15
386 Senders 34
331 Starter Motor 6
364 Switches 24
383 Trip Meter & Hour Meter 32
363 Washer 20
Window Wiper - Rear - Low Profile Cab 19
Window Wiper - Rear - Standard Cab 18
Windshield Wiper - Low Profile Cab 17
Windshield Wiper - Standard Cab 16
371 Wiring Harness - Cab 27
Wiring Harness - Cab 28
Wiring Harness - Front 26
Wiring Harness - Rear 29

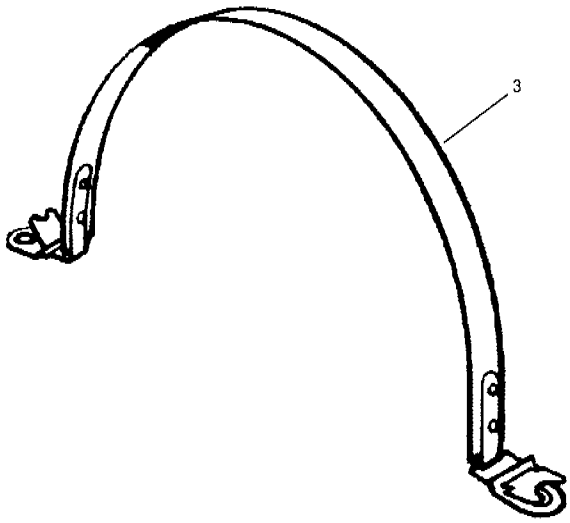

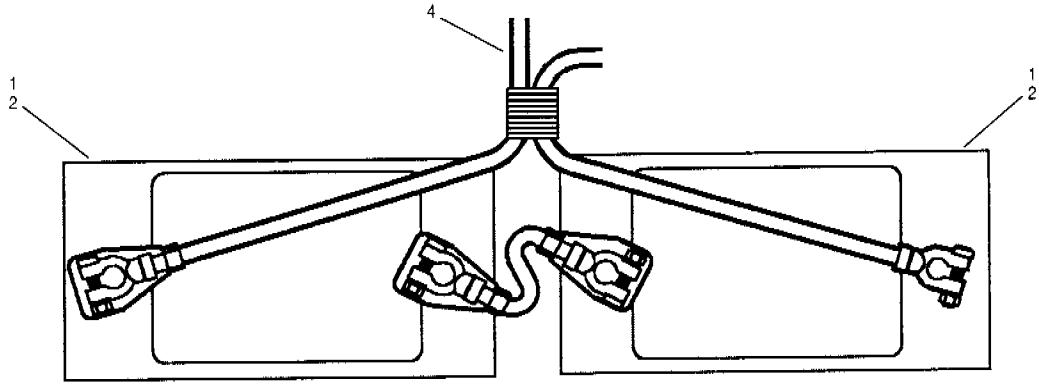

Item	Part No.	Description	Qty.	Remarks
1	400192	Battery	2	G710 to G716
2	400193	Battery	2	G720 to G780
3	68934	Carrier strap	1	EEC
4		**Battery cable & isolation switch**	Ref.	371-30

Item	Part No.	Description	Qty.	Remarks

SERIAL NUMBERS: 33000 & UP	**BATTERY**	Date **01/2001**	Group **311**
		Illustr. No. **00006186**	Page **3**
			Issue **1**

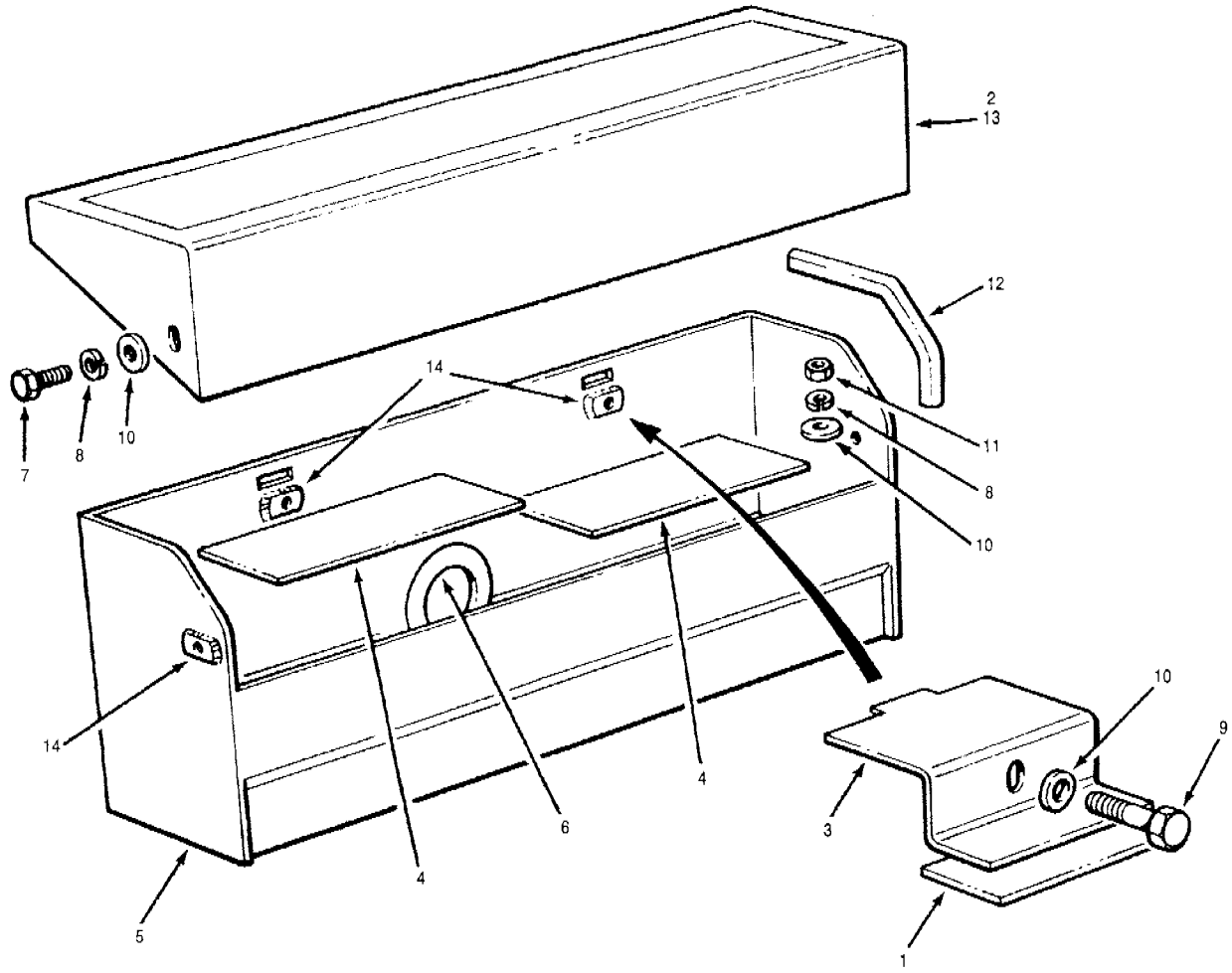

Item	Part No.	Description	Qty.	Remarks
1	7011 x 3.5	Webbing	2	
2	69964	Lid	1	
3	66637	Clamp plate - battery	2	
4	69694	Underpad - battery	2	
5	87177	Battery box	1	
6	40839 x 8.5	Edge trim	1	
7	50A-0610 Zi	Bolt	2	
8	14A-06 Zi	Lockwasher	6	
9	50A-0622 Zi	Bolt	2	
10	14C-06 Zi	Flatwasher	8	
11	30A-06 Zi	Nut	4	
12	66689	Rubber channel	A.R.	
13	58432	Non skid tape	1	
14	66690	Weld nut	4	

Item	Part No.	Description	Qty.	Remarks

SERIAL NUMBERS: 33000 & UP	**BATTERY BOX**	Date 01/2001	Group 313
		Illustr. Nos 00006187	Page 4
			Issue 1

G720 to G780 - Optional

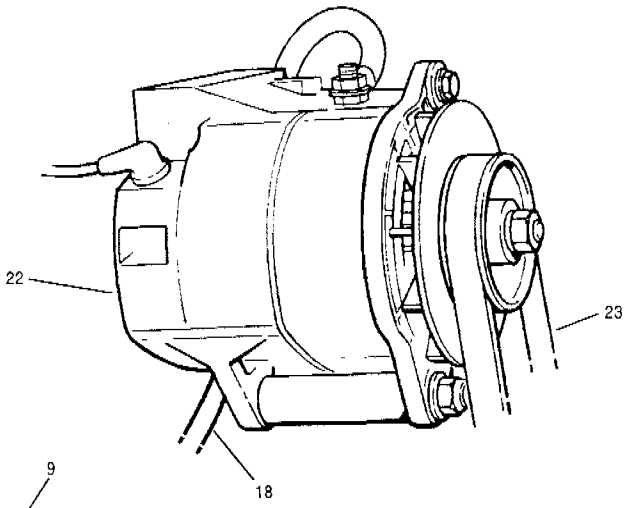

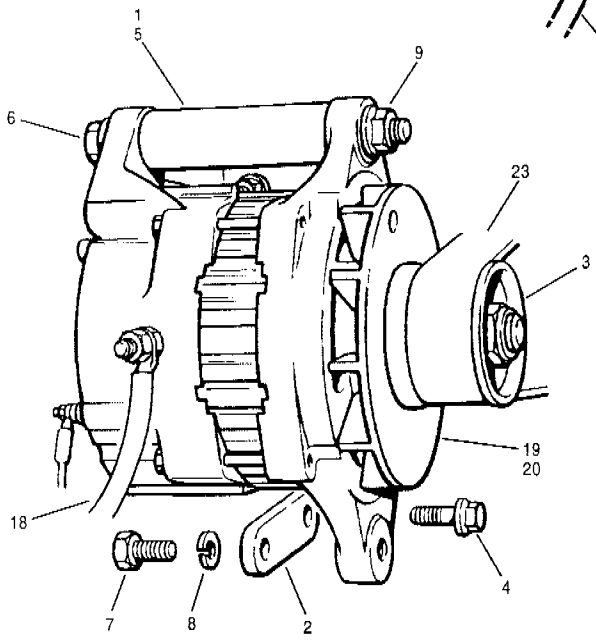

G710 & G716

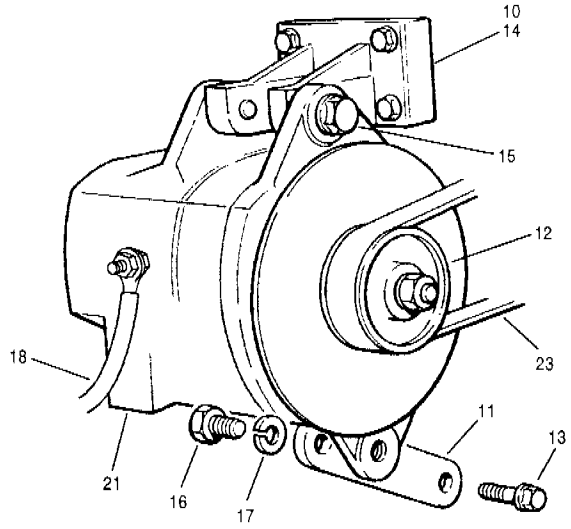

G720 to G780

Item	Part No.	Description	Qty.	Remarks
1	86999	Support - alternator	1	G710 to G716
2	95000	Brace - alternator	1	
3	95001	Pulley - alternator	1	
4	350AC-08020 Zi	Bolt	1	
5	350AC-08025 Zi	Bolt	3	
6	350AC-12150 Zi	Bolt	1	
7	50A-0808 Zi	Bolt	1	
8	14A-08 Zi	Lockwasher	1	
9	330N-12 Zi	Nut	1	
10	95269	Support - alternator	1	G720 & G736
11	95267	Brace - alternator	1	
12	95268	Pulley - alternator	1	
13	350AC-08020 Zi	Bolt	1	
14	350AC-08025 Zi	Bolt	4	
15	350AC-12040 Zi	Bolt	2	
16	50A-0808 Zi	Bolt	1	
17	14A-08 Zi	Lockwasher	1	

Item	Part No.	Description	Qty.	Remarks
18	96439	Ground strap - to frame	1	G710 to G736
18	400149	Ground strap - to frame	1	G740 to G780
19	68207	Alternator - 50 Amp	1	G710 & G716
20	75391	Alternator - 70 Amp	1	G710 to G716 Optional
21	68208	Alternator - 75 Amp	1	G720 to G780
22	61066	Alternator - 100 Amp	1	G720 to G780 Optional
23		**Fan belt - models G710 & G716**	Ref.	263 - 27
23		**Fan belt - models G720 to G736**	Ref.	263 - 28
23		**Fan belt - models G740 to G780**	Ref.	263 - 29

SERIAL NUMBERS: 33000 & UP	**ALTERNATOR**	Date 01/2001	Group 321
		Illustr. Nos 00006188	Page 5
			Issue 1

G710 to G716

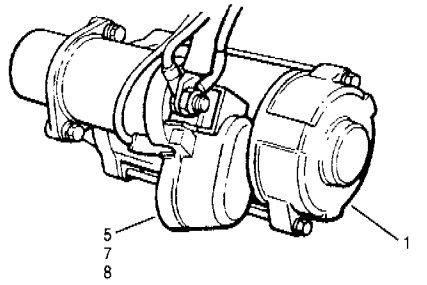

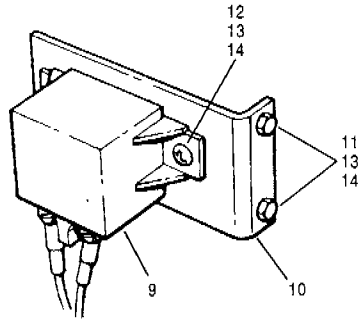

G720 to G736

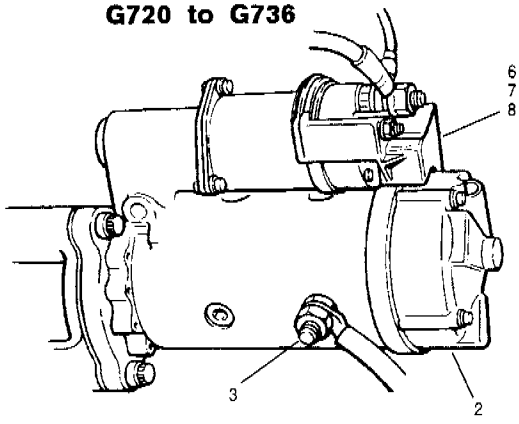

G740 to G780

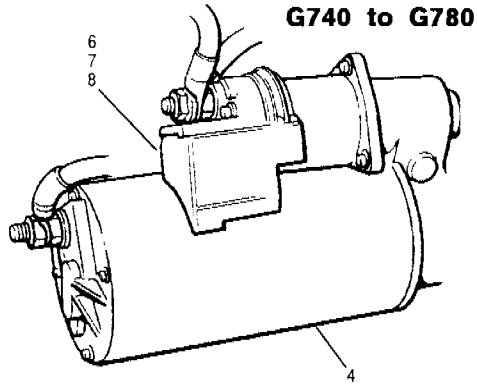

Item	Part No.	Description	Qty.	Remarks
1	65908	Starter	1	G710 to G716
2	84629	Starter - includes item 3	1	G720 to G736
				See note
3	84631	Bolt	1	G720 to G736
4	65906	Starter	1	G740 to G780
5	65912	Terminal shield	1	G710 to G716
6	65911	Terminal shield	1	G720 to G780
7	314A-05 Zi	Lockwasher	1	
8	330A-05 Zi	Nut	1	
9	73067	Relay	1	
10	86742	Bracket - relay	1	
11	52C-1006 Zi	Bolt	2	G710 & G716
12	52L-1004 Zi	Screw	2	
13	14F-10 Zi	Lockwasher	4	
14	32A-10 Zi	Nut	4	

Note: starter P/N 84629 must be supplied with battery cable P/N 73053 - see 371 - 30

Item	Part No.	Description	Qty.	Remarks

SERIAL NUMBERS: 33000 & UP	**STARTER MOTOR**	Date **01/2001**	Group **331**
		Illustr. Nos **00006189**	Page **6**
			Issue **1**

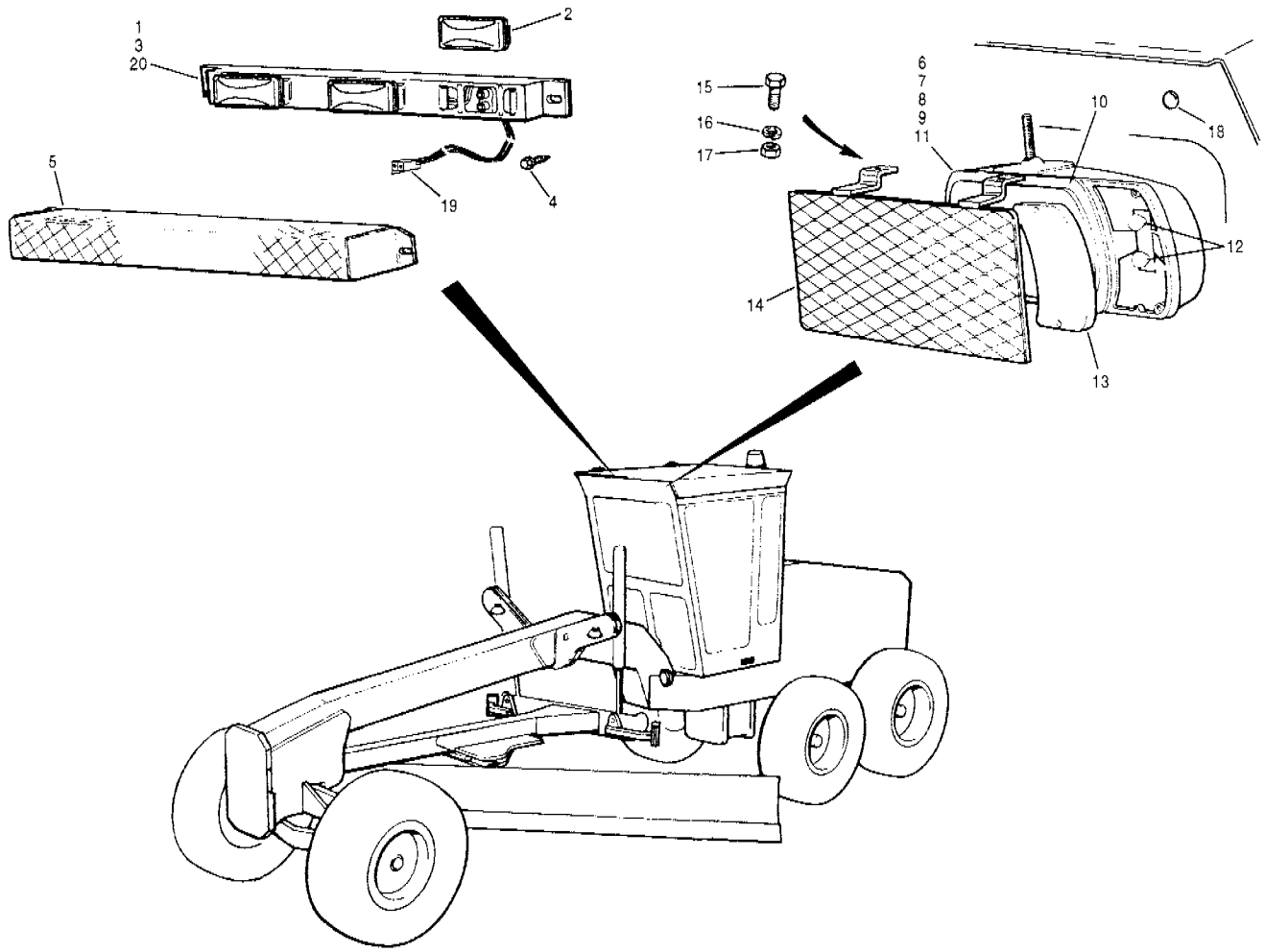

Item	Part No.	Description	Qty.	Remarks
		For parts specific to EEC graders see 352 - 8		
1	98738	Identification lights - amber - includes items 2 & 19	1	
2	98741	Sealed lamp	3	
3	98735	Bracket - for item 2	1	All cabs
4	62A-1006	Screw	2	
5	73938	Brush guard	1	
6	404218	Headlight - L.H. - includes items 7 & 10 to 13 & hardware	1	
7	402076	Housing - L.H	1	
8	404219	Headlight - R.H. - includes items 8 & 10 to 13 & hardware	1	
9	402075	Housing - R.H	1	
10	404223	Sealed lamp	1	
11	63379	Halogen bulb	1	
12	23855	Bulb	4	Park light & turn signal
13	402074	Lens - amber	1	Turn signal

Item	Part No.	Description	Qty.	Remarks
14	43632	Brush guard	2	
15	50A-0610 Zi	Bolt	4	
16	14A-06 Zi	Lockwasher	4	
17	30A-06 Zi	Nut	4	
18	68689	Grommet	2	No headlights
19	98743	Wiring harness - identification lights (triple lamps)	1	
20	96122	Wiring harness - identification lights & defroster mirror	1	
		Wiring harness - upper cab	Ref.	371 - 27

SERIAL NUMBERS: 33000 & UP	**LIGHTS - FRONT**	Date **01/2001**	Group **352**
		Illustr. Nos **00006190**	Page **7**
			Issue **1**

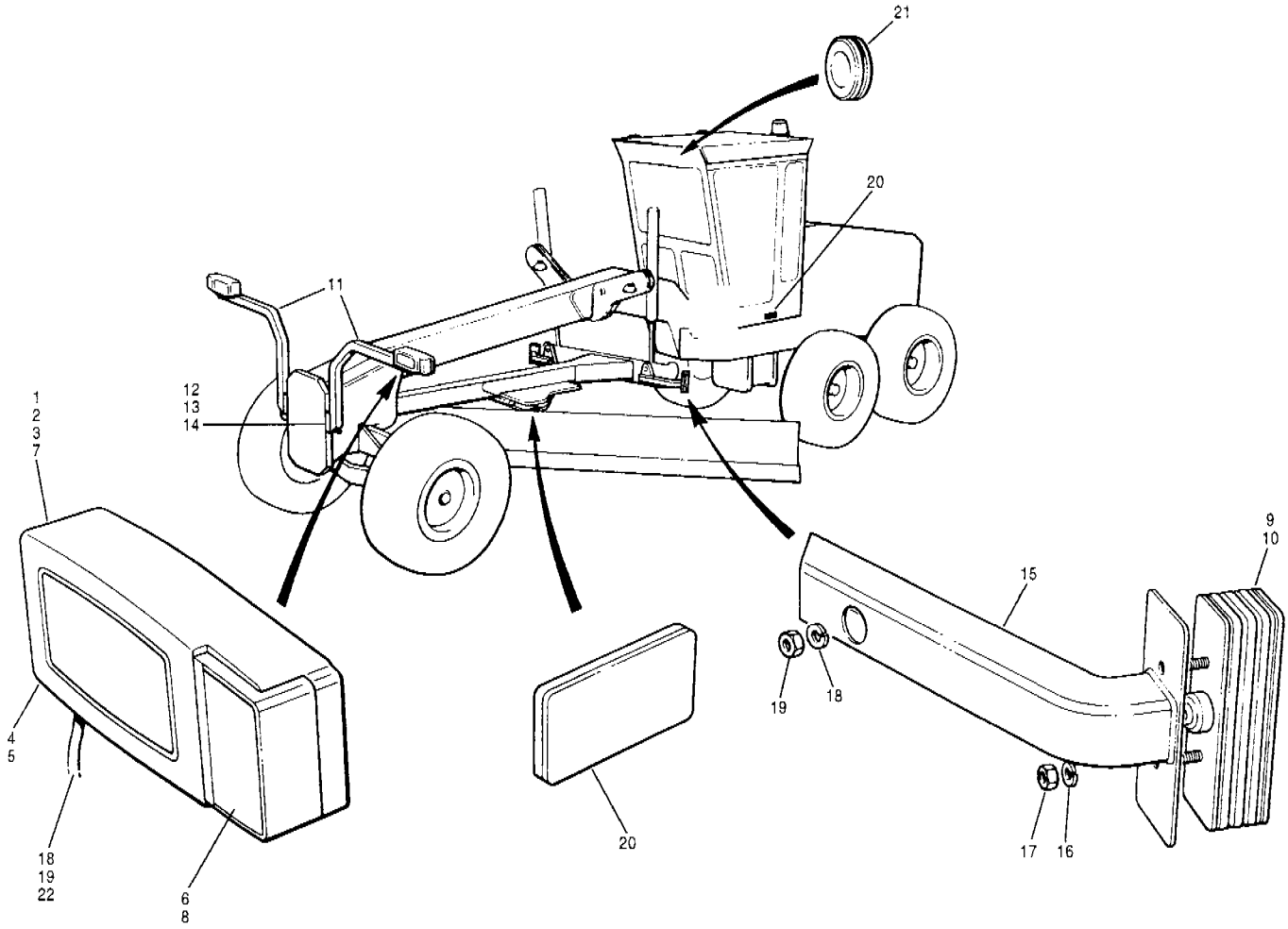

Item	Part No.	Description	Qty.	Remarks
1	75776	Headlight - R.H. - includes items 3 to 8	1	
2	75777	Headlight - L.H. - includes items 3 to 8	1	
3	68970	Housing	1	
4	63379	Halogen bulb	1	
5	76099	Bulb	1	Position
6	76100	Bulb	1	Turn signal
7	68968	Lens	1	
8	68969	Lens - amber	1	
9	68992	Turn signal - drawbar - includes item 10	2	
10	76082	Bulb	1	
11	68893	Bracket	2	

Item	Part No.	Description	Qty.	Remarks
12	68892	Mounting plate	2	
13	50A-0808 Zi	Bolt	4	
14	14A-08 Zi	Lockwasher	4	
15	84053	Extension tube	2	
16	314A-06 Zi	Lockwasher	4	
17	330A-06 Zi	Nut	4	
18	14A-06 Zi	Lockwasher	4	
19	30A-06 Zi	Nut	4	
20	68993	Reflector - amber	4	
21	68689	Grommet	2	No cab headlights
22		**Wiring harness** **- front headlights & signal**	Ref.	371 - 26

SERIAL NUMBERS: 33000 & UP	**LIGHTS - FRONT - EEC**	Date **01/2001**	Group **352**
		Illustr. Nos **00006191**	Page **8**
			Issue **1**

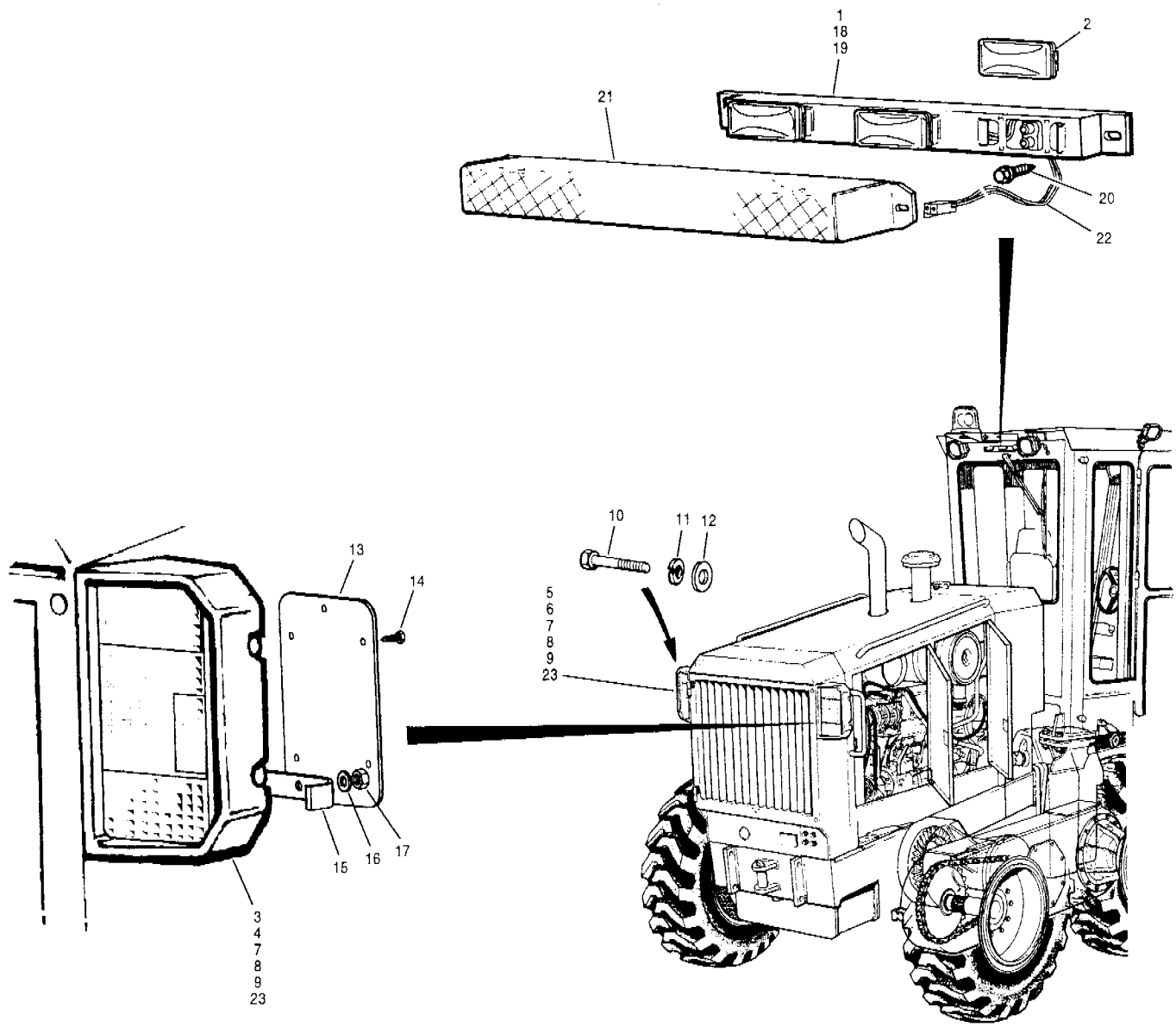

Item	Part No.	Description	Qty.	Remarks
		For parts specific to EEC graders see 353 - 10		
1	98739	Identification light assembly - red - includes items 2 & 22	1	
2	98742	Sealed lamp	3	
3	68888	Light - stop, tail, turn signal & back-up - R.H. - includes item 4	1	
4	12723749	Lens - R.H.	1	
5	68913	Light - stop, tail, turn signal & back-up - L.H. - includes item 6	1	
6	12723750	Lens - L.H.	1	
7	76101	Bulb - stop, turn signal & back-up lights	3	
8	76102	Bulb - tail light & reflector	2	
9	400335	Housing	2	

Item	Part No.	Description	Qty.	Remarks
10	50A-0656 Zi	Bolt	4	
11	14A-06 Zi	Lockwasher	4	
12	14C-06 Zi	Flatwasher	4	
13	404137	Back plate	2	
14	61G-1006	Screw	12	
15	93898	Bracket	4	
16	314A-06 Zi	Lockwasher	8	
17	330A-06 Zi	Nut	8	
18	98735	Bracket	1	Std. cab & LPC
19	98737	Bracket	1	Canopy cab
20	62A-1006 Zi	Screw	2	
21	73938	Brush guard	1	
22	98743	Wiring harness - identification light (triple lamps)	1	
23		**Wiring harness - upper cab**	Ref.	371 - 27
24		**Wiring harness - stop, tail, turn signal, back-up lights & alarm**	Ref.	371 - 29

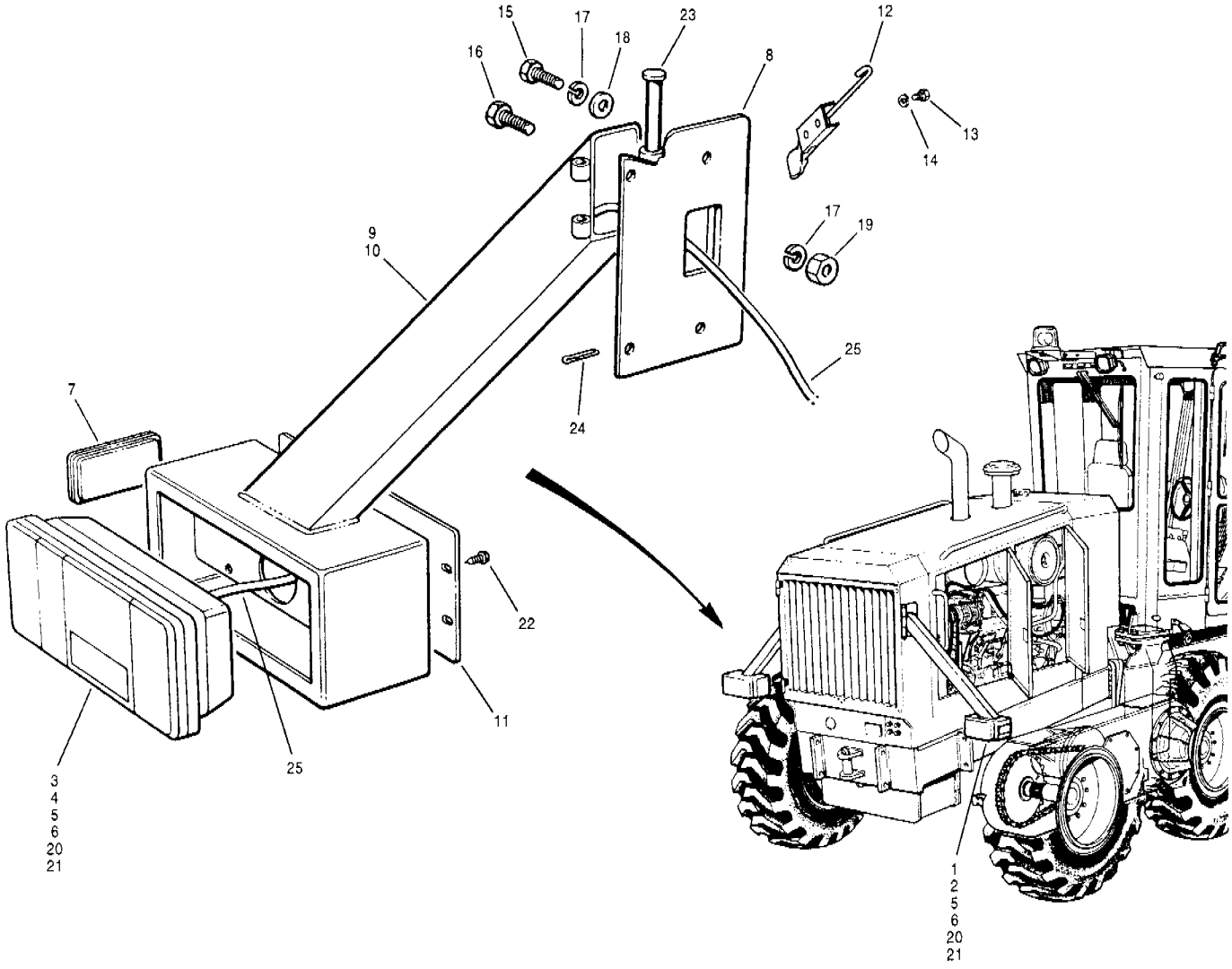

Item	Part No.	Description	Qty.	Remarks
1	68888	Light - stop, tail, turn signal & back-up - R.H. - includes item 2	1	
2	12723749	Lens - R.H.	1	
3	68913	Light - stop, tail, turn signal & back-up - L.H. - includes item 4	1	
4	12723750	Lens - L.H.		
5	76101	Bulb - stop, turn signal & back-up light	3	
6	76102	Bulb - tail light & reflector	2	
7	68993	Reflector - amber	2	
8	96155	Mounting plate	2	
9	96275	Arm - R.H.	1	
10	96276	Arm - L.H.	1	
11	84061	Cover	2	
12	84550	Latch	2	
13	50A-0404 Zi	Bolt	4	
14	14A-04 Zi	Lockwasher	4	
15	50A-0608 Zi	Bolt	6	
16	50A-0610 Zi	Bolt	4	
17	14A-06 Zi	Lockwasher	12	
18	14C-06 Zi	Flatwasher	4	
19	30A-06 Zi	Nut	9	

Item	Part No.	Description	Qty.	Remarks
20	314A-06 Zi	Lockwasher	8	
21	330A-06 Zi	Nut	8	
22	62A-1004 Zi	Screw	8	
23	10A-0896 Zi	Hinge pin	2	
24	13A-0516 Zi	Cotter pin	2	
25		**Wiring harness - rear tail lights & back-up alarm**	Ref.	371-29

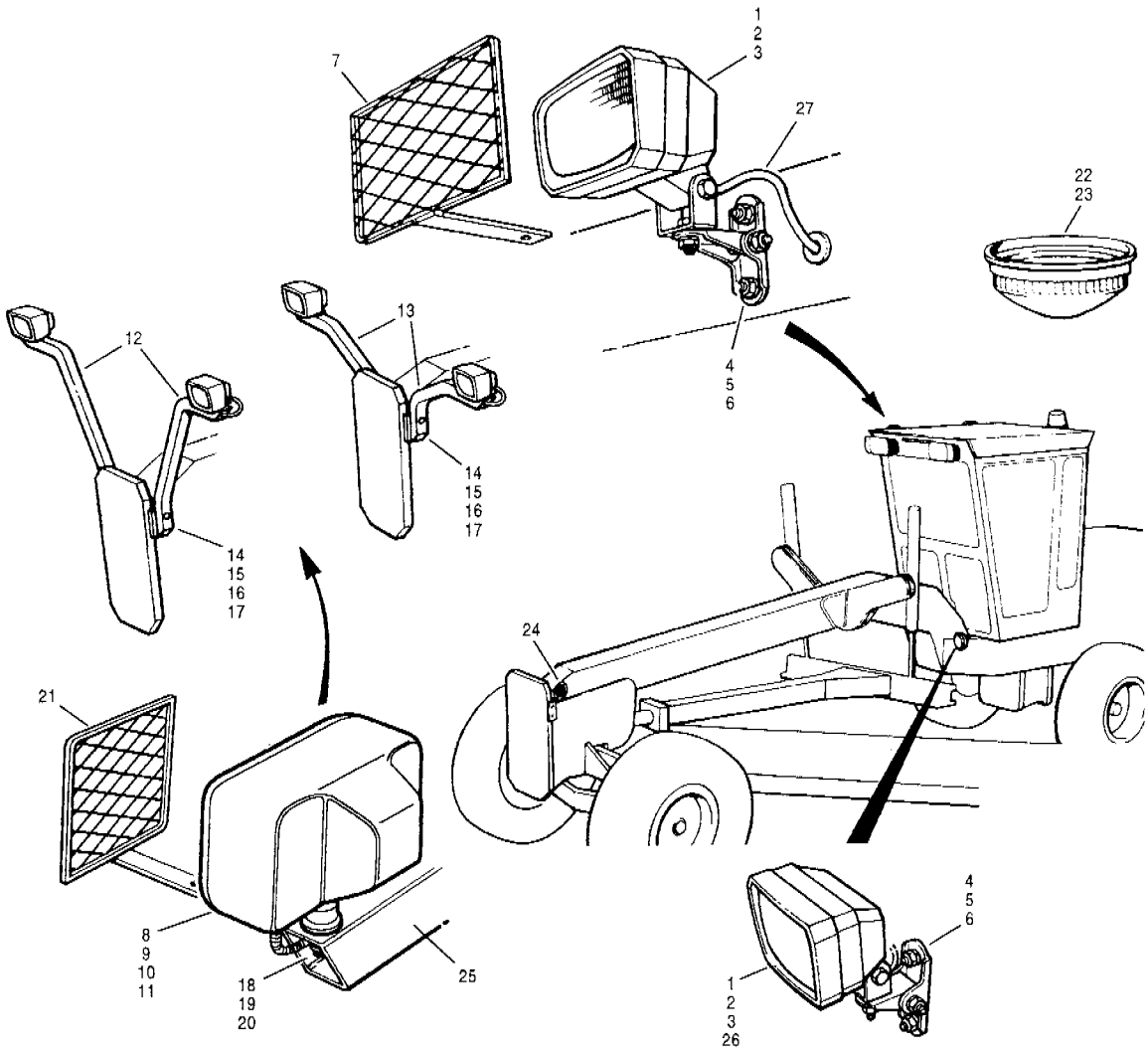

Item	Part No.	Description	Qty.	Remarks
1	* 404135	Light - moldboard - wing - includes hardware	A.R.	
2	* 63378	Halogen bulb	1	
3	* 404224	Lens	1	
4	8667	Bracket	A.R.	
5	14A-06 Zi	Lockwasher	A.R.	
6	30A-06 Zi	Nut	A.R.	
7	402306	Brush guard	A.R.	
8	404076	Headlight - extra front - includes items 9, 10 & 11	2	
9	402240	Bezel	1	
10	63379	Halogen bulb	1	
11	402241	Lens	1	
12	80294	Bracket - high headlight	2	
13	80295	Bracket - low headlight	2	
14	68890	Mounting bar	2	
15	50A-0818 Zi	Bolt	4	
16	14A-08 Zi	Lockwasher	4	
17	30A-08 Zi	Nut	4	
18	14A-07 Zi	Lockwasher	2	
19	14D-07 Zi	Flatwasher	2	
20	30A-07 Zi	Nut	2	

Item	Part No.	Description	Qty.	Remarks
21	402286	Brush guard	2	
22	98725	Dome light - includes item 23	1	
23	34275	Bulb	1	
24	65652	Reflector - amber	2	
25		**Wiring harness - extra front headlights**	Ref.	371-26
26		**Wiring harness - extra moldboard lights**	Ref.	371-26
27		**Wiring harness - upper cab**	Ref.	371-27

SERIAL NUMBERS: 33000 & UP	**EXTRA LIGHTS - FRONT**	Date **03/2001**	Group	**356**
		Illustr. Nos **00006194**	Page	**11**
			Issue	**1A**

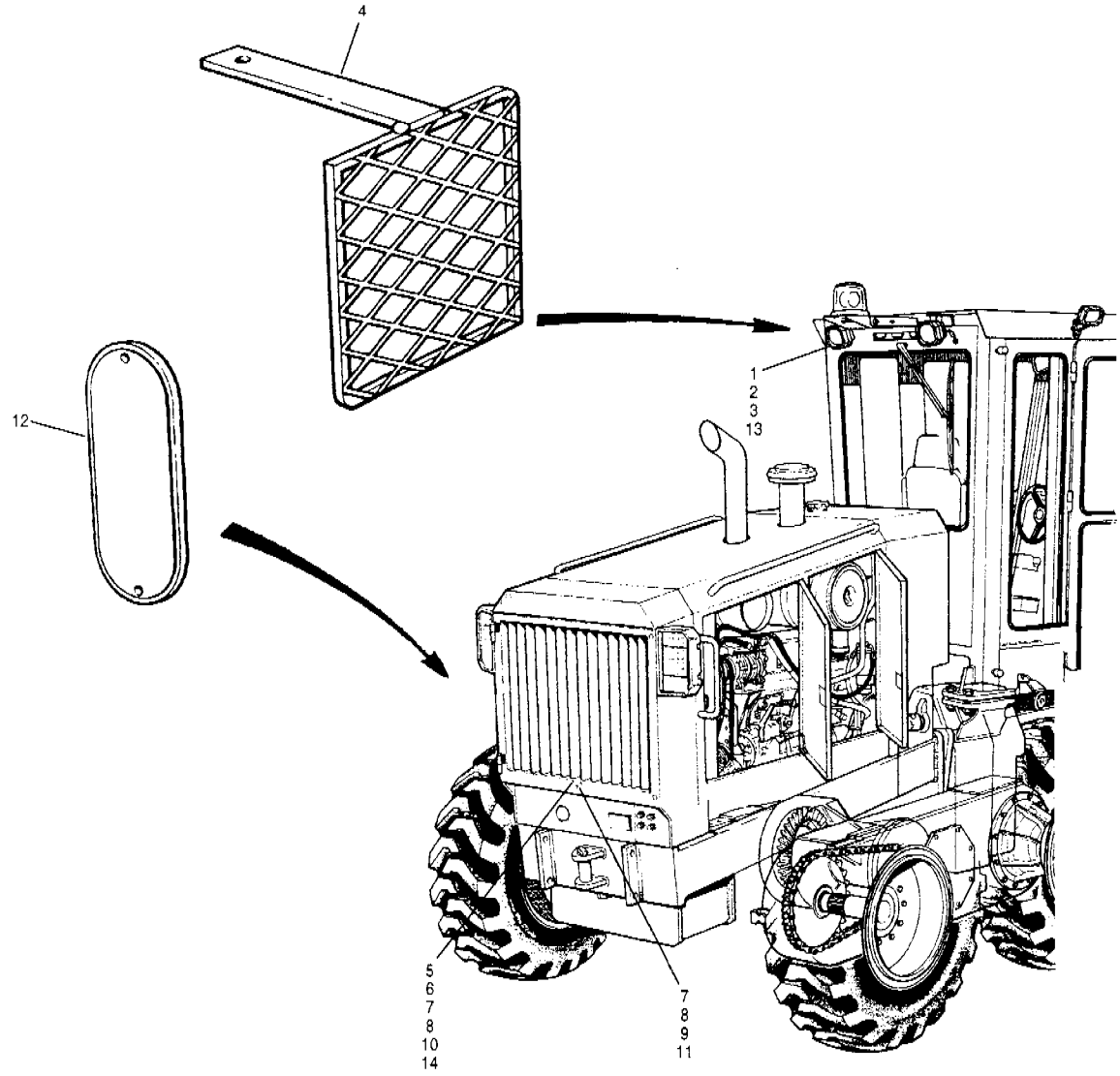

Item	Part No.	Description	Qty.	Remarks
1	* 402129	Flood light - includes hardware	2	
2	* 98765	Halogen bulb	1	
3	* 402243	Lens	1	
4	73930	Brush guard	2	
5	98707	Light - license plate - includes item 6	1	
6	98706	Sealed lamp	1	
7	50A-0408 Zi	Bolt	4	
8	14A-04 Zi	Lockwasher	4	
9	14C-04 Zi	Flatwasher	2	
10	30A-04 Zi	Nut	2	
11	402211	Wiring harness - license plate light	1	
12	81663	Reflector - red	2	
13		**Wiring harness - upper cab**	Ref.	371-27
14		**Wiring harness - stop, tail, turn signal, back-up lights & alarm**	Ref.	371-29

Item	Part No.	Description	Qty.	Remarks

SERIAL NUMBERS: 33000 & UP	**EXTRA LIGHTS - REAR**	Date **03/2001**	Group	**356**
		Illustr. Nos **00006195**	Page	**12**
			Issue	**1A**

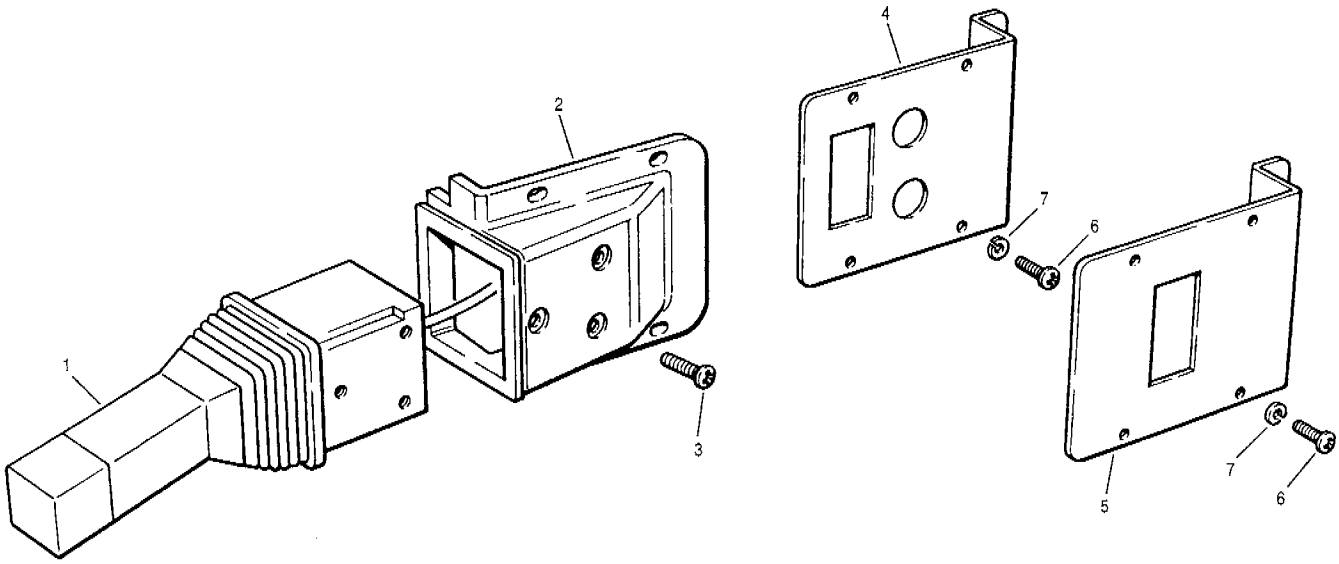

Item	Part No.	Description	Qty.	Remarks
1	400085	Switch - turn signal/high-low beam/horn	1	
2	402213	Housing - turn signal	1	
3	61A-0504	Screw	3	
4	* 12725862	Mounting plate - flashers & float valve	1	
5	96656	Mounting plate - flashers	1	
6	78664	Screw	8	
7	14F-10 Zi	Lockwasher	8	

Item	Part No.	Description	Qty.	Remarks

SERIAL NUMBERS: 33000 & UP	**DIRECTION INDICATOR**	Date **06/2001**	Group	**361**
		Illustr. Nos **00005297**	Page	**13**
			Issue	**1A**

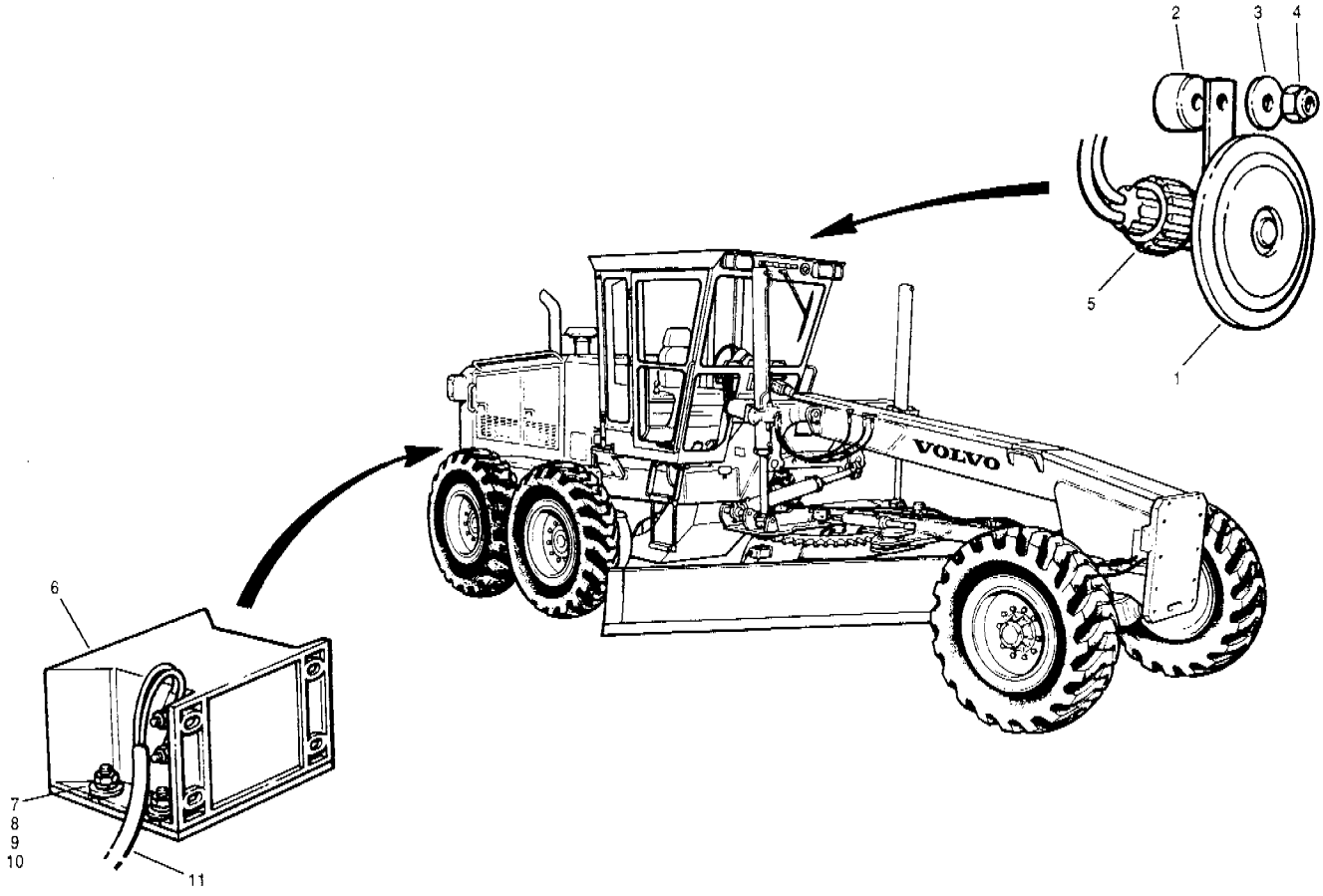

Item	Part No.	Description	Qty.	Remarks
1	402293	Horn	1	
2	69357	Spacer	1	
3	14C-05 Zi	Flatwasher	1	
4	36D-05 Zi	Locknut	1	
5	402296	Adapter harness	1	
6	84488	Back-up alarm	1	
7	50A-0406 Zi	Bolt	4	
8	14A-04 Zi	Lockwasher	4	
9	14C-04 Zi	Flatwasher	4	
10	30A-04 Zi	Nut	4	
11		**Wiring harness - stop, tail, turn signal, back-up lights & alarm**	Ref.	371-29

Item	Part No.	Description	Qty.	Remarks

SERIAL NUMBERS: 33000 & UP	**HORN & BACK-UP WARNING**	Date **01/2001**	Group **362**
		Illustr. Nos **00006197**	Page **14**
			Issue **1**

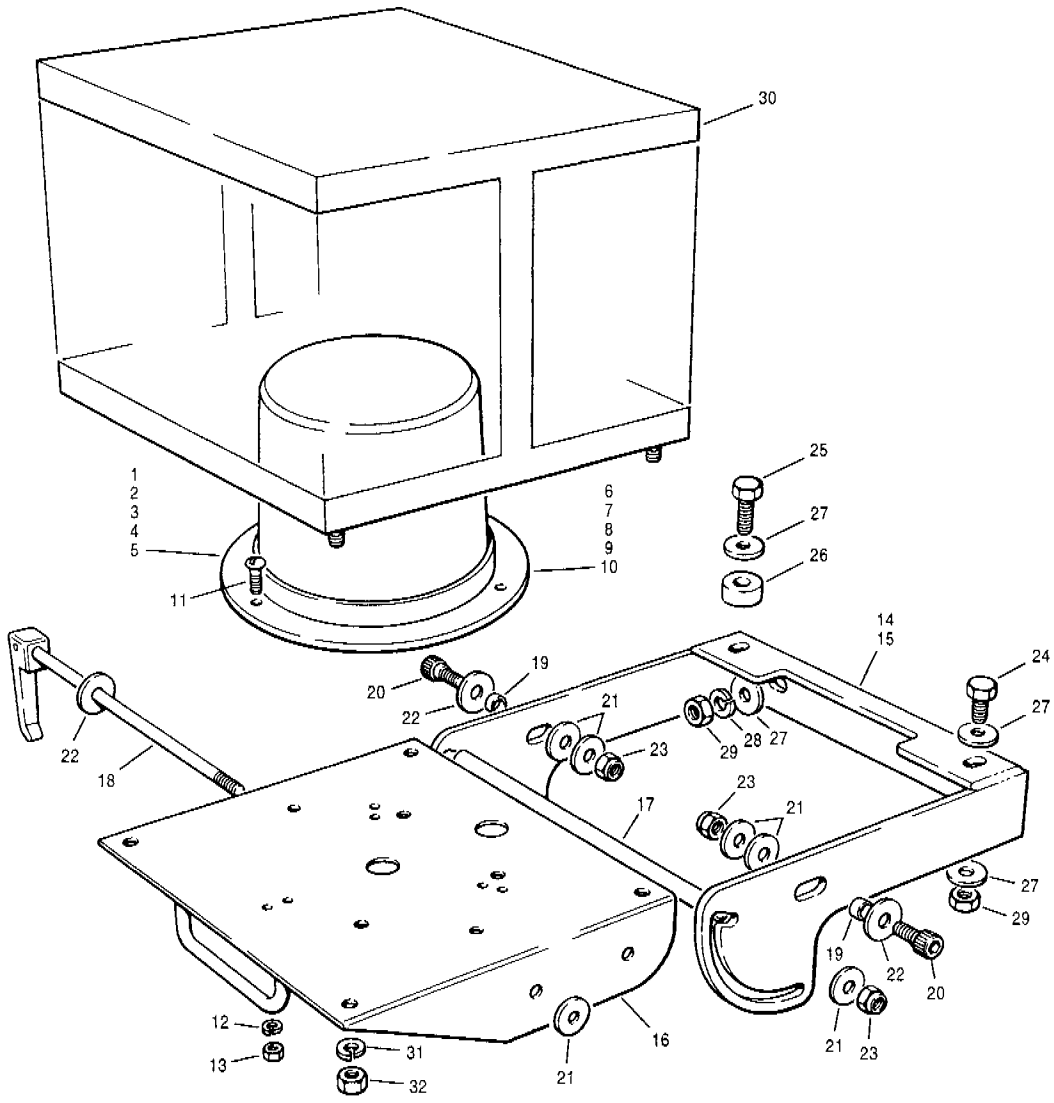

Item	Part No.	Description	Qty.	Remarks
1	98632	Rotating flasher - amber	1	
2	98659	Lens - amber	1	
3	98634	Rotating flasher - blue	1	
4	98660	Lens - blue	1	
5	63378	Halogen bulb	1	
6	98629	Strobe flasher - amber	1	
7	98763	Lens - amber	1	
8	402100	Strobe flasher - blue	1	
9	402239	Lens - blue	1	
10	98764	Flash tube	1	
11	52L-1008 Zi	Screw	3	
12	14F-10 Zi	Lockwasher	3	
13	32A-10 Zi	Nut	3	
	96790	**Flasher bracket assembly - rear** - includes items 14 & 16 to 23	1-2	
14	96788	Fixed bracket	1	
	401052	**Flasher bracket assembly - front** - includes items 15 to 23	1	EEC
15	401051	Fixed bracket	1	EEC
16	402208	Hinged bracket	1	

Item	Part No.	Description	Qty.	Remarks
17	96832	Spacer tube	1	
18	96829	**Latch handle assembly** - includes rod & pin	1	
19	96271	Bushing	2	
20	78537	Bolt	2	
21	14C-05 Zi	Flatwasher	7	
22	14C-06 Zi	Flatwasher	3	
23	36M-05 Zi	Locknut	3	
24	50A-0608 Zi	Bolt	2	
25	50A-0612 Zi	Bolt	4	EEC
26	69357	Spacer	4	EEC
27	14C-06-Zi	Flatwasher	6-10	
28	14A-06 Zi	Lockwasher	2	
29	30A-06 Zi	Nut	4-6	
30	57313	Brush guard	1	
31	14A-05 Zi	Lockwasher	4	
32	30A-05 Zi	Nut	4	

SERIAL NUMBERS: 33000 & UP	**ROTATING BEACON**	Date 01/2001	Group 362
		Illustr. Nos 00006198	Page 15
			Issue 1

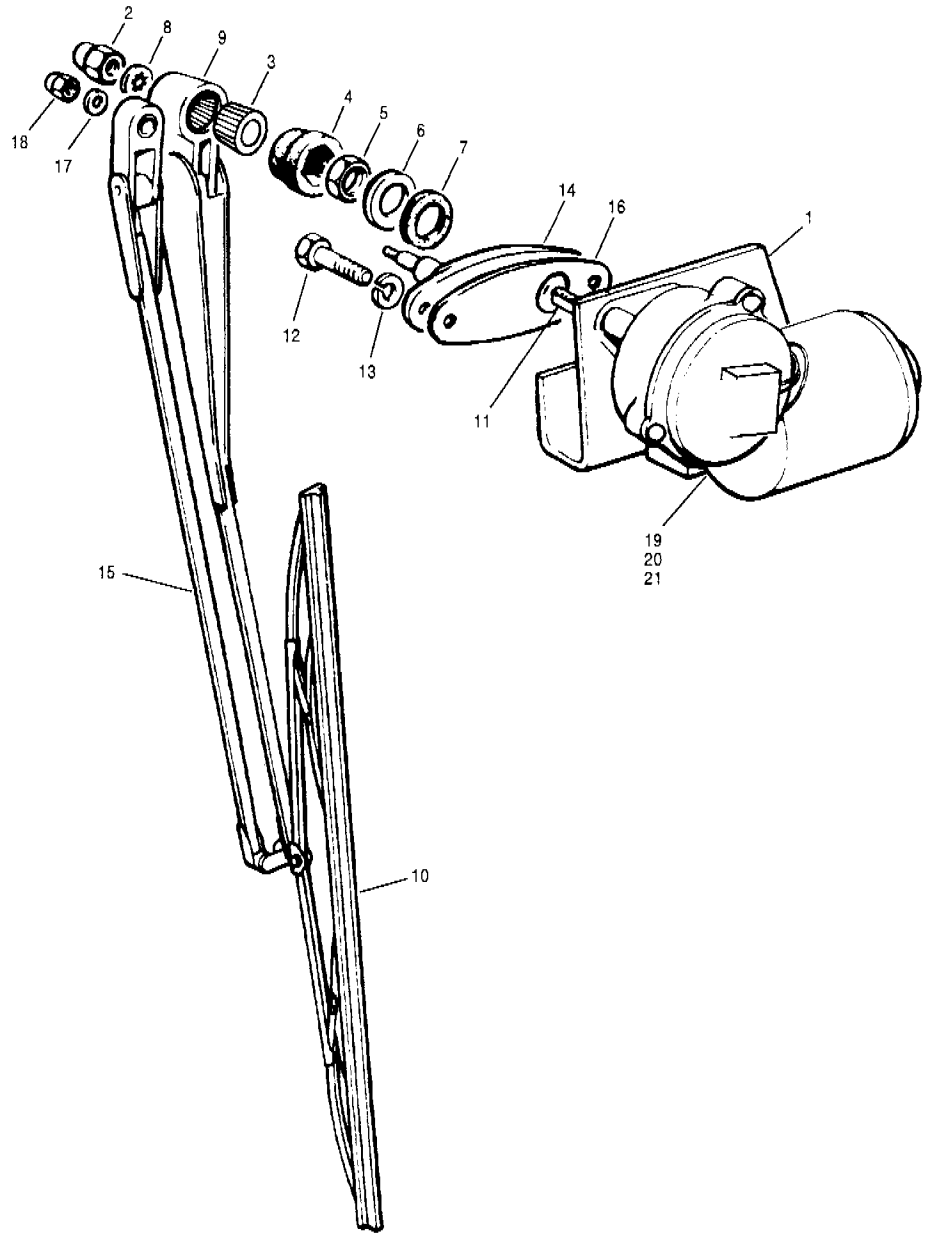

Item	Part No.	Description	Qty.	Remarks
1	**61056**	**Wiper motor assembly** - includes items 2 to 8	1	
2	76233	Nut	1	
3	63400	Adapter	1	
4	23236	Grommet	1	
5	23238	Jam nut	1	
6	23239	Flatwasher	1	
7	23240	Gasket	1	
8	23715	Washer	1	
9	68315	Wiper arm	1	
10	68316	Wiper blade - 20 in.	1	
11	38447	Pivot shaft	1	
12	51A-0406 Zi	Bolt	2	
13	14A-04 Zi	Lockwasher	2	

Item	Part No.	Description	Qty.	Remarks
	65521	**Pantograph kit** - includes items 16 to 20	1	
14		Pantograph pivot	1	
15		Pantograph arm	1	
16		Gasket	1	
17	14G-10	Lockwasher	1	
18	33D-10	Nut	1	
19	52C-1006 Zi	Bolt	1	
20	14P-10 SS	Starwasher	1	
21	32A-10 Zi	Nut	1	

SERIAL NUMBERS: 33000 & UP	**WINDSHIELD WIPER - STANDARD CAB**	Date **01/2001**	Group **363**
		Illustr. Nos **00006199**	Page **16**
			Issue **1**

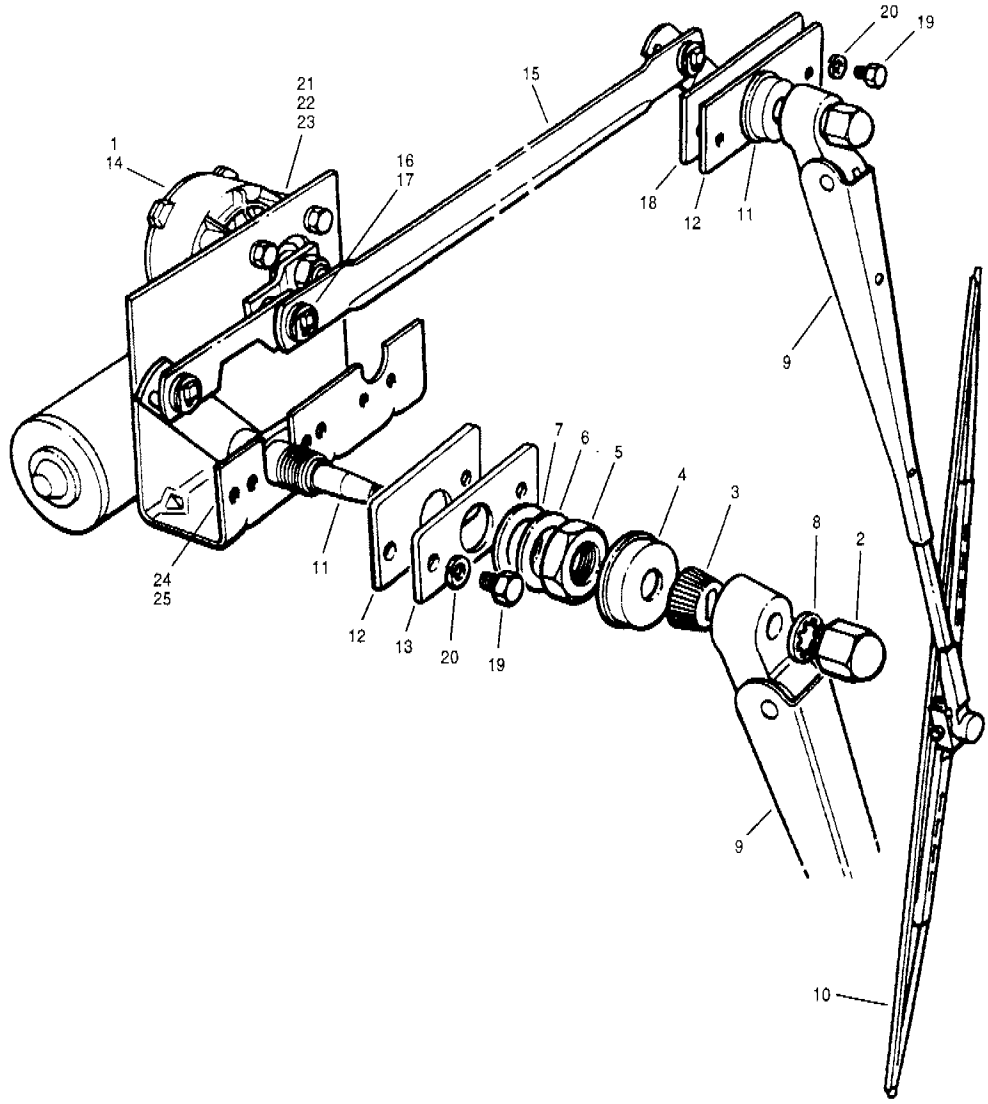

Item	Part No.	Description	Qty.	Remarks
	68387	**Wiper motor & linkage assembly** - includes items 1 to 8 & 14	1	
1	**61056**	**Wiper motor assembly** - includes items 2 to 8	1	
2	76233	Nut	1	
3	63400	Adapter	1	
4	23236	Grommet	1	
5	23238	Jam nut	1	
6	23239	Flatwasher	1	
7	23240	Gasket	1	
8	23715	Washer	1	
9	65001	Wiper arm	2	
10	57789	Wiper blade - 16 in.	2	
11	38447	Pivot shaft	2	
12	68801	Spacer - wiper motor	2	
13	68802	Spacer plate	1	
14	68390	Crank arm	1	
15	38448	Link	1	
16	38449	Washer	3	

Item	Part No.	Description	Qty.	Remarks
17	38450	Spring clip	3	
18	68800	Plate - wiper mount	1	
19	51A-0406 Zi	Bolt	4	
20	14A-04 Zi	Lockwasher	4	
21	52C-1006 Zi	Bolt	1	
22	14P-10 SS	Starwasher	1	
23	32A-10 Zi	Nut	1	
24	52L-1004 Zi	Screw	2	
25	14F-10 Zi	Lockwasher	2	

SERIAL NUMBERS: 33000 & UP	**WINDSHIELD WIPER - LOW PROFILE CAB**	Date **01/2001**	Group **363**
		Illustr. Nos **00006200**	Page **17**
			Issue **1**

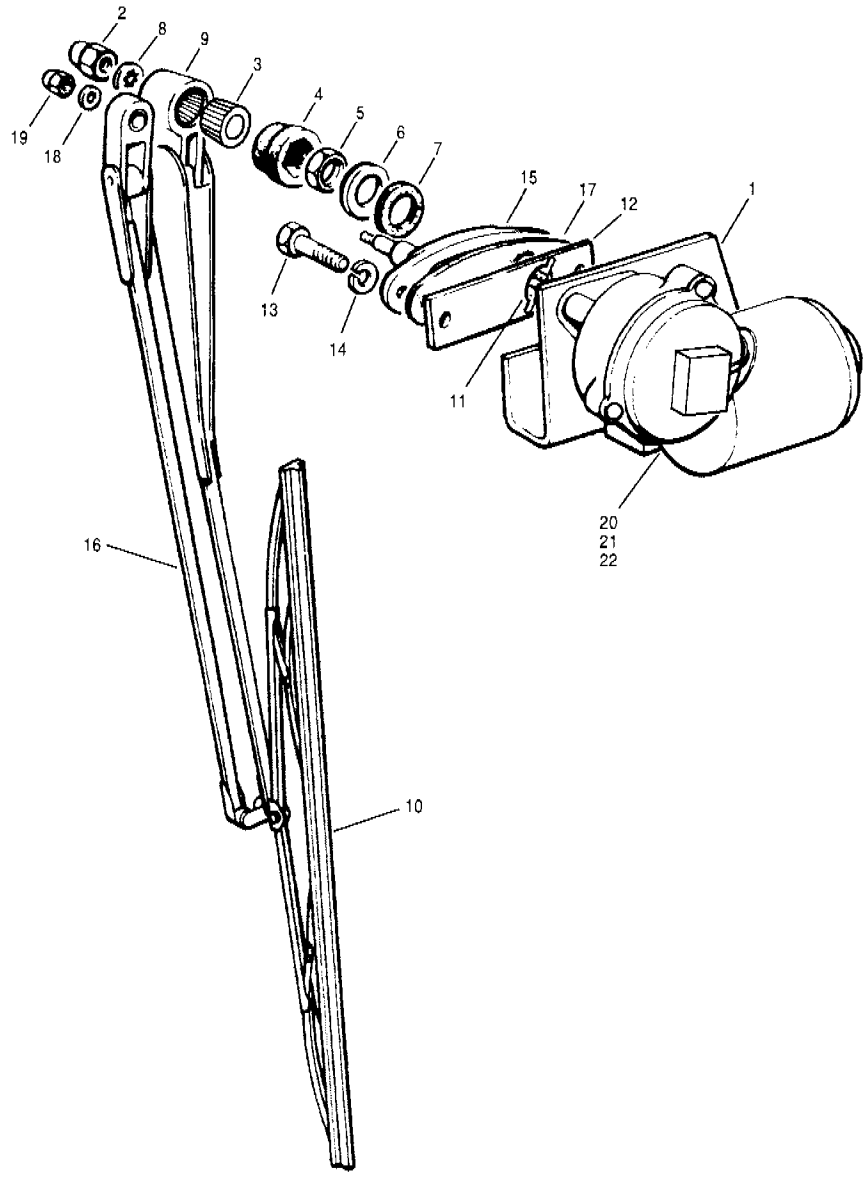

Item	Part No.	Description	Qty.	Remarks
1	**61056**	**Wiper motor assembly** - Includes items 2 to 8	1	
2	76233	Nut	1	
3	63400	Adapter	1	
4	23236	Grommet	1	
5	23238	Jam Nut	1	
6	23239	Flatwasher	1	
7	23240	Gasket	1	
8	23715	Washer	1	
9	68315	Wiper arm	1	
10	96056	Wiper blade - 22 in.	1	
11	38447	Pivot shaft	1	
12	12724692	Spacer	1	
13	51A-0406 Zi	Bolt	2	
14	14A-04 Zi	Lockwasher	2	

Item	Part No.	Description	Qty.	Remarks
	65521	**Pantograph kit** - includes items 15 to 19	1	
15		Pantograph pivot	1	
16		Pantograph arm	1	
17		Gasket	1	
18	14G-10	Lockwasher	1	
19	33D-10	Nut	1	
20	52C-1006 Zi	Bolt	1	
21	14P-10 SS	Starwasher	1	
22	32A-10 Zi	Nut	1	

SERIAL NUMBERS: 33000 & UP	**WINDOW WIPER - REAR - STANDARD CAB**	Date **01/2001**	Group **363**
		Illustr. Nos **00006201**	Page **18**
			Issue **1**

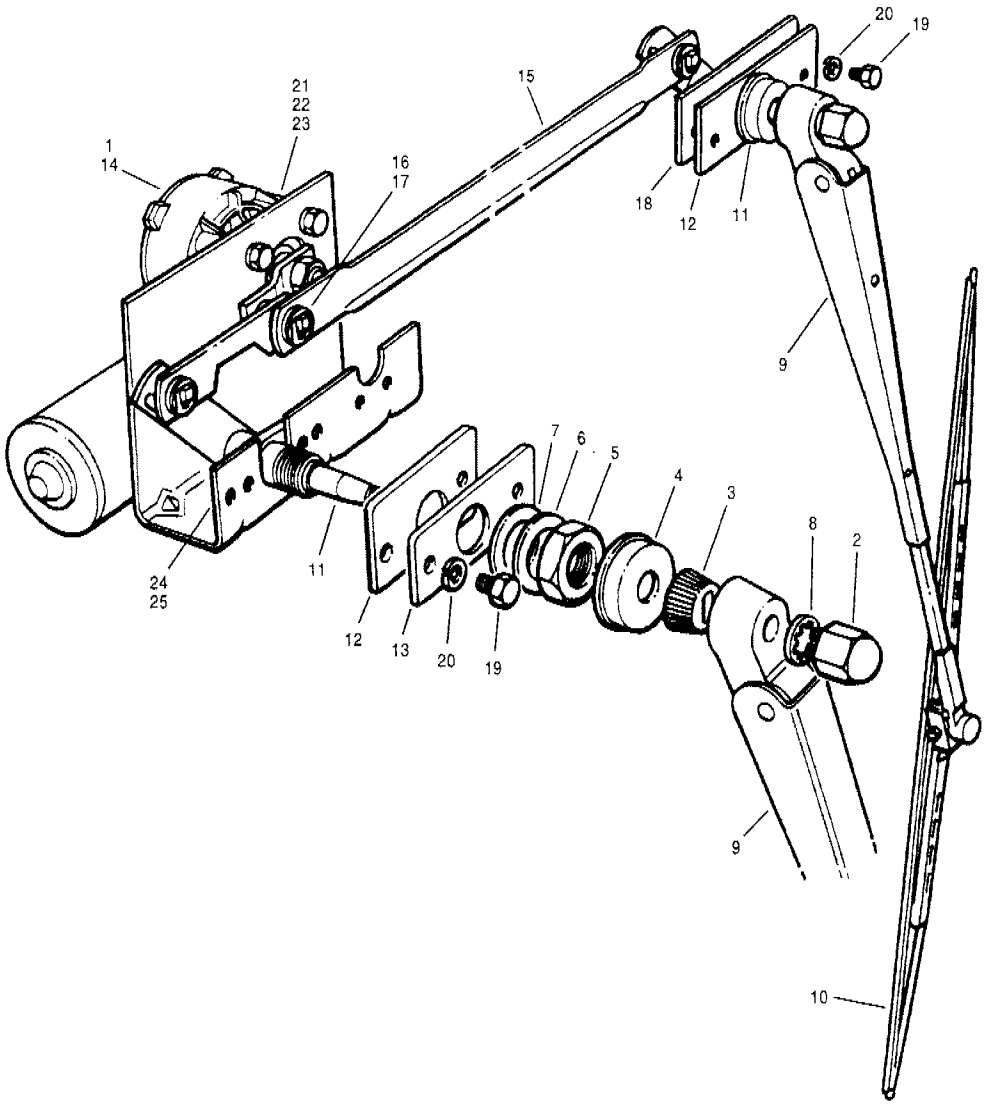

Item	Part No.	Description	Qty.	Remarks
	68388	**Wiper motor & linkage assembly** - includes items 1 to 8 & 14	1	
1	**61056**	**Wiper motor assembly** - includes items 2 to 8	1	
2	76233	Nut	1	
3	63400	Adapter	1	
4	23236	Grommet	1	
5	23238	Jam nut	1	
6	23239	Flatwasher	1	
7	23240	Gasket	1	
8	23715	Washer	1	
9	38451	Wiper arm	2	
10	38452	Wiper blade - 18 in.	2	
11	38447	Pivot shaft	2	
12	68801	Spacer - wiper motor	2	
13	68802	Spacer plate	1	
14	68389	Crank arm	1	
15	57484	Link	1	
16	38449	Washer	3	

Item	Part No.	Description	Qty.	Remarks
17	38450	Spring clip	3	
18	68800	Plate - wiper mount	1	
19	51A-0406 Zi	Bolt	4	
20	14A-04 Zi	Lockwasher	4	
21	52C-1006 Zi	Bolt	1	
22	14P-10 SS	Starwasher	1	
23	32A-10 Zi	Nut	1	
24	52L-1004 Zi	Screw	2	
25	14F-10 Zi	Lockwasher	2	

SERIAL NUMBERS: 33000 & UP	**WINDOW WIPER - REAR - LOW PROFILE CAB**	Date **01/2001**	Group **363**
		Illustr. Nos **00006200**	Page **19**
			Issue **1**

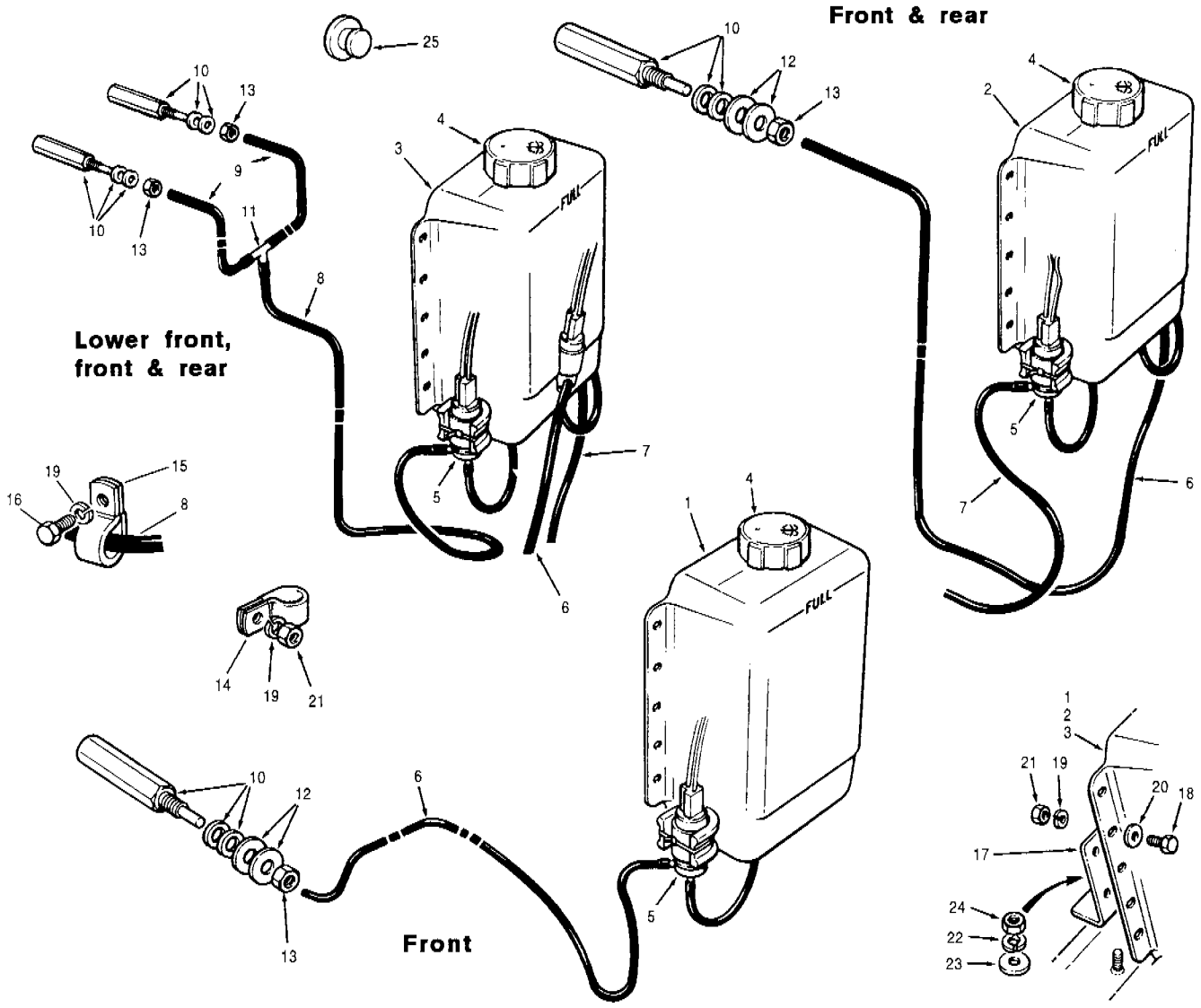

Item	Part No.	Description	Qty.	Remarks
1	**73179**	**Washer unit - single pump - front** - includes items 4 & 5	1	
2	**55020**	**Washer unit - double pump - front/rear** - includes items 4 & 5	1	
3	**73180**	**Washer unit - triple pump** - low front/front/rear - includes items 4 & 5	1	
4	54631	Cap	1	
5	56518	Pump	1-2-3	
6	401017 x 292	Hose - front upper	1	
7	401017 x 270	Hose - rear upper	1	
8	401017 x 142	Hose - front lower	1	
9	401017 x 10	Hose - front lower	2	

Item	Part No.	Description	Qty.	Remarks
10	53012	Nozzle	1-2-4	
11	56187	Tee	1	
12	14C-06 Zi	Flatwasher	2	
13	30A-06 Zi	Nut	1-2-4	
14	32316	Clamp	A.R.	
15	32318	Clamp	1	
16	50A-0408 Zi	Bolt	1	
17	402132	Mounting bracket	1	
18	50A-0406 Zi	Bolt	4	
19	14A-04 Zi	Lockwasher	9	
20	14C-04 Zi	Flatwasher	4	
21	30A-04 Zi	Nut	8	
22	14A-06 Zi	Lockwasher	2	
23	14C-06 Zi	Flatwasher	2	
24	30A-06 Zi	Nut	2	
25	78002	Plug	2	

SERIAL NUMBERS: 33000 & UP	**WASHER**	Date **01/2001**	Group **363**
		Illustr. Nos **00005022**	Page **20**
			Issue **1**

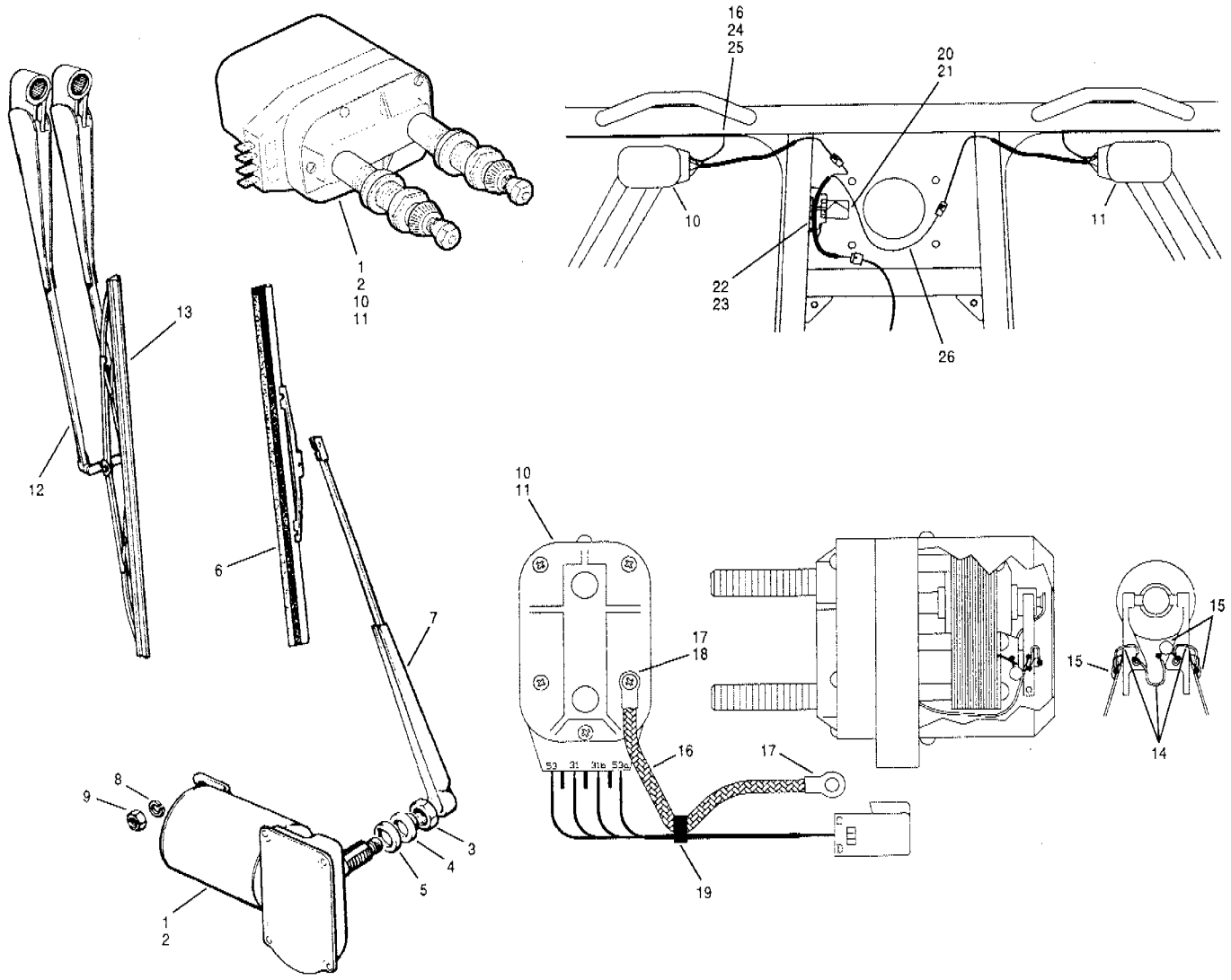

Item	Part No.	Description	Qty.	Remarks
1	402019	**Wiper motor - R.H.** - includes items 3 to 5	1	
2	402020	**Wiper motor - L.H.** - includes items 3 to 5	1	
3	23241	Jam nut	2	
4	23242	Washer	2	
5	23243	Gasket	2	
6	73792	Wiper blade - 10 in.	2	
7	73522	Wiper arm	2	
8	14A-05 Zi	Lockwasher	2	
9	30A-05 Zi	Nut	2	
		EEC wiper installation		
10	402175	**Wiper motor - L.H.** - RFI suppressed - includes items 14 to 19	1	
11	402176	**Wiper motor - R.H.** - RFI suppressed - includes items 14 to 19	1	

Item	Part No.	Description	Qty.	Remarks
	402081	**Fastener kit for 402175 & 402176 - wiper motors** - includes nuts & washers	1 per	
12	96673	Wiper arm & pantograph arm - 370 mm	1	
13	96672	Wiper blade - 500 mm	1	
14	99307 x 75	Insulated wire	2	
15	99306	Ceramic disc capacitor	6	
16	99305 x 12	Braid	2	
17	130B-02	Ring terminal	4	
18	14H-06	Starwasher	2	
19	65777	Tie wrap	2	
20	402177	Relay	1	
21	402178	Clip	1	
22	402224	Relay socket mount	1	
23	62A-1004 Ca	Screw	1	
24	62A-0604	Screw	2	
25	14H-06	Starwasher	2	
26	402179	Adapter wiring harness	1	

SERIAL NUMBERS: 33000 & UP	**LOWER FRONT WINDOW WIPERS - FIXED WINDOW**	Date **01/2001**	Group **363**
		Illustr. Nos **00005023**	Page **21**
			Issue **1**

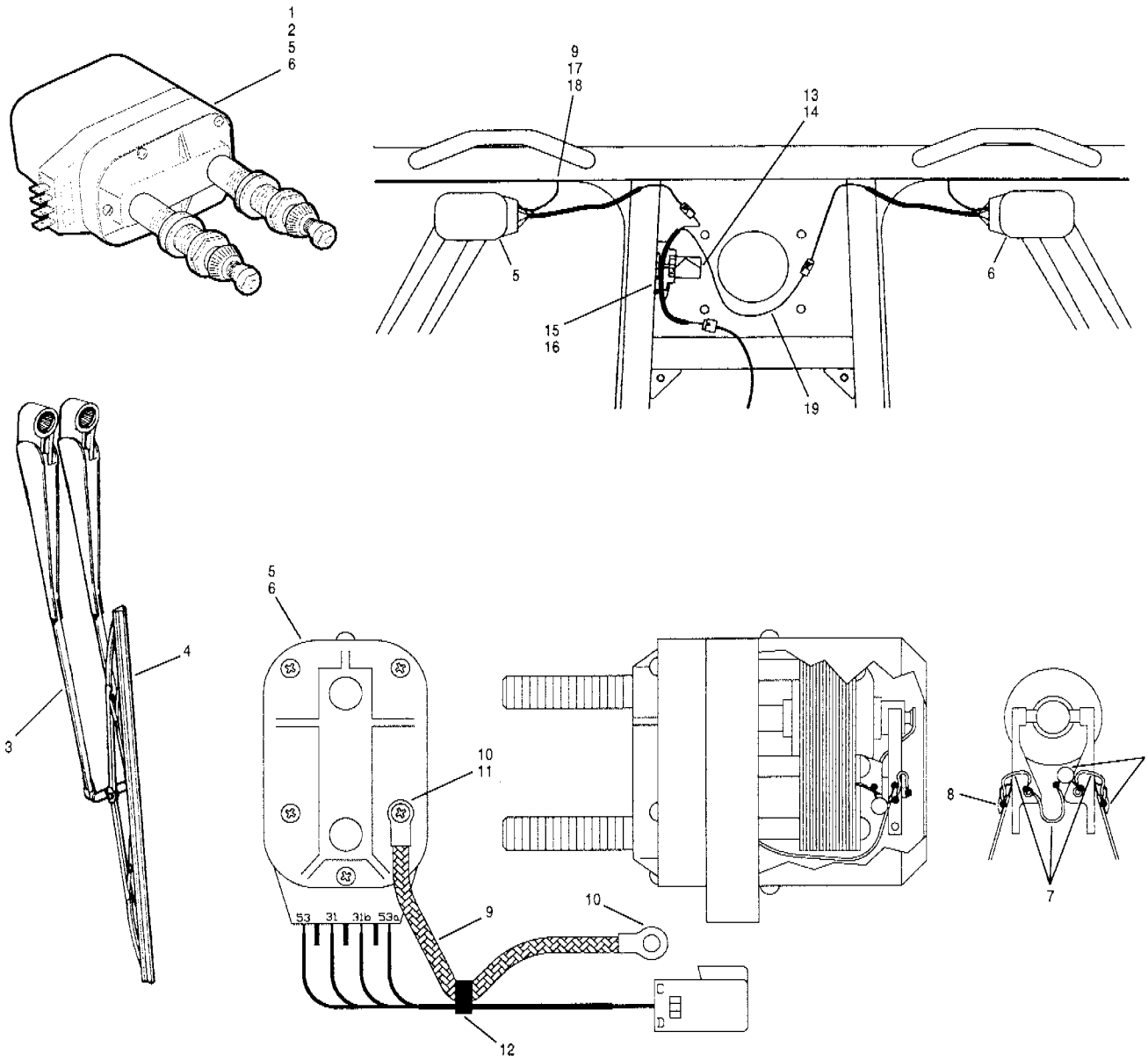

Item	Part No.	Description	Qty.	Remarks
1	402184	**Wiper motor - L.H.**	1	
2	402185	**Wiper motor - R.H.**	1	
	402081	**Fastener kit for 402184 & 402185 - wiper motors** - includes nuts & washers	1 per	
3	96673	Wiper arm & pantograph arm - 370 mm	1	
4	96672	Wiper blade - 500 mm	1	
		EEC wiper installation		
5	402175	**Wiper motor - L.H.** - RFI suppressed - includes items 7 to 12	1	
6	402176	**Wiper motor - R.H.** - RFI suppressed - includes items 7 to 12	1	
	402081	**Fastener kit for 402175 & 402176 - wiper motors** - includes nuts & washers	1 per	

Item	Part No.	Description	Qty.	Remarks
7	99307 x 75	Insulated wire	2	
8	99306	Ceramic disc capacitor	6	
9	99305 x 12	Braid	2	
10	130B-02	Ring terminal	4	
11	14H-06	Starwasher	2	
12	65777	Tie wrap	2	
13	402177	Relay	1	
14	402178	Clip	1	
15	402224	Relay socket mount	1	
16	62A-1004 Ca	Screw	1	
17	62A-0604	Screw	2	
18	14H-06	Starwasher	2	
19	402179	Adapter wiring harness	1	

SERIAL NUMBERS: 33000 & UP	**LOWER FRONT WINDOW WIPERS - VENT WINDOW**	Date 01/2001	Group 363
		Illustr. Nos 00005024	Page 22
			Issue 1

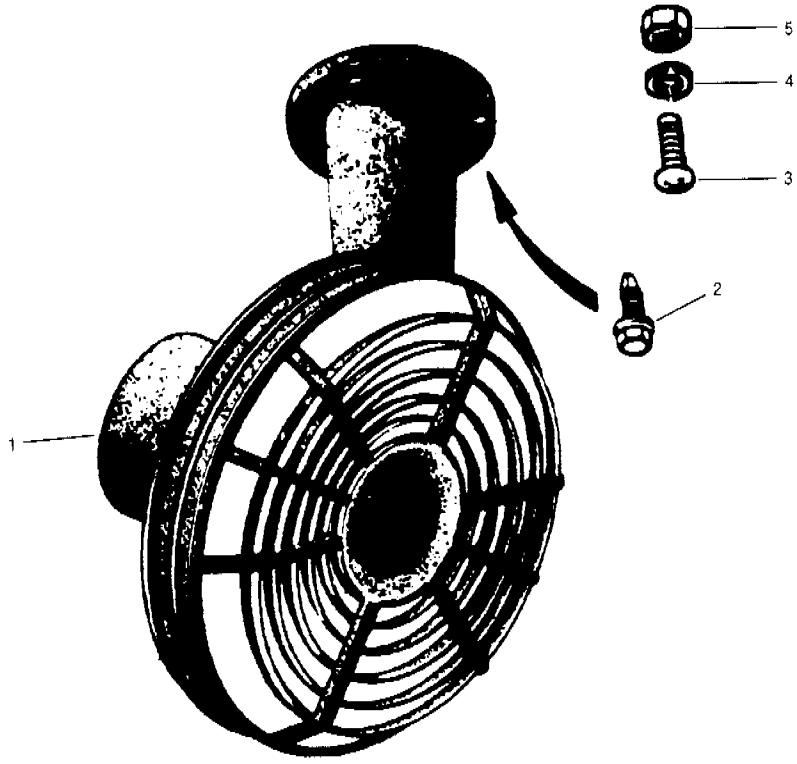

Item	Part No.	Description	Qty.	Remarks
1	96119	Defroster fan	1	
2	65705	Screw - front fan	3	
3	52L-1004 Zi	Screw - rear fan	3	
4	14F-10 Zi	Lockwasher	3	
5	32A-10 Zi	Nut	3	

Item	Part No.	Description	Qty.	Remarks

SERIAL NUMBERS: 33000 & UP	DEFROSTER FAN - FRONT & REAR	Date 01/2001	Group 363
		Illustr. Nos 00006202	Page 23
			Issue 1

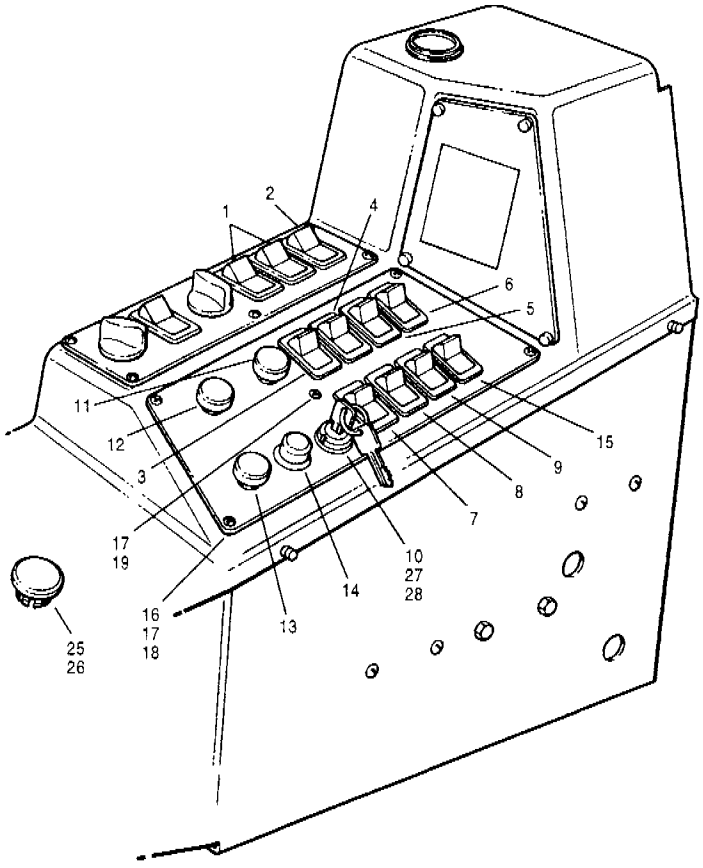

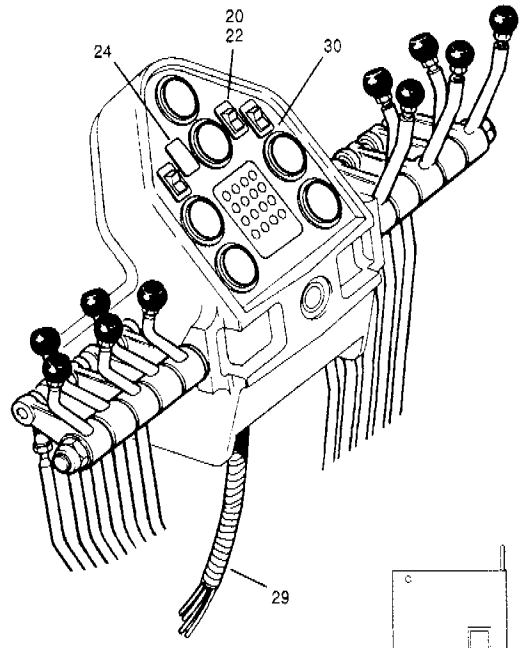

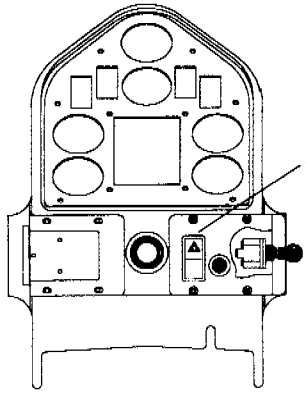

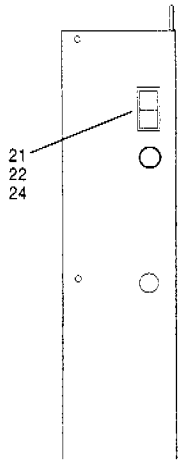

Lower door post cover

Item	Part No.	Description	Qty.	Remarks
1	73216	Switch - front & rear defroster fans	2	
2	73192	Switch - heated mirror	1	
3	73269	Switch - headlights	1	
4	73192	Switch - extra headlights	1	
5	73192	Switch - moldboard lights	1	
6	73192	Switch - rear floodlights	1	
7	73192	Switch - rotating flasher (Beacon) - amber	1	
8	73192	Switch - rotating flasher (Beacon) - blue	1	
9	73192	Switch - wing lights	1	
10	96170	Ignition switch & keys	1	
11	73119	Switch - rear wiper & washer	1	
12	73119	Switch - front wiper & washer	1	
13	81169	Switch - lower front wipers & washers	1	
14	96228	Cold start button/switch	1	
15	84780	Switch - mbcs lock cylinder	1	
16	84711	Switch panel	1	
17	52M-0804 Ph	Screw	5	
18	46A-08	Rivnut	4	
19	32A-08 Zi	Nut	1	

Item	Part No.	Description	Qty.	Remarks
20	73192	Switch - differential lock/unlock	1	
21	73192	Switch - dome light	1	
22	73134	Shim - switch	2	
23	96771	Switch - 4-way hazard flashers	1	
24	73071	Plug - switch	A.R.	
25	73597	Plug - 0.625" dia.	A.R.	
26	73598	Plug - 0.437" dia.	A.R.	
27	68095	Ignition - key	2	
28	404220	Key chain	1	
29		**Wiring harness - front cab**	Ref.	371-28
30		**Switch & gauge plate**	Ref.	641-11

SERIAL NUMBERS: 33000 & UP	**SWITCHES**	Date **01/2001**	Group **364**
		Illustr. Nos **00006203**	Page **24**
			Issue **1**

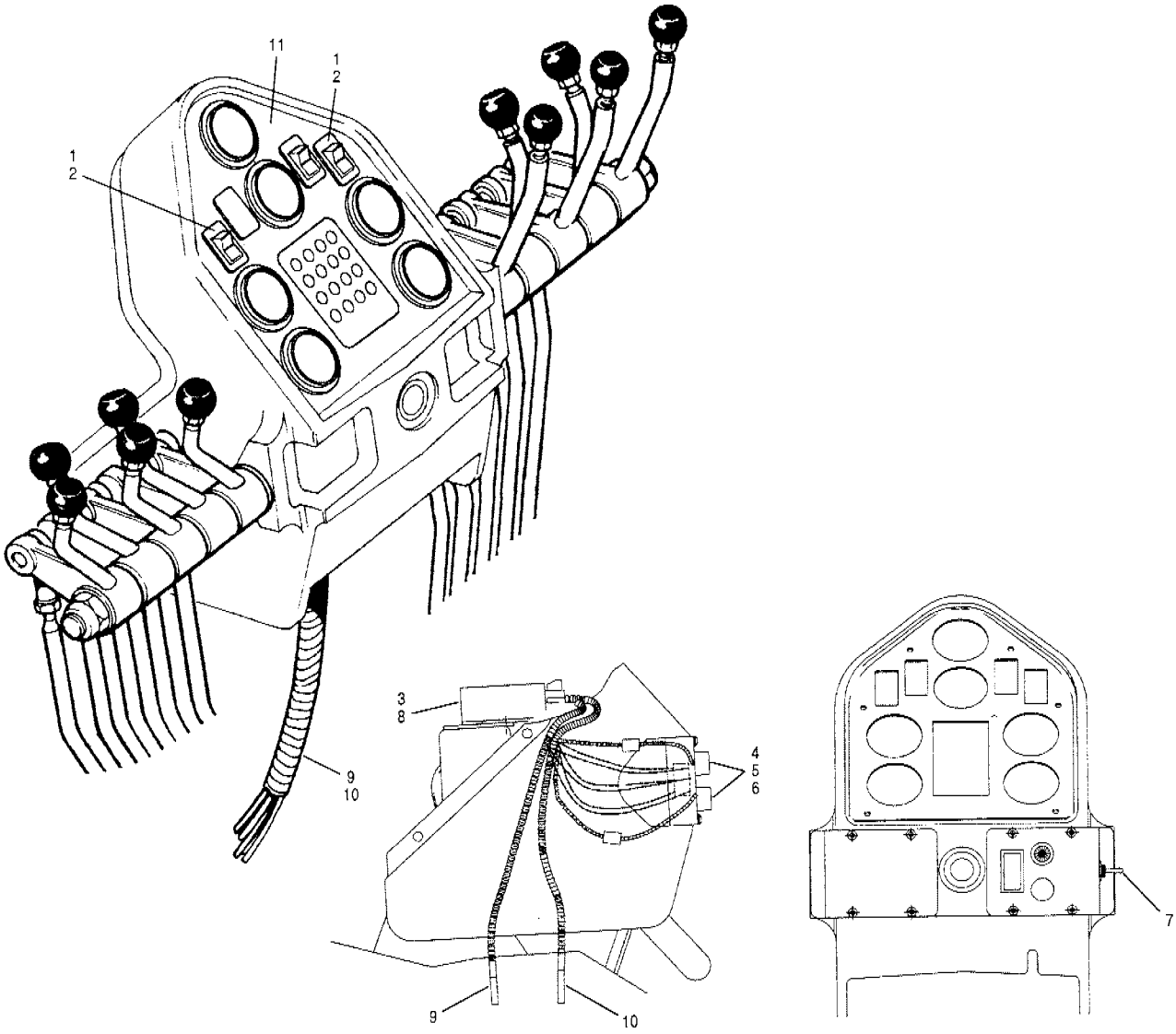

Item	Part No.	Description	Qty.	Remarks
1	73192	Switch - float valves	2	
2	73134	Shim - switch	2	
3	400144	Module - float valve	1-2	
4	68972	**Light indicator assembly** - includes item 5	2	
5	65511	Bulb	2	
6	68991	Lens - float valves	2	
7	* 12725779	Switch - float valves	1	
8	62A-1006 Zi	Screw	2	
9		**Wiring harness - front float**	Ref.	371-26
10		**Wiring harness - front cab**	Ref.	371-28
11		**Switch & gauge plate**	Ref.	641-11

Item	Part No.	Description	Qty.	Remarks

SERIAL NUMBERS: 33000 & UP	**ELECTRIC FLOAT CONTROLS**	Date **06/2001**	Group	**366**
		Illustr. Nos **00005293**	Page	**25**
			Issue	**1A**

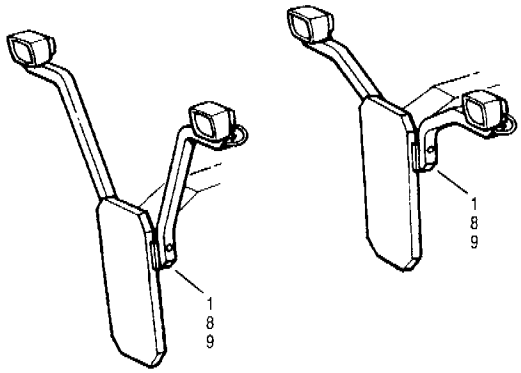

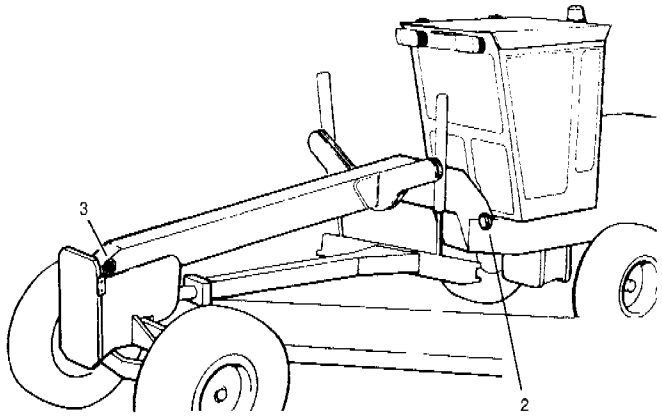

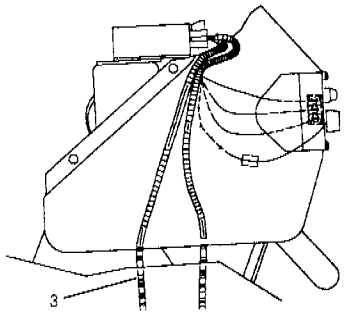

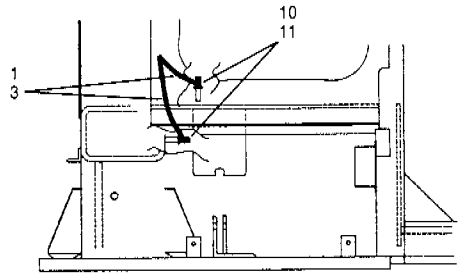

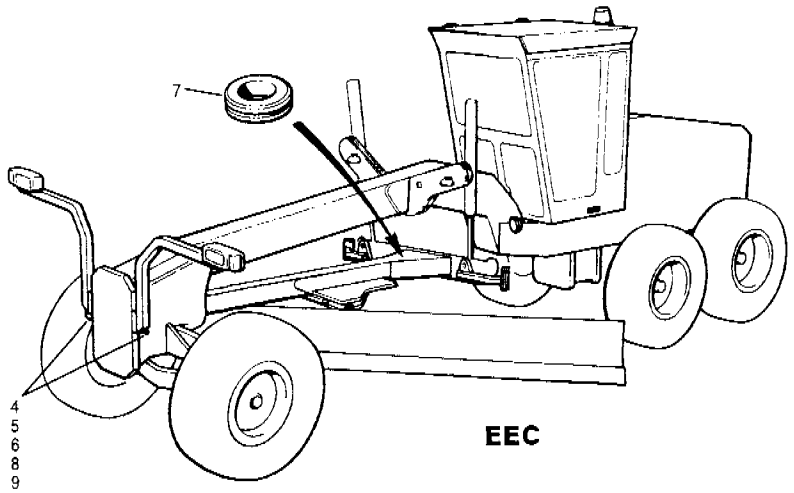

EEC

Item	Part No.	Description	Qty.	Remarks
1	401022	Extra front headlights	1	
2	85301	Extra moldboard lights	1	
3	84225	Front float	1	
4	96936	Front headlights	1	EEC
5	84142	Signal	1	EEC
6	32316	Clip	4	EEC
7	74731	Grommet	1	EEC
8	80302	Grommet	2	
9	15774	Tie wrap	A.R.	
10	14Q-06 SS	Starwasher	1	
11	30A-06 Zi	Nut	1	

Item	Part No.	Description	Qty.	Remarks

SERIAL NUMBERS: 33000 & UP	**WIRING HARNESS - FRONT**	Date **01/2001**	Group	**371**
		Illustr. Nos **00006205**	Page	**26**
			Issue	**1**

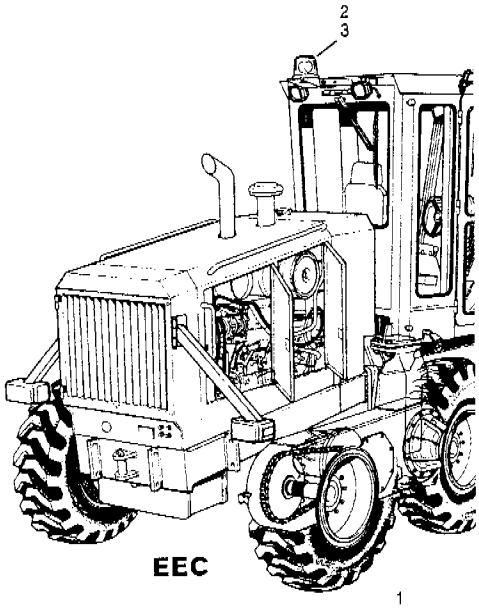

EEC

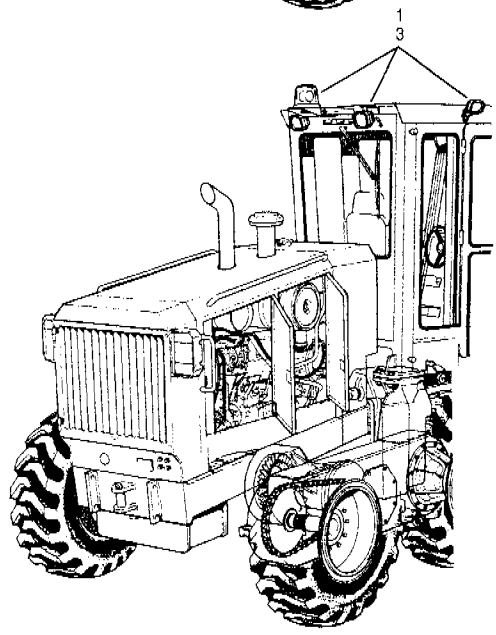

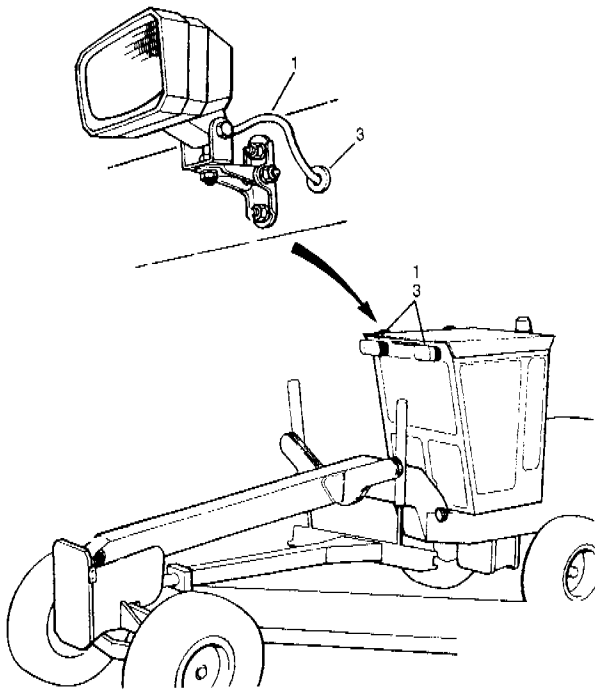

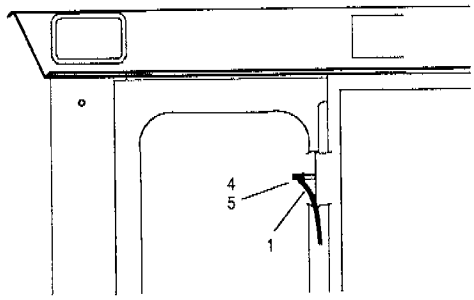

Item	Part No.	Description	Qty.	Remarks
1	402212	Harness - upper cab	1	
2	401054	Dual flasher	1	EEC
3	41710	Grommet	A.R.	
4	14Q-06 SS	Starwasher	1	
5	30A-06 Zi	Nut	1	

Item	Part No.	Description	Qty.	Remarks

SERIAL NUMBERS: 33000 & UP	WIRING HARNESS - CAB	Date 01/2001	Group 371
		Illustr. Nos 00006206	Page 27
			Issue 1

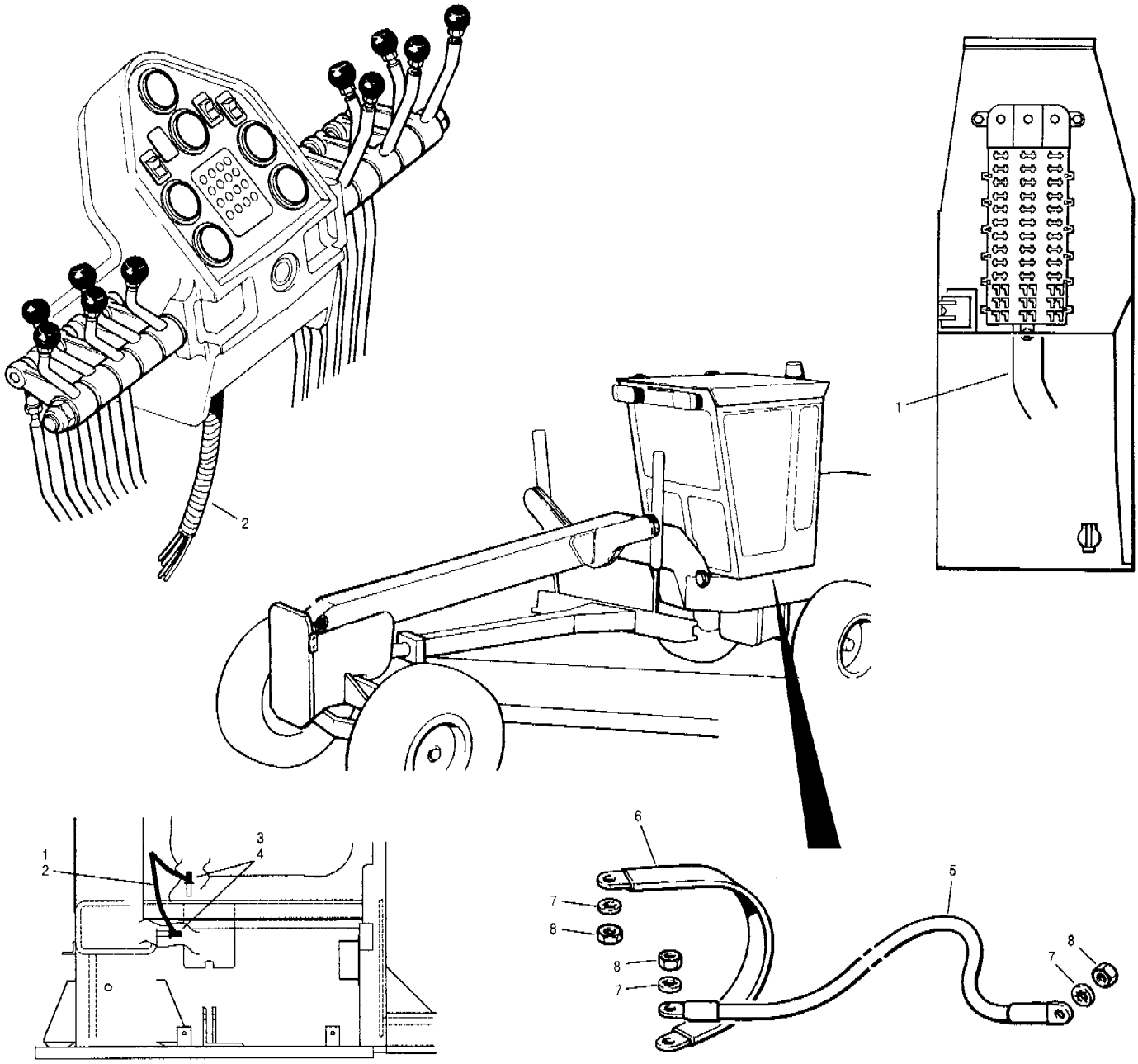

Item	Part No.	Description	Qty.	Remarks
1	* 12726079	Harness - Console	1	
2	404136	Front cab	1	
3	14Q-06 SS	Starwasher	2	
4	30A-06 Zi	Nut	2	
5	73828	Ground cable	1	
6	73829	Ground strap	1	
7	14P-10 SS	Starwasher	3	
8	30A-06 Zi	Nut	3	

Item	Part No.	Description	Qty.	Remarks

SERIAL NUMBERS: 33000 & UP	**WIRING HARNESS - CAB**	Date **06/2001**	Group	**371**
		Illustr. Nos **00006207**	Page	**28**
			Issue	**1A**

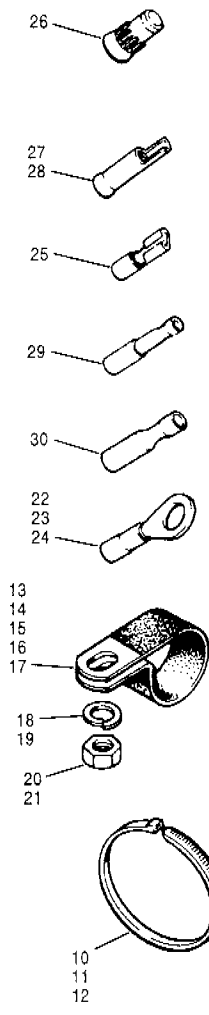

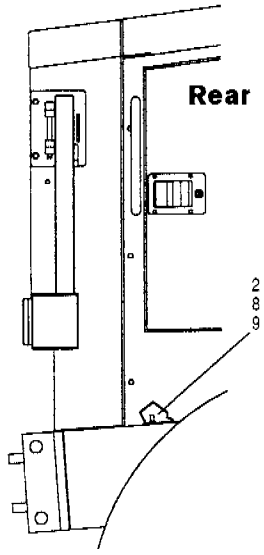

Rear R.H. side

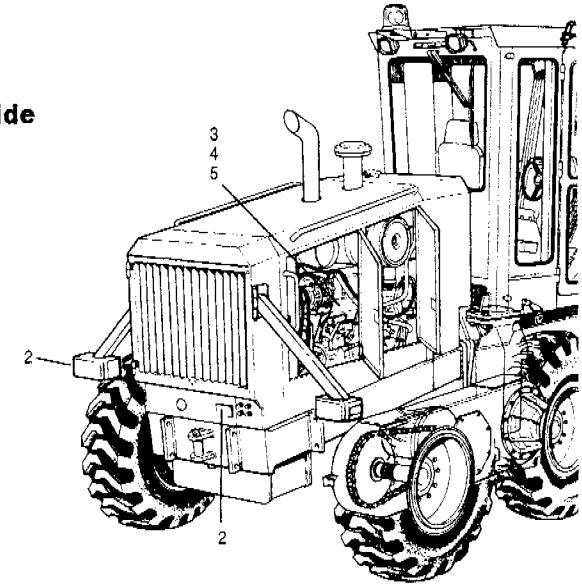

EEC

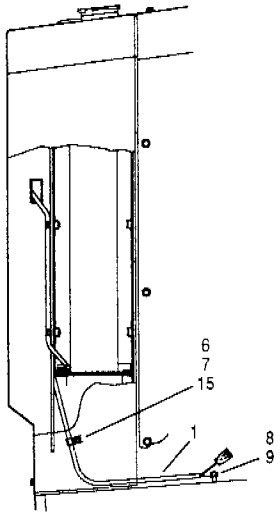

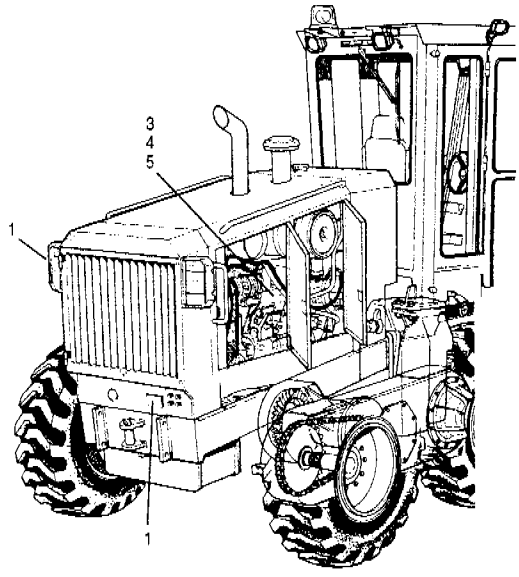

Item	Part No.	Description	Qty.	Remarks
1	402210	Stop, tail, turn signal, back-up lights & alarm	1	
2	96104	Tail lights & back-up alarm	1	EEC
3	* 12726080	Harness - rear chassis & engine	1	G710 to G716
4	* 12725315	Harness - rear chassis & engine	1	G720 to G736
5	* 12726081	Harness - rear chassis & engine	1	G740 to G780
6	* 955894	Hardened washer	2	
7	30A-05 Zi	Nut	1	
			2	
8	14Q-06 SS	Starwasher	1	
9	30A-06 Zi	Nut	1	
10	15774	Plastic tie	A.R.	
11	65776	Plastic tie	A.R.	
12	65777	Plastic tie	A.R.	

Item	Part No.	Description	Qty.	Remarks
13	32316	Clip - 3/8"	A.R.	
14	32317	Clip - 1/2"	A.R.	
15	32318	Clip - 3/4"	A.R.	
16	32319	Clip - 1"	A.R.	
17	32320	Clip - 1 1/4"	A.R.	
18	* 955893	Hardened washer	A.R.	
19	* 940097	Hardened washer	A.R.	
20	30A-04 Zi	Nut	A.R.	
21	30A-06 Zi	Nut	A.R.	
22	130B-03	Ring terminal	A.R.	
23	130B-04	Ring terminal	A.R.	
24	130C-03	Ring terminal	A.R.	
25	131B-04	Spade terminal	A.R.	
26	132A-00	Closed end terminal	A.R.	
27	133B-00	Butt connector	A.R.	
28	133C-00	Butt connector	A.R.	
29	134B-180	Male bullet	A.R.	
30	135B-21	Female bullet	A.R.	

SERIAL NUMBERS: 33000 & UP	**WIRING HARNESS - REAR**	Date 06/2001	Group 371
		Illustr. Nos 00006208	Page 29
			Issue 1A

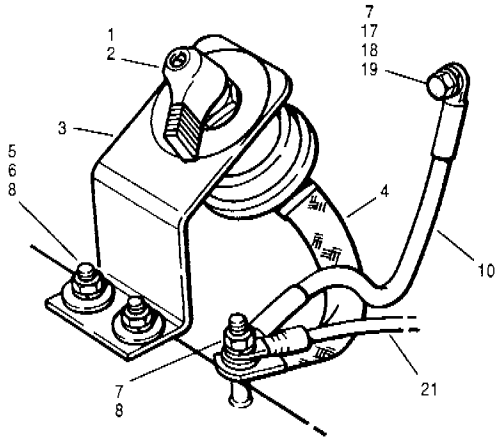

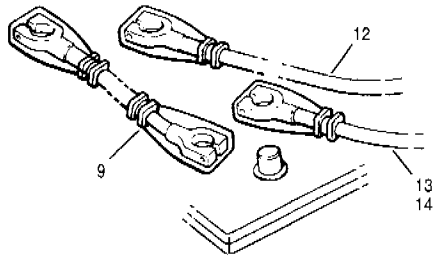

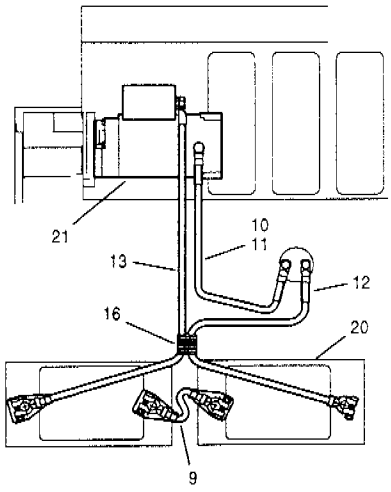

G710 to G736

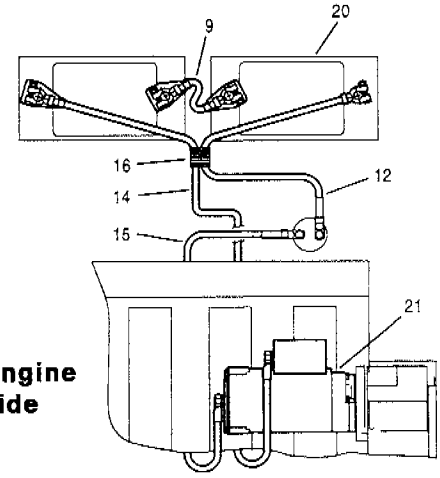

M11 engine
R.H. side

G740 to G780

Item	Part No.	Description	Qty.	Remarks
1	68947	Isolation switch	1	
2	68743	Decal	1	
3	96272	Bracket	1	
4	69336	Ground strap	1	
5	14C-06 Zi	Flatwasher	2	
6	14A-06 Zi	Lockwasher	2	
7	14Q-06 SS	Starwasher	1	G710 to G730
			2	G740 to G780
8	30A-06 Zi	Nut	3	
9	68835	Battery cable - neg/pos	1	
10	84326	Cable	2	G710 to G716
			1	G720 to G780
11	73053	Cable	1	G720 to G736
12	68884	Battery cable - negative	1	
13	68837	Battery cable - positive	1	G710 to G736
14	68834	Battery cable - positive	1	G740 to G780
15	73054	Cable	1	G740 to G780
16	27455 X 18	Protector	1	
17	350A-08020 Zi	Bolt	1	G710 to G716
18	14Q-05 SS	Starwasher	1	G710 to G716
19	350A-10020 Zi	Bolt	1	G740 to G780
20		**Battery**	Ref.	311-3
21		**Starter motor**	Ref.	331-6

Item	Part No.	Description	Qty.	Remarks

SERIAL NUMBERS: 33000 & UP	**BATTERY CABLE & ISOLATION SWITCH**	Date 01/2001	Group 371
		Illustr. Nos 00006209	Page 30
			Issue 1

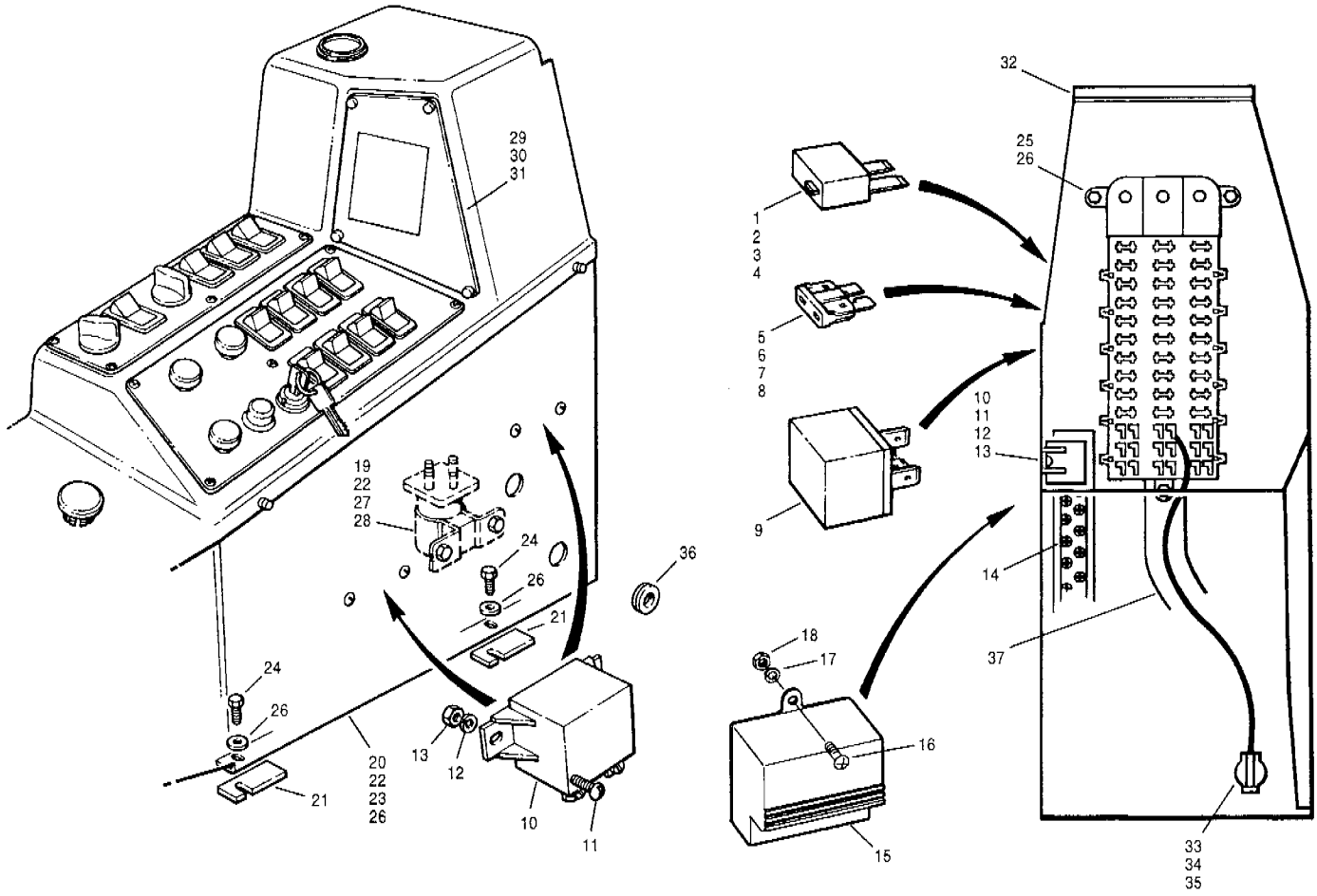

Item	Part No.	Description	Qty.	Remarks
1	73036	Circuit breaker - 3 Amp	2	
2	73270	Circuit breaker - 5 Amp	6	
3	73037	Circuit breaker - 7.5 Amp	7	
4	73038	Circuit breaker - 15 Amp	5	
5	73271	Fuse - 5 Amp	3	
6	73040	Fuse - 7.5 Amp	2	
7	73800	Fuse - 10 Amp	2	
8	96767	Fuse - 25 Amp	2	
9	73061	Relay	6	
10	73067	Power relay	2	
10	73067	Power relay	3	EEC
11	52L-1004 Zi	Screw	4 - 6	
12	14F-10 Zi	Lockwasher	4 - 6	
13	32A-10 Zi	Nut	4 - 6	
14	52H-1007 Zi	Screw	2	
15	96685	Flasher unit	1	
16	* 52M-0804 Ph	Screw	2	
17	14F-08 Zi	Lockwasher	2	
18	32A-08 Zi	Nut	2	
19	73277	Power solenoid	1	
20	400457	Console box	1	
21	400456	Shim - .120"	2	

Item	Part No.	Description	Qty.	Remarks
22	50A-0404 Zi	Bolt	6	
23	50A-0406 Zi	Bolt	1	
24	50A-0408 Zi	Bolt	2	
25	50A-0416 Zi	Bolt	3	
26	14C-04 Zi	Flatwasher	8	
27	14A-04 Zi	Lockwasher	2	
28	30A-04 Zi	Nut	2	
29	84708	Cover plate	1	
30	84707	Screw	4	
31	46A-10	Rivnut	4	
32	28344 x 5.75	Foam tape	1	
33	68940	Receptacle	1	EEC
34	14H-06	Lockwasher	1	EEC
35	68987	Plug - 0.750" dia.	1	
36	80302	Grommet	1	
37		**Wiring harness - console**	Ref.	371-28

SERIAL NUMBERS: 33000 & UP	**ELECTRICAL DISTRIBUTION BOX**	Date	05/2001	Group 372
		Illustr. Nos	00006210	Page 31
				Issue 1A

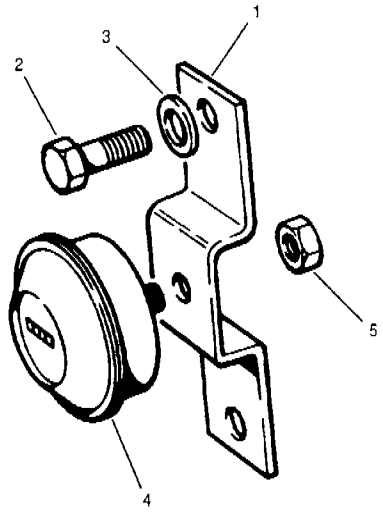

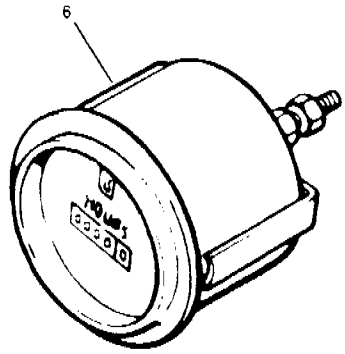

Item	Part No.	Description	Qty.	Remarks
		Hubodometers		
1	58567	Bracket	1	G710 to G740
1	58568	Bracket	1	G 780
2	56445	Washer - hardened	60	
3	50A-1416 Zi	Bolt	60	
4	10510	Hubodometer - 13:00 tire	1	Miles
4	10511	Hubodometer - 14:00 tire	1	
4	10973	Hubodometer - 17:50 tire	1	
4	11919	Hubodometer - 13:00 tire	1	Kilometers
4	11920	Hubodometer - 14:00 tire	1	
4	11922	Hubodometer - 17:50 tire	1	
5	37D-08	Locknut - included with hubodometer	1	
		Hour meter		
6	73152	Hour meter	1	

Item	Part No.	Description	Qty.	Remarks

SERIAL NUMBERS: 33000 & UP	**TRIP METER & HOUR METER**	Date	**01/2001**	Group **383**
		Illustr. Nos	**00005027**	Page **32**
				Issue **1**

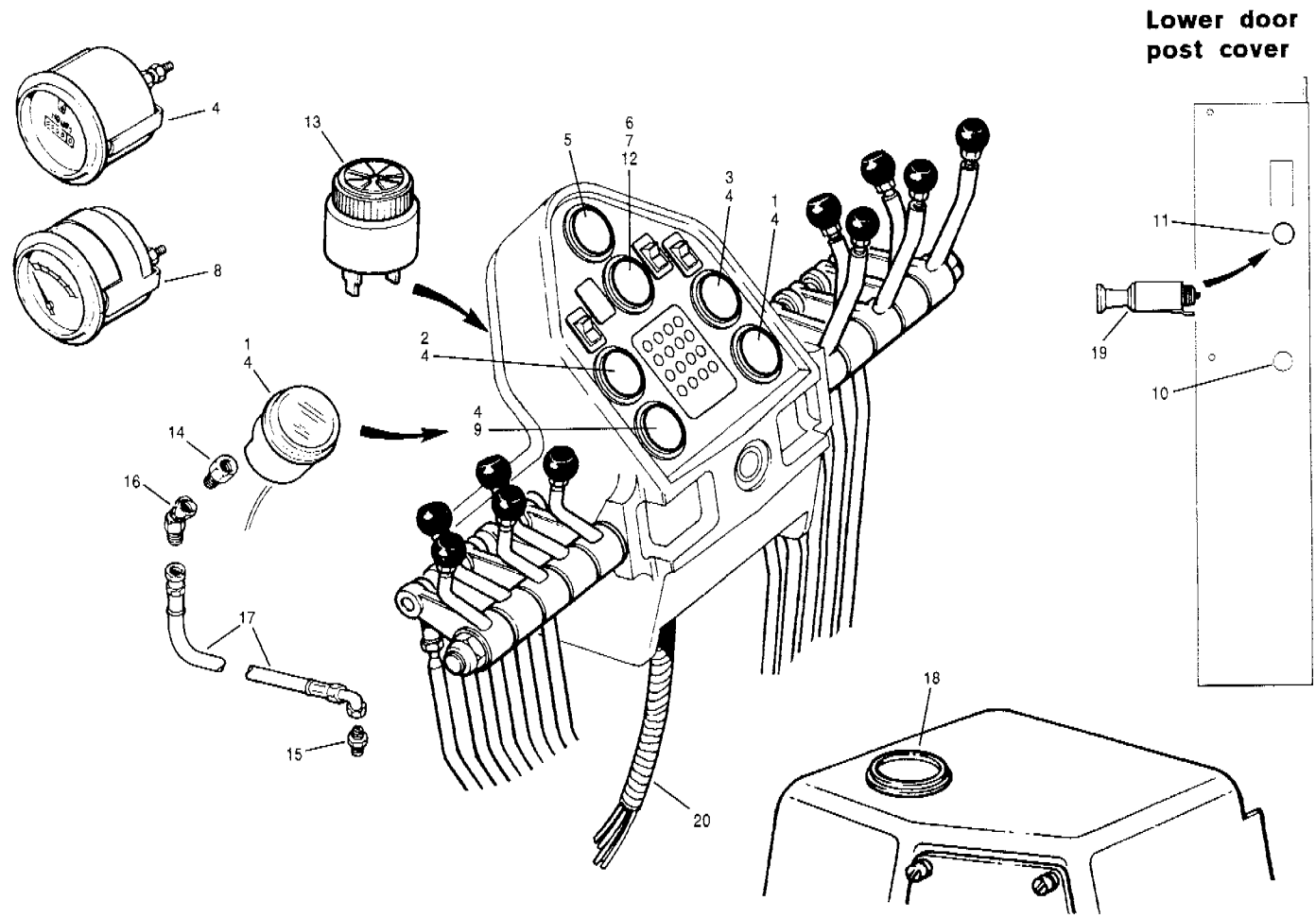

Item	Part No.	Description	Qty.	Remarks
1	73161	Gauge - engine oil pressure	1	G710 to G736
1	73162	Gauge - engine oil pressure	1	G740 to G780
2	68320	Gauge - fuel level	1	
3	73303	Gauge - coolant temperature	1	
4	67831	Bulb - gauge	1 per	
5	90898	Gauge - transmission display	1	
6	402225	Tachometer	1	Optional
7	67831	Bulb - tachometer	1	
8	93894	Voltmeter	1	Optional
9	96468	Gauge - hydraulic oil temperature	1	
10	68987	Plug - 0.750 in. dia.	A.R.	
11	73949	Plug - 0.875 in. dia.	A.R.	
12	73881	Plug - 2.060 in. dia.	A.R.	
13	73066	Alarm	1	

Item	Part No.	Description	Qty.	Remarks
14	110J-0402	Connector	1	
15	110G-0402	Connector	1	
16	112A-04	Connector	1	
17	65214 X 150	Hose assembly	1	
18	35535	Restriction indicator gauge - includes hose and fittings	1	
19	73948	Cigar lighter	1	Optional
20		**Wiring harness - front cab**	Ref.	371-28

SERIAL NUMBERS: 33000 & UP	**GAUGES**	Date **06/2001**	Group **386**
		Illustr. Nos **00006211**	Page **33**
			Issue **1A**

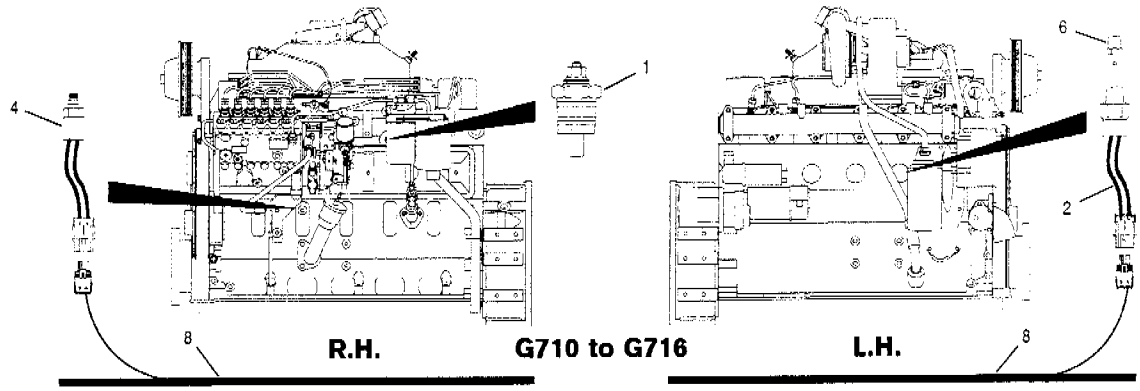

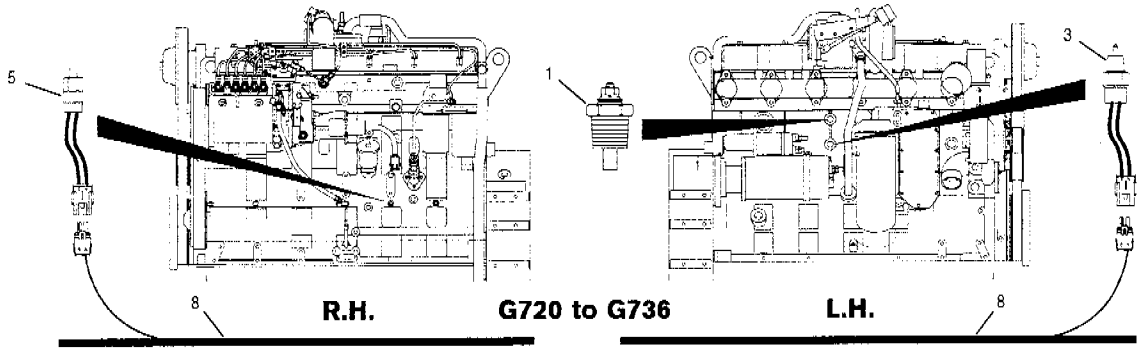

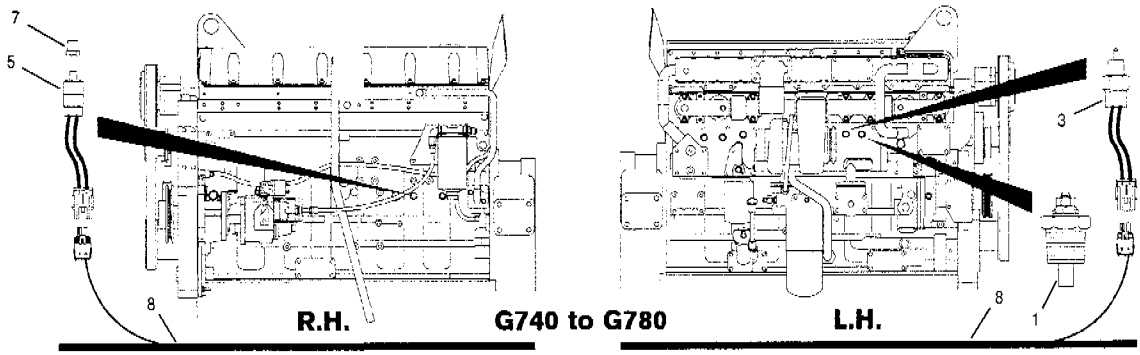

Item	Part No.	Description	Qty.	Remarks
1	57345	Sending unit - engine coolant temperature	1	
2	400245	Sending unit - engine coolant temperature	1	G710 & G716 Optional
3	400198	Sending unit - engine coolant temperature	1	G720 to G780 Optional
4	400203	Sending unit - engine oil pressure	1	G710 & G716
5	400199	Sending unit - engine oil pressure	1	G720 to G780
6	115B-1208	Reducer	1	G710 & G716
7	115B-0402	Reducer	1	G740 to G780
8	* 12724731	Reflective sleeve	1	
9	* 12724691	Clamp	1	
10	* 65776	Tie wrap	1	
11		**Harness - rear chassis & engine**	Ref.	371-29

Item	Part No.	Description	Qty.	Remarks

SERIAL NUMBERS: 33000 & UP	**SENDERS**	Date **06/2001**	Group	**386**
		Illustr. Nos **00005025**	Page	**34**
			Issue	**1A**

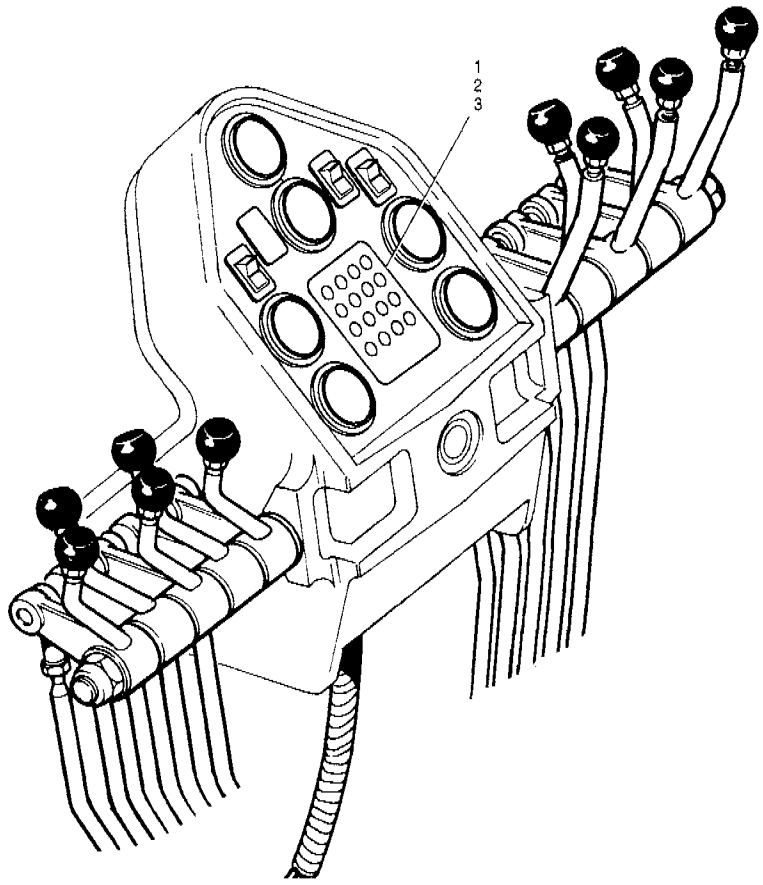

Item	Part No.	Description	Qty.	Remarks
1	12724770	M4 module	1	
2	12724771	M44 module	1	Optional
3	52M-0803 Ph	Screw	4	

Item	Part No.	Description	Qty.	Remarks

SERIAL NUMBERS: 33000 & UP	DISPLAY UNIT - M4/M44	Date 01/2001	Group 387
		Illustr. Nos 00005025	Page 35
			Issue 1

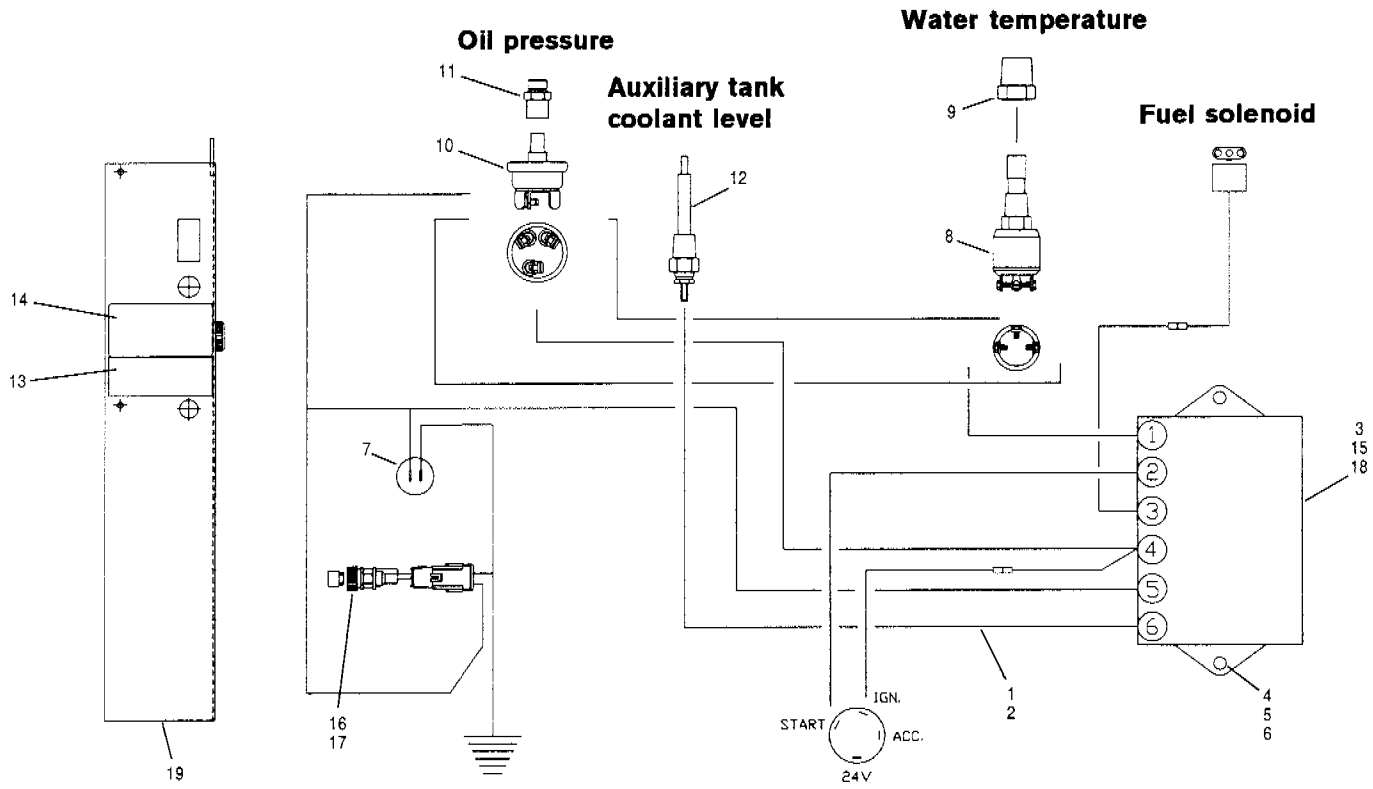

Item	Part No.	Description	Qty.	Remarks
1	96783	Harness - engine shut-down	1	
2	15774	Plastic tie	10	
3	63349	Alarm & shut-down module	1	
4	50A-0406 Zi	Bolt	2	
5	14A-04 Zi	Lockwasher	2	
6	30A-04 Zi	Nut	2	
7	73066	Alarm	1	
8	76226	Sending unit - engine coolant temperature	1	
9	115B-0806	Bushing - temperature sending unit	1	
10	84093	Sending unit - engine oil pressure	1	
11	95282	Adapter	1	G710 & G716
12	42681	Sending unit - low coolant level	1	
13	95327	Decal	2	
14	96209	Decal	2	
15		Installation & service guide	1	
16	**96162**	**Lamp assembly**	1	
17	65511	Bulb	1	
18		**Harness - rear**	Ref.	371-29
19		**Lower door post cover**	Ref.	810-3 810-4

Item	Part No.	Description	Qty.	Remarks

SERIAL NUMBERS: 33000 & UP	**AUTOMATIC OVERRIDE ENGINE SHUT-DOWN SYSTEM**	Date **01/2001**	Group	**388**
		Illustr. Nos **00004448**	Page	**36**
			Issue	**1**

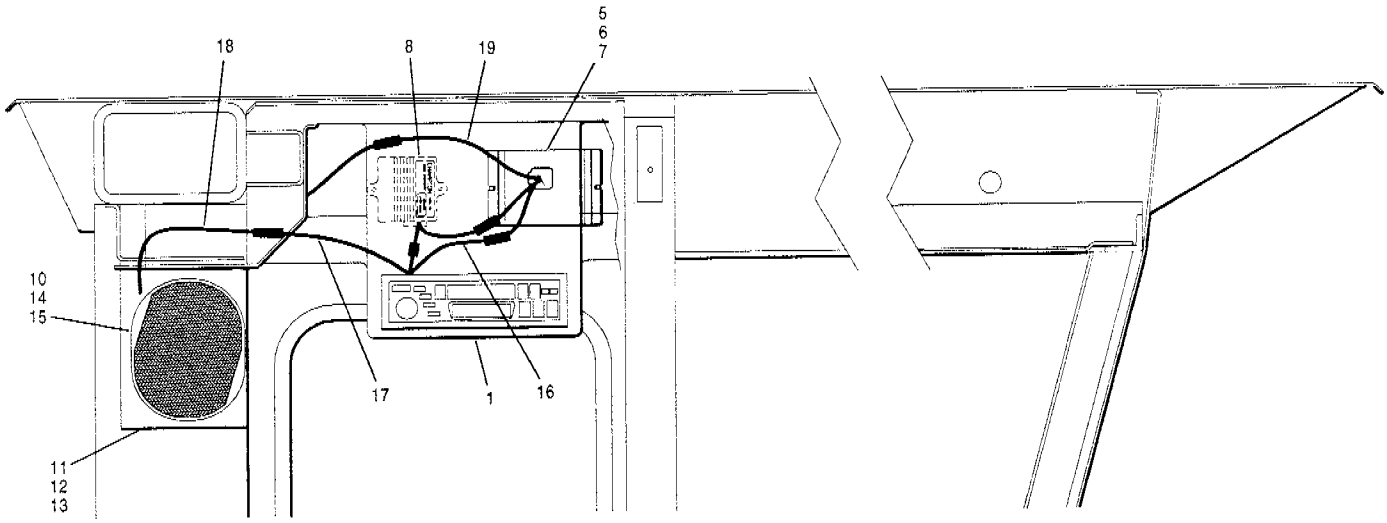

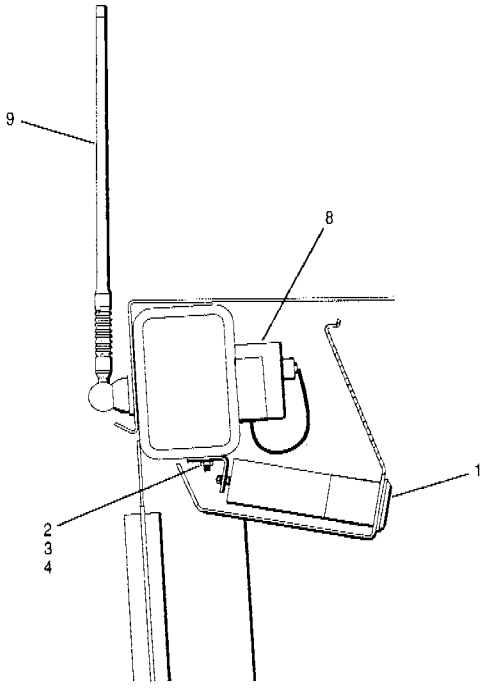

L.H. looking forward

Item	Part No.	Description	Qty.	Remarks
1	12723739	Radio/cassette player - includes hardware	1	
2	84133	Mounting bracket	1	
3	14C-04 Zi	Flatwasher	1	
4	30A-04 Zi	Nut	1	
5	73728	Converter - 24 volt to 12 volt	1	
6	14F-10 Zi	Lockwasher	4	
7	32A-10 Zi	Nut	4	
8	12723740	Battery back-up	1	
9	12724010	Antenna	1	
10	12723744	Loudspeaker c/w grille	1	Supplied as a pair
11	96324	Box - loudspeaker - R.H.	1	
12	96618	Box - loudspeaker - L.H.	1	
13	62A-1004	Screw	6	
14	52L-0806 Zi	Screw	8	
15	47388	Rivnut	8	

Item	Part No.	Description	Qty.	Remarks
		Wiring harnesses		
16	12724000	Harness - radio/cassette	1	
17	12723743	Harness - loudspeaker	1	
18	87923	Harness - loudspeaker	1	
19	12724004	Harness - converter	1	

SERIAL NUMBERS: 33000 & UP	**RADIO/CASSETTE PLAYER**	Date 01/2001	Group 393
		Illustr. Nos 00006180	Page 37
			Issue 1

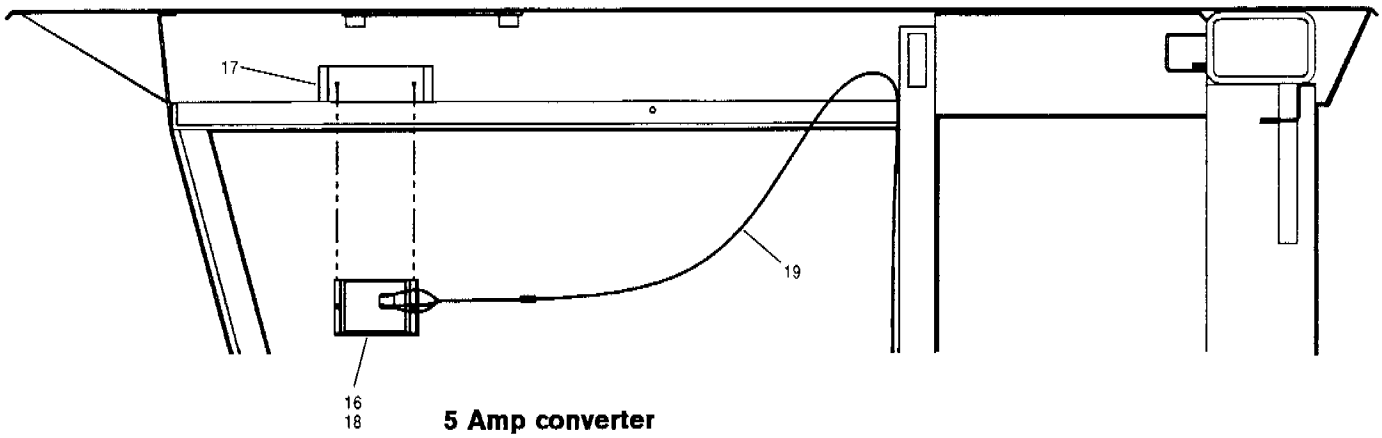

5 Amp converter

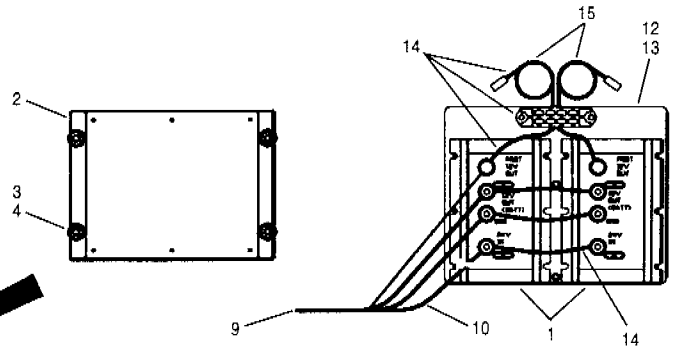

Dual 10 Amp converter

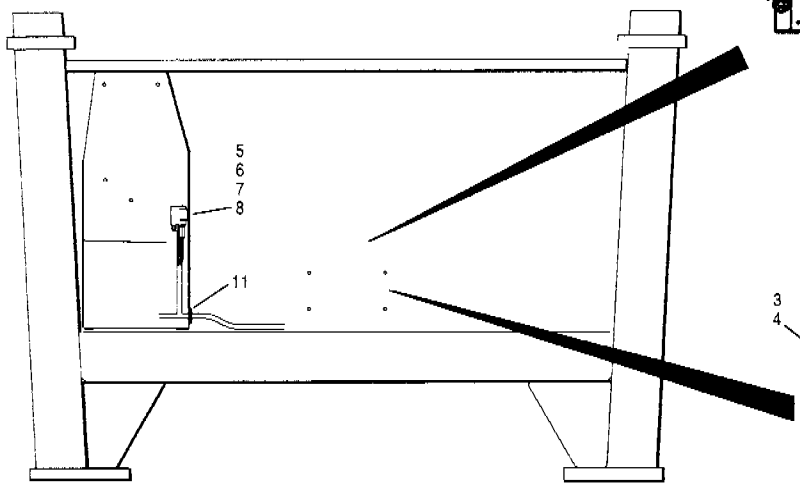

Interior back wall of cab with seat removed

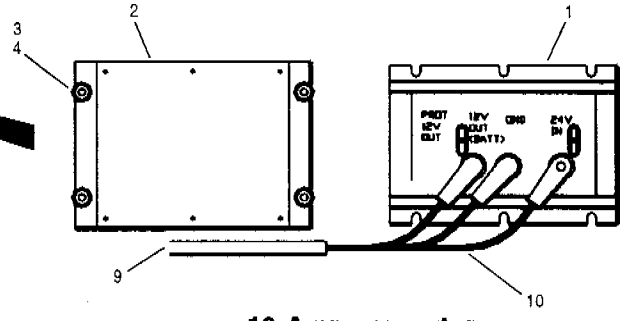

10 Amp converter

Item	Part No.	Description	Qty.	Remarks
1	**73730**	**Converter - 10 Amp** - includes hardware	1-2	
2	407057	Bracket	1	
3	14C-04 Zi	Flatwasher	4	
4	30A-04 Zi	Nut	4	
5	73067	Power relay	1	
6	52L-1006 Zi	Screw	2	
7	14F-10 Zi	Lockwasher	2	
8	32A-10 Zi	Nut	2	
9	17536 x 14	Conduit	1	
10	87933	Harness - 10 Amp converter	1	
11	80302	Grommet	1	
12	98113	Adapter plate	1	

Item	Part No.	Description	Qty.	Remarks
13	61A-0804	Screw	6	
14	98109	Harness - includes item 15	1	
15	98108	Fuse	2	
16	**73728**	**Converter - 5 Amp**	1	
17	78040	Bracket	1	
18	62A-1006	Screw	2	
19	96121	Harness - 5 Amp converter	1	

SERIAL NUMBERS: 33000 & UP	**CONVERTERS - 24 VOLT to 12 VOLT**	Date **01/2001**	Group **393**
		Illustr. Nos **00006182**	Page **38**
			Issue **1**

Group	Page

Numerical

400 Contents - Alphabetical 2
413 Clutch 3, 4
Clutch Booster Circuit & Slave Cylinder 5
Clutch Master Cylinder 6
Clutch Booster 7
Clutch Linkage 8
421 Transmission 9
Transmission Hydraulic Circuit 10
Input Clutch & Shaft 11
Reverse Clutch & Shaft 12
Output Clutch & Shaft 13
Intermediate Clutch & Shaft 14
Transmission Case Hydraulics 15
Transmission Control Valves 16
424 Transmission Controller 17
426 Transmission Mounts 18
442 Main Hydraulic Circuit - AWD 19
Main Hydraulic Pump - AWD 20
Hydraulic Oil Tank - Main Circuit - AWD 21
444 Hydraulic Circuit - Wheel Motors - AWD 22
Speed Sensors - AWD 23
Harnesses, Sending Units & Controller - AWD 24
Wheel Motor Assembly - AWD 25
Motor Bypass Valve - AWD 26
Free Wheeling Solenoid Valve &
Two-Speed Valve Assembly - AWD 27
Free Wheeling Valve - AWD 28
445 Hydraulic Circuit - Free Wheeling - AWD 29
Hydraulic Filter & Circuit - AWD 30
Pump Gear Box - AWD 31
Hydraulic Pumps - AWD 32
Charge Pump - AWD 33
Oil Cooler & Circuit 34
Hydraulic Oil Tank - AWD 35

Group	Page

451 Pump Driveshaft - Model G710 36
Pump Driveshaft - Models G720 to G730 37
Pump Driveshaft - Models G740 to G780 38
Upper Driveshaft 39
Lower Driveshaft 40
Pump Driveshaft - AWD - Model G716 VHP 41
Pump Driveshaft - AWD - Models G726 VHP & 736 VHP 42
463 Tandems 43
Final Drive - Differential Carrier Assembly
- Models G710 to G726 44
Final Drive - Differential Carrier Assembly
- Models G730 to G740 45
Final Drive Differential Oil Pump & Input Pinion
- Model G780 46
Final Drive - Housing Assembly - Models G710 to G726 47
Final Drive - Housing Assembly - Models G730 to G740 48
Final Drive - Housing Assembly - Model G780 49
468 Final Drive - Differential Lock - Models G710 to G726 50
Final Drive - Differential Lock - Models G730 to G740 51
Final Drive - Differential Lock - Model G780 52
Differential Hydraulic Circuit - Models G710 to G740 53
Differential Hydraulic Circuit - Model G780 54
491 Transmission Oil Cooler - Models G710 to G716 55
Transmission Oil Cooler - Models G720 to G736 56
Transmission Oil Cooler - Models G740 to G780 57
Control Module - AWD 58

Group	Page

Alphabetical

400 Contents - Numerical 1
Charge Pump - AWD 33
413 Clutch 3, 4
Clutch Booster 7
Clutch Booster Circuit & Slave Cylinder 5
Clutch Linkage 8
Clutch Master Cylinder 6
491 Control Module - AWD 58
468 Differential Hydraulic Circuit - Model G780 54
Differential Hydraulic Circuit - Models G710 to G740 53
463 Final Drive - Differential Carrier Assembly - Models G710 to G726 44
Final Drive - Differential Carrier Assembly - Models G730 to G740 45
Final Drive - Differential Lock - Model G780 52
468 Final Drive - Differential Lock - Models G710 to G726 50
Final Drive - Differential Lock - Models G730 to G740 51
463 Final Drive - Housing Assembly - Model G780 49
Final Drive - Housing Assembly - Models G710 to G726 47
Final Drive - Housing Assembly - Models G730 to G740 48
Final Drive Differential Oil Pump & Input Pinion - Model G780 46
444 Free Wheeling Solenoid Valve & Two-Speed Valve Assembly - AWD 27
Free Wheeling Valve - AWD 28
Harnesses, Sending Units & Controller - AWD 24
445 Hydraulic Circuit - Free Wheeling - AWD 29
444 Hydraulic Circuit - Wheel Motors - AWD 22
445 Hydraulic Filter & Circuit - AWD 30
Hydraulic Oil Tank - AWD 35
442 Hydraulic Oil Tank - Main Circuit - AWD 21
445 Hydraulic Pumps - AWD 32
421 Input Clutch & Shaft 11
Intermediate Clutch & Shaft 14
451 Lower Driveshaft 40
442 Main Hydraulic Circuit - AWD 19
444 Main Hydraulic Pump - AWD 20
Motor Bypass Valve - AWD 26
445 Oil Cooler & Circuit 34
421 Output Clutch & Shaft 13
451 Pump Driveshaft - AWD - Model G716 VHP 41
Pump Driveshaft - AWD - Models G726 VHP & 736 VHP 42
Pump Driveshaft - Model G710 36
Pump Driveshaft - Models G720 to G730 37
Pump Driveshaft - Models G740 to G780 38
445 Pump Gear Box - AWD 31
421 Reverse Clutch & Shaft 12
444 Speed Sensors - AWD 23
463 Tandems 43
421 Transmission 9
Transmission Case Hydraulics 15
Transmission Control Valves 16
424 Transmission Controller 17
421 Transmission Hydraulic Circuit 10
426 Transmission Mounts 18
491 Transmission Oil Cooler - Models G710 to G716 55
Transmission Oil Cooler - Models G720 to G736 56
Transmission Oil Cooler - Models G740 to G780 57
451 Upper Driveshaft 39
444 Wheel Motor Assembly - AWD 25

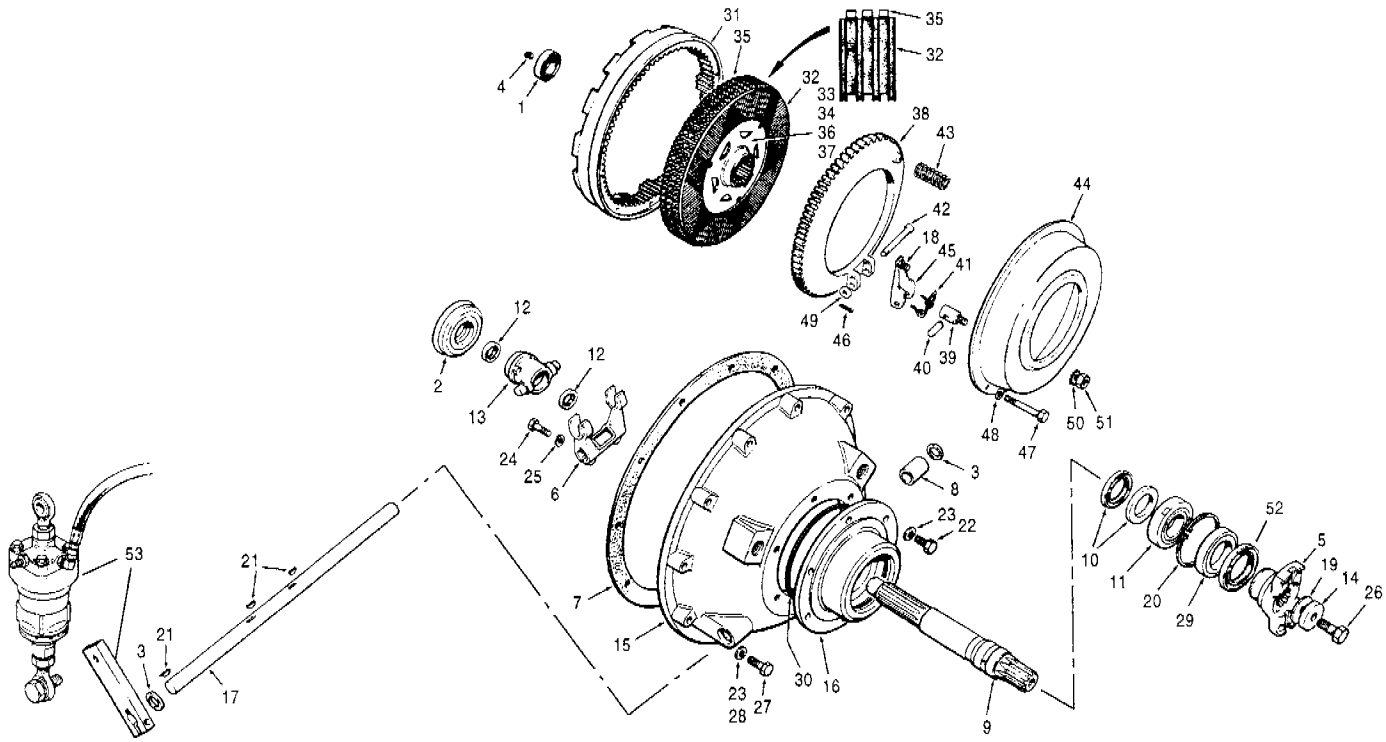

Item	Part No.	Description	Qty.	Remarks
1	3863	Pilot bearing	1	
2	3865	Thrust bearing	1	
3	5202	Oil seal	2	
4	62388	Modified setscrew	1	
5	87701	Yoke	1	
6	18916	Yoke	1	
7	25285	Gasket	1	
8	32891	Bushing	2	
9	59914	Clutch shaft - ensure item 4 is installed on end	1	
10	59922	Seal	2	
11	59924	Bearing	1	
12	37819	Bearing	2	
13	37820	Sleeve	1	
14	37919	Retaining washer	1	
15	59916	Clutch housing	1	
16	62144	Bearing support	1	
17	48740	Shaft	1	

Item	Part No.	Description	Qty.	Remarks
18	54531	Screw	3	
19	17973	Gasket	1	
20	19B-393	Retainer ring	1	
21	20J-0808	Key	3	
22	50A-0610 Zi	Bolt	16	
23	14A-06 Zi	Lockwasher	6	
24	50A-0610 UP	Bolt	2	Unplated
25	14A-06 UP	Lockwasher	2	Unplated
26	50A-1010 Zi	Bolt	1	
27	350A-10060 Zi	Bolt	10	G710 to G736 VHP
27	50A-0620 Zi	Bolt	10	G740 to G780 VHP
28	314A-10 Zi	Lockwasher	10	
29	59923	Seal	1	
30	12A-167	O-ring	1	
		Clutch - continued	Ref.	413-4

SERIAL NUMBERS: 33000 & UP	**CLUTCH**	Date **01/2001**	Group	**413**
		Illustr. Nos **00003396**	Page	**3**
			Issue	**1**

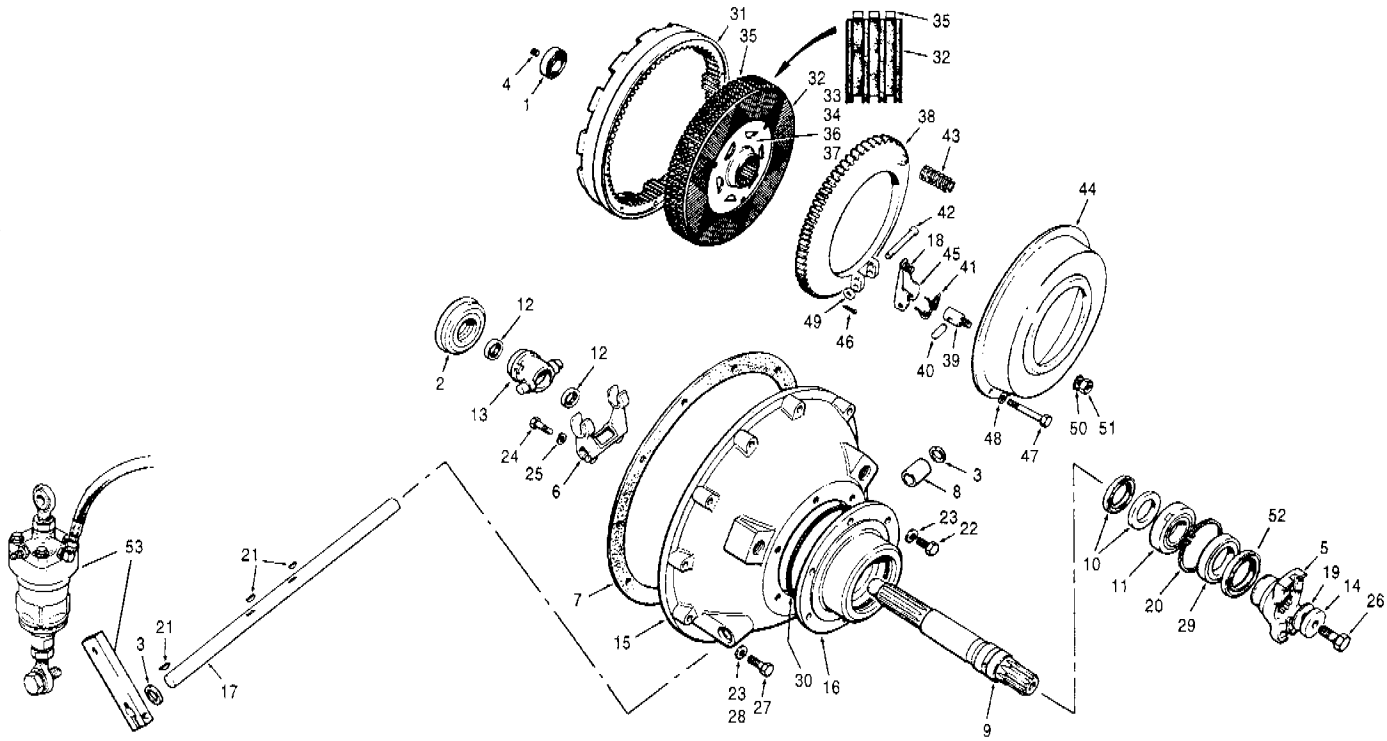

Item	Part No.	Description	Qty.	Remarks
	74039	**Clutch assembly** - includes items 32 to 52	1	G710, G710 VHP, G716 VHP & G720
	37677	**Clutch assembly** - includes items 32 to 52	1	G720 VHP to G736 VHP
	87541	**Clutch assembly** - includes items 32 to 52	1	G740 to G780 VHP
31	49990	Drive ring	1	
	49984	**Disc & hub assembly** - includes items 33 to 38	1	G710 to G736 VHP
	76294	**Disc & hub assembly** - includes items 33 to 38	1	G740 to G780 VHP
32	37170	Friction disc	4 - 5	
33	37172	Washer	3	
34	49986	Splined hub	1	
35	49987	Reaction plate	3	G710 to G736 VHP
35	87537	Reaction plate	4	G740 to G780 VHP
36	49988	Rivet	3	
37	49989	Retainer	1	

Item	Part No.	Description	Qty.	Remarks
	62975	**Cover assembly** - includes items 39 to 47	1	G710, G710 VHP, G716 VHP & G720
	49985	**Cover assembly** - includes items 39 to 47	1	G720 VHP to G780 VHP
38	37174	Pressure plate	1	
39	37177	Pivot block	3	
40	37178	Pivot pin	3	
41	37179	Anti-rattle spring	3	
42	37180	Lever pin	3	
43	37181	Spring	12	G710, G710 VHP, G716 VHP & G720
43	37181	Spring	15	G720 VHP to G780 VHP
44	37182	Back plate	1	
45	**49991**	**Lever assembly** - includes item 18	3	
	53249	**Repair kit for 49991 - lever assembly** - includes items 43, 47 & 50	1 per	
46	13A-0312	Caotter pin	3	
47	50A-0626 UP	Bolt	12	Unplated
48	14A-06 UP	Lockwasher	12	Unplated
49	14C-06	Flatwasher	3	
50	14J-10	Washer	3	
51	31D-10	Jam nut	3	
52	87576	V-ring seal	1	
53		**Clutch booster circuit**	Ref.	413-5
		Clutch - continued	Ref.	413-3

SERIAL NUMBERS: 33000 & UP	**CLUTCH**	Date **01/2001**	Group **413**
		Illustr. Nos **00003396**	Page **4**
			Issue **1**

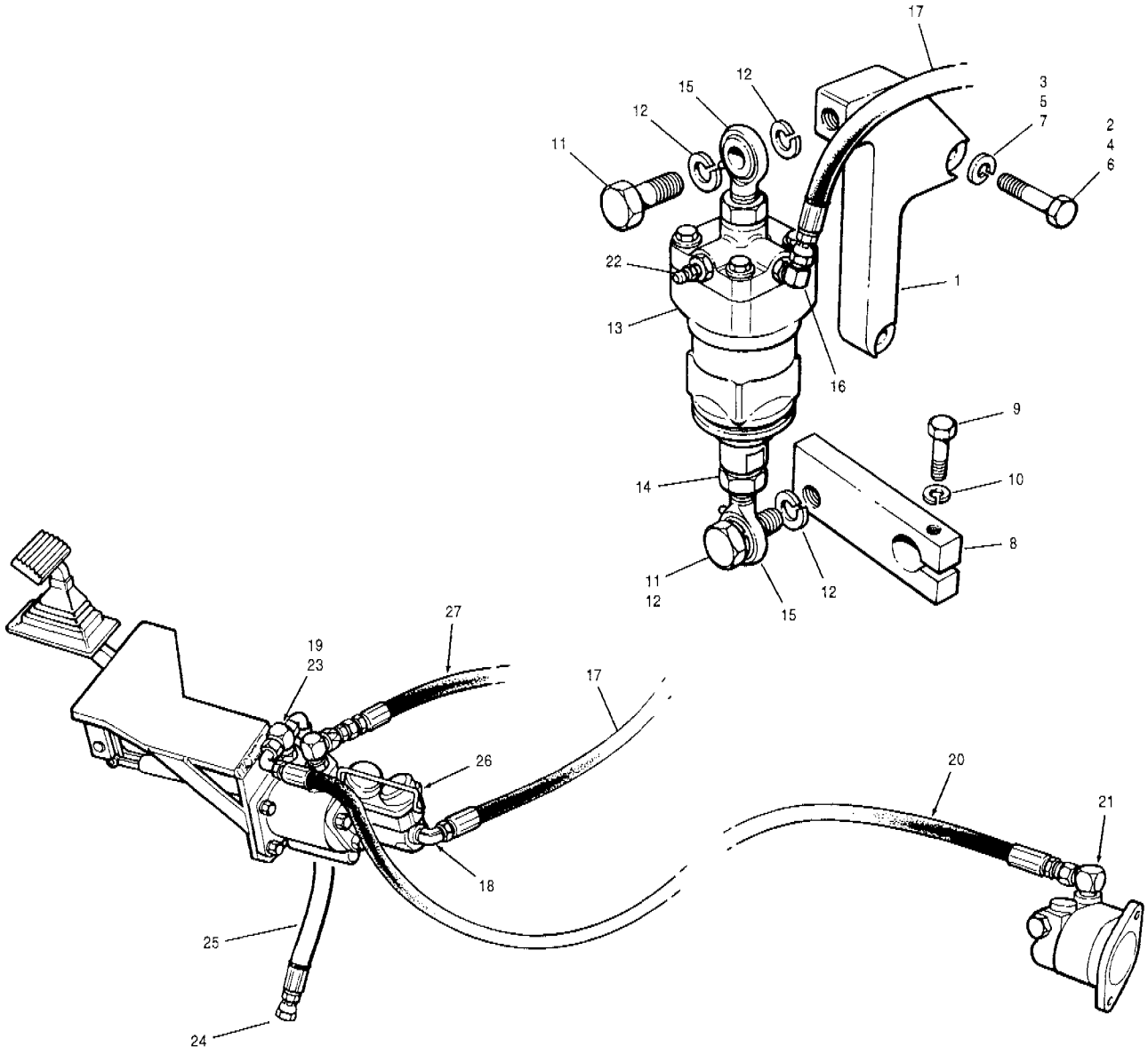

Item	Part No.	Description	Qty.	Remarks
1	62452	Bracket	1	
2	350A-10080 Zi	Bolt	2	G710 to G716
3	314A-10	Lockwasher	2	G710 to G716
4	350A-10080 Zi	Bolt	2	G720 to G736
5	314A-10 Zi	Lockwasher	2	G720 to G736
6	50A-0722	Bolt	2	G740 to G780
7	14A-07	Lockwasher	2	G740 to G780
8	62453	Arm	1	
9	50A-0612 Zi	Bolt	1	
10	14A-06 Zi	Lockwasher	1	
11	50A-1014 Zi	Bolt	2	
12	14A-10 Zi	Lockwasher	4	
13	**74930**	**Slave cylinder assembly**	1	
	76253	**Repair kit for 74930 - slave cylinder assembly** - includes the following:	1 per	
		Wiper	1	
		Cup	1	
		O-ring	1	

Item	Part No.	Description	Qty.	Remarks
14	31D-10 Zi	Jam nut	2	
15	62460	Ball joint	2	
16	111B-0404	Connector	1	
17	66686 x 50	Hose	1	
18	110P-0402	Elbow	1	
19	111C-0808	Connector	1	
20	78216 x 94	Hose	1	
21	111B-0808	Connector	1	
22	62461	Bleeder screw	1	
23	111R-1008	Connector	1	
24	110H-08	Plug	1	
25	78216 x 27	Hose	1	
26		**Clutch master cylinder & booster**	Ref.	413-6
27		**Brake circuit**	Ref.	522-6

SERIAL NUMBERS:
33000 & UP

CLUTCH BOOSTER CIRCUIT & SLAVE CYLINDER

Date **01/2001**
Illustr. Nos **00003397**
Group **413**
Page **5**
Issue **1**

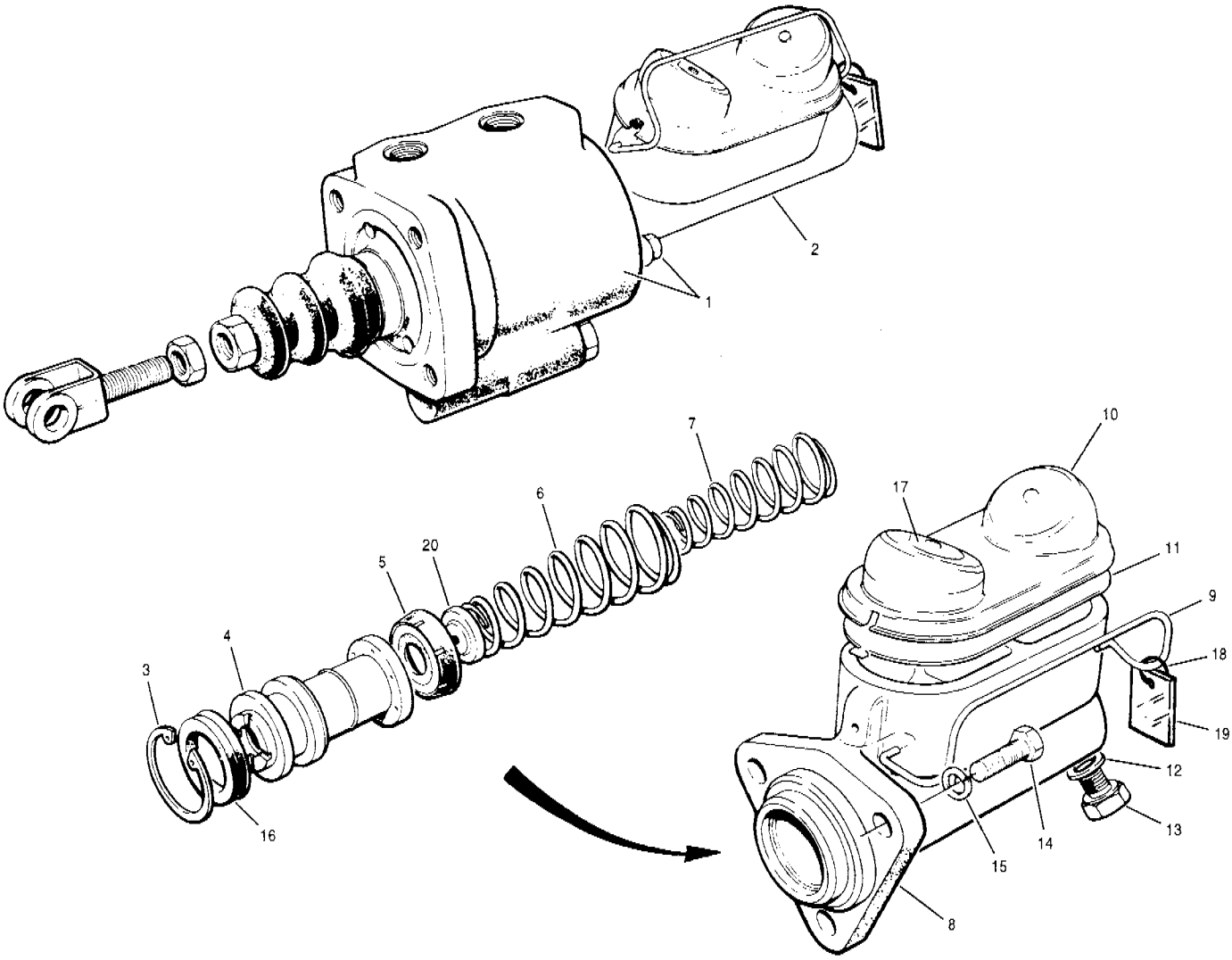

Item	Part No.	Description	Qty.	Remarks
1	**97116**	**Master cylinder & power booster assembly**	1	
2	**97117**	**Master cylinder assembly** - includes items 3 to 11 & 16 to 20	1	
	97118	**Repair kit for 97117 - master cylinder** - includes items 3 to 7, 11, 16, 20, 21 & 22	1 per	
3		Retaining ring	1	
4		Piston	1	
5		Cup	1	
6		Spring	1	
7		Spring	1	

Item	Part No.	Description	Qty.	Remarks
8		Housing	1	
9	49992	Bail hook	1	
10	76210	Cover	1	
11	63171	Diaphragm	1	
12	401030	Washer	2	
13	401031	Connector	2	
14	50A-0610	Bolt	3	
15	14A-06	Lockwasher	3	
16		Cup	1	
17	76209	Decal	1	
18		Ring	1	
19	76211	Label - warning	1	
20		Retainer	1	
21		Tool - seal installation	1	Not illustrated
22		Instruction sheet	1	Not illustrated

SERIAL NUMBERS: 33000 & UP	**CLUTCH MASTER CYLINDER**	Date **01/2001**	Group **413**
		Illustr. Nos **00004933**	Page **6**
			Issue **1**

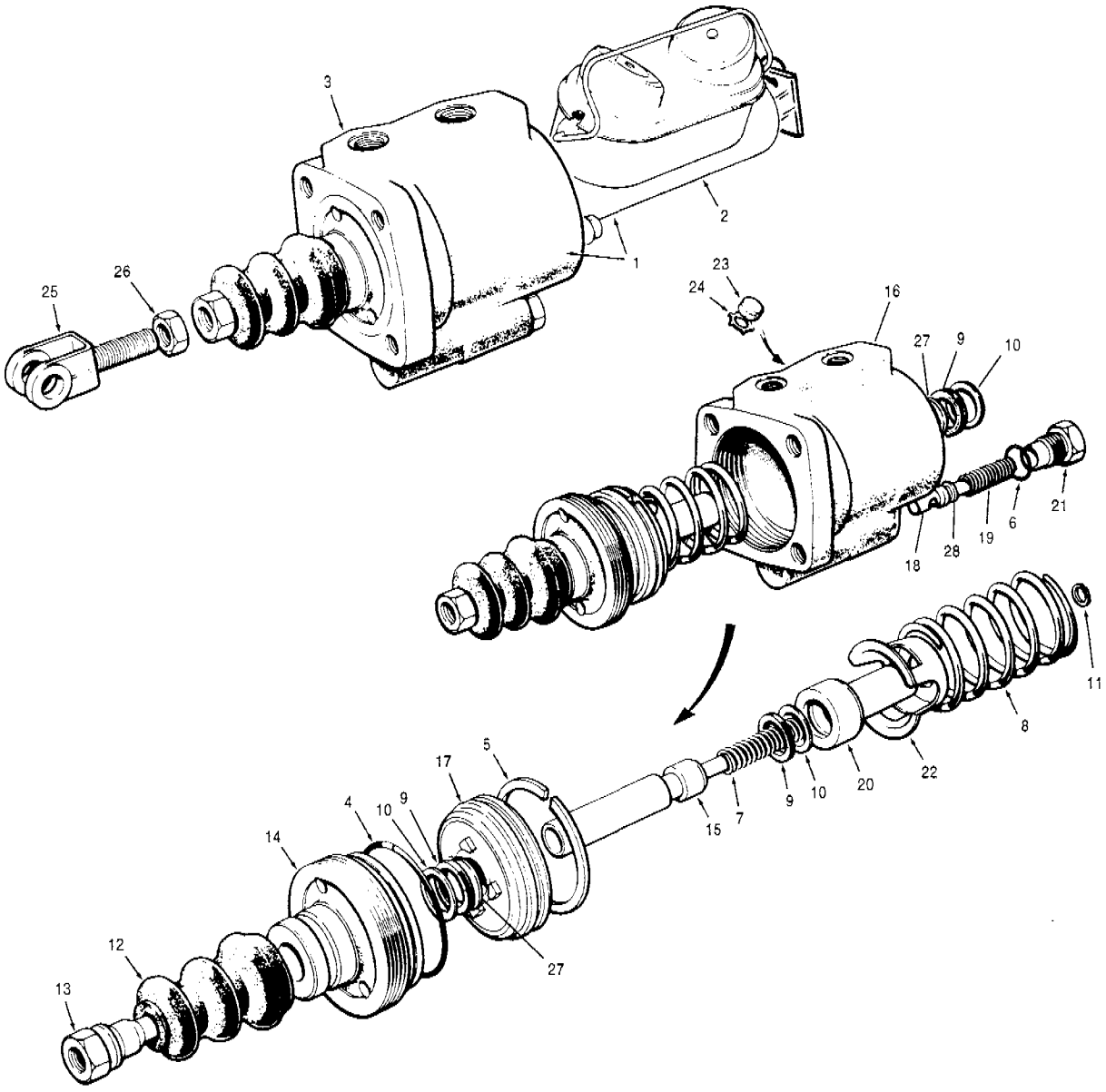

Item	Part No.	Description	Qty.	Remarks
1	**97116**	**Master cylinder & power booster assembly**	1	
2	**97117**	**Master cylinder assembly**	1	
3	**84485**	**Power booster assembly** - includes items 4 to 24, 27 & 28	3	
	84486	**Repair kit for 84485 - power booster** - includes items 4 to 12 & 27	1 per	
4		O-ring	1	
5		Piston ring	1	
6		O-ring	1	
7		Spring	1	
8		Spring	1	
9		Cup	3	
10		Back-up ring	3	

Item	Part No.	Description	Qty.	Remarks
11		Retaining ring	1	
12	7799	Boot	1	
13	36498	Push rod	1	
14		End plug	1	
15		Piston	1	
16		Housing	1	
17		Piston	1	
18		Piston	1	
19		Spring	1	
20		Piston	1	
21		End plug	1	
22		Retainer	1	
23		Snubber	1	
24		Retaining ring	1	
25	36463	Clevis	1	
26	31D-08	Jam nut	1	
27		Retaining ring	2	
28		Shim	A.R.	

SERIAL NUMBERS: 33000 & UP	**CLUTCH BOOSTER**	Date **01/2001**	Group **413**
		Illustr. Nos **00004934**	Page **7**
			Issue **1**

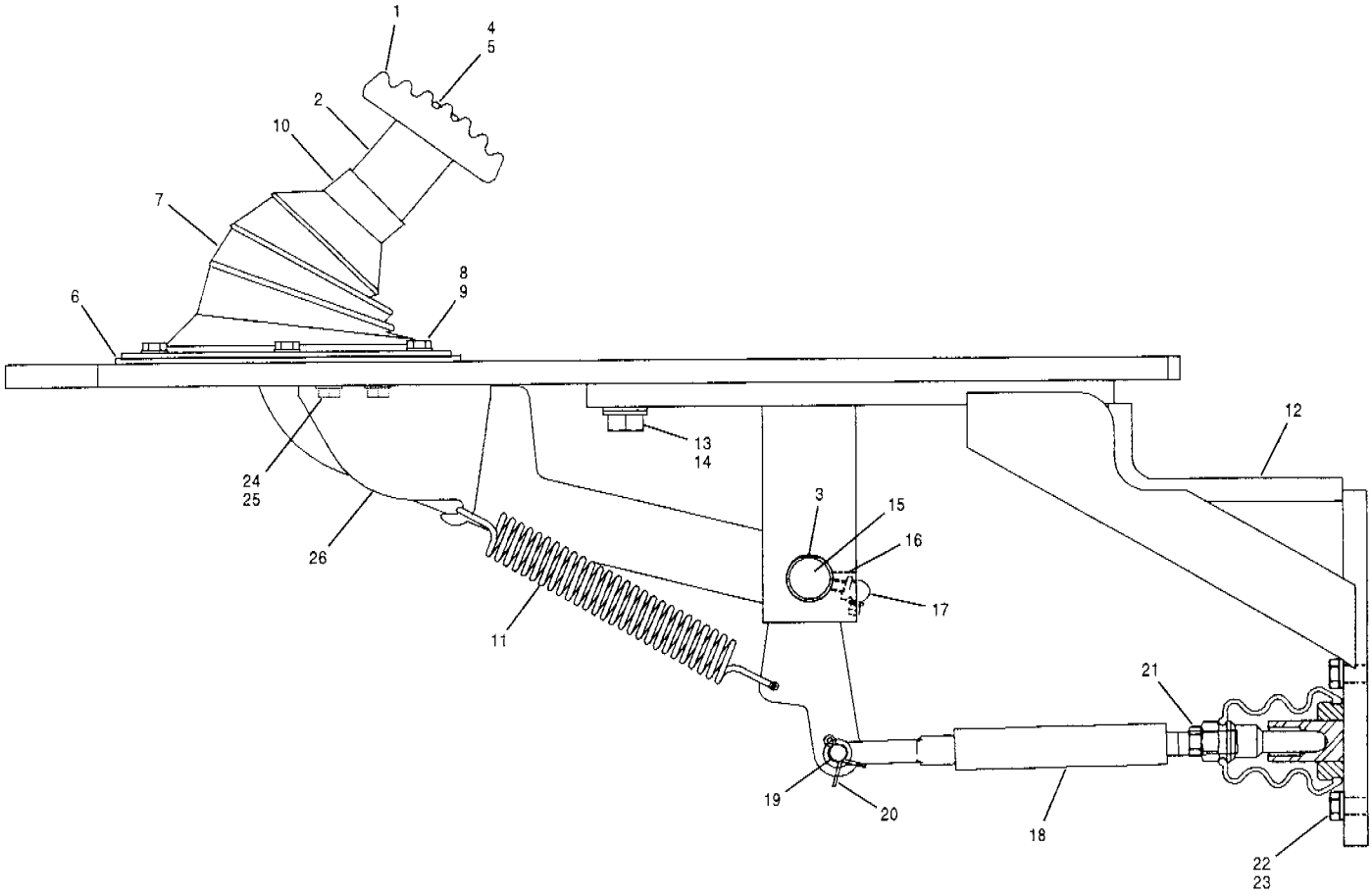

Item	Part No.	Description	Qty.	Remarks
1	402123	Pedal	1	
2	* **12725623**	**Pedal arm assembly** - includes item 3	1	
3	32824	Bushing	2	
4	50A-0610 Zi	Bolt	2	
5	* 940097	Hardened washer	2	
6	96492	Mounting flange	1	Enclosed cab
7	96525	Rubber boot	1	Enclosed cab
8	50A-0406 Zi	Bolt	6	Enclosed cab
9	* 955893	Hardened washer	6	Enclosed cab
10	* 12726304	Adhesive tape	1	
11	670	Spring	1	
12	* 12725642	Bracket	1	
13	* 50A-0809 Zi	Bolt	4	
14	* 955898	Hardened washer	8	
15	48341	Shaft	1	
16	70B-0405	Set screw	2	
17	28B-04	Grease fitting	1	
18	* 12725773	Rod	1	
19	10A-0618	Clevis pin	1	
20	13A-0416	Cotter pin	1	
21	31D-08 Zi	Jam nut	1	
22	50A-0714 Zi	Bolt	4	
23	* 955896	Hardened washer	4	
24	50A-0405 Zi	Bolt	2	
25	* 955893	Hardened washer	2	
26	* 12725847	Lug	1	

Item	Part No.	Description	Qty.	Remarks

SERIAL NUMBERS: 33000 & UP	**CLUTCH LINKAGE**	Date **06/2001**	Group	**413**
		Illustr. Nos **00005359**	Page	**8**
			Issue	**1A**

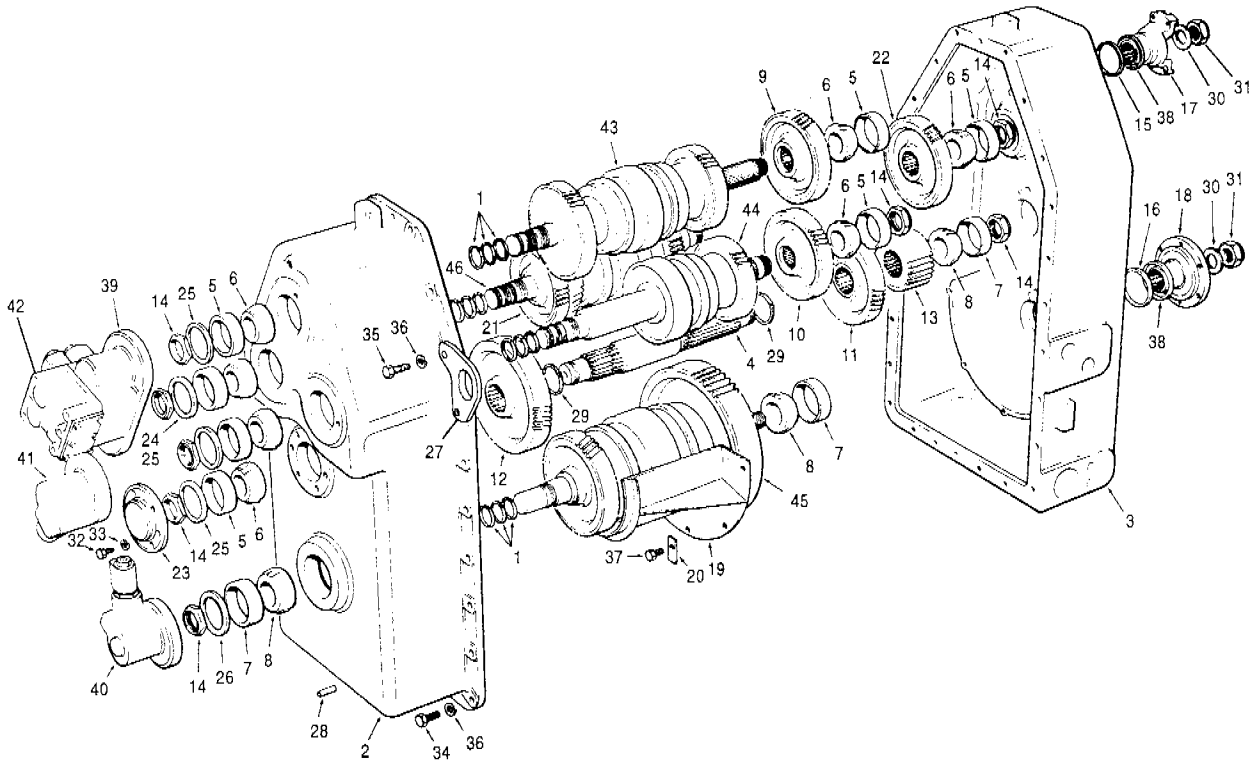

Item	Part No.	Description	Qty.	Remarks
	85393	**Transmission bearing kit**	1	
	85394	**Transmission seal kit**	1	
	87581	**Transmission assembly** - includes items 1 to 46 & transmission mount	Ref.	426-18
1	16814	Piston ring	12	
2	74404	Front case	1	
3	89226	Rear case	1	
4	29706	2nd. intermediate shaft	1	
5	29707	Cup	7	
6	29708	Cone	7	
7	29709	Cup	3	
8	29710	Cone	3	
9	29721	Gear - 52 teeth - L.H.	1	
10	29722	Gear - 52 teeth - R.H.	1	
11	65922	Gear - 52 teeth	1	
12	29726	Gear - 70 teeth	1	
13	68348	Gear - 24 teeth	1	
14	29728	Locknut	8	
15	87577	Seal	1	
16	87578	Seal	1	
17	87574	Yoke - upper	1	
18	87575	Yoke - lower	1	
19	29761	Oil baffle	1	
20	29762	Locking plate	5	
21	29777	Gear - 46 teeth	1	
22	29778	Gear - 54 teeth	1	
23	87724	Cap	1	
24	37764	Spacer - .1800" thick	1	
24	37765	Spacer - .1850" thick	1	
25	37766	Spacer - .1900" thick	1	
25	37767	Spacer - .1950" thick	4	
25	37768	Spacer - .2000" thick	4	
25	37769	Spacer - .2050" thick	4	
25	37770	Spacer - .2100" thick	4	
25	37771	Spacer - .2150" thick	4	
25	37772	Spacer - .2200" thick	4	
25	37773	Spacer - .2250" thick	4	
25	37774	Spacer - .2300" thick	4	
25	37794	Spacer - .2350" thick	4	
25	37795	Spacer - .2400" thick	4	
25	37799	Spacer - .1750" thick	4	

Item	Part No.	Description	Qty.	Remarks
26	37776	Spacer - .1900" thick	1	
26	37777	Spacer - .1950" thick	1	
26	37778	Spacer - .2000" thick	1	
26	37779	Spacer - .2050" thick	1	
26	37780	Spacer - .2100" thick	1	
26	37781	Spacer - .2150" thick	1	
26	37782	Spacer - .2200" thick	1	
26	37783	Spacer - .2250" thick	1	
26	37784	Spacer - .2300" thick	1	
26	37796	Spacer - .2350" thick	1	
26	37797	Spacer - .1800" thick	1	
26	37798	Spacer - .1850" thick	1	
27	87974	Lift eye	1	
28	406022	Dowel pin	2	
29	19C-237	Snap ring	2	
30	14D-20 Zi	Flatwasher	2	
31	37M-20 Zi	Locknut	2	
32	50A-0608 Zi	Bolt	6	
33	14A-06 Zi	Lockwasher	6	
34	50A-0812 Zi	Bolt	14	
35	50A-0814 Zi	Bolt	4	
36	14A-08 Zi	Lockwasher	24	
37	50A-0606 UP	Bolt	5	Unplated
38	87576	V-ring seal	2	
39		**Cap - main control valve**	Ref.	421-16
40		**Cap - range control valve**	Ref.	421-16
41		**Cap - reverse control valve**	Ref.	421-16
42		**Regulator valve**	Ref.	421-16
43		**Input clutch & shaft**	Ref.	421-11
44		**Reverse clutch & shaft**	Ref.	421-12
45		**Output clutch & shaft**	Ref.	421-13
46		**Intermediate clutch & shaft**	Ref.	421-14

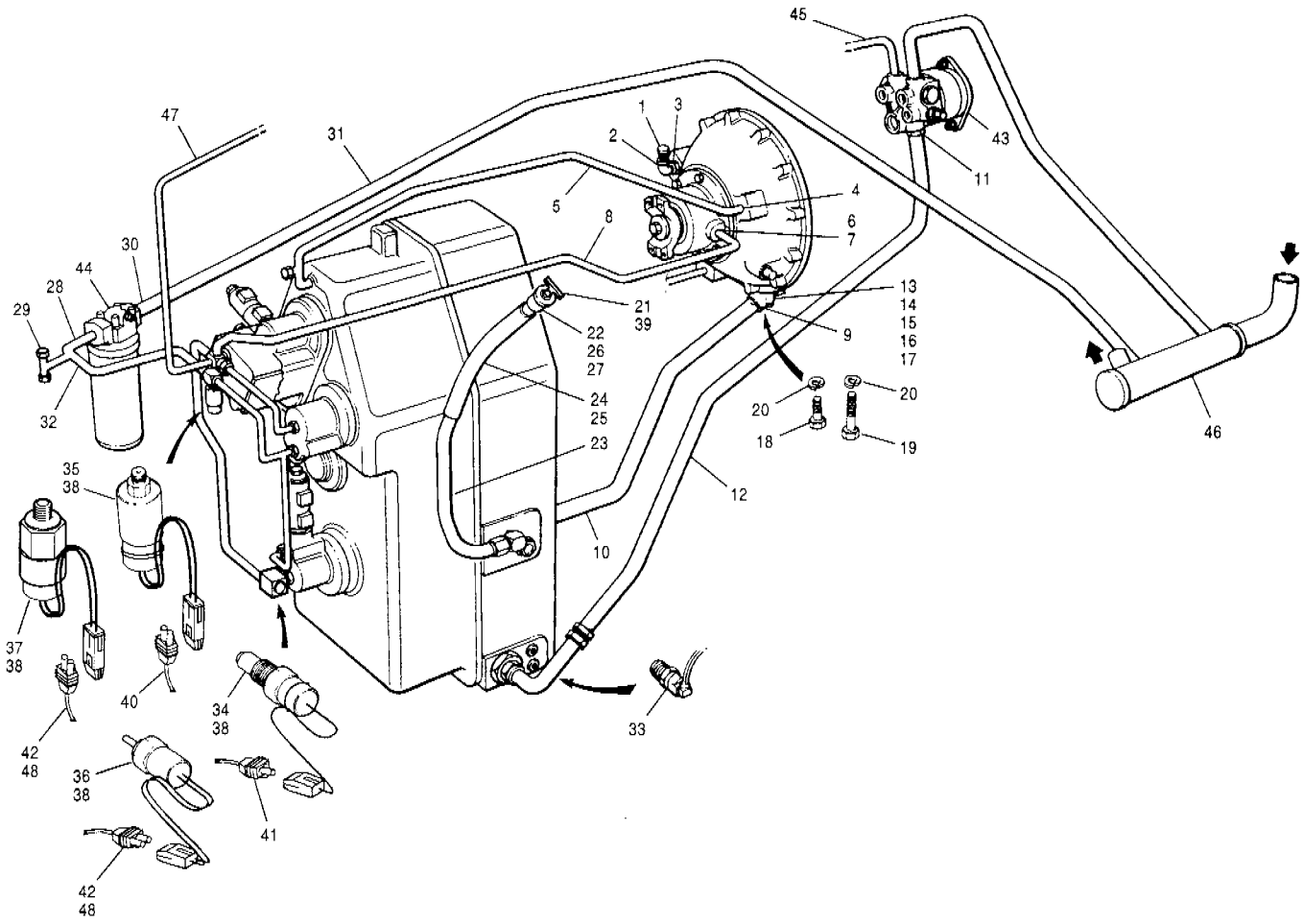

Item	Part No.	Description	Qty.	Remarks
1	4341	Breather	1	
2	103P-06	Connector	1	
3	62525	Plug	1	
4	111B-0606	Connector	1	
5	14388 x 48	Hose	1	
6	111E-0812	Connector	1	
7	112B-08	Connector	1	
8	9313 x 62	Hose	1	
9	111E-2024	Connector	1	G710 to G740
9	111B-2024	Connector	1	G780
10	62827 x 34	Hose	1	
11	111B-2420	Connector	1	
12	38485 x 76	Hose	1	G710 to G736
12	38485 x 85	Hose	1	G740 to G780
13	37926	Oil scoop	1	G710 to G736
13	53709	Oil scoop	1	G740 to G780
14	56808	Drain scoop	1	G710 to G736
14	87559	Drain scoop	1	G740
14	56065	Drain scoop	1	G780
15	53L-1004	Screw	2	
16	14F-10 Zi	Lockwasher	2	
17	50A-0526 Zi	Bolt	2	G780
18	50A-0507 Zi	Bolt	2 - 3	
19	50A-0518 Zi	Bolt	1	G710 to G740
20	14A-05 Zi	Lockwasher	4	
21	62829	Filler cap	1	
22	402094	Filler tube - top - c/w latch	1	
23	87976	Filler tube - bottom	1	
24	62828 x 19.5	Hose	1	
25	22B-16	Clamp	2	
26	14A-06 Zi	Lockwasher	1	
27	30A-06 Zi	Nut	1	
28	* 12725308	Connector	1	

Item	Part No.	Description	Qty.	Remarks
29	111D-0606	Tee	1	
30	111E-1620	Connector	1	
31	78217	Hose	1	G710 to G736
31	74758	Hose	1	G740 to G780
32	87492	Hose	1	
33	15828	Immersion heater	1	Optional
34	* 96240	Switch - transmission temperature - optional	1	To S/N 30830
35	* 96024	Switch - transmission oil pressure - optional	1	To S/N 30830
36	96868	Switch - transmission temperature - optional	1	S/N 30831& up
37	96867	Switch - transmission oil pressure - optional	1	S/N 30831& up
38	65776	Tie wrap	2	
39	402095	Latch - filler tube	1	
		Wiring harnesses		
40	96028	Adapter harness - optional - transmission pressure	1	To S/N 30830
41	96029	Adapter harness - optional - transmission temperature	1	To S/N 30830
42	* 400204	Adapter harness - optional	1	S/N 30831& up
43		**Transmission hydraulic pump**	Ref.	5-2
44		**Transmission hydraulic filter**	Ref.	5-9
45		**Clutch booster circuit**	Ref.	7-3
46		**Transmission oil cooler**	Ref.	8-10
47		**Brake circuit**	Ref.	11-6
48	*	**Harness - transmission**	Ref.	8-3

SERIAL NUMBERS: 33000 & UP	**TRANSMISSION HYDRAULIC CIRCUIT**	Date 03/2001	Group 421
		Illustr. Nos 00005076	Page 10
			Issue 1A

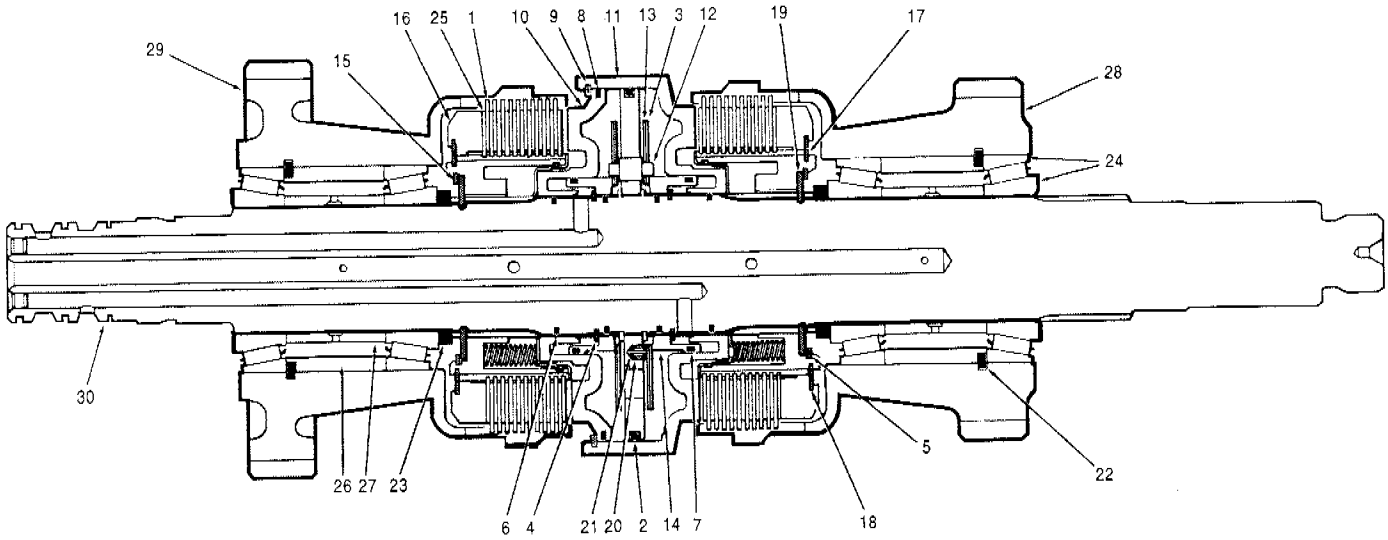

Item	Part No.	Description	Qty.	Remarks
	85393	**Transmission bearing kit**	1	
	85394	**Transmission seal kit**	1	
	68149	**Clutch pack assembly** - includes items 1 to 30	1	
	63165	**Repair kit for 68149** - includes items 1, 2, 4 to 9, 17 to 19, 22 & 24 to 27	1	
1	11299	Plate - externally splined	20	
2	68148	O-ring	1	
3	11305	Disc - valve	2	
4	11307	Snap ring	2	
5	11314	Snap ring	2	
6	11316	Seal ring	4	
7	11319	Seal ring	2	
8	11322	Seal ring	1	
9	11324	Snap ring	1	
10	37848	Piston - clutch	1	
11	37849	Housing - piston	1	
12	41073	Dowel pin	3	
13	41074	Disc - reinforcing	2	
14	68164	Piston - accelerating	2	
15	**41077**	**Hub assembly** - includes the following: Hub Springs Spring retainer Plate retainer	2	

Item	Part No.	Description	Qty.	Remarks
16	41080	Plate - clutch backing	2	
17	41081	Snap ring	2	
18	41082	Snap ring	2	
19	41083	Retainer	4	
20	41084	Spring - outer	6	
21	41085	Spring - inner	6	
22	41098	Snap ring	2	
23	41102	Spacer	2	
24	**41504**	**Cup & cone assembly**	4	
25	53950	Plate - internally splined	22	
26	63159	Spacer	2	
27	63160	Spacer	2	
28	**63161**	**Gear & drum assembly**	1	
29	**63162**	**Gear & drum assembly**	1	
30	**63163**	**Shaft assembly** - includes the following: Shaft Separator plate Snap rings Dowel pins Spring pins	1	

SERIAL NUMBERS: 33000 & UP	**INPUT CLUTCH & SHAFT**	Date **01/2001**	Group **421**
		Illustr. Nos **00003389**	Page **11**
			Issue **1**

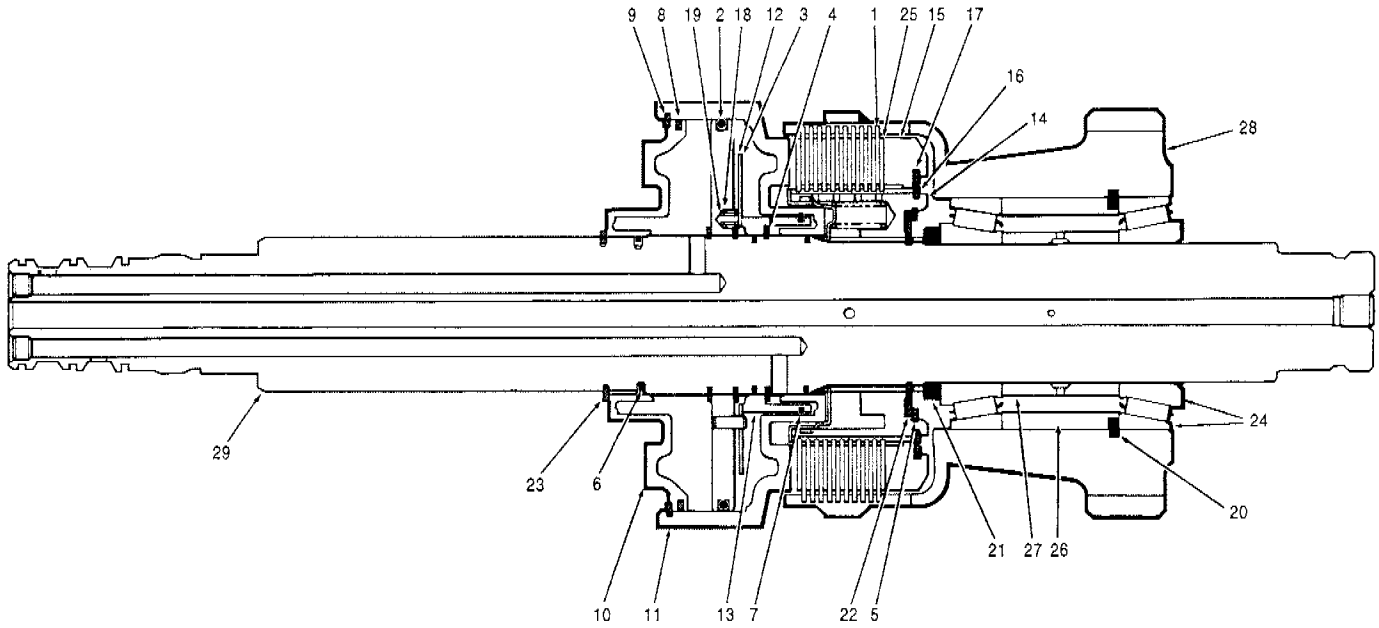

Item	Part No.	Description	Qty.	Remarks
	85393	**Transmission bearing kit**	1	
	85394	**Transmission seal kit**	1	
	68150	**Clutch pack assembly** - includes items 1 to 29	1	
	63166	**Repair kit for 68150** **- clutch pack assembly** - includes items 1, 2, 4 to 9, 16, 17, 20 & 22 to 27	1	
1	11299	Plate - externally splined	10	
2	68148	O-ring	1	
3	11305	Disc - valve	1	
4	11307	Snap ring	1	
5	11314	Snap ring	1	
6	11316	Seal ring	3	
7	11319	Seal ring	1	
8	11322	Seal ring	1	
9	11324	Snap ring	1	
10	37848	Piston - clutch	1	
11	37849	Housing - piston	1	
12	41074	Disc - reinforcing	1	
13	68164	Piston - accelerating	1	
14	**41077**	**Hub assembly** - includes the following: Hub Springs Spring retainer Plate retainer	1	

Item	Part No.	Description	Qty.	Remarks
15	41080	Plate - clutch backing	1	
16	41081	Snap ring	1	
17	41082	Snap ring	1	
18	41084	Spring - outer	3	
19	41085	Spring - inner	3	
20	41098	Snap ring	1	
21	41102	Spacer	1	
22	41104	Retainer	4	
23	41105	Snap ring	1	
24	**41504**	**Cup & cone assembly**	2	
25	53950	Plate - internally splined	11	
26	63159	Spacer	1	
27	63160	Spacer	1	
28	**63161**	**Gear & drum assembly**	1	
29	**63164**	**Shaft assembly** - includes the following: Shaft Separator plate Snap rings Dowel pins Spring pins	1	

SERIAL NUMBERS: 33000 & UP	**REVERSE CLUTCH & SHAFT**	Date **01/2001**	Group **421**
		Illustr. Nos **00003391**	Page **12**
			Issue **1**

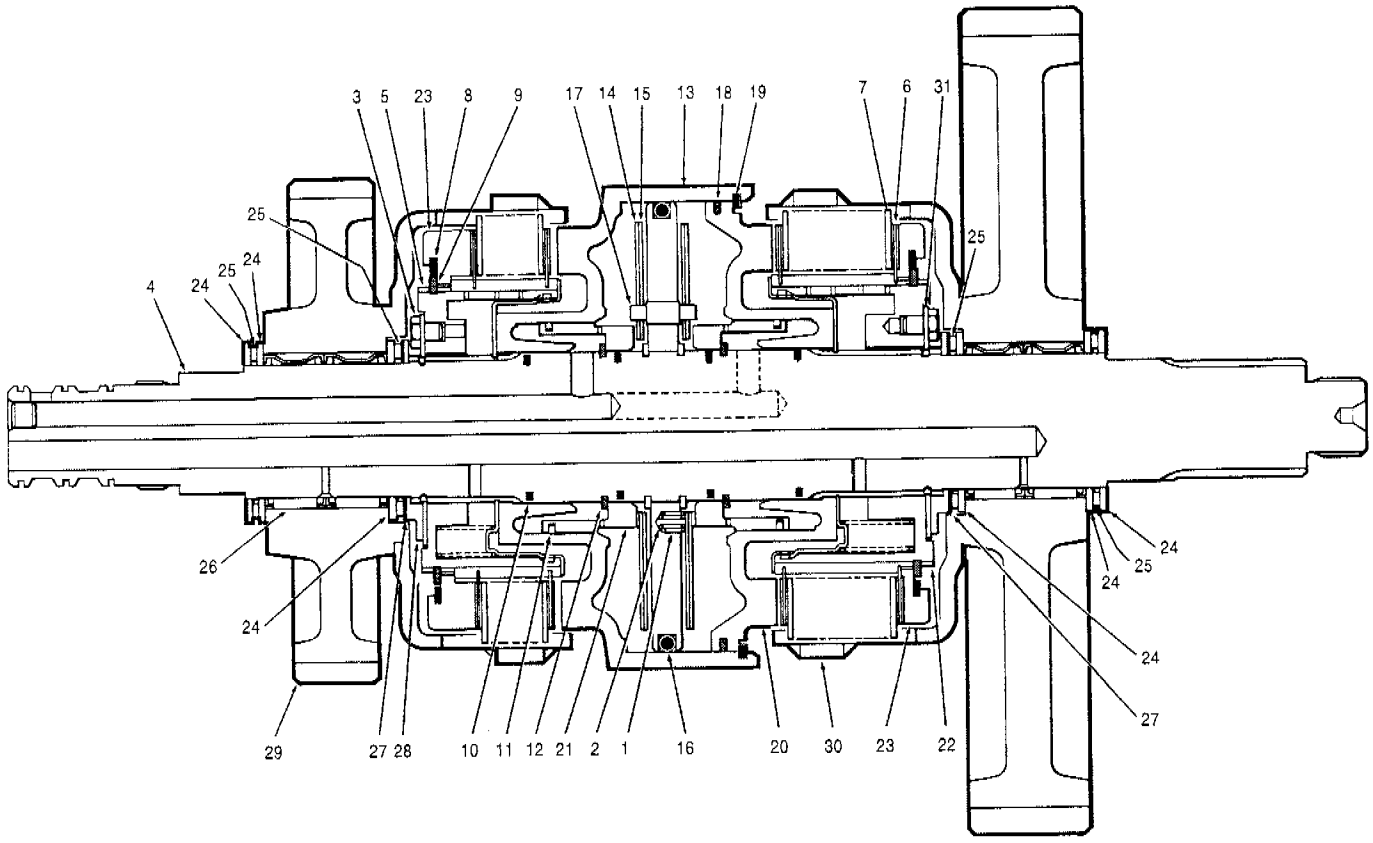

Item	Part No.	Description	Qty.	Remarks
	85393	**Transmission bearing kit**	1	
	85394	**Transmission seal kit**	1	
	62830	**Clutch pack assembly** - includes items 1 to 31	1	
	55273	**Repair kit for 62830 - clutch pack** - includes items 3, 6 to 12, 16, 18, 19, 24 to 27 & 31	1	
1	19453	Spring - outer	6	
2	19454	Spring - inner	6	
3	19456	Bolt	4	
4	**41109**	**Shaft assembly** - includes the following: Shaft Separator plate Snap rings Dowel pins Spring pins	1	
5	**41110**	**Hub assembly** - includes the following: Hub Springs Spring retainer Plate retainer	1	
6	53951	Plate - internally splined	20	
7	55272	Plate - externally splined	18	
8	41115	Snap ring	2	

Item	Part No.	Description	Qty.	Remarks
9	41116	Snap ring	2	
10	29438	Seal ring	4	
11	41118	Seal ring	2	
12	41119	Snap ring	2	
13	41120	Housing - piston	1	
14	41121	Disc - valve	2	
15	41122	Disc - reinforcing	2	
16	68153	O-ring	1	
17	41124	Dowel pin	3	
18	41125	Seal ring	1	
19	41126	Snap ring	1	
20	41127	Piston - clutch	1	
21	68165	Piston - accelerating	2	
22	**41129**	**Hub assembly** - includes the following: Hub Springs Spring retainer Plate retainer	1	
23	41130	Plate - clutch backing	2	
24	41131	Washer - .125" thick	6	
25	41132	Bearing	4	
26	41133	Bearing	4	
27	41134	Washer - .031" thick	2	
28	41135	Spacer	2	
29	**41136**	**Gear & drum assembly**	1	
30	**62846**	**Gear & drum assembly**	1	
31	41138	Retainer	4	

SERIAL NUMBERS: 33000 & UP	**OUTPUT CLUTCH & SHAFT**	Date **01/2001**	Group **421**
		Illustr. Nos **00003359**	Page **13**
			Issue **1**

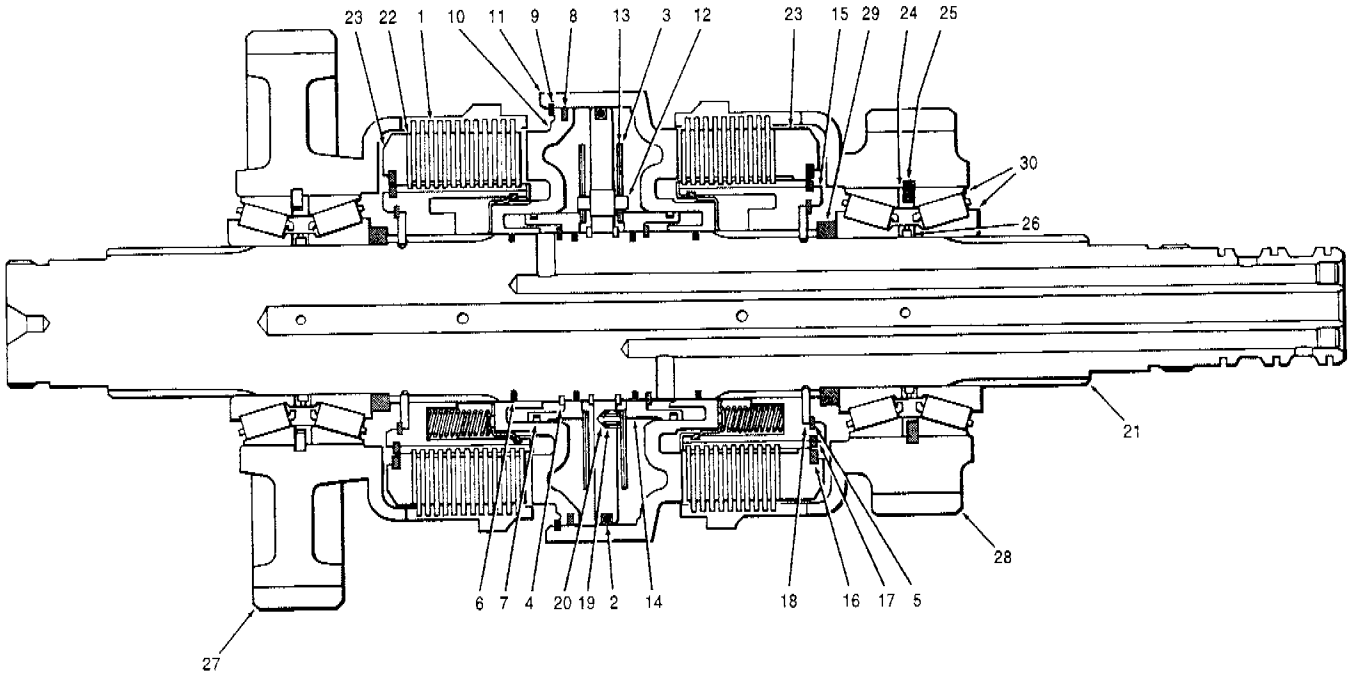

Item	Part No.	Description	Qty.	Remarks
	85393	**Transmission bearing kit**	1	
	85394	**Transmission seal kit**	1	
	68151	**Clutch pack assembly** - includes items 1 to 30	1	
	55276	**Repair kit for 68151 - clutch pack** - includes items 1, 2, 4 to 9, 16 to 18, 22, 24, 25 & 30	1	
1	11299	Plate - externally splined	24	
2	68148	O-ring	1	
3	11305	Disc - valve	2	
4	11307	Snap ring	2	
5	11314	Snap ring	2	
6	11316	Seal ring	4	
7	11319	Seal ring	2	
8	11322	Seal ring	1	
9	11324	Snap ring	1	
10	37848	Piston - clutch	1	
11	37849	Housing - piston	1	
12	41073	Dowel pin	3	
13	41074	Disc - reinforcing	2	
14	68164	Piston - accelerating	2	
15	**41077**	**Hub assembly** - includes the following: Hub Springs Spring retainer Plate retainer	2	

Item	Part No.	Description	Qty.	Remarks
16	41081	Snap ring	2	
17	41082	Snap ring	2	
18	41083	Retainer	2	
19	41084	Spring - outer	6	
20	41085	Spring - inner	6	
21	**54235**	**Shaft assembly** - includes the following: Shaft Separator plate Snap rings Dowel pins Spring pins	1	
22	53950	Plate - internally splined	26	
23	41093	Plate - clutch backing	2	
24	41097	Spacer - cup	2	
25	41098	Snap ring	2	
26	41099	Spacer - cone	2	
27	**41100**	**Gear & drum assembly**	1	
28	**41101**	**Gear & drum assembly**	1	
29	41102	Spacer	2	
30	**41504**	**Cup & cone assembly**	4	

SERIAL NUMBERS: 33000 & UP	**INTERMEDIATE CLUTCH & SHAFT**	Date **01/2001**	Group **421**
		Illustr. Nos **00003402**	Page **14**
			Issue **1**

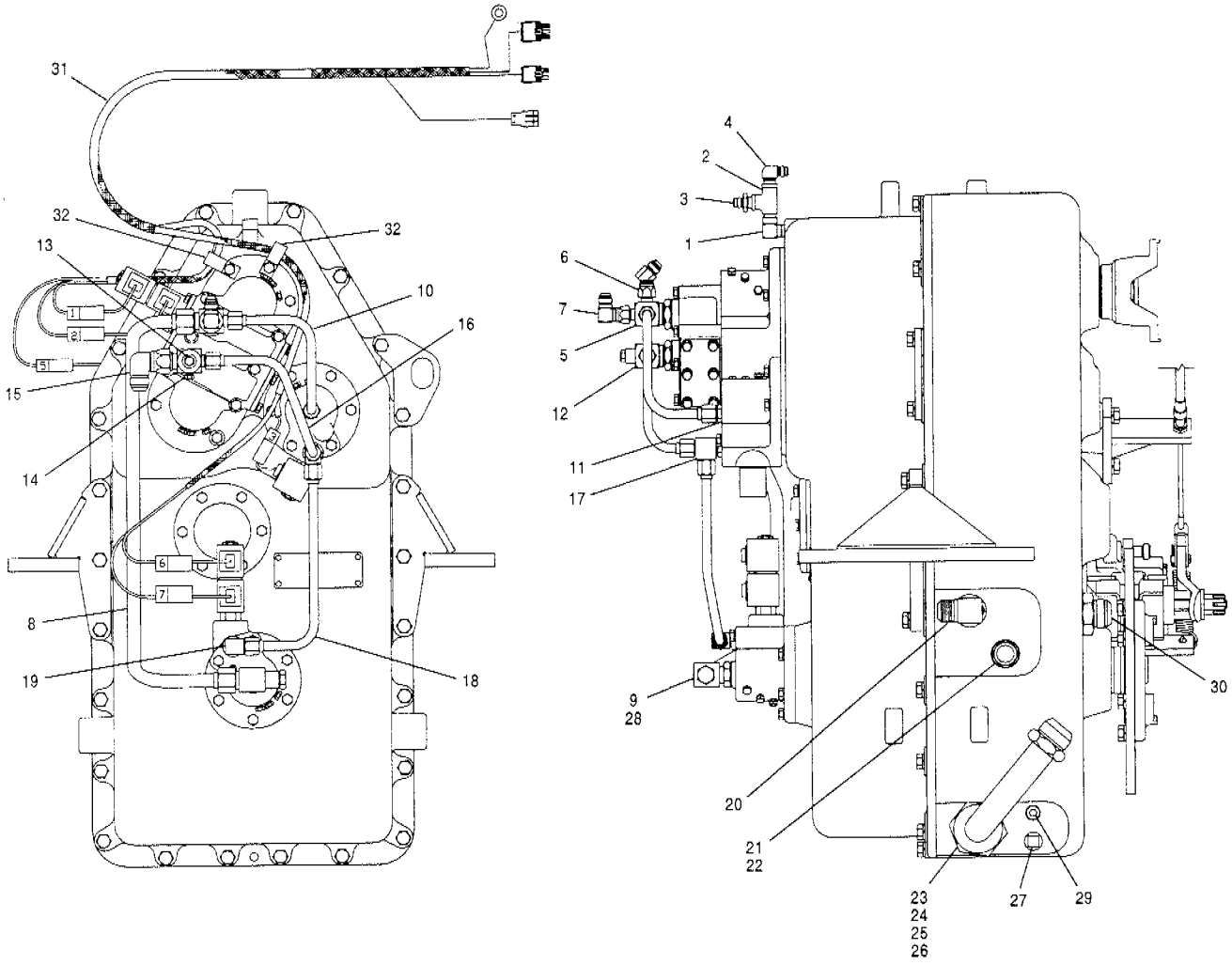

Item	Part No.	Description	Qty.	Remarks
1	103P-06	Elbow	1	
2	115V-0606	Tee	1	
3	110G-0606	Connector	1	
4	110R-0606	Elbow	1	
5	87514	Cross - special	1	
6	112A-08	Connector	1	
7	112B-08	Connector	1	
8	29755	Tube	1	
9	* 12725299	Connector	1	
10	87586	Tube	1	
11	111E-0808	Connector	1	
12	87513	Tee - special	1	
13	111H-04	Plug	1	
14	115C-02	Plug	1	
15	112B-12	Elbow	1	
16	87585	Tube	1	
17	111D-0808	Tee	1	
18	62797	Tube	1	
19	111B-0808	Connector	1	
20	111B-1616	Connector	1	
21	74036	Indicator - oil level - includes item 22	1	
22	12A-215	O-ring	1	
23	54137	Strainer	1	
24	74175	Elbow - includes items 25 & 26	1	
25	12A-028	O-ring	1	
26	116A-24	O-ring	1	
27	27449	Magnetic plug	1	
28	111H-08	Plug	1	
29	115D-08	Plug	1	
30	111E-2024	Connector	1	
		Wiring harness		
31	400213	Harness - transmission	1	
32	32317	Clip	2	

SERIAL NUMBERS: 33000 & UP	**TRANSMISSION CASE HYDRAULICS**	Date	**03/2001**	Group **421**
		Illustr. Nos	**00004716**	Page **15**
				Issue **1A**

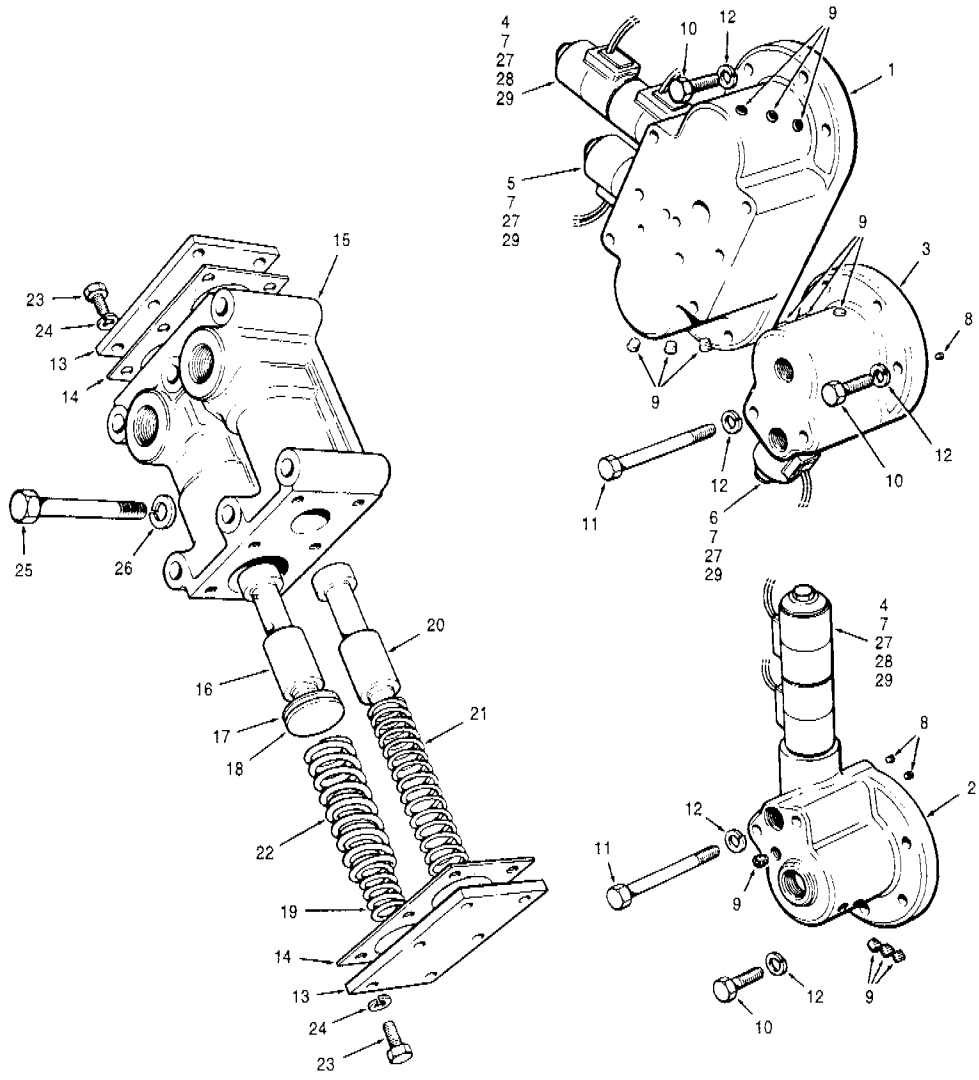

Item	Part No.	Description	Qty.	Remarks
	85394	**Transmission seal kit**	1	
1	59905	Cap - main control valve	1	
2	59907	Cap - range control valve	1	
3	59906	Cap - reverse control valve	1	
4	**65759**	**Cartridge**	2	
		- includes items 27, 28 & 29		
5	**65758**	**Cartridge**	1	
		- includes items 27 & 29		
6	**65757**	**Cartridge**	1	
		- includes items 27 & 29		
	66137	**Seal kit for 65758 & 65759 - cartridges**	1 per	
		- includes the following:		
		O-ring - large	1	
		O-ring - small	3	
		Back-up ring	6	
	66136	**Seal kit for 65757 - cartridge**	1 per	
		- includes the following:		
		O-ring - large	1	
		O-ring - small	2	
		Back-up ring	4	
7	87737	Coil	1 - 2	
8	115D-01	Plug	3	
9	115C-02	Plug	13	
10	50A-0610 Zi	Bolt	14	
11	50A-0632 Zi	Bolt	4	
12	14A-06 Zi	Lockwasher	18	

Item	Part No.	Description	Qty.	Remarks
		Regulator valve installation		
	87587	**Regulator valve assembly**	1	
		- includes items 13 to 24		
	38684	**Repair kit for 87587 - regulator valve assembly**	1 per	
		- includes items 14, 17, 18, 19, 21 & 22		
13	11212	Valve cover	2	
14	11213	Gasket	2	
15	76304	Valve body	1	
16	**73831**	**Spool assembly**	1	
17	11216	Spacer - thin	1	
18	11217	Spacer - thick	1	
19	**11218**	**Spring - spool assembly - inner**	1	
20	11221	Lube valve	1	
21	37213	Spring - lube valve	1	
22	**41094**	**Spring - spool assembly - outer**	1	
23	50A-0506 Zi	Bolt	12	
24	14A-05 Zi	Lockwasher	12	
25	50A-0652 Zi	Bolt	6	
26	14A-06 Zi	Lockwasher	6	
27	68269	Hex nut	1	
28		Spacer washer	1	
29		O-ring	2 - 3	

SERIAL NUMBERS: 33000 & UP	**TRANSMISSION CONTROL VALVES**	Date **01/2001**	Group **421**
		Illustr. Nos **00002503**	Page **16**
			Issue **1**

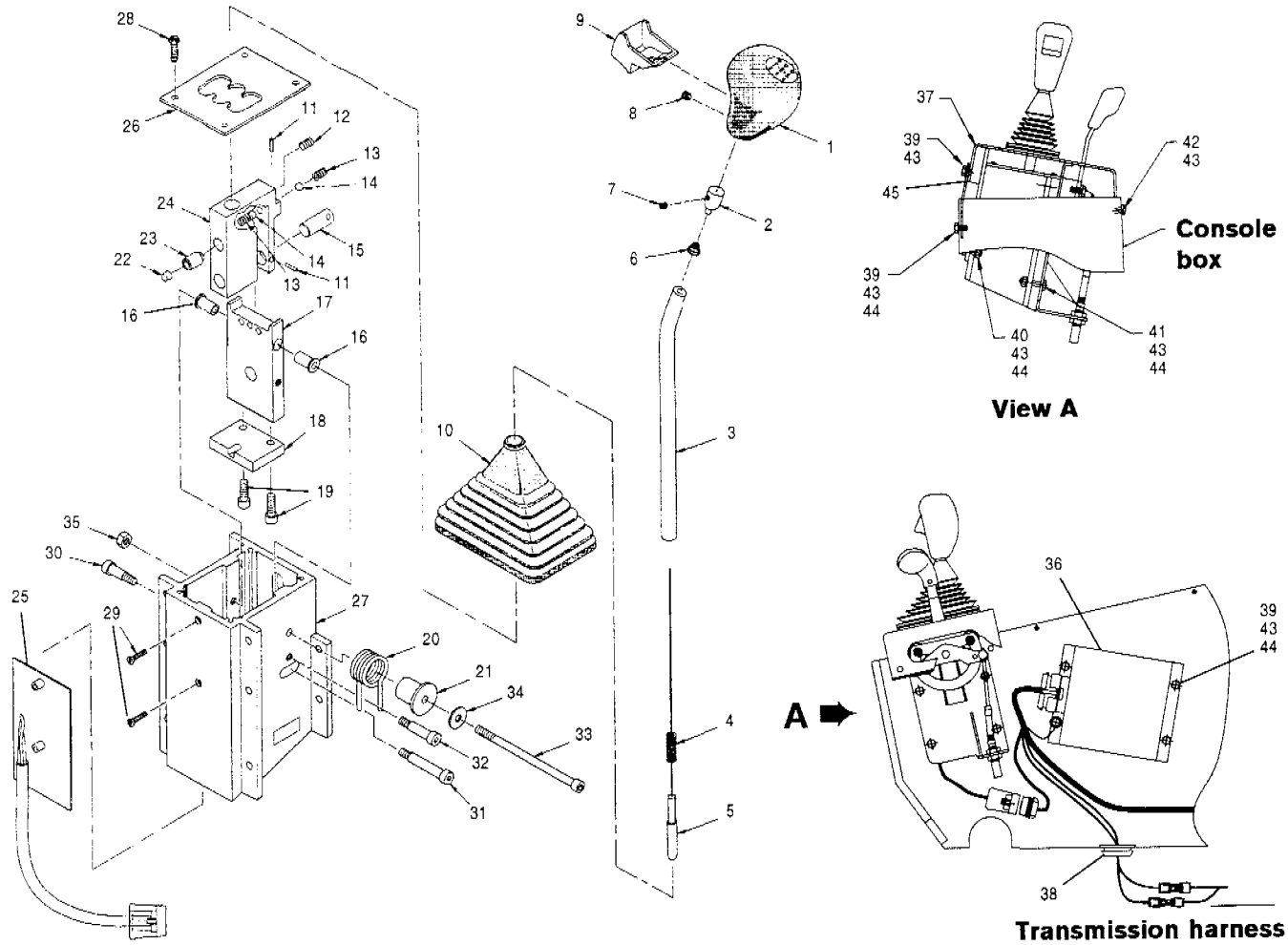

Item	Part No.	Description	Qty.	Remarks
	87521	**Transmission shifter assembly - complete** - includes items 1 to 35	1	
	76277	**Transmission shifter assembly - less printed circuit board** - includes items 1 to 24 & 26 to 35	1	
	76278	**Shifter handle kit** - includes items 1 to 10	1	
	76279	**Shifter detent kit** - includes items 11 to 24	1	
	76281	**Printed circuit board kit** - includes item 25 & harness	1	
1		Knob	1	
2		Guide - lever	1	
3		Handle	1	
4		Spring - neutral lock	1	
5		Rod	1	
6		Spring - lever	1	
7		Setscrew	1	
8		Setscrew	1	
9		Lever - knob	1	
10		Bellows	1	
11		Roll pin	2	
12		Setscrew	1	
13		Spring - plunger	2	
14		Ball	2	
15		Pin - pivot	1	
16		Flanged bushing	2	

Item	Part No.	Description	Qty.	Remarks
17		Plate - pivot	1	
18		Stop - neutral	1	
19		Bolt	2	
20		Spring - torsion	1	
21		Mandrel - spring	1	
22		Magnet	1	
23		Holder - magnet	1	
24		Plate - clevis	1	
25		Printed circuit board	1	
26		Plate - shifter gate	1	
27		Housing	1	
28		Screw	4	
29		Screw	2	
30		Bolt	1	
31		Bolt	1	
32		Bolt	1	
33		Bolt	1	
34		Flatwasher	1	
35		Nut	1	
36	84686	Electronic controller	1	
		AWD Electronic controller	Ref.	444-24
37	87518	Bracket - mounting	1	
38	65558	Grommet	1	
39	50A-0406 Zi	Bolt	6	
40	50A-0408 Zi	Bolt	4	
41	50A-0410 Zi	Bolt	4	
42	50F-0408 Ph	Screw	2	
43	14A-04 Zi	Lockwasher	16	
44	30A-04 Zi	Nut	13	
45	87136	Mounting Strap	1	

SERIAL NUMBERS: 33000 & UP	**TRANSMISSION CONTROLLER**	Date **01/2001**	Group **424**
		Illustr. Nos **00002479 00004286**	Page **17**
			Issue **1**

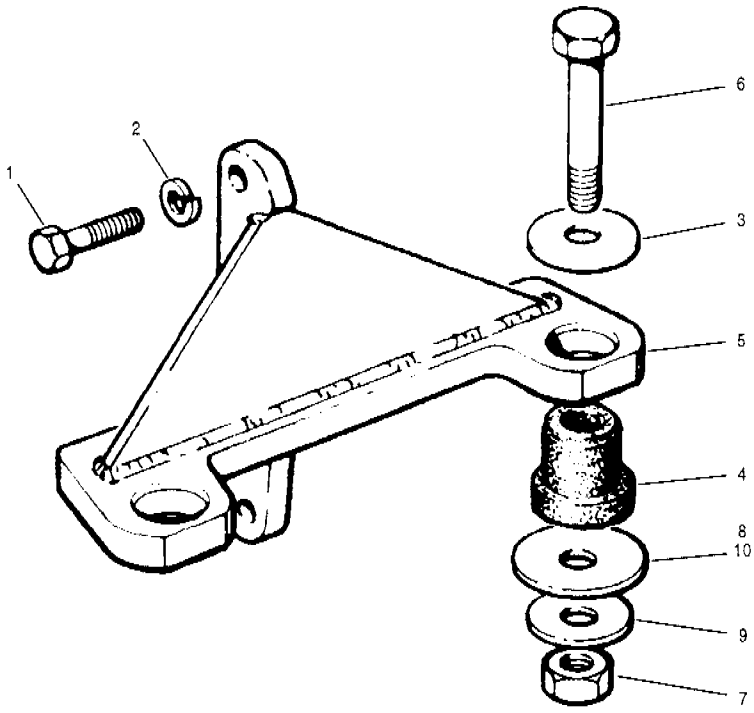

Item	Part No.	Description	Qty.	Remarks
1	50A-0818 Zi	Bolt	6	
2	14A-08 Zi	Lockwasher	24	
3	59498	Flatwasher	4	
4	59908	Rubber mount	4	
5	58074	Mount	2	
6	51A-1030 Zi	Bolt	4	
7	37D-10 Zi	Locknut	4	
8	59956	Washer	4	
9	86447	Hardened washer	4	
10	65396	Shim - .07"	A.R.	
10	65397	Shim - .05"	A.R.	
10	65398	Shim - .03"	A.R.	

Item	Part No.	Description	Qty.	Remarks

SERIAL NUMBERS: 33000 & UP	**TRANSMISSION MOUNTS**	Date **01/2001**	Group **426**
		Illustr. Nos **00004937**	Page **18**
			Issue **1**

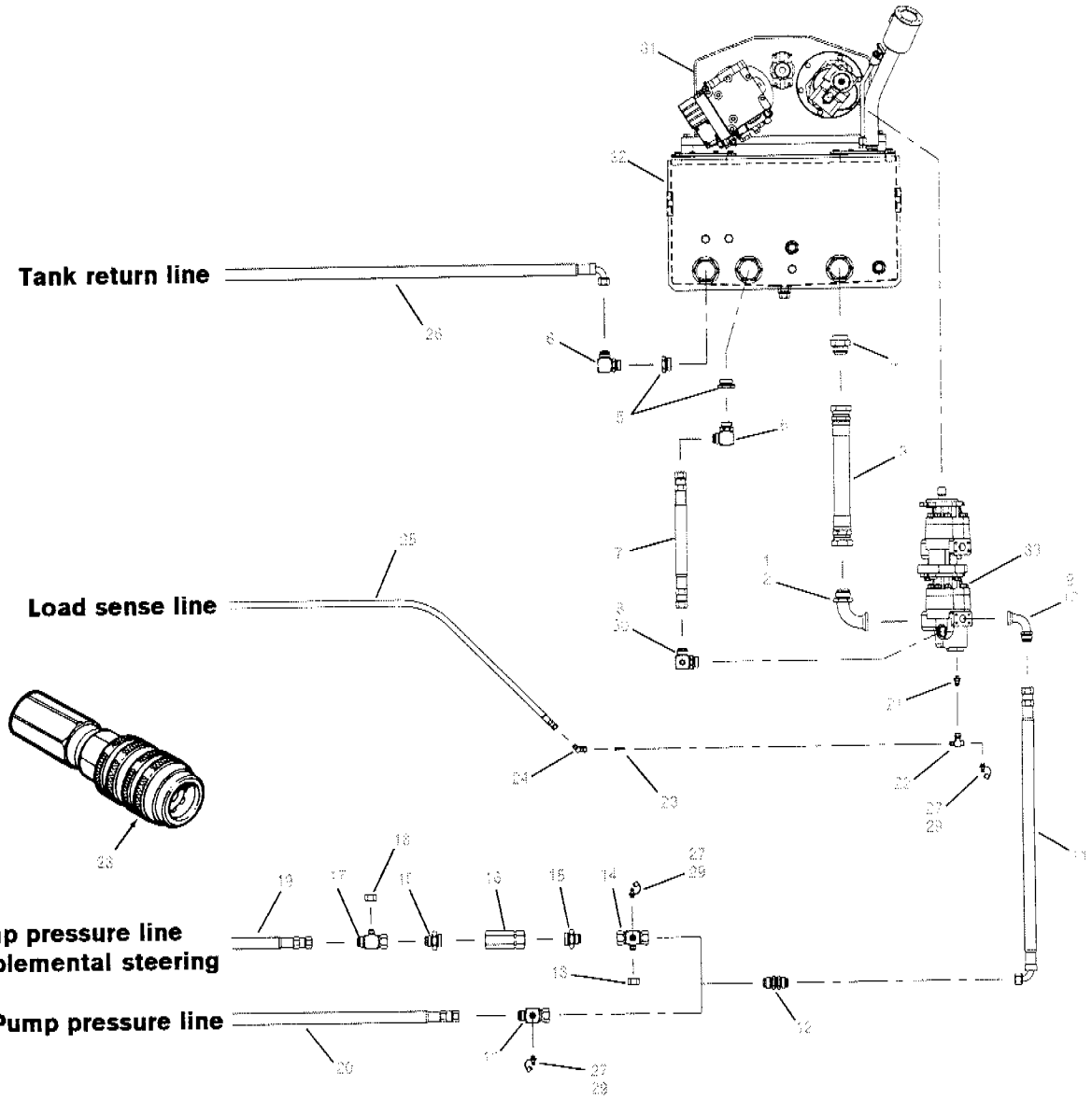

Item	Part No.	Description	Qty.	Remarks
1	114C-2424	Elbow	1	
2	**114D-24**	**Flange kit** - includes O-ring & hardware	1	
3	38485 x 39	Hose	1	
4	111E-2424	Connector	1	
5	111R-2416	Connector	2	
6	111B-1616	Connector	2	
7	74233 x 22	Hose	1	
8	81736	Connector	1	
9	114C-1616	Adapter	1	
10	**114D-16**	**Flange kit** - includes O-ring & hardware	1	
11	405000 x 37	Hose	1	
12	110N-16	Connector	1	
13	* 12725307	Tee	1	
14	87953	Tee - special	1	Supplemental steering
15	111E-1620	Connector	2	
16	74986	Check valve	1	
17	74237	Tee - special	1	
18	110E-06	Cap	A.R.	
19	74444 x 104	Hose - pump pressure	1	
20	74444 x 115	Hose - pump pressure	1	
21	405007	Connector	1	
22	97745	Elbow	1	
23	89236	Filter	1	

Item	Part No.	Description	Qty.	Remarks
24	112A-06	Connector	1	
25	89144 x 150	Hose - load sense	1	
26	78224 x 119	Hose - tank return	1	
27	97712	Test port nipple	A.R.	
28	97714	Quick disconnect coupler - female (for testing)	A.R.	In toolbox
29	97744	Dust cap	A.R.	
30		**Hydraulic oil cooler**	Ref.	911-6
31		**Pump gearbox - AWD**	Ref.	445-31
32		**Hydraulic oil tank**	Ref.	442-21
33		**Main hydraulic pump - AWD**	Ref.	442-20
		Main hydraulic circuit - front	Ref.	911-3

SERIAL NUMBERS: 33000 & UP	**MAIN HYDRAULIC CIRCUIT - AWD**	Date **01/2001**	Group **442**
		Illustr. Nos **00006054**	Page **19**
			Issue **1**

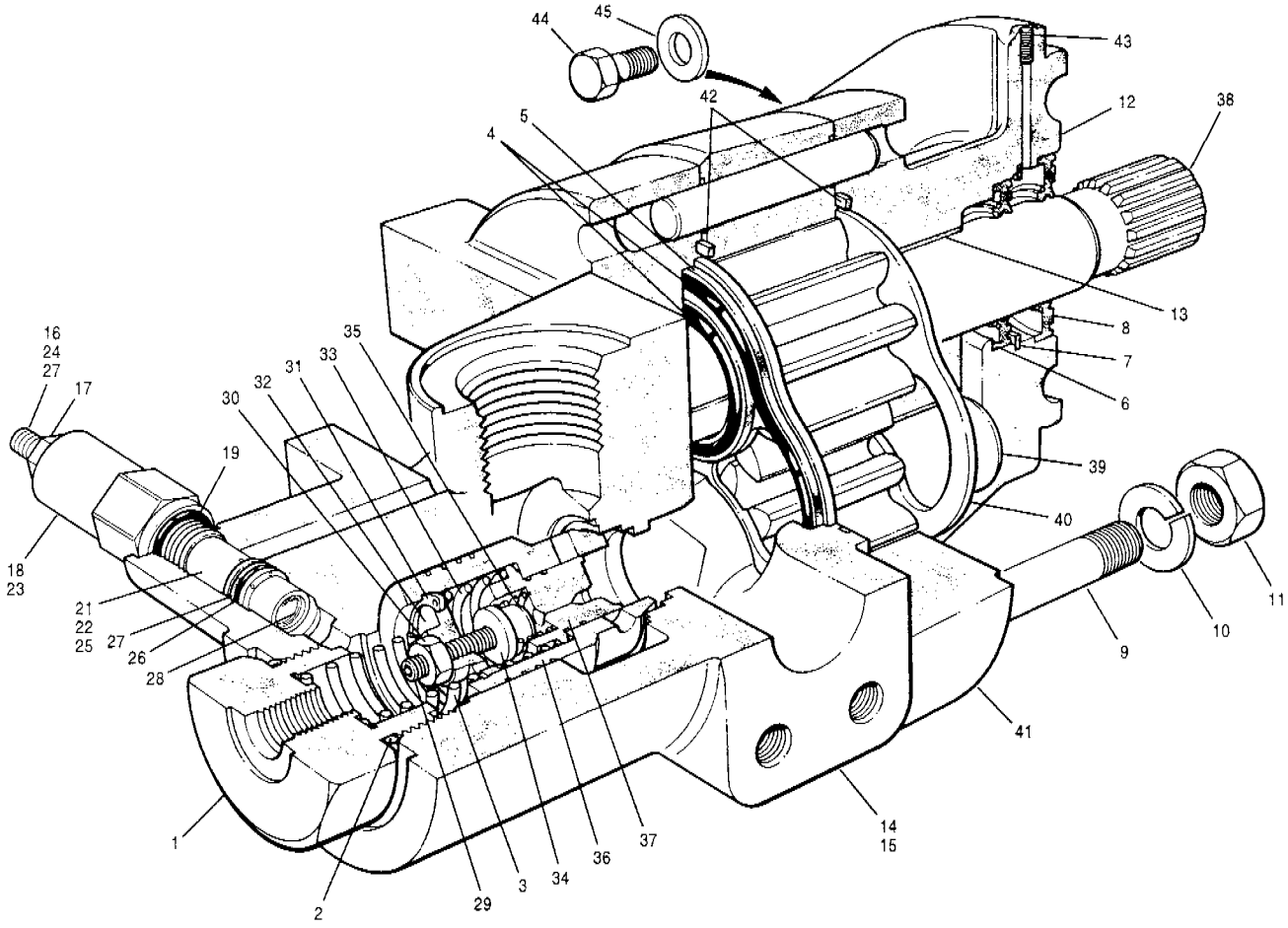

Item	Part No.	Description	Qty.	Remarks
	97482	**Hydraulic pump assembly** - includes items 1 to 41	1	
1	97484	Cap - load sense	1	
2	81207	O-ring	1	
3	97485	Spring	1	
4	81209	Seal gland	2	
5	81298	Seal retainer	2	
6	81208	Seal - inner	1	
7	81309	Retaining ring	1	
8	76036	Seal - outer	1	
9	81311	Stud	8	
10	81293	Lockwasher	8	
11	81310	Nut	8	
	76020	**Seal kit for 97482 - hydraulic pump** - includes items 2, 4 to 6, 8, 19, 24 to 27, 42 & 43	1	
	81314	**Front cover assembly** - includes items 12 & 13	1	
12		Front cover	1	
13		Bushing	2	
	81304	**Rear cover assembly** - includes items 14 & 15	1	
14		Rear cover	1	
15		Bushing	2	
	97483	**Cartridge assembly - relief valve** - includes items 16 to 27	1	
16		Adjusting screw	1	
17		Jam nut	1	
18		Housing	1	
19		O-ring housing	1	
20		Cap	1	

Item	Part No.	Description	Qty.	Remarks
21		Spool	1	
22		Cartridge	1	
23		Spring	1	
24		O-ring - adjusting screw	1	
25		O-ring - seat	1	
26		O-ring - cartridge	2	
27		Back-up ring	1	
28		Retaining ring	1	
	81307	**Load sense assembly** - includes items 29 to 37	1	
29		Setscrew	1	
30		Nut	1	
31		Retaining ring	1	
32		Spring retainer - large	1	
33		Spring - large	1	
34		Spring retainer - small	1	
35		Spring - small	1	
36		Poppet	1	
37		Spool	1	
	76018	**Displacement kit for 97482 - hydraulic pump** - includes items 38 to 41	1	
38	81313	Drive gear	1	
39	81312	Driven gear	1	
40	81210	Wear plate	2	
41	**81315**	**Center section assembly**	1	
42		Packing	2	
43		Plug	1	
44	50A-0812 Zi	Bolt	2	
45	37940	Hardened washer	2	

Note: items 12 to 37 are **not** available separately

Main hydraulic pump - non AWD Ref. 913-22

SERIAL NUMBERS: 33000 & UP	**MAIN HYDRAULIC PUMP - AWD**	Date **01/2001**	Group **442**
		Illustr. Nos **00004238**	Page **20**
			Issue **1**

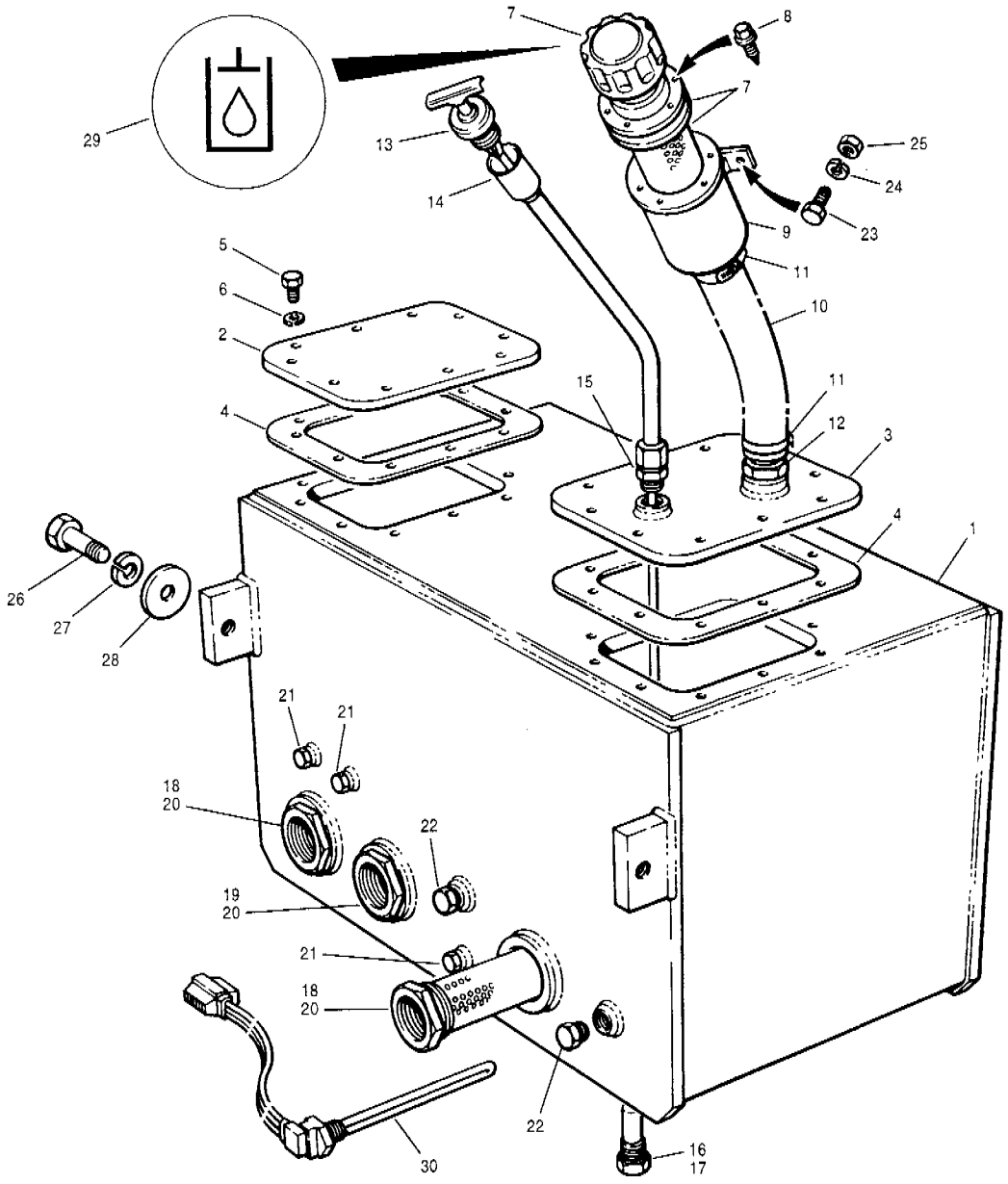

Item	Part No.	Description	Qty.	Remarks
	97561	**Hydraulic oil tank assembly** - includes items 1 to 22		
1	97562	Oil tank	1	
2	81547	Cover plate	1	
3	97502	Cover plate - L.H.	1	
4	81541	Gasket	2	
5	50A-0607 Zi	Bolt	20	
6	14A-06 Zi	Lockwasher	20	
7	* **400372**	**Cap assembly** - includes the following: Cap Basket Gasket	1	
8	62A-1006 Zi	Screw	6	
9	97508	Filler neck	1	
10	8585 x 17	Hose	1	
11	22B-28	Clamp	2	
12	8572-4	Coupling	1	
13	89352	Dipstick	1	
14	97506	Dipstick neck	1	
15	111E-0808	Connector	1	

Item	Part No.	Description	Qty.	Remarks
16	54040	Magnetic plug - includes item 17	1	
17	116A-12	O-ring	1	
18	54137	Diffuser - includes item 20	3	
19	87774	Diffuser c/w relief valve - includes item 20	1	
20	116A-40	O-ring	3	
21	111H-08	Plug	3	
22	115C-08	Plug	2	
23	50A-0608 Zi	Bolt	1	
24	14A-06 Zi	Lockwasher	1	
25	30A-06 Zi	Nut	1	
26	50A-1220 Zi	Bolt	3	
27	14A-12 Zi	Lockwasher	3	
28	14C-12 Zi	Flatwasher	A.R.	
29	* 400341	Decal	1	
30	15828	Immersion Heater	1	Optional

SERIAL NUMBERS:
33000 & UP

HYDRAULIC OIL TANK - MAIN CIRCUIT - AWD

Date 04/2001 | Group 442
Illustr. Nos 00006172 | Page 21
Issue 1A

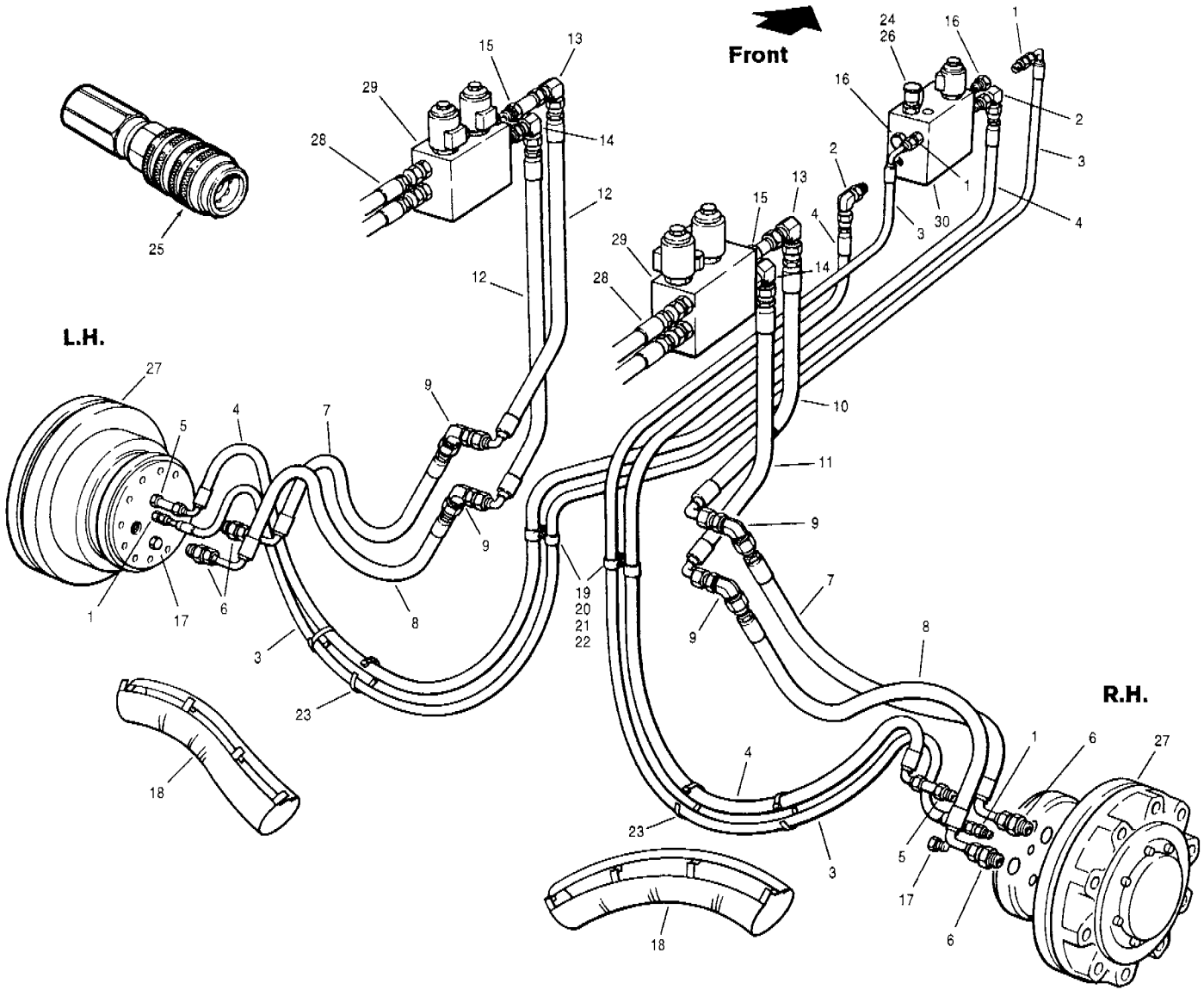

Item	Part No.	Description	Qty.	Remarks
1	127E-0606	Connector	4	
2	127B-0808	Connector	2	
3	97574 x 125	Hose	2	
4	97575 x 122	Hose	2	
5	127F-08	Connector	2	
6	127E-1012	Connector	4	
7	* 12726132	Hose	2	
8	* 12726133	Hose	2	
9	* 12725807	Connector	4	
10	97578 x 19.5	Hose	1	
11	97578 x 22	Hose	1	
12	97578 x 27	Hose	2	
13	128B-10	Elbow	2	
14	127B-1010	Connector	2	
15	127F-10	Connector	2	
16	111H-08	Plug	2	
17	111H-06	Plug	2	

Item	Part No.	Description	Qty.	Remarks
18	97823	Hose protector	2	
19	32318	Clamp	2	
20	32319	Clamp	2	
21	* 940097	Hardened washer	2	
22	30A-06 Zi	Nut	2	
23	45699	Tie wrap	4	
24	97712	Test port nipple	A.R.	
25	97714	Quick disconnect coupler - female (for testing)	A.R.	In toolbox
26	97744	Dust cap	A.R.	
27		**Wheel motor - AWD**	Ref.	444-25
28		**Hydraulic circuit - free wheeling**	Ref.	445-29
29		**Motor bypass valve**	Ref.	444-26
30		**Two-speed valve assembly**	Ref.	444-27

SERIAL NUMBERS: 33000 & UP	**HYDRAULIC CIRCUIT - WHEEL MOTORS - AWD**	Date 06/2001	Group 444
		Illustr. Nos 00006224	Page 22
			Issue 1 A

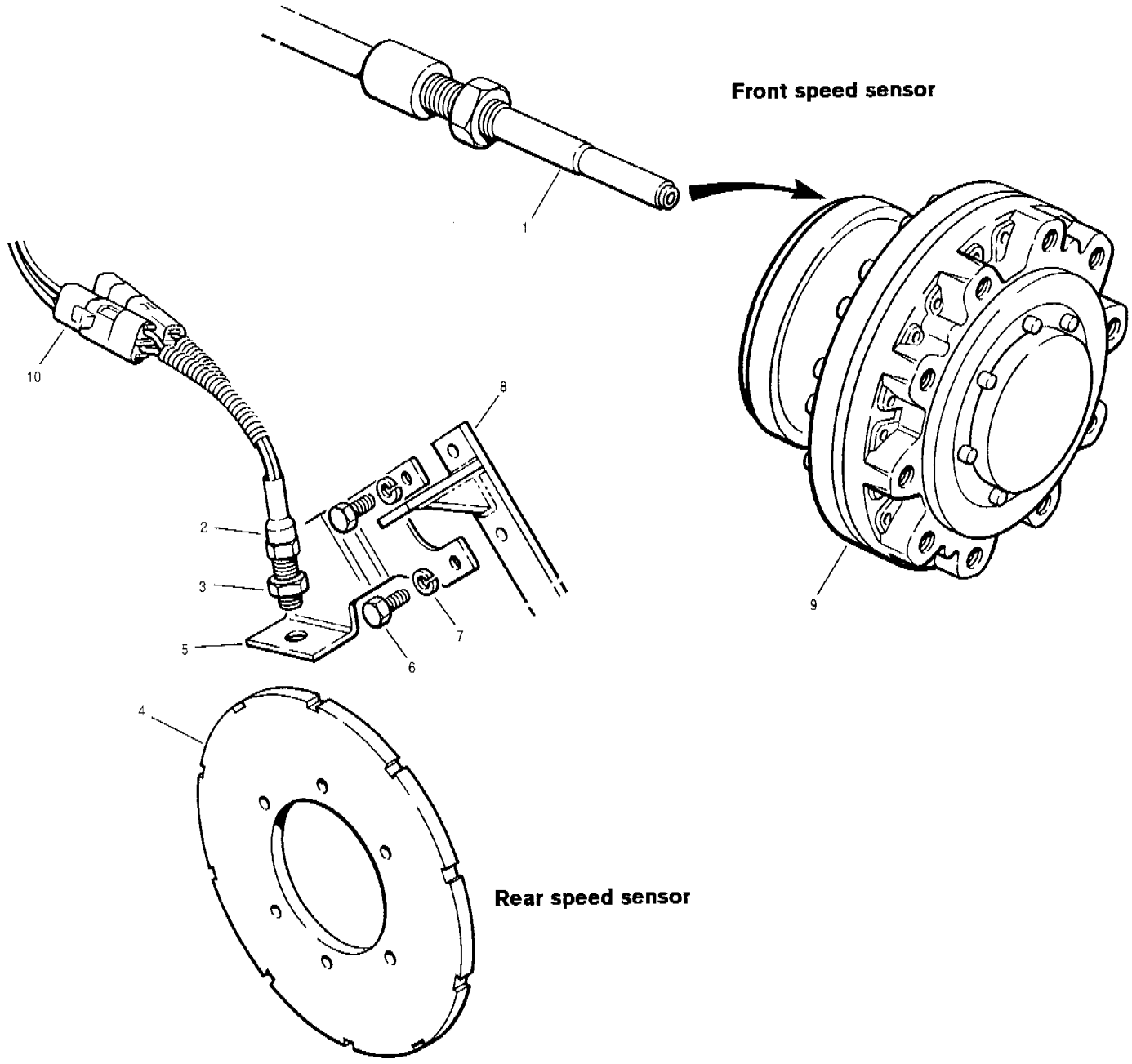

Item	Part No.	Description	Qty.	Remarks
1	87990	**Speed sensor - front** - includes jam nut	2	
2	61540	**Speed sensor - rear** - includes item 3	1	
3	31D-12 Zi	Jam nut	1	
4	96483	Disc	1	
5	61541	Bracket	1	
6	50A-0812 Zi	Bolt	2	
7	14A-08 Zi	Lockwasher	2	
8		**Hand brake caliper assembly**	Ref.	552-9
9		**Wheel motor assembly**	Ref.	444-25
10		**Speed sensor datalink harness**	Ref.	444-24

Item	Part No.	Description	Qty.	Remarks

SERIAL NUMBERS: 33000 & UP	**SPEED SENSORS - AWD**	Date	**01/2001**	Group **444**
		Illustr. Nos	**00006174** **00006056**	Page **23**
				Issue **1**

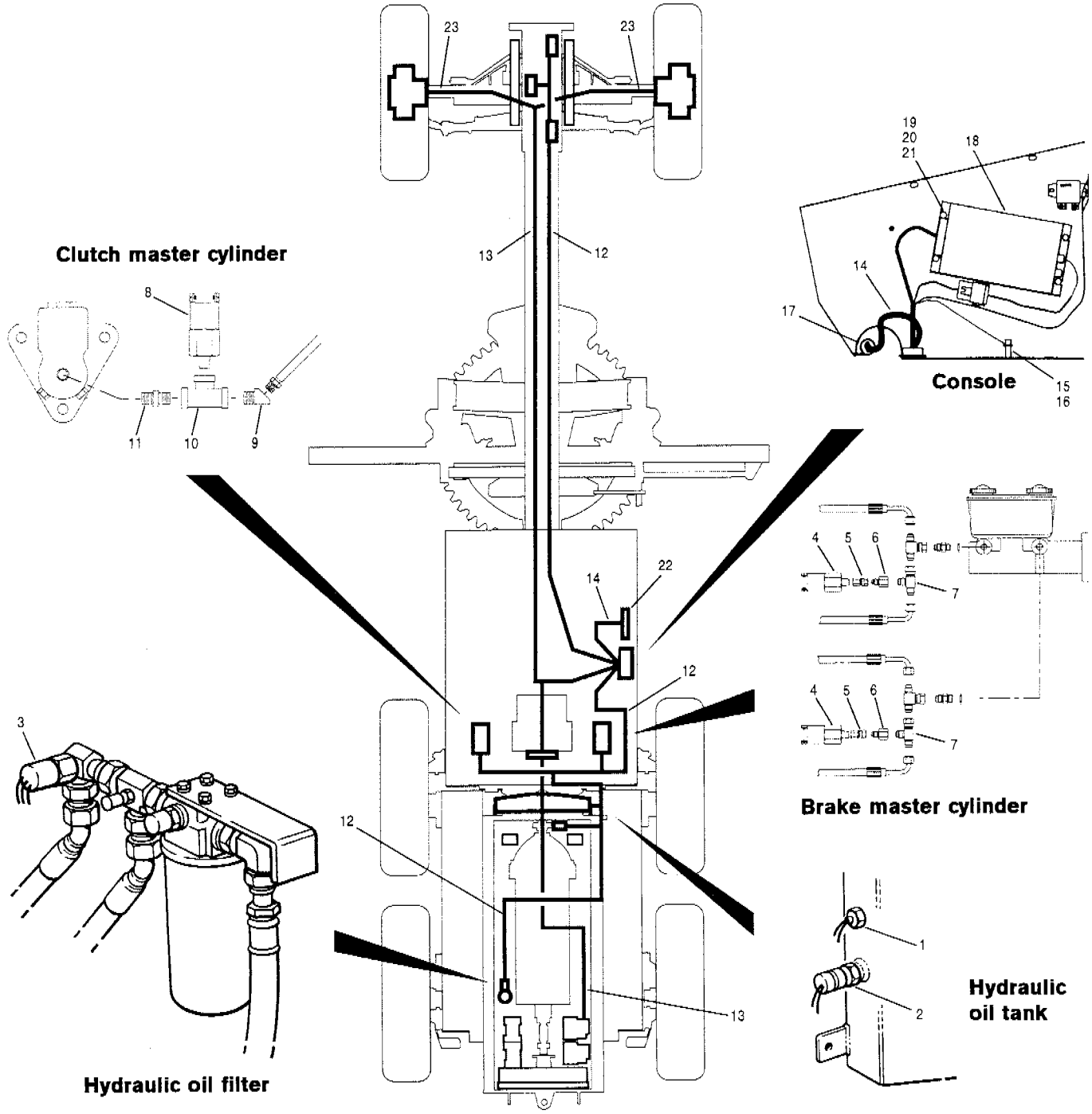

Item	Part No.	Description	Qty.	Remarks
1	87842	Switch - oil level	1	
2	87864	Switch - oil temperature	1	
3	402101	Switch - oil pressure - on filter	1	
4	400220	Switch - hydraulic pressure - on brake master cylinder	2	
5	74395	Connector	2	
6	110AH-0406	Reducer	2	
7	112C-06	Tee	2	
8	400220	Switch - clutch pressure - on clutch master cylinder	1	
9	110P-0402	Elbow	1	
10	115M-02	Tee	1	
11	103K-02	Nipple	1	
12	400221	Harness	1	

Item	Part No.	Description	Qty.	Remarks
13	87838	Harness - speed sensor datalink	1	
14	402187	Harness - console	1	
15	14Q-06 SS	Starwasher	1	
16	30A-06 Zi	Nut	1	
17	32320	Clamp	1	
18	* 12726321	Controller	1	
19	50A-0406 Zi	Bolt	4	
20	* 955893	Hardened washer	4	
21	30A-04 Zi	Nut	4	
22		**Control module**	Ref.	491-58
23		**Speed sensors**	Ref.	444-23

SERIAL NUMBERS: 33000 & UP	**HARNESSES, SENDING UNITS & CONTROLLER - AWD**	Date **06/2001**	Group	**444**
		Illustr. Nos **00006057**	Page	**24**
			Issue	**1 A**

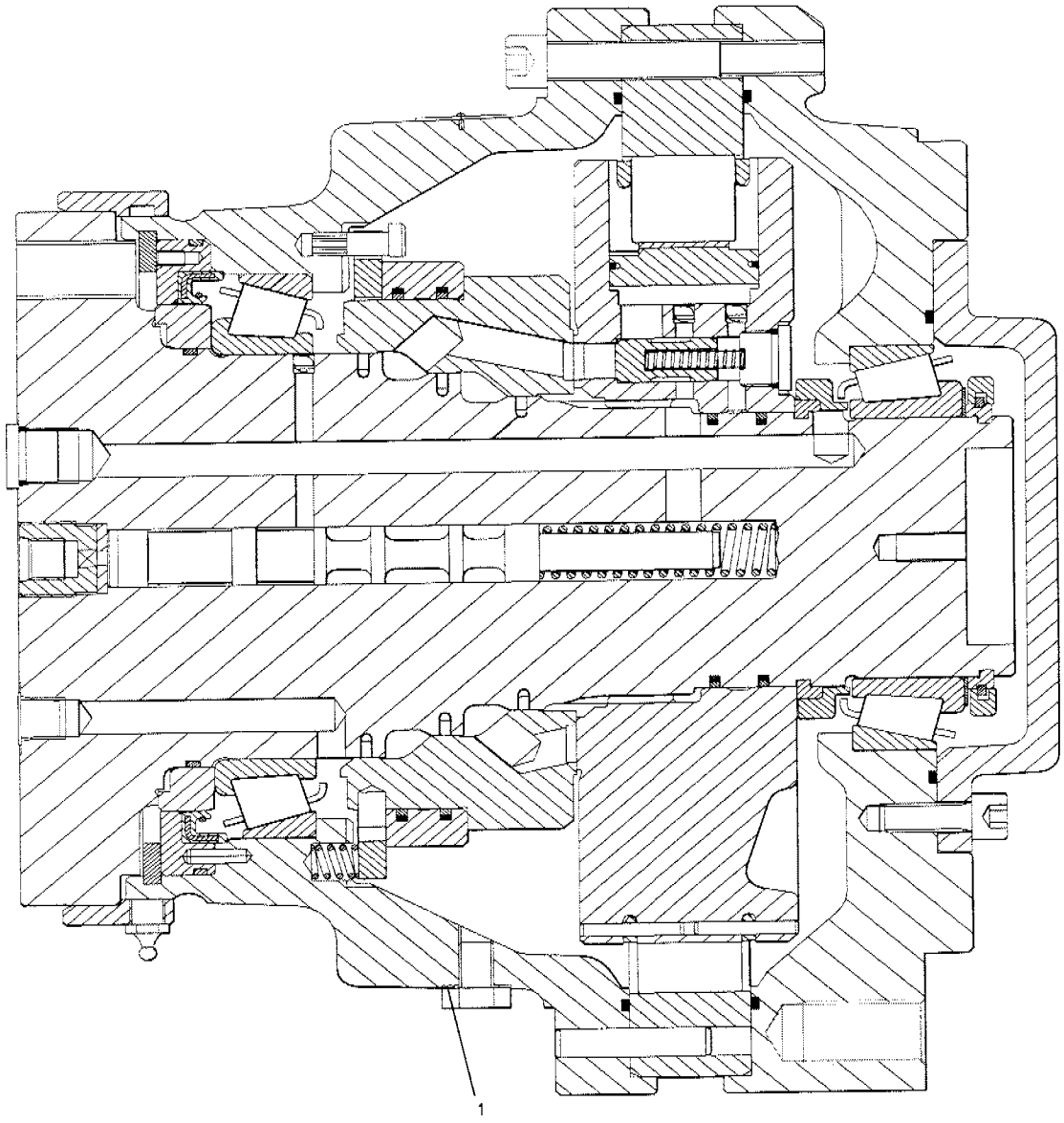

Item	Part No.	Description	Qty.	Remarks
	* 12725795	Wheel motor assembly	2	
1	* 12726332	Sealing washer - AWD motor bleed screw	2 per	

Item	Part No.	Description	Qty.	Remarks

SERIAL NUMBERS: 33000 & UP	**WHEEL MOTOR ASSEMBLY - AWD**	Date **06/2001**	Group	**444**
		Illustr. Nos **00006038**	Page	**25**
			Issue	**1A**

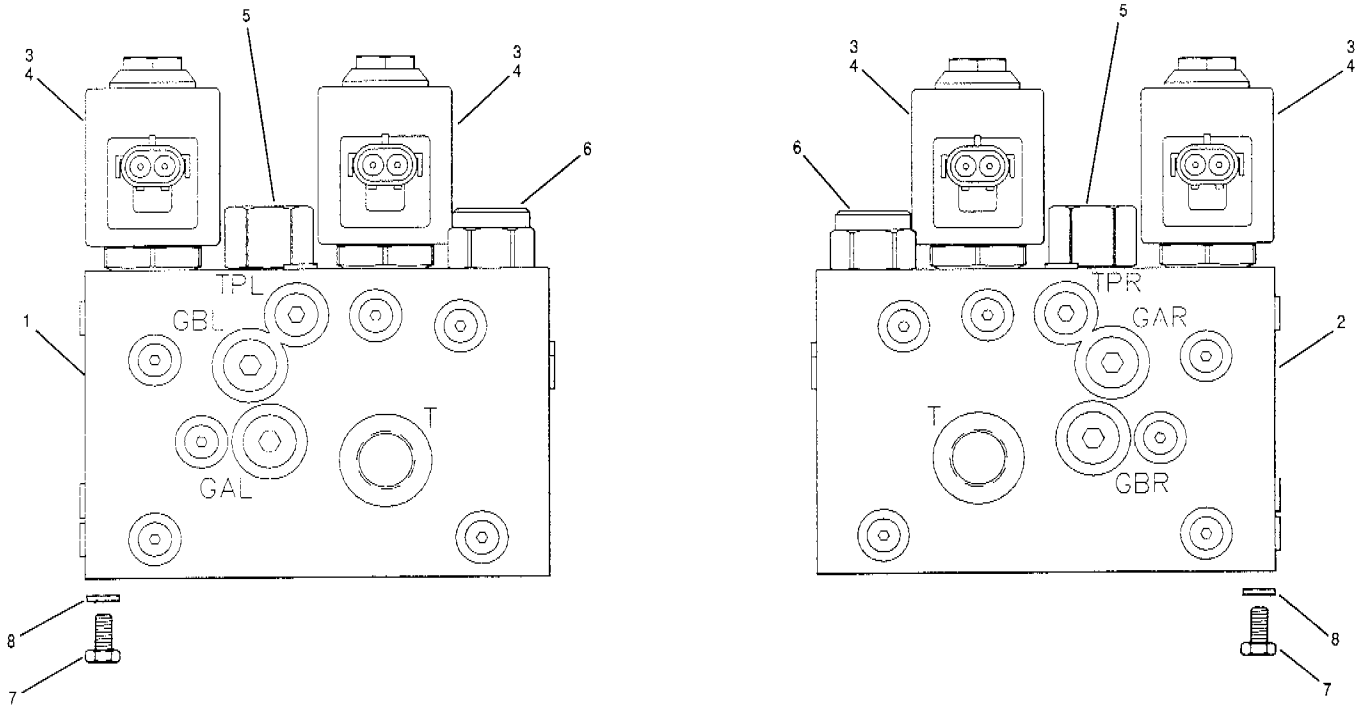

Item	Part No.	Description	Qty.	Remarks
1	**97637**	**Bypass valve assembly - L.H.** - includes items 3 to 6	1	
2	**97638**	**Bypass valve assembly - R.H.** - includes items 3 to 6	1	
3	87737	Coil	2	
4	97795	Solenoid cartridge	2	
5	97797	Logic element cartridge	1	
6	97799	Shuttle valve	1	
	97796	**Seal kit for 97795** **- solenoid cartridge**	1	
	97798	**Seal kit for 97797** **- logic element cartridge**	1	
7	50A-0506 Zi	Bolt	4	
8	* 955894	Hardened washer	4	

Item	Part No.	Description	Qty.	Remarks

SERIAL NUMBERS: 33000 & UP	**MOTOR BYPASS VALVE - AWD**	Date **06/2001**	Group **444**
		Illustr. Nos **00006225**	Page **26**
			Issue **1 A**

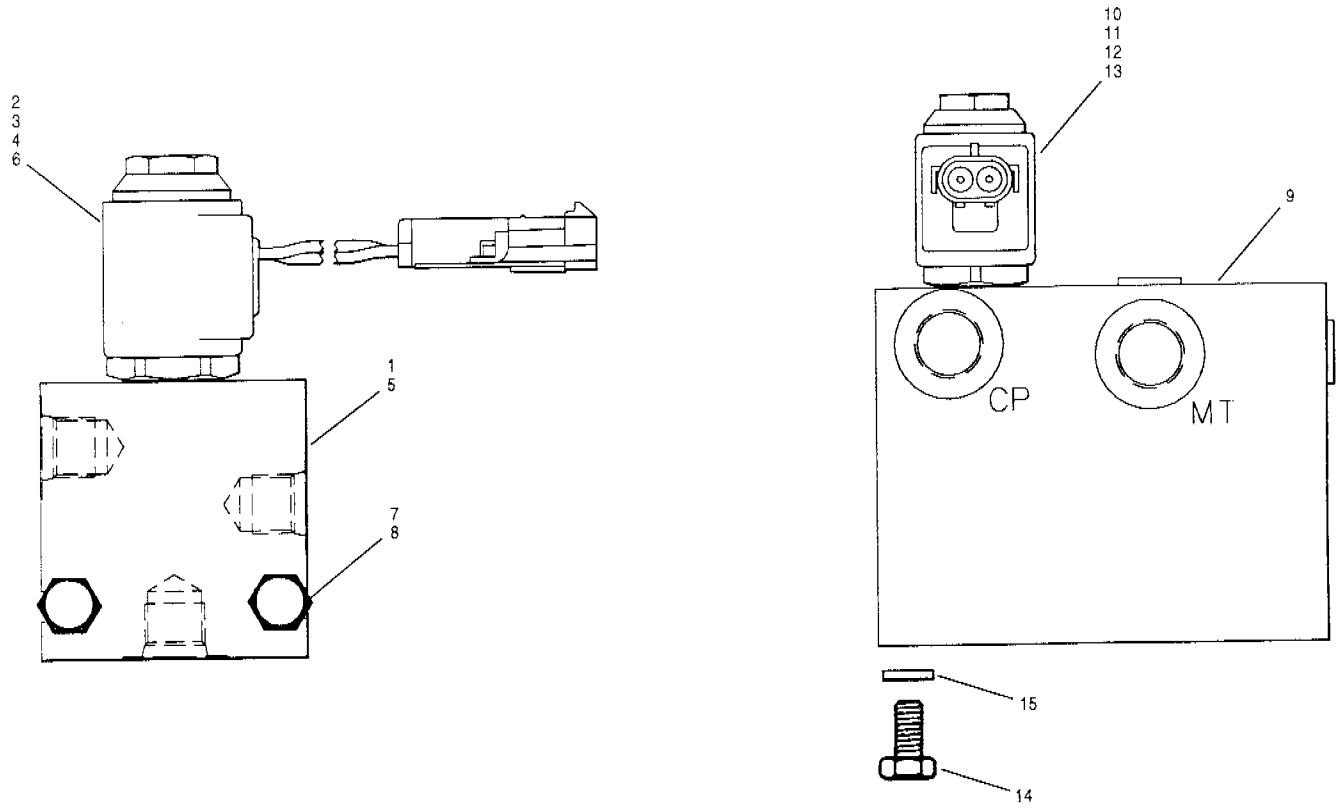

Item	Part No.	Description	Qty.	Remarks
1	**58740**	**Free wheeling solenoid valve** - includes items 2 to 6	1	
	63120	**Seal kit for 58740** **- free wheeling solenoid valve** - includes the following: O-ring large O-ring small Back-up ring	1 per 1 2 4	
2	**66123**	**Cartridge** - includes items 3 & 4	1	
3	12A-020	O-ring	2	
4	68218	Conical nut	1	
5	66124	Valve body	1	
6	66125	Coil	1	
7	50A-0412 Zi	Bolt	2	
8	* 955893	Hardened washer	2	

Item	Part No.	Description	Qty.	Remarks
9	**97639**	**Two-speed valve assembly** - includes items 10 to 13	1	
	63120	**Seal kit for 97639** **- two-speed valve assembly** - includes the following: O-ring - large O-ring - small Back-up ring	1	
10	**66123**	**Cartridge** - includes items 11 & 12	1	
11	12A-020	O-ring	2	
12	68218	Conical nut	1	
13	66125	Coil	1	
14	50A-0506 Zi	Bolt	4	
15	* 955894	Hardened washer	4	

SERIAL NUMBERS: 33000 & UP	**FREE WHEELING SOLENOID VALVE & TWO-SPEED VALVE ASSEMBLY - AWD**	Date **06/2001** Illustr. Nos **00006226**	Group **444** Page **27** Issue **1 A**

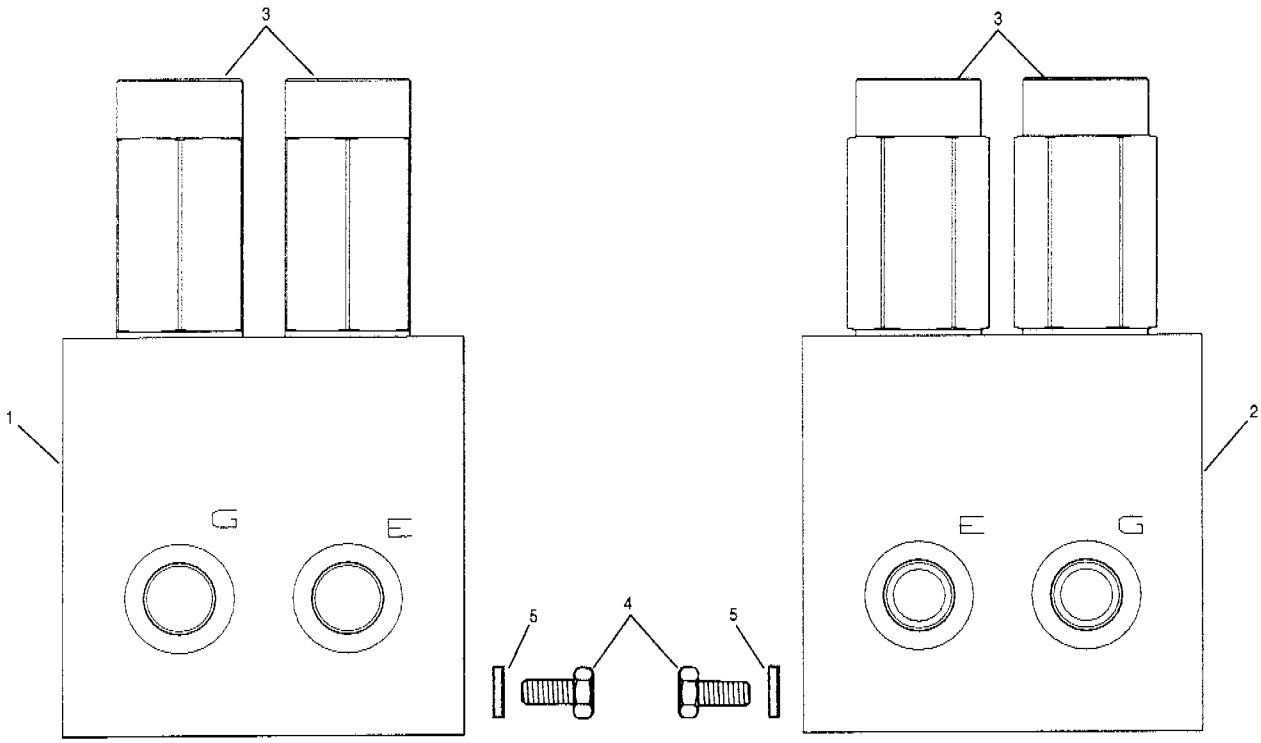

Item	Part No.	Description	Qty.	Remarks
1	**87966**	**Free wheeling valve assembly - L.H.** - includes item 3	1	
2	**87967**	**Free wheeling valve assembly - R.H.** - includes item 3	1	
3	**87968**	**Cartridge**	2	
	97801	**Seal kit for 87968 - cartridge**	1 per	
4	50A-0610 Zi	Bolt	4	
5	* 940097	Hardened washer	4	

Item	Part No.	Description	Qty.	Remarks

SERIAL NUMBERS: 33000 & UP	**FREE WHEELING VALVE - AWD**	Date **06/2001**	Group **444**
		Illustr. Nos **00006227**	Page **28**
			Issue **1 A**

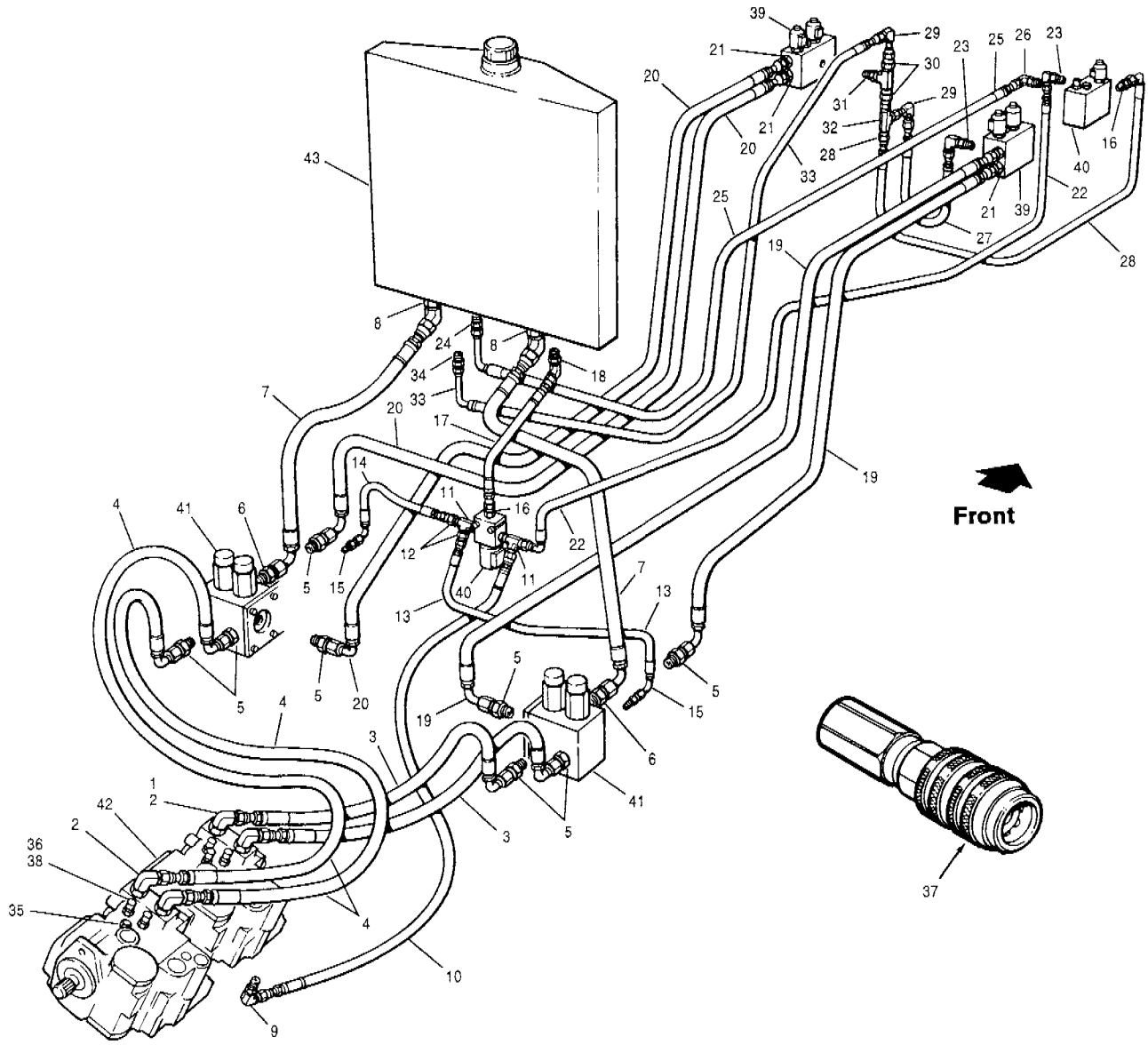

Item	Part No.	Description	Qty.	Remarks
1	127A-1012	Connector	2	G716
2	127B-1012	Connector	2	G716
			4	G726 & G736
3	97578 x 76	Hose	2	
4	97578 x 97	Hose	2	
5	127E-1012	Connector	8	
6	127E-1212	Connector	2	
7	97582 x 45	Hose	2	
8	127A-1212	Connector	2	
9	127B-0606	Connector	1	
10	97572 x 75	Hose	1	
11	127D-06	Tee	2	
12	128F-0604	Reducer	2	
13	97569 x 26	Hose	1	
14	97569 33	Hose	1	
15	127E-0404	Connector	2	
16	127E-0606	Connector	2	
17	97572 x 26	Hose	1	
18	12724241	Connector	1	
19	97578 x 270	Hose	2	
20	97578 x 276	Hose	2	
21	127E-1010	Connector	4	
22	97573 x 275	Hose	1	
23	127B-0608	Connector	2	
24	127E-1008	Connector	1	

Item	Part No.	Description	Qty.	Remarks
25	405054 x 255	Hose	1	
26	127B-1008	Connector	1	
27	97572 x 22	Hose	1	
28	97573 x 22	Hose	1	
29	128B-06	Elbow	2	
30	128F-0806	Reducer	2	
31	127C-08	Tee	1	
32	128C-06	Tee	1	
33	97574 x 250	Hose	1	
34	127E-0608	Connector	1	
35	111H-06	Plug	1	
36	97713	Test port nipple	5	
37	97714	Quick disconnect coupler	A.R.	In toolbox
38	97744	Dust cap	6	
39		**Motor bypass valve**	Ref.	444-26
40		**Free wheeling solenoid & two-speed valve assembly**	Ref.	444-27
41		**Free wheeling valve**	Ref.	444-28
42		**AWD hydraulic pump**	Ref.	445-32
43		**AWD hydraulic oil tank**	Ref.	445-35

SERIAL NUMBERS:
33000 & UP

HYDRAULIC CIRCUIT - FREE WHEELING - AWD

Date **01/2001**
Illustr. Nos **00006169**
Group **445**
Page **29**
Issue **1**

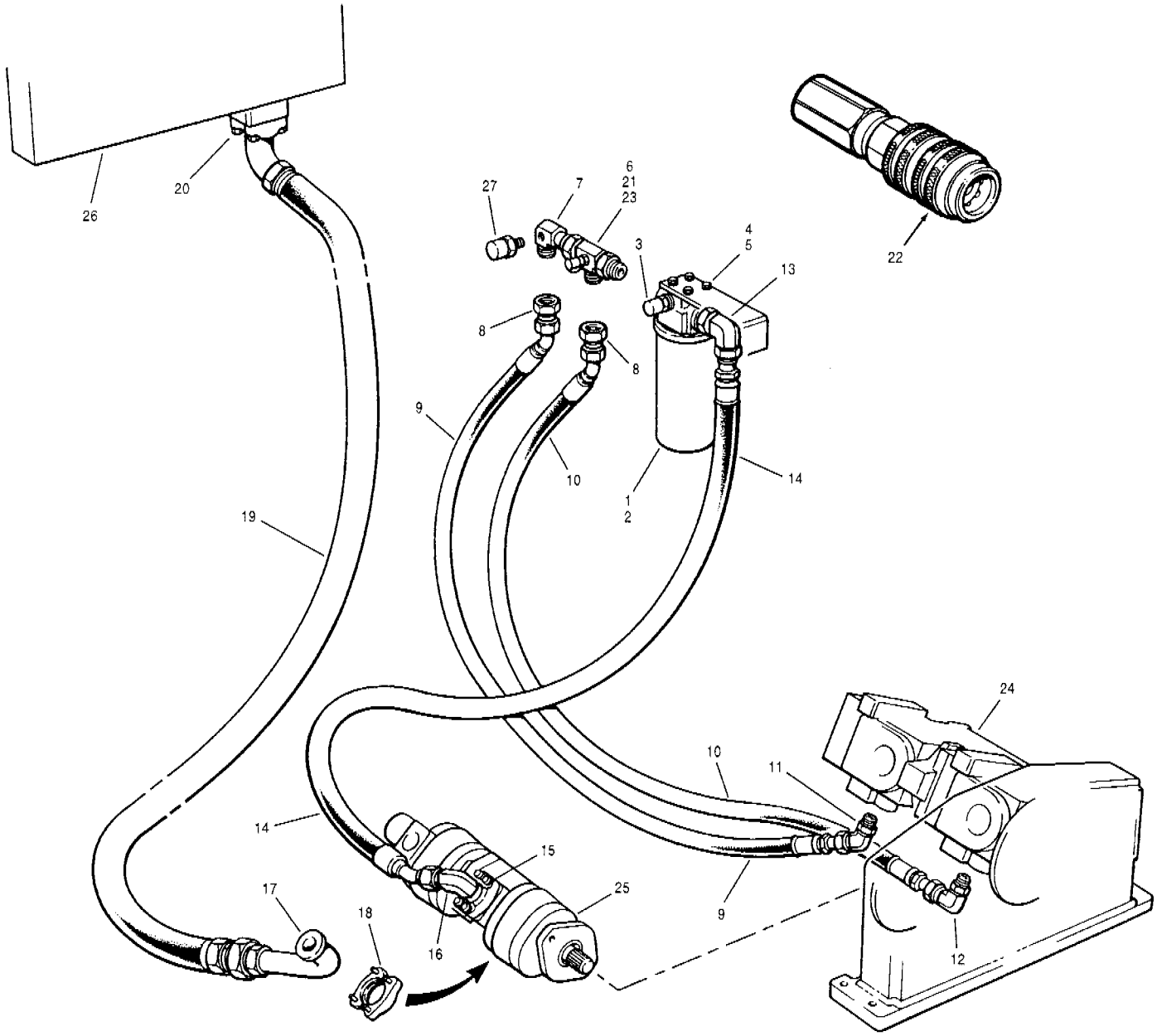

Item	Part No.	Description	Qty.	Remarks
1	**402131**	**Filter assembly** - includes items 2 & 3	1	
2	97710	Element	1	
3	97711	Switch - filter warning	1	
4	50A-0606 Zi	Bolt	4	
5	* 940097	Hardened washer	4	
6	97681	Tee	1	
7	* 12725291	Elbow	1	
8	128F-1612	Reducer	2	
9	97580 x 74	Hose	1	
10	97580 x 81	Hose	1	
11	127A-1210	Connector	1	
12	127B-1210	Connector	1	
13	127B-1616	Connector	1	
14	87963 x 39	Hose	1	G716
14	87963 x 37	Hose	1	G726 & G736
15	**114D-16**	**Flange kit** - includes O-ring & hardware	1	
16	97678	Elbow	1	
17	* 12726091	Connector	1	

Item	Part No.	Description	Qty.	Remarks
18	**114D-32**	**Flange kit** - includes O-ring & hardware	1	
19	* 12726083	Hose	1	
20	**114D-32**	**Flange kit** - includes O-ring & hardware	1	
21	97712	Test port nipple	1	
22	97714	Quick disconnect coupler - female (for testing)	1	In toolbox
23	97744	Dust cap	1	
24		**AWD hydraulic pump**	Ref.	445-32
25		**AWD charge pump**	Ref.	445-33
26		**AWD hydraulic oil tank**	Ref.	445-35
27		**Harnesses, sending units & controller**	Ref.	444-24

SERIAL NUMBERS: 33000 & UP	**HYDRAULIC FILTER & CIRCUIT - AWD**	Date	**06/2001**	Group	**445**
		Illustr. Nos	**00006228**	Page	**30**
				Issue	**1A**

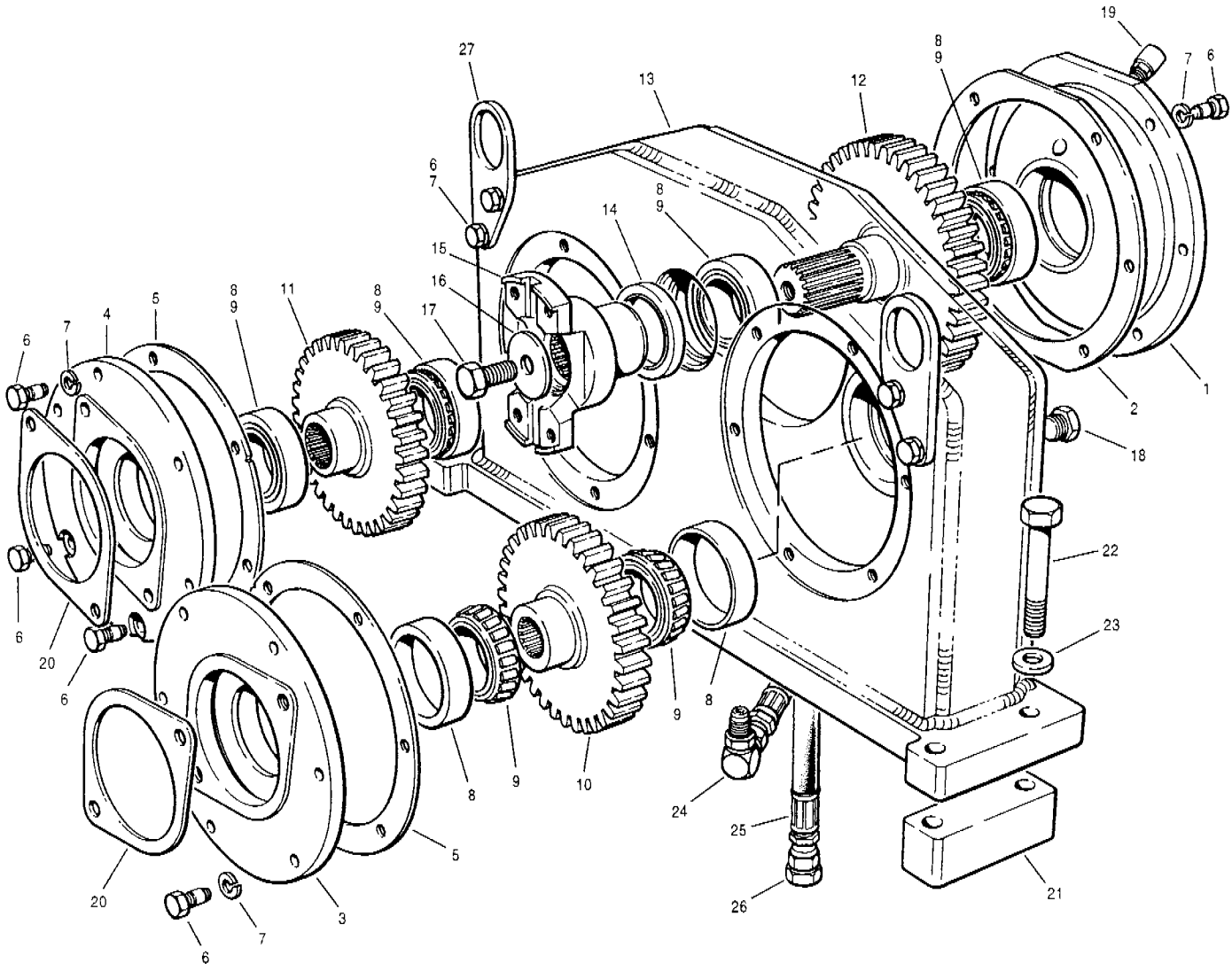

Item	Part No.	Description	Qty.	Remarks
	87956	**Pump gearbox assembly** - includes items 1 to 19 & 24 to 27	1	
1	42154	Cap - rear	1	
2	29570	Shim - .005"	4	
2	29571	Shim - .007"	3	
3	87954	Cap - front L.H.	1	
4	87955	Cap - front R.H.	1	
5	29573	Shim - .005"	4	
5	29574	Shim - .007"	3	
6	89102	Bolt	22	
7	14A-06 Zi	Lockwasher	20	
8	29159	Bearing cup	6	
9	29158	Bearing cone	6	
10	59952	Gear - 34 tooth - L.H.	1	
11	97317	Gear - 34 tooth - R.H.	1	
12	42153	Gear - 42 tooth	1	
13	87993	Case	1	
14	29577	Seal	1	
15	73620	Yoke	1	
16	29581	Washer	1	
17	50A-0808 Zi	Bolt	1	

Item	Part No.	Description	Qty.	Remarks
18	115C-08	Plug	1	
19	40296	Breather	1	
20	16899	Gasket	2	
21	97507	Spacer	2	
22	50A-0826 Zi	Bolt	4	
23	37940	Hardened washer	4	
24	111B-0808	Connector	1	
25	78192 x 18	Hose	1	
26	110H-08	Plug	1	
27	87994	Lifting lug	2	

SERIAL NUMBERS: 33000 & UP	**PUMP GEAR BOX - AWD**	Date **01/2001**	Group **445**
		Illustr. Nos **00006171**	Page **31**
			Issue **1**

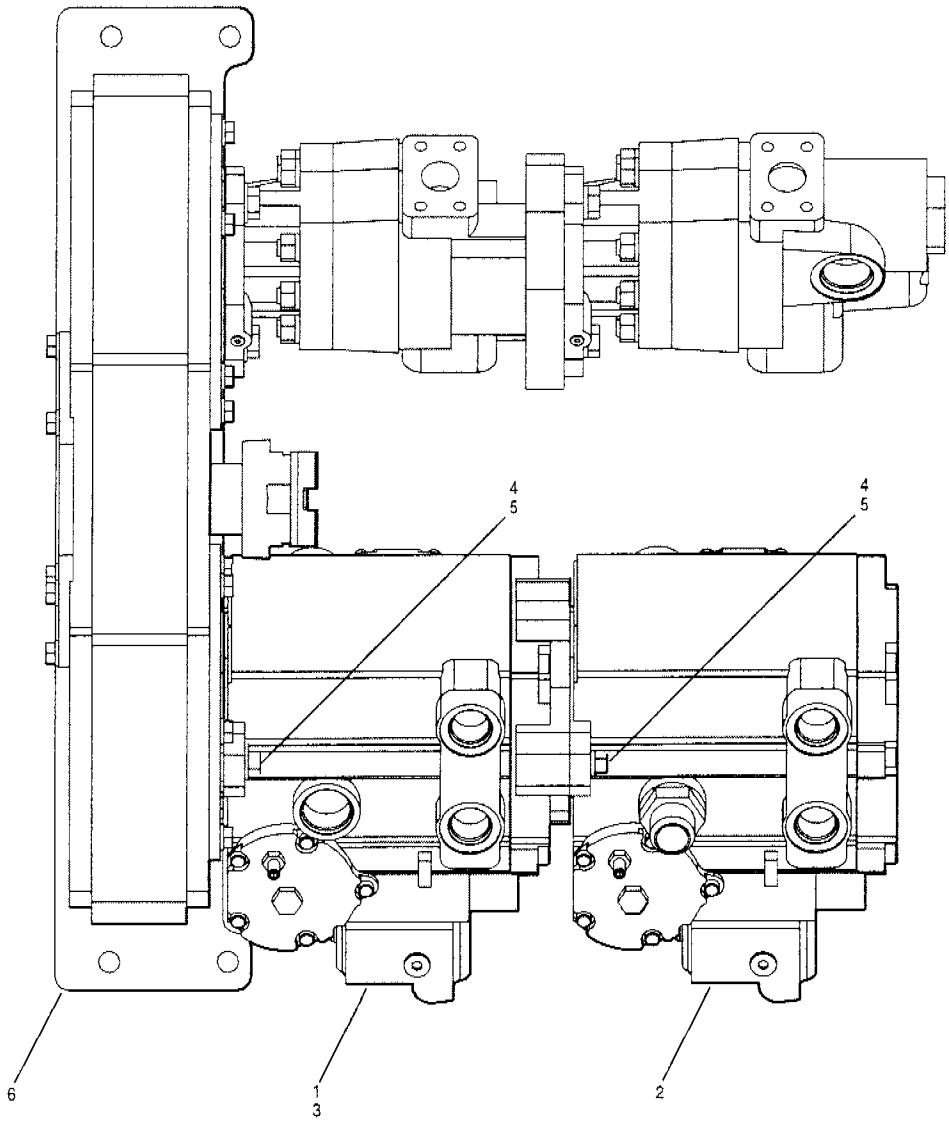

Item	Part No.	Description	Qty.	Remarks
1	**97548**	**Hydraulic pump - L.H.** - includes item 3	1	
2	**97549**	**Hydraulic pump - R.H.**	1	
3	12A-044	O-ring	2	
	97818	**Seal & gasket kit for 97548 & 97549 - pump**	1 per	
	97819	**EDC kit for 97548 & 97549 - pump**	1 per	
4	50A-0812 Zi	Bolt	4	
5	37940	Hardened washer	4	
6		**Pump gearbox**	Ref.	445-31

Item	Part No.	Description	Qty.	Remarks

SERIAL NUMBERS: 33000 & UP	**HYDRAULIC PUMPS - AWD**	Date	**01/2001**	Group **445**
		Illustr. Nos	**00006047**	Page **32**
				Issue **1**

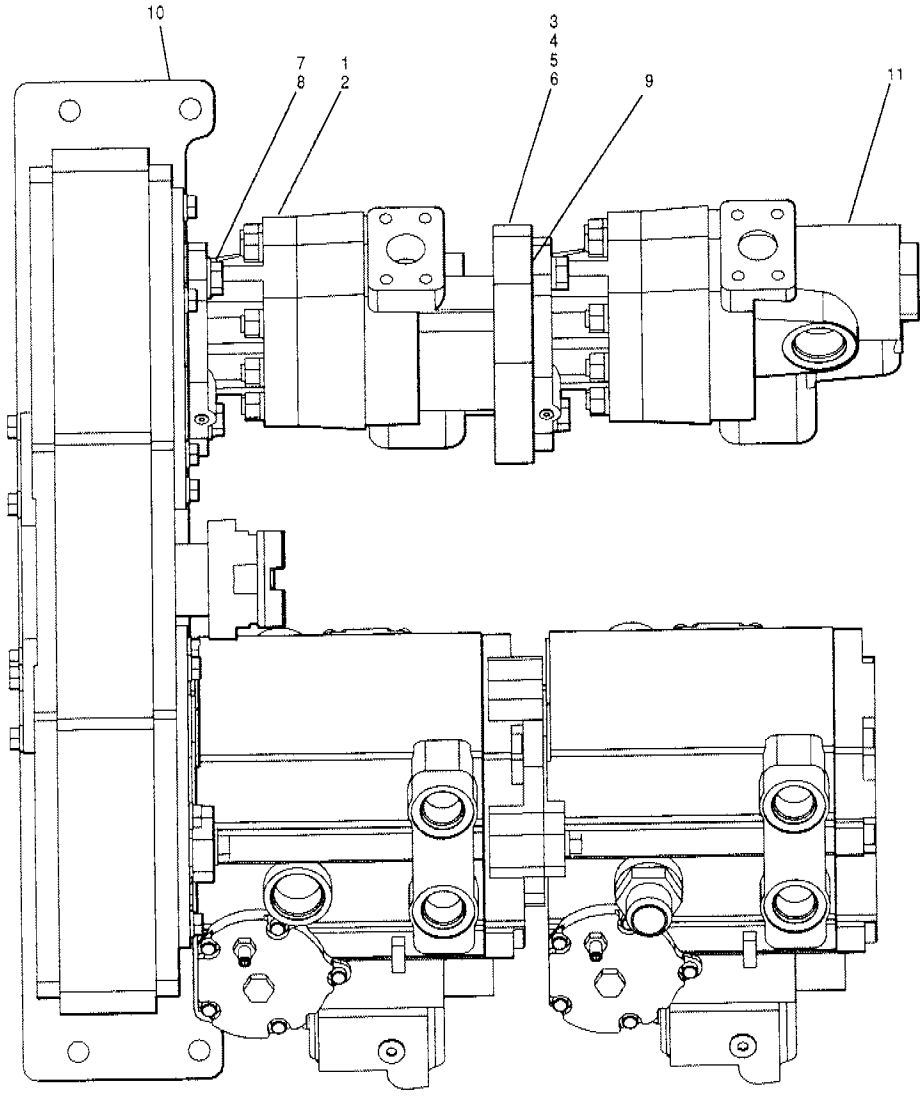

Item	Part No.	Description	Qty.	Remarks
	97604	**Charge pump assembly** - includes items 1 to 6	1	
	97803	**Seal kit for 97604** **- charge pump**	1	
	81314	**Front cover assembly** - includes items 1 & 2	1	
1		Front cover	1	
2		Bushing	2	
	97808	**Rear cover assembly** - includes items 3 & 4	1	
3		Rear cover	1	
4		Bushing	2	
	97806	**Displacment kit for 97604** **- charge pump**	1	
	97807	**Stud kit for 97604** **- charge pump**	1	

Item	Part No.	Description	Qty.	Remarks
5	97804	O-ring	1	
6	97805	Coupling	1	
7	50A-0812 Zi	Bolt	2	
8	37940	Hardened washer	2	
9	16899	Gasket	1	
10		**Pump gearbox**	Ref.	445-31
11		**Main hydraulic pump**	Ref.	442-20

SERIAL NUMBERS: 33000 & UP	**CHARGE PUMP - AWD**	Date	**01/2001**	Group **445**
		Illustr. Nos	**00006048**	Page **33**
				Issue **1**

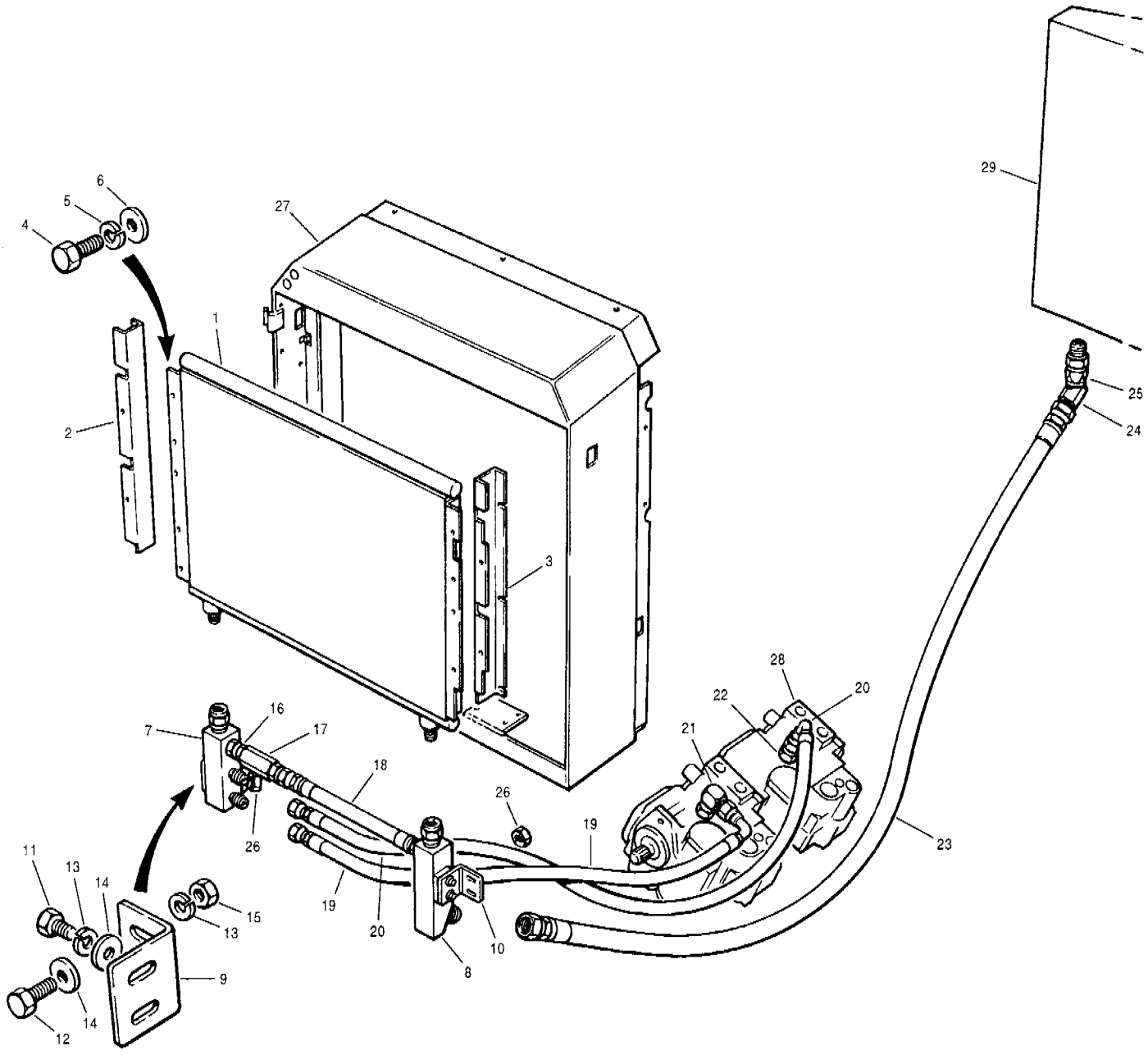

Item	Part No.	Description	Qty.	Remarks
1	400183	Oil cooler - 2 row	1	
2	97640	Seal bar - L.H.	1	
3	97642	Seal bar - R.H.	1	
4	50A-0508 Zi	Bolt	4	
5	14A-05 Zi	Lockwasher	4	
6	14C-05 Zi	Flatwasher	4	
7	* 12725290	Manifold - L.H.	1	
8	* 12725296	Manifold - R.H.	1	
9	97707	Mounting bracket - L.H.	1	
10	97708	Mounting bracket - R.H.	1	
11	50A-0506 Zi	Bolt	4	
12	50A-0508 Zi	Bolt	4	
13	14A-05 Zi	Lockwasher	8	
14	14C-05 Zi	Flatwasher	8	
15	30A-05 Zi	Nut	4	

Item	Part No.	Description	Qty.	Remarks
16	97672	Connector	1	
17	97673	Check Valve	1	
18	* 97670 x 19	Hose	1	
19	74233 x 33	Hose	1	
20	74233 x 43	Hose	1	
21	111B-1616	Connector	1	
22	111E-1616	Connector	1	
23	87965 x 112	Hose	1	
24	112A-24	Connector	1	
25	111E-2424	Connector	1	
26	110E-12	Cap	2	
27		**Radiator frame**	Ref.	823-7
28		**AWD hydraulic pump**	Ref.	445-32
29		**AWD hydraulic oil tank**	Ref.	445-35

SERIAL NUMBERS: 33000 & UP	**OIL COOLER & CIRCUIT -AWD**	Date **03/2001**	Group **445**
		Illustr. Nos **00006170**	Page **34**
			Issue **1A**

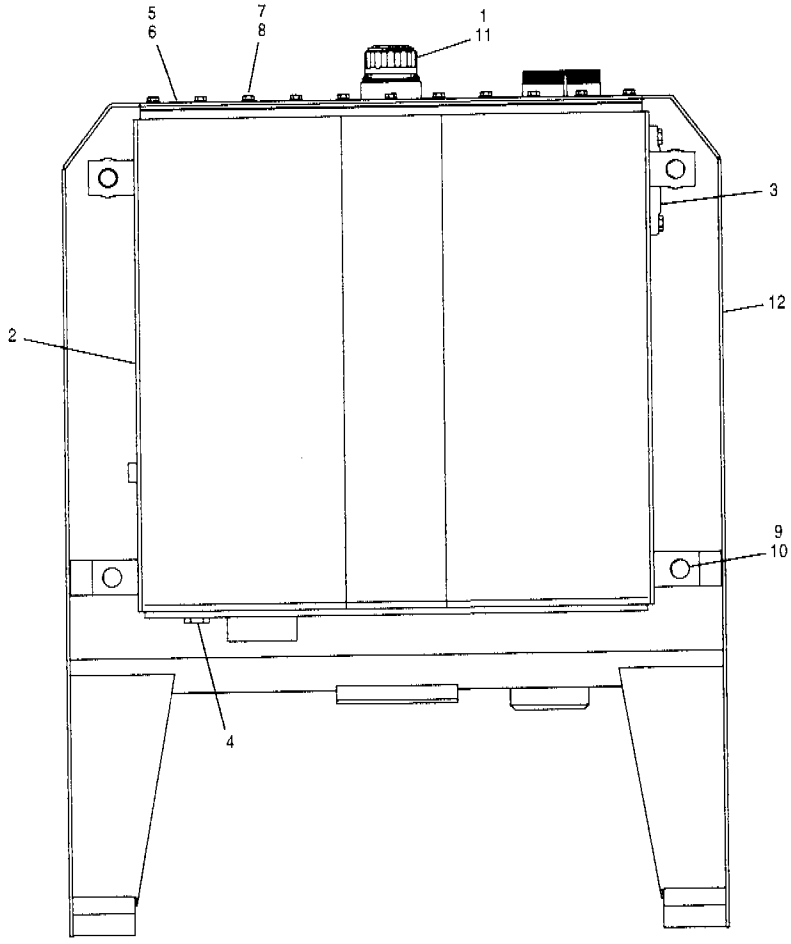

Item	Part No.	Description	Qty.	Remarks
1	62999	**Filler & breather cap assembly**	1	
2	97718	Hydraulic oil tank	1	
3	37554	Fluid level gauge	1	
4	54040	Magnetic plug	1	
5	97471	Cover plate	1	
6	97473	Gasket	1	
7	50A-0608 Zi	Bolt	22	
8	14A-06 Zi	Lockwasher	22	
9	50A-1008 Zi	Bolt	4	
10	14A-10 Zi	Lockwasher	4	
11	62A-1006	Screw	6	
12		**Fuel tank**	Ref.	234-7

Item	Part No.	Description	Qty.	Remarks

SERIAL NUMBERS: 33000 & UP	**HYDRAULIC OIL TANK - AWD**	Date	**01/2001**	Group **445**
		Illustr. Nos	**00004177**	Page **35**
				Issue **1**

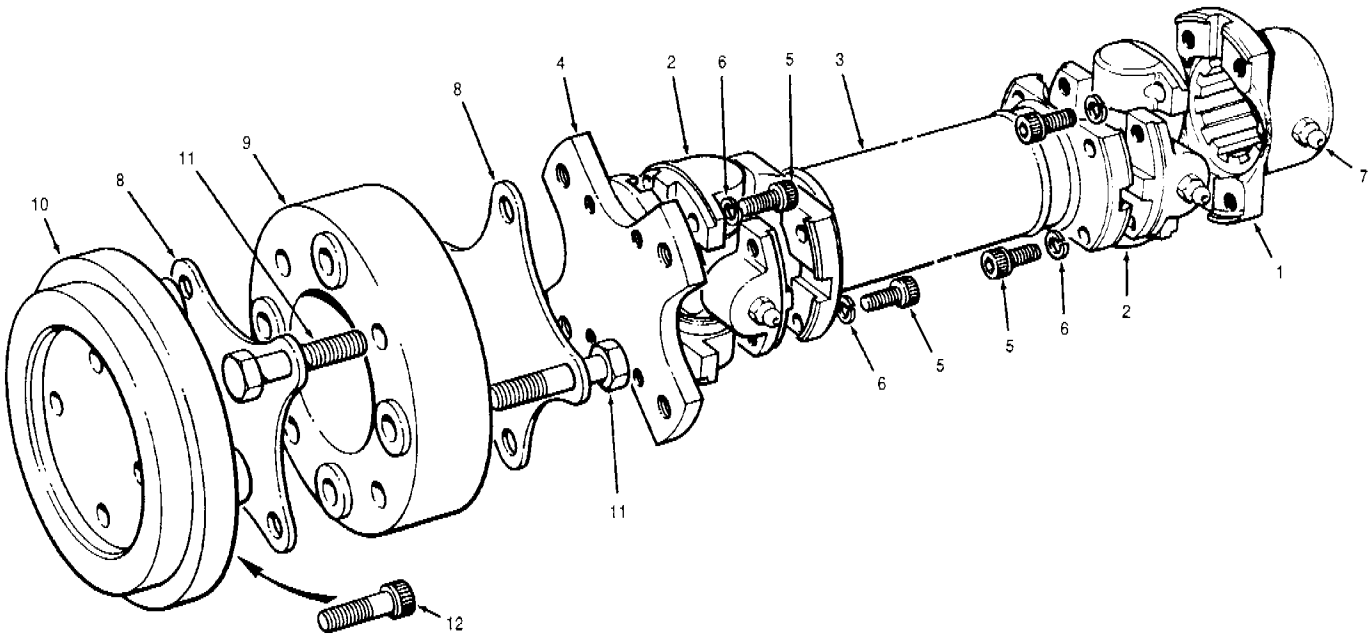

Item	Part No.	Description	Qty.	Remarks
		For all wheel drive models - see 451-41 & 451-42		
	89316	**Driveshaft assembly** - includes items 1 to 7	1	
1	73643	Yoke - splined	1	
2	**59435**	**Spider assembly**	2	
3	**73982**	**Tube assembly**	1	
4	73646	Yoke - flanged	1	
5	51D-0507	Bolt	16	
6	14T-05	Lockwasher	16	
7	29A-02	Grease fitting	1	
8	81156	Star washer	2	
9	73637	Coupling	1	
10	86761	Adapter	1	
11	50A-0816 Zi	Bolt	8	
12	50D-0710	Bolt	4	

Item	Part No.	Description	Qty.	Remarks

SERIAL NUMBERS: 33000 & UP	**PUMP DRIVESHAFT - Model G710**	Date	**01/2001**	Group **451**
		Illustr. Nos	**00004939**	Page **36**
				Issue **1**

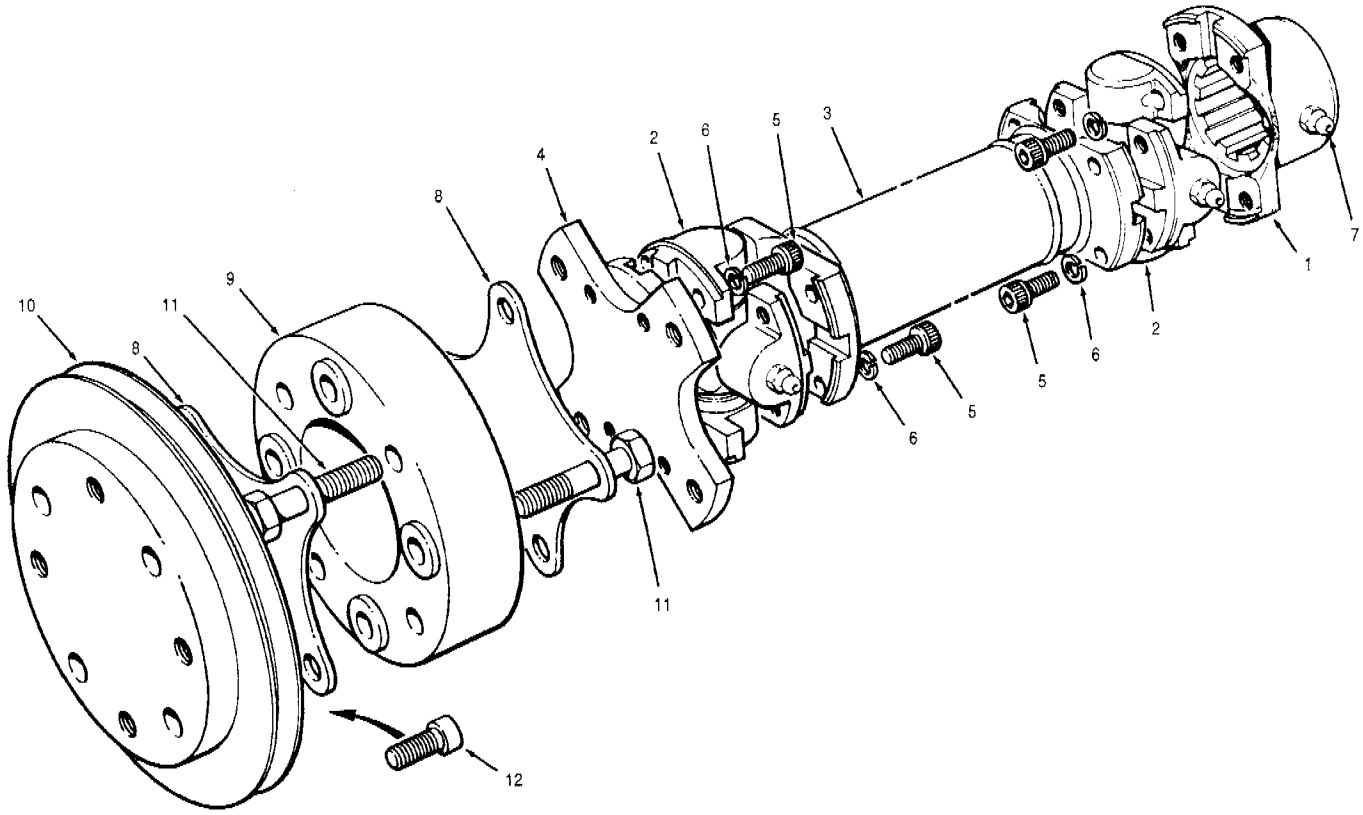

Item	Part No.	Description	Qty.	Remarks
		For all wheel drive models - see 451-41 & 451-42		
	89317	**Driveshaft assembly** - includes items 1 to 7	1	
1	73643	Yoke - splined	1	
2	**59435**	**Spider assembly**	2	
3	**73983**	**Tube assembly**	1	
4	73646	Yoke - flanged	1	
5	51D-0507	Bolt	16	
6	14T-05	Lockwasher	16	
7	29A-02	Grease fitting	1	
8	81156	Star washer	2	
9	73637	Coupling	1	
10	86950	Adapter	1	
11	50A-0816 Zi	Bolt	8	
12	350D-12030 Zi	Bolt	4	

Item	Part No.	Description	Qty.	Remarks

SERIAL NUMBERS: 33000 & UP	**PUMP DRIVESHAFT - Models G720 to G730**	Date **01/2001**	Group **451**
		Illustr. Nos **00004940**	Page **37**
			Issue **1**

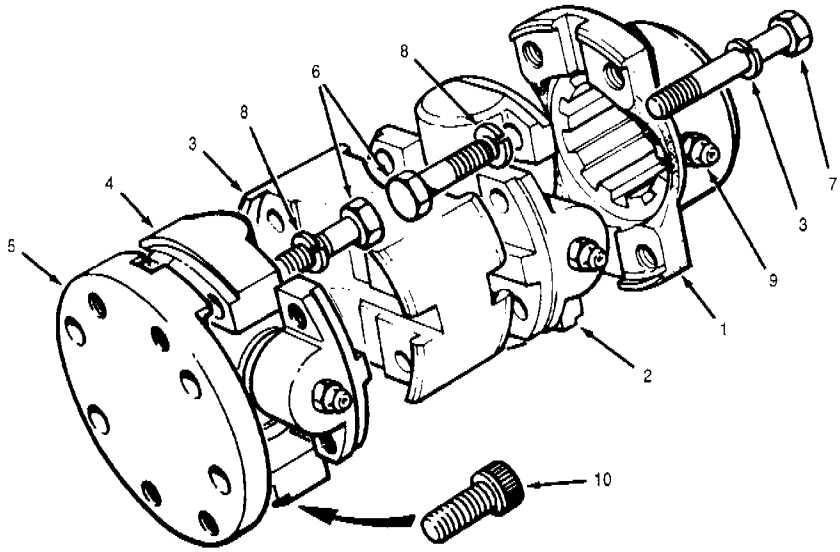

Item	Part No.	Description	Qty.	Remarks
		For all wheel drive models - see 451-41 & 451-42		
	89318	**Driveshaft assembly** - includes items 1 to 9	1	
1	73989	Yoke - splined	1	
2	**89444**	**Spider assembly**	1	
3	73988	Coupling	1	
4	**89443**	**Spider assembly**	1	
5	80481	Yoke - flanged	1	
6	51A-0614	Bolt	8	
7	51A-0624	Bolt	4	
8	14A-06	Lockwasher	12	
9	29A-02	Grease fitting	1	
10	51D-0708	Bolt	4	

Item	Part No.	Description	Qty.	Remarks

SERIAL NUMBERS: 33000 & UP	**PUMP DRIVESHAFT** **- Models G740 to G780**	Date **01/2001**	Group	**451**
		Illustr. Nos **00004941**	Page	**38**
			Issue	**1**

Transmission end

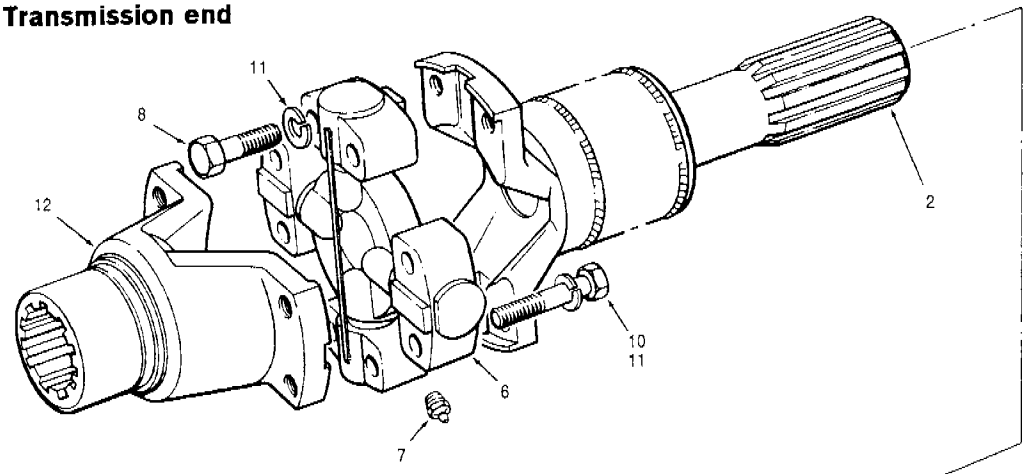

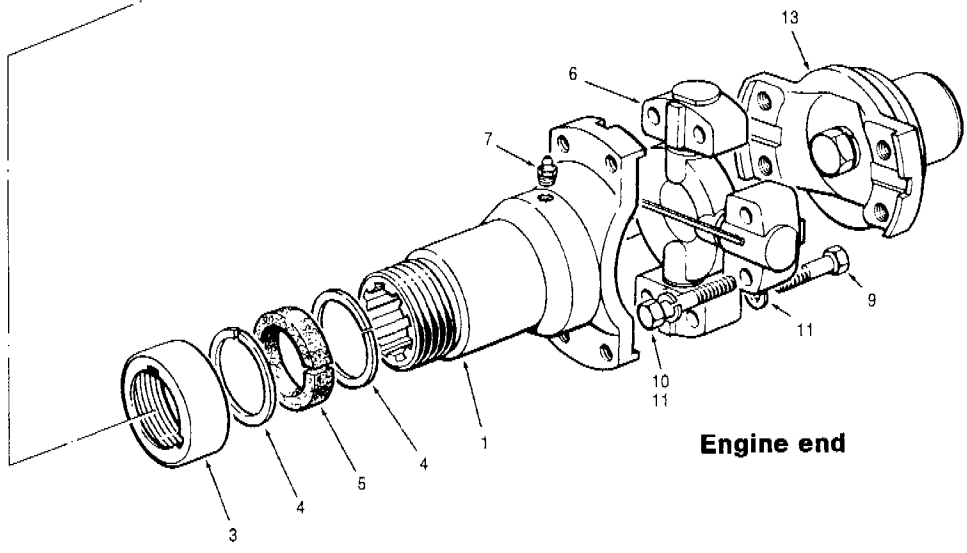

Engine end

Item	Part No.	Description	Qty.	Remarks
	14031	**Driveshaft assembly** - includes items 1 to 11	1	
1	14665	Yoke	1	
2	**14667**	**Tube assembly**	1	
3	14668	Cap	1	
4	14669	Steel washer	2	
5	14670	Felt washer	1	
6	37134	Cross & bearing	2	
7	29A-02	Grease fitting	2	
8	51A-0614 Zi	Bolt	4	
9	51A-0616 Zi	Bolt	4	
10	87736	Bolt	8	
11	14A-06 Zi	Lockwasher	16	
12		**Transmission**	Ref.	421-9
13		**Clutch**	Ref.	413-3 413-4

Item	Part No.	Description	Qty.	Remarks

SERIAL NUMBERS: 33000 & UP	**UPPER DRIVESHAFT**	Date **01/2001**	Group	**451**
		Illustr. Nos **00003481**	Page	**39**
			Issue	**1**

Transmission end

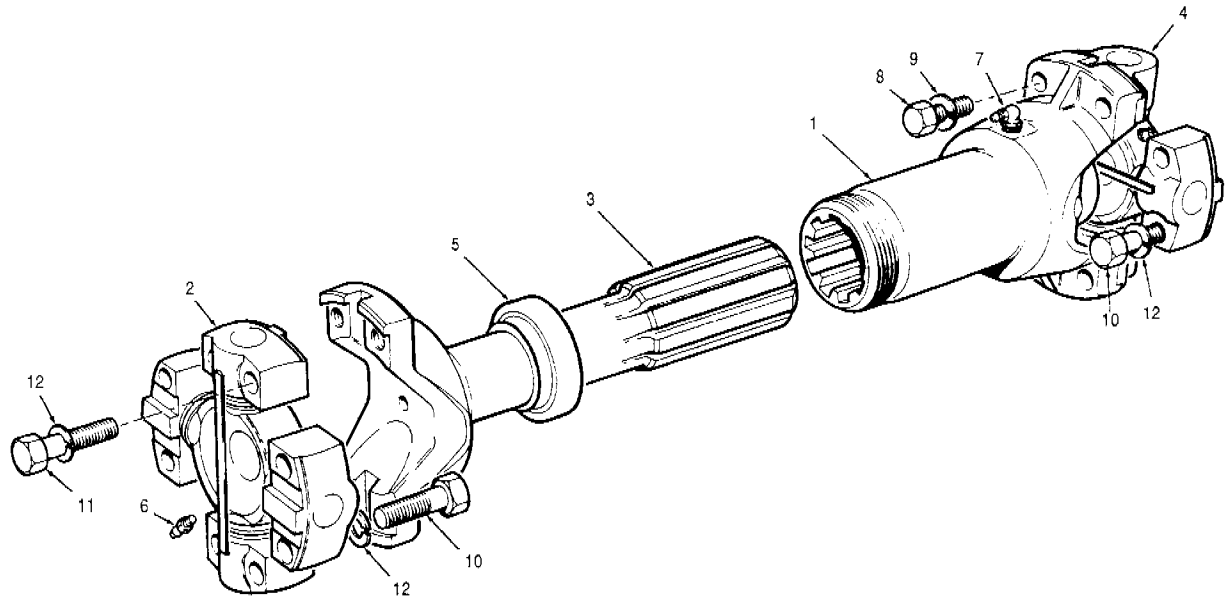

Final drive end

Item	Part No.	Description	Qty.	Remarks
	48520	**Driveshaft assembly** - includes items 1 to 12	1	
1	37139	Yoke	1	
2	37140	Universal joint	1	
3	37141	Yoke shaft	1	
4	49335	Universal joint	1	
5	49571	Cap	1	
6	29A-02	Grease fitting	2	
7	29B-04	Grease fitting	1	
8	51A-0510 Zi	Bolt	4	
9	14A-05 Zi	Lockwasher	4	
10	51A-0816 Zi	Bolt	8	
11	51A-0820 Zi	Bolt	4	
12	14A-08 Zi	Lockwasher	12	

Item	Part No.	Description	Qty.	Remarks

SERIAL NUMBERS: 33000 & UP	**LOWER DRIVESHAFT**	Date **01/2001**	Group **451**
		Illustr. Nos **00003480**	Page **40**
			Issue **1**

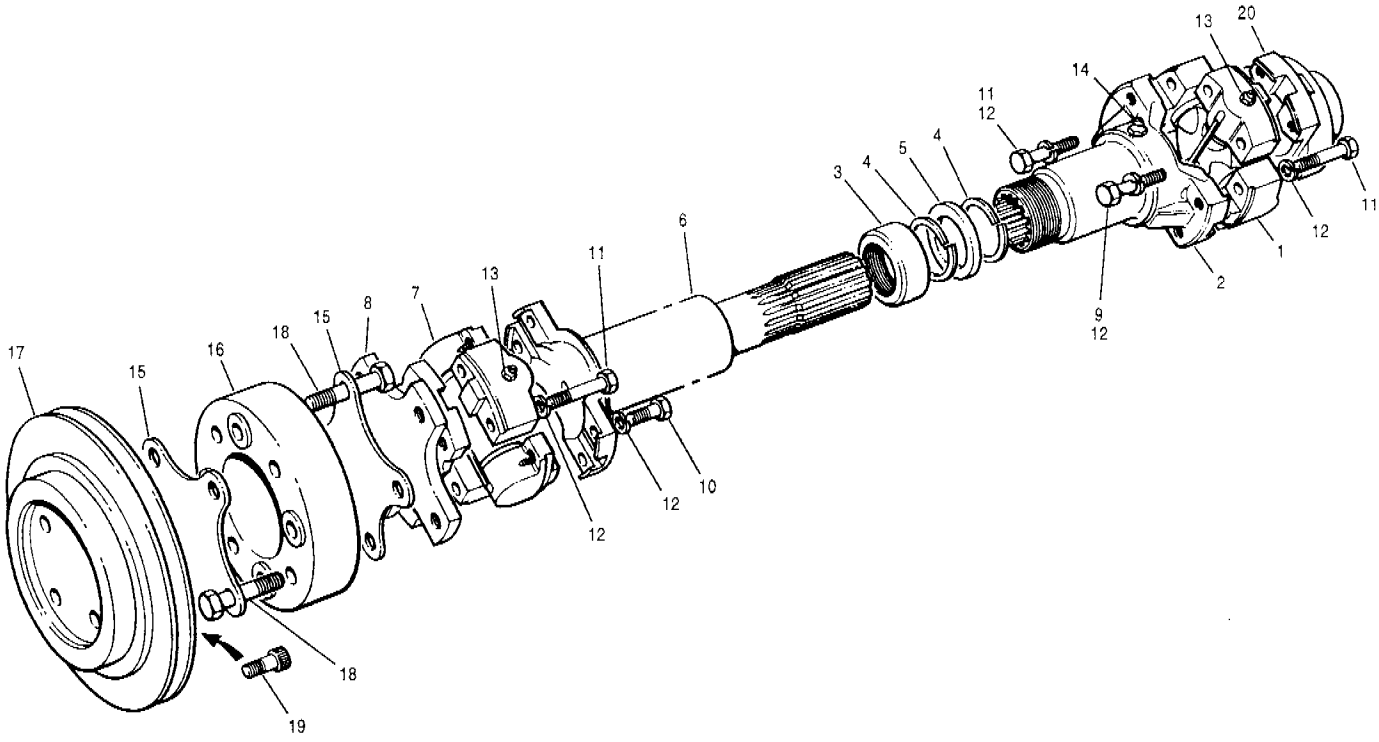

Item	Part No.	Description	Qty.	Remarks
	97469	**Driveshaft assembly** - includes items 1 to 14	1	
1	**89444**	**Spider assembly**	1	
2	73993	Slip yoke	1	
3	73994	Dust cap	1	
4	73995	Washer	2	
5	73996	Washer - felt	1	
6	**97723**	**Tube assembly**	1	
7	**89443**	**Spider assembly**	1	
8	73633	Yoke - flanged	1	
9	87736	Bolt	4	
10	51A-0608 Zi	Bolt	4	
11	51A-0616 Zi	Bolt	8	
12	14A-06 Zi	Lockwasher	16	
13	29A-02	Grease fitting	2	
14	28A-04	Grease fitting	1	
15	81156	Star washer	2	
16	73632	Coupling	1	
17	86761	Adapter	1	
18	50A-0820 Zi	Bolt	8	
19	50D-0710	Bolt	4	
20		**Pump gearbox - AWD**	Ref.	445-31

Item	Part No.	Description	Qty.	Remarks

SERIAL NUMBERS: 33000 & UP	**PUMP DRIVESHAFT - AWD** **- Model G716 VHP**	Date **01/2001**	Group	**451**
		Illustr.Nos **00004942**	Page	**41**
			Issue	**1**

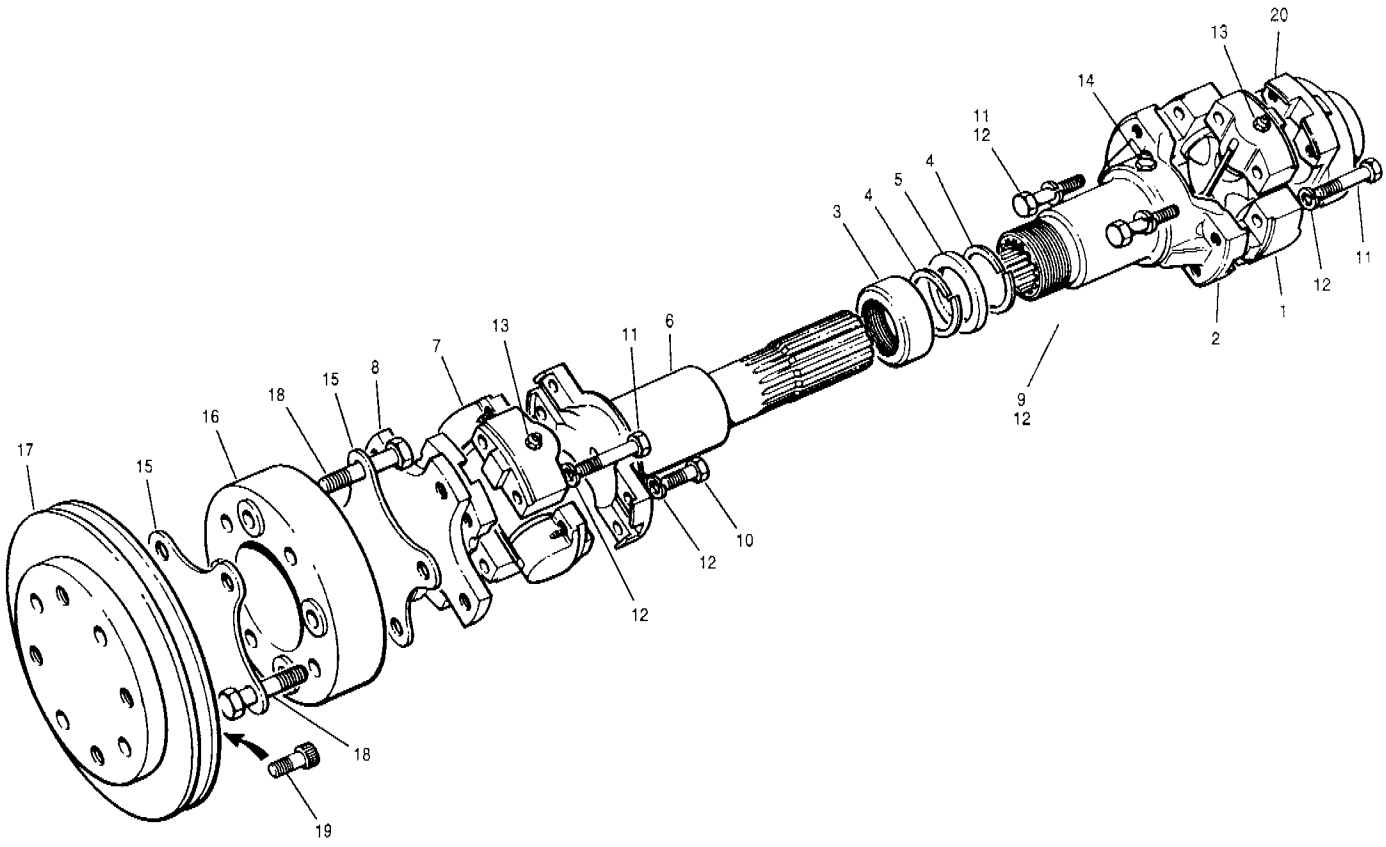

Item	Part No.	Description	Qty.	Remarks
	97470	**Driveshaft assembly** - includes items 1 to 20	1	
1	**89444**	**Spider assembly**	1	
2	73998	Slip yoke	1	
3	73994	Dust cap	1	
4	73995	Washer	2	
5	73996	Washer - felt	1	
6	**97724**	**Tube assembly**	1	
7	**89443**	**Spider assembly**	1	
8	73633	Yoke - flanged	1	
9	87736	Bolt	4	
10	51A-0608 Zi	Bolt	4	
11	51A-0616 Zi	Bolt	8	
12	14A-06 Zi	Lockwasher	16	
13	29A-02	Grease fitting	2	
14	28A-04	Grease fitting	1	
15	81156	Star washer	2	
16	73632	Coupling	1	
17	86950	Adapter	1	
18	50A-0820 Zi	Bolt	8	
19	350D-12030 Zi	Bolt	4	
20		**Pump gearbox - AWD**	Ref.	445-31

Item	Part No.	Description	Qty.	Remarks

SERIAL NUMBERS: 33000 & UP	**PUMP DRIVESHAFT - AWD** **- Models G726 VHP & 736 VHP**	Date	**01/2001**	Group **451**
		Illustr. Nos	**00004943**	Page **42**
				Issue **1**

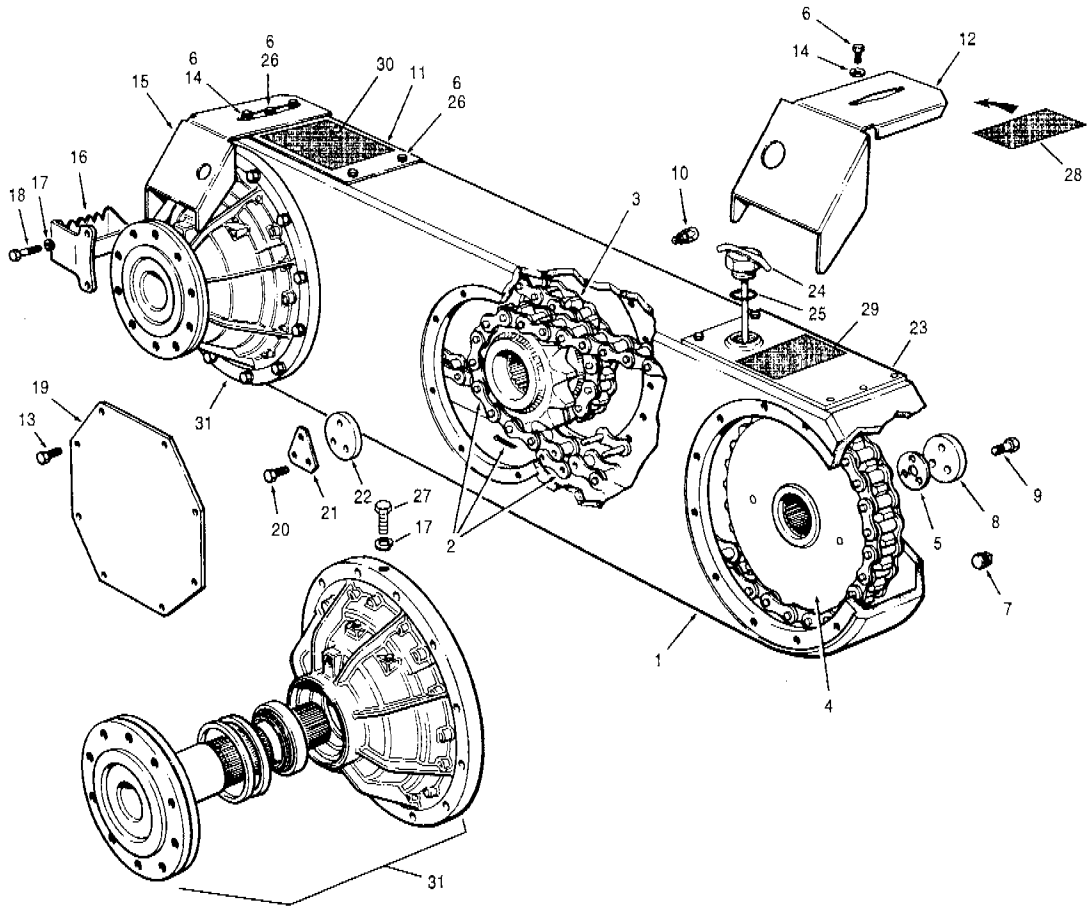

Item	Part No.	Description	Qty.	Remarks
1	87802	Tandem case - L.H.	1	G710 to G726
1	87803	Tandem case - R.H.	1	G710 to G726
1	87804	Tandem case - L.H.	1	G730 to G740
1	87805	Tandem case - R.H.	1	G730 to G740
1	87810	Tandem case - L.H.	1	G780
1	87811	Tandem case - R.H.	1	G780
2	29075	Chain - 58 link	4	G710 to G716
2	27496	Link		
2	29095	Connector link	4	
2	63365	Cotter pin	4	
2	40010	Chain - 52 link	4	G720 to G740
2	10858-1	Link		
2	53493	Connector link	4	
2	63366	Cotter pin	4	
2	48616	Chain - 52 link	2	G780
2	48617	Chain - 56 link	4	G780
2	46624	Link		
2	48715	Connector link	4	
2	48724	Spring clip	8	
		Note: chain includes connector link		
3	55352	Drive sprocket - 11 tooth	2	G710 to G716
3	55354	Drive sprocket - 11 tooth	2	G720 to G740
3	56007	Drive sprocket - 13 tooth	2	G780
4	89297	Sprocket - 33 tooth	4	G710 to G716
4	89298	Sprocket - 30 tooth	4	G720 to G740
4	89299	Sprocket - 29 tooth	4	G780

Item	Part No.	Description	Qty.	Remarks
5	37864	Shim - .005"	12	
5	37865	Shim - .007"	12	
5	37866	Shim - .020"	4	
6	89102	Special bolt	20	
7	877	Magnetic plug	4 - 6	
8	89303	Cap	4	
9	50A-1020 UP	Bolt	12	Unplated
10	84122	Breather	2	
11	87823	Cover plate - rear	2	
12	68919	Brake line shield - front - R.H. & rear - L.H.	2	
13	50A-0608 Zi	Bolt	16	
14	14C-06 Zi	Washer	8	
15	68920	Brake line shield - front - L.H. & rear - R.H.	2	
16	84176	Step	2	
17	14A-10 Zi	Lockwasher	6	
18	50A-1024 Zi	Bolt	4	
19	58154	Cover	2	
20	50A-0812 UP	Bolt	6	Unplated
21	36437	Tabwasher	2	G710 to G740
21	12653	Tabwasher	2	G780
22	37592	Cap	2	G710 to G740
22	17981	Cap	2	G780
23	87825	Cover plate - front	2	
24	66507	Dipstick - tandem	2	
25	116A-20	O-ring	2	
26	314C-10 Zi	Washer	12	
27	50A-1008 Zi	Bolt	2	
28	68848	Tape - non-skid	4	EEC
29	68849	Tape - non-skid	2	EEC
30	68850	Tape - non-skid	2	EEC
31		**Oil disc brakes**	Ref.	517-3

SERIAL NUMBERS: 33000 & UP	**TANDEMS**	Date **01/2001**	Group **463**
		Illustr. Nos **00005032**	Page **43**
			Issue **1**

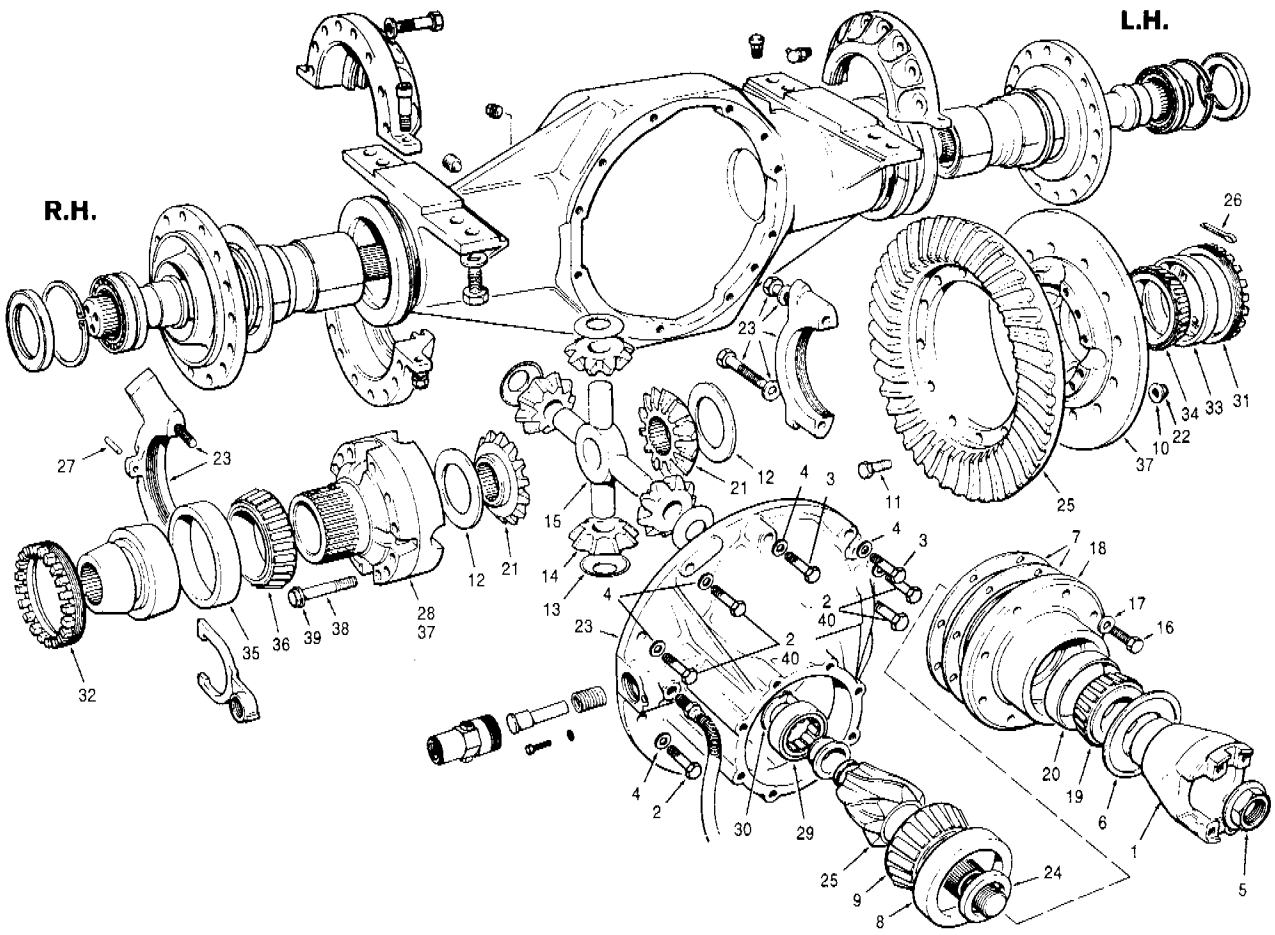

Item	Part No.	Description	Qty.	Remarks
	87503	**Final drive assembly**	1	**G710 to G716**
	87505	**Final drive assembly**	1	**G720 to G726**
1	37662	Yoke	1	
2	50A-1014 Zi	Bolt	4 - 8	
3	50A-1032 Zi	Bolt	4	
4	14D-10 Zi	Washer - special	12	
	87554	**Carrier assembly** - includes items 5 to 39 & differential lock	1	
5	63333	Nut	1	
6	49888	Seal	1	
7	63334	Shim - .002"	A.R.	
7	63335	Shim - .005"	A.R.	
7	63336	Shim - .008"	A.R.	
7	49895	Shim - .020"	A.R.	
8	49906	Bearing - cup	1	
9	49907	Bearing - cone	1	
10	63142	Washer	12	
11	63103	Bolt	12	
12	49924	Washer	2	
13	49926	Washer	4	
14	49927	Pinion	4	
15	49928	Spider	1	
16	49931	Bolt	8	
17	63129	Washer	8	
18	49948	Cage - pinion	1	
19	49949	Bearing - cone	1	
20	49950	Bearing - cup	1	
21	49962	Side gear	2	
22	63126	Nut	12	
23	**63360**	**Differential carrier & cap assembly**	1	
24	63084	Spacer - .250"	A.R.	
24	63085	Spacer - .251"	A.R.	
24	63086	Spacer - .252"	A.R.	

Item	Part No.	Description	Qty.	Remarks
24	63087	Spacer - .253"	A.R.	
24	63088	Spacer - .254"	A.R.	
24	63089	Spacer - .256"	A.R.	
24	63090	Spacer - .260"	A.R.	
24	63091	Spacer - .261"	A.R.	
24	63092	Spacer - .262"	A.R.	
24	63093	Spacer - .263"	A.R.	
24	63094	Spacer - .264"	A.R.	
25	63095	**Pinion & gear** - matched set	1	
26	63097	Cotter pin	1	
27	63147	Pin	1	
28	**58370**	**Case & nest assembly** - includes items 12 to 15, 21, 22 & 37	1	
29	58371	Bearing	1	
30	58372	Snap ring	1	
31	58373	Adjusting ring - L.H.	1	
32	58374	Adjusting ring - R.H.	1	
33	63133	Bearing - cup - L.H.	1	
34	63132	Bearing - cone - L.H.	1	
35	58388	Bearing - cup - R.H.	1	
36	58389	Bearing - cone - R.H.	1	
37	**63100**	**Case assembly - matched set** - includes both case halves & items 38 & 39	1	
38	49961	Bolt	12	
39	63143	Washer	12	
40	50A-1016 Zi	Bolt	4	
		Hose supports	Ref.	911-4
		Differential hydraulic circuit - models G710 to G740	Ref.	468-53

SERIAL NUMBERS: 33000 & UP	**FINAL DRIVE - DIFFERENTIAL CARRIER ASSEMBLY - Models G710 to G726**	Date **01/2001**	Group	**463**
		Illustr. Nos **00003276**	Page	**44**
			Issue	**1**

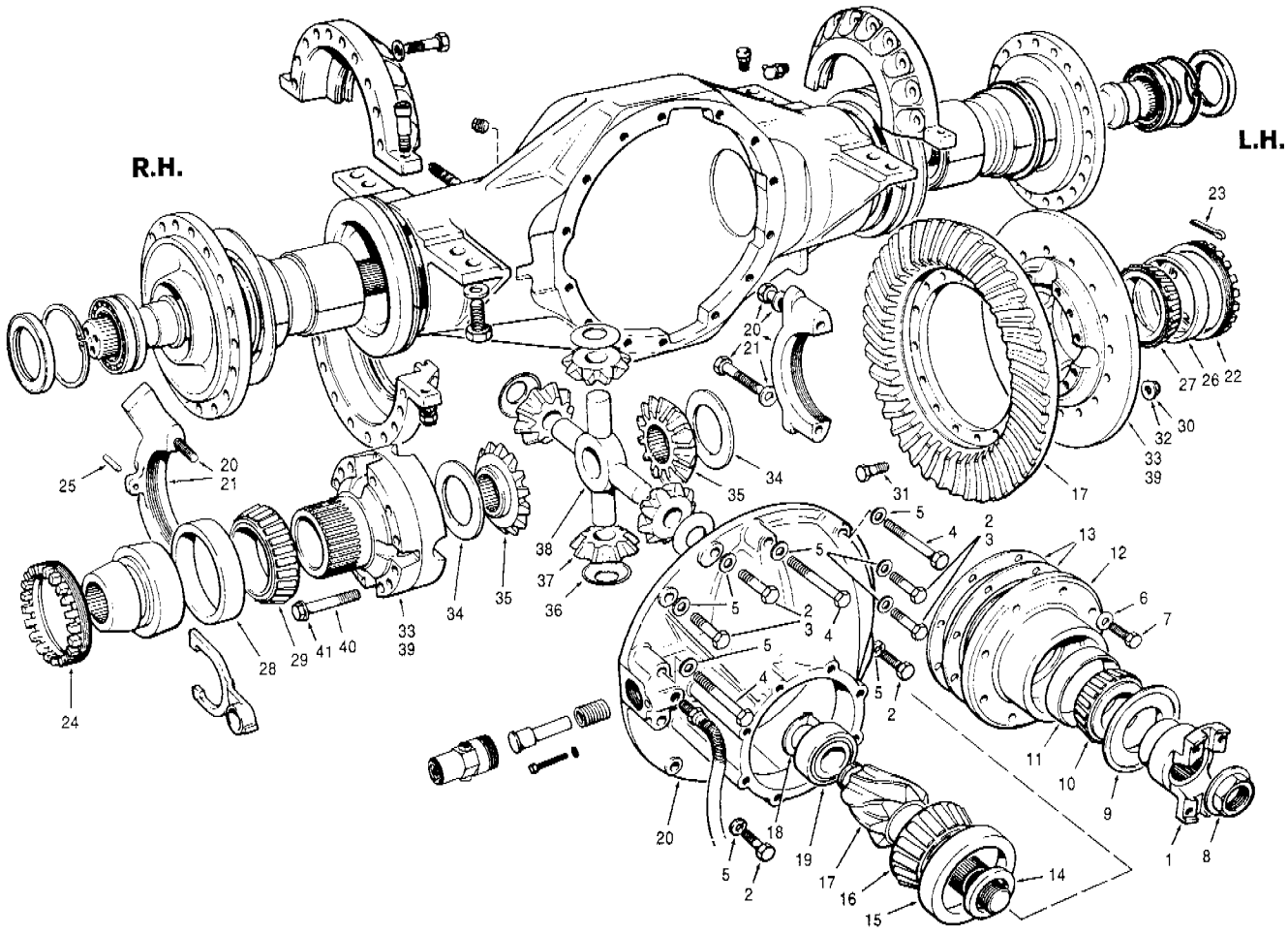

Item	Part No.	Description	Qty.	Remarks
	87499	**Final drive assembly**	1	
1	37660	Yoke	1	
2	50A-1012 Zi	Bolt	4	
3	50A-1014 Zi	Bolt	6	
4	50A-1032 Zi	Bolt	6	
5	14D-10 Zi	Washer - special	14	
	87555	**Carrier assembly** - includes items 6 to 41& differential lock	1	
6	63129	Washer	8	
7	49931	Bolt	8	
8	63333	Nut	1	
9	49888	Seal	1	
10	49889	Bearing - cone	1	
11	49890	Bearing - cup	1	
12	49891	Cage - pinion	1	
13	63334	Shim - .002"	3	
13	63335	Shim - .005"	2	
13	63336	Shim - .008"	2	
13	49895	Shim - .020"	2	
14	49896	Spacer - .250"	2	
14	49897	Spacer - .251"	2	
14	49898	Spacer - .252"	2	
14	49899	Spacer - .253"	1	
14	49900	Spacer - .254"	2	
14	49901	Spacer - .256"	2	
14	49902	Spacer - .260"	2	
14	49903	Spacer - .261"	2	
14	49904	Spacer - .262"	2	
14	49905	Spacer - .263"	2	
15	49906	Bearing - cup	1	
16	49907	Bearing - cone	1	
17	**63337**	**Pinion & gear - matched set** - includes items 18 & 19	1	

Item	Part No.	Description	Qty.	Remarks
18	63145	Snap ring	1	
19	63131	Bearing	1	
20	**63348**	**Differential carrier & cap assembly** - includes item 21	1	
21	63338	Bolt	4	
22	58373	Adjusting ring - small	1	
23	63097	Cotter pin	1	
24	63136	Adjusting ring - large	1	
25	63147	Pin	1	
26	63133	Bearing - cup L.H.	1	
27	63132	Bearing - cone L.H.	1	
28	63135	Bearing - cup R.H.	1	
29	63134	Bearing - cone R.H.	1	
30	63126	Nut	16	
31	63128	Bolt	16	
32	63142	Washer	16	
33	**63141**	**Case & nest assembly** - includes items 34 to 39	1	
34	49924	Washer	2	
35	49925	Side gear	2	
36	49926	Washer	4	
37	49927	Pinion	4	
38	49928	Spider	1	
39	**63140**	**Case assembly - matched set** - includes both case halves & items 40 & 41	1	
40	49961	Bolt	12	
41	63143	Washer	12	
		Hose supports	Ref.	911-4
		Differential hydraulic circuit - models G710 to G740	Ref.	468-53

SERIAL NUMBERS: 33000 & UP	**FINAL DRIVE - DIFFERENTIAL CARRIER ASSEMBLY - Models G730 to G740**	Date **01/2001**	Group **463**
		Illustr. Nos **00003279**	Page **45**
			Issue **1**

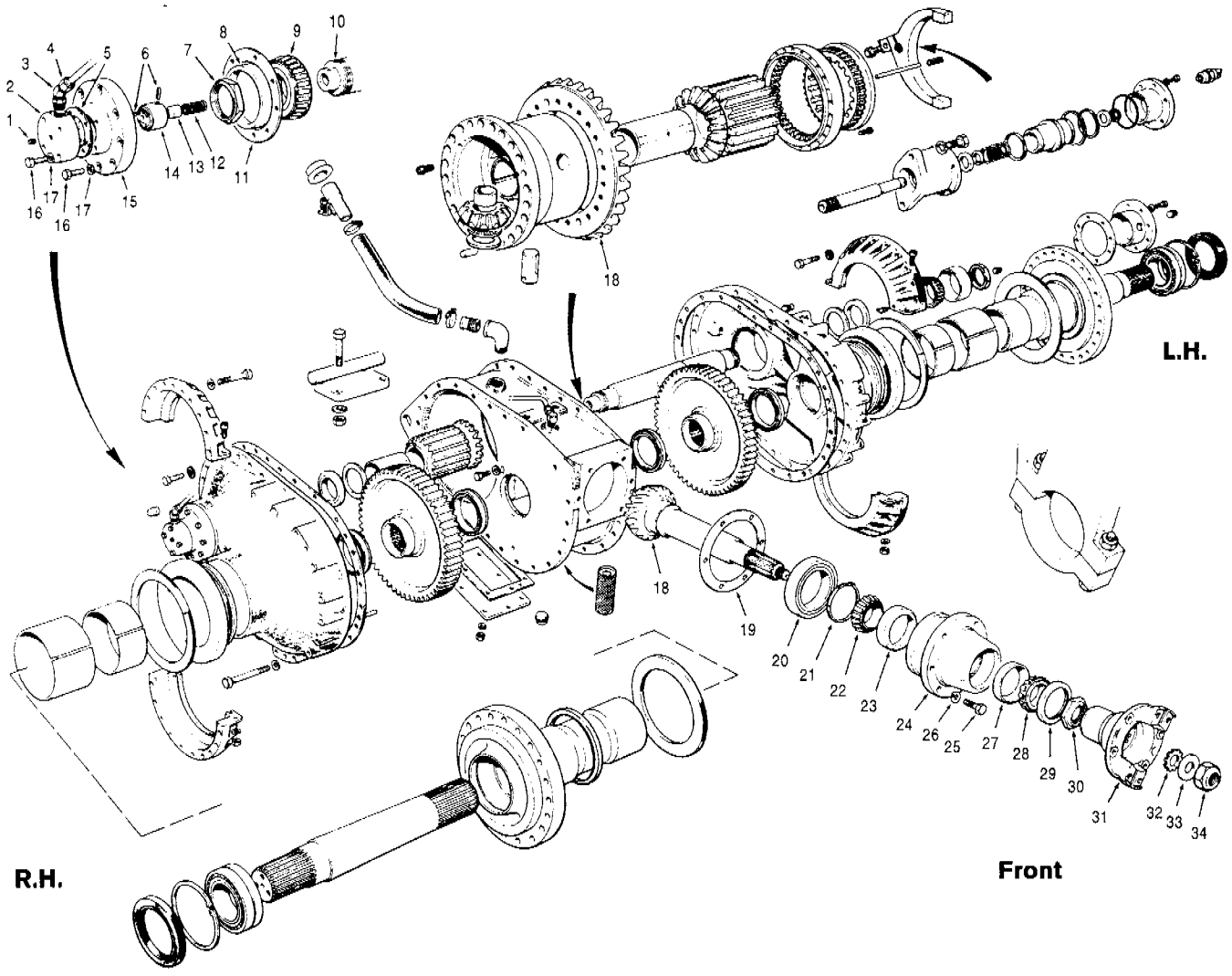

Item	Part No.	Description	Qty.	Remarks
1	115D-02	Plug	1	
2	18919	End cap	1	
3	111A-0808	Connector	1	
4	19729	Tube	1	
5	23036	Gasket	1	
6	13C-0608	Roll pin	4	
7	36S-12	Locknut	2	
8	16729	Bearing cup	2	
9	13148	Bearing cone	2	
10	55206	Cross shaft	1	
11	29191	Shim - .005"	6	
11	29192	Shim - .007"	7	
11	29193	Shim - .020"	3	
12	18922	Spring	1	
13	18921	Plunger	1	
14	18920	Pump	1	
15	44827	Adapter - pump mount	1	
16	50A-0614 Zi	Bolt	12	
17	14A-06 Zi	Lockwasher	21	
18	**29586**	**Spiral pinion shaft/gear, 12 & 34 teeth**	1	Set

Item	Part No.	Description	Qty.	Remarks
19	29187	Shim - .005"	1	
19	29188	Shim - .007"	2	
19	29189	Shim - .020"	2	
20	12655	Bearing	1	
21	19F-105	Snap ring	1	
22	18447	Bearing cone	1	
23	18446	Bearing cup	1	
24	16968	Pinion cap	1	
25	50A-1014 Zi	Bolt	6	
26	14A-10 Zi	Lockwasher	48	
27	16727	Bearing cup	1	
28	16728	Bearing cone	1	
29	29583	Oil seal	1	
30	16941	Nut	1	
31	36293	Yoke	1	
32	27341	Washer	1	
33	62160	Hardened washer	1	
34	37H-20 Zi	Locknut	1	

SERIAL NUMBERS: 33000 & UP	**FINAL DRIVE DIFFERENTIAL OIL PUMP & INPUT PINION - Model G780**	Date **01/2001**	Group **463**
		Illustr. Nos **00003282**	Page **46**
			Issue **1**

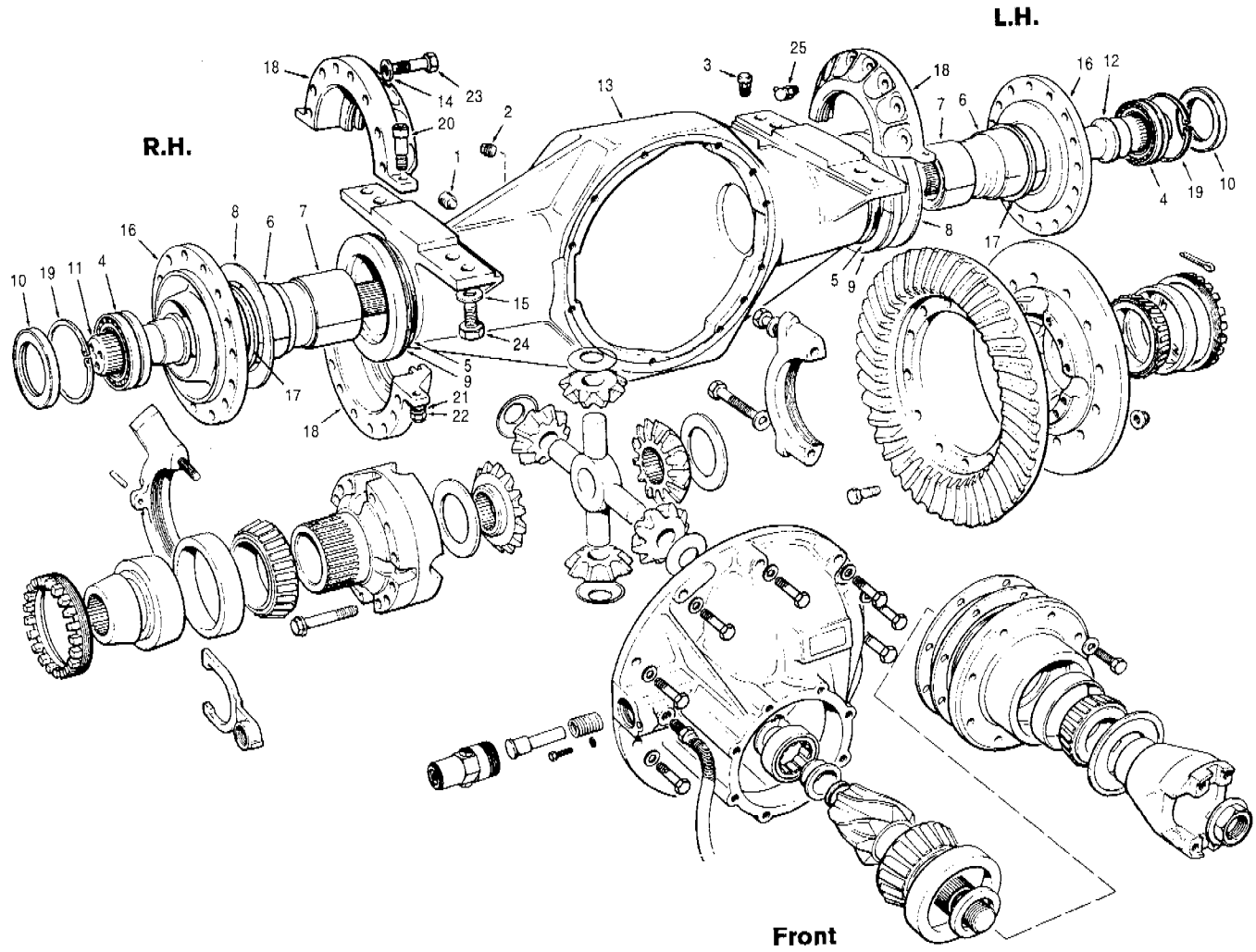

Item	Part No.	Description	Qty.	Remarks
	87503	**Final drive assembly**	1	**G710 to G716**
	87505	**Final drive assembly**	1	**G720 to G726**
1	877	Magnetic plug	1	
2	3614	Magnetic plug	1	
3	4341	Breather	1	
4	33892	Bearing	2	
5	37580	Seal	2	
6	68232	Bushing	2	
7	37583	Bushing	2	
8	37584	Thrust plate - outer	2	
9	37585	Thrust plate - inner	2	
10	37591	Oil seal	2	
11	37617	Axle shaft - R.H.	1	
12	37616	Axle shaft - L.H.	1	
13	89160	Housing	1	
14	69360	Hardened washer	32	
15	49380	Hardened washer	8	
16	54524	Flanged sleeve	2	
17	68233	Seal	2	

Item	Part No.	Description	Qty.	Remarks
18	**62696**	**Split ring assembly** - includes items 20, 21 & 22	2	
19	19B-550	Snap ring	2	
20	50G-1016	Bolt	4	
21	14A-08 Zi	Lockwasher	4	
22	30A-08 Zi	Nut	4	
23	50A-1228 Zi	Bolt	32	
24	50A-1620 Zi	Bolt	8	
25	29B-02	Grease fitting	2	
		Differential hydraulic circuit - models G710 to G740	Ref.	468-53

SERIAL NUMBERS: 33000 & UP	**FINAL DRIVE - HOUSING ASSEMBLY - Models G710 to G726**	Date **01/2001**	Group **463**
		Illustr. Nos **00003275**	Page **47**
			Issue **1**

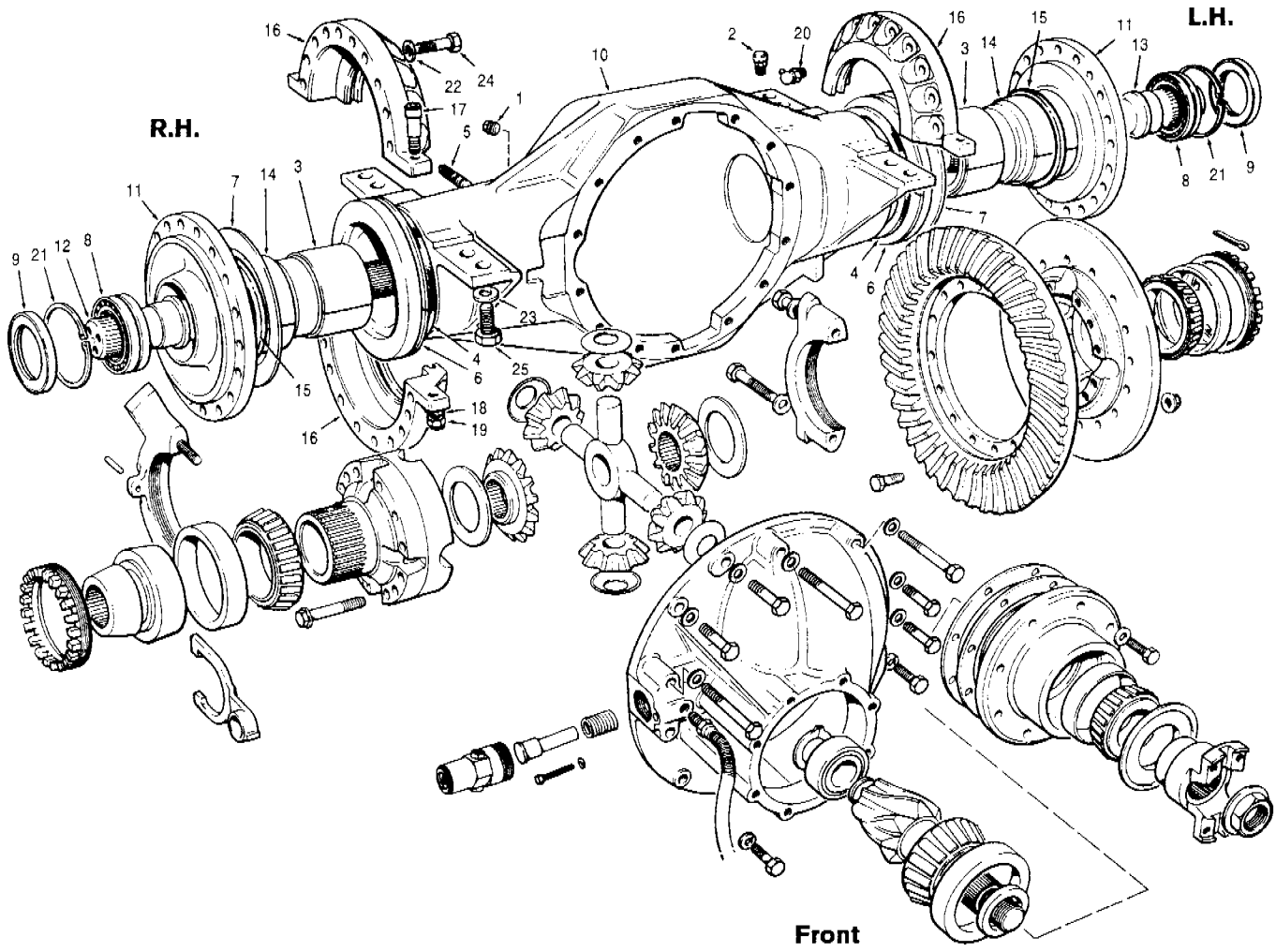

Item	Part No.	Description	Qty.	Remarks
	87499	**Final drive assembly**	1	
1	3614	Magnetic plug	1	
2	4341	Breather	1	
3	12638	Bushing	2	
4	19677	Seal	2	
5	27449	Plug - magnetic	1	
6	29483	Thrust plate - inner	2	
7	56768	Thrust plate - outer	2	
8	33892	Bearing	2	
9	37591	Oil seal - outer	2	
10	89161	Housing	1	
11	54525	Flanged sleeve	2	
12	37617	Axle shaft - R.H.	1	
13	37616	Axle shaft - L.H.	1	
14	68236	Bushing	2	
15	65938	Seal	2	

Item	Part No.	Description	Qty.	Remarks
16	**62697**	**Split ring assembly** - includes items 17, 18 & 19	2	
17	50G-1016	Bolt	4	
18	14A-08 Zi	Lockwasher	4	
19	30A-08 Zi	Nut	4	
20	29B-02	Grease fitting	2	
21	19B-550	Snap ring	2	
22	69360	Hardened washer	40	
23	49380	Hardened washer	8	
24	50A-1228 Zi	Bolt	40	
25	50A-1622 Zi	Bolt	8	
		Differential hydraulic circuit - models G710 to G740	Ref.	468-53

SERIAL NUMBERS: 33000 & UP	**FINAL DRIVE - HOUSING ASSEMBLY - Models G730 to G740**	Date **01/2001**	Group **463**
		Illustr. Nos **00003278**	Page **48**
			Issue **1**

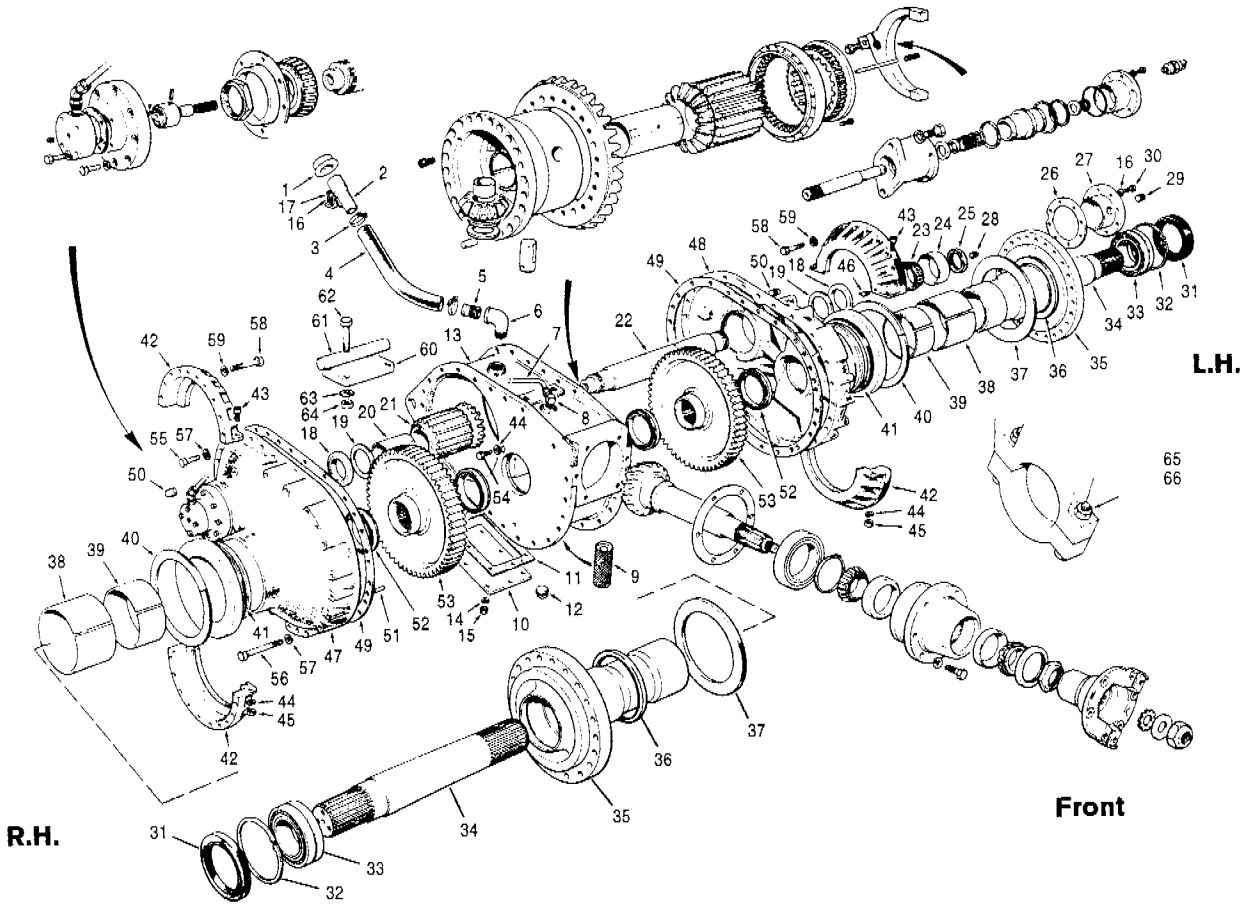

Item	Part No.	Description	Qty.	Remarks
	73324	**Final drive assembly** - includes differential	1	
1	5888	Breather cap	1	
2	51592	Filler pipe	1	
3	22B-28	Clamp	2	
4	8585 x 28	Hose	1	
5	8572-4	Nipple	1	
6	115J-1616	Elbow	1	
7	19729	Tube	1	
8	19923	Suction tube	1	
9	19922	Strainer	1	
10	19827	Cover plate	1	
11	11448	Gasket	1	
12	3614	Magnetic plug	1	
13	16972	Main case	1	
14	14A-05 Zi	Lockwasher	8	
15	30A-05 Zi	Nut	8	
16	14A-06 Zi	Lockwasher	21	
17	30A-06 Zi	Nut	1	
18	29619	Thrust washer	2	
19	12787	Bearing	2	
20	12784	Pinion sleeve	2	
21	56196	Gear - spider pinion	2	
22	55206	Cross shaft	1	
23	13148	Bearing cone	2	
24	16729	Bearing cup	2	
25	36S-12	Locknut	2	
26	29191	Shim - .005"	6	
26	29192	Shim - .007"	7	
26	29193	Shim - .020"	3	
27	44826	End cap	1	
28	115D-04	Plug	1	
29	115E-16	Plug	1	
30	50A-0612 Zi	Bolt	8	
31	29495	Oil seal	2	
32	19B-625	Snap ring	2	
33	29494	Bearing	2	

Item	Part No.	Description	Qty.	Remarks
34	29490	Drive axle	2	
35	37436	Flanged sleeve	2	
36	65937	Seal	2	
37	56768	Thrust plate - outer	2	
38	68117	Bushing	2	
39	12638	Bushing	2	
40	29483	Thrust plate - inner	2	
41	19677	Seal	2	
42	**403035**	**Half ring assembly** - includes items 43, 44 & 45	2	
43	50G-1016	Bolt	4	
44	14A-08 Zi	Lockwasher	7	
45	30A-08 Zi	Nut	4	
46	29B-02	Grease fitting	2	
47	**87594**	**Side housing - R.H.** - includes items 36, 38 & 39	1	
48	**87595**	**Side housing - L.H.** - includes items 36, 38 & 39	1	
49	78383	Gasket	2	
50	115E-08	Plug	2	
51	13D-1624	Dowel pin	4	
52	12660	Bearing	4	
53	16970	Bull gear	2	
54	16885	Screw	1	
55	50A-1016 Zi	Bolt	20	
56	50A-1040 Zi	Bolt	22	
57	14A-10 Zi	Lockwasher	48	
58	50A-1228 Zi	Bolt	40	
59	69360	Hardened washer	40	
60	12125-28	Mounting plate	1	
61	43688	Pin	1	
62	50A-1236 Zi	Bolt	4	
63	14A-12 Zi	Lockwasher	4	
64	30A-12 Zi	Nut	4	
65	62942	Bolt	4	
66	30A-18 Zi	Nut	4	

SERIAL NUMBERS: 33000 & UP	**FINAL DRIVE - HOUSING ASSEMBLY - Model G780**	Date 01/2001	Group 468
		Illustr.Nos 00004305	Page 49
			Issue 1

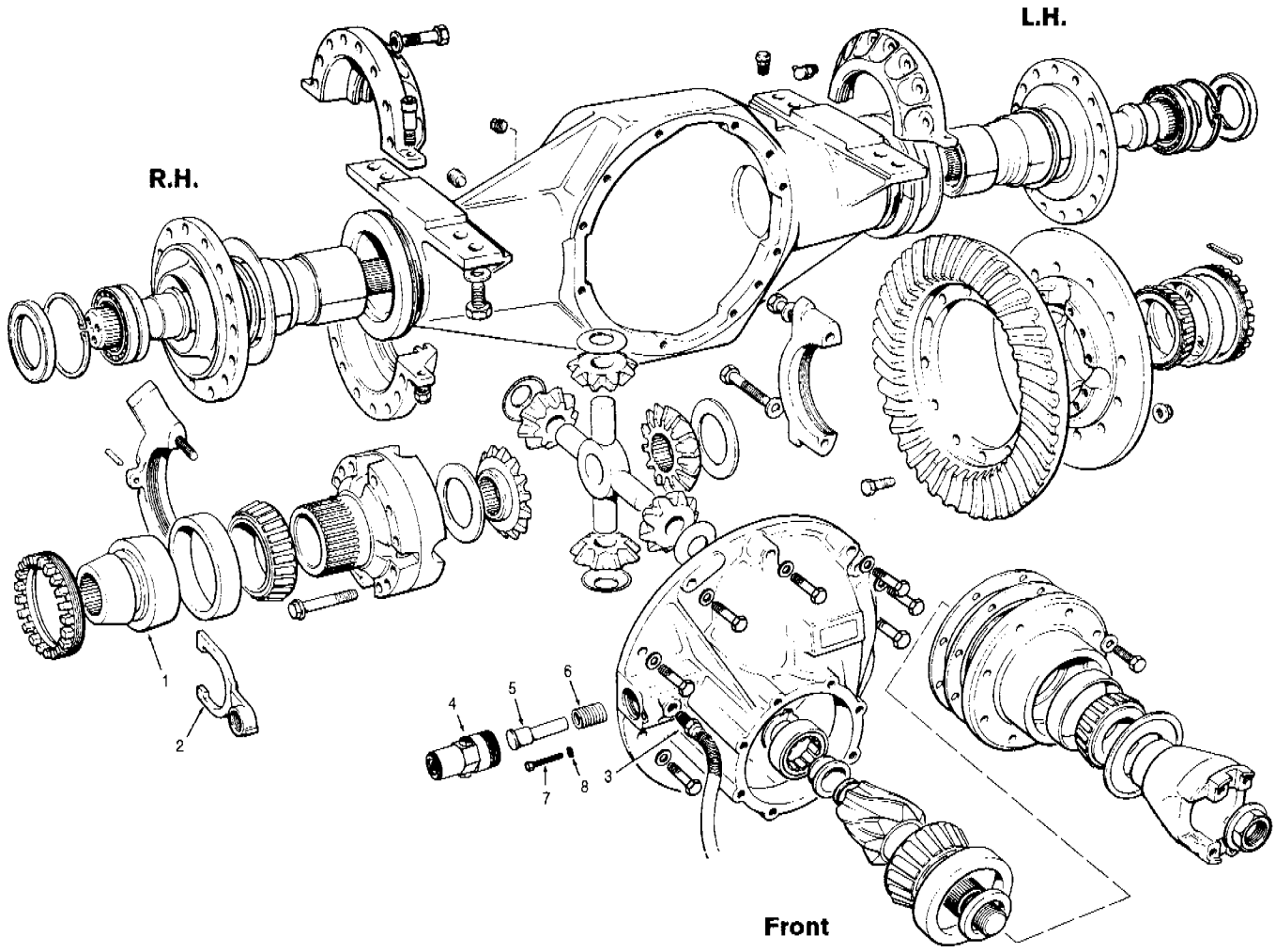

Item	Part No.	Description	Qty.	Remarks
	87503	**Final drive assembly**	1	**G710 to G716**
	87505	**Final drive assembly**	1	**G720 to G726**
		Differential lock		
1	63106	Collar	1	
2	63363	Fork	1	
3	63347	Switch - sensor	1	
4	95153	Shift cylinder - differential lock	1	
	76280	**Seal kit for 95153 - differential lock shift cylinder** - includes the following:	1 per	
		Ring	1	
		Back-up ring	1	
		O-ring	4	
5	63340	Push rod	1	
6	63341	Spring	1	
7	63346	Bolt	1	
8	63345	O-ring	1	
		Differential hydraulic circuit - models G710 to G740	Ref.	468-53

Item	Part No.	Description	Qty.	Remarks

SERIAL NUMBERS: 33000 & UP	**FINAL DRIVE - DIFFERENTIAL LOCK - Models G710 to G726**	Date **01/2001**	Group **468**
		Illustr. Nos **00003277**	Page **50**
			Issue **1**

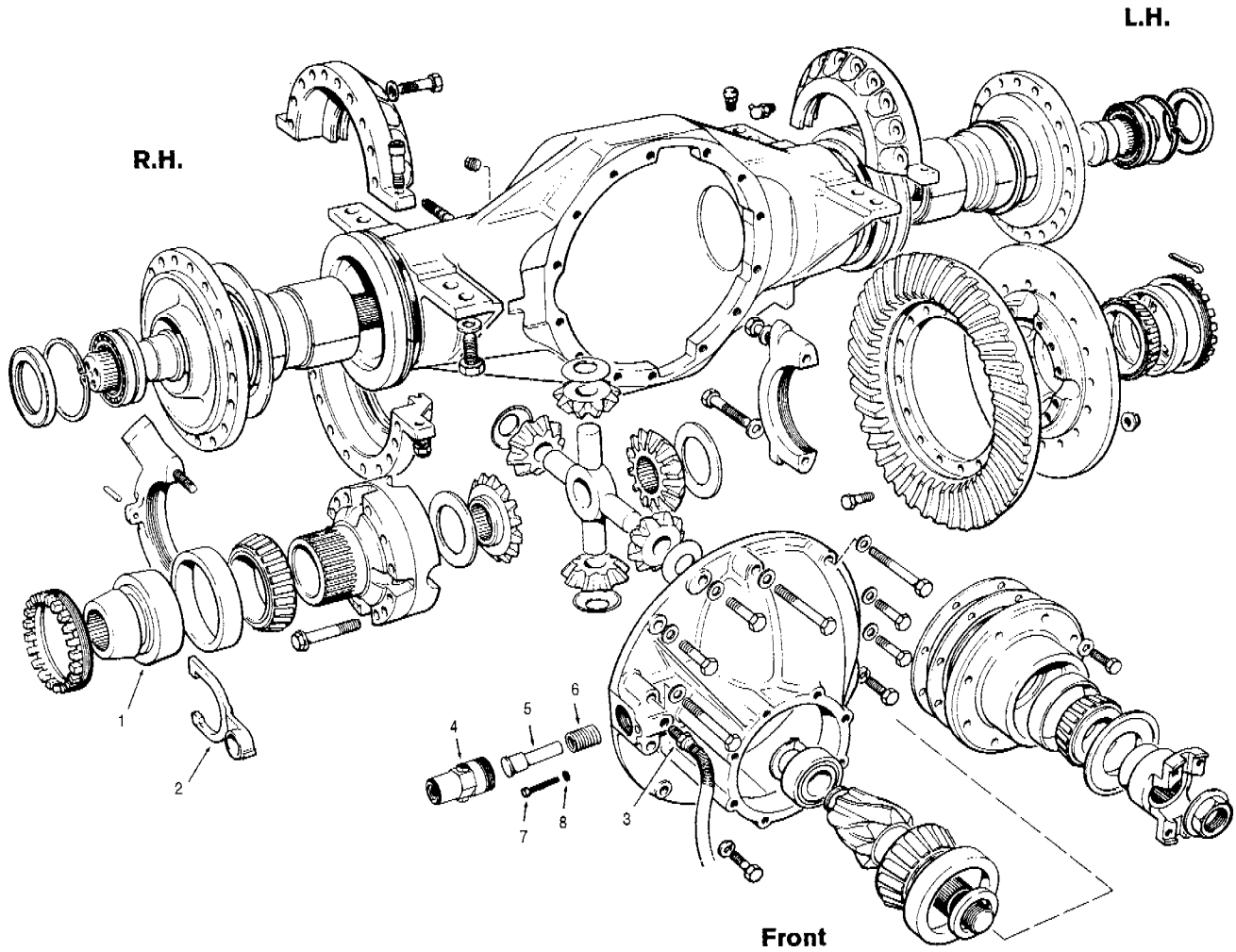

Item	Part No.	Description	Qty.	Remarks
	87499	**Final drive assembly**	1	
		Differential lock		
1	63137	Collar	1	
2	63339	Fork	1	
3	63347	Switch - sensor	1	
4	95153	Shift cylinder - differential lock	1	
	76280	**Seal kit for 95153 - differential lock shift cylinder** - includes the following:	1 per	
		Ring	1	
		Back-up ring	1	
		O-ring	4	
5	63340	Push rod	1	
6	63341	Spring	1	
7	63346	Bolt	1	
8	63345	O-ring	1	
		Differential hydraulic circuit - models G710 to G740	Ref.	468-53

Item	Part No.	Description	Qty.	Remarks

SERIAL NUMBERS: 33000 & UP	**FINAL DRIVE - DIFFERENTIAL LOCK - Models G730 to G740**	Date	**01/2001**	Group **468**
		Illustr. Nos	**00003280**	Page **51**
				Issue **1**

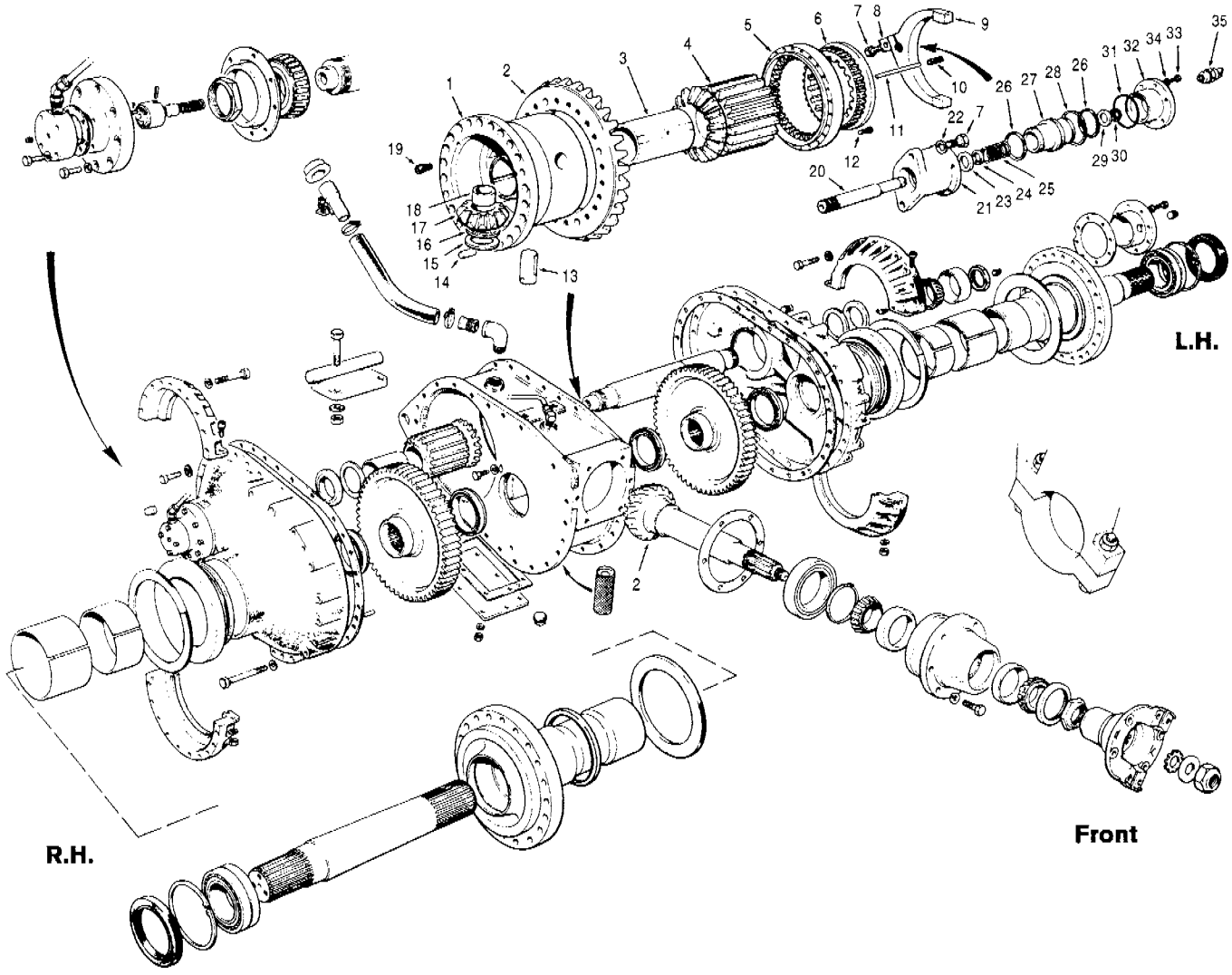

Item	Part No.	Description	Qty.	Remarks
1	56174	Housing - differential	1	
2	**29586**	**Spiral pinion shaft/gear, 12 & 34 teeth**	1	Set
3	12784	Pinion sleeve	2	
4	56196	Gear - spider pinion	2	
5	12788	Gear - shift clutch	1	
6	12789	Shift clutch	1	
7	50A-0812 Zi	Bolt	3	
8	12411	Tab washer	1	
9	29184	Shifter fork	1	
10	13C-1224	Roll pin	3	
11	65674	Pin	3	
12	51D-0610	Capscrew	21	
13	12785	Pin	3	
14	13D-2020	Dowel pin	2	
15	29526	Washer	3	
16	29525	Bearing	3	
17	29617	Gear - spider	3	
18	29499	Bushing	3	

Item	Part No.	Description	Qty.	Remarks
19	51D-0808	Capscrew	20	
20	29440	Shift rail	1	
21	37909	Barrel	1	
22	14A-08 Zi	Lockwasher	7	
23	12846	Seal	2	
24	29433	Washer	1	
25	29251	Spring	1	
26	10366	Piston ring	2	
27	29434	Piston	1	
28	29438	Piston ring	1	
29	29437	Retainer	1	
30	29439	Snap ring	1	
31	12A-230	O-ring	1	
32	29436	Cap - shift cylinder	1	
33	50A-0406 Zi	Bolt	6	
34	14A-04 Zi	Lockwasher	6	
35	73294	Switch	1	

SERIAL NUMBERS: 33000 & UP	**FINAL DRIVE - DIFFERENTIAL LOCK - Model G780**	Date **01/2001**	Group **468**
		Illustr. Nos **00003283**	Page **52**
			Issue **1**

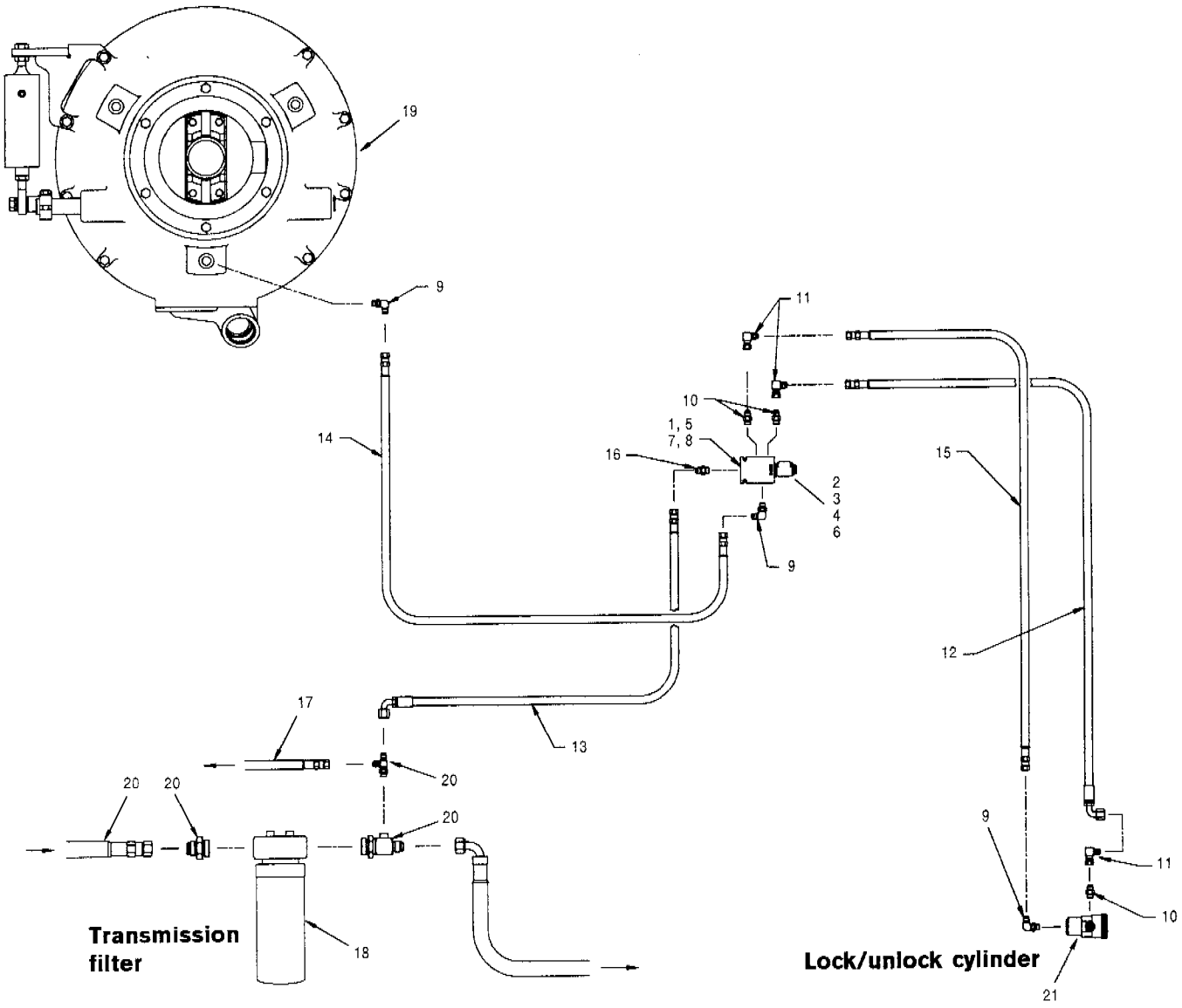

Item	Part No.	Description	Qty.	Remarks
1	**58741**	**Solenoid valve assembly** - includes items 2 to 6	1	
	63121	**Seal kit for 58741** **- solenoid valve** - includes the following:	1 per	
		O-ring - large	1	
		O-ring - small	3	
		Back-up ring	6	
2	**66126**	**Cartridge** - includes items 3 & 4	1	
3	12A-020	O-ring	2	
4	68218	Conical nut	1	
5	66127	Valve body	1	
6	66125	Coil	1	
7	50A-0414 Zi	Bolt	2	
8	14A-04 Zi	Lockwasher	2	

Item	Part No.	Description	Qty.	Remarks
		Hydraulic circuit		
9	111B-0606	Connector	3	
10	111E-0606	Connector	3	
11	112B-06	Connector	3	
12	78220 x 36	Hose	1	
13	78220 x 65	Hose	1	
14	78221 x 17	Hose	1	
15	78221 x 36	Hose	1	
16	99135	Check valve	1	
17		**Blade lift circuit - MBCS float valve - models G710 to G740**	Ref.	983-74
18		**Transmission hydraulic filter**	Ref.	911-7
19		**Clutch assembly**	Ref.	413-3
20		**Transmission hydraulic circuit**	Ref.	421-10
21		**Final drive - differential lock - models G710 to G726**	Ref.	468-50
21		**Final drive - differential lock - models G730 to G740**	Ref.	468-51

SERIAL NUMBERS: 33000 & UP	**DIFFERENTIAL HYDRAULIC CIRCUIT - Models G710 to G740**	Date **01/2001**	Group **468**
		Illustr. Nos **00004948**	Page **53**
			Issue **1**

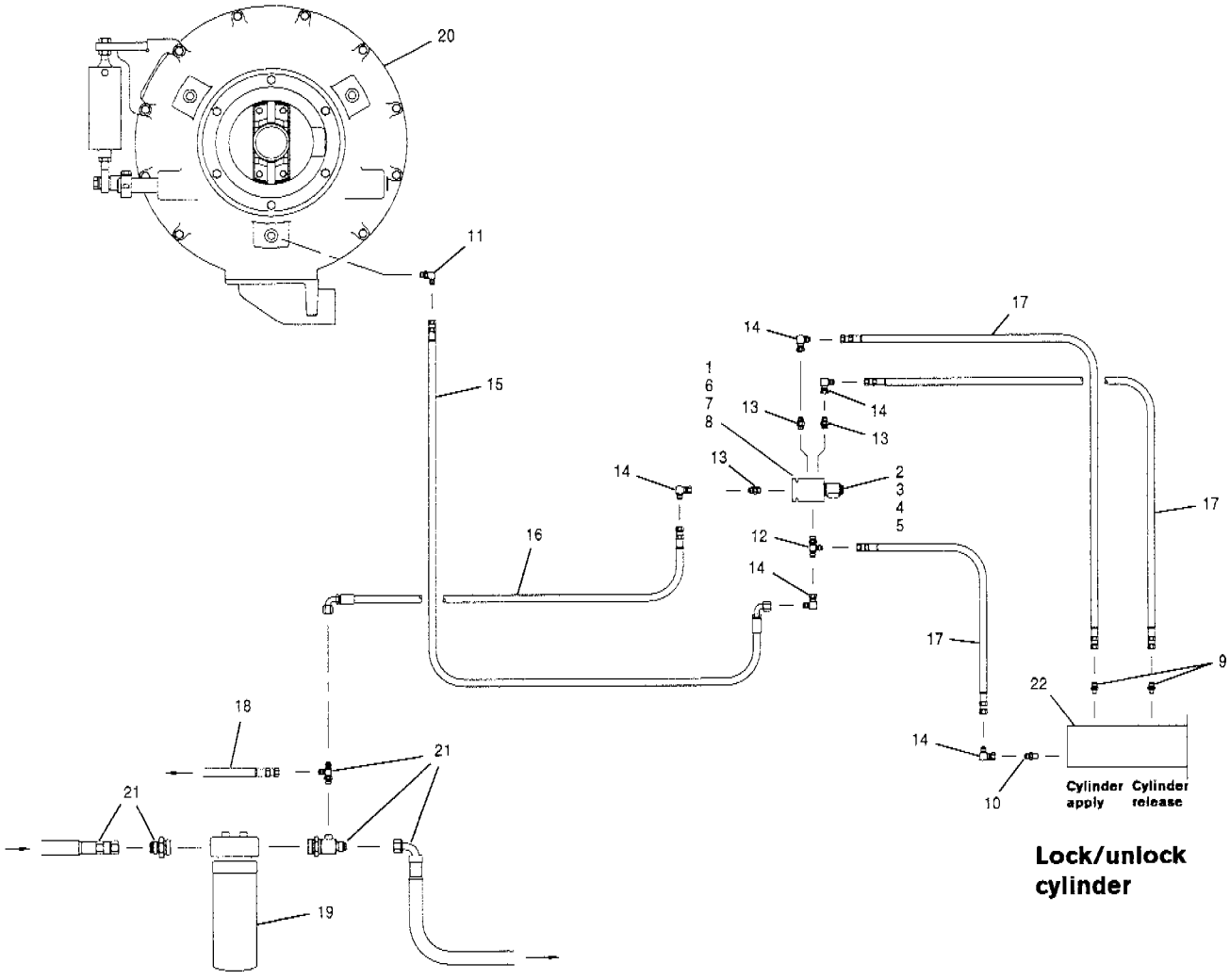

Transmission filter

Lock/unlock cylinder

Item	Part No.	Description	Qty.	Remarks
1	**58741**	**Solenoid valve assembly** - includes items 2 to 6	1	
	63121	**Seal kit for 58741** - includes the following: O-ring - large O-ring - small Back-up ring	1 per 1 3 6	
2	**66126**	**Cartridge** - includes items 3 & 4	1	
3	12A-020	O-ring	2	
4	68218	Conical nut	1	
5	66125	Coil	1	
6	66127	Valve body	1	
7	50A-0414 Zi	Bolt	2	
8	14A-04 Zi	Lockwasher	2	

Item	Part No.	Description	Qty.	Remarks
		Hydraulic circuit		
9	110G-0602	Connector	2	
10	110G-0604	Connector	1	
11	111B-0606	Connector	1	
12	111D-0606	Tee	1	
13	111E-0606	Connector	3	
14	112B-06	Connector	5	
15	78220 x 48	Hose	1	
16	78220 x 108	Hose	1	
17	78221 x 12	Hose	3	
18		**Blade lift circuit - HMBCS float valve**	Ref.	983-76
19		**Transmission hydraulic filter**	Ref.	911-7
20		**Clutch assembly**	Ref.	413-3
21		**Transmission hydraulic circuit**	Ref.	421-10
22		**Final drive - differential lock** **- models G750 to G780**	Ref.	468-52

SERIAL NUMBERS: 33000 & UP	**DIFFERENTIAL HYDRAULIC CIRCUIT** **- Model G780**	Date **01/2001**	Group **468**
		Illustr. Nos **00004731**	Page **54**
			Issue **1**

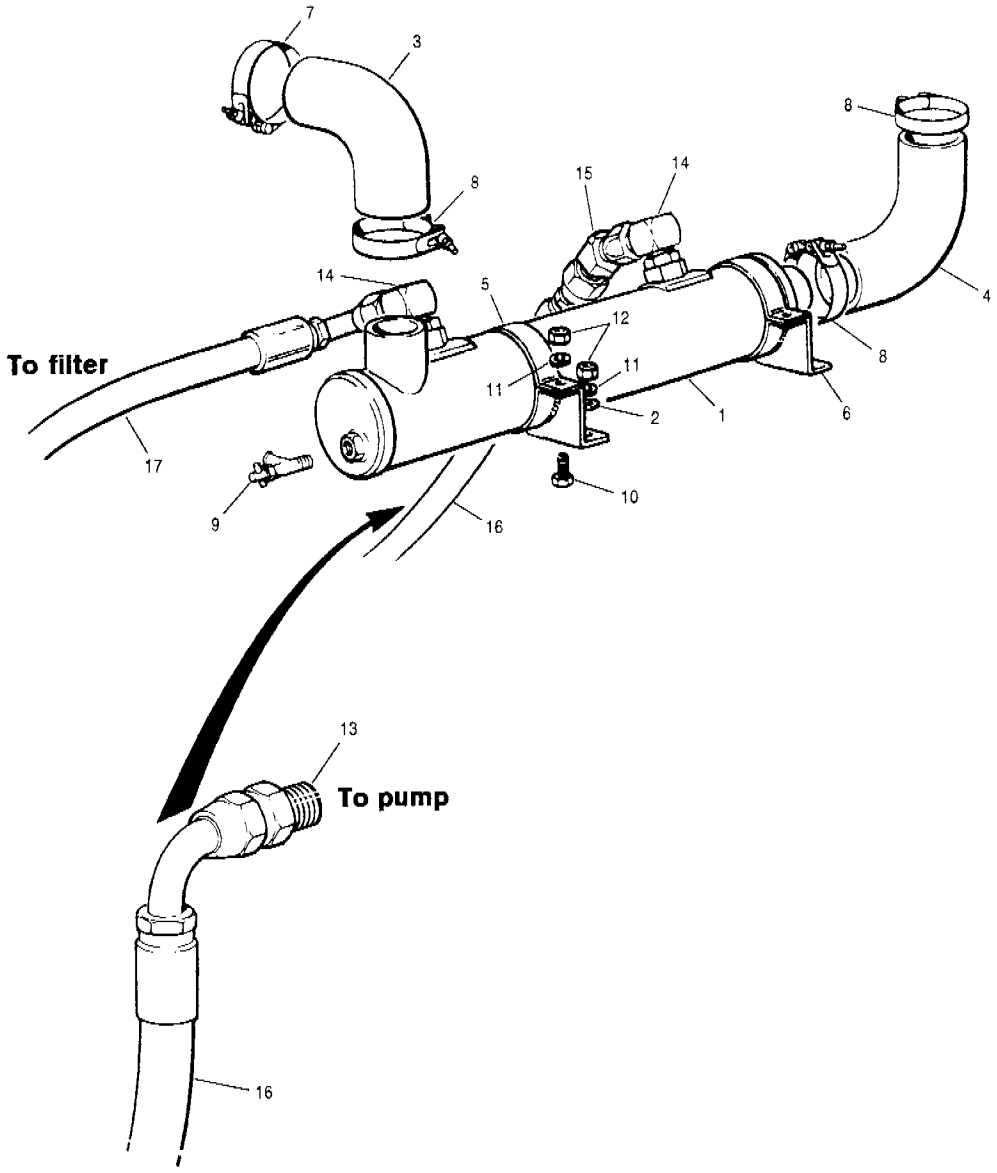

Item	Part No.	Description	Qty.	Remarks
1	57983	Oil cooler	1	
2	14C-06 Zi	Flatwasher	2	
3	52808	Hose	1	
4	80861	Hose	1	
5	54690	Clamp	2	
6	95250	Clamp base	2	
7	22A-256	Clamp	1	
8	22A-282	Clamp	3	
9	65134	Drain cock	1	
10	50A-0608 Zi	Bolt	4	
11	14A-06 Zi	Lockwasher	6	
12	30A-06 Zi	Nut	6	
13	111E-1612	Connector	1	
14	111B-1616	Connector	2	
15	112A-16	Connector	1	
16	78223 x 52	Hose	1	
17	78217	Hose	1	

Item	Part No.	Description	Qty.	Remarks

SERIAL NUMBERS: 33000 & UP	**TRANSMISSION OIL COOLER - Models G710 to G716**	Date **01/2001**	Group	**491**
		Illustr.Nos **00004945**	Page	**55**
			Issue	**1**

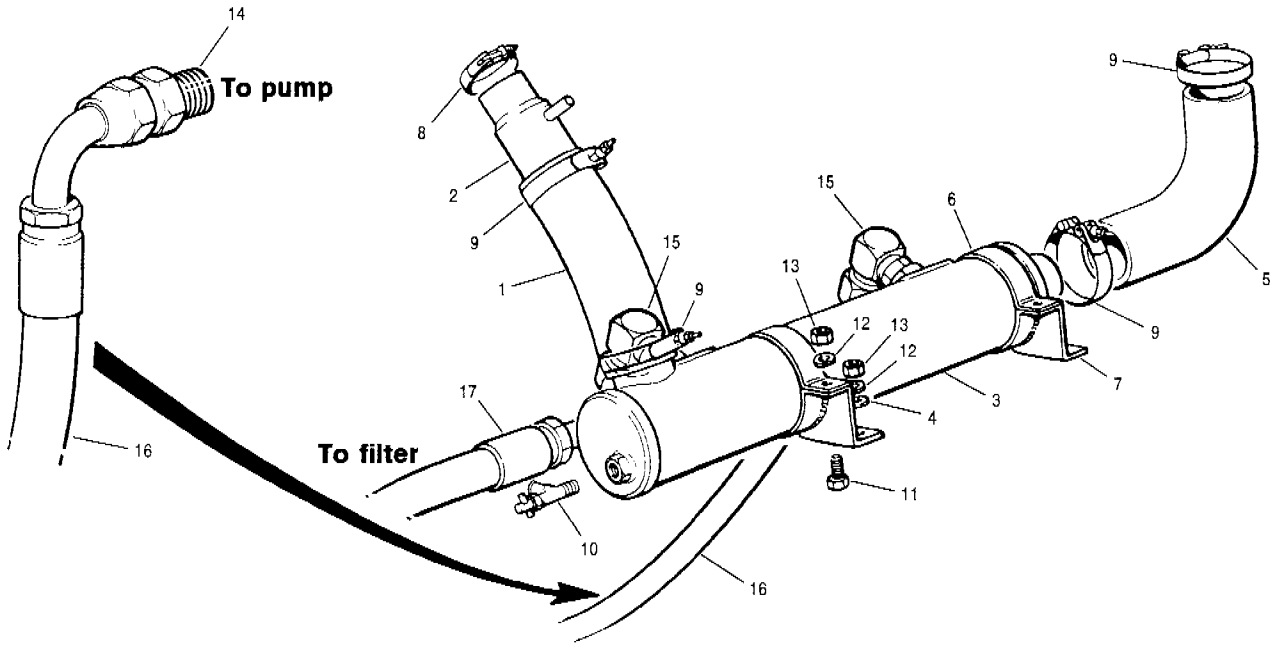

Item	Part No.	Description	Qty.	Remarks
1	84871	Hose	1	
2	86420	Adapter	1	
3	57983	Oil cooler	1	
4	14C-06 Zi	Flatwasher	2	
5	80861	Hose	1	
6	54690	Clamp	2	
7	95250	Clamp base	2	
8	22A-238	Clamp	1	
9	22A-282	Clamp	4	
10	65134	Drain cock	1	
11	50A-0608 Zi	Bolt	4	
12	14A-06 Zi	Lockwasher	6	
13	30A-06 Zi	Nut	6	
14	111E-1612	Connector	1	
15	111B-1616	Connector	2	
16	78223 x 52	Hose	1	
17	78217	Hose	1	

Item	Part No.	Description	Qty.	Remarks

SERIAL NUMBERS: 33000 & UP	**TRANSMISSION OIL COOLER - Models G720 to G736**	Date **01/2001**	Group **491**
		Illustr. Nos **00004946**	Page **56**
			Issue **1**

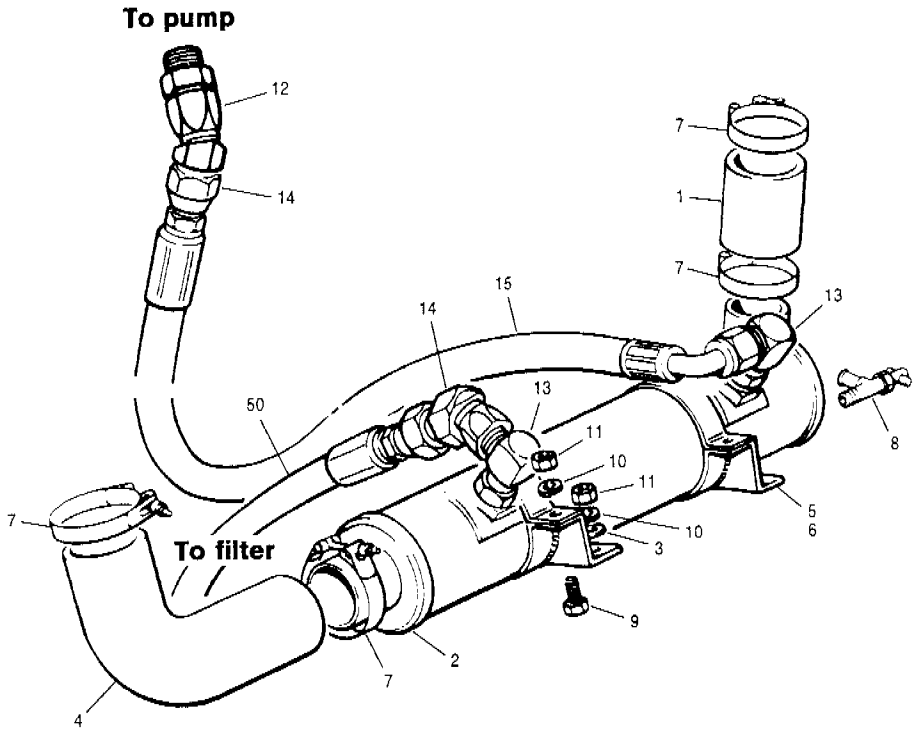

Item	Part No.	Description	Qty.	Remarks
1	86892	Hose	1	
2	86436	Oil cooler	1	
3	14C-06 Zi	Flatwasher	2	
4	95241	Hose	1	
5	54690	Clamp	2	
6	95250	Clamp base	2	
7	22A-282	Clamp	4	
8	65134	Drain cock	1	
9	50A-0608 Zi	Bolt	4	
10	14A-06 Zi	Lockwasher	6	
11	30A-06 Zi	Nut	6	
12	111E-1612	Connector	1	
13	111B-1616	Connector	2	
14	112A-16	Connector	2	
15	78223 x 52	Hose	1	
16	74758	Hose	1	

Item	Part No.	Description	Qty.	Remarks

SERIAL NUMBERS: 33000 & UP	**TRANSMISSION OIL COOLER - Models G740 to G780**	Date **01/2001**	Group **491**
		Illustr. Nos **00004947**	Page **57**
			Issue **1**

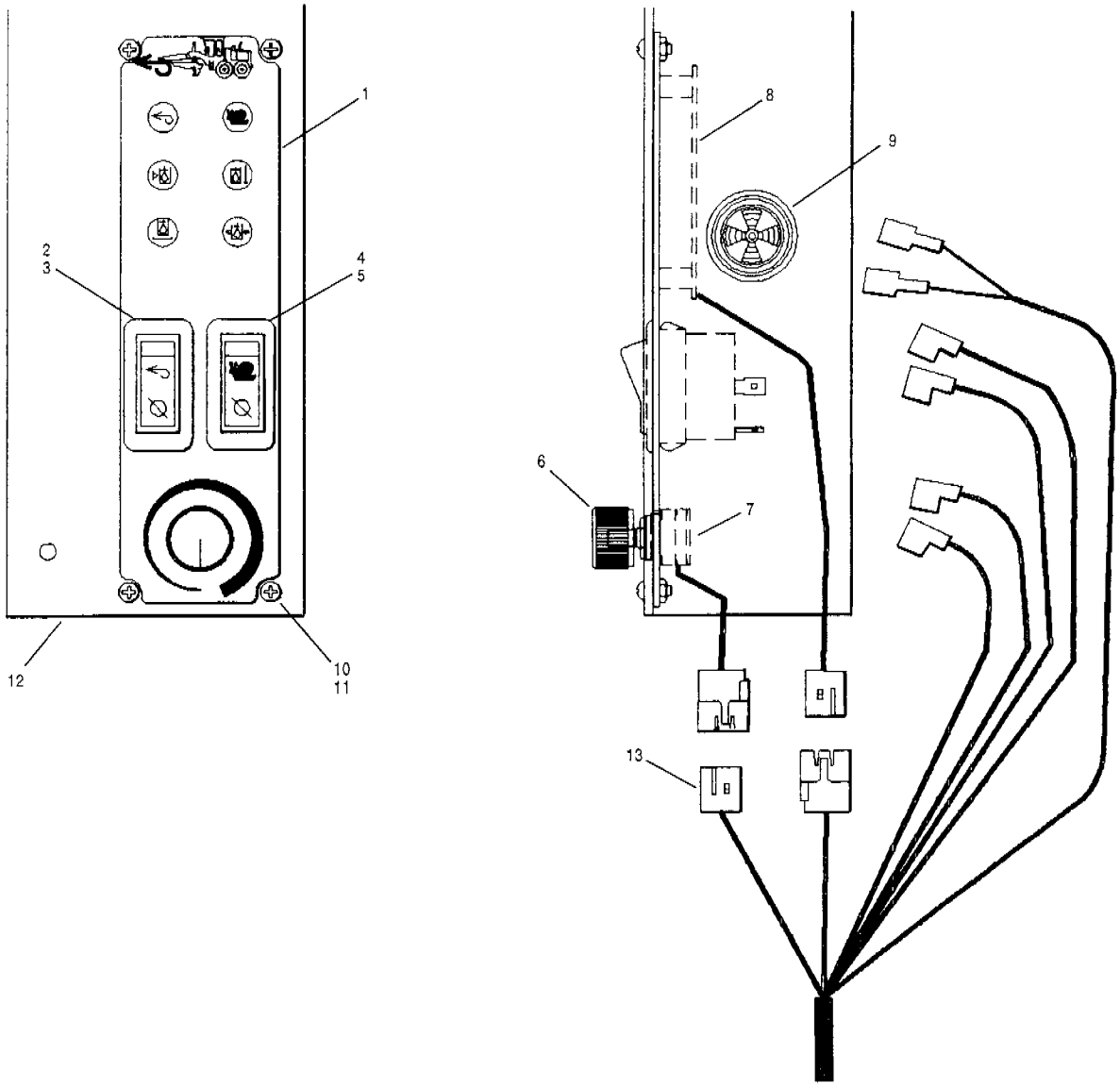

Item	Part No.	Description	Qty.	Remarks
	402206	**Module Assembly** - Includes Items 1 to 9	1	
1	87828	Faceplate - c/w decal - front	1	
2	73192	Switch	1	
3	87888	Decal - AWD	1	
4	87860	Switch	1	
5	87887	Decal - creep	1	
6	87856	Knob	1	
7	**87857**	**Rotary switch assembly**	1	
8	**87854**	**Circuit board assembly**	1	
9	73066	Alarm	1	
10	52M-0832 Ph	Screw	4	
11	46A-08	Rivnut	4	
12		**Upper door post cover**	Ref.	810-3 810-4
13		**Console harness**	Ref.	444-24

Item	Part No.	Description	Qty.	Remarks

SERIAL NUMBERS: 33000 & UP	**CONTROL MODULE - AWD**	Date **01/2001**	Group **491**
		Illustr. Nos **00006173**	Page **58**
			Issue **1**

Group	Page

Numerical

517 Oil Disc Brakes 3
520 Brake Linkage 4
521 Brake Master Cylinder 5
522 Brake Circuit 6
527 Brake Power Booster 7
551 Hand Brake 8
552 Hand Brake Caliper Assembly - Models G710 to G740 9
Hand Brake Caliper Assembly - Model G780 10

Group	Page

Alphabetical

522 Brake Circuit 6
520 Brake Linkage 4
521 Brake Master Cylinder 5
527 Brake Power Booster 7
551 Hand Brake 8
552 Hand Brake Caliper Assembly - Model G780 10
Hand Brake Caliper Assembly - Models G710 to G740 9
517 Oil Disc Brakes 3

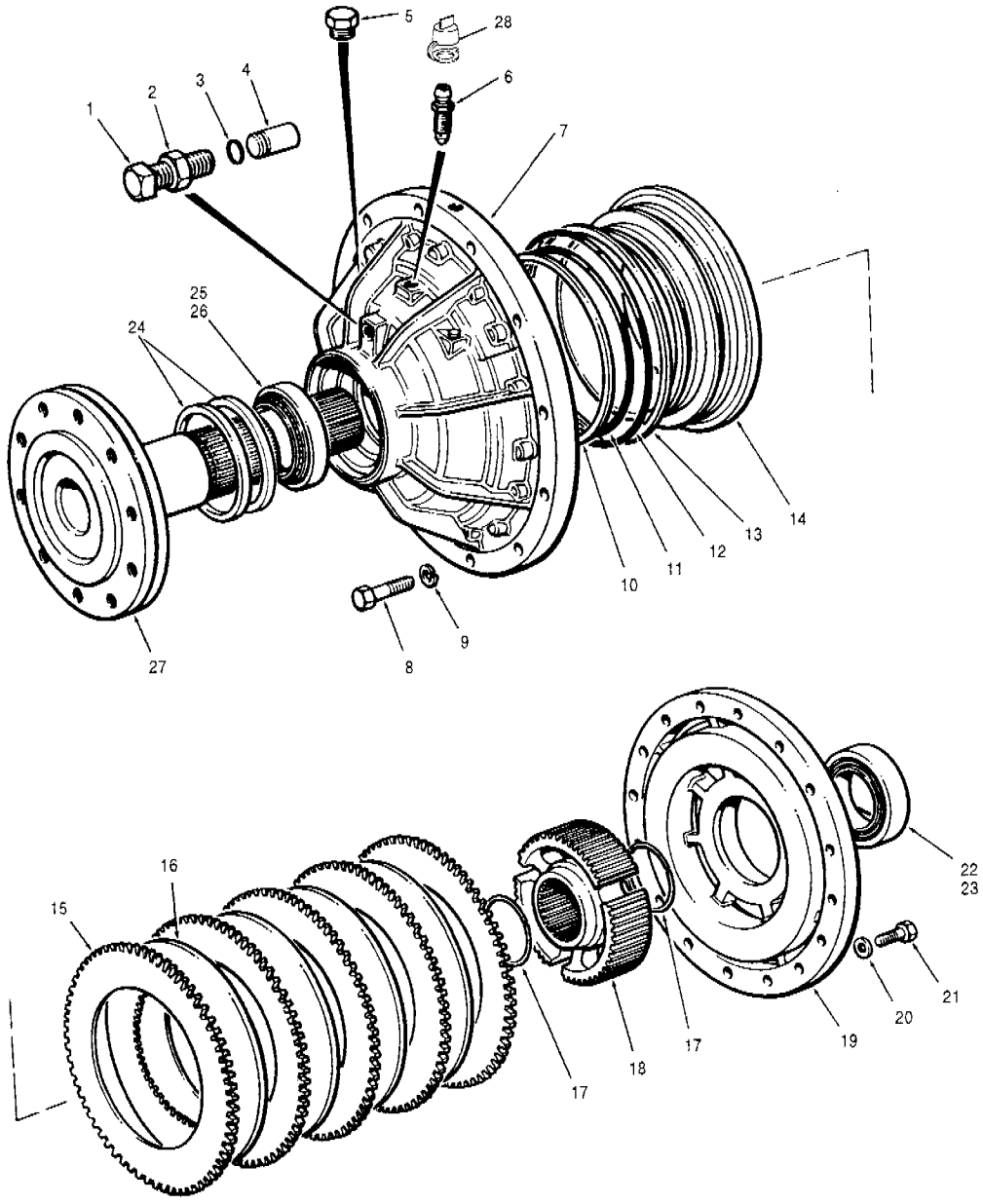

Item	Part No.	Description	Qty.	Remarks
1	70G-0824	Setscrew	1	
2	30D-08 Zi	Nut	1	
3	12A-110	O-ring	1	
4	56267	Pin	1	
5	111H-04	O-ring plug	1	
6	8317	Bleeder screw	1	
7	89301	Housing	1	
8	50A-1020 Zi	Bolt	10	
9	14A-10 Zi	Lockwasher	10	
10	37873	Back-up ring	1	
11	12A-451	O-ring	1	
12	12A-453	O-ring	1	
13	37874	Back-up ring	1	
14	37861	Piston	1	
15	37935	Reaction disc	4	G710 to G716
15	37935	Reaction disc	5	G720 to G736
15	37935	Reaction disc	6	G740 to G780

Item	Part No.	Description	Qty.	Remarks
16	37934	Friction disc	3	G710 to G716
16	37934	Friction disc	4	G720 to G736
16	37934	Friction disc	5	G740 to G780
17	37945	Snap ring	2	
18	37933	Hub	1	
19	37938	Inner housing	1	G710 to G716
19	37939	Inner housing	1	G720 to G736
19	37931	Inner housing	1	G740 to G780
20	37940	Washer	16	
21	50A-0816 UP	Bolt	16	Unplated
22	8142A	Bearing cup	1	
23	8142B	Bearing cone	1	
24	89267	Seal - tandem axle	1	
25	37867	Bearing cup	1	
26	37868	Bearing cone	1	
27	87771	Axle - tandem	1	G710 to G740
27	87772	Axle - tandem	1	G780
28	34196	Dust cap	1	

SERIAL NUMBERS: 33000 & UP	**OIL DISC BRAKES**	Date	**01/2001**	Group **517**
		Illustr. Nos	**00002569**	Page **3**
				Issue **1**

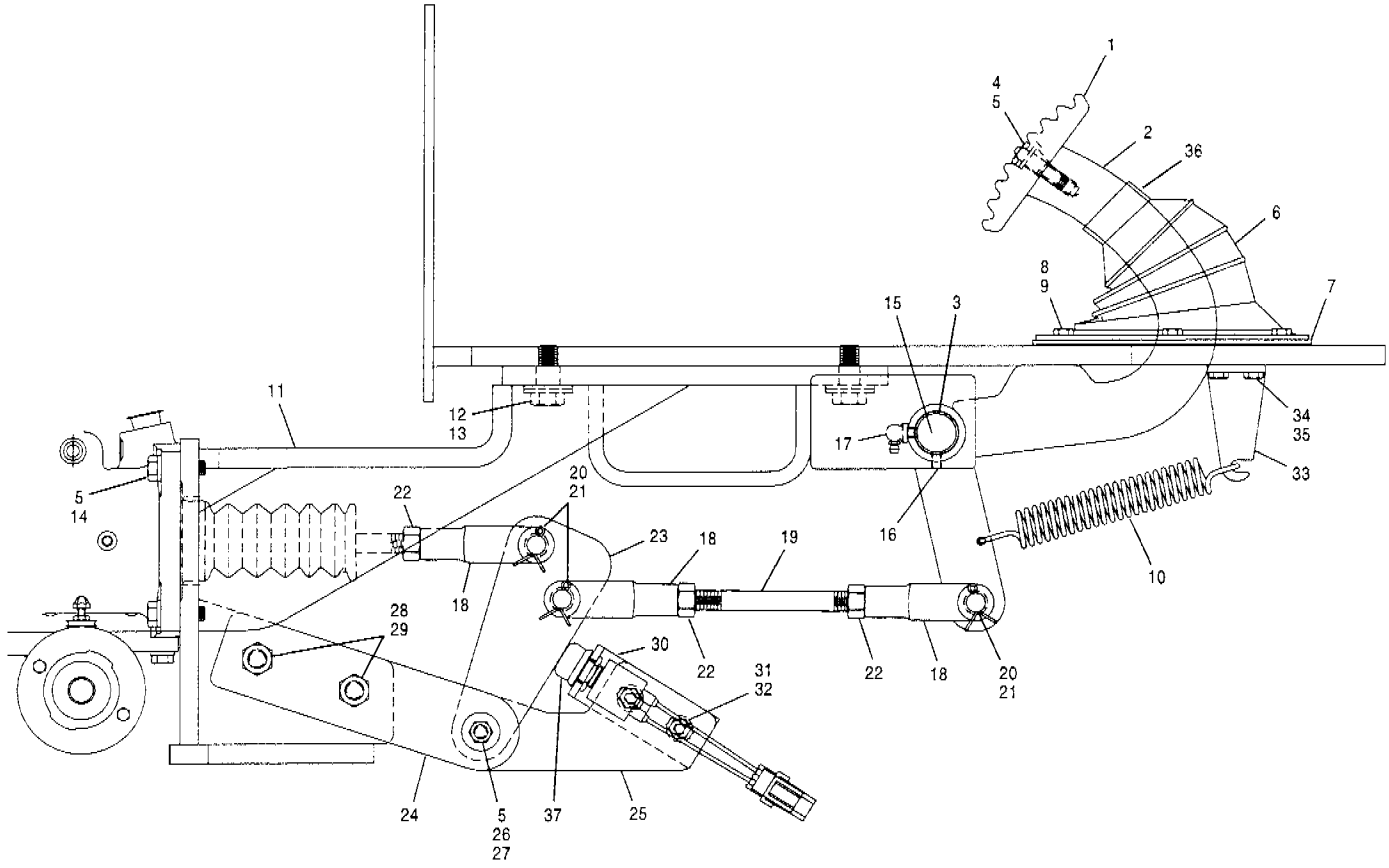

Item	Part No.	Description	Qty.	Remarks
1	* 402123	Pedal	1	
2	* **12725874**	**Pedal arm assembly** - includes item 3	1	
3	32824	Bushing	2	
4	* 50A-0608 Zi	Bolt	6	
5	* 940097	Hardened washer	6	
6	96525	Rubber boot	1	Enclosed cab
7	96492	Mounting flange	1	
8	50A-0406 Zi	Bolt	6	
9	* 955893	Hardened washer	6	
10	670	Spring	1	
11	* 404098	Bracket	1	
12	* 50A-0809 Zi	Bolt	3	
13	* 955898	Hardened washer	8	
14	* 50A-0610 Zi	Bolt	4	
15	48341	Shaft	1	
16	70B-0405	Setscrew	2	
17	* 28B-04	Grease fitting	1	
18	602	Clevis	3	
19	84194	Rod	1	

Item	Part No.	Description	Qty.	Remarks
20	10A-0820	Clevis pin	3	
21	13A-0420	Cotter pin	3	
22	31D-08 Zi	Nut	3	
23	56746	Pivot plate	1	
24	56745	Pivot - outer	1	
25	56773	Pivot - inner	1	
26	* 12725438	Shoulder screw	1	
27	36M-06 Zi	Locknut	1	
28	50A-0820 Zi	Bolt	2	
29	30A-08 Zi	Nut	2	
30	56774	Bracket	1	
31	50A-0506 Zi	Bolt	2	
32	* 955894	Hardened washer	2	
33	* 402142	Lug	1	
34	50A-0405 Zi	Bolt	2	
35	* 955893	Hardened washer	2	
36	* 12726304	Adhesive tape	1	
37	65852	Switch - brake light	1	

SERIAL NUMBERS: 33000 & UP	**BRAKE LINKAGE**	Date **06/2001**	Group **520**
		Illustr. Nos **00005363**	Page **4**
			Issue **1A**

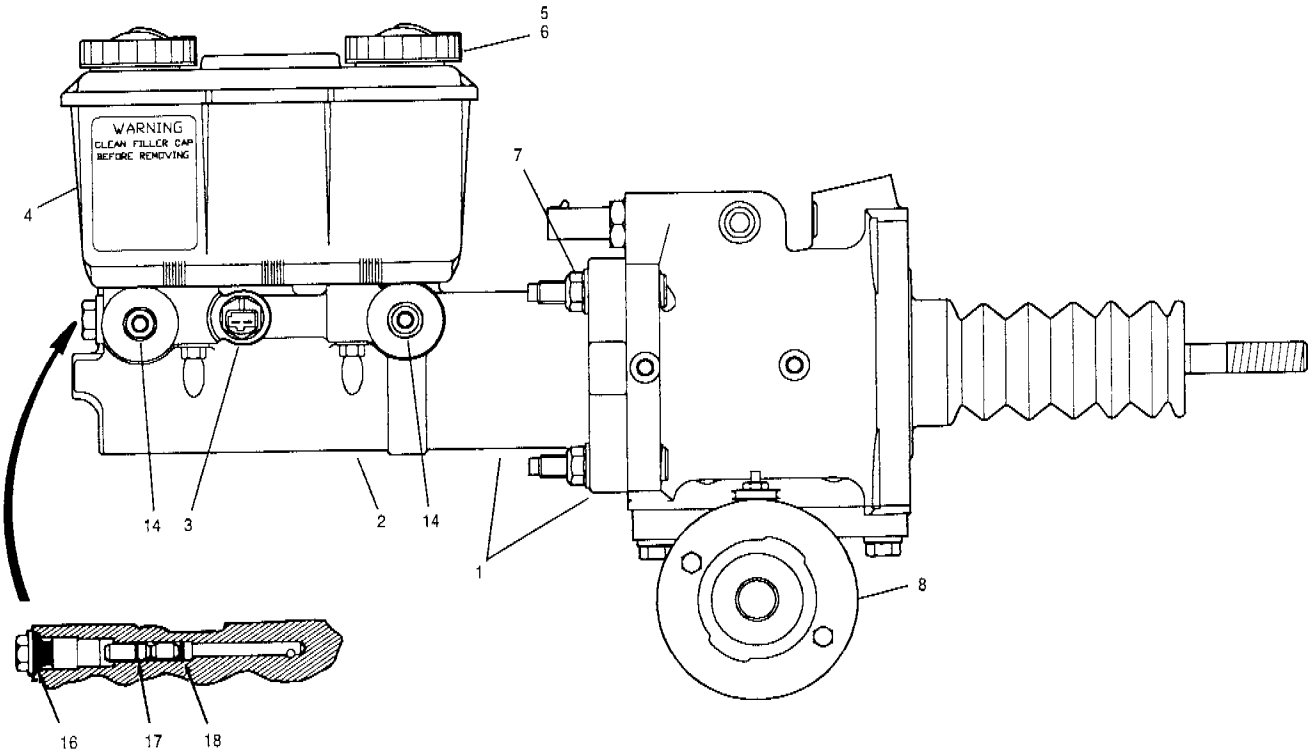

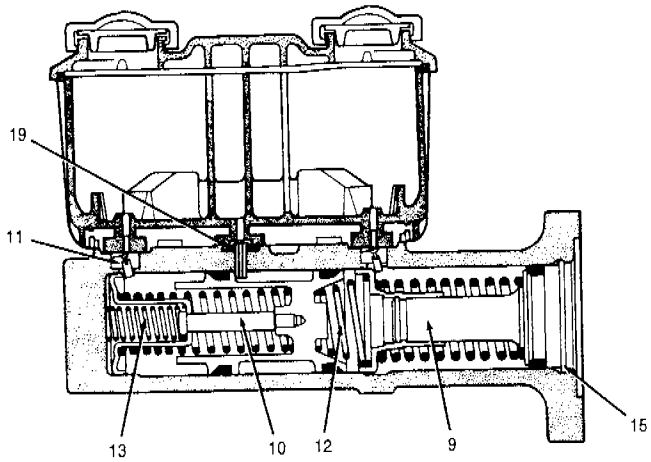

Item	Part No.	Description	Qty.	Remarks
1	* 12724047	**Master cylinder & power booster assembly** - includes item 8	1	
2	76282	**Master cylinder assembly**	1	
	76285	**Repair kit for 76282 - master cylinder** - includes items 6 & 9 to 19	1 per	
3	53034	Switch	1	
4	56747	Reservoir	1	
5	58748	Cap	2	
6	58749	Diaphragm	2	
7	53044	Nut	4	
8		Pump & motor	1	
	76287	**Kit - pump & motor** - includes items 8, seal & decal	1 per	

Item	Part No.	Description	Qty.	Remarks
9		**Primary piston assembly**	1	
10		**Secondary piston assembly**	1	
11	63177	Seal - reservoir	2	
12		Spring	1	
13		Spring	1	
14		Tube seat	4	
15		Snap ring	1	
16		O-ring	1	
17		O-ring	1	
18		O-ring	1	
19		O-ring	1	
	63251	Brake mineral hydraulic oil	1 liter	
		Brake power booster	Ref.	527-7

SERIAL NUMBERS:
33000 & UP

BRAKE MASTER CYLINDER

Date **06/2001**
Illustr. Nos **00003095**
Group **521**
Page **5**
Issue **1A**

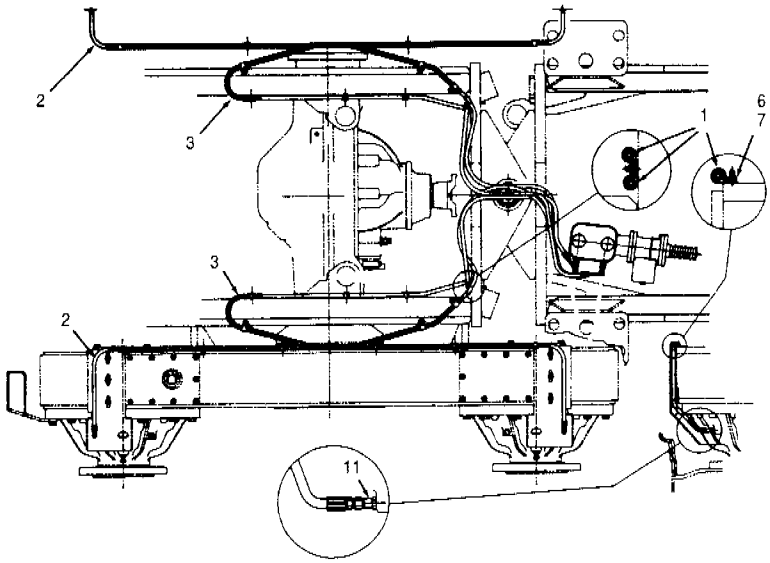

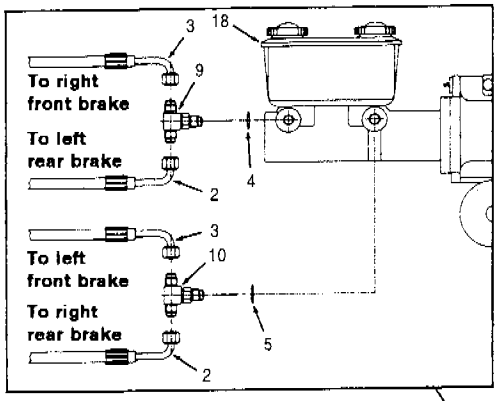

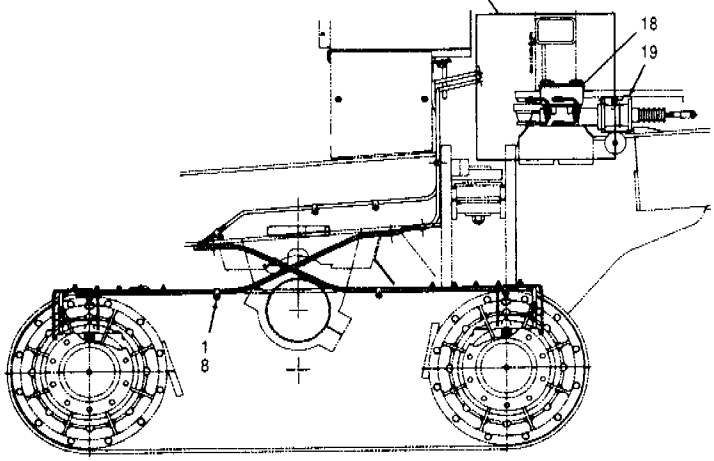

Clutch booster

Brake booster

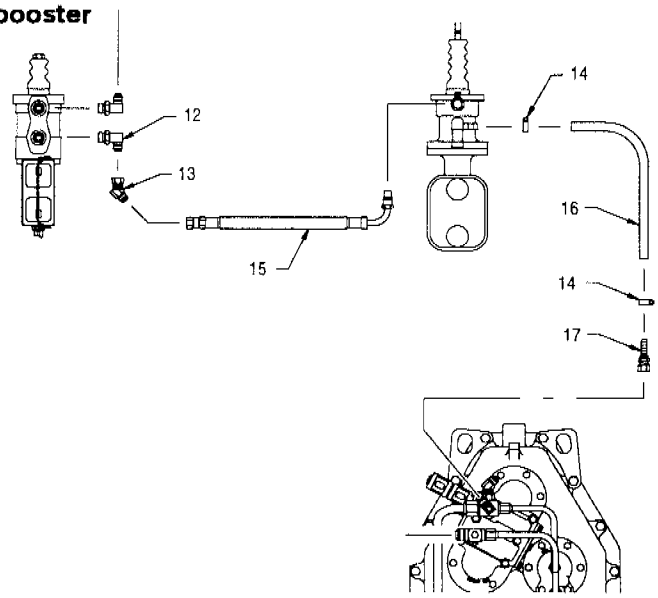

Item	Part No.	Description	Qty.	Remarks
1	32318	Clamp	22	
2	89115 x 150	Hose	2	
3	89115 x 160	Hose	2	
4	56793	Seal	1	
5	56794	Seal	1	
6	* 983335	Hardened washer	22	
7	30A-06	Nut	10	
8	89101	Bolt - special	12	
9	111C-0605	Connector	1	
10	111C-0606	Connector	1	
11	111E-0404	Connector	4	

Item	Part No.	Description	Qty.	Remarks
12	11B-0810	Connector	1	
13	112A-08	Connector	1	
14	22C-08	Clamp	2	
15	48849 x 35	Hose	1	
16	74476 x 36	Hose	1	
17	74477	Hose end	1	
18		**Brake master cylinder**	Ref.	521-5
19		**Brake power booster**	Ref.	527-7

SERIAL NUMBERS: 33000 & UP	**BRAKE CIRCUIT**	Date **06/2001**	Group **522**
		Illustr.Nos **00004902**	Page **6**
			Issue **1A**

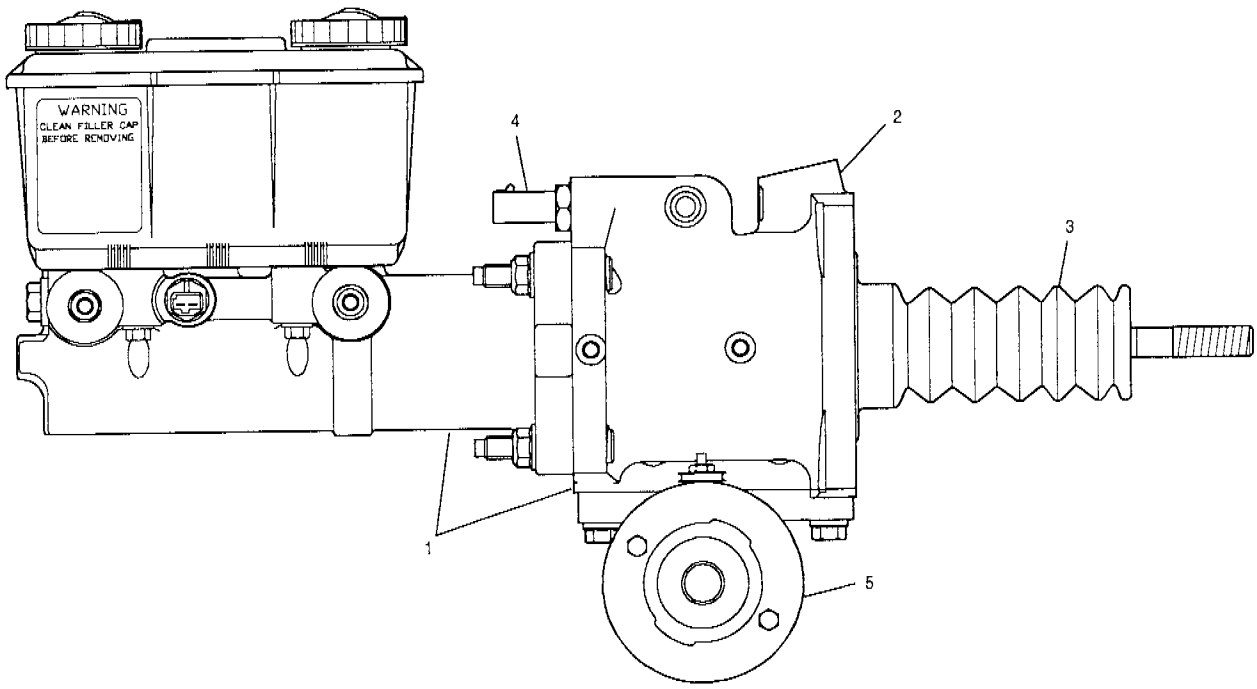

Item	Part No.	Description	Qty.	Remarks
1	* 12724047	**Master cylinder & power booster assembly** - includes item 5	1	
2	76284	**Power booster assembly**	1	
3	53045	Boot	1	
4	76288	Flow switch	1	
5		Pump & motor	1	
	76287	**Kit - pump & motor** - includes items 5, seal & decal	1 per	
	76286	**Seal kit for 76284 - power booster assembly** - includes seals, o-rings, seats, ball, grommet, bushing, retaining ring, seal retainer, boot, filter, sleeve, end cap & instruction sheet	1 per	
		Brake master cylinder	Ref.	521-5

Item	Part No.	Description	Qty.	Remarks

SERIAL NUMBERS: 33000 & UP	**BRAKE POWER BOOSTER**	Date	**06/2001**	Group **527**
		Illustr. Nos	**00004901**	Page **7**
				Issue **1A**

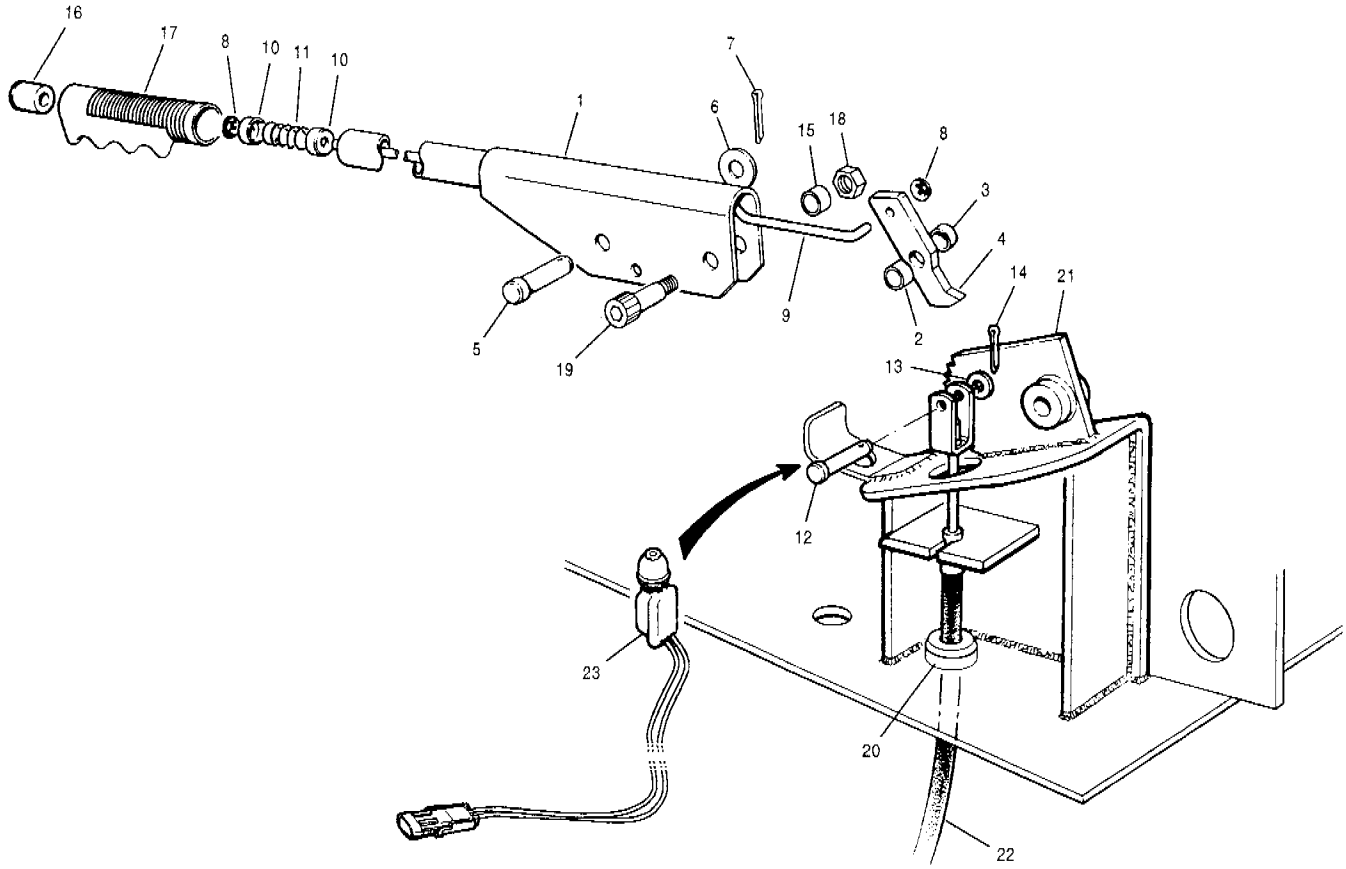

Item	Part No.	Description	Qty.	Remarks
	96521	**Handle assembly** - includes items 1 to 11	1	
1	96523	Handle	1	
2	54460	Spacer - long	1	
3	54461	Spacer - short	1	
4	48970	Pawl	1	
5	10A-0828	Clevis pin	1	
6	14D-08 Zi	Flatwasher	1	
7	13A-0420	Cotter pin	1	
8	46553	Fastener	2	
9	96522	Rod	1	
10	46552	Washer	2	
11	34561	Spring	1	

Item	Part No.	Description	Qty.	Remarks
12	10A-0516	Clevis pin	1	
13	14C-05 Zi	Flatwasher	1	
14	13A-0312	Cotter pin	1	
15	54461	Spacer - short	1	
16	73743	Release button	1	
17	73742	Grip - handle	1	
18	54657	Locknut	1	
19	* 12725438	Shoulder screw	1	
20	84693	Grommet	1	
21	54458	Ratchet	1	
22	56066	Brake Cable	1	
23	65852	Switch	1	

SERIAL NUMBERS: 33000 & UP	**HAND BRAKE**	Date **06/2001**	Group **551**
		Illustr. Nos **00002959**	Page **8**
			Issue **1A**

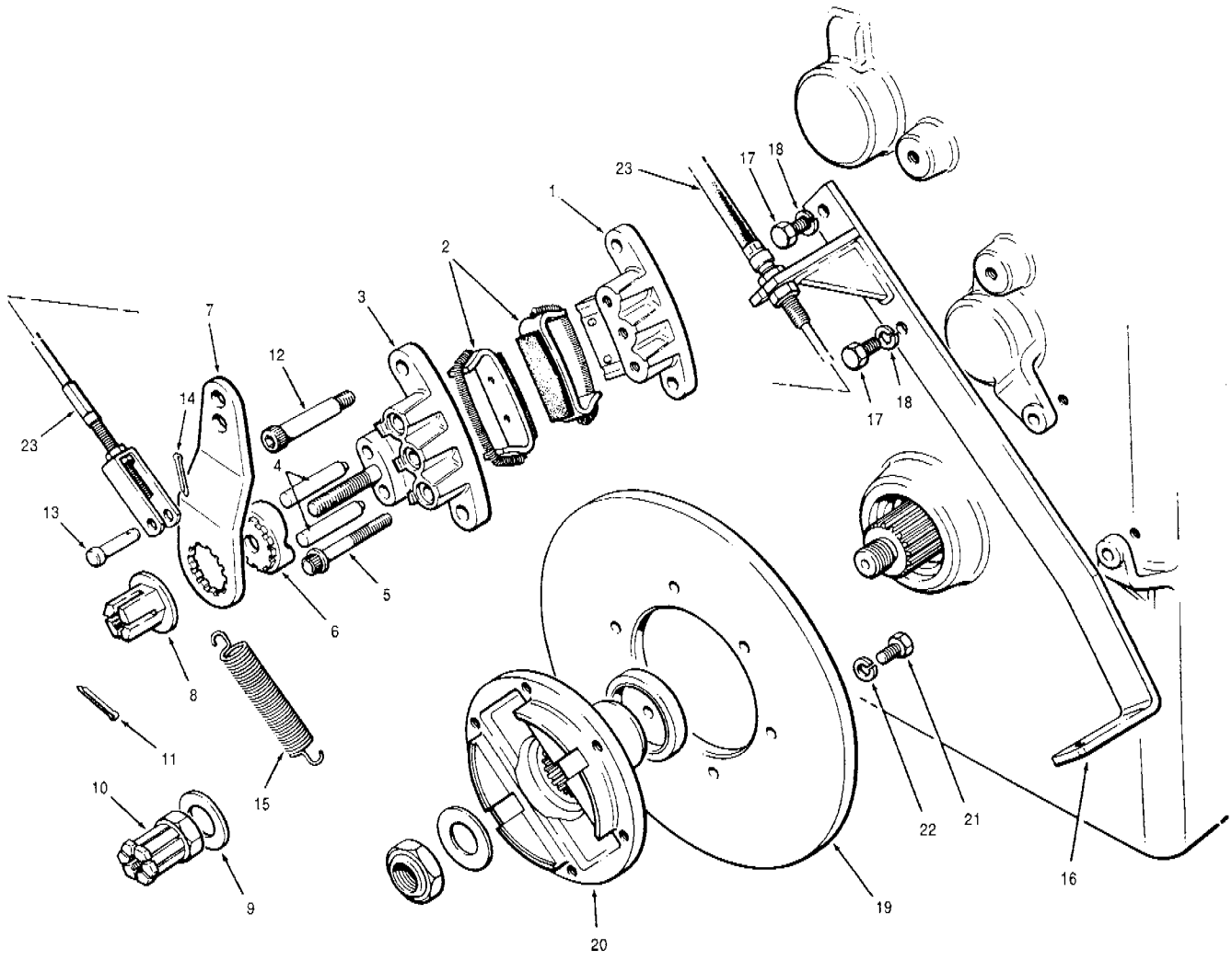

Item	Part No.	Description	Qty.	Remarks
1	48477	Brake - carrier	1	
2	**48476**	**Pad & holder assembly**	2	
3	48475	Brake - cam side	1	
4	48478	Push pins	2	
5	48483	Bolt	3	
6	55227	Cam	1	
7	55226	Lever	1	
8	56541	Nut	1	
9	55228	Washer	1	
10	55229	Nut	1	
11	13A-0524	Cotter pin	1	
12	50G-1028	Bolt	2	

Item	Part No.	Description	Qty.	Remarks
13	10A-0616	Clevis pin	1	
14	13A-0312	Cotter pin	1	
15	670	Spring	1	
16	89151	Bracket	1	
17	50A-0810 Zi	Bolt	2	
18	14A-08 Zi	Lockwasher	2	
19	37654	Disc	1	
20	37655	Yoke	1	
21	50A-0810 Zi	Bolt	6	
22	14A-08 Zi	Lockwasher	6	
23	56066	Brake cable	1	

SERIAL NUMBERS: 33000 & UP	**HAND BRAKE CALIPER ASSEMBLY - Models G710 to G740**	Date 01/2001	Group 552
		Illustr. Nos 00002947	Page 9
			Issue 1

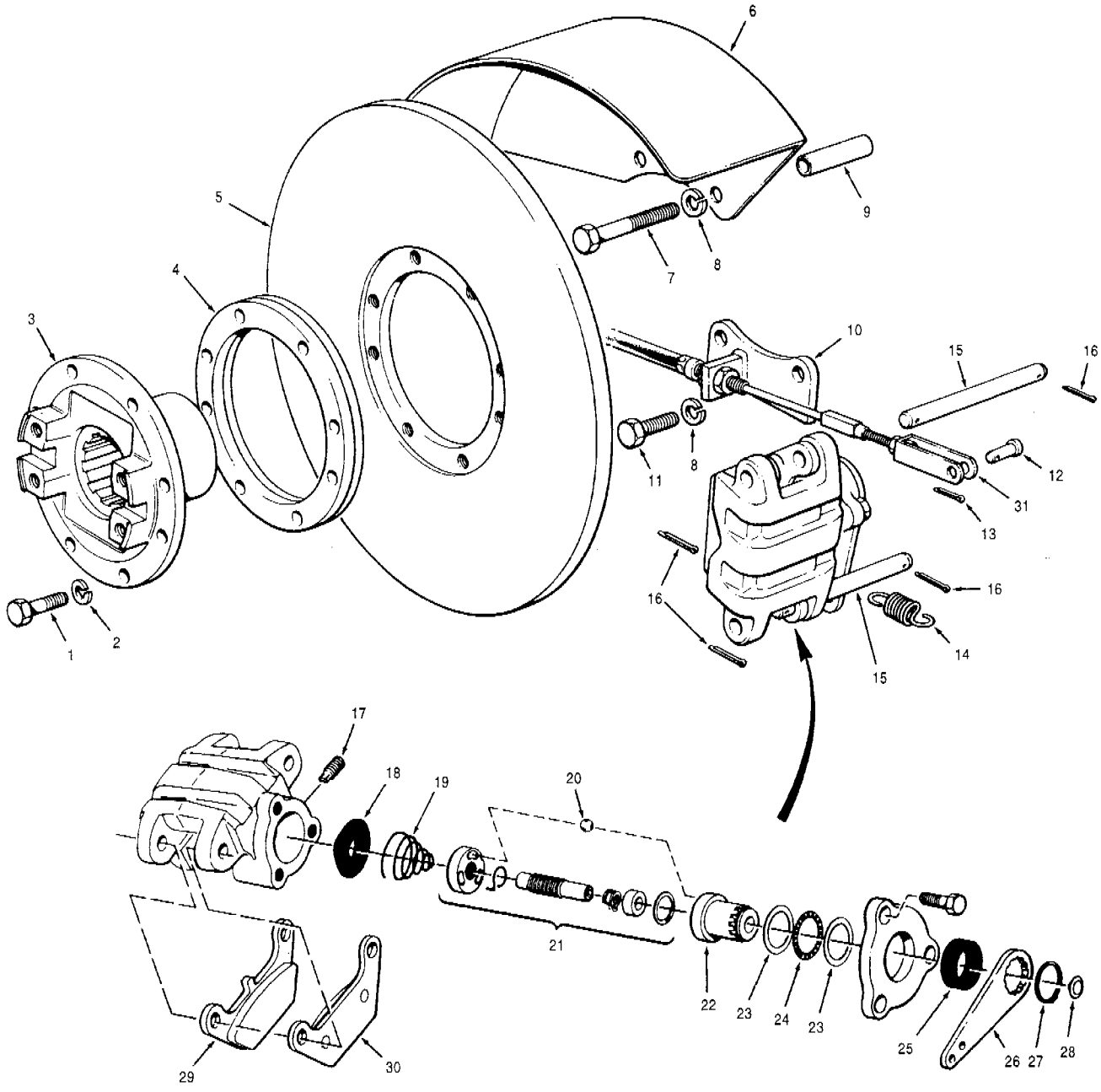

Item	Part No.	Description	Qty.	Remarks
1	51A-0718 Zi	Bolt	8	
2	14A-07 Zi	Lockwasher	8	
3	36293	Yoke	1	
4	55327	Adapter	1	
5	55324	Disc	1	
6	56068	Fender	1	
7	50A-1036 Zi	Bolt	2	
8	14A-10 Zi	Lockwasher	4	
9	58512	Spacer	2	
10	56071	Cable anchor	1	
11	50A-1018 Zi	Bolt	2	
12	10A-0616	Clevis pin	1	
13	13A-0312	Cotter pin	1	
14	56067	Spring	1	

Item	Part No.	Description	Qty.	Remarks
	55325	**Caliper assembly** - includes items 15 to 30	1	
15	58527	Mounting pin	2	
16	13A-0524	Cotter pin	4	
17	58516	Key	1	
18	58517	Boot	1	
19	58518	Spring	1	
20	58519	Ball	3	
21	**58515**	**Shaft & stator assembly**	1	
22	58520	Rotor	1	
23	58522	Thrust washer	2	
24	58521	Thrust bearing	1	
25	58523	Boot	1	
26	58524	Lever	1	
27	58525	Retaining ring	1	
28	58526	Plug	1	
29	**58513**	**Pad & holder assembly**	1	
30	**58514**	**Pad & holder assembly**	1	
31	56066	Brake cable	1	

SERIAL NUMBERS: 33000 & UP	**HAND BRAKE CALIPER ASSEMBLY** **- Model G780**	Date **01/2001**	Group **552**
		Illustr. Nos **00002986**	Page **10**
			Issue **1**

Group	Page

Numerical

622 Front Axle - Models G710 to G740 3
Hub & Knuckle - Models G710 to G740 4
Front Axle Drag Link - Models G710 to G740 5
Front Axle & Knuckle - Model G780 6
Front Axle Spindles - Model G780 7
Front Axle Drag Link - Model G780 8
Front Axle Hub & Knuckle - AWD 9
641 Steering Column 10
Control Head Assembly 11
Pedestal Adjuster 12
645 Steering Circuit 13
Steering Cylinders - Models G710 to G740 14
Steering Cylinders - Model G780 15
647 Supplemental Steering Circuit 16
Supplemental Steering Box 17
648 Wheel Lean Circuit 18
Wheel Lean Circuit - EEC 19
Wheel Lean Cylinders - Models G710 & G720 20
Wheel Lean Cylinders - Models G716 & G726 to G740 21
Wheel Lean Cylinders - Model G780 22

Group	Page

Alphabetical

641 Control Head Assembly 11
622 Front Axle - Models G710 to G740 3
Front Axle & Knuckle - Model G780 6
Front Axle Drag Link - Model G780 8
Front Axle Drag Link - Models G710 to G740 5
Front Axle Hub & Knuckle - AWD 9
Front Axle Spindles - Model G780 7
Hub & Knuckle - Models G710 to G740 4
641 Pedestal Adjuster 12
645 Steering Circuit 13
641 Steering Column 10
645 Steering Cylinders - Model G780 15
Steering Cylinders - Models G710 to G740 14
647 Supplemental Steering Box 17
Supplemental Steering Circuit 16
648 Wheel Lean Circuit 18
Wheel Lean Circuit - EEC 19
Wheel Lean Cylinders - Model G780 22
Wheel Lean Cylinders - Models G710 & G720 20
Wheel Lean Cylinders - Models G716 & G726 to G740 21

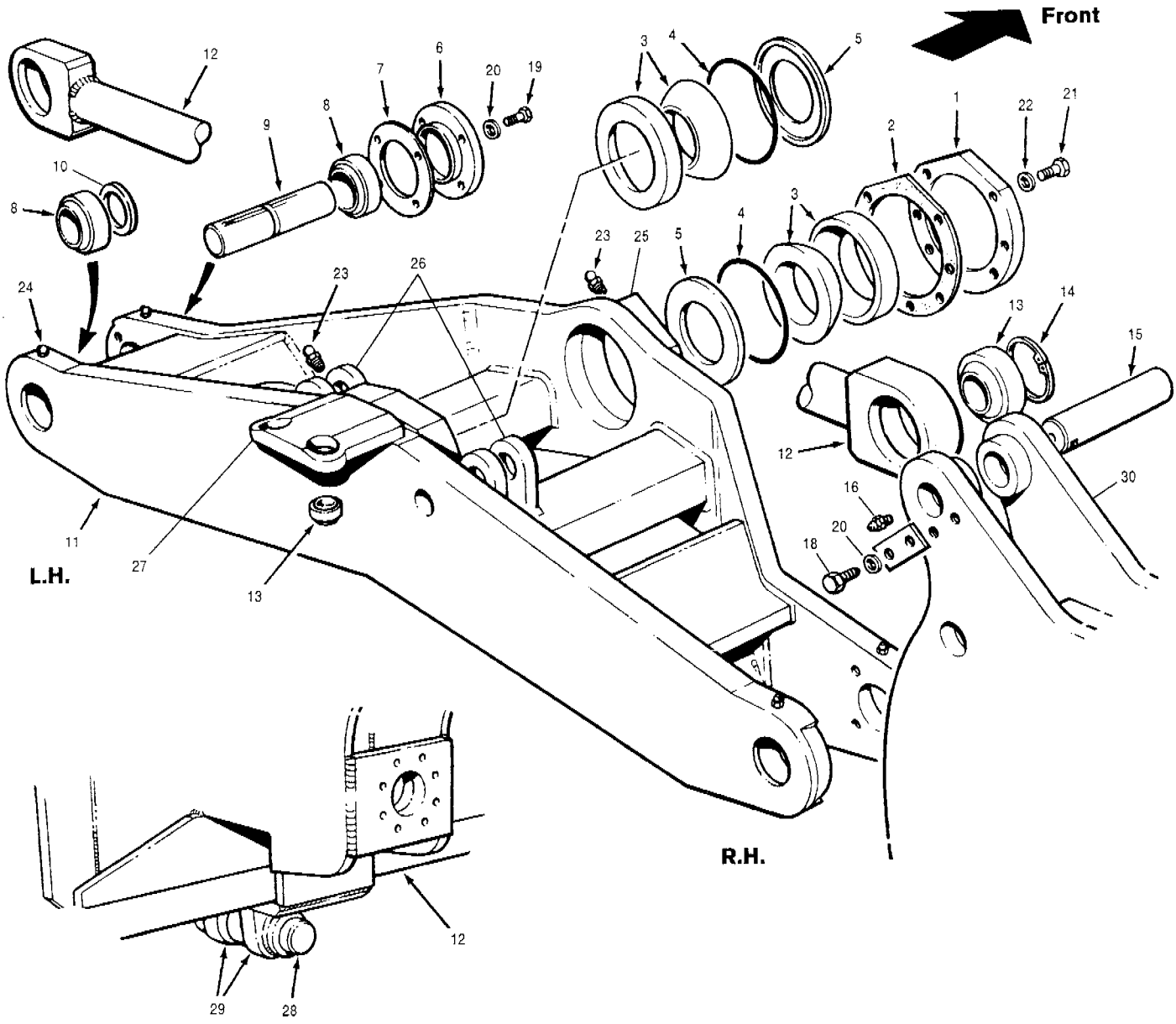

Item	Part No.	Description	Qty.	Remarks
1	35207	Cap	1	
2	35208	Shim - .010"	5	
2	35209	Shim - .005"	5	
2	62408	Shim - .007"	1	
3	19633	Bearing	2	
4	12A-247	O-ring	2	
5	18348	Washer - back-up	2	
6	87284	Bearing cap	2	
7	**76293**	**Shim pack kit**	1	
		- includes:		
	87556	Shim - .020"	3	
	87564	Shim - .005"	5	
	87565	Shim - .007"	5	
8	30561	Bearing	4	
9	30527	Pivot pin	2	
10	29526	Thrust washer	2	
11	87895	Axle frame	1	
12	80568	Tie bar	1	
13	19629	Bearing	4	
14	19B-218	Snap ring - internal	2	
15	80822	Bearing pin	2	

Item	Part No.	Description	Qty.	Remarks
16	29A-02	Grease fitting	2	
17	56909	Lock plate	2	
18	50A-0606 Zi	Bolt	4	
19	50A-0608 Zi	Bolt	8	
20	* 940097	Hardened washer	16	
21	50A-0814 Zi	Bolt	7	
22	* 955898	Hardened washer	7	
23	28A-04	Grease fitting	2	
24	28B-04	Grease fitting	4	
25	46563	Front bearing mount	1	
		- used with items 1 & 2		
26	62262	Lug - wheel lean cylinders	2	
27	62600	Lug - steering cylinders	1	
	17058-14	**Pin & lug assembly**	1	
		- includes items 28 & 29		
28	17058-38	Pin	1	
29	17058-39	Lug	2	
30		**Hub & knuckle**	Ref.	622-4
		Hub & knuckle - AWD	Ref.	622-9

SERIAL NUMBERS: 33000 & UP	**FRONT AXLE** **- Models G710 to G740**	Date **04/2001** Illustr. Nos **00005150**	Group **622** Page **3** Issue **1A**

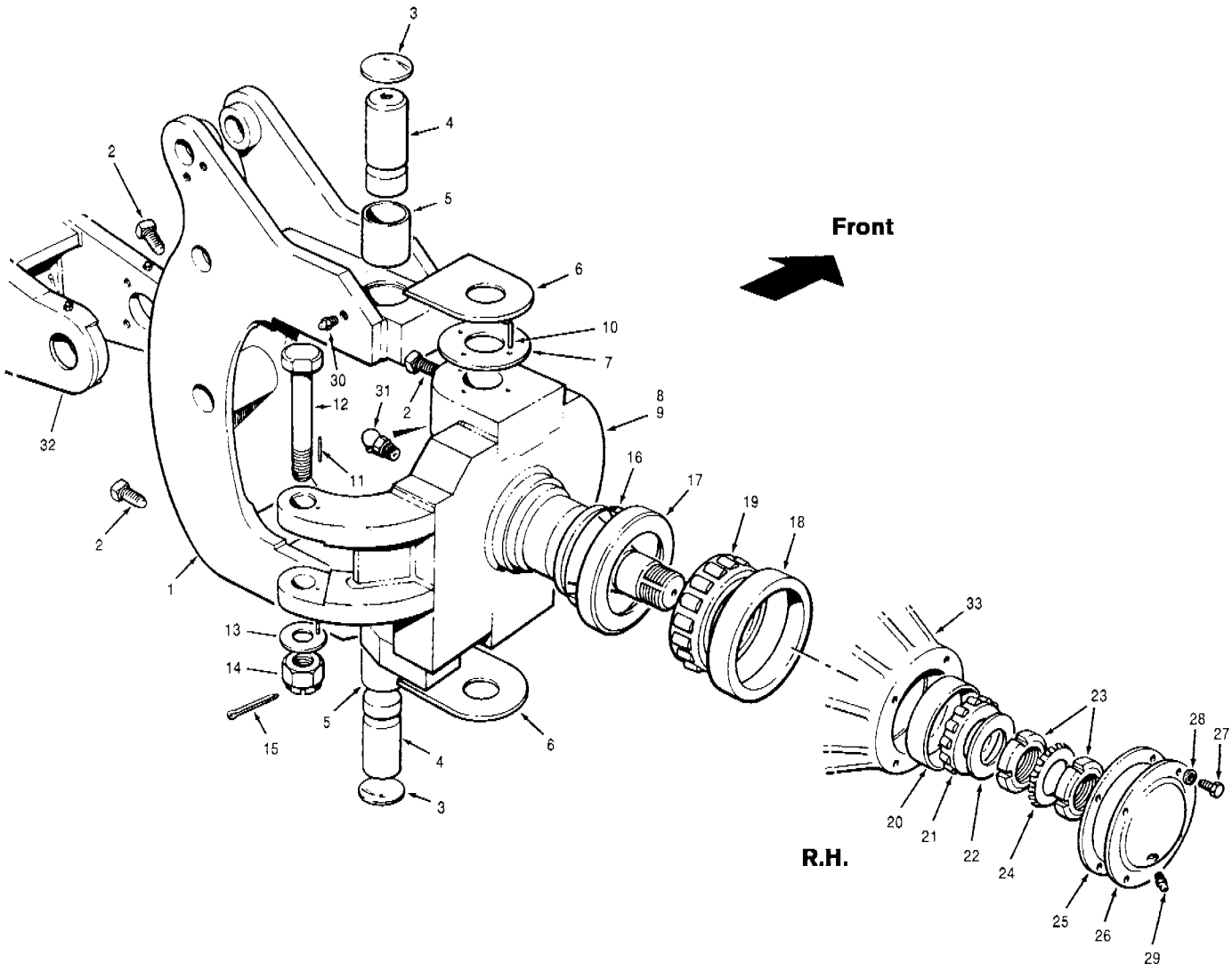

Item	Part No.	Description	Qty.	Remarks
1	87875	Knuckle	2	
2	70H-0832	Setscrew	6	
3	16507	Expansion plug	4	
4	80540	King pin	4	
5	30559	Bushing	4	
6	80533	Spacer	4	
7	80813	Thrust washer	2	
8	* 12726475	Hub & spindle - L.H.	1	
9	* 12726476	Hub & spindle - R.H.	1	
10	13C-0509	Roll pin	4	
11	13C-0515	Roll pin	4	
12	89534	Pin	2	
13	14D-18 Zi	Flatwasher	2	
14	31K-18 Zi	Castle nut	2	
15	13A-0840	Cotter pin	2	
	88049	**Wheel bearing kit** -includes items 16 to 25	1 per	

Item	Part No.	Description	Qty.	Remarks
16	24947	V-ring seal	2	
17	24948	Back-up ring	2	
18	8142A	Cup - inner bearing	2	
19	8142B	Cone - inner bearing	2	
20	8143A	Cup - outer bearing	2	
21	8143B	Cone - outer bearing	2	
22	9466	Washer - wheel bearing	2	
23	8148	Locknut	4	
24	8149	Lockwasher	2	
25	8146	Gasket - hub cap	2	
26	25243	Hub cap	2	
27	50A-0506 Zi	Bolt	8	
28	* 955894	Hardened washer	8	
29	29A-04	Grease fitting	2	
30	28A-04	Grease fitting	4	
31	28B-04	Grease fitting	8	
32		**Front axle**	Ref.	622-3
33		**Wheels & rims**	Ref.	771-11
		Hub & knuckle - AWD	Ref.	622-9

SERIAL NUMBERS: 33000 & UP	**HUB & KNUCKLE - Models G710 to G740**	Date 06/2001	Group 622
		Illustr. Nos 00006222	Page 4
			Issue 1A

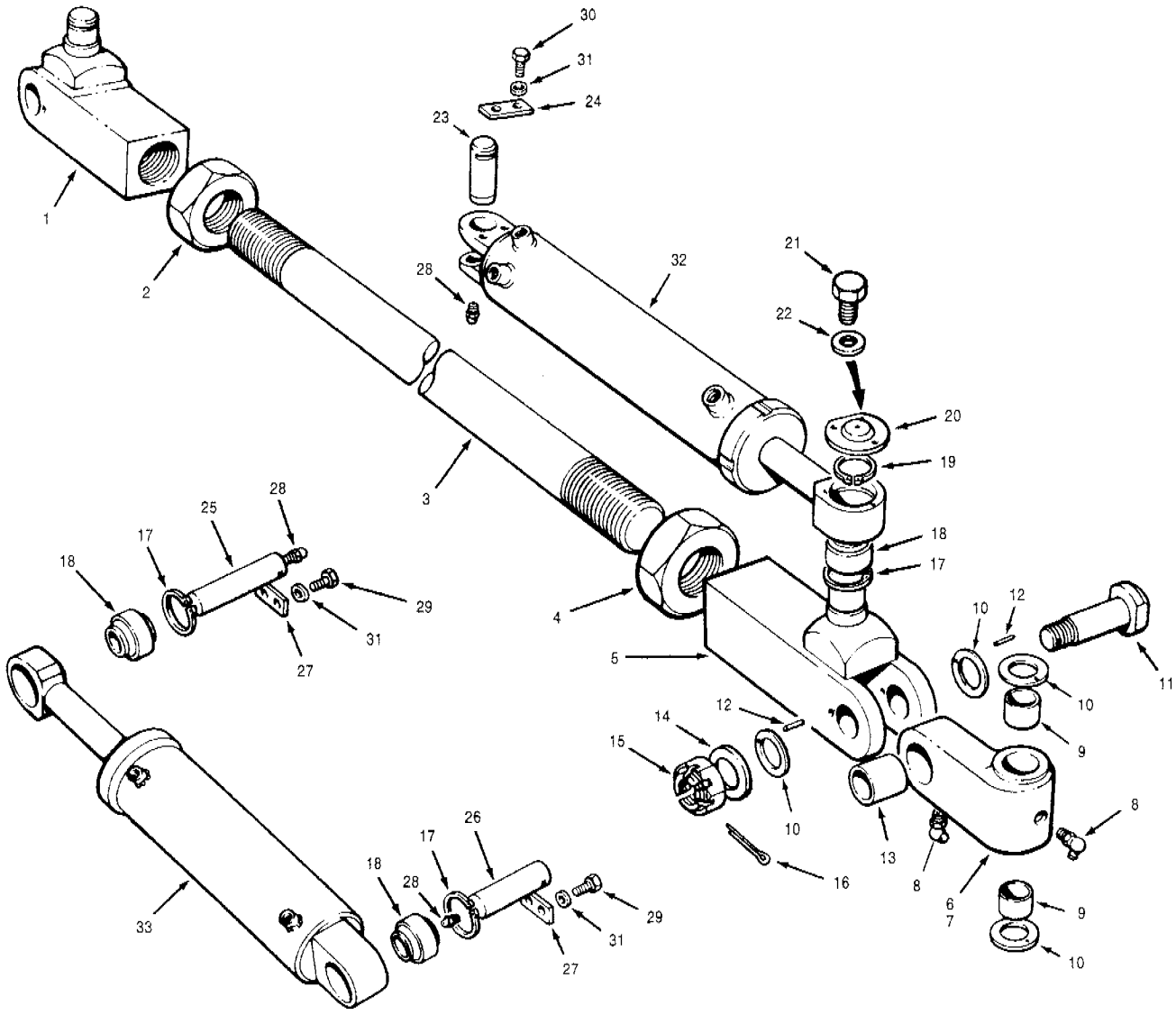

Item	Part No.	Description	Qty.	Remarks
1	81058	Yoke - L.H.	1	
2	81059	Jam nut - L.H.	1	
3	404097	Drag link	1	
4	31D-32 Zi	Jam nut	1	
5	81057	Yoke - R.H.	1	
6	74960	Pivot block - L.H.	1	
7	74961	Pivot block - R.H.	1	
8	29B-02	Grease fitting	4	
9	30562	Bushing	4	
10	30563	Thrust washer	8	
11	81292	Pivot pin	2	
12	13C-0510	Roll pin	4	
13	80976	Bushing	2	
14	14D-18 Zi	Flatwasher	2	
15	31K-18 Zi	Castle nut	2	
16	13A-0840	Cotter pin	2	
17	19B-218	Snap ring - internal	4 - 6	
18	19629	Bearing	4 - 6	
19	19C-137	Snap ring - external	2	
20	62584	Cap	2	
21	51A-0404 Zi	Bolt	6	
22	* 955893	Hardened washer	6	

Item	Part No.	Description	Qty.	Remarks
23	62489	Anchor pin	2	
24	59088	Lock plate	2	
25	80822	Bearing pin	1 - 2	
26	81158	Bearing pin	1 - 2	
27	56909	Lock plate	2 - 4	
28	29A-02	Grease fitting	4 - 6	
29	50A-0606 Zi	Bolt	4 - 8	
30	50A-0608 Zi	Bolt	4	
31	* 940097	Hardened washer	8 - 12	
32		**Steering cylinders**	Ref.	645-14
33		**Wheel lean cylinders**	Ref.	645-20 645-21

SERIAL NUMBERS: 33000 & UP	**FRONT AXLE DRAG LINK** **- Models G710 to G740**	Date	**04/2001**	Group	**622**
		Illustr. Nos	**00005148**	Page	**5**
				Issue	**1A**

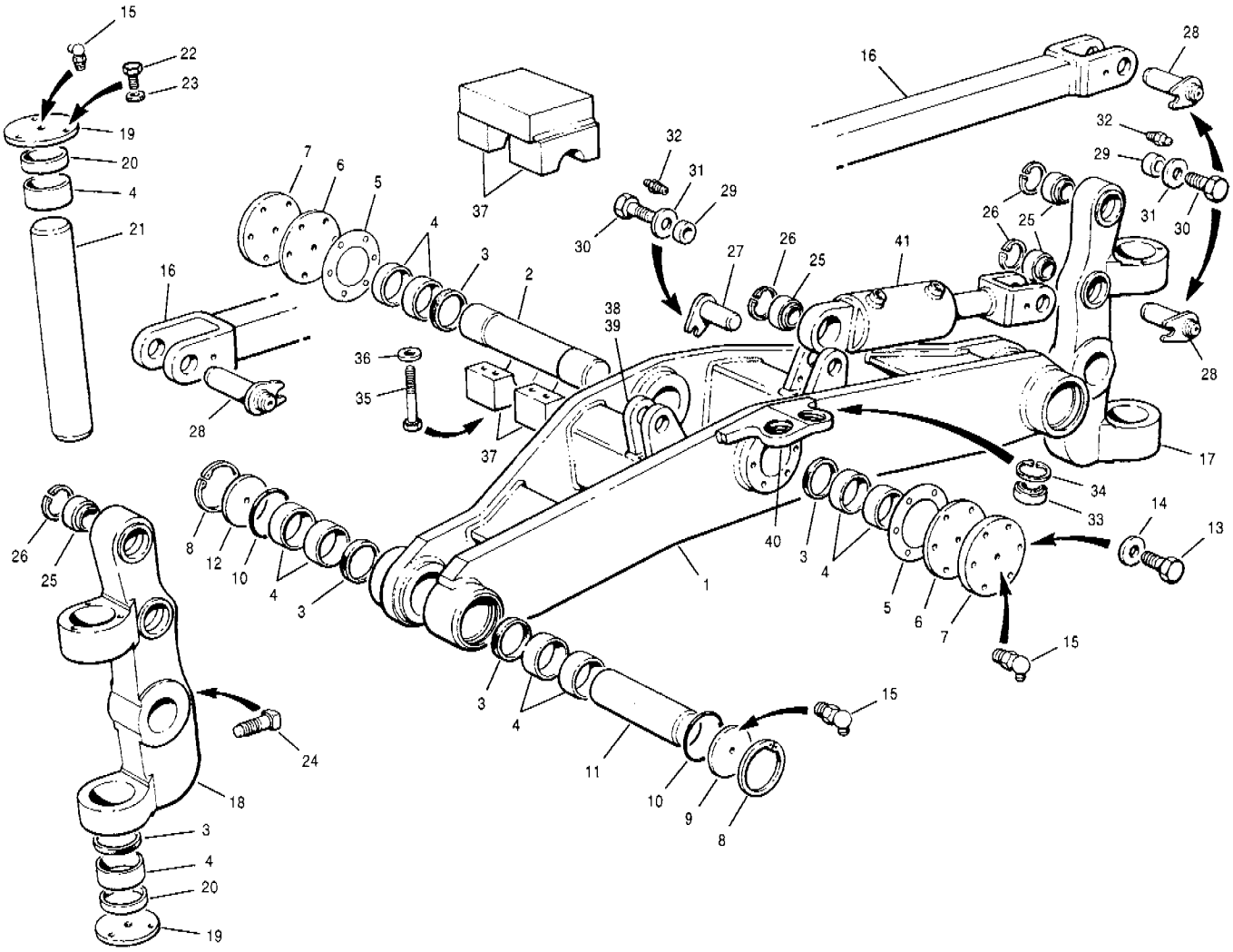

Item	Part No.	Description	Qty.	Remarks
1	87204	Axle frame	1	
2	87439	Pivot pin	1	
3	30448	Seal - pin	8	
4	30441	Needle bearing	16	
5	30478	Shim	8	
6	30092	Thrust washer	2	
7	46597	Thrust cap	2	
8	19B-400	Snap ring	4	
9	46598	Cap - axle	2	
10	12A-240	O-ring	4	
11	87300	Knuckle pin	2	
12	46598	Cap - axle	2	
13	50A-0612 Zi	Bolt	12	
14	* 940097	Hardened washer	12	
15	28B-04	Grease fitting	10	
16	80008	Tie bar	1	
17	87301	Knuckle - R.H.	1	
18	87302	Knuckle - L.H.	1	
19	45830	Cap - king pin	4	
20	30440	Needle bearing	4	
21	59882	King pin	2	
22	50A-0405 Zi	Bolt	12	
23	14J-04 Zi	Lockwasher	12	

Item	Part No.	Description	Qty.	Remarks
24	70G-1040 Zi	Setscrew	12	
25	18340	Bearing	6	
26	19B-244	Snap ring	6	
27	80030	Pin - lean wheel cylinder	2	
28	87580	Pin - knuckle	4	
29	80025	Spacer	6	
30	50A-0812 Zi	Bolt	12	
31	* 955898	Hardened washer	8	
32	29A-02	Grease fitting	6	
33	19629	Bearing	2	
34	19B-218	Snap ring	2	
35	50A-1236 Zi	Bolt	8	
36	* 955902	Hardened washer	8	
37	87438	Mounting block - matched halves	2	
38	80023	Lug - R.H. - wheel lean cylinder	1	
39	80027	Lug - L.H. - wheel lean cylinder	1	
40	87476	Lug - steering cylinders	1	
41		**Wheel lean cylinders**	Ref.	648-22

SERIAL NUMBERS: 33000 & UP	**FRONT AXLE & KNUCKLE - Model G780**	Date **07/2001**	Group **622**
		Illustr. Nos **00005421**	Page **6**
			Issue **1A**

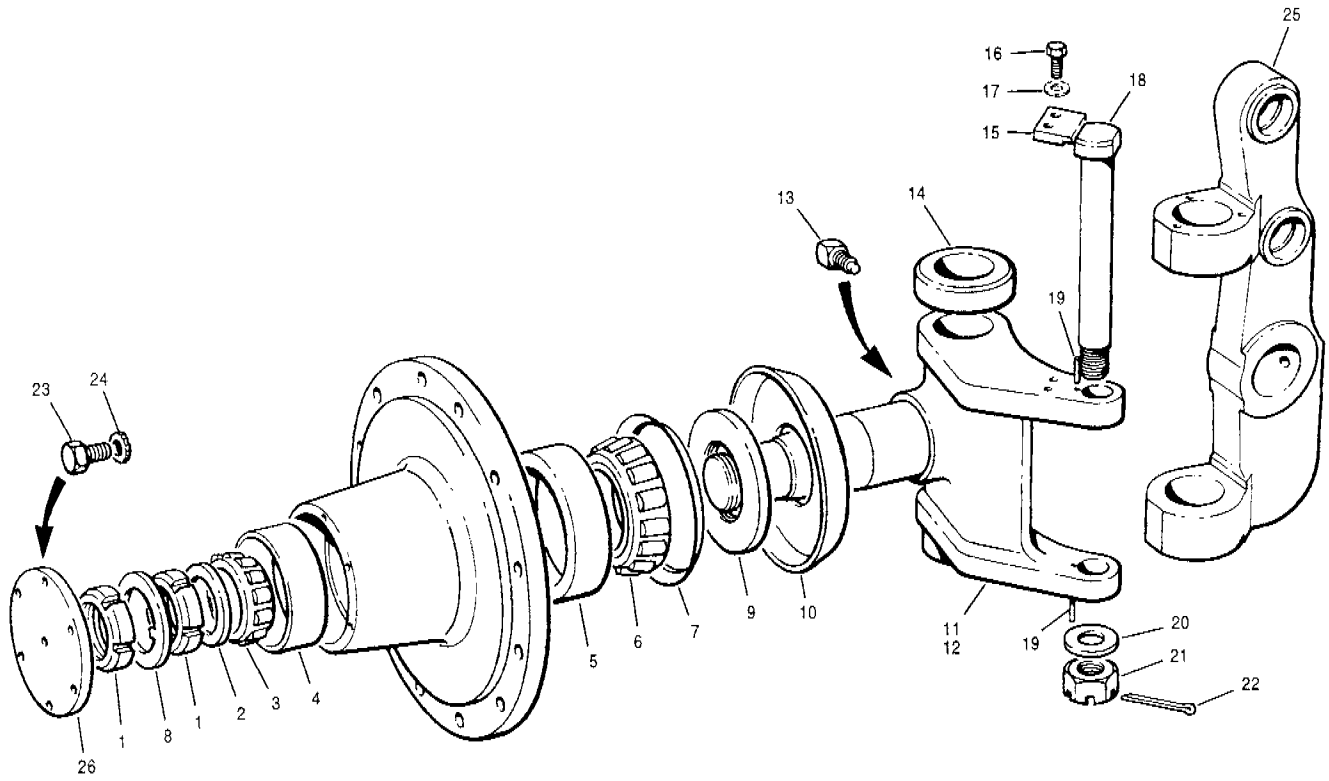

Item	Part No.	Description	Qty.	Remarks
	88050	**Wheel bearing kit**	1 per	
		- includes items 1 to 7		
1	30124	Locknut	4	
2	30125	Lockwasher	2	
3	30123	Cone - outer	2	
4	30122	Cup - outer	2	
5	30120	Cup - inner	2	
6	30121	Cone - inner	2	
7	30119	V-ring seal	2	
8	30137	Washer	2	
9	62072	Deflector spacer	2	
10	54549	Dust seal	2	
11	87193	Spindle - L.H.	1	
12	87194	Spindle - R.H.	1	
13	70E-0616	Setscrew	2	
14	30447	Thrust bearing	2	
15	87303	Lock plate	4	
16	50A-0508 Zi	Bolt	8	
17	* 955894	Hardened washer	8	
18	87181	Pin	2	
19	13C-0520	Roll pin	4	
20	14D-20 Zi	Flatwasher	2	
21	31H-20 Zi	Slotted nut	2	
22	13A-1048	Cotter pin	2	
23	50A-0405 Zi	Bolt	26	
24	14J-04 Zi	Lockwasher	20	
25		**Knuckle**	Ref.	622-6
26		**Wheels & rims**	Ref.	771-11

Item	Part No.	Description	Qty.	Remarks

SERIAL NUMBERS:
33000 & UP

FRONT AXLE SPINDLES
- Model G780

Date	07/2001	Group	622
Illustr. Nos	00005422	Page	7
		Issue	1A

VOLVO

G700 MODELS

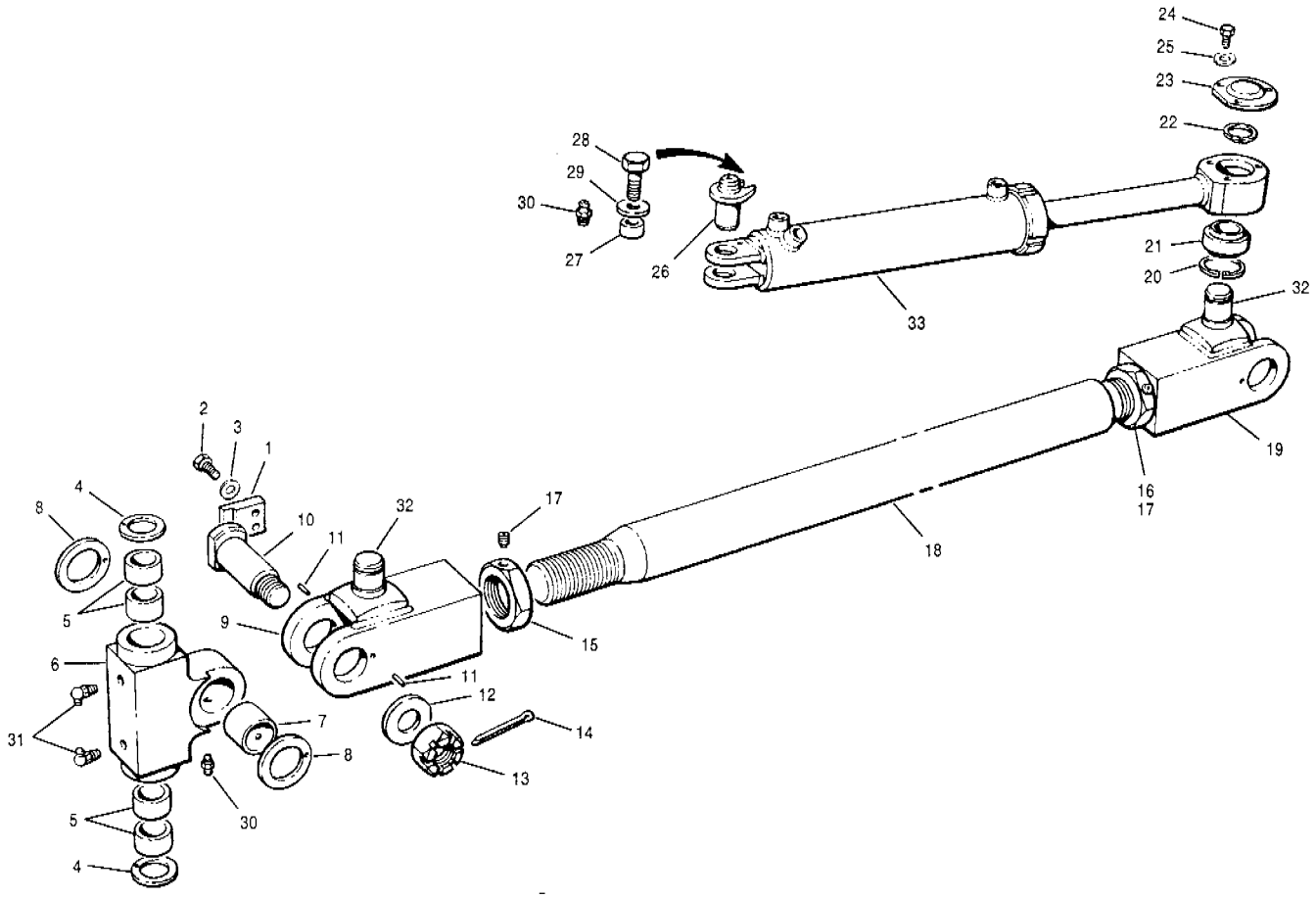

Item	Part No.	Description	Qty.	Remarks
1	87303	Lock plate	4	
2	50A-0508 Zi	Bolt	8	
3	* 955894	Hardened washer	8	
4	87190	Thrust washer	4	
5	87361	Bushing	8	
6	87186	Pivot block	2	
7	87187	Bushing	4	
8	87188	Thrust washer	2	
9	87183	Yoke - L.H.	1	
10	87180	Pin - pivot block	2	
11	13C-0611	Roll pin	2	
12	14C-24 Zi	Flatwasher	2	
13	31H-24 Zi	Slotted nut	2	
14	13A-1248	Cotter pin	2	

Item	Part No.	Description	Qty.	Remarks
	87199	**Nut assembly** - includes items 15 & 17	1	
	62494	**Nut assembly** - includes items 15 & 17	1	
15	87191	Nut - L.H.	1	
16	62495	Nut	1	
17	62497	Setscrew	1	
18	87185	Drag link	1	
19	87184	Yoke - R.H.	1	
20	19B-244	Snap ring	2	
21	19629	Bearing	2	
22	19C-137	Snap ring	2	
23	62584	Cap - grease retainer	2	
24	50A-0405 Zi	Bolt	26	
25	* 955893	Hardened washer	6	
26	80096	Pin - steering cylinder	2	
27	80025	Spacer	2	
28	50A-0812 Zi	Bolt	2	
29	* 955898	Hardened washer	2	
30	29A-02	Grease fitting	4	
31	29B-02	Grease fitting	4	
32	87182	Stud	2	
33		**Steering cylinders**	Ref.	645-15

SERIAL NUMBERS: 33000 & UP	**FRONT AXLE DRAG LINK** **- Model G780**	Date **07/2001**	Group **622**
		Illustr. Nos **00005423**	Page **8**
			Issue **1A**

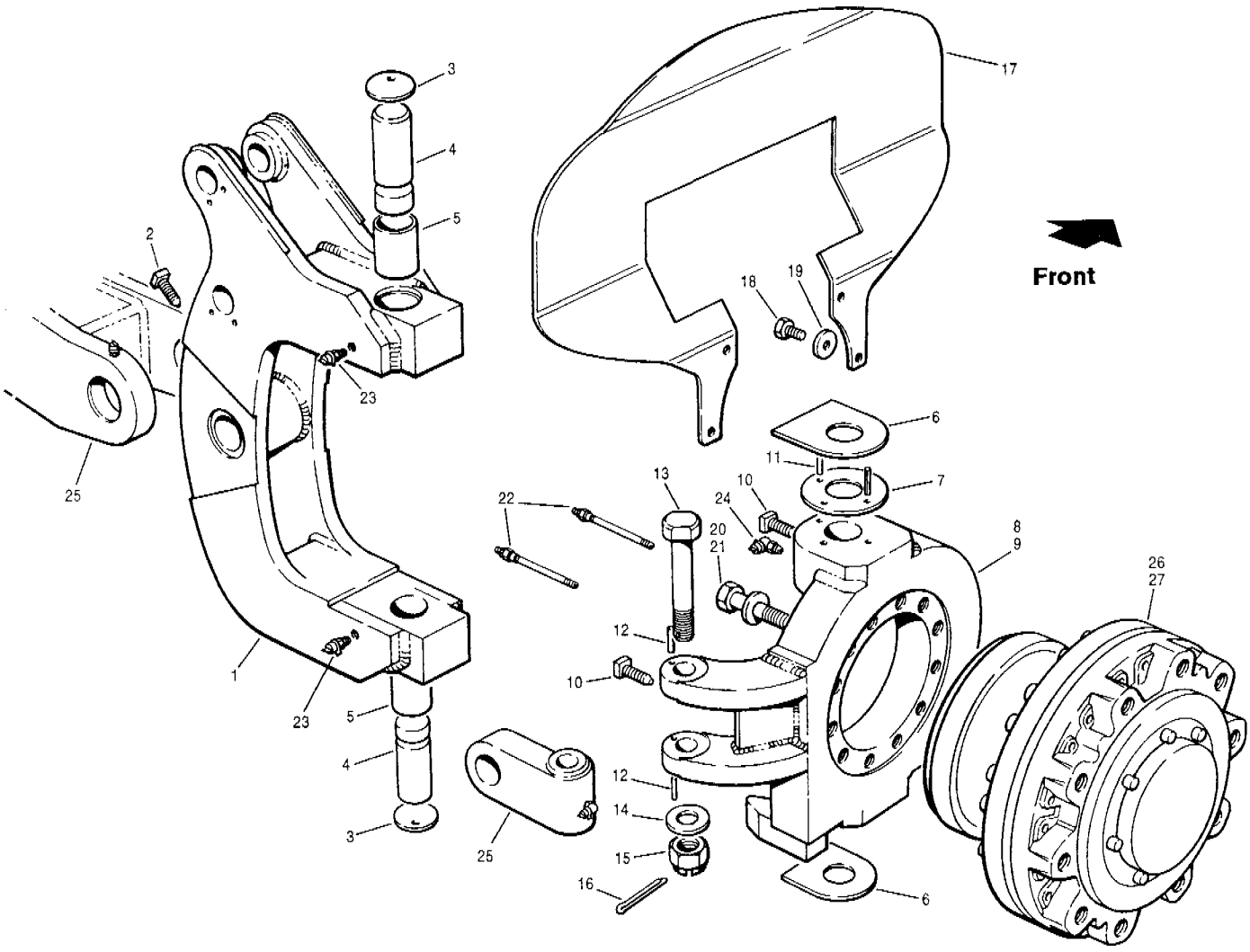

Item	Part No.	Description	Qty.	Remarks
1	403029	Axle frame	1	
2	87959	Knuckle	2	
3	70H-0832	Setscrew	2	
4	16507	Expansion plug	4	
5	80540	King Pin	4	
6	30559	Bushing	4	
7	80533	Spacer	4	
8	80813	Thrust washer	2	
9	* 12725740	Hub - L.H.	1	
10	* 12725741	Hub - R.H.	1	
11	70B-0824	Setscrew	4	
12	13C-0509	Roll pin	2	
13	13C-0515	Roll pin	4	
14	89534	Pin	2	
15	14D-18 Zi	Flatwasher	2	
16	31K-18 Zi	Nut - slotted	2	
17	13A-0840	Cotter pin	2	
18	405032	Hose guard	2	
19	50A-0808 Zi	Bolt	8	
20	* 955898	Hardened washer	8	
21	351AA-20080 Zi	Bolt	24	
22	* 955902	Hardened washer	24	
23	* 12725901	Grease fitting - extended	4	
24	28B-04	Grease fitting	6	

Item	Part No.	Description	Qty.	Remarks
25		Front axle & drag link	Ref.	622-3 622-5
26		Wheels & rims	Ref.	771-11
27		Wheel motor assembly	Ref.	444-25

SERIAL NUMBERS: 33000 & UP	FRONT AXLE HUB & KNUCKLE - AWD	Date 06/2001	Group 622
		Illustr. Nos 00006223	Page 9
			Issue 1A

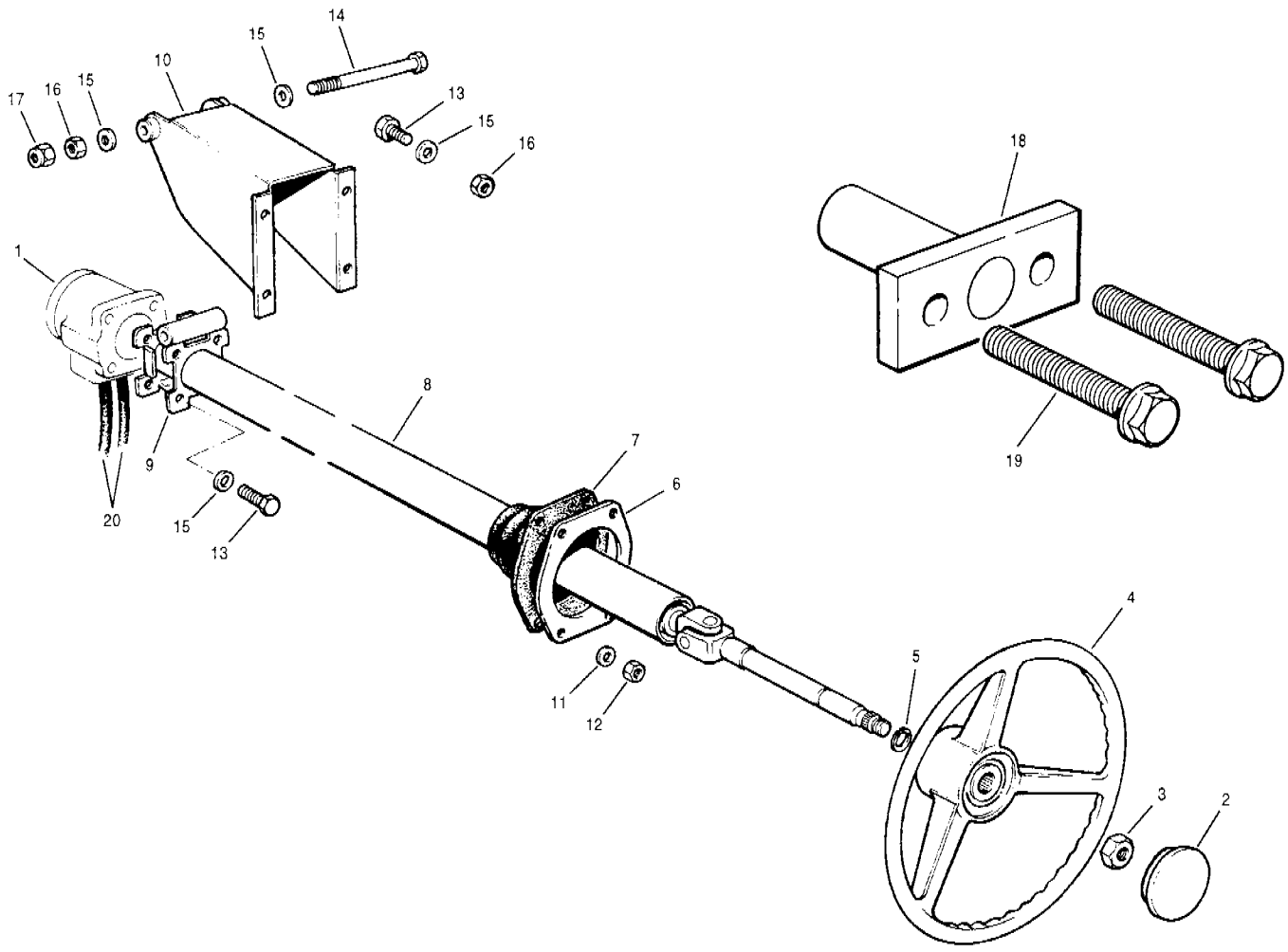

Item	Part No.	Description	Qty.	Remarks
1	**12724395**	**Steering control unit assembly**	1	
	* **12726225**	**Seal kit for 12724395** - control unit assembly	1	
2	400342	Cap - steering wheel	1	
3	12406	Nut	1	
4	400343	Steering wheel	1	
5	69867	Snap ring	1	
6	84132	Flange	1	
7	84131	Boot	1	
8	400339	Steering column	1	
9	69946	Mount plate	1	
10	81273	Support	1	
11	* 983334	Hardened washer	4	
12	30A-04 Zi	Nut	4	
13	50A-0608 Zi	Bolt	8	
14	50A-0648 Zi	Bolt	1	
15	* 983335	Hardened washer	10	
16	30A-06 Zi	Nut	5	
17	36D-06 Zi	Locknut	1	

Item	Part No.	Description	Qty.	Remarks
18	* **400424**	**Steering wheel puller** - includes item 19	1	
19	* 350AC-06050 Zi	Bolt	2	
20		**Steering circuit**	Ref.	645-13

SERIAL NUMBERS: 33000 & UP	**STEERING COLUMN**	Date **07/2001**	Group **641**
		Illustr. Nos **00006236 00006233**	Page **10**
			Issue **1A**

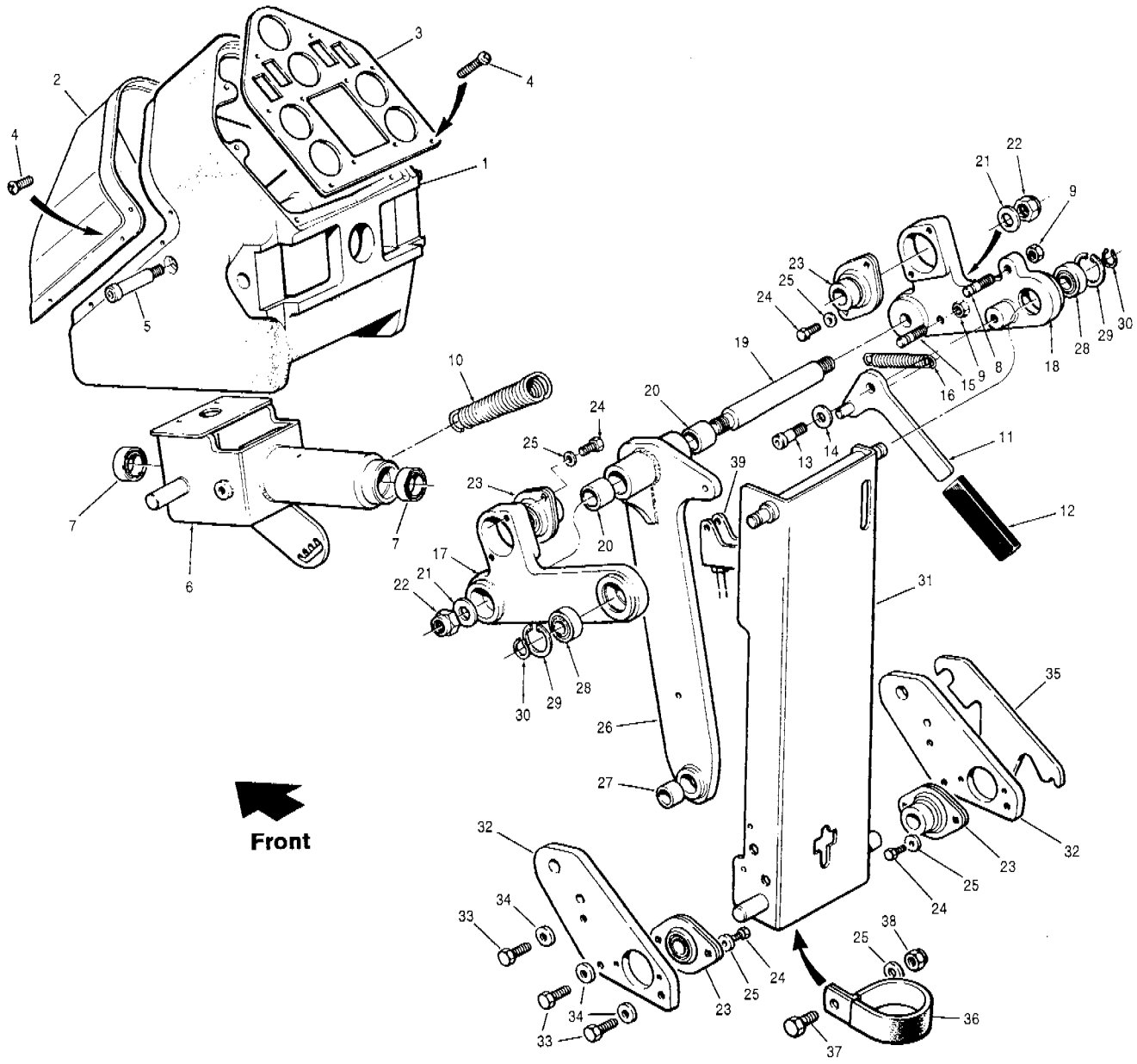

Item	Part No.	Description	Qty.	Remarks
1	96511	Head - pedestal	1	
2	* 12724114	Cover	1	
3	84678	Plate - switch & gauge	1	
4	78664	Screw	13	
5	78536	Bolt	2	
6	402055	Wheel tilt U-bracket	1	
7	69866	Bearing	2	
8	69658	Pin - spring	1	
9	30D-06 Zi	Jam nut	2	
10	96363	Spring - upper	1	
11	96616	Wheel tilt lever	1	
12	69890	Grip	1	
13	50G-0604	Bolt	1	
14	14E-06 Zi	Flatwasher	1	
15	69660	Pin - spring	1	
16	69739	Spring - lower	1	
17	69816	Side link - L.H.	1	
18	69814	Side link - R.H.	1	
19	69807	Shaft - pivot - upper	1	
20	69808	Bushing	2	
21	14D-12 Zi	Flatwasher	2	
22	36M-12 Zi	Locknut	2	

Item	Part No.	Description	Qty.	Remarks
23	69500	Flanged bearing	4	
24	50A-0506 Zi	Bolt	8	
25	14D-05 Zi	Flatwasher	9	
26	402051	Support beam	1	
27	69809	Bushing	1	
28	69621	Bearing - 20 mm	2	
29	19B-165	Snap ring	2	
30	69649	Snap ring - bowed	2	
31	402045	Pedestal support	1	
32	96600	Side plate	2	
33	50A-0810 Zi	Bolt	6	
34	* 983337	Hardened washer	6	
35	402215	Shim - .120"	A.R.	
35	402216	Shim - .075"	A.R.	
35	402217	Shim - .060"	A.R.	
36	74478	Clamp	1	
37	50A-0406 Zi	Bolt	1	
38	36M-04 Zi	Locknut	1	
39		**Pedal adjuster**	Ref.	641-12

SERIAL NUMBERS:
33000 & UP

CONTROL HEAD ASSEMBLY

Date 07/2001 | Group 641
Illustr. Nos 00006234 | Page 11
Issue 1A

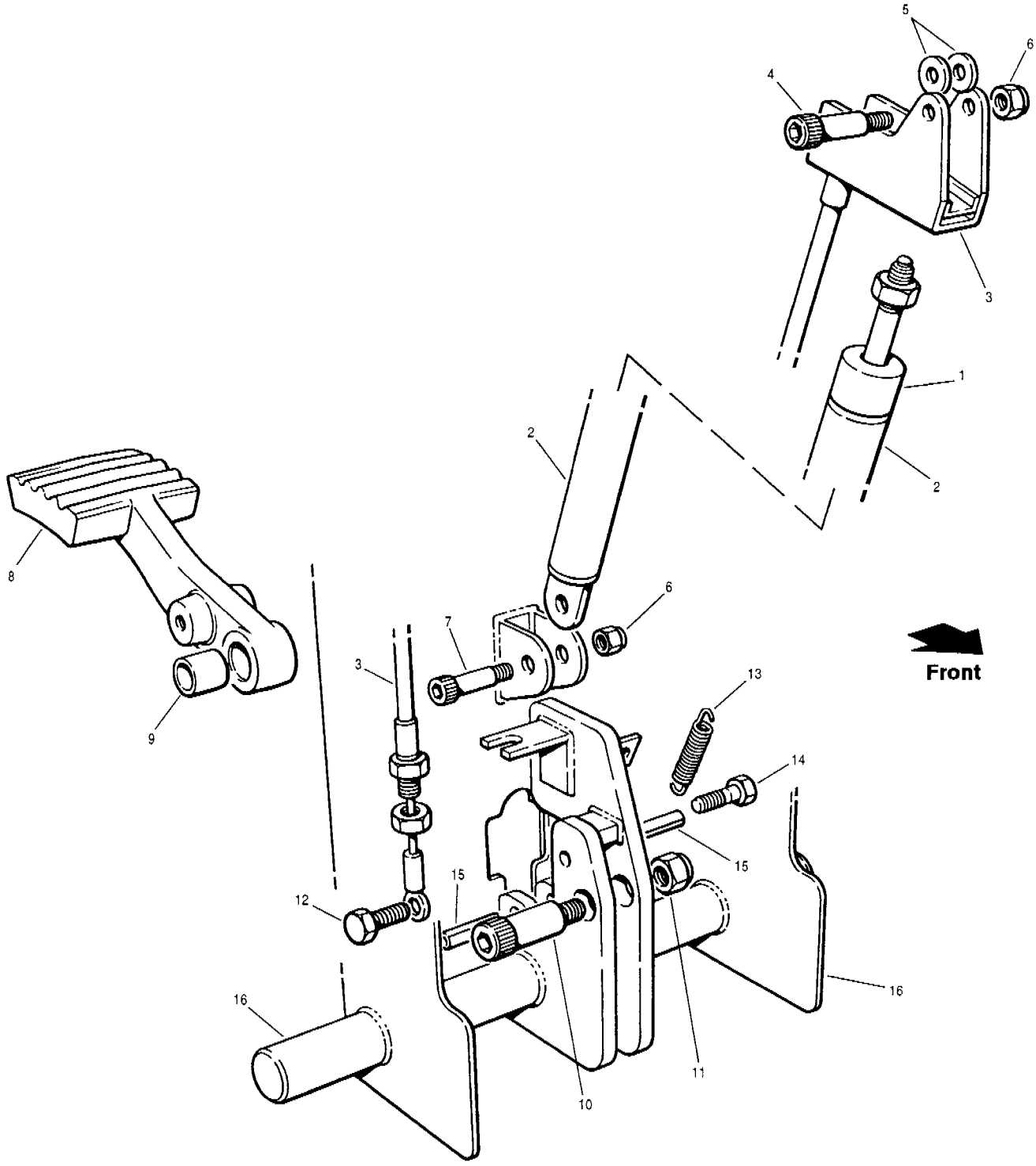

Item	Part No.	Description	Qty.	Remarks
	* 12725913	**Strut Assembly**	1	
		- includes items 1, 2 & 3		
1	* 12725100	Sleeve - 1"	1	
2	400160	Gas spring	1	
3	**96599**	**Cable assembly**	1	
4	78533	Bolt	1	
5	14D-05 Zi	Flatwasher	2	
6	36M-04 Zi	Locknut	2	
7	78532	Bolt	1	
8	96629	Foot pedal	1	
9	78784	Bushing	1	

Item	Part No.	Description	Qty.	Remarks
10	96977	Bolt	1	
11	36D-06 Zi	Locknut	1	
12	50A-0406 Zi	Bolt	1	
13	69960	Spring	1	
14	69961	Special bolt	1	
15	13C-0820	Roll pin	2	
16		**Control head assembly**	Ref.	641-11

SERIAL NUMBERS: 33000 & UP	**PEDESTAL ADJUSTER**	Date 07/2001	Group 641
		Illustr. Nos 00006232	Page 12
			Issue 1A

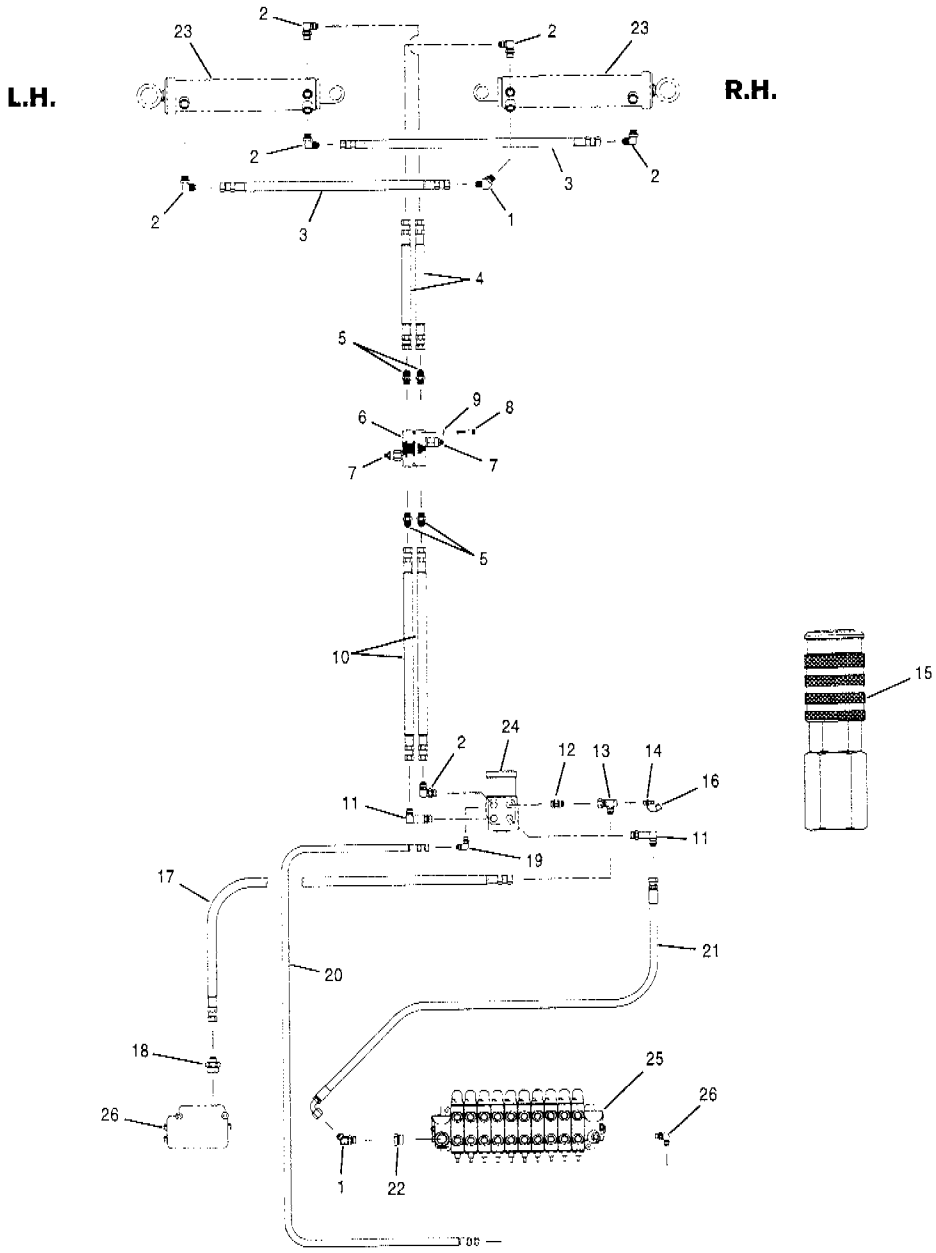

Item	Part No.	Description	Qty.	Remarks
1	111A-0808	Connector	2	
2	111B-0808	Connector	6	
3	9313 x 24	Hose	2	G710 to G740
3	9313 x 25	Hose	2	G780
4	9313 x 18	Hose	2	
5	111E-0808	Connector	4	
6	**97769**	**Cushion valve assembly**	1	
		- includes item 7		
7	**97859**	**Cartridge**	2	
	97860	**Seal kit for 97859 - cartridge**	1 per	
		- includes the following:		
		O-ring - small	1	
		O-ring - large	1	
		Back-up ring	1	
8	50A-0514 Zi	Bolt	2	
9	* 955894	Hardened washer	2	
10	9313 x 148	Hose	2	G710 to G736
10	9313 x 154	Hose	2	G740 to G780
11	111Q-0808	Connector	2	

Item	Part No.	Description	Qty.	Remarks
12	89202	Check valve	1	
13	* 12725289	Tee	1	
14	97712	Quick disconnect coupler - male	1	
15	97714	Quick disconnect coupler - female (for testing)	1	In toolbox
16	97744	Dust cap	1	
17	9313 x 62	Hose	1	
18	111E-0816	Connector	1	
19	111B-0604	Connector	1	
20	89144 x 69	Hose - load sense	1	
21	78216 x 24	Hose	1	
22	111R-1208	Connector	1	
23		**Steering cylinders**	Ref.	645-14 645-15
24		**Steering column**	Ref.	641-10
25		**Manifold valve**	Ref.	912-8 912-9
26		**Main hydraulic circuit**	Ref.	911-3

SERIAL NUMBERS: 33000 & UP	**STEERING CIRCUIT**	Date	**07/2001**	Group **645**
		Illustr. Nos	**00006081**	Page **13**
				Issue **1A**

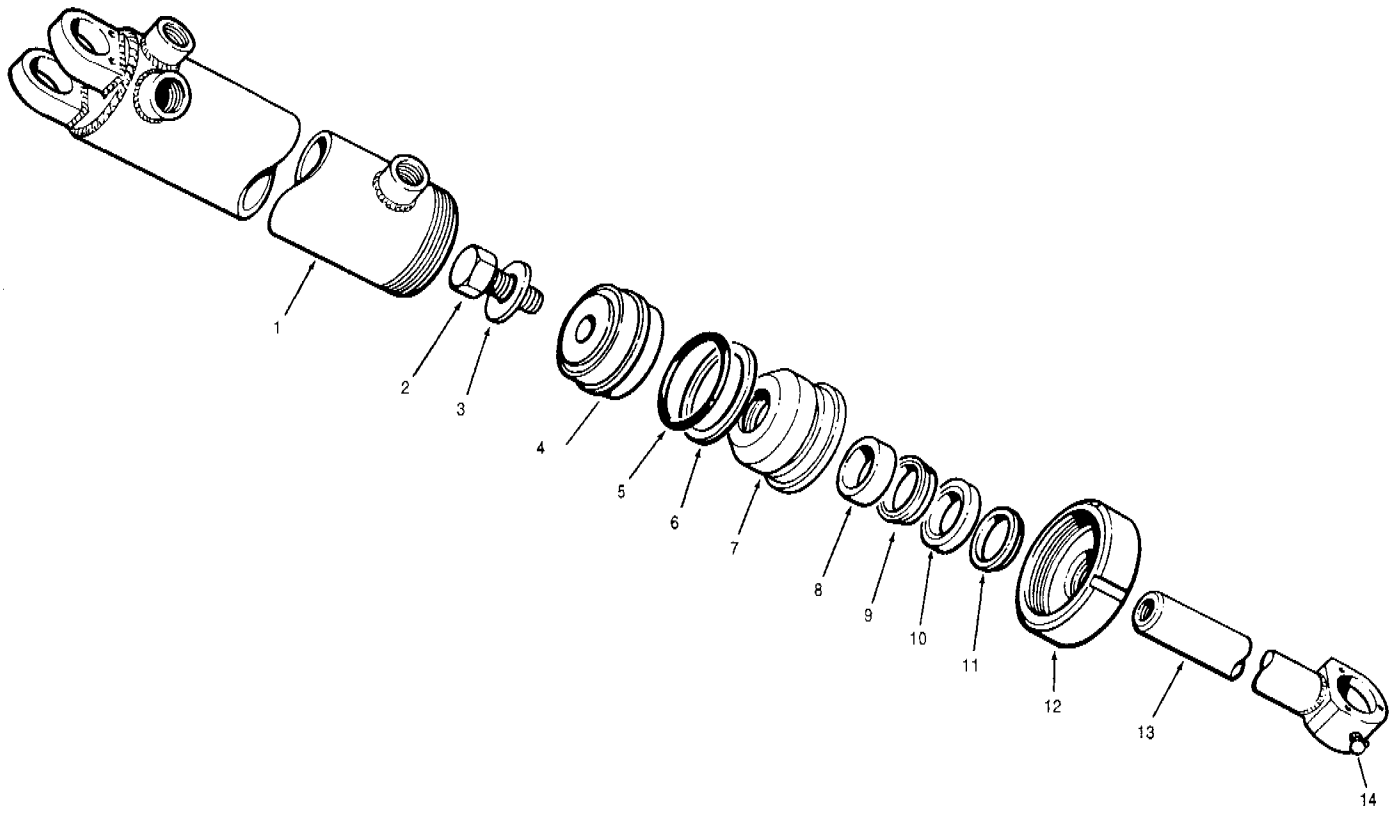

Item	Part No.	Description	Qty.	Remarks
	404013	**Steering cylinder assembly - L.H.** - includes items 1 to 13	1	
	404014	**Steering cylinder assembly - R.H.** - includes items 1 to 13	1	
	404016	**Repair kit for 404013 & 404014 - steering cylinders** - includes items 5, 6 & 8 to 11	1	
1	59808	Cylinder barrel - R.H. - includes item 12	1	
1	59809	Cylinder barrel - L.H. - includes item 12	1	
2	50A-1220 UP	Bolt	1	
3	69360	Hardened washer	1	
4	404001	Piston	1	
5	44243	O-ring	1	
6	44343	Back-up ring	1	
7	97826	Gland	1	
8	59768	Wear ring	1	
9	73706	Rod seal	1	
10	59136	Back-up ring	1	
11	12166	Rod wiper	1	
12	62146	Cylinder nut	1	
13	89072	Piston rod	1	
14	28B-04	Grease fitting	1	

Item	Part No.	Description	Qty.	Remarks

SERIAL NUMBERS: 33000 & UP	**STEERING CYLINDERS** **- Models G710 to G740**	Date **01/2001**	Group	**645**
		Illustr. Nos **00004921**	Page	**14**
			Issue	**1**

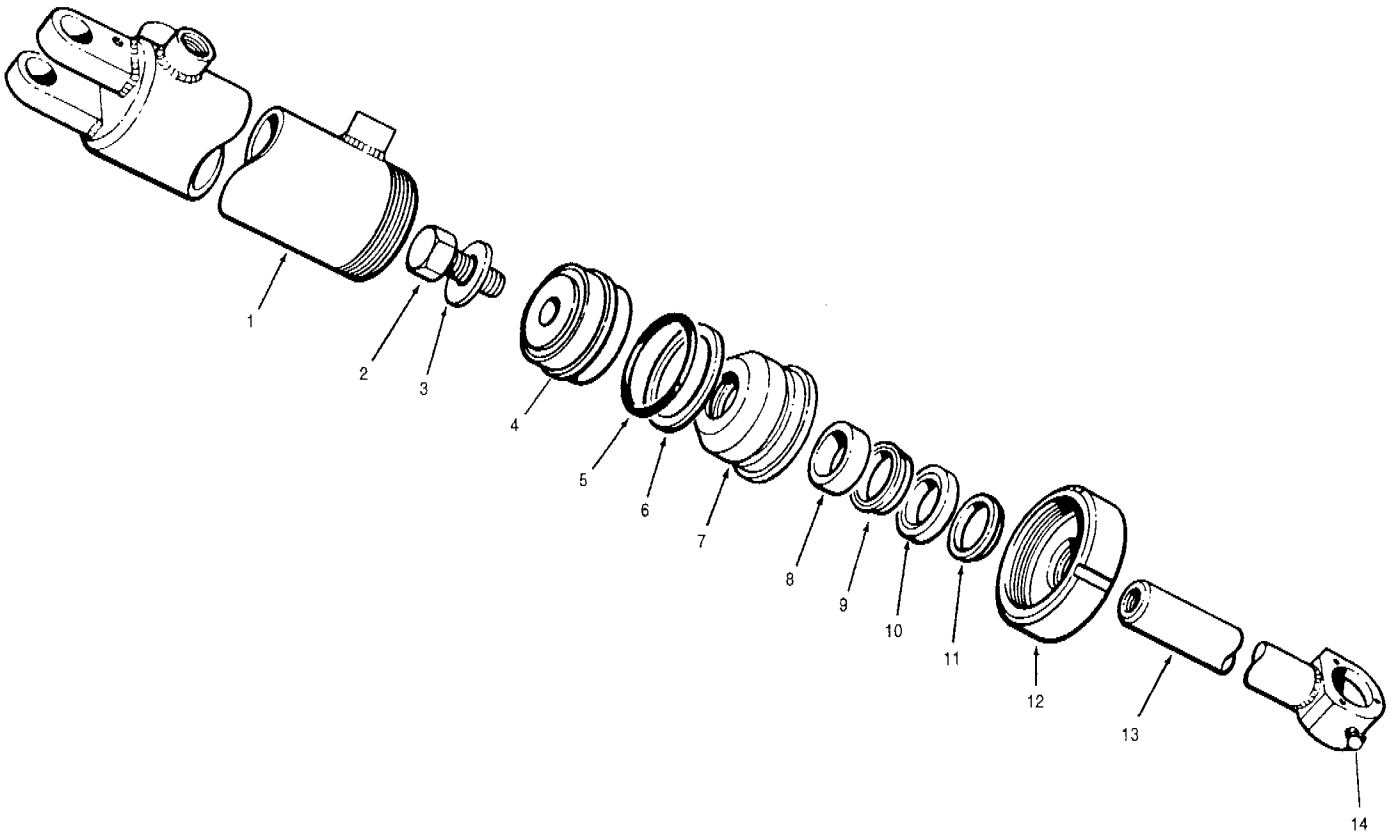

Item	Part No.	Description	Qty.	Remarks
	404004	**Steering cylinder assembly - R.H.** - includes items 1 to 13	1	
	404005	**Steering cylinder assembly - L.H.** - includes items 1 to 13	1	
	404016	**Repair kit for 404004 & 404005 - steering cylinders** - includes items 5, 6 & 8 to 11	1	
1	87202	Cylinder barrel - R.H. - includes item 12	1	
1	87203	Cylinder barrel - L.H. - includes item 12	1	
2	50A-1220 UP	Bolt	1	
3	69360	Hardened washer	1	
4	404001	Piston	1	
5	44243	O-ring	1	
6	44343	Back-up ring	1	
7	97826	Gland	1	
8	59768	Wear ring	1	
9	73706	Rod seal	1	
10	59136	Back-up ring	1	
11	12166	Rod wiper	1	
12	62146	Cylinder nut	1	
13	89074	Piston rod	1	
14	29B-02	Grease fitting	1	

Item	Part No.	Description	Qty.	Remarks

SERIAL NUMBERS: 33000 & UP	**STEERING CYLINDERS - Model G780**	Date **01/2001**	Group **645**
		Illustr. Nos **00004922**	Page **15**
			Issue **1**

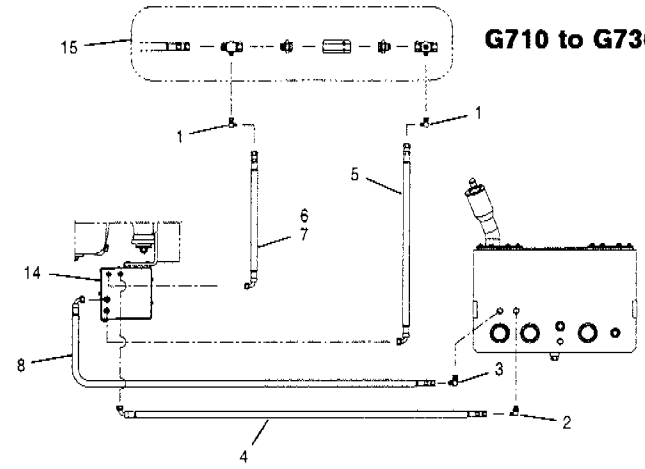

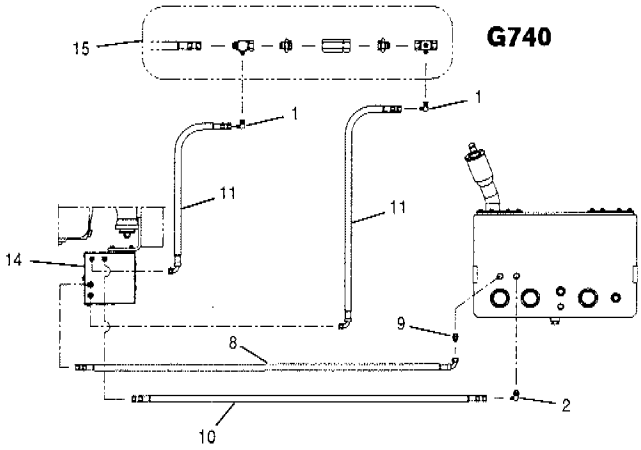

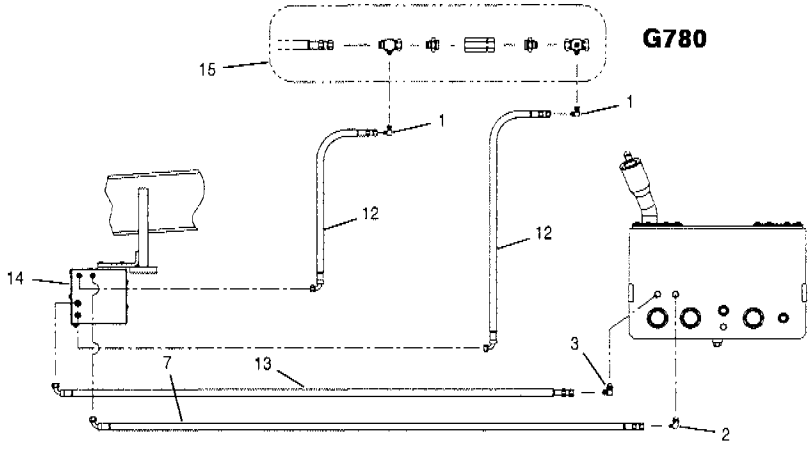

Item	Part No.	Description	Qty.	Remarks
1	112B-06	Connector	2	
2	111B-0608	Connector	1	
3	111B-0808	Connector	1	G710 to G736 & G780
4	78220 x 16	Hose	1	G710 to G736
5	78220 x 29	Hose	1	
6	78220 x 18	Hose	1	G720 to G736
7	78200 x 24	Hose	1	G710, G716 & G780
8	78216 x 14	Hose	1	G710 to G740

Item	Part No.	Description	Qty.	Remarks
9	111E-0808	Connector	1	G740
10	78221 x 16	Hose	1	
11	78220 x 26	Hose	2	
12	78220 x 28	Hose	2	G780
13	78216 x 24	Hose	1	
14		**Supplemental steering box**	Ref.	647-17
15		**Main hydraulic circuit**	Ref.	911-3 911-4

SERIAL NUMBERS: 33000 & UP	**SUPPLEMENTAL STEERING CIRCUIT**	Date **01/2001**	Group **647**
		Illustr. Nos **00006087**	Page **16**
			Issue **1**

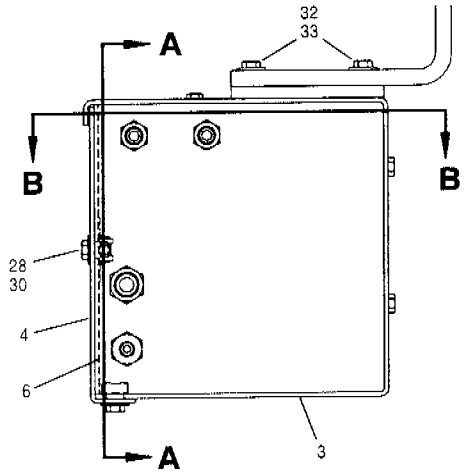

Side view

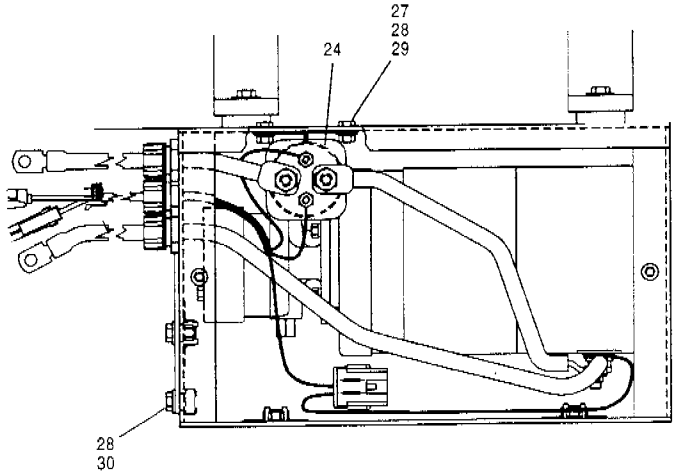

Section AA - Electrical

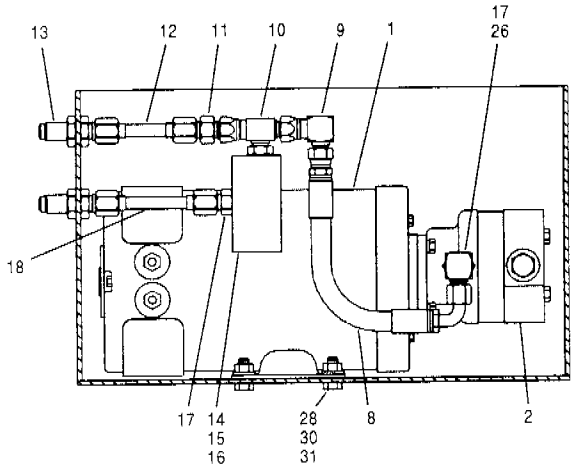

Section BB - Hydraulics

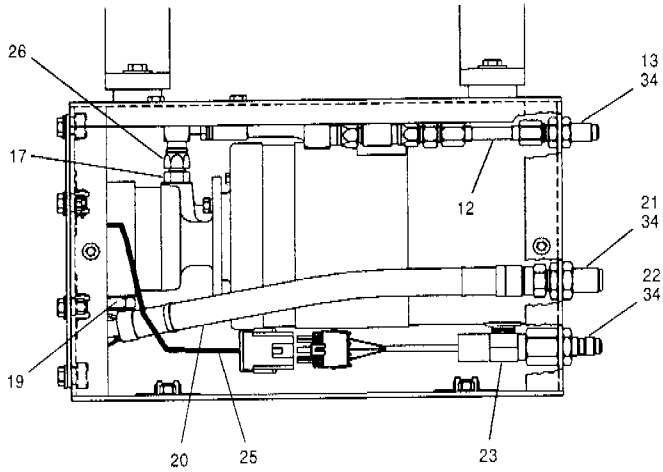

Section AA - Hydraulics

Item	Part No.	Description	Qty.	Remarks
	74279	**Pump & motor assembly** - includes 76231 coupling & items 1 & 2	1	
1	63287	Motor	1	
2	72754	Pump	1	
3	74471	Box	1	
4	74473	Cover	1	
5	58493	Cover - LH.	1	
6	57684 x 60	Weather seal	1	
7	3689	Vent	1	
8	78220 x 10	Hose	1	
9	112B-06	Connector	1	
10	74350	Tee	1	
11	74348	Check valve	1	
12	74344	Tube	1	
13	110N-06	Connector	2	
14	**74280**	**Relief valve** - includes items 15 & 16	1	
15	81248	Cartridge	1	
16	81249	Body	1	
	81250	**Seal kit for 74280** **- relief valve**	1 per	

Item	Part No.	Description	Qty.	Remarks
17	111E-0606	Connector	2	
18	74345	Tube	1	
19	111B-0810	Connector	1	
20	78216 x 14	Hose	1	
21	110N-08	Connector	1	
22	* 12725287	Connector	1	
23	96127	Switch - pressure	1	
24	73277	Solenoid	1	
25	73256	Wiring harness	1	
26	112B-06	Connector	1	
27	50A-0404 Zi	Bolt	2	
28	* 983334	Hardened washer	14	
29	30A-04 Zi	Nut	2	
30	* 50A-0506 Zi	Bolt	12	
31	30A-05 Zi	Nut	4	
32	50A-0608 Zi	Bolt	4	
33	* 983335	Hardened washer	4	
34		**Supplemental steering circuit**	Ref.	647-16

SERIAL NUMBERS: 33000 & UP	**SUPPLEMENTAL STEERING BOX**	Date **07/2001**	Group **647**
		Illustr. Nos **00005460**	Page **17**
			Issue **1A**

Dual wheel lean
G716 & G726 to G780

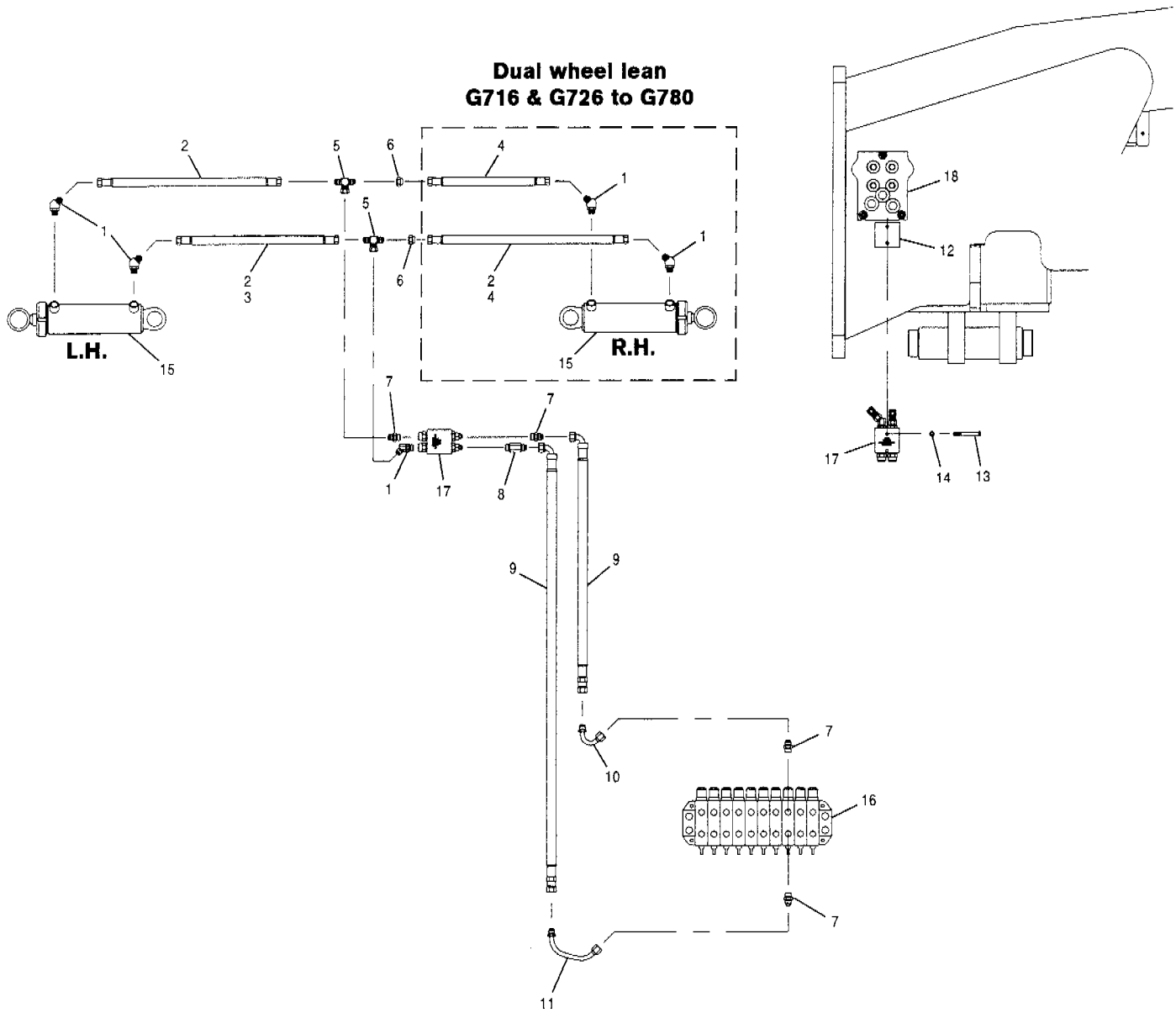

Item	Part No.	Description	Qty.	Remarks
		For EEC wheel lean circuit see 648-19		
1	111A-0808	Connector	3	G710 & G720
1	111A-0808	Connector	5	G716 & G726 to G780
2	74429 x 38	Hose	2	
3	74429 x 33	Hose	3	G710 to G740
4	74429 x 42	Hose	1	G716 & G726 to G740
4	74429 x 42	Hose	2	G780
5	112D-08	Tee	2	
6	110E-08	Cap	2	G710 & G720
7	111E-0808	Connector	4	
8	111F-0808	Connector	1	

Item	Part No.	Description	Qty.	Remarks
9	78193 x 185	Hose	2	
10	* 12725309	Tube	1	
11	* 12725310	Tube	1	
12	403038	Mounting plate	1	
13	50A-0524 Zl	Bolt	2	
14	* 983334	Hardened washer	2	
15		**Wheel lean cylinders**	Ref.	648-20 648-21 648-22
16		**Manifold valve**	Ref.	912-8 912-9
17		**Counterbalance valve**	Ref.	912-17
18		**Coupling plate**	Ref.	715-4

SERIAL NUMBERS: 33000 & UP	**WHEEL LEAN CIRCUIT**	Date **03/2001**	Group **648**
		Illustr. Nos **00006086**	Page **18**
			Issue **1A**

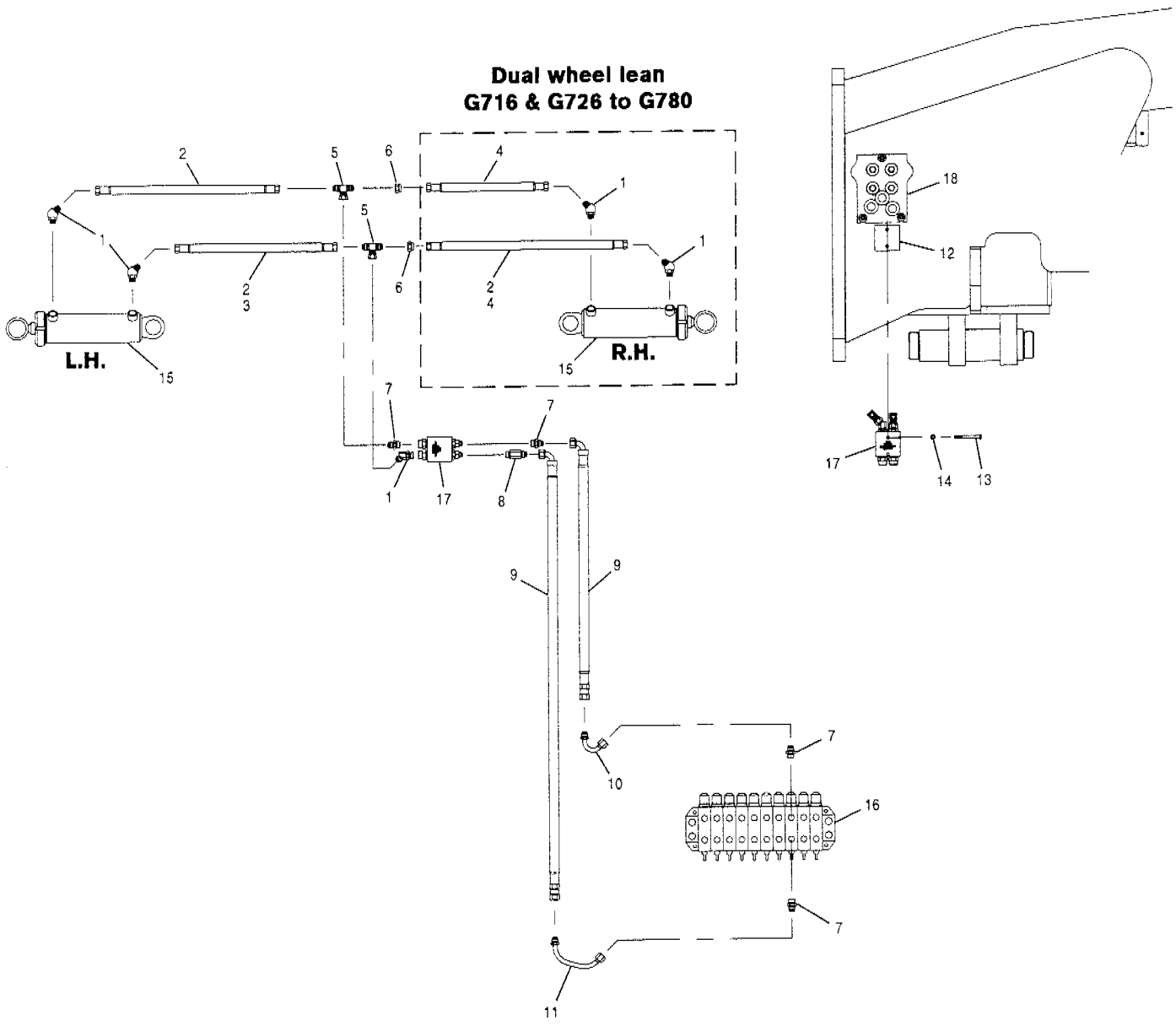

Item	Part No.	Description	Qty.	Remarks
1	111A-0808	Connector	3	G710 & G720
1	111A-0808	Connector	5	G716 & G726 to G780
2	74429 x 38	Hose	2	
3	74429 x 33	Hose	3	G710 to G740
4	74429 x 42	Hose	1	G716 & G726 to G740
4	74429 x 42	Hose	2	G780
5	112D-08	Tee	2	
6	110E-08	Cap	2	G710 & G720
7	111E-0808	Connector	4	
8	111F-0808	Connector	1	
9	78193 x 185	Hose	2	
10	* 12725309	Tube	1	
11	* 12725310	Tube	1	

Item	Part No.	Description	Qty.	Remarks
12	403038	Mounting plate	1	
13	50A-0524 Zi	Bolt	2	
14	* 983334	Hardened washer	2	
15		**Wheel lean cylinders**	Ref.	648-21 648-22
16		**Manifold valve**	Ref.	912-8 912-9
17		**Counterbalance valve - EEC**	Ref.	912-18
18		**Coupling plate**	Ref.	715-4

SERIAL NUMBERS: 33000 & UP	**WHEEL LEAN CIRCUIT - EEC**	Date **03/2001**	Group **648**
		Illustr. Nos **00006086**	Page **19**
			Issue **1A**

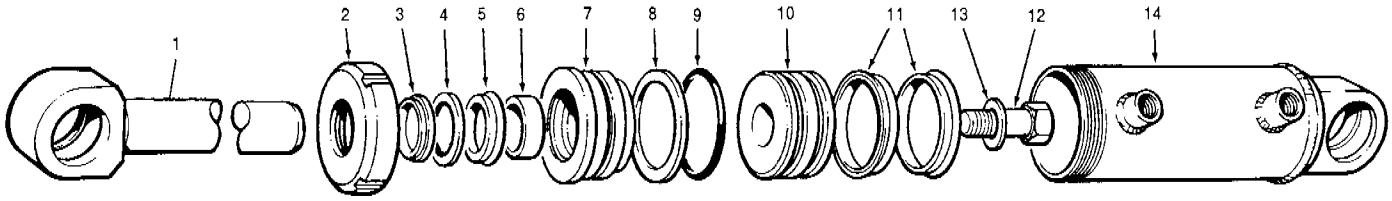

Item	Part No.	Description	Qty.	Remarks
		Single 4" diameter cylinder		**Standard**
	89016	**4" wheel lean cylinder assembly** - includes items 1 to 14	1	
	89134	**Repair kit for 89016** **- 4" wheel lean cylinder** - includes items 3 to 6, 8, 9 & 11	1 per	
1	89058	Piston rod	1	
2	62147	Cylinder nut	1	
3	12035	Wiper ring	1	
4	59189	Back-up ring	1	
5	73297	Rod seal	1	
6	43074	Wear ring	1	
7	97828	Gland	1	
8	44266	Back-up ring	1	
9	44244	O-ring	1	
10	59670	Piston	1	
11	12036	Piston seal	2	
12	50A-1622 UP	Bolt	1	
13	49380	Hardened washer	1	
14	80578	Cylinder barrel - includes item 2	1	

Item	Part No.	Description	Qty.	Remarks

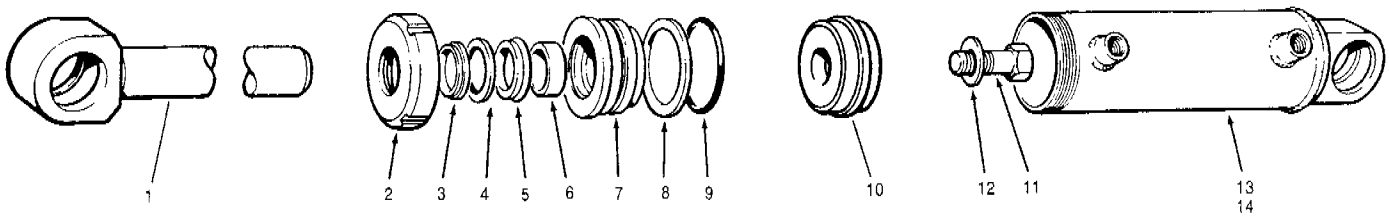

Item	Part No.	Description	Qty.	Remarks
		Dual 3" diameter cylinders - optional on models G710 & G720		**Standard**
	404009	**3" Cylinder assembly - L.H.** - includes items 1 to 12 & 14	1	
	404010	**3" Assembly cylinder - R.H.** - includes items 1 to 13	1	
	404016	**Repair kit for 404009 & 404010 - 3" cylinders** - includes items 3 to 6, 8 & 9	1 per	
1	89060	Piston rod	1	
2	62146	Cylinder nut	1	
3	12166	Wiper ring	1	
4	59136	Back-up ring	1	
5	73706	Rod seal	1	
6	59768	Wear ring	1	
7	97826	Gland	1	
8	44343	Back-up ring	1	
9	44243	O-ring	1	
10	404001	Piston	1	
11	50A-1220 UP	Bolt	1	
12	69360	Hardened washer	1	
13	59799	Cylinder barrel - R.H. - includes item 2	1	
14	59800	Cylinder barrel - L.H. - includes item 2	1	

Item	Part No.	Description	Qty.	Remarks

SERIAL NUMBERS:
33000 & UP

WHEEL LEAN CYLINDERS
- Models G716 & G726 to G740

Date	**01/2001**	Group	**648**
Illustr. Nos	**00004924**	Page	**21**
		Issue	**1**

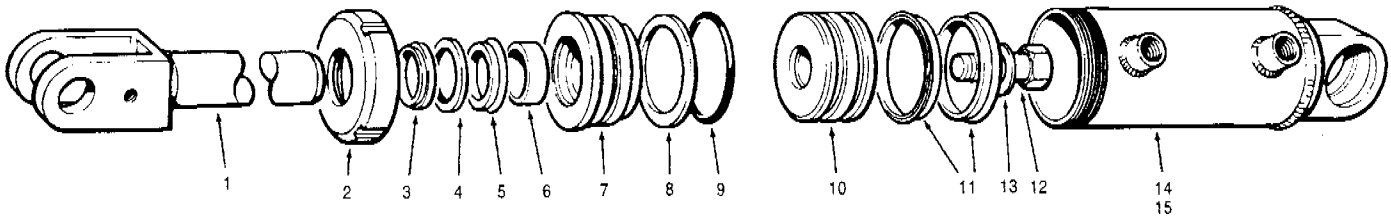

Item	Part No.	Description	Qty.	Remarks
		Dual 4" diameter cylinders		
	87206	**4" wheel lean cylinder assembly - R.H.** - includes Items 1 to 14	1	
	87208	**4" wheel lean cylinder assembly - L.H.** - includes Items 1 to 13 & 15	1	
	89134	**Repair kit for 87206 & 87208** **- 4" wheel lean cylinders** - includes Items 3 to 6, 8, 9 & 11	1 per	
1	87207	Piston rod	1	
2	62147	Cylinder nut	1	
3	12035	Wiper ring	1	
4	59189	Back-up ring	1	
5	73297	Rod seal	1	
6	43074	Wear ring	1	
7	97828	Gland	1	
8	44266	Back-up ring	1	
9	44244	O-ring	1	
10	59670	Piston	1	
11	12036	Piston seal	2	
12	50A-1622 UP	Bolt	1	
13	49380	Hardened washer	1	
14	59832	Cylinder barrel - R.H. - includes item 2	1	
15	59833	Cylinder barrel - L.H. - includes item 2	1	

Item	Part No.	Description	Qty.	Remarks

SERIAL NUMBERS: 33000 & UP	**WHEEL LEAN CYLINDERS** **- Model G780**	Date **01/2001** Illustr. Nos **00004224**	Group **648** Page **22** Issue **1**

Group	Page

Numerical

715 Transmission Guard 3
Covers 4
716 Push Block 5
740 Articulation Hinge 6
742 Articulation Hydraulic Circuit 7
Articulation Cylinders - Models G710 to G726 8
Articulation Cylinders - Models G730 to G780 9
Articulation Indicator 10
771 Wheels & Rims 11
Spare Wheel Hanger - Model G780 12

Group	Page

Alphabetical

742 Articulation Cylinders - Models G710 to G726 8
Articulation Cylinders - Models G730 to G780 9
740 Articulation Hinge 6
742 Articulation Hydraulic Circuit 7
Articulation Indicator 10
715 Covers 4
716 Push Block 5
771 Spare Wheel Hanger - Model G780 12
715 Transmission Guard 3
771 Wheels & Rims 11

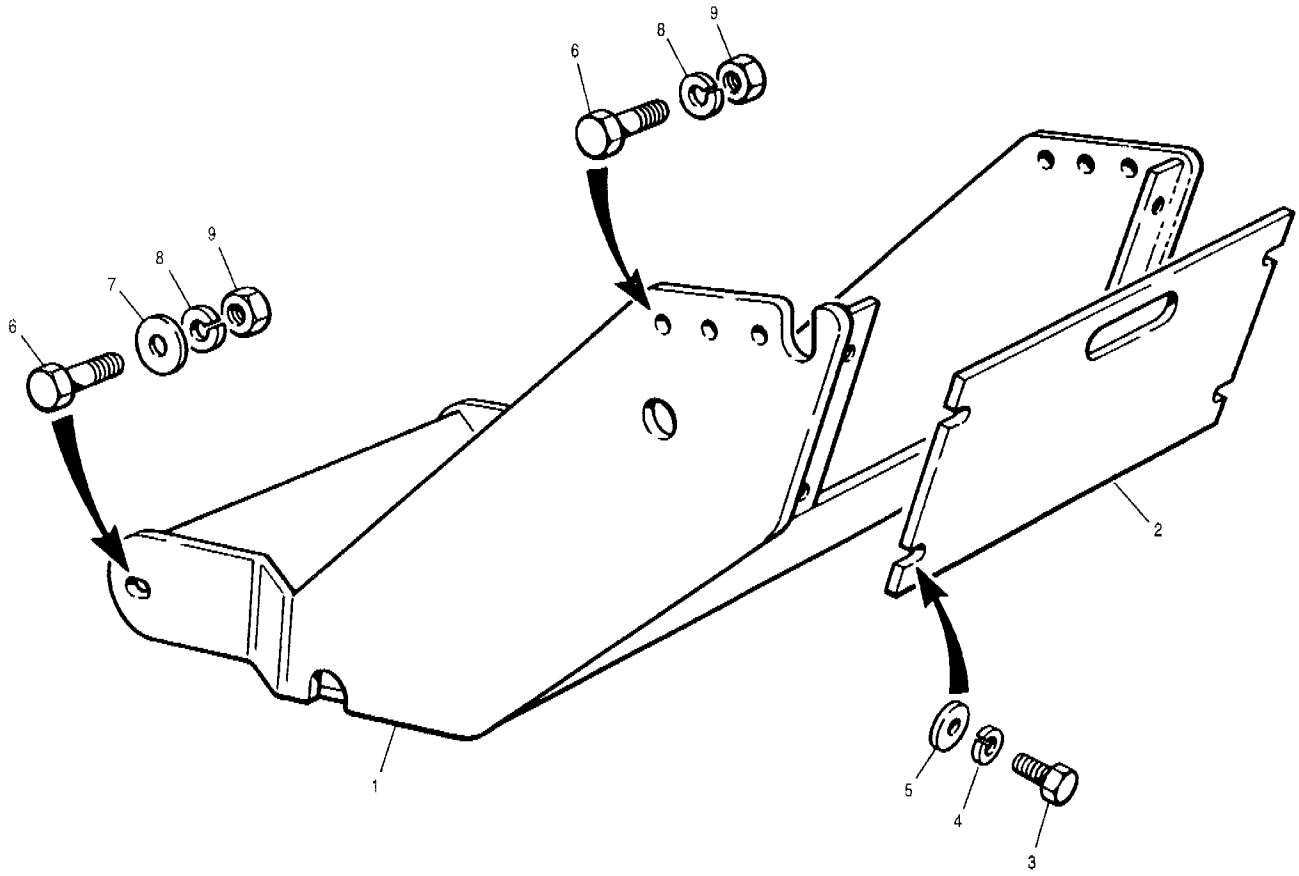

Item	Part No.	Description	Qty.	Remarks
1	401015	Guard	1	G710 to G740
1	401016	Guard	1	G780
2	81770	Cover	1	
3	50A-0808 Zi	Bolt	4	
4	14A-08 Zi	Lockwasher	4	
5	14C-08 Zi	Flatwasher	4	
6	50A-1220 Zi	Bolt	4	
7	37940	Hardened washer	2	
8	14A-12 Zi	Lockwasher	4	
9	30A-12 Zi	Nut	4	

Item	Part No.	Description	Qty.	Remarks

SERIAL NUMBERS: 33000 & UP	**TRANSMISSION GUARD**	Date **01/2001**	Group	**715**
		Illustr. Nos **00004267**	Page	**3**
			Issue	**1**

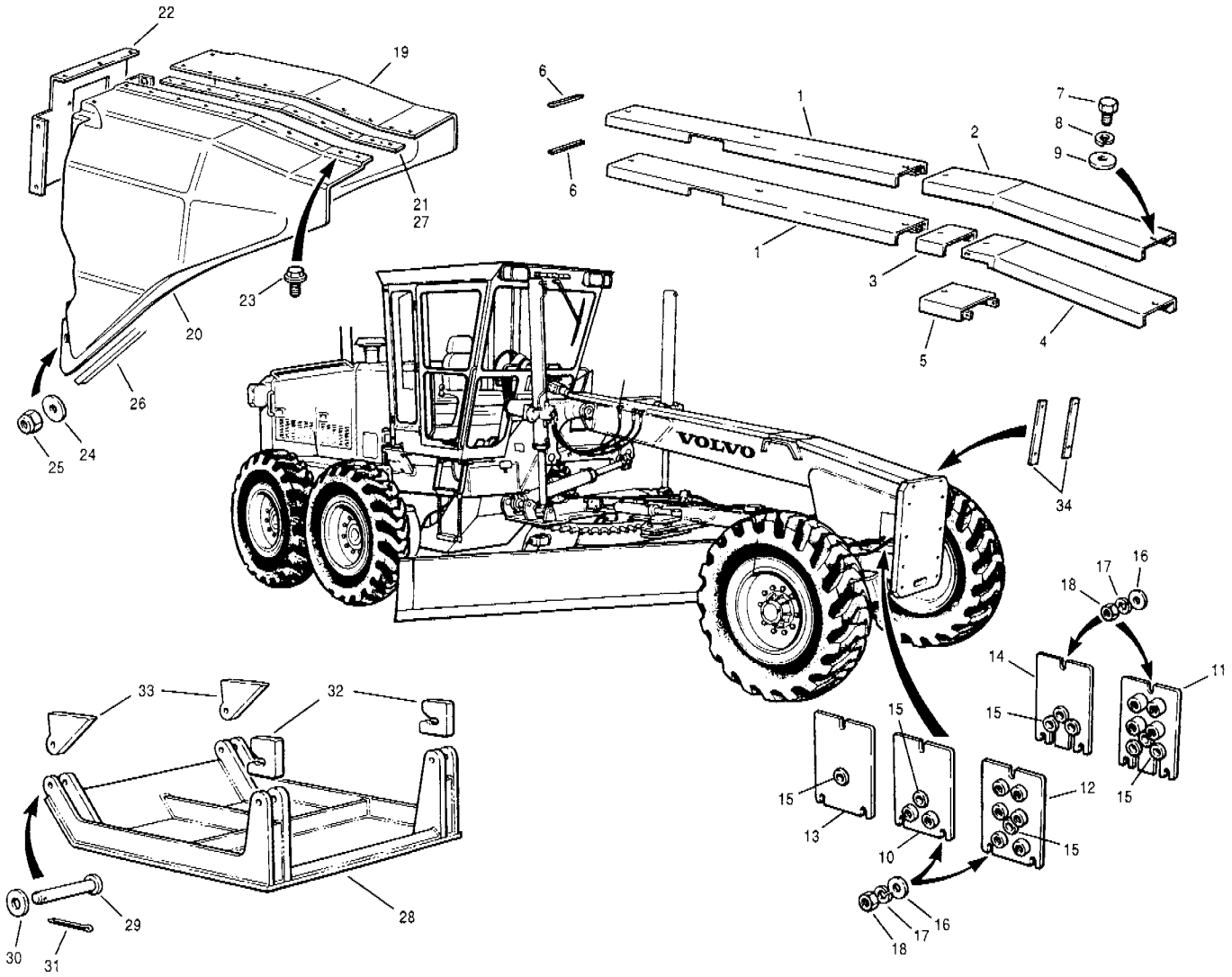

Item	Part No.	Description	Qty.	Remarks
1	79733	Cover - rear	1	G710 to G736
1	79735	Cover - rear	1	G740 to G780
2	79671	Cover - nose - no scarifier	1	
3	79499	Cover - with scarifier	1	G710 to G740
4	79672	Cover - with scarifier or scarifier brackets	1	G710 to G740
5	79403	Cover - scarifier brackets	1	G710 to G740
6	32576 x 9	Edge trim	1	
7	50A-0808Zi	Bolt	5 - 6	
8	14A-08 Zi	Lockwasher	5 - 6	
9	14C-08 Zi	Flatwasher	5 - 6	
10	* 12724815	Cover - R.H. - no attachments	1	G710 to G740
11	* 12724809	Cover - L.H. - attachments	1	G710 to G740
12	* 12724819	Cover - R.H. - attachments	1	G710 to G740
13	* 12724828	Cover – R.H. – single wheel lean	1	G710 to G740
14	* 12724807	Cover - no attachments	2	G780
15	80302	Grommet	A.R.	
16	14C-06 Zi	Flatwasher	6	
17	14A-06 Zi	Lockwasher	6	
18	30A-06 Zi	Nut	6	

Item	Part No.	Description	Qty.	Remarks
	96824	**Manifold cover assembly - includes items 19 to 27**	1	
19	402158	Cover - L.H.	1	
20	402157	Cover - R.H.	1	
21	402136	Bar	1	
22	402138	Bracket	1	
23	78460	Screw	16	
24	14C-05 Zi	Flatwasher	4	
25	36D-05 Zi	Locknut	4	
26	402034 x 106	Trim seal	1	
27	75B-046	Rivet	5	
28	79437	Belly pan	1	G780
29	10B-1648	Clevis pin	4	G780
30	14C-16 Zi	Flatwasher	4	G780
31	13A-0524	Cotter pin	4	G780
32	78745	Latch block	2	G780
33	78792	Support - rear	2	G780
34	43359-1	Bracket - front licence plate	2	

SERIAL NUMBERS: 33000 & UP	**COVERS**	Date **05/2001**	Group **715**
		Illustr. Nos **00005197**	Page **4**
			Issue **1A**

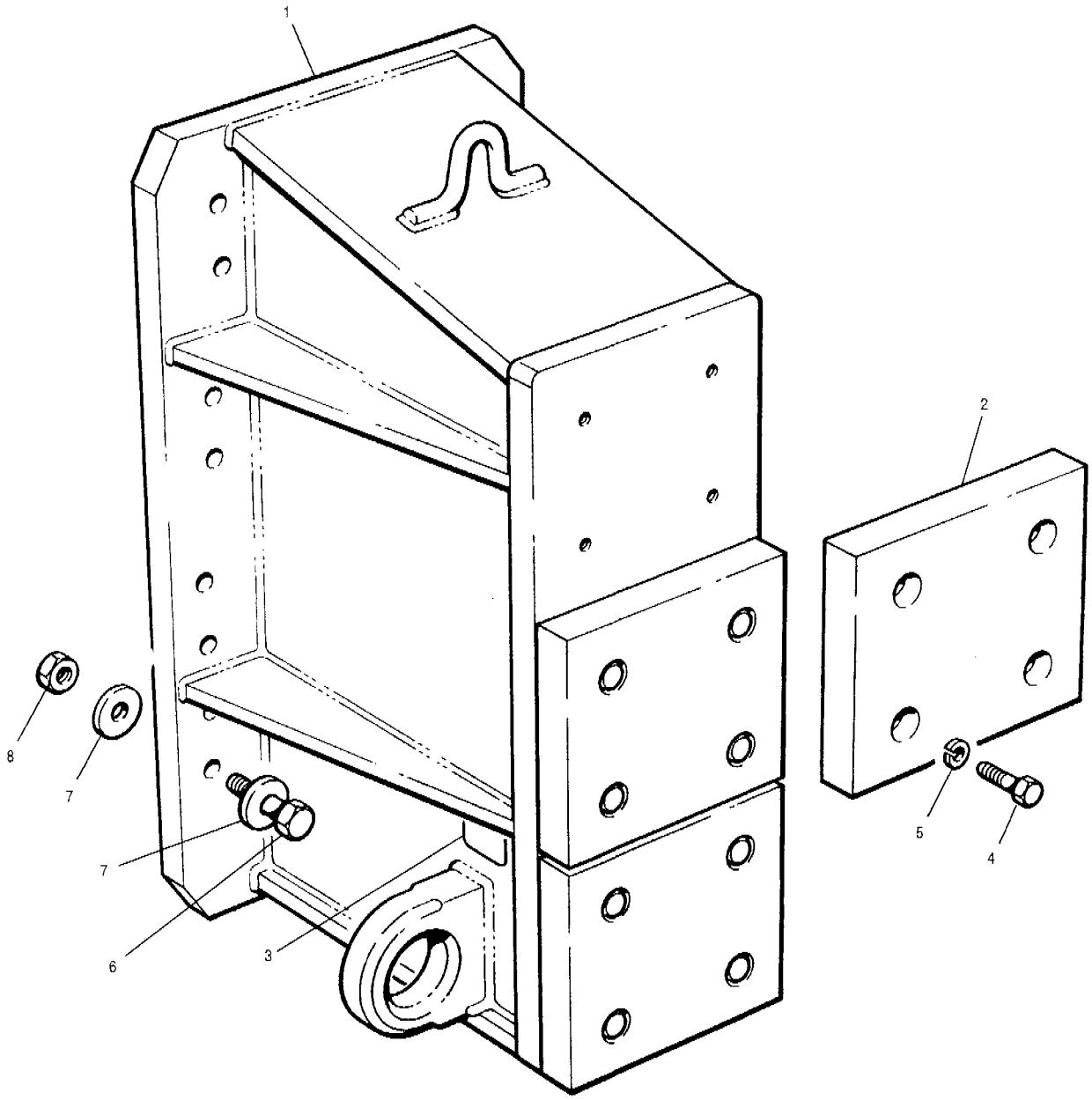

Item	Part No.	Description	Qty.	Remarks
1	74886	Push block	1	
2	74887	Wear plate	3	
3	68869	Decal - tie down	2	
4	50A-1014 Zi	Bolt	12	
5	14A-10 Zi	Lockwasher	12	
6	50A-1636 Zi	Bolt	8	G710 to G736
6	50A-1644 Zi	Bolt	8	G740 to G780
7	14C-16 Zi	Flatwasher	16	
8	30A-16 Zi	Locknut	8	

Item	Part No.	Description	Qty.	Remarks

SERIAL NUMBERS: 33000 & UP	**PUSH BLOCK**	Date **01/2001**	Group	**716**
		Illustr. Nos **00003665**	Page	**5**
			Issue	**1**

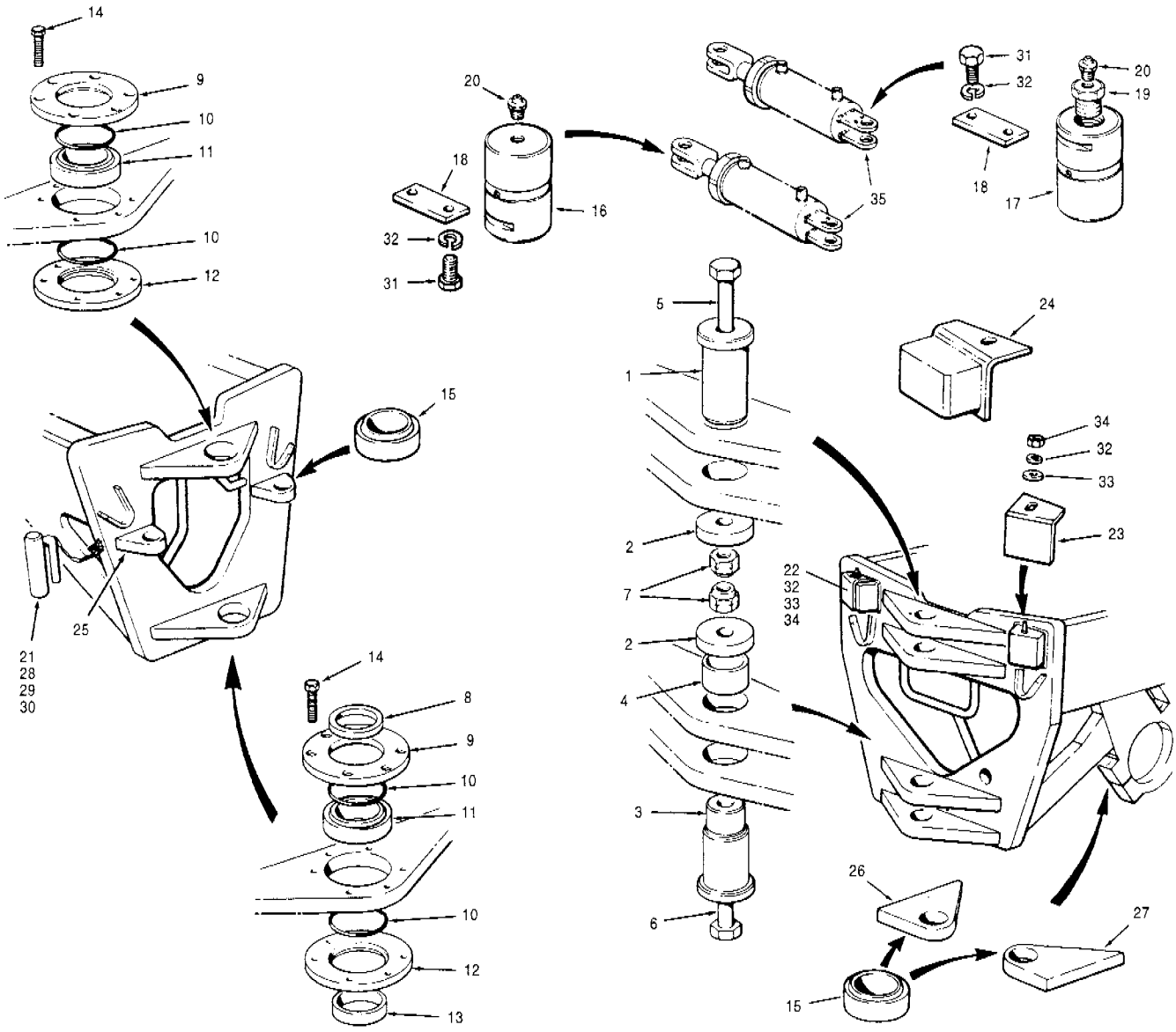

Item	Part No.	Description	Qty.	Remarks
1	404134	Pin - upper	1	
2	12745	Washer	2	
3	12742	Pin - lower	1	
4	34134	Sleeve	1	
5	50A-1672 Zi	Bolt	1	
6	50A-1672 Zi	Bolt	1	
7	36D-16 Zi	Locknut	2	
8	12746	Spacer	1	
9	12759	Retainer - upper bearing	2	
10	12A-240	O-ring	4	
11	12764	Bearing	2	
12	66946	Retainer - lower bearing	2	
13	12747	Spacer	1	
14	50A-0620 Zi	Bolt	12	
15	19630	Bearing	4	
16	58933	Pin - articulation cylinder - front	2	
17	87359	Pin - articulation cylinder - rear	2	
18	56909	Locking plate	4	
19	62501	Plug - pin	2	
20	29A-02	Grease fitting	4	
21	69827	Locking pin	2	
22	81636	Shim - R.H.	1	
23	81637	Shim - L.H.	1	

Item	Part No.	Description	Qty.	Remarks
24	81704	Restrictor - R.H. - front mount wing & auxiliary manifold	1	
25	62103	Pivot lug - front hinge - R.H. & L.H.	2	
26	68456	Pivot lug - rear hinge - R.H.	1	
27	68457	Pivot lug - rear hinge - L.H.	1	
28	14C-04 Zi	Flatwasher	2	
29	14A-04 Zi	Lockwasher	2	
30	30A-04 Zi	Nut	2	
31	50A-0606 Zi	Bolt	8	
32	14A-06 Zi	Lockwasher	8 - 10	
33	14C-06 Zi	Flatwasher	2	
34	30A-06 Zi	Nut	2	
35		**Articulation cylinders**	Ref.	742-8 742-9

SERIAL NUMBERS: 33000 & UP	**ARTICULATION HINGE**	Date **01/2001**	Group **740**
		Illustr. Nos **00004739**	Page **6**
			Issue **1**

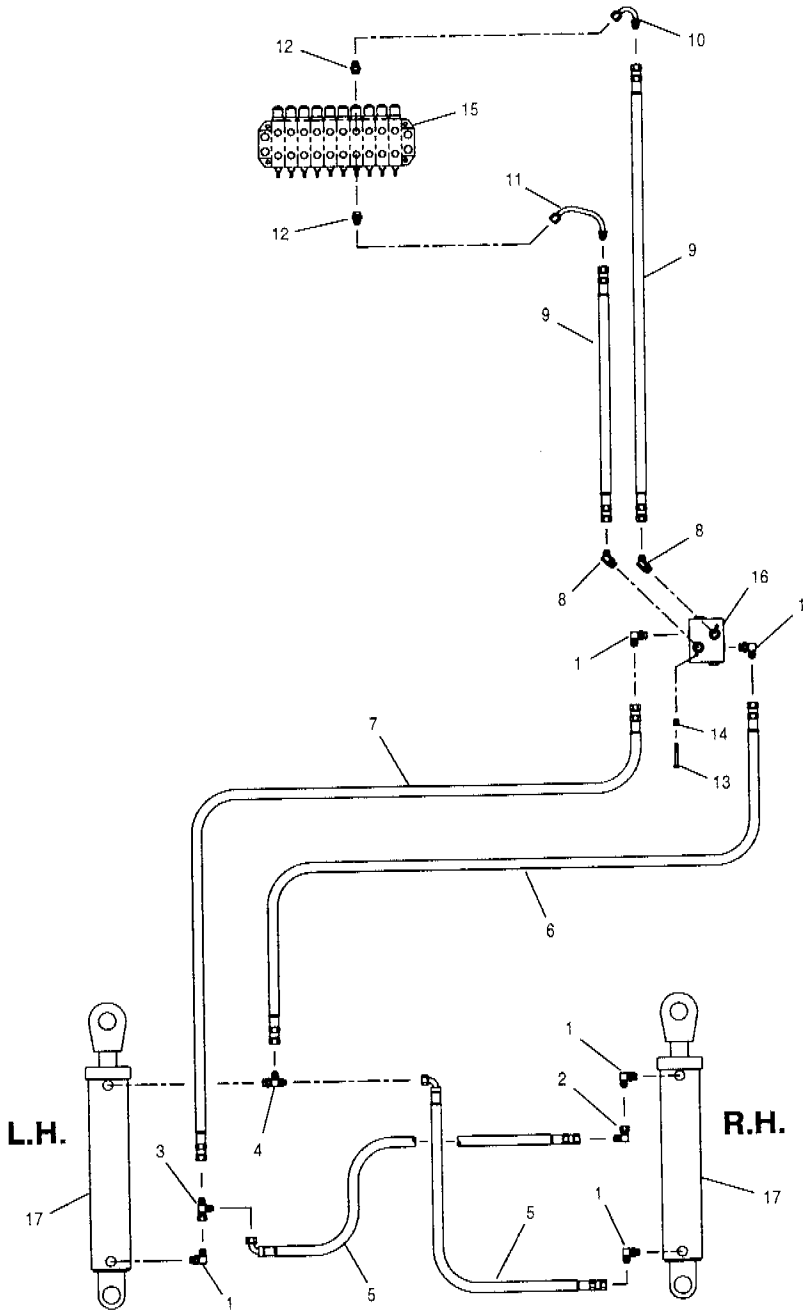

Item	Part No.	Description	Qty.	Remarks
1	111B-0808	Connector	5	
2	112B-08	Connector	1	
3	112C-08	Connector	1	
4	111D-0808	Connector	1	
5	74430 x 31	Hose	2	
6	74429 x 62	Hose	1	
7	74429 x 72	Hose	1	
8	111A-0808	Connector	2	
9	78192 x 72	Hose	2	
10	* 12725309	Tube	1	
11	* 12725310	Tube	1	
12	111E-0808	Connector	2	
13	50A-0520 Zi	Bolt	2	
14	38A-0502	Cage nut	2	

Item	Part No.	Description	Qty.	Remarks
15		Manifold valve	Ref.	912-8 912-9
16		Counterbalance valve	Ref.	912-17 912-18
17		Articulation cylinders	Ref.	742-8 742-9

SERIAL NUMBERS: 33000 & UP	**ARTICULATION HYDRAULIC CIRCUIT**	Date **03/2001**	Group	**742**
		Illustr. Nos **00004738**	Page	**7**
			Issue	**1A**

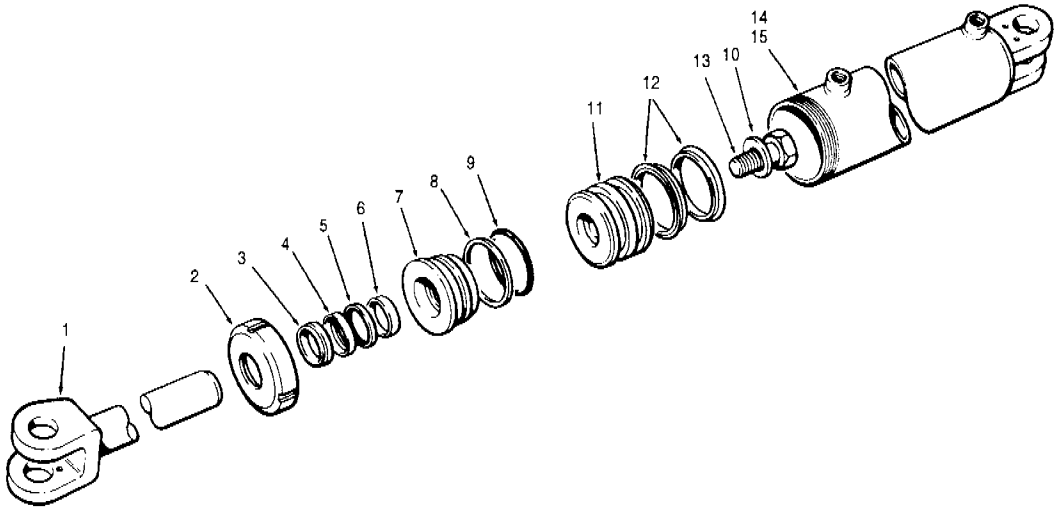

Item	Part No.	Description	Qty.	Remarks
	89001	**Articulation cylinder assembly - L.H.** - includes items 1 to 14	2	
	89002	**Articulation cylinder assembly - R.H.** - includes items 1 to 13, & 15	1	
	89136	**Repair kit for 89001 & 89002 - cylinder assemblies** - includes items 3 to 6, 8, 9 & 12	1	
1	89034	Piston rod	1	
2	74600	Cylinder nut	1	
3	12035	Wiper ring	1	
4	59189	Back-up ring	1	
5	73297	Rod seal	1	
6	43074	Wear ring	1	
7	97831	Gland	1	
8	74579	Back-up ring	1	
9	74578	O-ring	1	
10	62160	Washer	1	
11	74576	Piston	1	
12	74577	Piston seal	2	
13	50A-2024 UP	Bolt	1	
14	74570	Cylinder barrel - L.H. - includes item 2	1	
15	74571	Cylinder barrel - R.H. - includes item 2	1	

Item	Part No.	Description	Qty.	Remarks

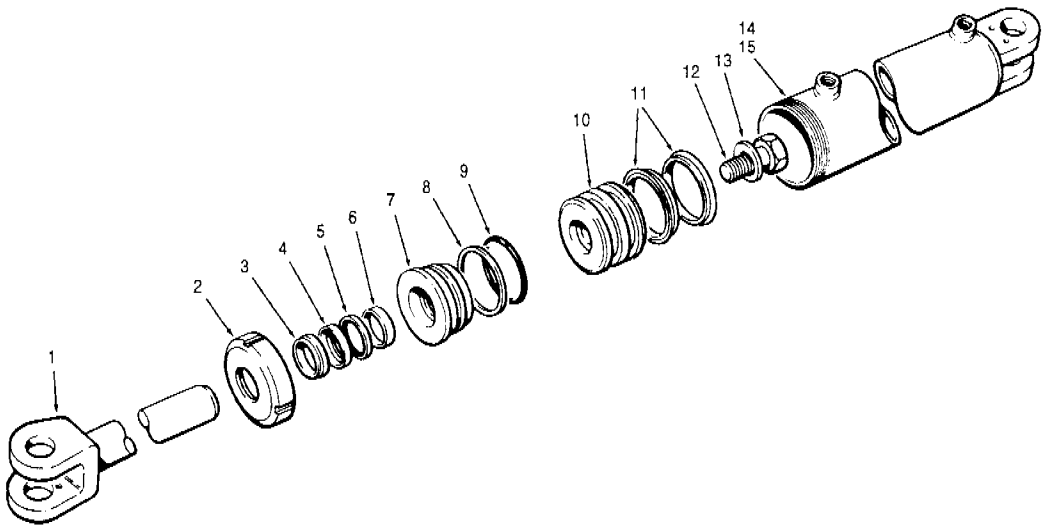

Item	Part No.	Description	Qty.	Remarks
	89003	**Articulation cylinder assembly - L.H.** - includes items 1 to 14	1	
	89004	**Articulation cylinder assembly - R.H.** - includes items 1 to 13 & 15	1	
	89137	**Repair kit for 89003 & 89004 - cylinder assemblies** - includes items 3 to 6, 8, 9 & 11	1	
1	89034	Piston rod	1	
2	62148	Cylinder nut	1	
3	12035	Wiper ring	1	
4	59189	Back-up ring	1	
5	73297	Rod seal	1	
6	43074	Wear ring	1	
7	97832	Gland	1	
8	44344	Back-up ring	1	
9	44245	O-ring	1	
10	59671	Piston	1	
11	53799	Piston seal	2	
12	50A-2024 UP	Bolt	1	
13	62160	Washer	1	
14	62081	Cylinder barrel - L.H. - includes item 2	1	
15	62078	Cylinder barrel - R.H. - includes item 2	1	

Item	Part No.	Description	Qty.	Remarks

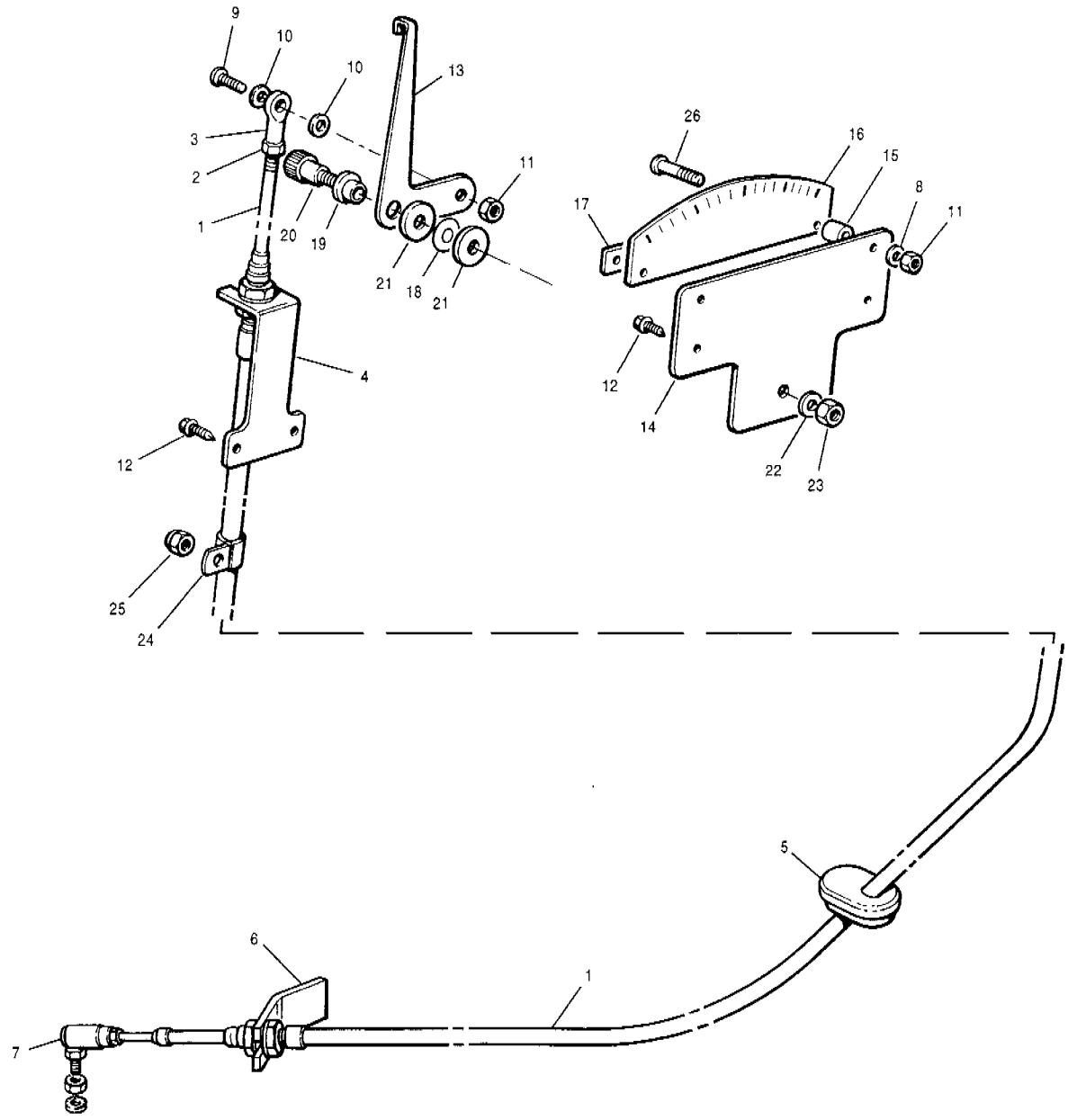

Item	Part No.	Description	Qty.	Remarks
1	84805	Cable	1	
2	33A-10 Zi	Jam nut	1	
3	73087	Ball joint	1	
4	84804	Anchor - cable	1	
5	69938	Grommet	1	
6	81735	Anchor - cable	1	
7	96256	Ball joint - includes lockwasher & nut	1	
8	14F-10 Zi	Lockwasher	2	
9	52L-1006 Zi	Screw	1	
10	14P-10	Starwasher	2	
11	32A-10 Zi	Nut	3	
12	62A-1206 Zi	Screw	4	
13	69933	Articulation pointer	1	
14	95345	Plate - support	1	
15	69935	Spacer	2	

Item	Part No.	Description	Qty.	Remarks
16	73296	Indicator face	1	
17	69963	Plate - mounting	1	
18	73088	Wave washer	1	
19	73089	Bushing	1	
20	78537	Bolt	1	
21	14C-06 Zi	Flatwasher	2	
22	14C-05 Zi	Flatwasher	1	
23	30A-05 Zi	Nut	1	
24	32316	Clamp	1	
25	36D-05 Zi	Locknut	1	
26	52L-1008 Zi	Screw	2	

SERIAL NUMBERS: 33000 & UP	**ARTICULATION INDICATOR**	Date **01/2001**	Group **742**
		Illustr. Nos **00004740**	Page **10**
			Issue **1**

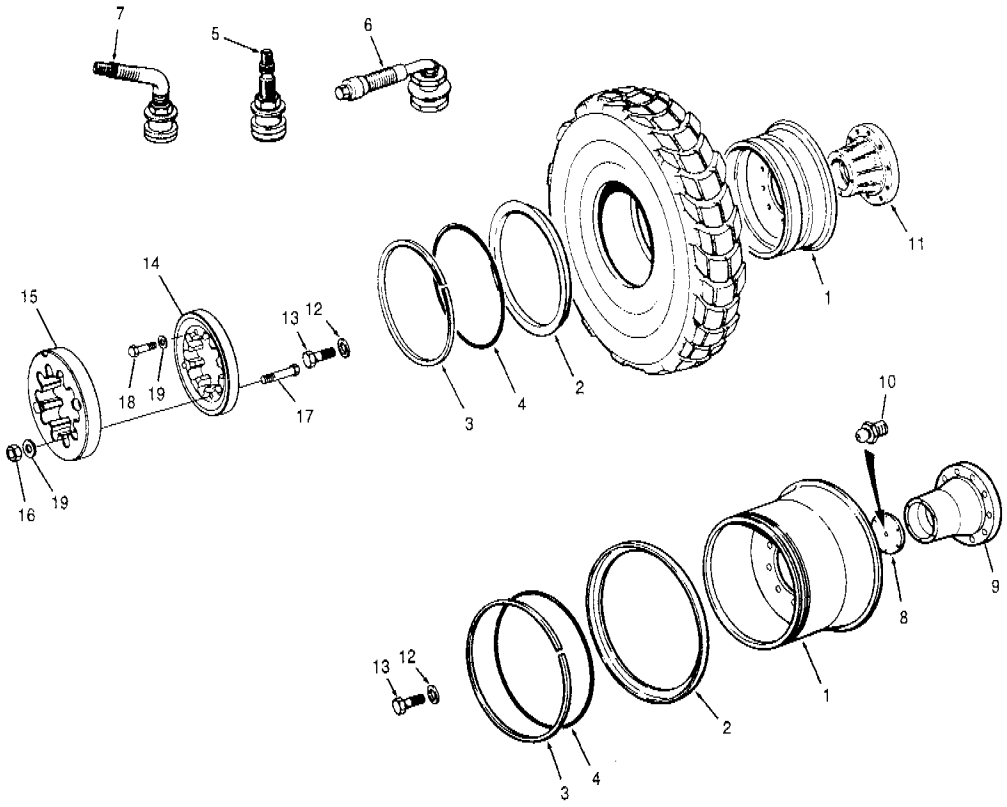

Item	Part No.	Description	Qty.	Remarks
		Rims		
1	58009	Rim - 8" x 24" (3 piece)	4 - 6	G710 to G740
1	87111	Rim - 9" x 24" (1 piece)	6	G710 to G740
1	84404	Rim - 9" x 24" (1" offset, 1 piece)	6	G710 to G740
1	76297	Rim - 10" x 24" (3 piece)	4 - 6	G710 to G740
1	87358	Rim - 10" x 24" (1 piece)	4 - 6	G710 to G740
1	76298	Rim - 10" x 24" (1" offset, 3 piece)	6	G710 to G740
1	87373	Rim - 10" x 24" (1" offset, 1 piece)	6	G710 to G740
1	87426	Rim - 13" x 25" (1 piece)	6	G710 to G740
1	76299	Rim - 14" x 25" (3 piece)	4 - 6	G710 to G740
1	76300	Rim - 10" x 24" (2" offset, 3 piece)	6	G780
1	76301	Rim - 17" x 25" (3 piece)	6	G780
1	87873	Rim - 13" x 25" - front (1 piece)	2	AWD
1	76315	Rim - 10" x 24" - front (3 piece)	2	AWD
1	76313	Rim - 14" x 25" - front (3 piece)	2	AWD
		Rim rings		
2	4275-2	Side ring - 8"	1 per rim	
2	4276-2	Side ring - 10"	1 per rim	
2	10852-2	Side ring - 14"	1 per rim	
2	76314	Side ring - 17"	1 per rim	
3	4275-3	Lock ring - 8"	1 per rim	
3	4276-3	Lock ring - 10"	1 per rim	
3	10852-3	Lock ring - 14" & 17"	1 per rim	
4	4275-4	O-ring - 8" & 10"		Tubeless tires only
4	10852-4	O-ring - 14" & 17"		Tubeless tires only

Item	Part No.	Description	Qty.	Remarks
		Valve stems		
5	4275-5	Valve stem - used on 8", 9", 10" & 13" rims	1 per rim	
6	87424	Valve stem - extended - used on 10", 14" & 17" rims & 10" front rims (AWD)	1 per rim	
7	87425	Valve stem - extended - used on 10" (1" & 2" offset) rims, 10" rims (tubeless tires) & 14" front rims (AWD)	1 per rim	
7	23090	Valve stem - extended - used on 10" rims (tube-type tires)	1 per rim	
		Wheels (hubs)		
8	46596	Cap - front axle hub	2	G780
9	54548	Hub - front axle	2	G780
10	28A-04	Grease fitting	2	G780
11	54065	Hub - front axle	2	G710 to G740
12	* 983340	Hardened washer	60	
13	50A-1416 Zi	Bolt	60	
		Wheel weights		
14	400277	Weight - inner	1 per	G710 to G740
14	400278	Weight - inner	1 per	G780
15	87756	Weight - outer	1 per	
16	30A-14 Zi	Nut	2 per	
17	50A-1444 Zi	Bolt	2 per	
18	50A-1436 Zi	Bolt	2 per	
19	* 983340	Hardened washer	4 per	

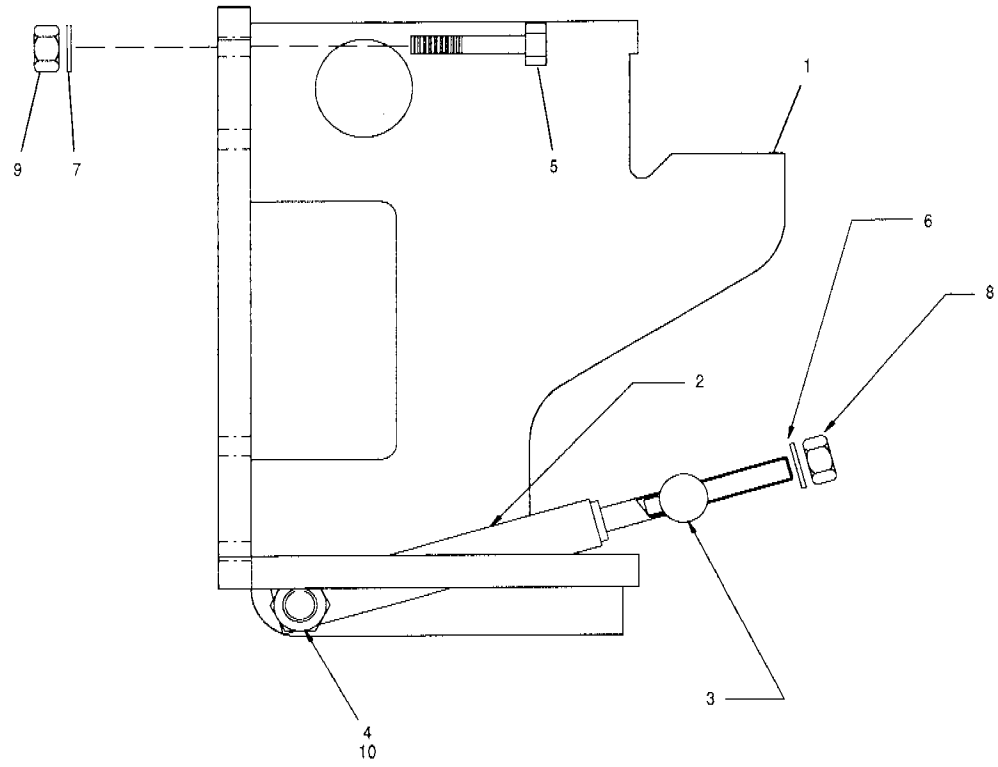

Item	Part No.	Description	Qty.	Remarks
1	75104	Spare wheel hanger	1	
2	75102	Clamp rod	1	
3	72853	Clamp bar	1	
4	50A-1622 Zi	Bolt	1	
5	50A-1644 Zi	Bolt	4	
6	14A-12 Zi	Lockwasher	1	
7	14A-16 Zi	Lockwasher	4	
8	30A-12 Zi	Nut	1	
9	30A-16 Zi	Nut	4	
10	30D-16 Zi	Locknut	1	

Item	Part No.	Description	Qty.	Remarks

SERIAL NUMBERS: 33000 & UP	**SPARE WHEEL HANGER - Model G780**	Date 01/2001	Group 771
		Illustr. Nos 00002597	Page 12
			Issue 1

Group	Page

Numerical

810 Cab - Standard & Low Profile 3
Cab - Split ROPS & Canopy 4
818 Cab Mounts 5
821 Engine Cowl 6
821 Radiator Frame 7
827 Cab Step 8
831 Doors & Latch 9
834 Door Lock & Handle 10
841 Decals 11
Decals - Grader Models 12
Safety Signs - English/French 13
Safety Signs - Spanish/Portuguese 14
Safety Signs - Greek/Dutch 15
Safety Signs - Brazillian 16
Mirrors 17
843 Cab Glass 18
844 Lower Front Vent Window 19
Side Slider Window 20
851 Sound Suppression & Trim - Upper Cab 21
Sound Suppression & Trim - Lower Cab 22
852 Bucket Seat 23
Suspension Seat Installation 24
Suspension Seat Assembly 25
Driver Convenience Package 26
872 Heater & Air Conditioner Installation 27
873 Cab Heater & Air Conditioner 28
Cab Heater Plumbing - Engine 29
874 Air Conditioner Compressor & Hoses 30
Air Conditioner Condensor Core Installation 31
Air Conditioner Receiver/Dryer & Hoses 32
Air Conditioner Compressor
Mounting Brackets - Models G710 to G716 33
Air Conditioner Compressor
Mounting Brackets - Models G720 to G736 34
Air Conditioner Compressor
Mounting Brackets - Models G740 to G780 35
884 Seat Belts 36
891 Toolbox, Tools & Paint 37
Slow Moving Vehicle Sign 38

Group	Page

Alphabetical

874 Air Conditioner Compressor
Mounting Brackets - Models G710 to G716 33
Air Conditioner Compressor
Mounting Brackets - Models G720 to G736 34
Air Conditioner Compressor
Mounting Brackets - Models G740 to G780 35
Air Conditioner Compressor & Hoses 30
Air Conditioner Condensor Core Installation 31
Air Conditioner Receiver/Dryer & Hoses 32
852 Bucket Seat 23
810 Cab - Split ROPS & Canopy 4
Cab - Standard & Low Profile 3
843 Cab Glass 18
873 Cab Heater & Air Conditioner 28
Cab Heater Plumbing - Engine 29
818 Cab Mounts 5
827 Cab Step 8
841 Decals 11
Decals - Grader Models 12
834 Door Lock & Handle 10
831 Doors & Latch 9
Driver Convenience Package 26
821 Engine Cowl 6
872 Heater & Air Conditioner Installation 27
844 Lower Front Vent Window 19
841 Mirrors 17
821 Radiator Frame 7
841 Safety Signs - Brazillian 16
Safety Signs - English/French 13
Safety Signs - Greek/Dutch 15
Safety Signs - Spanish/Portuguese 14
884 Seat Belts 36
844 Side Slider Window 20
891 Slow Moving Vehicle Sign 38
Sound Suppression & Trim - Lower Cab 22
851 Sound Suppression & Trim - Upper Cab 21
852 Suspension Seat Assembly 25
Suspension Seat Installation 24
891 Toolbox, Tools & Paint 37

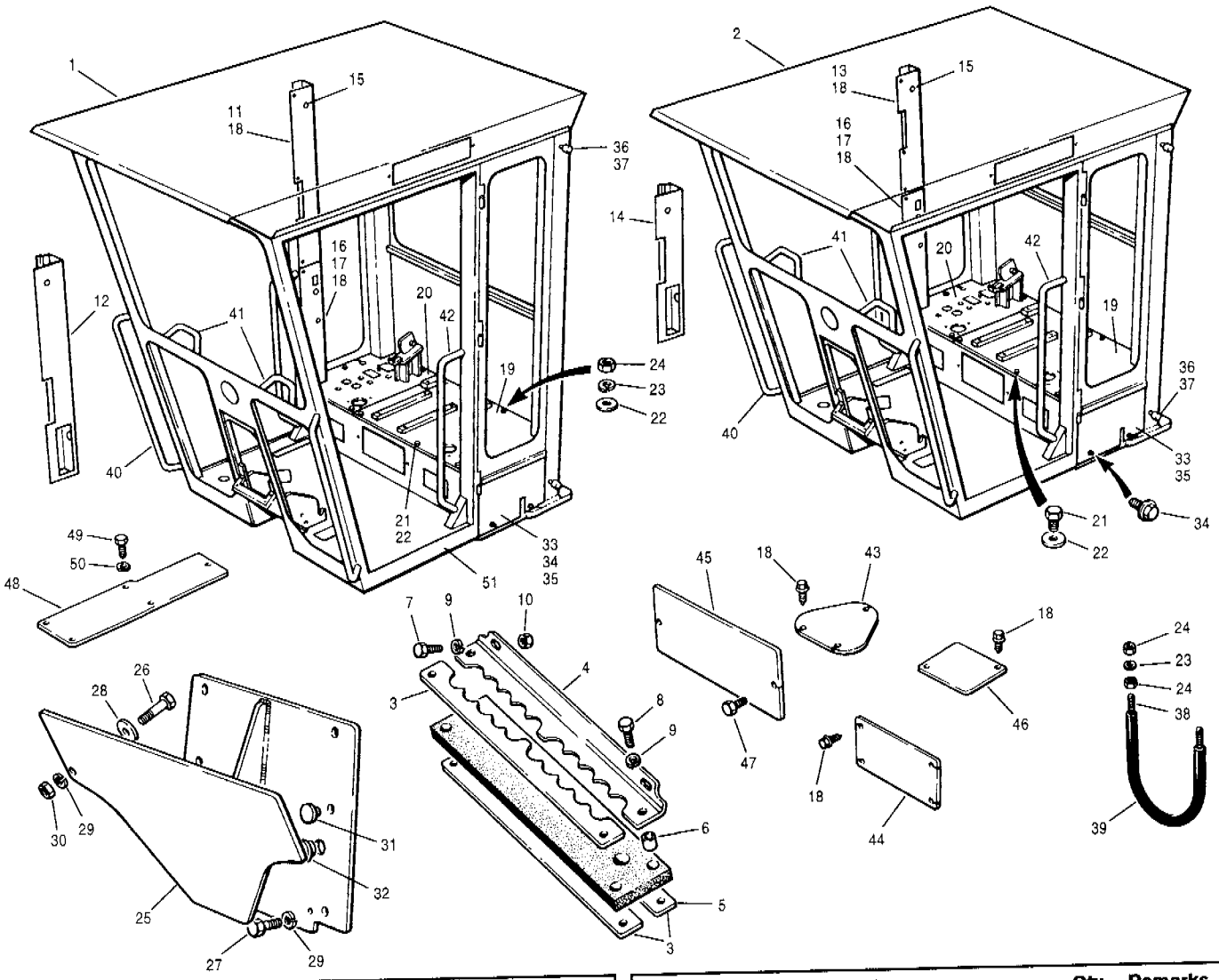

Item	Part No.	Description	Qty.	Remarks
1	96539	Cab - standard - ROPS	1	
2	96540	Cab - ROPS - low profile	1	
3	69930	Retainer plate - top & bottom	3	
4	400178	Cover	1	
5	400095	Grommet	1	
6	69931	Spacer	4	
7	50A-0406 Zi	Bolt	2	
8	50A-0412 Zi	Bolt	4	
9	* 955893	Hardened washer	6	
10	30A-04 Zi	Nut	2	
11	402151	Upper cover - door post	1	Standard
12	402153	Upper cover - door post	1	Standard - AWD
13	402150	Upper cover - door post	1	LPC
14	402152	Upper cover - door post	1	LPC - AWD
15	41710	Grommet - defroster fan	1	
16	87920	Lower cover - door post	1	
17	404043	Plug - no engine shutdown	1	
18	62A-1006	Screw	10 - 18	
19	400425	Seat deck - L.H.	1	
20	96967	Seat deck - R.H.	1	
21	50A-0506 Zi	Bolt	7	
22	14C-05 Zi	Flatwasher	12	
23	* 955894	Hardened washer	5	
24	30A-05 Zi	Nut	7	
25	400132	Manifold support	1	
26	50A-0608 Zi	Bolt	4	
27	50A-0612 Zi	Bolt	3	
28	14C-06 Zi	Flatwasher	3	

Item	Part No.	Description	Qty.	Remarks
29	* 940097	Hardened washer	7	
30	30A-06 Zi	Nut	3	
31	78002	Plug - no lower front wipers	2	
32	78003	Plug - no lower front wipers	2	
33	41370	Side panel - bottom	2	
34	78460	Screw	4	
35	* 407071	Foam Strip	1	
36	26019	Door bumper	4	
37	30D-08 Zi	Jam nut	4	
38	400101	U-bolt	1	
39	9480 x 15"	Hose	1	
40	96239	Handle - grab	2	
41	96052	Handle - grab	2	
42	96098	Handle - grab	2	
43	84473	Cover - seat deck vent	2	No cab heater - air conditioner
44	404018	Cover - seat riser vent	2	
45	404068	Cover - seat riser vent	1	
46	404069	Cover - seat deck	1	
47	50A-0404 Zi	Bolt	2	
48	96708	Cover - cab floor	1	No aux. manifold valve
49	50A-0408 Zi	Bolt	5	
50	* 955893	Hardened washer	5	
51	* 12726573	Protecting mat	2	
		Cab glass	Ref.	843-18
		Lower front vent window	Ref.	844-19

SERIAL NUMBERS: 33000 to 33027	**CAB - STANDARD & LOW PROFILE**	Date **06/2001**	Group **810**
		Illustr. Nos **00006220**	Page **3**
			Issue **1 A**

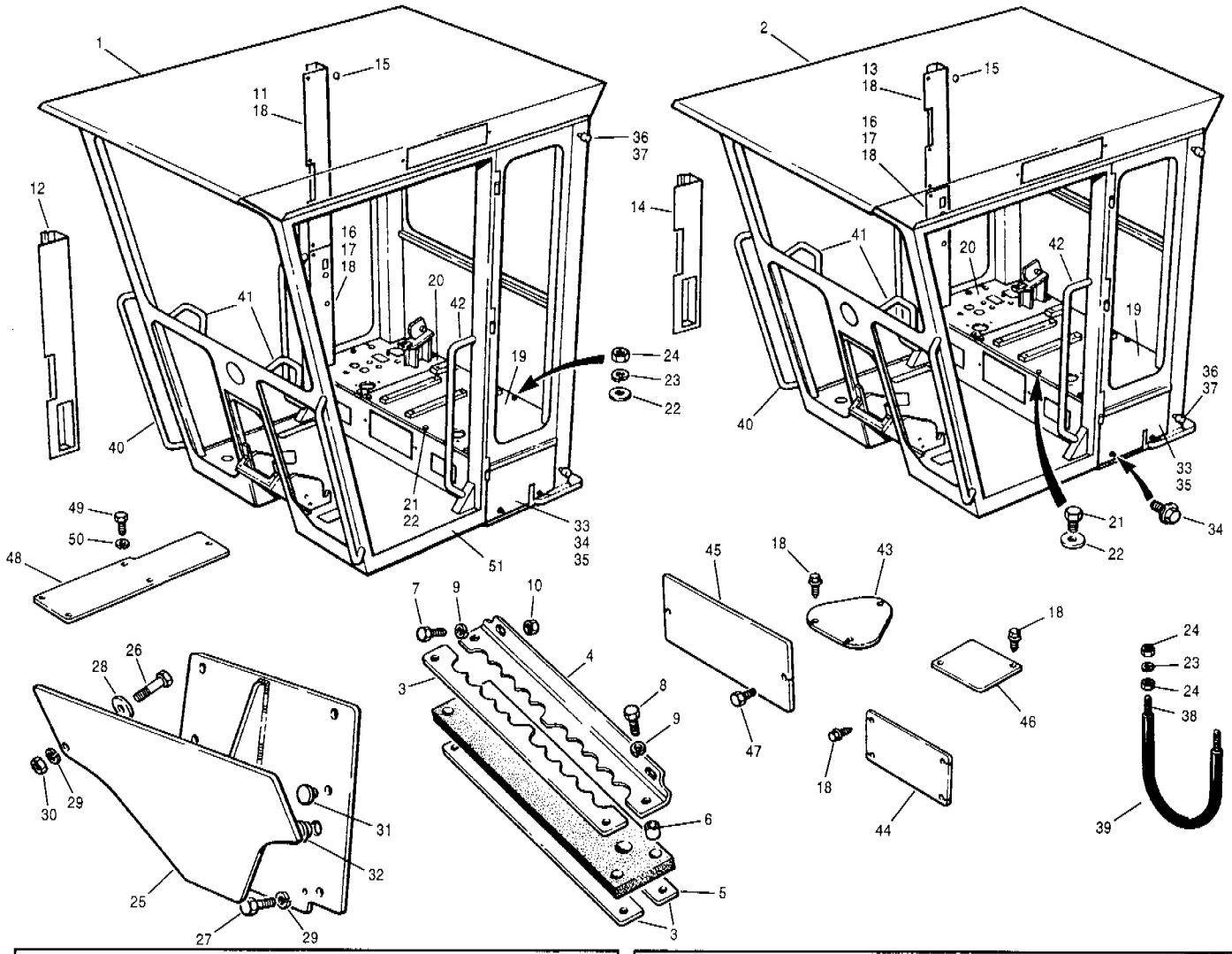

Item	Part No.	Description	Qty.	Remarks
1	96539	Cab - standard - ROPS	1	
2	96540	Cab - ROPS - low profile	1	
3	69930	Retainer plate - top & bottom	3	
4	400178	Cover	1	
5	400095	Grommet	1	
6	69931	Spacer	4	
7	50A-0406 Zi	Bolt	2	
8	50A-0412 Zi	Bolt	4	
9	* 955893	Hardened washer	6	
10	30A-04 Zi	Nut	2	
11	* 12725256	Upper cover - door post	1	Standard
12	* 12725258	Upper cover - door post	1	Standard - AWD
13	* 12725352	Upper cover - door post	1	LPC
14	* 12725353	Upper cover - door post	1	LPC - AWD
15	41710	Grommet - defroster fan	1	
16	87920	Lower cover - door post	1	
17	404043	Plug - no engine shutdown	1	
18	62A-1006	Screw	10 - 18	
19	* 12725463	Seat deck - L.H.	1	
20	* 12725464	Seat deck - R.H.	1	
21	50A-0506 Zi	Bolt	7	
22	14C-05 Zi	Flatwasher	12	
23	* 955894	Hardened washer	5	
24	30A-05 Zi	Nut	7	
25	400132	Manifold support	1	
26	50A-0608 Zi	Bolt	4	
27	50A-0612 Zi	Bolt	3	
28	14C-06 Zi	Flatwasher	3	

Item	Part No.	Description	Qty.	Remarks
29	* 940097	Hardened washer	7	
30	30A-06 Zi	Nut	3	
31	78002	Plug - no lower front wipers	2	
32	78003	Plug - no lower front wipers	2	
33	41370	Side panel - bottom	2	
34	78460	Screw	4	
35	407071	Foam Strip	1	
36	26019	Door bumper	4	
37	30D-08 Zi	Jam nut	4	
38	400101	U-bolt	1	
39	9480 x 15"	Hose	1	
40	96239	Handle - grab	2	
41	96052	Handle - grab	2	
42	96098	Handle - grab	2	
43	* 12725358	Cover - seat deck vent	2	No cab heater - air conditioner
44	404018	Cover - seat riser vent	2	
45	404068	Cover - seat riser vent	1	
46	404069	Cover - seat deck	1	
47	50A-0404 Zi	Bolt	2	
48	96708	Cover - cab floor	1	No aux. manifold valve
49	50A-0408 Zi	Bolt	5	
50	* 955893	Hardened washer	5	
51	* 12726573	Protecting mat	2	
		Cab glass	Ref.	843-18
		Lower front vent window	Ref.	844-19
		Side slider window	Ref.	844-20

SERIAL NUMBERS: 33028 & UP	**CAB - STANDARD & LOW PROFILE**	Date **06/2001**	Group **810**
		Illustr. Nos **00006216**	Page **3**
			Issue **2**

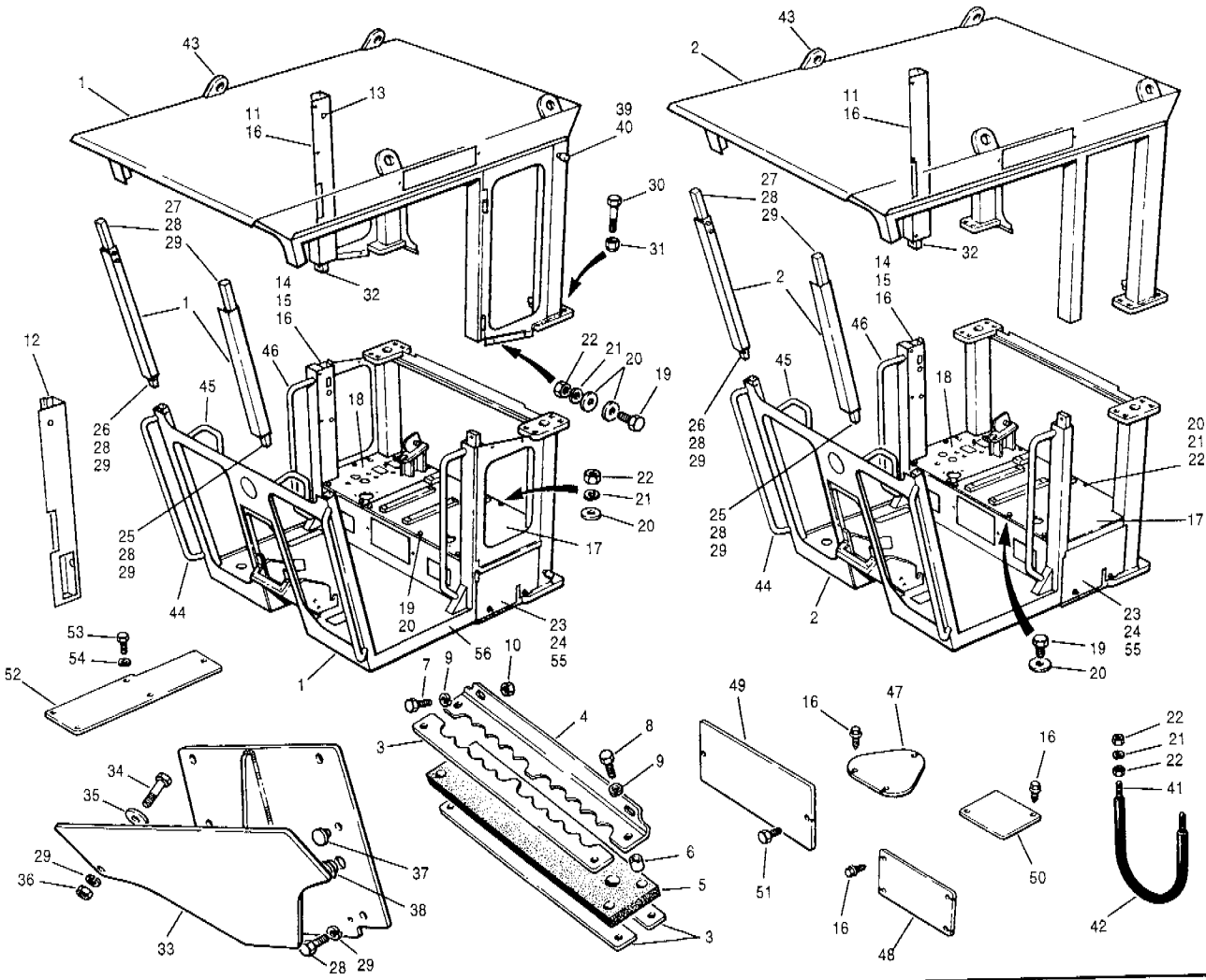

Item	Part No.	Description	Qty.	Remarks
1	96541	Cab - split ROPS	1	
2	96542	Cab - split ROPS canopy	1	
3	69930	Retainer plate - top & bottom	3	
4	400178	Cover	1	
5	400095	Grommet	1	
6	69931	Spacer	4	
7	50A-0406 Zi	Bolt	2	
8	50A-0412 Zi	Bolt	4	
9	* 955893	Hardened washer	6	
10	30A-04 Zi	Nut	2	
11	402151	Upper cover - door post	1	
12	402153	Upper cover - door post	1	AWD
13	41710	Grommet - defroster fan	1	
14	87920	Lower cover - door post	1	
15	404043	Plug - no engine shutdown	1	
16	62A-1006	Screw	5 - 22	
17	400425	Seat deck - L.H.	1	
18	96967	Seat deck - R.H.	1	
19	50A-0506 Zi	Bolt	7 - 11	
20	14C-05 Zi	Flatwasher	10 - 18	
21	* 955894	Hardened washer	5 - 9	
22	30A-05 Zi	Nut	7 - 11	
23	41370	Side panel - bottom	2	
24	78460	Screw	4	
25	62794	Link - L.H.	1	
26	62795	Link - R.H.	1	
27	62796	Link - upper	2	
28	50A-0608 Zi	Bolt	10	
29	* 940097	Hardened washer	13	
30	57003	Bolt - ROPS	8	
31	57002	Locknut - ROPS	8	

Item	Part No.	Description	Qty.	Remarks
32	50E-0808 Zi	Bolt	2	
33	400132	Manifold support	1	
34	50A-0612 Zi	Bolt	3	
35	14C-06 Zi	Flatwasher	3	
36	30A-06 Zi	Nut	3	
37	78002	Plug - no lower front wipers	2	
38	78003	Plug - no lower front wipers	2	
39	26019	Door bumper	4	Split ROPS
40	30D-08 Zi	Jam nut	4	Split ROPS
41	400101	U-bolt	1	
42	9480 x 15"	Hose	1	
43	36493	Cab lifting eye	4	
44	96239	Handle - grab	2	
45	96052	Handle - grab	2	
46	96098	Handle - grab	2	
47	84473	Cover - seat deck vent	3	
48	404018	Cover - seat riser vent	2	No cab heater - air conditioner
49	404068	Cover - seat riser vent	1	No cab heater - air conditioner
50	404069	Cover - seat deck vent	1	No cab heater - air conditioner
51	50A-0404 Zi	Bolt	2	No cab heater - air conditioner
52	96708	Cover - cab floor	1	No aux. manifold valve
53	50A-0408 Zi	Bolt	5	No aux. manifold valve
54	* 955893	Hardened washer	5	No aux. manifold valve
55	407071	Foam strip	1	
56	* 12726573	Protecting mat	2	
		Cab glass	Ref.	843-18
		Lower front vent window	Ref.	844-19
		Side slider window	Ref.	844-20

SERIAL NUMBERS:
33000 to 33027

CAB - SPLIT ROPS & CANOPY

Date	06/2001	Group	810
Illustr. Nos	00006136	Page	4
		Issue	1 A

VOLVO

G700 MODELS

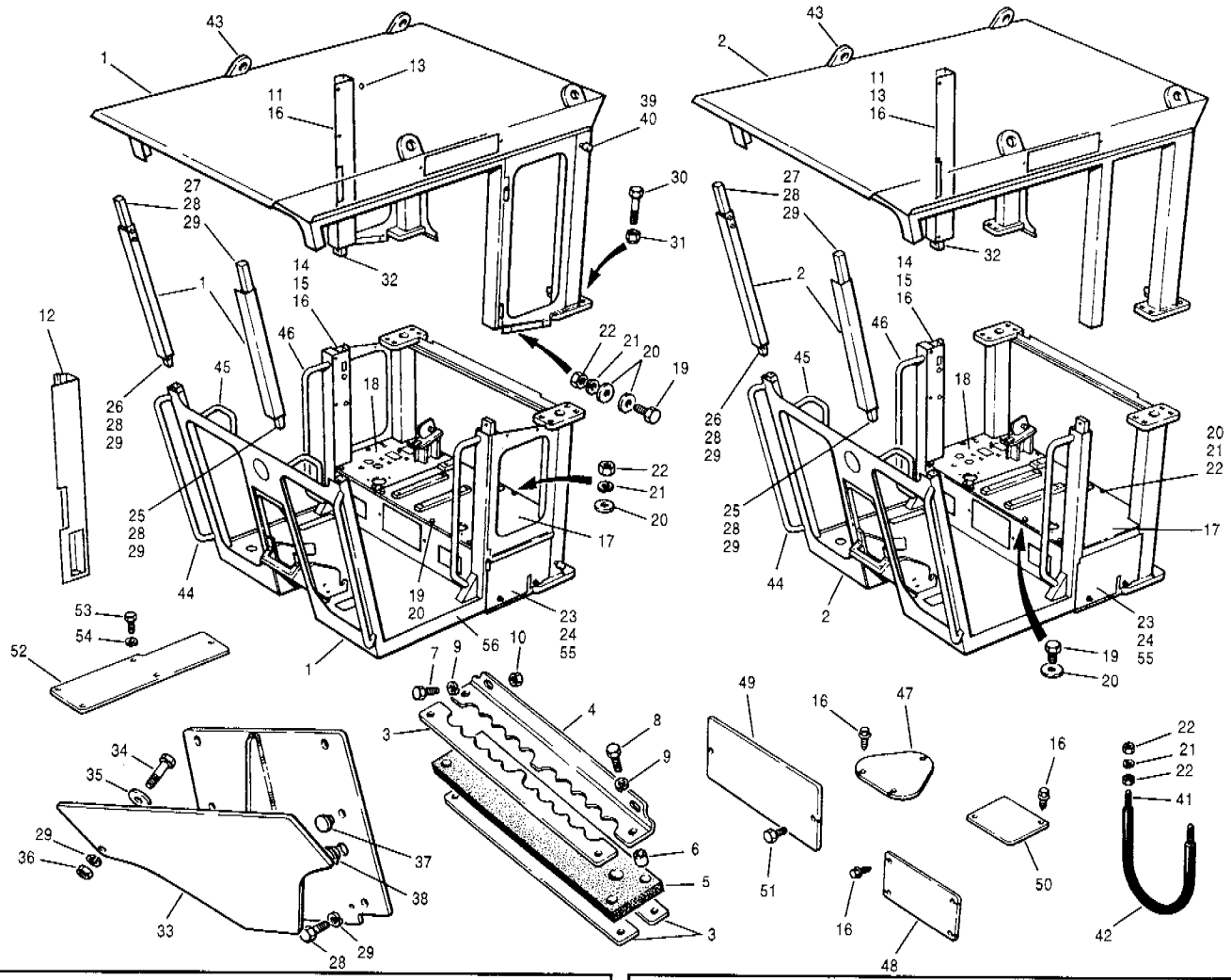

Item	Part No.	Description	Qty.	Remarks
1	96541	Cab - split ROPS	1	
2	96542	Cab - split ROPS canopy	1	
3	69930	Retainer plate - top & bottom	3	
4	400178	Cover	1	
5	400095	Grommet	1	
6	69931	Spacer	4	
7	50A-0406 Zi	Bolt	2	
8	50A-0412 Zi	Bolt	4	
9	955893	Hardened washer	6	
10	30A-04 Zi	Nut	2	
11	* 12725256	Upper cover - door post	1	
12	* 12725258	Upper cover - door post	1	AWD
13	41710	Grommet - defroster fan	1	
14	87920	Lower cover - door post	1	
15	404043	Plug - no engine shutdown	1	
16	62A-1006	Screw	5 - 22	
17	* 12725463	Seat deck - L.H.	1	
18	* 12725464	Seat deck - R.H.	1	
19	50A-0506 Zi	Bolt	7 - 11	
20	14C-05 Zi	Flatwasher	10 - 18	
21	955894	Hardened washer	5 - 9	
22	30A-05 Zi	Nut	7 - 11	
23	41370	Side panel - bottom	2	
24	78460	Screw	4	
25	62794	Link - L.H.	1	
26	62795	Link - R.H.	1	
27	62796	Link - upper	2	
28	50A-0608 Zi	Bolt	10	
29	940097	Hardened washer	13	
30	57003	Bolt - ROPS	8	
31	57002	Locknut - ROPS	8	

Item	Part No.	Description	Qty.	Remarks
32	50E-0808 Zi	Bolt	2	
33	400132	Manifold support	1	
34	50A-0612 Zi	Bolt	3	
35	14C-06 Zi	Flatwasher	3	
36	30A-06 Zi	Nut	3	
37	78002	Plug - no lower front wipers	2	
38	78003	Plug - no lower front wipers	2	
39	26019	Door bumper	4	Split ROPS
40	30D-08 Zi	Jam nut	4	Split ROPS
41	400101	U-bolt	1	
42	9480 x 15"	Hose	1	
43	36493	Cab lifting eye	4	
44	96239	Handle - grab	2	
45	96052	Handle - grab	2	
46	96098	Handle - grab	2	
47	* 12725358	Cover - seat deck vent	3	No cab heater - air conditioner
48	404018	Cover - seat riser vent	2	No cab heater - air conditioner
49	404068	Cover - seat riser vent	1	No cab heater - air conditioner
50	404069	Cover - seat deck vent	1	No cab heater - air conditioner
51	50A-0404 Zi	Bolt	2	No cab heater - air conditioner
52	96708	Cover - cab floor	1	No aux. manifold valve
53	50A-0408 Zi	Bolt	5	No aux. manifold valve
54	955893	Hardened washer	5	No aux. manifold valve
55	407071	Foam strip	1	
56	12726573	Protecting mat	2	
	Cab glass		Ref.	843-18
	Lower front vent window		Ref.	844-19
	Side slider window		Ref.	844-20

SERIAL NUMBERS: 33028 & UP	**CAB - SPLIT ROPS & CANOPY**	Date **06/2001**	Group **810**
		Illustr. Nos **00006217**	Page **4**
			Issue **2**

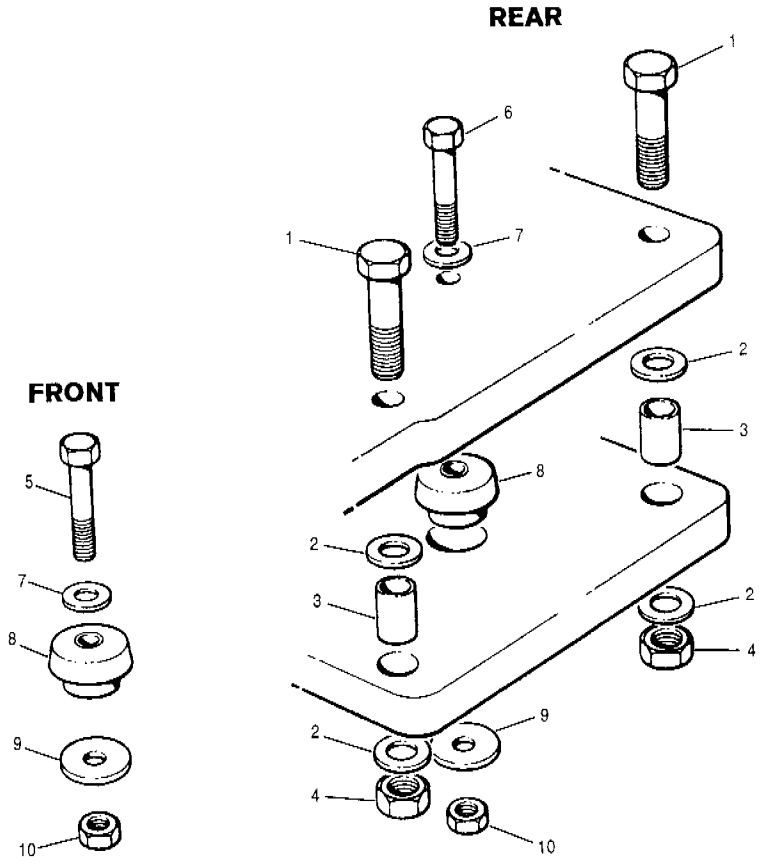

Item	Part No.	Description	Qty.	Remarks
1	57005	Bolt	8	
2	49380	Flatwasher	16	
3	46800	Spacer	8	
4	57004	Nut	8	
5	50A-1232	Bolt	2	
6	50A-1236	Bolt	2	
7	69360	Hardened washer	4	
8	11970	Rubber mount	4	
9	30075	Washer	4	
10	36N-12 Zi	Locknut	4	

Item	Part No.	Description	Qty.	Remarks

SERIAL NUMBERS: 33000 & UP	**CAB MOUNTS**	Date **01/2001**	Group	**818**
		Illustr. Nos **00006031**	Page	**5**
			Issue	**1**

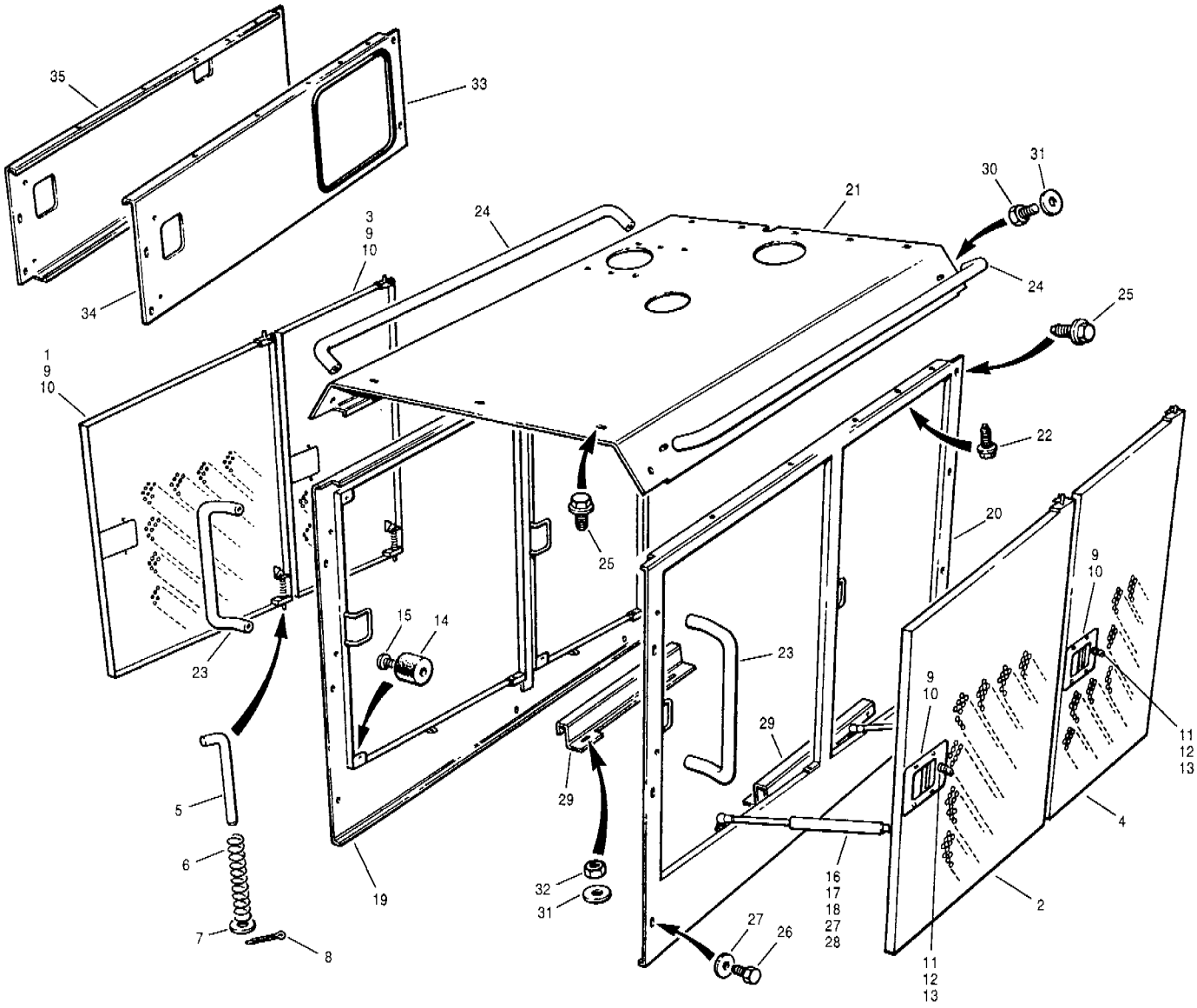

Item	Part No.	Description	Qty.	Remarks
1	* 12727173	**Door assembly** - rear - L.H. - includes items 5 to 13	1	
2	* 12727175	**Door assembly** - rear - R.H. - includes items 5 to 13	1	
3	* 12727172	**Door assembly** - front - L.H. - includes items 5 to 13	1	
4	* 12727174	**Door assembly** - front - R.H. - includes items 5 to 13	1	
5	52855	Hinge pin	4	
6	52857	Spring	4	
7	* 955894	Hardened washer	4	
8	13A-0212	Cotter pin	4	
9	**65033**	**Door handle assembly** - includes items 11, 12 & 13	4	
10	65034	Rivet	16	
11	57462	Tumbler - c/w keys	4	
12	68095	Key - latch & ignition	A.R.	
13	57463	Clip	4	
14	95524	Bumper	8	
15	61A-0806	Screw	8	
16	**84165**	**Cylinder assembly** - includes items 17 & 18	4	EEC

Item	Part No.	Description	Qty.	Remarks
17	52868	Swivel joint	4	
18	52869	Clip	4	
19	402067	Side panel - L.H.	1	
20	* 402066	Side panel - R.H.	1	
21	* 12725975	Hood	1	G710 to G716
21	* 12725281	Hood	1	G720 to G736
21	* 12725825	Hood	1	G740 to G780
22	54658	Screw	10	
23	96467	Grab handle - side panel	2	
24	96466	Grab handle - hood	2	
25	78460	Screw	24	
26	50A-0504 Zi	Bolt	6	
27	* 955894	Hardened washer	6 - 14	
28	30A-05 Zi	Nut	8	
29	400390	Mounting angle	2	
30	50A-0608 Zi	Bolt	8	
31	* 940097	Hardened washer	12	
32	30A-06 Zi	Nut	4	
		Half panels installation		
33	40839 x 63	Edge trim	1	
34	95445	Side panel - R.H.	1	
35	95444	Side panel - L.H.	1	

SERIAL NUMBERS: 33000 & UP	**ENGINE COWL**	Date **06/2001**	Group **821**
		Illustr. Nos **00006221**	Page **6**
			Issue **1A**

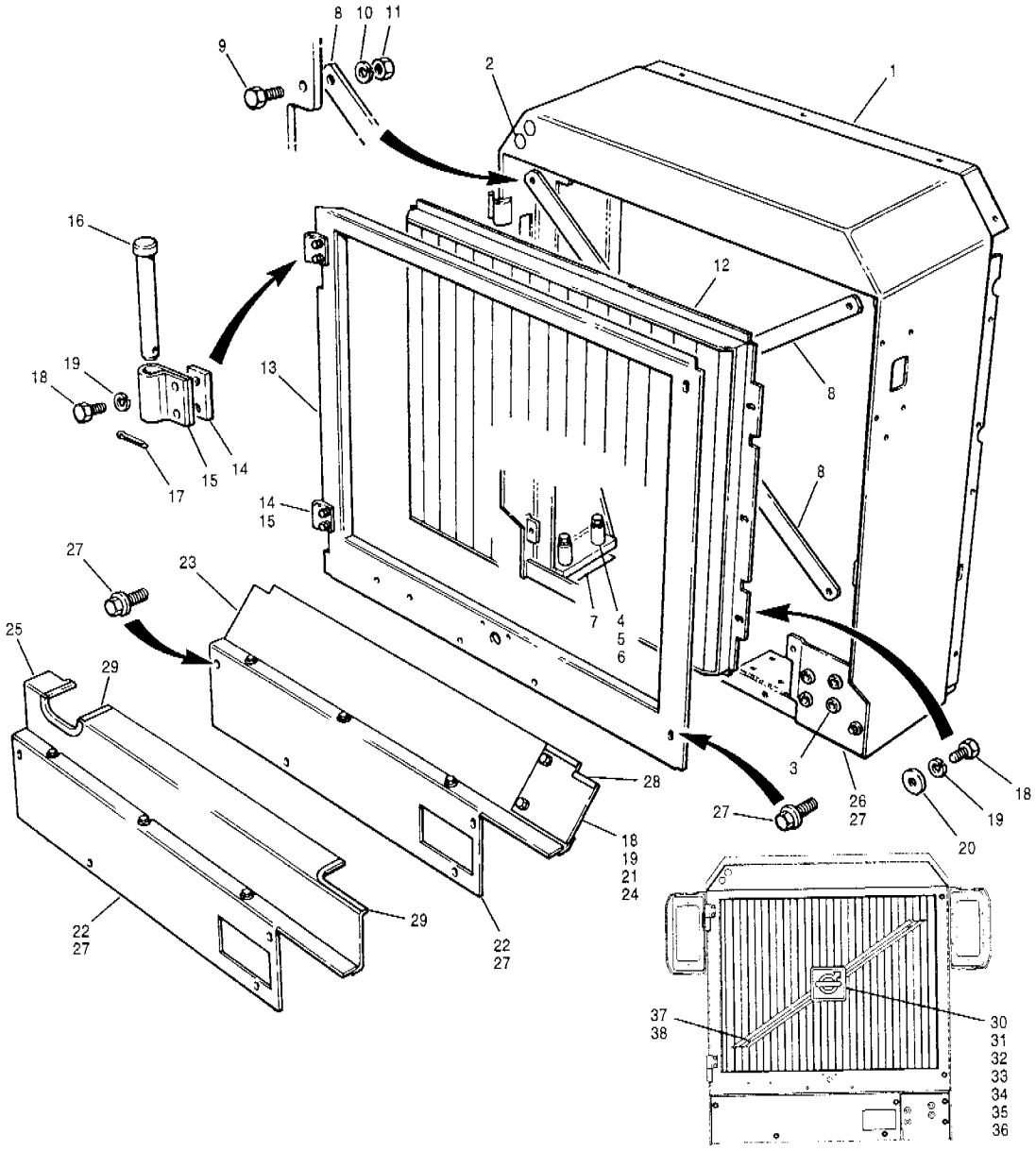

Item	Part No.	Description	Qty.	Remarks
1	400159	Radiator frame	1	
2	57740	Grommet	2	
3	41710	Grommet	4	
4	15400	Spacer	4	
5	50A-0828 Zi	Bolt	4	
6	14D-08 Zi	Flatwasher	4	
7	85863	Shim - .119"	A.R.	
7	85864	Shim - .190"	A.R.	
8	57719	Stabilizer bar	2	
9	50A-0608 Zi	Bolt	4	
10	14A-06 Zi	Lockwasher	4	
11	30A-06 Zi	Nut	4	
12	12724798	Grille	1	
13	95571	Grille frame	1	
14	65935	Mounting block	2	
15	65936	Hinge	2	
16	10A-0864 Zi	Pin	2	
17	13A-0412	Cotter pin	2	
18	50A-0506 Zi	Bolt	12	
19	14A-05 Zi	Lockwasher	12	
20	14C-05 Zi	Flatwasher	6	
21	30A-05 Zi	Nut	2	
22	400261	Cover plate - bottom	1	

Item	Part No.	Description	Qty.	Remarks
23	400263	Cover plate - top	1	
24	400326	Access plate	1	G710 to G780 Blower fan
25	400260	Cover plate - top	1	AWD Sucker fan
26	400167	Bulkhead plate	1	
27	78460	Screw	9	
28	32576 x 6	Edge trim	1	
29	32576 x 24	Edge trim	1	
	12724806	**Emblem assembly** - includes items 30 to 34		
30	350E-06014 Zi	Capscrew	3	
31	96267	Spacer	3	
32	11101277	Profile	1	
33	12724796	Back plate	1	
34	14343602	Emblem	1	
35	50D-0404 Zi	Capscrew	2	
36	14D-04 Zi	Flatwasher	2	
37	969737	Capscrew	2	
38	96267	Spacer	2	

SERIAL NUMBERS: 33000 & UP	**RADIATOR FRAME**	Date **01/2001**	Group **823**
		Illustr. Nos **00005020**	Page **7**
			Issue **1**

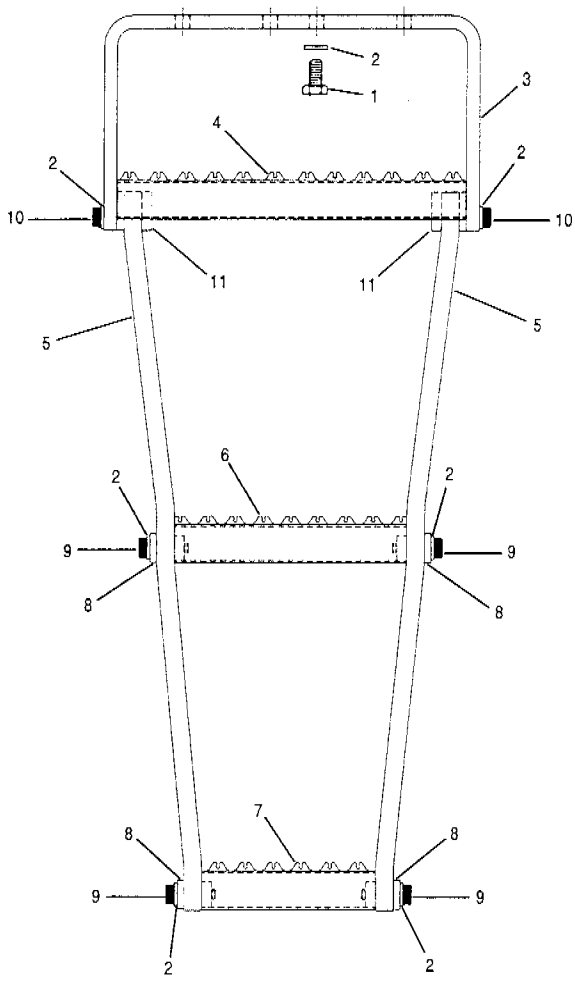

Item	Part No.	Description	Qty.	Remarks
	402113	**Step assembly** - includes items 1 to 11	2	
1	50A-0810 Zi	Bolt	2	
2	* 955898	Hardened washer	16	
3	* 402028	Bracket	1	
4	* 402032	Top step	1	
5	* 402027	Step support	2	
6	* 402114	Middle step	1	
7	* 402115	Lower step	1	
8	* 402030	Backing plate	4	
9	* 12725437	Shoulder screw	8	
10	* 12725438	Shoulder screw	6	
11	* 96421	Backing plate	2	

Item	Part No.	Description	Qty.	Remarks

SERIAL NUMBERS: 33000 & UP	**CAB STEP**	Date **06/2001**	Group	**827**
		Illustr. Nos **00005299**	Page	**8**
			Issue	**1A**

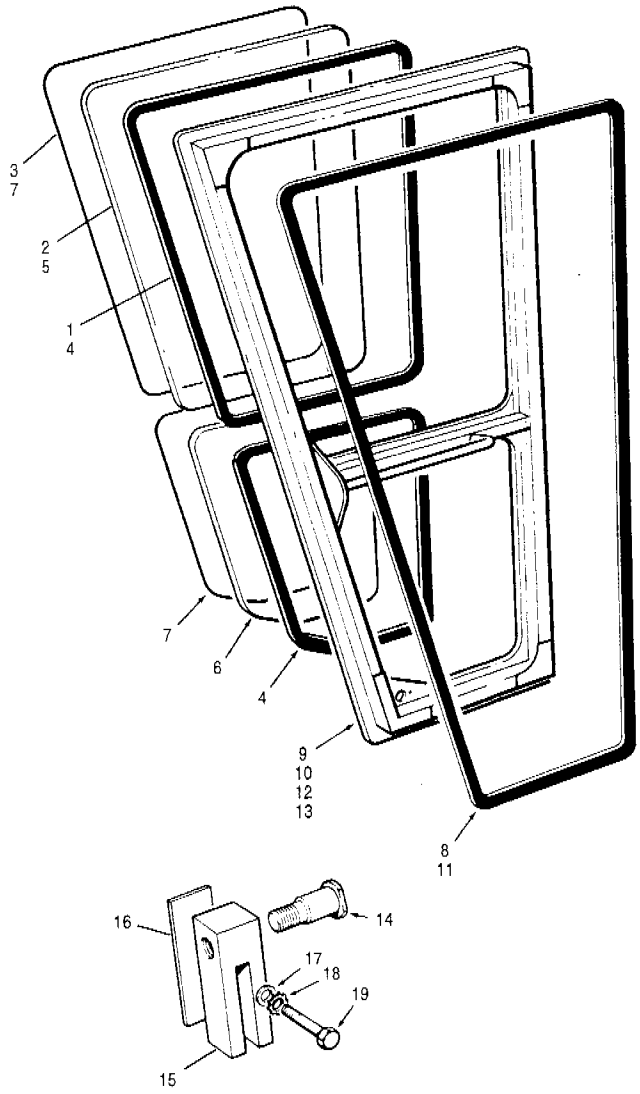

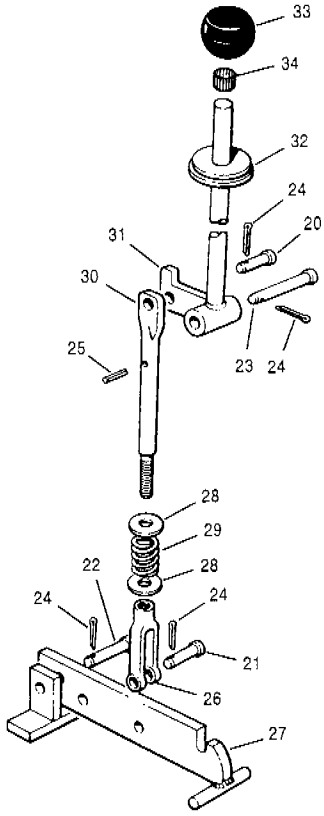

Item	Part No.	Description	Qty.	Remarks
1	15386 x 134	Rubber channel	2	
2	96083	Glass - upper	2	Standard
3	84642 x 134	Locking strip	2	
4	15386 x 110	Rubber channel	2	Standard
			4	LPC
5	96085	Glass - upper	2	LPC
6	96084	Glass - lower	2	
7	84642 x 110	Locking strip	2	Standard
			4	LPC
8	45378 x 210	Weather seal	2	
9	96006	Door - L.H.	1	Standard
10	96007	Door - R.H.	1	
11	45378 x 186	Weather seal	2	
12	96008	Door - L.H.	1	LPC
13	96009	Door - R.H.	1	
14	28580	Striker pin	2	
15	28597	Block - striker pin	2	
16	28598	Shim	4	
17	14C-04 Zi	Flatwasher	4	
18	14J-04 Zi	Starwasher	4	
19	50A-0410 Zi	Bolt	4	

Item	Part No.	Description	Qty.	Remarks
		Door holdback latch		
20	10A-0612	Clevis pin	2	
21	10A-0618	Clevis pin	2	
22	10A-0622	Clevis pin	2	
23	10A-0640	Clevis pin	2	
24	13A-0316	Cotter pin	8	
25	13C-0620	Roll pin	2	
26	1412	Yoke	2	
27	78189	Latch	2	
28	14C-08 Zi	Flatwasher	4	
29	73703	Spring	2	
30	68788	Push rod	2	
31	78836	Latch rod	2	
32	52812	Grommet	2	
33	48556	Knob	2	
34	17588	Insert	2	

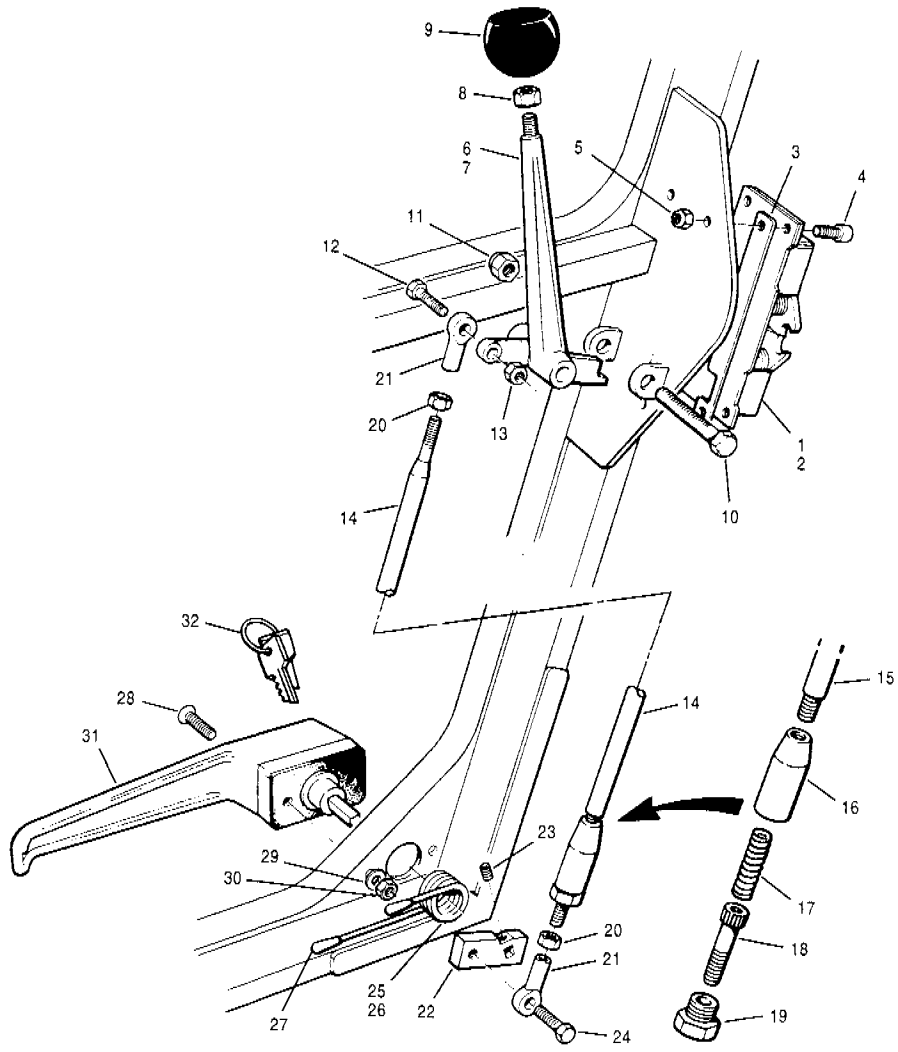

Item	Part No.	Description	Qty.	Remarks
1	96063	Latch - R.H.	1	
2	96064	Latch - L.H.	1	
3	68680	Shim	2	
4	50D-0408	Bolt	8	
5	36D-04 Zi	Locknut	10	
6	78901	Activator - lock - R.H.	1	
7	78902	Activator - lock - L.H.	1	
8	30A-06 Zi	Nut	2	
9	80981	Knob	2	
10	50A-0622 Zi	Bolt	2	
11	36D-06 Zi	Locknut	2	
12	50A-0510 Zi	Bolt	2	
13	36D-05 Zi	Locknut	2	

Item	Part No.	Description	Qty.	Remarks
14	**96388**	**Rod assembly** - includes items 15 to 20	2	
15	96389	Linkage rod	2	
16	96405	Spring housing	2	
17	96393	Spring	2	
18	51D-05 Ph	Capscrew	2	
19	96406	Guide	2	
20	31A-05 Zi	Nut	4	
21	81592	Rod end	4	
22	81594	Bar - linkage	2	
23	70A-0406	Setscrew	2	
24	50A-0512 Zi	Bolt	2	
25	81188	Spring - L.H.	1	
26	81060	Spring - R.H.	1	
27	84413	Rubber tip	4	
28	52E-1008	Screw	4	
29	14G-10 Zi	Flatwasher	4	
30	34B-10 Zi	Locknut	4	
31	81360	Handle	2	
32	68095	Key - door lock	2	

SERIAL NUMBERS: 33000 & UP	**DOOR LOCK & HANDLE**	Date **01/2001**	Group **834**
		Illustr. Nos **00005000**	Page **10**
			Issue **1**

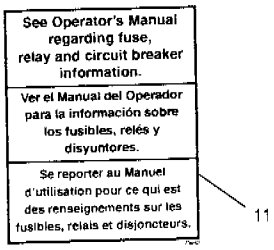

11



3



2

5

VOLVO



4

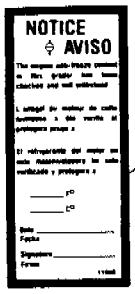

1

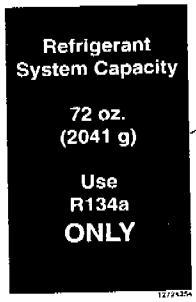

6

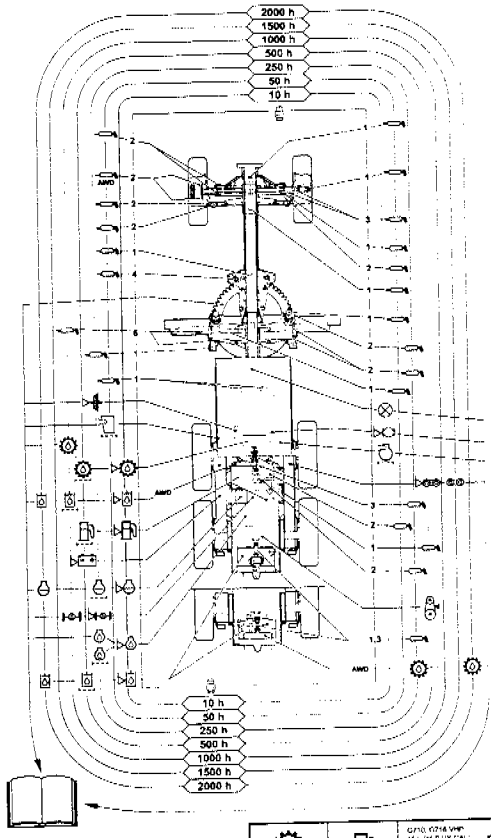

10

ALL WHEEL DRIVE

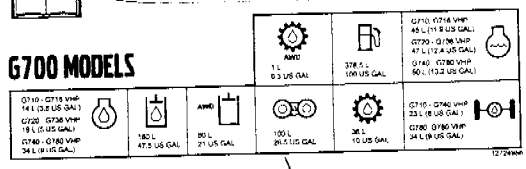

9

7

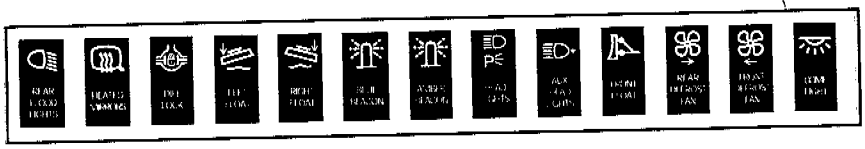



8

Item	Part No.	Description	Qty.	Remarks
1	11559	Engine coolant notice - trilingual	1	
2	25747	"Made in Canada"	1	
3	46629	Engine de-aerating	1	G710 to G716
			2	G720 to G736
4	95380	24 Volt	1	
5	12724728	Volvo - frame	2	
6	12724354	Refrigerant - R134a	1	
7	73967	Switch symbols	1	
8	73968	Switch symbols	1	
9	12724956	Lubrication chart	1	
10	12724769	All wheel drive - drawbar	2	
11	73942	Circuit protection	1	
		Grader model decals	Ref.	841-12

Item	Part No.	Description	Qty.	Remarks

SERIAL NUMBERS: 33000 & UP	**DECALS**	Date	01/2001	Group 841
		Illustr. Nos		Page 11
				Issue 1

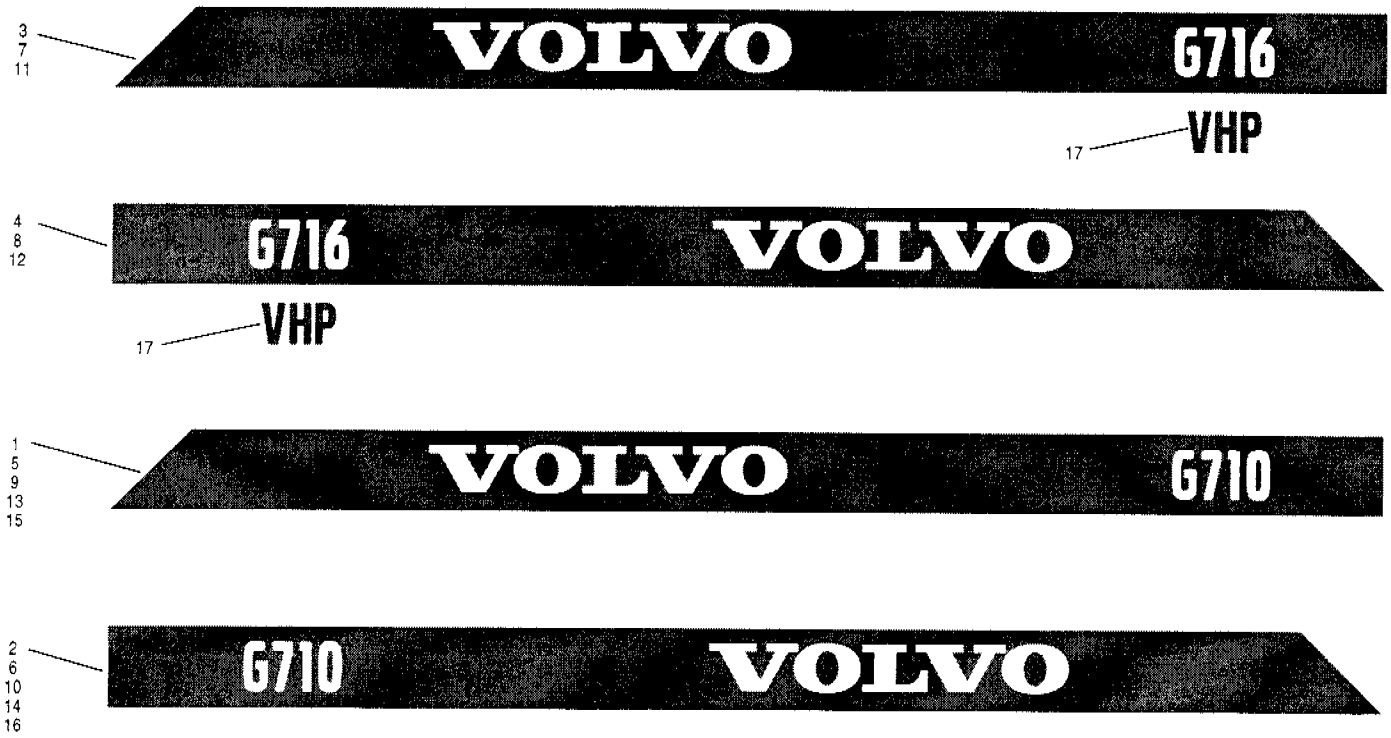

Item	Part No.	Description	Qty.	Remarks
1	12724712	G710 - L.H.	1	
2	12724713	G710 - R.H.	1	
3	12724714	G716 - L.H.	1	
4	12724715	G716 - R.H.	1	
5	12724716	G720 - L.H.	1	
6	12724717	G720 - R.H.	1	
7	12724718	G726 - L.H.	1	
8	12724719	G726 - R.H.	1	
9	12724720	G730 - L.H.	1	
10	12724721	G730 - R.H.	1	
11	12724722	G736 - L.H.	1	
12	12724723	G736 - R.H.	1	
13	12724724	G740 - L.H.	1	
14	12724725	G740 - R.H.	1	
15	12724726	G780 - L.H.	1	
16	12724727	G780 - R.H.	1	
17	12724729	VHP	1	

Item	Part No.	Description	Qty.	Remarks

SERIAL NUMBERS: 33000 & UP	**DECALS - GRADER MODELS**	Date **01/2001**	Group	**841**
		Illustr. Nos **00005001**	Page	**12**
			Issue	**1**

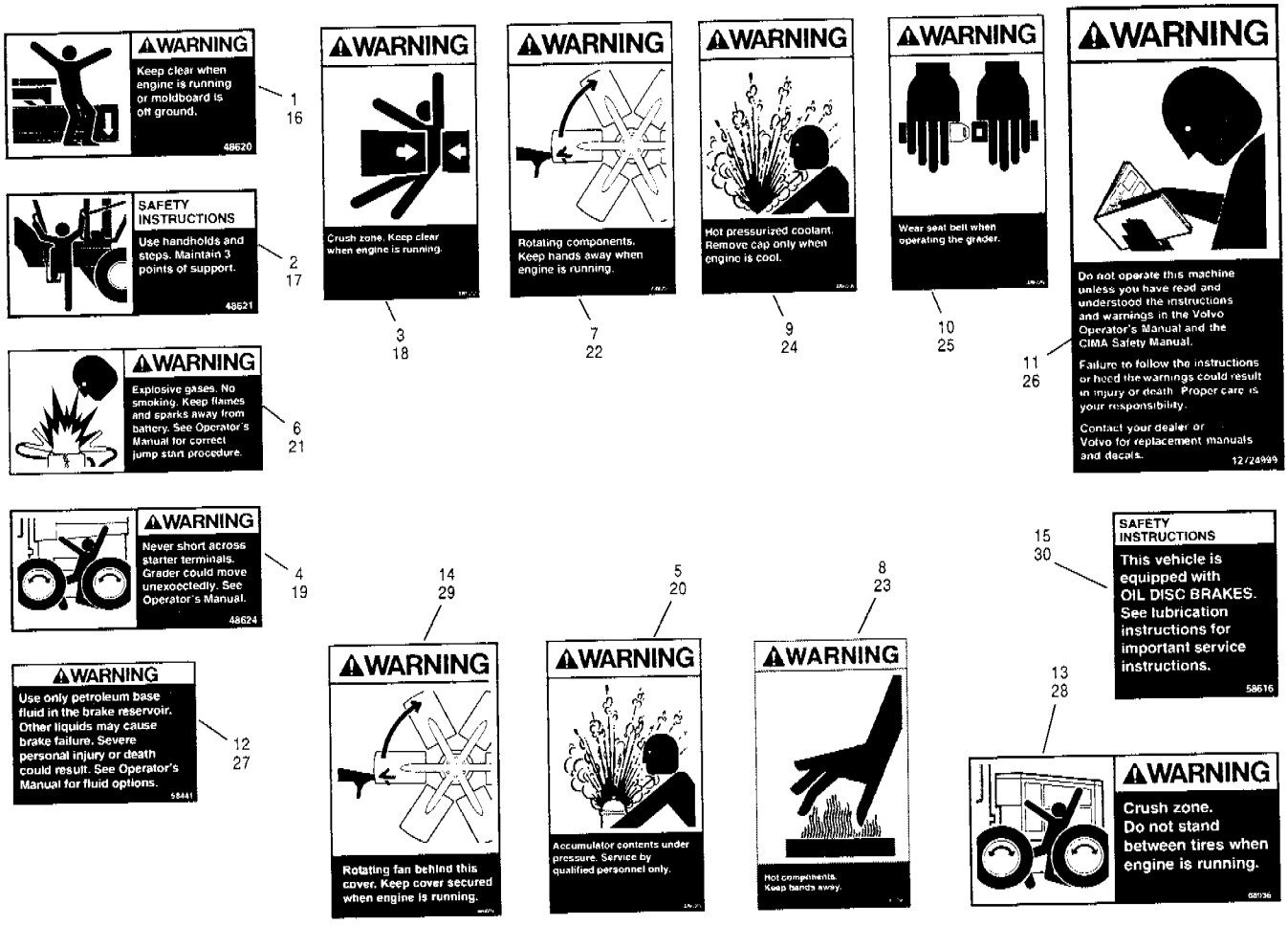

Item	Part No.	Description	Qty.	Remarks
		English		
1	48620	Warning - circle & moldboard	3	
2	48621	Safety instructions - use handholds	2	
3	48622	Warning - crush zone	2	
4	48624	Warning - never short starter	1	
5	48625	Warning - accumulator	2 - 3	
6	75399	Warning - explosive gases	1 - 2	
7	73825	Warning - rotating components	2	
8	401045	Warning - hot components	1	
9	48628	Warning - hot pressurized coolant	1	
10	73824	Warning - wear seat belt	1	
11	12724999	Warning - do not operate	1	
12	58441	Warning - brake fluid	1	
13	68936	Warning - tire crush zone	2	
14	86879	Warning - rotating fan	2	
15	58616	Safety instructions - oil disc brakes - English	2	
	75403	**Safety sign kit - English** - includes items 1 to 15	1	

Item	Part No.	Description	Qty.	Remarks
		French/English		
16	53728	Warning - circle & moldboard	3	
17	53729	Safety instructions - use handholds	2	
18	53730	Warning - crush zone	2	
19	53732	Warning - never short starter	1	
20	53733	Warning - accumulator	2 - 3	
21	75400	Warning - explosive gases	1 - 2	
22	68778	Warning - rotating components	2	
23	401049	Warning - hot components	1	
24	53736	Warning - hot pressurized coolant	1	
25	68779	Warning - wear seat belt	1	
26	12725000	Warning - do not operate	1	
27	65962	Warning - brake fluid	1	
28	68937	Warning - tire crush zone	2	
29	96019	Warning - rotating fan	2	
30	58617	Safety instructions - oil disc brakes - French	2	
	75404	**Safety sign kit - French/English** - includes items 16 to 30	1	
		Safety signs - Spanish & Portuguese	Ref.	841-14
		Safety signs - Greek & Dutch	Ref.	841-15
		Safety signs - Brazillian	Ref.	841-16

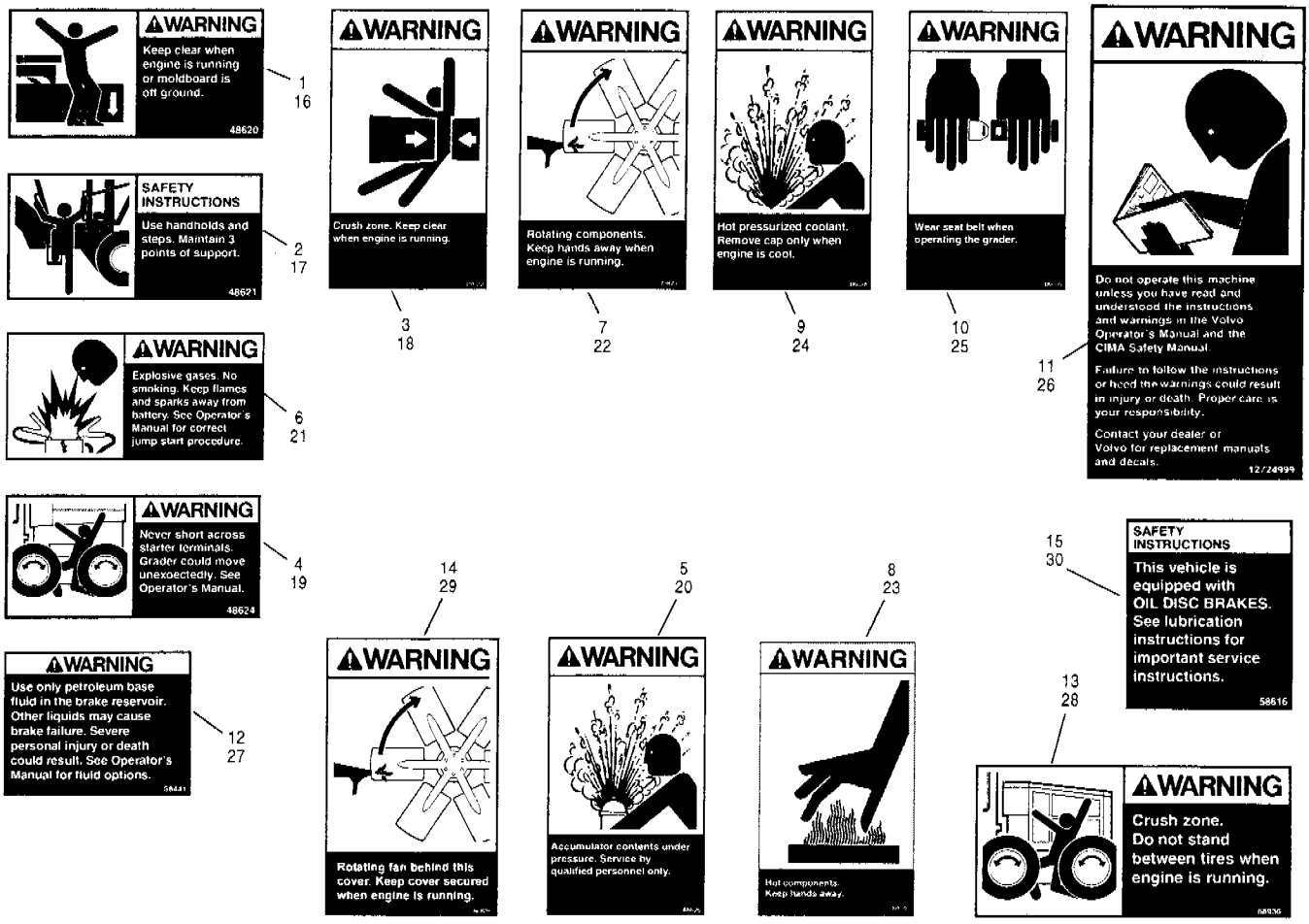

Item	Part No.	Description	Qty.	Remarks
		Spanish/English		
1	65876	Warning - circle & moldboard	3	
2	65877	Safety instructions - use handholds	2	
3	65880	Warning - crush zone	2	
4	65879	Warning - never short starter	1	
5	65883	Warning - accumulator	2 - 3	
6	75401	Warning - explosive gases	1 - 2	
7	65885	Warning - rotating components	2	
8	401044	Warning - hot components	1	
9	65886	Warning - hot pressurized coolant	1	
10	65881	Warning - wear seat belt	1	
11	12724997	Warning - do not operate	1	
12	65887	Warning - brake fluid	1	
13	68938	Warning - tire crush zone	2	
14	96021	Warning - rotating fan	2	
15	58618	Safety instructions - oil disc brakes - Spanish	2	
	75405	**Safety sign kit - Spanish/English** - includes items 1 to 15	1	

Item	Part No.	Description	Qty.	Remarks
		Portuguese/English		
16	84000	Warning - circle & moldboard	3	
17	84003	Safety instructions - use handholds	2	
18	84009	Warning - crush zone	2	
19	84011	Warning - never short starter	1	
20	84023	Warning - accumulator	2 - 3	
21	84013	Warning - explosive gases	1 - 2	
22	404143	Warning - rotating components	2	
23	401047	Warning - hot components		
24	84015	Warning - hot pressurized coolant	1	
25	84007	Warning - wear seat belt	1	
26	12724998	Warning - do not operate	1	
27	84019	Warning - brake fluid	1	
28	84025	Warning - tire crush zone	2	
29	404144	Warning - rotating fan	2	
30	84021	Safety instructions - oil disc brakes - Portuguese	2	
	85155	**Safety sign kit - Portuguese/English** - includes items 16 to 30	1	
		Safety signs - English & French	Ref.	841-13
		Safety signs - Greek & Dutch	Ref.	841-15
		Safety signs - Brazilian	Ref.	841-16

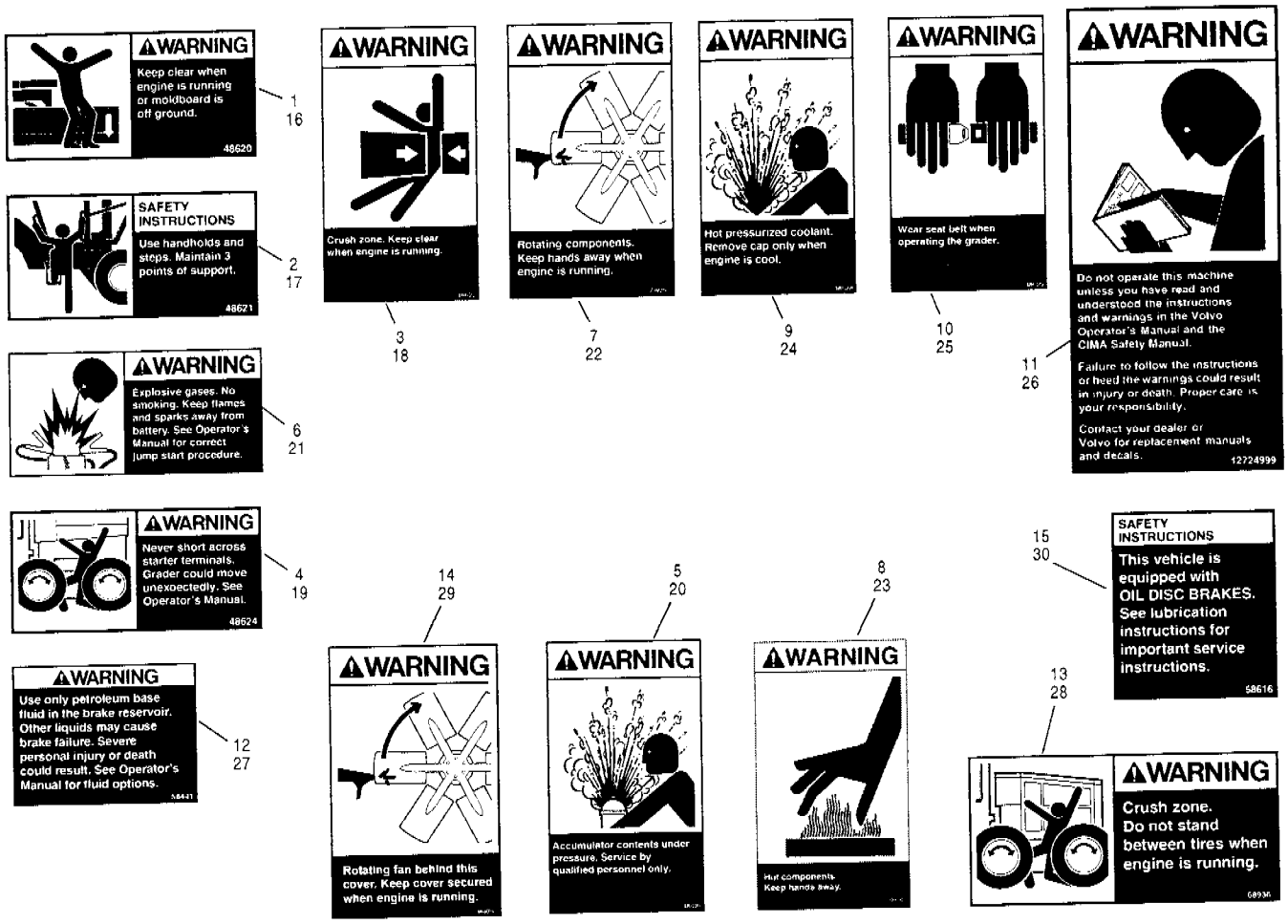

Item	Part No.	Description	Qty.	Remarks
		Greek/English		
1	84001	Warning - circle & moldboard	3	
2	84004	Safety instructions - use handholds	2	
3	84010	Warning - crush zone	2	
4	84012	Warning - never short starter	1	
5	84024	Warning - accumulator	2 - 3	
6	84014	Warning - explosive gases	1 - 2	
7	84018	Warning - rotating components	2	
8	401046	Warning - hot component	1	
9	84016	Warning - hot pressurized coolant	1	
10	84008	Warning - wear seat belt	1	
11	12724995	Warning - do not operate	1	
12	84020	Warning - brake fluid	1	
13	84026	Warning - tire crush zone	2	
14	96017	Warning - rotating fan	2	
15	84022	Safety instructions - oil disc brakes - Greek	2	
	85154	**Safety sign kit - Greek/English** - includes items 1 to 15	1	

Item	Part No.	Description	Qty.	Remarks
		Dutch/English		
16	84291	Warning - circle & moldboard	3	
17	84292	Safety instructions - use handholds	2	
18	84295	Warning - crush zone	2	
19	84296	Warning - never short starter	1	
20	84303	Warning - accumulator	2 - 3	
21	84297	Warning - explosive gases	1 - 2	
22	84299	Warning - rotating components	2	
23	401048	Warning - hot component	1	
24	84298	Warning - hot pressurized coolant	1	
25	84294	Warning - wear seat belt	1	
26	12724996	Warning - do not operate	1	
27	84300	Warning - brake fluid	1	
28	84302	Warning - tire crush zone	2	
29	96018	Warning - rotating fan	2	
30	84301	Safety instructions - oil disc brakes - Dutch	2	
	85395	**Safety sign kit - Dutch/English** - includes items 16 to 30	1	
		Safety signs - English & French	Ref.	841-13
		Safety signs - Spanish & Portuguese	Ref.	841-14
		Safety signs - Brazillian	Ref.	841-16

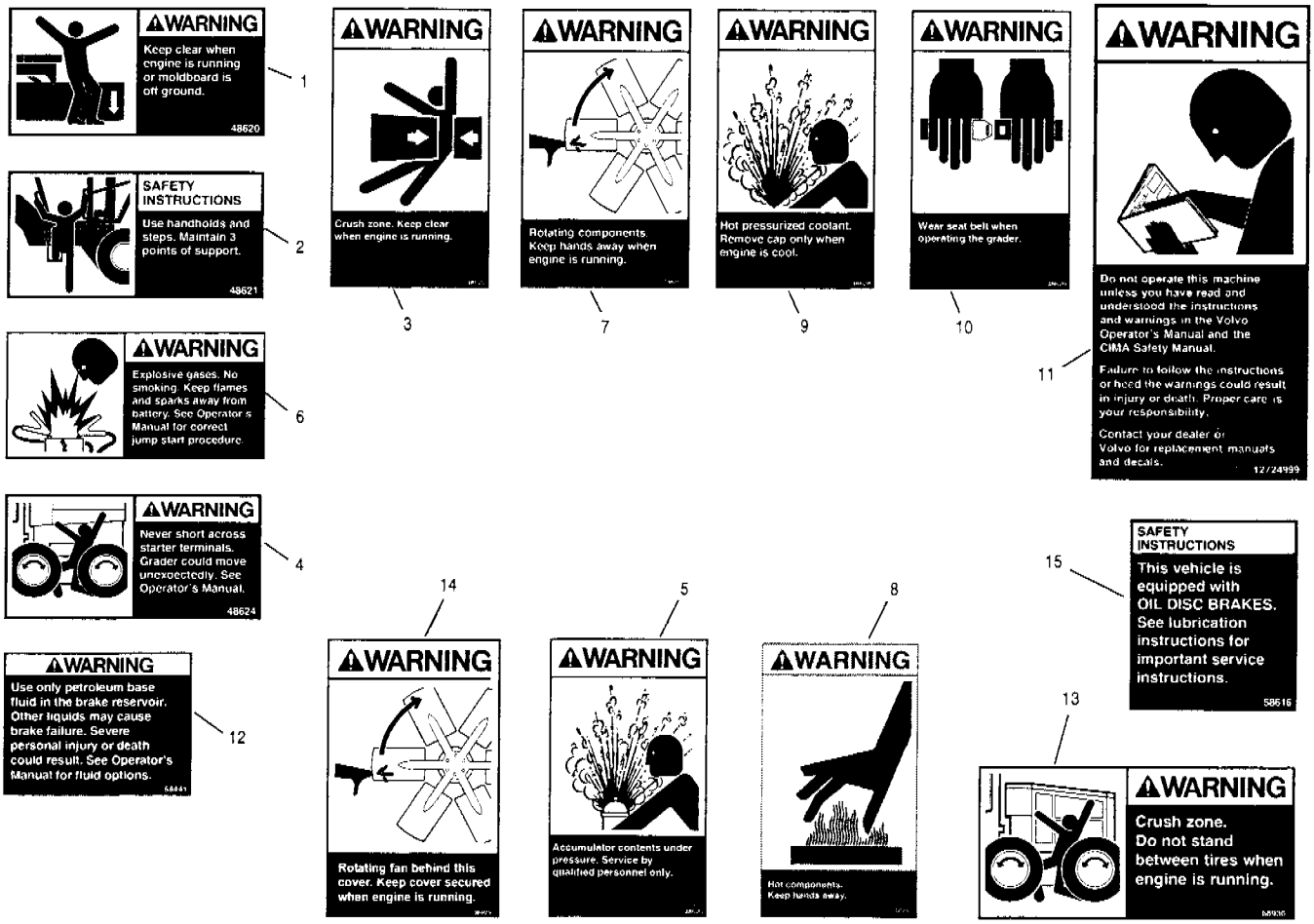

Item	Part No.	Description	Qty.	Remarks
		Brazillian/English		
1	88514	Warning - circle & moldboard	3	
2	88513	Safety instructions - use handholds	2	
3	88511	Warning - crush zone	2	
4	88510	Warning - never short starter	1	
5	84023	Warning - accumulator	2 - 3	
6	88516	Warning - explosive gases	1 - 2	
7	88509	Warning - rotating components	2	
8	88546	Warning - hot components		
9	88506	Warning - hot pressurized coolant	1	
10	84007	Warning - wear seat belt	1	
11	12725001	Warning - do not operate	1	
12	88508	Warning - brake fluid	1	
13	88515	Warning - tire crush zone	2	
14	88517	Warning - rotating fan	2	
15	88507	Safety instructions - oil disc brakes - Portuguese	2	
	12724152	**Safety sign kit - Brazillian/English** - includes items 1 to 15	1	
		Safety signs - English & French	Ref.	841-13
		Safety Signs - Spanish & Portuguese	Ref.	841-14
		Safety Signs - Greek & Dutch	Ref.	841-15

Item	Part No.	Description	Qty.	Remarks

SERIAL NUMBERS: 33000 & UP	**SAFETY SIGNS - BRAZILLIAN**	Date **01/2001**	Group	**841**
		Illustr. Nos	Page	**16**
			Issue	**1**

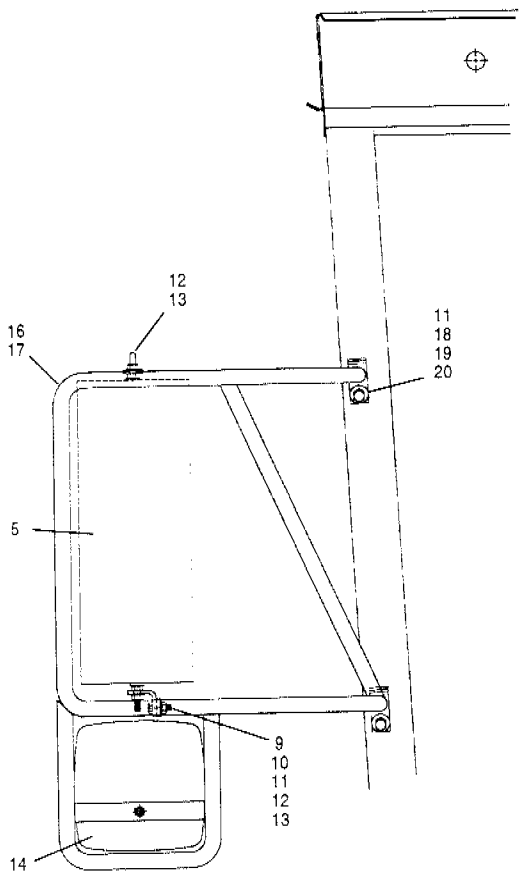

Outside mirrors

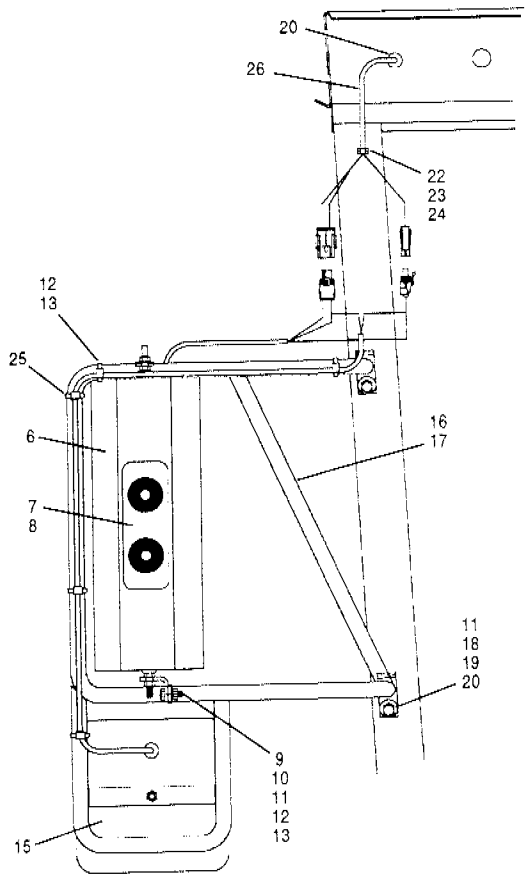

Outside mirrors - heated

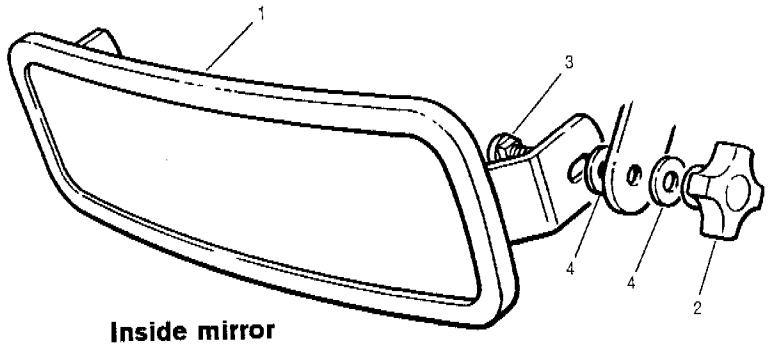

Inside mirror

Item	Part No.	Description	Qty.	Remarks
1	57357	Mirror - inside	1	
2	19890	Knob	2	
3	404187	Bolt	2	
4	14E-06 Zi	Flatwasher	4	
5	98649	Mirror - outside	2	
6	98657	Mirror - outside - defroster - includes items 7 & 8	2	
7	76207	Bulb	2	
8	76208	Lens	1	
9	406000	Bracket - clamping	2	
10	50A-0506 Zi	Bolt	2	
11	14C-05 Zi	Flatwasher	6	
12	14A-05 Zi	Lockwasher	4	
13	30A-05 Zi	Nut	4	

Item	Part No.	Description	Qty.	Remarks
14	57426	Mirror - convex	2	
15	85274	Mirror - convex - heated	2	
16	96038	Bracket - mirror - L.H.	1	
17	96039	Bracket - mirror - R.H.	1	
18	50A-0608 Zi	Bolt	4	
19	14A-06 Zi	Lockwasher	4	
20	65429	Mounting pad - cab	4	
21	41710	Grommet	2	
22	32317	Clamp	2	
23	62A-1004	Screw	2	
24	95352	Flatwasher	2	
25	15774	Tie wrap	10	
26		**Harness - clearance lights**	Ref.	352-7

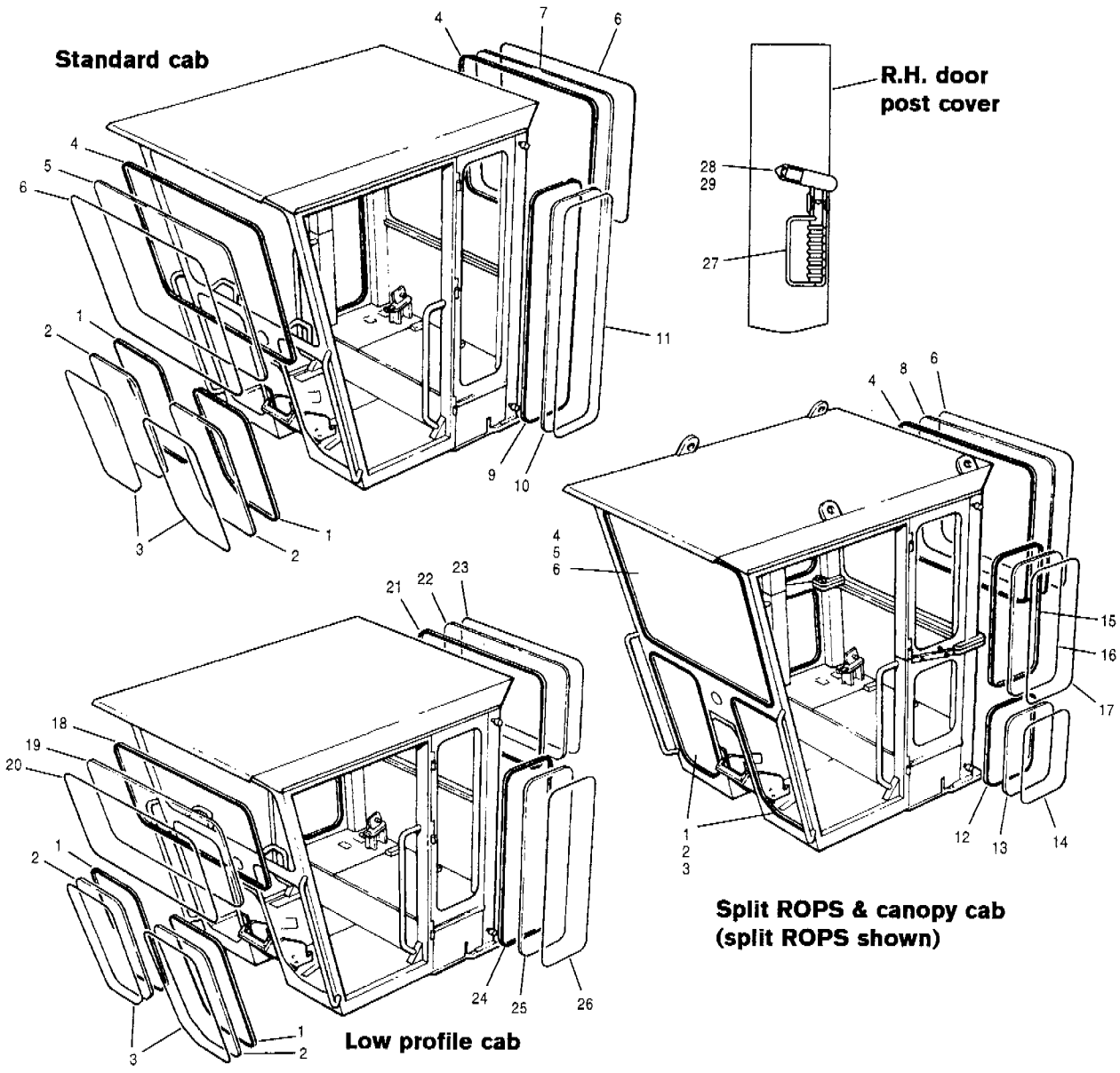

Item	Part No.	Description	Qty.	Remarks
1	15386 x 120	Rubber channel	2	
2	96082	Glass - front bottom	2	
2	402173	Glass - front bottom - thru glass mount windshield wiper	2	
3	84642 x 120	Locking strip	2	
4	15386 x 180	Rubber channel	2	
5	96078	Glass - front top	1	
6	84642 x 180	Locking strip	2	
7	96087	Glass - rear	1	Standard cab
8	96088	Glass - rear	1	Split ROPS & canopy cab
9	15386 x 144	Rubber channel	2	Standard cab
10	84940	Glass - side	2	
11	84642 x 144	Locking strip	2	
12	15386 x 62	Rubber channel	2	Split ROPS cab
13	84942	Glass - lower side	2	
14	84642 x 62	Locking strip	2	
15	15386 x 88	Rubber channel	1	
16	84943	Glass - upper side	1	
17	84642 x 88	Locking strip	1	

Item	Part No.	Description	Qty.	Remarks
18	15386 x 156	Rubber channel	1	LPC
19	96079	Glass - front top	1	
20	84642 x 156	Locking strip	1	
21	15386 x 166	Rubber channel	1	
22	96086	Glass - rear	1	
23	84642 x 166	Locking strip	1	
24	15386 x 124	Rubber channel	2	
25	84941	Glass - side	2	
26	84642 x 124	Locking strip	2	
27	96493	Emergency hammer	1	
28	96494	Bracket	1	
29	61A-0806	Screw	4	
		Cab door glass	Ref.	831-9
		Lower vent window glass	Ref.	844-19

SERIAL NUMBERS: 33000 to 33027	**CAB GLASS**	Date **02/2001**	Group **843**
		Illustr. Nos **00005004**	Page **18**
			Issue **1A**

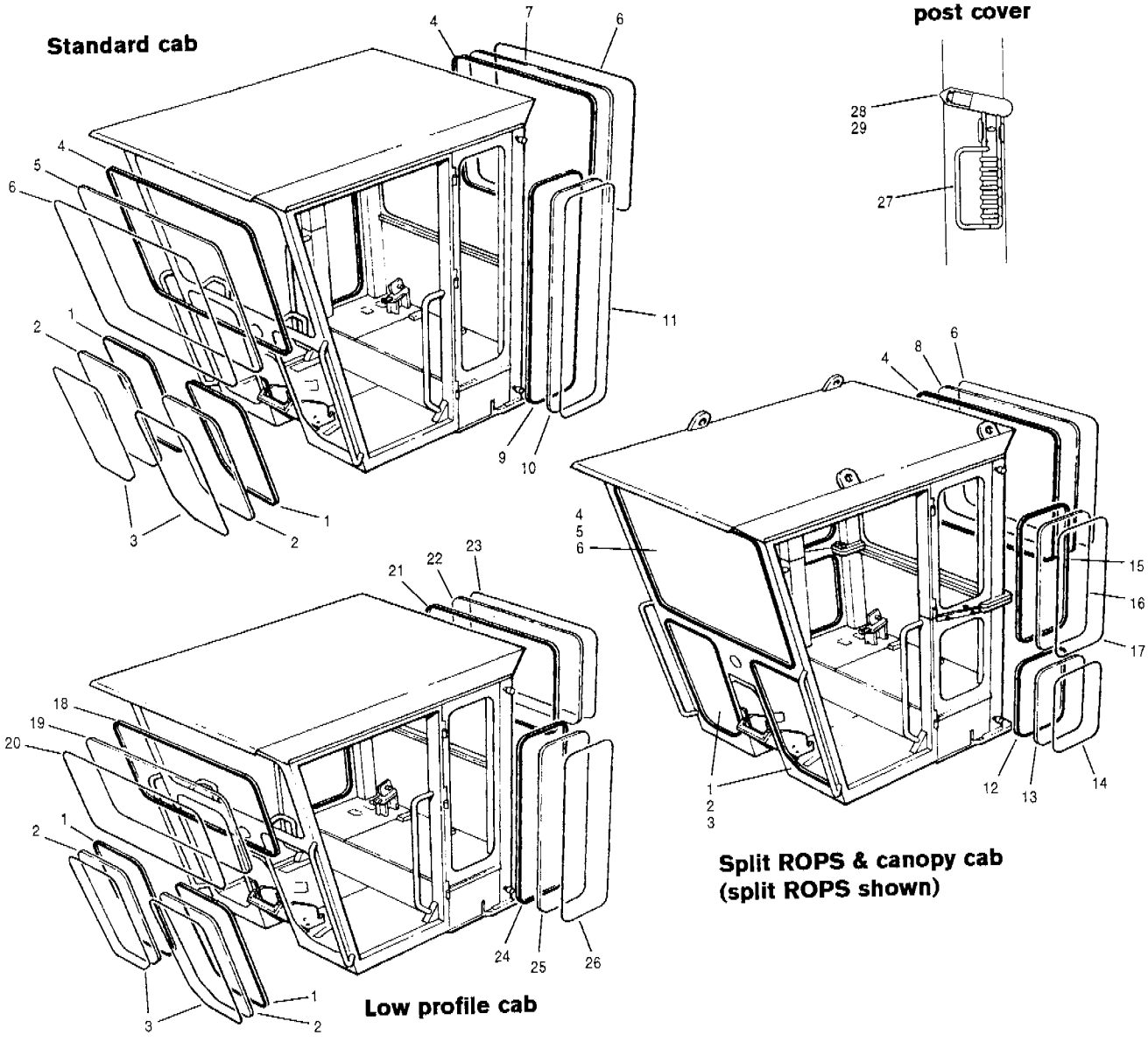

Item	Part No.	Description	Qty.	Remarks
1	15386 x 120	Rubber channel	2	
2	96082	Glass - front bottom	2	
2	402173	Glass - front bottom - thru glass mount windshield wiper	2	
3	84642 x 120	Locking strip	2	
4	15386 x 180	Rubber channel	2	
5	96078	Glass - front top	1	
6	84642 x 180	Locking strip	2	
7	96087	Glass - rear	1	Standard cab
8	96088	Glass - rear	1	Split ROPS & canopy cab
9	15386 x 144	Rubber channel	2	Standard cab
10	84940	Glass - side	2	Standard cab
11	84642 x 144	Locking strip	2	Standard cab
12	15386 x 62	Rubber channel	2	Split ROPS cab
13	84942	Glass - lower side	2	Split ROPS cab
14	84642 x 62	Locking strip	2	Split ROPS cab
15	15386 x 88	Rubber channel	1	Split ROPS cab
16	84943	Glass - upper side	1	Split ROPS cab
17	84642 x 88	Locking strip	1	Split ROPS cab

Item	Part No.	Description	Qty.	Remarks
18	15386 x 156	Rubber channel	1	LPC
19	96079	Glass - front top	1	LPC
20	84642 x 156	Locking strip	1	LPC
21	15386 x 166	Rubber channel	1	LPC
22	96086	Glass - rear	1	LPC
23	84642 x 166	Locking strip	1	LPC
24	15386 x 124	Rubber channel	2	LPC
25	84941	Glass - side	2	LPC
26	84642 x 124	Locking strip	2	LPC
27	96493	Emergency hammer	1	
28	96494	Bracket	1	
29	61A-0806	Screw	4	
		Cab door glass	Ref.	831-9
		Lower vent window glass	Ref.	844-19

SERIAL NUMBERS:
33028 & UP

CAB GLASS

Date **02/2001** | Group **843**
Illustr. Nos **00006215** | Page **18**
Issue **2**

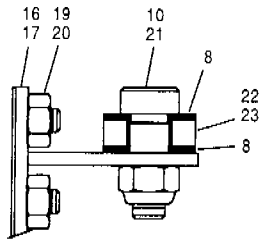

Section A-A

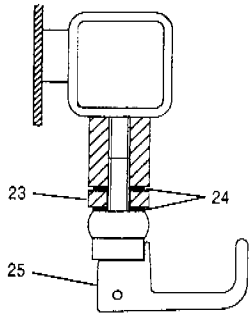

Section B-B

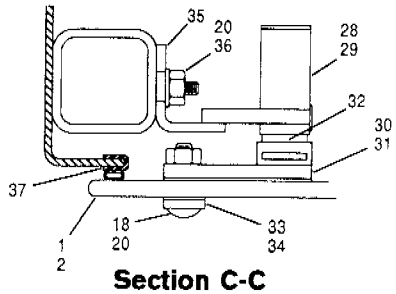

Section C-C

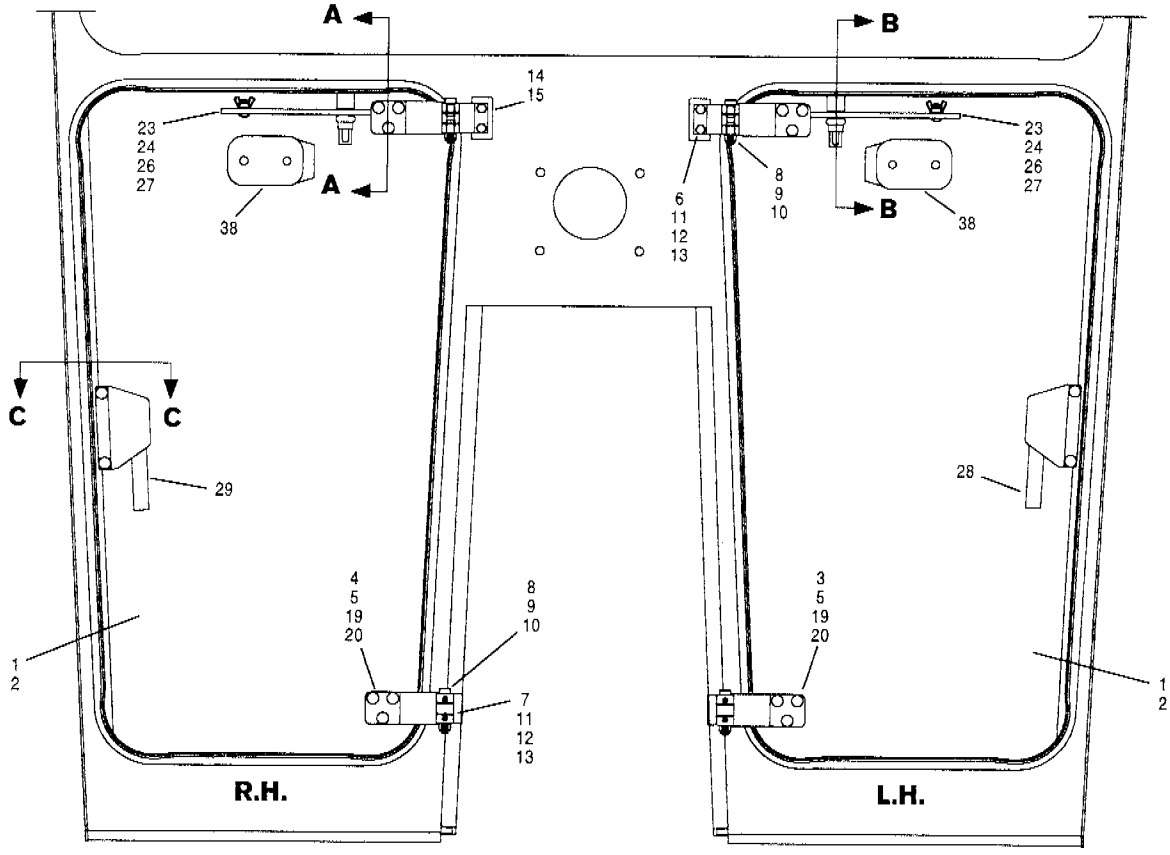

Item	Part No.	Description	Qty.	Remarks
1	96422	Glass - no wipers	2	
2	400264	Glass - wipers	2	
3	402001	Hinge - L.H.	2	
4	402000	Hinge - R.H.	2	
5	400188	Clamp plate	2	
6	402002	Hinge - upper	2	
7	402003	Hinge - lower	2	
8	96267	Spacer	A.R.	
9	50G-0612 Ph	Bolt	4	
10	36N-05 Ph	Locknut	6	
11	50A-0410 Ph	Bolt	8	
12	14A-04 Zi	Lockwasher	8	
13	402154	Riv nut	8	
14	400257	Shim - c/w holes - .075"	A.R.	
15	400258	Shim - c/w slots - .060"	A.R.	
16	400187	Pivot plate	2	
17	400266	Gasket	8	
18	40G-0408 Ph	Bolt	4	
19	40G-0410 Ph	Bolt	12	
20	36N-04 Ph	Locknut	20	
21	78537	Bolt	2	

Item	Part No.	Description	Qty.	Remarks
22	96271	Bushing	2	
23	400189	Slide bar	2	
24	14C-05 Ph	Flatwasher	6	
25	96384	Handle	2	
26	40G-0506 Ph	Bolt	2	
27	36U-05 Ph	Wing nut	2	
28	96385	Latch handle - L.H.	1	
29	96386	Latch handle - R.H.	1	
30	402161	Mounting plate	2	
31	400267	Gasket	2	
32	52E-1004 Ph	Screw	4	
33	402160	Clamp plate	2	
34	400269	Gasket	2	
35	84419	Latch	2	
36	14C-04 Zi	Flatwasher	4	
37	96361 x 101	Trim seal	2	
38		**Wiper**	Ref.	363-21 363-22

SERIAL NUMBERS: 33000 & UP	**LOWER FRONT VENT WINDOW**	Date **01/2001**	Group **844**
		Illustr. Nos **00005005**	Page **19**
			Issue **1**

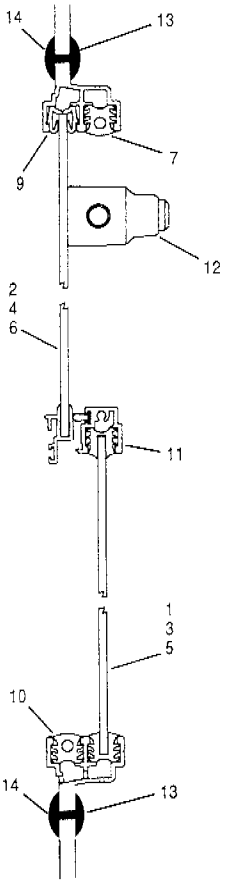

Section BB

Standard cab

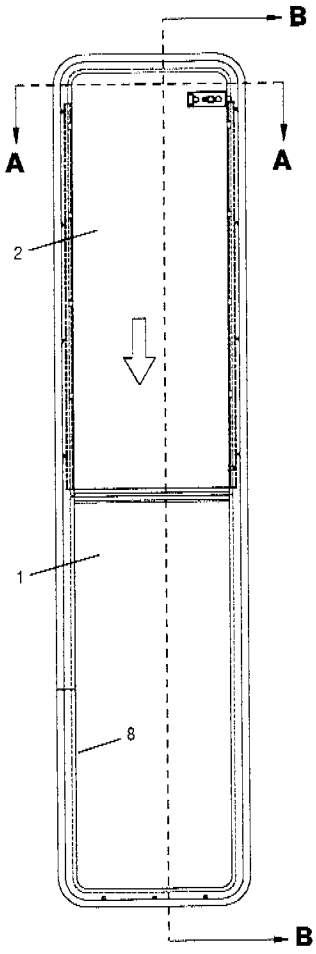

Low profile cab

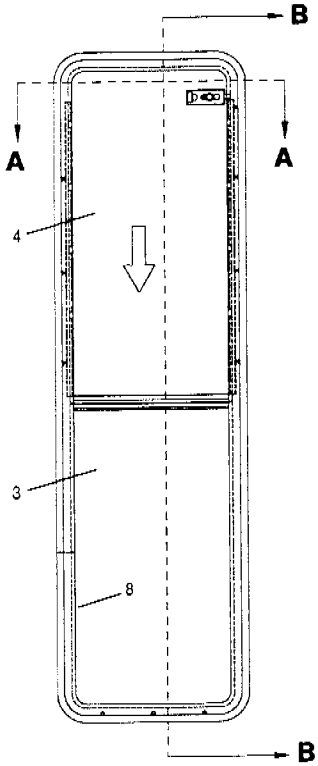

Split ROPS cab

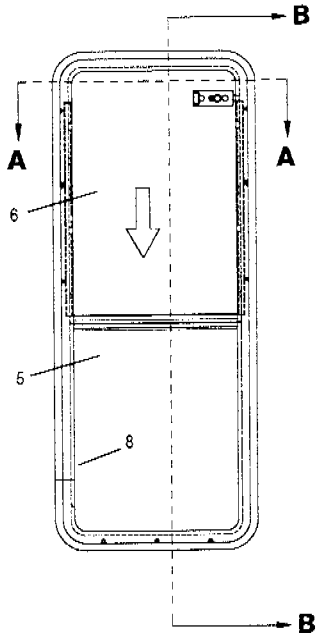

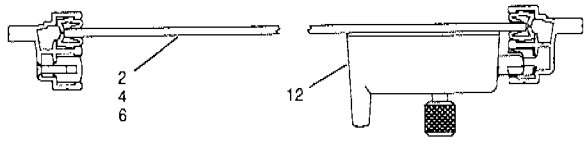

Section AA

Item	Part No.	Description	Qty.	Remarks
	* 12727075	**Side slider window assembly - R.H.** - includes items 1, 2 & 7 to 12	1	Standard cab
	* 12727076	**Side slider window assembly - L.H.** - includes items 1, 2 & 7 to 12	1	Standard cab
	* 12727071	**Side slider window assembly - R.H.** - includes items 3, 4 & 7 to 12	1	LPC
	* 12727072	**Side slider window assembly - L.H.** - includes items 3, 4 & 7 to 12	1	LPC
	* 12727073	**Side slider window assembly - R.H.** - includes items 5 to 12	1	Split ROPS
	* 12727074	**Side slider window assembly - L.H.** - includes items 5 to 12	1	Split ROPS
1	84983	Stationary glass	1	Standard cab
2	* 12727070	**Sliding glass assembly** - includes item 12	1	Standard cab
3	84974	Stationary glass	1	LPC
4	* 12727068	**Sliding glass assembly** - includes item 12	1	LPC
5	84990	Stationary glass	1	Split ROPS
6	* 12727069	**Sliding glass assembly** - includes item 12	1	Split ROPS

Item	Part No.	Description	Qty.	Remarks
7	84987	Trim cover	1	
8	84988	Rubber	1	
9	84989	Rubber	1	
10	84979	Trim	1	
11	84977	Keeper rail	1	
12	* 12727067	**Drop latch assembly**	1	
13	15386 x 144	Rubber channel	1	
14	84642 x 144	Locking strip	1	
	84986	**Seal kit for 12727071, 12727072, 12727073, 12727074, 12727075 & 12727076** - side slider window assemblies - includes items 7 to 10		

Note: R.H. windows are illustrated

SERIAL NUMBERS: 33000 & UP	**SIDE SLIDER WINDOW**	Date **07/2001**	Group **844**
		Illustr. Nos **00006132**	Page **20**
			Issue **1A**

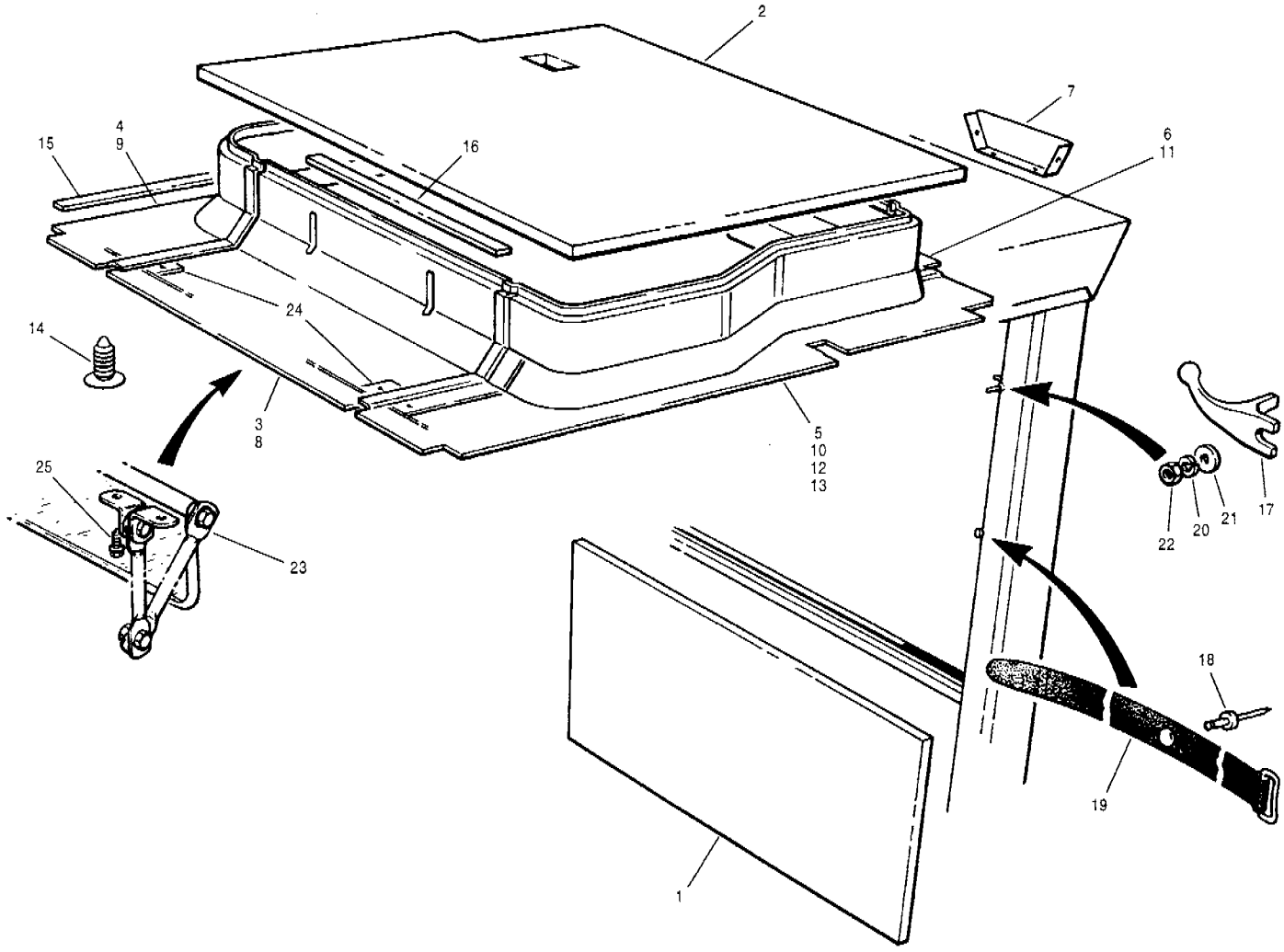

Item	Part No.	Description	Qty.	Remarks
1	73459	Sound suppression - cab rear	1	
2	12724955	Sound suppression - ceiling	1	
3	12724102	Headliner - front	1	
4	12724111	Headliner - R.H.	1	Standard cab
5	12724113	Headliner - L.H.	1	
6	12724107	Headliner - rear	1	
7	85861	Filler plate	1	Canopy cab
8	12724103	Headliner - front	1	
9	12724110	Headliner - R.H.	1	Low profile
10	12724112	Headliner - L.H.	1	cab
11	12724106	Headliner - rear	1	
		Radio/cassette player installation		Optional
12	12724109	Headliner - L.H.	1	Standard cab
13	12724108	Headliner - L.H.	1	Low profile cab
14	* 99063	Retainer	A.R.	
15	12736	Rubber strip	A.R.	
16	28344 x 30	Tape sealant	1	

Item	Part No.	Description	Qty.	Remarks
		Coat hook installation		Optional
17	73851	Coat hook	1	
18	73921	Stud & rivet	1	
19	73924	Strap	1	
20	14A-04 Zi	Lockwasher	2	
21	14C-04 Zi	Flatwasher	2	
22	30A-04 Zi	Nut	2	
23	**55383**	**Sunvisor assembly**	1	Optional
24	85555	Mounting bracket	2	
25	62A-1008	Screw	4	

SERIAL NUMBERS: 33000 & UP	**SOUND SUPPRESSION & TRIM - UPPER CAB**	Date **06/2001**	Group **851**
		Illustr. Nos **00005298**	Page **21**
			Issue **1A**

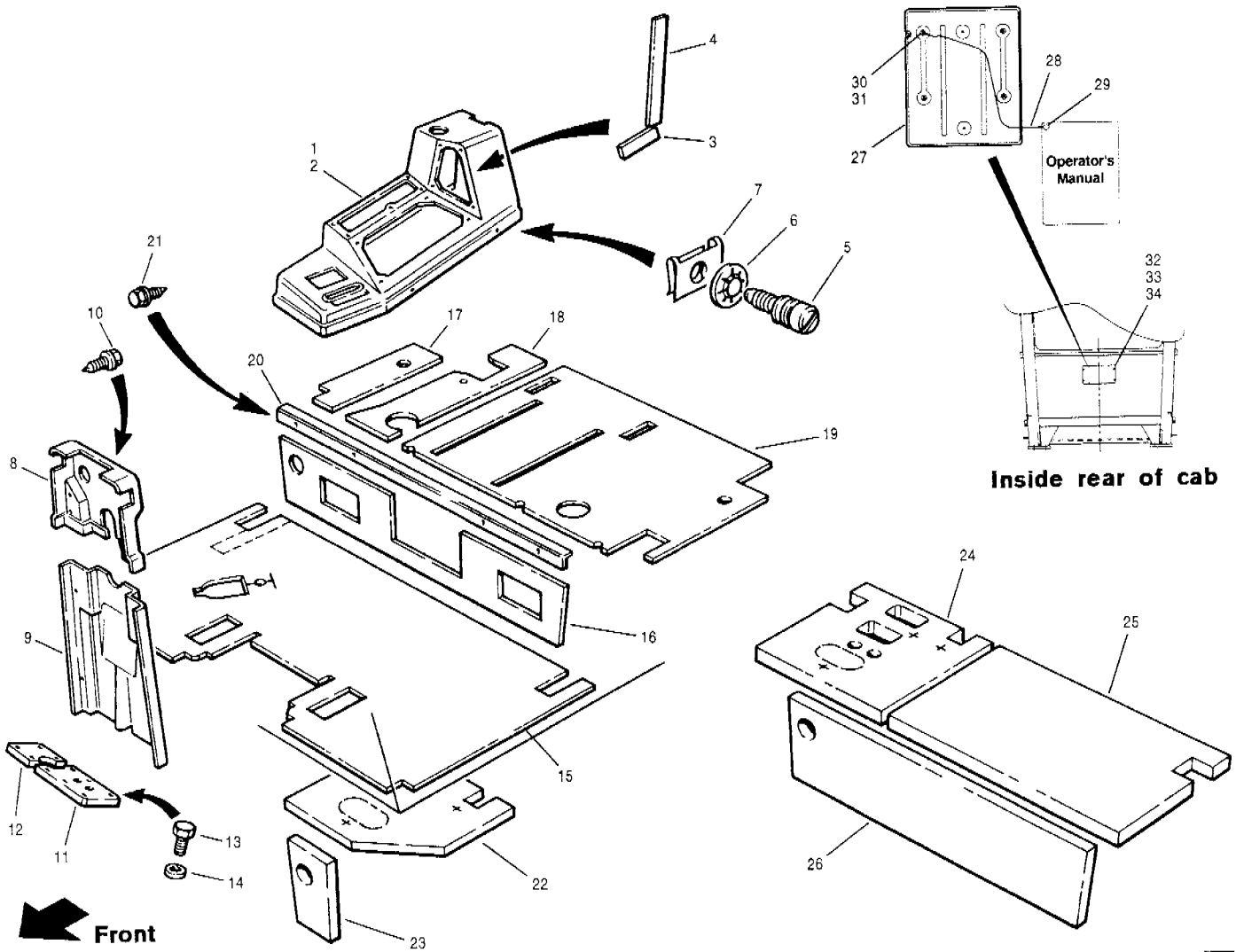

Item	Part No.	Description	Qty.	Remarks
1	12724100	Console - no heater	1	
2	12724101	Console - with heater	1	
3	12736 x 3	Rubber strip	1	
4	12736 x 7	Rubber strip	1	
5	73158	Screw	4	
6	73159	Washer	4	
7	73160	Retainer	4	
8	12724105	Cover - upper front	1	
9	12724115	Cover - lower front	1	
10	62A-1006	Screw	8	
11	400099	Grommet - L.H.	1	
12	84124	Grommet - R.H.	1	
13	50A-0406 Zi	Bolt	10	
14	* 983334	Hardened washer	10	
		Sound suppression		
15	404065	Floor mat	1	
15	404066	Floor mat	1	Canopy cab
16	96598	Sound suppression - seat deck riser	1	
17	84939	Sound suppression - seat deck - R.H.	1	
18	402191	Sound suppression - seat deck - centre	1	
19	400449	Sound suppression - seat deck - L.H.	1	
20	* 12726550	Trim strip - seat deck riser	1	

Item	Part No.	Description	Qty.	Remarks
21	* 62A 1004	Screw	4	
		Sound suppression - under seat deck		
22	* 12725788	Sound suppression - seat deck - R.H.	1	
23	* 12725783	Sound suppression - seat deck riser - R.H.	1	
24	* 12725789	Sound suppression - seat deck - R.H. - no heater	1	
25	* 12725786	Sound suppression - seat deck - L.H. - no heater	1	
26	* 12725784	Sound suppression - seat deck riser - no heater	1	
		Manuals box installation		
27	**12725116**	**Manuals box assembly** - includes item 28	1	
28	52006	Lanyard	1	
29	52004	Fastener – includes rivet	1	
30	77C-066	Rivet	4	
31	14E-04 Zi	Flatwasher	4	
32	* 12726300	Mounting plate	1	
33	* 983334	Hardened washer	4	
34	* 30A-04 Zi	Nut	4	

SERIAL NUMBERS: 33000 & UP	**SOUND SUPPRESSION & TRIM - LOWER CAB**	Date 07/2001	Group 851
		Illustr. Nos 00005473	Page 22
			Issue 1A

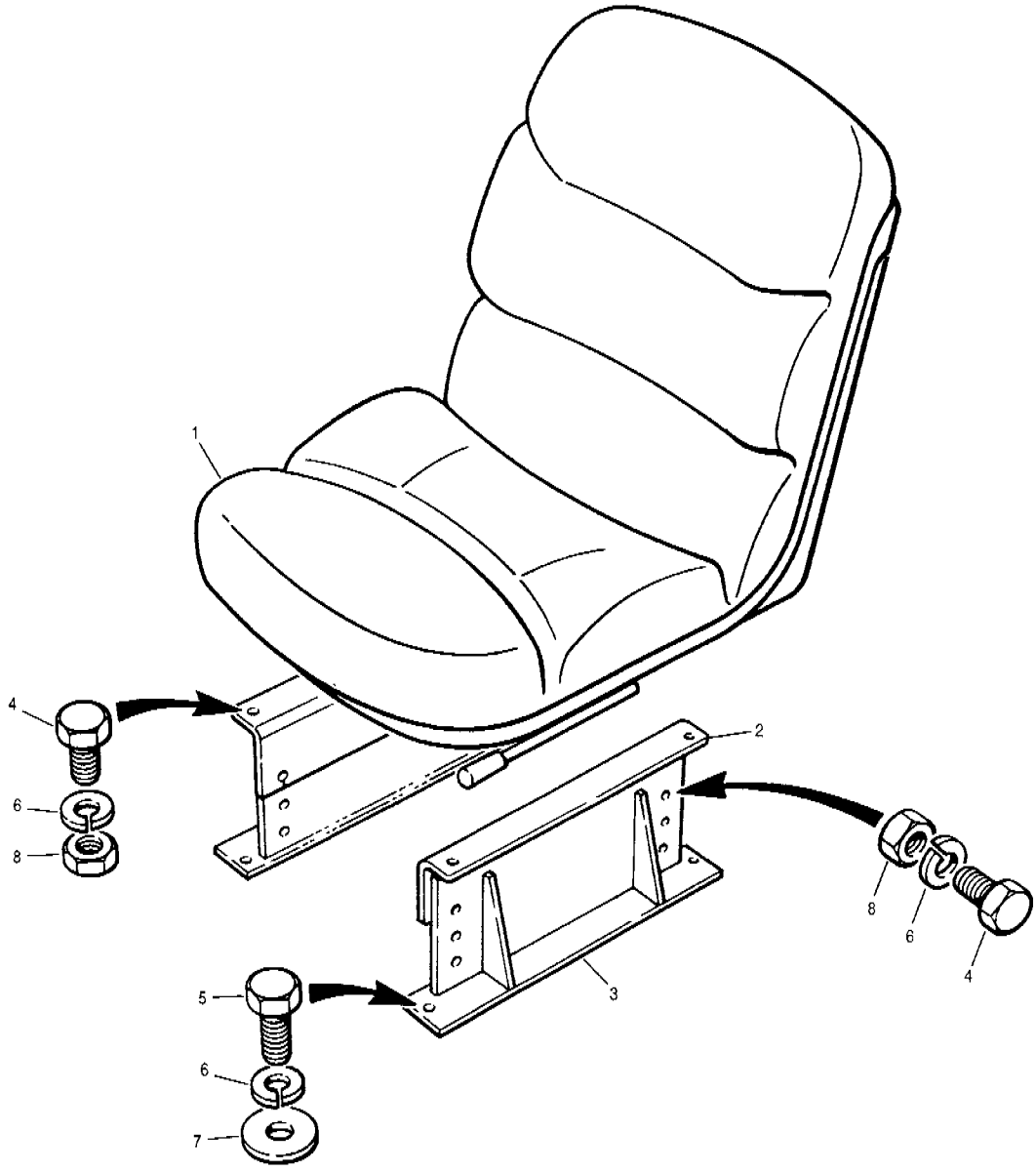

Item	Part No.	Description	Qty.	Remarks
1	53176	Seat	1	
2	400448	Bracket - riser - upper	2	
3	* 12725959	Bracket - riser - lower	2	
4	50A-0506 Zi	Bolt	8	
5	50A-0508 Zi	Bolt	4	
6	14A-05 Zi	Lockwasher	12	
7	14C-05 Zi	Flatwasher	4	
8	30A-05 Zi	Nut	8	

Item	Part No.	Description	Qty.	Remarks

SERIAL NUMBERS: 33000 & UP	**BUCKET SEAT**	Date **07/2001**	Group	**852**
		Illustr. Nos **00005006**	Page	**23**
			Issue	**1A**

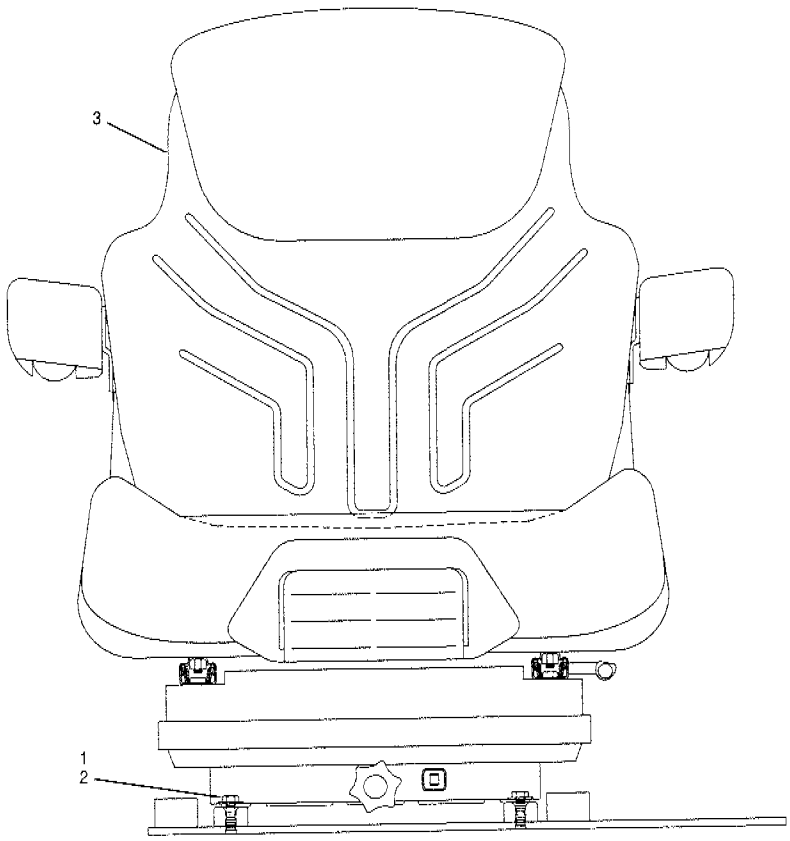

Item	Part No.	Description	Qty.	Remarks
1	50A-0508 Zi	Bolt	4	
2	14C-05 Zi	Flatwasher	4	
3		**Seat assembly**	Ref.	852-25

Item	Part No.	Description	Qty.	Remarks

SERIAL NUMBERS: 33000 & UP	**SUSPENSION SEAT INSTALLATION**	Date **01/2001**	Group **852**
		Illustr. Nos **00005009**	Page **24**
			Issue **1**

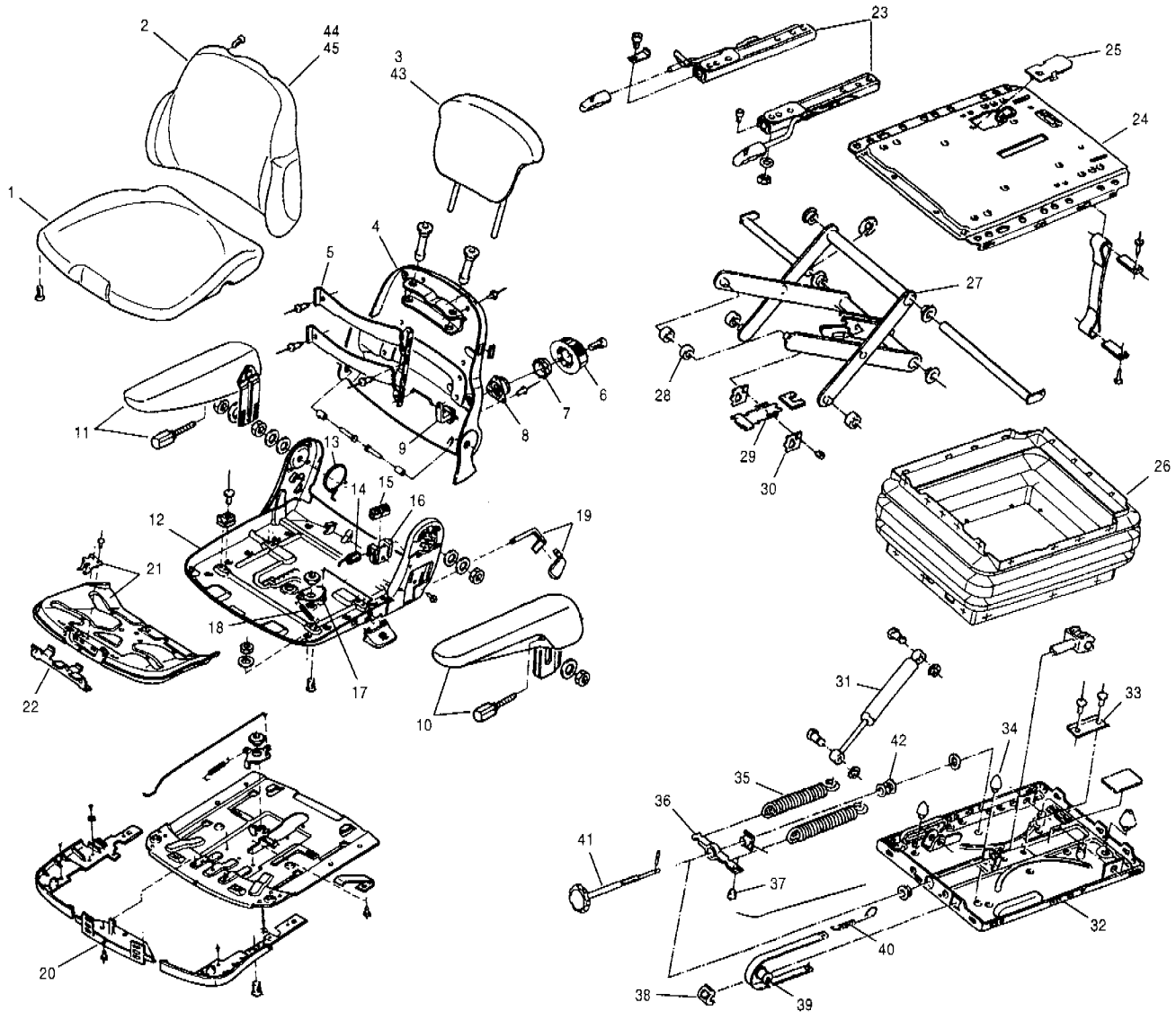

Item	Part No.	Description	Qty.	Remarks
	12723679	**Seat assembly** - includes items 4 to 42, 44 & 45	1	Standard
	12723680	**Seat assembly – vinyl** - includes items 1, 2 & 4 to 42, 44 & 45	1	Canopy cab
1	407030	Seat cushion c/w screws	1	
2	407029	Backrest cushion c/w screws	1	
3	407031	Backrest extension	1	Vinyl Optional
4	**407046**	**Backrest assembly**	1	
5	**407047**	**Lumbar support assembly** - includes items 6 to 9	1	
6	407048	Handle	1	
7	407049	Toothed wheel	1	
8	407050	Spring brake	1	
9	407051	Carrier	1	
10	**12725404**	**Armrest assembly – L.H.**	1	
11	**12725403**	**Armrest assembly – R.H.**	1	
12	407036	Seat pan assembly	1	
13	407037	Spring	1	
14	407038	Spring	1	
15	407039	Tooth gear	1	
16	407040	Bearing kit	1	
17	**407032**	**Lever assembly** – includes item 18	1	
18	407033	Spring	1	
19	**407041**	**Lever assembly**	1	
20	**407034**	**Bracket kit**	1	
21	**407043**	**Seat angle adjuster assembly**	1	
22	407044	Latch	1	

Item	Part No.	Description	Qty.	Remarks
23	**407045**	**Handle assembly**	1	
24	**407011**	**Upper suspension** – includes item 25	1	
25	407010	Cover	1	
26	407012	Bellows	1	
27	**407013**	**Swing arm assembly** - includes items 28, 29 & 30	1	
28	407014	Roller	4	
29	407015	Spring	2	
30	407016	Release plate	2	
31	407017	Shock absorber c/w hardware	1	
32	**407028**	**Lower suspension** - includes items 33 to 41	1	
33	407018	U-shaped profile c/w hardware	1	
34	407019	Bumper set	1	
35	407021	Spring	1	
36	407022	Bracket	1	
37	407023	Plug	1	
38	407024	Guide	1	
39	407025	Roller	1	
40	407026	Spring	1	
41	**407027**	**Adjustment spindle assembly** - includes item 42	1	
42	**407020**	**Thrust washer kit**	1	
43		Backrest extension	1	Cloth Optional
44	* 12726549	Bumper	2	
45	* 969439	Screw	2	

SERIAL NUMBERS: 33000 & UP	**SUSPENSION SEAT ASSEMBLY**	Date **07/2001**	Group **852**
		Illustr. Nos **00005412**	Page **25**
			Issue **1A**

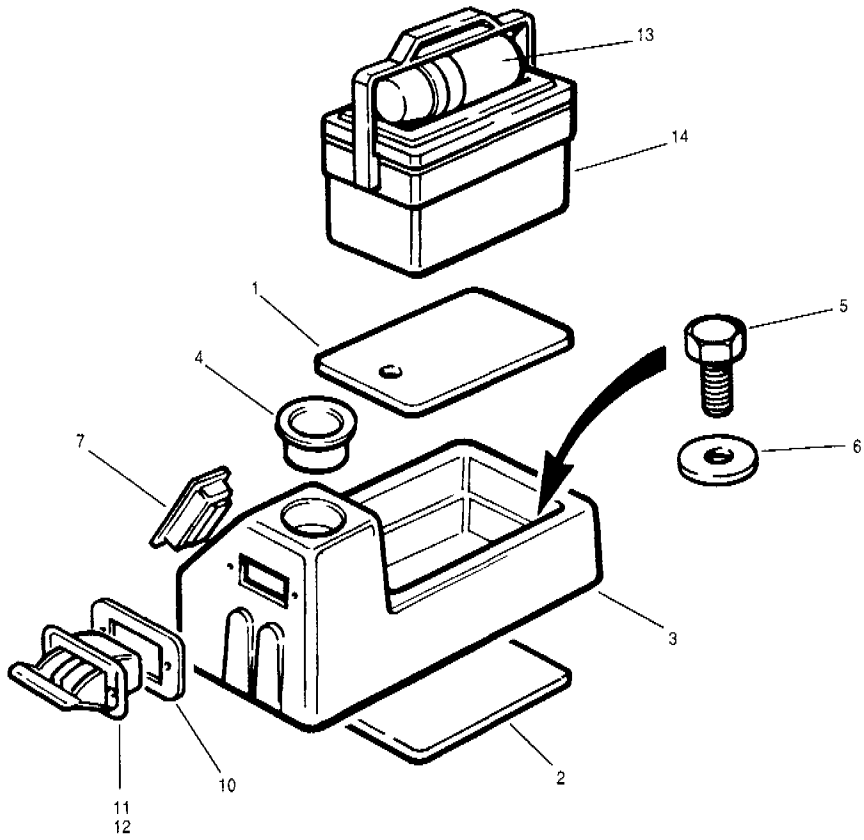

Item	Part No.	Description	Qty.	Remarks
	402015	**Driver convenience package** - includes items 1 to 3 & 5 to 12		Optional
	12724104	**Console assembly - L.H.** - includes items 1 to 4	1	
1	12724144	Cover plate	1	
2	12724145	Plate	1	
3	12724143	Console	1	
4	12724142	Cup holder	1	
5	68815	Screw	3	
6	14C-04 Zi	Flatwasher	3	
7	96556	Louver	1	
8	402156	Plate	1	
9	96554	Ashtray	1	
10	402155	Rivet	2	
	73751	**Lunch kit** - includes items 11 & 12	1	
11		Thermos	1	
12		Cooler	1	

Item	Part No.	Description	Qty.	Remarks

SERIAL NUMBERS: 33000 to 33027	**DRIVER CONVENIENCE PACKAGE**	Date **03/2001**	Group **852**
		Illustr. Nos **00006218**	Page **26**
			Issue **1A**

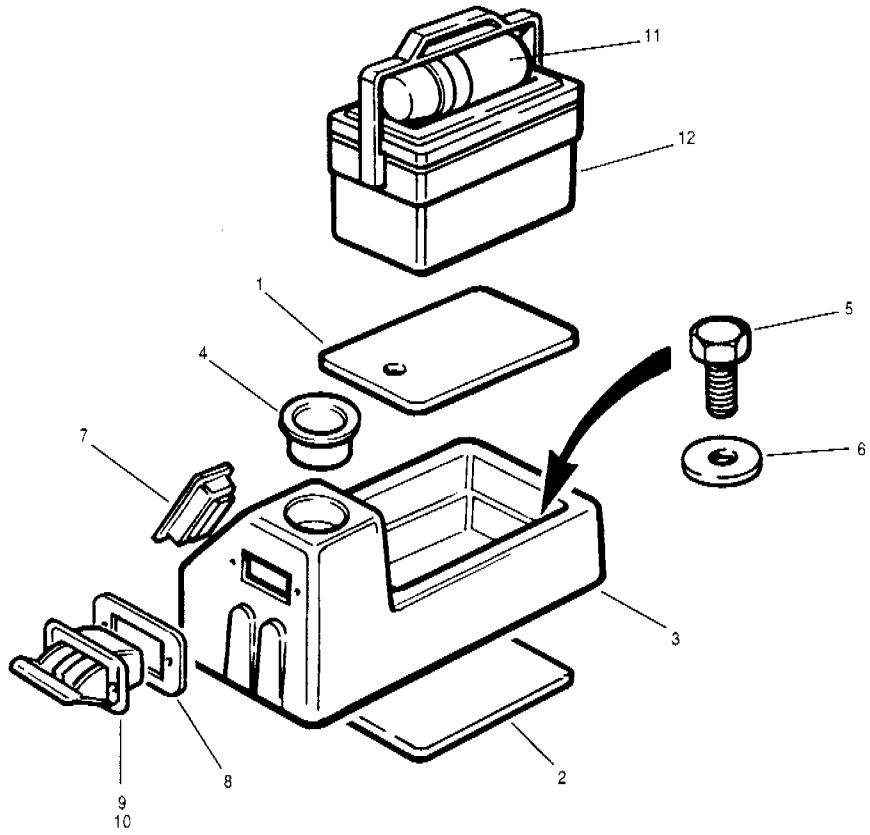

Item	Part No.	Description	Qty.	Remarks
	402015	**Driver convenience package** - includes items 1 to 3 & 5 to 12		Optional
	* **12725785**	**Console assembly - L.H.** - includes items 1 to 4	1	
1	12724144	Cover plate	1	
2	12724145	Plate	1	
3	* 12725787	Console	1	
4	12724142	Cup holder	1	
5	68815	Screw	3	
6	14C-04 Zi	Flatwasher	3	
7	* 12724659	Louver	1	
8	402156	Plate	1	
9	96554	Ashtray	1	
10	402155	Rivet	2	
	73751	**Lunch kit** - includes items 11 & 12	1	
11		Thermos	1	
12		Cooler	1	

Item	Part No.	Description	Qty.	Remarks

SERIAL NUMBERS: 33028 & UP	**DRIVER CONVENIENCE PACKAGE**	Date **03/2001**	Group	**852**
		Illustr. Nos **00006218**	Page	**26**
			Issue	**2**

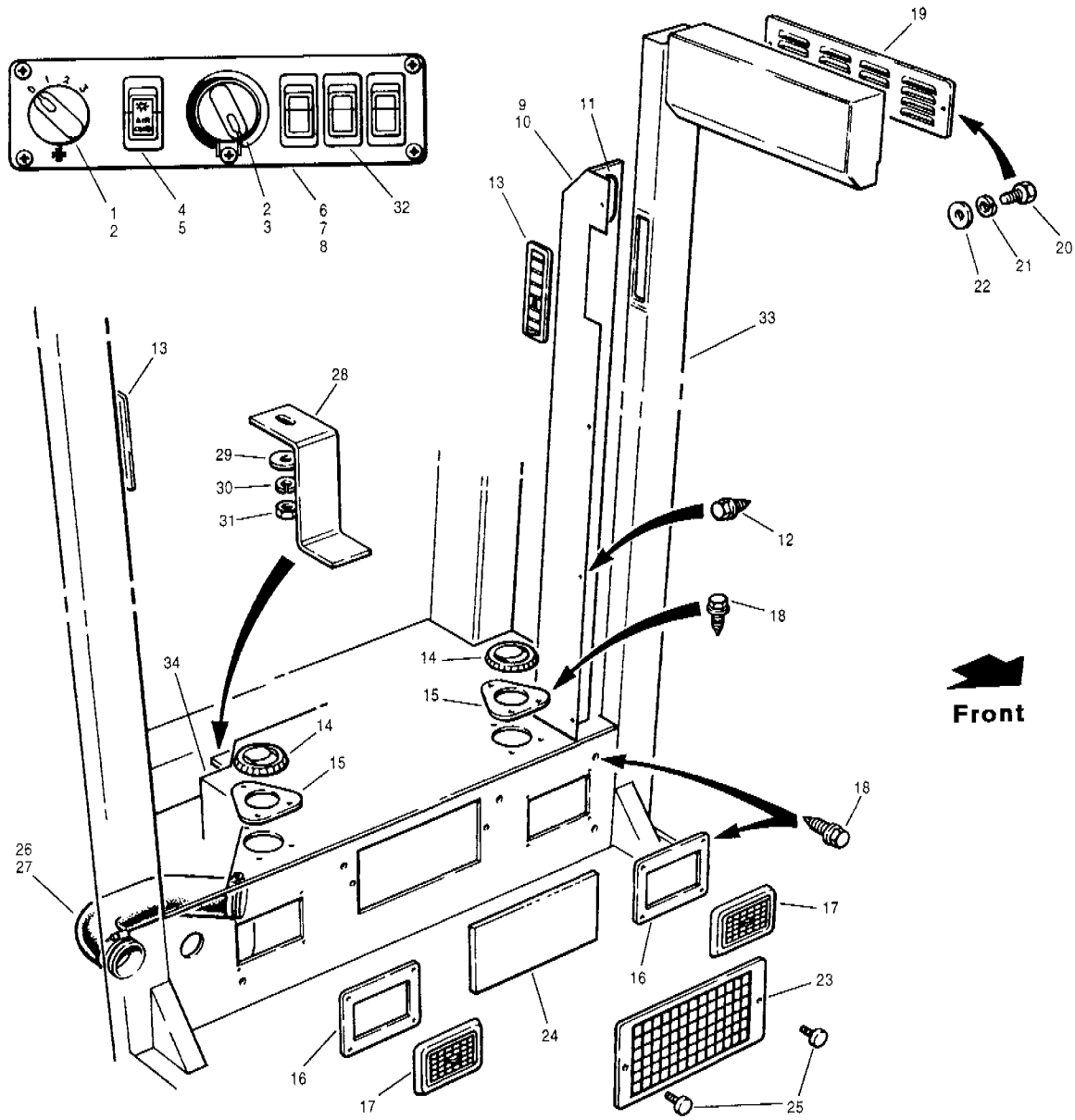

Item	Part No.	Description	Qty.	Remarks
1	65012	Switch	1	
2	96740	Knob - heater control	2	
3	**96741**	**Potentiometer assembly**	1	
4	73192	Switch	1	
5	96743	Decal	1	
6	402119	Switch panel	1	
7	52M-0804 Ph	Screw	5	
8	47388	Rivnut	5	
9	400133	Air intake	1	Standard cab
10	400134	Air intake	1	LPC
11	19176 x 12"	Weather stripping	1	
12	62A-1004	Screw	4 - 5	
13	96759	Louver	2	
14	65830	Vent	2	
15	84466	Spacer	2	
16	96981	Mounting flange	2	
17	96556	Louver	2	
18	62A-1006	Screw	20	
19	96657	Vent	1	
20	50A-0408 Zi	Bolt	2	
21	14A-04 Zi	Lockwasher	2	

Item	Part No.	Description	Qty.	Remarks
22	14C-04 Zi	Flatwasher	2	
	402141	**Filter assembly** - includes items 23 & 24	1	
23	96894	Grille	1	
24	96913	Recirculating air filter	1	
25	96917	Knob	2	
26	* 12724464	Air hose	1	
27	* 22B-50	Clamp	2	
28	96982	Support - heater & air conditioner	1	
29	14C-08 Zi	Flatwasher	1	
30	14A-08 Zi	Lockwasher	1	
31	30A-08 Zi	Nut	1	
32		**Gauges & switches - console**	Ref.	364-24
33		**Cab**	Ref.	810-3 810-4
34		**Heater & air conditioner**	Ref.	872-28

SERIAL NUMBERS:
33000 to 33027

HEATER & AIR CONDITIONER INSTALLATION

Date 03/2001
Illustr. Nos 00006219
Group 872
Page 27
Issue 1A

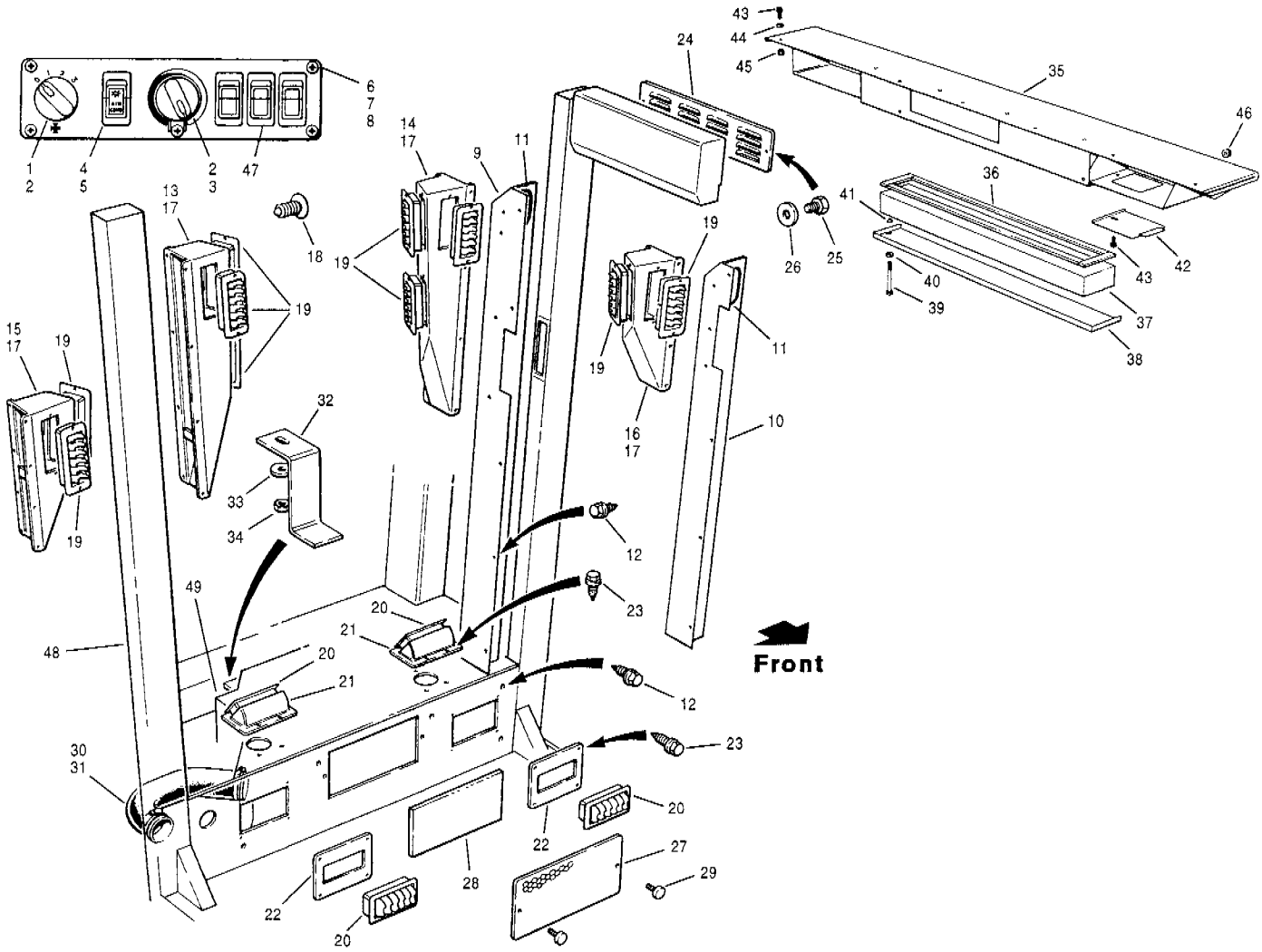

Item	Part No.	Description	Qty.	Remarks
1	65012	Switch	1	
2	96740	Knob - heater control	2	
3	**96741**	**Potentiometer assembly**	1	
4	73192	Switch	1	
5	96743	Decal	1	
6	402119	Switch panel	1	
7	52M-0804 Ph	Screw	5	
8	47388	Rivnut	5	
9	* 12727290	Air intake	1	Standard cab
10	* 12727294	Air intake	1	LPC
11	19176 x 12	Weather stripping	1	
12	62A-1004	Screw	10 - 11	
13	* 12724650	Vent cover - R.H.	1	Standard cab
14	* 12724651	Vent cover - L.H.	1	Standard cab
15	* 12724787	Vent cover - R.H.	1	LPC
16	* 12724788	Vent cover - L.H.	1	LPC
17	* 28344 x 2.25	Tape sealant	2	
18	* 99063	Retainer	24 - 28	
19	* 12725271	Louver	4 - 6	
20	* 12724659	Louver	2	
21	* 12724656	Vent	2	
22	* 12724792	Mounting flange	2	
23	62A-1006	Screw	14	
24	96657	Vent	1	
25	50A-0408 Zi	Bolt	2	
26	* 983334	Hardened washer	2	
	402141	**Filter assembly** - includes items 27 & 28	1	
27	96894	Grille	1	

Item	Part No.	Description	Qty.	Remarks
28	96913	Recirculating air filter	1	
29	96917	Knob	2	
30	12724464	Air hose	1	
31	22B-50	Clamp	2	
32	96982	Support - heater & air conditioner	1	
33	* 983337	Hardened washer	1	
34	30A-08 Zi	Nut	1	
		Filter housing installation		**Optional**
35	* 12724320	Filter housing	1	
36	* 28344 x 7.5	Tape sealant	1	
37	* 407083	Filter	1	
38	* 12724361	Louvre door	1	
39	* 50A-0528 Zi	Bolt	2	
40	* 14E-05 Zi	Flatwasher	2	
41	* 407086	Push nut	2	
42	* 12724326	Door	1	
43	* 64B-0505 Zi	Bolt	9	
44	* 407088	Seal washer	8	
45	* 36J-05	Locknut	5	
46	* 41710	Grommet	1	
47		**Gauges & switches - console**	Ref.	364-24
48		**Cab**	Ref.	810-3 810-4
49		**Heater & air conditioner**	Ref.	872-28

SERIAL NUMBERS: 33028 & UP	**HEATER & AIR CONDITIONER INSTALLATION**	Date **07/2001**	Group **872**
		Illustr. Nos **00006235 00006231**	Page **27**
			Issue **2**

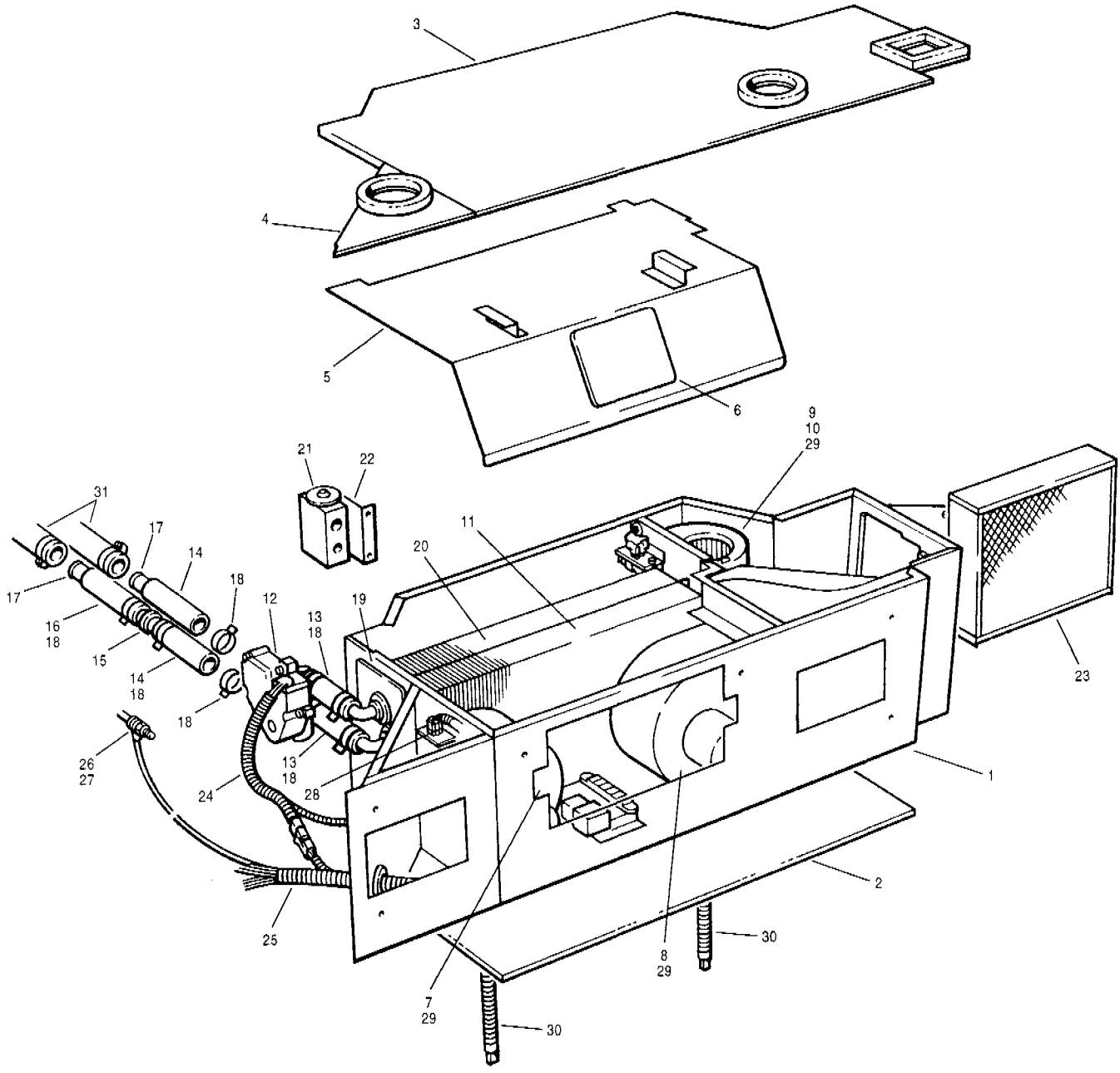

Item	Part No.	Description	Qty.	Remarks
1	96891	Box	1	
2	96904	Insulation	1	
3	96896	Cover	1	
4	96899	Cover	1	
5	96897	Inside cover	1	
6	96900	Relay cover	1	
7	**96905**	**Blower assembly**	1	
8	**96906**	**Blower assembly**	1	
9	**96907**	**Blower assembly**	1	
10	96895	Holder	1	
11	96910	Heater coil	1	
12	**96911**	**Valve assembly**	1	
13	407067	Hose	2	
14	407068	Hose	2	
15	400402	Reducer	1	
16	400404	Hose	1	

Item	Part No.	Description	Qty.	Remarks
17	407087	Connector	2	
18	400403	Clamp	10	
19	96893	Side cover	1	
20	96908	Evaporator	1	
21	96909	Block valve	1	
22	96898	Bracket	1	
23	96912	Filter - fresh air	1	To S/N 33023
23	* 12725424	Filter - fresh air	1	S/N 33024 & up
24	400298	Harness	1	
25	96914	Harness	1	
26	14Q-06 SS	Star washer	1	
27	30A-06 Zl	Nut	1	
28	96915	Thermostat	1	
29	96916	Resistor	3	
30	**400325**	**Drain hose assembly**	2	
31		**Cab heater plumbing - engine**	Ref.	873-29

SERIAL NUMBERS: 33000 & UP	**CAB HEATER & AIR CONDITIONER**	Date **03/2001**	Group **873**
		Illustr. Nos **00006123**	Page **28**
			Issue **1A**

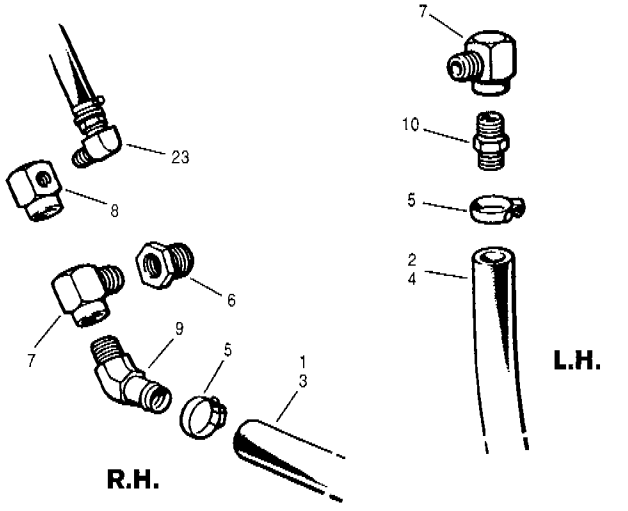

G710 to G716

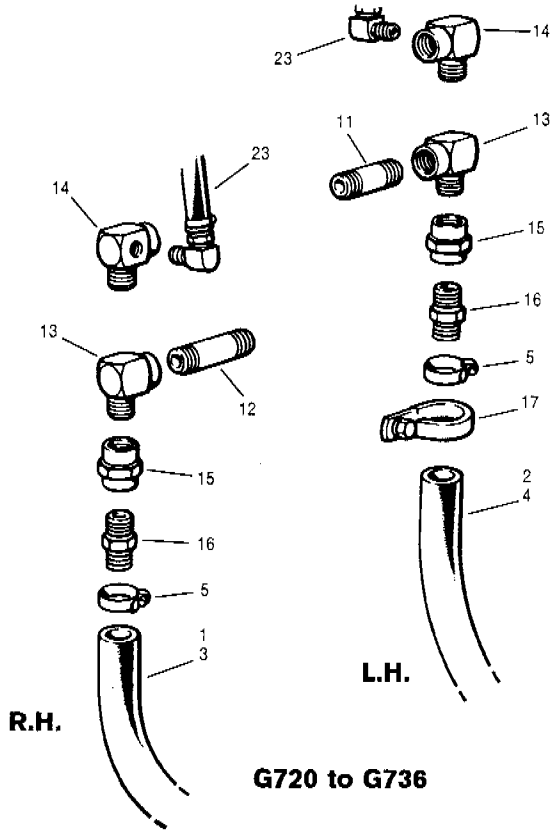

G720 to G736

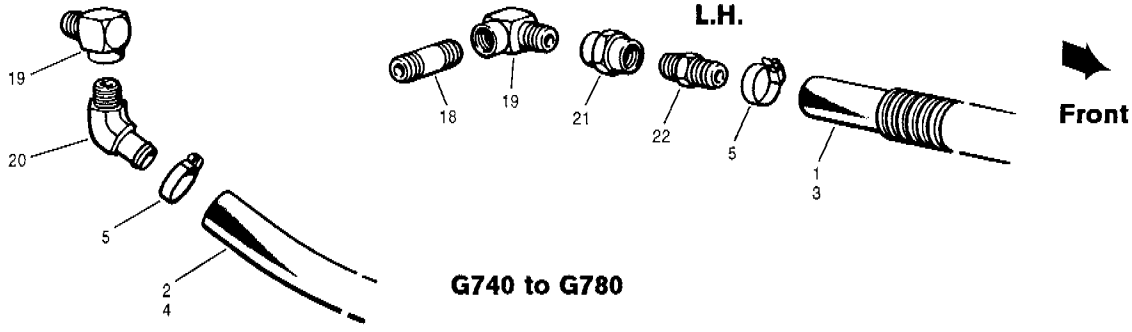

G740 to G780

Item	Part No.	Description	Qty.	Remarks
1	9513 x 60	Hose	1	
2	9513 x 100	Hose	1	
3	17539 x 48	Hose protector	1	
4	17539 x 60	Hose protector	1	
5	* 22B-12	Clamp	4	
		Models G710 & G716		
6	115B-1208	Reducer	1	
7	115J-0808	Elbow	2	
8	41161	Elbow	2	Radiator shutter
9	108F-1208	Connector	1	
10	108D-1208	Nipple	1	

Item	Part No.	Description	Qty.	Remarks
		Models G720 to G736		
11	115Z-0806	Nipple	1	
12	115Z-0808	Nipple	1	
13	115J-08	Elbow	2	
14	41161	Elbow	2	Radiator shutter
15	115G-08	Connector	2	
16	108D-1208	Nipple	2	
17	32319	Clamp	1	
		Models G740 to G780		
18	115Z-0806	Nipple	1	
19	115J-0808	Elbow	2	
20	108F-1208	Connector	1	
21	115G-08	Connector	1	
22	108D-1208	Nipple	1	
23		**Radiator shutter**	Ref.	261-23 261-24

SERIAL NUMBERS: 33000 & UP	**CAB HEATER PLUMBING - ENGINE**	Date **06/2001**	Group **873**
		Illustr. Nos **00005012**	Page **29**
			Issue **1A**

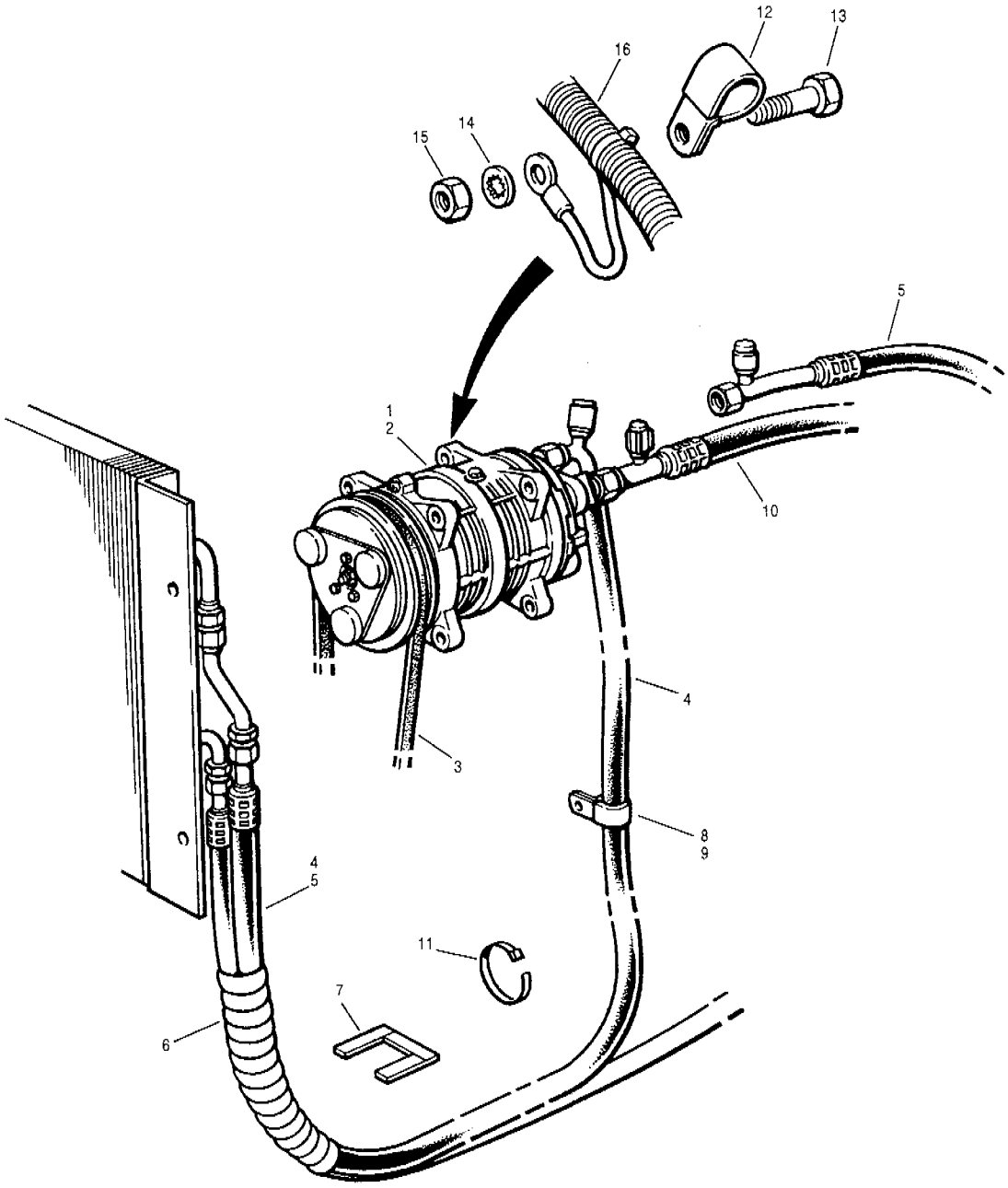

Item	Part No.	Description	Qty.	Remarks
1	95311	Compressor - includes item 2	1	
2	96096	Coil	1	
3	86800	V-belt	1	G710 to G716
3	95448	V-belt	1	G720 to G736
3	44213	V-belt	1	G740 to G780
4	400401	Hose - condensor to compressor	1	G710, G716A & G740 to G780
5	400400	Hose - condensor to compressor	1	G720 to G736
6	41647 x 15	Hose wrap	1	Sucker fan
7	32576 x 4	Edge trim	1	Blower fan
8	14C-04 Zi	Flatwasher	1	G740 to G780
9	32318	Clamp	1	G740 to G780

Item	Part No.	Description	Qty.	Remarks
10	400399	Hose - compressor to evaporator	1	
11	15574	Tie wrap	A.R.	
12	32316	Clamp	1	
13	50A-0612 Zi	Bolt	1	
14	14Q-06 SS	Star washer	1	
15	30A-06 Zi	Nut	1	
16		**Rear harness**	Ref.	371-29

SERIAL NUMBERS: 33000 & UP	**AIR CONDITIONER COMPRESSOR & HOSES**	Date **01/2001**	Group **874**
		Illustr. Nos **00006126**	Page **30**
			Issue **1**

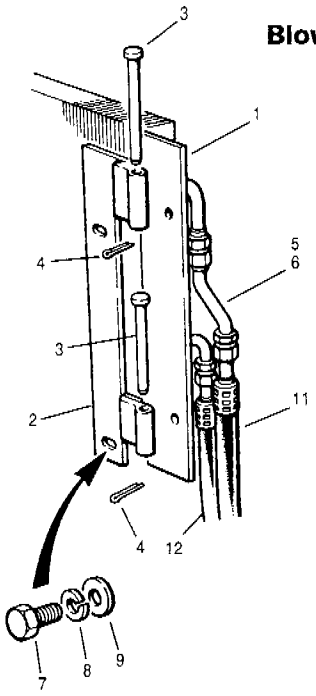

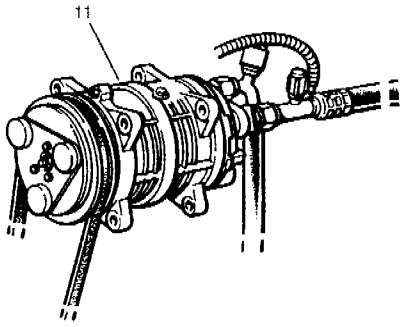

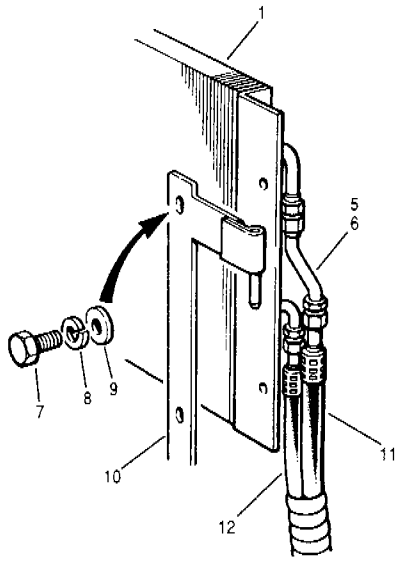

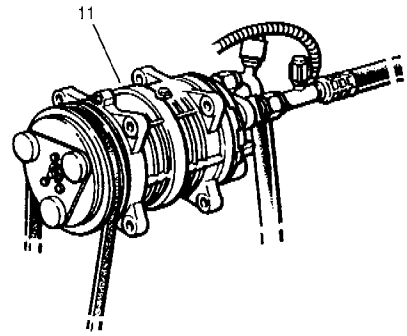

Sucker fan

Item	Part No.	Description	Qty.	Remarks
1	400243	Condensor core	1	
2	400185	Mounting bracket - R.H.	1	
3	10A-0652 Zi	Pin	2	Blower fan
4	13A-0412	Cotter pin	2	
5	**400255**	**Tube assembly** - includes item 6	1	
6	400254	O-ring	1	
7	50A-0508 Zi	Bolt	4	
8	14A-05 Zi	Lockwasher	4	
9	14C-05 Zi	Flatwasher	4	
	12723728	#6 A/C O-ring bulk pack - R134a	20 per	
	12723729	#8 A/C O-ring bulk pack - R134a	20 per	
	12723730	#10 A/C O-ring bulk pack - R134a	20 per	

Item	Part No.	Description	Qty.	Remarks
10		**Mounting brackets**	Ref.	911-6
11		**Compressor & hoses**	Ref.	874-30
12		**Receiver/dryer & hoses**	Ref.	874-32

SERIAL NUMBERS: 33000 & UP	**AIR CONDITIONER** **CONDENSOR CORE INSTALLATION**	Date	**01/2001**	Group	**874**
		Illustr. Nos	**00006125**	Page	**31**
				Issue	**1**

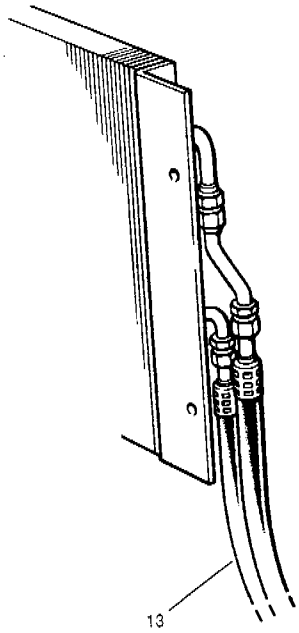

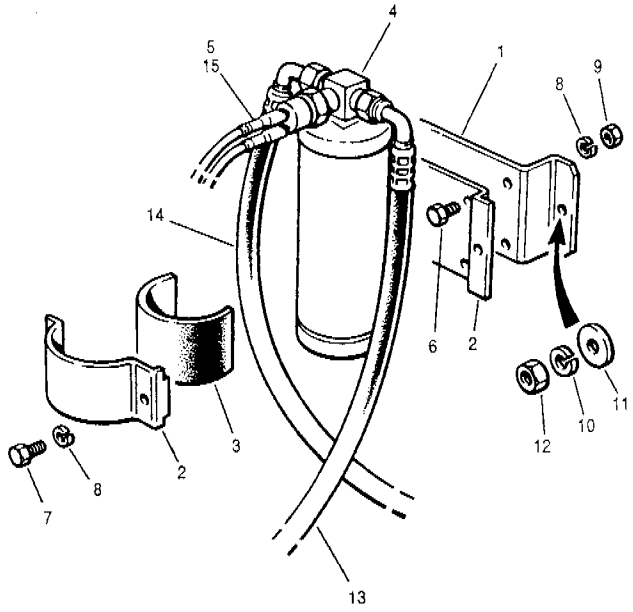

Item	Part No.	Description	Qty.	Remarks
1	57939	Bracket	1	
2	40997	Mounting bracket	1	
3	40996	Insulator	1	
4	96769	Filter - receiver/dryer	1	
5	96770	Pressure switch	1	
6	50A-0404 Zi	Bolt	4	
7	50A-0408 Zi	Bolt	1	
8	14A-04 Zi	Lockwasher	5	
9	30A-04 Zi	Nut	4	
10	14A-06 Zi	Lockwasher	4	
11	14C-06 Zi	Flatwasher	2	
12	30A-06 Zi	Nut	4	
13	400397	Hose - condensor to receiver/dryer	1	
14	400398	Hose - receiver/dryer to evaporator	1	
15		**Rear harness**	Ref.	371-29

Item	Part No.	Description	Qty.	Remarks

SERIAL NUMBERS: 33000 & UP	**AIR CONDITIONER RECEIVER/DRYER & HOSES**	Date	**01/2001**	Group **874**
		Illustr. Nos	**00005014**	Page **32**
				Issue **1**

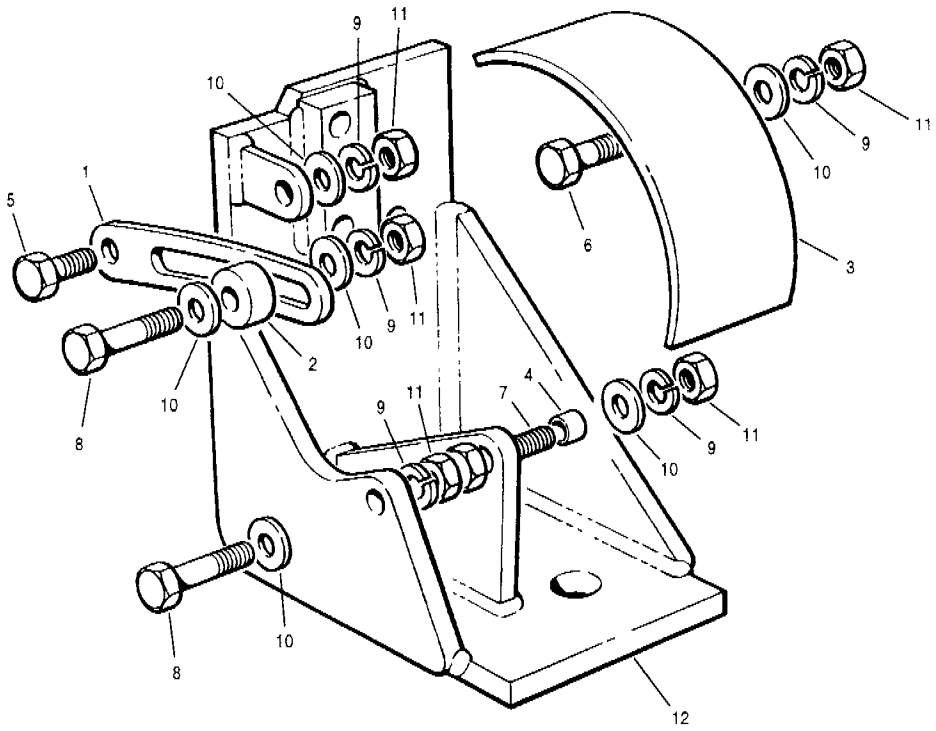

Item	Part No.	Description	Qty.	Remarks
1	95496	Adjuster strap	1	
2	86772	Spacer	1	
3	95487	Shield	1	
4	53941	Spacer	1	
5	50A-0608 Zi	Bolt	1	
6	50A-0610 Zi	Bolt	1	
7	50A-0614 Zi	Bolt	1	
8	50A-0616 Zi	Bolt	2	
9	14A-06 Zi	Lockwasher	5	
10	14C-06 Zi	Flatwasher	6	
11	30A-06 Zi	Nut	5	
12		**Bracket - engine mount**	Ref.	218-4

Item	Part No.	Description	Qty.	Remarks

SERIAL NUMBERS: 33000 & UP	**AIR CONDITIONER COMPRESSOR MOUNTING BRACKETS - Models G710 to G716**	Date **01/2001**	Group	**874**
		Illustr. Nos **00005015**	Page	**33**
			Issue	**1**

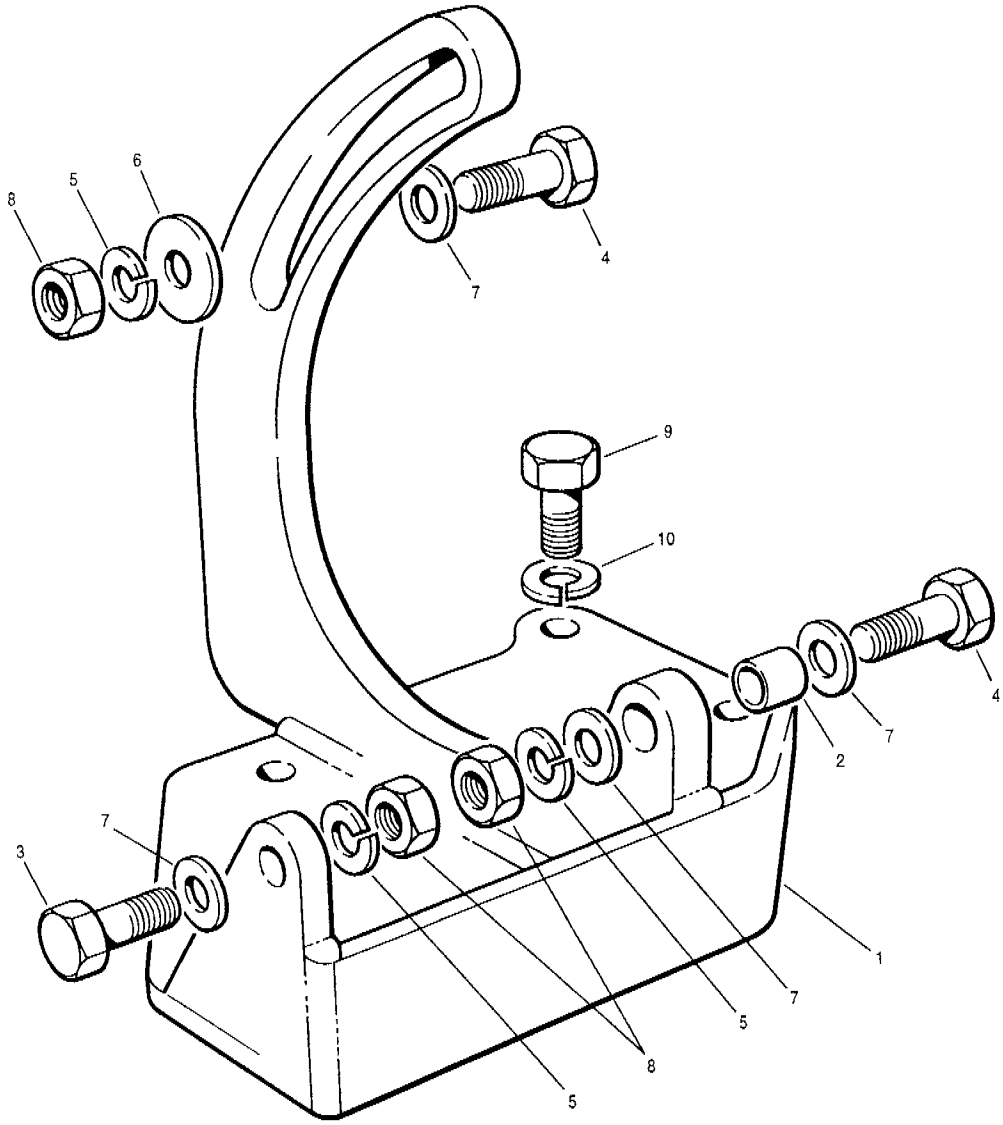

Item	Part No.	Description	Qty.	Remarks
1	* 12725580	Bracket	1	
2	* 53941	Spacer	1	
3	50A-0612 Zi	Bolt	1	
4	* 50A-0614 Zi	Bolt	2	
5	14A-06 Zi	Lockwasher	3	
6	14C-06 Z1	Flatwasher	1	
7	314C-10 Zi	Flatwasher	4	
8	30A-06 Zi	Nut	3	
9	350A-10025 Zi	Bolt	4	
10	314A-10 Zi	Lockwasher	4	

Item	Part No.	Description	Qty.	Remarks

SERIAL NUMBERS: 33000 & UP	**AIR CONDITIONER COMPRESSOR MOUNTING BRACKET- Models G720 to G736**	Date **02/2001**	Group **874**
		Illustr.Nos **00006214**	Page **34**
			Issue **1A**

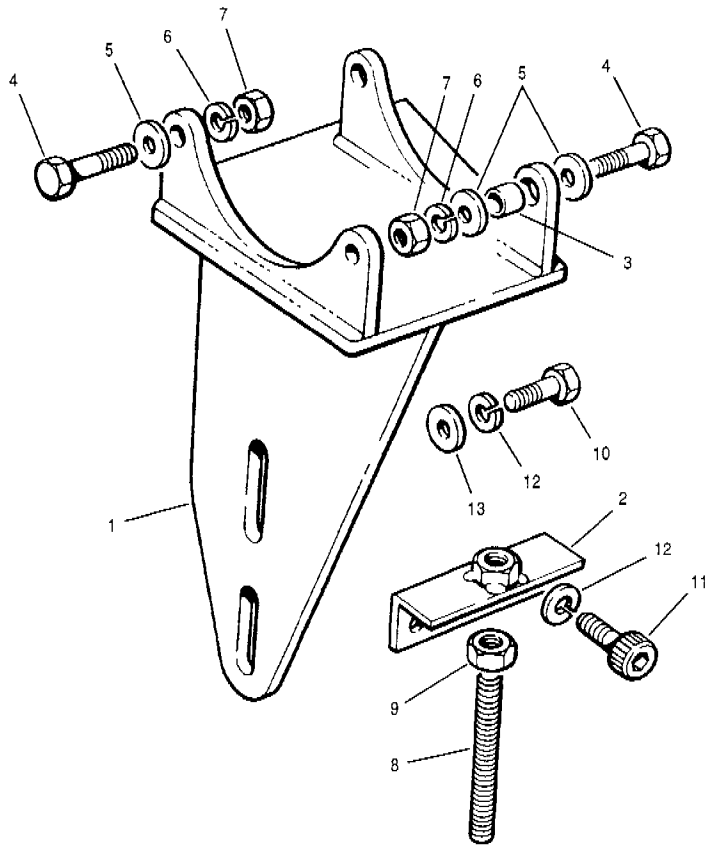

Item	Part No.	Description	Qty.	Remarks
1	53934	Mounting bracket	1	
2	53954	Adjusting bracket	1	
3	53941	Spacer	2	
4	50A-0614 Zi	Bolt	4	
5	14C-06 Zi	Flatwasher	6	
6	14A-06 Zi	Lockwasher	4	
7	30A-06 Zi	Nut	4	
8	71A-0864	Bolt	1	
9	31A-08 Zi	Nut	1	
10	350A-10030 Zi	Bolt	2	
11	350D-10030 Zi	Bolt	2	
12	314A-10 Zi	Lockwasher	4	
13	314C-10 Zi	Flatwasher	2	

Item	Part No.	Description	Qty.	Remarks

SERIAL NUMBERS: 33000 & UP	**AIR CONDITIONER COMPRESSOR MOUNTING BRACKETS - Models G740 to G780**	Date **01/2001**	Group **874**
		Illustr. Nos **00005017**	Page **35**
			Issue **1**

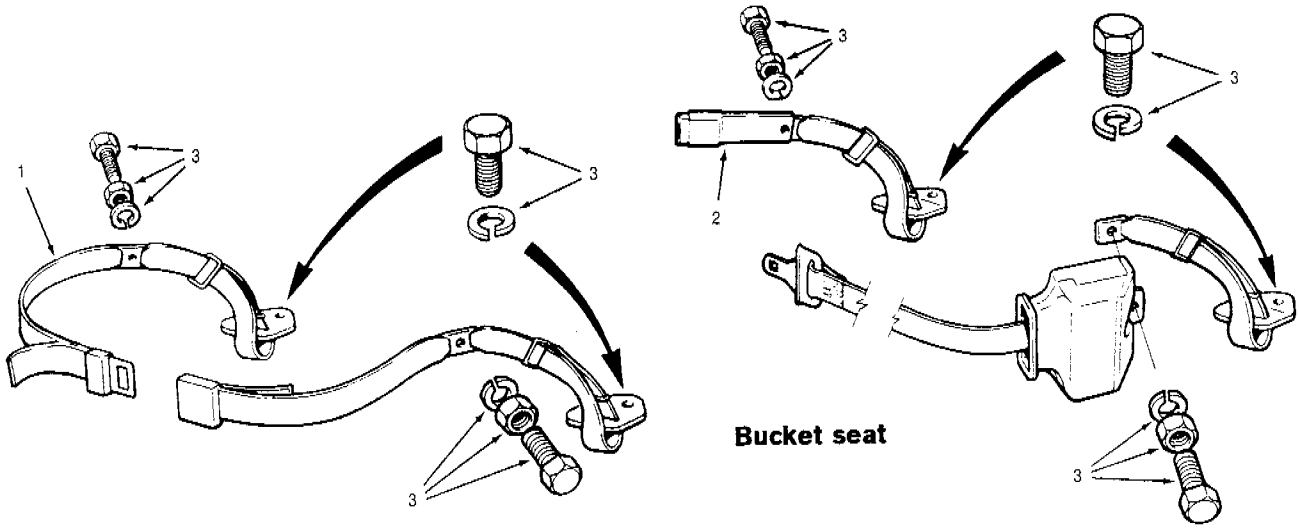

Bucket seat

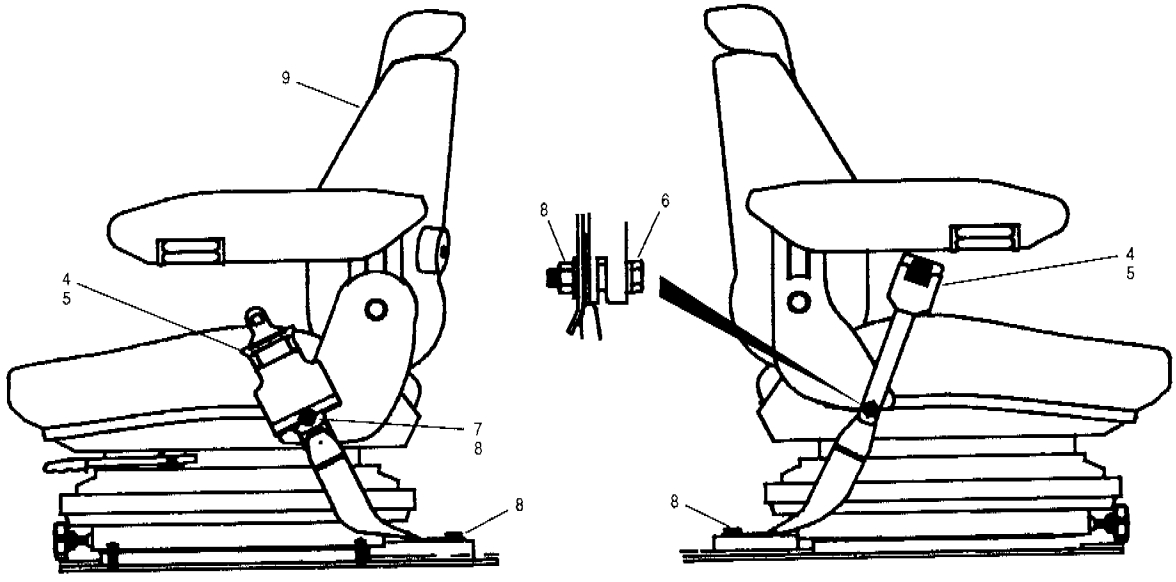

Suspension seat

Item	Part No.	Description	Qty.	Remarks
		Seat belt installation - bucket seat		
1	57700	**Seat belt assembly**	1	
2	12723677	**Seat belt assembly - 3" retractable**	1	Optional
3	400446	**Hardware kit** - seat & floor anchor	1	

Item	Part No.	Description	Qty.	Remarks
		Seat belt installation - suspension seat		
4	12725398	**Seat belt assembly - 2" retractable**	1	Standard
5	12723677	**Seat belt assembly - 3" retractable**	1	Optional
6	51A-0716 Zi	Bolt	1	
7	51A-0722 Zi	Bolt	1	
8	400446	**Hardware kit** - seat & floor anchor	1	
9		**Seat assembly**	Ref.	852-25

SERIAL NUMBERS: 33000 & UP	**SEAT BELTS**	Date	**01/2001**	Group **884**
		Illustr. Nos	**00005010**	Page **36**
				Issue **1**

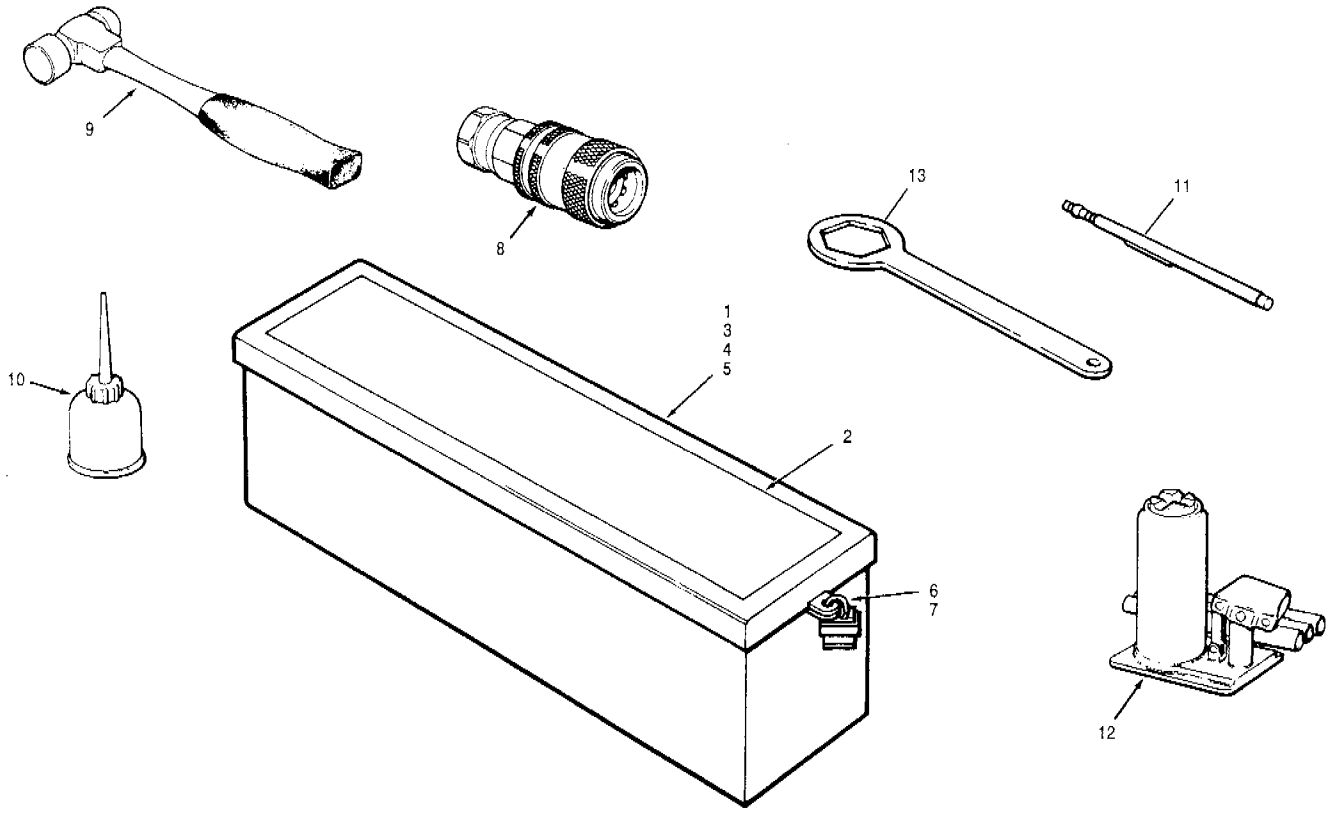

Item	Part No.	Description	Qty.	Remarks
1	80893	Tool box	1	
2	58432	Non skid tape	1	
3	14C-06 Zi	Flatwasher	4	
4	14A-06 Zi	Lockwasher	4	
5	30A-06 Zi	Nut	4	
6	18968	Padlock - c/w keys	1	
7	81946	Cover - padlock	1	
8	97714	Quick disconnect coupling - female	1	Hydraulic system test ports
		Tool kit - basic		
	93375	**Tool kit** - includes the following items:	1	Optional
	93377	Adjustable wrench - 12"	1	
	93378	Grease gun - includes hose	1	
	93379	Large screwdriver - flat	1	
	93380	15/16" Socket - 3/4" drive	1	
	93381	1 15/16" Socket - 3/4" drive	1	
	93382	15" Extension - 3/4" drive	1	
	93383	Johnson bar - 3/4" drive	1	
	93384	Canvas pouch	1	
	89130	Cylinder wrench - 3" to 4.5"	1	
	89131	Cylinder wrench - 5"	1	Articulation cylinders G730 to G780

Item	Part No.	Description	Qty.	Remarks
		Tool kit - deluxe		
	93376	**Tool kit** - includes 93375 **tool kit** & the following items:	1	Optional
	93385	Hand scraper	1	
	93386	Large vise grip	1	
	93387	Small screwdriver - flat	1	
	93388	Allen wrench set	1	
	93389	Test light - 24 Volt	1	
	93390	Spanner set	1	
	93391	Tool box - plastic	1	
		Miscellaneous tools		
9	2519-7	Hammer	1	
10	2519-8	Oil can	1	
11	9461	Tire pressure gauge	1	
12	44568-1	Hydraulic jack - 8 Ton	1	
12	9455	Hydraulic jack - 20 Ton	1	
13	89539	Wrench - transmission strainer	1	
		Paint		
	300A-175P	High gloss yellow - 5 US gallon		
	300A-175C	High gloss yellow - 1 US gallon		
	300A-175S	High gloss yellow - aerosol can		
	300C-100C	Cab grey - 1 US gallon		
	300C-100T	Cab grey - 1 US quart		
	300C-100S	Cab grey - aerosol can		

SERIAL NUMBERS: 33000 & UP	**TOOLBOX, TOOLS & PAINT**	Date **01/2001**	Group **891**
		Illustr. Nos **00003479**	Page **37**
			Issue **1**

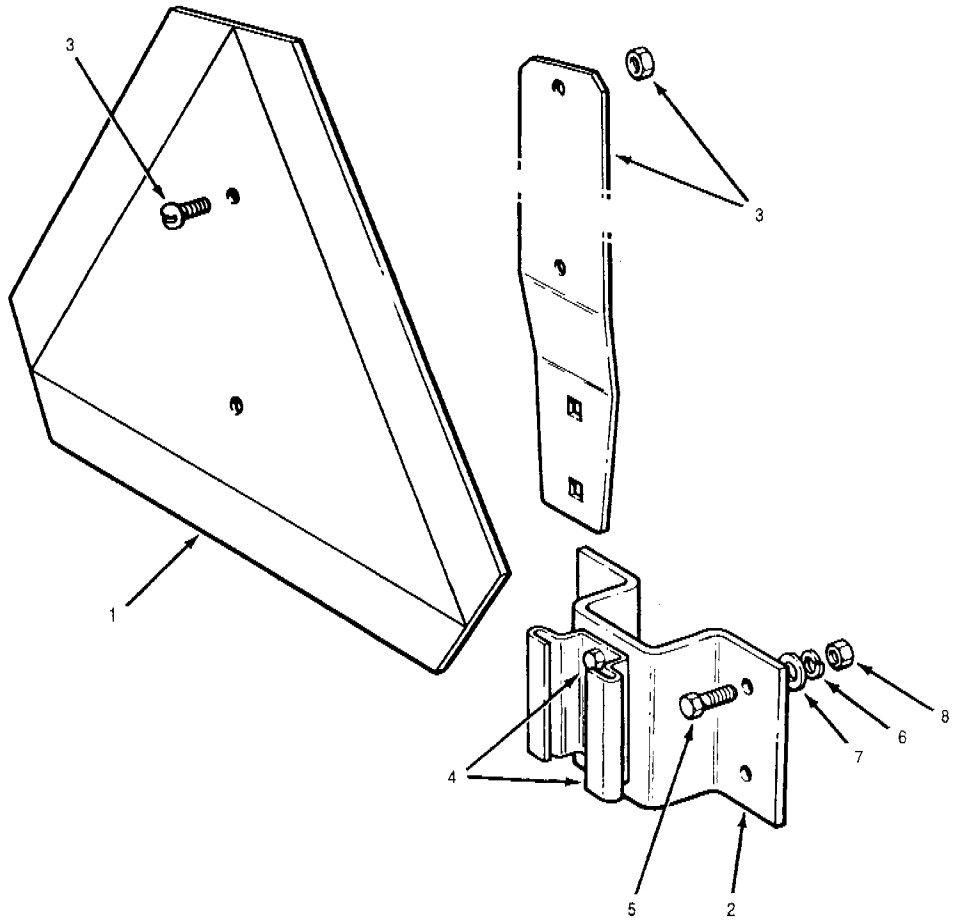

Item	Part No.	Description	Qty.	Remarks
1	51484	Slow moving vehicle sign	1	
2	74042	Bracket	1	
3	57043	Bracket - includes hardware	1	
4	57044	Socket - includes hardware	1	
5	50A-0506 Zi	Bolt	2 - 4	
6	14A-05 Zi	Lockwasher	2 - 4	
7	14C-05 Zi	Flatwasher	2 - 4	
8	30A-05 Zi	Nut	2 - 4	

Item	Part No.	Description	Qty.	Remarks

SERIAL NUMBERS: 33000 & UP	**SLOW MOVING VEHICLE SIGN**	Date **01/2001**	Group **891**
		Illustr. Nos **00003415**	Page **38**
			Issue **1**

Group	Page

Numerical

900 Contents - Alphabetical 2
911 Main Hydraulic Circuit - Front 3
Main Hydraulic Circuit - Rear 4
Hydraulic Oil Tank 5
Main Hydraulic Oil Cooler 6
Hydraulic Filter 7
912 Manifold Valve - Models G710 to G726 8
Manifold Valve - Models G730 to G780 9
Float Valves - Blade Lift 10
Auxiliary Manifold Valve - 3 Bank 11
Auxiliary Manifold Valve - 5 Bank 12
Priority Valve 13
Cushion Valve 14
Single Lock Valve 15
Double Lock Valve 16
Counterbalance Valve 17
Counterbalance Valve - EEC 18
Shuttle Valve 19
Control Levers 20
Controls - Auxiliary Manifold - 3 & 5 Bank 21
913 Main Hydraulic Pump 22
Transmission Hydraulic Pump 23
916 Attachments Manifold Valve Hydraulic Circuits 24
922 Towing Hook 25
926 Ripper 26
Ripper Circuit 27
Ripper Cylinder 28
Scarifier 29
Scarifer Hydraulic Circuit 30
Scarifier Cylinder 31
A-Frame 32
Plow & Dozer Circuit 33
Plow & Dozer Cylinder 34
Windrow Eliminator 35
Windrow Eliminator - Moldboard Assembly 36
Windrow Eliminator Circuit 37
Windrow Eliminator Cylinder 38
927 Bulldozer 39
Rear Mount Cable Wing - Front Mast Installation 40
Rear Mount Cable Wing - Rear Mast Installation 41
Front Mount Cable Wing - Front Mast Installation 42
Front Mount Cable Wing - Rear Mast Installation 43
Wing Installation - Cable Wing 44
Rear Mount Wing Hydraulics - Cable Wing 45
Front Mount Wing Hydraulics - Cable Wing 46
Wing Lift Cylinder - Front Mast - Cable Wing 47
Wing Cylinders - Rear Mast - Cable Wing 48
Lo-bank Rear Mount Wing Installation - Hydraulic Wing 49
Hi-bank Rear Mount Wing Installation - Hydraulic Wing 50
Wing Installation - Hydraulic Wing 51
Wing Stand-off Arms Installation - Hydraulic Wing 52
Lo-bank Wing Braces - Hydraulic Wing 53
Hi-bank Wing Braces - Hydraulic Wing 54
Wing Slide Hydraulic Circuit - Hydraulic Wing 55
Dual Slide Cylinder Assembly - Hydraulic Wing 56
Wing Lift Cylinder Circuit - Hydraulic Wing 57
Wing Lift Cylinder - Hydraulic Wing 58
One Way Plow 59
Chain Lift V-Plow 60
Down Pressure V-Plow 61
929 Lifting & Tie Down Brackets 62
981 Moldboards 63
982 Moldboard Installations - Models G710 to G716 64
Moldboard Installations - Models G720 to G740 65
Moldboard Installation - Model G780 66
Blade Tilt Circuit - Models G710 to G716 67
Blade Tilt Circuit - Models G720 to G780 68
Blade Tilt Cylinder - Models G710 to G716 69
Blade Tilt Cylinder - Models G720 to G780 70
983 Blade Lift - MBCS - Models G710 to G740 71
Blade Lift - HMBCS - Model G780 72
Blade Lift Circuit - MBCS
- Counterbalance Valve - Models G710 to G740 73
Blade Lift Circuit - MBCS
- Float Valve - Models G710 to G740 74
Blade Lift Circuit - MBCS
- Counterbalance Valve - Model G780 75
Blade Lift Circuit - HMBCS - Float Valve - Model G780 76
Blade Lift Cylinders 77
Accumulators 78
984 Slide Shift Circuit & Swivel Joint 79
Slide Shift Cylinder - Models G710 to G726 80
Slide Shift Cylinder - Models G730 to G740 81
Slide Shift Cylinder - Model G780 82
985 Circle Turn - Front - Models G710 to G740 83
Circle Turn - Rear - Models G710 to G740 84
Circle Turn - Front - HMBCS - Model G780 85
Circle Turn - Rear - HMBCS - Model G780 86
Circle Turn Circuit 87
Circle Turn Cylinders - Models G710 to G740 88
Circle Turn Cylinder - Model G780 89
Circle Turn Valve 90
986 Circle Shift Circuit - MBCS/HMBCS 91
Circle Shift Cylinders - Models G710 to G740 92
Circle Shift Cylinder - Model G780 93
Lock Cylinder Circuit - MBCS/HMBCS 94
Lock Cylinder & Wiring Harness - MBCS/HMBCS 95
987 Drawbar - Front - Models G710 to G740 96
Drawbar - Rear - Models G710 to G740 97
Drawbar - Front - HMBCS - Model G780 98
Drawbar - Rear - HMBCS - Model G780 99
992 Fire Extinguisher 100
Anti-vandalism Equipment 101
996 Tire Pump 102

Group	Page

Alphabetical

900 Contents - Numerical 1
983 Accumulators 78
926 A-Frame 32
992 Anti-vandalism Equipment 101
916 Attachments Manifold Valve Hydraulic Circuits 24
912 Auxiliary Manifold Valve - 3 Bank 11
Auxiliary Manifold Valve - 5 Bank 12
983 Blade Lift - HMBCS - Model G780 72
Blade Lift - MBCS - Models G710 to G740 71
Blade Lift Circuit - HMBCS - Float Valve - Model G780 76
Blade Lift Circuit - MBCS
- Counterbalance Valve - Models G710 to G740 73
Blade Lift Circuit - MBCS
- Float Valve - Models G710 to G740 74
Blade Lift Circuit - MBCS
- Counterbalance Valve - Model G780 75
Blade Lift Cylinders 77
982 Blade Tilt Circuit - Models G710 to G716 67
Blade Tilt Circuit - Models G720 to G780 68
Blade Tilt Cylinder - Models G710 to G716 69
Blade Tilt Cylinder - Models G720 to G780 70
927 Bulldozer 39
Chain Lift V-Plow 60
986 Circle Shift Circuit - MBCS/HMBCS 91
Circle Shift Cylinder - Model G780 93
Circle Shift Cylinders - Models G710 to G740 92
985 Circle Turn - Front - HMBCS - Model G780 85
Circle Turn - Front - Models G710 to G740 83
Circle Turn - Rear - HMBCS - Model G780 86
Circle Turn - Rear - Models G710 to G740 84
Circle Turn Circuit 87
Circle Turn Cylinder - Model G780 89
Circle Turn Cylinders - Models G710 to G740 88
Circle Turn Valve 90
912 Control Levers 20
Controls - Auxiliary Manifold - 3 & 5 Bank 21
Counterbalance Valve 17
Counterbalance Valve - EEC 18
Cushion Valve 14
Double Lock Valve 16
927 Down Pressure V-Plow 61
987 Drawbar - Front - HMBCS - Model G780 98
Drawbar - Front - Models G710 to G740 96
Drawbar - Rear - HMBCS - Model G780 99
Drawbar - Rear - Models G710 to G740 97
927 Dual Slide Cylinder Assembly - Hydraulic Wing 56
992 Fire Extinguisher 100
912 Float Valves - Blade Lift 10
927 Front Mount Cable Wing - Front Mast Installation 42
Front Mount Cable Wing - Rear Mast Installation 43
Front Mount Wing Hydraulics - Cable Wing 46
Hi-bank Rear Mount Wing Installation - Hydraulic Wing 50
Hi-bank Wing Braces - Hydraulic Wing 54
911 Hydraulic Filter 7
Hydraulic Oil Tank 5
929 Lifting & Tie Down Brackets 62
927 Lo-bank Rear Mount Wing Installation - Hydraulic Wing 49
Lo-bank Wing Braces - Hydraulic Wing 53
986 Lock Cylinder & Wiring Harness - MBCS/HMBCS 95
Lock Cylinder Circuit - MBCS/HMBCS 94
911 Main Hydraulic Circuit - Front 3
Main Hydraulic Circuit - Rear 4
Main Hydraulic Oil Cooler 6
913 Main Hydraulic Pump 22
912 Manifold Valve - Models G710 to G726 8
Manifold Valve - Models G730 to G780 9
982 Moldboard Installation - Model G780 66
Moldboard Installations - Models G710 to G716 64
Moldboard Installations - Models G720 to G740 65
981 Moldboards 63
927 One Way Plow 59
926 Plow & Dozer Circuit 33
Plow & Dozer Cylinder 34
912 Priority Valve 13
927 Rear Mount Cable Wing - Front Mast Installation 40
Rear Mount Cable Wing - Rear Mast Installation 41
Rear Mount Wing Hydraulics - Cable Wing 45
926 Ripper 26
Ripper Circuit 27
Ripper Cylinder 28
Scarifer Hydraulic Circuit 30
Scarifier 29
Scarifier Cylinder 31
912 Shuttle Valve 19
Single Lock Valve 15
984 Slide Shift Circuit & Swivel Joint 79
Slide Shift Cylinder - Model G780 82
Slide Shift Cylinder - Models G710 to G726 80
Slide Shift Cylinder - Models G730 to G740 81
996 Tire Pump 102
922 Towing Hook 25
913 Transmission Hydraulic Pump 23
926 Windrow Eliminator 35
Windrow Eliminator - Moldboard Assembly 36
Windrow Eliminator Circuit 37
Windrow Eliminator Cylinder 38
927 Wing Cylinders - Rear Mast - Cable Wing 48
Wing Installation - Cable Wing 44
Wing Installation - Hydraulic Wing 51
Wing Lift Cylinder - Front Mast - Cable Wing 47
Wing Lift Cylinder - Hydraulic Wing 58
Wing Lift Cylinder Circuit - Hydraulic Wing 57
Wing Slide Hydraulic Circuit - Hydraulic Wing 55
Wing Stand-off Arms Installation - Hydraulic Wing 52

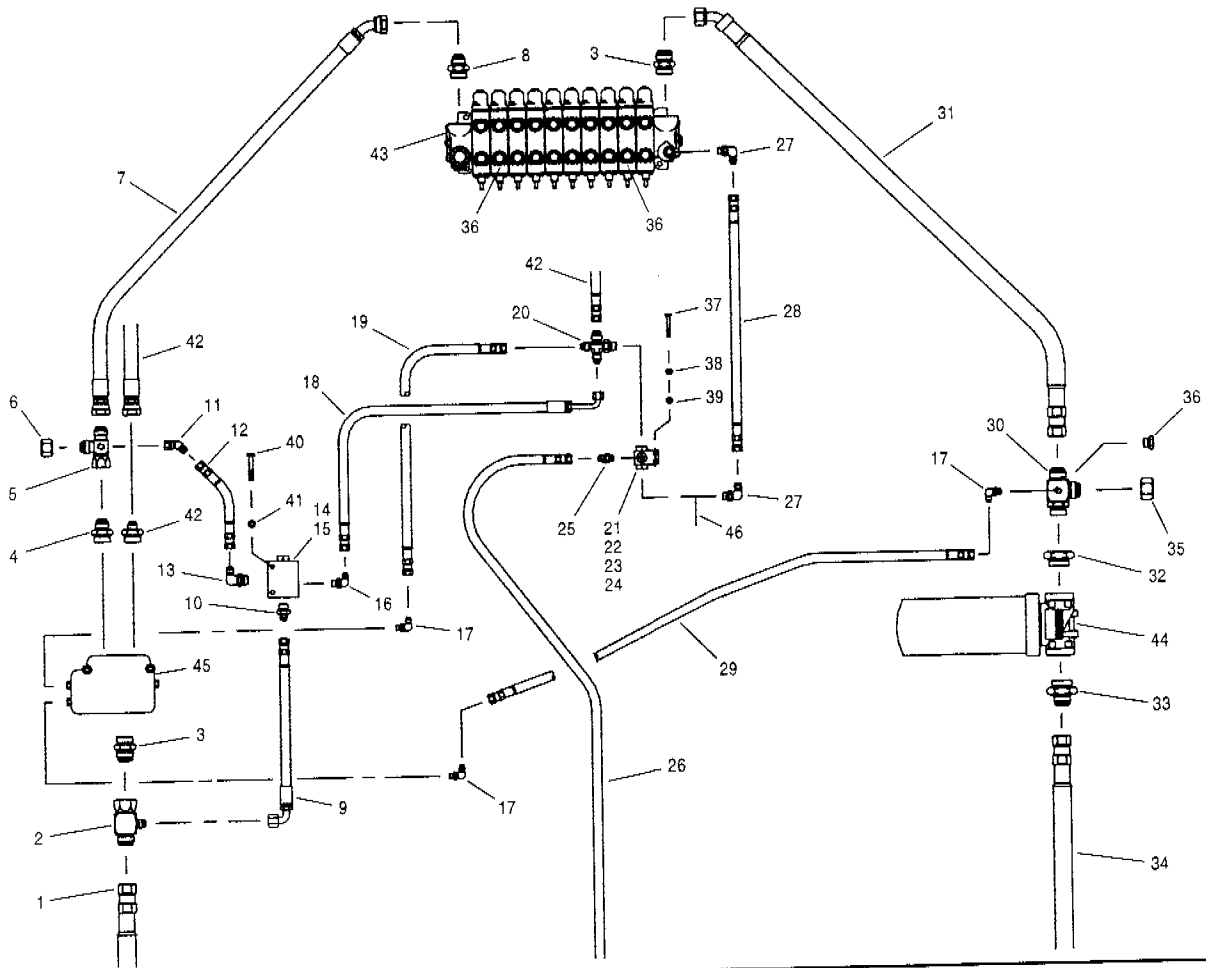

Item	Part No.	Description	Qty.	Remarks
1	74444 x 104	Hose - pump pressure - supplemental steering	1	
1	74444 x 115	Hose - pump pressure	1	
2	* 12725300	Tee	1	
3	111E-1616	Connector	2	
4	111E-1216	Connector	1	
5	* 12725293	Cross	1	
6	110E-12	Cap - no aux. circuit	1	
7	78218 x 63	Hose	1	
8	111E-1212	Connector	1	
9	78220 x 23	Hose	1	
10	111E-0608	Connector	1	
11	112A-06	Connector	1	
12	78221 x 17	Hose	1	
13	111B-0608	Connector	2	
14	**97771**	**Pilot check valve** - includes item 15	1	
	97854	**Seal kit for 97771 - pilot check valve** - includes the following:	1	
		O-ring - large	1	
		O-ring - medium	1	
		O-ring - small	1	
		Back-up ring - medium	2	
		Back-up ring - small	2	
15	**97853**	**Cartridge**	1	
16	111B-0406	Connector	1	
17	111B-0404	Connector	3	
18	405006 x 18	Hose	1	
19	74200 x 12	Hose	1	
20	405048	Adapter	1	

Item	Part No.	Description	Qty.	Remarks
21	**74698**	**Load sense shuttle valve** - includes items 22, 23 & 24	1	
22	76096	Ball	1	
23	76097	Adapter	2	
24	116A-08	O-ring	2	
25	111E-0604	Connector	1	
26	89144 x 162	Hose - load sense	1	
26	89144 x 150	Hose - load sense	1	AWD
27	111B-0606	Connector	2	
28	89144 x 69	Hose	1	
29	74200 x 9	Hose	1	
30	74232	Tee - special	1	
31	78219 x 68	Hose	1	
32	111R-2016	Connector	1	
33	111E-1620	Connector	1	
34	78224 x 119	Hose - tank return	1	
35	110E-16	Cap - no auxiliary circuit	1	
36	111H-08	Plug	A.R.	
37	50A-0414 Zi	Bolt	2	
38	14A-04 Zi	Lockwasher	2	
39	30A-04 Zi	Nut	2	
40	50A-0514 Zi	Bolt	2	
41	14A-05 Zi	Lockwasher	2	
42		**Steering circuit**	Ref.	645-13
43		**Manifold valve**	Ref.	912-8 912-9
44		**Hydraulic filter**	Ref.	911-7
45		**Priority valve**	Ref.	912-13
46		**Attachment circuit**	Ref.	916-24

SERIAL NUMBERS: 33000 & UP	**MAIN HYDRAULIC CIRCUIT - FRONT**	Date **03/2001**	Group **911**
		Illustr. Nos **00006111**	Page **3**
			Issue **1A**

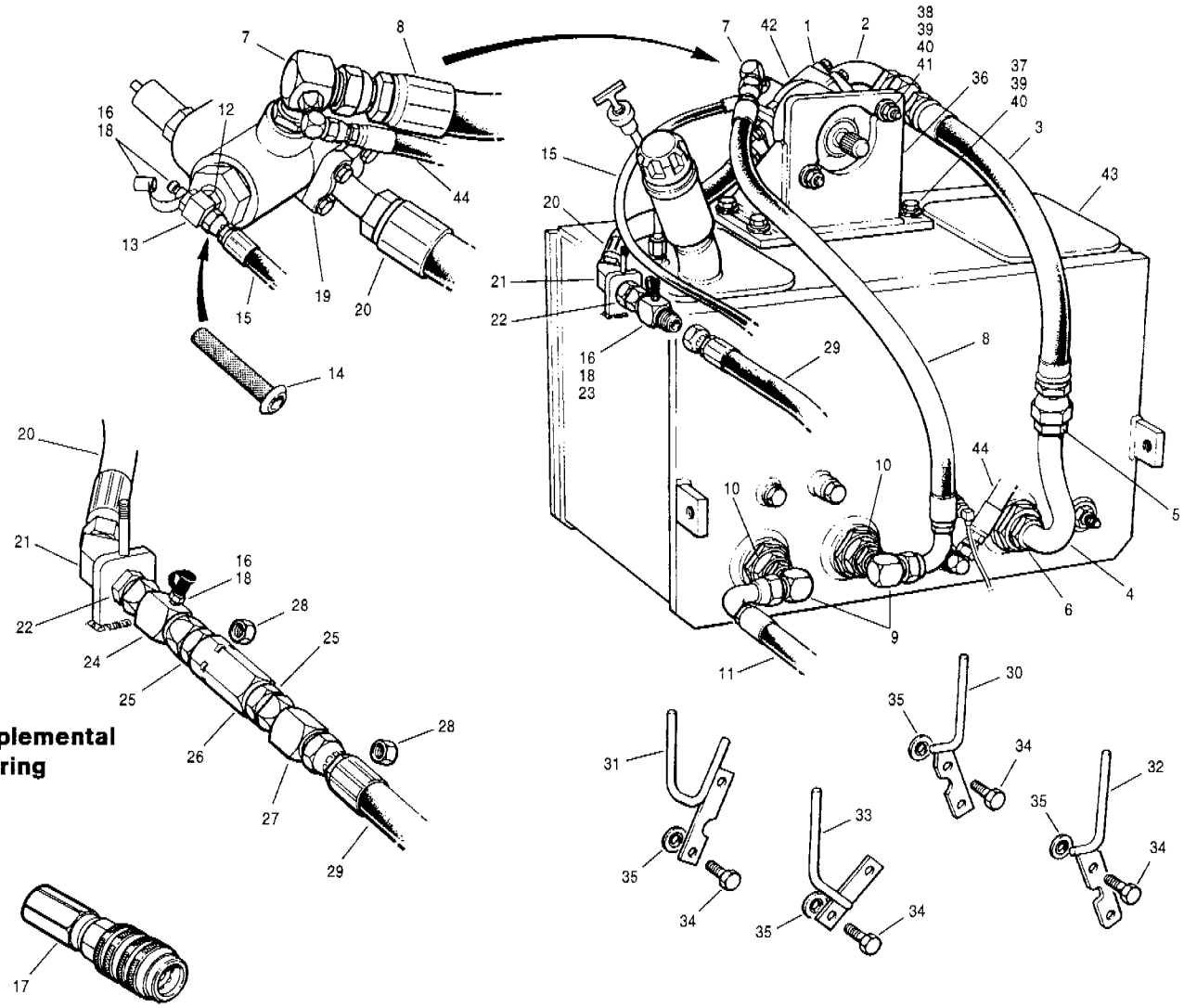

Item	Part No.	Description	Qty.	Remarks
		For all wheel drive models - see 442-19		
1	**114D-24**	**Flange kit** - includes O-ring & hardware	1	
2	114C-2424	Connector	1	
3	74234 x 26	Hose	1	
4	74175	Elbow - includes items 5 & 6		
5	12A-028	O-ring	1	
6	116A-24	O-ring	1	
7	* 12727341	Connector	1	
8	74233 x 35	Hose	1	
9	111B-1616	Connector	2	
10	111R-2416	Connector	2	
11	78224 x 119	Hose - tank return	1	
12	405007	Connector	1	
13	* 12725288	Tee	1	
14	89236	Filter	1	
15	89144 x 162	Hose - load sense	1	
16	97712	Quick disconnect coupler - male	2	
17	97714	Quick disconnect coupler - female (for testing)	1	In toolbox
18	97744	Dust cap	2	
19	**114D-16**	**Flange kit** - includes O-ring & hardware	1	
20	97667 x 15.5	Hose	1	
21	112A-16	Connector	1	
22	110N-16	Connector	1	
23	* 12725307	Connector	1	

Item	Part No.	Description	Qty.	Remarks
24	* 12725305	Tee	1	Supplemental steering
25	111E-1620	Connector	2	
26	74986	Check valve	1	
27	* 12725300	Tee	1	
28	110E-06	Cap	A.R.	
29	74444 x 104	Hose - pump pressure - supplemental steering	1	
29	74444 x 115	Hose - pump pressure	1	
30	74679	Hose support - L.H.	1	G710 to G726
31	74680	Hose support - R.H.	1	G710 to G726
32	74411	Hose support - L.H.	1	G730 to G740
33	74412	Hose support - R.H.	1	G730 to G740
34	50A-1016 Zi	Bolt	4	
35	14S-10	Seal washer	4	
36	80589	Mounting bracket	1	
37	50A-0810 Zi	Bolt	4	
38	50A-0816 Zi	Bolt	2	
39	14A-08 Zi	Lockwasher	6	
40	37940	Hardened washer	6	
41	30A-08 Zi	Nut	2	
42		**Main hydraulic pump**	Ref.	913-22
43		**Hydraulic oil tank**	Ref.	911-5
44		**Hydraulic oil cooler**	Ref.	911-6

SERIAL NUMBERS: 33000 & UP	**MAIN HYDRAULIC CIRCUIT - REAR**	Date **06/2001**	Group **911**
		Illustr. Nos **00004961**	Page **4**
			Issue **1A**

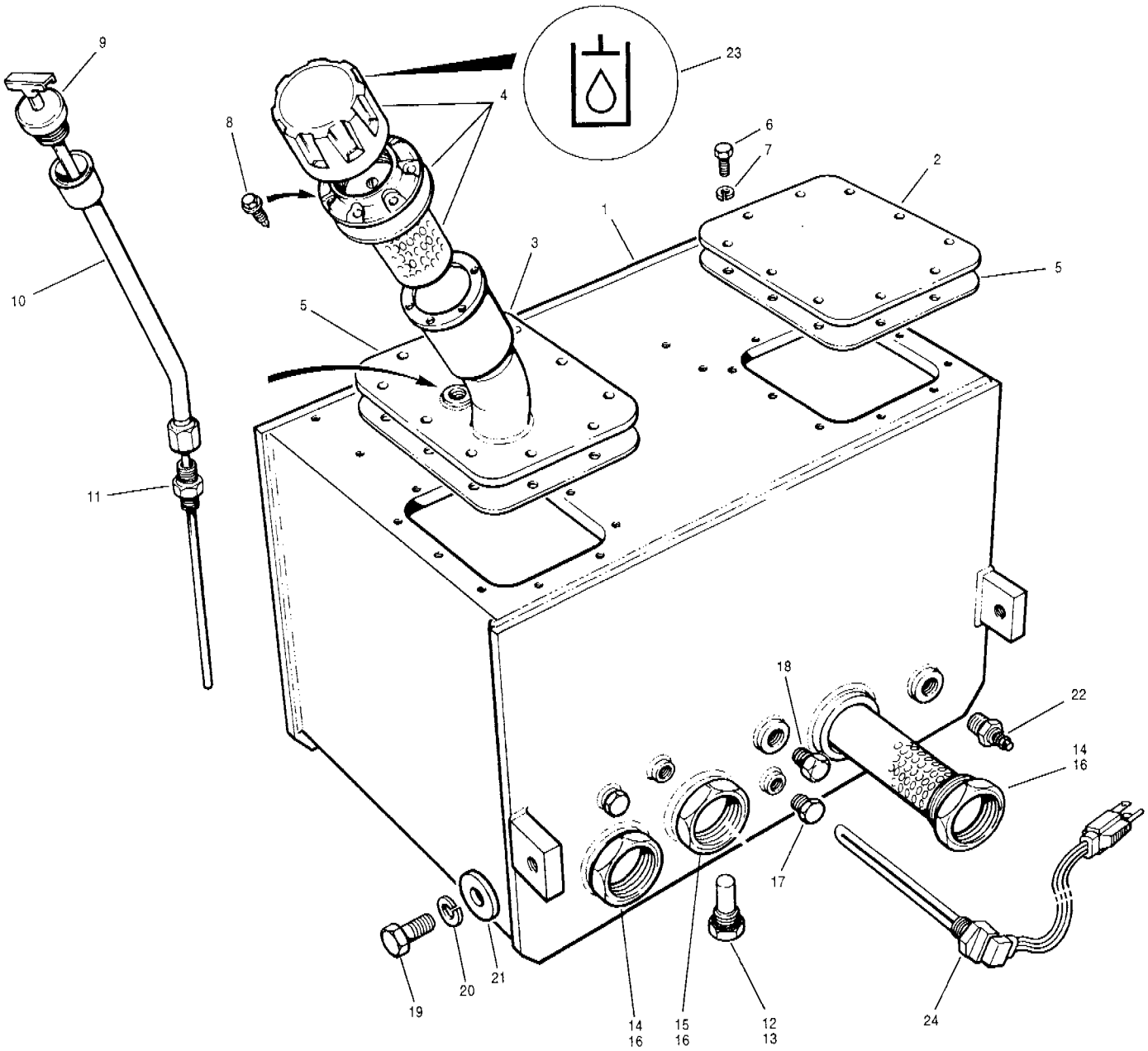

Item	Part No.	Description	Qty.	Remarks
	97555	**Hydraulic oil tank assembly** - includes items 1 to 18		
1	97556	Oil tank	1	
2	81547	Cover plate - L.H.	1	
3	89564	Cover plate - R.H.	1	
4	* **400372**	**Cap assembly** - includes the following: Cap Basket Gasket	1	
5	81541	Gasket	2	
6	50A-0607 Zi	Bolt	20	
7	14A-06 Zi	Lockwasher	20	
8	62A-1006 Zi	Screw	6	
9	89352	Dipstick	1	
10	89351	Dipstick neck	1	
11	111E-0808	Connector	1	
12	54040	Magnetic plug - includes item 13	1	

Item	Part No.	Description	Qty.	Remarks
13	116A-12	O-ring	1	
14	54137	Diffuser - includes item 16	2	
15	87774	Diffuser c/w relief valve - includes item 16	1	
16	116A-40	O-ring	3	
17	111H-08	Plug	3	
18	115C-08 Gn	Plug	1	
19	50A-1220 Zi	Bolt	3	
20	14A-12 Zi	Lockwasher	3	
21	26873	Shim - .064"	A.R.	
21	14C-12 Zi	Flatwasher	A.R.	
22	97567	Sender - hydraulic oil temperature	1	
23	* 400341	Decal	1	
24	15828	Immersion heater	1	Optional

SERIAL NUMBERS: 33000 & UP	**HYDRAULIC OIL TANK**	Date **01/2001**	Group	**911**
		Illustr. Nos **00005089**	Page	**5**
			Issue	**1A**

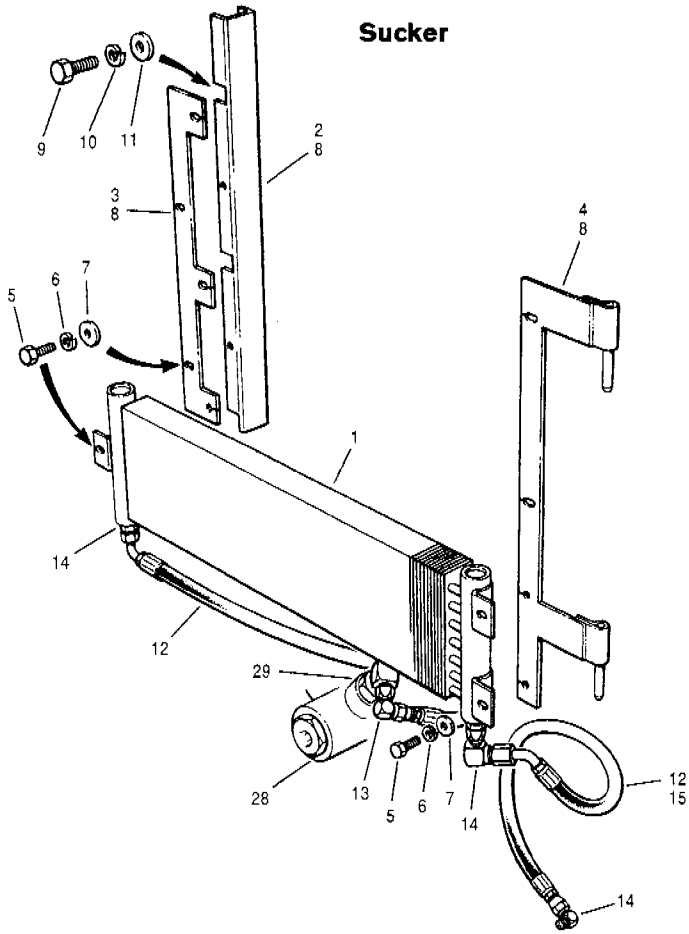

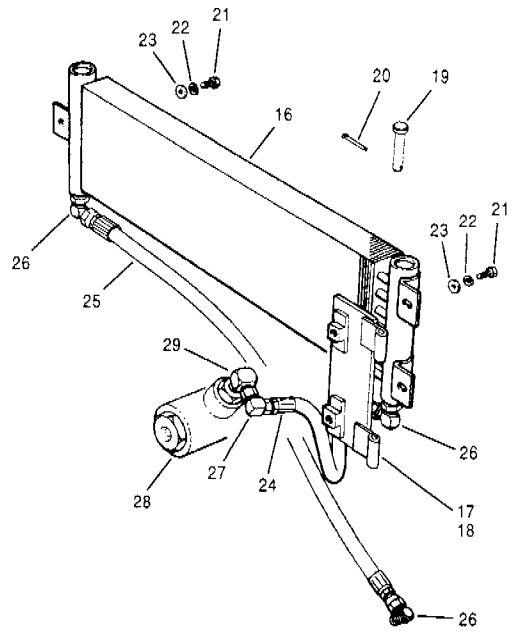

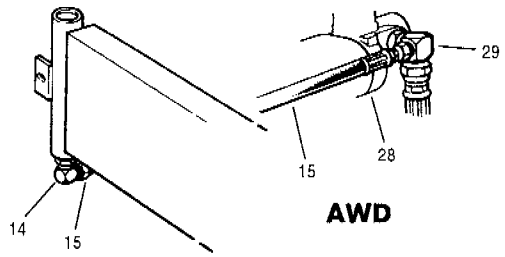

Item	Part No.	Description	Qty.	Remarks
		Oil cooler installation - sucker		
1	87773	Oil cooler	1	
2	97640	Seal bar - L.H. - includes item 8	1	
3	97646	Bracket - L.H. - includes item 8	1	
4	97648	Bracket - R.H. - includes item 8	1	
5	50A-0508 Zi	Bolt	5	
6	14A-05 Zi	Lockwasher	5	
7	14C-05 Zi	Flatwasher	5	
8	38B-05	Cage nut	5	
9	50A-0610 Zi	Bolt	3	
10	14A-06 Zi	Lockwasher	3	
11	14C-06 Zi	Flatwasher	3	
12	* 12727346	Hose	2	
13	* 112B-10	Connector	1	
14	* 111E-1008	Connector	3	
14	* 111E-1008	Connector	3	AWD
15	* 12727343	Hose	2	AWD
		Oil cooler installation - blower		
16	87773	Oil cooler	1	
17	86519	Bracket - includes item 18	1	
18	38B-05	Cage nut	2	
19	10A-0652	Clevis pin	2	
20	13A-0412	Cotter pin	2	
21	50A-0508 Zi	Bolt	3	
22	14A-05 Zi	Lockwasher	3	
23	14C-05 Zi	Flatwasher	3	
24	* 12727344	Hose	1	
25	* 12727343	Hose	1	
26	* 111B-1008	Connector	3	
27	* 112B-10	Connector	1	
28		**Main hydraulic pump**	Ref.	913-22 442-20
29		**Main hydraulic circuit - rear**	Ref.	911-4 442-19

SERIAL NUMBERS: 33000 & UP	**MAIN HYDRAULIC OIL COOLER**	Date **06/2001**	Group **911**
		Illustr. Nos **00005358**	Page **6**
			Issue **1A**

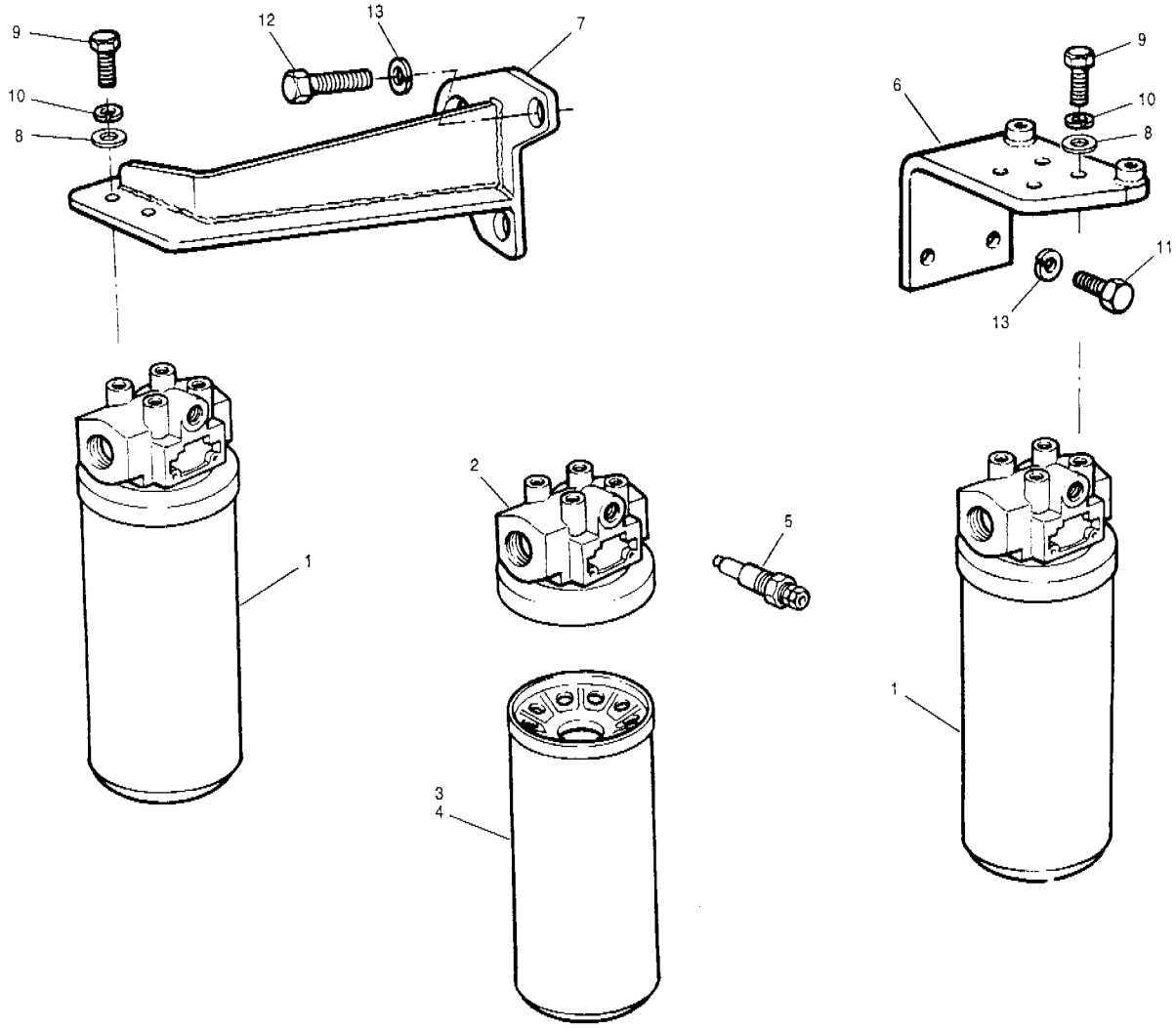

Item	Part No.	Description	Qty.	Remarks
1	**74043**	**Filter assembly** - includes items 2 to 4	1	
2	63369	Filter head	1	
3	49076	Element	1	
4	76306	O-ring	1	
5	74044	Switch - filter warning	1	Optional
6	74684	Mounting bracket	1	Main
7	87571	Mounting bracket	1	Transmission
8	14C-06 Zi	Flatwasher	4	
9	50A-0608 Zi	Bolt	4	
10	14A-06 Zi	Lockwasher	4	
11	50A-0810 Zi	Bolt	2	Main
12	50A-0814	Bolt	2	Transmission
13	14A-08 Zi	Lockwasher	2	

Item	Part No.	Description	Qty.	Remarks

SERIAL NUMBERS: 33000 & UP	**HYDRAULIC FILTER**	Date	**01/2001**	Group **911**
		Illustr. Nos	**00004723**	Page **7**
				Issue **1**

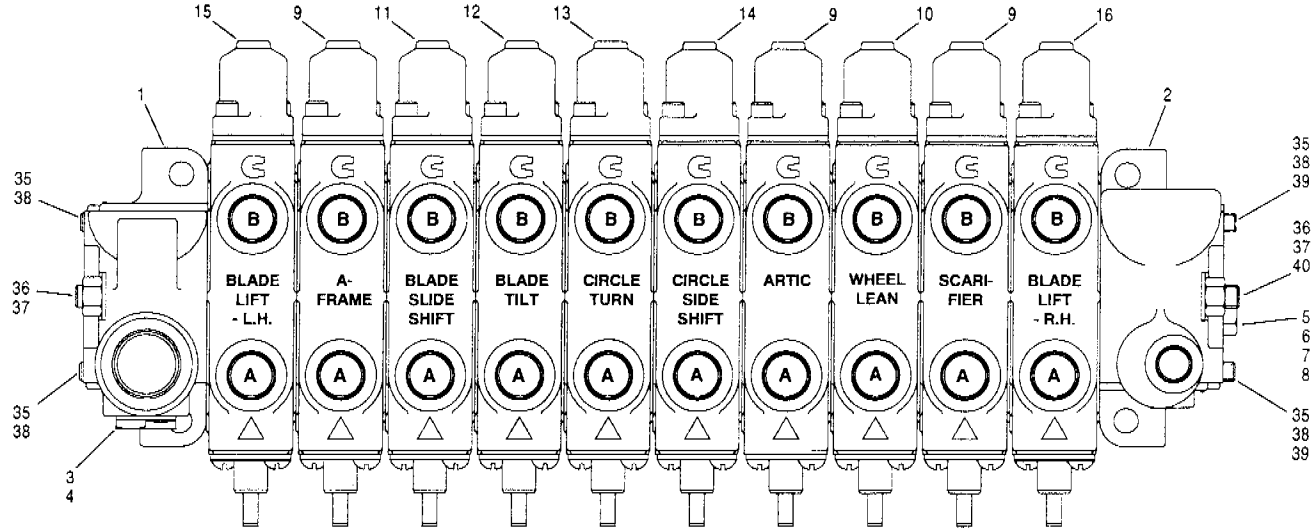

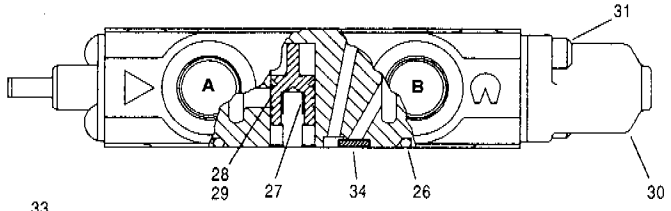

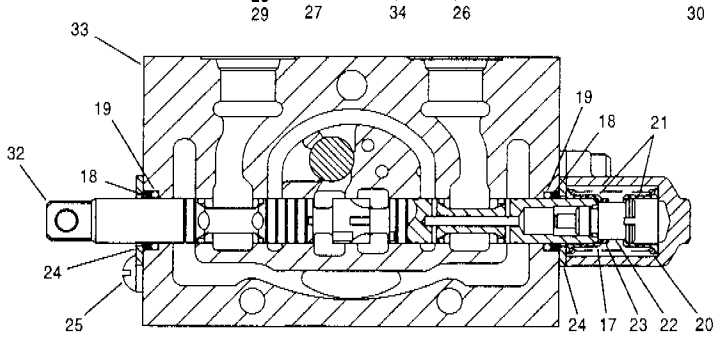

Item	Part No.	Description	Qty.	Remarks
	97873	**Manifold valve assembly** - includes items 1 to 40	1	
1	**89595**	**Inlet section assembly** - includes items 3, 4 & 26	1	
2	**89596**	**Outlet section assembly** - includes items 5 to 8	1	
3	49968	Plug	1	
4	49969	O-ring	1	
5	76228	Plug	1	
6	76232	O-ring	1	
7	76230	Spring	1	
8	76229	Poppet - check valve	1	
9	**405081**	**Valve section assembly** - includes items 17 to 28 & 30 to 33	3	
10	**405082**	**Valve section assembly** - includes items 17 to 28 & 30 to 33	1	
11	**97617**	**Valve section assembly** - includes items 17 to 27 & 29 to 33	1	
12	**89106**	**Valve section assembly** - includes items 17 to 27 & 29 to 33	1	
13	**89105**	**Valve section assembly** - includes items 17 to 27 & 29 to 33	1	
14	**97618**	**Valve section assembly** - includes items 17 to 27 & 29 to 33	1	
15	**97616**	**Valve section assembly** - includes items 17 to 27 & 29 to 33	1	
16	**97619**	**Valve section assembly** - includes items 17 to 27 & 29 to 33	1	
17	49975	O-ring	1	
18	89109	Wiper	2	

Item	Part No.	Description	Qty.	Remarks
19	49974	O-ring	2	
20	89110	Spring	1	
21	81343	Seat - spring	2	
22	49972	Spool end	1	
23	81345	Stop - spool	1	
24	63027	Plate - seal	2	
25	81338	Screw	2	
26	49965	O-ring	1	
27	81225	Spring	1	
28	405100	Piston - compensator	1	
29	81344	Piston - compensator	1	
30	81340	Cap	1	
31	81341	Bolt	2	
32		Spool	1	
33		Housing	1	
		Note: items 32 & 33 are **not** available separately		
	63393	**Seal kit for 89105, 89106, 97616, 97617, 97618, 97619, 405081 & 405082 - valve section assemblies** - includes items 18, 19, & 26	1 per	
	89599	**Tie rod kit** - includes items 35 to 40	1 per	
34	81328	Shuttle disc	9	Not used in R.H. blade lift valve section
35		Washer - compression	4	
36		Washer - compression	2	
37		Nut - special	2	
38		Nut - special	4	
39		Tie rod	2	
40		Tie rod	1	

SERIAL NUMBERS: 33000 & UP	**MANIFOLD VALVE - Models G710 to G726**	Date **01/2001**	Group **912**
		Illustr. Nos **00006113**	Page **8**
			Issue **1**

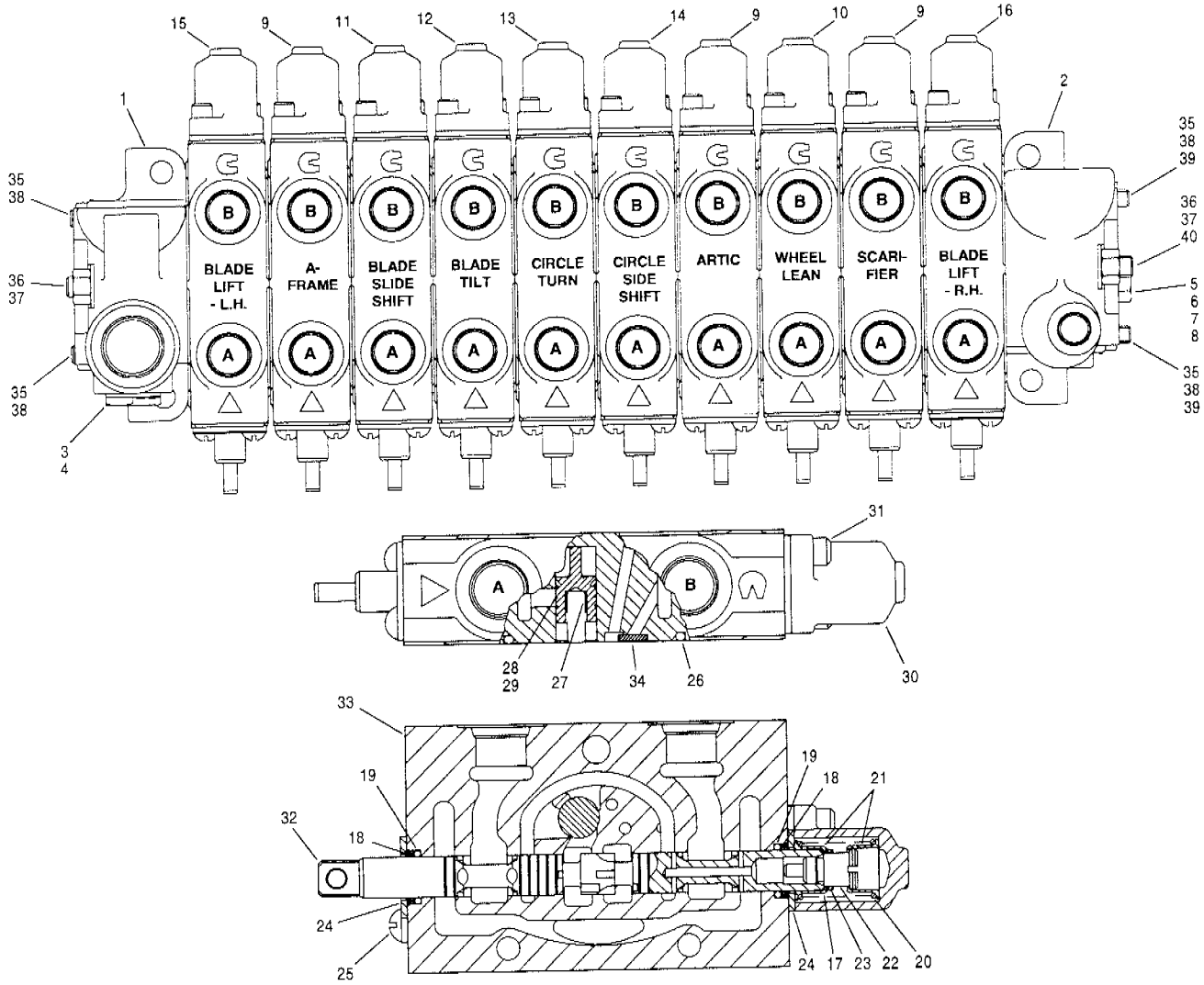

Item	Part No.	Description	Qty.	Remarks
	97872	**Manifold valve assembly** - includes items 1 to 40	1	
1	**89595**	**Inlet section assembly** - includes items 3, 4 & 26	1	
2	**89596**	**Outlet section assembly** - includes items 5 to 8	1	
3	49968	Plug	1	
4	49969	O-ring	1	
5	76228	Plug	1	
6	76232	O-ring	1	
7	76230	Spring	1	
8	76229	Poppet - check valve	1	
9	**405081**	**Valve section assembly** - includes items 17 to 28 & 30 to 33	3	
10	**405082**	**Valve section assembly** - includes items 17 to 28 & 30 to 33	1	
11	**89104**	**Valve section assembly** - includes items 17 to 27 & 29 to 33	1	
12	**89106**	**Valve section assembly** - includes items 17 to 27 & 29 to 33	1	
13	**89105**	**Valve section assembly** - includes items 17 to 27 & 29 to 33	1	
14	**89103**	**Valve section assembly** - includes items 17 to 27 & 29 to 33	1	
15	**97494**	**Valve section assembly** - includes items 17 to 27 & 29 to 33	1	
16	**97495**	**Valve section assembly** - includes items 17 to 27 & 29 to 33	1	
17	49975	O-ring	1	
18	89109	Wiper	2	

Item	Part No.	Description	Qty.	Remarks
19	49974	O-ring	2	
20	89110	Spring	1	
21	81343	Seat - spring	2	
22	49972	Spool end	1	
23	81345	Stop - spool	1	
24	63027	Plate - seal	2	
25	81338	Screw	2	
26	49965	O-ring	1	
27	81225	Spring	1	
28	405100	Piston - compensator	1	
29	81344	Piston - compensator	1	
30	81340	Cap	1	
31	81341	Bolt	2	
32		Spool	1	
33		Housing	1	
		Note: items 32 & 33 are **not** available separately		
	63393	**Seal kit for 89103, 89104, 89105, 89106, 97494, 97495, 405081 & 405082 - valve section assemblies** - includes items 18, 19, & 26	1 per	
	89599	**Tie rod kit** - includes items 35 to 40	1 per	
34	81328	Shuttle disc	9	Not used in R.H. blade lift valve section
35		Washer - compression	4	
36		Washer - compression	2	
37		Nut - special	2	
38		Nut - special	4	
39		Tie rod	2	
40		Tie rod	1	

SERIAL NUMBERS:
33000 & UP

MANIFOLD VALVE
- Models G730 to G780

Date **01/2001**
Illustr. Nos **00006113**
Group **912**
Page **9**
Issue **1**

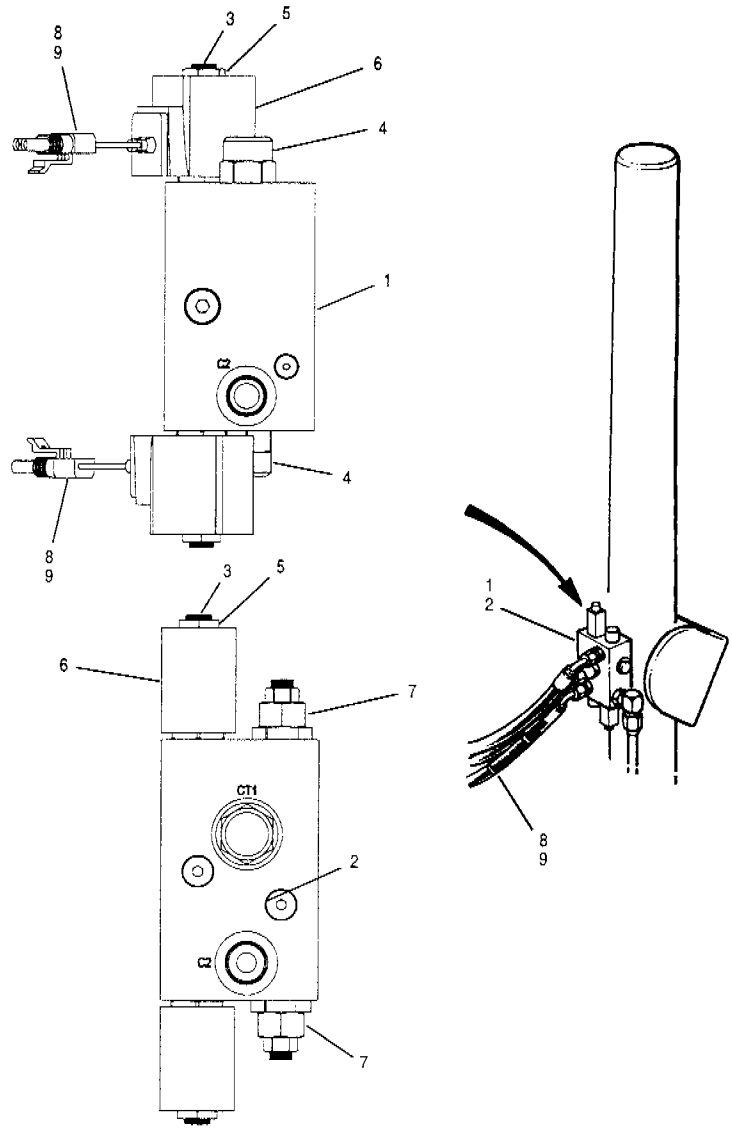

EEC

Item	Part No.	Description	Qty.	Remarks
1	**97772**	**Float valve assembly** - includes items 3 to 6	2	
2	**97773**	**Float valve assembly** - includes items 3 to 7	2	EEC
3	**97847**	**Solenoid valve cartridge**	2	
	97848	**Seal kit for 97847** **- solenoid valve cartridge**	2 per	
4	**97845**	**Counterbalance valve cartridge**	2	
	97846	**Seal kit for 97845** **- counterbalance valve cartridge**	2 per	
5	97850	Coil nut	2	
6	97849	Coil	2	

Item	Part No.	Description	Qty.	Remarks
7	**97851**	**Needle valve cartridge**	2	EEC
	97852	**Seal kit for 97851** **- needle valve cartridge**	2 per	
		Wiring harnesses		
8	400147	Harness - float valve - blade lift	1	
9	400148	Harness - front float extension - scarifier, plow & dozer	1	

SERIAL NUMBERS: 33000 & UP	**FLOAT VALVES - BLADE LIFT**	Date **01/2001**	Group **912**
		Illustr. Nos **00004962**	Page **10**
			Issue **1**

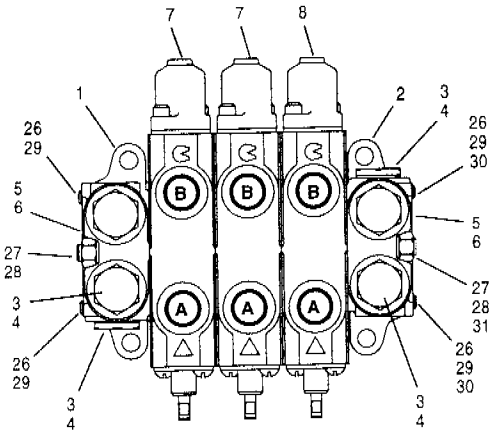

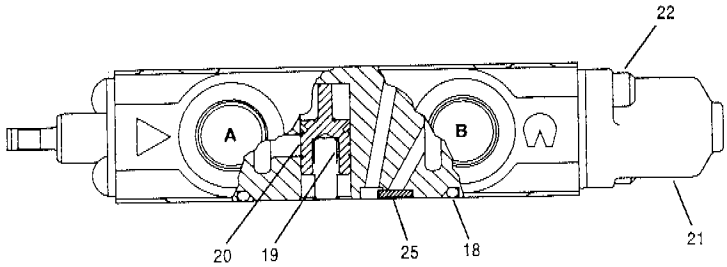

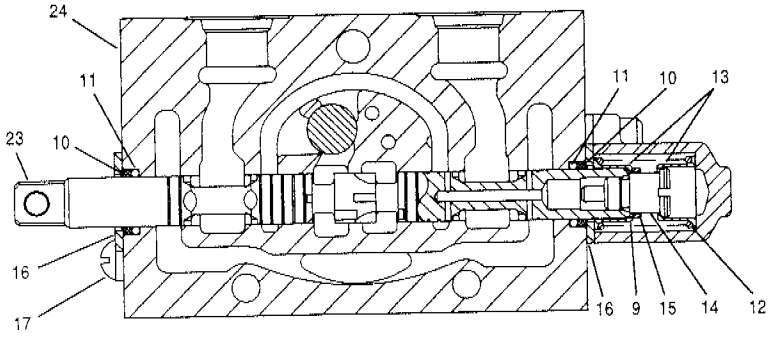

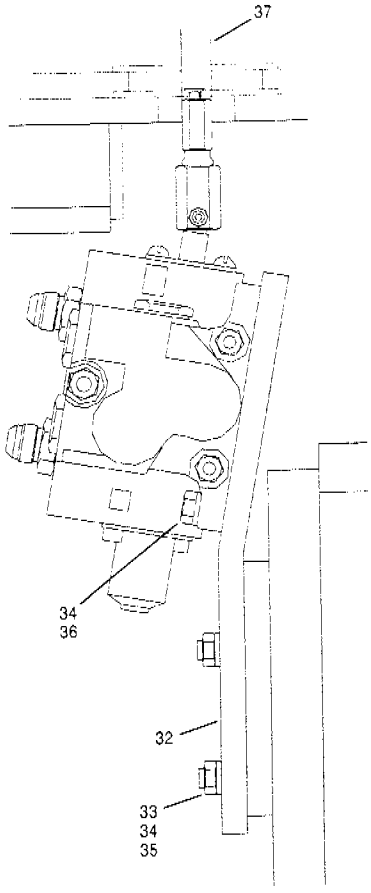

Item	Part No.	Description	Qty.	Remarks
	97874	**Manifold valve assembly** - includes items 1 to 31		
1	**81336**	**Inlet section assembly** - includes items 3 to 6 & 18	1	
2	**81337**	**Outlet section assembly** - includes items 3 to 6	1	
3	49968	Plug	2	
4	49969	O-ring	2	
5	81324	Plug	1	
6	81219	O-ring	1	
7	**405083**	**Valve section assembly** - includes items 9 to 24	2	
8	**405084**	**Valve section assembly** - includes items 9 to 24	1	
9	49975	O-ring	1	
10	89109	Wiper	2	
11	49974	O-ring	2	
12	89110	Spring	1	
13	81343	Seat - spring	2	
14	49972	Spool end	1	
15	81345	Stop - spool	1	
16	63027	Plate - seal	2	
17	81338	Screw	2	
18	49965	O-ring	1	
19	81225	Spring	1	

Item	Part No.	Description	Qty.	Remarks
20	405100	Piston - compensator	1	
21	89108	Cap	1	
22	81341	Bolt	2	
23		Spool	1	
24		Housing **Note:** items 23 & 24 are **not** available separately	1	
	63393	**Seal kit for 405083 & 405084 - valve section assemblies** - includes items 10, 11, & 18	1 per	
25	81328	Shuttle disc	2	
	63396	**Tie rod kit** - includes items 28 to 31	1	
26		Washer - compression	4	
27		Washer - compression	2	
28		Nut - special	2	
29		Nut - special	4	
30		Tie rod	2	
31		Tie rod	1	
32	* 12725512	Mounting bracket	1	
33	14C-06 Zi	Flatwasher	4	
34	* 940097	Hardened washer	7	
35	30A-06 Zi	Nut	4	
36	78378	Screw	3	
37		**Manifold valve controls**	Ref.	912-21

SERIAL NUMBERS:
33000 & UP

AUXILIARY MANIFOLD VALVE - 3 BANK

Date **06/2001**
Illustr. Nos **00006163**
Group **912**
Page **11**
Issue **1A**

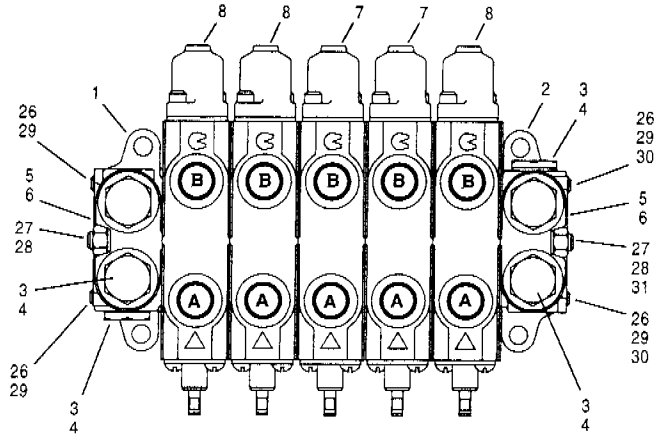

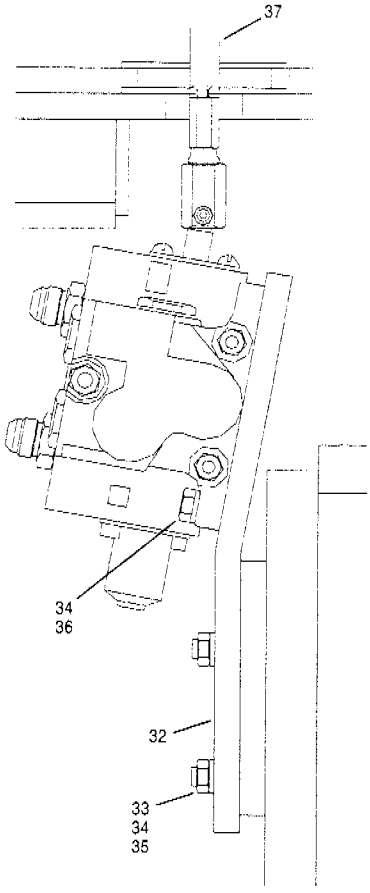

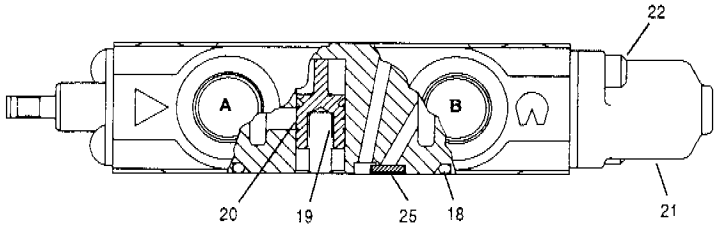

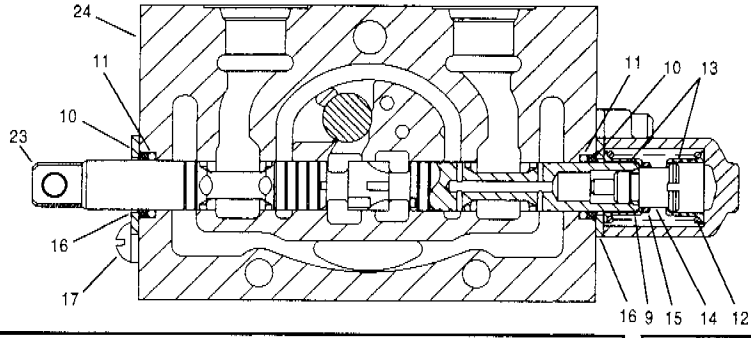

Item	Part No.	Description	Qty.	Remarks
	97875	**Manifold valve assembly** - includes items 1 to 31		
1	**81336**	**Inlet section assembly** - includes items 3 to 6 & 18	1	
2	**81337**	**Outlet section assembly** - includes items 3 to 6	1	
3	49968	Plug	2	
4	49969	O-ring	2	
5	81324	Plug	1	
6	81219	O-ring	1	
7	**405083**	**Valve section assembly** - includes items 9 to 24	2	
8	**405084**	**Valve section assembly** - includes items 9 to 24	3	
9	49975	O-ring	1	
10	89109	Wiper	2	
11	49974	O-ring	2	
12	89110	Spring	1	
13	81343	Seat - spring	2	
14	49972	Spool end	1	
15	81345	Stop - spool	1	
16	63027	Plate - seal	2	
17	81338	Screw	2	
18	49965	O-ring	1	
19	81225	Spring	1	

Item	Part No.	Description	Qty.	Remarks
20	405100	Piston - compensator	1	
21	89108	Cap	1	
22	81341	Bolt	2	
23		Spool	1	
24		Housing **Note:** items 23 & 24 are **not** available separately	1	
	63393	**Seal kit for 405083 & 405084 - valve section assemblies** - includes items 10, 11, & 18	1 per	
25	81328	Shuttle disc	4	
	63395	**Tie rod kit** - includes items 28 to 31	1	
26		Washer - compression	4	
27		Washer - compression	2	
28		Nut - special	2	
29		Nut - special	4	
30		Tie rod	2	
31		Tie rod	1	
32	* 12725512	Mounting bracket	1	
33	14C-06 Zi	Flatwasher	4	
34	* 940097	Hardened washer	7	
35	30A-06 Zi	Nut	4	
36	78378	Screw	3	
37		**Manifold valve controls**	Ref.	912-21

SERIAL NUMBERS: 33000 & UP	**AUXILIARY MANIFOLD VALVE - 5 BANK**	Date **06/2001**	Group **912**
		Illustr. Nos **00006163**	Page **12**
			Issue **1A**

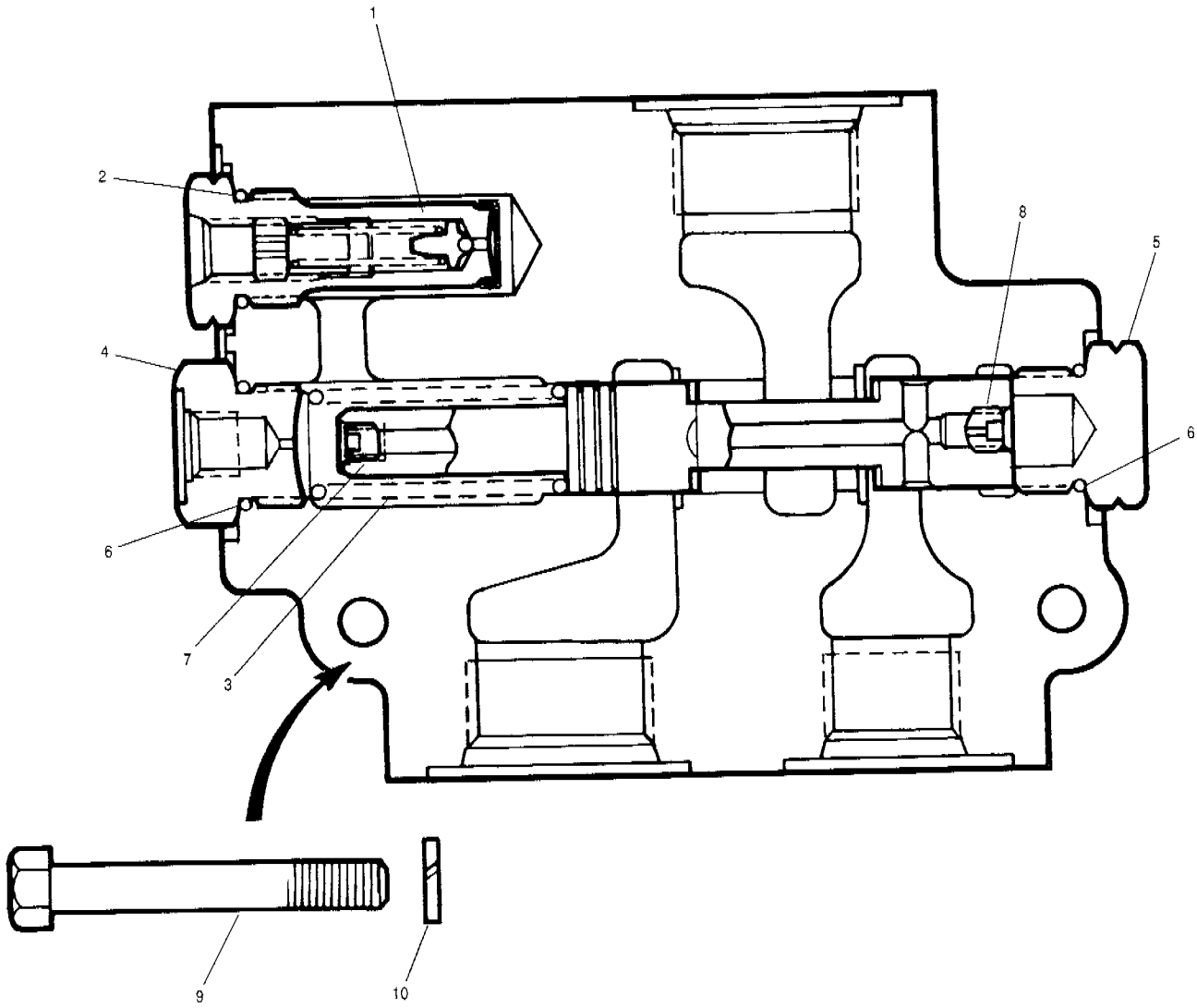

Item	Part No.	Description	Qty.	Remarks
	405002	**Priority valve assembly** - includes items 1 to 8	1	
1	**81409**	**Relief valve cartridge** - includes item 2	1	
2	116A-08	O-ring	1	
3	89188	Spring	1	
4	81419	Plug	1	
5	81420	Plug	1	
6	116A-10	O-ring	2	
7	89187	Set screw	1	
8	405050	Set screw	1	
9	50A-0524 Zi	Bolt	2	
10	14A-05 Zi	Lockwasher	2	

Item	Part No.	Description	Qty.	Remarks

SERIAL NUMBERS: 33000 & UP	**PRIORITY VALVE**	Date **01/2001**	Group	**912**
		Illustr. Nos **00004678**	Page	**13**
			Issue	**1**

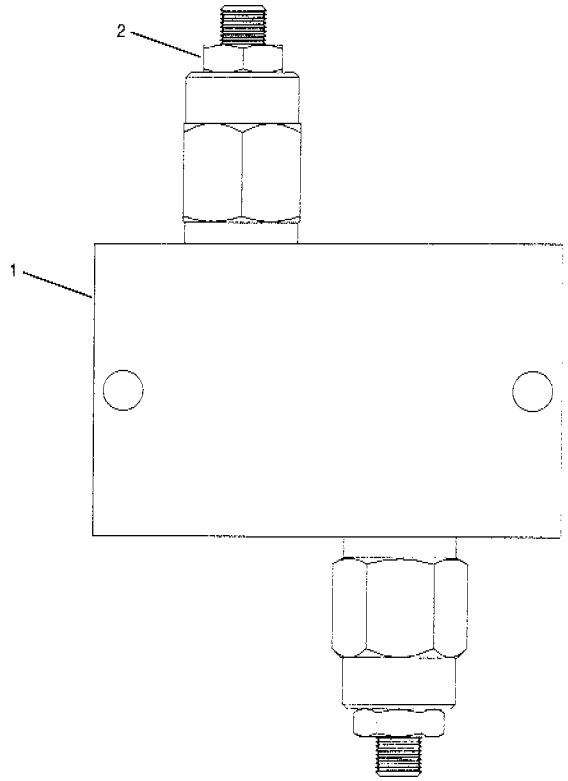

Item	Part No.	Description	Qty.	Remarks
1	97769	**Cushion valve assembly** - includes item 2	1	
2	97859	**Cartridge**	2	
	97860	**Seal kit for 97859** **- cartridge** - includes the following:	1 per	
		O-ring - small	1	
		O-ring - large	1	
		Back-up ring	1	

Item	Part No.	Description	Qty.	Remarks

SERIAL NUMBERS: 33000 & UP	**CUSHION VALVE**	Date **01/2001**	Group	**912**
		Illustr. Nos **00004951**	Page	**14**
			Issue	**1**

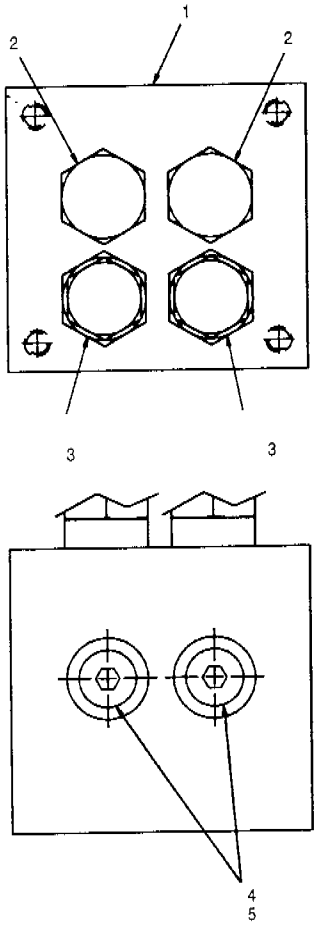

Single lock valve

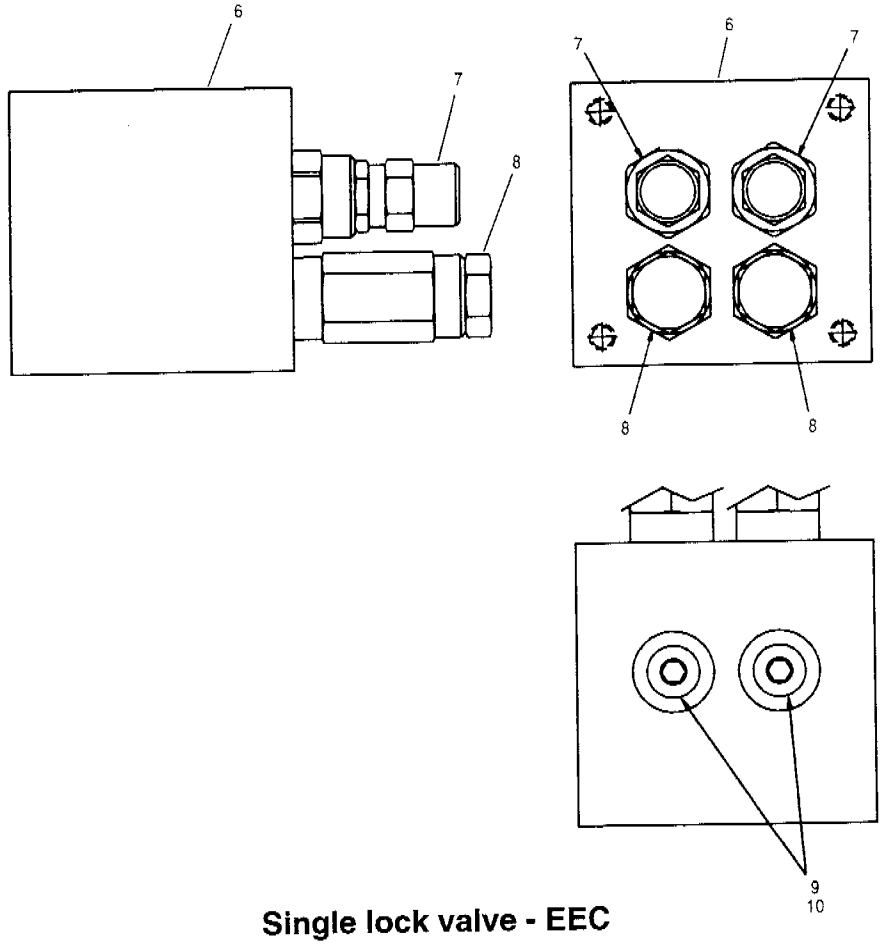

Single lock valve - EEC

Item	Part No.	Description	Qty.	Remarks
1	**81046**	**Single lock valve assembly** - includes items 2 to 5	1	
1	**97145**	**Single lock valve assembly** - includes items 2 to 5	1	
2	**63173**	**Check valve**	2	
3	**63192**	**Relief valve**	2	
	63075	**Seal kit for** **63173 - check valve** or **63192 - relief valve** - includes the following:	1 per	
		O-ring - large	1	
		O-ring - small	1	
		Back-up ring	1	
4	76094	Plug	2	
5	76095	O-ring	2	

Item	Part No.	Description	Qty.	Remarks
6	**74531**	**Single lock valve assembly** - includes items 7 to 10	1	EEC
7	**75978**	**Check valve**	2	
	76088	**Seal kit for** **75978 - check valve** - includes the following:	1 per	
		O-ring - large	1	
		O-ring - small	1	
		Back-up ring	2	
8	**63192**	**Relief valve**	2	
	63075	**Seal kit for** **63192 - relief valve** - includes the following:	1 per	
		O-ring - large	1	
		O-ring - small	1	
		Back-up ring	1	
9	76094	Plug	2	
10	76095	O-ring	2	

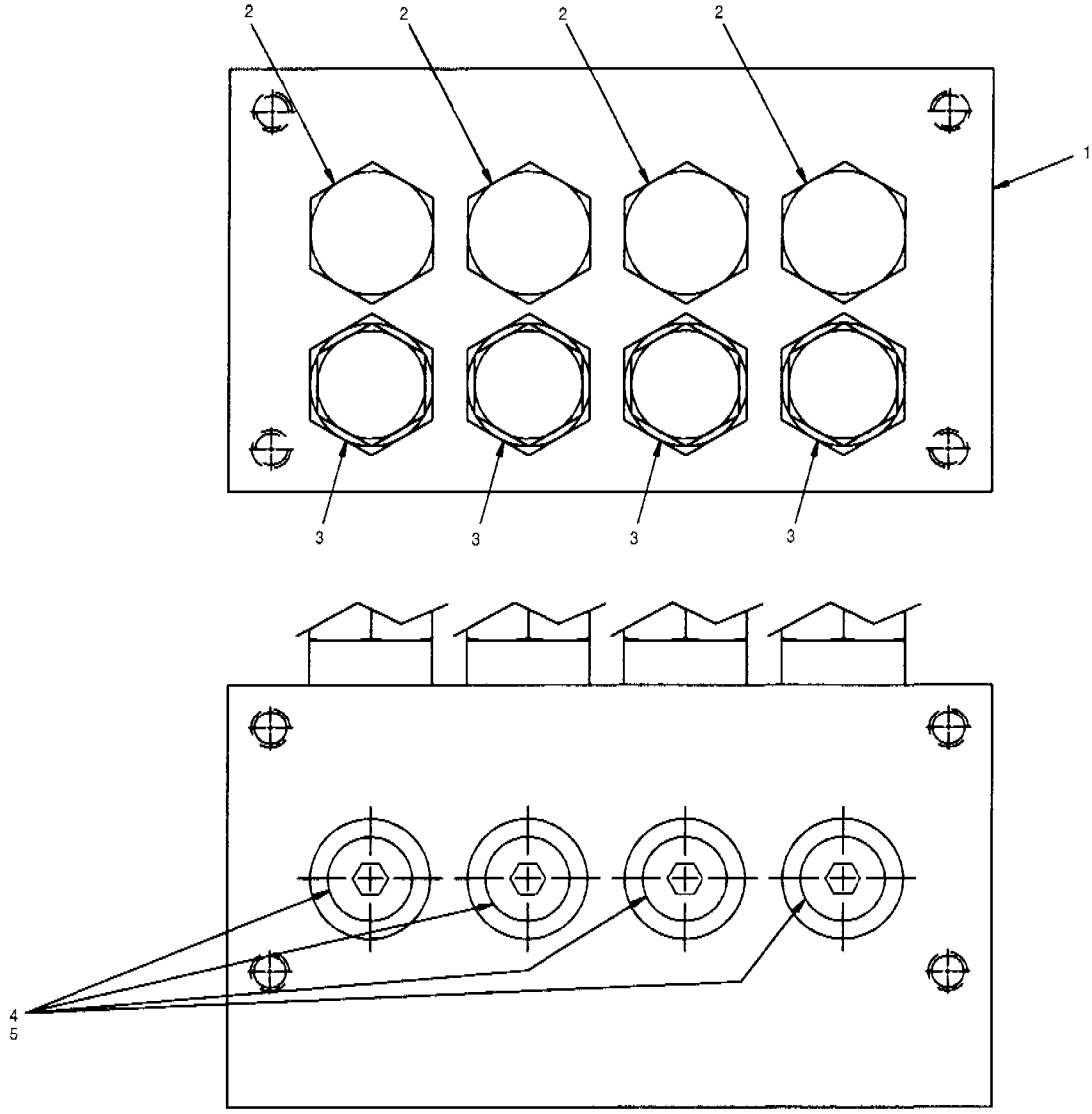

Item	Part No.	Description	Qty.	Remarks
1	**81047**	**Double lock valve assembly** - includes items 2 to 5	1	
2	63173	Check valve	4	
3	63192	Relief valve	4	
	63075	**Seal kit for** **63173 - check valve** or **63192 - relief valve** - includes the following:	1 per	
		O-ring - large	1	
		O-ring - small	1	
		Back-up ring	1	
4	76094	Plug	4	
5	76095	O-ring	4	

Item	Part No.	Description	Qty.	Remarks

SERIAL NUMBERS: 33000 & UP	**DOUBLE LOCK VALVE**	Date **01/2001**	Group **912**
		Illustr. Nos **00004963**	Page **16**
			Issue **1**

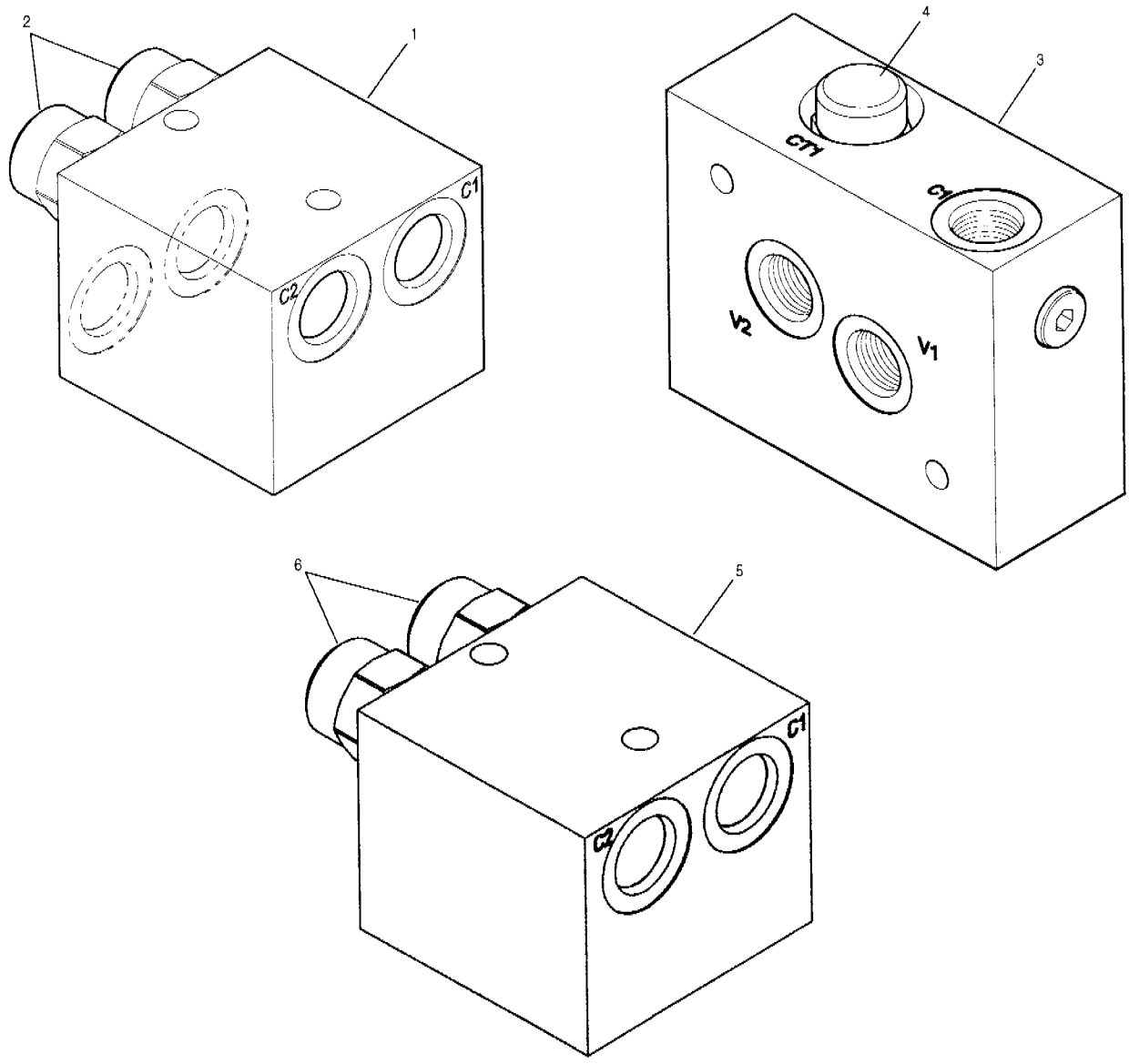

Item	Part No.	Description	Qty.	Remarks
		For EEC counterbalance valves - see 912-18		
1	**97775**	**Counterbalance valve assembly** - includes item 2	1	Circle turn
2	**97855**	**Cartridge**	2	
3	**97770**	**Counterbalance valve assembly** - includes item 4	A.R.	Articulation, circle shift & blade lift
4	**97845**	**Cartridge**	2	
5	**97782**	**Counterbalance valve assembly** - includes item 6	A.R.	Wheel lean, power tilt, scarifier, plow & dozer
6	**97883**	**Cartridge**	2	

Item	Part No.	Description	Qty.	Remarks
	97846	**Seal kit for 97845, 97855 & 97883 - cartridge** - includes the following	1 per	
		O-ring - large	1	
		O-ring - medium	1	
		O-ring - small	1	
		Back-up ring - medium	2	
		Back-up ring - small	1	

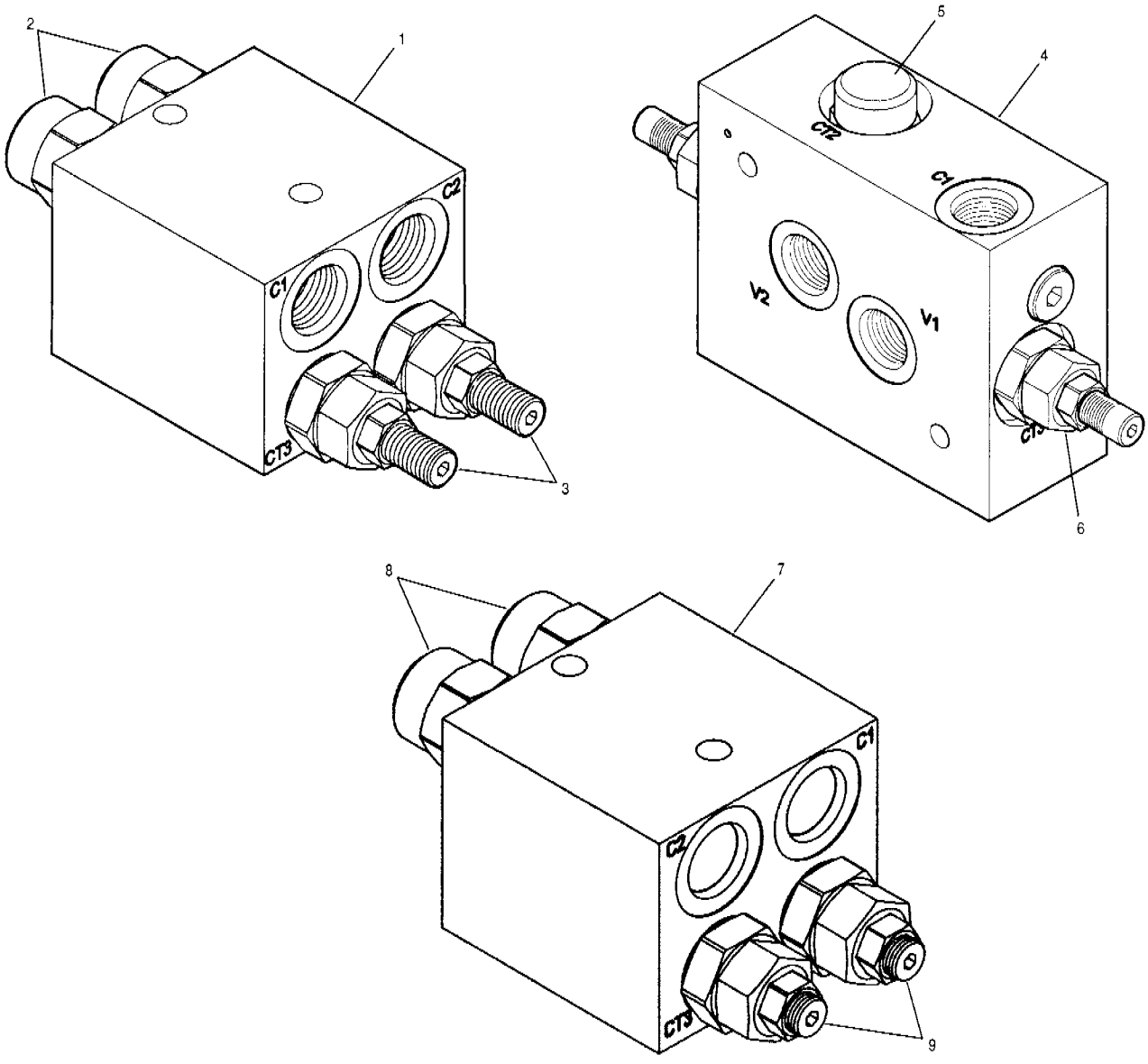

Item	Part No.	Description	Qty.	Remarks
1	**97776**	**Counterbalance valve assembly** - includes items 2 & 3	1	Circle turn
2	**97855**	**Cartridge**	2	
3	**97851**	**Needle valve cartridge**	2	
4	**97774**	**Counterbalance valve assembly** - includes items 5 & 6	A.R.	Articulation, circle shift, blade lift
5	**97845**	**Cartridge**	2	
6	**97851**	**Needle valve cartridge**	2	
7	**97781**	**Counterbalance valve assembly** - includes items 8 & 9	1	Wheel lean, power tilt, scarifier, plow & dozer
8	**97883**	**Cartridge**	2	
9	**97851**	**Needle valve cartridge**	2	

Item	Part No.	Description	Qty.	Remarks
	97846	**Seal kit for 97845, 97855 & 97883** **- cartridge** - includes the following:	1 per	
		O-ring - large	1	
		O-ring - medium	1	
		O-ring - small	1	
		Back-up ring - medium	2	
		Back-up ring - small	1	
	97852	**Seal kit for 97851** **- needle valve cartridge** - includes the following:	1 per	
		O-ring - large	1	
		O-ring - small	1	
		Back-up ring - small	2	

SERIAL NUMBERS: 33000 & UP	**COUNTERBALANCE VALVE - EEC**	Date **01/2001**	Group **912**
		Illustr. Nos **00004966**	Page **18**
			Issue **1**

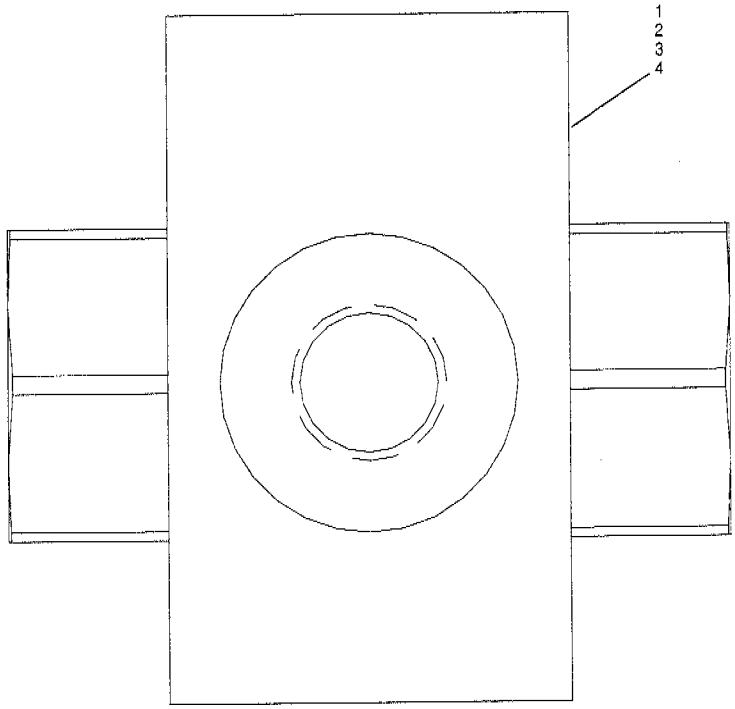

Item	Part No.	Description	Qty.	Remarks
1	74698	**Load sense shuttle valve** - includes items 2, 3 & 4	1	
2	76096	Ball	1	
3	76097	Adapter	2	
4	116A-08	O-ring	2	
		Main hydraulic circuit - front	Ref.	911-3

Item	Part No.	Description	Qty.	Remarks

SERIAL NUMBERS: 33000 & UP	**SHUTTLE VALVE**	Date **01/2001**	Group **912**
		Illustr. Nos **00004953**	Page **19**
			Issue **1**

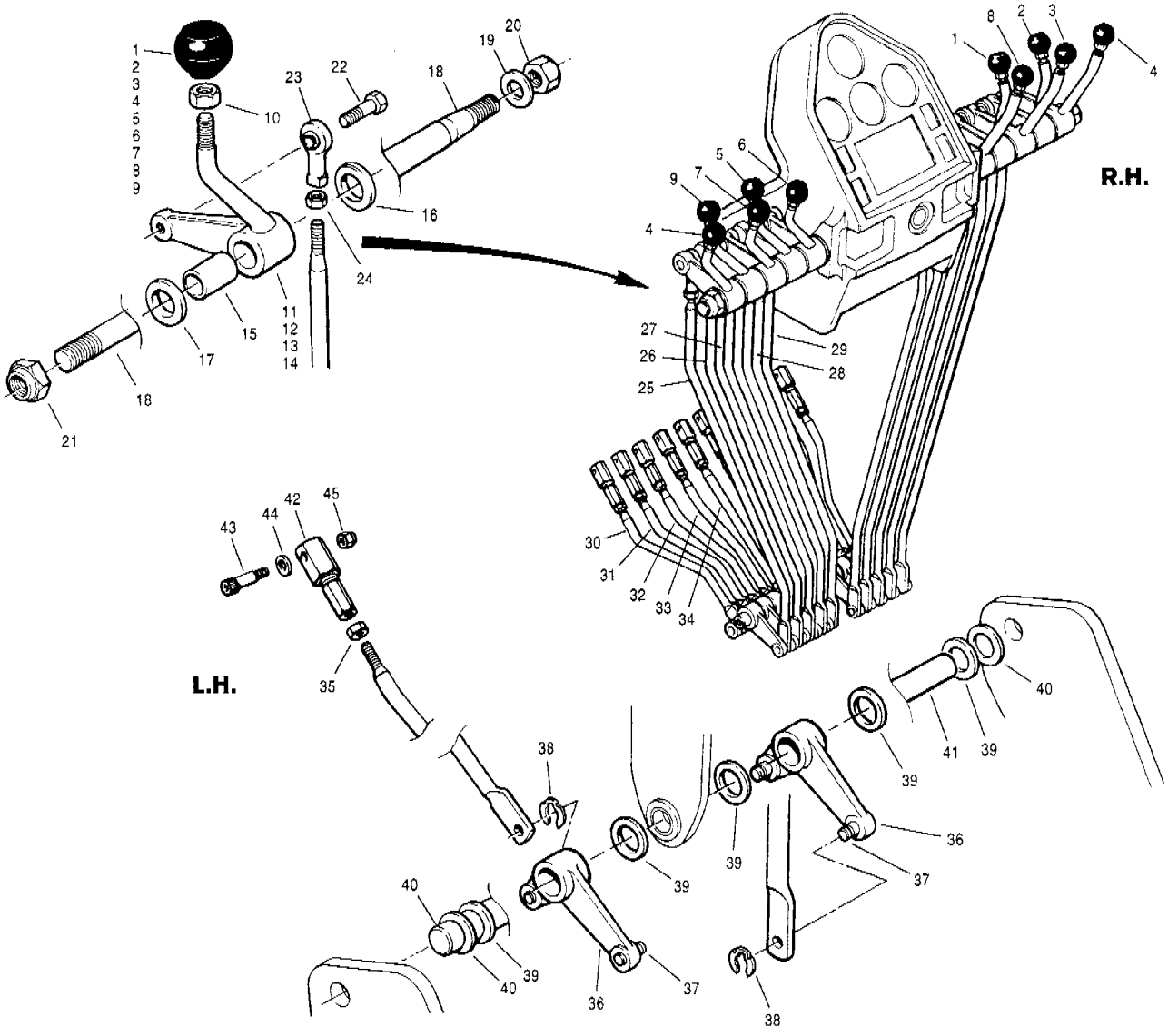

Item	Part No.	Description	Qty.	Remarks
1	73587	Control knob - articulation	1	
2	73588	Control knob - scarifier	1	
3	73589	Control knob - leaning wheel	1	
4	73590	Control knob - blade lift	2	
5	73591	Control knob - blade tilt	1	
6	73592	Control knob - circle turn	1	
7	73593	Control knob - slide shift	1	
8	73594	Control knob - circle shift	1	
9	73595	Control knob - v-plow	1	
10	30A-06 Zi	Nut	10	
11	78420	Control lever - R.H. rear	3	
12	78421	Control lever - R.H. front	2	
13	78422	Control lever - L.H. rear	3	
14	78423	Control lever - L.H. front	2	
15	69589	Bushing	10	
16	69592	Thrust bearing	2	
17	69593	Thrust bearing	10	
18	69709	Shaft - control levers	2	
19	14D-10 Zi	Flatwasher	2	
20	36D-10 Zi	Locknut	2	
21	36M-12 Zi	Locknut	2	
22	50A-0507 Ph	Bolt	10	
23	96144	Rod end	10	
24	31D-05 Ph	Jam nut	10	
25	96134	Control rod - upper	2	
26	96135	Control rod - upper	2	

Item	Part No.	Description	Qty.	Remarks
27	96136	Control rod - upper	2	
28	96137	Control rod - upper	2	
29	96138	Control rod - upper	2	
30	96649	Control rod - lower	2	
31	96650	Control rod - lower	2	
32	96651	Control rod - lower	2	
33	96652	Control rod - lower	2	
34	96653	Control rod - lower	2	
35	31D-05 Zi	Jam nut	10	
	97613	**Bell crank assembly - R.H.** - includes items 36 & 37	5	
	97614	**Bell crank assembly - L.H.** - includes items 36 & 37	5	
36	78253	Bell crank	1	
37	96710	Pivot pin	2	
38	19A-037	Retaining ring	20	
39	69591	Thrust bearing	12	
40	87031	Spacer	A.R.	
41	96296	Shaft - bell crank	1	
42	78407	Ball joint	10	
43	78538	Bolt	10	
44	* 955893	Flatwasher	10	
45	34B-10 Zi	Locknut	10	

SERIAL NUMBERS: 33000 & UP	**CONTROL LEVERS**	Date **06/2001**	Group **912**
		Illustr. Nos **00004967**	Page **20**
			Issue **1A**

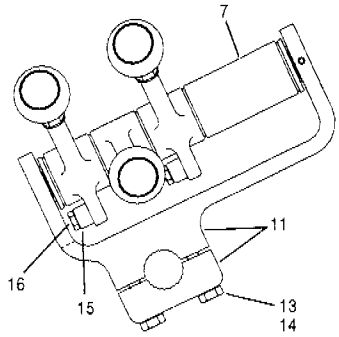

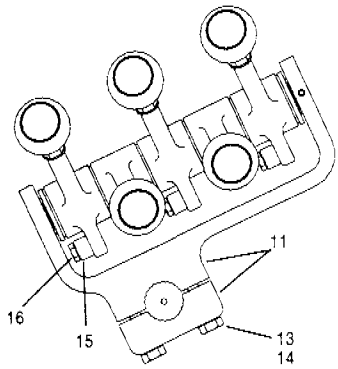

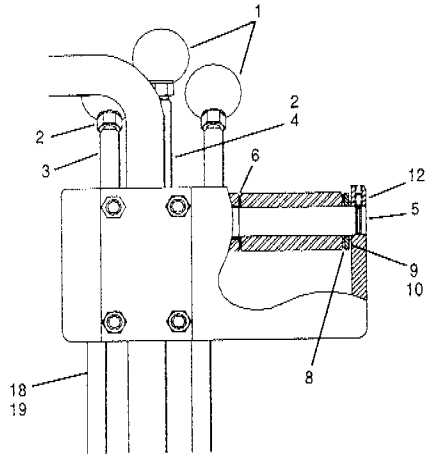

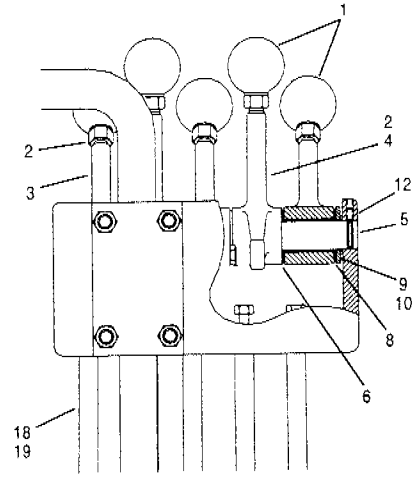

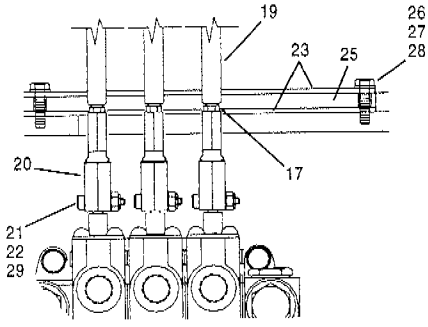

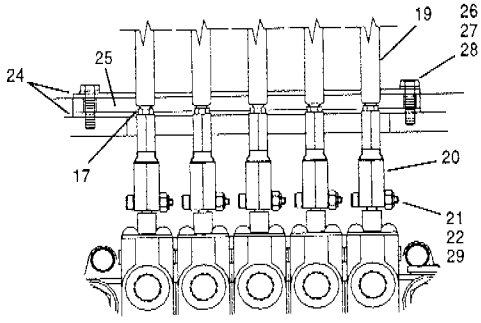

3 Bank

5 Bank

Item	Part No.	Description	Qty.	Remarks
1	80981	Knob	3 - 5	
2	30A-06 Zi	Nut	3 - 5	
3	80703	Lever	2 - 3	
4	80704	Lever	1 - 2	
5	81652	Shaft	1	
6	69589	Bearing - plain	3 - 5	
7	80715	Spacer	1	3 Bank
8	69593	Bearing - thrust	5 - 6	
9	69592	Thrust bearing	2	
10	80714	Wave washer	2	
11	84792	Bracket	1	
12	72B-1006	Setscrew	1	
13	50A-0616 Zi	Bolt	4	
14	* 940097	Hardened washer	4	
15	66789	Rod end	3 - 5	

Item	Part No.	Description	Qty.	Remarks
16	50A-0406 Zi	Bolt	3 - 5	
17	31D-05 Zi	Jam nut	3 - 5	
18	31A-04 Zi	Nut	3 - 5	
19	96238	Rod	3 - 5	
20	78407	Ball joint	3 - 5	
21	78538	Bolt	3 - 5	
22	34B-10 Zi	Locknut	3 - 5	
23	400273	Seal plate	2	3 Bank
24	400274	Seal plate	2	5 Bank
25	402036	Grommet	1	
26	69931	Spacer	5	
27	50A-0408 Ph	Bolt	5	
28	14C-04 Ph	Flatwasher	5	
29	* 755893	Hardened washer	3 - 5	

SERIAL NUMBERS:
33000 & UP

CONTROLS - AUXILIARY MANIFOLD - 3 & 5 BANK

Date 06/2001 | Group 912
Illustr. Nos 00006160 | Page 21
Issue 1A

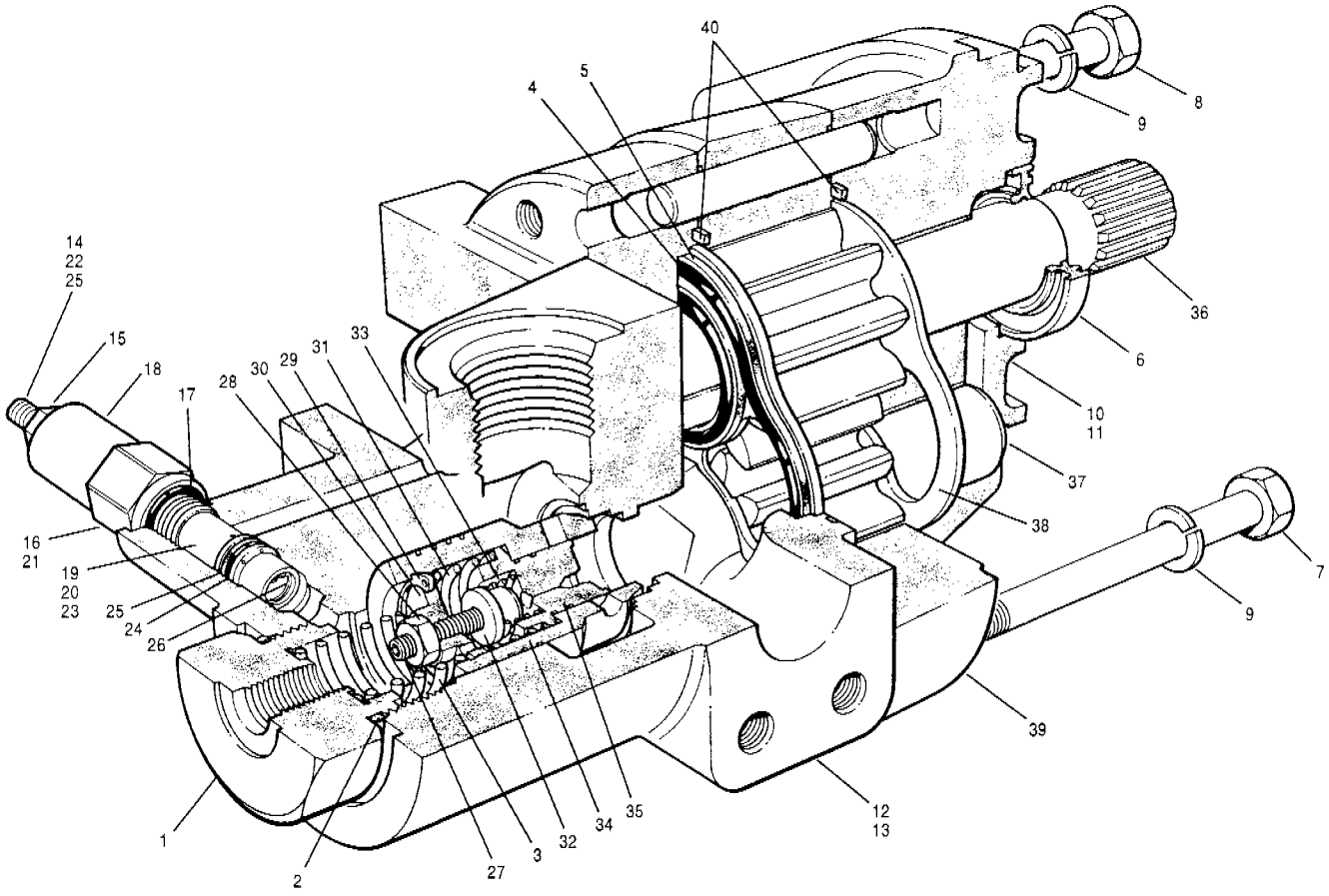

Item	Part No.	Description	Qty.	Remarks
		For all wheel drive models see 442-20		
	97481	**Hydraulic pump assembly** - includes items 1 to 39	1	
1	97484	Cap - load sense	1	
2	81207	O-ring	1	
3	97485	Spring	1	
4	81209	Seal gland	2	
5	81298	Seal retainer	2	
6	81208	Seal	1	
7	81294	Bolt - short	4	
8	81295	Bolt - long	4	
9	81293	Lockwasher	8	
	81302	**Front cover assembly** - includes items 10 & 11	1	
10		Front cover	1	
11		Bushing	2	
	81304	**Rear cover assembly** - includes items 12 & 13	1	
12		Rear cover	1	
13		Bushing	2	
	97483	**Cartridge assembly - relief valve** - includes items 14 to 26	1	
14		Adjusting screw	1	
15		Jam nut	1	
16		Housing	1	
17		O-ring - housing	1	
18		Cap	1	
19		Spool	1	
20		Cartridge	1	
21		Spring	1	

Item	Part No.	Description	Qty.	Remarks
22		O-ring - adjusting screw	1	
23		O-ring - seat	1	
24		O-ring - cartridge	1	
25		Back-up ring	2	
26		Retaining ring	1	
	97824	**Load sense assembly** - includes items 27 to 35	1	
27		Setscrew	1	
28		Nut	1	
29		Retaining ring	1	
30		Spring retainer - large	1	
31		Spring - large	1	
32		Spring retainer - small	1	
33		Spring - small	1	
34		Poppet	1	
35		Spool	1	
	76019	**Displacement kit for 97481 - hydraulic pump** - includes items 36 to 39	1	
36	81297	Drive gear	1	
37	81299	Driven gear	1	
38	81210	Wear plate	2	
39	**81300**	**Center section assembly**	1	
	76020	**Seal kit for 97481 - hydraulic pump** - includes items 2, 4 to 6, 17, 22 to 25, & 40	1	
40		Packing	2	
		Note: items 10 to 35 are **not** available separately		

SERIAL NUMBERS: 33000 & UP	**MAIN HYDRAULIC PUMP**	Date **01/2001**	Group **913**
		Illustr. Nos **00004034**	Page **22**
			Issue **1**

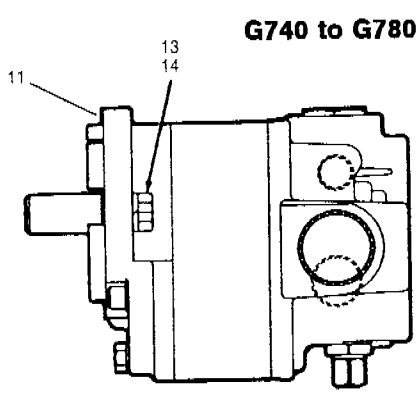

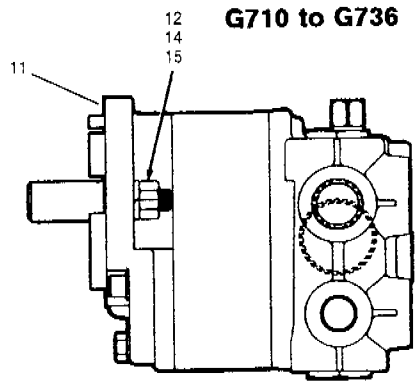

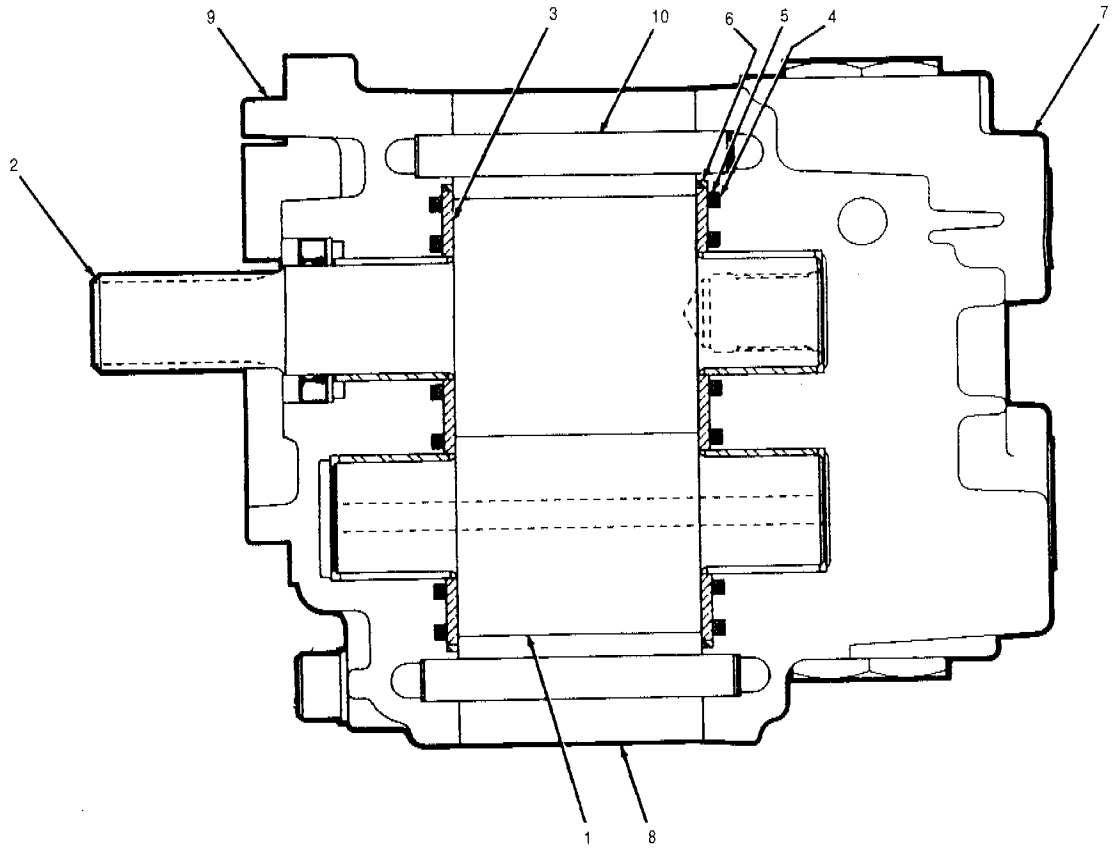

Item	Part No.	Description	Qty.	Remarks
	401040	**Hydraulic pump assembly** - includes items 1 to 10	1	**G710 to G736**
	401041	**Hydraulic pump assembly** - includes items 1 to 10	1	**G740 to G780**
	97869	**Repair kit for 401040 & 401041** **- hydraulic pumps** - includes items 3 to 6	1 per	
1	**81317**	**Idler assembly**	1	
2	81318	Drive gear & shaft c/w seal	1	
3		Wear plate	2	
4		Pre-load seal	2	
5		Load seal	2	
6		Seal ring	2	

Item	Part No.	Description	Qty.	Remarks
7		**Cover assembly**	1	
8		Gear plate	1	
9		**Body assembly**	1	
10		Dowel pin	2	
		Note: items 3 to 10 are **not** available separately		
11	62314	Gasket	1	
12	354E-12075	Stud	2	G710 to G736
13	350AA-12040 Zi	Bolt	2	G740 to G780
14	314A-12 Zi	Lockwasher	2	
15	330A-12 Zi	Nut	2	

SERIAL NUMBERS:
33000 & UP

TRANSMISSION HYDRAULIC PUMP

Date 01/2001
Illustr. Nos 00006110
Group 913
Page 23
Issue 1

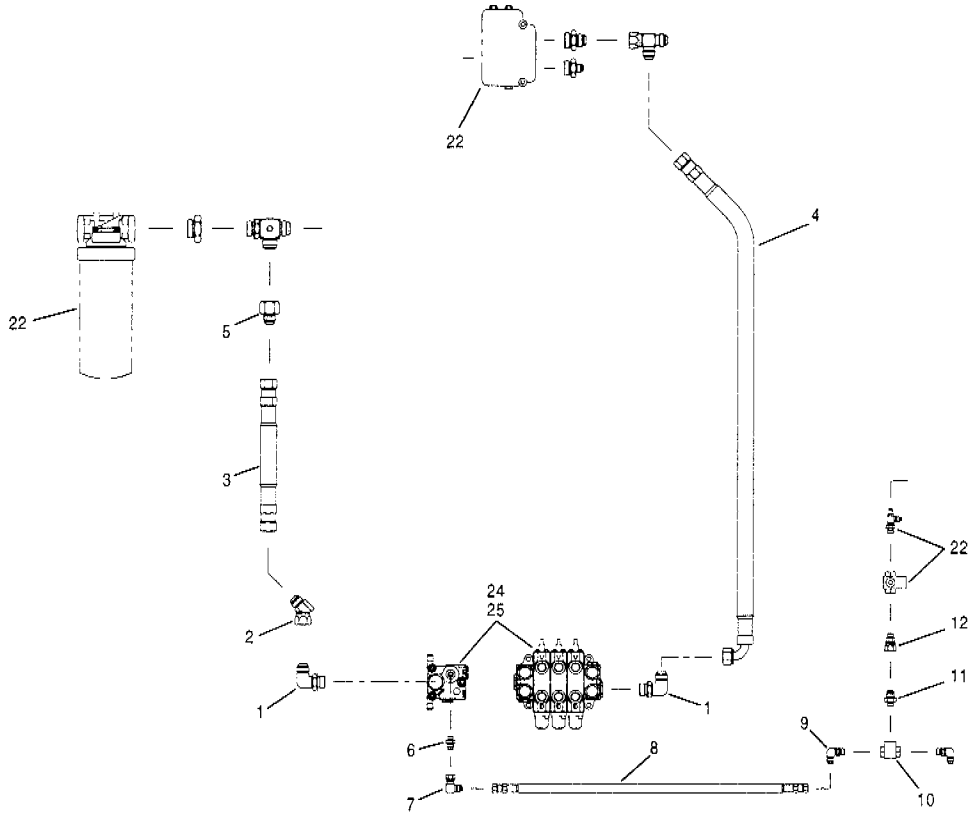

3 & 5 Bank manifold valve circuit

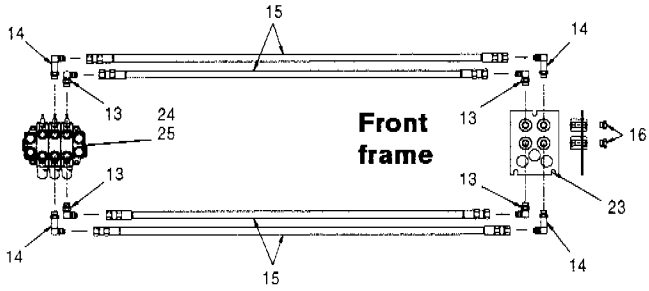

Single & double front

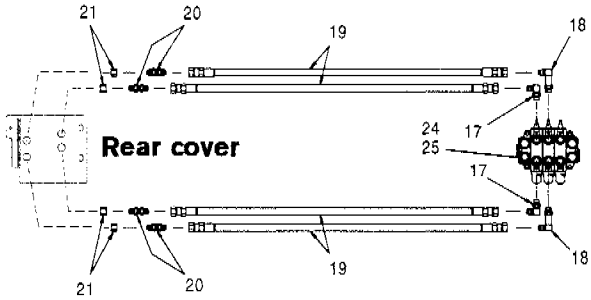

Single & double rear

Item	Part No.	Description	Qty.	Remarks
		3 & 5 Bank manifold valve circuits		
1	111B-1212	Connector	2	
2	112A-12	Connector	1	
3	28485 x 28	Hose	1	
4	74859 x 31	Hose	1	
5	110AH-1216	Adapter	1	
6	111E-0604	Connector	1	
7	112B-06	Connector	1	
8	89144 x 27	Hose	1	
9	111B-0606	Connector	1	
10	74699	Load sense shuttle valve	1	
11	111E-0806	Connector	1	
12	111G-0806	Connector	1	
		Single & double front hydraulic circuits		
13	111B-0808	Connector	1 - 2	
14	111Q-0808	Connector	1 - 2	
15	78192 x 240	Hose	2 - 4	
16	111H-08	Plug	2	Single

Item	Part No.	Description	Qty.	Remarks
		Single & double rear hydraulic circuits		
17	111B-0808	Connector	2	
18	111Q-0808	Connector	2	Double
19	78192 x 150	Hose	2 - 4	
20	110N-08	Connector	2 - 4	
21	110E-08	Cap	A.R.	
22		**Main hydraulic circuit**	Ref.	911-3 911-4
23		**Coupling plate**	Ref.	715-4
24		**3 Bank manifold valve**	Ref.	912-11
25		**5 Bank manifold valve**	Ref.	912-12

SERIAL NUMBERS: 33000 & UP	**ATTACHMENTS MANIFOLD VALVE HYDRAULIC CIRCUITS**	Date	**01/2001**	Group **916**
		Illustr. Nos	**00006155** **00006166**	Page **24**
				Issue **1**

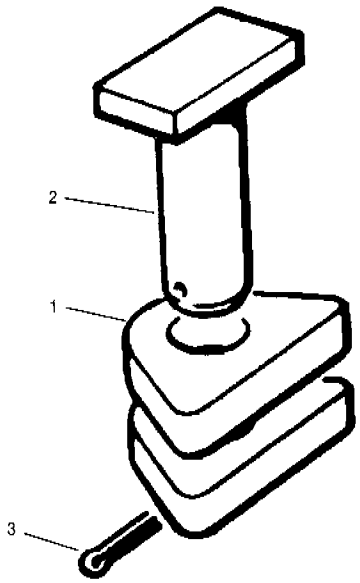

Item	Part No.	Description	Qty.	Remarks
1	49173	Towing lug - rear	2	
2	49174	Pin	1	
3	13A-0848	Cotter pin	1	

Item	Part No.	Description	Qty.	Remarks

SERIAL NUMBERS: 33000 & UP	TOWING HOOK	Date 01/2001	Group 922
		Illustr. Nos 00004954	Page 25
			Issue 1

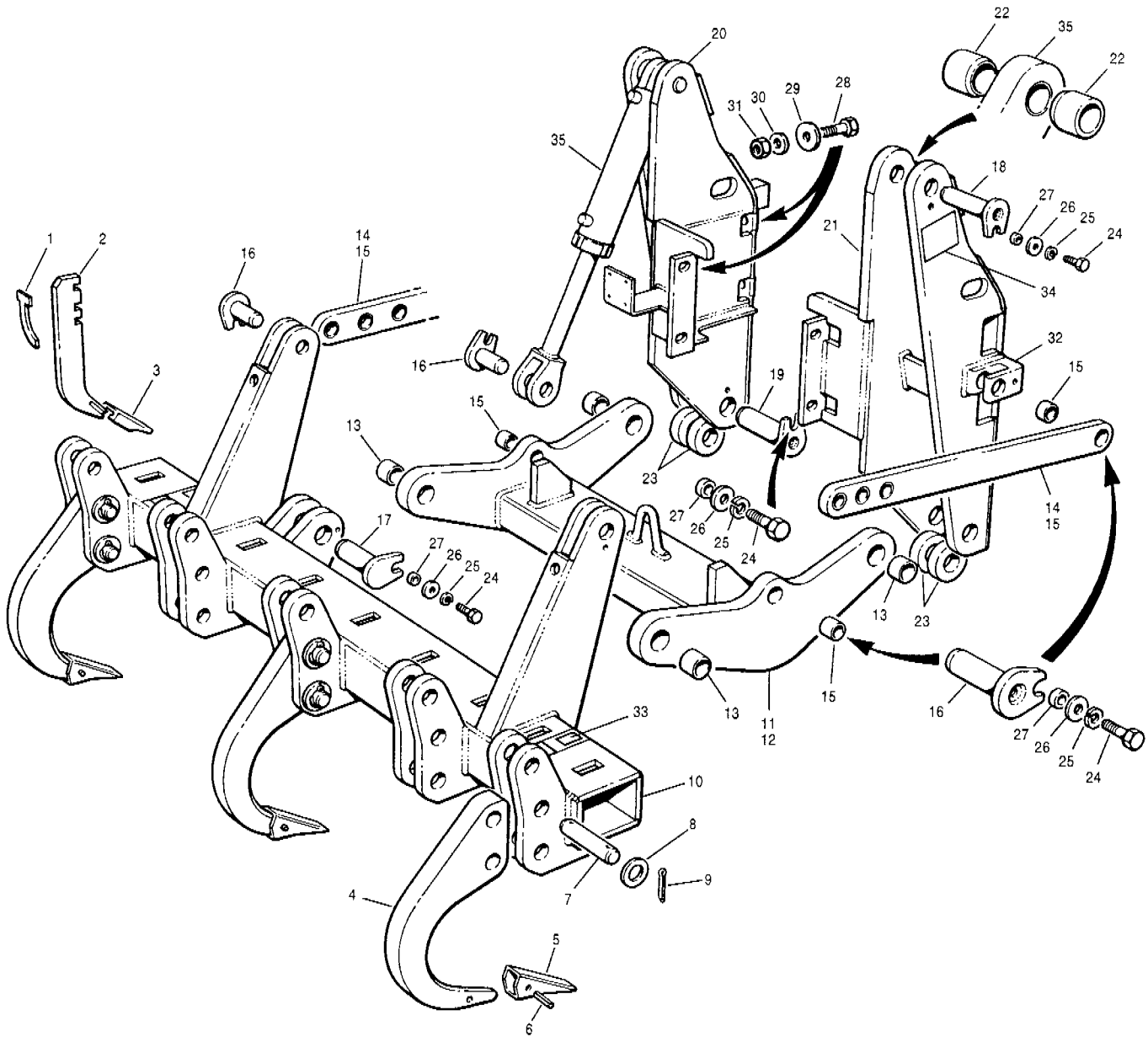

Item	Part No.	Description	Qty.	Remarks
1	74013	Wedge	9	Optional
2	8110	Tooth shank	9	Optional
3	8111	Tooth tip	9	Optional
4	9934	Shank	3 or 5	
5	9937	Point	3 or 5	
6	9938	Pin	3 or 5	
7	48286	Pin	6	
8	56890	Washer	12 or 20	
9	13A-0848	Cotter pin	12	
10	78813	Ripper box	1	
11	**98539**	**Lower pull arm assembly**	1	**G710 to G740**
12	**98540**	**Lower pull arm assembly**	1	**G780**
13	404295	Bearing	4	
14	**48414**	**Control rod assembly**	2	
		- includes item 15 (4 req'd)		
15	404296	Bearing	10	
16	78829	Pin	6	
17	78828	Pin	2	
18	78826	Pin	2	
19	78827	Pin	2	
20	95233	Bracket - L.H.	1	G710 to G740
20	78821	Bracket - L.H.	1	G780

Item	Part No.	Description	Qty.	Remarks
21	95232	Bracket - R.H.	1	G710 to G740
21	78820	Bracket - R.H.	1	G780
22	66990	Spacer - 2.50"	4	
23	66991	Spacer - 3.00"	4	
24	50A-0810 Zi	Bolt	12	
25	14A-08 Zi	Lockwasher	12	
26	14C-08 Zi	Flatwasher	12	
27	78767	Spacer	12	
28	50A-2036 Zi	Bolt	8	
29	14C-20 Zi	Flatwasher	8	
30	62160	Hardened washer	8	
31	30A-20 Zi	Nut	8	
32	78822	Mounting lug	2	
33	98417	Decal - lifting & tie down	2	
34	79057	Decal - English	2	
34	79058	Decal - French	2	
34	79059	Decal - Spanish	2	
34	79060	Decal - Portuguese	2	
34	79061	Decal - Greek	2	
34	79062	Decal - Dutch	2	
35		**Ripper cylinder assembly**	Ref.	926-28

SERIAL NUMBERS: 33000 & UP	**RIPPER**	Date **01/2001**	Group **926**
		Illustr. Nos **00004908**	Page **26**
			Issue **1**

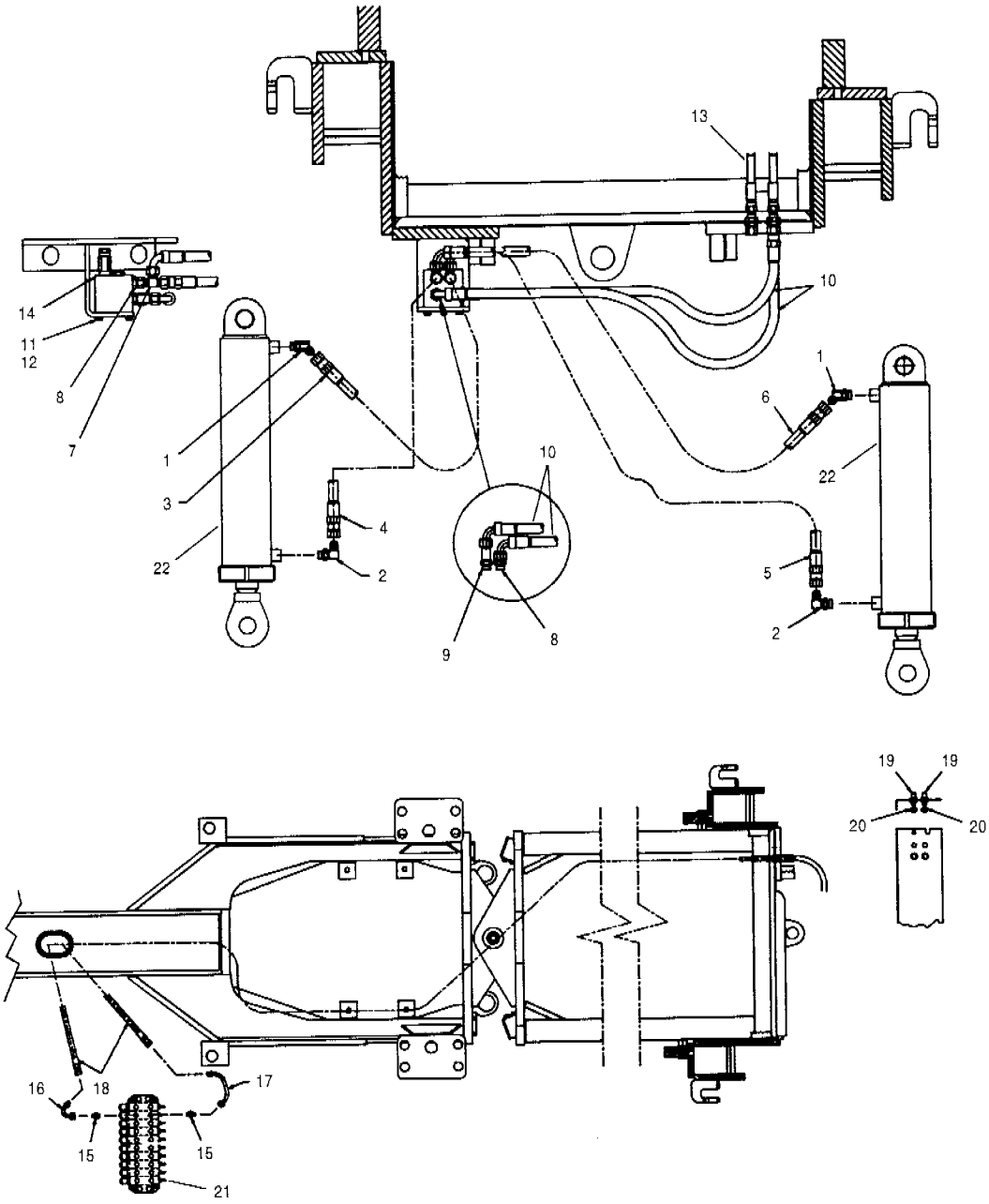

Item	Part No.	Description	Qty.	Remarks
1	111A-0808	Connector	2	
2	111B-0808	Connector	2	
3	74429 x 20	Hose	1	
4	74429 x 24	Hose	1	
5	74430 x 42	Hose	1	
6	74430 x 48	Hose	1	
7	112C-08	Tee	2	
8	111E-0808	Connector	3	
9	111F-0808	Connector	1	
10	78193 x 38	Hose	2	
11	50A-0507 Zi	Bolt	4	
12	14A-05 Zi	Lockwasher	4	
13		**Attachments manifold valve circuit**	Ref.	916-24
14		**Single lock valve**	Ref.	912-15

Item	Part No.	Description	Qty.	Remarks
		Circuit using A-frame or scarifier lever		
15	111E-0808	Connector	2	
16	* 12725309	Tube	1	
17	* 12725310	Tube	1	
18	78192 x 222	Hose	2	
19	110N-08	Connector	2	
20	110E-08	Cap	A.R.	
21		**Manifold valve**	Ref.	912-8 912-9
22		**Ripper cylinder**	Ref.	926-28

SERIAL NUMBERS: 33000 & UP	**RIPPER CIRCUIT**	Date **03/2001**	Group **926**
		Illustr. Nos **00004969**	Page **27**
			Issue **1A**

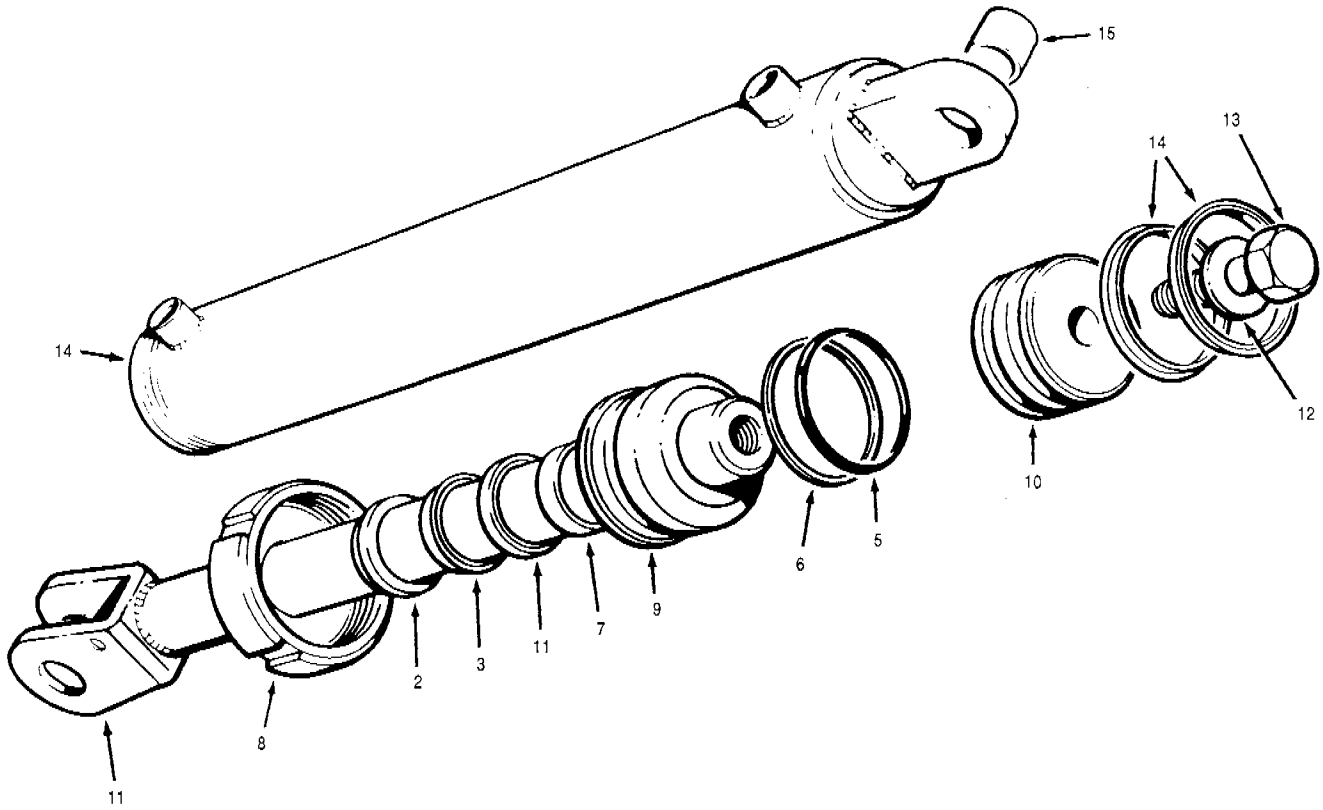

Item	Part No.	Description	Qty.	Remarks
	* 12724765	**Cylinder assembly** - includes items 1 to 5	2	
	* 12724303	**Repair kit for 12724765** **- cylinder assembly** - includes items 2 to 8	1 per	
1	* 12724223	Rod seal	1	
2	* 12724224	Rod wiper	1	
3	59189	Back-up ring	1	
4	12036	Piston seal	2	
5	44244	O-ring	1	
6	44266	Back-up ring	1	
7	* 12724222	Wear ring	1	
8	62147	Cylinder nut	1	
9	* 12724061	Gland	1	
10	59670	Piston	1	
11	78811	Piston rod	1	
12	49380	Hardened washer	1	
13	50A-1622 UP	Bolt	1	
14	62054	Cylinder barrel - includes item 8	1	
15	404296	Bearing	1	
16		**Ripper circuit**	Ref.	926-27

Item	Part No.	Description	Qty.	Remarks

SERIAL NUMBERS: 33000 & UP	**RIPPER CYLINDER**	Date	**04/2001**	Group **926**
		Illustr. Nos	**00004968**	Page **28**
				Issue **1A**

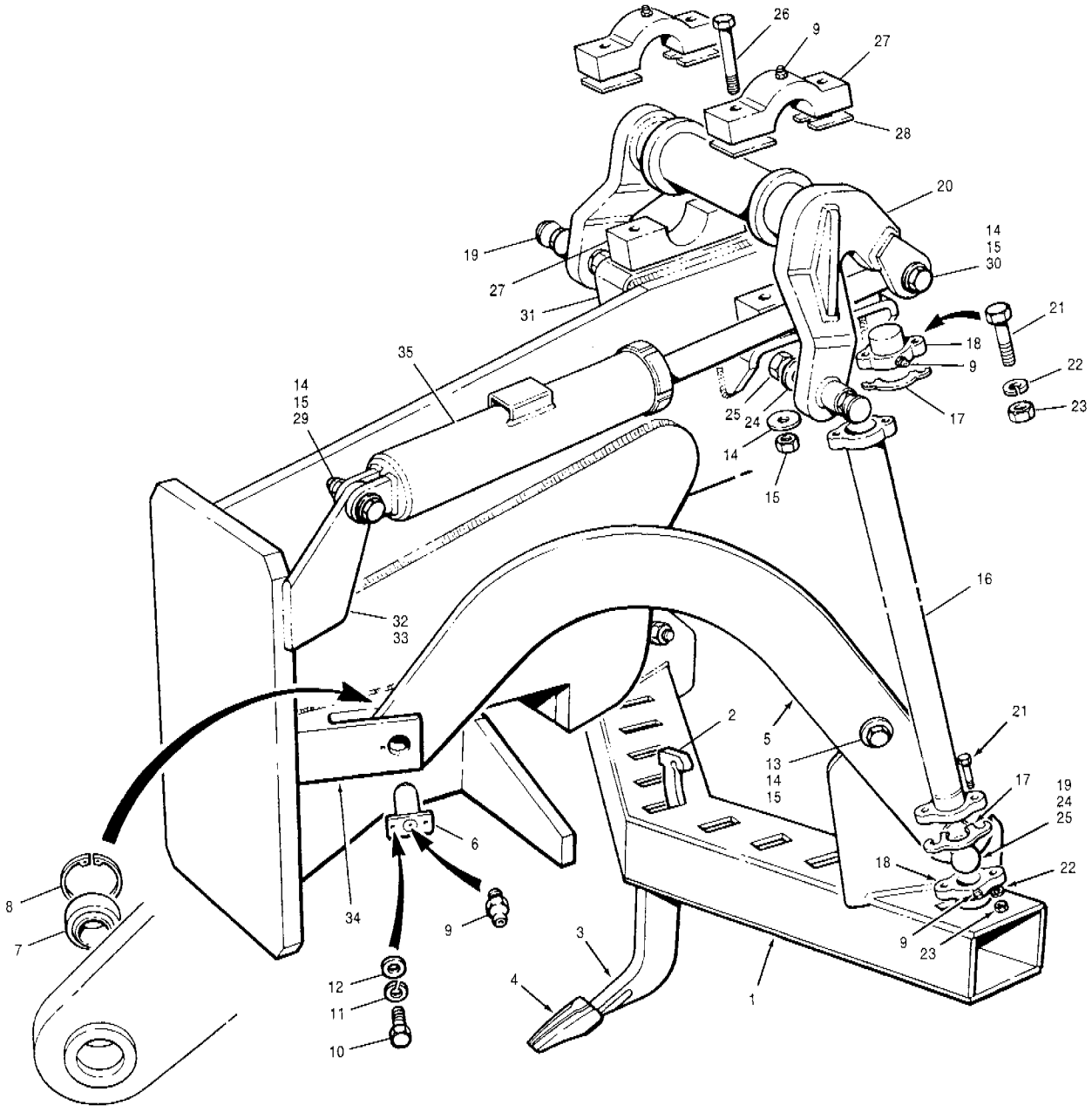

Item	Part No.	Description	Qty.	Remarks
1	**58887**	**Box assembly**	1	
2	98551	Wedge	11	
3	8110	Tooth shank	11	
4	8111	Tooth tip	11	
5	66642	Drawbar - R.H.	1	
5	66643	Drawbar - L.H.	1	
6	57160	Draw pin	2	
7	18340	Bearing	2	
8	19B-244	Retainer ring	2	
9	28A-04	Grease fitting	8	
10	50A-0610 Zi	Bolt	2	
11	14A-06 Zi	Lockwasher	2	
12	14C-06 Zi	Flatwasher	2	
13	50A-1628 Zi	Bolt	2	
14	14C-16 Zi	Flatwasher	18	
15	30A-16 Zi	Locknut	12	
16	79417	Lift link - L.H.	1	
16	79416	Lift link - R.H.	1	
17	96419	Shim - .010"	A.R.	
17	96420	Shim - .020"	A.R.	

Item	Part No.	Description	Qty.	Remarks
18	55119	Ball cap	4	
19	9921	Ball stud	4	
20	89259	Cross shaft	1	
21	50A-0820 Zi	Bolt	8	
22	14A-08 Zi	Lockwasher	8	
23	30A-08 Zi	Nut	8	
24	14C-20 Zi	Flatwasher	4	
25	31A-20 Zi	Locknut	4	
26	50A-1660 Zi	Bolt	4	
27	404051	Pillow block	2	
28	404086	Shim - .020"	A.R.	
29	50A-1632 Zi	Bolt	1	
30	50A-1640 Zi	Bolt	1	
31	79425	Bracket	2	
32	89266	Anchor lug	1	
33	80292	Plate	1	
34	79752	Pivot block	2	G710 to G716
34	58768	Pivot block	2	G720 to G740
35		**Scarifier cylinder**	Ref.	926-31

SERIAL NUMBERS:
33000 & UP

SCARIFIER

Date **01/2001**
Illustr. Nos **00003685**
Group **926**
Page **29**
Issue **1**

VOLVO

G700 MODELS

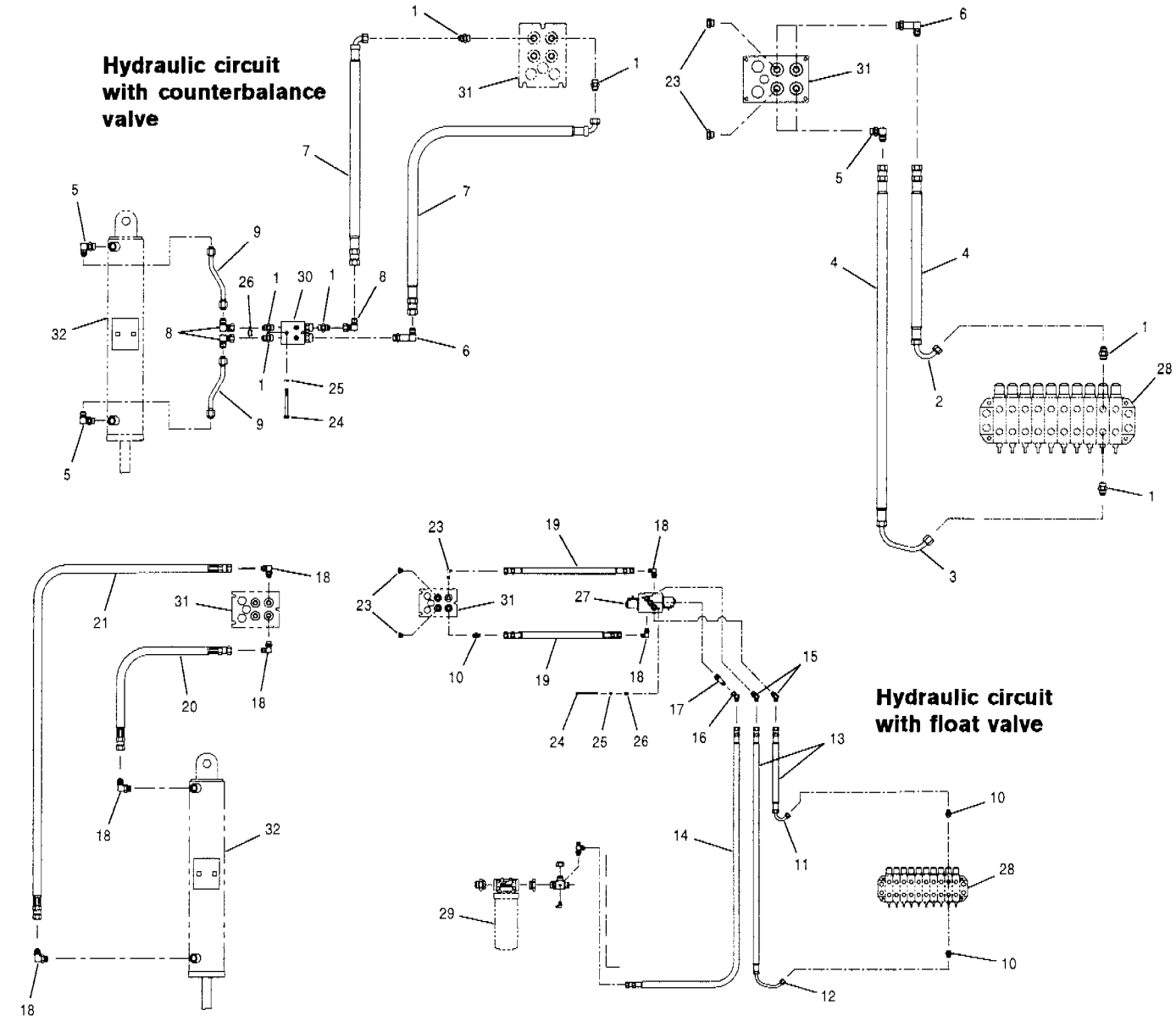

Item	Part No.	Description	Qty.	Remarks
		Hydraulic circuit with counterbalance valve		
1	111E-0808	Connector	7	
2	* 12725309	Tube	1	
3	* 12725310	Tube	1	
4	78192 x 185	Hose	2	
5	111B-0808	Connector	3	
6	111Q-0808	Connector	2	
7	78193x 25	Hose	2	
8	112B-08	Connector	3	
9	405088	Tube	2	
		Hydraulic circuit with float valve		
10	111E-0808	Connector	3	
11	* 12725309	Tube	1	
12	* 12725310	Tube	1	
13	78192 x 185	Hose	2	
14	9313 x 218	Hose	1	
15	111A-0808	Connector	2	
16	112A-0808	Connector	1	
17	111F-0808	Connector	1	

Item	Part No.	Description	Qty.	Remarks
18	111B-0808	Connector	6	
19	9313 x 22	Hose	2	
20	78192 x 12	Hose	1	
21	78192 x 30	Hose	1	
22	111H-08	Plug	A.R.	
23	* 111Q-0808	Connector	1	
24	50A-0528 Zi	Bolt	2	
25	14A-05 Zi	Lockwasher	2	
26	38A-0502	Cage nut	2	
27		**Float valve**	Ref.	912-10
28		**Manifold valve**	Ref.	912-8 912-9
29		**Main hydraulic circuit**	Ref.	911-3
30		**Counterbalance valve**	Ref.	912-17 912-18
31		**Coupling plate**	Ref..	715-4
32		**Scarifier cylinder**	Ref.	926-31

SERIAL NUMBERS: 33000 & UP	**SCARIFER HYDRAULIC CIRCUIT**	Date 04/2001	Group 926
		Illustr. Nos 00005141	Page 30
			Issue 1A

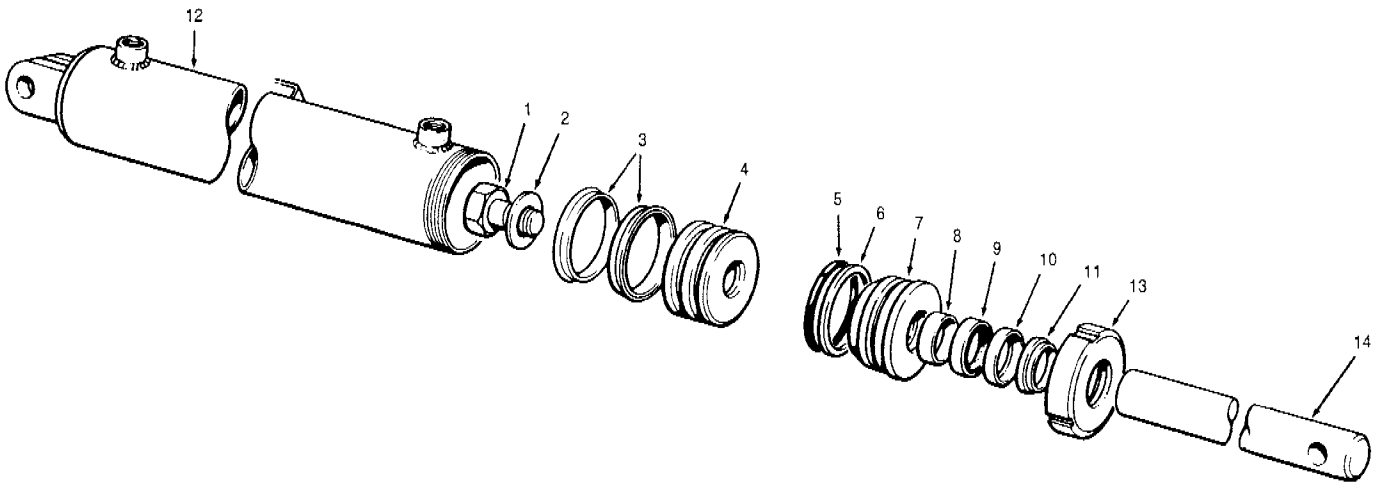

Item	Part No.	Description	Qty.	Remarks
	* 12724666	**Cylinder assembly** - includes items 1 to 14	1	
	* 12724303	**Repair kit for 12724666** **- cylinder assembly** - includes items 3, 5, 6, & 8 to 11	1	
1	50A-1622 UP	Bolt	1	
2	49380	Hardened washer	1	
3	12036	Piston seal	2	
4	59670	Piston	1	
5	44244	O-ring	1	
6	44266	Back-up ring	1	
7	* 12724061	Gland	1	
8	* 12724222	Wear ring	1	
9	* 12724223	Rod seal	1	
10	59189	Back-up ring	1	
11	* 12724224	Rod wiper	1	
12	403010	Cylinder barrel - includes item 13	1	
13	62147	Cylinder nut	1	
14	89078	Piston rod	1	
		Scarifier hydraulic circuit	Ref.	926-30

Item	Part No.	Description	Qty.	Remarks

SERIAL NUMBERS: 33000 & UP	**SCARIFIER CYLINDER**	Date	**04/2001**	Group **926**
		Illustr. Nos	**00004970**	Page **31**
				Issue **1A**

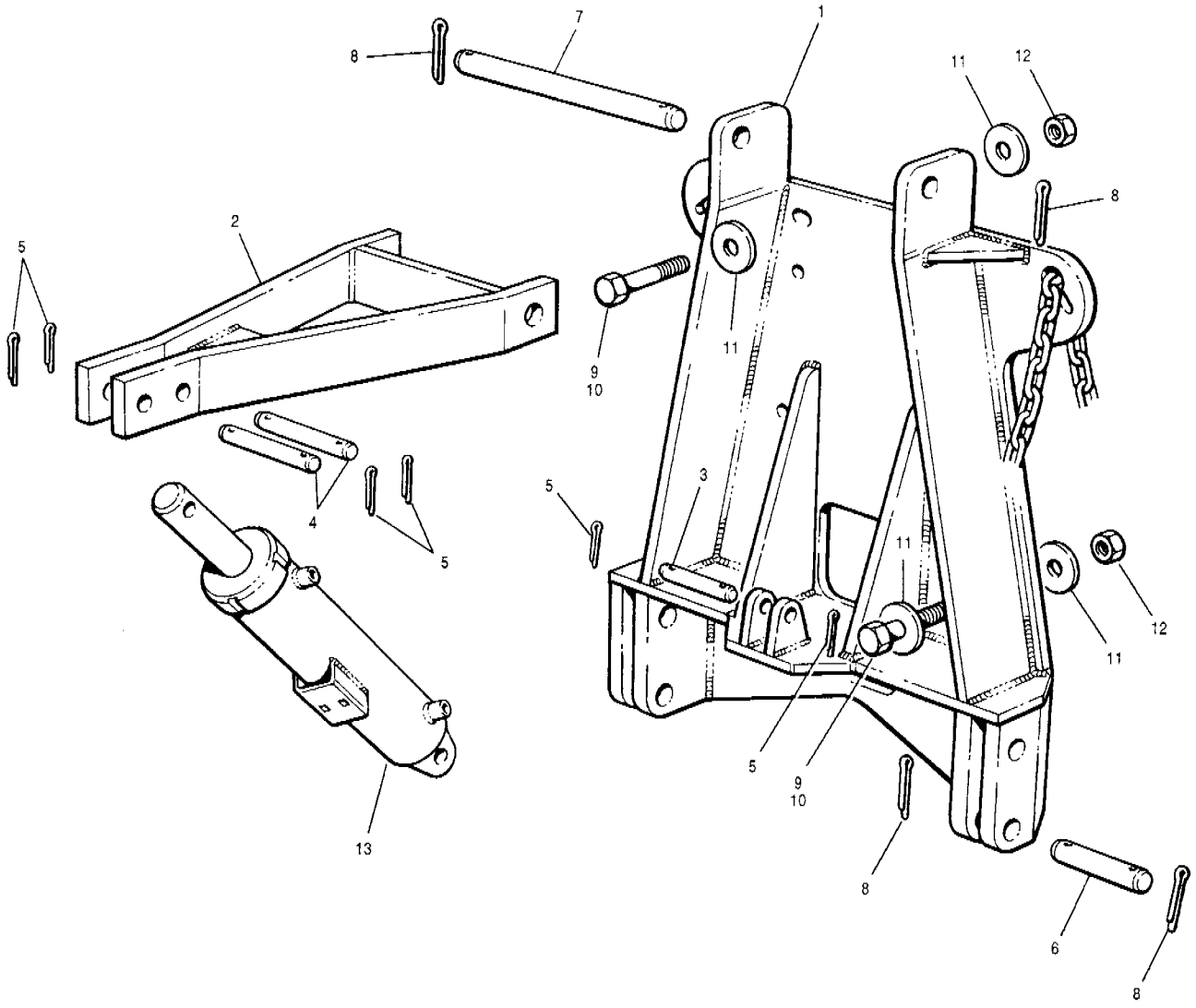

Item	Part No.	Description	Qty.	Remarks
1	79674	A-frame	1	
2	7176	Yoke	1	
3	18C-0820	Pin	1	
4	18C-0824	Pin	2	
5	13A-0628	Cotter pin	6	
6	18C-1024	Pin	2	
7	18C-1076	Pin	1	
8	13A-0836	Cotter pin	6	
9	50A-1636 Zi	Bolt	8	G710 to G736
10	50A-1644 Zi	Bolt	8	G740 to G780
11	14C-16 Zi	Flatwasher	16	
12	30A-16 Zi	Locknut	8	

Item	Part No.	Description	Qty.	Remarks
13		**Scarifier hydraulic circuit**	Ref.	926-30
13		**Plow & dozer hydraulic circuit**	Ref.	926-33
13		**Scarifier cylinder**	Ref.	926-31
13		**Plow & dozer cylinder**	Ref.	926-34

SERIAL NUMBERS: 33000 & UP	**A-FRAME**	Date **01/2001**	Group **926**
		Illustr. Nos **00004463**	Page **32**
			Issue **1**

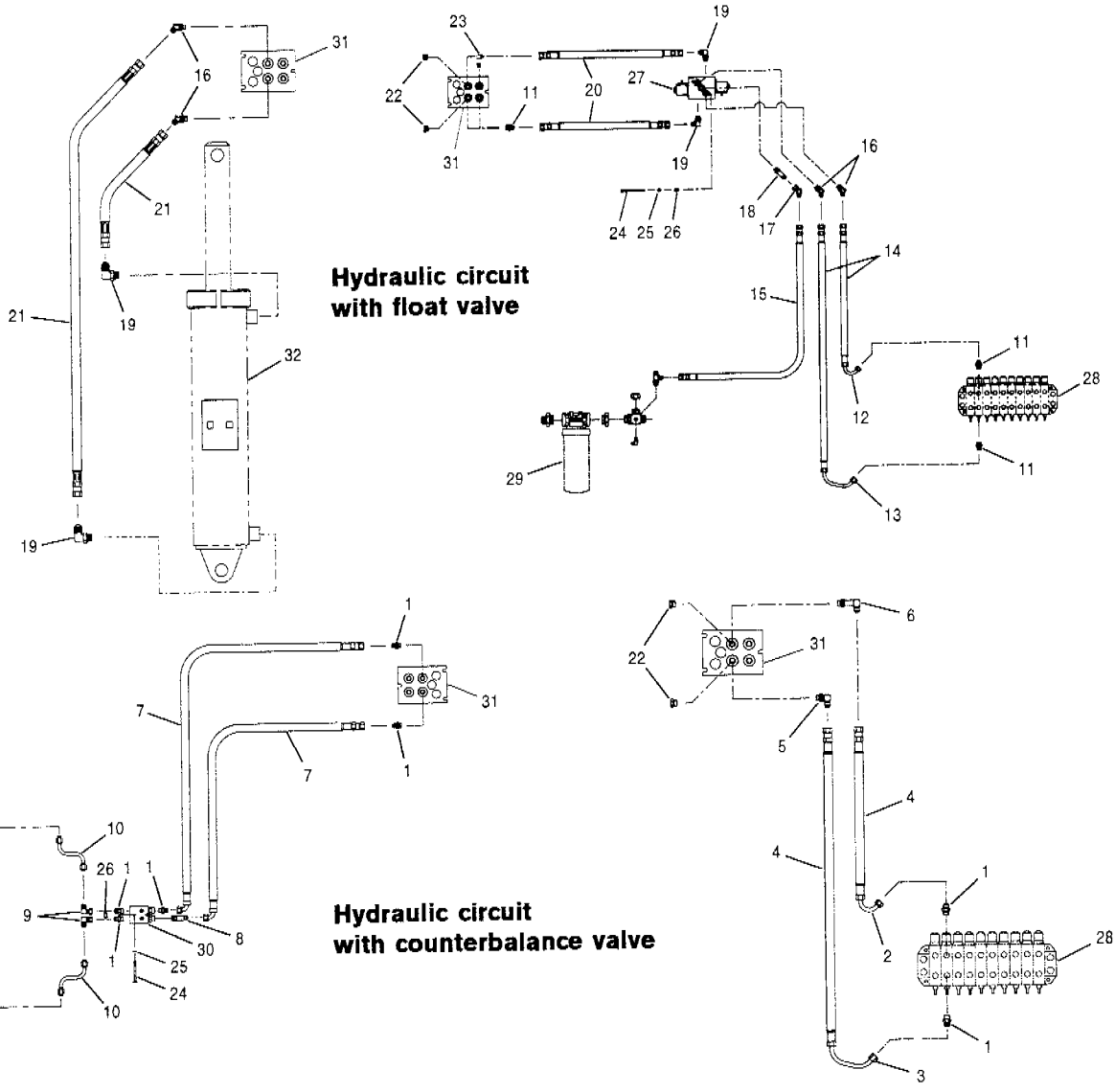

Item	Part No.	Description	Qty.	Remarks
		Hydraulic circuit with counterbalance valve		
1	111E-0808	Connector	7	
2	* 12725309	Tube	1	
3	* 12725310	Tube	1	
4	78192 x 185	Hose	2	
5	111B-0808	Connector	3	
6	111Q-0808	Connector	1	
7	78193 x 42	Hose	2	
8	111F-0808	Connector	1	
9	112B-08	Connector	2	
10	403008	Tube	2	
		Hydraulic circuit with float valve		
11	* 111E-0808	Connector	3	
12	* 12725309	Tube	1	
13	* 12725310	Tube	1	
14	78192 x 185	Hose	2	
15	9313 x 218	Hose	1	
16	111A-0808	Connector	4	
17	112A-08	Connector	1	
18	111F-0808	Connector	1	

Item	Part No.	Description	Qty.	Remarks
19	111B-0808	Connector	4	
20	9313 x 22	Hose	2	
21	78192 x 48	Hose	2	
22	111H-08	Plug	A.R.	
23	* 111Q-0808	Connector	1	
24	50A-0528 Zi	Bolt	2	
25	14A-05 Zi	Lockwasher	2	
26	38A-0502	Cage nut	2	
27		**Float valve**	Ref.	912-10
28		**Manifold valve**	Ref.	912-8 912-9
29		**Main hydraulic circuit**	Ref.	911-3
30		**Counterbalance valves**	Ref.	912-17 912-18
31		**Coupling plate**	Ref.	715-4
32		**Plow & dozer cylinder**	Ref.	926-34

SERIAL NUMBERS: 33000 & UP	**PLOW & DOZER CIRCUIT**	Date **04/2001**	Group **926**
		Illustr. Nos **00004843 00005139, 00004846 00004868**	Page **33**
			Issue **1A**

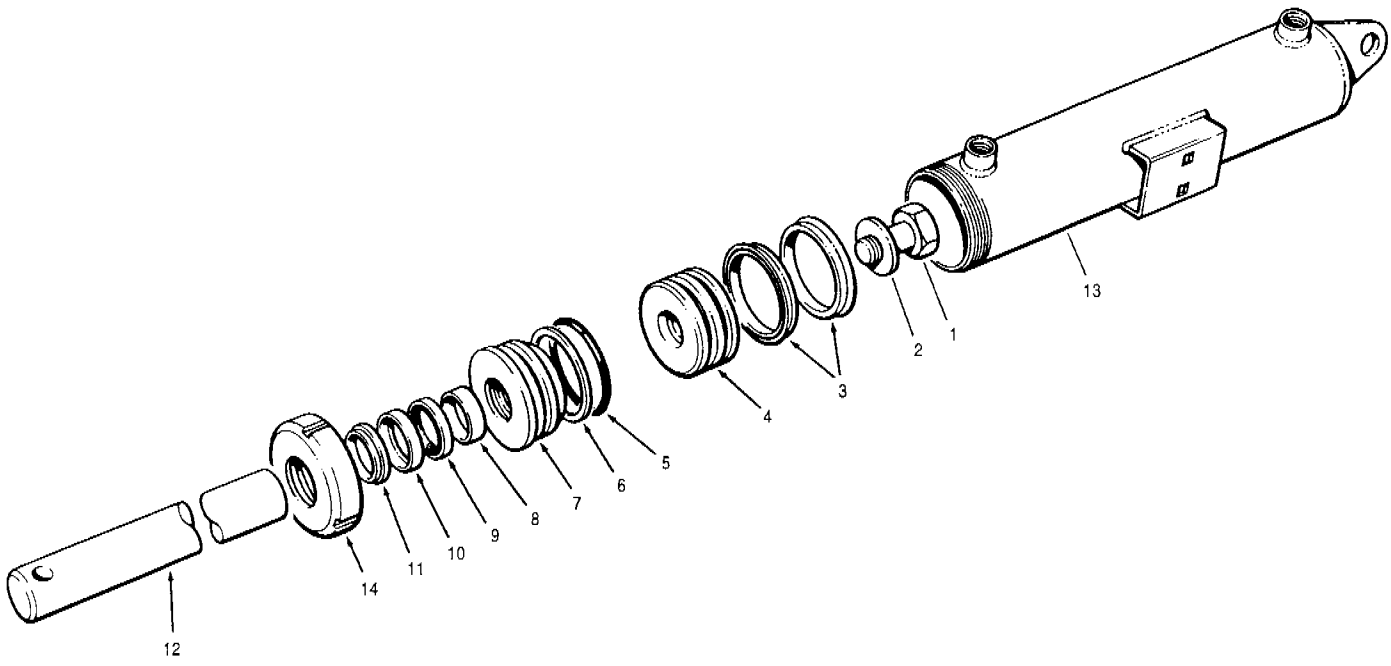

Item	Part No.	Description	Qty.	Remarks
	* 12724663	**Cylinder assembly** - includes items 1 to 14	1	
	* 12724303	**Repair kit for 12724663** **- cylinder assembly** - includes items 3, 5, 6, & 8 to 11	1	
1	50A-1622 UP	Bolt	1	
2	49380	Hardened washer	1	
3	12036	Piston seal	2	
4	59670	Piston	1	
5	44244	O-ring	1	
6	44266	Back up ring	1	
7	* 12724061	Gland	1	
8	* 12724222	Wear ring	1	
9	* 12724223	Rod seal	1	
10	59189	Back-up ring	1	
11	* 12724224	Rod wiper	1	
12	89033	Piston rod	1	
13	403013	Cylinder barrel - includes item 14	1	
14	62147	Cylinder nut	1	
		Plow & dozer circuit	Ref.	926-33

Item	Part No.	Description	Qty.	Remarks

SERIAL NUMBERS: 33000 & UP	**PLOW & DOZER CYLINDER**	Date **04/2001**	Group **926**
		Illustr. Nos **00004971**	Page **34**
			Issue **1A**

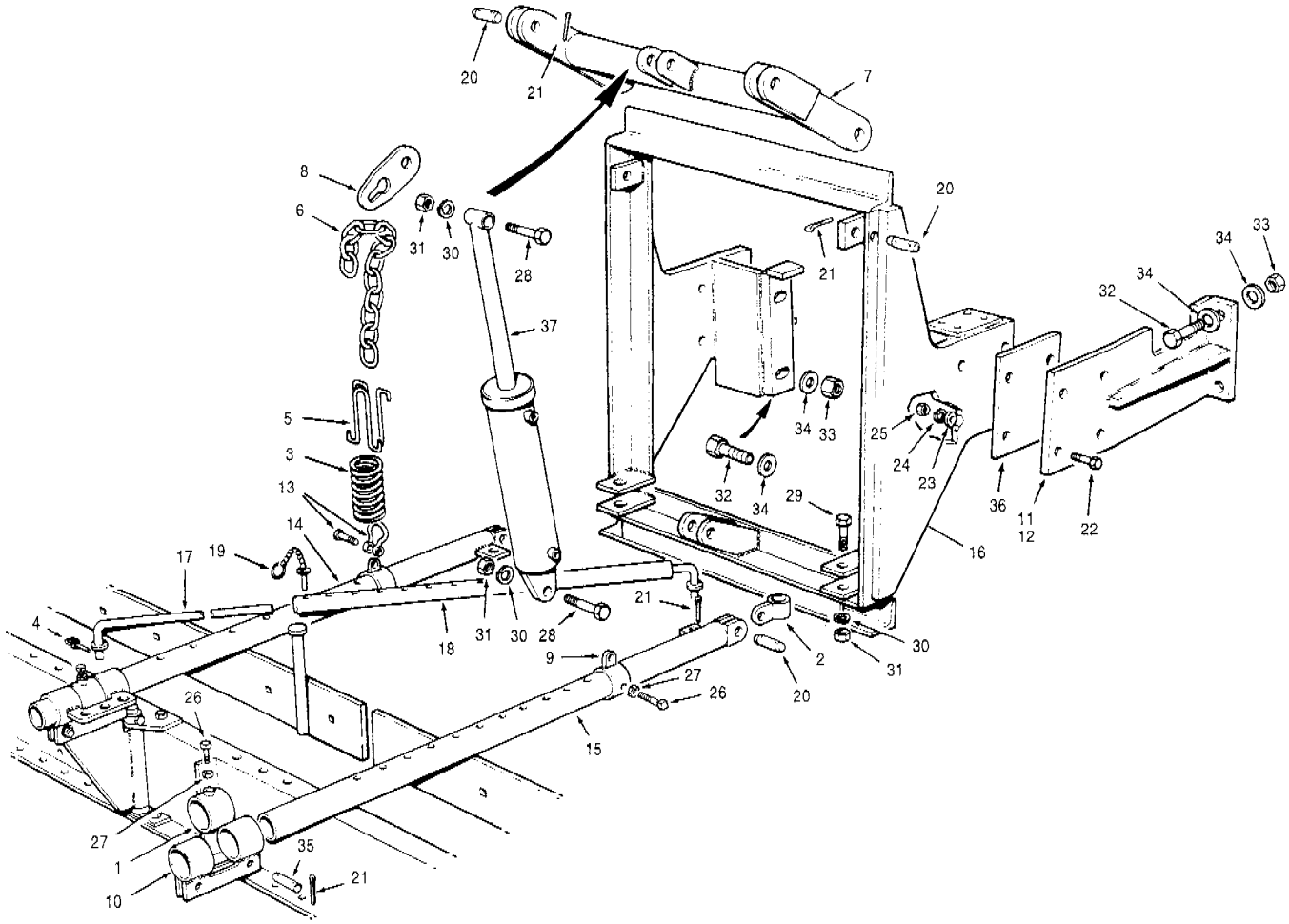

Item	Part No.	Description	Qty.	Remarks
1	5070	Collar	2	
2	5079	Swivel	2	
3	5081	Spring	2	
4	5369	Pin	2	
5	5763	Hook bar	4	
6	8457 x 28	Chain	2	
7	8501	Lifting arm	1	
8	8502	Plate	2	
9	8613	Collar	2	
10	9469	Bracket	2	
11	19256	Bracket - R.H.	1	
12	19257	Bracket - L.H.	1	
13	22129	Shackle	2	
14	41507	Pull tube - L.H.	1	
15	41508	Pull tube - R.H.	1	
16	69985	A-frame	1	
17	46280	Arm - inner	1	
18	46281	Arm - outer	1	
19	46282	Pin	1	
20	18C-0815	Pin	6	

Item	Part No.	Description	Qty.	Remarks
21	13A-0628	Cotter pin	20	
22	50A-1224 Zi	Bolt	8	
23	30075	Hardened washer	8	
24	14A-12 Zi	Lockwasher	8	
25	30A-12 Zi	Nut	8	
26	70K-1248	Setscrew	4	
27	30D-12 Zi	Nut	4	
28	50A-1636 Zi	Bolt	2	
29	50A-1644 Zi	Bolt	2	
30	14A-16 Zi	Lockwasher	4	
31	30A-16 Zi	Nut	4	
32	50A-2028 Zi	Bolt	8	
33	30A-20 Zi	Nut	16	
34	14C-20 Zi	Washer	8	
35	18C-0812	Pin	4	
36	46745	Shim	4	
37		**Windrow eliminator circuit**	Ref.	926-37
37		**Windrow eliminator cylinder**	Ref.	926-38

SERIAL NUMBERS: 33000 & UP	**WINDROW ELIMINATOR**	Date **01/2001**	Group **926**
		Illustr. Nos **00003666**	Page **35**
			Issue **1**

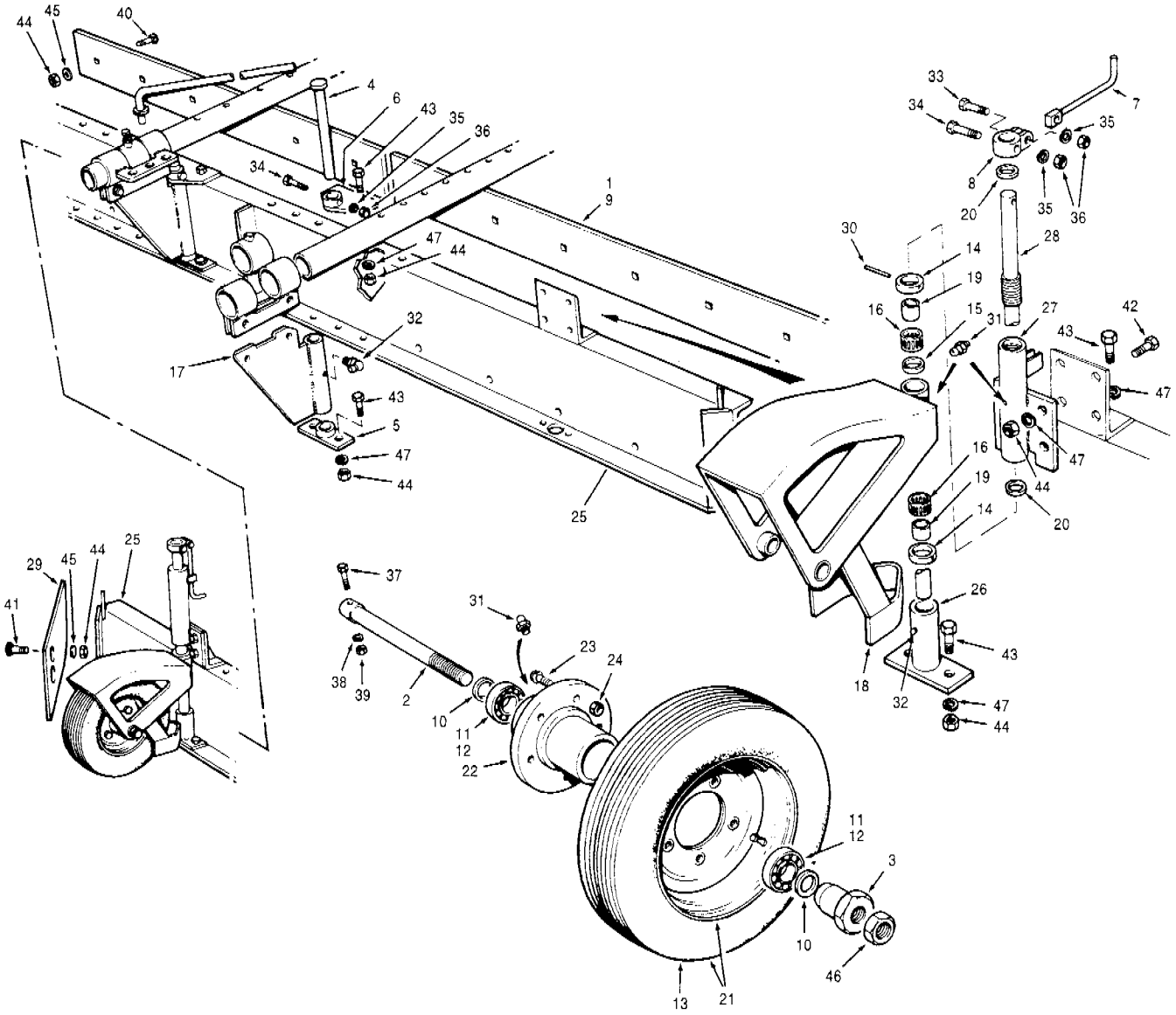

Item	Part No.	Description	Qty.	Remarks
1	42	Edge - 6'	1	
2	4779	Axle	2	
3	4780	Sleeve	2	
4	5072	Pin	2	
5	5073	Bracket - lower	2	
6	5074	Bracket - upper	2	
7	5154	Handle	2	
8	5155	Collar	2	
9	7686	Edge - 7'	1	
10	8250	Spacer	4	
11	8251	Cone	4	
12	8252	Cup	4	
13	8256	Tire & tube	2	
14	8505	Washer	4	
15	9447	Spacer	4	
16	9448	Bearing	4	
17	9470	Plate	2	
18	9491	Swivel housing	2	
19	9606	Inner race	4	
20	9897	Seal	4	
21	**25959**	**Rim & tire assembly** - includes item 13	2	
22	28024	Hub	2	
23	28026	Stud	10	
24	28027	Nut	10	

Item	Part No.	Description	Qty.	Remarks
25	**45812**	**Moldboard assembly**	1	
26	38657	Guide	2	
27	38651	Housing	2	
28	61660	Spindle	2	
29	45951	End shoe	2	
30	13C-0832	Roll pin	4	
31	29A-02	Grease fitting	6	
32	29B-02	Grease fitting	4	
33	50A-0516 Zi	Bolt	2	
34	50A-0520 Zi	Bolt	4	
35	14A-05 Zi	Lockwasher	6	
36	30A-05 Zi	Nut	6	
37	51A-0618 Zi	Bolt	2	
38	14A-06 Zi	Lockwasher	2	
39	31A-06 Zi	Nut	2	
40	40F-1016 Zi	Bolt	A.R.	
41	40G-1016 Zi	Bolt	4	
42	51A-1012 Zi	Bolt	8	
43	50A-1014 Zi	Bolt	16	
44	30A-10 Zi	Nut	35	
45	69361	Washer - hardened	16	
46	37K-12 Zi	Nut	2	
47	66001	Lockwasher	24	
		Windrow eliminator	Ref.	926-35

SERIAL NUMBERS: 33000 & UP	**WINDROW ELIMINATOR - MOLDBOARD ASSEMBLY**	Date **01/2001**	Group **926**
		Illustr. Nos **00003696**	Page **36**
			Issue **1**

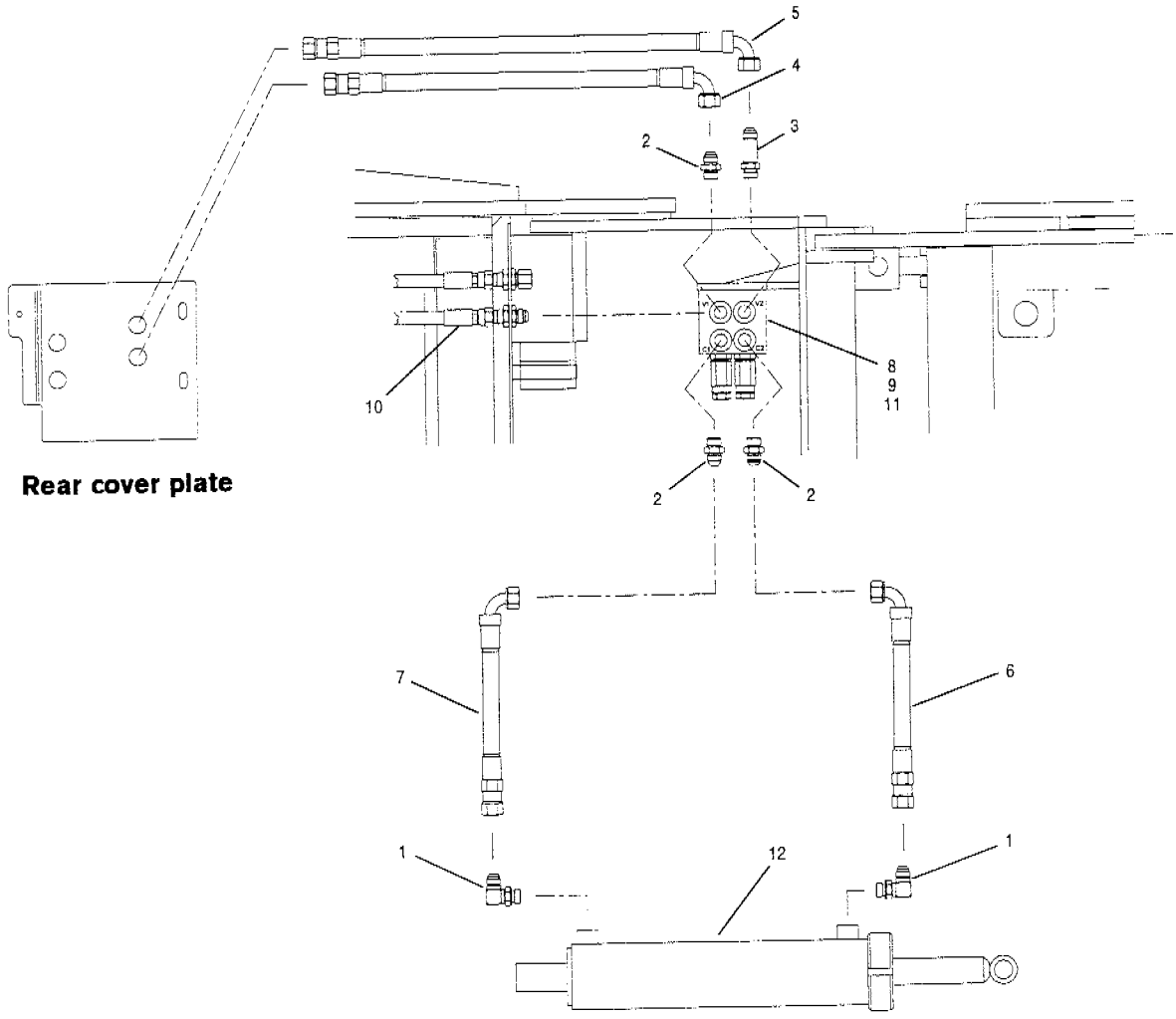

Rear cover plate

Item	Part No.	Description	Qty.	Remarks
1	111B-0808	Connector	2	
2	111E-0808	Connector	3	
3	111F-0808	Connector	1	
4	78193 x 11	Hose	1	
5	78193 x 12.25	Hose	1	
6	74430 x 28	Hose	1	
7	74430 x 31	Hose	1	
8	50A-0508 Zi	Bolt	4	
9	14A-05 Zi	Lockwasher	4	
10		**Attachments manifold valve circuit**	Ref.	926-24
11		**Single lock valve**	Ref.	926-15
12		**Windrow eliminator cylinder**	Ref.	926-38

Item	Part No.	Description	Qty.	Remarks

SERIAL NUMBERS: 33000 & UP	**WINDROW ELIMINATOR CIRCUIT**	Date **01/2001**	Group	**926**
		Illustr. Nos **00006158**	Page	**37**
			Issue	**1**

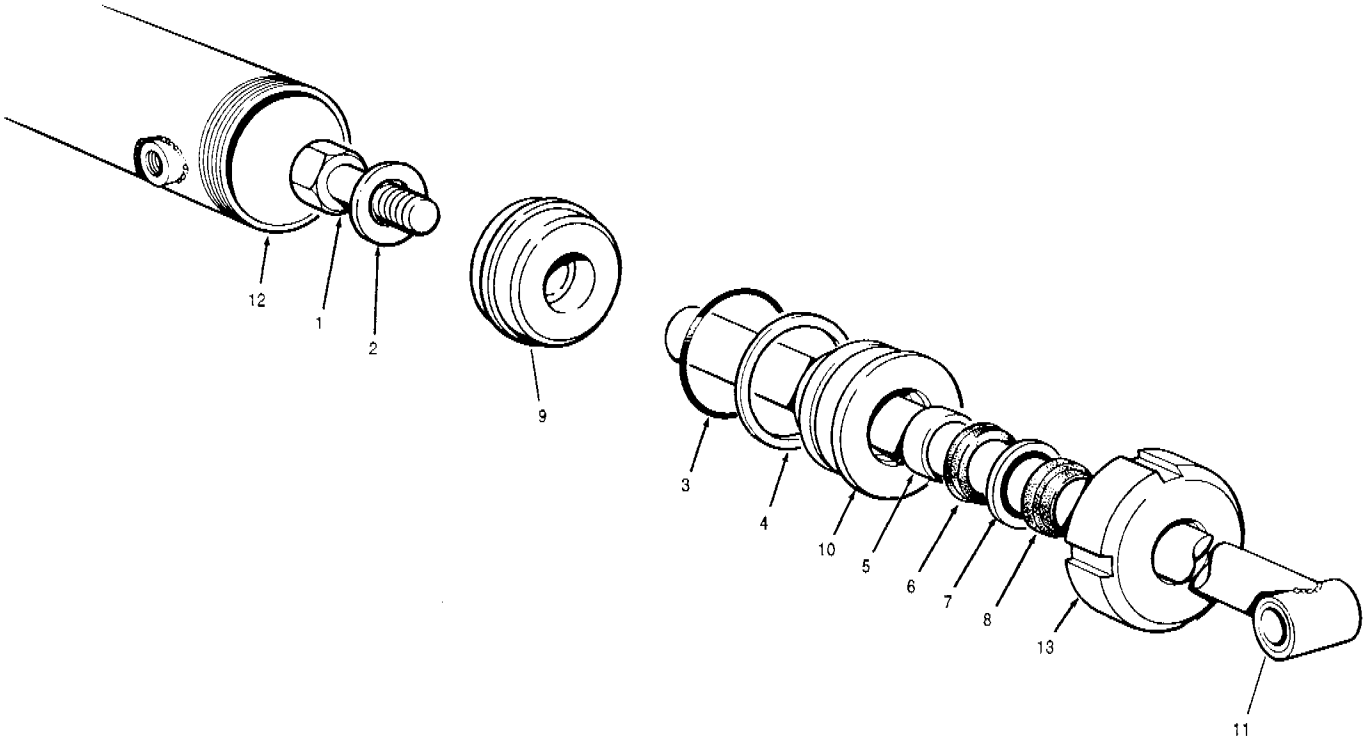

Item	Part No.	Description	Qty.	Remarks
	* 12724605	**Cylinder assembly** - includes items 1 to 13	1	
	* 12724304	**Repair kit for 12724605** **- cylinder assembly** - includes items 3 to 8	1	
1	50A-1220 UP	Bolt	1	
2	69360	Hardened washer	1	
3	44243	O-ring	1	
4	44343	Back-up ring	1	
5	59768	Wear ring	1	
6	* 12724215	Rod seal	1	
7	59136	Back-up ring	1	
8	* 12724216	Rod wiper	1	
9	404001	Piston	1	
10	* 406027	Gland	1	
11	89076	Piston rod	1	
12	62572	Cylinder barrel - includes item 13	1	
13	62146	Cylinder nut	1	

Item	Part No.	Description	Qty.	Remarks

SERIAL NUMBERS: 33000 & UP	**WINDROW ELIMINATOR CYLINDER**	Date **04/2001**	Group **926**
		Illustr. Nos **00004875**	Page **38**
			Issue **1A**

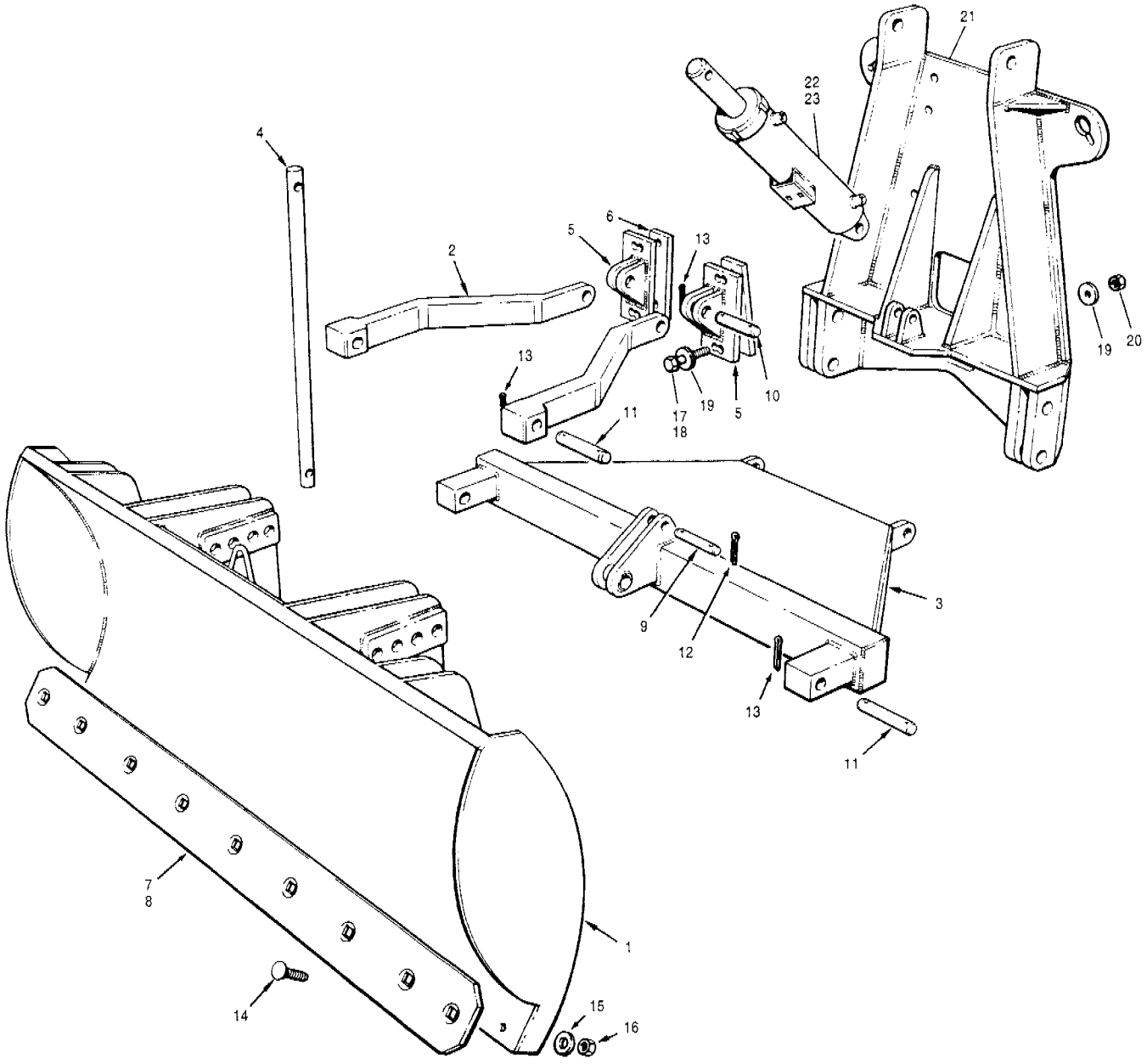

Item	Part No.	Description	Qty.	Remarks
1	**78845**	**Blade assembly - 8'**	1	
1	**78846**	**Blade assembly - 9'**	1	
2	1013	Arm	2	
3	2504	Frame	1	
4	78660	Link	1	
5	81795	Yoke	2	
6	22150	Shim - .135"	2	
6	22151	Shim - 1/4"	2	
6	22152	Shim - 1/2"	2	
6	22153	Shim - 3/4"	2	
7	23722	Edge - 8'	1	
7	23724	Edge - 8' - carbide tip	1	Optional
8	23725	Edge - 9'	1	
8	23723	Edge - 9' - carbide tip	1	Optional
9	18C-0820	Pin	1	
10	18C-1018	Pin	2	
11	18C-1234	Pin	5	

Item	Part No.	Description	Qty.	Remarks
12	13A-0628	Cotter pin	2	
13	13A-0836	Cotter pin	14	
14	40F-1016 Zi	Bolt	9 - 10	
15	69361	Hardened washer	9 - 10	
16	30A-10 Zi	Nut	9 - 10	
17	50A-1644 Zi	Bolt	4	G710 to G736
18	50A-1652 Zi	Bolt	4	G740 to G780
19	14C-16 Zi	Flatwasher	8	
20	30A-16 Zi	Locknut	4	
21		**A-frame**	Ref.	926-32
22		**Plow & dozer circuit**	Ref.	926-33
23		**Plow & dozer cylinder**	Ref.	926-34

SERIAL NUMBERS: 33000 & UP	**BULLDOZER**	Date **01/2001**	Group **927**
		Illustr. Nos **00003658**	Page **39**
			Issue **1**

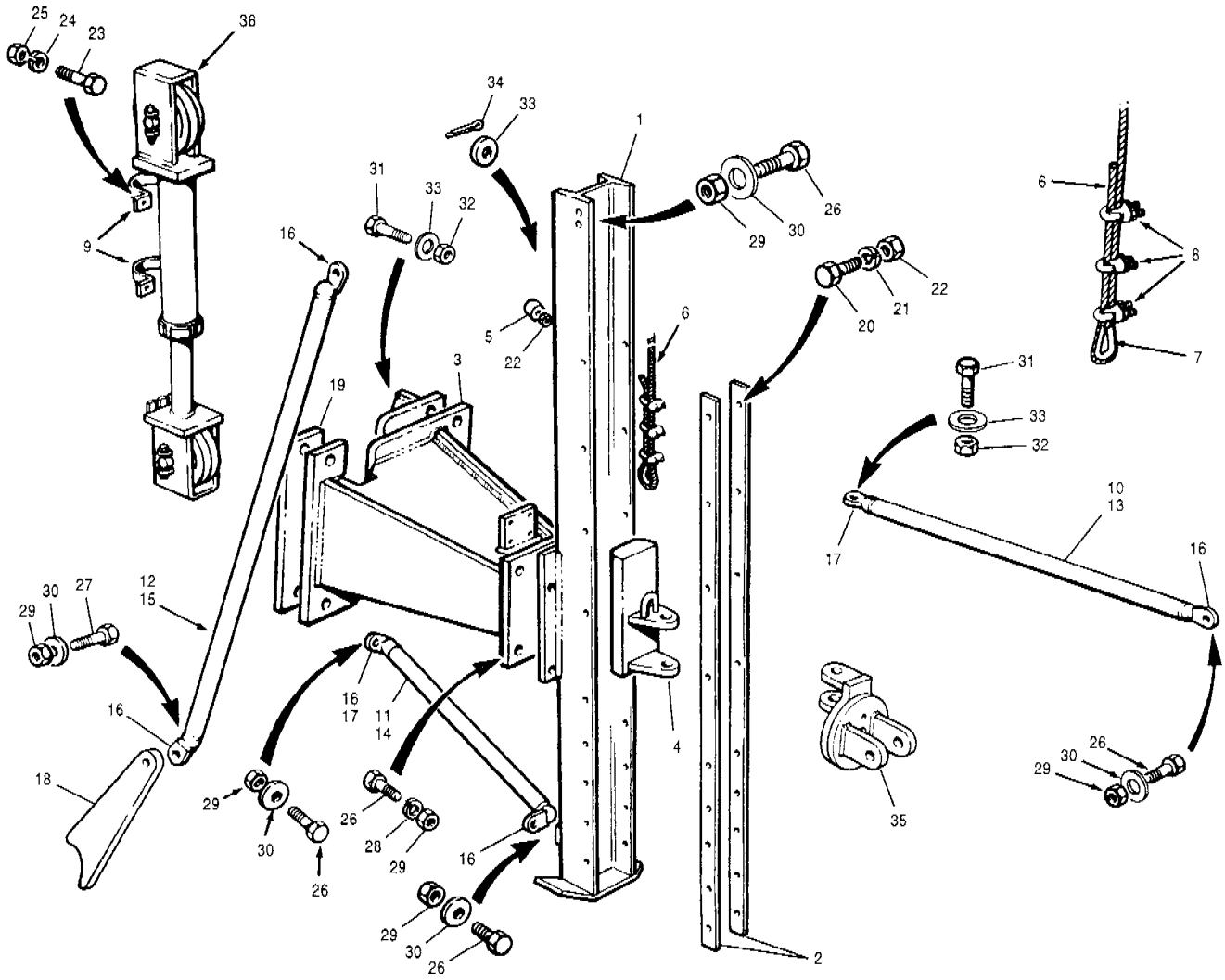

Item	Part No.	Description	Qty.	Remarks
1	78601	Front mast	1	
2	78380	Guide	2	
3	78605	Mounting bracket	1	G710 to G740
3	78604	Mounting bracket	1	G780
4	69154	Slide	1	
5	26019	Bumper pad	1	
6	11957 x 313"	Cable	1	
7	4051	Thimble	2	
8	4052	Clamp	6	
9	78833	Clamp	2	
10	12724037	Brace - includes 1 of item 16 & 1 of item 17	1	G710 to G740
11	78616	Brace - includes 2 of item 16	1	
12	404306	Brace - includes 2 of item 16	1	
13	78693	Brace - includes 1 of item 16 & 1 of item 17	1	G780
14	78618	Brace - includes 2 of item 16 & 1 of item 17	1	
15	78068	Brace - includes 2 of item 16	1	
16	18594	Adapter - 0.81" dia. hole	A.R.	
17	18858	Adapter - 1.06" dia. hole	A.R.	
18	80966	Brace mount	1	
19	78614	Mounting bracket	1	
20	50A-0814 Zi	Bolt	18	
21	14A-08 Zi	Lockwasher	18	
22	30A-08 Zi	Nut	19	

Item	Part No.	Description	Qty.	Remarks
23	50A-1014 Zi	Bolt	4	
24	14A-10 Zi	Lockwasher	4	
25	30A-10 Zi	Nut	4	
26	50A-1220 Zi	Bolt	8	
27	50A-1228 Zi	Bolt	1	
28	14A-12 Zi	Lockwasher	7	
29	30A-12 Zi	Nut	7	
30	14C-12 Zi	Flatwasher	5	
31	50A-1628 Zi	Bolt	5	
32	30A-16 Zi	Nut	5	
33	14C-16 Zi	Flatwasher	1	
34	13A-0824	Cotter pin	1	
35		**Wing installation**	Ref.	927-44
36		**Lift cylinder assembly**	Ref.	927-47

SERIAL NUMBERS: 33000 & UP	**REAR MOUNT CABLE WING - FRONT MAST INSTALLATION**	Date	**01/2001**	Group **927**
		Illustr. Nos	**00004369**	Page **40**
				Issue **1**

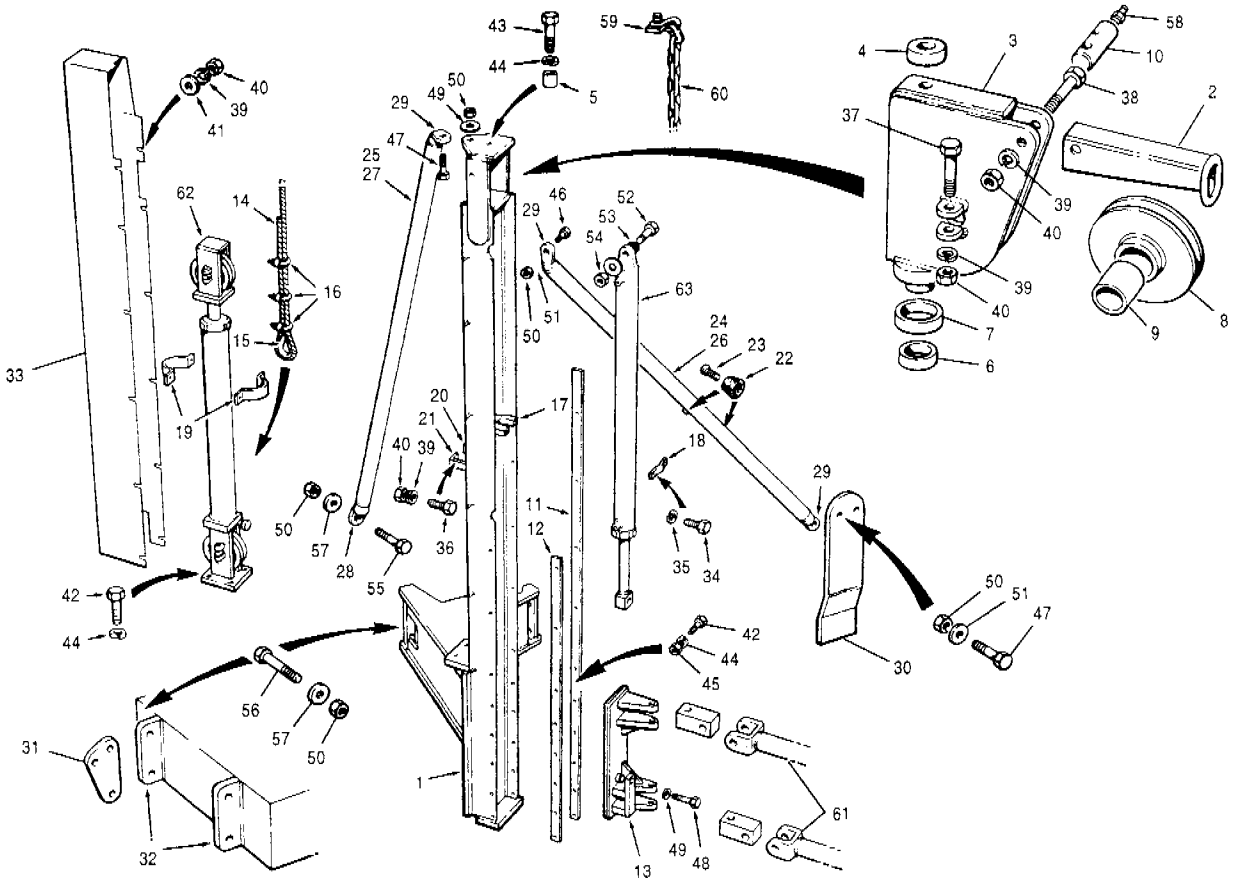

Item	Part No.	Description	Qty.	Remarks
1	81096	Rear mast	1	G710 to G740
1	81100	Rear mast	1	G750A & G780
2	21267	Cable guide	1	
3	89612	Swivel housing	1	
4	26873	Shim washer	2	
5	43562	Spacer	1	
6	69117	Bearing	1	
7	69118	Bearing	1	
	74967	**Sheave assembly** - includes items 8 & 9	1	
8	69112	Sheave - cable	1	
9	74968	Bushing	1	
10	89567	Pin	1	
11	69125	Guide - long	1	
12	69126	Guide - short	1	
13	69151	Slide	1	
14	11957 x 44'	Cable	1	
15	4051	Thimble	2	
16	4052	Clamp	6	
17	18450-38	Cylinder support	1	
18	18450-39	Clamp	1	
19	18741	Clamp		
20	69159	Bracket		
21	69160	Bracket		
22	57026	Bumper	2	
23	52L-1004 Zi	Screw	2	
24	57019	Brace - includes 2 of item 29	1	G710 to G740
25	55311	Brace - includes 1 of item 28 & 1 of item 29	1	G710 to G740
26	38690	Brace - includes 2 of item 29		G750A & G780
27	38689	Brace - includes 1 of item 28 & 1 of item 29		G750A & G780
28	18593	Adapter - 1.31" dia. hole	1	
29	18594	Adapter - 0.81" dia. hole	3	
30	19296	Brace mount	1	
31	23697	Brace mount	1	
32	69521	Lug	2	

Item	Part No.	Description	Qty.	Remarks
33	68491	Ice shield	1	
34	50A-0506 Zi	Bolt	2	
35	14A-05 Zi	Lockwasher	2	
36	50A-0612 Zi	Bolt	2	
37	50A-0614 Zi	Bolt	1	
38	50A-0620 Zi	Bolt	1	
39	14A-06 Zi	Lockwasher	16	
40	30A-06 Zi	Nut	16	
41	14C-06 Zi	Flatwasher	12	
42	50A-0814 Zi	Bolt	22	
43	50A-0816 Zi	Bolt	1	
44	14A-08 Zi	Lockwasher	23	
45	30A-08 Zi	Nut	18	
46	50A-1220 Zi	Bolt	1	
47	50A-1224 Zi	Bolt	2	
48	50A-1232 Zi	Bolt	1	
49	14A-12 Zi	Lockwasher	3	
50	30A-12 Zi	Nut	4	
51	14C-12 Zi	Flatwasher	4	
52	50A-1636 Zi	Bolt	1	
53	14A-16 Zi	Lockwasher	1	
54	30A-16 Zi	Nut	1	
55	50A-2028 Zi	Bolt	1	
56	50A-2036 Zi	Bolt	6	
57	14C-20 Zi	Flatwasher	7	
58	29A-02	Grease fitting	1	
59	11530	Lug - safety chain	2	
60		**Safety chain assembly**	Ref.	927-44
61		**Wing installation**	Ref.	927-44
62		**Lift cylinder assembly**	Ref.	927-48
63		**Slide cylinder assembly**	Ref.	927-48

SERIAL NUMBERS:
33000 & UP

REAR MOUNT CABLE WING
- REAR MAST INSTALLATION

Date **01/2001**
Illustr. Nos **00003661**

Group **927**
Page **41**
Issue **1**

VOLVO

G700 MODELS

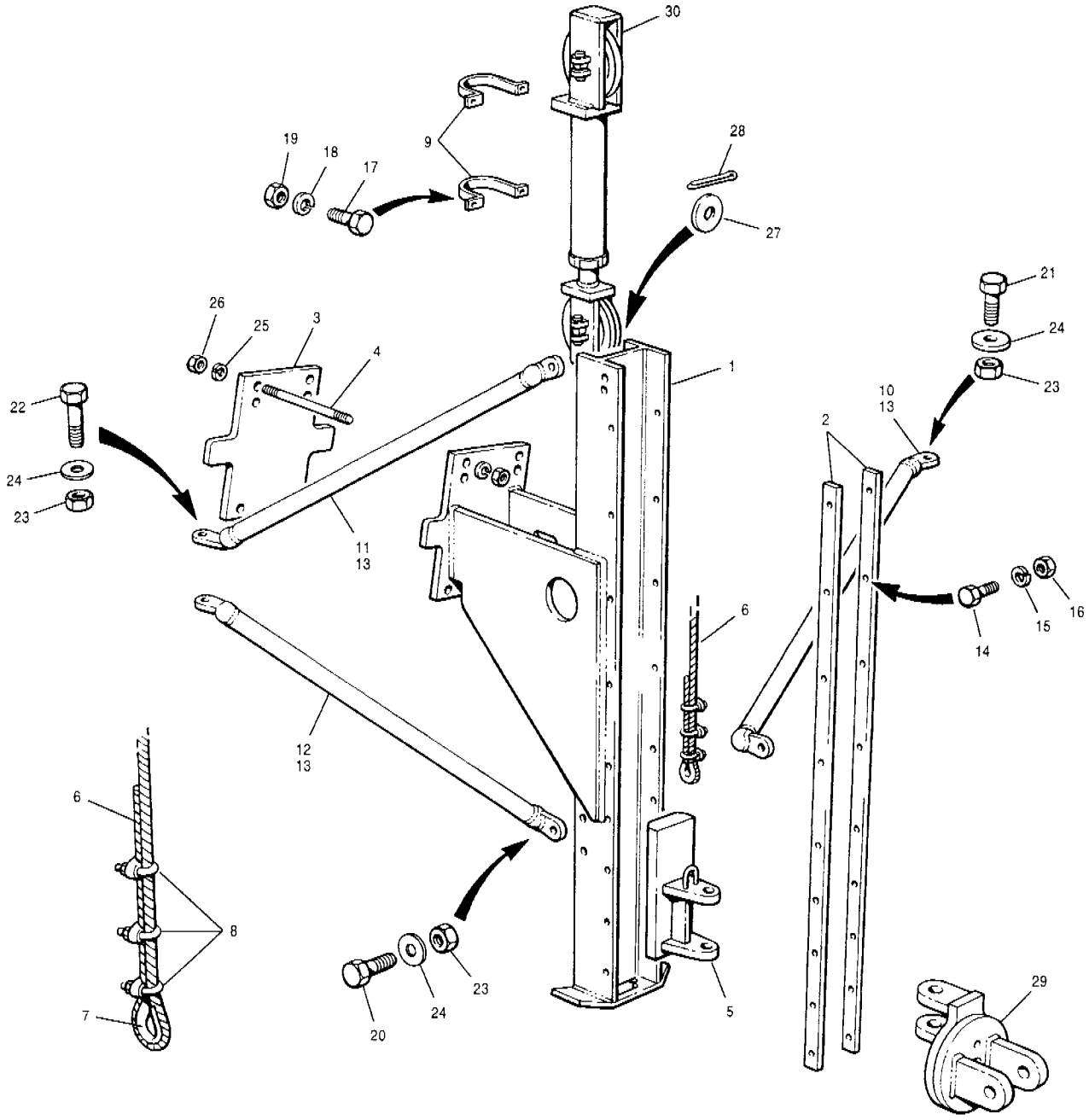

Item	Part No.	Description	Qty.	Remarks
1	79454	Front mast	1	
2	78380	Guide	2	
3	79455	Plate	1	
4	18729	Tie bolt	4	
5	69154	Slide	1	
6	11957 x 278"	Cable	1	
7	4051	Thimble	2	
8	4052	Clamp	6	
9	78833	Clamp	2	
10	78041	Brace - includes 2 of item 13	1	
11	78395	Brace - includes 2 of item 13	1	
12	78042	Brace - includes 2 of item 13	1	
13	18594	Adapter - 0.81 dia. hole	8	
14	50A-0814 Zi	Bolt	18	
15	14A-08 Zi	Lockwasher	18	

Item	Part No.	Description	Qty.	Remarks
16	30A-08 Zi	Nut	18	
17	50A-1014 Zi	Bolt	4	
18	14A-10 Zi	Lockwasher	4	
19	30A-10 Zi	Nut	4	
20	50A-1216 Zi	Bolt	3	
21	50A-1220 Zi	Bolt	1	
22	50A-1228 Zi	Bolt	1	
23	30A-12 Zi	Nut	6	
24	14C-12 Zi	Flatwasher	6	
25	14A-16 Zi	Lockwasher	8	
26	30A-16 Zi	Nut	8	
27	14C-16 Zi	Flatwasher	1	
28	13A-0824	Cotter pin	1	
29		**Wing installation**	Ref.	927-44
30		**Lift cylinder assembly**	Ref.	927-47

SERIAL NUMBERS: 33000 & UP	**FRONT MOUNT CABLE WING - FRONT MAST INSTALLATION**	Date	**01/2001**	Group	**927**
		Illustr. Nos	**00004492**	Page	**42**
				Issue	**1**

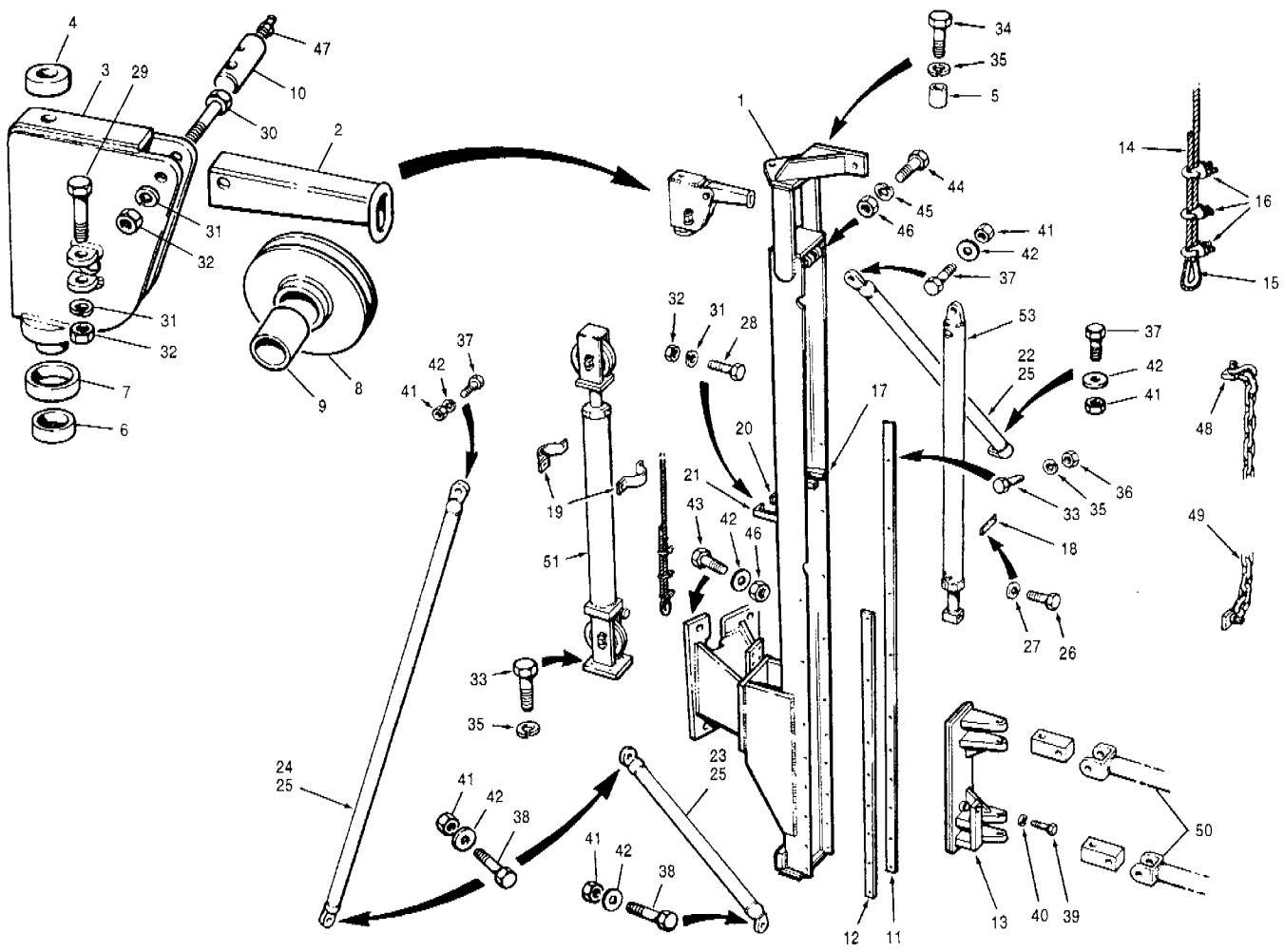

Item	Part No.	Description	Qty.	Remarks
1	78629	Rear mast	1	
2	21267	Cable guide	1	
3	89612	Swivel housing	1	
4	26873	Shim washer	2	
5	43562	Spacer	1	
6	69117	Bearing	1	
7	69118	Bearing	1	
	74967	**Sheave assembly** - includes items 8 & 9	1	
8	69112	Sheave - cable	1	
9	74968	Bushing	1	
10	89567	Pin	1	
11	69125	Guide - long	1	
12	69126	Guide - short	1	
13	69151	Slide	1	
14	11957 x 44'	Cable	1	
15	4051	Thimble	2	
16	4052	Clamp	6	
17	18450 - 38	Cylinder support	1	
18	18450 - 39	Clamp	1	
19	18741	Clamp	1	
20	69159	Bracket	1	
21	69160	Bracket	1	
22	401043	Brace - includes 2 of item 25	1	
23	40912	Brace - includes 2 of item 25	1	
24	27639	Brace - includes 2 of item 25	1	
25	18594	Adapter - 0.81" dia. hole	6	
26	50A-0506 Zi	Bolt	2	
27	14A-05 Zi	Lockwasher	2	

Item	Part No.	Description	Qty.	Remarks
28	50A-0612 Zi	Bolt	2	
29	50A-0614 Zi	Bolt	1	
30	50A-0620 Zi	Bolt	1	
31	14A-06 Zi	Lockwasher	6	
32	30A-06 Zi	Nut	6	
33	50A-0814 Zi	Bolt	22	
34	50A-0816 Zi	Bolt	1	
35	14A-08 Zi	Lockwasher	23	
36	30A-08 Zi	Nut	18	
37	50A-1220 Zi	Bolt	3	
38	50A-1224 Zi	Bolt	3	
39	50A-1232 Zi	Bolt	1	
40	14A-12 Zi	Lockwasher	4	
41	30A-12 Zi	Nut	3	
42	14C-12 Zi	Flatwasher	3	
43	50A-1628 Zi	Bolt	4	
44	50A-1636 Zi	Bolt	1	
45	14A-16 Zi	Lockwasher	5	
46	30A-16 Zi	Nut	5	
47	29A-02	Grease fitting	1	
48	11530	Lug - safety chain	2	
49		**Safety chain assembly**	Ref.	927-44
50		**Wing installation**	Ref.	927-44
51		**Lift cylinder assembly**	Ref.	927-48
52		**Slide cylinder assembly**	Ref.	927-48

SERIAL NUMBERS:
33000 & UP

FRONT MOUNT CABLE WING - REAR MAST INSTALLATION

Date	01/2001	Group	927
Illustr. Nos	00003662	Page	43
		Issue	1

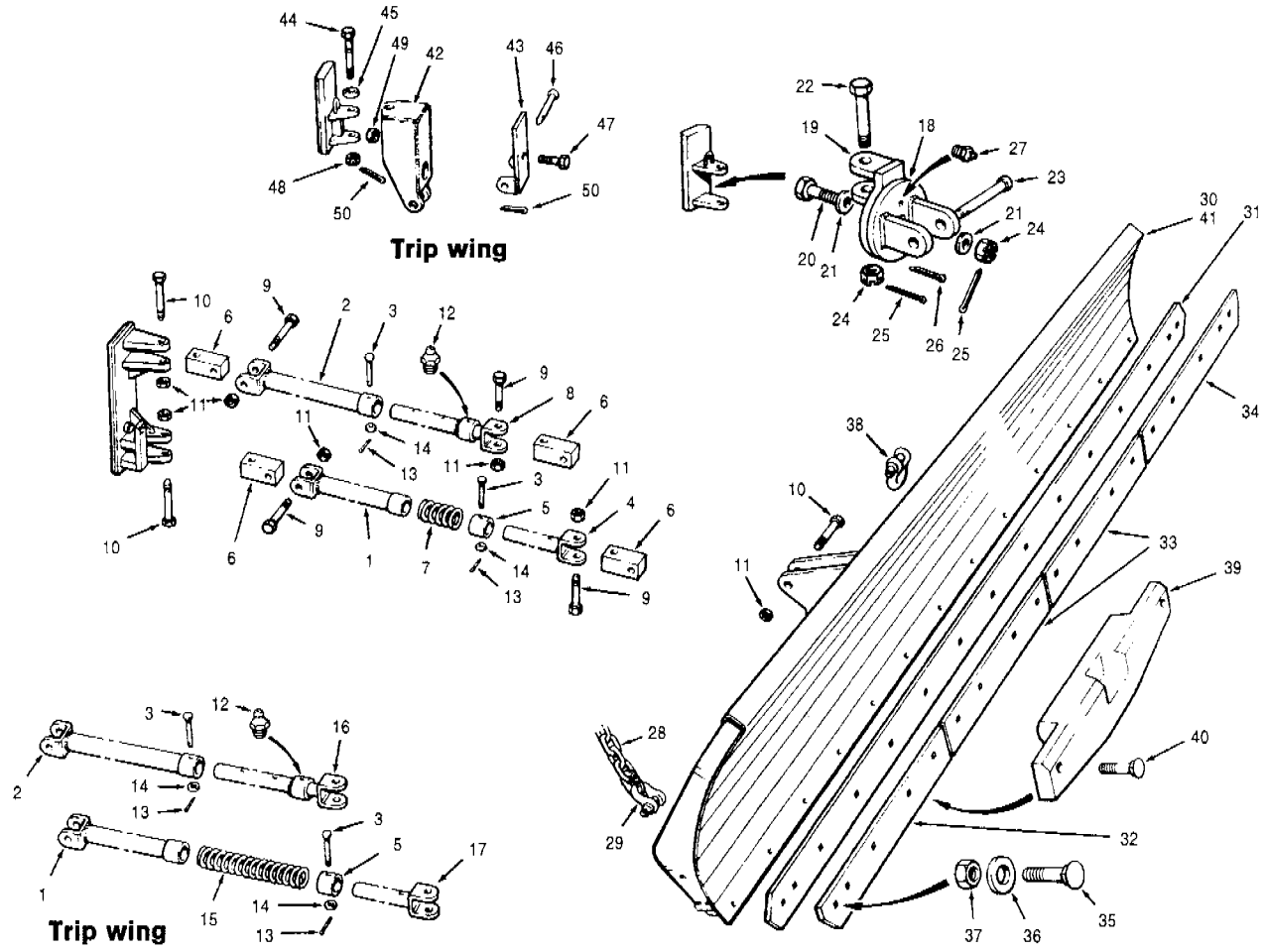

Item	Part No.	Description	Qty.	Remarks
		Stand-off arms installation		
1	21198	Outer sleeve - lower arm	1	
2	21501	Outer sleeve - upper arm	1	
3	21503	Shear pin	2	
4	21505	Inner sleeve - lower arm	1	
5	21507	Collar	1	
6	21595	Knuckle	4	
7	22126	Spring	1	
8	22155	Inner sleeve - upper arm	1	
9	50A-1640 Zi	Bolt	4	
10	50A-1648 Zi	Bolt	4	
11	36D-16 Zi	Nut	8	
12	29A-02	Grease fitting	1	
13	13A-0416	Cotter pin	2	
14	14C-10 Zi	Flatwasher	2	
15	21898	Spring	1	Optional trip wing
16	21930-SA1	Inner sleeve - upper arm	1	Optional trip wing
17	21931-SA1	Inner sleeve - lower arm	1	Optional trip wing
		Wing installation		
18	66061	Rotary plate	1	
19	66388	Swivel plate	1	
20	54332	Bolt - drilled	1	
21	66109	Washer	2	
22	66530	Retaining pin	1	
23	10570	Pin	1	
24	30J-24 Zi	Slotted nut	2	
25	13A-0848	Cotter pin	2	
26	13A-1240	Cotter pin	1	
27	29A-02	Grease fitting	1	

Item	Part No.	Description	Qty.	Remarks
	11531	**Safety chain assembly** - includes items 28 & 29	1	
28	8457 x 40	Chain	1	
29	22129	Shackle	2	
30	22093	Wing - drilled for standard edges	1	
30	22168	Wing - drilled for carbide edges	1	Optional
31	23733	Edge	1	
31	23736	Edge - 5/8" thick	1	Optional
32	23734	Edge - outer - carbide - L.H.	1	Optional
33	23735	Edge - inner - carbide	2	Optional
34	24171	Edge - outer - carbide - R.H	1	Optional
35	40F-1016 Zi	Bolt	A.R.	
36	69361	Hardened washer	A.R.	
37	30A-10 Zi	Nut	A.R.	
38	21590	Shackle	1	
39	22164	Shoe	A.R.	Optional
40	40F-1028 Zi	Bolt	A.R.	
		Trip wing installation		Optional
41	78888	Trip wing - drilled for standard edges	1	
41	78889	Trip wing - drilled for carbide edges	1	
42	78837	Swivel	1	
43	21970	Hinge plate	1	
44	69187	Swivel pin	1	
45	69191	Spacer	1	
46	21972	Pin	1	
47	45460	Bolt	1	
48	30J-24	Slotted nut	1	
49	37M-20 Zi	Locknut	1	
50	13A-0848 Zi	Cotter pin	2	

SERIAL NUMBERS: 33000 & UP	**WING INSTALLATION - CABLE WING**	Date 01/2001	Group 927
		Illustr. Nos 00002108	Page 44
			Issue 1

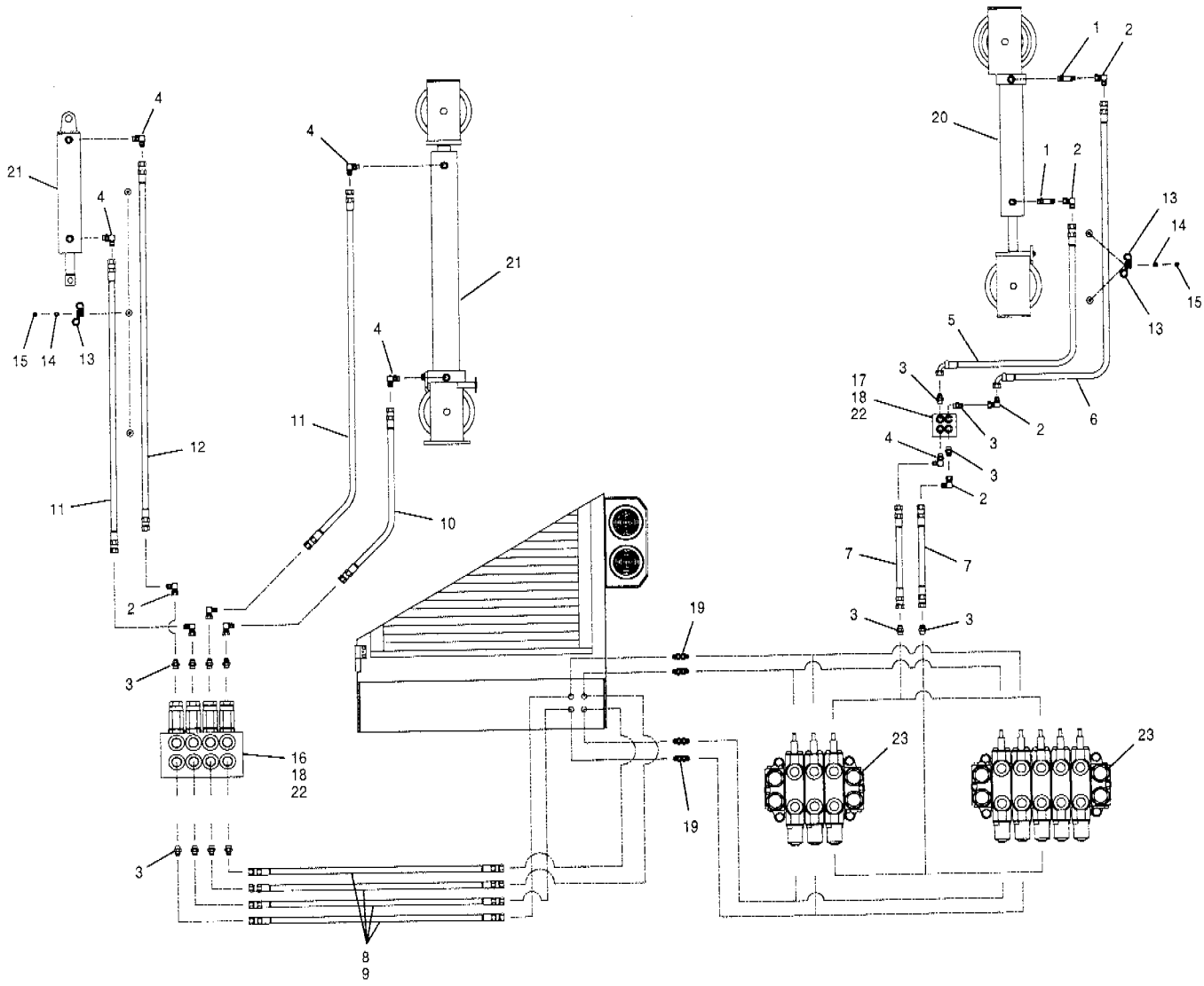

Item	Part No.	Description	Qty.	Remarks
1	111F-0808	Connector	7	
2	112B-08	Connector	8	
3	111E-0808	Connector	11	
4	111B-0808	Connector	5	
5	74430 x 60	Hose	1	
6	74430 x 80	Hose	1	
7	* 78192 x 27	Hose	2	
8	78192 x 24	Hose	4	G710 to G740
9	78192 x 28	Hose	4	G780
10	74429 x 27	Hose	1	
11	74429 x 60	Hose	2	
12	74429 x106	Hose	1	
13	32318	Clamp	10	
14	* 940097	Hardened washer	5	
15	30A-06 Zi	Nut	5	
16	50A-0508 Zi	Bolt	4	
17	50A-0510 Zi	Bolt	4	
18	* 955894	Hardened washer	8	

Item	Part No.	Description	Qty.	Remarks
19		Attachments manifold valve circuit - rear	Ref.	916-24
20		Wing lift cylinder - front mast	Ref.	927-47
21		Wing lift & slide cylinders - rear mast	Ref.	927-48
22		Lock valve	Ref.	912-15 912-16
23		Manifold valve	Ref.	912-11 912-12

SERIAL NUMBERS: 33000 & UP	**REAR MOUNT WING HYDRAULICS - CABLE WING**	Date **05/2001**	Group	**927**
		Illustr. Nos **00003653**	Page	**45**
			Issue	**1A**

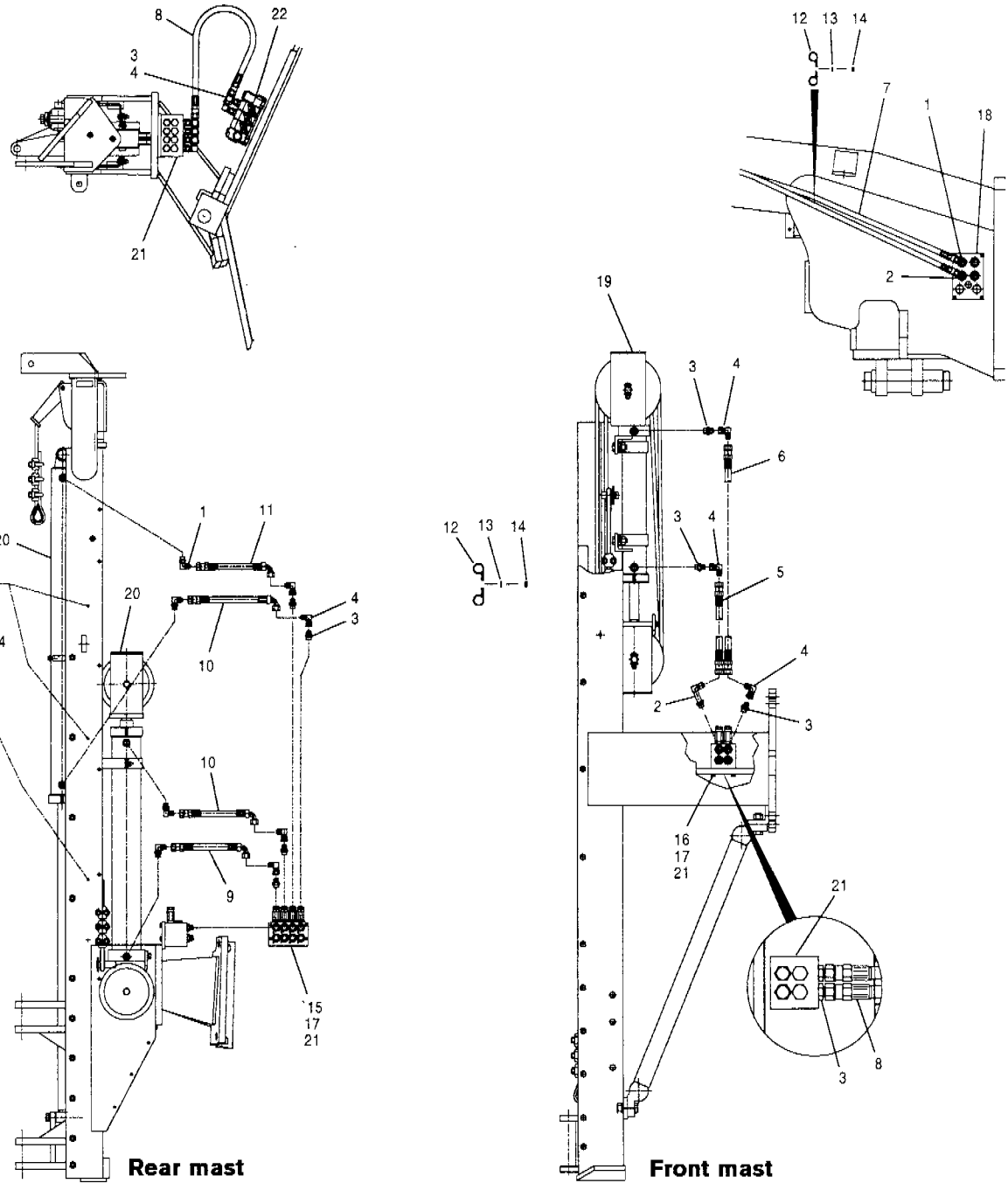

Rear mast

Front mast

Item	Part No.	Description	Qty.	Remarks
1	111B-0808	Connector	5	
2	111Q-0808	Connector	2	
3	111E-0808	Connector	18	
4	112B-08	Connector	15	
5	74429 x 27	Hose	1	
6	74429 x 30	Hose	1	
7	78192 x 72	Hose	2	
8	78192 x 30	Hose	4	
9	74430 x 12.25	Hose	1	
10	74430 x 42	Hose	2	
11	74430 x 90	Hose	1	
12	32318	Clamp	8	
13	14A-06 Zi	Lockwasher	5	
14	30A-06 Zi	Nut	5	
15	50A-0508 Zi	Bolt	4	
16	50A-0510 Zi	Bolt	4	
17	14A-05 Zi	Lockwasher	8	

Item	Part No.	Description	Qty.	Remarks
18		Attachment manifold valve circuit - front	Ref.	916-24
19		Wing lift cylinder - front mast	Ref.	927-47
20		Wing lift & slide cylinders - rear mast	Ref.	927-48
21		Lock valve	Ref.	912-15 912-16
22		Manifold valve	Ref.	912-11 912-12

SERIAL NUMBERS: 33000 & UP	**FRONT MOUNT WING HYDRAULICS - CABLE WING**	Date **01/2001**	Group **927**
		Illustr. Nos **00003668**	Page **46**
			Issue **1**

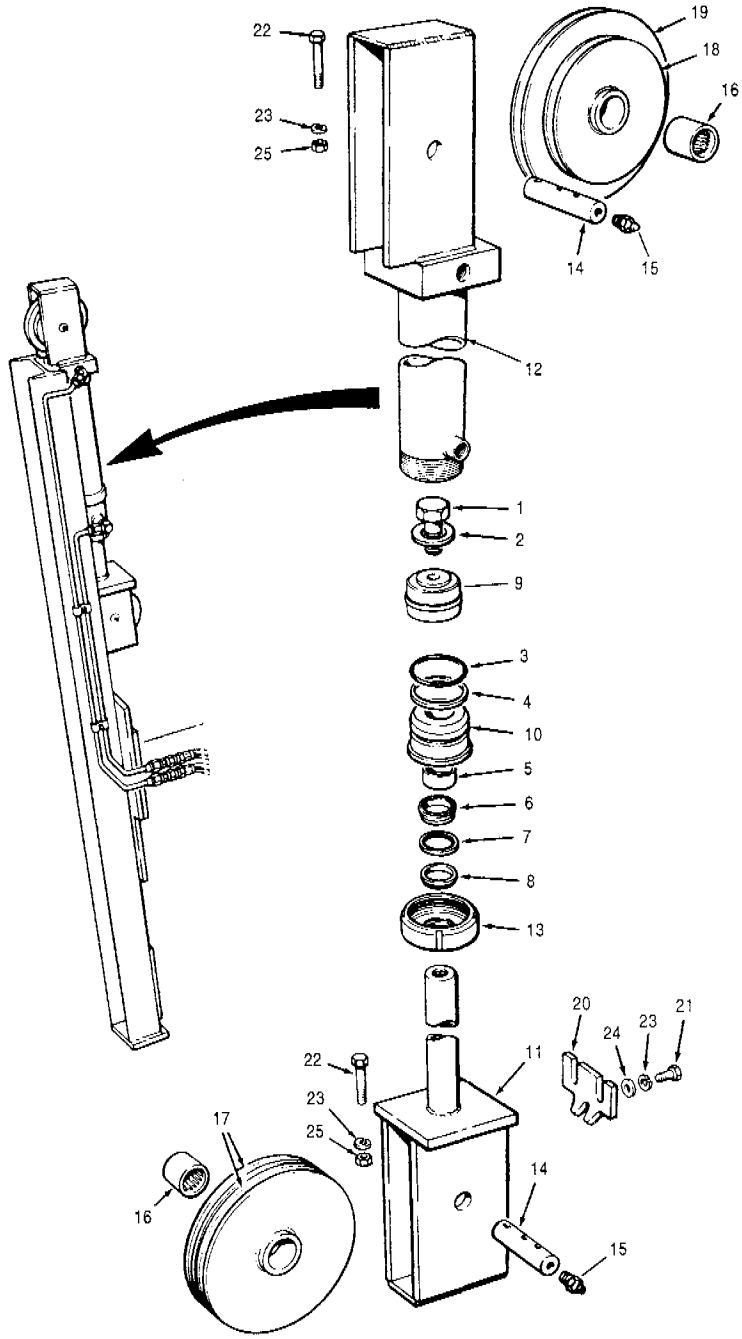

Item	Part No.	Description	Qty.	Remarks
	89571	**Cylinder assembly** - includes items 1 to 25	1	
	*** 12724304**	**Repair kit for 89571** **- cylinder assembly** - includes items 3 to 8	1	
1	50A-1220 UP	Bolt	1	
2	69360	Hardened washer	1	
3	44243	O-ring	1	
4	44343	Back-up ring	1	
5	59768	Wear ring	1	
6	* 12724215	Rod seal	1	
7	59136	Back-up ring	1	
8	* 12724216	Rod wiper	1	
9	404001	Piston	1	
10	* 406027	Gland	1	
11	89064	Piston rod	1	

Item	Part No.	Description	Qty.	Remarks
12	62566	Cylinder barrel - includes item 13	1	
13	62146	Cylinder nut	1	
14	89568	Pin	2	
15	29A-02	Grease fitting	2	
16	74966	Bushing	1 per	
17	74964	Sheave - includes item 16	2	
18	74963	Sheave - includes item 16	1	
19	74965	Sheave - includes item 16	1	
20	22084	Ice scraper	1	
21	51A-0608 Zi	Bolt	2	
22	50A-0616 Zi	Bolt	2	
23	14A-06 Zi	Lockwasher	4	
24	14C-06 Zi	Flatwasher	2	
25	30A-06 Zi	Nut	2	

SERIAL NUMBERS: 33000 & UP	**WING LIFT CYLINDER - FRONT MAST** **- CABLE WING**	Date **04/2001**	Group	**927**
		Illustr. Nos **00006156**	Page	**47**
			Issue	**1A**

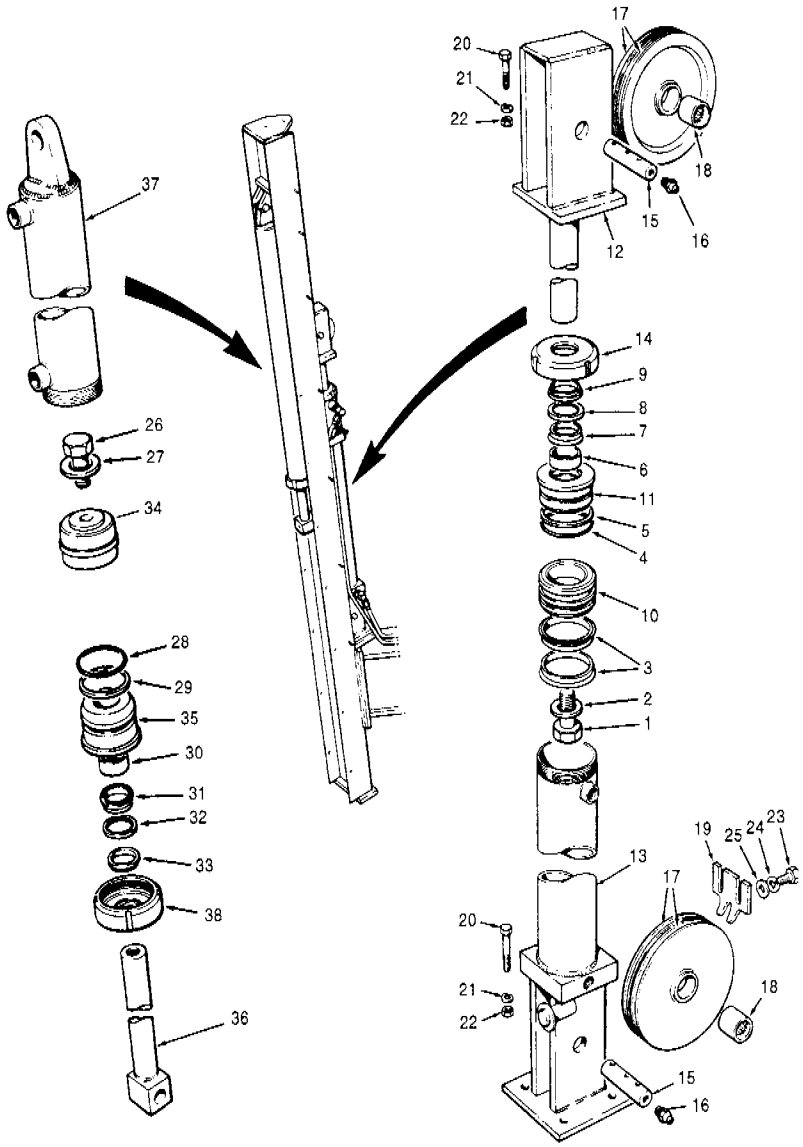

Item	Part No.	Description	Qty.	Remarks
	89573	**Lift cylinder assembly** - includes items 1 to 25	1	
	* **12724303**	**Repair kit for 89573 - cylinder assembly** - includes items 3 to 9	1	
1	50A-1620 UP	Bolt	1	
2	49380	Hardened washer	1	
3	12036	Piston seal	2	
4	44244	O-ring	1	
5	44266	Back-up ring	1	
6	43074	Wear ring	1	
7	* 12724223	Rod seal	1	
8	59189	Back-up ring	1	
9	* 12724224	Rod wiper	1	
10	59670	Piston	1	
11	* 12724061	Gland	1	
12	89066	Piston rod	1	
13	62554	Cylinder barrel - includes item 14	1	
14	62147	Cylinder nut	1	
15	89568	Pin	2	
16	29A-02	Grease fitting	2	
17	74964	Sheave - includes item 18	4	
18	74966	Bushing	1 per	
19	22084	Ice scraper	1	

Item	Part No.	Description	Qty.	Remarks
20	50A-0616 Zi	Bolt	2	
21	14A-06 Zi	Lockwasher	2	
22	30A-06 Zi	Nut	2	
23	51A-0808 Zi	Bolt	2	
24	14A-08 Zi	Lockwasher	2	
25	14C-08 Zi	Flatwasher	2	
	* **12724629**	**Slide cylinder assembly** - includes items 26 to 38	1	
	* **12724303**	**Repair kit for 12724629 - cylinder assembly** - includes items 28 to 33	1	
26	50A-1220 UP	Bolt	1	
27	69360	Hardened washer	1	
28	44243	O-ring	1	
29	44343	Back-up ring	1	
30	59768	Wear ring	1	
31	* 12724215	Rod seal	1	
32	59136	Back-up ring	1	
33	* 12724216	Rod wiper	1	
34	404001	Piston	1	
35	* 406027	Gland	1	
36	89068	Piston rod	1	
37	62568	Cylinder barrel - includes item 38	1	
38	62146	Cylinder nut	1	

SERIAL NUMBERS: 33000 & UP	**WING CYLINDERS - REAR MAST - CABLE WING**	Date 04/2001	Group 927
		Illustr. Nos 00006157	Page 48
			Issue 1A

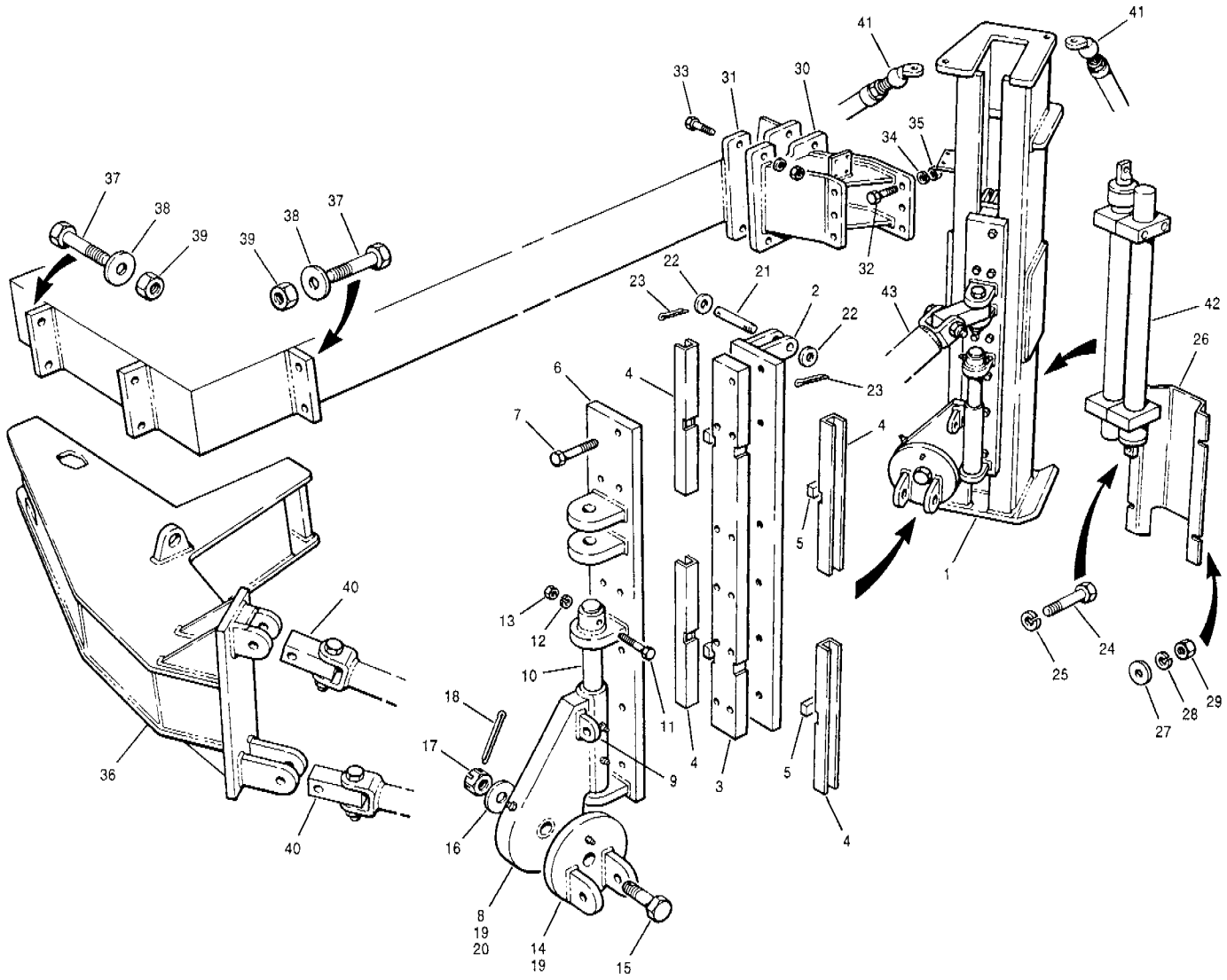

Item	Part No.	Description	Qty.	Remarks
	97520	**Front tower assembly** - includes items 1 to 29 & 42	1	
1	97522	Front mast	1	
2	97017	Inner slider plate	1	
3	97020	Spacer bar	1	
4	97528	Slider rail	4	
5	97026	Lock bar	4	
6	97021	Outer slider plate	1	
7	50A-1232 Zi	Bolt	11	
8	97139	Swivel mount - includes item 9	1	
9	11530	Lug	1	
10	97272	Pivot pin	1	
11	50A-0832 Zi	Bolt	1	
12	14A-08 Zi	Lockwasher	1	
13	30A-08 Zi	Nut	1	
14	89759	Swivel	1	
15	89763	Swivel pin	1	
16	14C-24 Zi	Flatwasher	1	
17	30J-24 Zi	Slotted nut	1	
18	13A-0848	Cotter pin	1	
19	29A-02	Grease fitting	3	
20	29E-04	Grease fitting	1	
21	18C-0616	Pin	1	
22	14C-10 Zi	Flatwasher	2	
23	13A-0420	Cotter pin	2	
24	50A-1228 Zi	Bolt	1	
25	14A-12 Zi	Lockwasher	1	
26	12723812	Guard	1	

Item	Part No.	Description	Qty.	Remarks
27	14C-06 Zi	Flatwasher	4	
28	14A-06 Zi	Lockwasher	4	
29	30A-06 Zi	Nut	4	
30	404155	Mounting bracket - front	1	G710 to G740
30	97539	Mounting bracket - front	1	G780
31	78614	Mounting bracket - frame	1	
32	50A-1622 Zi	Bolt	6	
33	50A-1628 Zi	Bolt	4	
34	14A-16 Zi	Lockwasher	10	
35	30A-16 Zi	Nut	10	
36	97404	Mounting bracket - rear	1	G710 to G740
36	97410	Mounting bracket - rear	1	G780
37	50A-2036 Zi	Bolt	4	
38	14C-20 Zi	Flatwasher	4	
39	36N-20 Zi	Locknut	4	
	97627	**General hardware kit**		
40		**Wing installation**	Ref.	927-51
41		**Wing braces**	Ref.	927-53
42		**Dual slide cylinder assembly & circuit**	Ref.	927-55 927-56
43		**Lift cylinder circuit**	Ref.	927-57
43		**Lift cylinder assembly**	Ref.	927-58

SERIAL NUMBERS: 33000 & UP	**LO-BANK REAR MOUNT WING INSTALLATION - HYDRAULIC WING**	Date **01/2001**	Group	**927**
		Illustr. Nos **00006000**	Page	**49**
			Issue	**1**

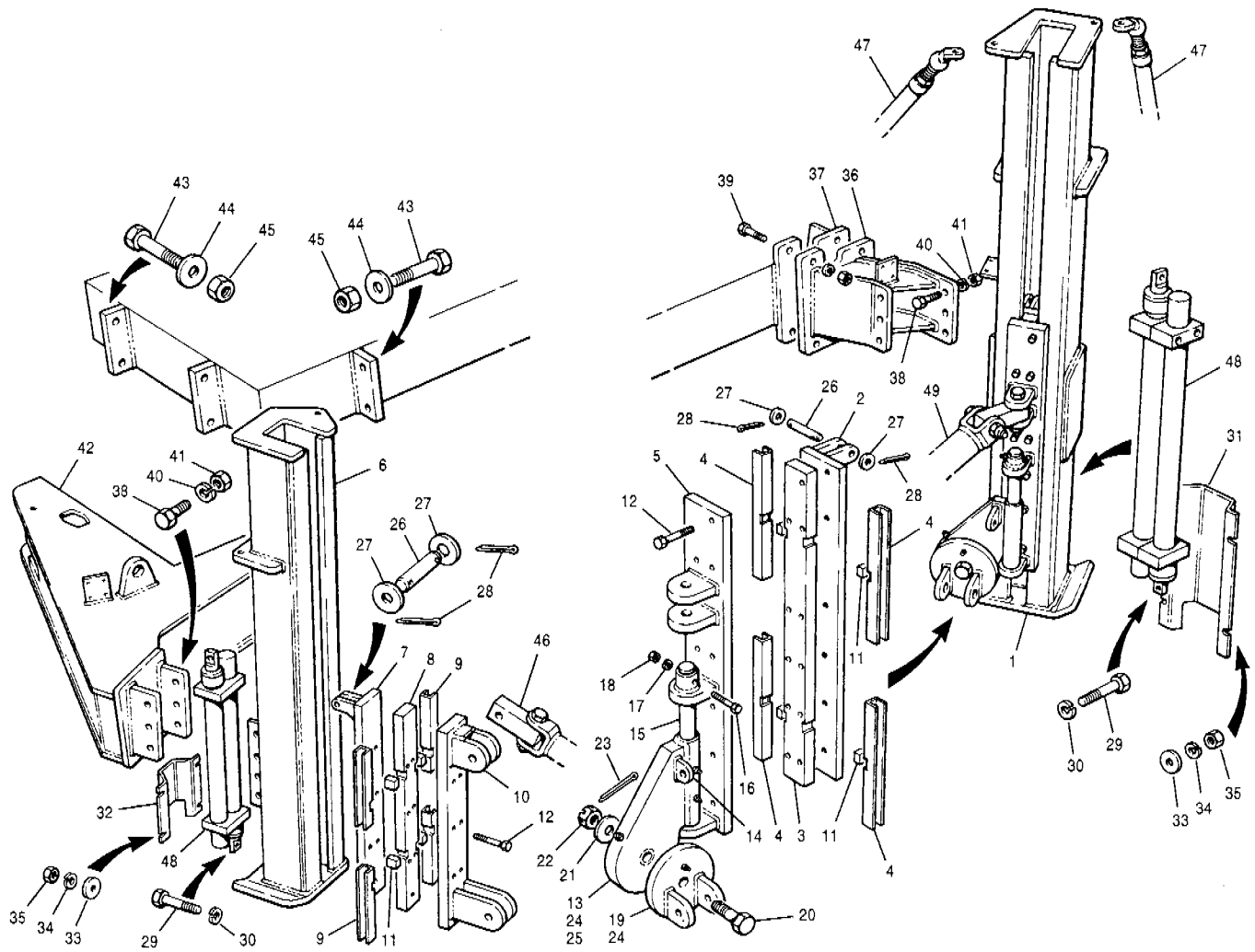

Item	Part No.	Description	Qty.	Remarks
	97521	**Front tower assembly** - includes items 1 to 5, 11 to 31, 33 to 35 & 48	1	
	97165	**Rear tower assembly** - includes items 6 to 30, 32 to 35 & 48	1	
1	97527	Front mast	1	
2	97017	Inner slider plate	1	
3	97020	Spacer bar	1	Front tower
4	97528	Slider rail	4	
5	97021	Outer slider plate	1	
6	97075	Rear mast	1	
7	97084	Inner slider plate	1	
8	97086	Spacer bar	1	Rear tower
9	97529	Slider rail	4	
10	97087	Outer slider plate	1	
11	97026	Lock bar	8	
12	50A-1232 Zi	Bolt	18	
13	97139	Swivel mount - includes item 14	1	
14	11530	Lug	1	
15	97272	Pivot pin	1	
16	50A-0832 Zi	Bolt	1	
17	14A-08zi	Lockwasher	1	
18	30A-08 Zi	Nut	1	
19	89759	Swivel	1	
20	89763	Swivel pin	1	
21	14C-24 Zi	Flatwasher	1	
22	30J-24 Zi	Slotted nut	1	
23	13A-0848	Cotter pin	1	
24	29A-02	Grease fitting	3	
25	29E-02	Grease fitting	1	
26	18C-0616	Pin	2	
27	14C-10 Zi	Flatwasher	4	

Item	Part No.	Description	Qty.	Remarks
28	13A-0420	Cotter pin	4	
29	50A-1228 Zi	Bolt	2	
30	14A-12 Zi	Lockwasher	2	
31	12723812	Guard	1	Front tower
32	12724002	Guard	1	Rear tower
33	14C-06 Zi	Flatwasher	8	
34	14A-06 Zi	Lockwasher	8	
35	30A-06 Zi	Nut	8	
36	404155	Mounting bracket - front	1	G710 to G740
36	97539	Mounting bracket - front	1	G780
37	78614	Mounting bracket - frame	1	
38	50A-1622 Zi	Bolt	12	
39	50A-1628 Zi	Bolt	4	
40	14A-16 Zi	Lockwasher	16	
41	30A-16 Zi	Nut	16	
42	97532	Mounting bracket - rear	1	G710 to G740
42	97533	Mounting bracket - rear	1	G780
43	50A-2036 Zi	Bolt	4	
44	14C-20 Zi	Flatwasher	4	
45	36N-20 Zi	Locknut	4	
	97626	**General hardware kit**		
46		**Wing installation**	Ref.	927-51
47		**Wing braces**	Ref.	927-54
48		**Dual slide cylinder assembly**	Ref.	927-56
49		**Lift cylinder circuit**	Ref.	927-57
49		**Lift cylinder assembly**	Ref.	927-58

SERIAL NUMBERS: 33000 & UP	**HI-BANK REAR MOUNT WING INSTALLATION - HYDRAULIC WING**	Date **01/2001**	Group **927**
		Illustr.Nos **00006001**	Page **50**
			Issue **1**

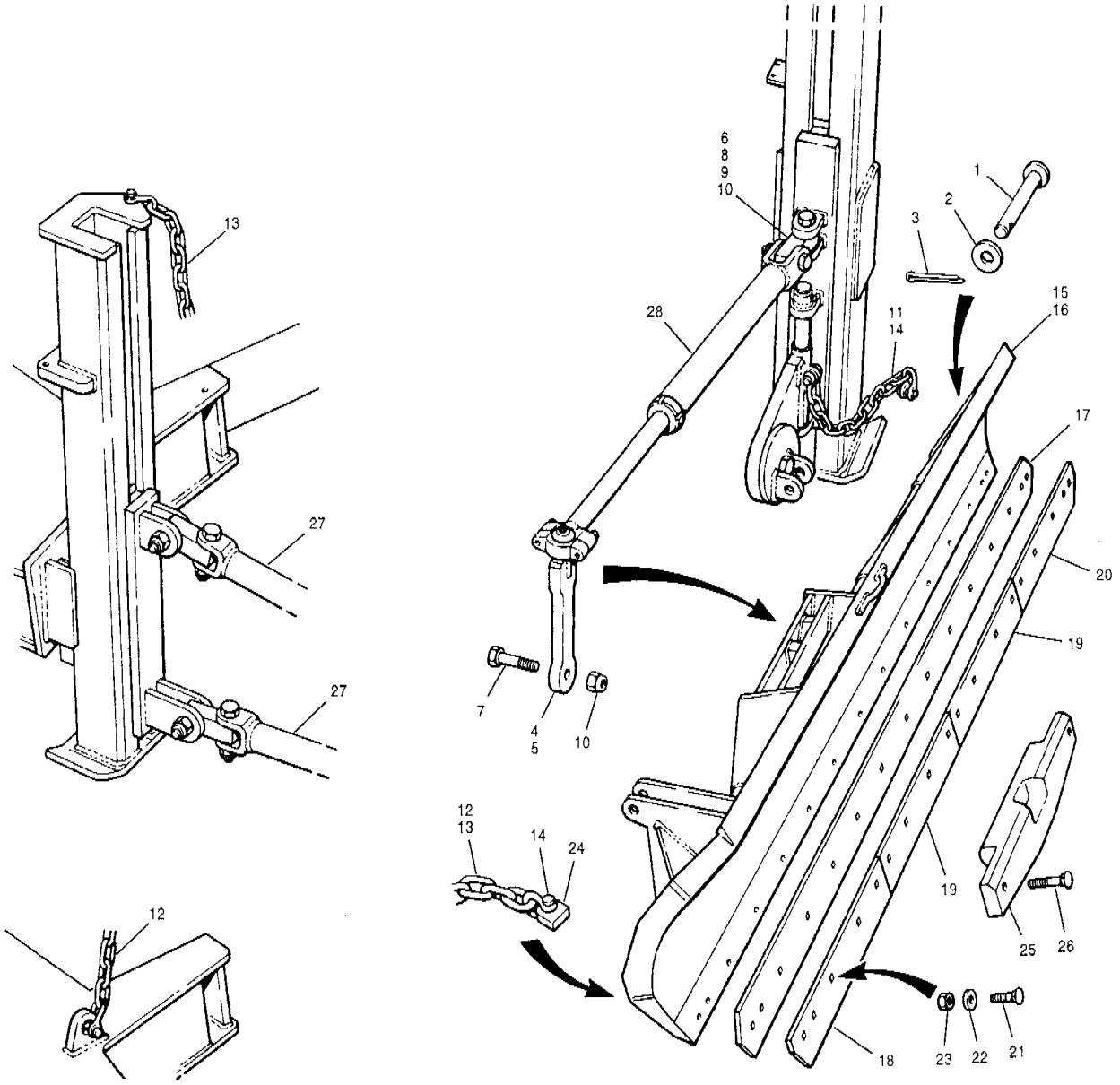

Item	Part No.	Description	Qty.	Remarks
1	10570	Pin	1	
2	14C-20 Zi	Flatwasher	1	
3	13A-1240	Cotter pin	1	
4	89795	Float arm	1	
5	29A-02	Grease fitting	1	
6	89991	Knuckle	1	
7	50A-2040 Zi	Bolt	1	
8	50A-2048 Zi	Bolt	1	
9	50A-2052 Zi	Bolt	1	
10	36D-20 Zi	Locknut	3	
11	8457 x 19	Chain	1	
12	8457 x 54	Chain	1	Lo-bank
13	8457 x 43	Chain	1	Hi-bank
14	21590	Shackle	4	

Item	Part No.	Description	Qty.	Remarks
15	**97137**	**Wing assembly** - includes items 17 & 21 to 24	1	Optional
16	**97138**	**Wing assembly** - includes items 18 to 24	1	Optional
17	23733	Edge	1	
17	23736	Edge - 5/8" thick	1	Optional
18	23734	Edge - outer - carbide - L.H.	1	Optional
19	23735	Edge - inner - carbide	2	Optional
20	24171	Edge - outer - carbide - R.H.	1	Optional
21	40F-1016 Zi	Bolt	A.R.	
22	69361	Hardened washer	A.R.	
23	30A-10 Zi	Nut	A.R.	
24	11530	Lug	1	
25	22164	Shoe	A.R.	Optional
26	40F-1028 Zi	Bolt	A.R.	
27		**Stand-off arms installation**	Ref.	927-52 927-54
28		**Lift cylinder circuit**	Ref.	927-57
28		**Lift cylinder assembly**	Ref.	927-58

SERIAL NUMBERS: 33000 & UP	**WING INSTALLATION - HYDRAULIC WING**	Date	**06/2001**	Group	**927**
		Illustr. Nos	**00006002**	Page	**51**
				Issue	**1A**

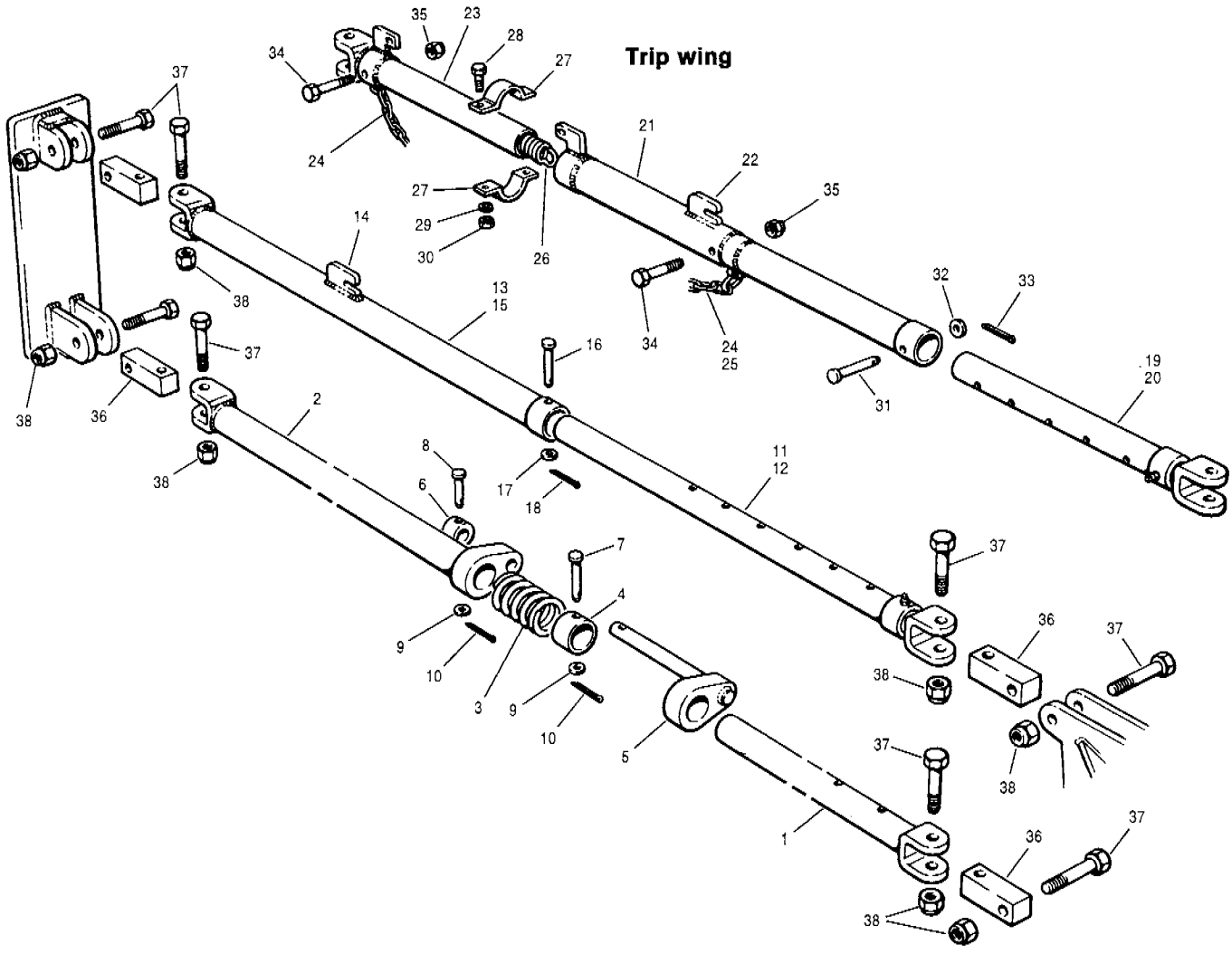

Item	Part No.	Description	Qty.	Remarks
	99295	**Stand off arm assembly - lower** - includes items 1 to 10	1	
1	99288	Inner sleeve	1	
2	99287	Outer sleeve	1	
3	22126	Spring	1	
4	89877	Collar	1	
5	97276	Rod	1	
6	97279	Collar	1	
7	89875	Pin	1	
8	97280	Pin	1	
9	14C-08 Zi	Flatwasher	2	
10	13A-0416	Cotter pin	2	
	99294	**Stand-off arm assembly - upper** - includes items 11 to 14, 16, 17 & 18	1	Lo-bank
	97146	**Stand-off arm assembly - upper** - includes items 11, 12 & 15 to 18	1	Hi-bank
11	99286	Inner sleeve - includes item 12	1	
12	29A-02	Grease fitting	1	
13	99285	Outer sleeve - includes item 14	1	Lo-bank
14	97158	Hook	1	Lo-bank
15	97148	Outer sleeve	1	Hi-bank
16	89875	Pin	1	
17	14C-08 Zi	Flatwasher	1	
18	13A-0416	Cotter pin	1	

Item	Part No.	Description	Qty.	Remarks
	400121	**Stand - off arm assembly - upper trip** - includes items 19 to 35	1	Optional
19	400120	Inner sleeve - includes item 20	1	
20	29A-02	Grease fitting	1	
21	400116	Outer sleeve - includes item 22	1	
22	97158	Hook	1	
23	**400115**	**Outer tube assembly** - includes items 24 & 25	1	
24	8457 x 44	Chain	1	
25	21590	Shackle	1	
26	400119	Spring	1	
27	400118	Collar	1	
28	50A-0812 Zi	Bolt	2	
29	14A-08 Zi	Lockwasher	2	
30	30A-08 Zi	Nut	2	
31	21503	Pin	1	
32	14C-10 Zi	Flatwasher	1	
33	13A-0416	Cotter pin	1	
34	50A-1236 Zi	Bolt	2	
35	36D-12 Zi	Locknut	2	
36	89991	Knuckle	4	
37	50A-2048 Zi	Bolt	8	
38	36D-20 Zi	Locknut	8	

SERIAL NUMBERS: 33000 & UP	**WING STAND-OFF ARMS INSTALLATION - HYDRAULIC WING**	Date **01/2001**	Group **927**
		Illustr. Nos **00006059**	Page **52**
			Issue **1**

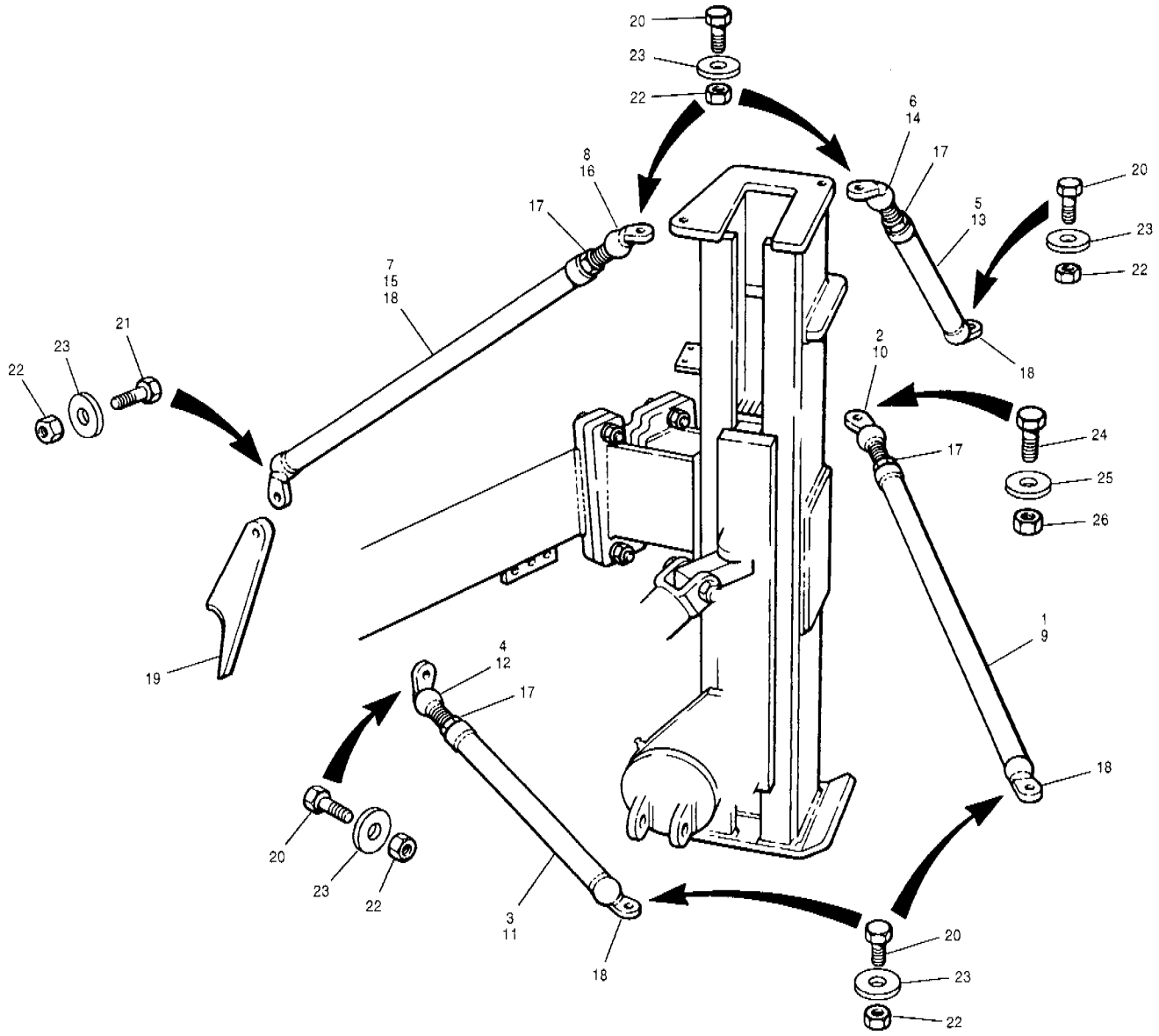

Item	Part No.	Description	Qty.	Remarks
		Models G710 to G740		
	97028	**Brace assembly - front lower** -includes items 1, 2 & 17	1	
1	97032	Brace - includes item 18	1	
2	97036	Adjusting ball	1	
	97030	**Brace assembly - rear lower** - includes items 3, 4 & 17	1	
3	97034	Brace - includes item 18	1	
4	97038	Adjusting ball	1	
	97050	**Brace assembly - front upper** -includes items 5, 6 & 17	1	
5	97052	Brace - includes item 18	1	
6	97057	Adjusting ball	1	
	97051	**Brace assembly - rear upper** - includes items 7, 8 & 17	1	
7	97053	Brace - includes item 18	1	
8	97054	Adjusting ball	1	
		Model G780		
	97177	**Brace assembly - front lower** - includes items 9, 10 & 17	1	
9	97181	Brace - includes item 18	1	

Item	Part No.	Description	Qty.	Remarks
10	97185	Adjusting ball	1	
	97178	**Brace assembly - rear lower** - includes items 11, 12 & 17	1	
11	97182	Brace - includes item 18	1	
12	97105	Adjusting ball	1	
	97179	**Brace assembly - front upper** -includes items 13, 14 & 17	1	
13	97183	Brace - includes item 18	1	
14	97186	Adjusting ball	1	
	97180	**Brace assembly - rear upper** - includes items 15, 16 & 17	1	
15	97184	Brace - includes item 18	1	
16	97038	Adjusting ball	1	
17	30D-28 Zi	Jam nut	1	
18	18594	Adapter - 0.81" dia. hole	1	
19	80966	Brace mount	1	
20	50A-1220 Zi	Bolt	6	
21	50A-1228 Zi	Bolt	1	
22	30A-12 Zi	Nut	6	
23	14C-12 Zi	Flatwasher	7	
24	50A-1628 Zi	Bolt	1	
25	14C-16 Zi	Flatwasher	1	
26	30A-16 Zi	Nut	1	

SERIAL NUMBERS: 33000 & UP	**LO-BANK WING BRACES - HYDRAULIC WING**	Date **01/2001**	Group **927**
		Illustr. Nos **00004332**	Page **53**
			Issue **1**

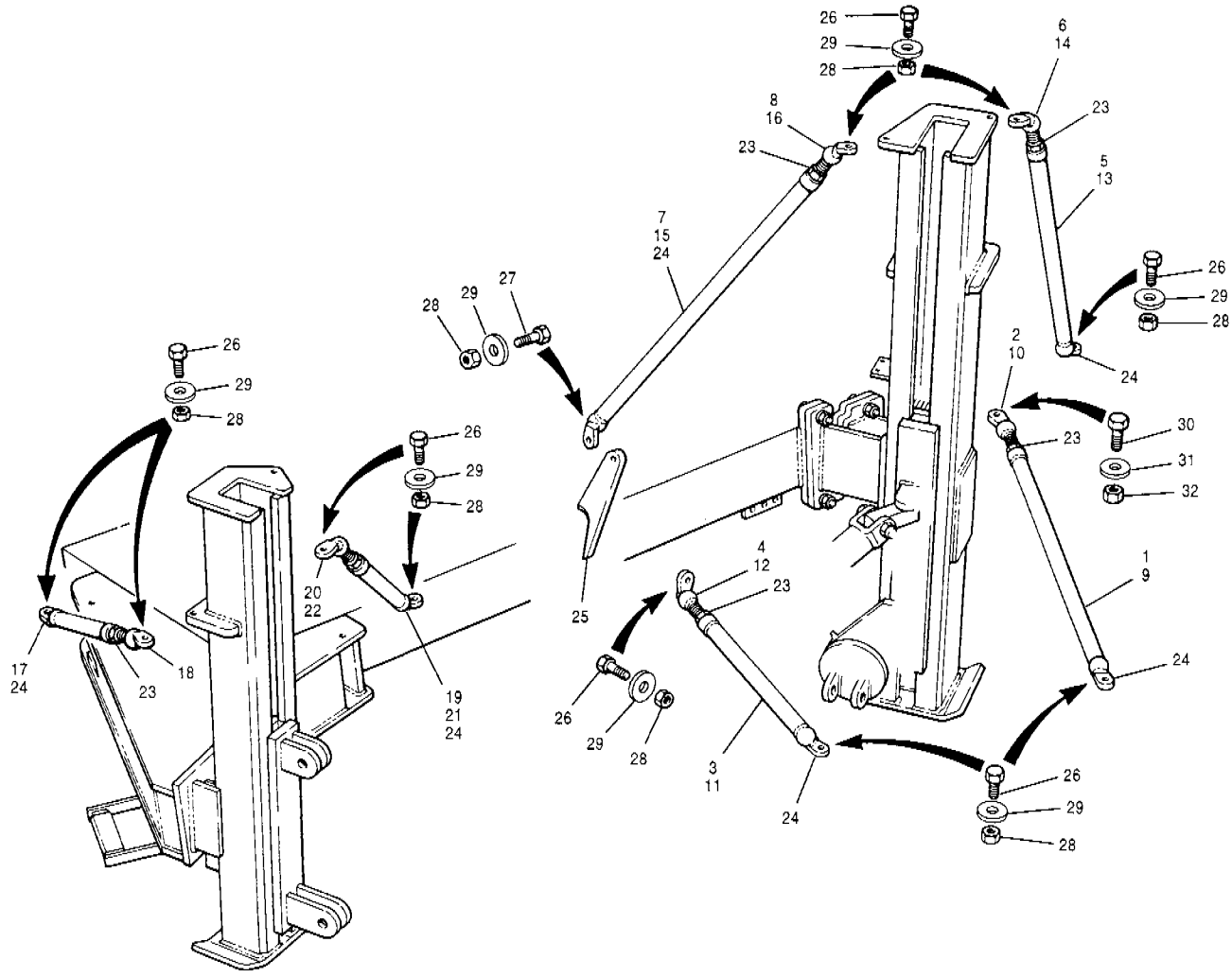

Item	Part No.	Description	Qty.	Remarks
		Front mast braces - models G710 to G740		
	97028	**Brace assembly - front lower** -includes items 1, 2 & 23	1	
1	97032	Brace - includes item 24	1	
2	97036	Adjusting ball	1	
	97030	**Brace assembly - rear lower** - includes items 3, 4 & 23	1	
3	97034	Brace - includes item 24	1	
4	97038	Adjusting ball	1	
	97029	**Brace assembly - front upper** -includes items 5, 6 & 23	1	
5	97033	Brace - includes item 24	1	
6	97037	Adjusting ball	1	
	97031	**Brace assembly - rear upper** - includes items 7, 8 & 23	1	
7	97035	Brace - includes item 24	1	
8	97039	Adjusting ball	1	
		Front mast braces - model G780		
	97177	**Brace assembly - front lower** - includes items 9, 10 & 23	1	
9	97181	Brace - includes item 24	1	
10	97185	Adjusting ball	1	
	97178	**Brace assembly - rear lower** - includes items 11, 12 & 23	1	
11	97182	Brace - includes item 24	1	
12	97105	Adjusting ball	1	
	97191	**Brace assembly - front upper** -includes items 13, 14 & 23	1	

Item	Part No.	Description	Qty.	Remarks
13	97194	Brace - includes item 24	1	
14	97197	Adjusting ball	1	
	97192	**Brace assembly - rear upper** - includes items 15, 16 & 23	1	
15	97195	Brace - includes item 24	1	
16	97037	Adjusting ball	1	
		Rear mast braces		
	97423	**Brace assembly - rear** - includes items 17, 18 & 23	1	
17	97424	Brace - includes item 24	1	
18	97103	Adjusting ball	1	
	97426	**Brace assembly - side** - includes items 19, 20 & 23	1	G710 to G740
19	97427	Brace - includes item 24	1	
20	97105	Adjusting ball	1	
	97429	**Brace assembly - side** - includes items 21, 22 & 23	1	G780
21	97430	Brace - includes item 24	1	
22	97039	Adjusting ball	1	
23	30D-28 Zi	Jam nut	1	
24	18594	Adapter - 0.81" dia. hole	1	
25	80966	Brace mount	1	
26	50A-1220 Zi	Bolt	10	
27	50A-1228 Zi	Bolt	1	
28	30A-12 Zi	Nut	10	
29	14C-12 Zi	Flatwasher	1	
30	50A-1628 Zi	Bolt	1	
31	14C-16 Zi	Flatwasher	1	
32	30A-16 Zi	Locknut	1	

SERIAL NUMBERS: 33000 & UP	**HI-BANK WING BRACES - HYDRAULIC WING**	Date **01/2001**	Group **927**
		Illustr. Nos **00004333**	Page **54**
			Issue **1**

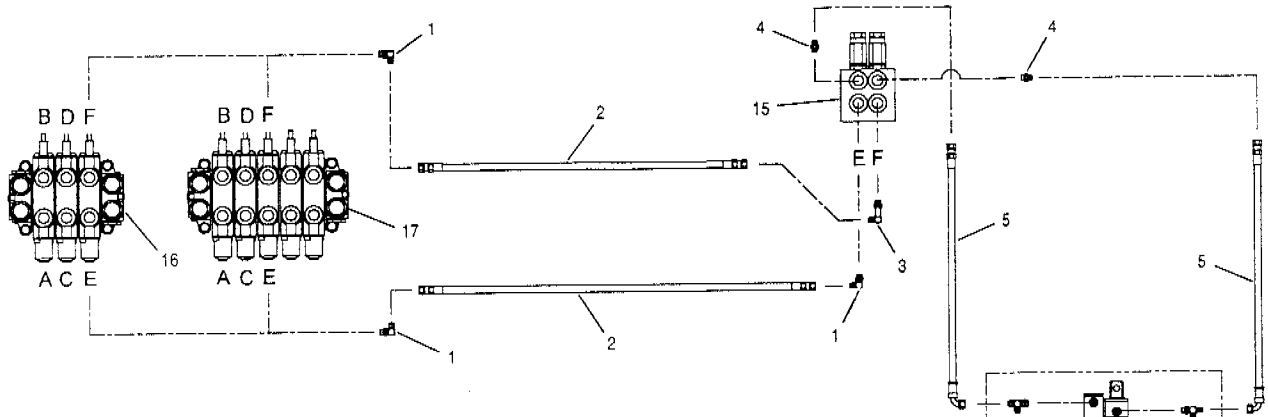

Front mast

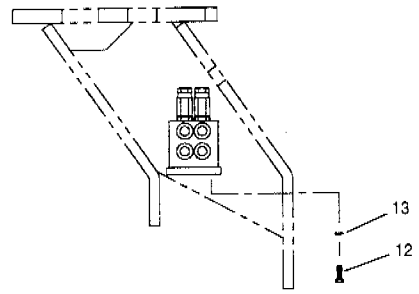

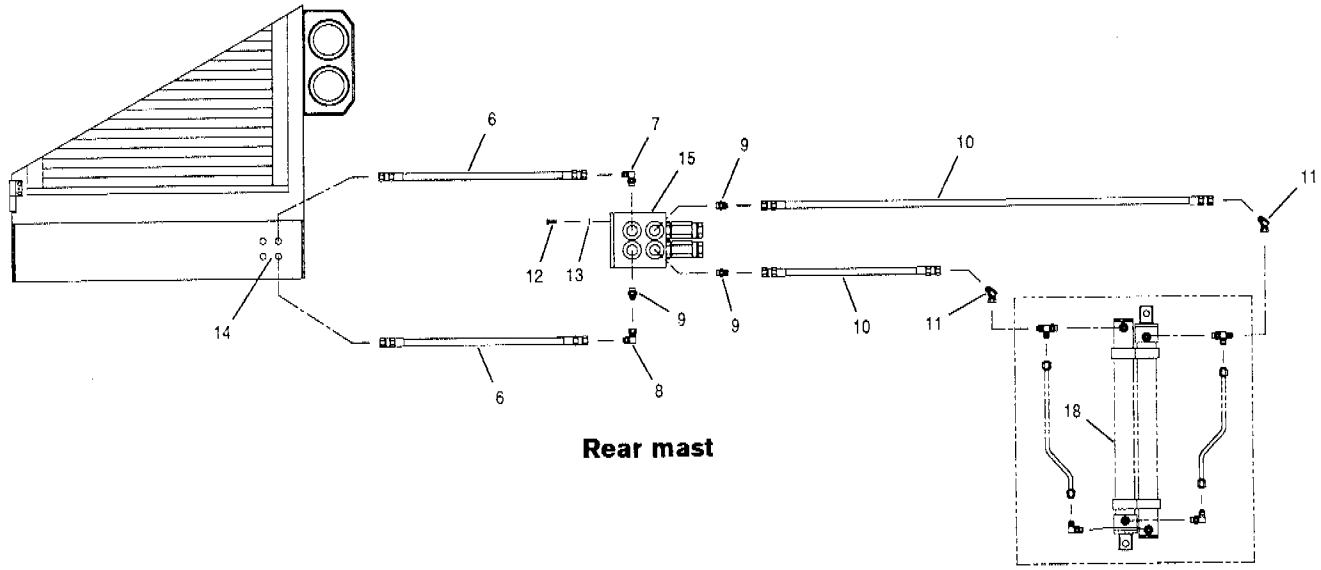

Rear mast

Item	Part No.	Description	Qty.	Remarks
		Front mast		
1	111B-0808	Connector	3	
2	78192 x 22	Hose	2	G710 to G740
2	78192 x 27	Hose	2	G780
3	111Q-0808	Connector	1	
4	111E-0808	Connector	2	
5	74430 x 41	Hose	2	
		Hi-bank rear mast		
6	78192 x 18	Hose	2	
7	111B-0808	Connector	1	
8	112B-08	Connector	1	
9	111E-0808	Connector	3	
10	74429 x 36	Hose	2	
11	112A-08	Connector	2	

Item	Part No.	Description	Qty.	Remarks
12	50A-0508 Zi	Bolt	4 - 8	
13	14A-05 Zi	Lockwasher	4 - 8	
14		**Attachments manifold valve circuit**	Ref.	916-24
15		**Single lock valve**	Ref.	912-15
16		**3 Bank manifold valve**	Ref.	912-11
17		**5 Bank manifold valve**	Ref.	912-12
18		**Dual slide cylinder assembly**	Ref.	927-56

SERIAL NUMBERS: 33000 & UP	**WING SLIDE HYDRAULIC CIRCUIT - HYDRAULIC WING**	Date **01/2001**	Group **927**
		Illustr. Nos **00004974**	Page **55**
			Issue **1**

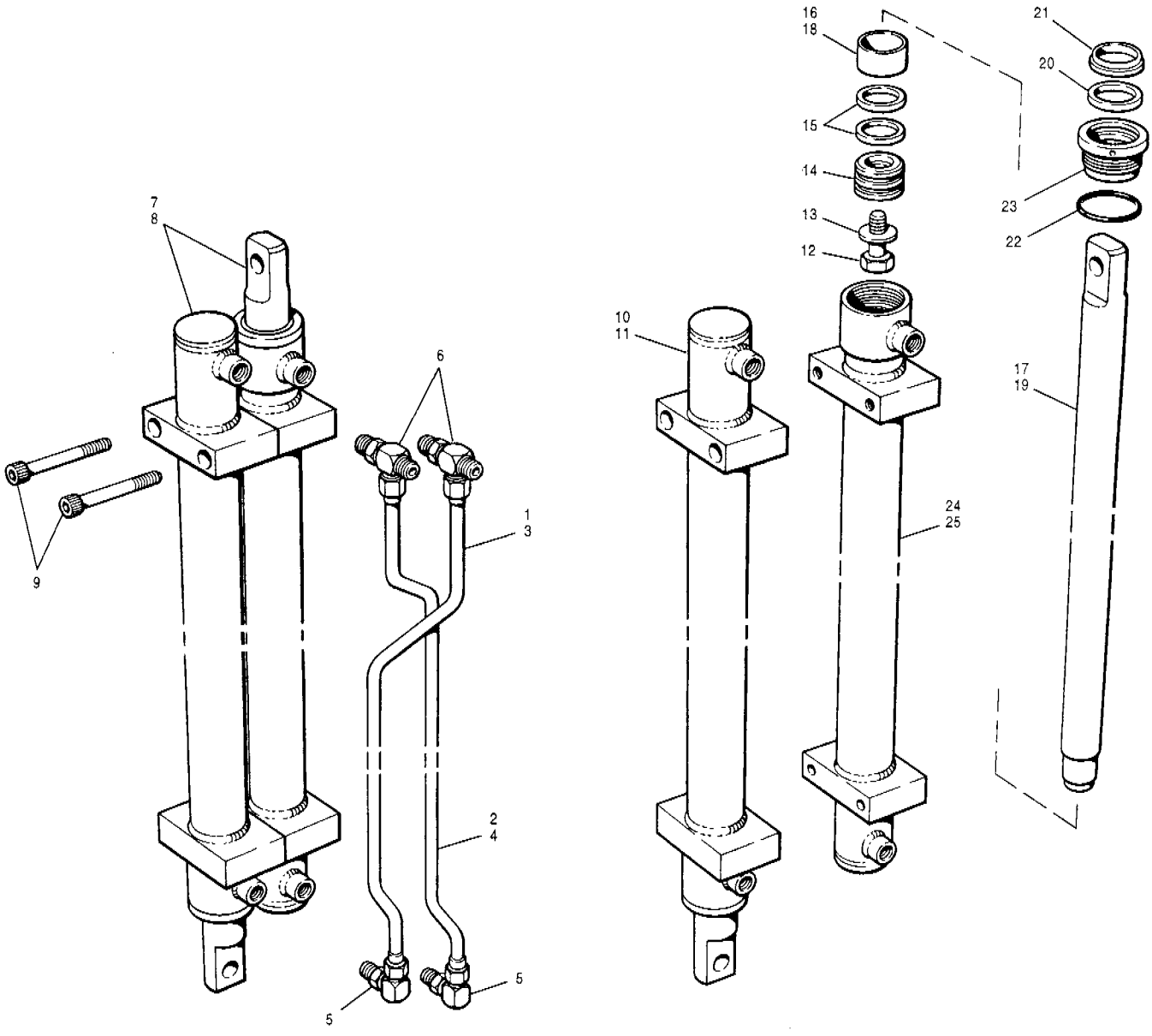

Item	Part No.	Description	Qty.	Remarks
	97274	**Dual slide cylinder assembly - short** - includes items 1, 2, 5, 6 & 7	1	Lo-bank front mast & hi-bank rear mast
1	89826	Tube	1	
2	89827	Tube	1	
	97275	**Dual slide cylinder assembly - long** - includes items 3 to 6 & 8	1	Hi-bank front mast
3	89824	Tube	1	
4	89825	Tube	1	
5	111B-0808	Connector	2	
6	111D-0808	Tee	2	
7	**97126**	**Dual slide cylinder assembly - short** - includes items 9 & 10	1	
8	**97108**	**Dual slide cylinder assembly - long** - includes items 9 & 11	1	
9	50D-0832	Bolt	4	
10	* **12724617**	**Slide cylinder assembly - short** - includes items 12 to 17 & 20 to 24	2	

Item	Part No.	Description	Qty.	Remarks
11	* **12724615**	**Slide cylinder assembly - long** - includes items 12 to 15, 18 to 23 & 25	2	
	* **12724309**	**Repair kit for 12724617 & 12724615 - cylinder assemblies** - includes items 15, 20, 21 & 22	1	
12	50A-1018 UP	Bolt	1	
13	69361	Hardened washer	1	
14	89773	Piston	1	
15	89776	Piston seal	2	
16	97131	Stop tube	1	Short
17	97130	Piston rod	1	Short
18	97115	Stop tube	1	Long
19	97113	Piston rod	1	Long
20	* 12724217	Rod seal	1	
21	* 12724218	Rod wiper	1	
22	97124	O-ring	1	
23	97114	Gland	1	
24	97833	Cylinder barrel	1	Short
25	97834	Cylinder barrel	1	Long

SERIAL NUMBERS: 33000 & UP	**DUAL SLIDE CYLINDER ASSEMBLY - HYDRAULIC WING**	Date **04/2001**	Group **927**
		Illustr. Nos **00003871**	Page **56**
			Issue **1A**

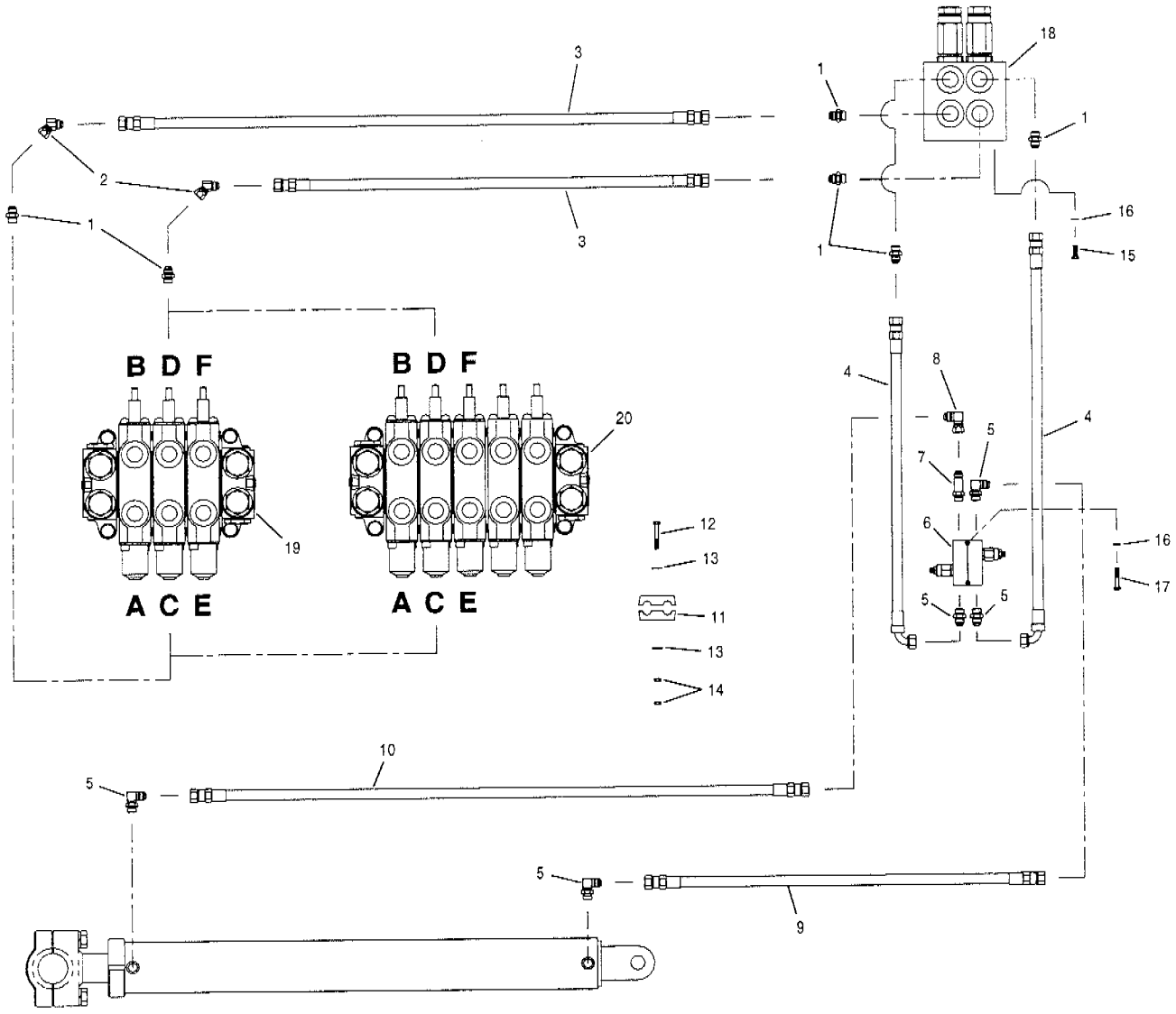

Item	Part No.	Description	Qty.	Remarks
1	111E-0808	Connector	6	
2	112A-08	Connector	2	
3	78192 x 35	Hose	2	
4	74430 x 27	Hose	2	
5	111B-0808	Connector	5	
6	**97769**	**Cushion valve assembly**	1	
	97860	Cartridge	2	
	97859	**Seal kit for 97769 - cushion valve** - includes the following:		
		O-ring - small	2	
		O-ring - large	2	
		Back-up ring	1	

Item	Part No.	Description	Qty.	Remarks
7	111F-0808	Connector	1	
8	112B-08	Connector	1	
9	74429 x 49	Hose	1	
10	74429 x 85	Hose	1	
11	89995	Clamp	1	
12	50A-0518 Zi	Bolt	1	
13	14C-05 Zi	Flatwasher	2	
14	30A-05 Zi	Nut	2	
15	50A-0508 Zi	Bolt	4	
16	14A-05 Zi	Lockwasher	6	
17	50A-0514 Zi	Bolt	1	
18		**Single lock valve**	Ref.	912-15
19		**3 Bank manifold valve**	Ref.	912-11
20		**5 Bank manifold valve**	Ref.	912-12

SERIAL NUMBERS: 33000 & UP	**WING LIFT CYLINDER CIRCUIT - HYDRAULIC WING**	Date **01/2001**	Group **927**
		Illustr. Nos **00004760**	Page **57**
			Issue **1**

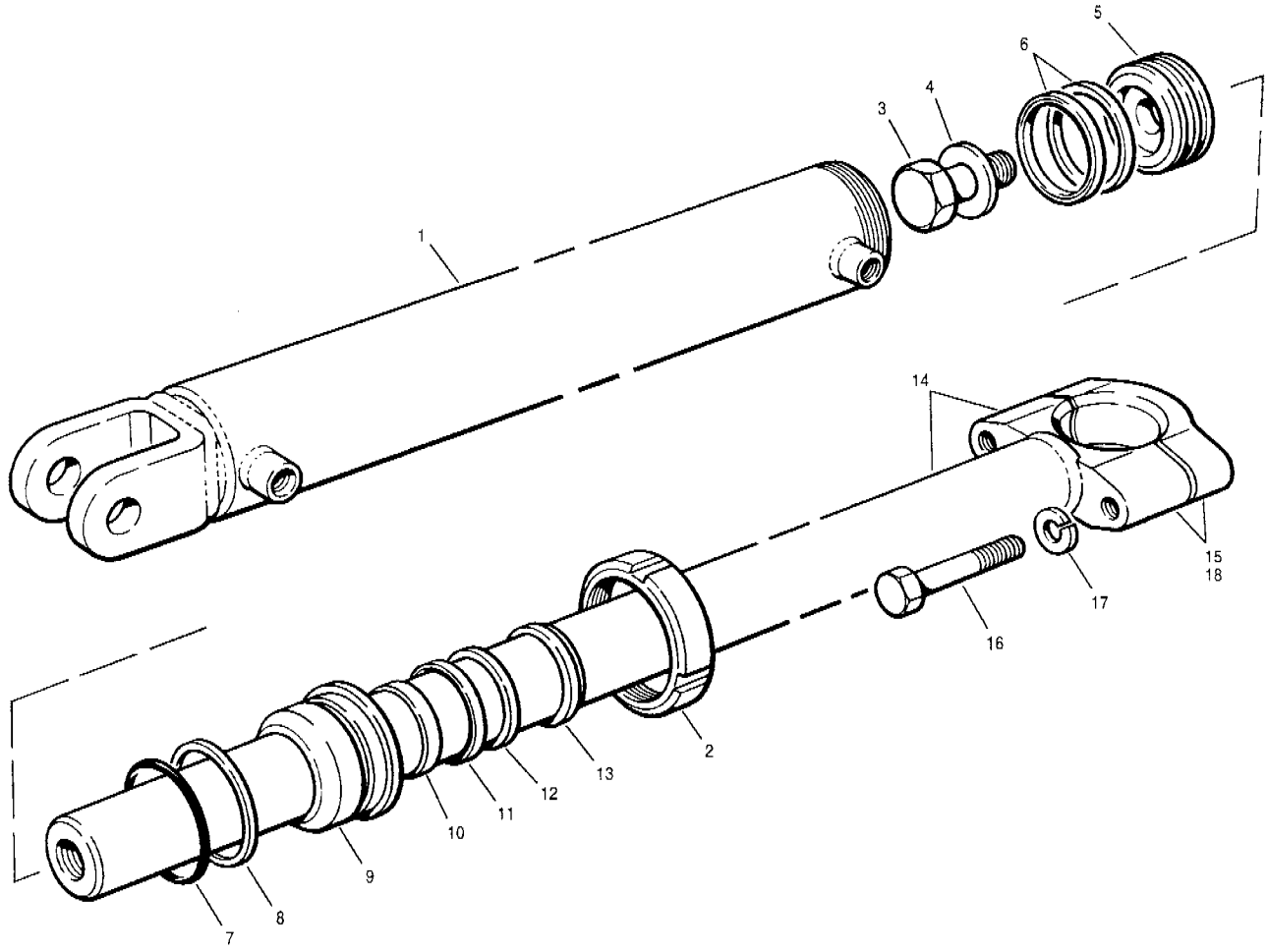

Item	Part No.	Description	Qty.	Remarks
	* 12724741	**Cylinder assembly** - includes items 1 to 17	1	
	* 12724307	**Repair kit for 12724741** **- cylinder assembly** - includes items 6, 7, 8 & 10 to 13	1	
1	89705	Cylinder barrel - includes item 2	1	
2	62147	Cylinder nut	1	
3	50A-2024 UP	Bolt	1	
4	62160	Hardened washer	1	
5	59945	Piston	1	
6	12036	Piston seal	2	
7	44244	O - ring	1	
8	44266	Back - up ring	1	
9	* 12724062	Gland	1	
10	* 12724219	Wear ring	1	
11	* 12724220	Rod seal	1	
12	59217	Back - up ring	1	
13	* 12724221	Wiper ring	1	
14	**89709**	**Piston rod assembly** - includes items 15, 16 & 17	1	
15	62287	Ball cap - matched set	1	
16	50A-1432 Zi	Bolt	2	
17	14A-14 Zi	Lockwasher	2	
18	62274	Shim - 0.010" thick	A.R.	
18	62275	Shim - 0.020" thick	A.R.	

Item	Part No.	Description	Qty.	Remarks

SERIAL NUMBERS: 33000 & UP	**WING LIFT CYLINDER - HYDRAULIC WING**	Date **04/2001**	Group **927**
		Illustr. Nos **00003872**	Page **58**
			Issue **1A**

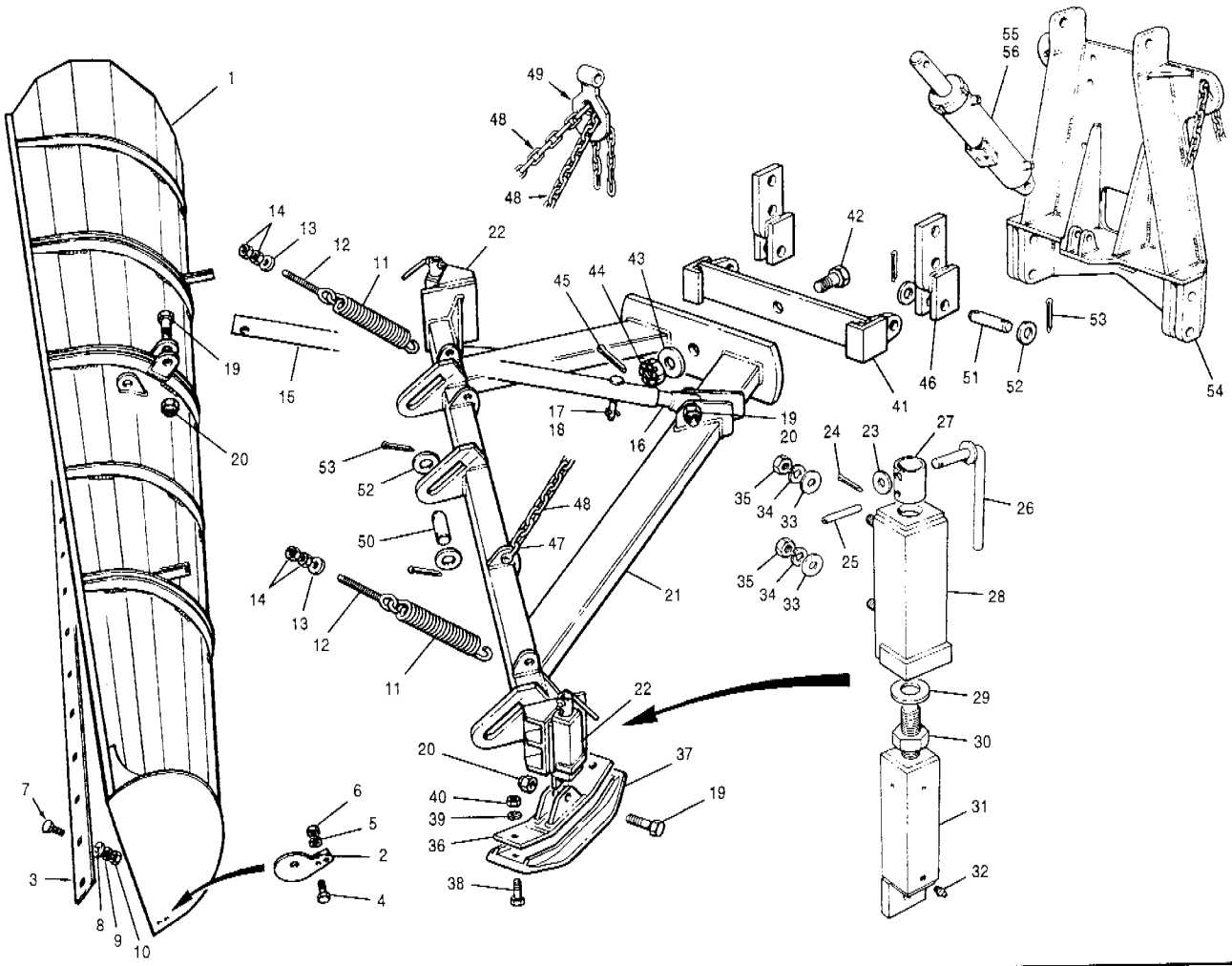

Item	Part No.	Description	Qty.	Remarks
1	**58774**	**Plow assembly**	1	
		- includes items 2 to 10		
2	33978	Nose	1	
3	58777	Edge	1	
4	50A-0814 Zi	Bolt	2	
5	14A-08 Zi	Lockwasher	2	
6	30A-08 Zi	Nut	2	
7	40F-1016 Zi	Bolt	20	
8	69361	Washer - hardened	20	
9	14A-10 Zi	Lockwasher	20	
10	30A-10 Zi	Nut	20	
	89419	**Push frame assembly**	1	
		- includes items 11 to 45		
11	74012	Spring	2	
12	49411	Eye bolt	2	
13	14C-12 Zi	Flatwasher	2	
14	30A-12 Zi	Nut	4	
15	89489	Arm - outer	1	
16	89488	Arm - inner	1	
17	10A-1060	Pin	1	
18	13A-0424	Cotter pin	1	
19	50A-1640 Zi	Bolt	4	
20	36D-16 Zi	Locknut	4	
21	89420	Push frame	1	
	89495	**Adjusting shoe assembly**	2	
		- includes items 22 to 37		
22	**89496**	**Adjusting screw assembly**	1	
		- includes items 23 to 32		
23	14C-08 Zi	Flatwasher	1	
24	13A-0416	Cotter pin	1	
25	13C-1240	Roll pin	1	
26	89503	Handle	1	
27	89504	Support	1	

Item	Part No.	Description	Qty.	Remarks
28	89497	Outer tube	1	
29	89505	Thrust washer	1	
30	89502	Adjusting screw	1	
31	89501	Inner tube	1	
32	29A-02	Grease fitting	1	
33	14C-10 Zi	Flatwasher	4	
34	14A-10 Zi	Lockwasher	4	
35	30A-10 Zi	Nut	4	
36	89506	Shoe holder	1	
37	89507	Shoe	1	
38	51A-1220 Zi	Bolt	4	
39	14A-12 Zi	Lockwasher	4	
40	31A-12 Zi	Nut	4	
41	89482	Swivel	1	
42	74005	Bolt	1	
43	14C-24 Zi	Flatwasher	1	
44	30H-24 Zi	Nut - slotted	1	
45	13A-0844	Cotter pin	1	
46	81656	Extension - push frame	2	
47	74010	Shackle	2	
48	8457 x 66	Chain	2	
49	898	Spade	1	
50	18C-1018	Pin	3	
51	18C-1024	Pin	4	
52	14C-20 Zi	Flatwasher	10	
53	13A-0840	Cotter pin	10	
54		**A-frame**	Ref.	926-32
55		**Plow & dozer circuit**	Ref.	926-33
56		**Plow & dozer cylinder**	Ref.	926-34

SERIAL NUMBERS: 33000 & UP	**ONE WAY PLOW**	Date **01/2001**	Group	**927**
		Illustr. Nos **00003688**	Page	**59**
			Issue	**1**

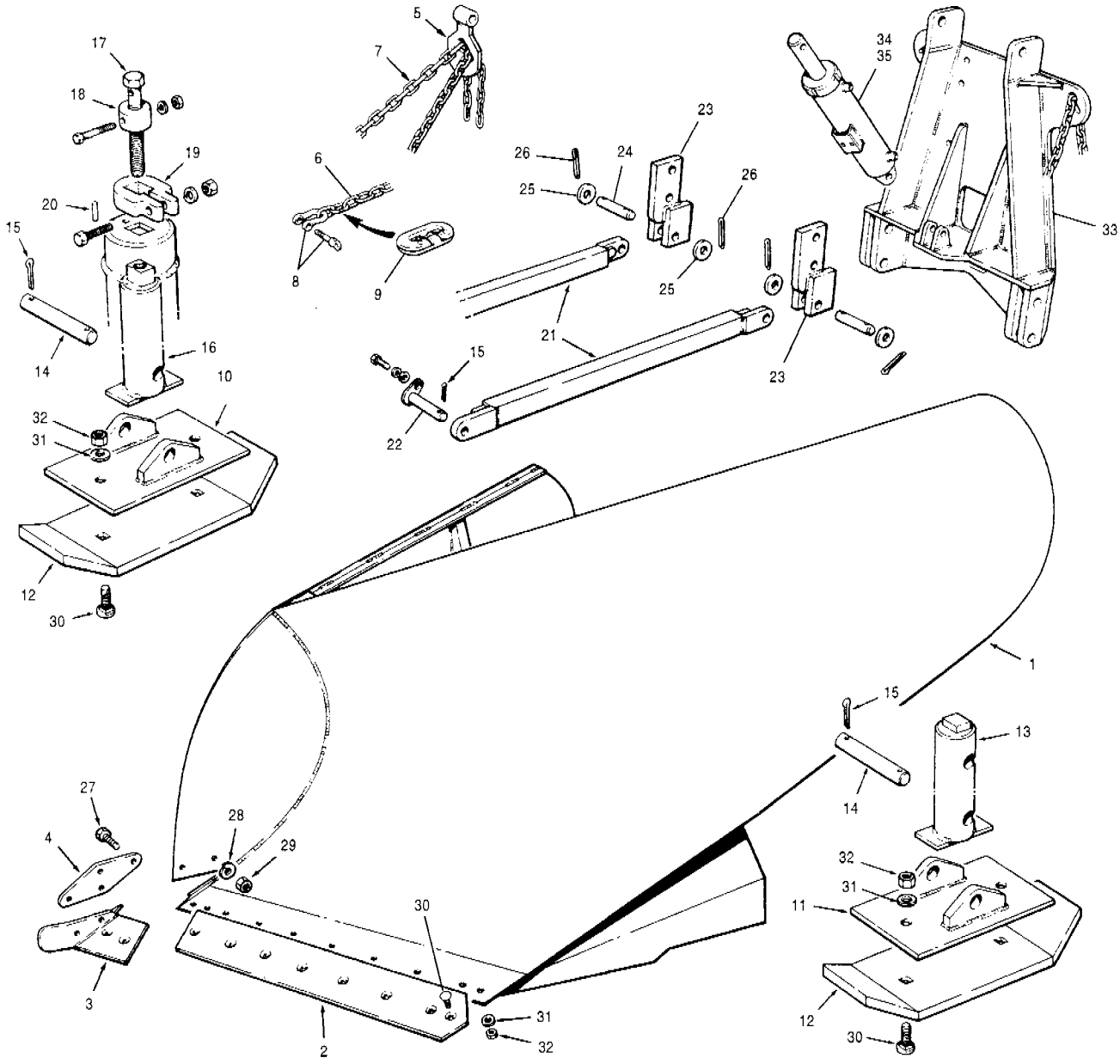

Item	Part No.	Description	Qty.	Remarks
	58851	**9' V-plow** - includes standard edges	1	
	58852	**10' V-plow** - includes standard edges	1	
1	58722	V-plow - 9'	1	
1	58723	V-plow - 10'	1	
2	73683	Edge - 9' V-plow	2	
2	73684	Edge - 10' V-plow	2	
3	63056	Nose piece	1	
4	63069	Plate	1	
5	898	Spade	1	
6	8457 x 90	Chain	2	
7	8457 x 150	Chain	2	
8	22129	Shackle	2	
9	22130	Splice link	4	
10	63062	Inner shoe - front	1	
11	63068	Inner shoe - L.H. & R.H.	2	
12	63063	Outer shoe	3	
13	63065	Arm	2	
14	63064	Pin	5	
15	13A-0324	Cotter pin	10	
16	63061	Screw box	1	
17	63060	Adjusting screw	1	

Item	Part No.	Description	Qty.	Remarks
18	63057	Bearing ring - includes hardware	1	
19	63058	Stop ring - includes hardware	1	
20	63059	Pin	1	
21	63055	Push rod	2	
22	63067	Pin	2	
23	81656	Extension	2	
24	18C-1024	Pin	2	
25	14C-20 Zi	Flatwasher	4	
26	13A-0840	Cotter pin	4	
27	50A-0816 Zi	Bolt	4	
28	14A-08 Zi	Lockwasher	4	
29	30A-08 Zi	Nut	4	
30	40F-1016 Zi	Bolt	24 - 28	
31	69361	Hardened washer	24 - 28	
32	30A-10 Zi	Nut	24 - 28	
33		**A-frame**	Ref.	926-32
34		**Plow & dozer circuit**	Ref.	926-33
35		**Plow & dozer cylinder**	Ref.	926-34

SERIAL NUMBERS: 33000 & UP	**CHAIN LIFT V-PLOW**	Date **01/2001**	Group **927**
		Illustr. Nos **00004996**	Page **60**
			Issue **1**

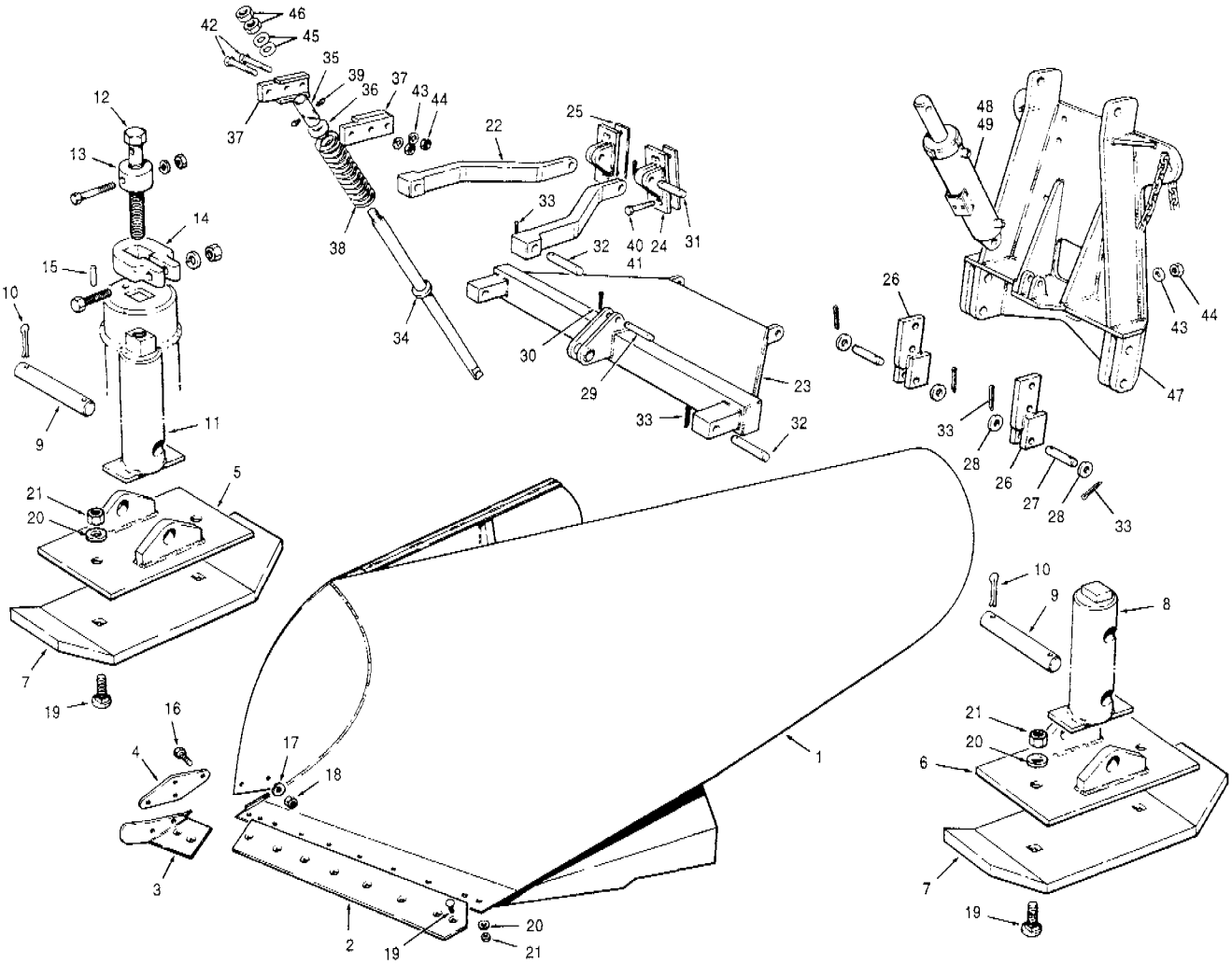

Item	Part No.	Description	Qty.	Remarks
	58849	**9' V-plow** - includes standard edges	1	
	58850	**10' V-plow** - includes standard edges	1	
1	39124	9' V-plow	1	
1	39079	10' V-plow	1	
2	73683	Edge - 9' V-plow	2	
2	73684	Edge - 10' V-plow	2	
3	63056	Nose piece	1	
4	63069	Plate	1	
5	63062	Inner shoe - front	1	
6	63068	Inner shoe - R.H & L.H.	2	
7	63063	Outer shoe	3	
8	63065	Arm	2	
9	63064	Pin	5	
10	13A-0324	Cotter pin	10	
11	63061	Screw box	1	
12	63060	Adjusting screw	1	
13	63057	Bearing ring	1	
14	63058	Stop ring	1	
15	63059	Pin	1	
16	50A-0816 Zi	Bolt	4	
17	14A-08 Zi	Lockwasher	4	
18	30A-08 Zi	Nut	4	
19	40F-1016 Zi	Bolt	24 - 28	
20	69361	Hardened washer	24 - 28	
21	30A-10 Zi	Nut	24 - 28	
22	1013	Arm	2	
23	2504	Push frame	1	
24	81795	Yoke	2	
25	22150	Shim - .135"	2	
25	22151	Shim - 1/4"	2	

Item	Part No.	Description	Qty.	Remarks
25	22152	Shim - 1/2"	2	
25	22153	Shim - 3/4"	2	
25	22154	Shim - 1"	2	
26	81656	Extension	2	
27	18C-1024	Pin	2	
28	14C-20 Zi	Flatwasher	4	
29	18C-0820	Pin	1	
30	13A-0628	Cotter pin	2	
31	18C-1018	Pin	2	
32	18C-1234	Pin	5	
33	13A-0824	Cotter pin	18	
34	78661	Lift link	1	
35	7997	Sleeve	1	
36	7998	Collar	1	
37	7999	Yoke extension	2	
38	22145C	Spring	1	
39	29A-02	Grease fitting	2	
40	50A-1644 Zi	Bolt	4	G710 to G736
41	50A-1652 Zi	Bolt	4	G740 to G780
42	50A-1664	Bolt	2	
43	14C-16 Zi	Lockwasher	6	
44	30A-16 Zi	Nut	6	
45	14C-24 Zi	Flatwasher	2	
46	31D-24 Zi	Nut	2	
47		**A-frame**	Ref.	926-32
48		**Plow & dozer hydraulic circuit**	Ref.	926-33
49		**Plow & dozer cylinder**	Ref.	926-34

SERIAL NUMBERS: 33000 & UP	**DOWN PRESSURE V-PLOW**	Date	**01/2001**	Group **927**
		Illustr. Nos	**00003690**	Page **61**
				Issue **1**

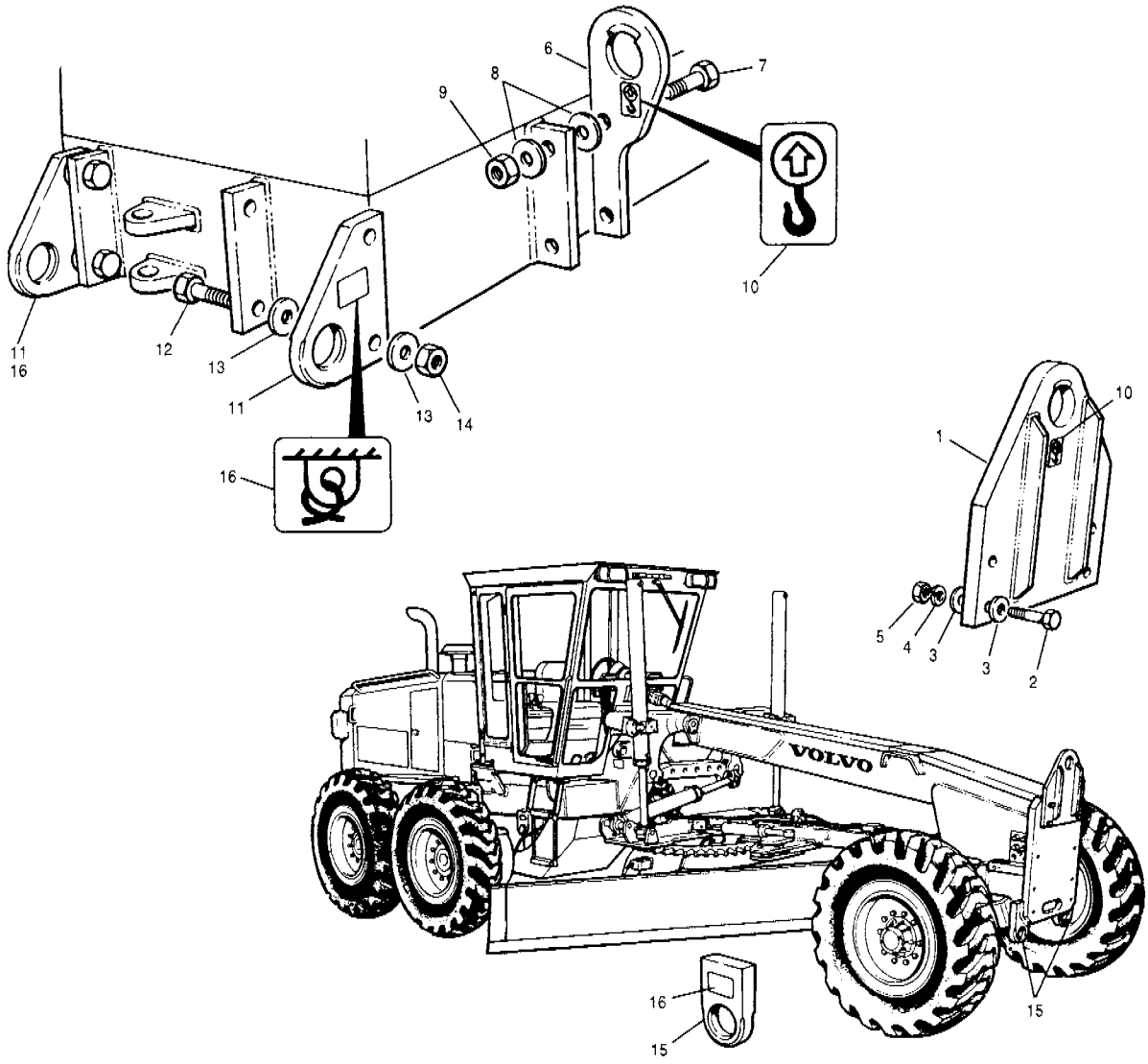

Item	Part No.	Description	Qty.	Remarks
	79677	**Lift plate assembly - front** - includes items 1 & 10	1	
1	79676	Lift plate	1	
2	50A-1640 Zi	Bolt	4	G710 to G736
2	50A-1648 Zi	Bolt	4	G740 to G780
3	14C-16 Zi	Flatwasher	8	
4	14A-16 Zi	Lockwasher	4	
5	30A-16 Zi	Nut	4	
	79591	**Lug assembly** - includes items 6 & 10	2	
6	79590	Lug	2	
7	50A-2036 Zi	Bolt	4	
8	14C-20 Zi	Flatwasher	8	
9	30A-20 Zi	Nut	4	
10	68868	Decal	3	

Item	Part No.	Description	Qty.	Remarks
11	86471	Lug	2	
12	50A-2040 Zi	Bolt	4	
13	14C-20 Zi	Flatwasher	8	
14	30A-20 Zi	Nut	4	
15	10933	Lug	4 - 6	Optional
16	68869	Decal	A.R.	

SERIAL NUMBERS: 33000 & UP	**LIFTING & TIE DOWN BRACKETS**	Date **01/2001**	Group **927**
		Illustr. Nos **00006036**	Page **62**
			Issue **1**

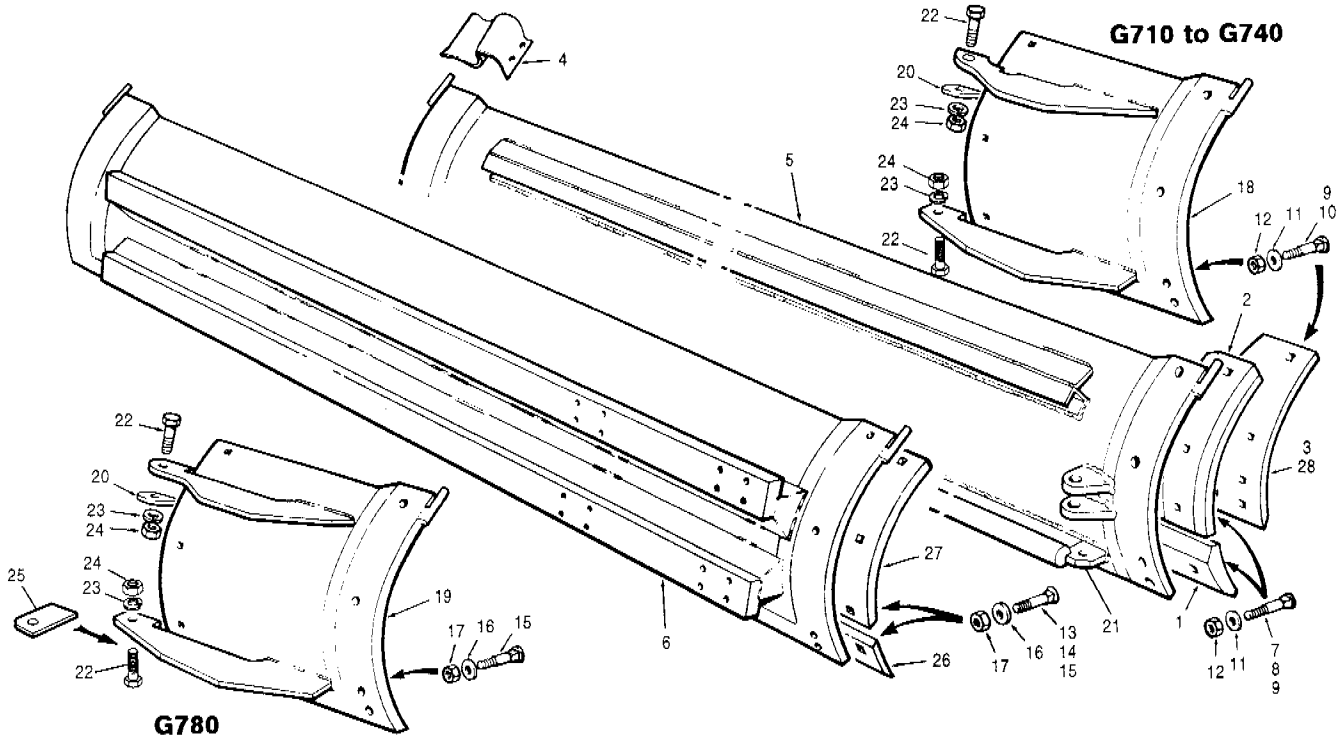

Item	Part No.	Description	Qty.	Remarks
		Edges		
1	75438	5/8" x 6" x 6' Edge - 5/8" holes	2	
1	75527	5/8" x 6" x 2' Edge - 5/8" holes	2	
1	75439	5/8" x 6" x 7' Edge - 5/8" holes	2	
1	7687	5/8" x 6" x 8' Edge - 5/8" holes	2	
1	75530	3/4" x 5 1/4" x 2' Edge - 5/8" holes- carbide tip	A.R.	
1	75536	3/4" x 5 1/4" x 3' Edge - 5/8" holes- carbide tip	A.R.	
1	75537	3/4" x 5 1/4" x 4' Edge - 5/8" holes- carbide tip	A.R.	
1	75443	1" x 8" x 6' Edge - 5/8" holes	2	
1	75442	1" x 8" x 7' Edge - 5/8" holes	2	
1	75529	1" x 8" x 2' Edge - 5/8" holes	1-2	
1	14712	1" x 8" x 8' Edge - 5/8" holes	2	
1	19809	7/8" x 4 1/2" x 3' Edge - 5/8" holes- carbide tip	A.R.	
1	23230	7/8" x 4 1/2" x 2' Edge - 5/8" holes- carbide tip	A.R.	
1	23232	7/8" x 4 1/2" x 4' Edge - 5/8" holes- carbide tip	A.R.	
		End shoes & end bits		
2	7440	End shoe - 5/8" holes - 22" moldboard	1	
2	7441	End shoe - 5/8" holes - 26" moldboard	1	
3	68324	End bit - 5/8" holes - 22" moldboard - R.H.	1	
3	68325	End bit - 5/8" holes - 22" moldboard - L.H.	1	
3	68326	End bit - 5/8" holes - 26" moldboard - R.H.	1	
3	68327	End bit - 5/8" holes - 26" moldboard - L.H.	1	
		Moldboards & hardware		
4	1068	Moldboard flag	1	
5	400000	7/8" x 22-3/16" x 12' Moldboard	1	
5	400002	7/8" x 22-3/16" x 14' Moldboard	1	
5	400004	1" x 26" x 12' Moldboard	1	
5	400006	1" x 26" x 13' Moldboard	1	
5	400008	1" x 26" x 14' Moldboard	1	
6	87069	1" x 26" x 14' Moldboard	1	G780
6	69575	1" x 26" x 16' Moldboard	1	G780

Item	Part No.	Description	Qty.	Remarks
7	40F-1018	Plow bolt	22	
8	40F-1020	Plow bolt	12 - 22	
9	40F-1024	Plow bolt	5-10	
10	40F-1028	Plow bolt	5	
11	69361	Hardened washer	22	
12	30A-10 Zi	Nut	22	
13	40F-1220	Plow bolt	26 - 30	
14	40F-1224	Plow bolt	30	
15	40F-1228	Plow bolt	22 - 32	
16	69360	Hardened washer	26 - 32	
17	30A-12 Zi	Nut	26 - 32	
		Extensions & hardware		
18	400135	5/8" x 22" Extension - R.H. - 5/8" holes	1	
18	400136	5/8" x 22" Extension - L.H. - 5/8" holes	1	
18	400140	5/8" x 26" Extension - R.H. - 5/8" holes	1	
18	400139	5/8" x 26" Extension - L.H. - 5/8" holes	1	
19	400142	5/8" x 26" Extension - R.H. - 5/8" holes	1	G780
19	400141	5/8" x 26" Extension - L.H. - 5/8" holes	1	G780
20	6611	Lug	1	
20	45841	Lug	1	1" x 8" edges only.
21	400145	End lug	1	
22	50A-1624 Zi	Bolt	2	
23	14A-16 Zi	Lockwasher	2	
24	30A-16 Zi	Nut	2	
25	78916	Bracket	1	G780
		Edges, end shoes & end bits		**G780**
26	75528	1" x 8" x 2' Edge - 3/4" holes	1	
26	28042	1" x 8" x 6' Edge - 3/4" holes	2	
26	75441	1" x 8" x 7' Edge - 3/4" holes	2	
26	75440	1" x 8" x 8' Edge - 3/4" holes	2	
26	44970	5/8" x 6" x 6' Edge - 3/4" holes	2	
26	44971	5/8" x 6" x 7' Edge - 3/4" holes	2	
26	44976	3/4" x 5" x 2' Edge - 3/4" holes - carbide tip	A.R.	
26	44977	3/4" x 5" x 3' Edge - 3/4" holes - carbide tip	A.R.	
26	44978	3/4" x 5" x 4' Edge - 3/4" holes - carbide tip	A.R.	
26	75526	5/8" x 6" x 2' Edge - 3/4" holes	1	
27	33512	End shoe	2	
28	68328	End bit - 3/4" holes - R.H. - 26" moldboard	1	
28	68329	End bit - 3/4" holes - L.H. - 26" moldboard	1	

SERIAL NUMBERS: 33000 & UP	**MOLDBOARDS**	Date	**01/2001**	Group	**981**
		Illustr. Nos	**00003507**	Page	**63**
				Issue	**1**

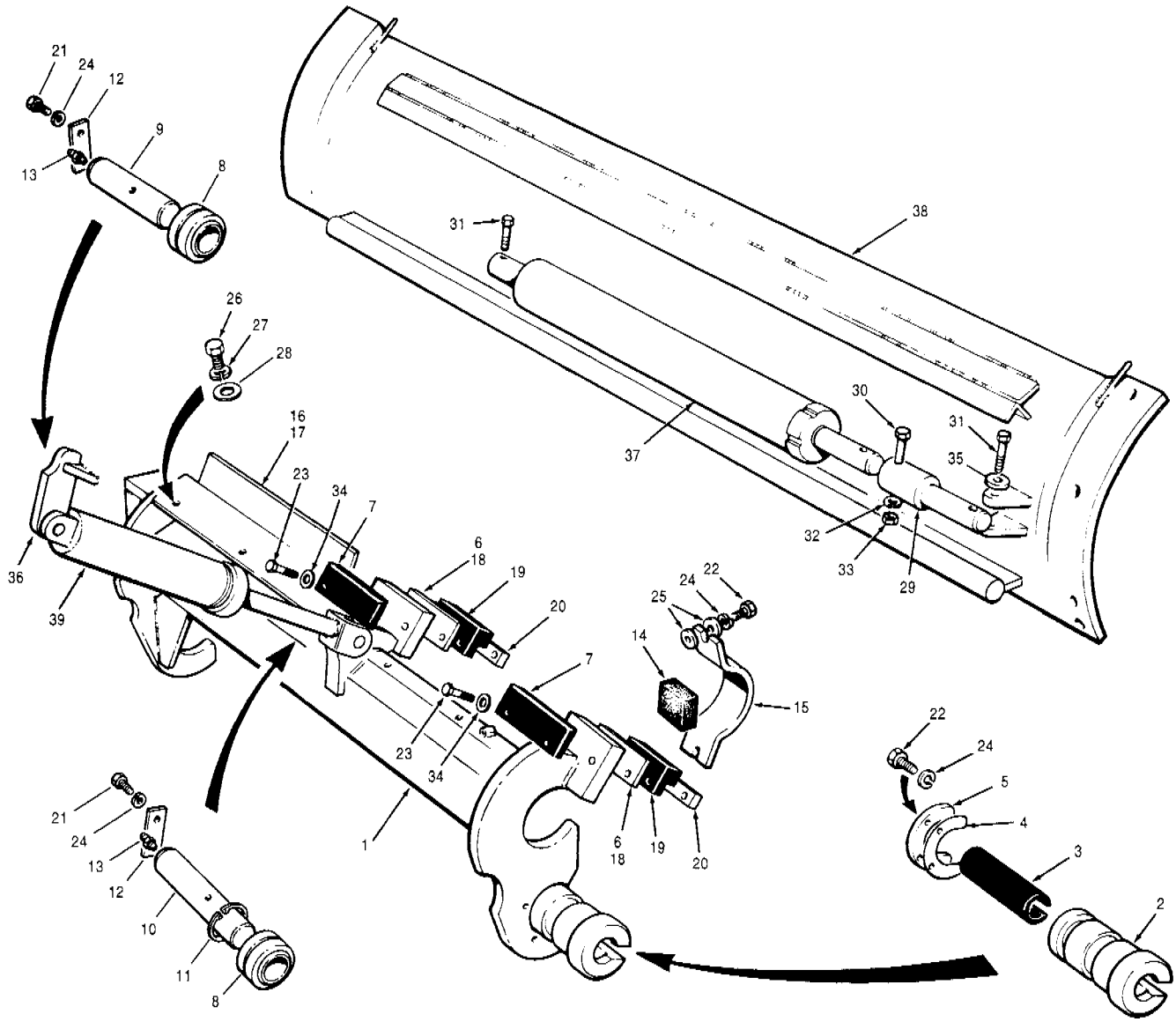

Item	Part No.	Description	Qty.	Remarks
1	**79220**	**Quadrant assembly**	1	
2	79012	Slide tube	2	
3	58406	Duramide slide bearing	2	
4	79013	Shim - .03"	6	
5	79011	Retainer	2	
6	79008	Shim - .12"	A.R.	
7	78684	Duramide bearing plate	3	
8	19629	Spherical bearing - 35 mm	2	
9	62500	Bearing pin - barrel end	1	
10	87295	Bearing pin - rod end	1	
11	19B-218	Snap ring	1	
12	56909	Lock plate	2	
13	29A-02	Grease fitting	2	
14	78921	Cushion block	1	
15	78920	Clamping plate	1	
16	69286	Stone guard - L.H.	1	
17	69285	Stone guard - R.H.	1	
18	78789	Shim - .06"	3	
19	78685	Duramide bearing plate	3	
20	78686	Clamp bar	3	
21	50A-0608 Zi	Bolt	4	
22	50A-0610 Zi	Bolt	6	
23	50A-0620 Zi	Bolt	6	
24	14A-06 Zi	Lockwasher	10	
25	14D-06 Zi	Flatwasher	4	

Item	Part No.	Description	Qty.	Remarks
26	50A-0808 Zi	Bolt	6	
27	14A-08 Zi	Lockwasher	6	
28	14C-08 Zi	Flatwasher	6	
29	80960	Slide shift cylinder extension (6" long) - 13' moldboard	1	
29	80961	Slide shift cylinder extension (12" long) - 14' moldboard	1	
30	51A-1632 Zi	Bolt	1	
31	51A-1640 Zi	Bolt	2	
32	14A-16 Zi	Lockwasher	3	
33	31A-16 Zi	Nut	3	
34	14D-06 Zi	Narrow flatwasher	6	
35	14C-16 Zi	Flatwasher	1	
36		**Circle turn & drawbar - front - models G710 to G740**	Ref.	984-83 987-97
37		**Slide shift cylinder**	Ref.	984-80
38		**Moldboards**	Ref.	981-63
39		**Blade tilt cylinders**	Ref.	982-69

SERIAL NUMBERS: 33000 & UP	**MOLDBOARD INSTALLATIONS - Models G710 to G716**	Date **01/2001**	Group **982**
		Illustr. Nos **00003510**	Page **64**
			Issue **1**

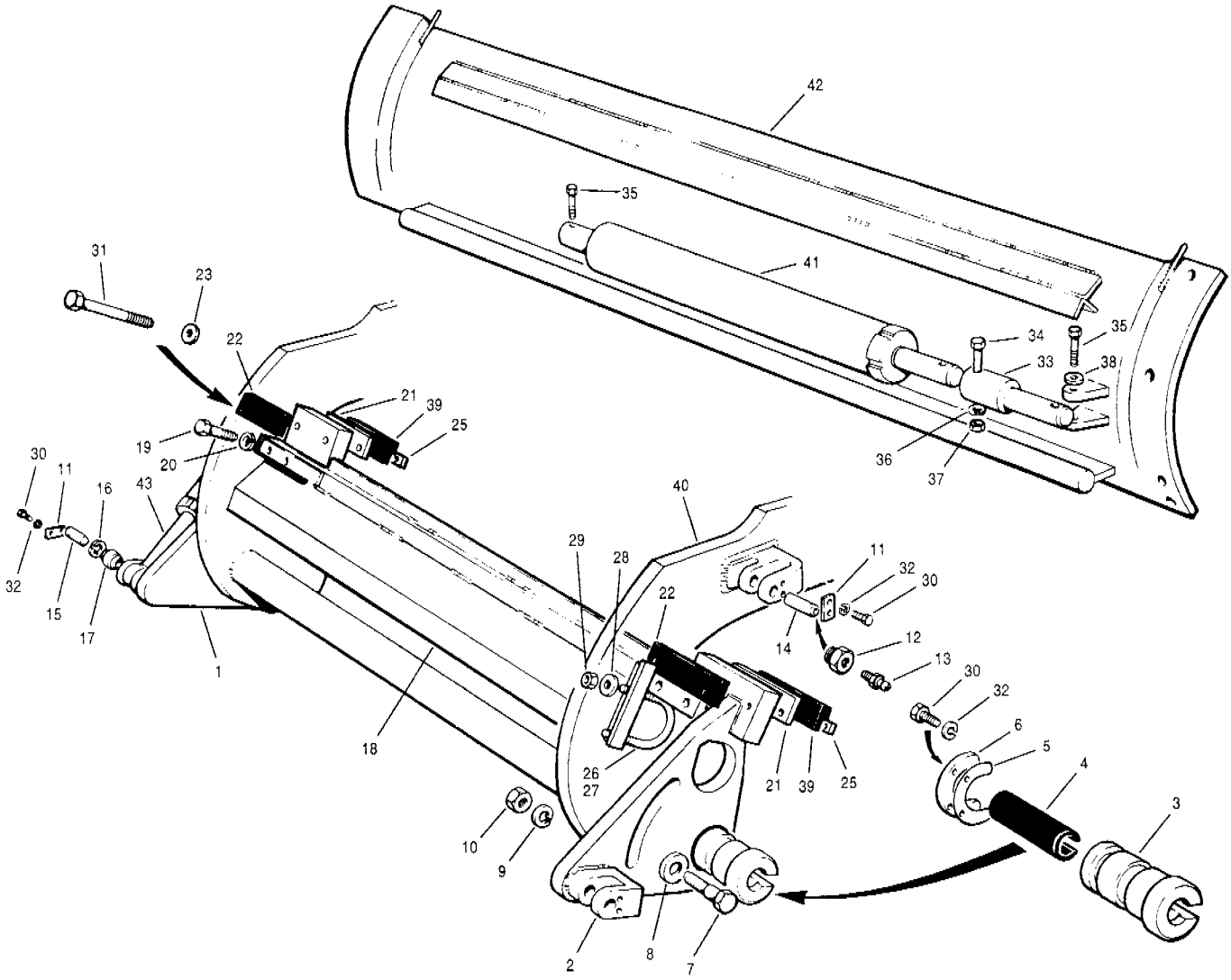

Item	Part No.	Description	Qty.	Remarks
1	79196	Quadrant - L.H.	1	
2	79195	Quadrant - R.H.	1	
3	79012	Slide tube	2	
4	58406	Duramide slide bearing	2	
5	79013	Shim - .03"	6	
6	79011	Retainer	2	
7	19598	Bolt	2	
8	19599	Retaining washer	2	
9	14A-20 Zi	Lockwasher	2	
10	30A-20 Zi	Nut	2	
11	56909	Lock plate	4	
12	62501	Plug - special	2 - 4	
13	29A-02	Grease fitting	4	
14	62502	Bearing pin - upper	2	
15	62503	Bearing pin - lower	2	
16	19B-218	Snap ring	4	
17	19629	Spherical bearing - 35 mm	4	
18	78923	Guard - slide shift cylinder	1	
19	50A-1420 Zi	Bolt	4	
20	14A-14 Zi	Lockwasher	4	
21	78675	Shim - .06"	2	
22	78673	Duramide bearing plate	2	
23	14D-06 Zi	Narrow flatwasher	4	
24	79007	Shim - .12"	A.R.	
25	81767	Clamp bar	2	
26	9513 x 11.5	Rubber hose - (used with item 27)	1	
27	78924	U-clamp	1	

Item	Part No.	Description	Qty.	Remarks
28	14C-08 Zi	Flatwasher	2	
29	36N-08 Zi	Locknut	2	
30	50A-0610 Zi	Bolt	12	
31	50A-0620 Zi	Bolt	4	
32	14A-06 Zi	Lockwasher	12	
33	80960	Slide shift cylinder extension (6" long) - 13' moldboard	1	
33	80961	Slide shift cylinder extension (12" long) - 14' moldboard	1	
34	51A-1632 Zi	Bolt	1	
35	51A-1640 Zi	Bolt	2	
36	14A-16 Zi	Lockwasher	3	
37	31A-16 Zi	Nut	3	
38	14C-16 Zi	Flatwasher	1	
39	78646	Duramide bearing plate	2	
40		**Circle turn & drawbar - front - models G710 to G740**	Ref.	984-83 987-97
41		**Slide shift cylinder**	Ref.	984-80
42		**Moldboards**	Ref.	981-63
43		**Blade tilt cylinders**	Ref.	982-69

SERIAL NUMBERS: 33000 & UP	**MOLDBOARD INSTALLATIONS - Models G720 to G740**	Date 01/2001	Group 982
		Illustr. Nos 00004515	Page 65
			Issue 1

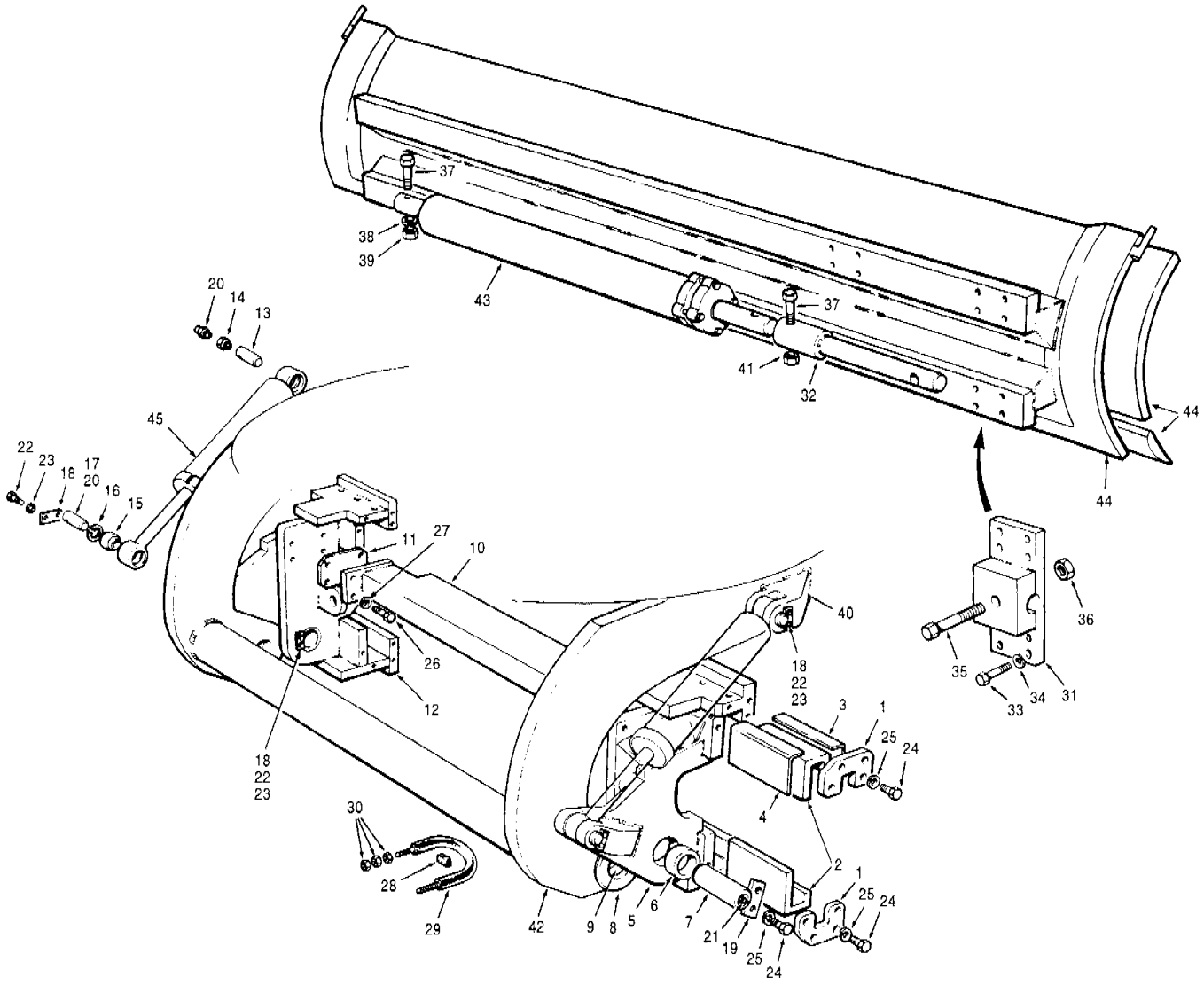

Item	Part No.	Description	Qty.	Remarks
1	45705	Retainer plate	8	
2	69579	Slide bearing	4	
3	45704	Shim - short	A.R.	
4	69292	Shim - long	A.R.	
5	66893	Tilt quadrant - R.H.	1	
6	78915	Pivot bushing	4	
7	58962	Pivot pin	2	
8	54357	Spacer	4	
9	36968	Pivot bushing	2	
10	32069	Tie bar	1	
11	78073	Shim	A.R.	
12	69402	Tilt quadrant - L.H.	1	
13	62502	Bearing pin - upper	2	
14	62501	Plug - special	2	
15	19629	Spherical bearing - 35 mm	4	
16	19B-218	Snap ring	4	
17	62503	Bearing pin - lower	2	
18	56909	Lock plate	6	
19	58799	Lock plate	2	
20	29A-02	Grease fitting	4	
21	29E-04	Grease fitting	2	
22	50A-0608 Zi	Bolt	12	
23	14A-06 Zi	Lockwasher	12	
24	50A-0810 Zi	Bolt	36	
25	14A-08 Zi	Lockwasher	36	
26	50A-1216 Zi	Bolt	8	

Item	Part No.	Description	Qty.	Remarks
27	14A-12 Zi	Lockwasher	8	
28	78928	Rubber pad	1	
29	66891	U-bolt	1	
30	30D-12 Zi	Nut	6	
31	69220	Slide shift cylinder mount	1	
32	80961	Slide shift cylinder extension (12" long) - 14' moldboard	1	
33	50A-1020 Zi	Bolt	8	
34	14A-10 Zi	Lockwasher	8	
35	51A-1640 Zi	Bolt	1	
36	37D-16 Zi	Locknut	1	
37	50A-1632 Zi	Bolt	2	
38	14A-16 Zi	Lockwasher	1	
39	30A-16 Zi	Nut	1	
40	66214	Mounting lug	2	
41	36N-16 Zi	Nut	1	
42		**Circle turn & drawbar - front - model G780**	Ref.	985-85 987-99
43		**Slide shift cylinders**	Ref.	984-82
44		**Moldboards**	Ref.	985-86
45		**Blade tilt cylinders**	Ref.	982-70

SERIAL NUMBERS: 33000 & UP	**MOLDBOARD INSTALLATION - Model G780**	Date **01/2001**	Group **982**
		Illustr. Nos **00003508**	Page **66**
			Issue **1**

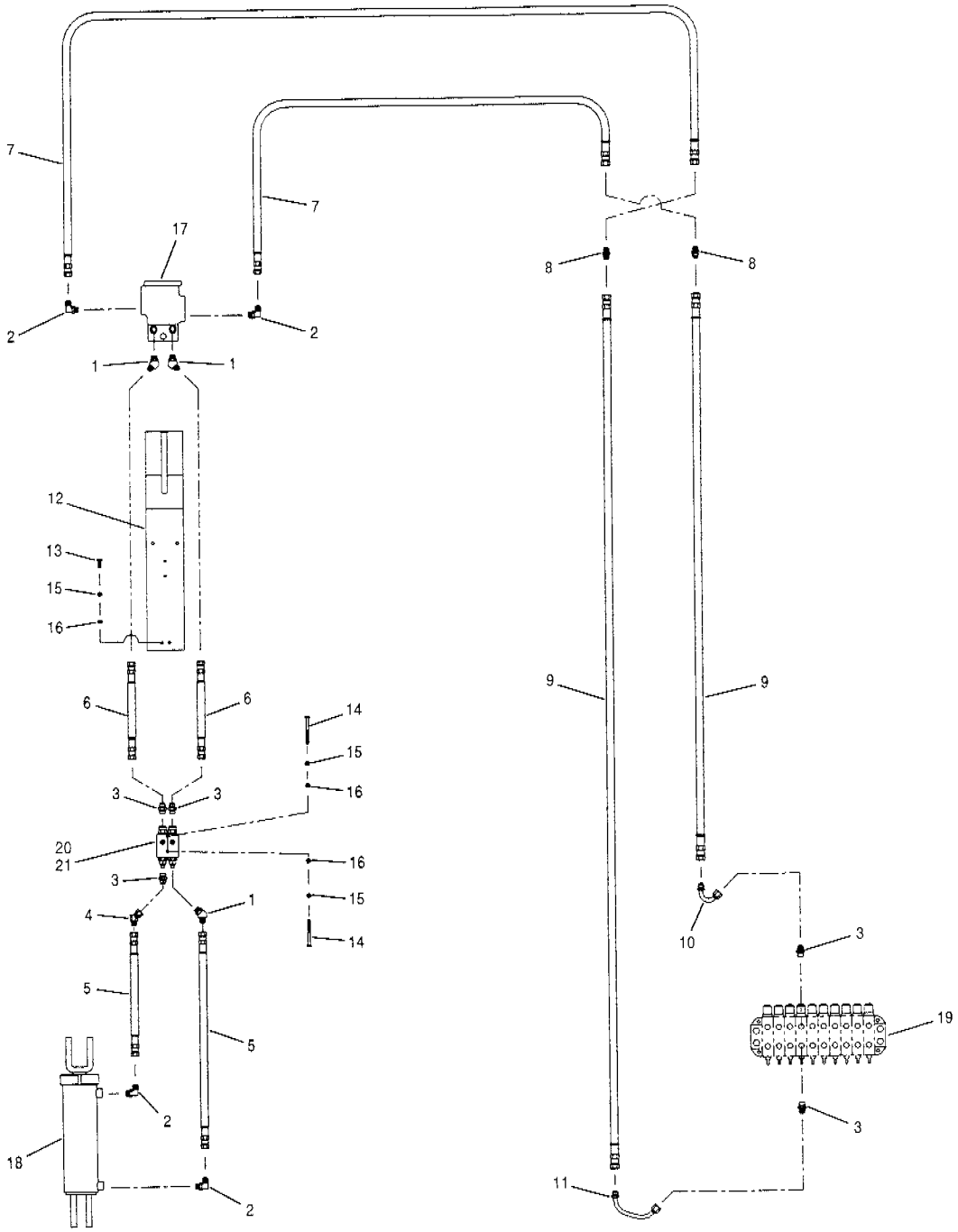

Item	Part No.	Description	Qty.	Remarks
1	111A-0808	Connector	3	
2	111B-0808	Connector	4	
3	111E-0808	Connector	5	
4	112A-08	Connector	1	
5	74429 x 14	Hose	2	
6	78192 x 14	Hose	2	
7	78192 x 118	Hose	2	
8	110I-0808	Connector	2	
9	78192 x 127	Hose	2	
10	* 12725309	Tube	1	
11	* 12725310	Tube	1	
12	403042	Drive arm	1	
13	50A-0508 Zi	Bolt	2	
14	50A-0528 Zi	Bolt	2	
15	* 955894	Hardened washer	4	
16	30A-05 Zi	Nut	4	

Item	Part No.	Description	Qty.	Remarks
17		Slide shift circuit & swivel joint	Ref.	984-79
18		Blade tilt cylinder	Ref.	982-69
19		Manifold valve	Ref.	912-8
20		Counterbalance valve	Ref.	912-17
21		Counterbalance valve - EEC	Ref.	912-18

SERIAL NUMBERS:
33000 & UP

BLADE TILT CIRCUIT - Models G710 to G716

Date 04/2001
Illustr. Nos 00006107

Group 982
Page 67
Issue 1A

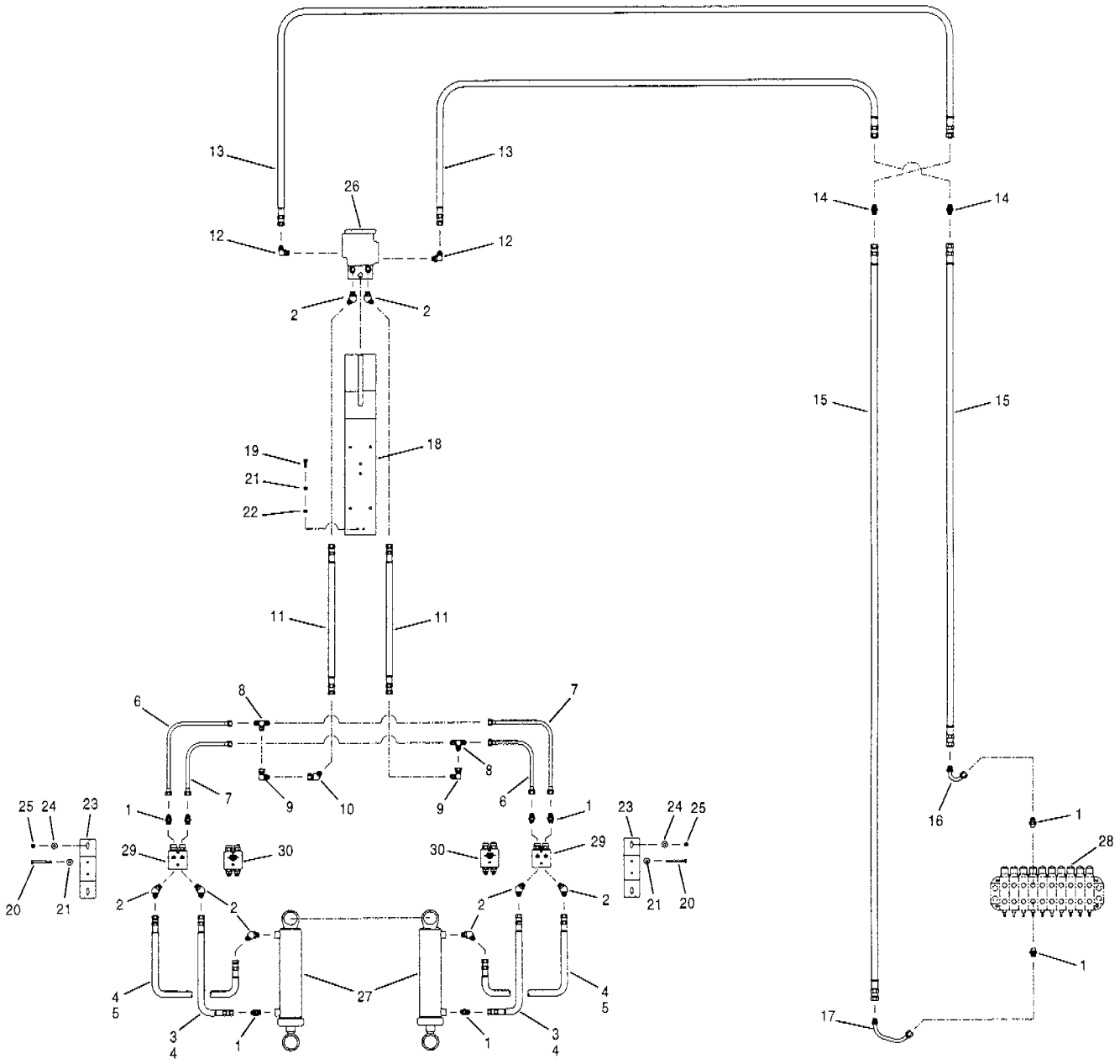

Item	Part No.	Description	Qty.	Remarks
1	111E-0808	Connector	8	
2	111A-0808	Connector	8	
3	74429 x 20	Hose	2	G720 to G740
4	74429 x 24	Hose	2	
5	74429 x 28	Hose	2	G780
6	17942	Tube	2	
7	17943	Tube	2	
8	110AA-08	Tee	2	
9	112B-08	Connector	2	
10	112A-08	Connector	1	
11	78192 x 31	Hose	2	
12	111B-0808	Connector	2	
13	78192 x 118	Hose	2	G720 to G736
13	78192 x 124	Hose	2	G740 to G780
14	110I-0808	Connector	2	
15	78192 x 127	Hose	2	G720 to G736
15	78192 x 133	Hose	2	G740 to G780
16	* 12725309	Tube	1	
17	* 12725310	Tube	1	
18	403042	Drive arm	1	

Item	Part No.	Description	Qty.	Remarks
19	50A-0508 Zi	Bolt	2	
20	50A-0524 Zi	Bolt	4	
21	* 955894	Hardened washer	6	
22	30A-05 Zi	Nut	2	
23	403044	Bracket	2	
24	* 94007	Hardened washer	4	
25	30A-06 Zi	Nut	4	
26		**Slide shift circuit & swivel joint**	Ref.	984-79
27		**Blade tilt cylinders**	Ref.	982-70
28		**Manifold valve**	Ref.	912-9
29		**Counterbalance valve**	Ref.	912-17
30		**Counterbalance valve - EEC**	Ref.	912-18

SERIAL NUMBERS: 33000 & UP	**BLADE TILT CIRCUIT - Models G720 to G780**	Date **04/2001**	Group **982**
		Illustr. Nos **00005066**	Page **68**
			Issue **1A**

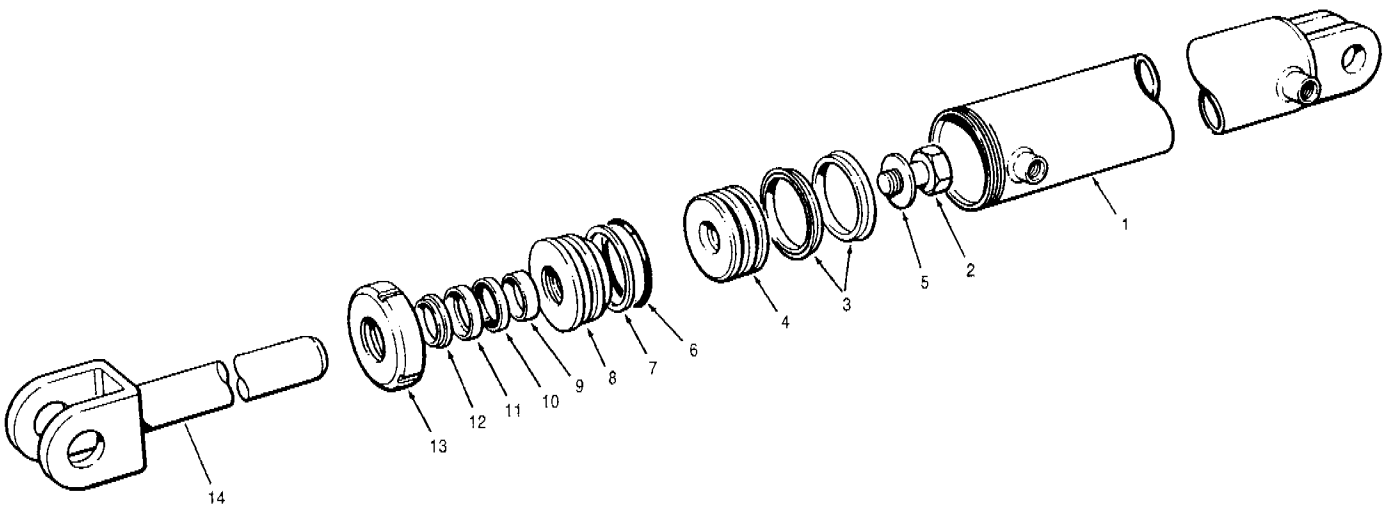

Item	Part No.	Description	Qty.	Remarks
	79217	**Power tilt cylinder assembly** - includes items 1 to 14	1	
	89134	**Repair kit for 79217** **- cylinder assembly** - includes items 3, 6, 7 & 9 to 12	1 per	
1	79218	Cylinder barrel - includes item 13	1	
2	50A-1622 UP	Bolt	1	
3	12036	Piston seal	2	
4	59670	Piston	1	
5	49380	Hardened washer	1	
6	44244	O-ring	1	
7	44266	Back-up ring	1	
8	97828	Gland	1	
9	43074	Wear ring	1	
10	73297	Rod seal	1	
11	59189	Back-up ring	1	
12	12035	Rod wiper	1	
13	62147	Cylinder nut	1	
14	87291	Piston rod	1	

Item	Part No.	Description	Qty.	Remarks

SERIAL NUMBERS: 33000 & UP	**BLADE TILT CYLINDER - Models G710 to G716**	Date **01/2001**	Group	**982**
		Illustr.Nos **00004976**	Page	**69**
			Issue	**1**

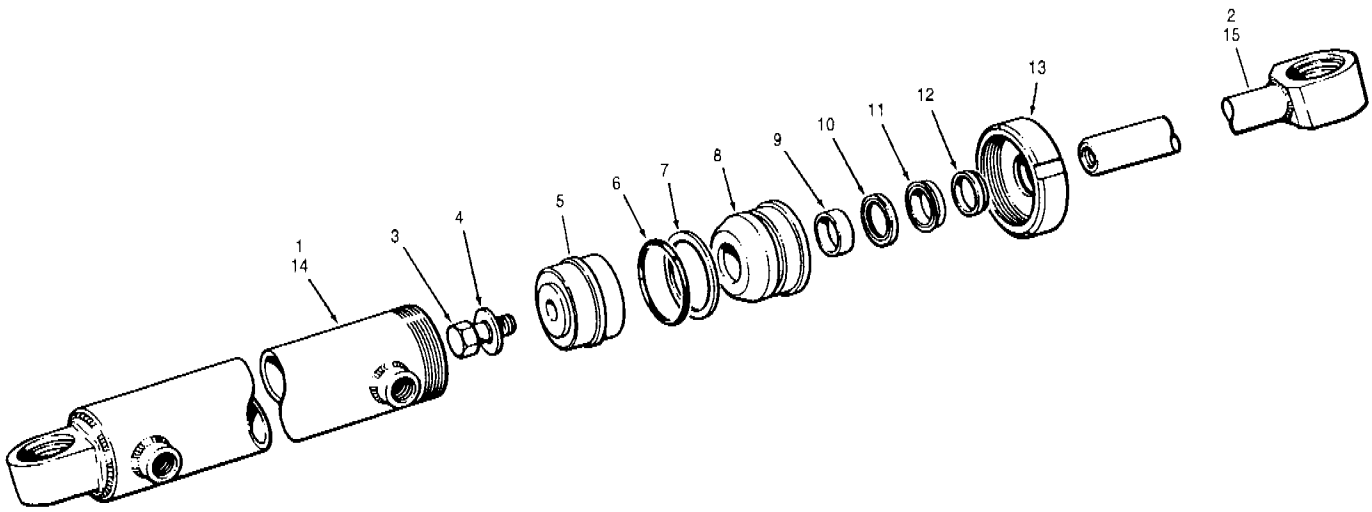

Item	Part No.	Description	Qty.	Remarks
	404002	**Power tilt cylinder assembly** - includes items 1 to 13	2	**G720 to G740**
	404003	**Power tilt cylinder assembly** - includes items 3 to 15	2	**G780**
	404016	**Repair kit for 404002 & 404003 - cylinder assemblies** - includes items 6, 7 & 9 to 12	1 per	
1	79188	Cylinder barrel - includes item 13	1	G720 to G740
2	79189	Piston rod	1	G720 to G740
3	50A-1220 UP	Bolt	1	
4	69360	Hardened washer	1	
5	404001	Piston	1	
6	44243	O-ring	1	
7	44343	Back-up ring	1	
8	97826	Gland	1	
9	59768	Wear ring	1	
10	73706	Rod seal	1	
11	59136	Back-up ring	1	
12	12166	Rod wiper	1	
13	62146	Cylinder nut	1	
14	79467	Cylinder barrel - includes item 13	1	G780
15	79468	Piston rod	1	G780

Item	Part No.	Description	Qty.	Remarks

SERIAL NUMBERS: 33000 & UP	**BLADE TILT CYLINDER - Models G720 to G780**	Date **01/2001**	Group **982**
		Illustr. Nos **00004977**	Page **70**
			Issue **1**

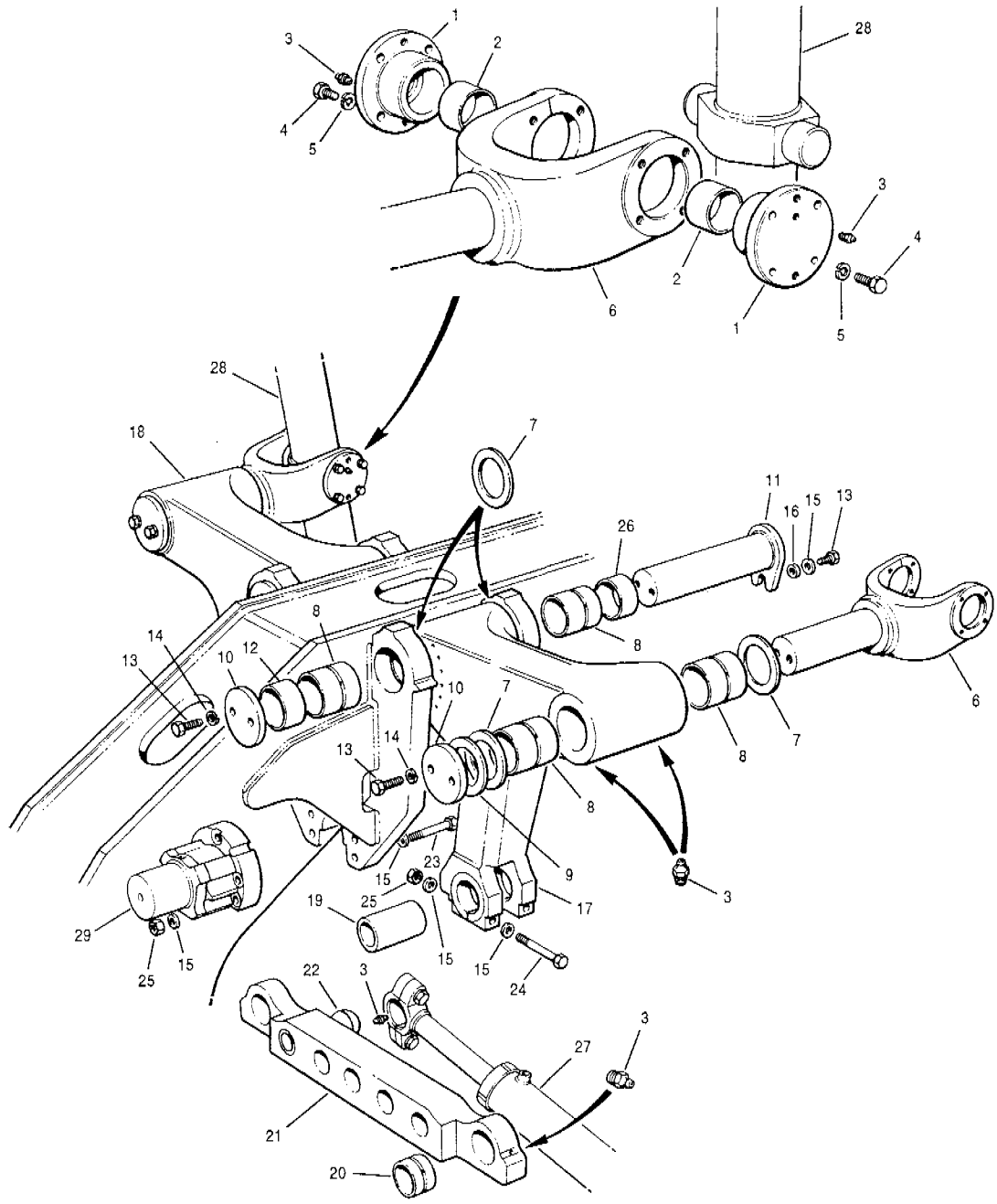

Item	Part No.	Description	Qty.	Remarks
1	81787	Housing - bushing	4	
2	80762	Bushing	4	
3	28A-04	Grease fitting	15	
4	50A-0814 Zi	Bolt	16	
5	14A-08 Zi	Lockwasher	16	
6	79702	Stirrup	2	
7	80618	Thrust washer	8	
8	80760	Bushing	8	
	87248	**Shim pack kit** - includes items 9	1	
9	87243	Shim - .010"	2	
9	87242	Shim - .020"	2	
9	87241	Shim - .040"	2	
10	80615	Cap	4	
11	79608	Pin - retaining	2	
12	80757	Bushing	2	
13	50A-1216 Zi	Bolt	10	
14	14A-12 Zi	Lockwasher	8	
15	79193	Hardened washer	20	

Item	Part No.	Description	Qty.	Remarks
16	80761	Spacer	2	
17	79431	Arm - R.H.	1	
18	79432	Arm - L.H.	1	
19	81365	Pivot pin	2	
20	80619	Bushing	2	
21	79482	Lockbar	1	
22	79478	Ball pin - lockbar	1	
23	50A-1226 Zi	Bolt	5	
24	50A-1244 Zi	Bolt	4	
25	30B-12 Zi	Nut	9	
26	79607	Bushing	2	
27		**Circle shift cylinders**	Ref.	986-92
28		**Blade lift cylinders**	Ref.	983-77
29		**Lock cylinder & circuit**	Ref.	986-94 986-95

SERIAL NUMBERS: 33000 & UP	**BLADE LIFT - MBCS - Models G710 to G740**	Date **01/2001**	Group	**983**
		Illustr. Nos **00004464**	Page	**71**
			Issue	**1**

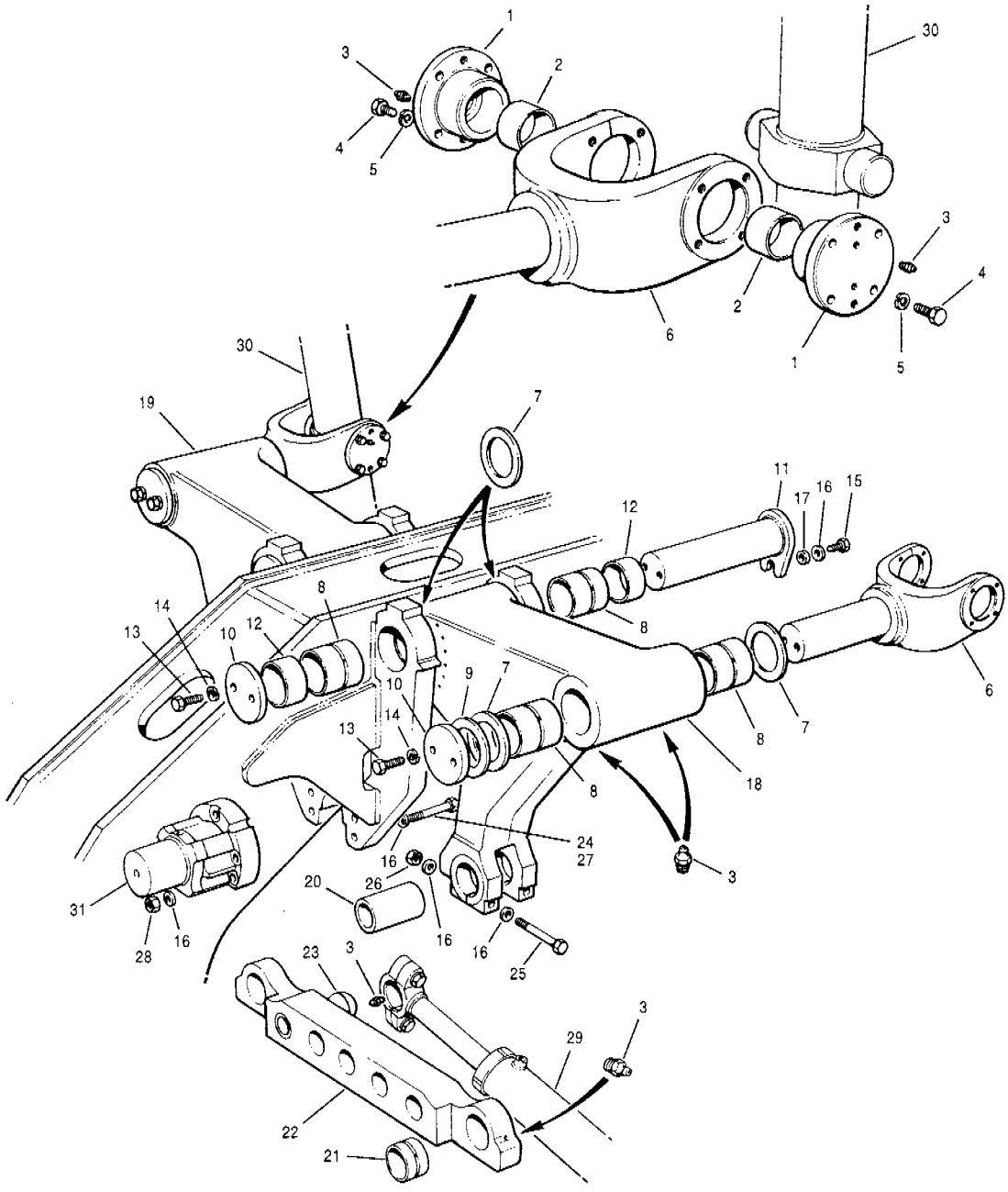

Item	Part No.	Description	Qty.	Remarks
1	81787	Housing - bushing	4	
2	80762	Bushing	4	
3	28A-04	Grease fitting	15	
4	50A-0814 Zi	Bolt	16	
5	14A-08 Zi	Lockwasher	16	
6	79705	Stirrup	2	
7	87267	Thrust washer	8	
8	81565	Bushing	8	
	87249	**Shim pack kit** - includes item 9	1	
9	87247	Shim - .010"	2	
9	87246	Shim - .020"	2	
9	87245	Shim - .040"	2	
10	81568	Cap	4	
11	89211	Pin - retaining	2	
12	81467	Bushing	4	
13	50A-1216 Zi	Bolt	8	
14	14A-12 Zi	Lockwasher	8	
15	50A-1220 Zi	Bolt	2	
16	79193	Hardened washer	20	
17	80761	Spacer	2	

Item	Part No.	Description	Qty.	Remarks
18	79538	Arm - R.H.	1	
19	79540	Arm - L.H.	1	
20	81564	Pivot pin	2	
21	81567	Bushing	2	
22	79534	Lockbar	1	
23	79537	Ball pin - lockbar	1	
24	50A-1228 Zi	Bolt	4	
25	50A-1250 Zi	Bolt	4	
26	30B-12 Zi	Nut	8	
27	50A-1226 Zi	Bolt	1	
28	30D-12 Zi	Locknut	1	
29		**Circle shift cylinder**	Ref.	986-93
30		**Blade lift cylinders**	Ref.	983-77
31		**Lock cylinder & circuit**	Ref.	986-94 986-95

SERIAL NUMBERS: 33000 & UP	**BLADE LIFT - HMBCS - Model G780**	Date **01/2001**	Group **983**
		Illustr. Nos **00004264**	Page **72**
			Issue **1**

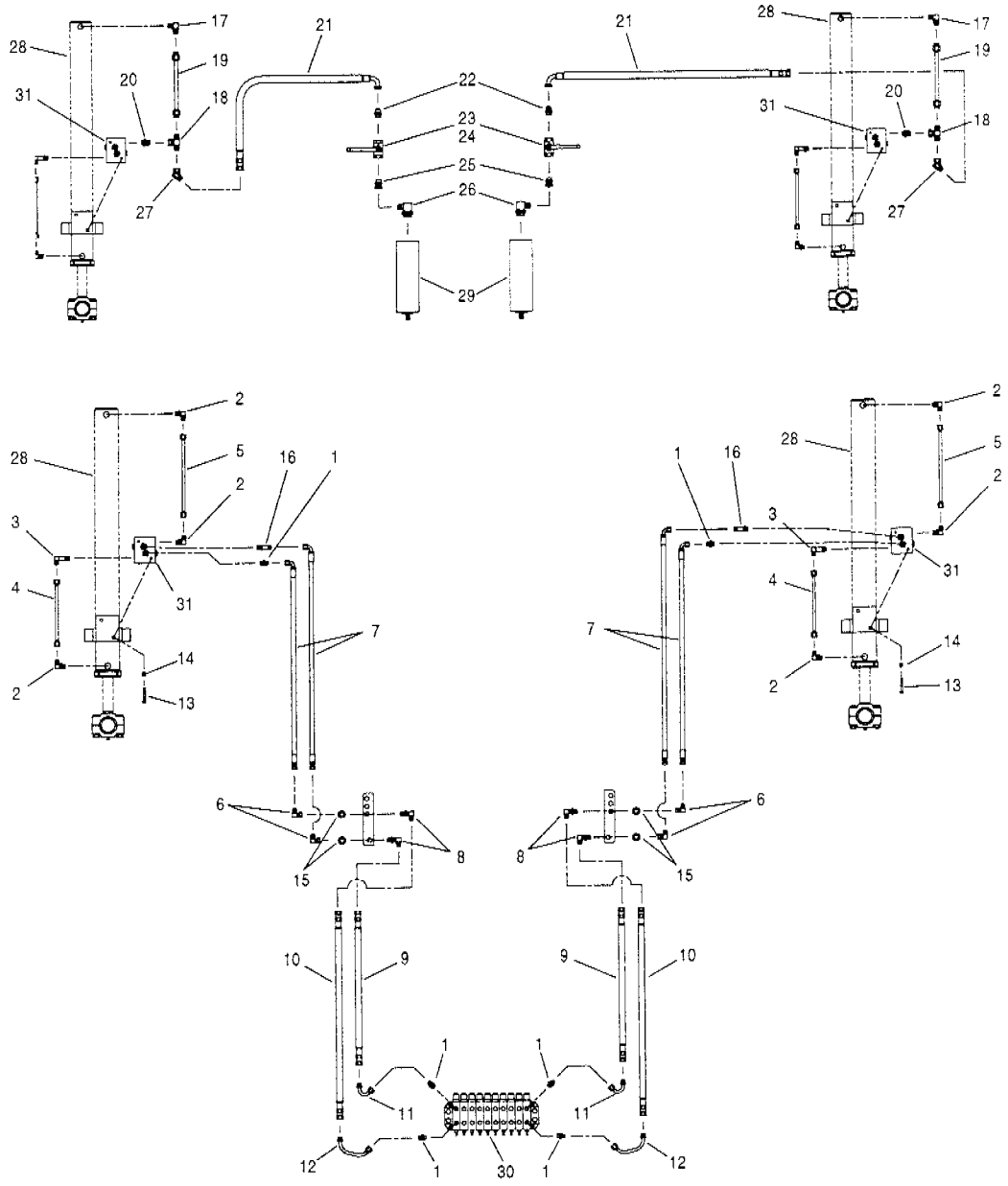

Item	Part No.	Description	Qty.	Remarks
1	111E-0808	Connector	8	
2	111B-0808	Connector	4 - 6	
3	111Q-0808	Connector	2	
4	97702	Tube	2	
5	97703	Tube	2	
6	112B-08	Connector	4	
7	78193 x 40	Hose	4	
8	110W-08	Connector	4	
9	78192 x 52	Hose	2	
10	78192 x 58	Hose	2	
11	* 12725309	Tube	2	
12	* 12725310	Tube	2	
13	50A-0520 Zi	Bolt	4	
14	38A-0502	Cage nut	4	
15	14D-12 Zi	Narrow flatwasher	4	
16	111F-0808	Connector	2	
		Accumulator installation		
17	111B-1208	Connector	2	
18	112D-12	Tee	2	

Item	Part No.	Description	Qty.	Remarks
19	97704	Tube	2	
20	111E-1208	Connector	2	
21	55105 x 48	Hose	2	
22	111E-1212	Connector	2	
23	54911	Valve	2	
24	56874	Handle	1	
25	54912	Connector	2	
26	111B-1220	Connector	2	
27	112A-12	Connector	2	
28		**Blade lift cylinders**	Ref.	983-77
29		**Accumulators**	Ref.	983-78
30		**Manifold valve**	Ref.	912-8 912-9
31		**Counterbalance valve**	Ref.	912-17
31		**Counterbalance valve - EEC**	Ref.	912-18

SERIAL NUMBERS: 33000 & UP	**BLADE LIFT CIRCUIT - MBCS - COUNTERBALANCE VALVE - Models G710 to G740**	Date	**03/2001**	Group **983**
		Illustr. Nos	**00004978**	Page **73**
				Issue **1A**

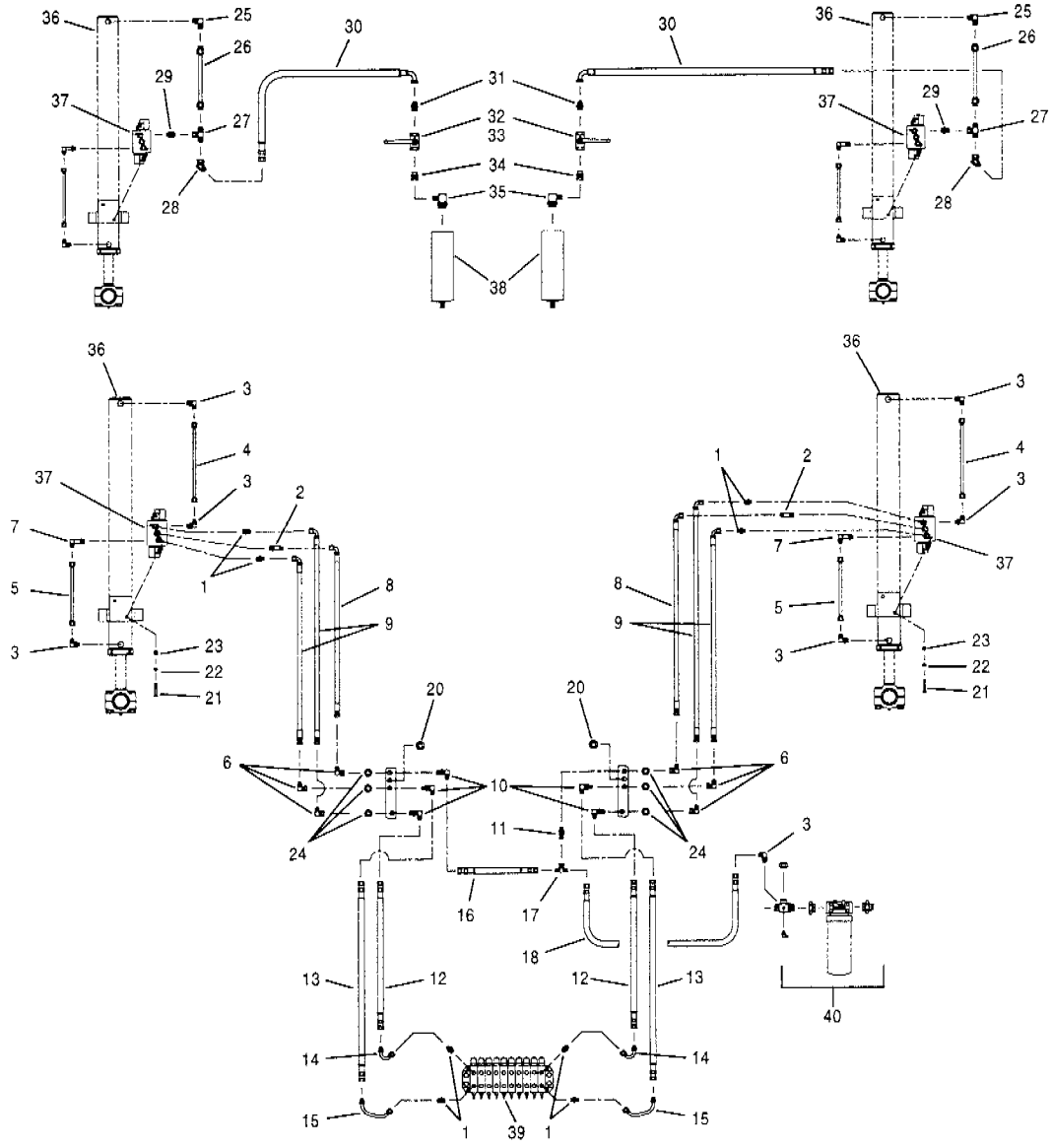

Item	Part No.	Description	Qty.	Remarks
1	111E-0808	Connector	8	
2	111F-0808	Connector	2	
3	111B-0808	Connector	3 - 7	
4	97703	Tube	2	
5	97702	Tube	2	
6	112B-08	Connector	6	
7	111Q-0808	Connector	2	
8	78216 x 40	Hose	2	
9	78193 x 40	Hose	4	
10	110W-08	Connector	5	
11	110N-08	Connector	1	
12	78192 x 52	Hose	2	
13	78192 x 58	Hose	2	
14	* 12725309	Tube	2	
15	* 12725310	Tube	2	
16	9313 x 24	Hose	1	
17	112D-08	Tee	1	
18	9313 x 103	Hose	1	
19	17539 x 24	Hose protector - frame	2	
20	74731	Grommet	2	
21	50A-0528 Zi	Bolt	4	
22	14A-05 Zi	Lockwasher	4	
23	38A-0502	Cage nut	4	
24	14D-12 Zi	Narrow flatwasher	6	

Item	Part No.	Description	Qty.	Remarks
		Accumulator installation		
25	111B-1208	Connector	2	
26	97704	Tube	2	
27	112D-12	Tee	2	
28	112A-12	Connector	2	
29	111E-1208	Connector	2	
30	55105 x 48	Hose	2	
31	111E-1212	Connector	2	
32	54911	Valve	2	
33	56874	Handle	2	
34	54912	Connector	2	
35	111B-1220	Connector	2	
36		**Blade lift cylinders**	Ref.	983-77
37		**Float valve & harness**	Ref.	912-10
38		**Accumulators**	Ref.	983-78
39		**Manifold valve**	Ref.	912-8 912-9
40		**Main hydraulic circuit**	Ref.	911-3

SERIAL NUMBERS: 33000 & UP	**BLADE LIFT CIRCUIT - MBCS - Float Valve - Models G710 to G740**	Date **03/2001**	Group	**983**
		Illustr. Nos **00004979**	Page	**74**
			Issue	**1A**

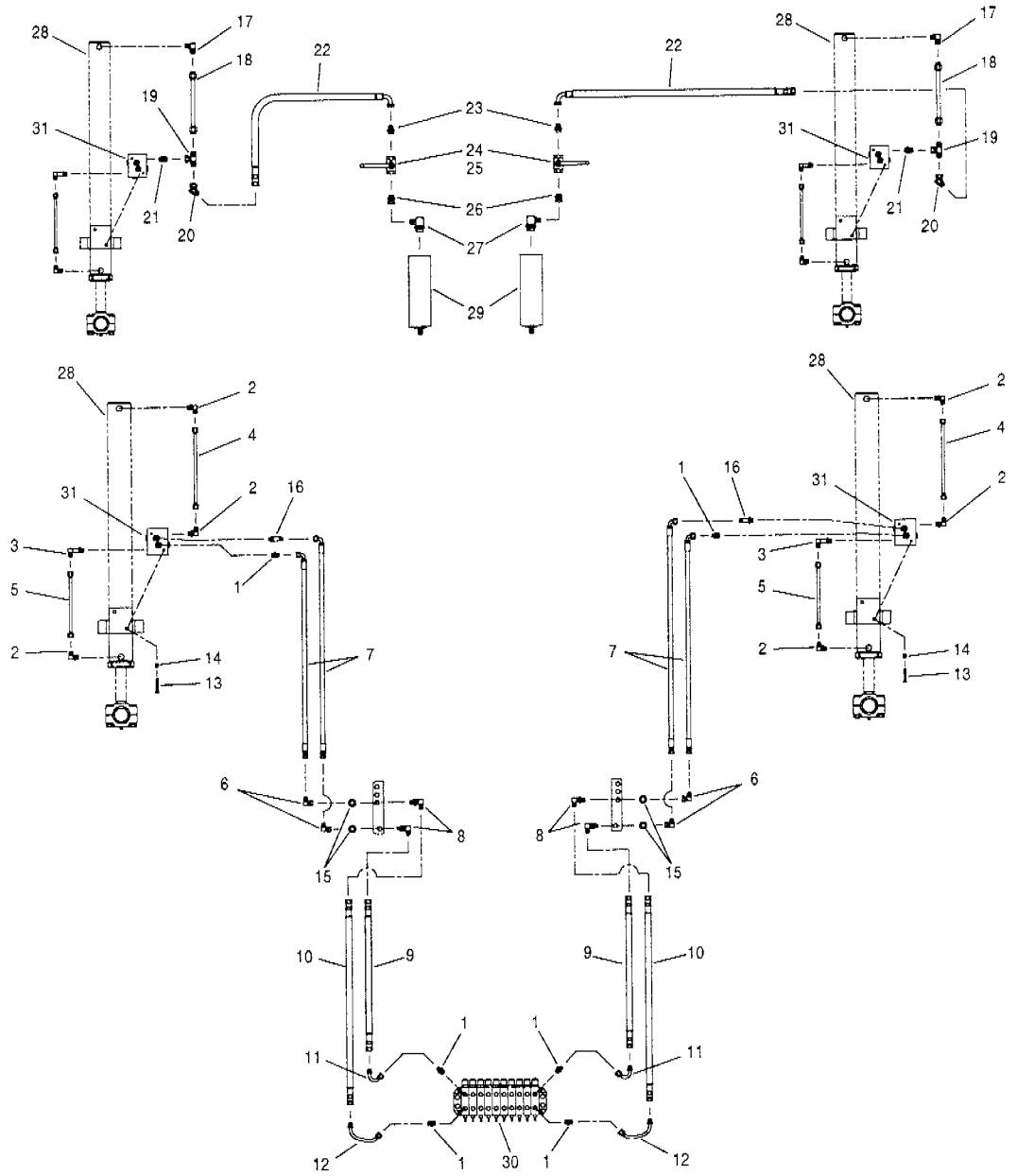

Item	Part No.	Description	Qty.	Remarks
1	111E-0808	Connector	6	
2	111B-0808	Connector	2 - 6	
3	111Q-0808	Connector	2	
4	89640	Tube	2	
5	89621	Tube	2	
6	112B-08	Connector	4	
7	78193 x 40	Hose	4	
8	110W-08	Connector	4	
9	78192 x 52	Hose	2	
10	78192 x 58	Hose	2	
11	* 12725309	Tube	2	
12	* 12725310	Tube	2	
13	50A-0520 Zi	Bolt	4	
14	38A-0502	Cage nut	4	
15	14D-12 Zi	Narrow flatwasher	4	
16	111F-0808	Connector	2	
		Accumulator installation		
17	111B-1208	Connector	2	
18	89641	Tube	2	

Item	Part No.	Description	Qty.	Remarks
19	112D-12	Tee	2	
20	112A-12	Connector	2	
21	111E-1208	Connector	2	
22	55105 x 48	Hose	2	
23	111E-1212	Connector	2	
24	54911	Valve	2	
25	56874	Handle	2	
26	54912	Connector	2	
27	111B-1220	Connector	2	
28		**Blade lift cylinders**	Ref.	983-77
29		**Accumulators**	Ref.	983-78
30		**Manifold valve**	Ref.	912-8 912-9
31		**Counterbalance valve**	Ref.	912-17
31		**Counterbalance valve - EEC**	Ref.	912-18

SERIAL NUMBERS: 33000 & UP	**BLADE LIFT CIRCUIT - MBCS - COUNTERBALANCE VALVE - Model G780**	Date	**03/2001**	Group **983**
		Illustr. Nos	**00004980**	Page **75**
				Issue **1A**

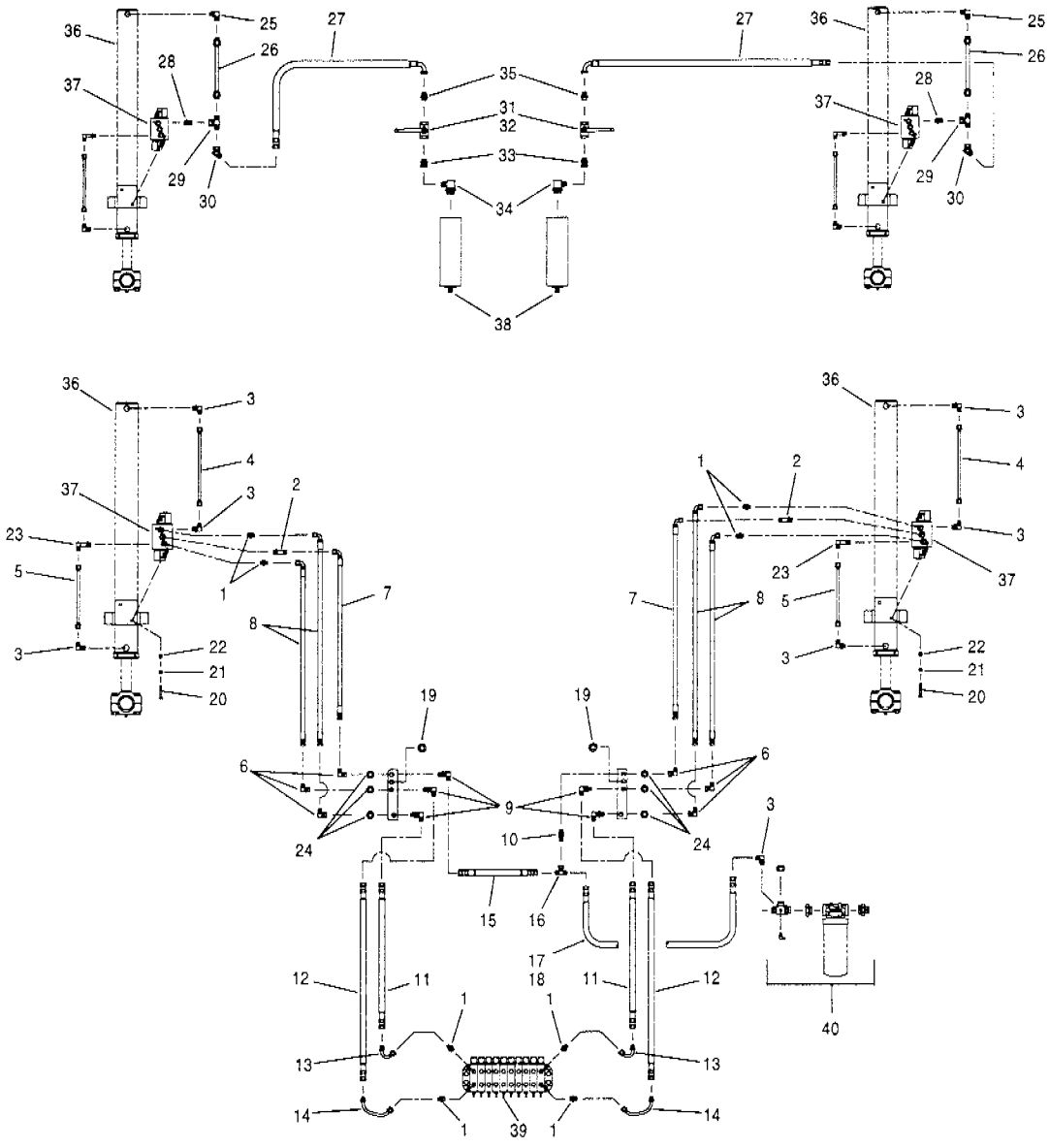

Item	Part No.	Description	Qty.	Remarks
1	111E-0808	Connector	8	
2	111F-0808	Connector	2	
3	111B-0808	Connector	3 - 7	
4	89640	Tube	2	
5	89621	Tube	2	
6	112B-08	Connector	6	
7	78216 x 40	Hose	2	
8	78193 x 40	Hose	4	
9	110W-08	Connector	5	
10	110N-08	Connector	1	
11	78192 x 52	Hose	2	
12	78192 x 58	Hose	2	
13	* 12725309	Tube	2	
14	* 12725310	Tube	2	
15	9313 x 24	Hose	1	
16	112D-08	Tee	1	
17	9313 x 103	Hose	1	
18	17539 x 24	Hose protector - frame	2	
19	74731	Grommet	2	
20	50A-0528 Zi	Bolt	4	
21	14A-05 Zi	Lockwasher	4	
22	38A-0502	Cage nut	4	
23	111Q-0808	Connector	2	
24	14D-12 Zi	Narrow flatwasher	6	

Item	Part No.	Description	Qty.	Remarks
		Accumulator installation		
25	111B-1208	Connector	2	
26	89641	Tube	2	
27	55105 x 48	Hose	2	
28	111E-1208	Connector	2	
29	112D-12	Tee	2	
30	112A-12	Connector	2	
31	54911	Valve	2	
32	56874	Handle	2	
33	54912	Connector	2	
34	111B-1220	Connector	2	
35	111E-1212	Connector	2	
36		**Blade lift cylinders**	Ref.	983-77
37		**Float valve & harness**	Ref.	912-10
38		**Accumulators**	Ref.	983-78
39		**Manifold valve**	Ref.	912-8 912-9
40		**Main hydraulic circuit**	Ref.	911-3

SERIAL NUMBERS: 33000 & UP	**BLADE LIFT CIRCUIT - HMBCS - Float Valve - Model G780**	Date **03/2001**	Group	**983**
		Illustr. Nos **00004459**	Page	**76**
			Issue	**1A**

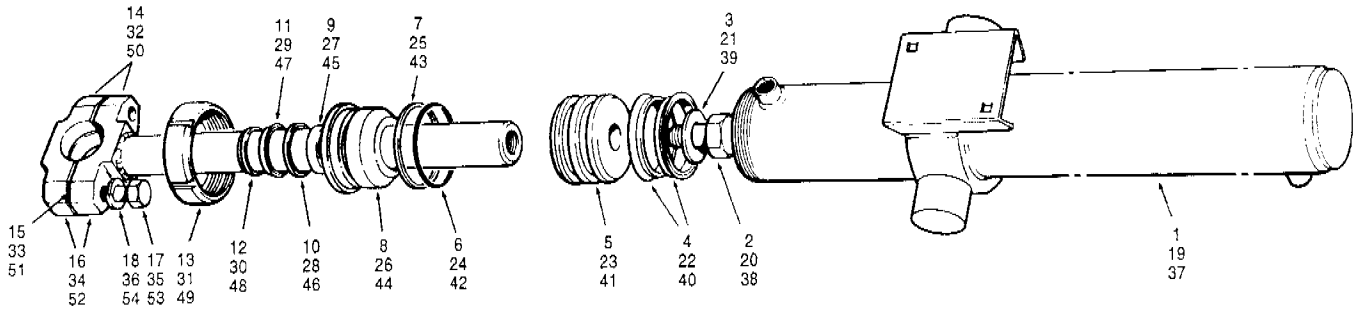

Item	Part No.	Description	Qty.	Remarks
	* **12724680**	**Blade lift cylinder assembly** - includes items 1 to 14, & 16 to 18	2	**G710 to G726**
	* **12724306**	**Repair kit for 12724680** **- cylinder assembly** - includes items 4, 6, 7 & 9 to 12	1 per	
1	97687	Barrel - includes item 13	1	
2	50A-1622 UP	Bolt	1	
3	49380	Hardened washer	1	
4	74695	Piston seal	2	
5	74694	Piston	1	
6	74696	O-ring	1	
7	74697	Back-up ring	1	
8	* 406028	Gland	1	
9	* 12724222	Wear ring	1	
10	* 12724223	Rod seal	1	
11	59189	Back-up ring	1	
12	* 12724224	Rod wiper	1	
13	74692	Cylinder nut	1	
14	**89038**	**Piston rod assembly** - includes items 16 to 18	1	
15	87356	Shim - .010"	2	
15	87357	Shim - .020"	2	
16	62287	Ball cap - matched set	1	
17	50A-1432 Zi	Bolt	2	
18	14A-14 Zi	Lockwasher	2	
	* **12724679**	**Blade lift cylinder assembly** - includes items 19 to 32, & 34 to 36	2	**G730 to G740**
	* **12724303**	**Repair kit for 12724679** **- cylinder assembly** - includes items 22, 24, 25 & 27 to 30	1 per	
19	97689	Barrel - includes item 31	1	
20	50A-1622 UP	Bolt	1	
21	49380	Hardened washer	1	
22	12036	Piston seal	2	
23	59670	Piston	1	
24	44244	O-ring	1	
25	44266	Back-up ring	1	
26	* 12724061	Gland	1	

Item	Part No.	Description	Qty.	Remarks
27	* 12724222	Wear ring	1	
28	* 12724223	Rod seal	1	
29	59189	Back-up ring	1	
30	* 12724224	Rod wiper	1	
31	62147	Cylinder nut	1	
32	**89038**	**Piston rod assembly** - includes items 34 to 36	1	
33	87356	Shim - .010"	2	
33	87357	Shim - .020"	2	
34	62287	Ball cap - matched set	1	
35	50A-1432 Zi	Bolt	2	
36	14A-14 Zi	Lockwasher	2	
	* **12724675**	**Blade lift cylinder assembly** - includes items 37 to 50 & 52 to 54	2	**G780**
	* **12724307**	**Repair kit for 12724675** **-cylinder assembly** - includes items 40, 42, 43 & 45 to 48	1 per	
37	97689	Barrel - includes item 49	1	
38	50A-2024 UP	Bolt	1	
39	62160	Hardened washer	1	
40	12036	Piston seal	2	
41	59945	Piston	1	
42	44244	O-ring	1	
43	44266	Back-up ring	1	
44	* 12724062	Gland	1	
45	* 12724219	Wear ring	1	
46	* 12724220	Rod seal	1	
47	59217	Back-up ring	1	
48	* 12724221	Rod wiper	1	
49	62147	Cylinder nut	1	
50	**97691**	**Piston rod assembly** - includes items 52 to 54	1	
51	87356	Shim - .010"	2	
51	87357	Shim - .020"	2	
52	87315	Ballcap - matched set	1	
53	50A-1436 Zi	Bolt	2	
54	14A-14 Zi	Lockwasher	2	

SERIAL NUMBERS: 33000 & UP	**BLADE LIFT CYLINDERS**	Date **04/2001**	Group **983**
		Illustr. Nos **00004465**	Page **77**
			Issue **1A**

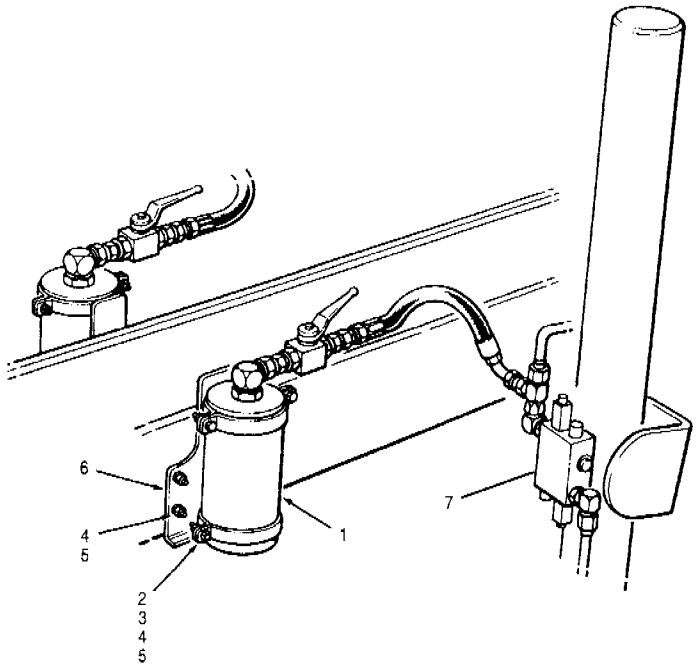

Item	Part No.	Description	Qty.	Remarks
1	62630	Accumulator	2 - 4	
1	74557	Accumulator	2 - 4	EEC
	56473	**Seal kit for 62630 & 74557 - accumulator** - includes the following:	1 per	
		O-ring	1	
		Seal ring	1	
		Square seal ring	2	
		Piston ring	2	
	56475	**Charging kit for 62630 & 74557 - accumulator**	1	
	56474	Gauge for charging kit	1	
2	78017	Clamp	4	
3	50A-0612 Zi	Bolt	8	
4	14A-06 Zi	Lockwasher	16	
5	30A-06 Zi	Nut	16	
6	87946	Bracket	1 per	
7	**97772**	**Float valves & harness**	Ref.	912-10

Item	Part No.	Description	Qty.	Remarks

SERIAL NUMBERS: 33000 & UP	**ACCUMULATORS**	Date **01/2001**	Group	**983**
		Illustr. Nos **00005028**	Page	**78**
			Issue	**1**

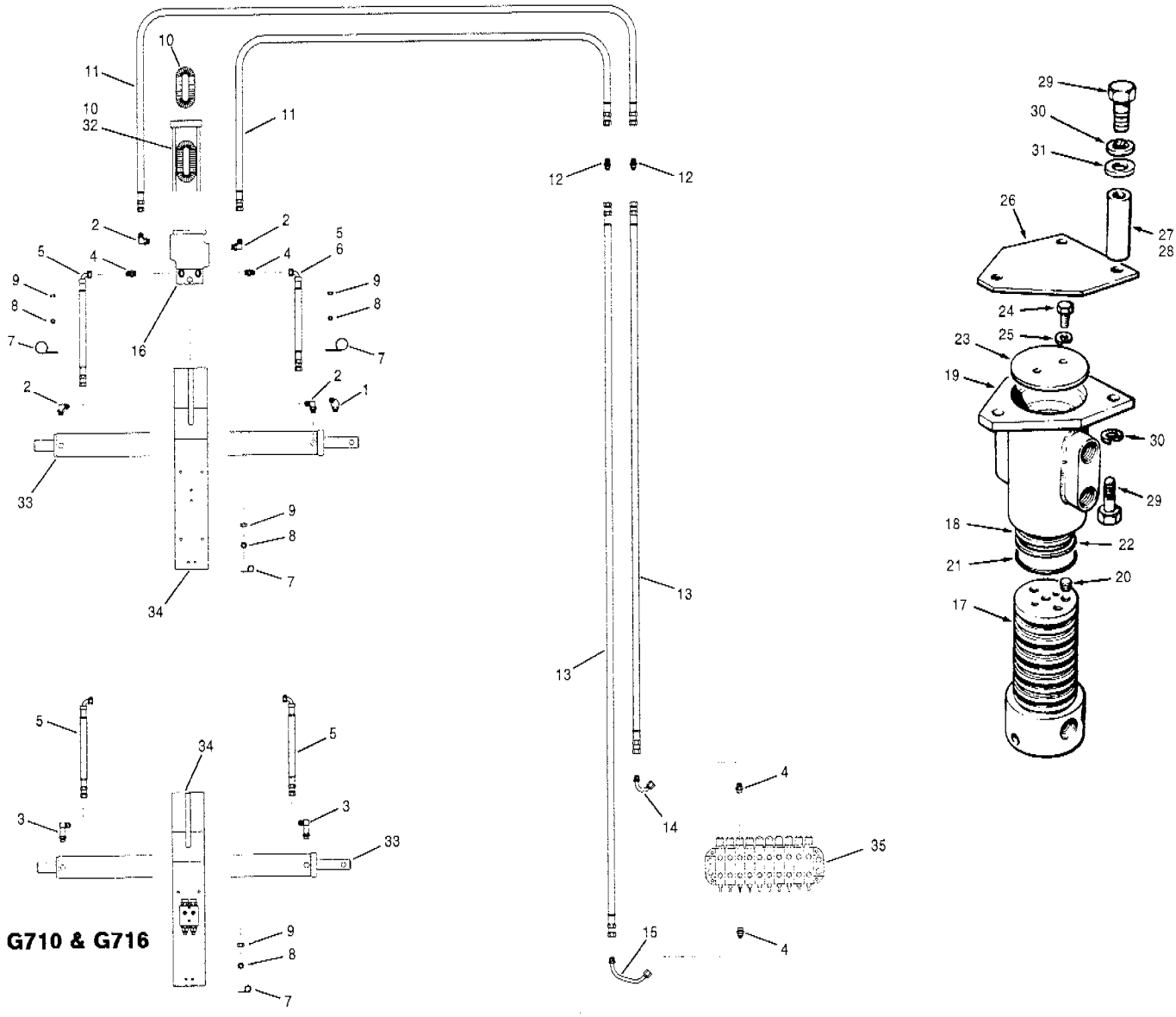

Item	Part No.	Description	Qty.	Remarks
1	111A-0808	Connector	1	G780
2	111B-0808	Connector	2	G710 to G716
2	111B-0808	Connector	4	G720 to G740
2	111B-0808	Connector	3	G780
3	111Q-0808	Connector	2	G710 to G716
4	111E-0808	Connector	4	
5	74430 x 69	Hose	2	G710 to G740
5	74430 x 69	Hose	1	G780
6	* 74430 x 80	Hose	1	G780
7	32318	Clamp	4 - 6	
8	* 940097	Hardened washer	10	
9	30A-06 Zi	Nut	8	
10	17539 x 24	Hose protector	2	
11	78192 x 118	Hose	2	G710 to G736
11	78192 x 124	Hose	2	G740 to G780
12	* 110L-08	Connector	2	
13	78192 x 127	Hose	2	G710 to G736
13	78192 x 133	Hose	2	G740 to G780
14	* 12725309	Tube	1	
15	* 12725310	Tube	1	
16	**74941**	**Swivel joint assembly** - includes items 19 to 25	1	
17	**74943**	**Spool** - includes item 18	1	

Item	Part No.	Description	Qty.	Remarks
18	66618	Seal	2	
19	66832	Body	1	
20	115D-04	Plug	4	
21	58327	O-ring	3	
22	52020	Back-up ring	6	
23	7306	Washer	1	
24	50A-0506 Zi	Bolt	2	
25	14A-05 Zi	Lockwasher	2	
26	66806	Cover	1	
27	69550	Spacer	3	G710 to G740
28	69551	Spacer	3	G780
29	50A-0810 Zi	Bolt	6	
30	14A-08 Zi	Lockwasher	6	
31	14C-08 Zi	Flatwasher	3	
32		**Circle turn & drawbar - front**	Ref.	985-83 987-98
33		**Slide shift cylinders**	Ref.	984-80, 81, 82
34		**Drive arm**	Ref.	982-67, 68
35		**Manifold valve**	Ref.	912-8, 9

SERIAL NUMBERS: 33000 & UP	**SLIDE SHIFT CIRCUIT & SWIVEL JOINT**	Date	**04/2001**	Group **984**
		Illustr. Nos	**00006096**	Page **79**
				Issue **1A**

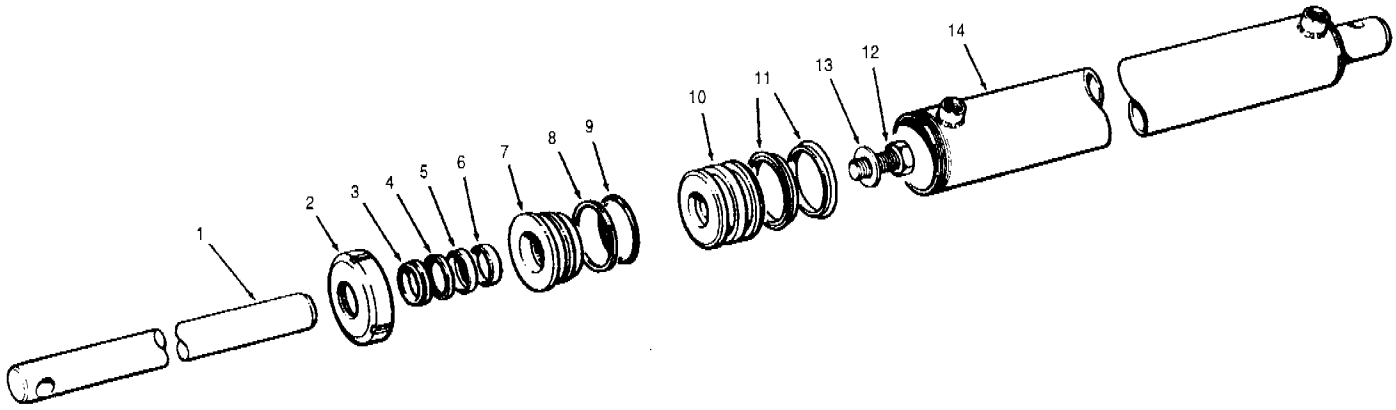

Item	Part No.	Description	Qty.	Remarks
	* 12724742	**Slide shift cylinder assembly** - includes items 1 to 14	1	G710 to G716
	* 12724681	**Slide shift cylinder assembly** - includes items 1 to 14	1	G720 to G726
	* 12724306	**Repair kit for 12724742 & 12724681** **- cylinder assembly** - includes items 3 to 6, 8, 9 & 11	1	
1	89079	Piston rod	1	G710 to G716
1	79052	Piston rod	1	G720 to G726
2	74692	Cylinder nut	1	
3	* 12724224	Rod wiper	1	
4	59189	Back-up ring	1	
5	* 12724223	Rod seal	1	
6	* 12724222	Wear ring	1	
7	* 406028	Gland	1	
8	74697	Back-up ring	1	
9	74696	O-ring	1	
10	74694	Piston	1	
11	74695	Piston seal	2	
12	50A-1622 UP	Bolt	1	
13	49380	Hardened washer	1	
14	89556	Cylinder barrel - includes item 2	1	G710 to G716
14	97341	Cylinder barrel - includes item 2	1	G720 to G726

Item	Part No.	Description	Qty.	Remarks

SERIAL NUMBERS: 33000 & UP	**SLIDE SHIFT CYLINDER - Models G710 to G726**	Date **04/2001**	Group **984**
		Illustr. Nos **00004981**	Page **80**
			Issue **1A**

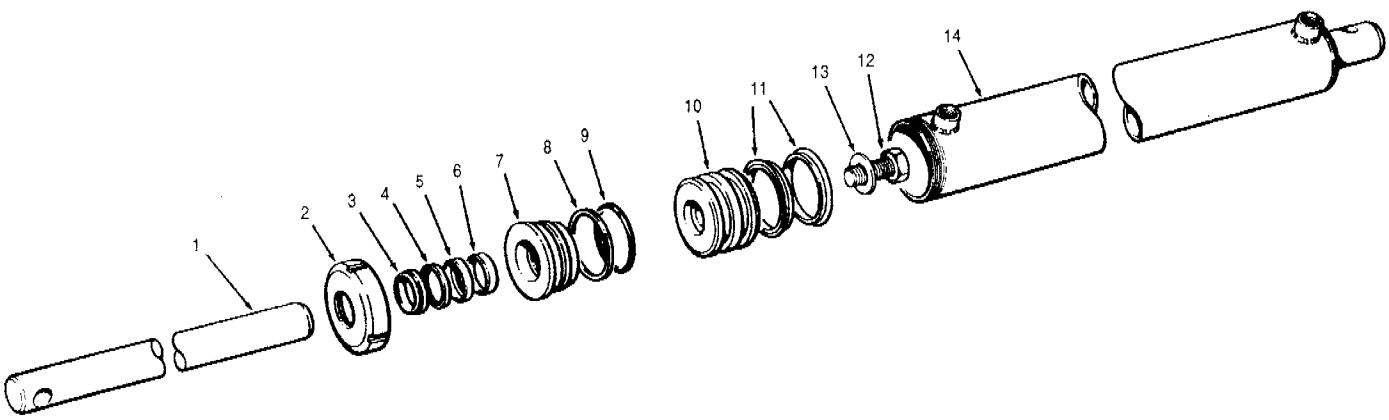

Item	Part No.	Description	Qty.	Remarks
	* 12724767	**Slide shift cylinder assembly** - includes items 1 to 14	1	
	* 12724303	**Repair kit for 12724767** **- cylinder assembly** - includes items 3 to 6, 8, 9 & 11	1	
1	79052	Piston rod	1	
2	62147	Cylinder nut	1	
3	* 12724224	Rod wiper	1	
4	59189	Back-up ring	1	
5	* 12724223	Rod seal	1	
6	* 12724222	Wear ring	1	
7	* 12724061	Gland	1	
8	44266	Back-up ring	1	
9	44244	O-ring	1	
10	59670	Piston	1	
11	12036	Piston seal	2	
12	50A-1622 UP	Bolt	1	
13	49380	Hardened washer	1	
14	79049	Cylinder barrel - includes item 2	1	

Item	Part No.	Description	Qty.	Remarks

SERIAL NUMBERS: 33000 & UP	**SLIDE SHIFT CYLINDER - Models G730 to G740**	Date **04/2001**	Group **984**
		Illustr. Nos **00004982**	Page **81**
			Issue **1A**

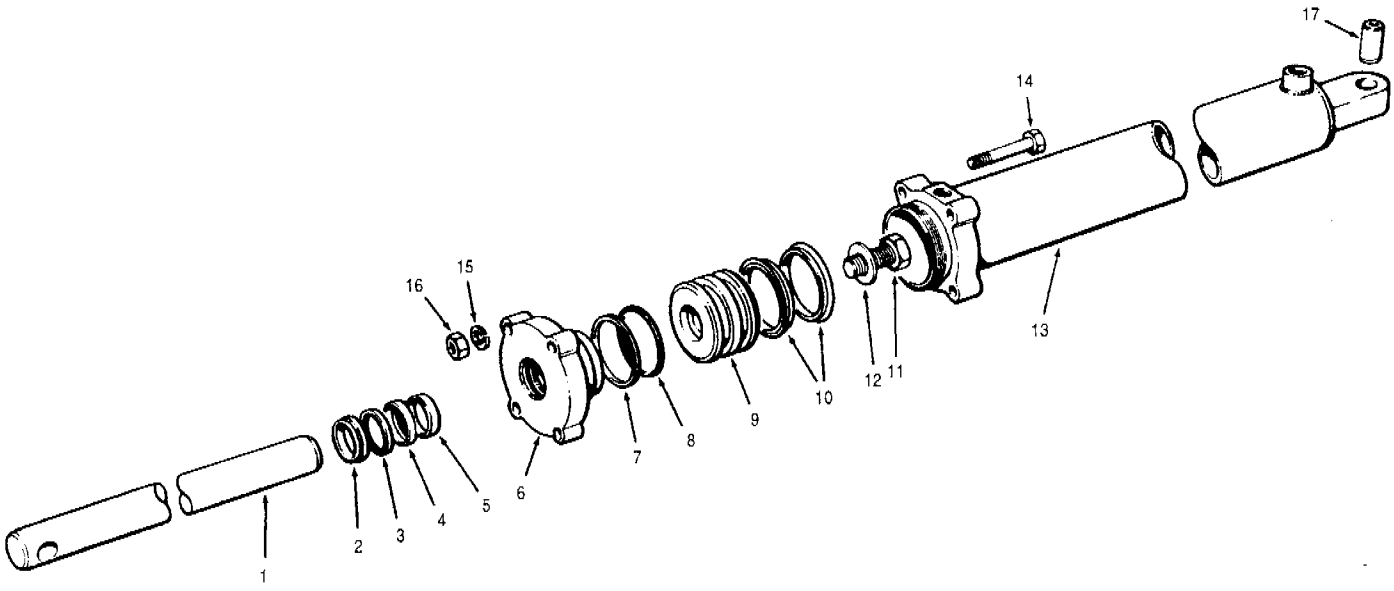

Item	Part No.	Description	Qty.	Remarks
	* 12724768	**Slide shift cylinder assembly - heavy duty circle** - includes items 1 to 17	1	
	* 12724303	**Repair kit for 12724768 - cylinder assembly** - includes items 2 to 5, 7, 8 & 10	1	
1	89080	Piston rod	1	
2	* 12724224	Rod wiper	1	
3	59189	Back-up ring	1	
4	* 12724223	Rod seal	1	
5	* 12724222	Wear ring	1	
6	* 12724063	Gland	1	
7	44266	Back-up ring	1	
8	44244	O-ring	1	
9	59670	Piston	1	
10	12036	Piston seal	2	
11	50A-1622 UP	Bolt	1	
12	49380	Hardened washer	1	
13	69408	Cylinder barrel	1	
14	50A-0832 Zi	Bolt	4	
15	14A-08 Zi	Lockwasher	4	
16	30A-08 Zi	Nut	4	
17	69441	Bushing	1	

Item	Part No.	Description	Qty.	Remarks

SERIAL NUMBERS: 33000 & UP	**SLIDE SHIFT CYLINDER - Model G780**	Date **04/2001**	Group **984**
		Illustr. Nos **00004983**	Page **82**
			Issue **1A**

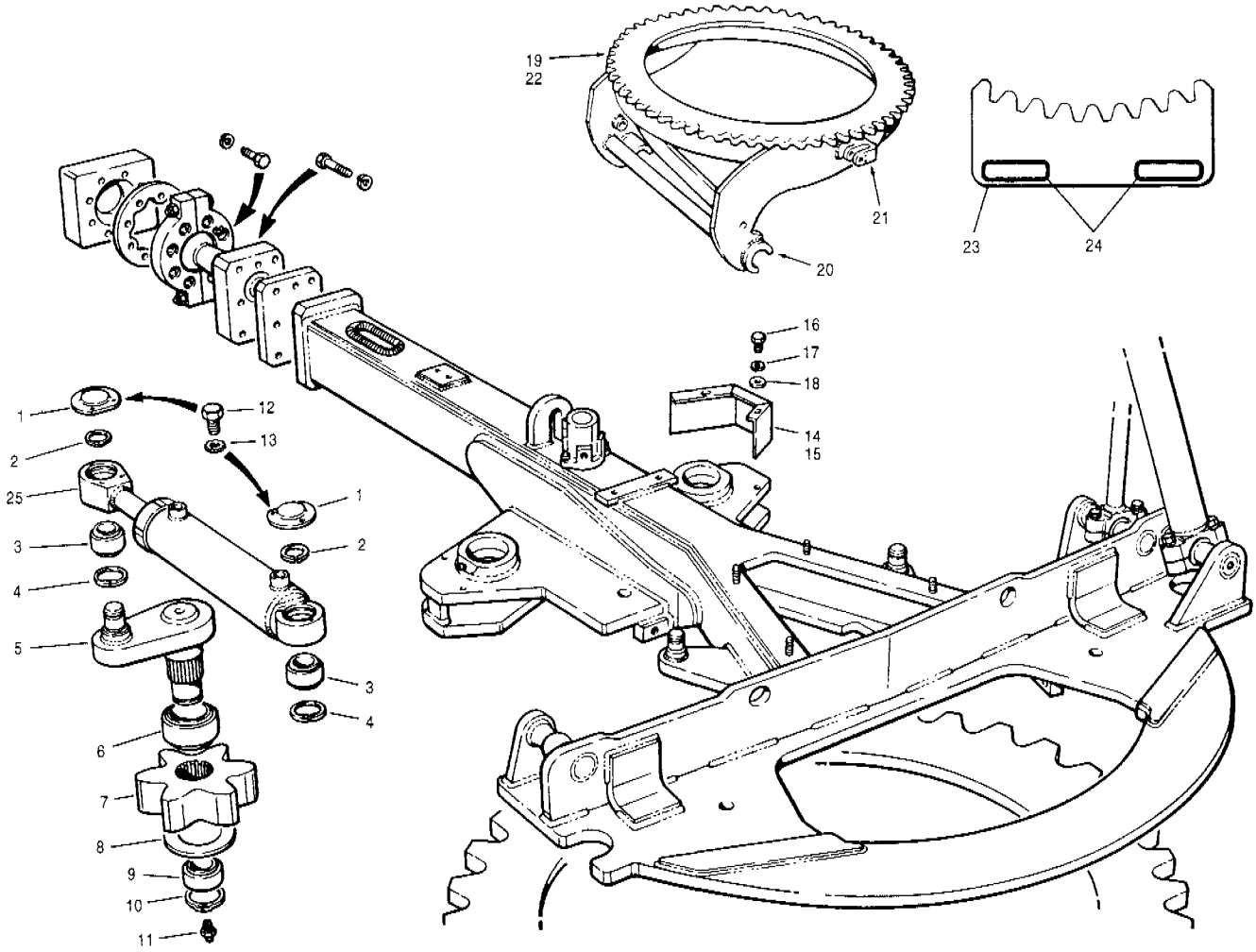

Item	Part No.	Description	Qty.	Remarks
1	62584	Cap	4	
2	19C-137	Snap ring	4	
3	19629	Bearing - 35 mm	4	
4	19B-218	Snap ring	4	
5	69772	Circle crank	2	
6	19631	Bearing - 70 mm	2	
7	79509	Circle drive pinion	2	
8	69779	Spacer	2	
9	19630	Bearing - 50 mm	2	
10	69510	Snap ring	2	
11	29E-04	Grease fitting	2	
12	51A-0404 Zi	Bolt	12	
13	14J-04 Zi	Starwasher	12	
14	79002	Pinion guard - R.H.	1	
15	79003	Pinion guard - L.H.	1	
16	50A-0608 Zi	Bolt	4	
17	14A-06 Zi	Lockwasher	4	
18	14C-06 Zi	Flatwasher	4	
19	79200	Circle	1	G710 to G716
19	79125	Circle	1	G720 to G740
20	27983	Arm pivot	2	G710 to G716
20	58400	Arm pivot	2	G720 to G740
21	59013	Straddle mount	2	G720 to G740
22	404196	6 Tooth segment	A.R.	
23	87058	Circle tooth template - includes item 48	1	
24	32576 x 21	Edge trim	2	
25		**Circle turn cylinders**	Ref.	985-88

Item	Part No.	Description	Qty.	Remarks

SERIAL NUMBERS: 33000 & UP	**CIRCLE TURN - FRONT - Models G710 to G740**	Date **01/2001**	Group **985**
		Illustr.Nos **00006098**	Page **83**
			Issue **1**

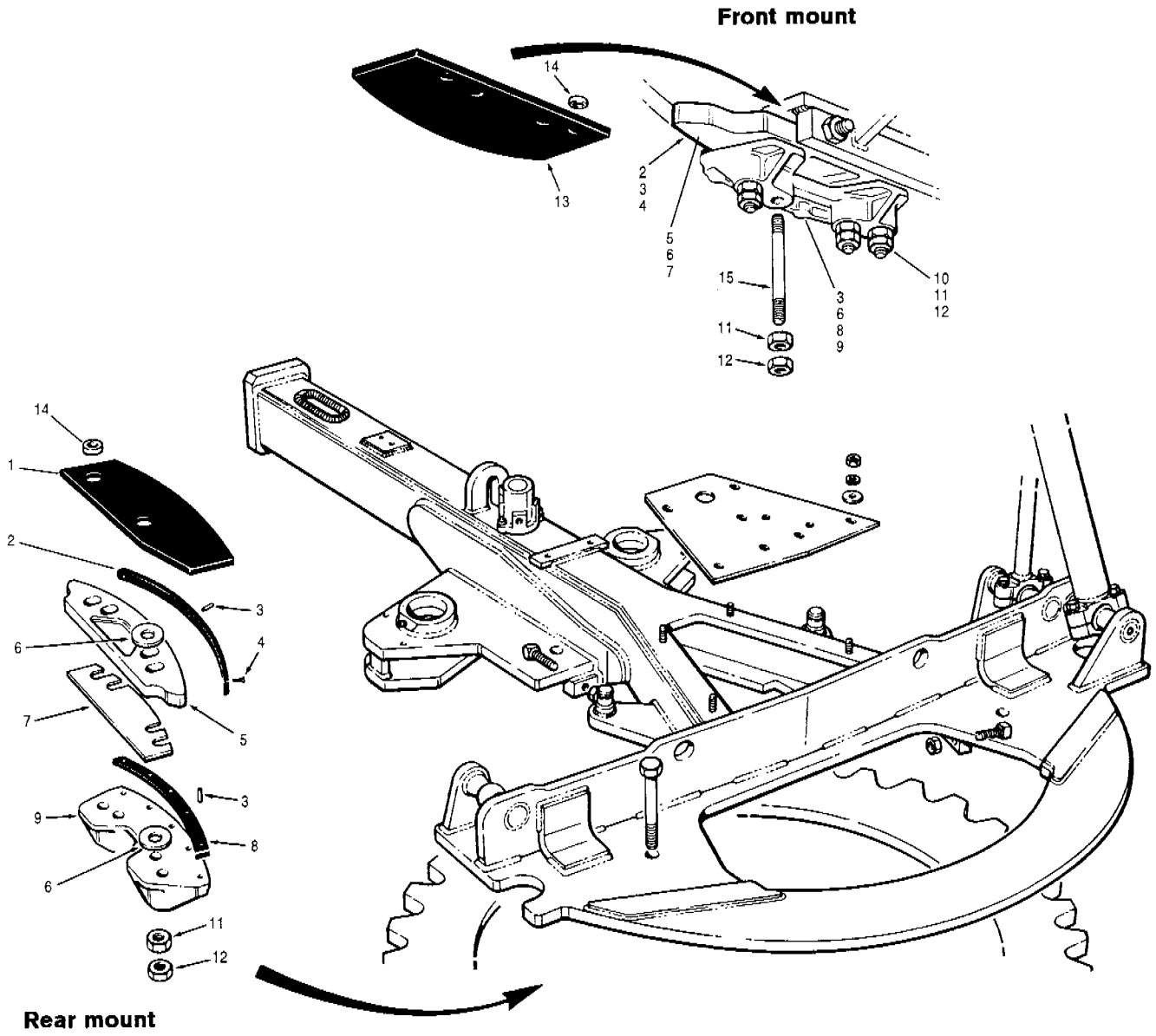

Item	Part No.	Description	Qty.	Remarks
1	79089	Duramide plate - rear	2	
2	58986	Duramide bearing plate	3	
3	54934	Pin - brass	24	
4	53063	Capscrew - brass	12	
5	58978	Guide plate	3	
6	5670A	Shim - .010"	14	
6	5670B	Shim - .020"	30	
7	12119-10	Shim - .135"	6	
7	12119-16	Shim - .064"	8 - 10	
7	12119-20	Shim - .036"	6 - 10	
8	69781	Duramide bearing plate	3	
9	69780	Clamp plate	3	
10	50A-1864 Zi	Bolt	6	
11	30A-18 Zi	Nut	6 - 8	
12	30D-18 Zi	Jam nut	6 - 8	
13	87022	Duramide plate - front	1	
14	66622	Spacer	2 - 6	
15	24323	Stud - front mount plate	2	G740

Item	Part No.	Description	Qty.	Remarks

SERIAL NUMBERS: 33000 & UP	CIRCLE TURN - REAR - Models G710 to G740	Date 01/2001	Group 985
		Illustr. Nos 00006099	Page 84
			Issue 1

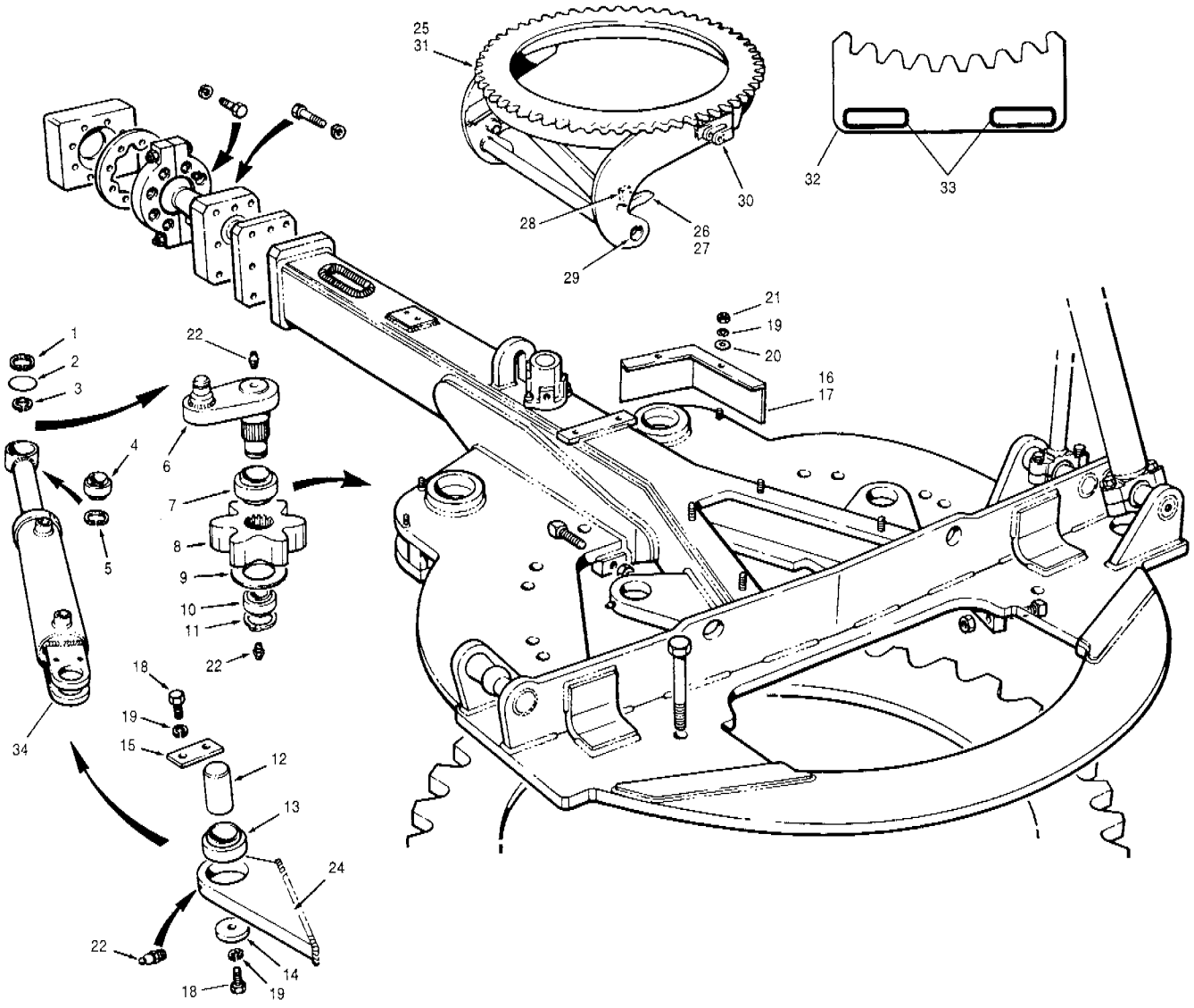

Item	Part No.	Description	Qty.	Remarks
1	19B-250	Snap ring	2	
2	59030	Expansion plug	2	
3	19C-156	Snap ring	2	
4	18340	Plain bearing - 40 mm	2	
5	19B-244	Snap ring	2	
6	87297	Circle crank	2	
7	19631	Plain bearing - 70 mm	2	
8	400016	Circle drive pinion	2	
9	69779	Spacer	2	
10	19630	Plain bearing - 50 mm	2	
11	69510	Snap ring	2	
12	56907	Pin	2	
13	69826	Plain bearing - 40 mm	2	
14	56908	Washer	2	
15	56909	Lock plate	2	
16	79004	Pinion guard - R.H.	1	
17	79005	Pinion guard - L.H.	1	
18	50A-0608 Zi	Bolt	6	
19	14A-06 Zi	Lockwasher	10	

Item	Part No.	Description	Qty.	Remarks
20	14C-06 Zi	Flatwasher	4	
21	30A-06 Zi	Nut	4	
22	29A-02	Grease fitting	6	
23	28B-04	Grease fitting	1	
24	81683	Lug - circle turn cylinder	2	
25	79458	Circle	1	
26	69524	Stone guard - R.H.	1	
27	69525	Stone guard - L.H.	1	
28	69527	Stop block	2	
29	36968	Bushing	2	
30	79459	Straddle mount	2	
31	404205	6 Tooth segment	A.R.	
32	87058	Circle tooth template - includes item 33	1	
33	32576 x 21	Edge trim	2	
34		**Circle turn cylinders**	Ref.	985-89

SERIAL NUMBERS: 33000 & UP	**CIRCLE TURN - FRONT - HMBCS - Model G780**	Date **01/2001**	Group	**985**
		Illustr. Nos **00006100**	Page	**85**
			Issue	**1**

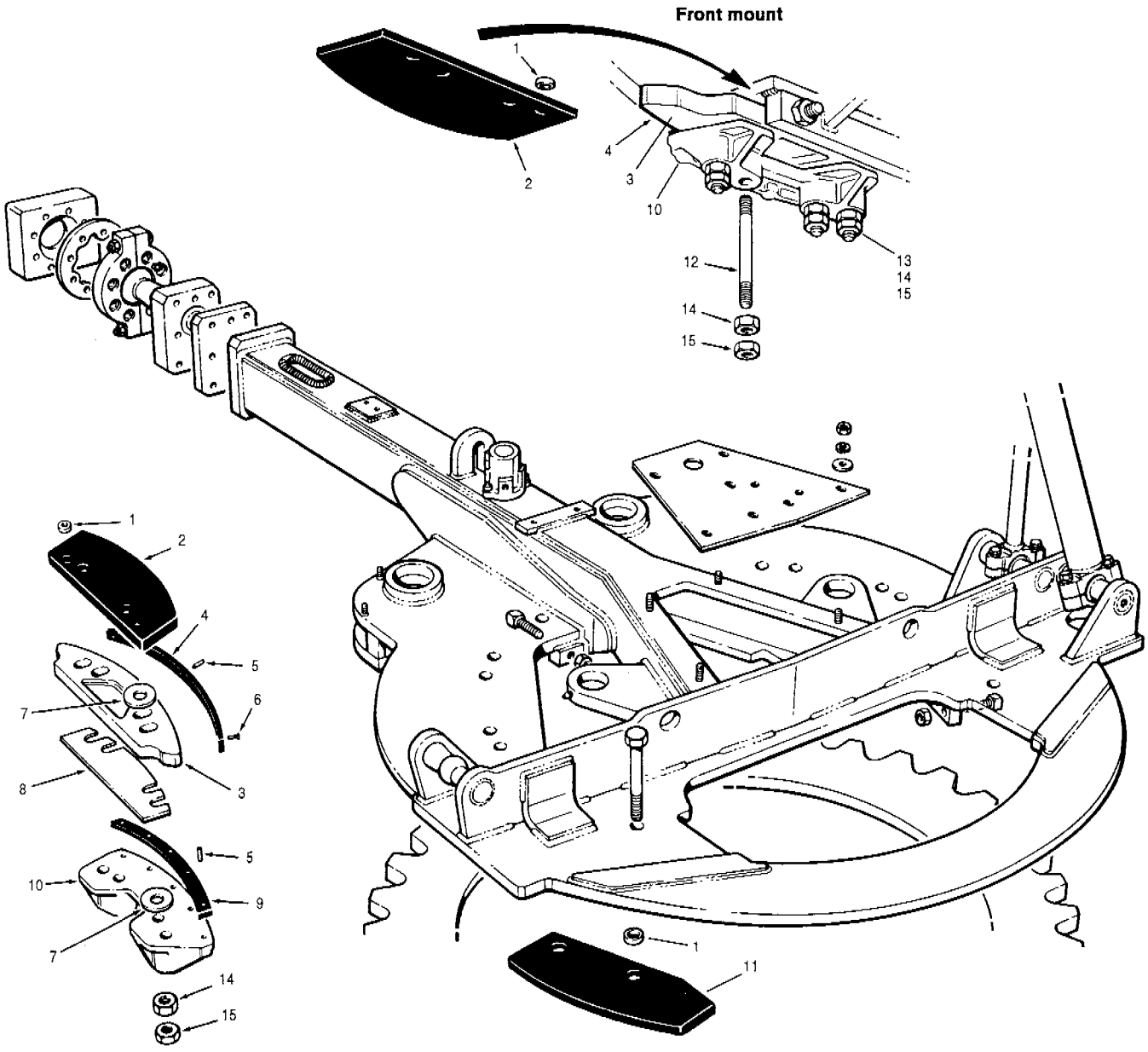

Item	Part No.	Description	Qty.	Remarks
1	66622	Spacer	16	
2	87022	Duramide plate - front	3	
3	54087	Guide plate	5	
4	54337	Duramide bearing plate	5	
5	54934	Pin - brass	40	
6	53063	Capscrew - brass	20	
7	5670A	Shim - .010"	14	
7	5670B	Shim - .020"	60	
8	12119-10	Shim - .135"	10	
8	12119-16	Shim - .064"	10	
8	12119-20	Shim - .036"	15	
9	69781	Duramide bearing plate	5	
10	69780	Clamp plate	5	
11	79089	Duramide plate - rear	2	
12	66598	Stud - front mount plate	2	
13	50A-1868 Zi	Bolt	14	
14	30A-18 Zi	Nut	16	
15	30D-18 Zi	Jam nut	16	

Item	Part No.	Description	Qty.	Remarks

SERIAL NUMBERS: 33000 & UP	**CIRCLE TURN - REAR - HMBCS - Model G780**	Date **01/2001**	Group	**985**
		Illustr. Nos **00006101**	Page	**86**
			Issue	**1**

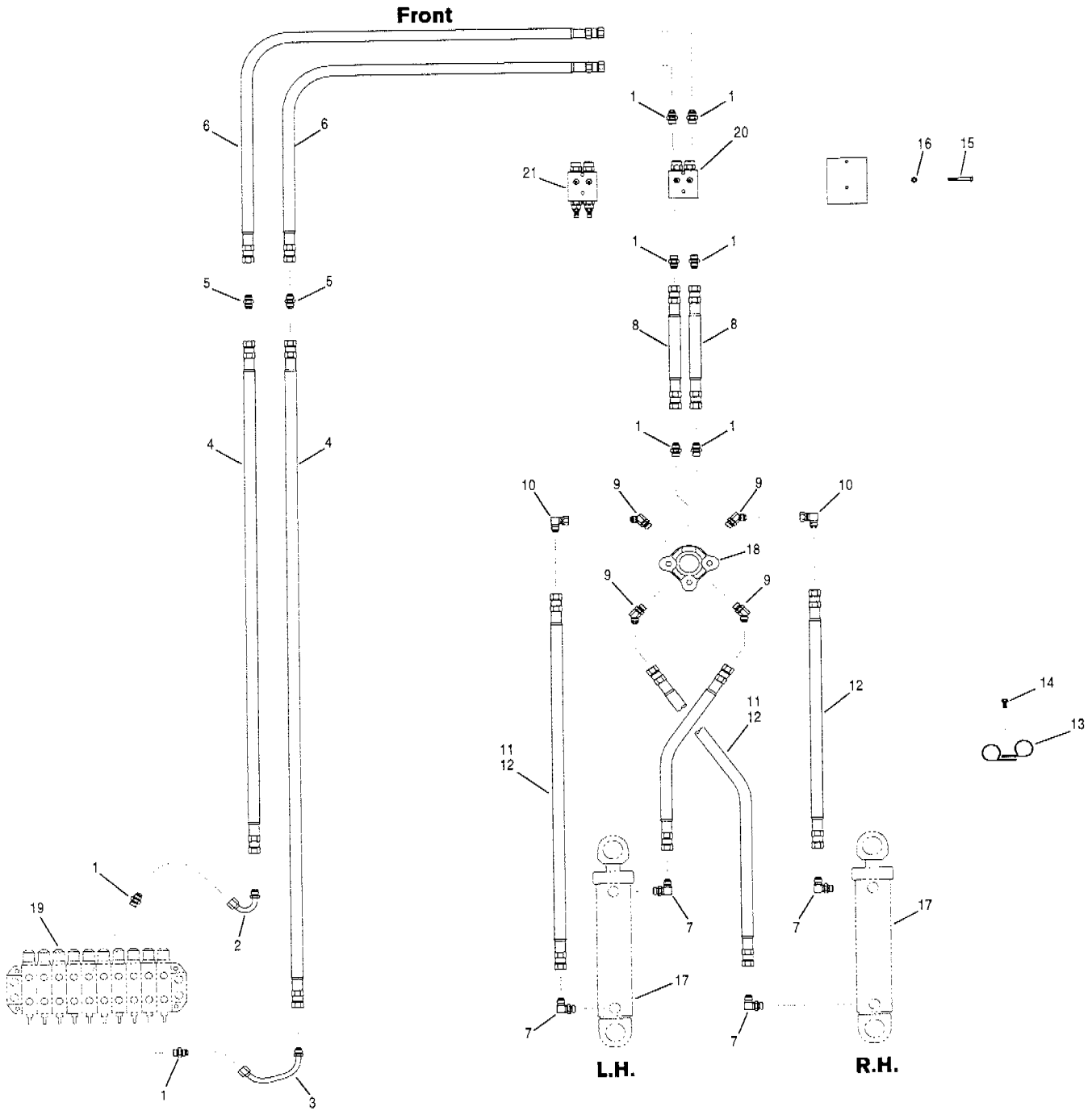

Item	Part No.	Description	Qty.	Remarks
1	111E-0808	Connector	8	
2	* 12725309	Tube	1	
3	* 12725310	Tube	1	
4	78192 x 127	Hose	2	G710 to G736
4	78192 x 133	Hose	2	G740 to G780
5	110I-08	Connector	2	
6	78192 x 56	Hose	2	G710 to G736
6	78192 x 62	Hose	2	G740 to G780
7	111B-0808	Connector	4	
8	74429 x 20	Hose	2	
9	111A-0808	Connector	4	
10	112B-08	Connector	2	
11	74429 x 28	Hose	2	G710 to G740
12	74429 x 33	Hose	2	G710 to G740
12	74429 x 33	Hose	4	G780
13	32318	Clamp	4	

Item	Part No.	Description	Qty.	Remarks
14	* 78460	Capscrew	2	
15	50A-0524 Zi	Bolt	2	
16	* 14A-05Zi	Lockwasher	2	
17		**Circle turn cylinders**	Ref.	985-88, 89
18		**Circle turn valve**	Ref.	985-90
19		**Manifold valve**	Ref.	912-8, 9
20		**Counterbalance valve**	Ref.	912-17
21		**Counterbalance valve - EEC**	Ref.	912-18

SERIAL NUMBERS: 33000 & UP	**CIRCLE TURN CIRCUIT**	Date **04/2001**	Group **985**
		Illustr. Nos **00005135**	Page **87**
			Issue **1A**

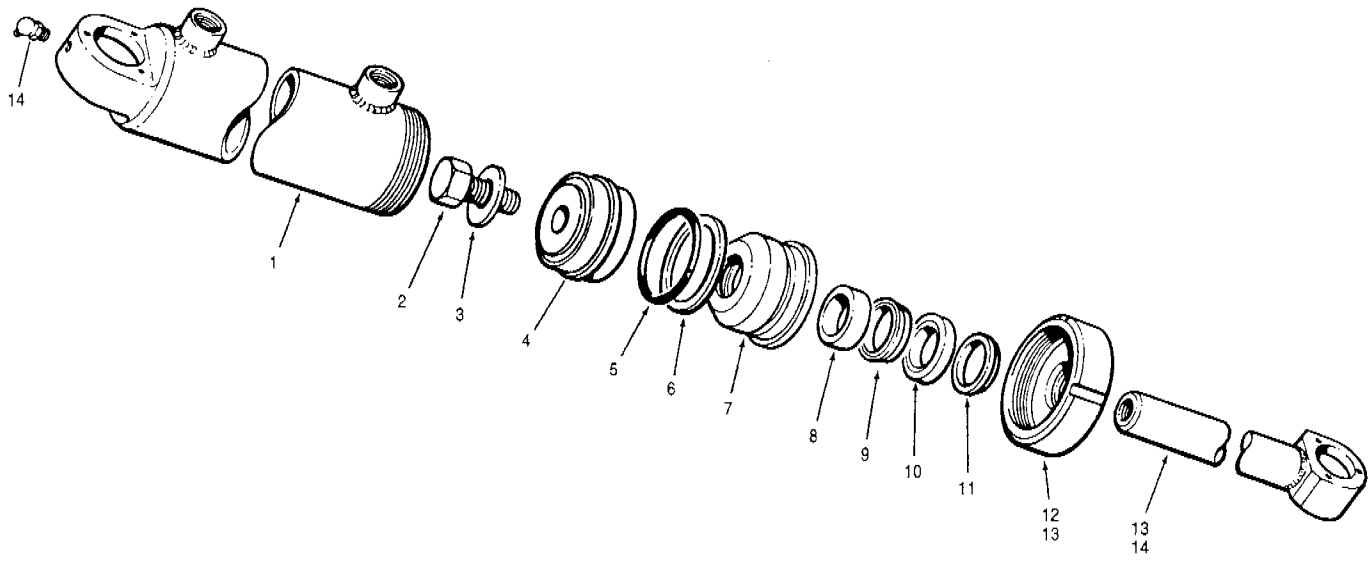

Item	Part No.	Description	Qty.	Remarks
	* 12724648	**Circle turn cylinder assembly** - includes items 1 to 13	2	
	* 12724304	**Repair kit for 12724648** **- circle turn cylinder** - includes items 5, 6 & 8 to 11	1	
1	59972	Cylinder barrel - includes item 12	1	
2	50A-1220 UP	Bolt	1	
3	69360	Hardened washer	1	
4	404001	Piston	1	
5	44243	O-ring	1	
6	44343	Back-up ring	1	
7	* 406027	Gland	1	
8	59768	Wear ring	1	
9	* 12724215	Rod seal	1	
10	59136	Back-up ring	1	
11	* 12724216	Wiper ring	1	
12	62146	Cylinder nut	1	
13	89048	Piston rod	1	
14	28B-04	Grease fitting	2	

Item	Part No.	Description	Qty.	Remarks

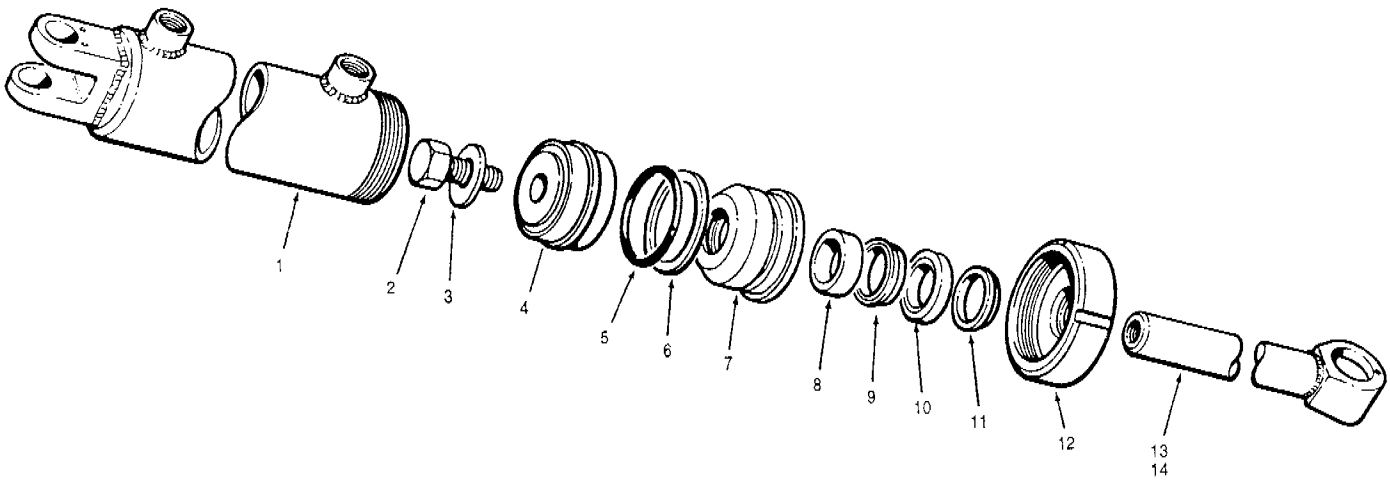

Item	Part No.	Description	Qty.	Remarks
	* 12724639	**Heavy duty circle turn cylinder assembly** - includes items 1 to 13	2	
	* 12724304	**Repair kit for 12724639 - circle turn cylinder** - includes items 5, 6 & 8 to 11	1	
1	62001	Cylinder barrel - includes item 12	1	
2	50A-1220 UP	Bolt	1	
3	69360	Hardened washer	1	
4	404001	Piston	1	
5	44243	O-ring	1	
6	44343	Back-up ring	1	
7	* 406027	Gland	1	
8	59768	Wear ring	1	
9	* 12724215	Rod seal	1	
10	59136	Back-up ring	1	
11	* 12724216	Wiper ring	1	
12	62146	Cylinder nut	1	
13	89050	Piston rod	1	
14	28B-04	Grease fitting	1	

Item	Part No.	Description	Qty.	Remarks

SERIAL NUMBERS: 33000 & UP	**CIRCLE TURN CYLINDER - Model G780**	Date	**04/2001**	Group **985**
		Illustr. Nos	**00004986**	Page **89**
				Issue **1A**

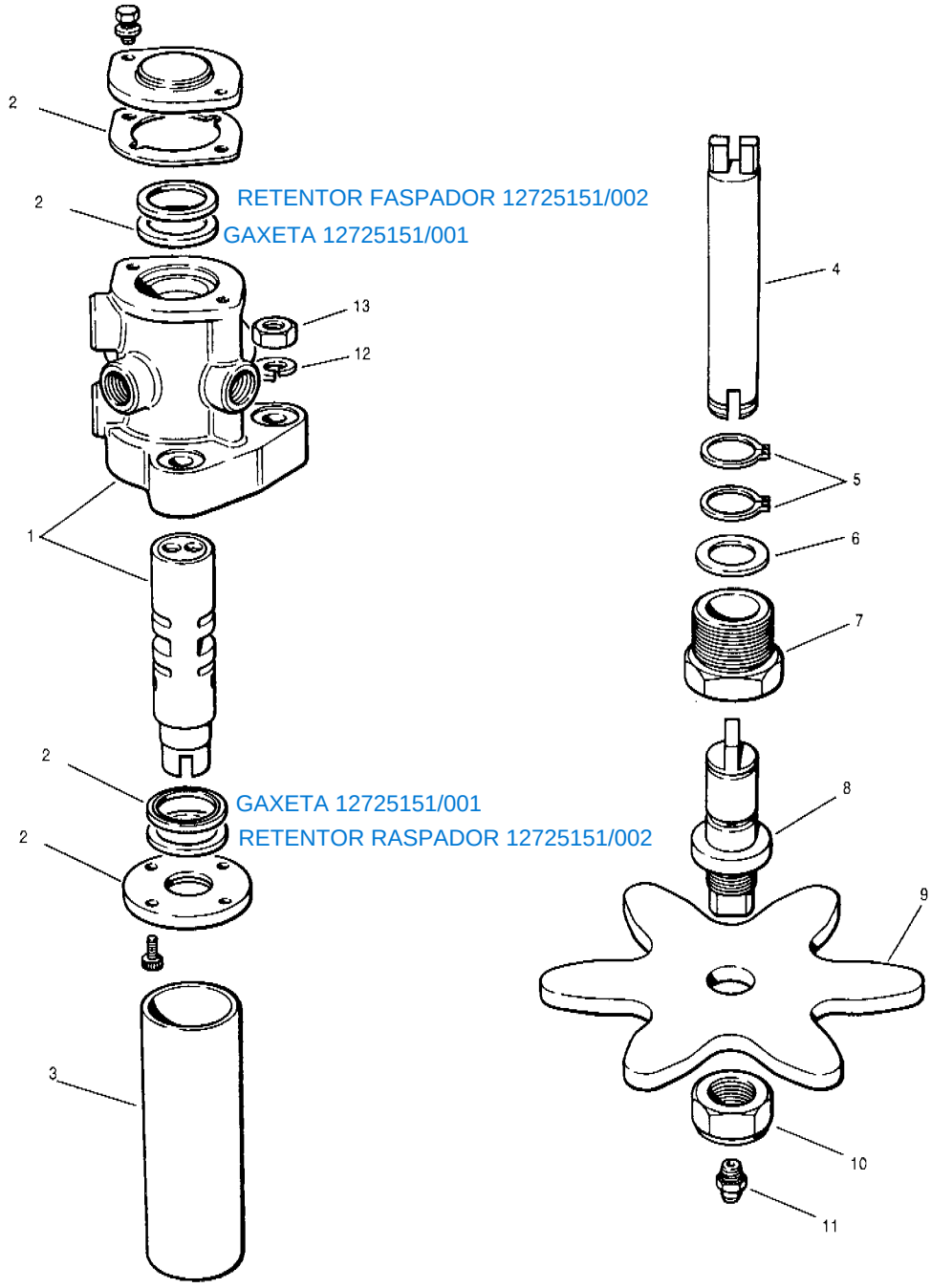

Item	Part No.	Description	Qty.	Remarks
1	400229	**Circle turn valve assembly** - includes the following:	1	
		Spool	1	
		Body	1	
		Note: spool & body are **not** available separately		
2	* 12725151	**Repair kit for 400229** - Circle turn valve assembly - includes the following:		
		Seal	1	
		Cup	2	
		Gasket	1	

Item	Part No.	Description	Qty.	Remarks
3	79090	Guard tube	1	
4	400230	Drive shaft	1	
5	66982	Snap ring	2	
6	78343	Thrust washer	1	
7	400023	Bearing	1	
8	400024	Pinion shaft	1	
9	52338	Valve pinion	1	
10	37M-16 Zi	Locknut	1	
11	29A-02	Grease fitting	1	
12	14A-08 Zi	Lockwasher	2	
13	30A-08 Zi	Nut	2	

SERIAL NUMBERS: 33000 & UP	**CIRCLE TURN VALVE**	Date 04/2001	Group 985
		Illustr. Nos 00006102	Page 90
			Issue 1A

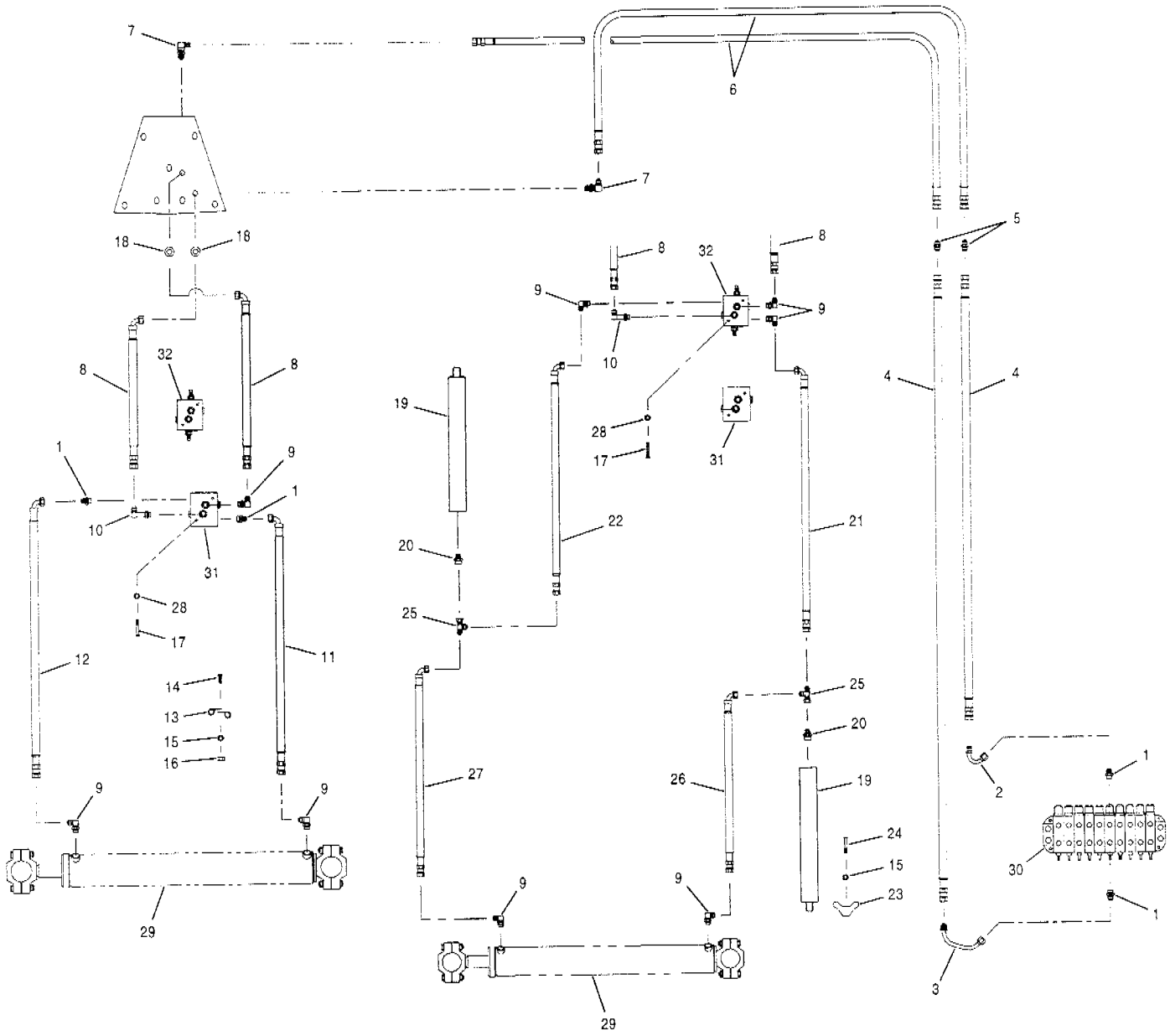

Item	Part No.	Description	Qty.	Remarks
1	111E-0808	Connector	2 - 4	
2	* 12725309	Tube	1	
3	* 12725310	Tube	1	
4	* 78192 x 127	Hose	1	G710 to G736
4	* 78192 x 133	Hose	1	G740 to G780
5	110L-08	Connector	2	
6	* 78192 x 118	Hose	2	G710 to G736
6	* 78192 x 124	Hose	2	G740 to G780
7	110W-08	Connector	2	
8	78193 x 24	Hose	2	
9	111B-0808	Connector	3 - 5	
10	111Q-0808	Connector	1	
11	74430 x 41	Hose	1	
12	* 74430 x 57	Hose	1	
13	32318	Clamp	2	
14	50A-0608 Zi	Bolt	1	
15	* 940097	Hardened washer	2 - 6	
16	30A-06 Zi	Nut	1	
17	50A-0520 Zi	Bolt	2	

Item	Part No.	Description	Qty.	Remarks
18	14D-12 Zi	Washer	2	
19	* 89111	Accumulator	2	
19	* 12724559	Accumulator	2	EEC
20	* 111E-0812	Connector	2	
21	* 89112 x 16	Hose	1	
22	* 89112 x 24	Hose	1	
23	* 89114	Clamp	2	
24	* 50A-0624 Zi	Bolt	4	
25	* 112C-08	Tee	2	
26	* 89112 x 52	Hose	1	
27	* 89112 x 56	Hose	1	
28	* 955894	Hardened washer	2	
29		**Circle shift cylinder**	Ref.	986-92, 93
30		**Manifold valve**	Ref.	912-8, 9
31		**Counterbalance valve**	Ref.	912-17
32		**Counterbalance valve - EEC**	Ref.	912-18

SERIAL NUMBERS: 33000 & UP	**CIRCLE SHIFT CIRCUIT - MBCS/HMBCS**	Date	**06/2001**	Group **986**
		Illustr. Nos	**00005248**	Page **91**
				Issue **1A**

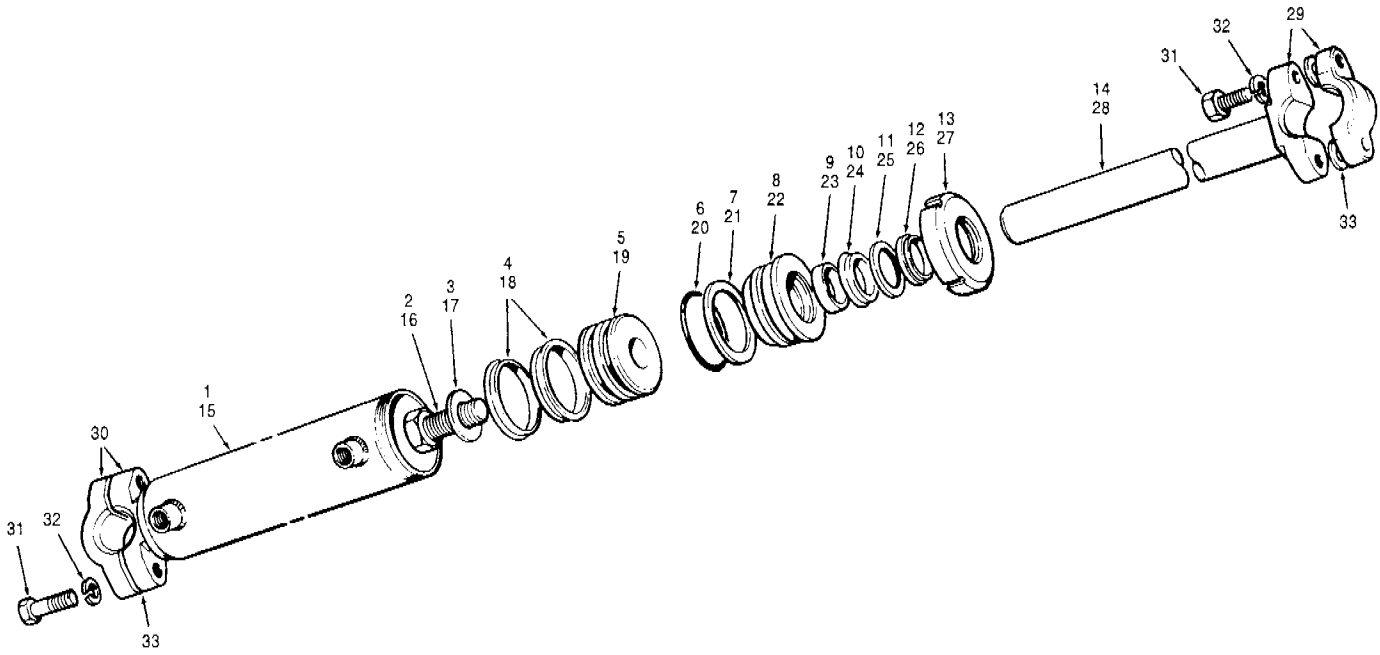

Item	Part No.	Description	Qty.	Remarks
	* 12724670	**Circle shift cylinder assembly** - includes items 1 to 14 & 29 to 32	1	G710 to G726
	* 12724306	**Repair kit for 12724670** **- cylinder assembly** - includes items 5, 7, 8 & 10 to 13	1	
1	97694	Cylinder barrel - includes items 13 & 30	1	
2	50A-1622 UP	Bolt	1	
3	49380	Hardened washer	1	
4	74695	Piston seal	2	
5	74694	Piston	1	
6	74696	O-ring	1	
7	74697	Back-up ring	1	
8	* 406028	Gland	1	
9	* 12724222	Wear ring	1	
10	* 12724223	Rod seal	1	
11	59189	Back-up ring	1	
12	* 12724224	Wiper ring	1	
13	74692	Cylinder nut	1	
14	97389	Piston rod - includes item 29	1	

Item	Part No.	Description	Qty.	Remarks
	* 12724667	**Circle shift cylinder assembly** - includes items 15 to 32	1	G730 to G740
	* 12724303	**Repair kit for 12724667** **- cylinder assembly** - includes items 18, 20, 21 & 23 to 26	1	
15	97697	Cylinder barrel - includes items 27 & 30	1	
16	50A-1622 UP	Bolt	1	
17	49380	Hardened washer	1	
18	12036	Piston seal	2	
19	59670	Piston	1	
20	44244	O-ring	1	
21	44266	Back-up ring	1	
22	* 12724061	Gland	1	
23	* 12724222	Wear ring	1	
24	* 12724223	Rod seal	1	
25	59189	Back-up ring	1	
26	* 12724224	Wiper ring	1	
27	62147	Cylinder nut	1	
28	97389	Piston rod - includes item 29	1	
29	81923	Ball cap - piston rod - includes items 31 & 32	1	
30	80670	Ball cap - barrel - includes items 31 & 32	1	
31	50A-1430 ZI	Bolt	4	
32	14A-14 ZI	Lockwasher	4	
33	87356	Shim - 0.010"	4	
33	87357	Shim - 0.020"	12	

SERIAL NUMBERS: 33000 & UP	**CIRCLE SHIFT CYLINDERS** **- Models G710 to G740**	Date **04/2001**	Group **986**
		Illustr. Nos **00004987**	Page **92**
			Issue **1A**

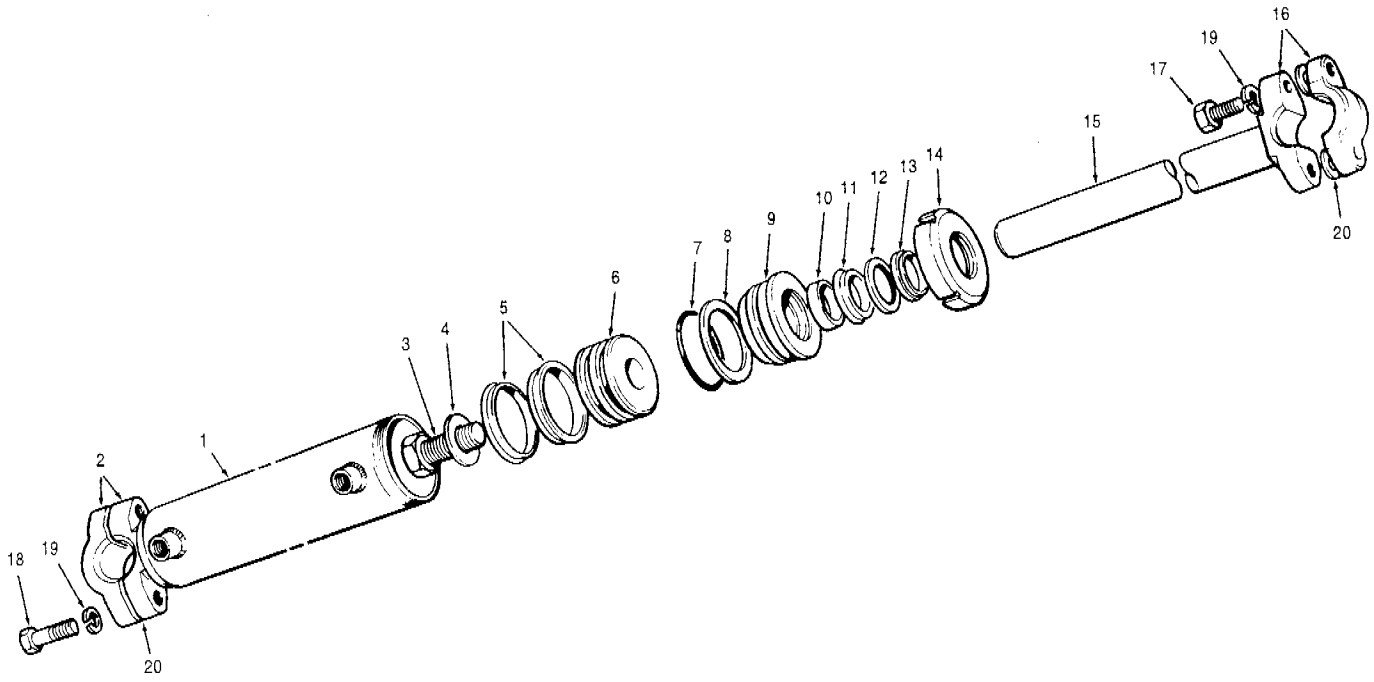

Item	Part No.	Description	Qty.	Remarks
	* 12724668	**Circle shift cylinder assembly** - includes items 1 to 19	1	
	* 12724307	**Repair kit for 12724668** **- cylinder assembly** - includes items 5, 7, 8 & 10 to 13	1	
1	97700	Cylinder barrel - includes items 2 & 14	1	
2	87116	Ball cap - includes items 18 & 19	1	
3	50A-2024 UP	Bolt	1	
4	62160	Hardened washer	1	
5	12036	Piston seal	2	
6	59945	Piston	1	
7	44244	O-ring	1	
7	44266	Back-up ring	1	
9	* 12724062	Gland	1	
10	44264	Wear ring	1	
11	* 12724220	Rod seal	1	
12	59217	Back-up ring	1	
13	* 12724221	Rod Wiper	1	
14	62147	Cylinder nut	1	
15	97398	Piston rod - includes item 16	1	
16	87115	Ball cap - includes items 17 & 19	1	
17	50A-1434 Zi	Bolt	2	
18	50A-1436 Zi	Bolt	2	
19	14A-14 Zi	Lockwasher	4	
20	87356	Shim - 0.010"	4	
20	87357	Shim - 0.020"	12	

Item	Part No.	Description	Qty.	Remarks

SERIAL NUMBERS: 33000 & UP	**CIRCLE SHIFT CYLINDER - Model G780**	Date	**04/2001**	Group **986**
		Illustr. Nos	**00004988**	Page **93**
				Issue **1A**

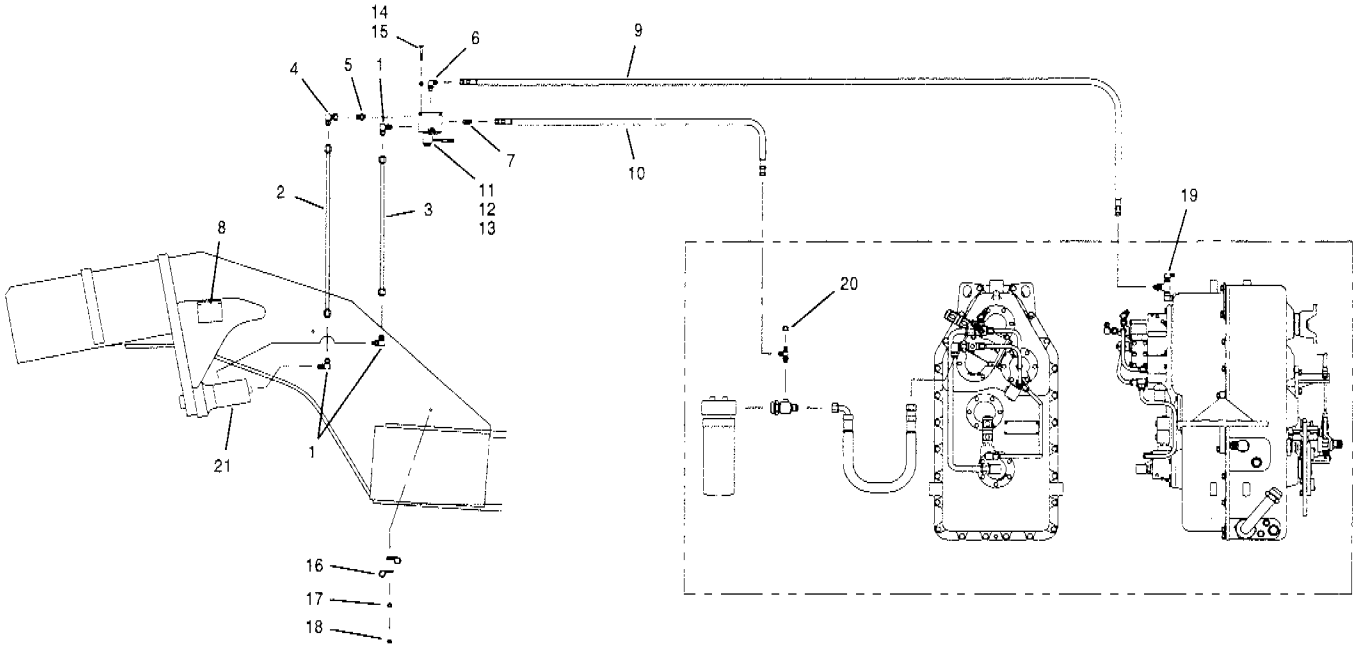

Item	Part No.	Description	Qty.	Remarks
1	111B-0806	Connector	3	
2	87927	Tube	1	
3	87925	Tube	1	MBCS
3	87926	Tube	1	HMBCS
4	112B-08	Connector	1	
5	111E-0806	Connector	1	
6	111B-0606	Connector	1	
7	111E-0606	Connector	1	
8	74241	Bracket - solenoid valve	1	
9	78221 x 67	Hose	1	
10	78221 x 72	Hose	1	
11	**80473**	**Solenoid valve assembly** - includes items 12 & 13	1	
	63121	**Seal kit for 80473** **- solenoid valve assembly** - includes the following: O-ring - large O-ring - small Back-up ring	1 per 1 3 6	

Item	Part No.	Description	Qty.	Remarks
12	**66126**	**Cartridge**	1	
	76022	**Seal kit for 66126 - cartridge** - includes the following: O-ring - small	1 per 1	
13	66125	Coil	1	
14	50A-0516 Zi	Bolt	2	
15	14A-05 Zi	Lockwasher	2	
16	32318	Clamp	4	
17	14A-06 Zi	Lockwasher	4	
18	30A-06 Zi	Nut	4	
19		**Transmission case hydraulics**	Ref.	421-15
20		**Transmission hydraulic circuit**	Ref.	421-10
21		**Lock cylinder - MBCS/HMBCS**	Ref.	986-95

SERIAL NUMBERS: 33000 & UP	**LOCK CYLINDER CIRCUIT - MBCS/HMBCS**	Date **01/2001**	Group **986**
		Illustr. Nos **00006088**	Page **94**
			Issue **1**

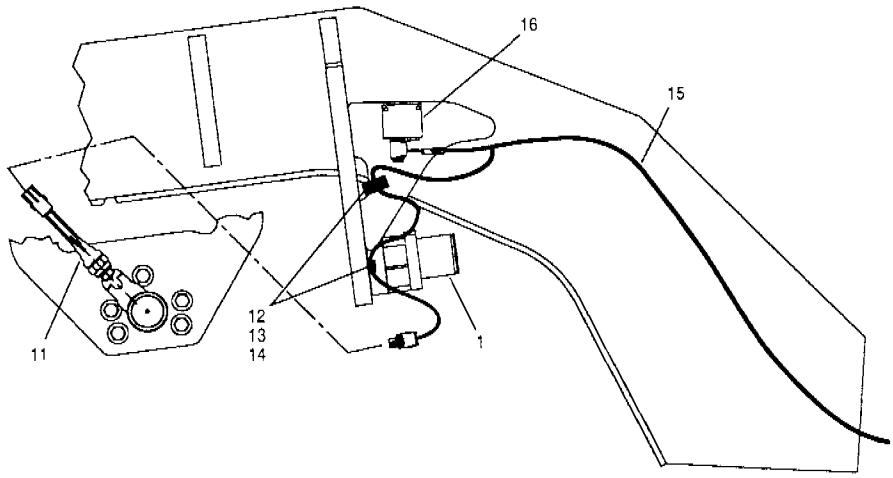

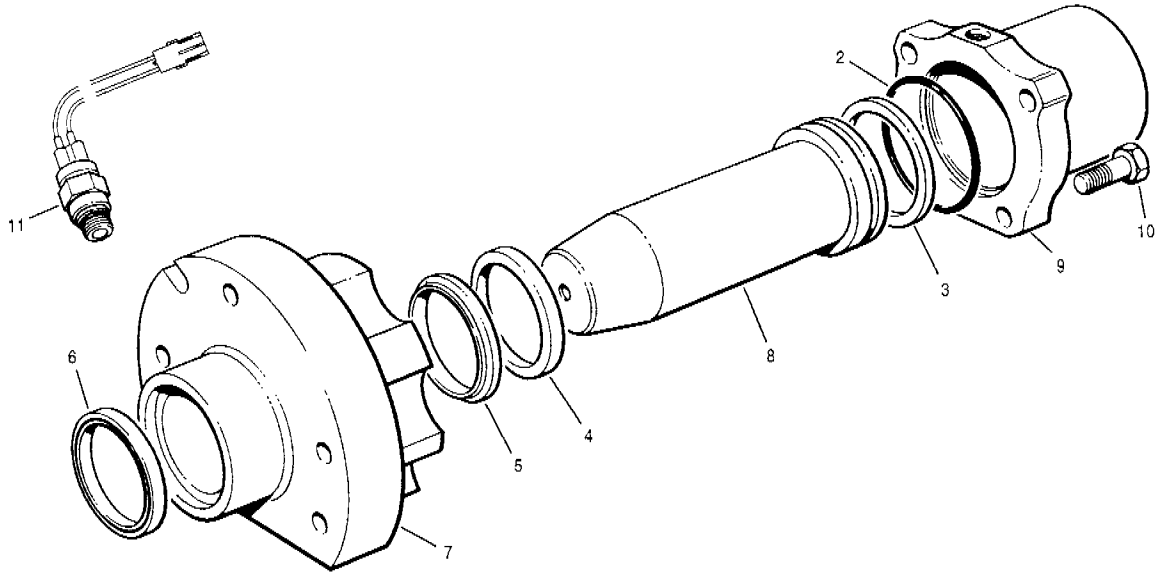

Item	Part No.	Description	Qty.	Remarks
1	404166	**Lock cylinder assembly - MBCS** - includes items 2 to 10	1	G710 to G740
	87119	**Seal kit for 404166** **- lock cylinder assembly** - includes items 2 to 6	1 per	
2	80684	O-ring	1	
3	80683	Seal - piston	1	
4	80685	Rod seal	1	
5	80686	Rod wiper	1	
6	87117	Gland wiper	1	
7	404165	Gland	1	
8	69954	Piston rod	1	
9	69955	Barrel	1	
10	50A-0806 Zi	Bolt	4	
11	79451	Switch	1	
12	32316	Clamp	2	
13	14A-06 Zi	Lockwasher	4	
14	30A-06 Zi	Nut	4	
		Wiring harness		
15	79452	Harness - MBCS lock valve	1	
16		**Solenoid valve**	Ref.	986-94
		Lock cylinder circuit - MBCS/HMBCS	Ref.	986-94

Item	Part No.	Description	Qty.	Remarks
1	79732	**Lock cylinder assembly - HMBCS** - includes items 2 to 10	1	G780
	87145	**Seal kit for 79732** **- lock cylinder assembly** - includes items 2 to 6	1 per	
2	87143	O-ring	1	
3	87140	Seal - piston	1	
4	87141	Rod seal	1	
5	87142	Rod wiper	1	
6	87144	Gland wiper	1	
7	79660	Gland	1	
8	79730	Piston rod	1	
9	87148	Barrel	1	
10	50A-0812	Bolt	4	
11	79451	Switch	1	
12	32316	Clamp	2	
13	14A-06 Zi	Lockwasher	4	
14	30A-06 Zi	Nut	4	
		Wiring harness		
15	79452	Harness - HMBCS lock valve	1	
16		**Solenoid valve**	Ref.	986-94
		Lock cylinder circuit - MBCS/HMBCS	Ref.	986-94

SERIAL NUMBERS: 33000 & UP	**LOCK CYLINDER & WIRING HARNESS - MBCS/HMBCS**	Date	**01/2001**	Group **986**
		Illustr. Nos	**00004989**	Page **95**
				Issue **1**

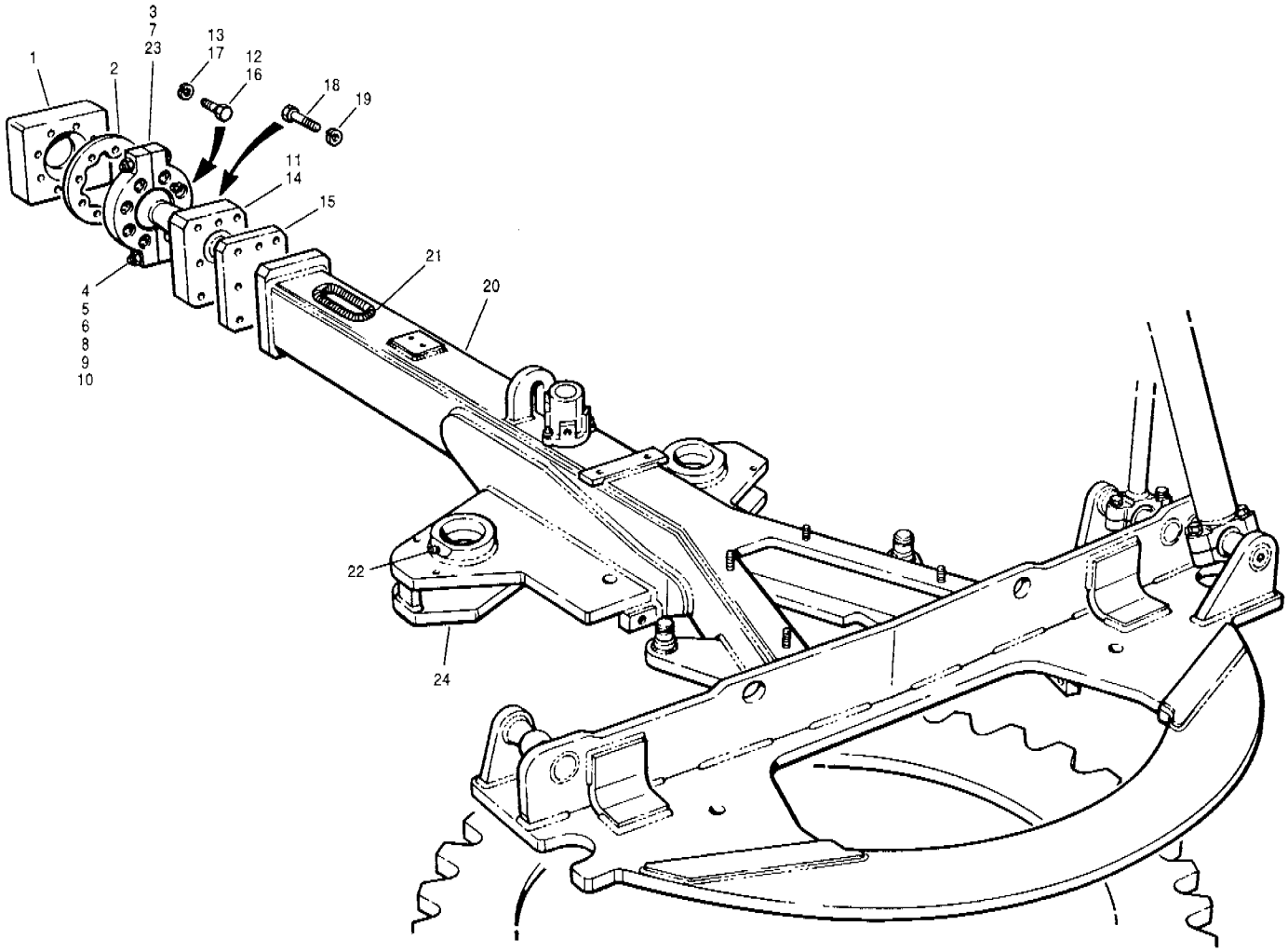

Item	Part No.	Description	Qty.	Remarks
1	79332	Ball seat	1	G710 to G736
1	79169	Ball seat	1	G740
2	48405	Shim - .010"	A.R.	
2	53345	Shim - .015"	A.R.	
2	48406	Shim - .020"	A.R.	
	79713	**Split ball cap assembly** - includes items 3 to 6	1	**G710 to G736**
3	69414	Split ball cap	2	
4	50G-1024	Bolt	2	
5	14A-08 Zi	Lockwasher	2	
6	30A-08 Zi	Nut	2	
	79717	**Split ball cap assembly** - includes items 7 to 10	1	**G740**
7	79718	Split ball cap	2	
8	50G-1224	Bolt	2	
9	14A-10 Zi	Lockwasher	2	
10	30A-10 Zi	Nut	2	

Item	Part No.	Description	Qty.	Remarks
11	79727	Ball stud	1	G710 to G736
12	50A-1018 Zi	Bolt	8	G710 to G736
13	14A-10 Zi	Lockwasher	8	G710 to G736
14	69415	Ball stud	1	G740
15	81678	Shim	1	G740
16	50A-1222 Zi	Bolt	8	G740
17	14A-12 Zi	Lockwasher	8	G740
18	50A-1220 Zi	Bolt	8	G710 to G736
18	50A-1230 Zi	Bolt	8	G740
19	14A-12 Zi	Lockwasher	8	
20	79542	Drawbar	1	
21	17539 x 24	Hose protector	1	
22	28A-04	Grease fitting	2	
23	28B-04	Grease fitting	1	
24	79239	Drive pinion mount	1	

SERIAL NUMBERS: 33000 & UP	**DRAWBAR - FRONT - Models G710 to G740**	Date **01/2001**	Group **987**
		Illustr.Nos **00004990**	Page **96**
			Issue **1**

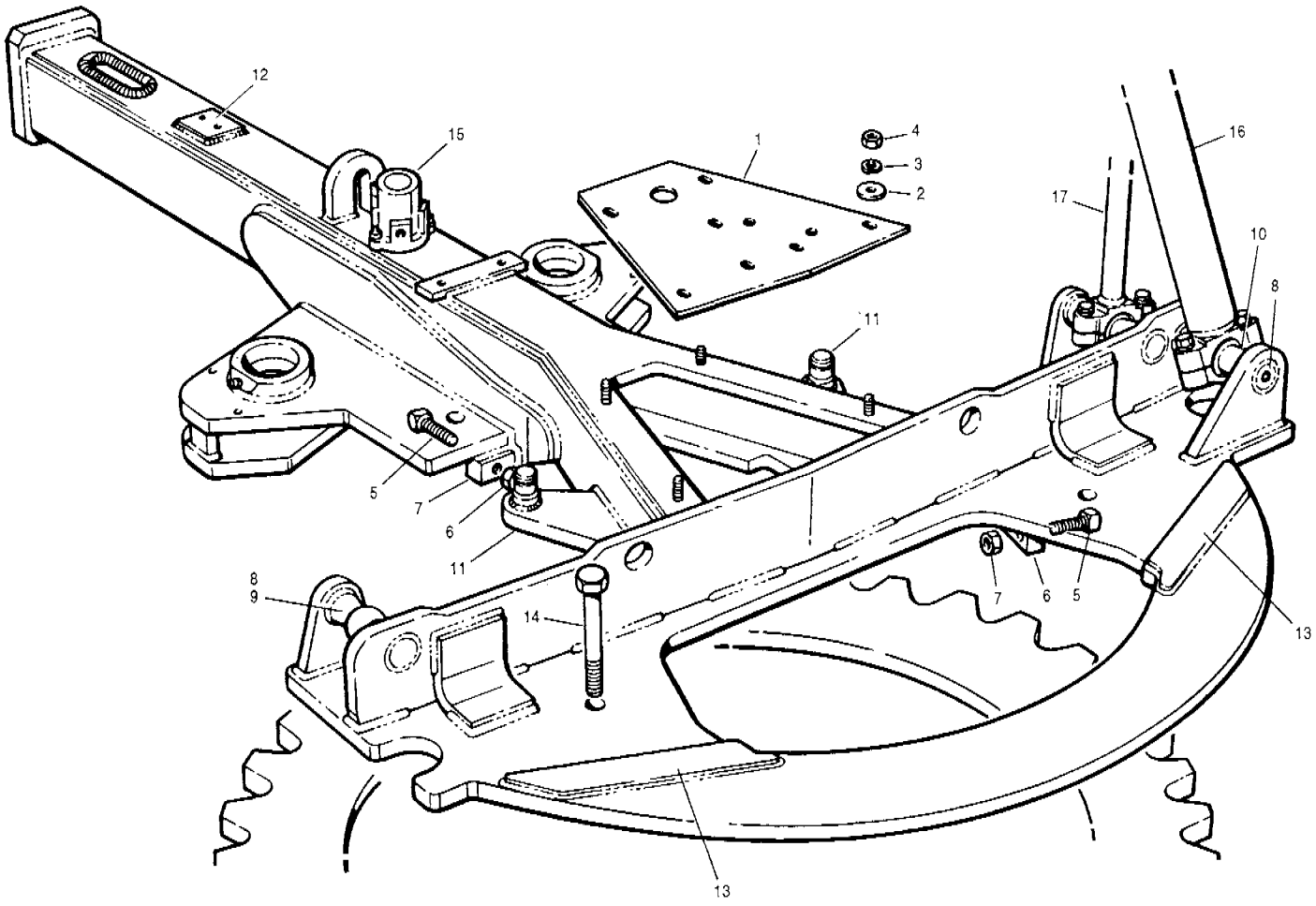

Item	Part No.	Description	Qty.	Remarks
1	74525	Cover plate	1	
2	14C-08 Zi	Flatwasher	4	
3	14A-08 Zi	Lockwasher	4	
4	30A-08 Zi	Nut	4	
5	62680	Bolt	6	
6	30D-16 Zi	Nut	6	
7	45714	Screw block	3	
8	28A-04	Grease fitting	3	
9	78210	Ball pin - hi-lift	2	
10	404039	Ball pin - circle shift cylinder	1	
11	66972	Anchor lug	2	
12	79650	Mounting plate	1	
13	79604	Wear plate	2	
14	50A-1864 Zi	Bolt	6	
15		**Circle turn circuit**	Ref.	985-87
15		**Circle turn valve**	Ref.	985-90
16		**Circle shift cylinder**	Ref.	986-92
17		**Blade lift cylinders**	Ref.	983-77

Item	Part No.	Description	Qty.	Remarks

SERIAL NUMBERS:
33000 & UP

DRAWBAR - REAR - Models G710 to G740

Date	01/2001	Group	987
Illustr.Nos	00004991	Page	97
		Issue	1

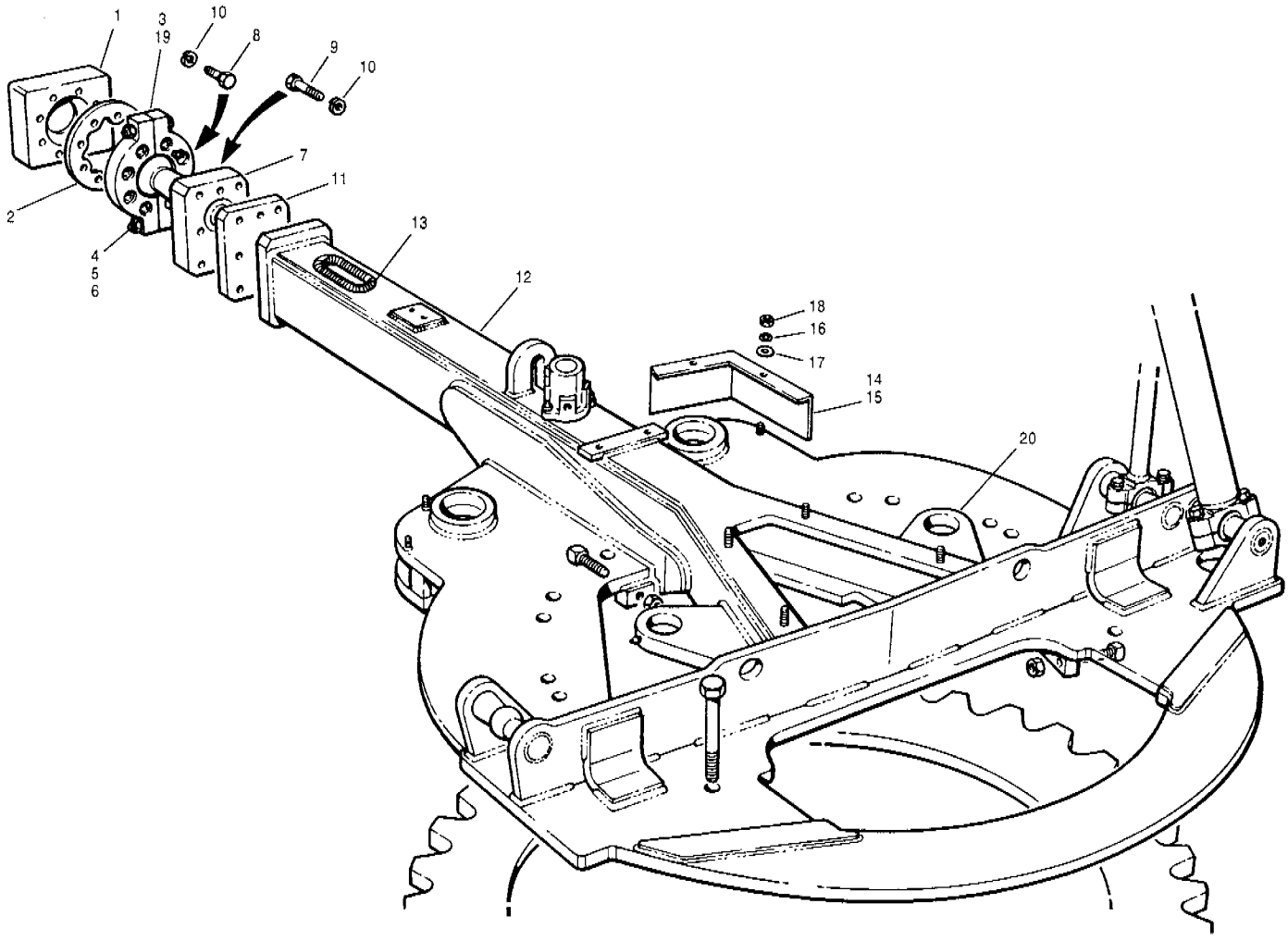

Item	Part No.	Description	Qty.	Remarks
1	79169	Drawbar ball seat	1	
2	48405	Shim - .010"	2	
2	53345	Shim - .015"	1	
2	48406	Shim - .020"	1	
	79717	**Split ball cap assembly** - includes items 3, 4, 5 & 6	1	
3	79718	Split ball cap	2	
4	50G-1224	Bolt	2	
5	14A-10 Zi	Lockwasher	2	
6	30A-10 Zi	Nut	2	
7	69415	Ball stud	1	
8	50A-1222 Zi	Bolt	8	
9	50A-1228 Zi	Bolt	8	
10	14A-12 Zi	Lockwasher	16	
11	87089	Shim - ball stud	1	
12	79548	Drawbar	1	
13	17539 x 24	Hose protector	1	
14	79004	Pinion guard - R.H.	1	
15	79005	Pinion guard - L.H.	1	
16	14A-06 Zi	Lockwasher	10	
17	14C-06 Zi	Flatwasher	4	
18	30A-06 Zi	Nut	4	
19	28B-04	Grease fitting	1	
20	81683	Lug - circle turn cylinder	2	

Item	Part No.	Description	Qty.	Remarks

SERIAL NUMBERS: 33000 & UP	**DRAWBAR - FRONT - HMBCS - Model G780**	Date **01/2001**	Group **987**
		Illustr.Nos **00004992**	Page **98**
			Issue **1**

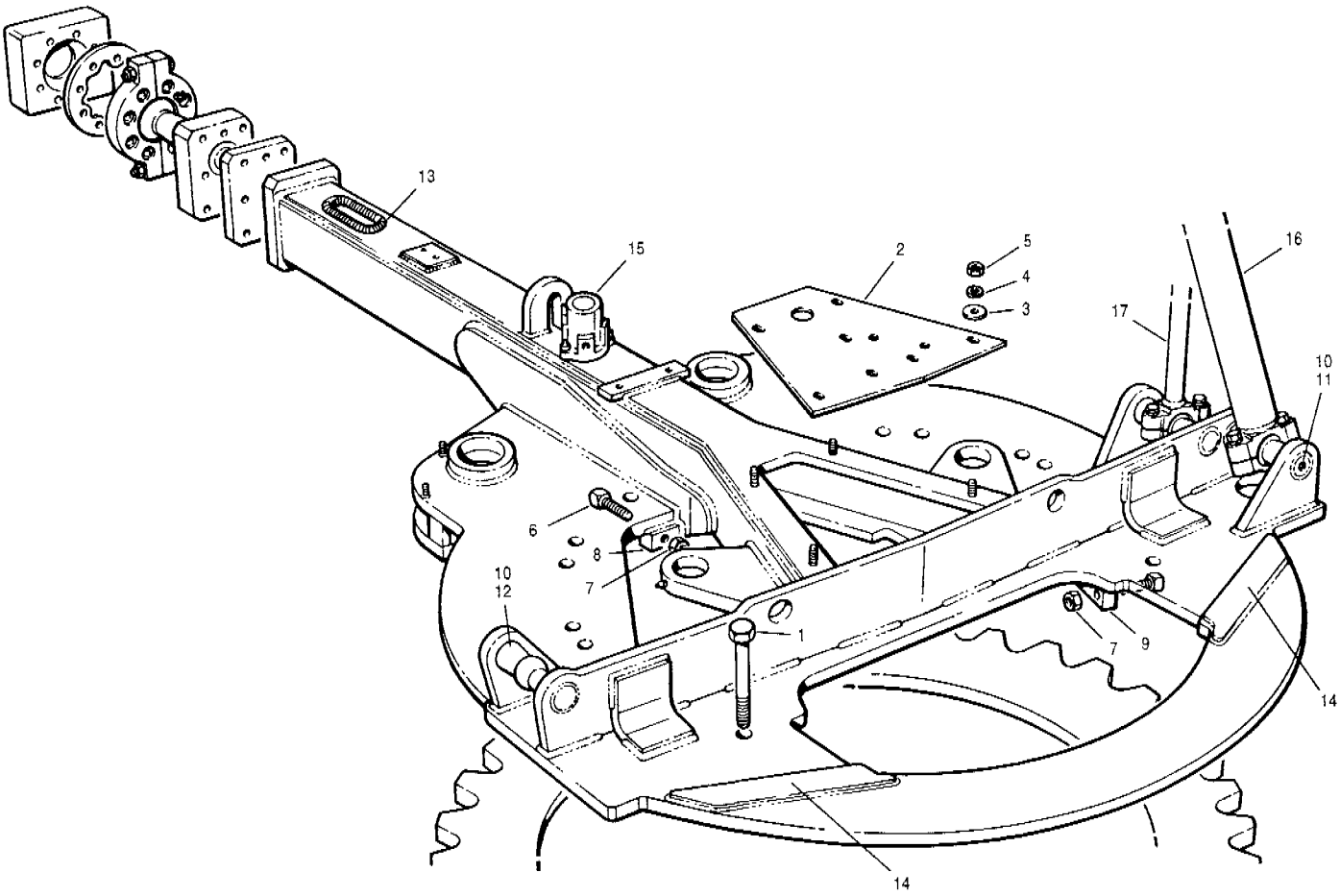

Item	Part No.	Description	Qty.	Remarks
1	50A-1868 Zi	Bolt	14	
2	74525	Cover plate	1	
3	14C-08 Zi	Flatwasher	7	
4	14A-08 Zi	Lockwasher	7	
5	30A-08 Zi	Nut	7	
6	62680	Bolt	10	
7	30A-16 Zi	Nut	10	
8	45714	Screw block	3	
9	87073	Screw block - rear	2	
10	28A-04	Grease fitting	3	
11	97576	Ball pin - circle shift cylinder	1	
12	87313	Ball pin - hi-lift	2	
13	79650	Mounting plate	1	
14	79604	Wear plate	2	
15		**Circle turn circuit**	Ref.	985-87
15		**Circle turn valve**	Ref.	985-90
16		**Circle shift cylinder**	Ref.	986-93
17		**Blade lift cylinders**	Ref.	983-77

Item	Part No.	Description	Qty.	Remarks

SERIAL NUMBERS: 33000 & UP	**DRAWBAR - REAR - HMBCS - Model G780**	Date	**01/2001**	Group **987**
		Illustr. Nos	**00004993**	Page **99**
				Issue **1**

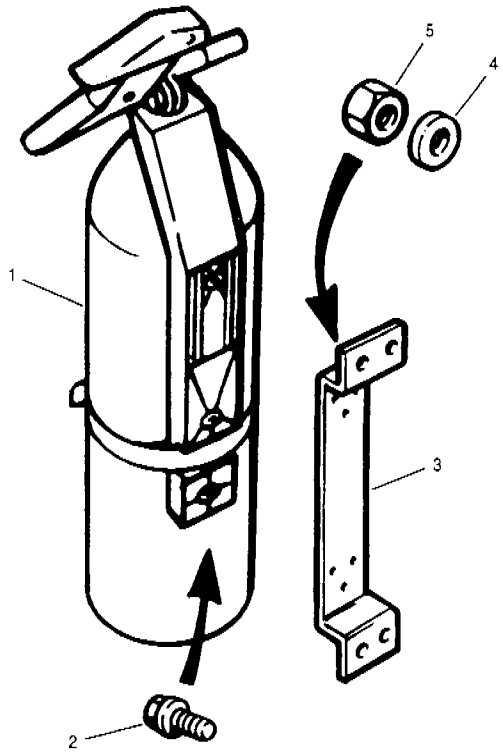

Item	Part No.	Description	Qty.	Remarks
1	49386	Fire extinguisher	1	
2	* 62A-1006	Screw	6	
3	73775	Bracket	1	
4	* 983334	Hardened washer	4	
5	* 36V-04 Zi	Nut	4	

Item	Part No.	Description	Qty.	Remarks

SERIAL NUMBERS: 33000 to 33218	**FIRE EXTINGUISHER**	Date **07/2001**	Group **992**
		Illustr. Nos **00005474**	Page **100**
			Issue **1A**

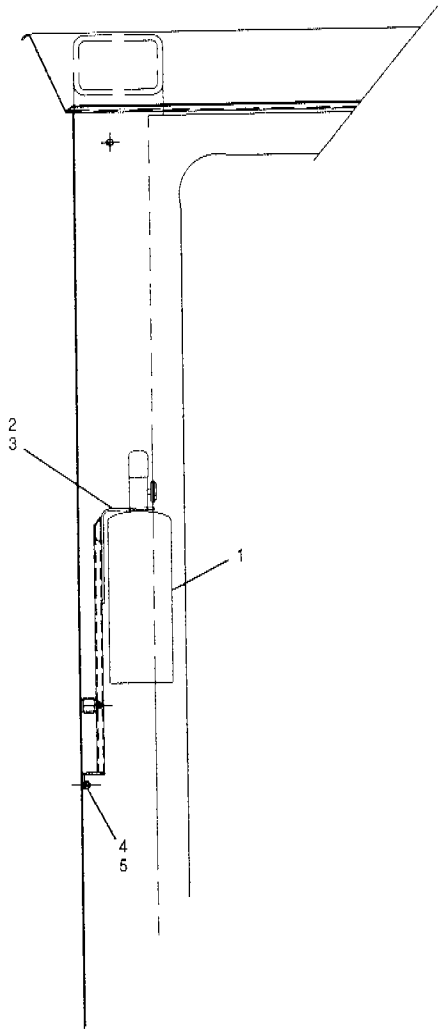

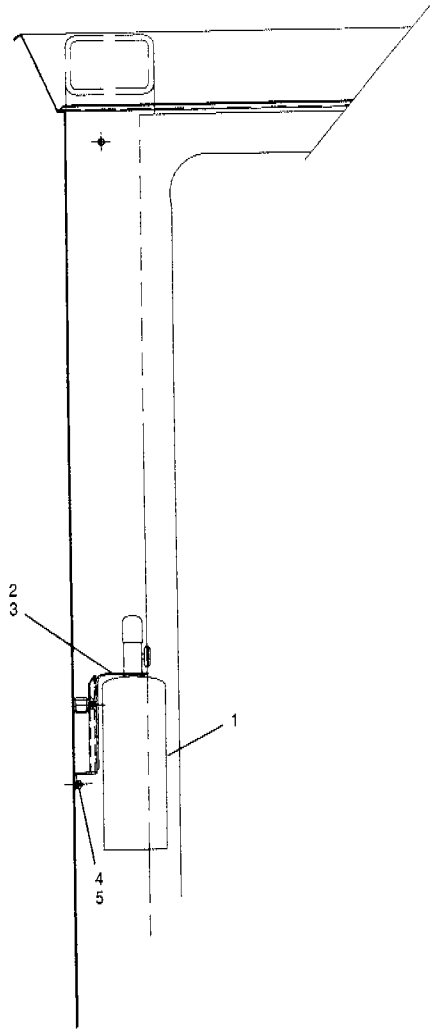

Item	Part No.	Description	Qty.	Remarks
1	49386	Fire extinguisher	1	
2	* 62A-1006	Screw	6	
3	* 12725130	Bracket - long	1	
3	* 12725350	Bracket - short	1	
4	* 983334	Hardened washer	4	
5	* 36V-04 Zi	Nut	4	

Item	Part No.	Description	Qty.	Remarks

SERIAL NUMBERS:
33219 to 33284

FIRE EXTINGUISHER

Date **07/2001**
Illustr. Nos **00005475**
Group **992**
Page **100**
Issue **2**

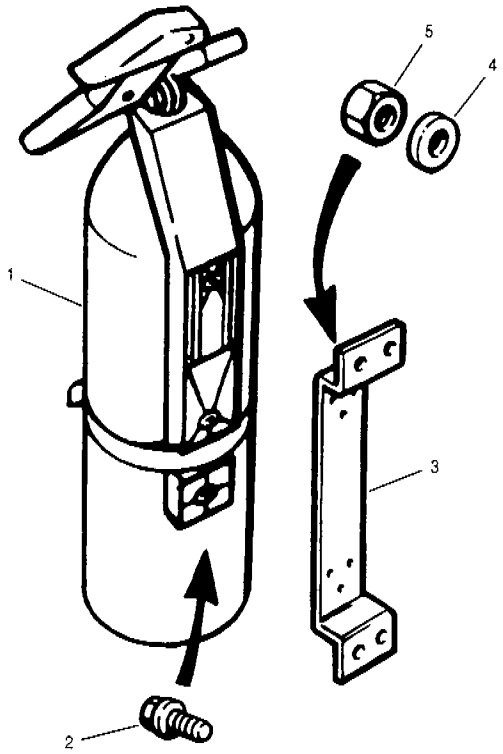

Item	Part No.	Description	Qty.	Remarks
1	49386	Fire extinguisher	1	
2	* 62A-1006	Screw	6	
3	* 12725130	Bracket	1	
4	* 983334	Hardened washer	4	
5	* 36V-04 Zi	Nut	4	

Item	Part No.	Description	Qty.	Remarks

SERIAL NUMBERS: 33285 & UP	FIRE EXTINGUISHER	Date 07/2001	Group 992
		Illustr. Nos 00005474	Page 100
			Issue 3

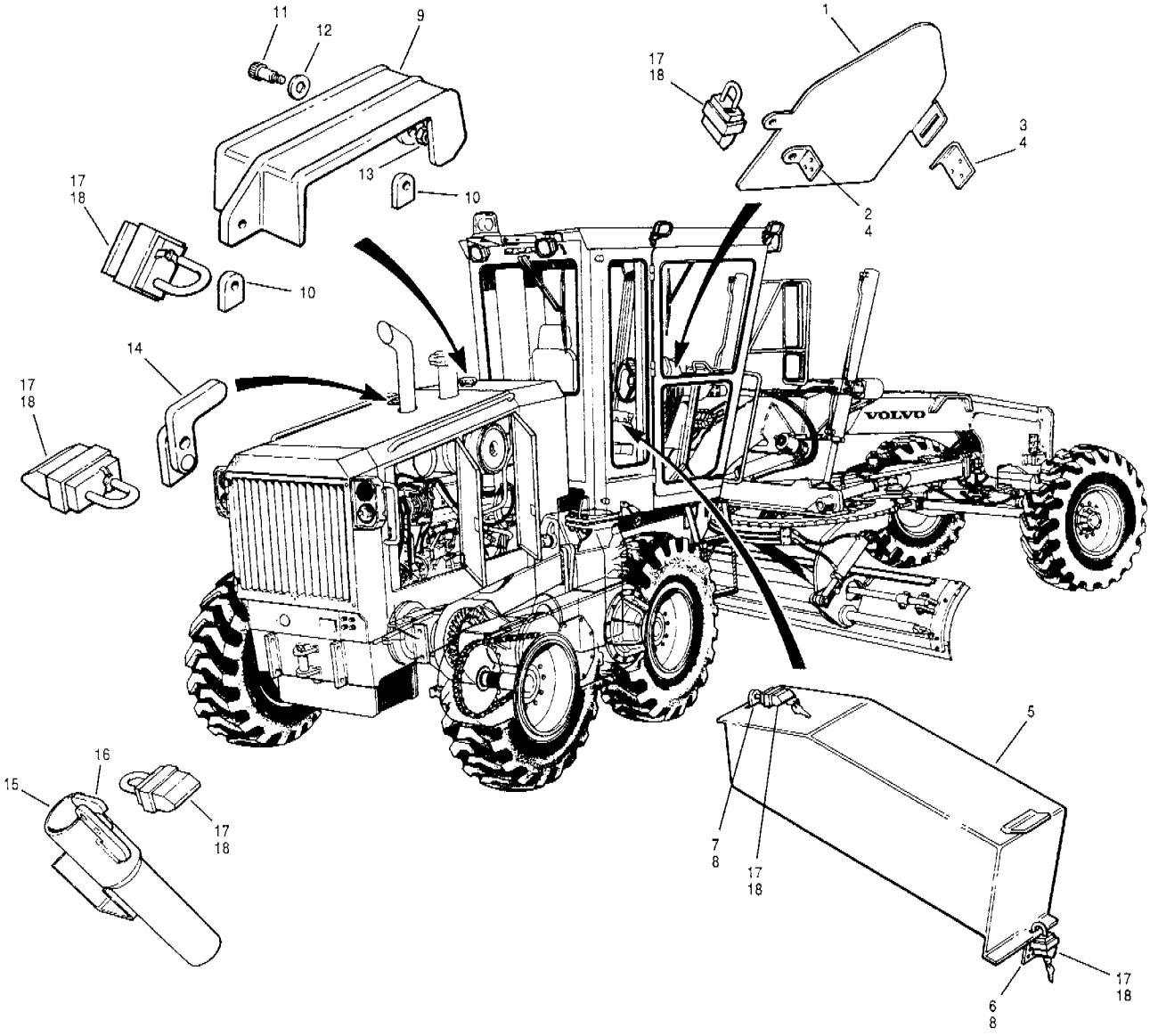

Item	Part No.	Description	Qty.	Remarks
1	73543	Cover - pedestal	1	
2	68102	Catch	1	
3	73544	Catch	1	
4	65034	Rivet	6	
5	* 12726033	Cover - console	1	
6	* 12726034	Catch	1	
7	* 12726035	Catch	1	
8	65034	Rivet	6	
9	81881	Cover - fuel cap	1	
10	81882	Mounting lug	2	
11	50G-0604	Bolt	1	
12	14C-06 Zi	Flatwasher	1	
13	36D-05 Zi	Locknut	1	

Item	Part No.	Description	Qty.	Remarks
14	86827	**Latch assembly** - auxiliary tank cap	1	
15	402094	Transmission oil filler tube - includes item 16	1	
16	402095	**Latch assembly**	1	
17	18968	Padlock - c/w keys	A.R.	
18	81946	Cover - padlock	A.R.	

SERIAL NUMBERS: 33000 & UP	**ANTI-VANDALISM EQUIPMENT**	Date **04/2001**	Group **992**
		Illustr. Nos **00005047**	Page **101**
			Issue **1A**

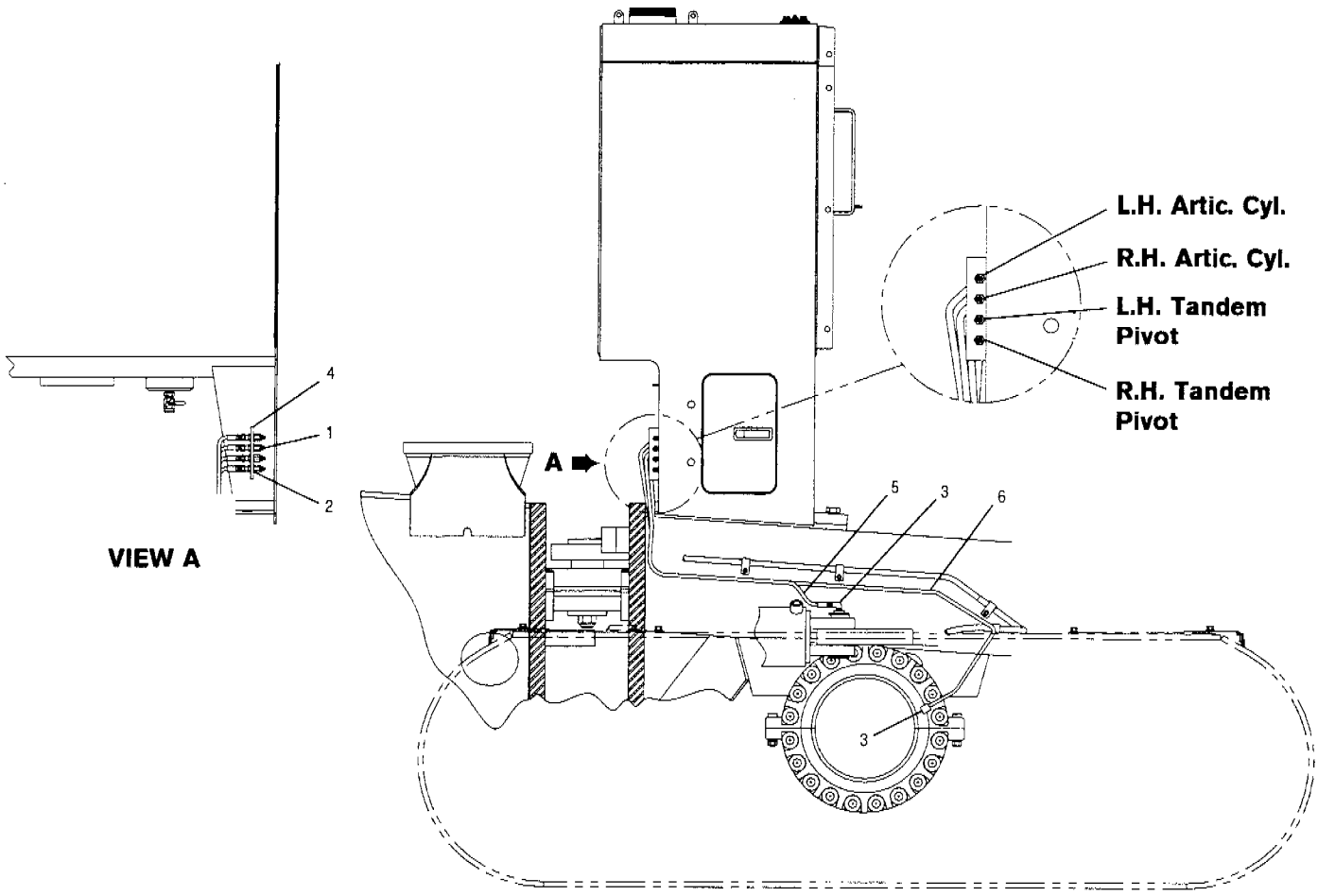

Item	Part No.	Description	Qty.	Remarks
1	29A-02	Grease fitting	4	
2	110K-0402	Connector	4	
3	103P-02	Connector	4	
4	87981	Bracket	1	
5	87985 x 36	Hose - articulation cylinder L.H.	1	
5	87985 x 65	Hose - articulation cylinder R.H.	1	
6	87985 x 65	Hose - tandem pivot L.H.	1	
6	87985 x 95	Hose - tandem pivot R.H.	1	

Item	Part No.	Description	Qty.	Remarks

SERIAL NUMBERS: 33000 & UP	REMOTE GREASING	Date 03/2001	Group 993
		Illustr. Nos 00004732	Page 102
			Issue 1

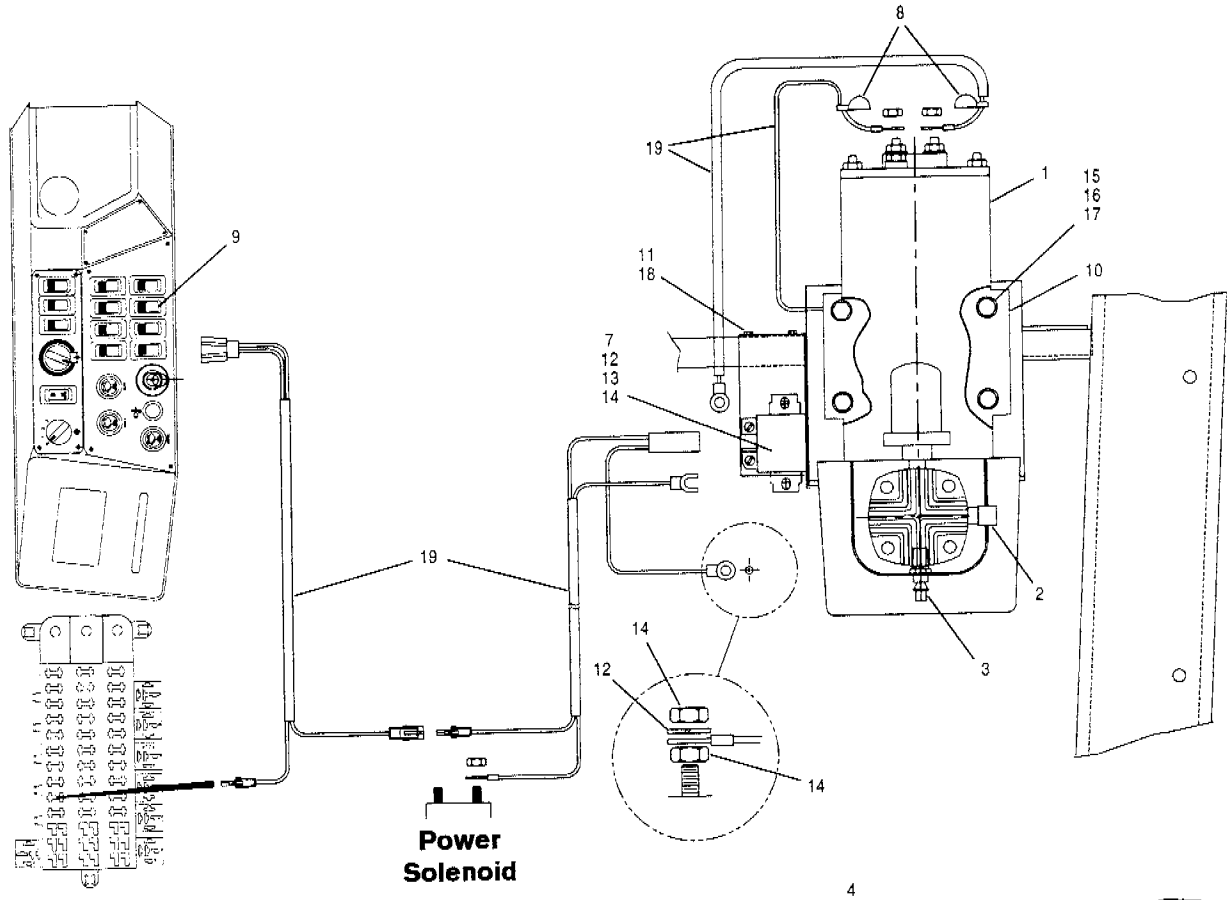

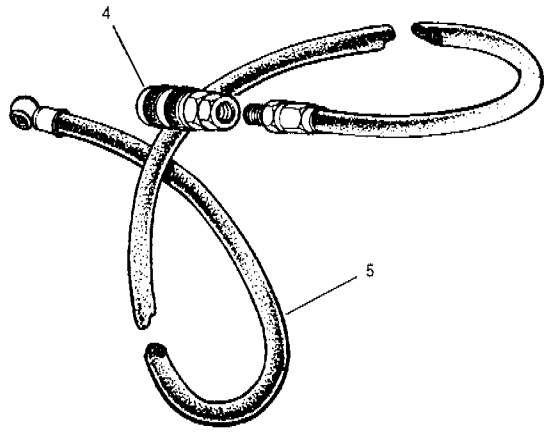

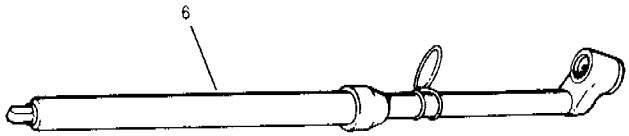

Item	Part No.	Description	Qty.	Remarks
1	84773	**Tire pump - electric**	1	
	76252	**Repair kit for 84773 - tire pump** - includes the following:	1 per	
		Inlet filter	1	
		Felt	1	
		Rider ring	1	
		Head gasket	1	
		Outlet valve	1	
		Piston seal	2	
		Inlet valve	1	
		Cylinder gasket	1	
		Piston ring	2	
2	39135	Relief valve	1	
3	18739	Male connector	1	
4	18738	Quick disconnect coupling - female	1	

Item	Part No.	Description	Qty.	Remarks
5	2799	**Air line assembly**	1	
6	9461	Tire gauge	1	
7	73067	Relay	1	
8	18561	Boot	2	
9	73192	Switch	1	
10	84407	Bracket	1	
11	73833	Cover	1	
12	14A-04 Zi	Lockwasher	3	
13	14C-04 Zi	Flatwasher	2	
14	30A-04 Zi	Nut	4	
15	50A-0510 Zi	Bolt	4	
16	14A-05 Zi	Lockwasher	4	
17	14C-05 Zi	Flatwasher	4	
18	62A-0604 Zi	Bolt	2	
		Wiring harness		
19	96219	Harness - tire pump	1	

SERIAL NUMBERS:
33000 & UP

TIRE PUMP

Date	03/2001	Group	996
Illustr. Nos	00004995	Page	103
		Issue	1