JULHO 2000

RUTHZIL TRATOR COMERCIAL DE PEÇAS LTDA 11 97083-6812 ROLANDO CITRANGULO

PEPB068601

PARTS BOOK

KOMATSU

GD511A-1
Serial No.10774 and up
ENGINE S6D95L-1L
Engine No.92607 and up

FOREWORD

When ordering a spare part, specify the part number, part name, and quantity required, and also specify your machine model code, machine serial number, engine serial number and the service meter reading.

This Parts Book describes not only standard items but also optional equipment and attachments. To order a part, please contact your nearest Komatsu distributor.

This Parts Book contains the information and special symbols as follows:

Figure and list	When you open this Parts Book, you will find an illustration on the left page (even-numbered page) for the spare parts group. Each individual part in the group is given an index number. On the right page, the component parts of the group are listed in the order of the index numbers shown on the illustration page. The part number, part name, and applicable machine serial number are given for each part.
FIG. No.	The FIG. No. is the number of the illustration shown on the page. It is not the spare part number. The numbers are not always continuous.
INDEX	This is the same as the index number in the illustration. The parts are listed in index number order.
PART No.	The number given in the PART No. column is the part number for the part shown. It is the code used when ordering that part. It is important that there be no mistake in this code number when ordering.
DESCRIP-TION	This gives the name of part that has the part number listed. The mark "." is put in front of the part name of an assembly part and the item is entered following the assembly. If a part marked with "." is a sub assembly, its components are marked with "..". Example: ELEMENT ASSEMBLY, AIR CLEANER .ELEMENT ASSEMBLY, OUTER ..ELEMENT, OUTER ..NUT, WING ..WASHER
Q'TY (Quantity)	This specifies the number of pieces used for one machine. However, if a part is included in the assembly and/or component, the quantity per such assembly and/or component is specified.
SERIAL No.	Applicable engine serial number is indicated for the engine volume. In the chassis volume, this indicates the machine serial number in which the part is used.
Symbols and codes	Symbols and codes are used in the PART No. and DESCRIPTION columns, and represent the following: □ The part specified in the line above can be used instead of this part.

Symbols and codes (Cont'd)

⊡	This part can be used instead of the part specified in the line immediately above.
◆	This part and the part specified in the line immediately above are interchangeable.
■	The part specified in the DESCRIPTION column can be used instead of this part if it is used as a set.
☒	This shows discontinued part. The part specified in the above line is supplied instead.
▼	This shows a discontinued part. The part specified in the DESCRIPTION column is supplied instead as a set.
☆	This part cannot be supplied as an individual part. It is supplied as an assembly.
★	This part cannot be supplied as an individual part. It is supplied as an assembly. However, it is supplied as an individual part by authorized distributors only.
⊙	This indicates a part group. The part marked with this symbol is not considered a supply part.
====	The parts surrounded by this line are components of the part group specified in the above line.
G-1,G-2	These indicate categories of part groups.
KIT	This indicates kit parts. For kit parts, refer to the service kit tables provided in this Parts Book.
△	This indicates a part supplied as semi-finished. It requires additional work before installation.
PAINT(1)	This indicates parts shipped painted with undercoat.
PAINT(2)	This indicates parts supplied with different colors from the original color of your machine.
(A)	This code indicates special parts for cold weather "A" specification (-30°C) machines.
(B)	This indicates special parts for cold weather "B" specification (-50°C) machines.

AVANT-PROPOS

Lorsque vous passez une commande d'une ou plusieurs pièces détachées, vous êtes prié de spécifier, outre le ou les numéro(s), désignation(s) et quantité(s) des pièces commandée(s), le numéro de carrosserie, le numéro de série du moteur et la lecture du compteur de service du véhicule.
Sur le présent catalogue des pièces figurent non seulement les équipements standard, mais également les équipements et accessoires en option. Si vous désirez un équipement ou une pièce quelconque, vous êtes prié de prendre contact avec le concessionnaire Komatsu le plus proche.

Ce catalogue des pièces se présente de la manière suivante:

Figures et listes	Lorsque vous ouvrez le présent catalogue, vous trouvez: sur la page de gauche (numéro de page pair), les illustrations de toutes les pièces composant l'équipement en question avec les numéros de référence pour chacune des pièces, sur la page de droite (numéro de page impair), la liste des pièces dans l'ordre des numéro de référence des pièces avec indication du numéro des pièces, de la désignation des pièces, de la quantité utilisée et des numéros de série.
FIG. No. (Figure et liste)	Le numéro de figure (FIG. XX) correspond au numéro de la figure représentée sur cette page, mais ne correspond pas au numéro de la pièce détachée. Veuillez noter que les numéros de figure ne se suivent pas systématiquement.
INDEX (Numéros de référence)	Les numéros de référence correspondent aux numéros de référence notés sur la figure et sont énumérés dans l'ordre des numéros de référence.
PART No. (Numéros de pièce)	Les numéros indiqués dans cette colonne correspondent aux numéros des pièces représentées et constituent les codes à spécifier pour toute commande de pièce. Il est important de ne pas faire d'erreur avec ce code au moment de la commande.
DESCRIP-TION (Descript-ion)	Dans cette colonne est indiquée la désignation des différentes pièces. Dans le cas d'un ensemble constitué de pièces, la désignation de chacune de ces pièces est précédée d'un point "." et dans le cas d'un ensemble constitué de sous-ensembles eux-mêmes constitués de pièces, la désignation de chacune de ces pièces est précédée de deux points "..". Exemple: ELEMENT ASSEMBLY, AIR CLEANER .ELEMENT ASSEMBLY, OUTER ..ELEMENT, OUTER ..NUT, WING ..WASHER
Q'TY (Quantité)	Dans cette colonne est indiqué le nombre de pièces nécessaires pour l'équipement en question. S'il s'agit de pièces comprises dans un ensemble et/ou composant, et la quantité indiquée est le nombre de pièces nécessaires pour l'ensemble et/ou le composant en question.
SERIAL No. (Numéros de série)	S'il s'agit d'un élément du moteur, ces numéros sont les numéros de série des moteurs sur lesquels cette pièce est utilisée. S'il s'agit d'un élément de la carrosserie, ces numéros sont les numéros des carrosseries sur lesquelles la pièce en question est utilisée.

Codification

Les codes indiqués dans les colonnes "N° de pièce" et "Description" ont les significations suivantes:

□	Au lieu de la pièce affectée de ce code, il est possible d'utiliser la pièce qui figure juste au-dessus.
⊡	La pièce affectée de ce code peut être utilisée à la place de la pièce figurant juste au-dessus.
◆	La pièce affectée de ce code et la pièce figurant dans la ligne justeau-dessus sont interchangeables
⊠	Au lieu de la pièce affectée de ce code, il est possible d'utiliser la combinaison des pièces indiquées dans la colonne "Description".
■	Les pièces affectées de ce code ne sont plus fournies. Au lieu de cette pièce, c'est la pièce figurant dans la ligne justeau-dessus qui sera fournie.
▼	Les pièces affectées de ce code ne sont plus fournies. Au lieu de cette pièce, c'est la combinaison de pièces figurant dans la colonne "Description" qui sera fournie.
☆	Les pièces affectées de ce code ne seront pas fournies à l'unité mais par jeu de pièces.
★	Les pièces affectées de ce code ne seront pas fournies à l'unité mais par jeu de pièces, sauf dans le cas de certains concessionnaires Komatsu.
⊙	Ce code indique qu'il s'agit d'un groupe de pièces. Les pièces affectées de ce code ne sont pas fournies en tant que pièces détachées.
= = = =	Les pièces ainsi encadrées sont les pièces composantes du groupe de pièces indiqué dans la ligne d'au-dessus.
G-1, G-2	Indique le numéro du groupe de pièces
KIT	Indique qu'il s'agit d'un kit de pièces. Pour les pièces composantes des kits, veuillez vous reporter à la liste des kits de service.
△	Indique qu'il s'agit de pièces fournies à l'état semi-fini. Ces pièces devront être usinées avant l'installation.
PAINT(1)	Indique que sur les pièces fournies est appliquée uniquement une couche primaire.
PAINT(2)	Indique que la couleur de la peinture est différente de celle d'origine.
(A)	Indique qu'il s'agit de pièces pour spécifications artiques A (–30°C)
(B)	Indique qu'il s'agit de pièces pour spécifications artiques B (–50°C)

VORWORT

Bei der Bestellung von Teilen bitte die Teilenummer, die Teilebezeichnung und die Menge des jeweiligen Teils sowie die Modellnummer, die Seriennummer der Maschine, die Seriennummer des Motors und den Stand des Betriebsstundenzählers angeben.

In dieser Ersatzteilliste ist nicht nur das Standardzubehör aufgeführt, sondern auch als Sonderausstattung erhältliche Teile und Einrichtungen.

Bestellungen nimmt Ihr zuständiger Komatsu-Händler entgegen.

Die folgenden Angaben sind in der Ersatzteilliste aufgeführt.

Bild und Liste	Beim Aufschlagen des Ersatzteilkatalogs ist auf der linken Seite (d.h. der Seite mit der geraden Zahl) eine Darstellung der Bauteile der betreffenden Baugruppe zu finden. Jedes Einzelteil der Baugruppe ist mit einer Kennzahl versehen. Auf der rechten Seite (d.h. der Seite mit der ungeraden Zahl) sind die Bauteile der Baugruppe, geordnet nach den auf der linken Seite angegebenen Kennzahlen, aufgeführt. Jedes Einzelteil wird mit Teilenummer, Teilebezeichnung und entsprechender Seriennummer angegeben.
FIG. No. (Bildnummer)	Die Bildnummer entspricht der Nummer des auf der betreffenden Seite stehenden Bilds. Es handelt sich dabei nicht um die Nummer des Lieferteils. Es sei ferner erwähnt, daß die Bilder nicht fortlaufend numeriert sind.
INDEX (Kennzahl)	Dabei handelt es sich um die gleiche Zahl wie die Kennzahl im Bild. Die Teile sind geordnet nach der Kennzahl aufgeführt.
PART No. (Teilenummer)	Die in der Spalte "Teilenummer" aufgeführte Nummer entspricht der Teilenummer für das betreffende Teil. Diese Nummer dient zur Bestellung des Teils. Deshalb bei der Bestellung stets auf die genaue Angabe der Teilenummer achten.
DESCRIPTION (Beschreibung)	Hierunter wird die Bezeichnung des Teils mit der aufgeführten Teilenummer angegeben. Jedes Baugruppen-Bauteil ist mit dem vorangestellten Symbol "." gekennzeichnet und wird hinter der entsprechenden Baugruppe aufgeführt. Handelt es sich bei dem mit "." gekennzeichneten Bauteil um eine Baugruppe, sind die Bauteile dieser Baugruppe mit ".." gekennzeichnet. Beispiel: Element assembly, air cleaner . Element assembly, outer .. Element, outer .. Nut, wing .. Washer
Q'TY (Menge)	Hierunter wird die Anzahl der Bauteile für eine Maschine angegeben. Im Falle einer Baugruppe oder eines Aggregats wird allerdings die Anzahl der Teile pro Baugruppe angegeben.
SERIAL No. (Serienummer)	Im Ersatzteilkatalog für den Motor versteht man hierunter die Seriennummer des Motors, in den das betreffende Teil eingebaut ist. Im Ersatzteilkatalog für die Maschine versteht man hierunter die Seriennummer der Maschine, in die das entsprechende Teil eingebaut ist.
Kodes	Die in den Spalten "Teile-Nr." und "Beschreibung" verwendeten Kodes haben folgende Bedeutung: □ Anstelle dieses Teils kann das in der vorangegangenen Zeile aufgeführte Teil verwendet werden.

⊡	Dieses Teil kann anstelle des in der vorangegangenen Zeile aufgeführten Teils verwendet werden.
◆	Dieses Teil ist mit dem in der vorangegangenen Zeile aufgeführten Teil austauschbar.
■	Anstelle dieses Teils kann das in der Spalte "Beschreibung" aufgeführte Teil verwendet werden, wenn das Teil zusammen mit anderen Teilen als ein Bauteilsatz verwendet wird.
☒	Dieses Teil kann nicht mehr geliefert werden. Statt dessen wird das in der vorangegangenen Zeile aufgeführte Teil geliefert.
▼	Dieses Teil kann nicht mehr geliefert werden. Statt dessen wird das in der Spalte "Beschreibung" aufgeführte Teil als ein Bauteilsatz geliefert.
☆	Dieses Teil kann nicht als Einzelteil, sondern nur als Baugruppe geliefert werden.
★	Dieses Teil kann nicht als Einzelteil, sondern nur als Baugruppe geliefert werden. Nur bei bestimmten Händlern kann es als Einzelteil bezogen werden.
⊙	Hierdurch wird ein Aggregat gekennzeichnet. Es wird nicht zu den Lieferteilen gerechnet.
= = = =	Die Teile innerhalb dieser Markierung gehören zu dem oben aufgeführten Aggregat.
G-1, G-2	Hiermit wird die Kategorie eines Aggregats angegeben.
KIT	Hiermit werden Teile gekennzeichnet, die nur als Satz erhältlich sind. Siehe dazu die Tabelle der als Satz gelieferten Ersatzteile.
△	Hiermit werden Teile gekennzeichnet, die in vorbearbeitetem Zustand geliefert werden und für den Einbau nachbearbeitet werden müssen.
PAINT(1)	Hiermit werden Teile gekennzeichnet, die mit Grundierung geliefert werden.
PAINT(2)	Hiermit werden Teile gekennzeichnet, die in unterschiedlichen Farben geliefert werden.
(A)	Hiermit werden Teile gekennzeichnet, die speziell für kalte Witterung (A) (-30°C) ausgelegt sind.
(B)	Hiermit werden Teile gekennzeichnet, die speziell für kalte Witterung (B) (-50°C) ausgelegt sind.

PROLOGO

Cuando tenga que efectuar un pedido de repuestos, se ruega especificar el número, el nombre y la cantidad de piezas requeridas, indicando asimismo el número de modelo, el número de serie del motor y la lectura del contador de servicio.

Esta lista de piezas especifica no solamente accesorios estándar sino también piezas y accesorios opcionales. Para realizar un pedido, sírvase ponerse en contacto con su distribuidor Komatsu más cercano.

La lista de repuestos se compone de los elementos siguientes.

Figura y lista	Al abrir esta lista de repuestos, encontrará en la página izquierda (página de número impar) una ilustración de los componentes del conjunto. La figura de cada componente individual va provista de un número de índice. En la página derecha (página de número par), los componentes del conjunto están listados siguiendo el orden de los números de índice de la página izquierda.
FIG. NO. (Número de figura)	El número de figura es el número indicado en cada una de las respectivas figuras, y no es el número de la pieza. Los números de figura no son siempre continuos.
INDEX (Número de índice)	Coincide con el número de índice de cada figura, y aparecen en la lista en orden numérico.
PART NO. (Número de pieza)	El número indicado en la columna de "Número de piezas" es el número de pieza que aparece en la figura. Es sumamente importante debido a que se utiliza como código al efectuar el pedido de piezas.
DESCRIP-TION (Nombre de las piezas)	Indica la descripción correspondiente a cada número de pieza. Los componentes de un conjunto llevan la marca "." antes del nombre. Por otra parte, cuando se tratan de piezas armadas, llevan la marca ".." antes del nombre Ejemplo: ELEMENT ASSEMBLY, AIR CLEANER .ELEMENT ASSEMBLY, OUTER ..ELEMENT, OUTER ..NUT, WING ..WASHER
Q'ty (Cantidad)	Especifica el número de piezas utilizadas en cada máquina. Sin embargo, para un conjunto o componentes de un grupo de piezas, se especifica el número de piezas por conjunto.
SERIAL NO. (Número de serie)	En el manual de piezas del motor, indica el número de serie del motor en que se utiliza la pieza. En el manual de piezas de la máquina, indica el número de serie del vehículo en que se utiliza esa pieza.

Códigos

Los códigos y números de piezas especificados en las columnas “N°. de pieza” y “Nombre de la pieza” representan lo siguiente:

□	En lugar de esta pieza es posible utilizar la pieza indicada en el renglón de arriba.
⊡	Es posible utilizar esta pieza en lugar de la indicada en el renglón inmediatamente anterior.
◆	Esta pieza y la indicada en el renglón inmediatamente anterior son intercambiables.
■	Es posible utilizar la pieza especificada en la columna "Nombre de las piezas" si se utiliza como un conjunto.
☒	Esta pieza se ha dejado de suministrar. En su lugar, se suministra la pieza indicada en el renglón anterior.
▼	Esta pieza se ha dejado de suministrar. En su lugar, se suministra la pieza especificada en la columna "Nombre de las piezas" como un conjunto.
☆	Esta pieza no se suministra como pieza individual. Se suministra como un conjunto.
★	Esta pieza no se suministra como pieza individual. Se suministra como un conjunto. Sin embargo, es suministrada como pieza individual por ciertos distribuidores.
⊙	Indica grupo de piezas. Las piezas que llevan este código no son suministrables.
====	Las piezas rodeadas por esta línea son componentes del grupo de piezas especificado arriba.
G-1, G-2	Indica la clasificación del grupo de piezas.
KIT	Indica componentes de un juego. Para los componentes de un juego, refiérase a la tabla de los juegos de servicio.
Δ	Indica pieza suministrada como semiterminada. Debe ser reelaborada antes del uso.
PAINT(1)	Indica piezas despachadas con una primera mano de pintura.
PAINT(2)	Indica piezas despachadas con colores diferentes.
(A)	Indica piezas especiales (A) especificadas para climas fríos (-30°C).
(B)	Indica piezas especiales (B) especificadas para climas fríos (-50°C)

INTRODUÇÃO

Ao solicitar uma peça, informe o número, nome e quantidade da peça necessária, bem como o número da carroçaria, número do motor, e leitura do medidor de serviço.

Esta lista de peças não somente especifica os acessórios padrões mas também as peças opcionais e aditamentos. Para pedir uma peça, entre em contato com o revendedor Komatsu mais próximo.

Este livro de peças consiste nos seguintes itens.

Figura e lista	Ao abrir este livro de peças, você encontrará na página esquerda (a página com número par), uma ilustração das peças componentes do conjunto. Cada peça individual no conjunto tem um número de índice. Na página direita (a página com número ímpar), as peças componentes do conjunto são relacionadas na ordem dos números de índice mostrados na página esquerda. Cada peça é designada com um número, nome, e número de série aplicável.
FIG. NO. (Número da figura)	O número da figura é o número da figura mostrada em tal página. Ele não é um número para fornecimento da peça. Do mesmo modo, os números das figuras nem sempre são contínuos.
INDEX (Número de índice)	Este número é igual ao número de índice na figura. As peças são relacionadas na ordem dos números de índice.
PART NO. (Número de peça)	O número designado na coluna "Número da peça" é o número para a peça mostrada. Ele é o código usado para o pedido da peça. É importante que não haja equívoco com respeito a este número ao pedir uma peça.
DESCRIP-TION (Descrição)	Este item descreve o nome da peça que tem o número de peça relacionado. É colocado um "." na frente do nome de um componente de conjunto e o item é introduzido após o conjunto. Se uma peça marcada com "." é um conjunto, seus componentes são marcados com "..". Exemplo: ELEMENT ASSEMBLY, AIR CLEANER .ELEMENT ASSEMBLY, OUTER ..ELEMENT, OUTER ..NUT, WING ..WASHER
Q'ty (Quantidade)	Este item especifica o número de peças usadas para 1 máquina. No entanto, para o conjunto ou componentes de um grupo de peças, o número de peças por conjunto é especificado.
SERIAL NO. (Número de série)	No livro de peças do motor, esse número indica o número de série do motor no qual a peça é usada. No livro de peças da máquina, esse número indica o número de série da máquina na qual a peça é usada.
Códigos	Os códigos e número de peça especificados nas colunas "N.º de peça" e "Descrição" representam o seguinte: □ A peça especificada na linha acima pode ser usada no lugar desta peça.

⊡	Esta peça pode ser usada no lugar da peça especificada na linha imediatamente acima.
◆	Esta peça e a peça especificada na linha imediatamente acima são intercambiáveis.
■	A peça especificada na coluna “Descrição” pode ser usada no lugar desta peça se ela for usada como um jogo.
☒	Esta peça não é mais fornecida. A peça especificada na linha acima é fornecida em seu lugar.
▼	Esta peça não é mais fornecida. A peça especificada na coluna “Descrição” é fornecida em seu lugar como um jogo.
☆	Esta peça não pode ser fornecida como uma peça individual. Ela é fornecida como um conjunto.
★	Esta peça não pode ser fornecida como uma peça individual. Ela é fornecida como um conjunto. No entanto, ela é fornecida como uma peça individual somente por revendedores específicos.
⊙	Isso indica um grupo de peças. Esta peça não é considerada uma peça de fornecimento.
====	As peças envolvidas por esta linha são componentes do grupo de peças especificado acima.
G-1, G-2	Isso indica a categoria do grupo de peças.
KIT	Isso indica componentes de um kit. Para os componentes de um kit, refira-se à tabela de kits de serviço.
Δ	Isso indica uma peça fornecida como produto semi-acabado. Ela deve ser reformada antes do uso.
PAINT(1)	Isso indica peças embarcadas pintadas com uma primeira mão de fundo.
PAINT(2)	Isso indica peças embarcadas com cores diferentes.
(A)	Isso indica peças especiais para especificação (A) de tempo frio (-30°C).
(B)	Isso indica peças especiais para especificação (B) de tempo frio (-50°C).

الرموز

الرموز وارقام القطع المذكورة في عمود « رقم القطعة » وعمود « الوصف » تمثل كما يلى:

□ القطعة المذكورة في السطر السابق يمكن استعمالها بدلاً من هذه القطعة.

⊡ هذه القطعة يمكن استعمالها بدلاً من القطعة المذكورة في السطر السابق مباشرة.

◆ هذه القطعة والقطعة المذكورة في السطر السابق مباشرة يمكن لكل منهما ان تحل محل الاخرى.

■ القطعة المذكورة في عمود « الوصف » يمكن استعمالها بدلاً من هذه القطعة اذا استخدمت كطقم.

⊠ هذه القطعة توقف توريدها. يتم توريد القطعة المذكورة في السطر السابق بدلاً منها.

▼ هذه القطعة توقف توريدها. يتم توريد القطعة المذكورة في عمود « الوصف » بدلاً منها كطقم.

☆ هذه القطعة لا يمكن توريدها كقطعة منفردة. يتم توريدها كمجموعة.

★ هذه القطعة لا يمكن توريدها كقطعة منفردة. يتم توريدها كمجموعة. على انه يتم توريدها كقطعة منفردة من قبل موزعين معيّنين فقط.

⊙ هذا يشير الى مجموعة قطع.
هذه القطعة لا تعتبر قطعة للتوريد.

==== القطع المحاطة بهذا الخط هي مكونات لمجموعة القطع المذكورة اعلاه.

G-1,G-2 هذا يشير الى فئة مجموعة القطع.

KIT هذا يشير الى مكونات الاطقم التركيبية. بخصوص الاطقم التركيبية، يرجى مراجعة جدول الاطقم التركيبية للخدمة.

△ هذا يشير الى قطعة مورّدة شبه مكتملة التصنيع. تتطلب استكمال تصنيعها قبل الاستعمال.

PAINT(1) هذا يشير الى القطع المشحونة بعد طلائها بطبقة سفلية.

PAINT(2) هذا يشير الى القطع المشحونة بألوان مختلفة.

(A) هذا يشير الى قطع خاصة بمواصفات الطقس البارد من الفئة (A) (-٣٠°م).

(B) هذا يشير الى قطع خاصة بمواصفات الطقس البارد من الفئة (B) (-٥٠°م).

مقدمة

عند طلب القطع، يرجى تحديد رقم القطعة واسم القطعة والكمية المطلوبة من القطعة، مع تحديد رقم الموديل والرقم التسلسلي للمحرك وقراءة عداد الخدمة.

قائمة القطع هذه لا تقتصر على الكماليات القياسية فقط بل تشمل ايضاً القطع والملحقات الاختيارية. لطلب القطع، يرجى الاتصال بأقرب موزع لمنتجات كوماتسو.

قائمة القطع تتضمن البنود التالية.

الشكل والقائمة	عندما تفتح كتاب القطع، ستجد على الصفحة اليسرى (الصفحة ذات الرقم الزوجي) شكلاً توضيحياً للقطع المكونة للمجموعة. كل قطعة في مجموعة المكونات لها رقم فهرس. على الصفحة اليمنى (الصفحة ذات الرقم الفردي) تم إدراج قائمة بالقطع التي تتكون منها المجموعة مرتبة حسب ارقام الفهرس المبيّنة في الصفحة اليسرى. وقد اعطيت كل قطعة من القطع رقم قطعة واسم قطعة ورقم تسلسلي ينطبق عليها.
FIG. No. (رقم الشكل)	رقم الشكل هو الرقم الخاص بالشكل التوضيحي الذي يظهر في تلك الصفحة. وهو ليس رقم القطعة التي يتم توريدها. كما ان ارقام الاشكال ليست دائماً متتابعة.
INDEX (رقم الفهرس)	هذا الرقم هو نفس رقم الفهرس الوارد في الشكل التوضيحي. تدرج القطع في القائمة مرتبة تبعاً لارقام الفهرس.
PART No. (رقم القطعة)	الرقم الوارد في عمود « رقم القطعة » هو رقم القطعة الخاص بالقطعة المبيّنة. وهو الرمز المستخدم لطلب تلك القطعة. ومن الضروري عدم ارتكاب اي خطأ في تحديد هذا الرقم عند طلب القطع.
DESCRIPTION (الوصف)	يعطي اسم القطعة المدرج رقمها في القائمة. توضع العلامة " . " امام اسماء القطع المكونة للمجموعة ويدرج البند بعد المجموعة. اذا كانت القطعة المشار اليها بالعلامة " . " هي نفسها عبارة عن مجموعة مكونات فان كلاً من مكوناتها يشار اليها بالعلامة " . . ". مثال : ELEMENT ASSEMBLY, AIR CLEANER .ELEMENT ASSEMBLY, OUTER .. ELEMENT, OUTER ..NUT, WING ..WASHER
Q'ty (الكمية)	هذا هو عدد القطع المستخدمة لآلية واحدة. أما بالنسبة لمجموعات المكونات ومجموعات القطع فانه يتم تحديد عدد القطع لكل مجموعة.
SERIAL No. (الرقم التسلسلي)	في كتاب قطع المحرك، يشير هذا الرقم الى الرقم التسلسلي للمحرك الذي تستخدم فيه القطعة. في كتاب قطع الآلية، يشير هذا الرقم الى الرقم التسلسلي للآلية التي تستخدم فيها القطعة.

ПРЕДИСЛОВИЕ

При формировании заказа на детали, узлы и агрегаты, кроме их номера детали, наименования и количества, завод-изготовитель просит заказчиков информировать о серийном номере машины и двигателя, для которых делается заказ, а также показании счетчика мото-часов.

В Каталоге приведены не только стандартные агрегаты, но и дополнительные устройства и принадлежности, поставляемые по специальному заказу. При необходимости приобретении их обратиться к местному дилеру фирмы "Комацу".

Каталог деталей составлен, как ниже изложено:

Рисунки и таблицы деталей	При открытии Каталога на левой странице (чётной) приведен рисунок деталей устройства или агрегата. Каждая деталь обозначена номером позиции. На правой странице (нечётной) приведена таблица деталей, нарисованных на левой странице, с соответствующим номером детали, наименованием, количеством и серийными номерами машины, для которых предназначена данная деталь, в порядке возрастания номеров позиции.
FIG No. (№ рисунка)	Номер рисунка (фиг.) является собственным для данного рисунка и не является номером показанной детали. Номера рисунков (фиг.) могут быть непорядковыми.
INDEX (Указатель)	В указателе приведены номера позиции деталей на рисунке в порядке возрастания цифр.
PART No. (Номер детали)	При заказе на деталь, установленную на рисунке, следует указать номер, приведенный в данной колонне. Именно этот номер определяет каждую деталь.
DESCRIPTION (Наименование детали)	Приведено наименование детали, соответствующей выбранному номеру детали. Точка "." поставлена перед наименованием каждой составной части устройства. Если составная часть состоит из множества деталей, то эти детали обозначаются двумя точками "..". Например: ELEMENT ASSEMBLY, AIR CLEANER . ELEMENT ASSEMBLY, OUTER .. ELEMENT, OUTER .. NUT, WING .. WASHER
Q'TY (Количество)	Указано количество деталей, необходимое на единицу данного устройства. Для деталей составной части устройства, а также для группы деталей указано их количество на единицу составной части или на группу.
SERIAL No. (Серийные номера)	В части двигателя приведены серийные номера двигателей, а в части шасси — серийные номера машин, в которых применена данная деталь.
Условные обозначения	Условные обозначения, применяемые в колоннах "Номер детали" и "Наименование детали", характеризуют следующее: □ Вышеприведенная деталь может заменить настоящую деталь.

Условные обозначения

(Продолжение)

◙	Настоящая деталь может заменить деталь, приведенную на одну строчку выше.
◆	Настоящая деталь и деталь, приведенную на одну строчку выше, имеют взаимозаменяемость.
■	Взамен настоящей детали возможно использовать детали, приведенные в колонне “Наименование детали”, в комплекте.
□	Поставка этой детали прекращена. Взамен этой детали поставляется деталь, приведенная на одну строчку выше.
▼	Поставка этой детали прекращена. Взамен этой детали поставляются детали, приведенные в колонне “Наименование детали”, в комплекте.
☆	Настоящая деталь поставляется только в комплекте, а не в отдельности.
★	Настоящая деталь поставляется, как правило, только в комплекте, а не в отдельности. Ее можно достать только у отдельных дилеров фирмы “Комацу”.
◉	Группа деталей. Детали не подлежат дополнительной поставке.
------	Детали, ограниченные этой линией, составляют вышеприведенную группу деталей.
G-1, G-2	Обозначения, характеризующие отдельные группы деталей.
KIT	Составляющая комплекта. См. таблицы ремонтных комплектов.
△	Деталь, поставляемая в неготовом виде. Перед употреблением необходимо дополнительно обработать.
PAINT(1)	Детали, отгружаемые в загрунтованном виде.
PAINT(2)	Детали, отгружаемые в окрашенном в другой цвет виде.
(A)	Детали, рассчитанные на холодные районы (-30° C)
(B)	Детали, рассчитанные на особо холодные районы (-50° C)

前　言

订购零件时，请注明需要零件的货号、品名、数量以及使用机器的车辆编号、发动机型号和系列号、工作时数。

此零件明细表上不仅记载有标准装备零件，还记载有选购零件、附件零件。如果您需要订货，请与最近的小松代理店联系。

为了清楚明了，零件手册中有如下规定:

图　　表	打开此零件清单后， 在左侧的页上（偶数页）用图示表示按安装的装置上的零件。在图示上标有各种零件的索引号码。 在右侧的页上（奇数页）按照左侧图示上表示的零件索引号码以表格的形式 表示货号、品名、数量、适用机型。
FIG. No.	图号 (FIG.) 表示该页图的号码，它不时补充零件用的货号同时，此号码不一定是连续号码。
INDEX	与图的索引号码一致，按索引号码顺序编制为表格形式。
PART No.	此栏所示的货号是图示零件的货号，它是在订货时需要的标明的特定代号，是非常重要的。
DESCRIP-TION	它表示相当于货号的零件名称。 构成组装品的零件，在品名的前面有标记，记载在组装品之后。 另外，如果标记的零件是组装品，在该构成零件的品名前标有 .. 标记。 例如: ELEMENT ASSEMBLY, AIR CLEANER .ELEMENT ASSEMBLY, OUTER ..ELEMENT, OUTER ..NUT, WING ..WASHER
Q'TY	表示 1 台机器中需要使用的该零件数量。 但是，如果是组装零件和零件组的构成零件时，表示其组装件的件数。
SERIAL No.	发动机篇中表示该使用零件的发动机型号，在机体篇中表示该使用零件的车辆号码。
代　　号	货号栏和零件品名栏里的代号如下所示: □　　上一行的零件可取代此行零件来使用。

代　　号（续）		
	⊡	此行零件可代替紧接着的上一行零件使用。
	◆	此行零件可与紧挨着的上一行零件互换使用。
	■	如果将此行零件说明栏内的零件配套后，可取代此零件来使用。
	⊠	该行零件已停止供应，用上一行的零件代替使用。
	▼	此行零件已停止供应，将此行零件说明栏内的零件配套后代替此零件供应。
	☆	此行零件拟成套供应，不以单一零件供应。
	★	此行零件拟成套供应，不以单一零件供应，但特定代理除外。
	⊙	成组零件，一般不考虑成组供应。
	====	用这种符号包括的零件是符号上一行指明成组件的零部件。
	G-1,G-2	成组零件编号。
	KIT	修理包，关于修理包构件详情，请参考技术服务修理包资料。
	△	此行零件以半成品的形式供应，使用前必须再加工。
	PAINT(1)	只涂底漆装船。
	PAINT(2)	和本体不同颜色装船。
	(A)	适用寒冷地区。（－30℃）
	(B)	适用极寒冷地区。（－50℃）

CONTENTS

FOREWORD.....0F- 2
CONTENTS.....0C- 1

01[CYLINDER HEAD] FIG NO. PAGE
CYLINDER HEAD.....0101 01- 2
ROCKER ARM.....0111 01- 4
CYLINDER HEAD COVER.....0115 01- 6
AIR INTAKE MANIFOLD AND CONNECTION(#22170-43661).....0131 01- 8
AIR INTAKE MANIFOLD AND CONNECTION(#43662-).....0131A 01- 10
AIR CLEANER.....0141 01- 12
AIR CLEANER (WITH EXTENSION TYPE)(#37188-).....0142 01- 14
EXHAUST MANIFOLD AND TURBOCHARGER.....0151 01- 16
TURBOCHARGER.....0155 01- 18
MUFFLER AND MOUNTING(#22170-26224).....0161 01- 20
MUFFLER AND MOUNTING(#26225-37187).....0161A 01- 22
MUFFLER AND MOUNTING(#37188-).....0161B 01- 24
MUFFLER AND MOUNTING (WITH RAIN CAP TYPE)(#37188-).....0162 01- 26
MUFFLER AND MOUNTING (WITH AIR COMPRESSOR TYPE) (#37188-).....0163 01- 28

02[CYLINDER BLOCK]
CYLINDER BLOCK.....0201 02- 2
FRONT COVER AND GEAR.....0205 02- 6
OIL PAN.....0211 02- 8
FLYWHEEL AND FLYWHEEL HOUSING.....0221 02- 10
CRANKSHAFT.....0231 02- 12
PISTON AND CONNECTING ROD.....0235 02- 16
CAMSHAFT AND TAPPET.....0241 02- 20

03[LUBRICATING OIL SYSTEM]
LUBRICATING OIL PUMP AND SUCTION PIPE.....0301 03- 2

FIG NO. PAGE
LUBRICATING OIL FILTER.....0311 03- 4
TURBOCHARGER LUBRICATING OIL PIPING.....0325 03- 6
LUBRICATING OIL COOLER(#22170-41622).....0331 03- 8
LUBRICATING OIL COOLER(#41623-).....0331A 03- 10

04[FUEL SYSTEM]
FUEL INJECTION PUMP AND PIPING.....0401 04- 2
FUEL INJECTION PUMP AND PIPING (WITH AIR COMPRESSOR TYPE).....0402 04- 4
FUEL INJECTION PUMP AND PIPING (WITH AIR COMPRESSOR AND STOP MOTOR TYPE)(#92607-).....0403 04- 6
ENGINE STOP MOTOR AND MOUNTING (WITHOUT AIR COMPRESSOR TYPE)(#92607-).....0405 04- 8
ENGINE STOP MOTOR AND MOUNTING (WITH AIR COMPRESSOR TYPE)(#92607-).....0406 04- 10
FUEL FILTER AND PIPING.....0411 04- 12
FUEL FILTER AND PIPING (WITH AIR COMPRESSOR TYPE).....0412 04- 14
WATER SEPARATOR.....0415 04- 16
FUEL NOZZLE AND SPILL PIPE.....0421 04- 18
FUEL INJECTION PUMP (PUMP) (1/2).....0451 04- 22
FUEL INJECTION PUMP (PUMP) (2/2).....0452 04- 26
FUEL INJECTION PUMP (PUMP) (1/2) (WITH ENGINE STOP MOTOR TYPE)(#92607-).....0453 04- 30
FUEL INJECTION PUMP (PUMP) (2/2) (WITH ENGINE STOP MOTOR TYPE)(#92607-).....0454 04- 34
FUEL INJECTION PUMP (PUMP) (1/2) (WITH AIR COMPRESSOR TYPE).....0455 04- 38
FUEL INJECTION PUMP (PUMP) (2/2) (WITH AIR COMPRESSOR TYPE).....0456 04- 42
FUEL INJECTION PUMP (PUMP) (1/2) (WITH AIR COMPRESSOR AND ENGINE STOP MOTOR TYPE)(#92607-).....0457 04- 46

	FIG NO.	PAGE
FUEL INJECTION PUMP (PUMP) (2/2) (WITH AIR COMPRESSOR AND ENGINE STOP MOTOR TYPE)(#92607-)	0458	04- 50
FUEL INJECTION PUMP (GOVERNOR) (1/2)	0461	04- 54
FUEL INJECTION PUMP (GOVERNOR) (2/2)	0462	04- 56
FUEL INJECTION PUMP (GOVERNOR) (1/2) (WITH ENGINE STOP MOTOR TYPE) (#92607-)	0463	04- 58
FUEL INJECTION PUMP (GOVERNOR) (2/2) (WITH ENGINE STOP MOTOR TYPE) (#92607-)	0464	04- 60
FUEL INJECTION PUMP (GOVERNOR) (1/2) (WITH AIR COMPRESSOR TYPE)	0465	04- 64
FUEL INJECTION PUMP (GOVERNOR) (2/2) (WITH AIR COMPRESSOR TYPE)	0466	04- 66
FUEL INJECTION PUMP (GOVERNOR) (1/2) (WITH AIR COMPRESSOR AND ENGINE STOP MOTOR TYPE)(#92607-)	0467	04- 68
FUEL INJECTION PUMP (GOVERNOR) (2/2) (WITH AIR COMPRESSOR AND ENGINE STOP MOTOR TYPE)(#92607-)	0468	04- 70
FUEL INJECTION PUMP (COUPLING) (WITH AIR COMPRESSOR TYPE)	0471	04- 74
FUEL INJECTION PUMP (COUPLING) (WITH AIR COMPRESSOR AND ENGINE STOP MOTOR TYPE)(#92607-)	0472	04- 76
FUEL INJECTION PUMP (FEED PUMP)	0481	04- 78
FUEL INJECTION PUMP (FEED PUMP) (WITH ENGINE STOP MOTOR TYPE)(#92607-)	0482	04- 80
FUEL INJECTION PUMP (FEED PUMP) (WITH AIR COMPRESSOR TYPE)	0483	04- 82
FUEL INJECTION PUMP (FEED PUMP) (WITH AIR COMPRESSOR AND ENGINE STOP MOTOR TYPE)(#92607-)	0484	04- 84

05[COOLING SYSTEM]

	FIG NO.	PAGE
WATER PUMP AND COOLING FAN.	0501	05- 2
CORROSION RESISTOR AND PIPING.	0521	05- 6

06[ELECTRICAL SYSTEM]

ALTERNATOR AND MOUNTING (25A)	0601	06- 2
ALTERNATOR AND MOUNTING (50A)	0602	06- 4
ALTERNATOR AND MOUNTING (25A) (SANDY AND DUSTY SPEC.)	0603	06- 6
ALTERNATOR AND MOUNTING (35A)	0604	06- 8
STARTING MOTOR AND MOUNTING (5.5KW)	0621	06- 10
ALTERNATOR (25A)	0641	06- 12
ALTERNATOR (50A)	0642	06- 14
ALTERNATOR (25A) (SANDY AND DUSTY SPEC.)	0643	06- 16
ALTERNATOR (35A)	0644	06- 18
STARTING MOTOR (5.5KW)	0661	06- 20

07[ACCESSORY]

AIR COMPRESSOR AND PIPING.	0701	07- 2
AIR COMPRESSOR.	0711	07- 4

09[ENGINE KIT]

GASKET KIT.	0991	09- 2
GASKET KIT (WITH AIR COMPRESSOR TYPE).	0992	09- 6

10[ENGINE RELATED PARTS AND ELECTRICAL SYSTEM]

ENGINE AND TRANSMISSION MOUTING PARTS.	1001	10- 2
AIR CLEANER RELATED PARTS.	1011	10- 4
RADIATOR(#10052-)	1201A	10- 6
RADIATOR PIPING(#10052-)	1203A	10- 8
FUEL AND HYDRAULIC TANK.	1301	10- 10
FUEL PIPING.	1303	10- 12

	FIG NO.	PAGE
FUEL AND HYDRAULIC TANK (WITH WATER SEPARATOR)	1305	10- 14
FUEL PIPING (WITH WATER SEPARATOR)	1307	10- 16
WATER SEPARATOR	1309	10- 18
BATTERY	1401	10- 20
INSTRUMENT PANEL (CENTER)	1411	10- 22
INSTRUMENT PANEL (SIDE)	1413	10- 24
ELECTRICAL SYSTEM (CENTER)	1501	10- 26
ELECTRICAL SYSTEM (BATTERY LINE)	1503	10- 28
ELECTRICAL SYSTEM (REAR)	1505	10- 30
ENGINE STOP MOTOR(#10242-)	1507	10- 32
HEAD LAMP	1801	10- 34
FRONT WORK LAMP	1803	10- 36
COMBINATION LAMP	1805	10- 38
BACK-UP LAMP	1831	10- 40
BACK-UP ALARM(#.-)	1833A	10- 42
REAR WORK LAMP	1835	10- 44
INSPECTION LAMP	1851	10- 46
CAUTION LAMP	1853	10- 48
SPEED METER	1855	10- 50

20[POWER TRAIN]

JOINT	2001	20- 2
DRIVE SHAFT	2051	20- 4
TRANSMISSION (POWER TAKE OFF)(#10774-)	2401A	20- 6
TRANSMISSION (TRANSMISSION CASE)(#10774-)	2411A	20- 10
TRANSMISSION (TRANSFAR CASE)(#10774-)	2412A	20- 14
TRANSMISSION (INPUT SHAFT AND REVERSE CLUTCH)(#10774-)	2415A	20- 18
TRANSMISSION (FORWARD AND 3RD CLUTCH)(#10774-)	2416A	20- 22
TRANSMISSION (1ST AND 2ND CLUTCH)(#10774-)	2417A	20- 26
TRANSMISSION (LOW/HIGH CLUTCH AND OUTPUT SHAFT) (#10774-)	2418A	20- 30
TRANSMISSION (OUTPUT SHAFT)(#10774-)	2421A	20- 34
TRANSMISSION (CONTROL VALVE COVER)(#10774-)	2422A	20- 36
TRANSMISSION (CONTROL VALVE) (1/2)(#10774-)	2451A	20- 40
TRANSMISSION (CONTROL VALVE) (2/2)(#10774-)	2452A	20- 44
PARKING BRAKE(#10774-)	2481A	20- 48
HYDRAULIC PUMP (FOR TRANSMISSION)	2501	20- 50
TRANSMISSION OIL FILTER	2511	20- 52
TRANSMISSION PIPING	2551	20- 54
FINAL DRIVE CASE(#10242-)	2601A	20- 58
FINAL DRIVE GEAR	2605	20- 62
FINAL DRIVE CASE (NO-SPIN DIFFERENTIAL TYPE) (CAGE SECTION SEAL TYPE)(#.-)	2611A	20- 66
FINAL DRIVE GEAR (NO-SPIN DIFFERENTIAL TYPE)	2615	20- 70
TANDEM DRIVE CASE	2651	20- 74
TANDEM DRIVE GEAR AND CHAIN(#10052-)	2653A	20- 76
STEERING VALVE (1/2)	2711	20- 78
STEERING VALVE (2/2)	2713	20- 80
STEERING CYLINDER	2721	20- 84
LEANING CYLINDER	2725	20- 86
ARTICULATE CYLINDER(#10084-)	2727A	20- 88
STEERING PIPING (1/2)	2751	20- 90
STEERING PIPING (2/2)	2753	20- 92
FRONT AXLE (1/3)	2801	20- 94
FRONT AXLE (2/3)	2803	20- 96
FRONT AXLE (3/3)	2805	20- 98

30[WHEELS]

WHEEL AND TUBE TIRE	3001	30- 2
WHEEL BRAKE	3101	30- 4

40[CONTROL SYSTEM]	FIG NO.	PAGE
FUEL CONTROL LEVER(#10242-)	4001A	40- 2
ACCELERATOR PEDAL(#10052-)	4011A	40- 4
CONSOLE BOX (TRANSMISSION CONTROL)	4101	40- 8
TRANSMISSION CONTROL LEVER(#10050-)	4103A	40- 10
INCHING PEDAL	4111	40- 14
PARKING BRAKE CONTROL LEVER	4121	40- 16
STEERING WHEEL(#10050-)	4201A	40- 18
BRAKE PEDAL(#10243-)	4211A	40- 20
BRAKE PIPING	4221	40- 24
BOOSTER AND MASTER CYLINDER	4225	40- 26
CONSOLE BOX	4301	40- 30
HYDRAULIC CONTROL LEVER	4311	40- 34
HYDRAULIC CONTROL LEVER, L.H. (FOR POWER TILT)	4313	40- 38
HYDRAULIC CONTROL LEVER, R.H. (FOR FRONT BLADE)	4315	40- 40
HYDRAULIC CONTROL LEVER, R.H. (FOR SCARIFIER)	4317	40- 42
BANK PIN	4351	40- 44

50[FRAME AND GUARD]		
FRONT FRAME	5001	50- 2
REAR FRAME	5005	50- 4
RADIATOR GUARD AND ENGINE HOOD	5101	50- 6
OPERATOR'S COMPARTMENT	5201	50- 8
OPERATOR'S SEAT	5301	50- 10
OPERATOR'S SEAT	5301A	50- 12
PUSH PLATE	5401	50- 14
OPERATOR'S CAB (C-TYPE) (1/5)	5421	50- 16
OPERATOR'S CAB (C-TYPE) (2/5)	5423	50- 18
OPERATOR'S CAB (C-TYPE) (3/5)	5425	50- 22
OPERATOR'S CAB (C-TYPE) (4/5)	5427	50- 24
OPERATOR'S CAB (C-TYPE) (5/5)	5429	50- 26
CANOPY(#.-)	5511A	50- 28

60[HYDRAULIC SYSTEM]		
HYDRAULIC PUMP (FOR WORK EQUIPMENT AND STEERING)	6001	60- 2
HYDRAULIC MOTOR	6051	60- 4
SWIVEL JOINT	6071	60- 6
SWIVEL JOINT (FOR POWER TILT)	6075	60- 8
HYDRAULIC FILTER(#10052-)	6111A	60- 10
HYDRAULIC CONTROL VALVE, L.H. (3-SPOOL)	6201	60- 12
HYDRAULIC CONTROL VALVE, R.H. (4-SPOOL)	6205	60- 16
HYDRAULIC CONTROL VALVE, L.H. (4-SPOOL) (FOR POWER TILT)	6207	60- 18
HYDRAULIC CONTROL VALVE, R.H. (5-SPOOL) (FOR SCARIFIER AND POWER TILT)	6209	60- 22
FLOW DIVIDER VALVE	6235	60- 24
PILOT CHECK VALVE (FOR BLADE LIFT, L.H.)	6241	60- 26
PILOT CHECK VALVE (FOR BLADE LIFT, R.H.)	6243	60- 28
PILOT CHECK VALVE (FOR ARTICULATE)	6245	60- 30
PILOT CHECK VALVE (FOR LEANING AND DRAWBAR SHIFT)	6247	60- 32
PILOT CHECK VALVE (FOR FRONT BLADE)	6251	60- 34
PILOT CHECK VALVE (FOR POWER TILT)	6253	60- 36
PILOT CHECK VALVE (FOR SCARIFIER)	6255	60- 38
DRAWBAR SHIFT CYLINDER	6301	60- 40
BLADE LIFT CYLINDER	6303	60- 42
BLADE SIDE SHIFT CYLINDER(#10016-)	6305A	60- 44
FRONT BLADE CYLINDER	6311	60- 46
POWER TILT CYLINDER(#.-)	6313A	60- 48
SCARIFIER CYLINDER	6315	60- 50
HYDRAULIC PIPING (TANK TO PUMP TO CONTROL VALVE)	6401	60- 52
HYDRAULIC PIPING (CONTROL VALVE TO TANK)	6403	60- 56
HYDRAULIC PIPING (LEANING CYLINDER LINE)	6421	60- 58

	FIG NO.	PAGE
HYDRAULIC PIPING (ARTICULATE CYLINDER LINE)(#10084-)	6423A	60- 60
HYDRAULIC PIPING (DRAWBAR SIDE SHIFT CYLINDER LINE)	6431	60- 62
HYDRAULIC PIPING (BLADE LIFT CYLINDER LINE)(#10031-)	6435A	60- 64
HYDRAULIC PIPING (BLADE SIDE SHIFT CYLINDER LINE)	6437	60- 66
HYDRAULIC PIPING (CIRCLE REVOLUTION MOTOR LINE)	6441	60- 68
HYDRAULIC PIPING (FRONT BLADE CYLINDER LINE)	6451	60- 70
HYDRAULIC PIPING (POWER TILT CYLINDER LINE) (1/3)	6461	60- 74
HYDRAULIC PIPING (POWER TILT CYLINDER LINE) (2/3)	6463	60- 76
HYDRAULIC PIPING (POWER TILT CYLINDER LINE) (3/3)	6465	60- 78
HYDRAULIC PIPING (SCARIFIER CYLINDER LINE) (1/2)	6471	60- 80
HYDRAULIC PIPING (SCARIFIER CYLINDER LINE) (2/2)	6473	60- 82

70[WORK EQUIPMENT]

DRAWBAR	7001	70- 2
BLADE AND CIRCLE SUPPORT	7011	70- 4
BLADE AND CIRCLE SUPPORT (FOR POWER TILT)	7013	70- 6
BLADE LIFTER	7021	70- 10
CIRCLE REVERSE GEAR (1/2)	7031	70- 12
CIRCLE REVERSE GEAR (2/2)	7033	70- 14
FRONT BLADE	7101	70- 16
SCARIFIER LIFTER	7201	70- 18
SCARIFIER	7203	70- 20

90[MARK PLATE、TOOL AND KIT]

MARKS AND PLATES(#10249-)	9801A	90- 2
TOOL	9901	90- 4
TABLES	9905	90- 6
SERVICE KIT	9991	90- 8

ZZ[NUMERICAL INDEX] ZZ- 1

CYLINDER HEAD

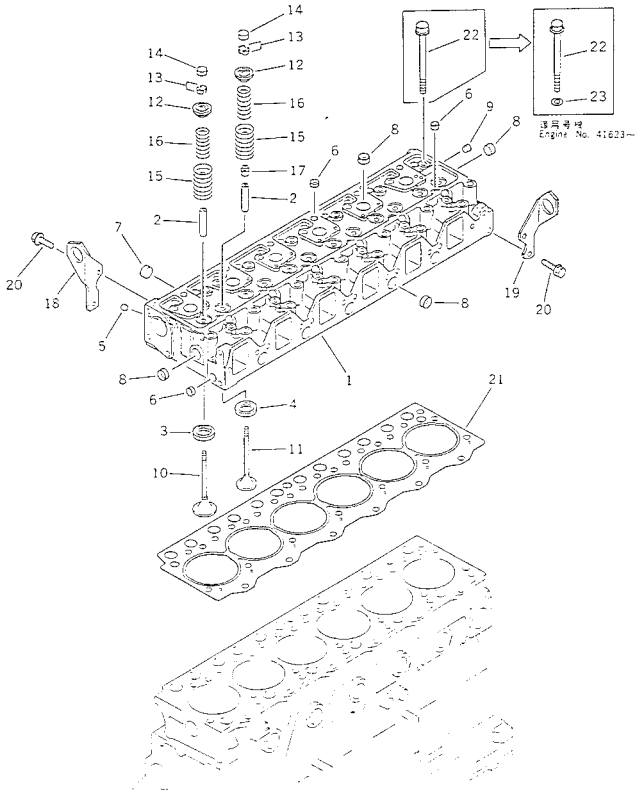

INDEX	PART NO.	DESCRIPTION	Q'TY	SERIAL NO.
	6207-11-1100	CYLINDER HEAD ASS'Y,VALVE LESS.	1	22170-
1	☆	.HEAD,CYLINDER.	1	22170-
2	6204-19-1310	.GUIDE,VALVE.	12	22170-
3	6207-11-1430	.SEAT,INTAKE VALVE.(STD)	6	22170-
	6207-19-1430	.SEAT, 0.25MM,INTAKE VALVE.(OS)	6	22170-
	6207-18-1430	.SEAT, 0.50MM,INTAKE VALVE.(OS)	6	22170-
4	6207-11-1440	.SEAT,EXHAUST VALVE.(STD)	6	22170-
	6207-19-1440	.SEAT, 0.25MM,EXHAUST VALVE.(OS)	6	22170-
	6207-18-1440	.SEAT, 0.50MM,EXHAUST VALVE.(OS)	6	22170-
5	07046-41008	.PLUG.	6	22170-
6	07046-41810	.PLUG.	13	22170-
7	07046-42216	.PLUG.	5	22170-
8	07046-42516	.PLUG.	15	42401-
	07046-42516	.PLUG.	16	22170-42400
9	02720-40104	.PLUG.	1	22170-
10	6207-41-4110	VALVE,INTAKE.	6	22170-
11	6204-41-4210	VALVE,EXHAUST.	6	22170-
12	6204-41-4510	SEAT,SPRING.	12	22170-
13	6204-41-4520	COTTER.	24	22170-
14	6204-41-4550	CAP,VALVE.	12	22170-
15	6204-41-4410	SPRING,OUTER.	12	22170-
16	6204-41-4420	SPRING,INNER.	12	22170-
17	6204-41-4540	SEAL,VALVE.(K1)	6	22170-
18	6206-11-1930	HANGER,FRONT.	1	22170-
19	6206-11-1920	HANGER,REAR.	1	22170-
20	01435-01020	BOLT.	4	22170-
21	6207-11-1822	GASKET,HEAD.(K1)	1	41623-
	(☒6207-11-1821)	GASKET,HEAD.(K1)	1	(41623-78650)
	◆6207-11-1820	GASKET,HEAD.(K1)	1	38221-41622
	□6207-11-1810	GASKET,HEAD.(K1)	1	22170-38220
22	6204-13-1610	BOLT,HEAD.	25	41623-
	■6142-11-1611	BOLT,HEAD.	25	22170-41622
		(6204-13-1610,01643-31232).		
23	01643-31232	WASHER.	25	41623-

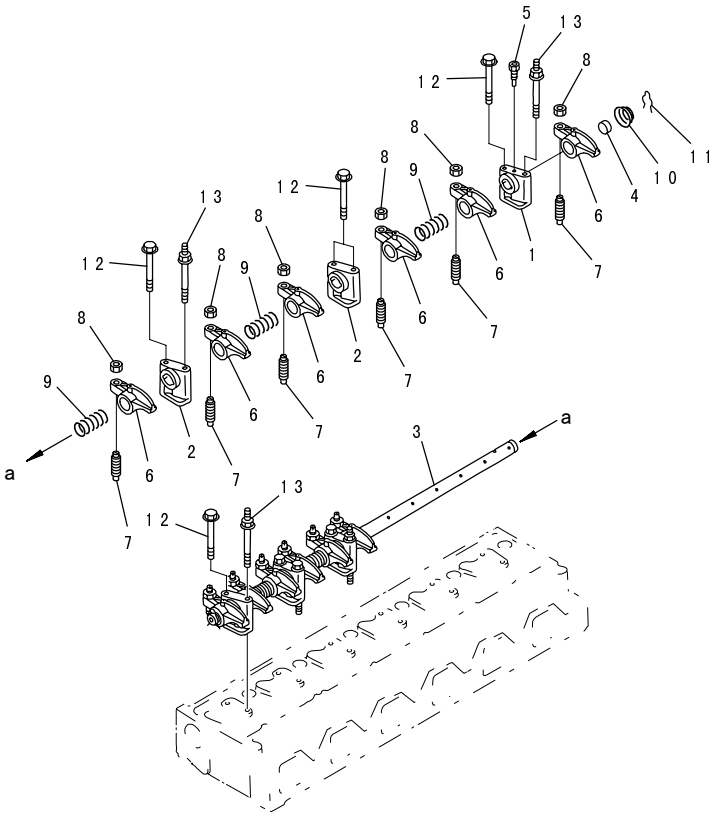

INDEX	PART NO.	DESCRIPTION	Q'TY	SERIAL NO.
1	6204-41-5110	BRACKET	1	22170-
2	6204-41-5120	BRACKET	5	22170-
	6206-41-5201	SHAFT ASS'Y	1	42401-
	■6206-41-5200	SHAFT ASS'Y	1	22170-42400
		(6206-41-5201,6221-41-5310)		
3	☆	.SHAFT	1	42401-
	☆	.SHAFT	1	22170-42400
4	6221-41-5540	.PLUG	2	42401-
	6142-42-5550	.PLUG	2	22170-42400
5	6221-41-5310	BOLT	1	42401-
	01010-30612	BOLT	1	22170-42400
6	6202-43-5410	ARM,ROCKER	12	42401-
	◆6204-41-5410	ARM,ROCKER	12	22170-42400
7	6221-41-5410	SCREW,ADJUST	12	42401-
	◆6204-41-5420	SCREW,ADJUST	12	22170-42400
8	6221-41-5420	NUT	12	42401-
	◆6130-41-5430	NUT	12	22170-42400
9	6202-43-5320	SPRING	5	42401-
	◆6142-42-5320	SPRING	5	22170-42400
10	6221-41-5520	SPRING	2	42401-
	◆6136-41-5320	SPRING	2	22170-42400
11	6136-41-5330	CLIP	2	22170-
12	01435-00865	BOLT	8	22170-
13	6204-41-5710	BOLT	4	22170-

FIG.0115 CYLINDER HEAD COVER

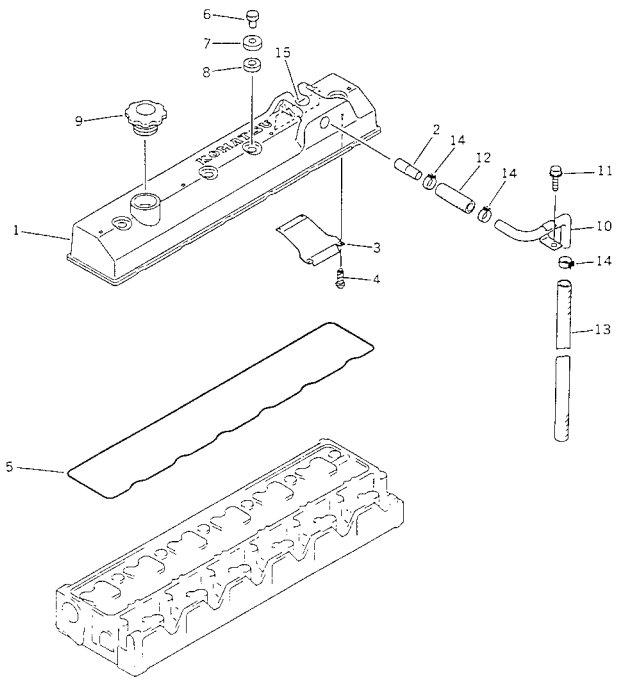

FIG NO. : 0115

INDEX	PART NO.	DESCRIPTION	Q'TY	SERIAL NO.
	6207-11-8100	HEAD COVER ASS'Y	1	22170-
1	6207-11-8110	.COVER,HEAD	1	22170-
2	6207-11-8170	.TUBE	1	22170-
3	6207-11-8140	.PLATE	1	22170-
4	04418-02550	.SCREW	4	22170-
5	6206-11-8810	O-RING (K1)	1	22170-
6	6136-11-8120	NUT	4	22170-
7	6136-11-8130	WASHER	4	22170-
8	6136-11-8142	PACKING (K1)	4	22170-
9	6130-12-8610	CAP	1	22170-
10	6207-11-8910	TUBE,BREATHER	1	22170-
11	01435-21020	BOLT	1	22170-
12	07286-01606	HOSE	1	22170-
13	07286-01670	HOSE	1	22170-
14	07285-00180	CLIP	3	22170-
15	6204-81-2210	PLATE, NAME,(ENGLISH) (LIMITED SUPPLY)	1	30752-
	6204-81-2240	PLATE, NAME,(SPANISH) (LIMITED SUPPLY)	1	22170-
	6204-81-2270	PLATE, NAME. (INDONESIAN) (LIMITED SUPPLY)	1	22170-
	6204-81-2290	PLATE, NAME,(FRENCH) (LIMITED SUPPLY)	1	22170-
	6204-81-2340	PLATE, NAME,(CHINESE) (LIMITED SUPPLY)	1	22170-
	6204-81-2370	PLATE, NAME,(ARABIC) (LIMITED SUPPLY)	1	22170-

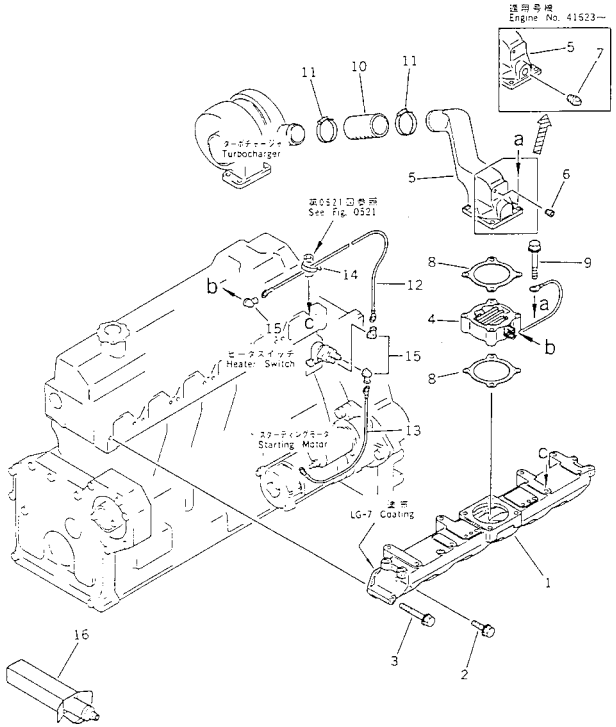

INDEX	PART NO.	DESCRIPTION	Q'TY	SERIAL NO.
1	6206-11-4110	MANIFOLD,AIR INTAKE.	1	22170-43661
2	01435-21030	BOLT.	11	22170-43661
3	01435-21085	BOLT.	1	22170-43661
4	600-815-2341	HEATER,RIBBON.	1	22170-★
5	6207-11-4380	CONNECTOR,AIR.	1	41623-★
	■6207-11-4320	CONNECTOR,AIR.	1	22170-41622
		(6207-11-4380,07042-70415)		
	6207-11-4380	CONNECTOR,AIR (WITH AIR COMPRESSOR TYPE)	1	22170-★
6	07043-50108	PLUG.	1	22170-★
7	07042-70415	PLUG,(WITHOUT AIR COMPRESSOR TYPE)	1	41623-★
8	6136-11-4820	GASKET.(K1)	2	22170-★
9	01435-21070	BOLT.	4	22170-★
10	6207-11-4370	HOSE.	1	22170-★
11	07281-00709	CLAMP.	2	22170-★
12	6206-81-4720	WIRE, 480MM.	1	22170-★
13	6206-81-4730	WIRE, 380MM.	1	22170-★
14	08034-00519	BAND.	1	22170-★
15	08038-00519	CAP.	3	22170-★
16	09920-00150	LIQUID GASKET,LG-7, 150G.	AR	22170-★

FIG.0131A AIR INTAKE MANIFOLD AND CONNECTION(#43662-)

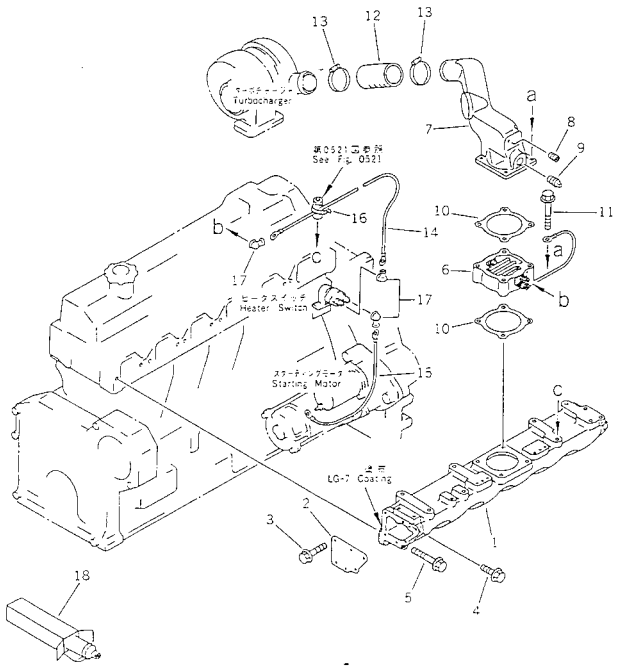

FIG NO. : 0131A

INDEX	PART NO.	DESCRIPTION	Q'TY	SERIAL NO.
	6206-11-4170	INTAKE MANIFOLD A.	1	43662-
1	6206-11-4140	.MANIFOLD,AIR INTAKE.	1	43662-
2	6206-11-4150	.PLATE.	2	43662-
3	6206-11-4160	.BOLT.	12	43662-
4	01435-21030	BOLT.	10	43662-
5	01435-21085	BOLT.	2	43662-
6	600-815-2341	HEATER,RIBBON.	1	22170-
7	6207-11-4380	CONNECTOR,AIR.	1	41623-
8	07043-50108	PLUG.	1	22170-
9	07042-70415	PLUG,(WITHOUT AIR COMPRESSOR TYPE)	1	41623-
10	6136-11-4820	GASKET.(K1)	2	22170-
11	01435-21070	BOLT.	4	22170-
12	6207-11-4370	HOSE.	1	22170-
13	07281-00709	CLAMP.	2	22170-
14	6206-81-4720	WIRE, 480MM.	1	22170-
15	6206-81-4730	WIRE, 380MM.	1	22170-
16	08034-00519	BAND.	1	22170-
17	08038-00519	CAP.	3	22170-
18	09920-00150	LIQUID GASKET,LG-7, 150G.	AR	22170-

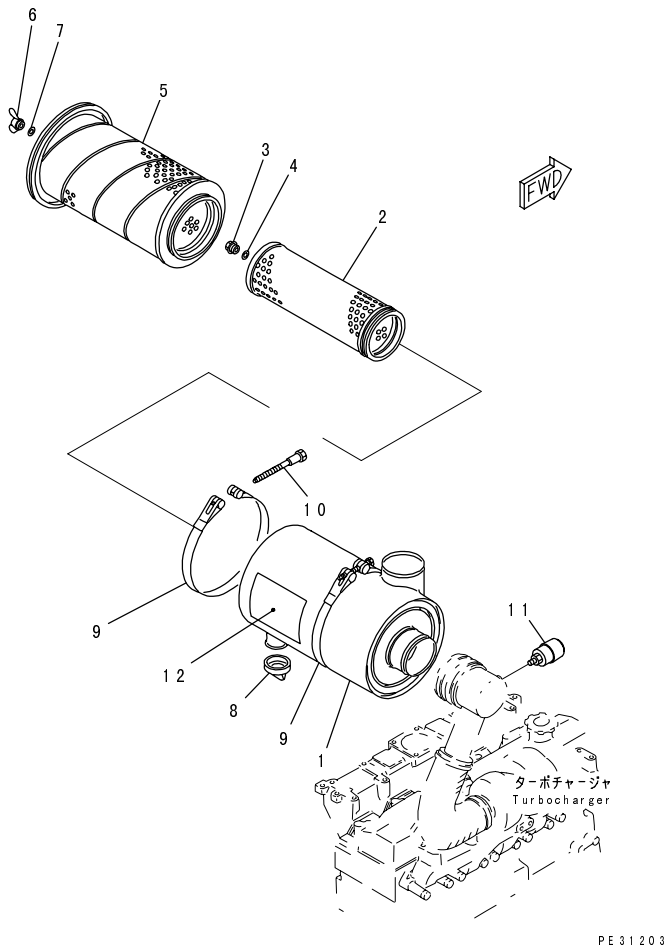

INDEX	PART NO.	DESCRIPTION	Q'TY	SERIAL NO.
1	600-181-6810	BODY	1	22170-
	600-181-6740	ELEMENT ASS'Y	1	22170-
2	☆	.ELEMENT,INNER	1	22170-
3	600-181-9671	.NUT	1	22170-
4	600-181-6750	.WASHER,SEAL	1	22170-
	600-181-6820	.ELEMENT ASS'Y,OUTER	1	22170-
5	☆	..ELEMENT,OUTER	1	22170-
6	600-181-6850	..NUT,WING	1	22170-
7	600-181-6840	..GASKET,SEAL	1	22170-
8	600-181-1370	VALVE	1	22170-
9	6131-11-4520	BAND ASS'Y	2	22170-
	6643-11-4620	.PIN	1	22170-
	6643-11-4630	.PIN, WITH THREAD	1	22170-
10	6643-11-4641	BOLT	2	22170-
11	08670-02001	INDICATOR,DUST	1	72907-
	□08670-01635	INDICATOR,DUST (JAPANESE-ENGLISH)	1	37188-72906
	□08670-00635	INDICATOR,DUST (JAPANESE-ENGLISH)	1	22170-37187
12	09637-00161	PLATE, INSTRUCTION,(JAPANESE-ENGLISH)	1	22170-
	09637-02161	PLATE, INSTRUCTION,(ARABIC-ENGLISH)	1	22170-
	09637-05161	PLATE, INSTRUCTION,(INDONESIAN-ENGLISH)	1	22170-
	09637-30161	PLATE, INSTRUCTION,(ENGLISH)	1	22170-
	09637-30262	PLATE, INSTRUCTION,(FRENCH-ENGLISH)	1	22170-
	09637-70161	PLATE, INSTRUCTION,(SPANISH-ENGLISH)	1	22170-
	09637-90261	PLATE, INSTRUCTION,(CHINESE)	1	22170-

FIG.0142 AIR CLEANER (WITH EXTENSION TYPE)(#37188-)

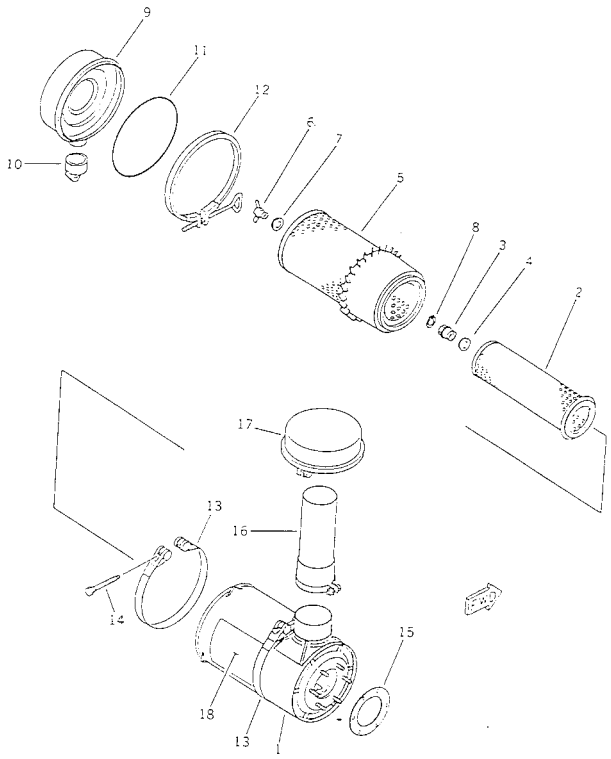

FIG NO. : 0142

INDEX	PART NO.	DESCRIPTION	Q'TY	SERIAL NO.
	6207-81-7600	AIR CLEANER ASS'Y.	1	37188-
1	6207-81-7610	.BODY.	1	37188-
	6131-82-7011	.ELEMENT ASS'Y.	1	37188-
2	☆	..ELEMENT,INNER.	1	37188-
3	600-181-9631	..NUT.	1	37188-
4	600-181-7511	..WASHER,SEAL.	1	37188-
	600-181-8300	..ELEMENT ASS'Y,OUTER.	1	37188-
5	☆	...ELEMENT,OUTER.	1	37188-
6	600-181-8640	...NUT,WING.	1	37188-
7	600-181-7511	...WASHER,SEAL.	1	37188-
8	04064-01510	...RING,SNAP.	1	37188-
9	600-181-8590	.PAN,DUST.	1	37188-
10	600-181-2480	.VALVE.	1	37188-
11	600-181-8490	.O-RING.	1	37188-
12	600-181-8580	.CLAMP.	1	37188-
13	6131-11-4520	BAND ASS'Y.	2	37188-
	6643-11-4620	.PIN.	1	37188-
	6643-11-4630	.PIN, WITH THREAD.	1	37188-
14	6643-11-4641	BOLT.	2	37188-
15	6110-11-4430	GASKET.	1	37188-
16	6207-81-7370	EXTENSION.	1	37188-
17	600-181-8160	CAP.	1	37188-
18	09637-00161	PLATE, INSTRUCTION,(JAPANESE-ENGLISH)	1	37188-
19	08670-02001	INDICATOR,DUST (NOT SHOWN)	1	37188-

FIG.0151 EXHAUST MANIFOLD AND TURBOCHARGER

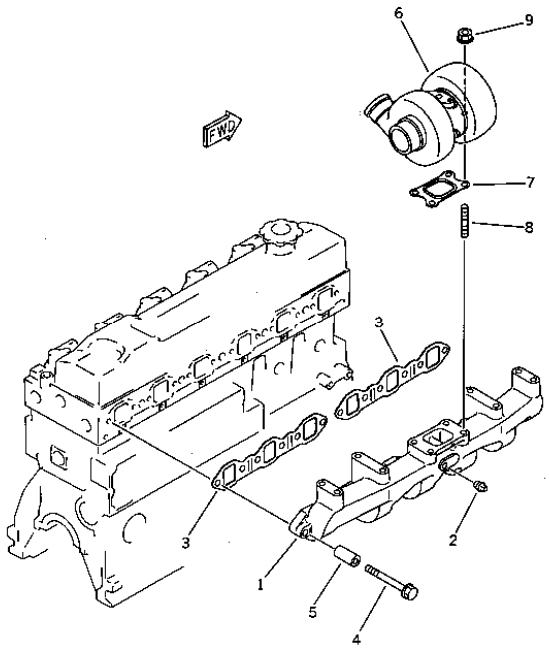

FIG NO. : 0151

INDEX	PART NO.	DESCRIPTION	Q'TY	SERIAL NO.
1	6207-11-5170	MANIFOLD,EXHAUST	1	92607-
	◆6207-11-5120	MANIFOLD,EXHAUST	1	22170-92606
2	07042-20108	PLUG	2	22170-
3	6207-11-5810	GASKET (K1)	2	22170-
4	01435-01090	BOLT	12	22170-
5	6134-11-5120	SPACER	12	22170-
6	(6207-81-8130)	TURBOCHARGER ASS'Y,(SEE FIG.0155)	1	22170-
7	6207-11-5580	GASKET (K1)	1	22170-
8	01140-61025	STUD	4	22170-
9	6142-12-5850	NUT	4	22170-

FIG.0155 TURBOCHARGER

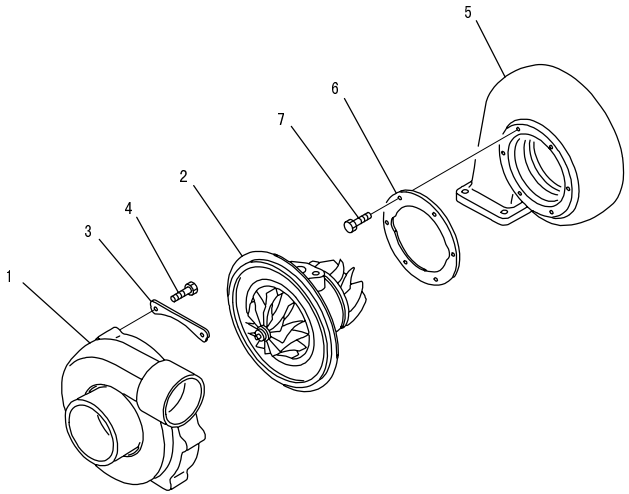

PE3T006

FIG NO. : 0155

INDEX	PART NO.	DESCRIPTION	Q'TY	SERIAL NO.
	6207-81-8130	TURBOCHARGER ASS'Y,(TA31GH).....	1	22170-
1	GA409115-0051	.HOUSING,COMPRESSOR.....	1	22170-
2	GA409172-5035	.ROTOR ASS'Y,HOUSING.....	1	22170-
3	GA409148-0000	.PLATE,CLAMP.....	3	22170-
4	GA400784-0810	.BOLT.....	6	22170-
5	GA409395-0063	.HOUSING,TURBINE.....	1	22170-
6	GA409188-0000	.PLATE,CLAMP.....	1	22170-
7	GA400677-0816	.BOLT.....	6	22170-

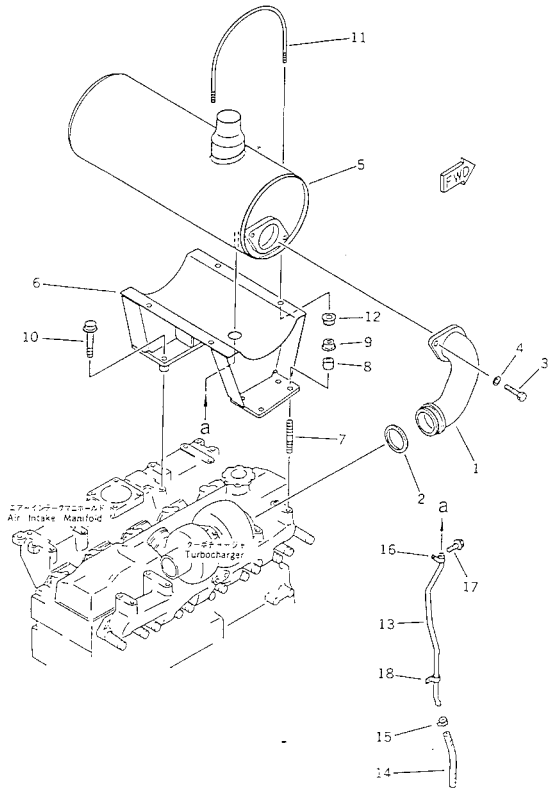

INDEX	PART NO.	DESCRIPTION	Q'TY	SERIAL NO.
1	6207-11-5610	PIPE	1	22170-★
2	6207-11-5380	RING,SEAL	1	22170-★
3	01020-00820	BOLT	2	22170-★
4	01641-20812	WASHER	2	22170-★
5	6206-11-5240	MUFFLER	1	22170-★
6	6207-11-5511	BRACKET	1	22170-26224
7	01140-61050	STUD	2	22170-26224
8	6631-11-6390	SPACER	2	22170-26224
9	6142-12-5850	NUT	2	22170-26224
10	01435-21045	BOLT	2	22170-★
11	6206-11-5970	U-BOLT	2	22170-★
12	01584-01008	NUT	4	22170-★
13	6207-11-5440	TUBE	1	22170-★
14	07260-20950	HOSE	1	22170-★
15	07281-00167	CLAMP	1	22170-★
16	281-03-12620	CLAMP	1	22170-★
17	01435-20812	BOLT	1	22170-★
18	6112-53-7760	CLAMP	1	22170-★

FIG.0161A MUFFLER AND MOUNTING(#26225-37187)

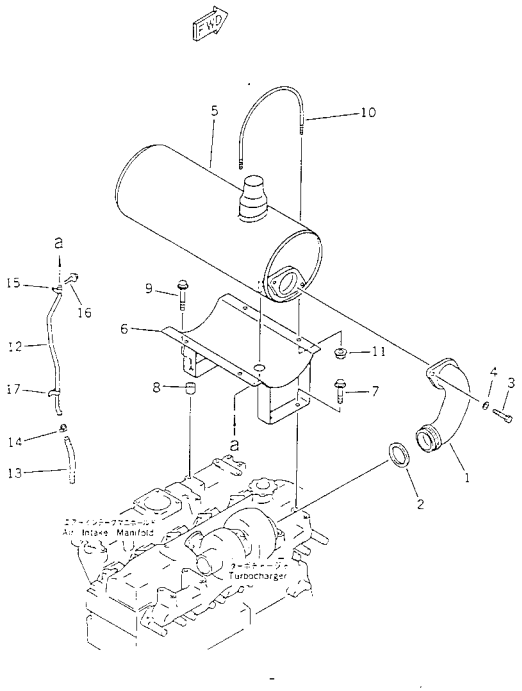

FIG NO. : 0161A

INDEX	PART NO.	DESCRIPTION	Q'TY	SERIAL NO.
1	6207-11-5610	PIPE	1	22170-37187
2	6207-11-5380	RING,SEAL	1	22170-★
3	01020-00820	BOLT	2	22170-37187
4	01641-20812	WASHER	2	22170-37187
5	6206-11-5240	MUFFLER	1	22170-37187
6	6207-11-5512	BRACKET	1	26225-37187
7	01435-01020	BOLT	2	26225-★
8	6144-81-6680	SPACER	2	26225-★
9	01435-21045	BOLT	2	22170-★
10	6206-11-5970	U-BOLT	2	22170-37187
11	01584-01008	NUT	4	22170-37187
12	6207-11-5440	TUBE	1	22170-37187
13	07260-20950	HOSE	1	22170-37187
14	07281-00167	CLAMP	1	22170-37187
15	281-03-12620	CLAMP	1	22170-37187
16	01435-20812	BOLT	1	22170-37187
17	6112-53-7760	CLAMP	1	22170-37187

FIG.0161B MUFFLER AND MOUNTING(#37188-)

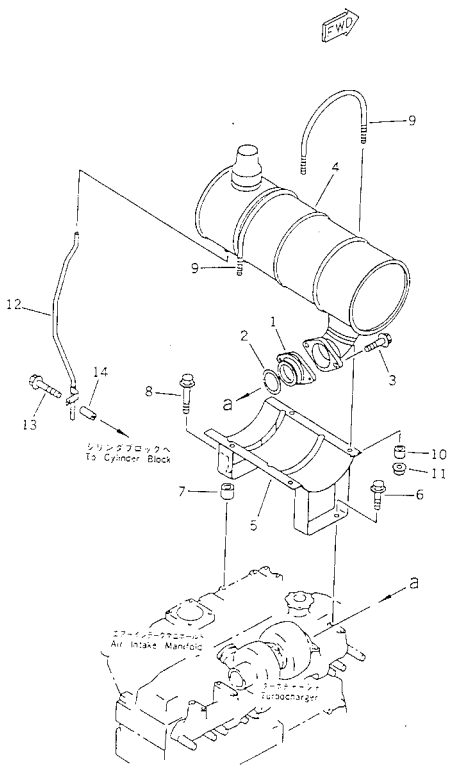

FIG NO. : 0161B

INDEX	PART NO.	DESCRIPTION	Q'TY	SERIAL NO.
1	6207-11-5640	CONNECTOR	1	37188-
2	6207-11-5380	RING,SEAL	1	22170-
3	01435-20825	BOLT	2	37188-
4	6207-11-5270	MUFFLER	1	37188-
5	6207-11-5690	BRACKET	1	37188-
6	01435-01020	BOLT	2	26225-
7	6144-81-6680	SPACER	2	26225-
8	01435-21045	BOLT	2	22170-
9	6206-11-5980	U-BOLT	2	37188-
10	6141-64-2560	SPACER	4	37188-
11	01584-00806	NUT	4	37188-
12	6206-11-5421	TUBE	1	92607-
	■6206-11-5420	TUBE (6206-11-5421,6134-11-5120, 01435-01065)	1	84806-92606
13	6134-11-5120	SPACER	1	92607-
14	01435-01065	BOLT	1	92607-

FIG.0162 MUFFLER AND MOUNTING (WITH RAIN CAP TYPE)(#37188-)

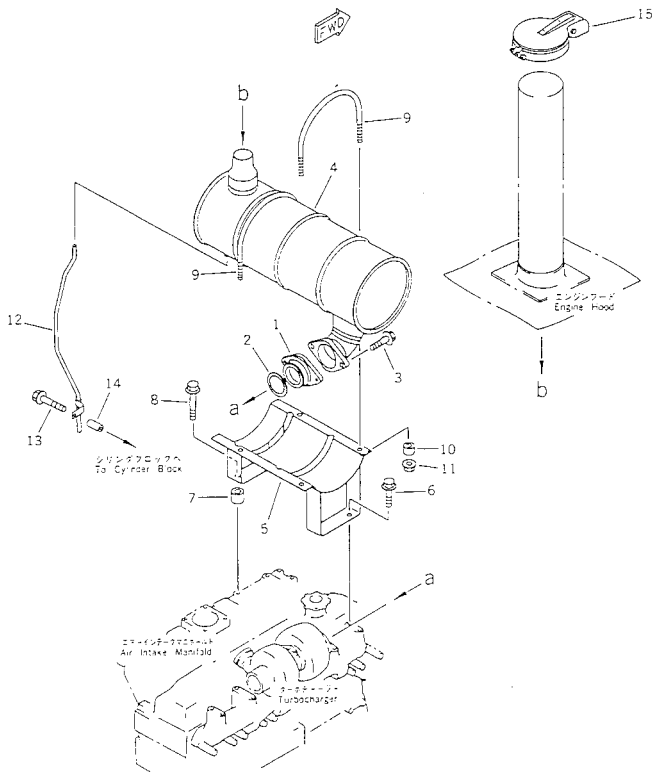

FIG NO. : 0162

INDEX	PART NO.	DESCRIPTION	Q'TY	SERIAL NO.
1	6207-11-5640	CONNECTOR	1	37188-
2	6207-11-5380	RING,SEAL	1	37188-
3	01435-20825	BOLT	2	37188-
4	6207-11-5270	MUFFLER	1	37188-
5	6207-11-5690	BRACKET	1	37188-
6	01435-01020	BOLT	2	37188-
7	6144-81-6680	SPACER	2	37188-
8	01435-21045	BOLT	2	37188-
9	6206-11-5980	U-BOLT	2	37188-
10	6141-64-2560	SPACER	4	37188-
11	01584-00806	NUT	4	37188-
12	6206-11-5421	TUBE	1	92607-
	■6206-11-5420	TUBE	1	84806-92606
		(6206-11-5421,6134-11-5120,		
		01435-01065)		
13	6134-11-5120	SPACER	1	92607-
14	01435-01065	BOLT	1	92607-
15	6711-11-5781	CAP,RAIN	1	37188-

FIG.0163 MUFFLER AND MOUNTING (WITH AIR COMPRESSOR TYPE)

(#37188-)

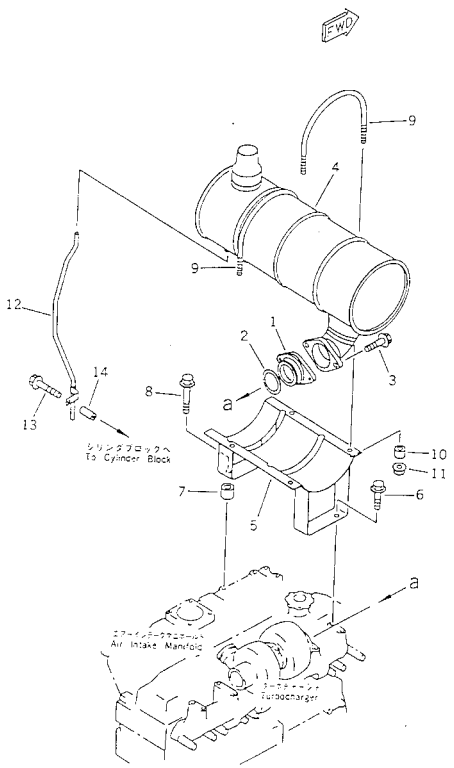

FIG NO. : 0163

INDEX	PART NO.	DESCRIPTION	Q'TY	SERIAL NO.
1	6207-11-5640	CONNECTOR	1	37188-
2	6207-11-5380	RING,SEAL	1	37188-
3	01435-20825	BOLT	2	37188-
4	6207-11-5270	MUFFLER	1	37188-
5	6207-11-5690	BRACKET	1	37188-
6	01435-01020	BOLT	2	37188-
7	6144-81-6680	SPACER	2	37188-
8	01435-21045	BOLT	2	37188-
9	6206-11-5980	U-BOLT	2	37188-
10	6141-64-2560	SPACER	4	37188-
11	01584-00806	NUT	4	37188-
12	6206-11-5421	TUBE	1	92607-
	■6206-11-5420	TUBE (6206-11-5421,6130-22-6760, 01435-01065)	1	84806-92606
13	6130-22-6760	SPACER	1	92607-
14	01435-01065	BOLT	1	92607-

CYLINDER BLOCK

FIG.0201 CYLINDER BLOCK

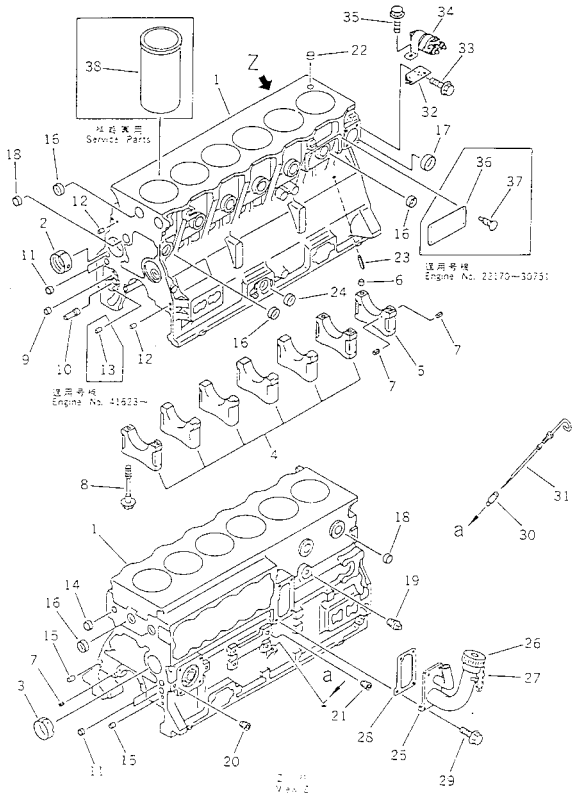

FIG NO. : 0201

INDEX	PART NO.	DESCRIPTION	Q'TY	SERIAL NO.
	6207-21-1102	CYLINDER BLOCK ASS'Y.	1	41623-
	■6207-21-1101	CYLINDER BLOCK ASS'Y.	1	22170-41622
		(6207-21-1102, 6207-51-1201)		
1	☆	.BLOCK, CYLINDER.	1	22170-
2	6204-21-1410	.BUSHING, CAMSHAFT.	1	22170-
3	6206-21-1420	.BUSHING, CAMSHAFT.	3	22170-
4	△6204-29-1210	.CAP, MAIN METAL, NO.1, 2, 3, 4, 5, 6.	6	22170-
5	△6204-29-1220	.CAP, MAIN METAL, NO.7.	1	22170-
6	6141-21-1530	.RING, DOWEL.	2	22170-
7	04025-00408	.PIN, SPRING.	6	22170-
8	6204-21-1610	.BOLT, MAIN CAP.	14	22170-
9	6204-51-1711	.BUSHING, OIL PUMP.	1	41623-
	□6204-51-1710	.BUSHING, OIL PUMP.	1	22170-41622
10	6204-51-1620	.SHAFT, OIL PUMP.	1	22170-
11	07046-41810	.PLUG.	4	41623-
	□07046-21810	.PLUG.	4	22170-41622
12	04020-00820	.PIN, DOWEL.	2	22170-
13	6136-52-1620	.PIN, DOWEL.	1	41623-
14	07046-42216	.PLUG.	1	22170-
15	04020-01228	.PIN, DOWEL.	2	22170-
16	07046-43016	.PLUG.	9	41623-
	07046-43016	.PLUG.	8	22170-41622
17	07046-44016	.PLUG.	1	22170-
18	07046-42516	.PLUG.	7	41623-
	07046-42516	.PLUG.	6	22170-41622
19	07042-10312	.PLUG.	1	41623-
20	07043-50108	.PLUG.	6	22170-
21	07043-50211	.PLUG.	1	22170-
22	6140-21-1130	.BUSHING, DOWEL.	2	22170-
23	6207-21-1190	.PIN.	6	22170-
24	07046-23016	PLUG, (WITHOUT AIR COMPRESSOR TYPE)	1	22170-
	6207-21-7400	OIL FILLER ASS'Y.	1	22170-
25	6207-21-7410	.FILLER.	1	22170-
26	6136-21-7120	.CAP ASS'Y.	1	22170-
	6136-21-7180	..GASKET.	1	22170-
27	6136-21-7190	.CHAIN.	1	22170-54303
28	6206-21-6810	GASKET. (K2)	1	22170-
29	01435-20816	BOLT.	4	22170-
30	6204-21-5410	GUIDE, OIL GAUGE.	1	22170-
31	6206-21-5340	GAUGE, OIL.	1	22170-
32	6206-81-5510	BRACKET.	1	22170-
33	01435-21020	BOLT.	2	22170-

FIG NO. : 0201

INDEX	PART NO.	DESCRIPTION	Q'TY	SERIAL NO.
34	600-815-2170	SWITCH,HEATER.....	1	22170-
35	01435-20612	BOLT.....	2	22170-
36	09605-01411	PLATE, NAME,(ENGLISH) (LIMITED SUPPLY)..	1	22170-30751
37	04418-02550	SCREW.....	4	22170-30751
38	6207-21-2110	LINER (MARK A),CYLINDER.....	AR	22170-
	6207-21-2120	LINER (MARK B),CYLINDER.....	AR	22170-

FIG.0205 FRONT COVER AND GEAR

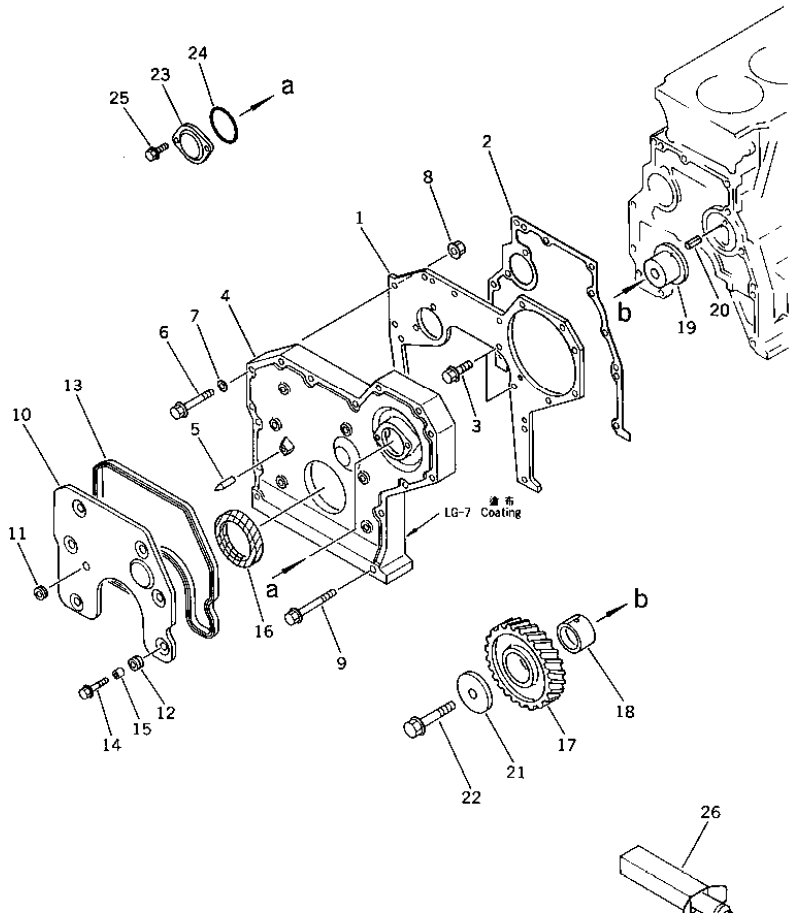

FIG NO. : 0205

INDEX	PART NO.	DESCRIPTION	Q'TY	SERIAL NO.
1	6204-21-3211	PLATE,FRONT	1	41623-
	◆6206-21-3210	PLATE,FRONT	1	22170-41622
2	6206-21-3830	GASKET (K2)	1	37188-
	□6204-21-3811	GASKET (K2)	1	22170-37187
3	01435-20816	BOLT	2	22170-
4	6204-21-3112	COVER,FRONT	1	41623-
	□6204-21-3111	COVER,FRONT	1	22170-41622
5	6204-21-3850	POINTER	1	22170-
6	01435-20855	BOLT	13	22170-
7	01641-20812	WASHER	1	22170-
8	01584-00806	NUT	2	22170-
9	01435-20870	BOLT	2	22170-
10	6204-21-3311	COVER	1	22170-
11	6204-21-3451	GROMMET (K2)	1	22170-
12	6204-21-3460	GROMMET (K2)	6	22170-
13	6204-21-3410	PACKING (K2)	1	22170-
14	01435-20620	BOLT	6	22170-
15	6204-21-3480	SPACER	6	22170-
16	6204-21-3510	SEAL, FRONT (K2)	1	22170-
	6206-31-6301	IDLER GEAR ASS'Y	1	37188-
	■6206-31-6300	IDLER GEAR ASS'Y	1	22170-37187
		(6206-31-6301,6204-31-6331)		
17	☆	.GEAR,IDLER	1	22170-
18	6204-31-6341	.BUSHING	1	37188-
	6204-31-6340	.BUSHING	1	22170-37187
19	6204-31-6331	SHAFT	1	37188-
	6204-31-6330	SHAFT	1	22170-37187
20	04025-00512	PIN,SPRING	1	22170-
21	6204-31-6350	WASHER	1	22170-
22	01435-01270	BOLT	1	22170-
23	6144-81-5151	COVER	1	22170-
24	07000-03050	O-RING (K2)	1	22170-
25	01435-20616	BOLT	2	22170-
26	(09920-00150)	LIQUID GASKET,LG-7, 150G	AR	22170-

FIG.0211 OIL PAN

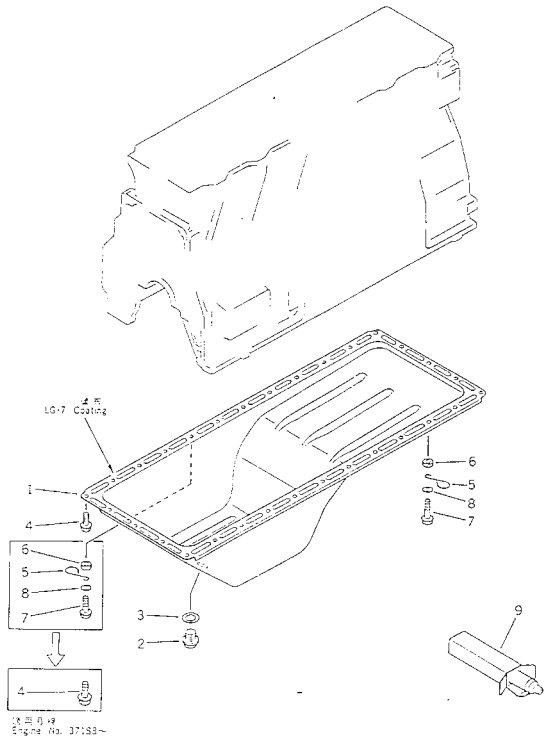

FIG NO. : 0211

INDEX	PART NO.	DESCRIPTION	Q'TY	SERIAL NO.
1	6206-21-5111	PAN,OIL	1	41623-
	6206-21-5110	PAN,OIL	1	22170-41622
2	6204-21-5180	PLUG,DRAIN	1	37188-
	□6204-21-5190	PLUG,DRAIN	1	22170-37187
3	07005-02216	GASKET (K2)	1	41623-
	□6204-21-5290	GASKET (K2)	1	22170-41622
4	01435-20814	BOLT	29	37188-
	01435-20814	BOLT	28	22170-37187
5	6130-22-5290	CLIP	1	37188-
	6130-22-5290	CLIP	2	22170-37187
6	6130-12-1961	SPACER	1	37188-
	6130-12-1961	SPACER	2	22170-37187
7	01435-20830	BOLT	1	37188-
	01435-20825	BOLT	2	22170-37187
8	01642-20810	WASHER	1	37188-
	01642-20810	WASHER	2	22170-37187
9	(09920-00150)	LIQUID GASKET,LG-7, 150G	AR	22170-

FIG.0221 FLYWHEEL AND FLYWHEEL HOUSING

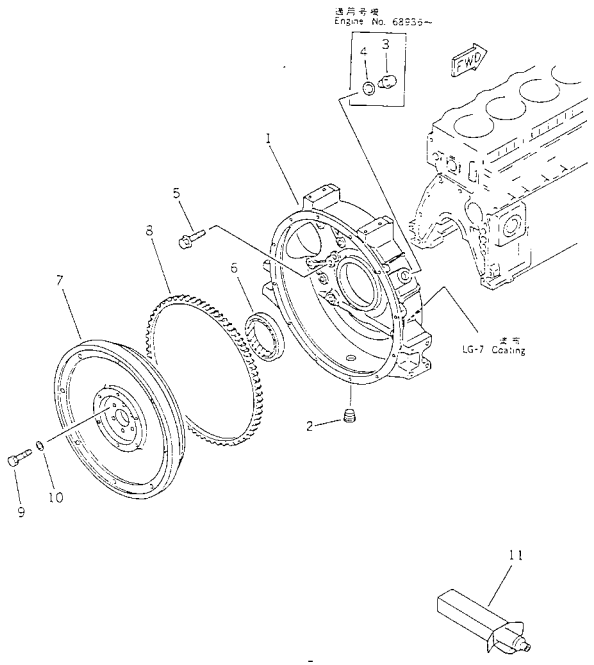

FIG NO. : 0221

INDEX	PART NO.	DESCRIPTION	Q'TY	SERIAL NO.
1	6306-22-4121	HOUSING,FLYWHEEL	1	91957-
	◆6205-21-4110	HOUSING,FLYWHEEL	1	68936-91956
	■6206-21-4143	HOUSING,FLYWHEEL (6306-22-4121,6204-21-5180, 07005-02216)	1	37188-68935
	6206-21-4190	HOUSING,FLYWHEEL	1	22170-37187
2	07043-00415	PLUG	1	22170-
3	6204-21-5180	PLUG	1	68936-
4	07005-02216	GASKET (K2)	1	68936-
5	01435-01030	BOLT	11	22170-
6	6141-21-1332	SEAL, REAR (K2)	1	22170-
	6206-31-4232	FLYWHEEL ASS'Y	1	41623-
	◆6206-31-4231	FLYWHEEL ASS'Y	1	37188-41622
	◆6206-31-4230	FLYWHEEL ASS'Y	1	22170-37187
7	☆	.FLYWHEEL	1	41623-
	☆	.FLYWHEEL	1	22170-41622
8	6206-31-4792	.GEAR,RING	1	37188-
	□6206-31-4790	.GEAR,RING	1	22170-37187
9	01050-31430	BOLT	6	22170-
10	6130-32-1361	WASHER	6	22170-
11	(09920-00150)	LIQUID GASKET,LG-7, 150G	AR	22170-

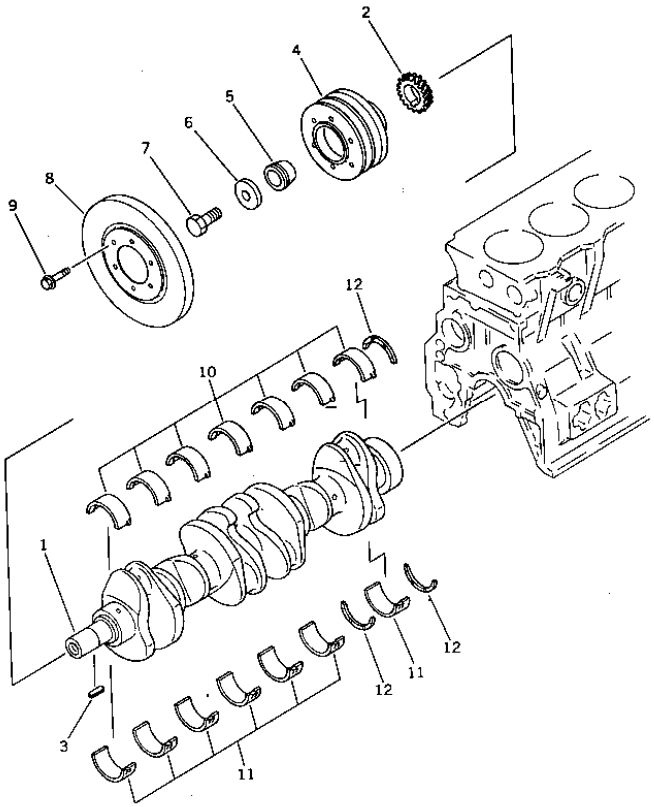

INDEX	PART NO.	DESCRIPTION	Q'TY	SERIAL NO.
	6207-31-1100	CRANKSHAFT ASS'Y.	1	22170-
1	☆	.CRANKSHAFT.	1	22170-
2	6204-31-1220	.GEAR,CRANKSHAFT.	1	22170-
3	6206-31-1530	.KEY.	1	22170-
4	6206-31-1420	PULLEY,NON HARDENING.	1	22170-
	6206-31-1820	PULLEY, HARDENING.	1	22170-
		(SANDY AND DUSTY SPEC.)		
5	6136-31-1420	COLLAR,TAPER.	1	22170-
6	6136-31-1431	PLATE.	1	22170-
7	01050-31845	BOLT.	1	37188-
	□6110-33-1411	BOLT,NYLOCK.	1	22170-37187
8	6206-31-8300	DAMPER.	1	41623-
	◆6206-31-8200	DAMPER.	1	22170-41622
9	01435-21016	BOLT.	6	22170-
		STANDARD.		
	6204-21-8100	MAIN METAL ASS'Y.	7	22170-
10	☆	.METAL,UPPER.	1	22170-
11	☆	.METAL,LOWER.	1	22170-
		UNDERSIZE 0.25MM.		
	6204-29-8100	MAIN METAL ASS'Y.	7	37188-
10	☆	.METAL,UPPER.	1	37188-
11	☆	.METAL,LOWER.	1	37188-
		UNDERSIZE 0.50MM.		
	6204-28-8100	MAIN METAL ASS'Y.	7	37188-
10	☆	.METAL,UPPER.	1	37188-
11	☆	.METAL,LOWER.	1	37188-
		UNDERSIZE 0.75MM.		
	6204-27-8100	MAIN METAL ASS'Y.	7	37188-
10	☆	.METAL,UPPER.	1	37188-
11	☆	.METAL,LOWER.	1	37188-
		UNDERSIZE 1.00MM.		
	6204-26-8100	MAIN METAL ASS'Y.	7	37188-
10	☆	.METAL,UPPER.	1	37188-
11	☆	.METAL,LOWER.	1	37188-
		STANDARD.		
12	6204-21-8500	THRUST METAL ASS'Y.	1	22170-
	☆	.METAL.	3	22170-
		OVERSIZE 0.25MM.		
12	6204-29-8500	THRUST METAL ASS'Y.	1	37188-
	☆	.METAL.	3	37188-
		OVERSIZE 0.50MM.		
12	6204-28-8500	THRUST METAL ASS'Y.	1	37188-

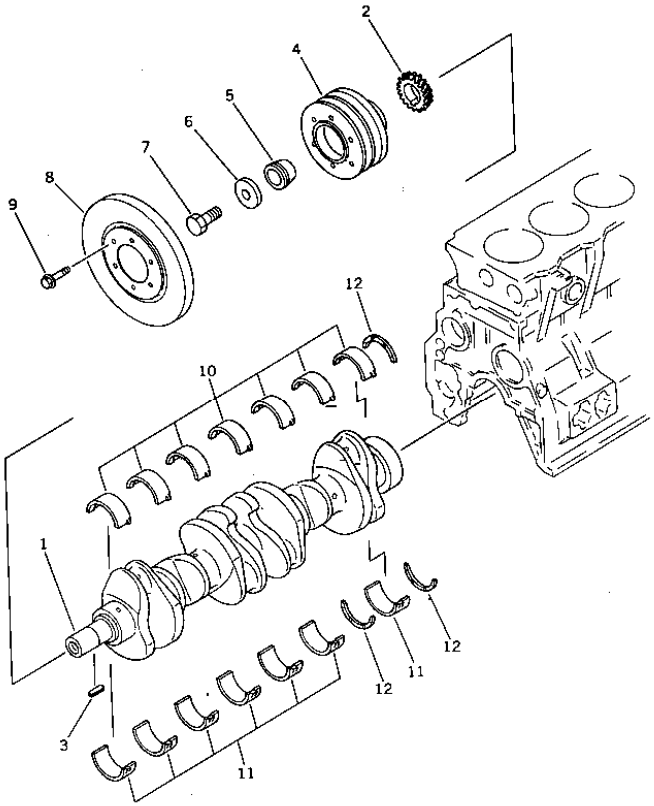

INDEX	PART NO.	DESCRIPTION	Q'TY	SERIAL NO.
	☆	.METAL.....	3	37188-
		OVERSIZE 0.75MM.....		
12	6204-27-8500	THRUST METAL ASS'Y.....	1	37188-
	☆	.METAL.....	3	37188-
		OVERSIZE 1.00MM.....		
12	6204-26-8500	THRUST METAL ASS'Y.....	1	37188-
	☆	.METAL.....	3	37188-

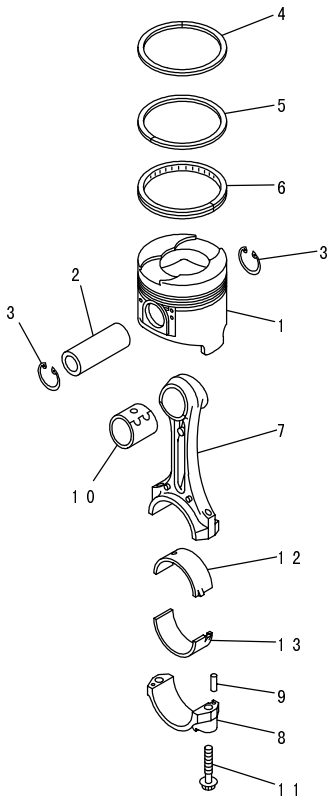

PG38696

INDEX	PART NO.	DESCRIPTION	Q'TY	SERIAL NO.
		STANDARD		
1	6207-31-2120	PISTON (S)	6	22170-
		OVERSIZE 0.25MM		
1	6207-39-2120	PISTON (S)	6	22170-
		OVERSIZE 0.50MM		
1	6207-38-2120	PISTON (S)	6	22170-
2	6207-31-2410	PIN,PISTON	6	22170-
3	04065-03012	RING,SNAP	12	22170-
		STANDARD		
	6207-31-2200	PISTON RING ASS'Y,PER CYLINDER	6	22170-
4	☆	.RING,TOP	1	22170-
5	☆	.RING,SECOND	1	22170-
6	☆	.RING,OIL	1	41623-
	☆	.RING,OIL	1	22170-41622
		OVERSIZE 0.25MM		
	6207-39-2200	PISTON RING ASS'Y,PER CYLINDER	6	22170-
4	☆	.RING,TOP	1	22170-
5	☆	.RING,SECOND	1	22170-
6	☆	.RING,OIL	1	41623-
	☆	.RING,OIL	1	22170-41622
		OVERSIZE 0.50MM		
	6207-38-2200	PISTON RING ASS'Y,PER CYLINDER	6	22170-
4	☆	.RING,TOP	1	22170-
5	☆	.RING,SECOND	1	22170-
6	☆	.RING,OIL	1	41623-
	☆	.RING,OIL	1	22170-41622
	6207-31-3101	CONNECTING ROD ASS'Y	6	92607-
	◆6207-31-3100	CONNECTING ROD ASS'Y	6	22170-96206
7	☆	.ROD,CONNECTING	1	96207-
	☆	.ROD,CONNECTING	1	22170-96206
8	☆	.CAP	1	96207-
	☆	.CAP	1	22170-96206
9	6207-31-3140	.PIN	2	92607-
10	6207-31-3130	.BUSHING	1	22170-
11	6204-31-3310	.BOLT	2	22170-
		STANDARD		
	6207-31-3300	CRANK PIN METAL A	6	37188-
	□6207-31-3400	CRANK PIN METAL A	6	22170-37187
12	☆	.METAL,UPPER	1	37188-
	☆	.METAL,UPPER	1	22170-37187
13	☆	.METAL,LOWER	1	37188-
	☆	.METAL,LOWER	1	22170-37187

FIG.0235 PISTON AND CONNECTING ROD

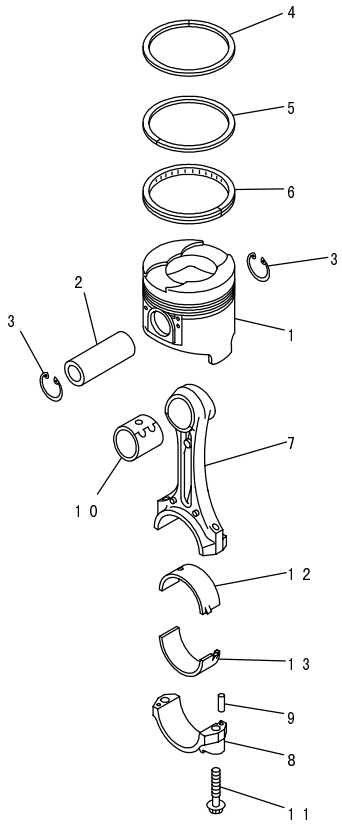

PG38696

FIG NO. : 0235

INDEX	PART NO.	DESCRIPTION	Q'TY	SERIAL NO.
		UNDERSIZE 0.25MM.		
	6207-39-3300	CRANK PIN METAL A.	6	37188-
11	☆	.METAL,UPPER.	1	37188-
12	☆	.METAL,LOWER.	1	37188-
		UNDERSIZE 0.50MM.		
	6207-38-3300	CRANK PIN METAL A.	6	37188-
11	☆	.METAL,UPPER.	1	37188-
12	☆	.METAL,LOWER.	1	37188-
		UNDERSIZE 0.75MM.		
	6207-37-3300	CRANK PIN METAL A.	6	37188-
11	☆	.METAL,UPPER.	1	37188-
12	☆	.METAL,LOWER.	1	37188-
		UNDERSIZE 1.00MM.		
	6207-36-3300	CRANK PIN METAL A.	6	37188-
11	☆	.METAL,UPPER.	1	37188-
12	☆	.METAL,LOWER.	1	37188-

FIG.0241 CAMSHAFT AND TAPPET

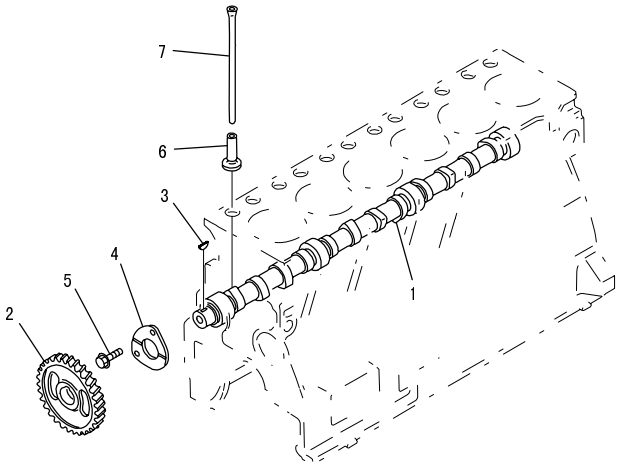

PE30024

FIG NO. : 0241

INDEX	PART NO.	DESCRIPTION	Q'TY	SERIAL NO.
	6207-41-1100	CAMSHAFT ASS'Y.	1	22170-
1	☆	. CAMSHAFT.	1	22170-
2	6206-41-1220	. GEAR, CAMSHAFT.	1	22170-
3	04010-00516	. KEY.	1	22170-
4	6206-41-1131	. PLATE, THRUST.	1	22170-
5	01435-20820	BOLT.	2	22170-
6	6204-41-2110	TAPPET.	12	22170-
7	6204-41-3110	ROD, PUSH.	12	22170-

LUBRICATING OIL SYSTEM

FIG.0301 LUBRICATING OIL PUMP AND SUCTION PIPE

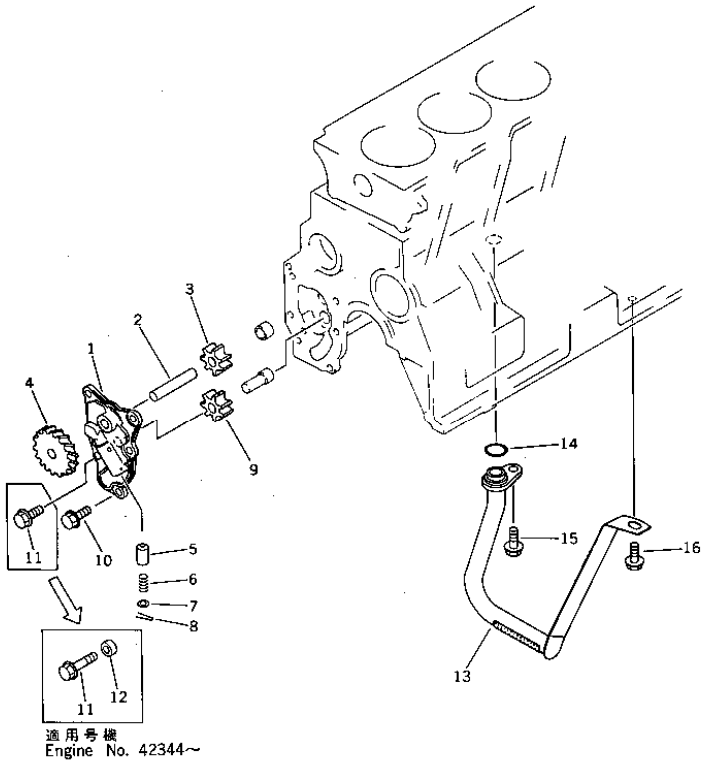

FIG NO. : 0301

INDEX	PART NO.	DESCRIPTION	Q'TY	SERIAL NO.
	6207-51-1201	COVER ASS'Y	1	41623-
	□6207-51-1200	COVER ASS'Y	1	22170-41622
1	☆	.COVER	1	41623-
	☆	.COVER	1	22170-41622
	6207-51-1400	.SHAFT ASS'Y	1	22170-
2	☆	..SHAFT	1	22170-
3	6207-51-1410	..GEAR,DRIVE	1	22170-
4	6204-51-1510	.GEAR	1	22170-
5	6204-51-1310	.VALVE	1	22170-
6	6206-51-1320	.SPRING	1	22170-
7	6204-51-1330	.WASHER	1	22170-
8	6204-51-1340	.PIN,COTTER	1	22170-
9	6207-51-1610	GEAR,DRIVEN	1	22170-
10	01435-20816	BOLT	4	22170-
11	01435-20825	BOLT	1	41623-
	01435-20816	BOLT	1	22170-41622
12	6691-41-8230	SPACER	1	41623-
13	6206-51-6220	TUBE,SUCTION	1	22170-
14	6204-51-6120	O-RING (K2)	1	22170-
15	01435-20816	BOLT	1	22170-
16	01435-20812	BOLT	1	22170-

FIG.0311 LUBRICATING OIL FILTER

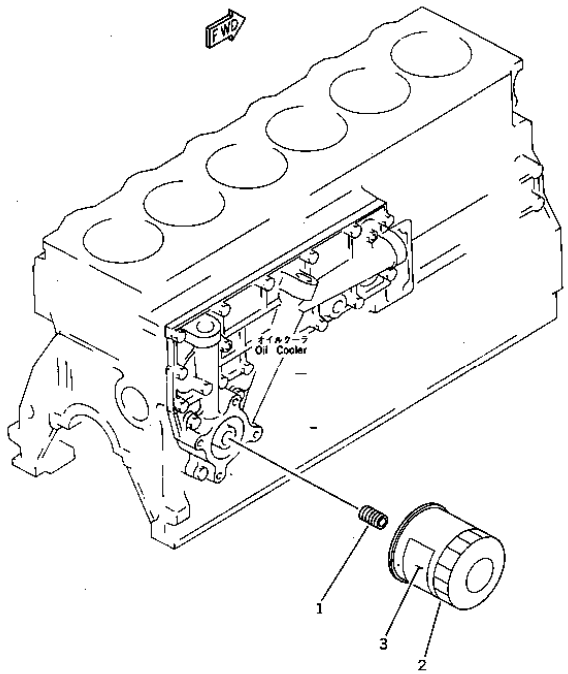

FIG NO. : 0311

INDEX	PART NO.	DESCRIPTION	Q'TY	SERIAL NO.
1	6204-51-5910	NIPPLE	1	22170-
2	600-211-6241	CARTRIDGE	1	41623-
	□600-211-6240	CARTRIDGE	1	22170-41622
3	600-211-6560	PLATE, CAUTION,(ARABIC-ENGLISH)	1	22170-
	600-211-6570	PLATE, CAUTION,(SPANISH-ENGLISH)	1	22170-
	600-211-6590	PLATE, CAUTION,(FRENCH-ENGLISH)	1	22170-
	600-211-6620	PLATE, CAUTION,(CHINESE)	1	22170-
	600-211-6630	PLATE, CAUTION,(ENGLISH)	1	22170-
	600-211-6650	PLATE, CAUTION,(INDONESIAN-ENGLISH)	1	22170-

FIG.0325 TURBOCHARGER LUBRICATING OIL PIPING

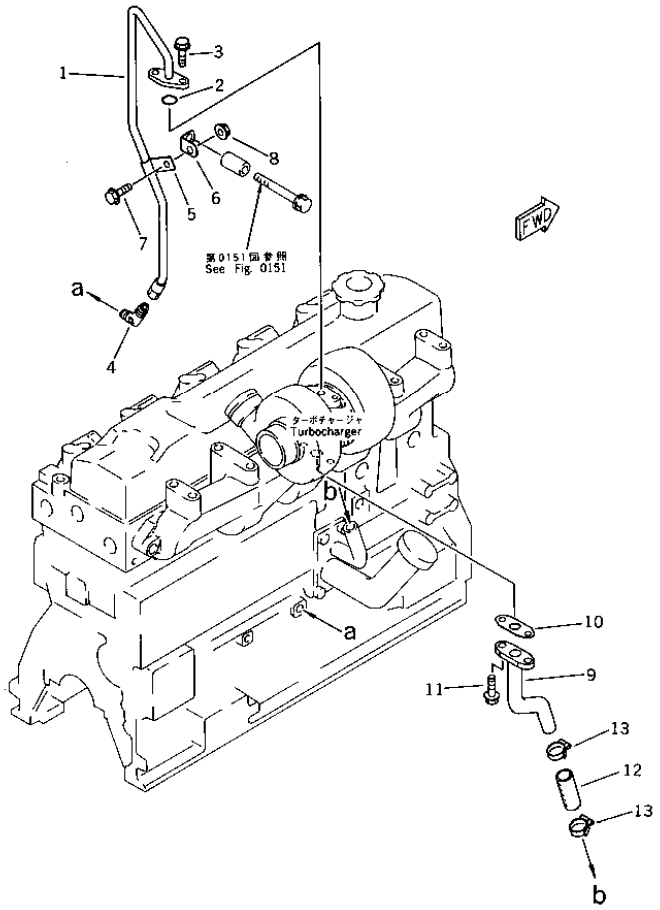

FIG NO. : 0325

INDEX	PART NO.	DESCRIPTION	Q'TY	SERIAL NO.
1	6207-51-8110	PIPE, INLET	1	22170-
2	07000-62018	O-RING (K1)	1	22170-
3	01435-20820	BOLT	2	22170-
4	6207-51-8150	ELBOW	1	22170-
5	6207-51-8190	CLIP	1	22170-
6	6207-51-8180	BRACKET	1	22170-
7	01435-20816	BOLT	1	22170-
8	01584-00806	NUT	1	22170-
9	6207-51-8310	PIPE, OUTLET	1	22170-
10	6131-51-7681	GASKET (K1)	1	22170-
11	01435-20820	BOLT	2	22170-
12	6207-51-8350	HOSE	1	22170-
13	07281-00289	CLAMP	2	37188-
	◆07281-00359	CLAMP	2	22170-37187

FIG.0331 LUBRICATING OIL COOLER(#22170-41622)

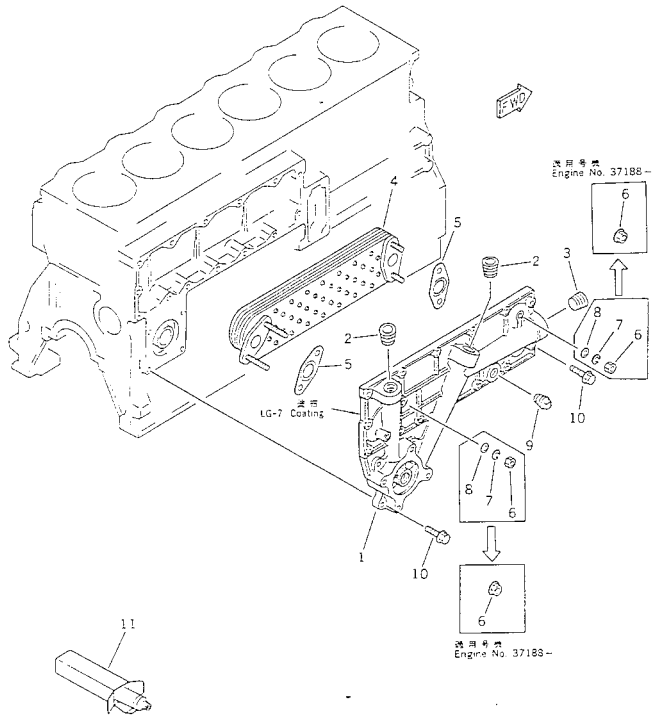

FIG NO. : 0331

INDEX	PART NO.	DESCRIPTION	Q'TY	SERIAL NO.
1	6207-61-5110	COVER ASS'Y	1	22170-★
2	6204-61-5170	.PLUG	2	26224-★
	07043-50617	.PLUG	2	22170-26223
3	6206-61-5170	.PLUG	1	26224-★
	07043-50617	.PLUG	1	22170-26223
4	600-651-1520	ELEMENT	1	22170-★
5	6204-61-5190	GASKET (K2)	2	22170-★
6	01584-00806	NUT	4	37188-★
	01580-10806	NUT	4	22170-37187
7	01602-20825	WASHER,SPRING	4	22170-37187
8	01641-20812	WASHER	4	22170-37187
9	07042-20312	PLUG	1	22170-★
10	01435-20825	BOLT	18	22170-★
11	(09920-00150)	LIQUID GASKET,LG-7, 150G	AR	22170-41622

FIG.0331A LUBRICATING OIL COOLER(#41623-)

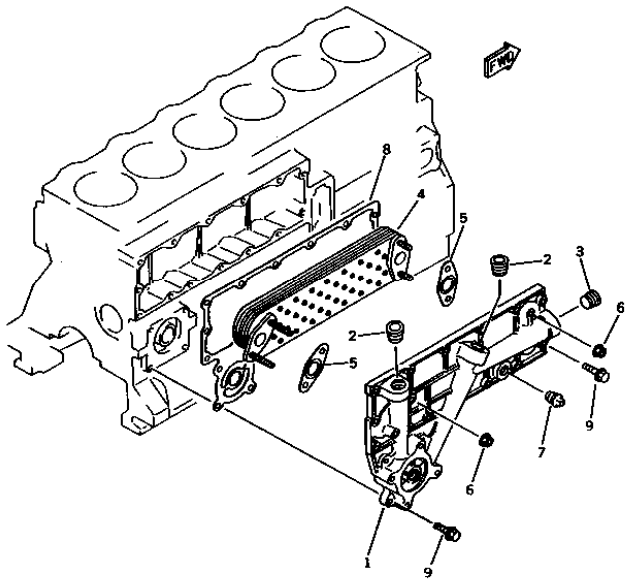

FIG NO. : 0331A

INDEX	PART NO.	DESCRIPTION	Q'TY	SERIAL NO.
1	6207-61-5110	COVER ASS'Y	1	22170-
2	6204-61-5170	.PLUG	2	26224-
3	6206-61-5170	.PLUG	1	26224-
4	600-651-1520	ELEMENT	1	22170-
5	6204-61-5190	GASKET (K2)	2	22170-
6	01584-00806	NUT	4	37188-
7	07042-20312	PLUG	1	22170-
8	6207-61-5311	GASKET (K2)	1	46363-
	6207-61-5311	GASKET	1	41623-46362
9	01435-20825	BOLT	18	22170-

FUEL SYSTEM

FIG.0401 FUEL INJECTION PUMP AND PIPING

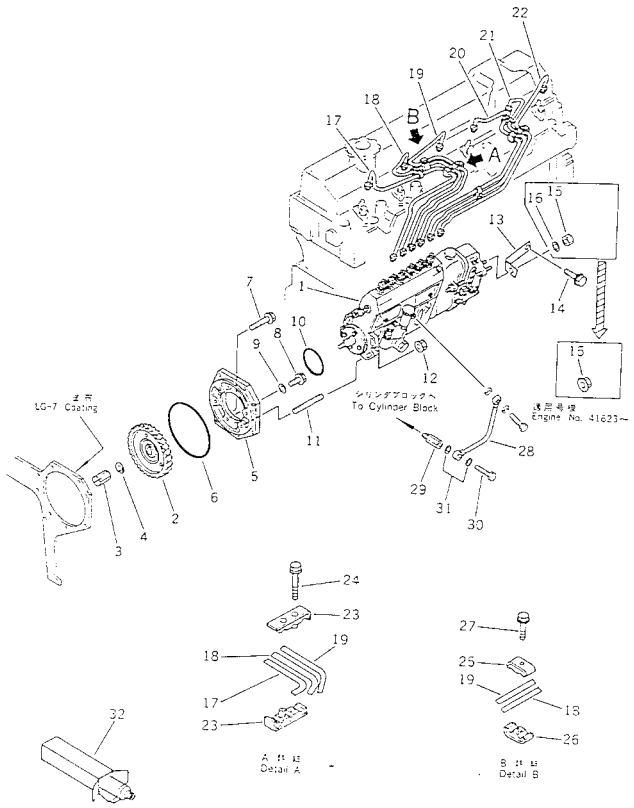

FIG NO. : 0401

INDEX	PART NO.	DESCRIPTION	Q'TY	SERIAL NO.
1	(6207-71-1910)	INJECTION PUMP ASS'Y,(SEE FIG.0451).....	1	22170-
	(6207-71-1911)	INJECTION PUMP ASS'Y.....	1	92607-
		(WITH ENGINE STOP MOTOR TYPE)		
2	6207-71-3131	GEAR.....	1	22170-
3	6206-71-3630	NUT.....	1	22170-
4	6130-32-1361	WASHER.....(K2).....	1	41623-
	□01653-21412	WASHER,LOCK.....(K2).....	1	22170-41622
5	6206-71-3110	HOLDER.....	1	22170-
6	07000-02135	O-RING.....(K2).....	1	22170-
7	6204-71-3190	BOLT.....	1	22170-
8	01435-20812	BOLT.....	1	22170-
9	07005-00812	GASKET.....(K2).....	1	22170-
10	287-01-12231	O-RING.....(K2).....	1	22170-
11	01144-31035	STUD.....	4	22170-
12	01584-01008	NUT.....	4	22170-
13	6206-71-1852	BRACKET.....	1	22170-
14	01435-21016	BOLT.....	1	22170-
15	01584-00806	NUT.....	1	41623-
	□01580-00806	NUT.....	1	22170-41622
16	01640-01016	WASHER.....	1	22170-41622
17	6207-71-5111	TUBE,INJECTION, NO.1.....	1	41623-
	◆6207-71-5110	TUBE,INJECTION, NO.1.....	1	22170-41622
18	6207-71-5121	TUBE,INJECTION, NO.2.....	1	41623-
	◆6207-71-5120	TUBE,INJECTION, NO.2.....	1	22170-41622
19	6207-71-5130	TUBE,INJECTION, NO.3.....	1	22170-
20	6207-71-5140	TUBE,INJECTION, NO.4.....	1	22170-
21	6207-71-5150	TUBE,INJECTION, NO.5.....	1	22170-
22	6207-71-5160	TUBE,INJECTION, NO.6.....	1	22170-
23	6206-71-5720	CLAMP.....	4	22170-
24	01435-20625	BOLT.....	4	22170-
	6206-71-5700	CLIP ASS'Y.....	4	22170-
25	6144-71-5730	.CLIP.....	1	22170-
26	6206-71-5730	.CLIP, WITH THREAD.....	1	22170-
27	6206-71-5740	.BOLT.....	1	22170-
28	6204-71-4230	PIPE,OIL.....	1	22170-
29	6204-71-4250	CONNECTOR.....	1	22170-
30	07206-30710	BOLT,JOINT.....	1	22170-
31	07005-01012	GASKET.....(K2).....	2	22170-
32	(09920-00150)	LIQUID GASKET,LG-7, 150G.....	AR	22170-

FIG.0402 FUEL INJECTION PUMP AND PIPING (WITH AIR COMPRESSOR TYP

E)

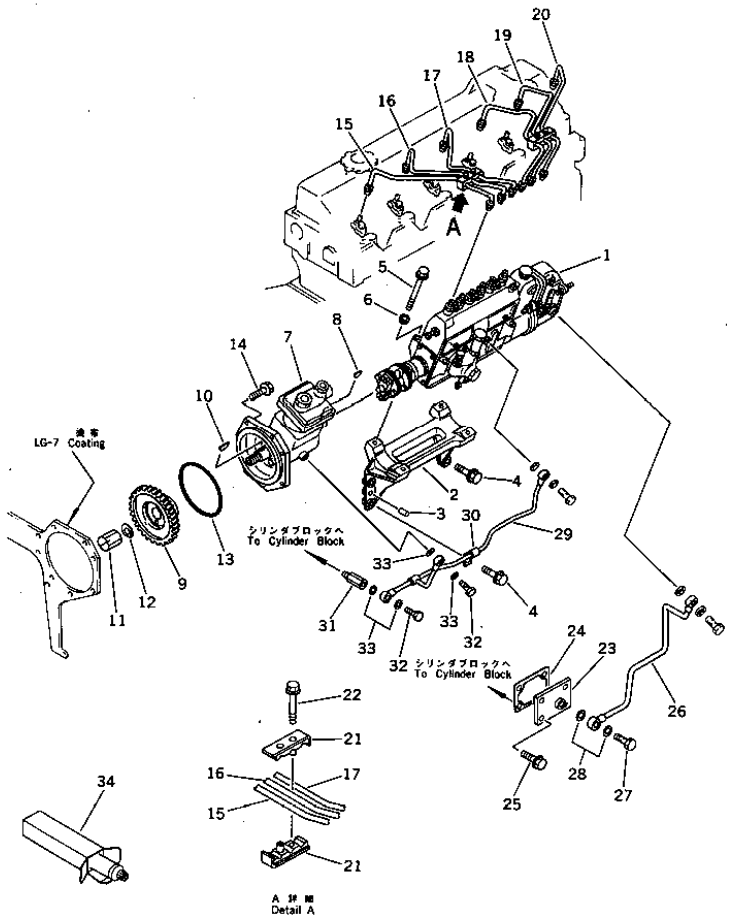

FIG NO. : 0402

INDEX	PART NO.	DESCRIPTION	Q'TY	SERIAL NO.
1	(6207-71-1950)	INJECTION PUMP ASS'Y,(SEE FIG.0455)	1	22170-
2	6206-71-1860	BRACKET	1	22170-
3	04020-01024	PIN,DOWEL	2	22170-
4	01435-01025	BOLT	4	22170-
5	01435-20865	BOLT	4	22170-
6	6110-71-5810	WASHER	4	22170-
7	(6206-91-1100)	AIR COMPRESSOR ASS'Y,(SEE FIG.0711)	1	22170-
8	04010-00416	KEY	1	22170-
9	6206-71-3250	GEAR	1	22170-
10	04010-00416	KEY	1	22170-
11	6206-71-3650	NUT	1	22170-
12	01653-22016	WASHER,LOCK (K2)	1	22170-
13	07000-02135	O-RING (K2)	1	22170-
14	6204-71-3190	BOLT	1	22170-
15	6207-71-5210	PIPE,INJECTION, NO.1	1	22170-
16	6207-71-5220	PIPE,INJECTION, NO.2	1	22170-
17	6207-71-5230	PIPE,INJECTION, NO.3	1	22170-
18	6207-71-5240	PIPE,INJECTION, NO.4	1	22170-
19	6207-71-5250	PIPE,INJECTION, NO.5	1	22170-
20	6207-71-5260	PIPE,INJECTION, NO.6	1	22170-
21	6206-71-5720	CLAMP	4	22170-
22	01435-20625	BOLT	4	22170-
23	6206-71-4710	PLATE	1	22170-
24	6206-21-6850	GASKET (K2)	1	22170-
25	01435-21016	BOLT	4	22170-
26	6206-71-4240	PIPE	1	22170-
27	07206-30812	BOLT,JOINT	1	22170-
28	07005-01212	GASKET (K2)	2	22170-
29	6206-71-4230	PIPE,OIL	1	22170-
30	6125-51-9531	CLIP	1	22170-
31	6204-71-4250	CONNECTOR	1	22170-
32	07206-30710	BOLT,JOINT	2	22170-
33	07005-01012	GASKET (K2)	4	22170-
34	(09920-00150)	LIQUID GASKET,LG-7,150G	AR	22170-

FIG.0403 FUEL INJECTION PUMP AND PIPING (WITH AIR COMPRESSOR AND STOP MOTOR TYPE)(#92607-)

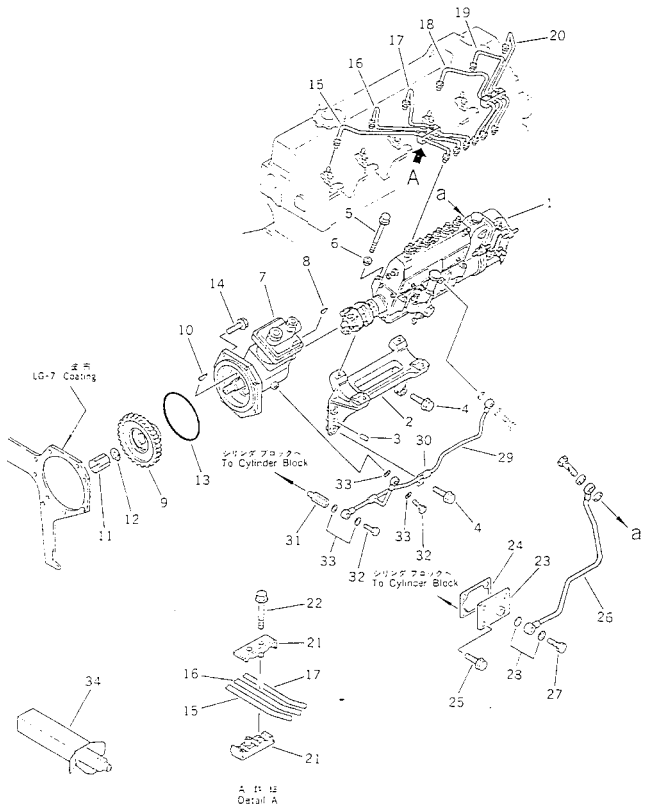

FIG NO. : 0403

INDEX	PART NO.	DESCRIPTION	Q'TY	SERIAL NO.
1	(6207-71-1951)	INJECTION PUMP ASS'Y,(SEE FIG.0457)	1	92607-
2	6206-71-1860	BRACKET	1	92607-
3	04020-01024	PIN,DOWEL	2	92607-
4	01435-01025	BOLT	3	92607-
5	01435-20865	BOLT	4	92607-
6	6110-71-5810	WASHER	4	92607-
7	(6206-91-1100)	AIR COMPRESSOR ASS'Y,(SEE FIG.0711)	1	92607-
8	04010-00416	KEY	1	92607-
9	6206-71-3250	GEAR	1	92607-
10	04010-00416	KEY	1	92607-
11	6206-71-3650	NUT	1	92607-
12	01653-22016	WASHER,LOCK (K2)	1	92607-
13	07000-02135	O-RING (K2)	1	92607-
14	6204-71-3190	BOLT	1	92607-
15	6207-71-5210	PIPE,INJECTION, NO.1	1	92607-
16	6207-71-5220	PIPE,INJECTION, NO.2	1	92607-
17	6207-71-5230	PIPE,INJECTION, NO.3	1	92607-
18	6207-71-5240	PIPE,INJECTION, NO.4	1	92607-
19	6207-71-5250	PIPE,INJECTION, NO.5	1	92607-
20	6207-71-5260	PIPE,INJECTION, NO.6	1	92607-
21	6206-71-5720	CLAMP	4	92607-
22	01435-20625	BOLT	4	92607-
23	6206-71-4710	PLATE	1	92607-
24	6206-21-6850	GASKET (K2)	1	92607-
25	01435-21016	BOLT	4	92607-
26	6207-71-4220	PIPE	1	92607-
27	07206-30812	BOLT,JOINT	1	92607-
28	07005-01212	GASKET (K2)	2	92607-
29	6206-71-4230	PIPE,OIL	1	92607-
30	6125-51-9531	CLIP	1	92607-
31	6204-71-4250	CONNECTOR	1	92607-
32	07206-30710	BOLT,JOINT	2	92607-
33	07005-01012	GASKET (K2)	4	92607-
34	(09920-00150)	LIQUID GASKET,LG-7,150G	AR	92607-

FIG.0405 ENGINE STOP MOTOR AND MOUNTING (WITHOUT AIR COMPRESSOR TYPE)(#92607-)

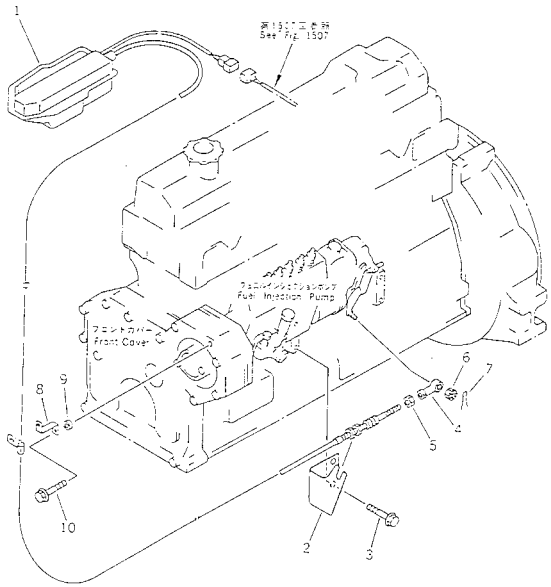

FIG NO. : 0405

INDEX	PART NO.	DESCRIPTION	Q'TY	SERIAL NO.
1	600-815-7650	MOTOR	1	92607-
2	6206-81-9880	BRACKET	1	92607-
3	01435-01020	BOLT	1	92607-
4	04250-50639	END,ROD	1	92607-
5	01580-00605	NUT	1	92607-
6	01590-10607	NUT	1	92607-
7	04050-11212	PIN,COTTER	1	92607-
8	416-99-15340	BRACKET	1	92607-
9	6144-21-5880	SPACER	1	92607-
10	01435-20865	BOLT	1	92607-

FIG.0406 ENGINE STOP MOTOR AND MOUNTING (WITH AIR COMPRESSOR TYPE)(#92607-)

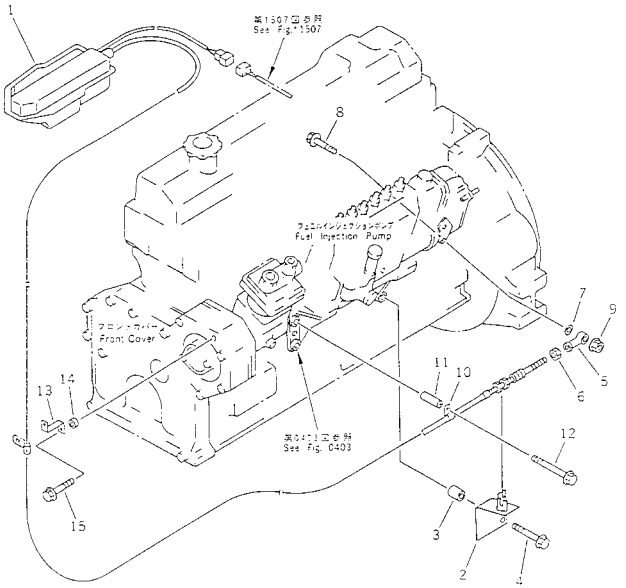

FIG NO. : 0406

INDEX	PART NO.	DESCRIPTION	Q'TY	SERIAL NO.
1	600-815-7630	MOTOR ASS'Y	1	92607-
2	6206-81-9870	SPACER	1	92607-
3	6202-83-6760	SPACER	2	92607-
4	01435-01060	BOLT	2	92607-
5	04250-50639	END,END	1	92607-
6	01580-00605	NUT	1	92607-
7	04254-10623	SPACER	1	92607-
8	01435-00625	BOLT	1	92607-
9	01584-00605	NUT	1	92607-
10	08036-11210	CLIP	1	92607-
11	6136-11-5120	SPACER	1	92607-
12	01435-01095	BOLT	1	92607-
13	416-99-15340	BRACKET	1	92607-
14	6144-21-5880	SPACER	1	92607-
15	01435-01065	BOLT	1	92607-

FIG.0411 FUEL FILTER AND PIPING

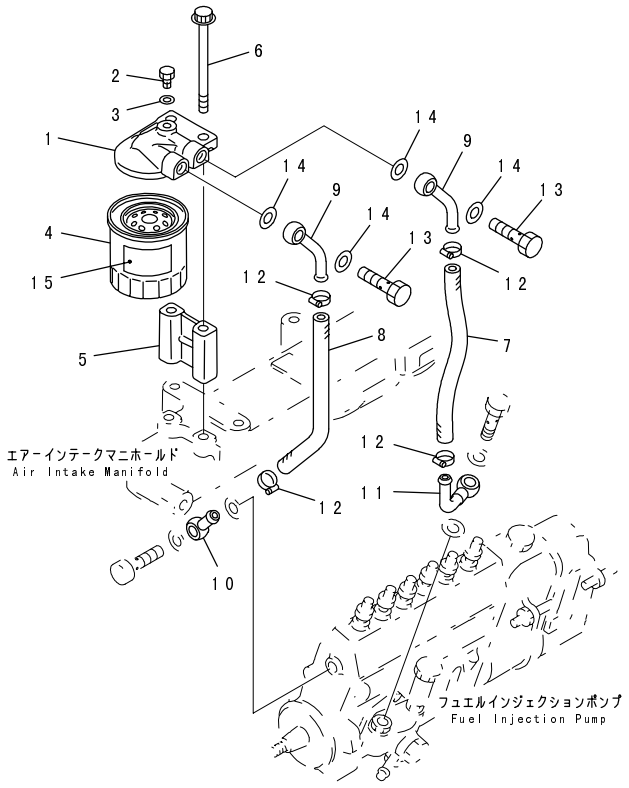

FIG NO. : 0411

INDEX	PART NO.	DESCRIPTION	Q'TY	SERIAL NO.
	600-311-9600	FUEL FILTER ASS'Y	1	22170-
1	600-311-9640	.HEAD	1	22170-
2	600-311-6720	.PLUG	1	22170-
3	07005-00812	.GASKET	1	37188-
	07005-00812	.GASKET (K2)	1	22170-37187
4	600-311-6220	.CARTRIDGE	1	22170-
5	6206-71-6550	SPACER	1	22170-
6	01435-21085	BOLT	2	22170-
7	07260-20925	HOSE	1	37188-
	07260-20932	HOSE	1	22170-37187
8	07260-20918	HOSE	1	37188-
	07260-20925	HOSE	1	22170-37187
9	6204-71-5730	JOINT	2	37188-
	6144-71-5750	JOINT	2	22170-37187
10	6144-71-5750	JOINT	1	22170-
11	6206-71-5850	JOINT	1	22170-
12	07281-00197	CLAMP	4	22170-
13	07206-31014	BOLT,JOINT	2	22170-
14	07005-01412	GASKET (K2)	4	22170-
15	600-311-1120	PLATE, CAUTION,(ENGLISH)	1	22170-
	600-311-1130	PLATE, CAUTION,(ENGLISH-SPANISH)	1	22170-
	600-311-1150	PLATE, CAUTION,(ENGLISH-FRENCH)	1	22170-
	600-311-1160	PLATE, CAUTION,(ENGLISH-ARABIC)	1	22170-
	600-311-1190	PLATE, CAUTION,(CHINESE)	1	22170-
	600-311-1220	PLATE, CAUTION,(ENGLISH-INDONESIAN)	1	22170-

FIG.0412 FUEL FILTER AND PIPING (WITH AIR COMPRESSOR TYPE)

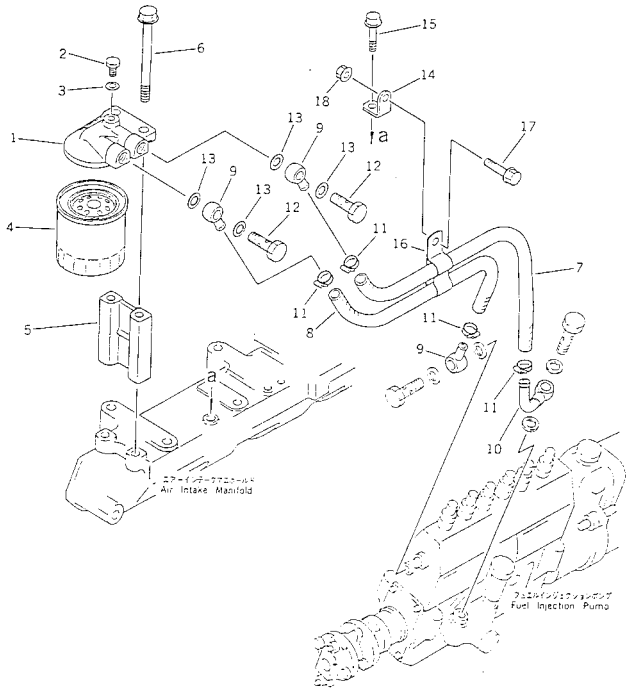

FIG NO. : 0412

INDEX	PART NO.	DESCRIPTION	Q'TY	SERIAL NO.
	600-311-9600	FUEL FILTER ASS'Y	1	22170-
1	600-311-9640	.HEAD	1	22170-
2	600-311-6720	.PLUG	1	22170-
3	07005-00812	.GASKET	1	22170-
4	600-311-6220	.CARTRIDGE	1	22170-
5	6206-71-6590	SPACER	1	22170-
6	01436-01020	BOLT	2	.-
	◆6206-71-6990	BOLT	2	22170-.
7	07260-20950	HOSE	1	22170-
8	07260-20945	HOSE	1	22170-
9	6144-71-5750	JOINT	3	22170-
10	6206-71-5850	JOINT	1	22170-
11	07281-00197	CLAMP	4	22170-
12	07206-31014	BOLT,JOINT	2	22170-
13	07005-01412	GASKET (K2)	4	22170-
14	6050-71-5710	BRACKET	1	22170-
15	01435-20612	BOLT	1	22170-
16	6128-71-5911	CLIP	1	22170-
17	01435-20816	BOLT	1	22170-
18	01584-00806	NUT	1	22170-

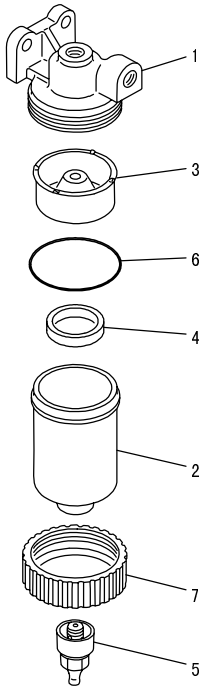

PG30078

INDEX	PART NO.	DESCRIPTION	Q'TY	SERIAL NO.
	600-311-9700	WATER SEPARATOR A.	1	22170-
1	600-311-9810	.COVER.	1	22170-
2	600-311-9820	.CASE.	1	22170-
3	600-311-9840	.BAFFLE.	1	22170-
4	600-311-9850	.RING.	1	22170-
5	600-311-9760	.PLUG.	1	22170-
6	07000-02060	.O-RING.	1	22170-
7	600-311-9830	.NUT.	1	22170-

FIG.0421 FUEL NOZZLE AND SPILL PIPE

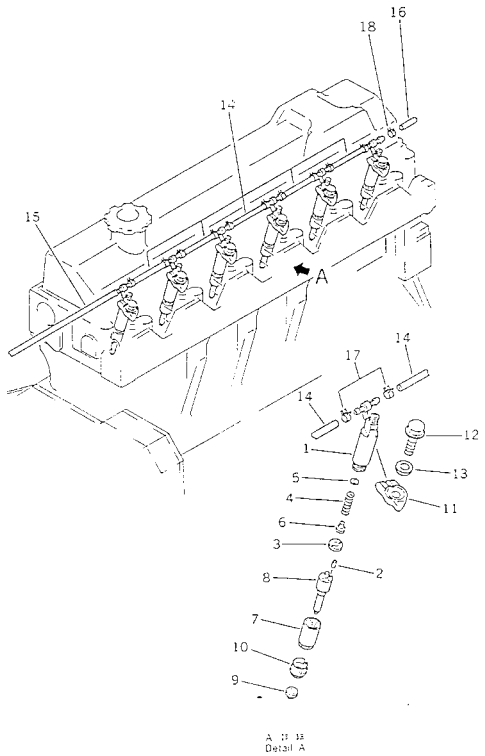

FIG NO. : 0421

INDEX	PART NO.	DESCRIPTION	Q'TY	SERIAL NO.
	6207-11-3100	NOZZLE HOLDER ASS'Y.	6	22170-
1	6207-11-3110	.HOLDER ASS'Y.	1	22170-
2	DK150508-5900	..PIN.	2	22170-
3	DK150515-9900	..SEAT.	1	22170-
4	DK150562-4300	..SPRING.	1	22170-
5	DK150531-0000	..SHIM, 0.50MM.	AR	22170-
	DK150531-0100	..SHIM, 0.525MM.	AR	22170-
	DK150531-0200	..SHIM, 0.55MM.	AR	22170-
	DK150531-0300	..SHIM, 0.575MM.	AR	22170-
	DK150531-0400	..SHIM, 0.60MM.	AR	22170-
	DK150531-0500	..SHIM, 0.625MM.	AR	22170-
	DK150531-0600	..SHIM, 0.65MM.	AR	22170-
	DK150531-0700	..SHIM, 0.675MM.	AR	22170-
	DK150531-0800	..SHIM, 0.70MM.	AR	22170-
	DK150531-0900	..SHIM, 0.725MM.	AR	22170-
	DK150531-1000	..SHIM, 0.75MM.	AR	22170-
	DK150531-1100	..SHIM, 0.775MM.	AR	22170-
	DK150531-1200	..SHIM, 0.80MM.	AR	22170-
	DK150531-1300	..SHIM, 0.825MM.	AR	22170-
	DK150531-1400	..SHIM, 0.85MM.	AR	22170-
	DK150531-1500	..SHIM, 0.875MM.	AR	22170-
	DK150531-1600	..SHIM, 0.90MM.	AR	22170-
	DK150531-1700	..SHIM, 0.925MM.	AR	22170-
	DK150531-1800	..SHIM, 0.95MM.	AR	22170-
	DK150531-1900	..SHIM, 0.975MM.	AR	22170-
	DK150531-2000	..SHIM, 1.0MM.	AR	22170-
	DK150531-2100	..SHIM, 1.025MM.	AR	22170-
	DK150531-2200	..SHIM, 1.05MM.	AR	22170-
	DK150531-2300	..SHIM, 1.075MM.	AR	22170-
	DK150531-2400	..SHIM, 1.10MM.	AR	22170-
	DK150531-2500	..SHIM, 1.125MM.	AR	22170-
	DK150531-2600	..SHIM, 1.15MM.	AR	22170-
	DK150531-2700	..SHIM, 1.175MM.	AR	22170-
	DK150531-2800	..SHIM, 1.200MM.	AR	22170-
	DK150531-2900	..SHIM, 1.225MM.	AR	22170-
	DK150531-3000	..SHIM, 1.25MM.	AR	22170-
	DK150531-3100	..SHIM, 1.275MM.	AR	22170-
	DK150531-3200	..SHIM, 1.30MM.	AR	22170-
	DK150531-3300	..SHIM, 1.325MM.	AR	22170-
	DK150531-3400	..SHIM, 1.35MM.	AR	22170-
	DK150531-3500	..SHIM, 1.375MM.	AR	22170-
	DK150531-3600	..SHIM, 1.40MM.	AR	22170-

FIG NO. : 0421

INDEX	PART NO.	DESCRIPTION	Q'TY	SERIAL NO.
	DK150531-3700	..SHIM, 1.425MM.	AR	22170-
	DK150531-3800	..SHIM, 1.45MM.	AR	22170-
	DK150531-3900	..SHIM, 1.475MM.	AR	22170-
	DK150531-4000	..SHIM, 1.50MM.	AR	22170-
6	DK150524-4600	..SPACER.	1	22170-
7	DK150655-0000	..NUT,RETAINING.	1	22170-
8	6207-11-3130	.NOZZLE.	1	22170-
9	6204-11-3880	GASKET.....(K1)	6	22170-
10	6204-11-3850	SEAL,DUST.....(K1)	6	22170-
11	6204-11-3810	HOLDER.	6	22170-
12	01435-01035	BOLT.	6	22170-
13	6204-11-3830	WASHER.	6	22170-
14	6204-71-9100	HOSE,SPILL.	5	41623-
	□07270-20410	TUBE,SPILL.	5	22170-41622
15	07270-20480	TUBE,SPILL.	1	22170-
16	6204-71-5581	CAP.	1	42401-
	□6204-71-5580	CAP.	1	22170-42400
17	07285-00100	CLIP.	10	41623-
18	07285-00100	CLIP.	1	42401-

S6D95L-1L

FIG.0451 FUEL INJECTION PUMP (PUMP) (1/2)

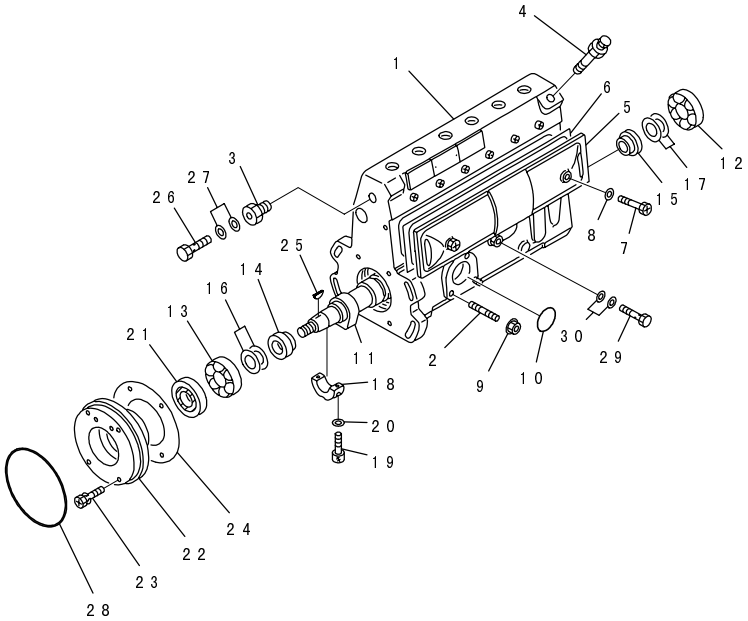

FIG NO. : 0451

INDEX	PART NO.	DESCRIPTION	Q'TY	SERIAL NO.
	6207-71-1910	INJECTION PUMP ASS'Y	1	22170-
	DK101069-9420	.PUMP ASS'Y	1	22170-
1	DK131073-7020	..HOUSING	1	22170-
2	DK029040-6020	...STUD	3	22170-
3	DK131400-0100	...ADAPTER	1	22170-
4	DK131420-0420	...BOLT	1	22170-
5	DK131028-6020	..COVER	1	22170-
6	DK131011-0800	...GASKET	1	22170-
7	DK131017-1000	..SCREW	2	22170-
8	DK029340-6020	..GASKET	2	22170-
9	DK139206-0400	..NUT	3	22170-
10	DK029633-1010	..O-RING	1	22170-
11	DK131371-3700	..CAMSHAFT	1	22170-
12	DK016630-2030	..BEARING	AR	22170-
	DK028201-7020	..BEARING	AR	22170-
13	DK016640-2030	..BEARING	AR	22170-
	DK028202-0020	..BEARING	AR	22170-
14	DK131302-1300	..RING	1	22170-
15	DK131302-1700	..RING	1	22170-
16	DK029312-0310	..SHIM, 0.10MM	AR	22170-
	DK029312-0320	..SHIM, 0.12MM	AR	22170-
	DK029312-0330	..SHIM, 0.14MM	AR	22170-
	DK029312-0340	..SHIM, 0.16MM	AR	22170-
	DK029312-0350	..SHIM, 0.18MM	AR	22170-
	DK029312-0360	..SHIM, 0.3MM	AR	22170-
	DK029312-0370	..SHIM, 0.5MM	AR	22170-
	DK029312-0380	..SHIM, 1.0MM	AR	22170-
17	DK029311-7010	..SHIM, 0.1MM	AR	22170-
	DK029311-7020	..SHIM, 0.12MM	AR	22170-
	DK029311-7030	..SHIM, 0.14MM	AR	22170-
	DK029311-7040	..SHIM, 0.16MM	AR	22170-
	DK029311-7050	..SHIM, 0.18MM	AR	22170-
	DK029311-7090	..SHIM, 0.3MM	AR	22170-
	DK029311-7060	..SHIM, 0.5MM	AR	22170-
	DK029311-7210	..SHIM, 0.7MM	AR	22170-
	DK029311-7070	..SHIM, 1.0MM	AR	22170-
	DK029311-7220	..SHIM, 1.4MM	AR	22170-
	DK139417-0000	..SHIM, 2.40MM	AR	22170-
18	DK131306-1000	..BEARING,CENTER	1	22170-
19	DK029050-5010	..SCREW	2	22170-
20	DK026505-0940	..GASKET	2	22170-
21	DK029622-0190	..SEAL,OIL	1	22170-

FIG NO. : 0451

INDEX	PART NO.	DESCRIPTION	Q'TY	SERIAL NO.
22	DK131330-1800	..COVER.....	1	22170-
23	DK020006-2040	..BOLT.....	4	22170-
24	DK131321-1700	..GASKET.....	1	22170-
25	DK029470-4030	..KEY.....	1	22170-
26	DK131401-0020	..BOLT,JOINT.....	1	22170-
27	DK029341-4130	..GASKET.....	2	22170-
28	DK029637-5020	..O-RING.....	1	22170-
29	DK029731-0120	..BOLT,JOINT.....	1	22170-
30	DK029341-0110	..GASKET.....	2	22170-

FIG.0452 FUEL INJECTION PUMP (PUMP) (2/2)

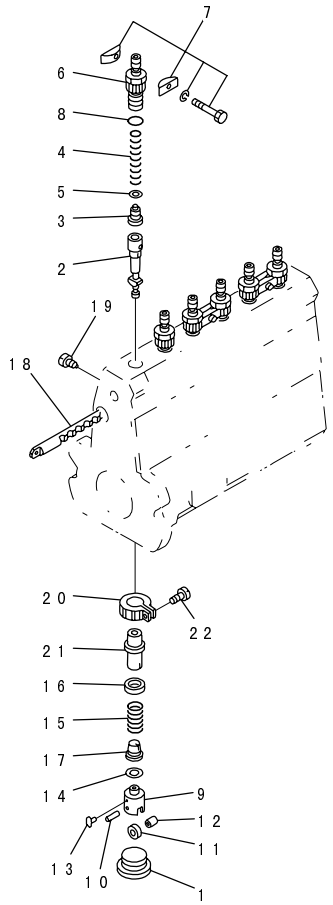

PE3P596

FIG NO. : 0452

INDEX	PART NO.	DESCRIPTION	Q'TY	SERIAL NO.
	(6207-71-1910)	INJECTION PUMP ASS'Y.	1	22170-
	(DK101069-9420)	.PUMP ASS'Y.	1	22170-
1	DK131034-1401	..PLUG.	6	22170-
2	DK131152-4020	..PLUNGER ASS'Y.	6	22170-
3	DK131110-6820	..VALVE,DELIVERY.	6	22170-
4	DK131112-4200	..SPRING.	6	22170-
5	DK131115-1600	..GASKET.	6	22170-
6	DK131116-8720	..HOLDER.	6	22170-
7	DK131122-0520	..PLATE ASS'Y.	3	22170-
8	DK029632-0030	..O-RING.	6	22170-
9	DK131200-2820	..TAPPET ASS'Y.	6	22170-
10	DK131203-0800	...PIN.	1	22170-
11	DK131204-1000	...ROLLER.	1	22170-
12	DK131205-0500	...BUSHING.	1	22170-
13	DK131206-0200	...GUIDE.	1	22170-
14	DK029311-0580	..SHIM, 0.2MM.	AR	22170-
	DK029311-0590	..SHIM, 0.25MM.	AR	22170-
	DK029311-0020	..SHIM, 0.30MM.	AR	22170-
	DK029311-0600	..SHIM, 0.35MM.	AR	22170-
	DK029311-0030	..SHIM, 0.40MM.	AR	22170-
	DK029311-0610	..SHIM, 0.45MM.	AR	22170-
	DK029311-0040	..SHIM, 0.50MM.	AR	22170-
	DK029311-0270	..SHIM, 0.55MM.	AR	22170-
	DK029311-0050	..SHIM, 0.6MM.	AR	22170-
	DK029311-0280	..SHIM, 0.65MM.	AR	22170-
	DK029311-0060	..SHIM, 0.7MM.	AR	22170-
	DK029311-0290	..SHIM, 0.75MM.	AR	22170-
	DK029311-0070	..SHIM, 0.8MM.	AR	22170-
	DK029311-0310	..SHIM, 0.85MM.	AR	22170-
	DK029311-0080	..SHIM, 0.9MM.	AR	22170-
	DK029311-0320	..SHIM, 0.95MM.	AR	22170-
	DK029311-0090	..SHIM, 1.0MM.	AR	22170-
	DK029311-0330	..SHIM, 1.05MM.	AR	22170-
	DK029311-0110	..SHIM, 1.1MM.	AR	22170-
	DK029311-0340	..SHIM, 1.15MM.	AR	22170-
	DK029311-0120	..SHIM, 1.2MM.	AR	22170-
	DK029311-0350	..SHIM, 1.25MM.	AR	22170-
	DK029311-0130	..SHIM, 1.3MM.	AR	22170-
	DK029311-0620	..SHIM, 1.35MM.	AR	22170-
	DK029311-0140	..SHIM, 1.4MM.	AR	22170-
	DK029311-0630	..SHIM, 1.45MM.	AR	22170-
	DK029311-0490	..SHIM, 1.5MM.	AR	22170-

FIG NO. : 0452

INDEX	PART NO.	DESCRIPTION	Q'TY	SERIAL NO.
	DK029311-0710	..SHIM, 1.55MM.....	AR	22170-
	DK029311-0500	..SHIM, 1.6MM.....	AR	22170-
15	DK131215-2500	..SPRING.....	6	22170-
16	DK131216-0100	..SEAT,SPRING.....	6	22170-
17	DK131217-0200	..SEAT,SPRING.....	6	22170-
18	DK131256-0000	..RACK,CONTROL.....	1	22170-
19	DK131226-0300	..SCREW.....	1	22170-
20	DK131240-0100	..PINION.....	6	22170-
21	DK131241-0100	..SLEEVE,CONTROL.....	6	22170-
22	DK131242-0100	..SCREW.....	6	22170-

FIG.0453 FUEL INJECTION PUMP (PUMP) (1/2) (WITH ENGINE STOP MOTO R TYPE)(#92607-)

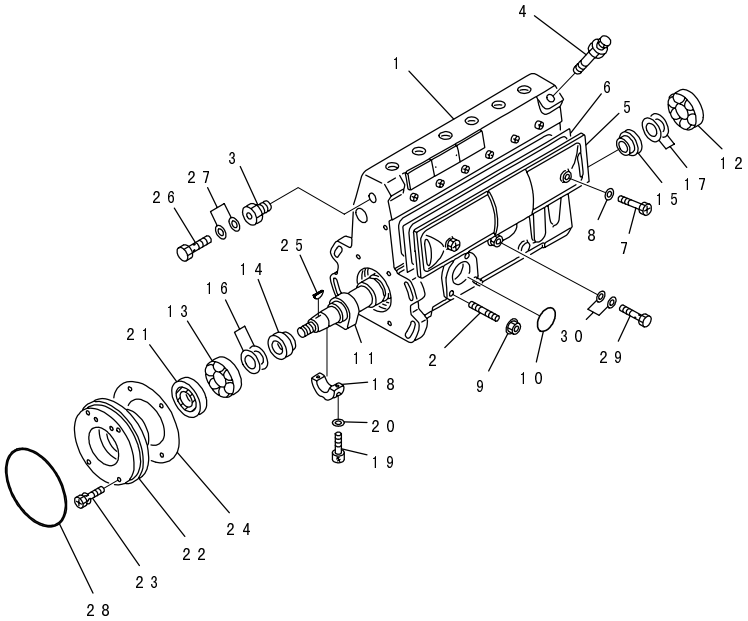

FIG NO. : 0453

INDEX	PART NO.	DESCRIPTION	Q'TY	SERIAL NO.
	6207-71-1911	INJECTION PUMP ASS'Y	1	92607-
	DK101069-9420	.PUMP ASS'Y	1	92607-
1	DK131073-7020	..HOUSING	1	92607-
2	DK029040-6020	...STUD	3	92607-
3	DK131400-0100	...ADAPTER	1	92607-
4	DK131420-0420	...BOLT	1	92607-
5	DK131028-6020	..COVER	1	92607-
6	DK131011-0800	...GASKET	1	92607-
7	DK131017-1000	..SCREW	2	92607-
8	DK029340-6020	..GASKET	2	92607-
9	DK139206-0400	..NUT	3	92607-
10	DK029633-1010	..O-RING	1	92607-
11	DK131371-3700	..CAMSHAFT	1	92607-
12	DK016630-2030	..BEARING	AR	92607-
	DK028201-7020	..BEARING	AR	92607-
13	DK016640-2030	..BEARING	AR	92607-
	DK028202-0020	..BEARING	AR	92607-
14	DK131302-1300	..RING	1	92607-
15	DK131302-1700	..RING	1	92607-
16	DK029312-0310	..SHIM, 0.10MM	AR	92607-
	DK029312-0320	..SHIM, 0.12MM	AR	92607-
	DK029312-0330	..SHIM, 0.14MM	AR	92607-
	DK029312-0340	..SHIM, 0.16MM	AR	92607-
	DK029312-0350	..SHIM, 0.18MM	AR	92607-
	DK029312-0360	..SHIM, 0.3MM	AR	92607-
	DK029312-0370	..SHIM, 0.5MM	AR	92607-
	DK029312-0380	..SHIM, 1.0MM	AR	92607-
17	DK029311-7010	..SHIM, 0.1MM	AR	92607-
	DK029311-7020	..SHIM, 0.12MM	AR	92607-
	DK029311-7030	..SHIM, 0.14MM	AR	92607-
	DK029311-7040	..SHIM, 0.16MM	AR	92607-
	DK029311-7050	..SHIM, 0.18MM	AR	92607-
	DK029311-7090	..SHIM, 0.3MM	AR	92607-
	DK029311-7060	..SHIM, 0.5MM	AR	92607-
	DK029311-7210	..SHIM, 0.7MM	AR	92607-
	DK029311-7070	..SHIM, 1.0MM	AR	92607-
	DK029311-7220	..SHIM, 1.4MM	AR	92607-
	DK139417-0000	..SHIM, 2.40MM	AR	92607-
18	DK131306-1000	..BEARING,CENTER	1	92607-
19	DK029050-5010	..SCREW	2	92607-
20	DK026505-0940	..GASKET	2	92607-
21	DK029622-0190	..SEAL,OIL	1	92607-

FIG NO. : 0453

INDEX	PART NO.	DESCRIPTION	Q'TY	SERIAL NO.
22	DK131330-1800	..COVER.....	1	92607-
23	DK020006-2040	..BOLT.....	4	92607-
24	DK131321-1700	..GASKET.....	1	92607-
25	DK029470-4030	..KEY.....	1	92607-
26	DK131401-0020	..BOLT,JOINT.....	1	92607-
27	DK029341-4130	..GASKET.....	2	92607-
28	DK029637-5020	..O-RING.....	1	92607-
29	DK029731-0120	..BOLT,JOINT.....	1	92607-
30	DK029341-0110	..GASKET.....	2	92607-

FIG.0454 FUEL INJECTION PUMP (PUMP) (2/2) (WITH ENGINE STOP MOTO R TYPE)(#92607-)

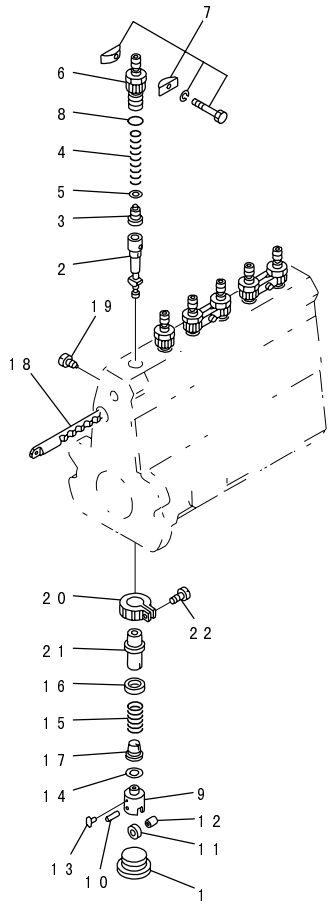

PE3P596

FIG NO. : 0454

INDEX	PART NO.	DESCRIPTION	Q'TY	SERIAL NO.
	(6207-71-1911)	INJECTION PUMP ASS'Y.	1	92607-
	(DK101069-9420)	.PUMP ASS'Y.	1	92607-
1	DK131034-1401	..PLUG.	6	92607-
2	DK131152-4020	..PLUNGER ASS'Y.	6	92607-
3	DK131110-6820	..VALVE,DELIVERY.	6	92607-
4	DK131112-4200	..SPRING.	6	92607-
5	DK131115-1600	..GASKET.	6	92607-
6	DK131116-8720	..HOLDER.	6	92607-
7	DK131122-0520	..PLATE ASS'Y.	3	92607-
8	DK029632-0030	..O-RING.	6	92607-
9	DK131200-2820	..TAPPET ASS'Y.	6	92607-
10	DK131203-0800	...PIN.	1	92607-
11	DK131204-1000	...ROLLER.	1	92607-
12	DK131205-0500	...BUSHING.	1	92607-
13	DK131206-0200	...GUIDE.	1	92607-
14	DK029311-0580	..SHIM, 0.2MM.	AR	92607-
	DK029311-0590	..SHIM, 0.25MM.	AR	92607-
	DK029311-0020	..SHIM, 0.30MM.	AR	92607-
	DK029311-0600	..SHIM, 0.35MM.	AR	92607-
	DK029311-0030	..SHIM, 0.40MM.	AR	92607-
	DK029311-0610	..SHIM, 0.45MM.	AR	92607-
	DK029311-0040	..SHIM, 0.50MM.	AR	92607-
	DK029311-0270	..SHIM, 0.55MM.	AR	92607-
	DK029311-0050	..SHIM, 0.6MM.	AR	92607-
	DK029311-0280	..SHIM, 0.65MM.	AR	92607-
	DK029311-0060	..SHIM, 0.7MM.	AR	92607-
	DK029311-0290	..SHIM, 0.75MM.	AR	92607-
	DK029311-0070	..SHIM, 0.8MM.	AR	92607-
	DK029311-0310	..SHIM, 0.85MM.	AR	92607-
	DK029311-0080	..SHIM, 0.9MM.	AR	92607-
	DK029311-0320	..SHIM, 0.95MM.	AR	92607-
	DK029311-0090	..SHIM, 1.0MM.	AR	92607-
	DK029311-0330	..SHIM, 1.05MM.	AR	92607-
	DK029311-0110	..SHIM, 1.1MM.	AR	92607-
	DK029311-0340	..SHIM, 1.15MM.	AR	92607-
	DK029311-0120	..SHIM, 1.2MM.	AR	92607-
	DK029311-0350	..SHIM, 1.25MM.	AR	92607-
	DK029311-0130	..SHIM, 1.3MM.	AR	92607-
	DK029311-0620	..SHIM, 1.35MM.	AR	92607-
	DK029311-0140	..SHIM, 1.4MM.	AR	92607-
	DK029311-0630	..SHIM, 1.45MM.	AR	92607-
	DK029311-0490	..SHIM, 1.5MM.	AR	92607-

FIG NO. : 0454

INDEX	PART NO.	DESCRIPTION	Q'TY	SERIAL NO.
	DK029311-0710	..SHIM, 1.55MM.....	AR	92607-
	DK029311-0500	..SHIM, 1.6MM.....	AR	92607-
15	DK131215-2500	..SPRING.....	6	92607-
16	DK131216-0100	..SEAT,SPRING.....	6	92607-
17	DK131217-0200	..SEAT,SPRING.....	6	92607-
18	DK131256-0000	..RACK,CONTROL.....	1	92607-
19	DK131226-0300	..SCREW.....	1	92607-
20	DK131240-0100	..PINION.....	6	92607-
21	DK131241-0100	..SLEEVE,CONTROL.....	6	92607-
22	DK131242-0100	..SCREW.....	6	92607-

FIG.0455 FUEL INJECTION PUMP (PUMP) (1/2) (WITH AIR COMPRESSOR TYPE)

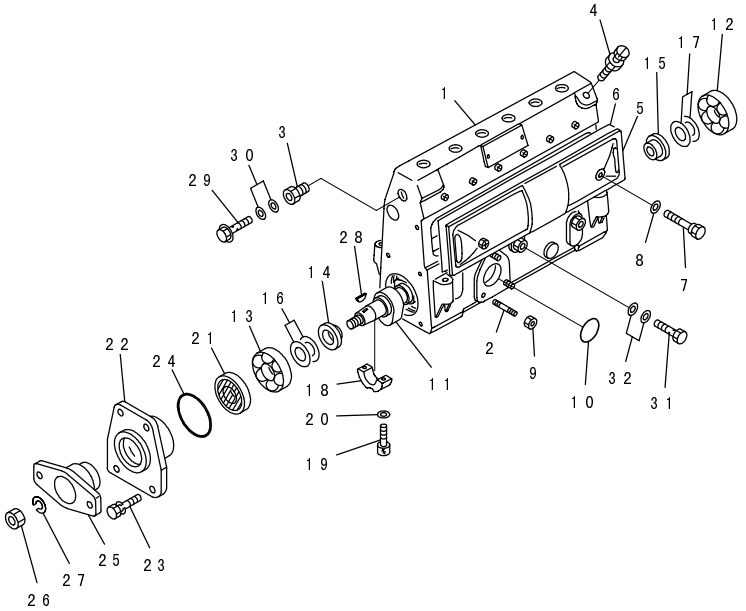

FIG NO. : 0455

INDEX	PART NO.	DESCRIPTION	Q'TY	SERIAL NO.
	6207-71-1950	INJECTION PUMP ASS'Y	1	22170-
	DK101069-3890	.PUMP ASS'Y	1	22170-
1	DK131071-9220	..HOUSING	1	22170-
2	DK029040-6020	...STUD	3	22170-
3	DK131400-0100	...ADAPTER	1	22170-
4	DK131420-0420	...BOLT	1	22170-
5	DK131028-6020	..COVER	1	22170-
6	DK131011-0800	...GASKET	1	22170-
7	DK131017-1000	..SCREW	2	22170-
8	DK029340-6020	..GASKET	2	22170-
9	DK139206-0400	..NUT	3	22170-
10	DK029633-1010	..O-RING	1	22170-
11	DK131371-3700	..CAMSHAFT	1	22170-
12	DK016630-2030	..BEARING	AR	22170-
	DK028201-7020	..BEARING	AR	22170-
13	DK016640-2030	..BEARING	AR	22170-
	DK028202-0020	..BEARING	AR	22170-
14	DK131302-1300	..RING	1	22170-
15	DK131302-1700	..RING	1	22170-
16	DK029312-0310	..SHIM, 0.10MM	AR	22170-
	DK029312-0320	..SHIM, 0.12MM	AR	22170-
	DK029312-0330	..SHIM, 0.14MM	AR	22170-
	DK029312-0340	..SHIM, 0.16MM	AR	22170-
	DK029312-0350	..SHIM, 0.18MM	AR	22170-
	DK029312-0360	..SHIM, 0.3MM	AR	22170-
	DK029312-0370	..SHIM, 0.5MM	AR	22170-
	DK029312-0380	..SHIM, 1.0MM	AR	22170-
17	DK029311-7010	..SHIM, 0.1MM	AR	22170-
	DK029311-7020	..SHIM, 0.12MM	AR	22170-
	DK029311-7030	..SHIM, 0.14MM	AR	22170-
	DK029311-7040	..SHIM, 0.16MM	AR	22170-
	DK029311-7050	..SHIM, 0.18MM	AR	22170-
	DK029311-7090	..SHIM, 0.3MM	AR	22170-
	DK029311-7060	..SHIM, 0.5MM	AR	22170-
	DK029311-7210	..SHIM, 0.7MM	AR	22170-
	DK029311-7070	..SHIM, 1.0MM	AR	22170-
	DK029311-7220	..SHIM, 1.4MM	AR	22170-
	DK139417-0000	..SHIM, 2.40MM	AR	22170-
18	DK131306-1000	..BEARING,CENTER	1	22170-
19	DK029050-5010	..SCREW	2	22170-
20	DK026505-0940	..GASKET	2	22170-
21	DK029622-0190	..SEAL,OIL	1	22170-

FIG NO. : 0455

INDEX	PART NO.	DESCRIPTION	Q'TY	SERIAL NO.
22	DK131316-2000	..COVER.....	1	22170-
23	DK020006-1440	..BOLT.....	4	22170-
24	DK029635-0050	..O-RING.....	1	22170-
25	DK156636-7420	..COUPLING.....	1	22170-
26	DK131325-2600	..NUT.....	1	22170-
27	DK029321-4010	..WASHER,SPRING.....	1	22170-
28	DK029470-4030	..KEY.....	1	22170-
29	DK131401-0020	..BOLT,JOINT.....	1	22170-
30	DK029341-4130	..GASKET.....	2	22170-
31	DK029731-0120	..BOLT,JOINT.....	1	22170-
32	DK029341-0110	..GASKET.....	2	22170-

FIG.0456 FUEL INJECTION PUMP (PUMP) (2/2) (WITH AIR COMPRESSOR TYPE)

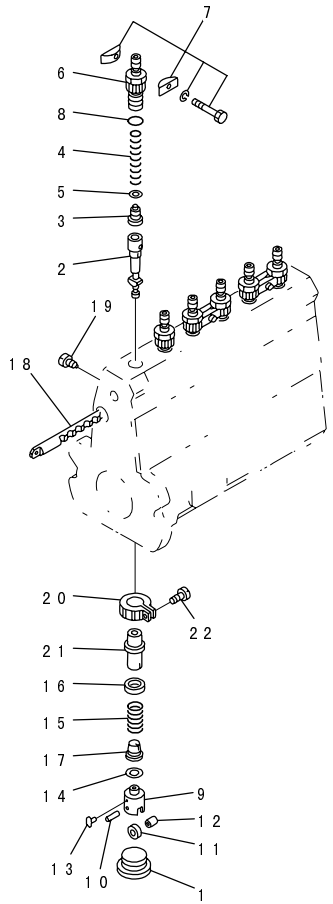

PE3P596

FIG NO. : 0456

INDEX	PART NO.	DESCRIPTION	Q'TY	SERIAL NO.
	(6207-71-1950)	INJECTION PUMP ASS'Y.	1	22170-
	(DK101069-3890)	.PUMP ASS'Y.	1	22170-
1	DK131034-1401	..PLUG.	6	22170-
2	DK131152-4020	..PLUNGER ASS'Y.	6	22170-
3	DK131110-6820	..VALVE,DELIVERY.	6	22170-
4	DK131112-4200	..SPRING.	6	22170-
5	DK131115-1600	..GASKET.	6	22170-
6	DK131116-8720	..HOLDER.	6	22170-
7	DK131122-0520	..PLATE ASS'Y.	3	22170-
8	DK029632-0030	..O-RING.	6	22170-
9	DK131200-2820	..TAPPET ASS'Y.	6	22170-
10	DK131203-0800	...PIN.	1	22170-
11	DK131204-1000	...ROLLER.	1	22170-
12	DK131205-0500	...BUSHING.	1	22170-
13	DK131206-0200	...GUIDE.	1	22170-
14	DK029311-0580	..SHIM, 0.2MM.	AR	22170-
	DK029311-0590	..SHIM, 0.25MM.	AR	22170-
	DK029311-0020	..SHIM, 0.30MM.	AR	22170-
	DK029311-0600	..SHIM, 0.35MM.	AR	22170-
	DK029311-0030	..SHIM, 0.40MM.	AR	22170-
	DK029311-0610	..SHIM, 0.45MM.	AR	22170-
	DK029311-0040	..SHIM, 0.50MM.	AR	22170-
	DK029311-0270	..SHIM, 0.55MM.	AR	22170-
	DK029311-0050	..SHIM, 0.6MM.	AR	22170-
	DK029311-0280	..SHIM, 0.65MM.	AR	22170-
	DK029311-0060	..SHIM, 0.7MM.	AR	22170-
	DK029311-0290	..SHIM, 0.75MM.	AR	22170-
	DK029311-0070	..SHIM, 0.8MM.	AR	22170-
	DK029311-0310	..SHIM, 0.85MM.	AR	22170-
	DK029311-0080	..SHIM, 0.9MM.	AR	22170-
	DK029311-0320	..SHIM, 0.95MM.	AR	22170-
	DK029311-0090	..SHIM, 1.0MM.	AR	22170-
	DK029311-0330	..SHIM, 1.05MM.	AR	22170-
	DK029311-0110	..SHIM, 1.1MM.	AR	22170-
	DK029311-0340	..SHIM, 1.15MM.	AR	22170-
	DK029311-0120	..SHIM, 1.2MM.	AR	22170-
	DK029311-0350	..SHIM, 1.25MM.	AR	22170-
	DK029311-0130	..SHIM, 1.3MM.	AR	22170-
	DK029311-0620	..SHIM, 1.35MM.	AR	22170-
	DK029311-0140	..SHIM, 1.4MM.	AR	22170-
	DK029311-0630	..SHIM, 1.45MM.	AR	22170-
	DK029311-0490	..SHIM, 1.5MM.	AR	22170-

FIG NO. : 0456

INDEX	PART NO.	DESCRIPTION	Q'TY	SERIAL NO.
	DK029311-0710	..SHIM, 1.55MM.....	AR	22170-
	DK029311-0500	..SHIM, 1.6MM.....	AR	22170-
15	DK131215-2500	..SPRING.....	6	22170-
16	DK131216-0100	..SEAT,SPRING.....	6	22170-
17	DK131217-0200	..SEAT,SPRING.....	6	22170-
18	DK131256-0000	..RACK,CONTROL.....	1	22170-
19	DK131226-0300	..SCREW.....	1	22170-
20	DK131240-0100	..PINION.....	6	22170-
21	DK131241-0100	..SLEEVE,CONTROL.....	6	22170-
22	DK131242-0100	..SCREW.....	6	22170-

FIG.0457 FUEL INJECTION PUMP (PUMP) (1/2) (WITH AIR COMPRESSOR A

ND ENGINE STOP MOTOR TYPE)(#92607-)

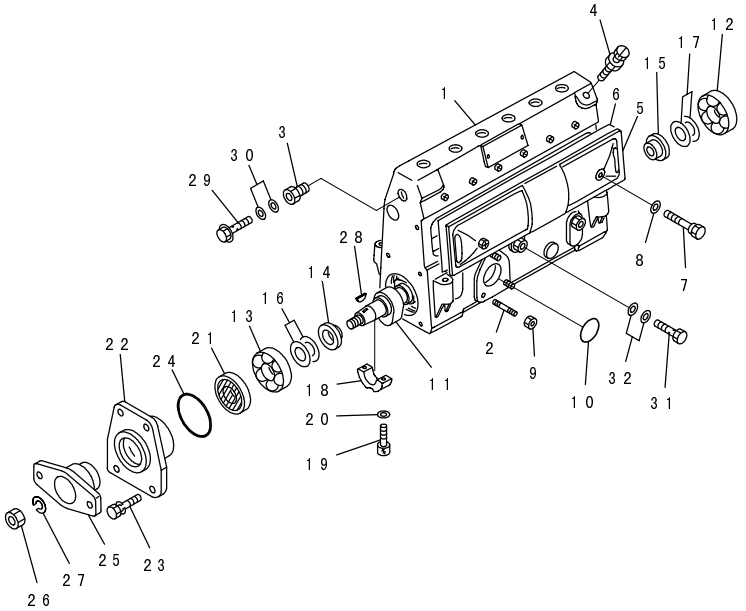

FIG NO. : 0457

INDEX	PART NO.	DESCRIPTION	Q'TY	SERIAL NO.
	6207-71-1951	INJECTION PUMP ASS'Y	1	92607-
	DK101069-3890	.PUMP ASS'Y	1	92607-
1	DK131071-9220	..HOUSING	1	92607-
2	DK029040-6020	...STUD	3	92607-
3	DK131400-0100	...ADAPTER	1	92607-
4	DK131420-0420	...BOLT	1	92607-
5	DK131028-6020	..COVER	1	92607-
6	DK131011-0800	...GASKET	1	92607-
7	DK131017-1000	..SCREW	2	92607-
8	DK029340-6020	..GASKET	2	92607-
9	DK139206-0400	..NUT	3	92607-
10	DK029633-1010	..O-RING	1	92607-
11	DK131371-3700	..CAMSHAFT	1	92607-
12	DK016630-2030	..BEARING	AR	92607-
	DK028201-7020	..BEARING	AR	92607-
13	DK016640-2030	..BEARING	AR	92607-
	DK028202-0020	..BEARING	AR	92607-
14	DK131302-1300	..RING	1	92607-
15	DK131302-1700	..RING	1	92607-
16	DK029312-0310	..SHIM, 0.10MM	AR	92607-
	DK029312-0320	..SHIM, 0.12MM	AR	92607-
	DK029312-0330	..SHIM, 0.14MM	AR	92607-
	DK029312-0340	..SHIM, 0.16MM	AR	92607-
	DK029312-0350	..SHIM, 0.18MM	AR	92607-
	DK029312-0360	..SHIM, 0.3MM	AR	92607-
	DK029312-0370	..SHIM, 0.5MM	AR	92607-
	DK029312-0380	..SHIM, 1.0MM	AR	92607-
17	DK029311-7010	..SHIM, 0.1MM	AR	92607-
	DK029311-7020	..SHIM, 0.12MM	AR	92607-
	DK029311-7030	..SHIM, 0.14MM	AR	92607-
	DK029311-7040	..SHIM, 0.16MM	AR	92607-
	DK029311-7050	..SHIM, 0.18MM	AR	92607-
	DK029311-7090	..SHIM, 0.3MM	AR	92607-
	DK029311-7060	..SHIM, 0.5MM	AR	92607-
	DK029311-7210	..SHIM, 0.7MM	AR	92607-
	DK029311-7070	..SHIM, 1.0MM	AR	92607-
	DK029311-7220	..SHIM, 1.4MM	AR	92607-
	DK139417-0000	..SHIM, 2.40MM	AR	92607-
18	DK131306-1000	..BEARING,CENTER	1	92607-
19	DK029050-5010	..SCREW	2	92607-
20	DK026505-0940	..GASKET	2	92607-
21	DK029622-0190	..SEAL,OIL	1	92607-

FIG NO. : 0457

INDEX	PART NO.	DESCRIPTION	Q'TY	SERIAL NO.
22	DK131316-2000	..COVER.....	1	92607-
23	DK020006-1440	..BOLT.....	4	92607-
24	DK029635-0050	..O-RING.....	1	92607-
25	DK156636-7420	..COUPLING.....	1	92607-
26	DK131325-2600	..NUT.....	1	92607-
27	DK029321-4010	..WASHER,SPRING.....	1	92607-
28	DK029470-4030	..KEY.....	1	92607-
29	DK131401-0020	..BOLT,JOINT.....	1	92607-
30	DK029341-4130	..GASKET.....	2	92607-
31	DK029731-0120	..BOLT,JOINT.....	1	92607-
32	DK029341-0110	..GASKET.....	2	92607-

FIG.0458 FUEL INJECTION PUMP (PUMP) (2/2) (WITH AIR COMPRESSOR A

ND ENGINE STOP MOTOR TYPE)(#92607-)

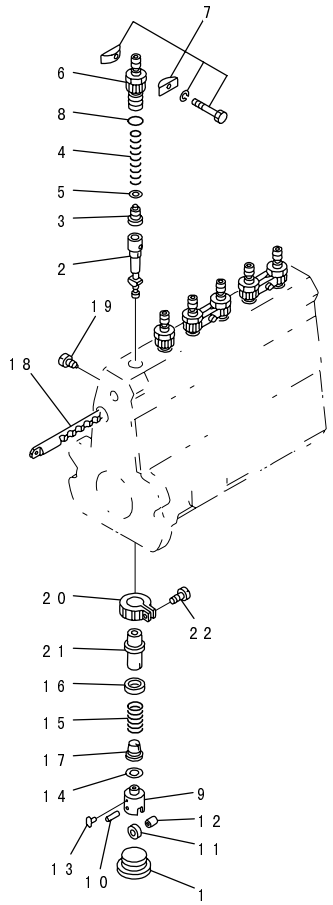

PE3P596

FIG NO. : 0458

INDEX	PART NO.	DESCRIPTION	Q'TY	SERIAL NO.
	(6207-71-1951)	INJECTION PUMP ASS'Y.	1	92607-
	(DK101069-3890)	.PUMP ASS'Y.	1	92607-
1	DK131034-1401	..PLUG.	6	92607-
2	DK131152-4020	..PLUNGER ASS'Y.	6	92607-
3	DK131110-6820	..VALVE,DELIVERY.	6	92607-
4	DK131112-4200	..SPRING.	6	92607-
5	DK131115-1600	..GASKET.	6	92607-
6	DK131116-8720	..HOLDER.	6	92607-
7	DK131122-0520	..PLATE ASS'Y.	3	92607-
8	DK029632-0030	..O-RING.	6	92607-
9	DK131200-2820	..TAPPET ASS'Y.	6	92607-
10	DK131203-0800	...PIN.	1	92607-
11	DK131204-1000	...ROLLER.	1	92607-
12	DK131205-0500	...BUSHING.	1	92607-
13	DK131206-0200	...GUIDE.	1	92607-
14	DK029311-0580	..SHIM, 0.2MM.	AR	92607-
	DK029311-0590	..SHIM, 0.25MM.	AR	92607-
	DK029311-0020	..SHIM, 0.30MM.	AR	92607-
	DK029311-0600	..SHIM, 0.35MM.	AR	92607-
	DK029311-0030	..SHIM, 0.40MM.	AR	92607-
	DK029311-0610	..SHIM, 0.45MM.	AR	92607-
	DK029311-0040	..SHIM, 0.50MM.	AR	92607-
	DK029311-0270	..SHIM, 0.55MM.	AR	92607-
	DK029311-0050	..SHIM, 0.6MM.	AR	92607-
	DK029311-0280	..SHIM, 0.65MM.	AR	92607-
	DK029311-0060	..SHIM, 0.7MM.	AR	92607-
	DK029311-0290	..SHIM, 0.75MM.	AR	92607-
	DK029311-0070	..SHIM, 0.8MM.	AR	92607-
	DK029311-0310	..SHIM, 0.85MM.	AR	92607-
	DK029311-0080	..SHIM, 0.9MM.	AR	92607-
	DK029311-0320	..SHIM, 0.95MM.	AR	92607-
	DK029311-0090	..SHIM, 1.0MM.	AR	92607-
	DK029311-0330	..SHIM, 1.05MM.	AR	92607-
	DK029311-0110	..SHIM, 1.1MM.	AR	92607-
	DK029311-0340	..SHIM, 1.15MM.	AR	92607-
	DK029311-0120	..SHIM, 1.2MM.	AR	92607-
	DK029311-0350	..SHIM, 1.25MM.	AR	92607-
	DK029311-0130	..SHIM, 1.3MM.	AR	92607-
	DK029311-0620	..SHIM, 1.35MM.	AR	92607-
	DK029311-0140	..SHIM, 1.4MM.	AR	92607-
	DK029311-0630	..SHIM, 1.45MM.	AR	92607-
	DK029311-0490	..SHIM, 1.5MM.	AR	92607-

FIG NO. : 0458

INDEX	PART NO.	DESCRIPTION	Q'TY	SERIAL NO.
	DK029311-0710	..SHIM, 1.55MM.....	AR	92607-
	DK029311-0500	..SHIM, 1.6MM.....	AR	92607-
15	DK131215-2500	..SPRING.....	6	92607-
16	DK131216-0100	..SEAT,SPRING.....	6	92607-
17	DK131217-0200	..SEAT,SPRING.....	6	92607-
18	DK131256-0000	..RACK,CONTROL.....	1	92607-
19	DK131226-0300	..SCREW.....	1	92607-
20	DK131240-0100	..PINION.....	6	92607-
21	DK131241-0100	..SLEEVE,CONTROL.....	6	92607-
22	DK131242-0100	..SCREW.....	6	92607-

FIG.0461 FUEL INJECTION PUMP (GOVERNOR) (1/2)

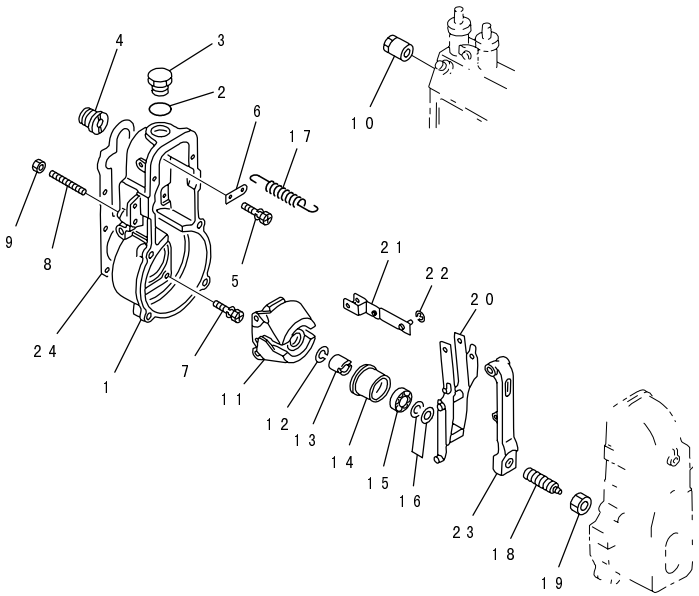

PE3P307

FIG NO. : 0461

INDEX	PART NO.	DESCRIPTION	Q'TY	SERIAL NO.
	(6207-71-1910)	INJECTION PUMP ASS'Y	1	22170-
	DK105400-6710	.GOVERNOR ASS'Y	1	22170-
1	DK154000-6300	..HOUSING	1	22170-
2	DK029632-5070	..O-RING	1	22170-
3	DK154007-2900	..PLUG	1	22170-
4	DK154007-0200	..ADAPTER	1	22170-
5	DK020018-1840	..BOLT	1	22170-
6	DK154350-1900	..PLATE	1	22170-
7	DK029010-6810	..BOLT	6	22170-
8	DK154010-0100	..SCREW	1	22170-
9	DK154011-0100	..NUT,LOCK	1	22170-
10	DK154050-1720	..LIMITER	1	22170-
11	DK154100-9720	..FLYWEIGHT ASS'Y	1	22170-
12	DK029321-2020	..WASHER,SPRING	1	22170-
13	DK029231-2030	..NUT	1	22170-
14	DK154123-0120	..SLEEVE	1	22170-
15	DK029801-0030	...BEARING	1	22170-
16	DK029311-0010	..SHIM, 0.20MM	AR	22170-
	DK029311-0180	..SHIM, 0.30MM	AR	22170-
	DK029311-0190	..SHIM, 0.40MM	AR	22170-
	DK139410-0000	..SHIM, 0.50MM	AR	22170-
	DK029311-0210	..SHIM, 1.00MM	AR	22170-
	DK139410-0100	..SHIM, 1.50MM	AR	22170-
	DK139410-3000	..SHIM, 2.00MM	AR	22170-
	DK139410-3100	..SHIM, 3.00MM	AR	22170-
	DK139410-3200	..SHIM, 4.00MM	AR	22170-
17	DK154154-0701	..SPRING	1	22170-
18	DK154177-0620	..CAPSULE,SPRING	1	22170-
19	DK029201-6010	..NUT	1	22170-
20	DK154210-0920	..GUIDE LEVER ASS'Y	1	22170-
21	DK154230-3920	..LINK	1	22170-
22	DK016010-0540	..RING,SNAP	1	22170-
23	DK154236-4100	..LEVER,TENSION	1	22170-
24	DK154350-7700	..GASKET	1	22170-

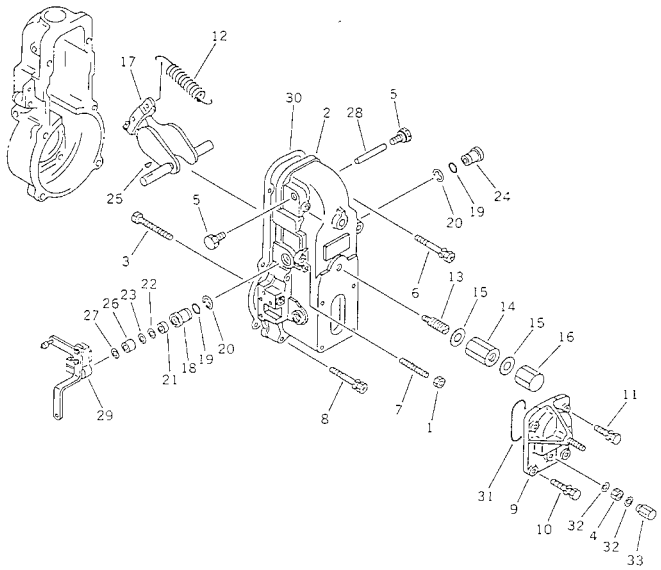

FIG NO. : 0462

INDEX	PART NO.	DESCRIPTION	Q'TY	SERIAL NO.
	(6207-71-1910)	INJECTION PUMP ASS'Y.	1	22170-
	(DK105400-6710)	.GOVERNOR ASS'Y.	1	22170-
1	DK154011-0100	..NUT,LOCK.	1	22170-
2	DK154500-2020	..COVER.	1	22170-
3	DK154031-2400	..SCREW.	1	22170-
4	DK139206-0600	..NUT.	1	22170-
5	DK154036-0300	..PLUG.	2	22170-
6	DK020106-5040	..BOLT.	2	22170-
7	DK154010-0300	..SCREW.	1	22170-
8	DK020106-3840	..BOLT.	4	22170-
9	DK154063-6820	..COVER.	1	22170-
10	DK029020-6210	..BOLT.	2	22170-
11	DK020006-1640	..BOLT.	2	22170-
12	DK154150-6400	..SPRING,GOVERNOR.	1	22170-
13	DK154158-0820	..CAPSULE,SPRING.	1	22170-
14	DK154011-1700	..NUT.	1	22170-
15	DK026512-1540	..GASKET.	2	22170-
16	DK154159-1200	..NUT,CAP.	1	22170-
17	DK154200-7020	..LEVER ASS'Y,SWIVEL.	1	22170-
18	DK154204-3000	..BUSHING.	1	22170-
19	DK029631-8020	..O-RING.	2	22170-
20	DK016010-1640	..RING,SNAP.	2	22170-
21	DK139611-0000	..SEAL,OIL.	1	22170-
22	DK139411-0000	..SHIM, 0.40MM.	1	22170-
23	DK029311-1090	..SHIM, 0.30MM.	AR	22170-
24	DK154204-3100	..BUSHING.	1	22170-
25	DK025803-1310	..KEY, 13MM.	1	22170-
26	DK154206-2800	..COLLAR.	1	22170-
27	DK154206-0200	..WASHER, 1.0MM.	AR	22170-
28	DK154237-0100	..PIN.	1	22170-
29	DK154343-5020	..LEVER.	1	22170-
30	DK154350-7800	..GASKET.	1	22170-
31	DK029635-2020	..O-RING.	1	22170-
32	DK026506-1040	..GASKET.	2	22170-
33	DK154035-1600	..NUT,CAP.	1	22170-

FIG.0463 FUEL INJECTION PUMP (GOVERNOR) (1/2)

(WITH ENGINE STOP MOTOR TYPE)

(#92607-)

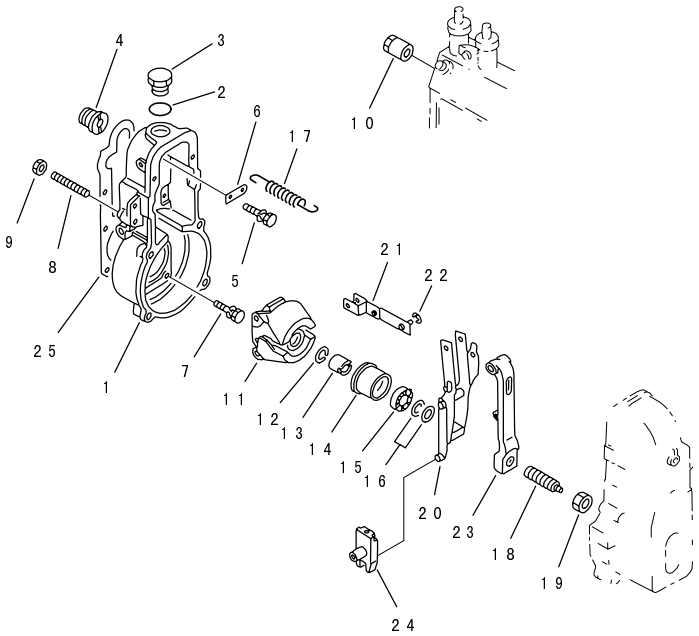

PE3P110

FIG NO. : 0463

INDEX	PART NO.	DESCRIPTION	Q'TY	SERIAL NO.
	(6207-71-1911)	INJECTION PUMP ASS'Y.	1	92607-
	DK105400-7750	.GOVERNOR ASS'Y.	1	92607-
1	DK154000-6300	..HOUSING.	1	92607-
2	DK029632-5070	..O-RING.	1	92607-
3	DK154007-2900	..PLUG.	1	92607-
4	DK154007-0200	..ADAPTER.	1	92607-
5	DK020018-1840	..BOLT.	1	92607-
6	DK154350-1900	..PLATE.	1	92607-
7	DK029010-6810	..BOLT.	6	92607-
8	DK154010-0100	..SCREW.	1	92607-
9	DK154011-0100	..NUT,LOCK.	1	92607-
10	DK154050-1720	..LIMITER.	1	92607-
11	DK154100-9720	..FLYWEIGHT ASS'Y.	1	92607-
12	DK029321-2020	..WASHER,SPRING.	1	92607-
13	DK029231-2030	..NUT.	1	92607-
14	DK154123-0120	..SLEEVE.	1	92607-
15	DK029801-0030	...BEARING.	1	92607-
16	DK029311-0010	..SHIM, 0.20MM.	AR	92607-
	DK029311-0180	..SHIM, 0.30MM.	AR	92607-
	DK029311-0190	..SHIM, 0.40MM.	AR	92607-
	DK139410-0000	..SHIM, 0.50MM.	AR	92607-
	DK029311-0210	..SHIM, 1.00MM.	AR	92607-
	DK139410-0100	..SHIM, 1.50MM.	AR	92607-
	DK139410-3000	..SHIM, 2.00MM.	AR	92607-
	DK139410-3100	..SHIM, 3.00MM.	AR	92607-
	DK139410-3200	..SHIM, 4.00MM.	AR	92607-
17	DK154154-0701	..SPRING.	1	92607-
18	DK154177-0620	..CAPSULE,SPRING.	1	92607-
19	DK029201-6010	..NUT.	1	92607-
20	DK154210-0920	..GUIDE LEVER ASS'Y.	1	92607-
21	DK154230-3920	..LINK.	1	92607-
22	DK016010-0540	..RING,SNAP.	1	92607-
23	DK154236-4100	..LEVER,TENSION.	1	92607-
24	DK154326-5020	..LEVER ASS'Y.	1	92607-
25	DK154350-7700	..GASKET.	1	92607-

FIG.0464 FUEL INJECTION PUMP (GOVERNOR) (2/2)

(WITH ENGINE STOP MOTOR TYPE)

(#92607-)

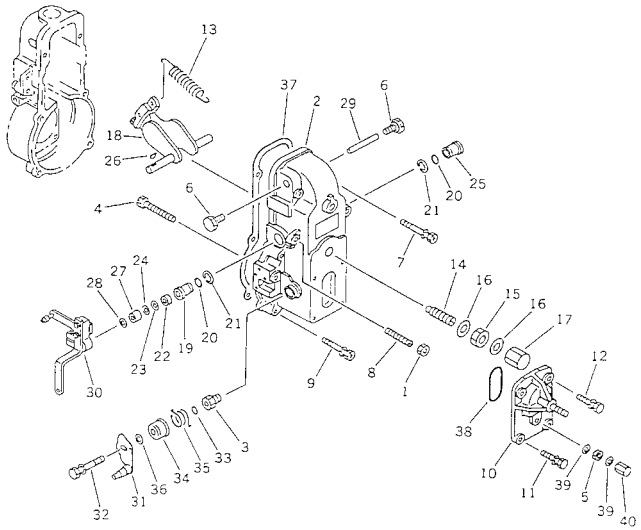

FIG NO. : 0464

INDEX	PART NO.	DESCRIPTION	Q'TY	SERIAL NO.
	(6207-71-1911)	INJECTION PUMP ASS'Y	1	92607-
	(DK105400-7750)	.GOVERNOR ASS'Y	1	92607-
1	DK154011-0100	..NUT,LOCK	1	92607-
2	DK154500-1020	..COVER	1	92607-
3	DK154321-0400	...BUSHING	1	92607-
4	DK154031-2400	..SCREW	1	92607-
5	DK139206-0600	..NUT	1	92607-
6	DK154036-0300	..PLUG	2	92607-
7	DK020106-5040	..BOLT	2	92607-
8	DK154010-0200	..SCREW	1	92607-
9	DK020106-3840	..BOLT	4	92607-
10	DK154063-6820	..COVER	1	92607-
11	DK029020-6210	..BOLT	2	92607-
12	DK020006-1640	..BOLT	2	92607-
13	DK154150-6400	..SPRING,GOVERNOR	1	92607-
14	DK154158-0820	..CAPSULE,SPRING	1	92607-
15	DK154011-1700	..NUT	1	92607-
16	DK026512-1540	..GASKET	2	92607-
17	DK154159-1200	..NUT,CAP	1	92607-
18	DK154200-7020	..LEVER ASS'Y,SWIVEL	1	92607-
19	DK154204-3000	..BUSHING	1	92607-
20	DK029631-8020	..O-RING	2	92607-
21	DK016010-1640	..RING,SNAP	2	92607-
22	DK139611-0000	..SEAL,OIL	1	92607-
23	DK139411-0000	..SHIM, 0.40MM	1	92607-
24	DK029311-1090	..SHIM, 0.30MM	AR	92607-
25	DK154204-3100	..BUSHING	1	92607-
26	DK025803-1310	..KEY, 13MM	1	92607-
27	DK154206-2800	..COLLAR	1	92607-
28	DK154206-0200	..WASHER, 1.0MM	AR	92607-
29	DK154237-0100	..PIN	1	92607-
30	DK154343-5020	..LEVER	1	92607-
31	DK154366-8120	..LEVER	1	92607-
32	DK020006-1640	..BOLT	1	92607-
33	DK029631-0030	..O-RING	1	92607-
34	DK154322-0100	..CAP	1	92607-
35	DK154327-7600	..SPRING	1	92607-
36	DK029311-0520	..SHIM, 0.2MM	AR	92607-
	DK029311-0530	..SHIM, 0.25MM	AR	92607-
	DK029311-0540	..SHIM, 0.3MM	AR	92607-
	DK029311-0550	..SHIM, 0.35MM	AR	92607-
	DK029311-0560	..SHIM, 0.4MM	AR	92607-

FIG.0464 FUEL INJECTION PUMP (GOVERNOR) (2/2)

(WITH ENGINE STOP MOTOR TYPE)

(#92607-)

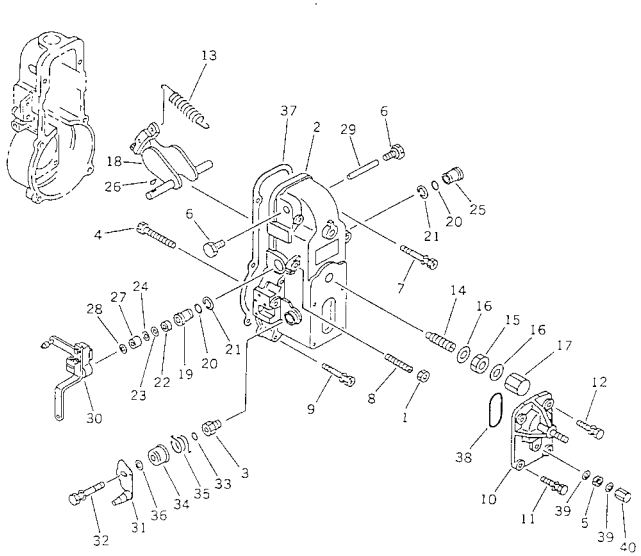

FIG NO. : 0464

INDEX	PART NO.	DESCRIPTION	Q'TY	SERIAL NO.
	DK029311-0570	..SHIM, 0.5MM.....	AR	92607-
37	DK154350-7800	..GASKET.....	1	92607-
38	DK029635-2020	..O-RING.....	1	92607-
39	DK026506-1040	..GASKET.....	2	92607-
40	DK154035-1600	..NUT,CAP.....	1	92607-

FIG.0465 FUEL INJECTION PUMP (GOVERNOR) (1/2) (WITH AIR COMPRESS OR TYPE)

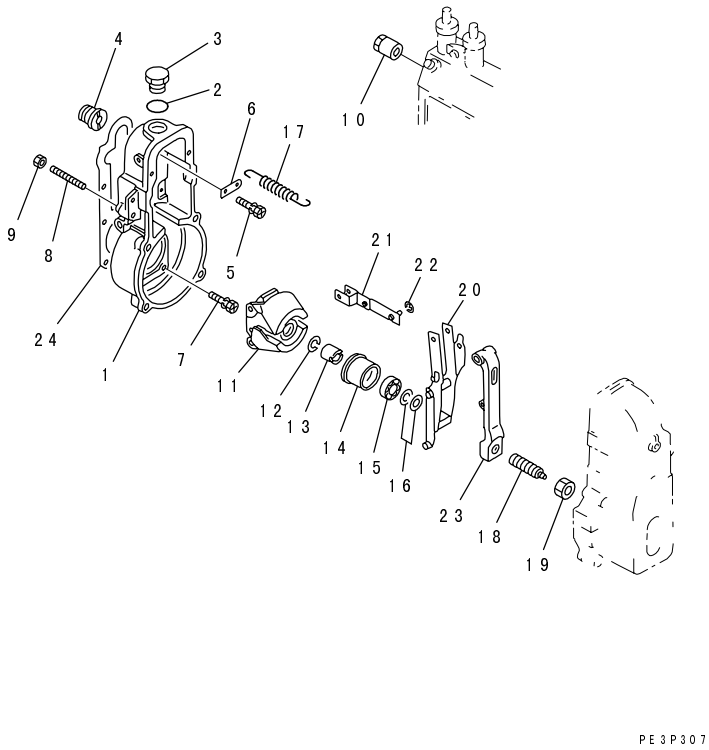

FIG NO. : 0465

INDEX	PART NO.	DESCRIPTION	Q'TY	SERIAL NO.
	(6207-71-1950)	INJECTION PUMP ASS'Y.	1	22170-
	DK105400-6700	.GOVERNOR ASS'Y.	1	22170-
1	DK154000-6300	..HOUSING.	1	22170-
2	DK029632-5070	..O-RING.	1	22170-
3	DK154007-2900	..PLUG.	1	22170-
4	DK154007-0200	..ADAPTER.	1	22170-
5	DK020018-1840	..BOLT.	1	22170-
6	DK154350-1900	..PLATE.	1	22170-
7	DK029010-6810	..BOLT.	6	22170-
8	DK154010-0100	..SCREW.	1	22170-
9	DK154011-0100	..NUT,LOCK.	1	22170-
10	DK154050-1720	..LIMITER.	1	22170-
11	DK154100-9720	..FLYWEIGHT ASS'Y.	1	22170-
12	DK029321-2020	..WASHER,SPRING.	1	22170-
13	DK029231-2030	..NUT.	1	22170-
14	DK154123-0120	..SLEEVE.	1	22170-
15	DK029801-0030	...BEARING.	1	22170-
16	DK029311-0010	..SHIM, 0.20MM.	AR	22170-
	DK029311-0180	..SHIM, 0.30MM.	AR	22170-
	DK029311-0190	..SHIM, 0.40MM.	AR	22170-
	DK139410-0000	..SHIM, 0.50MM.	AR	22170-
	DK029311-0210	..SHIM, 1.00MM.	AR	22170-
	DK139410-0100	..SHIM, 1.50MM.	AR	22170-
	DK139410-3000	..SHIM, 2.00MM.	AR	22170-
	DK139410-3100	..SHIM, 3.00MM.	AR	22170-
	DK139410-3200	..SHIM, 4.00MM.	AR	22170-
17	DK154154-0701	..SPRING.	1	22170-
18	DK154177-0620	..CAPSULE,SPRING.	1	22170-
19	DK029201-6010	..NUT.	1	22170-
20	DK154210-0920	..GUIDE LEVER ASS'Y.	1	22170-
21	DK154230-3920	..LINK.	1	22170-
22	DK016010-0540	..RING,SNAP.	1	22170-
23	DK154236-4100	..LEVER,TENSION.	1	22170-
24	DK154350-7700	..GASKET.	1	22170-

FIG.0466 FUEL INJECTION PUMP (GOVERNOR) (2/2) (WITH AIR COMPRESS OR TYPE)

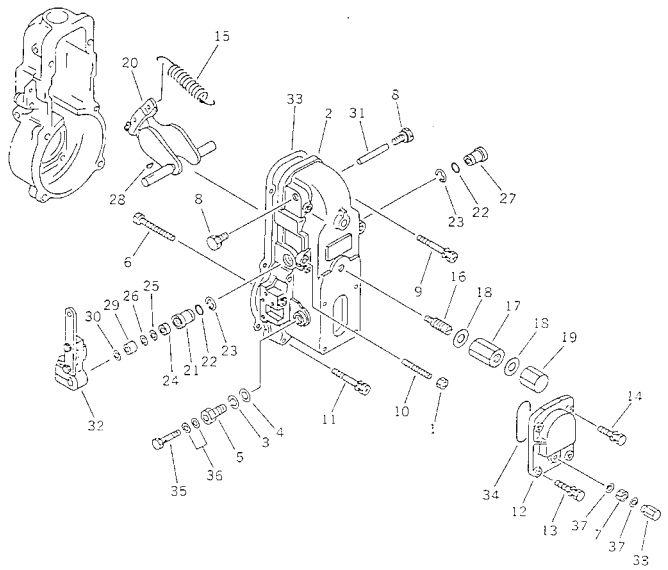

FIG NO. : 0466

INDEX	PART NO.	DESCRIPTION	Q'TY	SERIAL NO.
	(6207-71-1950)	INJECTION PUMP ASS'Y	1	22170-
	(DK105400-6700)	.GOVERNOR ASS'Y	1	22170-
1	DK154011-0100	..NUT,LOCK	1	22170-
2	DK154500-8720	..COVER	1	22170-
3	DK014110-3440	...WASHER,SPRING	1	22170-
4	DK026516-2040	...GASKET	1	22170-
5	DK154316-6600	...ADAPTER	1	22170-
6	DK154031-2400	..SCREW	1	22170-
7	DK139206-0600	..NUT	1	22170-
8	DK154036-0300	..PLUG	2	22170-
9	DK020106-5040	..BOLT	2	22170-
10	DK154010-0300	..SCREW	1	22170-
11	DK020106-3840	..BOLT	4	22170-
12	DK154063-1400	..COVER	1	22170-
13	DK029020-6210	..BOLT	2	22170-
14	DK020006-1640	..BOLT	2	22170-
15	DK154150-6400	..SPRING,GOVERNOR	1	22170-
16	DK154158-0820	..CAPSULE,SPRING	1	22170-
17	DK154011-1700	..NUT	1	22170-
18	DK026512-1540	..GASKET	2	22170-
19	DK154159-1200	..NUT,CAP	1	22170-
20	DK154200-7020	..LEVER ASS'Y,SWIVEL	1	22170-
21	DK154204-3000	..BUSHING	1	22170-
22	DK029631-8020	..O-RING	2	22170-
23	DK016010-1640	..RING,SNAP	2	22170-
24	DK139611-0000	..SEAL,OIL	1	22170-
25	DK139411-0000	..SHIM, 0.40MM	1	22170-
26	DK029311-1090	..SHIM, 0.30MM	AR	22170-
27	DK154204-3100	..BUSHING	1	22170-
28	DK025803-1310	..KEY, 13MM	1	22170-
29	DK154206-2800	..COLLAR	1	22170-
30	DK154206-0200	..WASHER, 1.0MM	AR	22170-
31	DK154237-0100	..PIN	1	22170-
32	DK154341-9520	..LEVER	1	22170-
33	DK154350-7800	..GASKET	1	22170-
34	DK029635-2020	..O-RING	1	22170-
35	DK029731-2040	..BOLT,EYE	1	22170-
36	DK029341-2140	..GASKET	2	22170-
37	DK026506-1040	..GASKET	2	22170-
38	DK154035-1600	..NUT,CAP	1	22170-

FIG.0467 FUEL INJECTION PUMP (GOVERNOR) (1/2) (WITH AIR COMPRESS

OR AND ENGINE STOP MOTOR TYPE)(#92607-)

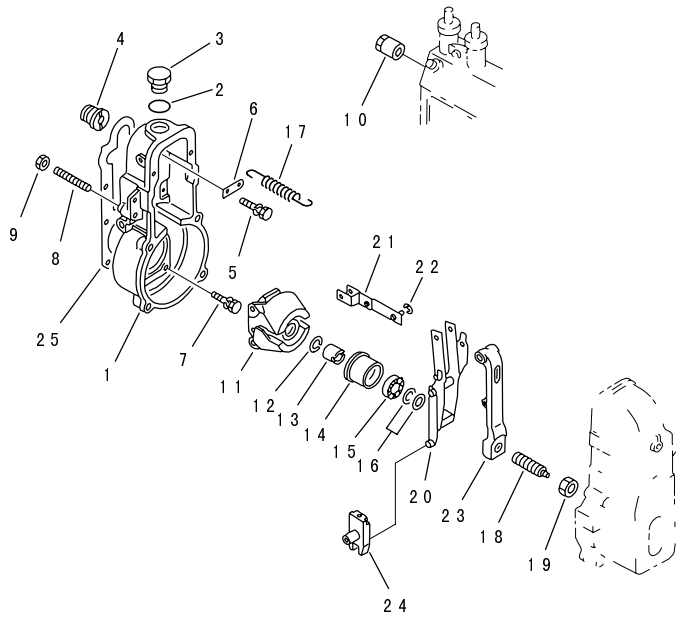

PE3P110

FIG NO. : 0467

INDEX	PART NO.	DESCRIPTION	Q'TY	SERIAL NO.
	(6207-71-1951)	INJECTION PUMP ASS'Y.	1	92607-
	DK105400-7790	.GOVERNOR ASS'Y.	1	92607-
1	DK154000-6300	..HOUSING.	1	92607-
2	DK029632-5070	..O-RING.	1	92607-
3	DK154007-2900	..PLUG.	1	92607-
4	DK154007-0200	..ADAPTER.	1	92607-
5	DK020018-1840	..BOLT.	1	92607-
6	DK154350-1900	..PLATE.	1	92607-
7	DK029010-6810	..BOLT.	6	92607-
8	DK154010-0100	..SCREW.	1	92607-
9	DK154011-0100	..NUT,LOCK.	1	92607-
10	DK154050-1720	..LIMITER.	1	92607-
11	DK154100-9720	..FLYWEIGHT ASS'Y.	1	92607-
12	DK029321-2020	..WASHER,SPRING.	1	92607-
13	DK029231-2030	..NUT.	1	92607-
14	DK154123-0120	..SLEEVE.	1	92607-
15	DK029801-0030	...BEARING.	1	92607-
16	DK029311-0010	..SHIM, 0.20MM.	AR	92607-
	DK029311-0180	..SHIM, 0.30MM.	AR	92607-
	DK029311-0190	..SHIM, 0.40MM.	AR	92607-
	DK139410-0000	..SHIM, 0.50MM.	AR	92607-
	DK029311-0210	..SHIM, 1.00MM.	AR	92607-
	DK139410-0100	..SHIM, 1.50MM.	AR	92607-
	DK139410-3000	..SHIM, 2.00MM.	AR	92607-
	DK139410-3100	..SHIM, 3.00MM.	AR	92607-
	DK139410-3200	..SHIM, 4.00MM.	AR	92607-
17	DK154154-0701	..SPRING.	1	92607-
18	DK154177-0620	..CAPSULE,SPRING.	1	92607-
19	DK029201-6010	..NUT.	1	92607-
20	DK154210-0920	..GUIDE LEVER ASS'Y.	1	92607-
21	DK154230-3920	..LINK.	1	92607-
22	DK016010-0540	..RING,SNAP.	1	92607-
23	DK154236-4100	..LEVER,TENSION.	1	92607-
24	DK154326-5020	..LEVER ASS'Y.	1	92607-
25	DK154350-7700	..GASKET.	1	92607-

FIG.0468 FUEL INJECTION PUMP (GOVERNOR) (2/2) (WITH AIR COMPRESS

OR AND ENGINE STOP MOTOR TYPE)(#92607-)

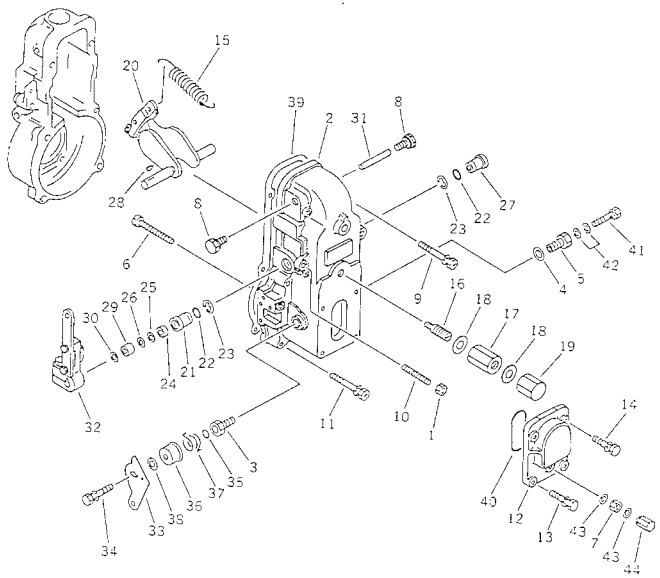

FIG NO. : 0468

INDEX	PART NO.	DESCRIPTION	Q'TY	SERIAL NO.
	(6207-71-1951)	INJECTION PUMP ASS'Y	1	92607-
	(DK105400-7790)	.GOVERNOR ASS'Y	1	92607-
1	DK154011-0100	..NUT,LOCK	1	92607-
2	DK154500-8220	..COVER	1	92607-
3	DK154321-0400	...BUSHING	1	92607-
4	DK026516-2040	...GASKET	1	92607-
5	DK154316-6600	...ADAPTER	1	92607-
6	DK154031-2400	..SCREW	1	92607-
7	DK139206-0600	..NUT	1	92607-
8	DK154036-0300	..PLUG	2	92607-
9	DK020106-5040	..BOLT	2	92607-
10	DK154010-0200	..SCREW	1	92607-
11	DK020106-3840	..BOLT	4	92607-
12	DK154063-1400	..COVER	1	92607-
13	DK029020-6210	..BOLT	2	92607-
14	DK020006-1640	..BOLT	2	92607-
15	DK154150-6400	..SPRING,GOVERNOR	1	92607-
16	DK154158-0820	..CAPSULE,SPRING	1	92607-
17	DK154011-1700	..NUT	1	92607-
18	DK026512-1540	..GASKET	2	92607-
19	DK154159-1200	..NUT,CAP	1	92607-
20	DK154200-7020	..LEVER ASS'Y,SWIVEL	1	92607-
21	DK154204-3000	..BUSHING	1	92607-
22	DK029631-8020	..O-RING	2	92607-
23	DK016010-1640	..RING,SNAP	2	92607-
24	DK139611-0000	..SEAL,OIL	1	92607-
25	DK139411-0000	..SHIM, 0.40MM	1	92607-
26	DK029311-1090	..SHIM, 0.30MM	AR	92607-
27	DK154204-3100	..BUSHING	1	92607-
28	DK025803-1310	..KEY, 13MM	1	92607-
29	DK154206-2800	..COLLAR	1	92607-
30	DK154206-0200	..WASHER, 1.0MM	AR	92607-
31	DK154237-0100	..PIN	1	92607-
32	DK154341-9520	..LEVER	1	92607-
33	DK154381-5300	..LEVER	1	92607-
34	DK020006-1640	..BOLT	1	92607-
35	DK029631-0030	..O-RING	1	92607-
36	DK154322-0100	..CAP	1	92607-
37	DK154327-7600	..SPRING	1	92607-
38	DK029311-0520	..SHIM, 0.2MM	AR	92607-
	DK029311-0530	..SHIM, 0.25MM	AR	92607-
	DK029311-0540	..SHIM, 0.3MM	AR	92607-

FIG NO. : 0468

INDEX	PART NO.	DESCRIPTION	Q'TY	SERIAL NO.
	DK029311-0550	..SHIM, 0.35MM.....	AR	92607-
	DK029311-0560	..SHIM, 0.4MM.....	AR	92607-
	DK029311-0570	..SHIM, 0.5MM.....	AR	92607-
39	DK154350-7800	..GASKET.....	1	92607-
40	DK029635-2020	..O-RING.....	1	92607-
41	DK029731-2040	..BOLT,EYE.....	1	92607-
42	DK029341-2140	..GASKET.....	2	92607-
43	DK026506-1040	..GASKET.....	2	92607-
44	DK154035-1600	..NUT,CAP.....	1	92607-

FIG.0471 FUEL INJECTION PUMP (COUPLING) (WITH AIR COMPRESSOR TYP

E)

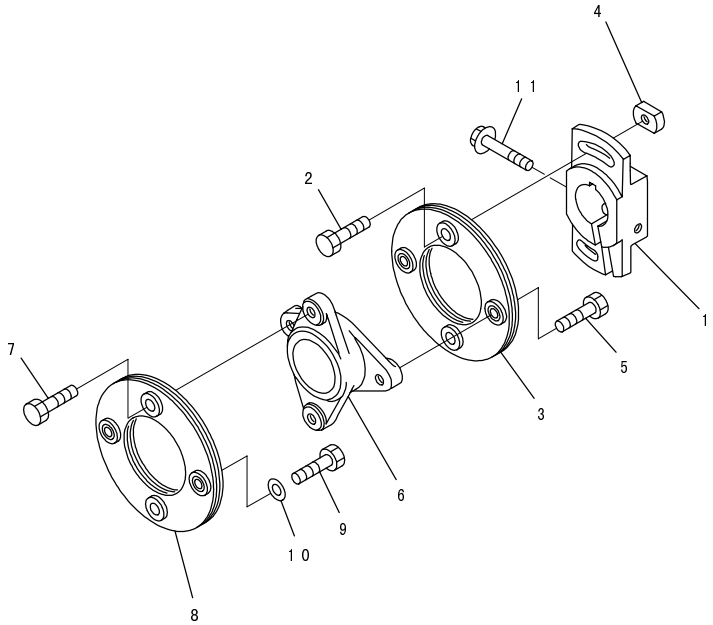

PG3P006

FIG NO. : 0471

INDEX	PART NO.	DESCRIPTION	Q'TY	SERIAL NO.
	(6207-71-1950)	INJECTION PUMP ASS'Y	1	22170-
	DK105661-0450	.COUPLING ASS'Y	1	22170-
1	DK156631-1300	..COUPLING	1	22170-
2	DK156633-6200	..BOLT	2	22170-
3	DK156605-2320	..PLATE	1	22170-
4	DK156617-2500	..NUT	2	22170-
5	DK156633-5900	..BOLT	2	22170-
6	DK156609-6100	..COUPLING,CROSS	1	22170-
7	DK156633-5900	..BOLT	2	22170-
8	DK156605-4620	..PLATE	1	22170-
9	DK156633-4300	..BOLT	2	22170-
10	DK156615-3800	..WASHER	2	22170-
11	DK156633-6000	..BOLT	1	22170-

FIG.0472 FUEL INJECTION PUMP (COUPLING) (WITH AIR COMPRESSOR AND ENGINE STOP MOTOR TYPE)(#92607-)

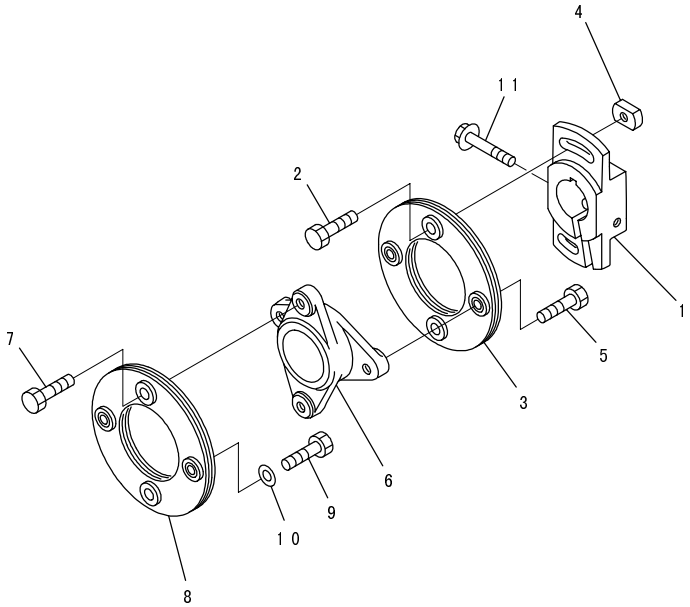

PG3P006

FIG NO. : 0472

INDEX	PART NO.	DESCRIPTION	Q'TY	SERIAL NO.
	(6207-71-1951)	INJECTION PUMP ASS'Y	1	92607-
	DK105661-0450	.COUPLING ASS'Y	1	92607-
1	DK156631-1300	..COUPLING	1	92607-
2	DK156633-6200	..BOLT	2	92607-
3	DK156605-2320	..PLATE	1	92607-
4	DK156617-2500	..NUT	2	92607-
5	DK156633-5900	..BOLT	2	92607-
6	DK156609-6100	..COUPLING,CROSS	1	92607-
7	DK156633-5900	..BOLT	2	92607-
8	DK156605-4620	..PLATE	1	92607-
9	DK156633-4300	..BOLT	2	92607-
10	DK156615-3800	..WASHER	2	92607-
11	DK156633-6000	..BOLT	1	92607-

FIG.0481 FUEL INJECTION PUMP (FEED PUMP)

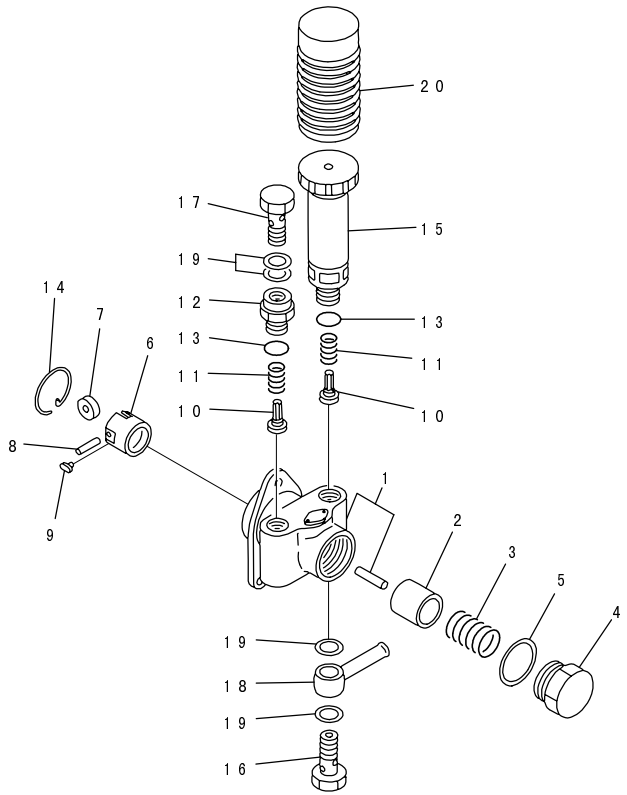

PE3P007

FIG NO. : 0481

INDEX	PART NO.	DESCRIPTION	Q'TY	SERIAL NO.
	(6207-71-1910)	INJECTION PUMP ASS'Y	1	22170-
	DK105220-5610	.FEED PUMP ASS'Y	1	22170-
1	DK152003-1020	..HOUSING	1	22170-
2	DK152100-1120	..PISTON	1	22170-
3	DK152102-1600	..SPRING	1	22170-
4	DK152105-1600	..PLUG	1	22170-
5	DK029332-6030	..GASKET	1	22170-
6	DK152111-2820	..TAPPET ASS'Y	1	22170-
7	DK152112-0100	...ROLLER	1	22170-
8	DK152113-0700	...PIN	1	22170-
9	DK152114-0400	...GUIDE	2	22170-
10	DK152115-0500	..VALVE	2	22170-
11	DK152116-0200	..SPRING	2	22170-
12	DK152118-0900	..ADAPTER	1	22170-
13	DK029631-6060	..O-RING	2	22170-
14	DK152121-0200	..RING,SNAP	1	22170-
15	DK152200-5420	..PUMP,PRIMING	1	22170-
16	DK152300-5920	..BOLT,JOINT	1	22170-
17	DK029731-4680	..BOLT,JOINT	1	22170-
18	DK029711-4310	..EYE	1	22170-
19	DK029341-4130	..GASKET	4	22170-
20	DK152320-0100	..COVER	1	22170-

FIG.0482 FUEL INJECTION PUMP (FEED PUMP) (WITH ENGINE STOP MOTOR TYPE)(#92607-)

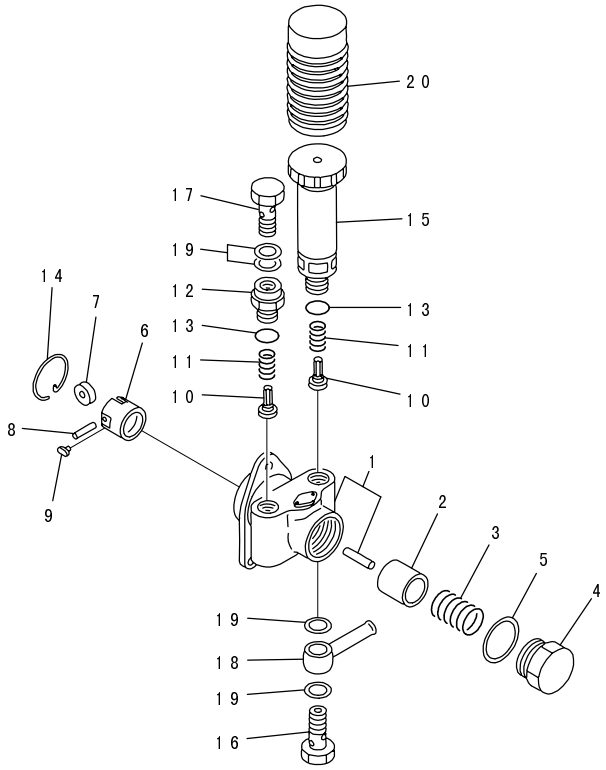

FIG NO. : 0482

INDEX	PART NO.	DESCRIPTION	Q'TY	SERIAL NO.
	(6207-71-1911)	INJECTION PUMP ASS'Y	1	92607-
	DK105220-5610	.FEED PUMP ASS'Y	1	92607-
1	DK152003-1020	..HOUSING	1	92607-
2	DK152100-1120	..PISTON	1	92607-
3	DK152102-1600	..SPRING	1	92607-
4	DK152105-1600	..PLUG	1	92607-
5	DK029332-6030	..GASKET	1	92607-
6	DK152111-2820	..TAPPET ASS'Y	1	92607-
7	DK152112-0100	...ROLLER	1	92607-
8	DK152113-0700	...PIN	1	92607-
9	DK152114-0400	...GUIDE	2	92607-
10	DK152115-0500	..VALVE	2	92607-
11	DK152116-0200	..SPRING	2	92607-
12	DK152118-0900	..ADAPTER	1	92607-
13	DK029631-6060	..O-RING	2	92607-
14	DK152121-0200	..RING,SNAP	1	92607-
15	DK152200-5420	..PUMP,PRIMING	1	92607-
16	DK152300-5920	..BOLT,JOINT	1	92607-
17	DK029731-4680	..BOLT,JOINT	1	92607-
18	DK029711-4310	..EYE	1	92607-
19	DK029341-4130	..GASKET	4	92607-
20	DK152320-0100	..COVER	1	92607-

FIG.0483 FUEL INJECTION PUMP (FEED PUMP) (WITH AIR COMPRESSOR TY PE)

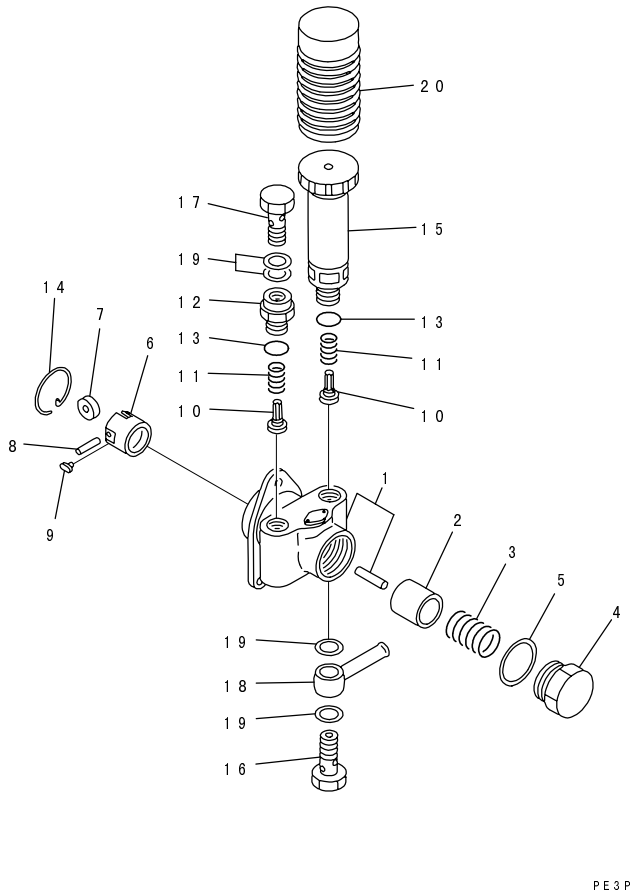

FIG NO. : 0483

INDEX	PART NO.	DESCRIPTION	Q'TY	SERIAL NO.
	(6207-71-1950)	INJECTION PUMP ASS'Y	1	22170-
	DK105220-5610	.FEED PUMP ASS'Y	1	22170-
1	DK152003-1020	..HOUSING	1	22170-
2	DK152100-1120	..PISTON	1	22170-
3	DK152102-1600	..SPRING	1	22170-
4	DK152105-1600	..PLUG	1	22170-
5	DK029332-6030	..GASKET	1	22170-
6	DK152111-2820	..TAPPET ASS'Y	1	22170-
7	DK152112-0100	...ROLLER	1	22170-
8	DK152113-0700	...PIN	1	22170-
9	DK152114-0400	...GUIDE	2	22170-
10	DK152115-0500	..VALVE	2	22170-
11	DK152116-0200	..SPRING	2	22170-
12	DK152118-0900	..ADAPTER	1	22170-
13	DK029631-6060	..O-RING	2	22170-
14	DK152121-0200	..RING,SNAP	1	22170-
15	DK152200-5420	..PUMP,PRIMING	1	22170-
16	DK152300-5920	..BOLT,JOINT	1	22170-
17	DK029731-4680	..BOLT,JOINT	1	22170-
18	DK029711-4310	..EYE	1	22170-
19	DK029341-4130	..GASKET	4	22170-
20	DK152320-0100	..COVER	1	22170-

FIG.0484 FUEL INJECTION PUMP (FEED PUMP) (WITH AIR COMPRESSOR AN D ENGINE STOP MOTOR TYPE)(#92607-)

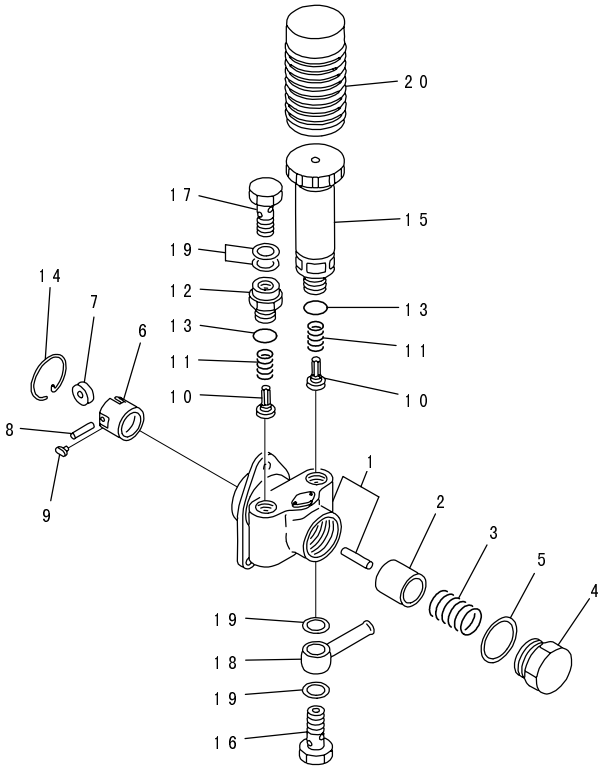

PE3P007

FIG NO. : 0484

INDEX	PART NO.	DESCRIPTION	Q'TY	SERIAL NO.
	(6207-71-1951)	INJECTION PUMP ASS'Y.	1	92607-
	DK105220-5610	.FEED PUMP ASS'Y.	1	92607-
1	DK152003-1020	..HOUSING.	1	92607-
2	DK152100-1120	..PISTON.	1	92607-
3	DK152102-1600	..SPRING.	1	92607-
4	DK152105-1600	..PLUG.	1	92607-
5	DK029332-6030	..GASKET.	1	92607-
6	DK152111-2820	..TAPPET ASS'Y.	1	92607-
7	DK152112-0100	...ROLLER.	1	92607-
8	DK152113-0700	...PIN.	1	92607-
9	DK152114-0400	...GUIDE.	2	92607-
10	DK152115-0500	..VALVE.	2	92607-
11	DK152116-0200	..SPRING.	2	92607-
12	DK152118-0900	..ADAPTER.	1	92607-
13	DK029631-6060	..O-RING.	2	92607-
14	DK152121-0200	..RING,SNAP.	1	92607-
15	DK152200-5420	..PUMP,PRIMING.	1	92607-
16	DK152300-5920	..BOLT,JOINT.	1	92607-
17	DK029731-4680	..BOLT,JOINT.	1	92607-
18	DK029711-4310	..EYE.	1	92607-
19	DK029341-4130	..GASKET.	4	92607-
20	DK152320-0100	..COVER.	1	92607-

COOLING SYSTEM

FIG.0501 WATER PUMP AND COOLING FAN

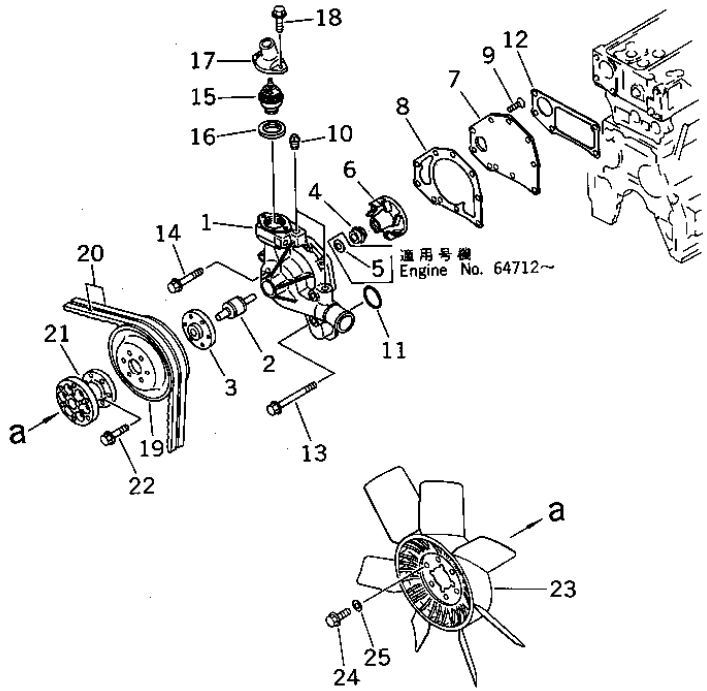

FIG NO. : 0501

INDEX	PART NO.	DESCRIPTION	Q'TY	SERIAL NO.
	6206-61-1504	WATER PUMP ASS'Y	1	41623-
	(☒6206-61-1503)	WATER PUMP ASS'Y	1	(41623-88216)
	□6206-61-1501	WATER PUMP ASS'Y	1	22170-41622
	(☒6206-61-1500)	WATER PUMP ASS'Y	1	(22170-30751)
1	☆	.BODY	1	88217-
	☆	.BODY	1	
	☆	.BODY	1	
	☆	.BODY	1	22170-30724
2	6206-61-1341	.SHAFT	1	88217-
	6206-61-1340	.SHAFT	1	30752-88216
	6206-61-1310	.SHAFT	1	22170-30751
3	6206-61-1411	.BOSS	1	41623-
	□6206-61-1410	.BOSS	1	22170-41622
4	6221-61-1520	.SEAL, WATER (K2)	1	46363-
	6221-61-1520	.SEAL, WATER	1	41623-46362
	■6204-61-1511	.SEAL, WATER (K2) (6221-61-1520, 6206-61-1551)	1	22170-41622
	(☒6204-61-1510)	.SEAL, WATER (K2)	1	(22170-30751)
5	6204-61-1520	.FLINGER	1	41623-
6	6206-61-1553	.IMPELLER	1	41623-
	◆6206-61-1551	.IMPELLER	1	30752-41622
	6206-61-1550	.IMPELLER	1	22170-30751
7	6206-61-1520	.COVER	1	22170-
8	6206-61-1531	.GASKET (K2)	1	30752-
	□6206-61-1530	.GASKET (K2)	1	22170-30751
	6206-61-1531	.GASKET, (WITH AIR COMPRESSOR TYPE)	1	46363-
	6206-61-1531	.GASKET (K2) (WITH AIR COMPRESSOR TYPE)	1	30752-46362
	□6206-61-1530	.GASKET, (WITH AIR COMPRESSOR TYPE)	1	22170-30752
9	01236-40816	.SCREW	5	22170-
10	6204-61-1910	GASKET (K1,K2)	1	41623-
	6204-61-1910	GASKET (K2)	1	37189-41622
	6204-61-1910	GASKET (K1,K2)	1	22170-37188
11	6206-61-1720	GASKET (K1,K2)	1	22170-
12	01435-21075	BOLT	4	22170-
13	01435-21050	BOLT	1	22170-
	(01435-21070)	BOLT, (FOR 35A, 50A ALTERNATOR)	1	22170-
	(01435-21070)	BOLT, (SANDY AND DUSTY SPEC.)	1	22170-
14	600-421-6120	THERMOSTAT	1	80132-
	□600-421-6110	THERMOSTAT	1	22170-80131
15	6140-11-6331	GASKET (K1)	1	37189-
	6140-11-6331	GASKET (K1,K2)	1	22170-37188

FIG NO. : 0501

INDEX	PART NO.	DESCRIPTION	Q'TY	SERIAL NO.
	6140-11-6331	GASKET.....(K1)..... (WITH AIR COMPRESSOR TYPE)	1	22170-
16	6204-11-6421	CONNECTOR,OUTLET.....	1	26224-
	6204-11-6420	CONNECTOR,OUTLET.....	1	22170-26223
17	01435-20820	BOLT.....	2	22170-
18	6207-61-3280	PULLEY,NON HARDENING.....	1	22170-
	6207-61-3880	PULLEY, HARDENING..... (SANDY AND DUSTY SPEC.)	1	22170-
19	04121-21754	V-BELT SET.....	1	22170-
	04121-21756	V-BELT SET,(FOR 35A, 50A ALTERNATOR)....	1	22170-
	04121-21756	V-BELT SET,(SANDY AND DUSTY SPEC.).....	1	22170-
20	6206-61-3980	SPACER.....	1	22170-
21	01435-20830	BOLT.....	6	22170-
22	600-623-6580	FAN.....	1	22170-
23	01435-21020	BOLT.....	6	22170-
24	01641-21016	WASHER.....	6	22170-

FIG.0521 CORROSION RESISTOR AND PIPING

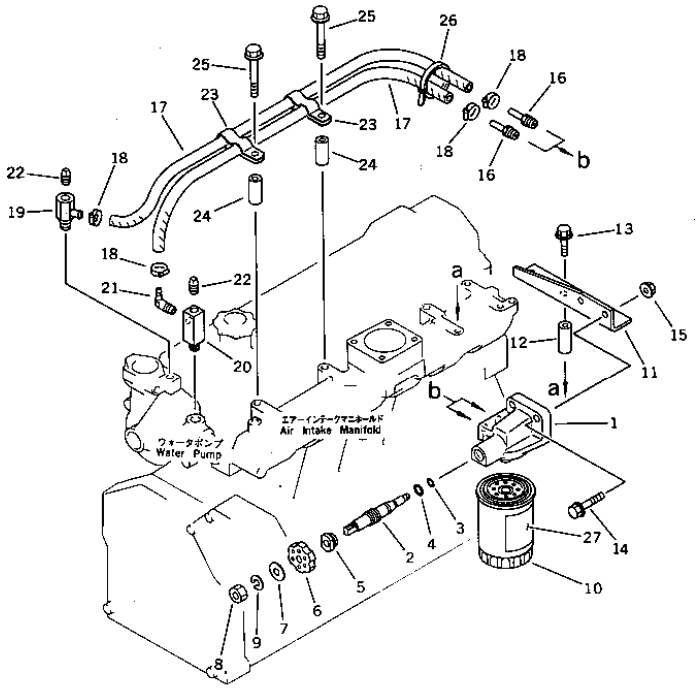

FIG NO. : 0521

INDEX	PART NO.	DESCRIPTION	Q'TY	SERIAL NO.
	600-411-1921	RESISTOR ASS'Y,CORROSION.	1	37188-
	◆600-411-1920	RESISTOR ASS'Y,CORROSION.	1	22170-37187
	600-411-1511	.HEAD ASS'Y.	1	22170-
1	600-411-1521	..HEAD.	1	22170-
2	600-411-1231	..VALVE.	1	22170-
3	07000-01006	..O-RING.	1	22170-
4	07000-02014	..O-RING.	1	22170-
5	600-411-1250	..COVER.	1	22170-
6	600-411-1240	..HANDLE.	1	22170-
7	600-411-1260	..PLATE.	1	22170-
8	600-411-1280	..NUT.	1	22170-
9	600-411-1290	..WASHER,SPRING.	1	22170-
10	600-411-1140	.CARTRIDGE.	1	37188-
	□600-411-1010	.CARTRIDGE.	1	22170-37187
11	6206-61-8110	BRACKET.	1	22170-
12	6134-11-5120	SPACER.	2	22170-
13	01435-21065	BOLT.	2	22170-
14	01435-21040	BOLT.	2	22170-
15	01584-01008	NUT.	2	22170-
16	113-04-32130	NIPPLE.	2	22170-
17	07260-20971	HOSE.	2	37188-
	□07260-20980	HOSE.	2	22170-37187
18	07281-00197	CLAMP.	4	22170-
19	6206-61-8620	TEE.	1	22170-
20	6136-61-8670	NIPPLE.	1	22170-
21	6127-61-8230	CONNECTOR.	1	22170-
22	07042-00312	PLUG.	2	22170-
23	6128-71-5911	CLIP.	2	22170-
24	6136-11-5120	SPACER.	2	22170-
25	01435-21085	BOLT.	2	22170-
26	08034-00519	BAND.	1	22170-
27	09647-02202	PLATE, INSTRUCTION,(ARABIC-ENGLISH).	1	22170-
	09647-05202	PLATE, INSTRUCTION,(INDONESIAN-ENGLISH).	1	22170-
	09647-10201	PLATE, INSTRUCTION,(ENGLISH).	1	22170-
	09647-20202	PLATE, INSTRUCTION,(FRENCH-ENGLISH).	1	22170-
	09647-60201	PLATE, INSTRUCTION,(CHINESE).	1	22170-
	09647-70202	PLATE, INSTRUCTION,(SPANISH-ENGLISH).	1	22170-

ELECTRICAL SYSTEM

FIG.0601 ALTERNATOR AND MOUNTING (25A)

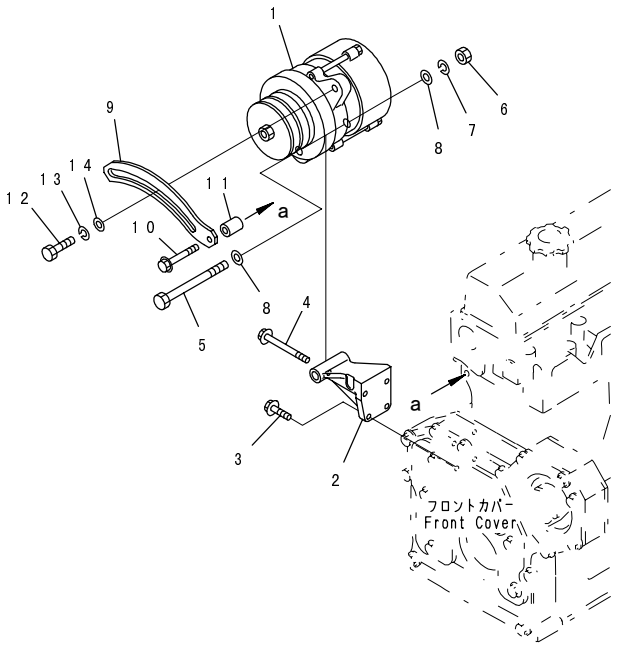

PG31200

FIG NO. : 0601

INDEX	PART NO.	DESCRIPTION	Q'TY	SERIAL NO.
1	(600-821-6130)	ALTERNATOR A. (25A),(SEE FIG.0641).....	1	22170-
2	6207-81-6510	BRACKET.....	1	41623-
	◆6206-81-6530	BRACKET.....	1	22170-41622
3	01435-20825	BOLT.....	3	22170-
4	01435-20895	BOLT.....	1	22170-
5	6112-21-6580	BOLT.....	1	22170-
6	01580-01411	NUT.....	1	22170-
7	01602-01442	WASHER,SPRING.....	1	22170-
8	01641-21423	WASHER.....	2	22170-
9	6206-81-6630	PLATE,ADJUST.....	1	22170-
10	01435-20855	BOLT.....	1	22170-
11	22D-62-18450	SPACER.....	1	22170-
12	01050-31230	BOLT.....	1	22170-
13	01602-01236	WASHER,SPRING.....	1	22170-
14	01643-31232	WASHER.....	1	22170-

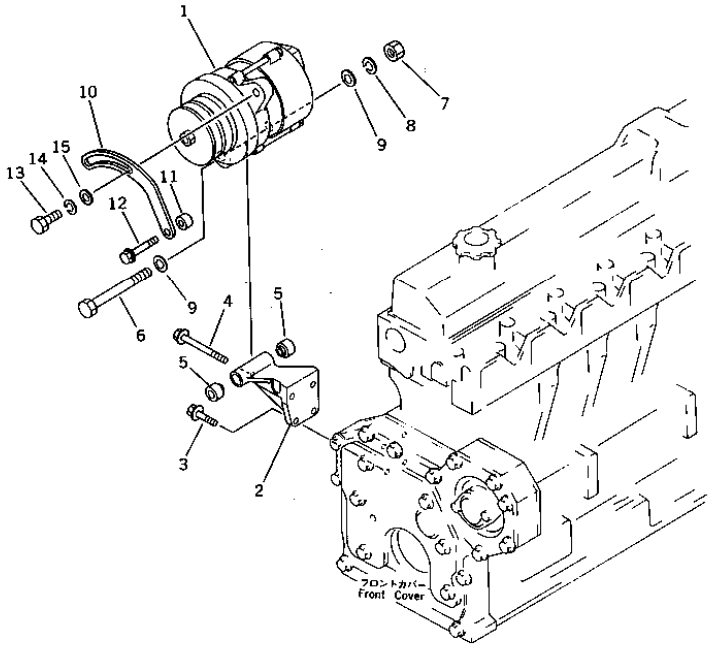

INDEX	PART NO.	DESCRIPTION	Q'TY	SERIAL NO.
1	(600-821-9290)	ALTERNATOR A. (50A),(SEE FIG.0642).....	1	22170-
2	6206-81-6530	BRACKET.....	1	22170-
3	01435-20825	BOLT.....	3	22170-
4	01435-20895	BOLT.....	1	22170-
5	6206-81-6840	SPACER.....	2	22170-
6	6206-81-6920	BOLT.....	1	22170-
7	01580-01210	NUT.....	1	22170-
8	01602-01236	WASHER,SPRING.....	1	22170-
9	01640-21223	WASHER.....	2	22170-
10	6206-81-6760	PLATE,ADJUST.....	1	22170-
11	01435-21070	BOLT.....	1	22170-
12	6206-11-4590	SPACER.....	1	22170-
13	01050-31230	BOLT.....	1	22170-
14	01602-01236	WASHER,SPRING.....	1	22170-
15	01643-31232	WASHER.....	1	22170-

FIG.0603 ALTERNATOR AND MOUNTING (25A) (SANDY AND DUSTY SPEC.)

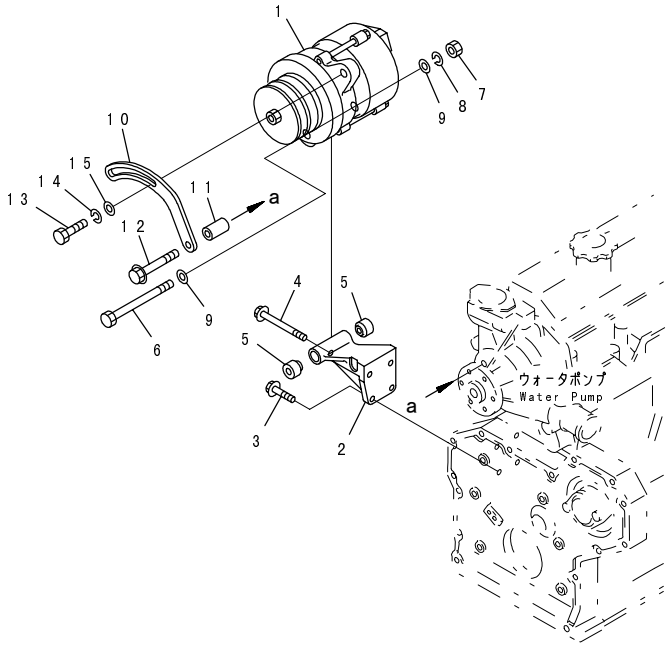

PG38701

FIG NO. : 0603

INDEX	PART NO.	DESCRIPTION	Q'TY	SERIAL NO.
1	(600-821-5630)	ALTERNATOR A. (25A),(SEE FIG.0643).....	1	22170-
2	6207-81-6510	BRACKET.....	1	41623-
	◆6206-81-6530	BRACKET.....	1	22170-41622
3	01435-20825	BOLT.....	3	22170-
4	01435-20895	BOLT.....	1	22170-
5	6206-81-6840	SPACER.....	2	22170-
6	6206-81-6920	BOLT.....	1	22170-
7	01580-01210	NUT.....	1	22170-
8	01602-01236	WASHER,SPRING.....	1	22170-
9	01640-21223	WASHER.....	2	22170-
10	6206-81-6760	PLATE,ADJUST.....	1	22170-
11	6206-11-4590	SPACER.....	1	22170-
12	01435-21070	BOLT.....	1	22170-
13	01050-31230	BOLT.....	1	22170-
14	01602-01236	WASHER,SPRING.....	1	22170-
15	01643-31232	WASHER.....	1	22170-

FIG.0604 ALTERNATOR AND MOUNTING (35A)

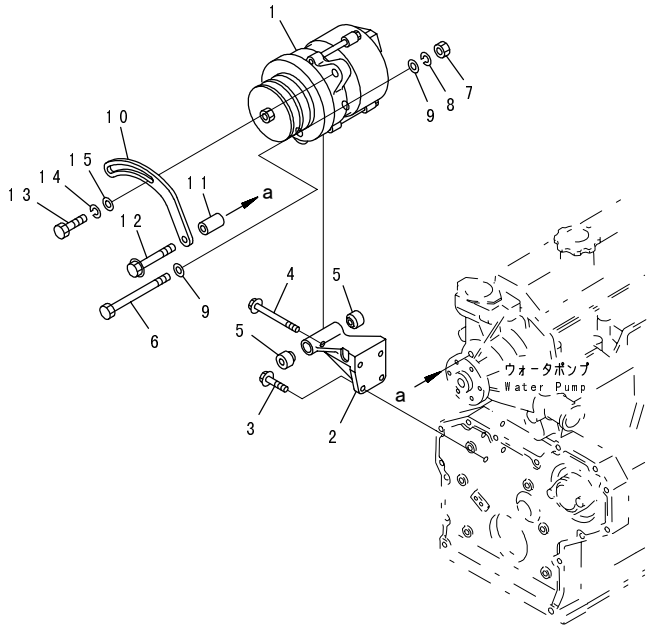

FIG NO. : 0604

INDEX	PART NO.	DESCRIPTION	Q'TY	SERIAL NO.
1	(600-821-7590)	ALTERNATOR A. (35A),(SEE FIG.0644).....	1	22170-
2	6207-81-6510	BRACKET.....	1	41623-
	◆6206-81-6530	BRACKET.....	1	22170-41622
3	01435-20825	BOLT.....	3	22170-
4	01435-20895	BOLT.....	1	22170-
5	6206-81-6840	SPACER.....	2	22170-
6	6206-81-6920	BOLT.....	1	22170-
7	01580-01210	NUT.....	1	22170-
8	01602-01236	WASHER,SPRING.....	1	22170-
9	01640-21223	WASHER.....	2	22170-
10	6206-81-6760	PLATE,ADJUST.....	1	22170-
11	6206-11-4590	SPACER.....	1	22170-
12	01435-21070	BOLT.....	1	22170-
13	01050-31230	BOLT.....	1	22170-
14	01602-01236	WASHER,SPRING.....	1	22170-
15	01643-31232	WASHER.....	1	22170-

FIG.0621 STARTING MOTOR AND MOUNTING (5.5KW)

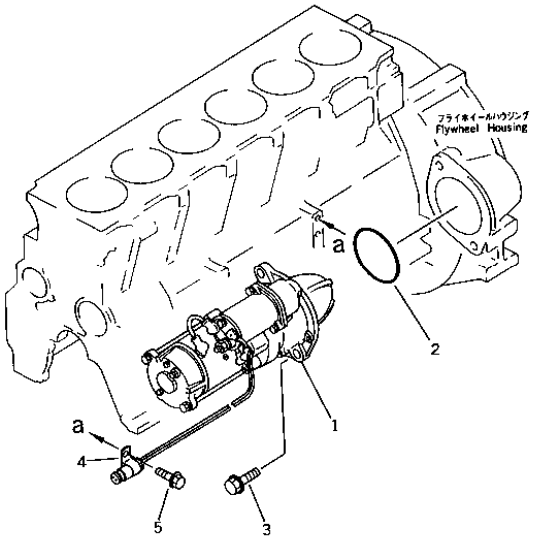

FIG NO. : 0621

INDEX	PART NO.	DESCRIPTION	Q'TY	SERIAL NO.
1	(600-813-3320)	STARTING MOTOR ASS'Y..... (5.5KW) (SEE FIG.0661)	1	22170-
2	07000-02105	O-RING.....(K2).....	1	22170-
3	01435-21230	BOLT.....	2	22170-
4	600-050-2620	CLIP.....	1	22170-
5	01435-21016	BOLT.....	1	22170-

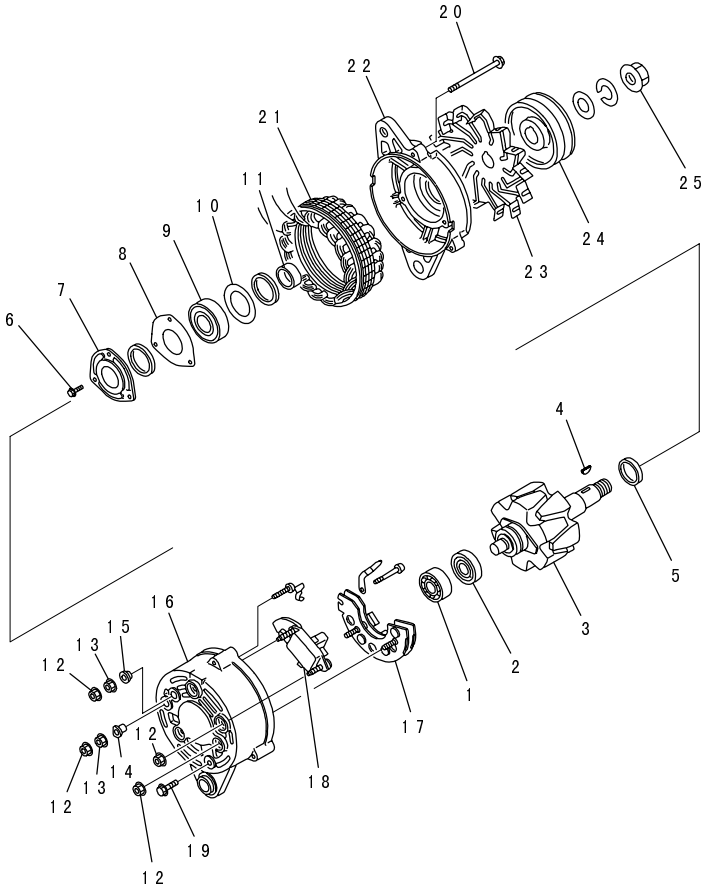

INDEX	PART NO.	DESCRIPTION	Q'TY	SERIAL NO.
	600-821-6130	ALTERNATOR A. (25A)	1	22170-
1	KD1-09201-0530	.BEARING,BALL, REAR	1	22170-
2	KD1-33926-0820	.RETAINER	1	22170-
3	KD0-33100-1450	.ROTOR ASS'Y	1	22170-
4	KD1-0416-04160	.KEY	1	22170-
5	KD0-33923-0980	.COLLAR	1	22170-
6	KD1-0055-06162	.SCREW	3	22170-
7	KD0-35926-0060	.RETAINER	1	22170-
8	KD1-33926-0750	.RETAINER	1	22170-
9	KD1-0456-63057	.BEARING,BALL, FRONT	1	22170-
10	KD1-33926-0730	.RETAINER	1	22170-
11	KD1-33923-0920	.COLLAR	1	22170-
	KD0-33700-2711	.REAR BRACKET ASS'Y	1	22170-
12	KD0-33902-0080	..NUT	6	22170-
13	KD0-33902-0090	..NUT	2	22170-
14	KD1-33943-0980	..BUSHING,INSULATE	1	22170-
15	KD0-33943-1050	..BUSHING,INSULATE	1	22170-
16	KD0-33710-3300	..REAR BRACKET ASS'Y	1	22170-
17	KD0-0274-05102	.BOLT	1	22170-
18	KD0-33730-2560	.RECTIFIER ASS'Y	1	22170-
19	KD1-33740-0450	..BRUSH	2	22170-
20	KD0-0275-06802	.BOLT	3	22170-
21	KD0-33200-1410	.STATOR ASS'Y	1	22170-
22	KD0-33311-0510	.BRACKET,FRONT	1	22170-
23	KD1-33421-0590	.FAN	1	22170-
24	KD0-33411-2850	.PULLEY	1	22170-
25	KD0-0280-16022	.NUT	1	22170-
26	KD1-33951-0610	PACKING,(NOT SHOWN)	2	22170-

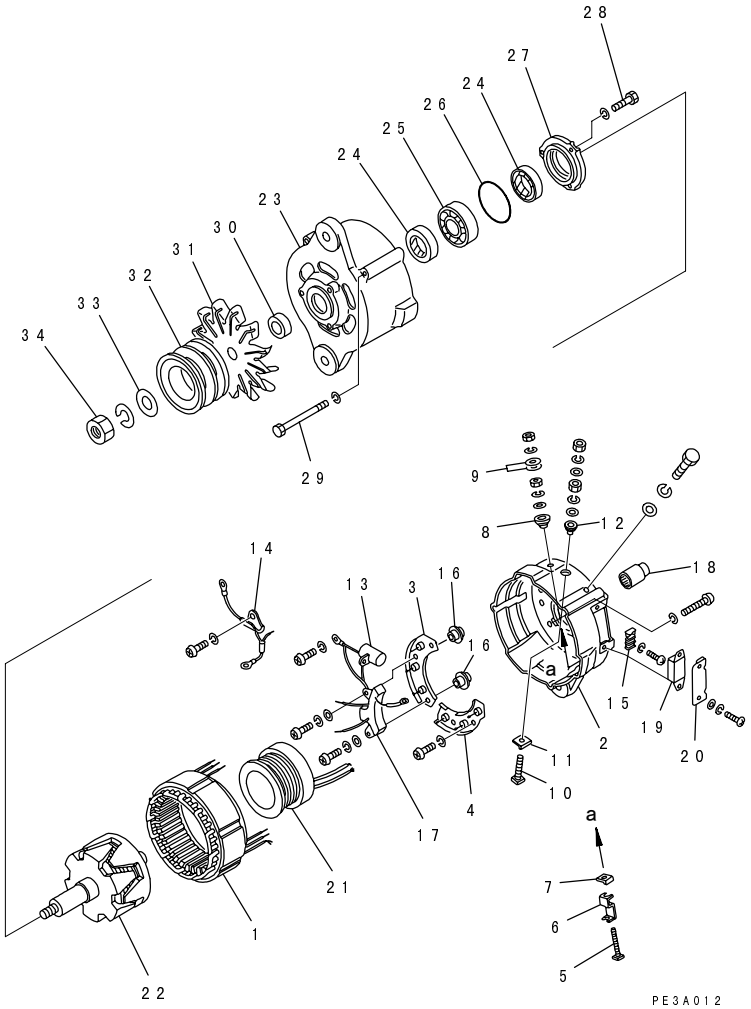

FIG NO. : 0642

INDEX	PART NO.	DESCRIPTION	Q'TY	SERIAL NO.
	600-821-9290	ALTERNATOR A. (50A)	1	22170-
1	SD1211-46000X0	.STATOR ASS'Y.	1	22170-
	SD1230-19400X0	.REAR BRACKET ASS'Y.	1	22170-
2	SD2240-20610X0	..BRACKET,REAR.	1	22170-
3	SD1235-07900X0	..HEAT SINK ASS'Y(+)	1	22170-
4	SD1235-08000X0	..HEAT SINK ASS'Y(-)	1	22170-
5	SD8140-0603510	..BOLT.	1	22170-
6	SD3220-40000X0	..SUPPORT.	1	22170-
7	SD4215-00701X0	..INSULATOR.	1	22170-
8	SD4041-05710X0	..BUSHING.	1	22170-
9	SD5030-05200X0	..WASHER.	2	22170-
10	SD8140-0503010	..BOLT.	1	22170-
11	SD4215-00800X0	..INSULATOR.	1	22170-
12	SD4041-05700X0	..BUSHING.	1	22170-
13	SD6060-11920X0	..CONDENSER.	1	22170-
14	SD1235-07601X0	..RESISTOR ASS'Y.	1	22170-
15	SD1239-03600X0	..CONNECTOR ASS'Y.	1	22170-
16	SD4041-03700X0	..BUSHING.	2	22170-
17	SD1239-04310X0	..CHARGE LAMP ASS'Y.	1	22170-
18	SD6206-00200X0	.BEARING,ROLLER.	1	22170-
19	SD1291-00300X0	.REGULATOR,IC.	1	22170-
20	SD3221-23220X0	.COVER.	1	22170-
21	SD1251-00600X0	.COIL ASS'Y.	1	22170-
22	SD1221-16700X0	.ROTOR ASS'Y.	1	22170-
	SD1240-07400X0	.FRONT BRACKET ASS'Y.	1	22170-
23	SD2242-09010X0	..BRACKET,FRONT.	1	22170-
24	SD6410-02000X0	..SEAL,OIL.	2	22170-
25	SD6206-00320X0	..BEARING,BALL.	1	22170-
26	SD4142-00900X0	..O-RING.	1	22170-
27	SD2202-02200X0	..COVER.	1	22170-
28	SD5010-21500X0	..BOLT.	3	22170-
29	SD5010-04300X0	.BOLT.	3	22170-
30	SD3600-17300X0	.COLLAR.	1	22170-
31	SD3448-00440X0	.FAN.	1	22170-
32	SD2080-21300X0	.PULLEY,NON HARDENING.	1	22170-
33	SD3000-07800X0	.WASHER.	1	22170-
34	SD8264-1830010	.NUT.	1	22170-

FIG.0643 ALTERNATOR (25A) (SANDY AND DUSTY SPEC.)

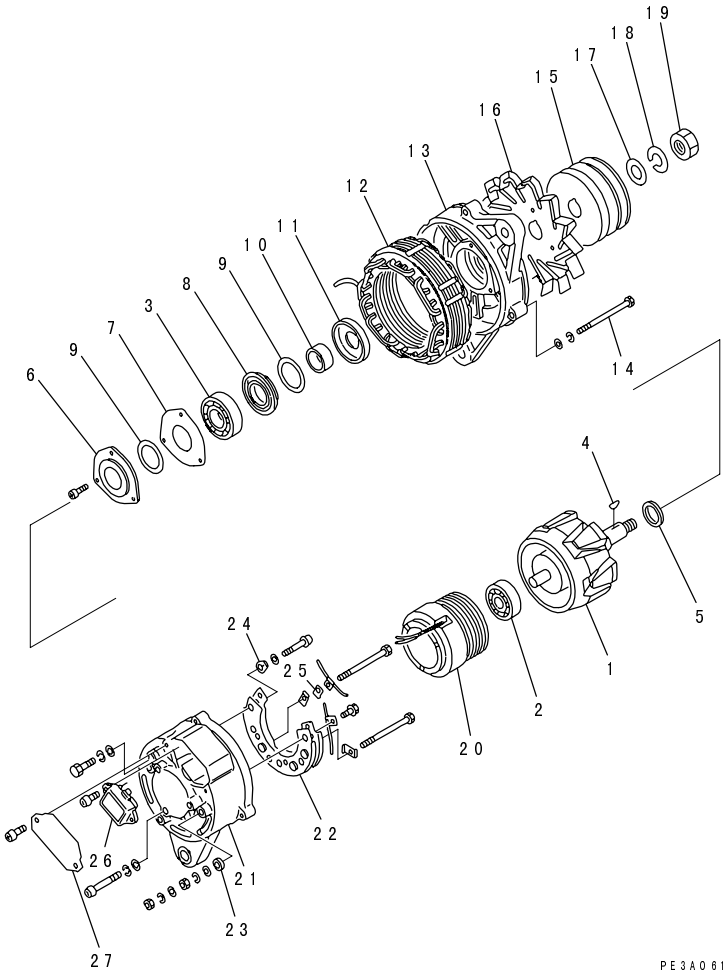

FIG NO. : 0643

INDEX	PART NO.	DESCRIPTION	Q'TY	SERIAL NO.
	600-821-5630	ALTERNATOR A. (25A)	1	22170-
1	KD0-35100-0080	.ROTOR ASS'Y	1	22170-
2	KD1-09201-0460	.BEARING,BALL, REAR	1	22170-
3	KD1-0456-63057	.BEARING,BALL, FRONT	1	22170-
4	KD1-0416-04160	.KEY	1	22170-
5	KD1-33923-0780	.COLLAR	1	22170-
6	KD0-35926-0060	.RETAINER	1	22170-
7	KD1-33926-0750	.RETAINER	1	22170-
8	KD1-33926-0730	.RETAINER	1	22170-
9	KD1-33951-0610	.PACKING	2	22170-
10	KD1-33923-0810	.COLLAR	1	22170-
11	KD1-33926-0770	.RETAINER	1	22170-
12	KD0-35200-0060	.STATOR ASS'Y	1	22170-
13	KD0-35310-0021	.FRONT BRACKET ASS'Y	1	22170-
14	KD0-0275-06802	.BOLT	3	22170-
15	KD0-35411-0200	.PULLEY, HARDENING,HARDENING	1	22170-
16	KD1-35421-0030	.FAN	1	22170-
17	KD1-0330-16012	.WASHER	1	22170-
18	KD1-0335-16002	.WASHER,SPRING	1	22170-
19	KD0-0280-16022	.NUT	1	22170-
20	KD0-35120-0040	.FIELD COIL ASS'Y	1	22170-
	KD0-35700-0130	.REAR BRACKET ASS'Y	1	22170-
21	KD0-35710-0140	..BRACKET,REAR	1	22170-
22	KD0-35730-0080	..RECTIFIER ASS'Y	1	22170-
23	KD1-35761-0060	..COVER	1	22170-
24	KD1-33943-0770	..BUSHING,INSULATE	2	22170-
25	KD1-09102-0010	..PLATE,INSULATE	1	22170-
26	KD1-33943-0760	..BUSHING,INSULATE	1	22170-
27	KD1-44000-0900	..REGULATOR	1	22170-

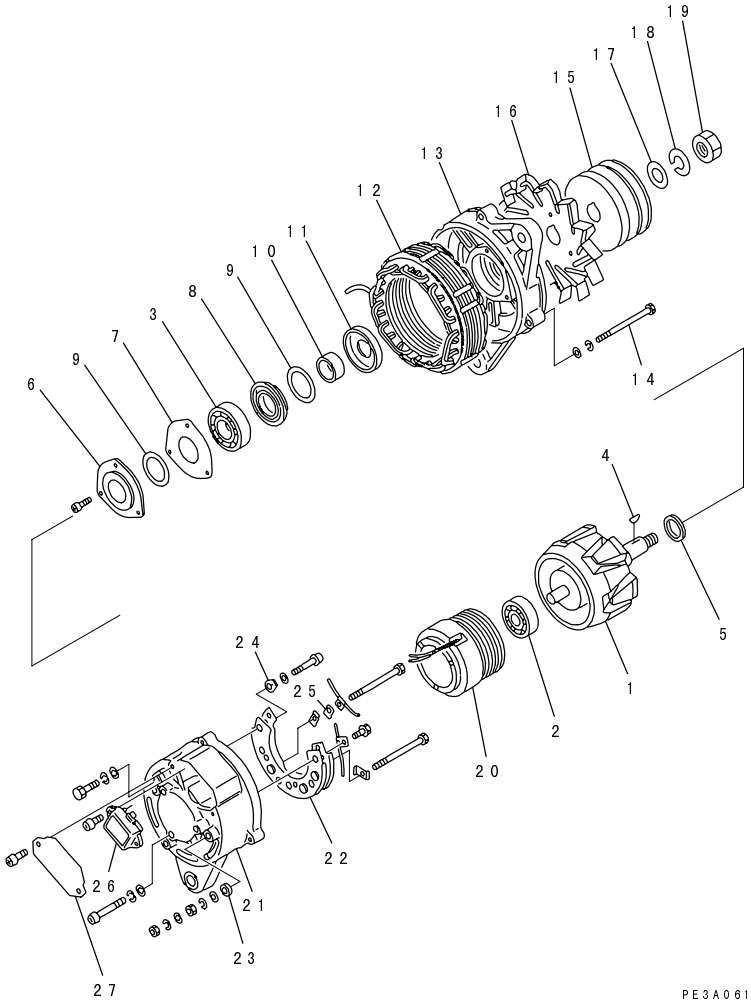

INDEX	PART NO.	DESCRIPTION	Q'TY	SERIAL NO.
	600-821-7590	ALTERNATOR A. (35A)	1	22170-
1	KD0-35100-0080	.ROTOR ASS'Y	1	22170-
2	KD1-09201-0460	.BEARING,BALL, REAR	1	22170-
3	KD1-0456-63057	.BEARING,BALL, FRONT	1	22170-
4	KD1-0416-04160	.KEY	1	22170-
5	KD1-33923-0780	.COLLAR	1	22170-
6	KD0-35926-0060	.RETAINER	1	22170-
7	KD1-33926-0750	.RETAINER	1	22170-
8	KD1-33926-0730	.RETAINER	1	22170-
9	KD1-33951-0610	.PACKING	2	22170-
10	KD1-33923-0810	.COLLAR	1	22170-
11	KD1-33926-0770	.RETAINER	1	22170-
12	KD0-35200-0230	.STATOR ASS'Y	1	22170-
13	KD0-35310-0021	.FRONT BRACKET ASS'Y	1	22170-
14	KD0-0275-06802	.BOLT	3	22170-
15	KD0-35411-0200	.PULLEY, HARDENING,HARDENING	1	22170-
16	KD1-35421-0030	.FAN	1	22170-
17	KD1-0330-16012	.WASHER	1	22170-
18	KD1-0335-16002	.WASHER,SPRING	1	22170-
19	KD0-0280-16022	.NUT	1	22170-
20	KD0-35120-0040	.FIELD COIL ASS'Y	1	22170-
	KD0-35700-0130	.REAR BRACKET ASS'Y	1	22170-
21	KD0-35710-0140	..BRACKET,REAR	1	22170-
22	KD0-35730-0080	..RECTIFIER ASS'Y	1	22170-
23	KD1-35761-0060	..COVER	1	22170-
24	KD1-33943-0770	..BUSHING,INSULATE	2	22170-
25	KD1-09102-0010	..PLATE,INSULATE	1	22170-
26	KD1-33943-0760	..BUSHING,INSULATE	1	22170-
27	KD1-44000-0900	..REGULATOR	1	22170-

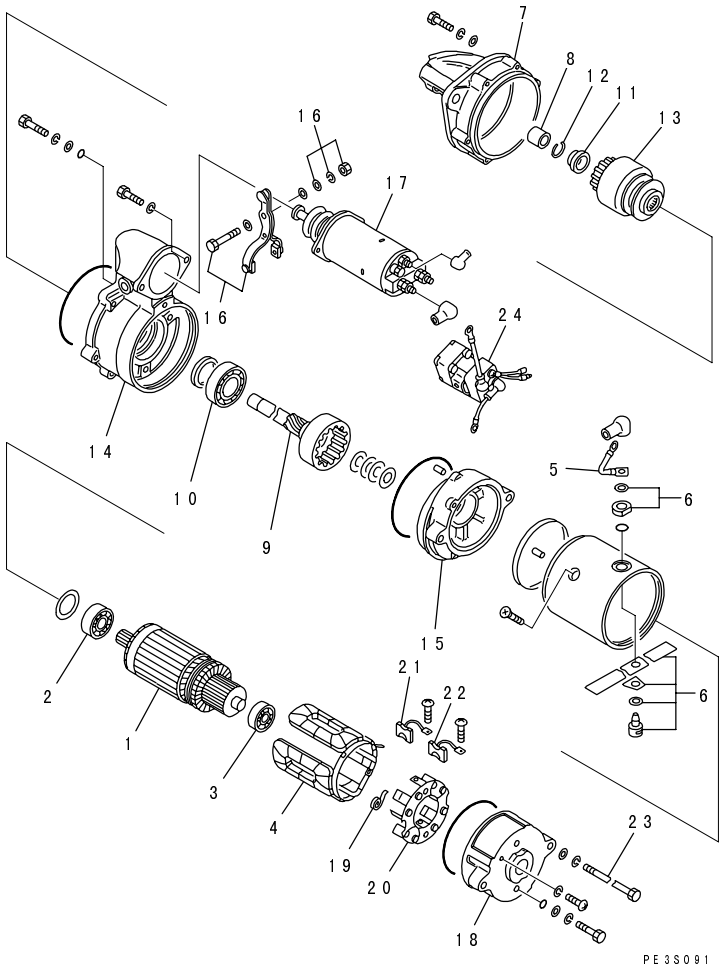

INDEX	PART NO.	DESCRIPTION	Q'TY	SERIAL NO.
	600-813-3320	STARTING MOTOR ASS'Y,(5.5KW).....	1	22170-
1	KD1-23100-0160	.ARMATURE ASS'Y.....	1	22170-
2	KD1-0454-60047	..BEARING,BALL, FRONT.....	1	22170-
3	KD1-0454-62007	..BEARING,BALL, REAR.....	1	22170-
4	KD0-23230-0210	.FIELD COIL ASS'Y.....	1	22170-
5	KD1-23785-0100	.LEAD WIRE ASS'Y.....	1	22170-
6	KD7-23780-0040	.TERMINAL ASS'Y.....	1	22170-
7	KD0-23310-0680	.FRONT BRACKET A.....	1	22170-
8	KD7-23351-0140	..METAL.....	1	22170-
9	KD7-23120-0270	.SHAFT ASS'Y.....	1	22170-
10	KD1-0454-60057	..BEARING,BALL.....	1	22170-
11	KD1-23181-0030	.STOPPER,PINION.....	1	22170-
12	KD1-23914-0030	.RING,CLIP.....	2	22170-
13	KD0-23500-0390	.CLUTCH ASS'Y,OVER RUNNING.....	1	22170-
14	KD0-23600-0220	.CNETER BRACKET A.....	1	22170-
15	KD1-23611-0430	.BRACKET,CENTER.....	1	22170-
16	KD7-23320-0040	.SHIFT LEVER ASS'Y.....	1	22170-
17	KD0-47100-3510	.MAGNETIC SWITCH A.....	1	22170-
	KD7-23700-0600	.REAR BRACKET ASS'Y.....	1	22170-
18	KD0-23711-0170	..BRACKET,REAR.....	1	22170-
19	KD1-23913-0010	..SPRING,BRUSH.....	4	22170-
20	KD0-23750-0120	..BRUSH HOLDER A.....	1	22170-
21	KD1-23740-0170	..BRUSH (+).....	2	22170-
22	KD0-23740-0180	..BRUSH (-).....	2	22170-
23	KD1-23901-0080	..BOLT.....	2	22170-
24	KD0-25000-6951	.SWITCH ASS'Y.....	1	22170-
25	KD7-09210-0720	SEAL ASS'Y,(NOT SHOWN).....	1	22170-

ACCESSORY

FIG.0701 AIR COMPRESSOR AND PIPING

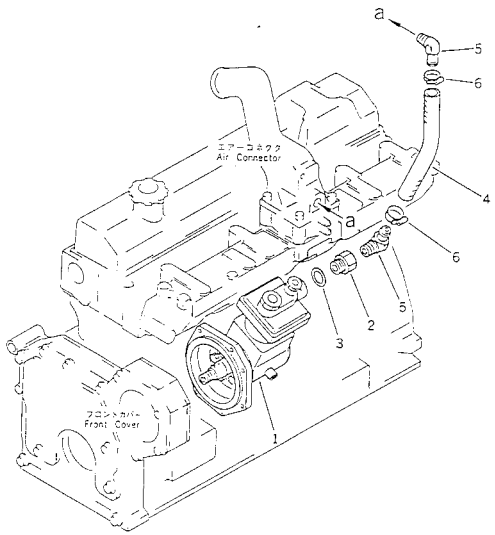

FIG NO. : 0701

INDEX	PART NO.	DESCRIPTION	Q'TY	SERIAL NO.
1	(6206-91-1100)	AIR COMPRESSOR ASS'Y,(SEE FIG.0711).....	1	22170-
2	6137-81-3210	ADAPTER.....	1	22170-
3	6164-91-6220	GASKET.....(K2).....	1	.-
	□07005-02416	GASKET.....(K2).....	1	22170-.
4	6206-91-1510	HOSE.....	1	22170-
5	6137-81-3221	ELBOW.....	2	22170-
6	07281-00289	CLAMP.....	2	22170-

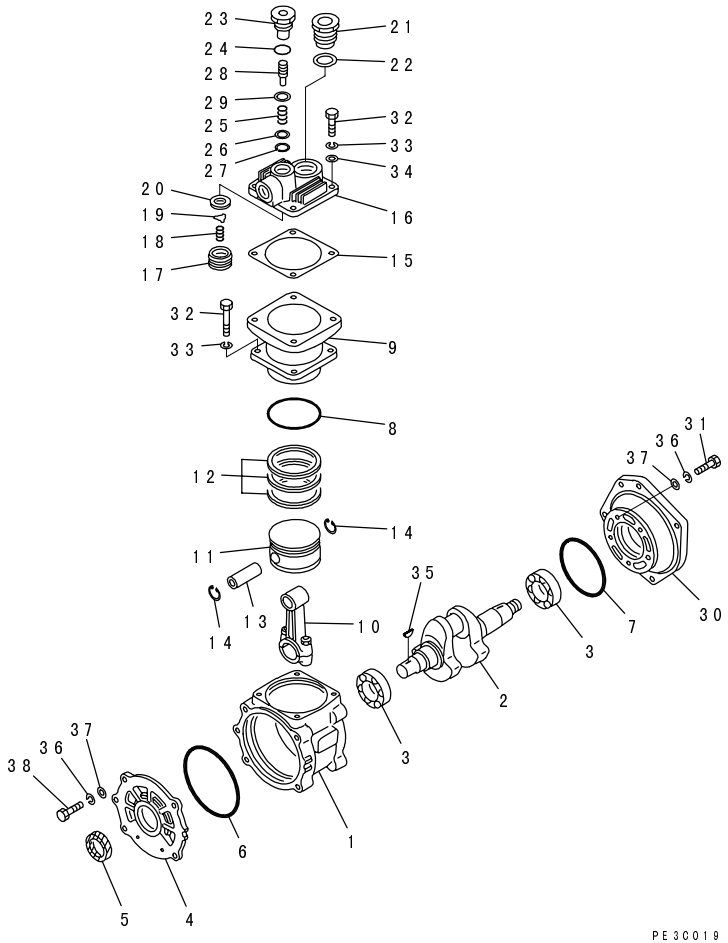

FIG NO. : 0711

INDEX	PART NO.	DESCRIPTION	Q'TY	SERIAL NO.
	6206-91-1100	AIR COMPRESSOR ASS'Y	1	22170-
1	DK487000-5900	.CASE,CRANK	1	22170-
2	DK487008-8400	.CRANKSHAFT	1	22170-
3	DK035620-6000	.BEARING	2	22170-
4	DK487003-4420	.COVER,BEARING	1	22170-
5	DK487085-0200	..SEAL,OIL	1	22170-
6	DK487061-4300	.O-RING	1	22170-
7	DK487061-3700	.O-RING	1	22170-
8	DK487061-4400	.O-RING	1	22170-
9	DK487001-3300	.CYLINDER	1	22170-
10	DK487013-2220	.CONNECTING ROD A	1	22170-
11	DK487009-1700	.PISTON	1	22170-
12	DK487010-3720	.RING KIT,PISTON	1	22170-
13	DK487012-0400	.PIN,PISTON	1	22170-
14	DK016110-1610	.RING,SNAP	2	22170-
15	DK487020-0400	.GASKET	1	22170-
	DK487099-3721	.CYLINDER HEAD ASS'Y	1	22170-
16	DK487018-1300	..CYLINDER HEAD A.,CYLINDER	1	22170-
17	DK487028-1100	..GUIDE,INTAKE VALVE	1	22170-
18	DK487027-0300	..SPRING,INTAKE VALVE	1	22170-
19	DK487026-0800	..VALVE,INLET	1	22170-
20	DK487025-0400	..SEAT,INTAKE VALVE	1	22170-
21	DK487030-1420	..DELIVERY VALVE A	1	22170-
22	DK029332-2100	..GASKET	1	22170-
	DK487021-2420	..UNLOADER VALVE A	1	22170-
23	DK487021-2400	...BODY	1	22170-
24	DK487061-4600	...O-RING	1	22170-
25	DK487024-1600	...SPRING	1	22170-
26	DK487351-0200	...WASHER	1	22170-
27	DK016110-1440	...RING,SNAP	1	22170-
28	DK487023-0700	...ROD	1	22170-
29	DK487351-0300	...WASHER	1	22170-
30	DK487073-0200	.CAP	1	22170-
31	DK010138-2570	.BOLT	5	22170-
32	DK010110-2570	.BOLT	8	22170-
33	DK014111-0440	.WASHER,SPRING	8	22170-
34	DK014011-0140	.WASHER	4	22170-
35	DK487099-7700	.KEY	2	22170-
36	DK014110-8440	.WASHER,SPRING	9	22170-
37	DK014020-8140	.WASHER	9	22170-
38	DK156603-4400	.BOLT	4	22170-

ENGINE KIT

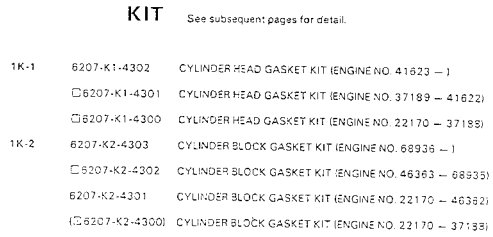

INDEX	PART NO.	DESCRIPTION	Q'TY	SERIAL NO.
1	6207-K1-4302	GASKET KIT,CYLINDER HEAD	1	41623-
	□6207-K1-4301	GASKET KIT,CYLINDER HEAD	1	37189-41622
	□6207-K1-4300	GASKET KIT,CYLINDER HEAD	1	22170-37188
	6204-41-4540	.SEAL	6	22170-
	6207-11-1822	.GASKET	1	41623-
	◆6207-11-1820	.GASKET	1	37189-41622
	□6207-11-1810	.GASKET	1	22170-37188
	6206-11-8810	.O-RING	1	22170-
	6136-11-8142	.PACKING	4	22170-
	6136-11-4820	.GASKET	2	22170-
	6207-11-5810	.GASKET	2	22170-
	6207-11-5580	.GASKET	1	22170-
	07000-62018	.O-RING	1	22170-
	6131-51-7681	.GASKET	1	22170-
	6204-11-3880	.GASKET	6	22170-
	6204-11-3850	.SEAL	6	22170-
	6204-61-1910	.GASKET	1	41623-
	6204-61-1910	.GASKET	1	22170-37188
	6206-61-1720	.GASKET	1	22170-
	6140-11-6331	.GASKET	1	22170-
	08034-00414	.BAND	2	37189-
	08034-00519	.BAND	2	37189-
2	6207-K2-4303	GASKET KIT,CYLINDER BLOCK	1	68936-
	□6207-K2-4302	GASKET KIT,CYLINDER BLOCK	1	46363-68935
	6207-K2-4301	GASKET KIT,CYLINDER BLOCK	1	22170-46362
	(☒6207-K2-4300)	GASKET KIT,CYLINDER BLOCK	1	(22170-37188)
	6206-21-6810	.GASKET	1	22170-
	6206-21-3830	.GASKET	1	37189-
	□6204-21-3811	.GASKET	1	22170-37188
	6204-21-3451	.GROMMET	1	22170-
	6204-21-3460	.GROMMET	6	22170-
	6204-21-3410	.PACKING	1	22170-
	6204-21-3510	.SEAL, FRONT	1	22170-
	07000-03050	.O-RING	1	22170-
	07005-02216	.GASKET	1	46363-
	□6204-21-5290	.GASKET	1	22170-46362
	07005-02216	.GASKET	1	68936-
	6141-21-1332	.SEAL, REAR	1	22170-
	6204-51-6120	.O-RING	1	22170-
	6204-61-5190	.GASKET	2	22170-
	6207-61-5311	.GASKET	1	46363-
	6130-32-1361	.WASHER	1	46363-

FIG NO. : 0991

INDEX	PART NO.	DESCRIPTION	Q'TY	SERIAL NO.
	□01653-21412	.WASHER	1	22170-46362
	07000-02135	.O-RING	1	22170-
	07005-00812	.GASKET	5	68936-
	07005-00812	.GASKET	1	22170-68935
	287-01-12231	.O-RING	1	22170-
	07005-01012	.GASKET	5	68936-
	07005-01012	.GASKET	4	22170-68935
	07005-00812	.GASKET	1	22170-37188
	07005-01412	.GASKET	10	68936-
	07005-01412	.GASKET	8	22170-68935
	6221-61-1520	.SEAL, WATER	1	46363-
	6204-61-1511	.SEAL, WATER	1	22170-46362
	(☒6204-61-1510)	.SEAL, WATER	1	(22170-37188)
	6206-61-1531	.GASKET	1	37189-
	□6206-61-1530	.GASKET	1	22170-37188
	6204-61-1910	.GASKET	1	22170-
	6206-61-1720	.GASKET	1	22170-
	6140-11-6331	.GASKET	1	22170-37188
	07000-02105	.O-RING	1	22170-
	6206-21-5811	.GASKET	1	46363-
	07000-63030	.O-RING	1	22170-
	7861-91-4220	.O-RING	1	46363-
	08034-00414	.BAND	2	37189-
	08034-00519	.BAND	2	37189-

S6D95L-1L

FIG.0992 GASKET KIT (WITH AIR COMPRESSOR TYPE)

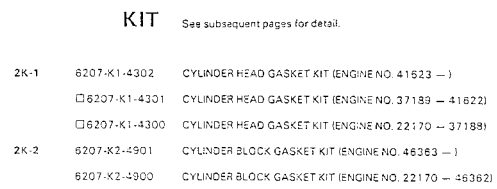

FIG NO. : 0992

INDEX	PART NO.	DESCRIPTION	Q'TY	SERIAL NO.
1	6207-K1-4302	GASKET KIT,CYLINDER HEAD	1	41623-
	□6207-K1-4301	GASKET KIT,CYLINDER HEAD	1	37189-41622
	□6207-K1-4300	GASKET KIT,CYLINDER HEAD	1	22170-37188
	6204-41-4540	.SEAL	6	22170-
	6207-11-1822	.GASKET	1	41623-
	◆6207-11-1820	.GASKET	1	37189-41622
	□6207-11-1810	.GASKET	1	22170-37188
	6206-11-8810	.O-RING	1	22170-
	6136-11-8142	.PACKING	4	22170-
	6136-11-4820	.GASKET	2	22170-
	6207-11-5810	.GASKET	2	22170-
	6207-11-5580	.GASKET	1	22170-
	07000-62018	.O-RING	1	22170-
	6131-51-7681	.GASKET	1	22170-
	6204-11-3880	.GASKET	6	22170-
	6204-11-3850	.SEAL	6	22170-
	6204-61-1910	.GASKET	1	41623-
	6204-61-1910	.GASKET	1	22170-41622
	6206-61-1720	.GASKET	1	22170-
	6140-11-6331	.GASKET	1	22170-
	08034-00414	.BAND	2	37189-
	08034-00519	.BAND	2	37189-
2	6207-K2-4901	GASKET KIT,CYLINDER BLOCK	1	46363-
	6207-K2-4900	GASKET KIT,CYLINDER BLOCK	1	22170-46362
	6206-21-6810	.GASKET	1	22170-
	6206-21-3830	.GASKET	1	22170-
	6204-21-3451	.GROMMET	1	22170-
	6204-21-3460	.GROMMET	6	22170-
	6204-21-3410	.PACKING	1	22170-
	6204-21-3510	.SEAL, FRONT	1	22170-
	07000-03050	.O-RING	1	22170-
	07005-02216	.GASKET	1	46363-
	□6204-21-5290	.GASKET	1	22170-46362
	07005-02216	.GASKET	1	46363-
	6141-21-1332	.SEAL, REAR	1	22170-
	6204-51-6120	.O-RING	1	22170-
	6204-61-5190	.GASKET	2	22170-
	6207-61-5311	.GASKET	1	46363-
	01653-22016	.WASHER	1	22170-
	07000-02135	.O-RING	1	22170-
	6206-21-6850	.GASKET	1	22170-
	07005-01212	.GASKET	5	46363-

FIG NO. : 0992

INDEX	PART NO.	DESCRIPTION	Q'TY	SERIAL NO.
	07005-01212	.GASKET	4	22170-46362
	07005-01012	.GASKET	10	46363-
	07005-01012	.GASKET	6	22170-46362
	07005-01412	.GASKET	10	46363-
	07005-01412	.GASKET	8	22170-46362
	6221-61-1520	.SEAL, WATER	1	46363-
	6204-61-1511	.SEAL, WATER	1	22170-46362
	6206-61-1531	.GASKET	1	22170-46362
	6204-61-1910	.GASKET	1	22170-
	6206-61-1720	.GASKET	1	22170-
	07000-02105	.O-RING	1	22170-
	6164-91-6220	.GASKET	1	46363-
	□07005-02416	.GASKET	1	22170-46362
	08034-00414	.BAND	2	22170-
	08034-00519	.BAND	2	22170-

ENGINE RELATED PARTS AND ELECTRICAL SYSTEM

FIG.1001 ENGINE AND TRANSMISSION MOUTING PARTS

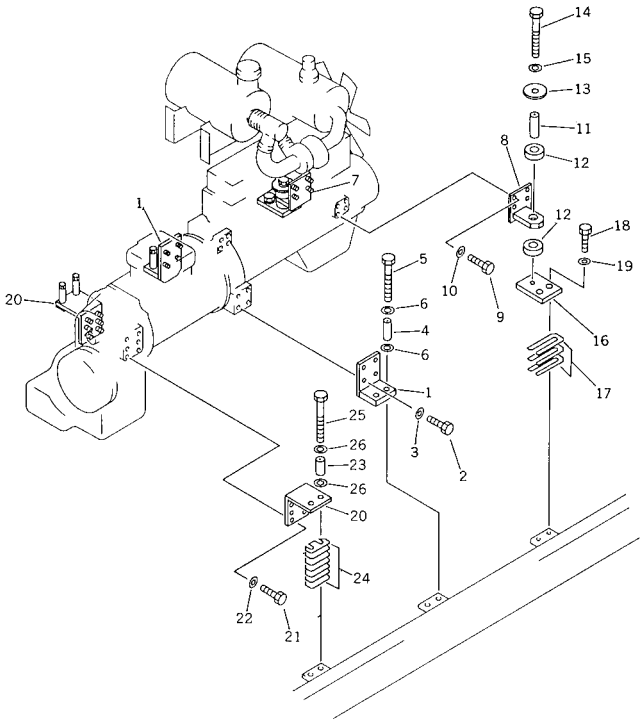

FIG NO. : 1001

INDEX	PART NO.	DESCRIPTION	Q'TY	SERIAL NO.
1	23A-01-12310	BRACKET	2	10001-
2	01010-51240	BOLT	8	10001-
3	01643-31232	WASHER	8	10001-
4	23A-01-11250	SPACER	4	10001-
5	01011-51615	BOLT	4	10001-
6	01643-31645	WASHER	8	10001-
7	23A-01-12220	BRACKET	1	10001-
8	23A-01-12230	BRACKET	1	10001-
9	01010-51035	BOLT	8	10001-
10	01643-31032	WASHER	8	10001-
11	23A-01-11250	SPACER	2	10001-
12	23A-01-11210	CUSHION	4	10001-
13	23A-01-11260	PLATE	2	10001-
14	01010-51695	BOLT	2	10001-
15	01643-31645	WASHER	2	10001-
16	23A-01-12240	PLATE	2	10001-
17	23B-01-00040	SHIM ASS'Y	1	10001-
18	01010-51660	BOLT	4	10001-
19	01643-31645	WASHER	4	10001-
20	23A-01-11330	BRACKET	2	10001-
21	01010-51240	BOLT	12	10001-
22	01643-31232	WASHER	12	10001-
23	23A-01-11250	SPACER	4	10001-
24	23A-01-00090	SHIM ASS'Y	1	10001-
25	01011-51615	BOLT	4	10001-
26	01643-31645	WASHER	8	10001-

FIG.1011 AIR CLEANER RELATED PARTS

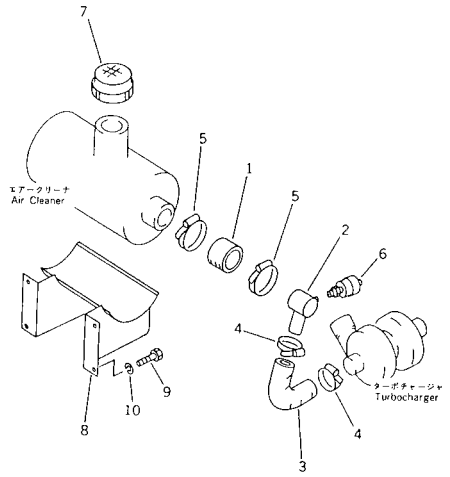

FIG NO. : 1011

INDEX	PART NO.	DESCRIPTION	Q'TY	SERIAL NO.
1	23D-01-11160	HOSE	1	10001-
2	23D-01-11140	CONNECTOR	1	10001-
3	23A-01-11160	HOSE	1	10001-
4	07281-00809	CLAMP	2	10001-
5	07281-01159	CLAMP	2	10001-
6	08670-00635	INDICATOR,DUST	1	10001-
7	23D-01-11130	NET	1	10001-
8	23A-01-11620	BRACKET	1	10001-
9	01010-51020	BOLT	4	10001-
10	01643-31032	WASHER	4	10001-

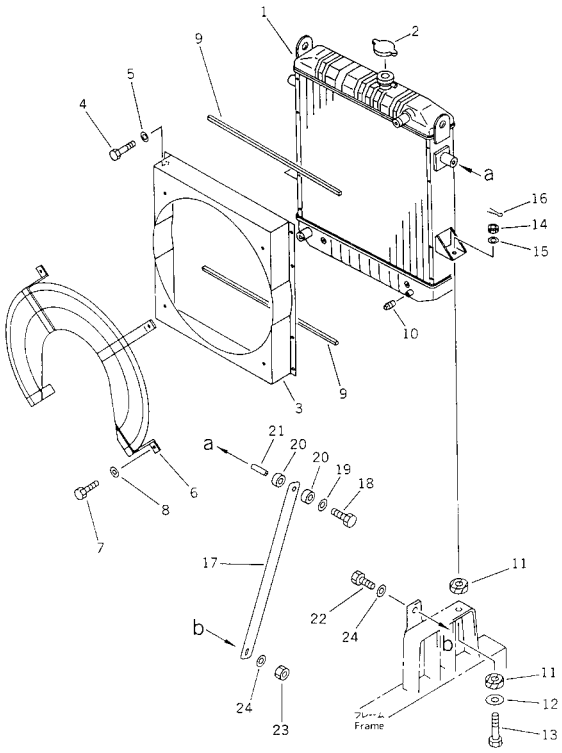

INDEX	PART NO.	DESCRIPTION	Q'TY	SERIAL NO.
	23A-03-21100	RADIATOR ASS'Y	1	10052-
1	23A-03-21410	.CORE	1	10052-
2	205-03-71280	.CAP ASS'Y	1	10052-
3	23A-03-21420	.SHROUD	1	10052-
4	01010-50820	.BOLT	8	10052-
5	01643-30823	.WASHER	8	10052-
6	23A-03-21430	.NET,WIRE	1	10052-
7	01010-50820	.BOLT	4	10052-
8	01643-30823	.WASHER	4	10052-
9	23A-03-21440	.PACKING	2	10052-
10	07042-20211	.PLUG	1	10052-
11	23A-03-21160	CUSHION	4	10052-
12	236-03-21190	WASHER	2	10052-
13	01012-51480	BOLT	2	10001-
14	01590-11416	NUT	2	10001-
15	01643-31445	WASHER	2	10052-
16	04050-13028	PIN,COTTER	2	10001-
17	23A-03-21150	PLATE	2	10052-
18	01010-51250	BOLT	2	10052-
19	23A-03-21190	WASHER	2	10001-
20	23A-03-21170	CUSHION	4	10052-
21	273-956-2190	COLLAR	2	10052-
22	01010-51645	BOLT	2	10052-
23	01580-11613	NUT	2	10052-
24	01643-31645	WASHER	4	10052-

FIG.1203A RADIATOR PIPING(#10052-)

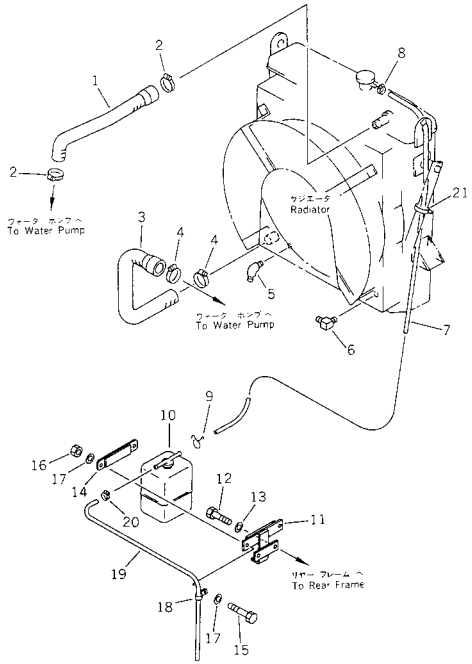

FIG NO. : 1203A

INDEX	PART NO.	DESCRIPTION	Q'TY	SERIAL NO.
1	23A-03-21210	HOSE	1	10052-
2	07289-00045	CLAMP	2	.-
	□07281-00489	CLAMP	2	10052-.
3	23A-03-21220	HOSE	1	10052-
4	07289-00045	CLAMP	2	.-
	□07281-00549	CLAMP	2	10052-.
5	238-03-11240	ELBOW	1	10001-
6	238-03-11170	ELBOW	1	10001-
7	23A-03-21370	HOSE	1	10052-
8	07281-00167	CLAMP	1	10052-
9	206-03-43340	CLIP	1	10052-
10	23A-03-12270	TANK	1	10052-
11	23A-03-21320	BRACKET	1	10052-
12	01010-51018	BOLT	2	10052-
13	01643-31032	WASHER	2	10052-
14	23A-03-21330	PLATE	1	10052-
15	01011-51075	BOLT	2	10052-
16	01598-01011	NUT	2	10052-
17	01643-31032	WASHER	4	10052-
18	08036-11214	CLIP	1	10052-
19	07270-00880	TUBE	1	10052-
20	07281-00167	CLAMP	1	10052-
21	08034-00519	BAND	1	10052-

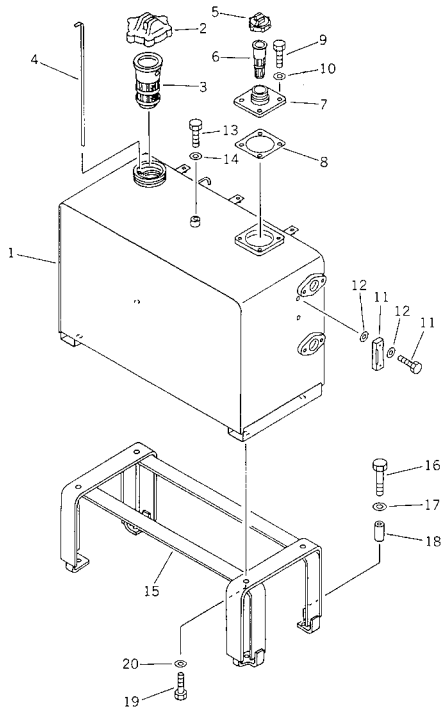

INDEX	PART NO.	DESCRIPTION	Q'TY	SERIAL NO.
1	23A-04-11150	TANK	1	10001-
2	07050-21200	CAP,FUEL	1	10001-
3	238-04-12130	STRAINER	1	10001-
4	23A-04-11410	GAUGE	1	10001-
5	07051-20000	CAP,HYDRAULIC	1	10001-
6	07056-10045	STRAINER	1	10001-
7	23A-04-11340	FILLER	1	10001-
8	232-60-68140	PACKING	1	10001-
9	01010-51020	BOLT	4	10001-
10	01643-31032	WASHER	4	10001-
11	23A-60-13500	GAUGE	1	10001-
12	07005-01012	GASKET	4	10001-
13	01010-51625	BOLT	1	10001-
14	01640-21626	WASHER	1	10001-
15	23A-04-11240	BRACKET	1	10001-
16	01010-51685	BOLT	4	10001-
17	01643-31645	WASHER	4	10001-
18	238-04-11140	SPACER	4	10001-
19	01010-51650	BOLT	4	10001-
20	01643-31645	WASHER	4	10001-

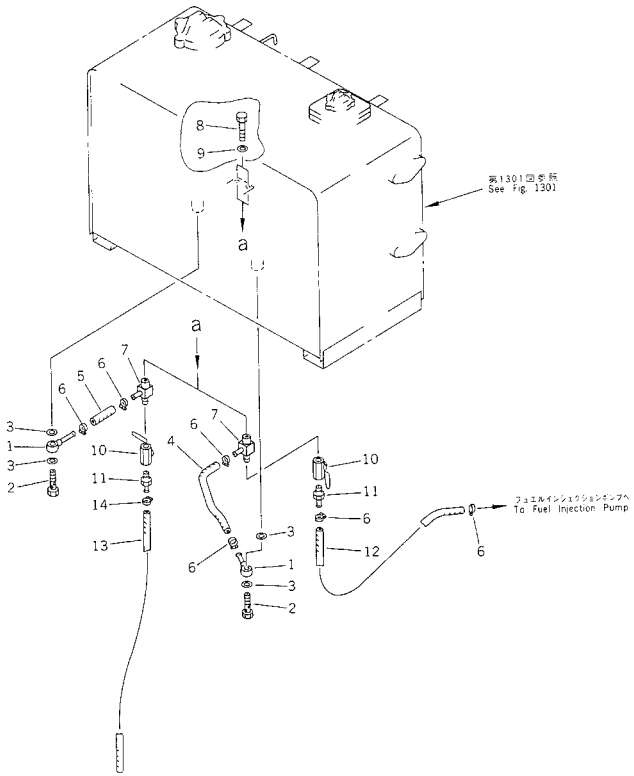

INDEX	PART NO.	DESCRIPTION	Q'TY	SERIAL NO.
1	238-04-12110	TUBE	2	10001-
2	07206-31014	BOLT,JOINT	2	10001-
3	07005-01412	GASKET	4	10001-
4	07260-20940	HOSE	1	10001-
5	07260-20909	HOSE	1	10001-
6	07281-00197	CLAMP	6	10001-
7	23D-04-11310	NIPPLE	2	10001-
8	01010-50816	BOLT	2	10001-
9	01643-30823	WASHER	2	10001-
10	07700-40240	VALVE	2	10001-
11	23D-04-11320	NIPPLE	2	10001-
12	07260-20990	HOSE	1	10001-
13	07270-01090	TUBE	1	10001-
14	07281-00167	CLAMP	1	10001-

FIG.1305 FUEL AND HYDRAULIC TANK (WITH WATER SEPARATOR)

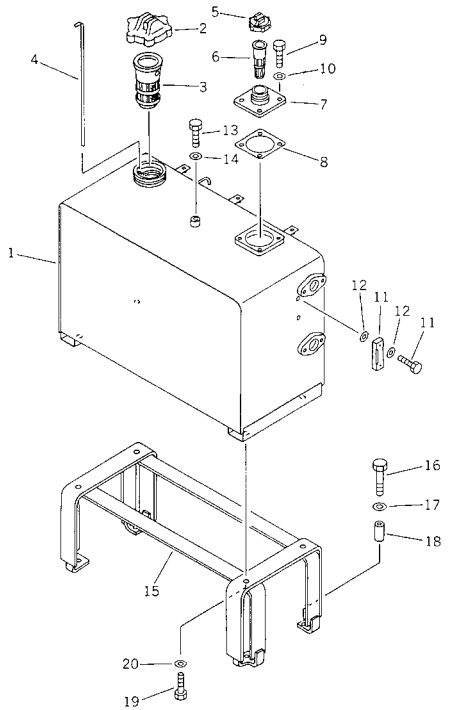

FIG NO. : 1305

INDEX	PART NO.	DESCRIPTION	Q'TY	SERIAL NO.
1	23A-04-11710	TANK, (MODIFIED PARTS)	1	10001-
	08036-41814	.CLIP	4	10001-
	01571-00814	.SEAT	2	10001-
2	07050-21200	CAP,FUEL	1	10001-
3	238-04-12130	STRAINER	1	10001-
4	23A-04-11410	GAUGE	1	10001-
5	07051-20000	CAP,HYDRAULIC	1	10001-
6	07056-10045	STRAINER	1	10001-
7	23A-04-11340	FILLER	1	10001-
8	232-60-68140	PACKING	1	10001-
9	01010-51020	BOLT	4	10001-
10	01643-31032	WASHER	4	10001-
11	23A-60-13500	GAUGE	1	10001-
12	07005-01012	GASKET	4	10001-
13	01010-51625	BOLT	1	10001-
14	01640-21626	WASHER	1	10001-
15	23A-04-11240	BRACKET	1	10001-
16	01010-51685	BOLT	4	10001-
17	01643-31645	WASHER	4	10001-
18	238-04-11140	SPACER	4	10001-
19	01010-51650	BOLT	4	10001-
20	01643-31645	WASHER	4	10001-

FIG.1307 FUEL PIPING (WITH WATER SEPARATOR)

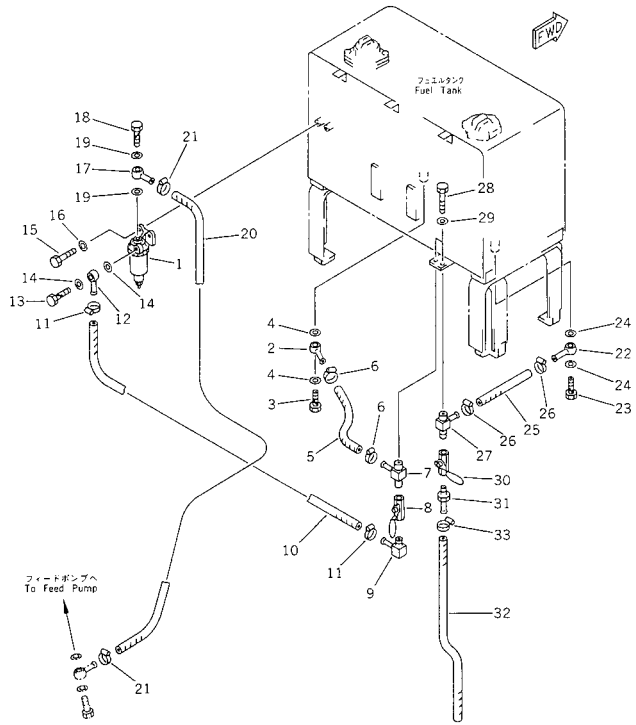

FIG NO. : 1307

INDEX	PART NO.	DESCRIPTION	Q'TY	SERIAL NO.
1	(600-311-9700)	WATER SEPARATOR A.,(SEE FIG.1309).....	1	10001-
2	238-04-12110	TUBE.....	1	10001-
3	07206-31014	BOLT,JOINT.....	1	10001-
4	07005-01412	GASKET.....	2	10001-
5	07260-20940	HOSE.....	1	10001-
6	07281-00197	CLAMP.....	2	10001-
7	23B-04-11430	NIPPLE.....	1	10001-
8	07700-40460	VALVE.....	1	10001-
9	232-04-52320	NIPPLE.....	1	10001-
10	07260-20990	HOSE.....	1	10001-
11	07281-00197	CLAMP.....	2	10001-
12	238-04-12110	TUBE.....	1	10001-
13	07206-31014	BOLT,JOINT.....	1	10001-
14	07005-01412	GASKET.....	2	10001-
15	01010-50825	BOLT.....	2	10001-
16	01643-30823	WASHER.....	2	10001-
17	238-04-12110	TUBE.....	1	10001-
18	07206-31014	BOLT,JOINT.....	1	10001-
19	07005-01412	GASKET.....	2	10001-
20	07261-20918	HOSE.....	1	.-
	□07261-20916	HOSE.....	1	10001-.
21	07281-00197	CLAMP.....	2	10001-
22	238-04-12110	TUBE.....	1	10001-
23	07206-31014	BOLT,JOINT.....	1	10001-
24	07005-01412	GASKET.....	2	10001-
25	07260-20909	HOSE.....	1	10001-
26	07281-00197	CLAMP.....	2	10001-
27	23D-04-11310	NIPPLE.....	1	10001-
28	01010-50816	BOLT.....	2	10001-
29	01643-30823	WASHER.....	2	10001-
30	07700-40240	VALVE.....	1	10001-
31	23D-04-11320	NIPPLE.....	1	10001-
32	07270-01090	TUBE.....	1	10001-
33	07281-00167	CLAMP.....	1	10001-

FIG.1309 WATER SEPARATOR

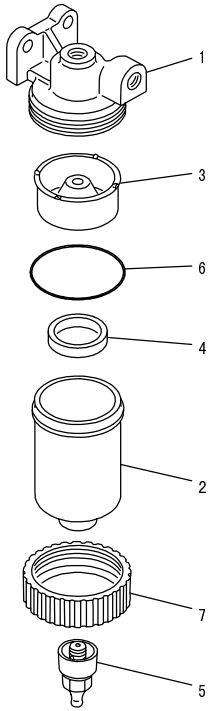

PG30078

FIG NO. : 1309

INDEX	PART NO.	DESCRIPTION	Q'TY	SERIAL NO.
	600-311-9700	WATER SEPARATOR A.	1	10001-
1	600-311-9810	.COVER.	1	10001-
2	600-311-9820	.CASE.	1	10001-
3	600-311-9840	.BAFFLE.	1	10001-
4	600-311-9850	.RING.	1	10001-
5	600-311-9760	.PLUG.	1	10001-
6	07000-02060	.O-RING.	1	10001-
7	600-311-9830	.NUT.	1	10001-

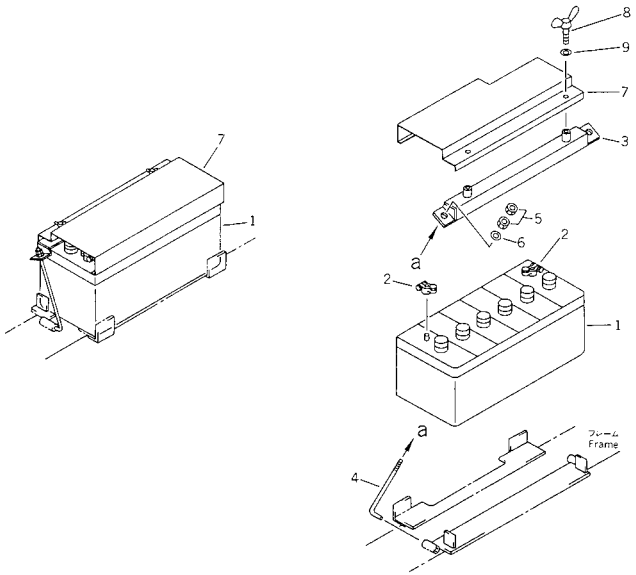

FIG NO. : 1401

INDEX	PART NO.	DESCRIPTION	Q'TY	SERIAL NO.
1	08000-02210	BATTERY (95E41R)	2	10001-
2	08000-00000	TERMINAL, (+)	2	10001-
	08000-00001	TERMINAL, (-)	2	10001-
3	23A-06-12840	HOLDER	2	10001-
4	23E-06-12550	BOLT	4	10001-
5	01580-10806	NUT	8	10001-
6	01643-30823	WASHER	4	10001-
7	23A-06-12850	COVER, L.H.	1	10001-
	23A-06-12860	COVER, R.H.	1	10001-
8	01434-00820	BOLT, WING	4	10001-
9	01640-20816	WASHER	4	10001-

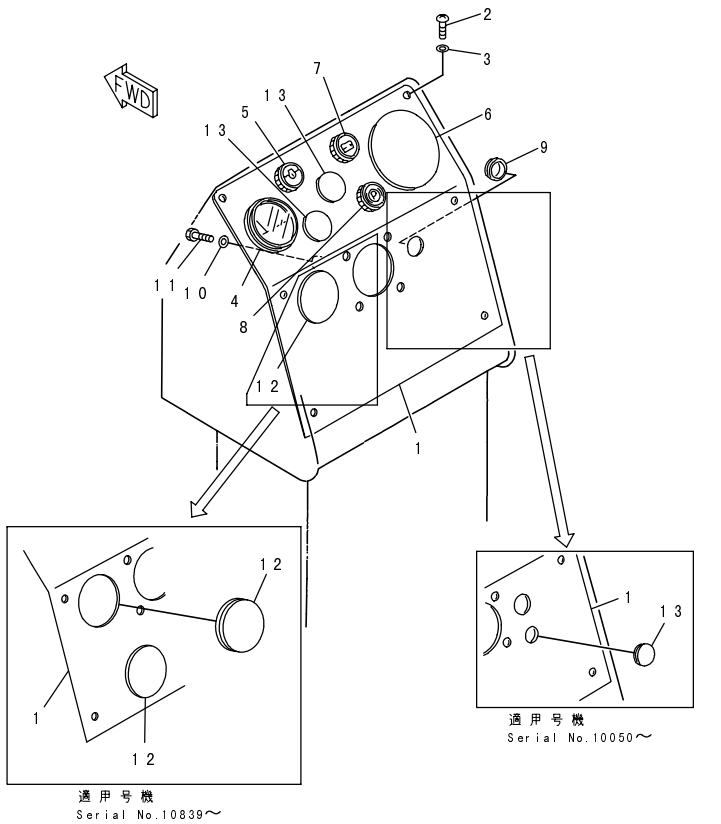

PJ50591A

INDEX	PART NO.	DESCRIPTION	Q'TY	SERIAL NO.
1	23E-06-12311	PANEL	1	10050-
	23E-06-12310	PANEL	1	10001-10049
2	01220-40816	SCREW	6	10001-
3	01640-20816	WASHER	6	10001-
4	232-06-52340	GAUGE,WATER TEMPERATURE	1	10001-
5	08147-42411	LAMP,ENGINE OIL PRESSURE	1	10001-
	08111-22430	.BULB, 3W	1	10001-
6	23B-06-12540	CAP	1	10001-
7	08147-42463	LAMP,CHARGE	1	10001-
	08111-22430	.BULB, 3W	1	10001-
8	08147-52430	LAMP,PARKING BRAKE	1	10001-
	08111-22430	.BULB, 3W	1	10001-
9	23A-06-12220	GROMMET	1	10001-
10	01640-20816	WASHER	1	10001-
11	01010-50812	BOLT	1	10001-
12	232-06-57190	CAP	2	10839-
	232-06-57190	CAP	1	10001-10838
13	09415-01610	CAP	3	10050-
	09415-01610	CAP	2	10001-10049

FIG.1413 INSTRUMENT PANEL (SIDE)

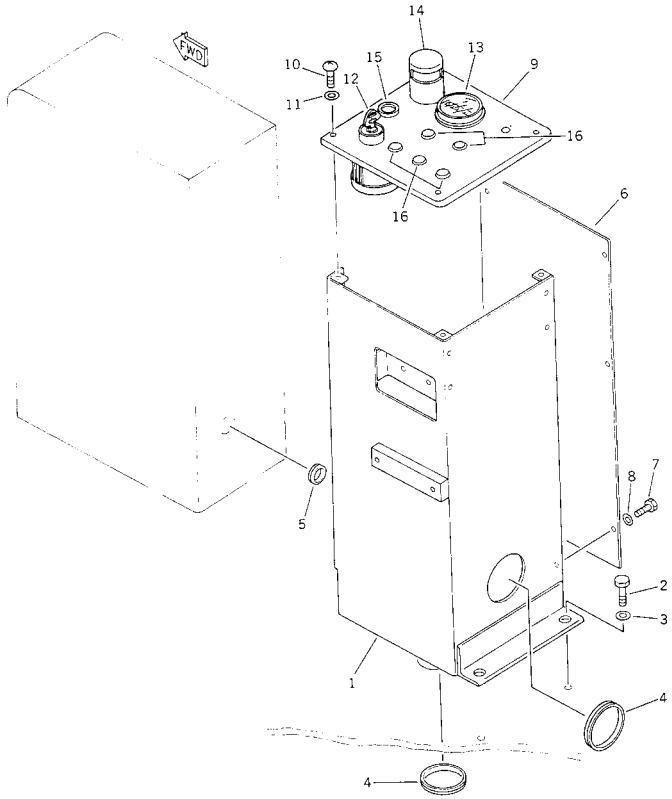

FIG NO. : 1413

INDEX	PART NO.	DESCRIPTION	Q'TY	SERIAL NO.
1	23B-06-12272	BOX	1	10621-
	23B-06-12271	BOX	1	10242-10620
	23B-06-12270	BOX	1	10001-10241
2	01010-51220	BOLT	3	10001-
3	01643-31232	WASHER	3	10001-
4	08037-05016	GROMMET	2	10001-
5	08037-02512	GROMMET	1	10001-
6	238-06-14220	PLATE	1	10001-
7	01010-50620	BOLT	6	10001-
8	01643-30623	WASHER	6	10001-
9	23B-06-12281	PANEL	1	10621-
	23B-06-12280	PANEL	1	10001-10620
10	01220-40612	SCREW	4	10001-
11	01643-30623	WASHER	4	10001-
12	08086-20000	SWITCH,STARTING	1	10001-
13	08687-22403	METER,SERVICE	1	10117-
	08687-22401	METER,SERVICE	1	10001-10116
14	08144-12400	LAMP,PANEL	1	10001-
	08110-12410	.BULB, 12W	1	10001-
15	(600-815-3730)	SIGNAL,HEATER	1	10001-
16	130-911-1640	PLUG	5	10001-

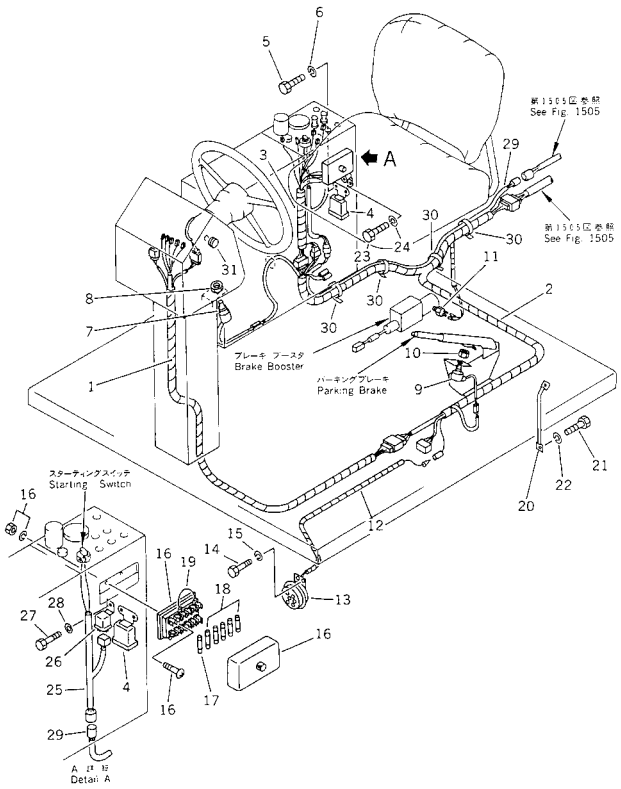

INDEX	PART NO.	DESCRIPTION	Q'TY	SERIAL NO.
1	23B-06-11180	WIRE ASS'Y.	1	10001-
2	23A-06-13120	WIRE ASS'Y.	1	10031-
	23B-06-11430	WIRE ASS'Y.	1	10001-10030
3	23A-06-13110	WIRE ASS'Y.	1	10031-
	23B-06-11230	WIRE ASS'Y.	1	10001-10030
4	08163-02400	RELAY,HORN.	1	10001-
5	01010-50612	BOLT.	2	10001-
6	01643-30623	WASHER.	2	10001-
7	08074-40000	SWITCH,SAFETY.	1	10001-
8	236-06-23230	NUT.	1	10001-
9	234-06-13361	SWITCH,PARKING BRAKE.	1	10001-
10	234-06-13380	NUT.	1	10001-
11	08071-10000	SWITCH,STOP LAMP.	1	10001-
12	23B-06-11330	WIRING HARNESS.	1	10001-
13	08160-52400	HORN.	1	10001-
14	01010-50814	BOLT.	2	10001-
15	01643-30823	WASHER.	2	10001-
16	08043-16000	BOX,FUSE.	1	10001-
17	08040-04000	FUSE, 40A.	1	10001-
18	08040-01000	FUSE, 10A.	5	10001-
19	234-06-11531	CABLE.	1	10001-
20	238-06-11160	CABLE.	1	10001-
21	01010-51016	BOLT.	2	10001-
22	01643-31032	WASHER.	2	10001-
23	01010-50612	BOLT.	1	10001-
24	01643-30623	WASHER.	1	10001-
25	23E-06-11610	HARNESS.	1	10242-
26	569-06-61960	RELAY,ENGINE STOP.	1	10242-
27	01010-50612	BOLT.	1	10242-
28	01643-30623	WASHER.	1	10242-
29	23E-06-11620	HARNESS.	1	10242-
30	08034-00414	BAND.	4	10242-
31	09415-00706	CAP.	1	10001-

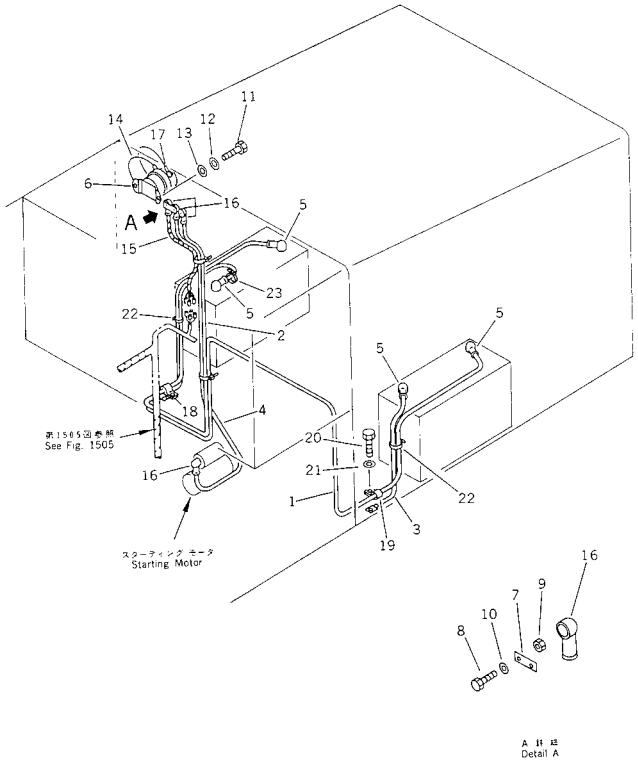

INDEX	PART NO.	DESCRIPTION	Q'TY	SERIAL NO.
1	23A-06-11210	WIRE	1	10031-
	08028-13325	CABLE	1	10001-10030
2	23A-06-11220	WIRE	1	10031-
	08028-13175	CABLE	1	10001-10030
3	23A-06-11280	WIRE	1	10031-
	23A-06-11130	WIRE	1	10001-10030
4	23A-06-11460	WIRE	1	10001-
5	232-06-11970	CAP,TERMINAL	4	10001-
6	22W-06-13220	SWITCH,BATTERY	1	10001-
7	234-06-32240	PLATE	1	10001-
8	01010-50820	BOLT	1	10001-
9	01580-10806	NUT	1	10001-
10	01643-30823	WASHER	1	10001-
11	01010-50830	BOLT	2	10001-
12	01643-30823	WASHER	2	10001-
13	01641-20812	WASHER	2	10001-
14	237-06-11510	WIRE	1	10001-
15	23A-06-13140	WIRE	1	10031-
	23A-06-11410	WIRE	1	10001-10030
16	232-06-11960	CAP	4	10001-
17	08038-00519	CAP	1	10001-
18	08036-01414	CLIP	2	10001-
19	08036-01414	CLIP	1	10001-
20	01010-51020	BOLT	1	10001-
21	01643-31032	WASHER	1	10001-
22	08034-00519	BAND	2	10001-
23	234-06-41320	BAND,MARK	2	10001-

FIG.1505 ELECTRICAL SYSTEM (REAR)

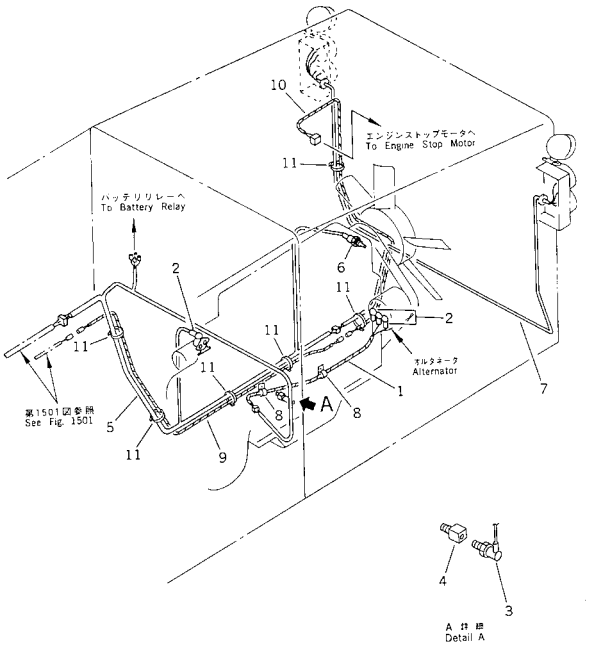

FIG NO. : 1505

INDEX	PART NO.	DESCRIPTION	Q'TY	SERIAL NO.
1	23A-06-13150	HARNESS	1	10031-
	23A-06-11420	WIRE ASS'Y	1	10001-10030
2	08038-00519	CAP	4	10001-
3	08073-00505	SWITCH	1	10001-
4	238-06-14310	NIPPLE	1	10001-
5	23A-06-13130	HARNESS	1	10031-
	23A-06-11430	WIRE ASS'Y	1	10001-10030
6	237-06-15120	SENSOR,WATER TEMPERATURE	1	10001-
7	23A-06-11250	WIRE ASS'Y	1	10001-
8	08036-10814	CLIP	2	10001-
9	23A-06-13440	HARNESS	1	10242-
10	23E-06-11540	HARNESS	1	10242-
11	08034-00414	BAND	6	10242-

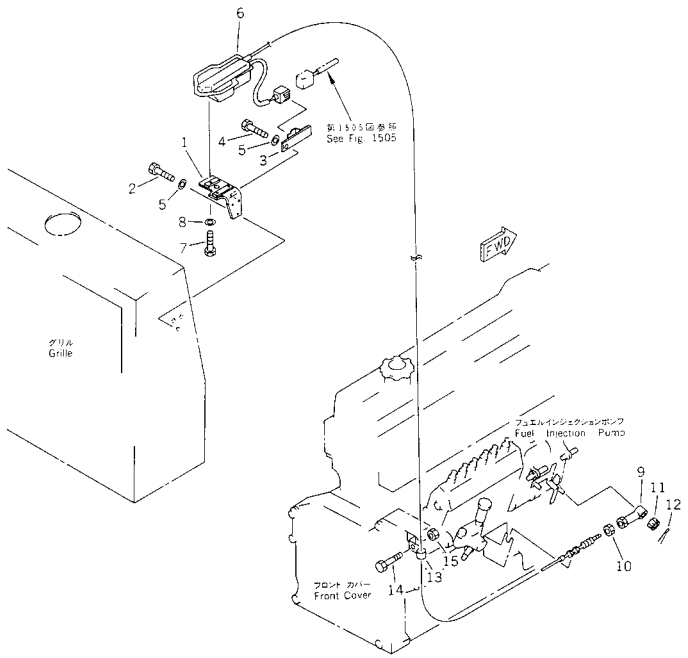

INDEX	PART NO.	DESCRIPTION	Q'TY	SERIAL NO.
1	23E-01-11310	BRACKET	1	10242-
2	01010-51025	BOLT	2	10242-
3	23E-01-11330	BRACKET	1	10242-
4	01010-51030	BOLT	1	10242-
5	01643-31032	WASHER	3	10242-
6	(600-815-7650)	MOTOR,ENGINE STOP	1	10242-
7	01010-50630	BOLT	3	10242-
8	01643-30623	WASHER	3	10242-
9	(04250-50639)	END,ROD	1	10242-
10	(01580-00605)	NUT	1	10242-
11	(01590-10607)	NUT	1	10242-
12	(04050-11212)	PIN,COTTER	1	10242-
13	424-04-11120	CLIP	1	10242-
14	01434-01020	BOLT, WING	1	10242-
15	01584-01008	NUT	1	10242-

FIG.1801 HEAD LAMP

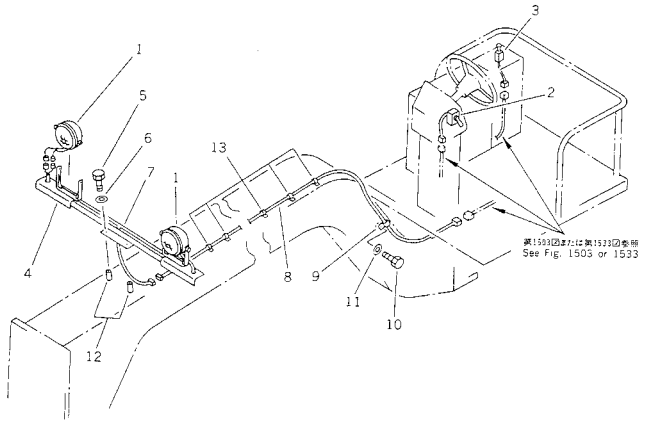

FIG NO. : 1801

INDEX	PART NO.	DESCRIPTION	Q'TY	SERIAL NO.
1	08121-22400	LAMP,HEAD	2	10001-
	08100-02460	.BULB, 60/60W	1	10001-
	08121-20005	.LENS	1	10001-
2	23A-06-12660	SWITCH,HEAD LAMP	1	10001-
3	237-06-15230	SWITCH,WORK LAMP	1	10001-
4	23A-06-12120	BRACKET	1	10001-
5	01010-51030	BOLT	2	10001-
6	01643-31032	WASHER	2	10001-
7	23B-06-11410	WIRE ASS'Y	1	10001-
8	23B-06-11150	WIRE ASS'Y	1	10001-
9	08036-10814	CLIP	1	10001-
10	01010-51016	BOLT	1	10001-
11	01643-31032	WASHER	1	10001-
12	234-46-11790	SEAT (WELDED)	2	10001-
13	565-44-13260	CLIP (WELDED)	11	10001-

FIG.1803 FRONT WORK LAMP

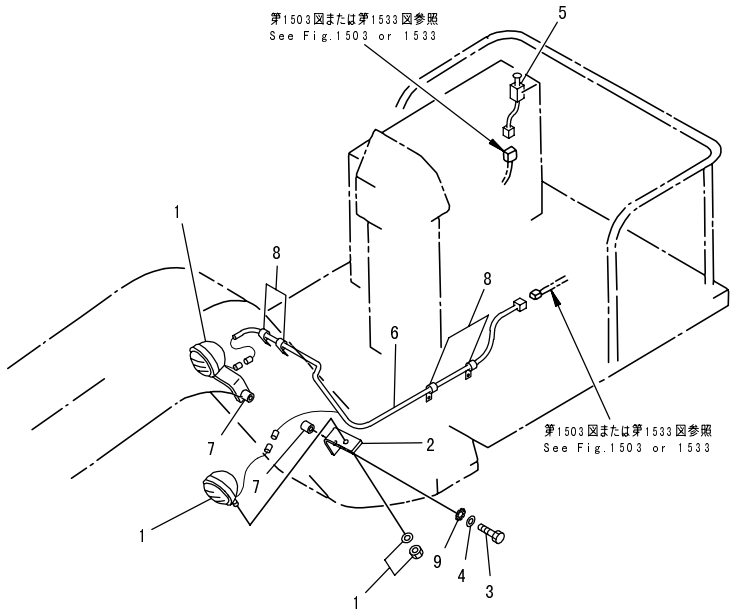

PJ2A652

FIG NO. : 1803

INDEX	PART NO.	DESCRIPTION	Q'TY	SERIAL NO.
1	232-06-51980	LAMP ASS'Y,FRONT WORK.	2	10001-
	08100-02460	.BULB, 60/60W.	1	10001-
	232-06-51990	.LENS.	1	10001-
2	23B-06-12290	BRACKET.	2	10001-
3	01010-51430	BOLT.	2	10001-
4	01643-31445	WASHER.	2	10001-
5	08061-30020	SWITCH,FRONT WORK LAMP.	1	10001-
6	23B-06-11140	WIRE ASS'Y.	1	10001-
	(23B-06-11150)	WIRE ASS'Y,(WITH COMBINATION LAMP)	1	10001-
7	01571-01422	SEAT.(WELDED)	2	10001-
8	565-44-13260	CLIP.(WELDED)	4	10001-
9	20U-54-25190	WASHER.	2	.-

FIG.1805 COMBINATION LAMP

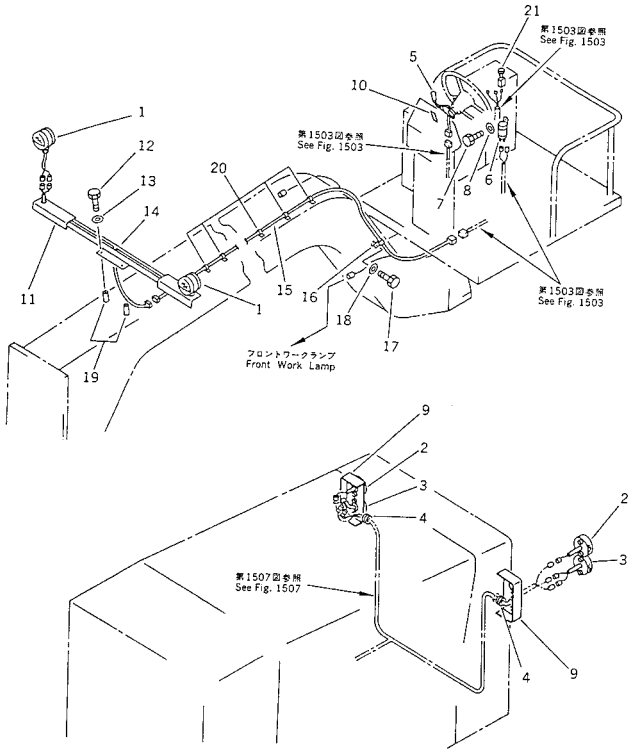

FIG NO. : 1805

INDEX	PART NO.	DESCRIPTION	Q'TY	SERIAL NO.
1	273-06-12610	LAMP ASS'Y,TURN SIGNAL, FRONT	2	10001-
	08105-02420	.BULB, 25W	1	10001-
	08136-02405	.BULB, 5W	1	10001-
	08136-00006	.LENS	1	10001-
	08136-00003	.LENS	1	10001-
2	23A-06-12620	LAMP ASS'Y,TURN SIGNAL, REAR	2	10001-
	08105-12420	.BULB, 25W	1	10001-
	23A-06-12640	.LENS	1	10001-
3	23A-06-12610	LAMP ASS'Y,STOP	2	10001-
	08104-12420	.BULB, 25/10W	1	10001-
	23A-06-12630	.LENS	1	10001-
4	08037-02512	GROMMET	2	10001-
5	23A-06-12650	SWITCH,TURN SIGNAL	1	10001-
6	08077-22400	FLASHER	1	10001-
7	01010-50612	BOLT	1	10001-
8	01643-30623	WASHER	1	10001-
9	23A-06-12160	BRACKET (WELDED)	2	10001-
10	23A-53-11550	PLATE, OPERATING,MARK	1	10001-
11	23A-06-12130	BRACKET	1	10001-
12	01010-51030	BOLT	2	10001-
13	01643-31032	WASHER	2	10001-
14	23B-06-11410	WIRE ASS'Y	1	10001-
15	23B-06-11150	WIRE ASS'Y	1	10001-
16	08036-10814	CLIP	1	10001-
17	01010-51016	BOLT	1	10001-
18	01643-31032	WASHER	1	10001-
19	234-46-11790	SEAT (WELDED)	2	10001-
20	565-44-13260	CLIP (WELDED)	11	10001-
21	237-06-15230	SWITCH,COMBINATION LAMP	1	10001-

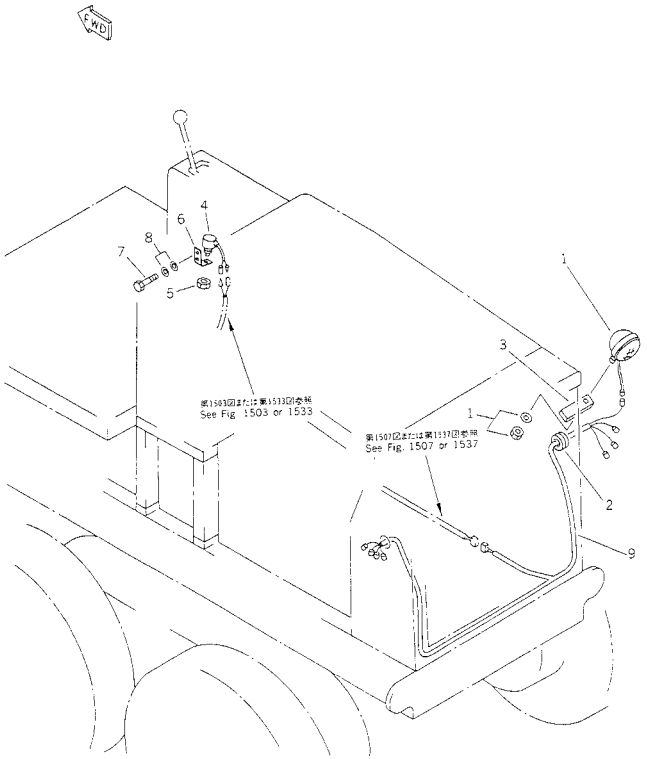

INDEX	PART NO.	DESCRIPTION	Q'TY	SERIAL NO.
1	232-06-13310	LAMP ASS'Y.	1	10001-
	232-06-13320	.BULB, 40W.	1	10001-
	08127-00060	.LENS.	1	10001-
2	08037-02512	GROMMET.	1	10001-
3	23A-06-12580	PLATE. (WELDED)	1	10001-
4	08074-40000	SWITCH,BACK-UP.	1	10001-
5	236-06-23230	NUT.	1	10001-
6	233-45-11250	BRACKET.	1	10001-
7	01010-50616	BOLT.	2	10001-
8	01643-30623	WASHER.	4	10001-
9	(23A-06-11250)	WIRE ASS'Y.	1	10001-

FIG.1833A BACK-UP ALARM(#.-)

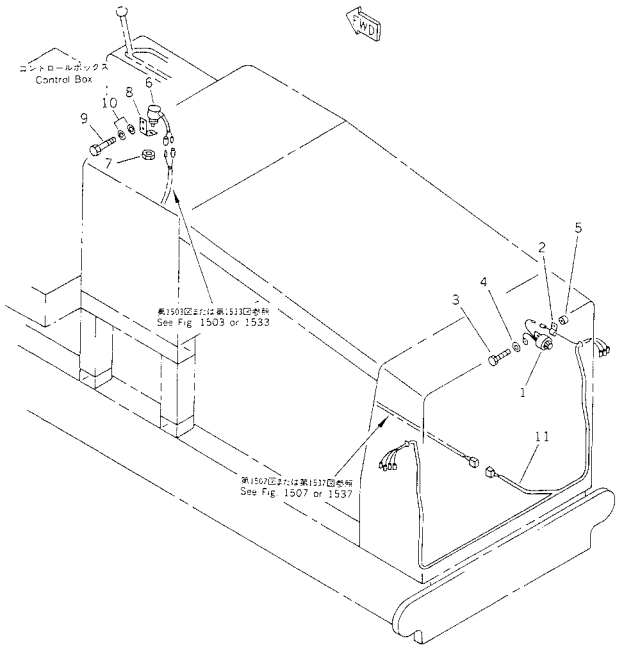

FIG NO. : 1833A

INDEX	PART NO.	DESCRIPTION	Q'TY	SERIAL NO.
1	08165-30000	BUZZER,BACK-UP	1	.-
2	08036-11210	CLIP	1	.-
3	01010-50814	BOLT	1	.-
4	01643-30823	WASHER	1	.-
5	01571-00814	SEAT (WELDED)	1	.-
6	08074-40000	SWITCH,BACK-UP BUZZER	1	10001-
7	236-06-23230	NUT	1	10001-
8	233-45-11250	BRACKET	1	10001-
9	01010-50616	BOLT	2	10001-
10	01643-30623	WASHER	4	10001-
11	(23A-06-11250)	WIRE ASS'Y	1	10001-

FIG.1835 REAR WORK LAMP

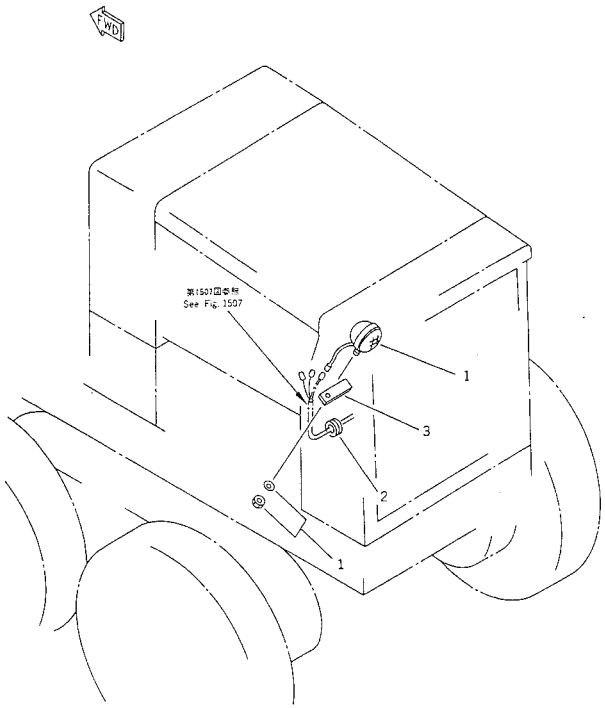

FIG NO. : 1835

INDEX	PART NO.	DESCRIPTION	Q'TY	SERIAL NO.
1	232-06-51980	LAMP ASS'Y,REAR WORK.....	1	10001-
	08100-02460	.BULB, 60/60W.....	1	10001-
	232-06-51990	.LENS.....	1	10001-
2	08037-02512	GROMMET.....	1	10001-
3	23A-06-12580	PLATE.....(WELDED)..	1	10001-

FIG.1851 INSPECTION LAMP

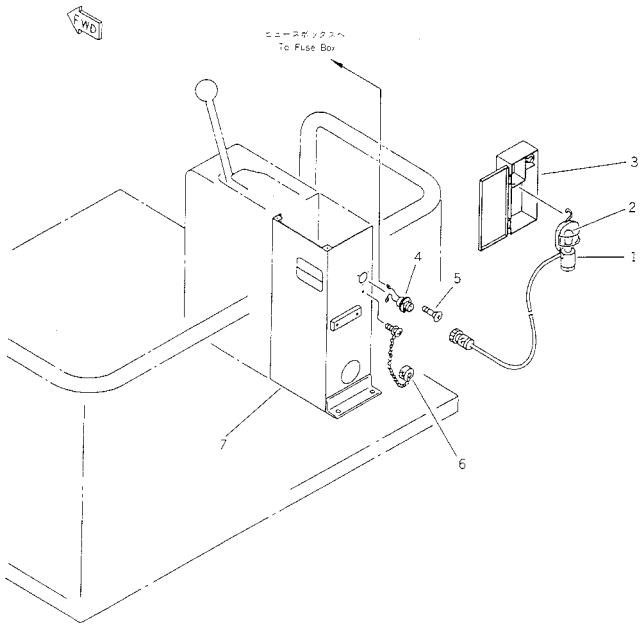

FIG NO. : 1851

INDEX	PART NO.	DESCRIPTION	Q'TY	SERIAL NO.
	232-999-3190	LAMP ASS'Y	1	10001-
1	232-999-3510	.LAMP	1	10001-
2	232-999-3520	.BULB	1	10001-
3	232-999-3530	.BOX	1	10001-
4	232-880-3840	CONNECTOR	1	10001-
5	01224-40308	SCREW	3	10001-
6	232-999-1280	CAP	1	10001-
7	23B-06-12890	BOX,(MODIFIED PART)	1	10001-

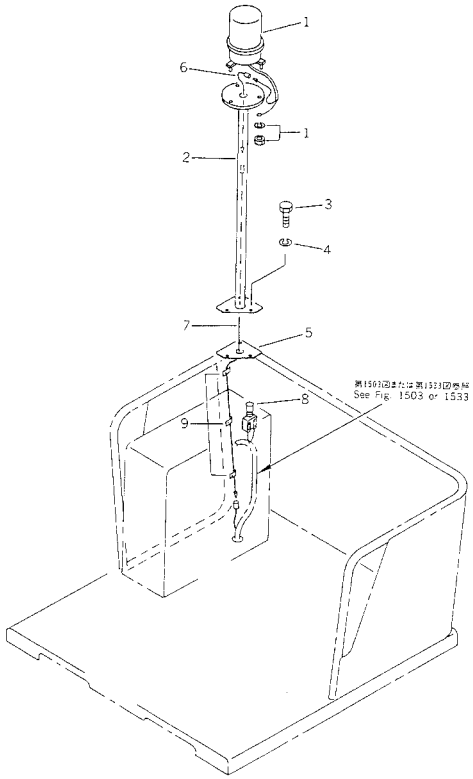

INDEX	PART NO.	DESCRIPTION	Q'TY	SERIAL NO.
1	08154-12400	LAMP ASS'Y,BEACON.	1	10001-
	08103-02460	.BULB, 35W.	1	10001-
2	23B-06-13110	BRACKET.	1	10001-
3	01010-51025	BOLT.	3	10001-
4	01643-31032	WASHER.	3	10001-
5	23B-06-13120	BRACKET.(WELDED).	1	10001-
6	23B-06-13140	WIRE ASS'Y.	1	10001-
7	23B-06-13150	WIRE ASS'Y.	1	10001-
8	236-06-23350	SWITCH,BEACON LAMP.	1	10001-
9	565-44-13260	CLIP.(WELDED).	3	10001-

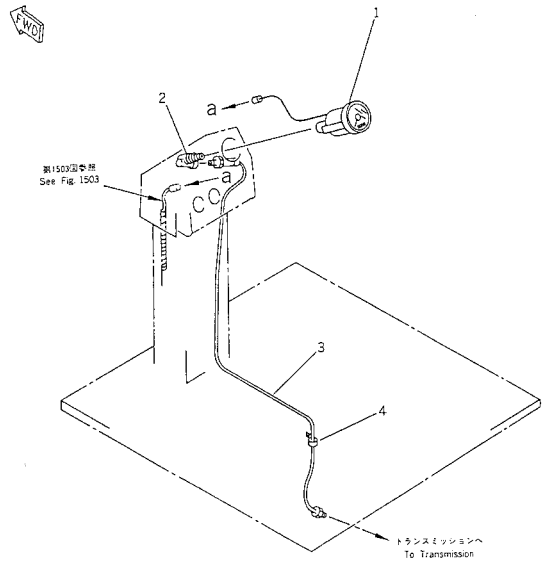

INDEX	PART NO.	DESCRIPTION	Q'TY	SERIAL NO.
1	238-06-15130	SPEEDOMETER	1	10001-
2	232-06-52380	ADAPTER	1	10001-
3	08603-40023	CABLE	1	10001-
4	08036-10814	CLIP	1	10001-

POWER TRAIN

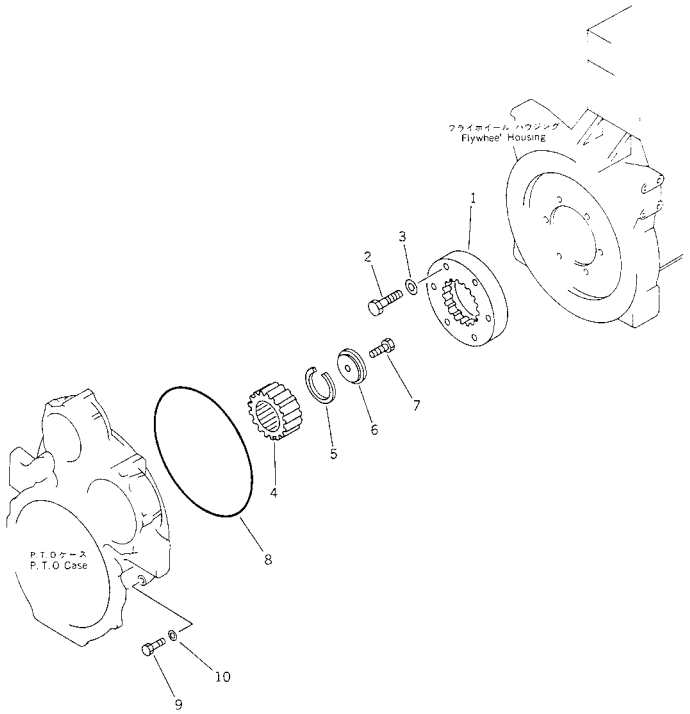

INDEX	PART NO.	DESCRIPTION	Q'TY	SERIAL NO.
1	23A-12-12210	COUPLING	1	10001-
2	01010-51250	BOLT	6	10001-
3	01643-31232	WASHER	6	10001-
4	23A-12-12220	COUPLING	1	10001-
5	23A-12-12130	RING,SNAP	1	10001-
6	23A-12-12141	HOLDER	1	10001-
7	01010-51235	BOLT	1	10001-
8	424-13-11110	O-RING	1	10001-
9	01010-51030	BOLT	12	10001-
10	01643-31032	WASHER	12	10001-

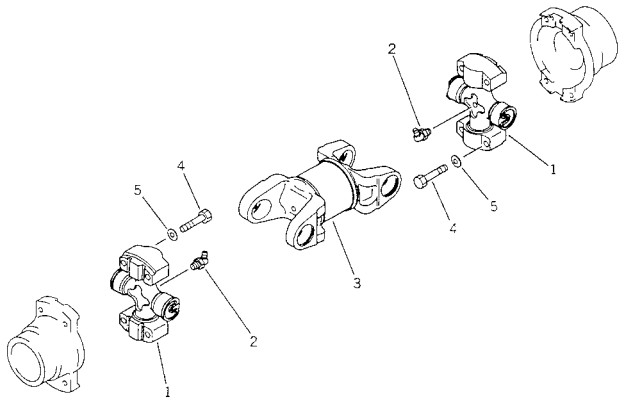

INDEX	PART NO.	DESCRIPTION	Q'TY	SERIAL NO.
	23B-20-11200	DRIVE SHAFT ASS'Y.....	1	10001-
1	23B-20-11210	.SPIDER ASS'Y.....	2	10001-
2	23A-20-11130	.NIPPLE.....	2	10001-
3	23B-20-11220	.TUBE ASS'Y.....	1	10001-
4	01050-81255	BOLT.....	8	10001-
5	01643-31232	WASHER.....	8	10001-

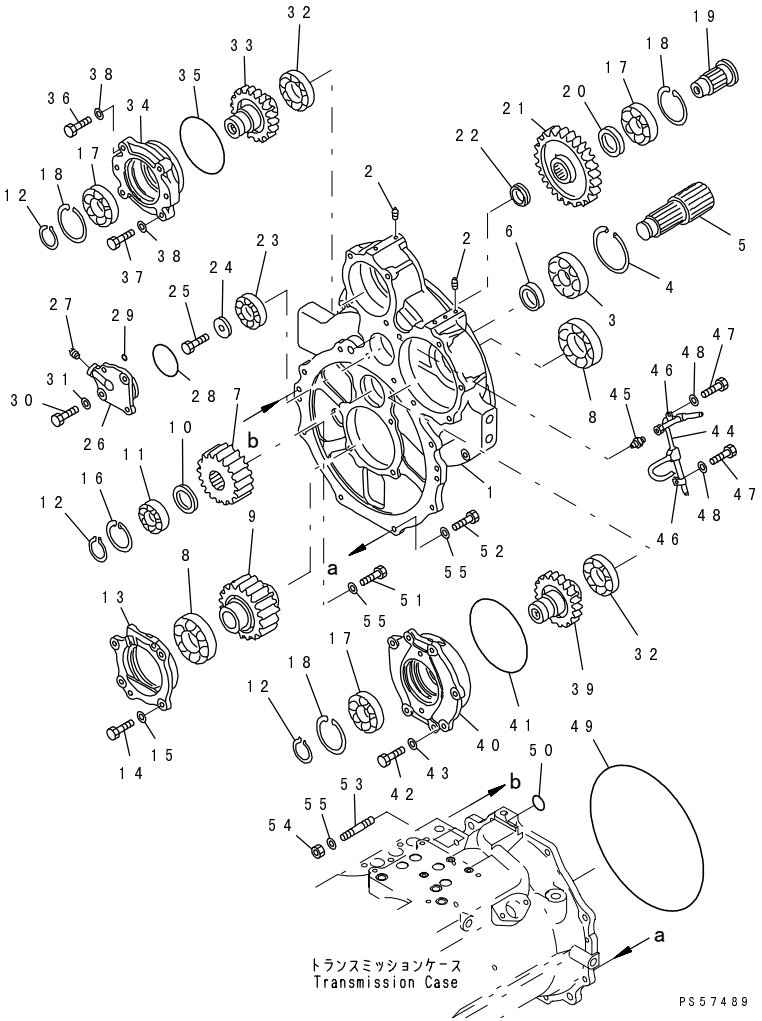

INDEX	PART NO.	DESCRIPTION	Q'TY	SERIAL NO.
	(23A-15-00062)	TRANSMISSION ASS'Y.	1	10774-
		THIS ASSEMBLY CONSISTS OF ALL PARTS SHOWN IN FIGS.2401A TO 2481A.		
	23A-15-19010	.PTO ASS'Y.	1	10774-
	23A-15-00130	..CASE ASS'Y.	1	10774-
1	☆	...CASE.	1	10774-
2	07042-20108	...PLUG.	7	10001-
3	06040-06211	..BEARING.	1	10001-
4	04065-01030	..RING,SNAP.	1	10001-
5	23A-15-18310	..SHAFT.	1	10774-
6	23B-15-18410	..SPACER.	1	10001-
7	23A-15-18210	..GEAR, 28 TEETH.	1	10001-
8	06044-00212	..BEARING.	2	10001-
9	23A-15-18220	..GEAR, 31 TEETH.	1	10774-
10	23B-15-18420	..SPACER.	1	10001-
11	23A-15-18710	..BEARING.	1	10001-
12	04064-04518	..RING,SNAP.	3	10001-
13	23A-15-18160	..CAGE.	1	10774-
14	01010-81230	..BOLT.	4	10001-
15	01643-31232	..WASHER.	4	10001-
16	04065-07525	..RING,SNAP.	1	10001-
17	06040-06209	..BEARING.	3	10001-
18	04065-08530	..RING,SNAP.	3	10001-
19	23B-15-18320	..SHAFT.	1	10001-
20	134-960-2150	..WASHER.	1	10001-
21	23A-15-18230	..GEAR, 41 TEETH.	1	10774-
22	23B-15-18430	..SPACER.	1	10001-
23	06044-00207	..BEARING,ROLLER.	1	10001-
24	23B-15-18510	..HOLDER.	1	10001-
25	01010-81235	..BOLT.	1	10001-
26	23B-15-18150	..CAGE.	1	10001-
27	07042-20108	..PLUG.	1	10001-
28	07000-02065	..O-RING.(K1)	1	10001-
29	07000-73025	..O-RING.(K1)	1	10001-
30	01010-81235	..BOLT.	2	10001-
31	01643-31232	..WASHER.	2	10001-
32	06044-00209	..BEARING.	2	10001-
33	23A-15-18260	..GEAR, 28 TEETH.	1	10774-
34	23B-15-18130	..CAGE.	1	10774-
35	07000-02120	..O-RING.(K1)	1	10774-
36	01010-81235	..BOLT.	2	10774-
37	01010-81245	..BOLT.	2	10774-

FIG NO. : 2401A

INDEX	PART NO.	DESCRIPTION	Q'TY	SERIAL NO.
38	01643-31232	..WASHER.....	4	10001-
39	23A-15-18260	..GEAR, 28 TEETH.....	1	10774-
40	23B-15-18140	..CAGE.....	1	10774-
41	07000-05170	..O-RING.....(K1).....	1	10001-
42	01010-81235	..BOLT.....	4	10001-
43	01643-31232	..WASHER.....	4	10001-
44	23A-15-18610	..TUBE.....	1	10001-
45	07213-50813	..CONNECTOR.....	1	10001-
46	04434-00808	..CLIP.....	2	10001-
47	01010-80816	..BOLT.....	2	10001-
48	01643-30823	..WASHER.....	2	10001-
49	07000-05365	..O-RING.....(K1).....	1	10001-
50	07000-73035	..O-RING.....(K1).....	1	10001-
51	01010-81235	..BOLT.....	5	10001-
52	01010-81240	..BOLT.....	2	10001-
53	01144-51235	..STUD.....	1	10001-
54	01580-11210	..NUT.....	1	10001-
55	01643-31232	..WASHER.....	8	10001-

GD511A-1

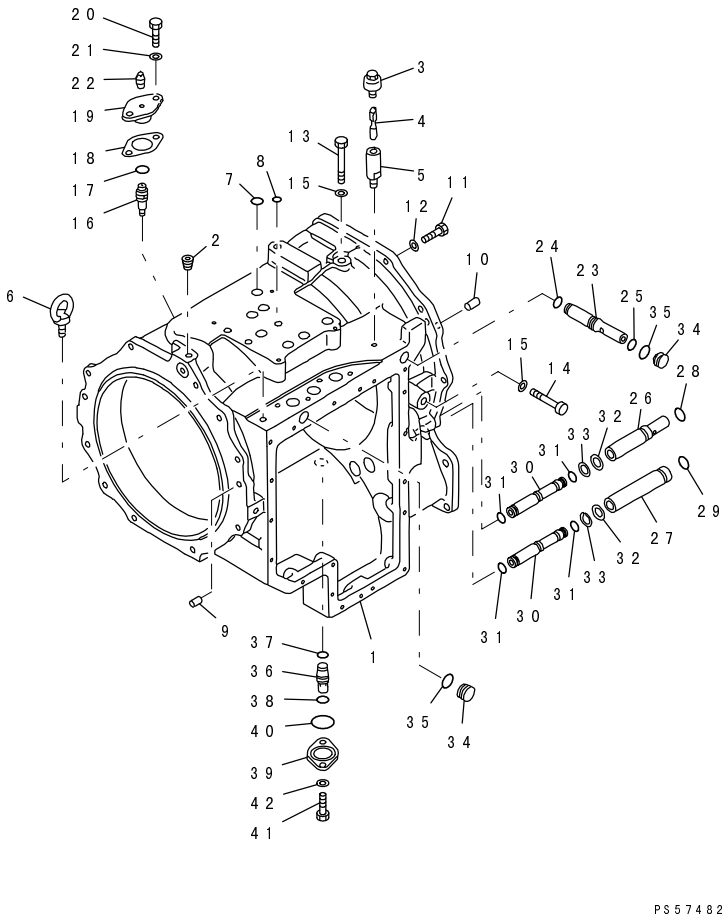

INDEX	PART NO.	DESCRIPTION	Q'TY	SERIAL NO.
	23A-15-00062	TRANSMISSION ASS'Y. THIS ASSEMBLY CONSISTS OF ALL PARTS SHOWN IN FIGS.2401A TO 2481A.	1	10774-
	23A-15-11021	.TRANSMISSION ASS'Y,(EXCEPT PTO) THIS ASSEMBLY CONSISTS OF ALL PARTS SHOWN IN FIGS.2411A TO 2481A.	1	10774-
	23A-15-00141	..CASE ASS'Y.	1	10001-
1	☆	...CASE.	1	10001-
2	07043-70312	...PLUG.	5	10001-
3	07030-00252	..BREATHER.	1	10001-
4	124-15-41690	..PIN.	1	10001-
5	124-15-41680	..BOSS.	1	10001-
6	04530-12030	..BOLT.	2	10001-
7	07000-72021	..O-RING.....(K1)	7	10001-
8	07000-72014	..O-RING.....(K1)	3	10001-
9	04020-01024	..PIN,DOWEL.	2	10001-
10	04020-01024	..PIN,DOWEL.	2	10001-
11	01010-81235	..BOLT.	13	10001-
12	01643-31232	..WASHER.	13	10001-
13	01010-61670	..BOLT.	4	10001-
14	01011-61600	..BOLT.	3	10001-
15	01643-31645	..WASHER.	7	10001-
16	23B-15-11610	..SLEEVE.	1	10001-
17	07000-72014	..O-RING.....(K1)	1	10001-
18	23B-15-16130	..GASKET.....(K1)	1	10001-
19	23B-15-11620	..COVER.	1	10774-
20	01010-81025	..BOLT.	2	10001-
21	01643-31032	..WASHER.	2	10001-
22	07042-20108	..PLUG.	1	10001-
23	23A-15-11360	..SLEEVE.	1	10001-
24	07000-72018	..O-RING.....(K1)	1	10001-
25	07000-72021	..O-RING.....(K1)	1	10001-
26	23A-15-11320	..SLEEVE.	1	10001-
27	23A-15-11330	..SLEEVE.	1	10001-
28	07000-73022	..O-RING.....(K1)	1	10001-
29	07000-73025	..O-RING.....(K1)	1	10001-
30	23B-15-11310	..SLEEVE.	2	10001-
31	07000-72018	..O-RING.....(K1)	4	10001-
32	23B-15-11340	..PLATE.	2	10001-
33	04064-02212	..RING,SNAP.	2	10001-
34	23B-15-11370	..STOPPER.	2	10001-
35	07000-73022	..O-RING.....(K1)	2	10001-

FIG NO. : 2411A

INDEX	PART NO.	DESCRIPTION	Q'TY	SERIAL NO.
36	23A-15-11350	..SLEEVE.....	1	10001-
37	07000-72018	..O-RING.....(K1).....	1	10001-
38	07000-72021	..O-RING.....(K1).....	1	10001-
39	23S-15-23710	..PLATE.....	1	10001-
40	07000-73038	..O-RING.....(K1).....	1	10001-
41	01010-81025	..BOLT.....	2	10001-
42	01643-31032	..WASHER.....	2	10001-

GD511A-1

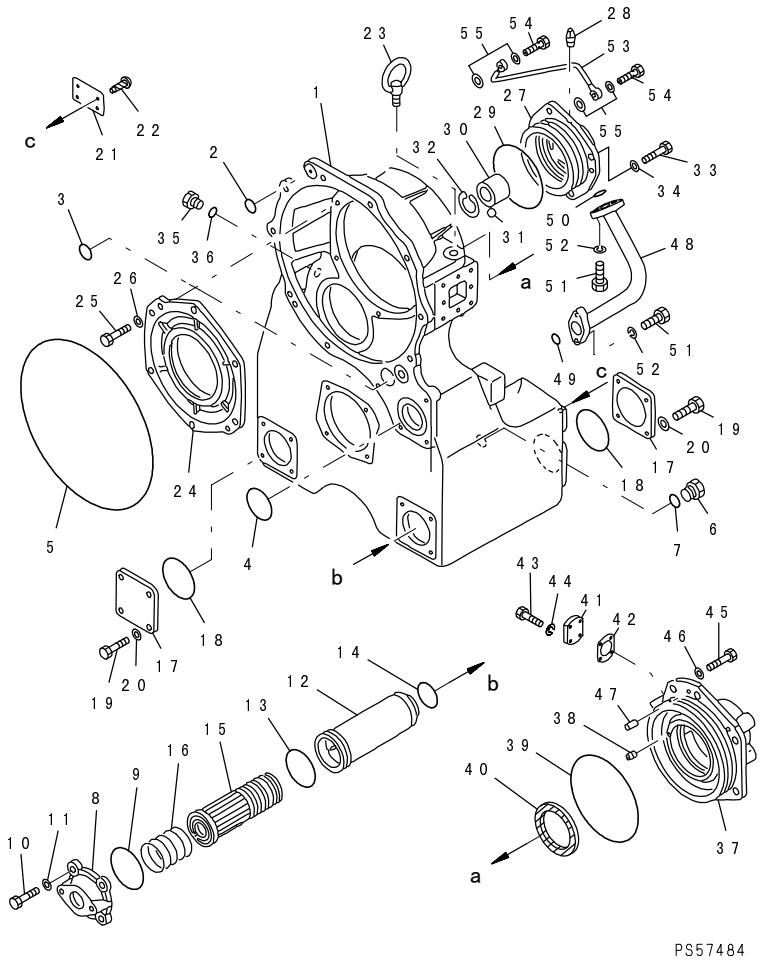

FIG NO. : 2412A

INDEX	PART NO.	DESCRIPTION	Q'TY	SERIAL NO.
		SERIAL NO. IN ( ) INDICATES TRANSMISSION SERIAL NO.		
	(23A-15-00062)	TRANSMISSION ASS'Y. THIS ASSEMBLY CONSISTS OF ALL PARTS SHOWN IN FIGS.2401A TO 2481A.	1	10774-
	(23A-15-11021)	.TRANSMISSION ASS'Y,(EXCEPT PTO) THIS ASSEMBLY CONSISTS OF ALL PARTS SHOWN IN FIGS.2411A TO 2481A.	1	10774-
1	23B-15-13111	..CASE.	1	10001-
2	07000-73028	..O-RING. (K1)	1	10001-
3	07000-73035	..O-RING. (K1)	2	10001-
4	07000-02075	..O-RING. (K1)	1	10001-
5	07000-05365	..O-RING. (K1)	1	10001-
6	07044-13620	..PLUG.	1	10001-
7	07002-03634	..O-RING. (K1)	1	10001-
8	23B-15-13180	..FLANGE.	1	10001-
9	07000-02090	..O-RING. (K1)	1	10001-
10	01010-81235	..BOLT.	4	10001-
11	01643-31232	..WASHER.	4	10001-
12	145-14-31662	..CASE.	1	10001-
13	07000-02075	..O-RING. (K1)	1	10001-
14	07000-73045	..O-RING. (K1)	1	10001-
15	145-14-31620	..MAGNET ASS'Y.	1	10001-
16	145-14-31650	..SPRING,(L=80)	1	10001-
17	235-15-13180	..FLANGE.	3	10001-
18	07000-02090	..O-RING. (K1)	3	10001-
19	01010-81025	..BOLT.	12	10001-
20	01643-31032	..WASHER.	12	10001-
21	09608-05080	..PLATE, NAME.	1	10001-
22	04418-13060	..SCREW.	4	10001-
23	04530-12030	..BOLT.	2	10001-
24	23B-15-13131	..CAGE.	1	10001-
25	01010-81235	..BOLT.	6	10001-
26	01643-31232	..WASHER.	6	10001-
27	23B-15-13140	..CAGE.	1	10001-
28	07043-70108	..PLUG.	2	10774-
29	07000-05140	..O-RING. (K1)	1	10001-
30	23B-15-13610	..COLLAR.	1	10001-
31	04260-00635	..BALL.	1	10001-
32	04065-05020	..RING,SNAP.	1	10001-
33	01010-81235	..BOLT.	4	10001-
34	01643-31232	..WASHER.	4	10001-

FIG NO. : 2412A

INDEX	PART NO.	DESCRIPTION	Q'TY	SERIAL NO.
35	424-15-13950	..PLUG	1	10001-
36	07000-73025	..O-RING (K1)	1	10001-
37	23B-15-13151	..CAGE	1	10001-
38	145-14-11320	..PLUG	1	10001-
39	07000-05200	..O-RING (K1)	1	10001-
40	07012-10075	..SEAL (K1)	1	10001-
41	23B-15-13430	..COVER	1	10001-
42	23B-15-13451	..GASKET (K1)	1	10001-
43	01010-80616	..BOLT	4	10001-
44	01602-20619	..WASHER,SPRING	4	10001-
45	01010-81235	..BOLT	7	10001-
46	01643-31232	..WASHER	7	10001-
47	04020-01228	..PIN,DOWEL	1	10001-
48	23B-15-13722	..TUBE	1	(4459)-
	23B-15-13721	..TUBE	1	(1114)-(4458)
49	07000-73028	..O-RING (K1)	1	(1114)-
50	07000-73025	..O-RING (K1)	1	(1114)-
51	01010-81035	..BOLT	4	(4459)-
	01010-81030	..BOLT	4	10001-(4458)
52	01602-21030	..WASHER,SPRING	4	10001-
53	23B-15-13710	..TUBE	1	10001-
54	07206-30812	..BOLT	2	10001-
55	07005-01212	..GASKET (K1)	4	10001-

GD511A-1

FIG.2415A TRANSMISSION (INPUT SHAFT AND REVERSE CLUTCH)(#10774-)

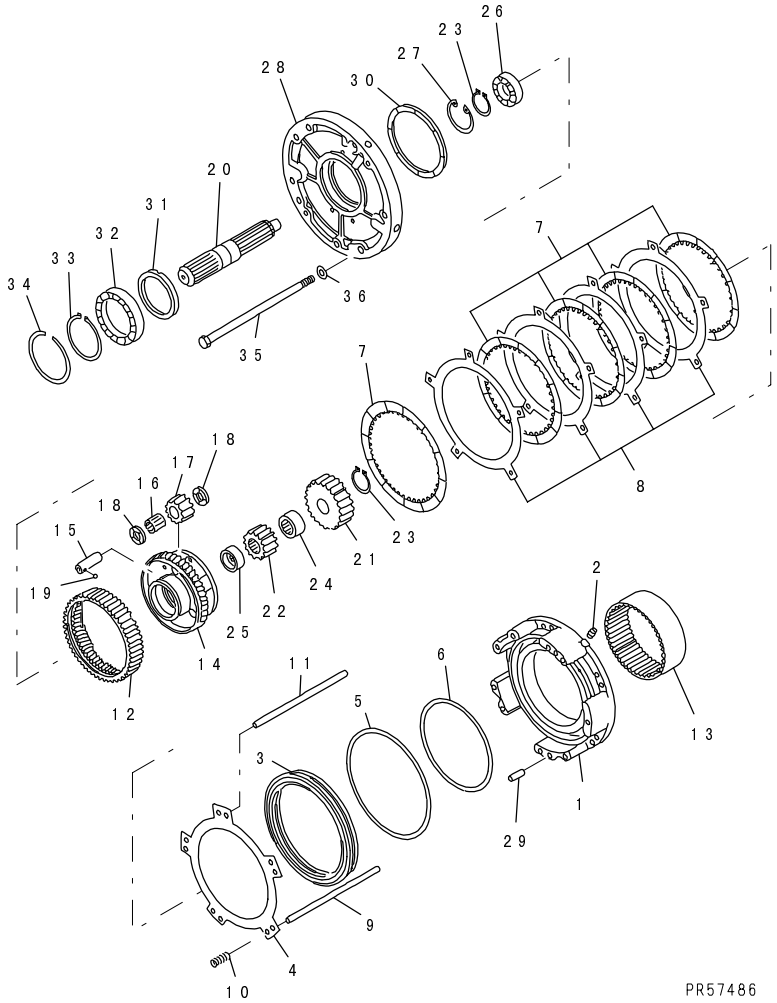

FIG NO. : 2415A

INDEX	PART NO.	DESCRIPTION	Q'TY	SERIAL NO.
		SERIAL NO. IN ( ) INDICATES TRANSMISSION SERIAL NO.		
	(23A-15-00062)	TRANSMISSION ASS'Y. THIS ASSEMBLY CONSISTS OF ALL PARTS SHOWN IN FIGS.2401A TO 2481A.	1	10774-
	(23A-15-11021)	.TRANSMISSION ASS'Y,(EXCEPT PTO) THIS ASSEMBLY CONSISTS OF ALL PARTS SHOWN IN FIGS.2411A TO 2481A.	1	10774-
1	23A-15-11173	..HOUSING	1	10041-
2	113-15-25490	..PLUG	1	10001-
3	23B-15-12762	..PISTON	1	10041-
4	238-15-12760	..PLATE	1	10041-
5	154-15-22831	..RING,SEAL (K1)	1	10001-
6	23B-15-19220	..SEAL,RING (K1)	1	10041-
7	23S-15-12720	..DISC	5	10041-
8	238-15-12810	..PLATE	4	10041-
9	22W-15-21280	..PIN,(D=10, L=270)	5	10001-
10	23B-15-12930	..SPRING,(L=40.1)	5	10041-
11	22W-15-21270	..PIN,(D=12, L=270)	5	10001-
12	23B-15-12611	..GEAR,RING	1	10041-
13	22W-15-22620	..GEAR,RING	1	10001-
14	23A-15-12310	..CARRIER	1	10001-
15	22W-15-22510	..SHAFT	3	10001-
16	423-15-19421	..BEARING	3	(4199)-
17	23A-15-12410	..GEAR	3	(4283)-
18	22W-15-22570	..WASHER,THRUST	6	10001-
19	04260-00635	..BALL	3	10001-
20	23A-15-12110	..SHAFT,INPUT	1	10001-
21	23A-15-12221	..GEAR	1	10001-
22	22W-15-22212	..GEAR	1	10001-
23	04064-04518	..RING,SNAP	2	10001-
24	23A-15-12150	..SPACER	1	10001-
25	423-15-12140	..SPACER	1	10001-
26	06000-06009	..BEARING	1	10001-
27	04065-07525	..RING,SNAP	1	10001-
28	23A-15-11181	..HOUSING	1	10001-
29	04020-01228	..PIN,DOWEL	4	10001-
30	23S-15-21220	..RING,SEAL	1	10001-
31	423-15-12810	..SPACER	1	10001-
32	06000-06918	..BEARING	1	10001-
33	04064-09030	..RING,SNAP	1	10001-
34	04071-00125	..RING,SNAP	1	10001-

FIG NO. : 2415A

INDEX	PART NO.	DESCRIPTION	Q'TY	SERIAL NO.
35	23A-15-11240	..BOLT.....	8	10001-
36	103-15-11220	..WASHER.....	8	10001-

GD511A-1

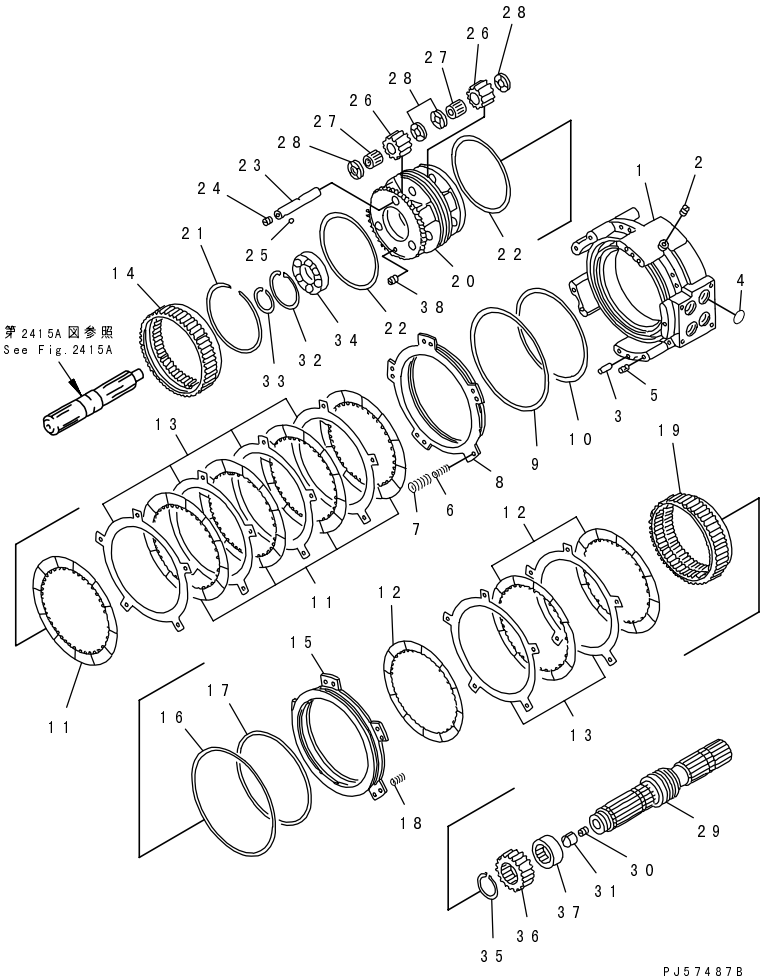

INDEX	PART NO.	DESCRIPTION	Q'TY	SERIAL NO.
		SERIAL NO. IN ( ) INDICATES TRANSMISSION SERIAL NO.		
	(23A-15-00062)	TRANSMISSION ASS'Y. THIS ASSEMBLY CONSISTS OF ALL PARTS SHOWN IN FIGS.2401A TO 2481A.	1	10774-
	(23A-15-11021)	.TRANSMISSION ASS'Y,(EXCEPT PTO) THIS ASSEMBLY CONSISTS OF ALL PARTS SHOWN IN FIGS.2411A TO 2481A.	1	10774-
	23A-15-00151	..HOUSING ASS'Y.	1	10001-
1	☆	...HOUSING.	1	10001-
2	175-15-11230	...PLUG.	1	10001-
3	04020-01228	..PIN,DOWEL.	2	10001-
4	07000-73030	..O-RING.....(K1)	4	10001-
5	124-15-41380	..SLEEVE.	8	10041-
6	23B-15-12950	..SPRING,(L=52.4)	5	10001-
7	23B-15-12940	..SPRING,(L=38.8)	5	10001-
8	23B-15-12771	..PISTON.	1	10001-
9	113-15-12861	..RING,SEAL.....(K1)	1	10001-
10	125-15-39210	..RING,SEAL.....(K1)	1	10001-
11	23S-15-12720	..DISC.	5	10001-
12	23S-15-12740	..DISC.	3	10001-
13	238-15-12810	..PLATE.	6	10001-
14	23S-15-22630	..GEAR,RING.	1	10001-
15	23A-15-12710	..PISTON.	1	10001-
16	154-15-22831	..RING,SEAL.....(K1)	1	10001-
17	125-15-39210	..RING,SEAL.....(K1)	1	10001-
18	23A-15-12940	..SPRING,(L=28.5)	5	10001-
19	23A-15-12640	..GEAR,RING.	1	10001-
20	23A-15-12320	..CARRIER.	1	10001-
21	22W-15-29510	..RING,SNAP.	1	10001-
22	07018-01805	..RING,SEAL.	2	10001-
23	23A-15-12530	..SHAFT.	3	10001-
24	145-14-11320	..PLUG.	3	(4076)-
25	04260-00635	..BALL.	3	10001-
26	22W-15-22421	..GEAR.	6	10001-
27	423-15-19421	..BEARING.	6	(4199)-
28	22W-15-22570	..WASHER,THRUST.	12	10001-
	23A-15-00120	..SHAFT ASS'Y.	1	10001-
29	☆	...SHAFT.	1	10001-
30	125-15-22780	...PLUG,(D=2.0MM)	1	10001-
31	22W-15-29710	..BUSHING.	1	10001-
32	04065-08530	..RING,SNAP.	1	10001-

FIG NO. : 2416A

INDEX	PART NO.	DESCRIPTION	Q'TY	SERIAL NO.
33	04064-04518	..RING,SNAP.....	1	10001-
34	06000-06209	..BEARING.....	1	10001-
35	04064-05520	..RING,SNAP.....	1	10001-
36	22W-15-22231	..GEAR.....	1	10001-
37	23A-15-12160	..SPACER.....	1	10001-
38	125-15-11230	..PLUG.....	1	10001-

GD511A-1

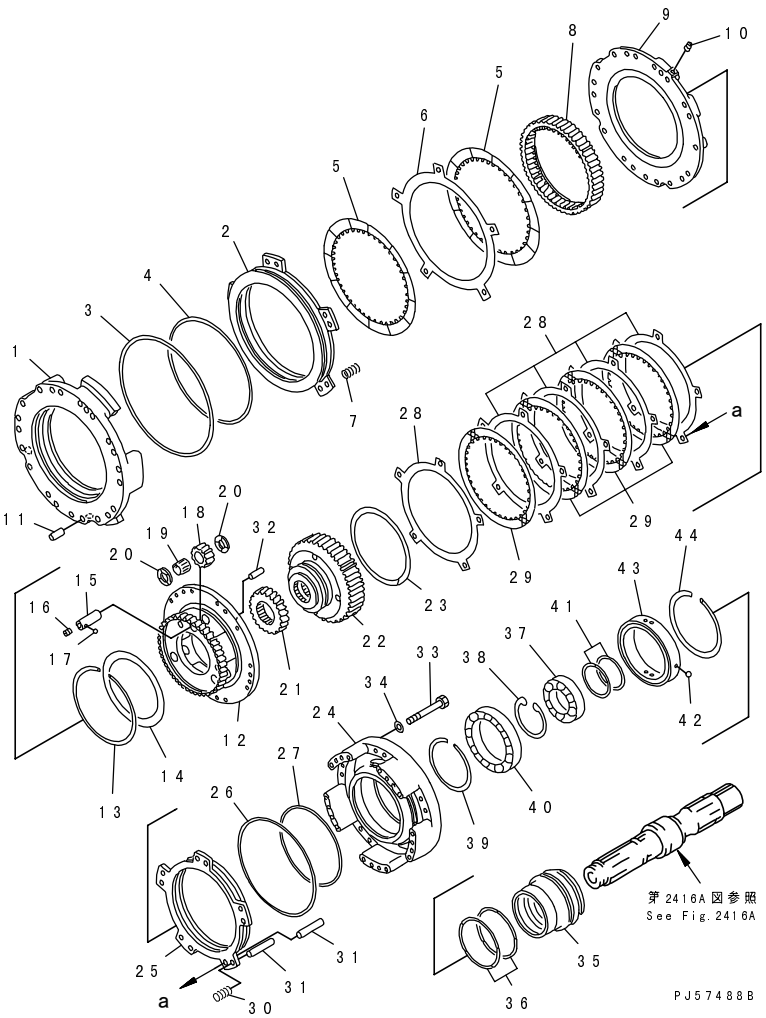

INDEX	PART NO.	DESCRIPTION	Q'TY	SERIAL NO.
		SERIAL NO. IN ( ) INDICATES TRANSMISSION SERIAL NO.		
	(23A-15-00062)	TRANSMISSION ASS'Y. THIS ASSEMBLY CONSISTS OF ALL PARTS SHOWN IN FIGS.2401A TO 2481A.	1	10774-
	(23A-15-11021)	.TRANSMISSION ASS'Y,(EXCEPT PTO) THIS ASSEMBLY CONSISTS OF ALL PARTS SHOWN IN FIGS.2411A TO 2481A.	1	10774-
1	23A-15-11150	..HOUSING	1	10001-
2	23A-15-12710	..PISTON	1	10001-
3	154-15-22831	..RING,SEAL.....(K1)	1	10001-
4	125-15-39210	..RING,SEAL.....(K1)	1	10001-
5	23S-15-12740	..DISC	2	10001-
6	238-15-12810	..PLATE	1	10001-
7	23A-15-12950	..SPRING,(L=18.5)	5	10001-
8	23A-15-12650	..GEAR,RING	1	10001-
9	22W-15-21140	..PLATE	1	10001-
10	113-15-25490	..PLUG	1	10001-
11	04020-01228	..PIN,DOWEL	2	10001-
12	23A-15-12330	..CARRIER	1	10001-
13	125-15-39521	..RING,SNAP	1	10041-
14	23S-15-22380	..PLATE	1	10041-
15	22W-15-22550	..SHAFT	3	10001-
16	145-14-11320	..PLUG	3	(4076)-
17	04260-00635	..BALL	3	10001-
18	22W-15-22441	..GEAR	3	10001-
19	124-15-49410	..BEARING	3	10001-
20	09233-12020	..WASHER,THRUST	6	(3294)-
21	22W-15-22242	..GEAR	1	10001-
22	23A-15-12270	..HUB	1	10001-
23	22W-15-29510	..RING,SNAP	1	10001-
24	23A-15-12361	..HOUSING	1	10001-
25	23A-15-12752	..PISTON	1	(1191)-
26	113-15-29250	..RING,SEAL.....(K1)	1	10001-
27	22W-75-15440	..RING,SEAL.....(K1)	1	10001-
28	125-15-32750	..PLATE	5	10001-
29	23S-15-42730	..DISC	4	(4199)-
30	238-15-12920	..SPRING,(L=45.5)	5	10001-
31	22W-15-21290	..PIN,(D=10, L=65)	10	10001-
32	04020-01024	..PIN,DOWEL	2	10001-
33	23A-15-11260	..BOLT	18	10001-
34	01643-50823	..WASHER	18	10001-

FIG NO. : 2417A

INDEX	PART NO.	DESCRIPTION	Q'TY	SERIAL NO.
35	23A-15-11210	..CAGE.....	1	10001-
36	07018-21155	..RING,SEAL.....	2	10001-
37	06000-06011	..BEARING.....	1	10001-
38	04065-09030	..RING,SNAP.....	1	10001-
39	04070-00105	..RING,SNAP.....	1	10001-
40	06000-06921	..BEARING.....	1	10001-
41	07018-10703	..RING,SEAL.....	2	10001-
42	04260-00635	..BALL.....	1	10001-
43	22W-15-22390	..BUSHING.....	1	10001-
44	04071-00150	..RING,SNAP.....	1	10001-

GD511A-1

FIG.2418A TRANSMISSION (LOW/HIGH CLUTCH AND OUTPUT SHAFT)

(#10774-)

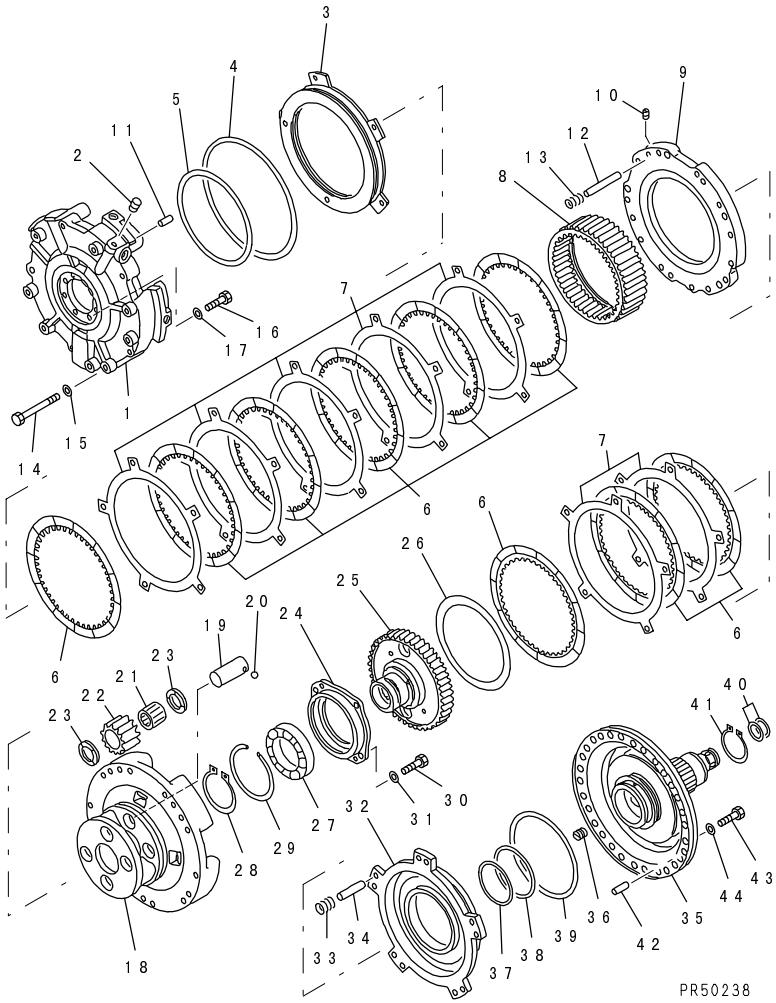

FIG NO. : 2418A

INDEX	PART NO.	DESCRIPTION	Q'TY	SERIAL NO.
		SERIAL NO. IN ( ) INDICATES TRANSMISSION SERIAL NO.		
	(23A-15-00062)	TRANSMISSION ASS'Y. THIS ASSEMBLY CONSISTS OF ALL PARTS SHOWN IN FIGS.2401A TO 2481A.	1	10774-
	(23A-15-11021)	.TRANSMISSION ASS'Y,(EXCEPT PTO) THIS ASSEMBLY CONSISTS OF ALL PARTS SHOWN IN FIGS.2411A TO 2481A.	1	10774-
1	23A-15-11130	..HOUSING	1	10001-
2	07043-00211	..PLUG	1	10001-
3	23A-15-12770	..PISTON	1	10001-
4	154-15-22831	..RING,SEAL (K1)	1	10001-
5	23A-15-19210	..RING,SEAL (K1)	1	10001-
6	23S-15-12740	..DISC	9	10001-
7	238-15-12810	..PLATE	7	10001-
8	23A-15-12660	..GEAR,RING	1	10001-
9	23A-15-11120	..PLATE	1	10001-
10	113-15-25490	..PLUG	1	10001-
11	04020-01228	..PIN,DOWEL	2	10001-
12	238-15-11271	..PIN,(D=12, L=80)	5	10001-
13	145-14-12790	..SPRING, (L= 59.0)	5	10001-
14	01011-81220	..BOLT	8	10001-
15	103-15-11220	..WASHER	8	10001-
16	01010-81025	..BOLT	7	10001-
17	01643-51032	..WASHER	7	10001-
18	23A-15-12340	..CARRIER	1	10001-
19	23B-15-12560	..SHAFT	4	10001-
20	04260-00635	..BALL	4	10001-
21	41E-15-19310	..BEARING	4	(3325)-
22	23A-15-12451	..GEAR	4	10001-
23	09233-13220	..WASHER,THRUST	8	(3294)-
24	23A-15-12350	..CAGE	1	10001-
25	23A-15-12280	..HUB	1	10001-
26	23A-15-19510	..RING,SEAL	1	10001-
27	06000-06015	..BEARING	1	10001-
28	04064-07525	..RING,SNAP	1	10001-
29	04071-00115	..RING,SNAP	1	10001-
30	01010-81035	..BOLT	4	10001-
31	01643-51032	..WASHER	4	10001-
32	23A-15-12761	..PISTON	1	(3318)-
33	23A-15-12960	..SPRING,(L=41)	5	10001-
34	124-15-41280	..PIN,(D=12, L=57)	10	10001-

FIG NO. : 2418A

INDEX	PART NO.	DESCRIPTION	Q'TY	SERIAL NO.
	23B-15-00170	..SHAFT ASS'Y.....	1	10001-
35	☆	...SHAFT.....	1	10001-
36	23A-15-11390	...PLUG.....	1	10001-
37	07018-00954	..RING,SEAL.....	1	10001-
38	23B-15-19210	..RING,SEAL.....(K1).....	1	10001-
39	234-15-29210	..RING,SEAL.....(K1).....	1	10001-
40	07018-20352	..RING,SEAL.....	2	10001-
41	04064-06525	..RING,SNAP.....	1	10001-
42	04020-01228	..PIN,DOWEL.....	2	10001-
43	01010-81255	..BOLT.....	18	10001-
44	01643-31232	..WASHER.....	18	10001-

GD511A-1

FIG.2421A TRANSMISSION (OUTPUT SHAFT)(#10774-)

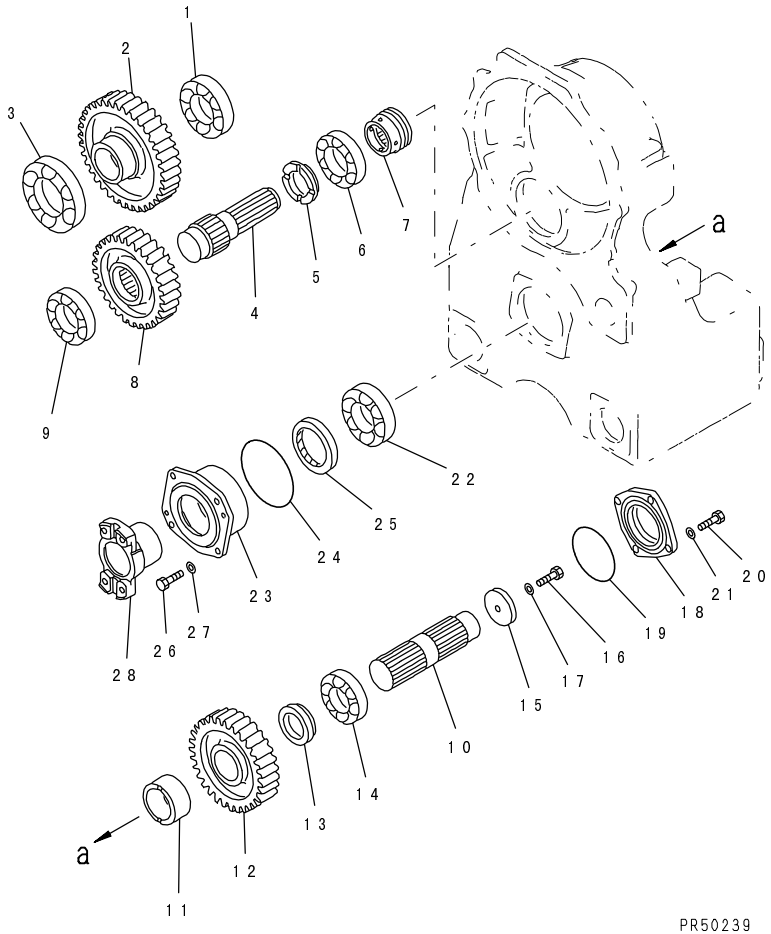

FIG NO. : 2421A

INDEX	PART NO.	DESCRIPTION	Q'TY	SERIAL NO.
		SERIAL NO. IN ( ) INDICATES TRANSMISSION SERIAL NO.		
	(23A-15-00062)	TRANSMISSION ASS'Y. THIS ASSEMBLY CONSISTS OF ALL PARTS SHOWN IN FIGS.2401A TO 2481A.	1	10774-
	(23A-15-11021)	.TRANSMISSION ASS'Y,(EXCEPT PTO) THIS ASSEMBLY CONSISTS OF ALL PARTS SHOWN IN FIGS.2411A TO 2481A.	1	10774-
1	06044-00213	..BEARING	1	(4363)-
	□23B-15-13930	..BEARING	1	10001-(4362)
2	23B-15-13211	..GEAR	1	10001-
3	23B-15-13960	..BEARING	1	10001-
4	23B-15-13311	..SHAFT	1	10001-
5	23B-15-13510	..SPACER	1	10001-
6	06044-00212	..BEARING	1	(4363)-
	□23B-15-13940	..BEARING	1	10001-(4362)
7	23B-15-13411	..WORM	1	10001-
8	23B-15-13221	..GEAR	1	10001-
9	06044-00213	..BEARING	1	(4363)-
	□23B-15-13930	..BEARING	1	10001-(4362)
10	23B-15-13320	..SHAFT	1	10001-
11	23B-15-13530	..COLLAR	1	10001-
12	23B-15-13230	..GEAR	1	10001-
13	23B-15-13540	..SPACER	1	10001-
14	23B-15-13950	..BEARING	1	10001-
15	23B-15-13350	..HOLDER	1	10001-
16	01050-51250	..BOLT	1	10001-
17	01643-31232	..WASHER	1	10001-
18	23B-15-13170	..COVER	1	10001-
19	07000-02115	..O-RING (K1)	1	10001-
20	01010-81235	..BOLT	4	10001-
21	01643-31232	..WASHER	4	10001-
22	06044-00213	..BEARING	1	(4363)-
	□23B-15-13930	..BEARING	1	10001-(4362)
23	23B-15-13161	..CAGE	1	10001-
24	07000-02140	..O-RING (K1)	1	(4384)-
	07000-02145	..O-RING (K1)	1	10001-(4383)
25	07012-10085	..SEAL (K1)	1	10001-
26	01010-81235	..BOLT	4	10001-
27	01643-31232	..WASHER	4	10001-
28	423-15-13251	..COUPLING COMPLETE	1	(4368)-
	□423-15-13250	..COUPLING COMPLETE	1	10001-(4367)

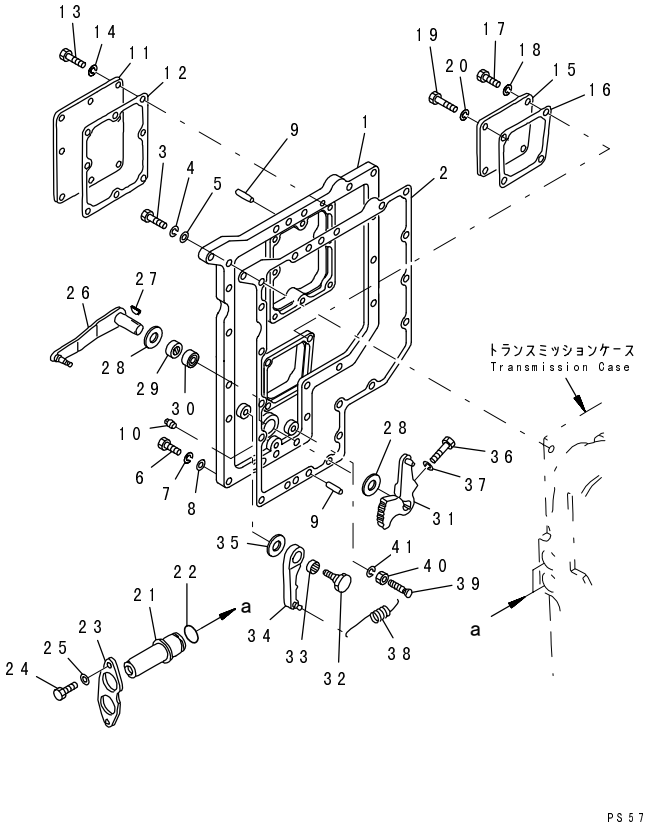

INDEX	PART NO.	DESCRIPTION	Q'TY	SERIAL NO.
		SERIAL NO. IN ( ) INDICATES TRANSMISSION SERIAL NO.		
	(23A-15-00062)	TRANSMISSION ASS'Y. THIS ASSEMBLY CONSISTS OF ALL PARTS SHOWN IN FIGS.2401A TO 2481A.	1	10774-
	(23A-15-11021)	.TRANSMISSION ASS'Y,(EXCEPT PTO) THIS ASSEMBLY CONSISTS OF ALL PARTS SHOWN IN FIGS.2411A TO 2481A.	1	10774-
1	23B-15-15810	..COVER	1	10001-
2	23B-15-15952	..GASKET (K1)	1	(4199)-
3	01010-81040	..BOLT	17	10774-
4	01602-21030	..WASHER,SPRING	17	10001-
5	01643-31032	..WASHER	17	10001-
6	01010-81030	..BOLT	1	10774-
7	01602-21030	..WASHER,SPRING	1	10001-
8	01643-31032	..WASHER	1	10001-
9	04020-01024	..PIN,DOWEL	2	10001-
10	07043-A0211	..PLUG	1	(4459)-
	07042-20211	..PLUG	1	10001-(4458)
11	232-15-15830	..COVER	1	10001-
12	232-15-15961	..GASKET (K1)	1	(3856)-
13	01010-81030	..BOLT	8	10001-
14	01602-21030	..WASHER,SPRING	8	10001-
15	232-15-15840	..COVER	1	10001-
16	232-15-15971	..GASKET (K1)	1	(3856)-
17	01010-81030	..BOLT	3	10001-
18	01602-21030	..WASHER,SPRING	3	10001-
19	01010-81065	..BOLT	1	10001-
20	01602-21030	..WASHER,SPRING	1	10001-
21	23B-15-11820	..COUPLING	2	10001-
22	07000-73028	..O-RING (K1)	2	10001-
23	23B-15-11810	..COVER	1	10001-
24	01010-81025	..BOLT	2	10001-
25	01643-31032	..WASHER	2	10001-
26	238-15-25750	..LEVER	1	10001-
27	04010-00300	..KEY	1	10001-
28	144-15-25570	..WASHER	2	10001-
29	144-15-29110	..SEAL,OIL (K1)	1	10001-
30	06120-02016	..BEARING	1	10001-
31	232-15-15761	..LEVER	1	10001-
32	232-15-15780	..SHAFT	1	10001-
33	06120-01612	..BEARING	1	10001-

FIG.2422A TRANSMISSION (CONTROL VALVE COVER)(#10774-)

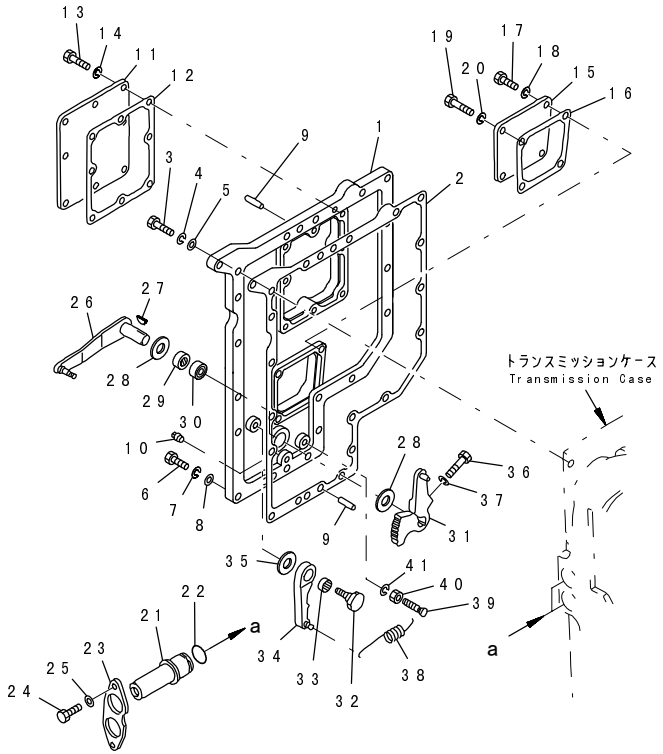

FIG NO. : 2422A

INDEX	PART NO.	DESCRIPTION	Q'TY	SERIAL NO.
34	232-15-15770	..LEVER	1	10001-
35	232-15-15790	..WASHER	1	10001-
36	01010-80850	..BOLT	1	10001-
37	01602-20825	..WASHER,SPRING	1	10001-
38	232-15-16270	..SPRING	1	10001-
39	125-15-11461	..BOLT	1	10001-
40	01580-11008	..NUT	1	10001-
41	01602-21030	..WASHER,SPRING	1	10001-

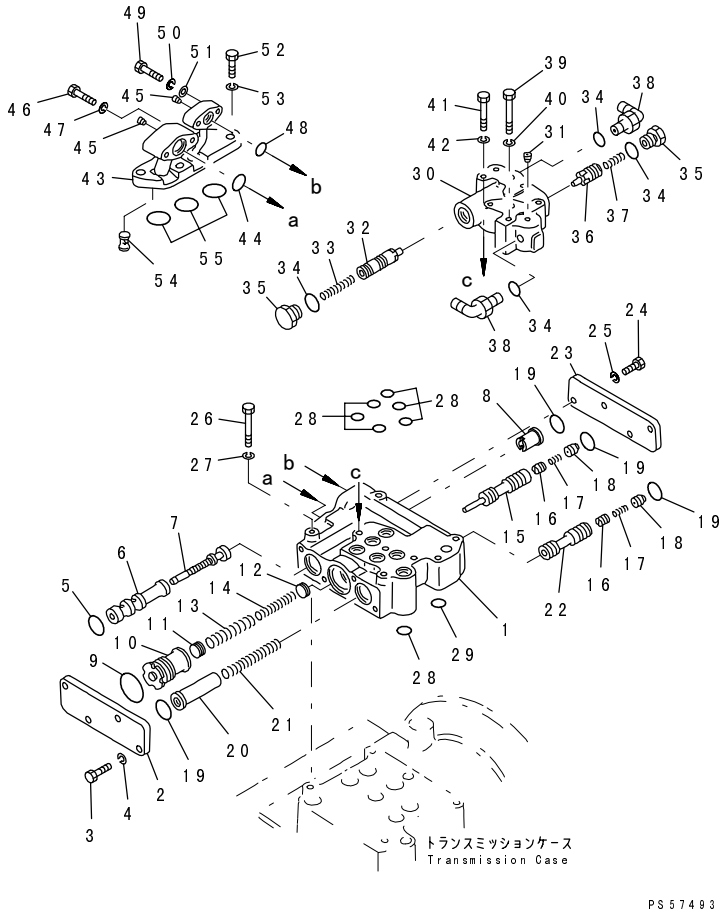

INDEX	PART NO.	DESCRIPTION	Q'TY	SERIAL NO.
		SERIAL NO. IN ( ) INDICATES TRANSMISSION SERIAL NO.		
	(23A-15-00062)	TRANSMISSION ASS'Y.....	1	10774-
		THIS ASSEMBLY CONSISTS OF ALL PARTS SHOWN IN FIGS.2401A TO 2481A.		
	(23A-15-11021)	.TRANSMISSION ASS'Y,(EXCEPT PTO).....	1	10774-
		THIS ASSEMBLY CONSISTS OF ALL PARTS SHOWN IN FIGS.2411A TO 2481A.		
	23B-15-00191	..VALVE ASS'Y.....	1	10041-
1	232-15-15410	...BODY,VALVE.....	1	10001-
2	232-15-15590	...COVER.....	1	10001-
3	01010-81030	...BOLT.....	4	10001-
4	01602-21030	...WASHER,SPRING.....	4	10001-
5	07000-73035	...O-RING.....(K2).....	1	10001-
6	232-15-15540	...SLEEVE.....	1	10001-
7	23B-15-15522	...SPOOL,QUICK RETURN VALVE.....	1	10041-
8	23B-15-15550	...STOPPER.....	1	10041-
9	07000-73045	...O-RING.....(K2).....	1	10001-
10	232-15-15490	...VALVE.....	1	10001-
11	232-15-15890	...SHIM, 0.5MM.....	4	10001-
12	238-15-15890	...SHIM, 0.5MM.....	13	10001-
13	234-15-26210	...SPRING,(L=86.7).....	1	(4095)-
14	232-15-16220	...SPRING,(L=71.2).....	1	10001-
15	232-15-15470	...VALVE,MODULATING.....	1	10001-
16	195-15-15130	...VALVE.....	2	10001-
17	180-14-25560	...SPRING,(L=35).....	2	10001-
18	175-15-15550	...VALVE.....	2	10001-
19	07000-73032	...O-RING.....(K2).....	4	10001-
20	232-15-15460	...STOPPER.....	1	10001-
21	232-15-16160	...SPRING,(L=115.5).....	1	10001-
22	232-15-15420	...VALVE,PRIORITY.....	1	10001-
23	232-15-15580	...COVER.....	1	10001-
24	01010-81030	...BOLT.....	4	10001-
25	01602-21030	...WASHER,SPRING.....	4	10001-
26	01010-81085	..BOLT.....	2	10001-
27	01602-21030	..WASHER,SPRING.....	2	10001-
28	07000-72021	..O-RING.....(K2).....	13	10001-
29	07000-72014	..O-RING.....(K2).....	3	10001-
	23B-15-00200	..VALVE ASS'Y.....	1	10001-
		LUBRICATION AND COOLER BYPASS		
	23B-15-00150	...VALVE BODY ASS'Y.....	1	10001-
30	☆	....BODY,VALVE.....	1	10001-

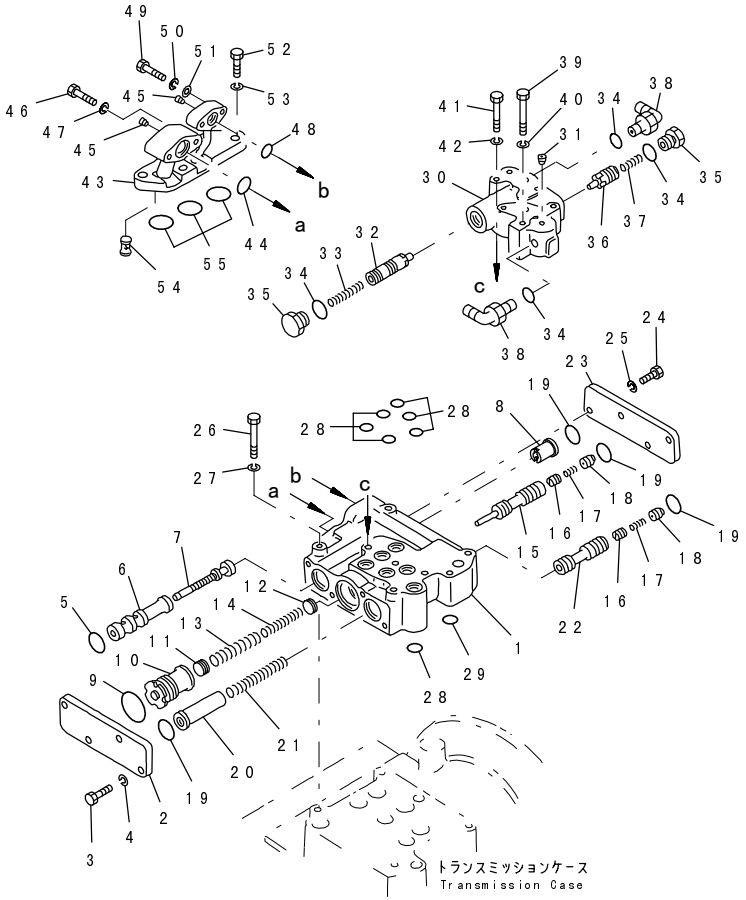

INDEX	PART NO.	DESCRIPTION	Q'TY	SERIAL NO.
31	07042-20108	....PLUG	1	10001-
32	232-15-14130	...VALVE,COOLER BYPASS	1	10001-
33	232-15-14160	...SPRING,(L=71.4)	1	10001-
34	07002-02434	...O-RING (K2)	4	10001-
35	232-15-14280	...PLUG	2	10001-
36	232-15-14230	...VALVE,LUBRICATION	1	10001-
37	232-15-14260	...SPRING, (L= 39.4)	1	10001-
38	07235-10628	...ELBOW	2	10041-
39	01011-81030	..BOLT	1	10001-
40	01602-21030	..WASHER,SPRING	1	10001-
41	01010-80860	..BOLT	3	10001-
42	01602-20825	..WASHER,SPRING	3	10001-
43	23B-15-15650	..TUBE	1	10001-
44	07000-73022	..O-RING (K2)	1	10001-
45	07042-20108	..PLUG	2	10001-
46	01010-81055	..BOLT	2	10001-
47	01602-21030	..WASHER,SPRING	2	10001-
48	07000-72012	..O-RING (K2)	1	10001-
49	01010-80850	..BOLT	2	10001-
50	01602-20825	..WASHER,SPRING	2	10001-
51	01643-30823	..WASHER	2	10001-
52	01010-81240	..BOLT	4	10001-
53	01602-21236	..WASHER,SPRING	4	10001-
54	238-15-15630	..STRAINER	1	10001-
55	07000-73035	..O-RING (K2)	3	10001-

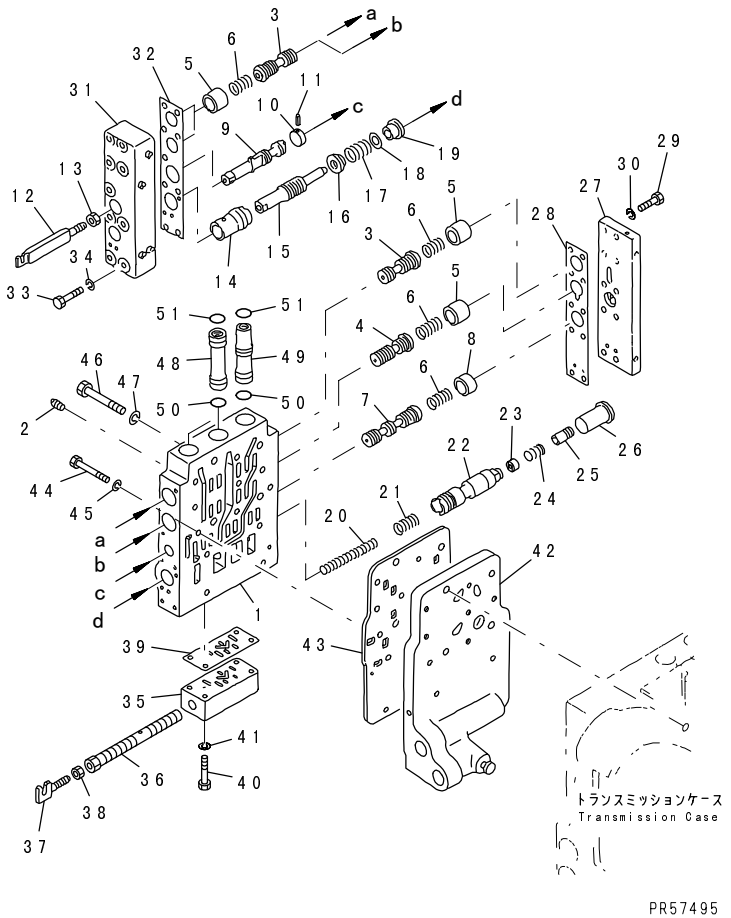

INDEX	PART NO.	DESCRIPTION	Q'TY	SERIAL NO.
		SERIAL NO. IN ( ) INDICATES TRANSMISSION SERIAL NO.		
	(23A-15-00062)	TRANSMISSION ASS'Y..... THIS ASSEMBLY CONSISTS OF ALL PARTS SHOWN IN FIGS.2401A TO 2481A.	1	10774-
	(23A-15-11021)	.TRANSMISSION ASS'Y,(EXCEPT PTO)..... THIS ASSEMBLY CONSISTS OF ALL PARTS SHOWN IN FIGS.2411A TO 2481A.	1	10774-
	23B-15-00220	..VALVE ASS'Y.....	1	10774-
1	232-15-15111	...BODY,VALVE.....	1	10001-
2	07042-20108	...PLUG.....	3	10001-
3	232-15-15210	...SPOOL,SHIFT VALVE.....	3	10001-
4	232-15-15221	...SPOOL,CUT OFF VALVE.....	1	10041-
5	232-15-15230	...STOPPER.....	4	10001-
6	232-15-16110	...SPRING,(L=36.8).....	5	10001-
7	232-15-15240	...SPOOL,HIGH-LOW SHIFT VALVE.....	1	10001-
8	232-15-15250	...STOPPER.....	1	10001-
9	232-15-15260	...SPOOL,FOWARD REVERSE.....	1	10001-
10	232-15-15270	...STOPPER.....	1	10001-
11	04025-00440	...PIN,SPRING.....	1	10001-
12	232-15-15710	...YOKE.....	2	10001-
13	01580-10806	...NUT.....	2	10001-
14	232-15-15360	...SLEEVE.....	1	10001-
15	23B-15-15280	...SPOOL,INCHING VALVE.....	1	10001-
16	23B-15-15340	...COLLAR.....	1	10001-
17	232-15-16180	...SPRING,(L=16.1).....	1	10001-
18	281-15-15480	...SHIM, 0.5MM.....	1	10001-
19	23B-15-15340	...COLLAR.....	1	10001-
20	232-15-16230	...SPRING,(L=50.2).....	1	(3690)-
21	23B-15-16241	...SPRING.....	1	10774-
22	23B-15-15371	...VALVE,INCHING.....	1	10001-
23	22W-75-18890	...VALVE.....	1	10001-
24	125-15-15290	...SPRING.....	1	10001-
25	22W-75-18880	...SLEEVE.....	1	10001-
26	232-15-15292	...STOPPER.....	1	10001-
27	232-15-15380	...COVER.....	1	10001-
28	23A-15-15910	...GASKET.....(K2).....	1	10041-
29	01010-80830	...BOLT.....	10	10001-
30	01602-20825	...WASHER,SPRING.....	10	10001-
31	23B-15-15390	...COVER.....	1	10001-
32	23A-15-15920	...GASKET.....(K2).....	1	10041-
33	01010-80850	...BOLT.....	9	10001-

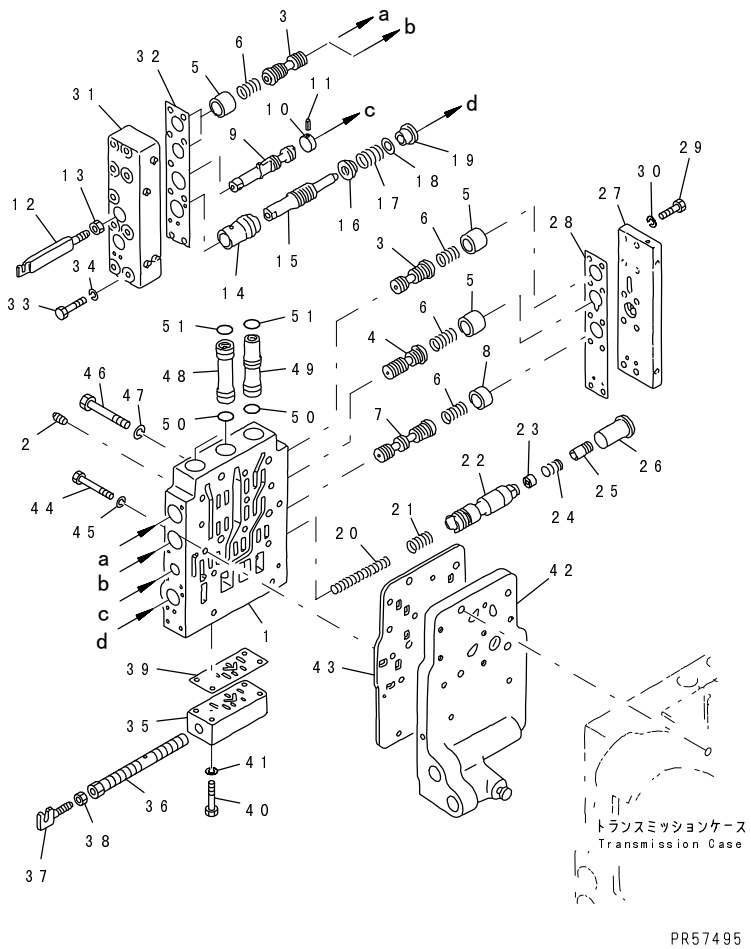

FIG NO. : 2452A

INDEX	PART NO.	DESCRIPTION	Q'TY	SERIAL NO.
34	01602-20825	...WASHER,SPRING	9	10001-
35	232-15-15310	...BODY,SPEED SELECTOR VALVE	1	10001-
36	232-15-15331	...SPOOL,SPEED SELECTOR	1	(1030)-
37	09363-00850	...YOKE	1	10001-
38	01580-10806	...NUT	1	10001-
39	232-15-15930	...GASKET (K2)	1	10001-
40	01010-80845	...BOLT	4	10001-
41	01602-20825	...WASHER,SPRING	4	10001-
42	23B-15-15130	...SEAT,VALVE	1	10001-
43	23A-15-15140	...PLATE	1	10041-
44	01010-80860	...BOLT	11	10001-
45	01602-20825	...WASHER,SPRING	11	10001-
46	01010-81080	..BOLT	4	10001-
47	01602-21030	..WASHER,SPRING	4	10001-
48	23B-15-15150	..SLEEVE	2	10001-
49	23B-15-15160	..SLEEVE	1	10001-
50	07000-72021	..O-RING (K2)	3	10001-
51	07000-73022	..O-RING (K2)	3	10001-

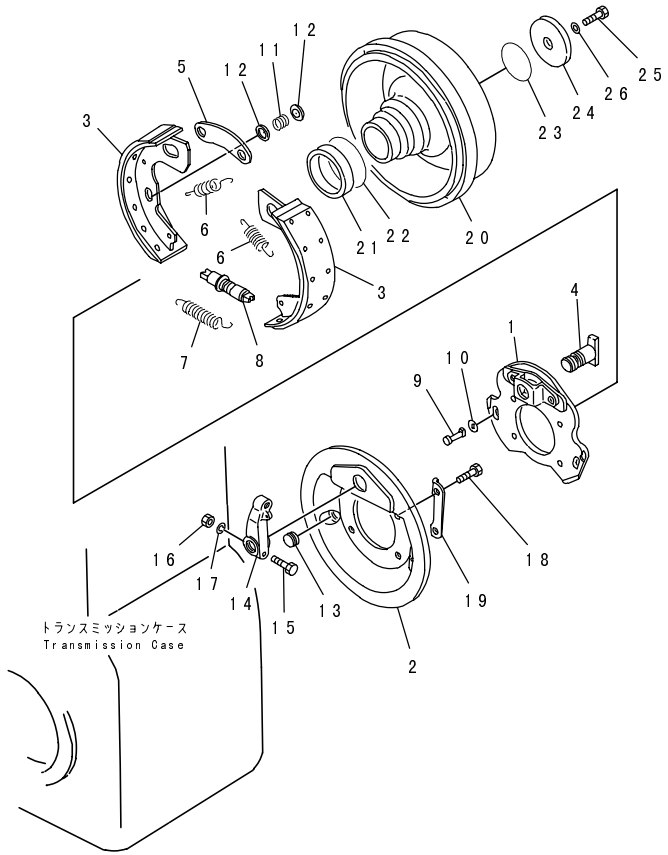

PV59188

INDEX	PART NO.	DESCRIPTION	Q'TY	SERIAL NO.
	(23A-15-00062)	TRANSMISSION ASS'Y..... THIS ASSEMBLY CONSISTS OF ALL PARTS SHOWN IN FIGS.2401A TO 2481A.	1	10774-
	(23A-15-11021)	.TRANSMISSION ASS'Y,(EXCEPT PTO)..... THIS ASSEMBLY CONSISTS OF ALL PARTS SHOWN IN FIGS.2411A TO 2481A.	1	10774-
	232-32-53101	..BRAKE ASS'Y.....	1	(3856)-
1	232-32-53110	...PLATE ASS'Y.....	1	10001-
2	232-32-53120	...PLATE,BACK.....	1	10001-
3	232-32-53131	...SHOE ASS'Y.....	2	(3856)-
4	232-32-53140	...SHAFT,CAM.....	1	10001-
5	232-32-53150	...BRACE.....	1	10001-
6	232-32-53160	...SPRING,RETURN.....	2	10001-
7	232-32-53170	...SPRING.....	1	10001-
8	232-32-53180	...SCREW ASS'Y.....	1	10001-
9	232-32-53190	...PIN.....	2	10001-
10	232-32-53210	...WASHER.....	2	10001-
11	232-32-53220	...SPRING.....	2	10001-
12	232-32-53230	...SEAT.....	4	10001-
13	232-32-53240	...GROMMET.....	2	10001-
14	232-32-53250	...ARM.....	1	10001-
15	232-32-53260	...BOLT.....	1	10001-
16	232-32-53270	...NUT.....	1	10001-
17	01602-21030	...WASHER,SPRING.....	1	10774-
18	232-32-53330	..BOLT.....	4	10001-
19	232-32-53320	..LOCK.....	2	10001-
	23A-32-00010	..DRUM ASS'Y.....	1	10001-
20	☆	...DRUM.....	1	10001-
21	23A-32-12120	...COLLAR.....	1	10001-
22	07000-22065	...O-RING.....	1	10001-
23	07000-15042	..O-RING.....	1	10001-
24	23A-32-12130	..HOLDER.....	1	10001-
25	01050-51260	..BOLT.....	1	10001-
26	01643-31232	..WASHER.....	1	10001-

FIG.2501 HYDRAULIC PUMP (FOR TRANSMISSION)

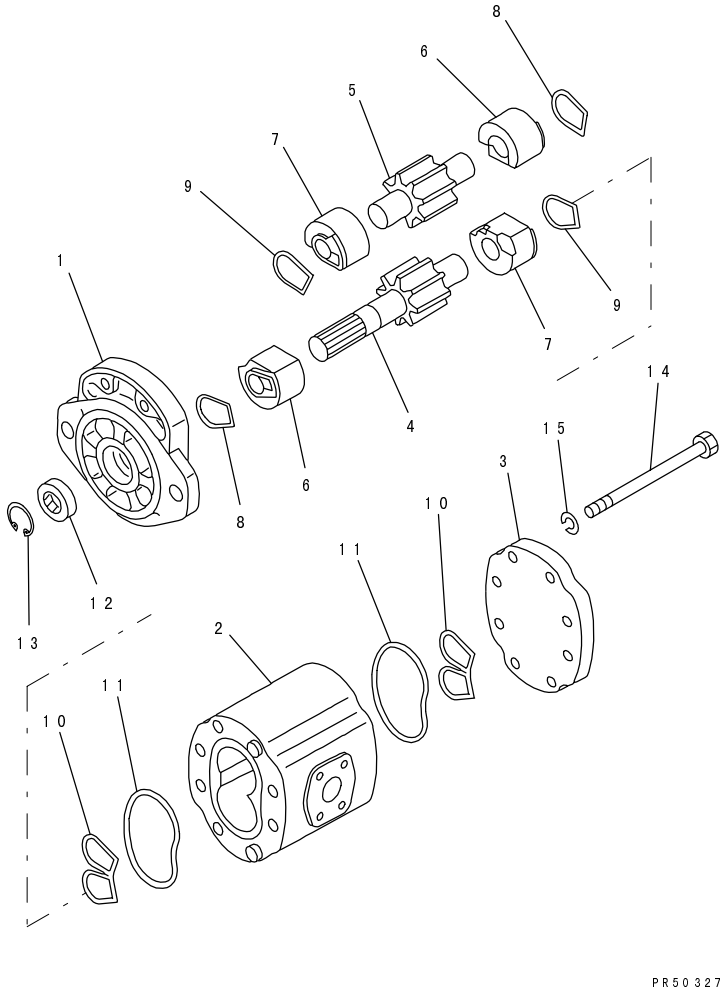

FIG NO. : 2501

INDEX	PART NO.	DESCRIPTION	Q'TY	SERIAL NO.
	23A-60-11202	PUMP ASS'Y	1	10217-
	23A-60-11201	PUMP ASS'Y	1	10052-10216
	23A-60-11200	PUMP ASS'Y	1	10001-10051
		THE KAYABA KOGYO PART NUMBER IS THAT KB IS REMOVED FROM KOMATSU PART NUMBER LISTED BELOW.		
1	KB20121-60705	.FLANGE	1	10001-
2	☆	.BODY	1	10052-
	☆	.BODY	1	10001-10051
3	KB20121-60101	.COVER	1	10001-
4	☆	.GEAR,DRIVE (K3)	1	10001-
5	☆	.GEAR,DRIVEN (K3)	1	10001-
6	☆	.BUSHING (K3)	2	10001-
7	☆	.BUSHING (K3)	2	10001-
8	☆	.PACKING,RING (K4)	2	10001-
9	☆	.PACKING,RING (K4)	2	10001-
10	☆	.SEAL (K4)	2	10001-
11	☆	.O-RING (K4)	2	10001-
12	☆	.SEAL,OIL (K4)	1	10001-
13	☆	.RING,SNAP (K4)	1	10001-
14	KB20121-61241	.BOLT	8	10001-
15	KB94101-10250	.WASHER,SPRING	8	10001-

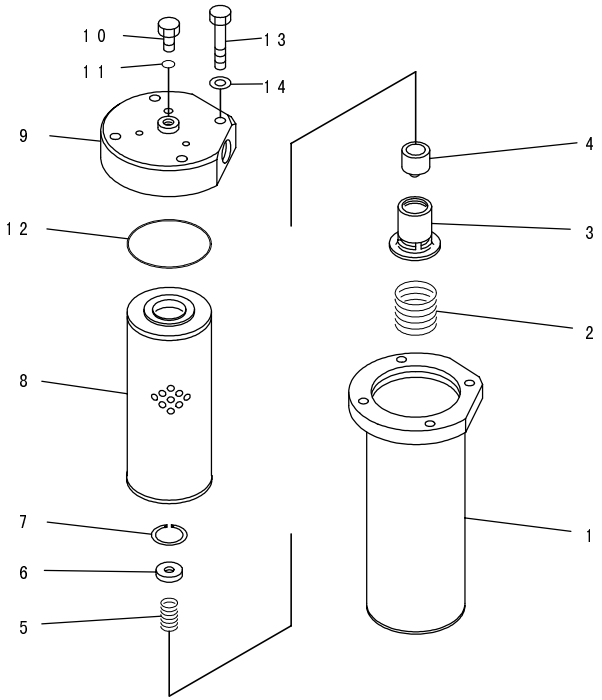

PJ59033

INDEX	PART NO.	DESCRIPTION	Q'TY	SERIAL NO.
	232-16-12100	FILTER ASS'Y	1	10001-
1	232-16-12120	.CASE	1	10001-
2	6003200-4-40	.SPRING	1	10001-
3	141-49-33990	.CAGE	1	10001-
4	141-49-33980	.SLEEVE	1	10001-
5	141-49-36171	.SPRING	1	10001-
6	141-49-33970	.PLATE	1	10001-
7	04065-03012	.RING,SNAP	1	10001-
8	23B-16-11310	.ELEMENT	1	10001-
	(☒281-16-11290)	.ELEMENT	1	(10001-10001)
9	232-16-12110	.FLANGE	1	10001-
10	145-49-12440	.BOLT	1	10001-
11	07000-12010	.O-RING	1	10001-
12	07000-13098	.O-RING	1	10001-
13	01010-51270	.BOLT	4	10001-
14	01643-31232	.WASHER	4	10001-

FIG.2551 TRANSMISSION PIPING

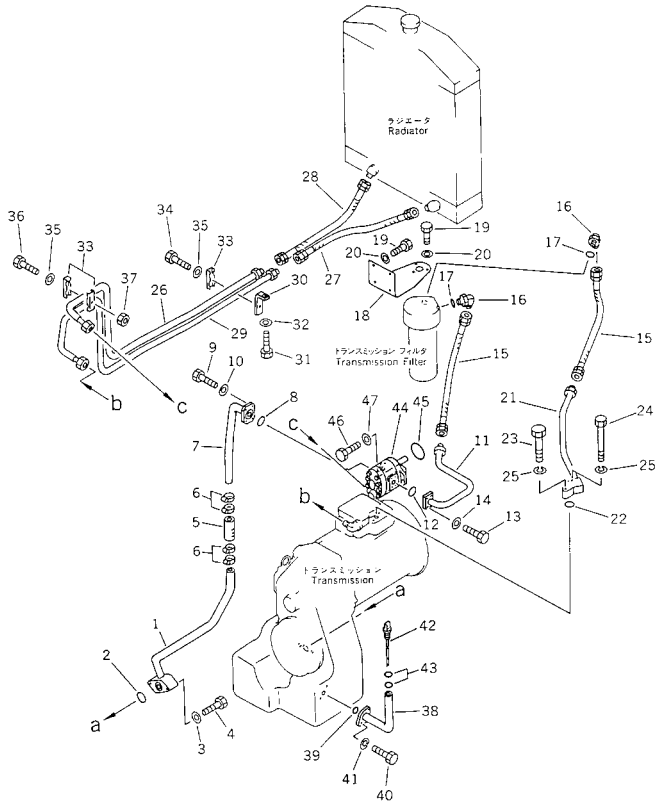

FIG NO. : 2551

INDEX	PART NO.	DESCRIPTION	Q'TY	SERIAL NO.
1	23A-16-11261	TUBE	1	10001-
2	07000-13042	O-RING	1	10001-
3	01643-31232	WASHER	2	10001-
4	01010-51270	BOLT	2	10001-
5	07260-23214	HOSE	1	10031-
	07260-23212	HOSE	1	10001-10030
6	07281-00489	CLAMP	4	10001-
7	23A-16-12150	TUBE	1	10001-
8	07000-13042	O-RING	1	10001-
9	145-27-42230	BOLT	4	10641-
	02010-70725	BOLT	4	10052-10640
	01010-51025	BOLT	4	10001-10051
10	01643-31232	WASHER	4	10052-
	01643-31032	WASHER	4	10001-10051
11	23A-16-11161	TUBE	1	10052-
	23A-16-11160	TUBE	1	10001-10051
12	07000-13028	O-RING	1	10052-
	07000-13030	O-RING	1	10001-10051
13	02010-70625	BOLT	4	10052-
	01010-50835	BOLT	4	10001-10051
14	01643-31032	WASHER	4	10052-
	01643-30823	WASHER	4	10001-10051
15	07102-20607	HOSE	2	10001-
16	07235-10628	ELBOW	2	10001-
17	07002-12434	O-RING	2	10001-
18	23A-16-12170	BRACKET	1	10001-
19	01010-51025	BOLT	7	10001-
20	01643-31032	WASHER	7	10001-
21	23A-16-12190	TUBE	1	10001-
22	07000-13028	O-RING	1	10001-
23	01010-51060	BOLT	1	10001-
24	01011-51025	BOLT	1	10001-
25	01643-31032	WASHER	2	10001-
26	23A-16-12210	TUBE	1	10001-
27	07102-20608	HOSE	1	10001-
28	07102-20604	HOSE	1	10001-
29	23A-16-12220	TUBE	1	10001-
30	23D-16-11230	BRACKET	1	10001-
31	01010-50830	BOLT	1	10001-
32	01643-30823	WASHER	1	10001-
33	233-60-24370	CLIP	3	10001-
34	01010-51050	BOLT	1	10001-

FIG NO. : 2551

INDEX	PART NO.	DESCRIPTION	Q'TY	SERIAL NO.
35	01643-31032	WASHER	2	10001-
36	01010-51060	BOLT	1	10001-
37	01580-11008	NUT	1	10001-
38	23A-16-11240	TUBE	1	10001-
39	07000-13035	O-RING	1	10001-
40	01010-51030	BOLT	2	10001-
41	01643-31032	WASHER	2	10001-
42	23A-16-11250	GAUGE	1	10001-
43	07000-13022	O-RING	2	10001-
44	(23A-60-11202)	PUMP ASS'Y,TRANSMISSION	1	10217-
	(23A-60-11201)	PUMP ASS'Y,TRANSMISSION	1	10052-10216
	(23A-60-11200)	PUMP ASS'Y,TRANSMISSION	1	10001-10051
45	07000-12105	O-RING	1	10001-
46	01010-51235	BOLT	2	10001-
47	01643-31232	WASHER	2	10001-

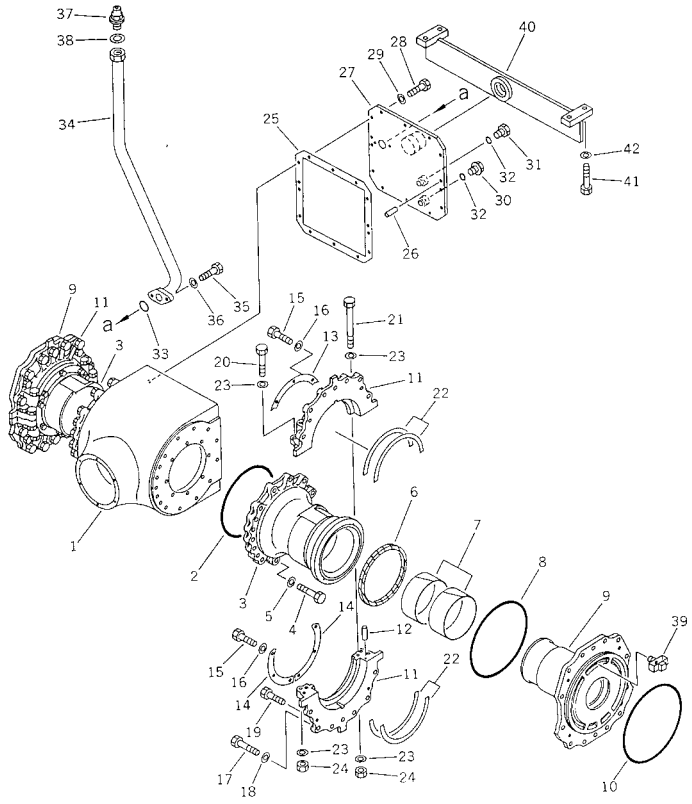

INDEX	PART NO.	DESCRIPTION	Q'TY	SERIAL NO.
	23A-22-01022	FINAL DRIVE ASS'Y THESE ASSEMBLIES CONSIST OF ALL PARTS SHOWN IN FIGS.2601A AND 2605.	1	10242-
1	23A-22-11110	.CASE	1	10001-
2	07000-15290	.O-RING (K5)	2	10001-
3	23A-22-11121	.CASE,SIDE	2	10242-
4	01010-51660	.BOLT	30	10001-
5	01643-31645	.WASHER	30	10001-
6	23D-22-11750	.SEAL (K5)	2	10242-
7	23A-22-11450	.BUSHING	4	10001-
8	23A-22-11490	.O-RING (K5)	2	10001-
9	23A-22-11131	.FLANGE	2	10242-
10	07000-15310	.O-RING (K5)	2	10001-
	23A-22-11402	.CAGE ASS'Y	2	10242-
11	☆	..CAGE,UPPER	1	10242-
	☆	..CAGE,LOWER	1	10242-
12	☆	..PIN,DOWEL	2	10001-
13	23D-22-11730	.PLATE	2	10242-
14	23D-22-11740	.PLATE	4	10242-
15	01010-50822	.BOLT	18	10242-
16	01643-30823	.WASHER	18	10242-
17	01010-51665	.BOLT	28	10001-
18	01643-31645	.WASHER	28	10001-
19	01010-51225	.BOLT	8	10001-
20	01010-51280	.BOLT	8	10001-
21	711-28-16560	.BOLT	4	10242-
22	23A-22-11460	.WASHER	8	10001-
23	01643-31232	.WASHER	24	10242-
24	01580-11210	.NUT	12	10001-
25	238-22-15122	GASKET (K5)	1	..-
	□238-22-15121	GASKET (K5)	1	.-..
	□238-22-15120	.GASKET (K5)	1	10001-.
26	04020-01228	.PIN	2	10001-
27	23A-22-11530	.COVER	1	10001-
28	01010-51235	.BOLT	12	10001-
29	01643-31232	.WASHER	12	10001-
30	07044-12412	.PLUG	1	10001-
31	07040-12414	.PLUG	1	10001-
32	07002-12434	.O-RING (K5)	2	10001-
33	07000-13045	.O-RING (K5)	1	10001-
34	23A-22-11560	.TUBE	1	10001-
35	01010-51235	.BOLT	2	10001-

FIG NO. : 2601A

INDEX	PART NO.	DESCRIPTION	Q'TY	SERIAL NO.
36	01643-31232	.WASHER	2	10001-
37	232-23-11220	.BREATHER	1	10001-
38	07003-03036	.GASKET (K5)	1	10001-
39	23A-22-11510	.TUBE	2	10001-
40	23B-22-11430	HANGER	1	10001-
41	01010-51650	BOLT	4	10001-
42	01643-31645	WASHER	4	10001-

GD511A-1

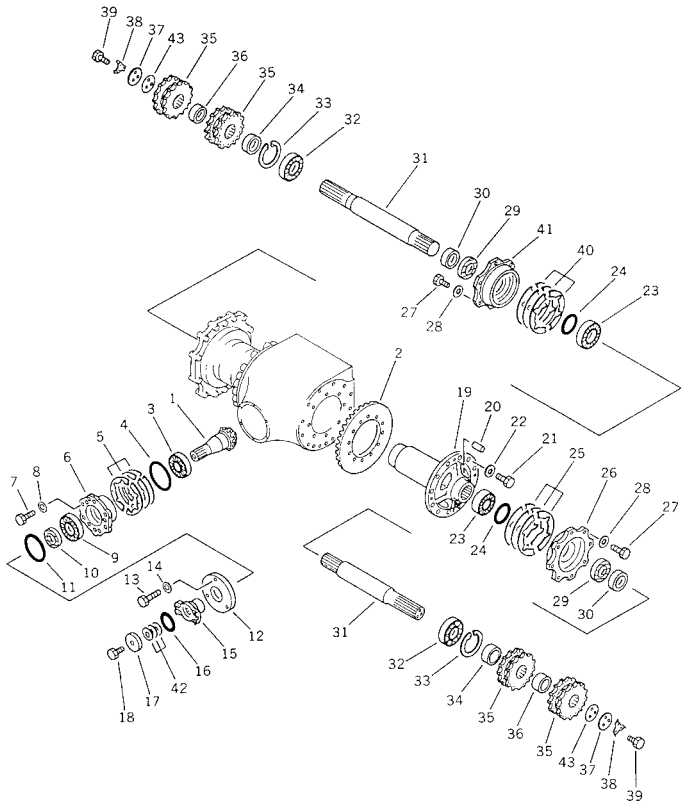

INDEX	PART NO.	DESCRIPTION	Q'TY	SERIAL NO.
	(23A-22-01022)	FINAL DRIVE ASS'Y	1	10242-
	(23A-22-01021)	FINAL DRIVE ASS'Y	1	10001-10241
	(☒23A-22-01020)	FINAL DRIVE ASS'Y	1	(10001-10105)
		THESE ASSEMBLIES CONSIST OF ALL PARTS SHOWN IN FIGS.2601 TO 2605.		
	23A-22-11200	.BEVEL GEAR ASS'Y	1	10001-
1	☆	..PINION	1	10001-
2	☆	..GEAR	1	10001-
3	06002-30315	.BEARING	1	10001-
4	234-23-11180	.O-RING (K5)	1	10001-
5	23A-22-00110	.SHIM ASS'Y	1	10001-
6	23A-22-11141	.RETAINER	1	10001-
7	01010-51245	.BOLT	6	10001-
8	01643-31232	.WASHER	6	10001-
9	06003-30311	.BEARING	1	10001-
10	07012-00085	.SEAL,OIL (K5)	1	10001-
11	07000-12145	.O-RING (K5)	1	10001-
12	23A-22-11180	.COVER	1	10001-
13	01010-51235	.BOLT	3	10001-
14	01643-31232	.WASHER	3	10001-
15	23A-22-11190	.COUPLING	1	10001-
16	23A-22-11210	.O-RING (K5)	1	10001-
17	423-22-11240	.HOLDER	1	10001-
18	01010-51680	.BOLT	1	10001-
19	23A-22-11250	.CAGE	1	10001-
20	04020-01434	.PIN,DOWEL	4	10001-
21	01010-51435	.BOLT	12	10001-
22	01643-31445	.WASHER	12	10001-
23	06002-32021	.BEARING	2	10001-
24	23A-22-11290	.O-RING (K5)	2	10001-
25	23A-22-00140	.SHIM ASS'Y	1	10001-
26	23A-22-11270	.CASE,L.H.	1	10001-
27	07372-51650	.BOLT	14	10001-
28	01643-51645	.WASHER	14	10001-
29	07012-00080	.SEAL,OIL (K5)	2	10001-
30	23A-22-11380	.SPACER	2	10001-
31	23A-22-11371	.SHAFT	2	10001-
32	06030-06214	.BEARING	2	10001-
33	04065-01254	.RING,SNAP	2	10001-
34	23A-22-11410	.SPACER	2	10001-
35	23A-22-11420	.SPROCKET	4	10001-
36	23A-22-11590	.SPACER	2	10001-

FIG NO. : 2605

INDEX	PART NO.	DESCRIPTION	Q'TY	SERIAL NO.
37	23A-22-11430	.HOLDER.....	2	10001-
38	238-22-15110	.LOCK.....(K5).....	2	10001-
39	01010-51245	.BOLT.....	6	10001-
40	23A-22-00120	.SHIM ASS'Y.....	1	10001-
41	23A-22-11280	.CAGE,R.H.....	1	10001-
42	23A-22-00180	.SHIM ASS'Y.....	1	10001-
43	23D-22-11650	.SHIM, 0.1MM.....	2	10001-

FIG.2611A FINAL DRIVE CASE (NO-SPIN DIFFERENTIAL TYPE) (CAGE SECTION SEAL TYPE)(#.-)

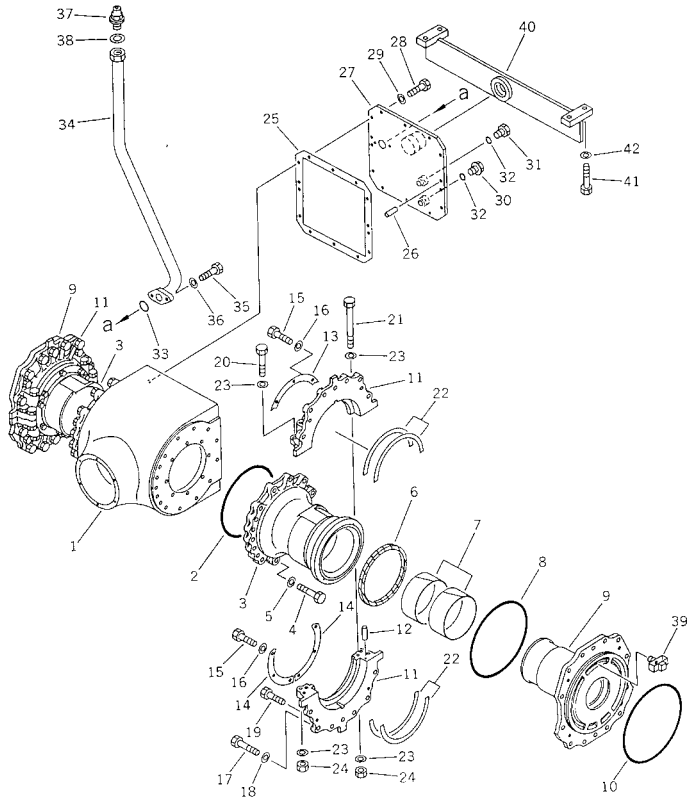

FIG NO. : 2611A

INDEX	PART NO.	DESCRIPTION	Q'TY	SERIAL NO.
	23A-22-01052	FINAL DRIVE ASS'Y.....	1	.-
		THIS ASSEMBLY CONSISTS OF ALL PARTS SHOWN IN FIGS.2611A AND 2615.		
1	23A-22-11110	.CASE.....	1	10001-
2	07000-15290	.O-RING.....(K5).....	2	10001-
3	23A-22-11121	.CASE,SIDE.....	2	.-
4	01010-51660	.BOLT.....	30	10001-
5	01643-31645	.WASHER.....	30	10001-
6	23D-22-11750	.SEAL.....(K5).....	2	.-
7	23A-22-11450	.BUSHING.....	4	10001-
8	23A-22-11490	.O-RING.....(K5).....	2	10001-
9	23A-22-11131	.FLANGE.....	2	.-
10	07000-15310	.O-RING.....(K5).....	2	10001-
	23A-22-11402	.CAGE ASS'Y.....	2	.-
11	☆	..CAGE,UPPER.....	1	.-
	☆	..CAGE,LOWER.....	1	.-
12	☆	..PIN,DOWEL.....	2	10001-
13	23D-22-11730	.PLATE.....	2	.-
14	23D-22-11740	.PLATE.....	4	.-
15	01010-50822	.BOLT.....	18	.-
16	01643-30823	.WASHER.....	18	.-
17	01010-51665	.BOLT.....	28	10001-
18	01643-31645	.WASHER.....	28	10001-
19	01010-51225	.BOLT.....	8	10001-
20	01010-51275	.BOLT.....	8	10001-
21	711-28-16560	.BOLT.....	4	.-
22	23A-22-11460	.WASHER.....	8	10001-
23	01643-31232	.WASHER.....	24	.-
24	01580-11210	.NUT.....	12	10001-
25	238-22-15122	GASKET.....(K5).....	1	..-
26	04020-01228	.PIN.....	2	10001-
27	23A-22-11530	.COVER.....	1	10001-
28	01010-51235	.BOLT.....	12	10001-
29	01643-31232	.WASHER.....	12	10001-
30	07044-12412	.PLUG.....	1	10001-
31	07040-12414	.PLUG.....	1	10001-
32	07002-12434	.O-RING.....(K5).....	2	10001-
33	07000-13045	.O-RING.....(K5).....	1	10001-
34	23A-22-11560	.TUBE.....	1	10001-
35	01010-51235	.BOLT.....	2	10001-
36	01643-31232	.WASHER.....	2	10001-
37	232-23-11220	.BREATHER.....	1	10001-

FIG NO. : 2611A

INDEX	PART NO.	DESCRIPTION	Q'TY	SERIAL NO.
38	07003-03036	.GASKET.....(K5).....	1	10001-
39	23A-22-11510	.TUBE.....	2	10001-
40	23B-22-11430	HANGER.....	1	10001-
41	01010-51650	BOLT.....	4	10001-
42	01643-31645	WASHER.....	4	10001-

GD511A-1

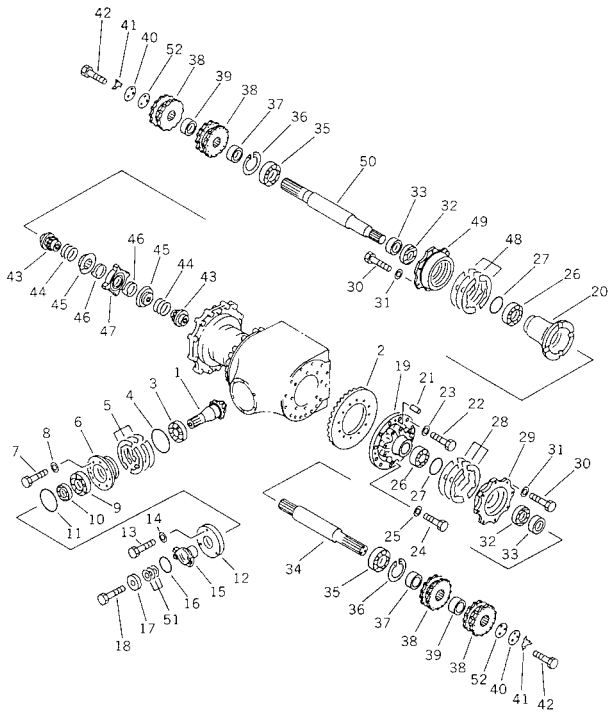

FIG NO. : 2615

INDEX	PART NO.	DESCRIPTION	Q'TY	SERIAL NO.
	(23A-22-01052)	FINAL DRIVE ASS'Y	1	.-
	(23A-22-01051)	FINAL DRIVE ASS'Y	1	10001-.
		THESE ASSEMBLIES CONSIST OF ALL PARTS SHOWN IN FIGS.2611 AND 2615.		
	23A-22-11200	.BEVEL GEAR ASS'Y	1	10001-
1	☆	..PINION	1	10001-
2	☆	..GEAR	1	10001-
3	06002-30315	.BEARING	1	10001-
4	234-23-11180	.O-RING (K5)	1	10001-
5	23A-22-00110	.SHIM ASS'Y	1	10001-
6	23A-22-11141	.RETAINER	1	10001-
7	01010-51245	.BOLT	6	10001-
8	01643-31232	.WASHER	6	10001-
9	06003-30311	.BEARING	1	10001-
10	07012-00085	.SEAL,OIL (K5)	1	10001-
11	07000-12145	.O-RING (K5)	1	10001-
12	23A-22-11180	.COVER	1	10001-
13	01010-51235	.BOLT	3	10001-
14	01643-31232	.WASHER	3	10001-
15	23A-22-11190	.COUPLING	1	10001-
16	23A-22-11210	.O-RING (K5)	1	10001-
17	423-22-11240	.HOLDER	1	10001-
18	01010-51680	.BOLT	1	10001-
	23A-22-11600	.CAGE ASS'Y	1	10001-
19	☆	..CAGE	1	10001-
20	☆	..CAGE	1	10001-
21	04020-01434	.PIN	4	10001-
22	01010-51435	.BOLT	12	10001-
23	01643-31445	.WASHER	12	10001-
24	01010-51280	.BOLT	8	10001-
25	01643-31232	.WASHER	8	10001-
26	06002-32021	.BEARING	2	10001-
27	23A-22-11290	.O-RING (K5)	2	10001-
28	23A-22-00140	.SHIM ASS'Y	1	10001-
29	23A-22-11270	.CASE,L.H	1	10001-
30	07372-51650	.BOLT	14	10001-
31	01643-51645	.WASHER	14	10001-
32	07012-00080	.SEAL,OIL (K5)	2	10001-
33	23A-22-11380	.SPACER	2	10001-
34	23A-22-11631	.SHAFT,L.H	1	10001-
35	06030-06214	.BEARING	2	10001-
36	04065-01254	.RING,SNAP	2	10001-

FIG NO. : 2615

INDEX	PART NO.	DESCRIPTION	Q'TY	SERIAL NO.
37	23A-22-11410	.SPACER	2	10001-
38	23A-22-11420	.SPROCKET	4	10001-
39	23A-22-11590	.SPACER	2	10001-
40	23A-22-11430	.HOLDER	2	10001-
41	238-22-15110	.LOCK (K5)	2	10001-
42	01010-51245	.BOLT	6	10001-
	23A-22-11900	.NO-SPIN ASS'Y	1	10001-
43	23A-22-11950	..GEAR,SIDE	2	10001-
44	23A-22-11940	..SPRING	2	10001-
45	23A-22-11910	..CLUTCH,DRIVEN	2	10001-
46	23A-22-11920	..RING,HOLD OUT	2	10001-
47	23A-22-11930	..SPIDER	1	10001-
48	23A-22-00120	.SHIM ASS'Y	1	10001-
49	23A-22-11280	.CAGE,R.H	1	10001-
50	23A-22-11641	.SHAFT,R.H	1	10001-
51	23A-22-00180	.SHIM ASS'Y	1	10001-
52	23D-22-11650	.SHIM, 0.1MM	2	10001-

GD511A-1

FIG.2651 TANDEM DRIVE CASE

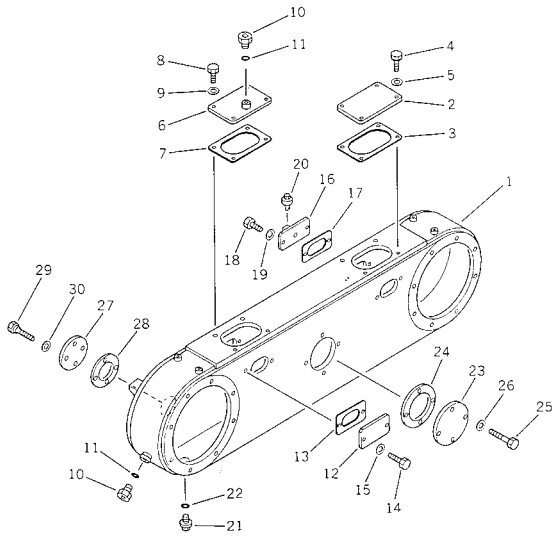

FIG NO. : 2651

INDEX	PART NO.	DESCRIPTION	Q'TY	SERIAL NO.
	23A-23-00032	TANDEM DRIVE ASS'Y,L.H.	1	10052-
	23A-23-00031	TANDEM DRIVE ASS'Y,L.H.	1	10031-10051
	23A-23-00030	TANDEM DRIVE ASS'Y,L.H.	1	10001-10030
	23A-23-00042	TANDEM DRIVE ASS'Y,R.H.	1	10052-
	23A-23-00041	TANDEM DRIVE ASS'Y,R.H.	1	10031-10051
	23A-23-00040	TANDEM DRIVE ASS'Y,R.H.	1	10001-10030
		THESE ASSEMBLIES CONSIST OF ALL PARTS SHOWN IN FIGS.2651 TO 2653A.		
1	23A-23-11111	.CASE	1	10001-
2	23A-23-11161	.COVER	1	10001-
3	238-23-16131	.GASKET (K6)	1	10001-
4	01010-51230	.BOLT	4	10001-
5	01643-31232	.WASHER	4	10001-
6	23A-23-11341	.COVER	1	10001-
7	238-23-16131	.GASKET (K6)	1	10001-
8	01010-51230	.BOLT	4	10001-
9	01643-31232	.WASHER	4	10001-
10	07040-12414	.PLUG	2	10001-
11	07002-12434	.O-RING (K6)	2	10001-
12	238-23-11130	.COVER	3	10001-
13	238-23-11120	.GASKET (K6)	3	10001-
14	01010-51230	.BOLT	6	10001-
15	01643-31232	.WASHER	6	10001-
16	238-23-11140	.COVER	1	10001-
17	238-23-11120	.GASKET (K6)	1	10001-
18	01010-51230	.BOLT	2	10001-
19	01643-31232	.WASHER	2	10001-
20	07030-00252	.BREATHER	1	10001-
21	07044-12412	.PLUG	1	10001-
22	07002-12434	.O-RING (K6)	1	10001-
23	23A-23-11120	.COVER	1	10001-
24	238-23-16110	.GASKET (K6)	1	10001-
25	01010-51240	.BOLT	4	10001-
26	01643-31232	.WASHER	4	10001-
27	23A-23-11140	.COVER	2	10001-
28	238-23-16120	.GASKET (K6)	2	10001-
29	01010-51240	.BOLT	8	10001-
30	01643-31232	.WASHER	8	10001-

FIG.2653A TANDEM DRIVE GEAR AND CHAIN(#10052-)

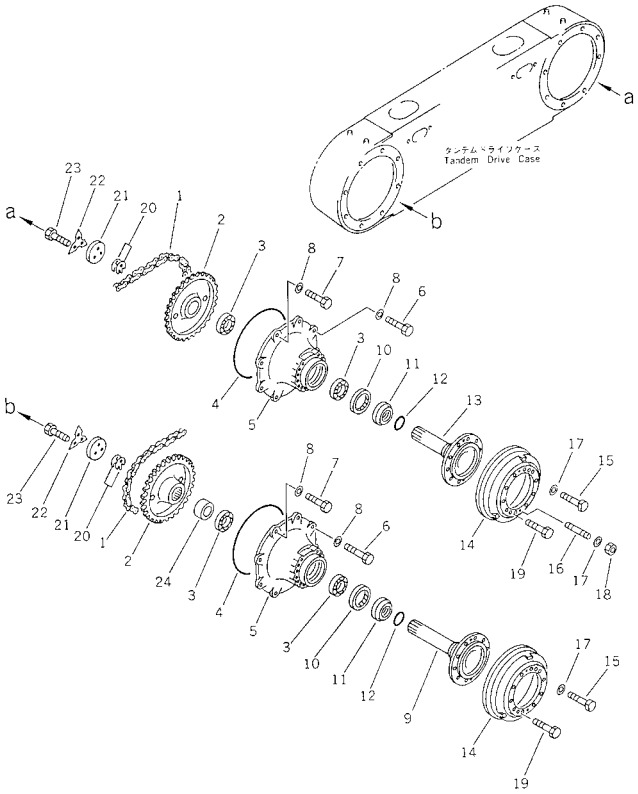

FIG NO. : 2653A

INDEX	PART NO.	DESCRIPTION	Q'TY	SERIAL NO.
	(23A-23-00032)	TANDEM DRIVE ASS'Y,L.H.	1	10052-
	(23A-23-00042)	TANDEM DRIVE ASS'Y,R.H.	1	10052-
		THESE ASSEMBLIES CONSIST OF ALL PARTS SHOWN IN FIGS.2651 AND 2653A.		
1	23A-23-11400	.CHAIN ASS'Y.	2	10001-
	23A-23-11430	..PIN.	2	10001-
	23A-23-11410	..LINK ASS'Y.	1	10001-
	23A-23-11450	..CHAIN.	1	10001-
2	23A-23-11290	.SPROCKET.	2	10001-
3	06002-32216	.BEARING.	4	10001-
4	07000-15460	.O-RING.(K6)	2	10001-
5	23A-23-11211	.CAGE.	2	10031-
6	01010-51640	.BOLT.	14	10001-
7	01010-51645	.BOLT.	2	10001-
8	01643-31645	.WASHER.	16	10001-
9	23A-23-11222	.SHAFT.	1	10052-
10	07012-00140	.SEAL,OIL.(K6)	2	10001-
11	23A-23-11260	.SPACER.	2	10001-
12	238-23-16140	.O-RING.(K6)	2	10001-
13	23A-23-11232	.SHAFT.	1	10052-
14	23A-23-11242	.DRUM.	2	10031-
15	01010-82265	.BOLT.	16	10052-
16	01124-82265	.STUD.	4	10052-
17	01643-32260	.WASHER.	20	10031-
18	01582-12218	.NUT.	4	10052-
19	01010-51220	.BOLT.	4	10001-
20	23A-23-00130	.SHIM ASS'Y.	2	10001-
21	238-22-11371	.HOLDER.	2	10001-
22	232-23-12141	.LOCK.(K6)	2	10001-
23	01010-51240	.BOLT.	6	10001-
24	23A-23-11280	.SPACER.	1	10001-

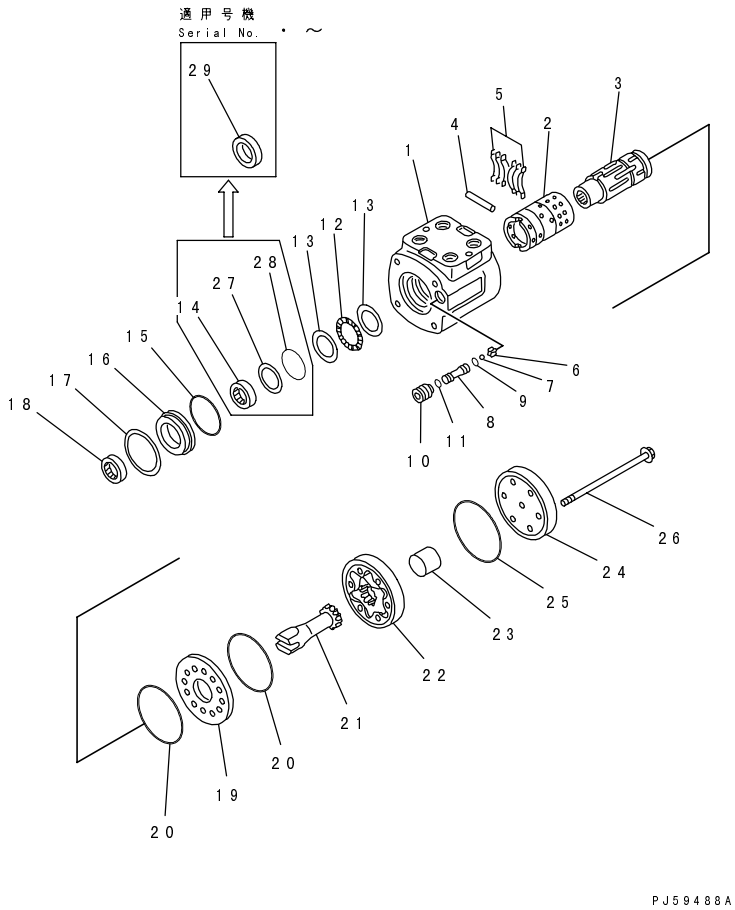

FIG NO. : 2711

INDEX	PART NO.	DESCRIPTION	Q'TY	SERIAL NO.
1	23A-40-11101	STEERING VALVE ASS'Y.	1	.-
	□23A-40-11100	STEERING VALVE ASS'Y.	1	10001-.
		THESE ASSEMBLIES CONSIST OF ALL PARTS SHOWN IN FIGS.2711 AND 2713.		
1	23A-40-11201	.VALVE ASS'Y,STEERING.	1	.-
	□23A-40-11200	.VALVE ASS'Y,STEERING.	1	10001-.
	237-40-12560	..HOUSING ASS'Y,CONTROL.	1	10001-
1	☆	...HOUSING.	1	10001-
2	☆	...SLEEVE.	1	10001-
3	☆	...SPOOL.	1	10001-
4	237-40-12620	...PIN.	1	10001-
5	237-40-12610	...SPRING.	6	10001-
6	237-40-12550	..RETAINER.	1	10001-
7	237-40-12540	..BALL.	1	10001-
8	237-40-12520	..SEAT.	1	10001-
9	☆	..O-RING. (K7)	1	10001-
10	237-40-12490	..SCREW.	1	10001-
11	☆	..O-RING. (K7)	1	10001-
	237-40-12460	..BEARING ASS'Y.	1	10001-
12	237-40-12480	...NEEDLE,BEARING.	1	10001-
13	237-40-12470	...RACE,BEARING.	2	10001-
14	☆	..SEAL. (K7)	1	10001-.
15	☆	..O-RING. (K7)	1	10001-
16	23A-40-11280	..BUSHING.	1	10001-
17	237-40-12420	..RING.	1	10001-
18	☆	..SEAL,DUST. (K7)	1	10001-
19	237-40-12640	..PLATE,SPACER.	1	10001-
20	☆	..O-RING,DRIVE. (K7)	2	10001-
21	237-40-12650	..SHAFT.	1	10001-
22	23A-40-11220	..DRIVE.	1	10001-
23	23A-40-11230	..SPACER.	1	10001-
24	237-40-12670	..CAP,END.	1	10001-
25	☆	..O-RING. (K7)	1	10001-
26	23A-40-11210	..SCREW.	7	10001-
27	☆	..RING,BACK-UP. (K7)	1	10001-.
28	☆	..O-RING. (K7)	1	10001-.
29	☆	..SEAL. (K7)	1	.-

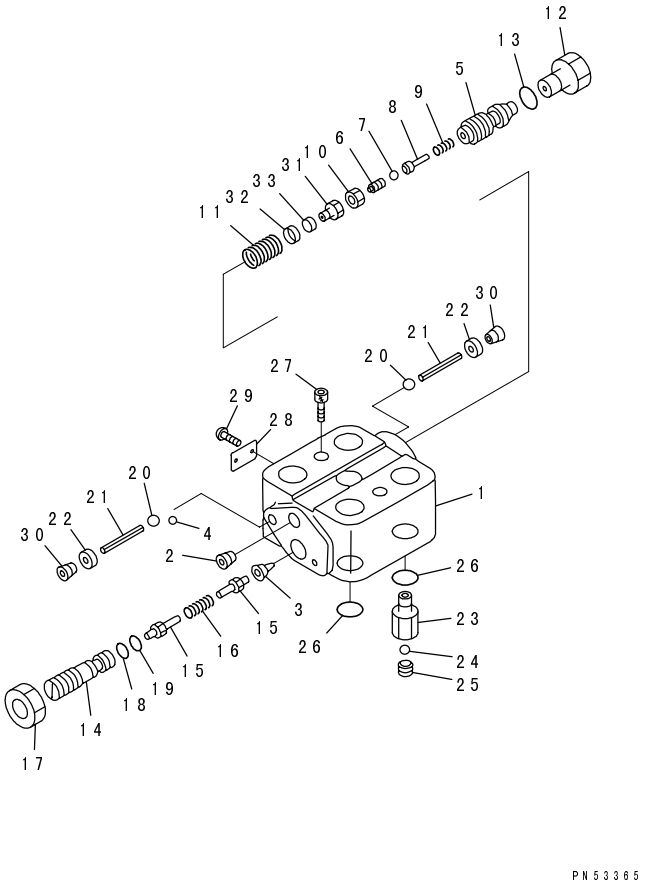

PN53365

INDEX	PART NO.	DESCRIPTION	Q'TY	SERIAL NO.
1	(23A-40-11101)	STEERING VALVE ASS'Y.	1	.-
	(□23A-40-11100)	STEERING VALVE ASS'Y.	1	10001-.
		THESE ASSEMBLIES CONSIST OF ALL PARTS SHOWN IN FIGS.2711 AND 2713.		
	23B-40-11300	.RELIEF VALVE ASS'Y.	1	10001-
	23A-40-11340	..HOUSING ASS'Y.	1	10001-
1	☆	...HOUSING.	1	10001-
2	☆	...PLUG.	1	10001-
3	☆	...VALVE.	1	10001-
4	☆	...BALL.	3	10001-
	23A-40-11390	..VALVE SUB ASS'Y.	1	10001-
5	☆	...SPOOL.	1	10001-
6	☆	...VALVE,SEAT.	1	10001-
7	☆	...BALL.	1	10001-
8	☆	...GUIDE,BALL.	1	10001-
9	☆	...SPRING.	1	10001-
10	☆	...NUT,LOCK.	1	10001-
11	23A-40-11470	..SPRING.	1	10001-
	23A-40-11480	..PLUG ASS'Y.	1	10001-
12	☆	...PLUG.	1	10001-
13	☆	...O-RING.	1	10001-
14	23A-40-11520	..SCREW,ADJUSTING.	1	10001-
15	23A-40-11530	..CONE,VALVE.	2	10001-
16	23A-40-11540	..SPRING,RELIEF.	1	10001-
17	23A-40-11550	..NUT,LOCK.	1	10001-
18	23A-40-11560	..O-RING.	1	10001-
19	23A-40-11570	..O-RING.	1	10001-
20	23A-40-11580	..BALL.	2	10001-
	23A-40-11590	..BALL SUB ASS'Y.	2	10001-
21	☆	...PIN,SPRING.	1	10001-
22	☆	...BUSHING.	1	10001-
	23A-40-11630	..CHECK VALVE ASS'Y.	1	10001-
23	☆	...BODY.	1	10001-
24	☆	...BALL.	1	10001-
25	☆	...PIN,SPRING.	1	10001-
26	23A-40-11670	..O-RING.	4	10001-
27	23A-40-11680	..BOLT.	2	10001-
28	☆	..PLATE, NAME.	1	10001-
29	☆	..RIVET.	2	10001-
30	23A-40-11720	..PLUG.	2	10001-
	23A-40-11730	..FILTER ASS'Y.	1	10001-
31	☆	...NUT.	1	10001-

FIG.2713 STEERING VALVE (2/2)

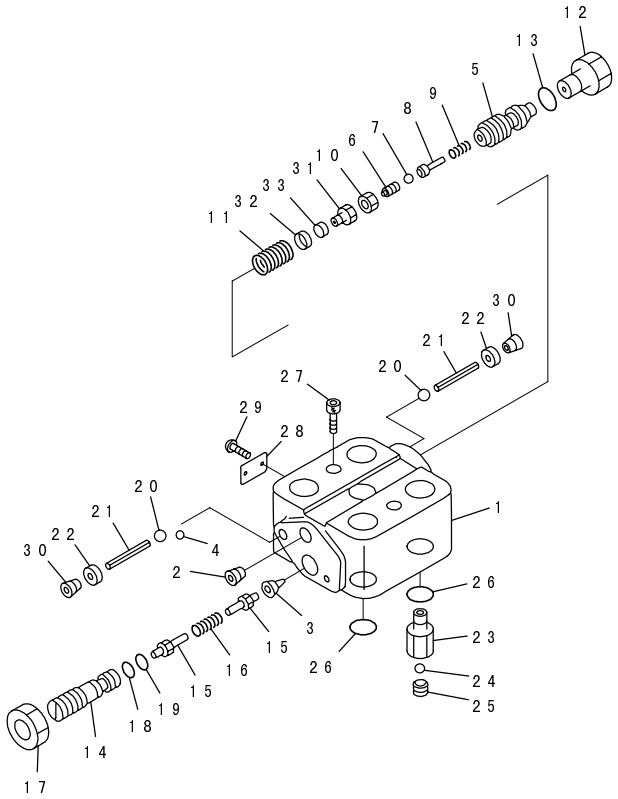

PN53365

FIG NO. : 2713

INDEX	PART NO.	DESCRIPTION	Q'TY	SERIAL NO.
32	☆	...RING.....	1	10001-
33	☆	...FILTER.....	1	10001-

FIG.2721 STEERING CYLINDER

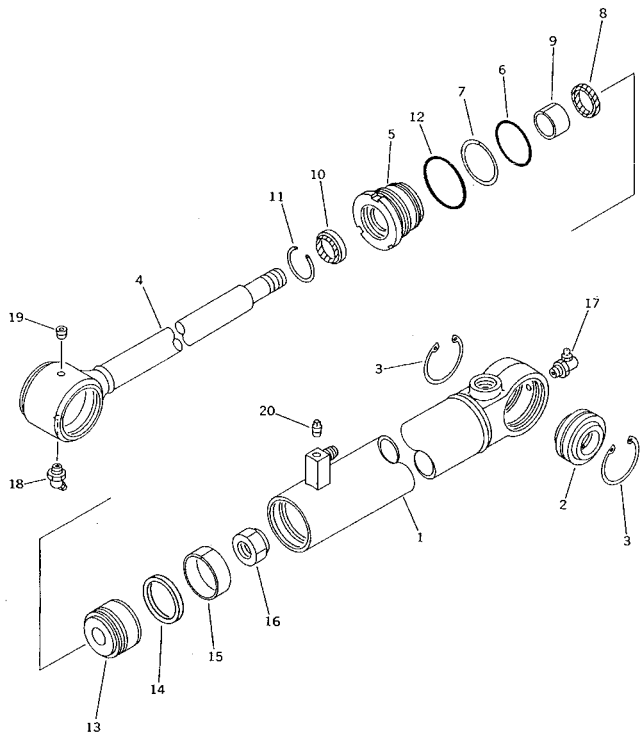

FIG NO. : 2721

INDEX	PART NO.	DESCRIPTION	Q'TY	SERIAL NO.
	23B-63-72102	CYLINDER ASS'Y,STEERING.	1	10001-
1	23B-63-72140	.CYLINDER.	1	10001-
2	707-76-35010	.BUSHING.	1	10001-
3	04065-05520	.RING,SNAP.	2	10001-
4	23B-63-72121	.ROD,PISTON.	1	10001-
5	707-29-60930	.HEAD,CYLINDER.	1	10001-
6	07000-12055	.O-RING.	1	10001-
7	07001-02055	.RING,BACK-UP.	1	10001-
8	707-51-30210	.PACKING,ROD.	1	10001-
9	07177-03025	.BUSHING.	1	10001-
10	707-56-30510	.SEAL,DUST.	1	10001-
11	07179-12042	.RING,SNAP.	1	10001-
12	07000-02060	.O-RING.	1	10001-
13	707-36-60910	.PISTON.	1	10001-
14	707-44-60070	.RING,PISTON.	1	10001-
15	07155-00615	.RING,WEAR.	1	10001-
16	07165-12022	.NUT.	1	10001-
17	07020-00900	.FITTING,GREASE.	1	10001-
18	07020-00675	.FITTING,GREASE.	1	10001-
19	07043-00108	.PLUG.	1	10001-
20	07042-20108	.PLUG.	1	10001-

FIG.2725 LEANING CYLINDER

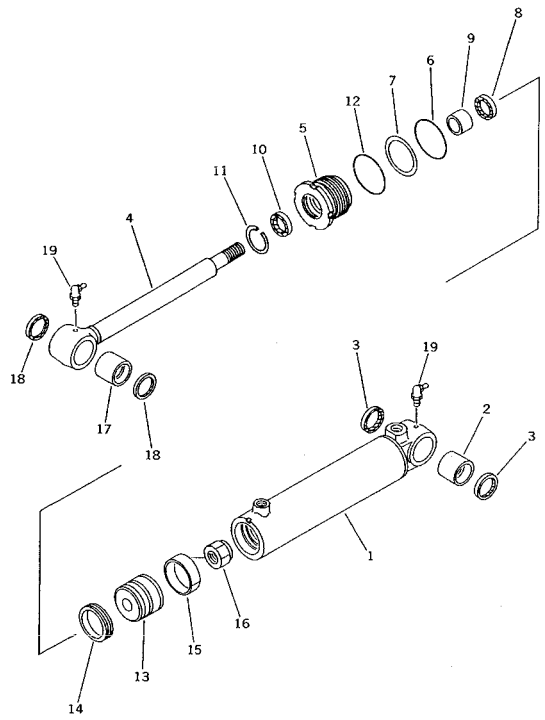

FIG NO. : 2725

INDEX	PART NO.	DESCRIPTION	Q'TY	SERIAL NO.
	23A-63-52102	CYLINDER ASS'Y,LEANING.	1	10001-
1	23A-63-52141	.CYLINDER.	1	10001-
2	07144-10404	.BUSHING.	1	10001-
3	07145-00040	.SEAL,DUST.	2	10001-
4	23A-63-52121	.ROD,PISTON.	1	10001-
5	707-29-70920	.HEAD,CYLINDER.	1	10001-
6	07000-12065	.O-RING.	1	10001-
7	07001-02065	.RING,BACK-UP.	1	10001-
8	707-51-35210	.PACKING,ROD.	1	10001-
9	07177-03525	.BUSHING.	1	10001-
10	175-63-75190	.SEAL,DUST.	1	10001-
11	07179-12047	.RING,SNAP.	1	10001-
12	07000-02070	.O-RING.	1	10001-
13	707-36-70910	.PISTON.	1	10001-
14	707-44-70070	.RING,PISTON.	1	10001-
15	07155-00720	.RING,WEAR.	1	10001-
16	07165-12426	.NUT.	1	10001-
17	707-76-45120	.BUSHING.	1	10001-
18	07145-00045	.SEAL,DUST.	2	10001-
19	07020-00675	.FITTING,GREASE.	2	10001-

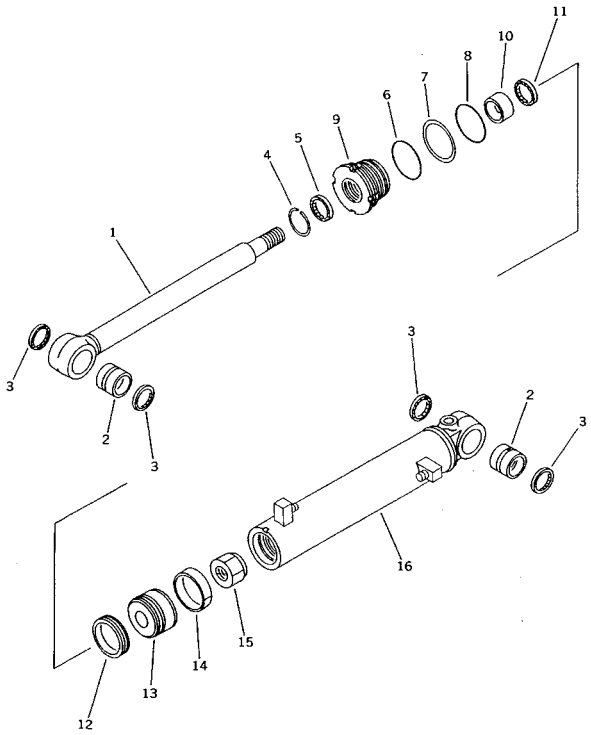

INDEX	PART NO.	DESCRIPTION	Q'TY	SERIAL NO.
	23A-63-62102	CYLINDER ASS'Y,L.H.	1	10084-
	23A-63-62202	CYLINDER ASS'Y,R.H.	1	10084-
1	23A-63-62121	.ROD	1	10084-
2	707-76-45020	.BUSHING	2	10001-
3	07145-00045	.SEAL,DUST	4	10001-
4	07179-12057	.RING,SNAP	1	10001-
5	112-63-15370	.SEAL,DUST	1	10001-
6	07000-02080	.O-RING	1	10001-
7	07146-02076	.RING,BACK-UP	1	10084-
8	07000-12075	.O-RING	1	10001-
9	707-29-80830	.HEAD,CYLINDER	1	10084-
10	07177-04530	.BUSHING	1	10001-
11	707-51-45210	.PACKING	1	10001-
12	707-44-80070	.RING,PISTON	1	10001-
13	707-36-80970	.PISTON	1	10084-
14	07156-00810	.RING,WEAR	1	10084-
15	07165-12729	.NUT,NYLON	1	10001-
16	23A-63-62141	.CYLINDER,L.H.	1	10084-
	23A-63-62241	.CYLINDER,R.H.	1	10084-

FIG.2751 STEERING PIPING (1/2)

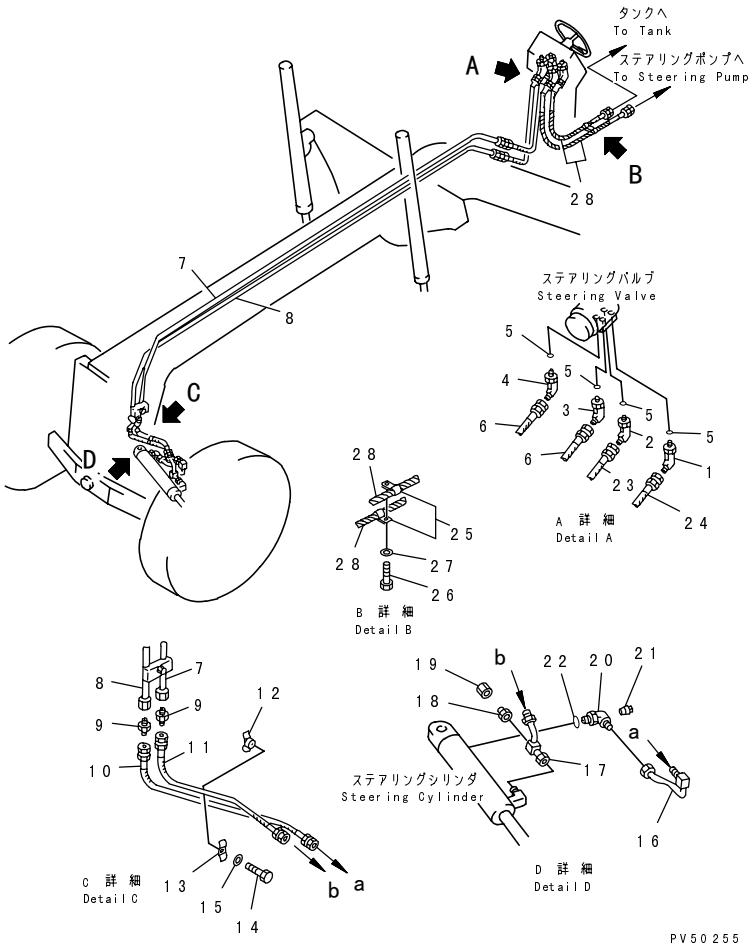

FIG NO. : 2751

INDEX	PART NO.	DESCRIPTION	Q'TY	SERIAL NO.
1	23A-40-12230	ELBOW	1	10001-
2	23A-40-12240	ELBOW	1	10001-
3	23A-40-12250	ELBOW	1	10001-
4	23A-40-12260	ELBOW	1	10001-
5	237-40-13160	O-RING	4	10001-
6	230-09-23180	HOSE	2	10001-
7	23A-40-12430	TUBE	1	10001-
8	23A-40-12440	TUBE	1	10001-
9	234-40-51450	NIPPLE	2	10001-
10	23A-40-12330	HOSE	1	10001-
11	23A-40-12340	HOSE	1	10001-
12	237-60-23360	CLIP	1	10001-
13	236-60-24920	CLIP	1	10001-
14	01010-50840	BOLT	1	10001-
15	01643-30823	WASHER	1	10001-
16	23A-40-12190	TUBE	1	10001-
17	23A-40-12210	TUBE	1	10001-
18	07220-00316	.SLEEVE	1	10001-
19	07221-20315	.NUT,SLEEVE	1	10001-
20	07235-50315	ELBOW	1	10001-
21	07042-50108	PLUG	1	10001-
22	07002-12034	O-RING	1	10001-
23	07108-20520	HOSE	1	10001-
24	07102-20519	HOSE	1	10001-
25	08036-02514	CLIP	2	10001-
26	01010-51016	BOLT	1	10001-
27	01643-31032	WASHER	1	10001-
28	273-60-24450	TUBE,SPIRAL	2	10001-

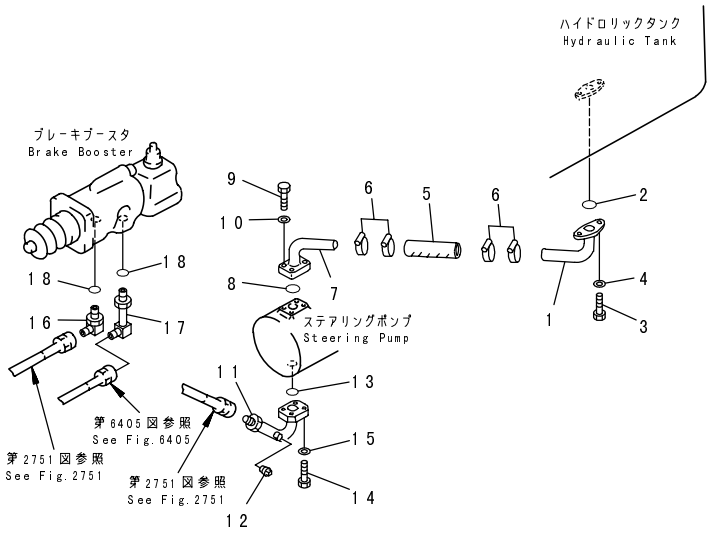

INDEX	PART NO.	DESCRIPTION	Q'TY	SERIAL NO.
1	23A-60-16550	TUBE	1	10001-
2	07000-13028	O-RING	1	10001-
3	01010-51030	BOLT	2	10001-
4	01643-31032	WASHER	2	10001-
5	07260-22616	HOSE	1	10001-
6	07281-00419	CLAMP	4	10001-
7	23A-60-16560	TUBE	1	10001-
8	07000-13020	O-RING	1	10001-
9	02010-70725	BOLT	4	10052-
	01010-51030	BOLT	4	10001-10051
10	01643-31232	WASHER	4	10052-
	01643-31032	WASHER	4	10001-10051
11	23A-40-12130	TUBE	1	10001-
12	07042-50108	PLUG	1	10001-
13	07000-13025	O-RING	1	10001-
14	02010-70625	BOLT	4	10052-
	01010-50830	BOLT	4	10001-10051
15	01643-31032	WASHER	4	10052-
	01643-30823	WASHER	4	10001-10051
16	07235-10522	ELBOW	1	10001-
17	234-60-35130	ELBOW	1	10001-
18	07002-12434	O-RING	2	10001-

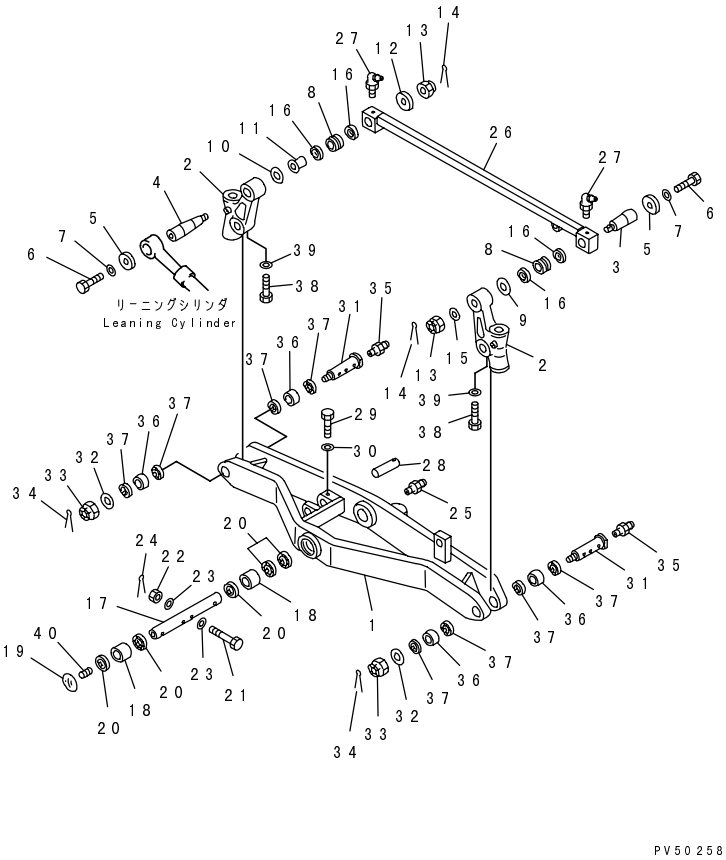

INDEX	PART NO.	DESCRIPTION	Q'TY	SERIAL NO.
1	23A-27-12111	AXLE,FRONT	1	10681-
	□23A-27-12110	AXLE,FRONT	1	10001-10680
2	23A-27-11160	BRACKET	2	10001-
3	23A-27-11310	PIN	1	10001-
4	23A-27-11330	PIN	1	10001-
5	23A-27-11340	HOLDER	2	10001-
6	01016-52045	BOLT	2	10001-
7	01643-32060	WASHER	2	10001-
8	23A-27-11630	BUSHING	2	10001-
9	23A-27-11370	COLLAR	1	10001-
10	23A-27-11380	COLLAR	1	10001-
11	23A-27-11390	SPACER	1	10001-
12	23A-27-11640	WASHER	1	10001-
13	01593-13018	NUT	2	10001-
14	04050-16045	PIN,COTTER	2	10001-
15	01643-33080	WASHER	1	10001-
16	07145-00045	SEAL,DUST	4	10001-
17	23A-27-11350	SHAFT	1	10001-
18	23A-27-11610	BUSHING	2	10001-
19	23B-27-11660	PLUG	1	10001-
20	07145-00050	SEAL,DUST	5	10001-
21	01093-51635	BOLT	1	10001-
22	01593-11613	NUT	1	10001-
23	07005-01612	GASKET	2	10001-
24	04050-14025	PIN,COTTER	1	10001-
25	07020-00000	FITTING,GREASE	1	10001-
26	23A-27-11231	ROD,LEANING	1	10001-
27	07020-00675	FITTING,GREASE	2	10001-
28	23A-27-11530	PIN	1	10001-
29	23B-27-11680	BOLT	1	10001-
30	01643-31232	WASHER	1	10001-
31	23A-27-11520	PIN	2	10001-
32	23A-27-11640	WASHER	2	10001-
33	01593-13018	NUT	2	10001-
34	04050-16045	PIN,COTTER	2	10001-
35	07020-00000	FITTING,GREASE	2	10001-
36	23A-27-11620	BUSHING	4	10001-
37	07145-00040	SEAL,DUST	8	10001-
38	23A-27-11650	BOLT	2	10001-
39	01643-31645	WASHER	2	10001-
40	23A-27-12210	SCREW	1	10001-

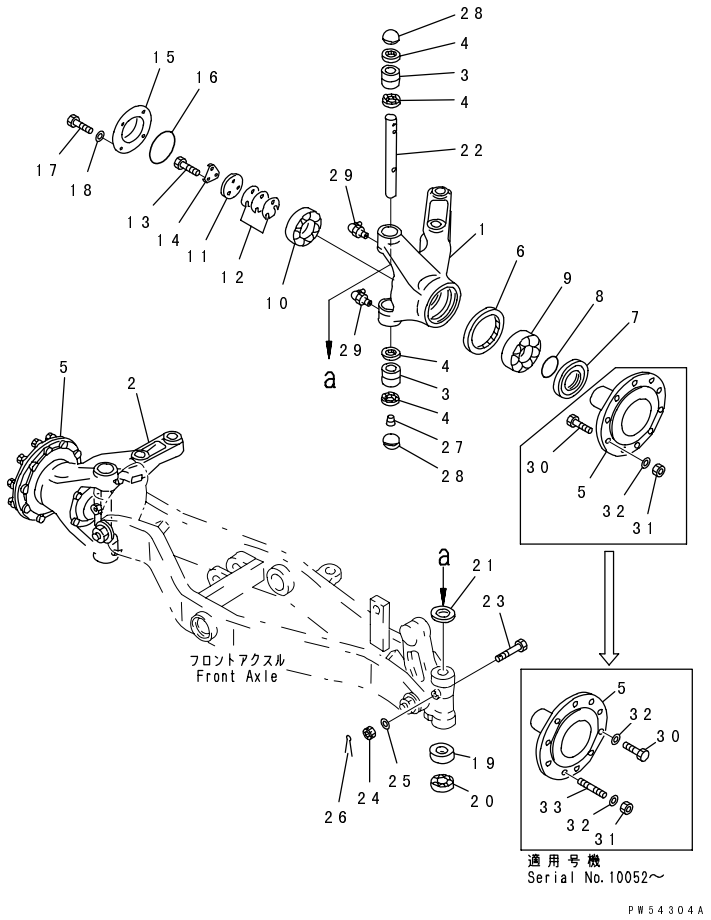

INDEX	PART NO.	DESCRIPTION	Q'TY	SERIAL NO.
1	23A-27-11141	HOUSING,L.H.	1	10001-
2	23A-27-11150	HOUSING,R.H.	1	10001-
3	07144-10404	BUSHING	4	10001-
4	07145-00040	SEAL,DUST	8	10001-
5	23A-27-11132	SHAFT,HUB	2	10052-
	23A-27-11131	SHAFT,HUB	2	10031-10051
	23A-27-11130	SHAFT,HUB	2	10001-10030
6	07012-10130	SEAL,OIL	2	10001-
7	23A-27-11170	SPACER	2	10001-
8	07000-12075	O-RING	2	10001-
9	06002-33215	BEARING	2	10001-
10	06002-33214	BEARING	2	10001-
11	23A-27-11190	HOLDER	2	10001-
12	23A-27-00010	SHIM ASS'Y	2	10001-
13	01010-51230	BOLT	6	10001-
14	23A-27-11890	LOCK	2	10001-
15	23A-27-11180	CAP	2	10001-
16	07000-12130	O-RING	2	10001-
17	01010-51020	BOLT	8	10001-
18	01643-31032	WASHER	8	10001-
19	23A-27-11270	COVER	2	10001-
20	23A-27-11281	BEARING	2	10001-
21	23A-27-11260	SPACER	2	10001-
22	23A-27-11250	PIN	2	10001-
23	01093-51200	BOLT	2	10001-
24	01593-11210	NUT	2	10001-
25	01643-31232	WASHER	2	10001-
26	04050-13020	PIN,COTTER	2	10001-
27	07043-00108	PLUG	2	10001-
28	23A-27-11360	PLUG	4	10001-
29	07020-00900	FITTING,GREASE	4	10001-
30	01010-82250	BOLT	16	10052-
	23B-25-11510	BOLT	20	10031-10051
	01084-02055	BOLT	20	10001-10030
31	01580-12218	NUT	4	10052-
	01580-12218	NUT	20	10031-10051
	01582-12016	NUT	20	10001-10030
32	01643-32260	WASHER	20	10031-
	01643-32060	WASHER	20	10001-10030
33	01124-82250	STUD	4	10052-

FIG.2805 FRONT AXLE (3/3)

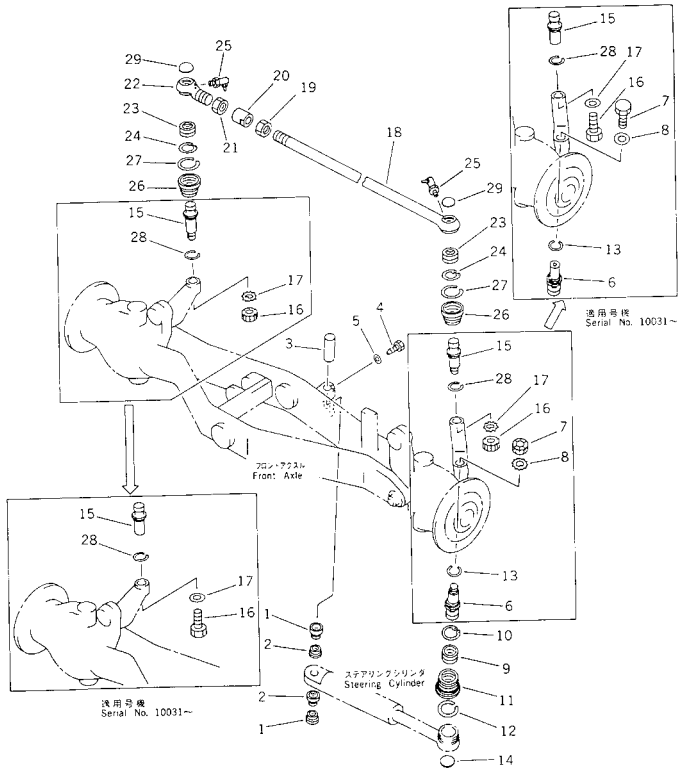

FIG NO. : 2805

INDEX	PART NO.	DESCRIPTION	Q'TY	SERIAL NO.
1	23B-27-11480	SPACER	2	10001-
2	235-27-11750	BOOT	2	10001-
3	23B-27-11540	PIN	1	10001-
4	23B-27-11680	BOLT	1	10001-
5	01643-31232	WASHER	1	10001-
6	23B-27-11563	STUD,BALL	1	10031-
	23B-27-11562	STUD,BALL	1	10001-10030
7	01010-81635	BOLT	1	10031-
	01530-03610	NUT	1	10001-10030
8	235-27-11240	PLATE	1	10031-
	01658-23618	WASHER	1	10001-10030
9	23B-27-11800	BUSHING ASS'Y	1	10001-
10	04065-06220	RING,SNAP	1	10001-
11	23B-27-11841	BOOT	1	10001-
12	23B-27-11910	RING,SNAP	1	10001-
13	23B-27-11920	RING,SNAP	1	10001-
14	23B-27-11360	PLUG	1	10001-
15	23B-27-11553	STUD,BALL	2	10031-
	23B-27-11552	STUD,BALL	2	10001-10030
16	01010-81635	BOLT	2	10031-
	01530-03610	NUT	2	10001-10030
17	235-27-11240	PLATE	2	10031-
	01658-23618	WASHER	2	10001-10030
18	23B-27-11411	ROD,TIE	1	10001-
19	23B-27-11450	NUT,L.H. THREAD	1	10001-
20	23B-27-11460	JOINT	1	10001-
21	01583-13923	NUT	1	10001-
22	23B-27-11441	ROD,END	1	10001-
23	23B-27-11800	BUSHING ASS'Y	2	10001-
24	04065-06220	RING,SNAP	2	10001-
25	07020-00900	FITTING,GREASE	2	10001-
26	23B-27-11841	BOOT	2	10001-
27	23B-27-11910	RING,SNAP	2	10001-
28	23B-27-11920	RING,SNAP	2	10001-
29	23B-27-11360	PLUG	2	10001-

WHEELS

FIG.3001 WHEEL AND TUBE TIRE

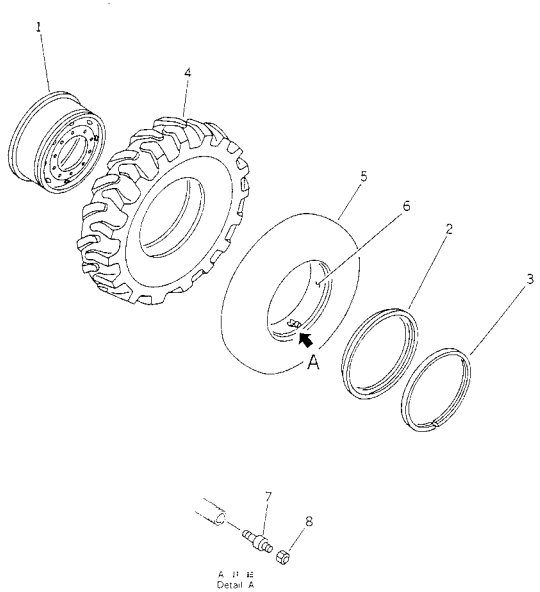

FIG NO. : 3001

INDEX	PART NO.	DESCRIPTION	Q'TY	SERIAL NO.
		TRACTION TYPE		
		13.00-24-8PR		
	23A-30-00550	WHEEL AND TIRE ASS'Y FRONT, L.H. AND REAR, R.H.	3	10001-
	23A-30-00560	WHEEL AND TIRE ASS'Y FRONT, R.H. AND REAR, L.H.	3	10001-
	23A-30-11101	.WHEEL ASS'Y,(TOPY)	1	.-
	□23A-30-11302	.WHEEL ASS'Y,(NMB)	1	10094-.
	□23A-30-11300	.WHEEL ASS'Y	1	10001-10093
	23A-30-11111	..RIM,WHEEL	1	.-
1	23A-30-11312	..RIM,WHEEL	1	10094-.
	23A-30-11310	..RIM,WHEEL	1	10001-10093
2	234-30-13420	..RING,SIDE	1	.-
	234-830-5221	..RING,SIDE	1	10094-.
	234-30-11320	..RING,SIDE	1	10001-10093
3	234-30-13430	..RING,LOCK	1	.-
	234-830-5231	..RING,LOCK	1	10094-.
	234-30-11330	..RING,LOCK	1	10001-10093
	233-801-3111	.TIRE ASS'Y,(YOKOHAMA)	1	10001-
4	233-801-3121	..TIRE	1	10001-
5	232-830-2120	..TUBE	1	10001-
6	232-830-2130	..FLAP	1	10001-
7	232-801-3150	..VALVE,CORE	1	10001-
8	232-801-3160	..CAP,VALVE	1	10001-

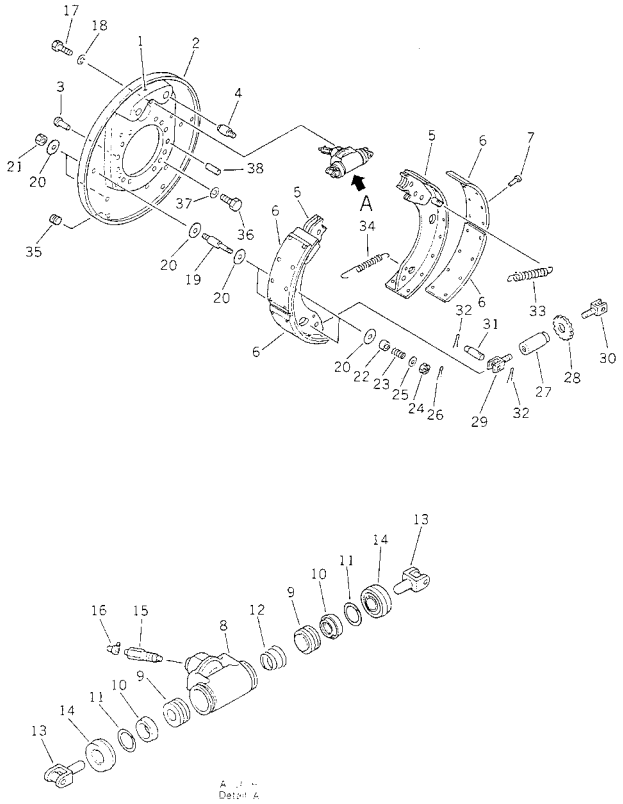

INDEX	PART NO.	DESCRIPTION	Q'TY	SERIAL NO.
	23A-32-11000	WHEEL BRAKE ASS'Y	4	10001-
	23A-32-11250	.PLATE SUB ASS'Y	1	10001-
1	☆	..PLATE	1	10001-
2	☆	..COVER	1	10001-
3	☆	..RIVET	3	10001-
4	☆	..PIN	2	10001-
	23A-32-11230	.SHOE ASS'Y	2	10001-
5	☆	..SHOE	1	10001-
6	☆	..LINING	2	10001-
7	☆	..RIVET	16	10001-
	232-32-56300	.CYLINDER ASS'Y,WHEEL	1	10001-
8	☆	..BODY	1	10001-
9	234-32-21320	..PISTON	2	10001-
10	234-32-21330	..CUP	2	10001-
11	234-32-21360	..RING,BACK-UP	2	10001-
12	234-32-21340	..SPRING	1	10001-
13	232-32-56340	..ROD	2	10001-
14	232-32-11221	..BOOT	2	10001-
15	232-32-11322	..VALVE	1	10001-
16	232-32-56330	..CAP	1	10001-
17	01010-50830	.BOLT	2	10001-
18	01602-20825	.WASHER,SPRING	2	10001-
19	233-32-21290	.PIN	4	10001-
20	234-32-21210	.WASHER	16	10001-
21	01580-11210	.NUT	4	10001-
22	234-32-21220	.COLLAR	4	10001-
23	234-32-11160	.SPRING	4	10001-
24	23A-32-11130	.NUT	4	10001-
25	23A-32-11140	.WASHER	4	10001-
26	04050-12018	.PIN,COTTER	4	10001-
	23A-32-11150	.ADJUST GEAR ASS'Y	1	10001-
27	☆	..NUT,ADJUSTER	1	10001-
28	☆	..GEAR	1	10001-
29	23A-32-11180	.YOKE	1	10001-
30	23A-32-11190	.YOKE	1	10001-
31	23A-32-11260	.PIN	2	10001-
32	04050-13028	.PIN,COTTER	4	10001-
33	233-32-21340	.SPRING	2	10001-
34	233-32-11460	.SPRING	1	10001-
35	237-32-11180	.PLUG	3	10001-
36	01010-51445	BOLT	48	10001-
37	01643-31445	WASHER	48	10001-

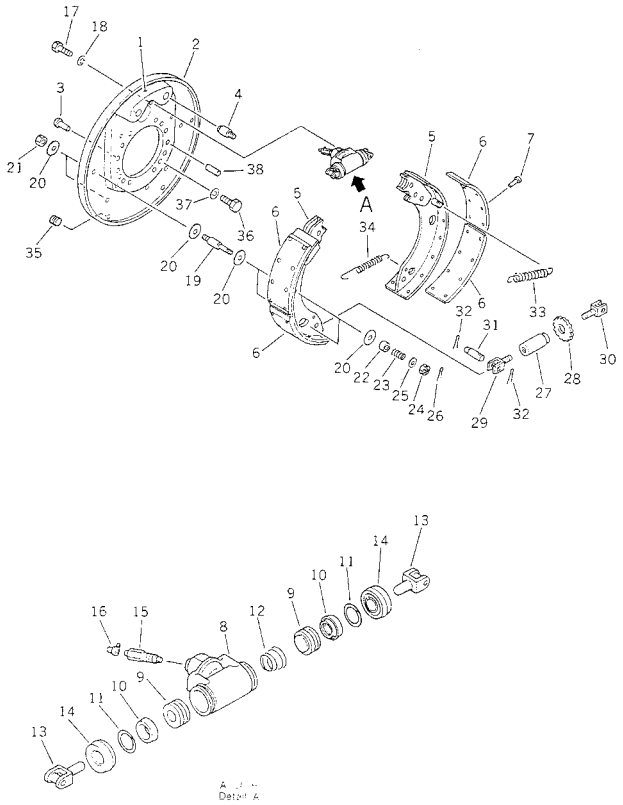

FIG NO. : 3101

INDEX	PART NO.	DESCRIPTION	Q'TY	SERIAL NO.
38	04020-01638	PIN,DOWEL.....	8	10001-

CONTROL SYSTEM

FIG.4001A FUEL CONTROL LEVER(#10242-)

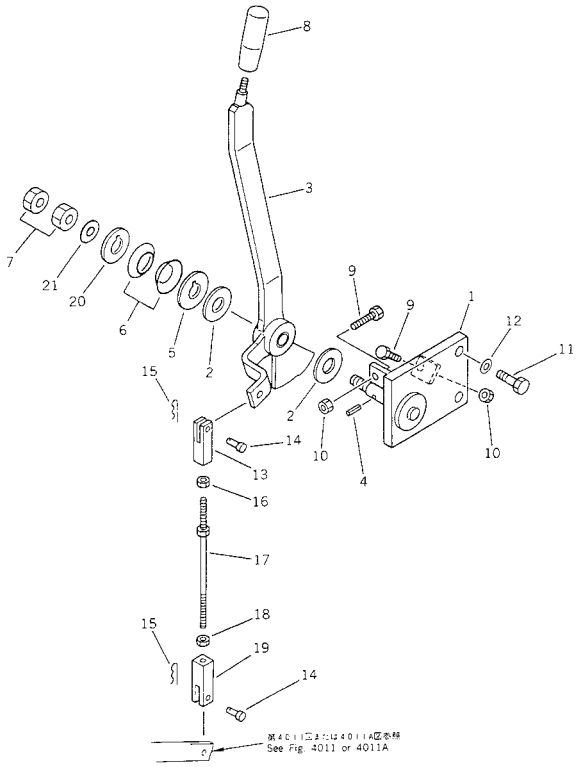

FIG NO. : 4001A

INDEX	PART NO.	DESCRIPTION	Q'TY	SERIAL NO.
1	23E-43-12360	BRACKET	1	10242-
2	10E-43-11160	FACING	2	10001-
3	23E-43-12410	LEVER	1	10242-
4	04025-00416	PIN,SPRING	1	10001-
5	273-43-12120	DISC	1	10001-
6	101-854-9355	SPRING	2	10001-
7	01580-11210	NUT	2	10001-
8	238-43-12310	KNOB	1	10001-
9	232-45-11610	BOLT	2	10001-
10	01580-10806	NUT	2	10001-
11	01010-51225	BOLT	2	10001-
12	01643-31232	WASHER	2	10001-
13	04211-20844	YOKE	1	10001-
14	04205-10822	PIN	2	10001-
15	04052-10833	PIN,SNAP	2	10050-
16	01580-10806	NUT	1	10001-
17	04248-30836	ROD	1	10001-
18	01508-20805	NUT,L.H. THREAD	1	10001-
19	04221-20844	YOKE,L.H. THREAD	1	10001-
20	23A-43-12220	DISC	1	10001-
21	01640-21223	WASHER	1	10001-

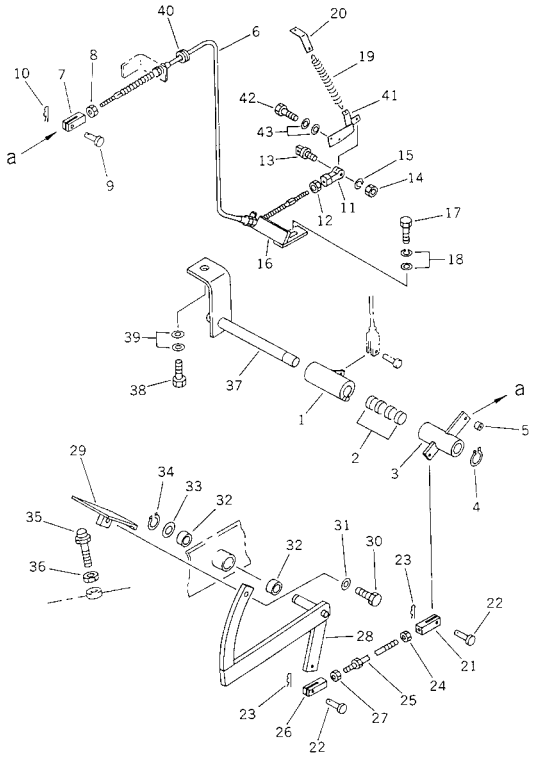

FIG NO. : 4011A

INDEX	PART NO.	DESCRIPTION	Q'TY	SERIAL NO.
1	23E-43-18640	LEVER	1	10052-
2	09350-01620	BUSHING	4	10052-
3	23B-43-12111	LEVER	1	10052-
4	04064-01610	RING,SNAP	1	10052-
5	06600-00805	BUSHING	1	10001-
6	23B-43-12120	CABLE	1	10001-
7	234-975-5760	YOKE	1	10001-
8	01580-10605	NUT	1	10001-
9	04205-10822	PIN	1	10001-
10	04052-10833	PIN,SNAP	1	10050-
11	04250-40639	END,ROD	1	10001-
12	01580-10605	NUT	1	10001-
13	232-43-52510	PIN	1	10001-
14	01580-10605	NUT	1	10001-
15	01643-30623	WASHER	1	10001-
16	23A-43-12350	BRACKET	1	10001-
17	01010-51225	BOLT	2	10001-
18	01643-31232	WASHER	3	10001-
19	232-43-12360	SPRING	1	10001-
20	23A-43-12420	PLATE	1	10001-
21	04221-20844	YOKE,L.H. THREAD	1	10001-
22	04205-10822	PIN	2	10001-
23	04052-10833	PIN,SNAP	2	10050-
24	01508-20805	NUT,L.H. THREAD	1	10001-
25	04248-30819	ROD	1	10001-
26	04211-20844	YOKE	1	10001-
27	01580-10806	NUT	1	10001-
28	23A-43-12110	LEVER	1	10001-
29	23A-43-12190	PEDAL	1	10001-
30	01010-51230	BOLT	1	10001-
31	01643-31232	WASHER	1	10001-
32	232-43-52320	BUSHING	2	10001-
33	01640-21626	WASHER	1	10001-
34	04064-01610	RING,SNAP	1	10001-
35	232-43-52430	BUMPER	1	10001-
36	01580-11210	NUT	1	10001-
37	23E-43-18630	SHAFT	1	10052-
38	01010-51230	BOLT	1	10052-
39	01643-31232	WASHER	2	10001-
40	08037-02512	GROMMET	1	10001-
41	23A-43-12321	LEVER	1	10001-
42	01010-50625	BOLT	2	10001-

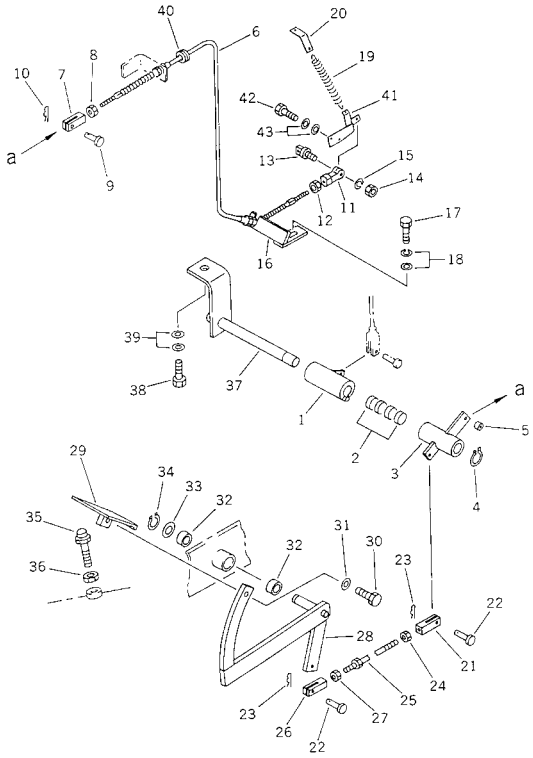

INDEX	PART NO.	DESCRIPTION	Q'TY	SERIAL NO.
43	01643-30623	WASHER.....	6	10001-

FIG.4101 CONSOLE BOX (TRANSMISSION CONTROL)

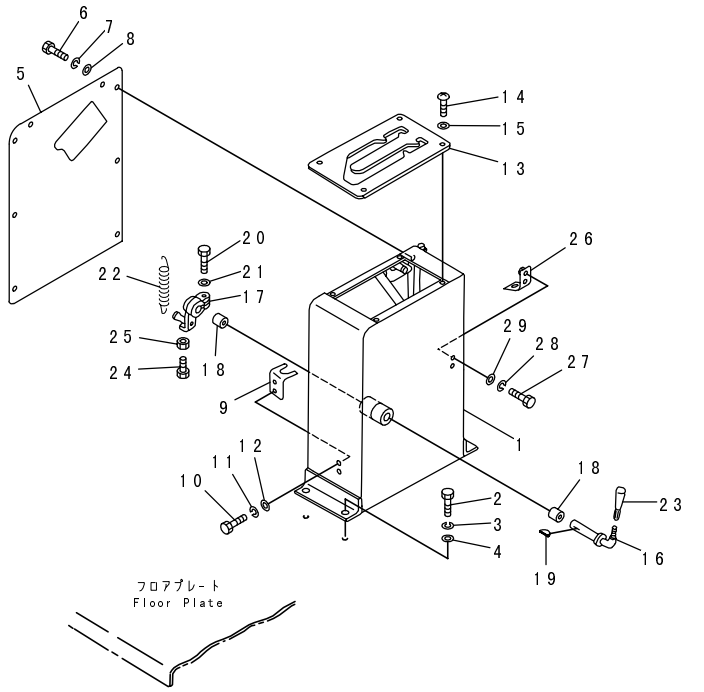

FIG NO. : 4101

INDEX	PART NO.	DESCRIPTION	Q'TY	SERIAL NO.
	23A-45-11411	BOX,(MODIFIED PART)	1	.-
1	23A-45-11112	BOX	1	10050-.
	23A-45-11110	BOX	1	10001-10049
2	01010-51230	BOLT	4	10001-
3	01602-21236	WASHER,SPRING	4	10001-10049
4	01643-31232	WASHER	4	10001-
5	23A-45-11180	PLATE	1	10001-
6	01010-50612	BOLT	8	10001-
7	01643-30623	WASHER	8	10001-
8	01641-20608	WASHER	8	10001-
9	23A-45-11170	PLATE,(FOR SAFETY SWITCH)	1	10001-
10	01010-50616	BOLT	2	10001-
11	01643-30623	WASHER	2	10001-
12	01641-20608	WASHER	2	10001-
13	233-45-11153	GUIDE	1	10001-
14	01220-40840	SCREW	4	10001-
15	01641-20812	WASHER	4	10001-
16	23B-45-11121	LEVER	1	10050-
	23B-45-11120	LEVER	1	10001-10049
17	232-45-11620	LEVER	1	10001-
18	232-43-52320	BUSHING	2	10001-
19	04010-00519	KEY	1	10001-
20	01010-50830	BOLT	1	10001-
21	01643-30823	WASHER	1	10001-
22	135-43-21480	SPRING	1	10001-
23	09305-00800	KNOB	1	10001-
24	232-45-11610	BOLT	1	10001-
25	01580-10806	NUT	1	10001-
26	233-45-11250	BRACKET	1	10001-
27	01010-50616	BOLT	2	10001-
28	01643-30623	WASHER	2	10001-
29	01641-20608	WASHER	2	10001-

FIG.4103A TRANSMISSION CONTROL LEVER(#10050-)

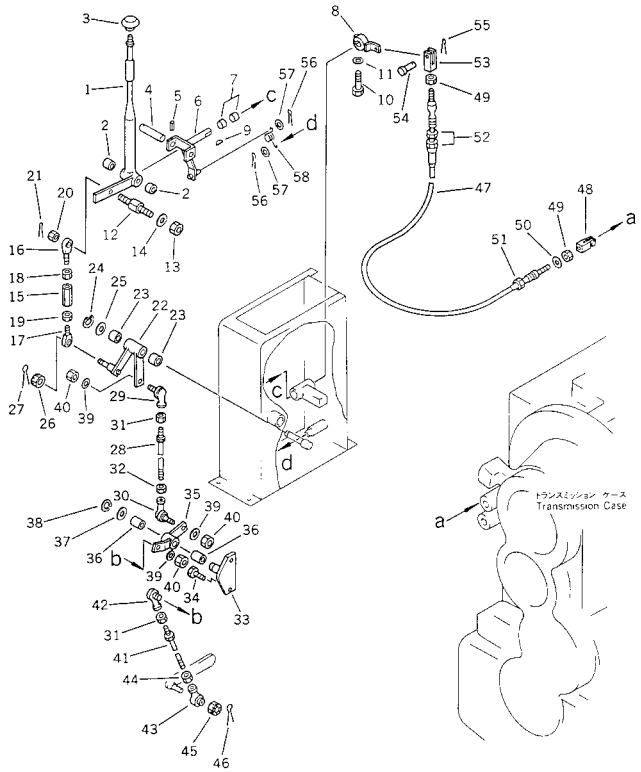

FIG NO. : 4103A

INDEX	PART NO.	DESCRIPTION	Q'TY	SERIAL NO.
1	232-45-11193	LEVER	1	10001-
2	232-43-52320	BUSHING	2	10001-
3	09304-01250	KNOB	1	10001-
4	232-45-11220	PIN	1	10001-
5	04025-00532	PIN	1	10001-
6	23A-45-11121	YOKE	1	10050-
7	232-43-52320	BUSHING	2	10001-
8	233-45-11140	LEVER	1	10001-
9	04010-00519	KEY	1	10001-
10	01010-50830	BOLT	1	10001-
11	01643-30823	WASHER	1	10001-
12	232-45-11340	PIN	1	10001-
13	01582-11008	NUT	1	10001-
14	01643-31032	WASHER	1	10001-
15	232-45-11180	ROD	1	10001-
16	04252-01061	END,ROD	1	10001-
17	04252-11061	END,ROD	1	10001-
18	01583-11006	NUT	1	10001-
19	01508-41006	NUT,L.H. THREAD	1	10001-
20	01593-11008	NUT	1	10001-
21	04050-12018	PIN,COTTER	1	10001-
22	23A-45-11130	LEVER	1	10001-
23	232-43-52320	BUSHING	2	10001-
24	04064-01610	RING,SNAP	1	10001-
25	01643-31645	WASHER	1	10001-
26	23A-45-11290	NUT	1	10001-
27	04050-12018	PIN,COTTER	1	10001-
28	04248-31068	ROD	1	10001-
29	238-45-11310	LINK,BALL	1	10001-
30	238-45-11320	LINK,BALL	1	10001-
31	01508-41006	NUT,L.H. THREAD	2	10115-
	01508-21006	NUT,L.H. THREAD	2	10001-10114
32	01582-11008	NUT	1	10001-
33	23E-45-11170	BRACKET	1	10001-
34	01010-51055	BOLT	2	10001-
35	23A-45-11140	LEVER	1	10001-
36	232-43-57180	BUSHING	2	10001-
37	01643-31645	WASHER	1	10001-
38	04064-01610	RING,SNAP	1	10001-
39	01643-31032	WASHER	3	10001-
40	01583-11006	NUT	3	10001-
41	04248-31025	ROD	1	10001-

FIG NO. : 4103A

INDEX	PART NO.	DESCRIPTION	Q'TY	SERIAL NO.
42	238-45-11320	LINK,BALL	1	10001-
43	04250-61056	END,ROD	1	10001-
44	01508-41006	NUT,L.H. THREAD	1	10050-
45	01593-11008	NUT	1	10001-
46	04050-12018	PIN,COTTER	1	10001-
47	23A-45-11161	CABLE	1	10031-
48	232-45-11311	YOKE	1	10001-
49	01580-10605	NUT	2	10001-
50	07005-01612	GASKET	1	10001-
51	01582-11613	NUT	1	10001-
52	01583-11610	NUT	2	10031-
53	23A-45-11190	YOKE	1	10050-
54	04205-10822	PIN	1	10001-
55	04052-10833	PIN,SNAP	1	10115-
	04052-00833	PIN,SNAP	1	10001-10114
56	04050-11610	PIN,COTTER	2	10050-
57	01643-30623	WASHER	2	10050-
58	09463-00002	SPRING	1	10050-

GD511A-1

FIG.4111 INCHING PEDAL

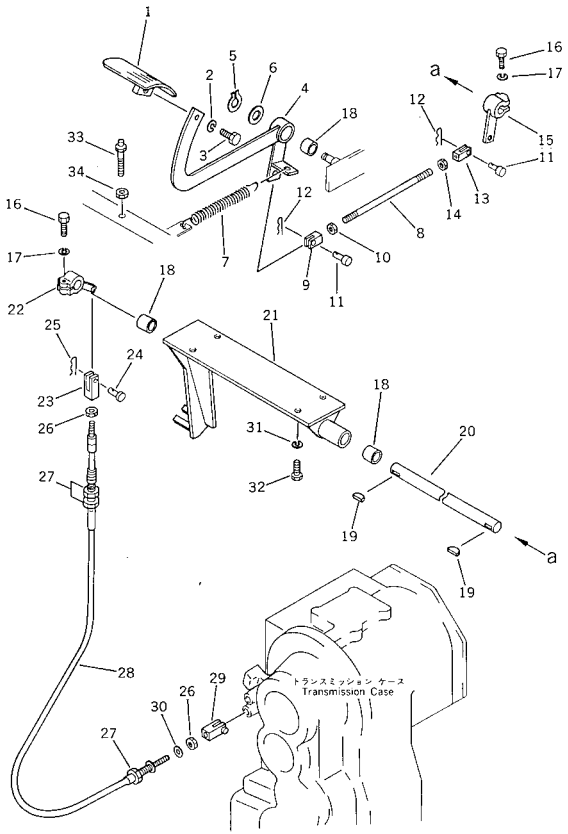

FIG NO. : 4111

INDEX	PART NO.	DESCRIPTION	Q'TY	SERIAL NO.
1	23A-45-12180	PEDAL	1	10001-
2	01643-31232	WASHER	1	10001-
3	01010-51225	BOLT	1	10001-
4	23A-45-12110	LEVER	1	10001-
5	04064-02012	RING,SNAP	1	10001-
6	01643-32060	WASHER	1	10001-
7	232-43-13162	SPRING	1	10001-
8	04248-31041	ROD	1	10001-
9	04210-21040	YOKE	1	10115-
	04210-01040	YOKE	1	10001-10114
10	01582-11008	NUT	1	10001-
11	04205-11028	PIN	2	10001-
12	04052-01038	PIN,SNAP	2	10001-
13	04220-21040	YOKE,L.H. THREAD	1	10115-
	04220-01040	YOKE,L.H. THREAD	1	10001-10114
14	01508-41006	NUT,L.H. THREAD	1	10050-
	01508-21006	NUT,L.H. THREAD	1	10001-10049
15	23A-45-12120	LEVER	1	10001-
16	01010-50830	BOLT	2	10001-
17	01643-30823	WASHER	2	10001-
18	234-885-1620	BUSHING	3	10001-
19	04010-00519	KEY	2	10001-
20	23A-45-12150	SHAFT	1	10001-
21	23A-45-12140	BRACKET	1	10001-
22	23A-45-12130	LEVER	1	10001-
23	232-43-12550	YOKE	1	10001-
24	04205-10822	PIN	1	10001-
25	04052-10833	PIN,SNAP	1	10050-
	04052-00833	PIN,SNAP	1	10001-10049
26	01580-10605	NUT	2	10001-
27	01582-11613	NUT	3	10001-
28	23A-45-12161	CABLE	1	10031-
	23A-45-12160	CABLE	1	10001-10030
29	232-45-11311	YOKE	1	10001-
30	07005-01612	GASKET	2	10001-
31	01643-31232	WASHER	4	10001-
32	01010-51220	BOLT	4	10001-
33	232-43-52430	BUMPER	1	10001-
34	01580-11210	NUT	1	10001-

FIG.4121 PARKING BRAKE CONTROL LEVER

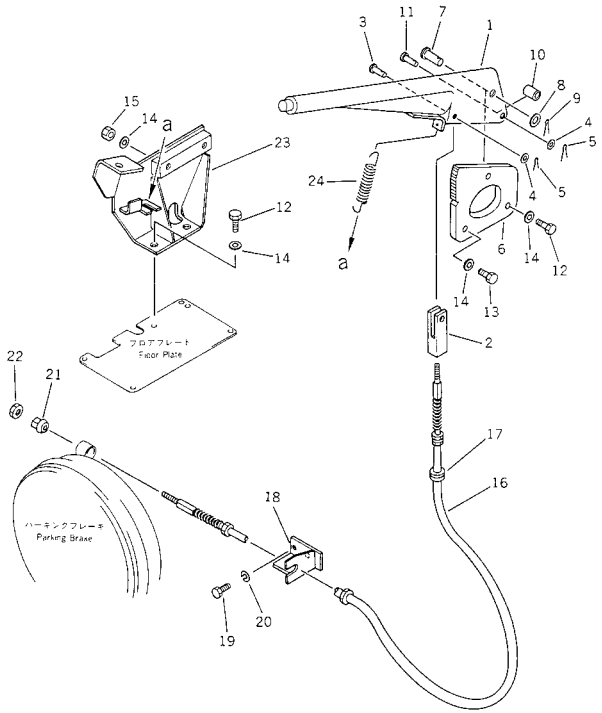

FIG NO. : 4121

INDEX	PART NO.	DESCRIPTION	Q'TY	SERIAL NO.
	232-43-56100	LEVER ASS'Y,SIDE BRAKE.	1	10001-
1	☆	.LEVER.	1	10001-
2	232-43-56120	.YOKE.	1	10001-
3	232-43-56130	.PIN.	1	10001-
4	01641-21016	.WASHER.	2	10001-
5	04050-13015	.PIN,COTTER.	2	10001-
6	232-43-56150	.BRACKET.	1	10001-
7	04205-11235	.PIN.	1	10001-
8	01641-21223	.WASHER.	1	10001-
9	04050-13020	.PIN,COTTER.	1	10001-
10	232-43-56140	.COLLAR.	1	10001-
11	04205-11030	.PIN.	1	10001-
12	01010-51230	BOLT.	3	10001-
13	01010-51245	BOLT.	1	10001-
14	01643-31232	WASHER.	5	10001-
15	01580-11210	NUT.	1	10001-
16	23A-43-15120	CABLE.	1	10001-
17	08037-02512	GROMMET.	1	10001-
18	23A-43-15130	BRACKET.	1	10001-
19	01010-51025	BOLT.	2	10001-
20	01643-31032	WASHER.	2	10001-
21	232-43-56210	NUT.	1	10001-
22	01580-10806	NUT.	1	10001-
23	23A-43-15110	BRACKET.	1	10001-
24	135-43-21480	SPRING.	1	10001-

FIG.4201A STEERING WHEEL(#10050-)

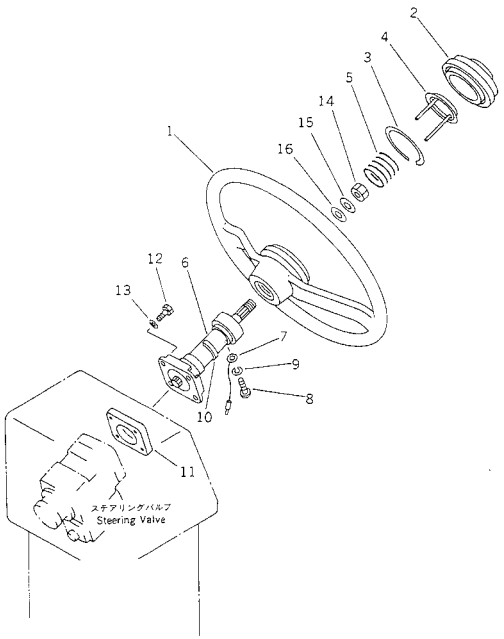

FIG NO. : 4201A

INDEX	PART NO.	DESCRIPTION	Q'TY	SERIAL NO.
	234-40-31201	WHEEL ASS'Y.	1	10001-
1	234-40-31210	.WHEEL,STEERING.	1	10001-
2	235-40-11230	.CAP,HORN.	1	10001-
3	235-40-11240	.SPRING,LOCK.	1	10001-
4	234-40-31231	.NEEDLE,CONTACT.	1	10001-
5	235-40-11220	.SPRING,HORN.	1	10001-
6	23D-40-11100	SHAFT ASS'Y.	1	10050-
7	23D-40-11130	.WIRE ASS'Y.	1	10050-
8	23D-40-11120	.SCREW.	1	10050-
9	01601-20307	.WASHER,SPRING.	1	10050-
10	23D-40-11110	SEAT.	1	10050-
11	23A-40-11310	SPACER.	1	10001-
12	02010-70670	BOLT.	4	10001-
13	01643-31032	WASHER.	4	10001-
14	01582-11411	NUT.	1	10001-
15	01643-31445	WASHER.	1	10001-
16	01640-21426	WASHER.	1	10001-

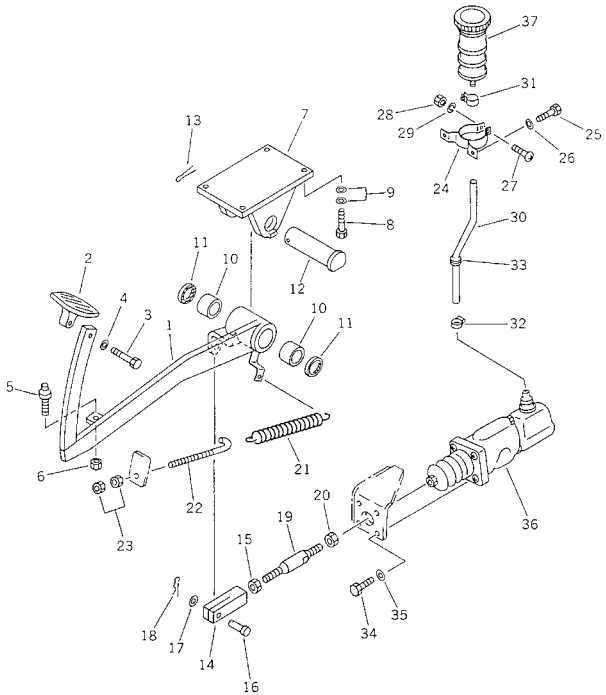

FIG NO. : 4211A

INDEX	PART NO.	DESCRIPTION	Q'TY	SERIAL NO.
1	23A-43-13161	LEVER	1	10243-
2	232-43-13130	PEDAL	1	10001-
3	01010-51035	BOLT	1	10001-
4	01643-31032	WASHER	1	10001-
5	09311-41237	BUMPER	1	10243-
	232-43-52430	BUMPER	1	10001-10242
6	01580-11210	NUT	1	10001-
7	23A-43-13170	BRACKET	1	10243-
8	01010-51225	BOLT	4	10001-
9	01643-31232	WASHER	8	10001-
10	07177-03525	BUSHING	2	10001-
11	232-43-53390	SEAL	2	10001-
12	238-43-13120	PIN	1	10001-
13	04050-16050	PIN,COTTER	1	10001-
14	23D-43-18870	YOKE,L.H. THREAD	1	10243-
15	01508-21408	NUT,L.H. THREAD	1	10001-
16	04205-11438	PIN	1	10001-
17	01641-21423	WASHER	1	10001-
18	04052-01453	PIN,SNAP	1	10001-
19	23D-43-18860	ROD	1	10243-
20	01580-11210	NUT	1	10001-
21	232-43-13162	SPRING	1	10001-
22	232-43-53160	BOLT	1	10001-
23	01580-11008	NUT	2	10001-
24	232-43-13440	BRACKET	1	10001-
25	01010-50812	BOLT	2	10001-
26	01643-30823	WASHER	2	10001-
27	01220-40530	SCREW	1	10001-
28	01580-10504	NUT	1	10001-
29	01601-20513	WASHER,SPRING	1	10001-
30	23A-43-13190	TUBE	1	10001-
31	236-04-21190	CLIP	1	10001-
32	232-43-13450	CLAMP	1	10001-
33	08037-01610	GROMMET	1	10001-
34	01010-51235	BOLT	4	10001-
35	01643-31232	WASHER	4	10001-
36	(23A-43-13111)	CYLINDER ASS'Y	1	10243-
37	23E-43-13500	RESERVOIR ASS'Y	1	10249-
	232-43-13600	RESERVOIR ASS'Y	1	10001-10248
	23E-43-13510	.RESERVOIR	1	10249-
	232-43-13610	.RESERVOIR	1	10001-10248
	232-43-13640	.FLOAT	1	10001-

FIG.4211A BRAKE PEDAL(#10243-)

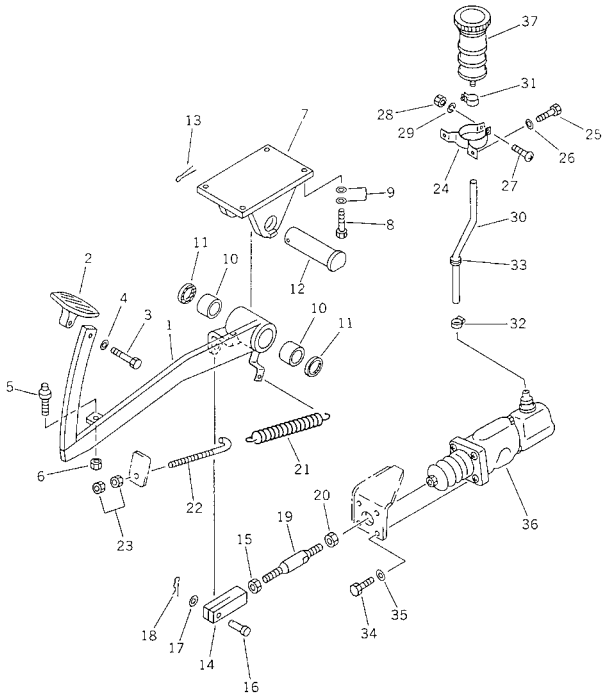

FIG NO. : 4211A

INDEX	PART NO.	DESCRIPTION	Q'TY	SERIAL NO.
	23E-43-13520	.CAP	1	10249-
	232-43-13630	.BAFFLE	1	10001-10248
	232-43-13620	.BUFFLE	1	10001-

FIG.4221 BRAKE PIPING

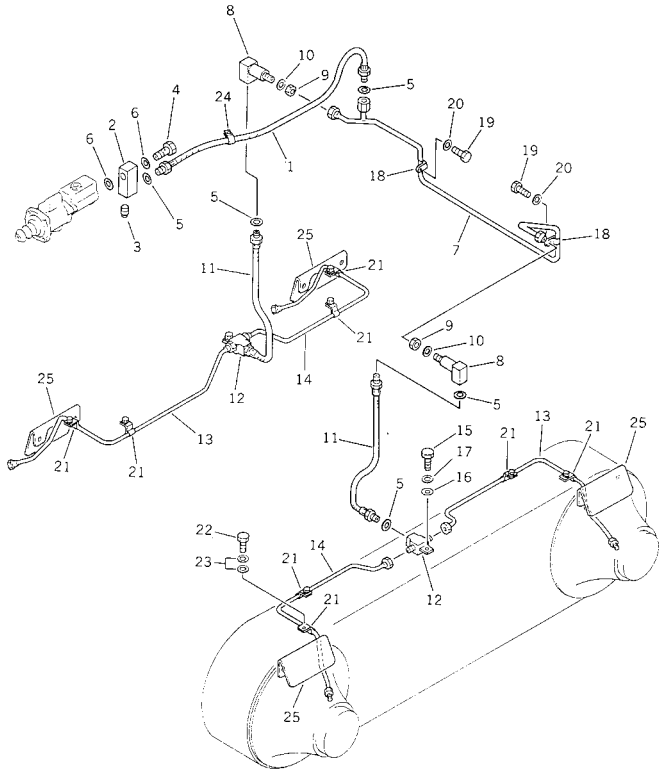

FIG NO. : 4221

INDEX	PART NO.	DESCRIPTION	Q'TY	SERIAL NO.
1	23B-43-14130	HOSE	1	10001-
2	23A-43-14160	JOINT	1	10001-
3	07042-70108	PLUG	1	10001-
4	23A-43-14220	BOLT,JOINT	1	10001-
5	232-43-14240	PACKING	6	10001-
6	232-43-54240	GASKET	2	10001-
7	23A-43-14230	TUBE	1	10001-
8	232-43-54590	JOINT	2	10001-
9	01582-11613	NUT	2	10001-
10	01643-31645	WASHER	2	10001-
11	237-43-14190	HOSE	2	10001-
12	232-43-54212	JOINT	2	10001-
13	23A-43-14110	TUBE	2	10001-
14	23A-43-14120	TUBE	2	10001-
15	01010-50816	BOLT	2	10001-
16	01643-30823	WASHER	2	10001-
17	01643-30823	WASHER	2	10001-
18	23A-43-14150	CLIP	2	10001-
19	01010-51016	BOLT	2	10001-
20	01643-31032	WASHER	2	10001-
21	232-43-54970	CLIP	8	10001-
22	01010-51220	BOLT	8	10001-
23	01643-31232	WASHER	16	10001-
24	08036-01414	CLIP	1	10001-
25	23A-43-14130	PROTECTOR	4	10001-

FIG.4225 BOOSTER AND MASTER CYLINDER

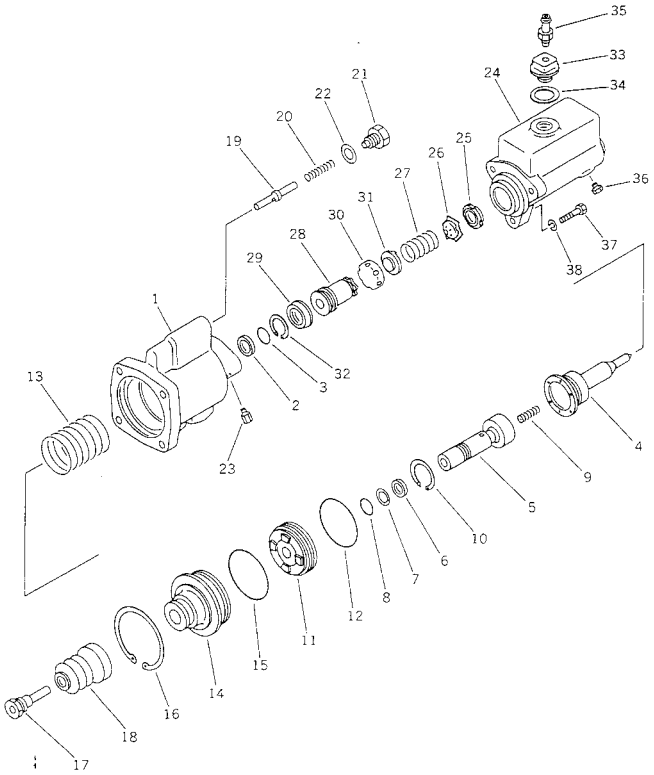

FIG NO. : 4225

INDEX	PART NO.	DESCRIPTION	Q'TY	SERIAL NO.
	23A-43-13111	CYLINDER ASS'Y,BOOSTER AND MASTER.....	1	10243-
	23A-43-13110	CYLINDER ASS'Y,BOOSTER AND MASTER.....	1	10001-10242
	23A-43-13211	.CYLINDER ASS'Y,BOOSTER.....	1	10243-
	23A-43-13210	.CYLINDER ASS'Y,BOOSTER.....	1	10001-10242
1	23A-43-13220	..BODY.....	1	10001-
2	238-43-19350	..SEAL.....(K8).....	1	10001-
3	238-43-19340	..O-RING.....(K8).....	1	10001-
4	23A-43-13250	..CYLINDER.....	1	10001-
5	23A-43-13230	..PISTON.....	1	10001-
6	232-843-1410	..CAP.....(K8).....	1	10001-
7	232-843-1421	..RING,BACK-UP.....(K8).....	1	10001-
8	232-843-1480	..O-RING.....(K8).....	1	10001-
9	232-843-1320	..SPRING.....	1	10001-
10	23A-43-13260	..RING,SNAP.....	1	10001-
11	23A-43-13240	..PISTON,BOOSTER.....	1	10001-
12	238-43-19330	..O-RING.....(K8).....	1	10001-
13	23A-43-13270	..SPRING.....	1	10001-
14	23A-43-13310	..STOPPER.....	1	10001-
15	238-43-19320	..O-RING.....(K8).....	1	10001-
16	04065-09030	..RING,SNAP.....	1	10001-
17	23A-43-13320	..ROD,PUSH.....	1	10001-
18	238-43-19310	..BOOT.....(K8).....	1	10001-
19	232-843-1270	..SEAT.....	1	10001-
20	23A-43-13291	..SPRING.....	1	10243-
	23A-43-13290	..SPRING.....	1	10001-10242
21	23A-43-13280	..BOLT.....	1	10001-
22	238-43-19360	..GASKET.....(K8).....	1	10001-
23	232-843-1430	..FILTER ASS'Y,AIR.....	1	10001-
	23A-43-13330	.CYLINDER ASS'Y,MASTER.....	1	10001-
24	232-843-1510	..CYLINDER.....	1	10001-
25	232-843-1680	..SEAT,VALVE.....(K9).....	1	10001-
26	23A-43-13380	..CHECK VALVE ASS'Y.....(K9).....	1	10001-
27	23A-43-13550	..SPRING.....(K9).....	1	10001-
	23A-43-13450	..PISTON ASS'Y.....(K9).....	1	10001-
28	23A-43-13340	...PISTON.....	1	10001-
29	23A-43-13350	...CAP.....	1	10001-
30	23A-43-13360	..CAP.....(K9).....	1	10001-
31	23A-43-13370	..RETAINER.....(K9).....	1	10001-
32	23A-43-13390	..RING,SNAP.....(K9).....	1	10001-
33	23A-43-13410	..CAP,FILTER.....	1	10001-
34	238-43-19370	..GASKET.....(K8,K9)...	1	10001-
35	23A-43-13420	..JOINT.....	1	10001-

FIG NO. : 4225

INDEX	PART NO.	DESCRIPTION	Q'TY	SERIAL NO.
36	232-843-1720	..PLUG.....	1	10001-
37	23A-43-13440	.BOLT.....	3	10001-
38	23A-43-13430	.WASHER,SPRING.....	3	10001-

FIG.4301 CONSOLE BOX

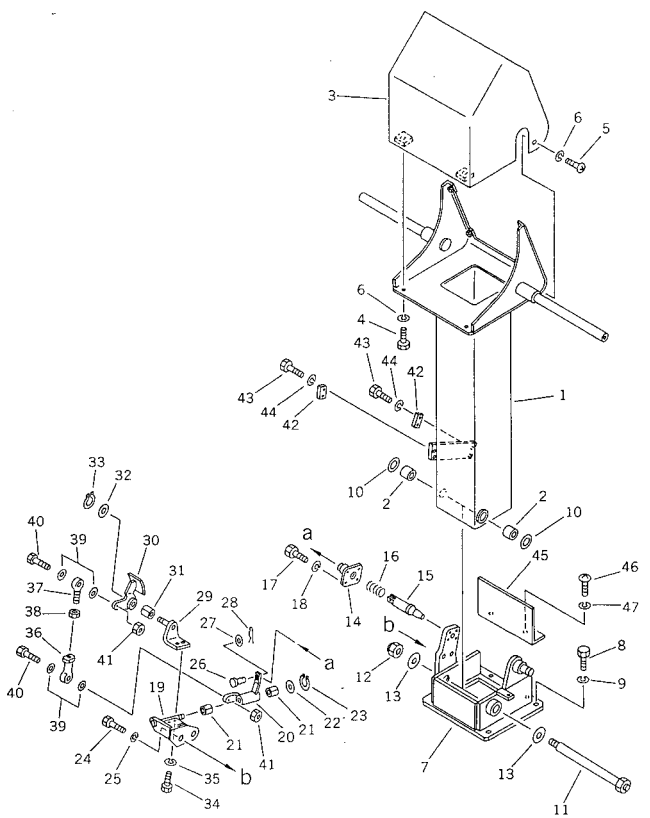

FIG NO. : 4301

INDEX	PART NO.	DESCRIPTION	Q'TY	SERIAL NO.
1	23E-43-18110	POST	1	10001-
2	234-885-1620	BUSHING	2	10001-
3	23E-43-18121	COVER	1	10048-
	23E-43-18120	COVER	1	10001-10047
4	01010-50616	BOLT	2	10001-
5	01220-40612	SCREW	2	10001-
6	01643-30623	WASHER	4	10001-
7	23A-43-18130	BRACKET	1	10001-
8	01010-51230	BOLT	4	10001-
9	01643-31232	WASHER	4	10001-
10	232-43-58380	SHIM, 0.2MM	2	10001-
11	23A-43-18450	SHAFT	1	10001-
12	233-43-27860	NUT	1	10001-
13	01643-32060	WASHER	2	10001-
14	237-43-17250	BRACKET	1	10001-
15	237-43-17230	PIN	1	10001-
16	237-43-17260	SPRING	1	10001-
17	01010-50820	BOLT	4	10001-
18	01643-30823	WASHER	4	10001-
19	23A-43-18430	BRACKET	1	10001-
20	23A-43-18420	LEVER	1	10001-
21	237-43-17240	BUSHING	2	10001-
22	01640-21223	WASHER	1	10001-
23	04064-01210	RING,SNAP	1	10001-
24	01010-51025	BOLT	2	10001-
25	01643-31032	WASHER	2	10001-
26	04205-10618	PIN	1	10001-
27	01641-20608	WASHER	1	10001-
28	04050-11612	PIN,COTTER	1	.-
	233-43-27750	PIN,SNAP	1	10001-.
29	23A-43-18440	BRACKET	1	10001-
30	23A-43-18410	PEDAL	1	10001-
31	237-43-17240	BUSHING	1	10001-
32	01640-21223	WASHER	1	10001-
33	04064-01210	RING,SNAP	1	10001-
34	01010-50820	BOLT	2	10001-
35	01643-30823	WASHER	2	10001-
36	04250-40847	END,ROD	1	10094-
	04250-80847	END,ROD	1	10001-10093
37	04252-00853	END,ROD	1	10094-
	04252-20853	END,ROD	1	10001-10093
38	01580-10806	NUT	1	10001-

FIG NO. : 4301

INDEX	PART NO.	DESCRIPTION	Q'TY	SERIAL NO.
39	04254-00823	SPACER	4	10001-
40	01090-50830	BOLT	2	10001-
41	01580-10806	NUT	2	10001-
42	237-43-17270	PLATE	2	10001-
43	01010-51025	BOLT	4	10001-
44	01643-31032	WASHER	4	10001-
45	23A-43-18390	PLATE	1	10001-
46	01220-40612	SCREW	2	10001-
47	01643-30623	WASHER	2	10001-

GD511A-1

FIG.4311 HYDRAULIC CONTROL LEVER

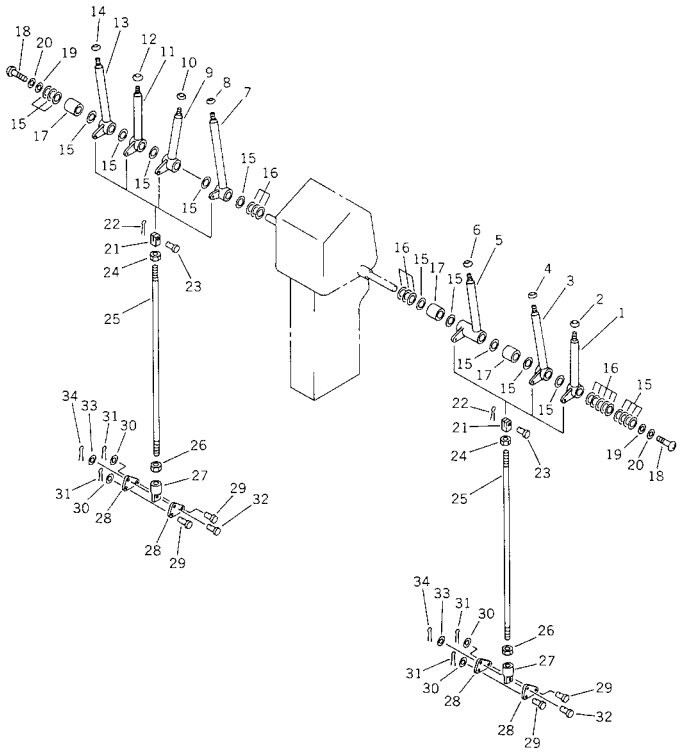

FIG NO. : 4311

INDEX	PART NO.	DESCRIPTION	Q'TY	SERIAL NO.
1	23A-43-18220	LEVER,BLADE LIFT, L.H.	1	10001-
2	237-43-00080	KNOB ASS'Y,BLADE LIFT, L.H.	1	10001-
	237-43-17480	.KNOB	1	10001-
	237-54-13210	.PLATE, OPERATING	1	10001-
3	23A-43-18230	LEVER,BLADE SIDE SHIFT	1	10001-
4	237-43-00060	KNOB ASS'Y,BLADE SIDE SHIFT	1	10001-
	237-43-17480	.KNOB	1	10001-
	237-54-13230	.PLATE, OPERATING	1	10001-
5	23A-43-18230	LEVER,CIRCLE REVERSE	1	10001-
6	237-43-00070	KNOB ASS'Y,CIRCLE REVERSE	1	10001-
	237-43-17480	.KNOB	1	10001-
	237-54-13250	.PLATE, OPERATING	1	10001-
7	23A-43-18250	LEVER,ARTICULATE	1	10001-
8	237-43-00100	KNOB ASS'Y,ARTICULATE	1	10001-
	237-43-17490	.KNOB	1	10001-
	237-54-13260	.PLATE, OPERATING	1	10001-
9	23A-43-18210	LEVER,DRAWBAR SHIFT	1	10001-
10	232-43-00120	KNOB ASS'Y,DRAWBAR SHIFT	1	10001-
	237-43-17480	.KNOB	1	10001-
	232-43-18290	.PLATE, OPERATING	1	10001-
11	23A-43-18220	LEVER,LEANING	1	10001-
12	237-43-00120	KNOB ASS'Y,LEANING	1	10001-
	237-43-17490	.KNOB	1	10001-
	237-54-13220	.PLATE, OPERATING	1	10001-
13	23A-43-18230	LEVER,BLADE LIFT, R.H.	1	10001-
14	237-43-00080	KNOB ASS'Y,BLADE LIFT, R.H.	1	10001-
	237-43-17480	.KNOB	1	10001-
	237-54-13210	.PLATE, OPERATING	1	10001-
15	237-43-17420	WASHER	17	10001-
16	23D-43-18540	COLLAR	11	10001-
17	237-43-17440	COLLAR	3	10001-
18	01220-40816	SCREW	2	10001-
19	23A-43-18190	WASHER	2	10001-
20	01643-30823	WASHER	2	10001-
21	04221-20844	YOKE,L.H. THREAD	7	10001-
22	234-43-18710	PIN,SNAP	7	10001-
23	04205-10822	PIN	7	10001-
24	01508-10805	NUT, L.H. THREAD,L.H. THREAD	7	10001-
25	23A-43-18460	ROD	7	10001-
26	01580-10806	NUT	7	10001-
27	23A-43-18290	JOINT	7	10001-
28	23A-43-18320	PLATE	14	10001-

FIG NO. : 4311

INDEX	PART NO.	DESCRIPTION	Q'TY	SERIAL NO.
29	23A-43-18360	PIN.....	14	10001-
30	01641-20508	WASHER.....	14	10001-
31	04052-00530	PIN,SNAP.....	14	10001-
32	04205-10616	PIN.....	7	10001-
33	01641-20608	WASHER.....	7	10001-
34	233-43-27750	PIN,SNAP.....	7	10001-

GD511A-1

FIG.4313 HYDRAULIC CONTROL LEVER、L.H. (FOR POWER TILT)

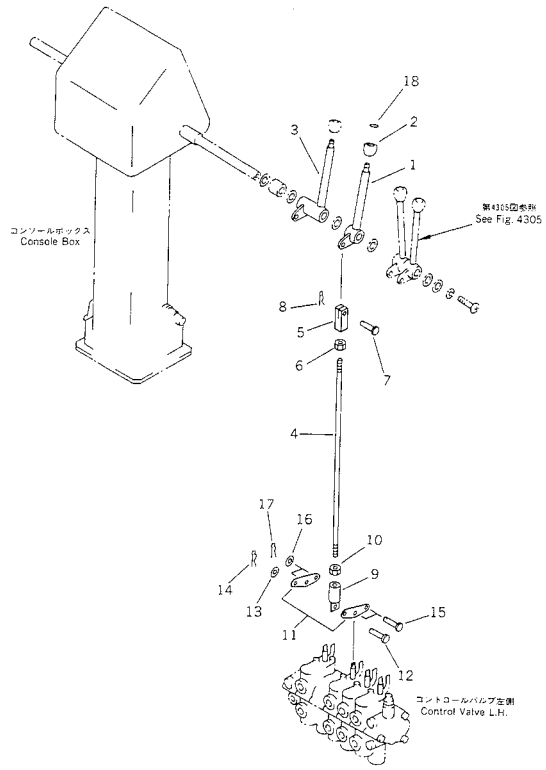

FIG NO. : 4313

INDEX	PART NO.	DESCRIPTION	Q'TY	SERIAL NO.
1	23A-43-18270	LEVER,POWER TILT	1	10001-
2	237-43-17480	KNOB	1	10001-
3	23A-43-18350	LEVER,CIRCLE REVERSE	1	10001-
4	23A-43-18460	ROD	1	10001-
5	04221-20844	YOKE,L.H. THREAD	1	10001-
6	01508-20805	NUT,L.H. THREAD	1	10001-
7	04205-10822	PIN	1	10001-
8	234-43-18710	PIN,SNAP	1	10001-
9	23A-43-18290	JOINT	1	10001-
10	01580-10806	NUT	1	10001-
11	23A-43-18320	PLATE	2	10001-
12	04205-10616	PIN	1	10001-
13	01641-20608	WASHER	1	10001-
14	233-43-27750	PIN,SNAP	1	10001-
15	23A-43-18360	PIN	2	10001-
16	01641-20508	WASHER	2	10001-
17	04052-00530	PIN,SNAP	2	10001-
18	232-735-1340	PLATE, OPERATING	1	10001-

FIG.4315 HYDRAULIC CONTROL LEVER、R.H. (FOR FRONT BLADE)

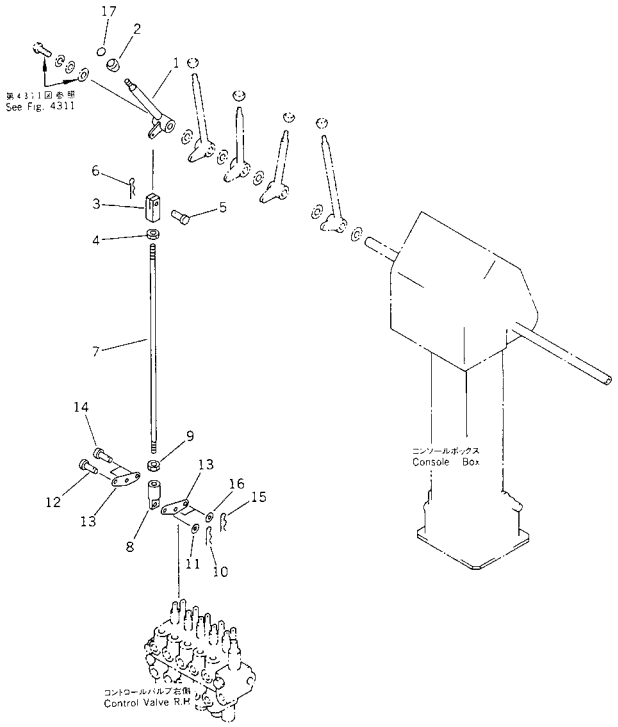

FIG NO. : 4315

INDEX	PART NO.	DESCRIPTION	Q'TY	SERIAL NO.
1	23A-43-18260	LEVER,FRONT BLADE	1	10001-
2	237-43-17480	KNOB	1	10001-
3	04221-20844	YOKE,L.H. THREAD	1	10001-
4	01508-20805	NUT,L.H. THREAD	1	10001-
5	04205-10822	PIN	1	10001-
6	234-43-18710	PIN,SNAP	1	10001-
7	23A-43-18460	ROD	1	10001-
8	23A-43-18290	JOINT	1	10001-
9	01580-10806	NUT	1	10001-
10	233-43-27750	PIN,SNAP	1	10001-
11	01641-20608	WASHER	1	10001-
12	04205-10616	PIN	1	10001-
13	23A-43-18320	PLATE	2	10001-
14	23A-43-18360	PIN	2	10001-
15	04052-00530	PIN,SNAP	2	10001-
16	01641-20508	WASHER	2	10001-
17	234-870-8511	PLATE, OPERATING	1	10001-

FIG.4317 HYDRAULIC CONTROL LEVER、R.H. (FOR SCARIFIER)

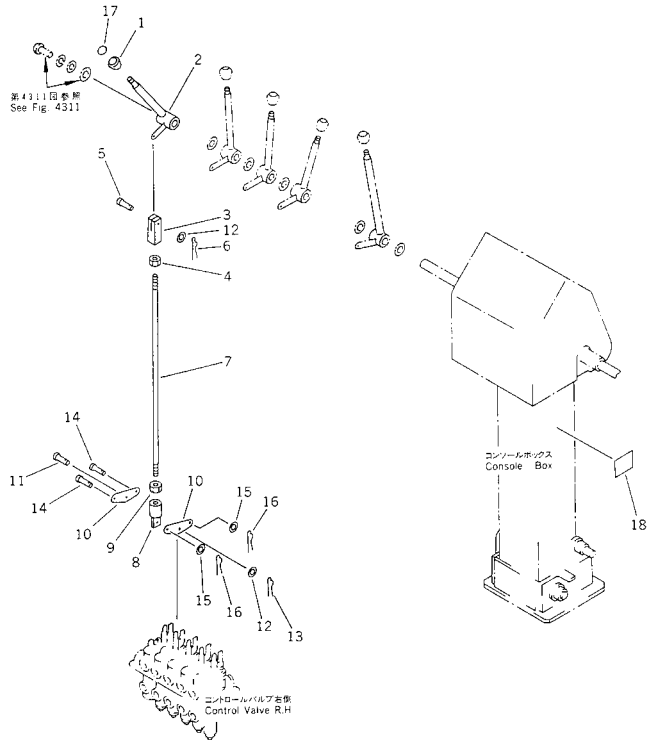

FIG NO. : 4317

INDEX	PART NO.	DESCRIPTION	Q'TY	SERIAL NO.
1	237-43-17480	KNOB	1	10001-
2	23A-43-18260	LEVER,SCARIFIER	1	10001-
3	04221-20844	YOKE,L.H. THREAD	1	10001-
4	01508-20805	NUT,L.H. THREAD	1	10001-
5	04205-10822	PIN	1	10001-
6	234-43-18710	PIN,SNAP	1	10001-
7	23A-43-18460	ROD	1	10001-
8	23A-43-18290	JOINT	1	10001-
9	01580-10806	NUT	1	10001-
10	23A-43-18320	PLATE	2	10001-
11	04205-10616	PIN	1	10001-
12	01641-20608	WASHER	2	10001-
13	233-43-27750	PIN,SNAP	1	10001-
14	23A-43-18360	PIN	2	10001-
15	01641-20508	WASHER	2	10001-
16	04052-00530	PIN,SNAP	2	10001-
17	237-43-13270	PLATE, OPERATING	1	10001-
18	232-53-65810	PLATE, OPERATING,(ARABIC)	1	10001-
	232-53-77120	PLATE, OPERATING,(INDONESIAN)	1	10001-
	232-53-64810	PLATE, OPERATING,(SPANISH)	1	10001-
	232-53-67810	PLATE, OPERATING,(CHINESE)	1	10001-
	232-53-63810	PLATE, OPERATING,(FRENCH)	1	10001-
	234-53-26220	PLATE, OPERATING,(PERSIAN)	1	10001-
	232-53-71810	PLATE, OPERATING,(PORTUGUESE)	1	10001-

FIG.4351 BANK PIN

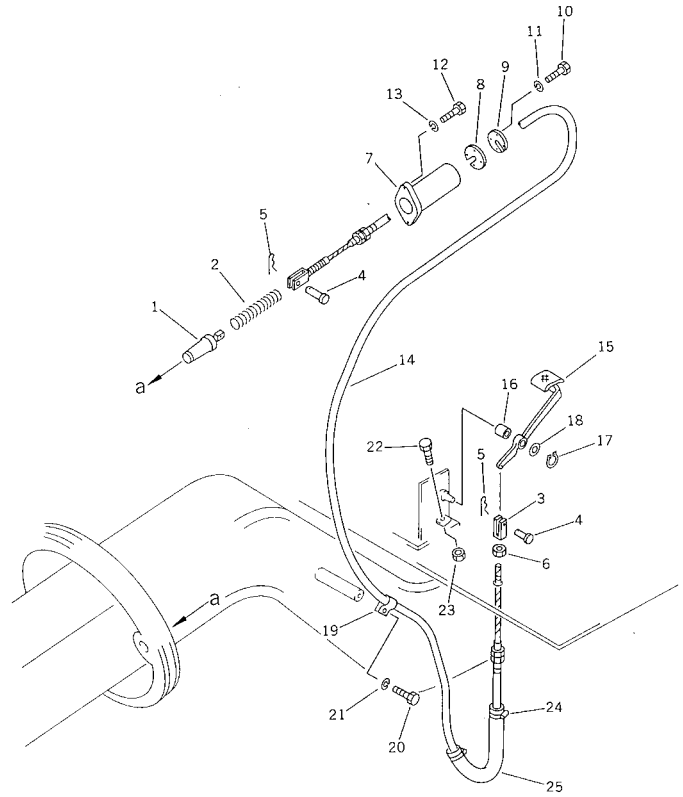

FIG NO. : 4351

INDEX	PART NO.	DESCRIPTION	Q'TY	SERIAL NO.
1	23A-43-19130	SHAFT	1	10001-
2	23A-43-19120	SPRING	1	10001-
3	04210-20832	YOKE	1	10001-
4	04205-10825	PIN	2	10001-
5	04052-10833	PIN,SNAP	2	10050-
	04052-00833	PIN,SNAP	2	10001-10049
6	01580-10806	NUT	1	10001-
7	23A-43-19140	BRACKET	1	10001-
8	23A-43-19160	SHIM	1	10001-
9	23A-43-19110	PLATE	1	10001-
10	01010-50816	BOLT	4	10001-
11	01643-30823	WASHER	4	10001-
12	01010-51445	BOLT	2	10001-
13	01643-31445	WASHER	2	10001-
14	23A-43-19150	CABLE	1	10001-
15	23A-43-19170	PEDAL	1	10001-
16	234-885-1620	BUSHING	1	10001-
17	04064-02012	RING,SNAP	1	10001-
18	232-975-5490	SPACER	1	10001-
19	08036-11214	CLIP	1	10001-
20	01010-51016	BOLT	1	10001-
21	01643-31032	WASHER	1	10001-
22	01016-51040	BOLT	1	10001-
23	01580-11008	NUT	1	10001-
24	08034-00414	BAND	2	10001-
25	23A-43-19180	TUBE	1	10001-

FRAME AND GUARD

FIG.5001 FRONT FRAME

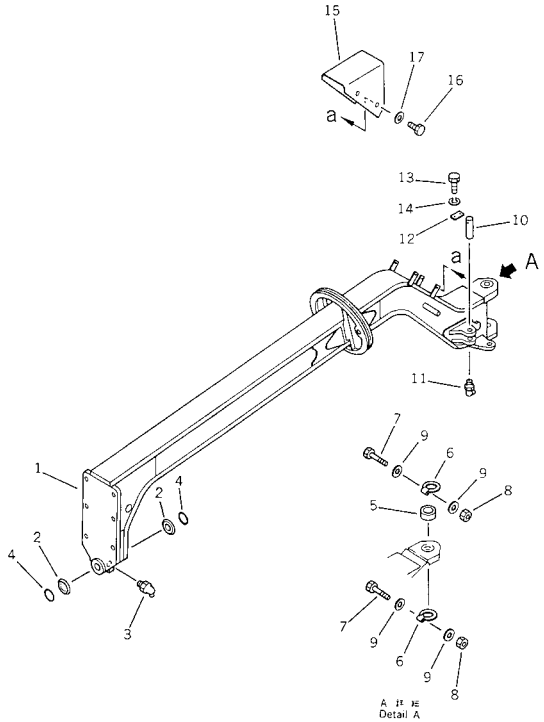

FIG NO. : 5001

INDEX	PART NO.	DESCRIPTION	Q'TY	SERIAL NO.
1	23A-46-11070	FRAME,FRONT	1	10001-
2	23A-46-11320	WASHER	2	10001-
3	07020-00675	FITTING,GREASE	1	10001-
4	07000-F5100	O-RING	2	.-
	07000-15100	O-RING	2	10001-.
5	232-46-53211	BUSHING	2	10048-
	232-46-53210	BUSHING	2	10001-10047
6	236-46-13610	O-RING	4	10001-
7	235-46-11710	BOLT	4	10001-
8	01598-00608	NUT	4	10001-
9	01640-20610	WASHER	8	10001-
10	23A-46-11390	PIN	2	10001-
11	07020-00900	FITTING,GREASE	2	10001-
12	04082-00206	LOCK	2	10001-
13	01010-51225	BOLT	4	10001-
14	01643-31232	WASHER	4	10001-
15	23A-46-11420	COVER	1	10001-
16	01010-51025	BOLT	4	10001-
17	01643-31032	WASHER	4	10001-

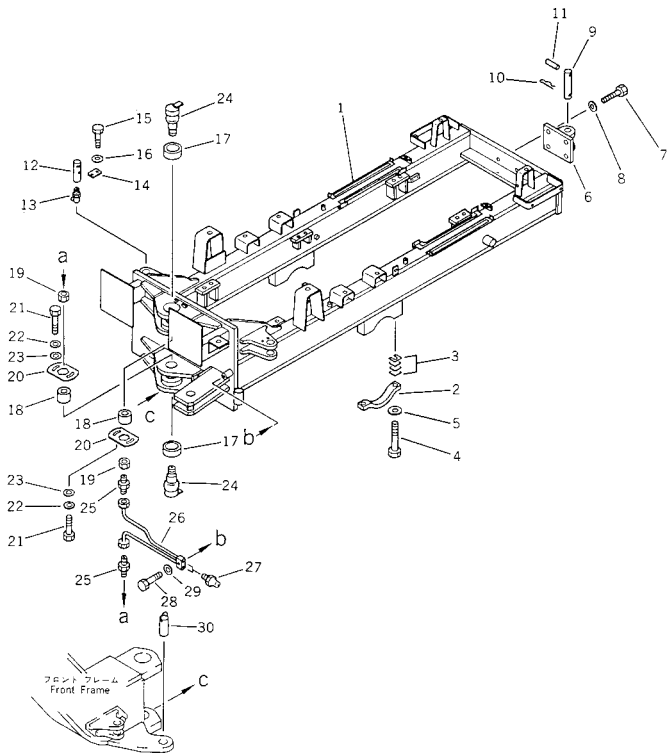

INDEX	PART NO.	DESCRIPTION	Q'TY	SERIAL NO.
1	23A-46-13020	FRAME, REAR	1	10001-
2	23A-46-12320	CAP	2	10001-
3	23A-46-00110	SHIM ASS'Y	1	10001-
4	01011-52765	BOLT	4	10001-
5	01643-32780	WASHER	4	10001-
6	238-46-11810	DRAWBAR	1	10001-
7	01010-52060	BOLT	4	10001-
8	01643-32060	WASHER	4	10001-
9	232-46-11711	PIN	1	10001-
10	232-46-11920	PIN, SNAP	1	10001-
11	04025-01065	PIN, SPRING	1	10001-
12	234-46-11390	PIN	2	10001-
13	07020-00900	FITTING, GREASE	2	10001-
14	04082-00206	LOCK	2	10001-
15	01010-51225	BOLT	4	10001-
16	01643-31232	WASHER	4	10001-
17	236-46-13381	BUSHING	2	10048-
	236-46-13380	BUSHING	2	10001-10047
18	236-46-13390	BUSHING	2	10001-
19	236-46-13410	NUT	2	10001-
20	23A-46-11380	PLATE	2	10001-
21	01010-51630	BOLT	4	10001-
22	01643-31645	WASHER	4	10001-
23	01643-31645	WASHER	4	10001-
24	23A-46-11371	PIN	2	10048-
	23A-46-11370	PIN	2	10001-10047
25	07213-50610	CONNECTOR	2	10001-
26	238-46-11290	TUBE	1	10001-
27	07020-00000	FITTING, GREASE	2	10001-
28	01010-51235	BOLT	1	10001-
29	01643-31232	WASHER	1	10001-
30	23A-46-11410	PIN, ARTICULATE LOCK	1	10001-

FIG.5101 RADIATOR GUARD AND ENGINE HOOD

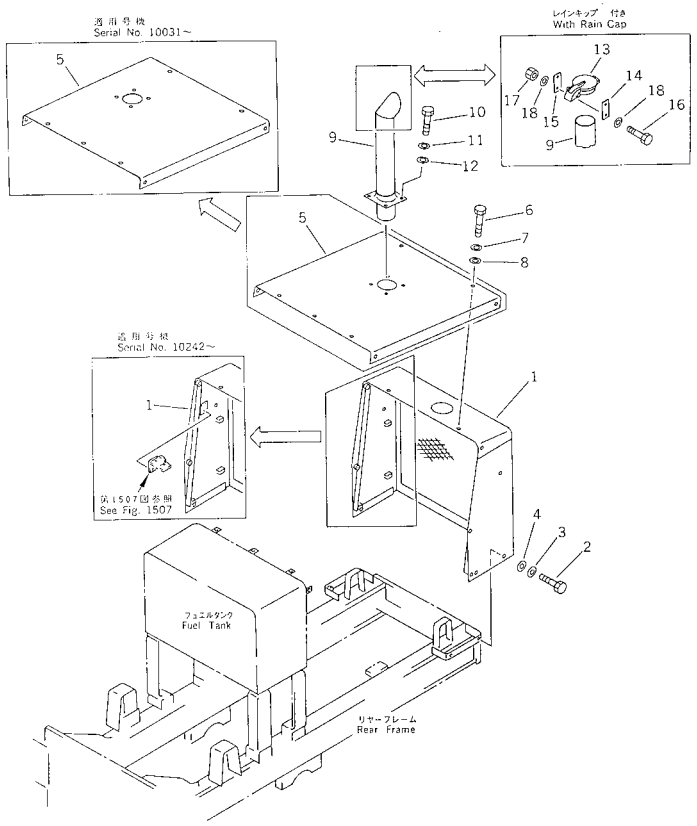

FIG NO. : 5101

INDEX	PART NO.	DESCRIPTION	Q'TY	SERIAL NO.
1	23A-54-24211	GRILL	1	10242-
	23A-54-24210	GRILL	1	10052-10241
	23A-54-16110	GRILL	1	10001-10051
2	01010-51025	BOLT	4	10001-
3	01643-31032	WASHER	4	10001-
4	234-54-13252	WASHER	4	10001-
5	23A-54-23140	HOOD	1	10031-
	23A-54-16140	HOOD	1	10001-10030
6	01010-51025	BOLT	9	10001-
7	01643-31032	WASHER	9	10001-
8	234-54-13252	WASHER	9	10001-
9	23B-54-23120	PIPE, EXHAUST	1	10001-
	23B-54-21140	PIPE, EXHAUST (WITH RAIN CAP)	1	10001-
10	01010-51025	BOLT	4	10001-
11	01643-31032	WASHER	4	10001-
12	232-43-58360	WASHER	4	10001-
13	6711-11-5781	CAP, RAIN	1	10001-
14	23A-54-17910	PLATE, (WITH RAIN CAP)	1	10001-
15	04082-00212	LOCK, (WITH RAIN CAP)	1	10001-
16	01010-51085	BOLT, (WITH RAIN CAP)	2	10001-
17	01580-11008	NUT, (WITH RAIN CAP)	2	10001-
18	01643-31032	WASHER	4	10001-

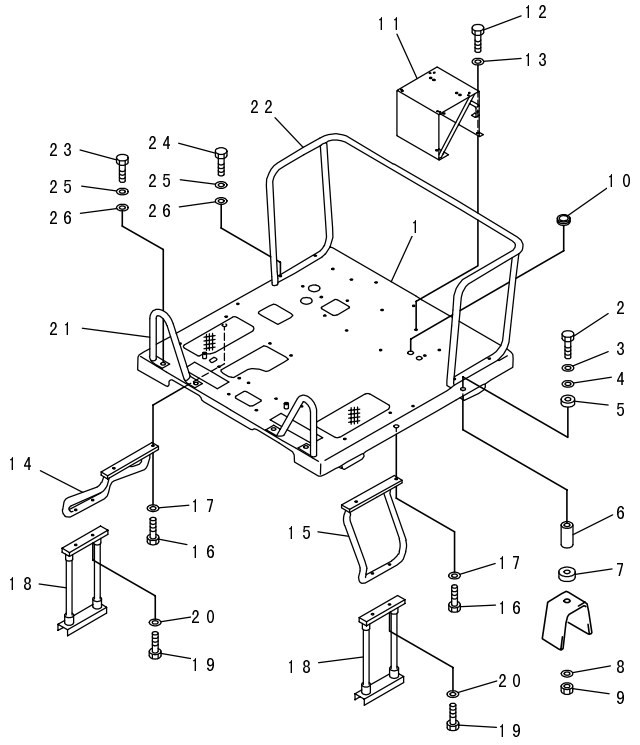

INDEX	PART NO.	DESCRIPTION	Q'TY	SERIAL NO.
1	23B-54-11111	FRAME,FLOOR	1	10243-
	23B-54-11110	FRAME,FLOOR	1	10001-10242
2	01010-51690	BOLT	4	10001-
3	234-54-11480	PLATE	4	10001-
4	238-54-11150	WASHER	4	10001-
5	23A-54-11180	CUSHION	4	10001-
6	234-54-11470	COLLAR	4	10001-
7	23A-54-11170	CUSHION	4	10001-
8	01643-31645	WASHER	4	10001-
9	01580-11613	NUT	4	10001-
10	08037-02512	GROMMET	1	10001-
11	23B-54-11361	BRACKET,SEAT	1	10676-
	□23B-54-11360	BRACKET,SEAT	1	10001-10675
12	01010-51225	BOLT	4	10001-
13	01643-31232	WASHER	4	10001-
14	23A-54-11120	STEP,R.H.	1	10001-
15	23A-54-11130	STEP,L.H.	1	10001-
16	01010-51230	BOLT	4	10001-
17	01643-31232	WASHER	4	10001-
18	233-54-21311	STEP,WIRE	2	10001-
19	01010-51040	BOLT	4	10001-
20	01643-31032	WASHER	4	10001-
21	23A-54-11350	GUARD	2	10001-
22	23A-54-11310	GUARD	1	10001-
23	01010-51225	BOLT	4	10001-
24	01010-51260	BOLT	4	10001-
25	01643-31232	WASHER	8	10001-
26	01643-31232	WASHER	8	10001-

FIG.5301 OPERATOR'S SEAT

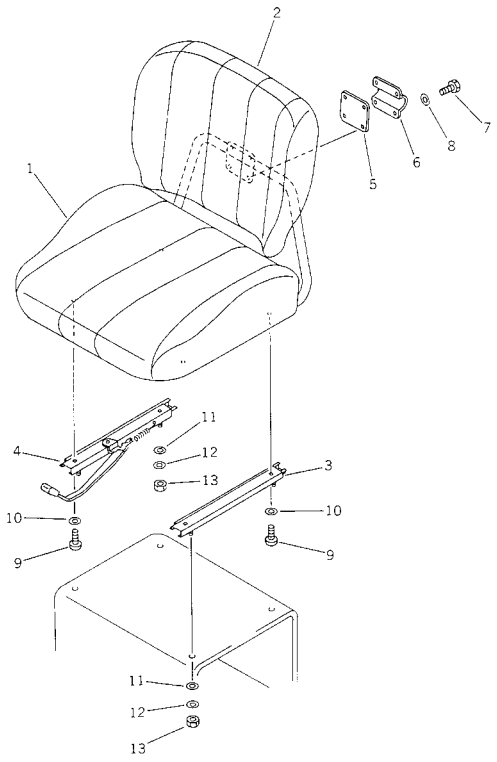

FIG NO. : 5301

INDEX	PART NO.	DESCRIPTION	Q'TY	SERIAL NO.
	23B-57-21000	OPERATOR'S SEAT A.	1	10001-10675
1	23B-57-21110	.SEAT ASS'Y.	1	10001-10675
2	23B-57-21120	.SEAT ASS'Y,BACK.	1	10001-10675
3	23B-57-21130	.SLIDE,L.H.	1	10001-10675
4	23B-57-21140	.SLIDE,R.H.	1	10001-10675
5	23B-57-21150	.PLATE.	1	10001-10675
6	23B-57-21160	.CLAMP.	1	10001-10675
7	01010-50614	.BOLT.	4	10001-10675
8	01643-30623	.WASHER.	4	10001-10675
9	01220-40825	.SCREW.	4	10001-10675
10	01643-30823	.WASHER.	4	10001-10675
11	01643-30823	WASHER.	4	10001-★
12	01643-30823	WASHER.	4	10001-★
13	01580-10806	NUT.	4	10001-★

FIG.5301A OPERATOR'S SEAT

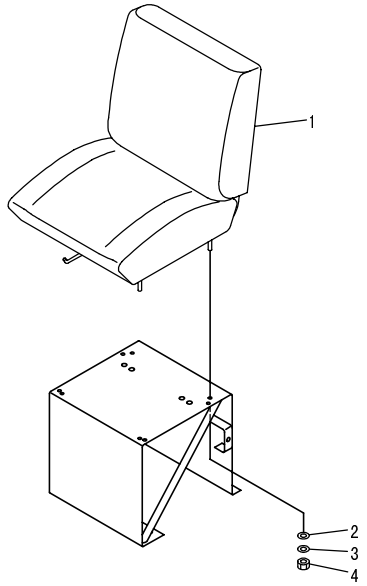

PJ59489

FIG NO. : 5301A

INDEX	PART NO.	DESCRIPTION	Q'TY	SERIAL NO.
1	363-57-31101	SEAT ASS'Y.	1	10676-
2	01643-30823	WASHER.	4	10001-
3	01643-30823	WASHER.	4	10001-
4	01580-10806	NUT.	4	10001-

FIG.5401 PUSH PLATE

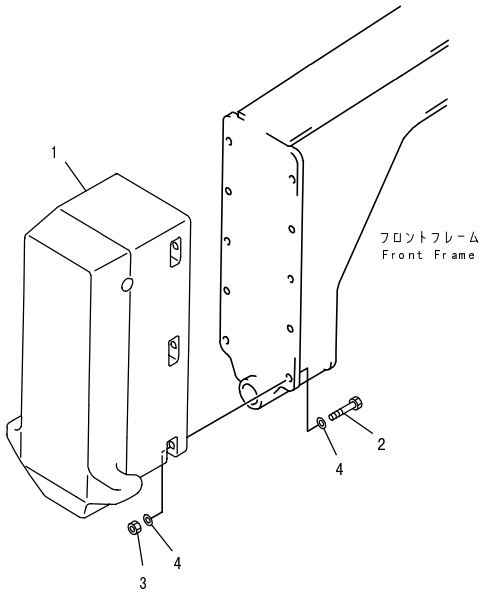

PV59282

FIG NO. : 5401

INDEX	PART NO.	DESCRIPTION	Q'TY	SERIAL NO.
1	23B-846-1111	WEIGHT	1	10249-
	□23B-846-1110	WEIGHT	1	10001-10248
2	01011-52410	BOLT	4	10001-
3	01580-12419	NUT	4	10001-
4	01643-32460	WASHER	8	10001-

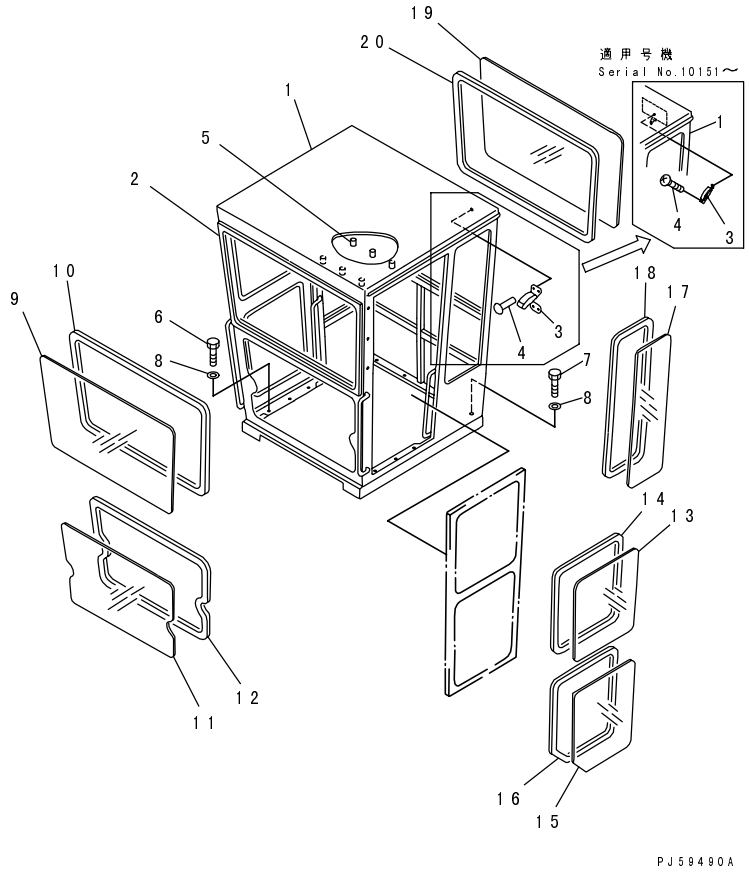

INDEX	PART NO.	DESCRIPTION	Q'TY	SERIAL NO.
1	23B-950-1200	CAB	1	10001-
2	23B-950-3110	BRACKET (WELDED)	1	10001-
3	22X-54-19260	LOCK, QUARTER	1	10151-
	23B-950-1520	LOCK	2	10001-10150
4	01225-40512	SCREW	3	10151-
	04400-00308	RIVET	8	10001-10150
5	23B-950-3130	COLLAR	40	10001-
6	01010-51255	BOLT	3	10001-
7	01010-51225	BOLT	12	10001-
8	01643-31232	WASHER	15	10001-
9	23B-950-1660	GLASS	1	10001-
10	09410-40426	STRIP, WEATHER	1	10001-
11	23A-950-1630	GLASS	1	10001-
12	09410-40404	STRIP, WEATHER	1	10001-
13	23B-950-1610	GLASS	2	10001-
14	09410-40332	STRIP, WEATHER	2	10001-
15	23B-950-1590	GLASS	2	10001-
16	09410-40284	STRIP, WEATHER	2	10001-
17	23B-950-1650	GLASS	2	10001-
18	09410-40381	STRIP, WEATHER	2	10001-
19	23B-950-1640	GLASS	1	10001-
20	09410-40407	STRIP, WEATHER	1	10001-

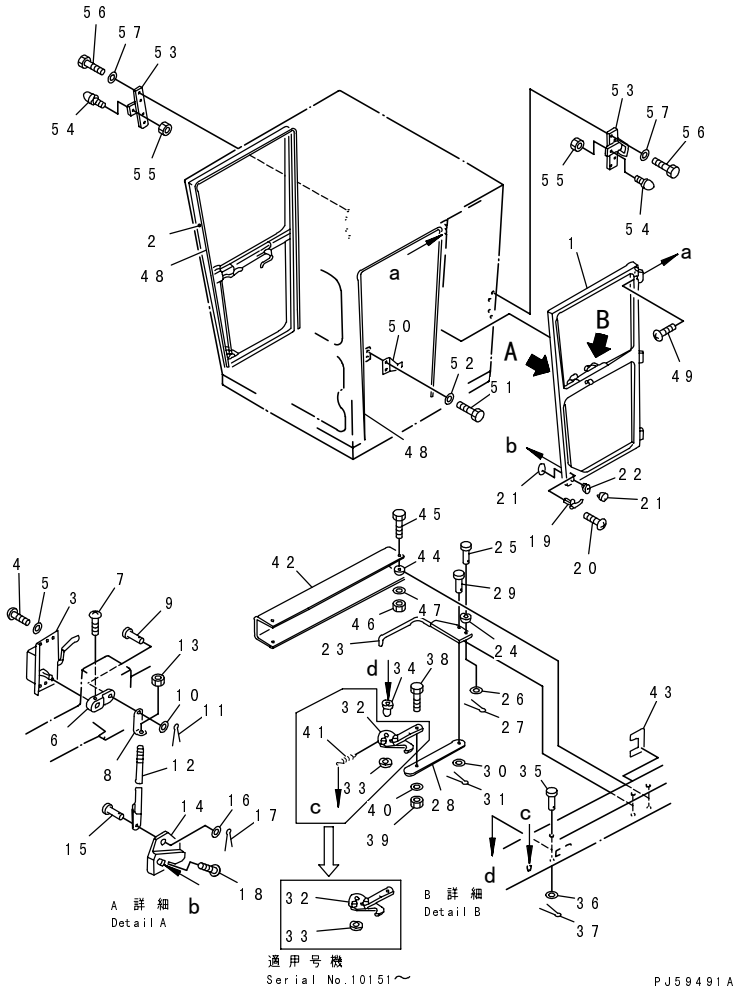

FIG NO. : 5423

INDEX	PART NO.	DESCRIPTION	Q'TY	SERIAL NO.
1	23B-950-1550	DOOR, L.H.	1	10001-
	235-950-1430	.HINGE.....(WELDED)	3	10001-
	232-957-6310	.SPRING	1	10151-
2	23B-950-1560	DOOR, R.H.	1	10001-
	235-950-1430	.HINGE.....(WELDED)	3	10001-
	232-957-6310	.SPRING	1	10151-
3	232-957-6471	LOCK, DOOR, L.H.	1	.-
	232-957-6470	LOCK, DOOR, L.H.	1	10001-.
	232-957-6481	LOCK, DOOR, R.H.	1	.-
	232-957-6480	LOCK, DOOR, R.H.	1	10001-.
4	01235-40616	SCREW	12	10001-
5	01643-30623	WASHER	12	10001-
6	232-957-6520	LEVER	2	10001-
7	01220-40420	SCREW	2	10001-
8	235-950-1560	PLATE	2	10001-
9	04205-10614	PIN	2	10001-
10	01641-20608	WASHER	2	10001-
11	04050-11610	PIN, COTTER	2	10001-
12	232-957-2840	ROD	2	10001-
13	01580-10605	NUT	2	10001-
14	235-950-1570	LEVER, L.H.	1	10001-
	235-950-1580	LEVER, R.H.	1	10001-
15	04205-10614	PIN	2	10001-
16	01641-20608	WASHER	2	10001-
17	04050-11610	PIN, COTTER	2	10001-
18	01220-40412	SCREW	2	10001-
19	232-957-6550	HANDLE	2	10001-
20	01220-40412	SCREW	4	10001-
21	232-855-1870	LOCK	1	10001-
22	232-855-1880	SPACER	1	10001-
23	235-950-1660	HANDLE, L.H.	1	10001-
	235-950-1670	HANDLE, R.H.	1	10001-
24	235-950-1540	SPACER	2	10001-
25	235-950-1510	PIN	2	10001-
26	01641-10608	WASHER	2	10001-
27	04050-11612	PIN, COTTER	2	10001-
28	235-950-1490	PLATE	2	10001-
29	04205-10616	PIN	2	10001-
30	01641-10608	WASHER	2	10001-
31	04050-11612	PIN, COTTER	2	10001-
32	232-957-6240	LOCK, L.H.	1	10001-
	232-957-6250	LOCK, R.H.	1	10001-

FIG NO. : 5423

INDEX	PART NO.	DESCRIPTION	Q'TY	SERIAL NO.
33	232-957-6540	COLLAR	2	10001-
34	232-957-6260	SPACER	2	10001-
35	04205-11045	PIN	2	10001-
36	01641-11016	WASHER	2	10001-
37	04050-13020	PIN,COTTER	2	10001-
38	01010-50616	BOLT	4	10001-
39	01580-10605	NUT	4	10001-
40	01643-30623	WASHER	4	10001-
41	232-957-6310	SPRING	2	10001-10150
42	235-950-1460	COVER,L.H.	1	10001-
	235-950-1470	COVER,R.H.	1	10001-
43	235-950-1480	PLATE	2	10001-
44	235-950-1520	SPACER	4	10001-
45	235-950-1530	BOLT	4	10001-
46	01580-10605	NUT	4	10001-
47	01602-20619	WASHER,SPRING	4	.-
	□01601-20619	WASHER,SPRING	4	10001-.
48	09412-00052	SEAL	2	10001-
49	01220-40812	SCREW	18	10001-
50	234-957-4250	HOOK	2	10001-
51	01010-51020	BOLT	4	10001-
52	01643-31032	WASHER	4	10001-
53	23B-950-3190	CATCH,L.H.	1	10001-
	23B-950-3210	CATCH,R.H.	1	10001-
54	235-950-1370	CUSHION	2	10001-
55	01580-11008	NUT	2	10001-
56	01010-51030	BOLT	8	10001-
57	01643-31032	WASHER	8	10001-

GD511A-1

FIG.5425 OPERATOR'S CAB (C-TYPE) (3/5)

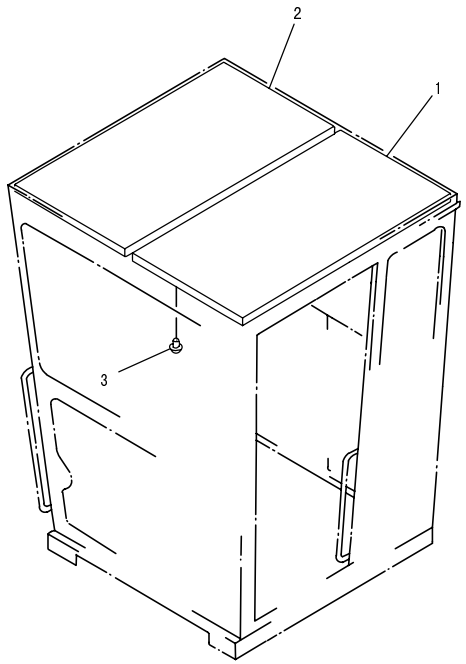

PV50733

FIG NO. : 5425

INDEX	PART NO.	DESCRIPTION	Q'TY	SERIAL NO.
1	23B-950-3140	BOARD, L.H.	1	10001-
2	23B-950-3150	BOARD, R.H.	1	10001-
3	09416-10000	BUTTON	40	10001-

FIG.5427 OPERATOR'S CAB (C-TYPE) (4/5)

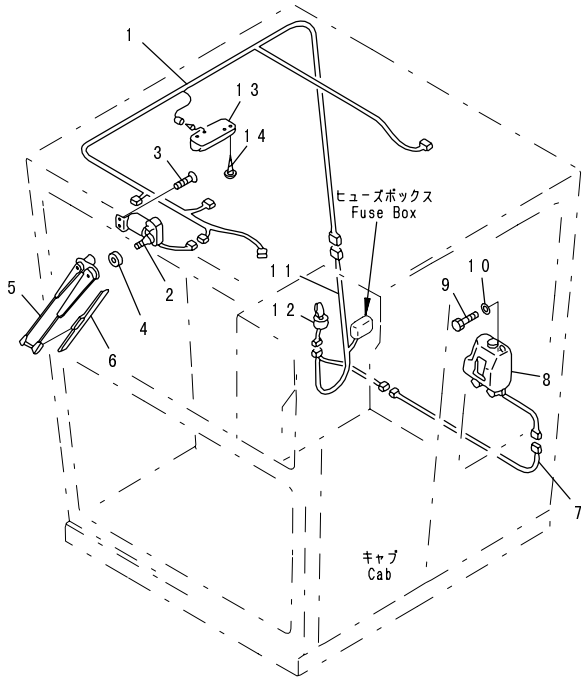

PV53395

FIG NO. : 5427

INDEX	PART NO.	DESCRIPTION	Q'TY	SERIAL NO.
1	23B-950-1810	WIRE ASS'Y.	1	10001-
2	08180-12411	WIPER MOTOR ASS'Y,WIPER.	1	10001-
3	01224-40516	SCREW.	2	10001-
4	23B-950-1460	COLLAR.	1	10001-
5	08184-30500	ARM,WIPER.	1	10001-
6	08185-00450	BLADE,WIPER.	1	10001-
7	23B-950-1840	WIRE ASS'Y.	1	10001-
8	232-950-5700	TANK ASS'Y,WINDOW WASHER.	1	10001-
9	01010-50612	BOLT.	2	10001-
10	01643-30623	WASHER.	2	10001-
11	23B-950-1820	WIRE ASS'Y.	1	10001-
12	205-06-71690	SWITCH ASS'Y,WIPER.	1	10001-
13	08141-02400	LAMP,ROOM.	1	10001-
	08116-02410	.BULB, 10W.	1	10001-
14	01370-00410	SCREW.	2	10001-

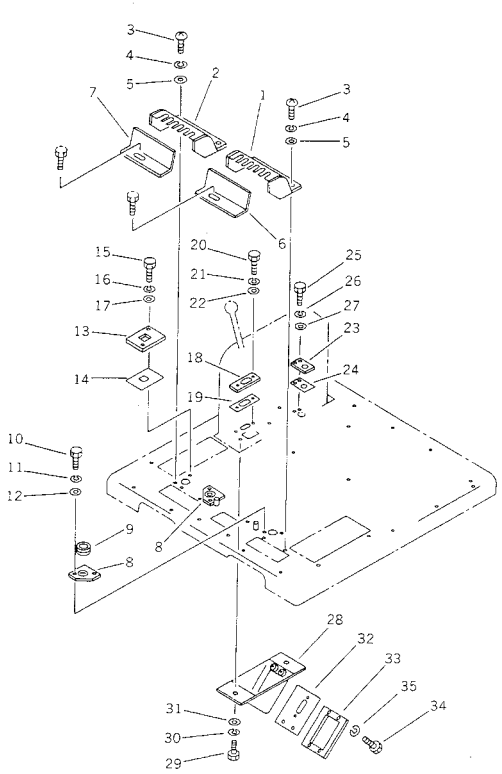

FIG NO. : 5429

INDEX	PART NO.	DESCRIPTION	Q'TY	SERIAL NO.
1	23B-53-12340	COVER, L.H.	1	10001-
2	23B-43-12310	COVER, R.H.	1	10001-
3	01220-40820	SCREW	4	10001-
4	01643-30823	WASHER	4	10001-
5	01643-30823	WASHER	4	10001-
6	23B-43-12350	PLATE, L.H.	1	10001-
7	23B-43-12320	PLATE, R.H.	1	10001-
8	23B-43-12210	COVER	2	10001-
9	235-957-2170	GROMMET	2	10001-
10	01010-50820	BOLT	4	10001-
11	01643-30823	WASHER	4	10001-
12	01643-30823	WASHER	4	10001-
13	23E-43-12241	COVER	1	10001-
14	23E-43-12251	SEAT	1	10001-
15	01010-50825	BOLT	2	10001-
16	01643-30823	WASHER	2	10001-
17	01643-30823	WASHER	1	10001-
18	23B-43-12230	COVER	1	10001-
19	23B-43-12240	SEAT	1	10001-
20	01010-50820	BOLT	2	10001-
21	01643-30823	WASHER	2	10001-
22	01643-30823	WASHER	2	10001-
23	23B-43-12250	COVER	1	10001-
24	23B-43-12260	SEAT	1	10001-
25	01010-50825	BOLT	2	10001-
26	01643-30823	WASHER	2	10001-
27	01643-30823	WASHER	2	10001-
28	23E-43-12210	COVER	1	10001-
29	01010-50825	BOLT	2	10001-
30	01643-30823	WASHER	2	10001-
31	01643-30823	WASHER	2	10001-
32	23E-43-12220	PLATE	1	10001-
33	23E-43-12230	SEAT	1	10001-
34	01010-50616	BOLT	4	10001-
35	01643-30623	WASHER	4	10001-

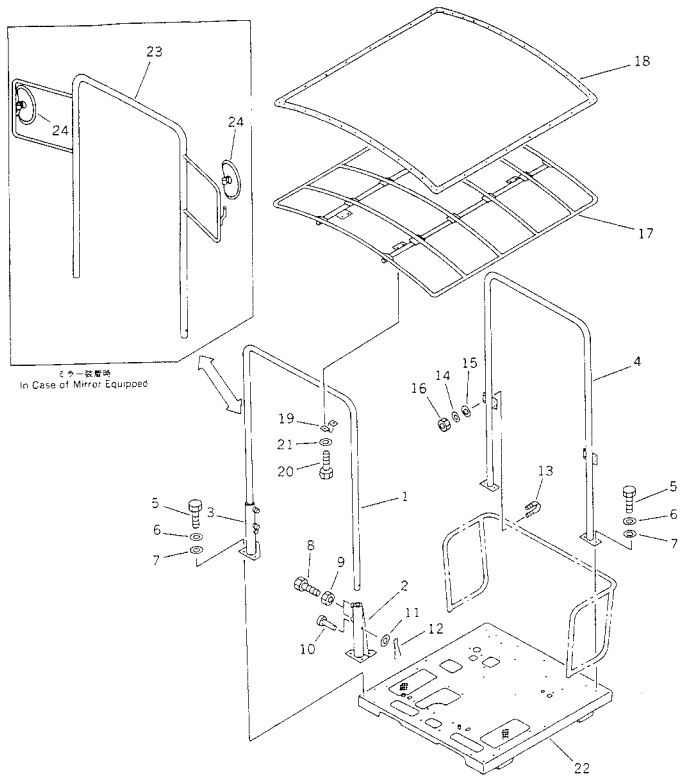

INDEX	PART NO.	DESCRIPTION	Q'TY	SERIAL NO.
1	234-855-7131	POLE,FRONT	1	.-
2	23B-956-1340	BRACKET,L.H.	1	.-
3	23B-956-1350	BRACKET,R.H.	1	.-
4	23B-956-1120	COLUMN,REAR	1	10001-
5	01010-51225	BOLT	10	10001-
6	01643-31232	WASHER	10	.-
7	01643-31232	WASHER	10	10001-
8	01016-51232	BOLT	4	.-
9	01580-11210	NUT	4	.-
10	232-55-13170	PIN	2	.-
11	01641-21223	WASHER	2	.-
12	04050-13020	PIN,COTTER	2	.-
13	07283-24346	CLIP	4	10001-
14	01643-31032	WASHER	8	10001-
15	01643-31032	WASHER	8	10001-
16	01580-11210	NUT	8	10001-
17	232-55-13113	ROOF	1	.-
18	23D-956-1180	SHEET	1	.-
19	23B-956-1180	CLIP	4	.-
20	01010-51430	BOLT	8	10001-
21	01643-31445	WASHER	8	10001-
22	23B-956-1140	FRAME,(MODIFIED PART)	1	10001-
23	23B-956-1131	COLUMN,(MODIFIED PART)	1	.-
	23B-956-1150	.BRACKET,L.H. (WELDED)	1	10001-
	23B-956-1160	.BRACKET,R.H. (WELDED)	1	10001-
24	232-957-2850	MIRROR	2	.-

HYDRAULIC SYSTEM

FIG.6001 HYDRAULIC PUMP (FOR WORK EQUIPMENT AND STEERING)

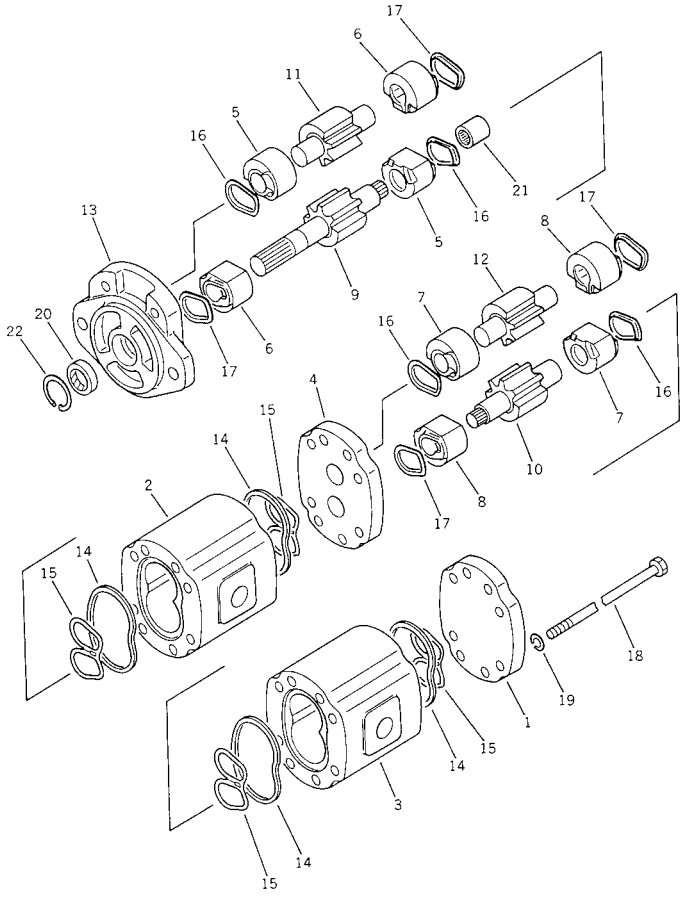

FIG NO. : 6001

INDEX	PART NO.	DESCRIPTION	Q'TY	SERIAL NO.
	23A-60-11101	PUMP ASS'Y,HYDRAULIC.	1	10052-
	23A-60-11100	PUMP ASS'Y,HYDRAULIC.	1	10001-10051
		THE KAYABA KOGYO PART NUMBER IS THAT KB IS REMOVED FROM KOMATSU PART NUMBER LISTED BELOW.		
1	KB20121-30101	.COVER.	1	10001-
2	☆	.BODY,FRONT.	1	10052-
	☆	.BODY,FRONT.	1	10001-10051
3	☆	.BODY,REAR.	1	10052-
	☆	.BODY,REAR.	1	10001-10051
4	KB20121-40105	.PLATE,CENTER.	1	10001-
5	☆	.BUSHING.(K10)	2	10001-
6	☆	.BUSHING.(K10)	2	10001-
7	☆	.BUSHING.(K11)	2	10001-
8	☆	.BUSHING.(K11)	2	10001-
9	☆	.GEAR,DRIVE, FRONT.(K10)	1	10001-
10	☆	.GEAR,DRIVE, REAR.(K11)	1	10001-
11	☆	.GEAR,DRIVEN, FRONT.(K10)	1	10001-
12	☆	.GEAR,DRIVEN, REAR.(K11)	1	10001-
13	KB20121-30705	.FLANGE.	1	10001-
14	☆	.SEAL.(K12)	4	10001-
15	☆	.SEAL.(K12)	4	10001-
16	☆	.PACKING,RING.(K12)	4	10001-
17	☆	.PACKING,RING.(K12)	4	10001-
18	KB20121-41265	.BOLT.	4	10001-
19	KB94101-10250	.WASHER,SPRING.	4	10001-
20	☆	.SEAL,OIL.(K12)	1	10001-
21	KB20121-41802	.COUPLING.	1	10001-
22	☆	.RING,SNAP.(K12)	1	10001-

FIG.6051 HYDRAULIC MOTOR

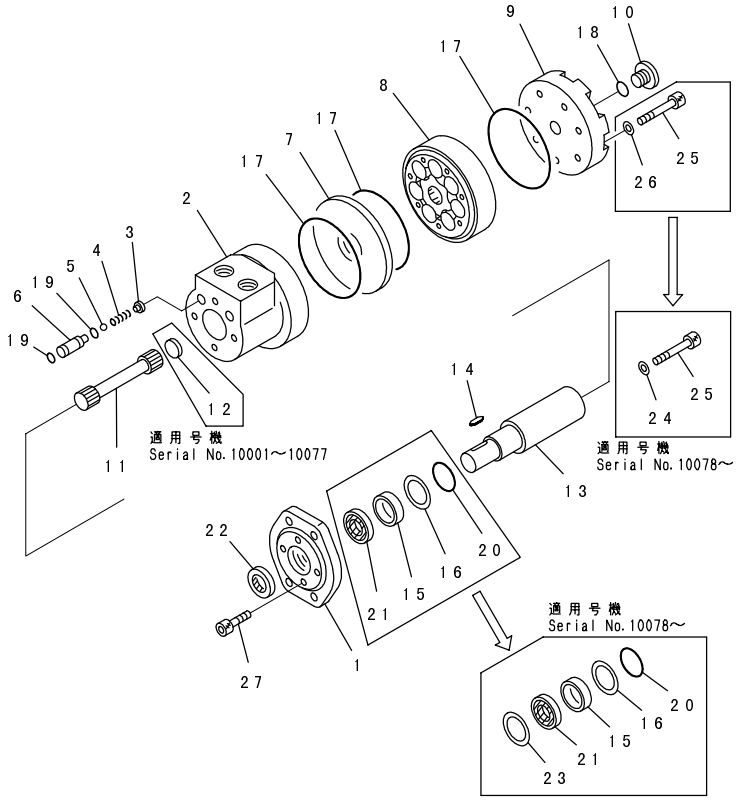

FIG NO. : 6051

INDEX	PART NO.	DESCRIPTION	Q'TY	SERIAL NO.
	23B-62-11501	MOTOR ASS'Y	1	10078-
	23B-62-11500	MOTOR ASS'Y	1	10001-10077
1	23B-62-11551	.FLANGE	1	10078-
	23B-62-11550	.FLANGE	1	10001-10077
2	23B-62-12230	.HOUSING	1	10001-
	23B-62-12170	.BALL CHECK ASS'Y	2	10001-
3	23B-62-12220	..WASHER	1	10001-
4	23B-62-12210	..SPRING	1	10001-
5	23B-62-12180	..BALL	1	10001-
6	23B-62-12190	..BODY	1	10001-
7	23B-62-12150	.PLATE	1	10001-
8	23B-62-11520	.GEROLER ASS'Y	1	10001-
9	23B-62-12140	.CAP	1	10001-
10	23B-62-12360	.PLUG	1	10001-
11	23B-62-11531	.DRIVE	1	10078-
	23B-62-11530	.DRIVE	1	10001-10077
12	23B-62-11540	.SPACER	1	10001-10077
13	23B-62-12240	.SHAFT	1	10001-
14	23B-62-12250	.KEY	1	10001-
15	23B-62-12260	.RACE,THRUST BEARING	1	10001-
16	23B-62-12270	.NEEDLE,THRUST BEARING	1	10001-
	23B-62-05011	.SEAL ASS'Y	1	10078-
	23B-62-05010	.SEAL ASS'Y	1	10001-10077
17	☆	..O-RING	3	10001-
18	☆	..O-RING	1	10001-
19	☆	..O-RING	4	10001-
20	☆	..O-RING	1	10001-
21	☆	..SEAL,OIL	1	10078-
	☆	..SEAL,OIL	1	10001-10077
22	☆	..SEAL,DUST	1	10001-
23	23B-62-12370	..RING	1	10078-
24	23B-62-11560	..WASHER	7	10078-
25	23B-62-11510	.SCREW	7	10001-
26	23B-62-11560	.WASHER	7	10001-10077
27	23B-62-12280	.SCREW	4	10001-

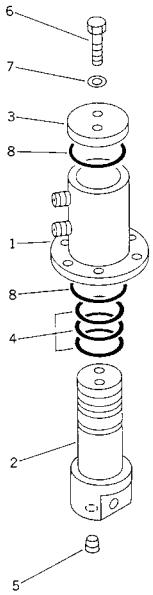

FIG NO. : 6071

INDEX	PART NO.	DESCRIPTION	Q'TY	SERIAL NO.
	232-60-54702	SWIVEL JOINT ASS'Y	1	10001-
1	232-60-54711	.BODY	1	10001-
2	232-60-54720	.FLANGE	1	10001-
3	232-60-54730	.PLATE	1	10001-
4	07000-13050	.O-RING	3	10001-
5	07043-00211	.PLUG	2	10001-
6	01010-51225	.BOLT	2	10001-
7	01643-31232	.WASHER	2	10001-
8	07000-12065	.O-RING	2	10001-

FIG.6075 SWIVEL JOINT (FOR POWER TILT)

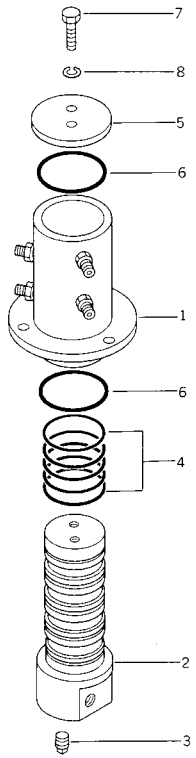

FIG NO. : 6075

INDEX	PART NO.	DESCRIPTION	Q'TY	SERIAL NO.
	232-735-3102	SWIVEL JOINT ASS'Y.	1	10001-
1	232-735-3111	.BODY.	1	10001-
2	232-735-3120	.FLANGE.	1	10001-
3	07043-00211	.PLUG.	4	10001-
4	07000-13050	.O-RING.	5	10001-
5	232-60-54730	.PLATE.	1	10001-
6	07000-12065	.O-RING.	2	10001-
7	01010-51225	.BOLT.	2	10001-
8	01643-31232	.WASHER.	2	10001-

FIG.6111A HYDRAULIC FILTER(#10052-)

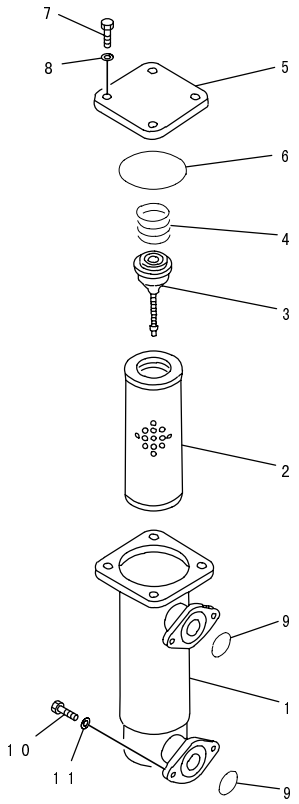

PV52424

FIG NO. : 6111A

INDEX	PART NO.	DESCRIPTION	Q'TY	SERIAL NO.
	23A-60-13601	FILTER ASS'Y,HYDRAULIC.....	1	10052-
1	23A-60-13610	.HOUSING.....	1	10001-
2	07063-01054	.ELEMENT.....	1	10001-
3	125-62-21150	.VALVE ASS'Y.....	1	10052-
4	23A-60-13640	.SPRING.....	1	10052-
5	23A-60-13620	.PLATE.....	1	10001-
6	07000-12100	.O-RING.....	1	10001-
7	01010-51025	.BOLT.....	4	10001-
8	01643-31032	.WASHER.....	4	10001-
9	07000-12065	.O-RING.....	2	10001-
10	01010-51025	.BOLT.....	4	10001-
11	01643-31032	.WASHER.....	4	10001-

FIG.6201 HYDRAULIC CONTROL VALVE、L.H. (3-SPOOL)

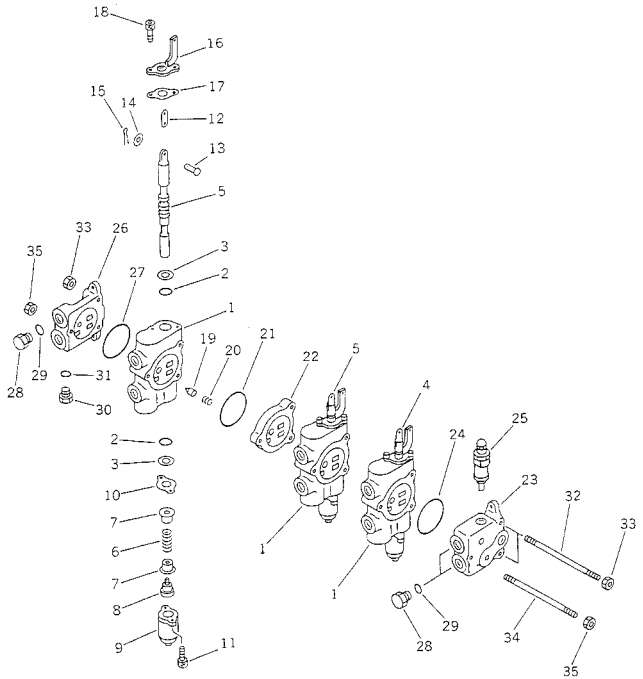

FIG NO. : 6201

INDEX	PART NO.	DESCRIPTION	Q'TY	SERIAL NO.
	23A-60-12500	CONTROL VALVE ASS'Y.	1	10001-
		THE KAYABA KOGYO PART NUMBER IS THAT KB IS REMOVED FROM KOMATSU PART NUMBER LISTED BELOW.		
	KB21013-32395	.SPOOL SECTION ASS'Y,A.	1	10001-
	KB21013-33309	.SPOOL SECTION ASS'Y,B.	2	10001-
1	☆	..HOUSING.	1	10001-
2	☆	..O-RING.(K13)	2	10001-
3	☆	..WIPER.(K13)	2	10001-
4	☆	..SPOOL,A.	1	10001-
5	☆	..SPOOL,B.	1	10001-
6	KB21011-30613	..SPRING.	1	10001-
7	KB21011-30702	..SEAT,SPRING.	2	10001-
8	KB21011-30507	..SCREW.	1	10001-
9	KB21011-31011	..CAP.	1	10001-
10	KB21011-31702	..PLATE,PLATE.	1	10001-
11	KB92702-06181	..BOLT.	2	10001-
12	KB21011-31507	..LINK.	1	10001-
13	KB21011-33307	..PIN.	1	10001-
14	KB94311-05082	..WASHER.	1	10001-
15	KB93601-12082	..PIN.	1	10001-
16	KB21011-31205	..BRACKET.	1	10001-
17	KB21011-31702	..PLATE,PLATE.	1	10001-
18	KB92702-06181	..BOLT.	2	10001-
19	KB21011-32404	..POPPET.	1	10001-
20	KB21011-30604	..SPRING.	1	10001-
21	☆	..O-RING.(K13)	1	10001-
22	KB21011-30917	.SPACER.	1	10001-
	KB21013-34810	.SECTION ASS'Y,INLET.	1	10001-
23	KB21011-30336	..HOUSING.	1	10001-
24	KB21001-00106	..O-RING.	1	10001-
25	KB21013-30664	.RELIEF VALVE ASS'Y.	1	10001-
	KB21013-34845	.SECTION ASS'Y,INLET.	1	10001-
26	KB21011-30351	..HOUSING.	1	10001-
27	KB21001-00106	..O-RING.	1	10001-
	KB21003-00207	.PLUG ASS'Y.	3	10001-
28	KB21001-00504	..PLUG.	1	10001-
29	KB95113-01800	..O-RING.	1	10001-
	KB21003-00191	.PLUG ASS'Y.	1	10001-
30	KB21001-00127	..PLUG.	1	10001-
31	KB21001-00036	..O-RING.	1	10001-
32	KB21041-30104	.STUD.	2	10001-

FIG.6201 HYDRAULIC CONTROL VALVE、L.H. (3-SPOOL)

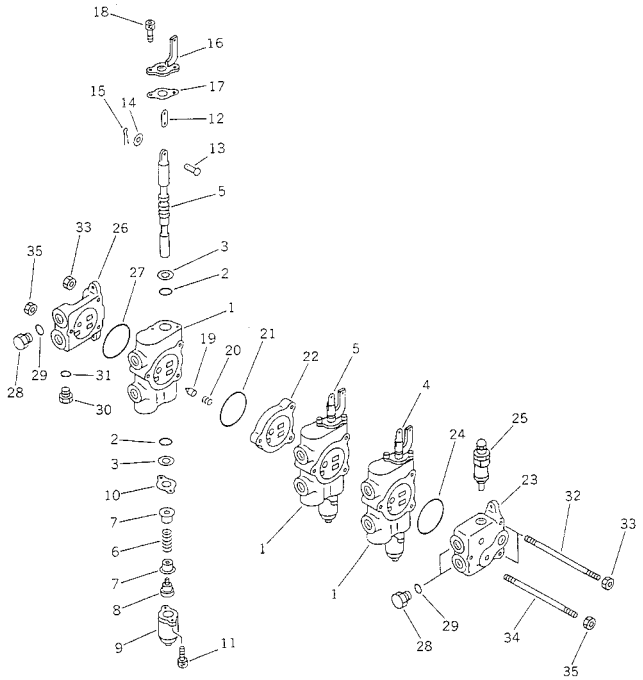

FIG NO. : 6201

INDEX	PART NO.	DESCRIPTION	Q'TY	SERIAL NO.
33	KB93118-08652	.NUT	4	10001-
34	KB21041-30103	.STUD	1	10001-
35	KB93128-10082	.NUT	2	10001-

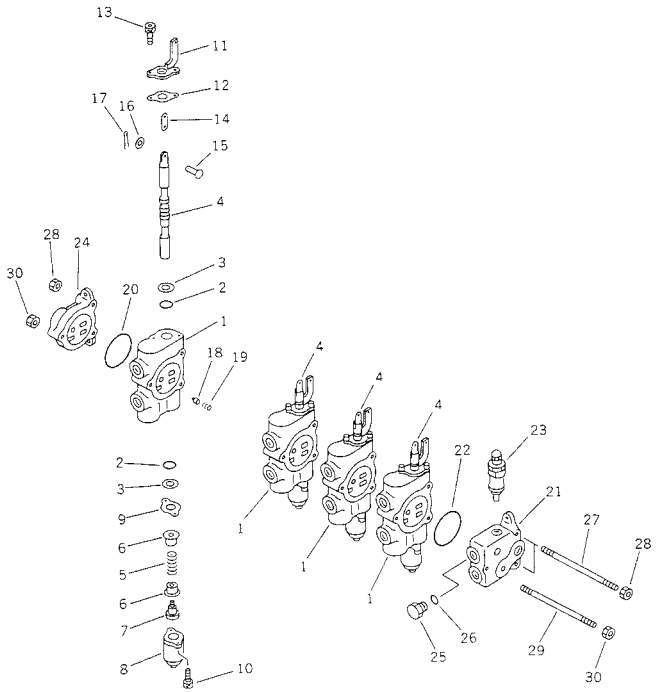

FIG NO. : 6205

INDEX	PART NO.	DESCRIPTION	Q'TY	SERIAL NO.
	23A-60-12200	CONTROL VALVE ASS'Y. THE KAYABA KOGYO PART NUMBER IS THAT KB IS REMOVED FROM KOMATSU PART NUMBER LISTED BELOW.	1	10001-
	KB21013-33315	.SPOOL SECTION ASS'Y.	4	10001-
1	☆	..HOUSING.	1	10001-
2	☆	..O-RING. (K13)	2	10001-
3	☆	..WIPER. (K13)	2	10001-
4	☆	..SPOOL.	1	10001-
5	KB21011-30613	..SPRING.	1	10001-
6	KB21011-30702	..SEAT,SPRING.	2	10001-
7	KB21011-30507	..SCREW.	1	10001-
8	KB21011-31044	..CAP.	1	10001-
9	KB21011-31702	..PLATE.	1	10001-
10	KB92702-06181	..BOLT.	2	10001-
11	KB21011-31205	..BRACKET.	1	10001-
12	KB21011-31702	..PLATE.	1	10001-
13	KB92702-06181	..BOLT.	2	10001-
14	KB21011-31507	..LINK.	1	10001-
15	KB21011-33307	..PIN.	1	10001-
16	KB94311-05082	..WASHER.	1	10001-
17	KB93601-12082	..PIN.	1	10001-
18	KB21011-32404	..POPPET.	1	10001-
19	KB21011-30604	..SPRING.	1	10001-
20	☆	..O-RING. (K13)	1	10001-
	KB21013-34810	.SECTION ASS'Y.	1	10001-
21	KB21011-30336	..HOUSING.	1	10001-
22	KB21001-00106	..O-RING.	1	10001-
23	KB21013-30664	.RELIEF VALVE ASS'Y.	1	10001-
24	KB21011-30153	.OUTER SECTION.	1	10001-
	KB21003-00207	.PLUG ASS'Y.	1	10001-
25	KB21001-00504	..PLUG.	1	10001-
26	KB95113-01800	..O-RING.	1	10001-
27	KB21041-30104	.STUD.	2	10001-
28	KB93118-08652	.NUT.	4	10001-
29	KB21041-30103	.STUD.	1	10001-
30	KB93128-10082	.NUT.	2	10001-

FIG.6207 HYDRAULIC CONTROL VALVE、L.H. (4-SPOOL) (FOR POWER TILT
)

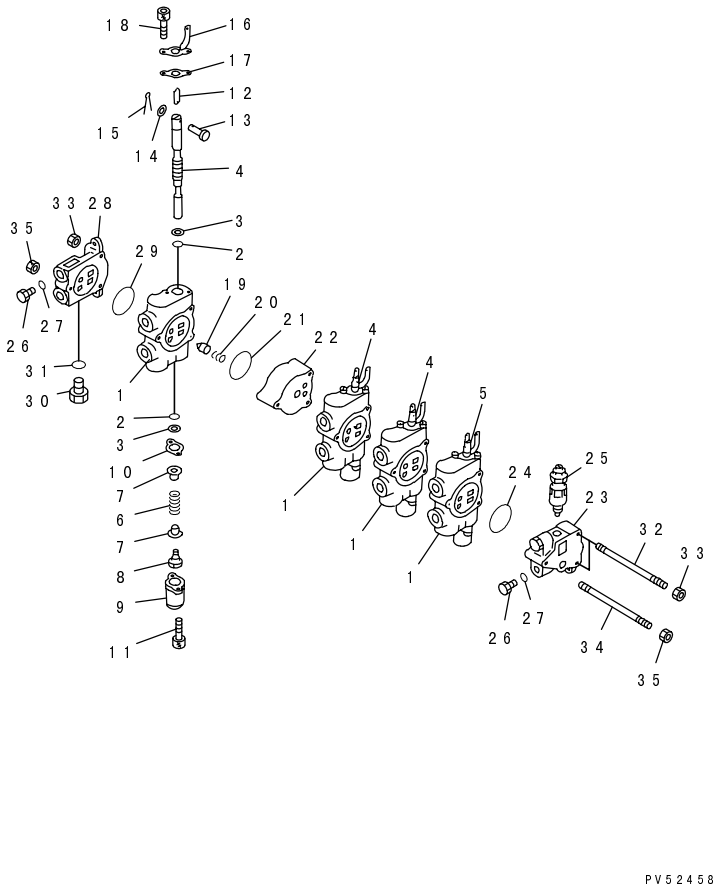

FIG NO. : 6207

INDEX	PART NO.	DESCRIPTION	Q'TY	SERIAL NO.
	23A-60-12600	CONTROL VALVE ASS'Y.	1	10001-
		THE KAYABA KOGYO PART NUMBER IS THAT KB IS REMOVED FROM KOMATSU PART NUMBER LISTED BELOW.		
	KB21013-33315	.SPOOL SECTION ASS'Y,B.	3	10001-
	KB21013-32399	.SPOOL SECTION ASS'Y,A.	1	10001-
1	☆	..HOUSING.	1	10001-
2	☆	..O-RING.(K13)	2	10001-
3	☆	..WIPER.(K13)	2	10001-
4	☆	..SPOOL,B.	1	10001-
5	☆	..SPOOL,A.	1	10001-
6	KB21011-30613	..SPRING.	1	10001-
7	KB21011-30702	..SEAT,SPRING.	2	10001-
8	KB21011-30507	..SCREW,CAP.	1	10001-
9	KB21011-31044	..CAP.	1	10001-
10	KB21011-31702	..PLATE.	1	10001-
11	KB92702-06181	..BOLT.	2	10001-
12	KB21011-31507	..LINK.	1	10001-
13	KB21011-33307	..PIN.	1	10001-
14	KB94311-05082	..WASHER.	1	10001-
15	KB93601-12082	..PIN,COTTER.	1	10001-
16	KB21011-31205	..BRACKET.	1	10001-
17	KB21011-31702	..PLATE.	1	10001-
18	KB92702-06181	..BOLT.	2	10001-
19	KB21011-32404	..POPPET.	1	10001-
20	KB21011-30604	..SPRING.	1	10001-
21	☆	..O-RING.(K13)	1	10001-
22	KB21011-30917	.SPACER.	1	10001-
	KB21013-34810	.SECTION ASS'Y.	1	10001-
23	KB21011-30336	..HOUSING.	1	10001-
24	KB21001-00106	..O-RING.	1	10001-
25	KB21013-30664	.RELIEF VALVE ASS'Y.	1	10001-
	KB21003-00207	.PLUG ASS'Y.	3	10001-
26	KB21001-00504	..PLUG.	1	10001-
27	KB95113-01800	..O-RING.	1	10001-
	KB21013-34845	.SECTION ASS'Y.	1	10001-
28	KB21011-30351	..HOUSING.	1	10001-
29	KB21001-00106	..O-RING.	1	10001-
	KB21003-00191	.PLUG ASS'Y.	1	10001-
30	KB21001-00127	..PLUG.	1	10001-
31	KB21001-00036	..O-RING.	1	10001-
32	KB21051-30106	.STUD.	2	10001-

FIG NO. : 6207

INDEX	PART NO.	DESCRIPTION	Q'TY	SERIAL NO.
33	KB93118-08652	.NUT.....	4	10001-
34	KB21051-30105	.STUD.....	1	10001-
35	KB93128-10082	.NUT.....	2	10001-

GD511A-1

FIG.6209 HYDRAULIC CONTROL VALVE、R.H. (5-SPOOL) (FOR SCARIFIER AND POWER TILT)

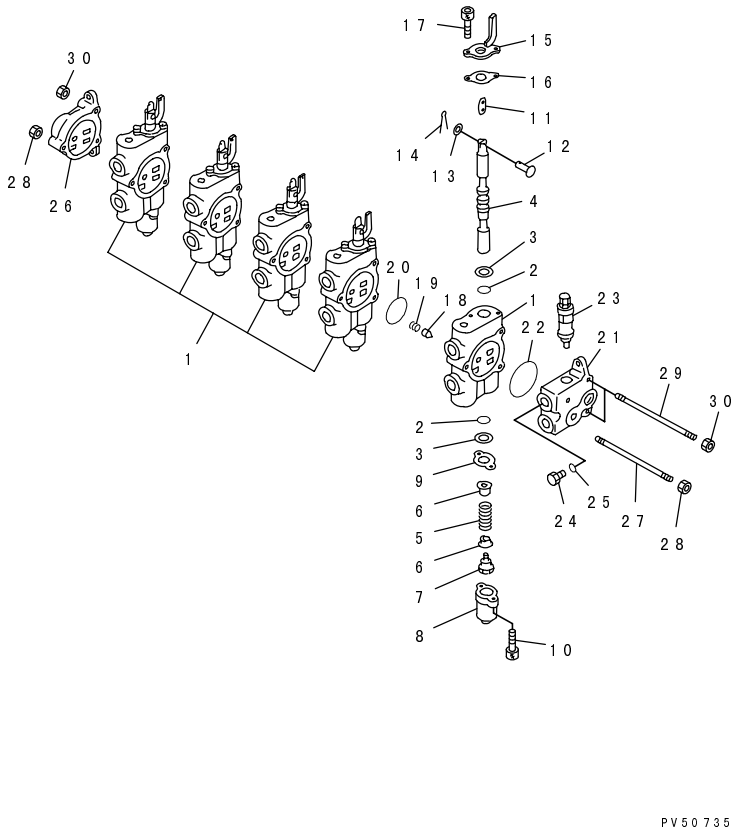

FIG NO. : 6209

INDEX	PART NO.	DESCRIPTION	Q'TY	SERIAL NO.
	23A-60-12300	VALVE ASS'Y,R.H.	1	10001-
		THE KAYABA KOGYO PART NUMBER IS THAT KB IS REMOVED FROM KOMATSU PART NUMBER LISTED BELOW.		
	KB21013-33315	.SPOOL SECTION ASS'Y.	5	10001-
1	☆	..HOUSING.	1	10001-
2	☆	..O-RING.....(K13).....	2	10001-
3	☆	..WIPER.....(K13).....	2	10001-
4	☆	..SPOOL.	1	10001-
5	KB21011-30613	..SPRING.	1	10001-
6	KB21011-30702	..SEAT,SPRING.	2	10001-
7	KB21011-30507	..SCREW,CAP.	1	10001-
8	KB21011-31044	..CAP.	1	10001-
9	KB21011-31702	..PLATE,PLATE.	1	10001-
10	KB92702-06181	..BOLT.	2	10001-
11	KB21011-31507	..LINK.	1	10001-
12	KB21011-33307	..PIN.	1	10001-
13	KB94311-05082	..WASHER.	1	10001-
14	KB93601-12082	..PIN,COTTER.	1	10001-
15	KB21011-31205	..BRACKET.	1	10001-
16	KB21011-31702	..PLATE,PLATE.	1	10001-
17	KB92702-06181	..BOLT.	2	10001-
18	KB21011-32404	..POPPET.	1	10001-
19	KB21011-30604	..SPRING.	1	10001-
20	☆	..O-RING.....(K13).....	1	10001-
	KB21013-34839	.SECTION ASS'Y,INLET.	1	10001-
21	KB21011-30349	..HOUSING.	1	10001-
22	KB21001-00106	..O-RING.	1	10001-
23	KB21013-30664	.RELIEF VALVE ASS'Y.	1	10001-
	KB21001-00207	.PLUG ASS'Y.	1	10001-
24	KB21001-00504	..PLUG.	1	10001-
25	KB95113-01800	..O-RING.	1	10001-
26	KB21011-30153	.OUTER SECTION.	1	10001-
27	KB21051-30105	.STUD.	1	10001-
28	KB93128-10082	.NUT.	2	10001-
29	KB21051-30106	.STUD.	2	10001-
30	KB93118-08652	.NUT.	4	10001-

FIG.6235 FLOW DIVIDER VALVE

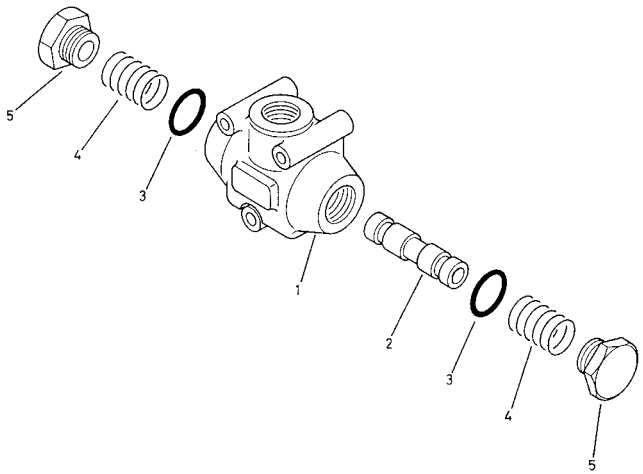

FIG NO. : 6235

INDEX	PART NO.	DESCRIPTION	Q'TY	SERIAL NO.
	23A-60-13100	VALVE ASS'Y,FLOW DIVIDER.....	1	10001-
1	23A-60-13110	.BODY.....	1	10001-
2	23A-60-13120	.SPOOL.....	1	10001-
3	23A-60-13130	.O-RING.....	2	10001-
4	23A-60-13140	.SPRING.....	2	10001-
5	23A-60-13150	.PLUG.....	2	10001-

FIG.6241 PILOT CHECK VALVE (FOR BLADE LIFT、L.H.)

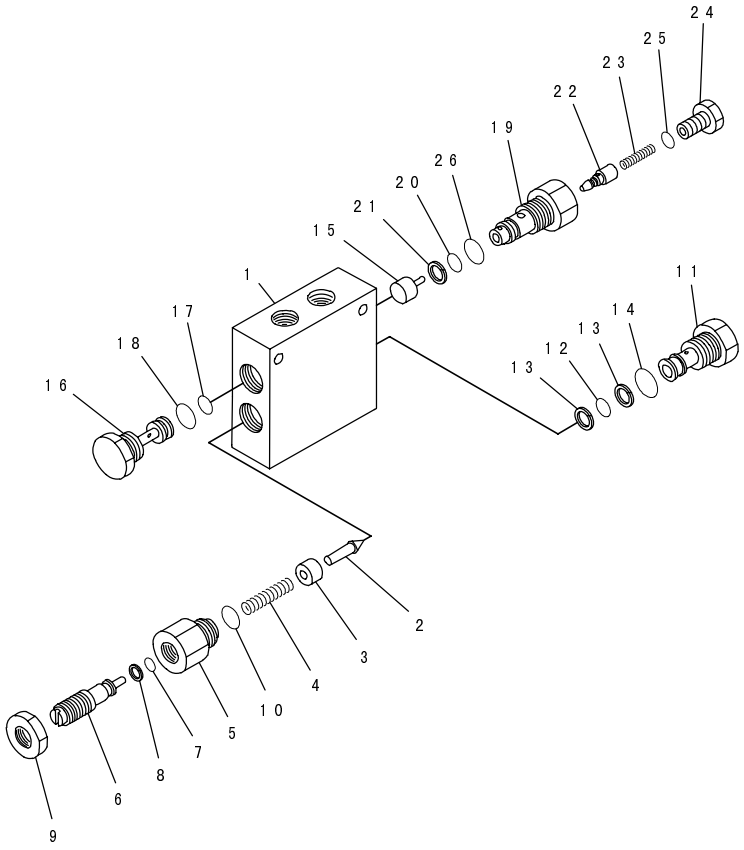

FIG NO. : 6241

INDEX	PART NO.	DESCRIPTION	Q'TY	SERIAL NO.
	235-61-14500	VALVE ASS'Y,PILOT	1	10001-
1	235-61-13210	.BODY,CHECK	1	10001-
2	☆	.VALVE	1	10001-
3	235-61-13250	.COLLAR	1	10001-
4	235-61-11620	.SPRING	1	10001-
5	235-61-13230	.SLEEVE	1	10001-
6	235-61-13220	.BOLT	1	10001-
7	07000-12010	.O-RING	1	10001-
8	07001-02010	.RING,BACK-UP	1	10001-
9	235-61-13270	.NUT	1	10001-
10	07002-12434	.O-RING	1	10001-
11	☆	.PLUG	1	10001-
12	07000-12014	.O-RING	1	10001-
13	07001-02014	.RING,BACK-UP	2	10001-
14	07002-12434	.O-RING	1	10001-
15	235-61-11220	.PISTON	1	10001-
16	235-61-11210	.PLUG	1	10001-
17	07000-12014	.O-RING	1	10001-
18	07002-12434	.O-RING	1	10001-
	235-61-14300	.VALVE ASS'Y	1	10001-
19	☆	..SLEEVE	1	10001-
20	07000-12014	..O-RING	1	10001-
21	07001-02014	..RING,BACK-UP	1	10001-
22	☆	..VALVE	1	10001-
23	235-61-11150	..SPRING	1	10001-
24	235-61-11140	..PLUG	1	10001-
25	07002-12434	..O-RING	1	10001-
26	07002-11423	..O-RING	1	10001-

FIG.6243 PILOT CHECK VALVE (FOR BLADE LIFT、R.H.)

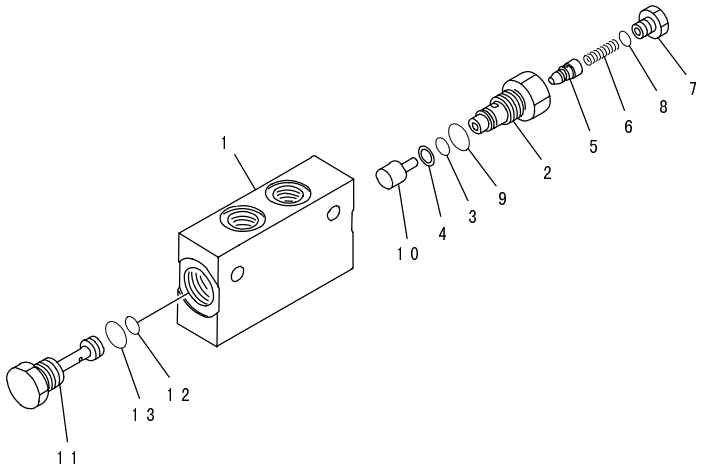

PV59106

FIG NO. : 6243

INDEX	PART NO.	DESCRIPTION	Q'TY	SERIAL NO.
	235-61-14600	VALVE ASS'Y,PILOT CHECK.	1	10001-
1	235-61-11110	.BODY.	1	10001-
	235-61-14300	.VALVE ASS'Y.	1	10001-
2	☆	..SLEEVE.	1	10001-
3	07000-12014	..O-RING.	1	10001-
4	07001-02014	..RING,BACK-UP.	1	10001-
5	☆	..VALVE.	1	10001-
6	235-61-11150	..SPRING.	1	10001-
7	235-61-11140	..PLUG.	1	10001-
8	07002-11423	..O-RING.	1	10001-
9	07002-12434	..O-RING.	1	10001-
10	235-61-11220	.PISTON.	1	10001-
11	235-61-11210	.PLUG.	1	10001-
12	07000-12014	.O-RING.	1	10001-
13	07002-12434	.O-RING.	1	10001-

FIG.6245 PILOT CHECK VALVE (FOR ARTICULATE)

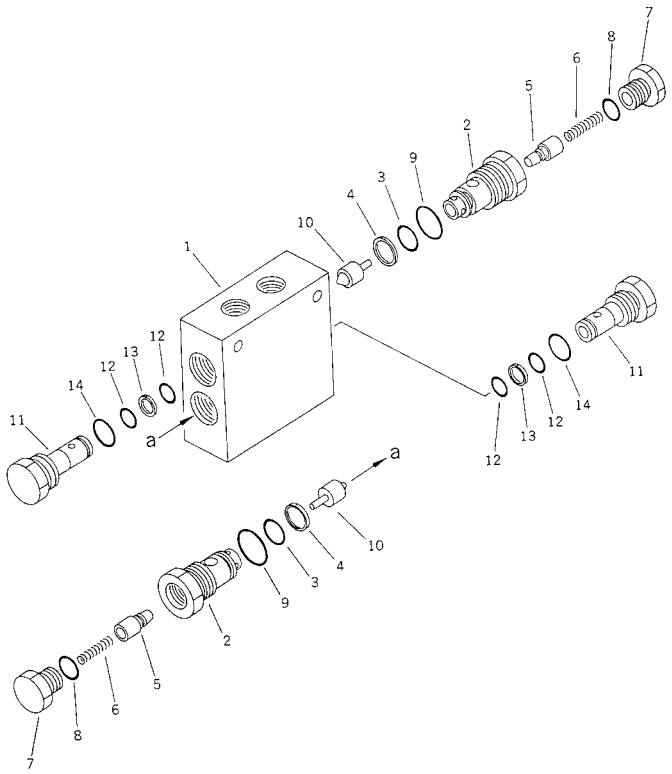

FIG NO. : 6245

INDEX	PART NO.	DESCRIPTION	Q'TY	SERIAL NO.
	235-61-13700	VALVE ASS'Y,PILOT CHECK.	1	10001-
1	235-61-13710	.BODY.	1	10001-
	235-61-11400	.VALVE ASS'Y.	2	10001-
2	☆	..SLEEVE.	1	10001-
3	07000-12014	..O-RING.	1	10001-
4	07001-02014	..RING,BACK-UP.	1	10001-
5	☆	..VALVE.	1	10001-
6	235-61-11150	..SPRING.	1	10001-
7	235-61-11140	..PLUG.	1	10001-
8	07002-11423	..O-RING.	1	10001-
9	07002-12434	..O-RING.	1	10001-
10	235-61-11220	.PISTON.	2	10001-
11	235-61-13720	.PLUG.	2	10001-
12	07000-12014	.O-RING.	4	10001-
13	07001-02014	.RING,BACK-UP.	2	10001-
14	07002-12434	.O-RING.	2	10001-

FIG.6247 PILOT CHECK VALVE (FOR LEANING AND DRAWBAR SHIFT)

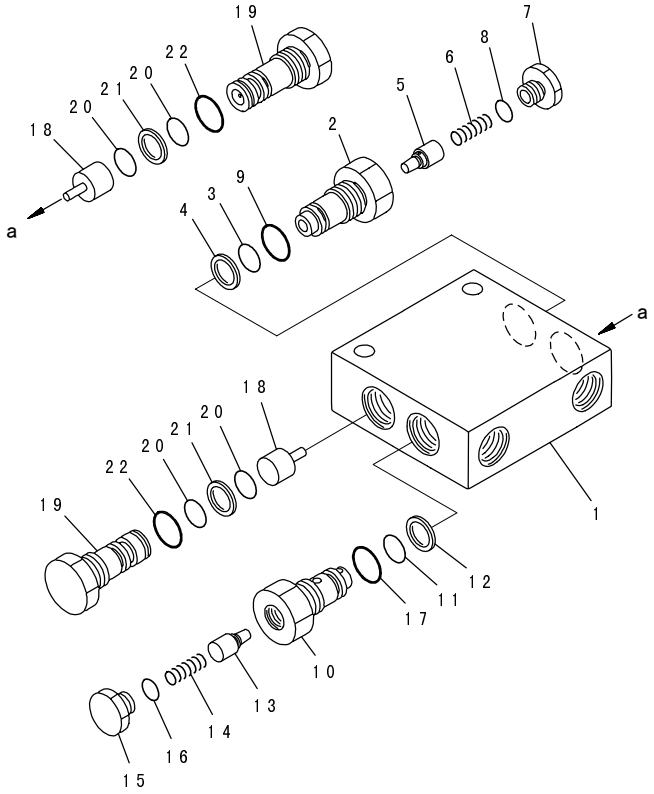

PN50149

FIG NO. : 6247

INDEX	PART NO.	DESCRIPTION	Q'TY	SERIAL NO.
	235-61-13800	VALVE ASS'Y,PILOT CHECK.	2	10001-
1	235-61-13710	.BODY.	1	10001-
	235-61-11400	.VALVE ASS'Y.	1	10001-
2	☆	..SLEEVE.	1	10001-
3	07000-12014	..O-RING.	1	10001-
4	07001-02014	..RING,BACK-UP.	1	10001-
5	☆	..VALVE.	1	10001-
6	235-61-11150	..SPRING.	1	10001-
7	235-61-11140	..PLUG.	1	10001-
8	07002-11423	..O-RING.	1	10001-
9	07002-12434	..O-RING.	1	10001-
	235-61-11500	.VALVE ASS'Y.	1	10001-
10	☆	..SLEEVE.	1	10001-
11	07000-12014	..O-RING.	1	10001-
12	07001-02014	..RING,BACK-UP.	1	10001-
13	☆	..VALVE.	1	10001-
14	235-61-11150	..SPRING.	1	10001-
15	235-61-11140	..PLUG.	1	10001-
16	07002-11423	..O-RING.	1	10001-
17	07002-12434	..O-RING.	1	10001-
18	☆	.PISTON.	2	10001-
19	☆	.PLUG.	2	10001-
20	07000-12014	.O-RING.	4	10001-
21	07001-02014	.RING,BACK-UP.	2	10001-
22	07002-12434	.O-RING.	2	10001-

FIG.6251 PILOT CHECK VALVE (FOR FRONT BLADE)

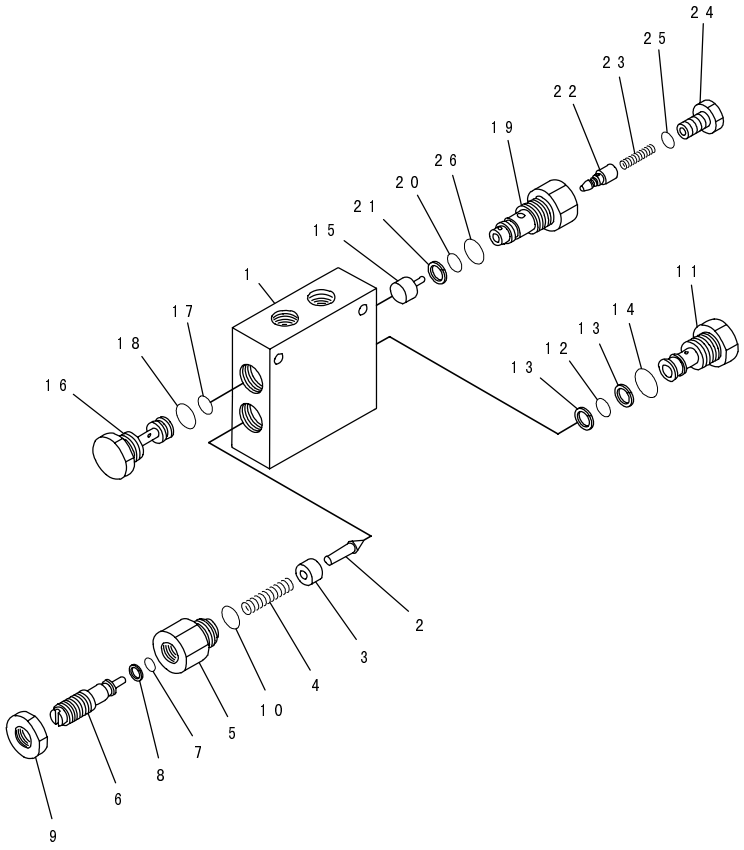

FIG NO. : 6251

INDEX	PART NO.	DESCRIPTION	Q'TY	SERIAL NO.
	235-61-14500	VALVE ASS'Y,PILOT CHECK	1	10001-
1	235-61-13210	.BODY	1	10001-
2	☆	.VALVE	1	10001-
3	235-61-13250	.COLLAR	1	10001-
4	235-61-11620	.SPRING	1	10001-
5	235-61-13230	.SLEEVE	1	10001-
6	235-61-13220	.BOLT	1	10001-
7	07000-12010	.O-RING	1	10001-
8	07001-02010	.RING,BACK-UP	1	10001-
9	235-61-13270	.NUT	1	10001-
10	07002-12434	.O-RING	1	10001-
11	☆	.PLUG	1	10001-
12	07000-12014	.O-RING	1	10001-
13	07001-02014	.RING,BACK-UP	2	10001-
14	07002-12434	.O-RING	1	10001-
15	235-61-11220	.PISTON	1	10001-
16	235-61-11210	.PLUG	1	10001-
17	07000-12014	.O-RING	1	10001-
18	07002-12434	.O-RING	1	10001-
	235-61-14300	.VALVE ASS'Y	1	10001-
19	☆	..SLEEVE	1	10001-
20	07000-12014	..O-RING	1	10001-
21	07001-02014	..RING,BACK-UP	1	10001-
22	☆	..VALVE	1	10001-
23	235-61-11150	..SPRING	1	10001-
24	235-61-11140	..PLUG	1	10001-
25	07002-11423	..O-RING	1	10001-
26	07002-12434	..O-RING	1	10001-

FIG.6253 PILOT CHECK VALVE (FOR POWER TILT)

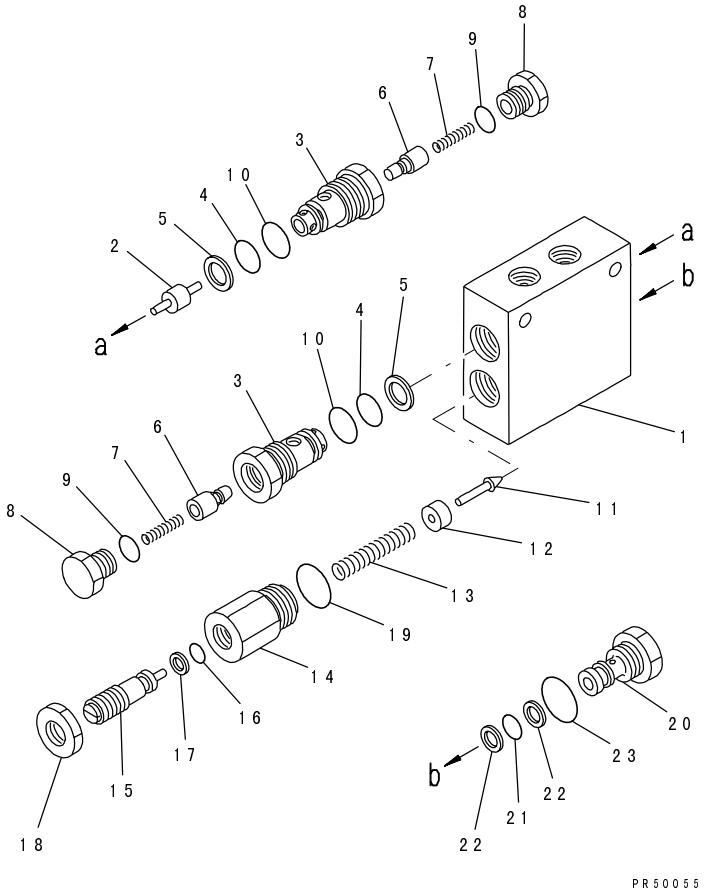

FIG NO. : 6253

INDEX	PART NO.	DESCRIPTION	Q'TY	SERIAL NO.
	235-61-14100	VALVE ASS'Y,PILOT CHECK.	1	10001-
1	235-61-13210	.BODY.	1	10001-
2	235-61-11120	.PISTON.	1	10001-
	235-61-11400	.VALVE ASS'Y.	2	10001-
3	☆	..SLEEVE.	1	10001-
4	07000-12014	..O-RING.	1	10001-
5	07001-02014	..RING,BACK-UP.	1	10001-
6	☆	..VALVE.	1	10001-
7	235-61-11150	..SPRING.	1	10001-
8	235-61-11140	..PLUG.	1	10001-
9	07002-11423	..O-RING.	1	10001-
10	07002-12434	..O-RING.	1	10001-
11	235-61-13240	.VALVE.	1	10001-
12	235-61-13250	.COLLAR.	1	10001-
13	235-61-11620	.SPRING.	1	10001-
14	235-61-13230	.SLEEVE.	1	10001-
15	235-61-13220	.BOLT.	1	10001-
16	07000-12010	.O-RING.	1	10001-
17	07001-02010	.RING,BACK-UP.	1	10001-
18	235-61-13270	.NUT.	1	10001-
19	07002-12434	.O-RING.	1	10001-
20	235-61-13260	.PLUG.	1	10001-
21	07000-12014	.O-RING.	1	10001-
22	07001-02014	.RING,BACK-UP.	2	10001-
23	07002-12434	.O-RING.	1	10001-

FIG.6255 PILOT CHECK VALVE (FOR SCARIFIER)

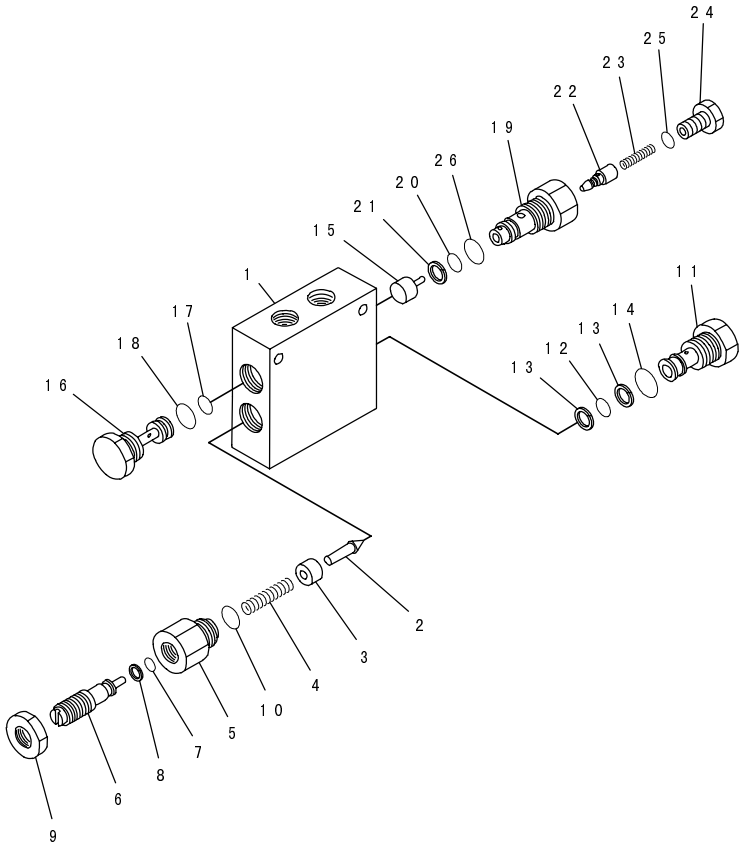

FIG NO. : 6255

INDEX	PART NO.	DESCRIPTION	Q'TY	SERIAL NO.
	235-61-14500	VALVE ASS'Y,PILOT CHECK.	1	10001-
1	235-61-13210	.BODY.	1	10001-
2	☆	.VALVE.	1	10001-
3	235-61-13250	.COLLAR.	1	10001-
4	235-61-11620	.SPRING.	1	10001-
5	235-61-13230	.SLEEVE.	1	10001-
6	235-61-13220	.BOLT.	1	10001-
7	07000-12010	.O-RING.	1	10001-
8	07001-02010	.RING,BACK-UP.	1	10001-
9	235-61-13270	.NUT.	1	10001-
10	07002-12434	.O-RING.	1	10001-
11	☆	.PLUG.	1	10001-
12	07000-12014	.O-RING.	1	10001-
13	07001-02014	.RING,BACK-UP.	2	10001-
14	07002-12434	.O-RING.	1	10001-
15	235-61-11220	.PISTON.	1	10001-
16	235-61-11210	.PLUG.	1	10001-
17	07000-12014	.O-RING.	1	10001-
18	07002-12434	.O-RING.	1	10001-
	235-61-14300	.VALVE ASS'Y.	1	10001-
19	☆	..SLEEVE.	1	10001-
20	07000-12014	..O-RING.	1	10001-
21	07001-02014	..RING,BACK-UP.	1	10001-
22	☆	..VALVE.	1	10001-
23	235-61-11150	..SPRING.	1	10001-
24	235-61-11140	..PLUG.	1	10001-
25	07002-11423	..O-RING.	1	10001-
26	07002-12434	..O-RING.	1	10001-

FIG.6301 DRAWBAR SHIFT CYLINDER

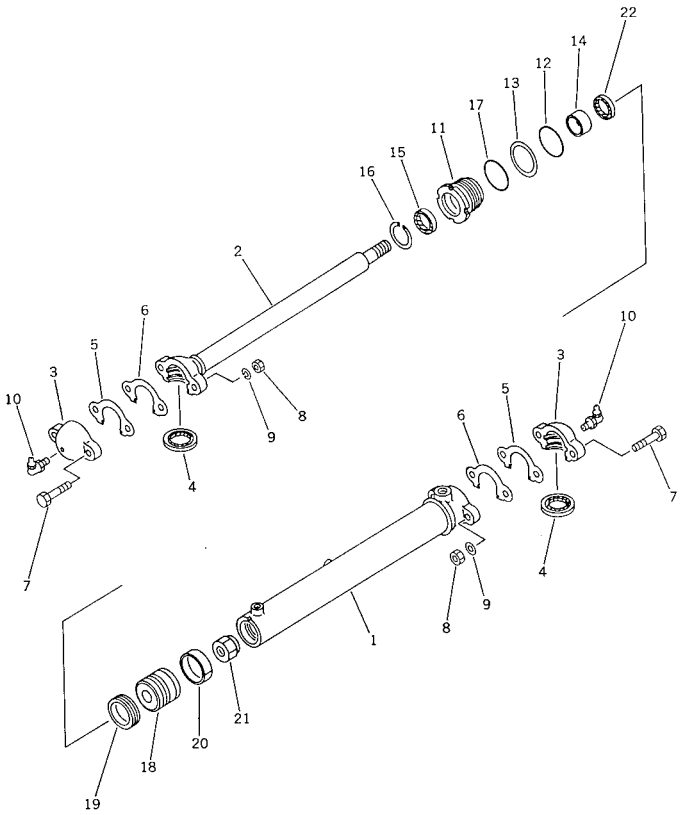

FIG NO. : 6301

INDEX	PART NO.	DESCRIPTION	Q'TY	SERIAL NO.
	23A-63-22101	CYLINDER ASS'Y,DRAWBAR SHIFT.....	1	10001-
1	23A-63-22140	.CYLINDER.....	1	10001-
2	23A-63-22120	.ROD,PISTON.....	1	10001-
3	07138-00980	.CAP.....	2	10001-
4	07141-00090	.SEAL,DUST.....	2	10001-
5	07139-00902	.SHIM, 0.2MM.....	6	10001-
6	07139-00905	.SHIM, 0.5MM.....	4	10001-
7	01010-52075	.BOLT.....	4	10001-
8	01580-12016	.NUT.....	4	10001-
9	01602-22060	.WASHER,SPRING.....	4	10001-
10	07020-00900	.FITTING,GREASE.....	2	10001-
11	707-29-70930	.HEAD,CYLINDER.....	1	10001-
12	07000-12065	.O-RING.....	1	10001-
13	07001-02065	.RING,BACK-UP.....	1	10001-
14	07177-04025	.BUSHING.....	1	10001-
15	198-63-75190	.SEAL,DUST.....	1	10001-
16	07179-12052	.RING,SNAP.....	1	10001-
17	07000-02070	.O-RING.....	1	10001-
18	707-36-70910	.PISTON.....	1	10001-
19	707-44-70070	.RING,PISTON.....	1	10001-
20	07155-00720	.RING,WEAR.....	1	10001-
21	07165-12426	.NUT.....	1	10001-
22	707-51-40210	.PACKING,ROD.....	1	10001-

FIG.6303 BLADE LIFT CYLINDER

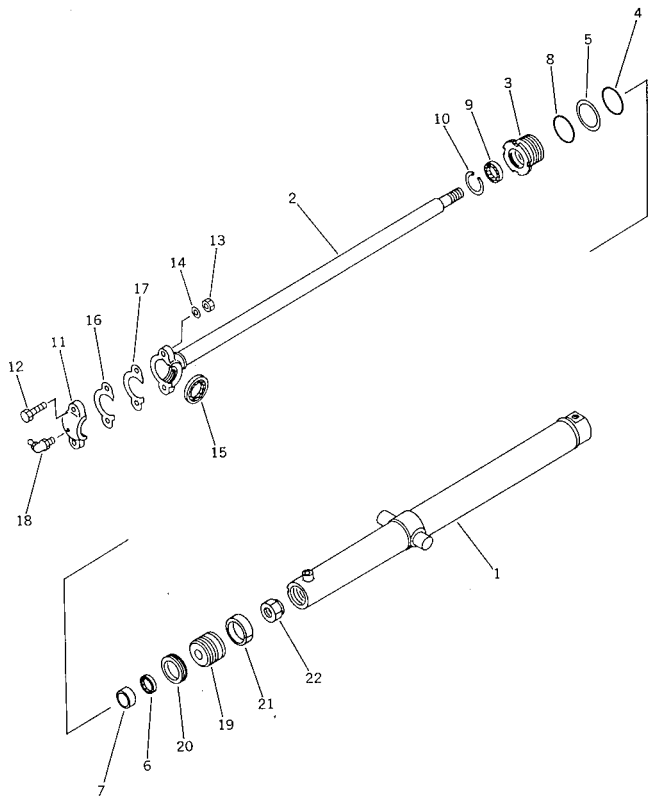

FIG NO. : 6303

INDEX	PART NO.	DESCRIPTION	Q'TY	SERIAL NO.
	23A-63-12101	CYLINDER ASS'Y,BLADE LIFT	2	10001-
1	23A-63-12140	.CYLINDER	1	10001-
2	23A-63-12120	.ROD,PISTON	1	10001-
3	707-29-70940	.HEAD	1	10001-
4	07000-12065	.O-RING,CYLINDER	1	10001-
5	07001-02065	.RING	1	10001-
6	707-51-45210	.PACKING,BACK-UP	1	10001-
7	07177-04530	.BUSHING,ROD	1	10001-
8	07000-02070	.O-RING	1	10001-
9	112-63-15370	.SEAL,DUST	1	10001-
10	07179-12057	.RING,SNAP	1	10001-
11	07138-00980	.CAP	1	10001-
12	01010-52075	.BOLT	2	10001-
13	01580-12016	.NUT	2	10001-
14	01602-22060	.WASHER,SPRING	2	10001-
15	07141-00090	.SEAL,DUST	1	10001-
16	07139-00905	.SHIM, 0.5MM	2	10001-
17	07139-00902	.SHIM, 0.2MM	3	10001-
18	07020-00900	.FITTING,GREASE	1	10001-
19	707-36-70910	.PISTON	1	10001-
20	707-44-70070	.RING,PISTON	1	10001-
21	07155-00720	.RING,WEAR	1	10001-
22	07165-12426	.NUT	1	10001-

FIG.6305A BLADE SIDE SHIFT CYLINDER(#10016-)

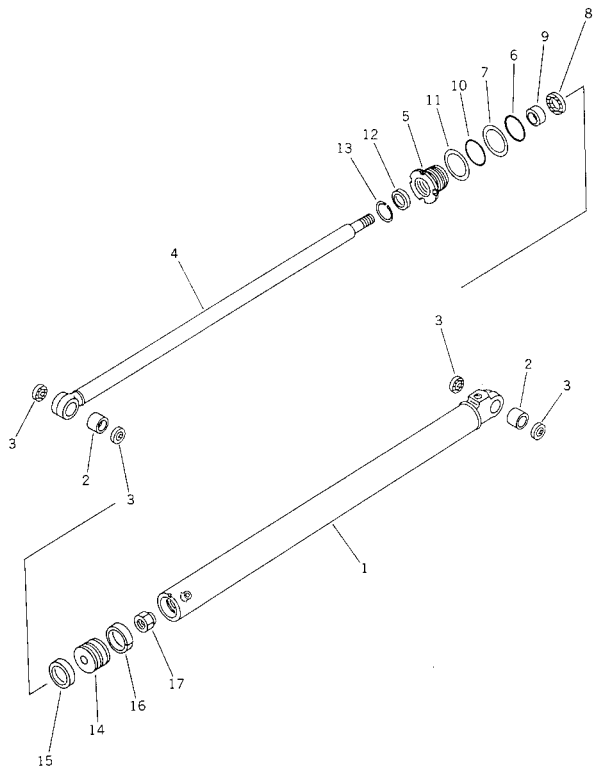

FIG NO. : 6305A

INDEX	PART NO.	DESCRIPTION	Q'TY	SERIAL NO.
	23B-63-42103	CYLINDER ASS'Y,BLADE SIDE SHIFT.....	1	10016-
1	23B-63-42141	.CYLINDER.....	1	10016-
2	07143-10304	.BUSHING.....	2	10001-
3	07145-00035	.SEAL,DUST.....	4	10001-
4	23B-63-42120	.ROD,PISTON.....	1	10001-
5	707-29-70980	.HEAD,CYLINDER.....	1	10016-
6	07000-12065	.O-RING.....	1	10001-
7	07001-02065	.RING,BACK-UP.....	1	10001-
8	707-51-45210	.PACKING,ROD.....	1	10001-
9	07177-04530	.BUSHING.....	1	10001-
10	07000-02070	.O-RING.....	1	10001-
11	707-45-70910	.WASHER,LOCK.....	1	10015-
12	112-63-15370	.SEAL,DUST.....	1	10001-
13	07179-12057	.RING,SNAP.....	1	10001-
14	707-36-70910	.PISTON.....	1	10001-
15	707-44-70070	.RING,PISTON.....	1	10001-
16	07155-00720	.RING,WEAR.....	1	10001-
17	07165-12426	.NUT.....	1	10001-

FIG.6311 FRONT BLADE CYLINDER

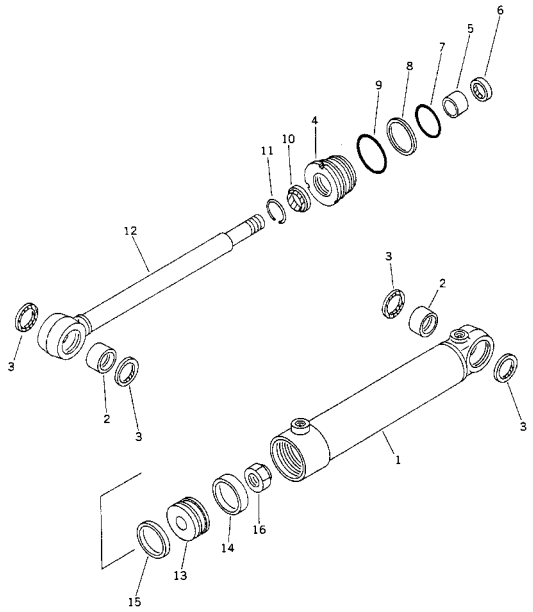

FIG NO. : 6311

INDEX	PART NO.	DESCRIPTION	Q'TY	SERIAL NO.
	232-63-38100	CYLINDER ASS'Y,FRONT BLADE.	1	10001-
1	232-63-38140	.CYLINDER.	1	10001-
2	07143-10505	.BUSHING.	2	10001-
3	07145-00050	.SEAL,DUST.	4	10001-
4	707-29-90920	.HEAD,CYLINDER.	1	10001-
5	07177-04530	.BUSHING.	1	10001-
6	707-51-45210	.PACKING,ROD.	1	10001-
7	07000-12085	.O-RING.	1	10001-
8	07001-02085	.RING,BACK-UP.	1	10001-
9	07000-02090	.O-RING.	1	10001-
10	112-63-15370	.SEAL,DUST.	1	10001-
11	07179-12057	.RING,SNAP.	1	10001-
12	232-63-38120	.ROD,PISTON.	1	10001-
13	707-36-90910	.PISTON.	1	10001-
14	07155-00925	.RING,WEAR.	1	10001-
15	07161-10090	.RING,PISTON.	1	10001-
16	07165-13033	.NUT,NYLON.	1	10001-

FIG.6313A POWER TILT CYLINDER(#.-)

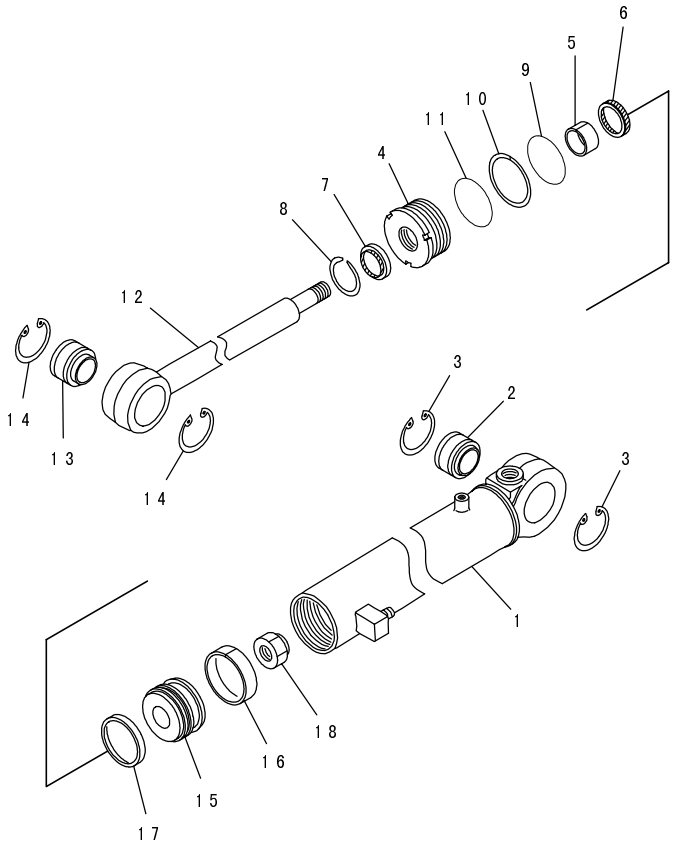

PJ52450

FIG NO. : 6313A

INDEX	PART NO.	DESCRIPTION	Q'TY	SERIAL NO.
	23B-63-18103	CYLINDER ASS'Y,POWER TILT.....	1	.-
1	23B-63-18142	.CYLINDER.....	1	.-
2	114-63-55170	.BUSHING.....	1	10001-
3	04065-06220	.RING,SNAP.....	2	10001-
4	707-29-80820	.HEAD,CYLINDER.....	1	.-
5	07177-04025	.BUSHING.....	1	10001-
6	707-51-40210	.PACKING,ROD.....	1	10001-
7	707-56-40690	.SEAL,DUST.....	1	.-
8	07179-12052	.RING,SNAP.....	1	10001-
9	07000-12075	.O-RING.....	1	10001-
10	07146-02076	.RING,BACK-UP.....	1	.-
11	07000-02080	.O-RING.....	1	10001-
12	23B-63-18121	.ROD,PISTON.....	1	.-
13	114-63-55170	.BUSHING.....	1	10001-
14	04065-06220	.RING,SNAP.....	2	10001-
15	707-36-80970	.PISTON.....	1	.-
16	07156-00810	.RING,WEAR.....	1	.-
17	707-44-80070	.RING,PISTON.....	1	10001-
18	07165-12729	.NUT,NYLON.....	1	10001-

FIG.6315 SCARIFIER CYLINDER

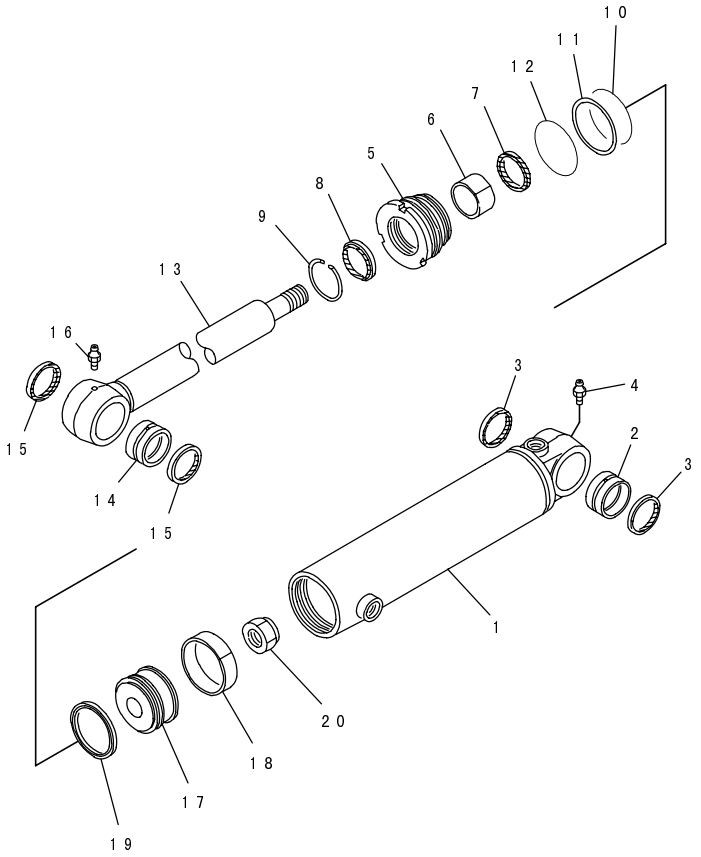

PV59254

FIG NO. : 6315

INDEX	PART NO.	DESCRIPTION	Q'TY	SERIAL NO.
	23A-63-32102	CYLINDER ASS'Y,SCARIFIER	1	10001-
1	23A-63-32141	.CYLINDER	1	10001-
2	07144-10404	.BUSHING	1	10001-
3	07145-00040	.SEAL,DUST	2	10001-
4	07020-00000	.FITTING,GREASE	1	10001-
5	707-29-80940	.HEAD,CYLINDER	1	10001-
6	07177-05030	.BUSHING	1	10001-
7	707-51-50210	.PACKING,ROD	1	10001-
8	176-63-92240	.SEAL,DUST	1	10001-
9	07179-12062	.RING,SNAP	1	10001-
10	07000-12075	.O-RING	1	10001-
11	07001-02075	.RING,BACK-UP	1	10001-
12	07000-02080	.O-RING	1	10001-
13	23A-63-32171	.ROD,PISTON	1	10001-
14	07144-10505	.BUSHING	1	10001-
15	07145-00050	.SEAL,DUST	2	10001-
16	07020-00000	.FITTING,GREASE	1	10001-
17	707-36-80911	.PISTON	1	10001-
18	07155-00820	.RING,WEAR	1	10001-
19	707-44-80070	.RING,PISTON	1	10001-
20	07165-12729	.NUT	1	10001-

FIG.6401 HYDRAULIC PIPING (TANK TO PUMP TO CONTROL VALVE)

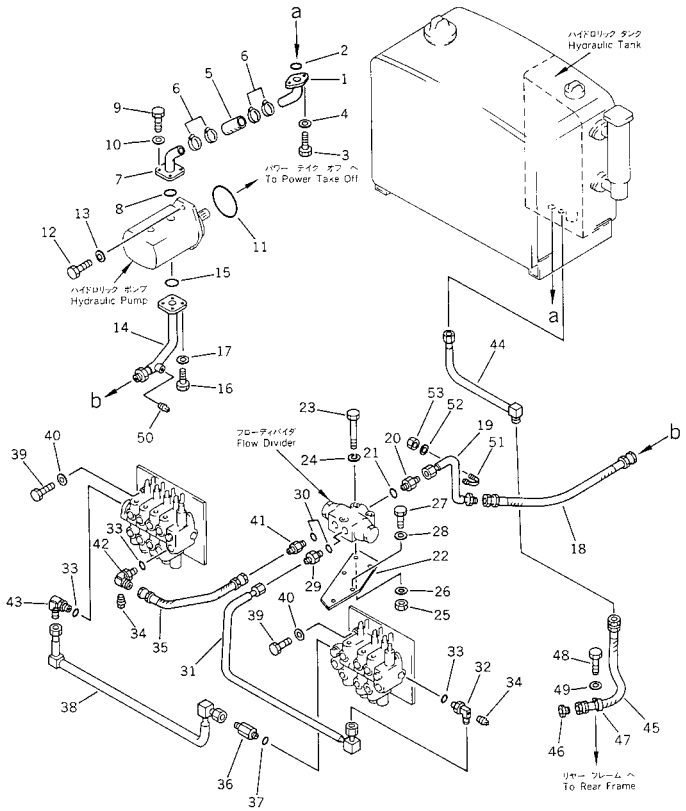

FIG NO. : 6401

INDEX	PART NO.	DESCRIPTION	Q'TY	SERIAL NO.
1	23A-60-16570	TUBE	1	10001-
2	07000-13035	O-RING	1	10001-
3	01010-51030	BOLT	2	10001-
4	01643-31032	WASHER	2	10001-
5	07260-03213	HOSE	1	10001-
6	07281-00549	CLAMP	4	10001-
7	23A-60-16580	TUBE	1	10001-
8	07000-13020	O-RING	1	10001-
9	02010-70725	BOLT	4	10052-
	01010-51035	BOLT	4	10001-10051
10	01643-31232	WASHER	4	10052-
	01643-31032	WASHER	4	10001-10051
11	07000-12085	O-RING	1	10001-
12	01010-51030	BOLT	2	10001-
13	01643-31032	WASHER	2	10001-
14	23A-60-16131	TUBE	1	10052-
	23A-60-16130	TUBE	1	10001-10051
15	07000-13028	O-RING	1	10052-
	07000-13025	O-RING	1	10001-10051
16	02010-70625	BOLT	4	10052-
	01010-50830	BOLT	4	10001-10051
17	01643-31032	WASHER	4	10052-
	01643-30823	WASHER	4	10001-10051
18	07108-20607	HOSE	1	10001-
19	23A-60-16141	TUBE	1	10016-
	23A-60-16140	TUBE	1	10001-10015
20	23A-60-16150	NIPPLE	1	10001-
21	234-60-17250	O-RING	1	10001-
22	23A-60-16450	PLATE	1	10001-
23	01010-50890	BOLT	3	10001-
24	01643-30823	WASHER	3	10001-
25	01580-10806	NUT	3	10001-
26	01643-30823	WASHER	3	10001-
27	01010-51016	BOLT	2	10001-
28	01643-31032	WASHER	2	10001-
29	23B-60-14410	NIPPLE	1	10001-
30	238-40-16140	O-RING	2	10001-
31	23A-60-16170	TUBE	1	10001-
32	23B-60-14430	ELBOW	1	10001-
33	07000-12018	O-RING	3	10050-
	237-60-22240	O-RING	3	10001-10049
34	07042-50108	PLUG	2	10001-

FIG.6401 HYDRAULIC PIPING (TANK TO PUMP TO CONTROL VALVE)

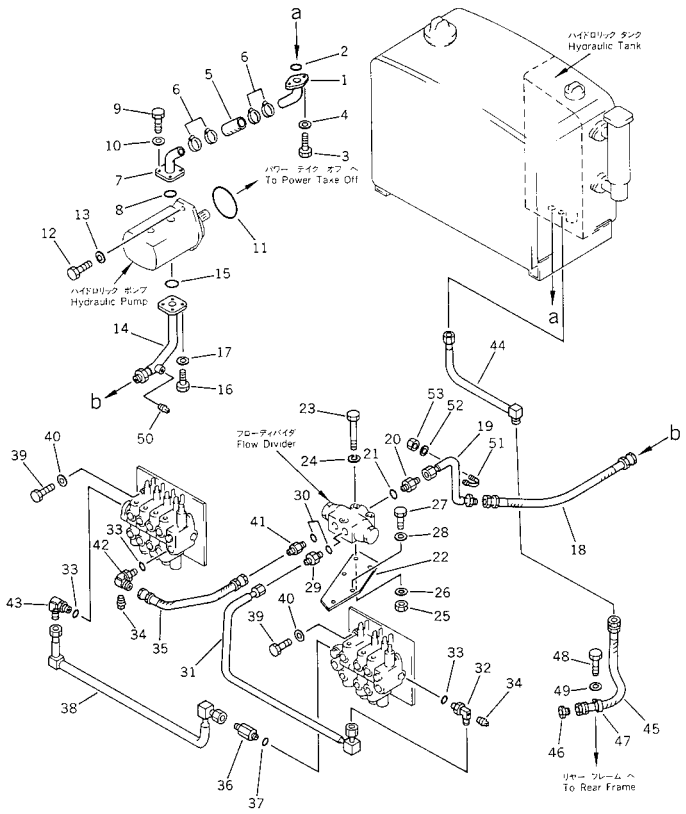

FIG NO. : 6401

INDEX	PART NO.	DESCRIPTION	Q'TY	SERIAL NO.
35	07108-20503	HOSE	1	10001-
36	235-60-15410	NIPPLE	1	10001-
37	07000-12018	O-RING	1	10050-
	237-60-22240	O-RING	1	10001-10049
38	23B-60-16190	TUBE	1	10001-
39	01010-50830	BOLT	6	10001-
40	01643-30823	WASHER	6	10001-
41	23B-60-14420	NIPPLE	1	10001-
42	23B-60-14440	ELBOW	1	10001-
43	23B-60-14450	ELBOW	1	10001-
44	23A-60-16690	TUBE	1	10001-
45	07102-20404	HOSE	1	10001-
46	07376-50422	PLUG	1	10001-
47	08036-02514	CLIP	1	10001-
48	01010-51016	BOLT	1	10001-
49	01643-31032	WASHER	1	10001-
50	07042-50108	PLUG	1	10001-
51	07283-23442	CLIP	1	10001-
52	01599-01011	NUT	2	10001-
53	01643-31032	WASHER	2	10001-

FIG.6403 HYDRAULIC PIPING (CONTROL VALVE TO TANK)

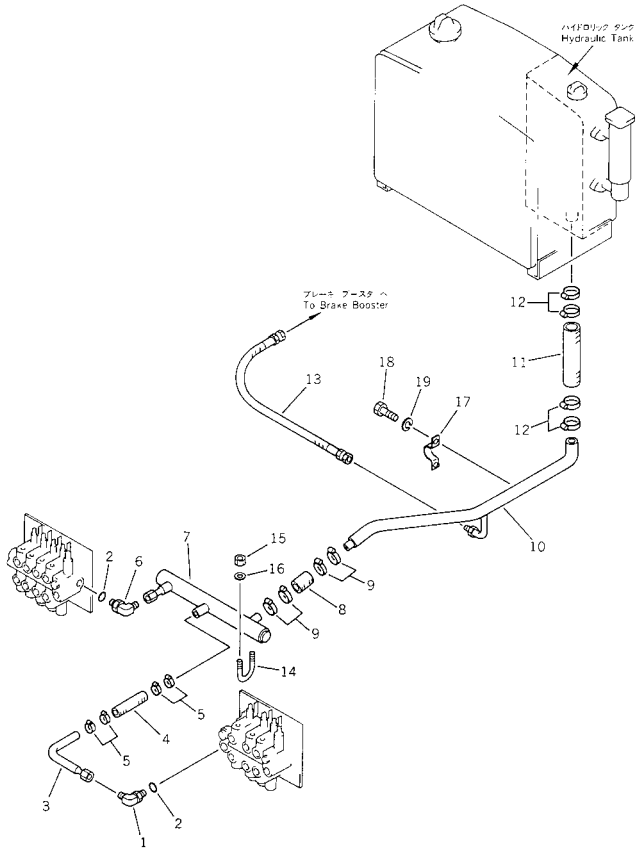

FIG NO. : 6403

INDEX	PART NO.	DESCRIPTION	Q'TY	SERIAL NO.
1	23B-60-14460	ELBOW	1	10001-
2	07000-12018	O-RING	2	10050-
	237-60-22240	O-RING	2	10001-10049
3	23B-60-16220	TUBE	1	10001-
4	07260-22613	HOSE	1	10001-
5	07281-00419	CLAMP	4	10001-
6	23A-60-16430	ELBOW	1	10001-
7	23A-60-16230	TUBE	1	10001-
8	07260-03218	HOSE	1	10001-
9	07281-00489	CLAMP	4	10001-
10	23A-60-16240	TUBE	1	10001-
11	07260-04118	HOSE	1	10001-
12	07281-10609	CLAMP	4	10001-
13	07102-20509	HOSE	1	10001-
14	07283-24346	CLIP	1	10001-
15	01599-01011	NUT	2	10001-
16	01643-31032	WASHER	2	10001-
17	07282-04311	CLAMP	1	10001-
18	01010-51020	BOLT	2	10001-
19	01643-31032	WASHER	2	10001-

FIG.6421 HYDRAULIC PIPING (LEANING CYLINDER LINE)

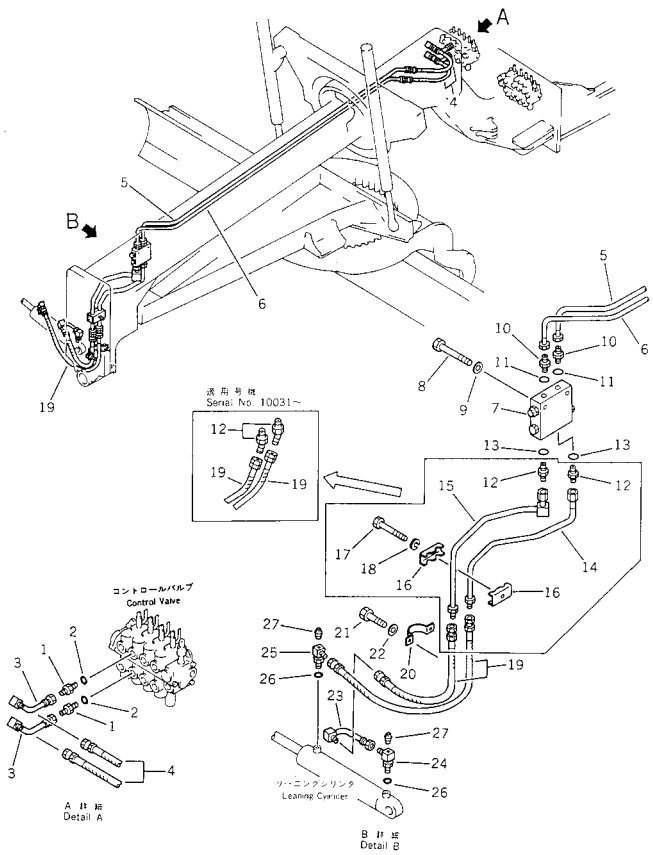

FIG NO. : 6421

INDEX	PART NO.	DESCRIPTION	Q'TY	SERIAL NO.
1	237-60-23120	NIPPLE	2	10001-
2	07000-12018	O-RING	2	10050-
	237-60-22240	O-RING	2	10001-10049
3	23A-60-14141	TUBE	2	10001-
4	230-09-23100	HOSE	2	10001-
5	23A-60-14920	TUBE	1	10001-
6	23A-60-14930	TUBE	1	10001-
7	(235-61-13800)	VALVE ASS'Y,PILOT CHECK	1	10001-
8	01010-50855	BOLT	2	10001-
9	01643-30823	WASHER	2	10001-
10	07230-10422	UNION	2	10001-
11	07002-12034	O-RING	2	10001-
12	233-60-24461	ELBOW	2	10031-
	07230-10422	UNION	2	10001-10030
13	07002-12034	O-RING	2	10001-
14	23A-60-24130	TUBE	1	10001-10030
15	23A-60-24140	TUBE	1	10001-10030
16	232-60-54830	CLIP	2	10001-10030
17	01010-51045	BOLT	1	10001-10030
18	01602-21030	WASHER,SPRING	1	10001-10030
19	230-09-23110	HOSE	2	10031-
	230-09-23090	HOSE	2	10001-10030
20	232-745-2131	CLIP	1	10001-
21	01010-51220	BOLT	2	10001-
22	01643-31232	WASHER	2	10001-
23	23A-60-14490	TUBE	1	10001-
24	07235-50422	ELBOW	1	10001-
25	07235-50315	ELBOW	1	10001-
26	07002-12034	O-RING	2	10001-
27	07042-50108	PLUG	2	10001-

FIG.6423A HYDRAULIC PIPING (ARTICULATE CYLINDER LINE)(#10084-)

FIG NO. : 6423A

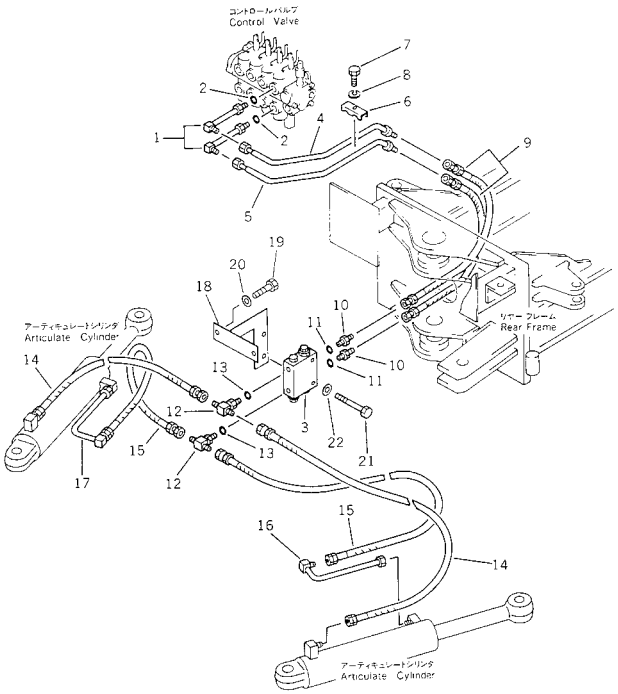

INDEX	PART NO.	DESCRIPTION	Q'TY	SERIAL NO.
1	237-60-22251	ELBOW	2	10001-
2	07000-12018	O-RING	2	10050-
3	(235-61-13700)	VALVE ASS'Y,PILOT CHECK	1	10001-
4	23A-60-14530	TUBE	1	10001-
5	23A-60-14590	TUBE	1	10001-
6	232-60-54820	CLIP	1	10001-
7	01010-51020	BOLT	1	10001-
8	01602-21030	WASHER,SPRING	1	10001-
9	230-09-03050	HOSE	2	10001-
10	07230-10315	UNION	2	10001-
11	07002-12034	O-RING	2	10001-
12	233-60-32250	TEE	2	10001-
13	07002-12034	O-RING	2	10001-
14	23A-60-16410	HOSE	2	10084-
15	07108-20306	HOSE	2	10084-
16	23A-60-14561	TUBE	1	10084-
17	23A-60-14581	TUBE	1	10084-
18	23B-60-14110	BRACKET	1	10001-
19	01010-51025	BOLT	2	10001-
20	01643-31032	WASHER	2	10001-
21	01010-50860	BOLT	2	10001-
22	01643-30823	WASHER	2	10001-

FIG.6431 HYDRAULIC PIPING (DRAWBAR SIDE SHIFT CYLINDER LINE)

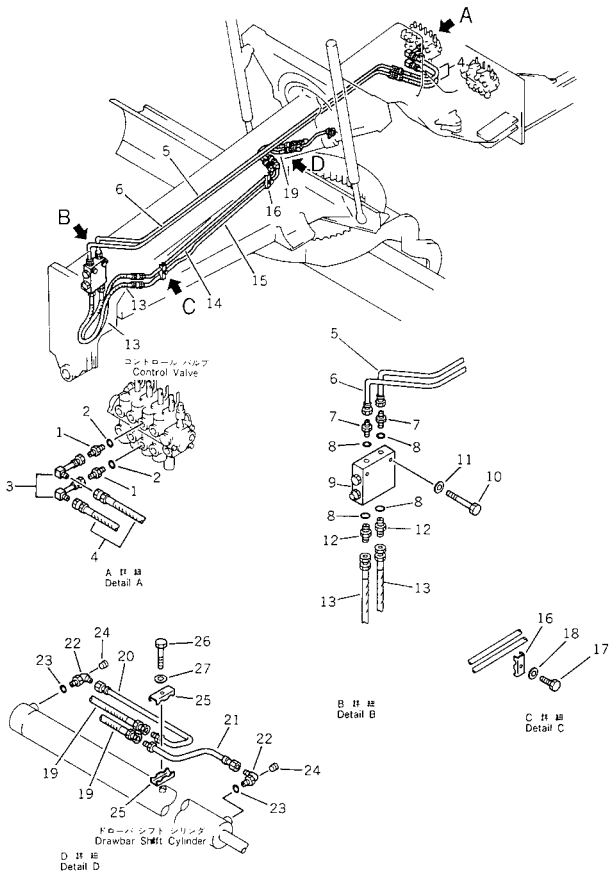

FIG NO. : 6431

INDEX	PART NO.	DESCRIPTION	Q'TY	SERIAL NO.
1	237-60-23120	NIPPLE	2	10001-
2	07000-12018	O-RING	2	10050-
	237-60-22240	O-RING	2	10001-10049
3	23A-60-14151	TUBE	2	10001-
4	230-09-23100	HOSE	2	10001-
5	23A-60-14890	TUBE	1	10001-
6	23A-60-14910	TUBE	1	10001-
7	07230-10422	UNION	2	10001-
8	07002-12034	O-RING	4	10001-
9	(235-61-13800)	VALVE ASS'Y,PILOT CHECK	1	10001-
10	01010-50855	BOLT	2	10001-
11	01643-30823	WASHER	2	10001-
12	07230-10315	UNION	2	10001-
13	230-09-03100	HOSE	2	10001-
14	23A-60-15410	TUBE	1	10001-
15	23A-60-15420	TUBE	1	10001-
16	237-60-14130	CLIP	2	10001-
17	01010-51020	BOLT	2	10001-
18	01643-31032	WASHER	2	10001-
19	230-09-03060	HOSE	2	10001-
20	234-60-52170	TUBE	1	10001-
21	234-60-52160	TUBE	1	10001-
22	07235-50422	ELBOW	2	10001-
23	07002-12034	O-RING	2	10001-
24	07042-20108	PLUG	2	10001-
25	232-60-54830	CLIP	2	10001-
26	01010-51050	BOLT	1	10001-
27	01643-31032	WASHER	1	10001-

FIG.6435A HYDRAULIC PIPING (BLADE LIFT CYLINDER LINE)(#10031-)

FIG NO. : 6435A

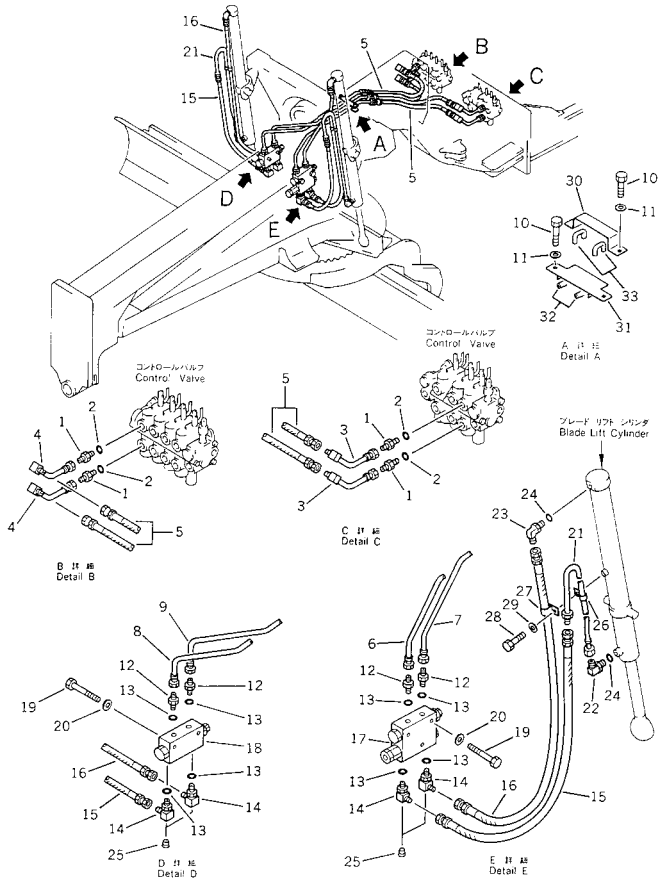

INDEX	PART NO.	DESCRIPTION	Q'TY	SERIAL NO.
1	237-60-23120	NIPPLE	4	10001-
2	07000-12018	O-RING	4	10050-
	237-60-22240	O-RING	4	10001-10049
3	23A-60-14111	TUBE	2	10001-
4	23A-60-14131	TUBE	2	10001-
5	230-09-23100	HOSE	4	10001-
6	23A-60-14161	TUBE	1	10001-
7	23A-60-14171	TUBE	1	10001-
8	23A-60-14181	TUBE	1	10001-
9	23A-60-14191	TUBE	1	10001-
10	01010-51020	BOLT	4	10001-
11	01643-31032	WASHER	4	10001-
12	07230-10422	UNION	4	10001-
13	07002-12034	O-RING	8	10001-
14	07235-50315	ELBOW	4	10001-
15	230-09-03100	HOSE	2	10031-
16	230-09-03150	HOSE	2	10031-
17	(235-61-14500)	VALVE ASS'Y,PILOT CHECK, L.H.	1	10001-
18	(235-61-14600)	VALVE ASS'Y,PILOT CHECK, R.H.	1	10001-
19	01010-50855	BOLT	4	10001-
20	01643-30823	WASHER	4	10001-
21	23A-60-14610	TUBE	2	10001-
22	07235-10422	ELBOW	2	10031-
23	07235-10315	ELBOW	2	10031-
24	07002-12034	O-RING	4	10001-
25	07042-50108	PLUG	4	10001-
26	232-60-63160	CLIP	2	10031-
27	08036-01814	CLIP	2	10031-
28	01010-51016	BOLT	2	10031-
29	01641-21016	WASHER	2	10031-
30	23B-60-16620	PLATE	1	10001-
31	23B-60-16630	PLATE	1	10001-
32	23A-40-12270	TUBE	4	10001-
33	23A-60-16960	TUBE	4	10001-

FIG.6437 HYDRAULIC PIPING (BLADE SIDE SHIFT CYLINDER LINE)

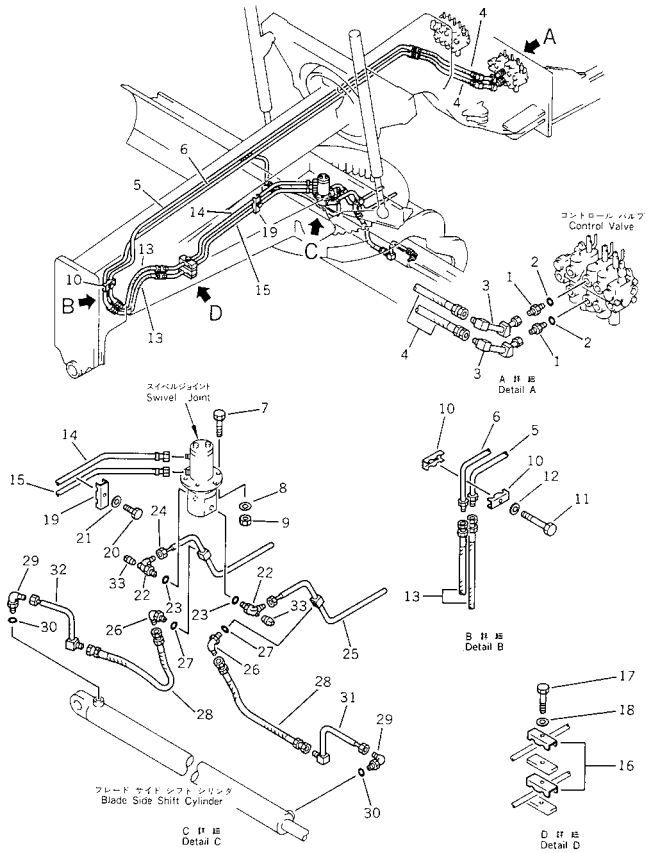

FIG NO. : 6437

INDEX	PART NO.	DESCRIPTION	Q'TY	SERIAL NO.
1	237-60-23120	NIPPLE	2	10001-
2	07000-12018	O-RING	2	10050-
	237-60-22240	O-RING	2	10001-10049
3	23A-60-14121	TUBE	2	10001-
4	230-09-23100	HOSE	2	10001-
5	23A-60-14850	TUBE	1	10001-
6	23A-60-14860	TUBE	1	10001-
7	01010-51245	BOLT	3	10001-
8	01643-31232	WASHER	3	10001-
9	01580-11210	NUT	3	10001-
10	232-60-54820	CLIP	2	10001-
11	01010-51045	BOLT	1	10001-
12	01641-21016	WASHER	1	10001-
13	07113-00312	HOSE	2	10001-
14	23A-60-15430	TUBE	1	10001-
15	23A-60-15440	TUBE	1	10001-
16	237-60-14130	CLIP	2	10001-
17	01010-51020	BOLT	1	10001-
18	01643-31032	WASHER	1	10001-
19	237-60-14130	CLIP	1	10001-
20	01010-51020	BOLT	1	10001-
21	01643-31032	WASHER	1	10001-
22	07235-50422	ELBOW	2	10001-
23	07002-12034	O-RING	2	10001-
24	23A-60-15190	TUBE	1	10001-
25	23A-60-15180	TUBE	1	10001-
26	07235-10315	ELBOW	2	10001-
27	07002-12034	O-RING	2	10001-
28	230-09-03060	HOSE	2	10001-
29	07235-10422	ELBOW	2	10001-
30	07002-12034	O-RING	2	10001-
31	23A-60-15210	TUBE	1	10001-
32	23A-60-15220	TUBE	1	10001-
33	07042-20108	PLUG	2	10001-

FIG.6441 HYDRAULIC PIPING (CIRCLE REVOLUTION MOTOR LINE)

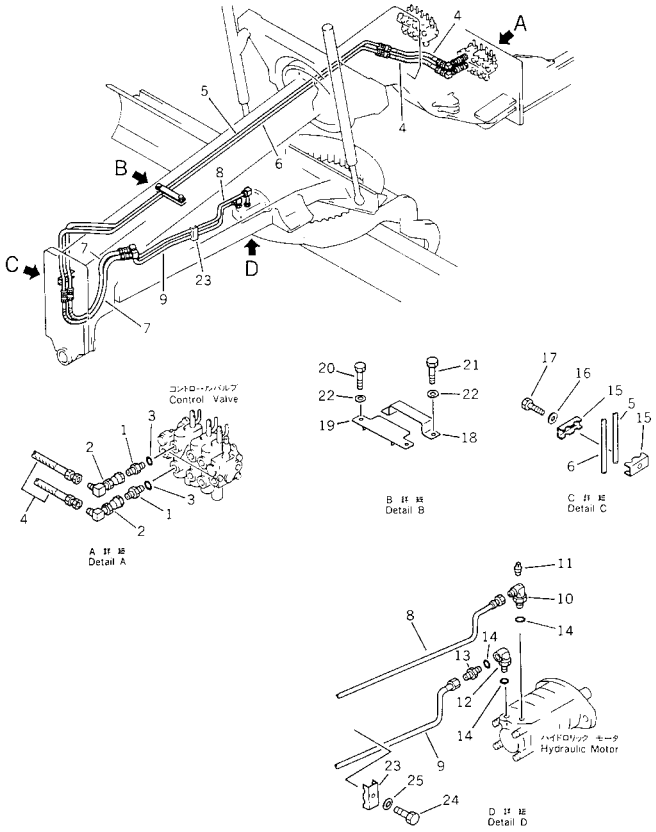

FIG NO. : 6441

INDEX	PART NO.	DESCRIPTION	Q'TY	SERIAL NO.
1	237-60-23120	NIPPLE	2	10001-
2	23A-60-14810	TUBE	2	10001-
3	07000-12018	O-RING	2	10050-
	237-60-22240	O-RING	2	10001-10049
4	230-09-24100	HOSE	2	10001-
5	23A-60-14870	TUBE	1	10001-
6	23A-60-14880	TUBE	1	10001-
7	07113-00411	HOSE	2	10001-
8	23A-60-15450	TUBE	1	10001-
9	23A-60-15460	TUBE	1	10001-
10	237-60-22230	ELBOW	1	10001-
11	07042-20108	PLUG	1	10001-
12	233-60-34270	ELBOW	1	10001-
13	07230-10442	UNION	1	10001-
14	07002-12034	O-RING	3	10001-
15	232-60-54830	CLIP	2	10001-
16	01641-21016	WASHER	1	10001-
17	01010-51045	BOLT	1	10001-
18	23B-60-16650	PLATE	1	10001-
19	23B-60-16660	PLATE	1	10001-
20	01010-51020	BOLT	2	10001-
21	01010-51016	BOLT	2	10001-
22	01643-31232	WASHER	4	10001-
23	237-60-14130	CLIP	1	10001-
24	01010-51020	BOLT	1	10001-
25	01643-31032	WASHER	1	10001-

FIG.6451 HYDRAULIC PIPING (FRONT BLADE CYLINDER LINE)

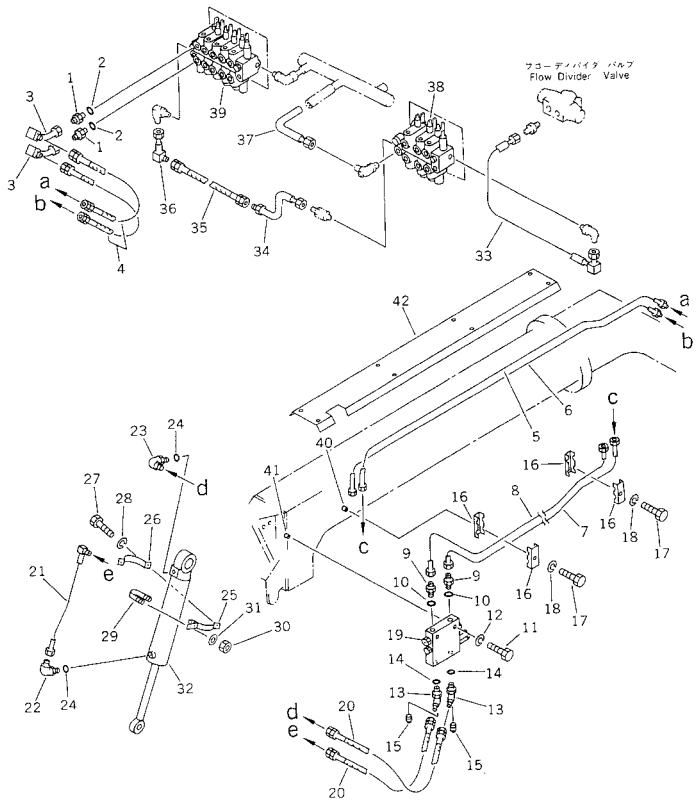

FIG NO. : 6451

INDEX	PART NO.	DESCRIPTION	Q'TY	SERIAL NO.
1	237-60-23120	NIPPLE	2	10001-
2	237-60-22240	O-RING	2	10001-
3	23B-60-14690	TUBE	2	10001-
4	230-09-23115	HOSE	2	.-
	□230-09-23110	HOSE	2	10001-.
5	23B-60-18110	TUBE	1	10001-
6	23B-60-18120	TUBE	1	10001-
7	23B-60-18130	TUBE	1	10001-
8	23B-60-18140	TUBE	1	10001-
9	07230-10422	UNION	2	10001-
10	07002-12034	O-RING	2	10001-
11	01010-50855	BOLT	2	10001-
12	01643-30823	WASHER	2	10001-
13	07235-50315	ELBOW	2	10001-
14	07002-12034	O-RING	2	10001-
15	07042-50108	PLUG	2	10001-
16	232-60-54830	CLIP	4	10001-
17	01010-51050	BOLT	2	10001-
18	01643-30823	WASHER	2	10001-
19	(235-61-14500)	VALVE ASS'Y,PILOT CHECK	1	10001-
20	230-09-03060	HOSE	2	10001-
21	232-60-65680	TUBE	1	10001-
22	07235-10422	ELBOW	1	10001-
23	07235-10315	ELBOW	1	10001-
24	07002-12034	O-RING	2	10001-
25	232-60-65690	BAND	1	10001-
26	234-60-33480	BAND	1	10001-
27	01010-50830	BOLT	2	10001-
28	01643-30823	WASHER	2	10001-
29	07283-21529	CLIP	1	10001-
30	01598-00809	NUT	2	10001-
31	01643-30823	WASHER	2	10001-
32	(232-63-38100)	CYLINDER ASS'Y,FRONT BLADE	1	10001-
33	23B-60-16930	TUBE	1	10001-
34	23B-60-17660	TUBE	1	10001-
35	07108-20503	HOSE	1	10001-
36	23B-60-16191	TUBE	1	10001-
37	23B-60-16220	TUBE	1	10001-
38	(23A-60-12500)	CONTROL VALVE ASS'Y,L.H.	1	10001-
39	(23A-60-12300)	VALVE ASS'Y,R.H.	1	10001-
40	234-46-31210	SEAT (WELDED)	1	10001-
41	233-70-21170	SEAT (WELDED)	1	10001-

FIG NO. : 6451

INDEX	PART NO.	DESCRIPTION	Q'TY	SERIAL NO.
42	23B-60-18160	COVER,(MODIFIED PARTS).....	1	10001-

GD511A-1

FIG.6461 HYDRAULIC PIPING (POWER TILT CYLINDER LINE) (1/3)

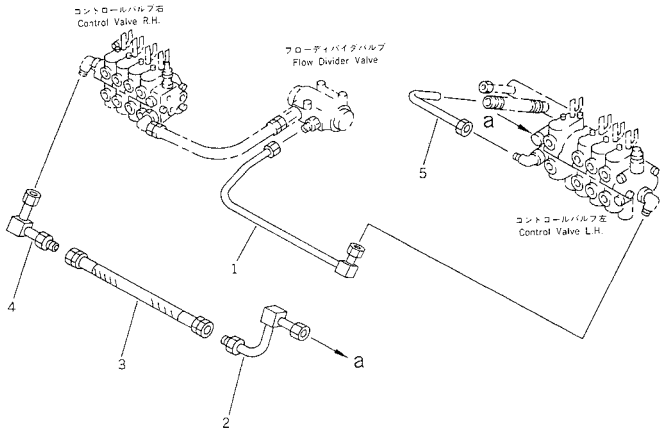

FIG NO. : 6461

INDEX	PART NO.	DESCRIPTION	Q'TY	SERIAL NO.
1	23B-60-16170	TUBE	1	10001-
2	23B-60-17140	TUBE	1	10001-
3	07108-20503	HOSE	1	10001-
4	23B-60-16191	TUBE	1	10001-
5	23B-60-17150	TUBE	1	10001-

FIG.6463 HYDRAULIC PIPING (POWER TILT CYLINDER LINE) (2/3)

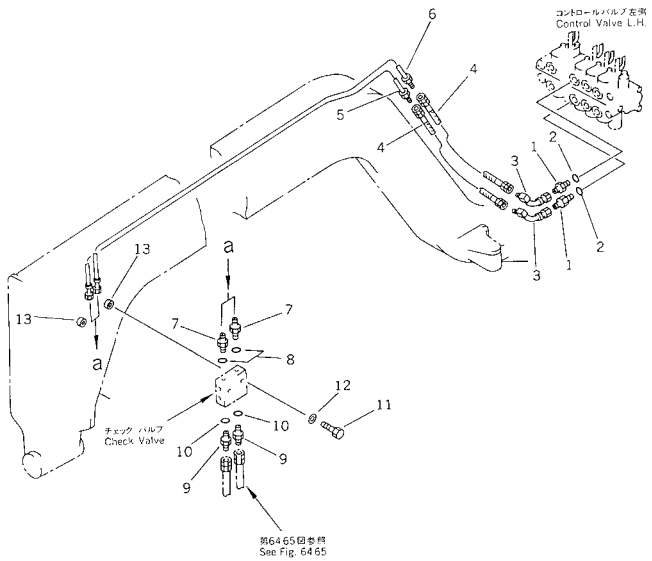

FIG NO. : 6463

INDEX	PART NO.	DESCRIPTION	Q'TY	SERIAL NO.
1	237-60-23120	NIPPLE	2	10001-
2	237-60-22240	O-RING	2	10001-
3	23A-60-17111	TUBE	2	10001-
4	230-09-23100	HOSE	2	10001-
5	23A-60-14950	TUBE	1	10001-
6	23A-60-14940	TUBE	1	10001-
7	07230-10422	UNION	2	10001-
8	07002-12034	O-RING	2	10001-
9	07230-10315	UNION	2	10001-
10	07002-12034	O-RING	2	10001-
11	01010-50855	BOLT	2	10001-
12	01643-30823	WASHER	2	10001-
13	23B-06-16720	SEAT (WELDED)	2	10001-

FIG.6465 HYDRAULIC PIPING (POWER TILT CYLINDER LINE) (3/3)

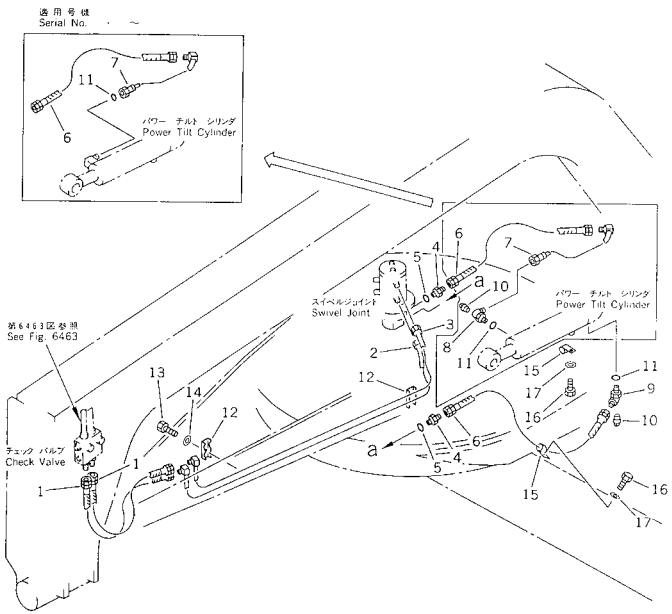

FIG NO. : 6465

INDEX	PART NO.	DESCRIPTION	Q'TY	SERIAL NO.
1	07113-00310	HOSE	2	10001-
2	23A-60-15380	TUBE	1	10001-
3	23A-60-15370	TUBE	1	10001-
4	07230-10315	UNION	2	10001-
5	07002-12034	O-RING	2	10001-
6	230-09-03090	HOSE	2	10001-
7	23A-60-17211	TUBE	1	.-
	23A-60-17210	TUBE	1	10001-.
8	07235-50315	ELBOW	1	10001-.
9	07235-50315	ELBOW	1	.-
	07235-50422	ELBOW	1	10001-.
10	07042-20108	PLUG	1	.-
	07042-20108	PLUG	2	10001-.
11	07002-12034	O-RING	2	10001-
12	237-60-14130	CLIP	2	10001-
13	01010-51020	BOLT	2	10001-
14	01643-31032	WASHER	2	10001-
15	232-60-63160	CLIP	3	10001-
16	01010-51016	BOLT	3	10001-
17	01643-31032	WASHER	3	10001-

FIG.6471 HYDRAULIC PIPING (SCARIFIER CYLINDER LINE) (1/2)

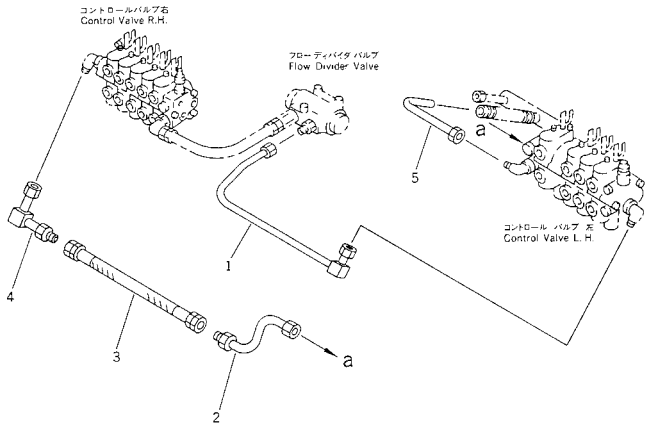

FIG NO. : 6471

INDEX	PART NO.	DESCRIPTION	Q'TY	SERIAL NO.
1	23B-60-16170	TUBE	1	10001-
2	23B-60-17660	TUBE	1	10001-
3	07108-20503	HOSE	1	10001-
4	23B-60-16191	TUBE	1	10001-
5	23B-60-16220	TUBE	1	10001-

FIG.6473 HYDRAULIC PIPING (SCARIFIER CYLINDER LINE) (2/2)

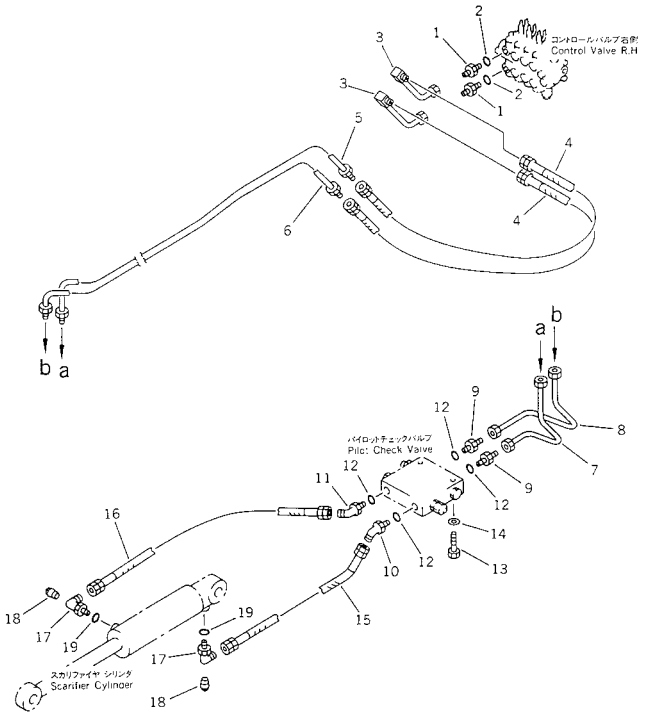

FIG NO. : 6473

INDEX	PART NO.	DESCRIPTION	Q'TY	SERIAL NO.
1	237-60-23120	NIPPLE	2	10001-
2	237-60-22240	O-RING	2	10001-
3	23B-60-14690	TUBE	2	10001-
4	230-09-23100	HOSE	2	10001-
5	23B-60-17620	TUBE	1	10001-
6	23B-60-17630	TUBE	1	10001-
7	23A-60-17710	TUBE	1	10001-
8	23A-60-17720	TUBE	1	10001-
9	07230-10422	UNION	2	10001-
10	233-60-24461	ELBOW	1	10001-
11	233-60-24461	ELBOW	1	10001-
12	07002-12034	O-RING	4	10001-
13	01010-50855	BOLT	2	10001-
14	01643-30823	WASHER	2	10001-
15	230-09-03030	HOSE	1	10001-
16	230-09-03075	HOSE	1	10001-
17	07235-50315	ELBOW	2	10001-
18	07042-20108	PLUG	2	10001-
19	07002-12034	O-RING	2	10001-

WORK EQUIPMENT

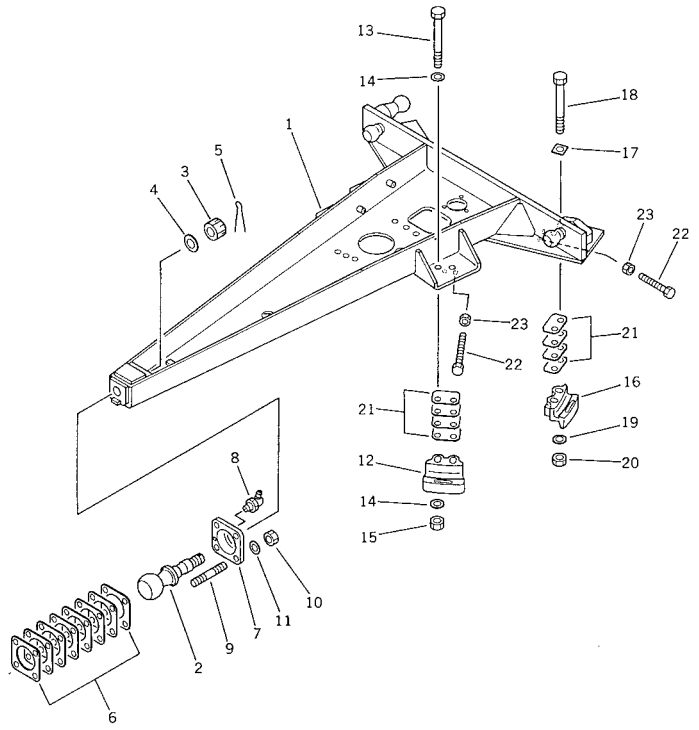

FIG NO. : 7001

INDEX	PART NO.	DESCRIPTION	Q'TY	SERIAL NO.
1	23A-70-11110	DRAWBAR	1	10001-
2	23B-70-11350	STUD,BALL	1	10106-
	23B-70-11150	STUD,BALL	1	10001-10105
3	01590-14548	NUT	1	10001-
4	238-70-11180	WASHER	1	10001-
5	04050-18080	PIN,COTTER	1	10001-
6	23A-70-00120	SHIM ASS'Y	1	10001-
	☆	.SHIM, 0.29MM	16	10001-
7	238-70-11210	JOINT	1	10001-
8	07020-00675	FITTING,GREASE	1	10001-
9	01124-52455	STUD	4	10001-
10	01580-12419	NUT	4	10001-
11	01643-32460	WASHER	4	10001-
12	23A-70-11130	GUIDE	2	10001-
13	01011-52435	BOLT	4	10001-
14	01643-32460	WASHER	8	10001-
15	01580-12419	NUT	4	10001-
16	23A-70-11130	GUIDE	2	10001-
17	238-70-11190	WASHER	4	10001-
18	01011-52435	BOLT	4	10001-
19	01643-32460	WASHER	4	10001-
20	01580-12419	NUT	4	10001-
21	233-70-00120	SHIM ASS'Y	4	10001-
22	01016-52270	BOLT	8	10001-
23	01580-12218	NUT	8	10001-

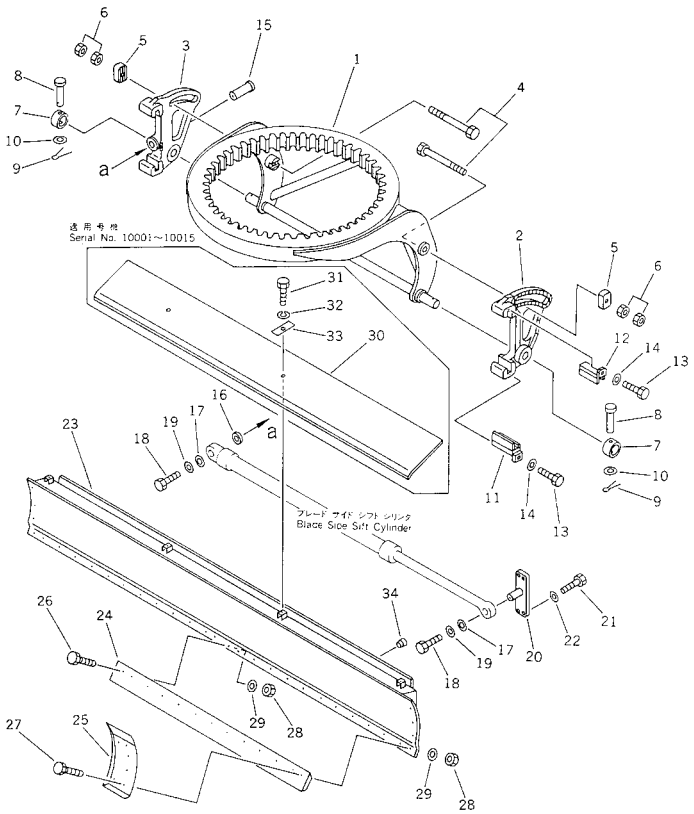

INDEX	PART NO.	DESCRIPTION	Q'TY	SERIAL NO.
1	23B-70-13112	SUPPORT	1	10926-
	23B-70-13111	SUPPORT	1	10001-10925
2	23A-70-13120	ADJUSTER,L.H.	1	10001-
3	23A-70-13130	ADJUSTER,R.H.	1	10001-
4	23B-735-1230	BOLT	2	10001-
5	234-70-12151	BLOCK	2	10001-
6	01580-13024	NUT	4	10001-
7	23A-70-13140	COLLAR	2	10001-
8	232-27-11150	PIN	2	10001-
9	04050-14028	PIN,COTTER	2	10001-
10	01643-31645	WASHER	2	10001-
11	232-70-12420	GUIDE	2	10001-
12	232-70-12430	GUIDE	2	10001-
13	01010-51435	BOLT	4	10001-
14	01643-31445	WASHER	4	10001-
15	23A-70-12131	SHAFT	1	10001-
16	23A-70-12140	COLLAR	1	10001-
17	23A-70-12150	WASHER	2	10001-
18	01010-51225	BOLT	2	10001-
19	01643-31232	WASHER	2	10001-
20	23A-70-12121	BRACKET	1	10001-
21	01010-51640	BOLT	4	10001-
22	01643-31645	WASHER	4	10001-
23	23A-70-12320	BLADE	1	10016-
	23A-70-12110	BLADE	1	10001-10015
	23A-70-12260	.RAIL,UPPER (WELDED)	1	10001-
	23A-70-12250	.RAIL,LOWER (WELDED)	1	10001-
24	232-70-12143	EDGE	2	10001-
25	232-70-52190	BIT,END	2	10001-
26	232-70-12450	BOLT	18	10001-
27	232-70-12460	BOLT	4	10001-
28	232-70-12480	NUT	22	10001-
29	01643-31645	WASHER	22	10001-
30	23B-70-12150	COVER	1	10001-10015
31	01010-51230	BOLT	4	10001-10015
32	01602-21236	WASHER,SPRING	4	10001-10015
33	234-70-12830	PLATE	4	10001-10015
34	07048-01510	PLUG	4	10001-

FIG.7013 BLADE AND CIRCLE SUPPORT (FOR POWER TILT)

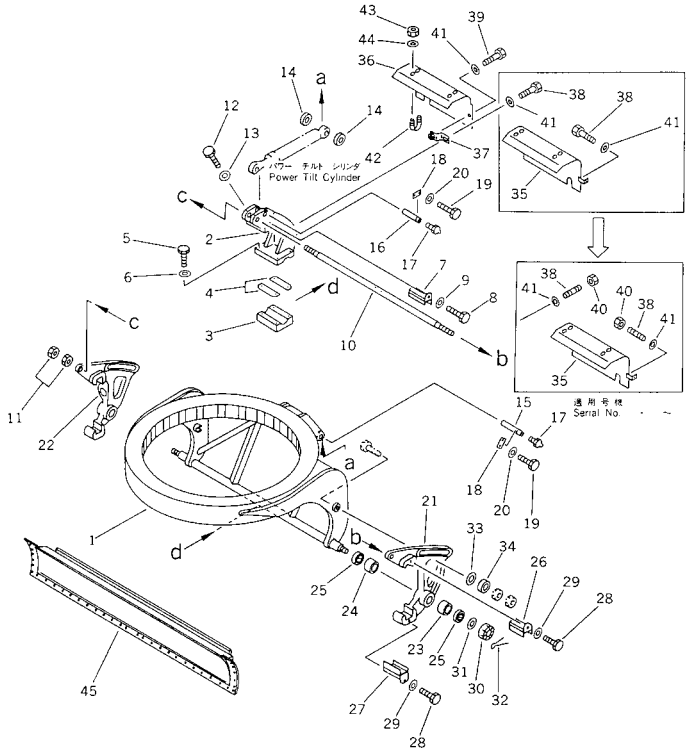

FIG NO. : 7013

INDEX	PART NO.	DESCRIPTION	Q'TY	SERIAL NO.
1	23B-735-1111	SUPPORT ASS'Y.	1	.-
	23B-735-1110	SUPPORT ASS'Y.	1	10001-.
	23B-735-0010	BRACKET ASS'Y.	1	10001-
2	☆	.BRACKET.	1	10001-
3	☆	.BRACKET.	1	10001-
4	23B-735-0120	SHIM ASS'Y.	1	10001-
	☆	.SHIM, 0.5MM.	10	10001-
5	01010-51270	BOLT.	4	10001-
6	01643-31232	WASHER.	4	10001-
7	23B-735-1190	GUIDE.	1	10001-
8	01010-51435	BOLT.	1	10001-
9	01643-31445	WASHER.	1	10001-
10	238-735-1331	ROD.	1	10926-
	238-735-1330	ROD.	1	10001-10925
11	01580-13629	NUT.	4	10001-
12	01010-51270	BOLT.	2	10001-
13	01643-31232	WASHER.	2	10001-
14	23B-735-1240	COLLAR.	2	10001-
15	238-735-1270	PIN.	1	10001-
16	238-735-1280	PIN.	1	10001-
17	07020-00000	FITTING,GREASE.	2	10001-
18	04082-00212	LOCK.	2	10001-
19	01010-51225	BOLT.	4	10001-
20	01643-31232	WASHER.	4	10001-
21	23B-735-1170	ADJUSTER,L.H.	1	10001-
22	23B-735-1180	ADJUSTER,R.H.	1	10001-
23	232-735-1410	BUSHING.	2	10001-
24	234-46-11142	BUSHING.	2	10001-
25	234-27-31740	SEAL,DUST.	4	10001-
26	232-70-12430	GUIDE.	2	10001-
27	232-70-12420	GUIDE.	2	10001-
28	01010-51435	BOLT.	4	10001-
29	01643-31445	WASHER.	4	10001-
30	01590-14548	NUT.	2	10001-
31	232-70-52380	WASHER.	2	10001-
32	04050-18080	PIN,COTTER.	2	10001-
33	232-735-1261	WASHER.	2	10001-
34	234-979-6240	COLLAR.	2	10001-
35	23B-735-1382	COVER,L.H.	1	10926-
	23B-735-1381	COVER,L.H.	1	.-10925
	23B-735-1380	COVER,L.H.	1	10001-.
36	23B-735-1392	COVER,R.H.	1	10926-

FIG NO. : 7013

INDEX	PART NO.	DESCRIPTION	Q'TY	SERIAL NO.
	23B-735-1391	COVER,R.H.	1	.-10925
	23B-735-1390	COVER,R.H.	1	10001-.
37	23B-735-1370	PLATE.	2	10001-
38	01144-51230	STUD.	4	.-
	01010-51230	BOLT.	4	10001-.
39	01010-51230	BOLT.	2	10001-
40	01598-01214	NUT.	4	.-
41	01643-31232	WASHER.	6	10001-
42	07283-24346	CLIP.	4	10001-
43	01599-01011	NUT.	8	10001-
44	234-54-13252	WASHER.	8	10001-
45	23A-735-1190	BLADE.	1	10001-

GD511A-1

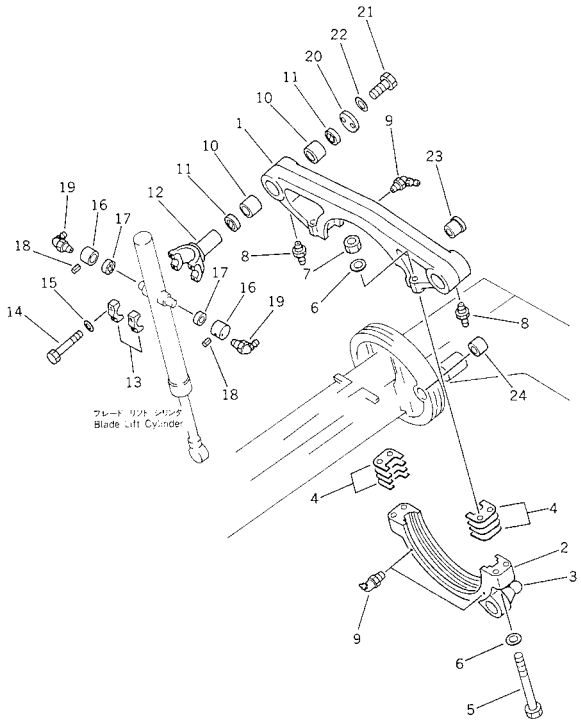

FIG NO. : 7021

INDEX	PART NO.	DESCRIPTION	Q'TY	SERIAL NO.
	23A-70-00010	BRACKET ASS'Y.	1	10001-
1	☆	.BRACKET.	1	10001-
2	☆	.BRACKET.	1	10001-
3	23B-70-14341	..STUD,BALL.....(WELDED).	1	10001-
4	23A-70-00130	.SHIM ASS'Y.	1	10001-
	☆	..SHIM.	8	10001-
5	232-70-53280	.BOLT.	4	10001-
6	01643-32460	.WASHER.	8	10001-
7	01580-12419	.NUT.	4	10001-
8	07020-00000	.FITTING,GREASE.	2	10001-
9	07020-00675	.FITTING,GREASE.	3	10001-
10	232-71-11422	.BUSHING.	4	10001-
11	07145-00075	.SEAL,DUST.	4	10001-
	23A-70-00210	YOKE ASS'Y.	2	10001-
12	☆	.YOKE.	1	10001-
13	☆	.CAP.	2	10001-
14	01010-51255	.BOLT.	4	10001-
15	01643-31232	.WASHER.	4	10001-
16	232-70-53140	BUSHING.	4	10001-
17	07145-00040	SEAL,DUST.	4	10001-
18	144-70-15251	PIN.	4	10001-
19	07020-00675	FITTING,GREASE.	4	10001-
20	232-70-53160	HOLDER.	2	10001-
21	01010-51635	BOLT.	4	10001-
22	01643-31645	WASHER.	4	10001-
23	23A-70-14210	BUSHING.	1	10001-
24	23B-70-14370	BUSHING.	1	10215-
	23A-70-14220	BUSHING.	1	10001-10214

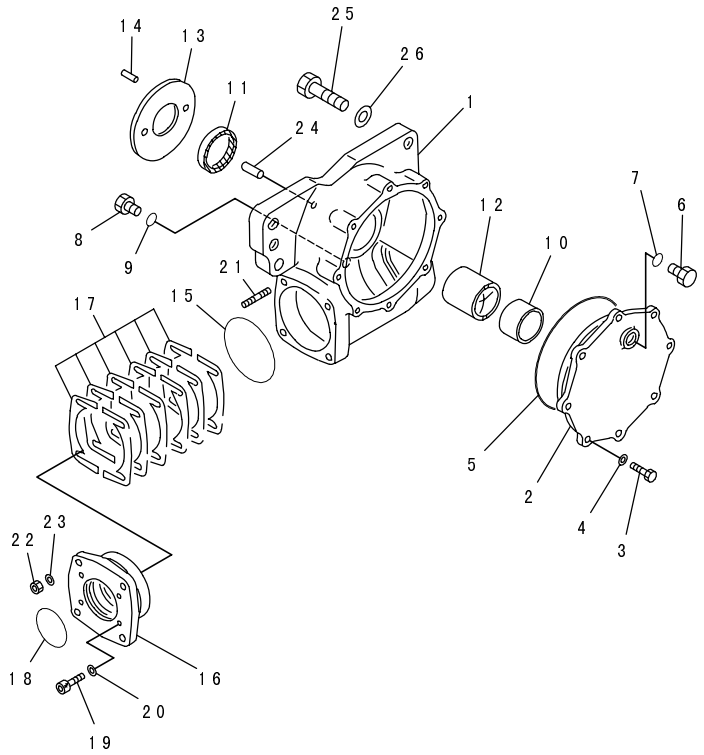

PV50305

INDEX	PART NO.	DESCRIPTION	Q'TY	SERIAL NO.
	23A-70-01031	GEAR ASS'Y,CIRCLE REVERSE.....	1	10067-
	23A-70-01030	GEAR ASS'Y,CIRCLE REVERSE.....	1	10001-10066
		THESE ASSEMBLIES CONSIST OF ALL PARTS SHOWN IN FIGS.7031 AND 7033.		
1	23A-70-15110	.CASE.....	1	10001-
2	23A-70-15120	.COVER.....	1	10001-
3	01010-51030	.BOLT.....	8	10001-
4	01643-31032	.WASHER.....	8	10001-
5	07000-15220	.O-RING.....(K14).....	1	10001-
6	07040-13016	.PLUG.....	1	10001-
7	07002-13034	.O-RING.....(K14).....	1	10001-
8	07040-11812	.PLUG.....	1	10001-
9	07002-11823	.O-RING.....(K14).....	1	10001-
10	23A-70-15160	.BUSHING.....	1	10001-
11	07012-00062	.SEAL,OIL.....(K14).....	1	10001-
12	23A-70-15150	.BUSHING.....	1	10001-
13	23A-70-15180	.PLATE.....	1	10001-
14	04020-01024	.PIN,DOWEL.....	2	10001-
15	07000-12130	.O-RING.....(K14).....	1	10001-
16	23A-70-15210	.HOUSING.....	1	10001-
17	233-70-00260	.SHIM ASS'Y.....	1	10001-
18	23B-70-16250	.O-RING.....(K14).....	1	10001-
19	01252-41035	.BOLT.....	4	10001-
20	01643-31032	.WASHER.....	4	10001-
21	01140-81235	.STUD.....	4	10001-
22	01582-11210	.NUT.....	4	10001-
23	01643-31032	.WASHER.....	4	10001-
24	232-71-13150	.PIN.....	2	10001-
25	01010-52455	.BOLT.....	4	10001-
26	01643-32460	.WASHER.....	4	10001-

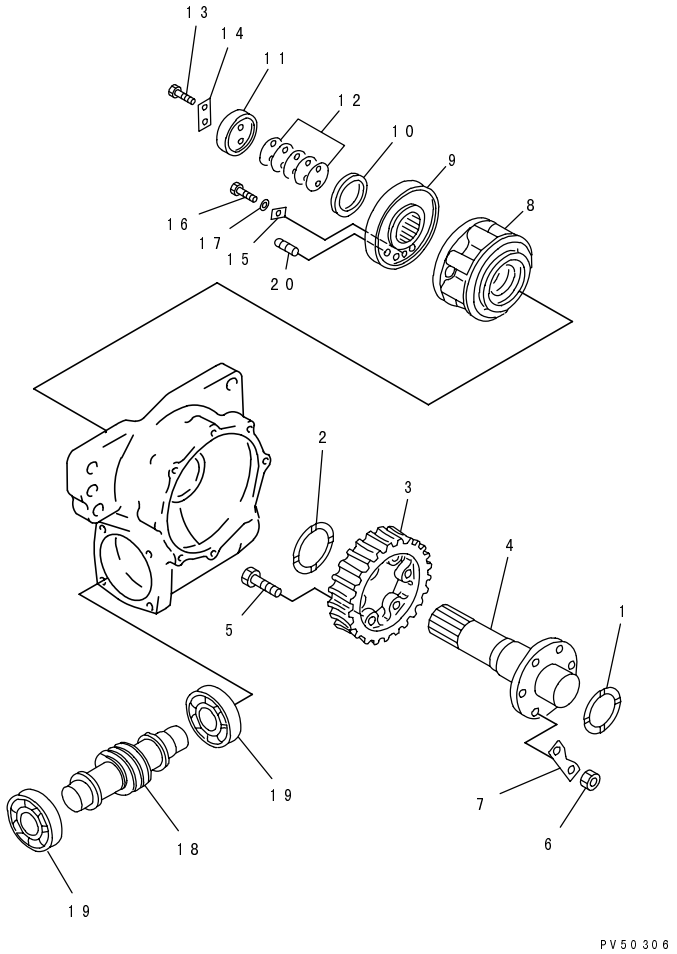

INDEX	PART NO.	DESCRIPTION	Q'TY	SERIAL NO.
	(23A-70-01031)	GEAR ASS'Y,CIRCLE REVERSE.	1	10067-
	(23A-70-01030)	GEAR ASS'Y,CIRCLE REVERSE.	1	10001-10066
		THESE ASSEMBLIES CONSIST OF ALL PARTS SHOWN IN FIGS.7031 AND 7033.		
1	232-70-54430	.WASHER.	1	10001-
2	232-70-54450	.WASHER.	1	10001-
3	232-70-54141	.WHEEL,WORM.	1	10001-
4	23A-70-15140	.SHAFT.	1	10001-
5	01090-51455	.BOLT.	6	10001-
6	01582-11411	.NUT.	6	10001-
7	232-70-54470	.LOCK.	3	10001-
8	233-71-13354	.GEAR.	1	10001-
9	234-71-13243	.JOINT.	1	10001-
10	233-70-25150	.SPACER.	1	10001-
11	04080-06012	.HOLDER.	1	10001-
12	238-70-00190	.SHIM ASS'Y.	1	10001-
	☆	..SHIM, 0.5MM.	10	10001-
13	01010-51235	.BOLT.	2	10001-
14	04081-06012	.LOCK.	1	10001-
15	232-71-13532	.PLATE.	1	10001-
16	01010-50820	.BOLT.	1	10001-
17	01643-30823	.WASHER.	1	10001-
18	23B-70-15150	.GEAR,WORM.	1	10067-
	23A-70-15170	.GEAR,WORM.	1	10001-10066
19	06002-30310	.BEARING.	2	10001-
20	234-71-13255	PIN,SHEAR.	1	10094-
	234-71-13254	PIN,SHEAR.	1	10016-10093
	234-71-13253	PIN,SHEAR.	1	10001-10015

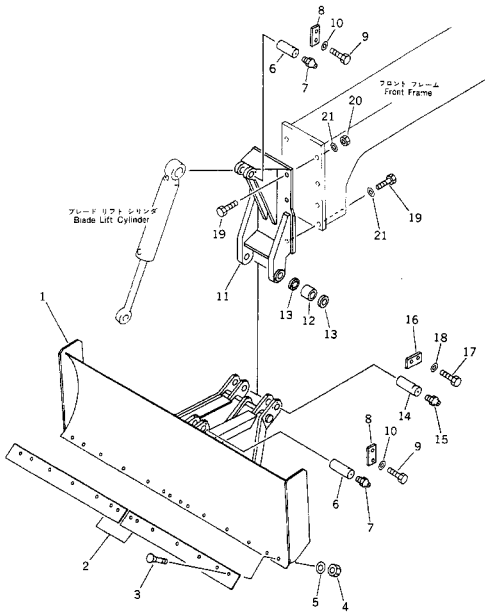

INDEX	PART NO.	DESCRIPTION	Q'TY	SERIAL NO.
1	232-725-1310	BLADE	1	10001-
2	233-971-5120	EDGE	2	10001-
3	232-70-12450	BOLT	14	10001-
4	232-70-12480	NUT	14	10001-
5	01643-31645	WASHER	14	10001-
6	09241-50140	PIN	2	10001-
7	07020-00000	FITTING,GREASE	2	10001-
8	04082-00212	LOCK	2	10001-
9	01010-51225	BOLT	4	10001-
10	01643-31232	WASHER	4	10001-
11	232-725-1320	BRACKET	1	10001-
12	07143-10505	BUSHING	2	10001-
13	07145-00050	SEAL,DUST	4	10001-
14	09241-50140	PIN	2	10001-
15	07020-00000	FITTING,GREASE	2	10001-
16	04082-00212	LOCK	2	10001-
17	01010-51225	BOLT	4	10001-
18	01643-31232	WASHER	4	10001-
19	01011-52440	BOLT	8	10001-
20	01580-12419	NUT	4	10001-
21	01643-32460	WASHER	8	10001-

FIG.7201 SCARIFIER LIFTER

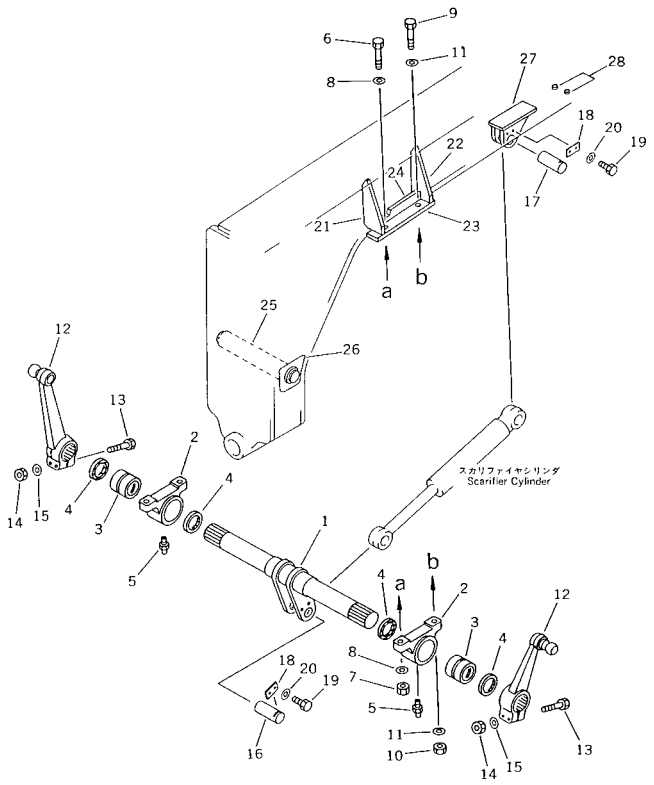

FIG NO. : 7201

INDEX	PART NO.	DESCRIPTION	Q'TY	SERIAL NO.
1	23A-71-11140	SHAFT	1	10001-
2	23A-71-11160	SUPPORT	2	10001-
3	23A-71-11270	BUSHING	2	10001-
4	07145-00080	SEAL,DUST	4	10001-
5	07020-00000	FITTING,GREASE	2	10001-
6	01019-32000	BOLT	2	10001-
7	01580-12016	NUT	2	10001-
8	01643-32060	WASHER	4	10001-
9	01091-52000	BOLT	2	10001-
10	01582-12016	NUT	2	.-
	01582-12012	NUT	2	10001-.
11	01643-32060	WASHER	4	10001-
12	233-71-16410	ARM	2	10001-
13	01010-51690	BOLT	4	10001-
14	01580-11613	NUT	4	10001-
15	01643-31645	WASHER	4	10001-
16	236-46-13460	PIN	1	10001-
17	23A-71-11180	PIN	1	10001-
18	04082-00212	LOCK	2	10001-
19	01010-51225	BOLT	4	10001-
20	01643-31232	WASHER	4	10001-
	23A-71-11200	FRAME,(MODIFIED PART)	1	10001-
21	23B-71-11420	.PLATE (WELDED)	2	10001-
22	23B-71-11420	.PLATE (WELDED)	2	10001-
23	23B-71-11430	.PLATE,L.H. (WELDED)	1	10001-
	23B-71-11410	.PLATE,R.H. (WELDED)	1	10001-
24	23B-71-11380	.PLATE,L.H. (WELDED)	1	10001-
	23B-71-11350	.PLATE,R.H. (WELDED)	1	.-
	23B-71-11390	.PLATE,R.H. (WELDED)	1	10001-.
25	23B-71-11260	.BOSS (WELDED)	1	10001-
26	23A-71-11340	.PLATE (WELDED)	2	10001-
27	23A-71-11120	.BRACKET (WELDED)	1	10001-
28	01571-00814	.SEAT (WELDED)	2	10001-

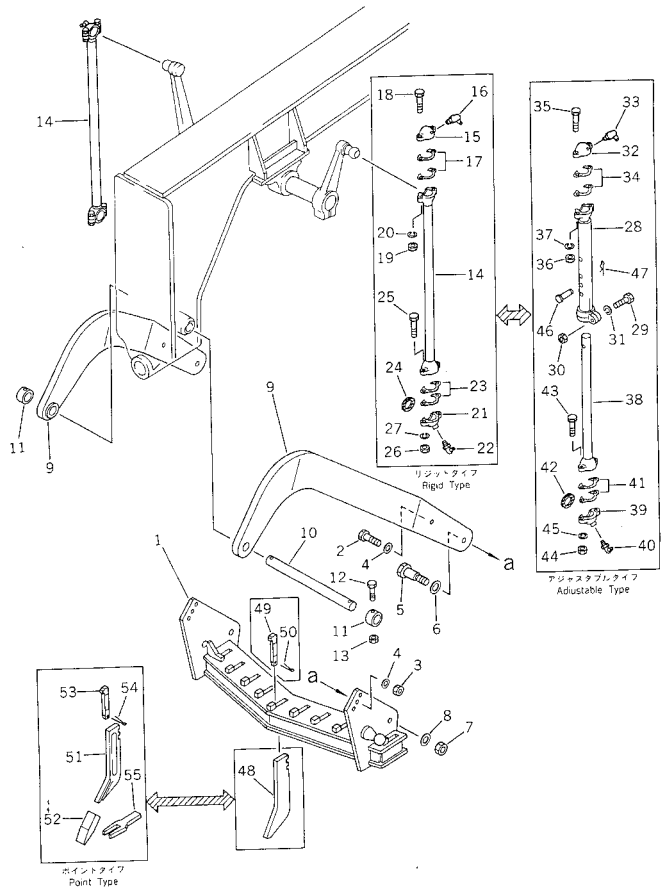

INDEX	PART NO.	DESCRIPTION	Q'TY	SERIAL NO.
1	23B-71-11150	BODY	1	10001-
2	01010-82495	BOLT	2	10001-
3	01580-12419	NUT	2	10001-
4	01643-32460	WASHER	4	10001-
5	232-70-13220	BOLT	2	10001-
6	01643-33080	WASHER	2	10001-
7	01580-12722	NUT	2	10001-
8	01643-32780	WASHER	2	10001-
9	23A-71-11250	DRAWBAR, L.H.	1	10001-
	23A-71-11240	DRAWBAR, R.H.	1	10001-
10	23B-71-11250	SHAFT	1	10001-
11	232-70-13210	COLLAR	2	10001-
12	01011-51400	BOLT	2	10001-
13	01598-01415	NUT	2	.-
	□01598-11415	NUT	2	10001-.
14	23A-71-11260	ROD	2	10001-
15	232-71-11330	CAP	2	10001-
16	07020-00900	FITTING, GREASE	2	10001-
17	232-71-11340	SHIM, 0.2MM	10	10001-
18	01010-51665	BOLT	4	10001-
19	01580-11613	NUT	4	10001-
20	01643-31645	WASHER	4	10001-
21	238-71-11210	CAP	2	10001-
22	07020-00900	FITTING, GREASE	2	10001-
23	07139-00705	SHIM, 0.5MM	6	10001-
24	07141-00070	SEAL, DUST	2	10001-
25	01010-51665	BOLT	4	10001-
26	01580-11613	NUT	4	10001-
27	01643-31645	WASHER	4	10001-
28	232-70-13333	ROD	2	10001-
29	01010-51680	BOLT	2	10001-
30	01580-11613	NUT	2	10001-
31	01643-31645	WASHER	2	10001-
32	232-71-11330	CAP	2	10001-
33	07020-00900	FITTING, GREASE	2	10001-
34	232-71-11340	SHIM, 0.2MM	10	10001-
35	01010-51665	BOLT	4	10001-
36	01580-11613	NUT	4	10001-
37	01643-31645	WASHER	4	10001-
38	23A-71-11210	ROD	2	10001-
39	238-71-11210	CAP	2	10001-
40	07020-00900	FITTING, GREASE	2	10001-

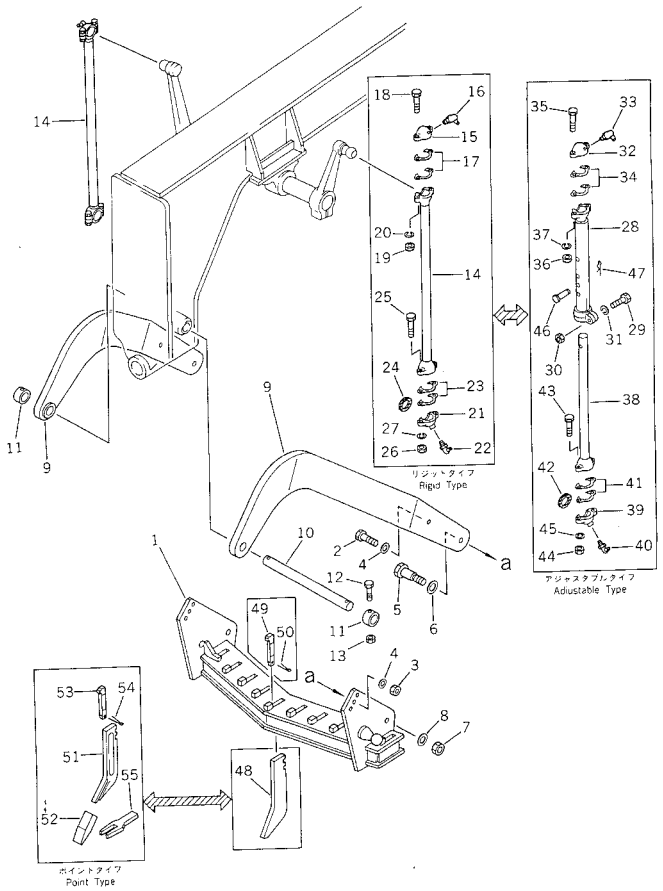

FIG NO. : 7203

INDEX	PART NO.	DESCRIPTION	Q'TY	SERIAL NO.
41	07139-00705	SHIM, 0.5MM	6	10001-
42	07141-00070	SEAL,DUST	2	10001-
43	01010-51665	BOLT	4	10001-
44	01580-11613	NUT	4	10001-
45	01643-31645	WASHER	4	10001-
46	232-70-13361	PIN	2	10001-
47	232-70-13440	PIN	2	10001-
48	09271-00045	TOOTH	11	10001-
49	232-70-13142	WEDGE	11	10001-
50	04050-18050	PIN,COTTER	11	10001-
51	232-71-51310	SHANK	11	10001-
52	232-71-51320	TOOTH	11	10001-
53	232-70-13142	WEDGE	11	10001-
54	04050-18050	PIN,COTTER	11	10001-
55	232-71-51330	TOOL	1	10001-

MARK PLATE、TOOL AND KIT

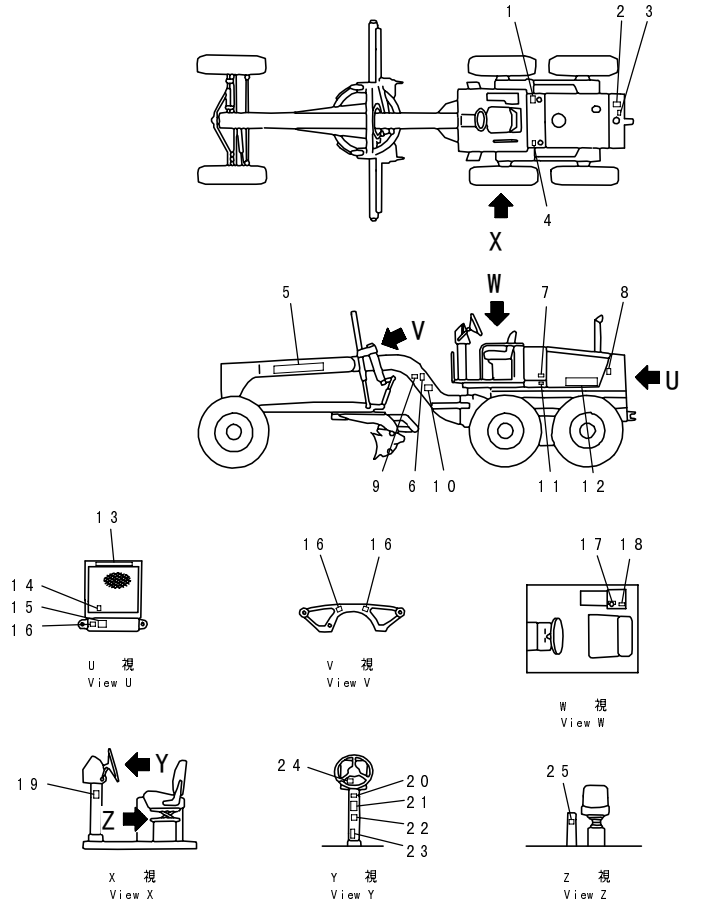

INDEX	PART NO.	DESCRIPTION	Q'TY	SERIAL NO.
1	09101-10000	PLATE, CAUTION,FUEL	1	10001-
2	09668-10000	PLATE, SAFETY,RADIATOR CAP	1	10001-
3	09650-00104	PLATE, INSTRUCTION,RADIATOR	1	10079-
4	09653-10000	PLATE, SAFETY,HYDRAULIC TANK	1	10001-
5	09690-B0400	PLATE, MARK,KOMATSU	2	10249-
6	09161-10000	PLATE, SAFETY,ARTICULATE LOCK	1	10001-
7	23A-53-12311	CHART, OIL	1	10249-
8	09667-30000	PLATE, SAFETY,ENGINE COVER	2	10001-
9	09162-10000	PLATE, SAFETY,KEEP OUT	2	10001-
10	09602-01635	PLATE, NAME,(LIMITED SUPPLY)	1	10249-
	04418-13060	SCREW	4	10001-
11	09652-00111	PLATE, CAUTION,FUEL TANK	1	10001-
12	23A-53-11441	PLATE, MARK,GD511A	1	10249-
13	09690-B0400	PLATE, MARK,KOMATSU	1	10249-
14	234-53-31270	TAG	1	10001-
15	23E-53-11650	PLATE, MARK,LIFTING	1	10249-
16	09960-01084	PLATE, MARK,HANDLING	4	10242-
17	09683-00150	PLATE, OPERATING,STARTING SWITCH	1	10242-
18	09649-10010	PLATE, INSTRUCTION,ENGINE STOP	1	10242-
19	232-53-61810	PLATE, OPERATING,SCARIFIER	1	10001-
20	09651-10000	PLATE, SAFETY,BEFORE OPERATING	1	10001-
21	09164-10000	PLATE, SAFETY,WARNING	1	10001-
22	23B-53-12240	PLATE, SAFETY,DRIVING	1	10001-
23	233-54-14120	PLATE, OPERATING,BLADE LOCK PIN	1	10001-
24	23B-53-12550	PLATE, OPERATING,BRAKE	1	10001-
25	232-53-61631	PLATE, CAUTION,BEFORE OPERATING	1	10001-

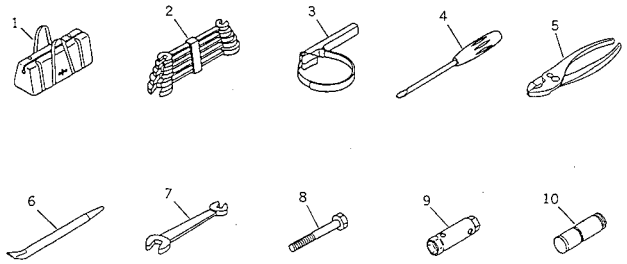

INDEX	PART NO.	DESCRIPTION	Q'TY	SERIAL NO.
1	09056-05513	BAG,TOOL	1	10001-
2	09000-30006	WRENCH SET	1	10001-
3	09019-08035	WRENCH,FILTER	1	10001-
4	09033-00190	DRIVER,SCREW	1	10001-
5	09036-00150	PLIERS	1	10001-
6	09055-10390	BAR	1	10001-
7	23B-98-11310	WRENCH, 32	1	10001-
8	01010-52480	BOLT,LEANING LOCK	1	10001-
9	09002-03641	WRENCH, 36X41	1	10001-
10	234-71-13255	PIN,SHEAR	4	10094-
	234-71-13254	PIN,SHEAR	4	10016-10093
	234-71-13253	PIN,SHEAR	4	10001-10015

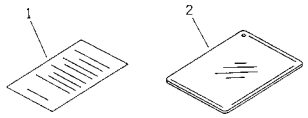

FIG NO. : 9905

INDEX	PART NO.	DESCRIPTION	Q'TY	SERIAL NO.
1	23B-53-12441	PLATE, CAUTION,BEFORE OPERATING.....	1	10249-
	23B-53-12440	PLATE, CAUTION,BEFORE OPERATING.....	1	10001-10248
2	09069-00280	CASE.....	1	10001-

KIT

詳細については次のページを参照して下さい。
See subsequent pages for detail.

		トランスミッション サービス キット	適用号機
1K-1	23A-15-05056	TRANSMISSION SERVICE KIT	(Serial No.(4384)〜)
		トランスミッション サービス キット	適用号機
	23A-15-05055	TRANSMISSION SERVICE KIT	(Serial No.10774〜(4383))
		トランスミッション サービス キット	適用号機
	23A-15-05013	TRANSMISSION SERVICE KIT	(Serial No.10041〜10073)
		トランスミッション サービス キット	適用号機
	23A-15-05012	TRANSMISSION SERVICE KIT	(Serial No.10021〜10040)
		トランスミッション サービス キット	適用号機
	23A-15-05011	TRANSMISSION SERVICE KIT	(Serial No.(1114)〜10020)
		トランスミッション サービス キット	適用号機
	23A-15-05010	TRANSMISSION SERVICE KIT	(Serial No.10001〜(1113))
		トランスミッション コントロール バルブ サービス キット 適用号機	
1K-2	23B-15-05121	TRANSMISSION CONTROL VALVE SERVICE KIT	(Serial No.10041〜)
		トランスミッション コントロール バルブ サービス キット	
	23B-15-05120	TRANSMISSION CONTROL VALVE SERVICE KIT	
			適用号機
			(Serial No.10001〜10040)
		トランスミッション ポンプ サービス キット	
1K-3	KB2012B-60009	TRANSMISSION PUMP SERVICE KIT	
		トランスミッション ポンプ サービス キット	
1K-4	KB2012A-60004	TRANSMISSION PUMP SERVICE KIT	
		ファイナル ドライブ サービス キット	適用号機
1K-5	23A-22-05013	FINAL DRIVE SERVICE KIT	(Serial No. ‥〜)
		ファイナル ドライブ サービス キット	適用号機
	□23A-22-05012	FINAL DRIVE SERVICE KIT	(Serial No. ・ 〜 ‥)
		ファイナル ドライブ サービス キット	適用号機
	□23A-22-05011	FINAL DRIVE SERVICE KIT	(Serial No.10242〜 ・)
		ファイナル ドライブ サービス キット	適用号機
	23A-22-05010	FINAL DRIVE SERVICE KIT	(Serial No.10001〜10241)
		タンデム ドライブ サービス キット	
1K-6	23A-23-05030	TANDEM DRIVE SERVICE KIT	
		ステアリング バルブ サービス キット	適用号機
1K-7	23A-40-05011	STEERING VALVE SERVICE KIT	(Serial No. ・ 〜)
		ステアリング バルブ サービス キット	適用号機
	23A-40-05010	STEERING VALVE SERVICE KIT	(Serial No.10001〜 ・)
		ブースタ および マスタ サービス キット	
1K-8	23A-43-05010	BOOSTER AND MASTER SERVICE KIT	
		ブースタ および マスタ サービス キット	
1K-9	23A-43-05020	BOOSTER AND MASTER SERVICE KIT	
		ハイドロリック ポンプ サービス キット	
1K-10	23A-60-05010	HYDRAULIC PUMP SERVICE KIT	
		ハイドロリック ポンプ サービス キット	
1K-11	23A-60-05110	HYDRAULIC PUMP SERVICE KIT	
		ハイドロリック ポンプ サービス キット	
1K-12	23A-60-05210	HYDRAULIC PUMP SERVICE KIT	
		ハイドロリック コントロール バルブ, 左 および 右 サービス キット	
1K-13	KB21003-30023	HYDRAULIC CONTROL VALVE,L.H. AND R.H. SERVICE KIT	
		サークル リバース ギヤー サービス キット	
1K-14	23A-70-05010	CIRCLE REVERSE GEAR SERVICE KIT	

PJX0294

INDEX	PART NO.	DESCRIPTION	Q'TY	SERIAL NO.
1	23A-15-05056	SERVICE KIT,TRANSMISSION.	1	(4384)-
	23A-15-05055	SERVICE KIT,TRANSMISSION.	1	10774-(4383)
	23A-15-05013	SERVICE KIT,TRANSMISSION.	1	10041-10773
	23A-15-05012	SERVICE KIT,TRANSMISSION.	1	10021-10040
	23A-15-05011	SERVICE KIT,TRANSMISSION.	1	(1114)-10020
	23A-15-05010	SERVICE KIT,TRANSMISSION.	1	10001-(1113)
	07000-02065	.O-RING.	1	10001-
	07000-73025	.O-RING.	1	10001-
	07000-02120	.O-RING.	1	10774-
	07000-02135	.O-RING.	1	10001-10773
	07000-05170	.O-RING.	1	10001-
	07000-05365	.O-RING.	1	10001-
	07000-73035	.O-RING.	1	10001-
	07000-72021	.O-RING.	7	10001-
	07000-72014	.O-RING.	3	10001-
	07000-72014	.O-RING.	1	10001-
	23B-15-16130	.GASKET.	1	10001-
	07000-72018	.O-RING.	1	10001-
	07000-72021	.O-RING.	1	10001-
	07000-73022	.O-RING.	1	10001-
	07000-73025	.O-RING.	1	10001-
	07000-72018	.O-RING.	4	10001-
	07000-73022	.O-RING.	2	10001-
	07000-72018	.O-RING.	1	10001-
	07000-72021	.O-RING.	1	10001-
	07000-73038	.O-RING.	1	10001-
	07000-05365	.O-RING.	1	10001-10040
	07000-73035	.O-RING.	1	10001-10040
	07000-73028	.O-RING.	1	10001-
	07000-73035	.O-RING.	2	10001-
	07000-02075	.O-RING.	1	10001-
	07000-05365	.O-RING.	1	10001-
	07002-03634	.O-RING.	1	10001-
	07000-02090	.O-RING.	1	10001-
	07000-02075	.O-RING.	1	10001-
	07000-73045	.O-RING.	1	10001-
	07000-02090	.O-RING.	3	10001-
	07000-05140	.O-RING.	1	10001-
	07000-73025	.O-RING.	1	10001-
	07000-05200	.O-RING.	1	10001-
	07012-10075	.SEAL,OIL.	1	10001-
	130-09-11590	.SEAL.	1	10001-10020

KIT

詳細については次のページを参照して下さい。
See subsequent pages for detail.

		トランスミッション サービス キット	適用号機
1K-1	23A-15-05056	TRANSMISSION SERVICE KIT	(Serial No.(4384)〜)
		トランスミッション サービス キット	適用号機
	23A-15-05055	TRANSMISSION SERVICE KIT	(Serial No.10774 〜(4383))
		トランスミッション サービス キット	適用号機
	23A-15-05013	TRANSMISSION SERVICE KIT	(Serial No.10041〜10073)
		トランスミッション サービス キット	適用号機
	23A-15-05012	TRANSMISSION SERVICE KIT	(Serial No.10021 〜10040)
		トランスミッション サービス キット	適用号機
	23A-15-05011	TRANSMISSION SERVICE KIT	(Serial No.(1114)〜10020)
		トランスミッション サービス キット	適用号機
	23A-15-05010	TRANSMISSION SERVICE KIT	(Serial No.10001 〜(1113))
		トランスミッション コントロール バルブ サービス キット	適用号機
1K-2	23B-15-05121	TRANSMISSION CONTROL VALVE SERVICE KIT	(Serial No.10041 〜)
		トランスミッション コントロール バルブ サービス キット	
	23B-15-05120	TRANSMISSION CONTROL VALVE SERVICE KIT	適用号機 (Serial No.10001 〜10040)
		トランスミッション ポンプ サービス キット	
1K-3	KB2012B-60009	TRANSMISSION PUMP SERVICE KIT	
		トランスミッション ポンプ サービス キット	
1K-4	KB2012A-60004	TRANSMISSION PUMP SERVICE KIT	
		ファイナル ドライブ サービス キット	適用号機
1K-5	23A-22-05013	FINAL DRIVE SERVICE KIT	(Serial No. •• 〜)
		ファイナル ドライブ サービス キット	適用号機
	□23A-22-05012	FINAL DRIVE SERVICE KIT	(Serial No. • 〜 ••)
		ファイナル ドライブ サービス キット	適用号機
	□23A-22-05011	FINAL DRIVE SERVICE KIT	(Serial No.10242〜 •)
		ファイナル ドライブ サービス キット	適用号機
	23A-22-05010	FINAL DRIVE SERVICE KIT	(Serial No.10001 〜10241)
		タンデム ドライブ サービス キット	
1K-6	23A-23-05030	TANDEM DRIVE SERVICE KIT	
		ステアリング バルブ サービス キット	適用号機
1K-7	23A-40-05011	STEERING VALVE SERVICE KIT	(Serial No. • 〜)
		ステアリング バルブ サービス キット	適用号機
	23A-40-05010	STEERING VALVE SERVICE KIT	(Serial No.10001 〜 •)
		ブースタ および マスタ サービス キット	
1K-8	23A-43-05010	BOOSTER AND MASTER SERVICE KIT	
		ブースタ および マスタ サービス キット	
1K-9	23A-43-05020	BOOSTER AND MASTER SERVICE KIT	
		ハイドロリック ポンプ サービス キット	
1K-10	23A-60-05010	HYDRAULIC PUMP SERVICE KIT	
		ハイドロリック ポンプ サービス キット	
1K-11	23A-60-05110	HYDRAULIC PUMP SERVICE KIT	
		ハイドロリック ポンプ サービス キット	
1K-12	23A-60-05210	HYDRAULIC PUMP SERVICE KIT	
		ハイドロリック コントロール バルブ, 左 および 右 サービス キット	
1K-13	KB21003-30023	HYDRAULIC CONTROL VALVE,L.H. AND R.H. SERVICE KIT	
		サークル リバース ギヤー サービス キット	
1K-14	23A-70-05010	CIRCLE REVERSE GEAR SERVICE KIT	

PJX0294

INDEX	PART NO.	DESCRIPTION	Q'TY	SERIAL NO.
	23B-15-13451	.GASKET	1	(3856)-
	23B-15-13450	.GASKET	1	10021-(3855)
	23B-15-13450	.GASKET	2	10001-10020
	07000-73028	.O-RING	1	(1114)-
	07000-73028	.O-RING	2	10001-(1113)
	07000-73025	.O-RING	1	(1114)-
	07005-01212	.GASKET	4	10001-
	154-15-22831	.RING,SEAL	1	10001-
	23B-15-19220	.SEAL,RING	1	10041-
	103-15-12811	.RING,SEAL	1	10001-10040
	07000-73030	.O-RING	4	10001-
	113-15-12861	.RING,SEAL	1	10001-
	125-15-39210	.RING,SEAL	1	10001-
	154-15-22831	.RING,SEAL	1	10001-
	125-15-39210	.RING,SEAL	1	10001-
	154-15-22831	.RING,SEAL	1	10001-
	125-15-39210	.RING,SEAL	1	10001-
	113-15-29250	.RING,SEAL	1	10001-
	22W-75-15440	.RING,SEAL	1	10001-
	154-15-22831	.RING,SEAL	1	10001-
	23A-15-19210	.RING,SEAL	1	10001-
	23B-15-19210	.RING,SEAL	1	10001-
	234-15-29210	.RING,SEAL	1	10001-
	07000-02115	.O-RING	1	10001-
	07000-02140	.O-RING	1	(4384)-
	07000-02145	.O-RING	1	10001-(4383)
	07012-10085	.SEAL,OIL	1	10001-
	23B-15-15952	.GASKET	1	(4199)-
	23B-15-15951	.GASKET	1	(3856)-(4198)
	23B-15-15950	.GASKET	1	10001-(3855)
	232-15-15961	.GASKET	1	(3856)-
	232-15-15960	.GASKET	1	10001-(3855)
	232-15-15971	.GASKET	1	(3856)-
	232-15-15970	.GASKET	1	10001-(3855)
	07000-73028	.O-RING	2	10001-
	144-15-29110	.SEAL,OIL	1	10001-
2	23B-15-05121	SERVICE KIT,TRANSMISSION CONTROL VALVE	1	10041-
	23B-15-05120	SERVICE KIT,TRANSMISSION CONTROL VALVE	1	10001-10040
	07000-73035	.O-RING	1	10001-
	07000-73045	.O-RING	1	10001-
	07000-73032	.O-RING	4	10001-
	07000-72021	.O-RING	13	10001-

FIG NO. : 9991

INDEX	PART NO.	DESCRIPTION	Q'TY	SERIAL NO.
	07000-72014	.O-RING	3	10001-
	07002-02434	.O-RING	4	10001-
	07000-73022	.O-RING	1	10001-
	07000-72012	.O-RING	1	10001-
	07000-73035	.O-RING	3	10001-
	23A-15-15910	.GASKET	1	10041-
	232-15-15910	.GASKET	1	10001-10040
	23A-15-15920	.GASKET	1	10041-
	232-15-15921	.GASKET	1	10001-10040
	232-15-15930	.GASKET	1	10001-
	07000-72021	.O-RING	3	10001-
	07000-73022	.O-RING	3	10001-
3	KB2012B-60009	SERVICE KIT,TRANSMISSION PUMP	1	10001-
4	KB2012A-60004	SERVICE KIT,TRANSMISSION PUMP	1	10001-
5	23A-22-05013	FINAL DRIVE	1	..-
	□23A-22-05012	SERVICE KIT,FINAL DRIVE	1	.-..
	□23A-22-05011	SERVICE KIT,FINAL DRIVE	1	10242-.
	23A-22-05010	SERVICE KIT,FINAL DRIVE	1	10001-10241
	07000-15290	.O-RING,SIDE CASE	2	10001-
	23D-22-11750	.SEAL,SIDE CASE	2	10242-
	07000-16225	.O-RING,SIDE CASE	2	10001-10241
	23A-22-11490	.O-RING,FLANGE	2	10001-
	07000-15310	.O-RING,FLANGE	2	10001-
	238-22-15122	.GASKET	1	..-
	□238-22-15121	.GASKET	1	.-..
	□238-22-15120	.GASKET,COVER	1	10001-.
	07002-12434	.O-RING,PLUG	2	10001-
	07000-13045	.O-RING,TUBE	1	10001-
	07003-03036	.GASKET,BREATHER	1	10001-
	234-23-11180	.O-RING,RETAINER	1	10001-
	07012-00085	.SEAL,OIL, RETAINER	1	10001-
	07000-12145	.O-RING,COVER	1	10001-
	23A-22-11210	.O-RING,HOLDER	1	10001-
	23A-22-11290	.O-RING,CASE	2	10001-
	07012-00080	.SEAL,OIL, CAGE	2	10001-
	238-22-15110	.LOCK,SHAFT	2	10001-
6	23A-23-05030	SERVICE KIT,TANDEM DRIVE	1	10001-
	238-23-16131	.GASKET,COVER	2	10001-
	238-23-16131	.GASKET,COVER	2	10001-
	07002-12434	.O-RING,PLUG	4	10001-
	238-23-11120	.GASKET,COVER	6	10001-
	238-23-11120	.GASKET,COVER	2	10001-

FIG NO. : 9991

INDEX	PART NO.	DESCRIPTION	Q'TY	SERIAL NO.
	07002-12434	.O-RING,PLUG	2	10001-
	238-23-16110	.GASKET,COVER	2	10001-
	238-23-16120	.GASKET,COVER	4	10001-
	07000-15460	.O-RING,CAGE	4	10001-
	07012-00140	.SEAL,OIL, CAGE	4	10001-
	238-23-16140	.O-RING,SHAFT	4	10001-
	232-23-12141	.LOCK,SHAFT	4	10001-
7	23A-40-05011	SERVICE KIT,STEERING VALVE	1	.-
	23A-40-05010	SERVICE KIT,STEERING VALVE	1	10001-.
	☆	.O-RING,SEAT, CHECK	1	10001-
	☆	.O-RING,SCREW	1	10001-
	☆	.SEAL	1	10001-.
	☆	.O-RING,BUSHING	1	10001-
	☆	.SEAL,HOUSING	1	10001-
	☆	.O-RING,DRIVE	2	10001-
	☆	.O-RING,CAP	1	
	☆	.RING,BACK-UP, HOUSING	1	
	☆	.O-RING,HOUSING	1	
	☆	.SEAL	1	.-
8	23A-43-05010	SERVICE KIT,BOOSTER AND MASTER	1	10001-
	238-43-19350	.SEAL,BODY	1	10001-
	238-43-19340	.O-RING,BODY	1	10001-
	232-843-1410	.CAP,PISTON	1	10001-
	232-843-1421	.RING,BACK-UP, PISTON	1	10001-
	232-843-1480	.O-RING,PISTON	1	10001-
	238-43-19330	.O-RING,PISTON	1	10001-
	238-43-19320	.O-RING,STOPPER	1	10001-
	238-43-19310	.BOOT,ROD, PUSH	1	10001-
	238-43-19360	.GASKET,BOLT	1	10001-
	238-43-19370	.GASKET,FILTER CAP	1	10001-
9	23A-43-05020	SERVICE KIT,BOOSTER AND MASTER	1	10001-
	232-843-1680	.SEAT,VALVE	1	10001-
	23A-43-13380	.CHECK VALVE ASS'Y,PISTON	1	10001-
	23A-43-13550	.SPRING,PISTON	1	10001-
	23A-43-13450	.PISTON ASS'Y,MASTER CYLINDER	1	10001-
	23A-43-13360	.CAP,PISTON	1	10001-
	23A-43-13370	.RETAINER,SPRING	1	10001-
	23A-43-13390	.RING,SNAP	1	10001-
	238-43-19370	.GASKET,FILTER CAP	1	10001-
10	23A-60-05010	SERVICE KIT,HYDRAULIC PUMP	1	10001-
11	23A-60-05110	SERVICE KIT,HYDRAULIC PUMP	1	10001-
12	23A-60-05210	SERVICE KIT,HYDRAULIC PUMP	1	10001-

KIT

詳細については次のページを参照して下さい。
See subsequent pages for detail.

		トランスミッション サービス キット	適用号機
1K-1	23A-15-05056	TRANSMISSION SERVICE KIT	(Serial No.(4384)〜)
		トランスミッション サービス キット	適用号機
	23A-15-05055	TRANSMISSION SERVICE KIT	(Serial No.10774 〜(4383))
		トランスミッション サービス キット	適用号機
	23A-15-05013	TRANSMISSION SERVICE KIT	(Serial No.10041〜10073)
		トランスミッション サービス キット	適用号機
	23A-15-05012	TRANSMISSION SERVICE KIT	(Serial No.10021 〜10040)
		トランスミッション サービス キット	適用号機
	23A-15-05011	TRANSMISSION SERVICE KIT	(Serial No.(1114)〜10020)
		トランスミッション サービス キット	適用号機
	23A-15-05010	TRANSMISSION SERVICE KIT	(Serial No.10001 〜(1113))
		トランスミッション コントロール バルブ サービス キット	適用号機
1K-2	23B-15-05121	TRANSMISSION CONTROL VALVE SERVICE KIT	(Serial No.10041 〜)
		トランスミッション コントロール バルブ サービス キット	
	23B-15-05120	TRANSMISSION CONTROL VALVE SERVICE KIT	適用号機 (Serial No.10001 〜10040)
		トランスミッション ポンプ サービス キット	
1K-3	KB2012B-60009	TRANSMISSION PUMP SERVICE KIT	
		トランスミッション ポンプ サービス キット	
1K-4	KB2012A-60004	TRANSMISSION PUMP SERVICE KIT	
		ファイナル ドライブ サービス キット	適用号機
1K-5	23A-22-05013	FINAL DRIVE SERVICE KIT	(Serial No. •• 〜)
		ファイナル ドライブ サービス キット	適用号機
	□23A-22-05012	FINAL DRIVE SERVICE KIT	(Serial No. • 〜 ••)
		ファイナル ドライブ サービス キット	適用号機
	□23A-22-05011	FINAL DRIVE SERVICE KIT	(Serial No.10242〜 •)
		ファイナル ドライブ サービス キット	適用号機
	23A-22-05010	FINAL DRIVE SERVICE KIT	(Serial No.10001 〜10241)
		タンデム ドライブ サービス キット	
1K-6	23A-23-05030	TANDEM DRIVE SERVICE KIT	
		ステアリング バルブ サービス キット	適用号機
1K-7	23A-40-05011	STEERING VALVE SERVICE KIT	(Serial No. • 〜)
		ステアリング バルブ サービス キット	適用号機
	23A-40-05010	STEERING VALVE SERVICE KIT	(Serial No.10001 〜 •)
		ブースタ および マスタ サービス キット	
1K-8	23A-43-05010	BOOSTER AND MASTER SERVICE KIT	
		ブースタ および マスタ サービス キット	
1K-9	23A-43-05020	BOOSTER AND MASTER SERVICE KIT	
		ハイドロリック ポンプ サービス キット	
1K-10	23A-60-05010	HYDRAULIC PUMP SERVICE KIT	
		ハイドロリック ポンプ サービス キット	
1K-11	23A-60-05110	HYDRAULIC PUMP SERVICE KIT	
		ハイドロリック ポンプ サービス キット	
1K-12	23A-60-05210	HYDRAULIC PUMP SERVICE KIT	
		ハイドロリック コントロール バルブ, 左 および 右 サービス キット	
1K-13	KB21003-30023	HYDRAULIC CONTROL VALVE,L.H. AND R.H. SERVICE KIT	
		サークル リバース ギヤー サービス キット	
1K-14	23A-70-05010	CIRCLE REVERSE GEAR SERVICE KIT	

PJX0294

INDEX	PART NO.	DESCRIPTION	Q'TY	SERIAL NO.
13	KB21003-30023	SERVICE KIT,CONTROL VALVE.....	1	10001-
14	23A-70-05010	SERVICE KIT,CIRCLE REVERSE GEAR.....	1	10001-
	07000-15220	.O-RING,COVER.....	1	10001-
	07002-13034	.O-RING,PLUG.....	1	10001-
	07002-11823	.O-RING,PLUG.....	1	10001-
	07012-00062	.SEAL,OIL, CASE.....	1	10001-
	07000-12130	.O-RING,HOUSING.....	1	10001-
	23B-70-16250	.O-RING,HOUSING.....	1	10001-

NUMERICAL INDEX

PARTS NO.	FIG NO.	INDEX	PAGE
DK010110-2570	0711	32	07- 5
DK010138-2570	0711	31	07- 5
DK014011-0140	0711	34	07- 5
DK014020-8140	0711	37	07- 5
DK014110-3440	0466	3	04- 67
DK014110-8440	0711	36	07- 5
DK014111-0440	0711	33	07- 5
DK016010-0540	0461	22	04- 55
DK016010-0540	0463	22	04- 59
DK016010-0540	0465	22	04- 65
DK016010-0540	0467	22	04- 69
DK016010-1640	0462	20	04- 57
DK016010-1640	0464	21	04- 61
DK016010-1640	0466	23	04- 67
DK016010-1640	0468	23	04- 71
DK016110-1440	0711	27	07- 5
DK016110-1610	0711	14	07- 5
DK016630-2030	0451	12	04- 23
DK016630-2030	0453	12	04- 31
DK016630-2030	0455	12	04- 39
DK016630-2030	0457	12	04- 47
DK016640-2030	0451	13	04- 23
DK016640-2030	0453	13	04- 31
DK016640-2030	0455	13	04- 39
DK016640-2030	0457	13	04- 47
DK020006-1440	0455	23	04- 40
DK020006-1440	0457	23	04- 48
DK020006-1640	0462	11	04- 57
DK020006-1640	0464	12	04- 61
DK020006-1640	0464	32	04- 61
DK020006-1640	0466	14	04- 67
DK020006-1640	0468	14	04- 71
DK020006-1640	0468	34	04- 71
DK020006-2040	0451	23	04- 24
DK020006-2040	0453	23	04- 32
DK020018-1840	0461	5	04- 55
DK020018-1840	0463	5	04- 59
DK020018-1840	0465	5	04- 65
DK020018-1840	0467	5	04- 69
DK020106-3840	0462	8	04- 57
DK020106-3840	0464	9	04- 61
DK020106-3840	0466	11	04- 67
DK020106-3840	0468	11	04- 71
DK020106-5040	0462	6	04- 57
DK020106-5040	0464	7	04- 61
DK020106-5040	0466	9	04- 67
DK020106-5040	0468	9	04- 71
DK025803-1310	0462	25	04- 57
DK025803-1310	0464	26	04- 61
DK025803-1310	0466	28	04- 67

PARTS NO.	FIG NO.	INDEX	PAGE
DK025803-1310	0468	28	04- 71
DK026505-0940	0451	20	04- 23
DK026505-0940	0453	20	04- 31
DK026505-0940	0455	20	04- 39
DK026505-0940	0457	20	04- 47
DK026506-1040	0462	32	04- 57
DK026506-1040	0464	39	04- 62
DK026506-1040	0466	37	04- 67
DK026506-1040	0468	43	04- 72
DK026512-1540	0462	15	04- 57
DK026512-1540	0464	16	04- 61
DK026512-1540	0466	18	04- 67
DK026512-1540	0468	18	04- 71
DK026516-2040	0466	4	04- 67
DK026516-2040	0468	4	04- 71
DK028201-7020	0451	12	04- 23
DK028201-7020	0453	12	04- 31
DK028201-7020	0455	12	04- 39
DK028201-7020	0457	12	04- 47
DK028202-0020	0451	13	04- 23
DK028202-0020	0453	13	04- 31
DK028202-0020	0455	13	04- 39
DK028202-0020	0457	13	04- 47
DK029010-6810	0461	7	04- 55
DK029010-6810	0463	7	04- 59
DK029010-6810	0465	7	04- 65
DK029010-6810	0467	7	04- 69
DK029020-6210	0462	10	04- 57
DK029020-6210	0464	11	04- 61
DK029020-6210	0466	13	04- 67
DK029020-6210	0468	13	04- 71
DK029040-6020	0451	2	04- 23
DK029040-6020	0453	2	04- 31
DK029040-6020	0455	2	04- 39
DK029040-6020	0457	2	04- 47
DK029050-5010	0451	19	04- 23
DK029050-5010	0453	19	04- 31
DK029050-5010	0455	19	04- 39
DK029050-5010	0457	19	04- 47
DK029201-6010	0461	19	04- 55
DK029201-6010	0463	19	04- 59
DK029201-6010	0465	19	04- 65
DK029201-6010	0467	19	04- 69
DK029231-2030	0461	13	04- 55
DK029231-2030	0463	13	04- 59
DK029231-2030	0465	13	04- 65
DK029231-2030	0467	13	04- 69
DK029311-0010	0461	16	04- 55
DK029311-0010	0463	16	04- 59
DK029311-0010	0465	16	04- 65

PARTS NO.	FIG NO.	INDEX	PAGE
DK029311-0010	0467	16	04- 69
DK029311-0020	0452	14	04- 27
DK029311-0020	0454	14	04- 35
DK029311-0020	0456	14	04- 43
DK029311-0020	0458	14	04- 51
DK029311-0030	0452	14	04- 27
DK029311-0030	0454	14	04- 35
DK029311-0030	0456	14	04- 43
DK029311-0030	0458	14	04- 51
DK029311-0040	0452	14	04- 27
DK029311-0040	0454	14	04- 35
DK029311-0040	0456	14	04- 43
DK029311-0040	0458	14	04- 51
DK029311-0050	0452	14	04- 27
DK029311-0050	0454	14	04- 35
DK029311-0050	0456	14	04- 43
DK029311-0050	0458	14	04- 51
DK029311-0060	0452	14	04- 27
DK029311-0060	0454	14	04- 35
DK029311-0060	0456	14	04- 43
DK029311-0060	0458	14	04- 51
DK029311-0070	0452	14	04- 27
DK029311-0070	0454	14	04- 35
DK029311-0070	0456	14	04- 43
DK029311-0070	0458	14	04- 51
DK029311-0080	0452	14	04- 27
DK029311-0080	0454	14	04- 35
DK029311-0080	0456	14	04- 43
DK029311-0080	0458	14	04- 51
DK029311-0090	0452	14	04- 27
DK029311-0090	0454	14	04- 35
DK029311-0090	0456	14	04- 43
DK029311-0090	0458	14	04- 51
DK029311-0110	0452	14	04- 27
DK029311-0110	0454	14	04- 35
DK029311-0110	0456	14	04- 43
DK029311-0110	0458	14	04- 51
DK029311-0120	0452	14	04- 27
DK029311-0120	0454	14	04- 35
DK029311-0120	0456	14	04- 43
DK029311-0120	0458	14	04- 51
DK029311-0130	0452	14	04- 27
DK029311-0130	0454	14	04- 35
DK029311-0130	0456	14	04- 43
DK029311-0130	0458	14	04- 51
DK029311-0140	0452	14	04- 27
DK029311-0140	0454	14	04- 35
DK029311-0140	0456	14	04- 43
DK029311-0140	0458	14	04- 51
DK029311-0180	0461	16	04- 55

PARTS NO.	FIG NO.	INDEX	PAGE
DK029311-0180	0463	16	04- 59
DK029311-0180	0465	16	04- 65
DK029311-0180	0467	16	04- 69
DK029311-0190	0461	16	04- 55
DK029311-0190	0463	16	04- 59
DK029311-0190	0465	16	04- 65
DK029311-0190	0467	16	04- 69
DK029311-0210	0461	16	04- 55
DK029311-0210	0463	16	04- 59
DK029311-0210	0465	16	04- 65
DK029311-0210	0467	16	04- 69
DK029311-0270	0452	14	04- 27
DK029311-0270	0454	14	04- 35
DK029311-0270	0456	14	04- 43
DK029311-0270	0458	14	04- 51
DK029311-0280	0452	14	04- 27
DK029311-0280	0454	14	04- 35
DK029311-0280	0456	14	04- 43
DK029311-0280	0458	14	04- 51
DK029311-0290	0452	14	04- 27
DK029311-0290	0454	14	04- 35
DK029311-0290	0456	14	04- 43
DK029311-0290	0458	14	04- 51
DK029311-0310	0452	14	04- 27
DK029311-0310	0454	14	04- 35
DK029311-0310	0456	14	04- 43
DK029311-0310	0458	14	04- 51
DK029311-0320	0452	14	04- 27
DK029311-0320	0454	14	04- 35
DK029311-0320	0456	14	04- 43
DK029311-0320	0458	14	04- 51
DK029311-0330	0452	14	04- 27
DK029311-0330	0454	14	04- 35
DK029311-0330	0456	14	04- 43
DK029311-0330	0458	14	04- 51
DK029311-0340	0452	14	04- 27
DK029311-0340	0454	14	04- 35
DK029311-0340	0456	14	04- 43
DK029311-0340	0458	14	04- 51
DK029311-0350	0452	14	04- 27
DK029311-0350	0454	14	04- 35
DK029311-0350	0456	14	04- 43
DK029311-0350	0458	14	04- 51
DK029311-0490	0452	14	04- 27
DK029311-0490	0454	14	04- 35
DK029311-0490	0456	14	04- 43
DK029311-0490	0458	14	04- 51
DK029311-0500	0452	14	04- 28
DK029311-0500	0454	14	04- 36
DK029311-0500	0456	14	04- 44

PARTS NO.	FIG NO.	INDEX	PAGE
DK029311-0500	0458	14	04- 52
DK029311-0520	0464	36	04- 61
DK029311-0520	0468	38	04- 71
DK029311-0530	0464	36	04- 61
DK029311-0530	0468	38	04- 71
DK029311-0540	0464	36	04- 61
DK029311-0540	0468	38	04- 71
DK029311-0550	0464	36	04- 61
DK029311-0550	0468	38	04- 72
DK029311-0560	0464	36	04- 61
DK029311-0560	0468	38	04- 72
DK029311-0570	0464	36	04- 62
DK029311-0570	0468	38	04- 72
DK029311-0580	0452	14	04- 27
DK029311-0580	0454	14	04- 35
DK029311-0580	0456	14	04- 43
DK029311-0580	0458	14	04- 51
DK029311-0590	0452	14	04- 27
DK029311-0590	0454	14	04- 35
DK029311-0590	0456	14	04- 43
DK029311-0590	0458	14	04- 51
DK029311-0600	0452	14	04- 27
DK029311-0600	0454	14	04- 35
DK029311-0600	0456	14	04- 43
DK029311-0600	0458	14	04- 51
DK029311-0610	0452	14	04- 27
DK029311-0610	0454	14	04- 35
DK029311-0610	0456	14	04- 43
DK029311-0610	0458	14	04- 51
DK029311-0620	0452	14	04- 27
DK029311-0620	0454	14	04- 35
DK029311-0620	0456	14	04- 43
DK029311-0620	0458	14	04- 51
DK029311-0630	0452	14	04- 27
DK029311-0630	0454	14	04- 35
DK029311-0630	0456	14	04- 43
DK029311-0630	0458	14	04- 51
DK029311-0710	0452	14	04- 28
DK029311-0710	0454	14	04- 36
DK029311-0710	0456	14	04- 44
DK029311-0710	0458	14	04- 52
DK029311-1090	0462	23	04- 57
DK029311-1090	0464	24	04- 61
DK029311-1090	0466	26	04- 67
DK029311-1090	0468	26	04- 71
DK029311-7010	0451	17	04- 23
DK029311-7010	0453	17	04- 31
DK029311-7010	0455	17	04- 39
DK029311-7010	0457	17	04- 47
DK029311-7020	0451	17	04- 23

PARTS NO.	FIG NO.	INDEX	PAGE
DK029311-7020	0453	17	04- 31
DK029311-7020	0455	17	04- 39
DK029311-7020	0457	17	04- 47
DK029311-7030	0451	17	04- 23
DK029311-7030	0453	17	04- 31
DK029311-7030	0455	17	04- 39
DK029311-7030	0457	17	04- 47
DK029311-7040	0451	17	04- 23
DK029311-7040	0453	17	04- 31
DK029311-7040	0455	17	04- 39
DK029311-7040	0457	17	04- 47
DK029311-7050	0451	17	04- 23
DK029311-7050	0453	17	04- 31
DK029311-7050	0455	17	04- 39
DK029311-7050	0457	17	04- 47
DK029311-7060	0451	17	04- 23
DK029311-7060	0453	17	04- 31
DK029311-7060	0455	17	04- 39
DK029311-7060	0457	17	04- 47
DK029311-7070	0451	17	04- 23
DK029311-7070	0453	17	04- 31
DK029311-7070	0455	17	04- 39
DK029311-7070	0457	17	04- 47
DK029311-7090	0451	17	04- 23
DK029311-7090	0453	17	04- 31
DK029311-7090	0455	17	04- 39
DK029311-7090	0457	17	04- 47
DK029311-7210	0451	17	04- 23
DK029311-7210	0453	17	04- 31
DK029311-7210	0455	17	04- 39
DK029311-7210	0457	17	04- 47
DK029311-7220	0451	17	04- 23
DK029311-7220	0453	17	04- 31
DK029311-7220	0455	17	04- 39
DK029311-7220	0457	17	04- 47
DK029312-0310	0451	16	04- 23
DK029312-0310	0453	16	04- 31
DK029312-0310	0455	16	04- 39
DK029312-0310	0457	16	04- 47
DK029312-0320	0451	16	04- 23
DK029312-0320	0453	16	04- 31
DK029312-0320	0455	16	04- 39
DK029312-0320	0457	16	04- 47
DK029312-0330	0451	16	04- 23
DK029312-0330	0453	16	04- 31
DK029312-0330	0455	16	04- 39
DK029312-0330	0457	16	04- 47
DK029312-0340	0451	16	04- 23
DK029312-0340	0453	16	04- 31
DK029312-0340	0455	16	04- 39

PARTS NO.	FIG NO.	INDEX	PAGE
DK029312-0340	0457	16	04- 47
DK029312-0350	0451	16	04- 23
DK029312-0350	0453	16	04- 31
DK029312-0350	0455	16	04- 39
DK029312-0350	0457	16	04- 47
DK029312-0360	0451	16	04- 23
DK029312-0360	0453	16	04- 31
DK029312-0360	0455	16	04- 39
DK029312-0360	0457	16	04- 47
DK029312-0370	0451	16	04- 23
DK029312-0370	0453	16	04- 31
DK029312-0370	0455	16	04- 39
DK029312-0370	0457	16	04- 47
DK029312-0380	0451	16	04- 23
DK029312-0380	0453	16	04- 31
DK029312-0380	0455	16	04- 39
DK029312-0380	0457	16	04- 47
DK029321-2020	0461	12	04- 55
DK029321-2020	0463	12	04- 59
DK029321-2020	0465	12	04- 65
DK029321-2020	0467	12	04- 69
DK029321-4010	0455	27	04- 40
DK029321-4010	0457	27	04- 48
DK029332-2100	0711	22	07- 5
DK029332-6030	0481	5	04- 79
DK029332-6030	0482	5	04- 81
DK029332-6030	0483	5	04- 83
DK029332-6030	0484	5	04- 85
DK029340-6020	0451	8	04- 23
DK029340-6020	0453	8	04- 31
DK029340-6020	0455	8	04- 39
DK029340-6020	0457	8	04- 47
DK029341-0110	0451	30	04- 24
DK029341-0110	0453	30	04- 32
DK029341-0110	0455	32	04- 40
DK029341-0110	0457	32	04- 48
DK029341-2140	0466	36	04- 67
DK029341-2140	0468	42	04- 72
DK029341-4130	0451	27	04- 24
DK029341-4130	0453	27	04- 32
DK029341-4130	0455	30	04- 40
DK029341-4130	0457	30	04- 48
DK029341-4130	0481	19	04- 79
DK029341-4130	0482	19	04- 81
DK029341-4130	0483	19	04- 83
DK029341-4130	0484	19	04- 85
DK029470-4030	0451	25	04- 24
DK029470-4030	0453	25	04- 32
DK029470-4030	0455	28	04- 40
DK029470-4030	0457	28	04- 48

PARTS NO.	FIG NO.	INDEX	PAGE
DK029622-0190	0451	21	04- 23
DK029622-0190	0453	21	04- 31
DK029622-0190	0455	21	04- 39
DK029622-0190	0457	21	04- 47
DK029631-0030	0464	33	04- 61
DK029631-0030	0468	35	04- 71
DK029631-6060	0481	13	04- 79
DK029631-6060	0482	13	04- 81
DK029631-6060	0483	13	04- 83
DK029631-6060	0484	13	04- 85
DK029631-8020	0462	19	04- 57
DK029631-8020	0464	20	04- 61
DK029631-8020	0466	22	04- 67
DK029631-8020	0468	22	04- 71
DK029632-0030	0452	8	04- 27
DK029632-0030	0454	8	04- 35
DK029632-0030	0456	8	04- 43
DK029632-0030	0458	8	04- 51
DK029632-5070	0461	2	04- 55
DK029632-5070	0463	2	04- 59
DK029632-5070	0465	2	04- 65
DK029632-5070	0467	2	04- 69
DK029633-1010	0451	10	04- 23
DK029633-1010	0453	10	04- 31
DK029633-1010	0455	10	04- 39
DK029633-1010	0457	10	04- 47
DK029635-0050	0455	24	04- 40
DK029635-0050	0457	24	04- 48
DK029635-2020	0462	31	04- 57
DK029635-2020	0464	38	04- 62
DK029635-2020	0466	34	04- 67
DK029635-2020	0468	40	04- 72
DK029637-5020	0451	28	04- 24
DK029637-5020	0453	28	04- 32
DK029711-4310	0481	18	04- 79
DK029711-4310	0482	18	04- 81
DK029711-4310	0483	18	04- 83
DK029711-4310	0484	18	04- 85
DK029731-0120	0451	29	04- 24
DK029731-0120	0453	29	04- 32
DK029731-0120	0455	31	04- 40
DK029731-0120	0457	31	04- 48
DK029731-2040	0466	35	04- 67
DK029731-2040	0468	41	04- 72
DK029731-4680	0481	17	04- 79
DK029731-4680	0482	17	04- 81
DK029731-4680	0483	17	04- 83
DK029731-4680	0484	17	04- 85
DK029801-0030	0461	15	04- 55
DK029801-0030	0463	15	04- 59

PARTS NO.	FIG NO.	INDEX	PAGE
DK029801-0030	0465	15	04- 65
DK029801-0030	0467	15	04- 69
DK035620-6000	0711	3	07- 5
DK101069-3890	0455	1	04- 39
DK101069-3890	0456	1	04- 43
DK101069-3890	0457	1	04- 47
DK101069-3890	0458	1	04- 51
DK101069-9420	0451	1	04- 23
DK101069-9420	0452	1	04- 27
DK101069-9420	0453	1	04- 31
DK101069-9420	0454	1	04- 35
DK105220-5610	0481	1	04- 79
DK105220-5610	0482	1	04- 81
DK105220-5610	0483	1	04- 83
DK105220-5610	0484	1	04- 85
DK105400-6700	0465	1	04- 65
DK105400-6700	0466	1	04- 67
DK105400-6710	0461	1	04- 55
DK105400-6710	0462	1	04- 57
DK105400-7750	0463	1	04- 59
DK105400-7750	0464	1	04- 61
DK105400-7790	0467	1	04- 69
DK105400-7790	0468	1	04- 71
DK105661-0450	0471	1	04- 75
DK105661-0450	0472	1	04- 77
DK131011-0800	0451	6	04- 23
DK131011-0800	0453	6	04- 31
DK131011-0800	0455	6	04- 39
DK131011-0800	0457	6	04- 47
DK131017-1000	0451	7	04- 23
DK131017-1000	0453	7	04- 31
DK131017-1000	0455	7	04- 39
DK131017-1000	0457	7	04- 47
DK131028-6020	0451	5	04- 23
DK131028-6020	0453	5	04- 31
DK131028-6020	0455	5	04- 39
DK131028-6020	0457	5	04- 47
DK131034-1401	0452	1	04- 27
DK131034-1401	0454	1	04- 35
DK131034-1401	0456	1	04- 43
DK131034-1401	0458	1	04- 51
DK131071-9220	0455	1	04- 39
DK131071-9220	0457	1	04- 47
DK131073-7020	0451	1	04- 23
DK131073-7020	0453	1	04- 31
DK131110-6820	0452	3	04- 27
DK131110-6820	0454	3	04- 35
DK131110-6820	0456	3	04- 43
DK131110-6820	0458	3	04- 51
DK131112-4200	0452	4	04- 27

PARTS NO.	FIG NO.	INDEX	PAGE
DK131112-4200	0454	4	04- 35
DK131112-4200	0456	4	04- 43
DK131112-4200	0458	4	04- 51
DK131115-1600	0452	5	04- 27
DK131115-1600	0454	5	04- 35
DK131115-1600	0456	5	04- 43
DK131115-1600	0458	5	04- 51
DK131116-8720	0452	6	04- 27
DK131116-8720	0454	6	04- 35
DK131116-8720	0456	6	04- 43
DK131116-8720	0458	6	04- 51
DK131122-0520	0452	7	04- 27
DK131122-0520	0454	7	04- 35
DK131122-0520	0456	7	04- 43
DK131122-0520	0458	7	04- 51
DK131152-4020	0452	2	04- 27
DK131152-4020	0454	2	04- 35
DK131152-4020	0456	2	04- 43
DK131152-4020	0458	2	04- 51
DK131200-2820	0452	9	04- 27
DK131200-2820	0454	9	04- 35
DK131200-2820	0456	9	04- 43
DK131200-2820	0458	9	04- 51
DK131203-0800	0452	10	04- 27
DK131203-0800	0454	10	04- 35
DK131203-0800	0456	10	04- 43
DK131203-0800	0458	10	04- 51
DK131204-1000	0452	11	04- 27
DK131204-1000	0454	11	04- 35
DK131204-1000	0456	11	04- 43
DK131204-1000	0458	11	04- 51
DK131205-0500	0452	12	04- 27
DK131205-0500	0454	12	04- 35
DK131205-0500	0456	12	04- 43
DK131205-0500	0458	12	04- 51
DK131206-0200	0452	13	04- 27
DK131206-0200	0454	13	04- 35
DK131206-0200	0456	13	04- 43
DK131206-0200	0458	13	04- 51
DK131215-2500	0452	15	04- 28
DK131215-2500	0454	15	04- 36
DK131215-2500	0456	15	04- 44
DK131215-2500	0458	15	04- 52
DK131216-0100	0452	16	04- 28
DK131216-0100	0454	16	04- 36
DK131216-0100	0456	16	04- 44
DK131216-0100	0458	16	04- 52
DK131217-0200	0452	17	04- 28
DK131217-0200	0454	17	04- 36
DK131217-0200	0456	17	04- 44

PARTS NO.	FIG NO.	INDEX	PAGE
DK131217-0200	0458	17	04- 52
DK131226-0300	0452	19	04- 28
DK131226-0300	0454	19	04- 36
DK131226-0300	0456	19	04- 44
DK131226-0300	0458	19	04- 52
DK131240-0100	0452	20	04- 28
DK131240-0100	0454	20	04- 36
DK131240-0100	0456	20	04- 44
DK131240-0100	0458	20	04- 52
DK131241-0100	0452	21	04- 28
DK131241-0100	0454	21	04- 36
DK131241-0100	0456	21	04- 44
DK131241-0100	0458	21	04- 52
DK131242-0100	0452	22	04- 28
DK131242-0100	0454	22	04- 36
DK131242-0100	0456	22	04- 44
DK131242-0100	0458	22	04- 52
DK131256-0000	0452	18	04- 28
DK131256-0000	0454	18	04- 36
DK131256-0000	0456	18	04- 44
DK131256-0000	0458	18	04- 52
DK131302-1300	0451	14	04- 23
DK131302-1300	0453	14	04- 31
DK131302-1300	0455	14	04- 39
DK131302-1300	0457	14	04- 47
DK131302-1700	0451	15	04- 23
DK131302-1700	0453	15	04- 31
DK131302-1700	0455	15	04- 39
DK131302-1700	0457	15	04- 47
DK131306-1000	0451	18	04- 23
DK131306-1000	0453	18	04- 31
DK131306-1000	0455	18	04- 39
DK131306-1000	0457	18	04- 47
DK131316-2000	0455	22	04- 40
DK131316-2000	0457	22	04- 48
DK131321-1700	0451	24	04- 24
DK131321-1700	0453	24	04- 32
DK131325-2600	0455	26	04- 40
DK131325-2600	0457	26	04- 48
DK131330-1800	0451	22	04- 24
DK131330-1800	0453	22	04- 32
DK131371-3700	0451	11	04- 23
DK131371-3700	0453	11	04- 31
DK131371-3700	0455	11	04- 39
DK131371-3700	0457	11	04- 47
DK131400-0100	0451	3	04- 23
DK131400-0100	0453	3	04- 31
DK131400-0100	0455	3	04- 39
DK131400-0100	0457	3	04- 47
DK131401-0020	0451	26	04- 24

PARTS NO.	FIG NO.	INDEX	PAGE
DK131401-0020	0453	26	04- 32
DK131401-0020	0455	29	04- 40
DK131401-0020	0457	29	04- 48
DK131420-0420	0451	4	04- 23
DK131420-0420	0453	4	04- 31
DK131420-0420	0455	4	04- 39
DK131420-0420	0457	4	04- 47
DK139206-0400	0451	9	04- 23
DK139206-0400	0453	9	04- 31
DK139206-0400	0455	9	04- 39
DK139206-0400	0457	9	04- 47
DK139206-0600	0462	4	04- 57
DK139206-0600	0464	5	04- 61
DK139206-0600	0466	7	04- 67
DK139206-0600	0468	7	04- 71
DK139410-0000	0461	16	04- 55
DK139410-0000	0463	16	04- 59
DK139410-0000	0465	16	04- 65
DK139410-0000	0467	16	04- 69
DK139410-0100	0461	16	04- 55
DK139410-0100	0463	16	04- 59
DK139410-0100	0465	16	04- 65
DK139410-0100	0467	16	04- 69
DK139410-3000	0461	16	04- 55
DK139410-3000	0463	16	04- 59
DK139410-3000	0465	16	04- 65
DK139410-3000	0467	16	04- 69
DK139410-3100	0461	16	04- 55
DK139410-3100	0463	16	04- 59
DK139410-3100	0465	16	04- 65
DK139410-3100	0467	16	04- 69
DK139410-3200	0461	16	04- 55
DK139410-3200	0463	16	04- 59
DK139410-3200	0465	16	04- 65
DK139410-3200	0467	16	04- 69
DK139411-0000	0462	22	04- 57
DK139411-0000	0464	23	04- 61
DK139411-0000	0466	25	04- 67
DK139411-0000	0468	25	04- 71
DK139417-0000	0451	17	04- 23
DK139417-0000	0453	17	04- 31
DK139417-0000	0455	17	04- 39
DK139417-0000	0457	17	04- 47
DK139611-0000	0462	21	04- 57
DK139611-0000	0464	22	04- 61
DK139611-0000	0466	24	04- 67
DK139611-0000	0468	24	04- 71
DK150508-5900	0421	2	04- 19
DK150515-9900	0421	3	04- 19
DK150524-4600	0421	6	04- 20

PARTS NO.	FIG NO.	INDEX	PAGE
DK150531-0000	0421	5	04- 19
DK150531-0100	0421	5	04- 19
DK150531-0200	0421	5	04- 19
DK150531-0300	0421	5	04- 19
DK150531-0400	0421	5	04- 19
DK150531-0500	0421	5	04- 19
DK150531-0600	0421	5	04- 19
DK150531-0700	0421	5	04- 19
DK150531-0800	0421	5	04- 19
DK150531-0900	0421	5	04- 19
DK150531-1000	0421	5	04- 19
DK150531-1100	0421	5	04- 19
DK150531-1200	0421	5	04- 19
DK150531-1300	0421	5	04- 19
DK150531-1400	0421	5	04- 19
DK150531-1500	0421	5	04- 19
DK150531-1600	0421	5	04- 19
DK150531-1700	0421	5	04- 19
DK150531-1800	0421	5	04- 19
DK150531-1900	0421	5	04- 19
DK150531-2000	0421	5	04- 19
DK150531-2100	0421	5	04- 19
DK150531-2200	0421	5	04- 19
DK150531-2300	0421	5	04- 19
DK150531-2400	0421	5	04- 19
DK150531-2500	0421	5	04- 19
DK150531-2600	0421	5	04- 19
DK150531-2700	0421	5	04- 19
DK150531-2800	0421	5	04- 19
DK150531-2900	0421	5	04- 19
DK150531-3000	0421	5	04- 19
DK150531-3100	0421	5	04- 19
DK150531-3200	0421	5	04- 19
DK150531-3300	0421	5	04- 19
DK150531-3400	0421	5	04- 19
DK150531-3500	0421	5	04- 19
DK150531-3600	0421	5	04- 19
DK150531-3700	0421	5	04- 20
DK150531-3800	0421	5	04- 20
DK150531-3900	0421	5	04- 20
DK150531-4000	0421	5	04- 20
DK150562-4300	0421	4	04- 19
DK150655-0000	0421	7	04- 20
DK152003-1020	0481	1	04- 79
DK152003-1020	0482	1	04- 81
DK152003-1020	0483	1	04- 83
DK152003-1020	0484	1	04- 85
DK152100-1120	0481	2	04- 79
DK152100-1120	0482	2	04- 81
DK152100-1120	0483	2	04- 83

PARTS NO.	FIG NO.	INDEX	PAGE
DK152100-1120	0484	2	04- 85
DK152102-1600	0481	3	04- 79
DK152102-1600	0482	3	04- 81
DK152102-1600	0483	3	04- 83
DK152102-1600	0484	3	04- 85
DK152105-1600	0481	4	04- 79
DK152105-1600	0482	4	04- 81
DK152105-1600	0483	4	04- 83
DK152105-1600	0484	4	04- 85
DK152111-2820	0481	6	04- 79
DK152111-2820	0482	6	04- 81
DK152111-2820	0483	6	04- 83
DK152111-2820	0484	6	04- 85
DK152112-0100	0481	7	04- 79
DK152112-0100	0482	7	04- 81
DK152112-0100	0483	7	04- 83
DK152112-0100	0484	7	04- 85
DK152113-0700	0481	8	04- 79
DK152113-0700	0482	8	04- 81
DK152113-0700	0483	8	04- 83
DK152113-0700	0484	8	04- 85
DK152114-0400	0481	9	04- 79
DK152114-0400	0482	9	04- 81
DK152114-0400	0483	9	04- 83
DK152114-0400	0484	9	04- 85
DK152115-0500	0481	10	04- 79
DK152115-0500	0482	10	04- 81
DK152115-0500	0483	10	04- 83
DK152115-0500	0484	10	04- 85
DK152116-0200	0481	11	04- 79
DK152116-0200	0482	11	04- 81
DK152116-0200	0483	11	04- 83
DK152116-0200	0484	11	04- 85
DK152118-0900	0481	12	04- 79
DK152118-0900	0482	12	04- 81
DK152118-0900	0483	12	04- 83
DK152118-0900	0484	12	04- 85
DK152121-0200	0481	14	04- 79
DK152121-0200	0482	14	04- 81
DK152121-0200	0483	14	04- 83
DK152121-0200	0484	14	04- 85
DK152200-5420	0481	15	04- 79
DK152200-5420	0482	15	04- 81
DK152200-5420	0483	15	04- 83
DK152200-5420	0484	15	04- 85
DK152300-5920	0481	16	04- 79
DK152300-5920	0482	16	04- 81
DK152300-5920	0483	16	04- 83
DK152300-5920	0484	16	04- 85
DK152320-0100	0481	20	04- 79

PARTS NO.	FIG NO.	INDEX	PAGE
DK152320-0100	0482	20	04- 81
DK152320-0100	0483	20	04- 83
DK152320-0100	0484	20	04- 85
DK154000-6300	0461	1	04- 55
DK154000-6300	0463	1	04- 59
DK154000-6300	0465	1	04- 65
DK154000-6300	0467	1	04- 69
DK154007-0200	0461	4	04- 55
DK154007-0200	0463	4	04- 59
DK154007-0200	0465	4	04- 65
DK154007-0200	0467	4	04- 69
DK154007-2900	0461	3	04- 55
DK154007-2900	0463	3	04- 59
DK154007-2900	0465	3	04- 65
DK154007-2900	0467	3	04- 69
DK154010-0100	0461	8	04- 55
DK154010-0100	0463	8	04- 59
DK154010-0100	0465	8	04- 65
DK154010-0100	0467	8	04- 69
DK154010-0200	0464	8	04- 61
DK154010-0200	0468	10	04- 71
DK154010-0300	0462	7	04- 57
DK154010-0300	0466	10	04- 67
DK154011-0100	0461	9	04- 55
DK154011-0100	0462	1	04- 57
DK154011-0100	0463	9	04- 59
DK154011-0100	0464	1	04- 61
DK154011-0100	0465	9	04- 65
DK154011-0100	0466	1	04- 67
DK154011-0100	0467	9	04- 69
DK154011-0100	0468	1	04- 71
DK154011-1700	0462	14	04- 57
DK154011-1700	0464	15	04- 61
DK154011-1700	0466	17	04- 67
DK154011-1700	0468	17	04- 71
DK154031-2400	0462	3	04- 57
DK154031-2400	0464	4	04- 61
DK154031-2400	0466	6	04- 67
DK154031-2400	0468	6	04- 71
DK154035-1600	0462	33	04- 57
DK154035-1600	0464	40	04- 62
DK154035-1600	0466	38	04- 67
DK154035-1600	0468	44	04- 72
DK154036-0300	0462	5	04- 57
DK154036-0300	0464	6	04- 61
DK154036-0300	0466	8	04- 67
DK154036-0300	0468	8	04- 71
DK154050-1720	0461	10	04- 55
DK154050-1720	0463	10	04- 59
DK154050-1720	0465	10	04- 65

PARTS NO.	FIG NO.	INDEX	PAGE
DK154050-1720	0467	10	04- 69
DK154063-1400	0466	12	04- 67
DK154063-1400	0468	12	04- 71
DK154063-6820	0462	9	04- 57
DK154063-6820	0464	10	04- 61
DK154100-9720	0461	11	04- 55
DK154100-9720	0463	11	04- 59
DK154100-9720	0465	11	04- 65
DK154100-9720	0467	11	04- 69
DK154123-0120	0461	14	04- 55
DK154123-0120	0463	14	04- 59
DK154123-0120	0465	14	04- 65
DK154123-0120	0467	14	04- 69
DK154150-6400	0462	12	04- 57
DK154150-6400	0464	13	04- 61
DK154150-6400	0466	15	04- 67
DK154150-6400	0468	15	04- 71
DK154154-0701	0461	17	04- 55
DK154154-0701	0463	17	04- 59
DK154154-0701	0465	17	04- 65
DK154154-0701	0467	17	04- 69
DK154158-0820	0462	13	04- 57
DK154158-0820	0464	14	04- 61
DK154158-0820	0466	16	04- 67
DK154158-0820	0468	16	04- 71
DK154159-1200	0462	16	04- 57
DK154159-1200	0464	17	04- 61
DK154159-1200	0466	19	04- 67
DK154159-1200	0468	19	04- 71
DK154177-0620	0461	18	04- 55
DK154177-0620	0463	18	04- 59
DK154177-0620	0465	18	04- 65
DK154177-0620	0467	18	04- 69
DK154200-7020	0462	17	04- 57
DK154200-7020	0464	18	04- 61
DK154200-7020	0466	20	04- 67
DK154200-7020	0468	20	04- 71
DK154204-3000	0462	18	04- 57
DK154204-3000	0464	19	04- 61
DK154204-3000	0466	21	04- 67
DK154204-3000	0468	21	04- 71
DK154204-3100	0462	24	04- 57
DK154204-3100	0464	25	04- 61
DK154204-3100	0466	27	04- 67
DK154204-3100	0468	27	04- 71
DK154206-0200	0462	27	04- 57
DK154206-0200	0464	28	04- 61
DK154206-0200	0466	30	04- 67
DK154206-0200	0468	30	04- 71
DK154206-2800	0462	26	04- 57

PARTS NO.	FIG NO.	INDEX	PAGE
DK154206-2800	0464	27	04- 61
DK154206-2800	0466	29	04- 67
DK154206-2800	0468	29	04- 71
DK154210-0920	0461	20	04- 55
DK154210-0920	0463	20	04- 59
DK154210-0920	0465	20	04- 65
DK154210-0920	0467	20	04- 69
DK154230-3920	0461	21	04- 55
DK154230-3920	0463	21	04- 59
DK154230-3920	0465	21	04- 65
DK154230-3920	0467	21	04- 69
DK154236-4100	0461	23	04- 55
DK154236-4100	0463	23	04- 59
DK154236-4100	0465	23	04- 65
DK154236-4100	0467	23	04- 69
DK154237-0100	0462	28	04- 57
DK154237-0100	0464	29	04- 61
DK154237-0100	0466	31	04- 67
DK154237-0100	0468	31	04- 71
DK154316-6600	0466	5	04- 67
DK154316-6600	0468	5	04- 71
DK154321-0400	0464	3	04- 61
DK154321-0400	0468	3	04- 71
DK154322-0100	0464	34	04- 61
DK154322-0100	0468	36	04- 71
DK154326-5020	0463	24	04- 59
DK154326-5020	0467	24	04- 69
DK154327-7600	0464	35	04- 61
DK154327-7600	0468	37	04- 71
DK154341-9520	0466	32	04- 67
DK154341-9520	0468	32	04- 71
DK154343-5020	0462	29	04- 57
DK154343-5020	0464	30	04- 61
DK154350-1900	0461	6	04- 55
DK154350-1900	0463	6	04- 59
DK154350-1900	0465	6	04- 65
DK154350-1900	0467	6	04- 69
DK154350-7700	0461	24	04- 55
DK154350-7700	0463	25	04- 59
DK154350-7700	0465	24	04- 65
DK154350-7700	0467	25	04- 69
DK154350-7800	0462	30	04- 57
DK154350-7800	0464	37	04- 62
DK154350-7800	0466	33	04- 67
DK154350-7800	0468	39	04- 72
DK154366-8120	0464	31	04- 61
DK154381-5300	0468	33	04- 71
DK154500-1020	0464	2	04- 61
DK154500-2020	0462	2	04- 57
DK154500-8220	0468	2	04- 71

PARTS NO.	FIG NO.	INDEX	PAGE
DK154500-8720	0466	2	04- 67
DK156603-4400	0711	38	07- 5
DK156605-2320	0471	3	04- 75
DK156605-2320	0472	3	04- 77
DK156605-4620	0471	8	04- 75
DK156605-4620	0472	8	04- 77
DK156609-6100	0471	6	04- 75
DK156609-6100	0472	6	04- 77
DK156615-3800	0471	10	04- 75
DK156615-3800	0472	10	04- 77
DK156617-2500	0471	4	04- 75
DK156617-2500	0472	4	04- 77
DK156631-1300	0471	1	04- 75
DK156631-1300	0472	1	04- 77
DK156633-4300	0471	9	04- 75
DK156633-4300	0472	9	04- 77
DK156633-5900	0471	5	04- 75
DK156633-5900	0471	7	04- 75
DK156633-5900	0472	5	04- 77
DK156633-5900	0472	7	04- 77
DK156633-6000	0471	11	04- 75
DK156633-6000	0472	11	04- 77
DK156633-6200	0471	2	04- 75
DK156633-6200	0472	2	04- 77
DK156636-7420	0455	25	04- 40
DK156636-7420	0457	25	04- 48
DK487000-5900	0711	1	07- 5
DK487001-3300	0711	9	07- 5
DK487003-4420	0711	4	07- 5
DK487008-8400	0711	2	07- 5
DK487009-1700	0711	11	07- 5
DK487010-3720	0711	12	07- 5
DK487012-0400	0711	13	07- 5
DK487013-2220	0711	10	07- 5
DK487018-1300	0711	16	07- 5
DK487020-0400	0711	15	07- 5
DK487021-2400	0711	23	07- 5
DK487021-2420	0711	23	07- 5
DK487023-0700	0711	28	07- 5
DK487024-1600	0711	25	07- 5
DK487025-0400	0711	20	07- 5
DK487026-0800	0711	19	07- 5
DK487027-0300	0711	18	07- 5
DK487028-1100	0711	17	07- 5
DK487030-1420	0711	21	07- 5
DK487061-3700	0711	7	07- 5
DK487061-4300	0711	6	07- 5
DK487061-4400	0711	8	07- 5
DK487061-4600	0711	24	07- 5
DK487073-0200	0711	30	07- 5

PARTS NO.	FIG NO.	INDEX	PAGE
DK487085-0200	0711	5	07- 5
DK487099-3721	0711	16	07- 5
DK487099-7700	0711	35	07- 5
DK487351-0200	0711	26	07- 5
DK487351-0300	0711	29	07- 5
GA400677-0816	0155	7	01- 19
GA400784-0810	0155	4	01- 19
GA409115-0051	0155	1	01- 19
GA409148-0000	0155	3	01- 19
GA409172-5035	0155	2	01- 19
GA409188-0000	0155	6	01- 19
GA409395-0063	0155	5	01- 19
KB2012A-60004	9991	4	90- 11
KB2012B-60009	9991	3	90- 11
KB20121-30101	6001	1	60- 3
KB20121-30705	6001	13	60- 3
KB20121-40105	6001	4	60- 3
KB20121-41265	6001	18	60- 3
KB20121-41802	6001	21	60- 3
KB20121-60101	2501	3	20- 51
KB20121-60705	2501	1	20- 51
KB20121-61241	2501	14	20- 51
KB21001-00036	6201	31	60- 13
KB21001-00036	6207	31	60- 19
KB21001-00106	6201	24	60- 13
KB21001-00106	6201	27	60- 13
KB21001-00106	6205	22	60- 17
KB21001-00106	6207	24	60- 19
KB21001-00106	6207	29	60- 19
KB21001-00106	6209	22	60- 23
KB21001-00127	6201	30	60- 13
KB21001-00127	6207	30	60- 19
KB21001-00207	6209	24	60- 23
KB21001-00504	6201	28	60- 13
KB21001-00504	6205	25	60- 17
KB21001-00504	6207	26	60- 19
KB21001-00504	6209	24	60- 23
KB21003-00191	6201	30	60- 13
KB21003-00191	6207	30	60- 19
KB21003-00207	6201	28	60- 13
KB21003-00207	6205	25	60- 17
KB21003-00207	6207	26	60- 19
KB21003-30023	9991	13	90- 13
KB21011-30153	6205	24	60- 17
KB21011-30153	6209	26	60- 23
KB21011-30336	6201	23	60- 13
KB21011-30336	6205	21	60- 17
KB21011-30336	6207	23	60- 19
KB21011-30349	6209	21	60- 23
KB21011-30351	6201	26	60- 13

PARTS NO.	FIG NO.	INDEX	PAGE
KB21011-30351	6207	28	60- 19
KB21011-30507	6201	8	60- 13
KB21011-30507	6205	7	60- 17
KB21011-30507	6207	8	60- 19
KB21011-30507	6209	7	60- 23
KB21011-30604	6201	20	60- 13
KB21011-30604	6205	19	60- 17
KB21011-30604	6207	20	60- 19
KB21011-30604	6209	19	60- 23
KB21011-30613	6201	6	60- 13
KB21011-30613	6205	5	60- 17
KB21011-30613	6207	6	60- 19
KB21011-30613	6209	5	60- 23
KB21011-30702	6201	7	60- 13
KB21011-30702	6205	6	60- 17
KB21011-30702	6207	7	60- 19
KB21011-30702	6209	6	60- 23
KB21011-30917	6201	22	60- 13
KB21011-30917	6207	22	60- 19
KB21011-31011	6201	9	60- 13
KB21011-31044	6205	8	60- 17
KB21011-31044	6207	9	60- 19
KB21011-31044	6209	8	60- 23
KB21011-31205	6201	16	60- 13
KB21011-31205	6205	11	60- 17
KB21011-31205	6207	16	60- 19
KB21011-31205	6209	15	60- 23
KB21011-31507	6201	12	60- 13
KB21011-31507	6205	14	60- 17
KB21011-31507	6207	12	60- 19
KB21011-31507	6209	11	60- 23
KB21011-31702	6201	10	60- 13
KB21011-31702	6201	17	60- 13
KB21011-31702	6205	12	60- 17
KB21011-31702	6205	9	60- 17
KB21011-31702	6207	10	60- 19
KB21011-31702	6207	17	60- 19
KB21011-31702	6209	16	60- 23
KB21011-31702	6209	9	60- 23
KB21011-32404	6201	19	60- 13
KB21011-32404	6205	18	60- 17
KB21011-32404	6207	19	60- 19
KB21011-32404	6209	18	60- 23
KB21011-33307	6201	13	60- 13
KB21011-33307	6205	15	60- 17
KB21011-33307	6207	13	60- 19
KB21011-33307	6209	12	60- 23
KB21013-30664	6201	25	60- 13
KB21013-30664	6205	23	60- 17
KB21013-30664	6207	25	60- 19

PARTS NO.	FIG NO.	INDEX	PAGE
KB21013-30664	6209	23	60- 23
KB21013-32395	6201	1	60- 13
KB21013-32399	6207	1	60- 19
KB21013-33309	6201	1	60- 13
KB21013-33315	6205	1	60- 17
KB21013-33315	6207	1	60- 19
KB21013-33315	6209	1	60- 23
KB21013-34810	6201	23	60- 13
KB21013-34810	6205	21	60- 17
KB21013-34810	6207	23	60- 19
KB21013-34839	6209	21	60- 23
KB21013-34845	6201	26	60- 13
KB21013-34845	6207	28	60- 19
KB21041-30103	6201	34	60- 14
KB21041-30103	6205	29	60- 17
KB21041-30104	6201	32	60- 13
KB21041-30104	6205	27	60- 17
KB21051-30105	6207	34	60- 20
KB21051-30105	6209	27	60- 23
KB21051-30106	6207	32	60- 19
KB21051-30106	6209	29	60- 23
KB92702-06181	6201	11	60- 13
KB92702-06181	6201	18	60- 13
KB92702-06181	6205	10	60- 17
KB92702-06181	6205	13	60- 17
KB92702-06181	6207	11	60- 19
KB92702-06181	6207	18	60- 19
KB92702-06181	6209	10	60- 23
KB92702-06181	6209	17	60- 23
KB93118-08652	6201	33	60- 14
KB93118-08652	6205	28	60- 17
KB93118-08652	6207	33	60- 20
KB93118-08652	6209	30	60- 23
KB93128-10082	6201	35	60- 14
KB93128-10082	6205	30	60- 17
KB93128-10082	6207	35	60- 20
KB93128-10082	6209	28	60- 23
KB93601-12082	6201	15	60- 13
KB93601-12082	6205	17	60- 17
KB93601-12082	6207	15	60- 19
KB93601-12082	6209	14	60- 23
KB94101-10250	2501	15	20- 51
KB94101-10250	6001	19	60- 3
KB94311-05082	6201	14	60- 13
KB94311-05082	6205	16	60- 17
KB94311-05082	6207	14	60- 19
KB94311-05082	6209	13	60- 23
KB95113-01800	6201	29	60- 13
KB95113-01800	6205	26	60- 17
KB95113-01800	6207	27	60- 19

PARTS NO.	FIG NO.	INDEX	PAGE
KB95113-01800	6209	25	60- 23
KDO-0274-05102	0641	17	06- 13
KDO-0275-06802	0641	20	06- 13
KDO-0275-06802	0643	14	06- 17
KDO-0275-06802	0644	14	06- 19
KDO-0280-16022	0641	25	06- 13
KDO-0280-16022	0643	19	06- 17
KDO-0280-16022	0644	19	06- 19
KDO-23230-0210	0661	4	06- 21
KDO-23310-0680	0661	7	06- 21
KDO-23500-0390	0661	13	06- 21
KDO-23600-0220	0661	14	06- 21
KDO-23711-0170	0661	18	06- 21
KDO-23740-0180	0661	22	06- 21
KDO-23750-0120	0661	20	06- 21
KDO-25000-6951	0661	24	06- 21
KDO-33100-1450	0641	3	06- 13
KDO-33200-1410	0641	21	06- 13
KDO-33311-0510	0641	22	06- 13
KDO-33411-2850	0641	24	06- 13
KDO-33700-2711	0641	12	06- 13
KDO-33710-3300	0641	16	06- 13
KDO-33730-2560	0641	18	06- 13
KDO-33902-0080	0641	12	06- 13
KDO-33902-0090	0641	13	06- 13
KDO-33923-0980	0641	5	06- 13
KDO-33943-1050	0641	15	06- 13
KDO-35100-0080	0643	1	06- 17
KDO-35100-0080	0644	1	06- 19
KDO-35120-0040	0643	20	06- 17
KDO-35120-0040	0644	20	06- 19
KDO-35200-0060	0643	12	06- 17
KDO-35200-0230	0644	12	06- 19
KDO-35310-0021	0643	13	06- 17
KDO-35310-0021	0644	13	06- 19
KDO-35411-0200	0643	15	06- 17
KDO-35411-0200	0644	15	06- 19
KDO-35700-0130	0643	21	06- 17
KDO-35700-0130	0644	21	06- 19
KDO-35710-0140	0643	21	06- 17
KDO-35710-0140	0644	21	06- 19
KDO-35730-0080	0643	22	06- 17
KDO-35730-0080	0644	22	06- 19
KDO-35926-0060	0641	7	06- 13
KDO-35926-0060	0643	6	06- 17
KDO-35926-0060	0644	6	06- 19
KDO-47100-3510	0661	17	06- 21
KD1-0055-06162	0641	6	06- 13
KD1-0330-16012	0643	17	06- 17
KD1-0330-16012	0644	17	06- 19

PARTS NO.	FIG NO.	INDEX	PAGE
KD1-0335-16002	0643	18	06- 17
KD1-0335-16002	0644	18	06- 19
KD1-0416-04160	0641	4	06- 13
KD1-0416-04160	0643	4	06- 17
KD1-0416-04160	0644	4	06- 19
KD1-0454-60047	0661	2	06- 21
KD1-0454-60057	0661	10	06- 21
KD1-0454-62007	0661	3	06- 21
KD1-0456-63057	0641	9	06- 13
KD1-0456-63057	0643	3	06- 17
KD1-0456-63057	0644	3	06- 19
KD1-09102-0010	0643	25	06- 17
KD1-09102-0010	0644	25	06- 19
KD1-09201-0460	0643	2	06- 17
KD1-09201-0460	0644	2	06- 19
KD1-09201-0530	0641	1	06- 13
KD1-23100-0160	0661	1	06- 21
KD1-23181-0030	0661	11	06- 21
KD1-23611-0430	0661	15	06- 21
KD1-23740-0170	0661	21	06- 21
KD1-23785-0100	0661	5	06- 21
KD1-23901-0080	0661	23	06- 21
KD1-23913-0010	0661	19	06- 21
KD1-23914-0030	0661	12	06- 21
KD1-33421-0590	0641	23	06- 13
KD1-33740-0450	0641	19	06- 13
KD1-33923-0780	0643	5	06- 17
KD1-33923-0780	0644	5	06- 19
KD1-33923-0810	0643	10	06- 17
KD1-33923-0810	0644	10	06- 19
KD1-33923-0920	0641	11	06- 13
KD1-33926-0730	0641	10	06- 13
KD1-33926-0730	0643	8	06- 17
KD1-33926-0730	0644	8	06- 19
KD1-33926-0750	0641	8	06- 13
KD1-33926-0750	0643	7	06- 17
KD1-33926-0750	0644	7	06- 19
KD1-33926-0770	0643	11	06- 17
KD1-33926-0770	0644	11	06- 19
KD1-33926-0820	0641	2	06- 13
KD1-33943-0760	0643	26	06- 17
KD1-33943-0760	0644	26	06- 19
KD1-33943-0770	0643	24	06- 17
KD1-33943-0770	0644	24	06- 19
KD1-33943-0980	0641	14	06- 13
KD1-33951-0610	0641	26	06- 13
KD1-33951-0610	0643	9	06- 17
KD1-33951-0610	0644	9	06- 19
KD1-35421-0030	0643	16	06- 17
KD1-35421-0030	0644	16	06- 19

PARTS NO.	FIG NO.	INDEX	PAGE
KD1-35761-0060	0643	23	06- 17
KD1-35761-0060	0644	23	06- 19
KD1-44000-0900	0643	27	06- 17
KD1-44000-0900	0644	27	06- 19
KD7-09210-0720	0661	25	06- 21
KD7-23120-0270	0661	9	06- 21
KD7-23320-0040	0661	16	06- 21
KD7-23351-0140	0661	8	06- 21
KD7-23700-0600	0661	18	06- 21
KD7-23780-0040	0661	6	06- 21
SD1211-46000X0	0642	1	06- 15
SD1221-16700X0	0642	22	06- 15
SD1230-19400X0	0642	2	06- 15
SD1235-07601X0	0642	14	06- 15
SD1235-07900X0	0642	3	06- 15
SD1235-08000X0	0642	4	06- 15
SD1239-03600X0	0642	15	06- 15
SD1239-04310X0	0642	17	06- 15
SD1240-07400X0	0642	23	06- 15
SD1251-00600X0	0642	21	06- 15
SD1291-00300X0	0642	19	06- 15
SD2080-21300X0	0642	32	06- 15
SD2202-02200X0	0642	27	06- 15
SD2240-20610X0	0642	2	06- 15
SD2242-09010X0	0642	23	06- 15
SD3000-07800X0	0642	33	06- 15
SD3220-40000X0	0642	6	06- 15
SD3221-23220X0	0642	20	06- 15
SD3448-00440X0	0642	31	06- 15
SD3600-17300X0	0642	30	06- 15
SD4041-03700X0	0642	16	06- 15
SD4041-05700X0	0642	12	06- 15
SD4041-05710X0	0642	8	06- 15
SD4142-00900X0	0642	26	06- 15
SD4215-00701X0	0642	7	06- 15
SD4215-00800X0	0642	11	06- 15
SD5010-04300X0	0642	29	06- 15
SD5010-21500X0	0642	28	06- 15
SD5030-05200X0	0642	9	06- 15
SD6060-11920X0	0642	13	06- 15
SD6206-00200X0	0642	18	06- 15
SD6206-00320X0	0642	25	06- 15
SD6410-02000X0	0642	24	06- 15
SD8140-050301O	0642	10	06- 15
SD8140-060351O	0642	5	06- 15
SD8264-183001O	0642	34	06- 15
01010-30612	0111	5	01- 5
01010-50612	1501	23	10- 27
01010-50612	1501	27	10- 27
01010-50612	1501	5	10- 27

PARTS NO.	FIG NO.	INDEX	PAGE
01010-50612	1805	7	10- 39
01010-50612	4101	6	40- 9
01010-50612	5427	9	50- 25
01010-50614	5301	7	50- 11
01010-50616	1831	7	10- 41
01010-50616	1833A	9	10- 43
01010-50616	4101	10	40- 9
01010-50616	4101	27	40- 9
01010-50616	4301	4	40- 31
01010-50616	5423	38	50- 20
01010-50616	5429	34	50- 27
01010-50620	1413	7	10- 25
01010-50625	4011A	42	40- 5
01010-50630	1507	7	10- 33
01010-50812	1411	11	10- 23
01010-50812	4211A	25	40- 21
01010-50814	1501	14	10- 27
01010-50814	1833A	3	10- 43
01010-50816	1303	8	10- 13
01010-50816	1307	28	10- 17
01010-50816	4221	15	40- 25
01010-50816	4351	10	40- 45
01010-50820	1201A	4	10- 7
01010-50820	1201A	7	10- 7
01010-50820	1503	8	10- 29
01010-50820	4301	17	40- 31
01010-50820	4301	34	40- 31
01010-50820	5429	10	50- 27
01010-50820	5429	20	50- 27
01010-50820	7033	16	70- 15
01010-50822	2601A	15	20- 59
01010-50822	2611A	15	20- 67
01010-50825	1307	15	10- 17
01010-50825	5429	15	50- 27
01010-50825	5429	25	50- 27
01010-50825	5429	29	50- 27
01010-50830	1503	11	10- 29
01010-50830	2551	31	20- 55
01010-50830	2753	14	20- 93
01010-50830	3101	17	30- 5
01010-50830	4101	20	40- 9
01010-50830	4103A	10	40- 11
01010-50830	4111	16	40- 15
01010-50830	6401	16	60- 53
01010-50830	6401	39	60- 54
01010-50830	6451	27	60- 71
01010-50835	2551	13	20- 55
01010-50840	2751	14	20- 91
01010-50855	6421	8	60- 59
01010-50855	6431	10	60- 63

PARTS NO.	FIG NO.	INDEX	PAGE
01010-50855	6435A	19	60- 65
01010-50855	6451	11	60- 71
01010-50855	6463	11	60- 77
01010-50855	6473	13	60- 83
01010-50860	6423A	21	60- 61
01010-50890	6401	23	60- 53
01010-51016	1501	21	10- 27
01010-51016	1801	10	10- 35
01010-51016	1805	17	10- 39
01010-51016	2751	26	20- 91
01010-51016	4221	19	40- 25
01010-51016	4351	20	40- 45
01010-51016	6401	27	60- 53
01010-51016	6401	48	60- 54
01010-51016	6435A	28	60- 65
01010-51016	6441	21	60- 69
01010-51016	6465	16	60- 79
01010-51018	1203A	12	10- 9
01010-51020	1011	9	10- 5
01010-51020	1301	9	10- 11
01010-51020	1305	9	10- 15
01010-51020	1503	20	10- 29
01010-51020	2803	17	20- 97
01010-51020	5423	51	50- 20
01010-51020	6403	18	60- 57
01010-51020	6423A	7	60- 61
01010-51020	6431	17	60- 63
01010-51020	6435A	10	60- 65
01010-51020	6437	17	60- 67
01010-51020	6437	20	60- 67
01010-51020	6441	20	60- 69
01010-51020	6441	24	60- 69
01010-51020	6465	13	60- 79
01010-51025	1507	2	10- 33
01010-51025	1853	3	10- 49
01010-51025	2551	19	20- 55
01010-51025	2551	9	20- 55
01010-51025	4121	19	40- 17
01010-51025	4301	24	40- 31
01010-51025	4301	43	40- 32
01010-51025	5001	16	50- 3
01010-51025	5101	10	50- 7
01010-51025	5101	2	50- 7
01010-51025	5101	6	50- 7
01010-51025	6111A	10	60- 11
01010-51025	6111A	7	60- 11
01010-51025	6423A	19	60- 61
01010-51030	1507	4	10- 33
01010-51030	1801	5	10- 35
01010-51030	1805	12	10- 39

PARTS NO.	FIG NO.	INDEX	PAGE
01010-51030	2001	9	20- 3
01010-51030	2551	40	20- 56
01010-51030	2753	3	20- 93
01010-51030	2753	9	20- 93
01010-51030	5423	56	50- 20
01010-51030	6401	12	60- 53
01010-51030	6401	3	60- 53
01010-51030	7031	3	70- 13
01010-51035	1001	9	10- 3
01010-51035	4211A	3	40- 21
01010-51035	6401	9	60- 53
01010-51040	5201	19	50- 9
01010-51045	6421	17	60- 59
01010-51045	6437	11	60- 67
01010-51045	6441	17	60- 69
01010-51050	2551	34	20- 55
01010-51050	6431	26	60- 63
01010-51050	6451	17	60- 71
01010-51055	4103A	34	40- 11
01010-51060	2551	23	20- 55
01010-51060	2551	36	20- 56
01010-51085	5101	16	50- 7
01010-51220	1413	2	10- 25
01010-51220	2653A	19	20- 77
01010-51220	4111	32	40- 15
01010-51220	4221	22	40- 25
01010-51220	6421	21	60- 59
01010-51225	2601A	19	20- 59
01010-51225	2611A	19	20- 67
01010-51225	4001A	11	40- 3
01010-51225	4011A	17	40- 5
01010-51225	4111	3	40- 15
01010-51225	4211A	8	40- 21
01010-51225	5001	13	50- 3
01010-51225	5005	15	50- 5
01010-51225	5201	12	50- 9
01010-51225	5201	23	50- 9
01010-51225	5421	7	50- 17
01010-51225	5511A	5	50- 29
01010-51225	6071	6	60- 7
01010-51225	6075	7	60- 9
01010-51225	7011	18	70- 5
01010-51225	7013	19	70- 7
01010-51225	7101	17	70- 17
01010-51225	7101	9	70- 17
01010-51225	7201	19	70- 19
01010-51230	2651	14	20- 75
01010-51230	2651	18	20- 75
01010-51230	2651	4	20- 75
01010-51230	2651	8	20- 75

PARTS NO.	FIG NO.	INDEX	PAGE
01010-51230	2803	13	20- 97
01010-51230	4011A	30	40- 5
01010-51230	4011A	38	40- 5
01010-51230	4101	2	40- 9
01010-51230	4121	12	40- 17
01010-51230	4301	8	40- 31
01010-51230	5201	16	50- 9
01010-51230	7011	31	70- 5
01010-51230	7013	38	70- 8
01010-51230	7013	39	70- 8
01010-51235	2001	7	20- 3
01010-51235	2551	46	20- 56
01010-51235	2601A	28	20- 59
01010-51235	2601A	35	20- 59
01010-51235	2605	13	20- 63
01010-51235	2611A	28	20- 67
01010-51235	2611A	35	20- 67
01010-51235	2615	13	20- 71
01010-51235	4211A	34	40- 21
01010-51235	5005	28	50- 5
01010-51235	7033	13	70- 15
01010-51240	1001	2	10- 3
01010-51240	1001	21	10- 3
01010-51240	2651	25	20- 75
01010-51240	2651	29	20- 75
01010-51240	2653A	23	20- 77
01010-51245	2605	39	20- 64
01010-51245	2605	7	20- 63
01010-51245	2615	42	20- 72
01010-51245	2615	7	20- 71
01010-51245	4121	13	40- 17
01010-51245	6437	7	60- 67
01010-51250	1201A	18	10- 7
01010-51250	2001	2	20- 3
01010-51255	5421	6	50- 17
01010-51255	7021	14	70- 11
01010-51260	5201	24	50- 9
01010-51270	2511	13	20- 53
01010-51270	2551	4	20- 55
01010-51270	7013	12	70- 7
01010-51270	7013	5	70- 7
01010-51275	2611A	20	20- 67
01010-51280	2601A	20	20- 59
01010-51280	2615	24	20- 71
01010-51430	1803	3	10- 37
01010-51430	5511A	20	50- 29
01010-51435	2605	21	20- 63
01010-51435	2615	22	20- 71
01010-51435	7011	13	70- 5
01010-51435	7013	28	70- 7

PARTS NO.	FIG NO.	INDEX	PAGE
01010-51435	7013	8	70- 7
01010-51445	3101	36	30- 5
01010-51445	4351	12	40- 45
01010-51625	1301	13	10- 11
01010-51625	1305	13	10- 15
01010-51630	5005	21	50- 5
01010-51635	7021	21	70- 11
01010-51640	2653A	6	20- 77
01010-51640	7011	21	70- 5
01010-51645	1201A	22	10- 7
01010-51645	2653A	7	20- 77
01010-51650	1301	19	10- 11
01010-51650	1305	19	10- 15
01010-51650	2601A	41	20- 60
01010-51650	2611A	41	20- 68
01010-51660	1001	18	10- 3
01010-51660	2601A	4	20- 59
01010-51660	2611A	4	20- 67
01010-51665	2601A	17	20- 59
01010-51665	2611A	17	20- 67
01010-51665	7203	18	70- 21
01010-51665	7203	25	70- 21
01010-51665	7203	35	70- 21
01010-51665	7203	43	70- 22
01010-51680	2605	18	20- 63
01010-51680	2615	18	20- 71
01010-51680	7203	29	70- 21
01010-51685	1301	16	10- 11
01010-51685	1305	16	10- 15
01010-51690	5201	2	50- 9
01010-51690	7201	13	70- 19
01010-51695	1001	14	10- 3
01010-52060	5005	7	50- 5
01010-52075	6301	7	60- 41
01010-52075	6303	12	60- 43
01010-52455	7031	25	70- 13
01010-52480	9901	8	90- 5
01010-61670	2411A	13	20- 11
01010-80616	2412A	43	20- 16
01010-80816	2401A	47	20- 8
01010-80830	2452A	29	20- 45
01010-80845	2452A	40	20- 46
01010-80850	2422A	36	20- 38
01010-80850	2451A	49	20- 42
01010-80850	2452A	33	20- 45
01010-80860	2451A	41	20- 42
01010-80860	2452A	44	20- 46
01010-81025	2411A	20	20- 11
01010-81025	2411A	41	20- 12
01010-81025	2412A	19	20- 15

PARTS NO.	FIG NO.	INDEX	PAGE
01010-81025	2418A	16	20- 31
01010-81025	2422A	24	20- 37
01010-81030	2412A	51	20- 16
01010-81030	2422A	13	20- 37
01010-81030	2422A	17	20- 37
01010-81030	2422A	6	20- 37
01010-81030	2451A	24	20- 41
01010-81030	2451A	3	20- 41
01010-81035	2412A	51	20- 16
01010-81035	2418A	30	20- 31
01010-81040	2422A	3	20- 37
01010-81055	2451A	46	20- 42
01010-81065	2422A	19	20- 37
01010-81080	2452A	46	20- 46
01010-81085	2451A	26	20- 41
01010-81230	2401A	14	20- 7
01010-81235	2401A	25	20- 7
01010-81235	2401A	30	20- 7
01010-81235	2401A	36	20- 7
01010-81235	2401A	42	20- 8
01010-81235	2401A	51	20- 8
01010-81235	2411A	11	20- 11
01010-81235	2412A	10	20- 15
01010-81235	2412A	25	20- 15
01010-81235	2412A	33	20- 15
01010-81235	2412A	45	20- 16
01010-81235	2421A	20	20- 35
01010-81235	2421A	26	20- 35
01010-81240	2401A	52	20- 8
01010-81240	2451A	52	20- 42
01010-81245	2401A	37	20- 7
01010-81255	2418A	43	20- 32
01010-81635	2805	16	20- 99
01010-81635	2805	7	20- 99
01010-82250	2803	30	20- 97
01010-82265	2653A	15	20- 77
01010-82495	7203	2	70- 21
01011-51025	2551	24	20- 55
01011-51075	1203A	15	10- 9
01011-51400	7203	12	70- 21
01011-51615	1001	25	10- 3
01011-51615	1001	5	10- 3
01011-52410	5401	2	50- 15
01011-52435	7001	13	70- 3
01011-52435	7001	18	70- 3
01011-52440	7101	19	70- 17
01011-52765	5005	4	50- 5
01011-61600	2411A	14	20- 11
01011-81030	2451A	39	20- 42
01011-81220	2418A	14	20- 31

PARTS NO.	FIG NO.	INDEX	PAGE
01012-51480	1201A	13	10- 7
01016-51040	4351	22	40- 45
01016-51232	5511A	8	50- 29
01016-52045	2801	6	20- 95
01016-52270	7001	22	70- 3
01019-32000	7201	6	70- 19
01020-00820	0161	3	01- 21
01020-00820	0161A	3	01- 23
01050-31230	0601	12	06- 3
01050-31230	0602	13	06- 5
01050-31230	0603	13	06- 7
01050-31230	0604	13	06- 9
01050-31430	0221	9	02- 11
01050-31845	0231	7	02- 13
01050-51250	2421A	16	20- 35
01050-51260	2481A	25	20- 49
01050-81255	2051	4	20- 5
01084-02055	2803	30	20- 97
01090-50830	4301	40	40- 32
01090-51455	7033	5	70- 15
01091-52000	7201	9	70- 19
01093-51200	2803	23	20- 97
01093-51635	2801	21	20- 95
01124-52455	7001	9	70- 3
01124-82250	2803	33	20- 97
01124-82265	2653A	16	20- 77
01140-61025	0151	8	01- 17
01140-61050	0161	7	01- 21
01140-81235	7031	21	70- 13
01144-31035	0401	11	04- 3
01144-51230	7013	38	70- 8
01144-51235	2401A	53	20- 8
01220-40412	5423	18	50- 19
01220-40412	5423	20	50- 19
01220-40420	5423	7	50- 19
01220-40530	4211A	27	40- 21
01220-40612	1413	10	10- 25
01220-40612	4301	46	40- 32
01220-40612	4301	5	40- 31
01220-40812	5423	49	50- 20
01220-40816	1411	2	10- 23
01220-40816	4311	18	40- 35
01220-40820	5429	3	50- 27
01220-40825	5301	9	50- 11
01220-40840	4101	14	40- 9
01224-40308	1851	5	10- 47
01224-40516	5427	3	50- 25
01225-40512	5421	4	50- 17
01235-40616	5423	4	50- 19
01236-40816	0501	9	05- 3

PARTS NO.	FIG NO.	INDEX	PAGE
01252-41035	7031	19	70- 13
01370-00410	5427	14	50- 25
01434-00820	1401	8	10- 21
01434-01020	1507	14	10- 33
01435-00625	0406	8	04- 11
01435-00865	0111	12	01- 5
01435-01020	0101	20	01- 3
01435-01020	0161A	7	01- 23
01435-01020	0161B	6	01- 25
01435-01020	0162	6	01- 27
01435-01020	0163	6	01- 29
01435-01020	0405	3	04- 9
01435-01025	0402	4	04- 5
01435-01025	0403	4	04- 7
01435-01030	0221	5	02- 11
01435-01035	0421	12	04- 20
01435-01060	0406	4	04- 11
01435-01065	0161B	14	01- 25
01435-01065	0162	14	01- 27
01435-01065	0163	14	01- 29
01435-01065	0406	15	04- 11
01435-01090	0151	4	01- 17
01435-01095	0406	12	04- 11
01435-01270	0205	22	02- 7
01435-20612	0201	35	02- 4
01435-20612	0412	15	04- 15
01435-20616	0205	25	02- 7
01435-20620	0205	14	02- 7
01435-20625	0401	24	04- 3
01435-20625	0402	22	04- 5
01435-20625	0403	22	04- 7
01435-20812	0161	17	01- 21
01435-20812	0161A	16	01- 23
01435-20812	0301	16	03- 3
01435-20812	0401	8	04- 3
01435-20814	0211	4	02- 9
01435-20814	0211	4	02- 9
01435-20816	0201	29	02- 3
01435-20816	0205	3	02- 7
01435-20816	0301	10	03- 3
01435-20816	0301	11	03- 3
01435-20816	0301	15	03- 3
01435-20816	0325	7	03- 7
01435-20816	0412	17	04- 15
01435-20820	0241	5	02- 21
01435-20820	0325	11	03- 7
01435-20820	0325	3	03- 7
01435-20820	0501	17	05- 4
01435-20825	0161B	3	01- 25
01435-20825	0162	3	01- 27

PARTS NO.	FIG NO.	INDEX	PAGE
01435-20825	0163	3	01- 29
01435-20825	0211	7	02- 9
01435-20825	0301	11	03- 3
01435-20825	0331	10	03- 9
01435-20825	0331A	9	03- 11
01435-20825	0601	3	06- 3
01435-20825	0602	3	06- 5
01435-20825	0603	3	06- 7
01435-20825	0604	3	06- 9
01435-20830	0211	7	02- 9
01435-20830	0501	21	05- 4
01435-20855	0205	6	02- 7
01435-20855	0601	10	06- 3
01435-20865	0402	5	04- 5
01435-20865	0403	5	04- 7
01435-20865	0405	10	04- 9
01435-20870	0205	9	02- 7
01435-20895	0601	4	06- 3
01435-20895	0602	4	06- 5
01435-20895	0603	4	06- 7
01435-20895	0604	4	06- 9
01435-21016	0231	9	02- 13
01435-21016	0401	14	04- 3
01435-21016	0402	25	04- 5
01435-21016	0403	25	04- 7
01435-21016	0621	5	06- 11
01435-21020	0115	11	01- 7
01435-21020	0201	33	02- 3
01435-21020	0501	23	05- 4
01435-21030	0131	2	01- 9
01435-21030	0131A	4	01- 11
01435-21040	0521	14	05- 7
01435-21045	0161	10	01- 21
01435-21045	0161A	9	01- 23
01435-21045	0161B	8	01- 25
01435-21045	0162	8	01- 27
01435-21045	0163	8	01- 29
01435-21050	0501	13	05- 3
01435-21065	0521	13	05- 7
01435-21070	0131	9	01- 9
01435-21070	0131A	11	01- 11
01435-21070	0501	13	05- 3
01435-21070	0501	13	05- 3
01435-21070	0602	11	06- 5
01435-21070	0603	12	06- 7
01435-21070	0604	12	06- 9
01435-21075	0501	12	05- 3
01435-21085	0131	3	01- 9
01435-21085	0131A	5	01- 11
01435-21085	0411	6	04- 13

PARTS NO.	FIG NO.	INDEX	PAGE
01435-21085	0521	25	05- 7
01435-21230	0621	3	06- 11
01436-01020	0412	6	04- 15
01508-10805	4311	24	40- 35
01508-20805	4001A	18	40- 3
01508-20805	4011A	24	40- 5
01508-20805	4313	6	40- 39
01508-20805	4315	4	40- 41
01508-20805	4317	4	40- 43
01508-21006	4103A	31	40- 11
01508-21006	4111	14	40- 15
01508-21408	4211A	15	40- 21
01508-41006	4103A	19	40- 11
01508-41006	4103A	31	40- 11
01508-41006	4103A	44	40- 12
01508-41006	4111	14	40- 15
01530-03610	2805	16	20- 99
01530-03610	2805	7	20- 99
01571-00814	1305	1	10- 15
01571-00814	1833A	5	10- 43
01571-00814	7201	28	70- 19
01571-01422	1803	7	10- 37
01580-00605	0405	5	04- 9
01580-00605	0406	6	04- 11
01580-00605	1507	10	10- 33
01580-00806	0401	15	04- 3
01580-01210	0602	7	06- 5
01580-01210	0603	7	06- 7
01580-01210	0604	7	06- 9
01580-01411	0601	6	06- 3
01580-10504	4211A	28	40- 21
01580-10605	4011A	12	40- 5
01580-10605	4011A	14	40- 5
01580-10605	4011A	8	40- 5
01580-10605	4103A	49	40- 12
01580-10605	4111	26	40- 15
01580-10605	5423	13	50- 19
01580-10605	5423	39	50- 20
01580-10605	5423	46	50- 20
01580-10806	0331	6	03- 9
01580-10806	1401	5	10- 21
01580-10806	1503	9	10- 29
01580-10806	2452A	13	20- 45
01580-10806	2452A	38	20- 46
01580-10806	4001A	10	40- 3
01580-10806	4001A	16	40- 3
01580-10806	4011A	27	40- 5
01580-10806	4101	25	40- 9
01580-10806	4121	22	40- 17
01580-10806	4301	38	40- 31

PARTS NO.	FIG NO.	INDEX	PAGE
01580-10806	4301	41	40- 32
01580-10806	4311	26	40- 35
01580-10806	4313	10	40- 39
01580-10806	4315	9	40- 41
01580-10806	4317	9	40- 43
01580-10806	4351	6	40- 45
01580-10806	5301	13	50- 11
01580-10806	5301A	4	50- 13
01580-10806	6401	25	60- 53
01580-11008	2422A	40	20- 38
01580-11008	2551	37	20- 56
01580-11008	4211A	23	40- 21
01580-11008	4351	23	40- 45
01580-11008	5101	17	50- 7
01580-11008	5423	55	50- 20
01580-11210	2401A	54	20- 8
01580-11210	2601A	24	20- 59
01580-11210	2611A	24	20- 67
01580-11210	3101	21	30- 5
01580-11210	4001A	7	40- 3
01580-11210	4011A	36	40- 5
01580-11210	4111	34	40- 15
01580-11210	4121	15	40- 17
01580-11210	4211A	20	40- 21
01580-11210	4211A	6	40- 21
01580-11210	5511A	16	50- 29
01580-11210	5511A	9	50- 29
01580-11210	6437	9	60- 67
01580-11613	1201A	23	10- 7
01580-11613	5201	9	50- 9
01580-11613	7201	14	70- 19
01580-11613	7203	19	70- 21
01580-11613	7203	26	70- 21
01580-11613	7203	30	70- 21
01580-11613	7203	36	70- 21
01580-11613	7203	44	70- 22
01580-12016	6301	8	60- 41
01580-12016	6303	13	60- 43
01580-12016	7201	7	70- 19
01580-12218	2803	31	20- 97
01580-12218	2803	31	20- 97
01580-12218	7001	23	70- 3
01580-12419	5401	3	50- 15
01580-12419	7001	10	70- 3
01580-12419	7001	15	70- 3
01580-12419	7001	20	70- 3
01580-12419	7021	7	70- 11
01580-12419	7101	20	70- 17
01580-12419	7203	3	70- 21
01580-12722	7203	7	70- 21

PARTS NO.	FIG NO.	INDEX	PAGE
01580-13024	7011	6	70- 5
01580-13629	7013	11	70- 7
01582-11008	4103A	13	40- 11
01582-11008	4103A	32	40- 11
01582-11008	4111	10	40- 15
01582-11210	7031	22	70- 13
01582-11411	4201A	14	40- 19
01582-11411	7033	6	70- 15
01582-11613	4103A	51	40- 12
01582-11613	4111	27	40- 15
01582-11613	4221	9	40- 25
01582-12012	7201	10	70- 19
01582-12016	2803	31	20- 97
01582-12016	7201	10	70- 19
01582-12218	2653A	18	20- 77
01583-11006	4103A	18	40- 11
01583-11006	4103A	40	40- 11
01583-11610	4103A	52	40- 12
01583-13923	2805	21	20- 99
01584-00605	0406	9	04- 11
01584-00806	0161B	11	01- 25
01584-00806	0162	11	01- 27
01584-00806	0163	11	01- 29
01584-00806	0205	8	02- 7
01584-00806	0325	8	03- 7
01584-00806	0331	6	03- 9
01584-00806	0331A	6	03- 11
01584-00806	0401	15	04- 3
01584-00806	0412	18	04- 15
01584-01008	0161	12	01- 21
01584-01008	0161A	11	01- 23
01584-01008	0401	12	04- 3
01584-01008	0521	15	05- 7
01584-01008	1507	15	10- 33
01590-10607	0405	6	04- 9
01590-10607	1507	11	10- 33
01590-11416	1201A	14	10- 7
01590-14548	7001	3	70- 3
01590-14548	7013	30	70- 7
01593-11008	4103A	20	40- 11
01593-11008	4103A	45	40- 12
01593-11210	2803	24	20- 97
01593-11613	2801	22	20- 95
01593-13018	2801	13	20- 95
01593-13018	2801	33	20- 95
01598-00608	5001	8	50- 3
01598-00809	6451	30	60- 71
01598-01011	1203A	16	10- 9
01598-01214	7013	40	70- 8
01598-01415	7203	13	70- 21

PARTS NO.	FIG NO.	INDEX	PAGE
01598-11415	7203	13	70- 21
01599-01011	6401	52	60- 54
01599-01011	6403	15	60- 57
01599-01011	7013	43	70- 8
01601-20307	4201A	9	40- 19
01601-20513	4211A	29	40- 21
01601-20619	5423	47	50- 20
01602-01236	0601	13	06- 3
01602-01236	0602	14	06- 5
01602-01236	0602	8	06- 5
01602-01236	0603	14	06- 7
01602-01236	0603	8	06- 7
01602-01236	0604	14	06- 9
01602-01236	0604	8	06- 9
01602-01442	0601	7	06- 3
01602-20619	2412A	44	20- 16
01602-20619	5423	47	50- 20
01602-20825	0331	7	03- 9
01602-20825	2422A	37	20- 38
01602-20825	2451A	42	20- 42
01602-20825	2451A	50	20- 42
01602-20825	2452A	30	20- 45
01602-20825	2452A	34	20- 46
01602-20825	2452A	41	20- 46
01602-20825	2452A	45	20- 46
01602-20825	3101	18	30- 5
01602-21030	2412A	52	20- 16
01602-21030	2422A	14	20- 37
01602-21030	2422A	18	20- 37
01602-21030	2422A	20	20- 37
01602-21030	2422A	4	20- 37
01602-21030	2422A	41	20- 38
01602-21030	2422A	7	20- 37
01602-21030	2451A	25	20- 41
01602-21030	2451A	27	20- 41
01602-21030	2451A	4	20- 41
01602-21030	2451A	40	20- 42
01602-21030	2451A	47	20- 42
01602-21030	2452A	47	20- 46
01602-21030	2481A	17	20- 49
01602-21030	6421	18	60- 59
01602-21030	6423A	8	60- 61
01602-21236	2451A	53	20- 42
01602-21236	4101	3	40- 9
01602-21236	7011	32	70- 5
01602-22060	6301	9	60- 41
01602-22060	6303	14	60- 43
01640-01016	0401	16	04- 3
01640-20610	5001	9	50- 3
01640-20816	1401	9	10- 21

PARTS NO.	FIG NO.	INDEX	PAGE
01640-20816	1411	10	10- 23
01640-20816	1411	3	10- 23
01640-21223	0602	9	06- 5
01640-21223	0603	9	06- 7
01640-21223	0604	9	06- 9
01640-21223	4001A	21	40- 3
01640-21223	4301	22	40- 31
01640-21223	4301	32	40- 31
01640-21426	4201A	16	40- 19
01640-21626	1301	14	10- 11
01640-21626	1305	14	10- 15
01640-21626	4011A	33	40- 5
01641-10608	5423	26	50- 19
01641-10608	5423	30	50- 19
01641-11016	5423	36	50- 20
01641-20508	4311	30	40- 36
01641-20508	4313	16	40- 39
01641-20508	4315	16	40- 41
01641-20508	4317	15	40- 43
01641-20608	4101	12	40- 9
01641-20608	4101	29	40- 9
01641-20608	4101	8	40- 9
01641-20608	4301	27	40- 31
01641-20608	4311	33	40- 36
01641-20608	4313	13	40- 39
01641-20608	4315	11	40- 41
01641-20608	4317	12	40- 43
01641-20608	5423	10	50- 19
01641-20608	5423	16	50- 19
01641-20812	0161	4	01- 21
01641-20812	0161A	4	01- 23
01641-20812	0205	7	02- 7
01641-20812	0331	8	03- 9
01641-20812	1503	13	10- 29
01641-20812	4101	15	40- 9
01641-21016	0501	24	05- 4
01641-21016	4121	4	40- 17
01641-21016	6435A	29	60- 65
01641-21016	6437	12	60- 67
01641-21016	6441	16	60- 69
01641-21223	4121	8	40- 17
01641-21223	5511A	11	50- 29
01641-21423	0601	8	06- 3
01641-21423	4211A	17	40- 21
01642-20810	0211	8	02- 9
01642-20810	0211	8	02- 9
01643-30623	1413	11	10- 25
01643-30623	1413	8	10- 25
01643-30623	1501	24	10- 27
01643-30623	1501	28	10- 27

PARTS NO.	FIG NO.	INDEX	PAGE
01643-30623	1501	6	10- 27
01643-30623	1507	8	10- 33
01643-30623	1805	8	10- 39
01643-30623	1831	8	10- 41
01643-30623	1833A	10	10- 43
01643-30623	4011A	15	40- 5
01643-30623	4011A	43	40- 6
01643-30623	4101	11	40- 9
01643-30623	4101	28	40- 9
01643-30623	4101	7	40- 9
01643-30623	4103A	57	40- 12
01643-30623	4301	47	40- 32
01643-30623	4301	6	40- 31
01643-30623	5301	8	50- 11
01643-30623	5423	40	50- 20
01643-30623	5423	5	50- 19
01643-30623	5427	10	50- 25
01643-30623	5429	35	50- 27
01643-30823	1201A	5	10- 7
01643-30823	1201A	8	10- 7
01643-30823	1303	9	10- 13
01643-30823	1307	16	10- 17
01643-30823	1307	29	10- 17
01643-30823	1401	6	10- 21
01643-30823	1501	15	10- 27
01643-30823	1503	10	10- 29
01643-30823	1503	12	10- 29
01643-30823	1833A	4	10- 43
01643-30823	2401A	48	20- 8
01643-30823	2451A	51	20- 42
01643-30823	2551	14	20- 55
01643-30823	2551	32	20- 55
01643-30823	2601A	16	20- 59
01643-30823	2611A	16	20- 67
01643-30823	2751	15	20- 91
01643-30823	2753	15	20- 93
01643-30823	4101	21	40- 9
01643-30823	4103A	11	40- 11
01643-30823	4111	17	40- 15
01643-30823	4211A	26	40- 21
01643-30823	4221	16	40- 25
01643-30823	4221	17	40- 25
01643-30823	4301	18	40- 31
01643-30823	4301	35	40- 31
01643-30823	4311	20	40- 35
01643-30823	4351	11	40- 45
01643-30823	5301	10	50- 11
01643-30823	5301	11	50- 11
01643-30823	5301	12	50- 11
01643-30823	5301A	2	50- 13

PARTS NO.	FIG NO.	INDEX	PAGE
01643-30823	5301A	3	50- 13
01643-30823	5429	11	50- 27
01643-30823	5429	12	50- 27
01643-30823	5429	16	50- 27
01643-30823	5429	17	50- 27
01643-30823	5429	21	50- 27
01643-30823	5429	22	50- 27
01643-30823	5429	26	50- 27
01643-30823	5429	27	50- 27
01643-30823	5429	30	50- 27
01643-30823	5429	31	50- 27
01643-30823	5429	4	50- 27
01643-30823	5429	5	50- 27
01643-30823	6401	17	60- 53
01643-30823	6401	24	60- 53
01643-30823	6401	26	60- 53
01643-30823	6401	40	60- 54
01643-30823	6421	9	60- 59
01643-30823	6423A	22	60- 61
01643-30823	6431	11	60- 63
01643-30823	6435A	20	60- 65
01643-30823	6451	12	60- 71
01643-30823	6451	18	60- 71
01643-30823	6451	28	60- 71
01643-30823	6451	31	60- 71
01643-30823	6463	12	60- 77
01643-30823	6473	14	60- 83
01643-30823	7033	17	70- 15
01643-31032	1001	10	10- 3
01643-31032	1011	10	10- 5
01643-31032	1203A	13	10- 9
01643-31032	1203A	17	10- 9
01643-31032	1301	10	10- 11
01643-31032	1305	10	10- 15
01643-31032	1501	22	10- 27
01643-31032	1503	21	10- 29
01643-31032	1507	5	10- 33
01643-31032	1801	11	10- 35
01643-31032	1801	6	10- 35
01643-31032	1805	13	10- 39
01643-31032	1805	18	10- 39
01643-31032	1853	4	10- 49
01643-31032	2001	10	20- 3
01643-31032	2411A	21	20- 11
01643-31032	2411A	42	20- 12
01643-31032	2412A	20	20- 15
01643-31032	2422A	25	20- 37
01643-31032	2422A	5	20- 37
01643-31032	2422A	8	20- 37
01643-31032	2551	10	20- 55

PARTS NO.	FIG NO.	INDEX	PAGE
01643-31032	2551	14	20- 55
01643-31032	2551	20	20- 55
01643-31032	2551	25	20- 55
01643-31032	2551	35	20- 56
01643-31032	2551	41	20- 56
01643-31032	2751	27	20- 91
01643-31032	2753	10	20- 93
01643-31032	2753	15	20- 93
01643-31032	2753	4	20- 93
01643-31032	2803	18	20- 97
01643-31032	4103A	14	40- 11
01643-31032	4103A	39	40- 11
01643-31032	4121	20	40- 17
01643-31032	4201A	13	40- 19
01643-31032	4211A	4	40- 21
01643-31032	4221	20	40- 25
01643-31032	4301	25	40- 31
01643-31032	4301	44	40- 32
01643-31032	4351	21	40- 45
01643-31032	5001	17	50- 3
01643-31032	5101	11	50- 7
01643-31032	5101	18	50- 7
01643-31032	5101	3	50- 7
01643-31032	5101	7	50- 7
01643-31032	5201	20	50- 9
01643-31032	5423	52	50- 20
01643-31032	5423	57	50- 20
01643-31032	5511A	14	50- 29
01643-31032	5511A	15	50- 29
01643-31032	6111A	11	60- 11
01643-31032	6111A	8	60- 11
01643-31032	6401	10	60- 53
01643-31032	6401	13	60- 53
01643-31032	6401	17	60- 53
01643-31032	6401	28	60- 53
01643-31032	6401	4	60- 53
01643-31032	6401	49	60- 54
01643-31032	6401	53	60- 54
01643-31032	6403	16	60- 57
01643-31032	6403	19	60- 57
01643-31032	6423A	20	60- 61
01643-31032	6431	18	60- 63
01643-31032	6431	27	60- 63
01643-31032	6435A	11	60- 65
01643-31032	6437	18	60- 67
01643-31032	6437	21	60- 67
01643-31032	6441	25	60- 69
01643-31032	6465	14	60- 79
01643-31032	6465	17	60- 79
01643-31032	7031	20	70- 13

PARTS NO.	FIG NO.	INDEX	PAGE
01643-31032	7031	23	70- 13
01643-31032	7031	4	70- 13
01643-31232	0101	23	01- 3
01643-31232	0601	14	06- 3
01643-31232	0602	15	06- 5
01643-31232	0603	15	06- 7
01643-31232	0604	15	06- 9
01643-31232	1001	22	10- 3
01643-31232	1001	3	10- 3
01643-31232	1413	3	10- 25
01643-31232	2001	3	20- 3
01643-31232	2051	5	20- 5
01643-31232	2401A	15	20- 7
01643-31232	2401A	31	20- 7
01643-31232	2401A	38	20- 8
01643-31232	2401A	43	20- 8
01643-31232	2401A	55	20- 8
01643-31232	2411A	12	20- 11
01643-31232	2412A	11	20- 15
01643-31232	2412A	26	20- 15
01643-31232	2412A	34	20- 15
01643-31232	2412A	46	20- 16
01643-31232	2418A	44	20- 32
01643-31232	2421A	17	20- 35
01643-31232	2421A	21	20- 35
01643-31232	2421A	27	20- 35
01643-31232	2481A	26	20- 49
01643-31232	2511	14	20- 53
01643-31232	2551	10	20- 55
01643-31232	2551	3	20- 55
01643-31232	2551	47	20- 56
01643-31232	2601A	23	20- 59
01643-31232	2601A	29	20- 59
01643-31232	2601A	36	20- 60
01643-31232	2605	14	20- 63
01643-31232	2605	8	20- 63
01643-31232	2611A	23	20- 67
01643-31232	2611A	29	20- 67
01643-31232	2611A	36	20- 67
01643-31232	2615	14	20- 71
01643-31232	2615	25	20- 71
01643-31232	2615	8	20- 71
01643-31232	2651	15	20- 75
01643-31232	2651	19	20- 75
01643-31232	2651	26	20- 75
01643-31232	2651	30	20- 75
01643-31232	2651	5	20- 75
01643-31232	2651	9	20- 75
01643-31232	2753	10	20- 93
01643-31232	2801	30	20- 95

PARTS NO.	FIG NO.	INDEX	PAGE
01643-31232	2803	25	20- 97
01643-31232	2805	5	20- 99
01643-31232	4001A	12	40- 3
01643-31232	4011A	18	40- 5
01643-31232	4011A	31	40- 5
01643-31232	4011A	39	40- 5
01643-31232	4101	4	40- 9
01643-31232	4111	2	40- 15
01643-31232	4111	31	40- 15
01643-31232	4121	14	40- 17
01643-31232	4211A	35	40- 21
01643-31232	4211A	9	40- 21
01643-31232	4221	23	40- 25
01643-31232	4301	9	40- 31
01643-31232	5001	14	50- 3
01643-31232	5005	16	50- 5
01643-31232	5005	29	50- 5
01643-31232	5201	13	50- 9
01643-31232	5201	17	50- 9
01643-31232	5201	25	50- 9
01643-31232	5201	26	50- 9
01643-31232	5421	8	50- 17
01643-31232	5511A	6	50- 29
01643-31232	5511A	7	50- 29
01643-31232	6071	7	60- 7
01643-31232	6075	8	60- 9
01643-31232	6401	10	60- 53
01643-31232	6421	22	60- 59
01643-31232	6437	8	60- 67
01643-31232	6441	22	60- 69
01643-31232	7011	19	70- 5
01643-31232	7013	13	70- 7
01643-31232	7013	20	70- 7
01643-31232	7013	41	70- 8
01643-31232	7013	6	70- 7
01643-31232	7021	15	70- 11
01643-31232	7101	10	70- 17
01643-31232	7101	18	70- 17
01643-31232	7201	20	70- 19
01643-31445	1201A	15	10- 7
01643-31445	1803	4	10- 37
01643-31445	2605	22	20- 63
01643-31445	2615	23	20- 71
01643-31445	3101	37	30- 5
01643-31445	4201A	15	40- 19
01643-31445	4351	13	40- 45
01643-31445	5511A	21	50- 29
01643-31445	7011	14	70- 5
01643-31445	7013	29	70- 7
01643-31445	7013	9	70- 7

PARTS NO.	FIG NO.	INDEX	PAGE
01643-31645	1001	15	10- 3
01643-31645	1001	19	10- 3
01643-31645	1001	26	10- 3
01643-31645	1001	6	10- 3
01643-31645	1201A	24	10- 7
01643-31645	1301	17	10- 11
01643-31645	1301	20	10- 11
01643-31645	1305	17	10- 15
01643-31645	1305	20	10- 15
01643-31645	2411A	15	20- 11
01643-31645	2601A	18	20- 59
01643-31645	2601A	42	20- 60
01643-31645	2601A	5	20- 59
01643-31645	2611A	18	20- 67
01643-31645	2611A	42	20- 68
01643-31645	2611A	5	20- 67
01643-31645	2653A	8	20- 77
01643-31645	2801	39	20- 95
01643-31645	4103A	25	40- 11
01643-31645	4103A	37	40- 11
01643-31645	4221	10	40- 25
01643-31645	5005	22	50- 5
01643-31645	5005	23	50- 5
01643-31645	5201	8	50- 9
01643-31645	7011	10	70- 5
01643-31645	7011	22	70- 5
01643-31645	7011	29	70- 5
01643-31645	7021	22	70- 11
01643-31645	7101	5	70- 17
01643-31645	7201	15	70- 19
01643-31645	7203	20	70- 21
01643-31645	7203	27	70- 21
01643-31645	7203	31	70- 21
01643-31645	7203	37	70- 21
01643-31645	7203	45	70- 22
01643-32060	2801	7	20- 95
01643-32060	2803	32	20- 97
01643-32060	4111	6	40- 15
01643-32060	4301	13	40- 31
01643-32060	5005	8	50- 5
01643-32060	7201	11	70- 19
01643-32060	7201	8	70- 19
01643-32260	2653A	17	20- 77
01643-32260	2803	32	20- 97
01643-32460	5401	4	50- 15
01643-32460	7001	11	70- 3
01643-32460	7001	14	70- 3
01643-32460	7001	19	70- 3
01643-32460	7021	6	70- 11
01643-32460	7031	26	70- 13

PARTS NO.	FIG NO.	INDEX	PAGE
01643-32460	7101	21	70- 17
01643-32460	7203	4	70- 21
01643-32780	5005	5	50- 5
01643-32780	7203	8	70- 21
01643-33080	2801	15	20- 95
01643-33080	7203	6	70- 21
01643-50823	2417A	34	20- 27
01643-51032	2418A	17	20- 31
01643-51032	2418A	31	20- 31
01643-51645	2605	28	20- 63
01643-51645	2615	31	20- 71
01653-21412	0401	4	04- 3
01653-21412	0991	2	09- 4
01653-22016	0402	12	04- 5
01653-22016	0403	12	04- 7
01653-22016	0992	2	09- 7
01658-23618	2805	17	20- 99
01658-23618	2805	8	20- 99
02010-70625	2551	13	20- 55
02010-70625	2753	14	20- 93
02010-70625	6401	16	60- 53
02010-70670	4201A	12	40- 19
02010-70725	2551	9	20- 55
02010-70725	2753	9	20- 93
02010-70725	6401	9	60- 53
02720-40104	0101	9	01- 3
04010-00300	2422A	27	20- 37
04010-00416	0402	10	04- 5
04010-00416	0402	8	04- 5
04010-00416	0403	10	04- 7
04010-00416	0403	8	04- 7
04010-00516	0241	3	02- 21
04010-00519	4101	19	40- 9
04010-00519	4103A	9	40- 11
04010-00519	4111	19	40- 15
04020-00820	0201	12	02- 3
04020-01024	0402	3	04- 5
04020-01024	0403	3	04- 7
04020-01024	2411A	10	20- 11
04020-01024	2411A	9	20- 11
04020-01024	2417A	32	20- 27
04020-01024	2422A	9	20- 37
04020-01024	7031	14	70- 13
04020-01228	0201	15	02- 3
04020-01228	2412A	47	20- 16
04020-01228	2415A	29	20- 19
04020-01228	2416A	3	20- 23
04020-01228	2417A	11	20- 27
04020-01228	2418A	11	20- 31
04020-01228	2418A	42	20- 32

PARTS NO.	FIG NO.	INDEX	PAGE
04020-01228	2601A	26	20- 59
04020-01228	2611A	26	20- 67
04020-01434	2605	20	20- 63
04020-01434	2615	21	20- 71
04020-01638	3101	38	30- 6
04025-00408	0201	7	02- 3
04025-00416	4001A	4	40- 3
04025-00440	2452A	11	20- 45
04025-00512	0205	20	02- 7
04025-00532	4103A	5	40- 11
04025-01065	5005	11	50- 5
04050-11212	0405	7	04- 9
04050-11212	1507	12	10- 33
04050-11610	4103A	56	40- 12
04050-11610	5423	11	50- 19
04050-11610	5423	17	50- 19
04050-11612	4301	28	40- 31
04050-11612	5423	27	50- 19
04050-11612	5423	31	50- 19
04050-12018	3101	26	30- 5
04050-12018	4103A	21	40- 11
04050-12018	4103A	27	40- 11
04050-12018	4103A	46	40- 12
04050-13015	4121	5	40- 17
04050-13020	2803	26	20- 97
04050-13020	4121	9	40- 17
04050-13020	5423	37	50- 20
04050-13020	5511A	12	50- 29
04050-13028	1201A	16	10- 7
04050-13028	3101	32	30- 5
04050-14025	2801	24	20- 95
04050-14028	7011	9	70- 5
04050-16045	2801	14	20- 95
04050-16045	2801	34	20- 95
04050-16050	4211A	13	40- 21
04050-18050	7203	50	70- 22
04050-18050	7203	54	70- 22
04050-18080	7001	5	70- 3
04050-18080	7013	32	70- 7
04052-00530	4311	31	40- 36
04052-00530	4313	17	40- 39
04052-00530	4315	15	40- 41
04052-00530	4317	16	40- 43
04052-00833	4103A	55	40- 12
04052-00833	4111	25	40- 15
04052-00833	4351	5	40- 45
04052-01038	4111	12	40- 15
04052-01453	4211A	18	40- 21
04052-10833	4001A	15	40- 3
04052-10833	4011A	10	40- 5

PARTS NO.	FIG NO.	INDEX	PAGE
04052-10833	4011A	23	40- 5
04052-10833	4103A	55	40- 12
04052-10833	4111	25	40- 15
04052-10833	4351	5	40- 45
04064-01210	4301	23	40- 31
04064-01210	4301	33	40- 31
04064-01510	0142	8	01- 15
04064-01610	4011A	34	40- 5
04064-01610	4011A	4	40- 5
04064-01610	4103A	24	40- 11
04064-01610	4103A	38	40- 11
04064-02012	4111	5	40- 15
04064-02012	4351	17	40- 45
04064-02212	2411A	33	20- 11
04064-04518	2401A	12	20- 7
04064-04518	2415A	23	20- 19
04064-04518	2416A	33	20- 24
04064-05520	2416A	35	20- 24
04064-06525	2418A	41	20- 32
04064-07525	2418A	28	20- 31
04064-09030	2415A	33	20- 19
04065-01030	2401A	4	20- 7
04065-01254	2605	33	20- 63
04065-01254	2615	36	20- 71
04065-03012	0235	3	02- 17
04065-03012	2511	7	20- 53
04065-05020	2412A	32	20- 15
04065-05520	2721	3	20- 85
04065-06220	2805	10	20- 99
04065-06220	2805	24	20- 99
04065-06220	6313A	14	60- 49
04065-06220	6313A	3	60- 49
04065-07525	2401A	16	20- 7
04065-07525	2415A	27	20- 19
04065-08530	2401A	18	20- 7
04065-08530	2416A	32	20- 23
04065-09030	2417A	38	20- 28
04065-09030	4225	16	40- 27
04070-00105	2417A	39	20- 28
04071-00115	2418A	29	20- 31
04071-00125	2415A	34	20- 19
04071-00150	2417A	44	20- 28
04080-06012	7033	11	70- 15
04081-06012	7033	14	70- 15
04082-00206	5001	12	50- 3
04082-00206	5005	14	50- 5
04082-00212	5101	15	50- 7
04082-00212	7013	18	70- 7
04082-00212	7101	16	70- 17
04082-00212	7101	8	70- 17

PARTS NO.	FIG NO.	INDEX	PAGE
04082-00212	7201	18	70- 19
04121-21754	0501	19	05- 4
04121-21756	0501	19	05- 4
04121-21756	0501	19	05- 4
04205-10614	5423	15	50- 19
04205-10614	5423	9	50- 19
04205-10616	4311	32	40- 36
04205-10616	4313	12	40- 39
04205-10616	4315	12	40- 41
04205-10616	4317	11	40- 43
04205-10616	5423	29	50- 19
04205-10618	4301	26	40- 31
04205-10822	4001A	14	40- 3
04205-10822	4011A	22	40- 5
04205-10822	4011A	9	40- 5
04205-10822	4103A	54	40- 12
04205-10822	4111	24	40- 15
04205-10822	4311	23	40- 35
04205-10822	4313	7	40- 39
04205-10822	4315	5	40- 41
04205-10822	4317	5	40- 43
04205-10825	4351	4	40- 45
04205-11028	4111	11	40- 15
04205-11030	4121	11	40- 17
04205-11045	5423	35	50- 20
04205-11235	4121	7	40- 17
04205-11438	4211A	16	40- 21
04210-01040	4111	9	40- 15
04210-20832	4351	3	40- 45
04210-21040	4111	9	40- 15
04211-20844	4001A	13	40- 3
04211-20844	4011A	26	40- 5
04220-01040	4111	13	40- 15
04220-21040	4111	13	40- 15
04221-20844	4001A	19	40- 3
04221-20844	4011A	21	40- 5
04221-20844	4311	21	40- 35
04221-20844	4313	5	40- 39
04221-20844	4315	3	40- 41
04221-20844	4317	3	40- 43
04248-30819	4011A	25	40- 5
04248-30836	4001A	17	40- 3
04248-31025	4103A	41	40- 11
04248-31041	4111	8	40- 15
04248-31068	4103A	28	40- 11
04250-40639	4011A	11	40- 5
04250-40847	4301	36	40- 31
04250-50639	0405	4	04- 9
04250-50639	0406	5	04- 11
04250-50639	1507	9	10- 33

PARTS NO.	FIG NO.	INDEX	PAGE
04250-61056	4103A	43	40- 12
04250-80847	4301	36	40- 31
04252-00853	4301	37	40- 31
04252-01061	4103A	16	40- 11
04252-11061	4103A	17	40- 11
04252-20853	4301	37	40- 31
04254-00823	4301	39	40- 32
04254-10623	0406	7	04- 11
04260-00635	2412A	31	20- 15
04260-00635	2415A	19	20- 19
04260-00635	2416A	25	20- 23
04260-00635	2417A	17	20- 27
04260-00635	2417A	42	20- 28
04260-00635	2418A	20	20- 31
04400-00308	5421	4	50- 17
04418-02550	0115	4	01- 7
04418-02550	0201	37	02- 4
04418-13060	2412A	22	20- 15
04418-13060	9801A	10	90- 3
04434-00808	2401A	46	20- 8
04530-12030	2411A	6	20- 11
04530-12030	2412A	23	20- 15
06000-06009	2415A	26	20- 19
06000-06011	2417A	37	20- 28
06000-06015	2418A	27	20- 31
06000-06209	2416A	34	20- 24
06000-06918	2415A	32	20- 19
06000-06921	2417A	40	20- 28
06002-30310	7033	19	70- 15
06002-30315	2605	3	20- 63
06002-30315	2615	3	20- 71
06002-32021	2605	23	20- 63
06002-32021	2615	26	20- 71
06002-32216	2653A	3	20- 77
06002-33214	2803	10	20- 97
06002-33215	2803	9	20- 97
06003-30311	2605	9	20- 63
06003-30311	2615	9	20- 71
06030-06214	2605	32	20- 63
06030-06214	2615	35	20- 71
06040-06209	2401A	17	20- 7
06040-06211	2401A	3	20- 7
06044-00207	2401A	23	20- 7
06044-00209	2401A	32	20- 7
06044-00212	2401A	8	20- 7
06044-00212	2421A	6	20- 35
06044-00213	2421A	1	20- 35
06044-00213	2421A	22	20- 35
06044-00213	2421A	9	20- 35
06120-01612	2422A	33	20- 37

PARTS NO.	FIG NO.	INDEX	PAGE
06120-02016	2422A	30	20- 37
06600-00805	4011A	5	40- 5
07000-F5100	5001	4	50- 3
07000-01006	0521	3	05- 7
07000-02014	0521	4	05- 7
07000-02060	0415	6	04- 17
07000-02060	1309	6	10- 19
07000-02060	2721	12	20- 85
07000-02065	2401A	28	20- 7
07000-02065	9991	1	90- 9
07000-02070	2725	12	20- 87
07000-02070	6301	17	60- 41
07000-02070	6303	8	60- 43
07000-02070	6305A	10	60- 45
07000-02075	2412A	13	20- 15
07000-02075	2412A	4	20- 15
07000-02075	9991	1	90- 9
07000-02075	9991	1	90- 9
07000-02080	2727A	6	20- 89
07000-02080	6313A	11	60- 49
07000-02080	6315	12	60- 51
07000-02090	2412A	18	20- 15
07000-02090	2412A	9	20- 15
07000-02090	6311	9	60- 47
07000-02090	9991	1	90- 9
07000-02090	9991	1	90- 9
07000-02105	0621	2	06- 11
07000-02105	0991	2	09- 4
07000-02105	0992	2	09- 8
07000-02115	2421A	19	20- 35
07000-02115	9991	1	90- 10
07000-02120	2401A	35	20- 7
07000-02120	9991	1	90- 9
07000-02135	0401	6	04- 3
07000-02135	0402	13	04- 5
07000-02135	0403	13	04- 7
07000-02135	0991	2	09- 4
07000-02135	0992	2	09- 7
07000-02135	9991	1	90- 9
07000-02140	2421A	24	20- 35
07000-02140	9991	1	90- 10
07000-02145	2421A	24	20- 35
07000-02145	9991	1	90- 10
07000-03050	0205	24	02- 7
07000-03050	0991	2	09- 3
07000-03050	0992	2	09- 7
07000-05140	2412A	29	20- 15
07000-05140	9991	1	90- 9
07000-05170	2401A	41	20- 8
07000-05170	9991	1	90- 9

PARTS NO.	FIG NO.	INDEX	PAGE
07000-05200	2412A	39	20- 16
07000-05200	9991	1	90- 9
07000-05365	2401A	49	20- 8
07000-05365	2412A	5	20- 15
07000-05365	9991	1	90- 9
07000-05365	9991	1	90- 9
07000-05365	9991	1	90- 9
07000-12010	2511	11	20- 53
07000-12010	6241	7	60- 27
07000-12010	6251	7	60- 35
07000-12010	6253	16	60- 37
07000-12010	6255	7	60- 39
07000-12014	6241	12	60- 27
07000-12014	6241	17	60- 27
07000-12014	6241	20	60- 27
07000-12014	6243	12	60- 29
07000-12014	6243	3	60- 29
07000-12014	6245	12	60- 31
07000-12014	6245	3	60- 31
07000-12014	6247	11	60- 33
07000-12014	6247	20	60- 33
07000-12014	6247	3	60- 33
07000-12014	6251	12	60- 35
07000-12014	6251	17	60- 35
07000-12014	6251	20	60- 35
07000-12014	6253	21	60- 37
07000-12014	6253	4	60- 37
07000-12014	6255	12	60- 39
07000-12014	6255	17	60- 39
07000-12014	6255	20	60- 39
07000-12018	6401	33	60- 53
07000-12018	6401	37	60- 54
07000-12018	6403	2	60- 57
07000-12018	6421	2	60- 59
07000-12018	6423A	2	60- 61
07000-12018	6431	2	60- 63
07000-12018	6435A	2	60- 65
07000-12018	6437	2	60- 67
07000-12018	6441	3	60- 69
07000-12055	2721	6	20- 85
07000-12065	2725	6	20- 87
07000-12065	6071	8	60- 7
07000-12065	6075	6	60- 9
07000-12065	6111A	9	60- 11
07000-12065	6301	12	60- 41
07000-12065	6303	4	60- 43
07000-12065	6305A	6	60- 45
07000-12075	2727A	8	20- 89
07000-12075	2803	8	20- 97
07000-12075	6313A	9	60- 49

PARTS NO.	FIG NO.	INDEX	PAGE
07000-12075	6315	10	60- 51
07000-12085	6311	7	60- 47
07000-12085	6401	11	60- 53
07000-12100	6111A	6	60- 11
07000-12105	2551	45	20- 56
07000-12130	2803	16	20- 97
07000-12130	7031	15	70- 13
07000-12130	9991	14	90- 13
07000-12145	2605	11	20- 63
07000-12145	2615	11	20- 71
07000-12145	9991	5	90- 11
07000-13020	2753	8	20- 93
07000-13020	6401	8	60- 53
07000-13022	2551	43	20- 56
07000-13025	2753	13	20- 93
07000-13025	6401	15	60- 53
07000-13028	2551	12	20- 55
07000-13028	2551	22	20- 55
07000-13028	2753	2	20- 93
07000-13028	6401	15	60- 53
07000-13030	2551	12	20- 55
07000-13035	2551	39	20- 56
07000-13035	6401	2	60- 53
07000-13042	2551	2	20- 55
07000-13042	2551	8	20- 55
07000-13045	2601A	33	20- 59
07000-13045	2611A	33	20- 67
07000-13045	9991	5	90- 11
07000-13050	6071	4	60- 7
07000-13050	6075	4	60- 9
07000-13098	2511	12	20- 53
07000-15042	2481A	23	20- 49
07000-15100	5001	4	50- 3
07000-15220	7031	5	70- 13
07000-15220	9991	14	90- 13
07000-15290	2601A	2	20- 59
07000-15290	2611A	2	20- 67
07000-15290	9991	5	90- 11
07000-15310	2601A	10	20- 59
07000-15310	2611A	10	20- 67
07000-15310	9991	5	90- 11
07000-15460	2653A	4	20- 77
07000-15460	9991	6	90- 12
07000-16225	9991	5	90- 11
07000-22065	2481A	22	20- 49
07000-62018	0325	2	03- 7
07000-62018	0991	1	09- 3
07000-62018	0992	1	09- 7
07000-63030	0991	2	09- 4
07000-72012	2451A	48	20- 42

PARTS NO.	FIG NO.	INDEX	PAGE
07000-72012	9991	2	90- 11
07000-72014	2411A	17	20- 11
07000-72014	2411A	8	20- 11
07000-72014	2451A	29	20- 41
07000-72014	9991	1	90- 9
07000-72014	9991	1	90- 9
07000-72014	9991	2	90- 11
07000-72018	2411A	24	20- 11
07000-72018	2411A	31	20- 11
07000-72018	2411A	37	20- 12
07000-72018	9991	1	90- 9
07000-72018	9991	1	90- 9
07000-72018	9991	1	90- 9
07000-72021	2411A	25	20- 11
07000-72021	2411A	38	20- 12
07000-72021	2411A	7	20- 11
07000-72021	2451A	28	20- 41
07000-72021	2452A	50	20- 46
07000-72021	9991	1	90- 9
07000-72021	9991	1	90- 9
07000-72021	9991	1	90- 9
07000-72021	9991	2	90- 10
07000-72021	9991	2	90- 11
07000-73022	2411A	28	20- 11
07000-73022	2411A	35	20- 11
07000-73022	2451A	44	20- 42
07000-73022	2452A	51	20- 46
07000-73022	9991	1	90- 9
07000-73022	9991	1	90- 9
07000-73022	9991	2	90- 11
07000-73022	9991	2	90- 11
07000-73025	2401A	29	20- 7
07000-73025	2411A	29	20- 11
07000-73025	2412A	36	20- 16
07000-73025	2412A	50	20- 16
07000-73025	9991	1	90- 9
07000-73025	9991	1	90- 9
07000-73025	9991	1	90- 9
07000-73025	9991	1	90- 10
07000-73028	2412A	2	20- 15
07000-73028	2412A	49	20- 16
07000-73028	2422A	22	20- 37
07000-73028	9991	1	90- 9
07000-73028	9991	1	90- 10
07000-73028	9991	1	90- 10
07000-73028	9991	1	90- 10
07000-73030	2416A	4	20- 23
07000-73030	9991	1	90- 10
07000-73032	2451A	19	20- 41
07000-73032	9991	2	90- 10

PARTS NO.	FIG NO.	INDEX	PAGE
07000-73035	2401A	50	20- 8
07000-73035	2412A	3	20- 15
07000-73035	2451A	5	20- 41
07000-73035	2451A	55	20- 42
07000-73035	9991	1	90- 9
07000-73035	9991	1	90- 9
07000-73035	9991	1	90- 9
07000-73035	9991	2	90- 11
07000-73035	9991	2	90- 10
07000-73038	2411A	40	20- 12
07000-73038	9991	1	90- 9
07000-73045	2412A	14	20- 15
07000-73045	2451A	9	20- 41
07000-73045	9991	1	90- 9
07000-73045	9991	2	90- 10
07001-02010	6241	8	60- 27
07001-02010	6251	8	60- 35
07001-02010	6253	17	60- 37
07001-02010	6255	8	60- 39
07001-02014	6241	13	60- 27
07001-02014	6241	21	60- 27
07001-02014	6243	4	60- 29
07001-02014	6245	13	60- 31
07001-02014	6245	4	60- 31
07001-02014	6247	12	60- 33
07001-02014	6247	21	60- 33
07001-02014	6247	4	60- 33
07001-02014	6251	13	60- 35
07001-02014	6251	21	60- 35
07001-02014	6253	22	60- 37
07001-02014	6253	5	60- 37
07001-02014	6255	13	60- 39
07001-02014	6255	21	60- 39
07001-02055	2721	7	20- 85
07001-02065	2725	7	20- 87
07001-02065	6301	13	60- 41
07001-02065	6303	5	60- 43
07001-02065	6305A	7	60- 45
07001-02075	6315	11	60- 51
07001-02085	6311	8	60- 47
07002-02434	2451A	34	20- 42
07002-02434	9991	2	90- 11
07002-03634	2412A	7	20- 15
07002-03634	9991	1	90- 9
07002-11423	6241	26	60- 27
07002-11423	6243	8	60- 29
07002-11423	6245	8	60- 31
07002-11423	6247	16	60- 33
07002-11423	6247	8	60- 33
07002-11423	6251	25	60- 35

PARTS NO.	FIG NO.	INDEX	PAGE
07002-11423	6253	9	60- 37
07002-11423	6255	25	60- 39
07002-11823	7031	9	70- 13
07002-11823	9991	14	90- 13
07002-12034	2751	22	20- 91
07002-12034	6421	11	60- 59
07002-12034	6421	13	60- 59
07002-12034	6421	26	60- 59
07002-12034	6423A	11	60- 61
07002-12034	6423A	13	60- 61
07002-12034	6431	23	60- 63
07002-12034	6431	8	60- 63
07002-12034	6435A	13	60- 65
07002-12034	6435A	24	60- 65
07002-12034	6437	23	60- 67
07002-12034	6437	27	60- 67
07002-12034	6437	30	60- 67
07002-12034	6441	14	60- 69
07002-12034	6451	10	60- 71
07002-12034	6451	14	60- 71
07002-12034	6451	24	60- 71
07002-12034	6463	10	60- 77
07002-12034	6463	8	60- 77
07002-12034	6465	11	60- 79
07002-12034	6465	5	60- 79
07002-12034	6473	12	60- 83
07002-12034	6473	19	60- 83
07002-12434	2551	17	20- 55
07002-12434	2601A	32	20- 59
07002-12434	2611A	32	20- 67
07002-12434	2651	11	20- 75
07002-12434	2651	22	20- 75
07002-12434	2753	18	20- 93
07002-12434	6241	10	60- 27
07002-12434	6241	14	60- 27
07002-12434	6241	18	60- 27
07002-12434	6241	25	60- 27
07002-12434	6243	13	60- 29
07002-12434	6243	9	60- 29
07002-12434	6245	14	60- 31
07002-12434	6245	9	60- 31
07002-12434	6247	17	60- 33
07002-12434	6247	22	60- 33
07002-12434	6247	9	60- 33
07002-12434	6251	10	60- 35
07002-12434	6251	14	60- 35
07002-12434	6251	18	60- 35
07002-12434	6251	26	60- 35
07002-12434	6253	10	60- 37
07002-12434	6253	19	60- 37

PARTS NO.	FIG NO.	INDEX	PAGE
07002-12434	6253	23	60- 37
07002-12434	6255	10	60- 39
07002-12434	6255	14	60- 39
07002-12434	6255	18	60- 39
07002-12434	6255	26	60- 39
07002-12434	9991	5	90- 11
07002-12434	9991	6	90- 12
07002-12434	9991	6	90- 11
07002-13034	7031	7	70- 13
07002-13034	9991	14	90- 13
07003-03036	2601A	38	20- 60
07003-03036	2611A	38	20- 68
07003-03036	9991	5	90- 11
07005-00812	0401	9	04- 3
07005-00812	0411	3	04- 13
07005-00812	0411	3	04- 13
07005-00812	0412	3	04- 15
07005-00812	0991	2	09- 4
07005-00812	0991	2	09- 4
07005-00812	0991	2	09- 4
07005-01012	0401	31	04- 3
07005-01012	0402	33	04- 5
07005-01012	0403	33	04- 7
07005-01012	0991	2	09- 4
07005-01012	0991	2	09- 4
07005-01012	0992	2	09- 8
07005-01012	0992	2	09- 8
07005-01012	1301	12	10- 11
07005-01012	1305	12	10- 15
07005-01212	0402	28	04- 5
07005-01212	0403	28	04- 7
07005-01212	0992	2	09- 8
07005-01212	0992	2	09- 7
07005-01212	2412A	55	20- 16
07005-01212	9991	1	90- 10
07005-01412	0411	14	04- 13
07005-01412	0412	13	04- 15
07005-01412	0991	2	09- 4
07005-01412	0991	2	09- 4
07005-01412	0992	2	09- 8
07005-01412	0992	2	09- 8
07005-01412	1303	3	10- 13
07005-01412	1307	14	10- 17
07005-01412	1307	19	10- 17
07005-01412	1307	24	10- 17
07005-01412	1307	4	10- 17
07005-01612	2801	23	20- 95
07005-01612	4103A	50	40- 12
07005-01612	4111	30	40- 15
07005-02216	0211	3	02- 9

PARTS NO.	FIG NO.	INDEX	PAGE
07005-02216	0221	4	02- 11
07005-02216	0991	2	09- 3
07005-02216	0991	2	09- 3
07005-02216	0992	2	09- 7
07005-02216	0992	2	09- 7
07005-02416	0701	3	07- 3
07005-02416	0992	2	09- 8
07012-00062	7031	11	70- 13
07012-00062	9991	14	90- 13
07012-00080	2605	29	20- 63
07012-00080	2615	32	20- 71
07012-00080	9991	5	90- 11
07012-00085	2605	10	20- 63
07012-00085	2615	10	20- 71
07012-00085	9991	5	90- 11
07012-00140	2653A	10	20- 77
07012-00140	9991	6	90- 12
07012-10075	2412A	40	20- 16
07012-10075	9991	1	90- 9
07012-10085	2421A	25	20- 35
07012-10085	9991	1	90- 10
07012-10130	2803	6	20- 97
07018-00954	2418A	37	20- 32
07018-01805	2416A	22	20- 23
07018-10703	2417A	41	20- 28
07018-20352	2418A	40	20- 32
07018-21155	2417A	36	20- 28
07020-00000	2801	25	20- 95
07020-00000	2801	35	20- 95
07020-00000	5005	27	50- 5
07020-00000	6315	16	60- 51
07020-00000	6315	4	60- 51
07020-00000	7013	17	70- 7
07020-00000	7021	8	70- 11
07020-00000	7101	15	70- 17
07020-00000	7101	7	70- 17
07020-00000	7201	5	70- 19
07020-00675	2721	18	20- 85
07020-00675	2725	19	20- 87
07020-00675	2801	27	20- 95
07020-00675	5001	3	50- 3
07020-00675	7001	8	70- 3
07020-00675	7021	19	70- 11
07020-00675	7021	9	70- 11
07020-00900	2721	17	20- 85
07020-00900	2803	29	20- 97
07020-00900	2805	25	20- 99
07020-00900	5001	11	50- 3
07020-00900	5005	13	50- 5
07020-00900	6301	10	60- 41

PARTS NO.	FIG NO.	INDEX	PAGE
07020-00900	6303	18	60- 43
07020-00900	7203	16	70- 21
07020-00900	7203	22	70- 21
07020-00900	7203	33	70- 21
07020-00900	7203	40	70- 21
07030-00252	2411A	3	20- 11
07030-00252	2651	20	20- 75
07040-11812	7031	8	70- 13
07040-12414	2601A	31	20- 59
07040-12414	2611A	31	20- 67
07040-12414	2651	10	20- 75
07040-13016	7031	6	70- 13
07042-00312	0521	22	05- 7
07042-10312	0201	19	02- 3
07042-20108	0151	2	01- 17
07042-20108	2401A	2	20- 7
07042-20108	2401A	27	20- 7
07042-20108	2411A	22	20- 11
07042-20108	2451A	31	20- 42
07042-20108	2451A	45	20- 42
07042-20108	2452A	2	20- 45
07042-20108	2721	20	20- 85
07042-20108	6431	24	60- 63
07042-20108	6437	33	60- 67
07042-20108	6441	11	60- 69
07042-20108	6465	10	60- 79
07042-20108	6465	10	60- 79
07042-20108	6473	18	60- 83
07042-20211	1201A	10	10- 7
07042-20211	2422A	10	20- 37
07042-20312	0331	9	03- 9
07042-20312	0331A	7	03- 11
07042-50108	2751	21	20- 91
07042-50108	2753	12	20- 93
07042-50108	6401	34	60- 53
07042-50108	6401	50	60- 54
07042-50108	6421	27	60- 59
07042-50108	6435A	25	60- 65
07042-50108	6451	15	60- 71
07042-70108	4221	3	40- 25
07042-70415	0131	7	01- 9
07042-70415	0131A	9	01- 11
07043-A0211	2422A	10	20- 37
07043-00108	2721	19	20- 85
07043-00108	2803	27	20- 97
07043-00211	2418A	2	20- 31
07043-00211	6071	5	60- 7
07043-00211	6075	3	60- 9
07043-00415	0221	2	02- 11
07043-50108	0131	6	01- 9

PARTS NO.	FIG NO.	INDEX	PAGE
07043-50108	0131A	8	01- 11
07043-50108	0201	20	02- 3
07043-50211	0201	21	02- 3
07043-50617	0331	2	03- 9
07043-50617	0331	3	03- 9
07043-70108	2412A	28	20- 15
07043-70312	2411A	2	20- 11
07044-12412	2601A	30	20- 59
07044-12412	2611A	30	20- 67
07044-12412	2651	21	20- 75
07044-13620	2412A	6	20- 15
07046-21810	0201	11	02- 3
07046-23016	0201	24	02- 3
07046-41008	0101	5	01- 3
07046-41810	0101	6	01- 3
07046-41810	0201	11	02- 3
07046-42216	0101	7	01- 3
07046-42216	0201	14	02- 3
07046-42516	0101	8	01- 3
07046-42516	0101	8	01- 3
07046-42516	0201	18	02- 3
07046-42516	0201	18	02- 3
07046-43016	0201	16	02- 3
07046-43016	0201	16	02- 3
07046-44016	0201	17	02- 3
07048-01510	7011	34	70- 5
07050-21200	1301	2	10- 11
07050-21200	1305	2	10- 15
07051-20000	1301	5	10- 11
07051-20000	1305	5	10- 15
07056-10045	1301	6	10- 11
07056-10045	1305	6	10- 15
07063-01054	6111A	2	60- 11
07102-20404	6401	45	60- 54
07102-20509	6403	13	60- 57
07102-20519	2751	24	20- 91
07102-20604	2551	28	20- 55
07102-20607	2551	15	20- 55
07102-20608	2551	27	20- 55
07108-20306	6423A	15	60- 61
07108-20503	6401	35	60- 54
07108-20503	6451	35	60- 71
07108-20503	6461	3	60- 75
07108-20503	6471	3	60- 81
07108-20520	2751	23	20- 91
07108-20607	6401	18	60- 53
07113-00310	6465	1	60- 79
07113-00312	6437	13	60- 67
07113-00411	6441	7	60- 69
07138-00980	6301	3	60- 41

PARTS NO.	FIG NO.	INDEX	PAGE
07138-00980	6303	11	60- 43
07139-00705	7203	23	70- 21
07139-00705	7203	41	70- 22
07139-00902	6301	5	60- 41
07139-00902	6303	17	60- 43
07139-00905	6301	6	60- 41
07139-00905	6303	16	60- 43
07141-00070	7203	24	70- 21
07141-00070	7203	42	70- 22
07141-00090	6301	4	60- 41
07141-00090	6303	15	60- 43
07143-10304	6305A	2	60- 45
07143-10505	6311	2	60- 47
07143-10505	7101	12	70- 17
07144-10404	2725	2	20- 87
07144-10404	2803	3	20- 97
07144-10404	6315	2	60- 51
07144-10505	6315	14	60- 51
07145-00035	6305A	3	60- 45
07145-00040	2725	3	20- 87
07145-00040	2801	37	20- 95
07145-00040	2803	4	20- 97
07145-00040	6315	3	60- 51
07145-00040	7021	17	70- 11
07145-00045	2725	18	20- 87
07145-00045	2727A	3	20- 89
07145-00045	2801	16	20- 95
07145-00050	2801	20	20- 95
07145-00050	6311	3	60- 47
07145-00050	6315	15	60- 51
07145-00050	7101	13	70- 17
07145-00075	7021	11	70- 11
07145-00080	7201	4	70- 19
07146-02076	2727A	7	20- 89
07146-02076	6313A	10	60- 49
07155-00615	2721	15	20- 85
07155-00720	2725	15	20- 87
07155-00720	6301	20	60- 41
07155-00720	6303	21	60- 43
07155-00720	6305A	16	60- 45
07155-00820	6315	18	60- 51
07155-00925	6311	14	60- 47
07156-00810	2727A	14	20- 89
07156-00810	6313A	16	60- 49
07161-10090	6311	15	60- 47
07165-12022	2721	16	20- 85
07165-12426	2725	16	20- 87
07165-12426	6301	21	60- 41
07165-12426	6303	22	60- 43
07165-12426	6305A	17	60- 45

PARTS NO.	FIG NO.	INDEX	PAGE
07165-12729	2727A	15	20- 89
07165-12729	6313A	18	60- 49
07165-12729	6315	20	60- 51
07165-13033	6311	16	60- 47
07177-03025	2721	9	20- 85
07177-03525	2725	9	20- 87
07177-03525	4211A	10	40- 21
07177-04025	6301	14	60- 41
07177-04025	6313A	5	60- 49
07177-04530	2727A	10	20- 89
07177-04530	6303	7	60- 43
07177-04530	6305A	9	60- 45
07177-04530	6311	5	60- 47
07177-05030	6315	6	60- 51
07179-12042	2721	11	20- 85
07179-12047	2725	11	20- 87
07179-12052	6301	16	60- 41
07179-12052	6313A	8	60- 49
07179-12057	2727A	4	20- 89
07179-12057	6303	10	60- 43
07179-12057	6305A	13	60- 45
07179-12057	6311	11	60- 47
07179-12062	6315	9	60- 51
07206-30710	0401	30	04- 3
07206-30710	0402	32	04- 5
07206-30710	0403	32	04- 7
07206-30812	0402	27	04- 5
07206-30812	0403	27	04- 7
07206-30812	2412A	54	20- 16
07206-31014	0411	13	04- 13
07206-31014	0412	12	04- 15
07206-31014	1303	2	10- 13
07206-31014	1307	13	10- 17
07206-31014	1307	18	10- 17
07206-31014	1307	23	10- 17
07206-31014	1307	3	10- 17
07213-50610	5005	25	50- 5
07213-50813	2401A	45	20- 8
07220-00316	2751	18	20- 91
07221-20315	2751	19	20- 91
07230-10315	6423A	10	60- 61
07230-10315	6431	12	60- 63
07230-10315	6463	9	60- 77
07230-10315	6465	4	60- 79
07230-10422	6421	10	60- 59
07230-10422	6421	12	60- 59
07230-10422	6431	7	60- 63
07230-10422	6435A	12	60- 65
07230-10422	6451	9	60- 71
07230-10422	6463	7	60- 77

PARTS NO.	FIG NO.	INDEX	PAGE
07230-10422	6473	9	60- 83
07230-10442	6441	13	60- 69
07235-10315	6435A	23	60- 65
07235-10315	6437	26	60- 67
07235-10315	6451	23	60- 71
07235-10422	6435A	22	60- 65
07235-10422	6437	29	60- 67
07235-10422	6451	22	60- 71
07235-10522	2753	16	20- 93
07235-10628	2451A	38	20- 42
07235-10628	2551	16	20- 55
07235-50315	2751	20	20- 91
07235-50315	6421	25	60- 59
07235-50315	6435A	14	60- 65
07235-50315	6451	13	60- 71
07235-50315	6465	8	60- 79
07235-50315	6465	9	60- 79
07235-50315	6473	17	60- 83
07235-50422	6421	24	60- 59
07235-50422	6431	22	60- 63
07235-50422	6437	22	60- 67
07235-50422	6465	9	60- 79
07260-03213	6401	5	60- 53
07260-03218	6403	8	60- 57
07260-04118	6403	11	60- 57
07260-20909	1303	5	10- 13
07260-20909	1307	25	10- 17
07260-20918	0411	8	04- 13
07260-20925	0411	7	04- 13
07260-20925	0411	8	04- 13
07260-20932	0411	7	04- 13
07260-20940	1303	4	10- 13
07260-20940	1307	5	10- 17
07260-20945	0412	8	04- 15
07260-20950	0161	14	01- 21
07260-20950	0161A	13	01- 23
07260-20950	0412	7	04- 15
07260-20971	0521	17	05- 7
07260-20980	0521	17	05- 7
07260-20990	1303	12	10- 13
07260-20990	1307	10	10- 17
07260-22613	6403	4	60- 57
07260-22616	2753	5	20- 93
07260-23212	2551	5	20- 55
07260-23214	2551	5	20- 55
07261-20916	1307	20	10- 17
07261-20918	1307	20	10- 17
07270-00880	1203A	19	10- 9
07270-01090	1303	13	10- 13
07270-01090	1307	32	10- 17

PARTS NO.	FIG NO.	INDEX	PAGE
07270-20410	0421	14	04- 20
07270-20480	0421	15	04- 20
07281-00167	0161	15	01- 21
07281-00167	0161A	14	01- 23
07281-00167	1203A	20	10- 9
07281-00167	1203A	8	10- 9
07281-00167	1303	14	10- 13
07281-00167	1307	33	10- 17
07281-00197	0411	12	04- 13
07281-00197	0412	11	04- 15
07281-00197	0521	18	05- 7
07281-00197	1303	6	10- 13
07281-00197	1307	11	10- 17
07281-00197	1307	21	10- 17
07281-00197	1307	26	10- 17
07281-00197	1307	6	10- 17
07281-00289	0325	13	03- 7
07281-00289	0701	6	07- 3
07281-00359	0325	13	03- 7
07281-00419	2753	6	20- 93
07281-00419	6403	5	60- 57
07281-00489	1203A	2	10- 9
07281-00489	2551	6	20- 55
07281-00489	6403	9	60- 57
07281-00549	1203A	4	10- 9
07281-00549	6401	6	60- 53
07281-00709	0131	11	01- 9
07281-00709	0131A	13	01- 11
07281-00809	1011	4	10- 5
07281-01159	1011	5	10- 5
07281-10609	6403	12	60- 57
07282-04311	6403	17	60- 57
07283-21529	6451	29	60- 71
07283-23442	6401	51	60- 54
07283-24346	5511A	13	50- 29
07283-24346	6403	14	60- 57
07283-24346	7013	42	70- 8
07285-00100	0421	17	04- 20
07285-00100	0421	18	04- 20
07285-00180	0115	14	01- 7
07286-01606	0115	12	01- 7
07286-01670	0115	13	01- 7
07289-00045	1203A	2	10- 9
07289-00045	1203A	4	10- 9
07372-51650	2605	27	20- 63
07372-51650	2615	30	20- 71
07376-50422	6401	46	60- 54
07700-40240	1303	10	10- 13
07700-40240	1307	30	10- 17
07700-40460	1307	8	10- 17

PARTS NO.	FIG NO.	INDEX	PAGE
08000-00000	1401	2	10- 21
08000-00001	1401	2	10- 21
08000-02210	1401	1	10- 21
08028-13175	1503	2	10- 29
08028-13325	1503	1	10- 29
08034-00414	0991	1	09- 3
08034-00414	0991	2	09- 4
08034-00414	0992	1	09- 7
08034-00414	0992	2	09- 8
08034-00414	1501	30	10- 27
08034-00414	1505	11	10- 31
08034-00414	4351	24	40- 45
08034-00519	0131	14	01- 9
08034-00519	0131A	16	01- 11
08034-00519	0521	26	05- 7
08034-00519	0991	1	09- 3
08034-00519	0991	2	09- 4
08034-00519	0992	1	09- 7
08034-00519	0992	2	09- 8
08034-00519	1203A	21	10- 9
08034-00519	1503	22	10- 29
08036-01414	1503	18	10- 29
08036-01414	1503	19	10- 29
08036-01414	4221	24	40- 25
08036-01814	6435A	27	60- 65
08036-02514	2751	25	20- 91
08036-02514	6401	47	60- 54
08036-10814	1505	8	10- 31
08036-10814	1801	9	10- 35
08036-10814	1805	16	10- 39
08036-10814	1855	4	10- 51
08036-11210	0406	10	04- 11
08036-11210	1833A	2	10- 43
08036-11214	1203A	18	10- 9
08036-11214	4351	19	40- 45
08036-41814	1305	1	10- 15
08037-01610	4211A	33	40- 21
08037-02512	1413	5	10- 25
08037-02512	1805	4	10- 39
08037-02512	1831	2	10- 41
08037-02512	1835	2	10- 45
08037-02512	4011A	40	40- 5
08037-02512	4121	17	40- 17
08037-02512	5201	10	50- 9
08037-05016	1413	4	10- 25
08038-00519	0131	15	01- 9
08038-00519	0131A	17	01- 11
08038-00519	1503	17	10- 29
08038-00519	1505	2	10- 31
08040-01000	1501	18	10- 27

PARTS NO.	FIG NO.	INDEX	PAGE
08040-04000	1501	17	10- 27
08043-16000	1501	16	10- 27
08061-30020	1803	5	10- 37
08071-10000	1501	11	10- 27
08073-00505	1505	3	10- 31
08074-40000	1501	7	10- 27
08074-40000	1831	4	10- 41
08074-40000	1833A	6	10- 43
08077-22400	1805	6	10- 39
08086-20000	1413	12	10- 25
08100-02460	1801	1	10- 35
08100-02460	1803	1	10- 37
08100-02460	1835	1	10- 45
08103-02460	1853	1	10- 49
08104-12420	1805	3	10- 39
08105-02420	1805	1	10- 39
08105-12420	1805	2	10- 39
08110-12410	1413	14	10- 25
08111-22430	1411	5	10- 23
08111-22430	1411	7	10- 23
08111-22430	1411	8	10- 23
08116-02410	5427	13	50- 25
08121-20005	1801	1	10- 35
08121-22400	1801	1	10- 35
08127-00060	1831	1	10- 41
08136-00003	1805	1	10- 39
08136-00006	1805	1	10- 39
08136-02405	1805	1	10- 39
08141-02400	5427	13	50- 25
08144-12400	1413	14	10- 25
08147-42411	1411	5	10- 23
08147-42463	1411	7	10- 23
08147-52430	1411	8	10- 23
08154-12400	1853	1	10- 49
08160-52400	1501	13	10- 27
08163-02400	1501	4	10- 27
08165-30000	1833A	1	10- 43
08180-12411	5427	2	50- 25
08184-30500	5427	5	50- 25
08185-00450	5427	6	50- 25
08603-40023	1855	3	10- 51
08670-00635	0141	11	01- 13
08670-00635	1011	6	10- 5
08670-01635	0141	11	01- 13
08670-02001	0141	11	01- 13
08670-02001	0142	19	01- 15
08687-22401	1413	13	10- 25
08687-22403	1413	13	10- 25
09000-30006	9901	2	90- 5
09002-03641	9901	9	90- 5

PARTS NO.	FIG NO.	INDEX	PAGE
09019-08035	9901	3	90- 5
09033-00190	9901	4	90- 5
09036-00150	9901	5	90- 5
09055-10390	9901	6	90- 5
09056-05513	9901	1	90- 5
09069-00280	9905	2	90- 7
09101-10000	9801A	1	90- 3
09161-10000	9801A	6	90- 3
09162-10000	9801A	9	90- 3
09164-10000	9801A	21	90- 3
09233-12020	2417A	20	20- 27
09233-13220	2418A	23	20- 31
09241-50140	7101	14	70- 17
09241-50140	7101	6	70- 17
09271-00045	7203	48	70- 22
09304-01250	4103A	3	40- 11
09305-00800	4101	23	40- 9
09311-41237	4211A	5	40- 21
09350-01620	4011A	2	40- 5
09363-00850	2452A	37	20- 46
09410-40284	5421	16	50- 17
09410-40332	5421	14	50- 17
09410-40381	5421	18	50- 17
09410-40404	5421	12	50- 17
09410-40407	5421	20	50- 17
09410-40426	5421	10	50- 17
09412-00052	5423	48	50- 20
09415-00706	1501	31	10- 27
09415-01610	1411	13	10- 23
09415-01610	1411	13	10- 23
09416-10000	5425	3	50- 23
09463-00002	4103A	58	40- 12
09602-01635	9801A	10	90- 3
09605-01411	0201	36	02- 4
09608-05080	2412A	21	20- 15
09637-00161	0141	12	01- 13
09637-00161	0142	18	01- 15
09637-02161	0141	12	01- 13
09637-05161	0141	12	01- 13
09637-30161	0141	12	01- 13
09637-30262	0141	12	01- 13
09637-70161	0141	12	01- 13
09637-90261	0141	12	01- 13
09647-02202	0521	27	05- 7
09647-05202	0521	27	05- 7
09647-10201	0521	27	05- 7
09647-20202	0521	27	05- 7
09647-60201	0521	27	05- 7
09647-70202	0521	27	05- 7
09649-10010	9801A	18	90- 3

PARTS NO.	FIG NO.	INDEX	PAGE
09650-00104	9801A	3	90- 3
09651-10000	9801A	20	90- 3
09652-00111	9801A	11	90- 3
09653-10000	9801A	4	90- 3
09667-30000	9801A	8	90- 3
09668-10000	9801A	2	90- 3
09683-00150	9801A	17	90- 3
09690-B0400	9801A	13	90- 3
09690-B0400	9801A	5	90- 3
09920-00150	0131	16	01- 9
09920-00150	0131A	18	01- 11
09920-00150	0205	26	02- 7
09920-00150	0211	9	02- 9
09920-00150	0221	11	02- 11
09920-00150	0331	11	03- 9
09920-00150	0401	32	04- 3
09920-00150	0402	34	04- 5
09920-00150	0403	34	04- 7
09960-01084	9801A	16	90- 3
10E-43-11160	4001A	2	40- 3
101-854-9355	4001A	6	40- 3
103-15-11220	2415A	36	20- 20
103-15-11220	2418A	15	20- 31
103-15-12811	9991	1	90- 10
112-63-15370	2727A	5	20- 89
112-63-15370	6303	9	60- 43
112-63-15370	6305A	12	60- 45
112-63-15370	6311	10	60- 47
113-04-32130	0521	16	05- 7
113-15-12861	2416A	9	20- 23
113-15-12861	9991	1	90- 10
113-15-25490	2415A	2	20- 19
113-15-25490	2417A	10	20- 27
113-15-25490	2418A	10	20- 31
113-15-29250	2417A	26	20- 27
113-15-29250	9991	1	90- 10
114-63-55170	6313A	13	60- 49
114-63-55170	6313A	2	60- 49
124-15-41280	2418A	34	20- 31
124-15-41380	2416A	5	20- 23
124-15-41680	2411A	5	20- 11
124-15-41690	2411A	4	20- 11
124-15-49410	2417A	19	20- 27
125-15-11230	2416A	38	20- 24
125-15-11461	2422A	39	20- 38
125-15-15290	2452A	24	20- 45
125-15-22780	2416A	30	20- 23
125-15-32750	2417A	28	20- 27
125-15-39210	2416A	10	20- 23
125-15-39210	2416A	17	20- 23

PARTS NO.	FIG NO.	INDEX	PAGE
125-15-39210	2417A	4	20- 27
125-15-39210	9991	1	90- 10
125-15-39210	9991	1	90- 10
125-15-39210	9991	1	90- 10
125-15-39521	2417A	13	20- 27
125-62-21150	6111A	3	60- 11
130-09-11590	9991	1	90- 9
130-911-1640	1413	16	10- 25
134-960-2150	2401A	20	20- 7
135-43-21480	4101	22	40- 9
135-43-21480	4121	24	40- 17
141-49-33970	2511	6	20- 53
141-49-33980	2511	4	20- 53
141-49-33990	2511	3	20- 53
141-49-36171	2511	5	20- 53
144-15-25570	2422A	28	20- 37
144-15-29110	2422A	29	20- 37
144-15-29110	9991	1	90- 10
144-70-15251	7021	18	70- 11
145-14-11320	2412A	38	20- 16
145-14-11320	2416A	24	20- 23
145-14-11320	2417A	16	20- 27
145-14-12790	2418A	13	20- 31
145-14-31620	2412A	15	20- 15
145-14-31650	2412A	16	20- 15
145-14-31662	2412A	12	20- 15
145-27-42230	2551	9	20- 55
145-49-12440	2511	10	20- 53
154-15-22831	2415A	5	20- 19
154-15-22831	2416A	16	20- 23
154-15-22831	2417A	3	20- 27
154-15-22831	2418A	4	20- 31
154-15-22831	9991	1	90- 10
154-15-22831	9991	1	90- 10
154-15-22831	9991	1	90- 10
154-15-22831	9991	1	90- 10
175-15-11230	2416A	2	20- 23
175-15-15550	2451A	18	20- 41
175-63-75190	2725	10	20- 87
176-63-92240	6315	8	60- 51
180-14-25560	2451A	17	20- 41
195-15-15130	2451A	16	20- 41
198-63-75190	6301	15	60- 41
20U-54-25190	1803	9	10- 37
205-03-71280	1201A	2	10- 7
205-06-71690	5427	12	50- 25
206-03-43340	1203A	9	10- 9
22D-62-18450	0601	11	06- 3
22W-06-13220	1503	6	10- 29
22W-15-21140	2417A	9	20- 27

PARTS NO.	FIG NO.	INDEX	PAGE
22W-15-21270	2415A	11	20- 19
22W-15-21280	2415A	9	20- 19
22W-15-21290	2417A	31	20- 27
22W-15-22212	2415A	22	20- 19
22W-15-22231	2416A	36	20- 24
22W-15-22242	2417A	21	20- 27
22W-15-22390	2417A	43	20- 28
22W-15-22421	2416A	26	20- 23
22W-15-22441	2417A	18	20- 27
22W-15-22510	2415A	15	20- 19
22W-15-22550	2417A	15	20- 27
22W-15-22570	2415A	18	20- 19
22W-15-22570	2416A	28	20- 23
22W-15-22620	2415A	13	20- 19
22W-15-29510	2416A	21	20- 23
22W-15-29510	2417A	23	20- 27
22W-15-29710	2416A	31	20- 23
22W-75-15440	2417A	27	20- 27
22W-75-15440	9991	1	90- 10
22W-75-18880	2452A	25	20- 45
22W-75-18890	2452A	23	20- 45
22X-54-19260	5421	3	50- 17
23A-01-00090	1001	24	10- 3
23A-01-11160	1011	3	10- 5
23A-01-11210	1001	12	10- 3
23A-01-11250	1001	11	10- 3
23A-01-11250	1001	23	10- 3
23A-01-11250	1001	4	10- 3
23A-01-11260	1001	13	10- 3
23A-01-11330	1001	20	10- 3
23A-01-11620	1011	8	10- 5
23A-01-12220	1001	7	10- 3
23A-01-12230	1001	8	10- 3
23A-01-12240	1001	16	10- 3
23A-01-12310	1001	1	10- 3
23A-03-12270	1203A	10	10- 9
23A-03-21100	1201A	1	10- 7
23A-03-21150	1201A	17	10- 7
23A-03-21160	1201A	11	10- 7
23A-03-21170	1201A	20	10- 7
23A-03-21190	1201A	19	10- 7
23A-03-21210	1203A	1	10- 9
23A-03-21220	1203A	3	10- 9
23A-03-21320	1203A	11	10- 9
23A-03-21330	1203A	14	10- 9
23A-03-21370	1203A	7	10- 9
23A-03-21410	1201A	1	10- 7
23A-03-21420	1201A	3	10- 7
23A-03-21430	1201A	6	10- 7
23A-03-21440	1201A	9	10- 7

PARTS NO.	FIG NO.	INDEX	PAGE
23A-04-11150	1301	1	10- 11
23A-04-11240	1301	15	10- 11
23A-04-11240	1305	15	10- 15
23A-04-11340	1301	7	10- 11
23A-04-11340	1305	7	10- 15
23A-04-11410	1301	4	10- 11
23A-04-11410	1305	4	10- 15
23A-04-11710	1305	1	10- 15
23A-06-11130	1503	3	10- 29
23A-06-11210	1503	1	10- 29
23A-06-11220	1503	2	10- 29
23A-06-11250	1505	7	10- 31
23A-06-11250	1831	9	10- 41
23A-06-11250	1833A	11	10- 43
23A-06-11280	1503	3	10- 29
23A-06-11410	1503	15	10- 29
23A-06-11420	1505	1	10- 31
23A-06-11430	1505	5	10- 31
23A-06-11460	1503	4	10- 29
23A-06-12120	1801	4	10- 35
23A-06-12130	1805	11	10- 39
23A-06-12160	1805	9	10- 39
23A-06-12220	1411	9	10- 23
23A-06-12580	1831	3	10- 41
23A-06-12580	1835	3	10- 45
23A-06-12610	1805	3	10- 39
23A-06-12620	1805	2	10- 39
23A-06-12630	1805	3	10- 39
23A-06-12640	1805	2	10- 39
23A-06-12650	1805	5	10- 39
23A-06-12660	1801	2	10- 35
23A-06-12840	1401	3	10- 21
23A-06-12850	1401	7	10- 21
23A-06-12860	1401	7	10- 21
23A-06-13110	1501	3	10- 27
23A-06-13120	1501	2	10- 27
23A-06-13130	1505	5	10- 31
23A-06-13140	1503	15	10- 29
23A-06-13150	1505	1	10- 31
23A-06-13440	1505	9	10- 31
23A-12-12130	2001	5	20- 3
23A-12-12141	2001	6	20- 3
23A-12-12210	2001	1	20- 3
23A-12-12220	2001	4	20- 3
23A-15-00062	2401A	1	20- 7
23A-15-00062	2411A	1	20- 11
23A-15-00062	2412A	1	20- 15
23A-15-00062	2415A	1	20- 19
23A-15-00062	2416A	1	20- 23
23A-15-00062	2417A	1	20- 27

PARTS NO.	FIG NO.	INDEX	PAGE
23A-15-00062	2418A	1	20- 31
23A-15-00062	2421A	1	20- 35
23A-15-00062	2422A	1	20- 37
23A-15-00062	2451A	1	20- 41
23A-15-00062	2452A	1	20- 45
23A-15-00062	2481A	1	20- 49
23A-15-00120	2416A	29	20- 23
23A-15-00130	2401A	1	20- 7
23A-15-00141	2411A	1	20- 11
23A-15-00151	2416A	1	20- 23
23A-15-05010	9991	1	90- 9
23A-15-05011	9991	1	90- 9
23A-15-05012	9991	1	90- 9
23A-15-05013	9991	1	90- 9
23A-15-05055	9991	1	90- 9
23A-15-05056	9991	1	90- 9
23A-15-11021	2411A	1	20- 11
23A-15-11021	2412A	1	20- 15
23A-15-11021	2415A	1	20- 19
23A-15-11021	2416A	1	20- 23
23A-15-11021	2417A	1	20- 27
23A-15-11021	2418A	1	20- 31
23A-15-11021	2421A	1	20- 35
23A-15-11021	2422A	1	20- 37
23A-15-11021	2451A	1	20- 41
23A-15-11021	2452A	1	20- 45
23A-15-11021	2481A	1	20- 49
23A-15-11120	2418A	9	20- 31
23A-15-11130	2418A	1	20- 31
23A-15-11150	2417A	1	20- 27
23A-15-11173	2415A	1	20- 19
23A-15-11181	2415A	28	20- 19
23A-15-11210	2417A	35	20- 28
23A-15-11240	2415A	35	20- 20
23A-15-11260	2417A	33	20- 27
23A-15-11320	2411A	26	20- 11
23A-15-11330	2411A	27	20- 11
23A-15-11350	2411A	36	20- 12
23A-15-11360	2411A	23	20- 11
23A-15-11390	2418A	36	20- 32
23A-15-12110	2415A	20	20- 19
23A-15-12150	2415A	24	20- 19
23A-15-12160	2416A	37	20- 24
23A-15-12221	2415A	21	20- 19
23A-15-12270	2417A	22	20- 27
23A-15-12280	2418A	25	20- 31
23A-15-12310	2415A	14	20- 19
23A-15-12320	2416A	20	20- 23
23A-15-12330	2417A	12	20- 27
23A-15-12340	2418A	18	20- 31

PARTS NO.	FIG NO.	INDEX	PAGE
23A-15-12350	2418A	24	20- 31
23A-15-12361	2417A	24	20- 27
23A-15-12410	2415A	17	20- 19
23A-15-12451	2418A	22	20- 31
23A-15-12530	2416A	23	20- 23
23A-15-12640	2416A	19	20- 23
23A-15-12650	2417A	8	20- 27
23A-15-12660	2418A	8	20- 31
23A-15-12710	2416A	15	20- 23
23A-15-12710	2417A	2	20- 27
23A-15-12752	2417A	25	20- 27
23A-15-12761	2418A	32	20- 31
23A-15-12770	2418A	3	20- 31
23A-15-12940	2416A	18	20- 23
23A-15-12950	2417A	7	20- 27
23A-15-12960	2418A	33	20- 31
23A-15-15140	2452A	43	20- 46
23A-15-15910	2452A	28	20- 45
23A-15-15910	9991	2	90- 11
23A-15-15920	2452A	32	20- 45
23A-15-15920	9991	2	90- 11
23A-15-18160	2401A	13	20- 7
23A-15-18210	2401A	7	20- 7
23A-15-18220	2401A	9	20- 7
23A-15-18230	2401A	21	20- 7
23A-15-18260	2401A	33	20- 7
23A-15-18260	2401A	39	20- 8
23A-15-18310	2401A	5	20- 7
23A-15-18610	2401A	44	20- 8
23A-15-18710	2401A	11	20- 7
23A-15-19010	2401A	1	20- 7
23A-15-19210	2418A	5	20- 31
23A-15-19210	9991	1	90- 10
23A-15-19510	2418A	26	20- 31
23A-16-11160	2551	11	20- 55
23A-16-11161	2551	11	20- 55
23A-16-11240	2551	38	20- 56
23A-16-11250	2551	42	20- 56
23A-16-11261	2551	1	20- 55
23A-16-12150	2551	7	20- 55
23A-16-12170	2551	18	20- 55
23A-16-12190	2551	21	20- 55
23A-16-12210	2551	26	20- 55
23A-16-12220	2551	29	20- 55
23A-20-11130	2051	2	20- 5
23A-22-00110	2605	5	20- 63
23A-22-00110	2615	5	20- 71
23A-22-00120	2605	40	20- 64
23A-22-00120	2615	48	20- 72
23A-22-00140	2605	25	20- 63

PARTS NO.	FIG NO.	INDEX	PAGE
23A-22-00140	2615	28	20- 71
23A-22-00180	2605	42	20- 64
23A-22-00180	2615	51	20- 72
23A-22-01020	2605	1	20- 63
23A-22-01021	2605	1	20- 63
23A-22-01022	2601A	1	20- 59
23A-22-01022	2605	1	20- 63
23A-22-01051	2615	1	20- 71
23A-22-01052	2611A	1	20- 67
23A-22-01052	2615	1	20- 71
23A-22-05010	9991	5	90- 11
23A-22-05011	9991	5	90- 11
23A-22-05012	9991	5	90- 11
23A-22-05013	9991	5	90- 11
23A-22-11110	2601A	1	20- 59
23A-22-11110	2611A	1	20- 67
23A-22-11121	2601A	3	20- 59
23A-22-11121	2611A	3	20- 67
23A-22-11131	2601A	9	20- 59
23A-22-11131	2611A	9	20- 67
23A-22-11141	2605	6	20- 63
23A-22-11141	2615	6	20- 71
23A-22-11180	2605	12	20- 63
23A-22-11180	2615	12	20- 71
23A-22-11190	2605	15	20- 63
23A-22-11190	2615	15	20- 71
23A-22-11200	2605	1	20- 63
23A-22-11200	2615	1	20- 71
23A-22-11210	2605	16	20- 63
23A-22-11210	2615	16	20- 71
23A-22-11210	9991	5	90- 11
23A-22-11250	2605	19	20- 63
23A-22-11270	2605	26	20- 63
23A-22-11270	2615	29	20- 71
23A-22-11280	2605	41	20- 64
23A-22-11280	2615	49	20- 72
23A-22-11290	2605	24	20- 63
23A-22-11290	2615	27	20- 71
23A-22-11290	9991	5	90- 11
23A-22-11371	2605	31	20- 63
23A-22-11380	2605	30	20- 63
23A-22-11380	2615	33	20- 71
23A-22-11402	2601A	11	20- 59
23A-22-11402	2611A	11	20- 67
23A-22-11410	2605	34	20- 63
23A-22-11410	2615	37	20- 72
23A-22-11420	2605	35	20- 63
23A-22-11420	2615	38	20- 72
23A-22-11430	2605	37	20- 64
23A-22-11430	2615	40	20- 72

PARTS NO.	FIG NO.	INDEX	PAGE
23A-22-11450	2601A	7	20- 59
23A-22-11450	2611A	7	20- 67
23A-22-11460	2601A	22	20- 59
23A-22-11460	2611A	22	20- 67
23A-22-11490	2601A	8	20- 59
23A-22-11490	2611A	8	20- 67
23A-22-11490	9991	5	90- 11
23A-22-11510	2601A	39	20- 60
23A-22-11510	2611A	39	20- 68
23A-22-11530	2601A	27	20- 59
23A-22-11530	2611A	27	20- 67
23A-22-11560	2601A	34	20- 59
23A-22-11560	2611A	34	20- 67
23A-22-11590	2605	36	20- 63
23A-22-11590	2615	39	20- 72
23A-22-11600	2615	19	20- 71
23A-22-11631	2615	34	20- 71
23A-22-11641	2615	50	20- 72
23A-22-11900	2615	43	20- 72
23A-22-11910	2615	45	20- 72
23A-22-11920	2615	46	20- 72
23A-22-11930	2615	47	20- 72
23A-22-11940	2615	44	20- 72
23A-22-11950	2615	43	20- 72
23A-23-00030	2651	1	20- 75
23A-23-00031	2651	1	20- 75
23A-23-00032	2651	1	20- 75
23A-23-00032	2653A	1	20- 77
23A-23-00040	2651	1	20- 75
23A-23-00041	2651	1	20- 75
23A-23-00042	2651	1	20- 75
23A-23-00042	2653A	1	20- 77
23A-23-00130	2653A	20	20- 77
23A-23-05030	9991	6	90- 11
23A-23-11111	2651	1	20- 75
23A-23-11120	2651	23	20- 75
23A-23-11140	2651	27	20- 75
23A-23-11161	2651	2	20- 75
23A-23-11211	2653A	5	20- 77
23A-23-11222	2653A	9	20- 77
23A-23-11232	2653A	13	20- 77
23A-23-11242	2653A	14	20- 77
23A-23-11260	2653A	11	20- 77
23A-23-11280	2653A	24	20- 77
23A-23-11290	2653A	2	20- 77
23A-23-11341	2651	6	20- 75
23A-23-11400	2653A	1	20- 77
23A-23-11410	2653A	1	20- 77
23A-23-11430	2653A	1	20- 77
23A-23-11450	2653A	1	20- 77

PARTS NO.	FIG NO.	INDEX	PAGE
23A-27-00010	2803	12	20- 97
23A-27-11130	2803	5	20- 97
23A-27-11131	2803	5	20- 97
23A-27-11132	2803	5	20- 97
23A-27-11141	2803	1	20- 97
23A-27-11150	2803	2	20- 97
23A-27-11160	2801	2	20- 95
23A-27-11170	2803	7	20- 97
23A-27-11180	2803	15	20- 97
23A-27-11190	2803	11	20- 97
23A-27-11231	2801	26	20- 95
23A-27-11250	2803	22	20- 97
23A-27-11260	2803	21	20- 97
23A-27-11270	2803	19	20- 97
23A-27-11281	2803	20	20- 97
23A-27-11310	2801	3	20- 95
23A-27-11330	2801	4	20- 95
23A-27-11340	2801	5	20- 95
23A-27-11350	2801	17	20- 95
23A-27-11360	2803	28	20- 97
23A-27-11370	2801	9	20- 95
23A-27-11380	2801	10	20- 95
23A-27-11390	2801	11	20- 95
23A-27-11520	2801	31	20- 95
23A-27-11530	2801	28	20- 95
23A-27-11610	2801	18	20- 95
23A-27-11620	2801	36	20- 95
23A-27-11630	2801	8	20- 95
23A-27-11640	2801	12	20- 95
23A-27-11640	2801	32	20- 95
23A-27-11650	2801	38	20- 95
23A-27-11890	2803	14	20- 97
23A-27-12110	2801	1	20- 95
23A-27-12111	2801	1	20- 95
23A-27-12210	2801	40	20- 95
23A-30-00550	3001	1	30- 3
23A-30-00560	3001	1	30- 3
23A-30-11101	3001	1	30- 3
23A-30-11111	3001	1	30- 3
23A-30-11300	3001	1	30- 3
23A-30-11302	3001	1	30- 3
23A-30-11310	3001	1	30- 3
23A-30-11312	3001	1	30- 3
23A-32-00010	2481A	20	20- 49
23A-32-11000	3101	1	30- 5
23A-32-11130	3101	24	30- 5
23A-32-11140	3101	25	30- 5
23A-32-11150	3101	27	30- 5
23A-32-11180	3101	29	30- 5
23A-32-11190	3101	30	30- 5

PARTS NO.	FIG NO.	INDEX	PAGE
23A-32-11230	3101	5	30- 5
23A-32-11250	3101	1	30- 5
23A-32-11260	3101	31	30- 5
23A-32-12120	2481A	21	20- 49
23A-32-12130	2481A	24	20- 49
23A-40-05010	9991	7	90- 12
23A-40-05011	9991	7	90- 12
23A-40-11100	2711	1	20- 79
23A-40-11100	2713	1	20- 81
23A-40-11101	2711	1	20- 79
23A-40-11101	2713	1	20- 81
23A-40-11200	2711	1	20- 79
23A-40-11201	2711	1	20- 79
23A-40-11210	2711	26	20- 79
23A-40-11220	2711	22	20- 79
23A-40-11230	2711	23	20- 79
23A-40-11280	2711	16	20- 79
23A-40-11310	4201A	11	40- 19
23A-40-11340	2713	1	20- 81
23A-40-11390	2713	5	20- 81
23A-40-11470	2713	11	20- 81
23A-40-11480	2713	12	20- 81
23A-40-11520	2713	14	20- 81
23A-40-11530	2713	15	20- 81
23A-40-11540	2713	16	20- 81
23A-40-11550	2713	17	20- 81
23A-40-11560	2713	18	20- 81
23A-40-11570	2713	19	20- 81
23A-40-11580	2713	20	20- 81
23A-40-11590	2713	21	20- 81
23A-40-11630	2713	23	20- 81
23A-40-11670	2713	26	20- 81
23A-40-11680	2713	27	20- 81
23A-40-11720	2713	30	20- 81
23A-40-11730	2713	31	20- 81
23A-40-12130	2753	11	20- 93
23A-40-12190	2751	16	20- 91
23A-40-12210	2751	17	20- 91
23A-40-12230	2751	1	20- 91
23A-40-12240	2751	2	20- 91
23A-40-12250	2751	3	20- 91
23A-40-12260	2751	4	20- 91
23A-40-12270	6435A	32	60- 65
23A-40-12330	2751	10	20- 91
23A-40-12340	2751	11	20- 91
23A-40-12430	2751	7	20- 91
23A-40-12440	2751	8	20- 91
23A-43-05010	9991	8	90- 12
23A-43-05020	9991	9	90- 12
23A-43-12110	4011A	28	40- 5

PARTS NO.	FIG NO.	INDEX	PAGE
23A-43-12190	4011A	29	40- 5
23A-43-12220	4001A	20	40- 3
23A-43-12321	4011A	41	40- 5
23A-43-12350	4011A	16	40- 5
23A-43-12420	4011A	20	40- 5
23A-43-13110	4225	1	40- 27
23A-43-13111	4211A	36	40- 21
23A-43-13111	4225	1	40- 27
23A-43-13161	4211A	1	40- 21
23A-43-13170	4211A	7	40- 21
23A-43-13190	4211A	30	40- 21
23A-43-13210	4225	1	40- 27
23A-43-13211	4225	1	40- 27
23A-43-13220	4225	1	40- 27
23A-43-13230	4225	5	40- 27
23A-43-13240	4225	11	40- 27
23A-43-13250	4225	4	40- 27
23A-43-13260	4225	10	40- 27
23A-43-13270	4225	13	40- 27
23A-43-13280	4225	21	40- 27
23A-43-13290	4225	20	40- 27
23A-43-13291	4225	20	40- 27
23A-43-13310	4225	14	40- 27
23A-43-13320	4225	17	40- 27
23A-43-13330	4225	24	40- 27
23A-43-13340	4225	28	40- 27
23A-43-13350	4225	29	40- 27
23A-43-13360	4225	30	40- 27
23A-43-13360	9991	9	90- 12
23A-43-13370	4225	31	40- 27
23A-43-13370	9991	9	90- 12
23A-43-13380	4225	26	40- 27
23A-43-13380	9991	9	90- 12
23A-43-13390	4225	32	40- 27
23A-43-13390	9991	9	90- 12
23A-43-13410	4225	33	40- 27
23A-43-13420	4225	35	40- 27
23A-43-13430	4225	38	40- 28
23A-43-13440	4225	37	40- 28
23A-43-13450	4225	28	40- 27
23A-43-13450	9991	9	90- 12
23A-43-13550	4225	27	40- 27
23A-43-13550	9991	9	90- 12
23A-43-14110	4221	13	40- 25
23A-43-14120	4221	14	40- 25
23A-43-14130	4221	25	40- 25
23A-43-14150	4221	18	40- 25
23A-43-14160	4221	2	40- 25
23A-43-14220	4221	4	40- 25
23A-43-14230	4221	7	40- 25

PARTS NO.	FIG NO.	INDEX	PAGE
23A-43-15110	4121	23	40- 17
23A-43-15120	4121	16	40- 17
23A-43-15130	4121	18	40- 17
23A-43-18130	4301	7	40- 31
23A-43-18190	4311	19	40- 35
23A-43-18210	4311	9	40- 35
23A-43-18220	4311	1	40- 35
23A-43-18220	4311	11	40- 35
23A-43-18230	4311	13	40- 35
23A-43-18230	4311	3	40- 35
23A-43-18230	4311	5	40- 35
23A-43-18250	4311	7	40- 35
23A-43-18260	4315	1	40- 41
23A-43-18260	4317	2	40- 43
23A-43-18270	4313	1	40- 39
23A-43-18290	4311	27	40- 35
23A-43-18290	4313	9	40- 39
23A-43-18290	4315	8	40- 41
23A-43-18290	4317	8	40- 43
23A-43-18320	4311	28	40- 35
23A-43-18320	4313	11	40- 39
23A-43-18320	4315	13	40- 41
23A-43-18320	4317	10	40- 43
23A-43-18350	4313	3	40- 39
23A-43-18360	4311	29	40- 36
23A-43-18360	4313	15	40- 39
23A-43-18360	4315	14	40- 41
23A-43-18360	4317	14	40- 43
23A-43-18390	4301	45	40- 32
23A-43-18410	4301	30	40- 31
23A-43-18420	4301	20	40- 31
23A-43-18430	4301	19	40- 31
23A-43-18440	4301	29	40- 31
23A-43-18450	4301	11	40- 31
23A-43-18460	4311	25	40- 35
23A-43-18460	4313	4	40- 39
23A-43-18460	4315	7	40- 41
23A-43-18460	4317	7	40- 43
23A-43-19110	4351	9	40- 45
23A-43-19120	4351	2	40- 45
23A-43-19130	4351	1	40- 45
23A-43-19140	4351	7	40- 45
23A-43-19150	4351	14	40- 45
23A-43-19160	4351	8	40- 45
23A-43-19170	4351	15	40- 45
23A-43-19180	4351	25	40- 45
23A-45-11110	4101	1	40- 9
23A-45-11112	4101	1	40- 9
23A-45-11121	4103A	6	40- 11
23A-45-11130	4103A	22	40- 11

PARTS NO.	FIG NO.	INDEX	PAGE
23A-45-11140	4103A	35	40- 11
23A-45-11161	4103A	47	40- 12
23A-45-11170	4101	9	40- 9
23A-45-11180	4101	5	40- 9
23A-45-11190	4103A	53	40- 12
23A-45-11290	4103A	26	40- 11
23A-45-11411	4101	1	40- 9
23A-45-12110	4111	4	40- 15
23A-45-12120	4111	15	40- 15
23A-45-12130	4111	22	40- 15
23A-45-12140	4111	21	40- 15
23A-45-12150	4111	20	40- 15
23A-45-12160	4111	28	40- 15
23A-45-12161	4111	28	40- 15
23A-45-12180	4111	1	40- 15
23A-46-00110	5005	3	50- 5
23A-46-11070	5001	1	50- 3
23A-46-11320	5001	2	50- 3
23A-46-11370	5005	24	50- 5
23A-46-11371	5005	24	50- 5
23A-46-11380	5005	20	50- 5
23A-46-11390	5001	10	50- 3
23A-46-11410	5005	30	50- 5
23A-46-11420	5001	15	50- 3
23A-46-12320	5005	2	50- 5
23A-46-13020	5005	1	50- 5
23A-53-11441	9801A	12	90- 3
23A-53-11550	1805	10	10- 39
23A-53-12311	9801A	7	90- 3
23A-54-11120	5201	14	50- 9
23A-54-11130	5201	15	50- 9
23A-54-11170	5201	7	50- 9
23A-54-11180	5201	5	50- 9
23A-54-11310	5201	22	50- 9
23A-54-11350	5201	21	50- 9
23A-54-16110	5101	1	50- 7
23A-54-16140	5101	5	50- 7
23A-54-17910	5101	14	50- 7
23A-54-23140	5101	5	50- 7
23A-54-24210	5101	1	50- 7
23A-54-24211	5101	1	50- 7
23A-60-05010	9991	10	90- 12
23A-60-05110	9991	11	90- 12
23A-60-05210	9991	12	90- 12
23A-60-11100	6001	1	60- 3
23A-60-11101	6001	1	60- 3
23A-60-11200	2501	1	20- 51
23A-60-11200	2551	44	20- 56
23A-60-11201	2501	1	20- 51
23A-60-11201	2551	44	20- 56

PARTS NO.	FIG NO.	INDEX	PAGE
23A-60-11202	2501	1	20- 51
23A-60-11202	2551	44	20- 56
23A-60-12200	6205	1	60- 17
23A-60-12300	6209	1	60- 23
23A-60-12300	6451	39	60- 71
23A-60-12500	6201	1	60- 13
23A-60-12500	6451	38	60- 71
23A-60-12600	6207	1	60- 19
23A-60-13100	6235	1	60- 25
23A-60-13110	6235	1	60- 25
23A-60-13120	6235	2	60- 25
23A-60-13130	6235	3	60- 25
23A-60-13140	6235	4	60- 25
23A-60-13150	6235	5	60- 25
23A-60-13500	1301	11	10- 11
23A-60-13500	1305	11	10- 15
23A-60-13601	6111A	1	60- 11
23A-60-13610	6111A	1	60- 11
23A-60-13620	6111A	5	60- 11
23A-60-13640	6111A	4	60- 11
23A-60-14111	6435A	3	60- 65
23A-60-14121	6437	3	60- 67
23A-60-14131	6435A	4	60- 65
23A-60-14141	6421	3	60- 59
23A-60-14151	6431	3	60- 63
23A-60-14161	6435A	6	60- 65
23A-60-14171	6435A	7	60- 65
23A-60-14181	6435A	8	60- 65
23A-60-14191	6435A	9	60- 65
23A-60-14490	6421	23	60- 59
23A-60-14530	6423A	4	60- 61
23A-60-14561	6423A	16	60- 61
23A-60-14581	6423A	17	60- 61
23A-60-14590	6423A	5	60- 61
23A-60-14610	6435A	21	60- 65
23A-60-14810	6441	2	60- 69
23A-60-14850	6437	5	60- 67
23A-60-14860	6437	6	60- 67
23A-60-14870	6441	5	60- 69
23A-60-14880	6441	6	60- 69
23A-60-14890	6431	5	60- 63
23A-60-14910	6431	6	60- 63
23A-60-14920	6421	5	60- 59
23A-60-14930	6421	6	60- 59
23A-60-14940	6463	6	60- 77
23A-60-14950	6463	5	60- 77
23A-60-15180	6437	25	60- 67
23A-60-15190	6437	24	60- 67
23A-60-15210	6437	31	60- 67
23A-60-15220	6437	32	60- 67

PARTS NO.	FIG NO.	INDEX	PAGE
23A-60-15370	6465	3	60- 79
23A-60-15380	6465	2	60- 79
23A-60-15410	6431	14	60- 63
23A-60-15420	6431	15	60- 63
23A-60-15430	6437	14	60- 67
23A-60-15440	6437	15	60- 67
23A-60-15450	6441	8	60- 69
23A-60-15460	6441	9	60- 69
23A-60-16130	6401	14	60- 53
23A-60-16131	6401	14	60- 53
23A-60-16140	6401	19	60- 53
23A-60-16141	6401	19	60- 53
23A-60-16150	6401	20	60- 53
23A-60-16170	6401	31	60- 53
23A-60-16230	6403	7	60- 57
23A-60-16240	6403	10	60- 57
23A-60-16410	6423A	14	60- 61
23A-60-16430	6403	6	60- 57
23A-60-16450	6401	22	60- 53
23A-60-16550	2753	1	20- 93
23A-60-16560	2753	7	20- 93
23A-60-16570	6401	1	60- 53
23A-60-16580	6401	7	60- 53
23A-60-16690	6401	44	60- 54
23A-60-16960	6435A	33	60- 65
23A-60-17111	6463	3	60- 77
23A-60-17210	6465	7	60- 79
23A-60-17211	6465	7	60- 79
23A-60-17710	6473	7	60- 83
23A-60-17720	6473	8	60- 83
23A-60-24130	6421	14	60- 59
23A-60-24140	6421	15	60- 59
23A-63-12101	6303	1	60- 43
23A-63-12120	6303	2	60- 43
23A-63-12140	6303	1	60- 43
23A-63-22101	6301	1	60- 41
23A-63-22120	6301	2	60- 41
23A-63-22140	6301	1	60- 41
23A-63-32102	6315	1	60- 51
23A-63-32141	6315	1	60- 51
23A-63-32171	6315	13	60- 51
23A-63-52102	2725	1	20- 87
23A-63-52121	2725	4	20- 87
23A-63-52141	2725	1	20- 87
23A-63-62102	2727A	1	20- 89
23A-63-62121	2727A	1	20- 89
23A-63-62141	2727A	16	20- 89
23A-63-62202	2727A	1	20- 89
23A-63-62241	2727A	16	20- 89
23A-70-00010	7021	1	70- 11

PARTS NO.	FIG NO.	INDEX	PAGE
23A-70-00120	7001	6	70- 3
23A-70-00130	7021	4	70- 11
23A-70-00210	7021	12	70- 11
23A-70-01030	7031	1	70- 13
23A-70-01030	7033	1	70- 15
23A-70-01031	7031	1	70- 13
23A-70-01031	7033	1	70- 15
23A-70-05010	9991	14	90- 13
23A-70-11110	7001	1	70- 3
23A-70-11130	7001	12	70- 3
23A-70-11130	7001	16	70- 3
23A-70-12110	7011	23	70- 5
23A-70-12121	7011	20	70- 5
23A-70-12131	7011	15	70- 5
23A-70-12140	7011	16	70- 5
23A-70-12150	7011	17	70- 5
23A-70-12250	7011	23	70- 5
23A-70-12260	7011	23	70- 5
23A-70-12320	7011	23	70- 5
23A-70-13120	7011	2	70- 5
23A-70-13130	7011	3	70- 5
23A-70-13140	7011	7	70- 5
23A-70-14210	7021	23	70- 11
23A-70-14220	7021	24	70- 11
23A-70-15110	7031	1	70- 13
23A-70-15120	7031	2	70- 13
23A-70-15140	7033	4	70- 15
23A-70-15150	7031	12	70- 13
23A-70-15160	7031	10	70- 13
23A-70-15170	7033	18	70- 15
23A-70-15180	7031	13	70- 13
23A-70-15210	7031	16	70- 13
23A-71-11120	7201	27	70- 19
23A-71-11140	7201	1	70- 19
23A-71-11160	7201	2	70- 19
23A-71-11180	7201	17	70- 19
23A-71-11200	7201	21	70- 19
23A-71-11210	7203	38	70- 21
23A-71-11240	7203	9	70- 21
23A-71-11250	7203	9	70- 21
23A-71-11260	7203	14	70- 21
23A-71-11270	7201	3	70- 19
23A-71-11340	7201	26	70- 19
23A-735-1190	7013	45	70- 8
23A-950-1630	5421	11	50- 17
23B-01-00040	1001	17	10- 3
23B-04-11430	1307	7	10- 17
23B-06-11140	1803	6	10- 37
23B-06-11150	1801	8	10- 35
23B-06-11150	1803	6	10- 37

PARTS NO.	FIG NO.	INDEX	PAGE
23B-06-11150	1805	15	10- 39
23B-06-11180	1501	1	10- 27
23B-06-11230	1501	3	10- 27
23B-06-11330	1501	12	10- 27
23B-06-11410	1801	7	10- 35
23B-06-11410	1805	14	10- 39
23B-06-11430	1501	2	10- 27
23B-06-12270	1413	1	10- 25
23B-06-12271	1413	1	10- 25
23B-06-12272	1413	1	10- 25
23B-06-12280	1413	9	10- 25
23B-06-12281	1413	9	10- 25
23B-06-12290	1803	2	10- 37
23B-06-12540	1411	6	10- 23
23B-06-12890	1851	7	10- 47
23B-06-13110	1853	2	10- 49
23B-06-13120	1853	5	10- 49
23B-06-13140	1853	6	10- 49
23B-06-13150	1853	7	10- 49
23B-06-16720	6463	13	60- 77
23B-15-00150	2451A	30	20- 41
23B-15-00170	2418A	35	20- 32
23B-15-00191	2451A	1	20- 41
23B-15-00200	2451A	30	20- 41
23B-15-00220	2452A	1	20- 45
23B-15-05120	9991	2	90- 10
23B-15-05121	9991	2	90- 10
23B-15-11310	2411A	30	20- 11
23B-15-11340	2411A	32	20- 11
23B-15-11370	2411A	34	20- 11
23B-15-11610	2411A	16	20- 11
23B-15-11620	2411A	19	20- 11
23B-15-11810	2422A	23	20- 37
23B-15-11820	2422A	21	20- 37
23B-15-12560	2418A	19	20- 31
23B-15-12611	2415A	12	20- 19
23B-15-12762	2415A	3	20- 19
23B-15-12771	2416A	8	20- 23
23B-15-12930	2415A	10	20- 19
23B-15-12940	2416A	7	20- 23
23B-15-12950	2416A	6	20- 23
23B-15-13111	2412A	1	20- 15
23B-15-13131	2412A	24	20- 15
23B-15-13140	2412A	27	20- 15
23B-15-13151	2412A	37	20- 16
23B-15-13161	2421A	23	20- 35
23B-15-13170	2421A	18	20- 35
23B-15-13180	2412A	8	20- 15
23B-15-13211	2421A	2	20- 35
23B-15-13221	2421A	8	20- 35

PARTS NO.	FIG NO.	INDEX	PAGE
23B-15-13230	2421A	12	20- 35
23B-15-13311	2421A	4	20- 35
23B-15-13320	2421A	10	20- 35
23B-15-13350	2421A	15	20- 35
23B-15-13411	2421A	7	20- 35
23B-15-13430	2412A	41	20- 16
23B-15-13450	9991	1	90- 10
23B-15-13450	9991	1	90- 10
23B-15-13451	2412A	42	20- 16
23B-15-13451	9991	1	90- 10
23B-15-13510	2421A	5	20- 35
23B-15-13530	2421A	11	20- 35
23B-15-13540	2421A	13	20- 35
23B-15-13610	2412A	30	20- 15
23B-15-13710	2412A	53	20- 16
23B-15-13721	2412A	48	20- 16
23B-15-13722	2412A	48	20- 16
23B-15-13930	2421A	1	20- 35
23B-15-13930	2421A	22	20- 35
23B-15-13930	2421A	9	20- 35
23B-15-13940	2421A	6	20- 35
23B-15-13950	2421A	14	20- 35
23B-15-13960	2421A	3	20- 35
23B-15-15130	2452A	42	20- 46
23B-15-15150	2452A	48	20- 46
23B-15-15160	2452A	49	20- 46
23B-15-15280	2452A	15	20- 45
23B-15-15340	2452A	16	20- 45
23B-15-15340	2452A	19	20- 45
23B-15-15371	2452A	22	20- 45
23B-15-15390	2452A	31	20- 45
23B-15-15522	2451A	7	20- 41
23B-15-15550	2451A	8	20- 41
23B-15-15650	2451A	43	20- 42
23B-15-15810	2422A	1	20- 37
23B-15-15950	9991	1	90- 10
23B-15-15951	9991	1	90- 10
23B-15-15952	2422A	2	20- 37
23B-15-15952	9991	1	90- 10
23B-15-16130	2411A	18	20- 11
23B-15-16130	9991	1	90- 9
23B-15-16241	2452A	21	20- 45
23B-15-18130	2401A	34	20- 7
23B-15-18140	2401A	40	20- 8
23B-15-18150	2401A	26	20- 7
23B-15-18320	2401A	19	20- 7
23B-15-18410	2401A	6	20- 7
23B-15-18420	2401A	10	20- 7
23B-15-18430	2401A	22	20- 7
23B-15-18510	2401A	24	20- 7

PARTS NO.	FIG NO.	INDEX	PAGE
23B-15-19210	2418A	38	20- 32
23B-15-19210	9991	1	90- 10
23B-15-19220	2415A	6	20- 19
23B-15-19220	9991	1	90- 10
23B-16-11310	2511	8	20- 53
23B-20-11200	2051	1	20- 5
23B-20-11210	2051	1	20- 5
23B-20-11220	2051	3	20- 5
23B-22-11430	2601A	40	20- 60
23B-22-11430	2611A	40	20- 68
23B-25-11510	2803	30	20- 97
23B-27-11360	2805	14	20- 99
23B-27-11360	2805	29	20- 99
23B-27-11411	2805	18	20- 99
23B-27-11441	2805	22	20- 99
23B-27-11450	2805	19	20- 99
23B-27-11460	2805	20	20- 99
23B-27-11480	2805	1	20- 99
23B-27-11540	2805	3	20- 99
23B-27-11552	2805	15	20- 99
23B-27-11553	2805	15	20- 99
23B-27-11562	2805	6	20- 99
23B-27-11563	2805	6	20- 99
23B-27-11660	2801	19	20- 95
23B-27-11680	2801	29	20- 95
23B-27-11680	2805	4	20- 99
23B-27-11800	2805	23	20- 99
23B-27-11800	2805	9	20- 99
23B-27-11841	2805	11	20- 99
23B-27-11841	2805	26	20- 99
23B-27-11910	2805	12	20- 99
23B-27-11910	2805	27	20- 99
23B-27-11920	2805	13	20- 99
23B-27-11920	2805	28	20- 99
23B-40-11300	2713	1	20- 81
23B-43-12111	4011A	3	40- 5
23B-43-12120	4011A	6	40- 5
23B-43-12210	5429	8	50- 27
23B-43-12230	5429	18	50- 27
23B-43-12240	5429	19	50- 27
23B-43-12250	5429	23	50- 27
23B-43-12260	5429	24	50- 27
23B-43-12310	5429	2	50- 27
23B-43-12320	5429	7	50- 27
23B-43-12350	5429	6	50- 27
23B-43-14130	4221	1	40- 25
23B-45-11120	4101	16	40- 9
23B-45-11121	4101	16	40- 9
23B-53-12240	9801A	22	90- 3
23B-53-12340	5429	1	50- 27

PARTS NO.	FIG NO.	INDEX	PAGE
23B-53-12440	9905	1	90- 7
23B-53-12441	9905	1	90- 7
23B-53-12550	9801A	24	90- 3
23B-54-11110	5201	1	50- 9
23B-54-11111	5201	1	50- 9
23B-54-11360	5201	11	50- 9
23B-54-11361	5201	11	50- 9
23B-54-21140	5101	9	50- 7
23B-54-23120	5101	9	50- 7
23B-57-21000	5301	1	50- 11
23B-57-21110	5301	1	50- 11
23B-57-21120	5301	2	50- 11
23B-57-21130	5301	3	50- 11
23B-57-21140	5301	4	50- 11
23B-57-21150	5301	5	50- 11
23B-57-21160	5301	6	50- 11
23B-60-14110	6423A	18	60- 61
23B-60-14410	6401	29	60- 53
23B-60-14420	6401	41	60- 54
23B-60-14430	6401	32	60- 53
23B-60-14440	6401	42	60- 54
23B-60-14450	6401	43	60- 54
23B-60-14460	6403	1	60- 57
23B-60-14690	6451	3	60- 71
23B-60-14690	6473	3	60- 83
23B-60-16170	6461	1	60- 75
23B-60-16170	6471	1	60- 81
23B-60-16190	6401	38	60- 54
23B-60-16191	6451	36	60- 71
23B-60-16191	6461	4	60- 75
23B-60-16191	6471	4	60- 81
23B-60-16220	6403	3	60- 57
23B-60-16220	6451	37	60- 71
23B-60-16220	6471	5	60- 81
23B-60-16620	6435A	30	60- 65
23B-60-16630	6435A	31	60- 65
23B-60-16650	6441	18	60- 69
23B-60-16660	6441	19	60- 69
23B-60-16930	6451	33	60- 71
23B-60-17140	6461	2	60- 75
23B-60-17150	6461	5	60- 75
23B-60-17620	6473	5	60- 83
23B-60-17630	6473	6	60- 83
23B-60-17660	6451	34	60- 71
23B-60-17660	6471	2	60- 81
23B-60-18110	6451	5	60- 71
23B-60-18120	6451	6	60- 71
23B-60-18130	6451	7	60- 71
23B-60-18140	6451	8	60- 71
23B-60-18160	6451	42	60- 72

PARTS NO.	FIG NO.	INDEX	PAGE
23B-62-05010	6051	17	60- 5
23B-62-05011	6051	17	60- 5
23B-62-11500	6051	1	60- 5
23B-62-11501	6051	1	60- 5
23B-62-11510	6051	25	60- 5
23B-62-11520	6051	8	60- 5
23B-62-11530	6051	11	60- 5
23B-62-11531	6051	11	60- 5
23B-62-11540	6051	12	60- 5
23B-62-11550	6051	1	60- 5
23B-62-11551	6051	1	60- 5
23B-62-11560	6051	24	60- 5
23B-62-11560	6051	26	60- 5
23B-62-12140	6051	9	60- 5
23B-62-12150	6051	7	60- 5
23B-62-12170	6051	3	60- 5
23B-62-12180	6051	5	60- 5
23B-62-12190	6051	6	60- 5
23B-62-12210	6051	4	60- 5
23B-62-12220	6051	3	60- 5
23B-62-12230	6051	2	60- 5
23B-62-12240	6051	13	60- 5
23B-62-12250	6051	14	60- 5
23B-62-12260	6051	15	60- 5
23B-62-12270	6051	16	60- 5
23B-62-12280	6051	27	60- 5
23B-62-12360	6051	10	60- 5
23B-62-12370	6051	23	60- 5
23B-63-18103	6313A	1	60- 49
23B-63-18121	6313A	12	60- 49
23B-63-18142	6313A	1	60- 49
23B-63-42103	6305A	1	60- 45
23B-63-42120	6305A	4	60- 45
23B-63-42141	6305A	1	60- 45
23B-63-72102	2721	1	20- 85
23B-63-72121	2721	4	20- 85
23B-63-72140	2721	1	20- 85
23B-70-11150	7001	2	70- 3
23B-70-11350	7001	2	70- 3
23B-70-12150	7011	30	70- 5
23B-70-13111	7011	1	70- 5
23B-70-13112	7011	1	70- 5
23B-70-14341	7021	3	70- 11
23B-70-14370	7021	24	70- 11
23B-70-15150	7033	18	70- 15
23B-70-16250	7031	18	70- 13
23B-70-16250	9991	14	90- 13
23B-71-11150	7203	1	70- 21
23B-71-11250	7203	10	70- 21
23B-71-11260	7201	25	70- 19

PARTS NO.	FIG NO.	INDEX	PAGE
23B-71-11350	7201	24	70- 19
23B-71-11380	7201	24	70- 19
23B-71-11390	7201	24	70- 19
23B-71-11410	7201	23	70- 19
23B-71-11420	7201	21	70- 19
23B-71-11420	7201	22	70- 19
23B-71-11430	7201	23	70- 19
23B-735-0010	7013	2	70- 7
23B-735-0120	7013	4	70- 7
23B-735-1110	7013	1	70- 7
23B-735-1111	7013	1	70- 7
23B-735-1170	7013	21	70- 7
23B-735-1180	7013	22	70- 7
23B-735-1190	7013	7	70- 7
23B-735-1230	7011	4	70- 5
23B-735-1240	7013	14	70- 7
23B-735-1370	7013	37	70- 8
23B-735-1380	7013	35	70- 7
23B-735-1381	7013	35	70- 7
23B-735-1382	7013	35	70- 7
23B-735-1390	7013	36	70- 8
23B-735-1391	7013	36	70- 8
23B-735-1392	7013	36	70- 7
23B-846-1110	5401	1	50- 15
23B-846-1111	5401	1	50- 15
23B-950-1200	5421	1	50- 17
23B-950-1460	5427	4	50- 25
23B-950-1520	5421	3	50- 17
23B-950-1550	5423	1	50- 19
23B-950-1560	5423	2	50- 19
23B-950-1590	5421	15	50- 17
23B-950-1610	5421	13	50- 17
23B-950-1640	5421	19	50- 17
23B-950-1650	5421	17	50- 17
23B-950-1660	5421	9	50- 17
23B-950-1810	5427	1	50- 25
23B-950-1820	5427	11	50- 25
23B-950-1840	5427	7	50- 25
23B-950-3110	5421	2	50- 17
23B-950-3130	5421	5	50- 17
23B-950-3140	5425	1	50- 23
23B-950-3150	5425	2	50- 23
23B-950-3190	5423	53	50- 20
23B-950-3210	5423	53	50- 20
23B-956-1120	5511A	4	50- 29
23B-956-1131	5511A	23	50- 29
23B-956-1140	5511A	22	50- 29
23B-956-1150	5511A	23	50- 29
23B-956-1160	5511A	23	50- 29
23B-956-1180	5511A	19	50- 29

PARTS NO.	FIG NO.	INDEX	PAGE
23B-956-1340	5511A	2	50- 29
23B-956-1350	5511A	3	50- 29
23B-98-11310	9901	7	90- 5
23D-01-11130	1011	7	10- 5
23D-01-11140	1011	2	10- 5
23D-01-11160	1011	1	10- 5
23D-04-11310	1303	7	10- 13
23D-04-11310	1307	27	10- 17
23D-04-11320	1303	11	10- 13
23D-04-11320	1307	31	10- 17
23D-16-11230	2551	30	20- 55
23D-22-11650	2605	43	20- 64
23D-22-11650	2615	52	20- 72
23D-22-11730	2601A	13	20- 59
23D-22-11730	2611A	13	20- 67
23D-22-11740	2601A	14	20- 59
23D-22-11740	2611A	14	20- 67
23D-22-11750	2601A	6	20- 59
23D-22-11750	2611A	6	20- 67
23D-22-11750	9991	5	90- 11
23D-40-11100	4201A	6	40- 19
23D-40-11110	4201A	10	40- 19
23D-40-11120	4201A	8	40- 19
23D-40-11130	4201A	7	40- 19
23D-43-18540	4311	16	40- 35
23D-43-18860	4211A	19	40- 21
23D-43-18870	4211A	14	40- 21
23D-956-1180	5511A	18	50- 29
23E-01-11310	1507	1	10- 33
23E-01-11330	1507	3	10- 33
23E-06-11540	1505	10	10- 31
23E-06-11610	1501	25	10- 27
23E-06-11620	1501	29	10- 27
23E-06-12310	1411	1	10- 23
23E-06-12311	1411	1	10- 23
23E-06-12550	1401	4	10- 21
23E-43-12210	5429	28	50- 27
23E-43-12220	5429	32	50- 27
23E-43-12230	5429	33	50- 27
23E-43-12241	5429	13	50- 27
23E-43-12251	5429	14	50- 27
23E-43-12360	4001A	1	40- 3
23E-43-12410	4001A	3	40- 3
23E-43-13500	4211A	37	40- 21
23E-43-13510	4211A	37	40- 21
23E-43-13520	4211A	37	40- 22
23E-43-18110	4301	1	40- 31
23E-43-18120	4301	3	40- 31
23E-43-18121	4301	3	40- 31
23E-43-18630	4011A	37	40- 5

PARTS NO.	FIG NO.	INDEX	PAGE
23E-43-18640	4011A	1	40- 5
23E-45-11170	4103A	33	40- 11
23E-53-11650	9801A	15	90- 3
23S-15-12720	2415A	7	20- 19
23S-15-12720	2416A	11	20- 23
23S-15-12740	2416A	12	20- 23
23S-15-12740	2417A	5	20- 27
23S-15-12740	2418A	6	20- 31
23S-15-21220	2415A	30	20- 19
23S-15-22380	2417A	14	20- 27
23S-15-22630	2416A	14	20- 23
23S-15-23710	2411A	39	20- 12
23S-15-42730	2417A	29	20- 27
230-09-03030	6473	15	60- 83
230-09-03050	6423A	9	60- 61
230-09-03060	6431	19	60- 63
230-09-03060	6437	28	60- 67
230-09-03060	6451	20	60- 71
230-09-03075	6473	16	60- 83
230-09-03090	6465	6	60- 79
230-09-03100	6431	13	60- 63
230-09-03100	6435A	15	60- 65
230-09-03150	6435A	16	60- 65
230-09-23090	6421	19	60- 59
230-09-23100	6421	4	60- 59
230-09-23100	6431	4	60- 63
230-09-23100	6435A	5	60- 65
230-09-23100	6437	4	60- 67
230-09-23100	6463	4	60- 77
230-09-23100	6473	4	60- 83
230-09-23110	6421	19	60- 59
230-09-23110	6451	4	60- 71
230-09-23115	6451	4	60- 71
230-09-23180	2751	6	20- 91
230-09-24100	6441	4	60- 69
232-04-52320	1307	9	10- 17
232-06-11960	1503	16	10- 29
232-06-11970	1503	5	10- 29
232-06-13310	1831	1	10- 41
232-06-13320	1831	1	10- 41
232-06-51980	1803	1	10- 37
232-06-51980	1835	1	10- 45
232-06-51990	1803	1	10- 37
232-06-51990	1835	1	10- 45
232-06-52340	1411	4	10- 23
232-06-52380	1855	2	10- 51
232-06-57190	1411	12	10- 23
232-06-57190	1411	12	10- 23
232-15-14130	2451A	32	20- 42
232-15-14160	2451A	33	20- 42

PARTS NO.	FIG NO.	INDEX	PAGE
232-15-14230	2451A	36	20- 42
232-15-14260	2451A	37	20- 42
232-15-14280	2451A	35	20- 42
232-15-15111	2452A	1	20- 45
232-15-15210	2452A	3	20- 45
232-15-15221	2452A	4	20- 45
232-15-15230	2452A	5	20- 45
232-15-15240	2452A	7	20- 45
232-15-15250	2452A	8	20- 45
232-15-15260	2452A	9	20- 45
232-15-15270	2452A	10	20- 45
232-15-15292	2452A	26	20- 45
232-15-15310	2452A	35	20- 46
232-15-15331	2452A	36	20- 46
232-15-15360	2452A	14	20- 45
232-15-15380	2452A	27	20- 45
232-15-15410	2451A	1	20- 41
232-15-15420	2451A	22	20- 41
232-15-15460	2451A	20	20- 41
232-15-15470	2451A	15	20- 41
232-15-15490	2451A	10	20- 41
232-15-15540	2451A	6	20- 41
232-15-15580	2451A	23	20- 41
232-15-15590	2451A	2	20- 41
232-15-15710	2452A	12	20- 45
232-15-15761	2422A	31	20- 37
232-15-15770	2422A	34	20- 38
232-15-15780	2422A	32	20- 37
232-15-15790	2422A	35	20- 38
232-15-15830	2422A	11	20- 37
232-15-15840	2422A	15	20- 37
232-15-15890	2451A	11	20- 41
232-15-15910	9991	2	90- 11
232-15-15921	9991	2	90- 11
232-15-15930	2452A	39	20- 46
232-15-15930	9991	2	90- 11
232-15-15960	9991	1	90- 10
232-15-15961	2422A	12	20- 37
232-15-15961	9991	1	90- 10
232-15-15970	9991	1	90- 10
232-15-15971	2422A	16	20- 37
232-15-15971	9991	1	90- 10
232-15-16110	2452A	6	20- 45
232-15-16160	2451A	21	20- 41
232-15-16180	2452A	17	20- 45
232-15-16220	2451A	14	20- 41
232-15-16230	2452A	20	20- 45
232-15-16270	2422A	38	20- 38
232-16-12100	2511	1	20- 53
232-16-12110	2511	9	20- 53

PARTS NO.	FIG NO.	INDEX	PAGE
232-16-12120	2511	1	20- 53
232-23-11220	2601A	37	20- 60
232-23-11220	2611A	37	20- 67
232-23-12141	2653A	22	20- 77
232-23-12141	9991	6	90- 12
232-27-11150	7011	8	70- 5
232-32-11221	3101	14	30- 5
232-32-11322	3101	15	30- 5
232-32-53101	2481A	1	20- 49
232-32-53110	2481A	1	20- 49
232-32-53120	2481A	2	20- 49
232-32-53131	2481A	3	20- 49
232-32-53140	2481A	4	20- 49
232-32-53150	2481A	5	20- 49
232-32-53160	2481A	6	20- 49
232-32-53170	2481A	7	20- 49
232-32-53180	2481A	8	20- 49
232-32-53190	2481A	9	20- 49
232-32-53210	2481A	10	20- 49
232-32-53220	2481A	11	20- 49
232-32-53230	2481A	12	20- 49
232-32-53240	2481A	13	20- 49
232-32-53250	2481A	14	20- 49
232-32-53260	2481A	15	20- 49
232-32-53270	2481A	16	20- 49
232-32-53320	2481A	19	20- 49
232-32-53330	2481A	18	20- 49
232-32-56300	3101	8	30- 5
232-32-56330	3101	16	30- 5
232-32-56340	3101	13	30- 5
232-43-00120	4311	10	40- 35
232-43-12360	4011A	19	40- 5
232-43-12550	4111	23	40- 15
232-43-13130	4211A	2	40- 21
232-43-13162	4111	7	40- 15
232-43-13162	4211A	21	40- 21
232-43-13440	4211A	24	40- 21
232-43-13450	4211A	32	40- 21
232-43-13600	4211A	37	40- 21
232-43-13610	4211A	37	40- 21
232-43-13620	4211A	37	40- 22
232-43-13630	4211A	37	40- 22
232-43-13640	4211A	37	40- 21
232-43-14240	4221	5	40- 25
232-43-18290	4311	10	40- 35
232-43-52320	4011A	32	40- 5
232-43-52320	4101	18	40- 9
232-43-52320	4103A	2	40- 11
232-43-52320	4103A	23	40- 11
232-43-52320	4103A	7	40- 11

PARTS NO.	FIG NO.	INDEX	PAGE
232-43-52430	4011A	35	40- 5
232-43-52430	4111	33	40- 15
232-43-52430	4211A	5	40- 21
232-43-52510	4011A	13	40- 5
232-43-53160	4211A	22	40- 21
232-43-53390	4211A	11	40- 21
232-43-54212	4221	12	40- 25
232-43-54240	4221	6	40- 25
232-43-54590	4221	8	40- 25
232-43-54970	4221	21	40- 25
232-43-56100	4121	1	40- 17
232-43-56120	4121	2	40- 17
232-43-56130	4121	3	40- 17
232-43-56140	4121	10	40- 17
232-43-56150	4121	6	40- 17
232-43-56210	4121	21	40- 17
232-43-57180	4103A	36	40- 11
232-43-58360	5101	12	50- 7
232-43-58380	4301	10	40- 31
232-45-11180	4103A	15	40- 11
232-45-11193	4103A	1	40- 11
232-45-11220	4103A	4	40- 11
232-45-11311	4103A	48	40- 12
232-45-11311	4111	29	40- 15
232-45-11340	4103A	12	40- 11
232-45-11610	4001A	9	40- 3
232-45-11610	4101	24	40- 9
232-45-11620	4101	17	40- 9
232-46-11711	5005	9	50- 5
232-46-11920	5005	10	50- 5
232-46-53210	5001	5	50- 3
232-46-53211	5001	5	50- 3
232-53-61631	9801A	25	90- 3
232-53-61810	9801A	19	90- 3
232-53-63810	4317	18	40- 43
232-53-64810	4317	18	40- 43
232-53-65810	4317	18	40- 43
232-53-67810	4317	18	40- 43
232-53-71810	4317	18	40- 43
232-53-77120	4317	18	40- 43
232-55-13113	5511A	17	50- 29
232-55-13170	5511A	10	50- 29
232-60-54702	6071	1	60- 7
232-60-54711	6071	1	60- 7
232-60-54720	6071	2	60- 7
232-60-54730	6071	3	60- 7
232-60-54730	6075	5	60- 9
232-60-54820	6423A	6	60- 61
232-60-54820	6437	10	60- 67
232-60-54830	6421	16	60- 59
232-60-54830	6431	25	60- 63
232-60-54830	6441	15	60- 69
232-60-54830	6451	16	60- 71
232-60-63160	6435A	26	60- 65
232-60-63160	6465	15	60- 79
232-60-65680	6451	21	60- 71
232-60-65690	6451	25	60- 71
232-60-68140	1301	8	10- 11
232-60-68140	1305	8	10- 15
232-63-38100	6311	1	60- 47
232-63-38100	6451	32	60- 71
232-63-38120	6311	12	60- 47
232-63-38140	6311	1	60- 47
232-70-12143	7011	24	70- 5
232-70-12420	7011	11	70- 5
232-70-12420	7013	27	70- 7
232-70-12430	7011	12	70- 5
232-70-12430	7013	26	70- 7
232-70-12450	7011	26	70- 5
232-70-12450	7101	3	70- 17
232-70-12460	7011	27	70- 5
232-70-12480	7011	28	70- 5
232-70-12480	7101	4	70- 17
232-70-13142	7203	49	70- 22
232-70-13142	7203	53	70- 22
232-70-13210	7203	11	70- 21
232-70-13220	7203	5	70- 21
232-70-13333	7203	28	70- 21
232-70-13361	7203	46	70- 22
232-70-13440	7203	47	70- 22
232-70-52190	7011	25	70- 5
232-70-52380	7013	31	70- 7
232-70-53140	7021	16	70- 11
232-70-53160	7021	20	70- 11
232-70-53280	7021	5	70- 11
232-70-54141	7033	3	70- 15
232-70-54430	7033	1	70- 15
232-70-54450	7033	2	70- 15
232-70-54470	7033	7	70- 15
232-71-11330	7203	15	70- 21
232-71-11330	7203	32	70- 21
232-71-11340	7203	17	70- 21
232-71-11340	7203	34	70- 21
232-71-11422	7021	10	70- 11
232-71-13150	7031	24	70- 13
232-71-13532	7033	15	70- 15
232-71-51310	7203	51	70- 22
232-71-51320	7203	52	70- 22
232-71-51330	7203	55	70- 22
232-725-1310	7101	1	70- 17
232-725-1320	7101	11	70- 17
232-735-1261	7013	33	70- 7
232-735-1340	4313	18	40- 39
232-735-1410	7013	23	70- 7
232-735-3102	6075	1	60- 9
232-735-3111	6075	1	60- 9
232-735-3120	6075	2	60- 9
232-745-2131	6421	20	60- 59
232-801-3150	3001	7	30- 3
232-801-3160	3001	8	30- 3
232-830-2120	3001	5	30- 3
232-830-2130	3001	6	30- 3
232-843-1270	4225	19	40- 27
232-843-1320	4225	9	40- 27
232-843-1410	4225	6	40- 27
232-843-1410	9991	8	90- 12
232-843-1421	4225	7	40- 27
232-843-1421	9991	8	90- 12
232-843-1430	4225	23	40- 27
232-843-1480	4225	8	40- 27
232-843-1480	9991	8	90- 12
232-843-1510	4225	24	40- 27
232-843-1680	4225	25	40- 27
232-843-1680	9991	9	90- 12
232-843-1720	4225	36	40- 28
232-855-1870	5423	21	50- 19
232-855-1880	5423	22	50- 19
232-880-3840	1851	4	10- 47
232-950-5700	5427	8	50- 25
232-957-2840	5423	12	50- 19
232-957-2850	5511A	24	50- 29
232-957-6240	5423	32	50- 19
232-957-6250	5423	32	50- 19
232-957-6260	5423	34	50- 20
232-957-6310	5423	1	50- 19
232-957-6310	5423	2	50- 19
232-957-6310	5423	41	50- 20
232-957-6470	5423	3	50- 19
232-957-6471	5423	3	50- 19
232-957-6480	5423	3	50- 19
232-957-6481	5423	3	50- 19
232-957-6520	5423	6	50- 19
232-957-6540	5423	33	50- 20
232-957-6550	5423	19	50- 19
232-975-5490	4351	18	40- 45
232-999-1280	1851	6	10- 47
232-999-3190	1851	1	10- 47
232-999-3510	1851	1	10- 47
232-999-3520	1851	2	10- 47
232-999-3530	1851	3	10- 47
233-32-11460	3101	34	30- 5
233-32-21290	3101	19	30- 5
233-32-21340	3101	33	30- 5
233-43-27750	4301	28	40- 31
233-43-27750	4311	34	40- 36
233-43-27750	4313	14	40- 39
233-43-27750	4315	10	40- 41
233-43-27750	4317	13	40- 43
233-43-27860	4301	12	40- 31
233-45-11140	4103A	8	40- 11
233-45-11153	4101	13	40- 9
233-45-11250	1831	6	10- 41
233-45-11250	1833A	8	10- 43
233-45-11250	4101	26	40- 9
233-54-14120	9801A	23	90- 3
233-54-21311	5201	18	50- 9
233-60-24370	2551	33	20- 55
233-60-24461	6421	12	60- 59
233-60-24461	6473	10	60- 83
233-60-24461	6473	11	60- 83
233-60-32250	6423A	12	60- 61
233-60-34270	6441	12	60- 69
233-70-00120	7001	21	70- 3
233-70-00260	7031	17	70- 13
233-70-21170	6451	41	60- 71
233-70-25150	7033	10	70- 15
233-71-13354	7033	8	70- 15
233-71-16410	7201	12	70- 19
233-801-3111	3001	4	30- 3
233-801-3121	3001	4	30- 3
233-971-5120	7101	2	70- 17
234-06-11531	1501	19	10- 27
234-06-13361	1501	9	10- 27
234-06-13380	1501	10	10- 27
234-06-32240	1503	7	10- 29
234-06-41320	1503	23	10- 29
234-15-26210	2451A	13	20- 41
234-15-29210	2418A	39	20- 32
234-15-29210	9991	1	90- 10
234-23-11180	2605	4	20- 63
234-23-11180	2615	4	20- 71
234-23-11180	9991	5	90- 11
234-27-31740	7013	25	70- 7
234-30-11320	3001	2	30- 3
234-30-11330	3001	3	30- 3
234-30-13420	3001	2	30- 3
234-30-13430	3001	3	30- 3
234-32-11160	3101	23	30- 5
234-32-21210	3101	20	30- 5
234-32-21220	3101	22	30- 5

PARTS NO.	FIG NO.	INDEX	PAGE
234-32-21320	3101	9	30- 5
234-32-21330	3101	10	30- 5
234-32-21340	3101	12	30- 5
234-32-21360	3101	11	30- 5
234-40-31201	4201A	1	40- 19
234-40-31210	4201A	1	40- 19
234-40-31231	4201A	4	40- 19
234-40-51450	2751	9	20- 91
234-43-18710	4311	22	40- 35
234-43-18710	4313	8	40- 39
234-43-18710	4315	6	40- 41
234-43-18710	4317	6	40- 43
234-46-11142	7013	24	70- 7
234-46-11390	5005	12	50- 5
234-46-11790	1801	12	10- 35
234-46-11790	1805	19	10- 39
234-46-31210	6451	40	60- 71
234-53-26220	4317	18	40- 43
234-53-31270	9801A	14	90- 3
234-54-11470	5201	6	50- 9
234-54-11480	5201	3	50- 9
234-54-13252	5101	4	50- 7
234-54-13252	5101	8	50- 7
234-54-13252	7013	44	70- 8
234-60-17250	6401	21	60- 53
234-60-33480	6451	26	60- 71
234-60-35130	2753	17	20- 93
234-60-52160	6431	21	60- 63
234-60-52170	6431	20	60- 63
234-70-12151	7011	5	70- 5
234-70-12830	7011	33	70- 5
234-71-13243	7033	9	70- 15
234-71-13253	7033	20	70- 15
234-71-13253	9901	10	90- 5
234-71-13254	7033	20	70- 15
234-71-13254	9901	10	90- 5
234-71-13255	7033	20	70- 15
234-71-13255	9901	10	90- 5
234-830-5221	3001	2	30- 3
234-830-5231	3001	3	30- 3
234-855-7131	5511A	1	50- 29
234-870-8511	4315	17	40- 41
234-885-1620	4111	18	40- 15
234-885-1620	4301	2	40- 31
234-885-1620	4351	16	40- 45
234-957-4250	5423	50	50- 20
234-975-5760	4011A	7	40- 5
234-979-6240	7013	34	70- 7
235-15-13180	2412A	17	20- 15
235-27-11240	2805	17	20- 99

PARTS NO.	FIG NO.	INDEX	PAGE
235-27-11240	2805	8	20- 99
235-27-11750	2805	2	20- 99
235-40-11220	4201A	5	40- 19
235-40-11230	4201A	2	40- 19
235-40-11240	4201A	3	40- 19
235-46-11710	5001	7	50- 3
235-60-15410	6401	36	60- 54
235-61-11110	6243	1	60- 29
235-61-11120	6253	2	60- 37
235-61-11140	6241	24	60- 27
235-61-11140	6243	7	60- 29
235-61-11140	6245	7	60- 31
235-61-11140	6247	15	60- 33
235-61-11140	6247	7	60- 33
235-61-11140	6251	24	60- 35
235-61-11140	6253	8	60- 37
235-61-11140	6255	24	60- 39
235-61-11150	6241	23	60- 27
235-61-11150	6243	6	60- 29
235-61-11150	6245	6	60- 31
235-61-11150	6247	14	60- 33
235-61-11150	6247	6	60- 33
235-61-11150	6251	23	60- 35
235-61-11150	6253	7	60- 37
235-61-11150	6255	23	60- 39
235-61-11210	6241	16	60- 27
235-61-11210	6243	11	60- 29
235-61-11210	6251	16	60- 35
235-61-11210	6255	16	60- 39
235-61-11220	6241	15	60- 27
235-61-11220	6243	10	60- 29
235-61-11220	6245	10	60- 31
235-61-11220	6251	15	60- 35
235-61-11220	6255	15	60- 39
235-61-11400	6245	2	60- 31
235-61-11400	6247	2	60- 33
235-61-11400	6253	3	60- 37
235-61-11500	6247	10	60- 33
235-61-11620	6241	4	60- 27
235-61-11620	6251	4	60- 35
235-61-11620	6253	13	60- 37
235-61-11620	6255	4	60- 39
235-61-13210	6241	1	60- 27
235-61-13210	6251	1	60- 35
235-61-13210	6253	1	60- 37
235-61-13210	6255	1	60- 39
235-61-13220	6241	6	60- 27
235-61-13220	6251	6	60- 35
235-61-13220	6253	15	60- 37
235-61-13220	6255	6	60- 39

PARTS NO.	FIG NO.	INDEX	PAGE
235-61-13230	6241	5	60- 27
235-61-13230	6251	5	60- 35
235-61-13230	6253	14	60- 37
235-61-13230	6255	5	60- 39
235-61-13240	6253	11	60- 37
235-61-13250	6241	3	60- 27
235-61-13250	6251	3	60- 35
235-61-13250	6253	12	60- 37
235-61-13250	6255	3	60- 39
235-61-13260	6253	20	60- 37
235-61-13270	6241	9	60- 27
235-61-13270	6251	9	60- 35
235-61-13270	6253	18	60- 37
235-61-13270	6255	9	60- 39
235-61-13700	6245	1	60- 31
235-61-13700	6423A	3	60- 61
235-61-13710	6245	1	60- 31
235-61-13710	6247	1	60- 33
235-61-13720	6245	11	60- 31
235-61-13800	6247	1	60- 33
235-61-13800	6421	7	60- 59
235-61-13800	6431	9	60- 63
235-61-14100	6253	1	60- 37
235-61-14300	6241	19	60- 27
235-61-14300	6243	2	60- 29
235-61-14300	6251	19	60- 35
235-61-14300	6255	19	60- 39
235-61-14500	6241	1	60- 27
235-61-14500	6251	1	60- 35
235-61-14500	6255	1	60- 39
235-61-14500	6435A	17	60- 65
235-61-14500	6451	19	60- 71
235-61-14600	6243	1	60- 29
235-61-14600	6435A	18	60- 65
235-950-1370	5423	54	50- 20
235-950-1430	5423	1	50- 19
235-950-1430	5423	2	50- 19
235-950-1460	5423	42	50- 20
235-950-1470	5423	42	50- 20
235-950-1480	5423	43	50- 20
235-950-1490	5423	28	50- 19
235-950-1510	5423	25	50- 19
235-950-1520	5423	44	50- 20
235-950-1530	5423	45	50- 20
235-950-1540	5423	24	50- 19
235-950-1560	5423	8	50- 19
235-950-1570	5423	14	50- 19
235-950-1580	5423	14	50- 19
235-950-1660	5423	23	50- 19
235-950-1670	5423	23	50- 19

PARTS NO.	FIG NO.	INDEX	PAGE
235-957-2170	5429	9	50- 27
236-03-21190	1201A	12	10- 7
236-04-21190	4211A	31	40- 21
236-06-23230	1501	8	10- 27
236-06-23230	1831	5	10- 41
236-06-23230	1833A	7	10- 43
236-06-23350	1853	8	10- 49
236-46-13380	5005	17	50- 5
236-46-13381	5005	17	50- 5
236-46-13390	5005	18	50- 5
236-46-13410	5005	19	50- 5
236-46-13460	7201	16	70- 19
236-46-13610	5001	6	50- 3
236-60-24920	2751	13	20- 91
237-06-11510	1503	14	10- 29
237-06-15120	1505	6	10- 31
237-06-15230	1801	3	10- 35
237-06-15230	1805	21	10- 39
237-32-11180	3101	35	30- 5
237-40-12420	2711	17	20- 79
237-40-12460	2711	12	20- 79
237-40-12470	2711	13	20- 79
237-40-12480	2711	12	20- 79
237-40-12490	2711	10	20- 79
237-40-12520	2711	8	20- 79
237-40-12540	2711	7	20- 79
237-40-12550	2711	6	20- 79
237-40-12560	2711	1	20- 79
237-40-12610	2711	5	20- 79
237-40-12620	2711	4	20- 79
237-40-12640	2711	19	20- 79
237-40-12650	2711	21	20- 79
237-40-12670	2711	24	20- 79
237-40-13160	2751	5	20- 91
237-43-00060	4311	4	40- 35
237-43-00070	4311	6	40- 35
237-43-00080	4311	14	40- 35
237-43-00080	4311	2	40- 35
237-43-00100	4311	8	40- 35
237-43-00120	4311	12	40- 35
237-43-13270	4317	17	40- 43
237-43-14190	4221	11	40- 25
237-43-17230	4301	15	40- 31
237-43-17240	4301	21	40- 31
237-43-17240	4301	31	40- 31
237-43-17250	4301	14	40- 31
237-43-17260	4301	16	40- 31
237-43-17270	4301	42	40- 32
237-43-17420	4311	15	40- 35
237-43-17440	4311	17	40- 35

PARTS NO.	FIG NO.	INDEX	PAGE
237-43-17480	4311	10	40- 35
237-43-17480	4311	14	40- 35
237-43-17480	4311	2	40- 35
237-43-17480	4311	4	40- 35
237-43-17480	4311	6	40- 35
237-43-17480	4313	2	40- 39
237-43-17480	4315	2	40- 41
237-43-17480	4317	1	40- 43
237-43-17490	4311	12	40- 35
237-43-17490	4311	8	40- 35
237-54-13210	4311	14	40- 35
237-54-13210	4311	2	40- 35
237-54-13220	4311	12	40- 35
237-54-13230	4311	4	40- 35
237-54-13250	4311	6	40- 35
237-54-13260	4311	8	40- 35
237-60-14130	6431	16	60- 63
237-60-14130	6437	16	60- 67
237-60-14130	6437	19	60- 67
237-60-14130	6441	23	60- 69
237-60-14130	6465	12	60- 79
237-60-22230	6441	10	60- 69
237-60-22240	6401	33	60- 53
237-60-22240	6401	37	60- 54
237-60-22240	6403	2	60- 57
237-60-22240	6421	2	60- 59
237-60-22240	6431	2	60- 63
237-60-22240	6435A	2	60- 65
237-60-22240	6437	2	60- 67
237-60-22240	6441	3	60- 69
237-60-22240	6451	2	60- 71
237-60-22240	6463	2	60- 77
237-60-22240	6473	2	60- 83
237-60-22251	6423A	1	60- 61
237-60-23120	6421	1	60- 59
237-60-23120	6431	1	60- 63
237-60-23120	6435A	1	60- 65
237-60-23120	6437	1	60- 67
237-60-23120	6441	1	60- 69
237-60-23120	6451	1	60- 71
237-60-23120	6463	1	60- 77
237-60-23120	6473	1	60- 83
237-60-23360	2751	12	20- 91
238-03-11170	1203A	6	10- 9
238-03-11240	1203A	5	10- 9
238-04-11140	1301	18	10- 11
238-04-11140	1305	18	10- 15
238-04-12110	1303	1	10- 13
238-04-12110	1307	12	10- 17
238-04-12110	1307	17	10- 17

PARTS NO.	FIG NO.	INDEX	PAGE
238-04-12110	1307	2	10- 17
238-04-12110	1307	22	10- 17
238-04-12130	1301	3	10- 11
238-04-12130	1305	3	10- 15
238-06-11160	1501	20	10- 27
238-06-14220	1413	6	10- 25
238-06-14310	1505	4	10- 31
238-06-15130	1855	1	10- 51
238-15-11271	2418A	12	20- 31
238-15-12760	2415A	4	20- 19
238-15-12810	2415A	8	20- 19
238-15-12810	2416A	13	20- 23
238-15-12810	2417A	6	20- 27
238-15-12810	2418A	7	20- 31
238-15-12920	2417A	30	20- 27
238-15-15630	2451A	54	20- 42
238-15-15890	2451A	12	20- 41
238-15-25750	2422A	26	20- 37
238-22-11371	2653A	21	20- 77
238-22-15110	2605	38	20- 64
238-22-15110	2615	41	20- 72
238-22-15110	9991	5	90- 11
238-22-15120	2601A	25	20- 59
238-22-15120	9991	5	90- 11
238-22-15121	2601A	25	20- 59
238-22-15121	9991	5	90- 11
238-22-15122	2601A	25	20- 59
238-22-15122	2611A	25	20- 67
238-22-15122	9991	5	90- 11
238-23-11120	2651	13	20- 75
238-23-11120	2651	17	20- 75
238-23-11120	9991	6	90- 11
238-23-11120	9991	6	90- 11
238-23-11130	2651	12	20- 75
238-23-11140	2651	16	20- 75
238-23-16110	2651	24	20- 75
238-23-16110	9991	6	90- 12
238-23-16120	2651	28	20- 75
238-23-16120	9991	6	90- 12
238-23-16131	2651	3	20- 75
238-23-16131	2651	7	20- 75
238-23-16131	9991	6	90- 11
238-23-16131	9991	6	90- 11
238-23-16140	2653A	12	20- 77
238-23-16140	9991	6	90- 12
238-40-16140	6401	30	60- 53
238-43-12310	4001A	8	40- 3
238-43-13120	4211A	12	40- 21
238-43-19310	4225	18	40- 27
238-43-19310	9991	8	90- 12

PARTS NO.	FIG NO.	INDEX	PAGE
238-43-19320	4225	15	40- 27
238-43-19320	9991	8	90- 12
238-43-19330	4225	12	40- 27
238-43-19330	9991	8	90- 12
238-43-19340	4225	3	40- 27
238-43-19340	9991	8	90- 12
238-43-19350	4225	2	40- 27
238-43-19350	9991	8	90- 12
238-43-19360	4225	22	40- 27
238-43-19360	9991	8	90- 12
238-43-19370	4225	34	40- 27
238-43-19370	9991	8	90- 12
238-43-19370	9991	9	90- 12
238-45-11310	4103A	29	40- 11
238-45-11320	4103A	30	40- 11
238-45-11320	4103A	42	40- 12
238-46-11290	5005	26	50- 5
238-46-11810	5005	6	50- 5
238-54-11150	5201	4	50- 9
238-70-00190	7033	12	70- 15
238-70-11180	7001	4	70- 3
238-70-11190	7001	17	70- 3
238-70-11210	7001	7	70- 3
238-71-11210	7203	21	70- 21
238-71-11210	7203	39	70- 21
238-735-1270	7013	15	70- 7
238-735-1280	7013	16	70- 7
238-735-1330	7013	10	70- 7
238-735-1331	7013	10	70- 7
273-06-12610	1805	1	10- 39
273-43-12120	4001A	5	40- 3
273-60-24450	2751	28	20- 91
273-956-2190	1201A	21	10- 7
281-03-12620	0161	16	01- 21
281-03-12620	0161A	15	01- 23
281-15-15480	2452A	18	20- 45
281-16-11290	2511	8	20- 53
287-01-12231	0401	10	04- 3
287-01-12231	0991	2	09- 4
363-57-31101	5301A	1	50- 13
41E-15-19310	2418A	21	20- 31
416-99-15340	0405	8	04- 9
416-99-15340	0406	13	04- 11
423-15-12140	2415A	25	20- 19
423-15-12810	2415A	31	20- 19
423-15-13250	2421A	28	20- 35
423-15-13251	2421A	28	20- 35
423-15-19421	2415A	16	20- 19
423-15-19421	2416A	27	20- 23
423-22-11240	2605	17	20- 63

PARTS NO.	FIG NO.	INDEX	PAGE
423-22-11240	2615	17	20- 71
424-04-11120	1507	13	10- 33
424-13-11110	2001	8	20- 3
424-15-13950	2412A	35	20- 16
565-44-13260	1801	13	10- 35
565-44-13260	1803	8	10- 37
565-44-13260	1805	20	10- 39
565-44-13260	1853	9	10- 49
569-06-61960	1501	26	10- 27
600-050-2620	0621	4	06- 11
600-181-1370	0141	8	01- 13
600-181-2480	0142	10	01- 15
600-181-6740	0141	2	01- 13
600-181-6750	0141	4	01- 13
600-181-6810	0141	1	01- 13
600-181-6820	0141	5	01- 13
600-181-6840	0141	7	01- 13
600-181-6850	0141	6	01- 13
600-181-7511	0142	4	01- 15
600-181-7511	0142	7	01- 15
600-181-8160	0142	17	01- 15
600-181-8300	0142	5	01- 15
600-181-8490	0142	11	01- 15
600-181-8580	0142	12	01- 15
600-181-8590	0142	9	01- 15
600-181-8640	0142	6	01- 15
600-181-9631	0142	3	01- 15
600-181-9671	0141	3	01- 13
600-211-6240	0311	2	03- 5
600-211-6241	0311	2	03- 5
600-211-6560	0311	3	03- 5
600-211-6570	0311	3	03- 5
600-211-6590	0311	3	03- 5
600-211-6620	0311	3	03- 5
600-211-6630	0311	3	03- 5
600-211-6650	0311	3	03- 5
600-311-1120	0411	15	04- 13
600-311-1130	0411	15	04- 13
600-311-1150	0411	15	04- 13
600-311-1160	0411	15	04- 13
600-311-1190	0411	15	04- 13
600-311-1220	0411	15	04- 13
600-311-6220	0411	4	04- 13
600-311-6220	0412	4	04- 15
600-311-6720	0411	2	04- 13
600-311-6720	0412	2	04- 15
600-311-9600	0411	1	04- 13
600-311-9600	0412	1	04- 15
600-311-9640	0411	1	04- 13
600-311-9640	0412	1	04- 15

PARTS NO.	FIG NO.	INDEX	PAGE
600-311-9700	0415	1	04- 17
600-311-9700	1307	1	10- 17
600-311-9700	1309	1	10- 19
600-311-9760	0415	5	04- 17
600-311-9760	1309	5	10- 19
600-311-9810	0415	1	04- 17
600-311-9810	1309	1	10- 19
600-311-9820	0415	2	04- 17
600-311-9820	1309	2	10- 19
600-311-9830	0415	7	04- 17
600-311-9830	1309	7	10- 19
600-311-9840	0415	3	04- 17
600-311-9840	1309	3	10- 19
600-311-9850	0415	4	04- 17
600-311-9850	1309	4	10- 19
600-411-1010	0521	10	05- 7
600-411-1140	0521	10	05- 7
600-411-1231	0521	2	05- 7
600-411-1240	0521	6	05- 7
600-411-1250	0521	5	05- 7
600-411-1260	0521	7	05- 7
600-411-1280	0521	8	05- 7
600-411-1290	0521	9	05- 7
600-411-1511	0521	1	05- 7
600-411-1521	0521	1	05- 7
600-411-1920	0521	1	05- 7
600-411-1921	0521	1	05- 7
600-421-6110	0501	14	05- 3
600-421-6120	0501	14	05- 3
600-623-6580	0501	22	05- 4
600-651-1520	0331	4	03- 9
600-651-1520	0331A	4	03- 11
600-813-3320	0621	1	06- 11
600-813-3320	0661	1	06- 21
600-815-2170	0201	34	02- 4
600-815-2341	0131	4	01- 9
600-815-2341	0131A	6	01- 11
600-815-3730	1413	15	10- 25
600-815-7630	0406	1	04- 11
600-815-7650	0405	1	04- 9
600-815-7650	1507	6	10- 33
600-821-5630	0603	1	06- 7
600-821-5630	0643	1	06- 17
600-821-6130	0601	1	06- 3
600-821-6130	0641	1	06- 13
600-821-7590	0604	1	06- 9
600-821-7590	0644	1	06- 19
600-821-9290	0602	1	06- 5
600-821-9290	0642	1	06- 15
6003200-4-40	2511	2	20- 53

PARTS NO.	FIG NO.	INDEX	PAGE
6050-71-5710	0412	14	04- 15
6110-11-4430	0142	15	01- 15
6110-33-1411	0231	7	02- 13
6110-71-5810	0402	6	04- 5
6110-71-5810	0403	6	04- 7
6112-21-6580	0601	5	06- 3
6112-53-7760	0161	18	01- 21
6112-53-7760	0161A	17	01- 23
6125-51-9531	0402	30	04- 5
6125-51-9531	0403	30	04- 7
6127-61-8230	0521	21	05- 7
6128-71-5911	0412	16	04- 15
6128-71-5911	0521	23	05- 7
6130-12-1961	0211	6	02- 9
6130-12-1961	0211	6	02- 9
6130-12-8610	0115	9	01- 7
6130-22-5290	0211	5	02- 9
6130-22-5290	0211	5	02- 9
6130-22-6760	0163	13	01- 29
6130-32-1361	0221	10	02- 11
6130-32-1361	0401	4	04- 3
6130-32-1361	0991	2	09- 3
6130-41-5430	0111	8	01- 5
6131-11-4520	0141	9	01- 13
6131-11-4520	0142	13	01- 15
6131-51-7681	0325	10	03- 7
6131-51-7681	0991	1	09- 3
6131-51-7681	0992	1	09- 7
6131-82-7011	0142	2	01- 15
6134-11-5120	0151	5	01- 17
6134-11-5120	0161B	13	01- 25
6134-11-5120	0162	13	01- 27
6134-11-5120	0521	12	05- 7
6136-11-4820	0131	8	01- 9
6136-11-4820	0131A	10	01- 11
6136-11-4820	0991	1	09- 3
6136-11-4820	0992	1	09- 7
6136-11-5120	0406	11	04- 11
6136-11-5120	0521	24	05- 7
6136-11-8120	0115	6	01- 7
6136-11-8130	0115	7	01- 7
6136-11-8142	0115	8	01- 7
6136-11-8142	0991	1	09- 3
6136-11-8142	0992	1	09- 7
6136-21-7120	0201	26	02- 3
6136-21-7180	0201	26	02- 3
6136-21-7190	0201	27	02- 3
6136-31-1420	0231	5	02- 13
6136-31-1431	0231	6	02- 13
6136-41-5320	0111	10	01- 5

PARTS NO.	FIG NO.	INDEX	PAGE
6136-41-5330	0111	11	01- 5
6136-52-1620	0201	13	02- 3
6136-61-8670	0521	20	05- 7
6137-81-3210	0701	2	07- 3
6137-81-3221	0701	5	07- 3
6140-11-6331	0501	15	05- 4
6140-11-6331	0501	15	05- 3
6140-11-6331	0501	15	05- 3
6140-11-6331	0991	1	09- 3
6140-11-6331	0991	2	09- 4
6140-11-6331	0992	1	09- 7
6140-21-1130	0201	22	02- 3
6141-21-1332	0221	6	02- 11
6141-21-1332	0991	2	09- 3
6141-21-1332	0992	2	09- 7
6141-21-1530	0201	6	02- 3
6141-64-2560	0161B	10	01- 25
6141-64-2560	0162	10	01- 27
6141-64-2560	0163	10	01- 29
6142-11-1611	0101	22	01- 3
6142-12-5850	0151	9	01- 17
6142-12-5850	0161	9	01- 21
6142-42-5320	0111	9	01- 5
6142-42-5550	0111	4	01- 5
6144-21-5880	0405	9	04- 9
6144-21-5880	0406	14	04- 11
6144-71-5730	0401	25	04- 3
6144-71-5750	0411	10	04- 13
6144-71-5750	0411	9	04- 13
6144-71-5750	0412	9	04- 15
6144-81-5151	0205	23	02- 7
6144-81-6680	0161A	8	01- 23
6144-81-6680	0161B	7	01- 25
6144-81-6680	0162	7	01- 27
6144-81-6680	0163	7	01- 29
6164-91-6220	0701	3	07- 3
6164-91-6220	0992	2	09- 8
6202-43-5320	0111	9	01- 5
6202-43-5410	0111	6	01- 5
6202-83-6760	0406	3	04- 11
6204-11-3810	0421	11	04- 20
6204-11-3830	0421	13	04- 20
6204-11-3850	0421	10	04- 20
6204-11-3850	0991	1	09- 3
6204-11-3850	0992	1	09- 7
6204-11-3880	0421	9	04- 20
6204-11-3880	0991	1	09- 3
6204-11-3880	0992	1	09- 7
6204-11-6420	0501	16	05- 4
6204-11-6421	0501	16	05- 4

PARTS NO.	FIG NO.	INDEX	PAGE
6204-13-1610	0101	22	01- 3
6204-19-1310	0101	2	01- 3
6204-21-1410	0201	2	02- 3
6204-21-1610	0201	8	02- 3
6204-21-3111	0205	4	02- 7
6204-21-3112	0205	4	02- 7
6204-21-3211	0205	1	02- 7
6204-21-3311	0205	10	02- 7
6204-21-3410	0205	13	02- 7
6204-21-3410	0991	2	09- 3
6204-21-3410	0992	2	09- 7
6204-21-3451	0205	11	02- 7
6204-21-3451	0991	2	09- 3
6204-21-3451	0992	2	09- 7
6204-21-3460	0205	12	02- 7
6204-21-3460	0991	2	09- 3
6204-21-3460	0992	2	09- 7
6204-21-3480	0205	15	02- 7
6204-21-3510	0205	16	02- 7
6204-21-3510	0991	2	09- 3
6204-21-3510	0992	2	09- 7
6204-21-3811	0205	2	02- 7
6204-21-3811	0991	2	09- 3
6204-21-3850	0205	5	02- 7
6204-21-5180	0211	2	02- 9
6204-21-5180	0221	3	02- 11
6204-21-5190	0211	2	02- 9
6204-21-5290	0211	3	02- 9
6204-21-5290	0991	2	09- 3
6204-21-5290	0992	2	09- 7
6204-21-5410	0201	30	02- 3
6204-21-8100	0231	10	02- 13
6204-21-8500	0231	12	02- 13
6204-26-8100	0231	10	02- 13
6204-26-8500	0231	12	02- 13
6204-27-8100	0231	10	02- 13
6204-27-8500	0231	12	02- 13
6204-28-8100	0231	10	02- 13
6204-28-8500	0231	12	02- 13
6204-29-1210	0201	4	02- 3
6204-29-1220	0201	5	02- 3
6204-29-8100	0231	10	02- 13
6204-29-8500	0231	12	02- 13
6204-31-1220	0231	2	02- 13
6204-31-3310	0235	11	02- 17
6204-31-6330	0205	19	02- 7
6204-31-6331	0205	19	02- 7
6204-31-6340	0205	18	02- 7
6204-31-6341	0205	18	02- 7
6204-31-6350	0205	21	02- 7

PARTS NO.	FIG NO.	INDEX	PAGE
6204-41-2110	0241	6	02- 21
6204-41-3110	0241	7	02- 21
6204-41-4210	0101	11	01- 3
6204-41-4410	0101	15	01- 3
6204-41-4420	0101	16	01- 3
6204-41-4510	0101	12	01- 3
6204-41-4520	0101	13	01- 3
6204-41-4540	0101	17	01- 3
6204-41-4540	0991	1	09- 3
6204-41-4540	0992	1	09- 7
6204-41-4550	0101	14	01- 3
6204-41-5110	0111	1	01- 5
6204-41-5120	0111	2	01- 5
6204-41-5410	0111	6	01- 5
6204-41-5420	0111	7	01- 5
6204-41-5710	0111	13	01- 5
6204-51-1310	0301	5	03- 3
6204-51-1330	0301	7	03- 3
6204-51-1340	0301	8	03- 3
6204-51-1510	0301	4	03- 3
6204-51-1620	0201	10	02- 3
6204-51-1710	0201	9	02- 3
6204-51-1711	0201	9	02- 3
6204-51-5910	0311	1	03- 5
6204-51-6120	0301	14	03- 3
6204-51-6120	0991	2	09- 3
6204-51-6120	0992	2	09- 7
6204-61-1510	0501	4	05- 3
6204-61-1510	0991	2	09- 4
6204-61-1511	0501	4	05- 3
6204-61-1511	0991	2	09- 4
6204-61-1511	0992	2	09- 8
6204-61-1520	0501	5	05- 3
6204-61-1910	0501	10	05- 3
6204-61-1910	0501	10	05- 3
6204-61-1910	0501	10	05- 3
6204-61-1910	0991	1	09- 3
6204-61-1910	0991	1	09- 3
6204-61-1910	0991	2	09- 4
6204-61-1910	0992	1	09- 7
6204-61-1910	0992	1	09- 7
6204-61-1910	0992	2	09- 8
6204-61-5170	0331	2	03- 9
6204-61-5170	0331A	2	03- 11
6204-61-5190	0331	5	03- 9
6204-61-5190	0331A	5	03- 11
6204-61-5190	0991	2	09- 3
6204-61-5190	0992	2	09- 7
6204-71-3190	0401	7	04- 3
6204-71-3190	0402	14	04- 5

PARTS NO.	FIG NO.	INDEX	PAGE
6204-71-3190	0403	14	04- 7
6204-71-4230	0401	28	04- 3
6204-71-4250	0401	29	04- 3
6204-71-4250	0402	31	04- 5
6204-71-4250	0403	31	04- 7
6204-71-5580	0421	16	04- 20
6204-71-5581	0421	16	04- 20
6204-71-5730	0411	9	04- 13
6204-71-9100	0421	14	04- 20
6204-81-2210	0115	15	01- 7
6204-81-2240	0115	15	01- 7
6204-81-2270	0115	15	01- 7
6204-81-2290	0115	15	01- 7
6204-81-2340	0115	15	01- 7
6204-81-2370	0115	15	01- 7
6205-21-4110	0221	1	02- 11
6206-11-1920	0101	19	01- 3
6206-11-1930	0101	18	01- 3
6206-11-4110	0131	1	01- 9
6206-11-4140	0131A	1	01- 11
6206-11-4150	0131A	2	01- 11
6206-11-4160	0131A	3	01- 11
6206-11-4170	0131A	1	01- 11
6206-11-4590	0602	12	06- 5
6206-11-4590	0603	11	06- 7
6206-11-4590	0604	11	06- 9
6206-11-5240	0161	5	01- 21
6206-11-5240	0161A	5	01- 23
6206-11-5420	0161B	12	01- 25
6206-11-5420	0162	12	01- 27
6206-11-5420	0163	12	01- 29
6206-11-5421	0161B	12	01- 25
6206-11-5421	0162	12	01- 27
6206-11-5421	0163	12	01- 29
6206-11-5970	0161	11	01- 21
6206-11-5970	0161A	10	01- 23
6206-11-5980	0161B	9	01- 25
6206-11-5980	0162	9	01- 27
6206-11-5980	0163	9	01- 29
6206-11-8810	0115	5	01- 7
6206-11-8810	0991	1	09- 3
6206-11-8810	0992	1	09- 7
6206-21-1420	0201	3	02- 3
6206-21-3210	0205	1	02- 7
6206-21-3830	0205	2	02- 7
6206-21-3830	0991	2	09- 3
6206-21-3830	0992	2	09- 7
6206-21-4143	0221	1	02- 11
6206-21-4190	0221	1	02- 11
6206-21-5110	0211	1	02- 9

PARTS NO.	FIG NO.	INDEX	PAGE
6206-21-5111	0211	1	02- 9
6206-21-5340	0201	31	02- 3
6206-21-5811	0991	2	09- 4
6206-21-6810	0201	28	02- 3
6206-21-6810	0991	2	09- 3
6206-21-6810	0992	2	09- 7
6206-21-6850	0402	24	04- 5
6206-21-6850	0403	24	04- 7
6206-21-6850	0992	2	09- 7
6206-31-1420	0231	4	02- 13
6206-31-1530	0231	3	02- 13
6206-31-1820	0231	4	02- 13
6206-31-4230	0221	7	02- 11
6206-31-4231	0221	7	02- 11
6206-31-4232	0221	7	02- 11
6206-31-4790	0221	8	02- 11
6206-31-4792	0221	8	02- 11
6206-31-6300	0205	17	02- 7
6206-31-6301	0205	17	02- 7
6206-31-8200	0231	8	02- 13
6206-31-8300	0231	8	02- 13
6206-41-1131	0241	4	02- 21
6206-41-1220	0241	2	02- 21
6206-41-5200	0111	3	01- 5
6206-41-5201	0111	3	01- 5
6206-51-1320	0301	6	03- 3
6206-51-6220	0301	13	03- 3
6206-61-1310	0501	2	05- 3
6206-61-1340	0501	2	05- 3
6206-61-1341	0501	2	05- 3
6206-61-1410	0501	3	05- 3
6206-61-1411	0501	3	05- 3
6206-61-1500	0501	1	05- 3
6206-61-1501	0501	1	05- 3
6206-61-1503	0501	1	05- 3
6206-61-1504	0501	1	05- 3
6206-61-1520	0501	7	05- 3
6206-61-1530	0501	8	05- 3
6206-61-1530	0501	8	05- 3
6206-61-1530	0991	2	09- 4
6206-61-1531	0501	8	05- 3
6206-61-1531	0501	8	05- 3
6206-61-1531	0501	8	05- 3
6206-61-1531	0991	2	09- 4
6206-61-1531	0992	2	09- 8
6206-61-1550	0501	6	05- 3
6206-61-1551	0501	6	05- 3
6206-61-1553	0501	6	05- 3
6206-61-1720	0501	11	05- 3
6206-61-1720	0991	1	09- 3

PARTS NO.	FIG NO.	INDEX	PAGE
6206-61-1720	0991	2	09- 4
6206-61-1720	0992	1	09- 7
6206-61-1720	0992	2	09- 8
6206-61-3980	0501	20	05- 4
6206-61-5170	0331	3	03- 9
6206-61-5170	0331A	3	03- 11
6206-61-8110	0521	11	05- 7
6206-61-8620	0521	19	05- 7
6206-71-1852	0401	13	04- 3
6206-71-1860	0402	2	04- 5
6206-71-1860	0403	2	04- 7
6206-71-3110	0401	5	04- 3
6206-71-3250	0402	9	04- 5
6206-71-3250	0403	9	04- 7
6206-71-3630	0401	3	04- 3
6206-71-3650	0402	11	04- 5
6206-71-3650	0403	11	04- 7
6206-71-4230	0402	29	04- 5
6206-71-4230	0403	29	04- 7
6206-71-4240	0402	26	04- 5
6206-71-4710	0402	23	04- 5
6206-71-4710	0403	23	04- 7
6206-71-5700	0401	25	04- 3
6206-71-5720	0401	23	04- 3
6206-71-5720	0402	21	04- 5
6206-71-5720	0403	21	04- 7
6206-71-5730	0401	26	04- 3
6206-71-5740	0401	27	04- 3
6206-71-5850	0411	11	04- 13
6206-71-5850	0412	10	04- 15
6206-71-6550	0411	5	04- 13
6206-71-6590	0412	5	04- 15
6206-71-6990	0412	6	04- 15
6206-81-4720	0131	12	01- 9
6206-81-4720	0131A	14	01- 11
6206-81-4730	0131	13	01- 9
6206-81-4730	0131A	15	01- 11
6206-81-5510	0201	32	02- 3
6206-81-6530	0601	2	06- 3
6206-81-6530	0602	2	06- 5
6206-81-6530	0603	2	06- 7
6206-81-6530	0604	2	06- 9
6206-81-6630	0601	9	06- 3
6206-81-6760	0602	10	06- 5
6206-81-6760	0603	10	06- 7
6206-81-6760	0604	10	06- 9
6206-81-6840	0602	5	06- 5
6206-81-6840	0603	5	06- 7
6206-81-6840	0604	5	06- 9
6206-81-6920	0602	6	06- 5

PARTS NO.	FIG NO.	INDEX	PAGE
6206-81-6920	0603	6	06- 7
6206-81-6920	0604	6	06- 9
6206-81-9870	0406	2	04- 11
6206-81-9880	0405	2	04- 9
6206-91-1100	0402	7	04- 5
6206-91-1100	0403	7	04- 7
6206-91-1100	0701	1	07- 3
6206-91-1100	0711	1	07- 5
6206-91-1510	0701	4	07- 3
6207-K1-4300	0991	1	09- 3
6207-K1-4300	0992	1	09- 7
6207-K1-4301	0991	1	09- 3
6207-K1-4301	0992	1	09- 7
6207-K1-4302	0991	1	09- 3
6207-K1-4302	0992	1	09- 7
6207-K2-4300	0991	2	09- 3
6207-K2-4301	0991	2	09- 3
6207-K2-4302	0991	2	09- 3
6207-K2-4303	0991	2	09- 3
6207-K2-4900	0992	2	09- 7
6207-K2-4901	0992	2	09- 7
6207-11-1100	0101	1	01- 3
6207-11-1430	0101	3	01- 3
6207-11-1440	0101	4	01- 3
6207-11-1810	0101	21	01- 3
6207-11-1810	0991	1	09- 3
6207-11-1810	0992	1	09- 7
6207-11-1820	0101	21	01- 3
6207-11-1820	0991	1	09- 3
6207-11-1820	0992	1	09- 7
6207-11-1821	0101	21	01- 3
6207-11-1822	0101	21	01- 3
6207-11-1822	0991	1	09- 3
6207-11-1822	0992	1	09- 7
6207-11-3100	0421	1	04- 19
6207-11-3110	0421	1	04- 19
6207-11-3130	0421	8	04- 20
6207-11-4320	0131	5	01- 9
6207-11-4370	0131	10	01- 9
6207-11-4370	0131A	12	01- 11
6207-11-4380	0131	5	01- 9
6207-11-4380	0131	5	01- 9
6207-11-4380	0131A	7	01- 11
6207-11-5120	0151	1	01- 17
6207-11-5170	0151	1	01- 17
6207-11-5270	0161B	4	01- 25
6207-11-5270	0162	4	01- 27
6207-11-5270	0163	4	01- 29
6207-11-5380	0161	2	01- 21
6207-11-5380	0161A	2	01- 23

PARTS NO.	FIG NO.	INDEX	PAGE
6207-11-5380	0161B	2	01- 25
6207-11-5380	0162	2	01- 27
6207-11-5380	0163	2	01- 29
6207-11-5440	0161	13	01- 21
6207-11-5440	0161A	12	01- 23
6207-11-5511	0161	6	01- 21
6207-11-5512	0161A	6	01- 23
6207-11-5580	0151	7	01- 17
6207-11-5580	0991	1	09- 3
6207-11-5580	0992	1	09- 7
6207-11-5610	0161	1	01- 21
6207-11-5610	0161A	1	01- 23
6207-11-5640	0161B	1	01- 25
6207-11-5640	0162	1	01- 27
6207-11-5640	0163	1	01- 29
6207-11-5690	0161B	5	01- 25
6207-11-5690	0162	5	01- 27
6207-11-5690	0163	5	01- 29
6207-11-5810	0151	3	01- 17
6207-11-5810	0991	1	09- 3
6207-11-5810	0992	1	09- 7
6207-11-8100	0115	1	01- 7
6207-11-8110	0115	1	01- 7
6207-11-8140	0115	3	01- 7
6207-11-8170	0115	2	01- 7
6207-11-8910	0115	10	01- 7
6207-18-1430	0101	3	01- 3
6207-18-1440	0101	4	01- 3
6207-19-1430	0101	3	01- 3
6207-19-1440	0101	4	01- 3
6207-21-1101	0201	1	02- 3
6207-21-1102	0201	1	02- 3
6207-21-1190	0201	23	02- 3
6207-21-2110	0201	38	02- 4
6207-21-2120	0201	38	02- 4
6207-21-7400	0201	25	02- 3
6207-21-7410	0201	25	02- 3
6207-31-1100	0231	1	02- 13
6207-31-2120	0235	1	02- 17
6207-31-2200	0235	4	02- 17
6207-31-2410	0235	2	02- 17
6207-31-3100	0235	7	02- 17
6207-31-3101	0235	7	02- 17
6207-31-3130	0235	10	02- 17
6207-31-3140	0235	9	02- 17
6207-31-3300	0235	12	02- 17
6207-31-3400	0235	12	02- 17
6207-36-3300	0235	11	02- 17
6207-37-3300	0235	11	02- 17
6207-38-2120	0235	1	02- 17

PARTS NO.	FIG NO.	INDEX	PAGE
6207-38-2200	0235	4	02- 17
6207-38-3300	0235	11	02- 17
6207-39-2120	0235	1	02- 17
6207-39-2200	0235	4	02- 17
6207-39-3300	0235	11	02- 17
6207-41-1100	0241	1	02- 21
6207-41-4110	0101	10	01- 3
6207-51-1200	0301	1	03- 3
6207-51-1201	0301	1	03- 3
6207-51-1400	0301	2	03- 3
6207-51-1410	0301	3	03- 3
6207-51-1610	0301	9	03- 3
6207-51-8110	0325	1	03- 7
6207-51-8150	0325	4	03- 7
6207-51-8180	0325	6	03- 7
6207-51-8190	0325	5	03- 7
6207-51-8310	0325	9	03- 7
6207-51-8350	0325	12	03- 7
6207-61-3280	0501	18	05- 4
6207-61-3880	0501	18	05- 4
6207-61-5110	0331	1	03- 9
6207-61-5110	0331A	1	03- 11
6207-61-5311	0331A	8	03- 11
6207-61-5311	0331A	8	03- 11
6207-61-5311	0991	2	09- 3
6207-61-5311	0992	2	09- 7
6207-71-1910	0401	1	04- 3
6207-71-1910	0451	1	04- 23
6207-71-1910	0452	1	04- 27
6207-71-1910	0461	1	04- 55
6207-71-1910	0462	1	04- 57
6207-71-1910	0481	1	04- 79
6207-71-1911	0401	1	04- 3
6207-71-1911	0453	1	04- 31
6207-71-1911	0454	1	04- 35
6207-71-1911	0463	1	04- 59
6207-71-1911	0464	1	04- 61
6207-71-1911	0482	1	04- 81
6207-71-1950	0402	1	04- 5
6207-71-1950	0455	1	04- 39
6207-71-1950	0456	1	04- 43
6207-71-1950	0465	1	04- 65
6207-71-1950	0466	1	04- 67
6207-71-1950	0471	1	04- 75
6207-71-1950	0483	1	04- 83
6207-71-1951	0403	1	04- 7
6207-71-1951	0457	1	04- 47
6207-71-1951	0458	1	04- 51
6207-71-1951	0467	1	04- 69
6207-71-1951	0468	1	04- 71

PARTS NO.	FIG NO.	INDEX	PAGE
6207-71-1951	0472	1	04- 77
6207-71-1951	0484	1	04- 85
6207-71-3131	0401	2	04- 3
6207-71-4220	0403	26	04- 7
6207-71-5110	0401	17	04- 3
6207-71-5111	0401	17	04- 3
6207-71-5120	0401	18	04- 3
6207-71-5121	0401	18	04- 3
6207-71-5130	0401	19	04- 3
6207-71-5140	0401	20	04- 3
6207-71-5150	0401	21	04- 3
6207-71-5160	0401	22	04- 3
6207-71-5210	0402	15	04- 5
6207-71-5210	0403	15	04- 7
6207-71-5220	0402	16	04- 5
6207-71-5220	0403	16	04- 7
6207-71-5230	0402	17	04- 5
6207-71-5230	0403	17	04- 7
6207-71-5240	0402	18	04- 5
6207-71-5240	0403	18	04- 7
6207-71-5250	0402	19	04- 5
6207-71-5250	0403	19	04- 7
6207-71-5260	0402	20	04- 5
6207-71-5260	0403	20	04- 7
6207-81-6510	0601	2	06- 3
6207-81-6510	0603	2	06- 7
6207-81-6510	0604	2	06- 9
6207-81-7370	0142	16	01- 15
6207-81-7600	0142	1	01- 15
6207-81-7610	0142	1	01- 15
6207-81-8130	0151	6	01- 17
6207-81-8130	0155	1	01- 19
6221-41-5310	0111	5	01- 5
6221-41-5410	0111	7	01- 5
6221-41-5420	0111	8	01- 5
6221-41-5520	0111	10	01- 5
6221-41-5540	0111	4	01- 5
6221-61-1520	0501	4	05- 3
6221-61-1520	0501	4	05- 3
6221-61-1520	0991	2	09- 4
6221-61-1520	0992	2	09- 8
6306-22-4121	0221	1	02- 11
6631-11-6390	0161	8	01- 21
6643-11-4620	0141	9	01- 13
6643-11-4620	0142	13	01- 15
6643-11-4630	0141	9	01- 13
6643-11-4630	0142	13	01- 15
6643-11-4641	0141	10	01- 13
6643-11-4641	0142	14	01- 15
6691-41-8230	0301	12	03- 3

PARTS NO.	FIG NO.	INDEX	PAGE
6711-11-5781	0162	15	01- 27
6711-11-5781	5101	13	50- 7
707-29-60930	2721	5	20- 85
707-29-70920	2725	5	20- 87
707-29-70930	6301	11	60- 41
707-29-70940	6303	3	60- 43
707-29-70980	6305A	5	60- 45
707-29-80820	6313A	4	60- 49
707-29-80830	2727A	9	20- 89
707-29-80940	6315	5	60- 51
707-29-90920	6311	4	60- 47
707-36-60910	2721	13	20- 85
707-36-70910	2725	13	20- 87
707-36-70910	6301	18	60- 41
707-36-70910	6303	19	60- 43
707-36-70910	6305A	14	60- 45
707-36-80911	6315	17	60- 51
707-36-80970	2727A	13	20- 89
707-36-80970	6313A	15	60- 49
707-36-90910	6311	13	60- 47
707-44-60070	2721	14	20- 85
707-44-70070	2725	14	20- 87
707-44-70070	6301	19	60- 41
707-44-70070	6303	20	60- 43
707-44-70070	6305A	15	60- 45
707-44-80070	2727A	12	20- 89
707-44-80070	6313A	17	60- 49
707-44-80070	6315	19	60- 51
707-45-70910	6305A	11	60- 45
707-51-30210	2721	8	20- 85
707-51-35210	2725	8	20- 87
707-51-40210	6301	22	60- 41
707-51-40210	6313A	6	60- 49
707-51-45210	2727A	11	20- 89
707-51-45210	6303	6	60- 43
707-51-45210	6305A	8	60- 45
707-51-45210	6311	6	60- 47
707-51-50210	6315	7	60- 51
707-56-30510	2721	10	20- 85
707-56-40690	6313A	7	60- 49
707-76-35010	2721	2	20- 85
707-76-45020	2727A	2	20- 89
707-76-45120	2725	17	20- 87
711-28-16560	2601A	21	20- 59
711-28-16560	2611A	21	20- 67
7861-91-4220	0991	2	09- 4

PARTS NO.	FIG NO.	INDEX	PAGE

For future use, write your Komatsu machine and distributor information below:

Machine Serial Number:

Engine Serial Number:

Date Delivered:

Komatsu Distributor Name:

Address:

Phone Number:

Fax Number:

E-mail Address:

© All Right Reserved. July 15,2000

Komatsu and its logo are the registered name and trademark of Komatsu Ltd., Japan