NOVEMBRO 2005

RUTHZIL TRATOR COMERCIAL DE PEÇAS LTDA 11 97083-6812 ROLANDO CITRANGULO

KEPB074300

PARTS BOOK

GD555-3C GALEO

Serial No. B10001 and up

ENGINE SAA6D102E-22A-8

Engine No. 26314444 and up

GD555-3C

GD555-3C

GD555-3C

CONTENTS

FOREWORD 0F- 2
CONTENTS 0C- 1

AA [ENGINE] FIG NO. PAGE

CYLINDER HEAD ..... A1009-01A4 AA- 2
WATER TEMPERATURE SENSOR (#26314444-) ..... A1010-01C9 AA- 4
HEAR HANGER ..... A105P-01A1 AA- 6
HEAD COVER (#26302312-) ..... A111P-01A3 AA- 8
AIR CONNECTOR (#26314444-) ..... A131P-01B0 AA- 10
AIR INTAKE HEATER ..... A131R-01A0 AA- 12
AIR INTAKE COVER ..... A131V-01A0 AA- 14
AIR PIPE ..... A1310-01A3 AA- 16
AIR PIPE ..... A151R-01A0 AA- 18
EXHAUST MANIFOLD GASKET AND BOLT ..... A151T-01A2 AA- 20
EXHAUST MANIFOLD ..... A151V-01A0 AA- 22
TURBOCHARGER OIL PIPING (#26314444-) ..... A153T-01C2 AA- 24
TURBOCHARGER OUT CONNECTION (#26314444-) ..... A153V-01A1 AA- 26
TURBOCHARGER MOUNTING (#26314444-) ..... A1539-01C0 AA- 28
THERMOSTAT HOUSING ..... A173P-01A5 AA- 30
THERMOSTAT (26295864-) ..... A173R-01A0 AA- 32
OIL PRESSURE SWITCH (#2314444-) ..... A201V-01A3 AA- 34
CYLINDER BLOCK ..... A2019-01A2 AA- 36
FRONT COVER ..... A2049-01A1 AA- 38
CAMFOLLOWER COVER ..... A206P-01A7 AA- 40
BREATHER HOSE ..... A2060-01B6 AA- 42
CYLINDER BLOCK BLIND PLUG (#26314444-) ..... A207P-01A2 AA- 44
OIL PAN BOLT (#26314444-) ..... A211R-01A5 AA- 46
OIL PAN AND SUCTION TUBE (#26314444-) ..... A2119-01B9 AA- 48
OIL DRAIN TUBE (#26314444-) ..... A2170-01A0 AA- 50
OIL LEVEL GAUGE (#26314444-) ..... A219P-01A7 AA- 52
FLYWHEEL HOUSING (#26314444-) ..... A2219-01B5 AA- 54

FIG NO. PAGE

FLYWHEEL (#26314444-) ..... A223P-01C3 AA- 56
ENGINE FRONT SUPPORT (#26314444-) ..... A225P-01A0 AA- 58
CRANKSHAFT ..... A2319-01A0 AA- 60
DAMPER ..... A233P-01A0 AA- 62
PISTON ..... A2359-01A2 AA- 64
ROCKER ARM ..... A241P-01A0 AA- 66
TAPPET ..... A241R-01A0 AA- 68
CAMSHAFT ..... A2419-01A0 AA- 70
FRONT GEAR TRAIN COVER ..... A261P-01A1 AA- 72
FAN PULLEY ..... A267P-01A0 AA- 74
TACHOMETER ADAPTER (26314444-) ..... A281P-01A1 AA- 76
UNDER PLATE ..... A283P-01A0 AA- 78
OIL PUMP ..... A301P-01A2 AA- 80
OIL COOLER AND OIL FILTER (26302312-) ..... A331P-01B2 AA- 82
FUEL INJECTION PUMP (#26314444-) ..... A401P-01H7 AA- 84
FUEL INJECTION PUMP (PUMP) (1/2)
(INNERS PARTS) (#26314444) ..... A401P-02H7 AA- 86
FUEL INJECTION PUMP (PUMP) (2/2)
(INNERS PARTS) (#26314444) ..... A401P-03H7 AA- 90
FUEL INJECTION PUMP (GOVERNOR) (1/3)
(INNERS PARTS) (#26314444-) ..... A401P-04H7 AA- 94
FUEL INJECTION PUMP (GOVERNOR) (2/3)
(INNER PARTS) (#26314444) ..... A401P-05H7 AA- 98
FUEL INJECTION PUMP (GOVERNOR) (3/3)
(INNERS PARTS) (#26314444-) ..... A401P-06H7 AA- 100
FUEL INJECTION PUMP (FEED PUMP)
(INNER PARTS) (#26314444) ..... A401P-07H7 AA- 104
BOOST TUBE (#26314444-) ..... A401R-01B6 AA- 106
FUEL INLET AND OUTLET JOINT CAP (26277757-) ..... A4010-01B0 AA- 108
FUEL INJECTION PUMP MOUNTING (#26302312-) ..... A408P-01B0 AA- 110
FUEL FILTER (#26302312) ..... A411P-01A0 AA- 112

	FIG NO.	PAGE
FUEL PIPING (#26314444-)	A411R-01A7	AA- 114
FUEL PIPING (#26314444-)	A411S-01C1	AA- 116
CYLINDER BLOCK BLIND COVER AND PIPING (#26302312-)	A417P-01B4	AA- 118
INJECTION NOZZLE	A4219-01A6	AA- 120
FUEL JOINT (#26314444-)	A423V-01A1	AA- 122
STOP SOLENOID(#26302312-)	A4510-01A5	AA- 124
WATER CONNECTOR (FOR 90A ALTERNATOR) (#26314444-)	A501R-01A4	AA- 126
WATER CONNECTOR PLUG	A501S-01A0Z	AA- 128
WATER PUMP	A5019-01A0Z	AA- 130
FAN DRIVE PULLEY (#26302312-)	A502P-01D2	AA- 132
COOLING FAN BOLT (#26314444-)	A502R-01A2	AA- 134
COOLING FAN (#26314444-)	A503P-01A1	AA- 136
COOLING FAN SPACER (#26314444-)	A5030-01C4	AA- 138
FAN PILOT SPACER (#26314444-)	A504P-01A4	AA- 140
ALTERNATOR (50A) (INNER PARTS) (#26314444-)	A601P-02A7	AA- 142
BELT TENSIONER (FOR 50A ALTERNATOR) (#26314444-)	A601S-01B4	AA- 144
ALTERNATOR SUPPORT (FOR 90A ALTERNATOR) (#26314444-)	A601T-01A5	AA- 146
ALTERNATOR MOUNTING (SHIELD ALTERNATOR) (#26294623-)	A601T-01A6	AA- 148
ALTERNATOR COVER (FOR 50A ALTERNATOR) (#26314444-)	A6010-01B2	AA- 150
STARTING MOTOR (7.5KW)	A621P-01A1	AA- 152
STARTING MOTOR MOUNTING (5. 5KW)	A621S-01A8	AA- 154
WIRING HARNESS CLIP (#26314444-)	A6810-01A3	AA- 156
REPAIR PARTS (1/4) (CYLINDER HEAD)	A8110-01A9	AA- 158
REPAIR PARTS (2/4) (CYLINDER BLOCK)	A8110-02A9	AA- 160
REPAIR PARTS (3/4) (CRANKSHAFT)	A8110-03A9	AA- 162
REPAIR PARTS (4/4) (PISTON)	A8110-04A9	AA- 166
CYLINDER HEAD GASKET KIT (#26314444-)	A8127-01A1	AA- 168
CYLINDER BLOCK GASKET KIT (#26314444-)	A8127-02A1	AA- 170
CAUTION PLATE (FOR REGULATION OF EPA) (#26308191-)	A9850-01A5	AA- 172
TIMER AND SAFETY RELAY (#26314444-)	B9999-01S8	AA- 174
AIR CLEANER (#26314444-)	B9999-01S9	AA- 176
MUFFLER (#26314444-)	B9999-01T0	AA- 178

B0 [ENGINE RELATED PARTS]

ENGINE MOUNTING PARTS	B0100-01A0	B0- 2
ENGINE ACESSORY (DAMPER)	B0110-01A0	B0- 4
ENGINE ACESSORY (REMOTE DRAIN)	B0110-02A0A	B0- 6
ENGINE ACCESSORY (ELECTRICAL RELAY)	B0110-03A0A	B0- 8
ENGINE ACCESSORY (ACCELERATOR CONTROL VARIABLE HORSE POWER TYPE)	B0110-04A0A	B0- 10
AIR INTAKE (AIR CLEANER, INNER PARTS)	B0200-01A0	B0- 12
AIR INTAKE (AIR CLEANER, INNER PARTS) (WITH INTAKE EXTENSION)	B0200-01A1	B0- 14
AIR INTAKE (SCREEN CAP AND BAND)	B0200-02A0A	B0- 16
AIR INTAKE (BAND) (WITH INTAKE EXTENSION)	B0200-02A1A	B0- 18
AIR INTAKE (AIR CLEANER MOUNTING PARTS)	B0200-03A0A	B0- 20
AIR INTAKE (AIR CLEANER PIPING)	B0200-04A0	B0- 22
AIR INTAKE (AIR PIPING)	B0200-05A0	B0- 24
AIR INTAKE (RAIN CAP) (WITH INTAKE EXTENSION)	B0200-06A1	B0- 26
EXHAUST SYSTEM	B0300-01A0A	B0- 28
EXHAUST SYSTEM (EXHAUST PIPE)	B0300-02A0	B0- 32
EXHAUST SYSTEM (SAFETY GUARD)	B0300-03A0	B0- 34

C0 [COOLING SYSTEM]

ENGINE COOLING (BLOWER FAN AND RELATED PARTS)	C0100-01A0	C0- 2
ENGINE COOLING (FAN PULLEY AND V-BELT)	C0100-02A0	C0- 4
RADIATOR AND MOUTING PARTS	C0110-01A0A	C0- 6
RADIATOR PIPING	C0120-01A0B	C0- 10
RADIATOR (SUB TANK AND PIPING)	C0120-03A0A	C0- 12
RADIATOR (FAN GUARD)	C0310-01A0A	C0- 16

FIG NO. PAGE

D0 [FUEL TANK AND RELATED PARTS]

FUEL, HYDRAULIC TANK AND MOUNTING PARTS D0100-01A0A D0- 2
FUEL PIPING (WITH WATER SEPARATOR) D0200-01A2 D0- 4

E0 [ELECTRICAL SYSTEM]

BATTERY E0110-01A0 E0- 2
FUSE, RELAY AND BATTERY HOLDER E0120-01A0 E0- 4
BATTERY WIRING E0120-02A0A E0- 6
FRONT FRAME HARNESS E0200-01A0A E0- 8
FRONT FRAME HARNESS (WITH BLADE ACCUMULATOR) E0200-01A1A E0- 10
REAR HARNESS (SENSOR AND BACK-UP ALARM) (WITH T/C OIL TEMPERATURE) E0202-01A2 E0- 12
REAR HARNESS (WIRING, 1/2) (WITH T/C OIL TEMPERATURE) E0202-02A2 E0- 14
REAR HARNESS (WIRING, 2/2) (WITH T/C OIL TEMPERATURE) E0202-03A2 E0- 18
REAR HARNESS (ARTICULATE SENSOR) E0202-04A0A E0- 20
REAR HARNESS (TORQUE CONVERTIER OIL SENSOR LINE) E0202-05A2 E0- 22
INSTRUMENT PANEL (WITH TORQUE CONVERTER TEMPERATURE GAUGE) E0260-01A1 E0- 24
ELECTRICAL SYSTEM (HEAD LAMP AND TURN SIGNAL LAMP) (FOR USA) E0300-01A0 E0- 26
ELECTRICAL SYSTEM (HEAD LAMP AND TURN SIGNAL LAMP) (FOR CAB) E0300-01A1A E0- 28
ELECTRICAL SYSTEM (REAR COMBINATION LAMP) E0302-01A0 E0- 30
ELECTRICAL SYSTEM (FRONT WORK LAMP) E0310-01A0 E0- 32
ELECTRICAL SYSTEM (REAR WORK LAMP) E0310-02A1 E0- 34
ELECTRICAL SYSTEM (BEACON LAMP) E0340-01A0 E0- 36
ELECTRICAL SYSTEM (HORN) E0410-01A0 E0- 38
LICENCE PLATE LAMP E0510-01A0 E0- 40

FIG NO. PAGE

F0 [TRANSMISSION]

DRIVE SHAFT F4200-01A0 F0- 2
TRANSMISSION AND OIL FILLER F4320-01A0A F0- 4
FRONT AXLE (AXLE SUPPORT) F4400-01A0 F0- 6
FRONT AXLE (HOUSING) F4400-02A0 F0- 10
FRONT AXLE (TIE ROD) F4400-03A0 F0- 12
REAR AXLE (FINAL DRIVE) (CENTER CASE) (NO SPIN DIFFERENTIAL) F4500-01A0 F0- 14
REAR AXLE (FINAL DRIVE) (CENTER CASE) (DIFFERENTIAL LOCK TYPE) F4500-01A1A F0- 16
REAR AXLE (FINAL DRIVE) (BEVEL GEAR) F4500-02A0 F0- 18
REAR AXLE (FINAL DRIVE) (DIFFERENTIAL) (NO SPIN DIFFERENTIAL) F4500-03A0 F0- 20
REAR AXLE (FINAL DRIVE) (DIFFERENTIAL) (DIFFERENTIAL LOCK TYPE) F4500-03A1 F0- 22
REAR AXLE (FINAL DRIVE) (PLANETARY GEAR) (DIFFERENTIAL LOCK TYPE) F4500-04A1 F0- 26
REAR AXLE (FINAL DRIVE) (TORQUE SHAFT) (NO SPIN DIFFERENTIAL) F4500-05A0 F0- 28
REAR AXLE (FINAL DRIVE) (TORQUE SHAFT) (DIFFERENTIAL LOCK TYPE) F4500-05A1 F0- 30
REAR AXLE (FINAL DRIVE) (FILLER TUBE) (NO SPIN DIFFERENTIAL) F4500-06A0A F0- 32
REAR AXLE (FINAL DRIVE) (FILLER TUBE) (DIFFERENTIAL LOCK TYPE) F4500-06A1A F0- 34
REAR AXLE (TANDEM CASE, L. H.) (NO SPIN DIFFERENTIAL) F4500-08A0 F0- 38
REAR AXLE (TANDEM CASE, L. H.) (DIFFERENTIAL LOCK TYPE) F4500-08A1 F0- 40
REAR AXLE (TANDEM CASE, L. H.) (NO SPIN DIFFERENTIAL) F4500-09A0 F0- 42
REAR AXLE (TANDEM CASE, R. H.) (DIFFERENTIAL LOCK TYPE) F4500-09A1 F0- 44

	FIG NO.	PAGE
REAR AXLE (TANDEM DRIVE) (FRONT PLANETARY) (NO SPIN DIFFERENTIAL)	F4500-10A0	F0- 46
REAR AXLE (TANDEM DRIVE) (FRONT PLANETARY) (DIFFERENTIAL LOCK TYPE)	F4500-10A1	F0- 50
REAR AXLE (TANDEM DRIVE) (REAR PLANETARY) (NO SPIN DIFFERENTIAL)	F4500-11A0	F0- 54
REAR AXLE (TANDEM DRIVE) (REAR PLANETARY) (DIFFERENTIAL LOCK TYPE)	F4500-11A1	F0- 58
REAR AXLE (TANDEM DRIVE) (SPROCKET CHAIN) (NO SPIN DIFFERENTIAL)	F4500-12A0	F0- 62
REAR AXLE (TANDEM DRIVE) (SPROCKET CHAIN) (DIFFERENTIAL LOCK TYPE)	F4500-12A1	F0- 64
REAR AXLE (STEP) (FOR TANDEM CASE)	F4500-13A0	F0- 66
REAR AXLE (TANDEM DRIVE) (BRAKE PIPING)	F4500-14A0A	F0- 68
REAR AXLE (PARKING BRAKE AND MOUNTING PARTS)	F4500-15A0	F0- 70
REAR AXLE (BRAKE CALIPER) (INNER PARTS)	F4500-16A0	F0- 72
REAR AXLE (SOLENOID VALVE, INNER PARTS) (DIFFERENTIAL LOCK TYPE)	F4500-51A1	F0- 74
TRANSMISSION PIPING (NO SPIN DIFFERENTIAL)	F4700-01A0A	F0- 76
TRANSMISSION PIPING (DIFFERENTIAL LOCK TYPE)	F4700-01A1A	F0- 80
TORQUE CONVERTER AND TRANSMISSION MOUNTING PARTS	F4810-01A0	F0- 84
TRANSMISSION (CASE)	F5350-51A0	F0- 86
TRANSMISSION (FOREWARD LOW AND REVERSE CLUTCH)	F5350-52A0	F0- 88
TRANSMISSION (FOREWARD HIGH AND 1ST CLUTCH)	F5350-53A0	F0- 92
TRANSMISSION (2ND AND 3RD CLUTCH)	F5350-54A0	F0- 96
TRANSMISSION (4TH CLUTCH)	F5350-55A0	F0- 98
TRANSMISSION (OUTPUT)	F5350-56A0	F0- 100
TRANSMISSION (P. T. O AND IDLER)	F5350-57A0	F0- 102
CONTROL VALVE (MAIN RELIEF VALVE)	F5350-58A0	F0- 106
CONTROL VALVE (L/C VALVE)	F5350-59A0	F0- 108
CONTROL VALVE (VALVE MOUNTING)	F5350-60A0	F0- 110
CONTROL VALVE	F5350-61A0	F0- 112
CONTROL VALVE MOUNTING	F5350-62A0	F0- 114
TRANSMISSION (PIPING 1/3)	F5350-63A0	F0- 116
TRANSMISSION (PIPING 2/3)	F5350-64A0	F0- 118
TRANSMISSION (PIPING 3/3)	F5350-65A0	F0- 120
TRANSMISSION (ACCESORY)	F5350-66A0	F0- 122
TRANSMISSION (SPEEDOMETER)	F5350-67A0	F0- 124
TORQUE CONVERTER (BARE)	F5350-68A0	F0- 126
TORQUE CONVERTER (DRIVE CASE)	F5350-69A0	F0- 128
TORQUE CONVERTER (P. T. 0)	F5350-70A0	F0- 130

H0 [HYDRAULIC SYSTEM]

HYDRAULIC TANK (ACCESSORY)	H0110-01A0A	H0- 2
HYDRAULIC TANK (DRAIN PIPING)	H0110-02A0A	H0- 6
MAIN CONTROL VALVE	H0120-01A0	H0- 8
MAIN CONTROL VALVE (WITH RIPPER)	H0120-01A1	H0- 10
MAIN CONTROL VALVE (WITH SCARIFIER)	H0120-01A2	H0- 12
HYDRAULIC PUMP	H0210-01A0	H0- 14
HYDRAULIC PUMP (DIFFERENTIAL LOCK TYPE)	H0210-01A1	H0- 16
STEERING PIPING (FRONT FRAME SIDE)	H4410-01A0A	H0- 18
ACCUMULATOR CHARGER VALVE (INNER PARTS)	H4410-51A0A	H0- 20
FLOOR VALVE	H5110-01A0	H0- 24
VALVE (FOR HYDRAULIC PIPING) (1/2)	H5120-01A0A	H0- 26
VALVE (FOR HYDRAULIC PIPING) (1/2) (WITH SCARIFIER, POWER TILT AND RIPPER)	H5120-01A1A	H0- 28
VALVE (FOR HYDRAULIC PIPING) (2/2)	H5120-02A0A	H0- 30
PILOT CHECK VALVE (INNER PARTS) (FOR LEANING)	H5120-03A0	H0- 32

	FIG NO.	PAGE
PILOT CHECK VALVE (INNER PARTS) (FOR ARTICULATE)	H5120-04A0	H0- 34
PILOT CHECK VALVE (INNER PARTS) (FOR DRAWBAR SHIFT)	H5120-05A0	H0- 36
PILOT CHECK VALVE (INNER PARTS) (FOR BLADE SHIFT, R. H.)	H5120-06A0	H0- 38
PILOT CHECK VALVE (INNER PARTS) (FOR BLADE SHIFT, R. H.) (WITH SCARIFIER, POWER TILT AND RIPPER)	H5120-06A1	H0- 40
PILOT CHECK VALVE (INNER PARTS) (FOR BLADE SHIFT, L. H.)	H5120-07A0	H0- 42
PILOT CHECK VALVE (INNER PARTS) (FOR BLADE SHIFT, L. H.)	H5120-07A1	H0- 46
SWIVEL JOINT (INNER PARTS)	H5120-08A0	H0- 50
HYDRAULIC PIPING (TANK TO PUMP)	H5200-01A0	H0- 52
HYDRAULIC PIPING (PUMP TO VALVE)	H5200-02A0A	H0- 54
HYDRAULIC PIPING (RETURN LINE)	H5200-03A0A	H0- 58
HYDRAULIC PIPING (L. S. PIPING,1/2)	H5200-04A0A	H0- 62
HYDRAULIC PIPING (L. S. PIPING,2/2)	H5200-05A0A	H0- 64
HYDRAULIC PIPING (CONNECTOR, FOR PRIORITY VALVE, 1/2)	H5200-06A0A	H0- 66
HYDRAULIC PIPING (CONNECTOR, FOR PRIORITY VALVE, 2/2)	H5200-07A0A	H0- 70
HYDRAULIC PIPING (CONNECTOR, FOR BANK CONTROL VALVE)	H5200-08A0A	H0- 72
HYDRAULIC PIPING (MOUNTING PARTS, FOR PIPING)	H5200-09A0	H0- 74
HYDRAULIC PIPING (BRAKE LINE)	H5200-10A0A	H0- 76
HYDRAULIC PIPING (DIFFERENTIAL PIPING)	H5200-11A1A	H0- 78
HYDRAULIC PIPING (RIPPER PIPING)	H5200-12A1A	H0- 80
PILOT CHECK VALVE (INNER PARTS) (FOR RIPPER)	H5200-13A1	H0- 82
HIDRAULIC PIPING (BANK CYLINDER LINE)	H5210-01B0	H0- 84
HIDRAULIC PIPING (CONNECTING PARTS, FOR MAIN VALVE)	H5210-02B0	H0- 86
HIDRAULIC PIPING (BLADE SIDE SHIFT CYLINDER LINE)	H5210-03B0	H0- 88
HIDRAULIC PIPING (BLADE LIFT CYLINDER LINE)	H5210-04B0	H0- 90
HIDRAULIC PIPING (DRAWBAR SIDE SHIFT CYLINDER LINE)	H5210-05B0	H0- 92
HIDRAULIC PIPING (LEANING CYLINDER LINE)	H5210-06B0	H0- 94
HIDRAULIC PIPING (ARTICULATE CYLINDER LINE)	H5210-07B0	H0- 96
HIDRAULIC PIPING (BLADE ACCUMULATOR LINE)	H5210-09B0	H0- 98
HIDRAULIC PIPING (POWER TILT CYLINDER LINE)	H5211-01A0A	H0- 100
PILOT CHECK VALVE (INNER PARTS) (FOR POWER TILT)	H5211-02A0	H0- 102

	FIG NO.	PAGE
HIDRAULIC PIPING (SCARIFIER LINE)	H5215-01A0A	H0- 104
PILOT CHECK VALVE (FOR SCARIFIER)	H5215-02A0	H0- 106
HYDRAULIC PIPING (TRANSMISSION COOLING)	H6290-01A0A	H0- 108

J0 [FRAME AND RELATED PARTS]

FRONT FRAME AND MOUNTING PIN	J4110-01A0	J0- 2
REAR FRAME AND MOUNTING PIN	J4120-01A0A	J0- 4
HINGE PIN (FOR FRONT AND REAR FRAME)	J4130-01A0	J0- 6
STEERING CYLINDER	J4140-01A0	J0- 8
REMOTE GREASE	J4710-01A0A	J0- 10
LEANING CYLINDER	J5110-01A0	J0- 12

K0 [OPERATOR'S COMPARTMENT AND CONTROL SYSTEM]

OPERATOR' S SEAT	K0110-01A0	K0- 2
OPERATOR' S SEAT (FABRIC SEAT, WITH SUSPENSION COVER)	K0110-01A1	K0- 4
SEAT BELT (2-POINT SEAT BELT, WIDTH 51MM)	K0160-01A0	K0- 6
SEAT BELT (2-POINT SEAT BELT, WIDTH 78MM)	K0160-01A1	K0- 8
OPERATOR' S CAB (CAB FRAME AND GLASS) (LOW ROPS CAB)	K0210-01A0	K0- 10
OPERATOR' S CAB (CAB FRAME AND GLASS) (HIGH ROPS CAB)	K0210-01B0	K0- 14
OPERATOR' S CAB (CAB EXTERIOR PARTS) (LOW ROPS CAB)	K0210-02A0	K0- 18
OPERATOR' S CAB (CAB EXTERIOR PARTS) (HGH ROPS CAB)	K0210-02B0	K0- 20
OPERATOR' S CAB (CAB INTERIOR PARTS) (1/2) (LOW ROPS CAB)	K0210-03A0	K0- 22
OPERATOR' S CAB (CAB INTERIOR PARTS) (1/2) (HIGH ROPS CAB)	K0210-03B0	K0- 26
OPERATOR' S CAB (CAB INTERIOR PARTS) (2/2) (LOW ROPS CAB)	K0210-04A0	K0- 30
OPERATOR' S CAB (CAB INTERIOR PARTS) (2/2) (HIGH ROPS CAB)	K0210-04B0	K0- 32
OPERATOR' S CAB (DOOR INNER PARTS, L. H.) (LOW ROPS CAB)	K0210-05A0A	K0- 34
OPERATOR' S CAB (DOOR INNER PARTS, L. H.) (HIGH ROPS CAB)	K0210-05B0A	K0- 38
OPERATOR' S CAB (LOCK, L. H.) (LOW ROPS CAB)	K0210-06A0	K0- 42

	FIG NO.	PAGE
OPERATOR' S CAB (LOCK, L. H.) (HIGH ROPS CAB)	K0210-06B0	K0- 46
OPERATOR' S CAB (DOOR INNER PARTS, R. H.) (LOW ROPS CAB)	K0210-07A0A	K0- 50
OPERATOR' S CAB (DOOR INNER PARTS, R. H.) (HIGH ROPS CAB)	K0210-07B0A	K0- 54
OPERATOR' S CAB (LOCK, R. H.) (LOW ROPS CAB)	K0210-08A0	K0- 58
OPERATOR' S CAB (LOCK, R. H.) (HIGH ROPS CAB)	K0210-08B0	K0- 62
OPERATOR' S CAB (CAB HARNESS) (LOW ROPS CAB)	K0210-09A0	K0- 66
OPERATOR' S CAB (CAB HARNESS) (HIGH ROPS CAB)	K0210-09B0	K0- 68
OPERATOR' S CAB (AIR CONDITIONER HARNESS) (LOW ROPS CAB)	K0210-11A0	K0- 70
OPERATOR' S CAB (AIR CONDITIONER HARNESS) (HIGH ROPS CAB)	K0210-11B0	K0- 72
OPERATOR' S CAB (DUMMY CAP)	K0210-12A0	K0- 74
OPERATOR' S CAB (FRONT LOWER WIPER)	K0210-13A0	K0- 76
OPERATOR' S CAB (REAR WIPER)	K0210-14A0	K0- 78
OPERATOR' S CAB (REAR WIPER) (HIGH ROPS CAB)	K0210-14B0	K0- 80
OPERATOR' S CAB (RADIO CASETTE)	K0210-15A0	K0- 82
OPERATOR' S CAB (AIR CONDITIONER UNIT AND DUCT)	K0210-16A0	K0- 84
OPERATOR' S CAB (CONTROL PANEL FOR AIR CONDITIONER)	K0210-17A0	K0- 86
OPERATOR' S CAB (SEAL AND MOUNTING PARTS) (LOW ROPS CAB)	K0210-18A0	K0- 88
OPERATOR' S CAB (SEAL AND MOUNTING PARTS) (HIGH ROPS CAB)	K0210-18B0	K0- 90
REAR VIEW (MIRROR FOR CAB)	K0215-01A0	K0- 92
FLOOR MAT	K0310-01A0	K0- 94
WINDOW WASHER (1-TANK TYPE)	K0350-01A0	K0- 96
WINDOW WASHER (2-TANKS TYPE)	K0350-01A1	K0- 98
DEFROSTER FAN	K0355-01A0	K0- 100
AIR CONDITIONER (AIR CONDITIONER EQUIPMENT AND MOUNTING PARTS)	K0710-01A0A	K0- 102
AIR CONDITIONER (PIPING)	K0710-02A0A	K0- 106
AIR CONDITIONER (HEATER PIPING)	K0713-01A0A	K0- 108
PLATFORM	K1110-01B0	K0- 110
WORK EQUIPMENT CONTROL LEVER	K1110-02B0	K0- 112

	FIG NO.	PAGE
WORK EQUIPMENT CONTROL LEVER (WITH RIPPER OR SCARIFIER)	K1110-02B1	K0- 114
ACCELERATOR PEDAL AND INCHING PEDAL	K1110-03B0	K0- 116
ACCELERATOR PEDAL AND INCHING PEDAL (WITH RIPPER OR SCARIFIER)	K1110-03B1	K0- 118
STEERING POST COVER	K1110-04B0	K0- 120
STEERING POST (1/2)	K1110-05B0	K0- 122
STEERING POST (2/2)	K1110-06B0	K0- 126
STEERING POST (2/2) (WITH RIPPER OR SCARIFIER)	K1110-06B1	K0- 128
VALVE CONTROL LEVER	K1110-07B0	K0- 130
VALVE CONTROL LEVER (WITH RIPPER OR SCARIFIER)	K1110-07B1	K0- 132
PLATFORM COVER (WITH CAB)	K1110-08B0	K0- 134
PLATFORM COVER (WITH RIPPER OR SCARIFIER)	K1110-08B1	K0- 136
CONSOLE BOX, R. H.	K1110-09B0	K0- 138
ACCELERATOR LEVER	K1110-10B0	K0- 140
OPERATOR' S SEAT BRACKET	K1110-11B0	K0- 142
BRAKE PEDAL	K1110-15B0	K0- 144
STEERING WHEEL AND STEERING VALVE	K1110-16B0	K0- 146
STEERING VALVE PIPING	K1110-17B0	K0- 148
STOP LAMP AND SERVICE METER	K1110-18B0	K0- 150
FLOOR HARNESS	K1110-19A0	K0- 152
FLOOR HARNESS	K1110-19B0	K0- 154
CONSOLE BOX, R. H. (ELECTRICAL SYSTEM)	K1110-20B0	K0- 156
FLOOR HARNESS AND TRANSMISSION	K1110-21B0	K0- 158
ELECTRICAL SYSTEM (STEERING POST AND R.H. CONSOLE BOX)	K1110-22B0	K0- 160
ELECTRICAL SYSTEM (STEERING POST AND R. H. CONSOLE BOX) (WITH AIR CONDITIONER)	K1110-22B1	K0- 162
AIR CONDITIONER (CONTROL PANEL AND AIR CONDITIONER UNIT)	K1110-23B1	K0- 164
AIR CONDITIONER (DUCT)	K1110-24B1	K0- 166
ELBOW (FOR BRAKE VALVE)	K1110-25B0	K0- 168
ENGINE ACCESSORY (ACCELERATOR CONTROL)	K1110-26B0	K0- 170

	FIG NO.	PAGE
BRAKE ACCUMULATOR AND SLACK ADJUSTER	K4460-01A0	K0- 172
SLACK ADJUSTER (INNER PARTS)	K4460-02A0	K0- 174
BRAKE ACCUMULATOR AND SLACK ADJUSTER (MOUNTING PARTS)	K4470-01A0	K0- 176
BRAKE PIPING (BRAKE VALVE TO ACCUMULATOR)	K4470-02A0A	K0- 178
BRAKE PEDAL PIPING (1/2)	K4470-03A0A	K0- 180
BRAKE PEDAL PIPING (2/2)	K4470-04A0A	K0- 182
ELBOW (FOR BRAKE VALVE AND SLACK ADJUSTER)	K4470-05A0A	K0- 184

M0 [GUARD]

ENGINE HOOD AND RADIATOR GUARD (1/2)	M4100-01A0A	M0- 2
ENGINE HOOD AND RADIATOR GUARD (2/2)	M4100-02A0A	M0- 4
ENGINE HOOD AND RADIATOR GUARD (2/2) (WITH PUNCHING MASK AND AIR INTAKE EXTENSION)	M4100-02A1A	M0- 6
SIDE PANEL (FOR ENGINE HOOD)	M4100-03A0A	M0- 8
BUFFER PLATE (FOR ENGINE HOOD)	M4100-04A0A	M0- 10
FLOOR COVER AND FRONT FRAME SIDE COVER	M4230-01A0A	M0- 12
FLOOR COVER AND FRONT FRAME SIDE COVER	M4230-01A1	M0- 14
PLATFORM MOUNTING	M4230-02A0	M0- 16
TRANSMISSION UNDER GUARD	M4231-01A0	M0- 18
TOOL BOX	M4240-01A0	M0- 20
LADDER AND SIDE STEP	M4310-01A0	M0- 22
FRONT WEIGHT	M4510-01A0	M0- 24
PUSHER WEIGHT	M4510-01A1	M0- 26
REAR WEIGHT	M4520-01A0	M0- 28

N0 [CIRCLE MOTOR AND PIPING]

HYDRAULIC PIPING (CIRCLE REVOLUTION MOTOR LINE)	N1220-01A0A	N0- 2

S0 [RIM AND TIRE]

RIM AND TIRE (14.00-24-12PR) (TOPY)	S0100-01C2	S0- 2
RIM AND TIRE (17.5-R25)	S0100-01D0	S0- 6
SPARE TIRE (14.00-24-12PR)	S0500-01C1	S0- 8
SPARE TIRE (17.50-R25))	S0500-01D0	S0- 12

T0 [WORK EQUIPMENT]

DRAWBAR AND CIRCLE SUPPORT	T5110-01A0A	T0- 2
BLADE LIFTER	T5115-01A0	T0- 4
BLADE (3. 7M)	T5120-01A0	T0- 8
BLADE (3. 7M) (WITH END BIT)	T5120-01A1	T0- 10
BLADE (3. 7M) (LARGE SIZE EDGE)	T5120-01A2	T0- 12
BLADE (3. 7M) (LARGE SIZE EDGE) (WITH END BIT)	T5120-01A3	T0- 14
BLADE (4. 3M)	T5120-01B0	T0- 16
BLADE (4. 3M) (WITH END BIT)	T5120-01B1	T0- 18
BLADE (4. 3M) (LARGE SIZE EDGE)	T5120-01B2	T0- 20
BLADE (4. 3M) (LARGE SIZE EDGE) (WITH END BIT)	T5120-01B3	T0- 22
CIRCLE SUPPORT MOUNTING PARTS	T5123-01A0	T0- 24
RIPPER	T5125-01A0	T0- 28
RIPPER SHANK (ADDITIONAL 2-SHANKS TYPE)	T5126-01A0	T0- 30
CIRCLE REVOLVING, 1/2 (WITH SLIP CLUTH)	T5130-11A1	T0- 32
CIRCLE REVOLVING, 2/2 (WITH SLIP CLUTH)	T5130-12A1	T0- 34
BLADE LIFT CYLINDER	T5140-01A0	T0- 38
BLADE SHIFT CYLINDER	T5141-01A0A	T0- 40
POWER TILT CYLINDER	T5151-01A0	T0- 42
DRAWBAR SHIFT CYLINDER	T5155-01A0A	T0- 44
SCARIFIER CYLINDER	T5156-01A0	T0- 46
RIPPER CYLINDER	T5157-01A0A	T0- 48
ARTICULATE CYLINDER	T5160-01A0A	T0- 50
SCARIFIER (FIXED ROD TYPE)	T5170-01A0	T0- 52
SCARIFIER SHANK TOOTH	T5175-01A0	T0- 56

U0 [MARKS AND PLATES]

MARKS AND PLATES (ENGLISH)	U0100-01A0A	U0- 2

FIG NO. PAGE

V0 [ACCESSORY AND TOOL]

TOOL V0300-01A0 V0- 2

Y0 [SERVICE KIT AND COMPONENT PARTS]

SERVICE KIT Y0100-01A0 Y0- 2
MAIN PUMP (1/6) Y1600-01A0 Y0- 6
MAIN PUMP (2/6) Y1600-02A0 Y0- 8
MAIN PUMP (3/6) Y1600-03A0 Y0- 10
MAIN PUMP (4/6) Y1600-04A0 Y0- 12
MAIN PUMP (5/6) Y1600-05A0 Y0- 14
MAIN PUMP (6/6) Y1600-06A0 Y0- 16
GEAR PUMP (SINGLE) (INNER PARTS) Y1610-01A0 Y0- 18
GEAR PUMP (TANDEM) (INNER PARTS) (1/2) Y1610-11A0 Y0- 20
GEAR PUMP (TANDEM) (INNER PARTS) (2/2) Y1610-12A0 Y0- 22
BLADE LIFT CYLINDER (INNER PARTS) Y1620-01A0A Y0- 24
BLADE SHIFT CYLINDER (INNER PARTS) Y1620-11A0A Y0- 28
DRAWBAR SHIFT CYLINDER (INNER PARTS) Y1620-21A0A Y0- 30
POWER TILT CYLINDER (INNER PARTS) Y1620-31A0A Y0- 32
SCARIFIER CYLINDER (INNER PARTS) Y1620-51A0A Y0- 34
REAR RIPPER CYLINDER (INNER PARTS) Y1620-71A0A Y0- 36
STEERING CYLINDER (INNER PARTS) Y1622-01A0A Y0- 38
LEANING CYLINDER (INNER PARTS) Y1622-11A0A Y0- 40
ARTICULATE CYLINDER (INNER PARTS) Y1622-21A0A Y0- 42
ACCUMULATOR (BRAKE) (INNER PARTS) Y1629-01A0 Y0- 44
ACCUMULATOR (BLADE) (INNER PARTS) Y1629-11A0 Y0- 46
CONTROL VALVE (4-SPOOL) (1/5) (L.H.) Y1664-01A0 Y0- 48
CONTROL VALVE (4-SPOOL) (2/5) (L. H.) Y1664-02A0 Y0- 50
CONTROL VALVE (4-SPOOL) (3/5) (L. H.) Y1664-03A0 Y0- 52
CONTROL VALVE (4-SPOOL) (4/5) (L. H.) Y1664-04A0 Y0- 54

FIG NO. PAGE

CONTROL VALVE (4-SPOOL) (5/5) (L. H.) Y1664-05A0 Y0- 56
CONTROL VALVE (4-SPOOL) (1/5) (R. H.) Y1664-11A0 Y0- 58
CONTROL VALVE (4-SPOOL) (2/5) (R. H.) Y1664-12A0 Y0- 60
CONTROL VALVE (4-SPOOL) (3/5) (R. H.) Y1664-13A0 Y0- 62
CONTROL VALVE (4-SPOOL) (4/5) (R. H.) Y1664-14A0 Y0- 64
CONTROL VALVE (4-SPOOL) (5/5) (R. H.) Y1664-15A0 Y0- 66
CONTROL VALVE (5-SPOOL) (1/5) (L. H.) (WITH RIPPER) Y1665-01A0 Y0- 68
CONTROL VALVE (5-SPOOL) (2/5) (L. H.) (WITH RIPPER) Y1665-02A0 Y0- 70
CONTROL VALVE (5-SPOOL) (3/5) (L. H.) (WITH RIPPER) Y1665-03A0 Y0- 72
CONTROL VALVE (5-SPOOL) (4/5) (L. H.) (WITH RIPPER) Y1665-04A0 Y0- 74
CONTROL VALVE (5-SPOOL) (5/5) (L. H.) (WITH RIPPER) Y1665-05A0 Y0- 76
CONTROL VALVE (5-SPOOL) (1/5) (L. H.) (WITH SCARIFIER) Y1665-21A0 Y0- 78
CONTROL VALVE (5-SPOOL) (2/5) (L. H.) (WITH SCARIFIER) Y1665-22A0 Y0- 80
CONTROL VALVE (5-SPOOL) (3/5) (L. H.) (WITH SCARIFIER) Y1665-23A0 Y0- 82
CONTROL VALVE (5-SPOOL) (4/5) (L. H.) (WITH SCARIFIER) Y1665-24A0 Y0- 84
CONTROL VALVE (5-SPOOL) (5/5) (L. H.) (WITH SCARIFIER) Y1665-25A0 Y0- 86
LS REDUCING VALVE Y1679-01A0 Y0- 88
STEERING VALVE (INNER PARTS) Y1689-01A0 Y0- 90
AIR CONDITIONER UNIT (1/2) Y1979-01A0 Y0- 94
AIR CONDITIONER UNIT (2/2) Y1979-02A0 Y0- 98
AIR CONDITIONER UNIT (EVAPORATOR) Y1979-03A0 Y0- 102

ZZ [NUMERICAL INDEX]

ENGINE

CYLINDER HEAD

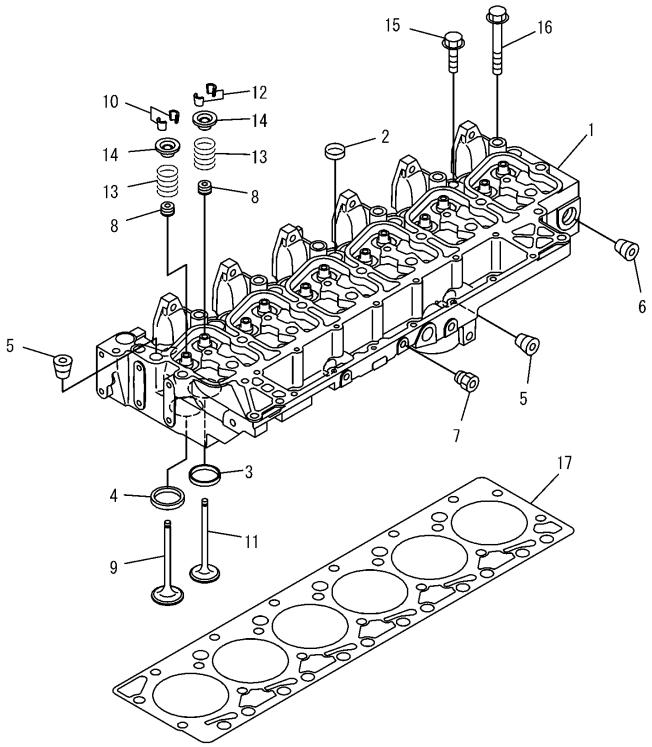

PJ6B436

CYLINDER HEAD

Item	Part Number	Description	Qty.	Ref.	Serial No.
	6735-11-1103	HEAD ASSEMBLY	1		26317355-
1	☆	.HEAD	1		26317355-
2	6736-11-1150	.PLUG	5		26274903-
3	6732-11-1170	.INSERT, EXHAUST	6		26274903-
4	6732-11-1180	.INSERT, INTAKE	6		26274903-
5	6732-11-1910	PLUG	5		26274903-
6	6732-11-1920	PLUG	1		26274903-
7	6732-11-1930	PLUG	2		26274903-
8	6732-41-4541	SEAL (K1)	12		26317355-
	6736-41-4110	INTAKE VALVE ASSEMBLY	6		26274903-
9	☆	.VALVE	1		26274903-
10	6732-41-4520	.COTTER	2		26274903-
	6736-41-4210	EXHAUST VALVE ASSEMBLY	6		26274903-
11	☆	.VALVE	1		26274903-
12	6732-41-4520	.COTTER	2		26274903-
13	6732-41-4430	SPRING	12		26274903-
14	6731-41-4511	RETAINER	12		26317355-
15	6732-11-1610	BOLT	6		26274903-
16	6732-11-1620	BOLT	14		26274903-
17	6735-11-1821	GASKET (K1)	1		26274903-
		REFER TO FIG.NOS.OF REPAIR PARTS FOR O.S., U.S., AND SERVICE PARTS.			

WATER TEMPERATURE SENSOR (#26314444-)

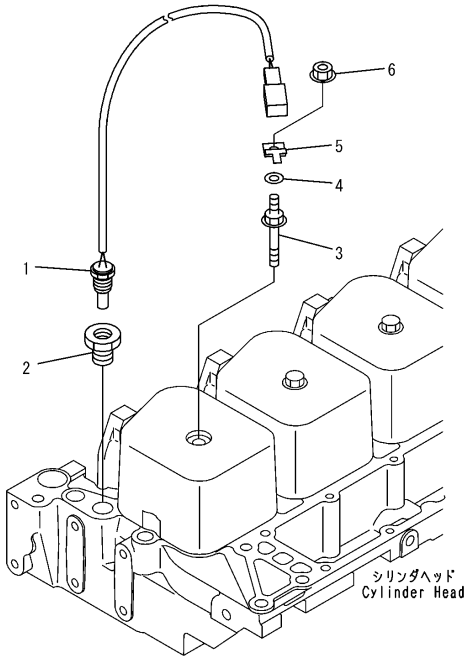

00003089

WATER TEMPERATURE SENSOR (#26314444-)

Item	Part Number	Description	Qty.	Ref.	Serial No.
1	7700-85-8610	SENSOR	1		26314444-
2	565-06-13212	NIPPLE	1		26314444-
3	6732-11-8140	BOLT	1		26314444-
4	01643-30823	WASHER	1		26314444-
5	08053-01510	CLIP	1		26314444-
6	01584-00806	NUT	1		26314444-

HEAR HANGER

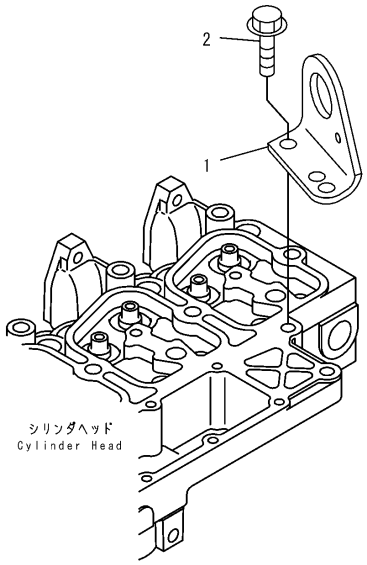

PJ6B415

HEAR HANGER

Item	Part Number	Description	Qty.	Ref.	Serial No.
1	6732-11-1710	BRACKET, LIFTING	1		26274903-
2	6732-11-1720	BOLT	2		26274903-

HEAD COVER (#26302312-)

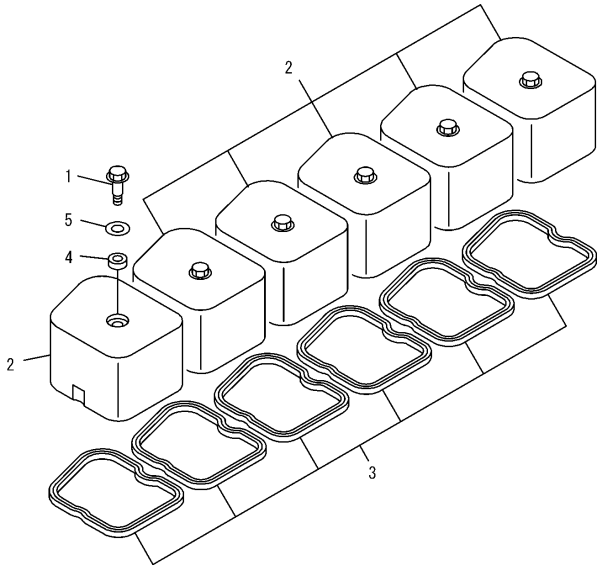

PFD1699

HEAD COVER (#26302312-)

Item	Part Number	Description	Qty.	Ref.	Serial No.
1	6732-11-8130	BOLT	6		26302312-
2	6735-11-8120	COVER	6		26302312-
3	6732-11-8181	GASKET (K1)	6		26302312-
4	6732-11-8210	GASKET (K1)	6		26302312-
5	6732-11-8150	WASHER	6		26302312-

AIR CONNECTOR (#26314444-)

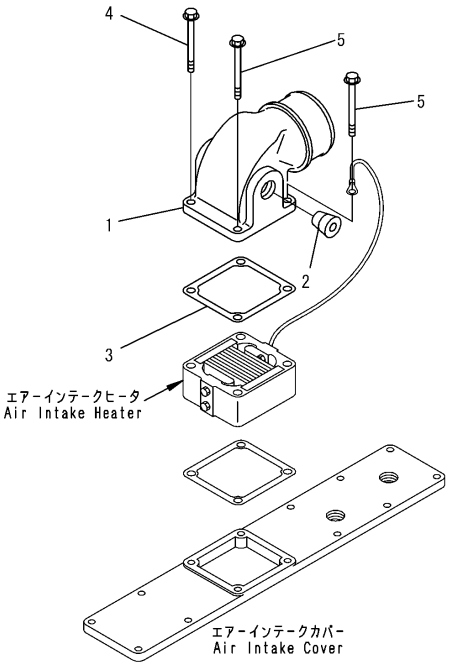

00009781

A131P-01B0

AIR CONNECTOR (#26314444-)

Item	Part Number	Description	Qty.	Ref.	Serial No.
1	6738-11-4450	CONNECTOR, AIR INTAKE	1		26314444-
2	6732-11-1920	PLUG	2		26314444-
3	6732-11-4812	GASKET (K1)	1		26314444-
4	6734-11-5210	BOLT	2		26314444-
5	6736-81-8730	BOLT	2		26314444-

AIR INTAKE HEATER

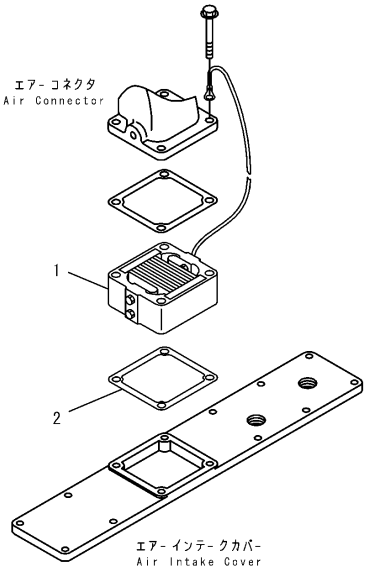

PJ6B399

AIR INTAKE HEATER

Item	Part Number	Description	Qty.	Ref.	Serial No.
1	6743-82-4110	HEATER ASSEMBLY	1		26277757-
2	6732-11-4812	GASKET (K1)	1		26277757-

AIR INTAKE COVER

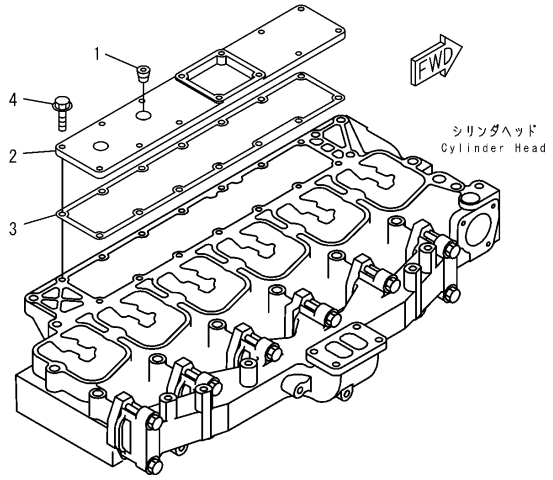

PJ6B414

AIR INTAKE COVER

Item	Part Number	Description	Qty.	Ref.	Serial No.
1	6732-11-1910	PLUG	2		26274903-
2	6735-11-4110	COVER, INTAKE	1		26274903-
3	6735-11-4812	GASKET (K1)	1		26287624-
	□6735-11-4811	GASKET	1		26274903-26287623
4	6732-11-4160	BOLT	8		26274903-

AIR PIPE

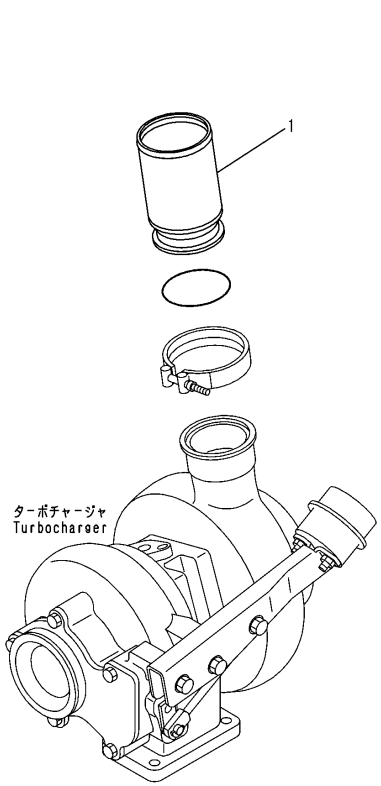

00009776

AIR PIPE

Item	Part Number	Description	Qty.	Ref.	Serial No.
1	23B-02-34280	TUBE	1		26314444-

AIR PIPE

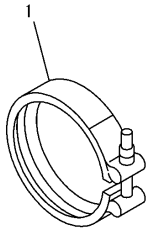

PMD1036

AIR PIPE

Item	Part Number	Description	Qty.	Ref.	Serial No.
1	6732-81-8220	CLAMP .....(K1)	1		26274903-

EXHAUST MANIFOLD GASKET AND BOLT

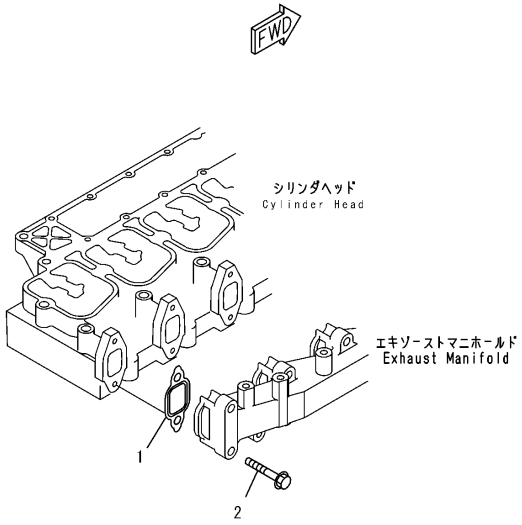

PFDI324

EXHAUST MANIFOLD GASKET AND BOLT

Item	Part Number	Description	Qty.	Ref.	Serial No.
1	6736-11-5820	GASKET	6		26312301-
2	6735-11-4150	BOLT	12		26274903-

EXHAUST MANIFOLD

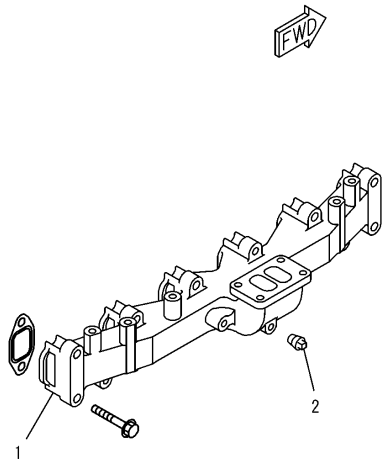

PJ6B423

EXHAUST MANIFOLD

Item	Part Number	Description	Qty.	Ref.	Serial No.
1	6735-11-5120	MANIFOLD, EXHAUST	1		26274903-
2	07042-00108	PLUG	1		26274903-

TURBOCHARGER OIL PIPING (#26314444-)

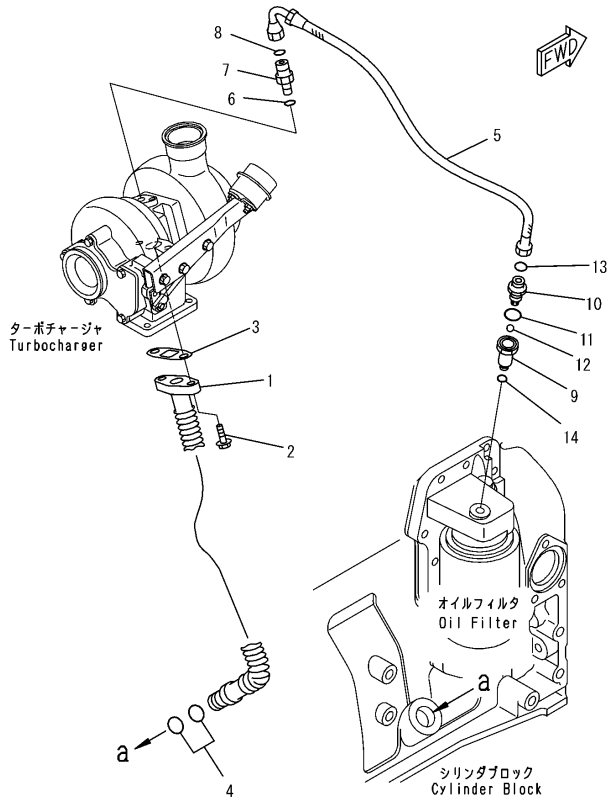

00009784

TURBOCHARGER OIL PIPING (#26314444-)

Item	Part Number	Description	Qty.	Ref.	Serial No.
1	6732-51-8410	TUBE, OIL	1		26314444-
2	6732-71-3220	BOLT	2		26314444-
3	6735-51-8180	GASKET (K1)	1		26314444-
4	6732-51-8330	O-RING (K2)	2		26314444-
5	6735-51-8140	HOSE	1		26314444-
	6732-51-8180	CONNECTOR ASSEMBLY	1		26314444-
6	6736-51-8710	.O-RING (K1)	1		26314444-
7	6732-81-8850	.CONNECTOR	1		26314444-
8	6732-81-8860	.O-RING	1		26314444-
	6732-51-8441	VALVE, CHECK	1		26314444-
9	6732-51-8451	.ADAPTER	1		26314444-
10	6732-51-8461	.NIPPLE	1		26314444-
11	07000-E2020	.O-RING	1		26314444-
12	04260-00793	.BALL	1		26314444-
13	6732-81-8860	O-RING (K1)	1		26314444-
14	6736-51-8710	O-RING (K1)	1		26314444-

TURBOCHARGER OUT CONNECTION (#26314444-)

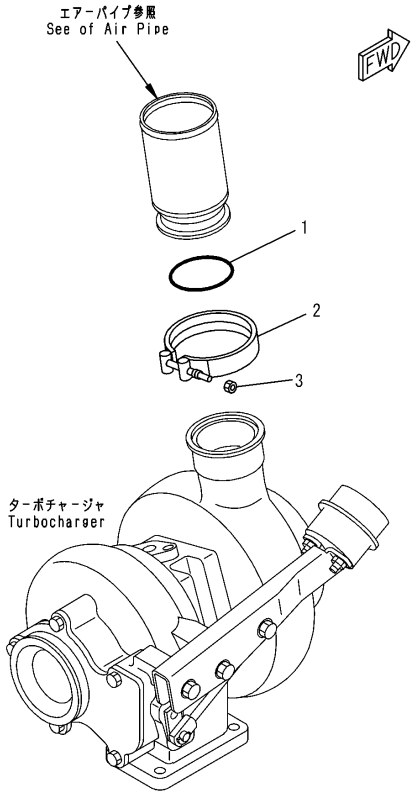

00009782

TURBOCHARGER OUT CONNECTION (#26314444-)

Item	Part Number	Description	Qty.	Ref.	Serial No.
1	6738-11-4370	O-RING . . . . . (K1)	1		26314444-
2	6738-11-4380	CLAMP	1		26314444-
3	6738-11-4390	NUT	1		26314444-

TURBOCHARGER MOUNTING (#26314444-)

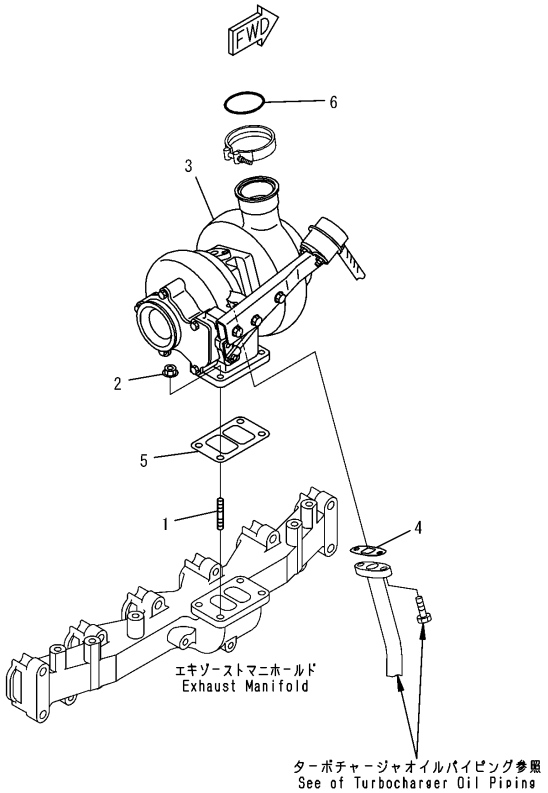

00003090

TURBOCHARGER MOUNTING (#26314444-)

Item	Part Number	Description	Qty.	Ref.	Serial No.
1	6732-81-8810	STUD	4		26314444-
2	6732-81-8820	NUT	4		26314444-
3	6738-81-8160	TURBOCHARGER	1		26314444-
4	6207-51-7690	GASKET (K1)	1		26314444-
5	6732-81-8830	GASKET (K1)	1		26314444-
6	6738-11-4370	O-RING (K1)	1		26314444-

TTHERMOSTAT HOUSING

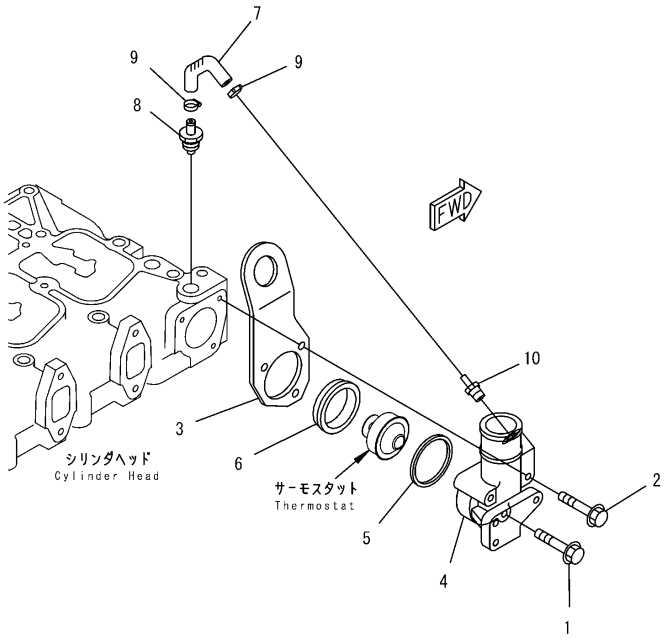

PMD1049

TTHERMOSTAT HOUSING

Item	Part Number	Description	Qty.	Ref.	Serial No.
1	6732-61-6140	BOLT	1		26274903-
2	6732-61-6180	BOLT	2		26274903-
3	6735-11-1920	BRACKET	1		26274903-
4	6732-61-6231	HOUSING, THERMOSTAT	1		26274903-
5	6732-61-6250	SEAL, RING (K1)	1		26274903-
6	6732-61-6240	GASKET (K1)	1		26274903-
7	6732-61-6280	HOSE	1		26274903-
8	6732-61-6270	VALVE, CHECK	1		26274903-
9	07285-00125	CLIP	2		26274903-
10	6732-61-6171	COUPLING	1		26274903-

THERMOSTAT (26295864-)

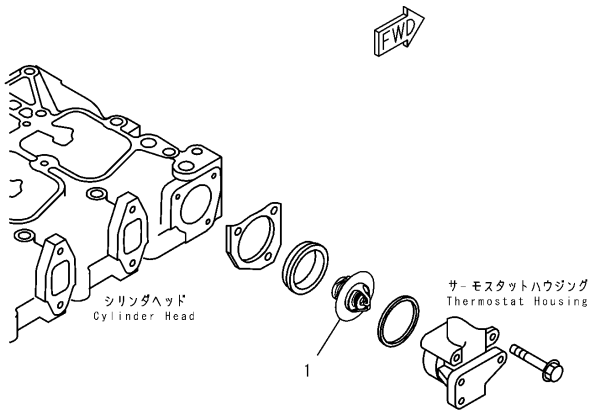

PJ6C418

THERMOSTAT (26295864-)

Item	Part Number	Description	Qty.	Ref.	Serial No.
1	6735-61-6471	THERMOSTAT	1		26295864-

OIL PRESSURE SWITCH (#2314444-)

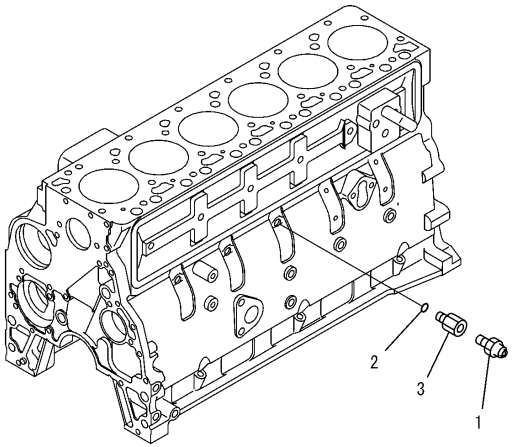

00009771

OIL PRESSURE SWITCH (#2314444-)

Item	Part Number	Description	Qty.	Ref.	Serial No.
1	6732-81-3111	SWITCH, OIL PRESSURE	1		26314444-
	6732-81-3190	ADAPTER ASSEMBLY	1		26314444-
2	6215-81-9710	.O-RING	1		26314444-
3	6732-81-3180	.ADAPTER	1		26314444-

CYLINDER BLOCK

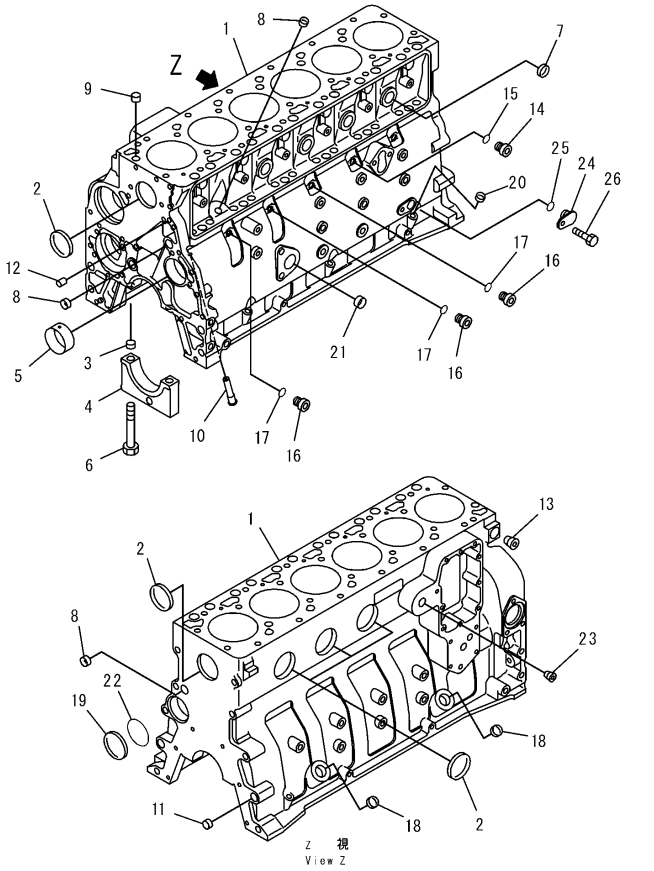

CYLINDER BLOCK

Item	Part Number	Description	Qty.	Ref.	Serial No.
	6731-21-1270	CYLINDER BLOCK ASSEMBLY	1		26274903-
	☆	.BLOCK ASSEMBLY	1		26274903-
1	☆	..BLOCK, CYLINDER	1		26312676-
2	6736-21-1810	..PLUG	5		26274903-
3	6732-21-1910	..RING	14		26274903-
4	△6731-21-1260	..CAP	7		26274903-
5	6732-21-1411	..BUSHING	1		26274903-
6	6732-21-1611	..BOLT	14		26274903-
7	6732-21-1820	..PLUG	4		26274903-
8	6731-21-1810	..PLUG, EXPANSION	3		26312676-
	6731-21-1210	.BLOCK SERVICE KIT	1		26274903-
9	6732-21-6140	..RING	2		26274903-
10	6731-21-1190	..NOZZLE, PISTON COOLING	6		26312676-
11	6732-21-1910	..RING	2		26274903-
12	6732-21-6120	..PIN	2		26274903-
13	6732-11-1910	..PLUG	1		26274903-
	6735-21-1910	..PLUG ASSEMBLY	1		26274903-
14	6735-21-1920	...PLUG	1		26274903-
15	6735-21-1930	...O-RING (K2)	1		26274903-
	6732-21-1960	..PLUG ASSEMBLY	3		26274903-
16	6215-81-9510	...PLUG	1		26274903-
17	6215-81-9710	...O-RING (K2)	1		26274903-
18	6735-21-5530	..PLUG	3		26274903-
19	6732-21-6130	..PLUG	1		26274903-
20	6732-21-5530	..PLUG	3		26274903-
21	6732-21-6160	..PLUG	1		26274903-
22	6732-21-1930	..O-RING	1		26274903-
23	6732-11-1920	..PLUG	1		26274903-
	6735-21-1940	..PLUG	1		26274903-
24	6735-21-1950	...PLUG	1		26274903-
25	6735-21-1960	...O-RING (K2)	1		26274903-
26	6732-21-3120	..BOLT	1		26274903-
		REFER TO FIG.NOS.OF REPAIR PARTS FOR O.S., U.S., AND SERVICE PARTS..			

FRONT COVER

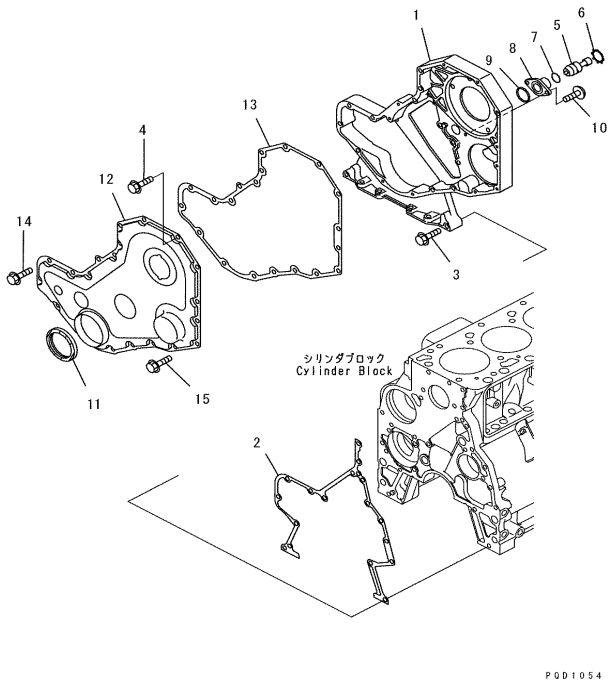

FRONT COVER

Item	Part Number	Description	Qty.	Ref.	Serial No.
1	6738-21-3110	HOUSING, GEAR	1		26274903-
2	6732-21-3812	GASKET (K2)	1		26274903-
3	6736-21-3210	BOLT	11		26274903-
4	6736-21-5310	BOLT	5		26274903-
5	6732-21-3140	PIN	1		26274903-
6	6732-21-3150	RING	1		26274903-
7	6732-21-3870	O-RING (K2)	1		26274903-
8	6732-21-3180	HOUSING	1		26274903-
9	6732-21-3880	GASKET (K2)	1		26274903-
10	6732-21-3160	BOLT	2		26274903-
11	6735-21-3511	SEAL	1		26274903-
12	6736-21-3310	COVER, GEAR	1		26274903-
13	6736-21-3450	GASKET (K2)	1		26274903-26312300
14	6742-01-0540	BOLT	5		26274903-
15	6736-21-5310	BOLT	10		26274903-
16	01643-30823	WASHER	1		26274903-
17	6736-21-5310	BOLT	10		26274903-

CAMFOLLOWER COVER

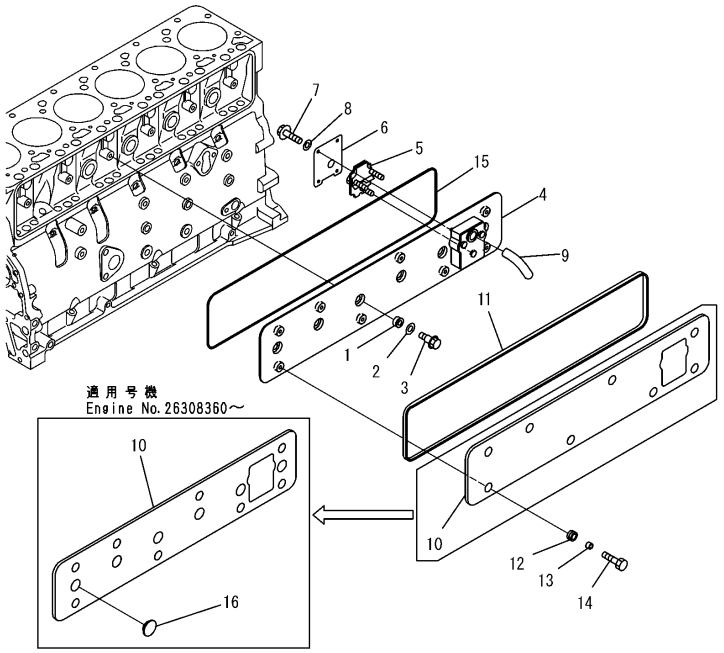

00009801

CAMFOLLOWER COVER

Item	Part Number	Description	Qty.	Ref.	Serial No.
1	6732-11-8210	GASKET, SEAL .....(K2)	6		26277761-
	□6738-11-8210	GROMMET, SEAL	6		26274903-26277760
2	6732-11-8150	WASHER	6		26277761-
3	6738-21-6280	BOLT	6		26274903-
	6738-21-6100	COVER ASSEMBLY	1		26274903-
4	☆	.COVER	1		26274903-
5	6738-21-7710	.BREATHER	1		26274903-
6	6738-21-7780	.COVER	1		26274903-
7	01435-00616	.BOLT	4		26274903-
8	01640-20610	.WASHER	4		26274903-
9	6738-21-7810	.TUBE	1		26274903-
10	6738-21-6620	PANEL	1		26308360-
	6738-21-6610	COVER	1		26274903-26308539
11	6738-21-6650	GASKET .....(K2)	1		26274903-
12	6738-21-6660	GASKET .....(K2)	8		26274903-
13	6738-21-6670	SPACER	8		26274903-
14	6732-71-3220	BOLT	8		26274903-
15	6738-21-6180	O-RING .....(K2)	1		26274903-
16	6738-21-6680	GROMMET	6		26308360-

BREATHER HOSE

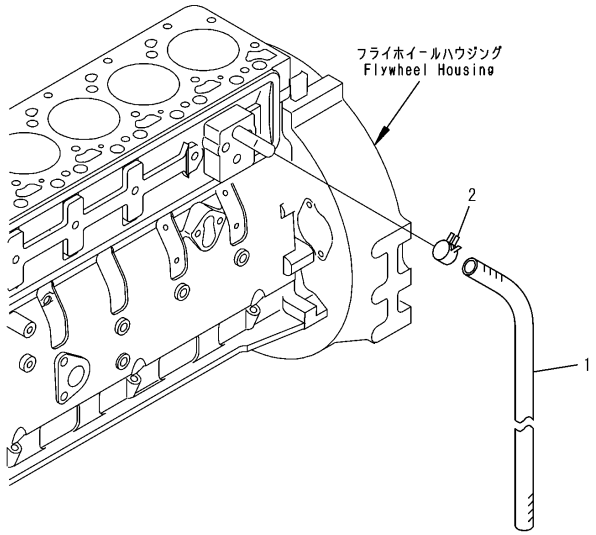

00003091

BREATHER HOSE

Item	Part Number	Description	Qty.	Ref.	Serial No.
1	07287-01911	HOSE	1		26314444-
2	07285-00220	CLIP	1		26314444-

CYLINDER BLOCK BLIND PLUG (#26314444-)

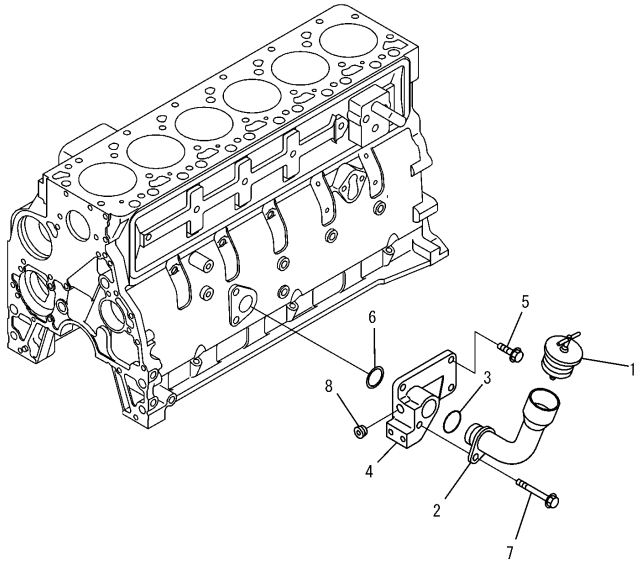

00009774

A207P-01A2

CYLINDER BLOCK BLIND PLUG (#26314444-)

Item	Part Number	Description	Qty.	Ref.	Serial No.
1	6735-21-7130	CAP	1		26314444-
2	6736-21-7210	TUBE	1		26314444-
3	6736-21-7220	O-RING	1		26314444-
4	6736-81-2110	CONNECTION	1		26314444-
5	6732-21-6920	BOLT	3		26314444-
6	6736-21-3360	SEAL	1		26314444-
7	6736-21-5350	BOLT	1		26314444-
8	6732-11-1910	PLUG	1		26314444-

OIL PAN BOLT (#26314444-)

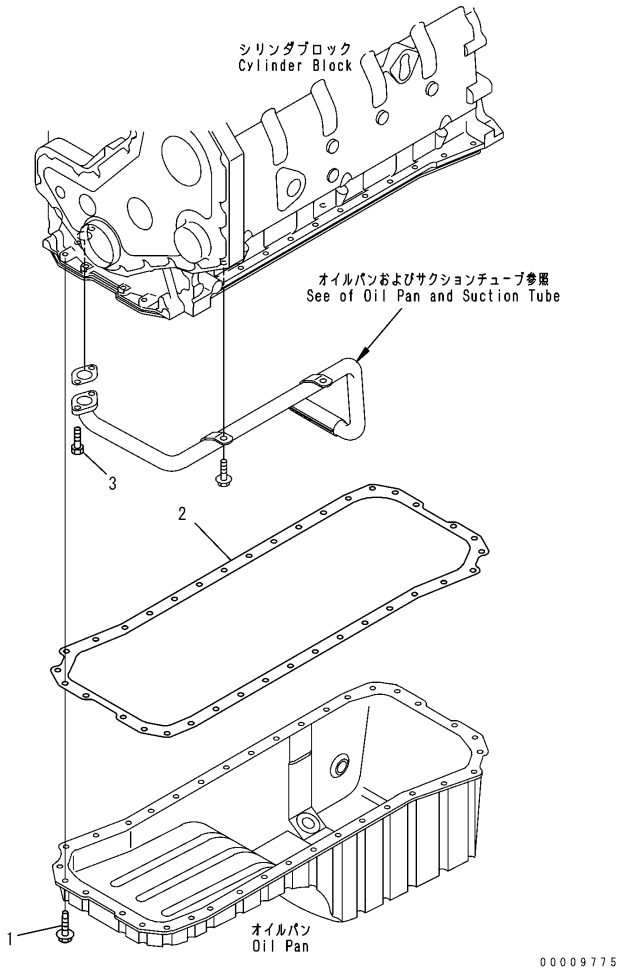

OIL PAN BOLT (#26314444-)

Item	Part Number	Description	Qty.	Ref.	Serial No.
1	6732-21-6610	BOLT	36		26314444-
2	6735-21-5661	GASKET	1		26314444-
3	6732-21-5160	BOLT	2		26314444-

OIL PAN AND SUCTION TUBE (#26314444-)

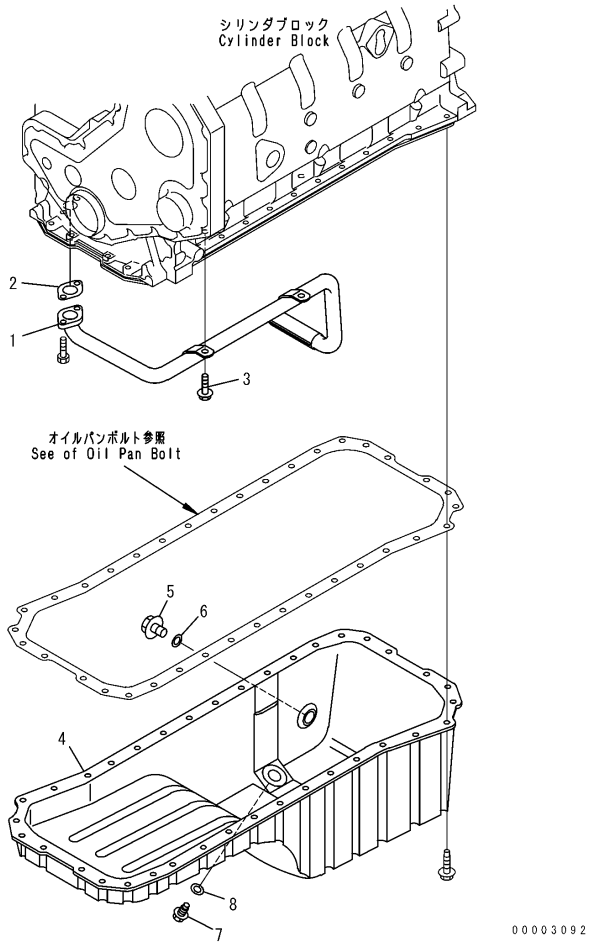

OIL PAN AND SUCTION TUBE (#26314444-)

Item	Part Number	Description	Qty.	Ref.	Serial No.
1	6736-21-5510	TUBE, SUCTION	1		26314444-
2	6733-21-5521	GASKET (K2)	1		26314444-
3	6732-71-3220	BOLT	2		26314444-
4	6735-21-5130	PAN, OIL	1		26314444-
5	6732-21-5210	PLUG	1		26314444-
6	6732-21-5170	WASHER, SEALING (K2)	1		26314444-
7	6736-21-5320	PLUG	1		26314444-
8	6732-21-5190	WASHER, SEALING (K2)	1		26314444-

OIL DRAIN TUBE (#26314444-)

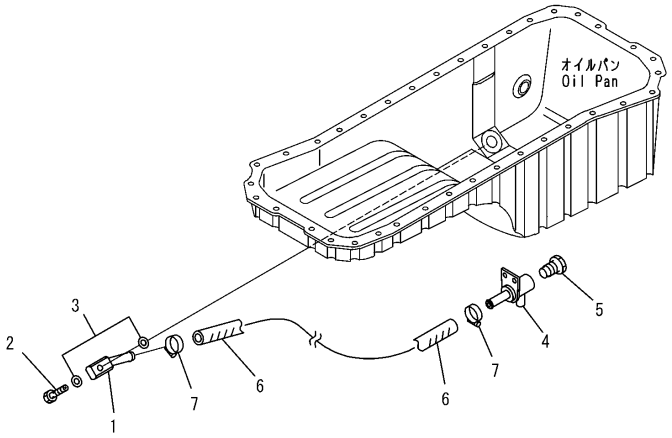

00003093

OIL DRAIN TUBE (#26314444-)

Item	Part Number	Description	Qty.	Ref.	Serial No.
1	23A-01-33311	TUBE	1		26314444-
2	07206-21518	BOLT, JOINT	1		26314444-
3	07005-01812	GASKET (K2)	2		26314444-
4	23B-01-33350	TUBE	1		26314444-
5	424-01-11110	PLUG	1		26314444-
6	23A-01-33341	HOSE	1		26314444-
7	07281-00359	CLAMP	2		26314444-

OIL LEVEL GAUGE (#26314444-)

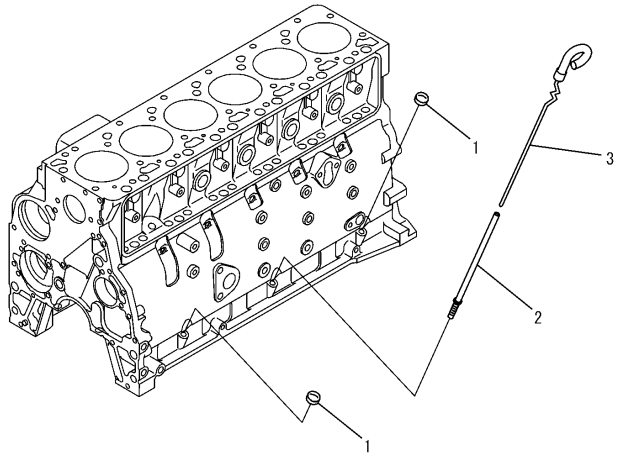

00009783

OIL LEVEL GAUGE (#26314444-)

Item	Part Number	Description	Qty.	Ref.	Serial No.
1	6732-21-5530	PLUG	2		26314444-
2	6735-21-5350	TUBE	1		26314444-
3	6735-21-5360	GAUGE, OIL LEVEL	1		26314444-

FLYWHEEL HOUSING (#26314444-)

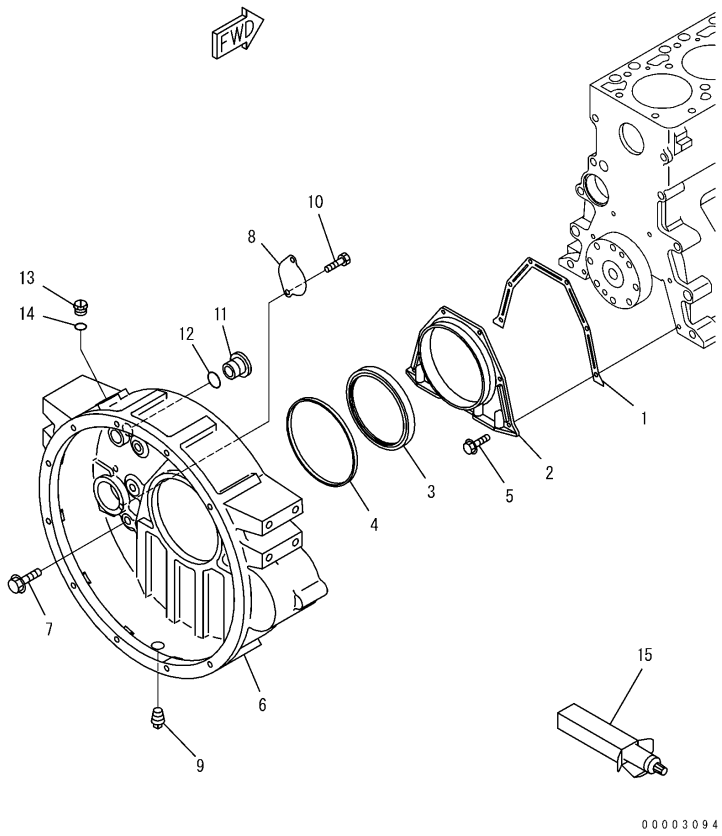

A2219-01B5

FLYWHEEL HOUSING (#26314444-)

Item	Part Number	Description	Qty.	Ref.	Serial No.
1	6735-21-4191	GASKET .....(K2)	1		26314444-
2	6731-21-6231	COVER	1		26314444-
3	6736-21-4220	SEAL, REAR .....(K2)	1		26314444-
	6732-21-1310	.SEAL	1		26314444-
4	6732-21-4170	GASKET	1		26314444-
5	6732-21-4290	BOLT	6		26314444-
6	6735-21-4130	HOUSING, FLYWHEEL	1		26314444-
7	6732-21-4220	BOLT	8		26314444-
8	6732-21-4130	PLATE	1		26314444-
9	6732-11-1920	PLUG	1		26314444-
10	6735-21-4120	BOLT	2		26314444-
11	6732-21-4150	PLUG	1		26314444-
12	6732-21-4161	O-RING	1		26314444-
13	6735-21-4170	PLUG	1		26314444-
14	6735-21-4160	O-RING	1		26314444-
15	(09920-00150)	LIQUID GASKET, LG-7, 150G	AR		26314444-

FLYWHEEL (#26314444-)

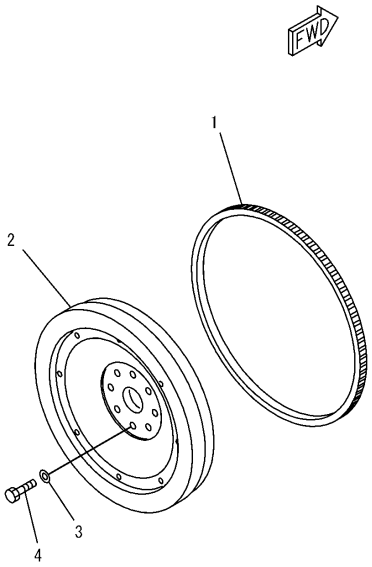

PJ6C388

A223P-01C3

FLYWHEEL (#26314444-)

Item	Part Number	Description	Qty.	Ref.	Serial No.
	6742-01-5545	FLYWHEEL ASSEMBLY	1		26314444-
1	6736-31-4180	.GEAR, RING	1		26314444-
2	☆	.FLYWHEEL	1		26314444-
3	6732-31-4120	WASHER	8		26314444-
4	6732-31-4130	BOLT	8		26314444-

ENGINE FRONT SUPPORT (#26314444-)

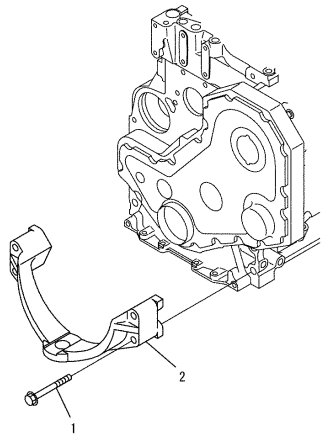

PMD1175

ENGINE FRONT SUPPORT (#26314444-)

Item	Part Number	Description	Qty.	Ref.	Serial No.
1	6735-21-3720	BOLT	4		26314444-
2	6735-21-3710	SUPPORT, FRONT	1		26314444-

CRANKSHAFT

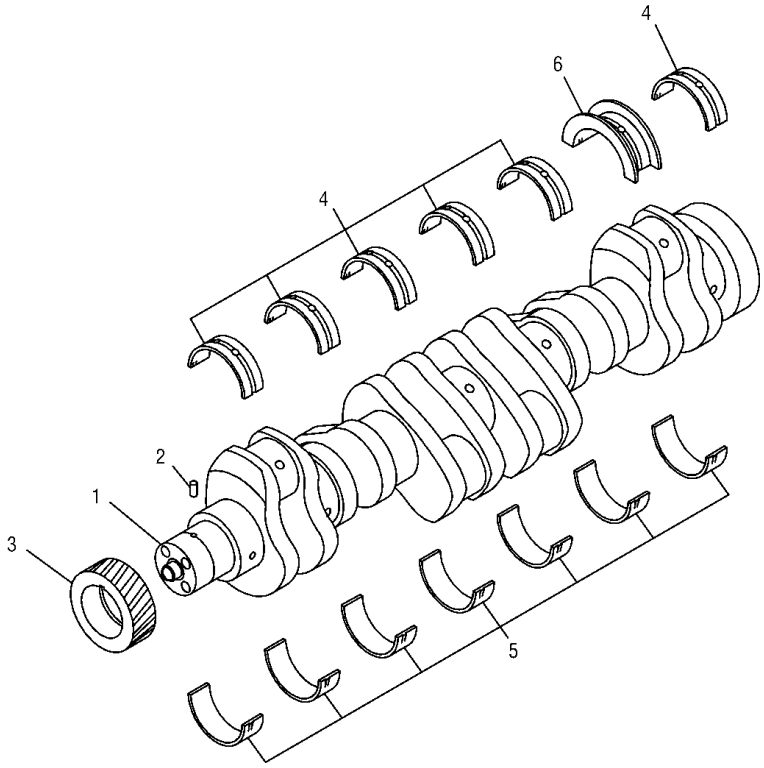

CRANKSHAFT

Item	Part Number	Description	Qty.	Ref.	Serial No.
	6736-31-1100	CRANKSHAFT ASSEMBLY	1		26274903-
1	☆	.CRANKSHAFT	1		26274903-
2	6732-21-6150	.PIN	1		26274903-
3	6732-31-1211	.GEAR	1		26274903-
4	6735-21-8110	METAL, UPPER.	6		26274903-
5	6735-21-8210	METAL, LOWER	7		26274903-
6	6732-21-8180	METAL, THRUST	1		26274903-
		REFER TO FIG.NOS.OF REPAIR PARTS FOR O.S., U.S., AND SERVICE PARTS..			

DAMPER

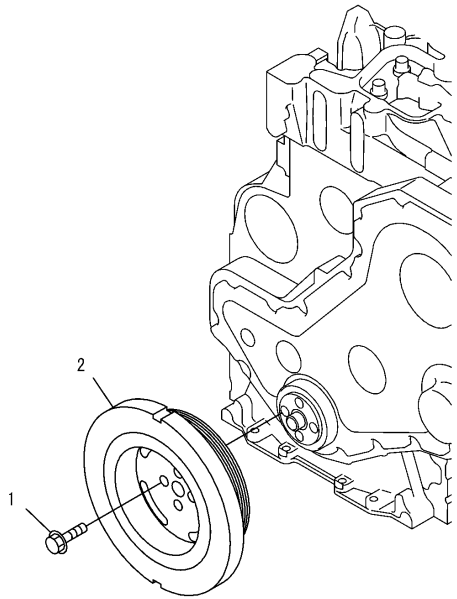

PMD1072

DAMPER

Item	Part Number	Description	Qty.	Ref.	Serial No.
1	6732-31-8120	BOLT	4		26274903-
2	6735-31-8120	DAMPER	1		26274903-

PISTON

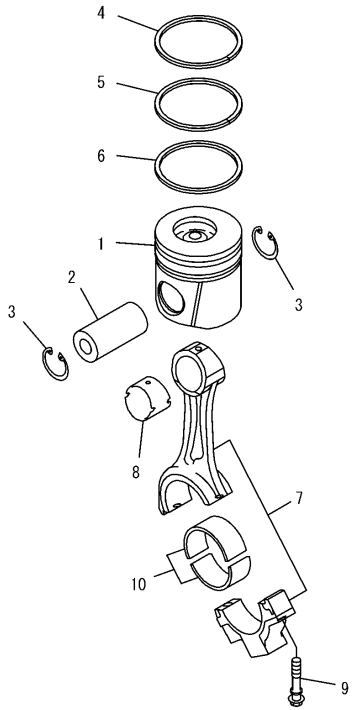

PMD0835

PISTON

Item	Part Number	Description	Qty.	Ref.	Serial No.
1	6738-31-2111	PISTON	6		26292269-
2	6731-31-2410	PIN	6		26274903-
3	6732-31-2420	RING, SNAP	12		26274903-
	6738-31-2031	PISTON RING ASSEMBLY	6		26292269-
4	☆	.RING, TOP	1		26292269-
	☆	.RING, TOP	1		26274903-26292268
5	☆	.RING, SECOND	1		26274903-
6	☆	.RING, OIL	1		26274903-
	6737-32-3120	CONNECTING ROD A.	6		26274903-
7	☆	.ROD	1		26274903-
8	6732-31-3132	.BUSHING	1		26274903-
9	6732-31-3320	.BOLT	2		26299827-
10	6732-31-3420	METAL	12		26274903-
		REFER TO FIG.NOS.OF REPAIR PARTS FOR O.S., U.S., AND SERVICE PARTS..			

ROCKER ARM

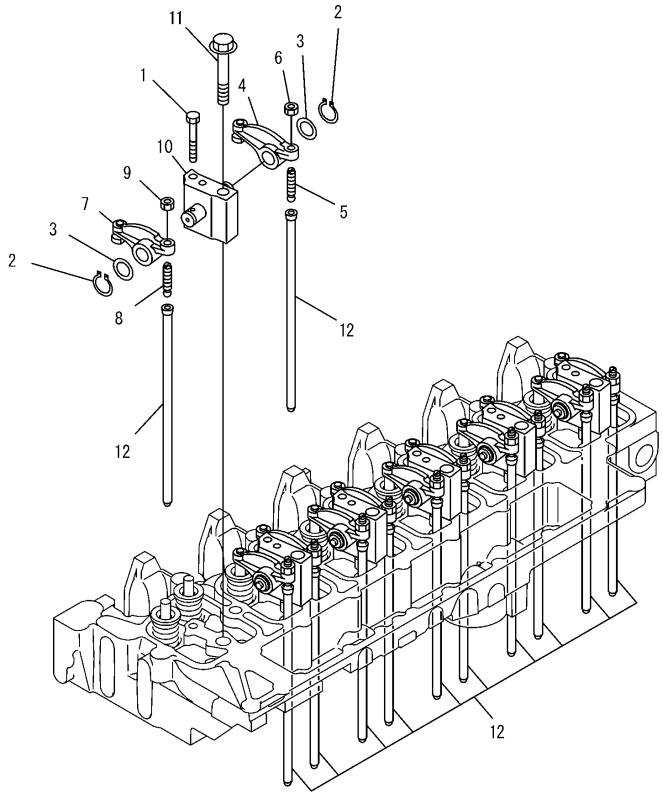

ROCKER ARM

Item	Part Number	Description	Qty.	Ref.	Serial No.
1	6732-41-5180	BOLT	6		26274903-
2	6732-41-5170	RING, SNAP	12		26274903-
3	6732-41-5160	WASHER	12		26274903-
4	6732-41-5400	ARM ASSEMBLY	6		26274903-
5	6735-41-5560	.SCREW	1		26296416-
6	6735-41-5550	.NUT	1		26274903-
7	6732-41-5200	ARM ASSEMBLY	6		26274903-
8	6735-41-5560	.SCREW	1		26296416-
9	6735-41-5550	.NUT	1		26274903-
10	6736-41-5110	BRACKET ASSEMBLY	6		26274903-
11	6732-11-1640	BOLT	6		26274903-
12	6732-41-3111	ROD, PUSH	12		26274903-

TAPPET

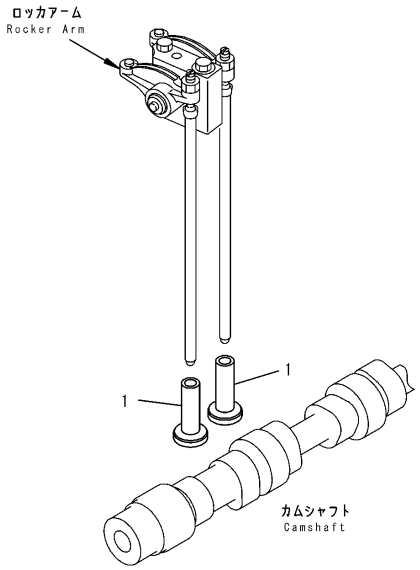

PMD0838

TAPPET

Item	Part Number	Description	Qty.	Ref.	Serial No.
1	6732-41-2112	TAPPET	12		26274903-

CAMSHAFT

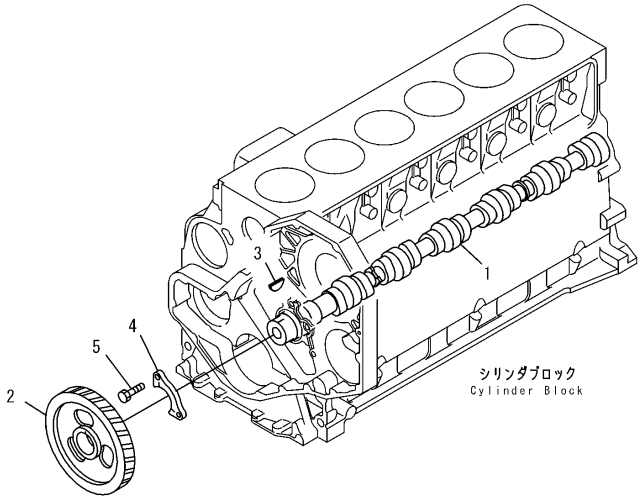

PMD1075

CAMSHAFT

Item	Part Number	Description	Qty.	Ref.	Serial No.
1	6735-41-1111	CAMSHAFT	1		26274903-
2	6732-41-1231	GEAR	1		26274903-
3	6732-41-1280	KEY	1		26274903-
4	6732-41-1220	SUPPORT, THRUST	1		26274903-
5	6732-41-1260	BOLT	2		26274903-

FRONT GEAR TRAIN COVER

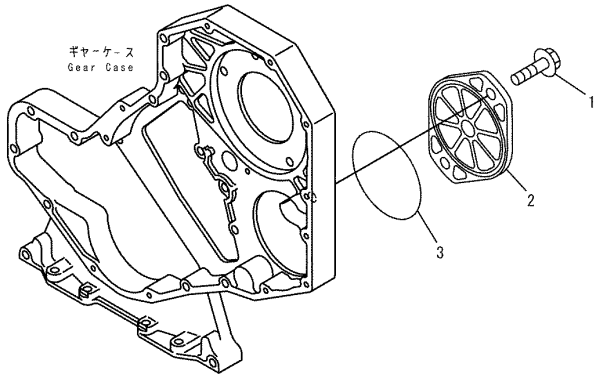

PJD5920

FRONT GEAR TRAIN COVER

Item	Part Number	Description	Qty.	Ref.	Serial No.
1	6732-51-5130	BOLT	2		26274903-
2	6732-21-9310	PLATE, COVER	1		26274903-
3	6732-21-3380	GASKET (K2)	1		26274903-

FAN PULLEY

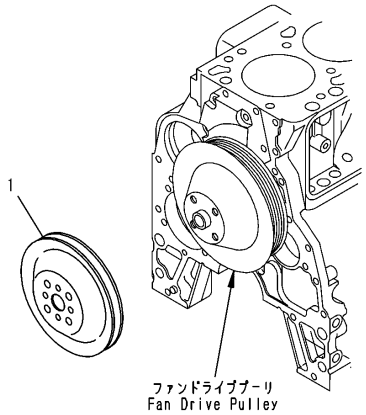

PJD4913

FAN PULLEY

Item	Part Number	Description	Qty.	Ref.	Serial No.
1	6732-81-2810	PULLEY	1		26314444-

TACHOMETER ADAPTER (26314444-)

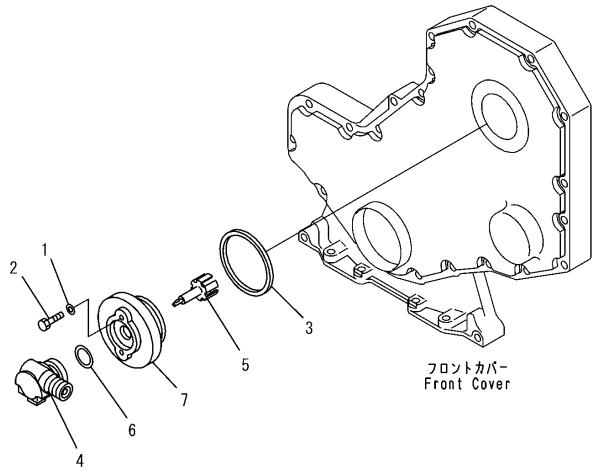

PXD1536

TACHOMETER ADAPTER (26314444-)

Item	Part Number	Description	Qty.	Ref.	Serial No.
1	6732-81-5250	WASHER	2		26314444-
2	6735-21-3430	BOLT	2		26314444-
3	6732-21-3220	SEAL	1		26314444-
4	6735-21-3450	ADAPTER	1		26314444-
5	6735-21-3420	HUB	1		26314444-
6	6736-21-7120	SEAL	1		26314444-
7	6735-21-3410	ADAPTER	1		26314444-

UNDER PLATE

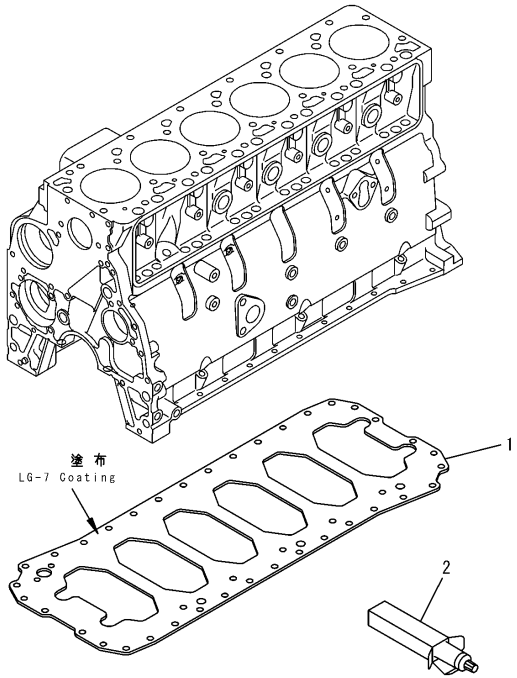

PMD1078

A283P-01A0

UNDER PLATE

Item	Part Number	Description	Qty.	Ref.	Serial No.
1	6735-21-5151	PLATE	1		26274903-
2	(09920-00150)	LIQUID GASKET, LG-7, 150G	AR		26274903-

OIL PUMP

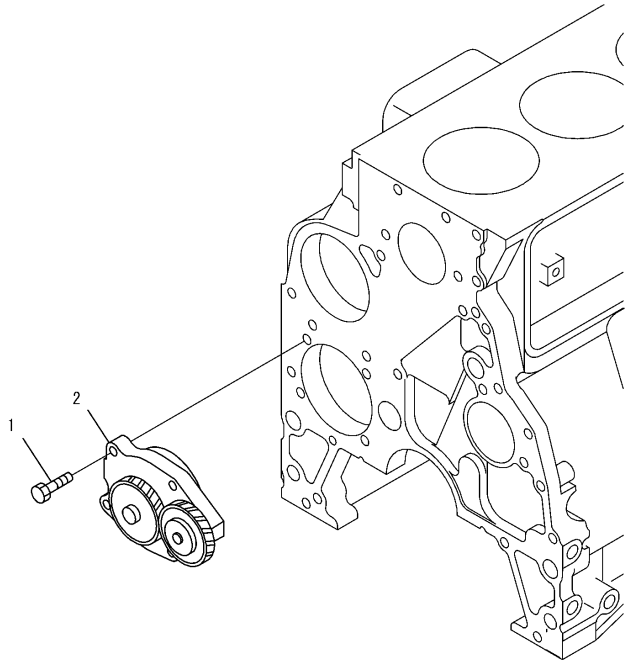

PM35943

OIL PUMP

Item	Part Number	Description	Qty.	Ref.	Serial No.
1	6735-51-1120	BOLT	4		26274903-
2	6731-51-1111	OIL PUMP ASSEMBLY	1		26274903-

OIL COOLER AND OIL FILTER (26302312-)

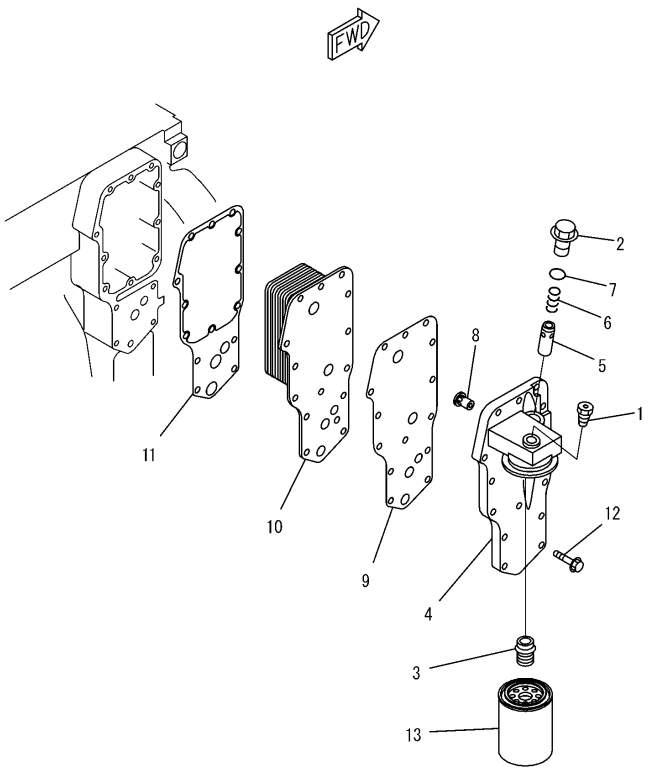

00000184

OIL COOLER AND OIL FILTER (26302312-)

Item	Part Number	Description	Qty.	Ref.	Serial No.
1	6732-11-1930	PLUG	1		26302312-
2	6735-61-2140	PLUG	1		26302312-
3	6736-61-5180	ADAPTER	1		26302312-
4	6738-51-5120	HEAD	1		26302312-
5	6735-61-2160	PLUNGER	1		26302312-
6	6735-61-2190	SPRING	1		26302312-
7	6732-51-4420	O-RING	1		26302312-
8	6731-61-2151	VALVE	1		26302312-
9	6732-51-4432	GASKET	1		26302312-
10	6735-62-2110	CORE	1		26302312-
11	6732-61-2311	GASKET	1		26302312-
12	6732-61-6140	BOLT	14		26302312-
13	6736-51-5142	CARTRIDGE	1		26302312-

FUEL INJECTION PUMP (#26314444-)

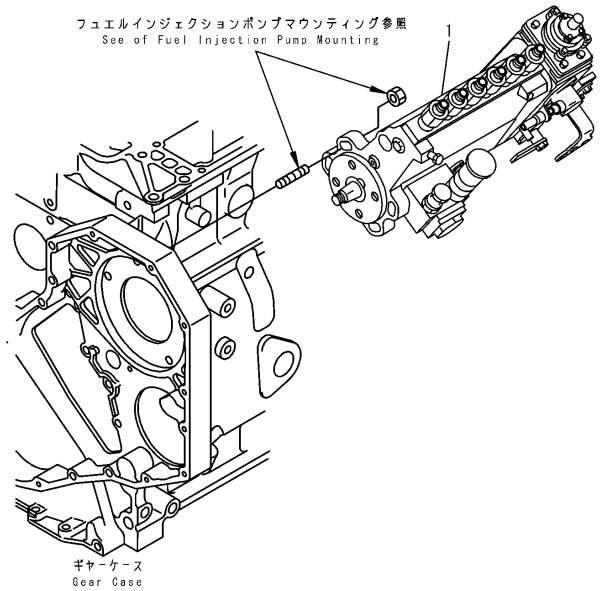

PJ6B408

FUEL INJECTION PUMP (#26314444-)

Item	Part Number	Description	Qty.	Ref.	Serial No.
1	(6738-71-1190)	INJECTION PUMP ASSEMBLY, (SEE FIG.A401P-02H7)	1		26314444-

FUEL INJECTION PUMP (PUMP) (1/2) (INNERS PARTS) (#26314444)

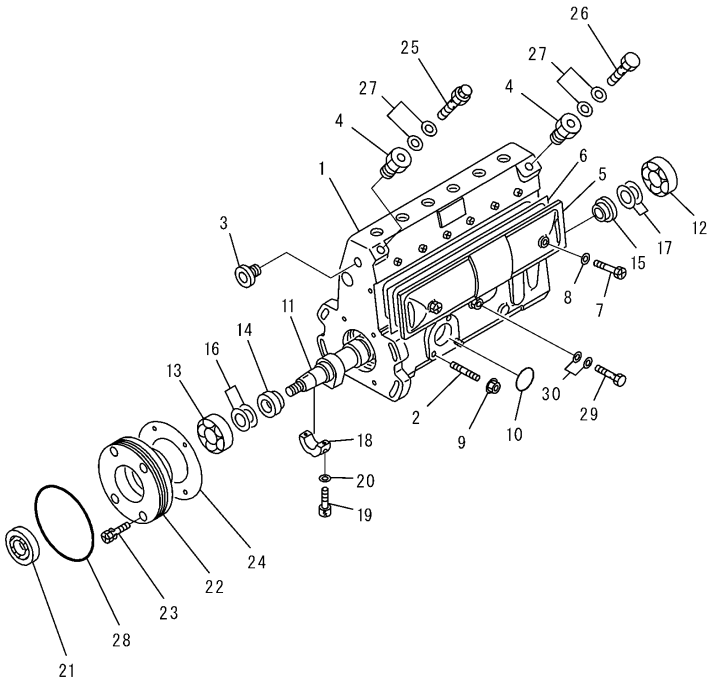

PG3P839

FUEL INJECTION PUMP (PUMP) (1/2) (INNERS PARTS) (#26314444)

Item	Part Number	Description	Qty.	Ref.	Serial No.
	6738-71-1190	INJECTION PUMP ASSEMBLY	1		26314444-
		THIS ASSEMBLY CONSISTS OF ALL PARTS SHOWN IN FIGS.A401P-02H7 TO A401P-07H7.			
	DK101062-9340	.PUMP ASSEMBLY	1		26314444-
		THIS ASSEMBLY CONSISTS OF ALL PARTS SHOWN IN FIGS.A401P-02H7 AND A401P-03H7.			
1	DK131073-9120	..HOUSING	1		26314444-
2	DK029040-6020	...STUD	3		26314444-
3	DK134026-0000	...PLUG	1		26314444-
4	DK131002-2000	...ADAPTER	2		26314444-
5	DK131028-6020	..COVER	1		26314444-
6	DK131011-0800	...GASKET	1		26314444-
7	DK131017-1000	..SCREW	2		26314444-
8	DK029340-6020	..GASKET	2		26314444-
9	DK139206-0400	..NUT	3		26314444-
10	DK029633-1010	..O-RING	1		26314444-
11	DK131371-4900	..CAMSHAFT	1		26314444-
12	DK016630-2030	..BEARING	AR		26314444-
	DK028201-7020	..BEARING	AR		26314444-
13	DK016640-2030	..BEARING	AR		26314444-
	DK028202-0020	..BEARING	AR		26314444-
14	DK131302-1300	..RING	1		26314444-
15	DK131302-1700	..RING	1		26314444-
16	DK029312-0310	..SHIM, 0.10MM	AR		26314444-
	DK029312-0320	..SHIM, 0.12MM	AR		26314444-
	DK029312-0330	..SHIM, 0.14MM	AR		26314444-
	DK029312-0340	..SHIM, 0.16MM	AR		26314444-
	DK029312-0350	..SHIM, 0.18MM	AR		26314444-
	DK029312-0360	..SHIM, 0.3MM	AR		26314444-
	DK029312-0370	..SHIM, 0.5MM	AR		26314444-
	DK029312-0380	..SHIM, 1.0MM	AR		26314444-
17	DK029311-7010	..SHIM, 0.1MM	AR		26314444-
	DK029311-7020	..SHIM, 0.12MM	AR		26314444-
	DK029311-7030	..SHIM, 0.14MM	AR		26314444-
	DK029311-7040	..SHIM, 0.16MM	AR		26314444-
	DK029311-7050	..SHIM, 0.18MM	AR		26314444-

FUEL INJECTION PUMP (PUMP) (1/2) (INNERS PARTS) (#26314444)

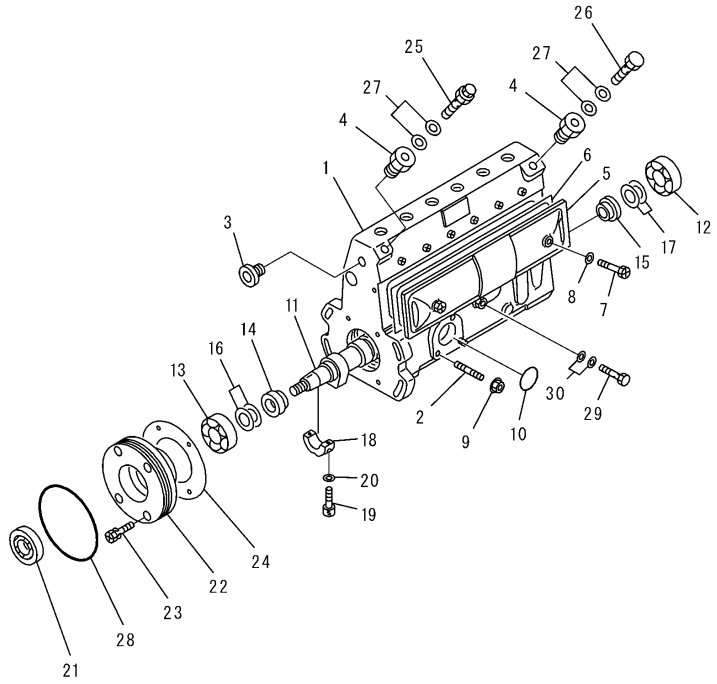

PG3P839

FUEL INJECTION PUMP (PUMP) (1/2) (INNERS PARTS) (#26314444)

Item	Part Number	Description	Qty.	Ref.	Serial No.
	DK029311-7090	..SHIM, 0.3MM	AR		26314444-
	DK029311-7060	..SHIM, 0.5MM	AR		26314444-
	DK029311-7210	..SHIM, 0.7MM	AR		26314444-
	DK029311-7070	..SHIM, 1.0MM	AR		26314444-
	DK029311-7220	..SHIM, 1.4MM	AR		26314444-
	DK139417-0000	..SHIM, 2.40MM	AR		26314444-
18	DK131306-1000	..BEARING, CENTER	1		26314444-
19	DK029050-5010	..SCREW	2		26314444-
20	DK026505-0940	..GASKET	2		26314444-
21	DK029622-0190	..SEAL, OIL	1		26314444-
22	DK131330-6400	..COVER	1		26314444-
23	DK029010-6810	..BOLT	4		26314444-
24	DK131321-1900	..GASKET	1		26314444-
25	DK131424-3420	..VALVE	1		26314444-
26	DK131401-0020	..BOLT, EYE	1		26314444-
27	DK029341-4130	..GASKET	4		26314444-
28	DK029637-5030	..O-RING	1		26314444-
29	DK029731-0120	..BOLT, EYE	1		26314444-
30	DK029341-0110	..GASKET	2		26314444-

FUEL INJECTION PUMP (PUMP) (2/2) (INNERS PARTS) (#26314444)

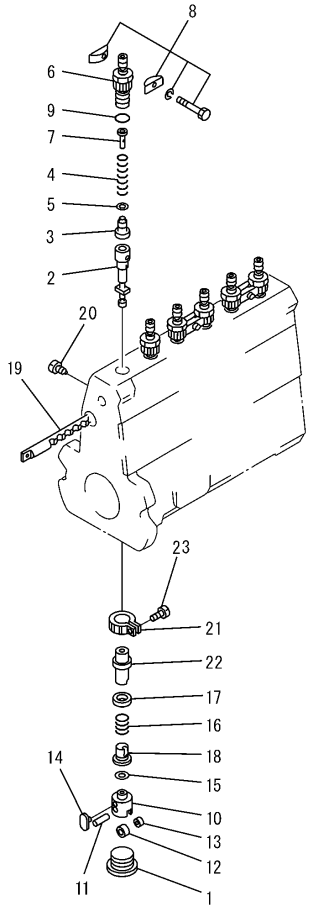

PG3P840

A401P-03H7

FUEL INJECTION PUMP (PUMP) (2/2) (INNERS PARTS) (#26314444)

Item	Part Number	Description	Qty.	Ref.	Serial No.
	(6738-71-1190)	INJECTION PUMP ASSEMBLY	1		26314444-
		THIS ASSEMBLY CONSISTS OF ALL PARTS SHOWN IN FIGS.A401P-02H7 TO A401P-07H7			
	(DK101062-9340)	.PUMP ASSEMBLY	1		26314444-
		THIS ASSEMBLY CONSISTS OF ALL PARTS SHOWN IN FIGS.A401P-02H7 AND A401P-03H7.			
1	DK131034-1401	..PLUG	6		26314444-
2	DK131154-6520	..PLUNGER ASSEMBLY	6		26314444-
3	DK131110-7720	..VALVE, DELIVERY	6		26314444-
4	DK131112-5600	..SPRING	6		26314444-
5	DK131115-1600	..GASKET	6		26314444-
6	DK131116-8420	..HOLDER	6		26314444-
7	DK131117-3100	..STOPPER	6		26314444-
8	DK131122-0520	..PLATE ASSEMBLY	3		26314444-
9	DK139717-0100	..O-RING	6		26314444-
10	DK131200-2820	..TAPPET ASSEMBLY	6		26314444-
11	DK131203-0800	...PIN	1		26314444-
12	DK131204-1000	...ROLLER	1		26314444-
13	DK131205-0500	...BUSHING	1		26314444-
14	DK131206-0200	...GUIDE	1		26314444-
15	DK029311-0580	..SHIM, 0.2MM	AR		26314444-
	DK029311-0590	..SHIM, 0.25MM	AR		26314444-
	DK029311-0020	..SHIM, 0.30MM	AR		26314444-
	DK029311-0600	..SHIM, 0.35MM	AR		26314444-
	DK029311-0030	..SHIM, 0.40MM	AR		26314444-
	DK029311-0610	..SHIM, 0.45MM	AR		26314444-
	DK029311-0040	..SHIM, 0.50MM	AR		26314444-
	DK029311-0270	..SHIM, 0.55MM	AR		26314444-
	DK029311-0050	..SHIM, 0.6MM	AR		26314444-
	DK029311-0280	..SHIM, 0.65MM	AR		26314444-
	DK029311-0060	..SHIM, 0.7MM	AR		26314444-
	DK029311-0290	..SHIM, 0.75MM	AR		26314444-
	DK029311-0070	..SHIM, 0.8MM	AR		26314444-
	DK029311-0310	..SHIM, 0.85MM	AR		26314444-
	DK029311-0080	..SHIM, 0.9MM	AR		26314444-

FUEL INJECTION PUMP (PUMP) (2/2) (INNERS PARTS) (#26314444)

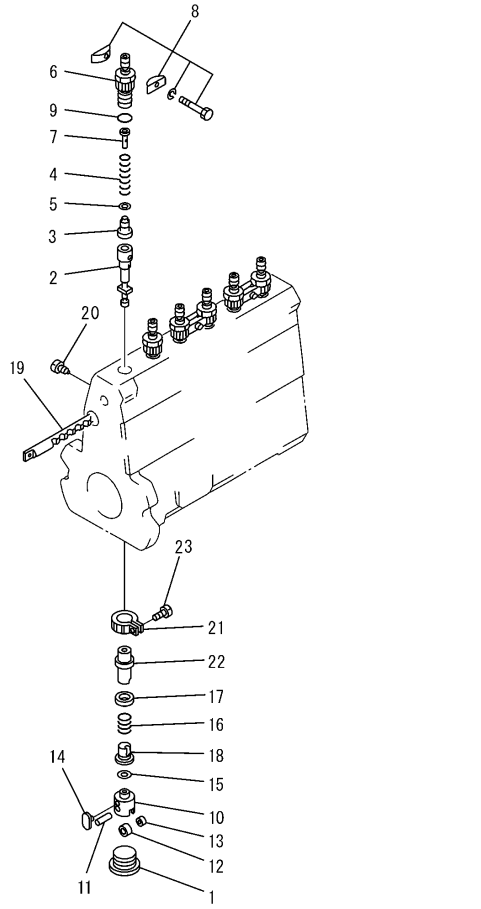

PG3P840

FUEL INJECTION PUMP (PUMP) (2/2) (INNERS PARTS) (#26314444)

Item	Part Number	Description	Qty.	Ref.	Serial No.
	DK029311-0320	..SHIM, 0.95MM	AR		26314444-
	DK029311-0090	..SHIM, 1.0MM	AR		26314444-
	DK029311-0330	..SHIM, 1.05MM	AR		26314444-
	DK029311-0110	..SHIM, 1.1MM	AR		26314444-
	DK029311-0340	..SHIM, 1.15MM	AR		26314444-
	DK029311-0120	..SHIM, 1.2MM	AR		26314444-
	DK029311-0350	..SHIM, 1.25MM	AR		26314444-
	DK029311-0130	..SHIM, 1.3MM	AR		26314444-
	DK029311-0620	..SHIM, 1.35MM	AR		26314444-
	DK029311-0140	..SHIM, 1.4MM	AR		26314444-
	DK029311-0630	..SHIM, 1.45MM	AR		26314444-
	DK029311-0490	..SHIM, 1.5MM	AR		26314444-
	DK029311-0710	..SHIM, 1.55MM	AR		26314444-
	DK029311-0500	..SHIM, 1.6MM	AR		26314444-
16	DK131215-2500	..SPRING	6		26314444-
17	DK131216-0100	..SEAT, SPRING	6		26314444-
18	DK131217-0200	..SEAT, SPRING	6		26314444-
19	DK131256-0900	..RACK, CONTROL	1		26314444-
20	DK131226-0300	..SCREW	1		26314444-
21	DK131240-0100	..PINION	6		26314444-
22	DK131241-0100	..SLEEVE, CONTROL	6		26314444-
23	DK131242-0100	..SCREW	6		26314444-

FUEL INJECTION PUMP (GOVERNOR) (1/3) (INNERS PARTS) (#26314444-)

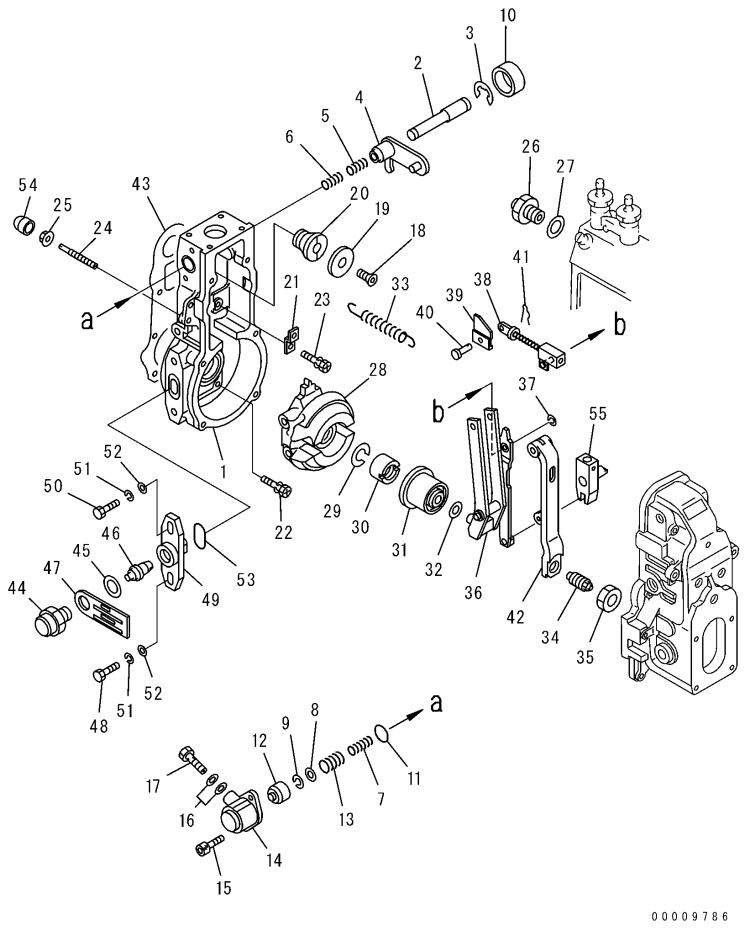

FUEL INJECTION PUMP (GOVERNOR) (1/3) (INNERS PARTS) (#26314444-)

Item	Part Number	Description	Qty.	Ref.	Serial No.
	(6738-71-1190)	INJECTION PUMP ASSEMBLY	1		26314444-
		THIS ASSEMBLY CONSISTS OF ALL PARTS SHOWN IN FIGS.A401P-02H7 TO A401P-07H7.			
	DK105404-6150	.GOVERNOR ASSEMBLY.	1		26314444-
		THIS ASSEMBLY CONSISTS OF ALL PARTS SHOWN IN FIGS.A401P-04H7 TO A401P-06H7.			
	DK154620-0820	...HOUSING ASSEMBLY	1		26314444-
1	DK154620-0020	...HOUSING	1		26314444-
2	DK154621-3701	...SHAFT	1		26314444-
3	DK016010-0740	...RING, SNAP	1		26314444-
4	DK154415-3320	...LEVER	1		26314444-
5	DK154415-3400	...SPRING	1		26314444-
6	DK154621-3800	...SPRING	1		26314444-
7	DK154621-4400	...SPRING	1		26314444-
8	DK139406-1400	...SHIM	1		26314444-
9	DK160100-0540	...RING, SNAP	1		26314444-
10	DK154621-3600	...CAP	1		26314444-
11	DK016520-2210	...O-RING	1		26314444-
12	DK154621-3500	...BUSHING	1		26314444-
13	DK154621-3900	...SPRING	1		26314444-
14	DK154620-1600	...COVER	1		26314444-
15	DK010235-1640	...BOLT, SOCKET	2		26314444-
16	DK029341-0110	...GASKET	2		26314444-
17	DK029731-0120	...BOLT, EYE	1		26314444-
18	DK154621-4300	..BOLT	1		26314444-
19	DK154621-4100	..WASHER	1		26314444-
20	DK154620-7900	..ADAPTER	1		26314444-
21	DK154375-9020	..PLATE	1		26314444-
22	DK029010-6810	..BOLT	5		26314444-
23	DK020106-1840	..BOLT	1		26314444-
24	DK154013-4000	..SCREW	1		26314444-
25	DK154011-4900	..NUT, LOCK	1		26314444-
26	DK155404-5120	..LIMITER	1		26314444-
27	DK026518-2240	..GASKET	1		26314444-
28	DK154621-2120	..FLYWEIGHT ASSEMBLY	1		26314444-
29	DK029321-2020	..WASHER, SPRING	1		26314444-

FUEL INJECTION PUMP (GOVERNOR) (1/3) (INNERS PARTS) (#26314444-)

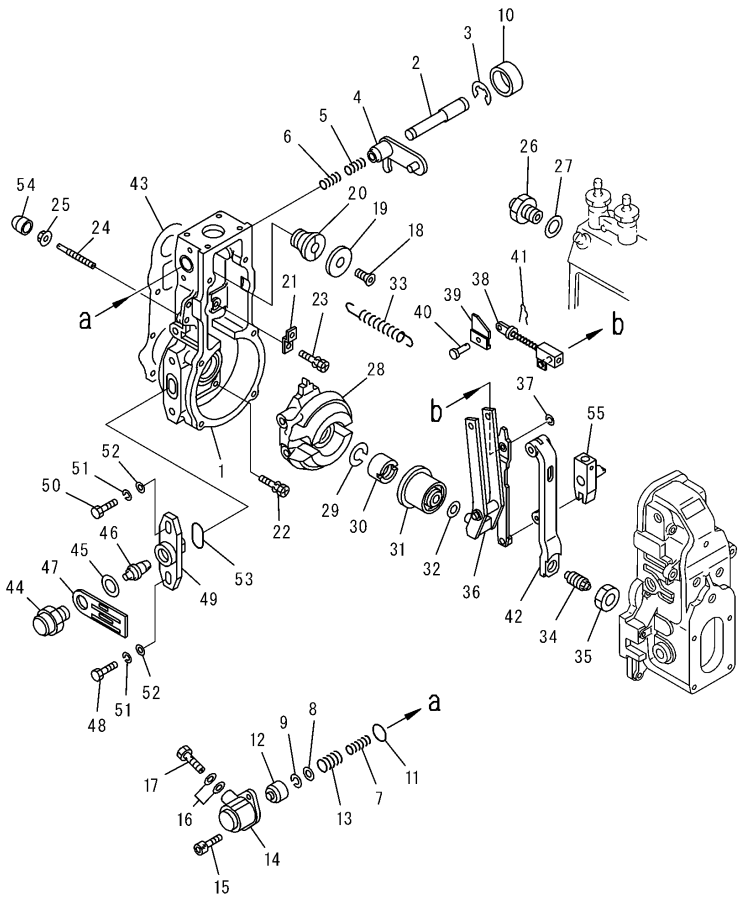

FUEL INJECTION PUMP (GOVERNOR) (1/3) (INNERS PARTS) (#26314444-)

Item	Part Number	Description	Qty.	Ref.	Serial No.
30	DK029231-2030	..NUT	1		26314444-
31	DK154123-2320	..SLEEVE	1		26314444-
32	DK029311-0010	..SHIM, 0.20MM	AR		26314444-
	DK029311-0180	..SHIM, 0.30MM	AR		26314444-
	DK029311-0190	..SHIM, 0.40MM	AR		26314444-
	DK139410-0000	..SHIM, 0.50MM	AR		26314444-
	DK029311-0210	..SHIM, 1.00MM	AR		26314444-
	DK139410-0100	..SHIM, 1.50MM	AR		26314444-
	DK139410-3000	..SHIM, 2.00MM	AR		26314444-
	DK139410-3100	..SHIM, 3.00MM	AR		26314444-
	DK139410-3200	..SHIM, 4.00MM	AR		26314444-
33	DK154154-5200	..SPRING	1		26314444-
34	DK154177-0720	..CAPSULE, SPRING	1		26314444-
35	DK029201-6010	..NUT	1		26314444-
36	DK154218-1620	..GUIDE LEVER ASSEMBLY	1		26314444-
37	DK016010-0540	..RING, SNAP	1		26314444-
38	DK154235-4720	..LINK	1		26314444-
39	DK154232-3200	..CONNECTOR	1		26314444-
40	DK154222-5800	..PIN	1		26314444-
41	DK155402-3800	..PIN	1		26314444-
42	DK154236-4100	..LEVER	1		26314444-
43	DK154390-0000	..GASKET	1		26314444-
44	DK154621-3000	..PLUG	1		26314444-
45	DK026518-2240	..GASKET	1		26314444-
46	DK154620-8800	..PIN	1		26314444-
47	DK154620-8901	..PLATE	1		26314444-
48	DK010038-1840	..BOLT	1		26314444-
49	DK154620-1500	..FLANGE	1		26314444-
50	DK154620-4700	..BOLT	1		26314444-
51	DK014110-8440	..WASHER, SPRING	2		26314444-
52	DK014010-8140	..WASHER	2		26314444-
53	DK154621-3200	..O-RING	1		26314444-
54	DK154062-3520	..CAP	1		26314444-
55	DK154326-5120	..LEVER ASSEMBLY	1		26314444-

FUEL INJECTION PUMP (GOVERNOR) (2/3) (INNER PARTS) (#26314444)

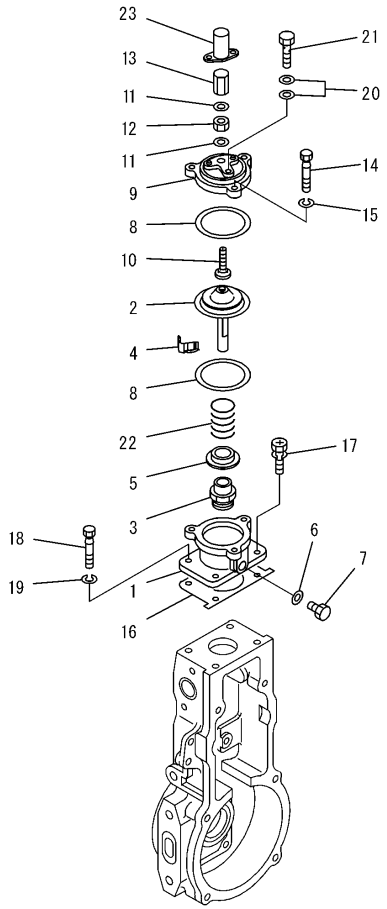

PJ6FI99

A401P-05H7

FUEL INJECTION PUMP (GOVERNOR) (2/3) (INNER PARTS) (#26314444)

Item	Part Number	Description	Qty.	Ref.	Serial No.
	(6738-71-1190)	INJECTION PUMP ASSEMBLY	1		26314444-
		THIS ASSEMBLY CONSISTS OF ALL PARTS SHOWN IN FIGS.A401P-02H7 TO A401P-07H7.			
	(DK105404-6150)	.GOVERNOR ASSEMBLY.	1		26314444-
		THIS ASSEMBLY CONSISTS OF ALL PARTS SHOWN IN FIGS.A401P-04H7 TO A401P-06H7.			
	DK154422-7820	..BOOST COMPENSATOR	1		26314444-
1	DK154422-7101	...HOUSING	1		26314444-
2	DK154400-9520	...DIAGRAM	1		26314444-
3	DK154415-1200	...BUSHING	1		26314444-
4	DK146711-0000	...PLATE.	1		26314444-
5	DK154415-1300	...NUT	1		26314444-
6	DK029331-2130	...GASKET	1		26314444-
7	DK029111-2090	...PLUG	1		26314444-
8	DK154413-2600	...GASKET	2		26314444-
9	DK154404-5600	...COVER	1		26314444-
10	DK144415-1800	...SCREW	1		26314444-
11	DK026506-1040	...GASKET	2		26314444-
12	DK013030-6040	...NUT	1		26314444-
13	DK154035-1600	...NUT	1		26314444-
14	DK154062-2900	...BOLT.	3		26314444-
15	DK014110-6440	...WASHER, SPRING	3		26314444-
16	DK154620-3200	...GASKET	1		26314444-
17	DK020106-1640	...BOLT.	3		26314444-
18	DK154062-5001	...BOLT.	1		26314444-
19	DK014110-6440	...WASHER, SPRING	1		26314444-
20	DK029341-0110	...GASKET	2		26314444-
21	DK029731-0120	...BOLT, EYE	1		26314444-
22	DK154411-7300	..SPRING	1		26314444-
23	DK154062-2720	..CAP	1		26314444-

FUEL INJECTION PUMP (GOVERNOR) (3/3) (INNERS PARTS) (#26314444-)

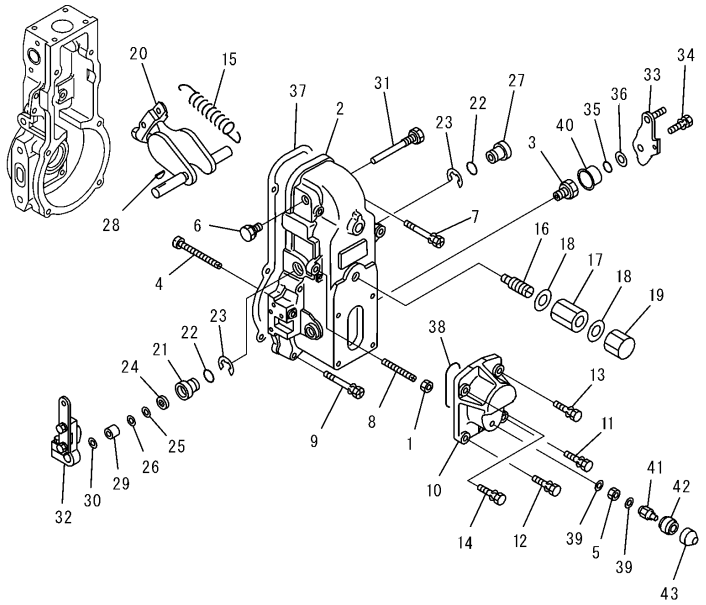

A401P-06H7

FUEL INJECTION PUMP (GOVERNOR) (3/3) (INNERS PARTS) (#26314444-)

Item	Part Number	Description	Qty.	Ref.	Serial No.
	(6738-71-1190)	INJECTION PUMP ASSEMBLY	1		26314444-
		THIS ASSEMBLY CONSISTS OF ALL PARTS SHOWN IN FIGS.A401P-02H7 TO A401P-07H7.			
	(DK105404-6150)	.GOVERNOR ASSEMBLY.	1		26314444-
		THIS ASSEMBLY CONSISTS OF ALL PARTS SHOWN IN FIGS.A401P-04H7 TO A401P-06H7.			
1	DK154011-0100	..NUT, LOCK	1		26314444-
2	DK154500-8020	..COVER	1		26314444-
3	DK154321-0400	...BUSHING	1		26314444-
4	DK154031-4700	..SCREW	1		26314444-
5	DK139208-0400	..NUT	1		26314444-
6	DK154036-0300	..PLUG	1		26314444-
7	DK139006-7100	..BOLT	2		26314444-
8	DK154010-0200	..SCREW	1		26314444-
9	DK020106-3840	..BOLT	4		26314444-
10	DK154063-8400	..COVER	1		26314444-
11	DK020006-1640	..BOLT	1		26314444-
12	DK020006-1640	..BOLT	1		26314444-
13	DK020006-1640	..BOLT	1		26314444-
14	DK020006-1640	..BOLT	1		26314444-
15	DK154150-0400	..SPRING, GOVERNOR	1		26314444-
16	DK154158-1220	..CAPSULE, SPRING	1		26314444-
17	DK154011-2700	..NUT	1		26314444-
18	DK026512-1540	..GASKET	2		26314444-
19	DK154159-1200	..NUT, CAP	1		26314444-
20	DK154200-7020	..LEVER ASSEMBLY, SWIVEL	1		26314444-
21	DK154204-4300	..BUSHING	1		26314444-
22	DK029631-8020	..O-RING	2		26314444-
23	DK016010-1640	..RING, SNAP	2		26314444-
24	DK139611-0000	..SEAL, OIL	1		26314444-
25	DK139411-0000	..SHIM, 0.40MM	1		26314444-
26	DK029311-1070	..SHIM, 0.50MM	AR		26314444-
27	DK154204-4400	..BUSHING	1		26314444-
28	DK025803-1310	..KEY, 13MM	1		26314444-
29	DK154206-2800	..COLLAR	1		26314444-
30	DK154206-0200	..WASHER, 1.0MM	AR		26314444-

FUEL INJECTION PUMP (GOVERNOR) (3/3) (INNERS PARTS) (#26314444-)

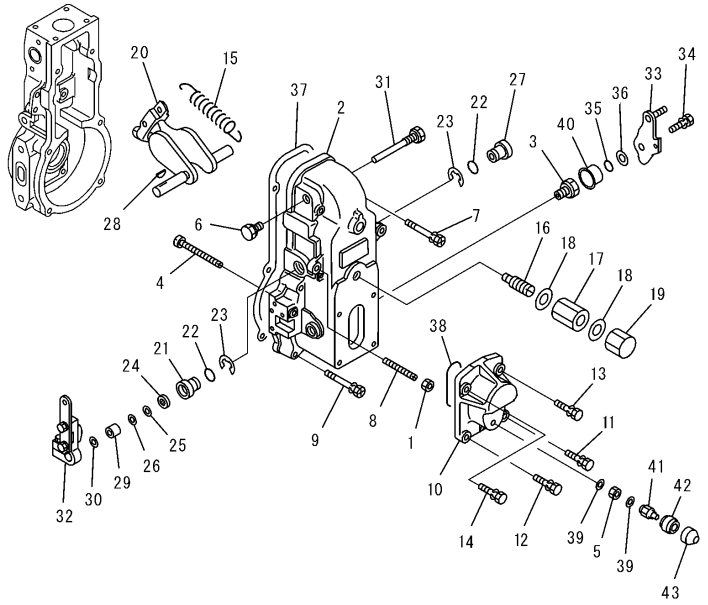

00009796

FUEL INJECTION PUMP (GOVERNOR) (3/3) (INNERS PARTS) (#26314444-)

Item	Part Number	Description	Qty.	Ref.	Serial No.
31	DK154237-1100	..PIN	1		26314444-
32	DK154342-2320	..LEVER	1		26314444-
33	DK154382-3720	..LEVER	1		26314444-
34	DK020006-1840	..BOLT	1		26314444-
35	DK029631-0030	..O-RING	1		26314444-
36	DK029311-0220	..SHIM, 0.2MM	AR		26314444-
	DK029311-0230	..SHIM, 0.5MM	AR		26314444-
37	DK154390-0300	..GASKET	1		26314444-
38	DK029635-2020	..O-RING	1		26314444-
39	DK026508-1140	..GASKET	2		26314444-
40	DK154322-0600	..CAP	1		26314444-
41	DK154035-2900	..NUT, CAP	1		26314444-
42	DK154062-3900	..ADAPTER	1		26314444-
43	DK154062-4020	..CAP	1		26314444-

FUEL INJECTION PUMP (FEED PUMP) (INNER PARTS) (#26314444)

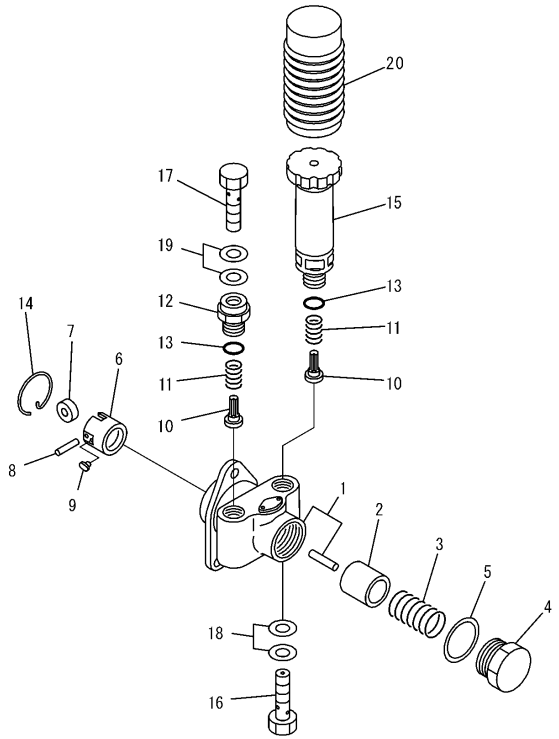

PQ3Q051

FUEL INJECTION PUMP (FEED PUMP) (INNER PARTS) (#26314444)

Item	Part Number	Description	Qty.	Ref.	Serial No.
	(6738-71-1190)	INJECTION PUMP ASSEMBLY	1		26314444-
		THIS ASSEMBLY CONSISTS OF ALL PARTS SHOWN IN FIGS.A401P-02H7 TO A401P-07H7.			
	DK105220-5960	.FEED PUMP ASSEMBLY	1		26314444-
1	DK152003-1020	..HOUSING	1		26314444-
2	DK152100-1120	..PISTON	1		26314444-
3	DK152102-1600	..SPRING	1		26314444-
4	DK152105-1600	..PLUG	1		26314444-
5	DK029332-6030	..GASKET	1		26314444-
6	DK152111-2820	..TAPPET ASSEMBLY	1		26314444-
7	DK152112-0100	...ROLLER	1		26314444-
8	DK152113-0700	...PIN	1		26314444-
9	DK152114-0400	...GUIDE	2		26314444-
10	DK152115-0500	..VALVE	2		26314444-
11	DK152116-0200	..SPRING	2		26314444-
12	DK152118-0900	..ADAPTER	1		26314444-
13	DK029631-6060	..O-RING	2		26314444-
14	DK152121-0200	..RING, SNAP	1		26314444-
15	DK152200-5420	..PUMP, PRIMING	1		26314444-
16	DK152300-5920	..BOLT, JOINT	1		26314444-
17	DK029731-4680	..BOLT, JOINT	1		26314444-
18	DK029341-4130	..GASKET	2		26314444-
19	DK029341-4130	..GASKET	2		26314444-
20	DK152320-0100	..COVER	1		26314444-

BOOST TUBE (#26314444-)

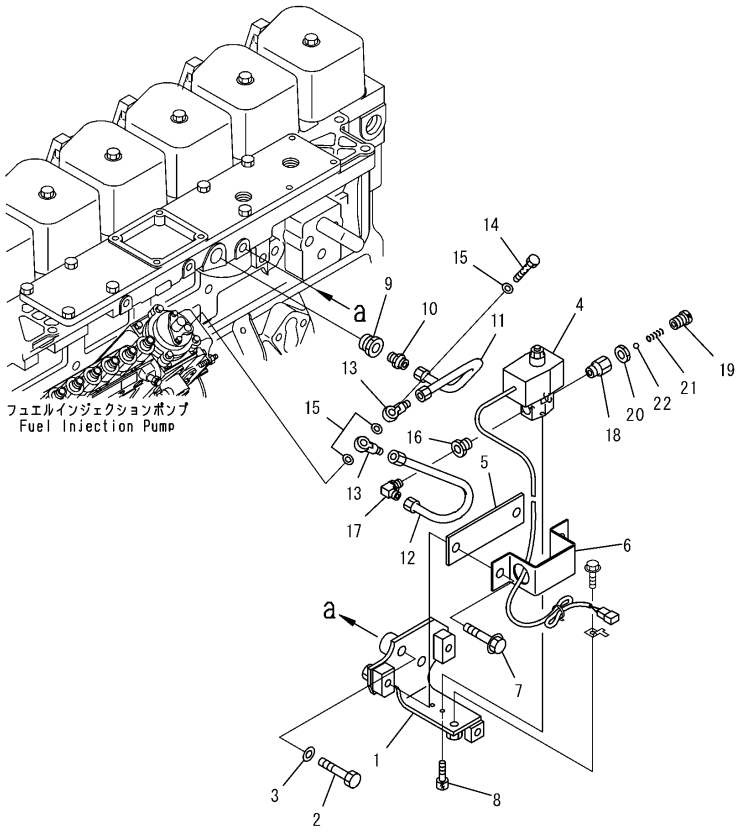

00009773

BOOST TUBE (#26314444-)

Item	Part Number	Description	Qty.	Ref.	Serial No.
1	6738-71-9210	BRACKET	1		26314444-
2	01050-31240	BOLT	2		26314444-
3	01643-31232	WASHER	2		26314444-
4	6743-81-9240	SOLENOID	1		26314444-
5	6738-71-9220	BRACKET	1		26314444-
6	6738-71-9230	CLAMP	1		26314444-
7	01435-01040	BOLT	2		26314444-
8	01252-60512	BOLT	2		26314444-
9	6738-71-9240	PLUG, ORIFICE	1		26314444-
10	6736-11-4530	CONNECTOR	1		26314444-
11	6742-11-4360	TUBE	1		26314444-
12	6731-81-8121	TUBE	1		26314444-
13	6738-81-8220	JOINT	2		26314444-
14	6735-71-5420	BOLT	1		26314444-
15	6731-71-5860	GASKET	3		26314444-
16	6738-71-9250	BUSHING	1		26314444-
17	6732-81-8150	ELBOW	1		26314444-
	6738-71-9300	VALVE ASSEMBLY	1		26314444-
18	6743-81-9310	.ADAPTER	1		26314444-
19	6743-81-9320	.PLUG, ORIFICE	1		26314444-
20	6743-81-9330	.NUT	1		26314444-
21	6743-81-9340	.SPRING	1		26314444-
22	6743-81-9350	.BALL, CHECK	1		26314444-

FUEL INLET AND OUTLET JOINT CAP (26277757-)

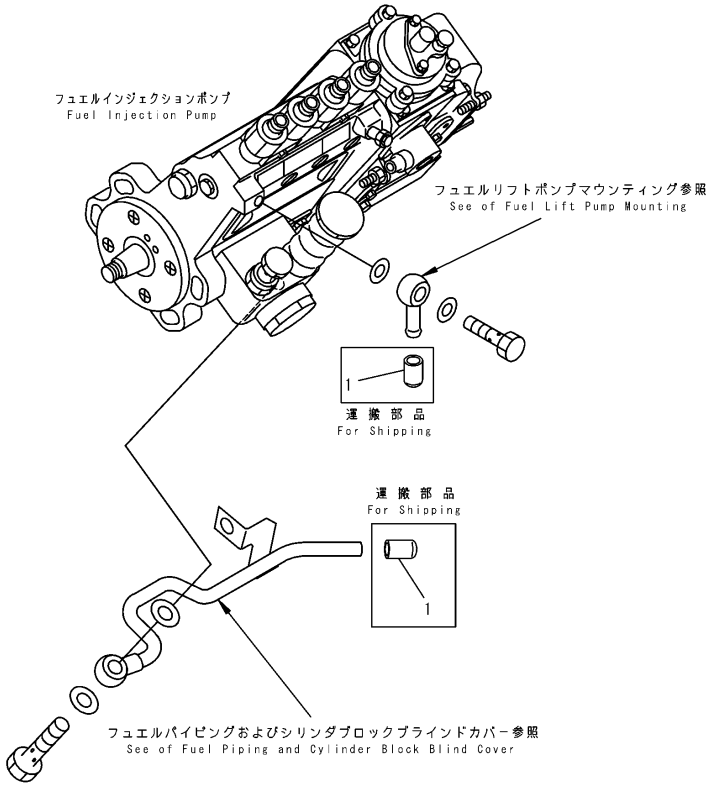

PJ6C391

FUEL INLET AND OUTLET JOINT CAP (26277757-)

Item	Part Number	Description	Qty.	Ref.	Serial No.
1	6732-71-5740	CAP, (FOR SHIPPING)	2		26277757-

FUEL INJECTION PUMP MOUNTING (#26302312-)

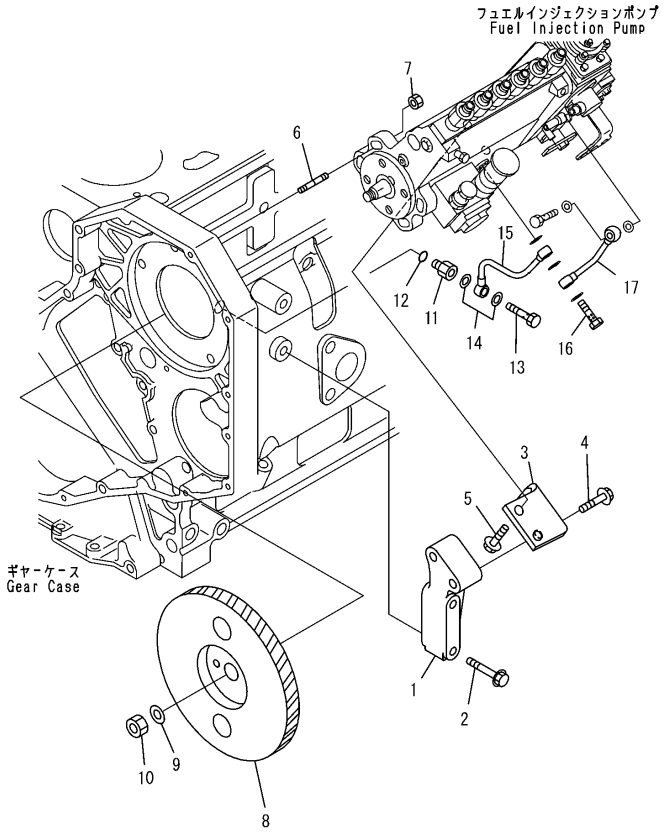

00000185

FUEL INJECTION PUMP MOUNTING (#26302312-)

Item	Part Number	Description	Qty.	Ref.	Serial No.
1	6738-71-3620	BRACKET	1		26302312-
2	6732-61-3110	BOLT	2		26302312-
3	6738-71-3610	BRACKET	1		26302312-
4	6735-71-3220	BOLT	2		26302312-
5	6734-71-5610	BOLT	2		26302312-
6	6738-71-3120	STUD	4		26302312-
7	6736-81-6170	NUT	4		26302312-
8	6738-71-3100	GEAR ASSEMBLY	1		26302312-
9	6130-32-1361	WASHER	1		26302312-
10	01582-01411	NUT	1		26302312-
11	6732-71-5450	NIPPLE	1		26302312-
12	6215-81-9710	O-RING	1		26302312-
13	07206-30710	BOLT, JOINT	1		26302312-
14	6731-71-5860	GASKET (K2)	2		26302312-
15	6735-71-5411	TUBE, OIL	1		26302312-
16	6735-71-5420	BOLT, JOINT	1		26302312-
17	6735-71-5430	TUBE	1		26302312-

FUEL FILTER (#26302312)

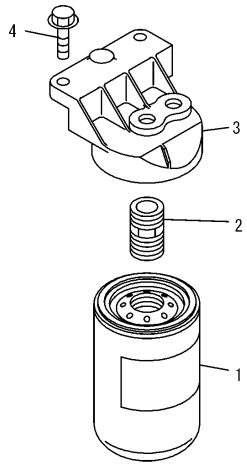

PMD1084

A411P-01A0

FUEL FILTER (#26302312)

Item	Part Number	Description	Qty.	Ref.	Serial No.
1	6732-71-6112	CARTRIDGE, FUEL	1		26306697-
	6732-71-6650	ADAPTER	1		26302312-26319074
2	6735-71-6230	HEAD	1		26302312-26319074
3	6732-61-6140	BOLT	2		26302312-

FUEL PIPING (#26314444-)

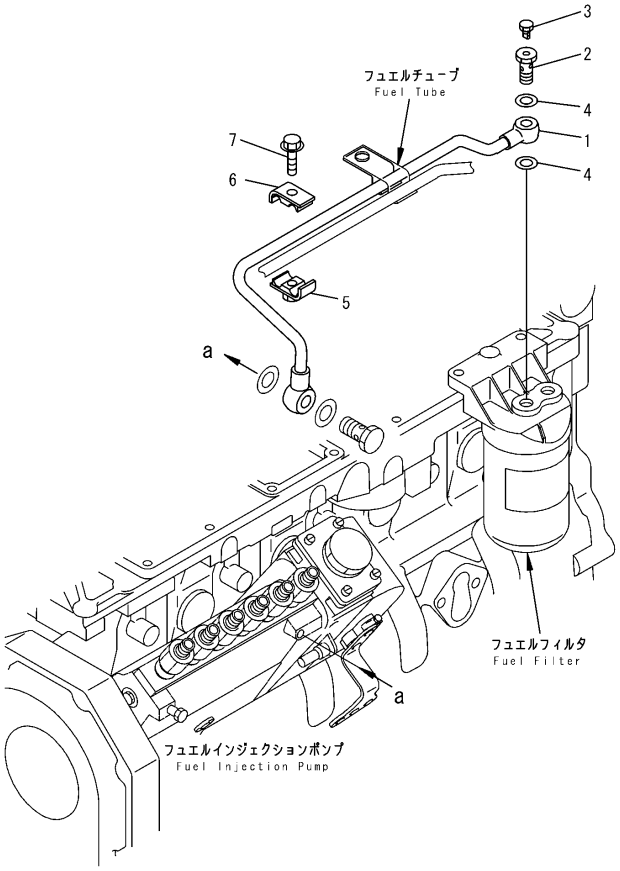

PFD1501

FUEL PIPING (#26314444-)

Item	Part Number	Description	Qty.	Ref.	Serial No.
1	6735-71-5160	TUBE	1		26302312-
	6735-71-6510	BOLT ASSEMBLY	1		26302312-
2	6735-71-6530	.BOLT, JOINT	1		26302312-
3	6735-71-6750	.BOLT	1		26306697-
4	6735-71-3840	GASKET	2		26302312-
5	6735-71-5170	CLAMP	1		26302312-
6	6735-71-5180	CLAMP	1		26302312-
7	6735-71-5190	BOLT	1		26302312-

FUEL PIPING (#26314444-)

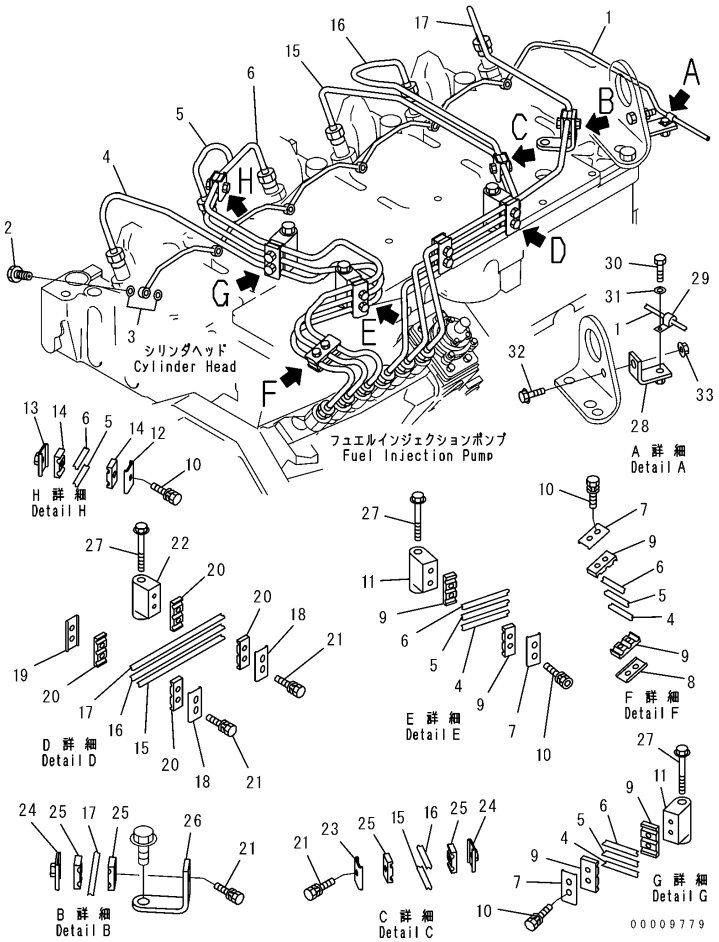

FUEL PIPING (#26314444-)

Item	Part Number	Description	Qty.	Ref.	Serial No.
1	6738-71-5510	TUBE	1		26314444-
2	6732-71-6240	BOLT, JOINT	6		26314444-
3	6732-71-6260	GASKET (K1)	12		26314444-
4	6738-71-5110	TUBE, NO.1	1		26314444-
5	6738-71-5120	TUBE, NO.2	1		26314444-
6	6738-71-5130	TUBE, NO.3	1		26314444-
7	6734-71-5710	BRACKET	3		26314444-
8	6735-71-5830	BRACKET	1		26314444-
9	6734-71-5720	ISOLATOR	6		26314444-
10	6734-71-5520	BOLT	7		26314444-
11	6734-71-5741	BRACKET	2		26314444-
12	6735-71-5820	BRACKET	1		26314444-
13	6735-71-5840	BRACKET	1		26314444-
14	6735-71-5860	ISOLATOR	2		26314444-
15	6735-71-5643	TUBE, NO.4	1		26314444-
16	6735-71-5653	TUBE, NO.5	1		26314444-
17	6735-71-5663	TUBE, NO.6	1		26314444-
18	6734-71-5710	BRACKET	2		26314444-
19	6735-71-5830	BRACKET	1		26314444-
20	6734-71-5720	ISOLATOR	4		26314444-
21	6734-71-5520	BOLT	6		26314444-
22	6734-71-5741	BRACKET	1		26314444-
23	6735-71-5820	BRACKET	1		26314444-
24	6735-71-5840	BRACKET	2		26314444-
25	6735-71-5860	ISOLATOR	4		26314444-
26	6732-71-5760	BRACKET	1		26314444-
27	6734-11-5210	BOLT	3		26314444-
28	6738-71-5570	BRACKET	1		26314444-
29	04434-50508	CLIP	1		26314444-
30	6732-21-3120	BOLT	1		26314444-
31	01643-30823	WASHER	1		26314444-
32	6732-71-3220	BOLT	1		26314444-
33	6732-71-3210	NUT	1		26314444-

CYLINDER BLOCK BLIND COVER AND PIPING (#26302312-)

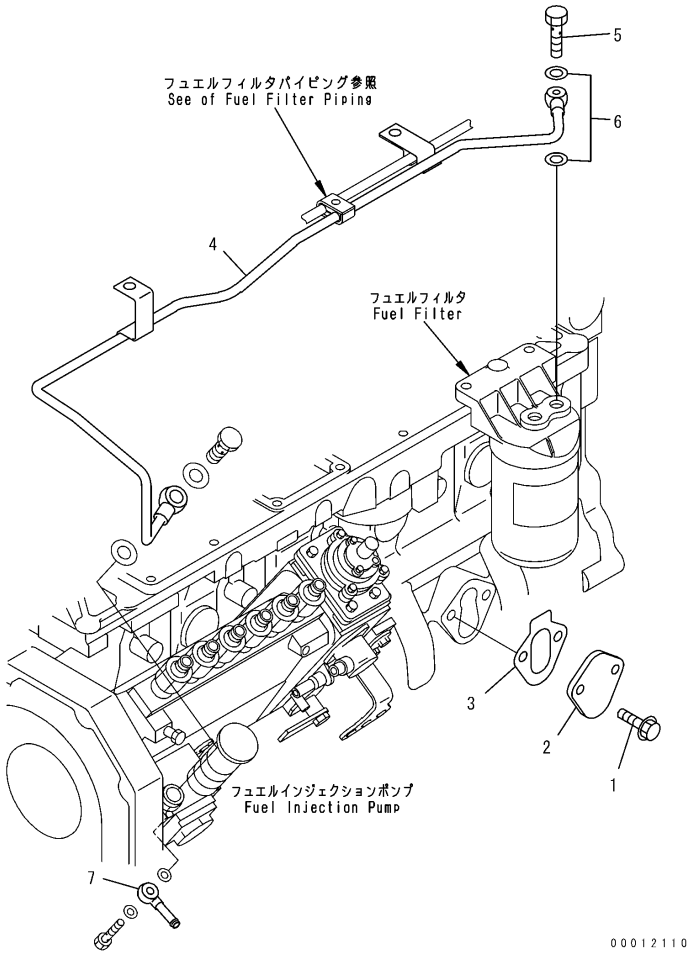

A417P-01B4

CYLINDER BLOCK BLIND COVER AND PIPING (#26302312-)

Item	Part Number	Description	Qty.	Ref.	Serial No.
1	6732-71-3220	BOLT	2		26302312-
2	6736-71-5811	PLATE	1		26302312-
3	6735-61-6411	GASKET (K2)	1		26302312-
4	6735-71-5371	TUBE	1		26302312-
5	6732-71-6510	BOLT, JOINT	1		26302312-
6	07005-01212	GASKET	2		26302312-
7	6141-71-1710	JOINT	1		26302312-

INJECTION NOZZLE

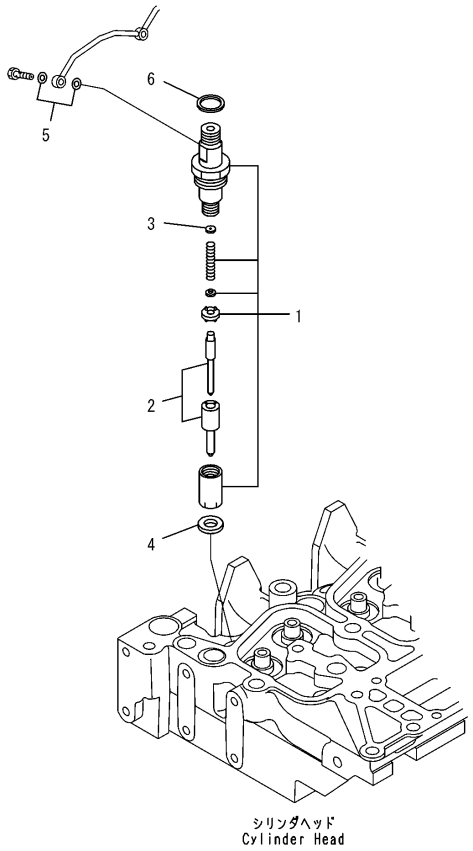

INJECTION NOZZLE

Item	Part Number	Description	Qty.	Ref.	Serial No.
	6738-11-3090	KIT, NOZZLE HOLDER	6		26274903-
1	6738-11-3100	.NOZZLE HOLDER ASSEMBLY	1		26274903-
2	6738-11-3120	..NOZZLE	1		26274903-
3	6734-11-3610	..SHIM, 1.00MM	1		26274903-
	6734-11-3620	..SHIM, 1.04MM	1		26274903-
	6734-11-3630	..SHIM, 1.08MM	1		26274903-
	6734-11-3640	..SHIM, 1.10MM	1		26274903-
	6734-11-3650	..SHIM, 1.14MM	1		26274903-
	6734-11-3660	..SHIM, 1.18MM	1		26274903-
	6734-11-3670	..SHIM, 1.20MM	1		26274903-
	6734-11-3680	..SHIM, 1.24MM	1		26274903-
	6734-11-3690	..SHIM, 1.28MM	1		26274903-
	6734-11-3710	..SHIM, 1.30MM	1		26274903-
	6734-11-3720	..SHIM, 1.34MM	1		26274903-
	6734-11-3730	..SHIM, 1.38MM	1		26274903-
	6734-11-3740	..SHIM, 1.40MM	1		26274903-
	6734-11-3750	..SHIM, 1.44MM	1		26274903-
	6734-11-3760	..SHIM, 1.48MM	1		26274903-
	6734-11-3770	..SHIM, 1.50MM	1		26274903-
	6734-11-3780	..SHIM, 1.54MM	1		26274903-
	6734-11-3790	..SHIM, 1.58MM	1		26274903-
	6734-11-3810	..SHIM, 1.60MM	1		26274903-
	6734-11-3820	..SHIM, 1.64MM	1		26274903-
	6734-11-3830	..SHIM, 1.68MM	1		26274903-
	6734-11-3840	..SHIM, 1.70MM	1		26274903-
	6734-11-3850	..SHIM, 1.74MM	1		26274903-
	6734-11-3860	..SHIM, 1.78MM	1		26274903-
	6734-11-3870	..SHIM, 1.80MM	1		26274903-
	6734-11-3880	..SHIM, 1.84MM	1		26274903-
	6734-11-3890	..SHIM, 1.88MM	1		26274903-
	6734-11-3910	..SHIM, 1.90MM	1		26274903-
	6734-11-3920	..SHIM, 1.94MM	1		26274903-
	6734-11-3930	..SHIM, 1.98MM	1		26274903-
4	6736-11-3430	..GASKET (K1)	1		26274903-
5	6732-71-6260	.GASKET (K1)	2		26274903-
6	6732-11-3850	.SEAL (K1)	1		26274903-

FUEL JOINT (#26314444-)

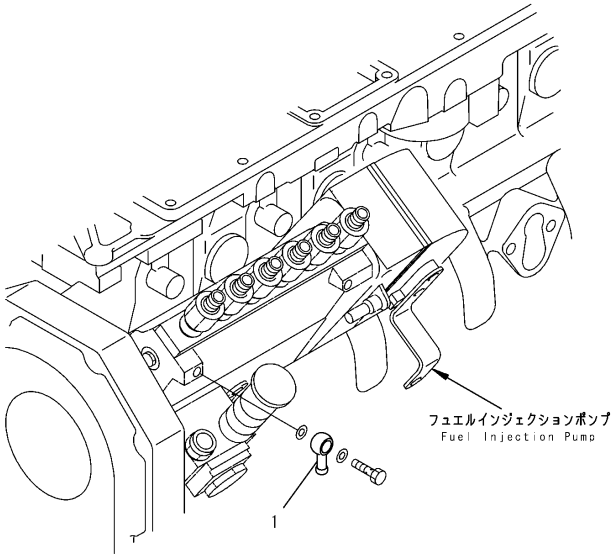

PFD2191

FUEL JOINT (#26314444-)

Item	Part Number	Description	Qty.	Ref.	Serial No.
1	6206-71-5940	JOINT	1		26314444-

STOP SOLENOID(#26302312-)

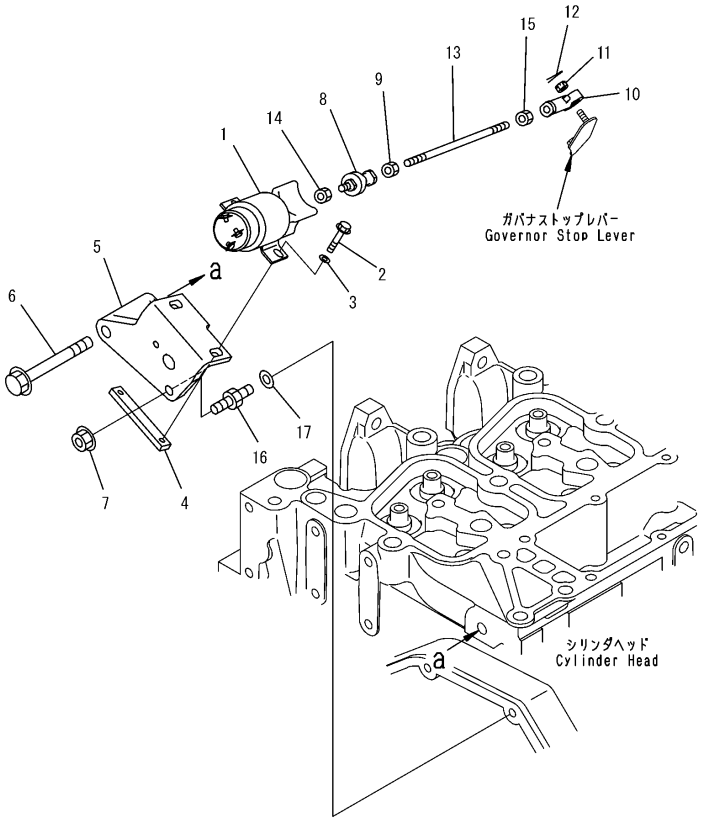

STOP SOLENOID(#26302312-)

Item	Part Number	Description	Qty.	Ref.	Serial No.
1					
2	600-815-9260	SOLENOID ASSEMBLY	1		26302312-
3	01435-00620	BOLT	2		26302312-
4	01640-20610	WASHER	2		26302312-
5	6732-81-9520	PLATE	1		26302312-
6	6732-81-9511	BRACKET	1		26302312-
7	01435-01070	BOLT	2		26302312-
8	01584-00806	NUT	1		26302312-
9	6204-81-9640	JOINT	1		26302312-
10	01580-00605	NUT	1		26302312-
11	04250-60639	END, ROD	1		26302312-
12	01590-10607	NUT	1		26302312-
13	04050-11212	PIN, COTTER	1		26302312-
14	04248-50625	ROD	1		26302312-
15	01580-00605	NUT	1		26302312-
16	01508-40603	NUT, L.H.THREAD	1		26302312-
17	6732-21-3990	STUD	1		26302312-
18	01640-20816	WASHER	1		26302312-

WATER CONNECTOR (FOR 90A ALTERNATOR) (#26314444-)

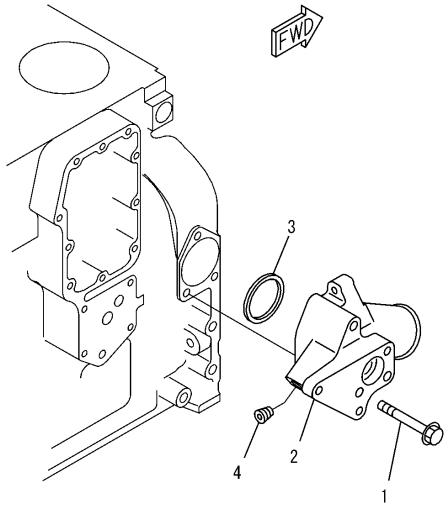

PQD3785

A501R-01A4

WATER CONNECTOR (FOR 90A ALTERNATOR) (#26314444-)

Item	Part Number	Description	Qty.	Ref.	Serial No.
1	01436-01005	BOLT	2		26314444-
2	6732-61-6350	CONNECTOR	1		26314444-
3	6732-61-6130	SEAL	1		26314444-
4	07043-70312	PLUG	1		26314444-

WATER CONNECTOR PLUG

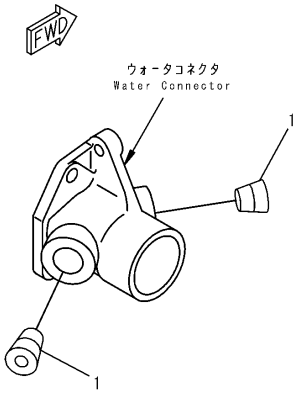

PJ6B427

WATER CONNECTOR PLUG

Item	Part Number	Description	Qty.	Ref.	Serial No.
1	6732-11-1910	PLUG	2		26274903-

WATER PUMP

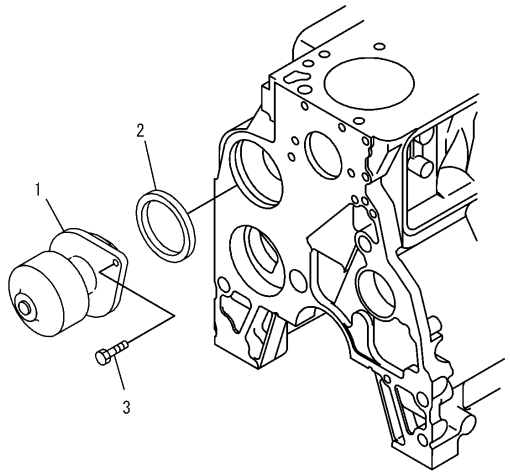

PJ6B451

WATER PUMP

Item	Part Number	Description	Qty.	Ref.	Serial No.
2	6735-61-1502	WATER PUMP ASSEMBLY	1		26281447-26340279
3	6736-61-1520	SEAL (K2)	1		26274903-
4	6732-41-1260	BOLT	2		26274903-

FAN DRIVE PULLEY (#26302312-)

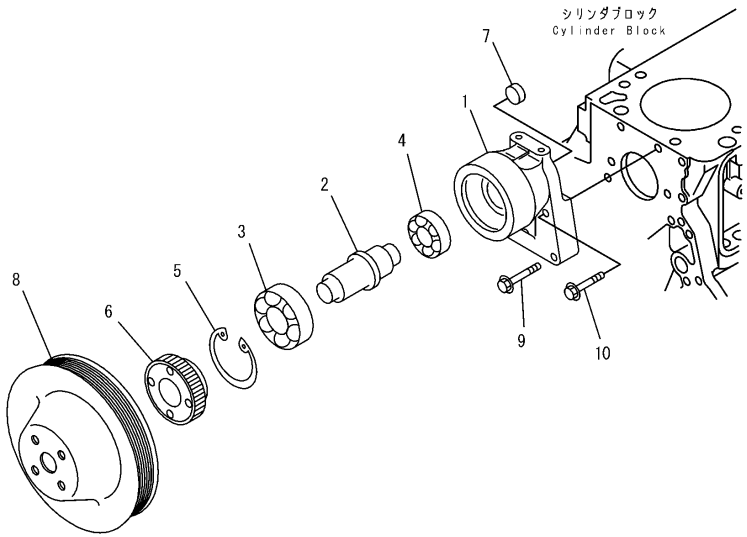

A502P-01D2

FAN DRIVE PULLEY (#26302312-)

Item	Part Number	Description	Qty.	Ref.	Serial No.
	6732-61-3503	SUPPORT ASSEMBLY	1		26302312-
1	☆	.SUPPORT	1		26302312-
2	6732-61-3533	.SHAFT	1		26302312-
3	06347-06207	.BEARING	1		26302312-
4	06330-06205	.BEARING	1		26302312-
5	6162-63-1440	.RING, SNAP	1		26302312-
6	6732-61-3542	.BOSS	1		26302312-
7	07046-22216	.PLUG	1		26302312-
8	6732-61-3750	PULLEY	1		26302312-
9	6732-61-3170	BOLT	2		26302312-
10	6732-62-3220	BOLT	2		26302312-

COOLING FAN BOLT (#26314444-)

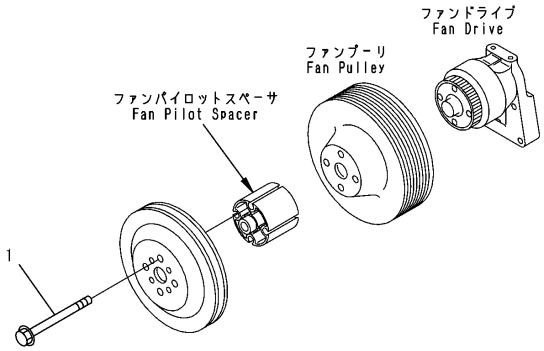

00009772

COOLING FAN BOLT (#26314444-)

Item	Part Number	Description	Qty.	Ref.	Serial No.
1	6732-61-4120	BOLT	4		26314444-

COOLING FAN (#26314444-)

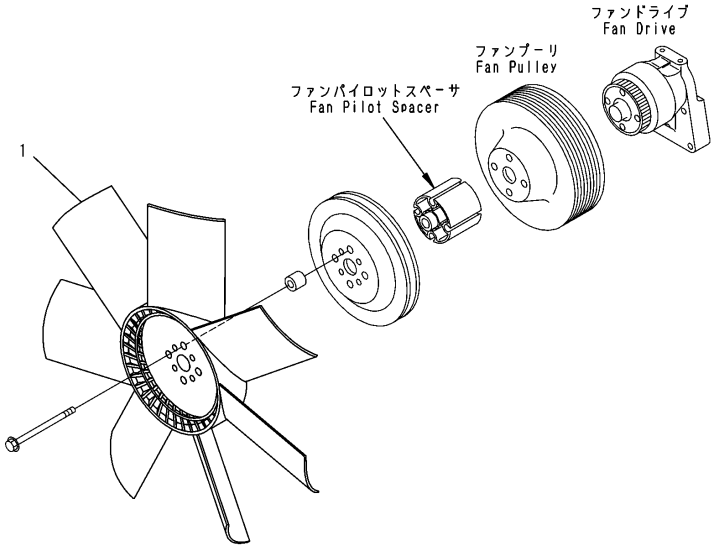

00009778

COOLING FAN (#26314444-)

Item	Part Number	Description	Qty.	Ref.	Serial No.
1	6742-01-2010	FAN	1		26314444-

COOLING FAN SPACER (#26314444-)

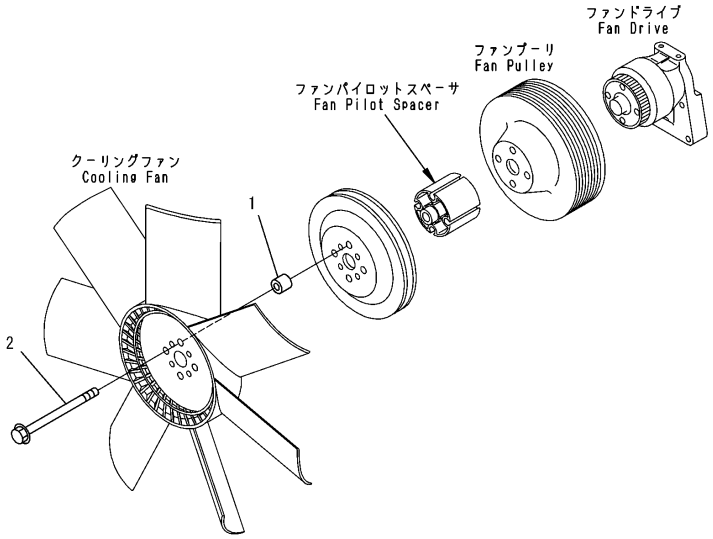

00003095

A5030-01C4

COOLING FAN SPACER (#26314444-)

Item	Part Number	Description	Qty.	Ref.	Serial No.
1	6152-11-4970	SPACER	1		26314444-
2	01435-01090	BOLT	1		26314444-

FAN PILOT SPACER (#26314444-)

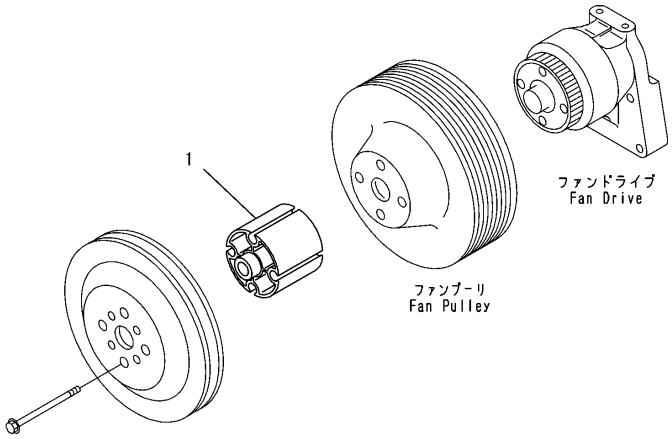

00009785

FAN PILOT SPACER (#26314444-)

Item	Part Number	Description	Qty.	Ref.	Serial No.
1	6738-61-3610	SPACER	2		26314444-

ALTERNATOR (50A) (#26314444-)

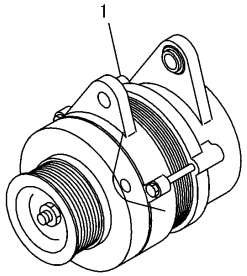

PM35778

ALTERNATOR (50A) (#26314444-)

Item	Part Number	Description	Qty.	Ref.	Serial No.
1	(600-861-5110)	ALTERNATOR A.(50A), (SEE FIG.A601P-02A7)	1		26314444-

ALTERNATOR (50A) (INNER PARTS) (#26314444-)

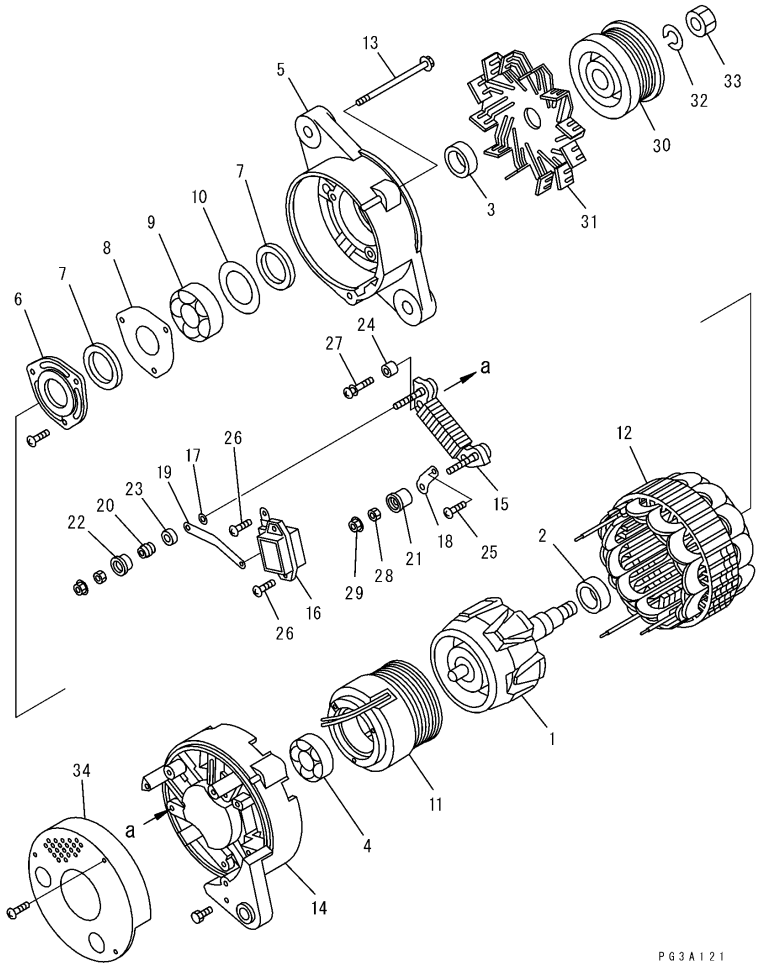

A601P-02A7

ALTERNATOR (50A) (INNER PARTS) (#26314444-)

Item	Part Number	Description	Qty.	Ref.	Serial No.
	600-861-5110	ALTERNATOR A.(50A)	1		26314444-
1	KD0-35100-0300	.ROTOR ASSEMBLY	1		26314444-
2	KD0-35923-0160	.COLLAR	1		26314444-
3	KD1-33923-0790	.COLLAR	1		26314444-
4	KD0-09201-0980	.BEARING, BALL	1		26314444-
5	KD0-35300-0190	.BRACKET ASSEMBLY, FRONT	1		26314444-
6	KD0-35926-0070	.RETAINER	1		26314444-
7	KD0-35926-0060	.RETAINER	2		26314444-
8	KD0-35926-0090	.RETAINER	1		26314444-
9	KD0-09201-0880	.BEARING, BALL	1		26314444-
10	KD1-33926-0730	.RETAINER	1		26314444-
11	KD0-35120-0210	.FIELD COIL ASSEMBLY	1		26314444-
12	KD0-35200-0430	.STATOR ASSEMBLY	1		26314444-
13	KD0-0275-06802	.BOLT	3		26314444-
	KD0-35700-0750	.BRACKET ASSEMBLY, REAR	1		26314444-
14	KD0-35710-0870	..BRACKET, REAR	1		26314444-
15	KD0-35730-0510	..RECTIFIER ASSEMBLY	1		26314444-
16	KD0-35719-0200	..REGULATOR ASSEMBLY	1		26314444-
17	KD1-0331-06013	..WASHER	1		26314444-
18	KD0-09120-0770	..PLATE, TERMINAL	1		26314444-
19	KD0-35784-0240	..BAR, CONNECT	1		26314444-
20	KD0-35923-0130	..COLLAR	3		26314444-
21	KD0-35943-0140	..BUSHING, INSULATE	1		26314444-
22	KD0-35943-0150	..BUSHING, INSULATE	1		26314444-
23	KD0-35943-0160	..BUSHING, INSULATE	1		26314444-
24	KD0-35943-0170	..BUSHING, INSULATE	2		26314444-
25	KD0-09011-3270	..SCREW	1		26314444-
26	KD0-0055-05202	..SCREW	2		26314444-
27	KD0-0056-05302	..SCREW	2		26314444-
28	KD0-33902-0090	..NUT	2		26314444-
29	KD0-33902-0080	..NUT	2		26314444-
30	KD0-35411-0640	.PULLEY	1		26314444-
31	KD0-35421-0170	.FAN	1		26314444-
32	KD1-0335-16002	.WASHER, SPRING	1		26314444-
33	KD0-0280-16022	.NUT	1		26314444-
34	KD0-35761-0220	.COVER	1		26314444-

BELT TENSIONER (FOR 50A ALTERNATOR) (#26314444-)

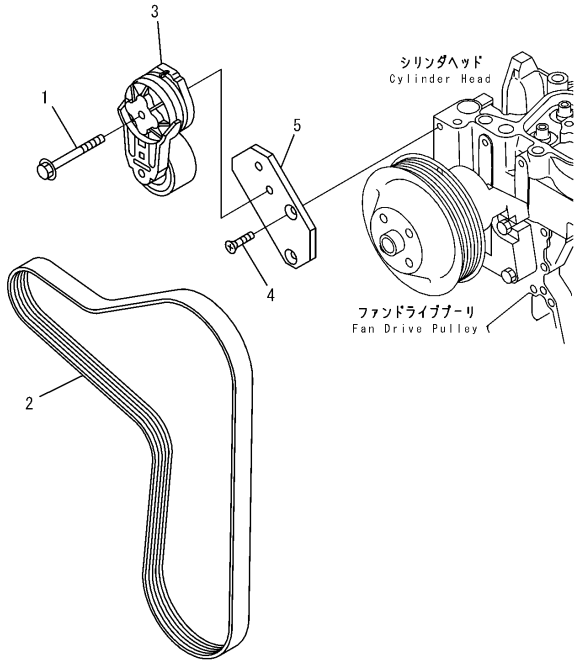

PQD3824

A601S-01B4

BELT TENSIONER (FOR 50A ALTERNATOR) (#26314444-)

Item	Part Number	Description	Qty.	Ref.	Serial No.
1	6732-61-4120	BOLT	1		26314444-
2	6732-81-3551	BELT	1		26314444-
3	6736-61-4120	TENSIONER, BELT	1		26314444-
4	6732-61-4220	SCREW	2		26314444-
5	6734-61-3940	PLATE	1		26314444-

ALTERNATOR MOUNTING (SHIELD ALTERNATOR) (#26294623-)

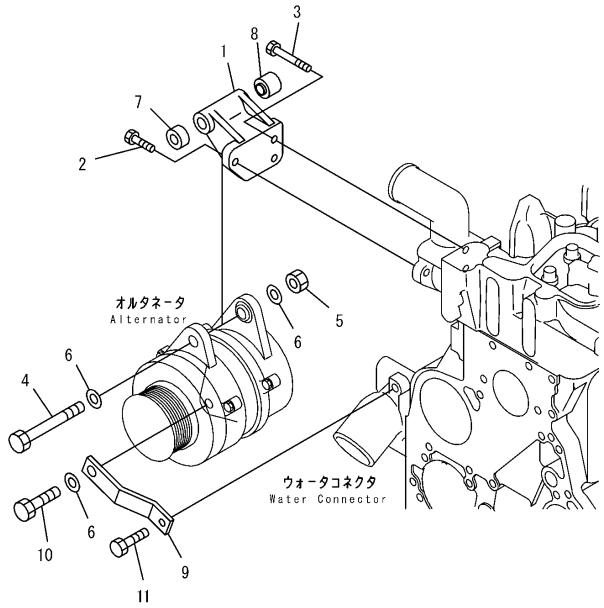

PMD1100

ALTERNATOR MOUNTING (SHIELD ALTERNATOR) (#26294623-)

Item	Part Number	Description	Qty.	Ref.	Serial No.
1	6732-81-6650	BRACKET	1		26294623-
2	6732-21-5160	BOLT	2		26294623-
3	6735-61-2120	BOLT	1		26294623-
4	6207-81-6980	BOLT	1		26294623-
5	01580-11210	NUT	1		26294623-
6	01641-21223	WASHER	3		26294623-
7	6732-81-6490	SPACER	1		26294623-
8	6732-81-6530	SPACER	1		26294623-
9	6732-81-6540	PLATE	1		26294623-
10	01050-31230	BOLT	1		26294623-
11	6732-71-3220	BOLT	1		26294623-

ALTERNATOR COVER (FOR 50A ALTERNATOR) (#26314444-)

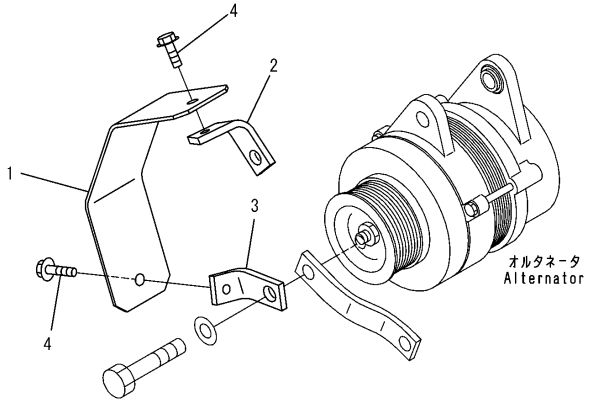

00009766

A6010-01B2

ALTERNATOR COVER (FOR 50A ALTERNATOR) (#26314444-)

Item	Part Number	Description	Qty.	Ref.	Serial No.
1	6738-81-6140	COVER	1		26314444-
2	6738-81-6170	PLATE	1		26314444-
3	6738-81-6180	PLATE	1		26314444-
4	01435-00812	BOLT	2		26317445-
	01435-00820	BOLT	2		26314444-26317444

STARTING MOTOR (7.5KW)

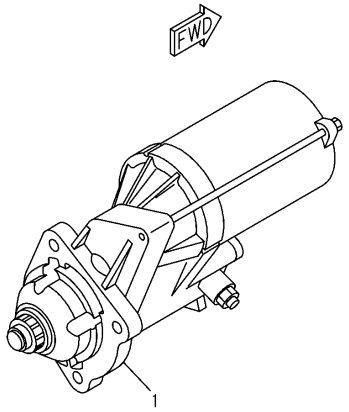

PMD1186

A621P-01A1

STARTING MOTOR (7.5KW)

Item	Part Number	Description	Qty.	Ref.	Serial No.
1	6738-82-6810	START MOTOR ASSEMBLY (7,5KW).	1		26298939-

STARTING MOTOR MOUNTING (5.5KW)

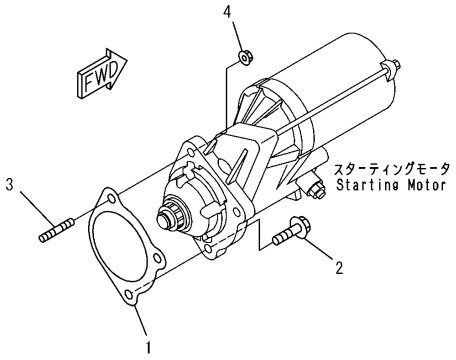

PJD4445

STARTING MOTOR MOUNTING (5.5KW)

Item	Part Number	Description	Qty.	Ref.	Serial No.
1	6735-81-6180	GASKET .....(K2)	1		26274903-
2	6736-81-4810	BOLT	2		26274903-
3	6735-81-6170	STUD.....	1		26274903-
4	6736-81-6170	NUT	1		26274903-

WIRING HARNESS CLIP (#26314444-)

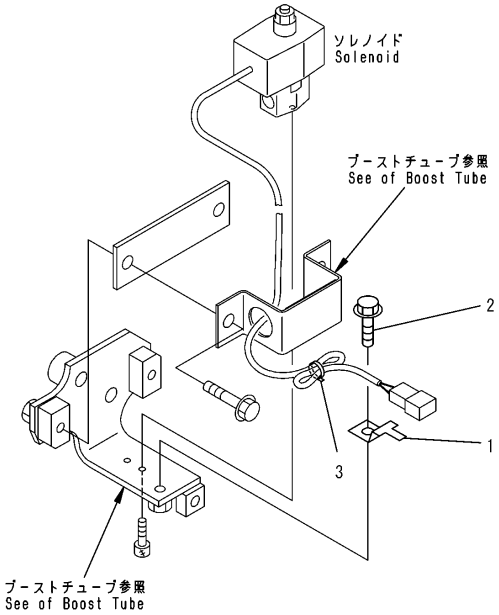

00009768

A6810-01A3

WIRING HARNESS CLIP (#26314444-)

Item	Part Number	Description	Qty.	Ref.	Serial No.
1	08193-21012	CLIP	1		26314444-
2	01435-01020	BOLT	1		26314444-
3	08034-00414	BAND	1		26314444-

REPAIR PARTS (1/4) (CYLINDER HEAD)

リペア パーツ
REPAIR PARTS

詳細については次のページを参照して下さい。
See subsequent pages for details.

REPAIR PARTS (1/4) (CYLINDER HEAD)

Item	Part Number	Description	Qty.	Ref.	Serial No.
1	6736-19-1310	GUIDE, 60.50MM	6		26274903-
2	6736-19-1410	GUIDE, 51.75MM	6		26274903-
3	6736-18-1310	GUIDE	12		26274903-
		OVERSIZE PARTS			
4	6735-11-1870	GASKET, 0.25MM	1		26274903-
	6735-11-1840	GASKET, 0.50MM	1		26274903-

REPAIR PARTS (2/4) (CYLINDER BLOCK)

リペア パーツ
REPAIR PARTS 詳細については次のページを参照して下さい。
See subsequent pages for details.

REPAIR PARTS (2/4) (CYLINDER BLOCK)

Item	Part Number	Description	Qty.	Ref.	Serial No.
		OVERSIZE PARTS			
1	6736-29-1410	BUSHING, CAM, NO.1	1		26274903-
2	6736-29-1420	BUSHING, CAM, NO.2, 3, 4, 5, 6, 7	1		26274903-
		STANDARD			
3	6736-29-2110	LINER, SALVAGE	6		26274903-

REPAIR PARTS (3/4) (CRANKSHAFT)

リペア パーツ
REPAIR PARTS

詳細については次のページを参照して下さい。
See subsequent pages for details.

A8110-03A9

REPAIR PARTS (3/4) (CRANKSHAFT)

Item	Part Number	Description	Qty.	Ref.	Serial No.
1	6736-39-1220	SLEEVE, WEAR	1		26274903-
2	6736-39-1130	SLEEVE, WET	1		26274903-
		OVERSIZE 0.25MM			
	6735-29-8100	MAIN METAL ASSEMBLY	6		26274903-
3	☆	.METAL, UPPER	1		26274903-
	6735-28-8100	MAIN METAL ASSEMBLY	6		26274903-
3	☆	.METAL, UPPER	1		26274903-
	6735-27-8100	MAIN METAL ASSEMBLY	6		26274903-
3	☆	.METAL, UPPER	1		26274903-
	6735-26-8100	MAIN METAL ASSEMBLY	6		26274903-
3	☆	.METAL, UPPER	1		26274903-
4	☆	.METAL, LOWER	1		26274903-
4	☆	.METAL, LOWER	1		26274903-
4	☆	.METAL, LOWER	1		26274903-
4	☆	.METAL, LOWER	1		26274903-
	6736-29-8610	THRUST METAL ASSEMBLY	1		26274903-
5	☆	.METAL, THRUST	1		26274903-
	6735-28-8200	THRUST METAL ASSEMBLY	1		26274903-
5	☆	.METAL, THRUST	1		26274903-
	6736-28-8620	THRUST METAL ASSEMBLY	1		26274903-
5	☆	.METAL, THRUST	1		26274903-
	6736-27-8620	THRUST METAL ASSEMBLY	1		26274903-
5	☆	.METAL, THRUST	1		26274903-
	6736-29-8700	THRUST METAL ASSEMBLY	1		26274903-
5	☆	.METAL, THRUST 0.5MM/0.5MM	1		26274903-
	6736-28-8700	THRUST METAL ASSEMBLY	1		26274903-
5	☆	.METAL, THRUST 1.0MM/1.0MM	1		26274903-
6	☆	.METAL, LOWER	1		26274903-
		OVERSIZE 0.50MM			
6	☆	.METAL, LOWER	1		26274903-
		OVERSIZE 0.75MM			
6	☆	.METAL, LOWER	1		26274903-
		OVERSIZE 1.00MM			
6	☆	.METAL, LOWER	1		26274903-
		OVERSIZE 0.5MM/0.5MM			
6	☆	.METAL, LOWER	1		26274903-

REPAIR PARTS (3/4) (CRANKSHAFT)

リペア パーツ
REPAIR PARTS

詳細については次のページを参照して下さい。
See subsequent pages for details.

REPAIR PARTS (3/4) (CRANKSHAFT)

Item	Part Number	Description	Qty.	Ref.	Serial No.
		OVERSIZE 1.0MM/1.0MM.			
6	☆	.METAL, LOWER.	1		26274903-

REPAIR PARTS (4/4) (PISTON)

リペア パーツ
REPAIR PARTS

詳細については次のページを参照して下さい。
See subsequent pages for details.

A8110-04A9

REPAIR PARTS (4/4) (PISTON)

Item	Part Number	Description	Qty.	Ref.	Serial No.
		OVERSIZE PARTS			
1	6736-39-3400	METAL, 0.25MM	12		26274903-
	6736-38-3400	METAL, 0.50MM	12		26274903-
	6736-37-3400	METAL, 0.75MM	12		26274903-
	6736-36-3400	METAL, 1.00MM	12		26274903-
		OVERSIZE 0.5MM.			
	6738-39-2031	PISTON RING ASSEMBLY	6		26292269-
	□6738-39-2030	PISTON RING ASSEMBLY	6		26274903-26292268
2	☆	.RING, TOP	1		26292269-
	☆	.RING, TOP	1		26274903-26292268
	6738-38-2031	PISTON RING ASSEMBLY	6		26292269-
	□6738-38-2030	PISTON RING ASSEMBLY	6		26274903-26292268
2	☆	.RING, TOP	1		26292269-
	☆	.RING, TOP	1		26274903-26292268
3	☆	.RING, SECOND	1		26274903-
3	☆	.RING, SECOND	1		26274903-
4	☆	.RING, OIL	1		26274903-
		OVERSIZE 1.0MM.			
4	☆	.RING, OIL	1		26274903-
		OVERSIZE PARTS			
5	6738-39-2111	PISTON, 0.5MM	6		26292269-
	□6738-39-2110	PISTON, 0.5MM	6		26274903-26292268
6	6738-38-2111	PISTON, 1.0MM	6		26292269-
	□6738-38-2110	PISTON, 1.0MM	6		26274903-26292268

CYLINDER HEAD GASKET KIT (#26314444-)

KIT 詳細については次のページを参照して下さい。
See subsequent pages for details.

K-1 6738-K1-1300 シリンダ ヘッド ガスケット キット
CYLINDER HEAD GASKET KIT

このガスケットキットは、キット区分ごとの基本セットです。
部品明細書中、キットの記号が付いていない消耗部品は、お手数ですが単品にて手配下さい。

This kit basis to the gasket kit.
Thers not kit mark parts articles of consumption single order.

00009797

CYLINDER HEAD GASKET KIT (#26314444-)

Item	Part Number	Description	Qty.	Ref.	Serial No.
1	6738-K1-1300	GASKET KIT, CYLINDER HEAD	1		26314444-
	6732-11-4811	.GASKET, AIR INTAKE HEATER	2		26314444-
	07005-01212	.GASKET, AIR TUBE	2		26314444-
	07005-01012	.GASKET, AIR TUBE	2		26314444-
	07005-01212	.GASKET, FUEL TUBE (FILTER)	4		26314444-
	07005-01412	.GASKET, FUEL TUBE (INJECTION PUMP)	8		26314444-
	6732-71-6260	.GASKET, INJECTOR - SPILL	12		26314444-
	6738-11-4370	.O-RING, TURBOCHARGER CONNECTOR	1		26314444-
	6735-11-4812	.GASKET, INTAKE MANIFOLD COVER	1		26314444-
	6732-11-3850	.SEAL, INJECTOR	6		26314444-
	6736-11-3430	.GASKET, INJECTOR SHIM	6		26314444-
	6732-81-8830	.GASKET, TURBOCHARGER GASKET	1		26314444-
	6732-41-4540	.SEAL, VALVE STEM	12		26314444-
	6735-11-1821	.GASKET, CYLINDER HEAD	1		26314444-
	6736-11-5820	.GASKET, EXHAUST MANIFOLD	6		26314444-
	6732-61-6250	.SEAL, THERMOSTAT	1		26314444-
	6732-61-6240	.GASKET, THERMOSTAT	1		26314444-
	6207-51-7690	.GASKET, TURBOCHARGER OIL DRAIN	1		26314444-
	6732-81-8860	.O-RING, TURBOCHARGER OIL SUPPLY TUBE	3		26314444-
	6736-51-8710	.O-RING, TURBOCHARGER OIL SUPPLY NIPPLE	1		26314444-
	6732-11-8181	.GASKET, HEAD COVER	6		26314444-
	6732-11-8210	.GASKET, CAMFOLLOWER COVER BOLT	6		26314444-
	6732-81-8220	.CLAMP, TURBOCHARGER OUTLET PIPE	1		26314444-

CYLINDER BLOCK GASKET KIT (#26314444-)

KIT 詳細については次のページを参照して下さい。
See subsequent pages for details.

K-1 6738-K1-1300 シリンダ ヘッド ガスケット キット
CYLINDER HEAD GASKET KIT

このガスケットキットは、キット区分ごとの基本セットです。
部品明細書中、キットの記号が付いていない消耗部品は、お手数ですが単品にて手配下さい。

This kit basis to the gasket kit.
Thers not kit mark parts articles of consumption single order.

00009797

CYLINDER BLOCK GASKET KIT (#26314444-)

Item	Part Number	Description	Qty.	Ref.	Serial No.
2	6738-K2-1300	GASKET KIT, CYLINDER BLOCK	1		26314444-
	6735-21-1960	.O-RING, SPEED SENSOR	1		26314444-
	6215-81-9710	.O-RING, M10 PLUG	3		26314444-
	6735-21-1930	.O-RING, M14 PLUG	1		26314444-
	6731-21-1190	.NOZZLE, COOLING NOZZLE	6		26314444-
	6732-21-3811	.GASKET, GEAR CASE	1		26314444-
	6732-21-3870	.O-RING, GEAR CASE	1		26314444-
	6732-21-3880	.GASKET, GEAR HOUSING	1		26314444-
	6731-21-4220	.SEAL, FRONT SEAL KIT	1		26314444-
	6736-21-3450	.GASKET, FRONT COVER	1		26314444-
	6732-11-8210	.GASKET, PUSH ROD COVER BOLT	6		26314444-
	6738-21-6180	.O-RING, PUSH ROD COVER	1		26314444-
	6738-21-6650	.GASKET, PUSH ROD COVER	1		26314444-
	6738-21-6660	.GASKET, PUSH ROD COVER BOLT	8		26314444-
	07000-72110	.O-RING, PTO COVER	1		26314444-
	6732-21-3380	.GASKET, PTO HOUSING	2		26314444-
	6732-21-3220	.SEAL, FRONT COVER	1		26314444-
	6735-21-4191	.GASKET, REAR COVER	1		26314444-
	6736-21-4220	.SEAL, REAR SEAL KIT (DOUBLE)	1		26314444-
	6732-21-4171	.GASKET, REAR COVER	1		26314444-
	6732-21-4161	.O-RING, BEARING CAP	1		26314444-
	07005-01012	.GASKET, INJECTION PUMP OIL PIPING	7		26314444-
	6735-61-6411	.GASKET	1		26314444-
	6732-51-4420	.O-RING, OIL PRESSURE PLUG	1		26314444-
	6732-51-4432	.GASKET, OIL PRESSURE PLUG	1		26314444-
	6732-61-2311	.GASKET, OIL COOLER CORE	1		26314444-
	6733-21-5520	.GASKET, SUCTION TUBE	1		26314444-
	07005-02216	.GASKET, OIL PAN DRAIN	1		26314444-
	07005-01812	.GASKET, OIL PAN DRAIN	1		26314444-
	6732-81-6811	.GASKET, STARTER	1		26314444-
	6732-51-8330	.O-RING, TURBOCHARGER DRAIN	1		26314444-
	6732-61-6130	.SEAL, WATER INLET CONNECTION	1		26314444-
	6736-61-1520	.SEAL, WATER PUMP	1		26314444-

CAUTION PLATE (FOR REGULATION OF EPA) (#26308191-)

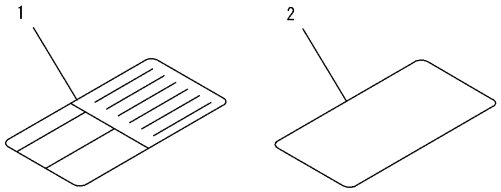

PJ6A211

A9850-01A5

CAUTION PLATE (FOR REGULATION OF EPA) (#26308191-)

Item	Part Number	Description	Qty.	Ref.	Serial No.
1	6732-81-5870	PLATE	1		26308191-
2	6735-83-2120	DECAL	1		26325462-
	□6738-81-2110	DECAL	1		26308191-26325461

TIMER AND SAFETY RELAY (#26314444-)

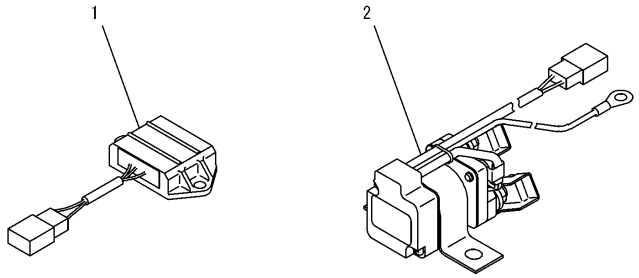

00009769

TIMER AND SAFETY RELAY (#26314444-)

Item	Part Number	Description	Qty.	Ref.	Serial No.
1	600-815-9270	TIMER	1		26314444-
2	600-815-8951	RELAY, SAFETY	1		26314444-

AIR CLEANER (#26314444-)

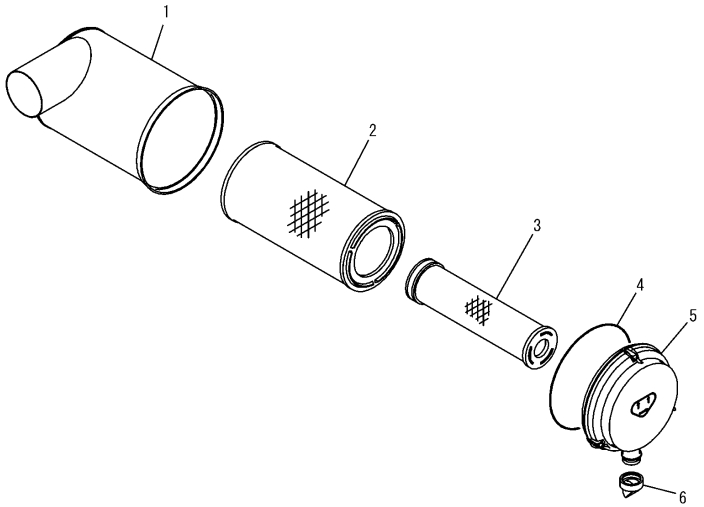

PW2B055

B9999-01S9

AIR CLEANER (#26314444-)

Item	Part Number	Description	Qty.	Ref.	Serial No.
1	6736-81-7100	AIR CLEANER ASSEMBLY	1		26314444-
2	6736-81-7110	.BODY ASSEMBLY	1		26314444-
	600-185-3100	.ELEMENT ASSEMBLY	1		26314444-
3	600-185-3110	..ELEMENT	1		26314444-
4	☆	..ELEMENT	1		26314444-
5	600-184-1370	..O-RING	1		26314444-
6	600-184-1310	.COVER ASSEMBLY	1		26314444-
	600-184-2810	..PLATE	1		26314444-
7	600-184-1350	.VALVE	1		26314444-

MUFFLER (#26314444-)

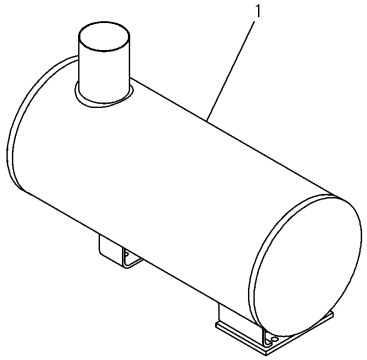

00009770

MUFFLER (#26314444-)

Item	Part Number	Description	Qty.	Ref.	Serial No.
1	6738-11-5550	MUFFLER	1		26314444-

ENGINE RELATED PARTS

ENGINE MOUNTING PARTS

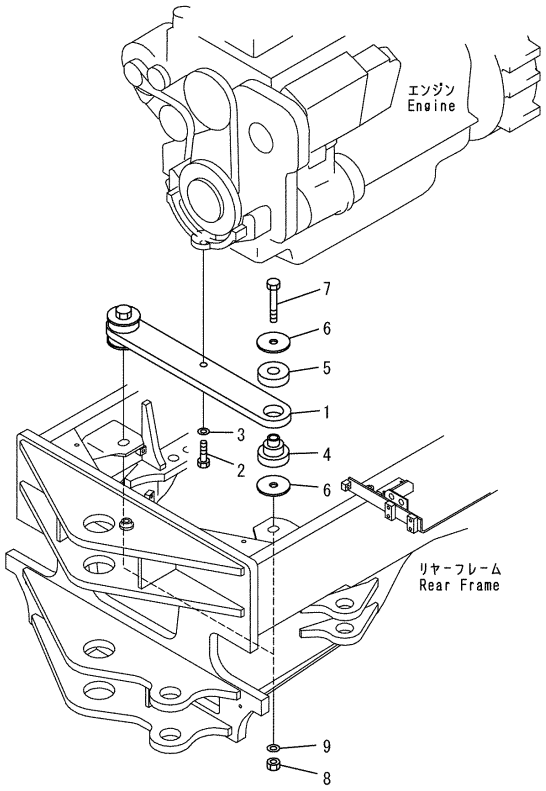

PW2B052

ENGINE MOUNTING PARTS

Item	Part Number	Description	Qty.	Ref.	Serial No.
1	23A-01-33110	BRACKET	1		B10001-
2	01010-81645	BOLT	1		B10001-
3	01643-31645	WASHER	1		B10001-
	418-01-11112	CUSHION ASSEMBLY	2		B10001-
4	418-01-11121	.CUSHION	1		B10001-
5	418-01-11131	.CUSHION	1		B10001-
6	419-01-11162	WASHER	4		B10001-
7	01011-82220	BOLT	2		B10001-
8	01580-12218	NUT	2		B10001-
9	01643-32260	WASHER	2		B10001-

ENGINE ACESSORY (DAMPER)

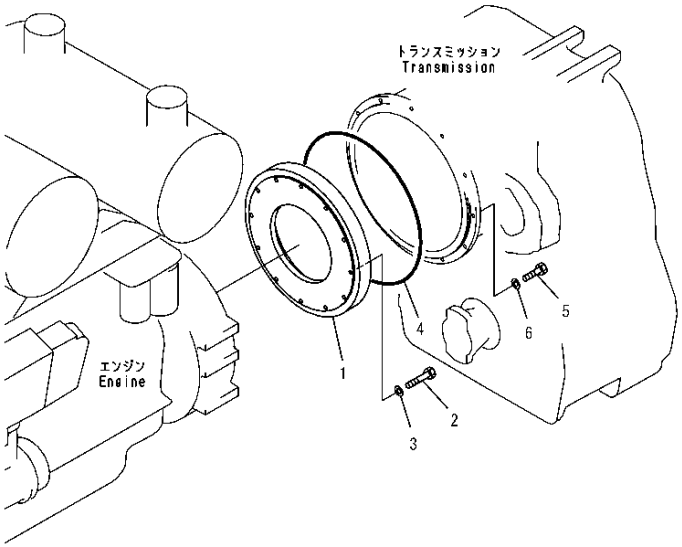

PW2A711

ENGINE ACESSORY (DAMPER)

Item	Part Number	Description	Qty.	Ref.	Serial No.
1	23B-12-31210	GEAR	1		B10001-
2	02010-70657	BOLT	12		B10001-
3	01643-31032	WASHER	12		B10001-
4	120-10-31120	O-RING	1		B10001-
5	01010-81040	BOLT	12		B10001-
6	01643-31032	WASHER	12		B10001-

ENGINE ACESSORY (REMOTE DRAIN)

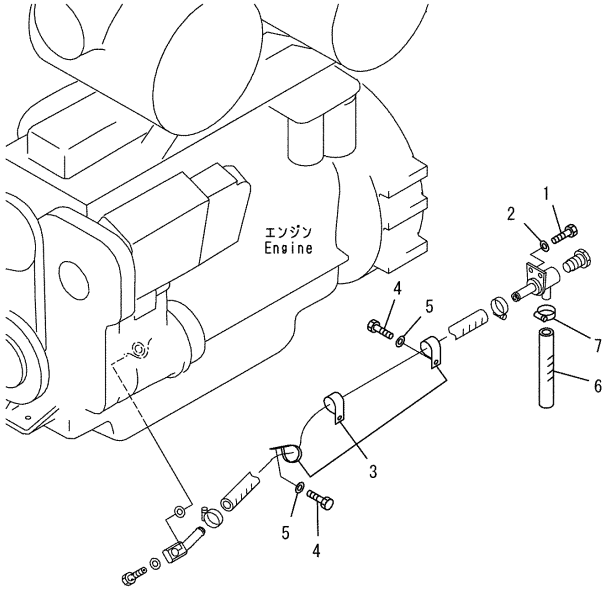

PJ2E042

ENGINE ACESSORY (REMOTE DRAIN)

Item	Part Number	Description	Qty.	Ref.	Serial No.
1	01010-81020	BOLT	2		B10001-
2	01643-31032	WASHER	2		B10001-
3	04434-53211	CLIP	3		B10001-
4	01010-81020	BOLT	3		B10001-
5	01643-31032	WASHER	3		B10001-
6	07260-22020	HOSE	1		B10001-
7	07281-00359	CLAMP	1		B10001-

ENGINE ACCESSORY (ELECTRICAL RELAY)

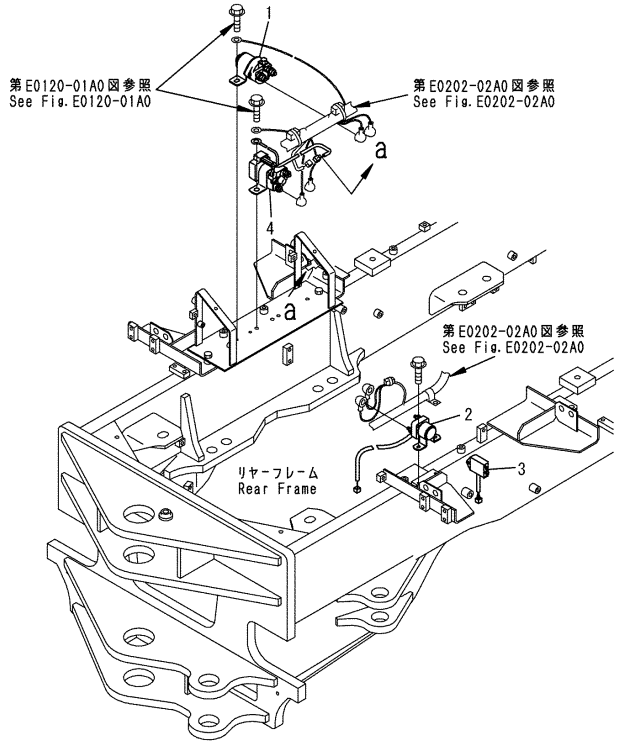

00010265

ENGINE ACCESSORY (ELECTRICAL RELAY)

Item	Part Number	Description	Qty.	Ref.	Serial No.
1	600-815-2170	SWITCH, HEATER	1		B10001-
2	600-815-7870	RELAY	1		B10001-
3	600-815-9270	TIMER	1		B10001-
4	600-815-8950	RELAY	1		B10001-

ENGINE ACCESSORY (ACCELERATOR CONTROL VARIABLE HORSE POWER TYPE)

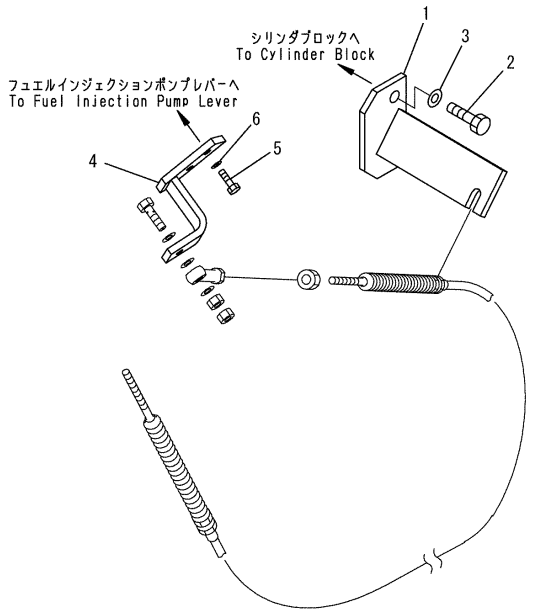

00010248

ENGINE ACCESSORY (ACCELERATOR CONTROL VARIABLE HORSE POWER TYPE)

Item	Part Number	Description	Qty.	Ref.	Serial No.
1	23A-43-31240	BRACKET	1		B10001-
2	01010-81020	BOLT	2		B10001-
3	01643-31032	WASHER	2		B10001-
4	23A-43-31250	BRACKET	1		B10001-
5	01010-80616	BOLT	2		B10001-
6	01643-30623	WASHER	2		B10001-

AIR INTAKE (AIR CLEANER, INNER PARTS)

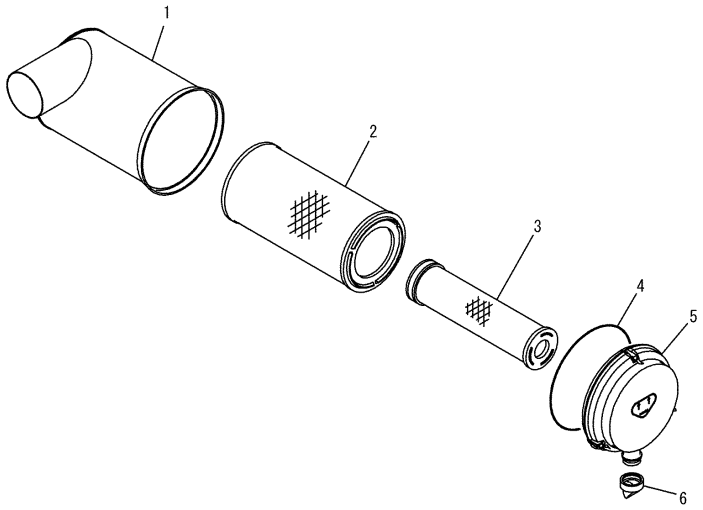

PW2B055

B0200-01A0

AIR INTAKE (AIR CLEANER, INNER PARTS)

Item	Part Number	Description	Qty.	Ref.	Serial No.
	6736-81-7100	AIR CLEANER ASSEMBLY	1		B10001-
1	6736-81-7110	.BODY ASSEMBLY	1		B10001-
	600-185-3100	.ELEMENT ASSEMBLY	1		B10001-
2	600-185-3110	..ELEMENT, OUTER	1		B10001-
3	600-185-3120	..ELEMENT, INNER	1		B10001-
4	600-184-1370	..O-RING	1		B10001-
5	600-184-1310	.COVER ASSEMBLY	1		B10001-
6	600-184-1350	.VALVE, VACUATOR	1		B10001-

AIR INTAKE (AIR CLEANER, INNER PARTS) (WITH INTAKE EXTENSION)

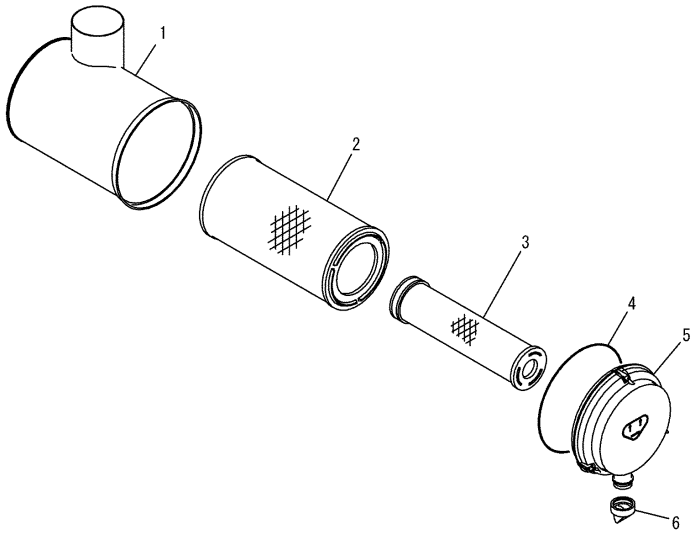

PW2B056

B0200-01A1

AIR INTAKE (AIR CLEANER, INNER PARTS) (WITH INTAKE EXTENSION)

Item	Part Number	Description	Qty.	Ref.	Serial No.
	6736-81-7300	AIR CLEANER ASSEMBLY	1		B10001-
1	6736-81-7310	.BODY ASSEMBLY	1		B10001-
	600-185-3100	.ELEMENT ASSEMBLY	1		B10001-
2	600-185-3110	..ELEMENT, OUTER,	1		B10001-
3	☆	..ELEMENT, INNER,	1		B10001-
4	600-184-1370	..O-RING	1		B10001-
5	600-184-1310	.COVER ASSEMBLY	1		B10001-
6	600-184-1350	.VALVE, VACUATOR,	1		B10001-

AIR INTAKE (SCREEN CAP AND BAND)

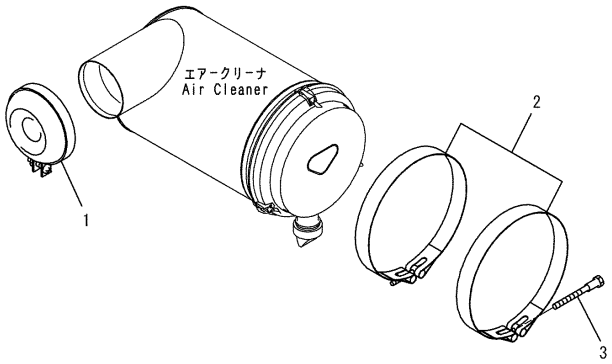

00010249

B0200-02A0A

AIR INTAKE (SCREEN CAP AND BAND)

Item	Part Number	Description	Qty.	Ref.	Serial No.
1	23A-02-32170	CAP, SCREEN	1		B10001-
2	6131-11-4520	BAND ASSEMBLY	2		B10001-
3	6643-11-4641	BOLT	2		B10001-

AIR INTAKE (BAND) (WITH INTAKE EXTENSION)

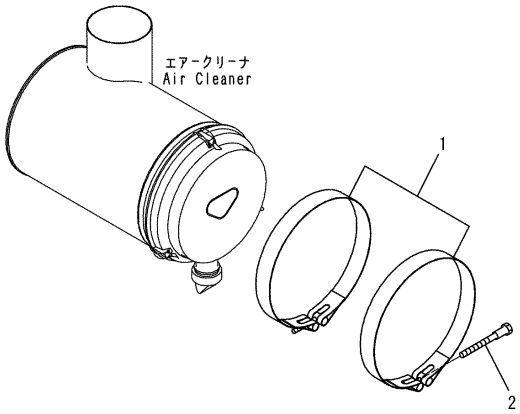

00010250

B0200-02A1A

AIR INTAKE (BAND) (WITH INTAKE EXTENSION)

Item	Part Number	Description	Qty.	Ref.	Serial No.
1	6131-11-4520	BAND ASSEMBLY	2		B10001-
2	6643-11-4641	BOLT	2		B10001-

AIR INTAKE (AIR CLEANER MOUNTING PARTS)

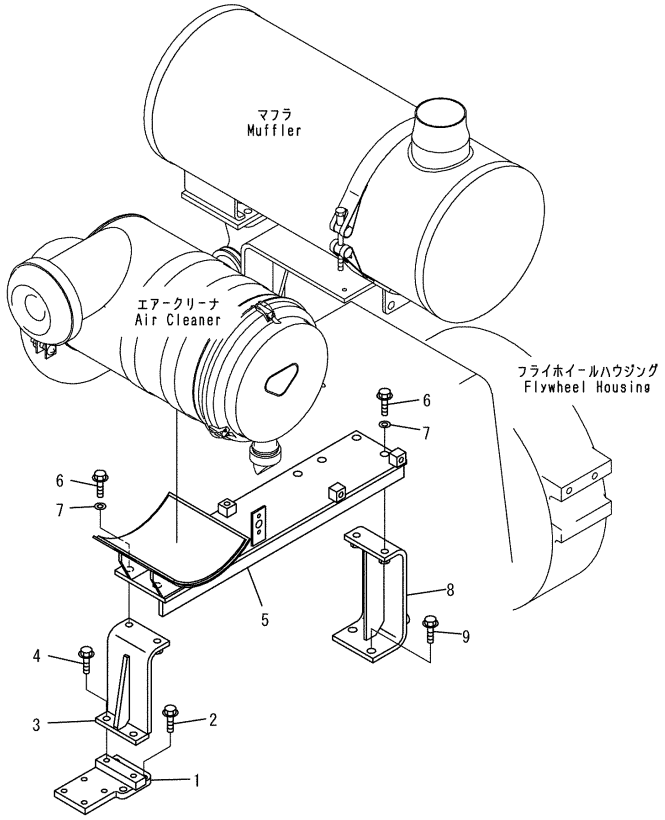

B0200-03A0A

AIR INTAKE (AIR CLEANER MOUNTING PARTS)

Item	Part Number	Description	Qty.	Ref.	Serial No.
1	23A-02-35170	BRACKET	1		B10001-
2	01435-01025	BOLT	3		B10001-
3	23A-02-35150	BRACKET	1		B10001-
4	01435-01020	BOLT	2		B10001-
5	23A-02-35110	BRACKET	1		B10001-
6	01435-01035	BOLT	4		B10001-
7	01643-31232	WASHER	4		B10001-
8	23A-02-33122	BRACKET	1		B10001-
9	01435-01225	BOLT	2		B10001-

AIR INTAKE (AIR CLEANER PIPING)

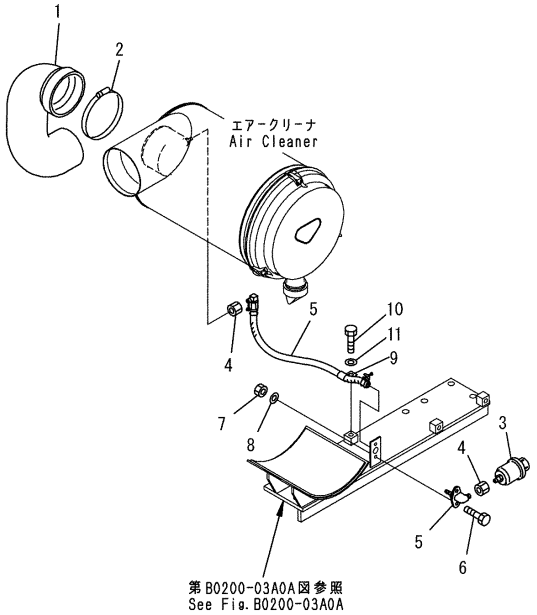

00010252

AIR INTAKE (AIR CLEANER PIPING)

Item	Part Number	Description	Qty.	Ref.	Serial No.
1	23A-02-32210	HOSE	1		B10001-
2	07299-00120	CLAMP	2		B10001-
3	08672-01000	INDICATOR, DUST	1		B10001-
4	6743-81-7530	ADAPTER	2		B10001-
5	08671-10040	HOSE	1		B10001-
6	01010-80616	BOLT	2		B10001-
7	01580-10605	NUT	2		B10001-
8	01643-30623	WASHER	2		B10001-
9	04434-51410	CLIP	1		B10001-
10	01010-81016	BOLT	1		B10001-
11	01643-31032	WASHER	1		B10001-

AIR INTAKE (AIR PIPING)

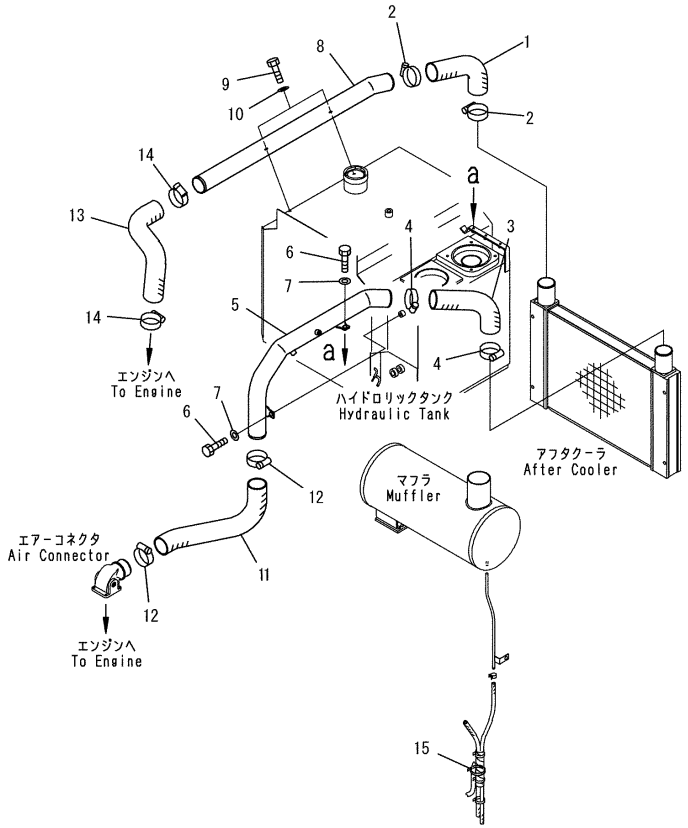

AIR INTAKE (AIR PIPING)

Item	Part Number	Description	Qty.	Ref.	Serial No.
1	23B-02-34220	HOSE	1		B10001-
2	07299-00080	CLAMP	2		B10001-
3	23B-02-34210	HOSE	1		B10001-
4	07299-00080	CLAMP	2		B10001-
5	23B-02-34230	TUBE	1		B10001-
6	01010-81225	BOLT	2		B10001-
7	01643-31232	WASHER	2		B10001-
8	23B-02-34240	TUBE	1		B10001-
9	01010-81225	BOLT	2		B10001-
10	01643-31232	WASHER	2		B10001-
11	23A-02-34250	HOSE	1		B10001-
12	07299-00080	CLAMP	2		B10001-
13	23A-02-34260	HOSE	1		B10001-
14	07299-00080	CLAMP	2		B10001-
15	08034-20536	BAND	1		B10001-

AIR INTAKE (RAIN CAP) (WITH INTAKE EXTENSION)

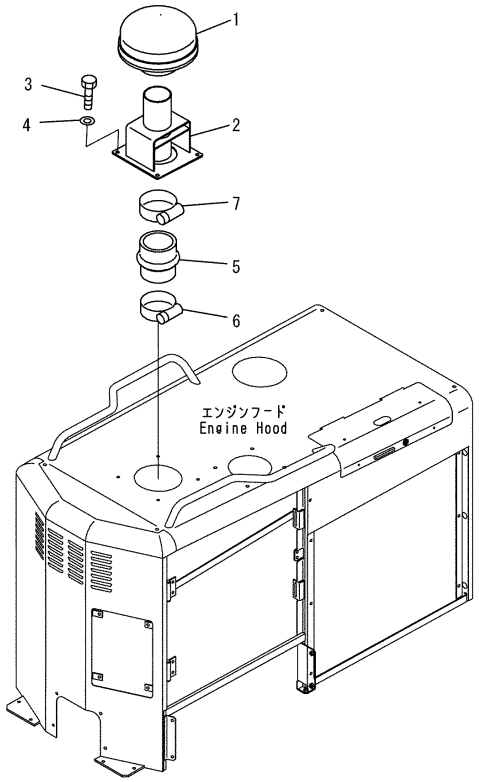

PW2B060

AIR INTAKE (RAIN CAP) (WITH INTAKE EXTENSION)

Item	Part Number	Description	Qty.	Ref.	Serial No.
1	600-181-3860	CAP	1		B10001-
	23B-02-31180	CAP	1		B10001-
	☆	.CAP	1		B10001-
2	23A-02-31210	BRACKET	1		B10001-
3	01010-81025	BOLT	4		B10001-
4	424-09-12650	WASHER	4		B10001-
5	23A-02-31220	HOSE	1		B10001-
6	07289-00130	CLAMP	1		B10001-
7	07289-00145	CLAMP, HOSE	1		B10001-

EXHAUST SYSTEM

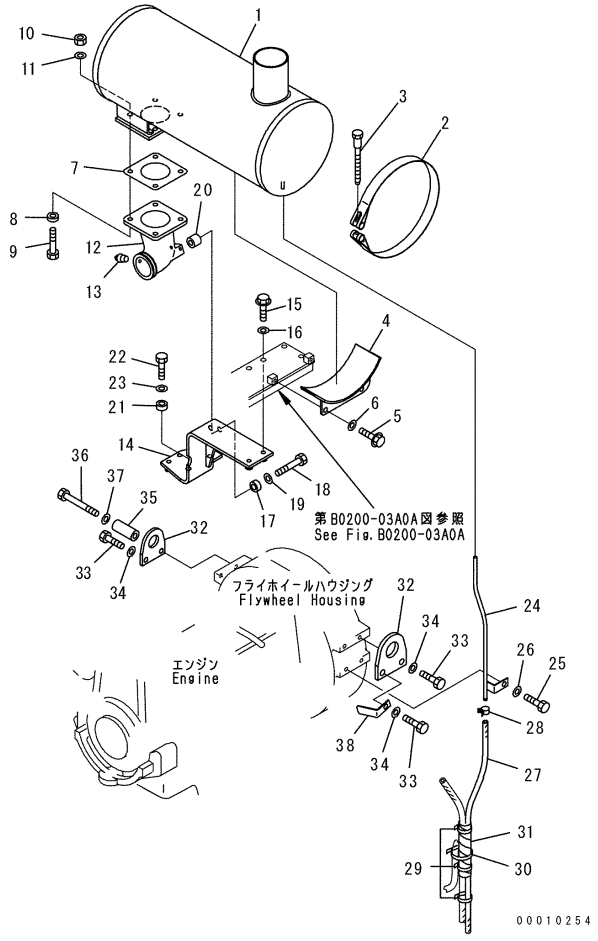

EXHAUST SYSTEM

Item	Part Number	Description	Qty.	Ref.	Serial No.
1	6738-11-5550	MUFFLER	1		B10001-
2	6138-11-5790	BAND ASSEMBLY	1		B10001-
3	6643-11-4641	BOLT	1		B10001-
4	23A-02-33181	BRACKET	1		B10001-
5	01435-01025	BOLT	2		B10001-
6	01643-31232	WASHER	2		B10001-
7	6151-11-5751	GASKET	1		B10001-
8	6127-11-5180	SPACER	4		B10001-
9	01010-E1250	BOLT	4		B10001-
10	01580-11210	NUT	4		B10001-
11	01643-31232	WASHER	4		B10001-
12	23A-02-36111	ELBOW	1		B10001-
13	07042-20108	PLUG	1		B10001-
14	23A-02-35130	BRACKET	1		B10001-
15	01435-01035	BOLT	2		B10001-
16	01643-31232	WASHER	2		B10001-
17	198-43-15310	COLLAR, 10MM	2		B10001-
18	01010-E1065	BOLT	2		B10001-
19	01643-31032	WASHER	2		B10001-
20	144-874-7470	BOSS	2		B10001-
21	198-43-15310	COLLAR, 10MM	2		B10001-
22	01010-E1035	BOLT	2		B10001-
23	01643-31032	WASHER	2		B10001-
24	23A-02-38210	HOSE	1		B10001-
25	01010-81230	BOLT	2		B10001-
26	01643-31232	WASHER	1		B10001-
27	07260-20990	HOSE	1		B10001-
28	07285-00155	CLIP	1		B10001-
29	08034-00519	BAND	3		B10001-
30	08034-20536	BAND	1		B10001-
31	415-62-13710	PROTECTOR	1		B10001-
32	23B-02-33160	PLATE	2		B10001-
33	01010-81240	BOLT	3		B10001-
34	01643-31232	WASHER	3		B10001-
35	12S-43-16270	SPACER	4		B10001-
36	01010-81295	BOLT	1		B10001-

EXHAUST SYSTEM

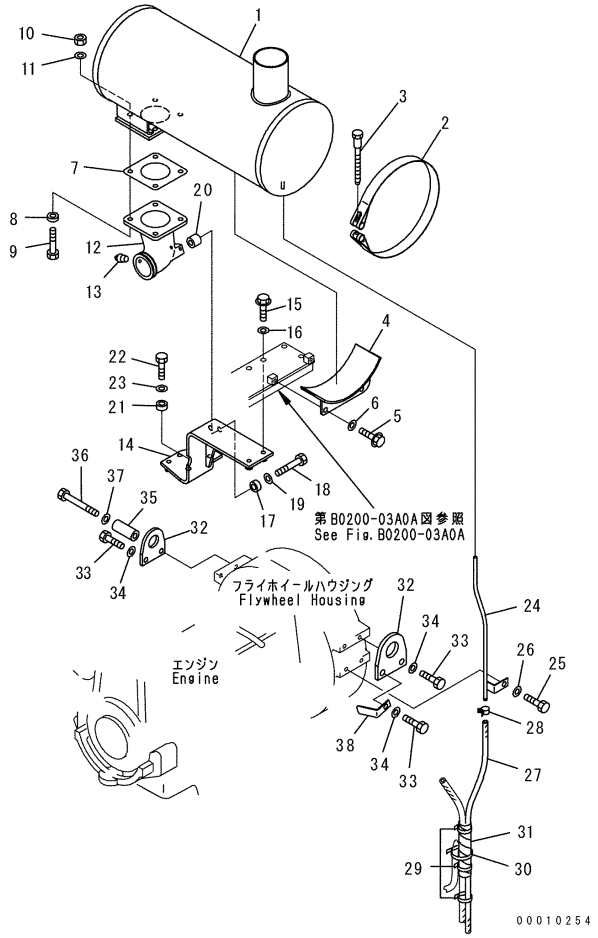

EXHAUST SYSTEM

Item	Part Number	Description	Qty.	Ref.	Serial No.
37	01643-31232	WASHER	1		B10001-
38	23A-02-36220	PLATE	1		B10001-

EXHAUST SYSTEM (EXHAUST PIPE)

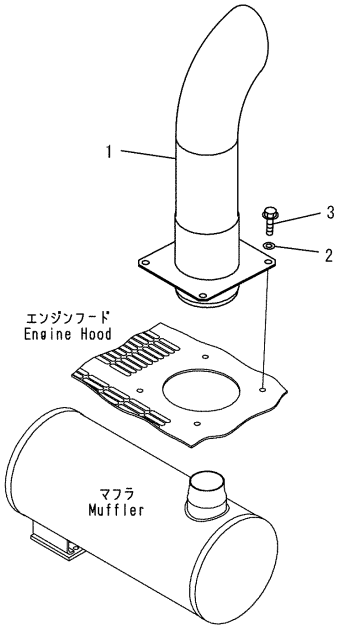

PW2B062

EXHAUST SYSTEM (EXHAUST PIPE)

Item	Part Number	Description	Qty.	Ref.	Serial No.
1	23B-02-36121	EXHAUST PIPE	1		B10001-
2	124-54-26540	WASHER	4		B10001-
3	01435-01225	BOLT	4		B10001-

EXHAUST SYSTEM (SAFETY GUARD)

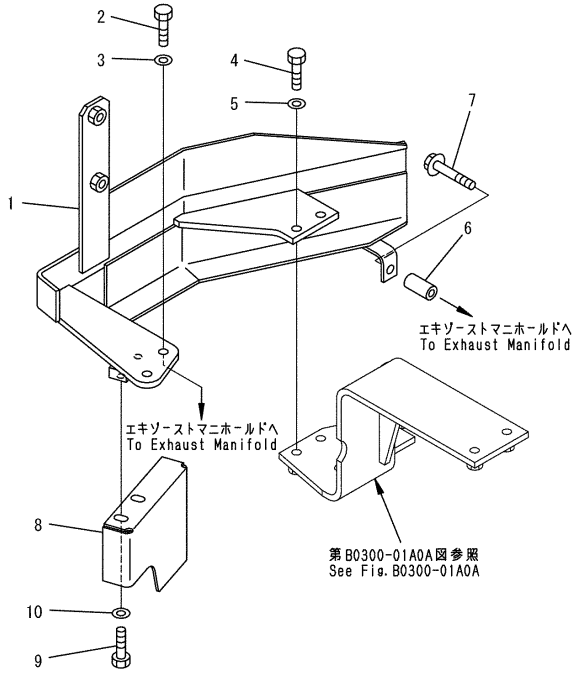

00010255

EXHAUST SYSTEM (SAFETY GUARD)

Item	Part Number	Description	Qty.	Ref.	Serial No.
1	23A-03-33881	BRACKET	1		B10001-
2	01010-E1025	BOLT	2		B10001-
3	01643-31032	WASHER	2		B10001-
4	01010-E1030	BOLT	2		B10001-
5	01643-31032	WASHER	2		B10001-
6	6138-81-8660	SPACER	1		B10001-
7	01435-01060	BOLT	1		B10001-
8	23A-02-31410	COVER	1		B10001-
9	01010-81020	BOLT	2		B10001-
10	01643-31032	WASHER	2		B10001-

COOLING SYSTEM

ENGINE COOLING (BLOWER FAN AND RELATED PARTS)

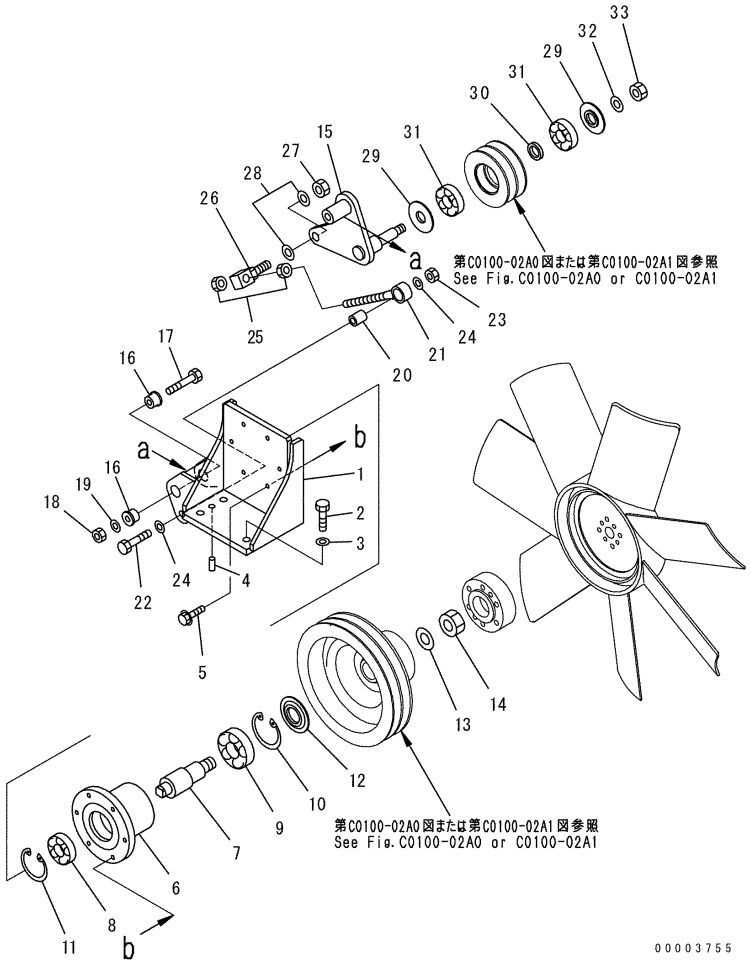

ENGINE COOLING (BLOWER FAN AND RELATED PARTS)

Item	Part Number	Description	Qty.	Ref.	Serial No.
1	23B-02-31312	BRACKET	1		B10001-
2	01010-81235	BOLT	4		B10001-
3	01643-31232	WASHER	4		B10001-
4	04020-01228	PIN, DOWEL	2		B10001-
5	01435-01030	BOLT	6		B10001-
6	23B-02-31241	CASE	1		B10001-
7	23B-02-31260	SHAFT	1		B10001-
8	06044-06305	BEARING	1		B10001-
9	06044-06307	BEARING	1		B10001-
10	04065-08025	RING, SNAP	1		B10001-
11	04065-06220	RING, SNAP	1		B10001-
12	23B-02-31250	PLATE	1		B10001-
13	01643-32460	WASHER	1		B10001-
14	01580-02419	NUT	1		B10001-
15	23B-02-31341	BRACKET	1		B10001-
16	23B-02-31350	ADAPTER	2		B10001-
17	01011-81010	BOLT	1		B10001-
18	01580-11008	NUT	1		B10001-
19	01643-31032	WASHER	1		B10001-
20	6215-81-6150	PIN	1		B10001-
21	6222-83-6740	ROD	1		B10001-
22	01010-81260	BOLT	1		B10001-
23	01580-11210	NUT	1		B10001-
24	01643-31232	WASHER	1		B10001-
25	01580-11411	NUT	1		B10001-
26	23B-02-31370	JOINT	1		B10001-
27	01580-11613	NUT	1		B10001-
28	01643-31645	WASHER	2		B10001-
29	23B-02-31360	PLATE	2		B10001-
30	23B-02-31170	COLLAR	1		B10001-
31	06034-06305	BEARING	2		B10001-
32	01643-32060	WASHER	1		B10001-
33	01580-12016	NUT	1		B10001-

ENGINE COOLING (FAN PULLEY AND V-BELT)

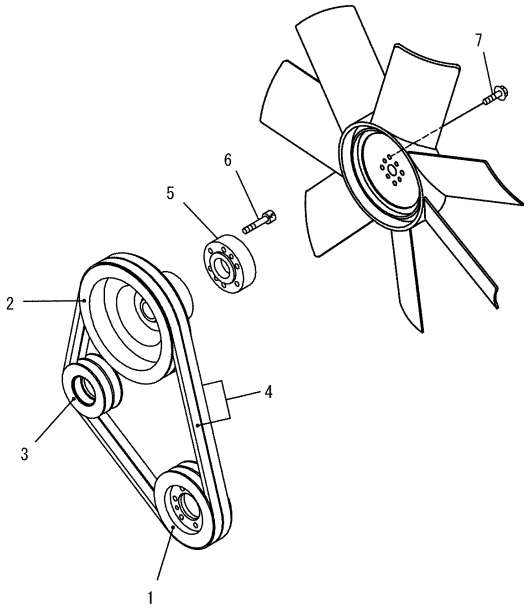

PJ2A722

ENGINE COOLING (FAN PULLEY AND V-BELT)

Item	Part Number	Description	Qty.	Ref.	Serial No.
1	23B-02-31141	PULLEY, DRIVE	1		B10001-
2	23B-02-31131	PULLEY, FAN	1		B10001-
3	23B-02-31161	PULLEY, IDLER	1		B10001-
4	04121-22265	V-BELT SET	1		B10001-
5	23B-02-31231	SPACER, FAN	1		B10001-
6	01252-71040	BOLT	6		B10001-
7	01435-01016	BOLT	4		B10001-

RADIATOR AND MOUTING PARTS

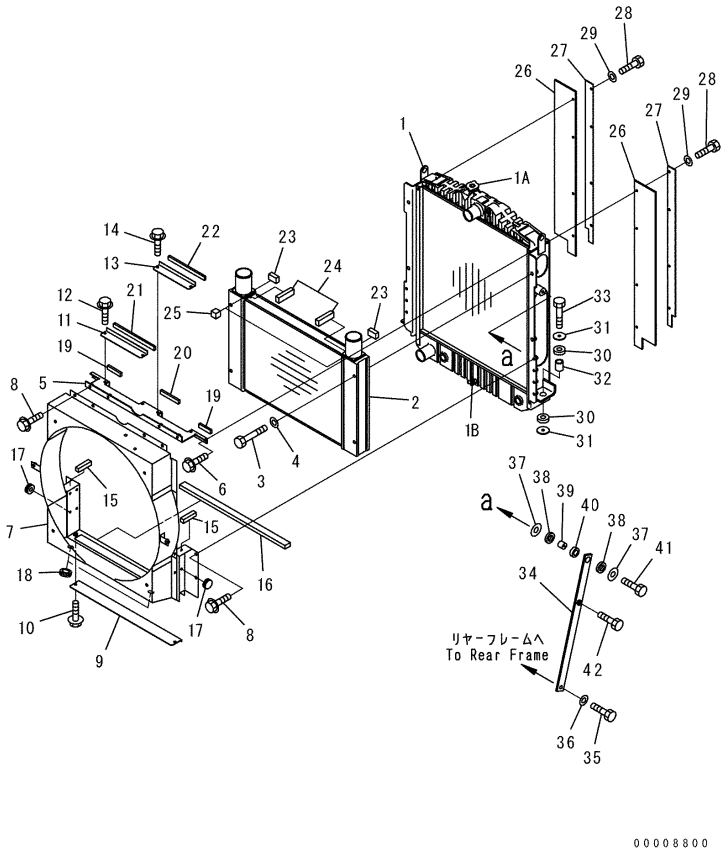

RADIATOR AND MOUTING PARTS

Item	Part Number	Description	Qty.	Ref.	Serial No.
	23A-03-33500	RADIATOR ASSEMBLY	1		B10001-
	23A-03-33111	.RADIATOR SUB ASSEMBLY	1		B10001-
1	23A-03-33120	..CORE ASSEMBLY	1		B10001-
1A	23A-03-31170	..COVER	1		B10001-
1B	415-03-11150	..COCK	1		B10001-
2	23B-02-34120	.AFTER COOLER ASSEMBLY	1		B10001-
3	01011-81210	.BOLT	4		B10001-
4	01643-31232	.WASHER	4		B10001-
5	23B-03-33130	.BRACKET	1		B10001-
6	01435-20816	.BOLT	2		B10001-
7	23A-03-33180	.SHROUD	1		B10001-
8	01435-20816	.BOLT	8		B10001-
9	23B-03-33170	.PLATE	1		B10001-
10	01435-20816	.BOLT	2		B10001-
11	23B-03-33140	.PLATE	1		B10001-
12	01435-20816	.BOLT	2		B10001-
13	23B-03-33150	.PLATE	1		B10001-
14	01435-20816	.BOLT	2		B10001-
15	23B-03-33210	.PACKING	2		B10001-
16	23B-03-33220	.PACKING	1		B10001-
17	09415-00706	.CAP	8		B10001-
18	09415-02110	.CAP	2		B10001-
19	23B-03-33230	.PACKING	2		B10001-
20	23B-03-33240	.PACKING	1		B10001-
21	23B-03-33260	.PACKING	1		B10001-
22	23B-03-33270	.PACKING	1		B10001-
23	23B-03-33290	.PACKING	2		B10001-
24	23B-03-33280	.PACKING	2		B10001-
25	23B-03-33970	.PACKING	2		B10001-
26	23B-54-41750	PLATE	2		B10001-
27	23B-54-31763	PLATE	2		B10001-
28	01010-80820	BOLT	8		B10001-
29	01643-30823	WASHER	8		B10001-
30	418-03-11390	CUSHION	4		B10001-
31	416-03-11210	WASHER	4		B10001-
32	415-03-11210	SPACER	2		B10001-

RADIATOR AND MOUTING PARTS

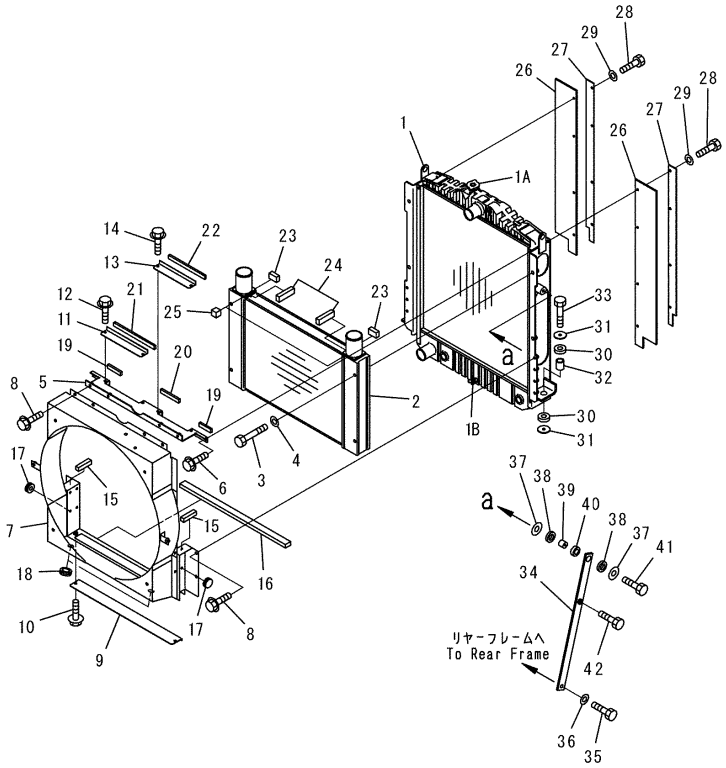

RADIATOR AND MOUTING PARTS

Item	Part Number	Description	Qty.	Ref.	Serial No.
33	01010-81255	BOLT	2		B10001-
34	23B-03-31511	PLATE	2		B10001-
35	416-03-11282	BOLT	2		B10001-
36	01643-31232	WASHER	2		B10001-
37	419-43-17920	WASHER	4		B10001-
38	416-03-11260	CUSHION	4		B10001-
39	416-03-11270	SPACER	2		B10001-
40	416-03-11250	CUSHION	2		B10001-
41	01010-81250	BOLT	2		B10001-
42	01010-81016	BOLT	1		B10001-

RADIATOR PIPING

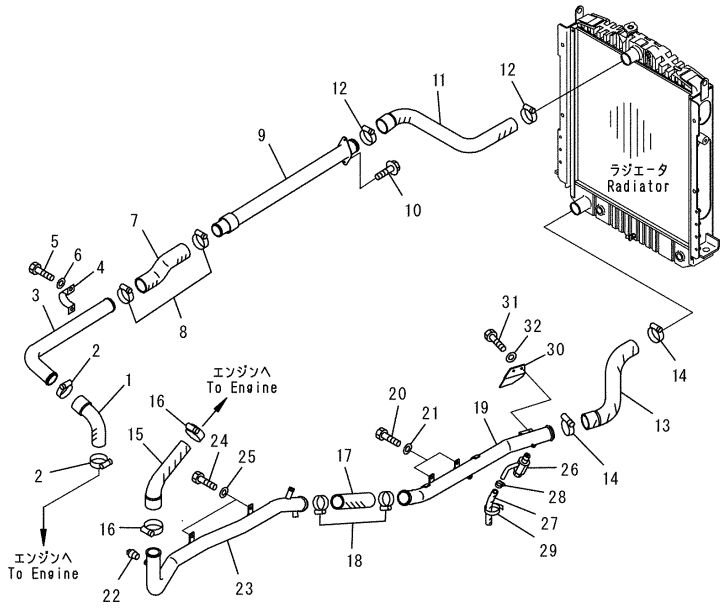

C0120-01A0B

RADIATOR PIPING

Item	Part Number	Description	Qty.	Ref.	Serial No.
1	23A-03-33611	HOSE	1		B10001-
2	07289-00070	CLAMP	2		B10001-
3	23A-03-33710	TUBE	1		B10001-
4	07282-16114	CLAMP	1		B10001-
5	01010-81230	BOLT	2		B10001-
6	01643-31232	WASHER	2		B10001-
7	23B-03-33621	HOSE	1		B10001-
8	07289-00070	CLAMP	2		B10001-
9	23B-03-33780	TUBE	1		B10001-
10	01435-01016	BOLT	2		B10001-
11	23B-03-33630	HOSE	1		B10001-
12	07289-00070	CLAMP	2		B10001-
13	23B-03-33641	HOSE	1		B10001-
14	07289-00070	CLAMP	2		B10001-
15	23A-03-31662	HOSE	1		B10001-
16	07289-00055	CLAMP	2		B10001-
17	23A-03-31751	HOSE	1		B10001-
18	07289-00070	CLAMP	2		B10001-
19	23B-03-32130	TUBE	1		B10001-
20	01010-81025	BOLT	2		B10001-
21	01463-31032	WASHER	2		B10001-
22	07042-70108	PLUG	1		B10001-
23	23A-03-31731	TUBE	1		B10001-
24	01010-81020	BOLT	2		B10001-
25	01643-31032	WASHER	2		B10001-
26	07730-40004	VALVE	1		B10001-
27	07260-21416	HOSE	1		B10001-
28	07281-00259	CLAMP	1		B10001-
29	08034-00536	BAND	1		B10001-
30	23B-03-31790	PLATE	1		B10001-
31	01010-81020	BOLT	2		B10001-
32	01643-31032	WASHER	2		B10001-

RADIATOR (SUB TANK AND PIPING)

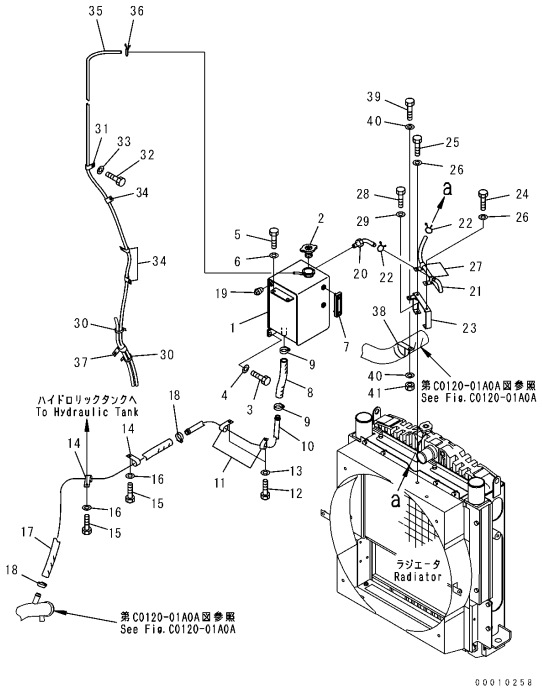

RADIATOR (SUB TANK AND PIPING)

Item	Part Number	Description	Qty.	Ref.	Serial No.
1	23B-03-33812	TANK	1		B10001-
2	23B-03-31180	CAP	1		B10001-
3	01010-81020	BOLT	2		B10001-
4	01643-31032	WASHER	2		B10001-
5	01010-81025	BOLT	2		B10001-
6	01643-31032	WASHER	2		B10001-
7	23B-03-34200	GAUGE	1		B10001-
8	07260-22028	HOSE	1		B10001-
9	07289-00035	CLAMP	2		B10001-
10	23B-03-31962	TUBE	1		B10001-
11	04434-52110	CLIP	2		B10001-
12	01010-81020	BOLT	2		B10001-
13	01643-31032	WASHER	2		B10001-
14	04434-53211	CLIP	2		B10001-
15	01010-81020	BOLT	2		B10001-
16	01643-31032	WASHER	2		B10001-
17	07261-22011	HOSE	1		B10001-
18	07289-00035	CLAMP	2		B10001-
19	07042-70108	PLUG	1		B10001-
20	23B-03-31351	JOINT	1		B10001-
21	417-03-21150	HOSE	1		B10001-
22	206-03-43340	CLIP	2		B10001-
23	23B-03-33411	BRACKET	1		B10001-
24	01010-81020	BOLT	1		B10001-
25	01010-81025	BOLT	1		B10001-
26	01643-31032	WASHER	2		B10001-
27	04434-51210	CLIP	2		B10001-
28	01010-81020	BOLT	2		B10001-
29	01643-31032	WASHER	2		B10001-
30	08034-20536	BAND	2		B10001-
31	04434-51210	CLIP	1		B10001-
32	01010-81020	BOLT	1		B10001-
33	01643-31032	WASHER	1		B10001-
34	04434-51210	CLIP	3		B10001-
35	23B-03-31450	HOSE	1		B10001-
36	206-03-43340	CLIP	1		B10001-

RADIATOR (SUB TANK AND PIPING)

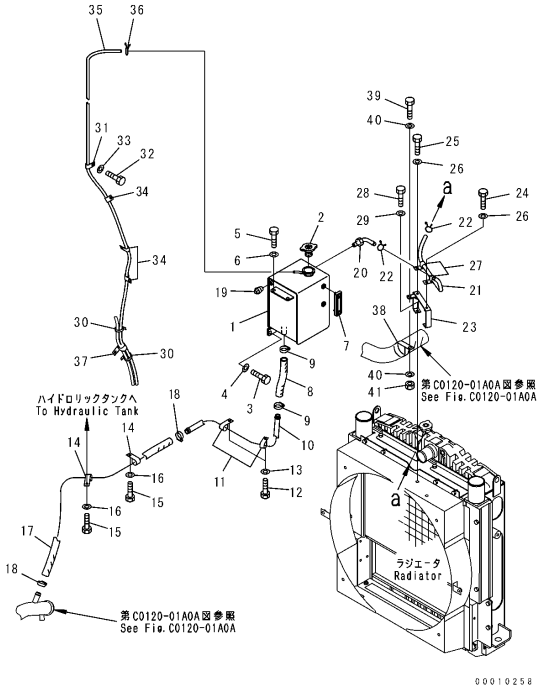

RADIATOR (SUB TANK AND PIPING)

Item	Part Number	Description	Qty.	Ref.	Serial No.
37	04434-51210	CLIP	1		B10001-
38	207-62-33690	CLIP	1		B10001-
39	01010-81025	BOLT	1		B10001-
40	01643-31032	WASHER	2		B10001-
41	01580-11008	NUT	1		B10001-

RADIATOR (FAN GUARD))

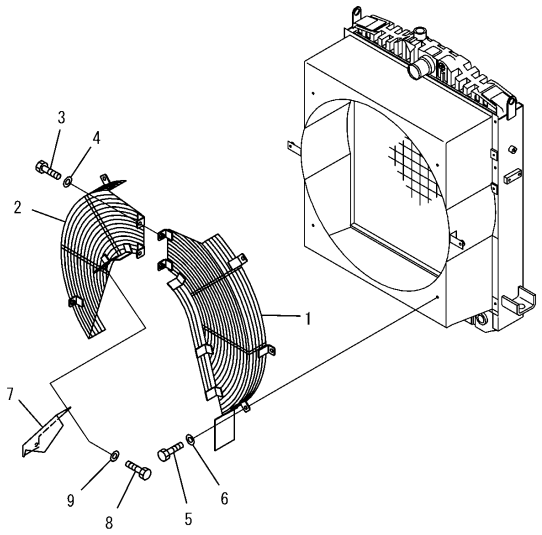

PJ2E417

RADIATOR (FAN GUARD))

Item	Part Number	Description	Qty.	Ref.	Serial No.
1	23A-03-33310	GUARD, FAN, L.H.	1		B10001-
2	23A-03-33320	GUARD, FAN, R.H.	1		B10001-
3	01010-81020	BOLT	2		B10001-
4	01643-31032	WASHER	2		B10001-
5	01010-81020	BOLT	6		B10001-
6	01643-31032	WASHER	6		B10001-
7	23A-03-31160	COVER	1		B10001-
8	01010-81020	BOLT	2		B10001-
9	01643-31032	WASHER	2		B10001-

FUEL TANK AND RELATED PARTS

FUEL, HYDRAULIC TANK AND MOUNTING PARTS

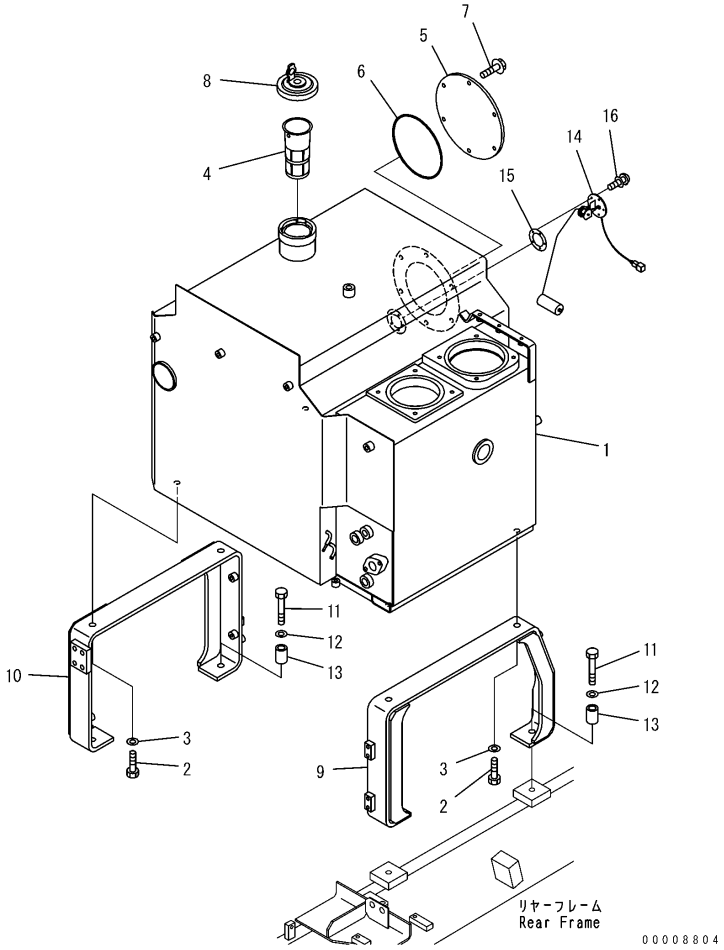

D0100-01A0A

FUEL, HYDRAULIC TANK AND MOUNTING PARTS

Item	Part Number	Description	Qty.	Ref.	Serial No.
1	23B-04-31511	TANK, FUEL	1		B10001-
2	01010-81640	BOLT	4		B10001-
3	01643-31645	WASHER	4		B10001-
4	238-04-12130	STRAINER	1		B10001-
5	428-04-11120	COVER	1		B10001-
6	07000-15200	O-RING	1		B10001-
7	01435-01020	BOLT	6		B10001-
8	20Y-04-11160	CAP	1		B10001-
9	23B-04-31322	BRACKET, L.H.	1		B10001-
10	23B-04-31333	BRACKET, R.H.	1		B10001-
11	01010-81685	BOLT	4		B10001-
12	01643-31645	WASHER	4		B10001-
13	238-04-11140	SPACER	4		B10001-
14	23B-06-42650	SENSOR, FUEL	1		B10001-
15	237-06-15190	PACKING	1		B10001-
16	01023-10412	SCREW	5		B10001-

FUEL PIPING (WITH WATER SEPARATOR)

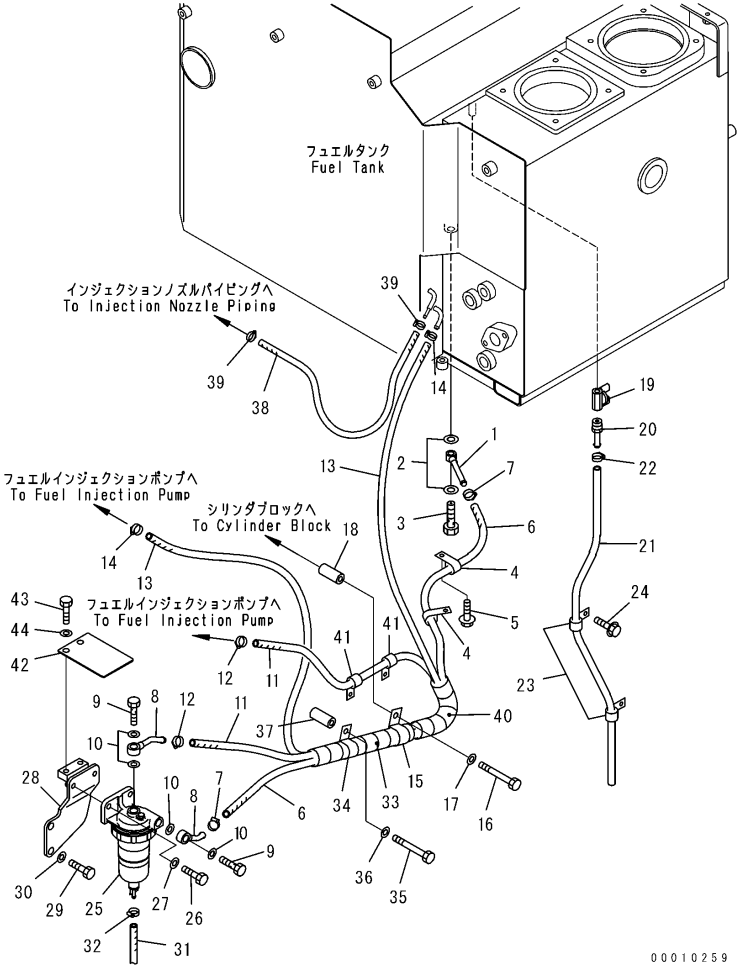

D0200-01A2

FUEL PIPING (WITH WATER SEPARATOR)

Item	Part Number	Description	Qty.	Ref.	Serial No.
1	238-04-12110	TUBE	1		B10001-
2	07005-01412	GASKET	2		B10001-
3	07206-31014	BOLT	1		B10001-
4	04434-51610	CLIP	2		B10001-
5	01435-01016	BOLT	2		B10001-
6	07288-11015	HOSE	1		B10001-
7	07281-00197	CLAMP	2		B10001-
8	23B-04-32130	TUBE	2		B10001-
9	07206-31014	BOLT	2		B10001-
10	07005-01412	GASKET	4		B10001-
11	07288-11013	HOSE	1		B10001-
12	07281-00197	CLAMP	2		B10001-
13	07288-10815	HOSE	1		B10001-
14	07281-00167	CLAMP	2		B10001-
15	23S-61-24870	CLIP	1		B10001-
16	01010-81290	BOLT	1		B10001-
17	01643-31232	WASHER	1		B10001-
18	195-97-95190	SPACER	1		B10001-
19	363-04-11130	VALVE	1		B10001-
20	113-04-32130	NIPPLE	1		B10001-
21	07270-61010	TUBE	1		B10001-
22	07281-00167	CLAMP	1		B10001-
23	04434-51310	CLIP	2		B10001-
24	01435-01016	BOLT	2		B10001-
25	22U-04-21131	WATER SEPARATOR	1		B10001-
26	01010-80830	BOLT	2		B10001-
27	01643-30823	WASHER	2		B10001-
28	23A-04-32111	BLACKET	1		B10001-
29	01010-81235	BOLT	2		B10001-
30	01643-51232	WASHER	2		B10001-
31	07288-10607	HOSE	1		B10001-
32	07281-00167	CLAMP	1		B10001-
33	415-62-13710	PROTECTOR	1		B10001-
34	04434-51412	CLIP	1		B10001-
35	01010-81290	BOLT	1		B10001-
36	01643-31232	WASHER	1		B10001-

FUEL PIPING (WITH WATER SEPARATOR)

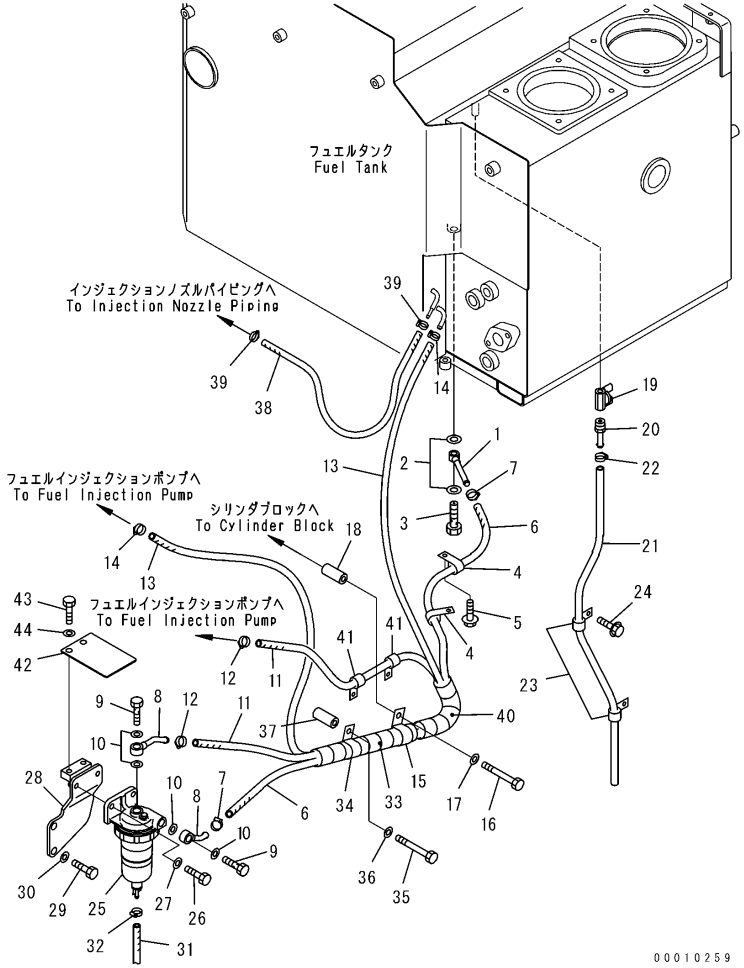

FUEL PIPING (WITH WATER SEPARATOR)

Item	Part Number	Description	Qty.	Ref.	Serial No.
37	195-97-95190	SPACER	1		B10001-
38	07288-10504	HOSE	1		B10001-
39	07280-01010	CLAMP	2		B10001-
40	203-62-32440	COVER	1		B10001-
41	04434-51612	CLIP	2		B10001-
42	23B-04-32220	PLATE	1		B10001-
43	01010-81020	BOLT	2		B10001-
44	01643-31032	WASHER	2		B10001-

ELECTRICAL SYSTEM

BATTERY

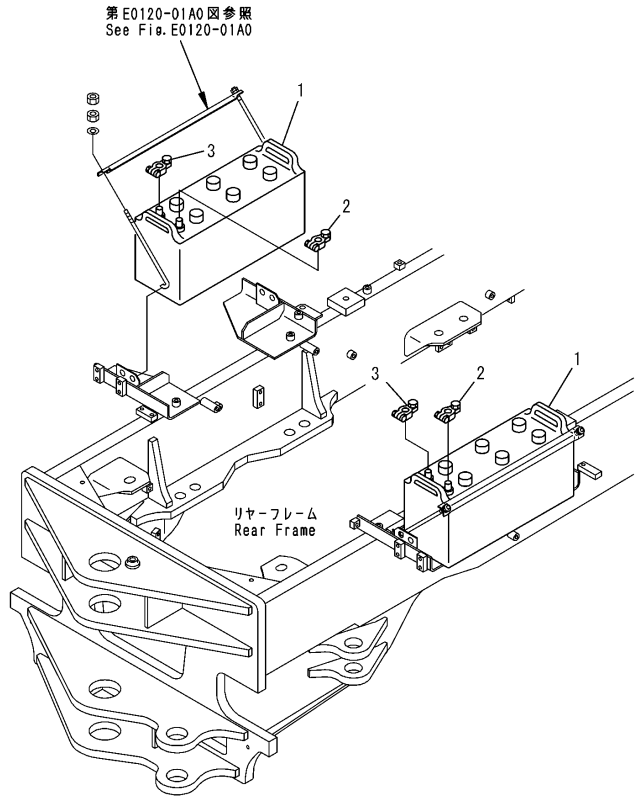

00008806

BATTERY

Item	Part Number	Description	Qty.	Ref.	Serial No.
1	134-06-61470	BATTERY, (1340661470)	2		B10001-
2	08000-00000	.TERMINAL, (+)	1		B10001-
3	08000-00001	.TERMINAL, (-)	1		B10001-

FUSE, RELAY AND BATTERY HOLDER

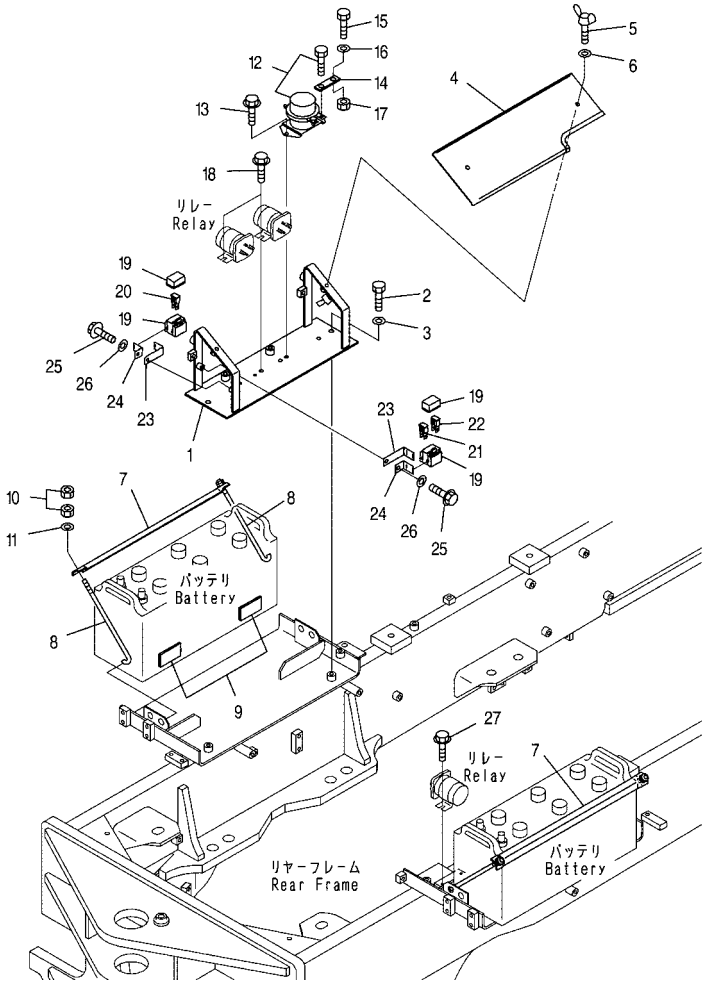

FUSE, RELAY AND BATTERY HOLDER

Item	Part Number	Description	Qty.	Ref.	Serial No.
1	23A-06-45750	BRACKET	1		B10001-
2	01010-81020	BOLT	2		B10001-
3	01643-31032	WASHER	2		B10001-
4	23A-06-43711	COVER	1		B10001-
5	01434-10820	BOLT, WING	2		B10001-
6	01643-30823	WASHER	2		B10001-
7	421-06-11221	HOLDER	2		B10001-
8	113-06-31120	BOLT	4		B10001-
9	23B-06-43650	RUBBER	4		B10001-
10	01580-11008	NUT	8		B10001-
11	01643-31032	WASHER	4		B10001-
12	22W-06-13220	SWITCH, BATTERY	1		B10001-
13	01435-00830	BOLT	2		B10001-
14	234-06-32240	PLATE	1		B10001-
15	01010-80820	BOLT	1		B10001-
16	01643-30823	WASHER	1		B10001-
17	01580-10806	NUT	1		B10001-
18	01435-00612	BOLT	4		B10001-
19	421-06-22880	HOLDER	2		B10001-
20	421-06-22840	FUSE, 30A	1		B10001-
21	23A-06-21390	FUSE, 40A	1		B10001-
22	421-06-22820	FUSE, 80A	1		B10001-
23	421-06-22920	BRACKET	2		B10001-
24	421-06-22910	BRACKET	2		B10001-
25	01435-00816	BOLT	2		B10001-
26	01643-30823	WASHER	2		B10001-
27	01435-00608	BOLT	2		B10001-

BATTERY WIRING

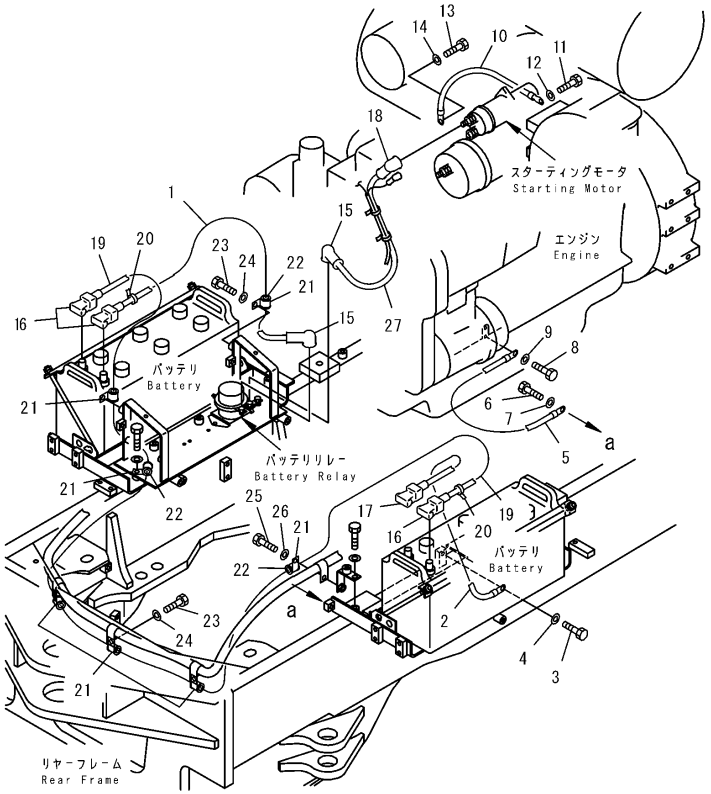

PJ2B707

BATTERY WIRING

Item	Part Number	Description	Qty.	Ref.	Serial No.
1	08028-64080	CABLE	1		B10001-
2	08028-44045	CABLE	1		B10001-
3	01010-81016	BOLT	1		B10001-
4	01643-31032	WASHER	1		B10001-
5	23A-06-41150	CABLE	1		B10001-
6	01010-81016	BOLT	1		B10001-
7	01643-31032	WASHER	1		B10001-
8	01010-81220	BOLT	1		B10001-
9	01643-31232	WASHER	1		B10001-
10	23A-06-41150	CABLE	1		B10001-
11	01010-81220	BOLT	1		B10001-
12	01643-31232	WASHER	1		B10001-
13	01010-81016	BOLT	1		B10001-
14	01643-31032	WASHER	1		B10001-
15	232-06-11960	CAP	2		B10001-
16	08038-42511	CAP	3		B10001-
17	08038-22511	CAP	1		B10001-
18	08038-00035	CAP	1		B10001-
19	23B-06-41151	CABLE	1		B10001-
20	234-06-41320	BAND	2		B10001-
21	04434-52210	CLIP	8		B10001-
22	07095-20314	CUSHION	8		B10001-
23	01010-81016	BOLT	6		B10001-
24	01643-31032	WASHER	6		B10001-
25	01010-81020	BOLT	1		B10001-
26	01643-31032	WASHER	1		B10001-
27	23A-06-41141	CABLE	1		B10001-

FRONT FRAME HARNESS

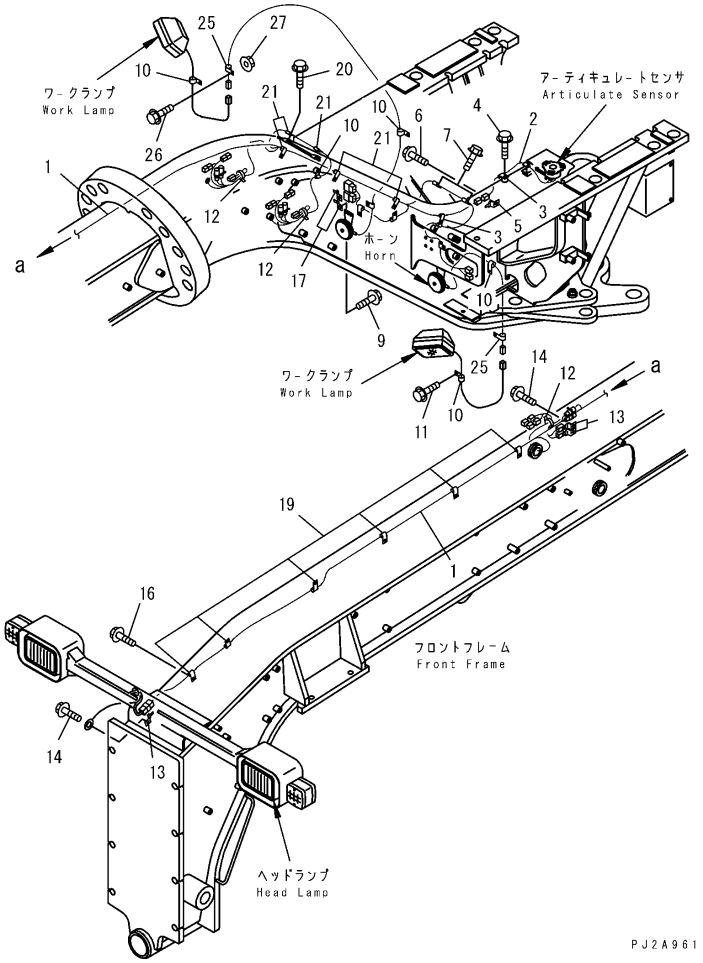

FRONT FRAME HARNESS

Item	Part Number	Description	Qty.	Ref.	Serial No.
1	23B-06-41421	WIRING HARNESS	1		B10001-
2	23B-06-41352	WIRING HARNESS	1		B10001-
3	04434-51010	CLIP	2		B10001-
4	01435-01016	BOLT	2		B10001-
5	08193-21012	CLIP	1		B10001-
6	01435-01016	BOLT	1		B10001-
7	01435-01016	BOLT	4		B10001-
9	01435-01016	BOLT	2		B10001-
10	04434-51010	CLIP	1		B10001-
	04434-50510	CLIP	5		B10001-
11	01435-01016	BOLT	1		B10001-
	01435-01016	BOLT	5		B10001-
12	08034-20519	BAND	3		B10001-
13	08193-21012	CLIP	1		B10001-
14	01435-01016	BOLT	1		B10001-
16	01435-01016	BOLT	2		B10001-
17	08193-31012	CLIP	2		B10001-
18*	01435-01016	BOLT	1		B10001-
19	04434-51410	CLIP	5		B10001-
20	01435-01016	BOLT	5		B10001-
21	04434-51810	CLIP	5		B10001-
25	04434-51010	CLIP	4		B10001-
26	01435-00820	BOLT	2		B10001-
27	01584-00806	NUT	2		B10001-

FRONT FRAME HARNESS (WITH BLADE ACCUMULATOR)

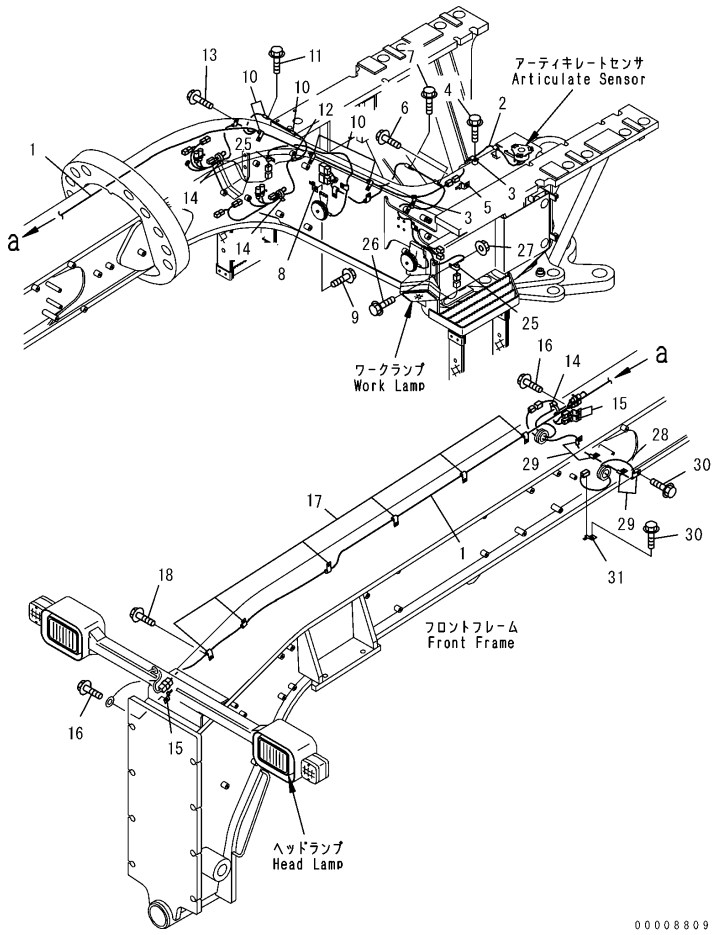

FRONT FRAME HARNESS (WITH BLADE ACCUMULATOR)

Item	Part Number	Description	Qty.	Ref.	Serial No.
1	23B-06-41421	WIRING HARNESS	1		B10001-
2	23B-06-41352	WIRING HARNESS	1		B10001-
3	04434-51010	CLIP	2		B10001-
4	01435-01016	BOLT	2		B10001-
5	08193-21012	CLIP	1		B10001-
6	01435-01016	BOLT	1		B10001-
7	01435-01016	BOLT	4		B10001-
8	08193-21012	CLIP	1		B10001-
9	01435-01016	BOLT	2		B10001-
10	04434-51410	CLIP	1		B10001-
11	01435-01016	BOLT	1		B10001-
12	04434-51010	CLIP	5		B10001-
13	01435-01016	BOLT	5		B10001-
14	08034-20519	BAND, (WITHOUT ACCUMULATOR)	3		B10001-
15	08193-21012	CLIP, (WITHOUT ACCUMULATOR)	1		B10001-
16	01435-01016	BOLT, (WITHOUT ACCUMULATOR)	1		B10001-
17	04434-51010	CLIP	6		B10001-
18	01435-01016	BOLT	6		B10001-
25	04434-51010	CLIP	4		B10001-
26	01435-00820	BOLT	2		B10001-
27	01584-00806	NUT	2		B10001-
28	23B-06-41430	WIRING HARNESS, (WITH ACCUMULATOR)	1		B10001-
29	04434-51410	CLIP, (WITH ACCUMULATOR)	5		B10001-
30	01435-01016	BOLT, (WITH ACCUMULATOR)	5		B10001-
31	08193-21012	CLIP	1		B10001-

REAR HARNESS (SENSOR AND BACK-UP ALARM) (WITH T/C OIL TEMPERATURE)

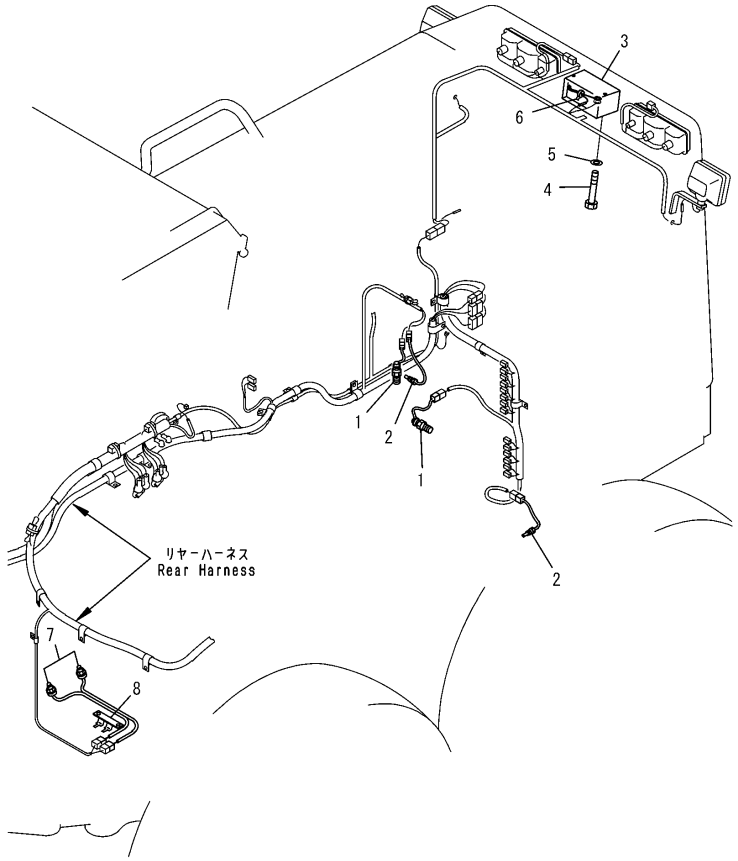

REAR HARNESS (SENSOR AND BACK-UP ALARM) (WITH T/C OIL TEMPERATURE)

Item	Part Number	Description	Qty.	Ref.	Serial No.
1	7861-93-2330	SENSOR, PICK-UP	3		B10001-
2	7861-93-3320	SENSOR, OIL TEMPERATURE	2		B10001-
3	14X-06-11130	ALARM, BACK-UP	1		B10001-
4	235-06-15150	BOLT	2		B10001-
5	01643-30823	WASHER	2		B10001-
6	08034-20519	BAND	1		B10001-
7	23B-06-42610	SWITCH, ACCUMULATOR OIL PRESSURE	2		B10001-
8	23B-06-44260	BRACKET	1		B10001-

REAR HARNESS (WIRING, 1/2) (WITH T/C OIL TEMPERATURE)

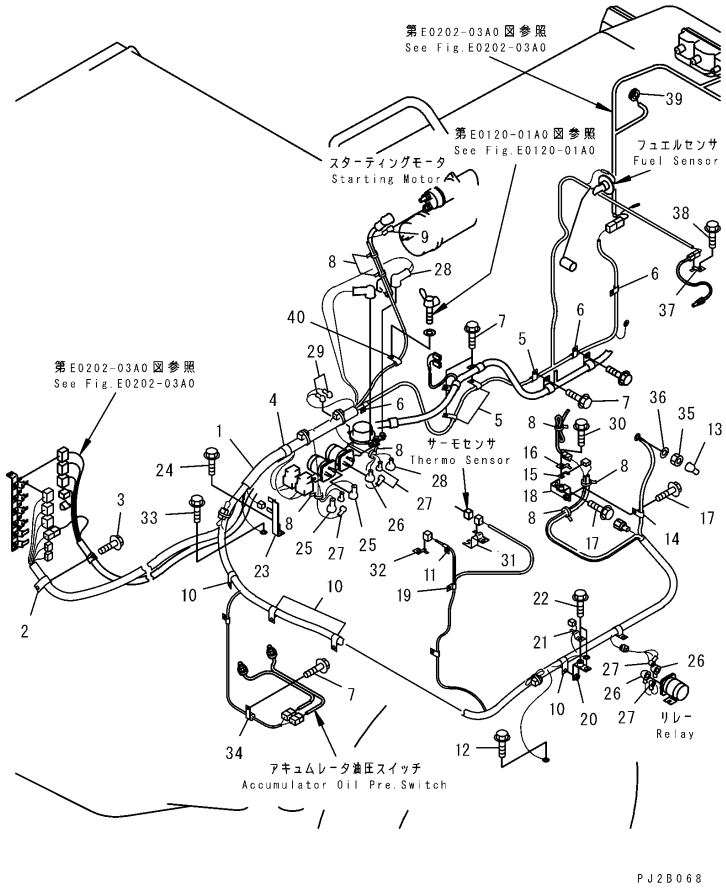

REAR HARNESS (WIRING, 1/2) (WITH T/C OIL TEMPERATURE)

Item	Part Number	Description	Qty.	Ref.	Serial No.
1	23A-06-41374	WIRING HARNESS	1		B10001-
2	04434-52711	CLIP	1		B10001-
3	01435-01016	BOLT	1		B10001-
4	04434-52711	CLIP	1		B10001-
5	04434-51310	CLIP	4		B10001-
6	04434-51210	CLIP	2		B10001-
7	01435-01016	BOLT	2		B10001-
8	08034-20519	BAND	7		B10001-
9	08038-00519	CAP	1		B10001-
10	04434-51510	CLIP	5		B10001-
11	04434-50510	CLIP	1		B10001-
12	01435-01016	BOLT	2		B10001-
13	08038-02027	CAP	1		B10001-
14	04434-51010	CLIP	2		B10001-
15	20Y-06-27170	BRACKET	1		B10001-
16	08193-21012	CLIP	1		B10001-
17	01435-01016	BOLT	2		B10001-
18	23A-06-44361	BRACKET	1		B10001-
19	08036-00814	CLIP	1		B10001-
20	23B-06-44241	BRACKET	1		B10001-
21	08193-21012	CLIP	1		B10001-
22	01435-01016	BOLT	2		B10001-
23	23B-06-44250	BRACKET	1		B10001-
24	01435-01016	BOLT	1		B10001-
25	08038-02027	CAP	2		B10001-
26	08038-00525	CAP	4		B10001-
27	08038-00519	CAP	6		B10001-
28	232-06-11960	CAP	1		B10001-
29	08038-00519	CAP	2		B10001-
30	01435-00812	BOLT	1		B10001-
31	23A-06-44370	BRACKET	1		B10001-
32	08053-01510	CLIP	1		B10001-
33	01435-01016	BOLT	1		B10001-
34	04434-51010	CLIP	1		B10001-
35	01580-10605	NUT	1		B10001-
36	01643-30623	WASHER	1		B10001-

REAR HARNESS (WIRING, 1/2) (WITH T/C OIL TEMPERATURE)

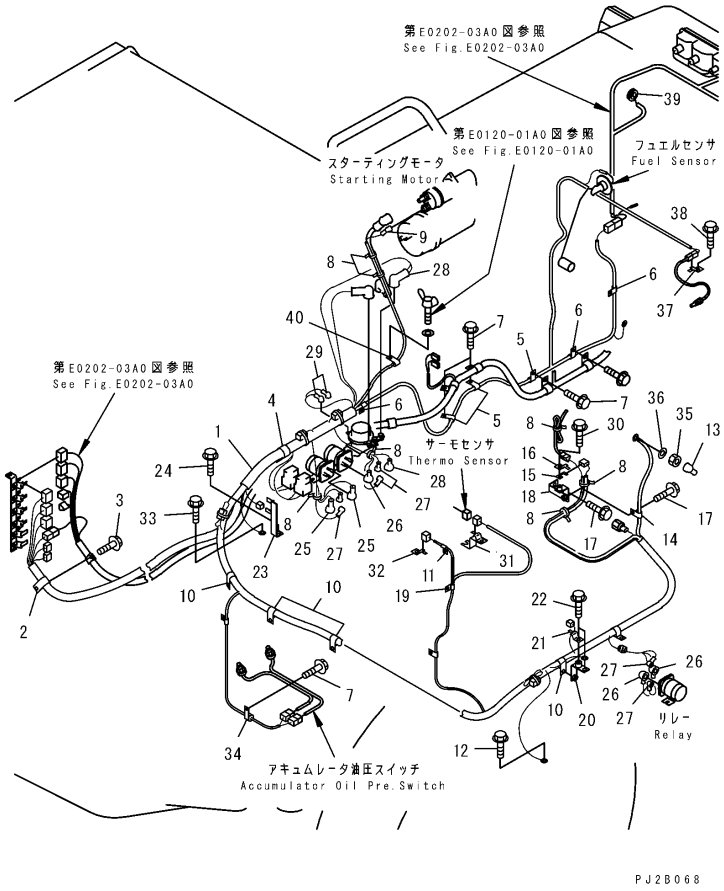

REAR HARNESS (WIRING, 1/2) (WITH T/C OIL TEMPERATURE)

Item	Part Number	Description	Qty.	Ref.	Serial No.
37	08193-21012	CLIP	1		B10001-
38	01435-01016	BOLT	1		B10001-
39	08037-02512	GROMMET	2		B10001-
40	04434-51410	CLIP	1		B10001-

REAR HARNESS (WIRING, 2/2) (WITH T/C OIL TEMPERATURE)

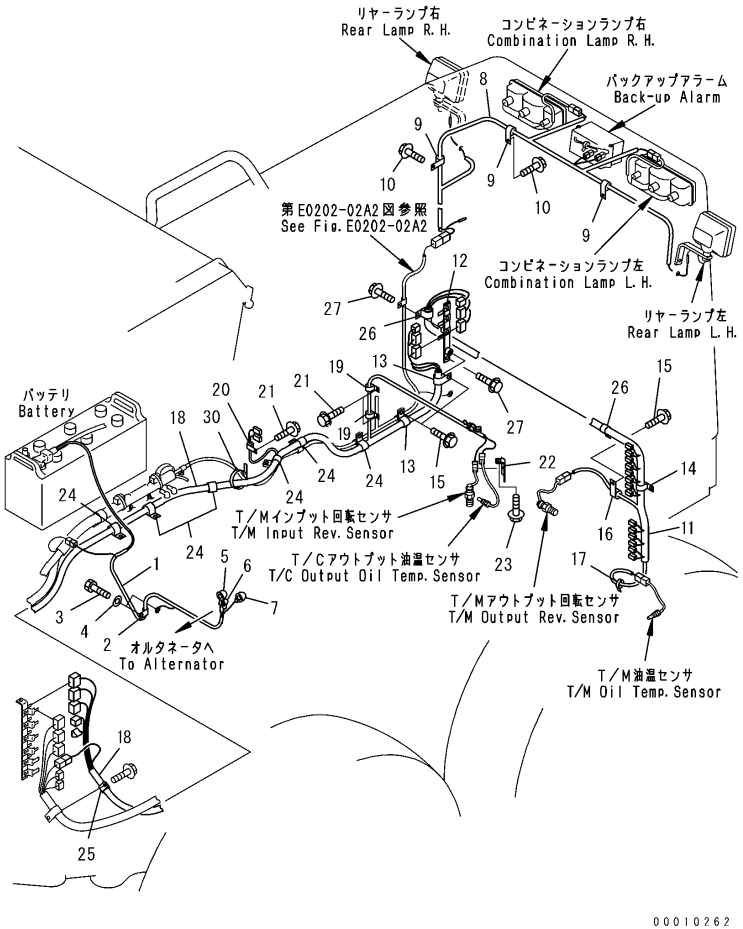

REAR HARNESS (WIRING, 2/2) (WITH T/C OIL TEMPERATURE)

Item	Part Number	Description	Qty.	Ref.	Serial No.
1	23B-06-45440	WIRING HARNESS	1		B10001-
2	04434-51612	CLIP	1		B10001-
3	01010-81220	BOLT	2		B10001-
4	01643-31232	WASHER	2		B10001-
5	08038-02027	CAP	1		B10001-
6	08038-00519	CAP	1		B10001-
7	08038-00525	CAP	1		B10001-
8	23B-06-41472	WIRING HARNESS	1		B10001-
9	04434-51410	CLIP	10		B10001-
10	01435-01016	BOLT	10		B10001-
11	23B-06-41753	WIRING HARNESS	1		B10001-
12	23B-06-44350	BRACKET	1		B10001-
13	04434-52711	CLIP	2		B10001-
14	04434-53211	CLIP	1		B10001-
15	01435-01016	BOLT	3		B10001-
16	04434-51010	CLIP	1		B10001-
17	08034-20519	BAND	1		B10001-
18	23B-06-41734	WIRING HARNESS	1		B10001-
19	04434-51710	CLIP	2		B10001-
20	04434-51410	CLIP	1		B10001-
21	01435-01016	BOLT	3		B10001-
22	23B-06-44331	BRACKET	1		B10001-
23	01435-01016	BOLT	1		B10001-
24	04434-52711	CLIP	6		B10001-
25	04434-52711	CLIP	1		B10001-
26	04434-52711	CLIP	2		B10001-
27	01435-01016	BOLT	9		B10001-
30	08034-20519	BAND	2		B10001-

REAR HARNESS (ARTICULATE SENSOR)

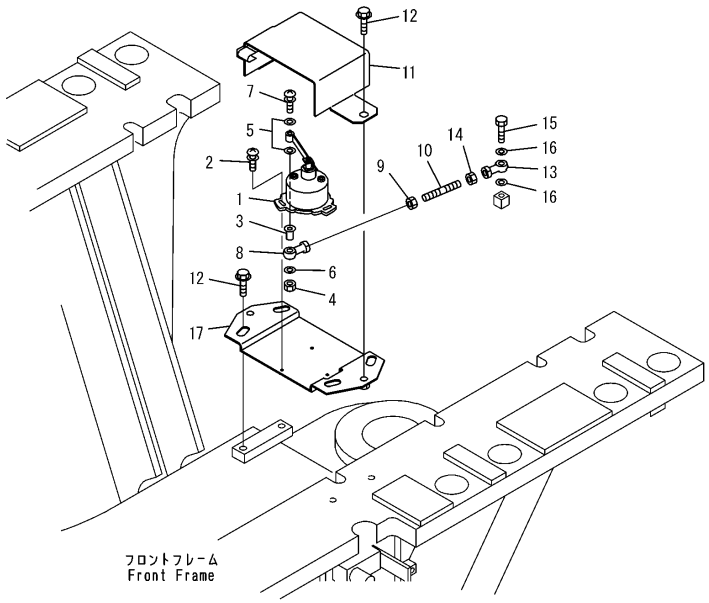

PJ2E057

REAR HARNESS (ARTICULATE SENSOR)

Item	Part Number	Description	Qty.	Ref.	Serial No.
1	23B-06-42170	SENSOR, ARTICULATE	1		B10001-
2	01023-10412	SCREW	3		B10001-
3	23B-06-43380	SPACER	1		B10001-
4	01580-10504	NUT	1		B10001-
5	01640-20508	WASHER	2		B10001-
6	04254-10823	SPACER	1		B10001-
7	01023-10535	BOLT	1		B10001-
8	04250-60847	END	1		B10001-
9	01508-40805	NUT, L.H.THREAD	3		B10001-
10	23B-06-44480	ROD	1		B10001-
11	23B-06-44383	COVER	1		B10001-
12	01435-01016	BOLT	2		B10001-
13	04250-40847	END	1		B10001-
14	01580-10806	NUT	1		B10001-
15	01010-80825	BOLT	1		B10001-
16	04254-10823	SPACER	2		B10001-
17	23B-06-44471	BRACKET	1		B10001-

REAR HARNESS (TORQUE CONVERTIER OIL SENSOR LINE)

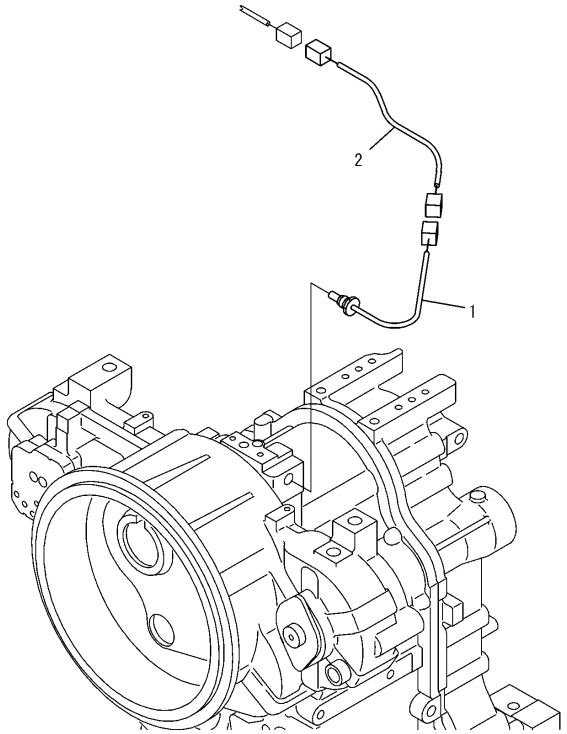

PW2B042

E0202-05A2

REAR HARNESS (TORQUE CONVERTIER OIL SENSOR LINE)

Item	Part Number	Description	Qty.	Ref.	Serial No.
1	7700-85-8610	SENSOR	1		B10001-
2	23A-06-41361	WIRING HARNESS	1		B10001-

INSTRUMENT PANEL (WITH TORQUE CONVERTER TEMPERATURE GAUGE)

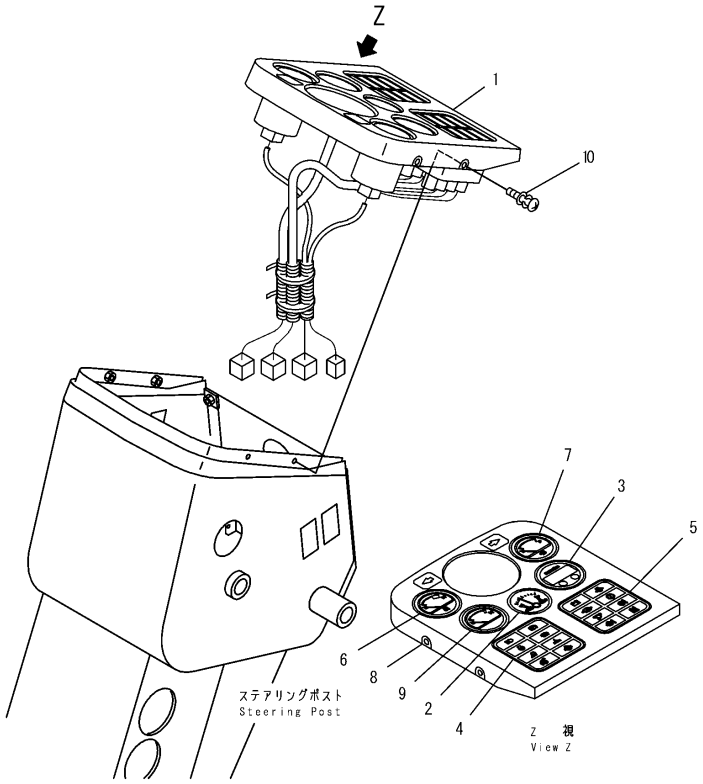

PJ2A963

INSTRUMENT PANEL (WITH TORQUE CONVERTER TEMPERATURE GAUGE)

Item	Part Number	Description	Qty.	Ref.	Serial No.
1	23B-06-45400	PANEL ASSEMBLY	1		B10001-
2	23B-06-45160	.GAUGE, ARTICULATE	1		B10001-
	□23B-06-42110	.GAUGE, ARTICULATE	1		B10001-
3	23B-06-42710	.MESSAGE CENTER	1		B10001-
4	23B-06-45110	.WARNING LAMP ASSEMBLY, L.H.	1		B10001-
5	23B-06-45120	.WARNING LAMP ASSEMBLY, R.H.	1		B10001-
6	23B-06-45130	.GAUGE, WATER TEMPERATURE	1		B10001-
	08111-12430	..BULB, 3W	1		B10001-
7	23B-06-45140	.GAUGE, FUEL LEVEL	1		B10001-
	08111-12430	..BULB, 3W	1		B10001-
8	23B-06-45150	.PANEL	1		B10001-
9	23B-06-45410	.GAUGE, TORQUE CONVERTER OIL TEMP.	1		B10001-
	08111-12430	..BULB, 3W	1		B10001-
10	01023-70614	SCREW	4		B10001-

ELECTRICAL SYSTEM (HEAD LAMP AND TURN SIGNAL LAMP) (FOR USA)

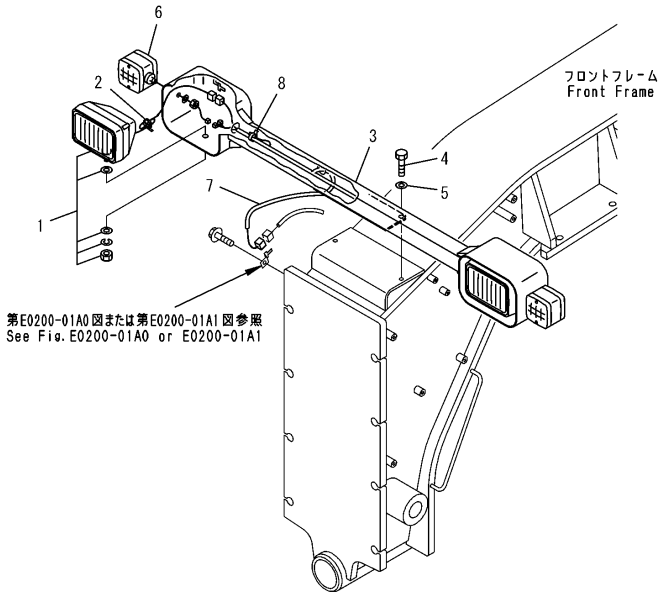

00004817

ELECTRICAL SYSTEM (HEAD LAMP AND TURN SIGNAL LAMP) (FOR USA)

Item	Part Number	Description	Qty.	Ref.	Serial No.
1	23S-06-54111	LAMP ASSEMBLY, HEAD	2		B10001-
	424-06-23230	.BULB, 75/70W	1		B10001-
	23S-06-54121	.LENS ASSEMBLY	1		B10001-
2	08034-20519	BAND	4		B10001-
3	23B-06-44110	BRACKET	1		B10001-
4	01010-81030	BOLT	2		B10001-
5	01643-31032	WASHER	2		B10001-
6	23B-06-42460	LAMP ASSEMBLY, COMBINATION	2		B10001-
	41G-06-13210	.LENS, FRONT	1		B10001-
	41G-06-13220	.LENS, REAR	1		B10001-
	41G-06-13230	.BULB, 5W	1		B10001-
	08105-12420	.BULB, 25W	1		B10001-
7	23B-06-41212	HARNESS	1		B10001-
8	08034-20519	BAND	2		B10001-

ELECTRICAL SYSTEM (HEAD LAMP AND TURN SIGNAL LAMP) (FOR CAB)

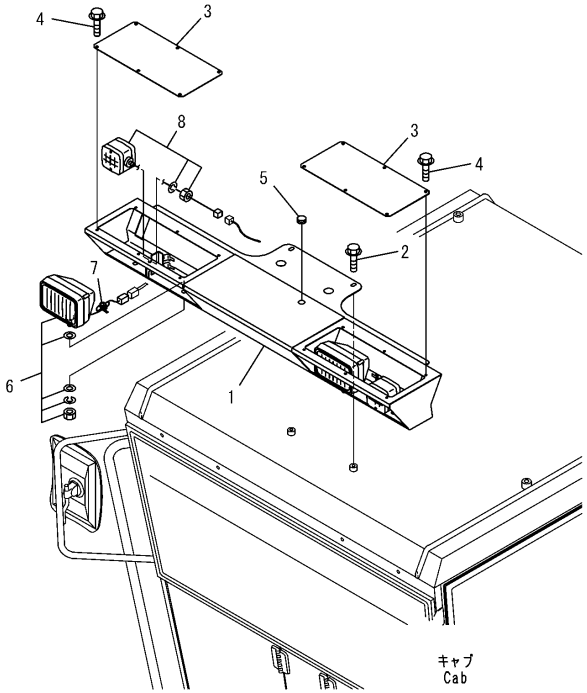

00004818

ELECTRICAL SYSTEM (HEAD LAMP AND TURN SIGNAL LAMP) (FOR CAB)

Item	Part Number	Description	Qty.	Ref.	Serial No.
1	23A-952-1722	BRACKET	1		B10001-
2	01435-41016	BOLT	6		B10001-
3	23A-952-1730	COVER	2		B10001-
4	01435-40610	BOLT	12		B10001-
5	08037-01610	GROMMET	2		B10001-
6	23S-06-54111	LAMP ASSEMBLY, HEAD	2		B10001-
	424-06-23230	.BULB, 75/70W	1		B10001-
	23S-06-54121	.LENS ASSEMBLY	1		B10001-
7	08034-20519	BAND	4		B10001-
8	23B-06-42460	LAMP ASSEMBLY, COMBINATION	2		B10001-
	41G-06-13210	.LENS, FRONT	1		B10001-
	41G-06-13220	.LENS, REAR	1		B10001-
	41G-06-13230	.BULB, 5W	1		B10001-
	08105-12420	.BULB, 25W	1		B10001-

ELECTRICAL SYSTEM (REAR COMBINATION LAMP)

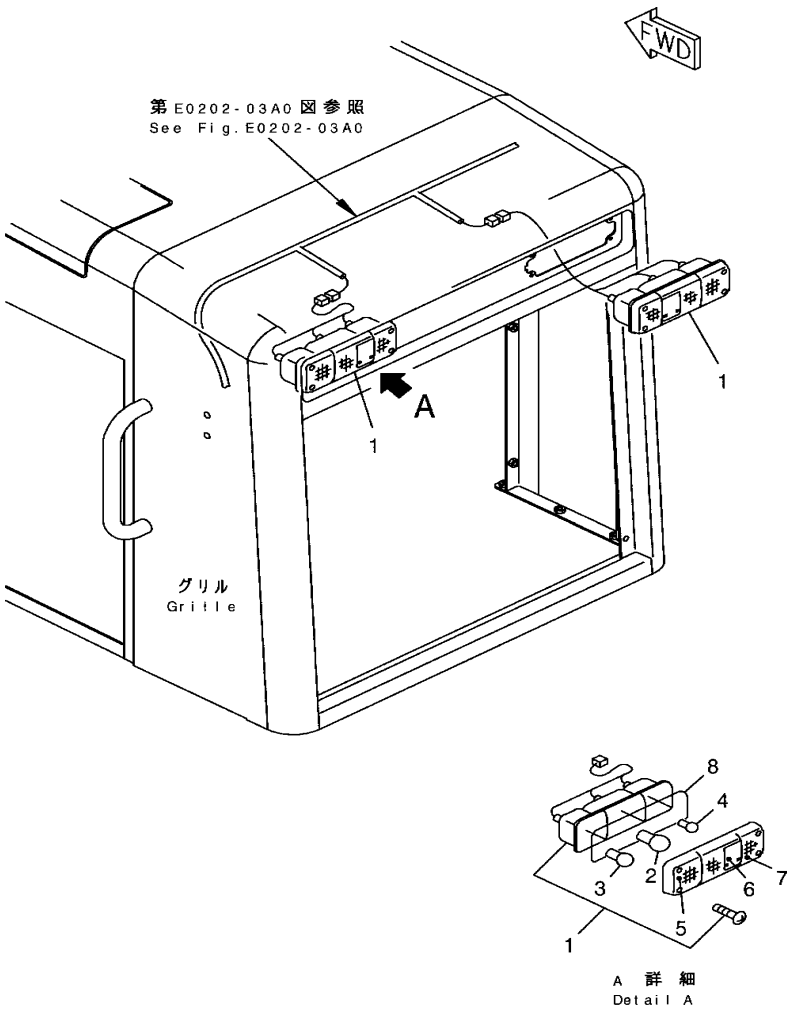

ELECTRICAL SYSTEM (REAR COMBINATION LAMP)

Item	Part Number	Description	Qty.	Ref.	Serial No.
1	23A-06-21400	LAMP ASSEMBLY, REAR, L.H.	1		B10001-
	23A-06-21500	LAMP ASSEMBLY, REAR, R.H.	1		B10001-
2	08104-12420	.BULB, 25/10W	1		B10001-
3	08105-12420	.BULB, 25W	1		B10001-
4	08110-12410	.BULB, 12W	1		B10001-
5	23A-06-21410	.LENS, AMBER, L.H.	1		B10001-
	23A-06-21510	.LENS, AMBER, R.H.	1		B10001-
6	23A-06-21420	.LENS, RED, L.H.	1		B10001-
	23A-06-21520	.LENS, RED, R.H.	1		B10001-
7	23A-06-21430	.LENS, CLEAR, L.H.	1		B10001-
	23A-06-21530	.LENS, CLEAR, R.H.	1		B10001-
8	23A-06-21440	.GASKET	1		B10001-

ELECTRICAL SYSTEM (FRONT WORK LAMP)

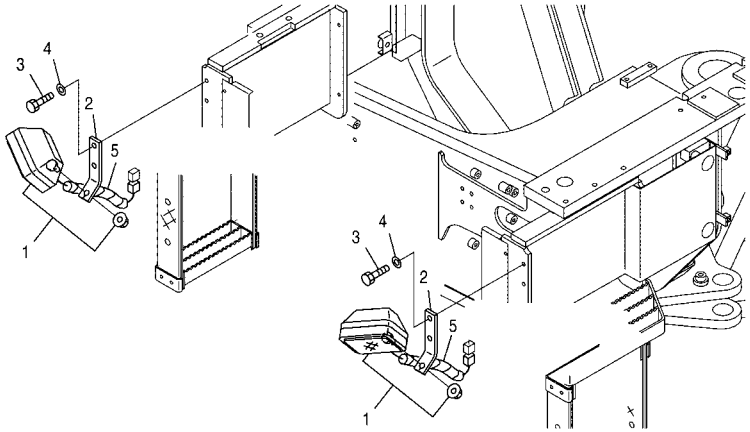

ELECTRICAL SYSTEM (FRONT WORK LAMP)

Item	Part Number	Description	Qty.	Ref.	Serial No.
1	421-06-23350	LAMP ASSEMBLY, WORK	2		B10001-
	421-06-23320	.LENS	1		B10001-
	421-06-23330	.BULB, 70W	1		B10001-
	08056-00271	.CONNECTOR	2		B10001-
2	23B-06-43931	BRACKET	2		B10001-
3	01010-81025	BOLT	4		B10001-
4	01643-31032	WASHER	4		B10001-
5	08017-30702	CONDUIT	2		B10001-

ELECTRICAL SYSTEM (REAR WORK LAMP)

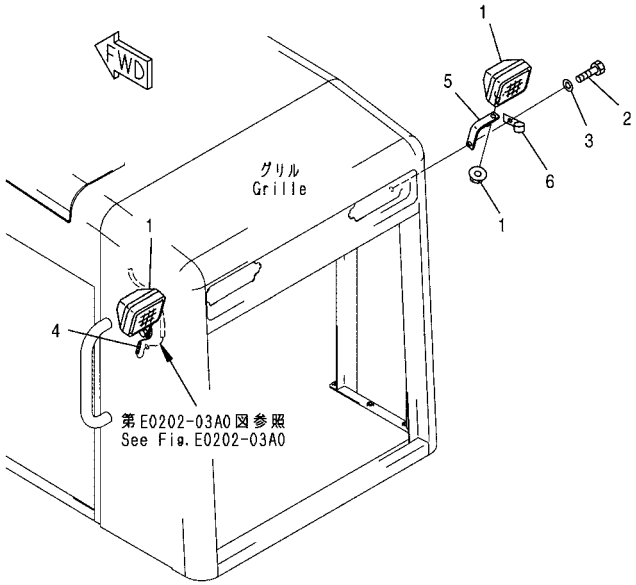

ELECTRICAL SYSTEM (REAR WORK LAMP)

Item	Part Number	Description	Qty.	Ref.	Serial No.
1	421-06-23350	LAMP ASSEMBLY	2		B10001-
	421-06-23320	.LENS	1		B10001-
	421-06-23330	.BULB, 70W	1		B10001-
	08056-00271	.CONNECTOR	2		B10001-
2	01010-81225	BOLT	2		B10001-
3	01643-31232	WASHER	2		B10001-
4	08017-30702	CONDUIT	2		B10001-
5	23A-06-43931	BRACKET	2		B10001-
6	04434-51012	CLIP	1		B10001-

ELECTRICAL SYSTEM (BEACON LAMP)

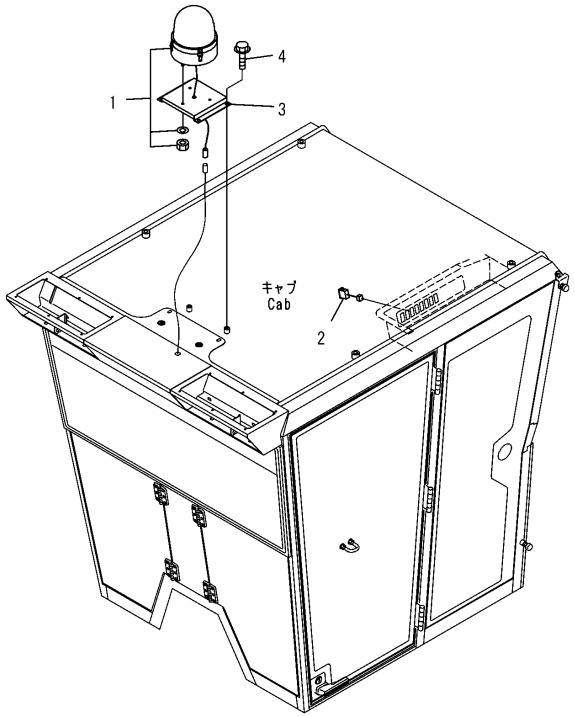

PW2A741

ELECTRICAL SYSTEM (BEACON LAMP)

Item	Part Number	Description	Qty.	Ref.	Serial No.
1	08154-72400	LAMP ASSEMBLY, BEACON	1		B10001-
	08154-72455	.BULB, 55W	1		B10001-
	08154-70003	.GLOBE	1		B10001-
2	20Y-06-29670	SWITCH	1		B10001-
3	23B-952-2290	BRACKET	1		B10001-
4	01435-01020	BOLT	4		B10001-

ELECTRICAL SYSTEM (HORN)

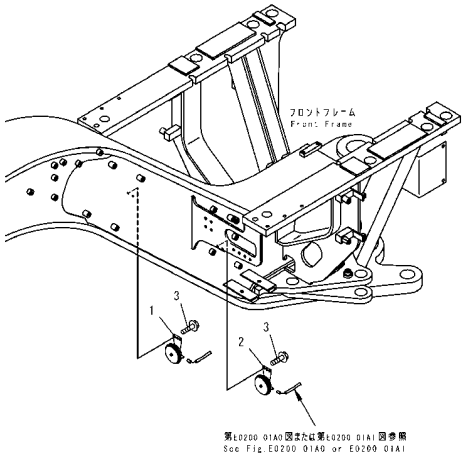

PJ2A742

ELECTRICAL SYSTEM (HORN)

Item	Part Number	Description	Qty.	Ref.	Serial No.
1	08160-62420	HORN, LOW	1		B10001-
2	08160-62430	HORN, HIGH	1		B10001-
3	01435-00812	BOLT	4		B10001-

LICENCE PLATE LAMP

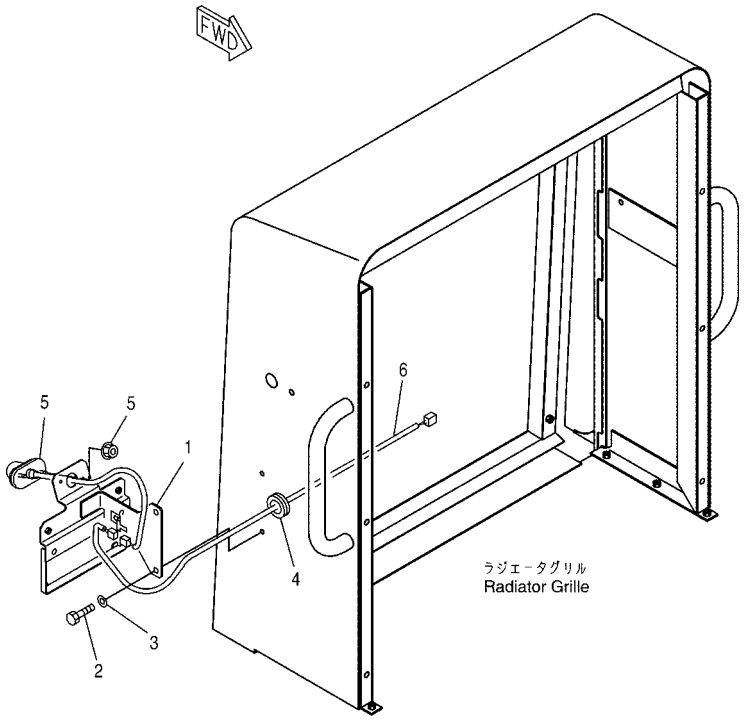

LICENCE PLATE LAMP

Item	Part Number	Description	Qty.	Ref.	Serial No.
1	23B-06-44710	BRACKET	1		B10001-
2	01010-81020	BOLT	2		B10001-
3	01643-31032	WASHER	2		B10001-
4	08037-02512	GROMMET	1		B10001-
5	08137-82400	LAMP	1		B10001-
6	23B-06-44720	WIRING HARNESS	1		B10001-

TRANSMISSION

DRIVE SHAFT

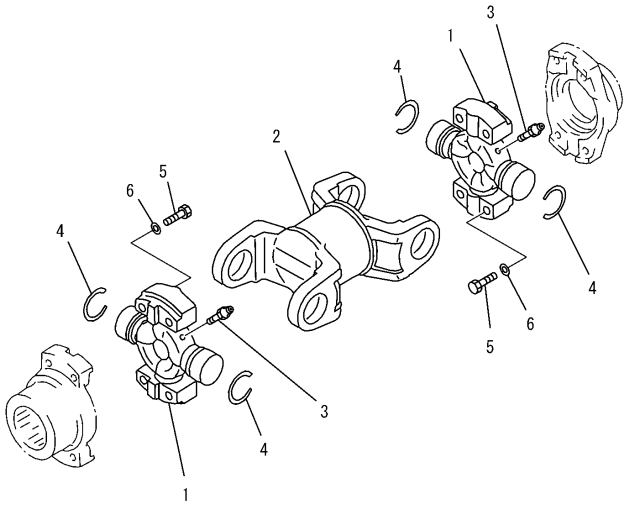

PW2A745

DRIVE SHAFT

Item	Part Number	Description	Qty.	Ref.	Serial No.
	23B-20-31100	DRIVE SHAFT ASSEMBLY	1		B10001-
1	14X-11-11110	.PIN ASSEMBLY, CROSS	2		B10001-
2	23B-20-31110	.SHAFT ASSEMBLY, YOKE	1		B10001-
3	423-20-12630	.FITTING, GREASE	2		B10001-
4	423-20-12710	.RING, SNAP	4		B10001-
5	01010-61255	BOLT	8		B10001-
6	01643-51232	WASHER	8		B10001-

TRANSMISSION AND OIL FILLER

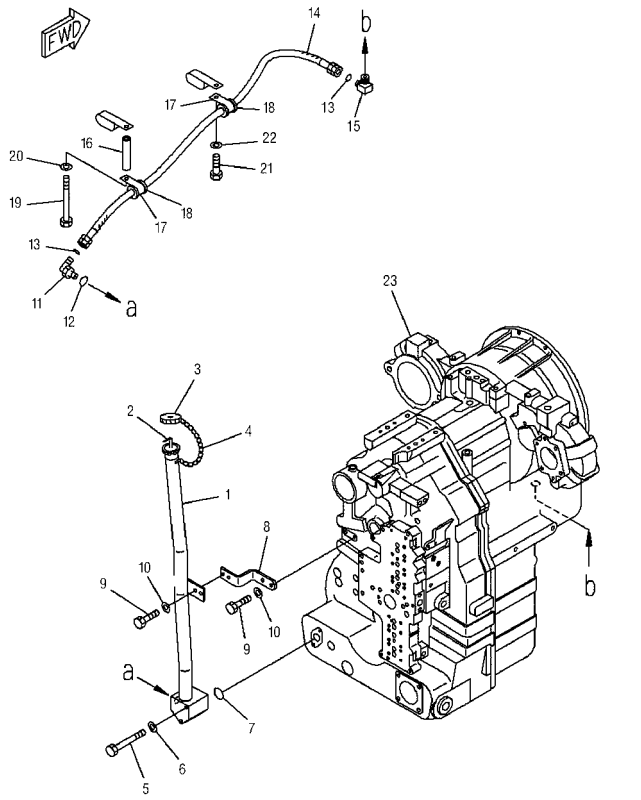

F4320-01A0A

TRANSMISSION AND OIL FILLER

Item	Part Number	Description	Qty.	Ref.	Serial No.
1	23B-16-31781	TUBE			B10001-
	23B-16-31780	TUBE			B10001-
2	23B-16-31562	GAUGE			B10001-
3	613-62-17120	CAP			B10001-
4	613-62-17190	CHAIN			B10001-
5	01011-81005	BOLT			B10001-
6	01643-51032	WASHER			B10001-
7	07000-13035	O-RING			B10001-
8	23B-16-31462	BRACKET			B10001-
9	01010-81025	BOLT			B10001-
10	01643-31032	WASHER			B10001-
11	02782-10422	ELBOW			B10001-
12	07002-12034	O-RING			B10001-
13	02896-11012	O-RING			B10001-
14	02762-00412	HOSE			B10001-
15	23B-16-31770	ELBOW			B10001-
16	615-15-15490	SPACER			B10001-
17	04434-52711	CLIP			B10001-
18	07095-20418	CUSHION			B10001-
19	01011-81040	BOLT			B10001-
20	01643-31032	WASHER			B10001-
21	01010-81025	BOLT			B10001-
22	01643-31032	WASHER			B10001-
23	714-23-10020	TRANSMISSION ASSEMBLY			B10001-

FRONT AXLE (AXLE SUPPORT)

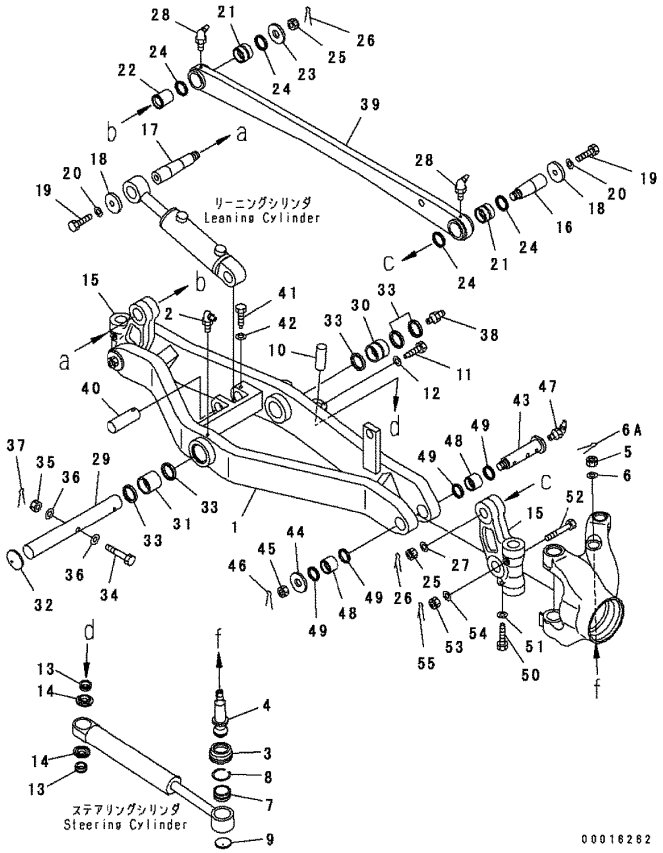

FRONT AXLE (AXLE SUPPORT)

Item	Part Number	Description	Qty.	Ref.	Serial No.
1	23A-27-31112	SUPPORT, AXLE	1		B10001-
2	07020-00900	FITTING, GREASE	1		B10001-
3	23B-27-31840	BOOT	2		B10001-
4	23B-27-31580	STUD, BALL (KIT)	2		B10001-
	23B-27-11564	STUD, BALL	2		B10001-
4A	01592-32427	NUT (KIT)	2		B10001-
4B	23B-27-31550	WASHER (KIT)	2		B10001-
4C	04050-15045	PIN (KIT)	2		B10001-
5	01010-81635	BOLT	4		B10001-
6	235-27-11240	PLATE	4		B10001-
7	23B-27-11800	BUSHING ASSEMBLY	2		B10001-
8	23B-27-31570	RING	2		B10001-
9	23B-27-11360	PLUG (KIT)	2		B10001-
9	23B-27-11360	PLUG	4		B10001-
10	23B-27-31540	PIN	2		B10001-
11	23B-27-11680	BOLT	2		B10001-
12	01643-31232	WASHER	2		B10001-
13	23B-27-31480	SPACER	4		B10001-
14	235-27-11750	BOOT	4		B10001-
15	23A-27-11160	BRACKET	2		B10001-
16	23A-27-11310	PIN	1		B10001-
17	23A-27-11330	PIN	1		B10001-
18	23A-27-11340	HOLDER	2		B10001-
19	01016-52045	BOLT	2		B10001-
20	01643-32060	WASHER	2		B10001-
21	23A-27-11630	BUSHING	2		B10001-
22	23A-27-11390	SPACER	1		B10001-
23	23A-27-11640	WASHER	1		B10001-
24	07145-00045	SEAL	4		B10001-
25	01593-33018	NUT	2		B10001-
26	04050-16045	PIN, COTTER	2		B10001-
27	01643-33080	WASHER	1		B10001-
28	07020-00675	FITTING, GREASE	2		B10001-
29	23A-27-31350	SHAFT	1		B10001-
30	07144-10506	BUSHING	1		B10001-
31	07143-10506	BUSHING	1		B10001-

FRONT AXLE (AXLE SUPPORT)

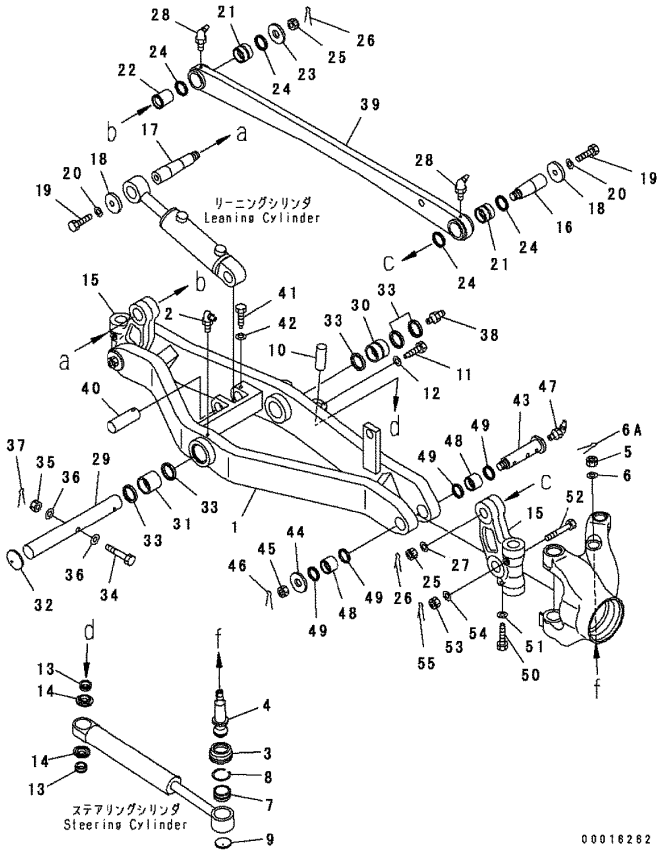

FRONT AXLE (AXLE SUPPORT)

Item	Part Number	Description	Qty.	Ref.	Serial No.
32	23B-27-11660	PLUG	1		B10001-
33	07145-00055	SEAL, DUST	5		B10001-
34	01093-51640	BOLT	1		B10001-
35	01593-31613	NUT	1		B10001-
36	01643-31645	WASHER	2		B10001-
37	04050-14025	PIN, COTTER	1		B10001-
38	07020-00000	FITTING, GREASE	1		B10001-
39	23A-27-31233	ROD, LEANING	1		B10001-
	□23A-27-31232	ROD, LEANING	1		B10001-
40	23A-27-11530	PIN	1		B10001-
41	23B-27-11680	BOLT	1		B10001-
42	01643-31232	WASHER	1		B10001-
43	23A-27-31520	PIN	2		B10001-
44	23A-27-11640	WASHER	2		B10001-
45	01593-33018	NUT	2		B10001-
46	04050-16045	PIN, COTTER	2		B10001-
47	07020-00675	FITTING, GREASE	2		B10001-
48	23A-27-11620	BUSHING	4		B10001-
49	07145-00040	SEAL	8		B10001-
50	23A-27-11650	BOLT	2		B10001-
51	01643-31645	WASHER	2		B10001-
52	01093-51200	BOLT	2		B10001-
53	01593-31210	NUT	2		B10001-
54	01643-31232	WASHER	2		B10001-
55	04050-13020	PIN, COTTER	2		B10001-
		SERVICE KIT			B10001-
	23B-27-31430	SERVICE KIT	1		B10001-

FRONT AXLE (HOUSING)

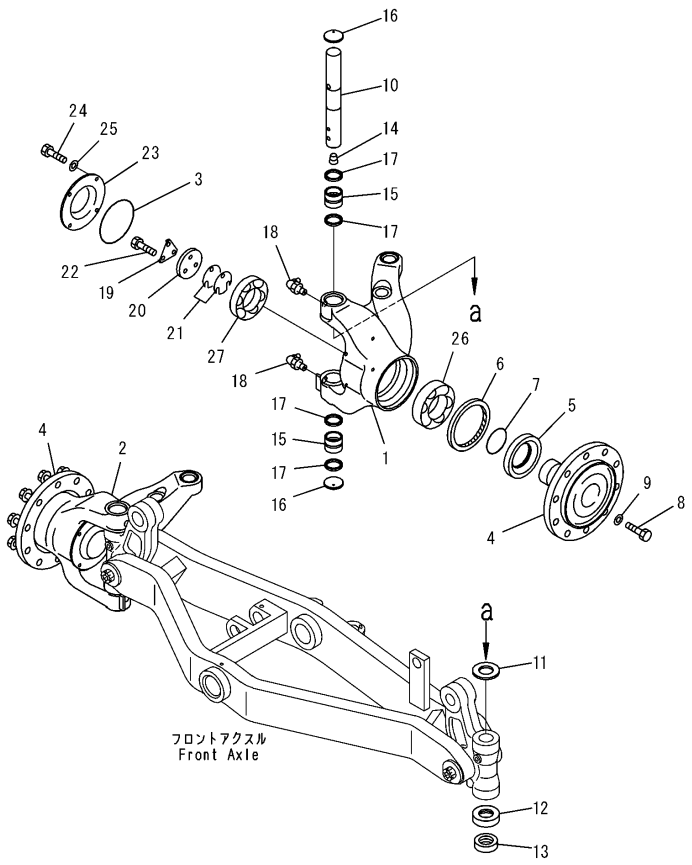

PW2B070

FRONT AXLE (HOUSING)

Item	Part Number	Description	Qty.	Ref.	Serial No.
1	23A-27-31140	HOUSING, L.H.	1		B10001-
2	23A-27-31150	HOUSING, R.H.	1		B10001-
3	07000-12130	O-RING	2		B10001-
4	23A-27-31130	SHAFT	2		B10001-
5	23A-27-11170	SPACER	2		B10001-
6	07012-10130	SEAL	2		B10001-
7	07000-12075	O-RING	2		B10001-
8	01010-82250	BOLT	20		B10001-
9	01643-32260	WASHER	20		B10001-
10	23A-27-11250	PIN	2		B10001-
11	23A-27-11260	SPACER	2		B10001-
12	23A-27-11270	COVER	2		B10001-
13	23A-27-11281	BEARING	2		B10001-
14	07043-00108	PLUG	2		B10001-
15	07144-10404	BUSHING	4		B10001-
16	23A-27-11360	PLUG	4		B10001-
17	07145-00040	SEAL	8		B10001-
18	07020-00900	FITTING, GREASE	4		B10001-
19	23A-27-11890	LOCK	2		B10001-
20	23A-27-11190	HOLDER	2		B10001-
21	23A-27-11860	SHIM, 0.1MM	8		B10001-
	23A-27-11870	SHIM, 0.3MM	4		B10001-
	23A-27-11880	SHIM, 0.5MM	4		B10001-
22	01010-81230	BOLT	6		B10001-
23	23A-27-11180	CAP	2		B10001-
24	01010-81020	BOLT	8		B10001-
25	01643-31032	WASHER	8		B10001-
26	06002-33215	BEARING	2		B10001-
27	06002-33214	BEARING	2		B10001-

FRONT AXLE (TIE ROD)

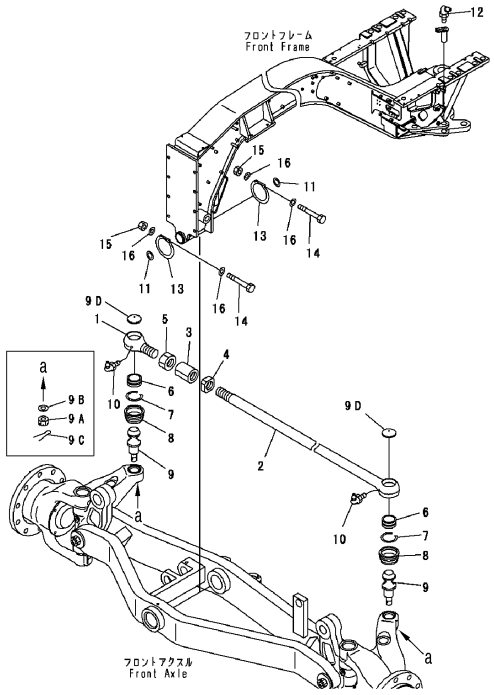

FRONT AXLE (TIE ROD)

Item	Part Number	Description	Qty.	Ref.	Serial No.
1	23B-27-11441	ROD	1		B10001-
2	23B-27-31410	ROD, TIE	1		B10001-
3	23B-27-11460	JOINT	1		B10001-
4	23B-27-11450	NUT	1		B10001-
5	01583-13923	NUT	1		B10001-
6	23B-27-11800	BUSHING ASSEMBLY	2		B10001-
7	23B-27-31570	RING	2		B10001-
8	23B-27-31840	BOOT	2		B10001-
	23B-27-11910	.RING, SNAP	1		B10001-
	23B-27-11920	.RING, SNAP	1		B10001-
9	23B-27-31590	STUD, BALL (KIT)	2		B10001-
	23B-27-11553	STUD, BALL	2		B10001-
9A	01592-32427	NUT (KIT)	2		B10001-
9B	23B-27-31550	WASHER (KIT)	2		B10001-
9C	04050-15045	PIN (KIT)	2		B10001-
9D	23B-27-11360	PLUG (KIT)	2		B10001-
10	07020-00900	FITTING, GREASE	2		B10001-
11	23B-46-11220	WASHER	2		B10001-
12	07020-00675	FITTING, GREASE	1		B10001-
14	23B-46-31810	O-RING	2		B10001-
15	419-70-11490	BOLT	2		B10001-
16	01596-00606	NUT	2		B10001-
17	01640-20610	WASHER	4		B10001-
		SERVICE KIT			B10001-
	23B-27-31690	SERVICE KIT	1		B10001-

REAR AXLE (FINAL DRIVE) (CENTER CASE) (NO SPIN DIFFERENTIAL)

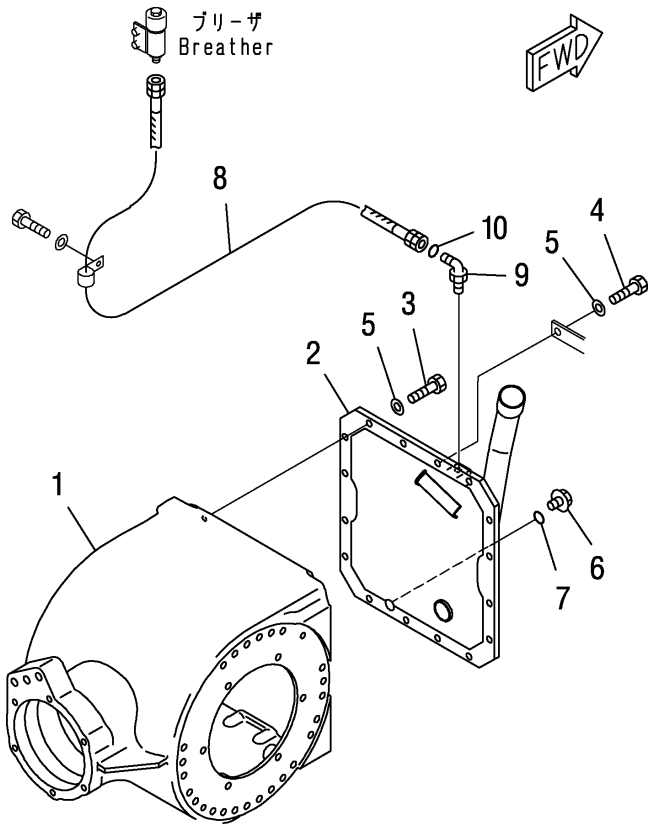

REAR AXLE (FINAL DRIVE) (CENTER CASE) (NO SPIN DIFFERENTIAL)

Item	Part Number	Description	Qty.	Ref.	Serial No.
1	23B-22-31112	CASE, CENTER	1		B10001-
2	23B-22-31254	COVER	1		B10001-
3	01010-61235	BOLT	15		B10001-
4	01010-61240	BOLT	1		B10001-
5	01643-31232	WASHER	16		B10001-
6	07044-12412	PLUG	1		B10001-
7	07002-12434	O-RING	1		B10001-
8	07621-00215	HOSE	1		B10001-
9	56B-43-17210	NIPPLE	1		B10001-
10	02986-21008	O-RING	1		B10001-

REAR AXLE (FINAL DRIVE) (CENTER CASE) (DIFFERENTIAL LOCK TYPE)

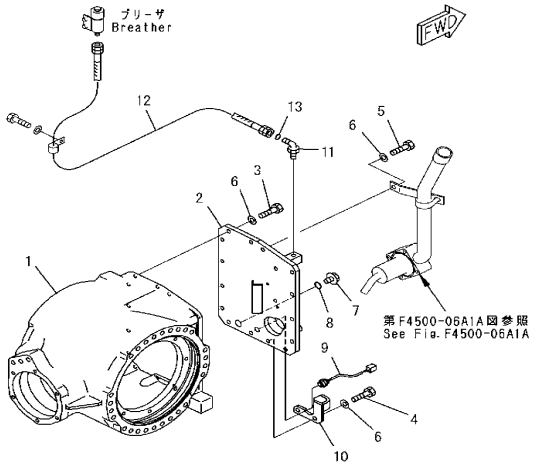

00008888

REAR AXLE (FINAL DRIVE) (CENTER CASE) (DIFFERENTIAL LOCK TYPE)

Item	Part Number	Description	Qty.	Ref.	Serial No.
1	23B-22-31511	CASE, CENTER	1		B10001-
2	23B-22-32113	COVER	1		B10001-
3	01010-81240	BOLT	12		B10001-
4	01010-81250	BOLT	2		B10001-
5	01010-81245	BOLT	1		B10001-
6	01643-31232	WASHER	14		B10001-
7	07044-12412	PLUG	1		B10001-
8	07002-12434	O-RING	1		B10001-
9	23B-06-42512	SWITCH, OIL TEMPERATURE	1		B10001-
10	23B-22-32562	BRACKET	1		B10001-
11	56B-43-17210	NIPPLE	1		B10001-
12	02763-00215	HOSE	1		B10001-
13	02896-21008	O-RING	1		B10001-

REAR AXLE (FINAL DRIVE) (BEVEL GEAR)

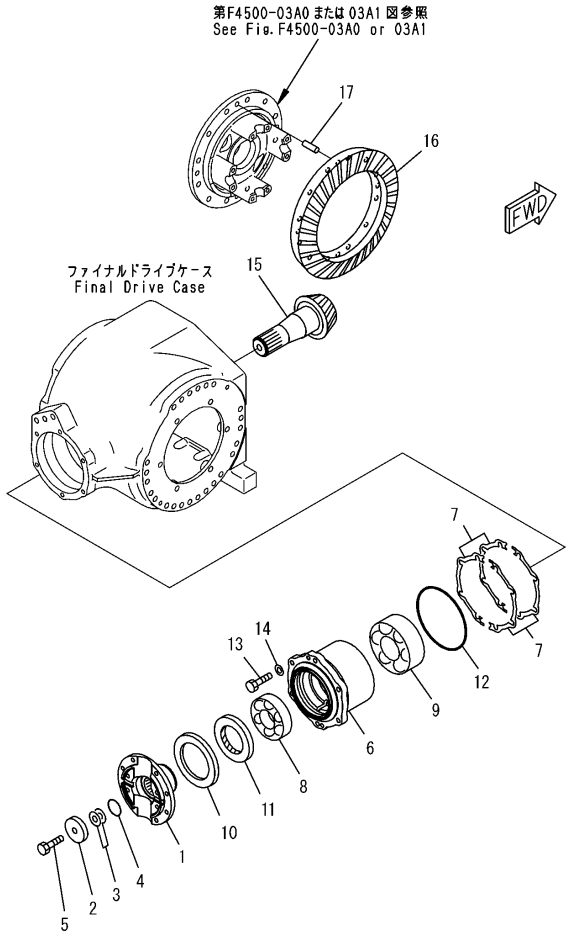

REAR AXLE (FINAL DRIVE) (BEVEL GEAR)

Item	Part Number	Description	Qty.	Ref.	Serial No.
1	23B-22-31151	COUPLING	1		B10001-
2	423-22-11240	HOLDER	1		B10001-
3	23A-22-11670	SHIM, 0.5MM	2		B10001-
	23A-22-11680	SHIM, 0.2MM	4		B10001-
	23A-22-11690	SHIM, 0.1MM	2		B10001-
4	423-09-11110	O-RING	1		B10001-
5	01010-61680	BOLT	1		B10001-
6	23B-22-31140	CAGE	1		B10001-
7	23A-22-11150	SHIM, 0.5MM	4		B10001-
	23A-22-11160	SHIM, 0.2MM	4		B10001-
	23A-22-11170	SHIM, 0.1MM	2		B10001-
	23A-22-11260	SHIM, 0.05MM	1		B10001-
8	06003-30312	BEARING	1		B10001-
9	23B-22-11420	BEARING	1		B10001-
10	714-07-14120	DEFLECTOR	1		B10001-
11	423-22-21750	SEAL	1		B10001-
12	07000-15180	O-RING	1		B10001-
13	01010-61245	BOLT	6		B10001-
14	01643-31232	WASHER	6		B10001-
	23B-22-31300	BEVEL GEAR ASSEMBLY	1		B10001-
15	☆	.PINION	1		B10001-
16	☆	.GEAR	1		B10001-
17	04020-01434	PIN, DOWEL	4		B10001-

REAR AXLE (FINAL DRIVE) (DIFFERENTIAL) (NO SPIN DIFFERENTIAL)

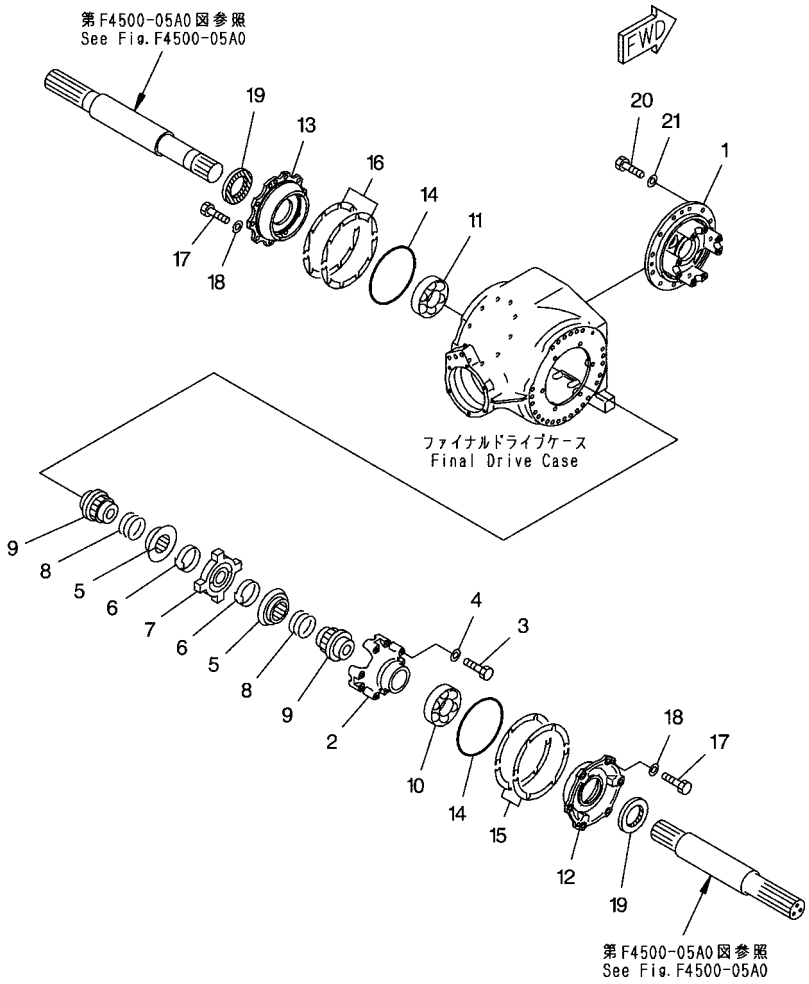

REAR AXLE (FINAL DRIVE) (DIFFERENTIAL) (NO SPIN DIFFERENTIAL)

Item	Part Number	Description	Qty.	Ref.	Serial No.
	23B-22-31201	CAGE ASSEMBLY	1		B10001-
1	☆	.CASE	1		B10001-
	☆	.CASE	1		B10001-
2	☆	.CASE	1		B10001-
3	01010-61275	BOLT	8		B10001-
4	01643-31232	WASHER	8		B10001-
	23B-22-11900	NO-SPIN ASSEMBLY	1		B10001-
5	23B-22-11910	.CLUTCH, DRIVEN	2		B10001-
6	23B-22-11920	.RING, HOLD OUT	2		B10001-
7	23B-22-11930	.SPIDER	1		B10001-
8	23B-22-11940	.SPRING	2		B10001-
9	23B-22-11950	.GEAR, SIDE	2		B10001-
10	06002-32022	BEARING	1		B10001-
11	06002-32024	BEARING	1		B10001-
12	23B-22-31380	CAGE, R.H.	1		B10001-
13	23B-22-31390	CAGE, L.H.	1		B10001-
14	07000-15230	O-RING	2		B10001-
15	23B-22-11310	SHIM, 0.5MM	4		B10001-
	23B-22-11320	SHIM, 0.2MM	4		B10001-
	23B-22-11330	SHIM, 0.1MM	2		B10001-
16	23B-22-11270	SHIM, 0.5MM	4		B10001-
	23B-22-11280	SHIM, 0.2MM	4		B10001-
	23B-22-11290	SHIM, 0.1MM	2		B10001-
17	01010-61650	BOLT	16		B10001-
18	01643-31645	WASHER	16		B10001-
19	07012-00080	SEAL, OIL	2		B10001-
20	01010-61445	BOLT	12		B10001-
21	01643-31445	WASHER	12		B10001-

REAR AXLE (FINAL DRIVE) (DIFFERENTIAL) (DIFFERENTIAL LOCK TYPE)

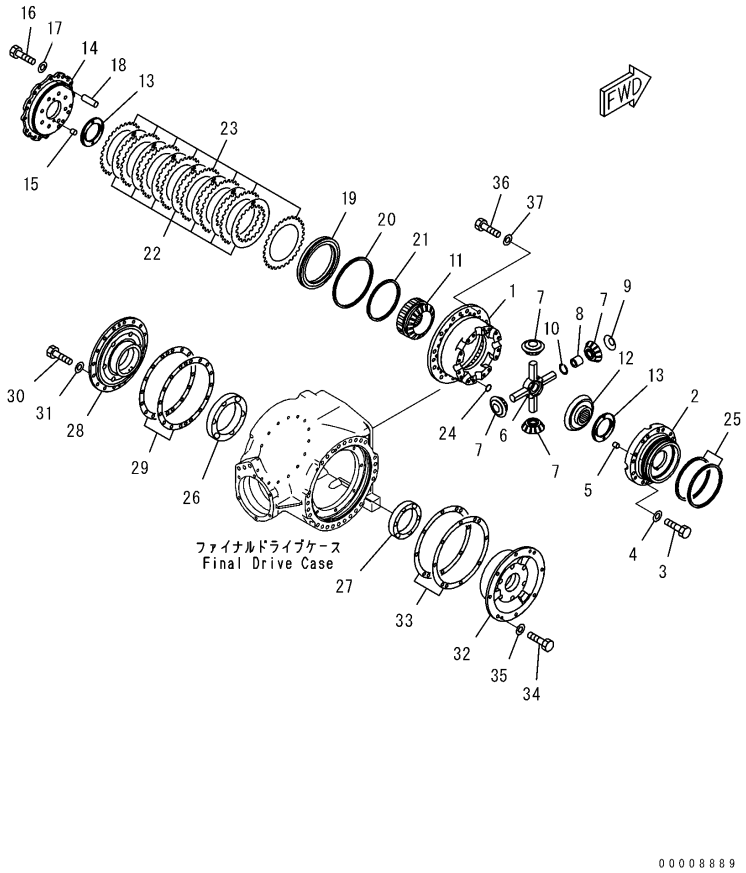

REAR AXLE (FINAL DRIVE) (DIFFERENTIAL) (DIFFERENTIAL LOCK TYPE)

Item	Part Number	Description	Qty.	Ref.	Serial No.
	23B-22-31601	CASE ASSEMBLY, DIFFERENTIAL	1		B10001-
1	23B-22-31611	.CASE	1		B10001-
2	23B-22-31621	.CASE	1		B10001-
3	01010-61255	.BOLT	16		B10001-
4	01643-31232	.WASHER	16		B10001-
5	23A-22-11740	.PIN	2		B10001-
6	23B-22-21460	JOINT	1		B10001-
7	23B-22-31680	GEAR	4		B10001-
8	23B-22-31690	BUSH	4		B10001-
9	23B-22-31710	WASHER	4		B10001-
10	23B-22-21450	RING, SNAP	4		B10001-
11	23B-22-31661	GEAR	1		B10001-
12	23B-22-31670	GEAR	1		B10001-
13	23B-22-11590	WASHER	2		B10001-
	23B-22-31700	CAGE ASSEMBLY	1		B10001-
14	23B-22-31630	.CAGE	1		B10001-
15	23A-22-11740	.PIN	2		B10001-
16	01010-61230	BOLT	16		B10001-
17	01643-31232	WASHER	16		B10001-
18	04020-01228	PIN, DOWEL	4		B10001-
19	23B-22-31721	PISTON	1		B10001-
20	23B-22-31730	SEAL, RING	1		B10001-
21	23B-22-31740	SEAL, RING	1		B10001-
22	23B-22-31751	DISC	7		B10001-
23	23B-22-31761	PLATE, DISC	8		B10001-
24	07000-12011	O-RING	2		B10001-
25	07018-02005	RING	2		B10001-
26	23B-22-31780	BEARING	1		B10001-
27	23B-22-31790	BEARING	1		B10001-
28	23B-22-31640	CAGE, L.H.	1		B10001-
29	23B-22-31810	SHIM, 0.5MM	4		B10001-
	23B-22-31820	SHIM, 0.2MM	4		B10001-
	23B-22-31830	SHIM, 0.1MM	2		B10001-
	23B-22-31770	SHIM, 0.05MM	1		B10001-
30	01010-61235	BOLT	16		B10001-
	07372-61235	BOLT	16		B10001-

REAR AXLE (FINAL DRIVE) (DIFFERENTIAL) (DIFFERENTIAL LOCK TYPE)

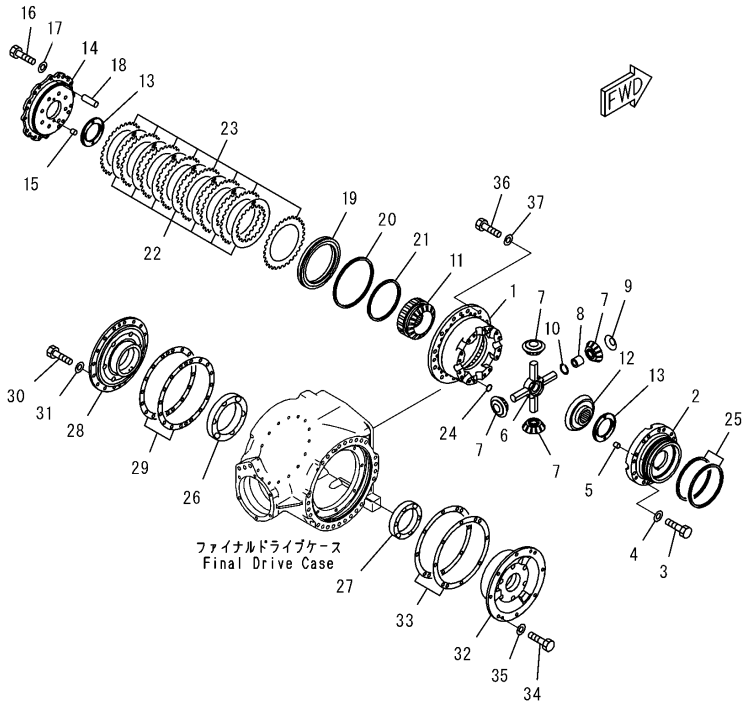

REAR AXLE (FINAL DRIVE) (DIFFERENTIAL) (DIFFERENTIAL LOCK TYPE)

Item	Part Number	Description	Qty.	Ref.	Serial No.
31	01643-31232	WASHER	16		B10001-
32	23B-22-31651	CAGE, R.H.	1		B10001-
33	23B-22-32210	SHIM, 0.5MM	4		B10001-
	23B-22-32220	SHIM, 0.2MM	4		B10001-
	23B-22-32230	SHIM, 0.1MM	2		B10001-
	23B-22-32290	SHIM, 0.05MM	1		B10001-
34	01010-61235	BOLT	8		B10001-
35	01643-31232	WASHER	8		B10001-
36	01010-61435	BOLT	12		B10001-
37	01643-31445	WASHER	12		B10001-

REAR AXLE (FINAL DRIVE) (PLANETARY GEAR) (DIFFERENTIAL LOCK TYPE)

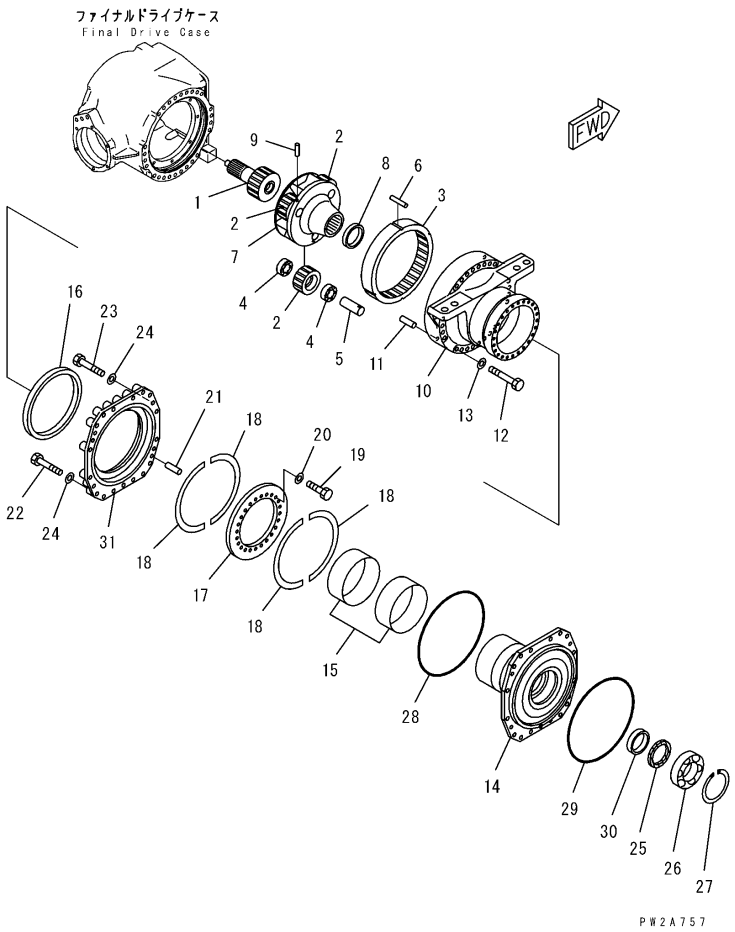

REAR AXLE (FINAL DRIVE) (PLANETARY GEAR) (DIFFERENTIAL LOCK TYPE)

Item	Part Number	Description	Qty.	Ref.	Serial No.
1	23B-22-31840	SHAFT	2		B10001-
2	23B-22-31850	GEAR	6		B10001-
3	23B-22-31860	GEAR	2		B10001-
4	23B-22-31870	BEARING	12		B10001-
5	23B-22-31880	PIN	6		B10001-
6	23B-22-31890	PIN	8		B10001-
7	23B-22-31550	CARRIER	2		B10001-
8	23B-22-31960	COLLAR	2		B10001-
9	419-22-12570	PIN	6		B10001-
10	23B-22-31522	HOUSING, AXLE	2		B10001-
	23B-22-31521	HOUSING, AXLE	2		B10001-
11	04020-01638	PIN, DOWEL	4		B10001-
12	01011-61620	BOLT	48		B10001-
13	01643-31645	WASHER	48		B10001-
14	23B-22-31530	FLANGE	2		B10001-
15	23B-22-21190	BUSHING	4		B10001-
16	23B-22-31930	SEAL	2		B10001-
17	23B-22-31940	PLATE	2		B10001-
18	23B-22-31950	WASHER	8		B10001-
19	01010-61255	BOLT	48		B10001-
20	01643-31232	WASHER	48		B10001-
21	04020-01638	PIN, DOWEL	4		B10001-
22	01010-61695	BOLT	34		B10001-
23	01010-61670	BOLT	4		B10001-
24	01643-31645	WASHER	38		B10001-
25	07012-00100	SEAL, OIL	2		B10001-
26	06030-22218	BEARING	2		B10001-
27	04071-00160	RING, SNAP	2		B10001-
28	07000-15380	O-RING	2		B10001-
29	07000-15370	O-RING	2		B10001-
30	23B-22-31980	COLLAR	2		B10001-
31	23B-22-31540	FLANGE	2		B10001-

REAR AXLE (FINAL DRIVE) (TORQUE SHAFT) (NO SPIN DIFFERENTIAL)

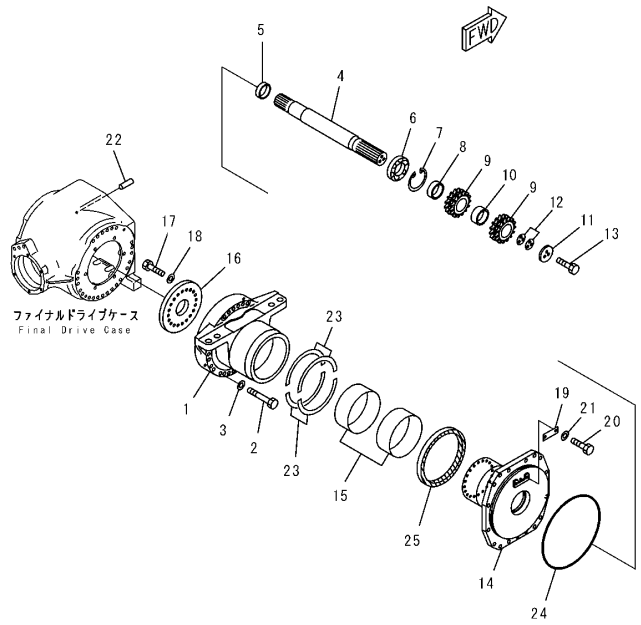

REAR AXLE (FINAL DRIVE) (TORQUE SHAFT) (NO SPIN DIFFERENTIAL)

Item	Part Number	Description	Qty.	Ref.	Serial No.
1	23B-22-31121	CASE, SIDE	2		B10001-
2	01011-61610	BOLT	48		B10001-
3	01643-31645	WASHER	48		B10001-
4	23B-22-31231	SHAFT	2		B10001-
	23B-22-31230	SHAFT	2		B10001-
5	23A-22-11380	SPACER	2		B10001-
6	23B-22-12160	BEARING	2		B10001-
7	04065-01254	RING, SNAP	2		B10001-
8	23A-22-11410	SPACER	2		B10001-
9	23A-22-11420	SPROCKET	4		B10001-
10	23A-22-11590	SPACER	2		B10001-
11	23A-22-11430	HOLDER	2		B10001-
12	23D-22-11650	SHIM, 0.1MM	2		B10001-
13	01010-61245	BOLT	6		B10001-
14	23B-22-31130	FLANGE	2		B10001-
	23B-22-31130	FLANGE	4		B10001-
15	23B-22-21190	BUSHING	4		B10001-
16	23B-22-31242	PLATE	2		B10001-
17	01010-61245	BOLT	40		B10001-
18	01643-31232	WASHER	40		B10001-
19	23B-22-31330	PLATE	2		B10001-
20	01010-61016	BOLT	4		B10001-
21	01643-31032	WASHER	4		B10001-
22	04020-01228	PIN, DOWEL	2		B10001-
23	23B-22-23140	WASHER	8		B10001-
24	07000-15370	O-RING	2		B10001-
25	23B-22-23150	SEAL	2		B10001-

REAR AXLE (FINAL DRIVE) (TORQUE SHAFT) (DIFFERENTIAL LOCK TYPE)

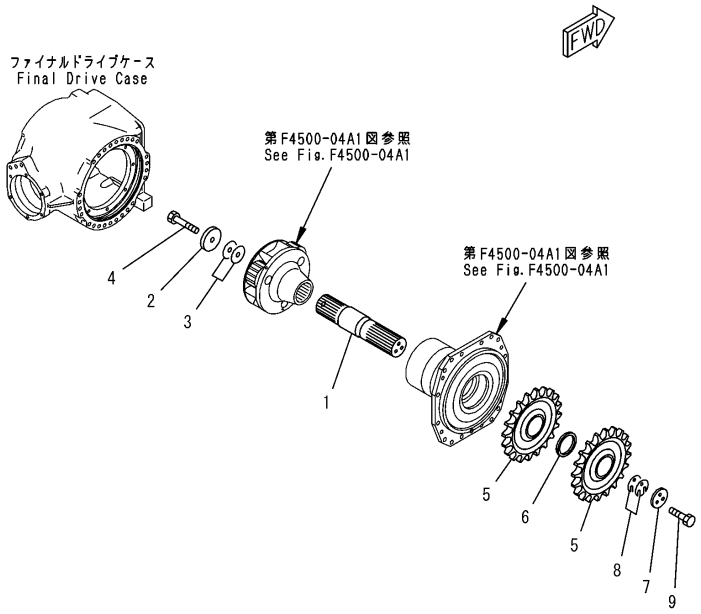

PJ2A759

REAR AXLE (FINAL DRIVE) (TORQUE SHAFT) (DIFFERENTIAL LOCK TYPE)

Item	Part Number	Description	Qty.	Ref.	Serial No.
1	23B-22-31910	SHAFT	2		B10001-
2	23B-22-31920	PLATE	2		B10001-
3	23B-22-32250	SHIM, 0.5MM	4		B10001-
	23B-22-32260	SHIM, 0.2MM	4		B10001-
	23B-22-32270	SHIM, 0.1MM	2		B10001-
4	01011-62005	BOLT	2		B10001-
5	23B-22-31560	SPROCKET	4		B10001-
6	23B-22-31970	SPACER	2		B10001-
7	238-22-11371	HOLDER	2		B10001-
8	23A-23-11310	SHIM, 0.5MM	2		B10001-
	23A-23-11320	SHIM, 0.2MM	4		B10001-
	23A-23-11330	SHIM, 0.1MM	2		B10001-
9	01010-61245	BOLT	6		B10001-

REAR AXLE (FINAL DRIVE) (FILLER TUBE) (NO SPIN DIFFERENTIAL)

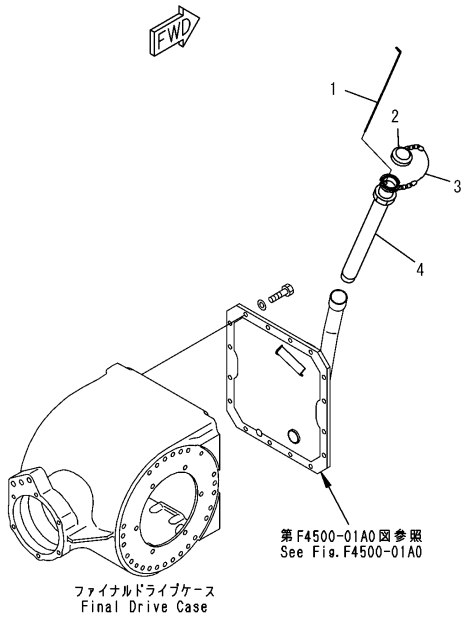

00003659

REAR AXLE (FINAL DRIVE) (FILLER TUBE) (NO SPIN DIFFERENTIAL)

Item	Part Number	Description	Qty.	Ref.	Serial No.
1	23B-22-31461	GAUGE	1		B10001-
2	6136-21-7120	CAP ASSEMBLY	1		B10001-
	6136-21-7180	.GASKET	1		B10001-
3	6136-21-7190	CHAIN	1		B10001-
4	23B-22-31480	TUBE	1		B10001-

REAR AXLE (FINAL DRIVE) (FILLER TUBE) (DIFFERENTIAL LOCK TYPE)

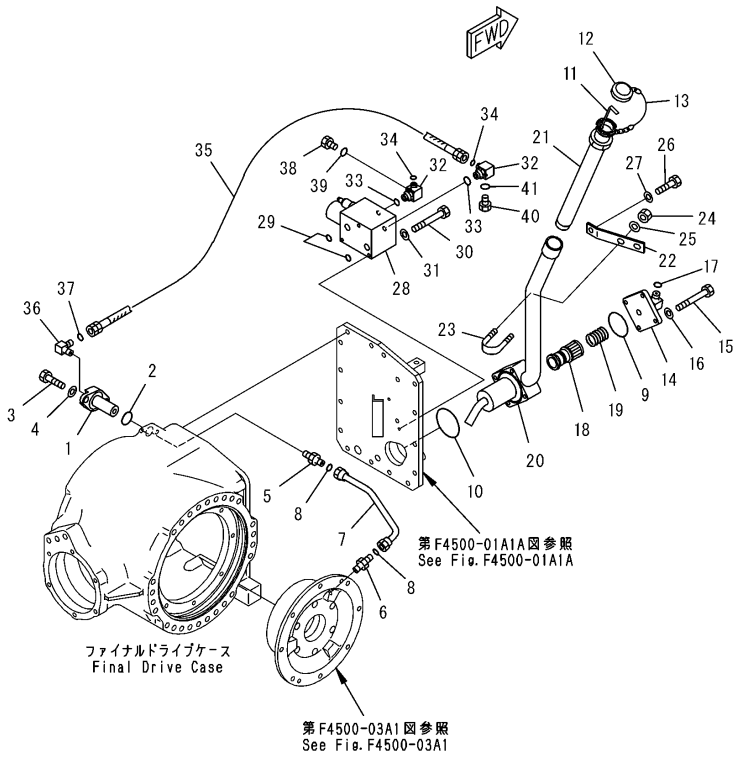

REAR AXLE (FINAL DRIVE) (FILLER TUBE) (DIFFERENTIAL LOCK TYPE)

Item	Part Number	Description	Qty.	Ref.	Serial No.
1	23B-22-22231	FLANGE	1		B10001-
2	07000-13035	O-RING	1		B10001-
3	01010-61230	BOLT	2		B10001-
4	01643-31232	WASHER	2		B10001-
5	56B-61-13960	NIPPLE	1		B10001-
6	56B-43-17210	NIPPLE	1		B10001-
7	23B-22-32541	TUBE	1		B10001-
8	02896-11008	O-RING	2		B10001-
9	07000-12075	O-RING	1		B10001-
10	07000-12090	O-RING	1		B10001-
11	23B-22-31431	GAUGE	1		B10001-
12	6136-21-7120	CAP ASSEMBLY	1		B10001-
	6136-21-7180	.GASKET	1		B10001-
13	6136-21-7190	CHAIN	1		B10001-
14	23B-22-32512	TUBE	1		B10001-
15	01010-61080	BOLT	4		B10001-
16	01643-31032	WASHER	4		B10001-
17	02896-11015	O-RING	1		B10001-
18	23B-22-22390	MAGNET ASSEMBLY	1		B10001-
19	125-15-11790	SPRING	1		B10001-
20	23B-22-31413	TUBE	1		B10001-
21	23B-22-31480	TUBE	1		B10001-
22	23B-22-31471	BRACKET	1		B10001-
23	07283-34346	CLIP	1		B10001-
24	01597-01009	NUT	2		B10001-
25	234-54-13252	WASHER	2		B10001-
26	(01010-61245)	BOLT	1		B10001-
27	232-43-58360	WASHER	1		B10001-
28	(23B-22-32601)	VALVE ASSEMBLY, SOLENOID	1		B10001-
29	419-43-27670	O-RING	2		B10001-
30	6132-11-4690	BOLT	3		B10001-
31	01643-30823	WASHER	3		B10001-
32	23B-60-41380	ELBOW	2		B10001-
33	418-62-11620	O-RING	2		B10001-
34	02896-11009	O-RING	2		B10001-
35	02765-B03A4	HOSE	1		B10001-

REAR AXLE (FINAL DRIVE) (FILLER TUBE) (DIFFERENTIAL LOCK TYPE)

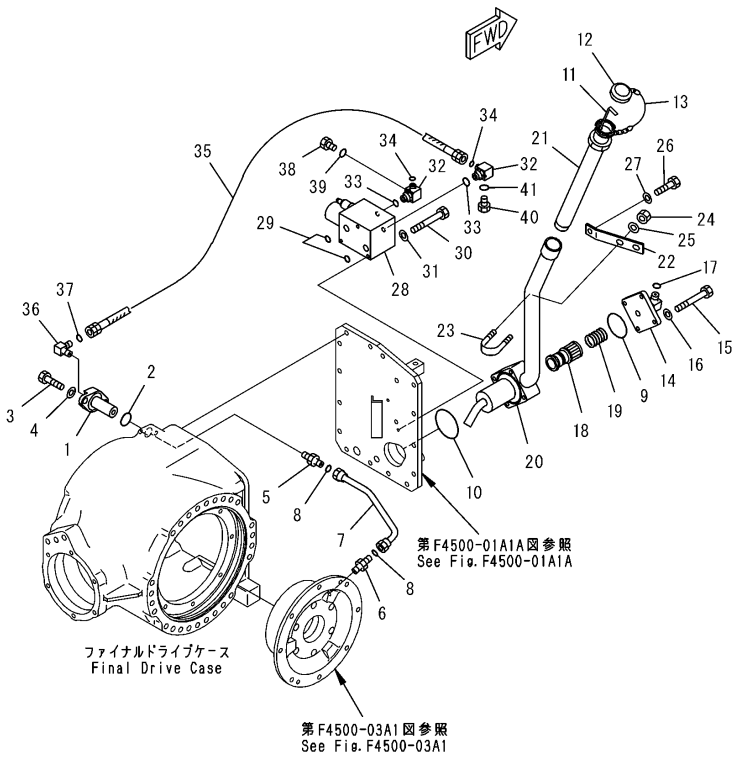

00009312

REAR AXLE (FINAL DRIVE) (FILLER TUBE) (DIFFERENTIAL LOCK TYPE)

Item	Part Number	Description	Qty.	Ref.	Serial No.
36	56B-61-13760	ELBOW	1		B10001-
37	02896-11009	O-RING	1		B10001-
38	07040-11007	PLUG	1		B10001-
39	07002-11023	O-RING	1		B10001-
40	07040-11007	PLUG	1		B10001-
41	07002-11023	O-RING	1		B10001-

REAR AXLE (TANDEM CASE, L.H.) (NO SPIN DIFFERENTIAL)

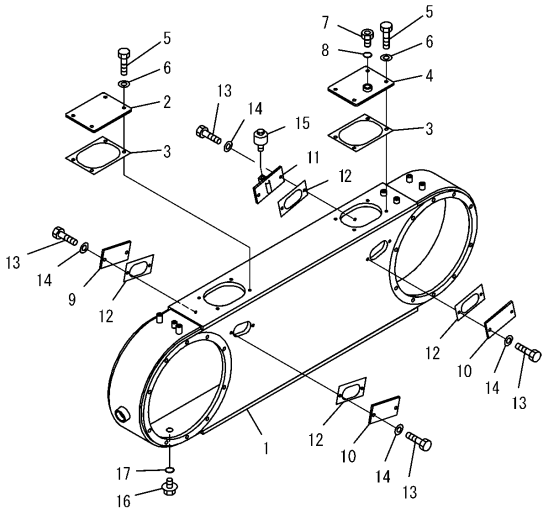

PJ2E420

REAR AXLE (TANDEM CASE, L.H.) (NO SPIN DIFFERENTIAL)

Item	Part Number	Description	Qty.	Ref.	Serial No.
1	23B-25-31211	CASE, L.H.	1		B10001-
2	23A-23-11161	COVER	1		B10001-
3	238-23-16132	GASKET	2		B10001-
4	23A-25-31220	COVER	1		B10001-
5	01010-61230	BOLT	8		B10001-
6	01643-31232	WASHER	8		B10001-
7	07040-12412	PLUG	2		B10001-
8	07002-12434	O-RING	2		B10001-
9	238-23-11130	COVER	1		B10001-
10	232-25-51770	COVER	2		B10001-
11	238-25-16760	COVER	1		B10001-
12	238-23-11121	GASKET	4		B10001-
13	01010-61230	BOLT	8		B10001-
14	01643-31232	WASHER	8		B10001-
15	07030-00252	BREATHER	1		B10001-
16	07044-12412	PLUG	1		B10001-
17	07002-12434	O-RING	1		B10001-

REAR AXLE (TANDEM CASE, L.H.) (DIFFERENTIAL LOCK TYPE)

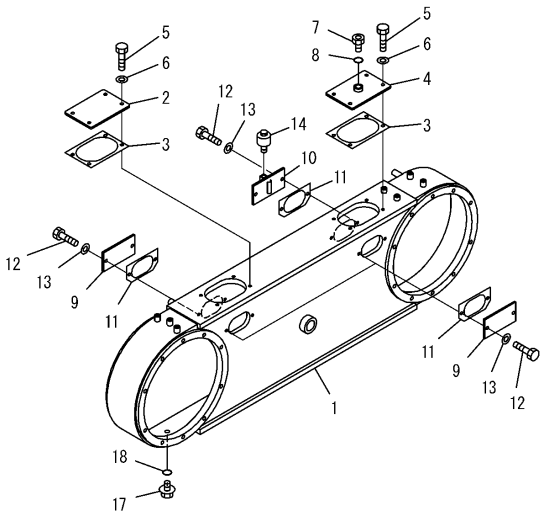

PW2A768

REAR AXLE (TANDEM CASE, L.H.) (DIFFERENTIAL LOCK TYPE)

Item	Part Number	Description	Qty.	Ref.	Serial No.
1	23B-25-31610	CASE, L.H.	1		B10001-
2	237-23-11142	COVER	1		B10001-
3	234-25-31142	GASKET	2		B10001-
4	23A-25-31211	COVER	1		B10001-
5	01010-61230	BOLT	8		B10001-
6	01643-31232	WASHER	8		B10001-
7	07040-12412	PLUG	1		B10001-
8	07002-12434	O-RING	1		B10001-
9	234-25-31150	COVER'	3		B10001-
10	234-25-31160	COVER	1		B10001-
11	234-25-31172	GASKET	4		B10001-
12	01010-61230	BOLT	8		B10001-
13	01643-31232	WASHER	8		B10001-
14	07030-00252	BREATHER	1		B10001-
17	07044-12412	PLUG	1		B10001-
18	07002-12434	O-RING	1		B10001-

REAR AXLE (TANDEM CASE, L.H.) (NO SPIN DIFFERENTIAL)

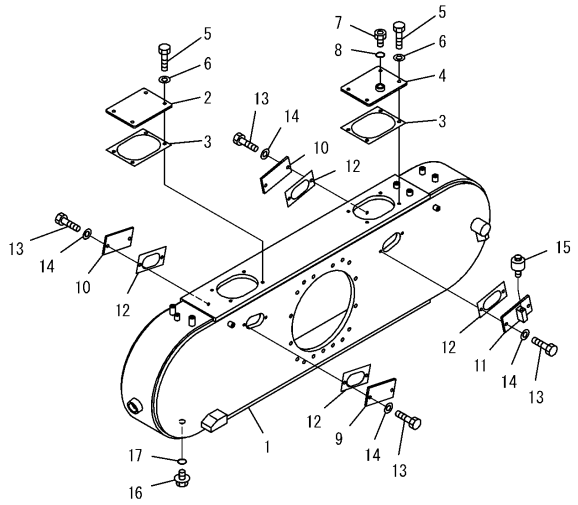

PJ2E422

REAR AXLE (TANDEM CASE, L.H.) (NO SPIN DIFFERENTIAL)

Item	Part Number	Description	Qty.	Ref.	Serial No.
1	23B-25-31311	CASE, R.H.	1		B10001-
2	23A-23-11161	COVER	1		B10001-
3	238-23-16132	GASKET	2		B10001-
4	23A-25-31220	COVER	1		B10001-
5	01010-61230	BOLT	8		B10001-
6	01643-31232	WASHER	8		B10001-
7	07040-12412	PLUG	2		B10001-
8	07002-12434	O-RING	2		B10001-
9	238-23-11130	COVER	1		B10001-
10	232-25-51770	COVER	2		B10001-
11	238-25-16760	COVER	1		B10001-
12	238-23-11121	GASKET	4		B10001-
13	01010-61230	BOLT	8		B10001-
14	01643-31232	WASHER	8		B10001-
15	07030-00252	BREATHER	1		B10001-
16	07044-12412	PLUG	1		B10001-
17	07002-12434	O-RING	1		B10001-

REAR AXLE (TANDEM CASE, R.H.) (DIFFERENTIAL LOCK TYPE)

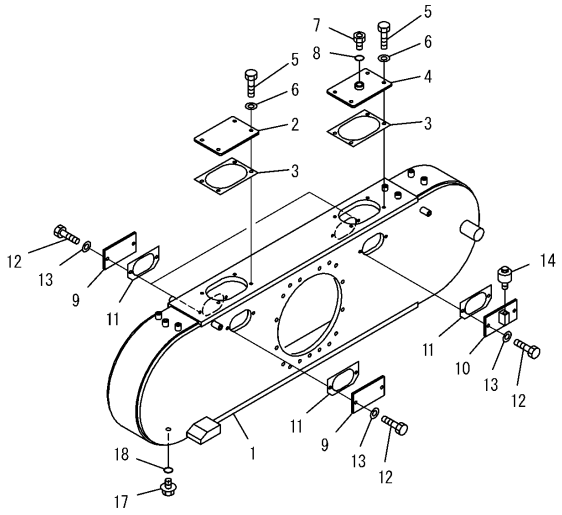

PW2A769

REAR AXLE (TANDEM CASE, R.H.) (DIFFERENTIAL LOCK TYPE)

Item	Part Number	Description	Qty.	Ref.	Serial No.
1	23B-25-31710	CASE, R.H.	1		B10001-
2	237-23-11142	COVER	1		B10001-
3	234-25-31142	GASKET	2		B10001-
4	23A-25-31211	COVER	1		B10001-
5	01010-61230	BOLT	8		B10001-
6	01643-31232	WASHER	8		B10001-
7	07040-12412	PLUG	1		B10001-
8	07002-12434	O-RING	1		B10001-
9	234-25-31150	COVER	3		B10001-
10	234-25-31160	COVER	1		B10001-
11	234-25-31172	GASKET	4		B10001-
12	01010-61230	BOLT	8		B10001-
13	01643-31232	WASHER	8		B10001-
14	07030-00252	BREATHER	1		B10001-
17	07044-12412	PLUG	1		B10001-
18	07002-12434	O-RING	1		B10001-

REAR AXLE (TANDEM DRIVE) (FRONT PLANETARY) (NO SPIN DIFFERENTIAL)

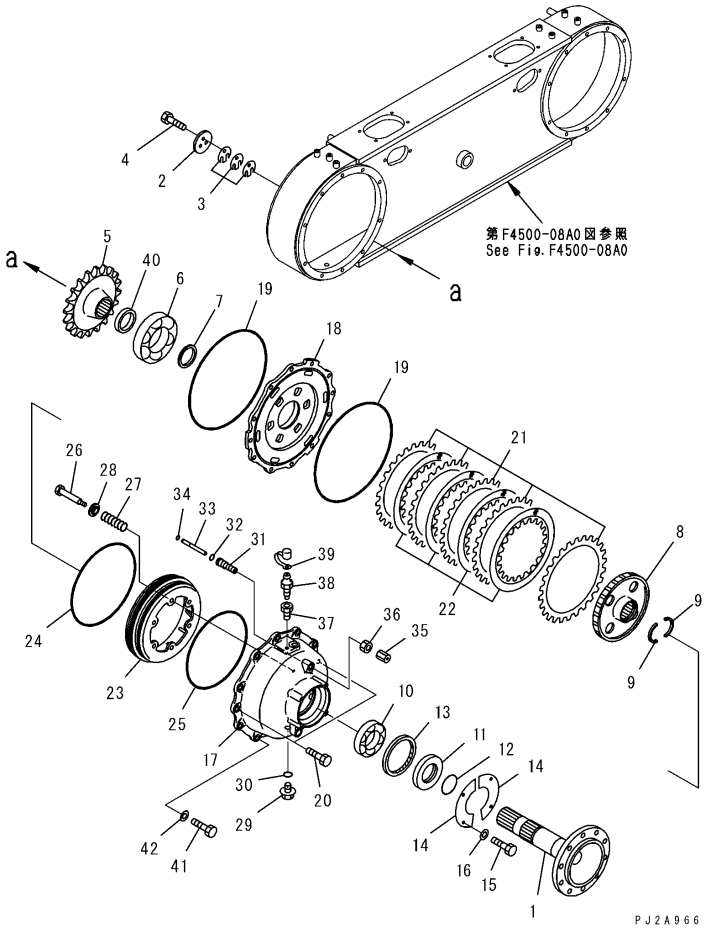

REAR AXLE (TANDEM DRIVE) (FRONT PLANETARY) (NO SPIN DIFFERENTIAL)

Item	Part Number	Description	Qty.	Ref.	Serial No.
1	23B-25-31142	SHAFT	2		B10001-
2	238-22-11371	HOLDER	2		B10001-
3	23A-23-11310	SHIM, 0.5MM	6		B10001-
	23A-23-11320	SHIM, 0.2MM	8		B10001-
	23A-23-11330	SHIM, 0.1MM	4		B10001-
4	01010-61240	BOLT	6		B10001-
5	23B-25-31150	SPROCKET	2		B10001-
6	06002-32217	BEARING	2		B10001-
7	23B-25-31190	COLLAR	2		B10001-
8	23B-25-31171	GEAR	2		B10001-
9	23B-25-21210	COLLAR	4		B10001-
10	06002-32218	BEARING	2		B10001-
11	23B-23-21170	SPACER	2		B10001-
12	23B-23-21180	O-RING	2		B10001-
13	238-25-16360	SEAL, OIL	2		B10001-
14	23B-25-11350	PLATE	4		B10001-
15	01010-61020	BOLT	8		B10001-
16	01643-31032	WASHER	8		B10001-
17	23B-25-33111	CAGE	2		B10001-
18	23B-25-31160	CAGE	2		B10001-
19	07000-15460	O-RING	4		B10001-
20	01010-81630	BOLT	4		B10001-
21	232-25-51430	PLATE	10		B10001-
22	235-25-11360	DISC	8		B10001-
23	23B-25-33121	PISTON	2		B10001-
24	232-25-51170	O-RING	2		B10001-
25	23B-25-33150	O-RING	2		B10001-
26	23B-25-33132	GUIDE	12		B10001-
27	714-12-17161	SPRING, OUTER	12		B10001-
28	23B-25-33610	WASHER	12		B10001-
29	07044-12412	PLUG	4		B10001-
30	07002-12434	O-RING	4		B10001-
31	23B-25-33220	GUIDE	2		B10001-
32	07000-12018	O-RING	2		B10001-
33	23B-25-33210	SHAFT, OUTER	2		B10001-
34	07000-11005	O-RING	2		B10001-

REAR AXLE (TANDEM DRIVE) (FRONT PLANETARY) (NO SPIN DIFFERENTIAL)

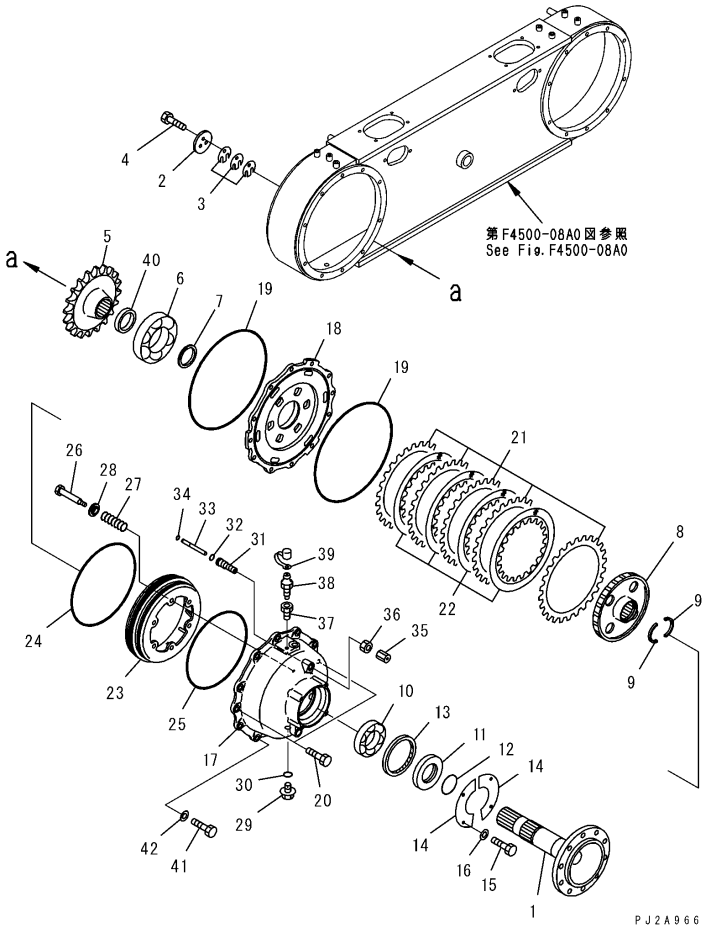

REAR AXLE (TANDEM DRIVE) (FRONT PLANETARY) (NO SPIN DIFFERENTIAL)

Item	Part Number	Description	Qty.	Ref.	Serial No.
35	421-33-31730	CAP	2		B10001-
36	01583-11610	NUT	2		B10001-
37	581-32-12140	PLUG	2		B10001-
38	566-32-11430	BLEEDER	2		B10001-
39	566-32-11620	CAP	2		B10001-
40	23B-25-31180	COLLAR	2		B10001-
41	01010-61660	BOLT	20		B10001-
42	01643-31645	WASHER	20		B10001-

REAR AXLE (TANDEM DRIVE) (FRONT PLANETARY) (DIFFERENTIAL LOCK TYPE)

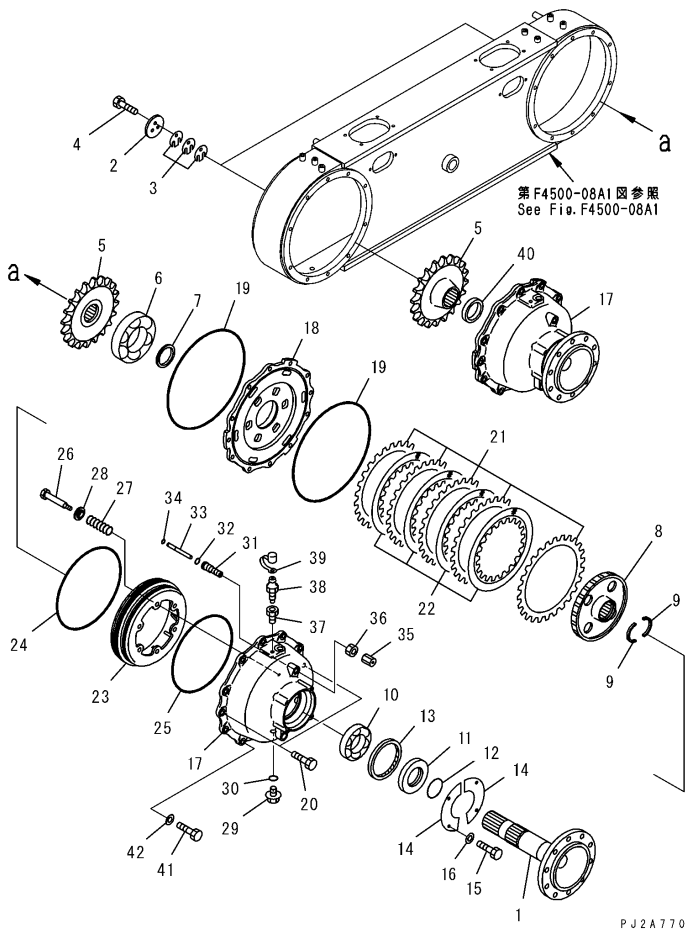

REAR AXLE (TANDEM DRIVE) (FRONT PLANETARY) (DIFFERENTIAL LOCK TYPE)

Item	Part Number	Description	Qty.	Ref.	Serial No.
1	23B-25-31432	SHAFT	2		B10001-
2	238-22-11371	HOLDER	2		B10001-
3	23A-23-11310	SHIM, 0.5MM	6		B10001-
	23A-23-11320	SHIM, 0.2MM	8		B10001-
	23A-23-11330	SHIM, 0.1MM	4		B10001-
4	01010-61240	BOLT	6		B10001-
5	23B-25-31450	SPROCKET	2		B10001-
6	06002-32217	BEARING	2		B10001-
7	23B-25-31190	COLLAR	2		B10001-
8	23B-25-31171	GEAR	2		B10001-
9	23B-25-21210	COLLAR	4		B10001-
10	06002-32218	BEARING	2		B10001-
11	23B-23-21170	SPACER	2		B10001-
12	23B-23-21180	O-RING	2		B10001-
13	238-25-16360	SEAL, OIL	2		B10001-
14	23B-25-11350	PLATE	4		B10001-
15	01010-61020	BOLT	8		B10001-
16	01643-31032	WASHER	8		B10001-
17	23B-25-33111	CAGE	2		B10001-
18	23B-25-31160	CAGE	2		B10001-
19	07000-15460	O-RING	4		B10001-
20	01010-61630	BOLT	4		B10001-
21	232-25-51430	PLATE	10		B10001-
22	235-25-11360	DISC	8		B10001-
23	23B-25-33121	PISTON	2		B10001-
24	232-25-51170	O-RING	2		B10001-
25	23B-25-33150	O-RING	2		B10001-
26	23B-25-33132	GUIDE	12		B10001-
27	714-12-17161	SPRING, OUTER	12		B10001-
28	23B-25-33610	WASHER	12		B10001-
29	07044-12412	PLUG	4		B10001-
30	07002-12434	O-RING	4		B10001-
31	23B-25-33220	GUIDE	2		B10001-
32	07000-12018	O-RING	2		B10001-
33	23B-25-33210	SHAFT	2		B10001-
34	07000-11005	O-RING	2		B10001-

REAR AXLE (TANDEM DRIVE) (FRONT PLANETARY) (DIFFERENTIAL LOCK TYPE)

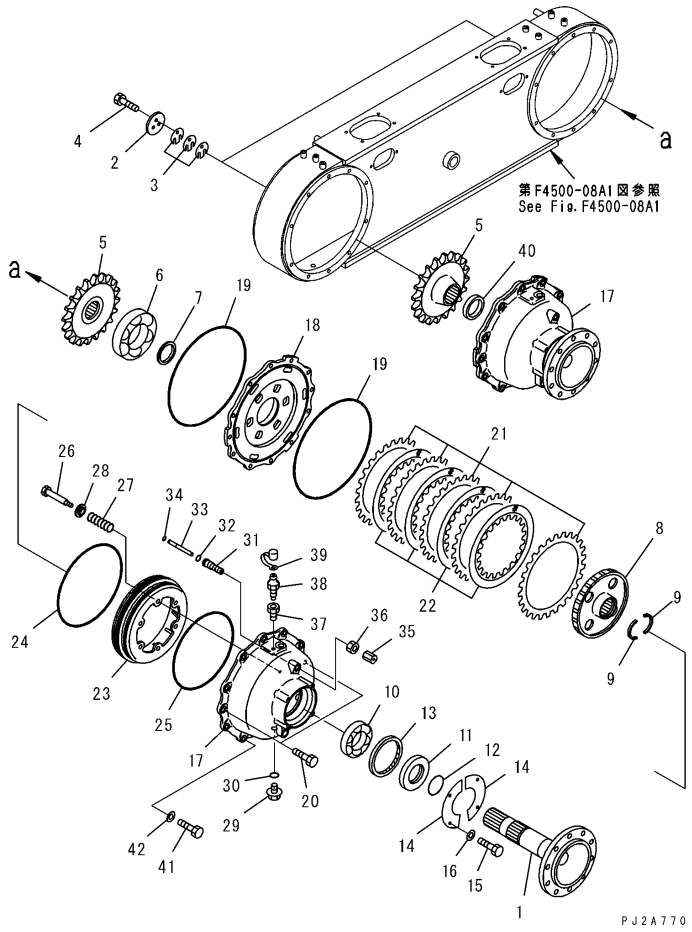

REAR AXLE (TANDEM DRIVE) (FRONT PLANETARY) (DIFFERENTIAL LOCK TYPE)

Item	Part Number	Description	Qty.	Ref.	Serial No.
35	421-33-31730	CAP	2		B10001-
36	01583-11610	NUT	2		B10001-
37	581-32-12140	PLUG	2		B10001-
38	566-32-11430	BLEEDER	2		B10001-
39	566-32-11620	CAP	2		B10001-
40	23B-25-31480	COLLAR	2		B10001-
41	01010-61660	BOLT	20		B10001-
42	01643-31645	WASHER	20		B10001-

REAR AXLE (TANDEM DRIVE) (REAR PLANETARY) (NO SPIN DIFFERENTIAL)

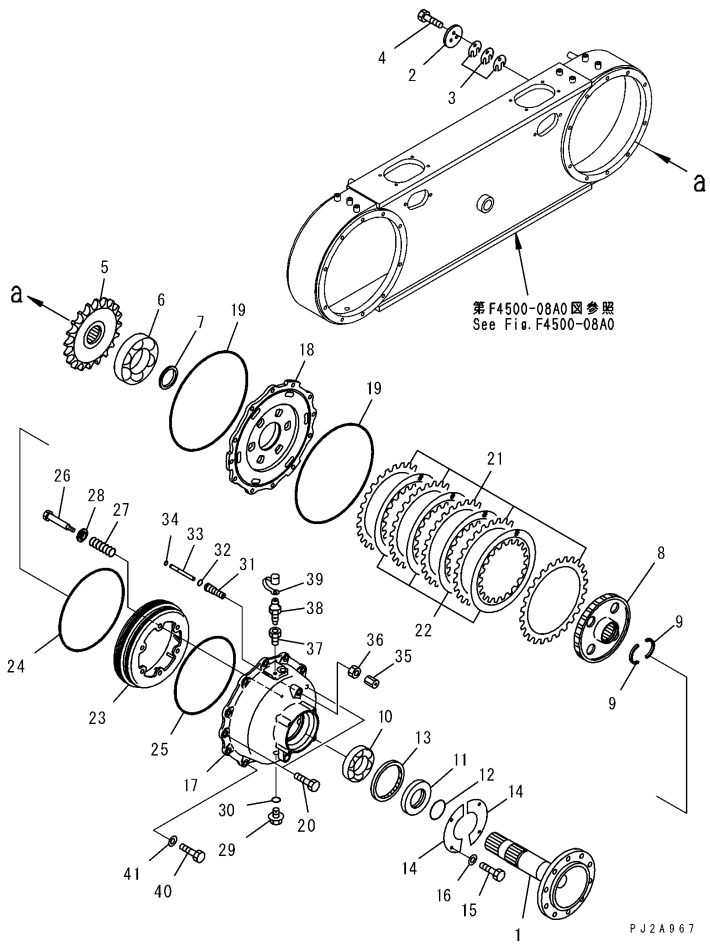

REAR AXLE (TANDEM DRIVE) (REAR PLANETARY) (NO SPIN DIFFERENTIAL)

Item	Part Number	Description	Qty.	Ref.	Serial No.
1	23B-25-31132	SHAFT	2		B10001-
2	238-22-11371	HOLDER	2		B10001-
3	23A-23-11310	SHIM, 0.5MM	6		B10001-
	23A-23-11320	SHIM, 0.2MM	8		B10001-
	23A-23-11330	SHIM, 0.1MM	4		B10001-
4	01010-61240	BOLT	6		B10001-
5	23B-25-31150	SPROCKET	2		B10001-
6	06002-32217	BEARING	2		B10001-
7	23B-25-31190	COLLAR	2		B10001-
8	23B-25-31171	GEAR	2		B10001-
9	23B-25-21210	COLLAR	4		B10001-
10	06002-32218	BEARING	2		B10001-
11	23B-23-21170	SPACER	2		B10001-
12	23B-23-21180	O-RING	2		B10001-
13	238-25-16360	SEAL	2		B10001-
14	23B-25-11350	PLATE	4		B10001-
15	01010-61020	BOLT	8		B10001-
16	01643-31032	WASHER	8		B10001-
17	23B-25-33111	CAGE	2		B10001-
18	23B-25-31160	CAGE	2		B10001-
19	07000-15460	O-RING	4		B10001-
20	01010-81630	BOLT	4		B10001-
21	232-25-51430	PLATE	10		B10001-
22	235-25-11360	DISC	8		B10001-
23	23B-25-33121	PISTON	2		B10001-
24	232-25-51170	O-RING	2		B10001-
25	23B-25-33150	O-RING	2		B10001-
26	23B-25-33132	GUIDE	12		B10001-
27	714-12-17161	SPRING, OUTER	12		B10001-
28	23B-25-33610	WASHER	12		B10001-
29	07044-12412	PLUG	4		B10001-
30	07002-12434	O-RING	4		B10001-
31	23B-25-33220	GUIDE	2		B10001-
32	07000-12018	O-RING	2		B10001-
33	23B-25-33210	SHAFT, OUTER	2		B10001-
34	07000-11005	O-RING	2		B10001-

REAR AXLE (TANDEM DRIVE) (REAR PLANETARY) (NO SPIN DIFFERENTIAL)

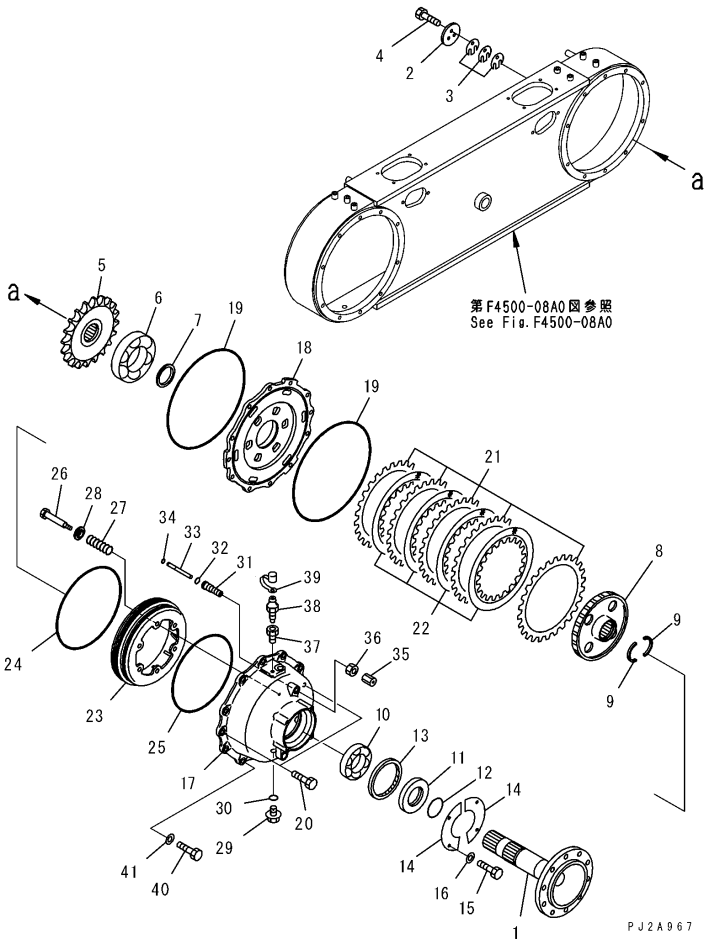

REAR AXLE (TANDEM DRIVE) (REAR PLANETARY) (NO SPIN DIFFERENTIAL)

Item	Part Number	Description	Qty.	Ref.	Serial No.
35	421-33-31730	CAP	2		B10001-
36	01583-11610	NUT	2		B10001-
37	581-32-12140	PLUG	2		B10001-
38	566-32-11430	BLEEDER	2		B10001-
39	566-32-11620	CAP	2		B10001-
40	01010-61660	BOLT	20		B10001-
41	01643-31645	WASHER	20		B10001-

REAR AXLE (TANDEM DRIVE) (REAR PLANETARY) (DIFFERENTIAL LOCK TYPE)

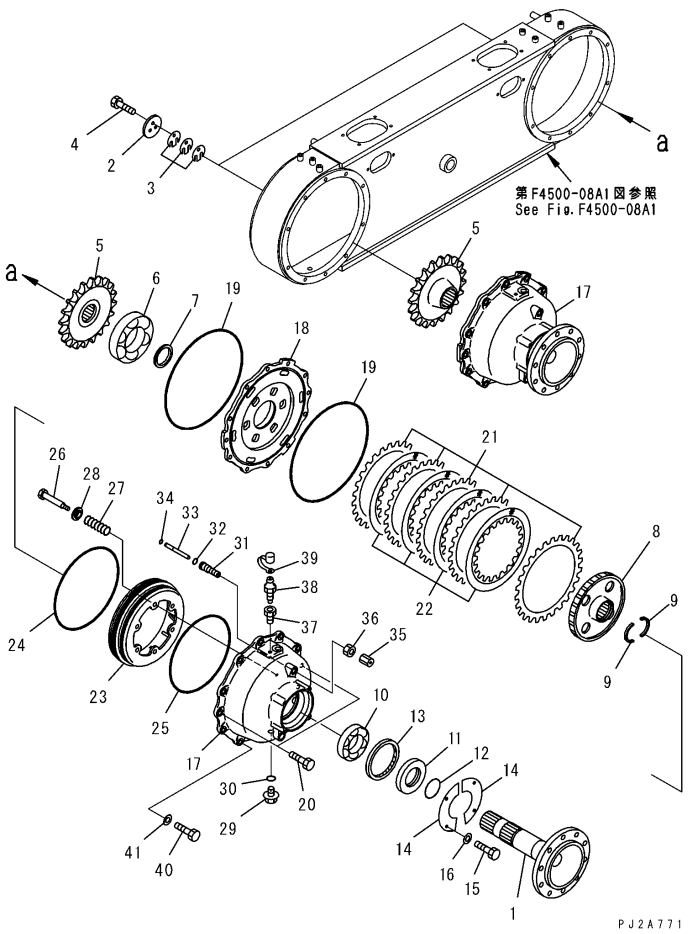

REAR AXLE (TANDEM DRIVE) (REAR PLANETARY) (DIFFERENTIAL LOCK TYPE)

Item	Part Number	Description	Qty.	Ref.	Serial No.
1	23B-25-31132	SHAFT	2		B10001-
2	238-22-11371	HOLDER	2		B10001-
3	23A-23-11310	SHIM, 0.5MM	6		B10001-
	23A-23-11320	SHIM, 0.2MM	8		B10001-
	23A-23-11330	SHIM, 0.1MM	4		B10001-
4	01010-61240	BOLT	6		B10001-
5	23B-25-31450	SPROCKET	2		B10001-
6	06002-32217	BEARING	2		B10001-
7	23B-25-31190	COLLAR	2		B10001-
8	23B-25-31171	GEAR	2		B10001-
9	23B-25-21210	COLLAR	4		B10001-
10	06002-32218	BEARING	2		B10001-
11	23B-23-21170	SPACER	2		B10001-
12	23B-23-21180	O-RING	2		B10001-
13	238-25-16360	SEAL	2		B10001-
14	23B-25-11350	PLATE	4		B10001-
15	01010-61020	BOLT	8		B10001-
16	01643-31032	WASHER	8		B10001-
17	23B-25-33111	CAGE	2		B10001-
18	23B-25-31160	CAGE	2		B10001-
19	07000-15460	O-RING	4		B10001-
20	01010-61630	BOLT	4		B10001-
21	232-25-51430	PLATE	10		B10001-
22	235-25-11360	DISC	8		B10001-
23	23B-25-33121	PISTON	2		B10001-
24	232-25-51170	O-RING	2		B10001-
25	23B-25-33150	O-RING	2		B10001-
26	23B-25-33132	GUIDE	12		B10001-
27	714-12-17161	SPRING, OUTER	12		B10001-
28	23B-25-33610	WASHER	12		B10001-
29	07044-12412	PLUG	4		B10001-
30	07002-12434	O-RING	4		B10001-
31	23B-25-33220	GUIDE	2		B10001-
32	07000-12018	O-RING	2		B10001-
33	23B-25-33210	SHAFT, OUTER	2		B10001-
34	07000-11005	O-RING	2		B10001-

REAR AXLE (TANDEM DRIVE) (REAR PLANETARY) (DIFFERENTIAL LOCK TYPE)

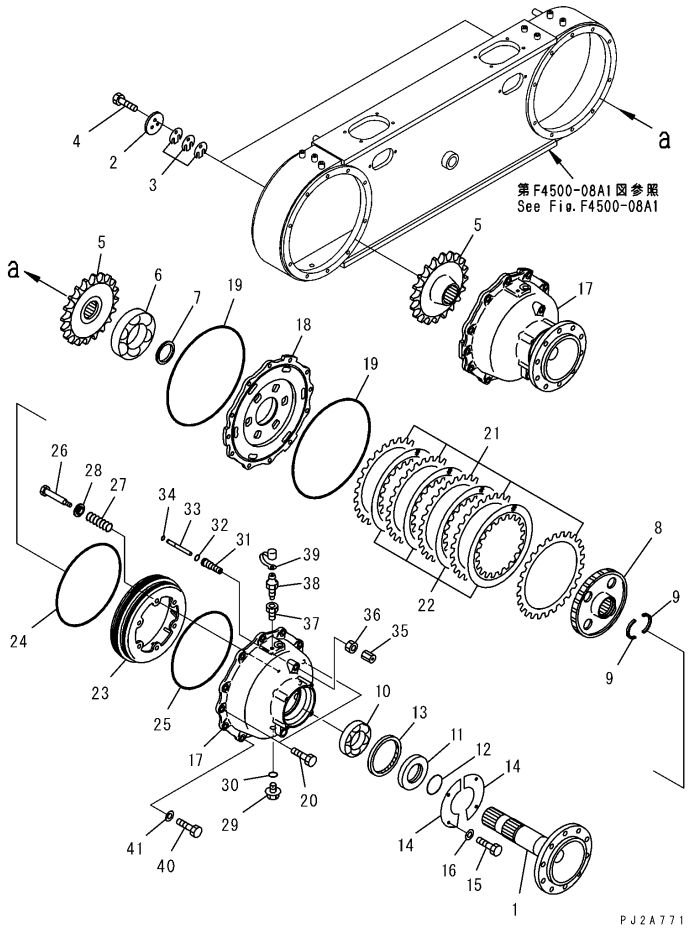

REAR AXLE (TANDEM DRIVE) (REAR PLANETARY) (DIFFERENTIAL LOCK TYPE)

Item	Part Number	Description	Qty.	Ref.	Serial No.
35	421-33-31730	CAP	2		B10001-
36	01583-11610	NUT	2		B10001-
37	581-32-12140	PLUG	2		B10001-
38	566-32-11430	BLEEDER	2		B10001-
39	566-32-11620	CAP	2		B10001-
40	01010-61660	BOLT	20		B10001-
41	01643-31645	WASHER	20		B10001-

REAR AXLE (TANDEM DRIVE) (SPROCKET CHAIN) (NO SPIN DIFFERENTIAL)

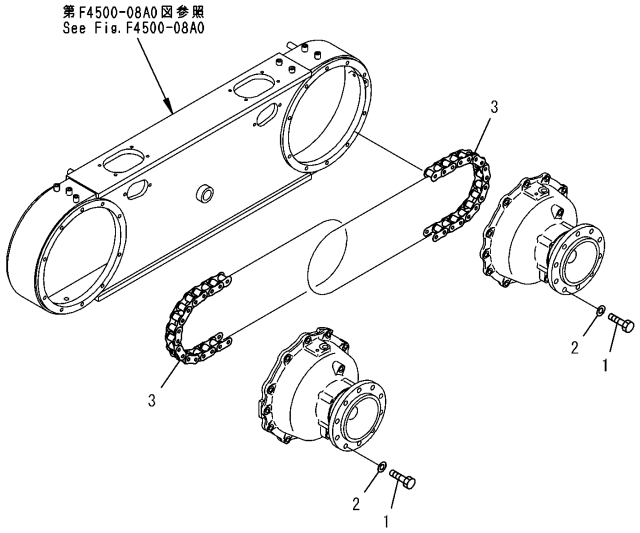

PJ2A968

REAR AXLE (TANDEM DRIVE) (SPROCKET CHAIN) (NO SPIN DIFFERENTIAL)

Item	Part Number	Description	Qty.	Ref.	Serial No.
1	01010-62250	BOLT	40		B10001-
2	01643-32260	WASHER	40		B10001-
3	23A-23-11500	CHAIN ASSEMBLY	4		B10001-

REAR AXLE (TANDEM DRIVE) (SPROCKET CHAIN) (DIFFERENTIAL LOCK TYPE)

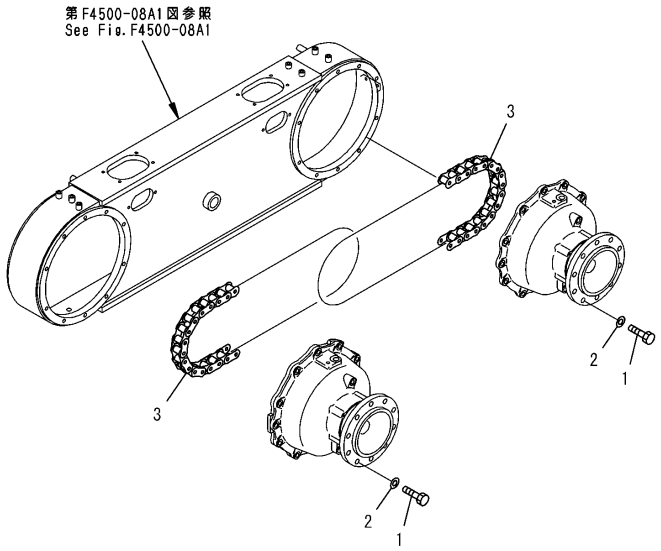

PJ2A772

REAR AXLE (TANDEM DRIVE) (SPROCKET CHAIN) (DIFFERENTIAL LOCK TYPE)

Item	Part Number	Description	Qty.	Ref.	Serial No.
1	(01010-62250)	BOLT	40		B10001-
2	(01643-32260)	WASHER	40		B10001-
3	23B-25-31500	CHAIN	4		B10001-
	23B-25-31520	.CHAIN ASSEMBLY	1		B10001-
	23B-25-31510	.JOINT LINK ASSEMBLY	1		B10001-

REAR AXLE (STEP) (FOR TANDEM CASE)

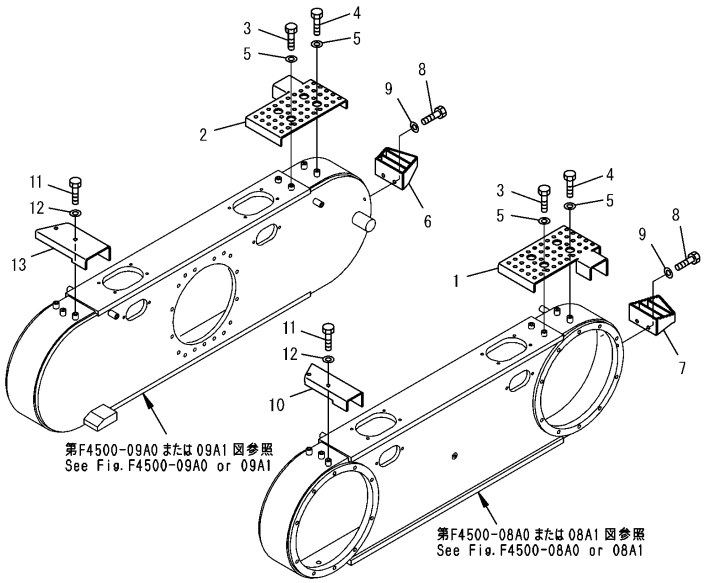

PJ2A773

REAR AXLE (STEP) (FOR TANDEM CASE)

Item	Part Number	Description	Qty.	Ref.	Serial No.
1	23B-25-31352	STEP, L.H.	1		B10001-
2	23B-25-31362	STEP, R.H.	1		B10001-
3	01010-61220	BOLT	4		B10001-
4	01010-61230	BOLT	4		B10001-
5	01643-31232	WASHER	8		B10001-
6	23B-25-31840	STEP, R.H.	1		B10001-
7	23B-25-31850	STEP, L.H.	1		B10001-
8	01010-61225	BOLT	4		B10001-
9	01643-31232	WASHER	4		B10001-
10	23B-43-32443	PLATE, L.H.	1		B10001-
11	01010-61225	BOLT	4		B10001-
12	01643-31232	WASHER	4		B10001-
13	23B-43-32481	PLATE, R.H.	1		B10001-

REAR AXLE (TANDEM DRIVE) (BRAKE PIPING)

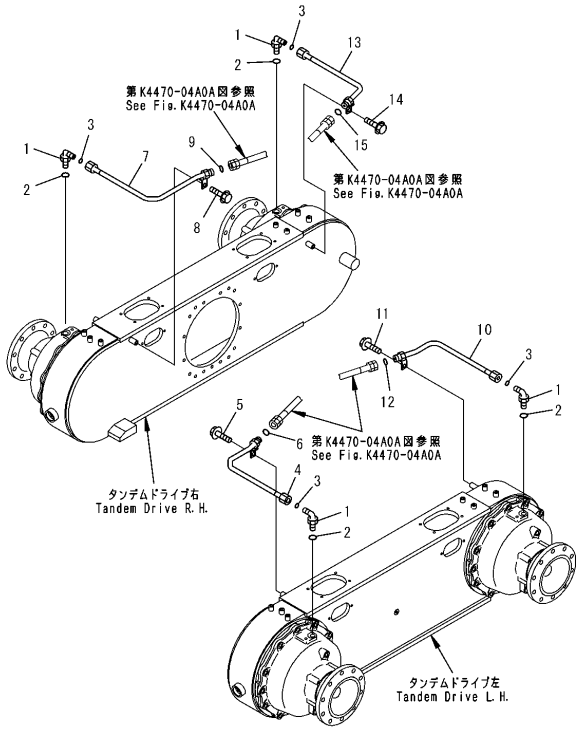

REAR AXLE (TANDEM DRIVE) (BRAKE PIPING)

Item	Part Number	Description	Qty.	Ref.	Serial No.
1	02782-10426	ELBOW	4		B10001-
2	07002-12434	O-RING	4		B10001-
3	02896-11012	O-RING	4		B10001-
4	23B-25-41110	TUBE	1		B10001-
5	01435-01016	BOLT	1		B10001-
6	02896-11012	O-RING	1		B10001-
7	23B-25-41120	TUBE	1		B10001-
8	01435-01016	BOLT	1		B10001-
9	02896-11012	O-RING	1		B10001-
10	23B-25-41130	TUBE	1		B10001-
11	01435-01016	BOLT	1		B10001-
12	02896-11012	O-RING	1		B10001-
13	23B-25-41140	TUBE	1		B10001-
14	01435-01016	BOLT	1		B10001-
15	02896-11012	O-RING	1		B10001-

REAR AXLE (PARKING BRAKE AND MOUNTING PARTS)

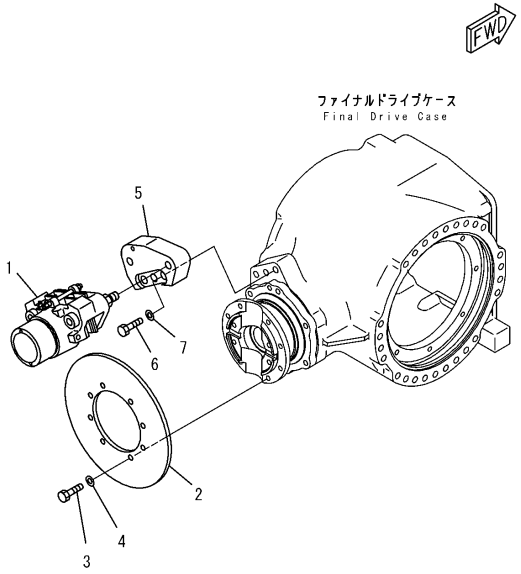

PW2A743

REAR AXLE (PARKING BRAKE AND MOUNTING PARTS)

Item	Part Number	Description	Qty.	Ref.	Serial No.
1	(23B-32-31301)	CALIPER ASSEMBLY, PARKING BRAKE	1		B10001-
2	23B-32-31311	DISK	1		B10001-
3	01010-61230	BOLT	8		B10001-
4	01643-31232	WASHER	8		B10001-
5	23B-32-31321	BRACKET	1		B10001-
6	01010-61670	BOLT	3		B10001-
7	01643-31645	WASHER	3		B10001-

REAR AXLE (BRAKE CALIPER) (INNER PARTS)

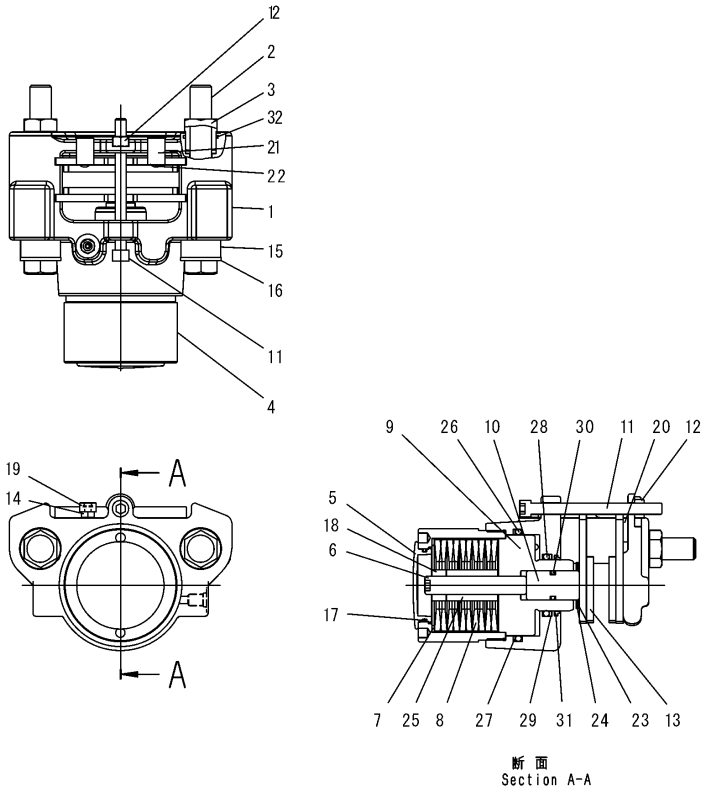

REAR AXLE (BRAKE CALIPER) (INNER PARTS)

Item	Part Number	Description	Qty.	Ref.	Serial No.
	23B-32-31301	CALIPER ASSEMBLY, PARKING BRAKE	1		B10001-
1	☆	.PLATE, TORQUE	1		B10001-
2	23B-32-31340	.BOLT	2		B10001-
3	23B-32-31351	.NUT	2		B10001-
4	☆	.HOUSING, SPRING	1		B10001-
5	23B-32-31370	.PLUG	1		B10001-
6	23B-32-31380	.BOLT, ADJUST	1		B10001-
7	☆	.SHIM	1		B10001-
8	☆	.SPRING, DISC	10		B10001-
9	☆	.PISTON	1		B10001-
10	☆	.PISTON	1		B10001-
11	23B-32-31510	.BOLT	1		B10001-
12	23B-32-31520	.NUT	2		B10001-
13	23B-32-31530	.CARRIER	2		B10001-
14	☆	.BLEEDER	1		B10001-
15	23B-32-31550	.SPRING, URETHANE	2		B10001-
16	23B-32-31560	.WASHER	2		B10001-
17	23B-32-31570	.O-RING	1		B10001-
18	23B-32-31580	.NUT	1		B10001-
19	23B-32-31590	.CAP	1		B10001-
20	23B-32-31610	.SPACER	1		B10001-
21	23B-32-31620	.SPRING	2		B10001-
22	23B-32-31630	.SCREW	2		B10001-
23	23B-32-31640	.SPRING	1		B10001-
24	23B-32-31650	.RING	1		B10001-
25	23B-32-31660	.SPACER	1		B10001-
	23B-32-31680	.SERVICE KIT	1		B10001-
26	☆	..O-RING (KIT)	1		B10001-
27	☆	..RING, BACK-UP (KIT)	1		B10001-
28	☆	..O-RING (KIT)	1		B10001-
29	☆	..RING, BACK-UP (KIT)	1		B10001-
30	☆	..O-RING (KIT)	1		B10001-
31	☆	..WIPER (KIT)	1		B10001-
32	23B-32-31670	..O-RING (KIT)	2		B10001-

REAR AXLE (SOLENOID VALVE, INNER PARTS) (DIFFERENTIAL LOCK TYPE)

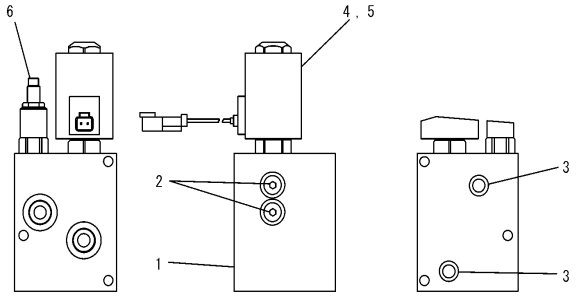

PW2B120

REAR AXLE (SOLENOID VALVE, INNER PARTS) (DIFFERENTIAL LOCK TYPE)

Item	Part Number	Description	Qty.	Ref.	Serial No.
	23B-22-32601	VALVE ASSEMBLY, SOLENOID	1		B10001-
1	23B-22-32610	.BLOCK	1		B10001-
2	23B-22-32620	.PLUG	2		B10001-
3	23B-22-32630	.O-RING	2		B10001-
4	23B-22-32640	.SOLENOID ASSEMBLY	1		B10001-
5	23B-22-32650	.VALVE	1		B10001-
6	23B-22-32660	.RELIEF VALVE ASSEMBLY	1		B10001-

TRANSMISSION PIPING (NO SPIN DIFFERENTIAL)

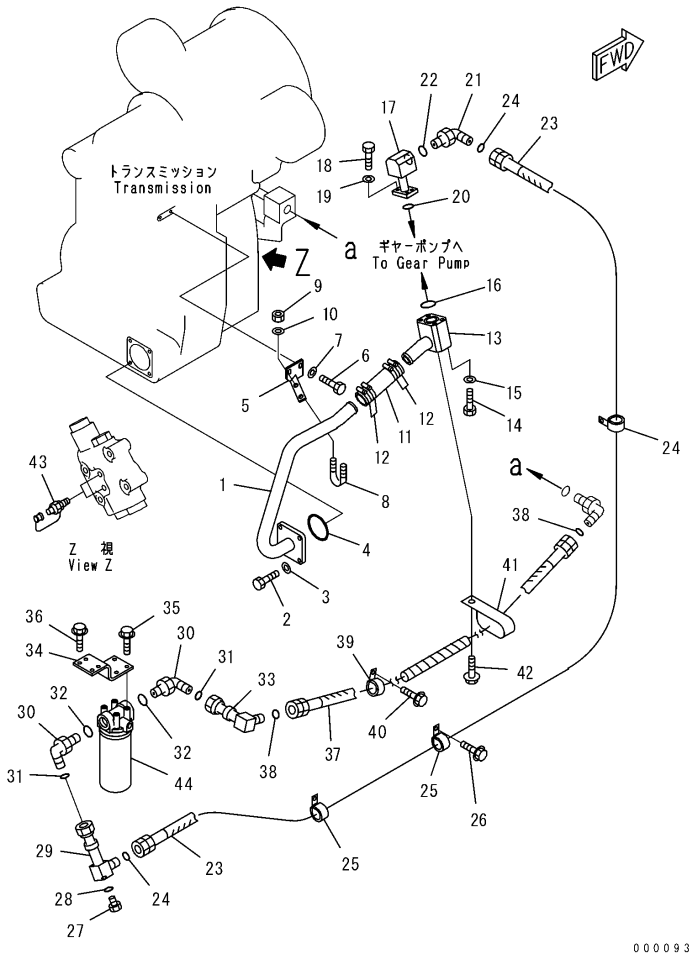

TRANSMISSION PIPING (NO SPIN DIFFERENTIAL)

Item	Part Number	Description	Qty.	Ref.	Serial No.
1	23B-16-31211	TUBE	1		B10001-
2	01010-81235	BOLT	4		B10001-
3	01643-31232	WASHER	4		B10001-
4	07000-12100	O-RING	1		B10001-
5	23B-16-31512	BRACKET	1		B10001-
6	01010-81025	BOLT	2		B10001-
7	01643-31032	WASHER	2		B10001-
8	07283-34346	CLIP	1		B10001-
9	01597-01009	NUT	2		B10001-
10	01643-31032	WASHER	2		B10001-
11	07260-04120	HOSE	1		B10001-
12	07281-00609	CLAMP	4		B10001-
13	23B-16-31272	TUBE	1		B10001-
14	01011-81020	BOLT	4		B10001-
15	01643-51032	WASHER	4		B10001-
16	07000-13042	O-RING	1		B10001-
17	23B-16-31321	TUBE	1		B10001-
18	01010-80830	BOLT	4		B10001-
19	01643-30823	WASHER	4		B10001-
20	07000-13028	O-RING	1		B10001-
21	21W-62-42640	ELBOW	1		B10001-
22	07002-13334	O-RING	1		B10001-
23	23B-16-31730	HOSE	1		B10001-
24	23B-60-33240	O-RING	2		B10001-
25	281-01-13180	CLIP	3		B10001-
26	01435-01020	BOLT	3		B10001-
27	07040-11007	PLUG	1		B10001-
28	07002-11023	O-RING	1		B10001-
29	23B-16-31651	TUBE	1		B10001-
30	21W-62-42640	ELBOW	2		B10001-
31	23B-60-33240	O-RING	2		B10001-
32	07002-13334	O-RING	2		B10001-
33	23B-16-31661	TUBE	1		B10001-
34	23B-16-33110	BRACKET	1		B10001-
35	01435-01025	BOLT	4		B10001-
36	01435-01035	BOLT	4		B10001-

TRANSMISSION PIPING (NO SPIN DIFFERENTIAL)

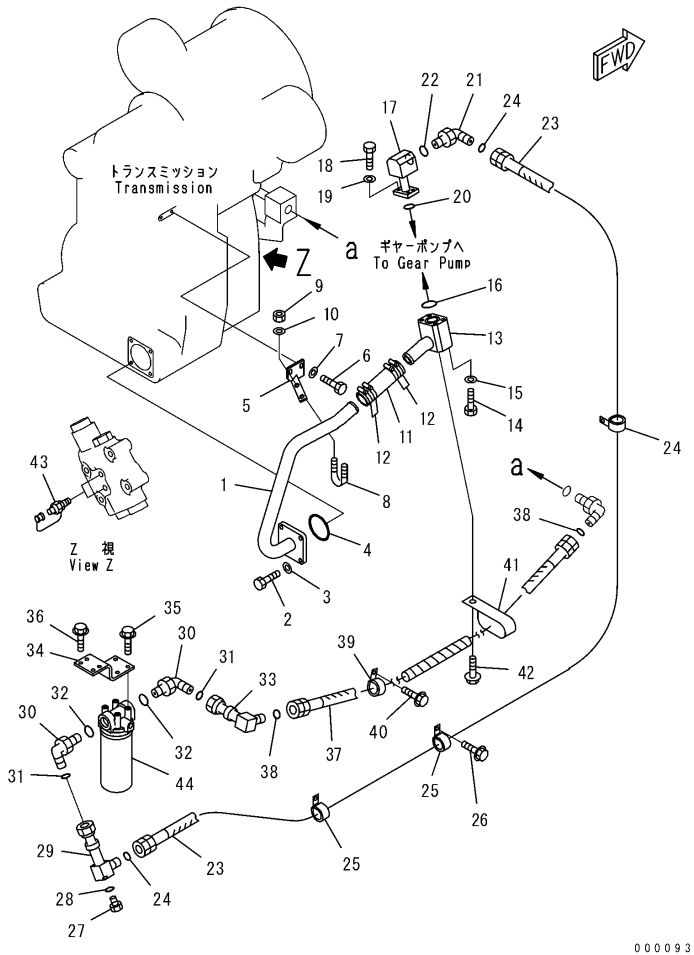

TRANSMISSION PIPING (NO SPIN DIFFERENTIAL)

Item	Part Number	Description	Qty.	Ref.	Serial No.
37	23B-16-31720	HOSE	1		B10001-
38	23B-60-33240	O-RING	2		B10001-
39	281-01-13180	CLIP	1		B10001-
40	01435-01220	BOLT	1		B10001-
41	196-911-3310	CLIP	1		B10001-
42	01435-01020	BOLT	1		B10001-
43	799-101-5160	NIPPLE'	2		B10001-
44	714-07-28702	FILTER ASSEMBLY	1		B10001-
	714-07-28712	.CARTRIDGE	1		B10001-

TRANSMISSION PIPING (DIFFERENTIAL LOCK TYPE)

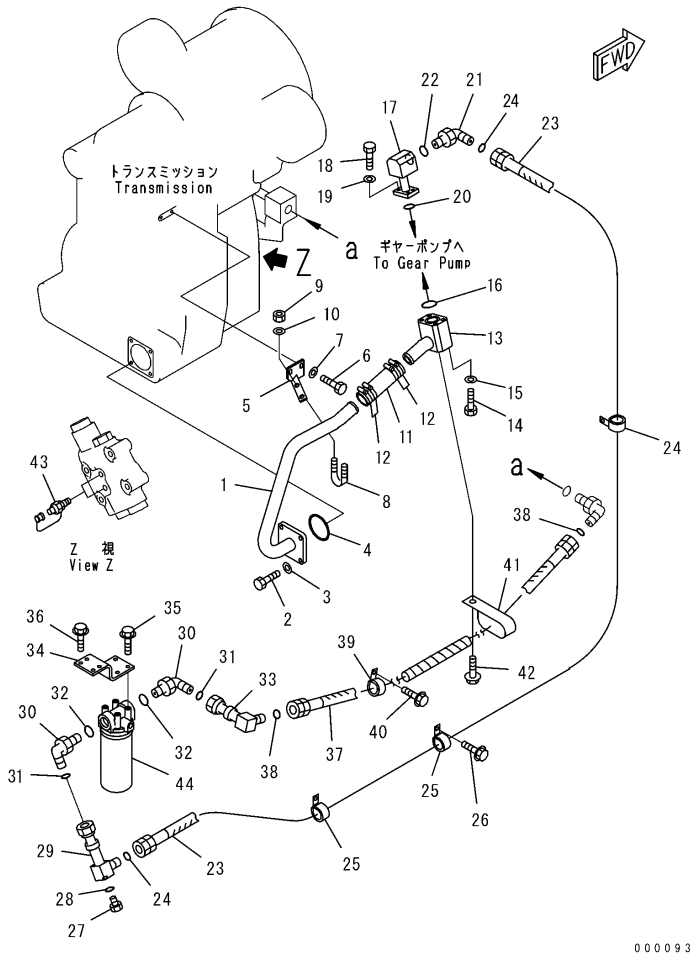

TRANSMISSION PIPING (DIFFERENTIAL LOCK TYPE)

Item	Part Number	Description	Qty.	Ref.	Serial No.
1	23B-16-31211	TUBE	1		B10001-
2	01010-81235	BOLT	4		B10001-
3	01643-31232	WASHER	4		B10001-
4	07000-12100	O-RING	1		B10001-
5	23B-16-31512	BRACKET	1		B10001-
6	01010-81025	BOLT	2		B10001-
7	01643-31032	WASHER	2		B10001-
8	07283-34346	CLIP	1		B10001-
9	01597-01009	NUT	2		B10001-
10	01643-31032	WASHER	2		B10001-
11	07260-04120	HOSE	1		B10001-
12	07281-00609	CLAMP	4		B10001-
13	23B-16-31411	TUBE	1		B10001-
14	01011-81220	BOLT	4		B10001-
15	01643-51232	WASHER	4		B10001-
16	07000-13042	O-RING	1		B10001-
17	23B-16-31321	TUBE	1		B10001-
18	01010-80830	BOLT	4		B10001-
19	01643-30823	WASHER	4		B10001-
20	07000-13028	O-RING	1		B10001-
21	21W-62-42640	ELBOW	1		B10001-
22	07002-13334	O-RING	1		B10001-
23	23B-16-31730	HOSE	1		B10001-
24	23B-60-33240	O-RING	2		B10001-
25	281-01-13180	CLIP	3		B10001-
26	01435-01020	BOLT	3		B10001-
27	07040-11007	PLUG	1		B10001-
28	07002-11023	O-RING	1		B10001-
29	23B-16-31651	TUBE	1		B10001-
30	21W-62-42640	ELBOW	2		B10001-
31	23B-60-33240	O-RING	2		B10001-
32	07002-13334	O-RING	2		B10001-
33	23B-16-31661	TUBE	1		B10001-
34	23B-16-33110	BRACKET	1		B10001-
35	01435-01025	BOLT	4		B10001-
36	01435-01035	BOLT	4		B10001-

TRANSMISSION PIPING (DIFFERENTIAL LOCK TYPE)

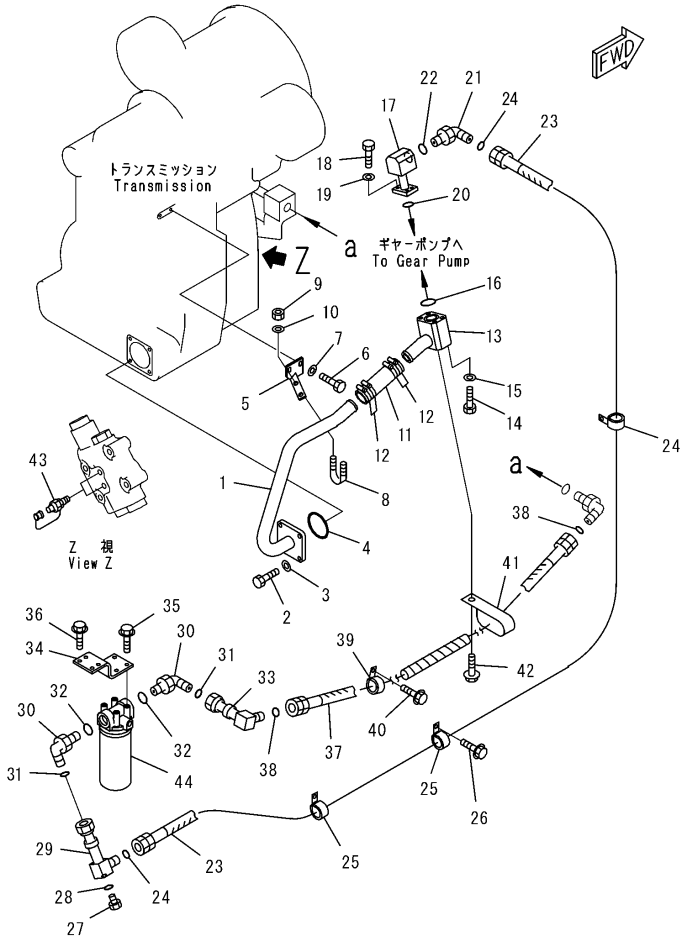

TRANSMISSION PIPING (DIFFERENTIAL LOCK TYPE)

Item	Part Number	Description	Qty.	Ref.	Serial No.
37	23B-16-31720	HOSE	1		B10001-
38	23B-60-33240	O-RING	2		B10001-
39	281-01-13180	CLIP	1		B10001-
40	01435-01220	BOLT	1		B10001-
41	196-911-3310	CLIP	1		B10001-
42	01435-01020	BOLT	1		B10001-
43	799-101-5160	NIPPLE	2		B10001-
44	714-07-28702	FILTER ASSEMBLY	1		B10001-
	714-07-28712	.CARTRIDGE	1		B10001-

TORQUE CONVERTER AND TRANSMISSION MOUNTING PARTS

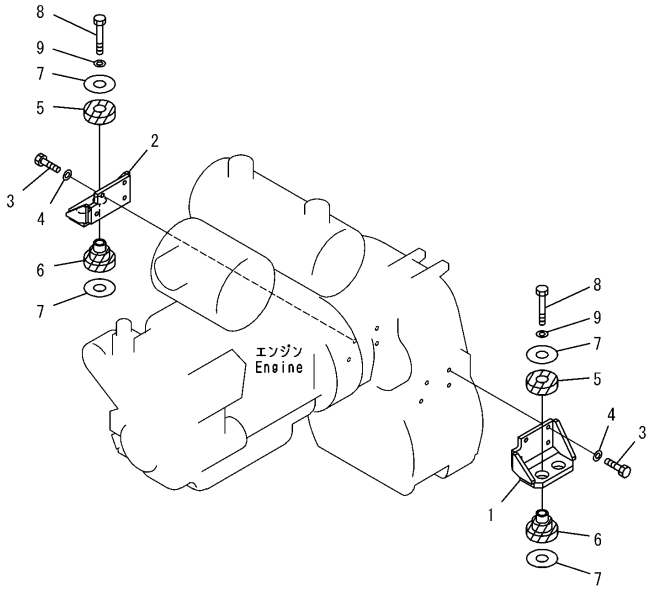

PW2A751

TORQUE CONVERTER AND TRANSMISSION MOUNTING PARTS

Item	Part Number	Description	Qty.	Ref.	Serial No.
1	23B-01-33211	BRACKET, L.H.	1		B10001-
2	23B-01-33221	BRACKET, R.H.	1		B10001-
3	01010-81650	BOLT	8		B10001-
4	01643-31645	WASHER	8		B10001-
	418-01-11111	CUSHION ASSEMBLY	4		B10001-
5	418-01-11120	.CUSHION	1		B10001-
6	418-01-11131	.CUSHION	1		B10001-
7	419-01-11162	WASHER	8		B10001-
8	01011-82220	BOLT	4		B10001-
9	01643-32260	WASHER	4		B10001-

TRANSMISSION (CASE)

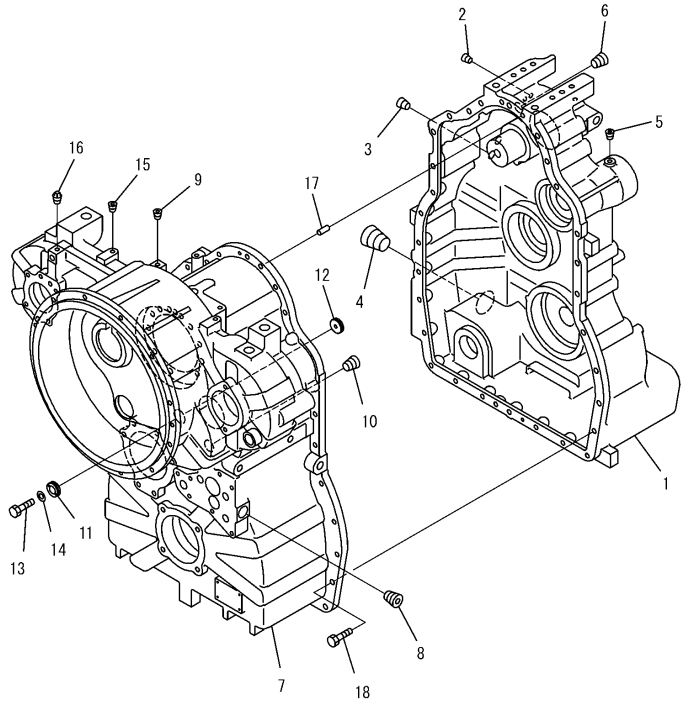

PWOB124

TRANSMISSION (CASE)

Item	Part Number	Description	Qty.	Ref.	Serial No.
	(714-23-10020)	TRANSMISSION ASSEMBLY	1		B10001-
		THIS ASSEMBLY CONSISTS OF ALL PARTS SHOWN IN FIGS.F5350-51A0 TO F5350-70A0.			
	714-23-11114	.CASE	1		B10001-
1	☆	..CASE	1		B10001-
2	07043-70211	..PLUG	4		B10001-
3	07043-70312	..PLUG	3		B10001-
4	07043-72026	..PLUG	2		B10001-
5	714-23-17320	..PLUG	1		B10001-
6	07043-70617	..PLUG	1		B10001-
	714-23-11125	.CASE, TORQUE CONVERTER	1		B10001-
	714-23-11124	.CASE, TORQUE CONVERTER	1		B10001-
7	☆	..CASE	1		B10001-
	☆	..CASE	1		B10001-
8	07043-70617	..PLUG	1		B10001-
9	07043-70211	..PLUG	4		B10001-
10	07043-71019	..PLUG	1		B10001-
11	567-15-41270	..PLUG	1		B10001-
12	567-15-41280	..PLUG	1		B10001-
13	01010-80850	..BOLT	1		B10001-
	01010-80840	..BOLT	1		B10001-
14	01643-30823	..WASHER	1		B10001-
15	714-23-17320	..PLUG	2		B10001-
16	07042-80211	..PLUG	1		B10001-
17	04020-01228	.PIN	2		B10001-
18	01010-81240	.BOLT	29		B10001-
19	419-15-18131	.LIQUID GASKET, (NOT SHOWN) .....(K1)	1		B10001-
20	01010-81245	.BOLT	8		B10001-
21	01643-31232	.WASHER	8		B10001-

TRANSMISSION (FOREWARD LOW AND REVERSE CLUTCH)

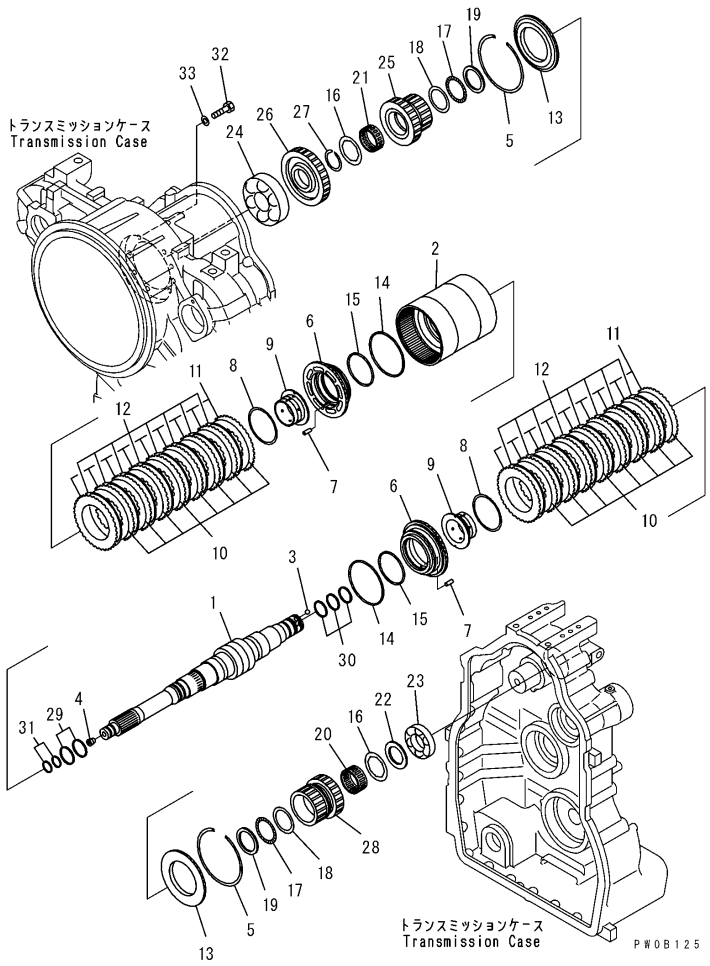

TRANSMISSION (FOREWARD LOW AND REVERSE CLUTCH)

Item	Part Number	Description	Qty.	Ref.	Serial No.
	(714-23-10020)	TRANSMISSION ASSEMBLY	1		B10001-
		THIS ASSEMBLY CONSISTS OF ALL PARTS SHOWN IN FIGS.F5350-51A0 TO F5350-70A0.			
	714-23-12012	.CLUTCH ASSEMBLY, FORWARD LOW AND REVERSE	1		B10001-
	714-23-12112	..SHAFT AND CYLINDER A, FORWARD LOW AND REVERSE	1		B10001-
1	☆	...SHAFT, INPUT	1		B10001-
2	☆	...HOUSING	1		B10001-
3	714-11-19390	...BALL, FORWARD LOW AND REVERSE	2		B10001-
4	07043-70211	...PLUG	1		B10001-
5	419-15-12140	..RING, SNAP	2		B10001-
6	714-23-12640	..PISTON, FORWARD LOW AND REVERSE	2		B10001-
7	04020-00514	..PIN	4		B10001-
8	362-15-19520	..RING	2		B10001-
9	714-23-12680	..PISTON, FORWARD LOW AND REVERSE	2		B10001-
10	714-12-19711	..DISC	16		B10001-
11	714-16-19730	..PLATE, SEPARATE	18		B10001-
12	419-15-12133	..SPRING, WAVE	16		B10001-
13	714-12-12610	..PLATE, END	2		B10001-
14	714-11-19230	..RING, SEAL	2		B10001-
15	714-07-19320	..RING, SEAL (K1)	2		B10001-
16	714-08-19560	..WASHER	2		B10001-
17	419-15-12640	..BEARING	2		B10001-
18	419-15-12650	..WASHER	2		B10001-
19	714-12-12760	..WASHER	2		B10001-
20	714-23-19420	..BEARING, NEEDLE	1		B10001-
21	714-23-19410	..BEARING, NEEDLE	1		B10001-
22	714-12-12740	..SPACER	1		B10001-
23	714-23-19320	..BEARING	1		B10001-
24	714-23-19310	..BEARING	1		B10001-
25	714-23-12411	..GEAR, FORWARD LOW	1		B10001-
26	714-23-12531	..GEAR, INPUT, FORWARD HI	1		B10001-
27	04066-00062	..RING, SNAP	1		B10001-
28	714-23-12420	..GEAR, REVERSE	1		B10001-
29	714-07-12290	.RING, SEAL	2		B10001-

TRANSMISSION (FOREWARD LOW AND REVERSE CLUTCH)

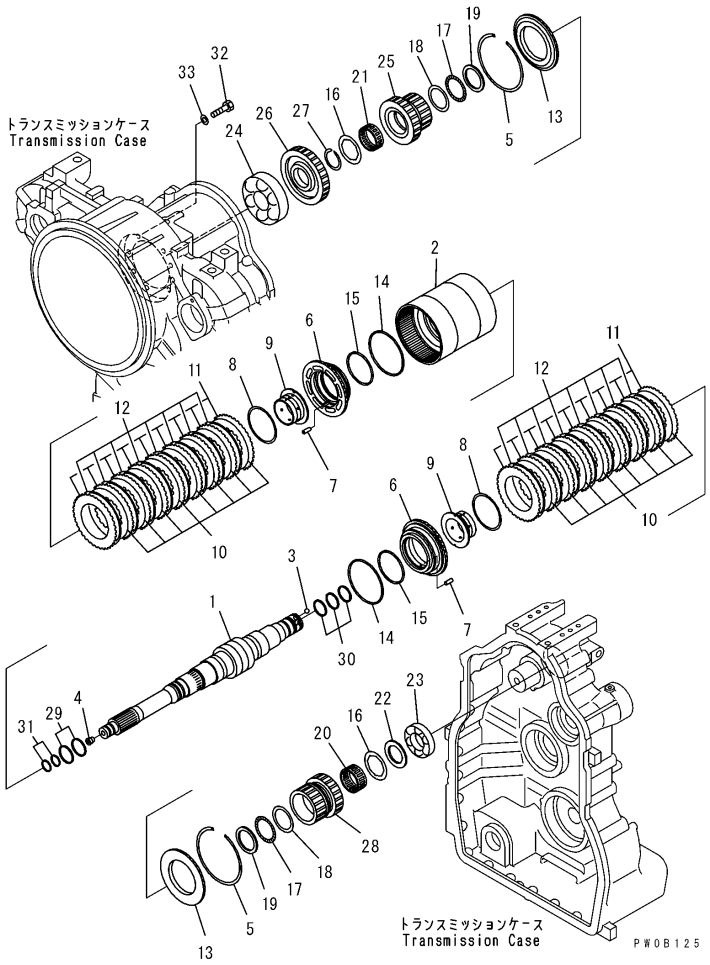

TRANSMISSION (FOREWARD LOW AND REVERSE CLUTCH)

Item	Part Number	Description	Qty.	Ref.	Serial No.
30	419-15-12122	.RING	3		B10001-
31	714-21-19810	.RING, SEAL	2		B10001-

TRANSMISSION (FOREWARD HIGH AND 1ST CLUTCH)

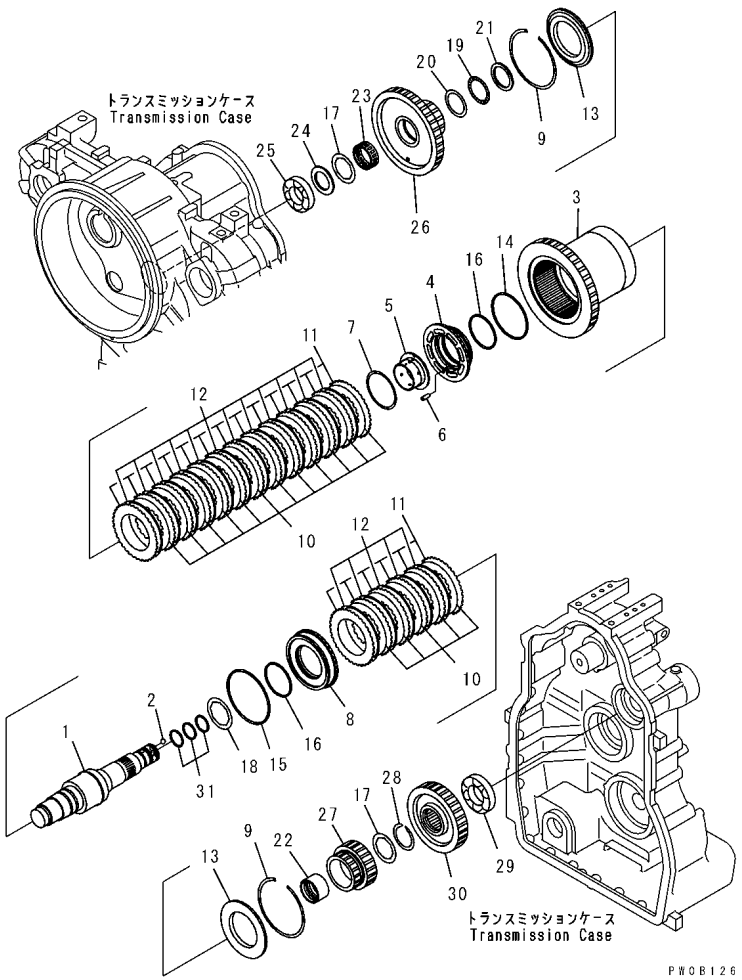

TRANSMISSION (FOREWARD HIGH AND 1ST CLUTCH)

Item	Part Number	Description	Qty.	Ref.	Serial No.
	(714-23-10020)	TRANSMISSION ASSEMBLY	1		B10001-
		THIS ASSEMBLY CONSISTS OF ALL PARTS SHOWN IN FIGS.F5350-51A0 TO F5350-70A0.			
	714-23-12022	.CLUTCH ASSEMBLY, FORWARD HI AND 1ST	1		B10001-
	714-23-12122	..SHAFT AND CYLINDER A, FORWARD HI AND 1ST	1		B10001-
1	☆	...SHAFT, UPPER	1		B10001-
2	714-11-19390	...BALL	2		B10001-
3	☆	...HOUSING, FORWARD HI AND 1ST	2		B10001-
4	714-23-12650	..PISTON, FORWARD AND REVERSE	1		B10001-
5	714-23-12670	..PISTON, FORWARD HI AND REVERSE	1		B10001-
6	04020-00514	..PIN	2		B10001-
7	362-15-19520	..RING	1		B10001-
8	714-23-12690	..PISTON, RANGE	1		B10001-
9	419-15-12140	..RING, SNAP	2		B10001-
10	714-12-19711	..DISC	17		B10001-
11	714-16-19730	..PLATE, SEPARATE	19		B10001-
12	419-15-12133	..SPRING, WAVE	17		B10001-
13	714-12-12610	..PLATE, END	2		B10001-
14	714-08-19220	..RING, SEAL (K1)	1		B10001-
15	714-16-19220	..RING, SEAL	1		B10001-
16	714-07-19320	..RING, SEAL (K1)	2		B10001-
17	714-08-19560	..WASHER	2		B10001-
18	714-08-19570	..WASHER, THRUST	1		B10001-
19	419-15-12640	..BEARING	1		B10001-
20	419-15-12650	..WASHER	1		B10001-
21	714-12-12760	..WASHER	1		B10001-
22	714-23-19631	..BUSHING, 1ST	1		B10001-
23	714-23-19410	..BEARING, NEEDLE	1		B10001-
24	714-12-12740	..SPACER	1		B10001-
25	714-23-19320	..BEARING	1		B10001-
26	714-23-12431	..GEAR, FOWARD HI	1		B10001-
27	714-23-12441	..GEAR, 1ST	1		B10001-
28	04066-00062	..RING, SNAP	1		B10001-
29	714-23-19330	.BEARING	1		B10001-
30	714-23-12561	.GEAR, UPPER	1		B10001-

TRANSMISSION (FOREWARD HIGH AND 1ST CLUTCH)

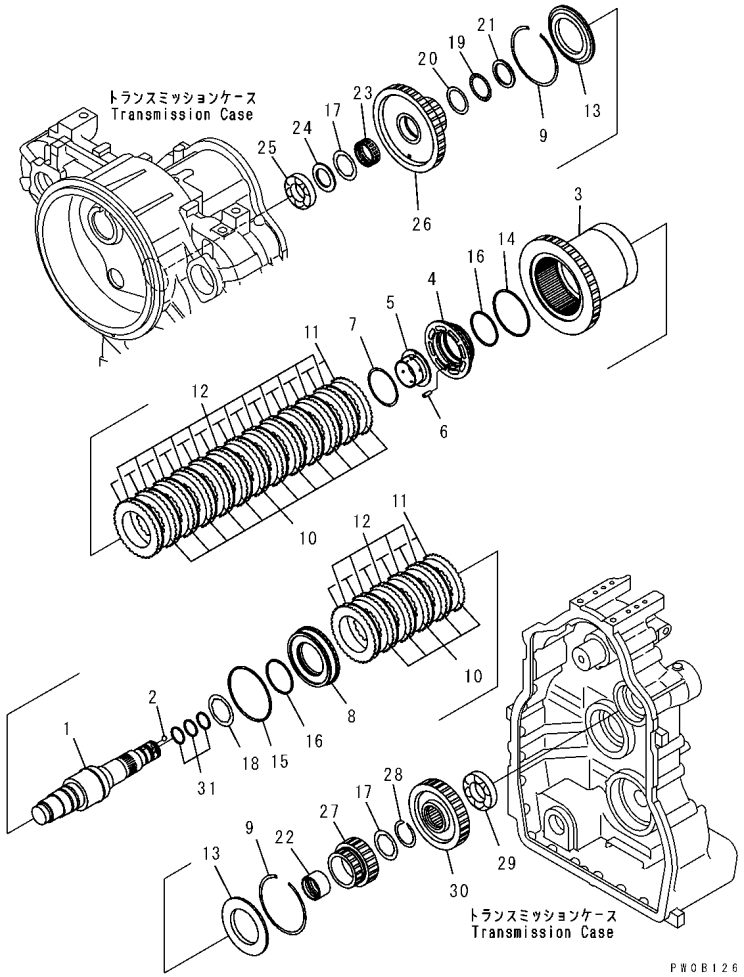

TRANSMISSION (FOREWARD HIGH AND 1ST CLUTCH)

Item	Part Number	Description	Qty.	Ref.	Serial No.
31	419-15-12122	.RING.	3		B10001-

TRANSMISSION (2ND AND 3RD CLUTCH)

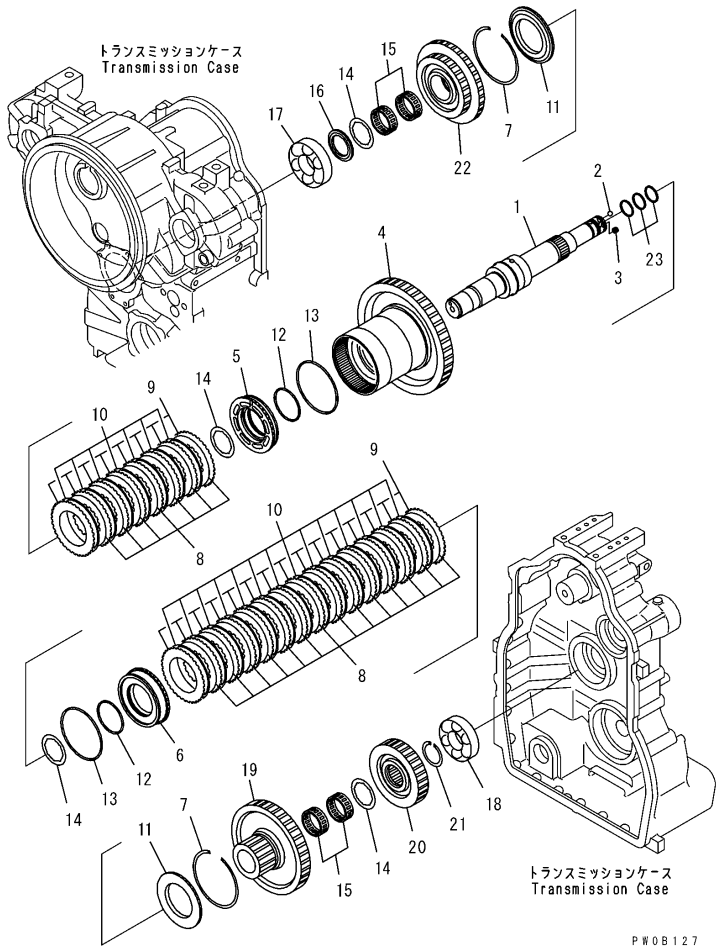

TRANSMISSION (2ND AND 3RD CLUTCH)

Item	Part Number	Description	Qty.	Ref.	Serial No.
	(714-23-10020)	TRANSMISSION ASSEMBLY	1		B10001-
		THIS ASSEMBLY CONSISTS OF ALL PARTS SHOWN IN FIGS.F5350-51A0 TO F5350-70A0.			
	714-23-12032	.CLUTCH ASSEMBLY, 2ND AND 3RD	1		B10001-
	714-23-12132	..SHAFT AND CYLINDER A, 2ND AND 3RD	1		B10001-
1	☆	...SHAFT, LOWER	1		B10001-
2	714-11-19390	...BALL	2		B10001-
3	714-08-12950	...ORIFICE	1		B10001-
4	☆	...HOUSING, 2ND	1		B10001-
5	714-23-12690	..PISTON, RANGE	1		B10001-
6	714-23-12660	..PISTON	1		B10001-
7	419-15-12140	..RING, SNAP	2		B10001-
8	714-12-19711	..DISC	21		B10001-
9	714-16-19730	..PLATE, SEPARATE	23		B10001-
10	419-15-12133	..SPRING, WAVE	21		B10001-
11	714-12-12610	..PLATE, END	2		B10001-
12	714-16-19220	..RING	2		B10001-
13	714-07-19320	..RING, SEAL (K1)	2		B10001-
14	714-08-19570	..WASHER, THRUST	4		B10001-
15	714-23-19430	..BEARING, NEEDLE	4		B10001-
16	714-23-12710	..SPACER, 4TH	1		B10001-
17	06040-06313	..BEARING	1		B10001-
18	714-12-19340	..BEARING, ROLLER	1		B10001-
19	714-23-12451	..GEAR, 2ND	1		B10001-
20	714-23-12540	..GEAR, LOWER, OUTPUT	1		B10001-
21	714-12-19520	..RING, SNAP	1		B10001-
22	714-23-12460	..GEAR, 3RD, 55 TEETH AND 41 TEETH	1		B10001-
23	419-15-12122	.RING	3		B10001-

TRANSMISSION (4TH CLUTCH)

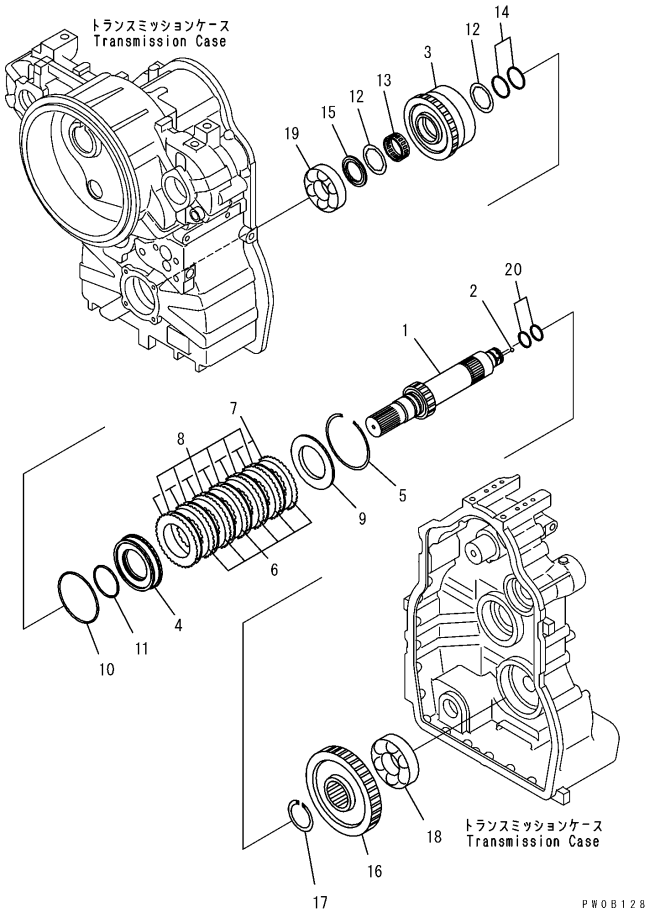

TRANSMISSION (4TH CLUTCH)

Item	Part Number	Description	Qty.	Ref.	Serial No.
	(714-23-10020)	TRANSMISSION ASSEMBLY	1		B10001-
		THIS ASSEMBLY CONSISTS OF ALL PARTS SHOWN IN FIGS.F5350-51A0 TO F5350-70A0.			
	714-23-12041	.CLUTCH ASSEMBLY, 4TH	1		B10001-
1	714-23-12240	..SHAFT, OUTPUT	1		B10001-
2	04260-01111	..BALL	1		B10001-
3	714-23-12591	..HOUSING, 4TH	1		B10001-
4	714-23-12690	..PISTON, RANGE	1		B10001-
5	419-15-12140	..RING, SNAP	1		B10001-
6	714-12-19711	..DISC	6		B10001-
7	714-16-19730	..PLATE, SEPARATE	7		B10001-
8	419-15-12133	..SPRING, WAVE	6		B10001-
9	714-12-12610	..PLATE, END	1		B10001-
10	714-16-19220	..RING	1		B10001-
11	714-07-19320	..RING, SEAL (K1)	1		B10001-
12	714-08-19570	..WASHER, THRUST	2		B10001-
13	714-23-19430	..BEARING, NEEDLE	1		B10001-
14	714-23-19210	..SEAL RING	2		B10001-
15	714-23-12710	..SPACER, 4TH, REAR	1		B10001-
16	714-23-12550	..GEAR, OUTPUT	1		B10001-
17	04064-08530	..RING	1		B10001-
18	06040-06315	..BEARING	1		B10001-
19	06040-06313	..BEARING	1		B10001-
20	419-15-12122	.RING	2		B10001-

TRANSMISSION (OUTPUT)

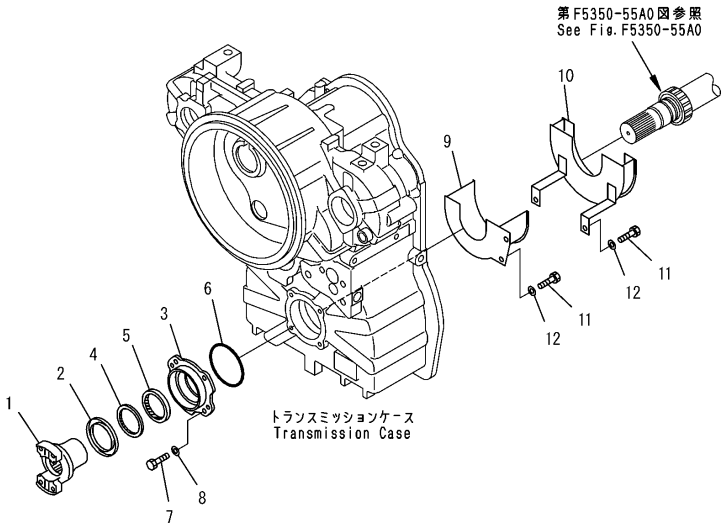

PW0B129

TRANSMISSION (OUTPUT)

Item	Part Number	Description	Qty.	Ref.	Serial No.
	(714-23-10020)	TRANSMISSION ASSEMBLY	1		B10001-
		THIS ASSEMBLY CONSISTS OF ALL PARTS SHOWN IN FIGS.F5350-51A0 TO F5350-70A0.			
	714-23-14110	.COUPLING ASSEMBLY	1		B10001-
1	☆	..COUPLING, OUTPUT	1		B10001-
2	714-11-14320	..DEFLECTOR	1		B10001-
3	714-23-14810	.RETAINER, OUTPUT	1		B10001-
4	714-12-19170	.SEAL, DUST (K1)	1		B10001-
5	714-12-19121	.SEAL, OIL (K1)	1		B10001-
6	07000-72120	.O-RING (K1)	1		B10001-
7	01010-81230	.BOLT	4		B10001-
8	01643-31232	.WASHER	4		B10001-
9	714-23-14910	.SHROUD	1		B10001-
10	714-23-14920	.SHROUD, 4TH	1		B10001-
11	01010-81225	.BOLT	4		B10001-
12	01643-31232	.WASHER	4		B10001-

TRANSMISSION (P. T. O AND IDLER)

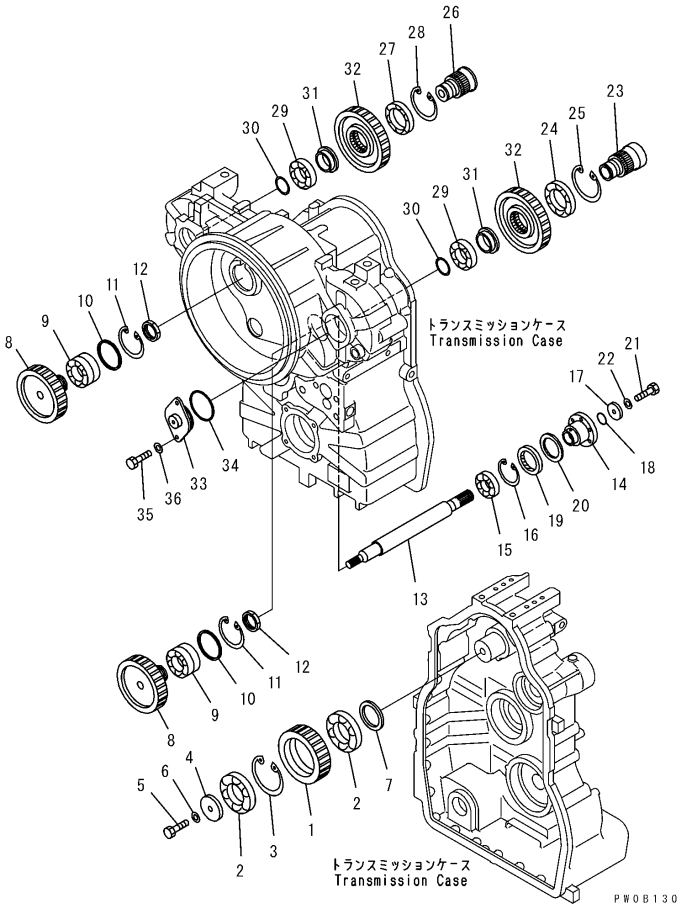

TRANSMISSION (P. T. O AND IDLER)

Item	Part Number	Description	Qty.	Ref.	Serial No.
	(714-23-10020)	TRANSMISSION ASSEMBLY	1		B10001-
		THIS ASSEMBLY CONSISTS OF ALL PARTS SHOWN IN FIGS.F5350-51A0 TO F5350-70A0.			
1	714-23-12492	.GEAR, IDLER	1		B10001-
2	56D-15-19630	.BEARING	2		B10001-
3	56D-15-19420	.HOLDER	1		B10001-
4	01010-81265	.BOLT	1		B10001-
5	01643-31232	.WASHER	1		B10001-
6	56D-15-19410	.COLLAR, P.T.O., IDLER	1		B10001-
7	714-23-13410	.GEAR	2		B10001-
8	711-35-14230	.BEARING	2		B10001-
9	711-35-14120	.PLATE	2		B10001-
10	04065-09530	.RING	2		B10001-
11	01530-04812	.NUT	2		B10001-
12	714-23-13210	.SHAFT, FAN	1		B10001-
13	714-23-14220	.COUPLING	1		B10001-
14	06040-06307	.BEARING	1		B10001-
15	04065-08025	.RING	1		B10001-
16	103-15-33280	.HOLDER	1		B10001-
17	07000-73030	.O-RING	(K1) 1		B10001-
18	07012-50065	.SEAL	1		B10001-
19	417-15-13810	.SEAL	(K1) 1		B10001-
20	01050-81250	.BOLT	1		B10001-
21	01643-31232	.WASHER	1		B10001-
22	714-23-13221	.SHAFT, P.T.O.	1		B10001-
23	06040-06014	.BEARING	1		B10001-
24	04065-01104	.RING	1		B10001-
25	714-23-13231	.SHAFT, P.T.O.	1		B10001-
26	06040-06914	.BEARING	1		B10001-
27	04065-01030	.RING	1		B10001-
28	06334-00210	.BEARING	2		B10001-
29	714-23-12740	.SPACER	1		B10001-
30	714-07-13210	.RING	2		B10001-
31	714-23-12730	.SPACER	2		B10001-
32	714-23-13421	.GEAR, P.T.O.	2		B10001-
33	714-23-13261	.COVER	1		B10001-

TRANSMISSION (P. T. O AND IDLER)

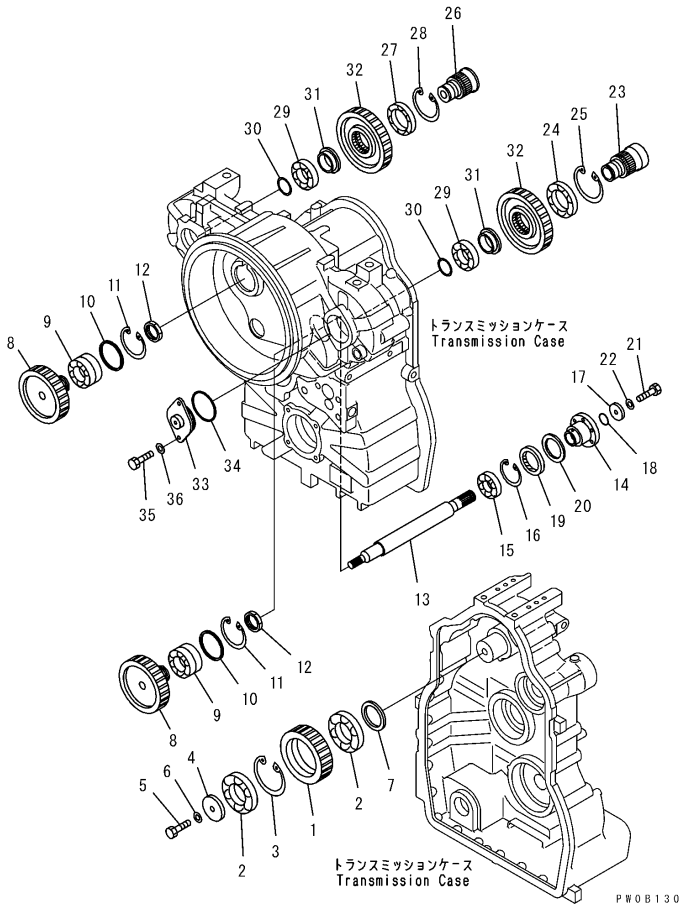

TRANSMISSION (P. T. O AND IDLER)

Item	Part Number	Description	Qty.	Ref.	Serial No.
34	07000-72085	.O-RING. . . . . .(K1)	1		B10001-
35	01010-81025	.BOLT.	2		B10001-
36	01643-31032	.WASHER	2		B10001-

CONTROL VALVE (MAIN RELIEF VALVE)

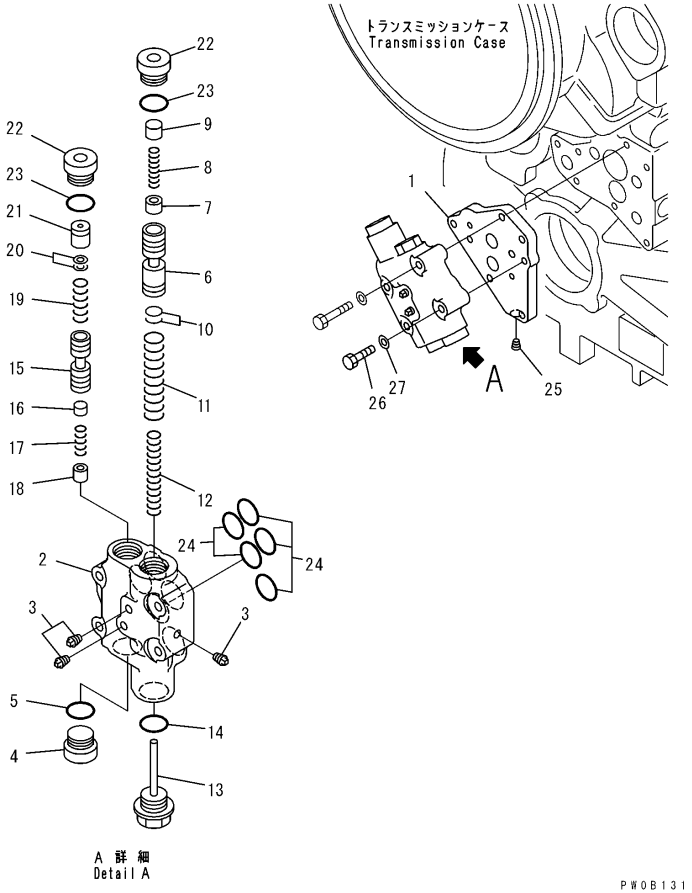

CONTROL VALVE (MAIN RELIEF VALVE)

Item	Part Number	Description	Qty.	Ref.	Serial No.
		SERIAL NO. IN ( ) INDICATES TRANSMISSION SERIAL NO.			
	(714-23-10020)	TRANSMISSION ASSEMBLY	1		B10001-
		THIS ASSEMBLY CONSISTS OF ALL PARTS SHOWN IN FIGS.F5350-51A0 TO F5350-70A0.			
	714-23-15102	.VALVE ASSEMBLY	1		B10001-
	714-23-15101	.VALVE ASSEMBLY	1		B10001-
1	714-23-15131	..VALVE SEAT	1		B10001-
	714-23-15130	..VALVE SEAT	1		B10001-
	56B-15-16000	..VALVE ASSEMBLY	1		B10001-
2	☆	...BODY	1		B10001-
3	07042-20108	...PLUG	3		B10001-
4	14X-15-15850	...PLUG	1		B10001-
5	07002-03034	...O-RING (K2)	1		B10001-
6	567-15-45230	...VALVE	1		B10001-
7	426-15-15490	...VALVE	1		B10001-
8	562-15-16110	...SPRING	1		B10001-
9	426-15-15480	...VALVE	1		B10001-
10	198-15-15570	...SHIM, 0.50MM	5		B10001-
11	56B-15-16250	...SPRING	1		B10001-
12	426-15-16261	...SPRING, (L=108.0)	1		B10001-
13	426-15-15810	...PLUG	1		B10001-
14	07002-03034	...O-RING (K2)	1		B10001-
15	12H-15-14130	...SPOOL	1		B10001-
16	104-15-25490	...VALVE	1		B10001-
17	125-15-15290	...SPRING	1		B10001-
18	104-15-25480	...VALVE	1		B10001-
19	14X-15-16210	...SPRING	1		B10001-
20	175-15-56470	...SHIM, 0.50MM	2		B10001-
21	12H-15-14140	...GUIDE	1		B10001-
22	14X-15-15850	...PLUG	2		B10001-
23	07002-03034	...O-RING (K2)	2		B10001-
24	07000-73030	..O-RING (K2)	5		B10001-
25	07043-70108	..PLUG	1		B10001-
26	01010-81065	..BOLT	2		B10001-
27	01643-31032	..WASHER	2		B10001-

CONTROL VALVE (L/C VALVE)

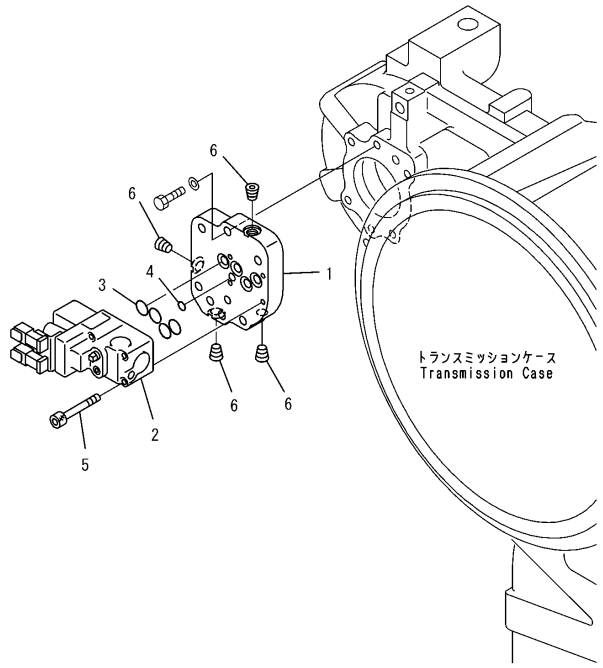

PWOB132

CONTROL VALVE (L/C VALVE)

Item	Part Number	Description	Qty.	Ref.	Serial No.
		SERIAL NO. IN ( ) INDICATES TRANSMISSION SERIAL NO.			
	(714-23-10020)	TRANSMISSION ASSEMBLY	1		B10001-
		THIS ASSEMBLY CONSISTS OF ALL PARTS SHOWN IN FIGS.F5350-51A0 TO F5350-70A0.			
	714-23-15203	.VALVE ASSEMBLY	1		B10001-
	714-23-15202	.VALVE ASSEMBLY	1		B10001-
1	714-23-15112	..VALVE SEAT	1		B10001-
2	714-23-15501	..ECMV ASSEMBLY	1		B10001-
	714-23-15500	..ECMV ASSEMBLY	1		B10001-
3	07000-72015	..O-RING (K2)	4		B10001-
4	07000-71007	..O-RING (K2)	1		B10001-
5	01252-70650	..BOLT	4		B10001-
6	07043-70211	..PLUG	4		B10001-
7	700-11-31940	..PLATE, NAME	1		B10001-

CONTROL VALVE (VALVE MOUNTING)

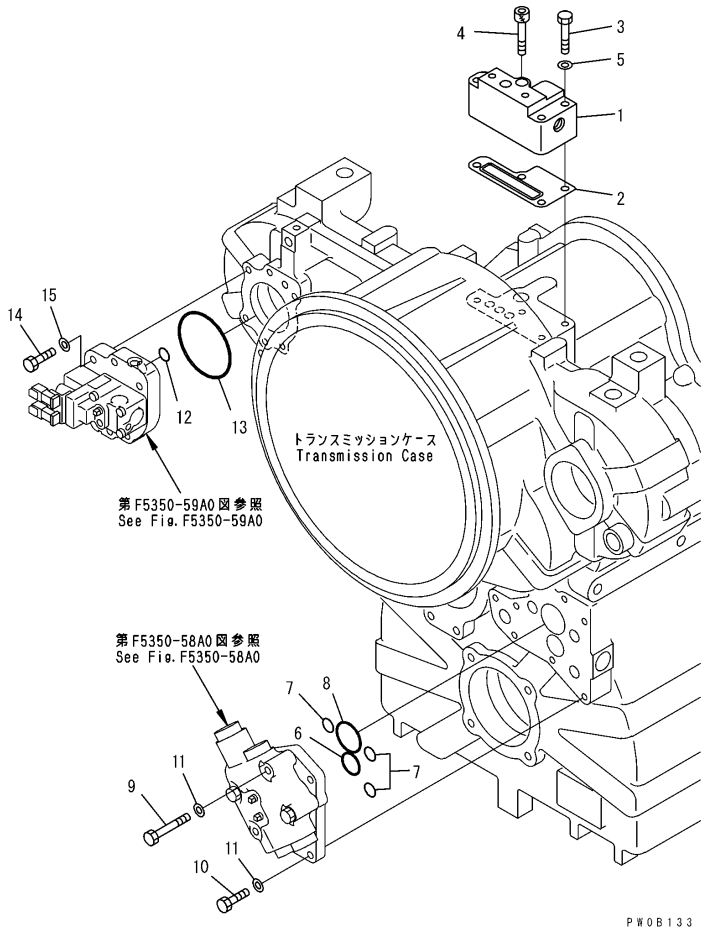

CONTROL VALVE (VALVE MOUNTING)

Item	Part Number	Description	Qty.	Ref.	Serial No.
		SERIAL NO. IN ( ) INDICATES TRANSMISSION SERIAL NO.			
	(714-23-10020)	TRANSMISSION ASSEMBLY	1		B10001-
		THIS ASSEMBLY CONSISTS OF ALL PARTS SHOWN IN FIGS.F5350-51A0 TO F5350-70A0.			
1	714-23-15151	.COVER	1		B10001-
2	714-23-15910	.GASKET (K2)	1		B10001-
3	01010-81075	.BOLT	3		B10001-
4	01252-71080	.BOLT	1		B10001-
5	01643-31032	.WASHER	3		B10001-
6	07000-73028	.O-RING (K2)	2		B10001-
	07000-73028	.O-RING (K2)	1		B10001-
7	07000-72015	.O-RING (K2)	2		B10001-
	07000-72015	.O-RING (K2)	3		B10001-
8	07000-73042	.O-RING (K2)	1		B10001-
9	01010-81080	.BOLT	2		B10001-
10	01010-81040	.BOLT	3		B10001-
11	01643-31032	.WASHER	5		B10001-
12	07000-72015	.O-RING (K2)	1		B10001-
13	07000-72100	.O-RING (K2)	1		B10001-
14	01010-81045	.BOLT	4		B10001-
15	01643-31032	.WASHER	4		B10001-

CONTROL VALVE

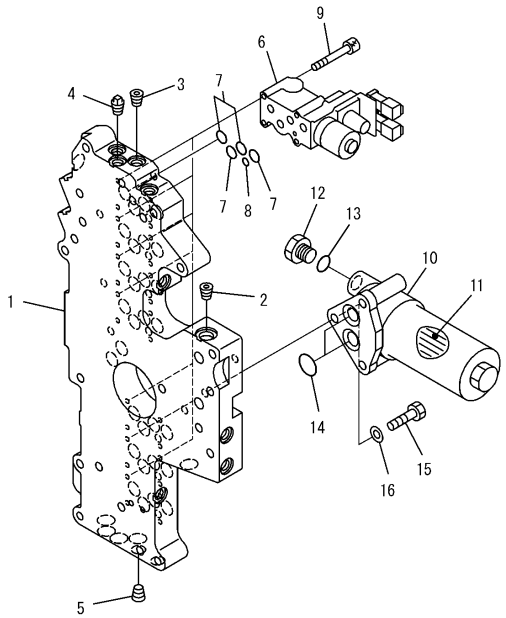

PW0B134

CONTROL VALVE

Item	Part Number	Description	Qty.	Ref.	Serial No.
	(714-23-10020)	TRANSMISSION ASSEMBLY	1		B10001-
		THIS ASSEMBLY CONSISTS OF ALL PARTS SHOWN IN FIGS.F5350-51A0 TO F5350-70A0.			
	714-23-15002	.VALVE ASSEMBLY	1		B10001-
1	714-23-15142	..VALVE SEAT	1		B10001-
2	07043-70312	..PLUG	1		B10001-
3	07043-70211	..PLUG	11		B10001-
4	07042-20211	..PLUG	6		B10001-
5	07043-70108	..PLUG	2		B10001-
6	714-23-15500	..ECMV ASSEMBLY	7		B10001-
7	07000-72015	..O-RING (K2)	28		B10001-
8	07000-71007	..O-RING (K2)	7		B10001-
9	01252-70650	..BOLT	28		B10001-
10	714-23-11720	..FILTER	1		B10001-
	07000-02060	...O-RING (K2)	1		B10001-
11	714-23-11730	...ELEMENT ASSEMBLY	1		B10001-
12	07040-11812	..PLUG	1		B10001-
13	07002-11823	..O-RING (K2)	1		B10001-
14	07000-73022	..O-RING (K2)	2		B10001-
15	01010-81030	..BOLT	1		B10001-
16	01643-31032	..WASHER	1		B10001-
17	700-11-31940	..PLATE, NAME	1		B10001-

CONTROL VALVE MOUNTING

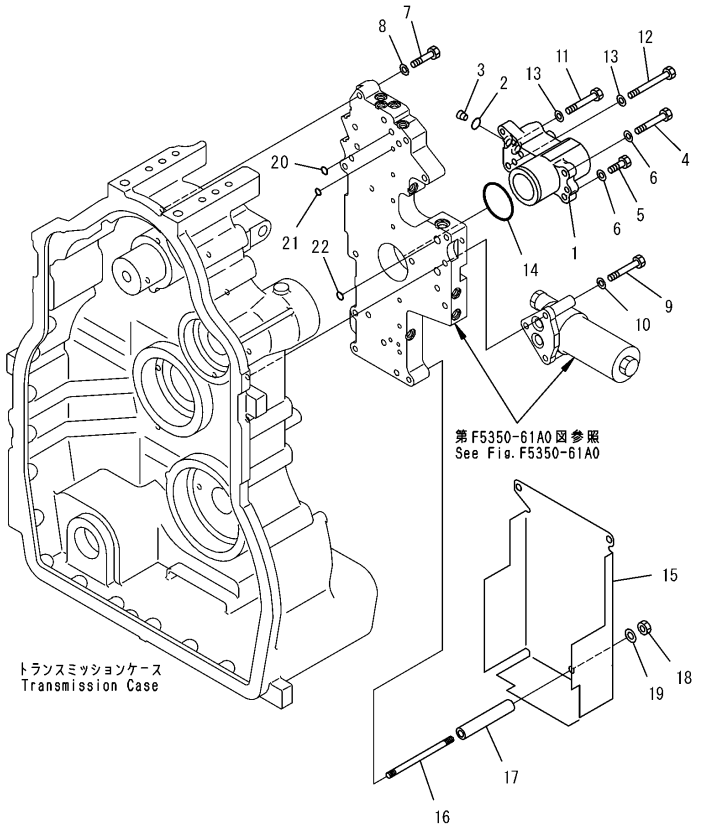

CONTROL VALVE MOUNTING

Item	Part Number	Description	Qty.	Ref.	Serial No.
	(714-23-10020)	TRANSMISSION ASSEMBLY	1		B10001-
		THIS ASSEMBLY CONSISTS OF ALL PARTS SHOWN IN FIGS.F5350-51A0 TO F5350-70A0.			
1	714-23-15810	.RETAINER	1		B10001-
2	07000-72015	.O-RING (K1)	2		B10001-
3	07043-70211	.PLUG	2		B10001-
4	01010-81075	.BOLT	1		B10001-
5	01010-81035	.BOLT	1		B10001-
6	01643-31032	.WASHER	2		B10001-
7	01010-81055	.BOLT	8		B10001-
8	01643-31032	.WASHER	8		B10001-
9	01011-81020	.BOLT	2		B10001-
10	01643-31032	.WASHER	2		B10001-
11	01010-81075	.BOLT	1		B10001-
12	01011-81015	.BOLT	1		B10001-
13	01643-31032	.WASHER	2		B10001-
14	07000-12065	.O-RING (K1)	1		B10001-
15	714-23-15821	.COVER	1		B10001-
16	561-15-55940	.STUD	3		B10001-
17	561-15-55910	.SPACER	3		B10001-
18	01580-01008	.NUT	3		B10001-
19	01643-31032	.WASHER	3		B10001-
20	07000-72015	.O-RING (K1)	8		B10001-
21	07000-71009	.O-RING (K1)	11		B10001-
22	07000-72022	.O-RING (K1)	1		B10001-

TRANSMISSION (PIPING 1/3)

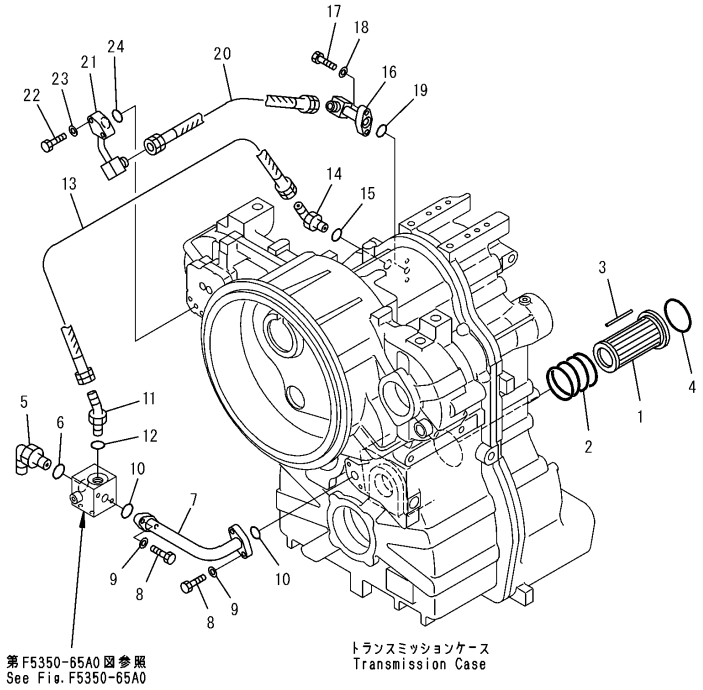

TRANSMISSION (PIPING 1/3)

Item	Part Number	Description	Qty.	Ref.	Serial No.
	(714-23-10020)	TRANSMISSION ASSEMBLY	1		B10001-
		THIS ASSEMBLY CONSISTS OF ALL PARTS SHOWN IN FIGS.F5350-51A0 TO F5350-70A0.			
	714-07-14521	.STRAINER ASSEMBLY	1		B10001-
1	714-07-14641	..STRAINER	1		B10001-
2	714-07-14652	..SPRING	1		B10001-
3	417-15-14660	..MAGNET	5		B10001-
4	07000-15085	.O-RING (K3)	1		B10001-
5	21W-62-42640	.ELBOW	1		B10001-
6	07002-13334	.O-RING (K3)	1		B10001-
7	714-23-18232	.TUBE	1		B10001-
8	01010-81040	.BOLT	4		B10001-
9	01643-31032	.WASHER	4		B10001-
10	07000-13028	.O-RING (K3)	2		B10001-
11	02783-10628	.ELBOW	1		B10001-
12	07002-12434	.O-RING (K3)	1		B10001-
13	02896-11018	.O-RING (K3)	1		B10001-
14	02762-20607	.HOSE	1		B10001-
15	02782-10628	.ELBOW	1		B10001-
16	07002-12434	.O-RING (K3)	1		B10001-
17	02896-11018	.O-RING (K3)	1		B10001-
18	714-23-18211	.TUBE	1		B10001-
19	01010-81040	.BOLT	2		B10001-
20	01643-31032	.WASHER	2		B10001-
21	07000-13025	.O-RING (K3)	1		B10001-
22	02762-20507	.HOSE	1		B10001-
23	714-23-18222	.TUBE	1		B10001-
24	01010-81075	.BOLT	2		B10001-
25	01643-31032	.WASHER	2		B10001-
26	07000-13022	.O-RING (K3)	1		B10001-
27	02896-11015	.O-RING (K3)	2		B10001-

TRANSMISSION (PIPING 2/3)

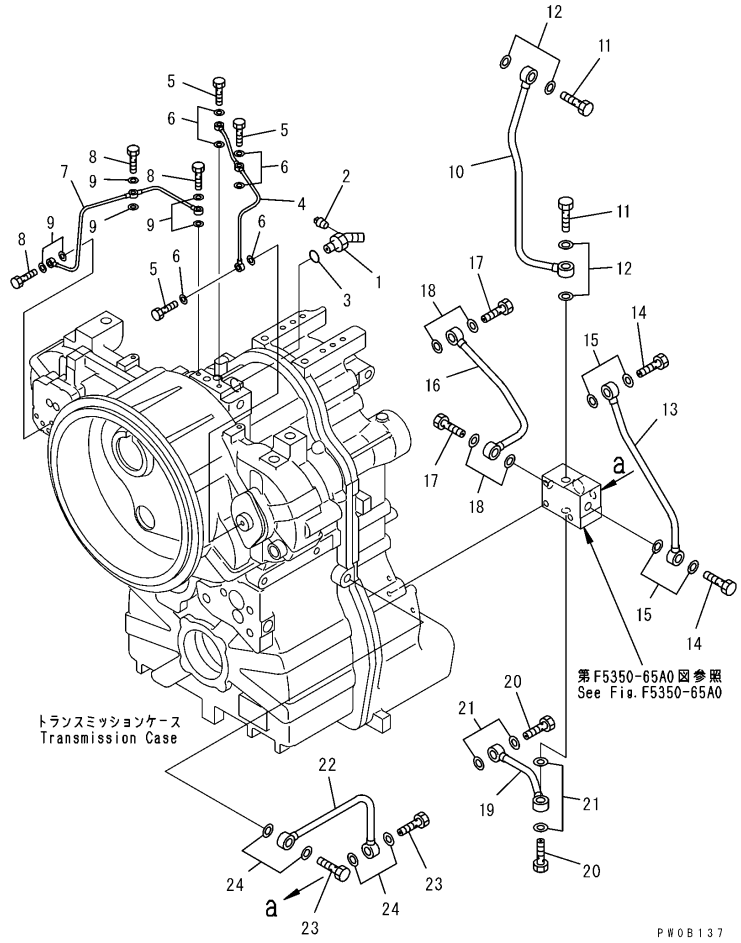

TRANSMISSION (PIPING 2/3)

Item	Part Number	Description	Qty.	Ref.	Serial No.
	(714-23-10020)	TRANSMISSION ASSEMBLY	1		B10001-
		THIS ASSEMBLY CONSISTS OF ALL PARTS SHOWN IN FIGS.F5350-51A0 TO F5350-70A0.			
1	207-62-7141B	.ELBOW	1		B10001-
2	07042-80108	.PLUG	1		B10001-
3	07002-63334	.O-RING	1	(K3)	B10001-
4	714-23-18110	.TUBE	1		B10001-
5	07206-30710	.BOLT	3		B10001-
6	07005-01012	.GASKET	6	(K3)	B10001-
7	714-23-18121	.TUBE, PTO	1		B10001-
8	07206-30710	.BOLT	3		B10001-
9	07005-01012	.GASKET	6	(K3)	B10001-
10	714-23-18131	.TUBE	1		B10001-
11	07206-31520	.BOLT	2		B10001-
12	07005-02012	.GASKET	4	(K3)	B10001-
13	714-23-18140	.TUBE	1		B10001-
14	07206-31520	.BOLT	2		B10001-
15	07005-02012	.GASKET	4	(K3)	B10001-
16	714-23-18151	.TUBE	1		B10001-
17	07206-31520	.BOLT	2		B10001-
18	07005-02012	.GASKET	4	(K3)	B10001-
19	714-23-18160	.TUBE	1		B10001-
20	07206-31520	.BOLT	2		B10001-
21	07005-02012	.GASKET	4	(K3)	B10001-
22	714-23-18180	.TUBE	1		B10001-
23	07206-31520	.BOLT	2		B10001-
24	07005-02012	.GASKET	4	(K3)	B10001-

TRANSMISSION (PIPING 3/3)

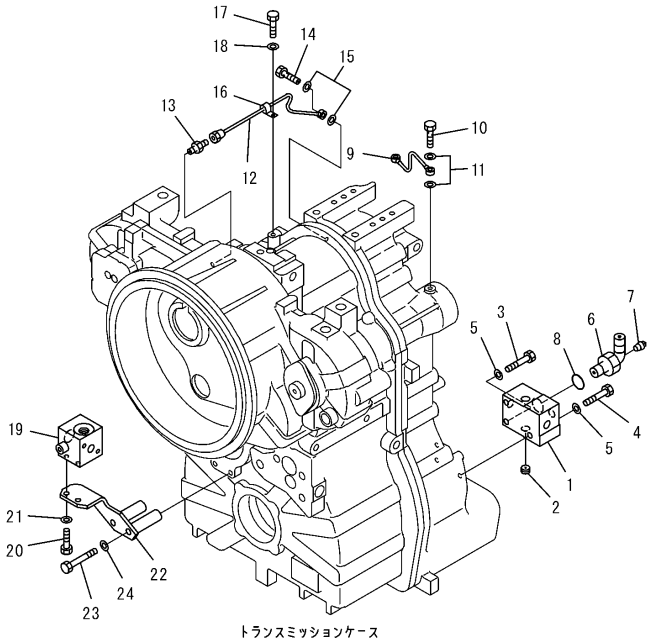

PWOB138

TRANSMISSION (PIPING 3/3)

Item	Part Number	Description	Qty.	Ref.	Serial No.
	(714-23-10020)	TRANSMISSION ASSEMBLY	1		B10001-
		THIS ASSEMBLY CONSISTS OF ALL PARTS SHOWN IN FIGS.F5350-51A0 TO F5350-70A0.			
1	714-23-18311	.BLOCK	1		B10001-
2	714-23-17330	.PLUG	1		B10001-
3	01010-81085	.BOLT	1		B10001-
4	01010-81075	.BOLT	2		B10001-
5	01643-31032	.WASHER	3		B10001-
6	21W-62-42640	.ELBOW	1		B10001-
7*	07042-80108	.PLUG	1		B10001-
7	07002-13334	.O-RING	1	(K3)	B10001-
8	714-23-18170	.TUBE	1		B10001-
9	07206-30710	.BOLT	2		B10001-
10	07005-01012	.GASKET	4	(K3)	B10001-
11	714-23-18192	.TUBE	1		B10001-
12	07206-31014	.BOLT	2		B10001-
13	07005-01412	.GASKET	4	(K3)	B10001-
14	04434-51010	.CLIP	1		B10001-
15	01010-81020	.BOLT	1		B10001-
16	01643-31032	.WASHER	1		B10001-
17	714-23-15160	.BLOCK	1		B10001-
18	01010-81040	.BOLT	2		B10001-
19	01643-31032	.WASHER	2		B10001-
20	714-23-18750	.BRACKET	1		B10001-
21	01011-81225	.BOLT	2		B10001-
22	01643-31232	.WASHER	2		B10001-

TRANSMISSION (ACCESORY)

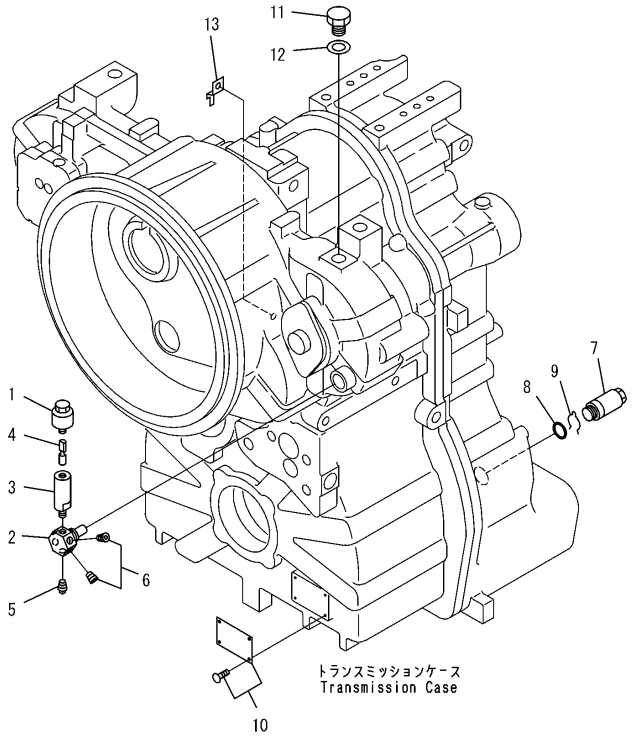

PW0B139

TRANSMISSION (ACCESORY)

Item	Part Number	Description	Qty.	Ref.	Serial No.
	(714-23-10020)	TRANSMISSION ASSEMBLY	1		B10001-
		THIS ASSEMBLY CONSISTS OF ALL PARTS SHOWN IN FIGS.F5350-51A0 TO F5350-70A0.			
1	07030-00252	.BREATHER	1		B10001-
2	714-23-18280	.PLUG	1		B10001-
3	124-15-41680	.BOSS	1		B10001-
4	124-15-41690	.PIN	1		B10001-
5	419-15-18241	.PLUG	1		B10001-
6	07002-12434	.O-RING	(K1)	1	B10001-
7	419-15-18251	.RING, SNAP	1		B10001-
8	09608-05080	.PLATE, NAME	1		B10001-
	04418-13060	.SCREW	4		B10001-
9	419-15-18220	.PLUG	1		B10001-
10	07005-02216	.GASKET	(K1)	1	B10001-
11	08193-21012	.CLIP	2		B10001-

TRANSMISSION (SPEEDOMETER)

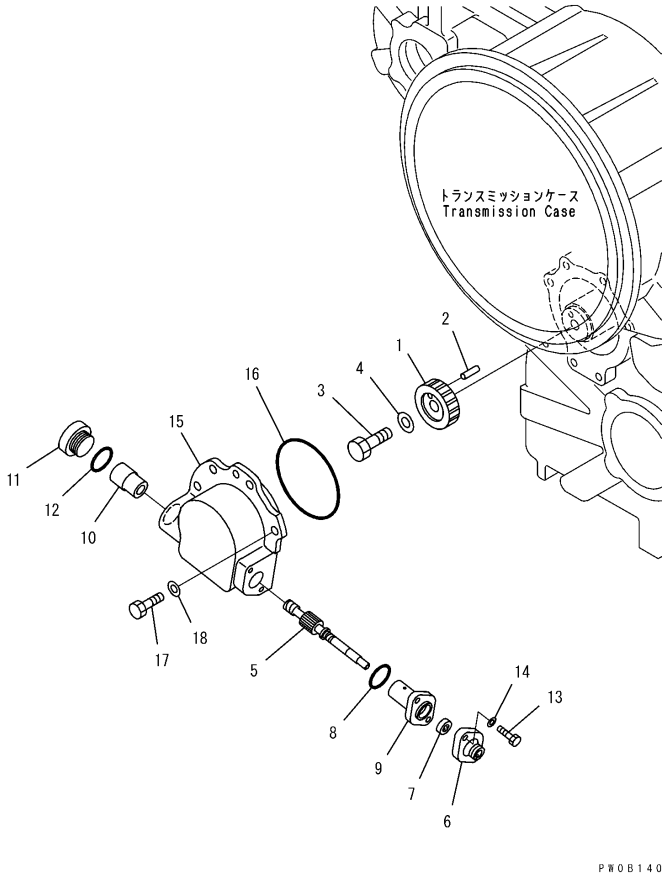

TRANSMISSION (SPEEDOMETER)

Item	Part Number	Description	Qty.	Ref.	Serial No.
	(714-23-10020)	TRANSMISSION ASSEMBLY	1		B10001-
		THIS ASSEMBLY CONSISTS OF ALL PARTS SHOWN IN FIGS.F5350-51A0 TO F5350-70A0.			
1	714-23-14681	.GEAR, WORM	1		B10001-
2	04020-00820	.PIN	1		B10001-
3	01010-81635	.BOLT	1		B10001-
4	01643-31645	.WASHER	1		B10001-
5	714-23-14671	.GEAR	1		B10001-
6	281-15-13470	.FLANGE	1		B10001-
7	281-15-13480	.NUT	1		B10001-
8	281-15-13820	.SEAL, RING (K1)	1		B10001-
9	07000-73038	.O-RING (K1)	1		B10001-
10	281-15-13431	.BUSHING	1		B10001-
11	569-15-33370	.BUSHING	1		B10001-
12	07040-13618	.PLUG	1		B10001-
13	07002-03634	.O-RING (K1)	1		B10001-
14	01010-80835	.BOLT	2		B10001-
15	01643-30823	.WASHER	2		B10001-
16	714-23-11310	.COVER, SPEED SENSOR	1		B10001-
17	07000-72120	.O-RING (K1)	1		B10001-
18	01010-81230	.BOLT	4		B10001-
19	01643-31232	.WASHER	4		B10001-

TORQUE CONVERTER (BARE)

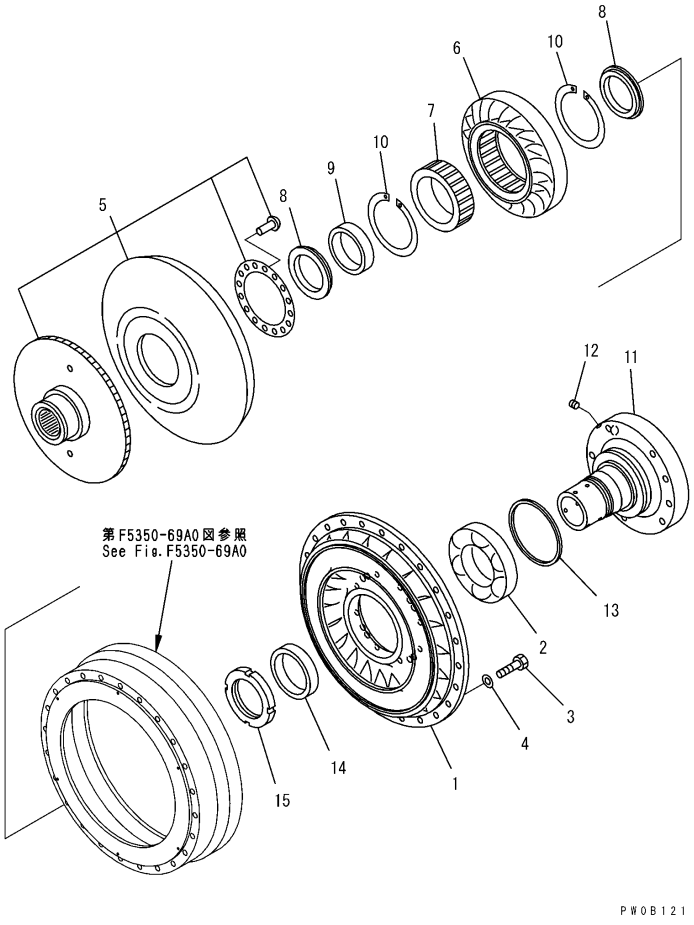

TORQUE CONVERTER (BARE)

Item	Part Number	Description	Qty.	Ref.	Serial No.
	(714-23-10020)	TRANSMISSION ASSEMBLY	1		B10001-
		THIS ASSEMBLY CONSISTS OF ALL PARTS SHOWN IN FIGS.F5350-51A0 TO F5350-70A0.			
	711-90-11000	.TORQUE CONVERTER A.	1		B10001-
		THIS ASSEMBLY CONSISTS OF ALL PARTS SHOWN IN FIGS.F5350-68A0 TO F5350-70A0.			
1	711-90-11121	..PUMP	1		B10001-
2	711-16-11560	..BEARING	1		B10001-
3	01010-81030	..BOLT	24		B10001-
4	01643-31032	..WASHER	24		B10001-
5	711-90-11511	..TURBINE COMPLETE	1		B10001-
	☆	...TURBINE	1		B10001-
	☆	...BOSS	1		B10001-
	☆	...RIVET	16		B10001-
	☆	...PLATE.	1		B10001-
6	711-61-42110	..STATOR.	1		B10001-
7	711-61-12120	..RACE.	1		B10001-
8	711-61-12140	..BUSHING	2		B10001-
9	711-61-12160	..WHEEL	1		B10001-
10	04077-00120	..RING	2		B10001-
	711-90-12511	..SHAFT ASSEMBLY	1		B10001-
11	☆	...SHAFT	1		B10001-
12	07043-70108	...PLUG	2		B10001-
13	07018-31255	..RING, SEAL (K1)	1		B10001-
14	711-90-11131	..SPACER	1		B10001-
15	711-61-42680	..NUT	1		B10001-

TORQUE CONVERTER (DRIVE CASE)

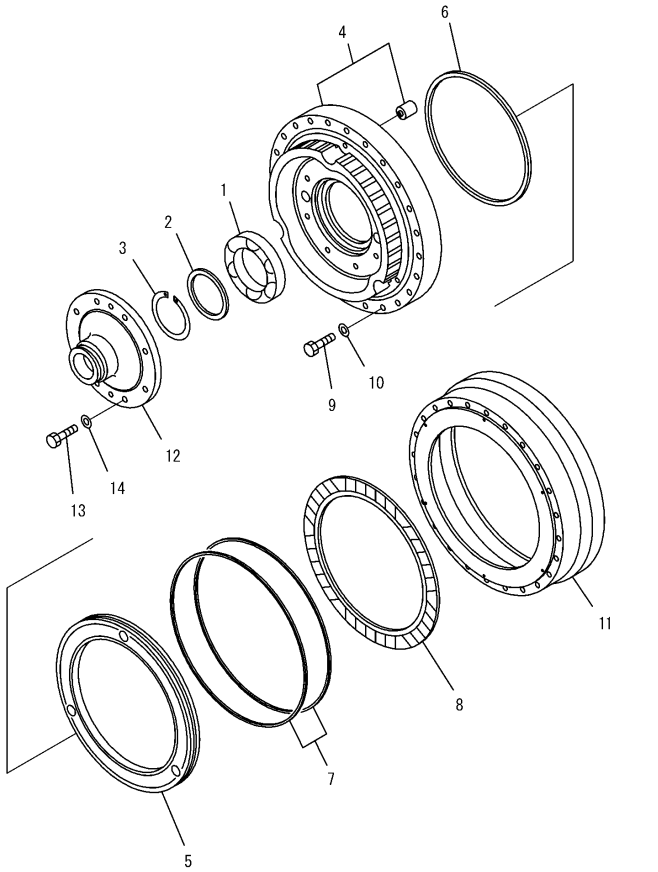

TORQUE CONVERTER (DRIVE CASE)

Item	Part Number	Description	Qty.	Ref.	Serial No.
	(714-23-10020)	TRANSMISSION ASSEMBLY	1		B10001-
		THIS ASSEMBLY CONSISTS OF ALL PARTS SHOWN IN FIGS.F5350-51A0 TO F5350-70A0.			
	(711-90-11000)	.TORQUE CONVERTER A.	1		B10001-
		THIS ASSEMBLY CONSISTS OF ALL PARTS SHOWN IN FIGS.F5350-68A0 TO F5350-70A0.			
1	711-90-19310	..BEARING	1		B10001-
2	711-53-11770	..PLATE	1		B10001-
3	04064-08025	..RING	1		B10001-
4	711-90-17112	..HOUSING COMPLETE	1		B10001-
	☆	...HOUSING	1		B10001-
	☆	...PIN	3		B10001-
5	23S-13-47210	..PISTON	1		B10001-
6	711-35-17151	..RING, SEAL	1		B10001-
7	568-15-12850	..RING, SEAL (K1)	2		B10001-
8	424-15-12711	..DISC	1		B10001-
9	01010-81065	..BOLT	24		B10001-
10	01643-31032	..WASHER	24		B10001-
11	711-61-21210	..CASE	1		B10001-
12	711-90-11253	..PILOT	1		B10001-
13	01010-81035	..BOLT	8		B10001-
14	01643-31032	..WASHER	8		B10001-

TORQUE CONVERTER (P. T. O)

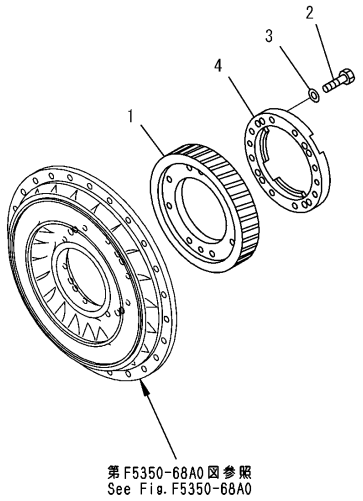

PWOB123

TORQUE CONVERTER (P. T. O)

Item	Part Number	Description	Qty.	Ref.	Serial No.
	(714-23-10020)	TRANSMISSION ASSEMBLY	1		B10001-
		THIS ASSEMBLY CONSISTS OF ALL PARTS SHOWN IN FIGS.F5350-51A0 TO F5350-70A0.			
	(711-90-11000)	.TORQUE CONVERTER A.	1		B10001-
		THIS ASSEMBLY CONSISTS OF ALL PARTS SHOWN IN FIGS.F5350-68A0 TO F5350-70A0.			
1	711-90-11142	..GEAR	1		B10001-
2	01010-81060	..BOLT	8		B10001-
3	01643-31032	..WASHER	8		B10001-
4	711-90-11191	..GUIDE	1		B10001-

HYDRAULIC SYSTEM

HYDRAULIC TANK (ACCESSORY)

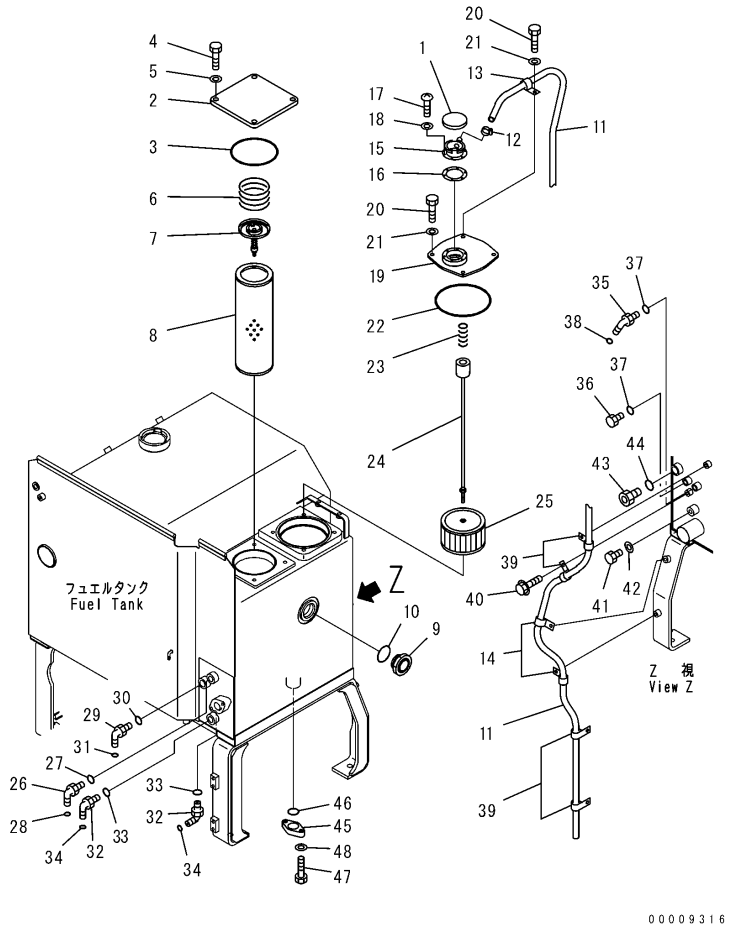

HYDRAULIC TANK (ACCESSORY)

Item	Part Number	Description	Qty.	Ref.	Serial No.
1	201-60-12190	CAP ASSEMBLY	1		B10001-
2	203-60-61130	COVER	1		B10001-
3	07000-15155	O-RING	1		B10001-
4	01010-81225	BOLT	4		B10001-
5	01643-31232	WASHER	4		B10001-
6	175-60-27340	SPRING	1		B10001-
7	203-60-52250	VALVE ASSEMBLY	1		B10001-
8	07063-51100	ELEMENT	1		B10001-
9	421-60-11622	GAUGE, SIGHT	1		B10001-
10	07002-15234	O-RING	1		B10001-
11	07270-60817	TUBE	1		B10001-
12	07280-01110	CLAMP	1		B10001-
13	08036-01014	CLIP	1		B10001-
14	04434-51010	CLIP	2		B10001-
15	201-60-12171	FILLER NECK	1		B10001-
16	205-60-51460	GASKET	2		B10001-
17	01220-40516	SCREW	6		B10001-
18	01641-20508	WASHER	6		B10001-
19	23B-60-32111	COVER	1		B10001-
20	01010-81225	BOLT	4		B10001-
21	01643-31232	WASHER	4		B10001-
22	07000-15180	O-RING	1		B10001-
23	12R-60-11230	SPRING	1		B10001-
24	23B-60-32121	ROD	1		B10001-
25	20Y-60-21311	STRAINER	1		B10001-
26	02782-10423	ELBOW	1		B10001-
27	07002-12034	O-RING	1		B10001-
28	02896-11012	O-RING	1		B10001-
29	02782-10628	ELBOW	1		B10001-
30	07002-12434	O-RING	1		B10001-
31	02896-11018	O-RING	1		B10001-
32	02782-10522	ELBOW	2		B10001-
33	07002-12434	O-RING	2		B10001-
34	02896-11015	O-RING	2		B10001-
35	02782-10210	ELBOW	1		B10001-
36	07040-11409	PLUG	1		B10001-

HYDRAULIC TANK (ACCESSORY)

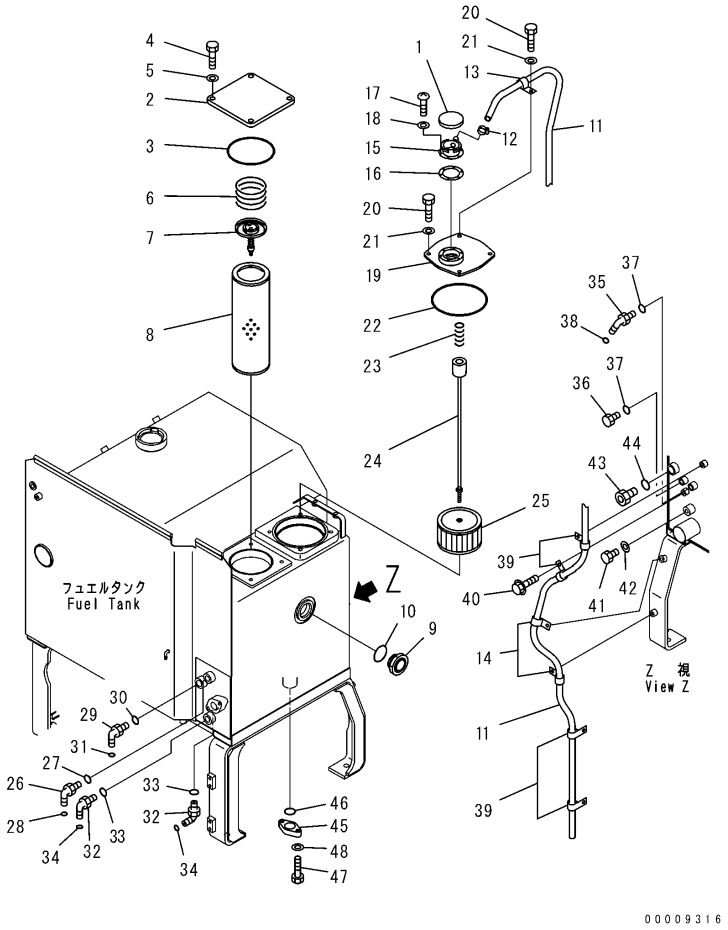

HYDRAULIC TANK (ACCESSORY)

Item	Part Number	Description	Qty.	Ref.	Serial No.
37	07002-11423	O-RING	2		B10001-
38	02896-11008	O-RING	1		B10001-
39	04434-51010	CLIP	5		B10001-
40	01435-01016	BOLT	5		B10001-
41	23B-60-32350	PLUG	1		B10001-
42	07005-01612	GASKET	1		B10001-
43	07040-12412	PLUG	1		B10001-
44	07002-12434	O-RING	1		B10001-
45	07336-61227	FLANGE	1		B10001-
46	07000-13035	O-RING	1		B10001-
47	01010-81035	BOLT	2		B10001-
48	01643-31032	WASHER	2		B10001-

HYDRAULIC TANK (DRAIN PIPING)

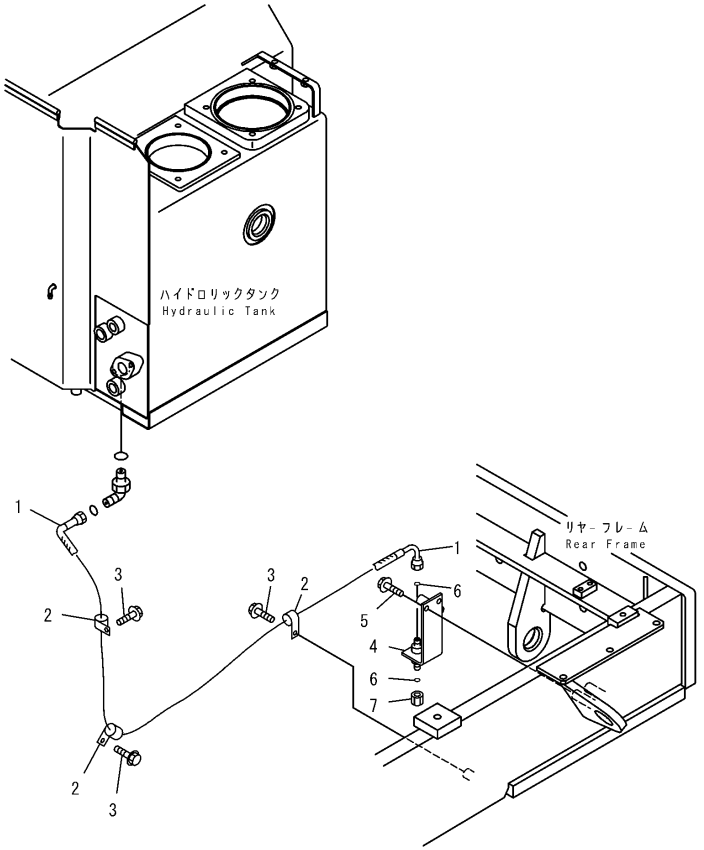

HYDRAULIC TANK (DRAIN PIPING)

Item	Part Number	Description	Qty.	Ref.	Serial No.
1	02763-00518	HOSE	1		B10001-
2	04434-52511	CLIP	3		B10001-
3	01435-01016	BOLT	3		B10001-
4	23B-60-42280	JOINT	1		B10001-
5	01435-01016	BOLT	2		B10001-
6	02896-11015	O-RING	2		B10001-
7	02789-00522	NUT	1		B10001-

MAIN CONTROL VALVE

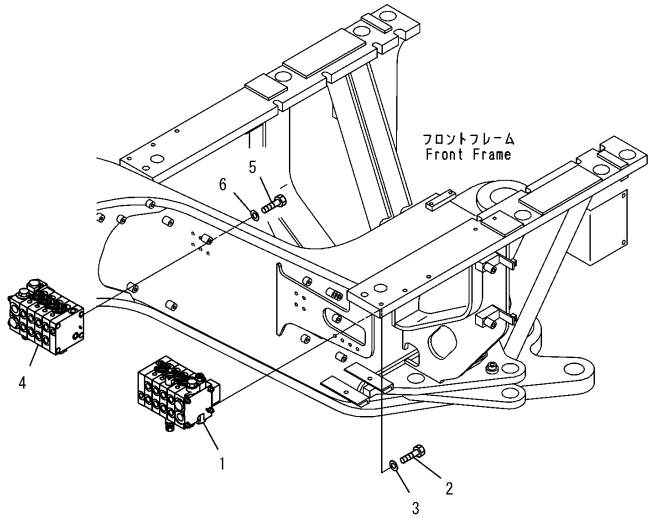

PW2A777

MAIN CONTROL VALVE

Item	Part Number	Description	Qty.	Ref.	Serial No.
1	(723-14-11701)	CONTROL VALVE, L.H.	1		B10001-
2	01010-80825	BOLT	3		B10001-
3	01643-30823	WASHER	3		B10001-
4	(723-14-11803)	CONTROL VALVE, R.H.	1		B10001-
5	01010-80825	BOLT	3		B10001-
6	01643-30823	WASHER	3		B10001-

MAIN CONTROL VALVE (WITH RIPPER)

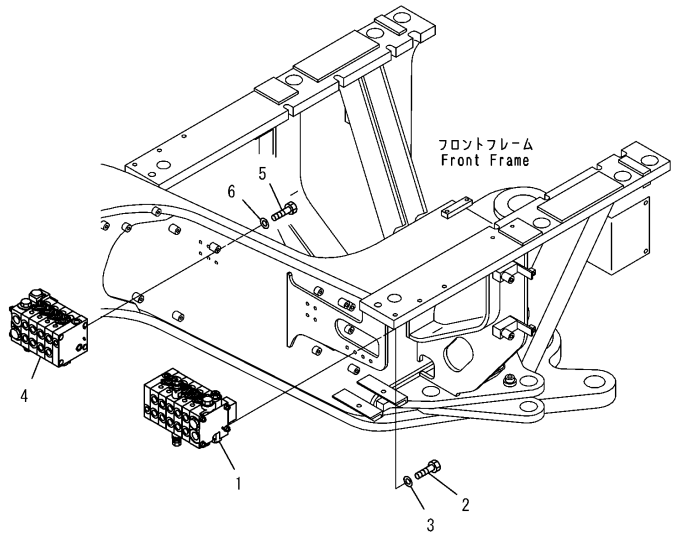

PW2A969

MAIN CONTROL VALVE (WITH RIPPER)

Item	Part Number	Description	Qty.	Ref.	Serial No.
1	(723-15-12600)	CONTROL VALVE, L.H.	1		B10001-
2	01010-80825	BOLT	3		B10001-
3	01643-30823	WASHER	3		B10001-
4	(723-14-11803)	CONTROL VALVE, R.H.	1		B10001-
5	01010-80825	BOLT	3		B10001-
6	01643-30823	WASHER	3		B10001-

MAIN CONTROL VALVE (WITH SCARIFIER)

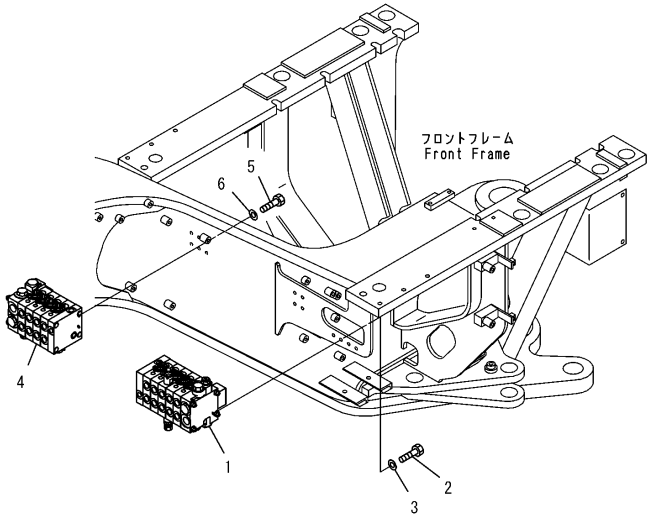

PW2A969

H0120-01A2

MAIN CONTROL VALVE (WITH SCARIFIER)

Item	Part Number	Description	Qty.	Ref.	Serial No.
1	(723-15-11801)	CONTROL VALVE, L.H.	1		B10001-
2	01010-80825	BOLT	3		B10001-
3	01643-30823	WASHER	3		B10001-
4	(723-14-11803)	CONTROL VALVE, R.H.	1		B10001-
5	01010-80825	BOLT	3		B10001-
6	01643-30823	WASHER	3		B10001-

HYDRAULIC PUMP

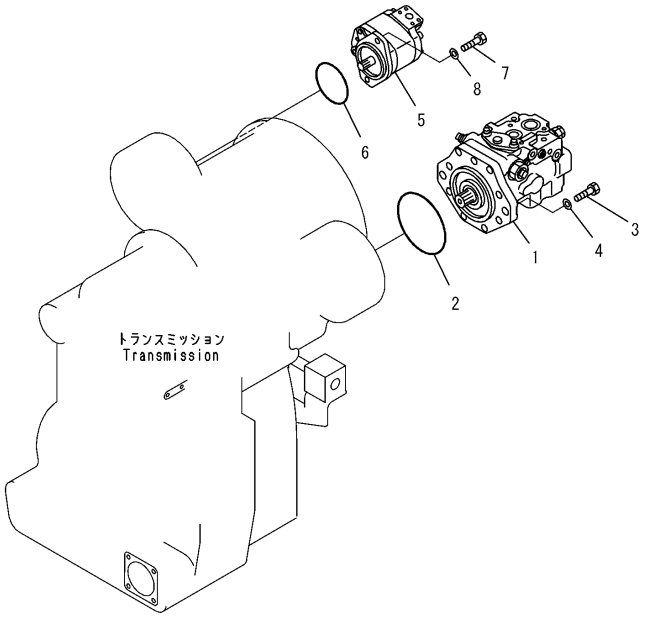

PW2A779

H0210-01A0

HYDRAULIC PUMP

Item	Part Number	Description	Qty.	Ref.	Serial No.
1	(708-1W-00620)	PUMP ASSEMBLY	1		B10001-
	(708-1W-00610)	PUMP ASSEMBLY	1		B10001-
2	07000-15160	O-RING	1		B10001-
3	01010-82060	BOLT	2		B10001-
4	01643-32060	WASHER	2		B10001-
5	(705-22-36260)	PUMP ASSEMBLY, SINGLE	1		B10001-
6	07000-12105	O-RING	1		B10001-
7	01010-81235	BOLT	2		B10001-
8	01643-31232	WASHER	2		B10001-

HYDRAULIC PUMP (DIFFERENTIAL LOCK TYPE)

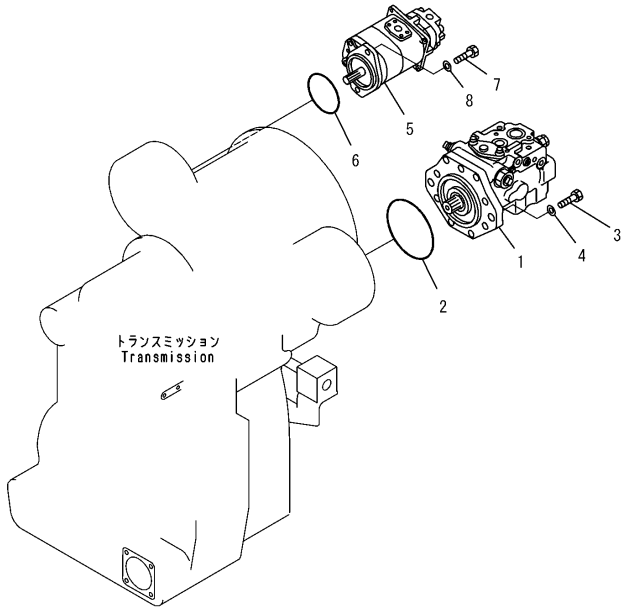

PW2A780

H0210-01A1

HYDRAULIC PUMP (DIFFERENTIAL LOCK TYPE)

Item	Part Number	Description	Qty.	Ref.	Serial No.
1	(708-1W-00620)	PUMP ASSEMBLY	1		B10001-
	(708-1W-00610)	PUMP ASSEMBLY	1		B10001-
2	07000-15160	O-RING	1		B10001-
3	01010-82060	BOLT	2		B10001-
4	01643-32060	WASHER	2		B10001-
5	(705-52-21160)	PUMP ASSEMBLY, TANDEM	1		B10001-
6	07000-12105	O-RING	1		B10001-
7	01010-81235	BOLT	2		B10001-
8	01643-31232	WASHER	2		B10001-

STEERING PIPING (FRONT FRAME SIDE)

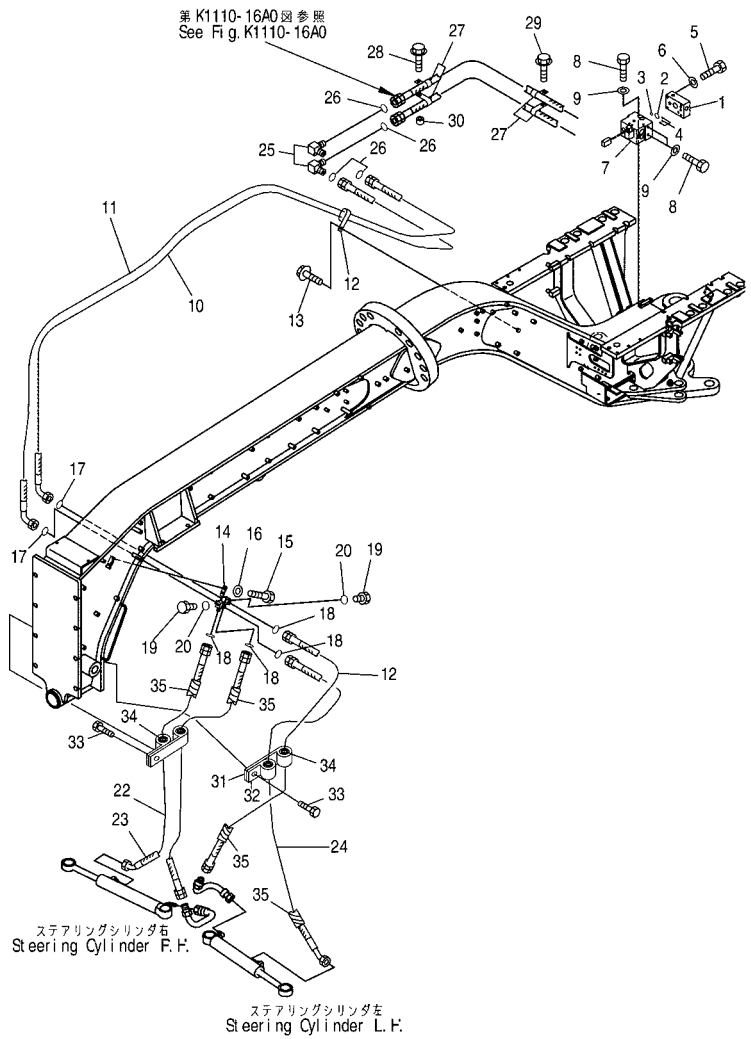

STEERING PIPING (FRONT FRAME SIDE)

Item	Part Number	Description	Qty.	Ref.	Serial No.
1	23B-40-42100	PRIORITY VALVE ASSEMBLY	1		B10001-
2	07000-13038	O-RING	1		B10001-
3	07000-12022	O-RING	1		B10001-
4	07000-12014	O-RING	3		B10001-
5	01010-81275	BOLT	4		B10001-
6	01643-31232	WASHER	4		B10001-
7	(23B-40-44101)	VALVE ASSEMBLY, ACCUMULATOR CHARGE	1		B10001-
8	01010-81230	BOLT	3		B10001-
9	01643-31232	WASHER	3		B10001-
10	23A-40-43110	HOSE	1		B10001-
11	23A-40-43120	HOSE	1		B10001-
12	391-62-19250	CLIP	1		B10001-
13	01435-01016	BOLT	2		B10001-
14	23B-40-42110	BRACKET	1		B10001-
15	01010-81020	BOLT	2		B10001-
16	01643-31032	WASHER	2		B10001-
17	02896-11012	O-RING	2		B10001-
18	02896-11009	O-RING	4		B10001-
19	07040-11007	PLUG	2		B10001-
20	07002-11023	O-RING	2		B10001-
21	02765-B0308	HOSE	1		B10001-
22	02765-B03A6	HOSE	1		B10001-
23	02767-B03A9	HOSE	1		B10001-
24	23B-40-43130	HOSE	1		B10001-
25	23B-60-41190	ELBOW	2		B10001-
26	02896-11012	O-RING	4		B10001-
27	04434-52511	CLIP	4		B10001-
28	01435-01025	BOLT	1		B10001-
29	01435-01016	BOLT	1		B10001-
30	198-43-15310	COLLAR, 10MM	1		B10001-
31	23B-40-43210	CLIP	2		B10001-
32	04434-53210	CLIP	2		B10001-
33	01435-01020	BOLT	2		B10001-
34	07095-20522	CUSHION	4		B10001-
35	415-62-13710	PROTECTOR	4		B10001-

ACCUMULATOR CHARGER VALVE (INNER PARTS)

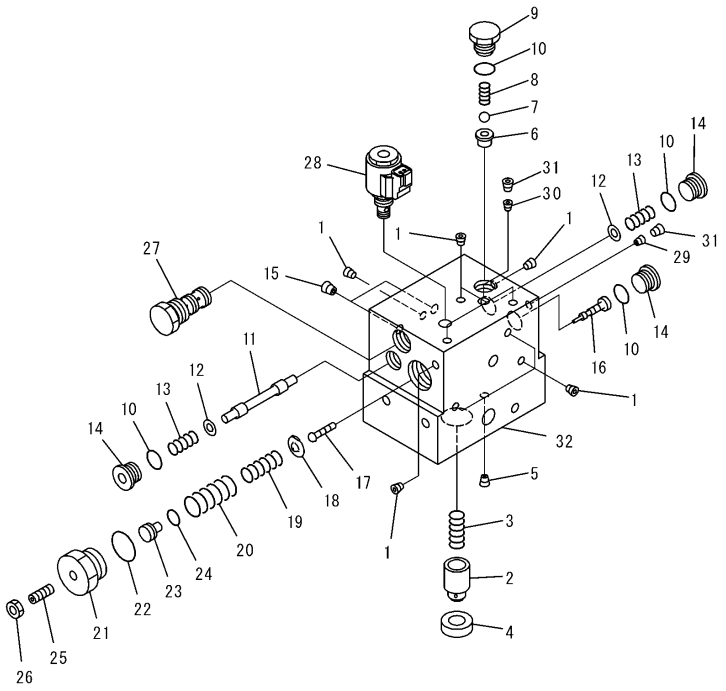

ACCUMULATOR CHARGER VALVE (INNER PARTS)

Item	Part Number	Description	Qty.	Ref.	Serial No.
	23B-40-44101	VALVE ASSEMBLY, ACCUMULATOR CHARGE	1		B10001-
1	23B-40-44460	.PLUG	9		B10001-
2	23B-40-44110	.VALVE	1		B10001-
3	23B-40-44120	.SPRING	1		B10001-
4	23B-40-44130	.SEAT	1		B10001-
5	23B-40-44140	.ORIFICE	1		B10001-
6	23B-40-44150	.VALVE	1		B10001-
7	23B-40-44160	.BALL	1		B10001-
8	23B-40-44170	.SPRING	1		B10001-
9	23B-40-44180	.PLUG	1		B10001-
10	07000-12018	.O-RING	4		B10001-
11	23B-40-44190	.SPOOL	1		B10001-
12	23B-40-44210	.WASHER	2		B10001-
13	23B-40-44220	.SPRING	2		B10001-
14	23B-40-44230	.PLUG	3		B10001-
15	23B-40-44240	.ORIFICE	2		B10001-
16	23B-40-44510	.PLUNGER	1		B10001-
17	23B-40-44420	.PLUNGER	1		B10001-
18	23B-40-44430	.SEAT	1		B10001-
19	23B-40-44280	.SPRING	1		B10001-
20	23B-40-44290	.SPRING	1		B10001-
21	23B-40-44440	.PLUG	1		B10001-
22	07000-13029	.O-RING	1		B10001-
23	23B-40-44330	.SEAT	1		B10001-
24	23B-40-44340	.O-RING	1		B10001-
25	23B-40-44450	.SCREW	1		B10001-
26	23B-40-44360	.NUT	1		B10001-
27	23B-40-44380	.SHUTTLE VALVE	1		B10001-
	23B-40-05120	..SEAL KIT	1		B10001-
28	23B-40-44390	.SOLENOID VALVE	1		B10001-
	23B-61-42150	..SOLENOID	1		B10001-
	23B-61-42130	..NUT	1		B10001-
	23B-40-05110	..SEAL KIT	1		B10001-
29	23B-40-44470	.ORIFICE	1		B10001-
30	23B-40-44480	.ORIFICE	1		B10001-
31	23B-40-44490	.PLUG	2		B10001-

ACCUMULATOR CHARGER VALVE (INNER PARTS)

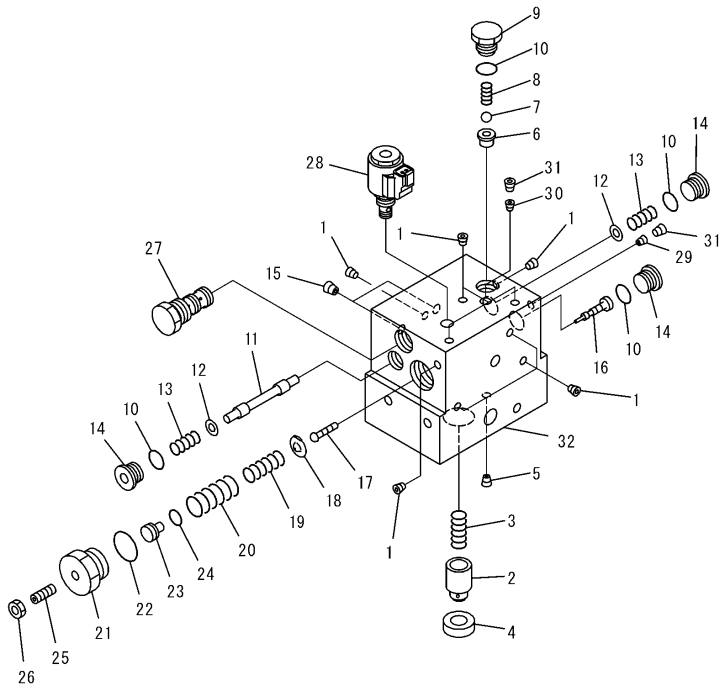

PJ2E072

ACCUMULATOR CHARGER VALVE (INNER PARTS)

Item	Part Number	Description	Qty.	Ref.	Serial No.
32	☆	.BODY	1		B10001-

FLOOR VALVE

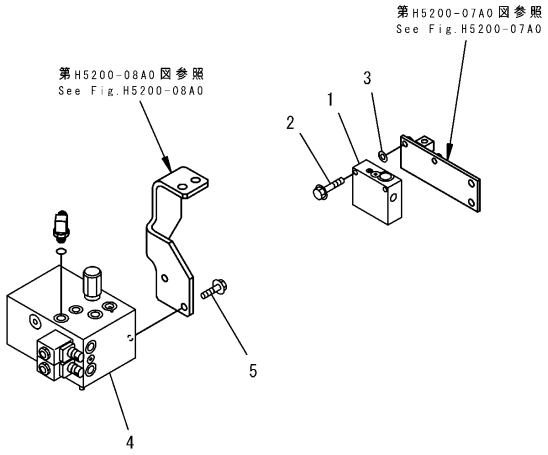

PJ2A782

FLOOR VALVE

Item	Part Number	Description	Qty.	Ref.	Serial No.
1	(723-10-13700)	VALVE ASSEMBLY, LS REDUCING	1		B10001-
2	(01435-00850)	BOLT	2		B10001-
3	(01643-30823)	WASHER	2		B10001-
4	(23B-61-42100)	VALVE ASSEMBLY	1		B10001-
5	(01435-01025)	BOLT	2		B10001-

VALVE (FOR HYDRAULIC PIPING) (1/2)

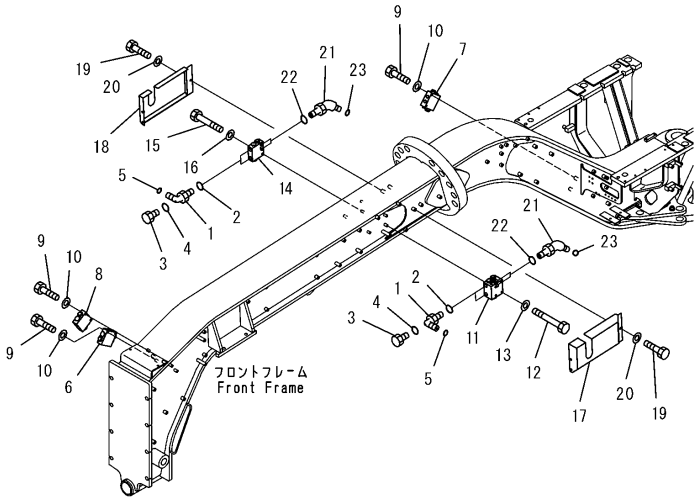

PJ2C464

VALVE (FOR HYDRAULIC PIPING) (1/2)

Item	Part Number	Description	Qty.	Ref.	Serial No.
1	02782-50315	ELBOW	4		B10001-
2	07002-12034	O-RING	4		B10001-
3	07040-11007	PLUG	4		B10001-
4	07002-11023	O-RING	4		B10001-
5	02896-11009	O-RING	4		B10001-
6	(235-61-15200)	VALVE ASSEMBLY, LEANING	1		B10001-
7	(235-61-13700)	VALVE ASSEMBLY, ARTICULATE	1		B10001-
8	235-61-13800	VALVE ASSEMBLY, DRAWBAR SHIFT	1		B10001-
9	01010-80855	BOLT	6		B10001-
10	01643-30823	WASHER	6		B10001-
11	(23B-61-43200)	VALVE ASSEMBLY, BLADE SHIFT	1		B10001-
12	01010-80890	BOLT	2		B10001-
13	01643-30823	WASHER	2		B10001-
14	(23B-61-43100)	VALVE ASSEMBLY, BLADE SHIFT	1		B10001-
15	01010-80855	BOLT	2		B10001-
16	01643-30823	WASHER	2		B10001-
17	23B-54-32552	COVER, L.H.	1		B10001-
18	23B-54-32562	COVER, R.H.	1		B10001-
19	01010-81020	BOLT	6		B10001-
20	01643-31032	WASHER	6		B10001-
21	23B-60-41170	ELBOW	4		B10001-
22	07002-12034	O-RING	4		B10001-
23	02896-11008	O-RING	4		B10001-

VALVE (FOR HYDRAULIC PIPING) (1/2) (WITH SCARIFIER, POWER TILT AND RIPPER)

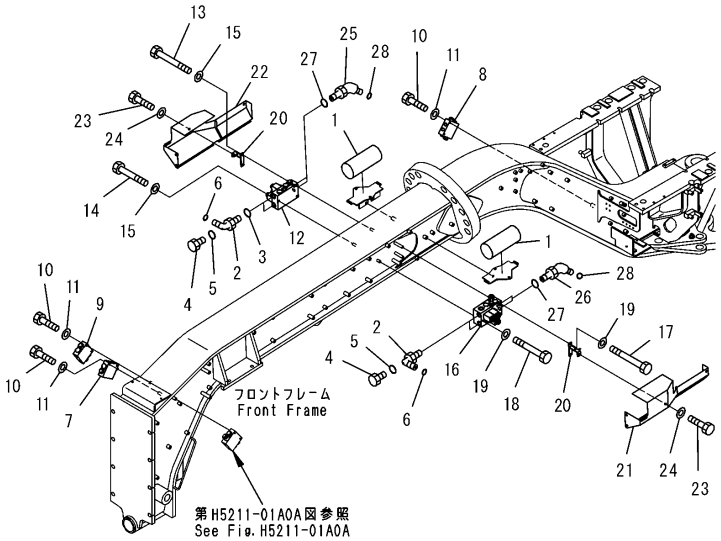

00009317

H5120-01A1A

VALVE (FOR HYDRAULIC PIPING) (1/2) (WITH SCARIFIER, POWER TILT AND RIPPER)

Item	Part Number	Description	Qty.	Ref.	Serial No.
1	(721-32-08151)	ACCUMULATOR ASSEMBLY, BLADE	2		B10001-
2	02782-50315	ELBOW	4		B10001-
3	07002-12034	O-RING	4		B10001-
4	07040-11007	PLUG	4		B10001-
5	07002-11023	O-RING	4		B10001-
6	02896-11009	O-RING	4		B10001-
7	(235-61-15200)	VALVE ASSEMBLY, LEANING	1		B10001-
8	(235-61-13700)	VALVE ASSEMBLY, ARTICULATE	1		B10001-
9	(235-61-13800)	VALVE ASSEMBLY, DRAWBAR SHIFT	1		B10001-
10	01010-80855	BOLT	6		B10001-
11	01643-30823	WASHER	6		B10001-
12	(23B-61-31901)	VALVE ASSEMBLY, BLADE SHIFT	1		B10001-
13	01010-80880	BOLT	2		B10001-
14	01010-80870	BOLT	1		B10001-
15	01643-30823	WASHER	3		B10001-
16	(23B-61-31801)	VALVE ASSEMBLY, BLADE SHIFT	1		B10001-
17	01010-80895	BOLT	2		B10001-
18	01010-80885	BOLT	1		B10001-
19	01643-30823	WASHER	3		B10001-
20	23B-54-32540	BRACKET	2		B10001-
21	23B-54-32522	COVER, L.H.	1		B10001-
22	23B-54-32532	COVER, R.H.	1		B10001-
23	01010-81020	BOLT	8		B10001-
24	01643-31032	WASHER	8		B10001-
25	23B-60-41170	ELBOW	2		B10001-
26	02783-10315	ELBOW	2		B10001-
27	07002-12034	O-RING	4		B10001-
28	02896-11009	O-RING	4		B10001-

VALVE (FOR HYDRAULIC PIPING) (2/2)

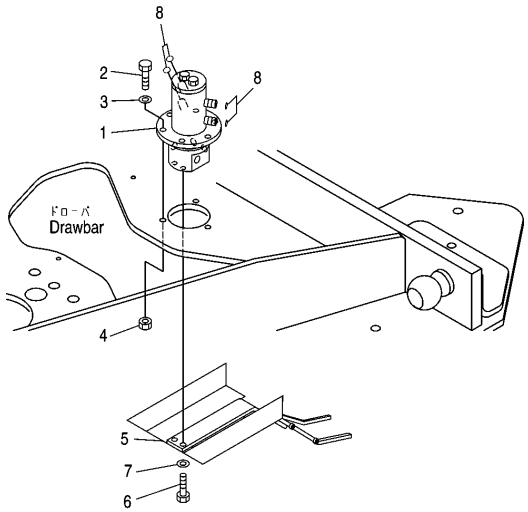

H5120-02A0A

VALVE (FOR HYDRAULIC PIPING) (2/2)

Item	Part Number	Description	Qty.	Ref.	Serial No.
1	(23B-60-42700)	SWIVEL JOINT ASSEMBLY	1		B10001-
2	01010-81255	BOLT	3		B10001-
3	01643-31232	WASHER	3		B10001-
4	01580-11210	NUT	3		B10001-
5	23B-60-34451	PLATE	1		50023-
6	01010-81230	BOLT	2		B10001-
7	01643-31232	WASHER	2		B10001-
8	02896-11009	O-RING	4		B10001-

PILOT CHECK VALVE (INNER PARTS) (FOR LEANING)

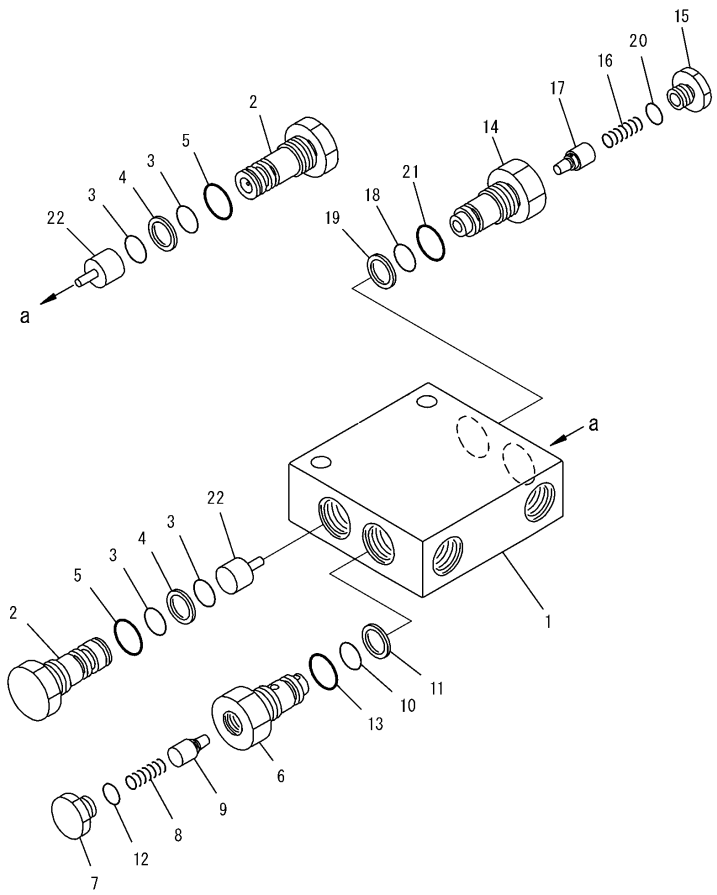

PILOT CHECK VALVE (INNER PARTS) (FOR LEANING)

Item	Part Number	Description	Qty.	Ref.	Serial No.
	235-61-15200	VALVE ASSEMBLY, PILOT CHECK	2		B10001-
1	235-61-13710	.BODY	1		B10001-
2	235-61-13720	.PLUG	2		B10001-
3	07000-12014	.O-RING	4		B10001-
4	07001-02014	.RING, BACK-UP	2		B10001-
5	07002-12434	.O-RING	2		B10001-
	235-61-14300	.VALVE ASSEMBLY	1		B10001-
6	☆	..SLEEVE	1		B10001-
7	235-61-11140	..PLUG	1		B10001-
8	235-61-11150	..SPRING	1		B10001-
9	235-61-14310	..VALVE	1		B10001-
10	07000-12014	..O-RING	1		B10001-
11	07001-12014	..RING, BACK-UP	1		B10001-
12	07002-11423	..O-RING	1		B10001-
13	07002-12434	..O-RING	1		B10001-
	235-61-11400	.VALVE ASSEMBLY	1		B10001-
14	☆	..SLEEVE	1		B10001-
15	235-61-11140	..PLUG	1		B10001-
16	235-61-11150	..SPRING	1		B10001-
17	☆	..VALVE	1		B10001-
18	07000-12014	..O-RING	1		B10001-
19	07001-12014	..RING, BACK-UP	1		B10001-
20	07002-11423	..O-RING	1		B10001-
21	07002-12434	..O-RING	1		B10001-
22	☆	.PISTON	2		B10001-

PILOT CHECK VALVE (INNER PARTS) (FOR ARTICULATE)

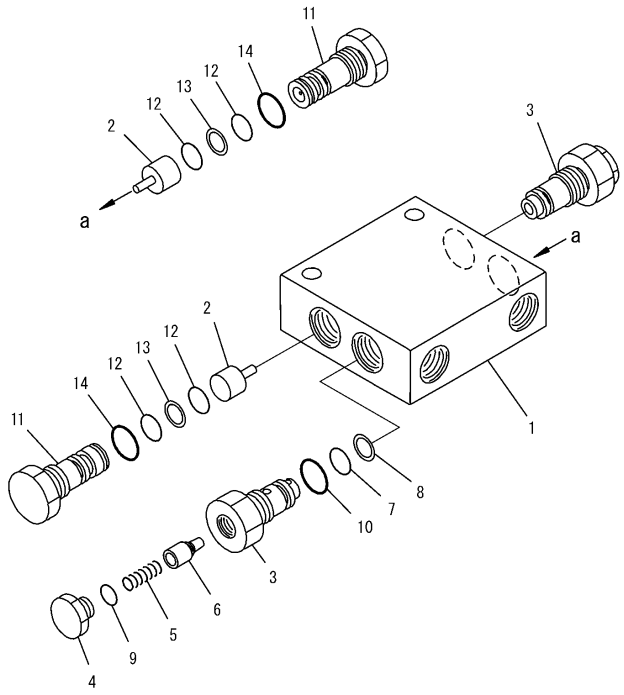

PW2A788

PILOT CHECK VALVE (INNER PARTS) (FOR ARTICULATE)

Item	Part Number	Description	Qty.	Ref.	Serial No.
	235-61-13700	VALVE ASSEMBLY, PILOT CHECK	1		B10001-
1	☆	.BODY	1		B10001-
2	☆	.PISTON	2		B10001-
	235-61-11400	.VALVE ASSEMBLY	2		B10001-
3	☆	..SLEEVE	1		B10001-
4	235-61-11140	..PLUG	1		B10001-
5	235-61-11150	..SPRING	1		B10001-
6	☆	..VALVE	1		B10001-
7	07000-12014	..O-RING	1		B10001-
8	07001-12014	..RING, BACK-UP	1		B10001-
9	07002-11423	..O-RING	1		B10001-
10	07002-12434	..O-RING	1		B10001-
11	☆	.PLUG	2		B10001-
12	07000-12014	.O-RING	4		B10001-
13	07001-02014	.RING, BACK-UP	2		B10001-
14	07002-12434	.O-RING	2		B10001-

PILOT CHECK VALVE (INNER PARTS) (FOR DRAWBAR SHIFT)

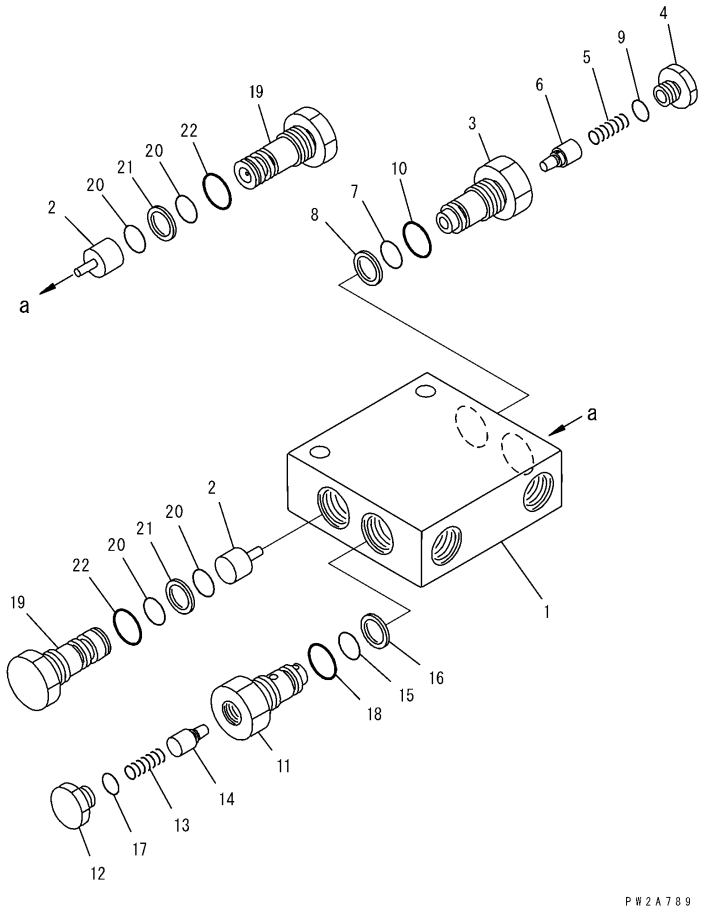

PILOT CHECK VALVE (INNER PARTS) (FOR DRAWBAR SHIFT)

Item	Part Number	Description	Qty.	Ref.	Serial No.
	235-61-13800	VALVE ASSEMBLY, PILOT CHECK	1		B10001-
1	235-61-13710	.BODY	1		B10001-
2	☆	.PISTON	2		B10001-
	235-61-11400	.VALVE ASSEMBLY	1		B10001-
3	☆	..SLEEVE	1		B10001-
4	235-61-11140	..PLUG	1		B10001-
5	235-61-11150	..SPRING	1		B10001-
6	☆	..VALVE	1		B10001-
7	07000-12014	..O-RING	1		B10001-
8	07001-12014	..RING, BACK-UP	1		B10001-
9	07002-11423	..O-RING	1		B10001-
10	07002-12434	..O-RING	1		B10001-
	235-61-11500	.VALVE ASSEMBLY	1		B10001-
11	☆	..SLEEVE	1		B10001-
12	235-61-11140	..PLUG	1		B10001-
13	235-61-11150	..SPRING	1		B10001-
14	☆	..VALVE	1		B10001-
15	07000-12014	..O-RING	1		B10001-
16	07001-02014	..RING, BACK-UP	1		B10001-
17	07002-11423	..O-RING	1		B10001-
18	07002-12434	..O-RING	1		B10001-
19	☆	.PLUG	2		B10001-
20	07000-12014	.O-RING	4		B10001-
21	07001-02014	.RING, BACK-UP	2		B10001-
22	07002-12434	.O-RING	2		B10001-

PILOT CHECK VALVE (INNER PARTS) (FOR BLADE SHIFT, R.H.)

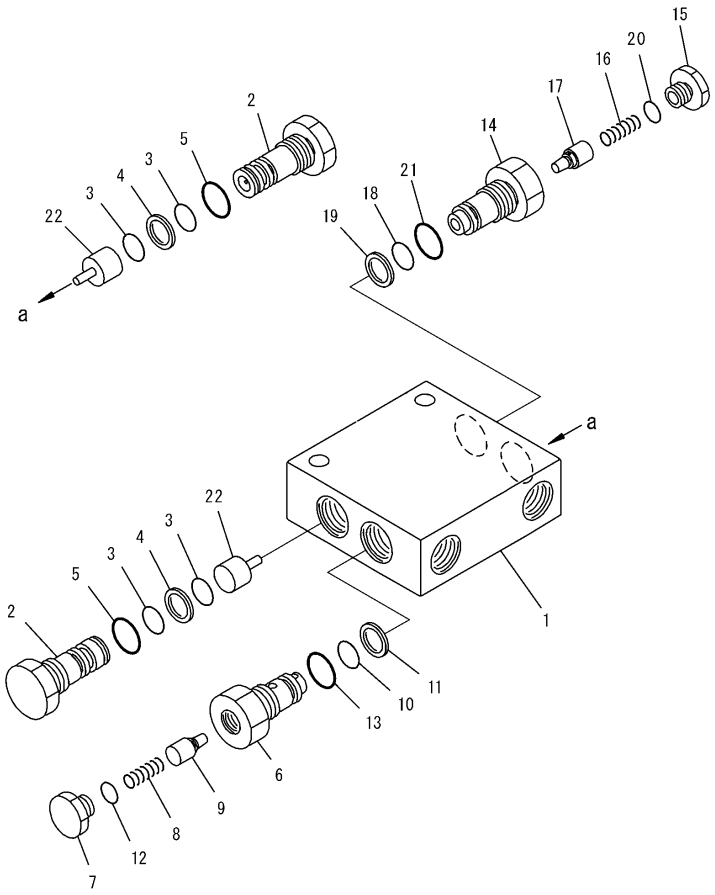

PILOT CHECK VALVE (INNER PARTS) (FOR BLADE SHIFT, R.H.)

Item	Part Number	Description	Qty.	Ref.	Serial No.
	23B-61-43100	VALVE ASSEMBLY	1		B10001-
1	235-61-13710	.BODY	1		B10001-
2	235-61-13720	.PLUG	2		B10001-
3	07000-12014	.O-RING	4		B10001-
4	07001-02014	.RING, BACK-UP	2		B10001-
5	07002-12434	.O-RING	2		B10001-
	235-61-14300	.VALVE ASSEMBLY	1		B10001-
6	☆	..SLEEVE	1		B10001-
7	235-61-11140	..PLUG	1		B10001-
8	235-61-11150	..SPRING	1		B10001-
9	235-61-14310	..VALVE	1		B10001-
10	07000-12014	..O-RING	1		B10001-
11	07001-12014	..RING, BACK-UP	1		B10001-
12	07002-11423	..O-RING	1		B10001-
13	07002-12434	..O-RING	1		B10001-
	235-61-14350	.VALVE ASSEMBLY	1		B10001-
14	☆	..SLEEVE	1		B10001-
15	235-61-11140	..PLUG	1		B10001-
16	235-61-11150	..SPRING	1		B10001-
17	☆	..VALVE	1		B10001-
18	07000-12014	..O-RING	1		B10001-
19	07001-12014	..RING, BACK-UP	1		B10001-
20	07002-11423	..O-RING	1		B10001-
21	07002-12434	..O-RING	1		B10001-
22	☆	.PISTON	2		B10001-

PILOT CHECK VALVE (INNER PARTS) (FOR BLADE SHIFT, R.H.) (WITH SCARIFIER, POWER TILT AND RIPPER)

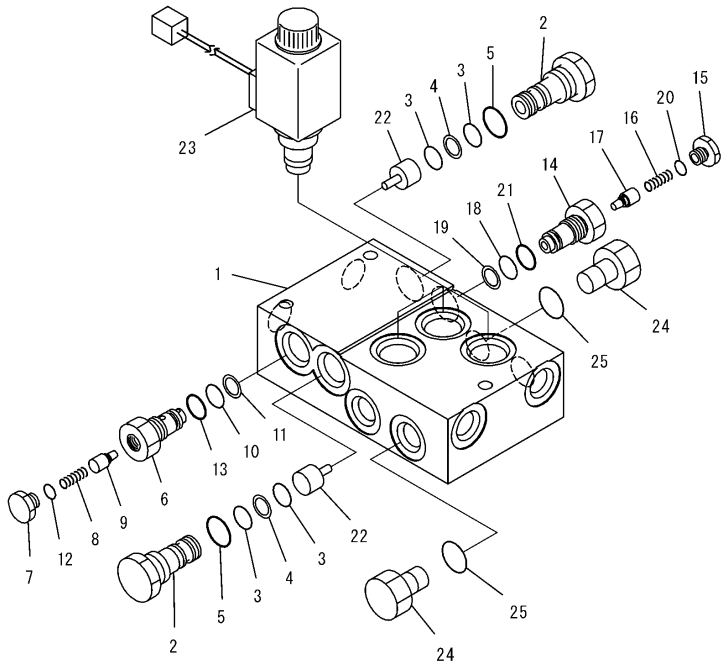

PW2A790

PILOT CHECK VALVE (INNER PARTS) (FOR BLADE SHIFT, R.H.) (WITH SCARIFIER, POWER TILT AND RIPPER)

Item	Part Number	Description	Qty.	Ref.	Serial No.
	23B-61-31901	VALVE ASSEMBLY	1		B10001-
1	23B-61-31910	.BLOCK	1		B10001-
2	235-61-13720	.PLUG	2		B10001-
3	07000-12014	.O-RING	4		B10001-
4	07001-02014	.RING, BACK-UP	2		B10001-
5	07002-12434	.O-RING	2		B10001-
	235-61-14300	.VALVE ASSEMBLY	1		B10001-
6	☆	..SLEEVE	1		B10001-
7	235-61-11140	..PLUG	1		B10001-
8	235-61-11150	..SPRING	1		B10001-
9	☆	..VALVE	1		B10001-
10	07000-12014	..O-RING	1		B10001-
11	07001-12014	..RING, BACK-UP	1		B10001-
12	07002-11423	..O-RING	1		B10001-
13	07002-12434	..O-RING	1		B10001-
	235-61-14350	.VALVE ASSEMBLY	1		B10001-
14	☆	..SLEEVE	1		B10001-
15	235-61-11140	..PLUG	1		B10001-
16	235-61-11150	..SPRING	1		B10001-
17	☆	..VALVE	1		B10001-
18	07000-12014	..O-RING	1		B10001-
19	07001-12014	..RING, BACK-UP	1		B10001-
20	07002-11423	..O-RING	1		B10001-
21	07002-12434	..O-RING	1		B10001-
22	235-61-13740	.PISTON	2		B10001-
23	23B-61-32210	.VALVE, SHUT OFF	3		B10001-
24	07040-12012	.PLUG	2		B10001-
25	07002-12034	.O-RING	2		B10001-

PILOT CHECK VALVE (INNER PARTS) (FOR BLADE SHIFT, L.H.)

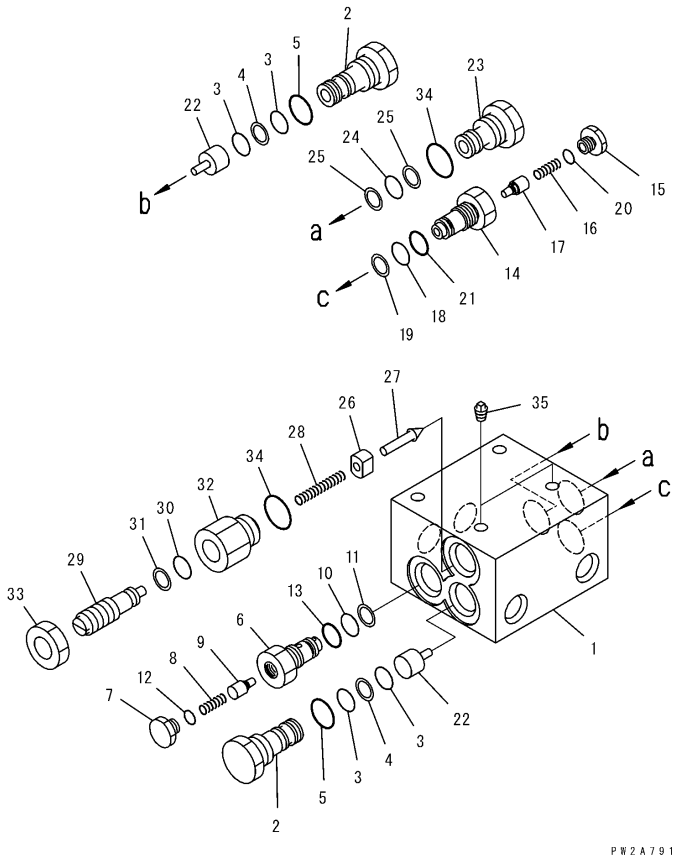

PILOT CHECK VALVE (INNER PARTS) (FOR BLADE SHIFT, L.H.)

Item	Part Number	Description	Qty.	Ref.	Serial No.
	23B-61-43200	VALVE ASSEMBLY	1		B10001-
1	23B-61-31510	.BLOCK	1		B10001-
2	235-61-13720	.PLUG	2		B10001-
3	07000-12014	.O-RING	4		B10001-
4	07001-02014	.RING, BACK-UP	2		B10001-
5	07002-12434	.O-RING	2		B10001-
	235-61-14350	.VALVE ASSEMBLY	1		B10001-
6	☆	..SLEEVE	1		B10001-
7	235-61-11140	..PLUG	1		B10001-
8	235-61-11150	..SPRING	1		B10001-
9	☆	..VALVE	1		B10001-
10	07000-12014	..O-RING	1		B10001-
11	07001-12014	..RING, BACK-UP	1		B10001-
12	07002-11423	..O-RING	1		B10001-
13	07002-12434	..O-RING	1		B10001-
	235-61-14300	.VALVE ASSEMBLY	1		B10001-
14	☆	..SLEEVE	1		B10001-
15	235-61-11140	..PLUG	1		B10001-
16	235-61-11150	..SPRING	1		B10001-
17	☆	..VALVE	1		B10001-
18	07000-12014	..O-RING	1		B10001-
19	07001-12014	..RING, BACK-UP	1		B10001-
20	07002-11423	..O-RING	1		B10001-
21	07002-12434	..O-RING	1		B10001-
22	235-61-13740	.PISTON	2		B10001-
23	235-61-13260	.PLUG	1		B10001-
24	07000-12014	.O-RING	1		B10001-
25	07001-02014	.RING, BACK-UP	2		B10001-
26	235-61-13250	.COLLAR	1		B10001-
27	235-61-13240	.VALVE	1		B10001-
28	235-61-11620	.SPRING	1		B10001-
29	235-61-13220	.BOLT	1		B10001-
30	07000-12010	.O-RING	1		B10001-
31	07001-02010	.RING, BACK-UP	1		B10001-
32	235-61-13230	.SLEEVE	1		B10001-
33	235-61-13270	.NUT	1		B10001-

PILOT CHECK VALVE (INNER PARTS) (FOR BLADE SHIFT, L.H.)

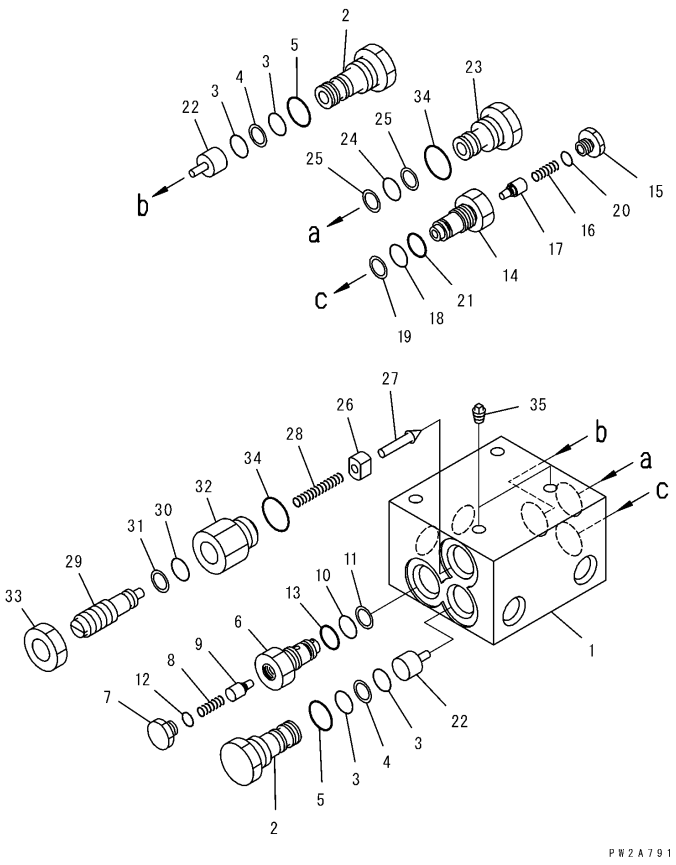

PILOT CHECK VALVE (INNER PARTS) (FOR BLADE SHIFT, L.H.)

Item	Part Number	Description	Qty.	Ref.	Serial No.
34	07002-12434	.O-RING	1		B10001-
35	07042-20108	.PLUG	2		B10001-

PILOT CHECK VALVE (INNER PARTS) (FOR BLADE SHIFT, L.H.) (WITH SCARIFIER, POWER TILT AND RIPPER)

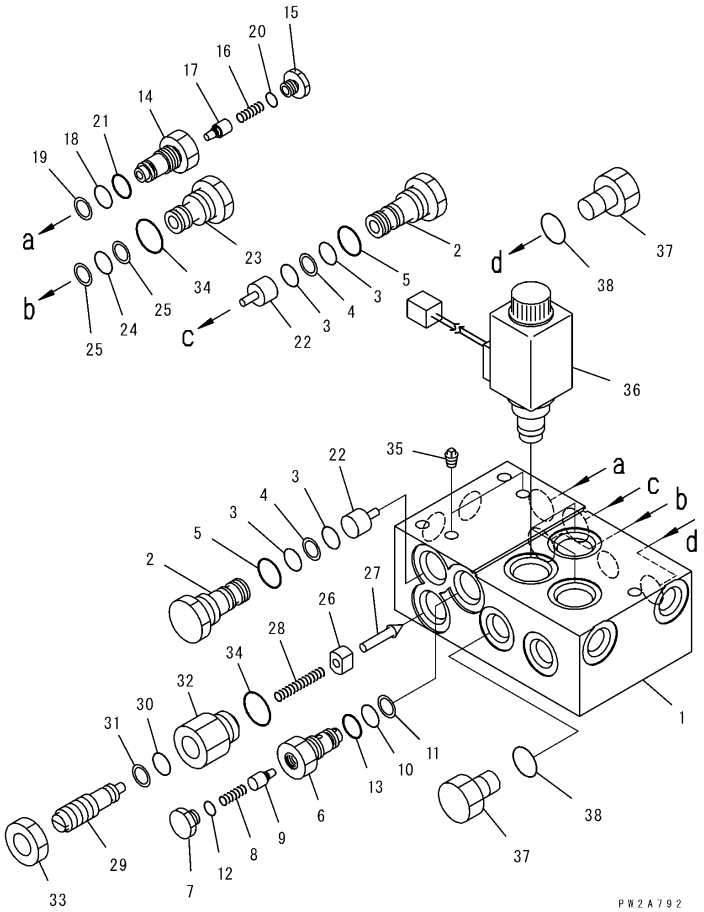

PILOT CHECK VALVE (INNER PARTS) (FOR BLADE SHIFT, L.H.) (WITH SCARIFIER, POWER TILT AND RIPPER)

Item	Part Number	Description	Qty.	Ref.	Serial No.
	23B-61-31801	VALVE ASSEMBLY	1		B10001-
1	23B-61-31810	.BLOCK	1		B10001-
2	235-61-13720	.PLUG	2		B10001-
3	07000-12014	.O-RING	4		B10001-
4	07001-02014	.RING, BACK-UP	2		B10001-
5	07002-12434	.O-RING	2		B10001-
	235-61-14350	.VALVE ASSEMBLY	1		B10001-
6	☆	..SLEEVE	1		B10001-
7	235-61-11140	..PLUG	1		B10001-
8	235-61-11150	..SPRING	1		B10001-
9	☆	..VALVE	1		B10001-
10	07000-12014	..O-RING	1		B10001-
11	07001-12014	..RING, BACK-UP	1		B10001-
12	07002-11423	..O-RING	1		B10001-
13	07002-12434	..O-RING	1		B10001-
	235-61-14300	.VALVE ASSEMBLY	1		B10001-
14	☆	..SLEEVE	1		B10001-
15	235-61-11140	..PLUG	1		B10001-
16	235-61-11150	..SPRING	1		B10001-
17	☆	..VALVE	1		B10001-
18	07000-12014	..O-RING	1		B10001-
19	07001-12014	..RING, BACK-UP	1		B10001-
20	07002-11423	..O-RING	1		B10001-
21	07002-12434	..O-RING	1		B10001-
22	235-61-13740	.PISTON	2		B10001-
23	235-61-13260	.PLUG	1		B10001-
24	07000-12014	.O-RING	1		B10001-
25	07001-02014	.RING, BACK-UP	2		B10001-
26	235-61-13250	.COLLAR	1		B10001-
27	235-61-13240	.VALVE	1		B10001-
28	235-61-11620	.SPRING	1		B10001-
29	235-61-13220	.BOLT	1		B10001-
30	07000-12010	.O-RING	1		B10001-
31	07001-02010	.RING, BACK-UP	1		B10001-
32	235-61-13230	.SLEEVE	1		B10001-
33	235-61-13270	.NUT	1		B10001-

PILOT CHECK VALVE (INNER PARTS) (FOR BLADE SHIFT, L.H.) (WITH SCARIFIER, POWER TILT AND RIPPER)

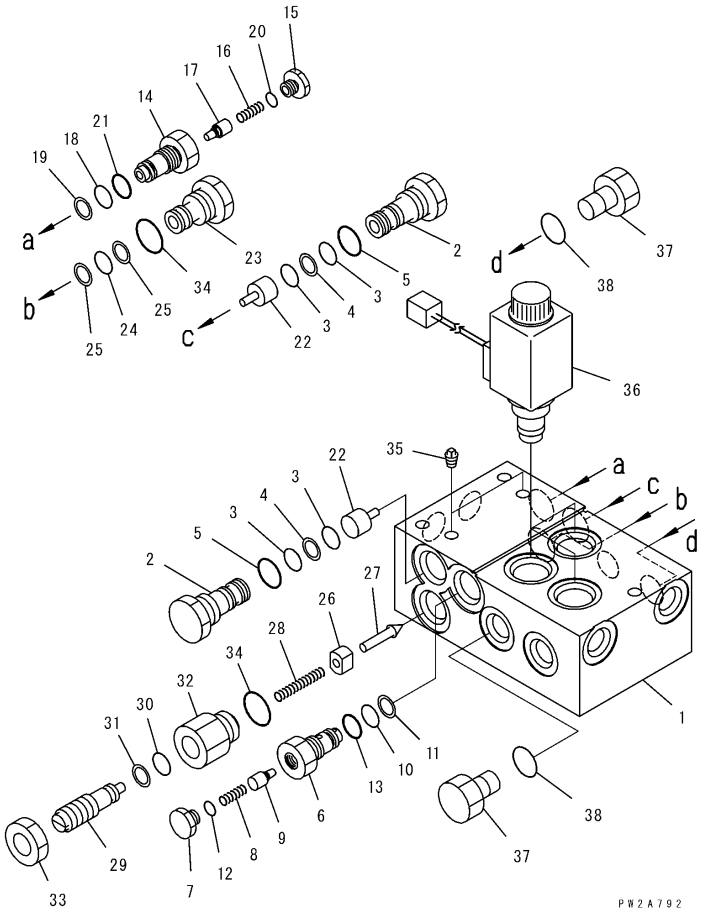

PILOT CHECK VALVE (INNER PARTS) (FOR BLADE SHIFT, L.H.) (WITH SCARIFIER, POWER TILT AND RIPPER)

Item	Part Number	Description	Qty.	Ref.	Serial No.
34	07002-12434	.O-RING	1		B10001-
35	07042-20108	.PLUG	2		B10001-
36	23B-61-32210	.VALVE, SHUT OFF	3		B10001-
37	07040-12012	.PLUG	2		B10001-
38	07002-12034	.O-RING	2		B10001-

SWIVEL JOINT (INNER PARTS)

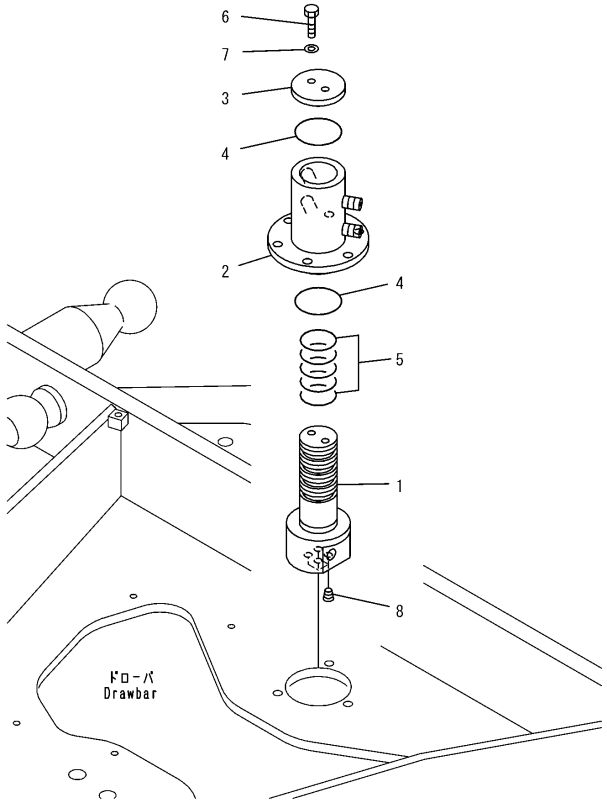

PW2A795

SWIVEL JOINT (INNER PARTS)

Item	Part Number	Description	Qty.	Ref.	Serial No.
	23B-60-42700	SWIVEL JOINT ASSEMBLY	1		B10001-
1	23E-735-1420	.FLANGE	1		B10001-
2	23B-60-42710	.CASE	1		B10001-
3	232-60-54730	.PLATE	1		B10001-
4	07000-12065	.O-RING	2		B10001-
5	07000-13050	.O-RING	5		B10001-
6	01010-81225	.BOLT	2		B10001-
7	01643-31232	.WASHER	2		B10001-
8	07043-00211	.PLUG	4		B10001-

HYDRAULIC PIPING (TANK TO PUMP)

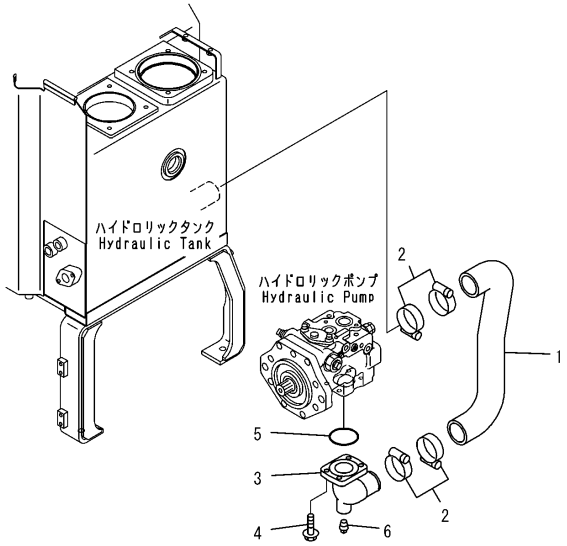

PW2A796

HYDRAULIC PIPING (TANK TO PUMP)

Item	Part Number	Description	Qty.	Ref.	Serial No.
1	23B-60-32312	HOSE	1		B10001-
2	07289-00070	CLAMP	4		B10001-
3	23B-60-32342	ELBOW	1		B10001-
4	01435-01235	BOLT	4		B10001-
5	07000-12075	O-RING	1		B10001-
6	07042-30108	PLUG	1		B10001-

HYDRAULIC PIPING (PUMP TO VALVE)

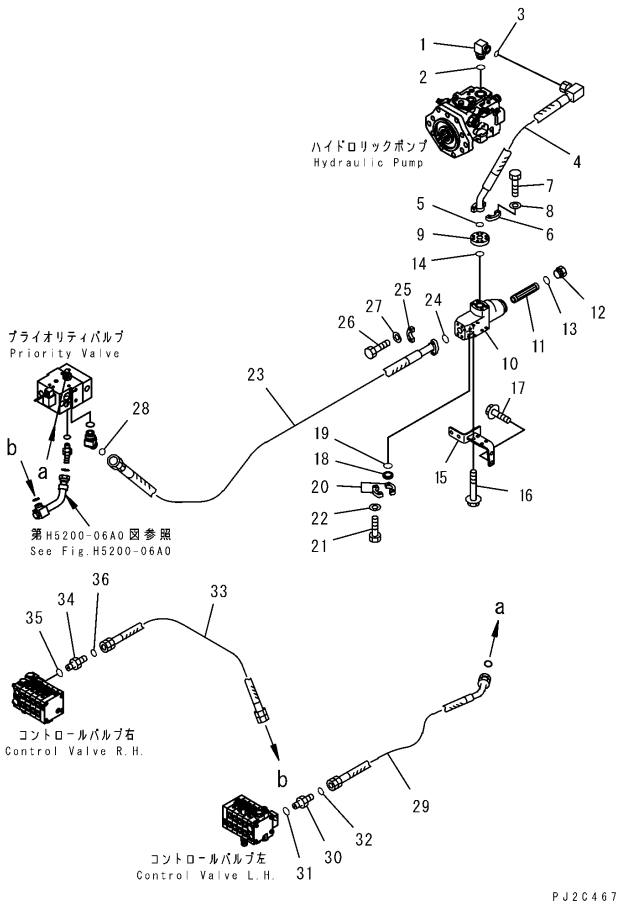

HYDRAULIC PIPING (PUMP TO VALVE)

Item	Part Number	Description	Qty.	Ref.	Serial No.
1	23B-60-33111	ELBOW	1		B10001-
2	235-60-15480	O-RING	1		B10001-
3	23B-60-33240	O-RING	1		B10001-
4	23B-60-33542	HOSE	1		B10001-
5	07000-13032	O-RING	1		B10001-
6	07371-31049	FLANGE, SPLIT	2		B10001-
7	07372-21035	BOLT	4		B10001-
8	01643-51032	WASHER	4		B10001-
9	07377-01018	FLANGE	1		B10001-
	207-62-61102	FILTER ASSEMBLY	1		B10001-
10	207-60-61250	.STRAINER	1		B10001-
11	207-62-61113	.CASE	1		B10001-
12	20Y-60-22371	.PLUG	1		B10001-
13	07002-13634	.O-RING	1		B10001-
14	07000-13035	O-RING	1		B10001-
15	23B-60-35272	PLATE	1		B10001-
16	01436-01040	BOLT	4		B10001-
17	01435-01225	BOLT	2		B10001-
18	07378-11000	HEAD, SLEEVE	1		B10001-
19	07000-13032	O-RING	1		B10001-
20	07371-31049	FLANGE, SPLIT	2		B10001-
21	07372-21035	BOLT	4		B10001-
22	01643-51032	WASHER	4		B10001-
23	23B-60-33590	HOSE	1		B10001-
24	07000-13032	O-RING	1		B10001-
25	07371-31049	FLANGE, SPLIT	2		B10001-
26	07372-21035	BOLT	4		B10001-
27	01643-51032	WASHER	4		B10001-
28	23B-60-33240	O-RING	1		B10001-
29	02767-00604	HOSE	1		B10001-
30	02781-00628	UNION	1		B10001-
31	07002-12434	O-RING	1		B10001-
32	02896-11018	O-RING	1		B10001-
33	02765-00610	HOSE	1		B10001-
34	02781-00628	UNION	1		B10001-
35	07002-12434	O-RING	1		B10001-

HYDRAULIC PIPING (PUMP TO VALVE)

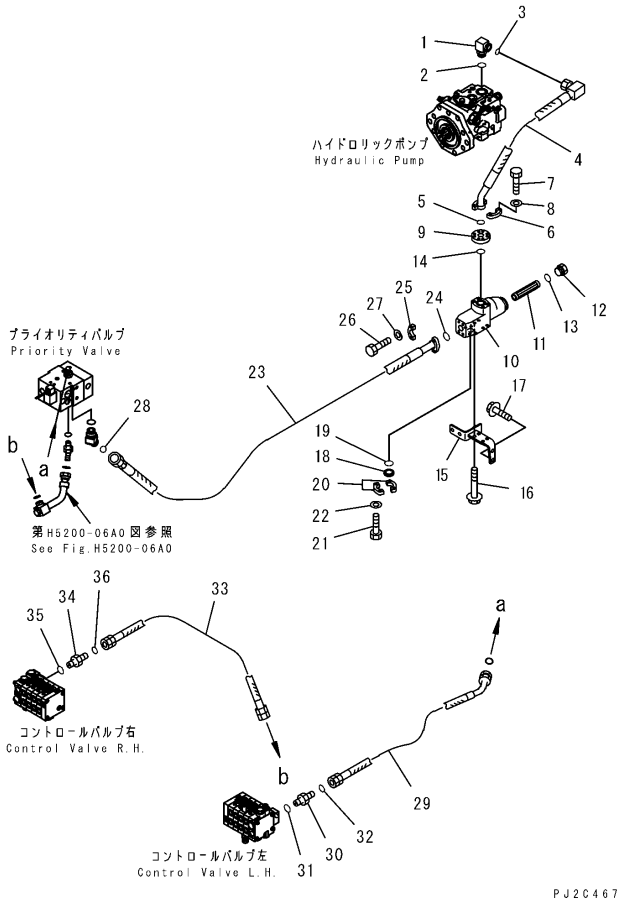

HYDRAULIC PIPING (PUMP TO VALVE)

Item	Part Number	Description	Qty.	Ref.	Serial No.
36	02896-11018	O-RING	1		B10001-

HYDRAULIC PIPING (RETURN LINE)

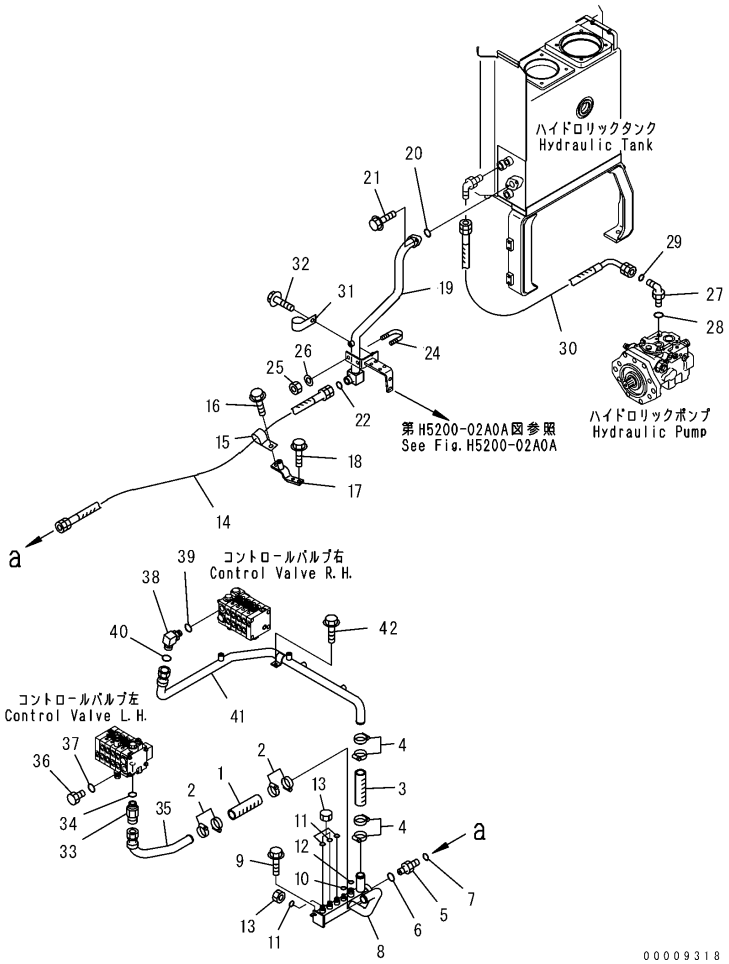

HYDRAULIC PIPING (RETURN LINE)

Item	Part Number	Description	Qty.	Ref.	Serial No.
1	23B-60-32970	HOSE	1		B10001-
2	07289-00045	CLAMP	4		B10001-
3	22T-62-27381	HOSE	1		B10001-
4	07289-00045	CLAMP	4		B10001-
5	207-62-72110	UNION	1		B10001-
6	07002-13334	O-RING	1		B10001-
7	23B-60-33240	O-RING	1		B10001-
8	23B-60-42210	TUBE	1		B10001-
9	01435-01020	BOLT	2		B10001-
10	02896-11008	O-RING	1		B10001-
11	02896-11009	O-RING	4		B10001-
12	02896-11012	O-RING	1		B10001-
13	02789-00315	NUT	3		B10001-
14	23B-60-43190	HOSE	1		B10001-
15	04434-53412	CLIP	1		B10001-
16	01435-01020	BOLT	1		B10001-
17	23B-60-32451	BRACKET	1		B10001-
18	01435-01020	BOLT	2		B10001-
19	23B-60-42270	TUBE	1		B10001-
20	07000-13035	O-RING	1		B10001-
21	01435-01035	BOLT	2		B10001-
22	23B-60-33240	O-RING	1		B10001-
24	07283-33442	CLIP	1		B10001-
25	01597-01009	NUT	2		B10001-
26	01643-31032	WASHER	2		B10001-
27	02782-10628	ELBOW	1		B10001-
28	07002-12434	O-RING	1		B10001-
29	02896-11018	O-RING	1		B10001-
30	02763-00607	HOSE	1		B10001-
31	04434-53211	CLIP	1		B10001-
32	01435-01016	BOLT	1		B10001-
33	23B-60-41310	UNION	1		B10001-
34	709-25-11390	O-RING	1		B10001-
35	23B-60-42250	TUBE	1		B10001-
36	07040-12412	PLUG	1		B10001-
37	07002-12434	O-RING	1		B10001-

HYDRAULIC PIPING (RETURN LINE)

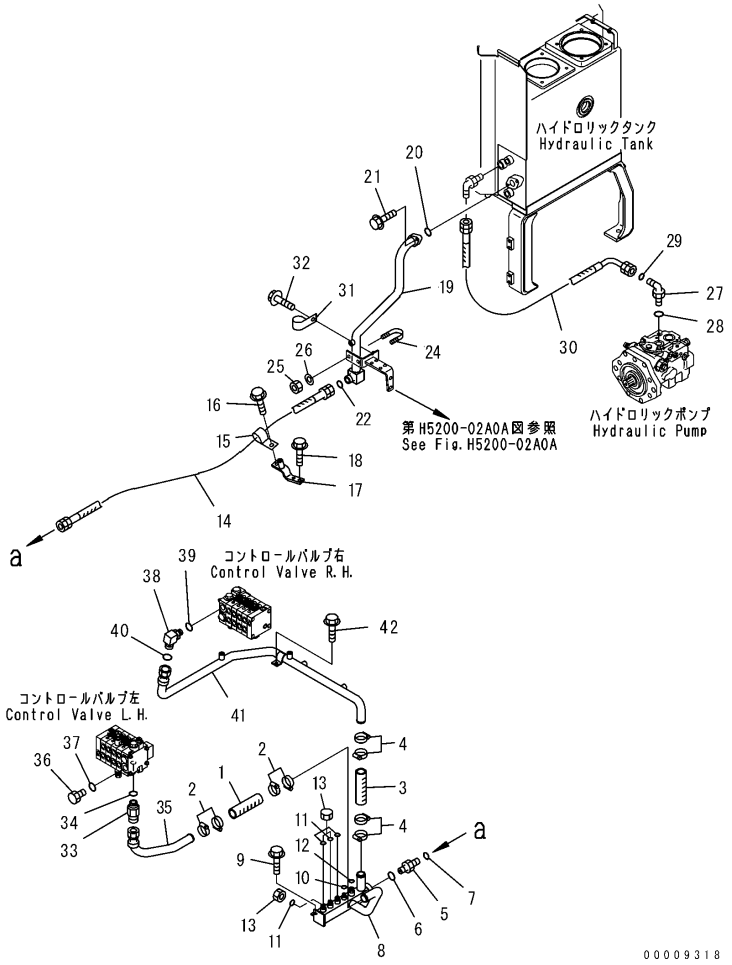

HYDRAULIC PIPING (RETURN LINE)

Item	Part Number	Description	Qty.	Ref.	Serial No.
38	207-62-72131	ELBOW	1		B10001-
39	07002-12434	O-RING	1		B10001-
40	23B-60-33240	O-RING	1		B10001-
41	23B-60-42230	TUBE	1		B10001-
42	01435-01020	BOLT	1		B10001-

HYDRAULIC PIPING (L.S.PIPING,1/2)

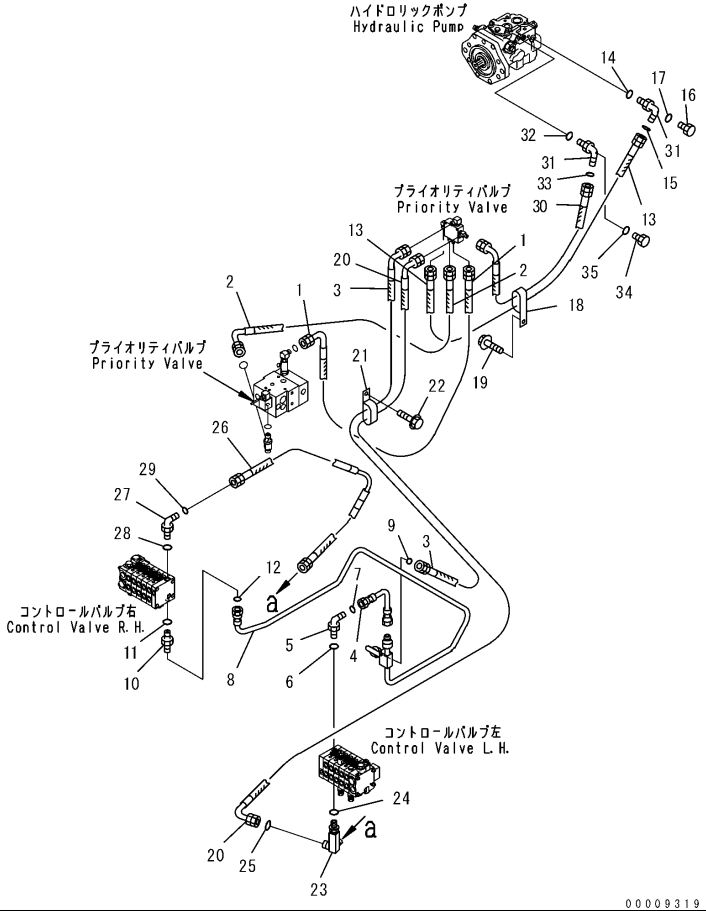

HYDRAULIC PIPING (L.S.PIPING,1/2)

Item	Part Number	Description	Qty.	Ref.	Serial No.
1	23B-60-43350	HOSE	1		B10001-
2	23B-60-43361	HOSE	1		B10001-
3	23B-60-43340	HOSE	1		B10001-
4	23B-60-42310	TUBE	1		B10001-
5	21W-62-42920	ELBOW	1		B10001-
6	07002-11023	O-RING	1		B10001-
7	02896-11008	O-RING	1		B10001-
8	23B-60-42320	TUBE	1		B10001-
9	02896-11008	O-RING	1		B10001-
10	23B-60-41250	UNION	1		B10001-
11	07002-11023	O-RING	1		B10001-
12	02896-11008	O-RING	1		B10001-
13	23B-60-43130	HOSE	1		B10001-
14	07002-11423	O-RING	1		B10001-
15	02896-11008	O-RING	1		B10001-
16	07040-11007	PLUG	1		B10001-
17	07002-11023	O-RING	1		B10001-
18	04435-51310	CLIP	3		B10001-
19	01435-01016	BOLT	3		B10001-
20	23B-60-43280	HOSE	1		B10001-
21	04435-51310	CLIP	2		B10001-
22	01435-01016	BOLT	2		B10001-
23	21W-62-45210	ELBOW	1		B10001-
24	07002-11423	O-RING	1		B10001-
25	02896-11008	O-RING	2		B10001-
26	23B-60-43270	HOSE	1		B10001-
27	02782-10210	ELBOW	1		B10001-
28	07002-11423	O-RING	1		B10001-
29	02896-11008	O-RING	1		B10001-
30	23B-60-43120	HOSE	1		B10001-
31	02782-50210	ELBOW	2		B10001-
32	07002-11423	O-RING	1		B10001-
33	02896-11008	O-RING	1		B10001-
34	07040-11007	PLUG	1		B10001-
35	07002-11023	O-RING	1		B10001-

HYDRAULIC PIPING (L.S.PIPING,2/2)

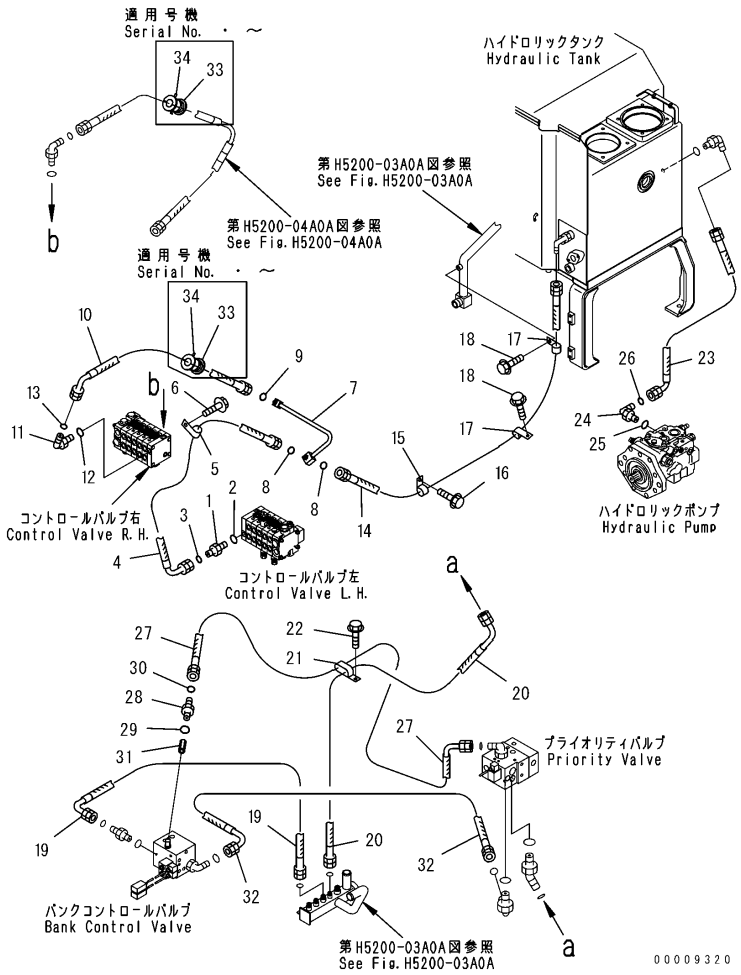

HYDRAULIC PIPING (L.S.PIPING,2/2)

Item	Part Number	Description	Qty.	Ref.	Serial No.
1	02781-00311	UNION	1		B10001-
2	07002-11423	O-RING	1		B10001-
3	02896-11009	O-RING	1		B10001-
4	02763-003A5	HOSE	1		B10001-
5	04434-51510	CLIP	1		B10001-
6	01435-01016	BOLT	1		B10001-
7	23B-60-42290	TUBE	1		B10001-
8	02896-11009	O-RING	2		B10001-
9	02896-11012	O-RING	1		B10001-
10	02763-003A4	HOSE	1		B10001-
11	02782-10311	ELBOW	1		B10001-
12	07002-11423	O-RING	1		B10001-
13	02896-11009	O-RING	1		B10001-
14	23B-60-43210	HOSE	1		B10001-
15	155-61-15350	CLIP	1		B10001-
16	01435-01016	BOLT	1		B10001-
17	04434-52110	CLIP	3		B10001-
18	01435-01016	BOLT	3		B10001-
19	02763-00303	HOSE	1		B10001-
20	02763-002A3	HOSE	1		B10001-
21	04435-51310	CLIP	1		B10001-
22	01435-01016	BOLT	1		B10001-
23	02761-00205	HOSE	1		B10001-
24	02782-10210	ELBOW	1		B10001-
25	07002-11423	O-RING	1		B10001-
26	02896-11008	O-RING	1		B10001-
27	02766-00203	HOSE	1		B10001-
28	11Y-62-12140	NIPPLE	1		B10001-
29	07000-12011	O-RING	2		B10001-
30	02896-11008	O-RING	1		B10001-
31	23B-61-41110	VALVE, CHECK	1		B10001-
32	02761-00203	HOSE	1		B10001-
33	07095-20211	CUSHION	2		B10001-
34	08034-20519	BAND	2		B10001-

HYDRAULIC PIPING (CONNECTOR, FOR PRIORITY VALVE, 1/2)

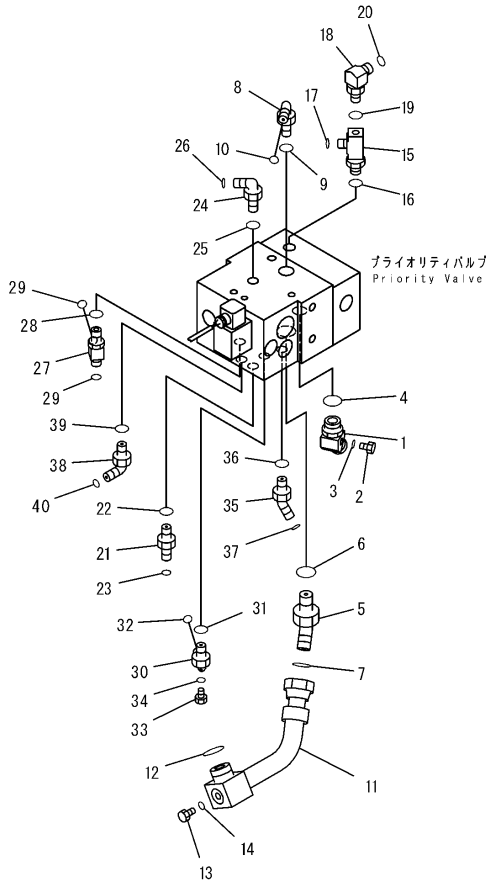

HYDRAULIC PIPING (CONNECTOR, FOR PRIORITY VALVE, 1/2)

Item	Part Number	Description	Qty.	Ref.	Serial No.
1	23B-60-33134	ELBOW	1		B10001-
2	07040-11007	PLUG	1		B10001-
3	07002-11023	O-RING	1		B10001-
4	235-60-15480	O-RING	1		B10001-
5	02783-10628	ELBOW	1		B10001-
6	07002-12434	O-RING	1		B10001-
7	02896-11018	O-RING	1		B10001-
8	02782-10628	ELBOW	1		B10001-
9	07002-12434	O-RING	1		B10001-
10	02896-11018	O-RING	1		B10001-
11	23B-60-42330	TUBE	1		B10001-
12	02896-11018	O-RING	1		B10001-
13	07040-11007	PLUG	1		B10001-
14	07002-11023	O-RING	1		B10001-
15	23B-60-41360	ELBOW	1		B10001-
16	22W-61-12220	O-RING	1		B10001-
17	02896-11012	O-RING	1		B10001-
18	21W-62-42920	ELBOW	1		B10001-
19	07002-11023	O-RING	1		B10001-
20	02896-11008	O-RING	1		B10001-
21	02781-00210	UNION	1		B10001-
22	07002-11423	O-RING	1		B10001-
23	02896-11008	O-RING	1		B10001-
24	02782-1021A	ELBOW	1		B10001-
25	07002-11423	O-RING	1		B10001-
26	02896-11008	O-RING	1		B10001-
27	23B-60-41350	TEE	1		B10001-
28	07002-11423	O-RING	1		B10001-
29	02896-11008	O-RING	2		B10001-
30	02782-50210	ELBOW	1		B10001-
31	07002-11423	O-RING	1		B10001-
32	02896-11008	O-RING	1		B10001-
33	07040-11007	PLUG	1		B10001-
34	07002-11023	O-RING	1		B10001-
35	02783-10210	ELBOW	1		B10001-
36	07002-11423	O-RING	1		B10001-

HYDRAULIC PIPING (CONNECTOR, FOR PRIORITY VALVE, 1/2)

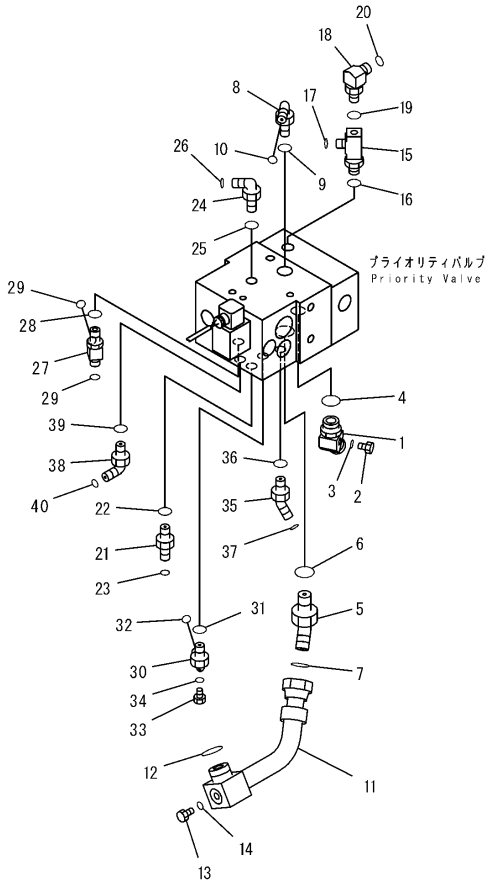

HYDRAULIC PIPING (CONNECTOR, FOR PRIORITY VALVE, 1/2)

Item	Part Number	Description	Qty.	Ref.	Serial No.
37	02896-11008	O-RING	1		B10001-
38	02782-10210	ELBOW	1		B10001-
39	07002-11423	O-RING	3		B10001-
40	02896-11008	O-RING	1		B10001-

HYDRAULIC PIPING (CONNECTOR, FOR PRIORITY VALVE, 2/2)

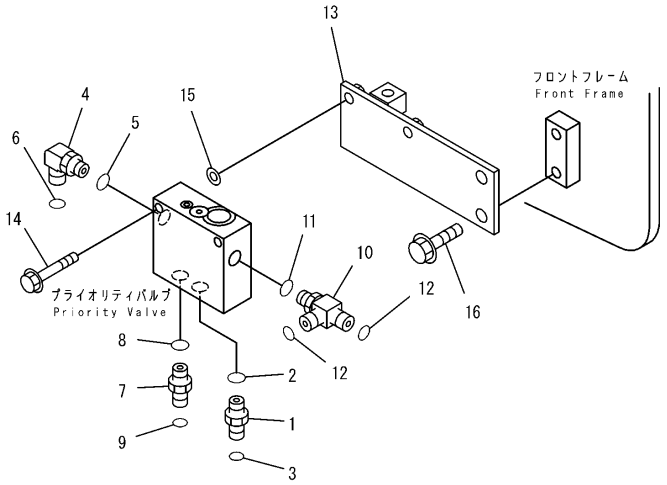

PJ2C472

HYDRAULIC PIPING (CONNECTOR, FOR PRIORITY VALVE, 2/2)

Item	Part Number	Description	Qty.	Ref.	Serial No.
1	11Y-62-12140	NIPPLE	1		B10001-
2	07000-12011	O-RING	1		B10001-
3	02896-11008	O-RING	1		B10001-
4	21W-62-43980	ELBOW	2		B10001-
5	07000-12011	O-RING	2		B10001-
6	02896-11008	O-RING	2		B10001-
7	11Y-62-12140	NIPPLE	1		B10001-
8	07000-12011	O-RING	1		B10001-
9	02896-11008	O-RING	1		B10001-
10	20U-62-41740	TEE	1		B10001-
11	07000-12011	O-RING	1		B10001-
12	02896-11008	O-RING	2		B10001-
13	23B-60-35211	PLATE	1		B10001-
14	01435-00850	BOLT	2		B10001-
15	01643-30823	WASHER	2		B10001-
16	01435-01020	BOLT	2		B10001-

HYDRAULIC PIPING (CONNECTOR, FOR BANK CONTROL VALVE)

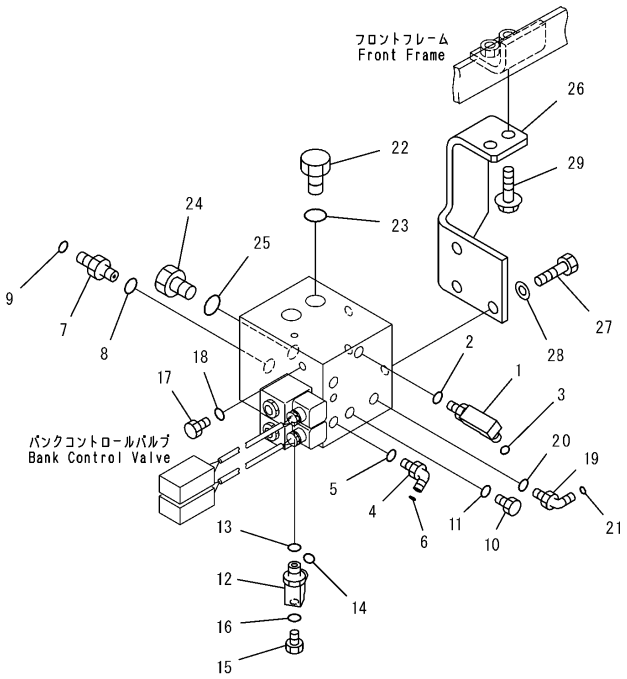

PJ2E082

HYDRAULIC PIPING (CONNECTOR, FOR BANK CONTROL VALVE)

Item	Part Number	Description	Qty.	Ref.	Serial No.
1	11Y-62-12270	ELBOW	1		B10001-
2	07002-11423	O-RING	1		B10001-
3	02896-11008	O-RING	1		B10001-
4	02782-10210	ELBOW	1		B10001-
5	07002-11423	O-RING	1		B10001-
6	02896-11008	O-RING	1		B10001-
7	02781-00315	UNION	1		B10001-
8	07002-12034	O-RING	1		B10001-
9	02896-11009	O-RING	1		B10001-
10	07040-11409	PLUG	1		B10001-
11	07002-11423	O-RING	1		B10001-
12	23B-60-41330	ELBOW	1		B10001-
13	07002-11423	O-RING	1		B10001-
14	07000-12011	O-RING	1		B10001-
15	07040-11007	PLUG	1		B10001-
16	07002-11023	O-RING	1		B10001-
17	07040-11007	PLUG	1		B10001-
18	07002-11023	O-RING	1		B10001-
19	02782-10210	ELBOW	2		B10001-
20	07002-11423	O-RING	2		B10001-
21	02896-11008	O-RING	2		B10001-
22	07040-12012	PLUG	1		B10001-
23	07002-12034	O-RING	1		B10001-
24	07040-12012	PLUG	1		B10001-
25	07002-12034	O-RING	1		B10001-
26	23B-43-42511	BRACKET	1		B10001-
27	01010-81230	BOLT	3		B10001-
28	01643-31232	WASHER	3		B10001-
29	01435-01230	BOLT	2		B10001-

HYDRAULIC PIPING (MOUNTING PARTS, FOR PIPING)

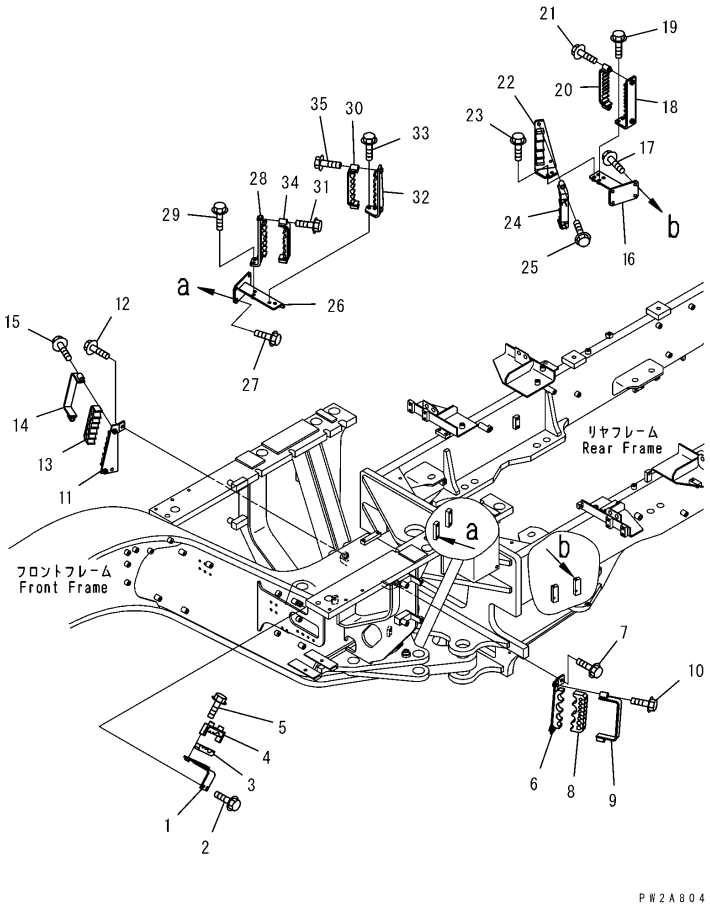

HYDRAULIC PIPING (MOUNTING PARTS, FOR PIPING)

Item	Part Number	Description	Qty.	Ref.	Serial No.
1	23B-60-35430	BRACKET	2		B10001-
2	01435-01020	BOLT	4		B10001-
3	23B-60-35420	CUSHION	2		B10001-
4	23B-60-35410	CLAMP	2		B10001-
5	01435-01065	BOLT	4		B10001-
6	23B-60-35442	BRACKET	1		B10001-
7	01435-01020	BOLT	2		B10001-
8	23B-60-35451	CUSHION	1		B10001-
9	23B-60-35463	CLAMP	1		B10001-
10	01435-01055	BOLT	2		B10001-
11	23B-60-35472	BRACKET, R.H.	1		B10001-
12	01435-01020	BOLT	2		B10001-
13	23B-60-35482	CUSHION	1		B10001-
14	23B-60-35492	CLAMP	1		B10001-
15	01435-01055	BOLT	2		B10001-
16	23B-60-35510	BRACKET	1		B10001-
17	01435-01020	BOLT	4		B10001-
18	23B-60-35520	BRACKET	1		B10001-
19	01435-01025	BOLT	2		B10001-
20	23B-60-35541	CLAMP	1		B10001-
21	01435-01055	BOLT	2		B10001-
22	23B-60-35530	BRACKET	1		B10001-
23	01435-01025	BOLT	2		B10001-
24	23B-60-35551	BRACKET	1		B10001-
25	01435-01055	BOLT	2		B10001-
26	23B-60-35590	BRACKET	1		B10001-
27	01435-01020	BOLT	4		B10001-
28	23B-60-35610	BRACKET	1		B10001-
29	01435-01025	BOLT	2		B10001-
30	23B-60-35361	CLAMP	1		B10001-
31	01435-01055	BOLT	2		B10001-
32	23B-60-35620	BRACKET	1		B10001-
33	01435-01025	BOLT	2		B10001-
34	23B-60-35641	CLAMP	1		B10001-
35	01435-01055	BOLT	2		B10001-

HYDRAULIC PIPING (BRAKE LINE)

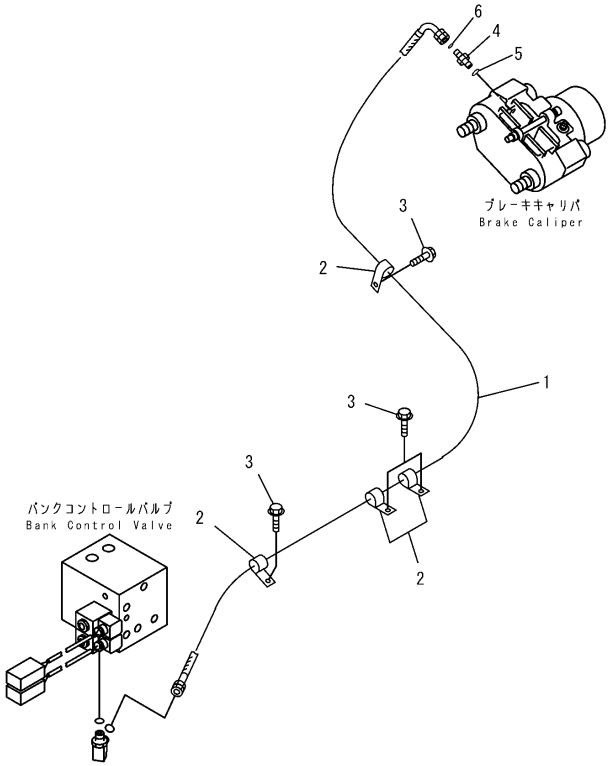

PJ2C474

HYDRAULIC PIPING (BRAKE LINE)

Item	Part Number	Description	Qty.	Ref.	Serial No.
1	23B-60-43161	HOSE	1		B10001-
2	04434-51310	CLIP	4		B10001-
3	01435-01016	BOLT	4		B10001-
4	11Y-62-12120	UNION	1		B10001-
5	416-62-11480	O-RING	1		B10001-
6	02896-11008	O-RING	1		B10001-

HYDRAULIC PIPING (DIFFERENTIAL PIPING)

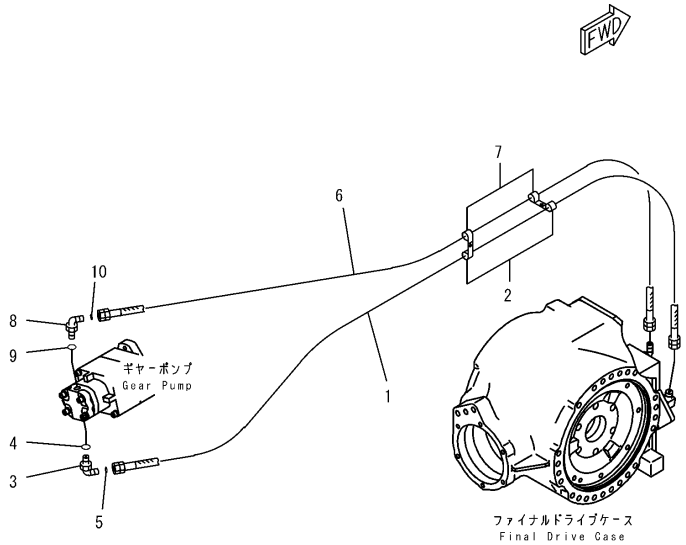

PJ2C475

HYDRAULIC PIPING (DIFFERENTIAL PIPING)

Item	Part Number	Description	Qty.	Ref.	Serial No.
1	02762-00519	HOSE	1		B10001-
2	04434-52310	CLIP	2		B10001-
3	56B-43-17360	ELBOW	1		B10001-
4	22W-62-13420	O-RING	1		B10001-
5	02896-11015	O-RING	1		B10001-
6	02762-00319	HOSE	1		B10001-
7	04434-51510	CLIP	2		B10001-
8	56B-88-12310	ELBOW	1		B10001-
9	07000-12018	O-RING	1		B10001-
10	02896-11009	O-RING	1		B10001-

HYDRAULIC PIPING (RIPPER PIPING)

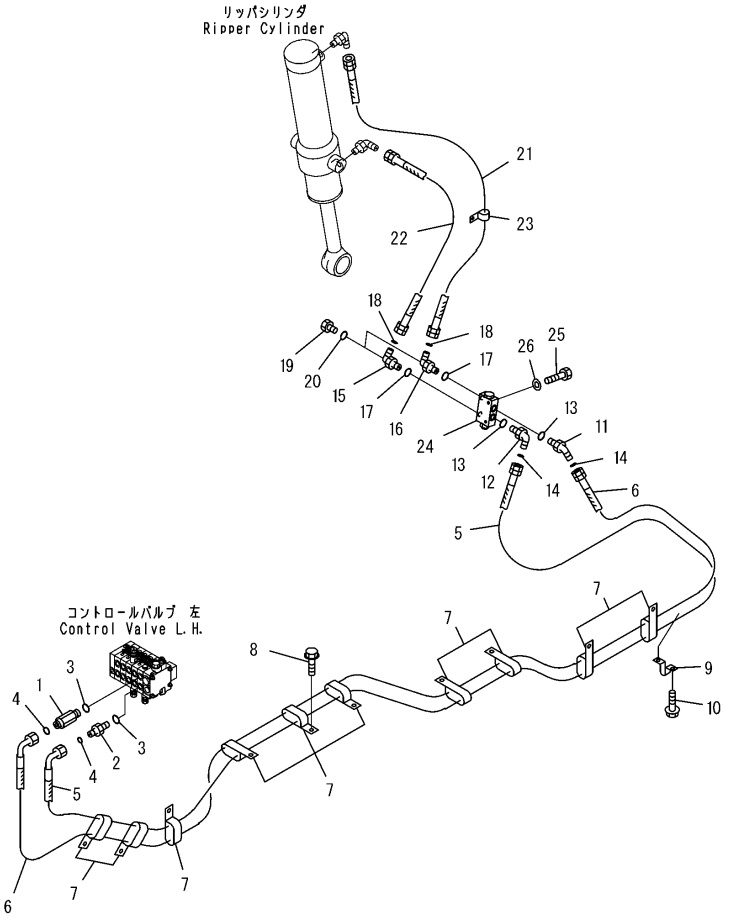

HYDRAULIC PIPING (RIPPER PIPING)

Item	Part Number	Description	Qty.	Ref.	Serial No.
1	23B-60-41220	UNION	1		B10001-
2	02781-00313	UNION	1		B10001-
3	07002-11823	O-RING	2		B10001-
4	02896-11009	O-RING	2		B10001-
5	23B-60-43170	HOSE	1		B10001-
6	23B-60-43180	HOSE	1		B10001-
7	04435-51810	CLIP	10		B10001-
8	01435-01016	BOLT	9		B10001-
9	232-745-2131	CLIP	1		B10001-
10	01435-01220	BOLT	2		B10001-
11	02783-10315	ELBOW	1		B10001-
12	02782-10317	ELBOW	1		B10001-
13	07002-12034	O-RING	2		B10001-
14	02896-11009	O-RING	2		B10001-
15	02782-50315	ELBOW	2		B10001-
16	02782-50315	ELBOW	2		B10001-
17	07002-12034	O-RING	2		B10001-
18	02896-11009	O-RING	2		B10001-
19	07040-11007	PLUG	2		B10001-
20	07002-11023	O-RING	2		B10001-
21	02765-B03A4	HOSE	1		B10001-
22	02765-B0309	HOSE	1		B10001-
23	04434-52112	CLIP	1		B10001-
24	(235-61-12300)	VALVE ASSEMBLY, RIPPER	1		B10001-
25	01010-80855	BOLT	2		B10001-
26	01643-30823	WASHER	2		B10001-

PILOT CHECK VALVE (INNER PARTS) (FOR RIPPER)

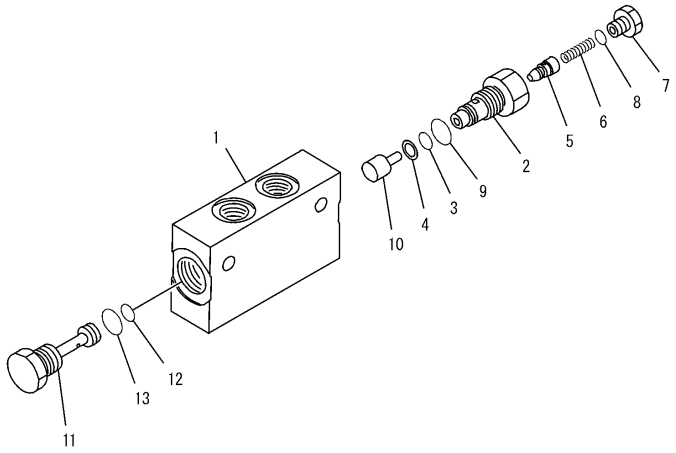

PV59106

H5200-13A1

PILOT CHECK VALVE (INNER PARTS) (FOR RIPPER)

Item	Part Number	Description	Qty.	Ref.	Serial No.
	235-61-12300	VALVE ASSEMBLY	1		B10001-
1	235-61-11110	.BODY	1		B10001-
	235-61-11400	.VALVE ASSEMBLY	1		B10001-
2	☆	..SLEEVE	1		B10001-
3	07000-12014	..O-RING	1		B10001-
4	07001-02014	..RING	1		B10001-
5	☆	..VALVE	1		B10001-
6	235-61-11150	..SPRING	1		B10001-
7	235-61-11140	..PLUG	1		B10001-
8	07002-11423	..O-RING	1		B10001-
9	07002-12434	..O-RING	1		B10001-
10	235-61-11220	.PISTON	1		B10001-
11	235-61-11210	.PLUG	1		B10001-
12	235-61-11230	.O-RING	1		B10001-
13	07002-12434	.O-RING	1		B10001-

HIDRAULIC PIPING (BANK CYLINDER LINE)

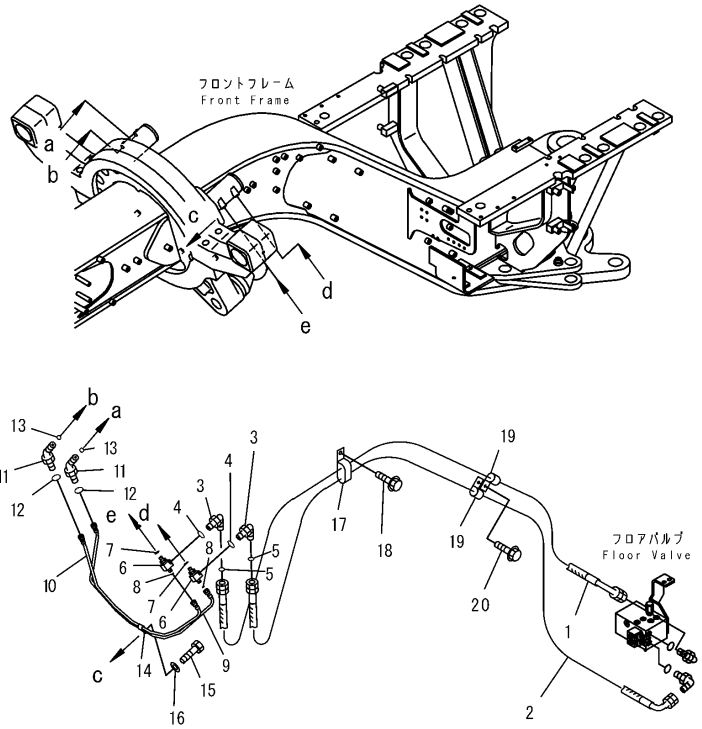

HIDRAULIC PIPING (BANK CYLINDER LINE)

Item	Part Number	Description	Qty.	Ref.	Serial No.
1	23A-60-43110	HOSE	1		B10001-
2	23B-60-43530	HOSE	1		B10001-
3	02782-10210	ELBOW	2		B10001-
4	07002-11423	O-RING	2		B10001-
5	02896-11008	O-RING	2		B10001-
6	424-43-37510	TEE	2		B10001-
7	07002-11423	O-RING	2		B10001-
8	02896-11008	O-RING	2		B10001-
9	23B-60-42420	TUBE	1		B10001-
10	23B-60-42410	TUBE	1		B10001-
11	02783-10210	ELBOW	2		B10001-
12	07002-11423	O-RING	2		B10001-
13	02896-11008	O-RING	2		B10001-
14	23B-60-34970	CLIP	1		B10001-
15	01010-81020	BOLT	3		B10001-
16	01643-31032	WASHER	1		B10001-
17	04435-51310	CLIP	1		B10001-
18	01435-01016	BOLT	1		B10001-
19	04434-51310	CLIP	2		B10001-
20	01435-01016	BOLT	1		B10001-

HIDRAULIC PIPING (CONNECTING PARTS, FOR MAIN VALVE)

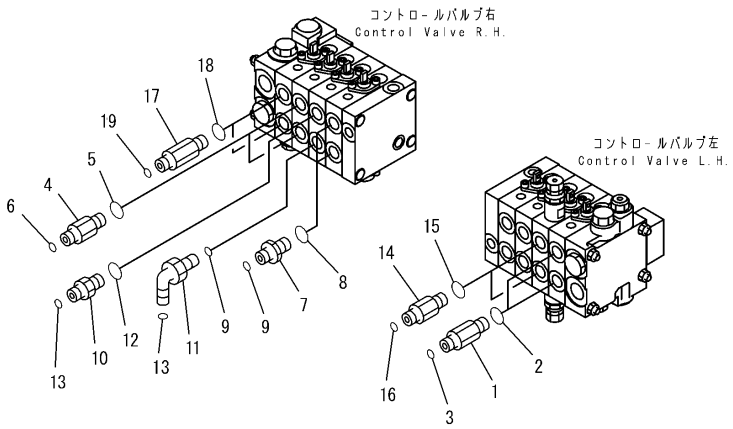

PJ2C478

HIDRAULIC PIPING (CONNECTING PARTS, FOR MAIN VALVE)

Item	Part Number	Description	Qty.	Ref.	Serial No.
1	21W-62-42411	NIPPLE	2		B10001-
2	07002-11823	O-RING	2		B10001-
3	02896-11009	O-RING	2		B10001-
4	20U-62-41940	UNION	2		B10001-
5	07002-11823	O-RING	2		B10001-
6	02896-11009	O-RING	2		B10001-
7	23B-60-41240	UNION	2		B10001-
8	07002-11823	O-RING	2		B10001-
9	02896-11009	O-RING	2		B10001-
10	02781-00313	UNION	1		B10001-
11	02782-10313	ELBOW	1		B10001-
12	07002-11823	O-RING	2		B10001-
13	02896-11009	O-RING	2		B10001-
14	20U-62-41940	UNION	2		B10001-
15	07002-11823	O-RING	2		B10001-
16	02896-11009	O-RING	2		B10001-
17	21W-62-42411	NIPPLE	2		B10001-
18	07002-11823	O-RING	2		B10001-
19	02896-11009	O-RING	2		B10001-

HIDRAULIC PIPING (BLADE SIDE SHIFT CYLINDER LINE)

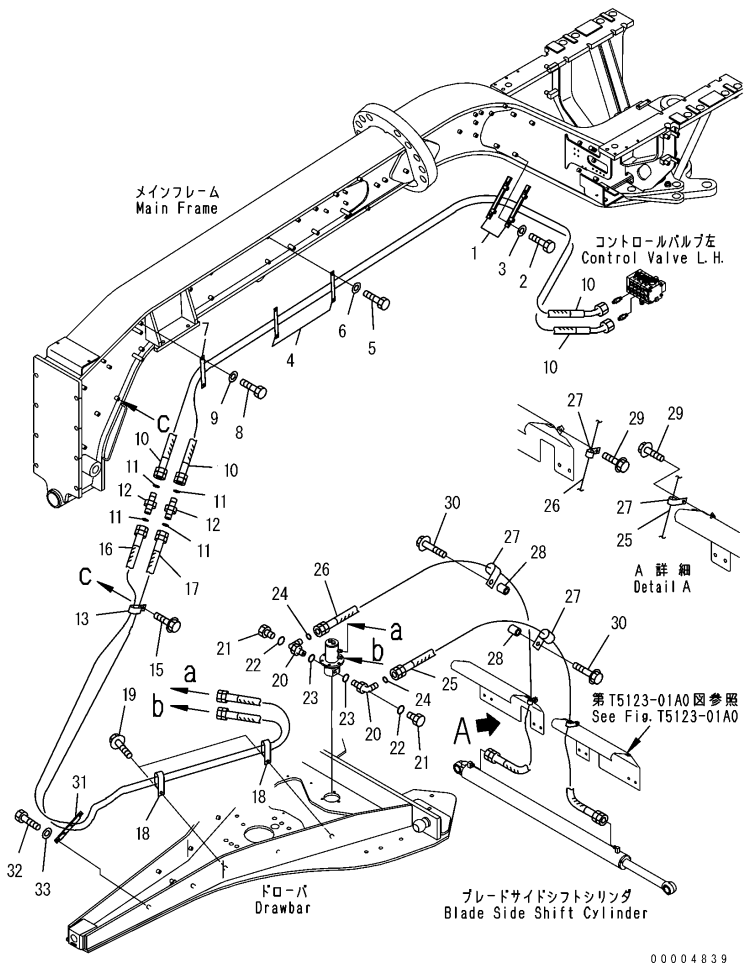

HIDRAULIC PIPING (BLADE SIDE SHIFT CYLINDER LINE)

Item	Part Number	Description	Qty.	Ref.	Serial No.
1	23B-60-34513	PLATE, REAR	4		B10001-
2	01010-81020	BOLT	8		B10001-
3	01643-31032	WASHER	8		B10001-
4	23B-60-34521	PLATE, FRONT	4		B10001-
5	01010-81020	BOLT	8		B10001-
6	01643-31032	WASHER	8		B10001-
7	23B-60-34530	PLATE, FRONT	2		B10001-
8	01010-81020	BOLT	4		B10001-
9	01643-31032	WASHER	4		B10001-
10	02755-00340	HOSE	2		B10001-
11	02896-11009	O-RING	4		B10001-
12	8255-62-4230	JOINT	2		B10001-
13	04435-51810	CLIP	2		B10001-
15	01435-01016	BOLT	1		B10001-
16	02765-B0332	HOSE	1		B10001-
17	02765-B0333	HOSE	1		B10001-
18	04435-51810	CLIP	2		B10001-
19	01435-01016	BOLT	2		B10001-
20	02782-50315	ELBOW	2		B10001-
21	07040-11007	PLUG	2		B10001-
22	07002-11023	O-RING	2		B10001-
23	07002-12034	O-RING	2		B10001-
24	02896-11009	O-RING	2		B10001-
25	02765-B0314	HOSE	1		B10001-
26	02765-B0315	HOSE	1		B10001-
27	04434-51810	CLIP	4		B10001-
28	419-15-17541	SPACER	2		B10001-
29	01435-01016	BOLT	2		B10001-
30	01435-01040	BOLT	2		B10001-
31	23B-60-35350	PLATE, DRAWBAR	1		B10001-
32	01010-81020	BOLT	2		B10001-
33	01643-31032	WASHER	2		B10001-

HIDRAULIC PIPING (BLADE LIFT CYLINDER LINE)

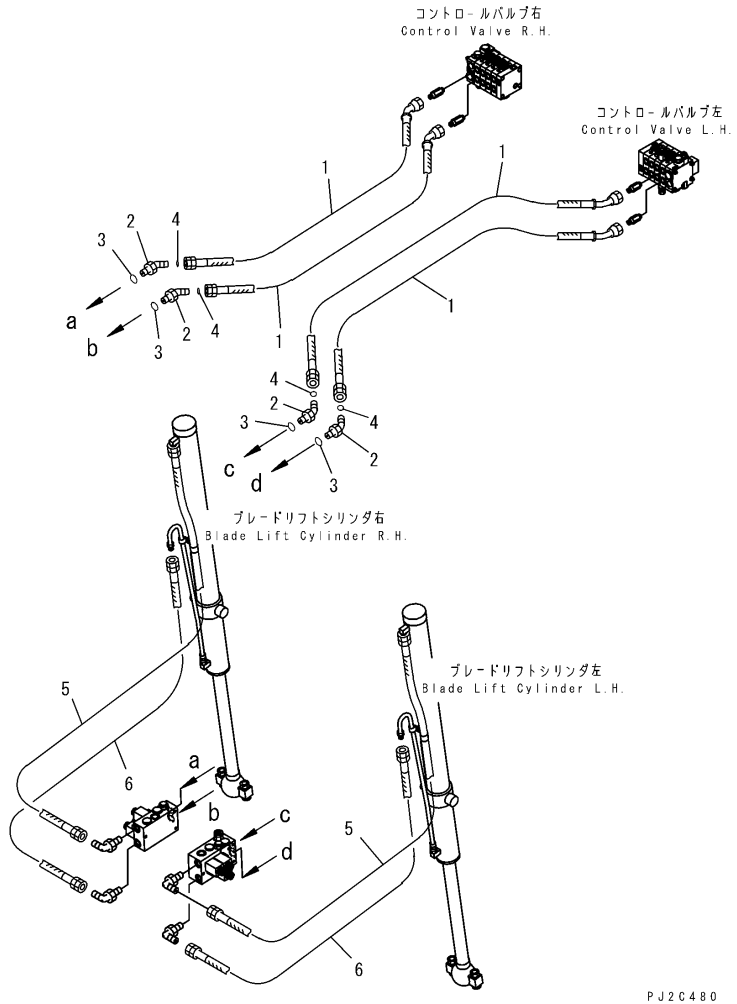

HIDRAULIC PIPING (BLADE LIFT CYLINDER LINE)

Item	Part Number	Description	Qty.	Ref.	Serial No.
1	02755-00319	HOSE	4		B10001-
2	02783-10315	ELBOW	4		B10001-
3	07002-12034	O-RING	4		B10001-
4	02896-11009	O-RING	4		B10001-
5	23B-60-43470	HOSE	2		B10001-
6	23B-60-43460	HOSE	2		B10001-

HIDRAULIC PIPING (DRAWBAR SIDE SHIFT CYLINDER LINE)

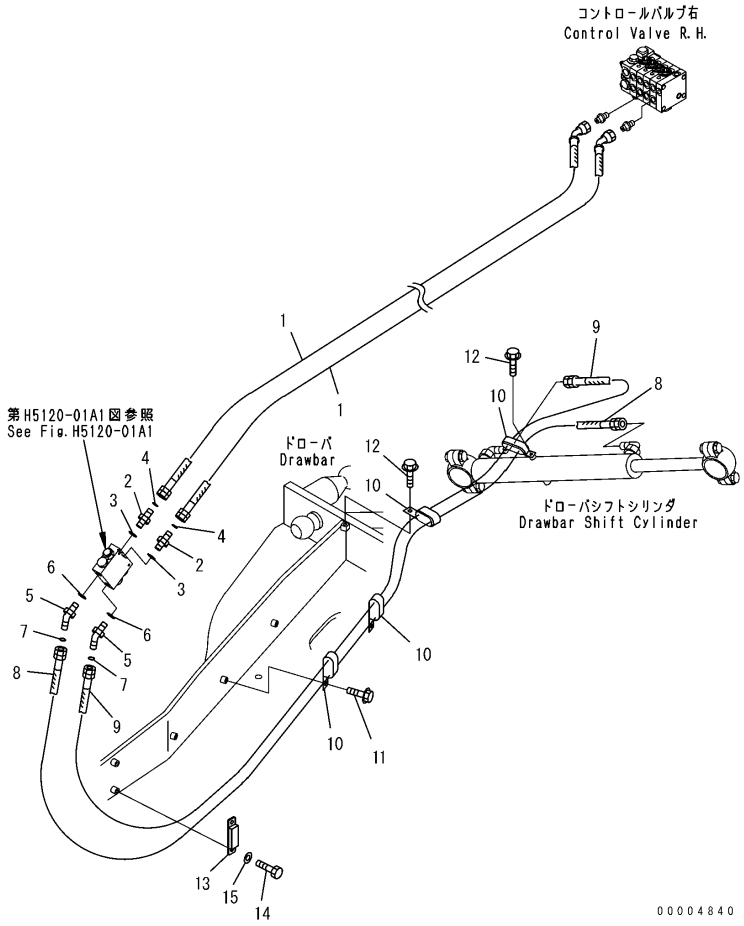

HIDRAULIC PIPING (DRAWBAR SIDE SHIFT CYLINDER LINE)

Item	Part Number	Description	Qty.	Ref.	Serial No.
1	02755-00340	HOSE	2		B10001-
2	02781-00315	UNION	2		B10001-
3	07002-12034	O-RING	2		B10001-
4	02896-11009	O-RING	2		B10001-
5	02783-10315	ELBOW	2		B10001-
6	07002-12034	O-RING	2		B10001-
7	02896-11009	O-RING	2		B10001-
8	02765-B0342	HOSE	1		B10001-
9	02765-B0340	HOSE	1		B10001-
10	04435-51810	CLIP	4		B10001-
11	01435-01020	BOLT	2		B10001-
12	01435-01016	BOLT	2		B10001-
13	23B-60-35360	PLATE	1		B10001-
14	01010-81020	BOLT	2		B10001-
15	01643-31032	WASHER	2		B10001-

HIDRAULIC PIPING (LEANING CYLINDER LINE)

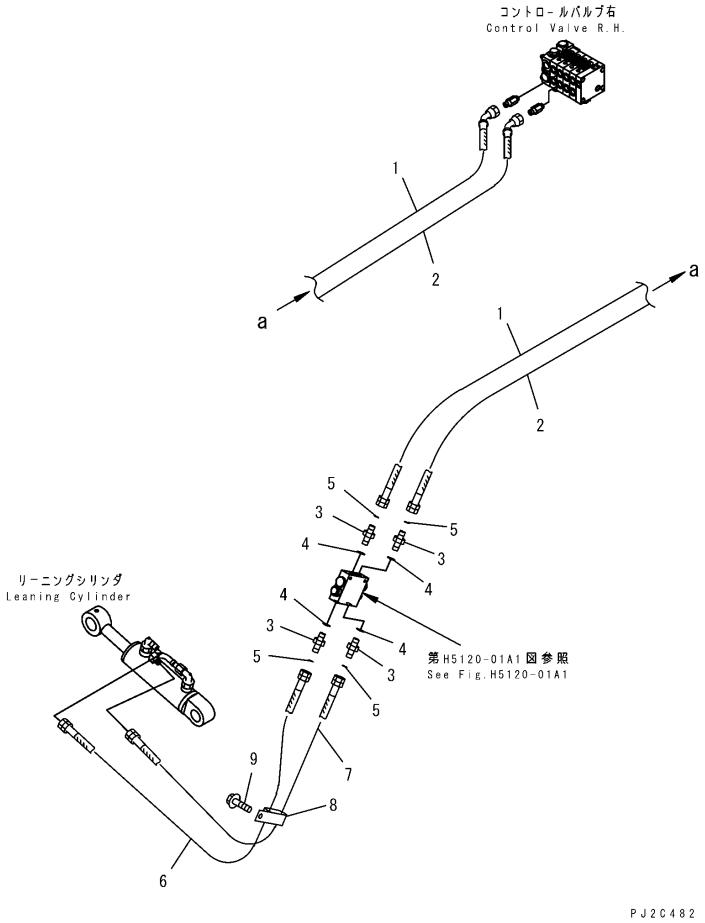

HIDRAULIC PIPING (LEANING CYLINDER LINE)

Item	Part Number	Description	Qty.	Ref.	Serial No.
1	02755-00339	HOSE	1		B10001-
2	02755-00339	HOSE	1		B10001-
3	02781-00315	UNION	4		B10001-
4	07002-12034	O-RING	4		B10001-
5	02896-11009	O-RING	4		B10001-
6	02765-B0310	HOSE	1		B10001-
7	02765-B0309	HOSE	1		B10001-
8	04435-51810	CLIP	1		B10001-
9	01435-01016	BOLT	1		B10001-

HIDRAULIC PIPING (ARTICULATE CYLINDER LINE)

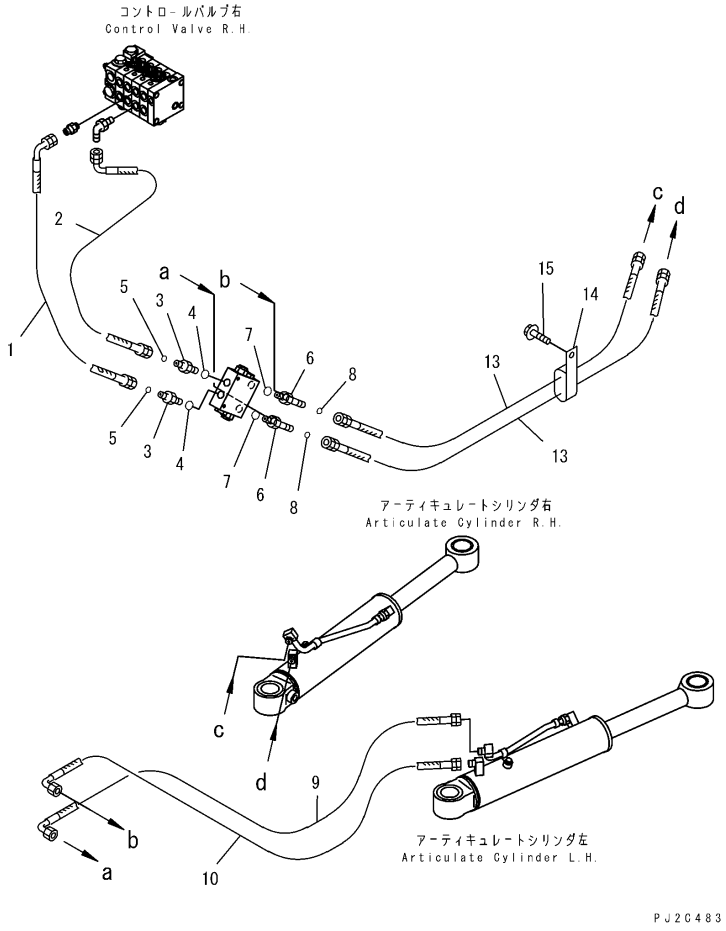

HIDRAULIC PIPING (ARTICULATE CYLINDER LINE)

Item	Part Number	Description	Qty.	Ref.	Serial No.
1	23B-60-43430	HOSE	1		B10001-
2	23B-60-43390	HOSE	1		B10001-
3	02781-00315	UNION	2		B10001-
4	07002-12034	O-RING	2		B10001-
5	02896-11009	O-RING	2		B10001-
6	424-43-37370	NIPPLE	2		B10001-
7	07002-12034	O-RING	2		B10001-
8	02896-11009	O-RING	2		B10001-
9	02754-00315	HOSE	1		B10001-
10	02754-00314	HOSE	1		B10001-
13	02765-B0307	HOSE	2		B10001-
14	04435-51810	CLIP	1		B10001-
15	01435-01016	BOLT	1		B10001-

HIDRAULIC PIPING (BLADE ACCUMULATOR LINE)

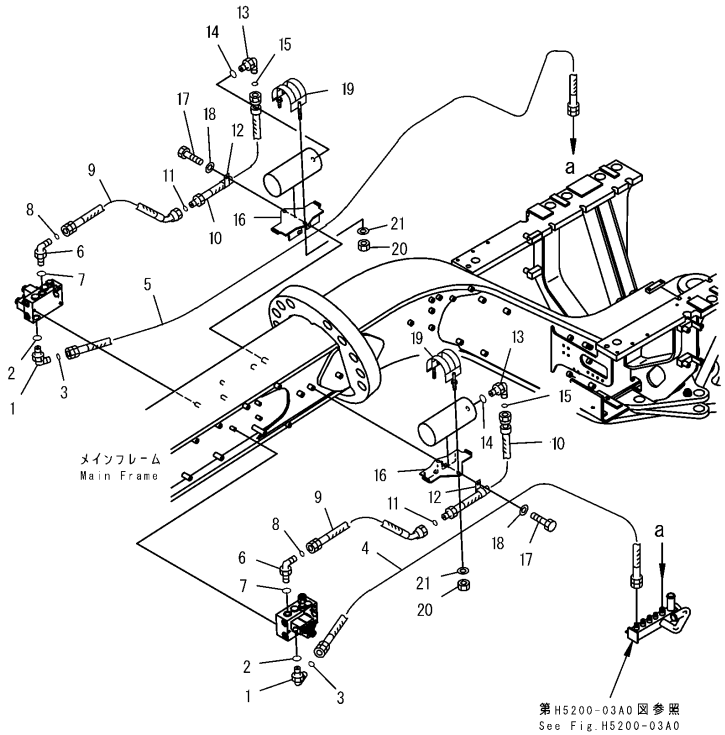

H5210-09B0

HIDRAULIC PIPING (BLADE ACCUMULATOR LINE)

Item	Part Number	Description	Qty.	Ref.	Serial No.
1	02782-1031C	ELBOW	2		B10001-
2	07002-12034	O-RING	2		B10001-
3	02896-11009	O-RING	2		B10001-
4	02760-00326	HOSE	1		B10001-
5	02760-00331	HOSE	1		B10001-
6	02782-1031C	ELBOW	2		B10001-
7	07002-12034	O-RING	2		B10001-
8	02896-11009	O-RING	2		B10001-
9	23B-833-4210	HOSE	2		B10001-
10	23B-833-4110	TUBE	2		B10001-
11	02896-11009	O-RING	2		B10001-
12	04434-51510	CLIP	2		B10001-
13	02782-10315	ELBOW	2		B10001-
14	07002-12034	O-RING	2		B10001-
15	02896-11009	O-RING	2		B10001-
16	23B-833-3561	BRACKET	2		B10001-
17	01010-81025	BOLT	4		B10001-
18	01643-31032	WASHER	4		B10001-
19	23B-833-3630	BAND	2		B10001-
20	421-40-12440	NUT	4		B10001-
21	01643-31232	WASHER	4		B10001-

HIDRAULIC PIPING (POWER TILT CYLINDER LINE)

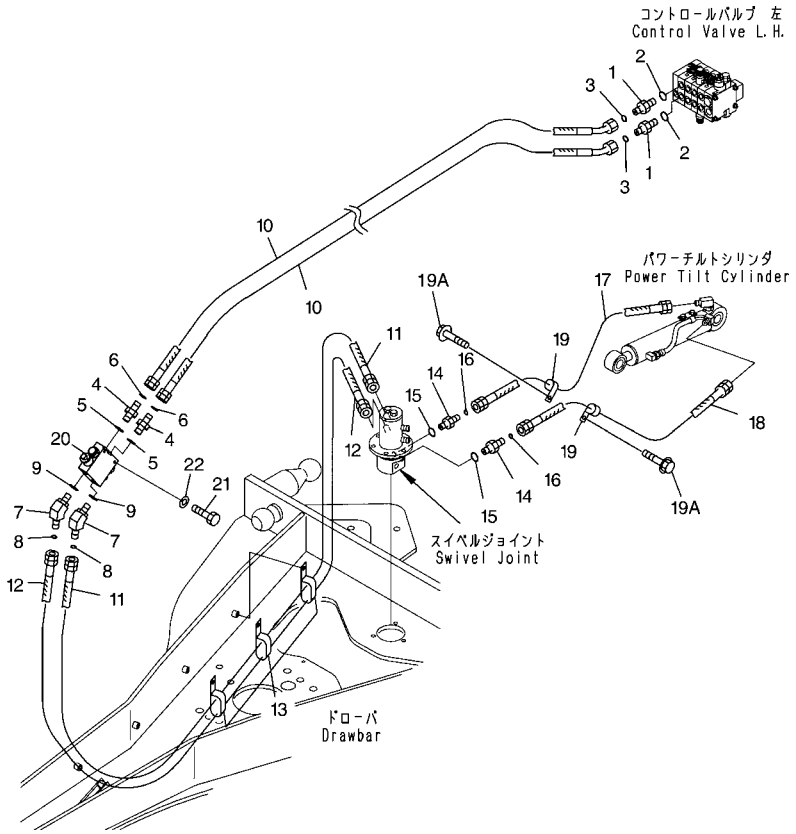

HIDRAULIC PIPING (POWER TILT CYLINDER LINE)

Item	Part Number	Description	Qty.	Ref.	Serial No.
1	23B-60-41240	UNION	2		B10001-
2	07002-11823	O-RING	2		B10001-
3	02896-11009	O-RING	2		B10001-
4	02781-00315	UNION	2		B10001-
5	07002-12034	O-RING	2		B10001-
6	02896-11009	O-RING	2		B10001-
7	02783-10315	ELBOW	2		B10001-
8	02896-11009	O-RING	2		B10001-
9	07002-12034	O-RING	2		B10001-
10	02755-00341	HOSE	2		B10001-
11	02765-B0336	HOSE	1		B10001-
12	02765-B0337	HOSE	1		B10001-
13	04435-51810	CLIP	2		B10001-
14	02781-00315	UNION	2		B10001-
15	07002-12034	O-RING	2		B10001-
16	02896-11009	O-RING	2		B10001-
17	02765-B0308	HOSE	1		B10001-
18	02765-B03A7	HOSE	1		B10001-
19	04434-51810	CLIP	2		B10001-
19A	01435-01040	BOLT	2		B10001-
20	(23B-61-31400)	VALVE ASSEMBLY, PILOT CHECK	1		B10001-
21	01010-80855	BOLT	2		B10001-
22	01643-30823	WASHER	2		B10001-

PILOT CHECK VALVE (INNER PARTS) (FOR POWER TILT)

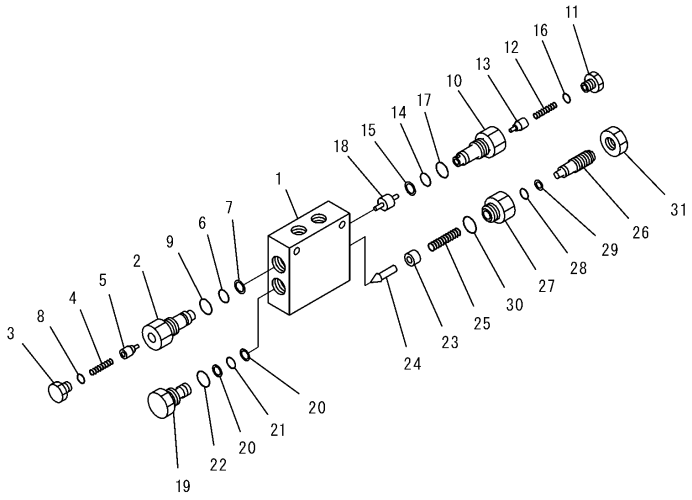

PILOT CHECK VALVE (INNER PARTS) (FOR POWER TILT)

Item	Part Number	Description	Qty.	Ref.	Serial No.
	(23B-61-31400)	VALVE ASSEMBLY, PILOT CHECK	1		B10001-
1	235-61-13210	.BODY	1		B10001-
	235-61-11400	.VALVE ASSEMBLY	1		B10001-
2	☆	..SLEEVE	1		B10001-
3	235-61-11140	..PLUG	1		B10001-
4	235-61-11150	..SPRING	1		B10001-
5	☆	..VALVE	1		B10001-
6	07000-12014	..O-RING	1		B10001-
7	07001-12014	..RING, BACK-UP	1		B10001-
8	07002-11423	..O-RING	1		B10001-
9	07002-12434	..O-RING	1		B10001-
	235-61-14300	.VALVE ASSEMBLY	1		B10001-
10	☆	..SLEEVE	1		B10001-
11	235-61-11140	..PLUG	1		B10001-
12	235-61-11150	..SPRING	1		B10001-
13	☆	..VALVE	1		B10001-
14	07000-12014	..O-RING	1		B10001-
15	07001-12014	..RING, BACK-UP	1		B10001-
16	07002-11423	..O-RING	1		B10001-
17	07002-12434	..O-RING	1		B10001-
18	235-61-11120	.PISTON	1		B10001-
19	☆	.PLUG	1		B10001-
20	07001-02014	.RING, BACK-UP	2		B10001-
21	07000-12014	.O-RING	1		B10001-
22	07002-12434	.O-RING	1		B10001-
23	235-61-13250	.COLLAR	1		B10001-
24	☆	.VALVE	1		B10001-
25	235-61-11620	.SPRING	1		B10001-
26	235-61-13220	.BOLT	1		B10001-
27	235-61-13230	.SLEEVE	1		B10001-
28	07000-12010	.O-RING	1		B10001-
29	07001-02010	.RING, BACK-UP	1		B10001-
30	07002-12434	.O-RING	1		B10001-
31	235-61-13270	.NUT	1		B10001-

HIDRAULIC PIPING (SCARIFIER LINE)

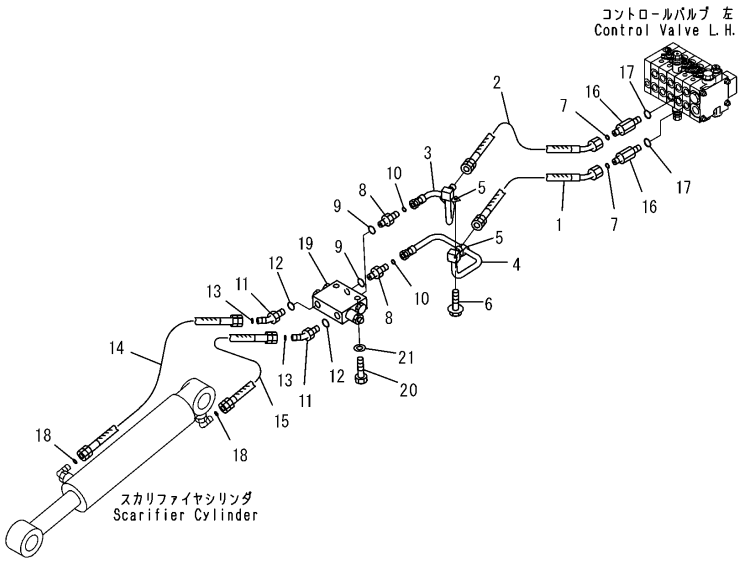

PW2C624

HIDRAULIC PIPING (SCARIFIER LINE)

Item	Part Number	Description	Qty.	Ref.	Serial No.
1	23A-60-43120	HOSE	1		B10001-
2	23A-60-43130	HOSE	1		B10001-
3	23A-60-42120	TUBE	1		B10001-
4	23A-60-42110	TUBE	1		B10001-
5	04434-51510	CLIP	2		B10001-
6	01435-01016	BOLT	1		B10001-
7	02896-11009	O-RING	2		B10001-
8	02781-00315	UNION	2		B10001-
9	07002-12034	O-RING	2		B10001-
10	02896-11009	O-RING	2		B10001-
11	23B-60-41170	ELBOW	2		B10001-
12	07002-12034	O-RING	2		B10001-
13	02896-11009	O-RING	2		B10001-
14	02753-003A7	HOSE	1		B10001-
15	02753-00304	HOSE	1		B10001-
16	23B-60-41220	UNION	2		B10001-
17	07002-11823	O-RING	2		B10001-
18	02896-11009	O-RING	2		B10001-
19	(23B-61-31300)	VALVE ASSEMBLY, PILOT CHECK	1		B10001-
20	01010-80855	BOLT	2		B10001-
21	01643-30823	WASHER	2		B10001-

PILOT CHECK VALVE (FOR SCARIFIER)

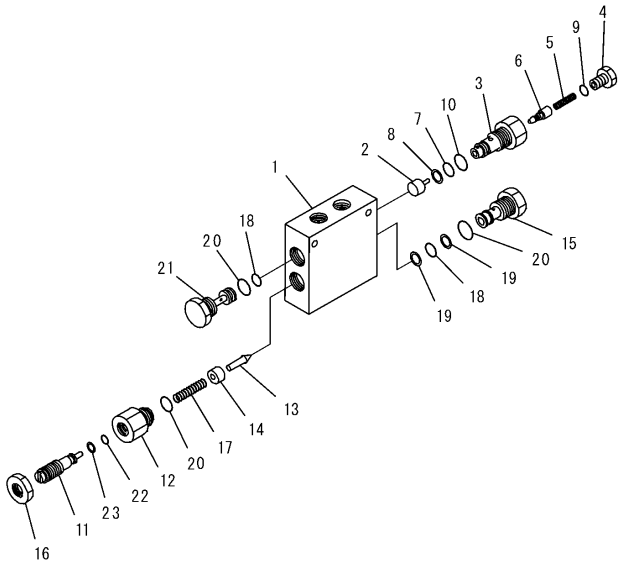

PW2A786

PILOT CHECK VALVE (FOR SCARIFIER)

Item	Part Number	Description	Qty.	Ref.	Serial No.
	23B-61-31300	VALVE ASSEMBLY	1		B10001-
1	235-61-13210	.BODY	1		B10001-
2	235-61-11220	.PISTON	1		B10001-
	235-61-12200	.VALVE ASSEMBLY	1		B10001-
3	☆	..SLEEVE	1		B10001-
4	235-61-11140	..PLUG	1		B10001-
5	235-61-11150	..SPRING	1		B10001-
6	☆	..VALVE	1		B10001-
7	07000-12014	..O-RING	1		B10001-
8	07001-12014	..RING, BACK-UP	1		B10001-
9	07002-11423	..O-RING	1		B10001-
10	07002-12434	..O-RING	1		B10001-
11	235-61-13220	.BOLT	1		B10001-
12	235-61-13230	.SLEEVE	1		B10001-
13	235-61-13240	.VALVE	1		B10001-
14	235-61-13250	.COLLAR	1		B10001-
15	235-61-13260	.PLUG	1		B10001-
16	235-61-13270	.NUT	1		B10001-
17	235-61-11620	.SPRING	1		B10001-
18	07000-12014	.O-RING	2		B10001-
19	07001-02014	.RING, BACK-UP	2		B10001-
20	07002-12434	.O-RING	3		B10001-
21	235-61-11210	.PLUG	1		B10001-
22	07000-12010	.O-RING	1		B10001-
23	07001-02010	.RING, BACK-UP	1		B10001-

HYDRAULIC PIPING (TRANSMISSION COOLING)

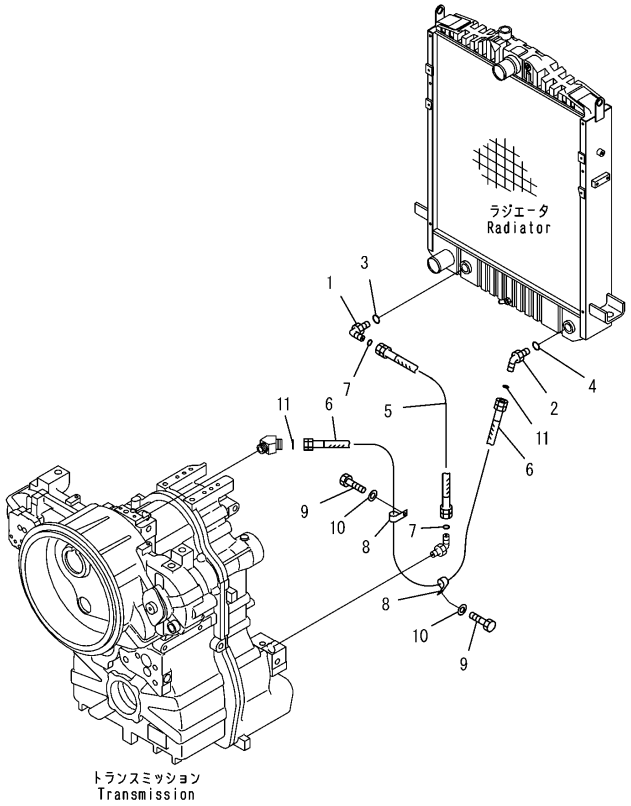

PJ2C487

HYDRAULIC PIPING (TRANSMISSION COOLING)

Item	Part Number	Description	Qty.	Ref.	Serial No.
1	21W-62-42640	ELBOW	1		B10001-
2	207-62-71410	ELBOW	1		B10001-
3	07002-13334	O-RING	1		B10001-
4	07002-23334	O-RING	1		B10001-
5	23B-16-31760	HOSE	1		B10001-
6	23B-16-31740	HOSE	1		B10001-
7	23B-60-33240	O-RING	2		B10001-
8	04434-53411	CLIP	2		B10001-
9	01010-81016	BOLT	2		B10001-
10	01643-31032	WASHER	2		B10001-
11	421-09-31140	O-RING	2		B10001-

FRAME AND RELATED PARTS

FRONT FRAME AND MOUNTING PIN

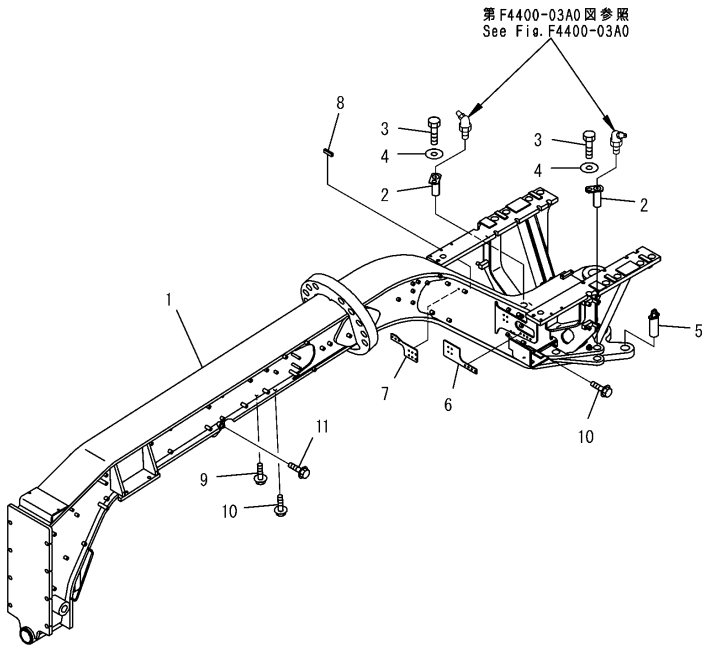

PJ2A820

FRONT FRAME AND MOUNTING PIN

Item	Part Number	Description	Qty.	Ref.	Serial No.
1	23A-46-31106	FRAME, FRONT	1		B10001-
2	23B-46-31361	PIN	2		B10001-
3	01010-81220	BOLT	2		B10001-
4	175-54-34170	WASHER	2		B10001-
5	23B-46-31423	PIN	1		B10001-
6	23B-60-32770	SHEET	1		B10001-
7	23B-60-32780	SHEET	1		B10001-
8	23B-60-35841	SEAL, EDGE	1		B10001-
9	01435-00812	BOLT	2		B10001-
10	01435-01014	BOLT	3		B10001-
11	01435-01220	BOLT	1		B10001-

REAR FRAME AND MOUNTING PIN

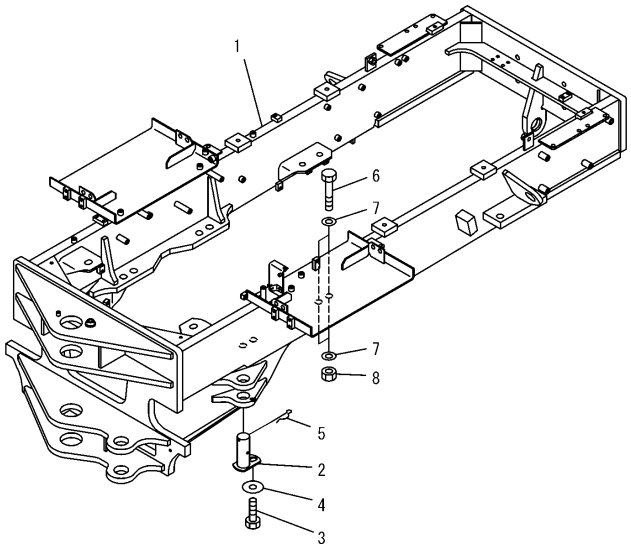

00014151

J4120-01A0A

REAR FRAME AND MOUNTING PIN

Item	Part Number	Description	Qty.	Ref.	Serial No.
1	23A-46-33100	FRAME, REAR	1		B10001-
	☆	.FRAME, REAR	1		B10001-
2	23B-46-31381	PIN	2		B10001-
3	01010-81220	BOLT	2		B10001-
4	175-54-34170	WASHER	2		B10001-
5	237-46-11250	PIN	2		B10001-
6	01011-62710	BOLT	8		B10001-
7	01643-32780	WASHER	16		B10001-
8	01580-02722	NUT	8		B10001-

HINGE PIN (FOR FRONT AND REAR FRAME)

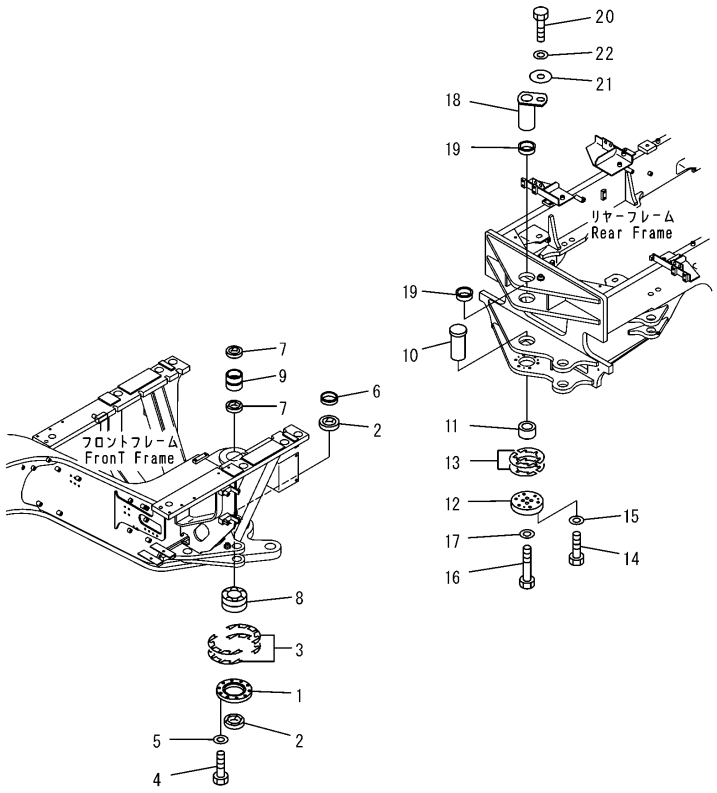

PJ2A822

HINGE PIN (FOR FRONT AND REAR FRAME)

Item	Part Number	Description	Qty.	Ref.	Serial No.
1	421-46-11710	RETAINER	1		B10001-
2	421-09-11310	SEAL, DUST	2		B10001-
3	421-46-11371	SHIM, 0.1MM	20		B10001-
	421-46-11381	SHIM, 0.5MM	20		B10001-
4	01010-81240	BOLT	10		B10001-
5	01643-31232	WASHER	10		B10001-
6	424-46-11171	SPACER	1		B10001-
7	419-09-11110	SEAL, DUST	2		B10001-
8	421-46-11361	BEARING	1		B10001-
9	419-70-11820	BUSHING	1		B10001-
10	424-46-11182	SHAFT	1		B10001-
11	424-46-11160	SPACER	1		B10001-
12	23B-46-33110	COVER	1		B10001-
13	23B-46-33120	SHIM, 0.2MM	10		B10001-
	23B-46-33130	SHIM, 0.5MM	8		B10001-
	23B-46-33160	SHIM, 1.0MM	4		B10001-
14	01010-81250	BOLT	6		B10001-
15	01643-31232	WASHER	6		B10001-
16	01010-61695	BOLT	4		B10001-
17	01643-31645	WASHER	4		B10001-
18	23B-46-33150	SHAFT	1		B10001-
19	23B-46-33140	BUSHING	2		B10001-
20	01010-81625	BOLT	1		B10001-
21	421-70-11280	WASHER	1		B10001-
22	01643-31645	WASHER	1		B10001-

STEERING CYLINDER

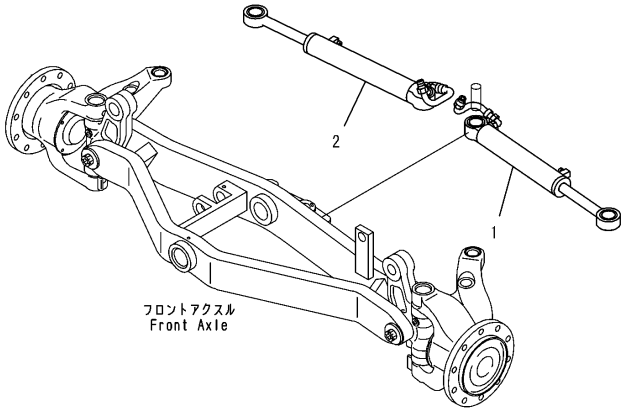

PW2A823

STEERING CYLINDER

Item	Part Number	Description	Qty.	Ref.	Serial No.
1	(707-00-X7G50)	CYLINDER GROUP, STEERING, R.H.	1		B10001-
2	(707-00-X7G60)	CYLINDER GROUP, STEERING, L.H.	1		B10001-

REMOTE GREASE

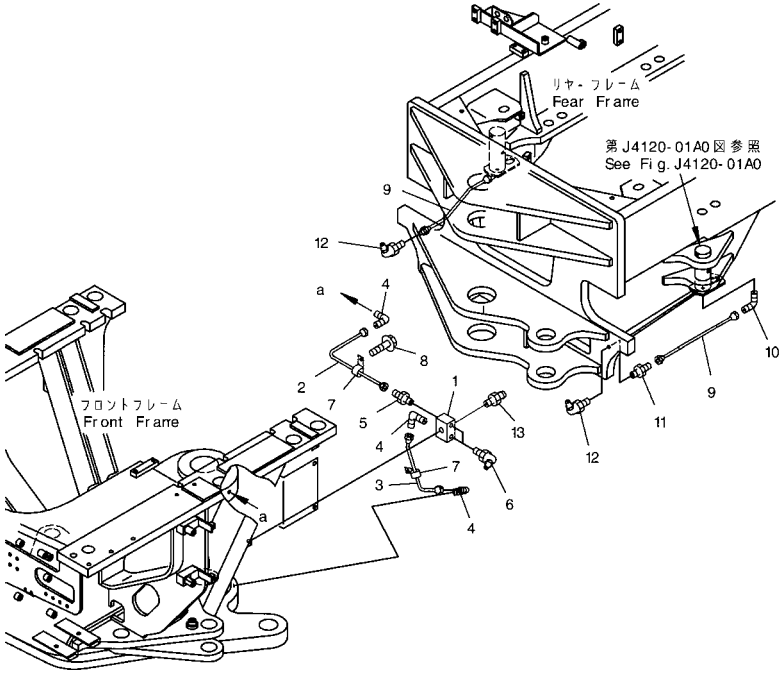

REMOTE GREASE

Item	Part Number	Description	Qty.	Ref.	Serial No.
1	23B-46-31540	BLOCK	1		B10001-
2	23B-46-31551	TUBE	1		B10001-
3	23B-46-31570	TUBE	1		B10001-
4	421-09-12540	ELBOW	3		B10001-
5	423-09-12110	CONNECTOR	1		B10001-
6	07020-00675	FITTING, GREASE	2		B10001-
7	04434-50610	CLIP	2		B10001-
8	01435-01014	BOLT	2		B10001-
9	23B-46-32510	TUBE	2		B10001-
10	421-09-12540	ELBOW	2		B10001-
11	423-09-12110	CONNECTOR	2		B10001-
12	07020-00675	FITTING, GREASE	2		B10001-
13	07020-00000	FITING, GREASE	2		B10001-

LEANING CYLINDER

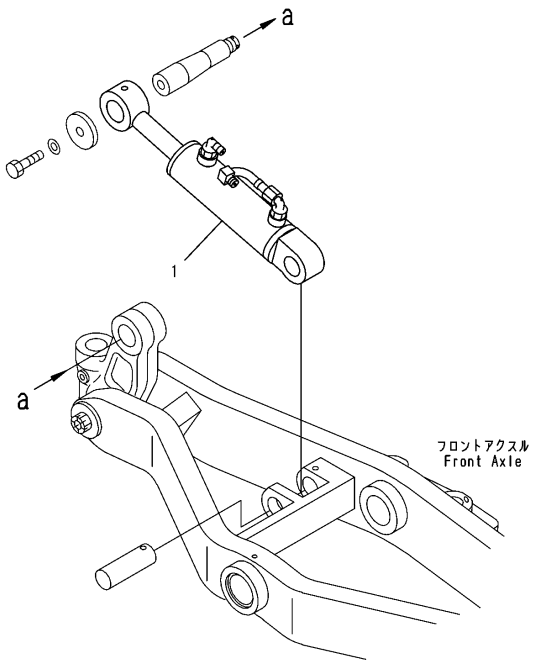

PW2A825

LEANING CYLINDER

Item	Part Number	Description	Qty.	Ref.	Serial No.
1	(707-00-X7G90)	CYLINDER GROUP	1		B10001-

OPERATOR' S COMPARTMENT AND CONTROL SYSTEM

OPERATOR'S SEAT

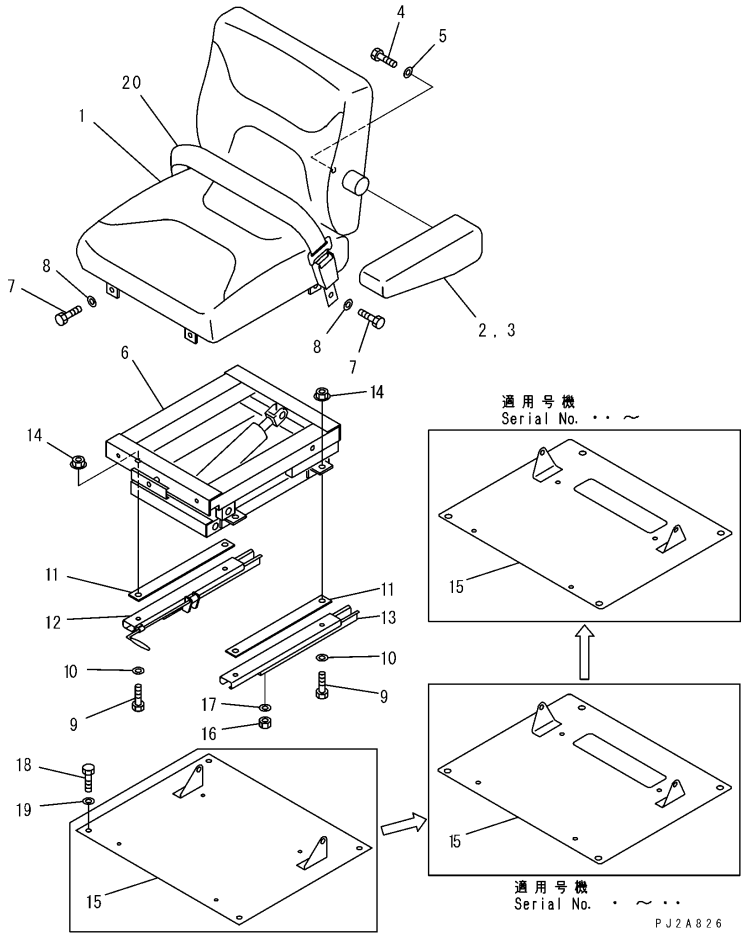

OPERATOR'S SEAT

Item	Part Number	Description	Qty.	Ref.	Serial No.
	23B-57-31201	SEAT ASSEMBLY, OPERATOR'S	1		B10001-
1	23B-57-31210	.SEAT	1		B10001-
2	23D-57-31120	.ARM	1		B10001-
3	23E-57-11480	.PROTECTOR	1		B10001-
4	01010-81016	.BOLT	1		B10001-
5	23E-57-11490	.WASHER	1		B10001-
6	23E-57-11442	.LIFTER ASSEMBLY	1		B10001-
7	01010-80820	.BOLT	4		B10001-
8	01643-30823	.WASHER	4		B10001-
9	01010-80825	.BOLT	4		B10001-
10	01643-30823	.WASHER	4		B10001-
11	23E-57-11470	.SPACER	2		B10001-
12	23E-57-11450	.ADJUSTER, SLIDE, R.H.	1		B10001-
13	23E-57-11460	.ADJUSTER, SLIDE, L.H.	1		B10001-
14	01584-00806	.NUT	4		B10001-
15	23B-57-31113	BRACKET	1		B10001-
	□23B-57-31112	BRACKET	1		B10001-
	23B-57-31111	BRACKET	1		B10001-
16	01580-10806	NUT	4		B10001-
17	01643-30823	WASHER	4		B10001-
18	01010-81225	BOLT	4		B10001-
19	01643-31232	WASHER	4		B10001-
20	09409-70000	BELT, LAP	1		B10001-

OPERATOR'S SEAT (FABRIC SEAT, WITH SUSPENSION COVER)

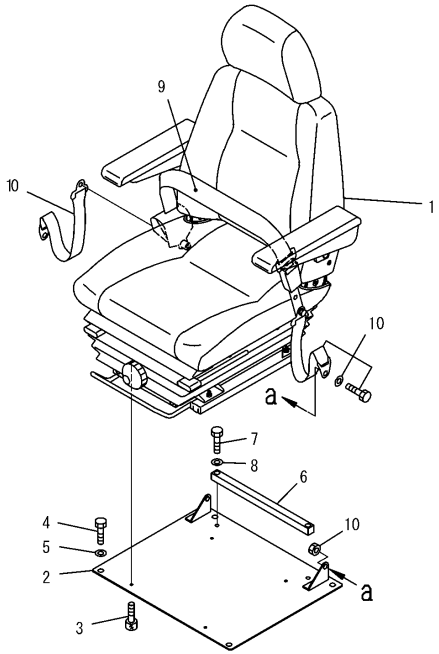

PW2B114

OPERATOR'S SEAT (FABRIC SEAT, WITH SUSPENSION COVER)

Item	Part Number	Description	Qty.	Ref.	Serial No.
1	23B-57-31301	SEAT ASSEMBLY, OPERATOR'S	1		B10001-
2	23B-57-31143	BRACKET	1		B10001-
3	01252-70820	BOLT	4		B10001-
4	01010-81225	BOLT	4		B10001-
5	01643-31232	WASHER	4		B10001-
6	23B-57-31220	PLATE	1		B10001-
7	01010-81240	BOLT	2		B10001-
8	01643-51232	WASHER	2		B10001-
9	09409-70000	BELT, LAP	1		B10001-
10	09409-20000	BELT, TETHER	2		B10001-
	09409-00001	.BOLT	2		B10001-
	09409-00002	.WASHER	2		B10001-
	09409-00003	.NUT	2		B10001-

SEAT BELT (2-POINT SEAT BELT, WIDTH 51MM)

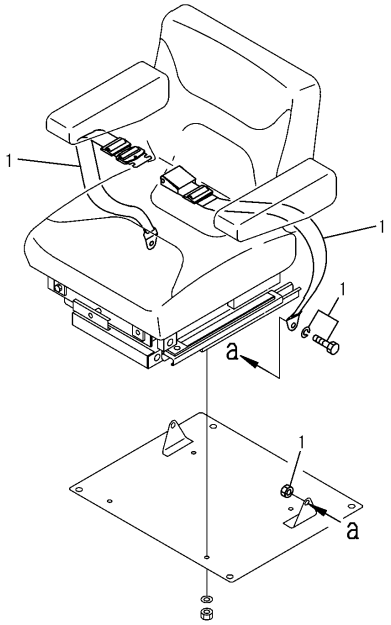

00009326

SEAT BELT (2-POINT SEAT BELT, WIDTH 51MM)

Item	Part Number	Description	Qty.	Ref.	Serial No.
1	09409-60000	BELT	1		B10001-
	09409-00001	.BOLT	2		B10001-
	09409-00002	.WASHER	2		B10001-
	09409-00003	.NUT	2		B10001-

SEAT BELT (2-POINT SEAT BELT, WIDTH 78MM)

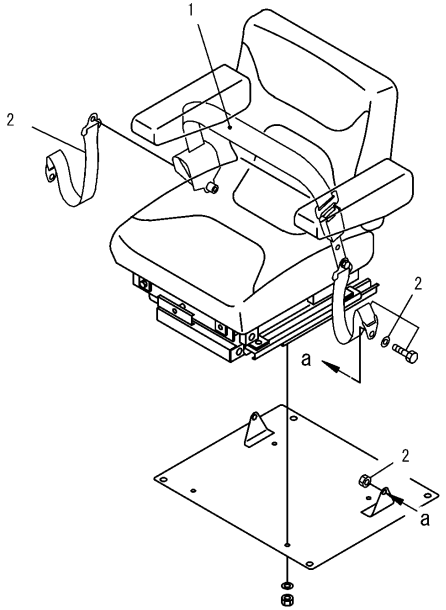

PJ2C494

SEAT BELT (2-POINT SEAT BELT, WIDTH 78MM)

Item	Part Number	Description	Qty.	Ref.	Serial No.
1	09409-70000	BELT, LAP	1		B10001-
2	09409-20000	BELT, TETHER	2		B10001-
	09409-00001	.BOLT	2		B10001-
	09409-00002	.WASHER	2		B10001-
	09409-00003	.NUT	2		B10001-

OPERATOR'S CAB (CAB FRAME AND GLASS) (LOW ROPS CAB)

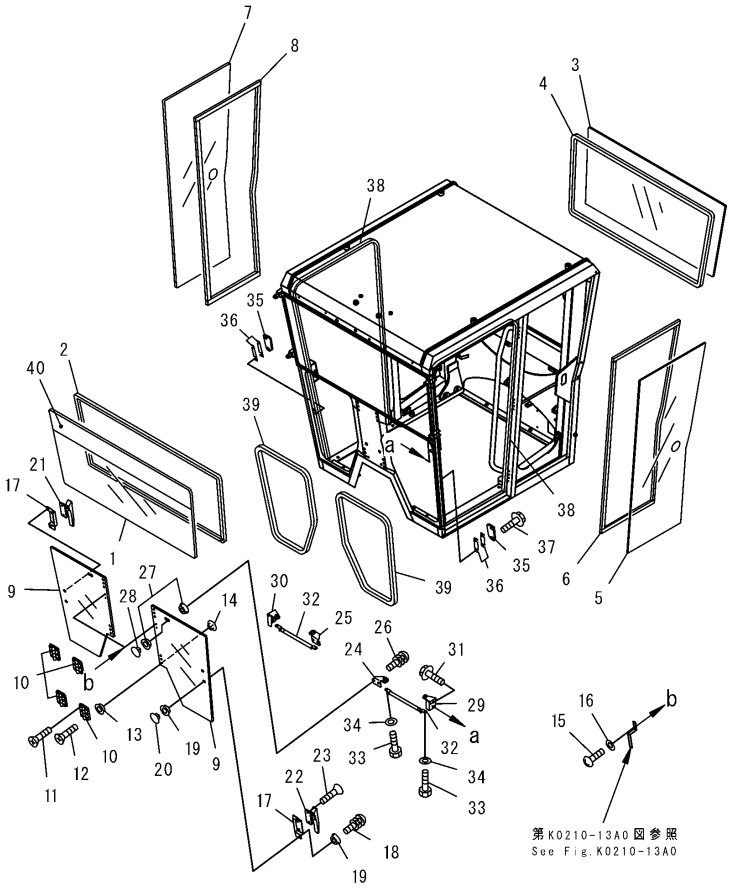

OPERATOR'S CAB (CAB FRAME AND GLASS) (LOW ROPS CAB)

Item	Part Number	Description	Qty.	Ref.	Serial No.
	23B-952-4080	CAB ASSEMBLY	1		B10001-
	23B-952-3022	CAB ASSEMBLY	1		B10001-
	23B-952-3021	CAB ASSEMBLY	1		B10001-
	23B-952-3020	CAB ASSEMBLY	1		B10001-
		THESE ASSEMBLIES CONSIST OF ALL PARTS SHOWN IN FIGS.K0210-01A0 TO K0210-17A0.			
1	23A-952-1112	.GLASS, FRONT, UPPER	1		B10001-
2	23A-952-1121	.WEATHER STRIP	1		B10001-
3	23A-952-1131	.GLASS, REAR	1		B10001-
4	23A-952-1141	.WEATHER STRIP	1		B10001-
5	23A-952-1151	.GLASS, L.H.	1		B10001-
6	23A-952-1160	.RUBBER	1		B10001-
7	23A-952-1171	.GLASS, R.H.	1		B10001-
8	23A-952-1160	.RUBBER	1		B10001-
9	23A-952-1192	.GLASS, FRONT, LOWER	2		B10001-
10	23B-952-2160	.HINGE	4		B10001-
11	01224-70620	.SCREW	12		B10001-
12	01224-70616	.SCREW	12		B10001-
13	205-54-51730	.PACKING	32		B10001-
14	23B-952-2120	.RETAINER	16		B10001-
15	01225-70610	.SCREW	4		B10001-
16	23S-55-51970	.WASHER	4		B10001-
17	23A-952-1212	.BRACKET	4		B10001-
18	01023-70610	.SCREW	4		B10001-
19	205-54-51730	.PACKING	8		B10001-
20	23B-952-2120	.RETAINER	4		B10001-
21	418-923-2770	.HANDLE, R.H.	1		B10001-
22	418-923-2760	.HANDLE, L.H.	1		B10001-
23	01224-70416	.SCREW	8		B10001-
24	23A-952-1221	.BRACKET, L.H.	1		B10001-
25	23A-952-1271	.BRACKET, R.H.	1		B10001-
26	01023-70610	.SCREW	4		B10001-
27	205-54-51730	.PACKING	8		B10001-
28	23B-952-2120	.RETAINER	4		B10001-
29	23A-952-1312	.BRACKET, L.H.	1		B10001-
30	23A-952-1322	.BRACKET, R.H.	1		B10001-

OPERATOR'S CAB (CAB FRAME AND GLASS) (LOW ROPS CAB)

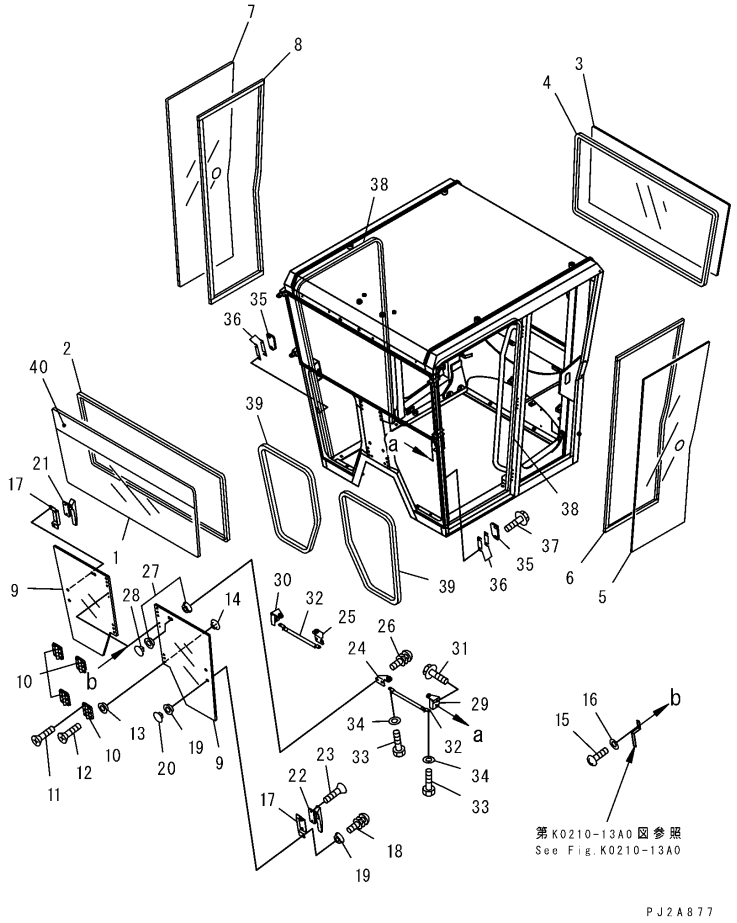

OPERATOR'S CAB (CAB FRAME AND GLASS) (LOW ROPS CAB)

Item	Part Number	Description	Qty.	Ref.	Serial No.
31	01435-40612	.BOLT	4		B10001-
32	23A-952-1351	.GAS SPRING	2		B10001-
33	23A-952-1361	.BOLT	4		B10001-
34	01643-70823	.WASHER	8		B10001-
35	23A-952-1330	.PLATE	4		B10001-
36	23A-952-1340	.SHIM, 1.6MM	64		B10001-
37	01435-40612	.BOLT	4		B10001-
38	23A-952-1370	.PLATE	2		B10001-
39	23A-952-1380	.SEAL	2		B10001-
40	23B-952-1860	.PLATE	1		B10001-

OPERATOR'S CAB (CAB FRAME AND GLASS) (HIGH ROPS CAB)

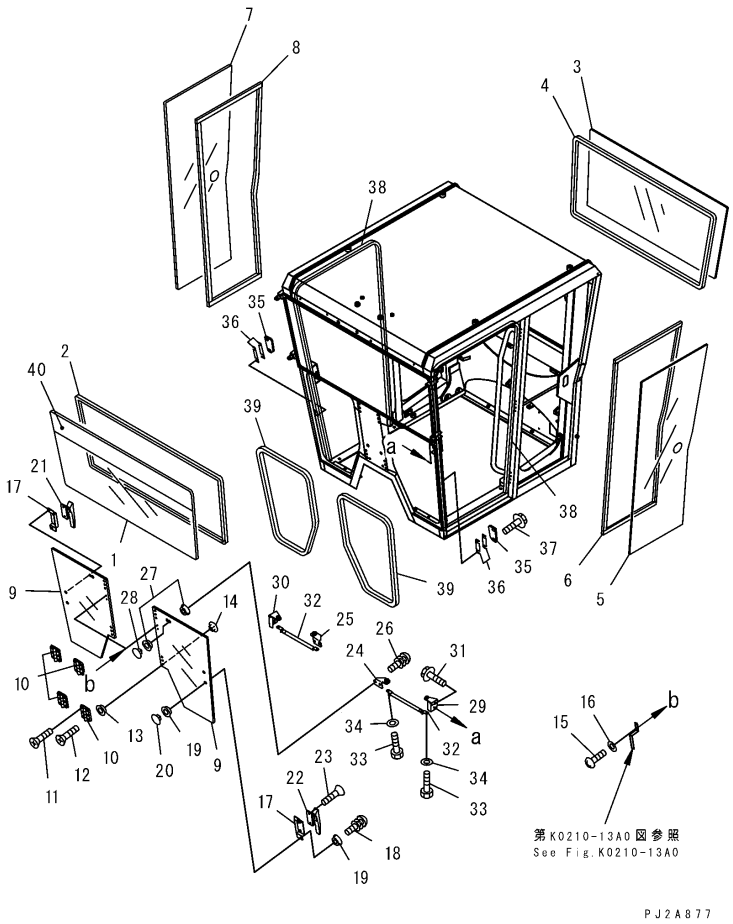

OPERATOR'S CAB (CAB FRAME AND GLASS) (HIGH ROPS CAB)

Item	Part Number	Description	Qty.	Ref.	Serial No.
	23B-953-4080	CAB ASSEMBLY	1		B10001-
	23B-953-3022	CAB ASSEMBLY	1		B10001-
	23B-953-3021	CAB ASSEMBLY	1		B10001-
	23B-953-3020	CAB ASSEMBLY	1		B10001-
		THESE ASSEMBLIES CONSIST OF ALL PARTS SHOWN IN FIGS.K0210-01B0 TO K0210-17A0.			
1	23A-953-1110	.GLASS, FRONT, UPPER	1		B10001-
2	23A-953-1120	.WEATHER STRIP	1		B10001-
3	23A-953-1130	.GLASS, REAR	1		B10001-
4	23A-953-1140	.WEATHER STRIP	1		B10001-
5	23A-953-1150	.GLASS, L.H.	1		B10001-
6	23A-953-1160	.DAM	1		B10001-
7	23A-953-1170	.GLASS, R.H.	1		B10001-
8	23A-953-1160	.DAM	1		B10001-
9	23A-952-1192	.GLASS, FRONT, LOWER	2		B10001-
10	23B-952-2160	.HINGE	4		B10001-
11	01224-70620	.SCREW	12		B10001-
12	01224-70616	.SCREW	12		B10001-
13	205-54-51730	.PACKING	32		B10001-
14	23B-952-2120	.RETAINER	16		B10001-
15	01225-70610	.SCREW	4		B10001-
16	23S-55-51970	.WASHER	4		B10001-
17	23A-952-1212	.BRACKET	4		B10001-
18	01023-70610	.SCREW	4		B10001-
19	205-54-51730	.PACKING	8		B10001-
20	23B-952-2120	.RETAINER	4		B10001-
21	418-923-2770	.HANDLE, R.H.	1		B10001-
22	418-923-2760	.HANDLE, L.H.	1		B10001-
23	01224-70416	.SCREW	8		B10001-
24	23A-952-1221	.BRACKET, L.H.	1		B10001-
25	23A-952-1271	.BRACKET, R.H.	1		B10001-
26	01023-70610	.SCREW	4		B10001-
27	205-54-51730	.PACKING	8		B10001-
28	23B-952-2120	.RETAINER	4		B10001-
29	23A-952-1312	.BRACKET, L.H.	1		B10001-
30	23A-952-1322	.BRACKET, R.H.	1		B10001-

OPERATOR'S CAB (CAB FRAME AND GLASS) (HIGH ROPS CAB)

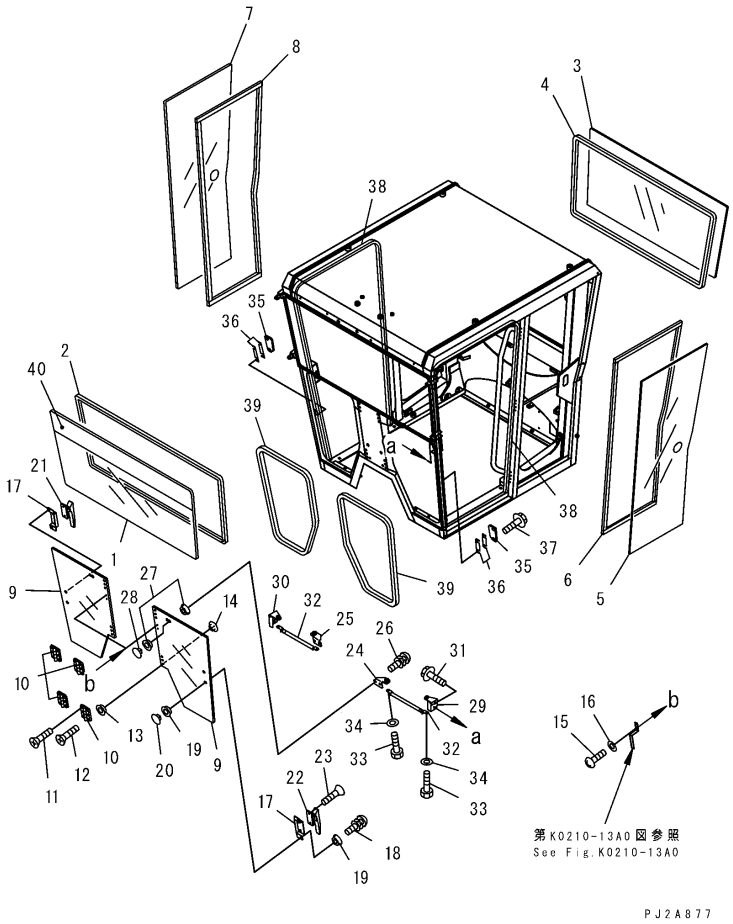

OPERATOR'S CAB (CAB FRAME AND GLASS) (HIGH ROPS CAB)

Item	Part Number	Description	Qty.	Ref.	Serial No.
31	01435-40612	.BOLT	4		B10001-
32	23A-952-1351	.GAS SPRING	2		B10001-
33	23A-952-1361	.BOLT	4		B10001-
34	01643-70823	.WASHER	8		B10001-
35	23A-952-1330	.PLATE	4		B10001-
36	23A-952-1340	.SHIM, 1.6MM	64		B10001-
37	01435-40612	.BOLT	4		B10001-
38	23A-953-1370	.SEAL	2		B10001-
39	23A-952-1380	.SEAL	2		B10001-
40	23B-953-1860	.PLATE, MARK	1		B10001-

OPERATOR'S CAB (CAB EXTERIOR PARTS) (LOW ROPS CAB)

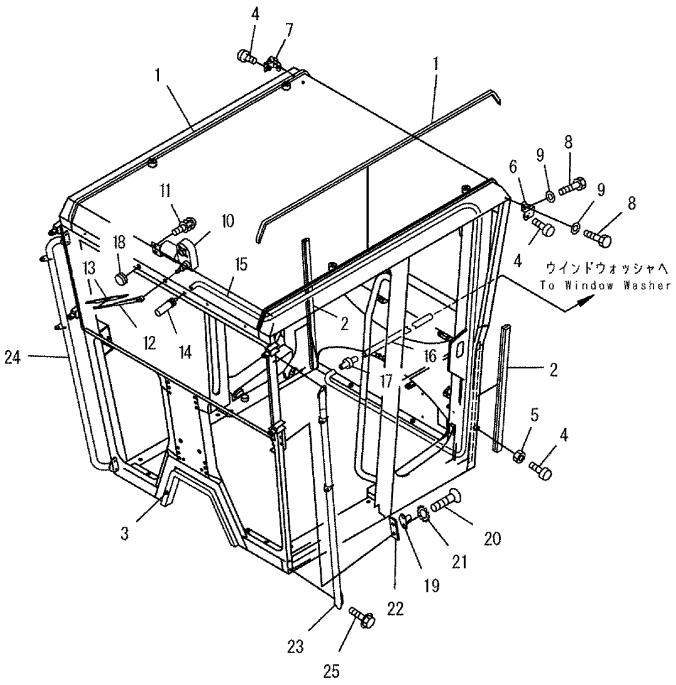

K0210-02A0

OPERATOR'S CAB (CAB EXTERIOR PARTS) (LOW ROPS CAB)

Item	Part Number	Description	Qty.	Ref.	Serial No.
	(23B-952-4080)	CAB ASSEMBLY	1		B10001-
	(23B-952-3022)	CAB ASSEMBLY	1		B10001-
	(23B-952-3021)	CAB ASSEMBLY	1		B10001-
	(23B-952-3020)	CAB ASSEMBLY	1		B10001-
		THESE ASSEMBLIES CONSIST OF ALL PARTS SHOWN IN FIGS.K0210-01A0 TO K0210-17A0.			
1	23A-952-1391	.TRIM	2		B10001-
2	23A-952-1410	.TRIM	2		B10001-
3	23A-952-1420	.SEAL	1		B10001-
4	20Y-54-11611	.STOPPER	4		B10001-
	□23B-952-2740	.STOPPER	4		B10001-
5	20T-54-74550	.NUT	4		B10001-
6	23A-952-1440	.BRACKET, L.H.	1		B10001-
7	23A-952-1450	.BRACKET, R.H.	1		B10001-
8	01010-D0816	.BOLT	4		B10001-
9	01643-70823	.WASHER	4		B10001-
10	08180-12411	.WIPER MOTOR ASSEMBLY	1		B10001-
11	01023-60512	.SCREW	2		B10001-
12	20T-54-84840	.ARM, WIPER	1		B10001-
13	20T-54-74990	.BLADE, WIPER	1		B10001-
14	22T-55-11630	.NOZZLE ASSEMBLY	1		B10001-
15	23A-952-1521	.HOSE	1		B10001-
16	23A-952-1550	.HOSE	1		B10001-
17	120-Y79-5760	.VALVE	1		B10001-
18	09415-01610	.CAP	1		B10001-
19	21J-54-16190	.STRIKER	2		B10001-
20	01240-01020	.SCREW	4		B10001-
21	20U-54-25190	.WASHER	4		B10001-
22	23A-952-1890	.PLATE	4		B10001-
23	23B-952-1871	.HANDRAIL, L.H.	1		B10001-
24	23B-952-2250	.HANDRAIL, R.H.	1		B10001-
25	01435-40820	.BOLT	8		B10001-

OPERATOR'S CAB (CAB EXTERIOR PARTS) (HGH ROPS CAB)

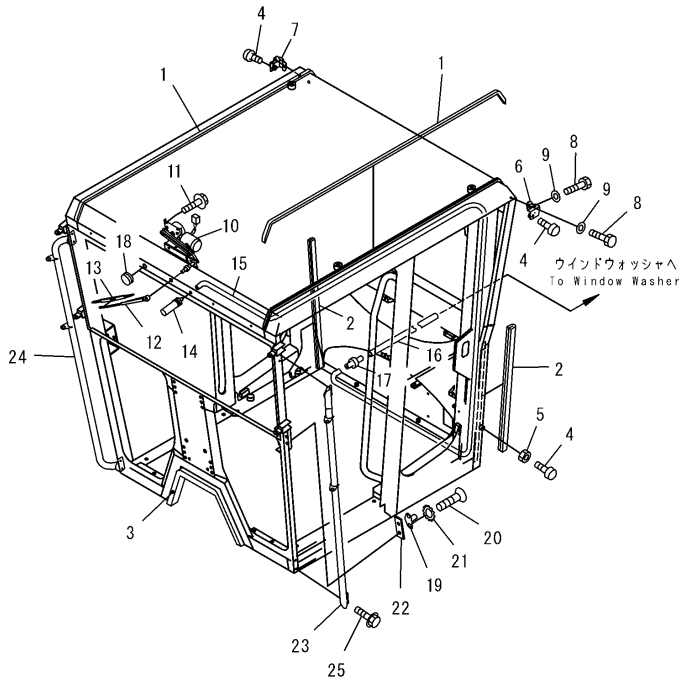

OPERATOR'S CAB (CAB EXTERIOR PARTS) (HGH ROPS CAB)

Item	Part Number	Description	Qty.	Ref.	Serial No.
	(23B-953-4080)	CAB ASSEMBLY	1		B10001-
	(23B-953-3022)	CAB ASSEMBLY	1		B10001-
	(23B-953-3021)	CAB ASSEMBLY	1		B10001-
	(23B-953-3020)	CAB ASSEMBLY	1		B10001-
		THESE ASSEMBLIES CONSIST OF ALL PARTS SHOWN IN FIGS.K0210-01B0 TO K0210-17A0.			
1	23A-953-1390	.TRIM	2		B10001-
2	23A-952-1410	.TRIM	2		B10001-
3	23A-952-1420	.SEAL	1		B10001-
4	20Y-54-11611	.STOPPER	4		B10001-
	□23B-952-2740	.STOPPER	4		B10001-
5	20T-54-74550	.NUT	4		B10001-
6	23A-952-1440	.BRACKET, L.H.	1		B10001-
7	23A-952-1450	.BRACKET, R.H.	1		B10001-
8	01010-D0816	.BOLT	4		B10001-
9	01643-70823	.WASHER	4		B10001-
10	23B-953-1130	.WIPER MOTOR ASSEMBLY	1		B10001-
11	01435-00616	.BOLT	4		B10001-
12	418-923-1270	.ARM, WIPER	1		B10001-
13	195-Z11-8550	.BLADE, WIPER	1		B10001-
14	22T-55-11630	.NOZZLE ASSEMBLY	1		B10001-
15	23A-953-1520	.HOSE	1		B10001-
16	23A-952-1550	.HOSE	1		B10001-
17	120-Y79-5760	.VALVE	1		B10001-
18	09415-01610	.CAP	1		B10001-
19	21J-54-16190	.STRIKER	2		B10001-
20	01240-01020	.SCREW	4		B10001-
21	20U-54-25190	.WASHER	4		B10001-
22	23A-952-1890	.PLATE	4		B10001-
23	23B-952-1871	.HANDRAIL, L.H.	1		B10001-
24	23B-952-2250	.HANDRAIL, R.H.	1		B10001-
25	01435-40820	.BOLT	8		B10001-

OPERATOR'S CAB (CAB INTERIOR PARTS) (1/2) (LOW ROPS CAB)

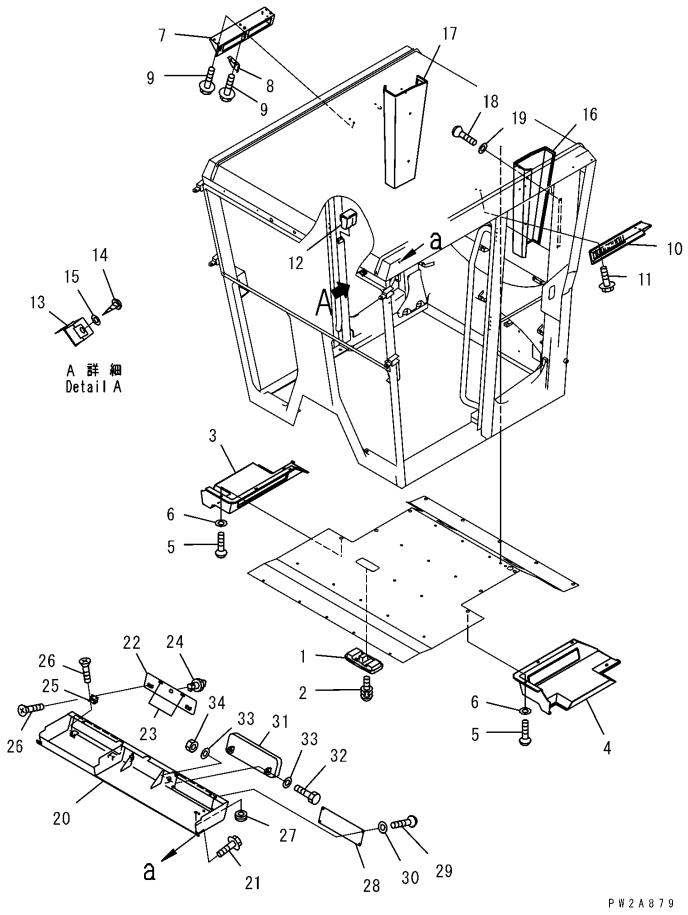

K0210-03A0

OPERATOR'S CAB (CAB INTERIOR PARTS) (1/2) (LOW ROPS CAB)

Item	Part Number	Description	Qty.	Ref.	Serial No.
	(23B-952-4080)	CAB ASSEMBLY	1		B10001-
	(23B-952-3022)	CAB ASSEMBLY	1		B10001-
	(23B-952-3021)	CAB ASSEMBLY	1		B10001-
	(23B-952-3020)	CAB ASSEMBLY	1		B10001-
		THESE ASSEMBLIES CONSIST OF ALL PARTS SHOWN IN FIGS.K0210-01A0 TO K0210-17A0.			
1	421-06-26210	.LAMP ASSEMBLY, ROOM	1		B10001-
	421-06-26250	..LENS	2		B10001-
	421-06-26260	..BULB, 10W	2		B10001-
2	01023-70512	.SCREW	2		B10001-
3	23B-952-1431	.COVER, R.H.	1		B10001-
4	23B-952-1421	.COVER, L.H.	1		B10001-
5	01225-70620	.SCREW	10		B10001-
6	23S-55-51970	.WASHER	10		B10001-
7	23B-952-1561	.BRACKET	1		B10001-
	23B-952-1560	.BRACKET	1		B10001-
8	23B-952-1571	.PLATE	1		B10001-
	23B-952-1570	.PLATE	1		B10001-
9	01435-00612	.BOLT	6		B10001-
10	23B-952-1551	.BRACKET	1		B10001-
11	01435-00612	.BOLT	4		B10001-
12	21J-54-13620	.ASHTRAY	1		B10001-
13	569-06-61960	.RELAY	1		B10001-
14	01370-00510	.SCREW	1		B10001-
15	01641-20508	.WASHER	1		B10001-
16	23B-952-1511	.COVER, L.H.	1		B10001-
17	23B-952-1521	.COVER, R.H.	1		B10001-
18	01225-70620	.SCREW	4		B10001-
19	23S-55-51970	.WASHER	4		B10001-
20	23A-952-1611	.COVER	1		B10001-
21	01435-40816	.BOLT	4		B10001-
22	23A-952-1620	.COVER	1		B10001-
23	421-09-21420	.SHEET	4		B10001-
24	23A-952-1630	.LOCK	1		B10001-
25	23A-952-1640	.HINGE	4		B10001-
26	01224-70408	.SCREW	8		B10001-

OPERATOR'S CAB (CAB INTERIOR PARTS) (1/2) (LOW ROPS CAB)

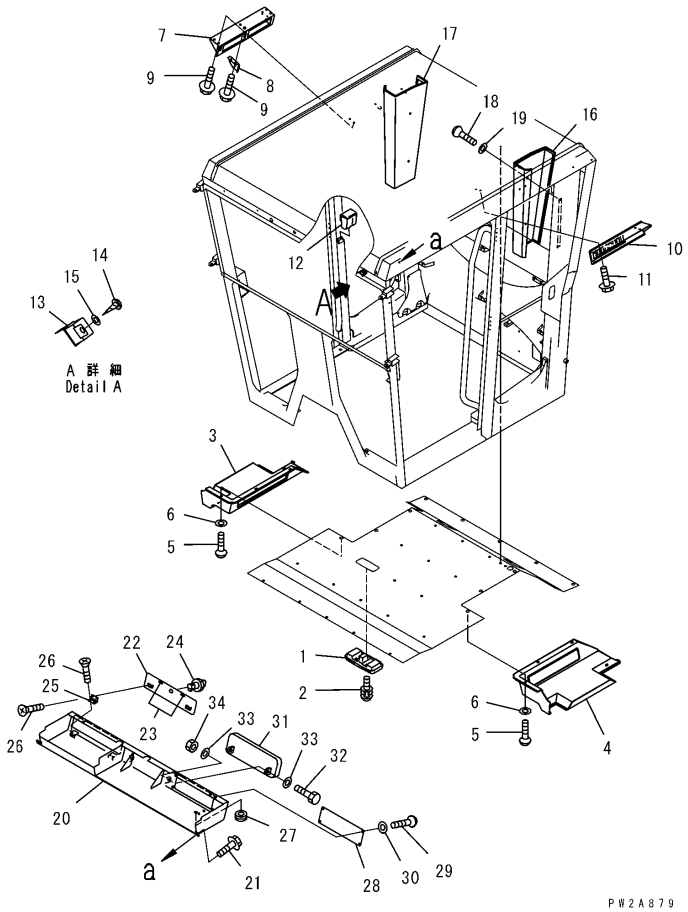

OPERATOR'S CAB (CAB INTERIOR PARTS) (1/2) (LOW ROPS CAB)

Item	Part Number	Description	Qty.	Ref.	Serial No.
27	08037-01008	.GROMMET	1		B10001-
28	23B-952-2220	.COVER, (WITHOUT AIR CONDITIONER)	1		B10001-
29	01225-70616	.SCREW	4		B10001-
30	23S-55-51970	.WASHER	4		B10001-
31	23A-952-1650	.MIRROR, ROOM	1		B10001-
32	01010-D1230	.BOLT	2		B10001-
33	01643-71232	.WASHER	4		B10001-
34	01596-01211	.NUT	2		B10001-

OPERATOR'S CAB (CAB INTERIOR PARTS) (1/2) (HIGH ROPS CAB)

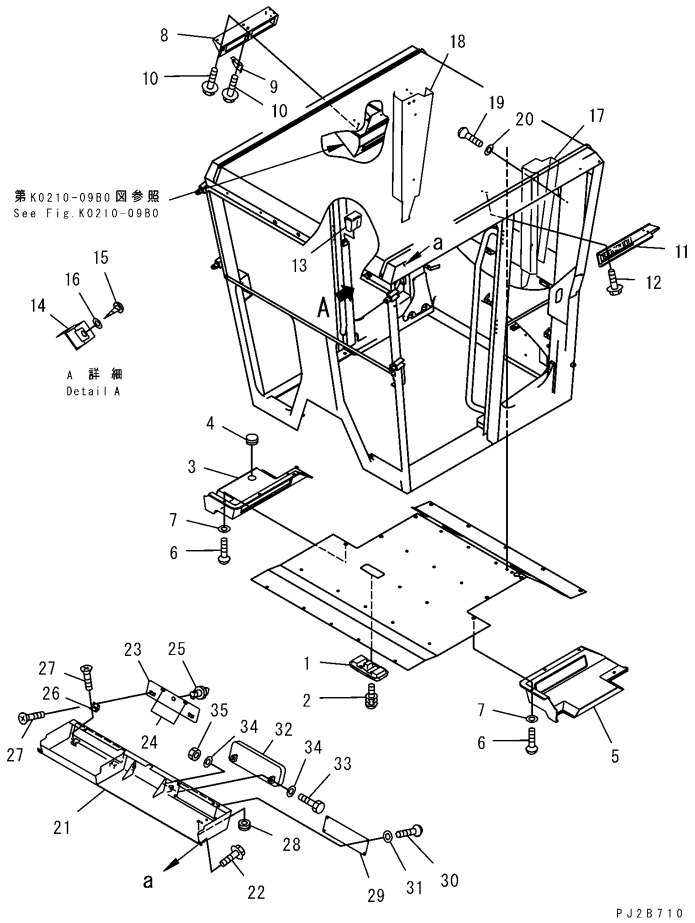

K0210-03B0

OPERATOR'S CAB (CAB INTERIOR PARTS) (1/2) (HIGH ROPS CAB)

Item	Part Number	Description	Qty.	Ref.	Serial No.
	(23B-953-4080)	CAB ASSEMBLY	1		B10001-
	(23B-953-3022)	CAB ASSEMBLY	1		B10001-
	(23B-953-3021)	CAB ASSEMBLY	1		B10001-
	(23B-953-3020)	CAB ASSEMBLY	1		B10001-
		THESE ASSEMBLIES CONSIST OF ALL PARTS SHOWN IN FIGS.K0210-01B0 TO K0210-17A0.			
1	421-06-26210	.LAMP ASSEMBLY, ROOM	1		B10001-
	421-06-26250	..LENS	2		B10001-
	421-06-26260	..BULB, 10W	2		B10001-
2	01023-70512	.SCREW	2		B10001-
3	23B-953-1430	.COVER, R.H.	1		B10001-
4	09415-03614	.CAP, (WITHOUT AIR CONDITIONER)	1		B10001-
5	23B-952-1421	.COVER, L.H.	1		B10001-
6	01225-70620	.SCREW	10		B10001-
7	23S-55-51970	.WASHER	10		B10001-
8	23B-952-1561	.BRACKET	1		B10001-
	23B-952-1560	.BRACKET	1		B10001-
9	23B-952-1571	.PLATE	1		B10001-
	23B-952-1570	.PLATE	1		B10001-
10	01435-00612	.BOLT	6		B10001-
11	23B-952-1551	.BRACKET	1		B10001-
12	01435-00612	.BOLT	4		B10001-
13	21J-54-13620	.ASHTRAY	1		B10001-
14	569-06-61960	.RELAY	1		B10001-
15	01370-00510	.SCREW	1		B10001-
16	01641-20508	.WASHER	1		B10001-
17	23B-953-1510	.COVER, L.H.	1		B10001-
18	23B-953-1520	.COVER, R.H.	1		B10001-
19	01225-70620	.SCREW	4		B10001-
20	23S-55-51970	.WASHER	4		B10001-
21	23A-953-1610	.COVER	1		B10001-
22	01435-40816	.BOLT	4		B10001-
23	23A-953-1620	.COVER	1		B10001-
24	421-09-21420	.SHEET	4		B10001-
25	23A-952-1630	.LOCK	1		B10001-
26	23A-952-1640	.HINGE	4		B10001-

OPERATOR'S CAB (CAB INTERIOR PARTS) (1/2) (HIGH ROPS CAB)

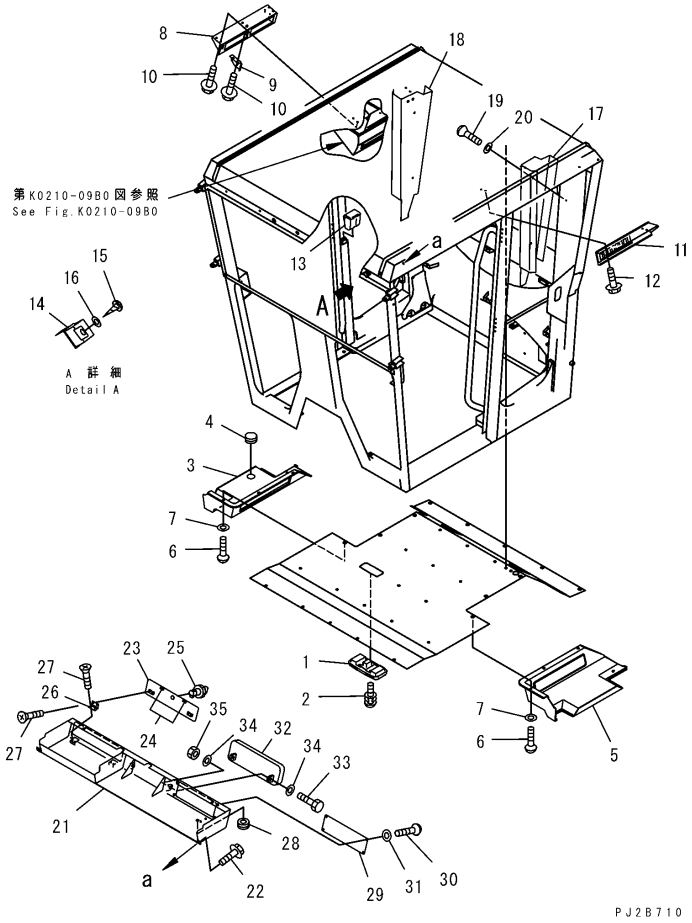

K0210-03B0

OPERATOR'S CAB (CAB INTERIOR PARTS) (1/2) (HIGH ROPS CAB)

Item	Part Number	Description	Qty.	Ref.	Serial No.
27	01224-70408	.SCREW	8		B10001-
28	08037-01008	.GROMMET	1		B10001-
29	23B-952-2220	.COVER, (WITHOUT AIR CONDITIONER)	1		B10001-
30	01225-70616	.SCREW	4		B10001-
31	23S-55-51970	.WASHER	4		B10001-
32	23A-952-1650	.MIRROR, ROOM	1		B10001-
33	01010-D1230	.BOLT	2		B10001-
34	01643-71232	.WASHER	4		B10001-
35	01596-01211	.NUT	2		B10001-

OPERATOR'S CAB (CAB INTERIOR PARTS) (2/2) (LOW ROPS CAB)

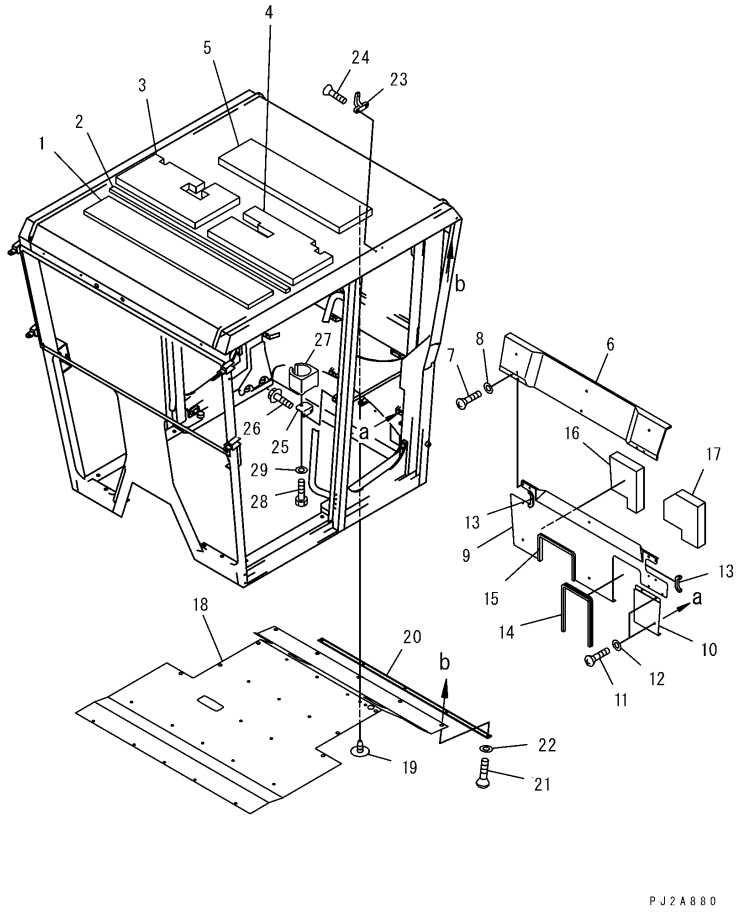

OPERATOR'S CAB (CAB INTERIOR PARTS) (2/2) (LOW ROPS CAB)

Item	Part Number	Description	Qty.	Ref.	Serial No.
	(23B-952-4080)	CAB ASSEMBLY	1		B10001-
	(23B-952-3022)	CAB ASSEMBLY	1		B10001-
	(23B-952-3021)	CAB ASSEMBLY	1		B10001-
	(23B-952-3020)	CAB ASSEMBLY	1		B10001-
		THESE ASSEMBLIES CONSIST OF ALL PARTS SHOWN IN FIGS.K0210-01A0 TO K0210-17A0.			
1	23B-952-1440	.SHEET	1		B10001-
2	23B-952-2240	.SHEET	1		B10001-
3	23B-952-1450	.SHEET	1		B10001-
4	23B-952-1461	.SHEET	1		B10001-
5	23B-952-1470	.SHEET	1		B10001-
6	23B-952-1712	.COVER	1		B10001-
7	01225-70620	.SCREW	8		B10001-
8	23S-55-51970	.WASHER	8		B10001-
9	23B-952-1723	.COVER	1		B10001-
10	23B-952-2280	.COVER	1		B10001-
11	01225-70616	.SCREW	5		B10001-
12	23S-55-51970	.WASHER	5		B10001-
13	421-54-22520	.FINISHER	2		B10001-
14	419-54-12670	.FINISHER	1		B10001-
15	427-54-11760	.SEAL	1		B10001-
16	23B-952-1752	.SHEET	1		B10001-
17	23B-952-1762	.SHEET	1		B10001-
18	23B-952-1771	.PAD, ROOF	1		B10001-
19	423-56-21910	.BUTTON	18		B10001-
20	23B-952-1590	.PLATE	1		B10001-
21	01225-70620	.SCREW	5		B10001-
22	23S-55-51970	.WASHER	5		B10001-
23	205-54-51250	.HANGER	1		B10001-
24	01224-70420	.SCREW	2		B10001-
25	23B-952-1821	.PLATE	1		B10001-
26	01435-40812	.BOLT	2		B10001-
27	23B-952-1810	.HOLDER, CUP	1		B10001-
28	01010-D0810	.BOLT	1		B10001-
29	01643-70823	.WASHER	1		B10001-

OPERATOR'S CAB (CAB INTERIOR PARTS) (2/2) (HIGH ROPS CAB)

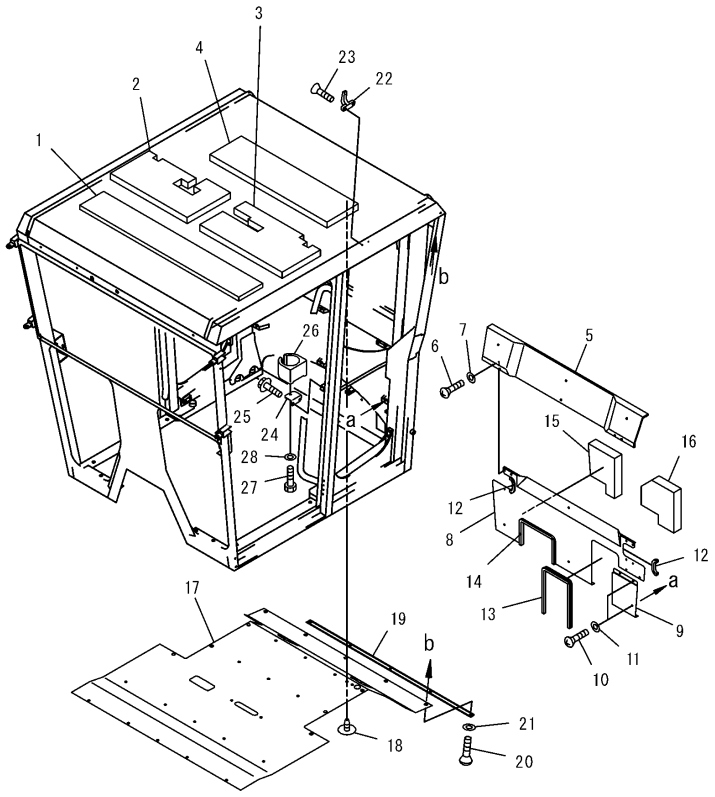

OPERATOR'S CAB (CAB INTERIOR PARTS) (2/2) (HIGH ROPS CAB)

Item	Part Number	Description	Qty.	Ref.	Serial No.
	(23B-953-4080)	CAB ASSEMBLY	1		B10001-
	(23B-953-3022)	CAB ASSEMBLY	1		B10001-
	(23B-953-3021)	CAB ASSEMBLY	1		B10001-
	(23B-953-3020)	CAB ASSEMBLY	1		B10001-
		THESE ASSEMBLIES CONSIST OF ALL PARTS SHOWN IN FIGS.K0210-01B0 TO K0210-17A0.			
1	23B-953-1440	.SHEET	1		B10001-
2	23B-953-1450	.SHEET	1		B10001-
3	23B-953-1460	.SHEET	1		B10001-
4	23B-953-1470	.SHEET	1		B10001-
5	23B-952-1712	.COVER	1		B10001-
6	01225-70620	.SCREW	8		B10001-
7	23S-55-51970	.WASHER	8		B10001-
8	23B-952-1723	.COVER	1		B10001-
9	23B-952-2280	.COVER	1		B10001-
10	01225-70616	.SCREW	5		B10001-
11	23S-55-51970	.WASHER	5		B10001-
12	421-54-22520	.FINISHER	2		B10001-
13	419-54-12670	.FINISHER	1		B10001-
14	427-54-11760	.SEAL	1		B10001-
15	23B-952-1752	.SHEET	1		B10001-
16	23B-952-1762	.SHEET	1		B10001-
17	23B-953-1770	.PAD, ROOF	1		B10001-
18	423-56-21910	.BUTTON	18		B10001-
19	23B-953-1590	.PLATE	1		B10001-
20	01225-70620	.SCREW	5		B10001-
21	23S-55-51970	.WASHER	5		B10001-
22	205-54-51250	.HANGER	1		B10001-
23	01224-70420	.SCREW	2		B10001-
24	23B-952-1821	.PLATE	1		B10001-
25	01435-40812	.BOLT	2		B10001-
26	23B-952-1810	.HOLDER, CUP	1		B10001-
27	01010-D0810	.BOLT	1		B10001-
28	01643-70823	.WASHER	1		B10001-

OPERATOR'S CAB (DOOR INNER PARTS, L.H.) (LOW ROPS CAB)

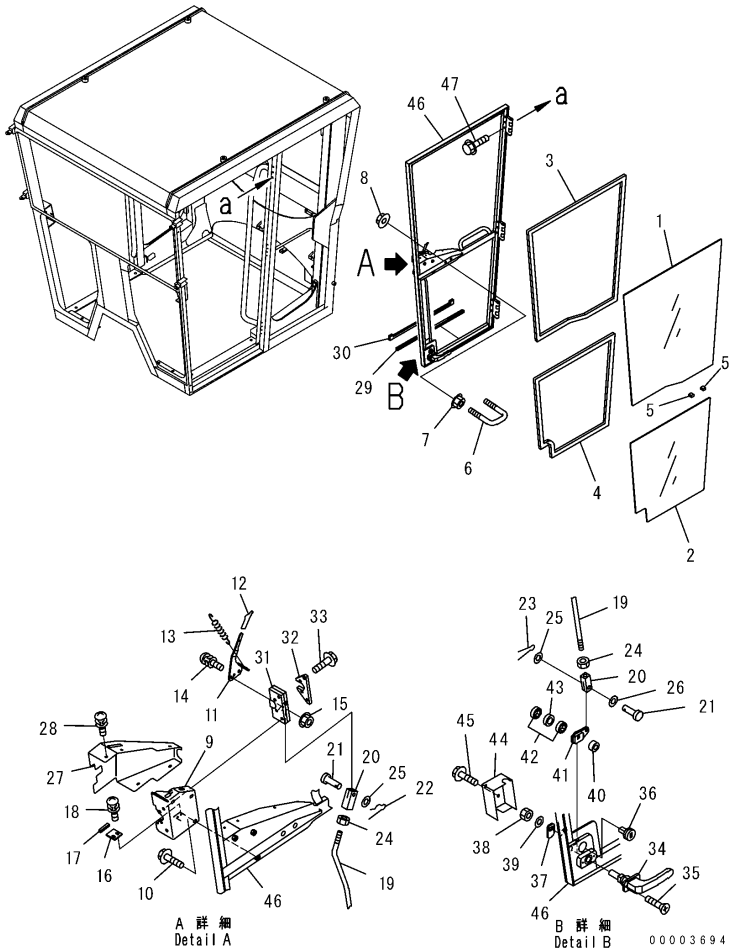

K0210-05A0A

OPERATOR'S CAB (DOOR INNER PARTS, L.H.) (LOW ROPS CAB)

Item	Part Number	Description	Qty.	Ref.	Serial No.
	(23B-952-4080)	CAB ASSEMBLY	1		B10001-
	(23B-952-3022)	CAB ASSEMBLY	1		B10001-
	(23B-952-3021)	CAB ASSEMBLY	1		B10001-
		THESE ASSEMBLIES CONSIST OF ALL PARTS SHOWN IN FIGS.K0210-01A0 TO K0210-17A0.			
	23B-952-2512	.DOOR ASSEMBLY, L.H.	1		B10001-
1	23B-952-2531	..GLASS, UPPER	1		B10001-
2	23B-952-2541	..GLASS, LOWER	1		B10001-
3	23B-952-2550	..DAM	1		B10001-
4	23B-952-2560	..DAM	1		B10001-
5	23S-55-51840	..RUBBER	2		B10001-
6	23B-952-1341	..STRIKER	1		B10001-
7	01594-01008	..NUT	2		B10001-
8	01584-31008	..NUT	2		B10001-
9	23B-952-1350	..BRACKET	1		B10001-
10	01435-40612	..BOLT	3		B10001-
11	23B-952-1361	..LEVER	1		B10001-
12	14X-911-1540	..KNOB	1		B10001-
13	23D-950-8310	..SPRING	1		B10001-
14	01023-60616	..SCREW	1		B10001-
15	01584-00605	..NUT	1		B10001-
16	23B-952-1370	..PLATE	1		B10001-
17	23B-952-1380	..SEAL	1		B10001-
18	01023-60410	..SCREW	2		B10001-
19	23B-952-1391	..ROD	1		B10001-
20	04211-20844	..YOKE	2		B10001-
21	04205-30825	..PIN	2		B10001-
22	04052-10833	..PIN, SNAP	1		B10001-
23	04050-12015	..PIN, COTTER	1		B10001-
24	01580-10806	..NUT	2		B10001-
25	01643-50823	..WASHER'	2		B10001-
26	01640-20816	..WASHER	1		B10001-
27	23B-952-2582	..COVER	1		B10001-
28	01023-70412	..SCREW	5		B10001-
29	23B-952-1620	..SEAL	1		B10001-
30	23B-952-1632	..SEAL	1		B10001-

OPERATOR'S CAB (DOOR INNER PARTS, L.H.) (LOW ROPS CAB)

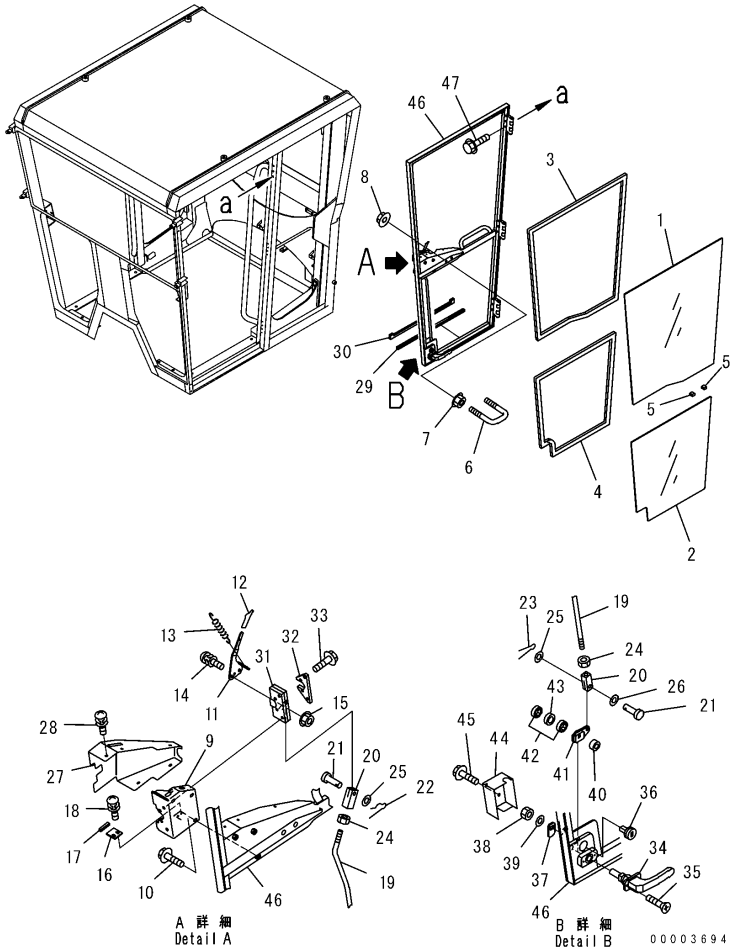

OPERATOR'S CAB (DOOR INNER PARTS, L.H.) (LOW ROPS CAB)

Item	Part Number	Description	Qty.	Ref.	Serial No.
31	195-Z11-4520	..LOCK	1		B10001-
32	23D-950-8260	..PLATE	1		B10001-
33	01435-40630	..BOLT	4		B10001-
34	23B-952-1990	..HANDLE	1		B10001-
35	01224-70420	..SCREW	2		B10001-
36	23B-952-1980	..LOCK	1		B10001-
37	23B-952-1971	..PLATE	1		B10001-
38	01580-11008	..NUT	1		B10001-
39	01643-31032	..WASHER	1		B10001-
40	23B-952-1170	..SPACER	1		B10001-
41	23B-952-1951	..PLATE	1		B10001-
42	23B-952-1180	..BEARING	2		B10001-
43	23B-952-1190	..SPACER	1		B10001-
44	23B-952-1931	..COVER	1		B10001-
45	01435-40610	..BOLT	2		B10001-
46	☆	..DOOR	1		B10001-
47	01435-40816	.BOLT	9		B10001-

OPERATOR'S CAB (DOOR INNER PARTS, L.H.) (HIGH ROPS CAB)

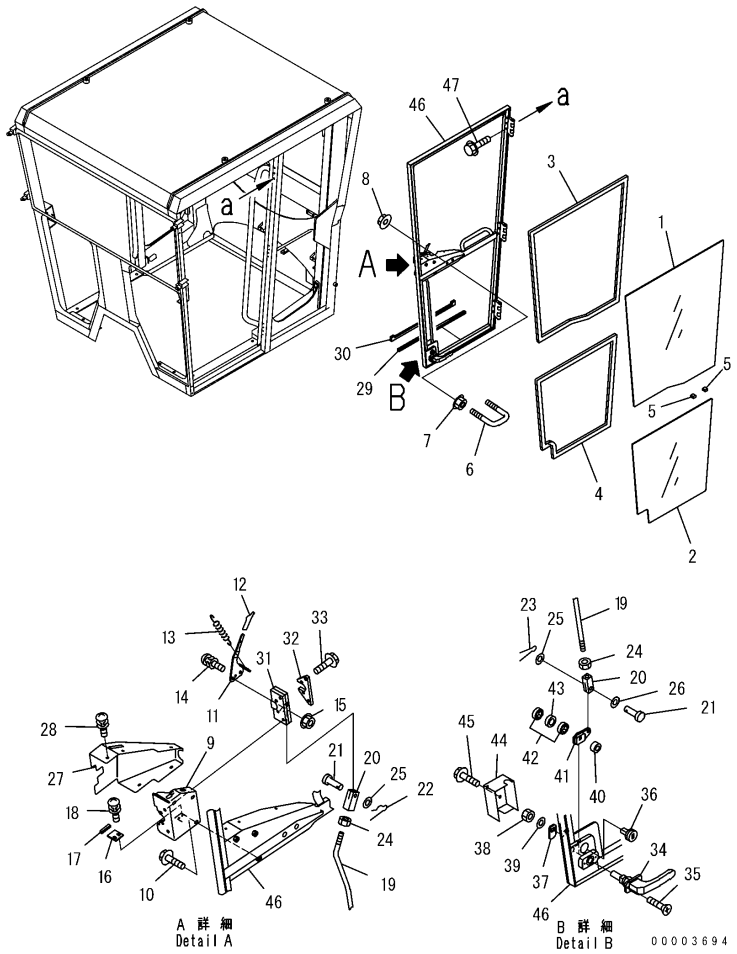

OPERATOR'S CAB (DOOR INNER PARTS, L.H.) (HIGH ROPS CAB)

Item	Part Number	Description	Qty.	Ref.	Serial No.
	(23B-953-4080)	CAB ASSEMBLY	1		B10001-
	(23B-953-3022)	CAB ASSEMBLY	1		B10001-
	(23B-953-3021)	CAB ASSEMBLY	1		B10001-
		THESE ASSEMBLIES CONSIST OF ALL PARTS SHOWN IN FIGS.K0210-01B0 TO K0210-17A0.			
	23B-953-2510	.DOOR ASSEMBLY, L.H.	1		B10001-
1	23B-953-2530	..GLASS, UPPER	1		B10001-
2	23B-952-2541	..GLASS, LOWER	1		B10001-
3	23B-953-2550	..DAM	1		B10001-
4	23B-952-2560	..DAM	1		B10001-
5	23S-55-51840	..RUBBER	2		B10001-
6	23B-952-1341	..STRIKER	1		B10001-
7	01584-31008	..NUT	2		B10001-
8	01594-01008	..NUT	2		B10001-
9	23B-952-1350	..BRACKET	1		B10001-
10	01435-40612	..BOLT	3		B10001-
11	23B-952-1361	..LEVER	1		B10001-
12	14X-911-1540	..KNOB	1		B10001-
13	23D-950-8310	..SPRING	1		B10001-
14	01023-60616	..SCREW	1		B10001-
15	01584-00605	..NUT	1		B10001-
16	23B-952-1370	..PLATE	1		B10001-
17	23B-952-1380	..SEAL	1		B10001-
18	01023-60410	..SCREW	2		B10001-
19	23B-952-1391	..ROD	1		B10001-
20	04211-20844	..YOKE	2		B10001-
21	04205-30825	..PIN	2		B10001-
22	04052-10833	..PIN, SNAP	1		B10001-
23	04050-12015	..PIN, COTTER	1		B10001-
24	01580-10806	..NUT	2		B10001-
25	01643-50823	..WASHER	2		B10001-
26	01640-20816	..WASHER	1		B10001-
27	23B-952-2582	..COVER	1		B10001-
28	01023-70412	..SCREW	5		B10001-
29	23B-952-1620	..SEAL	1		B10001-
30	23B-952-1632	..SEAL	1		B10001-

OPERATOR'S CAB (DOOR INNER PARTS, L.H.) (HIGH ROPS CAB)

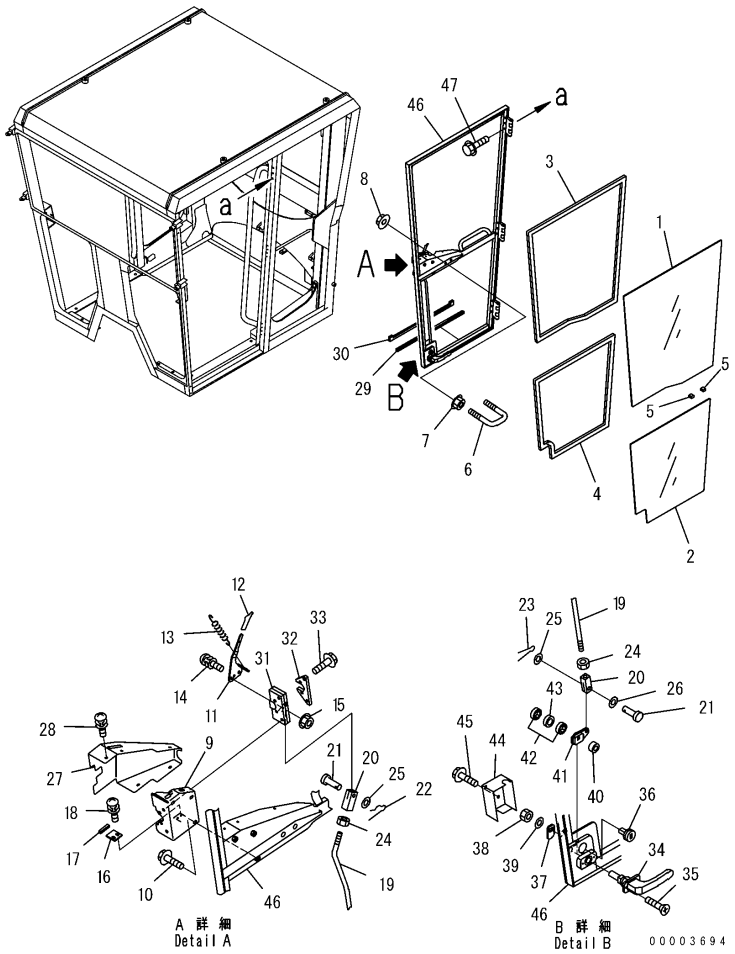

OPERATOR'S CAB (DOOR INNER PARTS, L.H.) (HIGH ROPS CAB)

Item	Part Number	Description	Qty.	Ref.	Serial No.
31	195-Z11-4520	..LOCK	1		B10001-
32	23D-950-8260	..PLATE	1		B10001-
33	01435-40630	..BOLT	4		B10001-
34	23B-952-1990	..HANDLE	1		B10001-
35	01224-70420	..SCREW	2		B10001-
36	23B-952-1980	..LOCK	1		B10001-
37	23B-952-1971	..PLATE	1		B10001-
38	01580-11008	..NUT	1		B10001-
39	01643-31032	..WASHER	1		B10001-
40	23B-952-1170	..SPACER	1		B10001-
41	23B-952-1951	..PLATE	1		B10001-
42	23B-952-1180	..BEARING	2		B10001-
43	23B-952-1190	..SPACER	1		B10001-
44	23B-952-1931	..COVER	1		B10001-
45	01435-40610	..BOLT	2		B10001-
46	☆	..DOOR	1		B10001-
47	01435-40816	.BOLT	9		B10001-

OPERATOR'S CAB (LOCK, L.H.) (LOW ROPS CAB)

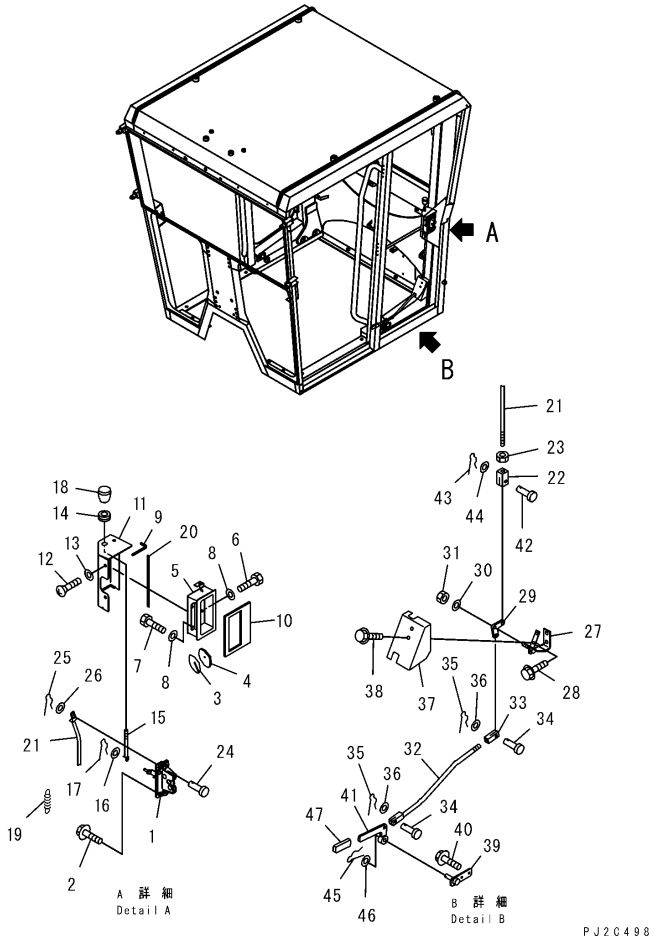

OPERATOR'S CAB (LOCK, L.H.) (LOW ROPS CAB)

Item	Part Number	Description	Qty.	Ref.	Serial No.
	(23B-952-4080)	CAB ASSEMBLY	1		B10001-
	(23B-952-3022)	CAB ASSEMBLY	1		B10001-
	(23B-952-3021)	CAB ASSEMBLY	1		B10001-
	(23B-952-3020)	CAB ASSEMBLY‘	1		B10001-
		THESE ASSEMBLIES CONSIST OF ALL PARTS SHOWN IN FIGS.K0210-01A0 TO K0210-17A0.			
1	23A-952-1792	.LOCK, L.H.	1		B10001-
2	01435-00612	.BOLT	2		B10001-
3	23A-952-1841	.PLATE	2		B10001-
4	23A-952-1851	.SEAL	1		B10001-
5	23A-952-1751	.CASE, L.H.	1		B10001-
6	01010-80610	.BOLT	2		B10001-
7	01010-80612	.BOLT	2		B10001-
8	01643-30623	.WASHER	4		B10001-
9	23A-952-1860	.SEAL	1		B10001-
10	23A-952-1871	.SEAL	1		B10001-
11	23A-952-1771	.COVER	1		B10001-
12	01225-70612	.SCREW	3		B10001-
13	23S-55-51970	.WASHER	3		B10001-
14	08037-01008	.GROMMET	1		B10001-
15	23A-952-1882	.ROD	1		B10001-
16	01640-20610	.WASHER	1		B10001-
17	04052-10633	.PIN, SNAP	1		B10001-
18	424-926-2170	.KNOB	1		B10001-
19	287-43-13721	.SPRING	2		B10001-
20	23B-952-1850	.RUBBER	1		B10001-
21	23A-952-1931	.ROD, L.H.	1		B10001-
22	04210-20832	.YOKE	1		B10001-
23	01580-10806	.NUT	1		B10001-
24	04205-30825	.PIN	1		B10001-
25	04052-10833	.PIN, SNAP	1		B10001-
26	01640-20816	.WASHER	1		B10001-
27	23A-952-1962	.BRACKET, L.H.	1		B10001-
28	01435-40816	.BOLT	2		B10001-
29	23A-952-1950	.PLATE	4		B10001-
30	01641-20812	.WASHER	2		B10001-

OPERATOR'S CAB (LOCK, L.H.) (LOW ROPS CAB)

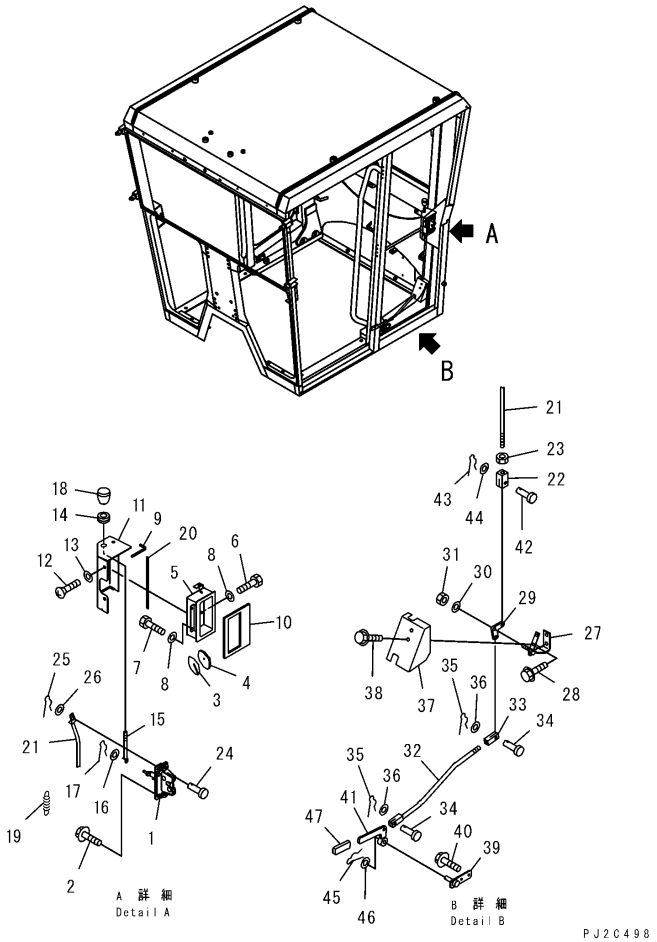

OPERATOR'S CAB (LOCK, L.H.) (LOW ROPS CAB)

Item	Part Number	Description	Qty.	Ref.	Serial No.
31	01580-10806	.NUT	2		B10001-
32	23A-952-1980	.ROD	2		B10001-
33	04210-20832	.YOKE	1		B10001-
34	04205-30825	.PIN	1		B10001-
35	04052-10833	.PIN, SNAP	1		B10001-
36	01640-20816	.WASHER	1		B10001-
37	23B-952-1881	.COVER, L.H.	1		B10001-
38	01435-40612	.BOLT	2		B10001-
39	23A-952-1920	.PLATE	2		B10001-
40	01435-40816	.BOLT	2		B10001-
41	23A-952-1990	.LEVER	2		B10001-
42	04205-30825	.PIN	1		B10001-
43	04052-10833	.PIN, SNAP	1		B10001-
44	01640-20816	.WASHER	1		B10001-
45	04052-11038	.PIN, SNAP	1		B10001-
46	01640-21016	.WASHER	1		B10001-
47	23B-952-1910	.CAP	1		B10001-

OPERATOR'S CAB (LOCK, L.H.) (HIGH ROPS CAB)

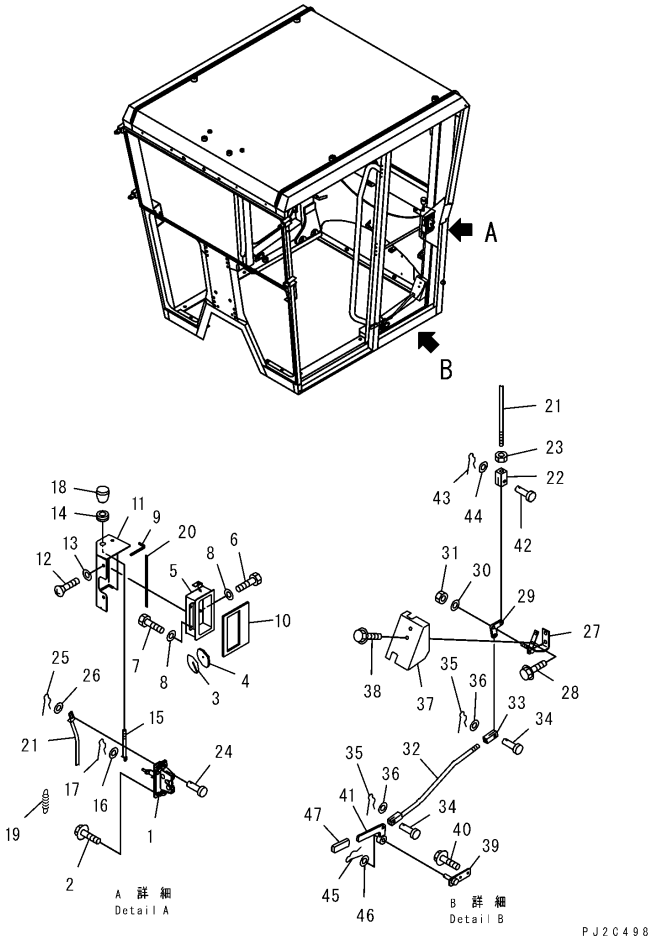

OPERATOR'S CAB (LOCK, L.H.) (HIGH ROPS CAB)

Item	Part Number	Description	Qty.	Ref.	Serial No.
	(23B-953-4080)	CAB ASSEMBLY	1		B10001-
	(23B-953-3022)	CAB ASSEMBLY	1		B10001-
	(23B-953-3021)	CAB ASSEMBLY	1		B10001-
	(23B-953-3020)	CAB ASSEMBLY	1		B10001-
		THESE ASSEMBLIES CONSIST OF ALL PARTS SHOWN IN FIGS.K0210-01B0 TO K0210-17A0.			
1	23A-952-1792	.LOCK, L.H.	1		B10001-
2	01435-00612	.BOLT	2		B10001-
3	23A-952-1841	.PLATE	2		B10001-
4	23A-952-1851	.SEAL	1		B10001-
5	23A-952-1751	.CASE, L.H.	1		B10001-
6	01010-80610	.BOLT	2		B10001-
7	01010-80612	.BOLT	2		B10001-
8	01643-30623	.WASHER	4		B10001-
9	23A-952-1860	.SEAL	1		B10001-
10	23A-952-1871	.SEAL	1		B10001-
11	23A-952-1771	.COVER	1		B10001-
12	01225-70612	.SCREW	3		B10001-
13	23S-55-51970	.WASHER	3		B10001-
14	08037-01008	.GROMMET	1		B10001-
15	23A-952-1882	.ROD	1		B10001-
16	01640-20610	.WASHER	1		B10001-
17	04052-10633	.PIN, SNAP	1		B10001-
18	424-926-2170	.KNOB	1		B10001-
19	287-43-13721	.SPRING	1		B10001-
20	23B-952-1850	.RUBBER	1		B10001-
21	23A-952-1931	.ROD, L.H.	1		B10001-
22	04210-20832	.YOKE	1		B10001-
23	01580-10806	.NUT	1		B10001-
24	04205-30825	.PIN	1		B10001-
25	04052-10833	.PIN, SNAP	1		B10001-
26	01640-20816	.WASHER	1		B10001-
27	23A-952-1962	.BRACKET, L.H.	1		B10001-
28	01435-40816	.BOLT	2		B10001-
29	23A-952-1950	.PLATE	2		B10001-
30	01641-20812	.WASHER	2		B10001-

OPERATOR'S CAB (LOCK, L.H.) (HIGH ROPS CAB)

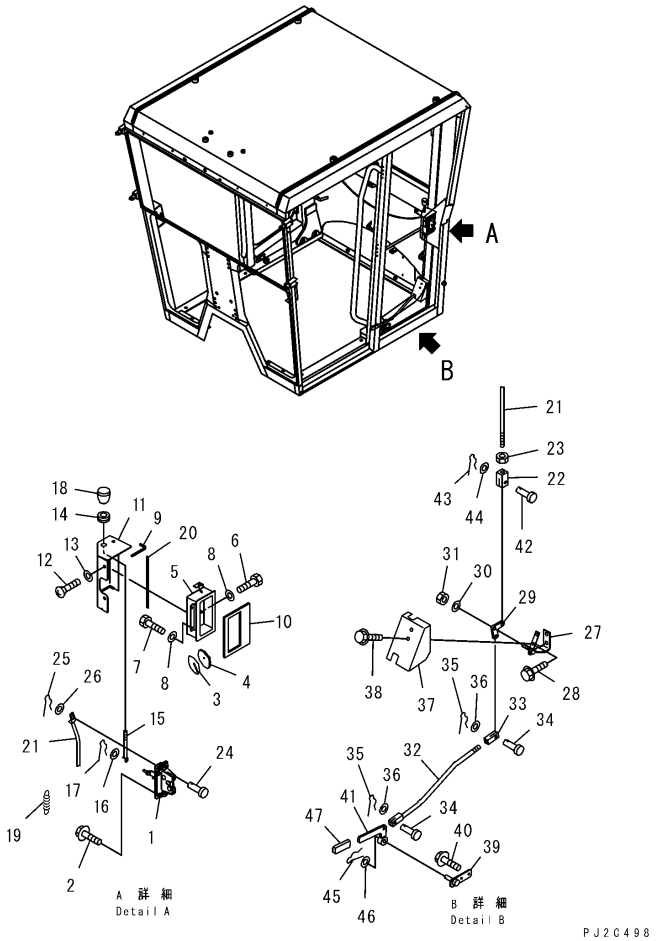

OPERATOR'S CAB (LOCK, L.H.) (HIGH ROPS CAB)

Item	Part Number	Description	Qty.	Ref.	Serial No.
31	01580-10806	.NUT	2		B10001-
32	23A-952-1980	.ROD	2		B10001-
33	04210-20832	.YOKE	1		B10001-
34	04205-30825	.PIN	1		B10001-
35	04052-10833	.PIN, SNAP	1		B10001-
36	01640-20816	.WASHER	1		B10001-
37	23B-952-1881	.COVER, L.H.	1		B10001-
38	01435-40612	.BOLT	2		B10001-
39	23A-952-1920	.PLATE	2		B10001-
40	01435-40816	.BOLT	2		B10001-
41	23A-952-1990	.LEVER	2		B10001-
42	04205-30825	.PIN	1		B10001-
43	04052-10833	.PIN, SNAP	1		B10001-
44	01640-20816	.WASHER	1		B10001-
45	04052-11038	.PIN, SNAP	1		B10001-
46	01640-21016	.WASHER	1		B10001-
47	23B-952-1910	.CAP	1		B10001-

OPERATOR'S CAB (DOOR INNER PARTS, R.H.) (LOW ROPS CAB)

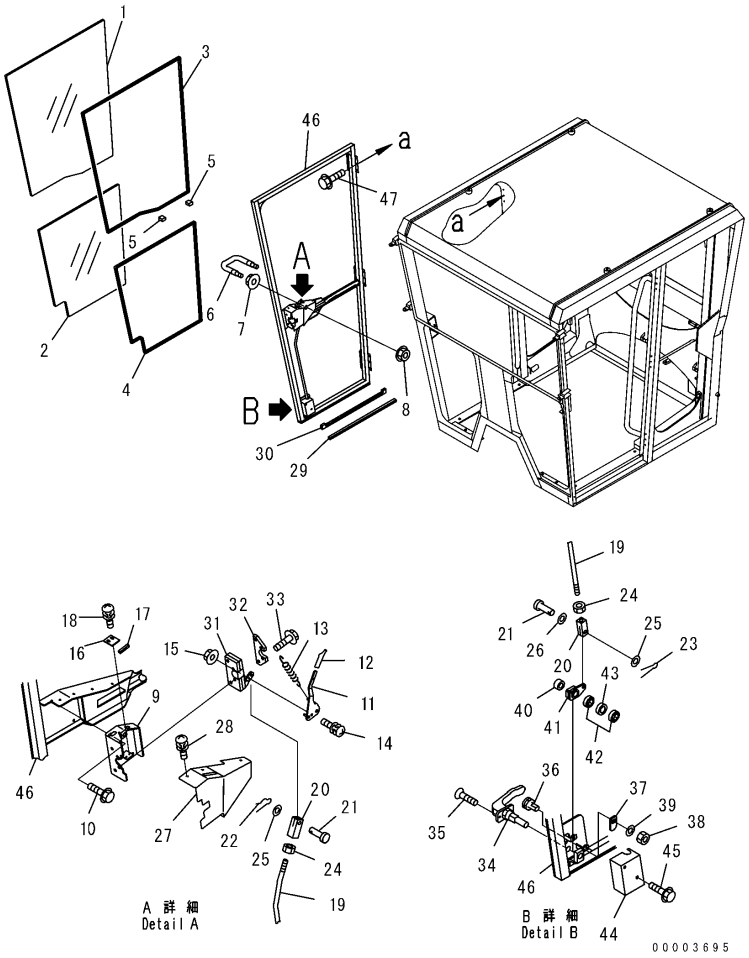

OPERATOR'S CAB (DOOR INNER PARTS, R.H.) (LOW ROPS CAB)

Item	Part Number	Description	Qty.	Ref.	Serial No.
	(23B-952-4080)	CAB ASSEMBLY	1		B10001-
	(23B-952-3022)	CAB ASSEMBLY	1		B10001-
	(23B-952-3021)	CAB ASSEMBLY	1		B10001-
		THESE ASSEMBLIES CONSIST OF ALL PARTS SHOWN IN FIGS.K0210-01A0 TO K0210-17A0.			
	23B-952-2612	.DOOR ASSEMBLY, R.H.	1		B10001-
1	23B-952-2631	..GLASS	1		B10001-
2	23B-952-2641	..GLASS	1		B10001-
3	23B-952-2550	..DAM	1		B10001-
4	23B-952-2560	..DAM	1		B10001-
5	23S-55-51840	..RUBBER	2		B10001-
6	23B-952-1341	..STRIKER	1		B10001-
7	01594-01008	..NUT	2		B10001-
8	01584-31008	..NUT	2		B10001-
9	23B-952-1670	..BRACKET	1		B10001-
10	01435-40612	..BOLT	3		B10001-
11	23B-952-1681	..LEVER	1		B10001-
12	14X-911-1540	..KNOB	1		B10001-
13	23D-950-8310	..SPRING	1		B10001-
14	01023-60616	..SCREW	1		B10001-
15	01584-00605	..NUT	1		B10001-
16	23B-952-1370	..PLATE	1		B10001-
17	23B-952-1380	..SEAL	1		B10001-
18	01023-60410	..SCREW	2		B10001-
19	23B-952-1921	..ROD	1		B10001-
20	04211-20844	..YOKE	2		B10001-
21	04205-30825	..PIN	2		B10001-
22	04052-10833	..PIN, SNAP	1		B10001-
23	04050-12015	..PIN, COTTER	1		B10001-
24	01580-10806	..NUT	2		B10001-
25	01643-50823	..WASHER	2		B10001-
26	01640-20816	..WASHER	1		B10001-
27	23B-952-2682	..COVER	1		B10001-
28	01023-70412	..SCREW	5		B10001-
29	23B-952-1620	..SEAL	1		B10001-
30	23B-952-1632	..SEAL	1		B10001-

OPERATOR'S CAB (DOOR INNER PARTS, R.H.) (LOW ROPS CAB)

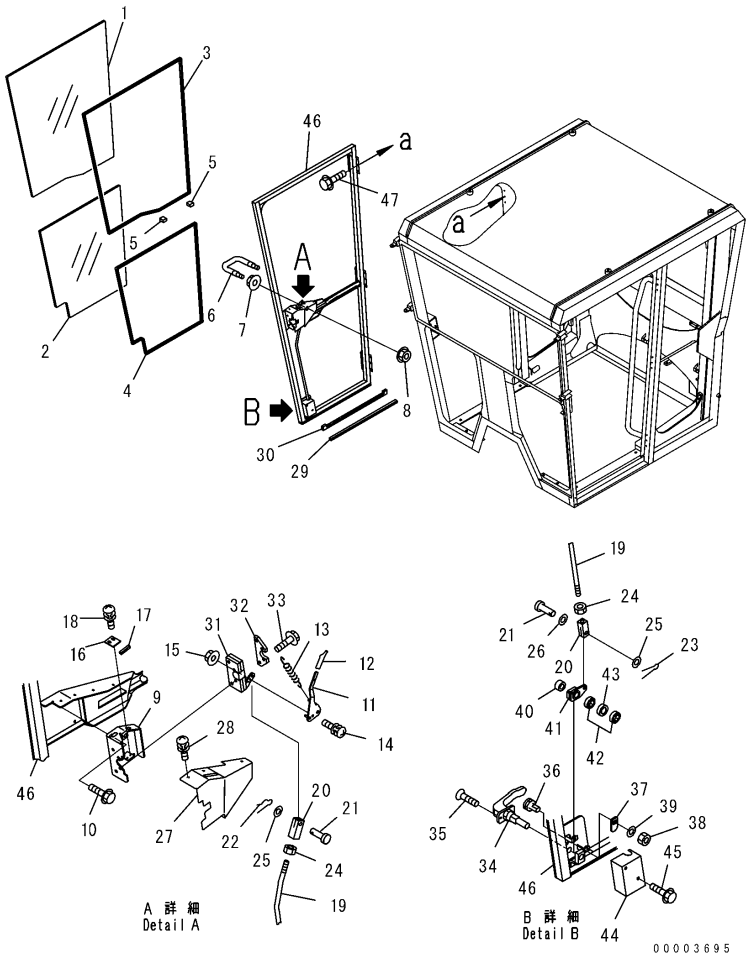

OPERATOR'S CAB (DOOR INNER PARTS, R.H.) (LOW ROPS CAB)

Item	Part Number	Description	Qty.	Ref.	Serial No.
31	195-Z11-4510	..LOCK	1		B10001-
32	23D-950-8260	..PLATE	1		B10001-
33	01435-40630	..BOLT	4		B10001-
34	23B-952-1990	..HANDLE	1		B10001-
35	01224-70420	..SCREW	2		B10001-
36	23B-952-1980	..LOCK	1		B10001-
37	23B-952-1971	..PLATE	1		B10001-
38	01580-11008	..NUT	1		B10001-
39	01643-31032	..WASHER	1		B10001-
40	23B-952-1170	..SPACER	1		B10001-
41	23B-952-1961	..PLATE	1		B10001-
42	23B-952-1180	..BEARING	2		B10001-
43	23B-952-1190	..SPACER	1		B10001-
44	23B-952-1941	..COVER	1		B10001-
45	01435-40610	..BOLT	2		B10001-
46	☆	..DOOR	1		B10001-
47	01435-40816	.BOLT	9		B10001-

OPERATOR'S CAB (DOOR INNER PARTS, R.H.) (HIGH ROPS CAB)

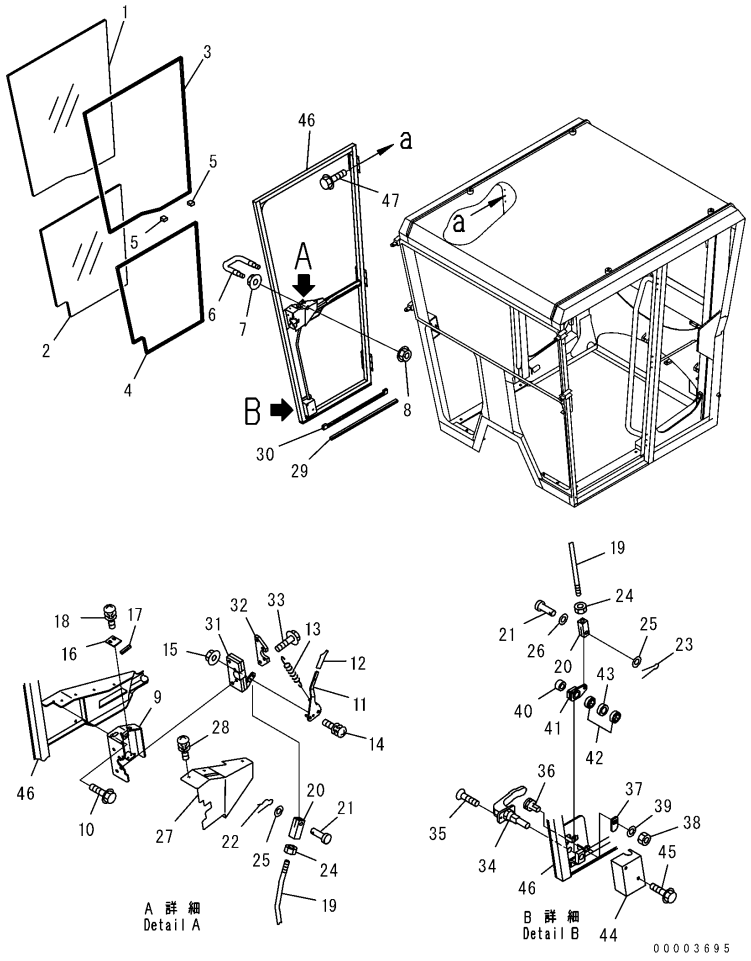

K0210-07B0A

OPERATOR'S CAB (DOOR INNER PARTS, R.H.) (HIGH ROPS CAB)

Item	Part Number	Description	Qty.	Ref.	Serial No.
	(23B-953-4080)	CAB ASSEMBLY	1		B10001-
	(23B-953-3022)	CAB ASSEMBLY	1		B10001-
	(23B-953-3021)	CAB ASSEMBLY	1		B10001-
		THESE ASSEMBLIES CONSIST OF ALL PARTS SHOWN IN FIGS.K0210-01B0 TO K0210-17A0.			
	23B-953-2610	.DOOR ASSEMBLY, R.H.	1		B10001-
1	23B-953-2630	..GLASS	1		B10001-
2	23B-952-2641	..GLASS	1		B10001-
3	23B-953-2550	..DAM	1		B10001-
4	23B-952-2560	..DAM	1		B10001-
5	23S-55-51840	..RUBBER	2		B10001-
6	23B-952-1341	..STRIKER	1		B10001-
7	01584-31008	..NUT	2		B10001-
8	01594-01008	..NUT	2		B10001-
9	23B-952-1670	..BRACKET	1		B10001-
10	01435-40612	..BOLT	3		B10001-
11	23B-952-1681	..LEVER	1		B10001-
12	14X-911-1540	..KNOB	1		B10001-
13	23D-950-8310	..SPRING	1		B10001-
14	01023-60616	..SCREW	1		B10001-
15	01584-00605	..NUT	1		B10001-
16	23B-952-1370	..PLATE	1		B10001-
17	23B-952-1380	..SEAL	1		B10001-
18	01023-60410	..SCREW	2		B10001-
19	23B-952-1921	..ROD	1		B10001-
20	04211-20844	..YOKE	2		B10001-
21	04205-30825	..PIN	2		B10001-
22	04052-10833	..PIN	1		B10001-
23	04050-12015	..PIN	1		B10001-
24	01580-10806	..NUT	2		B10001-
25	01643-50823	..WASHER	2		B10001-
26	01640-20816	..WASHER	1		B10001-
27	23B-952-2682	..COVER	1		B10001-
28	01023-70412	..SCREW	5		B10001-
29	23B-952-1620	..SEAL	1		B10001-
30	23B-952-1632	..SEAL	1		B10001-

OPERATOR'S CAB (DOOR INNER PARTS, R.H.) (HIGH ROPS CAB)

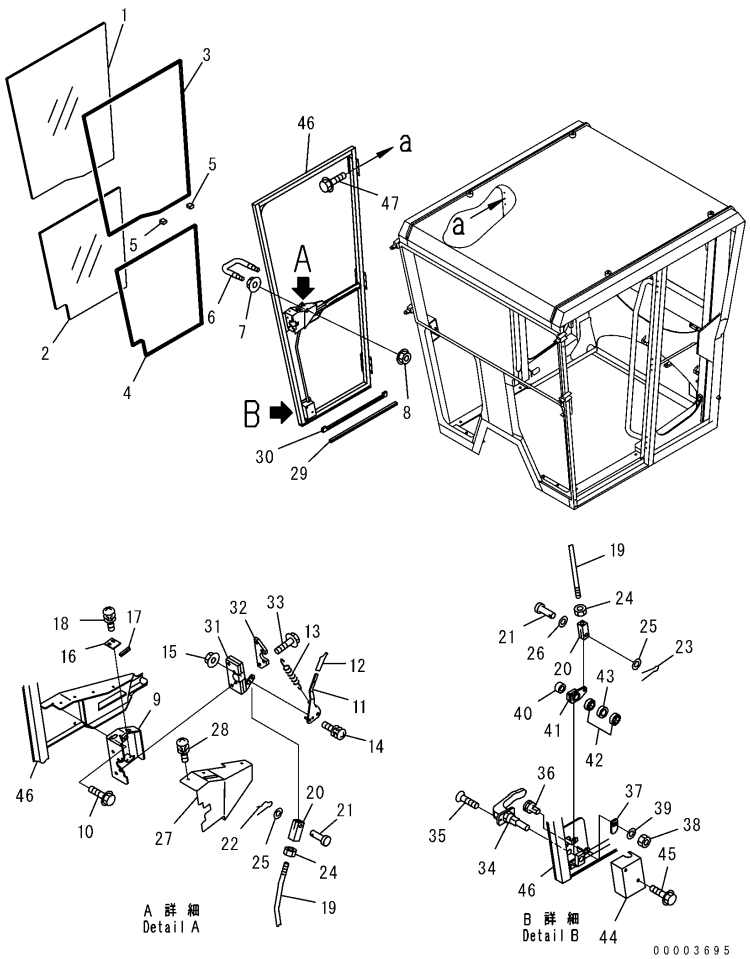

OPERATOR'S CAB (DOOR INNER PARTS, R.H.) (HIGH ROPS CAB)

Item	Part Number	Description	Qty.	Ref.	Serial No.
31	195-Z11-4510	..LOCK	1		B10001-
32	23D-950-8260	..PLATE	1		B10001-
33	01435-40630	..BOLT	4		B10001-
34	23B-952-1990	..HANDLE	1		B10001-
35	01224-70420	..SCREW	2		B10001-
36	23B-952-1980	..LOCK	1		B10001-
37	23B-952-1971	..PLATE	1		B10001-
38	01580-11008	..NUT	1		B10001-
39	01643-31032	..WASHER	1		B10001-
40	23B-952-1170	..SPACER	1		B10001-
41	23B-952-1961	..PLATE	1		B10001-
42	23B-952-1180	..BEARING	2		B10001-
43	23B-952-1190	..SPACER	1		B10001-
44	23B-952-1941	..COVER	1		B10001-
45	01435-40610	..BOLT	2		B10001-
46	☆	..DOOR	1		B10001-
47	01435-40816	.BOLT	9		B10001-

OPERATOR'S CAB (LOCK, R.H.) (LOW ROPS CAB)

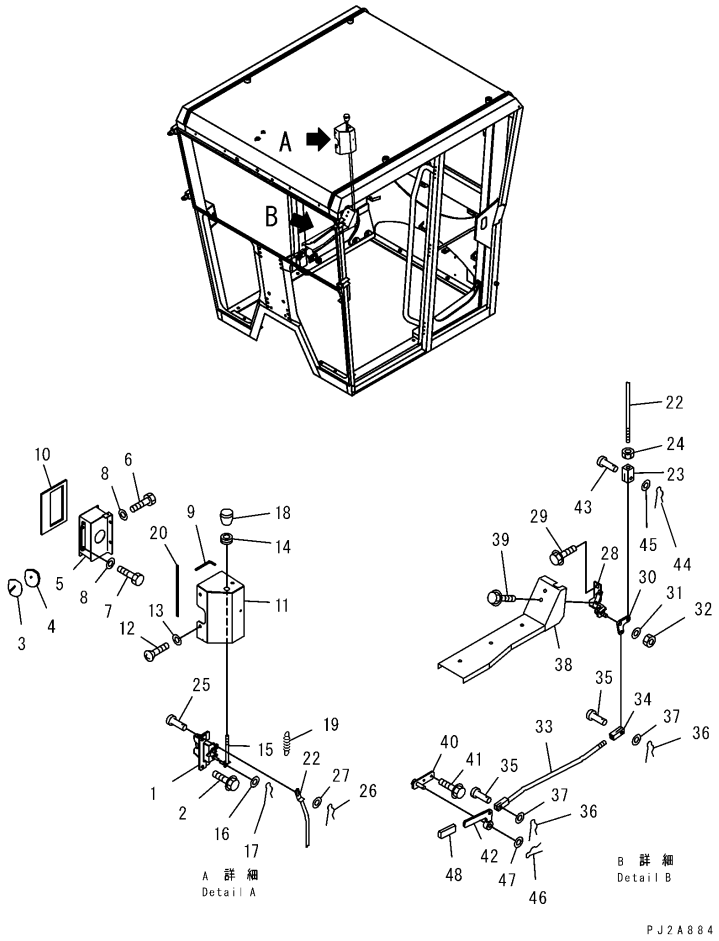

OPERATOR'S CAB (LOCK, R.H.) (LOW ROPS CAB)

Item	Part Number	Description	Qty.	Ref.	Serial No.
	(23B-952-4080)	CAB ASSEMBLY	1		B10001-
	(23B-952-3022)	CAB ASSEMBLY	1		B10001-
	(23B-952-3021)	CAB ASSEMBLY	1		B10001-
	(23B-952-3020)	CAB ASSEMBLY	1		B10001-
		THESE ASSEMBLIES CONSIST OF ALL PARTS SHOWN IN FIGS.K0210-01A0 TO K0210-17A0.			
1	23A-952-1812	.LOCK, R.H.	1		B10001-
2	01435-00612	.BOLT	2		B10001-
3	23A-952-1841	.PLATE	2		B10001-
4	23A-952-1851	.SEAL	1		B10001-
5	23A-952-1761	.CASE, R.H.	1		B10001-
6	01010-80610	.BOLT	2		B10001-
7	01010-80612	.BOLT	2		B10001-
8	01643-30623	.WASHER	4		B10001-
9	23A-952-1860	.SEAL	1		B10001-
10	23A-952-1871	.SEAL	1		B10001-
11	23A-952-1781	.COVER	1		B10001-
12	01225-70612	.SCREW	3		B10001-
13	23S-55-51970	.WASHER	3		B10001-
14	08037-01008	.GROMMET	1		B10001-
15	23B-952-2261	.ROD	1		B10001-
16	01640-20610	.WASHER	1		B10001-
17	04052-10633	.PIN, SNAP	1		B10001-
18	424-926-2170	.KNOB	1		B10001-
19	287-43-13721	.SPRING	2		B10001-
20	23B-952-1850	.RUBBER	1		B10001-
22	23A-952-1941	.ROD, R.H.	1		B10001-
23	04210-20832	.YOKE	1		B10001-
24	01580-10806	.NUT	1		B10001-
25	04205-30825	.PIN	1		B10001-
26	04052-10833	.PIN, SNAP	1		B10001-
27	01640-20816	.WASHER	1		B10001-
28	23A-952-1972	.BRACKET	1		B10001-
29	01435-40816	.BOLT	2		B10001-
30	23A-952-1950	.PLATE	2		B10001-
31	01641-20812	.WASHER	2		B10001-

OPERATOR'S CAB (LOCK, R.H.) (LOW ROPS CAB)

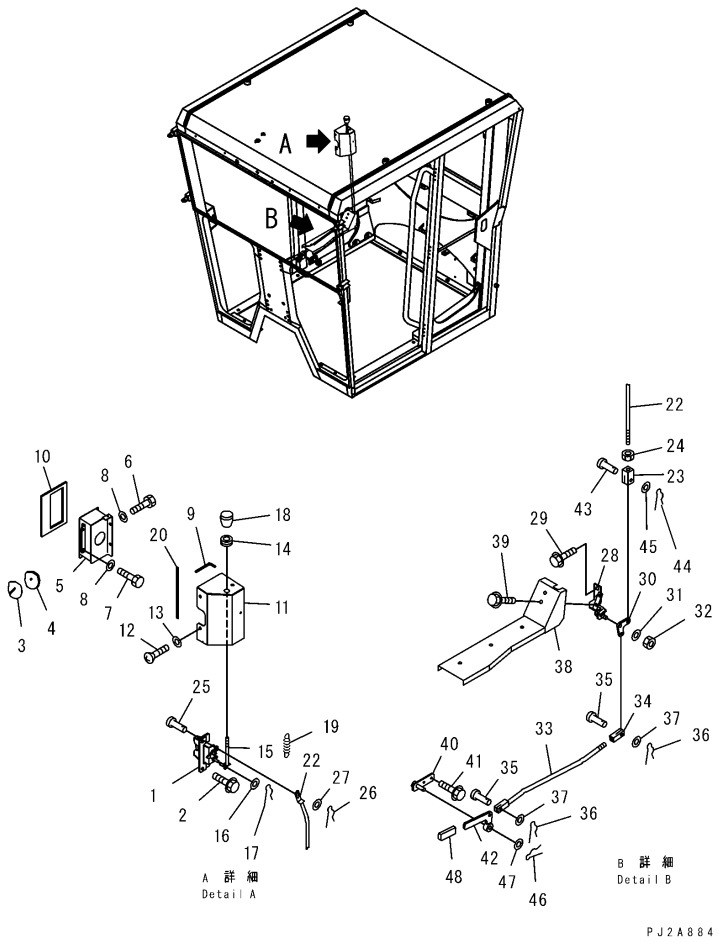

OPERATOR'S CAB (LOCK, R.H.) (LOW ROPS CAB)

Item	Part Number	Description	Qty.	Ref.	Serial No.
32	01580-10806	.NUT	2		B10001-
33	23A-952-1980	.ROD	2		B10001-
34	04210-20832	.YOKE	1		B10001-
35	04205-30825	.PIN	1		B10001-
36	04052-10833	.PIN, SNAP	1		B10001-
37	01640-20816	.WASHER	1		B10001-
38	23B-952-1891	.COVER, R.H.	1		B10001-
39	01435-40612	.BOLT	5		B10001-
40	23A-952-1920	.PLATE	2		B10001-
41	01435-40816	.BOLT	2		B10001-
42	23A-952-1990	.LEVER	2		B10001-
43	04205-30825	.PIN	1		B10001-
44	04052-10833	.PIN, SNAP	1		B10001-
45	01640-20816	.WASHER	1		B10001-
46	04052-11038	.PIN, SNAP	1		B10001-
47	01640-21016	.WASHER	1		B10001-
48	23B-952-1910	.CAP	1		B10001-

OPERATOR'S CAB (LOCK, R.H.) (HIGH ROPS CAB)

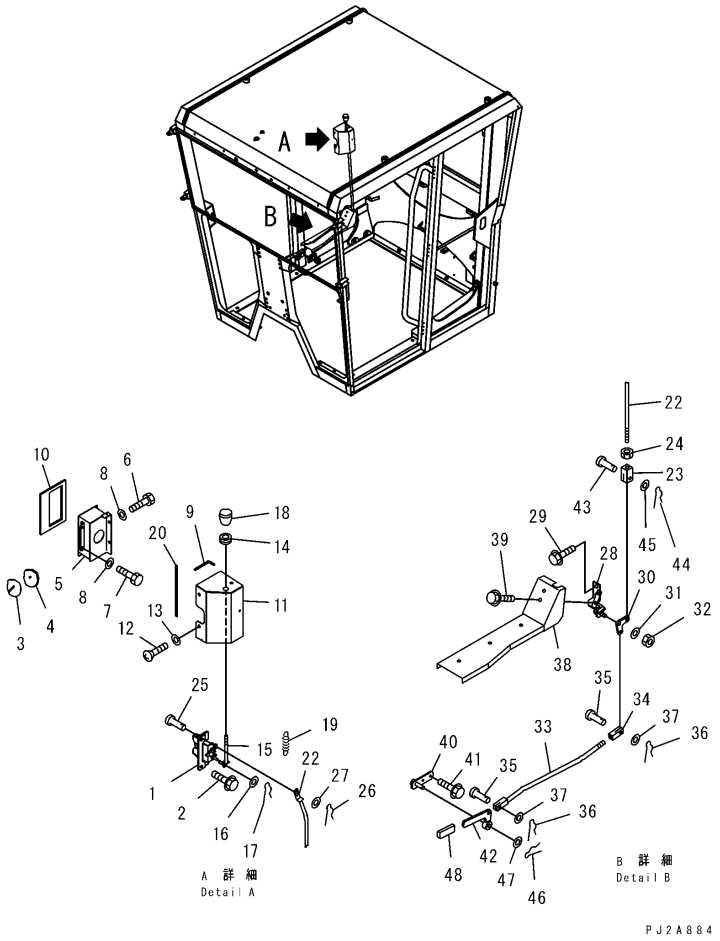

OPERATOR'S CAB (LOCK, R.H.) (HIGH ROPS CAB)

Item	Part Number	Description	Qty.	Ref.	Serial No.
	(23B-953-4080)	CAB ASSEMBLY	1		B10001-
	(23B-953-3022)	CAB ASSEMBLY	1		B10001-
	(23B-953-3021)	CAB ASSEMBLY	1		B10001-
	(23B-953-3020)	CAB ASSEMBLY	1		B10001-
		THESE ASSEMBLIES CONSIST OF ALL PARTS SHOWN IN FIGS.K0210-01B0 TO K0210-17A0.			
1	23A-952-1812	.LOCK, R.H.	1		B10001-
2	01435-00612	.BOLT	2		B10001-
3	23A-952-1841	.PLATE	2		B10001-
4	23A-952-1570	.SEAL	1		B10001-
5	23A-952-1761	.CASE, R.H.	1		B10001-
6	01010-80610	.BOLT	2		B10001-
7	01010-80612	.BOLT	2		B10001-
8	01643-30623	.WASHER	4		B10001-
9	23A-952-1860	.SEAL	1		B10001-
10	23A-952-1871	.SEAL	1		B10001-
11	23A-952-1781	.COVER	1		B10001-
12	01225-70612	.SCREW	3		B10001-
13	23S-55-51970	.WASHER	3		B10001-
14	08037-01008	.GROMMET	1		B10001-
15	23B-952-2261	.ROD	1		B10001-
16	01640-20610	.WASHER	1		B10001-
17	04052-10633	.PIN, SNAP	1		B10001-
18	424-926-2170	.KNOB	1		B10001-
19	287-43-13721	.SPRING	1		B10001-
20	23B-952-1850	.RUBBER	1		B10001-
22	23A-952-1941	.ROD, R.H.	1		B10001-
23	04210-20832	.YOKE	1		B10001-
24	01580-10806	.NUT	1		B10001-
25	04205-30825	.PIN	1		B10001-
26	04052-10833	.PIN, SNAP	1		B10001-
27	01640-20816	.WASHER	1		B10001-
28	23A-952-1972	.BRACKET	1		B10001-
29	01435-40816	.BOLT	2		B10001-
30	23A-952-1950	.PLATE	2		B10001-
31	01641-20812	.WASHER	2		B10001-

OPERATOR'S CAB (LOCK, R.H.) (HIGH ROPS CAB)

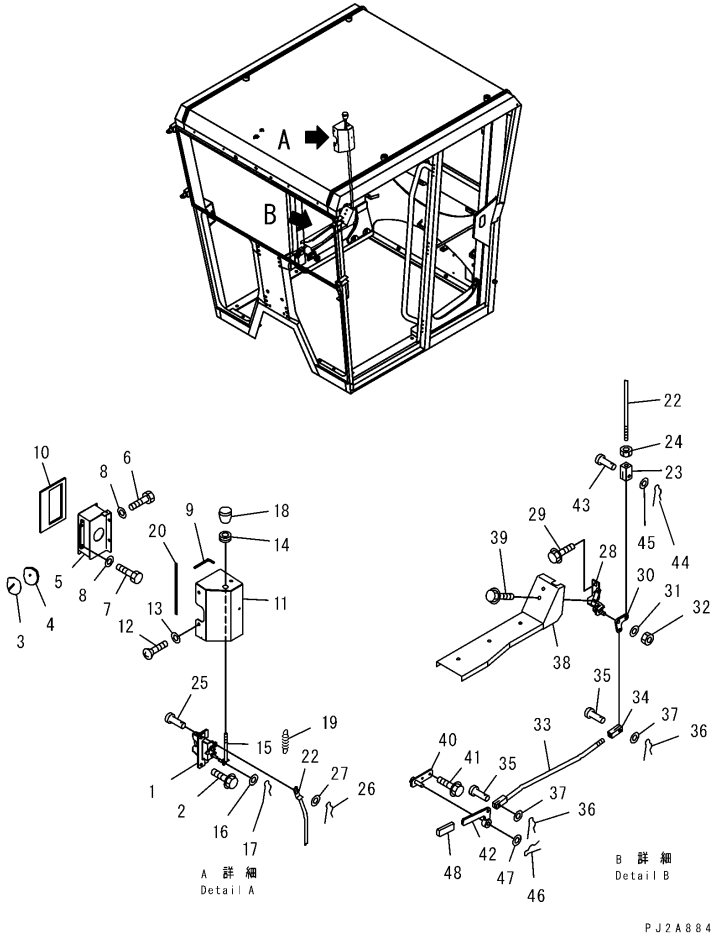

OPERATOR'S CAB (LOCK, R.H.) (HIGH ROPS CAB)

Item	Part Number	Description	Qty.	Ref.	Serial No.
32	01580-10806	.NUT	2		B10001-
33	23A-952-1980	.ROD	2		B10001-
34	04210-20832	.YOKE	1		B10001-
35	04205-30825	.PIN	1		B10001-
36	04052-10833	.PIN, SNAP	1		B10001-
37	01640-20816	.WASHER	1		B10001-
38	23B-952-1891	.COVER, R.H.	1		B10001-
39	01435-40612	.BOLT	5		B10001-
40	23A-952-1920	.PLATE	2		B10001-
41	01435-40816	.BOLT	2		B10001-
42	23A-952-1990	.LEVER	2		B10001-
43	04205-30825	.PIN	1		B10001-
44	04052-10833	.PIN, SNAP	1		B10001-
45	01640-20816	.WASHER	1		B10001-
46	04052-11038	.PIN, SNAP	1		B10001-
47	01640-21016	.WASHER	1		B10001-
48	23B-952-1910	.CAP	1		B10001-

OPERATOR'S CAB (CAB HARNESS) (LOW ROPS CAB)

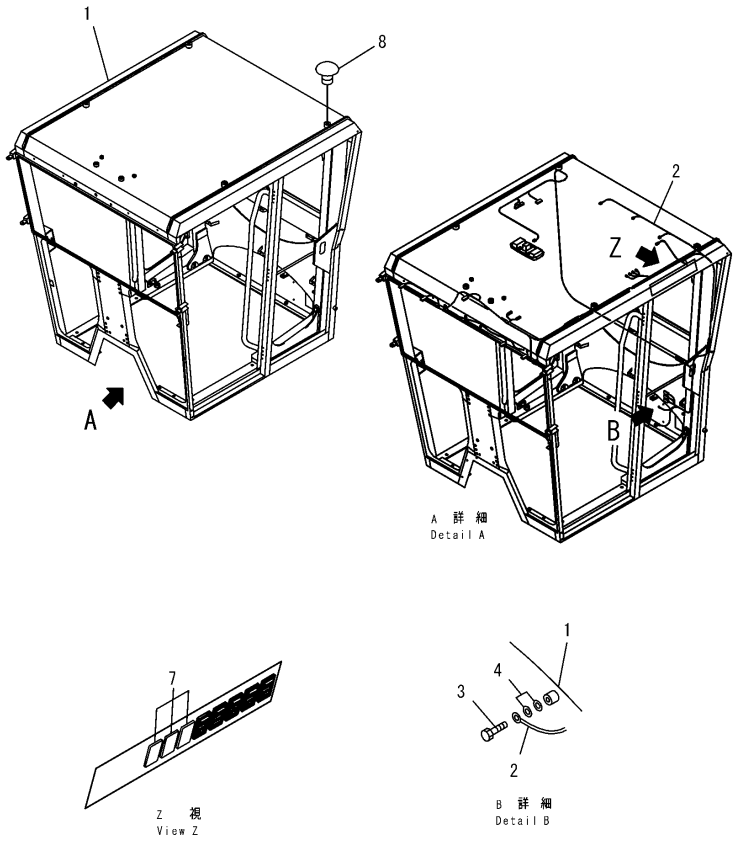

OPERATOR'S CAB (CAB HARNESS) (LOW ROPS CAB)

Item	Part Number	Description	Qty.	Ref.	Serial No.
	(23B-952-4080)	CAB ASSEMBLY	1		B10001-
	(23B-952-3022)	CAB ASSEMBLY	1		B10001-
	(23B-952-3021)	CAB ASSEMBLY	1		B10001-
	(23B-952-3020)	CAB ASSEMBLY	1		B10001-
		THESE ASSEMBLIES CONSIST OF ALL PARTS SHOWN IN FIGS.K0210-01A0 TO K0210-17A0.			
1	☆	.CAB	1		B10001-
	☆	.CAB	1		B10001-
2	23A-952-1561	.WIRING HARNESS	1		B10001-
3	01010-D0810	.BOLT	2		B10001-
	01010-D0810	.BOLT	1		B10001-
4	01643-70823	.WASHER	2		B10001-
7	23B-952-2360	.CAP	3		B10001-
8	421-56-21720	.CAP	4		B10001-

OPERATOR'S CAB (CAB HARNESS) (HIGH ROPS CAB)

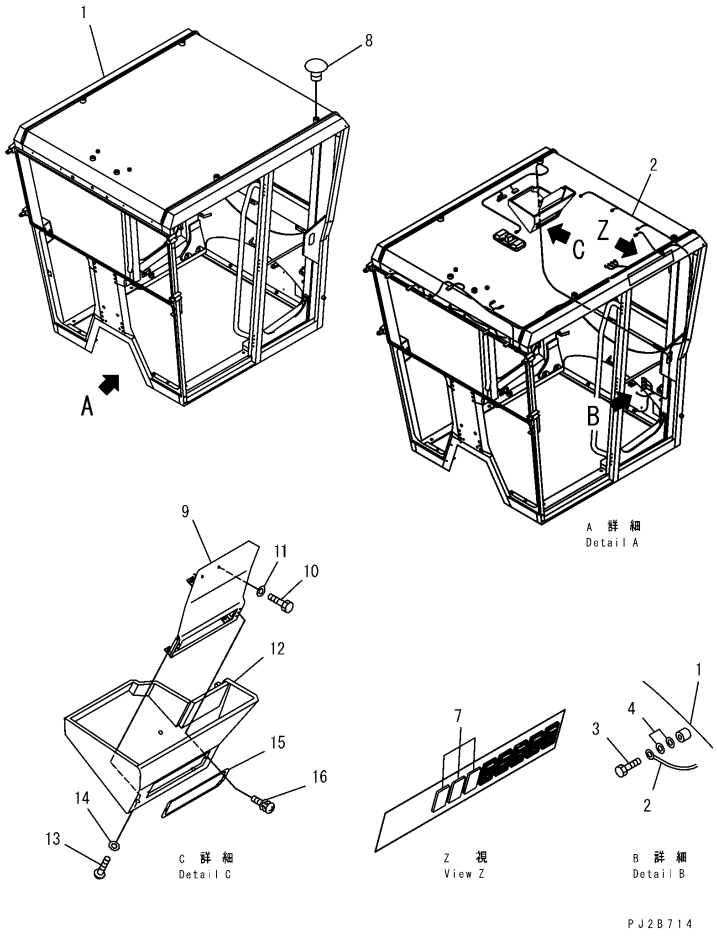

OPERATOR'S CAB (CAB HARNESS) (HIGH ROPS CAB)

Item	Part Number	Description	Qty.	Ref.	Serial No.
	(23B-953-4080)	CAB ASSEMBLY	1		B10001-
	(23B-953-3022)	CAB ASSEMBLY	1		B10001-
	(23B-953-3021)	CAB ASSEMBLY	1		B10001-
	(23B-953-3020)	CAB ASSEMBLY	1		B10001-
		THESE ASSEMBLIES CONSIST OF ALL PARTS SHOWN IN FIGS.K0210-01B0 TO K0210-17A0.			
1	☆	.CAB	1		B10001-
	☆	.CAB	1		B10001-
2	23A-953-1560	.WIRING HARNESS	1		B10001-
3	01010-D0810	.BOLT	2		B10001-
	01010-D0810	.BOLT	1		B10001-
4	01643-70823	.WASHER	2		B10001-
7	23B-952-2360	.CAP	3		B10001-
8	421-56-21720	.CAP	4		B10001-
9	23B-953-2420	.BRACKET	1		B10001-
10	01010-81030	.BOLT	2		B10001-
11	01643-31032	.WASHER	2		B10001-
12	23B-953-2430	.COVER	1		B10001-
13	01225-70620	.SCREW	3		B10001-
14	23S-55-51970	.WASHER	3		B10001-
15	23B-953-2440	.COVER	1		B10001-
16	01023-70425	.SCREW	2		B10001-

OPERATOR'S CAB (AIR CONDITIONER HARNESS) (LOW ROPS CAB)

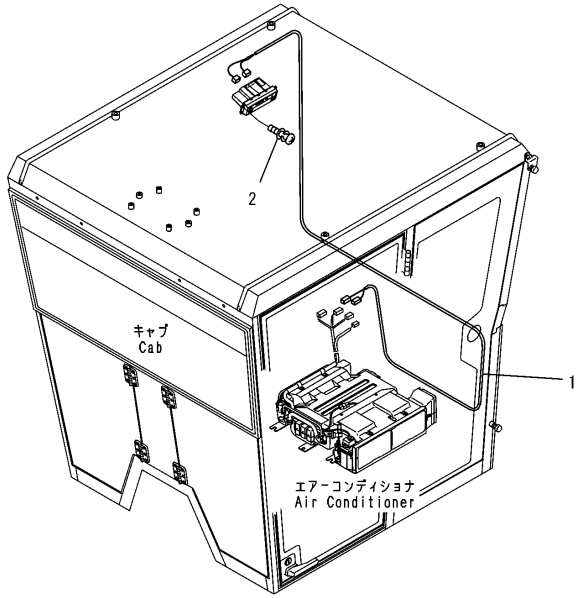

PW2A889

K0210-11A0

OPERATOR'S CAB (AIR CONDITIONER HARNESS) (LOW ROPS CAB)

Item	Part Number	Description	Qty.	Ref.	Serial No.
	(23B-952-4080)	CAB ASSEMBLY	1		B10001-
	(23B-952-3022)	CAB ASSEMBLY	1		B10001-
	(23B-952-3021)	CAB ASSEMBLY	1		B10001-
	(23B-952-3020)	CAB ASSEMBLY	1		B10001-
		THESE ASSEMBLIES CONSIST OF ALL PARTS SHOWN IN FIGS.K0210-01A0 TO K0210-17A0.			
1	23B-809-7832	WIRING HARNESS	1		B10001-
2	01023-70414	SCREW	4		B10001-

OPERATOR'S CAB (AIR CONDITIONER HARNESS) (HIGH ROPS CAB)

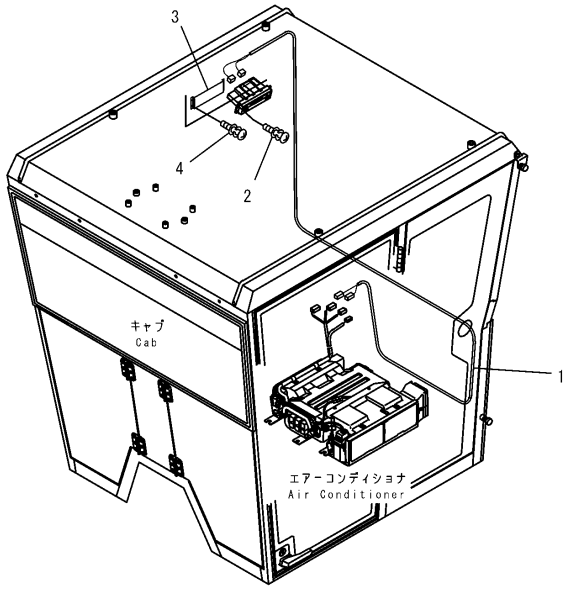

PJ2B715

OPERATOR'S CAB (AIR CONDITIONER HARNESS) (HIGH ROPS CAB)

Item	Part Number	Description	Qty.	Ref.	Serial No.
	(23B-953-4080)	CAB ASSEMBLY	1		B10001-
	(23B-953-3022)	CAB ASSEMBLY	1		B10001-
	(23B-953-3021)	CAB ASSEMBLY	1		B10001-
	(23B-953-3020)	CAB ASSEMBLY	1		B10001-
		THESE ASSEMBLIES CONSIST OF ALL PARTS SHOWN IN FIGS.K0210-01B0 TO K0210-17A0.			
1	23B-809-7890	WIRING HARNESS	1		B10001-
2	01023-70414	SCREW	4		B10001-
3	23B-952-1580	COVER, AIR CONDITIONER	1		B10001-
4	01023-70410	SCREW	4		B10001-

OPERATOR'S CAB (DUMMY CAP)

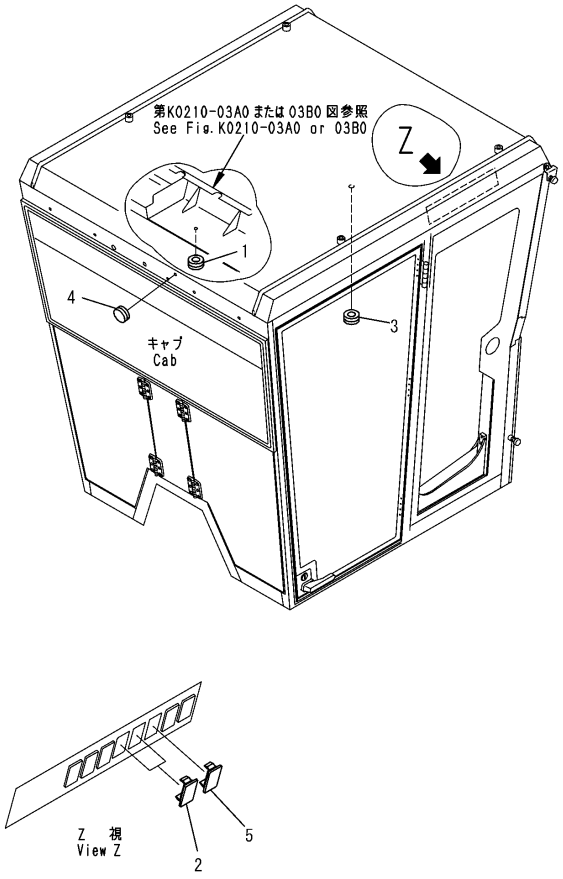

00009327

OPERATOR'S CAB (DUMMY CAP)

Item	Part Number	Description	Qty.	Ref.	Serial No.
	(23B-952-4080)	CAB ASSEMBLY, (LOW ROPS CAB)	1		B10001-
	(23B-952-3022)	CAB ASSEMBLY, (LOW ROPS CAB)	1		B10001-
	(23B-952-3021)	CAB ASSEMBLY, (LOW ROPS CAB)	1		B10001-
	(23B-952-3020)	CAB ASSEMBLY, (LOW ROPS CAB)	1		B10001-
	(23B-953-4080)	CAB ASSEMBLY, (HIGH ROPS CAB)	1		B10001-
	(23B-953-3022)	CAB ASSEMBLY, (HIGH ROPS CAB)	1		B10001-
	(23B-953-3021)	CAB ASSEMBLY, (HIGH ROPS CAB)	1		B10001-
	(23B-953-3020)	CAB ASSEMBLY, (HIGH ROPS CAB)	1		B10001-
		THESE ASSEMBLIES CONSIST OF ALL PARTS SHOWN IN FIGS.K0210-01A0 TO K0210-17A0.			
1	09415-01008	.CAP, (FOR FAN LESS)	1		B10001-
2	23B-952-2360	.CAP	2		B10001-
3	09415-02520	.CAP, (FOR FAN LESS)	1		B10001-
4	09415-01610	.CAP	1		B10001-
5	23B-952-2360	.CAP	1		B10001-

OPERATOR'S CAB (FRONT LOWER WIPER)

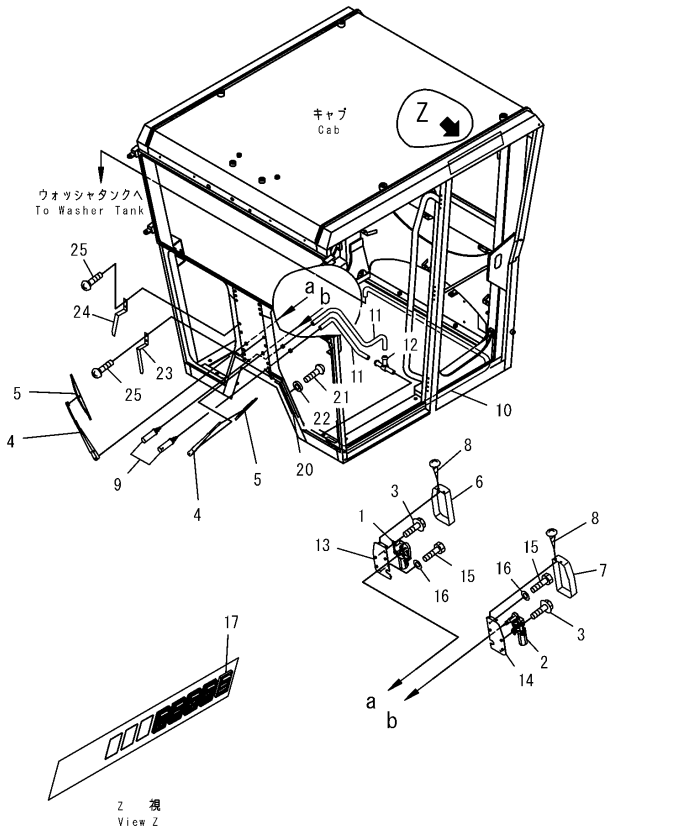

OPERATOR'S CAB (FRONT LOWER WIPER)

Item	Part Number	Description	Qty.	Ref.	Serial No.
	(23B-952-4080)	CAB ASSEMBLY, (LOW ROPS CAB)	1		B10001-
	(23B-952-3022)	CAB ASSEMBLY, (LOW ROPS CAB)	1		B10001-
	(23B-952-3021)	CAB ASSEMBLY, (LOW ROPS CAB)	1		B10001-
	(23B-952-3020)	CAB ASSEMBLY, (LOW ROPS CAB)	1		B10001-
	(23B-953-4080)	CAB ASSEMBLY, (HIGH ROPS CAB)	1		B10001-
	(23B-953-3022)	CAB ASSEMBLY, (HIGH ROPS CAB)	1		B10001-
	(23B-953-3021)	CAB ASSEMBLY, (HIGH ROPS CAB)	1		B10001-
	(23B-953-3020)	CAB ASSEMBLY, (HIGH ROPS CAB)	1		B10001-
		THESE ASSEMBLIES CONSIST OF ALL PARTS SHOWN IN FIGS.K0210-01A0 TO K0210-17A0.			
1	42C-56-11390	WIPER MOTOR ASSEMBLY, R.H.	1		B10001-
2	42C-56-11380	WIPER MOTOR ASSEMBLY, L.H.	1		B10001-
3	01435-00620	BOLT	6		B10001-
4	14X-911-3221	ARM, WIPER	2		B10001-
5	426-U53-2160	BLADE, WIPER	2		B10001-
6	23A-952-1590	COVER, R.H.	1		B10001-
7	23A-952-1580	COVER, L.H.	1		B10001-
8	14X-911-1770	SCREW	8		B10001-
9	22T-55-11630	NOZZLE ASSEMBLY	2		B10001-
10	23A-952-1541	HOSE	1		B10001-
11	23A-952-1531	HOSE	2		B10001-
12	232-957-9710	CONNECTOR	1		B10001-
13	23A-952-1241	BRACKET, R.H.	1		B10001-
14	23A-952-1291	BRACKET, L.H.	1		B10001-
15	01010-80612	BOLT	4		B10001-
16	01643-30623	WASHER	4		B10001-
17	20T-06-71410	SWITCH, FRONT WIPER, LOWER	1		B10001-
20	23B-952-1161	COVER	1		B10001-
21	01225-70630	SCREW	2		B10001-
22	23S-55-51970	WASHER	2		B10001-
23	23B-952-2171	PLATE, L.H.	1		B10001-
24	23B-952-2270	PLATE, R.H.	1		B10001-
25	01225-70612	SCREW	4		B10001-

OPERATOR'S CAB (REAR WIPER)

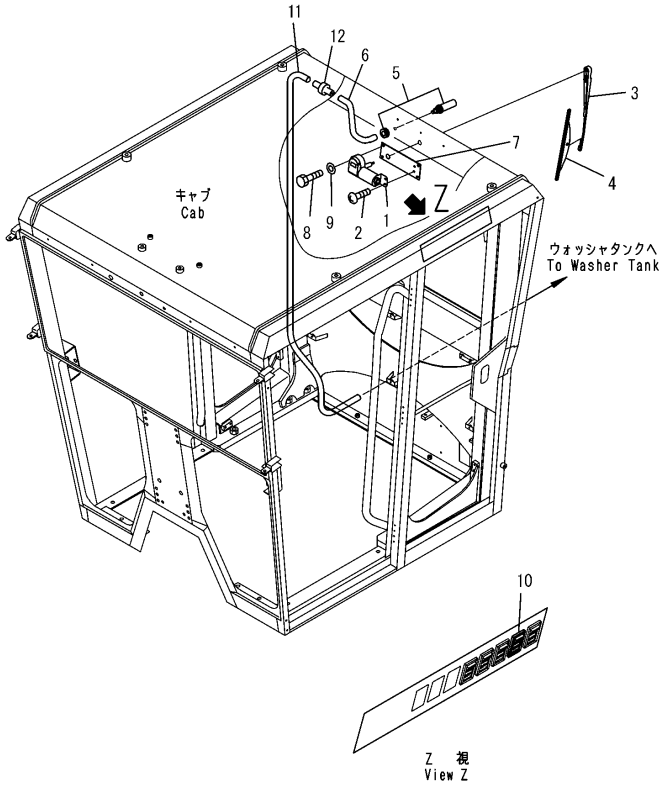

OPERATOR'S CAB (REAR WIPER)

Item	Part Number	Description	Qty.	Ref.	Serial No.
	(23B-952-4080)	CAB ASSEMBLY	1		B10001-
	(23B-952-3022)	CAB ASSEMBLY	1		B10001-
	(23B-952-3021)	CAB ASSEMBLY	1		B10001-
	(23B-952-3020)	CAB ASSEMBLY	1		B10001-
		THESE ASSEMBLIES CONSIST OF ALL PARTS SHOWN IN FIGS.K0210-01A0 TO K0210-17A0.			
1	08180-12411	WIPER MOTOR ASSEMBLY	1		B10001-
2	01023-60512	SCREW	2		B10001-
3	20T-54-84840	ARM, WIPER	1		B10001-
4	20T-54-74990	BLADE, WIPER	1		B10001-
5	22T-55-11630	NOZZLE ASSEMBLY	1		B10001-
6	23A-952-1541	HOSE	1		B10001-
7	23A-952-1460	BRACKET	1		B10001-
8	01010-80620	BOLT	4		B10001-
9	01643-30623	WASHER	4		B10001-
10	20T-06-71410	SWITCH, REAR WIPER	1		B10001-
11	23A-952-1550	HOSE	1		B10001-
12	120-Y79-5760	VALVE, CHECK	1		B10001-

OPERATOR'S CAB (REAR WIPER) (HIGH ROPS CAB)

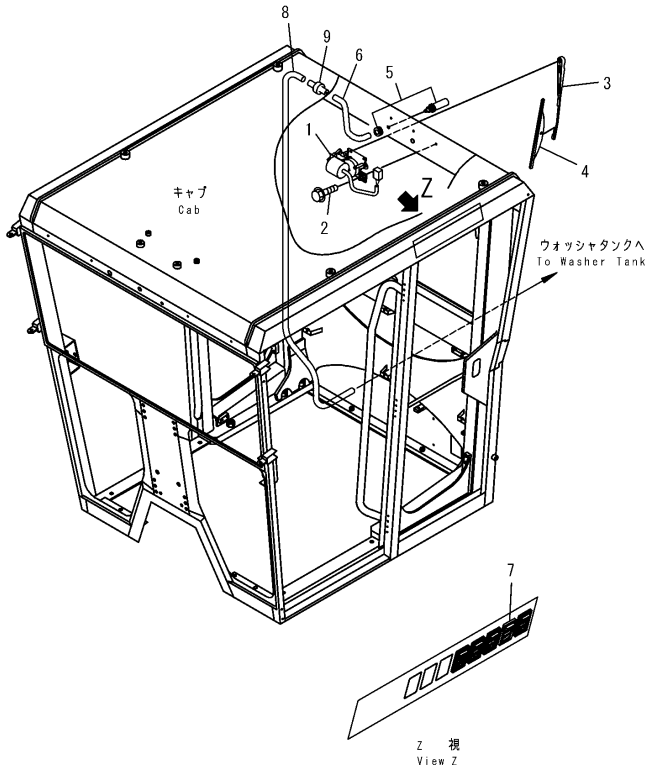

PJ2B716

OPERATOR'S CAB (REAR WIPER) (HIGH ROPS CAB)

Item	Part Number	Description	Qty.	Ref.	Serial No.
	(23B-953-4080)	CAB ASSEMBLY	1		B10001-
	(23B-953-3022)	CAB ASSEMBLY	1		B10001-
	(23B-953-3021)	CAB ASSEMBLY	1		B10001-
	(23B-953-3020)	CAB ASSEMBLY	1		B10001-
		THESE ASSEMBLIES CONSIST OF ALL PARTS SHOWN IN FIGS.K0210-01B0 TO K0210-17A0.			
1	23B-953-1130	WIPER MOTOR ASSEMBLY	1		B10001-
2	01435-00616	BOLT	4		B10001-
3	418-923-1270	ARM, WIPER	1		B10001-
4	195-Z11-8550	BLADE, WIPER	1		B10001-
5	22T-55-11630	NOZZLE ASSEMBLY	1		B10001-
6	23A-953-1540	HOSE	1		B10001-
7	20T-06-71410	SWITCH, REAR WIPER	1		B10001-
8	23A-952-1550	HOSE	1		B10001-
9	120-Y79-5760	VALVE, CHECK	1		B10001-

OPERATOR'S CAB (RADIO CASETTE)

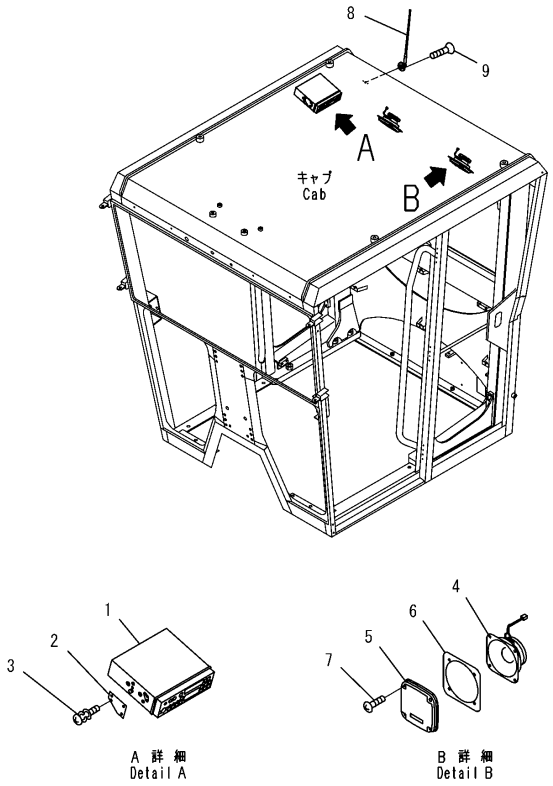

PW2A890

OPERATOR'S CAB (RADIO CASETTE)

Item	Part Number	Description	Qty.	Ref.	Serial No.
	(23B-952-4080)	CAB ASSEMBLY, (LOW ROPS CAB)	1		B10001-
	(23B-952-3022)	CAB ASSEMBLY, (LOW ROPS CAB)	1		B10001-
	(23B-952-3021)	CAB ASSEMBLY, (LOW ROPS CAB)	1		B10001-
	(23B-952-3020)	CAB ASSEMBLY, (LOW ROPS CAB)	1		B10001-
	(23B-953-4080)	CAB ASSEMBLY, (HIGH ROPS CAB)	1		B10001-
	(23B-953-3022)	CAB ASSEMBLY, (HIGH ROPS CAB)	1		B10001-
	(23B-953-3021)	CAB ASSEMBLY, (HIGH ROPS CAB)	1		B10001-
	(23B-953-3020)	CAB ASSEMBLY, (HIGH ROPS CAB)	1		B10001-
		THESE ASSEMBLIES CONSIST OF ALL PARTS SHOWN IN FIGS.K0210-01A0 TO K0210-17A0.			
1	425-S67-2150	STEREO CASSETTE A.	1		B10001-
	425-S67-2180	.KNOB KIT	1		B10001-
	08040-00300	.FUSE, 3A.	1		B10001-
	08040-00100	.FUSE, 1A.	1		B10001-
2	421-925-3140	PLATE	2		B10001-
	□418-S67-2211	PLATE	2		B10001-
3	01023-70410	SCREW	4		B10001-
4	421-06-26310	SPEAKER	2		B10001-
5	418-967-2150	COVER, SPEAKER	2		B10001-
6	418-967-2230	PLATE	2		B10001-
7	01220-40420	SCREW	8		B10001-
8	362-56-42261	RUBBER ANTENNA	1		B10001-
9	01224-40420	SCREW	2		B10001-

OPERATOR'S CAB (AIR CONDITIONER UNIT AND DUCT)

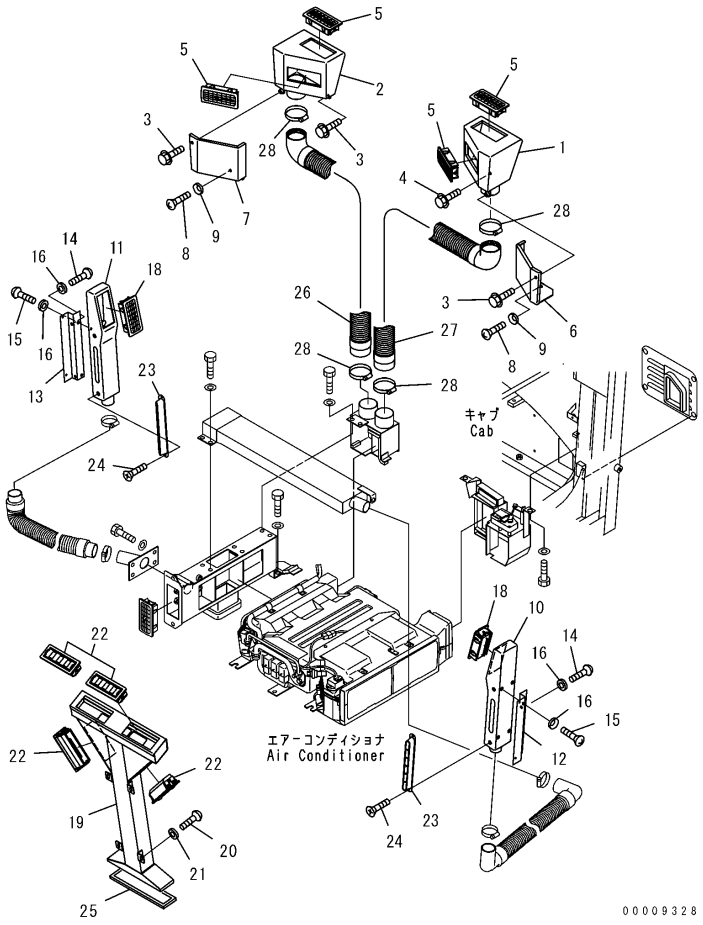

OPERATOR'S CAB (AIR CONDITIONER UNIT AND DUCT)

Item	Part Number	Description	Qty.	Ref.	Serial No.
	(23B-952-4080)	CAB ASSEMBLY, (LOW ROPS CAB)	1		B10001-
	(23B-952-3022)	CAB ASSEMBLY, (LOW ROPS CAB)	1		B10001-
	(23B-953-4080)	CAB ASSEMBLY, (HIGH ROPS CAB)	1		B10001-
	(23B-953-3022)	CAB ASSEMBLY, (HIGH ROPS CAB)	1		B10001-
		THESE ASSEMBLIES CONSIST OF ALL PARTS SHOWN IN FIGS.K0210-01A0 TO K0210-17A0.			
1	23B-809-8831	BOX, L.H.	1		B10001-
2	23B-809-8841	BOX, R.H.	1		B10001-
3	01435-00612	BOLT	2		B10001-
4	01435-00616	BOLT	4		B10001-
5	421-07-23870	GRILLE	4		B10001-
6	23B-809-8871	COVER, L.H.	1		B10001-
7	23B-809-8881	COVER, R.H.	1		B10001-
8	01225-70612	SCREW	6		B10001-
9	23S-55-51970	WASHER	6		B10001-
10	23B-809-8891	DUCT, L.H.	1		B10001-
11	23B-809-8980	DUCT, R.H.	1		B10001-
12	23B-809-8921	PLATE, L.H.	1		B10001-
13	23B-809-8990	PLATE, R.H.	1		B10001-
14	01225-70616	SCREW	4		B10001-
15	01225-70610	SCREW	4		B10001-
16	23S-55-51970	WASHER	8		B10001-
18	421-07-23870	GRILLE	2		B10001-
19	23B-809-8911	DUCT	1		B10001-
20	01225-70616	SCREW	4		B10001-
21	23S-55-51970	WASHER	4		B10001-
22	421-07-23870	GRILLE	4		B10001-
23	09487-30220	NOZZLE	2		B10001-
24	01224-70406	SCREW	4		B10001-
25	23B-809-8930	SEAL	1		B10001-
26	23B-809-8670	HOSE	1		B10001-
27	23B-809-8680	HOSE	1		B10001-
28	07281-00709	CLAMP	4		B10001-

OPERATOR'S CAB (CONTROL PANEL FOR AIR CONDITIONER)

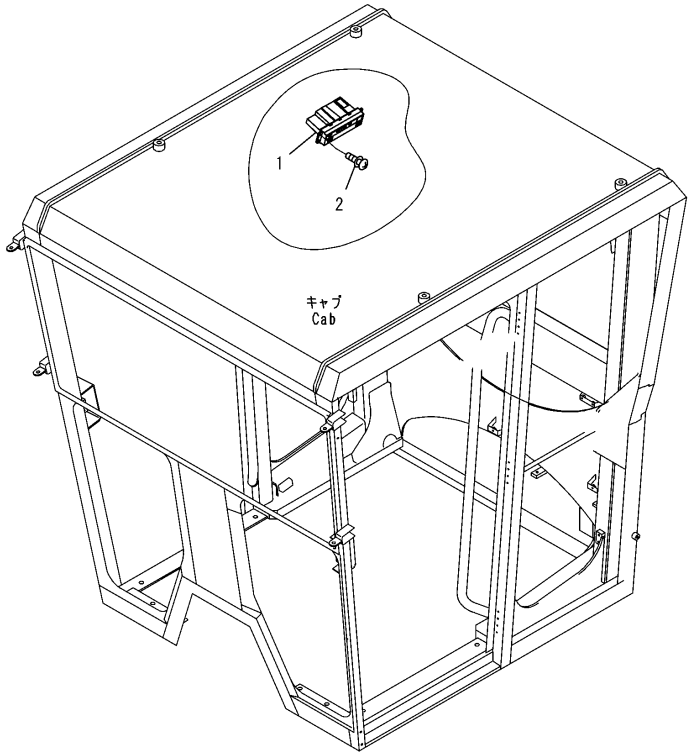

00009329

K0210-17A0

OPERATOR'S CAB (CONTROL PANEL FOR AIR CONDITIONER)

Item	Part Number	Description	Qty.	Ref.	Serial No.
	(23B-952-4080)	CAB ASSEMBLY, (LOW ROPS CAB)	1		B10001-
	(23B-952-3022)	CAB ASSEMBLY, (LOW ROPS CAB)	1		B10001-
	(23B-953-4080)	CAB ASSEMBLY, (HIGH ROPS CAB).	1		B10001-
	(23B-953-3022)	CAB ASSEMBLY, (HIGH ROPS CAB).	1		B10001-
		THESE ASSEMBLIES CONSIST OF ALL PARTS SHOWN IN FIGS.K0210-01A0 TO K0210-17A0.			
1	23B-809-3200	.PANEL ASSEMBLY	1		B10001-
2	01023-70414	.SCREW	4		B10001-

OPERATOR'S CAB (SEAL AND MOUNTING PARTS) (LOW ROPS CAB)

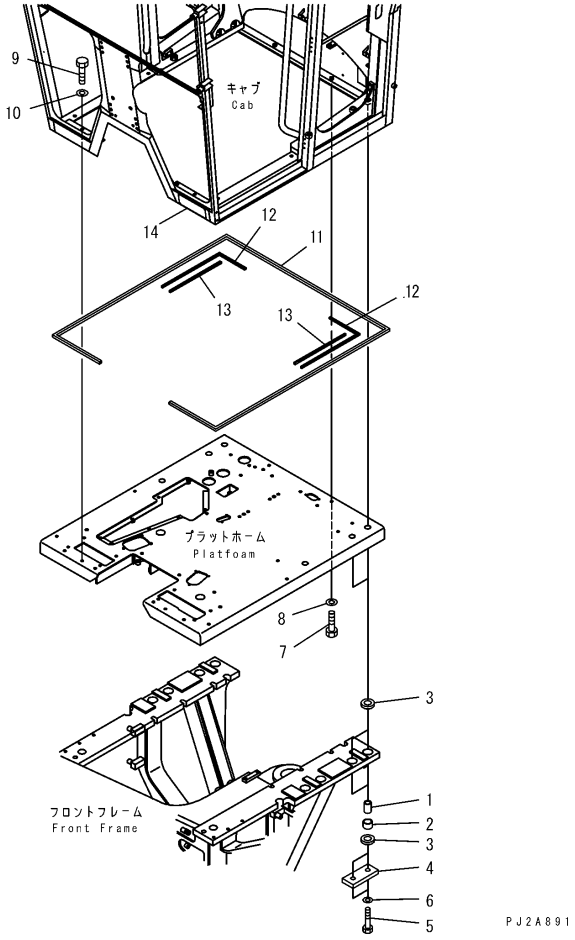

OPERATOR'S CAB (SEAL AND MOUNTING PARTS) (LOW ROPS CAB)

Item	Part Number	Description	Qty.	Ref.	Serial No.
1	23B-957-5510	SPACER	8		B10001-
	23B-957-4510	SPACER	8		B10001-
2	23B-957-5520	CUSHION	8		B10001-
	23B-957-4521	CUSHION	8		B10001-
3	23B-957-5530	CUSHION	16		B10001-
	23B-957-4530	CUSHION	16		B10001-
4	23B-957-5570	PLATE	4		B10001-
	23B-957-4570	PLATE	4		B10001-
5	01011-82730	BOLT	8		B10001-
	01011-82430	BOLT	8		B10001-
6	01643-32780	WASHER	8		B10001-
	01643-32460	WASHER	8		B10001-
7	01016-51045	BOLT	2		B10001-
	01016-51050	BOLT	2		B10001-
8	01643-31032	WASHER	2		B10001-
9	01010-81030	BOLT	8		B10001-
10	01643-31032	WASHER	8		B10001-
11	23B-952-1830	SEAL	1		B10001-
12	23B-952-1842	SEAL	2		B10001-
13	23B-952-2310	SEAL	2		B10001-
14	(09620-30201)	PLATE, NAME, (FOR ROPS CAB)	1		B10001-
	(04418-13060)	SCREW	4		B10001-

OPERATOR'S CAB (SEAL AND MOUNTING PARTS) (HIGH ROPS CAB)

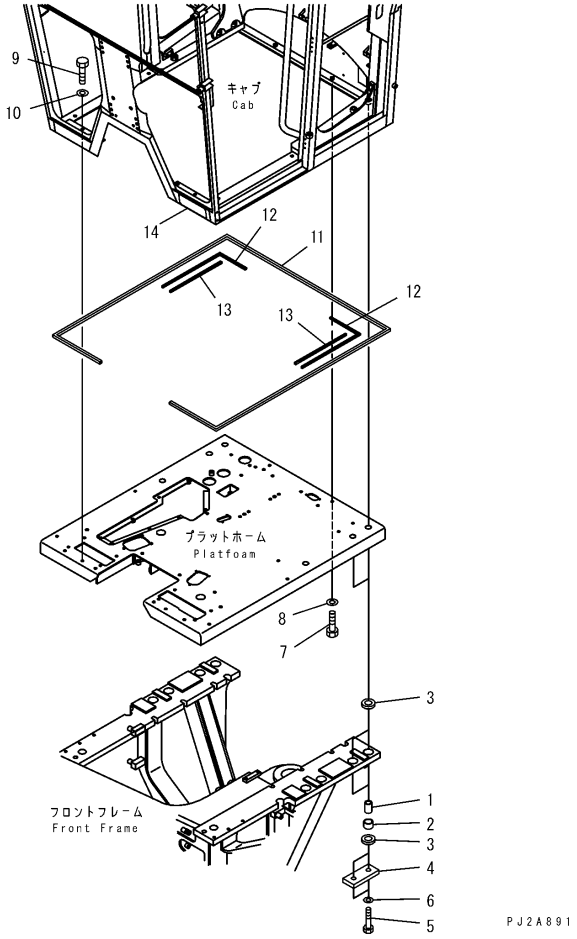

OPERATOR'S CAB (SEAL AND MOUNTING PARTS) (HIGH ROPS CAB)

Item	Part Number	Description	Qty.	Ref.	Serial No.
1	23B-957-5510	SPACER	8		B10001-
	23B-957-4510	SPACER	8		B10001-
2	23B-957-5520	CUSHION	8		B10001-
	23B-957-4521	CUSHION	8		B10001-
3	23B-957-5530	CUSHION	16		B10001-
	23B-957-4530	CUSHION	16		B10001-
4	23B-957-5570	PLATE	4		B10001-
	23B-957-4570	PLATE	4		B10001-
5	01011-82730	BOLT	8		B10001-
	01011-82430	BOLT	8		B10001-
6	01643-32780	WASHER	8		B10001-
	01643-32460	WASHER	8		B10001-
7	01016-51045	BOLT	2		B10001-
	01016-51050	BOLT	2		B10001-
8	01643-31032	WASHER	2		B10001-
9	01010-81030	BOLT	8		B10001-
10	01643-31032	WASHER	8		B10001-
11	23B-952-1830	SEAL	1		B10001-
12	23B-952-1842	SEAL	2		B10001-
13	23B-952-2310	SEAL	2		B10001-
14	(09620-30201)	PLATE, NAME, (FOR ROPS CAB)	1		B10001-
	(04418-13060)	SCREW	4		B10001-

REAR VIEW (MIRROR FOR CAB)

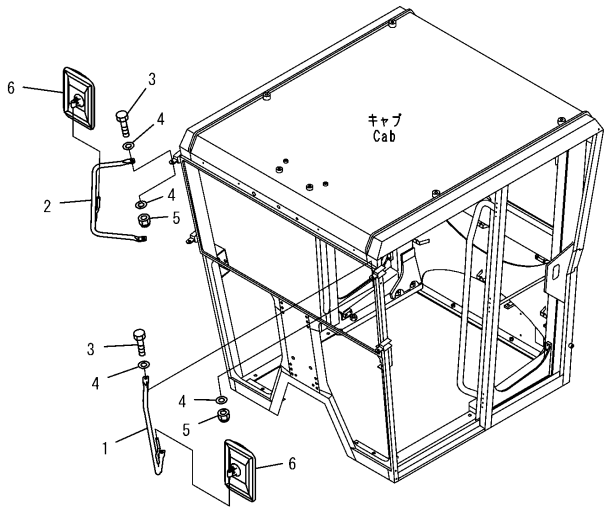

PW2A888

REAR VIEW (MIRROR FOR CAB)

Item	Part Number	Description	Qty.	Ref.	Serial No.
1	23A-952-1681	STAY, L.H.	1		B10001-
2	23A-952-1691	STAY, R.H.	1		B10001-
3	01010-D1030	BOLT	4		B10001-
4	01643-71032	WASHER	8		B10001-
5	01596-01009	NUT	4		B10001-
6	235-950-1790	MIRROR, REAR VIEW	2		B10001-

FLOOR MAT

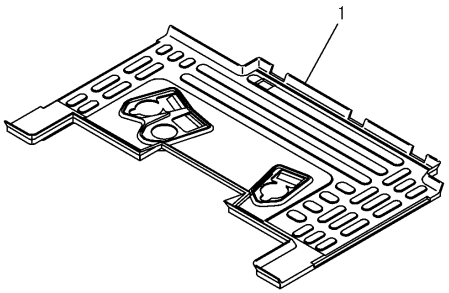

PW2A827

FLOOR MAT

Item	Part Number	Description	Qty.	Ref.	Serial No.
1	23B-54-32315	MAT, FLOOR	1		B10001-

WINDOW WASHER (1-TANK TYPE)

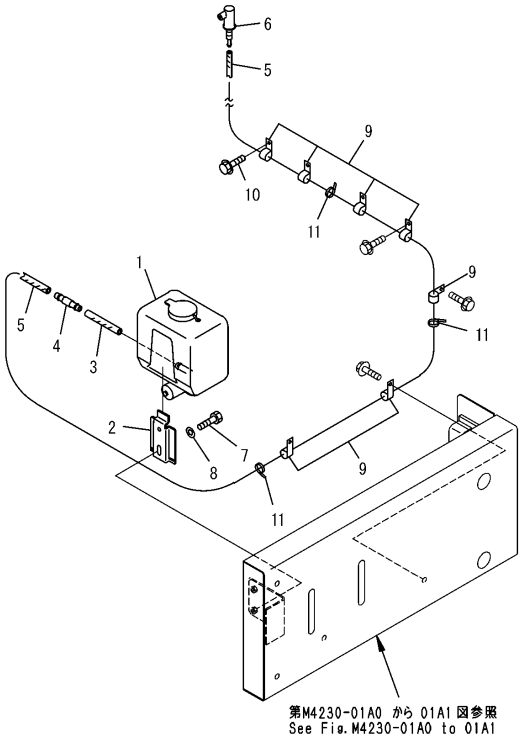

00009330

WINDOW WASHER (1-TANK TYPE)

Item	Part Number	Description	Qty.	Ref.	Serial No.
	232-950-5700	TANK ASSEMBLY	1		B10001-
1	232-856-5120	.TANK ASSEMBLY	1		B10001-
2	232-856-5130	.BRACKET	1		B10001-
3	232-856-5140	.HOSE	1		B10001-
4	232-856-5160	.CONNECTOR	1		B10001-
5	232-856-5260	.HOSE, 10M	1		B10001-
6	232-856-5170	.NOZZLE	1		B10001-
7	01010-80616	BOLT	2		B10001-
8	01643-30623	WASHER	2		B10001-
9	04434-50610	CLIP	7		B10001-
10	01435-01016	BOLT	1		B10001-
11	08034-20519	BAND	3		B10001-

WINDOW WASHER (2-TANKS TYPE)

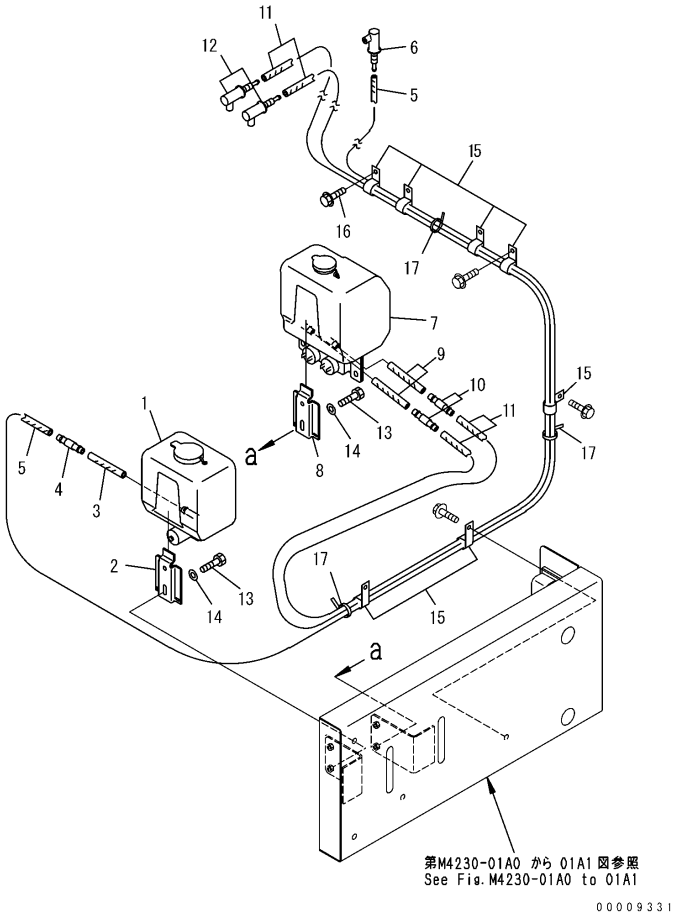

WINDOW WASHER (2-TANKS TYPE)

Item	Part Number	Description	Qty.	Ref.	Serial No.
	232-950-5700	TANK ASSEMBLY	1		B10001-
1	232-856-5120	.TANK ASSEMBLY	1		B10001-
2	232-856-5130	.BRACKET	1		B10001-
3	232-856-5140	.HOSE	1		B10001-
4	232-856-5160	.CONNECTOR	1		B10001-
5	232-856-5260	.HOSE, 10M	1		B10001-
6	232-856-5170	.NOZZLE	1		B10001-
	23B-950-2810	TANK ASSEMBLY	1		B10001-
7	23B-950-2820	.BODY	1		B10001-
8	232-856-5130	.BRACKET	1		B10001-
9	232-856-5140	.HOSE	2		B10001-
10	232-856-5160	.CONNECTOR	2		B10001-
11	232-856-5260	.HOSE, 10M	2		B10001-
12	232-856-5170	.NOZZLE	2		B10001-
13	01010-80616	BOLT	4		B10001-
14	01643-30623	WASHER	4		B10001-
15	04434-51410	CLIP	7		B10001-
16	01435-01016	BOLT	1		B10001-
17	08034-20519	BAND	3		B10001-

DEFROSTER FAN

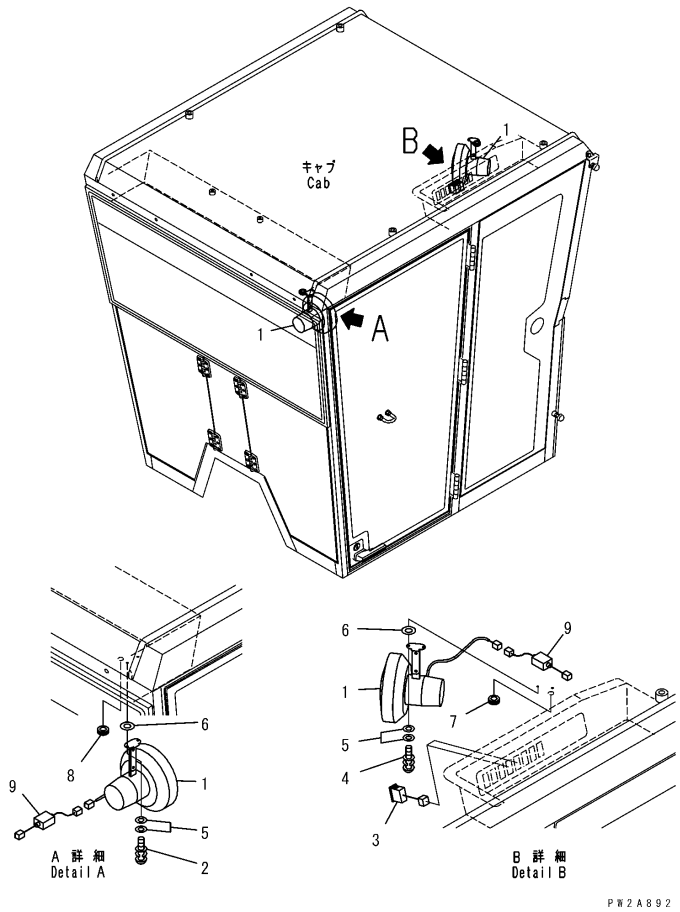

DEFROSTER FAN

Item	Part Number	Description	Qty.	Ref.	Serial No.
1	23A-952-1911	FAN, DEFROSTER	2		B10001-
	23A-952-1490	.FAN	1		B10001-
2	01023-70412	SCREW	2		B10001-
3	23A-952-1510	SWITCH, DEFROSTER	2		B10001-
4	01023-70416	SCREW	2		B10001-
5	01640-20408	WASHER	8		B10001-
6	01643-70823	WASHER	2		B10001-
7	424-06-12910	GROMMET	1		B10001-
8	08037-01008	GROMMET	1		B10001-
9	23A-952-1480	NOIZE FILTER	2		B10001-

AIR CONDITIONER (AIR CONDITIONER EQUIPMENT AND MOUNTING PARTS)

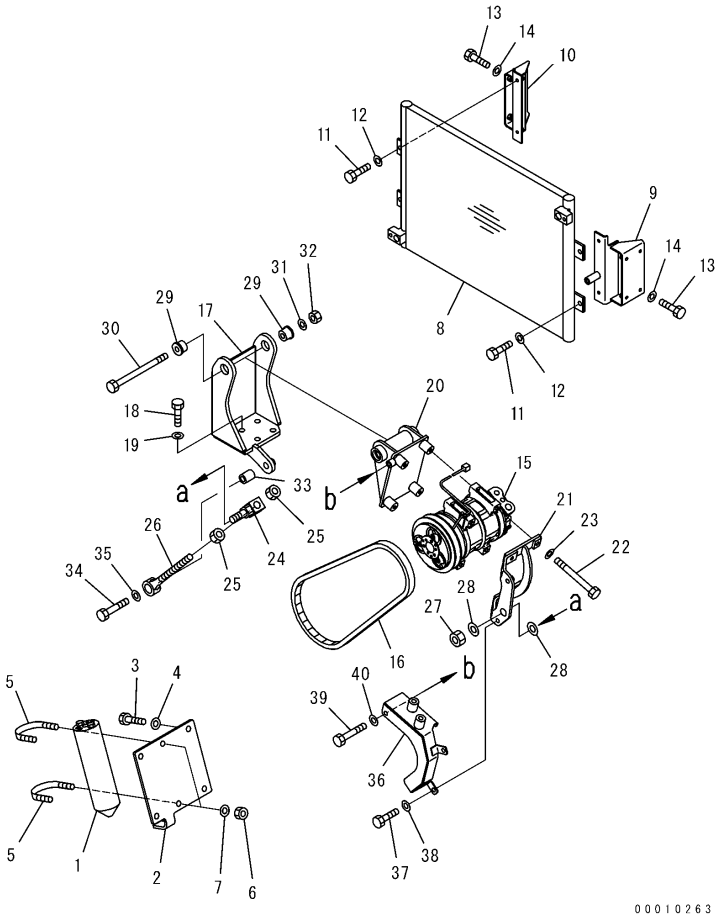

AIR CONDITIONER (AIR CONDITIONER EQUIPMENT AND MOUNTING PARTS)

Item	Part Number	Description	Qty.	Ref.	Serial No.
1	22B-979-1650	RECEIVER DRYER	1		B10001-
2	23B-809-7742	BRACKET	1		B10001-
3	01010-81025	BOLT	2		B10001-
4	01643-31032	WASHER	2		B10001-
5	07283-36155	CLIP	2		B10001-
6	01597-01009	NUT	4		B10001-
7	01643-31032	WASHER	4		B10001-
8	22B-979-1640	CONDENSER ASSEMBLY	1		B10001-
9	23B-809-9110	BRACKET	1		B10001-
10	23B-809-9120	BRACKET	1		B10001-
11	01010-80820	BOLT	4		B10001-
12	01643-30823	WASHER	4		B10001-
13	01010-81020	BOLT	8		B10001-
14	01643-31032	WASHER	8		B10001-
15	22U-979-1711	COMPRESSOR ASSEMBLY	1		B10001-
16	04120-21744	V-BELT	1		B10001-
17	23A-80-99310	BRACKET	1		B10001-
18	01010-81025	BOLT	4		B10001-
19	01643-31032	WASHER	4		B10001-
20	23A-809-9320	BRACKET	4		B10001-
21	23A-809-9330	BRACKET	1		B10001-
22	10E-60-25120	BOLT	4		B10001-
23	01643-30823	WASHER	4		B10001-
24	23B-02-31370	JOINT	1		B10001-
25	01580-11411	NUT	2		B10001-
26	6222-83-6740	ROD	1		B10001-
27	01580-11613	NUT	1		B10001-
28	01643-31645	WASHER	2		B10001-
29	23B-02-31350	ADAPTER	2		B10001-
30	01011-81065	BOLT	1		B10001-
31	01643-31032	WASHER	1		B10001-
32	01580-11008	NUT	1		B10001-
33	6215-81-6150	PIN	1		B10001-
34	01010-81255	BOLT	1		B10001-
35	01643-31232	WASHER	1		B10001-
36	23A-80-99340	COVER	1		B10001-

AIR CONDITIONER (AIR CONDITIONER EQUIPMENT AND MOUNTING PARTS)

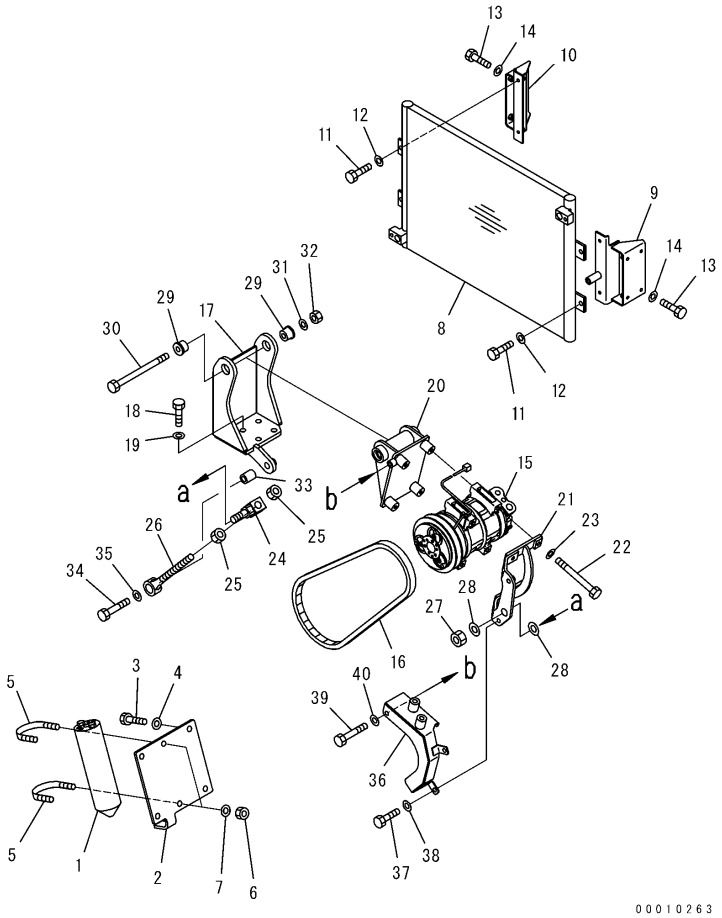

AIR CONDITIONER (AIR CONDITIONER EQUIPMENT AND MOUNTING PARTS)

Item	Part Number	Description	Qty.	Ref.	Serial No.
37	01010-80825	BOLT	2		B10001-
38	01643-30823	WASHER	2		B10001-
39	01010-80875	BOLT	1		B10001-
40	01643-30823	WASHER	1		B10001-

AIR CONDITIONER (PIPING)

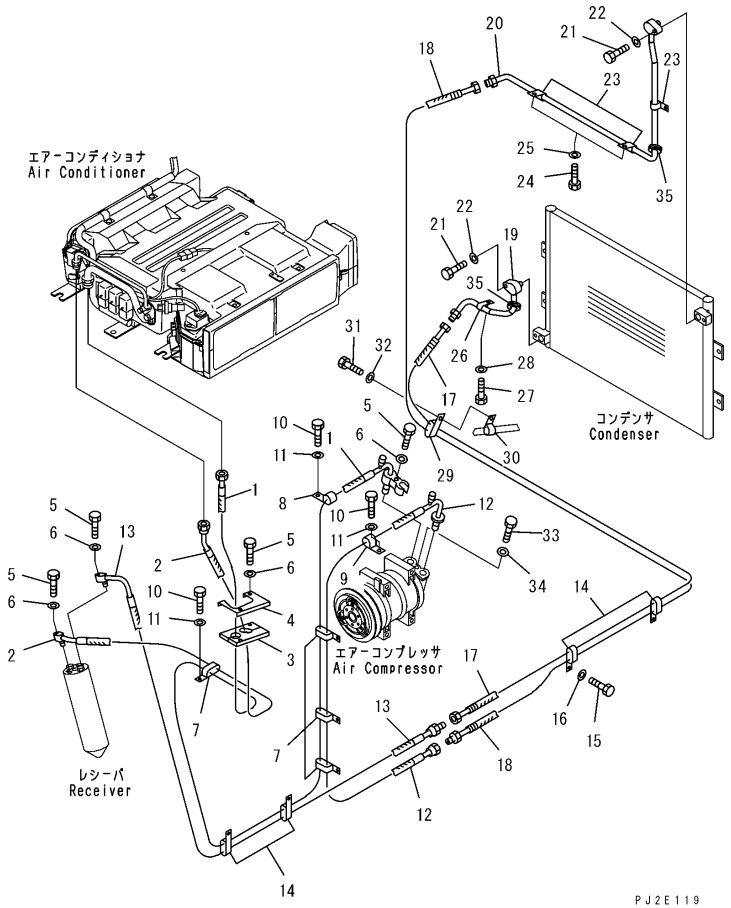

AIR CONDITIONER (PIPING)

Item	Part Number	Description	Qty.	Ref.	Serial No.
1	23B-809-7822	HOSE	1		B10001-
2	23B-809-7811	HOSE	1		B10001-
3	23B-809-7362	CUSHION	1		B10001-
4	23B-809-8740	PLATE	1		B10001-
5	01010-80625	BOLT	5		B10001-
6	01643-30623	WASHER	5		B10001-
7	04435-52110	CLIP	4		B10001-
8	04434-52210	CLIP	1		B10001-
9	04434-51810	CLIP	6		B10001-
10	01010-81016	BOLT	6		B10001-
11	01643-31032	WASHER	6		B10001-
12	23B-809-7783	HOSE	1		B10001-
13	23B-809-7793	HOSE	1		B10001-
14	04435-51910	CLIP	4		B10001-
15	01010-81016	BOLT	4		B10001-
16	01643-31032	WASHER	4		B10001-
17	23B-809-9190	HOSE	1		B10001-
18	23B-809-9180	HOSE	1		B10001-
19	23B-809-9170	TUBE	1		B10001-
20	23B-809-9160	TUBE	1		B10001-
21	01010-80830	BOLT	2		B10001-
22	01643-30823	WASHER	2		B10001-
23	04434-51208	CLIP	3		B10001-
24	01010-80816	BOLT	3		B10001-
25	01643-30823	WASHER	3		B10001-
26	208-06-12160	CLIP	1		B10001-
27	01010-80816	BOLT	1		B10001-
28	01643-30823	WASHER	1		B10001-
29	04435-51910	CLIP	1		B10001-
30	04434-51810	CLIP	1		B10001-
31	01010-81016	BOLT	1		B10001-
32	01643-31032	WASHER	1		B10001-
33	01050-81040	BOLT	1		B10001-
34	01643-31032	WASHER	1		B10001-
35	23B-03-31270	CAP, (WITH AIR CONDITIONER)	2		B10001-

AIR CONDITIONER (HEATER PIPING)

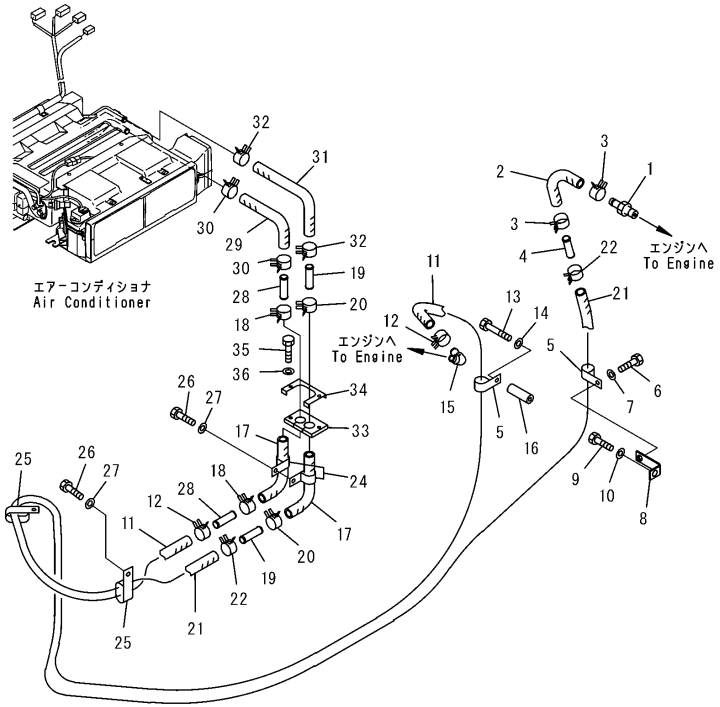

AIR CONDITIONER (HEATER PIPING)

Item	Part Number	Description	Qty.	Ref.	Serial No.
1	423-07-31110	JOINT	1		B10001-
2	23B-809-7340	HOSE	1		B10001-
3	09479-02400	CLAMP	2		B10001-
4	09484-00560	CONNECTOR	1		B10001-
5	04434-52511	CLIP	2		B10001-
6	01010-81025	BOLT	1		B10001-
7	01643-31032	WASHER	1		B10001-
8	23B-01-31720	BRACKET	1		B10001-
9	01010-81220	BOLT	1		B10001-
10	01643-31232	WASHER	1		B10001-
11	09483-10529	HOSE	2		B10001-
12	09479-02400	CLAMP	2		B10001-
13	01010-80880	BOLT	1		B10001-
14	01643-30823	WASHER	1		B10001-
15	6732-61-6910	ELBOW	1		B10001-
16	6354-81-6930	SPACER	1		B10001-
17	23B-809-7340	HOSE	2		B10001-
18	09479-02400	CLAMP	2		B10001-
19	09484-00560	CONNECTOR	2		B10001-
20	09479-02400	CLAMP	2		B10001-
21	09483-10530	HOSE	1		B10001-
22	09479-02400	CLAMP	2		B10001-
24	04434-52511	CLIP	2		B10001-
25	04435-52210	CLIP	2		B10001-
26	01010-81020	BOLT	2		B10001-
27	01643-31032	WASHER	2		B10001-
28	09484-00560	CONNECTOR	4		B10001-
29	23B-809-7340	HOSE	1		B10001-
30	09479-02400	CLAMP	2		B10001-
31	23B-809-7350	HOSE	1		B10001-
32	09479-02400	CLAMP	2		B10001-
33	23B-809-7371	SHEET	1		B10001-
34	23B-809-8730	PLATE	1		B10001-
35	01010-80625	BOLT	2		B10001-
36	01643-30623	WASHER	2		B10001-

PLATFORM

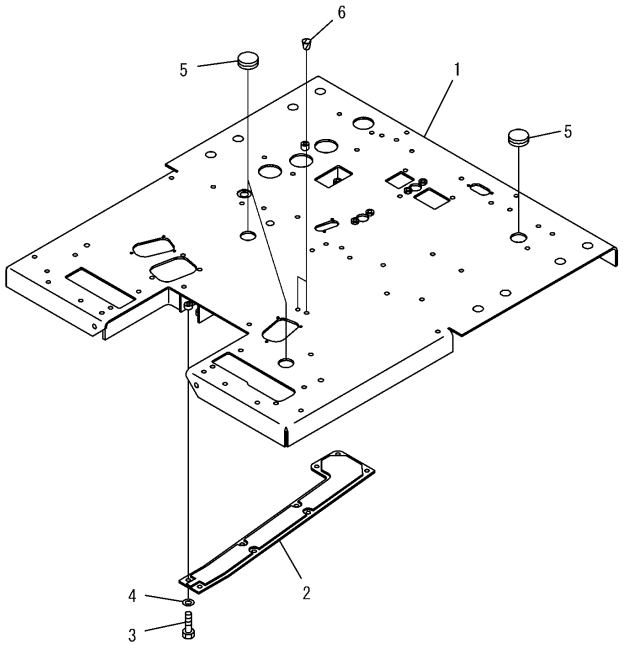

00003673

K1110-01B0

PLATFORM

Item	Part Number	Description	Qty.	Ref.	Serial No.
1	23B-54-32118	PLATFORM	1		B10001-
2	23B-54-32511	COVER	1		B10001-
3	01010-81025	BOLT	9		B10001-
4	01643-31032	WASHER	9		B10001-
5	09415-03614	CAP	3		B10001-
6	07049-01012	PLUG	2		B10001-

WORK EQUIPMENT CONTROL LEVER

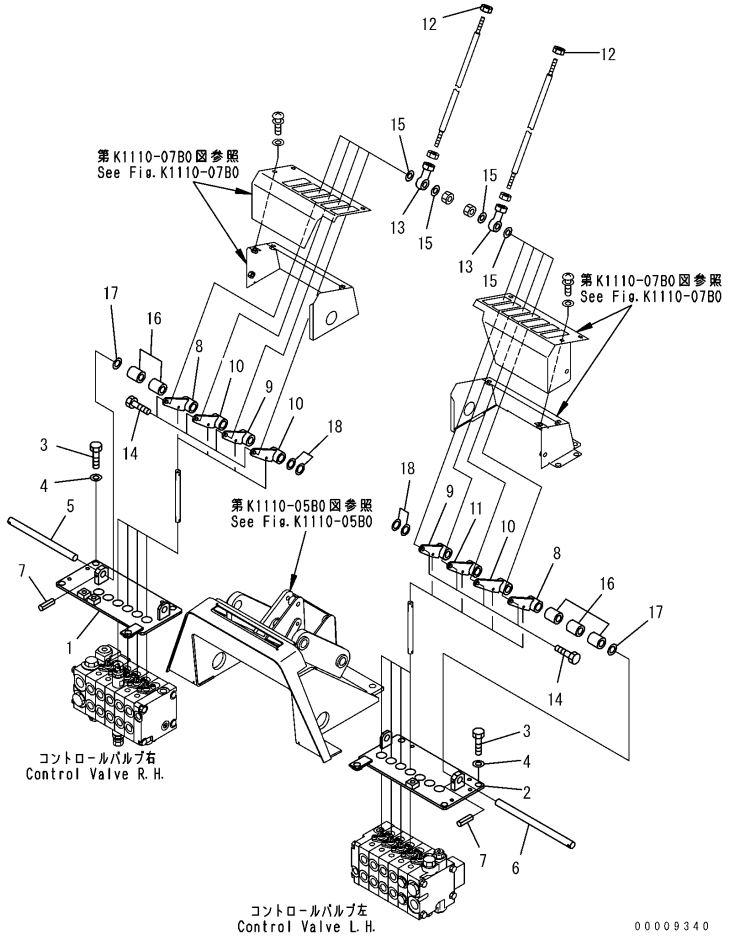

WORK EQUIPMENT CONTROL LEVER

Item	Part Number	Description	Qty.	Ref.	Serial No.
1	23B-43-35672	PLATE, R.H.	1		B10001-
2	23B-43-35682	PLATE, L.H.	1		B10001-
3	01010-81030	BOLT	6		B10001-
4	01643-31032	WASHER	6		B10001-
5	23B-43-35650	SHAFT	1		B10001-
6	23B-43-33321	SHAFT	1		B10001-
7	04025-00532	PIN	2		B10001-
8	23B-43-33332	LEVER	2		B10001-
	234-43-38440	.BUSHING	1		B10001-
9	23B-43-33662	LEVER	2		B10001-
	234-43-38440	.BUSHING	1		B10001-
10	23B-43-33332	LEVER	3		B10001-
	234-43-38440	.BUSHING	1		B10001-
11	23B-43-33343	LEVER	1		B10001-
	234-43-38440	.BUSHING	1		B10001-
12	01580-10806	NUT	8		B10001-
13	04250-90847	END	8		B10001-
14	235-43-18380	BOLT	8		B10001-
15	04254-10823	SPACER	16		B10001-
16	23D-43-33530	COLLAR	5		B10001-
17	01643-51645	WASHER	2		B10001-
18	195-40-31530	SHIM, 0.5MM	10		B10001-

WORK EQUIPMENT CONTROL LEVER (WITH RIPPER OR SCARIFIER)

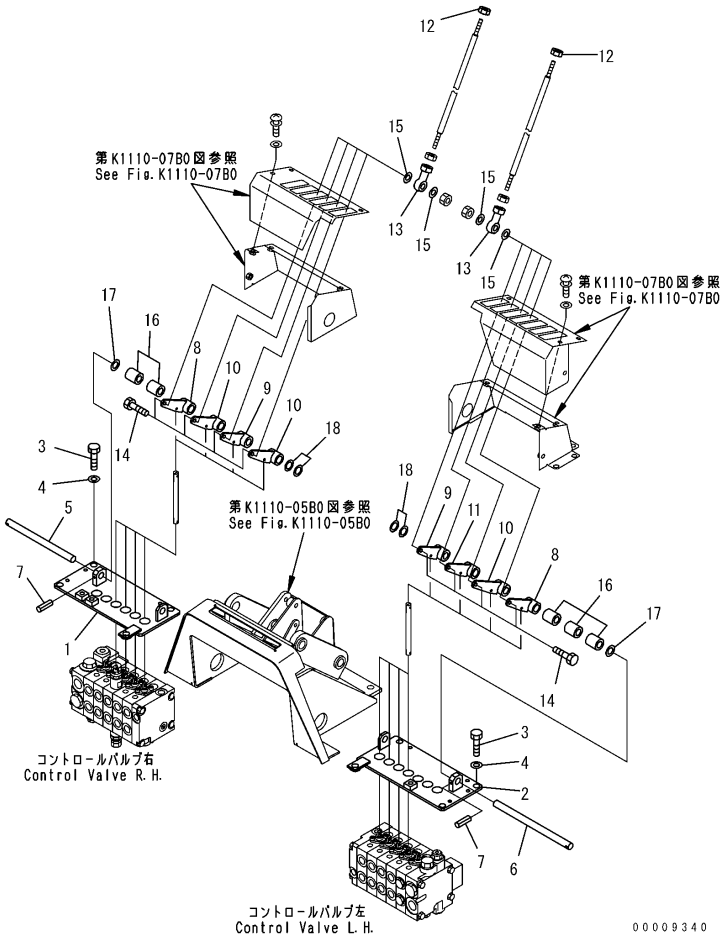

WORK EQUIPMENT CONTROL LEVER (WITH RIPPER OR SCARIFIER)

Item	Part Number	Description	Qty.	Ref.	Serial No.
1	23B-43-35672	PLATE, R.H.	1		B10001-
2	23B-43-35682	PLATE, L.H.	1		B10001-
3	01010-81030	BOLT	6		B10001-
4	01643-31032	WASHER	6		B10001-
5	23B-43-35650	SHAFT	1		B10001-
6	23B-43-33321	SHAFT	1		B10001-
7	04025-00532	PIN	2		B10001-
8	23B-43-33332	LEVER	2		B10001-
	234-43-38440	.BUSHING	1		B10001-
9	23B-43-33662	LEVER	3		B10001-
	234-43-38440	.BUSHING	1		B10001-
10	23B-43-33332	LEVER	3		B10001-
	234-43-38440	.BUSHING	1		B10001-
11	23B-43-33343	LEVER	1		B10001-
	234-43-38440	.BUSHING	1		B10001-
12	01580-10806	NUT	9		B10001-
13	04250-90847	END	9		B10001-
14	235-43-18380	BOLT	9		B10001-
15	04254-10823	SPACER	18		B10001-
16	23D-43-33530	COLLAR	4		B10001-
17	01643-51645	WASHER	2		B10001-
18	195-40-31530	SHIM, 0.5MM	10		B10001-

ACCELERATOR PEDAL AND INCHING PEDAL

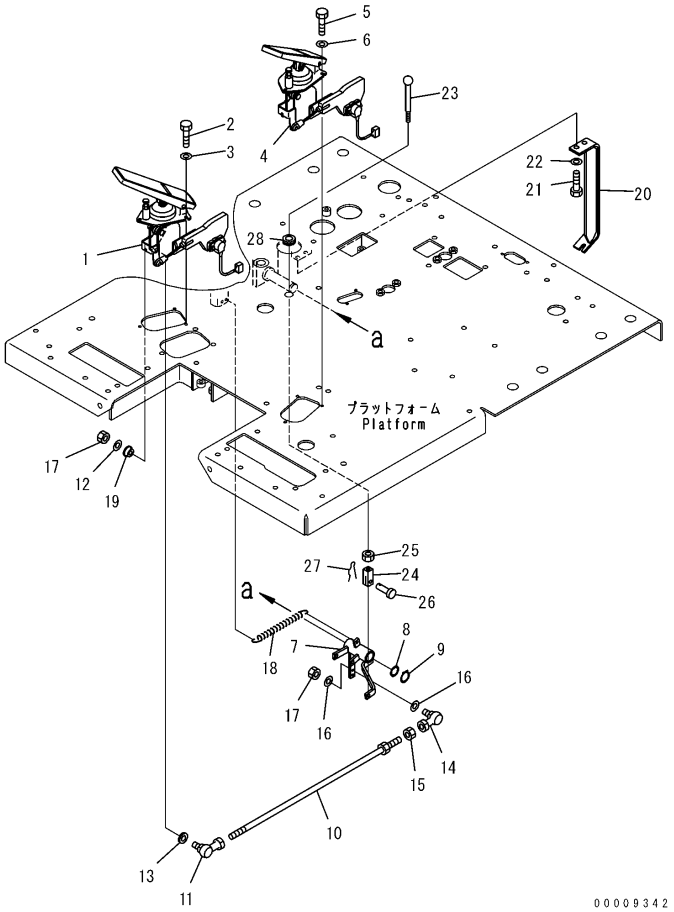

ACCELERATOR PEDAL AND INCHING PEDAL

Item	Part Number	Description	Qty.	Ref.	Serial No.
1	23B-43-31102	PEDAL, ACCELERATOR	1		B10001-
2	01010-80620	BOLT	3		B10001-
3	01643-30623	WASHER	3		B10001-
4	23B-45-32102	PEDAL, INCHING	1		B10001-
5	01010-80620	BOLT	3		B10001-
6	01643-30623	WASHER	3		B10001-
7	23B-43-31113	LEVER	1		B10001-
	232-14-67150	.BUSHING	2		B10001-
	06600-00805	.BUSHING	3		B10001-
8	01640-22440	WASHER	1		B10001-
9	04064-02512	RING, SNAP	1		B10001-
10	23B-43-31180	ROD	1		B10001-
11	04256-40615	JOINT, ROD	1		B10001-
12	01640-20610	WASHER	1		B10001-
13	01643-30623	WASHER	1		B10001-
14	04256-30615	JOINT	1		B10001-
15	01508-40603	NUT, L.H.THREAD	1		B10001-
16	01643-30623	WASHER	2		B10001-
17	01580-10605	NUT	2		B10001-
18	232-43-42330	SPRING	1		B10001-
19	23D-43-31430	BUSHING	1		B10001-
20	23B-43-31220	BRACKET	1		B10001-
21	01010-81020	BOLT	2		B10001-
22	01643-31032	WASHER	2		B10001-
23	23B-43-31491	PEDAL	1		B10001-
24	04210-20832	YOKE	1		B10001-
25	01580-10806	NUT	1		B10001-
26	04205-30822	PIN	1		B10001-
27	04052-10833	PIN, SNAP	1		B10001-
28	08037-01610	GROMMET	1		B10001-

ACCELERATOR PEDAL AND INCHING PEDAL (WITH RIPPER OR SCARIFIER)

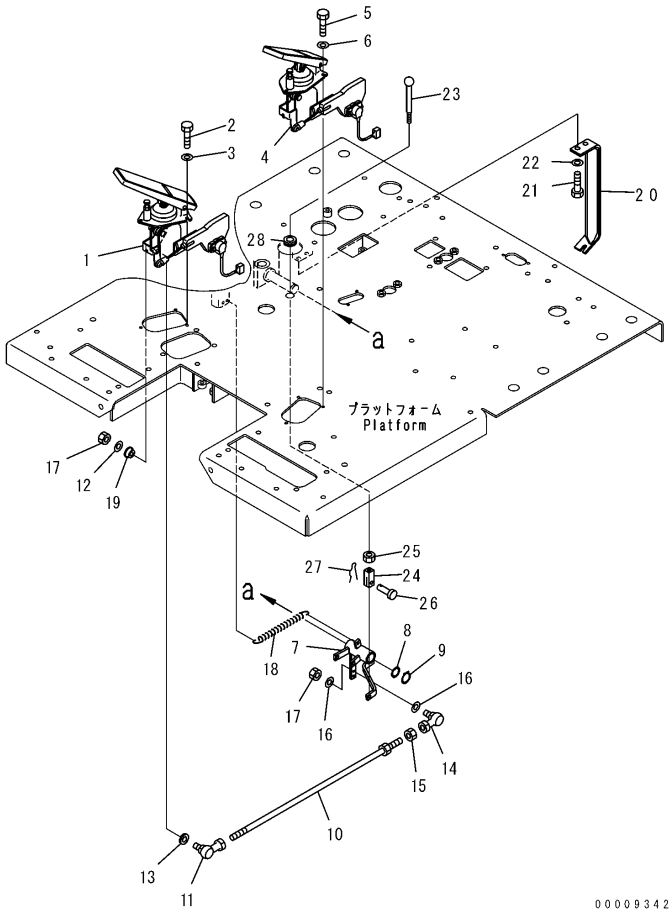

ACCELERATOR PEDAL AND INCHING PEDAL (WITH RIPPER OR SCARIFIER)

Item	Part Number	Description	Qty.	Ref.	Serial No.
1	23B-43-31102	PEDAL, ACCELERATOR	1		B10001-
2	01010-80620	BOLT	3		B10001-
3	01643-30623	WASHER	3		B10001-
4	23B-45-32102	PEDAL, INCHING	1		B10001-
5	01010-80620	BOLT	3		B10001-
6	01643-30623	WASHER	3		B10001-
7	23B-43-31113	LEVER	1		B10001-
	232-14-67150	.BUSHING	2		B10001-
	06600-00805	.BUSHING	3		B10001-
8	01640-22440	WASHER	1		B10001-
9	04064-02512	RING, SNAP	1		B10001-
10	23B-43-31180	ROD	1		B10001-
11	04256-40615	JOINT, ROD	1		B10001-
12	01640-20610	WASHER	1		B10001-
13	04256-30615	JOINT	1		B10001-
14	01508-40603	NUT, L.H.THREAD	1		B10001-
15	01643-30623	WASHER	2		B10001-
16	01580-10605	NUT	2		B10001-
17	232-43-42330	SPRING	1		B10001-
18	23D-43-31430	BUSHING	1		B10001-
19	23B-43-31220	BRACKET	1		B10001-
20	01010-81020	BOLT	2		B10001-
21	01643-31032	WASHER	2		B10001-
22	23B-43-31491	PEDAL	1		B10001-
23	04210-20832	YOKE	1		B10001-
24	01580-10806	NUT	1		B10001-
25	04205-30822	PIN	1		B10001-
26	04052-10833	PIN, SNAP	1		B10001-
27	08037-01610	GROMMET	1		B10001-

STEERING POST COVER

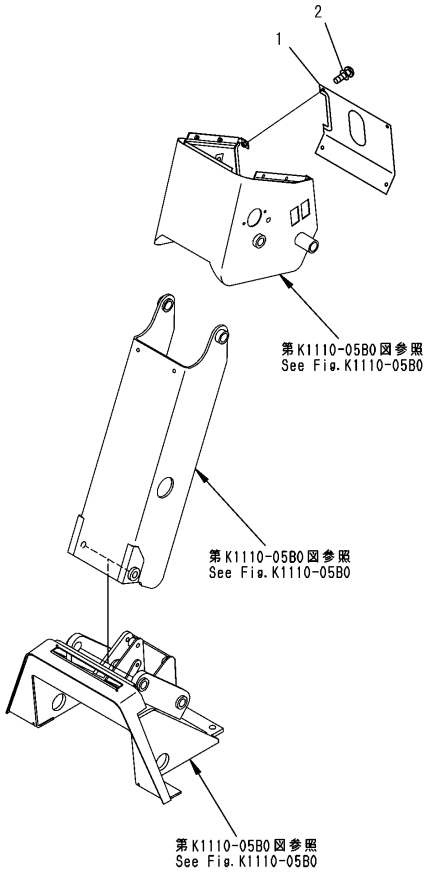

00009344

STEERING POST COVER

Item	Part Number	Description	Qty.	Ref.	Serial No.
1	23B-43-35393	PLATE	1		B10001-
2	01023-10612	SCREW	4		B10001-

STEERING POST (1/2)

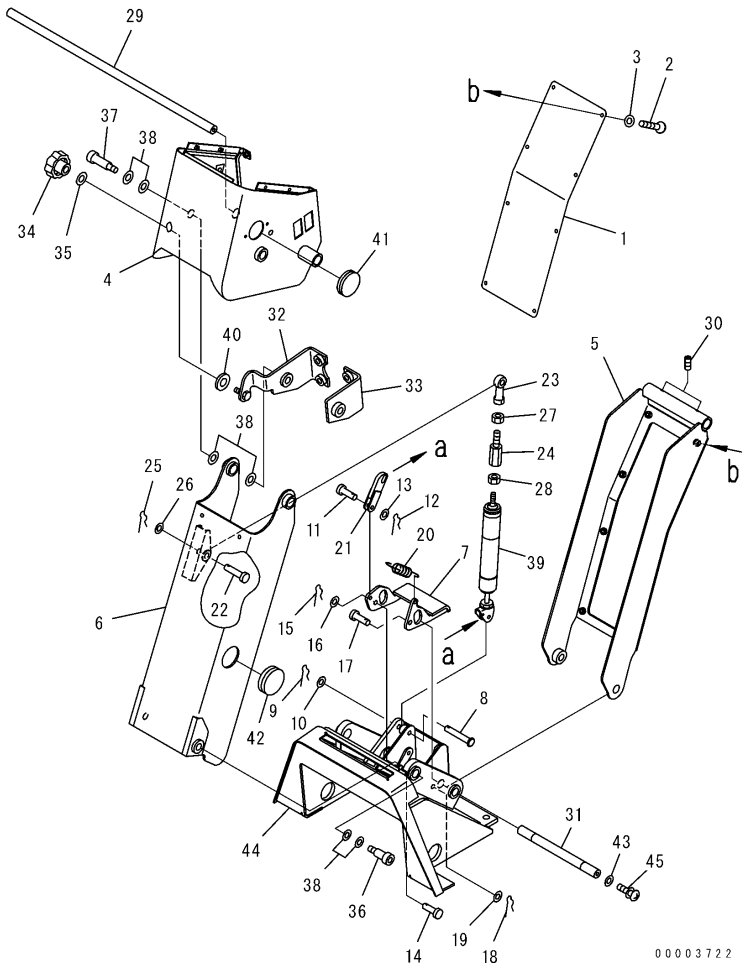

STEERING POST (1/2)

Item	Part Number	Description	Qty.	Ref.	Serial No.
1	23B-43-35360	COVER	1		B10001-
2	01225-70616	SCREW	8		B10001-
3	23S-55-51970	WASHER	8		B10001-
4	23B-43-36341	COVER	1		B10001-
5	23B-43-36240	CHANNEL	1		B10001-
	234-885-1610	.BUSHING	2		B10001-
6	23B-43-36250	CHANNEL	1		B10001-
	234-885-1620	.BUSHING	2		B10001-
7	23B-43-36230	PEDAL	1		B10001-
8	23B-43-36210	PIN	1		B10001-
9	04052-11038	PIN, SNAP	1		B10001-
10	01640-21016	WASHER	1		B10001-
11	04205-10822	PIN	1		B10001-
12	04052-10833	PIN, SNAP	1		B10001-
13	01640-20816	WASHER	1		B10001-
14	04205-31038	PIN	1		B10001-
15	04052-11038	PIN, SNAP	1		B10001-
16	01643-31032	WASHER	1		B10001-
17	04205-31032	PIN	1		B10001-
18	04052-11038	PIN, SNAP	1		B10001-
19	01643-31032	WASHER	1		B10001-
20	234-835-2230	SPRING	1		B10001-
21	23B-43-36220	LINK	1		B10001-
22	23D-43-33332	PIN	1		B10001-
23	23D-43-33550	END, ROD	1		B10001-
24	23D-43-33120	JOINT	1		B10001-
25	04052-11038	PIN, SNAP	1		B10001-
26	01643-31032	WASHER	1		B10001-
27	01580-11008	NUT	1		B10001-
28	01582-11008	NUT	1		B10001-
29	23B-43-35660	BAR	1		B10001-
30	01310-20812	SCREW	2		B10001-
31	23B-43-35320	SHAFT	1		B10001-
32	23B-43-35412	BRACKET	1		B10001-
33	23B-43-35420	BRACKET	1		B10001-
34	232-950-2291	KNOB	1		B10001-

STEERING POST (1/2)

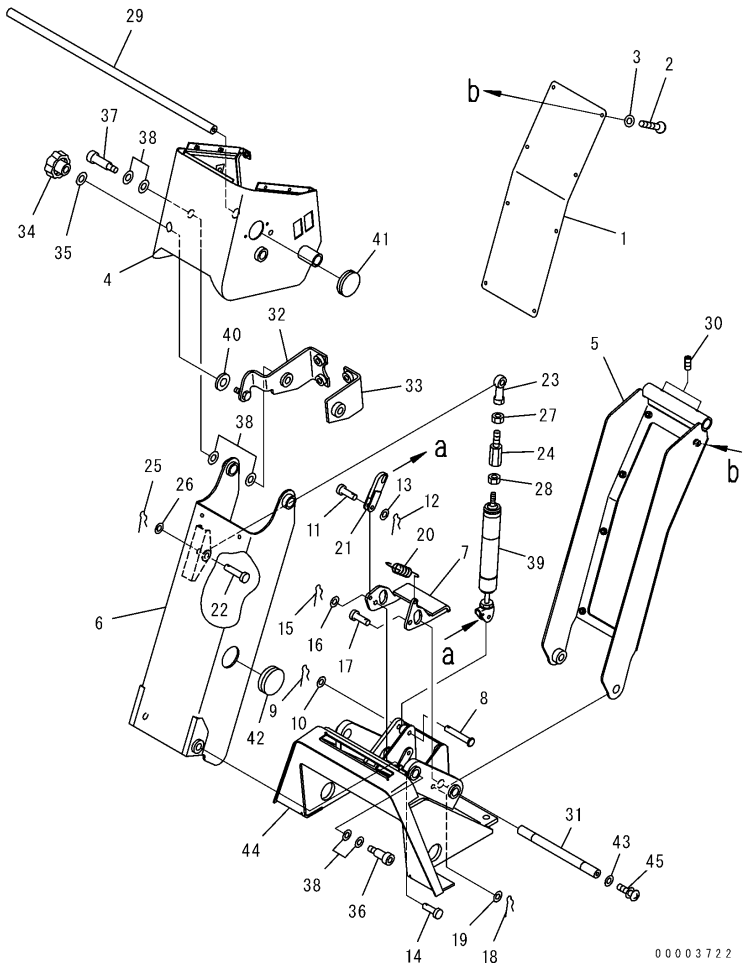

STEERING POST (1/2)

Item	Part Number	Description	Qty.	Ref.	Serial No.
35	175-54-34170	WASHER	1		B10001-
36	23B-43-35330	BOLT	2		B10001-
37	23B-43-35430	BOLT	2		B10001-
38	237-43-17420	WASHER	20		B10001-
39	23B-43-32200	DUMPER	1		B10001-
40	23B-43-35820	PLATE	1		B10001-
41	09415-03614	CAP	2		B10001-
42	09415-02512	CAP	1		B10001-
43	23B-43-35810	PLATE	2		B10001-
44	23B-43-36270	BRACKET	1		B10001-
45	01023-20816	SCREW	2		B10001-

STEERING POST (2/2)

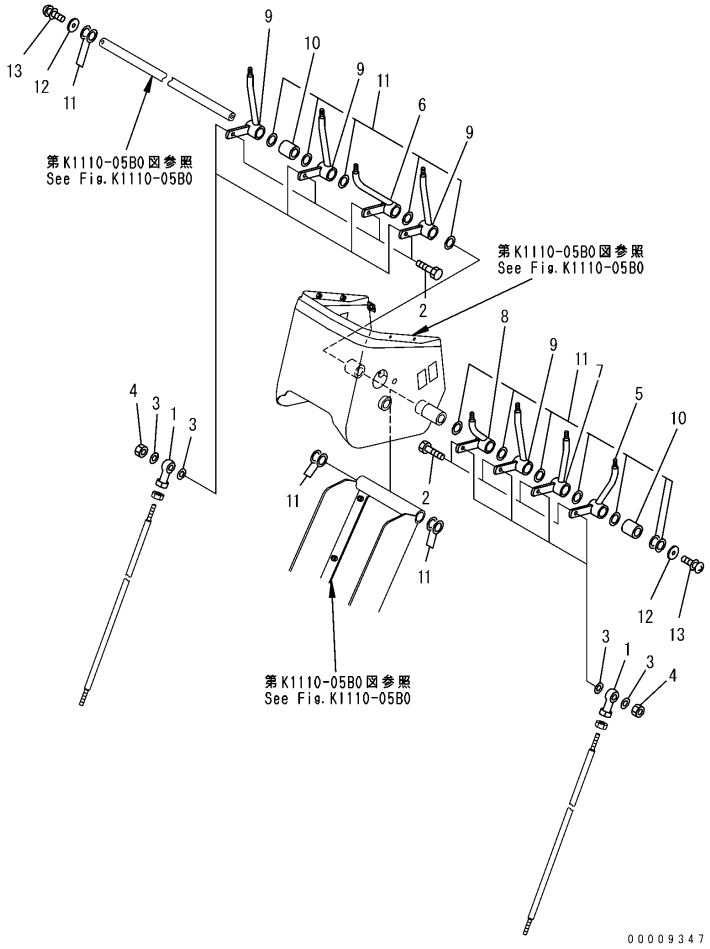

STEERING POST (2/2)

Item	Part Number	Description	Qty.	Ref.	Serial No.
1	04250-80847	END, ROD	8		B10001-
2	235-43-18380	BOLT	8		B10001-
3	04254-10823	SPACER	16		B10001-
4	01580-10806	NUT	16		B10001-
5	23B-43-35451	LEVER	1		B10001-
	234-885-1610	.BUSHING	1		B10001-
6	23B-43-35462	LEVER	1		B10001-
	234-885-1610	.BUSHING	1		B10001-
7	23B-43-35471	LEVER	1		B10001-
	234-885-1610	.BUSHING	1		B10001-
8	23B-43-35482	LEVER	1		B10001-
	234-885-1610	.BUSHING	1		B10001-
9	23B-43-35491	LEVER	4		B10001-
	234-885-1610	.BUSHING	1		B10001-
10	237-43-17440	COLLAR	2		B10001-
11	237-43-17420	WASHER	22		B10001-
12	23B-43-35810	PLATE	2		B10001-
13	01023-20816	SCREW	2		B10001-

STEERING POST (2/2) (WITH RIPPER OR SCARIFIER)

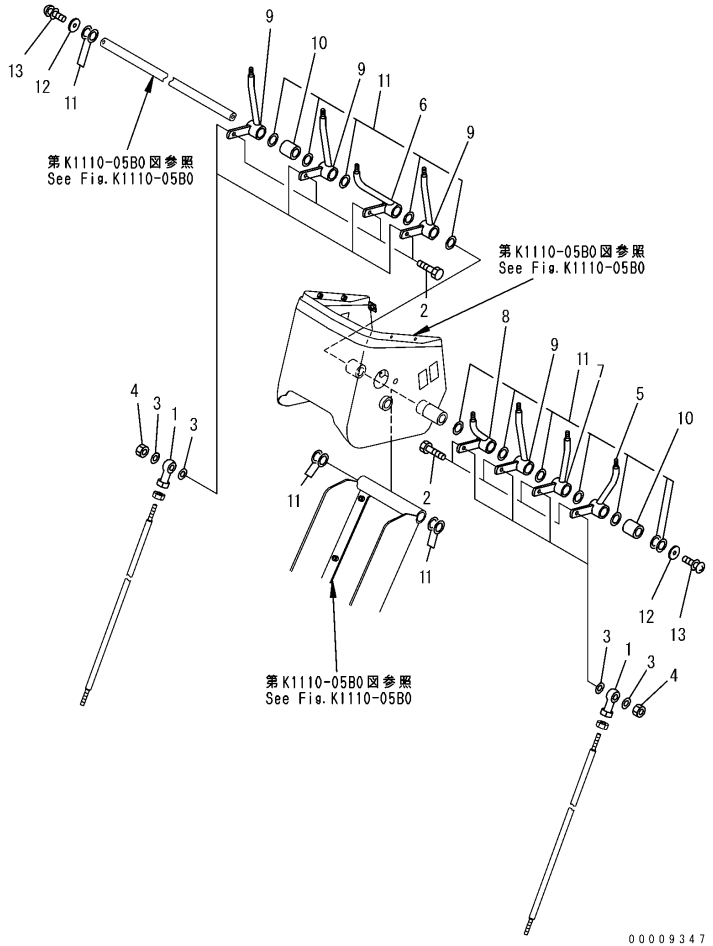

STEERING POST (2/2) (WITH RIPPER OR SCARIFIER)

Item	Part Number	Description	Qty.	Ref.	Serial No.
1	04250-80847	END, ROD	9		B10001-
2	235-43-18380	BOLT	9		B10001-
3	04254-10823	SPACER	18		B10001-
4	01580-10806	NUT	18		B10001-
5	23B-43-35451	LEVER	1		B10001-
	234-885-1610	.BUSHING	1		B10001-
6	23B-43-35462	LEVER	2		B10001-
	234-885-1610	.BUSHING	1		B10001-
7	23B-43-35471	LEVER	1		B10001-
	234-885-1610	.BUSHING	1		B10001-
8	23B-43-35482	LEVER	1		B10001-
	234-885-1610	.BUSHING	1		B10001-
9	23B-43-35491	LEVER	4		B10001-
	234-885-1610	.BUSHING	1		B10001-
10	237-43-17440	COLLAR	2		B10001-
11	237-43-17420	WASHER	22		B10001-
12	23B-43-35810	PLATE	2		B10001-
13	01023-20816	SCREW	2		B10001-

VALVE CONTROL LEVER

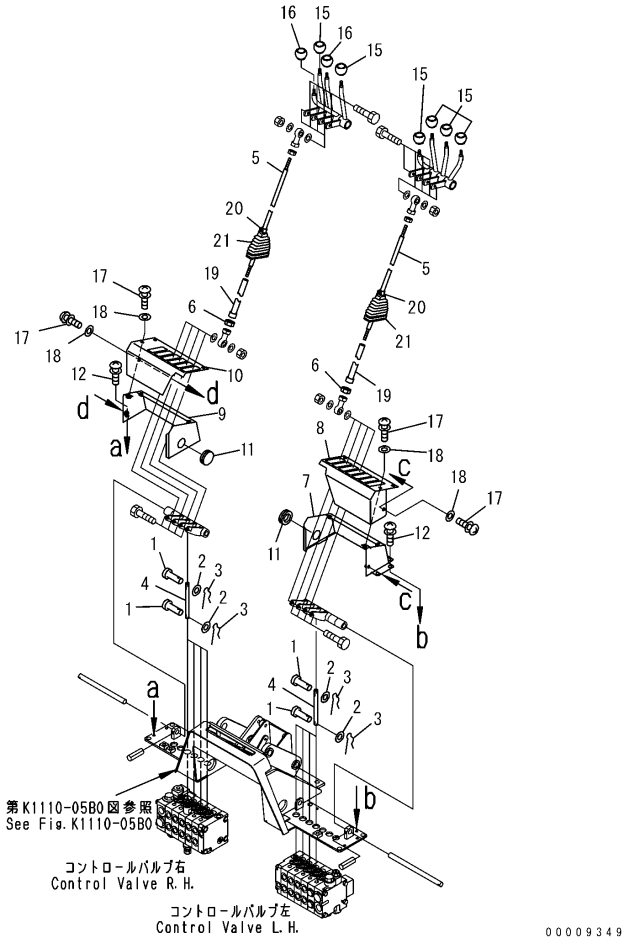

VALVE CONTROL LEVER

Item	Part Number	Description	Qty.	Ref.	Serial No.
1	04205-10518	PIN	16		B10001-
2	01640-20508	WASHER	16		B10001-
3	04052-10530	PIN, SNAP	16		B10001-
4	23B-43-33410	ROD	8		B10001-
5	23B-43-35513	ROD	8		B10001-
6	01508-40805	NUT, L.H.THREAD	8		B10001-
7	23B-43-35525	COVER	1		B10001-
8	23B-43-35535	COVER	1		B10001-
9	23B-43-35545	COVER	1		B10001-
10	23B-43-35555	COVER	1		B10001-
11	09415-02512	CAP	2		B10001-
12	01023-20820	SCREW	8		B10001-
15	237-43-17480	KNOB	6		B10001-
16	237-43-17490	KNOB	2		B10001-
17	01023-20810	SCREW	8		B10001-
18	01643-70823	WASHER	8		B10001-
19	23B-43-35881	PIPE, L.H.	8		B10001-
20	07285-00180	CLIP, R.H.	8		B10001-
21	23B-43-35641	BOOT	8		B10001-

VALVE CONTROL LEVER (WITH RIPPER OR SCARIFIER)

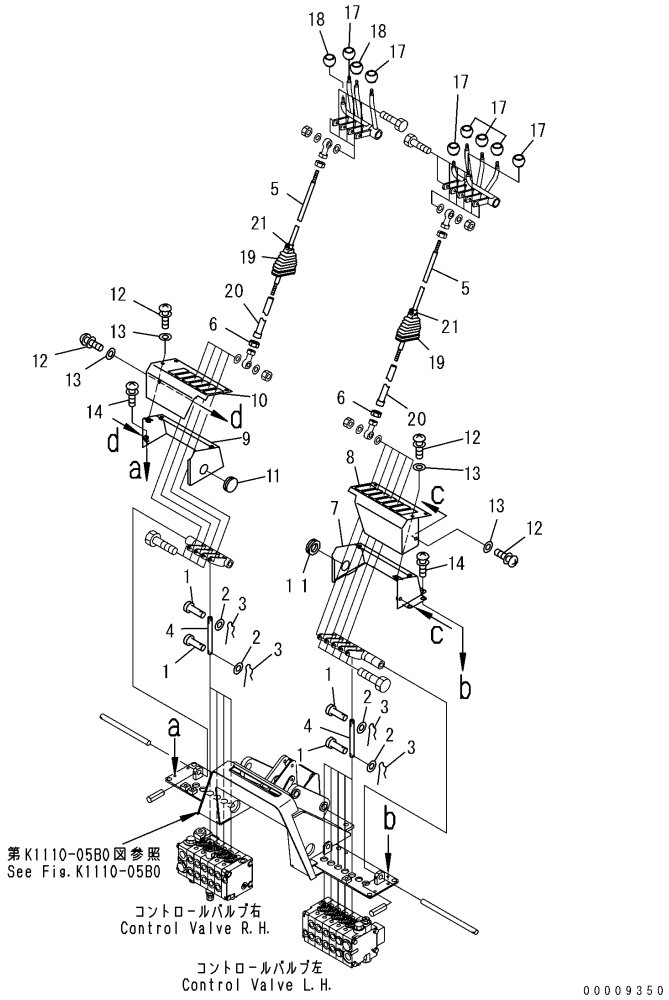

VALVE CONTROL LEVER (WITH RIPPER OR SCARIFIER)

Item	Part Number	Description	Qty.	Ref.	Serial No.
1	04205-10518	PIN	18		B10001-
2	01640-20508	WASHER	18		B10001-
3	04052-10530	PIN, SNAP	18		B10001-
4	23B-43-33410	ROD	9		B10001-
5	23B-43-35513	ROD	9		B10001-
6	01508-40805	NUT, L.H.THREAD	9		B10001-
7	23B-43-35525	COVER	1		B10001-
8	23B-43-35535	COVER	1		B10001-
9	23B-43-35545	COVER	1		B10001-
10	23B-43-35555	COVER	1		B10001-
11	09415-02512	CAP	2		B10001-
12	01023-20810	SCREW	8		B10001-
13	01643-70823	WASHER	8		B10001-
14	01023-20820	SCREW	8		B10001-
17	237-43-17480	KNOB	7		B10001-
18	237-43-17490	KNOB	2		B10001-
19	23B-43-35641	BOOT, L.H.	9		B10001-
20	23B-43-35881	PIPE, R.H.	9		B10001-
21	07285-00180	CLIP	9		B10001-

PLATFORM COVER (WITH CAB)

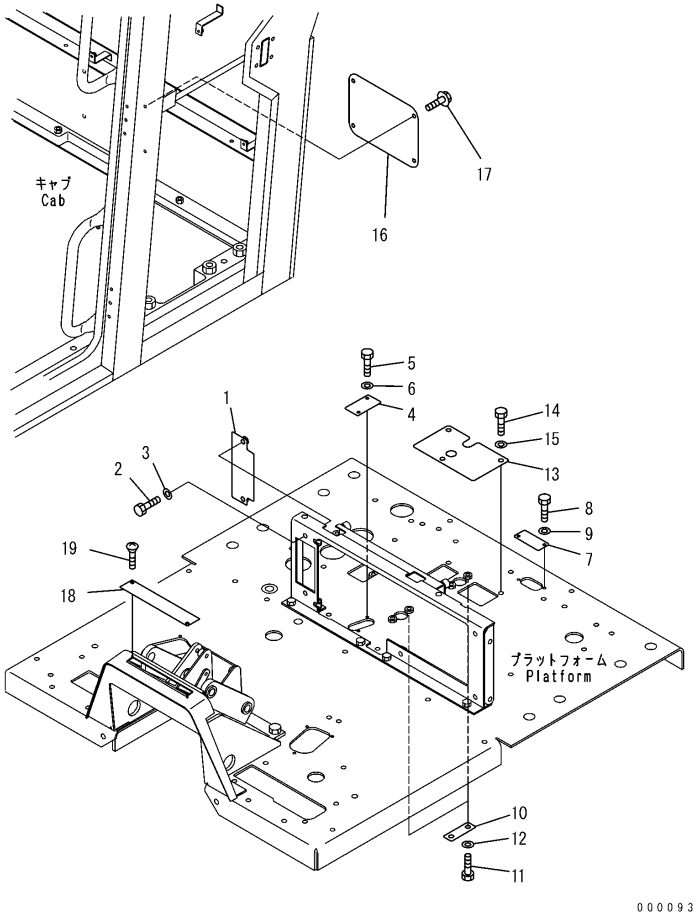

PLATFORM COVER (WITH CAB)

Item	Part Number	Description	Qty.	Ref.	Serial No.
1	23B-54-33410	PLATE	1		B10001-
2	01010-81016	BOLT	2		B10001-
3	01643-31032	WASHER	2		B10001-
4	23B-54-33420	PLATE	1		B10001-
5	01010-80610	BOLT	2		B10001-
6	01643-30623	WASHER	2		B10001-
7	23B-54-33430	PLATE	1		B10001-
8	01010-80610	BOLT	2		B10001-
9	01643-30623	WASHER	2		B10001-
10	23B-54-33441	PLATE	2		B10001-
11	01010-81016	BOLT	4		B10001-
12	01643-31032	WASHER	4		B10001-
13	23B-54-33452	PLATE	1		B10001-
14	01010-81020	BOLT	3		B10001-
15	01643-31032	WASHER	3		B10001-
16	23B-807-3510	PLATE	1		B10001-
17	01435-40612	BOLT	4		B10001-
18	23B-43-36410	PLATE	1		B10001-
19	01225-70616	SCREW	2		B10001-

PLATFORM COVER (WITH RIPPER OR SCARIFIER)

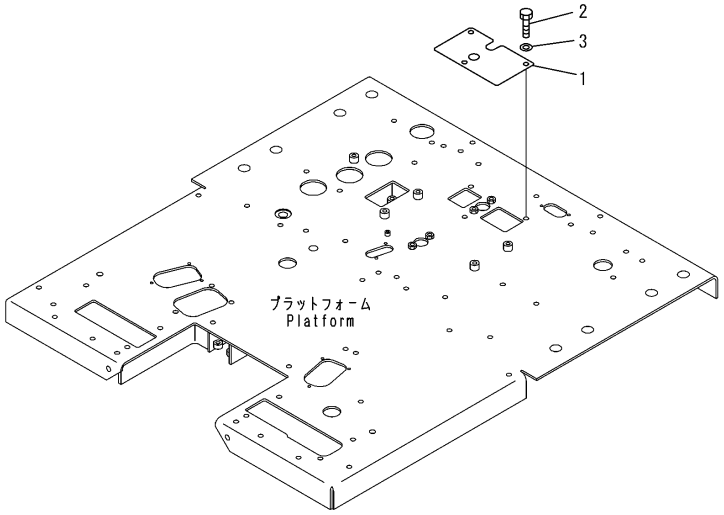

PLATFORM COVER (WITH RIPPER OR SCARIFIER)

Item	Part Number	Description	Qty.	Ref.	Serial No.
1	23B-54-33452	PLATE	1		B10001-
2	01010-81020	BOLT	3		B10001-
3	01643-31032	WASHER	3		B10001-

CONSOLE BOX, R.H.

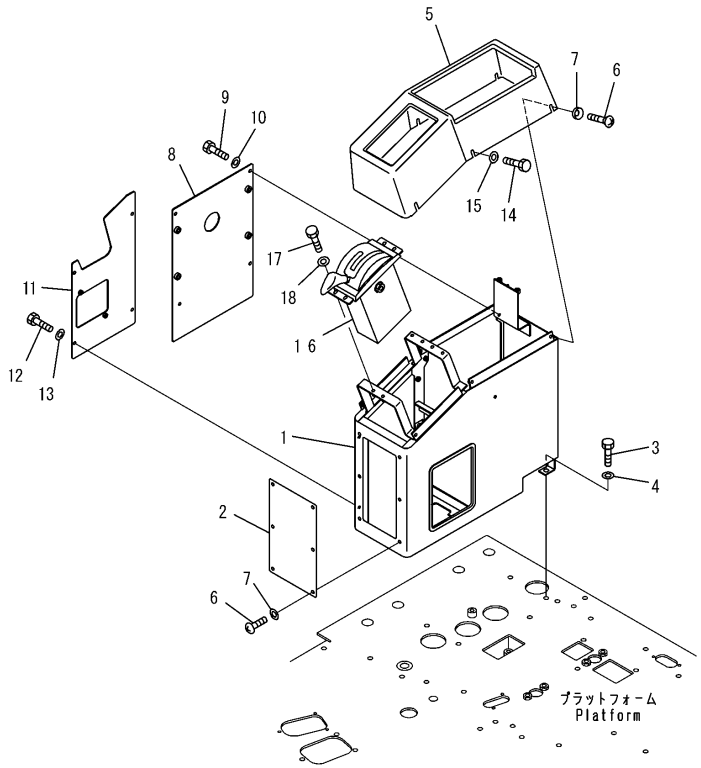

PJ2E430

CONSOLE BOX, R.H.

Item	Part Number	Description	Qty.	Ref.	Serial No.
1	23B-43-34387	COVER	1		B10001-
2	23B-43-34640	PLATE	1		B10001-
3	01010-81025	BOLT	6		B10001-
4	01643-31032	WASHER	6		B10001-
5	23B-43-35212	COVER	1		B10001-
6	01225-70616	SCREW	11		B10001-
7	23S-55-51970	WASHER	11		B10001-
8	23B-43-34574	PLATE	1		B10001-
9	01010-80610	BOLT	6		B10001-
10	01643-30623	WASHER	6		B10001-
11	23B-43-34615	COVER	1		B10001-
12	01010-80616	BOLT	4		B10001-
13	01643-30623	WASHER	4		B10001-
14	01010-80616	BOLT	1		B10001-
15	01643-30623	WASHER	1		B10001-
16	23B-45-31802	LEVER ASSEMBLY	1		B10001-
17	01010-80616	BOLT	4		B10001-
18	01643-30623	WASHER	4		B10001-

ACCELERATOR LEVER

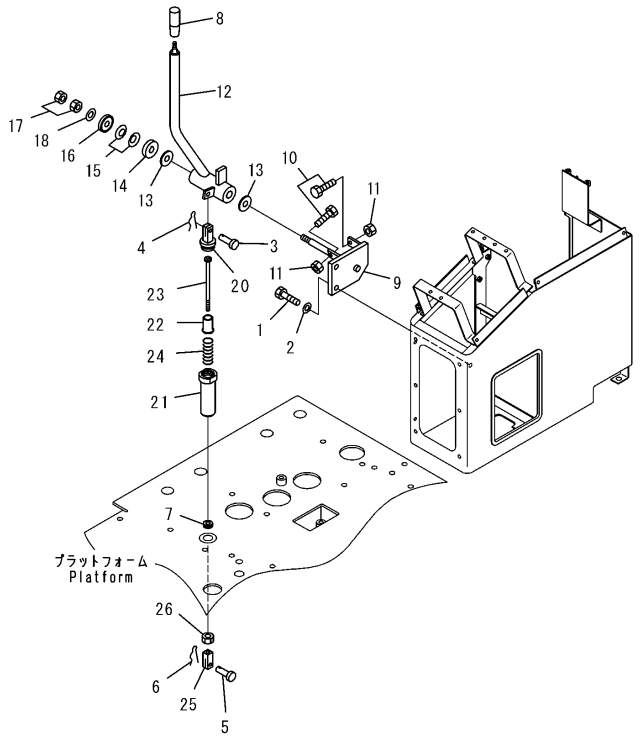

00003730

ACCELERATOR LEVER

Item	Part Number	Description	Qty.	Ref.	Serial No.
1	01010-81030	BOLT	2		B10001-
2	01643-31032	WASHER	2		B10001-
3	04205-30822	PIN	1		B10001-
4	04052-10833	PIN, SNAP	1		B10001-
5	04205-30822	PIN	1		B10001-
6	04052-10833	PIN, SNAP	1		B10001-
7	08037-01008	GROMMET	1		B10001-
8	238-43-12310	KNOB	1		B10001-
9	23B-43-31283	BRACKET	1		B10001-
10	01016-50825	BOLT	2		B10001-
11	01580-10806	NUT	2		B10001-
12	23B-43-31613	LEVER	1		B10001-
13	144-43-51220	FACING	2		B10001-
14	273-43-12120	DISC	2		B10001-
15	101-854-9355	SPRING	2		B10001-
16	23A-43-12220	DISC	1		B10001-
17	01580-11210	NUT	2		B10001-
18	01640-21223	WASHER	1		B10001-
20	23B-43-31380	YOKE	1		B10001-
21	23B-43-31410	BODY	1		B10001-
22	232-43-52170	COLLAR	1		B10001-
23	23B-43-31451	ROD	1		B10001-
24	23B-43-31480	SPRING	1		B10001-
25	04210-20832	YOKE	1		B10001-
26	01580-10806	NUT	1		B10001-

OPERATOR'S SEAT BRACKET

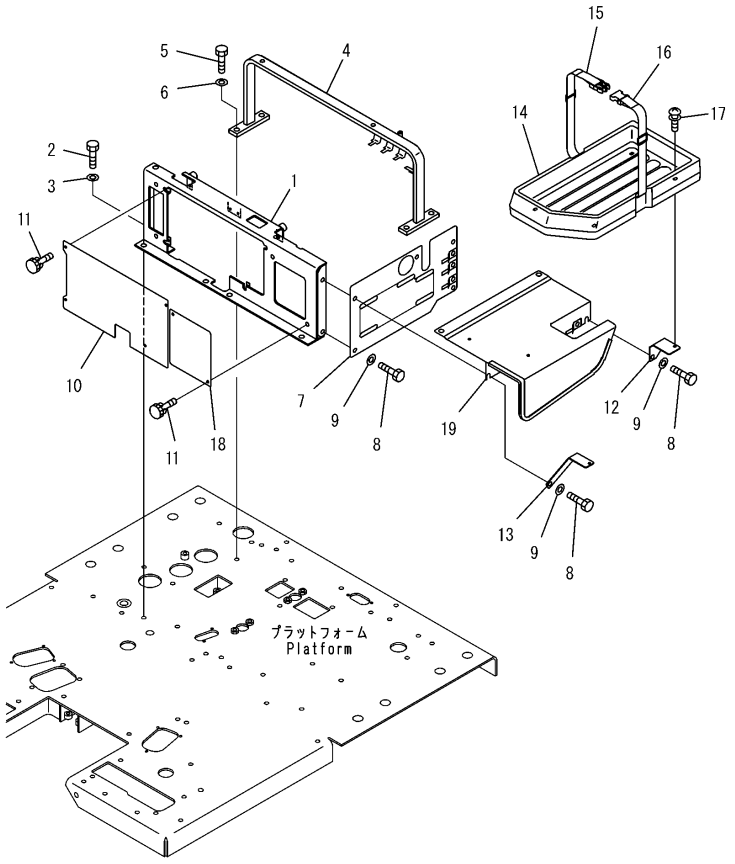

PJ2E131

OPERATOR'S SEAT BRACKET

Item	Part Number	Description	Qty.	Ref.	Serial No.
1	23B-54-33114	BRACKET	1		B10001-
2	01010-81025	BOLT	4		B10001-
3	01643-31032	WASHER	4		B10001-
4	23B-54-33183	BRACKET	1		B10001-
5	01010-81035	BOLT	4		B10001-
6	01643-31032	WASHER	4		B10001-
7	23B-54-33273	COVER	1		B10001-
8	01010-81020	BOLT	4		B10001-
9	01643-31032	WASHER	4		B10001-
10	23B-54-33323	PLATE	1		B10001-
11	235-54-11540	KNOB	6		B10001-
12	23B-54-35171	PLATE	1		B10001-
13	23B-54-35181	PLATE	1		B10001-
14	421-54-32611	TRAY	1		B10001-
15	426-54-22790	BAND	1		B10001-
16	426-54-22780	BAND	1		B10001-
17	01023-10612	SCREW	4		B10001-
18	23B-54-32810	PLATE	1		B10001-
19	23B-54-31421	PLATE	1		B10001-

BRAKE PEDAL

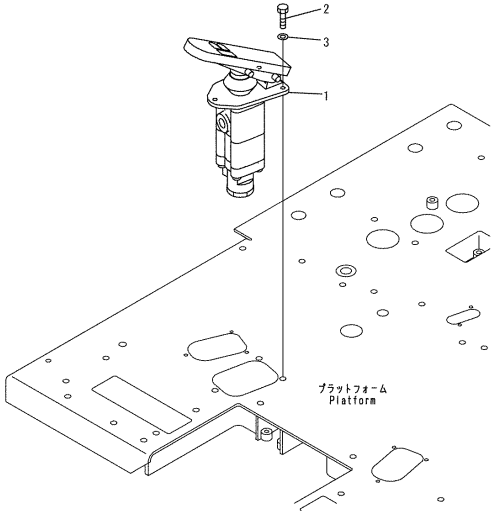

PW2C644

BRAKE PEDAL

Item	Part Number	Description	Qty.	Ref.	Serial No.
1	23B-43-32101	VALVE ASSEMBLY, TANDEM	1		B10001-
2	01010-81025	BOLT	3		B10001-
3	01643-31032	WASHER	3		B10001-

STEERING WHEEL AND STEERING VALVE

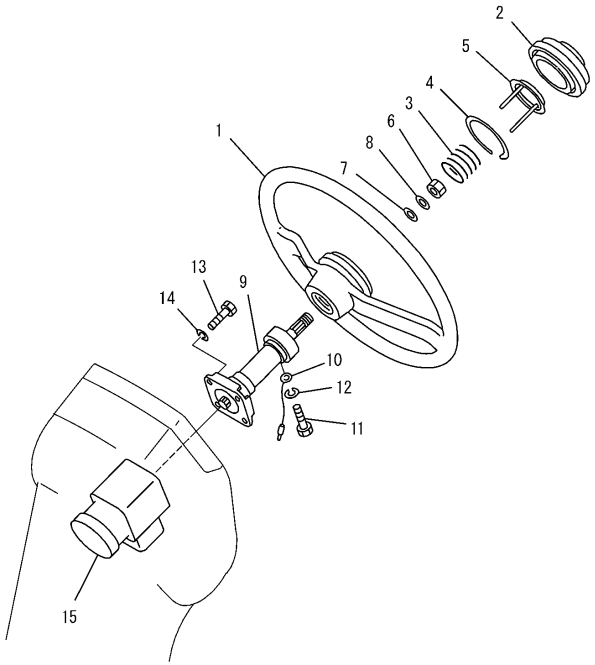

PW2A912

STEERING WHEEL AND STEERING VALVE

Item	Part Number	Description	Qty.	Ref.	Serial No.
	234-40-31201	WHEEL ASSEMBLY	1		B10001-
1	234-40-31210	.WHEEL, STEERING	1		B10001-
2	235-40-11230	.CAP, HORN	1		B10001-
3	235-40-11220	.SPRING, HORN	1		B10001-
4	235-40-11240	.SPRING, LOCK	1		B10001-
5	234-40-31231	.NEEDLE, CONTACT	1		B10001-
6	01582-11411	NUT	1		B10001-
7	01640-21426	WASHER	1		B10001-
8	01643-31445	WASHER‘	1		B10001-
9	23D-40-11100	SHAFT ASSEMBLY	1		B10001-
10	23D-40-11130	.WIRE ASSEMBLY	1		B10001-
11	23D-40-11120	.SCREW	1		B10001-
12	01601-20307	.WASHER, SPRING	1		B10001-
13	01010-81035	BOLT	4		B10001-
14	01602-21030	WASHER, SPRING	4		B10001-
15	(23B-40-41102)	VALVE ASSEMBLY, STEERING	1		B10001-

STEERING VALVE PIPING

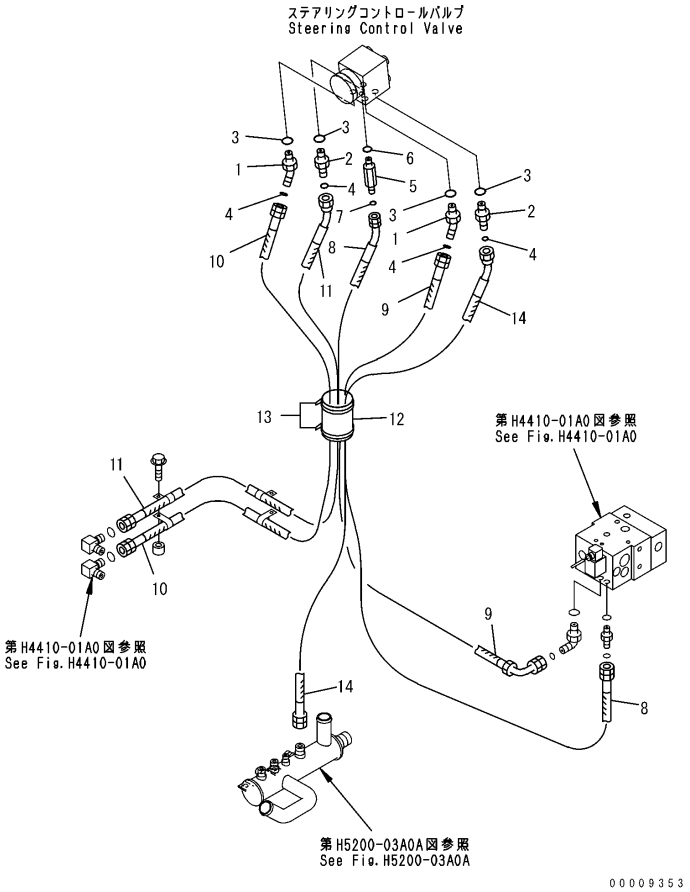

STEERING VALVE PIPING

Item	Part Number	Description	Qty.	Ref.	Serial No.
1	23B-60-41150	ELBOW	2		B10001-
2	56D-61-11360	UNION	2		B10001-
3	22W-61-12220	O-RING	4		B10001-
4	02896-11012	O-RING	4		B10001-
5	23B-60-41210	UNION	1		B10001-
6	416-62-11480	O-RING	1		B10001-
7	02896-11008	O-RING	1		B10001-
8	02755-00215	HOSE	1		B10001-
9	02753-00415	HOSE	1		B10001-
10	23B-40-43170	HOSE	1		B10001-
11	23B-40-43180	HOSE	1		B10001-
12	135-49-33370	VINYL	1		B10001-
13	08034-20834	BAND	2		B10001-
14	23B-60-43520	HOSE	1		B10001-

STOP LAMP AND SERVICE METER

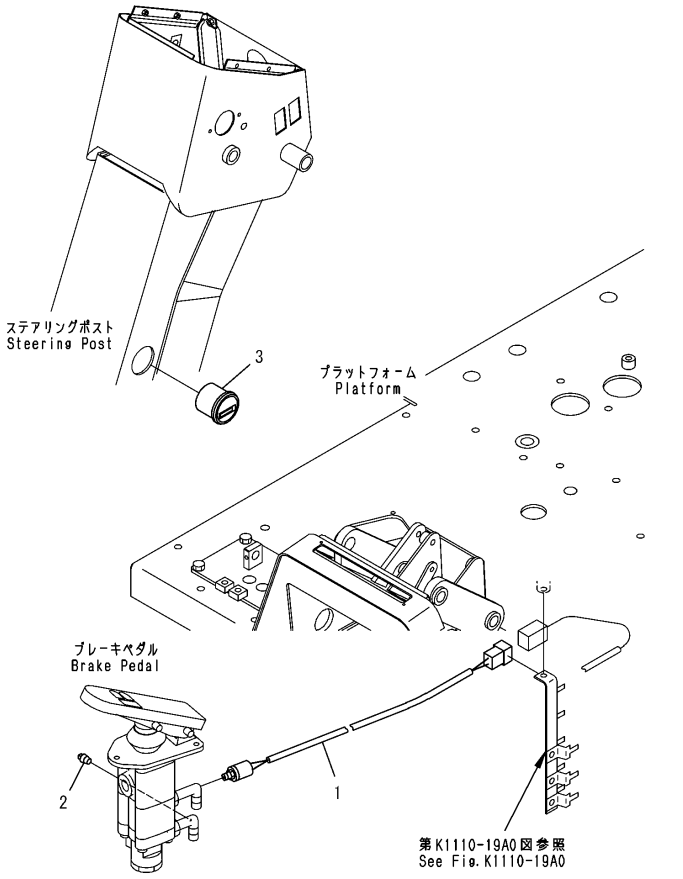

00009355

STOP LAMP AND SERVICE METER

Item	Part Number	Description	Qty.	Ref.	Serial No.
1	42C-43-12941	SWITCH, STOP LAMP	1		B10001-
2	07042-30108	PLUG	1		B10001-
3	08687-42404	SERVICE METER	1		B10001-

FLOOR HARNESS

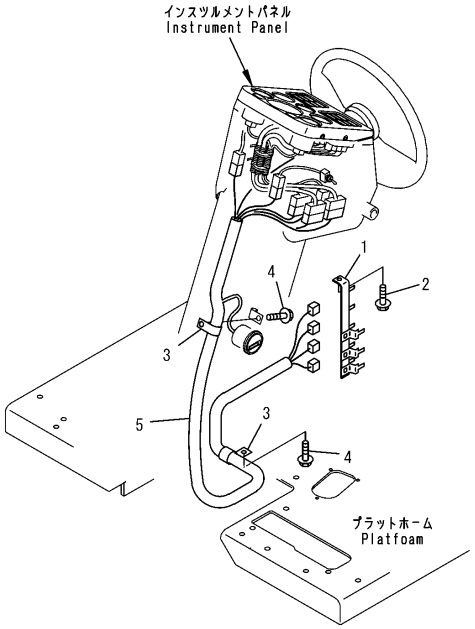

PW2A915

FLOOR HARNESS

Item	Part Number	Description	Qty.	Ref.	Serial No.
1	23B-06-44421	BRACKET	1		B10001-
2	01435-01016	BOLT	1		B10001-
3	04434-52310	CLIP	2		B10001-
4	01435-01016	BOLT	1		B10001-
5	23B-06-41256	WIRING HARNESS	1		B10001-

FLOOR HARNESS

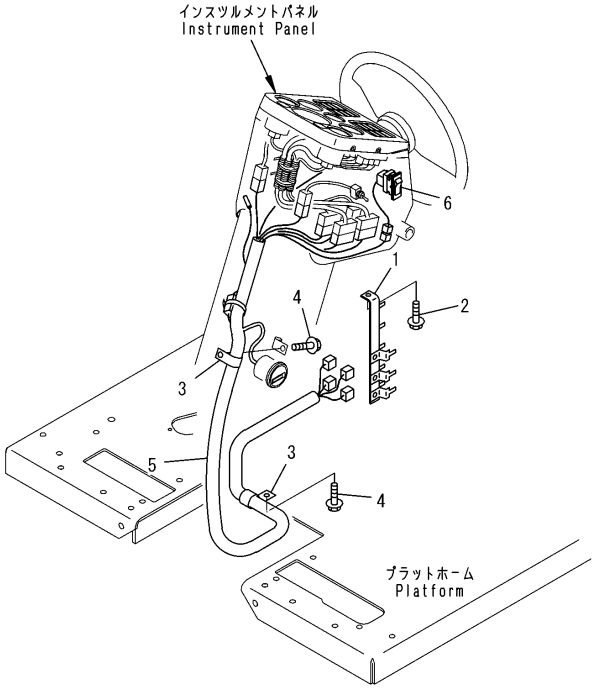

FLOOR HARNESS

Item	Part Number	Description	Qty.	Ref.	Serial No.
1	23B-06-44421	BRACKET	1		B10001-
2	01435-01016	BOLT	1		B10001-
3	04434-52310	CLIP	2		B10001-
4	01435-01016	BOLT	2		B10001-
5	23B-06-41256	WIRING HARNESS	1		B10001-
6	42C-06-11320	SWITCH, ENGINE START HELP	1		B10001-

CONSOLE BOX, R.H.(ELECTRICAL SYSTEM)

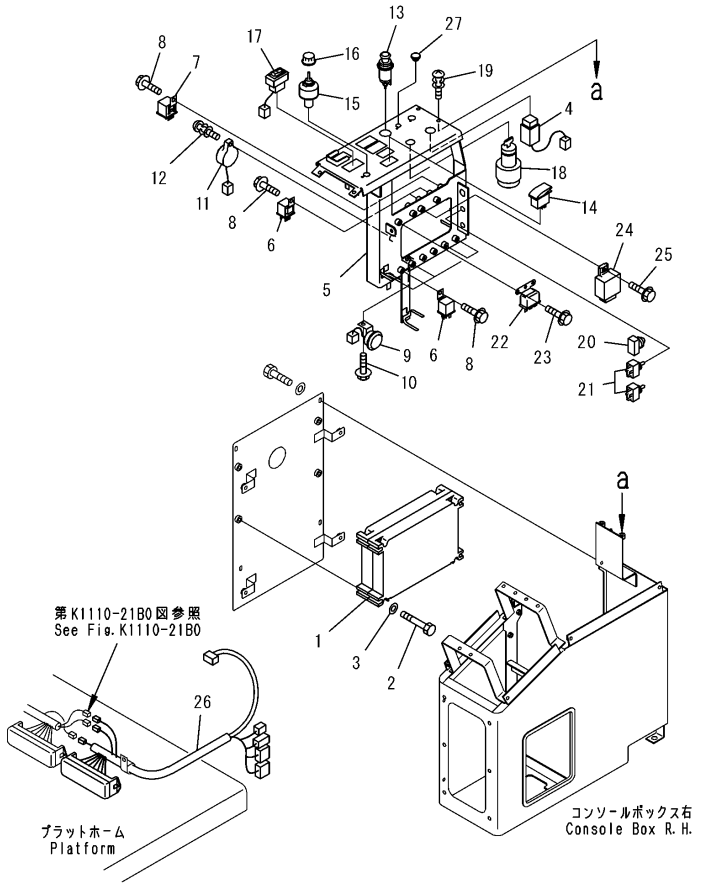

CONSOLE BOX, R.H.(ELECTRICAL SYSTEM)

Item	Part Number	Description	Qty.	Ref.	Serial No.
1	7821-25-1001	CONTROLLER, TRANSMISSION	1		B10001-
2	01010-80885	BOLT	4		B10001-
3	01643-30823	WASHER	4		B10001-
4	23B-06-42570	SWITCH, LIFTER LOCK	1		B10001-
5	23B-06-44393	PANEL	1		B10001-
6	569-06-61960	RELAY	7		B10001-
7	569-06-61970	RELAY	1		B10001-
8	01435-00608	BOLT	8		B10001-
9	203-06-56230	BUZZER ASSEMBLY	1		B10001-
10	01435-00608	BOLT	1		B10001-
11	23B-06-42431	BUZZER	1		B10001-
12	01023-70520	SCREW	1		B10001-
13	20Y-06-23471	LIGHTER, CIGAR	1		B10001-
14	23B-06-42310	SWITCH, HEAD LAMP	1		B10001-
15	205-06-71390	SWITCH, WIPER	1		B10001-
16	42C-06-11410	DIAL	1		B10001-
17	42C-06-11350	SWITCH, TRANSMISSION LOCK-UP	1		B10001-
18	08086-20000	SWITCH, STARTING	1		B10001-
19	01023-70614	SCREW	4		B10001-
20	08064-10000	HORN SWITCH, RESET	1		B10001-
21	26A-06-11570	SWITCH, MEMORY CLEAR	2		B10001-
22	08163-02400	RELAY, HORN	1		B10001-
23	01435-00608	BOLT	2		B10001-
24	23D-06-33280	RELAY	1		B10001-
25	01435-00614	BOLT	1		B10001-
26	23B-06-41540	HARNESS, CAB	1		B10001-
	08044-01500	.BOX, FUSE	1		B10001-
	08041-01000	.FUSE, 10A	6		B10001-
	08041-02000	.FUSE, 20A	5		B10001-
27	130-911-1640	PLUG	1		B10001-

FLOOR HARNESS AND TRANSMISSION

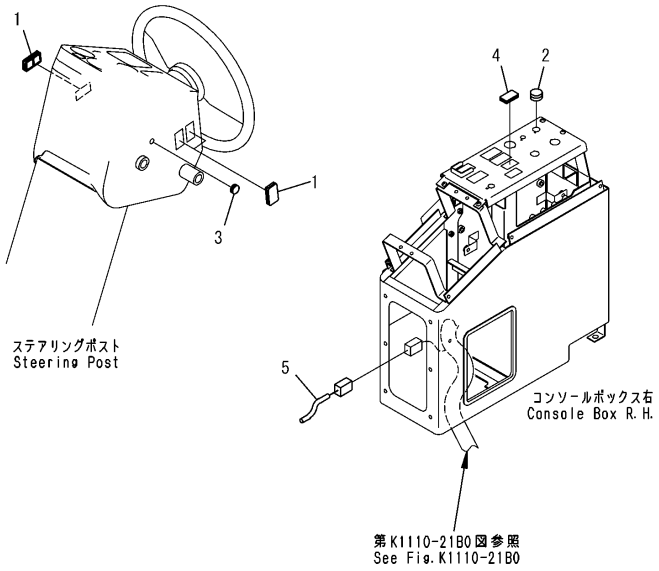

00009361

FLOOR HARNESS AND TRANSMISSION

Item	Part Number	Description	Qty.	Ref.	Serial No.
1	23B-06-41315	WIRING HARNESS	1		B10001-
2	23B-06-41348	WIRING HARNESS	1		B10001-
3	08044-01500	.BOX, FUSE	1		B10001-
	08041-01000	.FUSE, 10A	6		B10001-
	08041-02000	.FUSE, 20A	13		B10001-
4	23B-06-44331	BRACKET	1		B10001-
5	23B-06-44411	BRACKET	1		B10001-
6	23B-06-44431	BRACKET	1		B10001-
7	01435-01016	BOLT	9		B10001-
8	04434-51410	CLIP	8		B10001-
9	01435-01016	BOLT	3		B10001-
10	09415-05016	CAP	1		B10001-
11	01435-01016	BOLT	2		B10001-
12	04434-51810	CLIP	1		B10001-
13	04434-52210	CLIP	1		B10001-
14	23D-06-31370	CABLE, EARTH	1		B10001-
15	01435-01016	BOLT	2		B10001-
16	01435-01016	BOLT	1		B10001-
17	01023-10620	SCREW	4		B10001-
18	23B-06-31180	GROMMET	2		B10001-
19	23B-06-41520	BRACKET	1		B10001-
20	01435-01016	BOLT	1		B10001-
25	23B-06-41718	WIRING HARNESS, TRANSMISSION CONTROL	1		B10001-
26	04434-50810	CLIP	1		B10001-
27	01435-01016	BOLT	1		B10001-

ELECTRICAL SYSTEM (STEERING POST AND R.H.CONSOLE BOX)

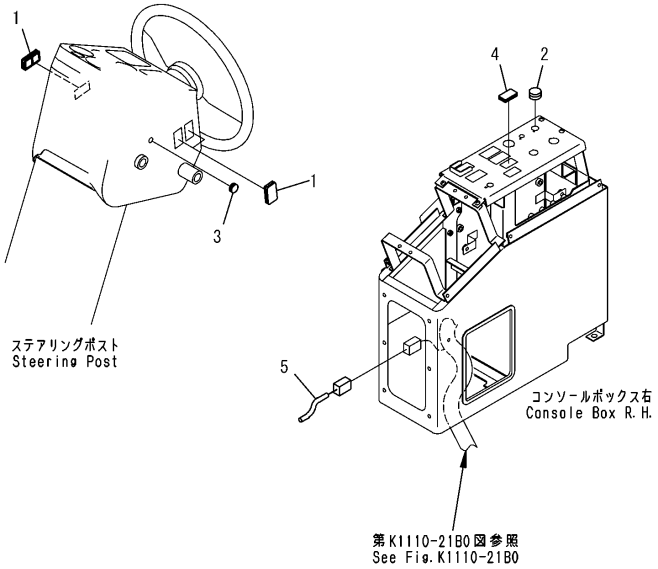

00009361

ELECTRICAL SYSTEM (STEERING POST AND R.H.CONSOLE BOX)

Item	Part Number	Description	Qty.	Ref.	Serial No.
1	23B-06-44270	CAP	6		B10001-
2	09415-01008	CAP	1		B10001-
3	09415-00706	CAP, (WITHOUT HEAD LAMP)	1		B10001-
4	273-06-63130	CAP, (WITHOUT HAZARD SWITCH)	1		B10001-
5	23B-06-41861	CONNECTOR, SHORT	1		B10001-

ELECTRICAL SYSTEM (STEERING POST AND R.H.CONSOLE BOX) (WITH AIR CONDITIONER)

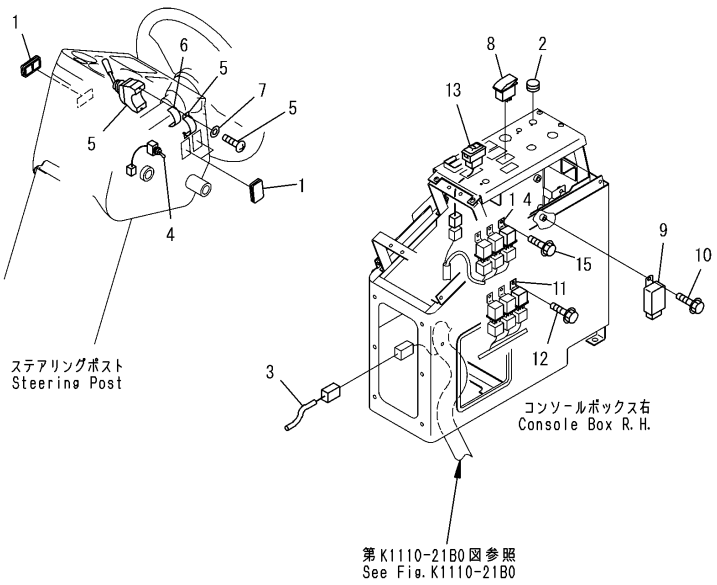

ELECTRICAL SYSTEM (STEERING POST AND R.H.CONSOLE BOX) (WITH AIR CONDITIONER)

Item	Part Number	Description	Qty.	Ref.	Serial No.
1	23B-06-44270	CAP	6		B10001-
2	09415-01008	CAP	1		B10001-
3	23B-06-41861	CONNECTOR, SHORT	1		B10001-
4	23B-06-42580	SWITCH, HEAD LAMP	1		B10001-
5	23B-06-42590	SWITCH, TURN SIGNAL	1		B10001-
6	23D-40-11110	SEAT	1		B10001-
7	01640-20408	WASHER	2		B10001-
8	23B-06-42320	SWITCH, HAZARD	1		B10001-
9	416-06-22250	FLASHER	1		B10001-
10	01435-00608	BOLT	1		B10001-
11	569-06-61970	RELAY	1		B10001-
12	01435-00608	BOLT	1		B10001-
13	42C-06-11350	SWITCH	1		B10001-
14	569-06-61960	RELAY	1		B10001-
15	01435-00608	BOLT	1		B10001-

AIR CONDITIONER (CONTROL PANEL AND AIR CONDITIONER UNIT)

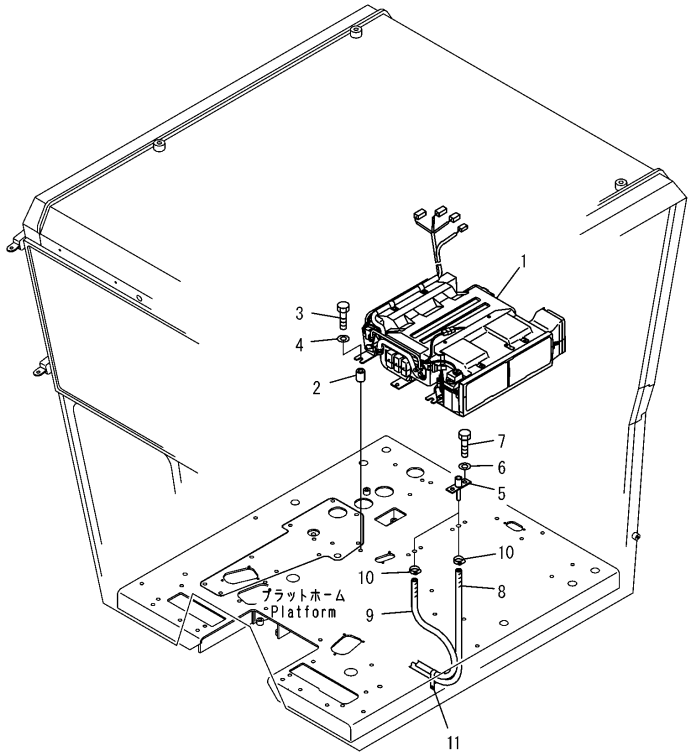

00003678

AIR CONDITIONER (CONTROL PANEL AND AIR CONDITIONER UNIT)

Item	Part Number	Description	Qty.	Ref.	Serial No.
1	22U-979-1720	AIR CONDITIONER UNIT	1		B10001-
2	23B-809-8970	SPACER	6		B10001-
3	01010-81055	BOLT	6		B10001-
4	01643-31032	WASHER	6		B10001-
5	23B-809-8772	TUBE	2		B10001-
6	01010-81020	BOLT	4		B10001-
7	01643-31032	WASHER	4		B10001-
8	07260-20955	HOSE	1		B10001-
9	07260-20970	HOSE	1		B10001-
10	07281-00197	CLAMP	1		B10001-
11	04435-51610	CLIP	1		B10001-

AIR CONDITIONER (DUCT)

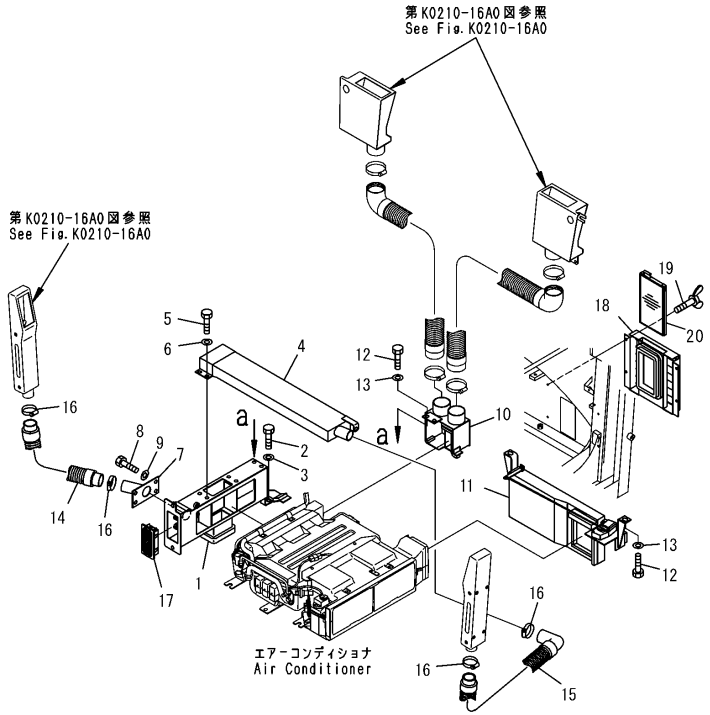

AIR CONDITIONER (DUCT)

Item	Part Number	Description	Qty.	Ref.	Serial No.
1	23B-809-7383	DUCT	1		B10001-
	23B-809-8220	.CUSHION	1		B10001-
	23B-809-8240	.CUSHION	1		B10001-
2	01010-81025	BOLT	3		B10001-
3	01643-31032	WASHER	3		B10001-
4	23B-809-7651	DUCT	1		B10001-
5	01010-81020	BOLT	5		B10001-
6	01643-31032	WASHER	5		B10001-
7	23B-809-8321	DUCT	1		B10001-
8	01010-81016	BOLT	4		B10001-
9	01643-31032	WASHER	4		B10001-
10	23B-809-7454	DUCT	1		B10001-
11	23B-809-9150	DAMPER ASSEMBLY	1		B10001-
	23B-809-9210	.MOTOR	1		B10001-
12	01010-81016	BOLT	4		B10001-
13	01643-31032	WASHER	4		B10001-
14	23B-809-8632	HOSE, AIR	1		B10001-
15	23B-809-8622	HOSE, AIR	1		B10001-
16	07280-04726	CLAMP	4		B10001-
17	421-07-23870	GRILLE	1		B10001-
18	23B-809-9132	LOUVER	1		B10001-
19	01434-10616	BOLT, WING	4		B10001-
20	23B-809-9310	FILTER	1		B10001-

ELBOW (FOR BRAKE VALVE)

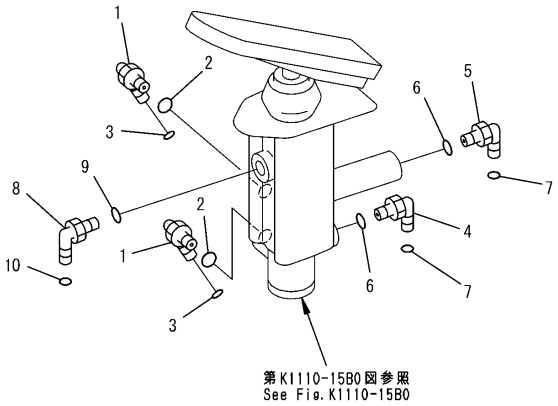

00009364

ELBOW (FOR BRAKE VALVE)

Item	Part Number	Description	Qty.	Ref.	Serial No.
1	02782-10422	ELBOW	2		B10001-
2	07002-12034	O-RING	2		B10001-
3	02896-11012	O-RING	2		B10001-
4	02782-10422	ELBOW	1		B10001-
5	23B-60-41270	ELBOW	1		B10001-
6	07002-12034	O-RING	2		B10001-
7	02896-11012	O-RING	2		B10001-
8	02782-10522	ELBOW	1		B10001-
9	07002-12434	O-RING	1		B10001-
10	02896-11015	O-RING	1		B10001-

ENGINE ACCESSORY (ACCELERATOR CONTROL)

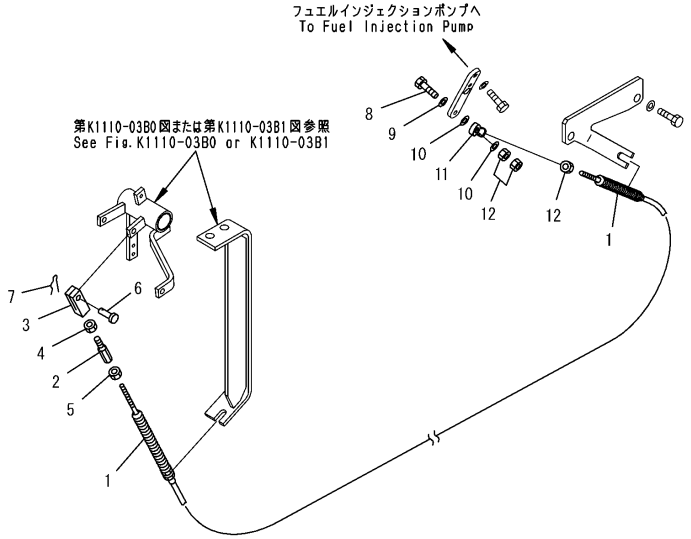

00009365

ENGINE ACCESSORY (ACCELERATOR CONTROL)

Item	Part Number	Description	Qty.	Ref.	Serial No.
1	23A-43-31221	CABLE	1		B10001-
2	23B-43-31590	JOINT	1		B10001-
3	04220-20832	YOKE, L.H.THREAD	1		B10001-
4	01508-40805	NUT, L.H.THREAD	1		B10001-
5	01580-10605	NUT	1		B10001-
6	04205-30822	PIN	1		B10001-
7	04052-10833	PIN, SNAP	1		B10001-
8	01010-80635	BOLT	1		B10001-
9	01643-30623	WASHER	1		B10001-
10	04254-10623	SPACER	2		B10001-
11	04250-40639	END, ROD	1		B10001-
12	01580-10605	NUT	3		B10001-

BRAKE ACCUMULATOR AND SLACK ADJUSTER

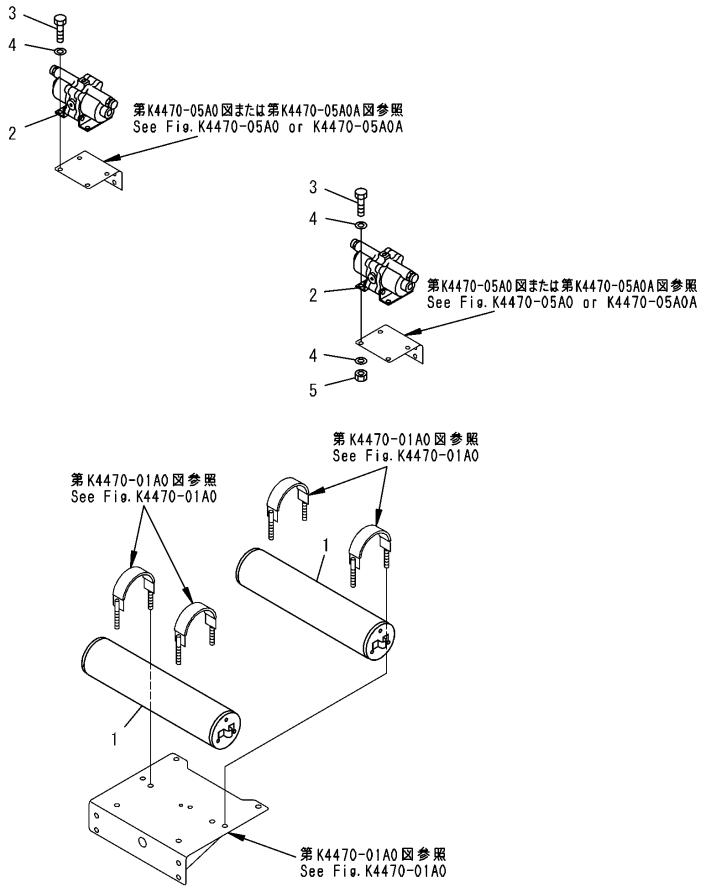

00009370

BRAKE ACCUMULATOR AND SLACK ADJUSTER

Item	Part Number	Description	Qty.	Ref.	Serial No.
1	(721-32-10241)	ACCUMULATOR ASSEMBLY	2		B10001-
2	(424-35-15201)	SLACK ADJUSTER ASSEMBLY	2		B10001-
3	01010-81030	BOLT	8		B10001-
4	01643-31032	WASHER	16		B10001-
5	01580-11008	NUT	8		B10001-

SLACK ADJUSTER (INNER PARTS)

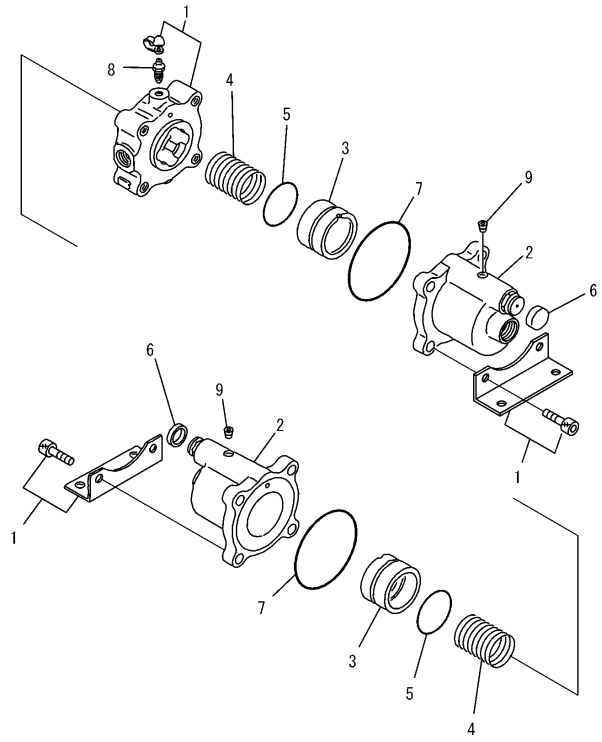

PNE3837

SLACK ADJUSTER (INNER PARTS)

Item	Part Number	Description	Qty.	Ref.	Serial No.
1	424-35-15201	SLACK ADJUSTER ASSEMBLY	2		B10001-
2	☆	.CYLINDER ASSEMBLY	2		B10001-
	424-35-15280	..O-RING, VALVE	1		B10001-
3	424-35-15220	.PISTON	2		B10001-
4	424-35-15230	.SPRING	2		B10001-
5	424-35-15240	.O-RING	2		B10001-
6	424-35-15250	.COVER	2		B10001-
7	424-35-15260	.O-RING	2		B10001-
8	424-35-15270	.VALVE	1		B10001-
9	07043-70108	.PLUG	2		B10001-

BRAKE ACCUMULATOR AND SLACK ADJUSTER (MOUNTING PARTS)

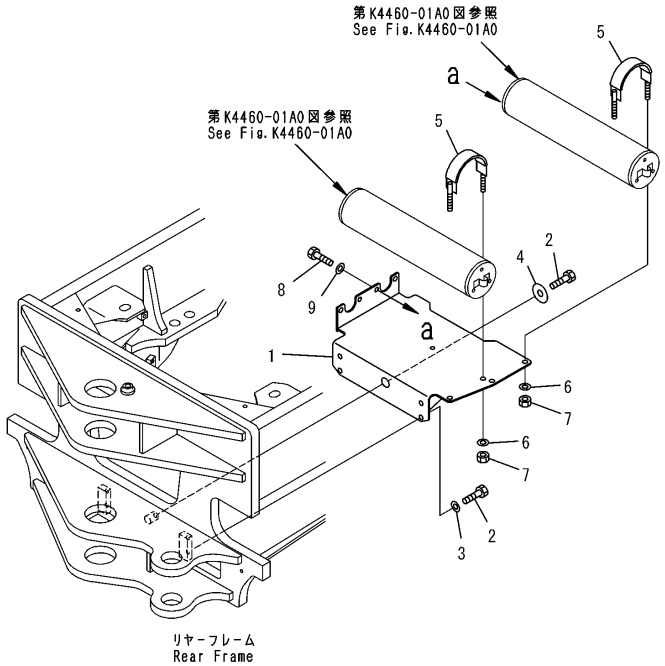

PW2A919

BRAKE ACCUMULATOR AND SLACK ADJUSTER (MOUNTING PARTS)

Item	Part Number	Description	Qty.	Ref.	Serial No.
1	23B-43-32312	BRACKET	1		B10001-
2	01010-81225	BOLT	5		B10001-
3	01643-31232	WASHER	4		B10001-
4	175-54-34170	WASHER	1		B10001-
5	421-43-22360	BAND	2		B10001-
6	01643-31232	WASHER	4		B10001-
7	421-40-12440	NUT	4		B10001-
8	01010-81225	BOLT	4		B10001-
9	01643-31232	WASHER	4		B10001-

BRAKE PIPING (BRAKE VALVE TO ACCUMULATOR)

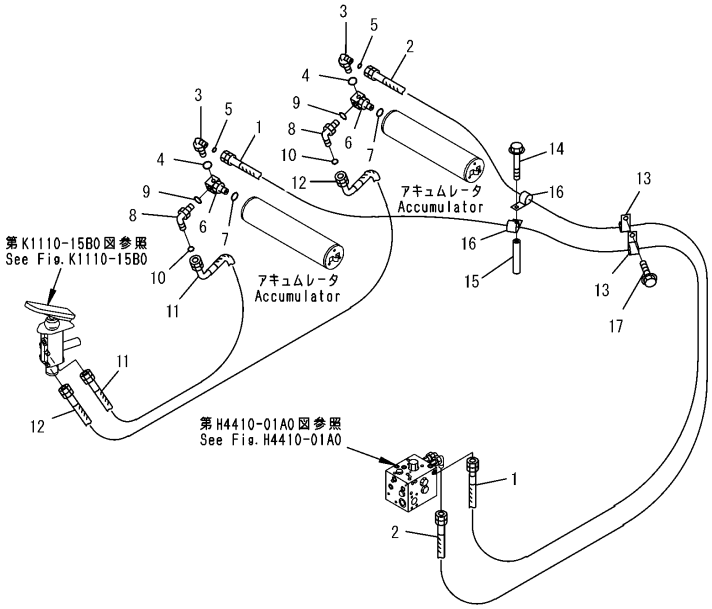

00009371

BRAKE PIPING (BRAKE VALVE TO ACCUMULATOR)

Item	Part Number	Description	Qty.	Ref.	Serial No.
1	23B-60-43140	HOSE	1		B10001-
2	23B-60-43150	HOSE	1		B10001-
3	02781-00210	UNION	2		B10001-
4	07002-11423	O-RING	2		B10001-
5	02896-11008	O-RING	2		B10001-
6	23B-43-32321	TEE	2		B10001-
7	07002-12034	O-RING	2		B10001-
8	02782-10422	ELBOW	2		B10001-
9	07002-12034	O-RING	2		B10001-
10	02896-11012	O-RING	2		B10001-
11	23B-60-43250	HOSE	1		B10001-
12	23B-60-43260	HOSE	1		B10001-
13	04434-51310	CLIP	2		B10001-
14	01436-01040	BOLT	1		B10001-
15	195-01-16261	COLLAR	1		B10001-
16	04434-51310	CLIP	2		B10001-
17	01435-01016	BOLT	1		B10001-

BRAKE PEDAL PIPING (1/2)

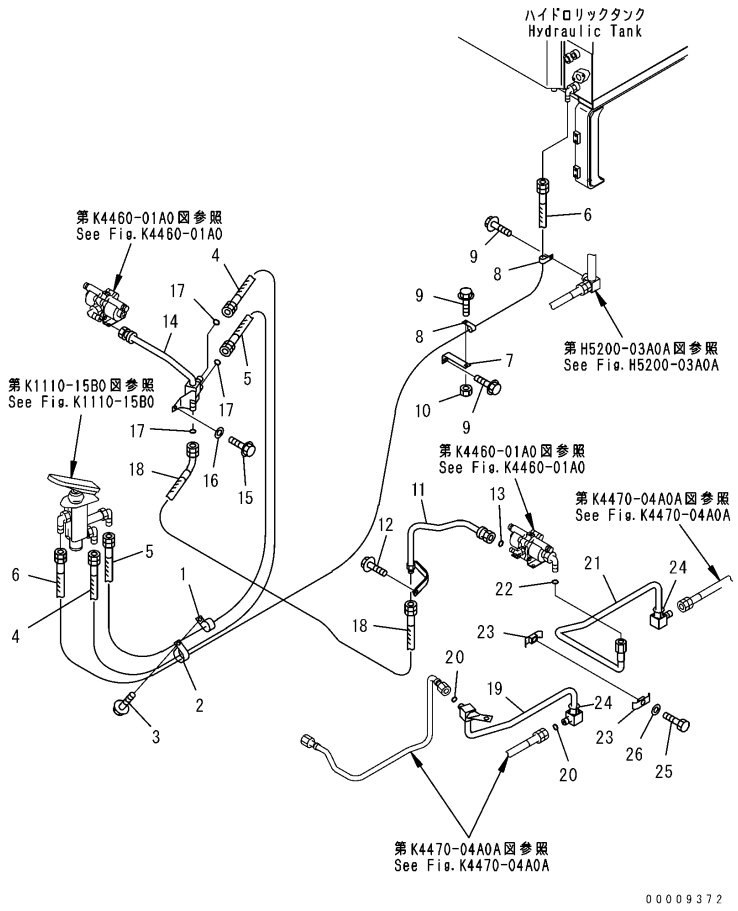

BRAKE PEDAL PIPING (1/2)

Item	Part Number	Description	Qty.	Ref.	Serial No.
1	04435-52110	CLIP	1		B10001-
2	569-07-61790	CLIP	1		B10001-
3	01435-01016	BOLT	1		B10001-
4	23B-60-43231	HOSE	1		B10001-
5	23B-60-43221	HOSE	1		B10001-
6	23B-60-43241	HOSE	1		B10001-
7	6166-51-8231	PLATE	1		B10001-
8	04434-52210	CLIP	2		B10001-
9	01435-01016	BOLT	3		B10001-
10	01580-11008	NUT	1		B10001-
11	23B-43-42110	TUBE, L.H.	1		B10001-
12	01435-01020	BOLT	1		B10001-
13	02896-11012	O-RING	1		B10001-
14	23B-43-42121	TUBE, R.H.	1		B10001-
15	01435-01025	BOLT	1		B10001-
16	417-43-16210	WASHER	1		B10001-
17	02896-11012	O-RING	3		B10001-
18	23B-60-43290	HOSE	1		B10001-
19	23B-43-42130	TUBE	1		B10001-
20	02896-11012	O-RING	2		B10001-
21	23B-43-42150	TUBE	1		B10001-
22	02896-11012	O-RING	1		B10001-
23	262-60-74340	CLAMP	2		B10001-
24	425-43-11180	GROMMET	2		B10001-
25	01010-81250	BOLT	1		B10001-
26	01643-31232	WASHER	1		B10001-

BRAKE PEDAL PIPING (2/2)

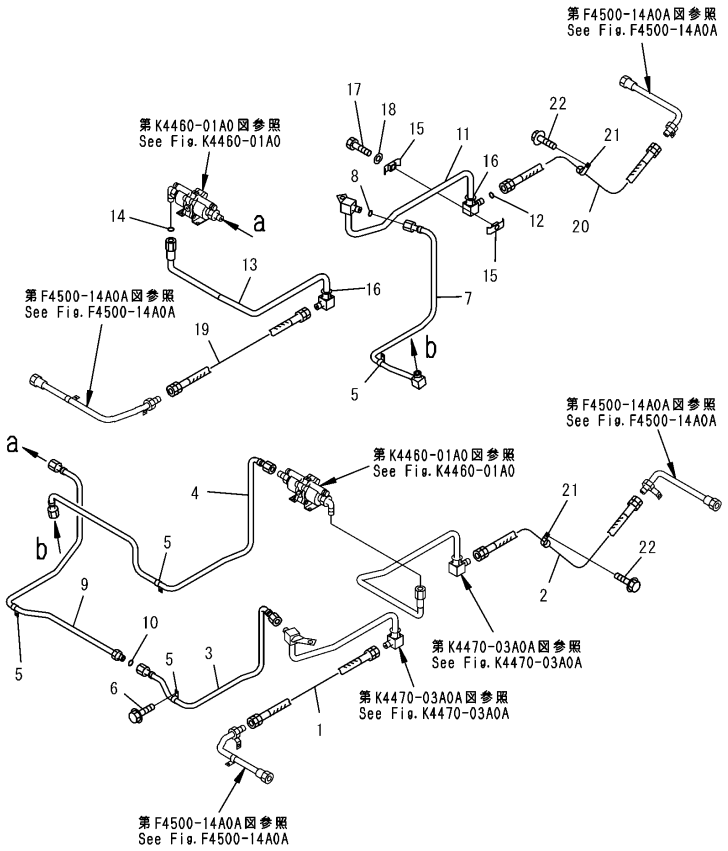

BRAKE PEDAL PIPING (2/2)

Item	Part Number	Description	Qty.	Ref.	Serial No.
1	02753-204A5	HOSE	1		B10001-
2	02753-204A7	HOSE	1		B10001-
3	23B-43-42170	TUBE, L.H.	1		B10001-
4	23B-43-42190	TUBE, L.H.	1		B10001-
5	04434-51510	CLIP	4		B10001-
6	01435-01016	BOLT	4		B10001-
7	23B-43-42180	TUBE, R.H.	1		B10001-
8	02896-11012	O-RING	1		B10001-
9	23B-43-42210	TUBE, R.H.	1		B10001-
10	02896-11012	O-RING	1		B10001-
11	23B-43-42140	TUBE, R.H.	1		B10001-
12	02896-11012	O-RING	2		B10001-
13	23B-43-42160	TUBE, R.H.	1		B10001-
14	02896-11012	O-RING	1		B10001-
15	262-60-74340	CLAMP	2		B10001-
16	425-43-11180	GROMMET	2		B10001-
17	01010-81250	BOLT	1		B10001-
18	01643-31232	WASHER	1		B10001-
19	02753-204A7	HOSE	1		B10001-
20	02753-204A5	HOSE	1		B10001-
21	04434-52512	CLIP	2		B10001-
22	01435-01016	BOLT	2		B10001-

ELBOW (FOR BRAKE VALVE AND SLACK ADJUSTER)

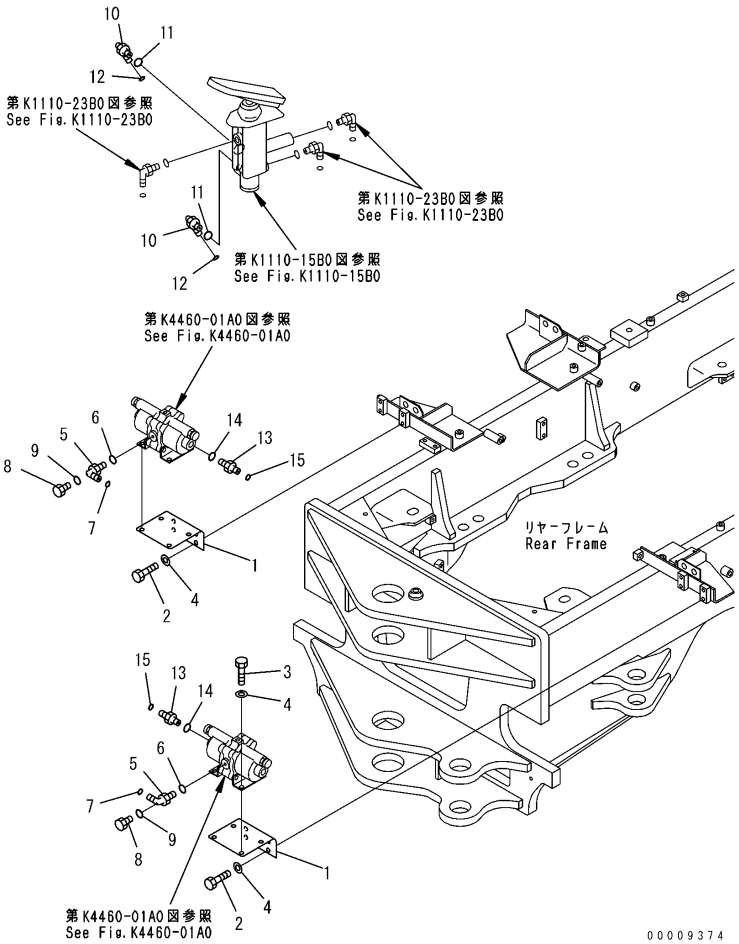

ELBOW (FOR BRAKE VALVE AND SLACK ADJUSTER)

Item	Part Number	Description	Qty.	Ref.	Serial No.
1	23B-43-32711	BRACKET	2		B10001-
2	01010-81020	BOLT	8		B10001-
3	01010-81025	BOLT	8		B10001-
4	01643-31032	WASHER	16		B10001-
5	02782-50422	ELBOW	2		B10001-
6	07002-12034	O-RING	2		B10001-
7	02896-11012	O-RING	2		B10001-
8	07040-11007	PLUG	2		B10001-
9	07002-11023	O-RING	2		B10001-
10	02782-10422	ELBOW	2		B10001-
11	07002-12034	O-RING	2		B10001-
12	02896-11012	O-RING	2		B10001-
13	02781-00422	UNION	2		B10001-
14	07002-12034	O-RING	2		B10001-
15	02896-11012	O-RING	2		B10001-

GUARD

ENGINE HOOD AND RADIATOR GUARD (1/2)

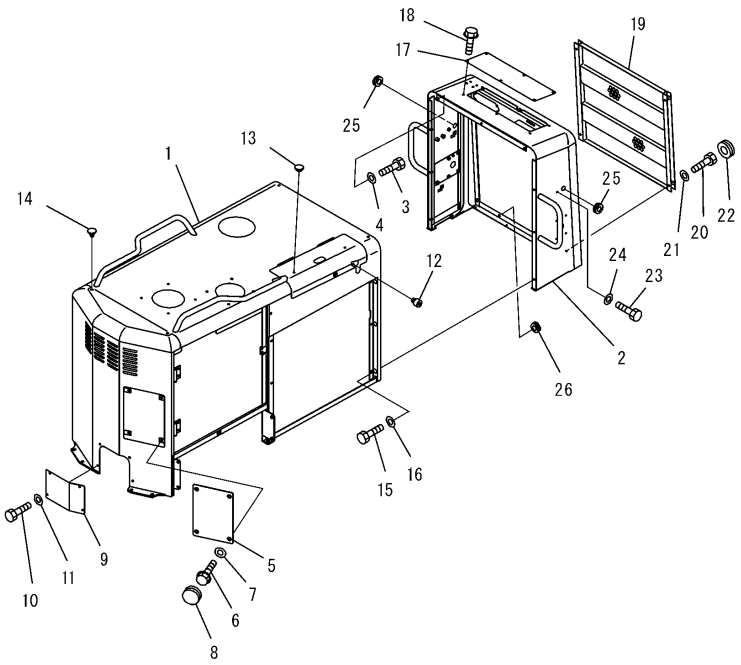

PJ2E138

M4100-01A0A

ENGINE HOOD AND RADIATOR GUARD (1/2)

Item	Part Number	Description	Qty.	Ref.	Serial No.
1	23B-54-36151	HOOD	1		B10001-
	416-09-12220	.HINGE (WELDED)	2		B10001-
	23B-54-34540	.LOCK ASSEMBLY (WELDED)	1		B10001-
2	23B-54-36140	GRILLE	1		B10001-
3	01010-81025	BOLT	9		B10001-
4	01643-31032	WASHER	9		B10001-
5	23B-54-31951	COVER	1		B10001-
6	01435-01025	BOLT	4		B10001-
7	01643-31032	WASHER	4		B10001-
8	09415-02110	CAP	4		B10001-
9	23B-54-35111	PLATE	1		B10001-
10	01010-81020	BOLT	4		B10001-
11	424-09-12650	WASHER	4		B10001-
12	415-54-11980	CUSHION	2		B10001-
13	203-54-32260	STOPPER	2		B10001-
14	416-54-21710	PLUG	4		B10001-
15	01010-81025	BOLT	14		B10001-
16	01643-31032	WASHER	14		B10001-
17	23B-54-36130	COVER	1		B10001-
18	01435-01016	BOLT	4		B10001-
19	23B-54-34520	MASK	1		B10001-
20	01010-81020	BOLT	4		B10001-
21	01643-31032	WASHER	4		B10001-
22	09415-02110	CAP	4		B10001-
23	01010-81225	BOLT	2		B10001-
24	01643-31232	WASHER	2		B10001-
25	08037-01008	GROMMET	2		B10001-
26	09415-01008	CAP	1		B10001-

ENGINE HOOD AND RADIATOR GUARD (2/2)

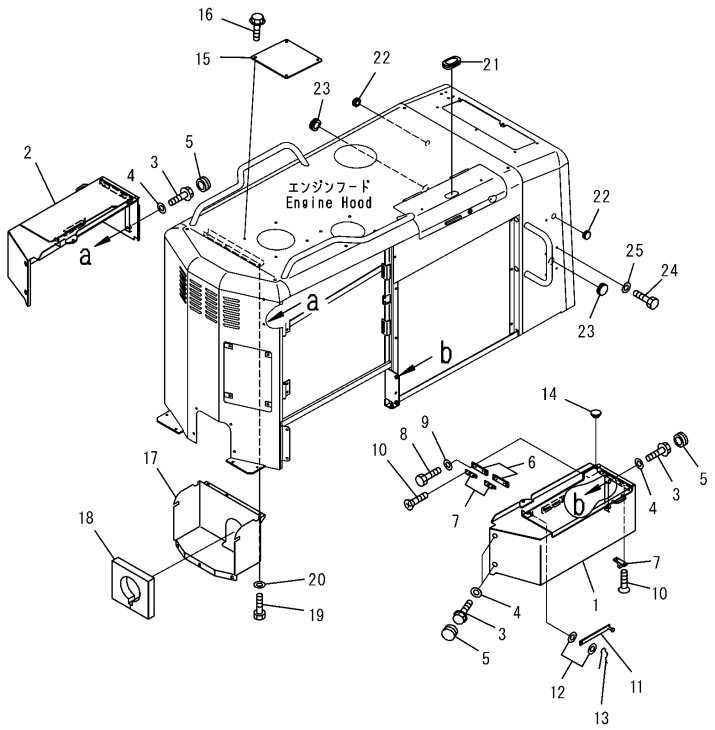

00010267

M4100-02A0A

ENGINE HOOD AND RADIATOR GUARD (2/2)

Item	Part Number	Description	Qty.	Ref.	Serial No.
1	23B-54-34245	COVER, L.H.	1		B10001-
	23B-54-31891	.HINGE (WELDED)	2		B10001-
2	23B-54-34254	COVER, R.H.	1		B10001-
	23B-54-31891	.HINGE (WELDED)	2		B10001-
3	01435-01025	BOLT	8		B10001-
4	01643-31032	WASHER	8		B10001-
5	09415-02110	CAP	8		B10001-
6	23B-54-34381	PLATE	4		B10001-
7	23B-54-34390	CATCH	4		B10001-
8	01010-80620	BOLT	8		B10001-
9	01643-30623	WASHER	8		B10001-
10	01224-40406	SCREW	16		B10001-
11	421-06-24230	BAR	2		B10001-
12	01640-20816	WASHER	4		B10001-
13	04052-10833	PIN, SNAP	2		B10001-
14	203-54-32260	STOPPER	2		B10001-
15	23B-54-34430	COVER	1		B10001-
16	01435-01016	BOLT	4		B10001-
17	23A-54-31810	COVER	1		B10001-
18	23A-54-31820	SHEET	1		B10001-
19	01010-81020	BOLT	6		B10001-
20	01643-31032	WASHER	6		B10001-
21	170-43-11370	GROMMET	1		B10001-
22	09415-02512	CAP	2		B10001-
23	09415-03614	CAP	2		B10001-
24	01010-81016	BOLT	4		B10001-
25	01643-31032	WASHER	4		B10001-

ENGINE HOOD AND RADIATOR GUARD (2/2) (WITH PUNCHING MASK AND AIR INTAKE EXTENSION)

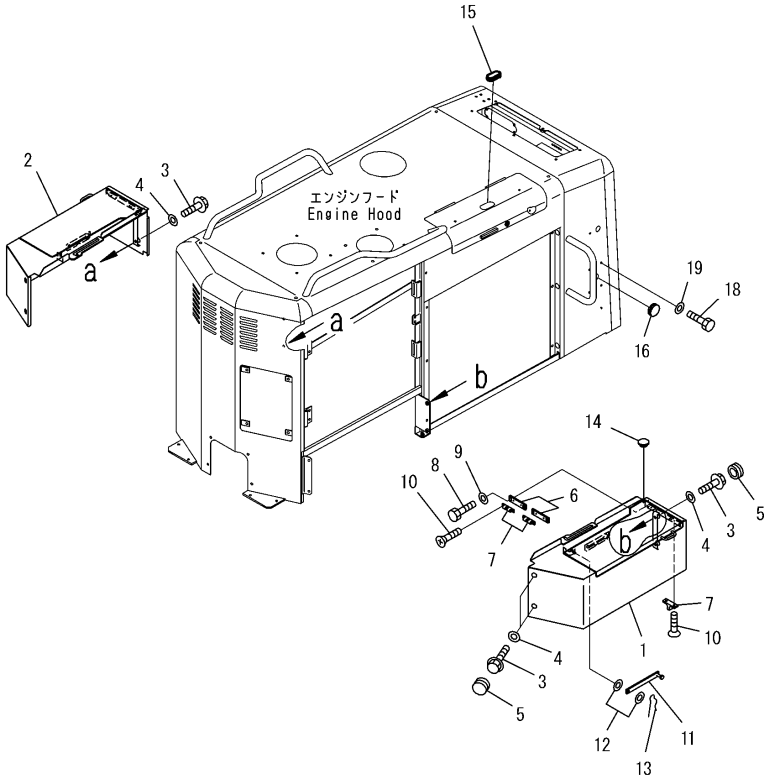

00009375

ENGINE HOOD AND RADIATOR GUARD (2/2) (WITH PUNCHING MASK AND AIR INTAKE EXTENSION)

Item	Part Number	Description	Qty.	Ref.	Serial No.
1	23B-54-34245	COVER, L.H.	1		B10001-
2	23B-54-34254	COVER, R.H.	1		B10001-
3	01435-01025	BOLT	8		B10001-
4	01643-31032	WASHER	8		B10001-
5	09415-02110	CAP	8		B10001-
6	23B-54-34381	PLATE	4		B10001-
7	23B-54-34390	CATCH	4		B10001-
8	01010-80620	BOLT	8		B10001-
9	01643-30623	WASHER	8		B10001-
10	01224-40406	SCREW	16		B10001-
11	421-06-24230	BAR	2		B10001-
12	01640-20816	WASHER	4		B10001-
13	04052-10833	PIN, SNAP	2		B10001-
14	203-54-32260	STOPPER	2		B10001-
15	170-43-11370	GROMMET	1		B10001-
16	09415-02512	CAP	2		B10001-
17	09415-03614	CAP	2		B10001-
18	01010-81016	BOLT	4		B10001-
19	01643-31032	WASHER	4		B10001-

SIDE PANEL (FOR ENGINE HOOD)

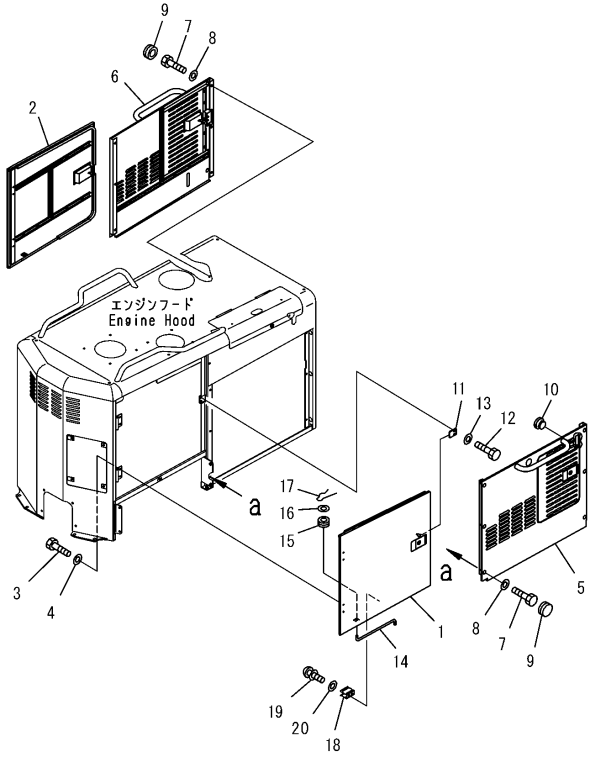

PJ2E140

SIDE PANEL (FOR ENGINE HOOD)

Item	Part Number	Description	Qty.	Ref.	Serial No.
1	23B-54-34162	COVER, L.H.	1		B10001-
	421-54-11364	.LOCK ASSEMBLY (WELDED)	1		B10001-
2	23B-54-34173	COVER, R.H.	1		B10001-
	421-54-11364	.LOCK ASSEMBLY (WELDED)	1		B10001-
3	01010-81020	BOLT	8		B10001-
4	01643-31032	WASHER	8		B10001-
5	23B-54-36181	COVER, L.H.	1		B10001-
	421-54-11364	.LOCK ASSEMBLY (WELDED)	1		B10001-
6	23B-54-36191	COVER, R.H.	1		B10001-
	421-54-11364	.LOCK ASSEMBLY (WELDED)	1		B10001-
7	01435-01025	BOLT	12		B10001-
8	01643-31032	WASHER	12		B10001-
9	09415-02110	CAP	12		B10001-
10	415-54-11980	CUSHION	4		B10001-
11	23B-54-34480	PLATE	4		B10001-
12	01010-81025	BOLT	8		B10001-
13	01643-31032	WASHER	8		B10001-
14	23B-54-31960	BAR	2		B10001-
15	08037-01008	GROMMET	2		B10001-
16	01643-31032	WASHER	2		B10001-
17	04052-11038	PIN, SNAP	2		B10001-
18	23S-54-54750	SPRING	2		B10001-
19	01023-10408	SCREW	4		B10001-
20	01640-20408	WASHER	4		B10001-

BUFFER PLATE (FOR ENGINE HOOD)

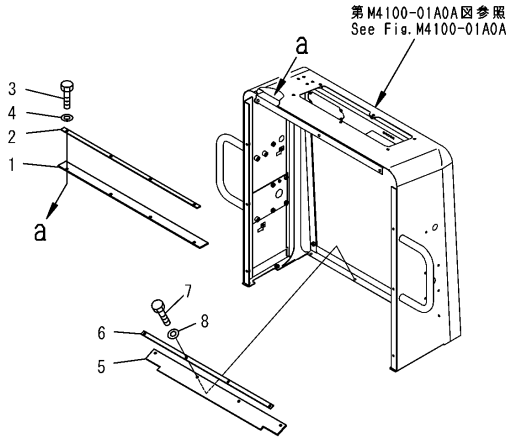

00009376

BUFFER PLATE (FOR ENGINE HOOD)

Item	Part Number	Description	Qty.	Ref.	Serial No.
1	23B-54-36730	PLATE	1		B10001-
2	23B-54-36740	PLATE	1		B10001-
3	01010-80820	BOLT	4		B10001-
4	01643-30823	WASHER	4		B10001-
5	23B-54-36770	PLATE	1		B10001-
6	23B-54-31781	PLATE	1		B10001-
7	01010-80820	BOLT	4		B10001-
8	01643-30823	WASHER	4		B10001-

FLOOR COVER AND FRONT FRAME SIDE COVER

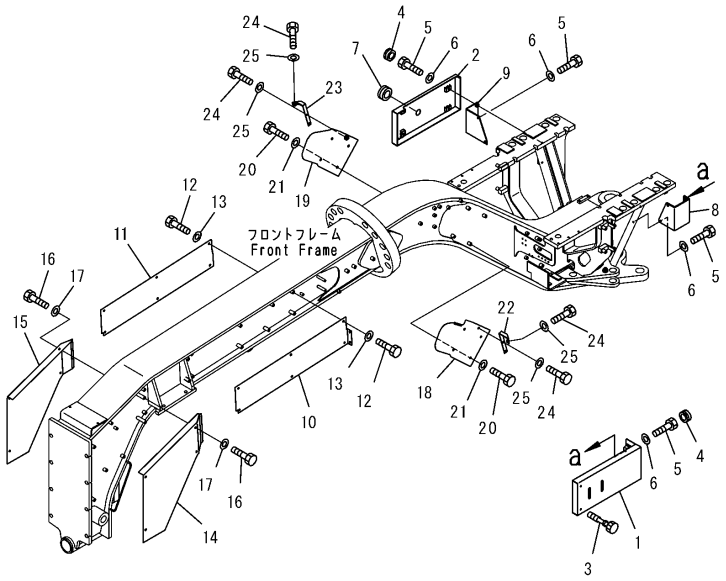

00004854

M4230-01A0A

FLOOR COVER AND FRONT FRAME SIDE COVER

Item	Part Number	Description	Qty.	Ref.	Serial No.
1	23B-54-31653	COVER, L.H.	1		B10001-
2	23B-54-33660	COVER, R.H.	1		B10001-
3	23B-54-31990	SCREW	2		B10001-
4	09415-02512	CAP	8		B10001-
5	01010-81025	BOLT	10		B10001-
6	01643-31032	WASHER	10		B10001-
7	09415-03614	CAP	1		B10001-
8	23B-54-33680	BRACKET	1		B10001-
9	23B-54-33690	BRACKET	1		B10001-
10	23A-54-31930	COVER, L.H.	1		B10001-
11	23A-54-31940	COVER, R.H.	1		B10001-
12	01010-81020	BOLT	12		B10001-
13	01643-31032	WASHER	12		B10001-
14	23B-54-31523	COVER, L.H.	1		B10001-
15	23B-54-31534	COVER, R.H.	1		B10001-
16	01010-81020	BOLT	8		B10001-
17	01463-31032	WASHER	8		B10001-
18	23B-54-31573	COVER, L.H.	1		B10001-
19	23B-54-31583	COVER, R.H.	1		B10001-
20	01010-81020	BOLT	8		B10001-
21	234-54-13252	WASHER	8		B10001-
22	23A-952-2140	BRACKET, L.H.	1		B10001-
23	23A-952-2150	BRACKET, R.H.	1		B10001-
24	01010-81020	BOLT	4		B10001-
25	01643-31032	WASHER	4		B10001-

FLOOR COVER AND FRONT FRAME SIDE COVER

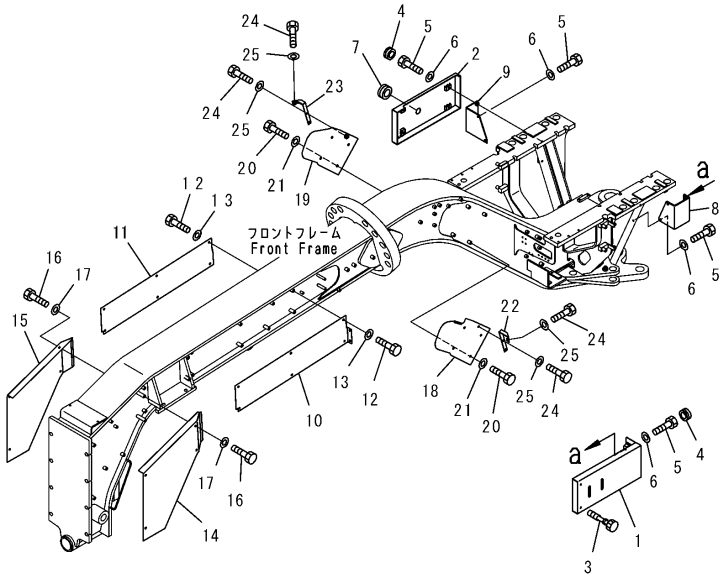

00004854

FLOOR COVER AND FRONT FRAME SIDE COVER

Item	Part Number	Description	Qty.	Ref.	Serial No.
1	23B-54-31653	COVER, L.H.	1		B10001-
2	23B-54-33660	COVER, R.H.	1		B10001-
3	23B-54-31990	SCREW	2		B10001-
4	09415-02512	CAP	8		B10001-
5	01010-81025	BOLT	10		B10001-
6	01643-31032	WASHER	10		B10001-
7	09415-03614	CAP	1		B10001-
8	23B-54-33680	BRACKET	1		B10001-
9	23B-54-33690	BRACKET	1		B10001-
10	23A-54-31912	COVER, L.H.	1		B10001-
11	23A-54-31922	COVER, R.H.	1		B10001-
12	01010-81020	BOLT	12		B10001-
13	01643-31032	WASHER	12		B10001-
14	23B-54-31523	COVER, L.H.	1		B10001-
15	23B-54-31534	COVER, R.H.	1		B10001-
16	01010-81020	BOLT	8		B10001-
17	01643-31032	WASHER	8		B10001-
18	23B-54-31573	COVER, L.H.	1		B10001-
19	23B-54-31583	COVER, R.H.	1		B10001-
20	01010-81020	BOLT	8		B10001-
21	234-54-13252	WASHER	8		B10001-
22	23A-952-2140	BRACKET, L.H.	1		B10001-
23	23A-952-2150	BRACKET, R.H.	1		B10001-
24	01010-81020	BOLT	4		B10001-
25	01643-31032	WASHER	4		B10001-

PLATFORM MOUNTING

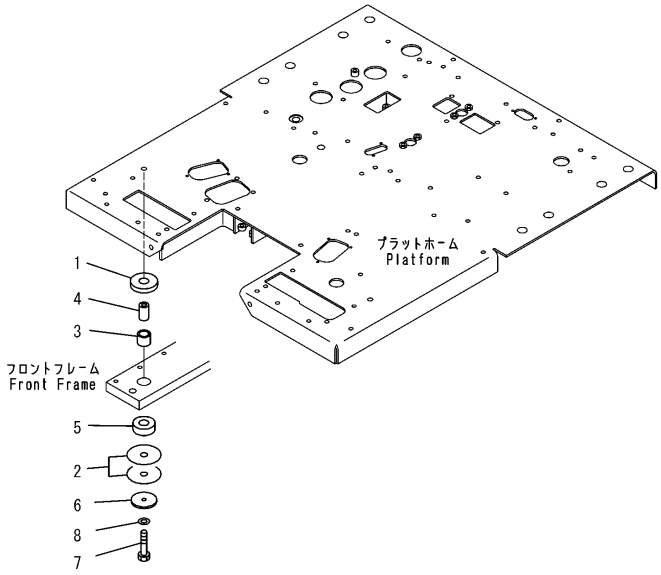

00009377

PLATFORM MOUNTING

Item	Part Number	Description	Qty.	Ref.	Serial No.
1	23B-54-32130	CUSHION	2		B10001-
2	237-01-11170	SHIM, 0.5MM	3		B10001-
	237-01-11180	SHIM, 0.2MM	3		B10001-
3	23B-54-32140	CUSHION	2		B10001-
4	23B-54-32151	SPACER	2		B10001-
5	23A-54-11180	CUSHION	2		B10001-
6	23B-54-32160	PLATE	2		B10001-
7	01010-81280	BOLT	2		B10001-
8	01643-31232	WASHER	2		B10001-

TRANSMISSION UNDER GUARD

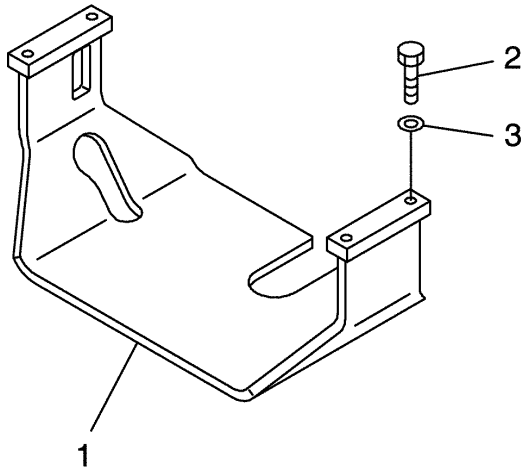

TRANSMISSION UNDER GUARD

Item	Part Number	Description	Qty.	Ref.	Serial No.
1	23B-915-3113	GUARD, UNDER	1		B10001-
2	01010-82470	BOLT	4		B10001-
3	01643-32460	WASHER	4		B10001-

TOOL BOX

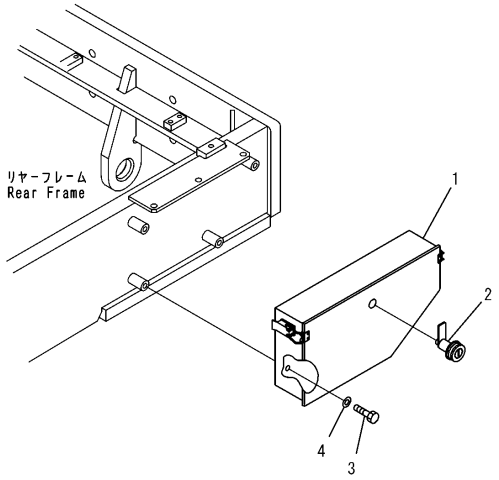

PW2A838

TOOL BOX

Item	Part Number	Description	Qty.	Ref.	Serial No.
1	23B-98-31121	BOX, TOOL	1		B10001-
2	205-60-71220	.LOCK ASSEMBLY	1		B10001-
3	01010-81020	BOLT	4		B10001-
4	01643-31032	WASHER	4		B10001-

LADDER AND SIDE STEP

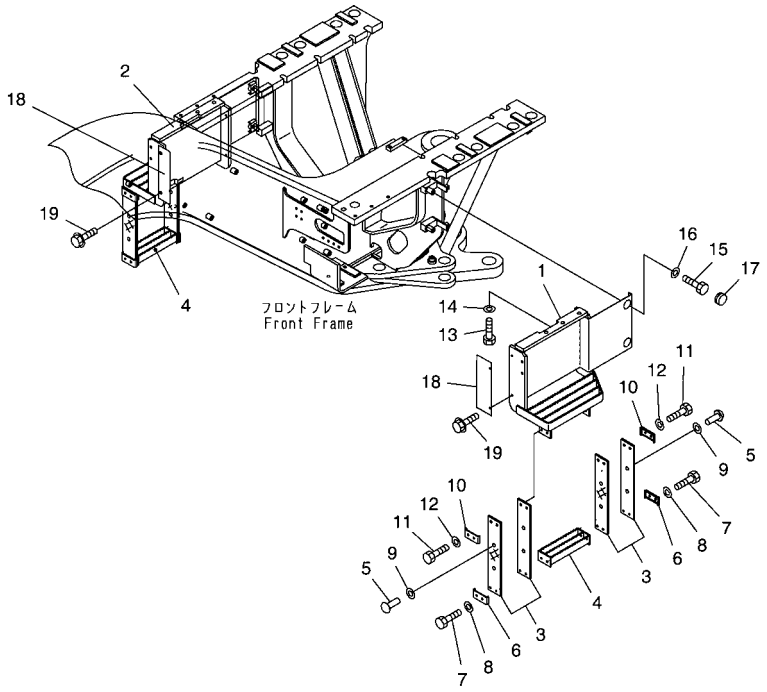

M4310-01A0

LADDER AND SIDE STEP

Item	Part Number	Description	Qty.	Ref.	Serial No.
1	23B-54-32215	STEP, L.H.	1		B10001-
2	23B-54-32225	STEP, R.H.	1		B10001-
	23B-54-32203	STEP ASSEMBLY	2		B10001-
3	23B-54-32241	RUBBER	16		B10001-
	23B-54-32203	STEP ASSEMBLY	2		B10001-
4	23B-54-32241	.RUBBER	8		B10001-
5	23B-54-32232	.STEP	2		B10001-
6	04400-00830	.RIVET	8		B10001-
7	235-54-32130	.CLAMP	4		B10001-
8	01010-81040	.BOLT	8		B10001-
9	01643-31032	.WASHER	8		B10001-
10	01640-20816	.WASHER	16		B10001-
11	235-54-32130	CLAMP	4		B10001-
12	01010-81040	BOLT	8		B10001-
13	01643-31032	WASHER	8		B10001-
14	01010-81235	BOLT	6		B10001-
15	01643-31232	WASHER	6		B10001-
16	01010-81025	BOLT	4		B10001-
17	01643-31032	WASHER	4		B10001-
18	09415-02512	CAP	4		B10001-
19	23B-54-32261	COVER	2		B10001-
20	01435-01014	BOLT	4		B10001-

FRONT WEIGHT

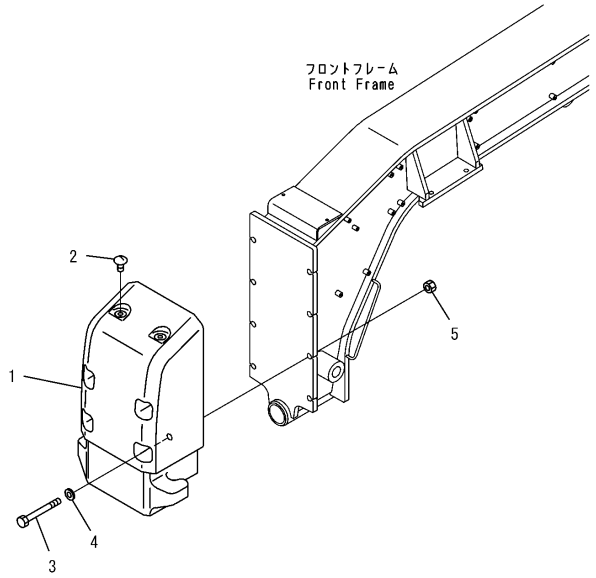

PW2B096

FRONT WEIGHT

Item	Part Number	Description	Qty.	Ref.	Serial No.
1	23A-846-3240	WEIGHT	1		B10001-
2	23D-846-3190	PLUG	2		B10001-
3	419-09-11130	BOLT	4		B10001-
4	22X-22-11280	WASHER	4		B10001-
5	01580-02419	NUT	4		B10001-

PUSHER WEIGHT

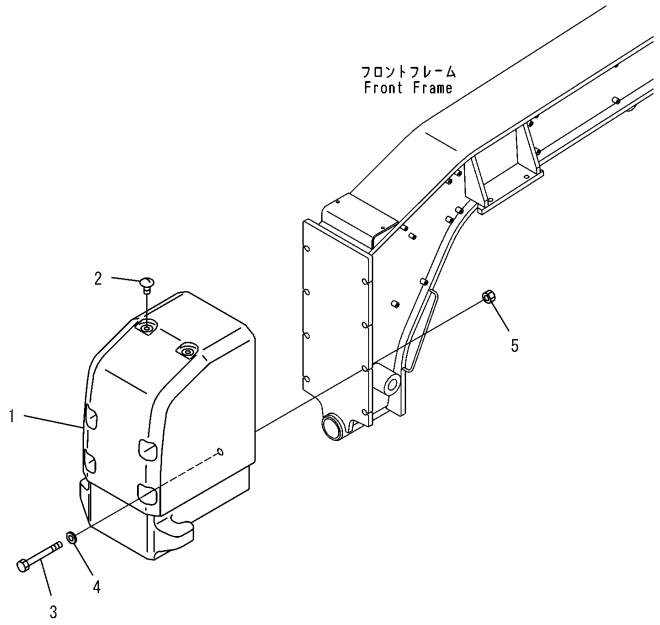

PW2B097

PUSHER WEIGHT

Item	Part Number	Description	Qty.	Ref.	Serial No.
1	23A-846-3250	PUSHER	1		B10001-
2	23D-846-3190	PLUG	2		B10001-
3	419-09-11130	BOLT	4		B10001-
4	22X-22-11280	WASHER	4		B10001-
5	01580-02419	NUT	4		B10001-

REAR WEIGHT

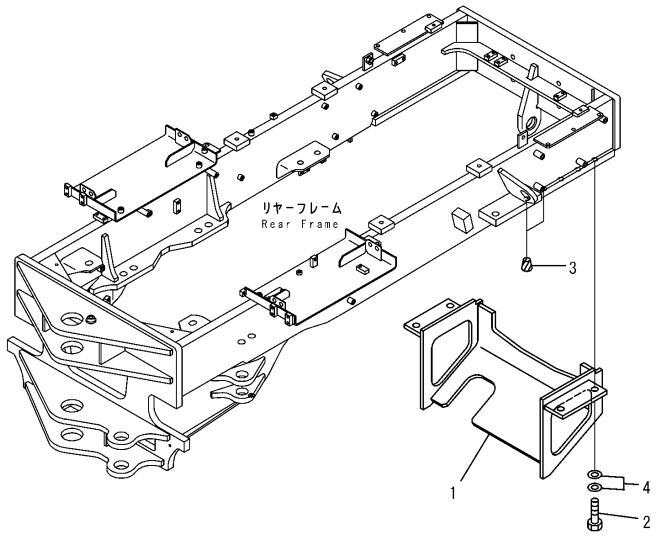

PW2B098

REAR WEIGHT

Item	Part Number	Description	Qty.	Ref.	Serial No.
1	23A-846-3260	COVER	1		B10001-
2	01010-82455	BOLT	4		B10001-
3	07049-02430	PLUG	4		B10001-
4	01643-32460	WASHER	8		B10001-

CIRCLE MOTOR AND PIPING

HYDRAULIC PIPING (CIRCLE REVOLUTION MOTOR LINE)

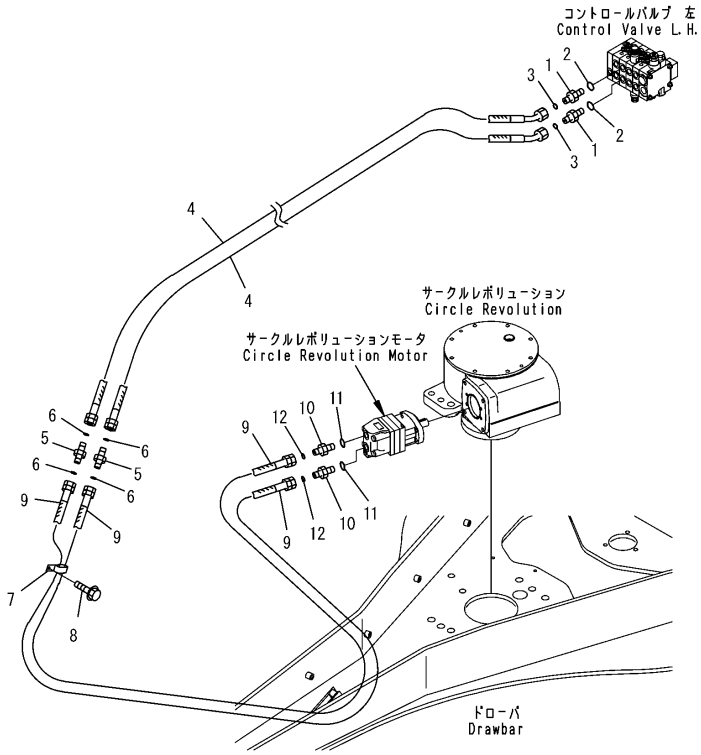

PW2C648

HYDRAULIC PIPING (CIRCLE REVOLUTION MOTOR LINE)

Item	Part Number	Description	Qty.	Ref.	Serial No.
1	02781-00420	UNION	2		B10001-
2	07002-11823	O-RING	2		B10001-
3	02896-11012	O-RING	2		B10001-
4	02755-00442	HOSE	2		B10001-
5	8255-62-4250	NIPPLE	2		B10001-
6	02896-11012	O-RING	4		B10001-
7	04435-52110	CLIP	1		B10001-
8	01435-01016	BOLT	1		B10001-
9	02765-B0419	HOSE	2		B10001-
10	23B-60-41260	UNION	2		B10001-
11	418-62-11620	O-RING	2		B10001-
12	02896-11012	O-RING	2		B10001-

RIM AND TIRE

RIM AND TIRE (14.00-24-12PR) (TOPY)

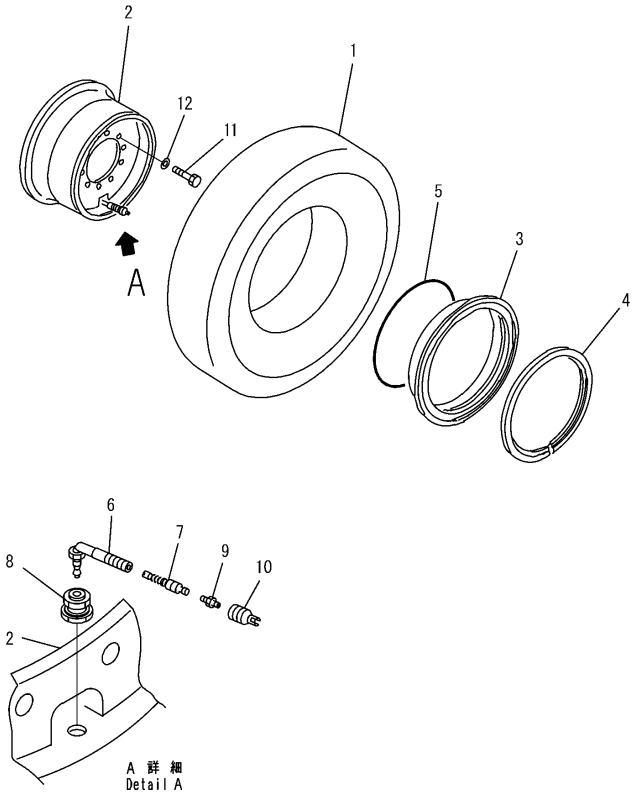

RIM AND TIRE (14.00-24-12PR) (TOPY)

Item	Part Number	Description	Qty.	Ref.	Serial No.
		BRIDGESTONE	0		B10001-
	23B-30-31400	WHEEL ASSEMBLY, FRONT, R.H.	1		B10001-
1	23B-30-31420	.TIRE	1		B10001-
	23A-30-11601	.WHEEL ASSEMBLY, (TOPY)	1		B10001-
2	23A-30-11611	..RIM, WHEEL	1		B10001-
3	234-30-22120	..RING, SIDE	1		B10001-
4	234-30-22130	..RING, LOCK	1		B10001-
5	232-30-54340	.O-RING	1		B10001-
	09280-10040	.VALVE, TIRE	1		B10001-
6	09280-10130	..STEM	1		B10001-
7	09281-00041	..CORE	1		B10001-
8	09283-00000	..SEAT	1		B10001-
9	09285-00000	..ADAPTER	1		B10001-
10	09282-00017	..CAP	1		B10001-
	23B-30-31500	WHEEL ASSEMBLY, FRONT, L.H.	1		B10001-
1	23B-30-31420	.TIRE	1		B10001-
	23A-30-11601	.WHEEL ASSEMBLY, (TOPY)	1		B10001-
2	23A-30-11611	..RIM, WHEEL	1		B10001-
3	234-30-22120	..RING, SIDE	1		B10001-
4	234-30-22130	..RING, LOCK	1		B10001-
5	232-30-54340	.O-RING	1		B10001-
	09280-10040	.VALVE, TIRE	1		B10001-
6	09280-10130	..STEM	1		B10001-
7	09281-00041	..CORE	1		B10001-
8	09283-00000	..SEAT	1		B10001-
9	09285-00000	..ADAPTER	1		B10001-
10	09282-00017	..CAP	1		B10001-
	23B-30-31400	WHEEL ASSEMBLY, REAR, R.H.	2		B10001-
1	23B-30-31420	.TIRE	1		B10001-
	23A-30-11601	.WHEEL ASSEMBLY, (TOPY)	1		B10001-
2	23A-30-11611	..RIM, WHEEL	1		B10001-
3	234-30-22120	..RING, SIDE	1		B10001-
4	234-30-22130	..RING, LOCK	1		B10001-
5	232-30-54340	.O-RING	1		B10001-
	09280-10040	.VALVE, TIRE	1		B10001-
6	09280-10130	..STEM	1		B10001-

RIM AND TIRE (14.00-24-12PR) (TOPY)

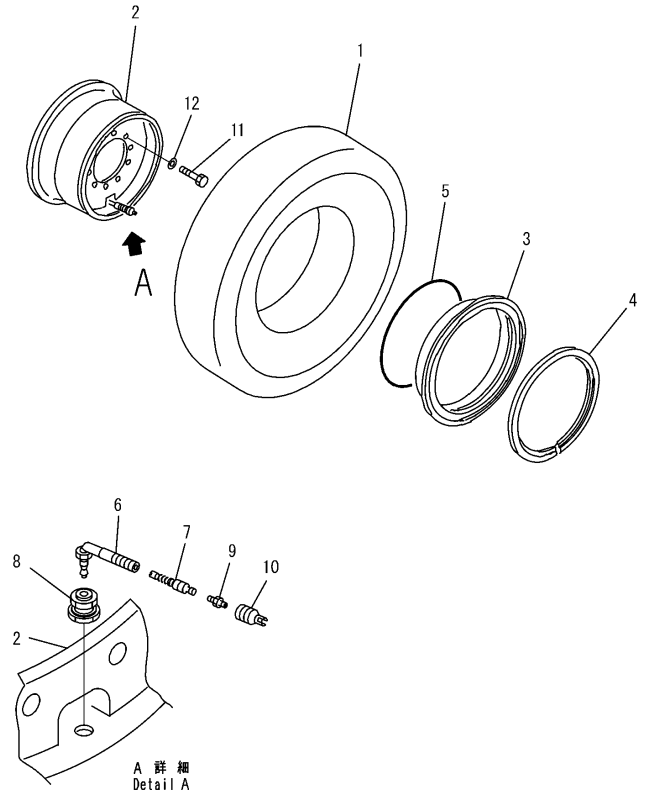

00004856

RIM AND TIRE (14.00-24-12PR) (TOPY)

Item	Part Number	Description	Qty.	Ref.	Serial No.
7	09281-00041	..CORE	1		B10001-
8	09283-00000	..SEAT	1		B10001-
9	09285-00000	..ADAPTER	1		B10001-
10	09282-00017	..CAP	1		B10001-
	23B-30-31500	WHEEL ASSEMBLY, REAR, L.H.	2		B10001-
1	23B-30-31420	.TIRE	1		B10001-
	23A-30-11601	.WHEEL ASSEMBLY, (TOPY)	1		B10001-
2	23A-30-11611	..RIM, WHEEL	1		B10001-
3	234-30-22120	..RING, SIDE	1		B10001-
4	234-30-22130	..RING, LOCK	1		B10001-
5	232-30-54340	.O-RING	1		B10001-
	09280-10040	.VALVE, TIRE	1		B10001-
6	09280-10130	..STEM	1		B10001-
7	09281-00041	..CORE	1		B10001-
8	09283-00000	..SEAT	1		B10001-
9	09285-00000	..ADAPTER	1		B10001-
10	09282-00017	..CAP	1		B10001-
11	01010-62250	BOLT	60		B10001-
12	01643-32260	WASHER	60		B10001-

RIM AND TIRE (17.5-R25)

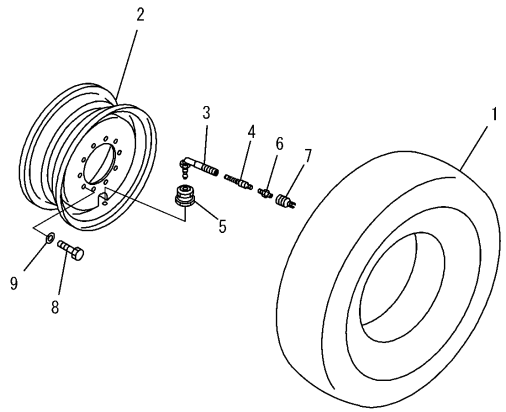

00004857

RIM AND TIRE (17.5-R25)

Item	Part Number	Description	Qty.	Ref.	Serial No.
		MICHELIN	0		B10001-
	23B-30-32100	WHEEL ASSEMBLY	2		B10001-
1	23B-30-32120	.TIRE	1		B10001-
2	23B-30-32110	.RIM, (TOPY)	1		B10001-
	09280-10040	.VALVE	1		B10001-
3	09280-10130	..STEM	1		B10001-
4	09281-00041	..CORE	1		B10001-
5	09283-00000	..SEAT	1		B10001-
6	09285-00000	..ADAPTER	1		B10001-
7	09282-00017	..CAP	1		B10001-
	23B-30-32100	WHEEL ASSEMBLY	4		B10001-
1	23B-30-32120	.TIRE	1		B10001-
2	23B-30-32110	.RIM, (TOPY)	1		B10001-
	09280-10040	.VALVE	1		B10001-
3	09280-10130	..STEM	1		B10001-
4	09281-00041	..CORE	1		B10001-
5	09283-00000	..SEAT	1		B10001-
6	09285-00000	..ADAPTER	1		B10001-
7	09282-00017	..CAP	1		B10001-
8	01010-62250	BOLT	60		B10001-
9	01643-32260	WASHER	60		B10001-

SPARE TIRE (14.00-24-12PR)

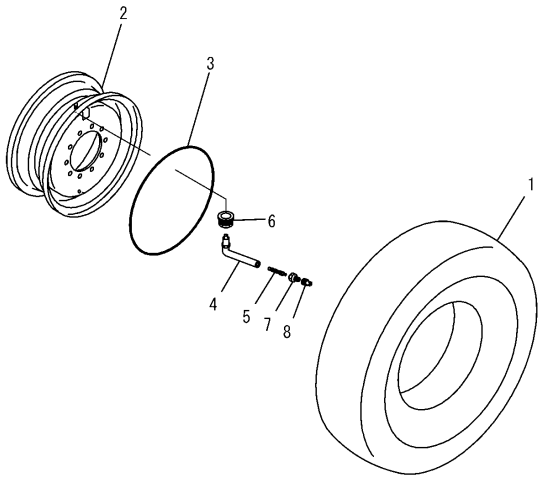

PW2C649

SPARE TIRE (14.00-24-12PR)

Item	Part Number	Description	Qty.	Ref.	Serial No.
		BRIDGESTONE, SPARE 14.00			B10001-
	23B-30-31400	WHEEL ASSEMBLY	1		B10001-
1	23B-30-31420	.TIRE	1		B10001-
2	23A-30-11601	.WHEEL ASSEMBLY	1		B10001-
3	232-30-54340	.O-RING	1		B10001-
	09280-10040	.VALVE, TIRE	1		B10001-
4	09280-10130	..STEM, VALVE	1		B10001-
5	09281-00041	..CORE	1		B10001-
6	09283-00000	..SEAT	1		B10001-
7	09285-00000	..ADAPTER	1		B10001-
8	09282-00017	..CAP	1		B10001-

SPARE TIRE (17.50-R25))

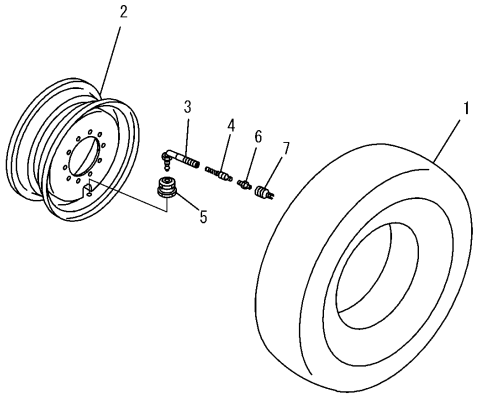

00015075

SPARE TIRE (17.50-R25))

Item	Part Number	Description	Qty.	Ref.	Serial No.
		MICHELIN	0		B10001-
	23B-30-32100	WHEEL ASSEMBLY	1		B10001-
1	23B-30-32120	.TIRE	1		B10001-
2	23B-30-32110	.RIM, (TOPY)	1		B10001-
	09280-10040	.VALVE.	1		B10001-
3	09280-10130	..STEM.	1		B10001-
4	09281-00041	..CORE	1		B10001-
5	09283-00000	..SEAT	1		B10001-
6	09285-00000	..ADAPTER	1		B10001-
7	09282-00017	..CAP	1		B10001-

WORK EQUIPMENT

DRAWBAR AND CIRCLE SUPPORT

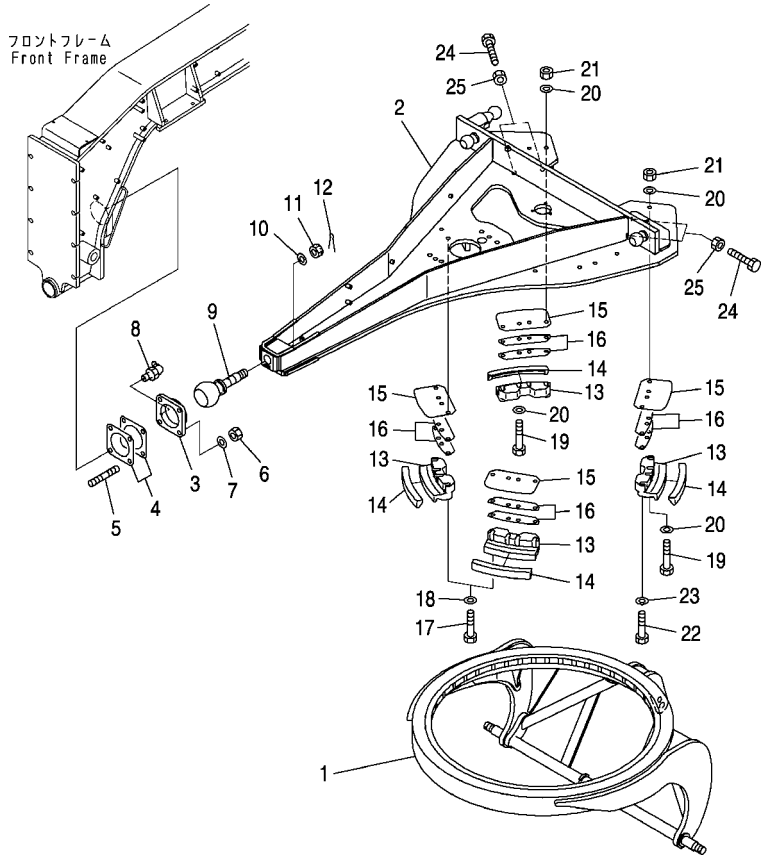

DRAWBAR AND CIRCLE SUPPORT

Item	Part Number	Description	Qty.	Ref.	Serial No.
1	23A-735-3112	SUPPORT	1		B10001-
2	23A-70-31514	DRAWBAR	1		B10001-
3	23B-70-31523	HOLDER	1		B10001-
4	23B-70-31540	SHIM, 0.29MM	16		B10001-
5	01124-52460	STUD	4		B10001-
6	01580-12419	NUT	4		B10001-
7	01643-32460	WASHER	4		B10001-
8	07020-00675	FITTING, GREASE	1		B10001-
9	23B-70-31140	STUD, BALL	1		B10001-
10	238-70-11180	WASHER	1		B10001-
11	01590-14548	NUT	1		B10001-
12	04050-18080	PIN, COTTER	1		B10001-
13	23B-70-51550	GUIDE	4		B10001-
14	23B-70-51560	GUIDE	4		B10001-
15	23B-70-31630	PLATE, 6.0MM	4		B10001-
16	23B-70-31610	SHIM, 1.0MM	20		B10001-
	23B-70-31620	SHIM, 0.5MM	20		B10001-
17	01011-82050	BOLT	2		B10001-
18	01643-32060	WASHER	2		B10001-
19	01011-82050	BOLT	8		B10001-
20	01643-32060	WASHER	16		B10001-
21	01580-12016	NUT	8		B10001-
22	01011-82035	BOLT	2		B10001-
23	01643-32060	WASHER	2		B10001-
24	01016-52470	BOLT	8		B10001-
25	01580-12419	NUT	8		B10001-

BLADE LIFTER

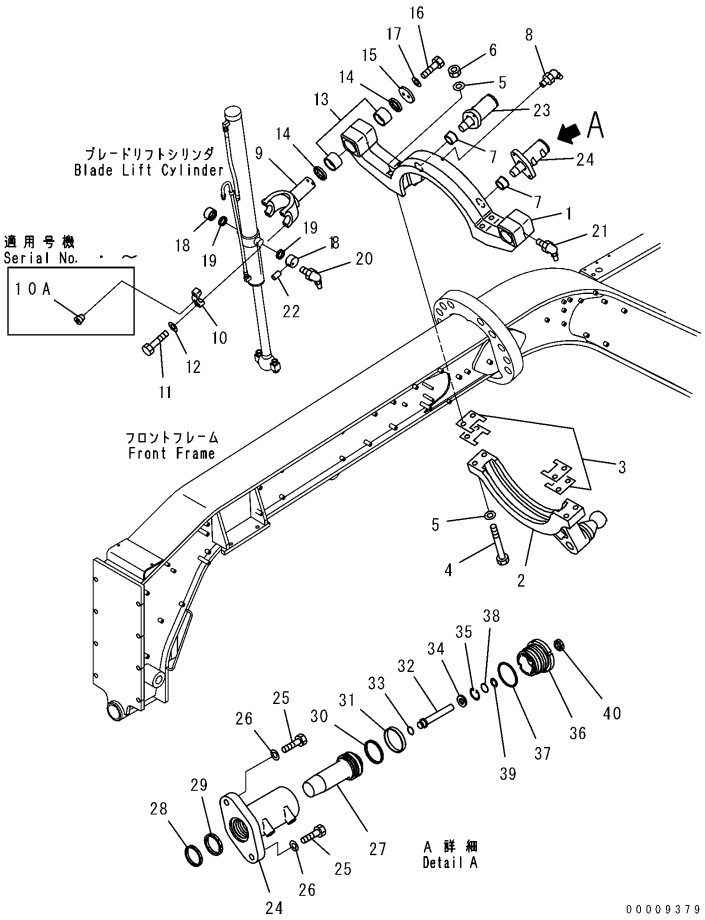

BLADE LIFTER

Item	Part Number	Description	Qty.	Ref.	Serial No.
1	23B-70-31350	BRACKET	1		B10001-
2	23B-70-31360	BRACKET	1		B10001-
3	23B-70-31790	SHIM, 1.0MM	8		B10001-
4	561-88-68950	BOLT	4		B10001-
5	01643-32460	WASHER	8		B10001-
6	01580-12419	NUT	4		B10001-
7	23A-70-14210	BUSHING	2		B10001-
8	07020-00675	FITTING, GREASE	3		B10001-
9	232-70-53133	YOKE	2		B10001-
10	232-70-53271	CAP	4		B10001-
10A	07043-70108	PLUG	4		B10001-
11	01010-81255	BOLT	8		B10001-
12	01643-31232	WASHER	8		B10001-
13	19N-72-11220	BUSHING	4		B10001-
14	07145-00075	SEAL	4		B10001-
15	232-70-53160	HOLDER	2		B10001-
16	01010-81635	BOLT	4		B10001-
17	01643-31645	WASHER	4		B10001-
18	232-70-53141	BUSHING	4		B10001-
19	07145-00045	SEAL	4		B10001-
20	07020-00675	FITTING, GREASE	4		B10001-
21	07020-00900	FITTING, GREASE	2		B10001-
22	144-70-15251	PIN, DOWEL	4		B10001-
23	23B-43-35110	CASE, R.H.	1		B10001-
24	23B-43-35270	CASE, L.H.	1		B10001-
25	01010-81455	BOLT	4		B10001-
26	01643-31645	WASHER	4		B10001-
27	23B-43-35150	ROD	2		B10001-
28	23B-43-35180	SEAL	2		B10001-
29	23B-43-35190	PACKING	2		B10001-
30	07161-00070	RING	2		B10001-
31	07156-00710	RING, WEAR	2		B10001-
32	23B-43-35160	SHAFT	2		B10001-
33	07000-12014	O-RING	2		B10001-
34	01643-31645	WASHER	2		B10001-
35	04065-03212	RING, SNAP	2		B10001-

BLADE LIFTER

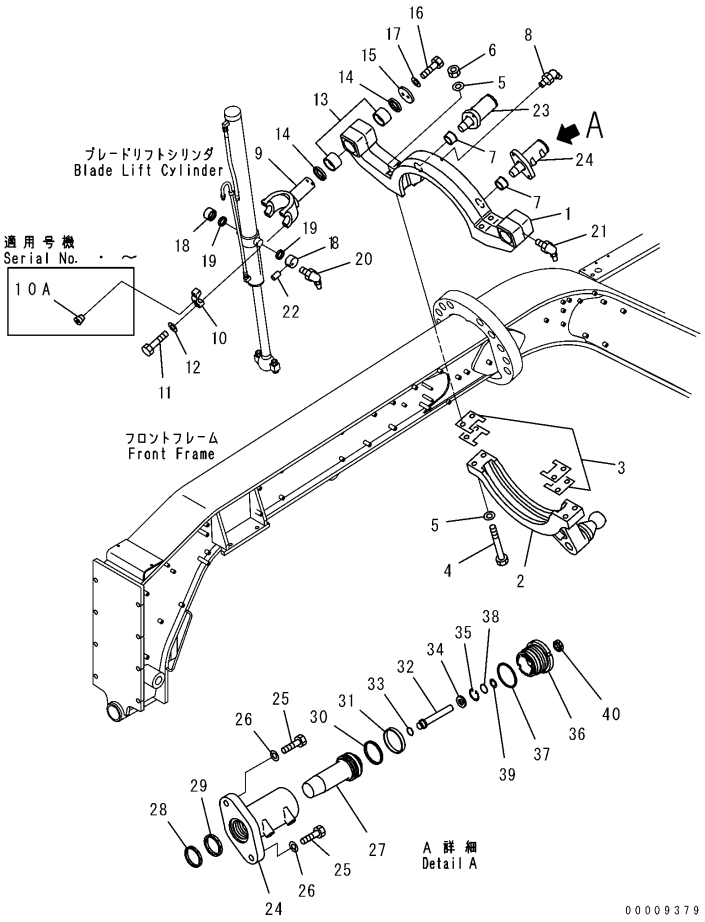

BLADE LIFTER

Item	Part Number	Description	Qty.	Ref.	Serial No.
36	23B-43-35170	COVER	2		B10001-
37	07000-12065	O-RING	2		B10001-
38	07000-12016	O-RING	2		B10001-
39	07001-02016	RING, BACK-UP	2		B10001-
40	234-43-39250	SEAL	2		B10001-

BLADE (3.7M)

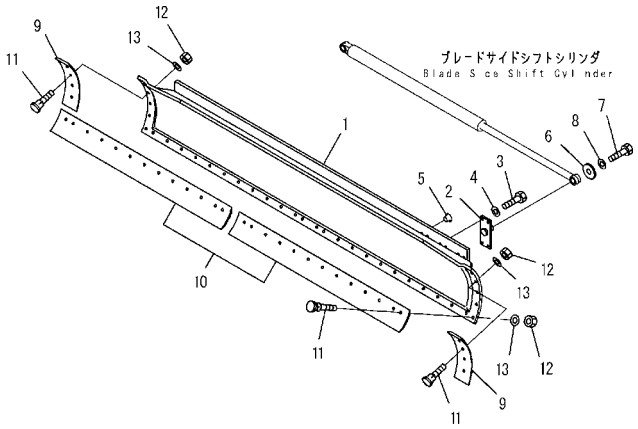

BLADE (3.7M)

Item	Part Number	Description	Qty.	Ref.	Serial No.
1	23B-70-31161	BLADE	1		B10001-
	23B-70-31220	.RAIL (WELDED)	1		B10001-
	23B-70-31230	.RAIL (WELDED)	1		B10001-
2	23B-70-31260	BRACKET	1		B10001-
3	01010-81640	BOLT	4		B10001-
4	01643-31645	WASHER	4		B10001-
5	07048-01510	PLUG	8		B10001-
6	23A-70-12150	WASHER	1		B10001-
7	01010-81225	BOLT	1		B10001-
8	01643-31232	WASHER	1		B10001-
9	23B-70-31660	EDGE, SIDE	2		B10001-
10	23B-70-31310	EDGE	2		B10001-
11	232-70-12550	BOLT	34		B10001-
12	232-70-12480	NUT	34		B10001-
13	01643-31645	WASHER	34		B10001-

BLADE (3.7M) (WITH END BIT)

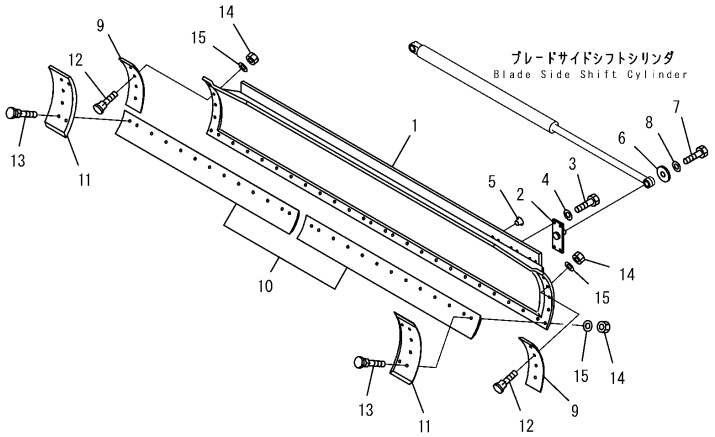

T5120-01A1

BLADE (3.7M) (WITH END BIT)

Item	Part Number	Description	Qty.	Ref.	Serial No.
1	23B-70-31161	BLADE	1		B10001-
	23B-70-31220	.RAIL (WELDED)	1		B10001-
	23B-70-31230	.RAIL (WELDED)	1		B10001-
2	23B-70-31260	BRACKET	1		B10001-
3	01010-81640	BOLT	4		B10001-
4	01643-31645	WASHER	4		B10001-
5	07048-01510	PLUG	8		B10001-
6	23A-70-12150	WASHER	1		B10001-
7	01010-81225	BOLT	1		B10001-
8	01643-31232	WASHER	1		B10001-
9	23B-70-31660	EDGE, SIDE	2		B10001-
10	23B-70-31310	EDGE	2		B10001-
11	23B-70-31340	BIT, END	2		B10001-
12	232-70-12550	BOLT	24		B10001-
13	232-70-12560	BOLT	10		B10001-
14	232-70-12480	NUT	34		B10001-
15	01643-31645	WASHER	34		B10001-

BLADE (3.7M) (LARGE SIZE EDGE)

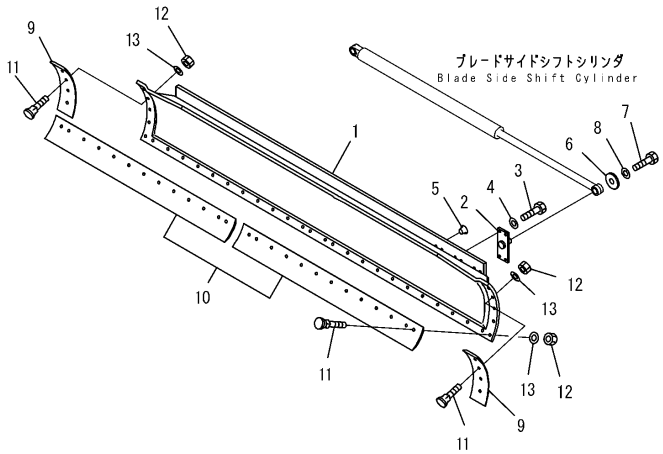

BLADE (3.7M) (LARGE SIZE EDGE)

Item	Part Number	Description	Qty.	Ref.	Serial No.
1	23B-70-31161	BLADE	1		B10001-
	23B-70-31220	.RAIL (WELDED)	1		B10001-
	23B-70-31230	.RAIL (WELDED)	1		B10001-
2	23B-70-31260	BRACKET	1		B10001-
3	01010-81640	BOLT	4		B10001-
4	01643-31645	WASHER	4		B10001-
5	07048-01510	PLUG	8		B10001-
6	23A-70-12150	WASHER	1		B10001-
7	01010-81225	BOLT	1		B10001-
8	01643-31232	WASHER	1		B10001-
9	23B-70-31660	EDGE, SIDE	2		B10001-
10	23B-70-31470	EDGE	2		B10001-
11	232-70-12550	BOLT	34		B10001-
12	232-70-12480	NUT	34		B10001-
13	01643-31645	WASHER	34		B10001-

BLADE (3.7M) (LARGE SIZE EDGE) (WITH END BIT)

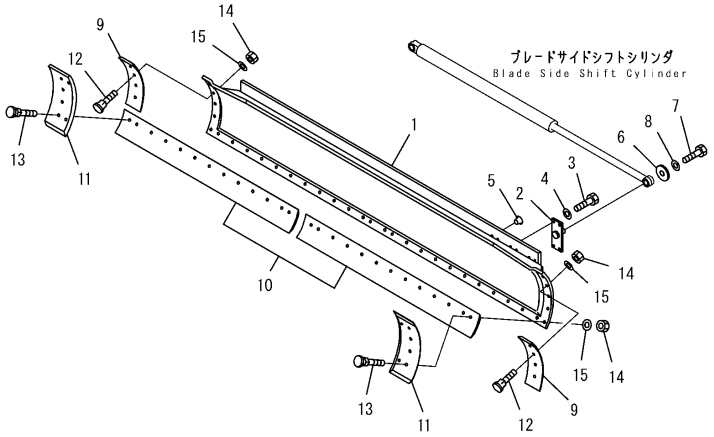

PW2A929

BLADE (3.7M) (LARGE SIZE EDGE) (WITH END BIT)

Item	Part Number	Description	Qty.	Ref.	Serial No.
1	23B-70-31161	BLADE	1		B10001-
	23B-70-31220	.RAIL (WELDED)	1		B10001-
	23B-70-31230	.RAIL (WELDED)	1		B10001-
2	23B-70-31260	BRACKET	1		B10001-
3	01010-81640	BOLT	4		B10001-
4	01643-31645	WASHER	4		B10001-
5	07048-01510	PLUG	8		B10001-
6	23A-70-12150	WASHER	1		B10001-
7	01010-81225	BOLT	1		B10001-
8	01643-31232	WASHER	1		B10001-
9	23B-70-31660	EDGE, SIDE	2		B10001-
10	23B-70-31470	EDGE	2		B10001-
11	23B-70-31490	BIT, END	2		B10001-
12	232-70-12550	BOLT	24		B10001-
13	232-70-12560	BOLT	10		B10001-
14	232-70-12480	NUT	34		B10001-
15	01643-31645	WASHER	34		B10001-

BLADE (4.3M)

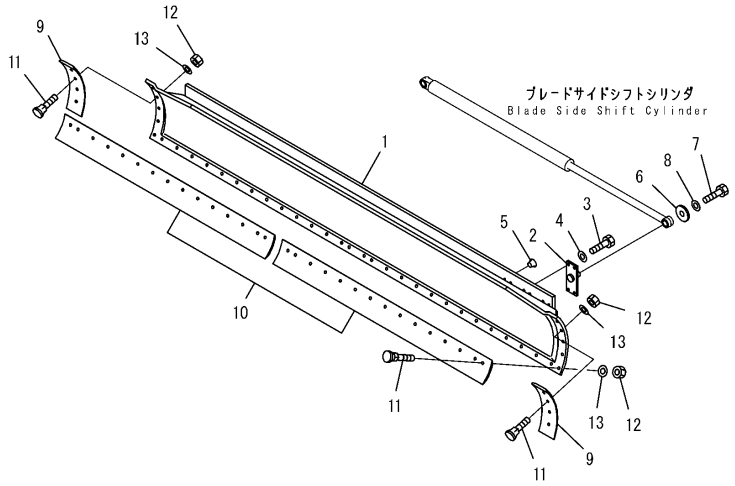

PW2A930

BLADE (4.3M)

Item	Part Number	Description	Qty.	Ref.	Serial No.
1	23B-70-31170	BLADE	1		B10001-
	23B-70-31G80	.RAIL (WELDED)	1		B10001-
	23B-70-31G90	.RAIL (WELDED)	1		B10001-
2	23B-70-31260	BRACKET	1		B10001-
3	01010-81640	BOLT	4		B10001-
4	01643-31645	WASHER	4		B10001-
5	07048-01510	PLUG	8		B10001-
6	23A-70-12150	WASHER	1		B10001-
7	01010-81225	BOLT	1		B10001-
8	01643-31232	WASHER	1		B10001-
9	23B-70-31660	EDGE, SIDE	2		B10001-
10	23B-70-31460	EDGE	2		B10001-
11	232-70-12550	BOLT	38		B10001-
12	232-70-12480	NUT	38		B10001-
13	01643-31645	WASHER	38		B10001-

BLADE (4.3M) (WITH END BIT)

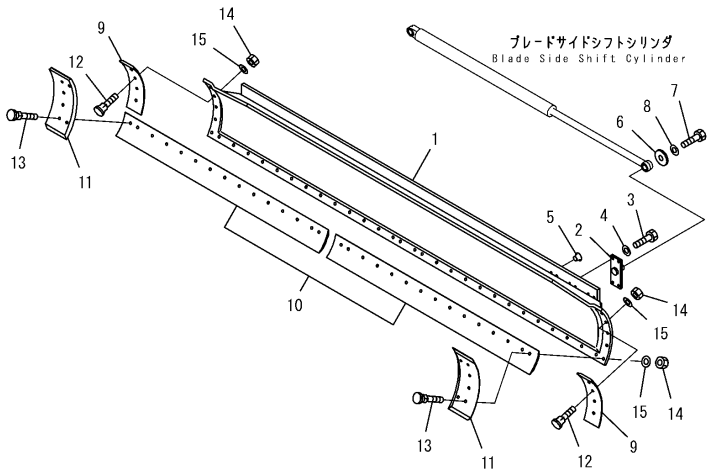

BLADE (4.3M) (WITH END BIT)

Item	Part Number	Description	Qty.	Ref.	Serial No.
1	23B-70-31170	BLADE	1		B10001-
	23B-70-31220	.RAIL (WELDED)	1		B10001-
	23B-70-31230	.RAIL (WELDED)	1		B10001-
2	23B-70-31260	BRACKET	1		B10001-
3	01010-81640	BOLT	4		B10001-
4	01643-31645	WASHER	4		B10001-
5	07048-01510	PLUG	8		B10001-
6	23A-70-12150	WASHER	1		B10001-
7	01010-81225	BOLT	1		B10001-
8	01643-31232	WASHER	1		B10001-
9	23B-70-31660	EDGE, SIDE	2		B10001-
10	23B-70-31460	EDGE	2		B10001-
11	23B-70-31340	BIT, END	2		B10001-
12	232-70-12550	BOLT	28		B10001-
13	232-70-12560	BOLT	10		B10001-
14	232-70-12480	NUT	38		B10001-
15	01643-31645	WASHER	38		B10001-

BLADE (4.3M) (LARGE SIZE EDGE)

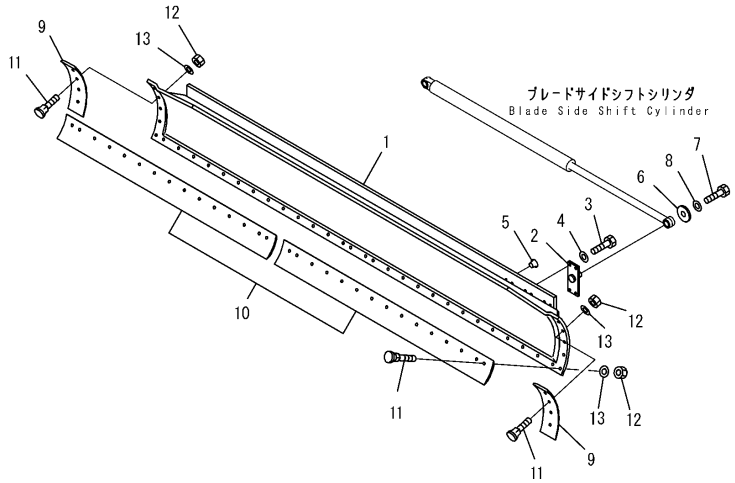

PW2A930

BLADE (4.3M) (LARGE SIZE EDGE)

Item	Part Number	Description	Qty.	Ref.	Serial No.
1	23B-70-31170	BLADE	1		B10001-
	23B-70-31220	.RAIL (WELDED)	1		B10001-
	23B-70-31230	.RAIL (WELDED)	1		B10001-
2	23B-70-31260	BRACKET	1		B10001-
3	01010-81640	BOLT	4		B10001-
4	01643-31645	WASHER	4		B10001-
5	07048-01510	PLUG	8		B10001-
6	23A-70-12150	WASHER	1		B10001-
7	01010-81225	BOLT	1		B10001-
8	01643-31232	WASHER	1		B10001-
9	23B-70-31660	EDGE, SIDE	2		B10001-
10	23B-70-31480	EDGE	2		B10001-
11	232-70-12550	BOLT	38		B10001-
12	232-70-12480	NUT	38		B10001-
13	01643-31645	WASHER	38		B10001-

BLADE (4.3M) (LARGE SIZE EDGE) (WITH END BIT)

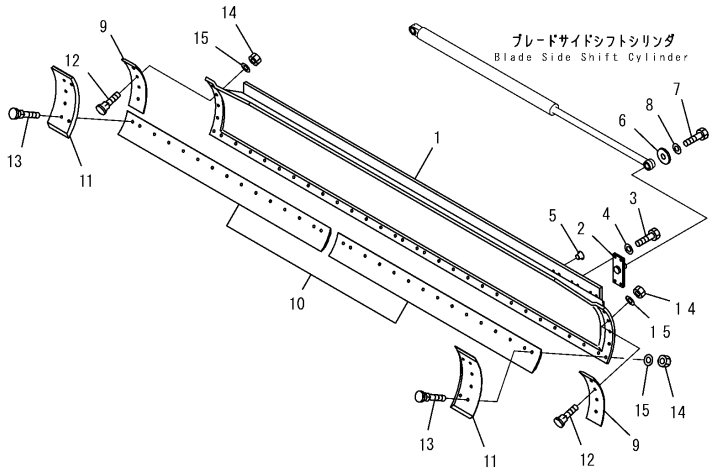

PW2A931

BLADE (4.3M) (LARGE SIZE EDGE) (WITH END BIT)

Item	Part Number	Description	Qty.	Ref.	Serial No.
1	23B-70-31170	BLADE	1		B10001-
	23B-70-31220	.RAIL (WELDED)	1		B10001-
	23B-70-31230	.RAIL (WELDED)	1		B10001-
2	23B-70-31260	BRACKET	1		B10001-
3	01010-81640	BOLT	4		B10001-
4	01643-31645	WASHER	4		B10001-
5	07048-01510	PLUG	8		B10001-
6	23A-70-12150	WASHER	1		B10001-
7	01010-81225	BOLT	1		B10001-
8	01643-31232	WASHER	1		B10001-
9	23B-70-31660	EDGE, SIDE	2		B10001-
10	23B-70-31480	EDGE	2		B10001-
11	23B-70-31490	BIT, END	2		B10001-
12	232-70-12550	BOLT	28		B10001-
13	232-70-12560	BOLT	10		B10001-
14	232-70-12480	NUT	38		B10001-
15	01643-31645	WASHER	38		B10001-

CIRCLE SUPPORT MOUNTING PARTS

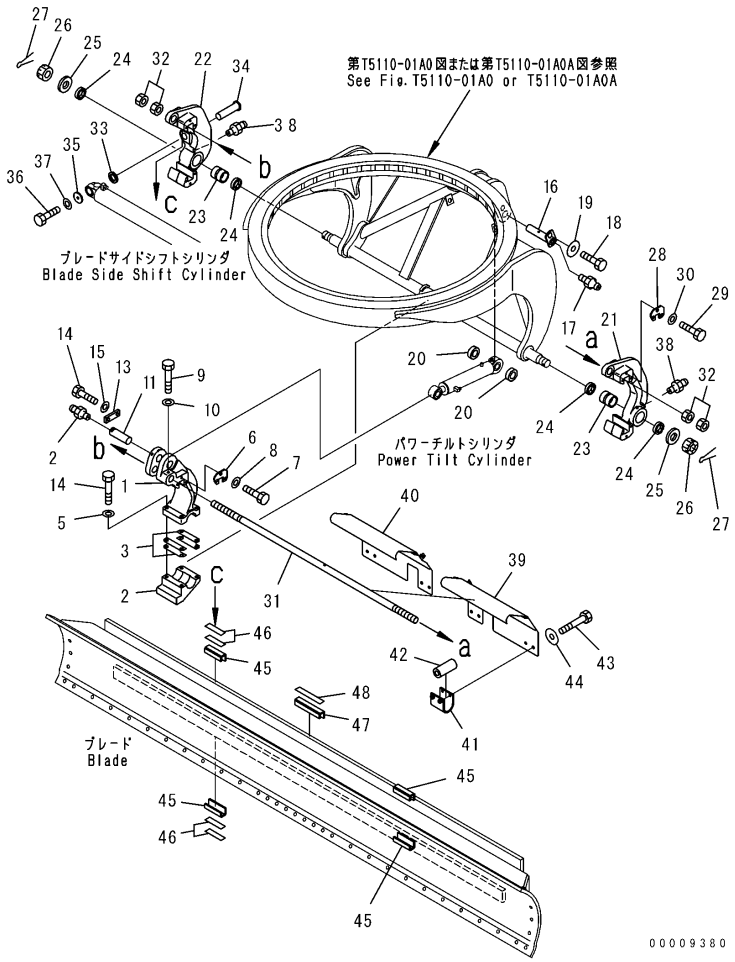

CIRCLE SUPPORT MOUNTING PARTS

Item	Part Number	Description	Qty.	Ref.	Serial No.
1	23B-735-3151	BRACKET	1		B10001-
2	23B-735-5160	BRACKET	1		B10001-
3	23B-735-3250	SHIM, 0.5MM	10		B10001-
4	01010-81670	BOLT	4		B10001-
5	01643-31645	WASHER	4		B10001-
6	23B-70-31640	PLATE	2		B10001-
7	01010-81025	BOLT	6		B10001-
8	01643-31032	WASHER	6		B10001-
9	01010-81270	BOLT	1		B10001-
10	01643-31232	WASHER	1		B10001-
11	238-735-1280	PIN	1		B10001-
12	07020-00000	FITTING, GREASE	1		B10001-
13	04082-00212	LOCK	1		B10001-
14	01010-81225	BOLT	2		B10001-
15	01643-31232	WASHER	2		B10001-
16	23B-735-3360	PIN	1		B10001-
17	07020-00000	FITTING, GREASE	1		B10001-
18	01010-81225	BOLT	1		B10001-
19	175-54-34170	WASHER	1		B10001-
20	23B-735-1240	COLLAR	2		B10001-
21	23B-735-5132	ADJUSTER, L.H.	1		B10001-
22	23B-735-5142	ADJUSTER, R.H.	1		B10001-
23	23B-70-31730	BUSHING	2		B10001-
24	416-09-11130	SEAL, DUST	4		B10001-
25	232-70-52380	WASHER	2		B10001-
26	01590-14548	NUT	2		B10001-
27	04050-18080	PIN, COTTER	2		B10001-
28	23B-70-31640	PLATE	8		B10001-
29	01010-81025	BOLT	24		B10001-
30	01643-31032	WASHER	24		B10001-
31	23B-735-3240	ROD	1		B10001-
32	01580-13629	NUT	4		B10001-
33	23A-70-13180	COLLAR	1		B10001-
34	23A-70-13190	SHAFT	1		B10001-
35	23A-70-12150	WASHER	1		B10001-
36	01010-81225	BOLT	1		B10001-

CIRCLE SUPPORT MOUNTING PARTS

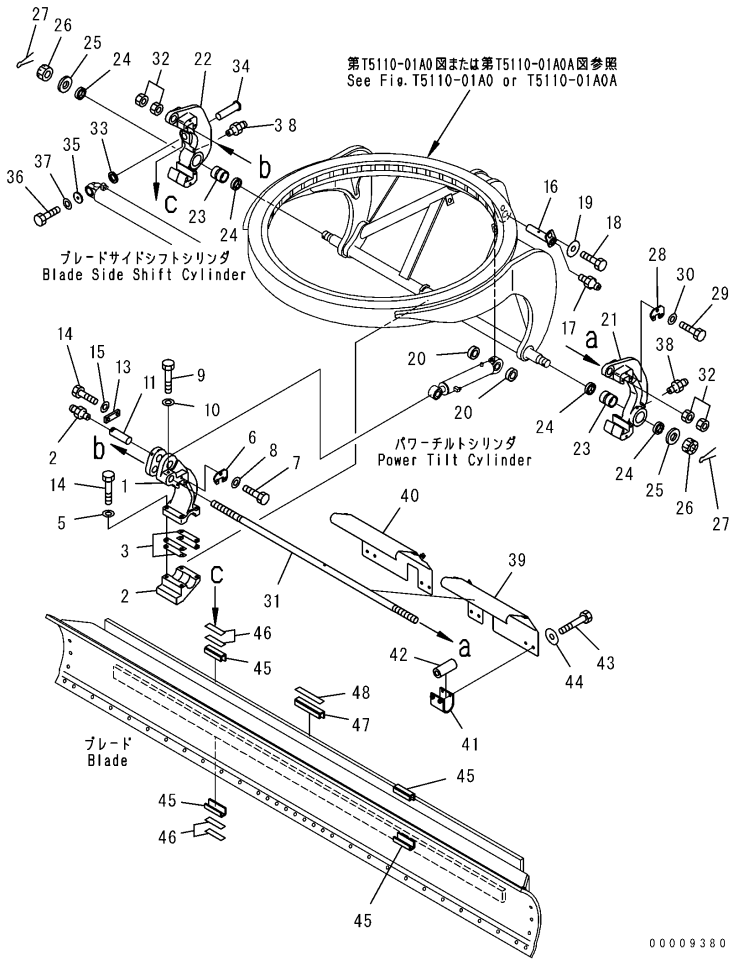

CIRCLE SUPPORT MOUNTING PARTS

Item	Part Number	Description	Qty.	Ref.	Serial No.
37	01643-31232	WASHER	1		B10001-
38	07020-00000	FITTING, GREASE	2		B10001-
39	23B-735-3283	COVER	1		B10001-
40	23B-735-3293	COVER	1		B10001-
41	23B-735-3210	BRACKET	4		B10001-
42	23B-735-3221	SPACER	8		B10001-
43	01011-81210	BOLT	8		B10001-
44	175-54-34170	WASHER	8		B10001-
45	23B-70-31331	GUIDE	4		B10001-
46	23B-70-31451	SHIM, 1.0MM	12		B10001-
47	23B-735-3320	GUIDE	1		B10001-
48	23B-735-3350	SHIM, 1.0MM	2		B10001-

RIPPER

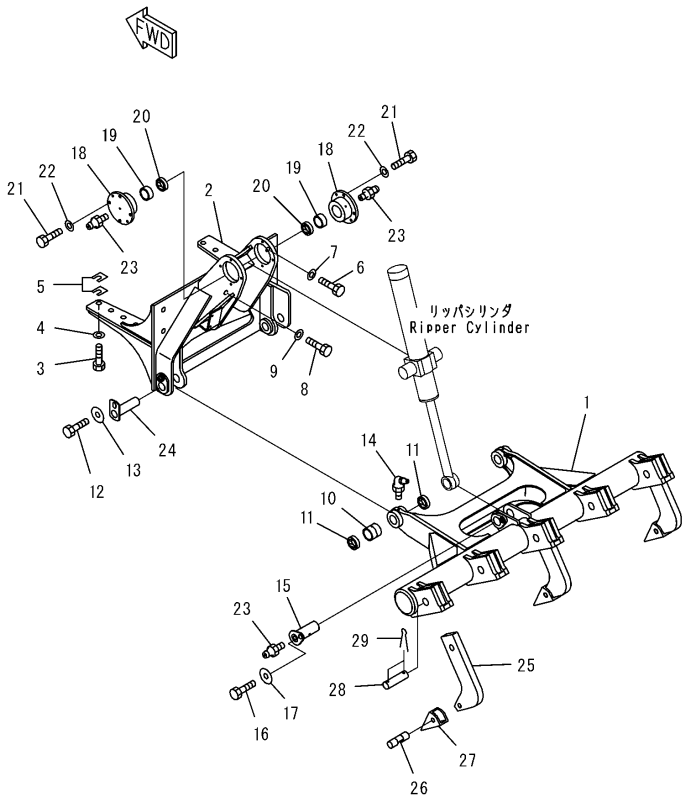

RIPPER

Item	Part Number	Description	Qty.	Ref.	Serial No.
1	23A-785-3111	BRACKET	1		B10001-
2	23A-785-3121	BRACKET	1		B10001-
3	01010-82455	BOLT	10		B10001-
4	01643-32460	WASHER	10		B10001-
5	419-54-12850	SHIM, 0.5MM	12		B10001-
	419-54-12860	SHIM, 1.6MM	1		B10001-
6	01010-82450	BOLT	4		B10001-
7	01643-32460	WASHER	4		B10001-
8	01010-82050	BOLT	4		B10001-
9	01643-32060	WASHER	4		B10001-
10	416-70-11810	BUSHING	2		B10001-
11	416-09-11140	SEAL, DUST	4		B10001-
12	01010-81225	BOLT	2		B10001-
13	175-54-34170	WASHER	2		B10001-
14	07020-00675	FITTING, GREASE	2		B10001-
15	23S-71-51410	PIN	1		B10001-
16	01010-81225	BOLT	1		B10001-
17	175-54-34170	WASHER	1		B10001-
18	23A-785-3160	SUPPORT	2		B10001-
19	07144-10603	BUSHING	2		B10001-
20	416-09-11120	SEAL	4		B10001-
21	01010-81240	BOLT	8		B10001-
22	01643-31232	WASHER	8		B10001-
23	07020-00000	FITTING, GREASE	3		B10001-
24	23B-785-3141	PIN	2		B10001-
25	23A-785-3150	SHANK	3		B10001-
26	113-78-21170	PIN	3		B10001-
27	113-78-21140	POINT	3		B10001-
28	238-785-1330	PIN	3		B10001-
29	04050-10070	PIN, COTTER	6		B10001-

RIPPER SHANK (ADDITIONAL 2-SHANKS TYPE)

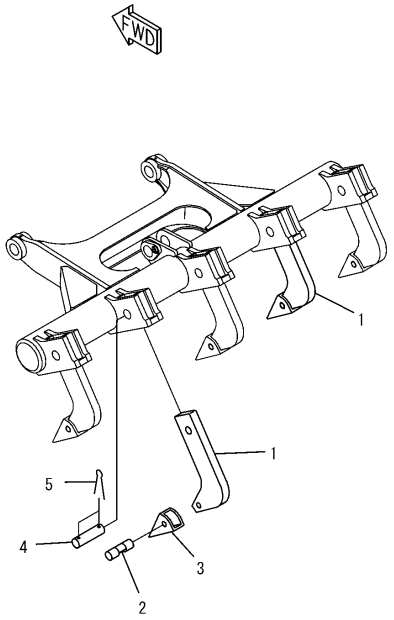

PW2B101

RIPPER SHANK (ADDITIONAL 2-SHANKS TYPE)

Item	Part Number	Description	Qty.	Ref.	Serial No.
1	23A-785-3150	SHANK	2		B10001-
2	113-78-21170	PIN	2		B10001-
3	113-78-21140	POINT	2		B10001-
4	238-785-1330	PIN	2		B10001-
5	04050-10070	PIN, COTTER	4		B10001-

CIRCLE REVOLVING, 1/2 (WITH SLIP CLUTH)

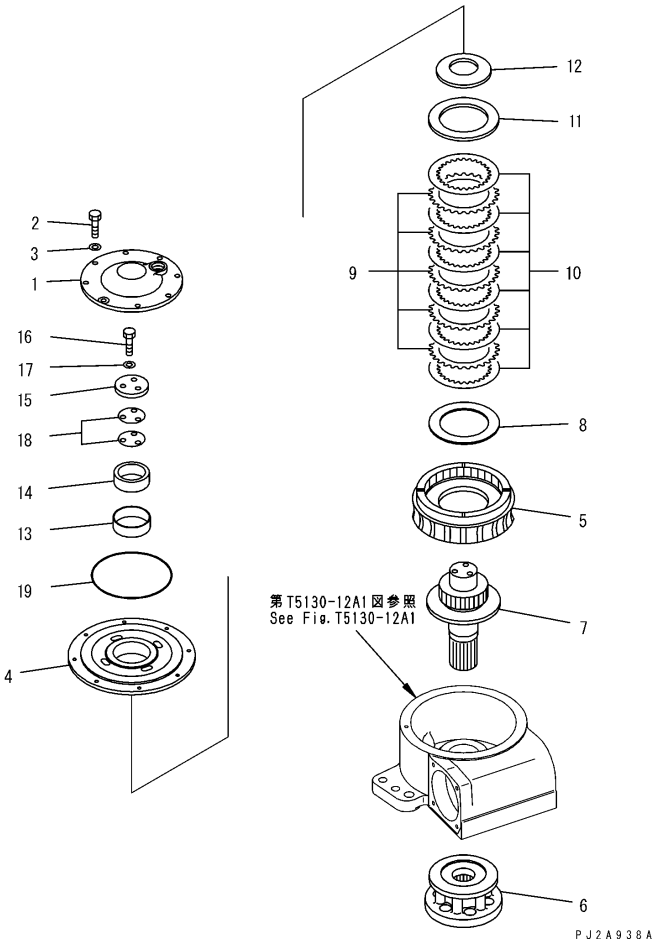

CIRCLE REVOLVING, 1/2 (WITH SLIP CLUTH)

Item	Part Number	Description	Qty.	Ref.	Serial No.
1	23B-70-52130	COVER	1		B10001-
2	01010-81025	BOLT	8		B10001-
3	01643-31032	WASHER	8		B10001-
4	23B-70-52140	COVER	1		B10001-
5	23B-70-52311	WHEEL, WORM	1		B10001-
6	23B-70-52282	GEAR	1		B10001-
7	23B-70-52180	SHAFT	1		B10001-
8	235-70-45260	SPACER	1		B10001-
9	714-07-12680	PLATE, SEPARATE	5		B10001-
10	235-70-45420	DISK	6		B10001-
11	235-70-45270	SPACER	1		B10001-
12	235-70-45360	SPRING	1		B10001-
13	23B-70-52210	BUSHING	1		B10001-
14	23B-70-52240	COLLAR	1		B10001-
15	23B-70-52230	PLATE	1		B10001-
16	01010-81240	BOLT	3		B10001-
17	01643-31232	WASHER	3		B10001-
18	235-70-45330	SHIM, 0.5MM	6		B10001-
	235-70-45340	SHIM, 0.2MM	8		B10001-
19	07000-15195	O-RING	1		B10001-

CIRCLE REVOLVING, 2/2 (WITH SLIP CLUTH)

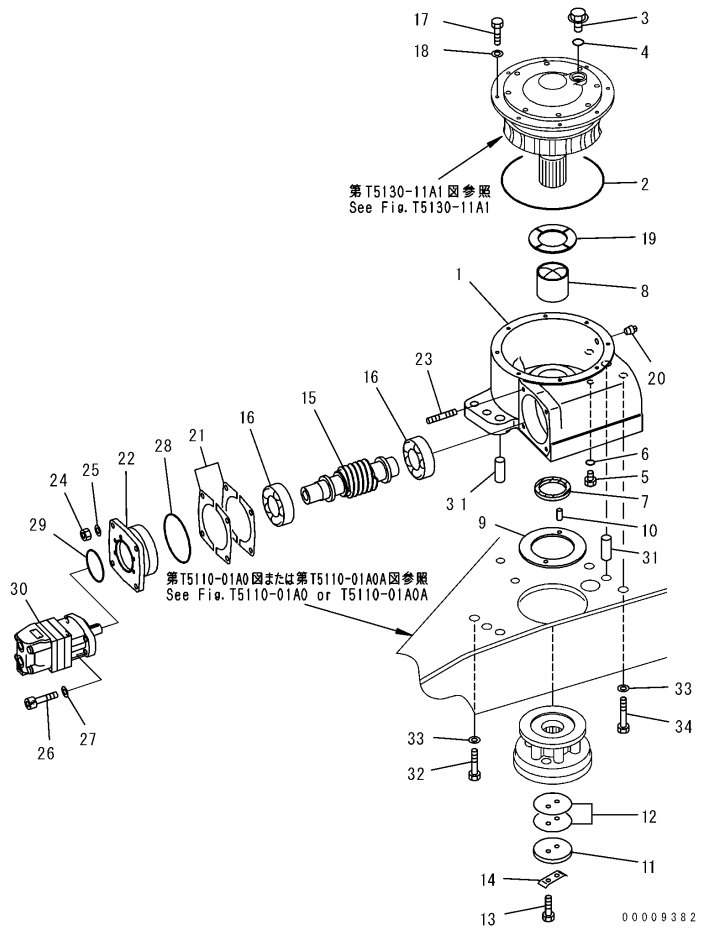

CIRCLE REVOLVING, 2/2 (WITH SLIP CLUTH)

Item	Part Number	Description	Qty.	Ref.	Serial No.
1	23B-70-52110	CASE	1		B10001-
2	07000-15260	O-RING	1		B10001-
3	07041-13012	PLUG	1		B10001-
4	07002-13034	O-RING	1		B10001-
5	07040-11812	PLUG	1		B10001-
6	07002-11823	O-RING	1		B10001-
7	23B-70-52290	SEAL	1		B10001-
8	23B-70-52190	BUSHING	1		B10001-
9	23B-70-52220	PLATE	1		B10001-
10	04020-01024	PIN	2		B10001-
11	235-70-15850	HOLDER	1		B10001-
12	235-70-15870	SHIM, 0.5MM	6		B10001-
	235-70-15860	SHIM, 1.0MM	4		B10001-
	235-70-15880	SHIM, 0.2MM	5		B10001-
13	01010-81235	BOLT	2		B10001-
14	04081-05512	LOCK	1		B10001-
15	23B-70-52121	WORM	1		B10001-
16	06002-30310	BEARING	2		B10001-
17	01010-81030	BOLT	8		B10001-
18	01643-31032	WASHER	8		B10001-
19	23B-70-52320	PLATE	1		B10001-
20	07042-70108	PLUG	1		B10001-
21	238-70-16210	SHIM, 0.1MM	8		B10001-
	238-70-16220	SHIM, 0.2MM	12		B10001-
	238-70-16240	SHIM, 1.0MM	4		B10001-
	23B-70-52470	SHIM, 0.05MM	4		B10001-
22	23B-70-52250	HOUSING	1		B10001-
23	01140-81235	STUD	4		B10001-
24	01582-11210	NUT	4		B10001-
25	01643-31232	WASHER	4		B10001-
26	01252-41035	BOLT	4		B10001-
27	01643-31032	WASHER	4		B10001-
28	07000-12130	O-RING	1		B10001-
29	23B-70-16240	O-RING	1		B10001-
30	23B-62-31100	MOTOR ASSEMBLY	1		B10001-
31	232-71-13151	PIN	2		B10001-

CIRCLE REVOLVING, 2/2 (WITH SLIP CLUTH)

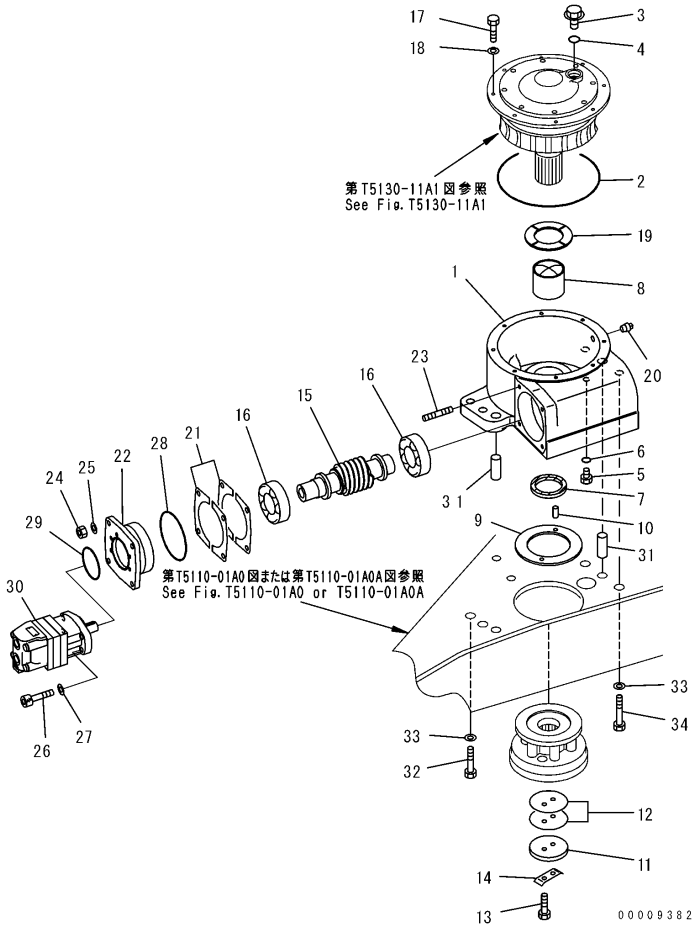

CIRCLE REVOLVING, 2/2 (WITH SLIP CLUTH)

Item	Part Number	Description	Qty.	Ref.	Serial No.
32	01010-82465	BOLT	2		B10001-
33	01643-32460	WASHER	4		B10001-
34	01010-82470	BOLT	2		B10001-

BLADE LIFT CYLINDER

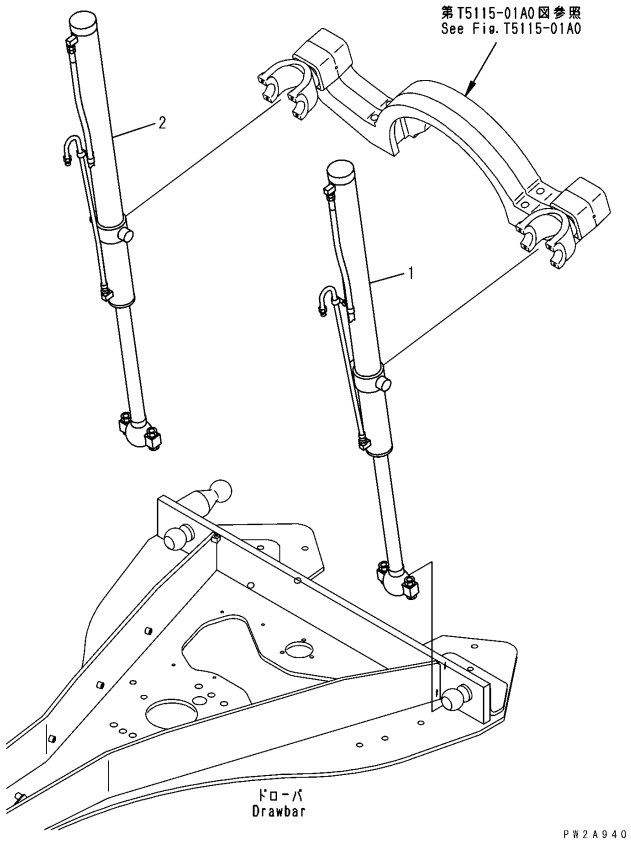

BLADE LIFT CYLINDER

Item	Part Number	Description	Qty.	Ref.	Serial No.
1	(707-02-X7310)	CYLINDER GROUP, BLADE LIFT, L.H.	1		B10001-
	(707-02-X7030)	CYLINDER GROUP, BLADE LIFT, L.H.	1		B10001-
2	(707-02-X7320)	CYLINDER GROUP, BLADE LIFT, R.H.	1		B10001-
	(707-02-X7040)	CYLINDER GROUP, BLADE LIFT, R.H.	1		B10001-

BLADE SHIFT CYLINDER

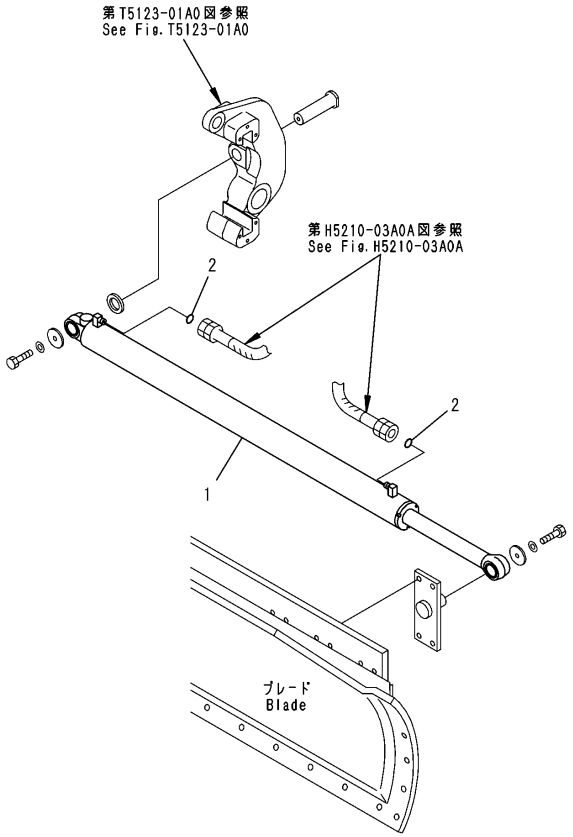

00009383

BLADE SHIFT CYLINDER

Item	Part Number	Description	Qty.	Ref.	Serial No.
1	(707-00-07G00)	CYLINDER ASSEMBLY, BLADE SIDE SHIFT . .	1		B10001-
	(707-00-0C140)	.CYLINDER ASSEMBLY	1		B10001-
2	(02896-11009)	.O-RING.	2		B10001-

POWER TILT CYLINDER

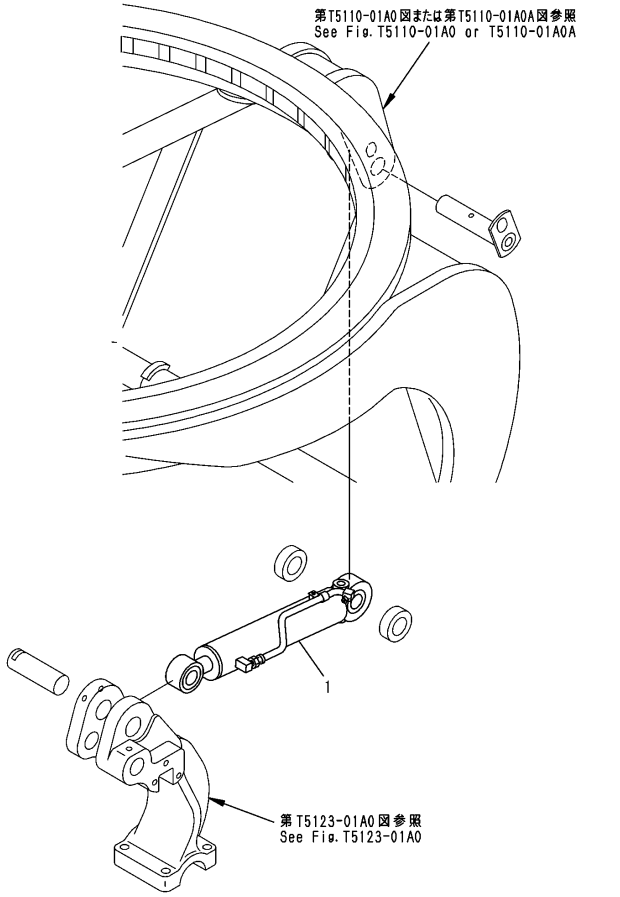

POWER TILT CYLINDER

Item	Part Number	Description	Qty.	Ref.	Serial No.
1	(707-00-X7G10)	CYLINDER GROUP, POWER TILT	1		B10001-
	(707-00-X7D10)	CYLINDER GROUP, POWER TILT	1		B10001-

DRAWBAR SHIFT CYLINDER

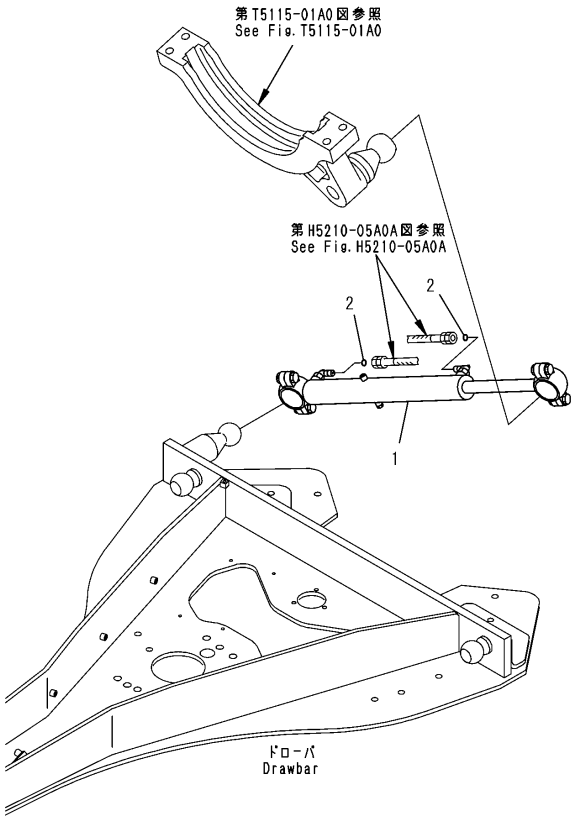

00009385

DRAWBAR SHIFT CYLINDER

Item	Part Number	Description	Qty.	Ref.	Serial No.
1	(707-00-07G20)	CYLINDER GROUP, DRAWBAR SHIFT	1		B10001-
	(707-00-0C160)	.CYLINDER ASSEMBLY	1		B10001-
2	(02896-11009)	.O-RING	2		B10001-

SCARIFIER CYLINDER

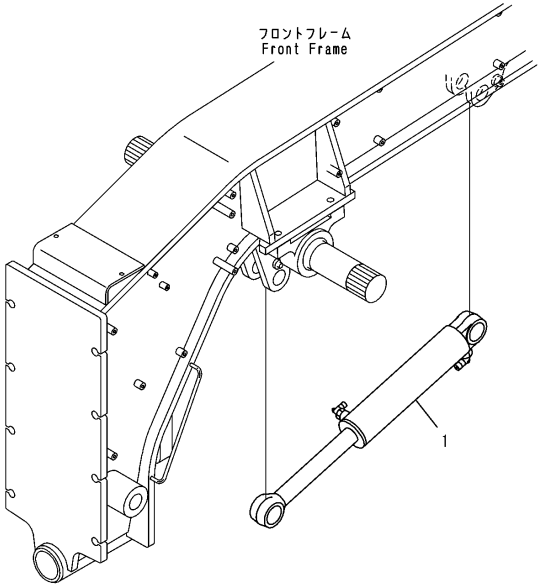

PW2A973

SCARIFIER CYLINDER

Item	Part Number	Description	Qty.	Ref.	Serial No.
1	(707-00-XC250)	CYLINDER GROUP	1		B10001-
	(707-00-X7D60)	CYLINDER GROUP	1		B10001-

RIPPER CYLINDER

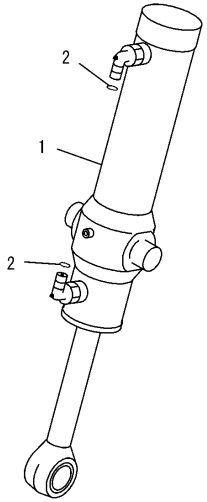

PJ2C539

RIPPER CYLINDER

Item	Part Number	Description	Qty.	Ref.	Serial No.
1	(707-02-07340)	CYLINDER ASSEMBLY, RIPPER	1		B10001-
	(707-02-00170)	.CYLINDER ASSEMBLY, RIPPER	1		B10001-
2	(02896-11009)	..O-RING	2		B10001-

ARTICULATE CYLINDER

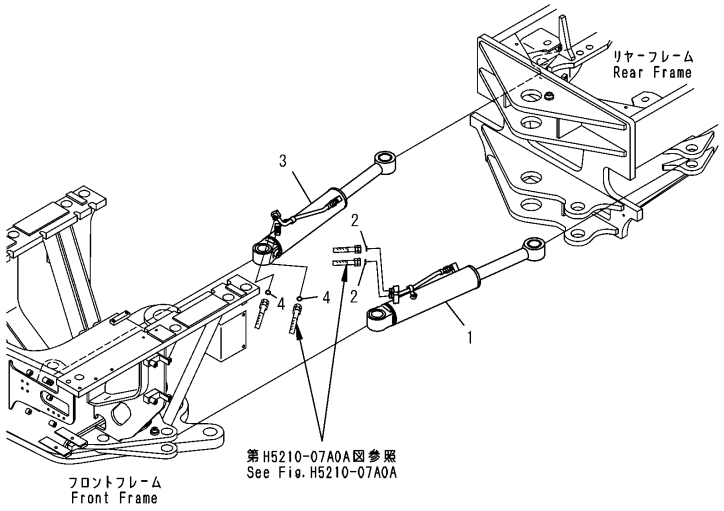

00009386

ARTICULATE CYLINDER

Item	Part Number	Description	Qty.	Ref.	Serial No.
1	(707-00-X7G30)	CYLINDER GROUP, ARTICULATE, L.H.	1		B10001-
	(707-00-XC170)	.CYLINDER GROUP	1		B10001-
	(707-00-0C170)	..CYLINDER ASSEMBLY	1		B10001-
2	(02896-11009)	..O-RING	3		B10001-
3	(707-00-X7G40)	CYLINDER GROUP, ARTICULATE, R.H.	1		B10001-
	(707-00-XC180)	.CYLINDER GROUP	1		B10001-
	(707-00-0C180)	..CYLINDER ASSEMBLY	1		B10001-
4	(02896-11009)	..O-RING	3		B10001-

SCARIFIER (FIXED ROD TYPE)

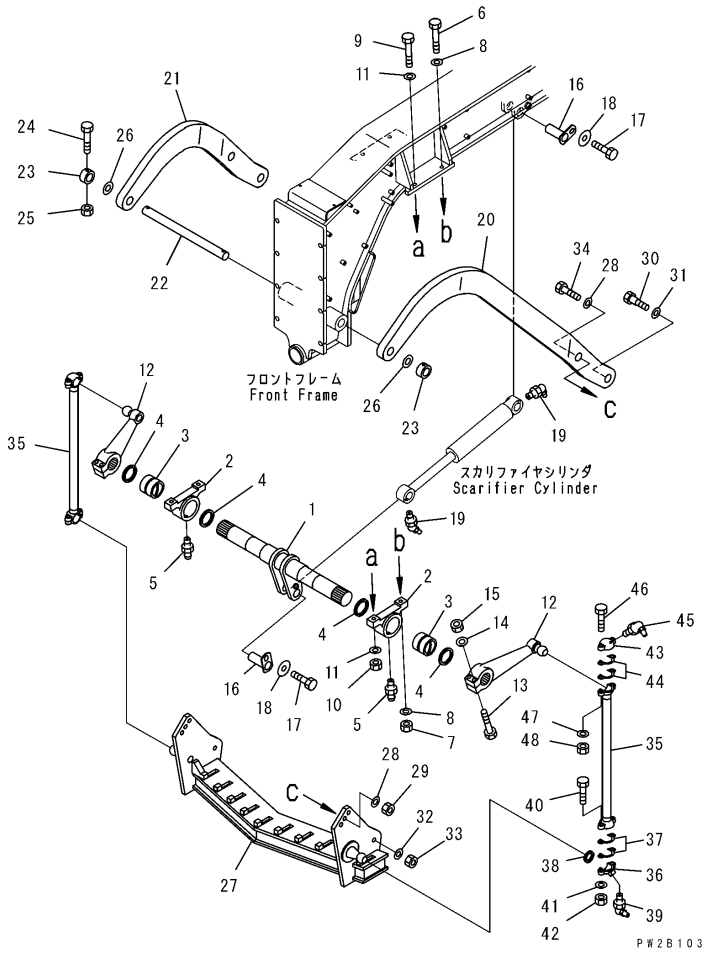

SCARIFIER (FIXED ROD TYPE)

Item	Part Number	Description	Qty.	Ref.	Serial No.
1	23A-71-31312	SHAFT	1		B10001-
2	23A-71-11160	SUPPORT	2		B10001-
3	23A-71-11270	BUSHING	2		B10001-
4	07145-00080	SEAL, DUST	4		B10001-
5	07020-00000	FITTING, GREASE	2		B10001-
6	01091-52010	BOLT	2		B10001-
7	01582-12016	NUT	2		B10001-
8	01643-32060	WASHER	4		B10001-
9	01019-32010	BOLT	2		B10001-
10	01580-12016	NUT	2		B10001-
11	01643-32060	WASHER	4		B10001-
12	233-71-16410	ARM	2		B10001-
13	01010-81690	BOLT	4		B10001-
14	01643-51645	WASHER	4		B10001-
15	01580-11613	NUT	4		B10001-
16	23B-71-31190	PIN	2		B10001-
17	01010-81225	BOLT	2		B10001-
18	175-54-34170	WASHER	2		B10001-
19	07020-00675	FITTING, GREASE	2		B10001-
20	23A-71-31294	ARM, L.H.	1		B10001-
21	23A-71-31324	ARM, R.H.	1		B10001-
22	23B-71-31131	PIN	1		B10001-
23	232-70-13210	COLLAR	2		B10001-
24	01011-81400	BOLT	2		B10001-
25	01598-01415	NUT	2		B10001-
26	23A-71-31420	WASHER	2		B10001-
27	23B-71-31113	BODY	1		B10001-
28	01643-32460	WASHER	4		B10001-
29	01580-12419	NUT	2		B10001-
30	232-71-51220	BOLT	2		B10001-
31	01643-33080	WASHER	2		B10001-
32	01643-32780	WASHER	2		B10001-
33	01580-12722	NUT	2		B10001-
34	01011-82400	BOLT	2		B10001-
35	23A-71-31160	ROD	2		B10001-
36	238-71-11210	CAP	2		B10001-

SCARIFIER (FIXED ROD TYPE)

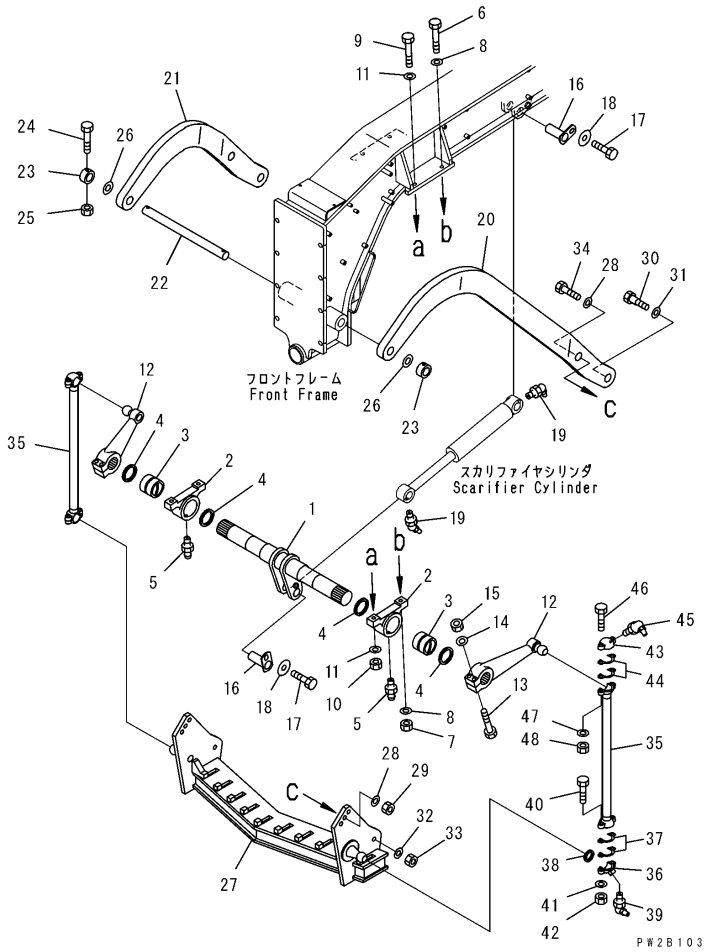

SCARIFIER (FIXED ROD TYPE)

Item	Part Number	Description	Qty.	Ref.	Serial No.
37	07139-00705	SHIM, 0.5MM	6		B10001-
38	07141-00070	SEAL, DUST	2		B10001-
39	07020-00900	FITTING, GREASE	2		B10001-
40	01010-81665	BOLT	4		B10001-
41	01643-51645	WASHER	4		B10001-
42	01580-11613	NUT	4		B10001-
43	232-71-11330	CAP	2		B10001-
44	232-71-11340	SHIM, 0.2MM	10		B10001-
45	07020-00900	FITTING, GREASE	2		B10001-
46	01010-81665	BOLT	4		B10001-
47	01643-51645	WASHER	4		B10001-
48	01580-11613	NUT	4		B10001-

SCARIFIER SHANK TOOTH

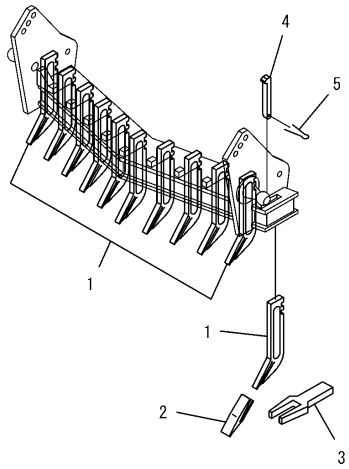

PW2A947

SCARIFIER SHANK TOOTH

Item	Part Number	Description	Qty.	Ref.	Serial No.
1	232-71-51310	SHANK	11		B10001-
2	232-71-51320	TOOTH	11		B10001-
3	232-71-51330	TOOL	1		B10001-
4	232-70-13142	WEDGE	11		B10001-
5	04050-18050	PIN, COTTER	11		B10001-

MARKS AND PLATES

MARKS AND PLATES (ENGLISH)

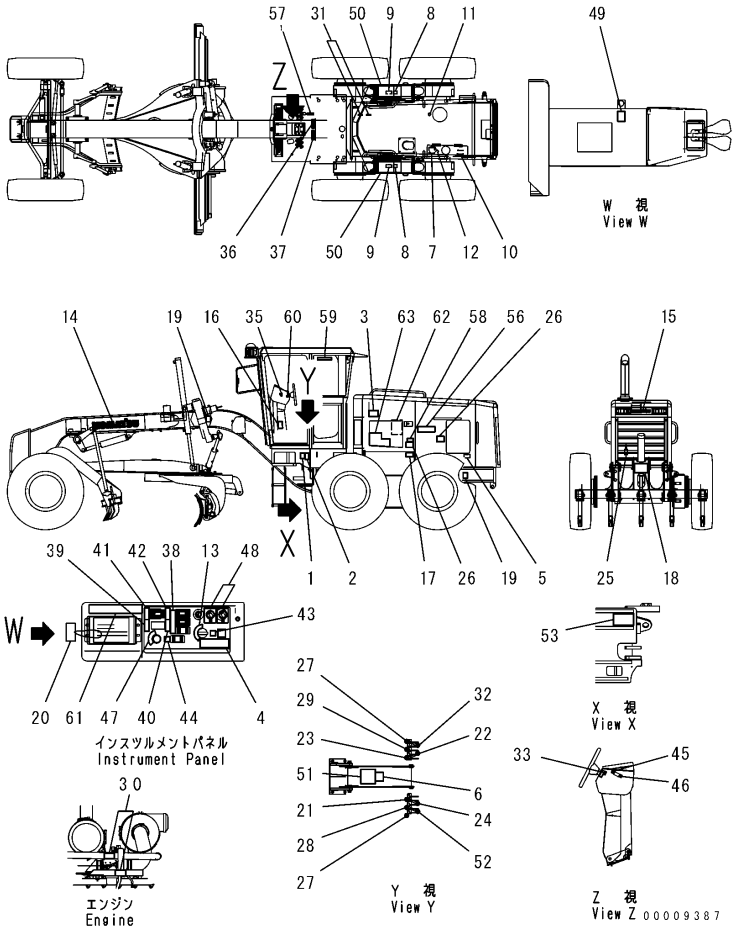

MARKS AND PLATES (ENGLISH)

Item	Part Number	Description	Qty.	Ref.	Serial No.
1	09161-33000	PLATE, SAFETY, ARTICULATE LOCK	1		B10001-
2	09162-33000	PLATE, SAFETY, KEEP OUT	2		B10001-
3	09637-30163	PLATE, INSTRUCTION, AIR CLEANER	1		B10001-
4	09649-03012	PLATE, INSTRUCTION	1		B10001-
5	09650-30104	PLATE, INSTRUCTION, WATER LEVEL	1		B10001-
6	09651-03001	PLATE, SAFETY, BEFORE OPERATION	1		B10001-
7	09653-03001	PLATE, SAFETY, TANK CAP	1		B10001-
8	09664-30070	PLATE, SAFETY, (FOR USA)	2		B10001-
9	09664-30082	PLATE, SAFETY, BATTERY	2		B10001-
10	09668-03001	PLATE, SAFETY, RADIATOR CAP	1		B10001-
11	09669-0000E	PLATE, CAUTION	1		B10001-
12	09669-0000C	PLATE, CAUTION, HYDRAULIC OIL INTAKE	1		B10001-
13	09683-0000A	PLATE, OPERATING, STARTING SWITCH	1		B10001-
14	09690-P0900	PLATE, MARK, KOMATSU	2		B10001-
15	09690-F0315	PLATE, MARK, KOMATSU	1		B10001-
16	09802-43000	PLATE, SAFETY, BACK-UP	1		B10001-
17	09808-03000	PLATE, SAFETY, BATTERY CABLE	2		B10001-
18	09812-13000	PLATE, SAFETY, KEEP A SAFE DISTANCE	1		B10001-
19	09960-01001	PLATE, MARK, HANGING POINT	4		B10001-
20	09963-03001	TAG, DO NOT OPERATE	1		B10001-
21	232-43-18281	PLATE, OPERATING, DRAWBAR SHIFT	1		B10001-
22	232-735-1340	PLATE, OPERATING, POWER TILT	1		B10001-
23	234-53-32321	PLATE, OPERATING, CIRCLE REVOLUTION	1		B10001-
24	234-53-32330	PLATE, OPERATING, ARTICULATE	1		B10001-
25	234-53-32340	TAG, RADIATOR COOLANT	1		B10001-
26	09667-03001	PLATE, CAUTION, ENGINE	4		B10001-
27	237-54-13211	PLATE, OPERATING, BLADE LIFT	2		B10001-
28	237-54-13221	PLATE, OPERATING, LEANING	1		B10001-
29	237-54-13231	PLATE, OPERATING, DRAWBAR SHIFT	1		B10001-
30	09817-K088B	PLATE, SAFETY, HIGH TEMPERATURE	2		B10001-
31	09659-53000	PLATE, SAFETY, ACCUMULATOR	2		B10001-
32	232-785-1411	PLATE, OPERATING, RIPPER	1		B10001-
33	23A-53-11550	PLATE, OPERATING, TURN SIGNAL	1		B10001-
35	23B-53-31670	PLATE, OPERATING, DIMMER SWITCH	1		B10001-
	23B-53-31513	PLATE KIT	1		B10001-
36	☆	.PLATE, NAME, FUSE ARRANGEMENT	1		B10001-

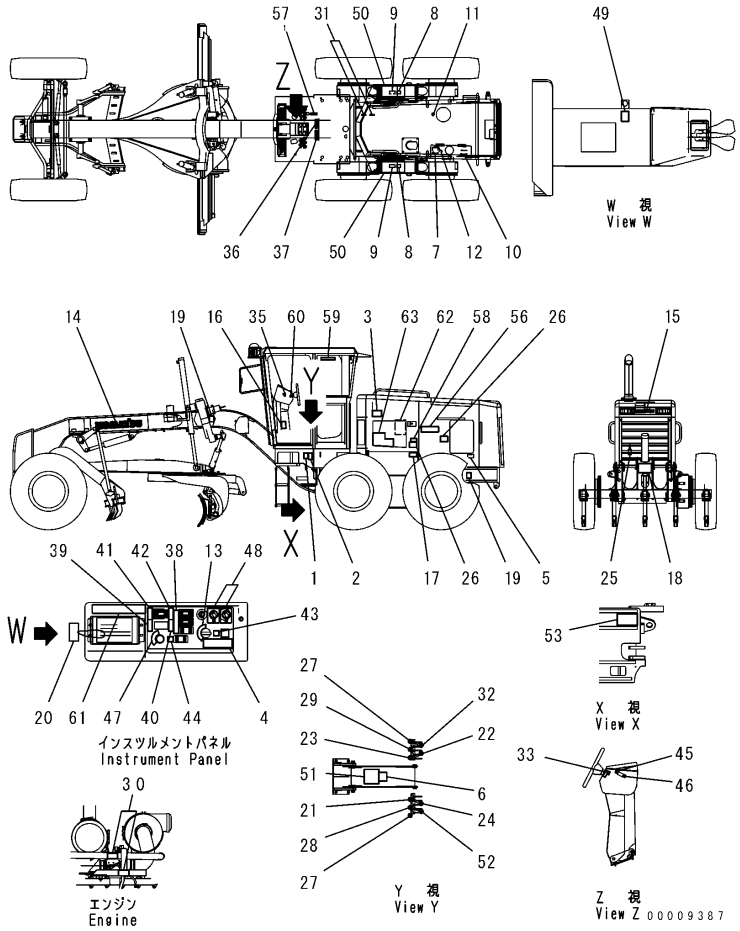

Item	Part Number	Description	Qty.	Ref.	Serial No.
37	☆	.PLATE, NAME, FUSE ARRANGEMENT	1		B10001-
38	☆	.PLATE, OPERATING, LAMP SWITCH	1		B10001-
39	☆	.PLATE, OPERATING, MODE, 1	1		B10001-
40	☆	.PLATE, OPERATING, MODE, 2	1		B10001-
41	☆	.PLATE, OPERATING, FLOAT	1		B10001-
42	☆	.PLATE, OPERATING, ACCUMULATOR	1		B10001-
43	☆	.PLATE, OPERATING, LOCK PIN	1		B10001-
44	☆	.PLATE, OPERATING, HEAD LAMP	1		B10001-
45	☆	.PLATE, OPERATING, DIFFERENTIAL LOCK	1		B10001-
46	☆	.PLATE, OPERATING, DIFFERENTIAL LOCK	1		B10001-
47	☆	.PLATE, OPERATING, WIPER	1		B10001-
48	☆	.PLATE, OPERATING, HEATER	2		B10001-
49	☆	.PLATE, OPERATING, HEATER	1		B10001-
50	23B-53-31350	PLATE, NON SLIP	2		B10001-
51	232-53-62710	PLATE, CAUTION, SCARIFIER	1		B10001-
52	237-54-13271	PLATE, OPERATING, SCARIFIER	1		B10001-
53	09602-12051	PLATE, NAME, (LIMITED SUPPLY)	1		B10001-
	04418-13060	SCREW	6		B10001-
56	23B-53-31450	PLATE, MARK, LATERRA	2		B10001-
57	23B-53-31690	PLATE, TAG, DO NOT OPERATE	1		B10001-
	23B-53-31740	PLATE KIT	1		B10001-
58	☆	.PLATE, CAUTION, NO WALKING	2		B10001-
59	09970-00230	PLATE, MARK, GALEO	2		B10001-
60	23B-53-32210	PLATE, OPERATING, ENGINE START ASSIST	1		B10001-
61	23B-53-32240	PLATE, OPERATING, ENGINE START POSITION	1		B10001-
62	23A-53-31113	OIL CHART	1		B10001-
63	23A-53-31140	PLATE, MARK, GD555	2		B10001-

ACCESSORY AND TOOL

TOOL

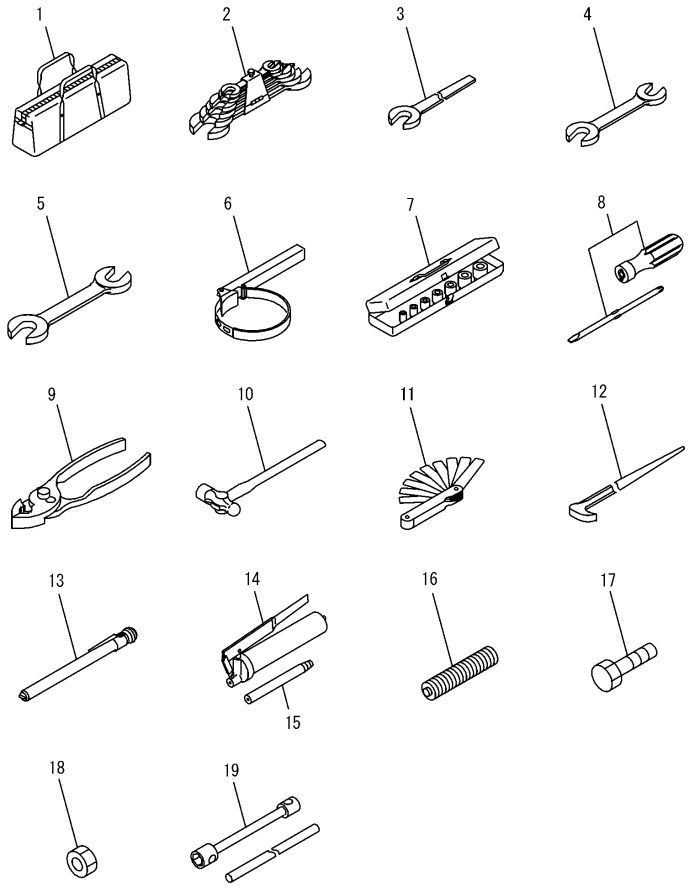

TOOL

Item	Part Number	Description	Qty.	Ref.	Serial No.
1	09056-05513	BAG, TOOL	1		B10001-
2	09000-30005	WRENCH SET	1		B10001-
3	09001-06000	WRENCH, 60	1		B10001-
4	09002-03641	WRENCH, 36X41	1		B10001-
5	09002-04650	WRENCH, 46X50	1		B10001-
6	09019-08035	WRENCH, FILTER	1		B10001-
7	09020-10282	SOCKET WRENCH SET	1		B10001-
8	09033-00190	DRIVER, SCREW	1		B10001-
9	09036-00150	PLIERS	1		B10001-
10	09039-00150	HAMMER	1		B10001-
11	09054-00009	GAUGE, THICKNESS	1		B10001-
12	09055-10390	BAR	1		B10001-
13	09289-00000	GAUGE, TIRE	1		B10001-
	07952-80003	GREASE PUMP ASSEMBLY	1		B10001-
14	07950-10450	.PUMP, GREASE	1		B10001-
15	07951-41043	.NOZZLE	1		B10001-
16	07950-90403	CARTRIDGE, GREASE	1		B10001-
17	01010-82495	BOLT, LEANING LOCK	1		B10001-
18	01580-12419	NUT	1		B10001-
19	23B-981-1310	WRENCH	1		B10001-

SERVICE KIT AND COMPONENT PARTS

SERVICE KIT

KIT 詳細については次のページを参照して下さい。
See subsequent pages for details.

K-1	714-23-05000	トランスミッション サービス キット TRANSMISSION SERVICE KIT
K-2	714-23-05010	トランスミッション コントロール バルブ サービス キット TRANSMISSION CONTROL VALVE SERVICE KIT
K-3	714-23-05020	トランスミッション パイピング サービス キット TRANSMISSION PIPING SERVICE KIT

PW0B141

SERVICE KIT

Item	Part Number	Description	Qty.	Ref.	Serial No.
1	714-23-05000	SERVICE KIT	1		B10001-
	07000-12065	.O-RING, (F5320-62A0 -14)	1		B10001-
	07000-71009	.O-RING, (F5320-62A0 -21)	11		B10001-
	07000-72015	.O-RING, (F5320-62A0 -2)	2		B10001-
	07000-72015	.O-RING, (F5320-62A0 -20)	8		B10001-
	07000-72018	.O-RING, (F5320-62A0 -22)	1		B10001-
	07000-72085	.O-RING, (F5320-57A0 -34)	1		B10001-
	07000-72120	.O-RING, (F5320-56A0 -6)	1		B10001-
	07000-72120	.O-RING, (F5320-67A0 -16)	1		B10001-
	07000-73030	.O-RING, (F5320-57A0 -18)	1		B10001-
	07000-73038	.O-RING, (F5320-67A0 -8)	1		B10001-
	07002-03634	.O-RING, (F5320-67A0 -12)	1		B10001-
	07002-12434	.O-RING, (F5320-66A0 -8)	1		B10001-
	07005-02216	.GASKET, (F5320-66A0 -12)	1		B10001-
	07018-31255	.RING, (F5310-51A0 -13)	1		B10001-
	281-15-13820	.SEAL, (F5320-67A0 -7)	1		B10001-
	417-15-13810	.SEAL, (F5320-57A0 -20)	1		B10001-
	419-15-18131	.LIQUID GASKET, (F5320-51A0 -19)	1		B10001-
	568-15-12850	.RING, (F5310-52A0 -7)	2		B10001-
	714-07-19320	.RING, (F5320-52A0 -15)	2		B10001-
	714-07-19320	.RING, (F5320-53A0 -16)	2		B10001-
	714-07-19320	.RING, (F5320-54A0 -13)	2		B10001-
	714-07-19320	.RING, (F5320-55A0 -11)	1		B10001-
	714-08-19220	.RING, (F5320-53A0 -14)	1		B10001-
	714-12-19120	.SEAL, (F5320-56A0 -5)	1		B10001-
	714-12-19170	.SEAL, (F5320-56A0 -4)	1		B10001-
2	714-23-05010	SERVICE KIT	1		B10001-
	07000-02060	.O-RING, (F5320-61A0 -34)	1		B10001-
	07000-71007	.O-RING, (F5320-59A0 -28)	1		B10001-
	07000-71007	.O-RING, (F5320-61A0 -32)	7		B10001-
	07000-72015	.O-RING, (F5320-59A0 -27)	4		B10001-
	07000-72015	.O-RING, (F5320-60A0 -7)	3		B10001-
	07000-72015	.O-RING, (F5320-60A0 -12)	1		B10001-
	07000-72015	.O-RING, (F5320-61A0 -31)	28		B10001-
	07000-72100	.O-RING, (F5320-60A0 -13)	1		B10001-
	07000-73022	.O-RING, (F5320-61A0 -37)	2		B10001-

SERVICE KIT

KIT 詳細については次のページを参照して下さい。
See subsequent pages for details.

		トランスミッション サービス キット
K-1	714-23-05000	TRANSMISSION SERVICE KIT
		トランスミッション コントロール バルブ サービス キット
K-2	714-23-05010	TRANSMISSION CONTROL VALVE SERVICE KIT
		トランスミッション パイピング サービス キット
K-3	714-23-05020	TRANSMISSION PIPING SERVICE KIT

PW0B141

SERVICE KIT

Item	Part Number	Description	Qty.	Ref.	Serial No.
	07000-73028	.O-RING, (F5320-59A0 -21)	1		B10001-
	07000-73028	.O-RING, (F5320-60A0 -6)	1		B10001-
	07000-73028	.O-RING, (F5320-61A0 -25)	1		B10001-
	07000-73030	.O-RING, (F5320-58A0 -24)	5		B10001-
	07000-73042	.O-RING, (F5320-60A0 -8)	1		B10001-
	07002-03034	.O-RING, (F5320-58A0 -5)	1		B10001-
	07002-03034	.O-RING, (F5320-58A0 -14)	1		B10001-
	07002-03034	.O-RING, (F5320-58A0 -23)	2		B10001-
	07002-11823	.O-RING, (F5320-61A0 -36)	1		B10001-
	07002-22034	.O-RING, (F5320-59A0 -7)	1		B10001-
	07002-22034	.O-RING, (F5320-61A0 -11)	1		B10001-
	714-23-15560	.O-RING, (F5320-59A0 -6)	1		B10001-
	714-23-15560	.O-RING, (F5320-61A0 -10)	1		B10001-
	714-23-15910	.GASKET, (F5320-60A0 -2)	1		B10001-
3	714-23-05020	SERVICE KIT	1		B10001-
	07000-13022	.O-RING, (F5320-63A0 -24)	1		B10001-
	07000-13025	.O-RING, (F5320-63A0 -19)	1		B10001-
	07000-13028	.O-RING, (F5320-63A0 -10)	2		B10001-
	07000-15085	.O-RING, (F5320-63A0 -4)	1		B10001-
	07002-12434	.O-RING, (F5320-63A0 -12)	1		B10001-
	07002-12434	.O-RING, (F5320-63A0 -15)	1		B10001-
	07002-13334	.O-RING, (F5320-63A0 -6)	1		B10001-
	07002-13334	.O-RING, (F5320-64A0 -3)	1		B10001-
	07002-13334	.O-RING, (F5320-65A0 -8)	1		B10001-
	07005-01012	.GASKET, (F5320-64A0 -6)	6		B10001-
	07005-01012	.GASKET, (F5320-64A0 -9)	6		B10001-
	07005-01012	.GASKET, (F5320-65A0 -11)	4		B10001-
	07005-01412	.GASKET, (F5320-65A0 -15)	2		B10001-
	07005-02012	.GASKET, (F5320-64A0 -12)	4		B10001-
	07005-02012	.GASKET, (F5320-64A0 -15)	4		B10001-
	07005-02012	.GASKET, (F5320-64A0 -18)	4		B10001-
	07005-02012	.GASKET, (F5320-64A0 -21)	4		B10001-
	07005-02012	.GASKET, (F5320-64A0 -24)	4		B10001-

MAIN PUMP (1/6)

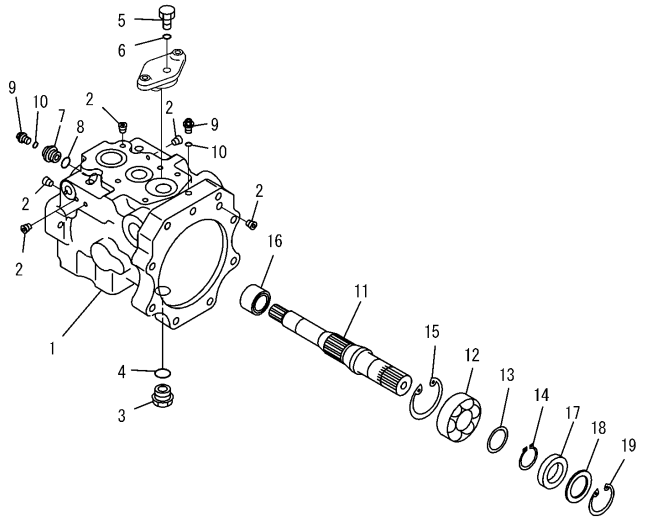

PW5A019

Y1600-01A0

MAIN PUMP (1/6)

Item	Part Number	Description	Qty.	Ref.	Serial No.
	708-1W-00620	PUMP ASSEMBLY	1		B10001-
	708-1W-00610	PUMP ASSEMBLY	1		B10001-
		THESE ASSEMBLIES CONSIST OF ALL PARTS SHOWN IN FIGS.Y1600-01A0 TO Y1600-06A0.			
	708-1W-01610	.PUMP SUB ASSEMBLY	1		B10001-
	(★708-1W-04210)	..CASE ASSEMBLY	1		B10001-
1	☆	...CASE, PUMP	1		B10001-
2	☆	...PLUG	11		B10001-
3	07044-12412	..PLUG	1		B10001-
4	07002-62434	..O-RING	1		B10001-
5	720-68-19870	..PLUG	1		B10001-
6	07002-61223	..O-RING	1		B10001-
7	708-1W-21510	..PLUG	1		B10001-
8	07002-11823	..O-RING	1		B10001-
9	708-8E-16150	..PLUG	2		B10001-
10	07002-61023	..O-RING	2		B10001-
11	(★708-1W-22310)	..SHAFT	1		B10001-
12	(★708-1W-22140)	..BEARING	1		B10001-
13	(★708-23-05011)	..WASHER KIT	1		B10001-
	☆	...WASHER, 2.60MM	1		B10001-
	☆	...WASHER, 2.70MM	1		B10001-
	☆	...WASHER, 2.80MM	1		B10001-
	☆	...WASHER, 2.50MM	1		B10001-
14	(★708-23-12840)	..RING, SNAP	1		B10001-
15	(★04065-07225)	..RING	1		B10001-
16	(★708-1W-22320)	..BEARING	1		B10001-
17	708-8D-12221	..SEAL, OIL	1		B10001-
18	708-1W-22160	..SPACER	1		B10001-
19	04065-05520	..RING	1		B10001-

MAIN PUMP (2/6)

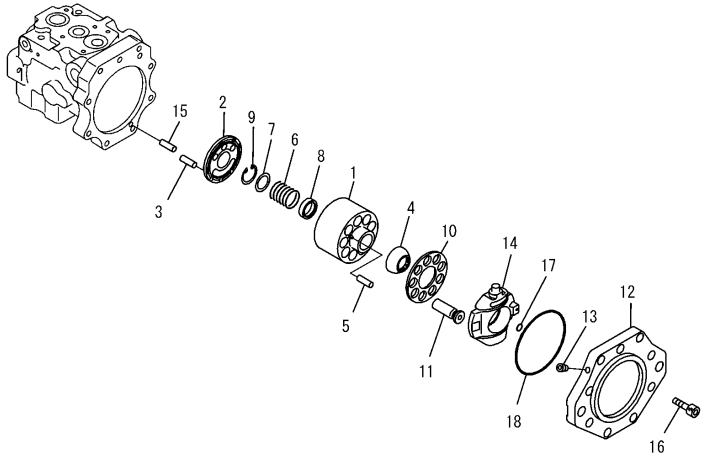

PW5A020

MAIN PUMP (2/6)

Item	Part Number	Description	Qty.	Ref.	Serial No.
	(708-1W-00620)	PUMP ASSEMBLY	1		B10001-
	(708-1W-00610)	PUMP ASSEMBLY	1		B10001-
		THESE ASSEMBLIES CONSIST OF ALL PARTS SHOWN IN FIGS.Y1600-01A0 TO Y1600-06A0.			
	(708-1W-01610)	.PUMP SUB ASSEMBLY	1		B10001-
	(★708-1W-04190)	..CYLINDER BLOCK ASSEMBLY	1		B10001-
1	☆	...BLOCK, CYLINDER	1		B10001-
2	☆	...PLATE, VALVE	1		B10001-
3	(★720-68-19610)	..PIN	1		B10001-
4	(★708-1W-23351)	..GUIDE, RETAINER	1		B10001-
5	(★708-7L-13360)	..PIN	3		B10001-
6	(★708-1W-23150)	..SPRING	1		B10001-
7	(★708-1W-23130)	..SEAT	1		B10001-
8	(★708-1W-23140)	..SEAT	1		B10001-
9	(★04065-04218)	..RING, SNAP	1		B10001-
10	(★708-1W-33340)	..RETAINER, SHOE	1		B10001-
11	(★708-1W-33310)	..PISTON SUB ASSEMBLY	9		B10001-
	(★708-1W-04260)	..CRADLE ASSEMBLY	1		B10001-
	(★708-1W-04250)	...CRADLE SUB ASSEMBLY	1		B10001-
12	☆	....CRADLE	1		B10001-
13	☆	....PLUG	1		B10001-
14	(★708-1W-23450)	...CAM, ROCKER	1		B10001-
15	(★04020-01024)	..PIN, DOWEL	1		B10001-
16	(★01252-61230)	..BOLT	9		B10001-
17	(★07000-B2011)	..O-RING	1		B10001-
18	(★07000-12145)	..O-RING	1		B10001-

MAIN PUMP (3/6)

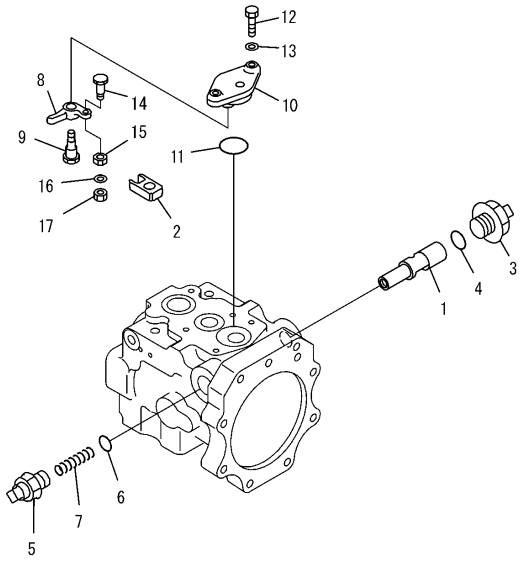

PW5A021

MAIN PUMP (3/6)

Item	Part Number	Description	Qty.	Ref.	Serial No.
	(708-1W-00620)	PUMP ASSEMBLY	1		B10001-
	(708-1W-00610)	PUMP ASSEMBLY	1		B10001-
		THESE ASSEMBLIES CONSIST OF ALL PARTS SHOWN IN FIGS.Y1600-01A0 TO Y1600-06A0.			
	(708-1W-01610)	.PUMP SUB ASSEMBLY	1		B10001-
1	(★708-1W-24160)	..PISTON, SERVO	1		B10001-
2	(★708-1W-24450)	..SLIDER	1		B10001-
3	(★708-1W-24250)	..BOLT, ADJUST	1		B10001-
4	07002-63334	..O-RING	1		B10001-
5	(★708-1W-24311)	..BOLT, ADJUST	1		B10001-
6	07002-62434	..O-RING	1		B10001-
7	708-1W-24350	..SPRING	1		B10001-
8	(★708-1W-25840)	..LEVER	1		B10001-
9	(★708-1W-26132)	..PIN	1		B10001-
10	(★708-1W-26113)	..COVER	1		B10001-
11	(★07000-13045)	..O-RING	1		B10001-
12	(★01010-80830)	..BOLT	2		B10001-
13	(★01643-30823)	..WASHER	2		B10001-
14	(★708-1W-26210)	..PIN	1		B10001-
15	(★708-1W-26221)	..SLIDER	1		B10001-
16	(★708-1W-26230)	..WASHER	1		B10001-
17	01580-10605	..NUT	1		B10001-

MAIN PUMP (4/6)

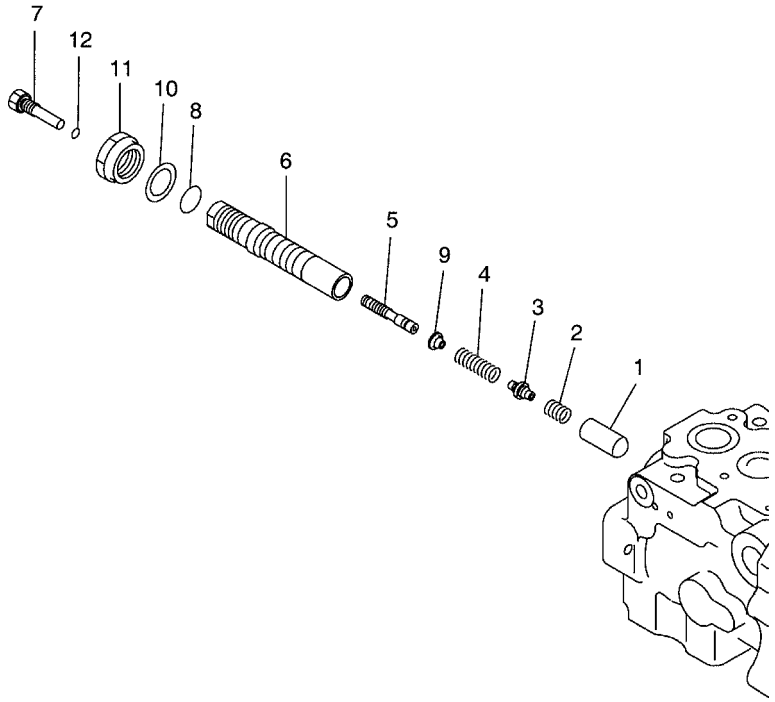

MAIN PUMP (4/6)

Item	Part Number	Description	Qty.	Ref.	Serial No.
	(708-1W-00620)	PUMP ASSEMBLY	1		B10001-
		THESE ASSEMBLIES CONSIST OF ALL PARTS SHOWN IN FIGS.Y1600-01A0 TO Y1600-06A0.			
	708-1W-04540	.VALVE ASSEMBLY, PC	1		B10001-
1	(★708-1W-25110)	..PISTON	1		B10001-
2	(★708-1W-25150)	..SPRING	1		B10001-
3	(★708-1W-25140)	..SEAT	1		B10001-
4	(★708-1W-25160)	..SPRING	1		B10001-
5	(★708-1W-25181)	..SPOOL	1		B10001-
6	(★708-1W-25192)	..SLEEVE	1		B10001-
7	(★708-1W-26510)	..PLUG	1		B10001-
8	07002-63034	..O-RING	1		B10001-
9	(★708-1W-25170)	..SEAT	1		B10001-
10	(★708-1W-25351)	..WASHER	1		B10001-
11	(★708-1W-25311)	..NUT	1		B10001-
12	(★07002-11223)	..O-RING	1		B10001-

MAIN PUMP (5/6)

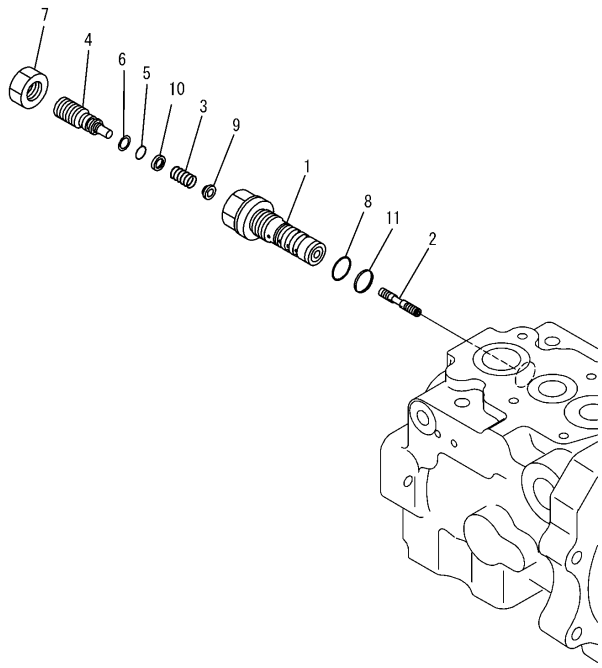

PW5A023

Y1600-05A0

MAIN PUMP (5/6)

Item	Part Number	Description	Qty.	Ref.	Serial No.
	(708-1W-00620)	PUMP ASSEMBLY	1		B10001-
	(708-1W-00610)	PUMP ASSEMBLY	1		B10001-
		THESE ASSEMBLIES CONSIST OF ALL PARTS SHOWN IN FIGS.Y1600-01A0 TO Y1600-06A0.			
	708-1W-04840	.VALVE ASSEMBLY, LS.	1		B10001-
1	(★708-1W-25523)	..SLEEVE	1		B10001-
2	(★708-1W-25513)	..SPOOL	1		B10001-
3	(★708-1W-25550)	..SPRING	1		B10001-
4	(★708-1W-25680)	..PLUG	1		B10001-
5	(★07000-12010)	..O-RING	1		B10001-
6	(★07001-02010)	..RING	1		B10001-
7	(★01583-11811)	..NUT	1		B10001-
8	07002-62434	..O-RING	1		B10001-
9	(★708-1W-25591)	..SEAT	1		B10001-
10	(★708-1W-25580)	..SEAT	1		B10001-
11	708-1W-25630	..SEAL	1		B10001-

MAIN PUMP (6/6)

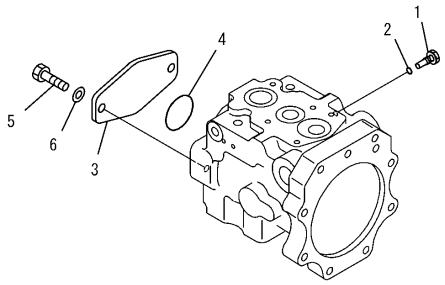

PW5A024

MAIN PUMP (6/6)

Item	Part Number	Description	Qty.	Ref.	Serial No.
	(708-1W-00620)	PUMP ASSEMBLY	1		B10001-
	(708-1W-00610)	PUMP ASSEMBLY	1		B10001-
		THESE ASSEMBLIES CONSIST OF ALL PARTS SHOWN IN FIGS.Y1600-01A0 TO Y1600-06A0.			
1	708-1W-25740	.ORIFICE	1		B10001-
2	07002-61023	.O-RING	1		B10001-
3	708-1W-28750	.PLATE	1		B10001-
4	07000-12060	.O-RING	1		B10001-
5	01010-81235	.BOLT	2		B10001-
6	01643-31232	.WASHER	2		B10001-

GEAR PUMP (SINGLE) (INNER PARTS)

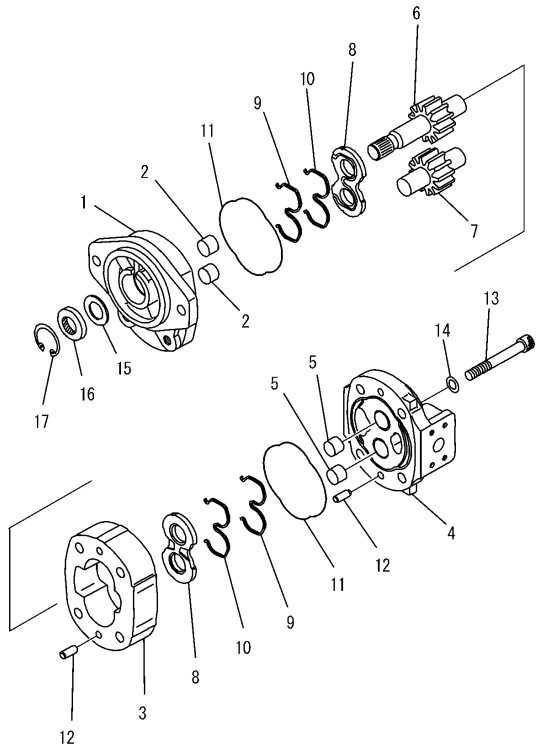

PR53785

GEAR PUMP (SINGLE) (INNER PARTS)

Item	Part Number	Description	Qty.	Ref.	Serial No.
	705-22-36260	PUMP ASSEMBLY, (SAR63)	1		B10001-
1	(★705-17-02022)	.BRACKET ASSEMBLY	1		B10001-
2	(★705-17-02353)	..BUSHING, PLANE	2		B10001-
3	(★705-18-36050)	.CASE, GEAR	1		B10001-
4	(★705-17-02122)	.COVER ASSEMBLY	1		B10001-
5	(★705-17-02353)	..BUSHING, PLANE	2		B10001-
6	(★705-18-36710)	.GEAR, DRIVE	1		B10001-
7	(★705-18-36820)	.GEAR, DRIVEN	1		B10001-
8	705-17-02612	.PLATE, SIDE	2		B10001-
9	705-17-02430	.RING, BACK-UP	2		B10001-
10	705-17-02460	.RING, SEAL	2		B10001-
11	705-17-02360	.O-RING	2		B10001-
12	04020-01024	.PIN, DOWEL	4		B10001-
13	01253-61210	.BOLT	4		B10001-
14	01643-51232	.WASHER	4		B10001-
15	705-17-02870	.PLATE	1		B10001-
16	705-17-02830	.SEAL, OIL	1		B10001-
17	04065-04018	.RING, SNAP	1		B10001-

GEAR PUMP (TANDEM) (INNER PARTS) (1/2)

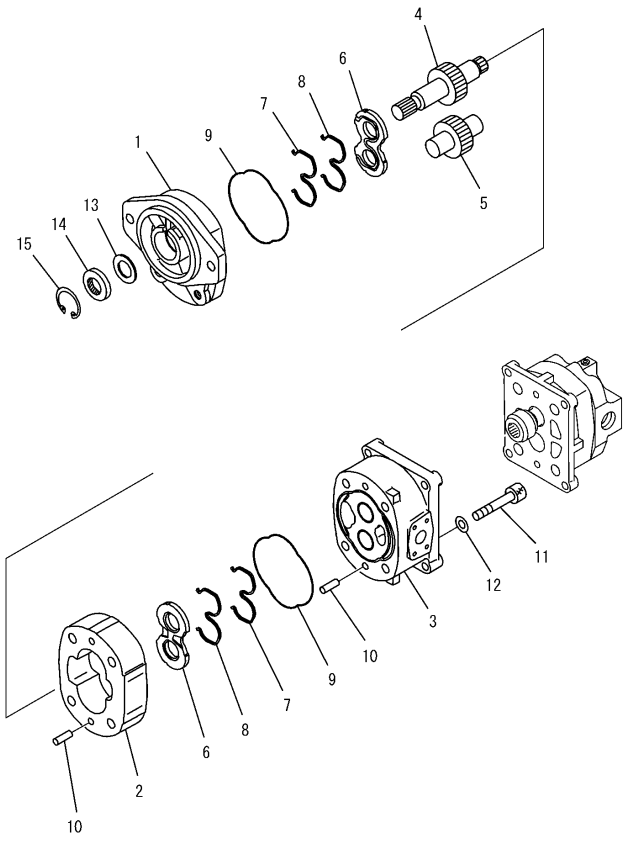

Y1610-11A0

GEAR PUMP (TANDEM) (INNER PARTS) (1/2)

Item	Part Number	Description	Qty.	Ref.	Serial No.
	705-52-21160	PUMP ASSEMBLY, (SAR63+SBR10)	1		B10001-
		THIS ASSEMBLY CONSISTS OF ALL PARTS SHOWN IN FIGS.Y1600-11A0 AND Y1600-12A0.			
	705-22-36270	.PUMP ASSEMBLY, (SAR63)	1		B10001-
1	(★705-17-02022)	..BRACKET ASSEMBLY	1		B10001-
	(★705-17-02353)	...BUSHING, PLANE	2		B10001-
2	(★705-18-36050)	..CASE, GEAR	1		B10001-
3	(★705-17-02220)	..CARRIER	1		B10001-
	(★705-17-02353)	...BUSHING, PLANE	2		B10001-
4	(★705-29-36660)	..GEAR, DRIVE	1		B10001-
5	(★705-18-36820)	..GEAR, DRIVEN	1		B10001-
6	705-17-02612	..PLATE, SIDE	2		B10001-
7	705-17-02430	..RING, BACK-UP	2		B10001-
8	705-17-02460	..RING, SEAL	2		B10001-
9	705-17-02360	..O-RING	2		B10001-
10	04020-01024	..PIN, DOWEL	4		B10001-
11	01253-61220	..BOLT	4		B10001-
12	01643-51232	..WASHER	4		B10001-
13	705-17-02870	..PLATE	1		B10001-
14	705-17-02830	..SEAL, OIL	1		B10001-
15	04065-04018	..RING, SNAP	1		B10001-

GEAR PUMP (TANDEM) (INNER PARTS) (2/2)

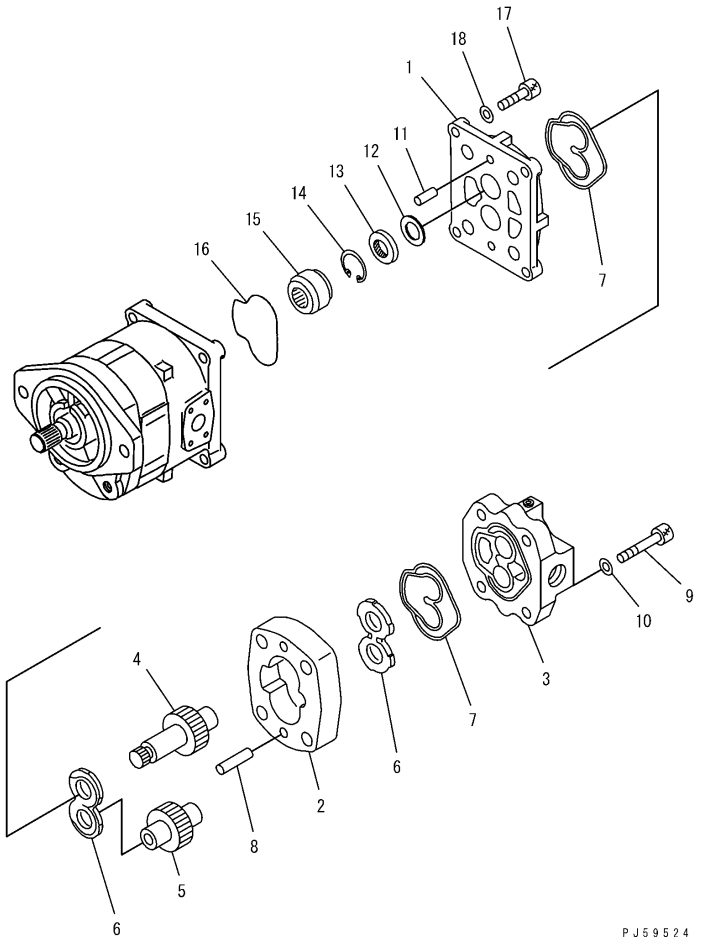

GEAR PUMP (TANDEM) (INNER PARTS) (2/2)

Item	Part Number	Description	Qty.	Ref.	Serial No.
	(705-52-21160)	PUMP ASSEMBLY, (SAR63+SBR10)	1		B10001-
		THIS ASSEMBLY CONSISTS OF ALL PARTS SHOWN IN FIGS.Y1600-11A0 AND Y1600-12A0.			
	705-41-05460	.PUMP ASSEMBLY, (SBR10)	1		B10001-
1	(★705-41-83050)	..BRACKET	1		B10001-
	(★705-40-80610)	...BUSHING, PLANE	1		B10001-
	(★705-40-80620)	...BUSHING, PLANE	1		B10001-
2	(★705-40-22020)	..CASE, GEAR	1		B10001-
3	(★705-41-83110)	..COVER	1		B10001-
	(★705-40-80610)	...BUSHING, PLANE	1		B10001-
	(★705-40-80620)	...BUSHING, PLANE	1		B10001-
4	(★705-40-22760)	..GEAR, DRIVE	1		B10001-
5	(★705-40-22511)	..GEAR, DRIVEN	1		B10001-
6	705-40-83720	..PLATE, SIDE	2		B10001-
7	705-40-80770	..SEAL, RING	2		B10001-
8	04020-00820	..PIN, DOWEL	2		B10001-
9	705-41-80830	..BOLT	4		B10001-
10	01643-51232	..WASHER	4		B10001-
11	04020-01024	..PIN, DOWEL	2		B10001-
12	705-40-81870	..PLATE	1		B10001-
13	705-40-81820	..SEAL, OIL	1		B10001-
14	705-17-02870	..PLATE, SNAP	1		B10001-
15	705-67-01330	.COUPLING ASSEMBLY	1		B10001-
16	705-17-02420	.O-RING, RING	1		B10001-
17	01252-61040	.BOLT	4		B10001-
18	01643-51032	.WASHER	4		B10001-

BLADE LIFT CYLINDER (INNER PARTS)

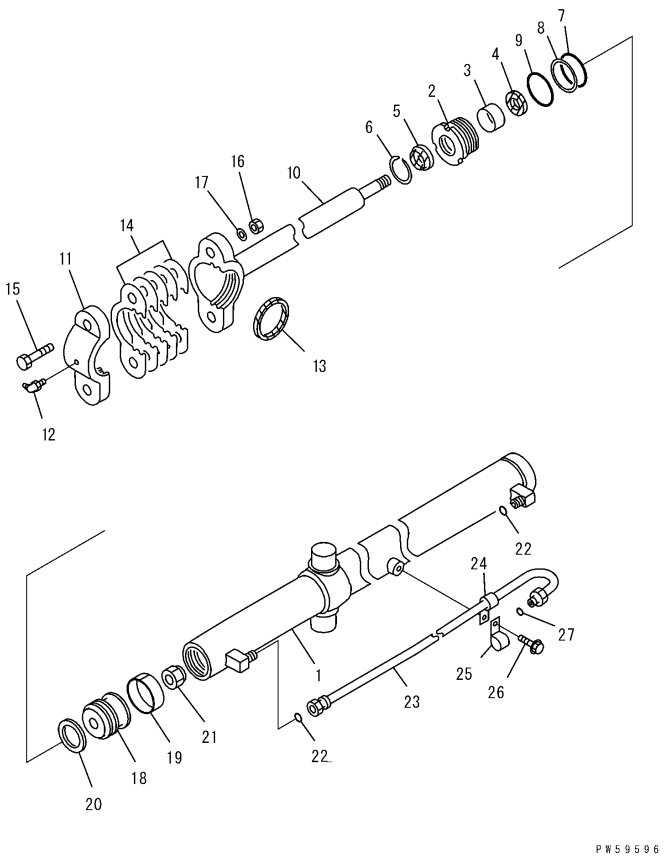

Y1620-01A0A

BLADE LIFT CYLINDER (INNER PARTS)

Item	Part Number	Description	Qty.	Ref.	Serial No.
G1	(⊙707-02-X0140)	CYLINDER GROUP, L.H.	1		B10001-
	(⊙707-02-X7310)	CYLINDER GROUP, L.H.(FINAL COATING)	1		B10001-
	(⊙707-02-X0150)	CYLINDER GROUP, R.H.	1		B10001-
	(⊙707-02-X7320)	CYLINDER GROUP, R.H.(FINAL COATING)	1		B10001-
		==========.			B10001-
	707-02-00140	CYLINDER ASSEMBLY	1		B10001-
1	707-12-80160	.CYLINDER	1		B10001-
2	707-29-80740	.HEAD, CYLINDER	1		B10001-
3	07177-05030	.BUSHING	1		B10001-
4	707-51-50211	.PACKING, ROD (KIT)	1		B10001-
5	176-63-92240	.SEAL, DUST (KIT)	1		B10001-
6	07179-12062	.RING, SNAP	1		B10001-
7	07000-12075	.O-RING (KIT)	1		B10001-
8	07146-02076	.RING, BACK-UP (KIT)	1		B10001-
9	07000-12080	.O-RING (KIT)	1		B10001-
10	707-60-50020	.ROD, PISTON	1		B10001-
11	07138-00980	.CAP	1		B10001-
12	07020-00900	.FITTING, GREASE	1		B10001-
13	07141-00090	.SEAL, DUST (KIT)	1		B10001-
14	07139-00902	.SHIM, 0.2MM	3		B10001-
	07139-00905	.SHIM, 0.5MM	2		B10001-
15	01010-82075	.BOLT	2		B10001-
16	01580-12016	.NUT	2		B10001-
17	01643-32060	.WASHER	2		B10001-
18	707-36-80070	.PISTON	1		B10001-
19	07156-00810	.RING, WEAR (KIT)	1		B10001-
20	707-44-80180	.RING, PISTON (KIT)	1		B10001-
21	07165-12729	.NUT, NYLON	1		B10001-
22	02896-11009	.O-RING (KIT)	2		B10001-
23	23B-60-34351	TUBE, L.H.	1		B10001-
	23B-60-34371	TUBE, R.H.	1		B10001-
24	04434-51510	CLIP	1		B10001-
25	04434-51810	CLIP	1		B10001-
26	01010-81020	BOLT	1		B10001-
27	02896-11009	O-RING (KIT)	1		B10001-
		==========.			B10001-

BLADE LIFT CYLINDER (INNER PARTS)

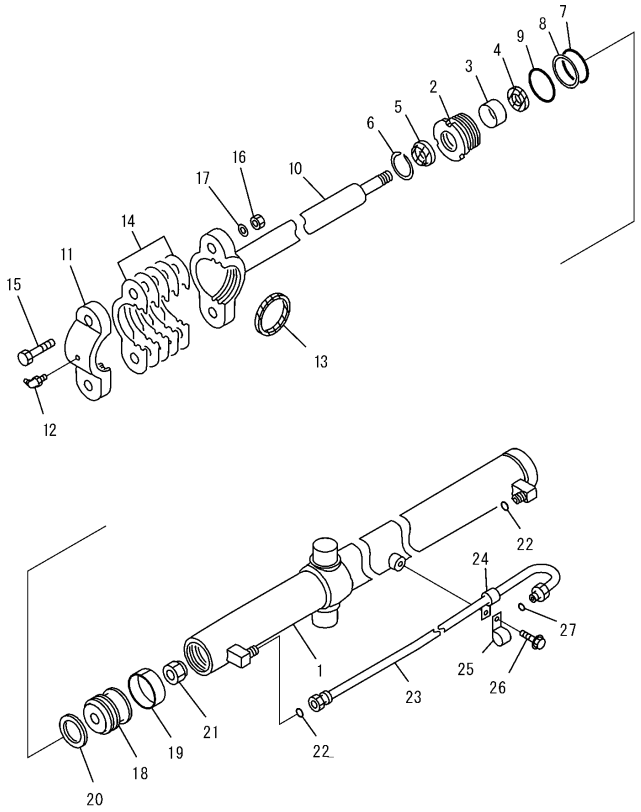

BLADE LIFT CYLINDER (INNER PARTS)

Item	Part Number	Description	Qty.	Ref.	Serial No.
		SERVICE KIT			B10001-
K	707-98-25320	SERVICE KIT, BLADE LIFT CYLINDER	2		B10001-

BLADE SHIFT CYLINDER (INNER PARTS)

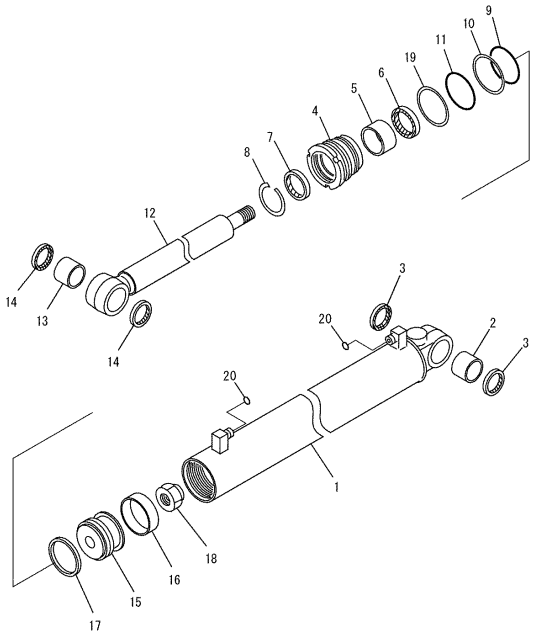

Y1620-11A0A

BLADE SHIFT CYLINDER (INNER PARTS)

Item	Part Number	Description	Qty.	Ref.	Serial No.
	707-00-0C140	CYLINDER ASSEMBLY	1		B10001-
	707-00-07G00	CYLINDER ASSEMBLY, (FINAL COATING)	1		B10001-
1	707-11-80C20	.CYLINDER	1		B10001-
2	07143-10404	.BUSHING	1		B10001-
3	07145-00040	.SEAL, DUST (KIT)	2		B10001-
4	707-29-80840	.HEAD, CYLINDER	1		B10001-
5	07177-05030	.BUSHING	1		B10001-
6	707-51-50211	.PACKING, ROD (KIT)	1		B10001-
7	176-63-92240	.SEAL, DUST (KIT)	1		B10001-
8	07179-12062	.RING, SNAP	1		B10001-
9	07000-12075	.O-RING (KIT)	1		B10001-
10	07146-02076	.RING, BACK-UP (KIT)	1		B10001-
11	07000-12080	.O-RING (KIT)	1		B10001-
12	707-58-50400	.ROD, PISTON	1		B10001-
13	07143-10404	.BUSHING	1		B10001-
14	07145-00040	.SEAL, DUST (KIT)	2		B10001-
15	707-36-80911	.PISTON	1		B10001-
16	07155-00820	.RING, WEAR (KIT)	1		B10001-
17	707-44-80070	.RING, PISTON (KIT)	1		B10001-
18	07165-12729	.NUT, NYLON	1		B10001-
19	707-45-80910	.LOCK	1		B10001-
20	02896-11009	.O-RING (KIT)	2		B10001-
		SERVICE KIT			B10001-
K	707-98-25330	SERVICE KIT, BLADE SIDE SHIFT CYLINDER	1		B10001-

DRAWBAR SHIFT CYLINDER (INNER PARTS)

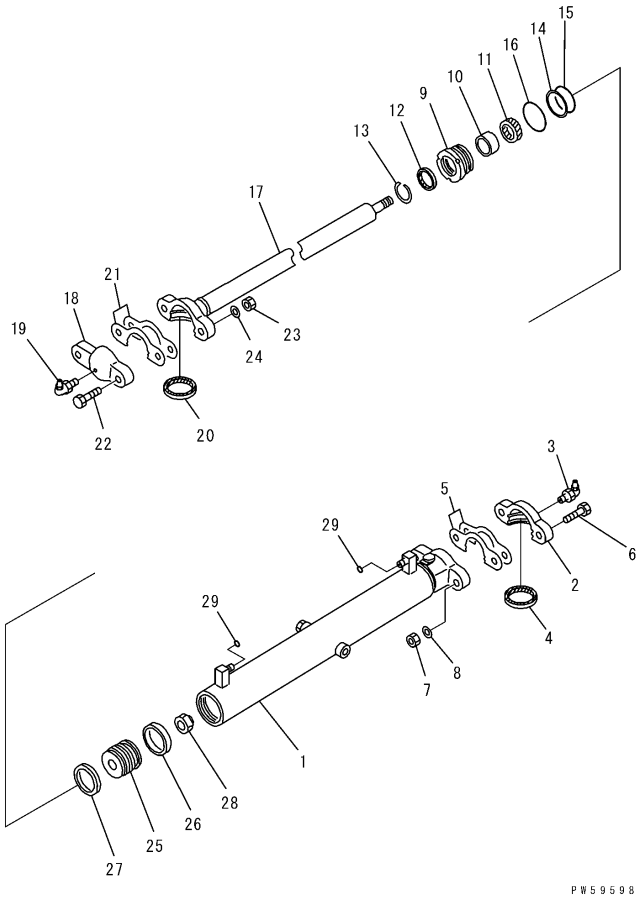

Y1620-21A0A

DRAWBAR SHIFT CYLINDER (INNER PARTS)

Item	Part Number	Description	Qty.	Ref.	Serial No.
	707-00-0C160	CYLINDER ASSEMBLY	1		B10001-
	707-00-07G20	CYLINDER GROUP, (FINAL COATING)	1		B10001-
1	707-11-80C40	.CYLINDER	1		B10001-
2	07138-00980	.CAP, CYLINDER	1		B10001-
3	07020-00900	.FITTING, GREASE	1		B10001-
4	07141-00090	.SEAL, DUST (KIT)	1		B10001-
5	07139-00902	.SHIM, 0.2MM	3		B10001-
	07139-00905	.SHIM, 0.5MM	2		B10001-
6	01010-82075	.BOLT	2		B10001-
7	01580-12016	.NUT	2		B10001-
8	01643-32060	.WASHER	2		B10001-
9	707-29-80930	.HEAD, CYLINDER	1		B10001-
10	07177-04530	.BUSHING	1		B10001-
11	707-51-45210	.PACKING, ROD (KIT)	1		B10001-
12	112-63-15370	.SEAL, DUST (KIT)	1		B10001-
13	07179-12057	.RING, SNAP	1		B10001-
14	07000-12075	.O-RING (KIT)	1		B10001-
15	07001-02075	.RING, BACK-UP (KIT)	1		B10001-
16	07000-12080	.O-RING (KIT)	1		B10001-
17	707-60-45010	.ROD, PISTON	1		B10001-
18	07138-00980	.CAP, ROD	1		B10001-
19	07020-00900	.FITTING, GREASE	1		B10001-
20	07141-00090	.SEAL, DUST (KIT)	1		B10001-
21	07139-00902	.SHIM, 0.2MM	3		B10001-
	07139-00905	.SHIM, 0.5MM	2		B10001-
22	01010-82075	.BOLT	2		B10001-
23	01580-12016	.NUT	2		B10001-
24	01643-32060	.WASHER	2		B10001-
25	707-36-80911	.PISTON	1		B10001-
26	07155-00820	.RING, WEAR (KIT)	1		B10001-
27	707-44-80070	.RING, PISTON (KIT)	1		B10001-
28	07165-12729	.NUT, NYLON	1		B10001-
29	02896-11009	.O-RING (KIT)	2		B10001-
		SERVICE KIT			B10001-
K	707-98-24320	SERVICE KIT, DRAWBAR SIDE SHIFT CYLINDER	1		B10001-

POWER TILT CYLINDER (INNER PARTS)

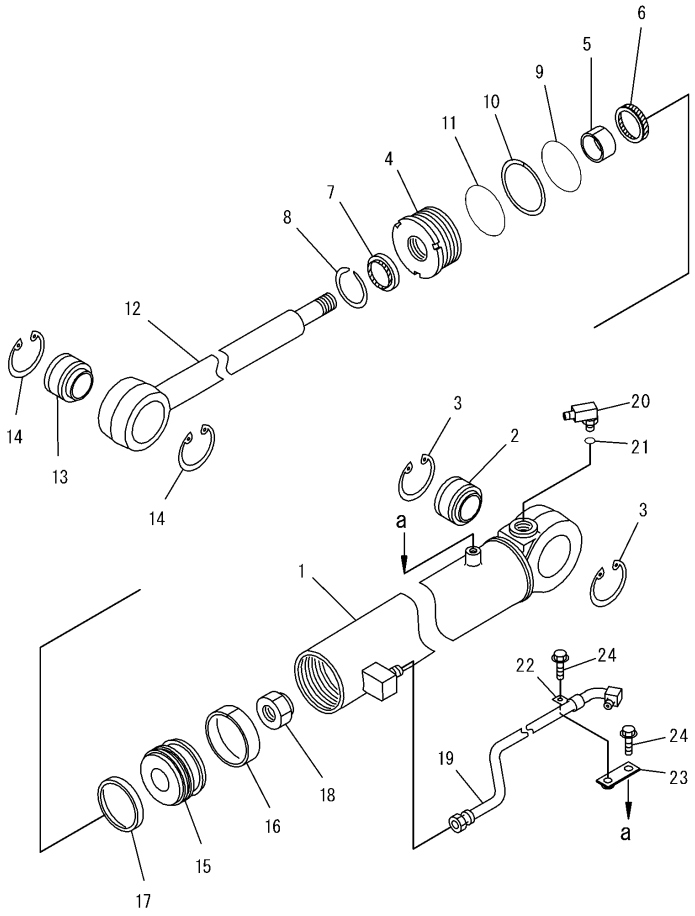

PJ59527

POWER TILT CYLINDER (INNER PARTS)

Item	Part Number	Description	Qty.	Ref.	Serial No.
G1	(⊙707-00-XC150)	CYLINDER GROUP	1		B10001-
	(⊙707-00-X7G10)	CYLINDER GROUP, (FINAL COATING)	1		B10001-
		==========			B10001-
	707-00-0C150	CYLINDER ASSEMBLY	1		B10001-
1	707-11-80C30	.CYLINDER	1		B10001-
2	114-63-55170	.BUSHING	1		B10001-
3	04065-06220	.RING, SNAP	2		B10001-
4	707-29-80820	.HEAD, CYLINDER	1		B10001-
5	07177-04025	.BUSHING	1		B10001-
6	707-51-40210	.PACKING, ROD (KIT)	1		B10001-
7	198-63-75190	.SEAL, DUST (KIT)	1		B10001-
8	07179-12052	.RING, SNAP	1		B10001-
9	07000-12075	.O-RING (KIT)	1		B10001-
10	07146-02076	.RING, BACK-UP (KIT)	1		B10001-
11	07000-12080	.O-RING (KIT)	1		B10001-
12	23B-63-18121	.ROD, PISTON	1		B10001-
13	114-63-55170	.BUSHING	1		B10001-
14	04065-06220	.RING, SNAP	2		B10001-
15	707-36-80970	.PISTON	1		B10001-
16	07156-00810	.RING, WAER (KIT)	1		B10001-
17	707-44-80070	.RING, PISTON (KIT)	1		B10001-
18	07165-12729	.NUT	1		B10001-
19	02896-11009	.O-RING (KIT)	2		B10001-
20	707-86-38980	TUBE	1		B10001-
21	02896-11009	O-RING	1		B10001-
22	04434-51510	CLIP	1		B10001-
23	01435-01016	BOLT	1		B10001-
		==========			B10001-
		SERVICE KIT			B10001-
K	707-98-23170	SERVICE KIT, POWER TILT CYLINDER	1		B10001-

SCARIFIER CYLINDER (INNER PARTS)

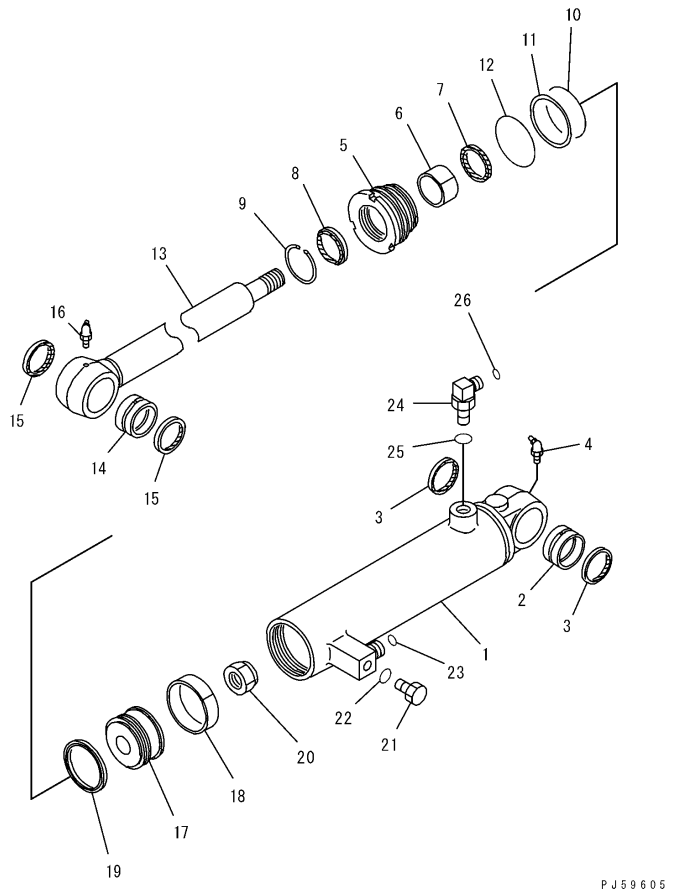

SCARIFIER CYLINDER (INNER PARTS)

Item	Part Number	Description	Qty.	Ref.	Serial No.
G1	(⊙707-00-XC250)	CYLINDER GROUP	1		B10001-
	(⊙707-00-X7H00)	CYLINDER GROUP, (FINAL COATING)	1		B10001-
		==========			B10001-
	707-00-0C250	CYLINDER ASSEMBLY	1		B10001-
1	707-11-80C60	.CYLINDER	1		B10001-
2	07144-10505	.BUSHING	1		B10001-
3	07145-00050	.SEAL, DUST (KIT)	2		B10001-
4	07020-00675	.FITTING, GREASE	1		B10001-
5	707-29-80740	.HEAD, CYLINDER	1		B10001-
6	07177-05030	.BUSHING	1		B10001-
7	707-51-50211	.PACKING, ROD (KIT)	1		B10001-
8	176-63-92240	.SEAL, DUST (KIT)	1		B10001-
9	07179-12062	.RING, SNAP	1		B10001-
10	07000-12075	.O-RING (KIT)	1		B10001-
11	07146-02076	.RING, BACK-UP (KIT)	1		B10001-
12	07000-12080	.O-RING (KIT)	1		B10001-
13	721-58-50800	.ROD, PISTON	1		B10001-
14	07144-10505	.BUSHING	1		B10001-
15	07145-00050	.SEAL, DUST (KIT)	2		B10001-
16	07020-00000	.FITTING, GREASE	1		B10001-
17	707-36-80970	.PISTON	1		B10001-
18	07156-00810	.RING, WEAR (KIT)	1		B10001-
19	707-44-80070	.RING, PISTON (KIT)	1		B10001-
20	07165-12729	.NUT, NYLON	1		B10001-
21	07040-11007	.PLUG	1		B10001-
22	07002-11023	.O-RING (KIT)	1		B10001-
23	02896-11009	.O-RING (KIT)	1		B10001-
24	02782-10315	ELBOW	1		B10001-
25	07002-12034	O-RING (KIT)	1		B10001-
26	02896-11009	O-RING (KIT)	1		B10001-
		==========			B10001-
		SERVICE KIT			B10001-
K	707-98-25340	SERVICE KIT, SCARIFIER CYLINDER	1		B10001-

REAR RIPPER CYLINDER (INNER PARTS)

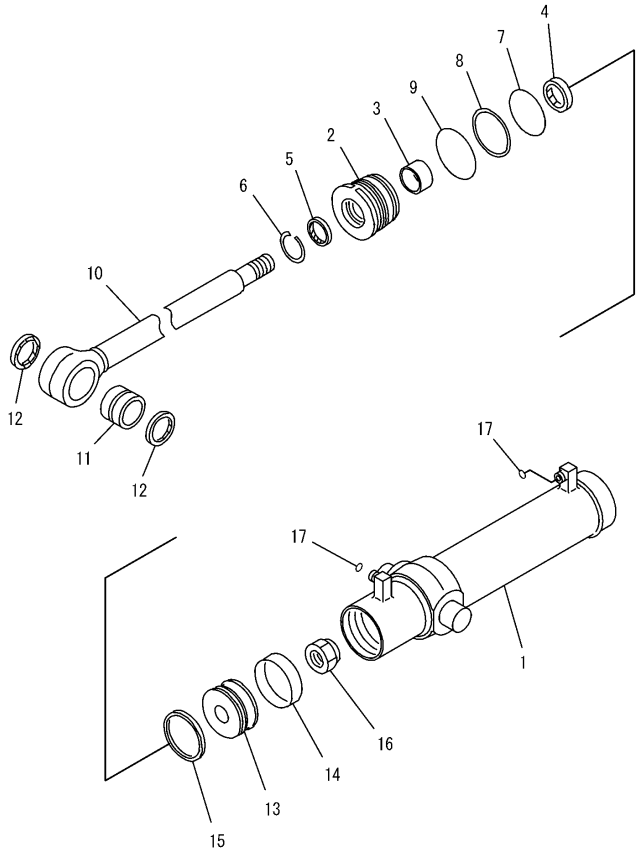

PJ59606

REAR RIPPER CYLINDER (INNER PARTS)

Item	Part Number	Description	Qty.	Ref.	Serial No.
	707-02-00170	CYLINDER ASSEMBLY	1		B10001-
	707-02-07340	CYLINDER ASSEMBLY, (FINAL COATING)	1		B10001-
1	707-12-10150	.CYLINDER	1		B10001-
2	707-29-10921	.HEAD, CYLINDER	1		B10001-
3	07177-05030	.BUSHING	1		B10001-
4	707-51-50210	.PACKING, ROD (KIT)	1		B10001-
5	176-63-92240	.SEAL, DUST (KIT)	1		B10001-
6	07179-12062	.RING, SNAP	1		B10001-
7	07000-12095	.O-RING (KIT)	1		B10001-
8	07001-02095	.RING, BACK-UP (KIT)	1		B10001-
9	07000-12100	.O-RING (KIT)	1		B10001-
10	721-58-50900	.ROD, PISTON	1		B10001-
11	07143-10506	.BUSHING	1		B10001-
12	07145-00055	.SEAL, DUST (KIT)	2		B10001-
13	707-36-10950	.PISTON	1		B10001-
14	07156-01012	.RING, WEAR (KIT)	1		B10001-
15	707-44-10070	.RING, PISTON (KIT)	1		B10001-
16	07165-13336	.NUT, NYLON	1		B10001-
17	02896-11009	.O-RING (KIT)	2		B10001-
		SERVICE KIT			B10001-
	707-98-32310	SERVICE KIT, RIPPER CYLINDER	1		B10001-

STEERING CYLINDER (INNER PARTS)

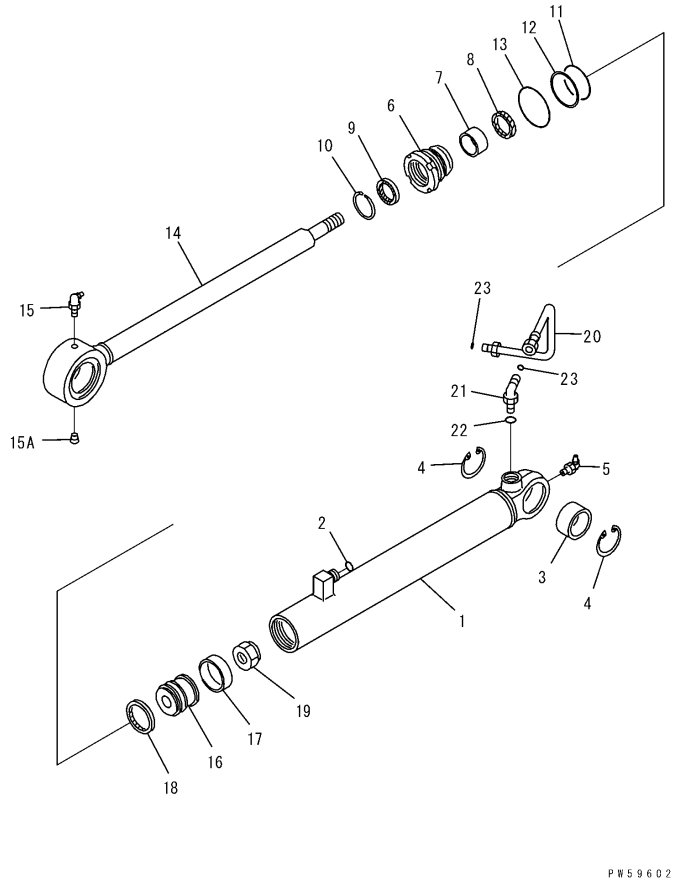

STEERING CYLINDER (INNER PARTS)

Item	Part Number	Description	Qty.	Ref.	Serial No.
G1	(⊙707-00-XC200)	CYLINDER GROUP, L.H.	1		B10001-
	(⊙707-00-X7G50)	CYLINDER GROUP, L.H.(FINAL COATING)	1		B10001-
	(⊙707-00-XC210)	CYLINDER GROUP, R.H.	1		B10001-
	(⊙707-00-X7G60)	CYLINDER GROUP, R.H.(FINAL COATING)	1		B10001-
		==========			B10001-
	707-00-0C200	CYLINDER ASSEMBLY, L.H.	1		B10001-
	707-00-0C210	CYLINDER ASSEMBLY, R.H.	1		B10001-
1	721-11-50470	.CYLINDER	1		B10001-
2	02896-11009	.O-RING (KIT)	1		B10001-
3	707-76-35010	.BUSHING	1		B10001-
4	04065-05520	.RING, SNAP	2		B10001-
5	07020-00900	.FITTING, GREASE	1		B10001-
6	707-29-50981	.HEAD, CYLINDER	1		B10001-
7	07177-03525	.BUSHING	1		B10001-
8	707-51-35210	.PACKING, ROD (KIT)	1		B10001-
9	175-63-75190	.SEAL, DUST (KIT)	1		B10001-
10	07179-00054	.RING, SNAP	1		B10001-
11	07000-13045	.O-RING (KIT)	1		B10001-
12	707-35-99500	.RING, BACK-UP (KIT)	1		B10001-
13	07000-13048	.O-RING (KIT)	1		B10001-
14	707-61-35040	.ROD, PISTON	1		B10001-
15	07020-00675	.FITTING, GREASE	1		B10001-
15A	07043-70108	.PLUG	1		B10001-
16	707-36-50400	.PISTON	1		B10001-
17	10E-63-32390	.RING, WEAR (KIT)	1		B10001-
18	707-44-50070	.RING, PISTON (KIT)	1		B10001-
19	07165-12022	.NUT, NYLON	1		B10001-
20	707-86-38100	TUBE, L.H.	1		B10001-
	707-86-38200	TUBE, R.H.	1		B10001-
21	02782-10315	ELBOW	1		B10001-
22	07002-12034	O-RING (KIT)	1		B10001-
23	02896-11009	O-RING (KIT)	2		B10001-
		==========			B10001-
		SERVICE KIT			B10001-
K	707-98-05450	SERVICE KIT, STEERING CYLINDER	2		B10001-

LEANING CYLINDER (INNER PARTS)

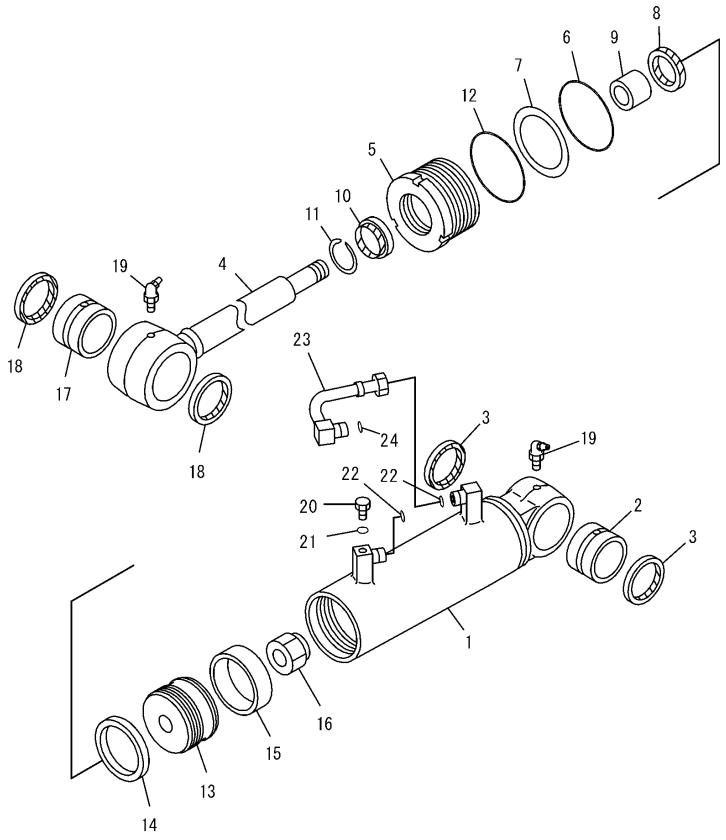

PJ59607

LEANING CYLINDER (INNER PARTS)

Item	Part Number	Description	Qty.	Ref.	Serial No.
G1	(⊙707-00-XC240)	CYLINDER GROUP	1		B10001-
	(⊙707-00-X7G90)	CYLINDER GROUP, (FINAL COATING)	1		B10001-
		==========			B10001-
	707-00-0C240	CYLINDER ASSEMBLY	1		B10001-
1	721-11-70690	.CYLINDER	1		B10001-
2	07144-10404	.BUSHING	1		B10001-
3	07145-00040	.SEAL, DUST (KIT)	2		B10001-
4	721-58-35310	.ROD, PISTON	1		B10001-
5	707-29-70820	.HEAD, CYLINDER	1		B10001-
6	07000-12065	.O-RING (KIT)	1		B10001-
7	07146-02066	.RING, BACK-UP (KIT)	1		B10001-
8	707-51-35210	.PACKING, ROD (KIT)	1		B10001-
9	07177-03525	.BUSHING	1		B10001-
10	175-63-75190	.SEAL, DUST (KIT)	1		B10001-
11	07179-12047	.RING, SNAP	1		B10001-
12	07000-12070	.O-RING (KIT)	1		B10001-
13	707-36-70930	.PISTON	1		B10001-
14	707-44-70070	.RING, PISTON (KIT)	1		B10001-
15	07156-00710	.RING, WEAR (KIT)	1		B10001-
16	07165-12426	.NUT, NYLON	1		B10001-
17	707-76-45120	.BUSHING	1		B10001-
18	07145-00045	.SEAL, DUST (KIT)	2		B10001-
19	07020-00675	.FITTING, GREASE	2		B10001-
20	07040-11007	.PLUG	1		B10001-
21	07002-11023	.O-RING (KIT)	1		B10001-
22	02896-11009	.O-RING (KIT)	2		B10001-
23	707-86-38960	TUBE	1		B10001-
24	02896-11009	O-RING (KIT)	1		B10001-
		==========			B10001-
		SERVICE KIT			B10001-
K	707-98-12690	SERVICE KIT, LEANING CYLINDER	1		B10001-

ARTICULATE CYLINDER (INNER PARTS)

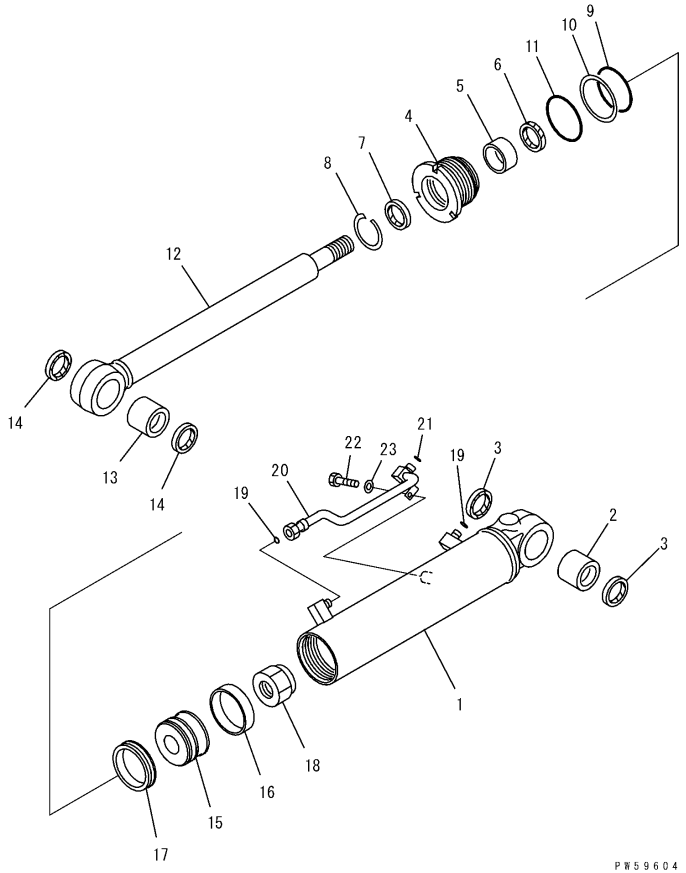

Y1622-21A0A

ARTICULATE CYLINDER (INNER PARTS)

Item	Part Number	Description	Qty.	Ref.	Serial No.
G1	(⊙707-00-XC170)	CYLINDER GROUP, L.H.	1		B10001-
	(⊙707-00-X7G30)	CYLINDER GROUP, L.H.(FINAL COATING)	1		B10001-
	(⊙707-00-XC180)	CYLINDER GROUP, R.H.	1		B10001-
	(⊙707-00-X7G40)	CYLINDER GROUP, R.H.(FINAL COATING)	1		B10001-
		==========			B10001-
	707-00-0C170	CYLINDER ASSEMBLY, L.H.	1		B10001-
	707-00-0C180	CYLINDER ASSEMBLY, R.H.	1		B10001-
1	721-11-90370	.CYLINDER, L.H.	1		B10001-
	721-11-90380	.CYLINDER, R.H.	1		B10001-
2	07143-10505	.BUSHING	1		B10001-
3	07145-00050	.SEAL, DUST (KIT)	2		B10001-
4	707-29-90730	.HEAD, CYLINDER	1		B10001-
5	07177-05030	.BUSHING	1		B10001-
6	707-51-50211	.PACKING, ROD (KIT)	1		B10001-
7	176-63-92240	.SEAL, DUST (KIT)	1		B10001-
8	07179-12062	.RING, SNAP	1		B10001-
9	07000-12085	.O-RING (KIT)	1		B10001-
10	07146-02086	.RING, BACK-UP (KIT)	1		B10001-
11	07000-12090	.O-RING (KIT)	1		B10001-
12	721-58-50500	.ROD, PISTON	1		B10001-
13	07143-10505	.BUSHING	1		B10001-
14	07145-00050	.SEAL, DUST (KIT)	2		B10001-
15	707-36-90930	.PISTON	1		B10001-
16	07156-00912	.RING, WEAR (KIT)	1		B10001-
17	707-44-90070	.RING, PISTON (KIT)	1		B10001-
18	07165-13638	.NUT, NYLON	1		B10001-
19	02896-11009	.O-RING (KIT)	2		B10001-
20	707-86-38940	TUBE, L.H.	1		B10001-
	707-86-38950	TUBE, R.H.	1		B10001-
21	02896-11009	O-RING (KIT)	1		B10001-
22	01010-81020	BOLT	1		B10001-
23	01643-31032	WASHER	1		B10001-
		==========			B10001-
		SERVICE KIT			B10001-
K	707-98-25680	SERVICE KIT, ARTICULATE CYLINDER	2		B10001-

ACCUMULATOR (BRAKE) (INNER PARTS)

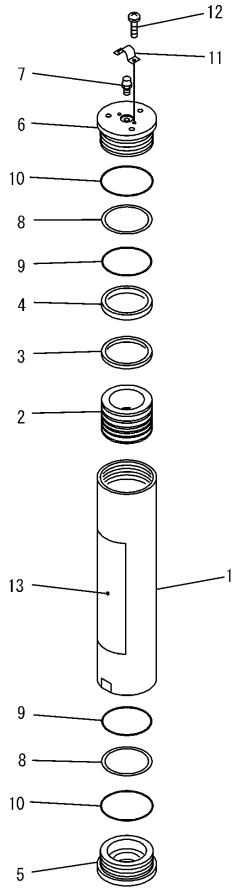

PJW0963

ACCUMULATOR (BRAKE) (INNER PARTS)

Item	Part Number	Description	Qty.	Ref.	Serial No.
	721-32-10241	ACCUMULATOR ASSEMBLY	1		B10001-
1	721-10-10260	.CYLINDER	1		B10001-
2	721-36-10030	.PISTON	1		B10001-
3	721-47-12020	.SEAL	1		B10001-
4	721-47-12080	.SEAL	1		B10001-
5	721-26-10050	.COVER, BOTTOM	1		B10001-
6	721-29-10090	.COVER, TOP	1		B10001-
7	721-89-12010	.VALVE	1		B10001-
8	707-35-91020	.RING, BACK-UP	2		B10001-
9	07000-15090	.O-RING	2		B10001-
10	07000-12100	.O-RING	2		B10001-
11	707-88-45770	.COVER	1		B10001-
12	707-88-81480	.SCREW	2		B10001-
13	721-89-10053	.PLATE, SPECIFICATION	1		B10001-

ACCUMULATOR (BLADE) (INNER PARTS)

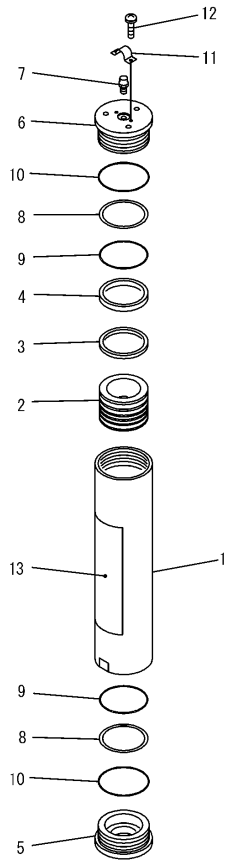

PJW0963

ACCUMULATOR (BLADE) (INNER PARTS)

Item	Part Number	Description	Qty.	Ref.	Serial No.
	721-32-08151	ACCUMULATOR ASSEMBLY, (FINAL COATING)	1		B10001-
	721-32-10251	ACCUMULATOR ASSEMBLY	1		B10001-
1	721-10-10240	.CYLINDER	1		B10001-
2	721-36-10030	.PISTON	1		B10001-
3	721-47-12020	.SEAL	1		B10001-
4	721-47-12080	.SEAL	1		B10001-
5	721-26-10050	.COVER, BOTTOM	1		B10001-
6	721-29-10090	.COVER, TOP	1		B10001-
7	721-89-12010	.VALVE	1		B10001-
8	707-35-91020	.RING, BACK-UP	2		B10001-
9	07000-15090	.O-RING	2		B10001-
10	07000-12100	.O-RING	2		B10001-
11	707-88-45770	.COVER	1		B10001-
12	707-88-81480	.SCREW	2		B10001-
13	721-89-10053	.PLATE, SPECIFICATION	1		B10001-

CONTROL VALVE (4-SPOOL) (1/5) (L.H.)

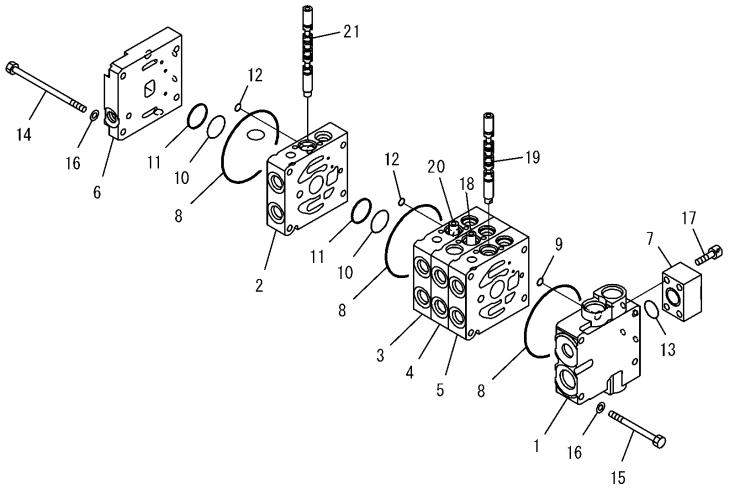

PW5H238

CONTROL VALVE (4-SPOOL) (1/5) (L.H.)

Item	Part Number	Description	Qty.	Ref.	Serial No.
	723-14-11701	CONTROL VALVE	1		B10001-
		THIS ASSEMBLY CONSISTS OF ALL PARTS SHOWN IN FIGS.Y1664-01A0 T0 Y1664-05A0..			
1	☆	.BODY, VALVE	1		B10001-
2	☆	.BLOCK, VALVE	1		B10001-
3	☆	.BLOCK, VALVE	1		B10001-
4	☆	.BLOCK, VALVE	1		B10001-
5	☆	.BLOCK, VALVE	1		B10001-
6	☆	.COVER, VALVE	1		B10001-
7	723-11-18420	.BLOCK	1		B10001-
8	07000-12100	.O-RING	5		B10001-
9	07000-11008	.O-RING	1		B10001-
10	723-11-19110	.O-RING	4		B10001-
11	723-11-19150	.RING	4		B10001-
12	07000-11007	.O-RING	4		B10001-
13	723-11-18430	.O-RING	1		B10001-
14	723-11-32780	.BOLT	4		B10001-
15	01010-80855	.BOLT	4		B10001-
16	01643-50823	.WASHER	8		B10001-
17	01252-60830	.BOLT	4		B10001-
18	☆	.SPOOL	1		B10001-
19	☆	.SPOOL	1		B10001-
20	☆	.SPOOL	1		B10001-
21	☆	.SPOOL	1		B10001-

CONTROL VALVE (4-SPOOL) (2/5) (L.H.)

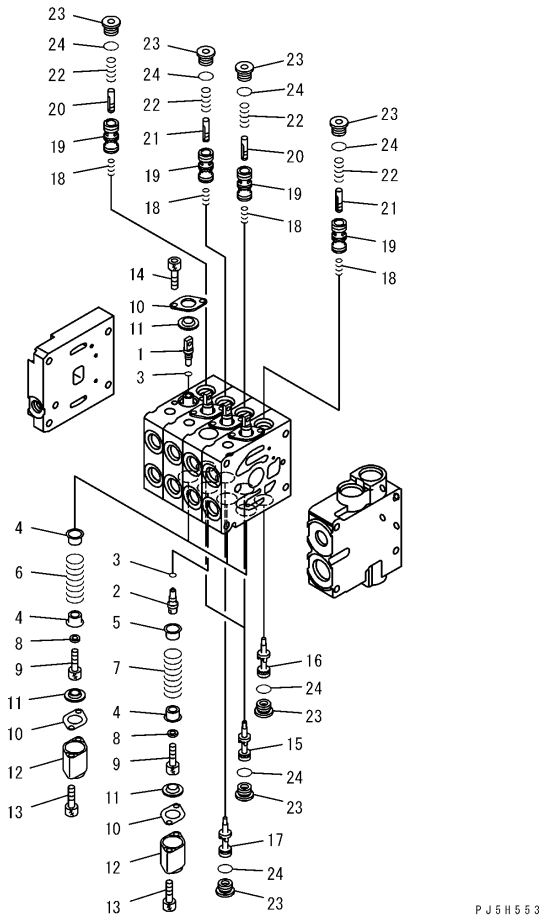

CONTROL VALVE (4-SPOOL) (2/5) (L.H.)

Item	Part Number	Description	Qty.	Ref.	Serial No.
	(723-14-11701)	CONTROL VALVE	1		B10001-
		THIS ASSEMBLY CONSISTS OF ALL PARTS SHOWN IN FIGS.Y1664-01A0 T0 Y1664-05A0..			
1	☆	.PLUG	4		B10001-
2	☆	.PLUG	1		B10001-
3	07002-10823	.O-RING	5		B10001-
4	723-11-32810	.RETAINER, 9.7MM	7		B10001-
	723-11-32820	.RETAINER, 9.8MM	7		B10001-
	723-11-32830	.RETAINER, 9.6MM	7		B10001-
5	723-11-32840	.RETAINER, 9.7MM	1		B10001-
	723-11-32850	.RETAINER, 9.8MM	1		B10001-
	723-11-32860	.RETAINER, 9.6MM	1		B10001-
6	☆	.SPRING	3		B10001-
7	☆	.SPRING	1		B10001-
8	723-11-17150	.WASHER	4		B10001-
9	01252-60610	.BOLT	4		B10001-
10	723-11-17130	.PLATE	8		B10001-
11	709-32-11530	.SEAL	8		B10001-
12	723-11-17930	.CASE, SPRING	4		B10001-
13	01252-60640	.BOLT	8		B10001-
14	01252-60610	.BOLT	8		B10001-
15	☆	.VALVE	2		B10001-
16	☆	.VALVE	1		B10001-
17	☆	.VALVE	1		B10001-
18	723-11-15130	.SPRING	4		B10001-
19	☆	.VALVE	4		B10001-
20	☆	.PISTON	2		B10001-
21	☆	.PISTON	2		B10001-
22	723-11-16130	.SPRING	4		B10001-
23	723-11-15110	.PLUG	8		B10001-
24	07002-11623	.O-RING	8		B10001-

CONTROL VALVE (4-SPOOL) (3/5) (L.H.)

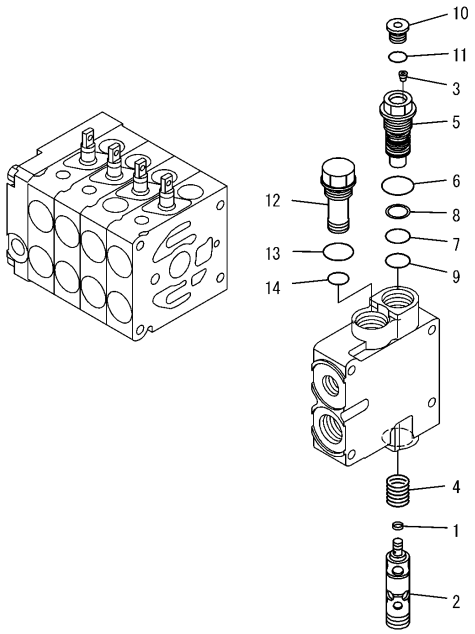

PW5H240

CONTROL VALVE (4-SPOOL) (3/5) (L.H.)

Item	Part Number	Description	Qty.	Ref.	Serial No.
	(723-14-11701)	CONTROL VALVE	1		B10001-
		THIS ASSEMBLY CONSISTS OF ALL PARTS SHOWN IN FIGS.Y1664-01A0 T0 Y1664-05A0..			
1	☆	.SEAL	1		B10001-
2	☆	.SPOOL	1		B10001-
3	☆	.SCREW	1		B10001-
4	723-11-32730	.SPRING	1		B10001-
5	723-11-32720	.SLEEVE	1		B10001-
6	07002-12434	.O-RING	1		B10001-
7	723-11-18150	.O-RING	1		B10001-
8	723-11-18160	.RING	1		B10001-
9	720-68-19760	.O-RING	1		B10001-
10	702-21-55620	.PLUG	1		B10001-
11	07002-11423	.O-RING	1		B10001-
12	700-26-11150	.PLUG	1		B10001-
13	07002-12434	.O-RING	1		B10001-
14	07000-12014	.O-RING	1		B10001-

CONTROL VALVE (4-SPOOL) (4/5) (L.H.)

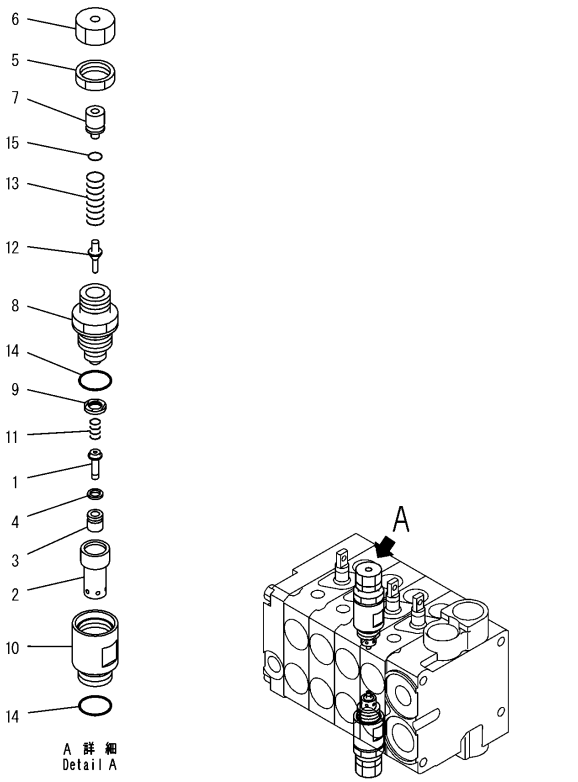

CONTROL VALVE (4-SPOOL) (4/5) (L.H.)

Item	Part Number	Description	Qty.	Ref.	Serial No.
	(723-14-11701)	CONTROL VALVE	1		B10001-
		THIS ASSEMBLY CONSISTS OF ALL PARTS SHOWN IN FIGS.Y1664-01A0 T0 Y1664-05A0.			
	723-10-17100	.VALVE ASSEMBLY, SUCTION AND SAFETY	2		B10001-
1	☆	..PISTON	1		B10001-
2	☆	..SLEEVE	1		B10001-
3	☆	..POPPET	1		B10001-
4	☆	..SEAL	1		B10001-
5	☆	..NUT	1		B10001-
6	☆	..NUT	1		B10001-
7	☆	..SPACER	1		B10001-
8	☆	..PLUG	1		B10001-
9	☆	..SEAL	1		B10001-
10	☆	..SLEEVE	1		B10001-
11	☆	..SPRING	1		B10001-
12	☆	..POPPET	1		B10001-
13	☆	..SPRING	1		B10001-
14	07002-12034	..O-RING	2		B10001-
15	☆	..O-RING	1		B10001-

CONTROL VALVE (4-SPOOL) (5/5) (L.H.)

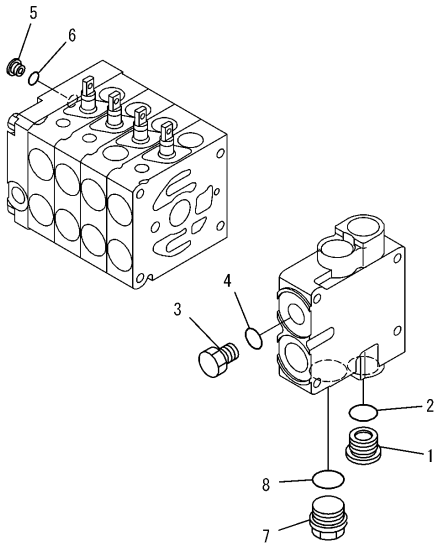

PW5H242

CONTROL VALVE (4-SPOOL) (5/5) (L.H.)

Item	Part Number	Description	Qty.	Ref.	Serial No.
	(723-14-11701)	CONTROL VALVE	1		B10001-
		THIS ASSEMBLY CONSISTS OF ALL PARTS SHOWN IN FIGS.Y1664-01A0 T0 Y1664-05A0..			
1	723-26-15230	.PLUG	1		B10001-
2	07002-12434	.O-RING	1		B10001-
3	708-8E-16250	.PLUG	1		B10001-
4	07002-11823	.O-RING	1		B10001-
5	723-11-18190	.PLUG	1		B10001-
6	07002-11023	.O-RING	1		B10001-
7	709-74-91520	.PLUG	1		B10001-
8	07000-13024	.O-RING	1		B10001-

CONTROL VALVE (4-SPOOL) (1/5) (R.H.)

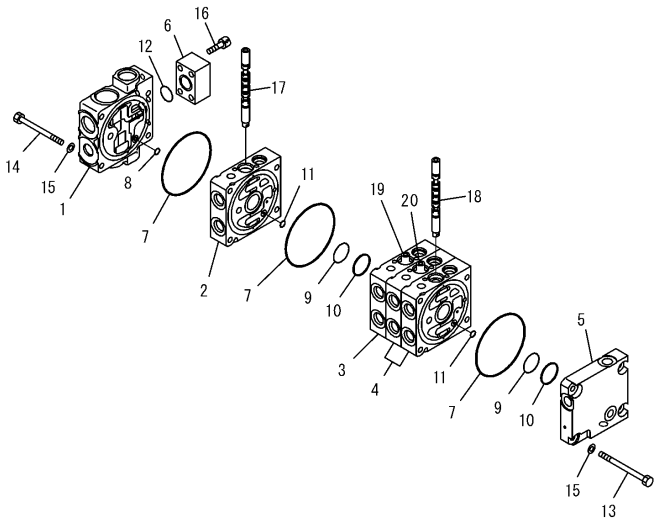

PW5H224

Y1664-11A0

CONTROL VALVE (4-SPOOL) (1/5) (R.H.)

Item	Part Number	Description	Qty.	Ref.	Serial No.
	723-14-11803	CONTROL VALVE	1		B10001-
		THIS ASSEMBLY CONSISTS OF ALL PARTS SHOWN IN FIGS.Y1664-11A0 T0 Y1664-15A0.			
1	☆	.BODY, VALVE	1		B10001-
2	☆	.BLOCK, VALVE	1		B10001-
3	☆	.BLOCK, VALVE	1		B10001-
4	☆	.BLOCK, VALVE	2		B10001-
5	☆	.COVER, VALVE	1		B10001-
6	723-11-18420	.BLOCK	1		B10001-
7	07000-12100	.O-RING	5		B10001-
8	07000-11008	.O-RING	1		B10001-
9	723-11-19110	.O-RING	4		B10001-
10	723-11-19150	.RING	4		B10001-
11	07000-11007	.O-RING	4		B10001-
12	723-11-18430	.O-RING	1		B10001-
13	723-11-32760	.BOLT	4		B10001-
14	723-11-32790	.BOLT	4		B10001-
15	01643-50823	.WASHER	8		B10001-
16	01252-60830	.BOLT	4		B10001-
17	☆	.SPOOL	1		B10001-
18	☆	.SPOOL	1		B10001-
19	☆	.SPOOL	1		B10001-
20	☆	.SPOOL	1		B10001-

CONTROL VALVE (4-SPOOL) (2/5) (R.H.)

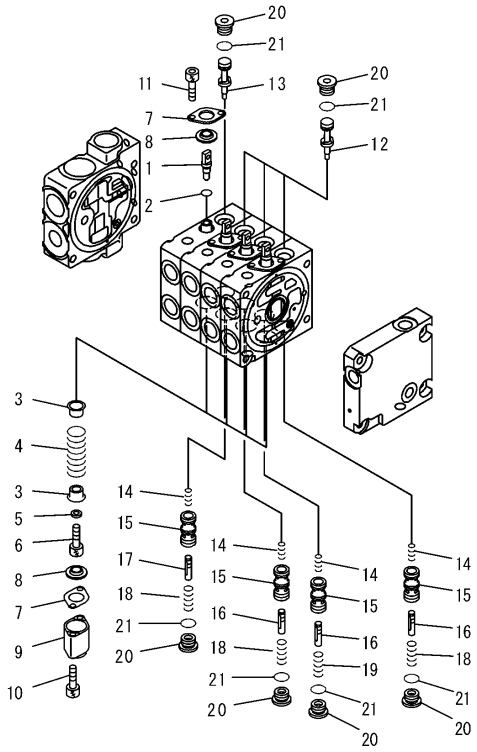

PJ5H554

CONTROL VALVE (4-SPOOL) (2/5) (R.H.)

Item	Part Number	Description	Qty.	Ref.	Serial No.
	(723-14-11803)	CONTROL VALVE	1		B10001-
		THIS ASSEMBLY CONSISTS OF ALL PARTS SHOWN IN FIGS.Y1664-11A0 T0 Y1664-15A0.			
1	☆	.PLUG	4		B10001-
2	07002-10823	.O-RING	4		B10001-
3	723-11-32810	.RETAINER, 9.7MM	8		B10001-
	723-11-32820	.RETAINER, 9.8MM	8		B10001-
	723-11-32830	.RETAINER, 9.6MM	8		B10001-
4	☆	.SPRING	4		B10001-
5	723-11-17150	.WASHER	4		B10001-
6	01252-60610	.BOLT	4		B10001-
7	723-11-17130	.PLATE	8		B10001-
8	709-32-11530	.SEAL	8		B10001-
9	723-11-17930	.CASE, SPRING	4		B10001-
10	01252-60640	.BOLT	8		B10001-
11	01252-60610	.BOLT	8		B10001-
12	☆	.VALVE	3		B10001-
13	☆	.VALVE	1		B10001-
14	723-11-15130	.SPRING	4		B10001-
15	☆	.VALVE	4		B10001-
16	☆	.PISTON	3		B10001-
17	☆	.PISTON	1		B10001-
18	723-11-16130	.SPRING	3		B10001-
19	723-11-26350	.SPRING	1		B10001-
20	723-11-15110	.PLUG	8		B10001-
21	07002-11623	.O-RING	8		B10001-

CONTROL VALVE (4-SPOOL) (3/5) (R.H.)

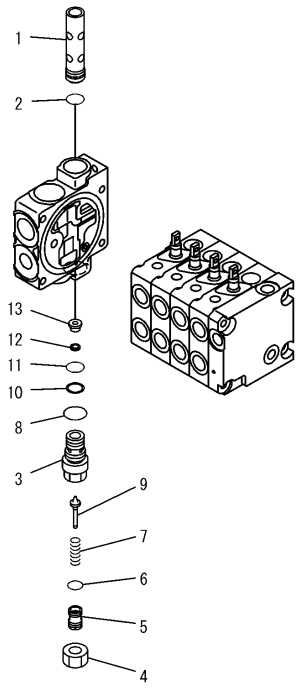

PJ5H555

CONTROL VALVE (4-SPOOL) (3/5) (R.H.)

Item	Part Number	Description	Qty.	Ref.	Serial No.
	(723-14-11803)	CONTROL VALVE	1		B10001-
		THIS ASSEMBLY CONSISTS OF ALL PARTS SHOWN IN FIGS.Y1664-11A0 T0 Y1664-15A0.			
1	☆	.SPOOL	1		B10001-
2	723-11-18150	.O-RING	1		B10001-
	723-10-17802	.VALVE ASSEMBLY, RELIEF	1		B10001-
3	☆	..SLEEVE	1		B10001-
4	700-20-63150	..NUT	1		B10001-
5	700-20-63141	..SCREW	1		B10001-
6	07000-12015	..O-RING	1		B10001-
7	☆	..SPRING	1		B10001-
8	07002-12434	..O-RING	1		B10001-
9	☆	..POPPET	1		B10001-
10	723-11-18160	..RING	1		B10001-
11	723-11-18150	..O-RING	1		B10001-
12	723-60-21130	..FILTER	1		B10001-
13	723-60-21140	..PLUG	1		B10001-

CONTROL VALVE (4-SPOOL) (4/5) (R.H.)

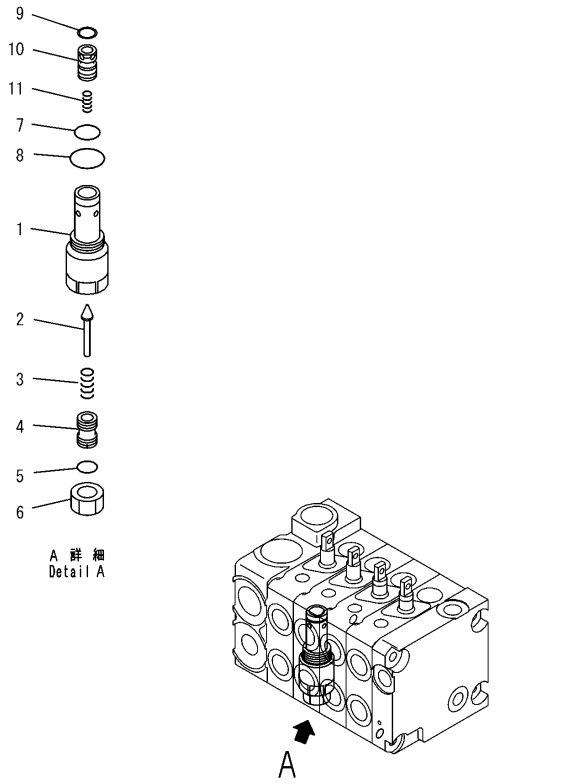

Y1664-14A0

CONTROL VALVE (4-SPOOL) (4/5) (R.H.)

Item	Part Number	Description	Qty.	Ref.	Serial No.
	(723-14-11803)	CONTROL VALVE	1		B10001-
		THIS ASSEMBLY CONSISTS OF ALL PARTS SHOWN IN FIGS.Y1664-11A0 T0 Y1664-15A0.			
	723-10-16903	.VALVE ASSEMBLY, RELIEF	1		B10001-
1	☆	..SLEEVE	1		B10001-
2	☆	..POPPET	1		B10001-
3	☆	..SPRING	1		B10001-
4	☆	..SCREW	1		B10001-
5	☆	..O-RING	1		B10001-
6	☆	..NUT	1		B10001-
7	700-22-11410	..O-RING	1		B10001-
8	07002-12434	..O-RING	1		B10001-
9	☆	..RING	1		B10001-
10	☆	..VALVE	1		B10001-
11	☆	..SPRING	1		B10001-

CONTROL VALVE (4-SPOOL) (5/5) (R.H.)

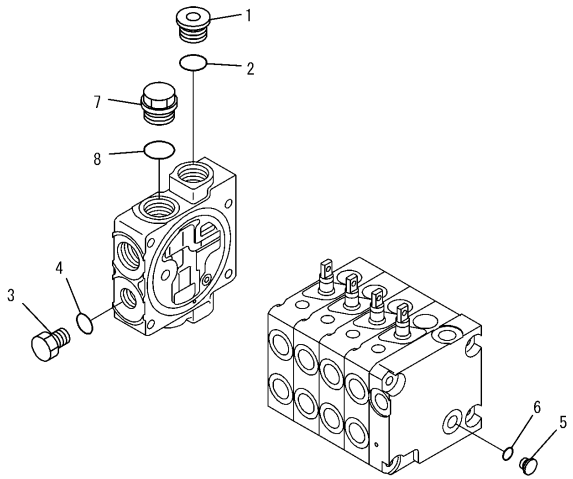

PW5H228

CONTROL VALVE (4-SPOOL) (5/5) (R.H.)

Item	Part Number	Description	Qty.	Ref.	Serial No.
	(723-14-11803)	CONTROL VALVE	1		B10001-
		THIS ASSEMBLY CONSISTS OF ALL PARTS SHOWN IN FIGS.Y1664-11A0 T0 Y1664-15A0.			
1	723-26-15230	.PLUG	1		B10001-
2	07002-12434	.O-RING	1		B10001-
3	708-8E-16250	.PLUG	1		B10001-
4	07002-11823	.O-RING	1		B10001-
5	723-11-18190	.PLUG	1		B10001-
6	07002-11023	.O-RING	1		B10001-
7	709-74-91520	.PLUG	1		B10001-
8	07000-13024	.O-RING	1		B10001-

CONTROL VALVE (5-SPOOL) (1/5) (L.H.) (WITH RIPPER)

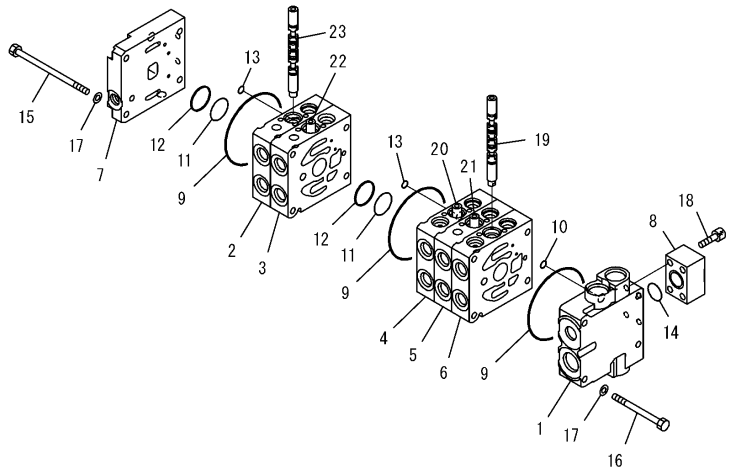

PW5H233

CONTROL VALVE (5-SPOOL) (1/5) (L.H.) (WITH RIPPER)

Item	Part Number	Description	Qty.	Ref.	Serial No.
	723-15-12600	CONTROL VALVE	1		B10001-
		THIS ASSEMBLY CONSISTS OF ALL PARTS SHOWN IN FIGS.Y1665-01A0 T0 Y1665-05A0..			
1	☆	.BODY, VALVE	1		B10001-
2	☆	.BLOCK, VALVE	1		B10001-
3	☆	.BLOCK, VALVE	1		B10001-
4	☆	.BLOCK, VALVE	1		B10001-
5	☆	.BLOCK, VALVE	1		B10001-
6	☆	.BLOCK, VALVE	1		B10001-
7	☆	.COVER, VALVE	1		B10001-
8	723-11-18420	.BLOCK	1		B10001-
9	07000-12100	.O-RING	6		B10001-
10	07000-11008	.O-RING	1		B10001-
11	723-11-19110	.O-RING	5		B10001-
12	723-11-19150	.RING	5		B10001-
13	07000-11007	.O-RING	5		B10001-
14	723-11-18430	.O-RING	1		B10001-
15	723-11-32780	.BOLT	4		B10001-
16	723-11-32790	.BOLT	4		B10001-
17	01643-50823	.WASHER	8		B10001-
18	01252-60830	.BOLT	4		B10001-
19	☆	.SPOOL	1		B10001-
20	☆	.SPOOL	1		B10001-
21	☆	.SPOOL	1		B10001-
22	☆	.SPOOL	1		B10001-
23	☆	.SPOOL	1		B10001-

CONTROL VALVE (5-SPOOL) (2/5) (L.H.) (WITH RIPPER)

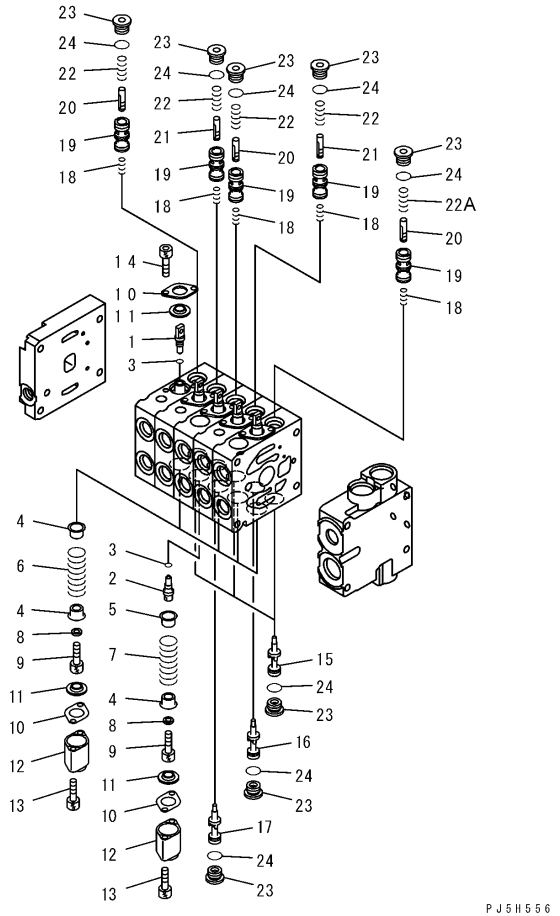

CONTROL VALVE (5-SPOOL) (2/5) (L.H.) (WITH RIPPER)

Item	Part Number	Description	Qty.	Ref.	Serial No.
	(723-15-12600)	CONTROL VALVE	1		B10001-
		THIS ASSEMBLY CONSISTS OF ALL PARTS SHOWN IN FIGS.Y1665-01A0 T0 Y1665-05A0..			
1	☆	.PLUG	5		B10001-
2	☆	.PLUG	1		B10001-
3	07002-10823	.O-RING	6		B10001-
4	723-11-32810	.RETAINER, 9.7MM	9		B10001-
	723-11-32820	.RETAINER, 9.8MM	9		B10001-
	723-11-32830	.RETAINER, 9.6MM	9		B10001-
5	723-11-32840	.RETAINER, 9.7MM	1		B10001-
	723-11-32850	.RETAINER, 9.8MM	1		B10001-
	723-11-32860	.RETAINER, 9.6MM	1		B10001-
6	☆	.SPRING	4		B10001-
7	☆	.SPRING	1		B10001-
8	723-11-17150	.WASHER	5		B10001-
9	01252-60610	.BOLT	5		B10001-
10	723-11-17130	.PLATE	10		B10001-
11	709-32-11530	.SEAL	10		B10001-
12	723-11-17930	.CASE, SPRING	5		B10001-
13	01252-60640	.BOLT	10		B10001-
14	01252-60610	.BOLT	10		B10001-
15	☆	.VALVE	3		B10001-
16	☆	.VALVE	1		B10001-
17	☆	.VALVE	1		B10001-
18	723-11-15130	.SPRING	5		B10001-
19	☆	.VALVE	5		B10001-
20	☆	.PISTON	3		B10001-
21	☆	.PISTON	2		B10001-
22	723-11-16130	.SPRING	5		B10001-
22A	723-11-26350	.SPRING	1		B10001-
23	723-11-15110	.PLUG	10		B10001-
24	07002-11623	.O-RING	10		B10001-

CONTROL VALVE (5-SPOOL) (3/5) (L.H.) (WITH RIPPER)

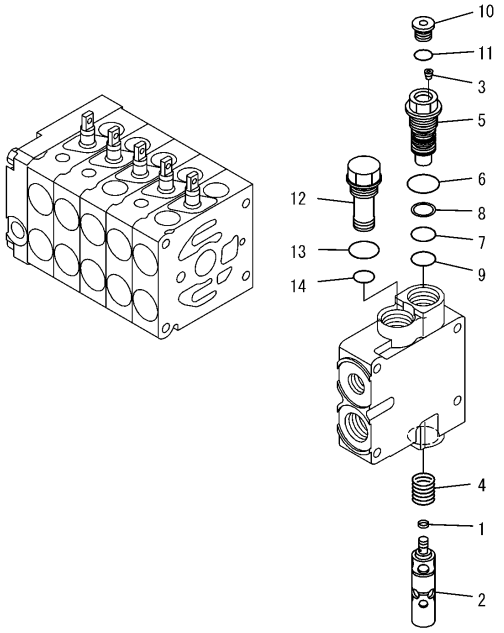

PW5H235

CONTROL VALVE (5-SPOOL) (3/5) (L.H.) (WITH RIPPER)

Item	Part Number	Description	Qty.	Ref.	Serial No.
	(723-15-12600)	CONTROL VALVE	1		B10001-
		THIS ASSEMBLY CONSISTS OF ALL PARTS SHOWN IN FIGS.Y1665-01A0 T0 Y1665-05A0..			
1	☆	.SEAL	1		B10001-
2	☆	.SPOOL	1		B10001-
3	☆	.SCREW	1		B10001-
4	723-11-32730	.SPRING	1		B10001-
5	723-11-32720	.SLEEVE	1		B10001-
6	07002-12434	.O-RING	1		B10001-
7	723-11-18150	.O-RING	1		B10001-
8	723-11-18160	.RING	1		B10001-
9	720-68-19760	.O-RING	1		B10001-
10	702-21-55620	.PLUG	1		B10001-
11	07002-11423	.O-RING	1		B10001-
12	700-26-11150	.PLUG	1		B10001-
13	07002-12434	.O-RING	1		B10001-
14	07000-12014	.O-RING	1		B10001-

CONTROL VALVE (5-SPOOL) (4/5) (L.H.) (WITH RIPPER)

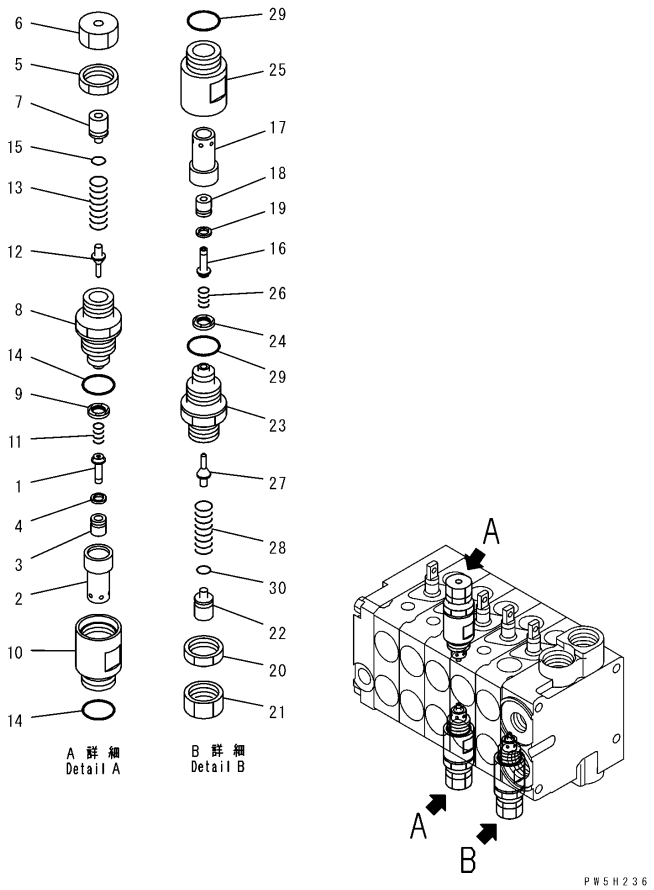

CONTROL VALVE (5-SPOOL) (4/5) (L.H.) (WITH RIPPER)

Item	Part Number	Description	Qty.	Ref.	Serial No.
	(723-15-12600)	CONTROL VALVE	1		B10001-
		THIS ASSEMBLY CONSISTS OF ALL PARTS SHOWN IN FIGS.Y1665-01A0 T0 Y1665-05A0..			
	723-10-17100	.VALVE ASSEMBLY, SUCTION AND SAFETY	2		B10001-
1	☆	..PISTON	1		B10001-
2	☆	..SLEEVE	1		B10001-
3	☆	..POPPET	1		B10001-
4	☆	..SEAL	1		B10001-
5	☆	..NUT	1		B10001-
6	☆	..NUT	1		B10001-
7	☆	..SPACER	1		B10001-
8	☆	..PLUG	1		B10001-
9	☆	..SEAL	1		B10001-
10	☆	..SLEEVE	1		B10001-
11	☆	..SPRING	1		B10001-
12	☆	..POPPET	1		B10001-
13	☆	..SPRING	1		B10001-
14	07002-12034	..O-RING	2		B10001-
15	☆	..O-RING	1		B10001-
	723-10-17200	.VALVE ASSEMBLY, SUCTION AND SAFETY	1		B10001-
16	☆	..PISTON	1		B10001-
17	☆	..SLEEVE	1		B10001-
18	☆	..POPPET	1		B10001-
19	☆	..SEAL	1		B10001-
20	☆	..NUT	1		B10001-
21	☆	..NUT	1		B10001-
22	☆	..SPACER	1		B10001-
23	☆	..PLUG	1		B10001-
24	☆	..SEAL	1		B10001-
25	☆	..SLEEVE	1		B10001-
26	☆	..SPRING	1		B10001-
27	☆	..POPPET	1		B10001-
28	☆	..SPRING	1		B10001-
29	07002-12034	..O-RING	2		B10001-
30	☆	..O-RING	1		B10001-

CONTROL VALVE (5-SPOOL) (5/5) (L.H.) (WITH RIPPER)

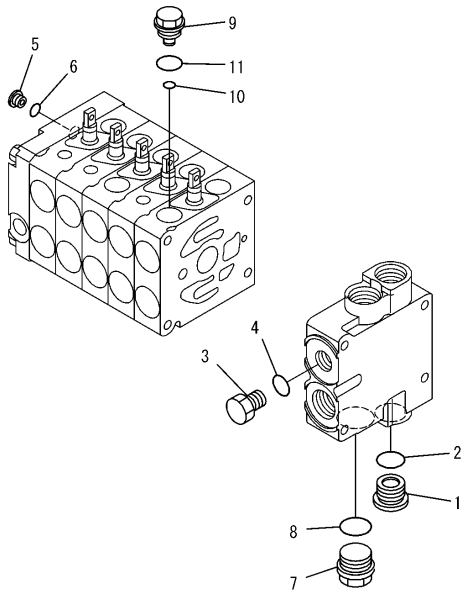

PW5H237

CONTROL VALVE (5-SPOOL) (5/5) (L.H.) (WITH RIPPER)

Item	Part Number	Description	Qty.	Ref.	Serial No.
	(723-15-12600)	CONTROL VALVE	1		B10001-
		THIS ASSEMBLY CONSISTS OF ALL PARTS SHOWN IN FIGS.Y1665-01A0 T0 Y1665-05A0..			
1	723-26-15230	.PLUG	1		B10001-
2	07002-12434	.O-RING	1		B10001-
3	708-8E-16250	.PLUG	1		B10001-
4	07002-11823	.O-RING	1		B10001-
5	723-11-18190	.PLUG	1		B10001-
6	07002-11023	.O-RING	1		B10001-
7	709-74-91520	.PLUG	1		B10001-
8	07000-13024	.O-RING	1		B10001-
9	723-11-19620	.PLUG	1		B10001-
10	709-32-11840	.O-RING	1		B10001-
11	07002-12034	.O-RING	1		B10001-

CONTROL VALVE (5-SPOOL) (1/5) (L.H.) (WITH SCARIFIER)

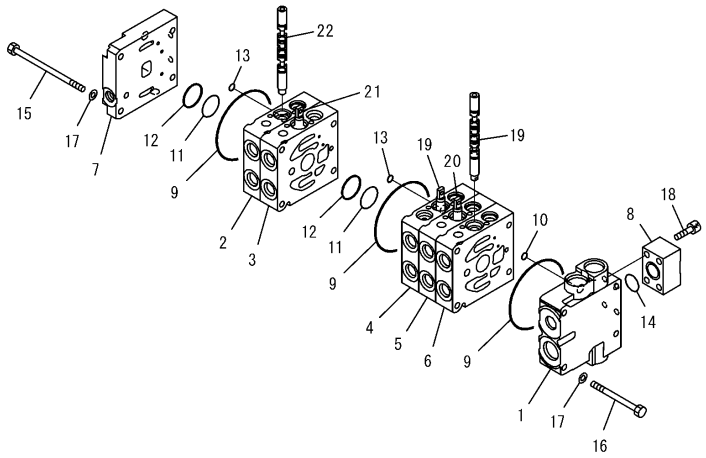

PW5H244

CONTROL VALVE (5-SPOOL) (1/5) (L.H.) (WITH SCARIFIER)

Item	Part Number	Description	Qty.	Ref.	Serial No.
	723-15-11801	CONTROL VALVE	1		B10001-
		THIS ASSEMBLY CONSISTS OF ALL PARTS SHOWN IN FIGS.Y1665-21A0 T0 Y1665-25A0..			
1	☆	.BODY, VALVE	1		B10001-
2	☆	.BLOCK, VALVE	1		B10001-
3	☆	.BLOCK, VALVE	1		B10001-
4	☆	.BLOCK, VALVE	1		B10001-
5	☆	.BLOCK, VALVE	1		B10001-
6	☆	.BLOCK, VALVE	1		B10001-
7	☆	.COVER, VALVE	1		B10001-
8	723-11-18420	.BLOCK	1		B10001-
9	07000-12100	.O-RING	6		B10001-
10	07000-11008	.O-RING	1		B10001-
11	723-11-19110	.O-RING	5		B10001-
12	723-11-19150	.RING	5		B10001-
13	07000-11007	.O-RING	5		B10001-
14	723-11-18430	.O-RING	1		B10001-
15	723-11-32780	.BOLT	4		B10001-
16	723-11-32790	.BOLT	4		B10001-
17	01643-50823	.WASHER	8		B10001-
18	01252-60830	.BOLT	4		B10001-
19	☆	.SPOOL	2		B10001-
20	☆	.SPOOL	1		B10001-
21	☆	.SPOOL	1		B10001-
22	☆	.SPOOL	1		B10001-

CONTROL VALVE (5-SPOOL) (2/5) (L.H.) (WITH SCARIFIER)

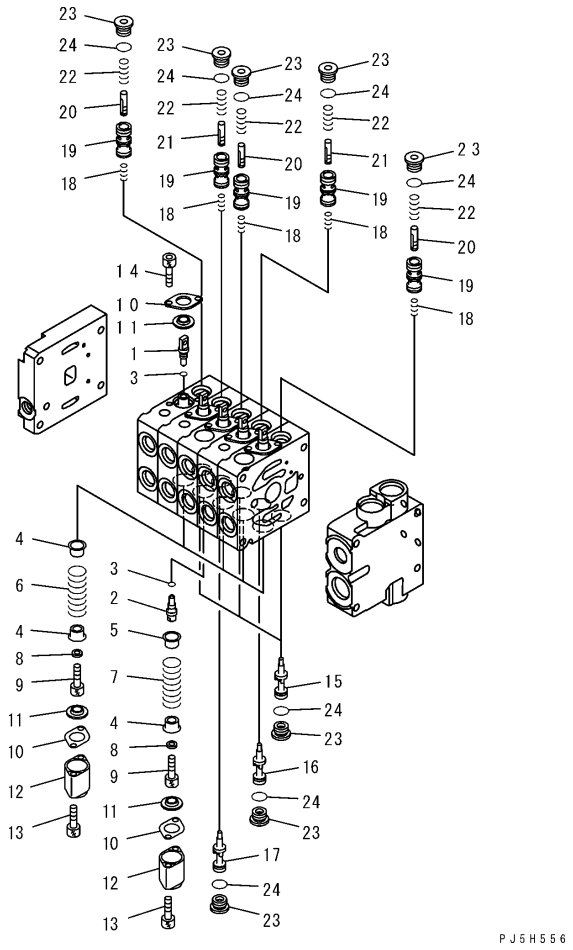

CONTROL VALVE (5-SPOOL) (2/5) (L.H.) (WITH SCARIFIER)

Item	Part Number	Description	Qty.	Ref.	Serial No.
	(723-15-11801)	CONTROL VALVE	1		B10001-
		THIS ASSEMBLY CONSISTS OF ALL PARTS SHOWN IN FIGS.Y1665-21A0 T0 Y1665-25A0..			
1	☆	.PLUG	5		B10001-
2	☆	.PLUG	1		B10001-
3	07002-10823	.O-RING	6		B10001-
4	723-11-32810	.RETAINER, 9.7MM	9		B10001-
	723-11-32820	.RETAINER, 9.8MM	9		B10001-
	723-11-32830	.RETAINER, 9.6MM	9		B10001-
5	723-11-32840	.RETAINER, 9.7MM	1		B10001-
	723-11-32850	.RETAINER, 9.8MM	1		B10001-
	723-11-32860	.RETAINER, 9.6MM	1		B10001-
6	☆	.SPRING	4		B10001-
7	☆	.SPRING	1		B10001-
8	723-11-17150	.WASHER	5		B10001-
9	01252-60610	.BOLT	5		B10001-
10	723-11-17130	.PLATE	10		B10001-
11	709-32-11530	.SEAL	10		B10001-
12	723-11-17930	.CASE, SPRING	5		B10001-
13	01252-60640	.BOLT	10		B10001-
14	01252-60610	.BOLT	10		B10001-
15	☆	.VALVE	3		B10001-
16	☆	.VALVE	1		B10001-
17	☆	.VALVE	1		B10001-
18	723-11-15130	.SPRING	5		B10001-
19	☆	.VALVE	5		B10001-
20	☆	.PISTON	3		B10001-
21	☆	.PISTON	2		B10001-
22	723-11-16130	.SPRING	5		B10001-
23	723-11-15110	.PLUG	10		B10001-
24	07002-11623	.O-RING	10		B10001-

CONTROL VALVE (5-SPOOL) (3/5) (L.H.) (WITH SCARIFIER)

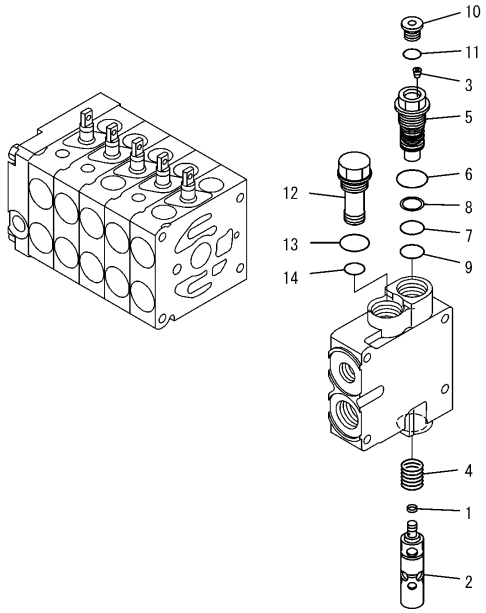

PW5H235

CONTROL VALVE (5-SPOOL) (3/5) (L.H.) (WITH SCARIFIER)

Item	Part Number	Description	Qty.	Ref.	Serial No.
	(723-15-11801)	CONTROL VALVE	1		B10001-
		THIS ASSEMBLY CONSISTS OF ALL PARTS SHOWN IN FIGS.Y1665-21A0 T0 Y1665-25A0..			
1	☆	.SEAL	1		B10001-
2	☆	.SPOOL	1		B10001-
3	☆	.SCREW	1		B10001-
4	723-11-32730	.SPRING	1		B10001-
5	723-11-32720	.SLEEVE	1		B10001-
6	07002-12434	.O-RING	1		B10001-
7	723-11-18150	.O-RING	1		B10001-
8	723-11-18160	.RING	1		B10001-
9	720-68-19760	.O-RING	1		B10001-
10	702-21-55620	.PLUG	1		B10001-
11	07002-11423	.O-RING	1		B10001-
12	700-26-11150	.PLUG	1		B10001-
13	07002-12434	.O-RING	1		B10001-
14	07000-12014	.O-RING	1		B10001-

CONTROL VALVE (5-SPOOL) (4/5) (L.H.) (WITH SCARIFIER)

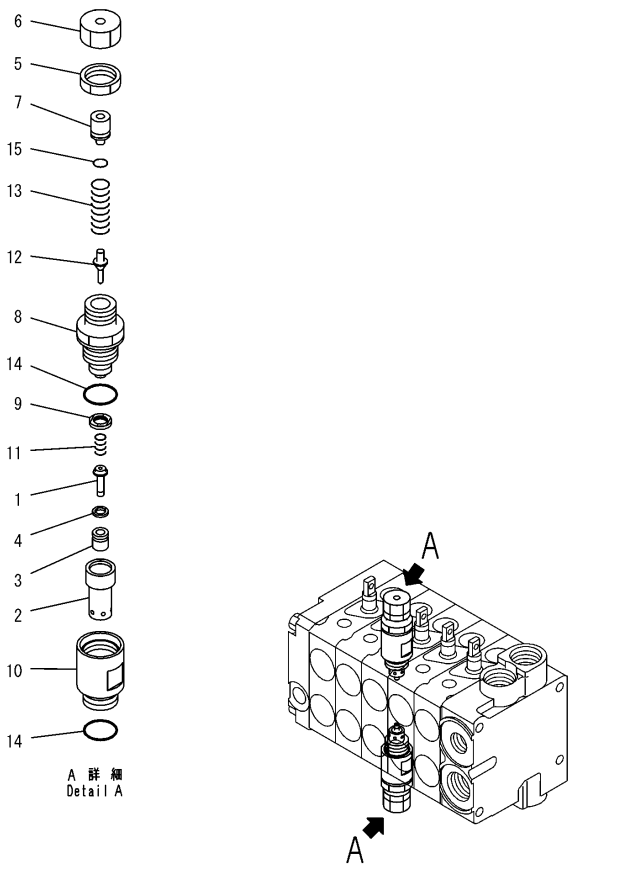

CONTROL VALVE (5-SPOOL) (4/5) (L.H.) (WITH SCARIFIER)

Item	Part Number	Description	Qty.	Ref.	Serial No.
	(723-15-11801)	CONTROL VALVE	1		B10001-
		THIS ASSEMBLY CONSISTS OF ALL PARTS SHOWN IN FIGS.Y1665-21A0 T0 Y1665-25A0..			
	723-10-17100	.VALVE ASSEMBLY, SUCTION AND SAFETY	2		B10001-
1	☆	..PISTON	1		B10001-
2	☆	..SLEEVE	1		B10001-
3	☆	..POPPET	1		B10001-
4	☆	..SEAL	1		B10001-
5	☆	..NUT	1		B10001-
6	☆	..NUT	1		B10001-
7	☆	..SPACER	1		B10001-
8	☆	..PLUG	1		B10001-
9	☆	..SEAL	1		B10001-
10	☆	..SLEEVE	1		B10001-
11	☆	..SPRING	1		B10001-
12	☆	..POPPET	1		B10001-
13	☆	..SPRING	1		B10001-
14	07002-12034	..O-RING	2		B10001-
15	☆	..O-RING	1		B10001-

CONTROL VALVE (5-SPOOL) (5/5) (L.H.) (WITH SCARIFIER)

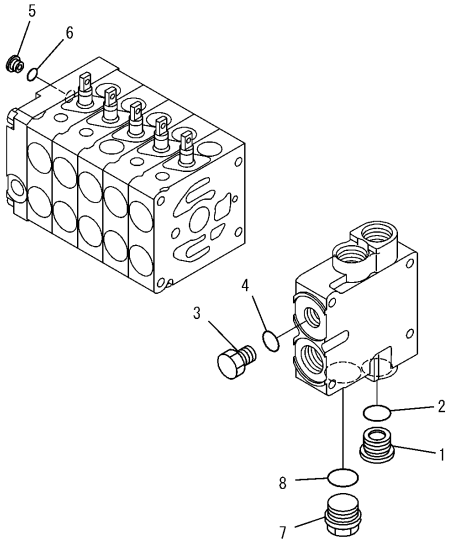

PW5H248

CONTROL VALVE (5-SPOOL) (5/5) (L.H.) (WITH SCARIFIER)

Item	Part Number	Description	Qty.	Ref.	Serial No.
	(723-15-11801)	CONTROL VALVE	1		B10001-
		THIS ASSEMBLY CONSISTS OF ALL PARTS SHOWN IN FIGS.Y1665-21A0 T0 Y1665-25A0..			
1	723-26-15230	.PLUG	1		B10001-
2	07002-12434	.O-RING	1		B10001-
3	708-8E-16250	.PLUG	1		B10001-
4	07002-11823	.O-RING	1		B10001-
5	723-11-18190	.PLUG	1		B10001-
6	07002-11023	.O-RING	1		B10001-
7	709-74-91520	.PLUG	1		B10001-
8	07000-13024	.O-RING	1		B10001-

LS REDUCING VALVE

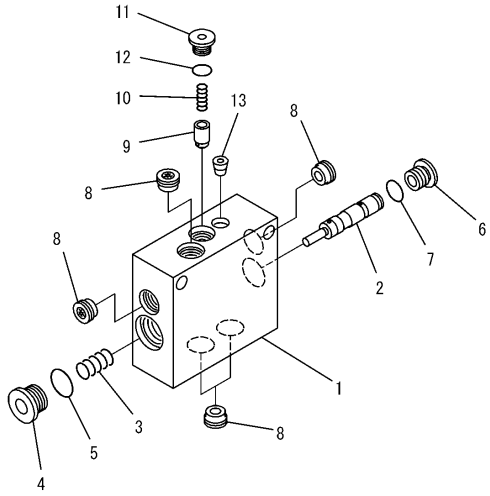

PW5X033

LS REDUCING VALVE

Item	Part Number	Description	Qty.	Ref.	Serial No.
	723-10-13700	VALVE ASSEMBLY	1		B10001-
1	☆	.BLOCK	1		B10001-
2	☆	.SPOOL SUB ASSEMBLY	1		B10001-
3	723-11-16760	.SPRING	1		B10001-
4	723-11-26170	.PLUG	1		B10001-
5	07002-11623	.O-RING	1		B10001-
6	708-7R-11220	.PLUG	1		B10001-
7	07002-11223	.O-RING	1		B10001-
8	702-16-54880	.FILTER	5		B10001-
9	723-11-18170	.VALVE	1		B10001-
10	723-11-18180	.SPRING	1		B10001-
11	723-11-18190	.PLUG	1		B10001-
12	07002-11023	.O-RING	1		B10001-
13	☆	.PLUG	1		B10001-

STEERING VALVE (INNER PARTS)

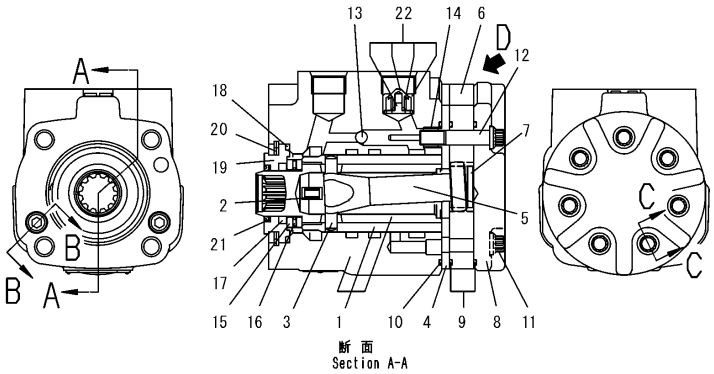

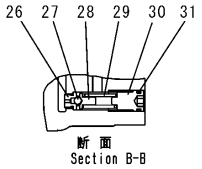

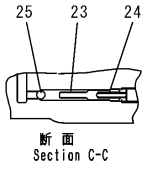

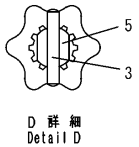

PW2B124

STEERING VALVE (INNER PARTS)

Item	Part Number	Description	Qty.	Ref.	Serial No.
	23B-40-41102	VALVE ASSEMBLY	1		B10001-
1	☆	.CONTROL ASSEMBLY	1		B10001-
	☆	.CONTROL ASSEMBLY	1		B10001-
	☆	.CONTROL ASSEMBLY	1		B10001-
2	ST230327	.SPRING	6		B10001-
3	ST15	.PIN	1		B10001-
4	ST7970	.PLATE	1		B10001-
5	ST5126	.DRIVE	1		B10001-
6	ST8436-3	.GEROTOR	1		B10001-
7	ST6901S-9	.SPACER	1		B10001-
8	ST8438S-1	.CAP, END	1		B10001-
9	☆	.O-RING (KIT)	2		B10001-
10	☆	.O-RING (KIT)	1		B10001-
11	ST5389-1	.SCREW	6		B10001-
12	ST5389R-001	.SCREW, RETAINER	1		B10001-
13	STBA0097A	.BALL	1		B10001-
14	STBA0096A	.SCREW, ADAPTER	1		B10001-
	ST64009	.BEARING	1		B10001-
15	ST8329	..RACE	2		B10001-
16	ST5544	..BEARING	1		B10001-
17	☆	.SEAL, OIL (KIT)	1		B10001-
18	☆	.O-RING (KIT)	1		B10001-
19	ST8703	.BUSHING	1		B10001-
20	ST14317	.RING	1		B10001-
21	☆	.SEAL, DUST (KIT)	1		B10001-
22	☆	.VALVE SUB ASSEMBLY	1		B10001-
22	☆	.VALVE SUB ASSEMBLY	1		B10001-
22	☆	.VALVE SUB ASSEMBLY	1		B10001-
23	ST21785	.RETAINER	2		B10001-
24	ST230313	.SPRING	2		B10001-
25	ST18015	.BALL	2		B10001-
26	☆	.SEAT	2		B10001-
	☆	.SEAT	2		B10001-
	☆	.SEAT	2		B10001-
27	☆	.BALL	2		B10001-
	☆	.BALL	2		B10001-

STEERING VALVE (INNER PARTS)

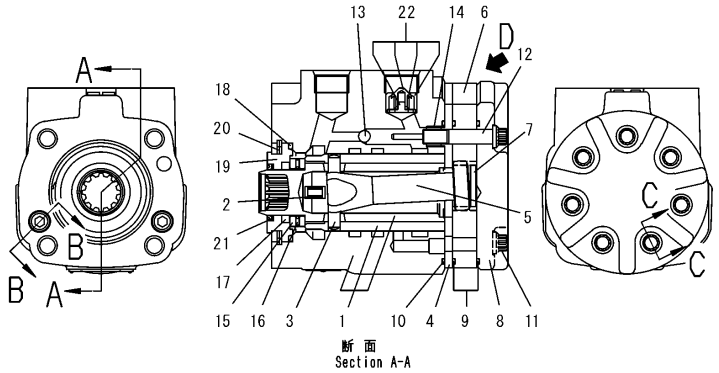

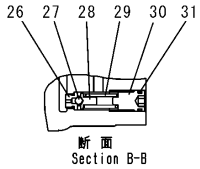

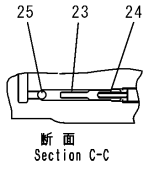

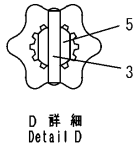

PW2B124

STEERING VALVE (INNER PARTS)

Item	Part Number	Description	Qty.	Ref.	Serial No.
	☆	.BALL	2		B10001-
28	☆	.HOLDER	2		B10001-
	☆	.HOLDER	2		B10001-
	☆	.HOLDER	2		B10001-
29	☆	.SPRING	2		B10001-
	☆	.SPRING	2		B10001-
	☆	.SPRING	2		B10001-
30	☆	.PLUG	2		B10001-
	☆	.PLUG	2		B10001-
	☆	.PLUG	2		B10001-
31	☆	.O-RING	2		B10001-
	☆	.O-RING	2		B10001-
	☆	.O-RING	2		B10001-
		SERVICE KIT			B10001-
	STBA0273A	SERVICE KIT, ORBITROL	1		B10001-

AIR CONDITIONER UNIT (1/2)

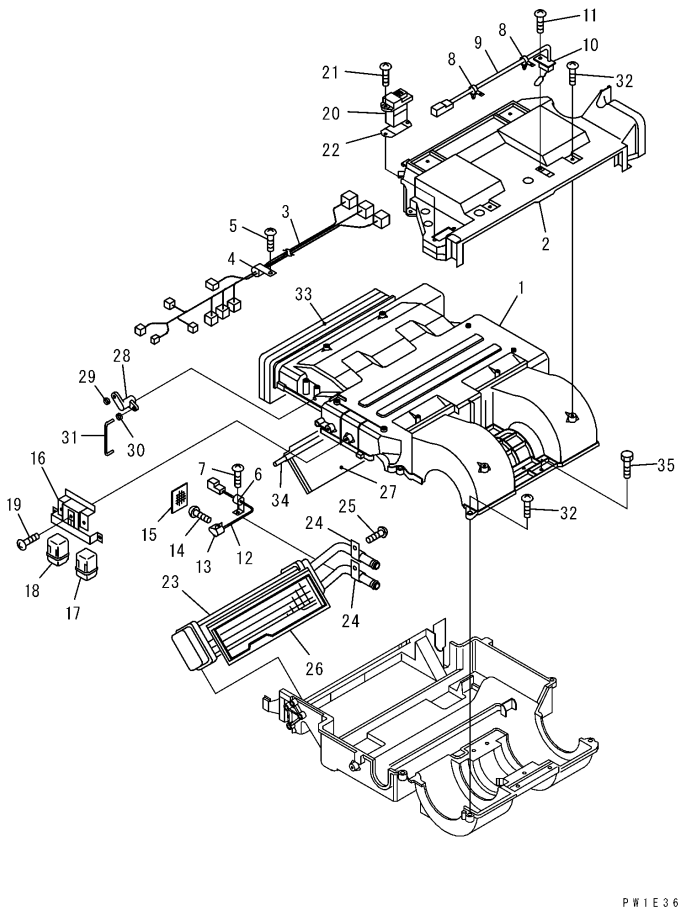

Y1979-01A0

AIR CONDITIONER UNIT (1/2)

Item	Part Number	Description	Qty.	Ref.	Serial No.
	22U-979-1720	AIR CONDITIONER UNIT	1		B10001-
1	TW534136-9221	.CASE ASSEMBLY	1		B10001-
2	TW534461-8802	.COVER	1		B10001-
3	TW536021-6501	.WIRING HARNESS	1		B10001-
4	TW592024-3100	.CLIP	2		B10001-
5	TW592022-3700	.SCREW	2		B10001-
6	TW595327-8100	.CLIP	2		B10001-
7	TW592022-3700	.SCREW	2		B10001-
8	TW580534-0400	.CLIP	3		B10001-
9	TW582623-8500	.SENSOR	1		B10001-
10	TW534102-6000	.BRACKET	1		B10001-
11	TW012514-1640	.TAPPING SCREW	1		B10001-
12	TW582623-1800	.SENSOR	1		B10001-
13	TW580529-7000	.CLIP	1		B10001-
14	TW012155-1440	.SCREW	1		B10001-
15	TW583032-2300	.INSULATOR	1		B10001-
	TW582594-3020	.RELAY ASSEMBLY	1		B10001-
16	TW534104-8400	..BRACKET	1		B10001-
17	TW593111-8800	..RELAY ASSEMBLY	2		B10001-
18	TW593230-1420	..RELAY ASSEMBLY	1		B10001-
19	TW580140-0600	.SCREW	3		B10001-
20	TW582670-2501	.POWER TRANSISTOR	1		B10001-
21	TW012514-1640	.TAPPING SCREW	2		B10001-
22	TW534232-2200	.SEAL	1		B10001-
23	TW502700-2520	.HEATER CORE ASSEMBLY	1		B10001-
24	TW580534-4300	.CLIP	2		B10001-
25	TW592022-3700	.SCREW	2		B10001-
26	TW524120-1720	.PLATE ASSEMBLY	1		B10001-
27	TW534270-8321	.DOOR	1		B10001-
28	TW534470-9100	.LEVER	1		B10001-
29	TW580521-6800	.CLIP	1		B10001-
30	TW592055-0900	.CLIP	1		B10001-
31	TW536160-2201	.ROD	1		B10001-
32	TW012514-1640	.TAPPING SCREW	13		B10001-
33	TW534189-9200	.LINING	1		B10001-
34	TW534280-1400	.SHAFT	1		B10001-

AIR CONDITIONER UNIT (1/2)

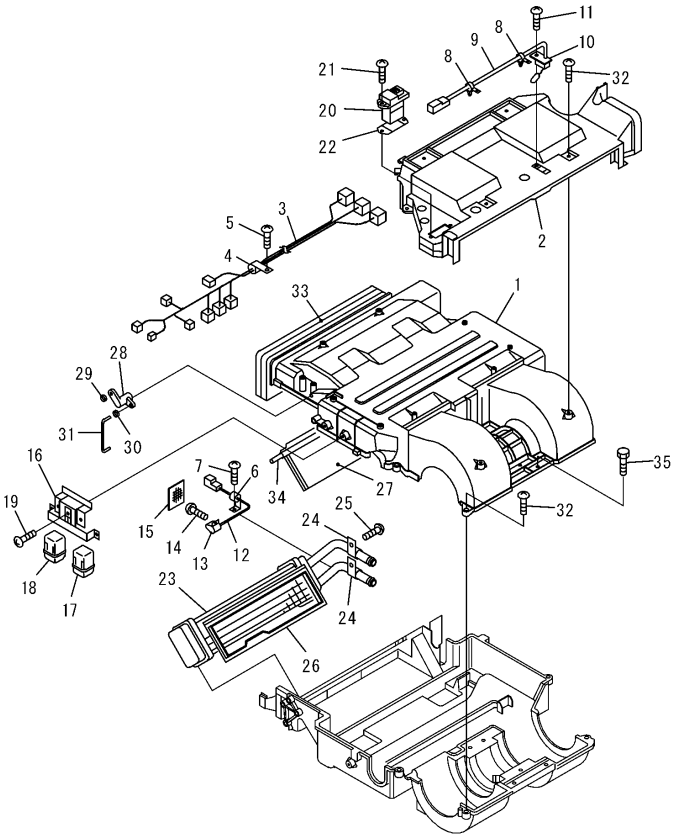

PW1E367

AIR CONDITIONER UNIT (1/2)

Item	Part Number	Description	Qty.	Ref.	Serial No.
35	TW020046-3540	.BOLT.	3		B10001-

AIR CONDITIONER UNIT (2/2)

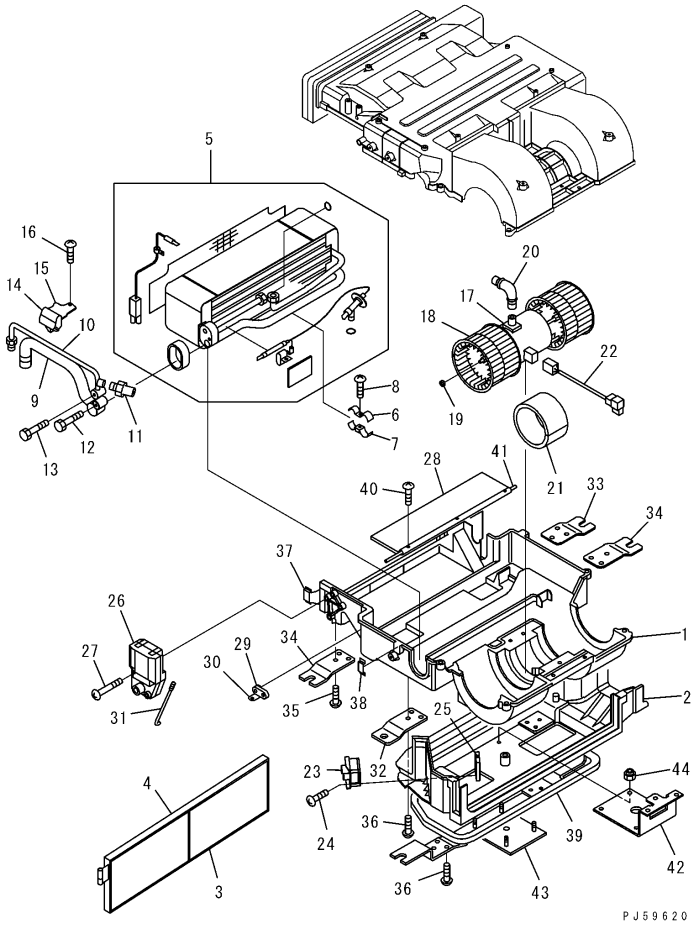

AIR CONDITIONER UNIT (2/2)

Item	Part Number	Description	Qty.	Ref.	Serial No.
	22U-979-1720	AIR CONDITIONER UNIT	1		B10001-
	(21W-979-4110)	AIR CONDITIONER UNIT	1		B10001-
1	TW534136-9321	.CASE ASSEMBLY	1		B10001-
2	TW534461-8902	.COVER	1		B10001-
3	TW534241-3200	.FILTER	1		B10001-
4	TW534189-9400	.LINING	2		B10001-
5	(TW503700-3990)	.EVAPORATOR ASSEMBLY	1		B10001-
6	TW580534-1500	.CLIP	1		B10001-
7	TW580534-1600	.CLIP	1		B10001-
8	TW012114-1240	.SCREW	1		B10001-
9	TW534057-3520	.PIPE	1		B10001-
	TW534057-3720	.PIPE ASSEMBLY	1		B10001-
10	TW534057-3620	..PIPE	1		B10001-
11	TW582532-0700	..PRESSURE SWITCH	1		B10001-
12	TW020058-3040	.BOLT	1		B10001-
13	TW020046-3040	.BOLT	1		B10001-
14	TW580534-1900	.CLIP	1		B10001-
15	TW580534-2000	.CLIP	1		B10001-
16	TW592022-3700	.SCREW	2		B10001-
	TW502725-1730	.FAN MOTOR	1		B10001-
17	☆	..MOTOR	1		B10001-
18	☆	..IMPELLER	2		B10001-
19	TW592050-0500	..RING, SNAP	2		B10001-
20	TW534510-5200	.HOSE	1		B10001-
21	TW592405-1700	.ISOLATOR	1		B10001-
22	TW536021-5200	.WIRING HARNESS	1		B10001-
23	TW582571-4300	.RESISTOR	1		B10001-
24	TW012514-1640	.TAPPING SCREW	2		B10001-
25	TW523100-0700	.PLATE	1		B10001-
26	TW502752-3250	.MOTOR ACTUATOR	1		B10001-
27	TW580140-0300	.TAPPING SCREW	3		B10001-
28	TW534270-7920	.DOOR	1		B10001-
29	TW534470-9200	.LEVER	1		B10001-
30	TW592055-0900	.CLIP	1		B10001-
31	TW536160-2100	.ROD	1		B10001-
32	TW534104-4300	.BRACKET	1		B10001-

AIR CONDITIONER UNIT (2/2)

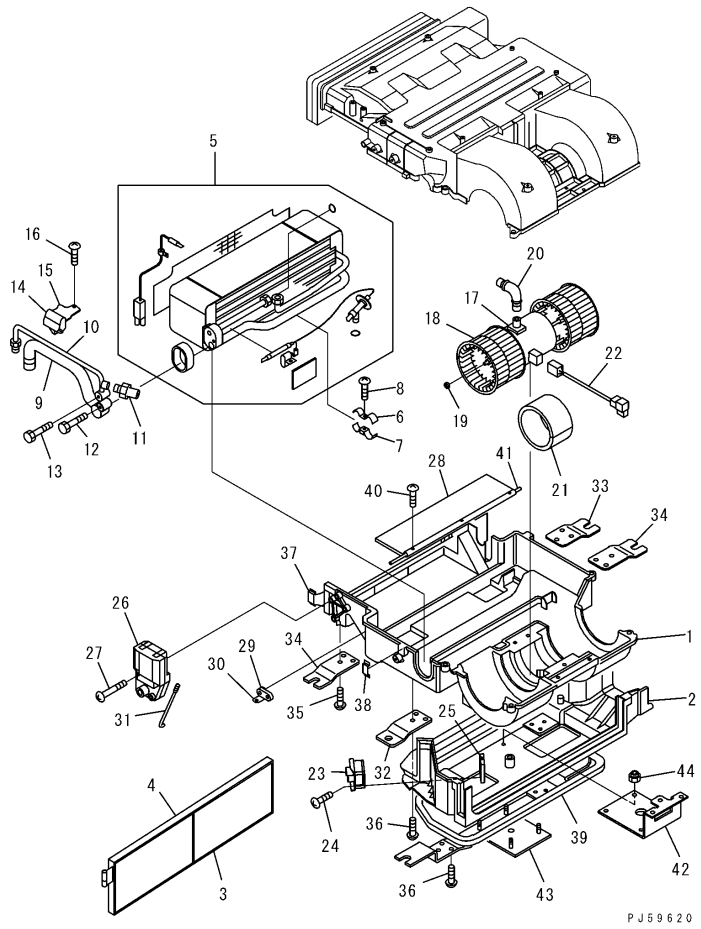

Y1979-02A0

AIR CONDITIONER UNIT (2/2)

Item	Part Number	Description	Qty.	Ref.	Serial No.
33	TW534104-4400	.BRACKET	1		B10001-
34	TW534104-5000	.BRACKET	2		B10001-
35	TW592022-3700	.SCREW	20		B10001-
36	TW012514-1640	.TAPPING SCREW	21		B10001-
37	TW580521-7700	.CLIP	3		B10001-
38	TW592024-1800	.CLIP	1		B10001-
39	TW534190-0300	.LINING	1		B10001-
40	TW012153-0640	.SCREW	6		B10001-
41	TW534280-1500	.SHAFT	1		B10001-
42	TW534104-7300	.BRACKET	1		B10001-
43	TW534104-7500	.BRACKET	1		B10001-
44	TW029200-6240	.NUT	4		B10001-

AIR CONDITIONER UNIT (EVAPORATOR)

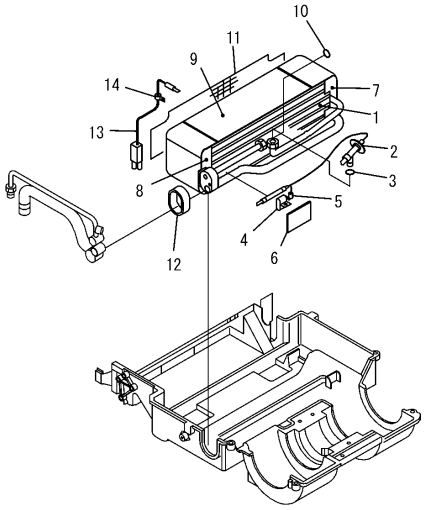

PWIE370

AIR CONDITIONER UNIT (EVAPORATOR)

Item	Part Number	Description	Qty.	Ref.	Serial No.
	22U-979-1720	AIR CONDITIONER UNIT	1		B10001-
	(21W-979-4110)	AIR CONDITIONER UNIT	1		B10001-
	TW503700-3990	.EVAPORATOR ASSEMBLY	1		B10001-
1	☆	..EVAPORATOR	1		B10001-
2	☆	..VALVE, EXPANSION	1		B10001-
3	☆	..O-RING	1		B10001-
4	TW580530-0100	..CLIP	1		B10001-
5	TW592022-3600	..TAPPING SCREW	1		B10001-
6	TW595324-2600	..INSULATOR	1		B10001-
7	☆	..LINING	1		B10001-
8	☆	..LINING	1		B10001-
9	☆	..LINING	1		B10001-
10	TW581520-7700	..O-RING	1		B10001-
11	TW534540-2200	..FILTER	1		B10001-
12	TW534190-3100	..LINING	1		B10001-
13	TW582551-3901	..THERMOSTAT	1		B10001-
14	TW580532-4600	..CLIP	1		B10001-

NUMERICAL INDEX

PARTS	FIG NO.	INDEX	PAGE
01010-61016	F4500-05A0	20	F0- 29
01010-61020	F4500-10A0	15	F0- 47
01010-61020	F4500-10A1	15	F0- 51
01010-61020	F4500-11A0	15	F0- 55
01010-61020	F4500-11A1	15	F0- 59
01010-61080	F4500-06A1A	15	F0- 35
01010-61220	F4500-13A0	3	F0- 67
01010-61225	F4500-13A0	8	F0- 67
01010-61225	F4500-13A0	11	F0- 67
01010-61230	F4500-03A1	16	F0- 23
01010-61230	F4500-06A1A	3	F0- 35
01010-61230	F4500-08A0	5	F0- 39
01010-61230	F4500-08A0	13	F0- 39
01010-61230	F4500-08A1	5	F0- 41
01010-61230	F4500-08A1	12	F0- 41
01010-61230	F4500-09A0	5	F0- 43
01010-61230	F4500-09A0	13	F0- 43
01010-61230	F4500-09A1	5	F0- 45
01010-61230	F4500-09A1	12	F0- 45
01010-61230	F4500-13A0	4	F0- 67
01010-61230	F4500-15A0	3	F0- 71
01010-61235	F4500-01A0	3	F0- 15
01010-61235	F4500-03A1	30	F0- 23
01010-61235	F4500-03A8	34	F0- 25
01010-61240	F4500-01A0	4	F0- 15
01010-61240	F4500-10A0	4	F0- 47
01010-61240	F4500-10A1	4	F0- 51
01010-61240	F4500-11A0	4	F0- 55
01010-61240	F4500-11A1	4	F0- 59
01010-61245	F4500-02A0	13	F0- 19
01010-61245	F4500-05A0	13	F0- 29
01010-61245	F4500-05A0	17	F0- 29
01010-61245	F4500-05A1	9	F0- 31
01010-61245	F4500-06A1A	26	F0- 35
01010-61255	F4200-01A0	5	F0- 3
01010-61255	F4500-03A1	3	F0- 23
01010-61255	F4500-04A1	19	F0- 27
01010-61275	F4500-03A0	3	F0- 21
01010-61435	F4500-03A10	36	F0- 25
01010-61445	F4500-03A0	20	F0- 21
01010-61630	F4500-10A1	20	F0- 51
01010-61630	F4500-11A1	20	F0- 59
01010-61650	F4500-03A0	17	F0- 21
01010-61660	F4500-10A0	41	F0- 49
01010-61660	F4500-10A1	41	F0- 53
01010-61660	F4500-11A0	40	F0- 57
01010-61660	F4500-11A1	40	F0- 61
01010-61670	F4500-04A1	23	F0- 27
01010-61670	F4500-15A0	6	F0- 71
01010-61680	F4500-02A0	5	F0- 19

PARTS	FIG NO.	INDEX	PAGE
01010-61695	F4500-04A1	22	F0- 27
01010-61695	J4130-01A0	16	J0- 7
01010-62250	F4500-12A0	1	F0- 63
01010-62250	F4500-12A1	1	F0- 65
01010-62250	S0100-01C2	11	S0- 5
01010-62250	S0100-01D0	8	S0- 7
01010-80610	K0210-06A0	6	K0- 43
01010-80610	K0210-06B0	6	K0- 47
01010-80610	K0210-08A0	6	K0- 59
01010-80610	K0210-08B0	6	K0- 63
01010-80610	K1110-08B0	5	K0- 135
01010-80610	K1110-08B0	8	K0- 135
01010-80610	K1110-09B0	9	K0- 139
01010-80612	K0210-06A0	7	K0- 43
01010-80612	K0210-06B0	7	K0- 47
01010-80612	K0210-08A0	7	K0- 59
01010-80612	K0210-08B0	7	K0- 63
01010-80612	K0210-13A0	15	K0- 77
01010-80616	B0110-04A0A	5	B0- 11
01010-80616	B0200-04A0	6	B0- 23
01010-80616	K0350-01A0	7	K0- 97
01010-80616	K0350-01A1	13	K0- 99
01010-80616	K1110-09B0	12	K0- 139
01010-80616	K1110-09B0	14	K0- 139
01010-80616	K1110-09B0	17	K0- 139
01010-80620	K0210-14A0	8	K0- 79
01010-80620	K1110-03B0	2	K0- 117
01010-80620	K1110-03B0	5	K0- 117
01010-80620	K1110-03B1	2	K0- 119
01010-80620	K1110-03B1	5	K0- 119
01010-80620	M4100-02A0A	8	M0- 5
01010-80620	M4100-02A1A	8	M0- 7
01010-80625	K0710-02A0A	5	K0- 107
01010-80625	K0713-01A0A	35	K0- 109
01010-80635	K1110-26B0	8	K0- 171
01010-80816	K0710-02A0A	24	K0- 107
01010-80816	K0710-02A0A	27	K0- 107
01010-80820	C0110-01A0A	28	C0- 7
01010-80820	E0120-01A0	15	E0- 5
01010-80820	K0110-01A0	7	K0- 3
01010-80820	K0710-01A0A	11	K0- 103
01010-80820	M4100-04A0A	3	M0- 11
01010-80820	M4100-04A0A	7	M0- 11
01010-80825	E0202-04A0A	15	E0- 21
01010-80825	H0120-01A0	2	H0- 9
01010-80825	H0120-01A0	5	H0- 9
01010-80825	H0120-01A1	2	H0- 11
01010-80825	H0120-01A1	5	H0- 11
01010-80825	H0120-01A2	2	H0- 13
01010-80825	H0120-01A2	5	H0- 13

PARTS	FIG NO.	INDEX	PAGE
01010-80825	K0110-01A0	9	K0- 3
01010-80825	K0710-01A0A	37	K0- 105
01010-80830	D0200-01A2	26	D0- 5
01010-80830	F4700-01A0A	18	F0- 77
01010-80830	F4700-01A1A	18	F0- 81
01010-80830	K0710-02A0A	21	K0- 107
01010-80830	Y1600-03A0	12	Y0- 11
01010-80835	F5350-67A0	14	F0- 125
01010-80840	F5350-51A0	13	F0- 87
01010-80850	F5350-51A0	13	F0- 87
01010-80855	H5120-01A0A	9	H0- 27
01010-80855	H5120-01A0A	15	H0- 27
01010-80855	H5120-01A1A	10	H0- 29
01010-80855	H5200-12A1A	25	H0- 81
01010-80855	H5211-01A0A	21	H0- 101
01010-80855	H5215-01A0A	20	H0- 105
01010-80855	Y1664-01A0	15	Y0- 47
01010-80870	H5120-01A1A	14	H0- 29
01010-80875	K0710-01A0A	39	K0- 105
01010-80880	H5120-01A1A	13	H0- 29
01010-80880	K0713-01A0A	13	K0- 109
01010-80885	H5120-01A1A	18	H0- 29
01010-80885	K1110-20B0	2	K0- 157
01010-80890	H5120-01A0A	12	H0- 27
01010-80895	H5120-01A1A	17	H0- 29
01010-81016	B0200-04A0	10	B0- 23
01010-81016	C0110-01A0A	42	C0- 9
01010-81016	E0120-02A0A	3	E0- 7
01010-81016	E0120-02A0A	6	E0- 7
01010-81016	E0120-02A0A	13	E0- 7
01010-81016	E0120-02A0A	23	E0- 7
01010-81016	H6290-01A0A	9	H0- 109
01010-81016	K0110-01A0	4	K0- 3
01010-81016	K0710-02A0A	10	K0- 107
01010-81016	K0710-02A0A	15	K0- 107
01010-81016	K0710-02A0A	31	K0- 107
01010-81016	K1110-08B0	2	K0- 135
01010-81016	K1110-08B0	11	K0- 135
01010-81016	K1110-24B1	8	K0- 167
01010-81016	K1110-24B1	12	K0- 167
01010-81016	M4100-02A0A	24	M0- 5
01010-81016	M4100-02A1A	18	M0- 7
01010-81020	B0110-02A0A	1	B0- 7
01010-81020	B0110-02A0A	4	B0- 7
01010-81020	B0110-04A0A	2	B0- 11
01010-81020	B0300-03A0	9	B0- 35
01010-81020	C0120-01A0B	24	C0- 11
01010-81020	C0120-01A0B	31	C0- 11
01010-81020	C0120-03A0A	3	C0- 13
01010-81020	C0120-03A0A	12	C0- 13

PARTS	FIG NO.	INDEX	PAGE
01010-81020	C0120-03A0A	15	C0- 13
01010-81020	C0120-03A0A	24	C0- 13
01010-81020	C0120-03A0A	28	C0- 13
01010-81020	C0120-03A0A	32	C0- 13
01010-81020	C0310-01A0A	3	C0- 17
01010-81020	C0310-01A0A	5	C0- 17
01010-81020	C0310-01A0A	8	C0- 17
01010-81020	D0200-01A9	43	D0- 7
01010-81020	E0120-01A0	2	E0- 5
01010-81020	E0120-02A0A	25	E0- 7
01010-81020	E0510-01A0	2	E0- 41
01010-81020	F4400-02A0	24	F0- 11
01010-81020	F5350-65A0	15	F0- 121
01010-81020	H4410-01A0A	15	H0- 19
01010-81020	H5120-01A0A	19	H0- 27
01010-81020	H5120-01A1A	23	H0- 29
01010-81020	H5210-01B0	15	H0- 85
01010-81020	H5210-03B0	2	H0- 89
01010-81020	H5210-03B0	5	H0- 89
01010-81020	H5210-03B0	8	H0- 89
01010-81020	H5210-03B0	32	H0- 89
01010-81020	H5210-05B0	14	H0- 93
01010-81020	K0710-01A0A	13	K0- 103
01010-81020	K0713-01A0A	26	K0- 109
01010-81020	K1110-03B0	21	K0- 117
01010-81020	K1110-03B1	20	K0- 119
01010-81020	K1110-08B0	14	K0- 135
01010-81020	K1110-08B1	2	K0- 137
01010-81020	K1110-11B0	8	K0- 143
01010-81020	K1110-23B1	6	K0- 165
01010-81020	K1110-24B1	5	K0- 167
01010-81020	K4470-05A0A	2	K0- 185
01010-81020	M4100-01A0A	10	M0- 3
01010-81020	M4100-01A0A	20	M0- 3
01010-81020	M4100-02A0A	19	M0- 5
01010-81020	M4100-03A0A	3	M0- 9
01010-81020	M4230-01A0A	12	M0- 13
01010-81020	M4230-01A0A	16	M0- 13
01010-81020	M4230-01A0A	20	M0- 13
01010-81020	M4230-01A0A	24	M0- 13
01010-81020	M4230-01A1	12	M0- 15
01010-81020	M4230-01A1	16	M0- 15
01010-81020	M4230-01A1	20	M0- 15
01010-81020	M4230-01A1	24	M0- 15
01010-81020	M4240-01A0	3	M0- 21
01010-81020	Y1620-01A0A	26	Y0- 25
01010-81020	Y1622-21A0A	22	Y0- 41
01010-81025	B0200-06A1	3	B0- 27
01010-81025	C0120-01A0B	20	C0- 11
01010-81025	C0120-03A0A	5	C0- 13

PARTS	FIG NO.	INDEX	PAGE
01010-81025	C0120-03A0A	25	C0- 13
01010-81025	C0120-03A0A	39	C0- 15
01010-81025	E0310-01A0	3	E0- 33
01010-81025	F4320-01A0A	9	F0- 5
01010-81025	F4320-01A0A	21	F0- 5
01010-81025	F4700-01A0A	6	F0- 77
01010-81025	F4700-01A1A	6	F0- 81
01010-81025	F5350-57A0	35	F0- 105
01010-81025	H5210-09B0	17	H0- 99
01010-81025	K0710-01A0A	3	K0- 103
01010-81025	K0710-01A0A	18	K0- 103
01010-81025	K0713-01A0A	6	K0- 109
01010-81025	K1110-01B0	3	K0- 111
01010-81025	K1110-09B0	3	K0- 139
01010-81025	K1110-11B0	2	K0- 143
01010-81025	K1110-15B0	2	K0- 145
01010-81025	K1110-24B1	2	K0- 167
01010-81025	K4470-05A0A	3	K0- 185
01010-81025	M4100-01A0A	3	M0- 3
01010-81025	M4100-01A0A	15	M0- 3
01010-81025	M4100-03A0A	12	M0- 9
01010-81025	M4230-01A0A	5	M0- 13
01010-81025	M4230-01A1	5	M0- 15
01010-81025	M4310-01A0	15	M0- 23
01010-81025	T5123-01A0	7	T0- 25
01010-81025	T5123-01A0	29	T0- 25
01010-81025	T5130-11A1	2	T0- 33
01010-81030	E0300-01A0	4	E0- 27
01010-81030	F5350-61A0	15	F0- 113
01010-81030	F5350-68A0	3	F0- 127
01010-81030	K0210-09B0	10	K0- 69
01010-81030	K0210-18A0	9	K0- 89
01010-81030	K0210-18B0	9	K0- 91
01010-81030	K1110-02B0	3	K0- 113
01010-81030	K1110-02B1	3	K0- 115
01010-81030	K1110-10B0	1	K0- 141
01010-81030	K4460-01A0	3	K0- 173
01010-81030	T5130-12A1	17	T0- 35
01010-81035	F5350-62A0	5	F0- 115
01010-81035	F5350-69A0	13	F0- 129
01010-81035	H0110-01A0A	47	H0- 5
01010-81035	K1110-11B0	5	K0- 143
01010-81035	K1110-16B0	13	K0- 147
01010-81040	B0110-01A0	5	B0- 5
01010-81040	F5350-60A0	10	F0- 111
01010-81040	F5350-63A0	8	F0- 117
01010-81040	F5350-63A0	19	F0- 117
01010-81040	F5350-65A0	18	F0- 121
01010-81040	M4310-01A0	7	M0- 23
01010-81040	M4310-01A0	11	M0- 23

PARTS	FIG NO.	INDEX	PAGE
01010-81045	F5350-60A0	14	F0- 111
01010-81055	F5350-62A0	7	F0- 115
01010-81055	K1110-23B1	3	K0- 165
01010-81060	F5350-70A0	2	F0- 131
01010-81065	F5350-58A0	26	F0- 107
01010-81065	F5350-69A0	9	F0- 129
01010-81075	F5350-60A0	3	F0- 111
01010-81075	F5350-62A0	4	F0- 115
01010-81075	F5350-62A0	11	F0- 115
01010-81075	F5350-63A0	24	F0- 117
01010-81075	F5350-65A0	4	F0- 121
01010-81080	F5350-60A0	9	F0- 111
01010-81085	F5350-65A0	3	F0- 121
01010-81220	E0120-02A0A	8	E0- 7
01010-81220	E0120-02A0A	11	E0- 7
01010-81220	E0202-03A2	3	E0- 19
01010-81220	J4110-01A0	3	J0- 3
01010-81220	J4120-01A0A	3	J0- 5
01010-81220	K0713-01A0A	9	K0- 109
01010-81225	B0200-05A0	6	B0- 25
01010-81225	B0200-05A0	9	B0- 25
01010-81225	E0310-02A1	2	E0- 35
01010-81225	F5350-56A0	11	F0- 101
01010-81225	H0110-01A0A	4	H0- 3
01010-81225	H0110-01A0A	20	H0- 3
01010-81225	H5120-08A0	6	H0- 51
01010-81225	K0110-01A0	18	K0- 3
01010-81225	K0110-01A1	4	K0- 5
01010-81225	K4470-01A0	2	K0- 177
01010-81225	K4470-01A0	8	K0- 177
01010-81225	M4100-01A0A	23	M0- 3
01010-81225	T5120-01A0	7	T0- 9
01010-81225	T5120-01A1	7	T0- 11
01010-81225	T5120-01A2	7	T0- 13
01010-81225	T5120-01A3	7	T0- 15
01010-81225	T5120-01B0	7	T0- 17
01010-81225	T5120-01B1	7	T0- 19
01010-81225	T5120-01B2	7	T0- 21
01010-81225	T5120-01B3	7	T0- 23
01010-81225	T5123-01A0	14	T0- 25
01010-81225	T5123-01A0	18	T0- 25
01010-81225	T5123-01A0	36	T0- 25
01010-81225	T5125-01A0	12	T0- 29
01010-81225	T5125-01A0	16	T0- 29
01010-81225	T5170-01A0	17	T0- 53
01010-81230	B0300-01A0A	25	B0- 29
01010-81230	C0120-01A0B	5	C0- 11
01010-81230	F4400-02A0	22	F0- 11
01010-81230	F5350-56A0	7	F0- 101
01010-81230	F5350-67A0	18	F0- 125

PARTS	FIG NO.	INDEX	PAGE
01010-81230	H4410-01A0A	8	H0- 19
01010-81230	H5120-02A0A	6	H0- 31
01010-81230	H5200-08A0A	27	H0- 73
01010-81235	C0100-01A0	2	C0- 3
01010-81235	D0200-01A2	29	D0- 5
01010-81235	F4700-01A0A	2	F0- 77
01010-81235	F4700-01A1A	2	F0- 81
01010-81235	H0210-01A0	7	H0- 15
01010-81235	H0210-01A1	7	H0- 17
01010-81235	M4310-01A0	13	M0- 23
01010-81235	T5130-12A1	13	T0- 35
01010-81235	Y1600-06A0	5	Y0- 17
01010-81240	B0300-01A0A	33	B0- 29
01010-81240	F4500-01A1A	3	F0- 17
01010-81240	F5350-51A0	18	F0- 87
01010-81240	J4130-01A0	4	J0- 7
01010-81240	K0110-01A1	7	K0- 5
01010-81240	T5125-01A0	21	T0- 29
01010-81240	T5130-11A1	16	T0- 33
01010-81245	F4500-01A1A	5	F0- 17
01010-81245	F5350-51A0	20	F0- 87
01010-81250	C0110-01A0A	41	C0- 9
01010-81250	F4500-01A1A	4	F0- 17
01010-81250	J4130-01A0	14	J0- 7
01010-81250	K4470-03A0A	25	K0- 181
01010-81250	K4470-04A0A	17	K0- 183
01010-81255	C0110-01A0A	33	C0- 9
01010-81255	H5120-02A0A	2	H0- 31
01010-81255	K0710-01A0A	34	K0- 103
01010-81255	T5115-01A0	11	T0- 5
01010-81260	C0100-01A0	22	C0- 3
01010-81265	F5350-57A0	4	F0- 103
01010-81270	T5123-01A0	9	T0- 25
01010-81275	H4410-01A0A	5	H0- 19
01010-81280	M4230-02A0	7	M0- 17
01010-81290	D0200-01A2	16	D0- 5
01010-81290	D0200-01A2	35	D0- 5
01010-81295	B0300-01A0A	36	B0- 29
01010-81455	T5115-01A0	25	T0- 5
01010-81625	J4130-01A0	20	J0- 7
01010-81630	F4500-10A0	20	F0- 47
01010-81630	F4500-11A0	20	F0- 55
01010-81635	F4400-01A0	5	F0- 7
01010-81635	F5350-67A0	3	F0- 125
01010-81635	T5115-01A0	16	T0- 5
01010-81640	D0100-01A0A	2	D0- 3
01010-81640	T5120-01A0	3	T0- 9
01010-81640	T5120-01A1	3	T0- 11
01010-81640	T5120-01A2	3	T0- 13
01010-81640	T5120-01A3	3	T0- 15

PARTS	FIG NO.	INDEX	PAGE
01010-81640	T5120-01B0	3	T0- 17
01010-81640	T5120-01B1	3	T0- 19
01010-81640	T5120-01B2	3	T0- 21
01010-81640	T5120-01B3	3	T0- 23
01010-81645	B0100-01A0	2	B0- 3
01010-81650	F4810-01A0	3	F0- 85
01010-81665	T5170-01A10	46	T0- 55
01010-81665	T5170-01A4	40	T0- 55
01010-81670	T5123-01A0	4	T0- 25
01010-81685	D0100-01A0A	11	D0- 3
01010-81690	T5170-01A0	13	T0- 53
01010-82050	T5125-01A0	8	T0- 29
01010-82060	H0210-01A0	3	H0- 15
01010-82060	H0210-01A1	3	H0- 17
01010-82075	Y1620-01A0A	15	Y0- 25
01010-82075	Y1620-21A0A	6	Y0- 29
01010-82075	Y1620-21A0A	22	Y0- 29
01010-82250	F4400-02A0	8	F0- 11
01010-82450	T5125-01A0	6	T0- 29
01010-82455	M4520-01A0	2	M0- 29
01010-82455	T5125-01A0	3	T0- 29
01010-82465	T5130-12A1	32	T0- 37
01010-82470	M4231-01A0	2	M0- 19
01010-82470	T5130-12A1	34	T0- 37
01010-82495	V0300-01A0	17	V0- 3
01010-D0810	K0210-04A0	28	K0- 31
01010-D0810	K0210-04B0	27	K0- 33
01010-D0810	K0210-09A0	3	K0- 67
01010-D0810	K0210-09A0	3	K0- 67
01010-D0810	K0210-09B0	3	K0- 69
01010-D0810	K0210-09B0	3	K0- 69
01010-D0816	K0210-02A0	8	K0- 19
01010-D0816	K0210-02B0	8	K0- 21
01010-D1030	K0215-01A0	3	K0- 93
01010-D1230	K0210-03A0	32	K0- 25
01010-D1230	K0210-03B0	33	K0- 29
01010-E1025	B0300-03A0	2	B0- 35
01010-E1030	B0300-03A0	4	B0- 35
01010-E1035	B0300-01A0A	22	B0- 29
01010-E1065	B0300-01A0A	18	B0- 29
01010-E1250	B0300-01A0A	9	B0- 29
01011-61610	F4500-05A0	2	F0- 29
01011-61620	F4500-04A1	12	F0- 27
01011-62005	F4500-05A1	4	F0- 31
01011-62710	J4120-01A0A	6	J0- 5
01011-81005	F4320-01A0A	5	F0- 5
01011-81010	C0100-01A0	17	C0- 3
01011-81015	F5350-62A0	12	F0- 115
01011-81020	F4700-01A0A	14	F0- 77
01011-81020	F5350-62A0	9	F0- 115

PARTS	FIG NO.	INDEX	PAGE
01011-81040	F4320-01A0A	19	F0- 5
01011-81065	K0710-01A0A	30	K0- 103
01011-81210	C0110-01A0A	3	C0- 7
01011-81210	T5123-01A7	43	T0- 27
01011-81220	F4700-01A1A	14	F0- 81
01011-81225	F5350-65A0	21	F0- 121
01011-81400	T5170-01A0	24	T0- 53
01011-82035	T5110-01A0A	22	T0- 3
01011-82050	T5110-01A0A	17	T0- 3
01011-82050	T5110-01A0A	19	T0- 3
01011-82220	B0100-01A0	7	B0- 3
01011-82220	F4810-01A0	8	F0- 85
01011-82400	T5170-01A0	34	T0- 53
01011-82430	K0210-18A0	5	K0- 89
01011-82430	K0210-18B0	5	K0- 91
01011-82730	K0210-18A0	5	K0- 89
01011-82730	K0210-18B0	5	K0- 91
01016-50825	K1110-10B0	10	K0- 141
01016-51045	K0210-18A0	7	K0- 89
01016-51045	K0210-18B0	7	K0- 91
01016-51050	K0210-18A0	7	K0- 89
01016-51050	K0210-18B0	7	K0- 91
01016-52045	F4400-01A0	19	F0- 7
01016-52470	T5110-01A0A	24	T0- 3
01019-32010	T5170-01A0	9	T0- 53
01023-10408	M4100-03A0A	19	M0- 9
01023-10412	D0100-01A0A	16	D0- 3
01023-10412	E0202-04A0A	2	E0- 21
01023-10535	E0202-04A0A	7	E0- 21
01023-10612	K1110-04B0	2	K0- 121
01023-10612	K1110-11B0	17	K0- 143
01023-10620	K1110-21B0	17	K0- 159
01023-20810	K1110-07B0	17	K0- 131
01023-20810	K1110-07B1	12	K0- 133
01023-20816	K1110-05B0	45	K0- 125
01023-20816	K1110-06B0	13	K0- 127
01023-20816	K1110-06B1	13	K0- 129
01023-20820	K1110-07B0	12	K0- 131
01023-20820	K1110-07B1	14	K0- 133
01023-60410	K0210-05A0A	18	K0- 35
01023-60410	K0210-05B0A	18	K0- 39
01023-60410	K0210-07A0A	18	K0- 51
01023-60410	K0210-07B0A	18	K0- 55
01023-60512	K0210-02A0	11	K0- 19
01023-60512	K0210-14A0	2	K0- 79
01023-60616	K0210-05A0A	14	K0- 35
01023-60616	K0210-05B0A	14	K0- 39
01023-60616	K0210-07A0A	14	K0- 51
01023-60616	K0210-07B0A	14	K0- 55
01023-70410	K0210-11B0	4	K0- 73

PARTS	FIG NO.	INDEX	PAGE
01023-70410	K0210-15A0	3	K0- 83
01023-70412	K0210-05A0A	28	K0- 35
01023-70412	K0210-05B0A	28	K0- 39
01023-70412	K0210-07A0A	28	K0- 51
01023-70412	K0210-07B0A	28	K0- 55
01023-70412	K0355-01A0	2	K0- 101
01023-70414	K0210-11A0	2	K0- 71
01023-70414	K0210-11B0	2	K0- 73
01023-70414	K0210-17A0	2	K0- 87
01023-70416	K0355-01A0	4	K0- 101
01023-70425	K0210-09B0	16	K0- 69
01023-70512	K0210-03A0	2	K0- 23
01023-70512	K0210-03B0	2	K0- 27
01023-70520	K1110-20B0	12	K0- 157
01023-70610	K0210-01A0	18	K0- 11
01023-70610	K0210-01A0	26	K0- 11
01023-70610	K0210-01B0	18	K0- 15
01023-70610	K0210-01B0	26	K0- 15
01023-70614	E0260-01A1	10	E0- 25
01023-70614	K1110-20B0	19	K0- 157
01050-31230	A601T-01A6	10	AA- 149
01050-31240	A401R-01B6	2	AA- 107
01050-81040	K0710-02A0A	33	K0- 107
01050-81250	F5350-57A0	20	F0- 103
01091-52010	T5170-01A0	6	T0- 53
01093-51200	F4400-01A0	52	F0- 9
01093-51640	F4400-01A0	34	F0- 9
01124-52460	T5110-01A0A	5	T0- 3
01140-81235	T5130-12A1	23	T0- 35
01220-40420	K0210-15A0	7	K0- 83
01220-40516	H0110-01A0A	17	H0- 3
01224-40406	M4100-02A0A	10	M0- 5
01224-40406	M4100-02A1A	10	M0- 7
01224-40420	K0210-15A0	9	K0- 83
01224-70406	K0210-16A0	24	K0- 85
01224-70408	K0210-03A0	26	K0- 23
01224-70408	K0210-03B0	27	K0- 29
01224-70416	K0210-01A0	23	K0- 11
01224-70416	K0210-01B0	23	K0- 15
01224-70420	K0210-04A0	24	K0- 31
01224-70420	K0210-04B0	23	K0- 33
01224-70420	K0210-05A0A	35	K0- 37
01224-70420	K0210-05B0A	35	K0- 41
01224-70420	K0210-07A0A	35	K0- 53
01224-70420	K0210-07B0A	35	K0- 57
01224-70616	K0210-01A0	12	K0- 11
01224-70616	K0210-01B0	12	K0- 15
01224-70620	K0210-01A0	11	K0- 11
01224-70620	K0210-01B0	11	K0- 15
01225-70610	K0210-01A0	15	K0- 11

PARTS	FIG NO.	INDEX	PAGE
01225-70610	K0210-01B0	15	K0- 15
01225-70610	K0210-16A0	15	K0- 85
01225-70612	K0210-06A0	12	K0- 43
01225-70612	K0210-06B0	12	K0- 47
01225-70612	K0210-08A0	12	K0- 59
01225-70612	K0210-08B0	12	K0- 63
01225-70612	K0210-13A0	25	K0- 77
01225-70612	K0210-16A0	8	K0- 85
01225-70616	K0210-03A0	29	K0- 25
01225-70616	K0210-03B0	30	K0- 29
01225-70616	K0210-04A0	11	K0- 31
01225-70616	K0210-04B0	10	K0- 33
01225-70616	K0210-16A0	14	K0- 85
01225-70616	K0210-16A0	20	K0- 85
01225-70616	K1110-05B0	2	K0- 123
01225-70616	K1110-08B0	19	K0- 135
01225-70616	K1110-09B0	6	K0- 139
01225-70620	K0210-03A0	5	K0- 23
01225-70620	K0210-03A0	18	K0- 23
01225-70620	K0210-03B0	6	K0- 27
01225-70620	K0210-03B0	19	K0- 27
01225-70620	K0210-04A0	7	K0- 31
01225-70620	K0210-04A0	21	K0- 31
01225-70620	K0210-04B0	6	K0- 33
01225-70620	K0210-04B0	20	K0- 33
01225-70620	K0210-09B0	13	K0- 69
01225-70630	K0210-13A0	21	K0- 77
01240-01020	K0210-02A0	20	K0- 19
01240-01020	K0210-02B0	20	K0- 21
01252-41035	T5130-12A1	26	T0- 35
01252-60512	A401R-01B6	8	AA- 107
01252-60610	Y1664-02A0	9	Y0- 49
01252-60610	Y1664-02A0	14	Y0- 49
01252-60610	Y1664-12A0	6	Y0- 59
01252-60610	Y1664-12A0	11	Y0- 59
01252-60610	Y1665-02A0	9	Y0- 69
01252-60610	Y1665-02A0	14	Y0- 69
01252-60610	Y1665-22A0	9	Y0- 79
01252-60610	Y1665-22A0	14	Y0- 79
01252-60640	Y1664-02A0	13	Y0- 49
01252-60640	Y1664-12A0	10	Y0- 59
01252-60640	Y1665-02A0	13	Y0- 69
01252-60640	Y1665-22A0	13	Y0- 79
01252-60830	Y1664-01A0	17	Y0- 47
01252-60830	Y1664-11A0	16	Y0- 57
01252-60830	Y1665-01A0	18	Y0- 67
01252-60830	Y1665-21A0	18	Y0- 77
01252-61040	Y1610-12A0	17	Y0- 23
01252-61230	Y1600-02A0	16	Y0- 9
01252-70650	F5350-59A0	5	F0- 109

PARTS	FIG NO.	INDEX	PAGE
01252-70650	F5350-61A0	9	F0- 113
01252-70820	K0110-01A1	3	K0- 5
01252-71040	C0100-02A0	6	C0- 5
01252-71080	F5350-60A0	4	F0- 111
01253-61210	Y1610-01A0	13	Y0- 19
01253-61220	Y1610-11A0	11	Y0- 21
01310-20812	K1110-05B0	30	K0- 123
01370-00510	K0210-03A0	14	K0- 23
01370-00510	K0210-03B0	15	K0- 27
01434-10616	K1110-24B1	19	K0- 167
01434-10820	E0120-01A0	5	E0- 5
01435-00608	E0120-01A0	27	E0- 5
01435-00608	K1110-20B0	8	K0- 157
01435-00608	K1110-20B0	10	K0- 157
01435-00608	K1110-20B0	23	K0- 157
01435-00608	K1110-22B1	10	K0- 163
01435-00608	K1110-22B1	12	K0- 163
01435-00608	K1110-22B1	15	K0- 163
01435-00612	E0120-01A0	18	E0- 5
01435-00612	K0210-03A0	9	K0- 23
01435-00612	K0210-03A0	11	K0- 23
01435-00612	K0210-03B0	10	K0- 27
01435-00612	K0210-03B0	12	K0- 27
01435-00612	K0210-06A0	2	K0- 43
01435-00612	K0210-06B0	2	K0- 47
01435-00612	K0210-08A0	2	K0- 59
01435-00612	K0210-08B0	2	K0- 63
01435-00612	K0210-16A0	3	K0- 85
01435-00614	K1110-20B0	25	K0- 157
01435-00616	A206P-01A7	7	AA- 41
01435-00616	K0210-02B0	11	K0- 21
01435-00616	K0210-14B0	2	K0- 81
01435-00616	K0210-16A0	4	K0- 85
01435-00620	A4510-01A5	2	AA- 125
01435-00620	K0210-13A0	3	K0- 77
01435-00812	A6010-01B2	4	AA- 151
01435-00812	E0202-02A2	30	E0- 15
01435-00812	E0410-01A0	3	E0- 39
01435-00812	J4110-01A0	9	J0- 3
01435-00816	E0120-01A0	25	E0- 5
01435-00820	A6010-01B2	4	AA- 151
01435-00820	E0200-01A0A	26	E0- 9
01435-00820	E0200-01A1A	26	E0- 11
01435-00830	E0120-01A0	13	E0- 5
01435-00850	H5110-01A0	2	H0- 25
01435-00850	H5200-07A0A	14	H0- 71
01435-01014	J4110-01A0	10	J0- 3
01435-01014	J4710-01A0A	8	J0- 11
01435-01014	M4310-01A0	19	M0- 23
01435-01016	C0100-02A0	7	C0- 5

PARTS	FIG NO.	INDEX	PAGE
01435-01016	C0120-01A0B	10	C0- 11
01435-01016	D0200-01A2	5	D0- 5
01435-01016	D0200-01A2	24	D0- 5
01435-01016	E0200-01A0A	4	E0- 9
01435-01016	E0200-01A0A	6	E0- 9
01435-01016	E0200-01A0A	7	E0- 9
01435-01016	E0200-01A0A	9	E0- 9
01435-01016	E0200-01A0A	11	E0- 9
01435-01016	E0200-01A0A	11	E0- 9
01435-01016	E0200-01A0A	14	E0- 9
01435-01016	E0200-01A0A	16	E0- 9
01435-01016	E0200-01A0A	20	E0- 9
01435-01016	E0200-01A1A	4	E0- 11
01435-01016	E0200-01A1A	6	E0- 11
01435-01016	E0200-01A1A	7	E0- 11
01435-01016	E0200-01A1A	9	E0- 11
01435-01016	E0200-01A1A	11	E0- 11
01435-01016	E0200-01A1A	13	E0- 11
01435-01016	E0200-01A1A	16	E0- 11
01435-01016	E0200-01A1A	18	E0- 11
01435-01016	E0200-01A1A	30	E0- 11
01435-01016	E0202-02A2	3	E0- 15
01435-01016	E0202-02A2	7	E0- 15
01435-01016	E0202-02A2	12	E0- 15
01435-01016	E0202-02A2	17	E0- 15
01435-01016	E0202-02A2	22	E0- 15
01435-01016	E0202-02A2	24	E0- 15
01435-01016	E0202-02A2	33	E0- 15
01435-01016	E0202-02A4	38	E0- 17
01435-01016	E0202-03A2	10	E0- 19
01435-01016	E0202-03A2	15	E0- 19
01435-01016	E0202-03A2	21	E0- 19
01435-01016	E0202-03A2	23	E0- 19
01435-01016	E0202-03A2	27	E0- 19
01435-01016	E0202-04A0A	12	E0- 21
01435-01016	F4500-14A0A	5	F0- 69
01435-01016	F4500-14A0A	8	F0- 69
01435-01016	F4500-14A0A	11	F0- 69
01435-01016	F4500-14A0A	14	F0- 69
01435-01016	H0110-01A0A	40	H0- 5
01435-01016	H0110-02A0A	3	H0- 7
01435-01016	H0110-02A0A	5	H0- 7
01435-01016	H4410-01A0A	13	H0- 19
01435-01016	H4410-01A0A	29	H0- 19
01435-01016	H5200-03A0A	32	H0- 59
01435-01016	H5200-04A0A	19	H0- 63
01435-01016	H5200-04A0A	22	H0- 63
01435-01016	H5200-05A0A	6	H0- 65
01435-01016	H5200-05A0A	16	H0- 65
01435-01016	H5200-05A0A	18	H0- 65

PARTS	FIG NO.	INDEX	PAGE
01435-01016	H5200-05A0A	22	H0- 65
01435-01016	H5200-10A0A	3	H0- 77
01435-01016	H5200-12A1A	8	H0- 81
01435-01016	H5210-01B0	18	H0- 85
01435-01016	H5210-01B0	20	H0- 85
01435-01016	H5210-03B0	15	H0- 89
01435-01016	H5210-03B0	19	H0- 89
01435-01016	H5210-03B0	29	H0- 89
01435-01016	H5210-05B0	12	H0- 93
01435-01016	H5210-06B0	9	H0- 95
01435-01016	H5210-07B0	15	H0- 97
01435-01016	H5215-01A0A	6	H0- 105
01435-01016	K0350-01A0	10	K0- 97
01435-01016	K0350-01A1	16	K0- 99
01435-01016	K1110-19A0	2	K0- 153
01435-01016	K1110-19A0	4	K0- 153
01435-01016	K1110-19B0	2	K0- 155
01435-01016	K1110-19B0	4	K0- 155
01435-01016	K1110-21B0	7	K0- 159
01435-01016	K1110-21B0	9	K0- 159
01435-01016	K1110-21B0	11	K0- 159
01435-01016	K1110-21B0	15	K0- 159
01435-01016	K1110-21B0	16	K0- 159
01435-01016	K1110-21B0	20	K0- 159
01435-01016	K1110-21B0	27	K0- 159
01435-01016	K4470-02A0A	17	K0- 179
01435-01016	K4470-03A0A	3	K0- 181
01435-01016	K4470-03A0A	9	K0- 181
01435-01016	K4470-04A0A	6	K0- 183
01435-01016	K4470-04A0A	22	K0- 183
01435-01016	M4100-01A0A	18	M0- 3
01435-01016	M4100-02A0A	16	M0- 5
01435-01016	N1220-01A0A	8	N0- 3
01435-01016	Y1620-31A0A	23	Y0- 31
01435-01020	A6810-01A3	2	AA- 157
01435-01020	B0200-03A0A	4	B0- 21
01435-01020	D0100-01A0A	7	D0- 3
01435-01020	E0340-01A0	4	E0- 37
01435-01020	F4700-01A0A	26	F0- 77
01435-01020	F4700-01A0A	42	F0- 79
01435-01020	F4700-01A1A	26	F0- 81
01435-01020	F4700-01A1A	42	F0- 83
01435-01020	H4410-01A0A	33	H0- 19
01435-01020	H5200-03A0A	9	H0- 59
01435-01020	H5200-03A0A	16	H0- 59
01435-01020	H5200-03A0A	18	H0- 59
01435-01020	H5200-03A0A	42	H0- 61
01435-01020	H5200-07A0A	16	H0- 71
01435-01020	H5200-09A0	2	H0- 75
01435-01020	H5200-09A0	7	H0- 75

PARTS	FIG NO.	INDEX	PAGE
01435-01020	H5200-09A0	12	H0- 75
01435-01020	H5200-09A0	17	H0- 75
01435-01020	H5200-09A0	27	H0- 75
01435-01020	H5210-05B0	11	H0- 93
01435-01020	K4470-03A0A	12	K0- 181
01435-01025	B0200-03A0A	2	B0- 21
01435-01025	B0300-01A0A	5	B0- 29
01435-01025	F4700-01A0A	35	F0- 77
01435-01025	F4700-01A1A	35	F0- 81
01435-01025	H4410-01A0A	28	H0- 19
01435-01025	H5110-01A0	5	H0- 25
01435-01025	H5200-09A0	19	H0- 75
01435-01025	H5200-09A0	23	H0- 75
01435-01025	H5200-09A0	29	H0- 75
01435-01025	H5200-09A0	33	H0- 75
01435-01025	K4470-03A0A	15	K0- 181
01435-01025	M4100-01A0A	6	M0- 3
01435-01025	M4100-02A0A	3	M0- 5
01435-01025	M4100-02A1A	3	M0- 7
01435-01025	M4100-03A0A	7	M0- 9
01435-01030	C0100-01A0	5	C0- 3
01435-01035	B0200-03A0A	6	B0- 21
01435-01035	B0300-01A0A	15	B0- 29
01435-01035	F4700-01A0A	36	F0- 77
01435-01035	F4700-01A1A	36	F0- 81
01435-01035	H5200-03A0A	21	H0- 59
01435-01040	A401R-01B6	7	AA- 107
01435-01040	H5210-03B0	30	H0- 89
01435-01040	H5211-01A0A	19A	H0- 101
01435-01055	H5200-09A0	10	H0- 75
01435-01055	H5200-09A0	15	H0- 75
01435-01055	H5200-09A0	21	H0- 75
01435-01055	H5200-09A0	25	H0- 75
01435-01055	H5200-09A0	31	H0- 75
01435-01055	H5200-09A0	35	H0- 75
01435-01060	B0300-03A0	7	B0- 35
01435-01065	H5200-09A0	5	H0- 75
01435-01070	A4510-01A5	6	AA- 125
01435-01090	A5030-01C4	2	AA- 139
01435-01220	F4700-01A0A	40	F0- 79
01435-01220	F4700-01A1A	40	F0- 83
01435-01220	H5200-12A1A	10	H0- 81
01435-01220	J4110-01A0	11	J0- 3
01435-01225	B0200-03A0A	9	B0- 21
01435-01225	B0300-02A0	3	B0- 33
01435-01225	H5200-02A0A	17	H0- 55
01435-01230	H5200-08A0A	29	H0- 73
01435-01235	H5200-01A0	4	H0- 53
01435-20816	C0110-01A0A	6	C0- 7
01435-20816	C0110-01A0A	8	C0- 7

PARTS	FIG NO.	INDEX	PAGE
01435-20816	C0110-01A0A	10	C0- 7
01435-20816	C0110-01A0A	12	C0- 7
01435-20816	C0110-01A0A	14	C0- 7
01435-40610	E0300-01A1A	4	E0- 29
01435-40610	K0210-05A0A	45	K0- 37
01435-40610	K0210-05B0A	45	K0- 41
01435-40610	K0210-07A0A	45	K0- 53
01435-40610	K0210-07B0A	45	K0- 57
01435-40612	K0210-01A1	31	K0- 13
01435-40612	K0210-01A7	37	K0- 13
01435-40612	K0210-01B0	31	K0- 17
01435-40612	K0210-01B0	37	K0- 17
01435-40612	K0210-05A0A	10	K0- 35
01435-40612	K0210-05B0A	10	K0- 39
01435-40612	K0210-06A0	38	K0- 45
01435-40612	K0210-06B0	38	K0- 49
01435-40612	K0210-07A0A	10	K0- 51
01435-40612	K0210-07B0A	10	K0- 55
01435-40612	K0210-08A0	39	K0- 61
01435-40612	K0210-08B0	39	K0- 65
01435-40612	K1110-08B0	17	K0- 135
01435-40630	K0210-05A0A	33	K0- 37
01435-40630	K0210-05B0A	33	K0- 41
01435-40630	K0210-07A0A	33	K0- 53
01435-40630	K0210-07B0A	33	K0- 57
01435-40812	K0210-04A0	26	K0- 31
01435-40812	K0210-04B0	25	K0- 33
01435-40816	K0210-03A0	21	K0- 23
01435-40816	K0210-03B0	22	K0- 27
01435-40816	K0210-05A0A	47	K0- 37
01435-40816	K0210-05B0A	47	K0- 41
01435-40816	K0210-06A0	28	K0- 43
01435-40816	K0210-06A0	40	K0- 45
01435-40816	K0210-06B0	28	K0- 47
01435-40816	K0210-06B0	40	K0- 49
01435-40816	K0210-07A0A	47	K0- 53
01435-40816	K0210-07B0A	47	K0- 57
01435-40816	K0210-08A0	29	K0- 59
01435-40816	K0210-08A0	41	K0- 61
01435-40816	K0210-08B0	29	K0- 63
01435-40816	K0210-08B0	41	K0- 65
01435-40820	K0210-02A0	25	K0- 19
01435-40820	K0210-02B0	25	K0- 21
01435-41016	E0300-01A1A	2	E0- 29
01436-01005	A501R-01A4	1	AA- 127
01436-01040	H5200-02A0A	16	H0- 55
01436-01040	K4470-02A0A	14	K0- 179
01463-31032	C0120-01A0B	21	C0- 11
01463-31032	M4230-01A0A	17	M0- 13
01508-40603	A4510-01A5	15	AA- 125

PARTS	FIG NO.	INDEX	PAGE
01508-40603	K1110-03B0	15	K0- 117
01508-40603	K1110-03B1	14	K0- 119
01508-40805	E0202-04A0A	9	E0- 21
01508-40805	K1110-07B0	6	K0- 131
01508-40805	K1110-07B1	6	K0- 133
01508-40805	K1110-26B0	4	K0- 171
01530-04812	F5350-57A0	11	F0- 103
01580-00605	A4510-01A5	9	AA- 125
01580-00605	A4510-01A5	14	AA- 125
01580-01008	F5350-62A0	18	F0- 115
01580-02419	C0100-01A0	14	C0- 3
01580-02419	M4510-01A0	5	M0- 25
01580-02419	M4510-01A1	5	M0- 27
01580-02722	J4120-01A0A	8	J0- 5
01580-10504	E0202-04A0A	4	E0- 21
01580-10605	B0200-04A0	7	B0- 23
01580-10605	E0202-02A2	35	E0- 15
01580-10605	K1110-03B0	17	K0- 117
01580-10605	K1110-03B1	16	K0- 119
01580-10605	K1110-26B0	5	K0- 171
01580-10605	K1110-26B0	12	K0- 171
01580-10605	Y1600-03A0	17	Y0- 11
01580-10806	E0120-01A0	17	E0- 5
01580-10806	E0202-04A0A	14	E0- 21
01580-10806	K0110-01A0	16	K0- 3
01580-10806	K0210-05A0A	24	K0- 35
01580-10806	K0210-05B0A	24	K0- 39
01580-10806	K0210-06A0	23	K0- 43
01580-10806	K0210-06A0	31	K0- 45
01580-10806	K0210-06B0	23	K0- 47
01580-10806	K0210-06B0	31	K0- 49
01580-10806	K0210-07A0A	24	K0- 51
01580-10806	K0210-07B0A	24	K0- 55
01580-10806	K0210-08A0	24	K0- 59
01580-10806	K0210-08A0	32	K0- 61
01580-10806	K0210-08B0	24	K0- 63
01580-10806	K0210-08B0	32	K0- 65
01580-10806	K1110-02B0	12	K0- 113
01580-10806	K1110-02B1	12	K0- 115
01580-10806	K1110-03B0	25	K0- 117
01580-10806	K1110-03B1	24	K0- 119
01580-10806	K1110-06B0	4	K0- 127
01580-10806	K1110-06B1	4	K0- 129
01580-10806	K1110-10B0	11	K0- 141
01580-10806	K1110-10B0	26	K0- 141
01580-11008	C0100-01A0	18	C0- 3
01580-11008	C0120-03A0A	41	C0- 15
01580-11008	E0120-01A0	10	E0- 5
01580-11008	K0210-05A0A	38	K0- 37
01580-11008	K0210-05B0A	38	K0- 41

PARTS	FIG NO.	INDEX	PAGE
01580-11008	K0210-07A0A	38	K0- 53
01580-11008	K0210-07B0A	38	K0- 57
01580-11008	K0710-01A0A	32	K0- 103
01580-11008	K1110-05B0	27	K0- 123
01580-11008	K4460-01A0	5	K0- 173
01580-11008	K4470-03A0A	10	K0- 181
01580-11210	A601T-01A6	5	AA- 149
01580-11210	B0300-01A0A	10	B0- 29
01580-11210	C0100-01A0	23	C0- 3
01580-11210	H5120-02A0A	4	H0- 31
01580-11210	K1110-10B0	17	K0- 141
01580-11411	C0100-01A0	25	C0- 3
01580-11411	K0710-01A0A	25	K0- 103
01580-11613	C0100-01A0	27	C0- 3
01580-11613	K0710-01A0A	27	K0- 103
01580-11613	T5170-01A0	15	T0- 53
01580-11613	T5170-01A12	48	T0- 55
01580-11613	T5170-01A6	42	T0- 55
01580-12016	C0100-01A0	33	C0- 3
01580-12016	T5110-01A0A	21	T0- 3
01580-12016	T5170-01A0	10	T0- 53
01580-12016	Y1620-01A0A	16	Y0- 25
01580-12016	Y1620-21A0A	7	Y0- 29
01580-12016	Y1620-21A0A	23	Y0- 29
01580-12218	B0100-01A0	8	B0- 3
01580-12419	T5110-01A0A	6	T0- 3
01580-12419	T5110-01A0A	25	T0- 3
01580-12419	T5115-01A0	6	T0- 5
01580-12419	T5170-01A0	29	T0- 53
01580-12419	V0300-01A0	18	V0- 3
01580-12722	T5170-01A0	33	T0- 53
01580-13629	T5123-01A0	32	T0- 25
01582-01411	A408P-01B0	10	AA- 111
01582-11008	K1110-05B0	28	K0- 123
01582-11210	T5130-12A1	24	T0- 35
01582-11411	K1110-16B0	6	K0- 147
01582-12016	T5170-01A0	7	T0- 53
01583-11610	F4500-10A0	36	F0- 49
01583-11610	F4500-10A1	36	F0- 53
01583-11610	F4500-11A0	36	F0- 57
01583-11610	F4500-11A1	36	F0- 61
01583-11811	Y1600-05A0	7	Y0- 15
01583-13923	F4400-03A0	5	F0- 13
01584-00605	K0210-05A0A	15	K0- 35
01584-00605	K0210-05B0A	15	K0- 39
01584-00605	K0210-07A0A	15	K0- 51
01584-00605	K0210-07B0A	15	K0- 55
01584-00806	A1010-01C9	6	AA- 5
01584-00806	A4510-01A5	7	AA- 125
01584-00806	E0200-01A0A	27	E0- 9

PARTS	FIG NO.	INDEX	PAGE
01584-00806	E0200-01A1A	27	E0- 11
01584-00806	K0110-01A0	14	K0- 3
01584-31008	K0210-05A0A	8	K0- 35
01584-31008	K0210-05B0A	7	K0- 39
01584-31008	K0210-07A0A	8	K0- 51
01584-31008	K0210-07B0A	7	K0- 55
01590-10607	A4510-01A5	11	AA- 125
01590-14548	T5110-01A0A	11	T0- 3
01590-14548	T5123-01A0	26	T0- 25
01592-32427	F4400-01A0	4A	F0- 7
01592-32427	F4400-03A0	9A	F0- 13
01593-31210	F4400-01A0	53	F0- 9
01593-31613	F4400-01A0	35	F0- 9
01593-33018	F4400-01A0	25	F0- 7
01593-33018	F4400-01A0	45	F0- 9
01594-01008	K0210-05A0A	7	K0- 35
01594-01008	K0210-05B0A	8	K0- 39
01594-01008	K0210-07A0A	7	K0- 51
01594-01008	K0210-07B0A	8	K0- 55
01596-00606	F4400-03A0	16	F0- 13
01596-01009	K0215-01A0	5	K0- 93
01596-01211	K0210-03A0	34	K0- 25
01596-01211	K0210-03B0	35	K0- 29
01597-01009	F4500-06A1A	24	F0- 35
01597-01009	F4700-01A0A	9	F0- 77
01597-01009	F4700-01A1A	9	F0- 81
01597-01009	H5200-03A0A	25	H0- 59
01597-01009	K0710-01A0A	6	K0- 103
01598-01415	T5170-01A0	25	T0- 53
01601-20307	K1110-16B0	12	K0- 147
01602-21030	K1110-16B0	14	K0- 147
01640-20408	K0355-01A0	5	K0- 101
01640-20408	K1110-22B1	7	K0- 163
01640-20408	M4100-03A0A	20	M0- 9
01640-20508	E0202-04A0A	5	E0- 21
01640-20508	K1110-07B0	2	K0- 131
01640-20508	K1110-07B1	2	K0- 133
01640-20610	A206P-01A7	8	AA- 41
01640-20610	A4510-01A5	3	AA- 125
01640-20610	F4400-03A0	17	F0- 13
01640-20610	K0210-06A0	16	K0- 43
01640-20610	K0210-06B0	16	K0- 47
01640-20610	K0210-08A0	16	K0- 59
01640-20610	K0210-08B0	16	K0- 63
01640-20610	K1110-03B0	12	K0- 117
01640-20610	K1110-03B1	12	K0- 119
01640-20816	A4510-01A5	17	AA- 125
01640-20816	K0210-05A0A	26	K0- 35
01640-20816	K0210-05B0A	26	K0- 39
01640-20816	K0210-06A0	26	K0- 43

PARTS	FIG NO.	INDEX	PAGE
01640-20816	K0210-06A0	36	K0- 45
01640-20816	K0210-06A0	44	K0- 45
01640-20816	K0210-06B0	26	K0- 47
01640-20816	K0210-06B0	36	K0- 49
01640-20816	K0210-06B0	44	K0- 49
01640-20816	K0210-07A0A	26	K0- 51
01640-20816	K0210-07B0A	26	K0- 55
01640-20816	K0210-08A0	27	K0- 59
01640-20816	K0210-08A0	37	K0- 61
01640-20816	K0210-08A0	45	K0- 61
01640-20816	K0210-08B0	27	K0- 63
01640-20816	K0210-08B0	37	K0- 65
01640-20816	K0210-08B0	45	K0- 65
01640-20816	K1110-05B0	13	K0- 123
01640-20816	M4100-02A0A	12	M0- 5
01640-20816	M4100-02A1A	12	M0- 7
01640-20816	M4310-01A0	9	M0- 23
01640-21016	K0210-06A0	46	K0- 45
01640-21016	K0210-06B0	46	K0- 49
01640-21016	K0210-08A0	47	K0- 61
01640-21016	K0210-08B0	47	K0- 65
01640-21016	K1110-05B0	10	K0- 123
01640-21223	K1110-10B0	18	K0- 141
01640-21426	K1110-16B0	7	K0- 147
01640-22440	K1110-03B0	8	K0- 117
01640-22440	K1110-03B1	8	K0- 119
01641-20508	H0110-01A0A	18	H0- 3
01641-20508	K0210-03A0	15	K0- 23
01641-20508	K0210-03B0	16	K0- 27
01641-20812	K0210-06A0	30	K0- 43
01641-20812	K0210-06B0	30	K0- 47
01641-20812	K0210-08A0	31	K0- 59
01641-20812	K0210-08B0	31	K0- 63
01641-21223	A601T-01A6	6	AA- 149
01643-30623	B0110-04A0A	6	B0- 11
01643-30623	B0200-04A0	8	B0- 23
01643-30623	E0202-02A2	36	E0- 15
01643-30623	K0210-06A0	8	K0- 43
01643-30623	K0210-06B0	8	K0- 47
01643-30623	K0210-08A0	8	K0- 59
01643-30623	K0210-08B0	8	K0- 63
01643-30623	K0210-13A0	16	K0- 77
01643-30623	K0210-14A0	9	K0- 79
01643-30623	K0350-01A0	8	K0- 97
01643-30623	K0350-01A1	14	K0- 99
01643-30623	K0710-02A0A	6	K0- 107
01643-30623	K0713-01A0A	36	K0- 109
01643-30623	K1110-03B0	3	K0- 117
01643-30623	K1110-03B0	6	K0- 117
01643-30623	K1110-03B0	13	K0- 117

PARTS	FIG NO.	INDEX	PAGE
01643-30623	K1110-03B0	16	K0- 117
01643-30623	K1110-03B1	3	K0- 119
01643-30623	K1110-03B1	6	K0- 119
01643-30623	K1110-03B1	15	K0- 119
01643-30623	K1110-08B0	6	K0- 135
01643-30623	K1110-08B0	9	K0- 135
01643-30623	K1110-09B0	10	K0- 139
01643-30623	K1110-09B0	13	K0- 139
01643-30623	K1110-09B0	15	K0- 139
01643-30623	K1110-09B0	18	K0- 139
01643-30623	K1110-26B0	9	K0- 171
01643-30623	M4100-02A0A	9	M0- 5
01643-30623	M4100-02A1A	9	M0- 7
01643-30823	A1010-01C9	4	AA- 5
01643-30823	A2049-01A1	16	AA- 39
01643-30823	A411S-01C1	31	AA- 117
01643-30823	C0110-01A0A	29	C0- 7
01643-30823	D0200-01A2	27	D0- 5
01643-30823	E0120-01A0	6	E0- 5
01643-30823	E0120-01A0	16	E0- 5
01643-30823	E0120-01A0	26	E0- 5
01643-30823	E0202-01A2	5	E0- 13
01643-30823	F4500-06A1A	31	F0- 35
01643-30823	F4700-01A0A	19	F0- 77
01643-30823	F4700-01A1A	19	F0- 81
01643-30823	F5350-51A0	14	F0- 87
01643-30823	F5350-67A0	15	F0- 125
01643-30823	H0120-01A0	3	H0- 9
01643-30823	H0120-01A0	6	H0- 9
01643-30823	H0120-01A1	3	H0- 11
01643-30823	H0120-01A1	6	H0- 11
01643-30823	H0120-01A2	3	H0- 13
01643-30823	H0120-01A2	6	H0- 13
01643-30823	H5110-01A0	3	H0- 25
01643-30823	H5120-01A0A	10	H0- 27
01643-30823	H5120-01A0A	13	H0- 27
01643-30823	H5120-01A0A	16	H0- 27
01643-30823	H5120-01A1A	11	H0- 29
01643-30823	H5120-01A1A	15	H0- 29
01643-30823	H5120-01A1A	19	H0- 29
01643-30823	H5200-07A0A	15	H0- 71
01643-30823	H5200-12A1A	26	H0- 81
01643-30823	H5211-01A0A	22	H0- 101
01643-30823	H5215-01A0A	21	H0- 105
01643-30823	K0110-01A0	8	K0- 3
01643-30823	K0110-01A0	10	K0- 3
01643-30823	K0110-01A0	17	K0- 3
01643-30823	K0710-01A0A	12	K0- 103
01643-30823	K0710-01A0A	23	K0- 103
01643-30823	K0710-01A0A	38	K0- 105

PARTS	FIG NO.	INDEX	PAGE
01643-30823	K0710-01A0A	40	K0- 105
01643-30823	K0710-02A0A	22	K0- 107
01643-30823	K0710-02A0A	25	K0- 107
01643-30823	K0710-02A0A	28	K0- 107
01643-30823	K0713-01A0A	14	K0- 109
01643-30823	K1110-20B0	3	K0- 157
01643-30823	M4100-04A0A	4	M0- 11
01643-30823	M4100-04A0A	8	M0- 11
01643-30823	Y1600-03A0	13	Y0- 11
01643-31032	B0110-01A0	3	B0- 5
01643-31032	B0110-01A0	6	B0- 5
01643-31032	B0110-02A0A	2	B0- 7
01643-31032	B0110-02A0A	5	B0- 7
01643-31032	B0110-04A0A	3	B0- 11
01643-31032	B0200-04A0	11	B0- 23
01643-31032	B0300-01A0A	19	B0- 29
01643-31032	B0300-01A0A	23	B0- 29
01643-31032	B0300-03A0	3	B0- 35
01643-31032	B0300-03A0	5	B0- 35
01643-31032	B0300-03A0	10	B0- 35
01643-31032	C0100-01A0	19	C0- 3
01643-31032	C0120-01A0B	25	C0- 11
01643-31032	C0120-01A0B	32	C0- 11
01643-31032	C0120-03A0A	4	C0- 13
01643-31032	C0120-03A0A	6	C0- 13
01643-31032	C0120-03A0A	13	C0- 13
01643-31032	C0120-03A0A	16	C0- 13
01643-31032	C0120-03A0A	26	C0- 13
01643-31032	C0120-03A0A	29	C0- 13
01643-31032	C0120-03A0A	33	C0- 13
01643-31032	C0120-03A0A	40	C0- 15
01643-31032	C0310-01A0A	4	C0- 17
01643-31032	C0310-01A0A	6	C0- 17
01643-31032	C0310-01A0A	9	C0- 17
01643-31032	D0200-01A10	44	D0- 7
01643-31032	E0120-01A0	3	E0- 5
01643-31032	E0120-01A0	11	E0- 5
01643-31032	E0120-02A0A	4	E0- 7
01643-31032	E0120-02A0A	7	E0- 7
01643-31032	E0120-02A0A	14	E0- 7
01643-31032	E0120-02A0A	24	E0- 7
01643-31032	E0120-02A0A	26	E0- 7
01643-31032	E0300-01A0	5	E0- 27
01643-31032	E0310-01A0	4	E0- 33
01643-31032	E0510-01A0	3	E0- 41
01643-31032	F4320-01A0A	10	F0- 5
01643-31032	F4320-01A0A	20	F0- 5
01643-31032	F4320-01A0A	22	F0- 5
01643-31032	F4400-02A0	25	F0- 11
01643-31032	F4500-05A0	21	F0- 29

PARTS	FIG NO.	INDEX	PAGE
01643-31032	F4500-06A1A	16	F0- 35
01643-31032	F4500-10A0	16	F0- 47
01643-31032	F4500-10A1	16	F0- 51
01643-31032	F4500-11A0	16	F0- 55
01643-31032	F4500-11A1	16	F0- 59
01643-31032	F4700-01A0A	7	F0- 77
01643-31032	F4700-01A0A	10	F0- 77
01643-31032	F4700-01A1A	7	F0- 81
01643-31032	F4700-01A1A	10	F0- 81
01643-31032	F5350-57A0	36	F0- 105
01643-31032	F5350-58A0	27	F0- 107
01643-31032	F5350-60A0	5	F0- 111
01643-31032	F5350-60A0	11	F0- 111
01643-31032	F5350-60A0	15	F0- 111
01643-31032	F5350-61A0	16	F0- 113
01643-31032	F5350-62A0	6	F0- 115
01643-31032	F5350-62A0	8	F0- 115
01643-31032	F5350-62A0	10	F0- 115
01643-31032	F5350-62A0	13	F0- 115
01643-31032	F5350-62A0	19	F0- 115
01643-31032	F5350-63A0	9	F0- 117
01643-31032	F5350-63A0	20	F0- 117
01643-31032	F5350-63A0	25	F0- 117
01643-31032	F5350-65A0	5	F0- 121
01643-31032	F5350-65A0	16	F0- 121
01643-31032	F5350-65A0	19	F0- 121
01643-31032	F5350-68A0	4	F0- 127
01643-31032	F5350-69A0	10	F0- 129
01643-31032	F5350-69A0	14	F0- 129
01643-31032	F5350-70A0	3	F0- 131
01643-31032	H0110-01A0A	48	H0- 5
01643-31032	H4410-01A0A	16	H0- 19
01643-31032	H5120-01A0A	20	H0- 27
01643-31032	H5120-01A1A	24	H0- 29
01643-31032	H5200-03A0A	26	H0- 59
01643-31032	H5210-01B0	16	H0- 85
01643-31032	H5210-03B0	3	H0- 89
01643-31032	H5210-03B0	6	H0- 89
01643-31032	H5210-03B0	9	H0- 89
01643-31032	H5210-03B0	33	H0- 89
01643-31032	H5210-05B0	15	H0- 93
01643-31032	H5210-09B0	18	H0- 99
01643-31032	H6290-01A0A	10	H0- 109
01643-31032	K0210-05A0A	39	K0- 37
01643-31032	K0210-05B0A	39	K0- 41
01643-31032	K0210-07A0A	39	K0- 53
01643-31032	K0210-07B0A	39	K0- 57
01643-31032	K0210-09B0	11	K0- 69
01643-31032	K0210-18A0	8	K0- 89
01643-31032	K0210-18A0	10	K0- 89

PARTS	FIG NO.	INDEX	PAGE
01643-31032	K0210-18B0	8	K0- 91
01643-31032	K0210-18B0	10	K0- 91
01643-31032	K0710-01A0A	4	K0- 103
01643-31032	K0710-01A0A	7	K0- 103
01643-31032	K0710-01A0A	14	K0- 103
01643-31032	K0710-01A0A	19	K0- 103
01643-31032	K0710-01A0A	31	K0- 103
01643-31032	K0710-02A0A	11	K0- 107
01643-31032	K0710-02A0A	16	K0- 107
01643-31032	K0710-02A0A	32	K0- 107
01643-31032	K0710-02A0A	34	K0- 107
01643-31032	K0713-01A0A	7	K0- 109
01643-31032	K0713-01A0A	27	K0- 109
01643-31032	K1110-01B0	4	K0- 111
01643-31032	K1110-02B0	4	K0- 113
01643-31032	K1110-02B1	4	K0- 115
01643-31032	K1110-03B0	22	K0- 117
01643-31032	K1110-03B1	21	K0- 119
01643-31032	K1110-05B0	16	K0- 123
01643-31032	K1110-05B0	19	K0- 123
01643-31032	K1110-05B0	26	K0- 123
01643-31032	K1110-08B0	3	K0- 135
01643-31032	K1110-08B0	12	K0- 135
01643-31032	K1110-08B0	15	K0- 135
01643-31032	K1110-08B1	3	K0- 137
01643-31032	K1110-09B0	4	K0- 139
01643-31032	K1110-10B0	2	K0- 141
01643-31032	K1110-11B0	3	K0- 143
01643-31032	K1110-11B0	6	K0- 143
01643-31032	K1110-11B0	9	K0- 143
01643-31032	K1110-15B0	3	K0- 145
01643-31032	K1110-23B1	4	K0- 165
01643-31032	K1110-23B1	7	K0- 165
01643-31032	K1110-24B1	3	K0- 167
01643-31032	K1110-24B1	6	K0- 167
01643-31032	K1110-24B1	9	K0- 167
01643-31032	K1110-24B1	13	K0- 167
01643-31032	K4460-01A0	4	K0- 173
01643-31032	K4470-05A0A	4	K0- 185
01643-31032	M4100-01A0A	4	M0- 3
01643-31032	M4100-01A0A	7	M0- 3
01643-31032	M4100-01A0A	16	M0- 3
01643-31032	M4100-01A0A	21	M0- 3
01643-31032	M4100-02A0A	4	M0- 5
01643-31032	M4100-02A0A	20	M0- 5
01643-31032	M4100-02A0A	25	M0- 5
01643-31032	M4100-02A1A	4	M0- 7
01643-31032	M4100-02A1A	19	M0- 7
01643-31032	M4100-03A0A	4	M0- 9
01643-31032	M4100-03A0A	8	M0- 9

PARTS	FIG NO.	INDEX	PAGE
01643-31032	M4100-03A0A	13	M0-9
01643-31032	M4100-03A0A	16	M0-9
01643-31032	M4230-01A0A	6	M0-13
01643-31032	M4230-01A0A	13	M0-13
01643-31032	M4230-01A0A	25	M0-13
01643-31032	M4230-01A1	6	M0-15
01643-31032	M4230-01A1	13	M0-15
01643-31032	M4230-01A1	17	M0-15
01643-31032	M4230-01A1	25	M0-15
01643-31032	M4240-01A0	4	M0-21
01643-31032	M4310-01A0	8	M0-23
01643-31032	M4310-01A0	12	M0-23
01643-31032	M4310-01A0	16	M0-23
01643-31032	T5123-01A0	8	T0-25
01643-31032	T5123-01A0	30	T0-25
01643-31032	T5130-11A1	3	T0-33
01643-31032	T5130-12A1	18	T0-35
01643-31032	T5130-12A1	27	T0-35
01643-31032	Y1622-21A0A	23	Y0-41
01643-31232	A401R-01B6	3	AA-107
01643-31232	B0200-03A0A	7	B0-21
01643-31232	B0200-05A0	7	B0-25
01643-31232	B0200-05A0	10	B0-25
01643-31232	B0300-01A0A	6	B0-29
01643-31232	B0300-01A0A	11	B0-29
01643-31232	B0300-01A0A	16	B0-29
01643-31232	B0300-01A0A	26	B0-29
01643-31232	B0300-01A0A	34	B0-29
01643-31232	B0300-01A0A	37	B0-31
01643-31232	C0100-01A0	3	C0-3
01643-31232	C0100-01A0	24	C0-3
01643-31232	C0110-01A0A	4	C0-7
01643-31232	C0110-01A0A	36	C0-9
01643-31232	C0120-01A0B	6	C0-11
01643-31232	D0200-01A2	17	D0-5
01643-31232	D0200-01A2	36	D0-5
01643-31232	E0120-02A0A	9	E0-7
01643-31232	E0120-02A0A	12	E0-7
01643-31232	E0202-03A2	4	E0-19
01643-31232	E0310-02A1	3	E0-35
01643-31232	F4400-01A0	12	F0-7
01643-31232	F4400-01A0	42	F0-9
01643-31232	F4400-01A0	54	F0-9
01643-31232	F4500-01A0	5	F0-15
01643-31232	F4500-01A1A	6	F0-17
01643-31232	F4500-02A0	14	F0-19
01643-31232	F4500-03A0	4	F0-21
01643-31232	F4500-03A1	4	F0-23
01643-31232	F4500-03A1	17	F0-23
01643-31232	F4500-03A2	31	F0-25

PARTS	FIG NO.	INDEX	PAGE
01643-31232	F4500-03A9	35	F0-25
01643-31232	F4500-04A1	20	F0-27
01643-31232	F4500-05A0	18	F0-29
01643-31232	F4500-06A1A	4	F0-35
01643-31232	F4500-08A0	6	F0-39
01643-31232	F4500-08A0	14	F0-39
01643-31232	F4500-08A1	6	F0-41
01643-31232	F4500-08A1	13	F0-41
01643-31232	F4500-09A0	6	F0-43
01643-31232	F4500-09A0	14	F0-43
01643-31232	F4500-09A1	6	F0-45
01643-31232	F4500-09A1	13	F0-45
01643-31232	F4500-13A0	5	F0-67
01643-31232	F4500-13A0	9	F0-67
01643-31232	F4500-13A0	12	F0-67
01643-31232	F4500-15A0	4	F0-71
01643-31232	F4700-01A0A	3	F0-77
01643-31232	F4700-01A1A	3	F0-81
01643-31232	F5350-51A0	21	F0-87
01643-31232	F5350-56A0	8	F0-101
01643-31232	F5350-56A0	12	F0-101
01643-31232	F5350-57A0	5	F0-103
01643-31232	F5350-57A0	21	F0-103
01643-31232	F5350-65A0	22	F0-121
01643-31232	F5350-67A0	19	F0-125
01643-31232	H0110-01A0A	5	H0-3
01643-31232	H0110-01A0A	21	H0-3
01643-31232	H0210-01A0	8	H0-15
01643-31232	H0210-01A1	8	H0-17
01643-31232	H4410-01A0A	6	H0-19
01643-31232	H4410-01A0A	9	H0-19
01643-31232	H5120-02A0A	3	H0-31
01643-31232	H5120-02A0A	7	H0-31
01643-31232	H5120-08A0	7	H0-51
01643-31232	H5200-08A0A	28	H0-73
01643-31232	H5210-09B0	21	H0-99
01643-31232	J4130-01A0	5	J0-7
01643-31232	J4130-01A0	15	J0-7
01643-31232	K0110-01A0	19	K0-3
01643-31232	K0110-01A1	5	K0-5
01643-31232	K0710-01A0A	35	K0-103
01643-31232	K0713-01A0A	10	K0-109
01643-31232	K4470-01A0	3	K0-177
01643-31232	K4470-01A0	6	K0-177
01643-31232	K4470-01A0	9	K0-177
01643-31232	K4470-03A0A	26	K0-181
01643-31232	K4470-04A0A	18	K0-183
01643-31232	M4100-01A0A	24	M0-3
01643-31232	M4230-02A0	8	M0-17
01643-31232	M4310-01A0	14	M0-23

PARTS	FIG NO.	INDEX	PAGE
01643-31232	T5115-01A0	12	T0-5
01643-31232	T5120-01A0	8	T0-9
01643-31232	T5120-01A1	8	T0-11
01643-31232	T5120-01A2	8	T0-13
01643-31232	T5120-01A3	8	T0-15
01643-31232	T5120-01B0	8	T0-17
01643-31232	T5120-01B1	8	T0-19
01643-31232	T5120-01B2	8	T0-21
01643-31232	T5120-01B3	8	T0-23
01643-31232	T5123-01A0	10	T0-25
01643-31232	T5123-01A0	15	T0-25
01643-31232	T5123-01A1	37	T0-27
01643-31232	T5125-01A0	22	T0-29
01643-31232	T5130-11A1	17	T0-33
01643-31232	T5130-12A1	25	T0-35
01643-31232	Y1600-06A0	6	Y0-17
01643-31445	F4500-03A0	21	F0-21
01643-31445	F4500-03A11	37	F0-25
01643-31445	K1110-16B0	8	K0-147
01643-31645	B0100-01A0	3	B0-3
01643-31645	C0100-01A0	28	C0-3
01643-31645	D0100-01A0A	3	D0-3
01643-31645	D0100-01A0A	12	D0-3
01643-31645	F4400-01A0	36	F0-9
01643-31645	F4400-01A0	51	F0-9
01643-31645	F4500-03A0	18	F0-21
01643-31645	F4500-04A1	13	F0-27
01643-31645	F4500-04A1	24	F0-27
01643-31645	F4500-05A0	3	F0-29
01643-31645	F4500-10A0	42	F0-49
01643-31645	F4500-10A1	42	F0-53
01643-31645	F4500-11A0	41	F0-57
01643-31645	F4500-11A1	41	F0-61
01643-31645	F4500-15A0	7	F0-71
01643-31645	F4810-01A0	4	F0-85
01643-31645	F5350-67A0	4	F0-125
01643-31645	J4130-01A0	17	J0-7
01643-31645	J4130-01A0	22	J0-7
01643-31645	K0710-01A0A	28	K0-103
01643-31645	T5115-01A0	17	T0-5
01643-31645	T5115-01A0	26	T0-5
01643-31645	T5115-01A0	34	T0-5
01643-31645	T5120-01A0	4	T0-9
01643-31645	T5120-01A0	13	T0-9
01643-31645	T5120-01A1	4	T0-11
01643-31645	T5120-01A1	15	T0-11
01643-31645	T5120-01A2	4	T0-13
01643-31645	T5120-01A2	13	T0-13
01643-31645	T5120-01A3	4	T0-15
01643-31645	T5120-01A3	15	T0-15

PARTS	FIG NO.	INDEX	PAGE
01643-31645	T5120-01B0	4	T0-17
01643-31645	T5120-01B0	13	T0-17
01643-31645	T5120-01B1	4	T0-19
01643-31645	T5120-01B1	15	T0-19
01643-31645	T5120-01B2	4	T0-21
01643-31645	T5120-01B2	13	T0-21
01643-31645	T5120-01B3	4	T0-23
01643-31645	T5120-01B3	15	T0-23
01643-31645	T5123-01A0	5	T0-25
01643-32060	C0100-01A0	32	C0-3
01643-32060	F4400-01A0	20	F0-7
01643-32060	H0210-01A0	4	H0-15
01643-32060	H0210-01A1	4	H0-17
01643-32060	T5110-01A0A	18	T0-3
01643-32060	T5110-01A0A	20	T0-3
01643-32060	T5110-01A0A	23	T0-3
01643-32060	T5125-01A0	9	T0-29
01643-32060	T5170-01A0	8	T0-53
01643-32060	T5170-01A0	11	T0-53
01643-32060	Y1620-01A0A	17	Y0-25
01643-32060	Y1620-21A0A	8	Y0-29
01643-32060	Y1620-21A0A	24	Y0-29
01643-32260	B0100-01A0	9	B0-3
01643-32260	F4400-02A0	9	F0-11
01643-32260	F4500-12A0	2	F0-63
01643-32260	F4500-12A1	2	F0-65
01643-32260	F4810-01A0	9	F0-85
01643-32260	S0100-01C2	12	S0-5
01643-32260	S0100-01D0	9	S0-7
01643-32460	C0100-01A0	13	C0-3
01643-32460	K0210-18A0	6	K0-89
01643-32460	K0210-18B0	6	K0-91
01643-32460	M4231-01A0	3	M0-19
01643-32460	M4520-01A0	4	M0-29
01643-32460	T5110-01A0A	7	T0-3
01643-32460	T5115-01A0	5	T0-5
01643-32460	T5125-01A0	4	T0-29
01643-32460	T5125-01A0	7	T0-29
01643-32460	T5130-12A1	33	T0-37
01643-32460	T5170-01A0	28	T0-53
01643-32780	J4120-01A0A	7	J0-5
01643-32780	K0210-18A0	6	K0-89
01643-32780	K0210-18B0	6	K0-91
01643-32780	T5170-01A0	32	T0-53
01643-33080	F4400-01A0	27	F0-7
01643-33080	T5170-01A0	31	T0-53
01643-50823	K0210-05A0A	25	K0-35
01643-50823	K0210-05B0A	25	K0-39
01643-50823	K0210-07A0A	25	K0-51
01643-50823	K0210-07B0A	25	K0-55

PARTS	FIG NO.	INDEX	PAGE
01643-50823	Y1664-01A0	16	Y0- 47
01643-50823	Y1664-11A0	15	Y0- 57
01643-50823	Y1665-01A0	17	Y0- 67
01643-50823	Y1665-21A0	17	Y0- 77
01643-51032	F4320-01A0A	6	F0- 5
01643-51032	F4700-01A0A	15	F0- 77
01643-51032	H5200-02A0A	8	H0- 55
01643-51032	H5200-02A0A	22	H0- 55
01643-51032	H5200-02A0A	27	H0- 55
01643-51032	Y1610-12A0	18	Y0- 23
01643-51232	D0200-01A2	30	D0- 5
01643-51232	F4200-01A0	6	F0- 3
01643-51232	F4700-01A1A	15	F0- 81
01643-51232	K0110-01A1	8	K0- 5
01643-51232	Y1610-01A0	14	Y0- 19
01643-51232	Y1610-11A0	12	Y0- 21
01643-51232	Y1610-12A0	10	Y0- 23
01643-51645	K1110-02B0	17	K0- 113
01643-51645	K1110-02B1	17	K0- 115
01643-51645	T5170-01A0	14	T0- 53
01643-51645	T5170-01A11	47	T0- 55
01643-51645	T5170-01A5	41	T0- 55
01643-70823	K0210-01A4	34	K0- 13
01643-70823	K0210-01B0	34	K0- 17
01643-70823	K0210-02A0	9	K0- 19
01643-70823	K0210-02B0	9	K0- 21
01643-70823	K0210-04A0	29	K0- 31
01643-70823	K0210-04B0	28	K0- 33
01643-70823	K0210-09A0	4	K0- 67
01643-70823	K0210-09B0	4	K0- 69
01643-70823	K0355-01A0	6	K0- 101
01643-70823	K1110-07B0	18	K0- 131
01643-70823	K1110-07B1	13	K0- 133
01643-71032	K0215-01A0	4	K0- 93
01643-71232	K0210-03A0	33	K0- 25
01643-71232	K0210-03B0	34	K0- 29
02010-70657	B0110-01A0	2	B0- 5
02753-00304	H5215-01A0A	15	H0- 105
02753-003A7	H5215-01A0A	14	H0- 105
02753-00415	K1110-17B0	9	K0- 149
02753-204A5	K4470-04A0A	1	K0- 183
02753-204A5	K4470-04A0A	20	K0- 183
02753-204A7	K4470-04A0A	2	K0- 183
02753-204A7	K4470-04A0A	19	K0- 183
02754-00314	H5210-07B0	10	H0- 97
02754-00315	H5210-07B0	9	H0- 97
02755-00215	K1110-17B0	8	K0- 149
02755-00319	H5210-04B0	1	H0- 91
02755-00339	H5210-06B0	1	H0- 95
02755-00339	H5210-06B0	2	H0- 95

PARTS	FIG NO.	INDEX	PAGE
02755-00340	H5210-03B0	10	H0- 89
02755-00340	H5210-05B0	1	H0- 93
02755-00341	H5211-01A0A	10	H0- 101
02755-00442	N1220-01A0A	4	N0- 3
02760-00326	H5210-09B0	4	H0- 99
02760-00331	H5210-09B0	5	H0- 99
02761-00203	H5200-05A0A	32	H0- 65
02761-00205	H5200-05A0A	23	H0- 65
02762-00319	H5200-11A1A	6	H0- 79
02762-00412	F4320-01A0A	14	F0- 5
02762-00519	H5200-11A1A	1	H0- 79
02762-20507	F5350-63A0	22	F0- 117
02762-20607	F5350-63A0	14	F0- 117
02763-00215	F4500-01A1A	12	F0- 17
02763-002A3	H5200-05A0A	20	H0- 65
02763-00303	H5200-05A0A	19	H0- 65
02763-003A4	H5200-05A0A	10	H0- 65
02763-003A5	H5200-05A0A	4	H0- 65
02763-00518	H0110-02A0A	1	H0- 7
02763-00607	H5200-03A0A	30	H0- 59
02765-00610	H5200-02A0A	33	H0- 55
02765-B0307	H5210-07B0	13	H0- 97
02765-B0308	H4410-01A0A	21	H0- 19
02765-B0308	H5211-01A0A	17	H0- 101
02765-B0309	H5200-12A1A	22	H0- 81
02765-B0309	H5210-06B0	7	H0- 95
02765-B0310	H5210-06B0	6	H0- 95
02765-B0314	H5210-03B0	25	H0- 89
02765-B0315	H5210-03B0	26	H0- 89
02765-B0332	H5210-03B0	16	H0- 89
02765-B0333	H5210-03B0	17	H0- 89
02765-B0336	H5211-01A0A	11	H0- 101
02765-B0337	H5211-01A0A	12	H0- 101
02765-B0340	H5210-05B0	9	H0- 93
02765-B0342	H5210-05B0	8	H0- 93
02765-B03A4	F4500-06A1A	35	F0- 35
02765-B03A4	H5200-12A1A	21	H0- 81
02765-B03A6	H4410-01A0A	22	H0- 19
02765-B03A7	H5211-01A0A	18	H0- 101
02765-B0419	N1220-01A0A	9	N0- 3
02766-00203	H5200-05A0A	27	H0- 65
02767-00604	H5200-02A0A	29	H0- 55
02767-B03A9	H4410-01A0A	23	H0- 19
02781-00210	H5200-06A0A	21	H0- 67
02781-00210	K4470-02A0A	3	K0- 179
02781-00311	H5200-05A0A	1	H0- 65
02781-00313	H5200-12A1A	2	H0- 81
02781-00313	H5210-02B0	10	H0- 87
02781-00315	H5200-08A0A	7	H0- 73
02781-00315	H5210-05B0	2	H0- 93

PARTS	FIG NO.	INDEX	PAGE
02781-00315	H5210-06B0	3	H0- 95
02781-00315	H5210-07B0	3	H0- 97
02781-00315	H5211-01A0A	4	H0- 101
02781-00315	H5211-01A0A	14	H0- 101
02781-00315	H5215-01A0A	8	H0- 105
02781-00420	N1220-01A0A	1	N0- 3
02781-00422	K4470-05A0A	13	K0- 185
02781-00628	H5200-02A0A	30	H0- 55
02781-00628	H5200-02A0A	34	H0- 55
02782-10210	H0110-01A0A	35	H0- 3
02782-10210	H5200-04A0A	27	H0- 63
02782-10210	H5200-05A0A	24	H0- 65
02782-10210	H5200-06A0A	38	H0- 69
02782-10210	H5200-08A0A	4	H0- 73
02782-10210	H5200-08A0A	19	H0- 73
02782-10210	H5210-01B0	3	H0- 85
02782-1021A	H5200-06A0A	24	H0- 67
02782-10311	H5200-05A0A	11	H0- 65
02782-10313	H5210-02B0	11	H0- 87
02782-10315	H5210-09B0	13	H0- 99
02782-10315	Y1620-51A0A	24	Y0- 33
02782-10315	Y1622-01A0A	21	Y0- 37
02782-10317	H5200-12A1A	12	H0- 81
02782-1031C	H5210-09B0	1	H0- 99
02782-1031C	H5210-09B0	6	H0- 99
02782-10422	F4320-01A0A	11	F0- 5
02782-10422	K1110-25B0	1	K0- 169
02782-10422	K1110-25B0	4	K0- 169
02782-10422	K4470-02A0A	8	K0- 179
02782-10422	K4470-05A0A	10	K0- 185
02782-10423	H0110-01A0A	26	H0- 3
02782-10426	F4500-14A0A	1	F0- 69
02782-10522	H0110-01A0A	32	H0- 3
02782-10522	K1110-25B0	8	K0- 169
02782-10628	F5350-63A0	15	F0- 117
02782-10628	H0110-01A0A	29	H0- 3
02782-10628	H5200-03A0A	27	H0- 59
02782-10628	H5200-06A0A	8	H0- 67
02782-50210	H5200-04A0A	31	H0- 63
02782-50210	H5200-06A0A	30	H0- 67
02782-50315	H5120-01A0A	1	H0- 27
02782-50315	H5120-01A1A	2	H0- 29
02782-50315	H5200-12A1A	15	H0- 81
02782-50315	H5200-12A1A	16	H0- 81
02782-50315	H5210-03B0	20	H0- 89
02782-50422	K4470-05A0A	5	K0- 185
02783-10210	H5200-06A0A	35	H0- 67
02783-10210	H5210-01B0	11	H0- 85
02783-10315	H5120-01A1A	26	H0- 29
02783-10315	H5200-12A1A	11	H0- 81

PARTS	FIG NO.	INDEX	PAGE
02783-10315	H5210-04B0	2	H0- 91
02783-10315	H5210-05B0	5	H0- 93
02783-10315	H5211-01A0A	7	H0- 101
02783-10628	F5350-63A0	11	F0- 117
02783-10628	H5200-06A0A	5	H0- 67
02789-00315	H5200-03A0A	13	H0- 59
02789-00522	H0110-02A0A	7	H0- 7
02896-11008	F4500-06A1A	8	F0- 35
02896-11008	H0110-01A0A	38	H0- 5
02896-11008	H5120-01A0A	23	H0- 27
02896-11008	H5200-03A0A	10	H0- 59
02896-11008	H5200-04A0A	7	H0- 63
02896-11008	H5200-04A0A	9	H0- 63
02896-11008	H5200-04A0A	12	H0- 63
02896-11008	H5200-04A0A	15	H0- 63
02896-11008	H5200-04A0A	25	H0- 63
02896-11008	H5200-04A0A	29	H0- 63
02896-11008	H5200-04A0A	33	H0- 63
02896-11008	H5200-05A0A	26	H0- 65
02896-11008	H5200-05A0A	30	H0- 65
02896-11008	H5200-06A0A	20	H0- 67
02896-11008	H5200-06A0A	23	H0- 67
02896-11008	H5200-06A0A	26	H0- 67
02896-11008	H5200-06A0A	29	H0- 67
02896-11008	H5200-06A0A	32	H0- 67
02896-11008	H5200-06A0A	37	H0- 69
02896-11008	H5200-06A0A	40	H0- 69
02896-11008	H5200-07A0A	3	H0- 71
02896-11008	H5200-07A0A	6	H0- 71
02896-11008	H5200-07A0A	9	H0- 71
02896-11008	H5200-07A0A	12	H0- 71
02896-11008	H5200-08A0A	3	H0- 73
02896-11008	H5200-08A0A	6	H0- 73
02896-11008	H5200-08A0A	21	H0- 73
02896-11008	H5200-10A0A	6	H0- 77
02896-11008	H5210-01B0	5	H0- 85
02896-11008	H5210-01B0	8	H0- 85
02896-11008	H5210-01B0	13	H0- 85
02896-11008	K1110-17B0	7	K0- 149
02896-11008	K4470-02A0A	5	K0- 179
02896-11009	F4500-06A1A	34	F0- 35
02896-11009	F4500-06A1A	37	F0- 37
02896-11009	H4410-01A0A	18	H0- 19
02896-11009	H5120-01A0A	5	H0- 27
02896-11009	H5120-01A1A	6	H0- 29
02896-11009	H5120-01A1A	28	H0- 29
02896-11009	H5120-02A0A	8	H0- 31
02896-11009	H5200-03A0A	11	H0- 59
02896-11009	H5200-05A0A	3	H0- 65
02896-11009	H5200-05A0A	8	H0- 65

PARTS	FIG NO.	INDEX	PAGE
02896-11009	H5200-05A0A	13	H0- 65
02896-11009	H5200-08A0A	9	H0- 73
02896-11009	H5200-11A1A	10	H0- 79
02896-11009	H5200-12A1A	4	H0- 81
02896-11009	H5200-12A1A	14	H0- 81
02896-11009	H5200-12A1A	18	H0- 81
02896-11009	H5210-02B0	3	H0- 87
02896-11009	H5210-02B0	6	H0- 87
02896-11009	H5210-02B0	9	H0- 87
02896-11009	H5210-02B0	13	H0- 87
02896-11009	H5210-02B0	16	H0- 87
02896-11009	H5210-02B0	19	H0- 87
02896-11009	H5210-03B0	11	H0- 89
02896-11009	H5210-03B0	24	H0- 89
02896-11009	H5210-04B0	4	H0- 91
02896-11009	H5210-05B0	4	H0- 93
02896-11009	H5210-05B0	7	H0- 93
02896-11009	H5210-06B0	5	H0- 95
02896-11009	H5210-07B0	5	H0- 97
02896-11009	H5210-07B0	8	H0- 97
02896-11009	H5210-09B0	3	H0- 99
02896-11009	H5210-09B0	8	H0- 99
02896-11009	H5210-09B0	11	H0- 99
02896-11009	H5210-09B0	15	H0- 99
02896-11009	H5211-01A0A	3	H0- 101
02896-11009	H5211-01A0A	6	H0- 101
02896-11009	H5211-01A0A	8	H0- 101
02896-11009	H5211-01A0A	16	H0- 101
02896-11009	H5215-01A0A	7	H0- 105
02896-11009	H5215-01A0A	10	H0- 105
02896-11009	H5215-01A0A	13	H0- 105
02896-11009	H5215-01A0A	18	H0- 105
02896-11009	T5141-01A0A	2	T0- 41
02896-11009	T5155-01A0A	2	T0- 45
02896-11009	T5157-01A0A	2	T0- 49
02896-11009	T5160-01A0A	2	T0- 51
02896-11009	T5160-01A0A	4	T0- 51
02896-11009	Y1620-01A0A	22	Y0- 25
02896-11009	Y1620-01A0A	27	Y0- 25
02896-11009	Y1620-11A0A	20	Y0- 27
02896-11009	Y1620-21A0A	29	Y0- 29
02896-11009	Y1620-31A0A	19	Y0- 31
02896-11009	Y1620-31A0A	21	Y0- 31
02896-11009	Y1620-51A0A	23	Y0- 33
02896-11009	Y1620-51A0A	26	Y0- 33
02896-11009	Y1620-71A0A	17	Y0- 35
02896-11009	Y1622-01A0A	2	Y0- 37
02896-11009	Y1622-01A0A	23	Y0- 37
02896-11009	Y1622-11A0A	22	Y0- 39
02896-11009	Y1622-11A0A	24	Y0- 39

PARTS	FIG NO.	INDEX	PAGE
02896-11009	Y1622-21A0A	19	Y0- 41
02896-11009	Y1622-21A0A	21	Y0- 41
02896-11012	F4320-01A0A	13	F0- 5
02896-11012	F4500-14A0A	3	F0- 69
02896-11012	F4500-14A0A	6	F0- 69
02896-11012	F4500-14A0A	9	F0- 69
02896-11012	F4500-14A0A	12	F0- 69
02896-11012	F4500-14A0A	15	F0- 69
02896-11012	H0110-01A0A	28	H0- 3
02896-11012	H4410-01A0A	17	H0- 19
02896-11012	H4410-01A0A	26	H0- 19
02896-11012	H5200-03A0A	12	H0- 59
02896-11012	H5200-05A0A	9	H0- 65
02896-11012	H5200-06A0A	17	H0- 67
02896-11012	K1110-17B0	4	K0- 149
02896-11012	K1110-25B0	3	K0- 169
02896-11012	K1110-25B0	7	K0- 169
02896-11012	K4470-02A0A	10	K0- 179
02896-11012	K4470-03A0A	13	K0- 181
02896-11012	K4470-03A0A	17	K0- 181
02896-11012	K4470-03A0A	20	K0- 181
02896-11012	K4470-03A0A	22	K0- 181
02896-11012	K4470-04A0A	8	K0- 183
02896-11012	K4470-04A0A	10	K0- 183
02896-11012	K4470-04A0A	12	K0- 183
02896-11012	K4470-04A0A	14	K0- 183
02896-11012	K4470-05A0A	7	K0- 185
02896-11012	K4470-05A0A	12	K0- 185
02896-11012	K4470-05A0A	15	K0- 185
02896-11012	N1220-01A0A	3	N0- 3
02896-11012	N1220-01A0A	6	N0- 3
02896-11012	N1220-01A0A	12	N0- 3
02896-11015	F4500-06A1A	17	F0- 35
02896-11015	F5350-63A0	27	F0- 117
02896-11015	H0110-01A0A	34	H0- 3
02896-11015	H0110-02A0A	6	H0- 7
02896-11015	H5200-11A1A	5	H0- 79
02896-11015	K1110-25B0	10	K0- 169
02896-11018	F5350-63A0	13	F0- 117
02896-11018	F5350-63A0	17	F0- 117
02896-11018	H0110-01A0A	31	H0- 3
02896-11018	H5200-02A0A	32	H0- 55
02896-11018	H5200-02A0A	36	H0- 57
02896-11018	H5200-03A0A	29	H0- 59
02896-11018	H5200-06A0A	7	H0- 67
02896-11018	H5200-06A0A	10	H0- 67
02896-11018	H5200-06A0A	12	H0- 67
02896-21008	F4500-01A1A	13	F0- 17
02986-21008	F4500-01A0	10	F0- 15
04020-00514	F5350-52A0	7	F0- 89

PARTS	FIG NO.	INDEX	PAGE
04020-00514	F5350-53A0	6	F0- 93
04020-00820	F5350-67A0	2	F0- 125
04020-00820	Y1610-12A0	8	Y0- 23
04020-01024	T5130-12A1	10	T0- 35
04020-01024	Y1600-02A0	15	Y0- 9
04020-01024	Y1610-01A0	12	Y0- 19
04020-01024	Y1610-11A0	10	Y0- 21
04020-01024	Y1610-12A0	11	Y0- 23
04020-01228	C0100-01A0	4	C0- 3
04020-01228	F4500-03A1	18	F0- 23
04020-01228	F4500-05A0	22	F0- 29
04020-01228	F5350-51A0	17	F0- 87
04020-01434	F4500-02A0	17	F0- 19
04020-01638	F4500-04A1	11	F0- 27
04020-01638	F4500-04A1	21	F0- 27
04025-00532	K1110-02B0	7	K0- 113
04025-00532	K1110-02B1	7	K0- 115
04050-10070	T5125-01A0	29	T0- 29
04050-10070	T5126-01A0	5	T0- 31
04050-11212	A4510-01A5	12	AA- 125
04050-12015	K0210-05A0A	23	K0- 35
04050-12015	K0210-05B0A	23	K0- 39
04050-12015	K0210-07A0A	23	K0- 51
04050-12015	K0210-07B0A	23	K0- 55
04050-13020	F4400-01A0	55	F0- 9
04050-14025	F4400-01A0	37	F0- 9
04050-15045	F4400-01A0	4C	F0- 7
04050-15045	F4400-03A0	9C	F0- 13
04050-16045	F4400-01A0	26	F0- 7
04050-16045	F4400-01A0	46	F0- 9
04050-18050	T5175-01A0	5	T0- 57
04050-18080	T5110-01A0A	12	T0- 3
04050-18080	T5123-01A0	27	T0- 25
04052-10530	K1110-07B0	3	K0- 131
04052-10530	K1110-07B1	3	K0- 133
04052-10633	K0210-06A0	17	K0- 43
04052-10633	K0210-06B0	17	K0- 47
04052-10633	K0210-08A0	17	K0- 59
04052-10633	K0210-08B0	17	K0- 63
04052-10833	K0210-05A0A	22	K0- 35
04052-10833	K0210-05B0A	22	K0- 39
04052-10833	K0210-06A0	25	K0- 43
04052-10833	K0210-06A0	35	K0- 45
04052-10833	K0210-06A0	43	K0- 45
04052-10833	K0210-06B0	25	K0- 47
04052-10833	K0210-06B0	35	K0- 49
04052-10833	K0210-06B0	43	K0- 49
04052-10833	K0210-07A0A	22	K0- 51
04052-10833	K0210-07B0A	22	K0- 55
04052-10833	K0210-08A0	26	K0- 59

PARTS	FIG NO.	INDEX	PAGE
04052-10833	K0210-08A0	36	K0- 61
04052-10833	K0210-08A0	44	K0- 61
04052-10833	K0210-08B0	26	K0- 63
04052-10833	K0210-08B0	36	K0- 65
04052-10833	K0210-08B0	44	K0- 65
04052-10833	K1110-03B0	27	K0- 117
04052-10833	K1110-03B1	26	K0- 119
04052-10833	K1110-05B0	12	K0- 123
04052-10833	K1110-10B0	4	K0- 141
04052-10833	K1110-10B0	6	K0- 141
04052-10833	K1110-26B0	7	K0- 171
04052-10833	M4100-02A0A	13	M0- 5
04052-10833	M4100-02A1A	13	M0- 7
04052-11038	K0210-06A0	45	K0- 45
04052-11038	K0210-06B0	45	K0- 49
04052-11038	K0210-08A0	46	K0- 61
04052-11038	K0210-08B0	46	K0- 65
04052-11038	K1110-05B0	9	K0- 123
04052-11038	K1110-05B0	15	K0- 123
04052-11038	K1110-05B0	18	K0- 123
04052-11038	K1110-05B0	25	K0- 123
04052-11038	M4100-03A0A	17	M0- 9
04064-02512	K1110-03B0	9	K0- 117
04064-02512	K1110-03B1	9	K0- 119
04064-08025	F5350-69A0	3	F0- 129
04064-08530	F5350-55A0	17	F0- 99
04065-01030	F5350-57A0	27	F0- 103
04065-01104	F5350-57A0	24	F0- 103
04065-01254	F4500-05A0	7	F0- 29
04065-03212	T5115-01A0	35	T0- 5
04065-04018	Y1610-01A0	17	Y0- 19
04065-04018	Y1610-11A0	15	Y0- 21
04065-04218	Y1600-02A0	9	Y0- 9
04065-05520	Y1600-01A0	19	Y0- 7
04065-05520	Y1622-01A0A	4	Y0- 37
04065-06220	C0100-01A0	11	C0- 3
04065-06220	Y1620-31A0A	3	Y0- 31
04065-06220	Y1620-31A0A	14	Y0- 31
04065-07225	Y1600-01A0	15	Y0- 7
04065-08025	C0100-01A0	10	C0- 3
04065-08025	F5350-57A0	15	F0- 103
04065-09530	F5350-57A0	10	F0- 103
04066-00062	F5350-52A0	27	F0- 89
04066-00062	F5350-53A0	28	F0- 93
04071-00160	F4500-04A1	27	F0- 27
04077-00120	F5350-68A0	10	F0- 127
04081-05512	T5130-12A1	14	T0- 35
04082-00212	T5123-01A0	13	T0- 25
04120-21744	K0710-01A0A	16	K0- 103
04121-22265	C0100-02A0	4	C0- 5

PARTS	FIG NO.	INDEX	PAGE
04205-10518	K1110-07B0	1	K0- 131
04205-10518	K1110-07B1	1	K0- 133
04205-10822	K1110-05B0	11	K0- 123
04205-30822	K1110-03B0	26	K0- 117
04205-30822	K1110-03B1	25	K0- 119
04205-30822	K1110-10B0	3	K0- 141
04205-30822	K1110-10B0	5	K0- 141
04205-30822	K1110-26B0	6	K0- 171
04205-30825	K0210-05A0A	21	K0- 35
04205-30825	K0210-05B0A	21	K0- 39
04205-30825	K0210-06A0	24	K0- 43
04205-30825	K0210-06A0	34	K0- 45
04205-30825	K0210-06A0	42	K0- 45
04205-30825	K0210-06B0	24	K0- 47
04205-30825	K0210-06B0	34	K0- 49
04205-30825	K0210-06B0	42	K0- 49
04205-30825	K0210-07A0A	21	K0- 51
04205-30825	K0210-07B0A	21	K0- 55
04205-30825	K0210-08A0	25	K0- 59
04205-30825	K0210-08A0	35	K0- 61
04205-30825	K0210-08A0	43	K0- 61
04205-30825	K0210-08B0	25	K0- 63
04205-30825	K0210-08B0	35	K0- 65
04205-30825	K0210-08B0	43	K0- 65
04205-31032	K1110-05B0	17	K0- 123
04205-31038	K1110-05B0	14	K0- 123
04210-20832	K0210-06A0	22	K0- 43
04210-20832	K0210-06A0	33	K0- 45
04210-20832	K0210-06B0	22	K0- 47
04210-20832	K0210-06B0	33	K0- 49
04210-20832	K0210-08A0	23	K0- 59
04210-20832	K0210-08A0	34	K0- 61
04210-20832	K0210-08B0	23	K0- 63
04210-20832	K0210-08B0	34	K0- 65
04210-20832	K1110-03B0	24	K0- 117
04210-20832	K1110-03B1	23	K0- 119
04210-20832	K1110-10B0	25	K0- 141
04211-20844	K0210-05A0A	20	K0- 35
04211-20844	K0210-05B0A	20	K0- 39
04211-20844	K0210-07A0A	20	K0- 51
04211-20844	K0210-07B0A	20	K0- 55
04220-20832	K1110-26B0	3	K0- 171
04248-50625	A4510-01A5	13	AA- 125
04250-40639	K1110-26B0	11	K0- 171
04250-40847	E0202-04A0A	13	E0- 21
04250-60639	A4510-01A5	10	AA- 125
04250-60847	E0202-04A0A	8	E0- 21
04250-80847	K1110-06B0	1	K0- 127
04250-80847	K1110-06B1	1	K0- 129
04250-90847	K1110-02B0	13	K0- 113

PARTS	FIG NO.	INDEX	PAGE
04250-90847	K1110-02B1	13	K0- 115
04254-10623	K1110-26B0	10	K0- 171
04254-10823	E0202-04A0A	6	E0- 21
04254-10823	E0202-04A0A	16	E0- 21
04254-10823	K1110-02B0	15	K0- 113
04254-10823	K1110-02B1	15	K0- 115
04254-10823	K1110-06B0	3	K0- 127
04254-10823	K1110-06B1	3	K0- 129
04256-30615	K1110-03B0	14	K0- 117
04256-30615	K1110-03B1	13	K0- 119
04256-40615	K1110-03B0	11	K0- 117
04256-40615	K1110-03B1	11	K0- 119
04260-00793	A153T-01C2	12	AA- 25
04260-01111	F5350-55A0	2	F0- 99
04400-00830	M4310-01A0	5	M0- 23
04418-13060	F5350-66A0	8	F0- 123
04418-13060	K0210-18A0	14	K0- 89
04418-13060	K0210-18B0	14	K0- 91
04418-13060	U0100-01A0	53	U0- 5
04434-50508	A411S-01C1	29	AA- 117
04434-50510	E0200-01A0A	10	E0- 9
04434-50510	E0202-02A2	11	E0- 15
04434-50610	J4710-01A0A	7	J0- 11
04434-50610	K0350-01A0	9	K0- 97
04434-50810	K1110-21B0	26	K0- 159
04434-51010	E0200-01A0A	3	E0- 9
04434-51010	E0200-01A0A	10	E0- 9
04434-51010	E0200-01A0A	25	E0- 9
04434-51010	E0200-01A1A	3	E0- 11
04434-51010	E0200-01A1A	12	E0- 11
04434-51010	E0200-01A1A	17	E0- 11
04434-51010	E0200-01A1A	25	E0- 11
04434-51010	E0202-02A2	14	E0- 15
04434-51010	E0202-02A2	34	E0- 15
04434-51010	E0202-03A2	16	E0- 19
04434-51010	F5350-65A0	14	F0- 121
04434-51010	H0110-01A0A	14	H0- 3
04434-51010	H0110-01A0A	39	H0- 5
04434-51012	E0310-02A1	6	E0- 35
04434-51208	K0710-02A0A	23	K0- 107
04434-51210	C0120-03A0A	27	C0- 13
04434-51210	C0120-03A0A	31	C0- 13
04434-51210	C0120-03A0A	34	C0- 13
04434-51210	C0120-03A0A	37	C0- 15
04434-51210	E0202-02A2	6	E0- 15
04434-51310	D0200-01A2	23	D0- 5
04434-51310	E0202-02A2	5	E0- 15
04434-51310	H5200-10A0A	2	H0- 77
04434-51310	H5210-01B0	19	H0- 85
04434-51310	K4470-02A0A	13	K0- 179

PARTS	FIG NO.	INDEX	PAGE
04434-51310	K4470-02A0A	16	K0- 179
04434-51410	B0200-04A0	9	B0- 23
04434-51410	E0200-01A0A	19	E0- 9
04434-51410	E0200-01A1A	10	E0- 11
04434-51410	E0200-01A1A	29	E0- 11
04434-51410	E0202-02A6	40	E0- 17
04434-51410	E0202-03A2	9	E0- 19
04434-51410	E0202-03A2	20	E0- 19
04434-51410	K0350-01A1	15	K0- 99
04434-51410	K1110-21B0	8	K0- 159
04434-51412	D0200-01A2	34	D0- 5
04434-51510	E0202-02A2	10	E0- 15
04434-51510	H5200-05A0A	5	H0- 65
04434-51510	H5200-11A1A	7	H0- 79
04434-51510	H5210-09B0	12	H0- 99
04434-51510	H5215-01A0A	5	H0- 105
04434-51510	K4470-04A0A	5	K0- 183
04434-51510	Y1620-01A0A	24	Y0- 25
04434-51510	Y1620-31A0A	22	Y0- 31
04434-51610	D0200-01A2	4	D0- 5
04434-51612	D0200-01A7	41	D0- 7
04434-51612	E0202-03A2	2	E0- 19
04434-51710	E0202-03A2	19	E0- 19
04434-51810	E0200-01A0A	21	E0- 9
04434-51810	H5210-03B0	27	H0- 89
04434-51810	H5211-01A0A	19	H0- 101
04434-51810	K0710-02A0A	9	K0- 107
04434-51810	K0710-02A0A	30	K0- 107
04434-51810	K1110-21B0	12	K0- 159
04434-51810	Y1620-01A0A	25	Y0- 25
04434-52110	C0120-03A0A	11	C0- 13
04434-52110	H5200-05A0A	17	H0- 65
04434-52112	H5200-12A1A	23	H0- 81
04434-52210	E0120-02A0A	21	E0- 7
04434-52210	K0710-02A0A	8	K0- 107
04434-52210	K1110-21B0	13	K0- 159
04434-52210	K4470-03A0A	8	K0- 181
04434-52310	H5200-11A1A	2	H0- 79
04434-52310	K1110-19A0	3	K0- 153
04434-52310	K1110-19B0	3	K0- 155
04434-52511	H0110-02A0A	2	H0- 7
04434-52511	H4410-01A0A	27	H0- 19
04434-52511	K0713-01A0A	5	K0- 109
04434-52511	K0713-01A0A	24	K0- 109
04434-52512	K4470-04A0A	21	K0- 183
04434-52711	E0202-02A2	2	E0- 15
04434-52711	E0202-02A2	4	E0- 15
04434-52711	E0202-03A2	13	E0- 19
04434-52711	E0202-03A2	24	E0- 19
04434-52711	E0202-03A2	25	E0- 19

PARTS	FIG NO.	INDEX	PAGE
04434-52711	E0202-03A2	26	E0- 19
04434-52711	F4320-01A0A	17	F0- 5
04434-53210	H4410-01A0A	32	H0- 19
04434-53211	B0110-02A0A	3	B0- 7
04434-53211	C0120-03A0A	14	C0- 13
04434-53211	E0202-03A2	14	E0- 19
04434-53211	H5200-03A0A	31	H0- 59
04434-53411	H6290-01A0A	8	H0- 109
04434-53412	H5200-03A0A	15	H0- 59
04435-51310	H5200-04A0A	18	H0- 63
04435-51310	H5200-04A0A	21	H0- 63
04435-51310	H5200-05A0A	21	H0- 65
04435-51310	H5210-01B0	17	H0- 85
04435-51610	K1110-23B1	11	K0- 165
04435-51810	H5200-12A1A	7	H0- 81
04435-51810	H5210-03B0	13	H0- 89
04435-51810	H5210-03B0	18	H0- 89
04435-51810	H5210-05B0	10	H0- 93
04435-51810	H5210-06B0	8	H0- 95
04435-51810	H5210-07B0	14	H0- 97
04435-51810	H5211-01A0A	13	H0- 101
04435-51910	K0710-02A0A	14	K0- 107
04435-51910	K0710-02A0A	29	K0- 107
04435-52110	K0710-02A0A	7	K0- 107
04435-52110	K4470-03A0A	1	K0- 181
04435-52110	N1220-01A0A	7	N0- 3
04435-52210	K0713-01A0A	25	K0- 109
06002-30310	T5130-12A1	16	T0- 35
06002-32022	F4500-03A0	10	F0- 21
06002-32024	F4500-03A0	11	F0- 21
06002-32217	F4500-10A0	6	F0- 47
06002-32217	F4500-10A1	6	F0- 51
06002-32217	F4500-11A0	6	F0- 55
06002-32217	F4500-11A1	6	F0- 59
06002-32218	F4500-10A0	10	F0- 47
06002-32218	F4500-10A1	10	F0- 51
06002-32218	F4500-11A0	10	F0- 55
06002-32218	F4500-11A1	10	F0- 59
06002-33214	F4400-02A0	27	F0- 11
06002-33215	F4400-02A0	26	F0- 11
06003-30312	F4500-02A0	8	F0- 19
06030-22218	F4500-04A1	26	F0- 27
06034-06305	C0100-01A0	31	C0- 3
06040-06014	F5350-57A0	23	F0- 103
06040-06307	F5350-57A0	14	F0- 103
06040-06313	F5350-54A0	17	F0- 97
06040-06313	F5350-55A0	19	F0- 99
06040-06315	F5350-55A0	18	F0- 99
06040-06914	F5350-57A0	26	F0- 103
06044-06305	C0100-01A0	8	C0- 3

PARTS	FIG NO.	INDEX	PAGE
06044-06307	C0100-01A0	9	C0- 3
06330-06205	A502P-01D2	4	AA- 133
06334-00210	F5350-57A0	28	F0- 103
06347-06207	A502P-01D2	3	AA- 133
06600-00805	K1110-03B0	7	K0- 117
06600-00805	K1110-03B1	7	K0- 119
07000-02060	F5350-61A0	10	F0- 113
07000-02060	Y0100-01A0	2	Y0- 3
07000-11005	F4500-10A0	34	F0- 47
07000-11005	F4500-10A1	34	F0- 51
07000-11005	F4500-11A0	34	F0- 55
07000-11005	F4500-11A1	34	F0- 59
07000-11007	Y1664-01A0	12	Y0- 47
07000-11007	Y1664-11A0	11	Y0- 57
07000-11007	Y1665-01A0	13	Y0- 67
07000-11007	Y1665-21A0	13	Y0- 77
07000-11008	Y1664-01A0	9	Y0- 47
07000-11008	Y1664-11A0	8	Y0- 57
07000-11008	Y1665-01A0	10	Y0- 67
07000-11008	Y1665-21A0	10	Y0- 77
07000-12010	H5120-07A0	30	H0- 43
07000-12010	H5120-07A1	30	H0- 47
07000-12010	H5211-02A0	28	H0- 103
07000-12010	H5215-02A0	22	H0- 107
07000-12010	Y1600-05A0	5	Y0- 15
07000-12011	F4500-03A1	24	F0- 23
07000-12011	H5200-05A0A	29	H0- 65
07000-12011	H5200-07A0A	2	H0- 71
07000-12011	H5200-07A0A	5	H0- 71
07000-12011	H5200-07A0A	8	H0- 71
07000-12011	H5200-07A0A	11	H0- 71
07000-12011	H5200-08A0A	14	H0- 73
07000-12014	H4410-01A0A	4	H0- 19
07000-12014	H5120-03A0	3	H0- 33
07000-12014	H5120-03A0	10	H0- 33
07000-12014	H5120-03A0	18	H0- 33
07000-12014	H5120-04A0	7	H0- 35
07000-12014	H5120-04A0	12	H0- 35
07000-12014	H5120-05A0	7	H0- 37
07000-12014	H5120-05A0	15	H0- 37
07000-12014	H5120-05A0	20	H0- 37
07000-12014	H5120-06A0	3	H0- 39
07000-12014	H5120-06A0	10	H0- 39
07000-12014	H5120-06A0	18	H0- 39
07000-12014	H5120-06A1	3	H0- 41
07000-12014	H5120-06A1	10	H0- 41
07000-12014	H5120-06A1	18	H0- 41
07000-12014	H5120-07A0	3	H0- 43
07000-12014	H5120-07A0	10	H0- 43
07000-12014	H5120-07A0	18	H0- 43

PARTS	FIG NO.	INDEX	PAGE
07000-12014	H5120-07A0	24	H0- 43
07000-12014	H5120-07A1	3	H0- 47
07000-12014	H5120-07A1	10	H0- 47
07000-12014	H5120-07A1	18	H0- 47
07000-12014	H5120-07A1	24	H0- 47
07000-12014	H5200-13A1	3	H0- 83
07000-12014	H5211-02A0	6	H0- 103
07000-12014	H5211-02A0	14	H0- 103
07000-12014	H5211-02A0	21	H0- 103
07000-12014	H5215-02A0	7	H0- 107
07000-12014	H5215-02A0	18	H0- 107
07000-12014	T5115-01A0	33	T0- 5
07000-12014	Y1664-03A0	14	Y0- 51
07000-12014	Y1665-03A0	14	Y0- 71
07000-12014	Y1665-23A0	14	Y0- 81
07000-12015	Y1664-13A0	6	Y0- 61
07000-12016	T5115-01A0	38	T0- 7
07000-12018	F4500-10A0	32	F0- 47
07000-12018	F4500-10A1	32	F0- 51
07000-12018	F4500-11A0	32	F0- 55
07000-12018	F4500-11A1	32	F0- 59
07000-12018	H4410-51A0A	10	H0- 21
07000-12018	H5200-11A1A	9	H0- 79
07000-12022	H4410-01A0A	3	H0- 19
07000-12060	Y1600-06A0	4	Y0- 17
07000-12065	F5350-62A0	14	F0- 115
07000-12065	H5120-08A0	4	H0- 51
07000-12065	T5115-01A0	37	T0- 7
07000-12065	Y0100-01A0	1	Y0- 3
07000-12065	Y1622-11A0A	6	Y0- 39
07000-12070	Y1622-11A0A	12	Y0- 39
07000-12075	F4400-02A0	7	F0- 11
07000-12075	F4500-06A1A	9	F0- 35
07000-12075	H5200-01A0	5	H0- 53
07000-12075	Y1620-01A0A	7	Y0- 25
07000-12075	Y1620-11A0A	9	Y0- 27
07000-12075	Y1620-21A0A	14	Y0- 29
07000-12075	Y1620-31A0A	9	Y0- 31
07000-12075	Y1620-51A0A	10	Y0- 33
07000-12080	Y1620-01A0A	9	Y0- 25
07000-12080	Y1620-11A0A	11	Y0- 27
07000-12080	Y1620-21A0A	16	Y0- 29
07000-12080	Y1620-31A0A	11	Y0- 31
07000-12080	Y1620-51A0A	12	Y0- 33
07000-12085	Y1622-21A0A	9	Y0- 41
07000-12090	F4500-06A1A	10	F0- 35
07000-12090	Y1622-21A0A	11	Y0- 41
07000-12095	Y1620-71A0A	7	Y0- 35
07000-12100	F4700-01A0A	4	F0- 77
07000-12100	F4700-01A1A	4	F0- 81

PARTS	FIG NO.	INDEX	PAGE
07000-12100	Y1620-71A0A	9	Y0- 35
07000-12100	Y1629-01A0	10	Y0- 43
07000-12100	Y1629-11A0	10	Y0- 45
07000-12100	Y1664-01A0	8	Y0- 47
07000-12100	Y1664-11A0	7	Y0- 57
07000-12100	Y1665-01A0	9	Y0- 67
07000-12100	Y1665-21A0	9	Y0- 77
07000-12105	H0210-01A0	6	H0- 15
07000-12105	H0210-01A1	6	H0- 17
07000-12130	F4400-02A0	3	F0- 11
07000-12130	T5130-12A1	28	T0- 35
07000-12145	Y1600-02A0	18	Y0- 9
07000-13022	F5350-63A0	26	F0- 117
07000-13022	Y0100-01A0	3	Y0- 5
07000-13024	Y1664-05A0	8	Y0- 55
07000-13024	Y1664-15A0	8	Y0- 65
07000-13024	Y1665-05A0	8	Y0- 75
07000-13024	Y1665-25A0	8	Y0- 87
07000-13025	F5350-63A0	21	F0- 117
07000-13025	Y0100-01A0	3	Y0- 5
07000-13028	F4700-01A0A	20	F0- 77
07000-13028	F4700-01A1A	20	F0- 81
07000-13028	F5350-63A0	10	F0- 117
07000-13028	Y0100-01A0	3	Y0- 5
07000-13029	H4410-51A0A	22	H0- 21
07000-13032	H5200-02A0A	5	H0- 55
07000-13032	H5200-02A0A	19	H0- 55
07000-13032	H5200-02A0A	24	H0- 55
07000-13035	F4320-01A0A	7	F0- 5
07000-13035	F4500-06A1A	2	F0- 35
07000-13035	H0110-01A0A	46	H0- 5
07000-13035	H5200-02A0A	14	H0- 55
07000-13035	H5200-03A0A	20	H0- 59
07000-13038	H4410-01A0A	2	H0- 19
07000-13042	F4700-01A0A	16	F0- 77
07000-13042	F4700-01A1A	16	F0- 81
07000-13045	Y1600-03A0	11	Y0- 11
07000-13045	Y1622-01A0A	11	Y0- 37
07000-13048	Y1622-01A0A	13	Y0- 37
07000-13050	H5120-08A0	5	H0- 51
07000-15085	F5350-63A0	4	F0- 117
07000-15085	Y0100-01A0	3	Y0- 5
07000-15090	Y1629-01A0	9	Y0- 43
07000-15090	Y1629-11A0	9	Y0- 45
07000-15155	H0110-01A0A	3	H0- 3
07000-15160	H0210-01A0	2	H0- 15
07000-15160	H0210-01A1	2	H0- 17
07000-15180	F4500-02A0	12	F0- 19
07000-15180	H0110-01A0A	22	H0- 3
07000-15195	T5130-11A1	19	T0- 33

PARTS	FIG NO.	INDEX	PAGE
07000-15200	D0100-01A0A	6	D0- 3
07000-15230	F4500-03A0	14	F0- 21
07000-15260	T5130-12A1	2	T0- 35
07000-15370	F4500-04A1	29	F0- 27
07000-15370	F4500-05A0	24	F0- 29
07000-15380	F4500-04A1	28	F0- 27
07000-15460	F4500-10A0	19	F0- 47
07000-15460	F4500-10A1	19	F0- 51
07000-15460	F4500-11A0	19	F0- 55
07000-15460	F4500-11A1	19	F0- 59
07000-71007	F5350-59A0	4	F0- 109
07000-71007	F5350-61A0	8	F0- 113
07000-71007	Y0100-01A0	2	Y0- 3
07000-71007	Y0100-01A0	2	Y0- 3
07000-71009	F5350-62A0	21	F0- 115
07000-71009	Y0100-01A0	1	Y0- 3
07000-72015	F5350-59A0	3	F0- 109
07000-72015	F5350-60A0	7	F0- 111
07000-72015	F5350-60A0	7	F0- 111
07000-72015	F5350-60A0	12	F0- 111
07000-72015	F5350-61A0	7	F0- 113
07000-72015	F5350-62A0	2	F0- 115
07000-72015	F5350-62A0	20	F0- 115
07000-72015	Y0100-01A0	1	Y0- 3
07000-72015	Y0100-01A0	1	Y0- 3
07000-72015	Y0100-01A0	2	Y0- 3
07000-72015	Y0100-01A0	2	Y0- 3
07000-72015	Y0100-01A0	2	Y0- 3
07000-72015	Y0100-01A0	2	Y0- 3
07000-72018	Y0100-01A0	1	Y0- 3
07000-72022	F5350-62A0	22	F0- 115
07000-72085	F5350-57A0	34	F0- 105
07000-72085	Y0100-01A0	1	Y0- 3
07000-72100	F5350-60A0	13	F0- 111
07000-72100	Y0100-01A0	2	Y0- 3
07000-72110	A8127-02A1	2	AA- 171
07000-72120	F5350-56A0	6	F0- 101
07000-72120	F5350-67A0	17	F0- 125
07000-72120	Y0100-01A0	1	Y0- 3
07000-72120	Y0100-01A0	1	Y0- 3
07000-73022	F5350-61A0	14	F0- 113
07000-73022	Y0100-01A0	2	Y0- 3
07000-73028	F5350-60A0	6	F0- 111
07000-73028	F5350-60A0	6	F0- 111
07000-73028	Y0100-01A0	2	Y0- 5
07000-73028	Y0100-01A0	2	Y0- 5
07000-73028	Y0100-01A0	2	Y0- 5
07000-73030	F5350-57A0	17	F0- 103
07000-73030	F5350-58A0	24	F0- 107
07000-73030	Y0100-01A0	1	Y0- 3

PARTS	FIG NO.	INDEX	PAGE
07000-73030	Y0100-01A0	2	Y0- 5
07000-73038	F5350-67A0	9	F0- 125
07000-73038	Y0100-01A0	1	Y0- 3
07000-73042	F5350-60A0	8	F0- 111
07000-73042	Y0100-01A0	2	Y0- 5
07000-B2011	Y1600-02A0	17	Y0- 9
07000-E2020	A153T-01C2	11	AA- 25
07001-02010	H5120-07A0	31	H0- 43
07001-02010	H5120-07A1	31	H0- 47
07001-02010	H5211-02A0	29	H0- 103
07001-02010	H5215-02A0	23	H0- 107
07001-02010	Y1600-05A0	6	Y0- 15
07001-02014	H5120-03A0	4	H0- 33
07001-02014	H5120-04A0	13	H0- 35
07001-02014	H5120-05A0	16	H0- 37
07001-02014	H5120-05A0	21	H0- 37
07001-02014	H5120-06A0	4	H0- 39
07001-02014	H5120-06A1	4	H0- 41
07001-02014	H5120-07A0	4	H0- 43
07001-02014	H5120-07A0	25	H0- 43
07001-02014	H5120-07A1	4	H0- 47
07001-02014	H5120-07A1	25	H0- 47
07001-02014	H5200-13A1	4	H0- 83
07001-02014	H5211-02A0	20	H0- 103
07001-02014	H5215-02A0	19	H0- 107
07001-02016	T5115-01A0	39	T0- 7
07001-02075	Y1620-21A0A	15	Y0- 29
07001-02095	Y1620-71A0A	8	Y0- 35
07001-12014	H5120-03A0	11	H0- 33
07001-12014	H5120-03A0	19	H0- 33
07001-12014	H5120-04A0	8	H0- 35
07001-12014	H5120-05A0	8	H0- 37
07001-12014	H5120-06A0	11	H0- 39
07001-12014	H5120-06A0	19	H0- 39
07001-12014	H5120-06A1	11	H0- 41
07001-12014	H5120-06A1	19	H0- 41
07001-12014	H5120-07A0	11	H0- 43
07001-12014	H5120-07A0	19	H0- 43
07001-12014	H5120-07A1	11	H0- 47
07001-12014	H5120-07A1	19	H0- 47
07001-12014	H5211-02A0	7	H0- 103
07001-12014	H5211-02A0	15	H0- 103
07001-12014	H5215-02A0	8	H0- 107
07002-03034	F5350-58A0	5	F0- 107
07002-03034	F5350-58A0	14	F0- 107
07002-03034	F5350-58A0	23	F0- 107
07002-03034	Y0100-01A0	2	Y0- 5
07002-03034	Y0100-01A0	2	Y0- 5
07002-03034	Y0100-01A0	2	Y0- 5
07002-03634	F5350-67A0	13	F0- 125

PARTS	FIG NO.	INDEX	PAGE
07002-03634	Y0100-01A0	1	Y0- 3
07002-10823	Y1664-02A0	3	Y0- 49
07002-10823	Y1664-12A0	2	Y0- 59
07002-10823	Y1665-02A0	3	Y0- 69
07002-10823	Y1665-22A0	3	Y0- 79
07002-11023	F4500-06A1A	39	F0- 37
07002-11023	F4500-06A1A	41	F0- 37
07002-11023	F4700-01A0A	28	F0- 77
07002-11023	F4700-01A1A	28	F0- 81
07002-11023	H4410-01A0A	20	H0- 19
07002-11023	H5120-01A0A	4	H0- 27
07002-11023	H5120-01A1A	5	H0- 29
07002-11023	H5200-04A0A	6	H0- 63
07002-11023	H5200-04A0A	11	H0- 63
07002-11023	H5200-04A0A	17	H0- 63
07002-11023	H5200-04A0A	35	H0- 63
07002-11023	H5200-06A0A	3	H0- 67
07002-11023	H5200-06A0A	14	H0- 67
07002-11023	H5200-06A0A	19	H0- 67
07002-11023	H5200-06A0A	34	H0- 67
07002-11023	H5200-08A0A	16	H0- 73
07002-11023	H5200-08A0A	18	H0- 73
07002-11023	H5200-12A1A	20	H0- 81
07002-11023	H5210-03B0	22	H0- 89
07002-11023	K4470-05A0A	9	K0- 185
07002-11023	Y1620-51A0A	22	Y0- 33
07002-11023	Y1622-11A0A	21	Y0- 39
07002-11023	Y1664-05A0	6	Y0- 55
07002-11023	Y1664-15A0	6	Y0- 65
07002-11023	Y1665-05A0	6	Y0- 75
07002-11023	Y1665-25A0	6	Y0- 87
07002-11223	Y1600-04A0	12	Y0- 13
07002-11223	Y1679-01A0	7	Y0- 89
07002-11423	H0110-01A0A	37	H0- 5
07002-11423	H5120-03A0	12	H0- 33
07002-11423	H5120-03A0	20	H0- 33
07002-11423	H5120-04A0	9	H0- 35
07002-11423	H5120-05A0	9	H0- 37
07002-11423	H5120-05A0	17	H0- 37
07002-11423	H5120-06A0	12	H0- 39
07002-11423	H5120-06A0	20	H0- 39
07002-11423	H5120-06A1	12	H0- 41
07002-11423	H5120-06A1	20	H0- 41
07002-11423	H5120-07A0	12	H0- 43
07002-11423	H5120-07A0	20	H0- 43
07002-11423	H5120-07A1	12	H0- 47
07002-11423	H5120-07A1	20	H0- 47
07002-11423	H5200-04A0A	14	H0- 63
07002-11423	H5200-04A0A	24	H0- 63

PARTS	FIG NO.	INDEX	PAGE
07002-11423	H5200-04A0A	28	H0- 63
07002-11423	H5200-04A0A	32	H0- 63
07002-11423	H5200-05A0A	2	H0- 65
07002-11423	H5200-05A0A	12	H0- 65
07002-11423	H5200-05A0A	25	H0- 65
07002-11423	H5200-06A0A	22	H0- 67
07002-11423	H5200-06A0A	25	H0- 67
07002-11423	H5200-06A0A	28	H0- 67
07002-11423	H5200-06A0A	31	H0- 67
07002-11423	H5200-06A0A	36	H0- 67
07002-11423	H5200-06A0A	39	H0- 69
07002-11423	H5200-08A0A	2	H0- 73
07002-11423	H5200-08A0A	5	H0- 73
07002-11423	H5200-08A0A	11	H0- 73
07002-11423	H5200-08A0A	13	H0- 73
07002-11423	H5200-08A0A	20	H0- 73
07002-11423	H5200-13A1	8	H0- 83
07002-11423	H5210-01B0	4	H0- 85
07002-11423	H5210-01B0	7	H0- 85
07002-11423	H5210-01B0	12	H0- 85
07002-11423	H5211-02A0	8	H0- 103
07002-11423	H5211-02A0	16	H0- 103
07002-11423	H5215-02A0	9	H0- 107
07002-11423	K4470-02A0A	4	K0- 179
07002-11423	Y1664-03A0	11	Y0- 51
07002-11423	Y1665-03A0	11	Y0- 71
07002-11423	Y1665-23A0	11	Y0- 81
07002-11623	Y1664-02A0	24	Y0- 49
07002-11623	Y1664-12A0	21	Y0- 59
07002-11623	Y1665-02A0	24	Y0- 69
07002-11623	Y1665-22A0	24	Y0- 79
07002-11623	Y1679-01A0	5	Y0- 89
07002-11823	F5350-61A0	13	F0- 113
07002-11823	H5200-12A1A	3	H0- 81
07002-11823	H5210-02B0	2	H0- 87
07002-11823	H5210-02B0	5	H0- 87
07002-11823	H5210-02B0	8	H0- 87
07002-11823	H5210-02B0	12	H0- 87
07002-11823	H5210-02B0	15	H0- 87
07002-11823	H5210-02B0	18	H0- 87
07002-11823	H5211-01A0A	2	H0- 101
07002-11823	H5215-01A0A	17	H0- 105
07002-11823	N1220-01A0A	2	N0- 3
07002-11823	T5130-12A1	6	T0- 35
07002-11823	Y0100-01A0	2	Y0- 5
07002-11823	Y1600-01A0	8	Y0- 7
07002-11823	Y1664-05A0	4	Y0- 55
07002-11823	Y1664-15A0	4	Y0- 65
07002-11823	Y1665-05A0	4	Y0- 75
07002-11823	Y1665-25A0	4	Y0- 87

PARTS	FIG NO.	INDEX	PAGE
07002-12034	F4320-01A0A	12	F0- 5
07002-12034	H0110-01A0A	27	H0- 3
07002-12034	H5120-01A0A	2	H0- 27
07002-12034	H5120-01A0A	22	H0- 27
07002-12034	H5120-01A1A	3	H0- 29
07002-12034	H5120-01A1A	27	H0- 29
07002-12034	H5120-06A1	25	H0- 41
07002-12034	H5120-07A6	38	H0- 49
07002-12034	H5200-08A0A	8	H0- 73
07002-12034	H5200-08A0A	23	H0- 73
07002-12034	H5200-08A0A	25	H0- 73
07002-12034	H5200-12A1A	13	H0- 81
07002-12034	H5200-12A1A	17	H0- 81
07002-12034	H5210-03B0	23	H0- 89
07002-12034	H5210-04B0	3	H0- 91
07002-12034	H5210-05B0	3	H0- 93
07002-12034	H5210-05B0	6	H0- 93
07002-12034	H5210-06B0	4	H0- 95
07002-12034	H5210-07B0	4	H0- 97
07002-12034	H5210-07B0	7	H0- 97
07002-12034	H5210-09B0	2	H0- 99
07002-12034	H5210-09B0	7	H0- 99
07002-12034	H5210-09B0	14	H0- 99
07002-12034	H5211-01A0A	5	H0- 101
07002-12034	H5211-01A0A	9	H0- 101
07002-12034	H5211-01A0A	15	H0- 101
07002-12034	H5215-01A0A	9	H0- 105
07002-12034	H5215-01A0A	12	H0- 105
07002-12034	K1110-25B0	2	K0- 169
07002-12034	K1110-25B0	6	K0- 169
07002-12034	K4470-02A0A	7	K0- 179
07002-12034	K4470-02A0A	9	K0- 179
07002-12034	K4470-05A0A	6	K0- 185
07002-12034	K4470-05A0A	11	K0- 185
07002-12034	K4470-05A0A	14	K0- 185
07002-12034	Y1620-51A0A	25	Y0- 33
07002-12034	Y1622-01A0A	22	Y0- 37
07002-12034	Y1664-04A0	14	Y0- 53
07002-12034	Y1665-04A0	14	Y0- 73
07002-12034	Y1665-04A0	29	Y0- 73
07002-12034	Y1665-05A0	11	Y0- 75
07002-12034	Y1665-24A0	14	Y0- 85
07002-12434	F4500-01A0	7	F0- 15
07002-12434	F4500-01A1A	8	F0- 17
07002-12434	F4500-08A0	8	F0- 39
07002-12434	F4500-08A0	17	F0- 39
07002-12434	F4500-08A1	8	F0- 41
07002-12434	F4500-08A1	18	F0- 41
07002-12434	F4500-09A0	8	F0- 43
07002-12434	F4500-09A0	17	F0- 43

PARTS	FIG NO.	INDEX	PAGE
07002-12434	F4500-09A1	8	F0- 45
07002-12434	F4500-09A1	18	F0- 45
07002-12434	F4500-10A0	30	F0- 47
07002-12434	F4500-10A1	30	F0- 51
07002-12434	F4500-11A0	30	F0- 55
07002-12434	F4500-11A1	30	F0- 59
07002-12434	F4500-14A0A	2	F0- 69
07002-12434	F5350-63A0	12	F0- 117
07002-12434	F5350-63A0	16	F0- 117
07002-12434	F5350-66A0	6	F0- 123
07002-12434	H0110-01A0A	30	H0- 3
07002-12434	H0110-01A0A	33	H0- 3
07002-12434	H0110-01A0A	44	H0- 5
07002-12434	H5120-03A0	5	H0- 33
07002-12434	H5120-03A0	13	H0- 33
07002-12434	H5120-03A0	21	H0- 33
07002-12434	H5120-04A0	10	H0- 35
07002-12434	H5120-04A0	14	H0- 35
07002-12434	H5120-05A0	10	H0- 37
07002-12434	H5120-05A0	18	H0- 37
07002-12434	H5120-05A0	22	H0- 37
07002-12434	H5120-06A0	5	H0- 39
07002-12434	H5120-06A0	13	H0- 39
07002-12434	H5120-06A0	21	H0- 39
07002-12434	H5120-06A1	5	H0- 41
07002-12434	H5120-06A1	13	H0- 41
07002-12434	H5120-06A1	21	H0- 41
07002-12434	H5120-07A0	5	H0- 43
07002-12434	H5120-07A0	13	H0- 43
07002-12434	H5120-07A0	21	H0- 43
07002-12434	H5120-07A0	34	H0- 45
07002-12434	H5120-07A1	5	H0- 47
07002-12434	H5120-07A1	13	H0- 47
07002-12434	H5120-07A1	21	H0- 47
07002-12434	H5120-07A2	34	H0- 49
07002-12434	H5200-02A0A	31	H0- 55
07002-12434	H5200-02A0A	35	H0- 55
07002-12434	H5200-03A0A	28	H0- 59
07002-12434	H5200-03A0A	37	H0- 59
07002-12434	H5200-03A0A	39	H0- 61
07002-12434	H5200-06A0A	6	H0- 67
07002-12434	H5200-06A0A	9	H0- 67
07002-12434	H5200-13A1	9	H0- 83
07002-12434	H5200-13A1	13	H0- 83
07002-12434	H5211-02A0	9	H0- 103
07002-12434	H5211-02A0	17	H0- 103
07002-12434	H5211-02A0	22	H0- 103
07002-12434	H5211-02A0	30	H0- 103
07002-12434	H5215-02A0	10	H0- 107
07002-12434	H5215-02A0	20	H0- 107

PARTS	FIG NO.	INDEX	PAGE
07002-12434	K1110-25B0	9	K0- 169
07002-12434	Y0100-01A0	1	Y0- 3
07002-12434	Y0100-01A0	3	Y0- 5
07002-12434	Y0100-01A0	3	Y0- 5
07002-12434	Y1664-03A0	6	Y0- 51
07002-12434	Y1664-03A0	13	Y0- 51
07002-12434	Y1664-05A0	2	Y0- 55
07002-12434	Y1664-13A0	8	Y0- 61
07002-12434	Y1664-14A0	8	Y0- 63
07002-12434	Y1664-15A0	2	Y0- 65
07002-12434	Y1665-03A0	6	Y0- 71
07002-12434	Y1665-03A0	13	Y0- 71
07002-12434	Y1665-05A0	2	Y0- 75
07002-12434	Y1665-23A0	6	Y0- 81
07002-12434	Y1665-23A0	13	Y0- 81
07002-12434	Y1665-25A0	2	Y0- 87
07002-13034	T5130-12A1	4	T0- 35
07002-13334	F4700-01A0A	22	F0- 77
07002-13334	F4700-01A0A	32	F0- 77
07002-13334	F4700-01A1A	22	F0- 81
07002-13334	F4700-01A1A	32	F0- 81
07002-13334	F5350-63A0	6	F0- 117
07002-13334	F5350-65A0	7	F0- 121
07002-13334	H5200-03A0A	6	H0- 59
07002-13334	H6290-01A0A	3	H0- 109
07002-13334	Y0100-01A0	3	Y0- 5
07002-13334	Y0100-01A0	3	Y0- 5
07002-13334	Y0100-01A0	3	Y0- 5
07002-13634	H5200-02A0A	13	H0- 55
07002-15234	H0110-01A0A	10	H0- 3
07002-22034	Y0100-01A0	2	Y0- 5
07002-22034	Y0100-01A0	2	Y0- 5
07002-23334	H6290-01A0A	4	H0- 109
07002-61023	Y1600-01A0	10	Y0- 7
07002-61023	Y1600-06A0	2	Y0- 17
07002-61223	Y1600-01A0	6	Y0- 7
07002-62434	Y1600-01A0	4	Y0- 7
07002-62434	Y1600-03A0	6	Y0- 11
07002-62434	Y1600-05A0	8	Y0- 15
07002-63034	Y1600-04A0	8	Y0- 13
07002-63334	F5350-64A0	3	F0- 119
07002-63334	Y1600-03A0	4	Y0- 11
07005-01012	A8127-01A1	1	AA- 169
07005-01012	A8127-02A1	2	AA- 171
07005-01012	F5350-64A0	6	F0- 119
07005-01012	F5350-64A0	9	F0- 119
07005-01012	F5350-65A0	10	F0- 121
07005-01012	Y0100-01A0	3	Y0- 5
07005-01012	Y0100-01A0	3	Y0- 5
07005-01012	Y0100-01A0	3	Y0- 5

PARTS	FIG NO.	INDEX	PAGE
07005-01212	A417P-01B4	6	AA- 119
07005-01212	A8127-01A1	1	AA- 169
07005-01212	A8127-01A1	1	AA- 169
07005-01412	A8127-01A1	1	AA- 169
07005-01412	D0200-01A2	2	D0- 5
07005-01412	D0200-01A2	10	D0- 5
07005-01412	F5350-65A0	13	F0- 121
07005-01412	Y0100-01A0	3	Y0- 5
07005-01612	H0110-01A0A	42	H0- 5
07005-01812	A2170-01A0	3	AA- 51
07005-01812	A8127-02A1	2	AA- 171
07005-02012	F5350-64A0	12	F0- 119
07005-02012	F5350-64A0	15	F0- 119
07005-02012	F5350-64A0	18	F0- 119
07005-02012	F5350-64A0	21	F0- 119
07005-02012	F5350-64A0	24	F0- 119
07005-02012	Y0100-01A0	3	Y0- 5
07005-02012	Y0100-01A0	3	Y0- 5
07005-02012	Y0100-01A0	3	Y0- 5
07005-02012	Y0100-01A0	3	Y0- 5
07005-02012	Y0100-01A0	3	Y0- 5
07005-02216	A8127-02A1	2	AA- 171
07005-02216	F5350-66A0	10	F0- 123
07005-02216	Y0100-01A0	1	Y0- 3
07012-00080	F4500-03A0	19	F0- 21
07012-00100	F4500-04A1	25	F0- 27
07012-10130	F4400-02A0	6	F0- 11
07012-50065	F5350-57A0	18	F0- 103
07018-02005	F4500-03A1	25	F0- 23
07018-31255	F5350-68A0	13	F0- 127
07018-31255	Y0100-01A0	1	Y0- 3
07020-00000	F4400-01A0	38	F0- 9
07020-00000	J4710-01A0A	13	J0- 11
07020-00000	T5123-01A0	12	T0- 25
07020-00000	T5123-01A0	17	T0- 25
07020-00000	T5123-01A2	38	T0- 27
07020-00000	T5125-01A0	23	T0- 29
07020-00000	T5170-01A0	5	T0- 53
07020-00000	Y1620-51A0A	16	Y0- 33
07020-00675	F4400-01A0	28	F0- 7
07020-00675	F4400-01A0	47	F0- 9
07020-00675	F4400-03A0	12	F0- 13
07020-00675	J4710-01A0A	6	J0- 11
07020-00675	J4710-01A0A	12	J0- 11
07020-00675	T5110-01A0A	8	T0- 3
07020-00675	T5115-01A0	8	T0- 5
07020-00675	T5115-01A0	20	T0- 5
07020-00675	T5125-01A0	14	T0- 29
07020-00675	T5170-01A0	19	T0- 53
07020-00675	Y1620-51A0A	4	Y0- 33

PARTS	FIG NO.	INDEX	PAGE
07020-00675	Y1622-01A0A	15	Y0- 37
07020-00675	Y1622-11A0A	19	Y0- 39
07020-00900	F4400-01A0	2	F0- 7
07020-00900	F4400-02A0	18	F0- 11
07020-00900	F4400-03A0	10	F0- 13
07020-00900	T5115-01A0	21	T0- 5
07020-00900	T5170-01A3	39	T0- 55
07020-00900	T5170-01A9	45	T0- 55
07020-00900	Y1620-01A0A	12	Y0- 25
07020-00900	Y1620-21A0A	3	Y0- 29
07020-00900	Y1620-21A0A	19	Y0- 29
07020-00900	Y1622-01A0A	5	Y0- 37
07030-00252	F4500-08A0	15	F0- 39
07030-00252	F4500-08A1	14	F0- 41
07030-00252	F4500-09A0	15	F0- 43
07030-00252	F4500-09A1	14	F0- 45
07030-00252	F5350-66A0	1	F0- 123
07040-11007	F4500-06A1A	38	F0- 37
07040-11007	F4500-06A1A	40	F0- 37
07040-11007	F4700-01A0A	27	F0- 77
07040-11007	F4700-01A1A	27	F0- 81
07040-11007	H4410-01A0A	19	H0- 19
07040-11007	H5120-01A0A	3	H0- 27
07040-11007	H5120-01A1A	4	H0- 29
07040-11007	H5200-04A0A	16	H0- 63
07040-11007	H5200-04A0A	34	H0- 63
07040-11007	H5200-06A0A	2	H0- 67
07040-11007	H5200-06A0A	13	H0- 67
07040-11007	H5200-06A0A	33	H0- 67
07040-11007	H5200-08A0A	15	H0- 73
07040-11007	H5200-08A0A	17	H0- 73
07040-11007	H5200-12A1A	19	H0- 81
07040-11007	H5210-03B0	21	H0- 89
07040-11007	K4470-05A0A	8	K0- 185
07040-11007	Y1620-51A0A	21	Y0- 33
07040-11007	Y1622-11A0A	20	Y0- 39
07040-11409	H0110-01A0A	36	H0- 3
07040-11409	H5200-08A0A	10	H0- 73
07040-11812	F5350-61A0	12	F0- 113
07040-11812	T5130-12A1	5	T0- 35
07040-12012	H5120-06A1	24	H0- 41
07040-12012	H5120-07A5	37	H0- 49
07040-12012	H5200-08A0A	22	H0- 73
07040-12012	H5200-08A0A	24	H0- 73
07040-12412	F4500-08A0	7	F0- 39
07040-12412	F4500-08A1	7	F0- 41
07040-12412	F4500-09A0	7	F0- 43
07040-12412	F4500-09A1	7	F0- 45
07040-12412	H0110-01A0A	43	H0- 5
07040-12412	H5200-03A0A	36	H0- 59

PARTS	FIG NO.	INDEX	PAGE
07040-13618	F5350-67A0	12	F0- 125
07041-13012	T5130-12A1	3	T0- 35
07042-00108	A151V-01A0	2	AA- 23
07042-20108	B0300-01A0A	13	B0- 29
07042-20108	F5350-58A0	3	F0- 107
07042-20108	H5120-07A0	35	H0- 45
07042-20108	H5120-07A3	35	H0- 49
07042-20211	F5350-61A0	4	F0- 113
07042-30108	H5200-01A0	6	H0- 53
07042-30108	K1110-18B0	2	K0- 151
07042-70108	C0120-01A0B	22	C0- 11
07042-70108	C0120-03A0A	19	C0- 13
07042-70108	T5130-12A1	20	T0- 35
07042-80108	F5350-64A0	2	F0- 119
07042-80211	F5350-51A0	16	F0- 87
07043-00108	F4400-02A0	14	F0- 11
07043-00211	H5120-08A0	8	H0- 51
07043-70108	F5350-58A0	25	F0- 107
07043-70108	F5350-61A0	5	F0- 113
07043-70108	F5350-68A0	12	F0- 127
07043-70108	K4460-02A0	9	K0- 175
07043-70108	T5115-01A0	10A	T0- 5
07043-70108	Y1622-01A0A	15A	Y0- 37
07043-70211	F5350-51A0	2	F0- 87
07043-70211	F5350-51A0	9	F0- 87
07043-70211	F5350-52A0	4	F0- 89
07043-70211	F5350-59A0	6	F0- 109
07043-70211	F5350-61A0	3	F0- 113
07043-70211	F5350-62A0	3	F0- 115
07043-70312	A501R-01A4	4	AA- 127
07043-70312	F5350-51A0	3	F0- 87
07043-70312	F5350-61A0	2	F0- 113
07043-70617	F5350-51A0	6	F0- 87
07043-70617	F5350-51A0	8	F0- 87
07043-71019	F5350-51A0	10	F0- 87
07043-72026	F5350-51A0	4	F0- 87
07044-12412	F4500-01A0	6	F0- 15
07044-12412	F4500-01A1A	7	F0- 17
07044-12412	F4500-08A0	16	F0- 39
07044-12412	F4500-08A1	17	F0- 41
07044-12412	F4500-09A0	16	F0- 43
07044-12412	F4500-09A1	17	F0- 45
07044-12412	F4500-10A0	29	F0- 47
07044-12412	F4500-10A1	29	F0- 51
07044-12412	F4500-11A0	29	F0- 55
07044-12412	F4500-11A1	29	F0- 59
07044-12412	Y1600-01A0	3	Y0- 7
07046-22216	A502P-01D2	7	AA- 133
07048-01510	T5120-01A0	5	T0- 9
07048-01510	T5120-01A1	5	T0- 11

PARTS	FIG NO.	INDEX	PAGE
07048-01510	T5120-01A2	5	T0- 13
07048-01510	T5120-01A3	5	T0- 15
07048-01510	T5120-01B0	5	T0- 17
07048-01510	T5120-01B1	5	T0- 19
07048-01510	T5120-01B2	5	T0- 21
07048-01510	T5120-01B3	5	T0- 23
07049-01012	K1110-01B0	6	K0- 111
07049-02430	M4520-01A0	3	M0- 29
07063-51100	H0110-01A0A	8	H0- 3
07095-20211	H5200-05A0A	33	H0- 65
07095-20314	E0120-02A0A	22	E0- 7
07095-20418	F4320-01A0A	18	F0- 5
07095-20522	H4410-01A0A	34	H0- 19
07138-00980	Y1620-01A0A	11	Y0- 25
07138-00980	Y1620-21A0A	2	Y0- 29
07138-00980	Y1620-21A0A	18	Y0- 29
07139-00705	T5170-01A1	37	T0- 55
07139-00902	Y1620-01A0A	14	Y0- 25
07139-00902	Y1620-21A0A	5	Y0- 29
07139-00902	Y1620-21A0A	21	Y0- 29
07139-00905	Y1620-01A0A	14	Y0- 25
07139-00905	Y1620-21A0A	5	Y0- 29
07139-00905	Y1620-21A0A	21	Y0- 29
07141-00070	T5170-01A2	38	T0- 55
07141-00090	Y1620-01A0A	13	Y0- 25
07141-00090	Y1620-21A0A	4	Y0- 29
07141-00090	Y1620-21A0A	20	Y0- 29
07143-10404	Y1620-11A0A	2	Y0- 27
07143-10404	Y1620-11A0A	13	Y0- 27
07143-10505	Y1622-21A0A	2	Y0- 41
07143-10505	Y1622-21A0A	13	Y0- 41
07143-10506	F4400-01A0	31	F0- 7
07143-10506	Y1620-71A0A	11	Y0- 35
07144-10404	F4400-02A0	15	F0- 11
07144-10404	Y1622-11A0A	2	Y0- 39
07144-10505	Y1620-51A0A	2	Y0- 33
07144-10505	Y1620-51A0A	14	Y0- 33
07144-10506	F4400-01A0	30	F0- 7
07144-10603	T5125-01A0	19	T0- 29
07145-00040	F4400-01A0	49	F0- 9
07145-00040	F4400-02A0	17	F0- 11
07145-00040	Y1620-11A0A	3	Y0- 27
07145-00040	Y1620-11A0A	14	Y0- 27
07145-00040	Y1622-11A0A	3	Y0- 39
07145-00045	F4400-01A0	24	F0- 7
07145-00045	T5115-01A0	19	T0- 5
07145-00045	Y1622-11A0A	18	Y0- 39
07145-00050	Y1620-51A0A	3	Y0- 33
07145-00050	Y1620-51A0A	15	Y0- 33
07145-00050	Y1622-21A0A	3	Y0- 41

PARTS	FIG NO.	INDEX	PAGE
07145-00050	Y1622-21A0A	14	Y0- 41
07145-00055	F4400-01A0	33	F0- 9
07145-00055	Y1620-71A0A	12	Y0- 35
07145-00075	T5115-01A0	14	T0- 5
07145-00080	T5170-01A0	4	T0- 53
07146-02066	Y1622-11A0A	7	Y0- 39
07146-02076	Y1620-01A0A	8	Y0- 25
07146-02076	Y1620-11A0A	10	Y0- 27
07146-02076	Y1620-31A0A	10	Y0- 31
07146-02076	Y1620-51A0A	11	Y0- 33
07146-02086	Y1622-21A0A	10	Y0- 41
07155-00820	Y1620-11A0A	16	Y0- 27
07155-00820	Y1620-21A0A	26	Y0- 29
07156-00710	T5115-01A0	31	T0- 5
07156-00710	Y1622-11A0A	15	Y0- 39
07156-00810	Y1620-01A0A	19	Y0- 25
07156-00810	Y1620-31A0A	16	Y0- 31
07156-00810	Y1620-51A0A	18	Y0- 33
07156-00912	Y1622-21A0A	16	Y0- 41
07156-01012	Y1620-71A0A	14	Y0- 35
07161-00070	T5115-01A0	30	T0- 5
07165-12022	Y1622-01A0A	19	Y0- 37
07165-12426	Y1622-11A0A	16	Y0- 39
07165-12729	Y1620-01A0A	21	Y0- 25
07165-12729	Y1620-11A0A	18	Y0- 27
07165-12729	Y1620-21A0A	28	Y0- 29
07165-12729	Y1620-31A0A	18	Y0- 31
07165-12729	Y1620-51A0A	20	Y0- 33
07165-13336	Y1620-71A0A	16	Y0- 35
07165-13638	Y1622-21A0A	18	Y0- 41
07177-03525	Y1622-01A0A	7	Y0- 37
07177-03525	Y1622-11A0A	9	Y0- 39
07177-04025	Y1620-31A0A	5	Y0- 31
07177-04530	Y1620-21A0A	10	Y0- 29
07177-05030	Y1620-01A0A	3	Y0- 25
07177-05030	Y1620-11A0A	5	Y0- 27
07177-05030	Y1620-51A0A	6	Y0- 33
07177-05030	Y1620-71A0A	3	Y0- 35
07177-05030	Y1622-21A0A	5	Y0- 41
07179-00054	Y1622-01A0A	10	Y0- 37
07179-12047	Y1622-11A0A	11	Y0- 39
07179-12052	Y1620-31A0A	8	Y0- 31
07179-12057	Y1620-21A0A	13	Y0- 29
07179-12062	Y1620-01A0A	6	Y0- 25
07179-12062	Y1620-11A0A	8	Y0- 27
07179-12062	Y1620-51A0A	9	Y0- 33
07179-12062	Y1620-71A0A	6	Y0- 35
07179-12062	Y1622-21A0A	8	Y0- 41
07206-21518	A2170-01A0	2	AA- 51
07206-30710	A408P-01B0	13	AA- 111

PARTS	FIG NO.	INDEX	PAGE
07206-30710	F5350-64A0	5	F0- 119
07206-30710	F5350-64A0	8	F0- 119
07206-30710	F5350-65A0	9	F0- 121
07206-31014	D0200-01A2	3	D0- 5
07206-31014	D0200-01A2	9	D0- 5
07206-31014	F5350-65A0	12	F0- 121
07206-31520	F5350-64A0	11	F0- 119
07206-31520	F5350-64A0	14	F0- 119
07206-31520	F5350-64A0	17	F0- 119
07206-31520	F5350-64A0	20	F0- 119
07206-31520	F5350-64A0	23	F0- 119
07260-04120	F4700-01A0A	11	F0- 77
07260-04120	F4700-01A1A	11	F0- 81
07260-20955	K1110-23B1	8	K0- 165
07260-20970	K1110-23B1	9	K0- 165
07260-20990	B0300-01A0A	27	B0- 29
07260-21416	C0120-01A0B	27	C0- 11
07260-22020	B0110-02A0A	6	B0- 7
07260-22028	C0120-03A0A	8	C0- 13
07261-22011	C0120-03A0A	17	C0- 13
07270-60817	H0110-01A0A	11	H0- 3
07270-61010	D0200-01A2	21	D0- 5
07280-01010	D0200-01A5	39	D0- 7
07280-01110	H0110-01A0A	12	H0- 3
07280-04726	K1110-24B1	16	K0- 167
07281-00167	D0200-01A2	14	D0- 5
07281-00167	D0200-01A2	22	D0- 5
07281-00167	D0200-01A2	32	D0- 5
07281-00197	D0200-01A2	7	D0- 5
07281-00197	D0200-01A2	12	D0- 5
07281-00197	K1110-23B1	10	K0- 165
07281-00259	C0120-01A0B	28	C0- 11
07281-00359	A2170-01A0	7	AA- 51
07281-00359	B0110-02A0A	7	B0- 7
07281-00609	F4700-01A0A	12	F0- 77
07281-00609	F4700-01A1A	12	F0- 81
07281-00709	K0210-16A0	28	K0- 85
07282-16114	C0120-01A0B	4	C0- 11
07283-33442	H5200-03A0A	24	H0- 59
07283-34346	F4500-06A1A	23	F0- 35
07283-34346	F4700-01A0A	8	F0- 77
07283-34346	F4700-01A1A	8	F0- 81
07283-36155	K0710-01A0A	5	K0- 103
07285-00125	A173P-01A5	9	AA- 31
07285-00155	B0300-01A0A	28	B0- 29
07285-00180	K1110-07B0	20	K0- 131
07285-00180	K1110-07B1	21	K0- 133
07285-00220	A2060-01B6	2	AA- 43
07287-01911	A2060-01B6	1	AA- 43
07288-10504	D0200-01A4	38	D0- 7

PARTS	FIG NO.	INDEX	PAGE
07288-10607	D0200-01A2	31	D0- 5
07288-10815	D0200-01A2	13	D0- 5
07288-11013	D0200-01A2	11	D0- 5
07288-11015	D0200-01A2	6	D0- 5
07289-00035	C0120-03A0A	9	C0- 13
07289-00035	C0120-03A0A	18	C0- 13
07289-00045	H5200-03A0A	2	H0- 59
07289-00045	H5200-03A0A	4	H0- 59
07289-00055	C0120-01A0B	16	C0- 11
07289-00070	C0120-01A0B	2	C0- 11
07289-00070	C0120-01A0B	8	C0- 11
07289-00070	C0120-01A0B	12	C0- 11
07289-00070	C0120-01A0B	14	C0- 11
07289-00070	C0120-01A0B	18	C0- 11
07289-00070	H5200-01A0	2	H0- 53
07289-00130	B0200-06A1	6	B0- 27
07289-00145	B0200-06A1	7	B0- 27
07299-00080	B0200-05A0	2	B0- 25
07299-00080	B0200-05A0	4	B0- 25
07299-00080	B0200-05A0	12	B0- 25
07299-00080	B0200-05A0	14	B0- 25
07299-00120	B0200-04A0	2	B0- 23
07336-61227	H0110-01A0A	45	H0- 5
07371-31049	H5200-02A0A	6	H0- 55
07371-31049	H5200-02A0A	20	H0- 55
07371-31049	H5200-02A0A	25	H0- 55
07372-21035	H5200-02A0A	7	H0- 55
07372-21035	H5200-02A0A	21	H0- 55
07372-21035	H5200-02A0A	26	H0- 55
07372-61235	F4500-03A1	30	F0- 23
07377-01018	H5200-02A0A	9	H0- 55
07378-11000	H5200-02A0A	18	H0- 55
07621-00215	F4500-01A0	8	F0- 15
07730-40004	C0120-01A0B	26	C0- 11
07950-10450	V0300-01A0	14	V0- 3
07950-90403	V0300-01A0	16	V0- 3
07951-41043	V0300-01A0	15	V0- 3
07952-80003	V0300-01A0	14	V0- 3
08000-00000	E0110-01A0	2	E0- 3
08000-00001	E0110-01A0	3	E0- 3
08017-30702	E0310-01A0	5	E0- 33
08017-30702	E0310-02A1	4	E0- 35
08028-44045	E0120-02A0A	2	E0- 7
08028-64080	E0120-02A0A	1	E0- 7
08034-00414	A6810-01A3	3	AA- 157
08034-00519	B0300-01A0A	29	B0- 29
08034-00536	C0120-01A0B	29	C0- 11
08034-20519	E0200-01A0A	12	E0- 9
08034-20519	E0200-01A1A	14	E0- 11
08034-20519	E0202-01A2	6	E0- 13

PARTS	FIG NO.	INDEX	PAGE
08034-20519	E0202-02A2	8	E0- 15
08034-20519	E0202-03A2	17	E0- 19
08034-20519	E0202-03A2	30	E0- 19
08034-20519	E0300-01A0	2	E0- 27
08034-20519	E0300-01A0	8	E0- 27
08034-20519	E0300-01A1A	7	E0- 29
08034-20519	H5200-05A0A	34	H0- 65
08034-20519	K0350-01A0	11	K0- 97
08034-20519	K0350-01A1	17	K0- 99
08034-20536	B0200-05A0	15	B0- 25
08034-20536	B0300-01A0A	30	B0- 29
08034-20536	C0120-03A0A	30	C0- 13
08034-20834	K1110-17B0	13	K0- 149
08036-00814	E0202-02A2	19	E0- 15
08036-01014	H0110-01A0A	13	H0- 3
08037-01008	K0210-03A0	27	K0- 25
08037-01008	K0210-03B0	28	K0- 29
08037-01008	K0210-06A0	14	K0- 43
08037-01008	K0210-06B0	14	K0- 47
08037-01008	K0210-08A0	14	K0- 59
08037-01008	K0210-08B0	14	K0- 63
08037-01008	K0355-01A0	8	K0- 101
08037-01008	K1110-10B0	7	K0- 141
08037-01008	M4100-01A0A	25	M0- 3
08037-01008	M4100-03A0A	15	M0- 9
08037-01610	E0300-01A1A	5	E0- 29
08037-01610	K1110-03B0	28	K0- 117
08037-01610	K1110-03B1	27	K0- 119
08037-02512	E0202-02A5	39	E0- 17
08037-02512	E0510-01A0	4	E0- 41
08038-00035	E0120-02A0A	18	E0- 7
08038-00519	E0202-02A2	9	E0- 15
08038-00519	E0202-02A2	27	E0- 15
08038-00519	E0202-02A2	29	E0- 15
08038-00519	E0202-03A2	6	E0- 19
08038-00525	E0202-02A2	26	E0- 15
08038-00525	E0202-03A2	7	E0- 19
08038-02027	E0202-02A2	13	E0- 15
08038-02027	E0202-02A2	25	E0- 15
08038-02027	E0202-03A2	5	E0- 19
08038-22511	E0120-02A0A	17	E0- 7
08038-42511	E0120-02A0A	16	E0- 7
08040-00100	K0210-15A0	1	K0- 83
08040-00300	K0210-15A0	1	K0- 83
08041-01000	K1110-20B0	26	K0- 157
08041-01000	K1110-21B0	3	K0- 159
08041-02000	K1110-20B0	26	K0- 157
08041-02000	K1110-21B0	3	K0- 159
08044-01500	K1110-20B0	26	K0- 157
08044-01500	K1110-21B0	3	K0- 159

PARTS	FIG NO.	INDEX	PAGE
08053-01510	A1010-01C9	5	AA- 5
08053-01510	E0202-02A2	32	E0- 15
08056-00271	E0310-01A0	1	E0- 33
08056-00271	E0310-02A1	1	E0- 35
08064-10000	K1110-20B0	20	K0- 157
08086-20000	K1110-20B0	18	K0- 157
08104-12420	E0302-01A0	2	E0- 31
08105-12420	E0300-01A0	6	E0- 27
08105-12420	E0300-01A1A	8	E0- 29
08105-12420	E0302-01A0	3	E0- 31
08110-12410	E0302-01A0	4	E0- 31
08111-12430	E0260-01A1	6	E0- 25
08111-12430	E0260-01A1	7	E0- 25
08111-12430	E0260-01A1	9	E0- 25
08137-82400	E0510-01A0	5	E0- 41
08154-70003	E0340-01A0	1	E0- 37
08154-72400	E0340-01A0	1	E0- 37
08154-72455	E0340-01A0	1	E0- 37
08160-62420	E0410-01A0	1	E0- 39
08160-62430	E0410-01A0	2	E0- 39
08163-02400	K1110-20B0	22	K0- 157
08180-12411	K0210-02A0	10	K0- 19
08180-12411	K0210-14A0	1	K0- 79
08193-21012	A6810-01A3	1	AA- 157
08193-21012	E0200-01A0A	5	E0- 9
08193-21012	E0200-01A0A	13	E0- 9
08193-21012	E0200-01A1A	5	E0- 11
08193-21012	E0200-01A1A	8	E0- 11
08193-21012	E0200-01A1A	15	E0- 11
08193-21012	E0200-01A1A	31	E0- 11
08193-21012	E0202-02A2	16	E0- 15
08193-21012	E0202-02A2	21	E0- 15
08193-21012	E0202-02A3	37	E0- 17
08193-21012	F5350-66A0	11	F0- 123
08193-31012	E0200-01A0A	17	E0- 9
08671-10040	B0200-04A0	5	B0- 23
08672-01000	B0200-04A0	3	B0- 23
08687-42404	K1110-18B0	3	K0- 151
09000-30005	V0300-01A0	2	V0- 3
09001-06000	V0300-01A0	3	V0- 3
09002-03641	V0300-01A0	4	V0- 3
09002-04650	V0300-01A0	5	V0- 3
09019-08035	V0300-01A0	6	V0- 3
09020-10282	V0300-01A0	7	V0- 3
09033-00190	V0300-01A0	8	V0- 3
09036-00150	V0300-01A0	9	V0- 3
09039-00150	V0300-01A0	10	V0- 3
09054-00009	V0300-01A0	11	V0- 3
09055-10390	V0300-01A0	12	V0- 3
09056-05513	V0300-01A0	1	V0- 3

PARTS	FIG NO.	INDEX	PAGE
09161-33000	U0100-01A0	1	U0- 3
09162-33000	U0100-01A0	2	U0- 3
09280-10040	S0100-01C2	6	S0- 3
09280-10040	S0100-01C2	6	S0- 3
09280-10040	S0100-01C2	6	S0- 3
09280-10040	S0100-01C2	6	S0- 5
09280-10040	S0100-01D0	3	S0- 7
09280-10040	S0100-01D0	3	S0- 7
09280-10040	S0500-01C1	4	S0- 9
09280-10040	S0500-01D0	3	S0- 11
09280-10130	S0100-01C2	6	S0- 3
09280-10130	S0100-01C2	6	S0- 3
09280-10130	S0100-01C2	6	S0- 3
09280-10130	S0100-01C2	6	S0- 5
09280-10130	S0100-01D0	3	S0- 7
09280-10130	S0100-01D0	3	S0- 7
09280-10130	S0500-01C1	4	S0- 9
09280-10130	S0500-01D0	3	S0- 11
09281-00041	S0100-01C2	7	S0- 3
09281-00041	S0100-01C2	7	S0- 3
09281-00041	S0100-01C2	7	S0- 5
09281-00041	S0100-01C2	7	S0- 5
09281-00041	S0100-01D0	4	S0- 7
09281-00041	S0100-01D0	4	S0- 7
09281-00041	S0500-01C1	5	S0- 9
09281-00041	S0500-01D0	4	S0- 11
09282-00017	S0100-01C2	10	S0- 3
09282-00017	S0100-01C2	10	S0- 3
09282-00017	S0100-01C2	10	S0- 5
09282-00017	S0100-01C2	10	S0- 5
09282-00017	S0100-01D0	7	S0- 7
09282-00017	S0100-01D0	7	S0- 7
09282-00017	S0500-01C1	8	S0- 9
09282-00017	S0500-01D0	7	S0- 11
09283-00000	S0100-01C2	8	S0- 3
09283-00000	S0100-01C2	8	S0- 3
09283-00000	S0100-01C2	8	S0- 5
09283-00000	S0100-01C2	8	S0- 5
09283-00000	S0100-01D0	5	S0- 7
09283-00000	S0100-01D0	5	S0- 7
09283-00000	S0500-01C1	6	S0- 9
09283-00000	S0500-01D0	5	S0- 11
09285-00000	S0100-01C2	9	S0- 3
09285-00000	S0100-01C2	9	S0- 3
09285-00000	S0100-01C2	9	S0- 5
09285-00000	S0100-01C2	9	S0- 5
09285-00000	S0100-01D0	6	S0- 7
09285-00000	S0100-01D0	6	S0- 7
09285-00000	S0500-01C1	7	S0- 9
09285-00000	S0500-01D0	6	S0- 11

PARTS	FIG NO.	INDEX	PAGE
09289-00000	V0300-01A0	13	V0- 3
09409-00001	K0110-01A1	10	K0- 5
09409-00001	K0160-01A0	1	K0- 7
09409-00001	K0160-01A1	2	K0- 9
09409-00002	K0110-01A1	10	K0- 5
09409-00002	K0160-01A0	1	K0- 7
09409-00002	K0160-01A1	2	K0- 9
09409-00003	K0110-01A1	10	K0- 5
09409-00003	K0160-01A0	1	K0- 7
09409-00003	K0160-01A1	2	K0- 9
09409-20000	K0110-01A1	10	K0- 5
09409-20000	K0160-01A1	2	K0- 9
09409-60000	K0160-01A0	1	K0- 7
09409-70000	K0110-01A0	20	K0- 3
09409-70000	K0110-01A1	9	K0- 5
09409-70000	K0160-01A1	1	K0- 9
09415-00706	C0110-01A0A	17	C0- 7
09415-00706	K1110-22B0	3	K0- 161
09415-01008	K0210-12A0	1	K0- 75
09415-01008	K1110-22B0	2	K0- 161
09415-01008	K1110-22B1	2	K0- 163
09415-01008	M4100-01A0A	26	M0- 3
09415-01610	K0210-02A0	18	K0- 19
09415-01610	K0210-02B0	18	K0- 21
09415-01610	K0210-12A0	4	K0- 75
09415-02110	C0110-01A0A	18	C0- 7
09415-02110	M4100-01A0A	8	M0- 3
09415-02110	M4100-01A0A	22	M0- 3
09415-02110	M4100-02A0A	5	M0- 5
09415-02110	M4100-02A1A	5	M0- 7
09415-02110	M4100-03A0A	9	M0- 9
09415-02512	K1110-05B0	42	K0- 125
09415-02512	K1110-07B0	11	K0- 131
09415-02512	K1110-07B1	11	K0- 133
09415-02512	M4100-02A0A	22	M0- 5
09415-02512	M4100-02A1A	16	M0- 7
09415-02512	M4230-01A0A	4	M0- 13
09415-02512	M4230-01A1	4	M0- 15
09415-02512	M4310-01A0	17	M0- 23
09415-02520	K0210-12A0	3	K0- 75
09415-03614	K0210-03B0	4	K0- 27
09415-03614	K1110-01B0	5	K0- 111
09415-03614	K1110-05B0	41	K0- 125
09415-03614	M4100-02A0A	23	M0- 5
09415-03614	M4100-02A1A	17	M0- 7
09415-03614	M4230-01A0A	7	M0- 13
09415-03614	M4230-01A1	7	M0- 15
09415-05016	K1110-21B0	10	K0- 159
09479-02400	K0713-01A0A	3	K0- 109
09479-02400	K0713-01A0A	12	K0- 109

PARTS	FIG NO.	INDEX	PAGE
09479-02400	K0713-01A0A	18	K0- 109
09479-02400	K0713-01A0A	20	K0- 109
09479-02400	K0713-01A0A	22	K0- 109
09479-02400	K0713-01A0A	30	K0- 109
09479-02400	K0713-01A0A	32	K0- 109
09483-10529	K0713-01A0A	11	K0- 109
09483-10530	K0713-01A0A	21	K0- 109
09484-00560	K0713-01A0A	4	K0- 109
09484-00560	K0713-01A0A	19	K0- 109
09484-00560	K0713-01A0A	28	K0- 109
09487-30220	K0210-16A0	23	K0- 85
09602-12051	U0100-01A0	53	U0- 5
09608-05080	F5350-66A0	8	F0- 123
09620-30201	K0210-18A0	14	K0- 89
09620-30201	K0210-18B0	14	K0- 91
09637-30163	U0100-01A0	3	U0- 3
09649-03012	U0100-01A0	4	U0- 3
09650-30104	U0100-01A0	5	U0- 3
09651-03001	U0100-01A0	6	U0- 3
09653-03001	U0100-01A0	7	U0- 3
09659-53000	U0100-01A0	31	U0- 3
09664-30070	U0100-01A0	8	U0- 3
09664-30082	U0100-01A0	9	U0- 3
09667-03001	U0100-01A0	26	U0- 3
09668-03001	U0100-01A0	10	U0- 3
09669-0000C	U0100-01A0	12	U0- 3
09669-0000E	U0100-01A0	11	U0- 3
09683-0000A	U0100-01A0	13	U0- 3
09690-F0315	U0100-01A0	15	U0- 3
09690-P0900	U0100-01A0	14	U0- 3
09802-43000	U0100-01A0	16	U0- 3
09808-03000	U0100-01A0	17	U0- 3
09812-13000	U0100-01A0	18	U0- 3
09817-K088B	U0100-01A0	30	U0- 3
09920-00150	A2219-01B5	15	AA- 55
09920-00150	A283P-01A0	2	AA- 79
09960-01001	U0100-01A0	19	U0- 3
09963-03001	U0100-01A0	20	U0- 3
09970-00230	U0100-01A0	59	U0- 5
101-854-9355	K1110-10B0	15	K0- 141
103-15-33280	F5350-57A0	16	F0- 103
104-15-25480	F5350-58A0	18	F0- 107
104-15-25490	F5350-58A0	16	F0- 107
10E-60-25120	K0710-01A0A	22	K0- 103
10E-63-32390	Y1622-01A0A	17	Y0- 37
112-63-15370	Y1620-21A0A	12	Y0- 29
113-04-32130	D0200-01A2	20	D0- 5
113-06-31120	E0120-01A0	8	E0- 5
113-78-21140	T5125-01A0	27	T0- 29
113-78-21140	T5126-01A0	3	T0- 31

PARTS	FIG NO.	INDEX	PAGE
113-78-21170	T5125-01A0	26	T0- 29
113-78-21170	T5126-01A0	2	T0- 31
114-63-55170	Y1620-31A0A	2	Y0- 31
114-63-55170	Y1620-31A0A	13	Y0- 31
11Y-62-12120	H5200-10A0A	4	H0- 77
11Y-62-12140	H5200-05A0A	28	H0- 65
11Y-62-12140	H5200-07A0A	1	H0- 71
11Y-62-12140	H5200-07A0A	7	H0- 71
11Y-62-12270	H5200-08A0A	1	H0- 73
120-10-31120	B0110-01A0	4	B0- 5
120-Y79-5760	K0210-02A0	17	K0- 19
120-Y79-5760	K0210-02B0	17	K0- 21
120-Y79-5760	K0210-14A0	12	K0- 79
120-Y79-5760	K0210-14B0	9	K0- 81
124-15-41680	F5350-66A0	3	F0- 123
124-15-41690	F5350-66A0	4	F0- 123
124-54-26540	B0300-02A0	2	B0- 33
125-15-11790	F4500-06A1A	19	F0- 35
125-15-15290	F5350-58A0	17	F0- 107
12H-15-14130	F5350-58A0	15	F0- 107
12H-15-14140	F5350-58A0	21	F0- 107
12R-60-11230	H0110-01A0A	23	H0- 3
12S-43-16270	B0300-01A0A	35	B0- 29
130-911-1640	K1110-20B0	27	K0- 157
134-06-61470	E0110-01A0	1	E0- 3
135-49-33370	K1110-17B0	12	K0- 149
144-43-51220	K1110-10B0	13	K0- 141
144-70-15251	T5115-01A0	22	T0- 5
144-874-7470	B0300-01A0A	20	B0- 29
14X-06-11130	E0202-01A2	3	E0- 13
14X-11-11110	F4200-01A0	1	F0- 3
14X-15-15850	F5350-58A0	4	F0- 107
14X-15-15850	F5350-58A0	22	F0- 107
14X-15-16210	F5350-58A0	19	F0- 107
14X-911-1540	K0210-05A0A	12	K0- 35
14X-911-1540	K0210-05B0A	12	K0- 39
14X-911-1540	K0210-07A0A	12	K0- 51
14X-911-1540	K0210-07B0A	12	K0- 55
14X-911-1770	K0210-13A0	8	K0- 77
14X-911-3221	K0210-13A0	4	K0- 77
155-61-15350	H5200-05A0A	15	H0- 65
170-43-11370	M4100-02A0A	21	M0- 5
170-43-11370	M4100-02A1A	15	M0- 7
175-15-56470	F5350-58A0	20	F0- 107
175-54-34170	J4110-01A0	4	J0- 3
175-54-34170	J4120-01A0A	4	J0- 5
175-54-34170	K1110-05B0	35	K0- 125
175-54-34170	K4470-01A0	4	K0- 177
175-54-34170	T5123-01A0	19	T0- 25
175-54-34170	T5123-01A8	44	T0- 27

PARTS	FIG NO.	INDEX	PAGE
175-54-34170	T5125-01A0	13	T0- 29
175-54-34170	T5125-01A0	17	T0- 29
175-54-34170	T5170-01A0	18	T0- 53
175-60-27340	H0110-01A0A	6	H0- 3
175-63-75190	Y1622-01A0A	9	Y0- 37
175-63-75190	Y1622-11A0A	10	Y0- 39
176-63-92240	Y1620-01A0A	5	Y0- 25
176-63-92240	Y1620-11A0A	7	Y0- 27
176-63-92240	Y1620-51A0A	8	Y0- 33
176-63-92240	Y1620-71A0A	5	Y0- 35
176-63-92240	Y1622-21A0A	7	Y0- 41
195-01-16261	K4470-02A0A	15	K0- 179
195-40-31530	K1110-02B0	18	K0- 113
195-40-31530	K1110-02B1	18	K0- 115
195-97-95190	D0200-01A2	18	D0- 5
195-97-95190	D0200-01A3	37	D0- 7
195-Z11-4510	K0210-07A0A	31	K0- 53
195-Z11-4510	K0210-07B0A	31	K0- 57
195-Z11-4520	K0210-05A0A	31	K0- 37
195-Z11-4520	K0210-05B0A	31	K0- 41
195-Z11-8550	K0210-02B0	13	K0- 21
195-Z11-8550	K0210-14B0	4	K0- 81
196-911-3310	F4700-01A0A	41	F0- 79
196-911-3310	F4700-01A1A	41	F0- 83
198-15-15570	F5350-58A0	10	F0- 107
198-43-15310	B0300-01A0A	17	B0- 29
198-43-15310	B0300-01A0A	21	B0- 29
198-43-15310	H4410-01A0A	30	H0- 19
198-63-75190	Y1620-31A0A	7	Y0- 31
19N-72-11220	T5115-01A0	13	T0- 5
201-60-12171	H0110-01A0A	15	H0- 3
201-60-12190	H0110-01A0A	1	H0- 3
203-06-56230	K1110-20B0	9	K0- 157
203-54-32260	M4100-01A0A	13	M0- 3
203-54-32260	M4100-02A0A	14	M0- 5
203-54-32260	M4100-02A1A	14	M0- 7
203-60-52250	H0110-01A0A	7	H0- 3
203-60-61130	H0110-01A0A	2	H0- 3
203-62-32440	D0200-01A6	40	D0- 7
205-06-71390	K1110-20B0	15	K0- 157
205-54-51250	K0210-04A0	23	K0- 31
205-54-51250	K0210-04B0	22	K0- 33
205-54-51730	K0210-01A0	13	K0- 11
205-54-51730	K0210-01A0	19	K0- 11
205-54-51730	K0210-01A0	27	K0- 11
205-54-51730	K0210-01B0	13	K0- 15
205-54-51730	K0210-01B0	19	K0- 15
205-54-51730	K0210-01B0	27	K0- 15
205-60-51460	H0110-01A0A	16	H0- 3
205-60-71220	M4240-01A0	2	M0- 21

PARTS	FIG NO.	INDEX	PAGE
206-03-43340	C0120-03A0A	22	C0- 13
206-03-43340	C0120-03A0A	36	C0- 13
207-60-61250	H5200-02A0A	10	H0- 55
207-62-33690	C0120-03A0A	38	C0- 15
207-62-61102	H5200-02A0A	10	H0- 55
207-62-61113	H5200-02A0A	11	H0- 55
207-62-71410	H6290-01A0A	2	H0- 109
207-62-7141B	F5350-64A0	1	F0- 119
207-62-72110	H5200-03A0A	5	H0- 59
207-62-72131	H5200-03A0A	38	H0- 61
208-06-12160	K0710-02A0A	26	K0- 107
20T-06-71410	K0210-13A0	17	K0- 77
20T-06-71410	K0210-14A0	10	K0- 79
20T-06-71410	K0210-14B0	7	K0- 81
20T-54-74550	K0210-02A0	5	K0- 19
20T-54-74550	K0210-02B0	5	K0- 21
20T-54-74990	K0210-02A0	13	K0- 19
20T-54-74990	K0210-14A0	4	K0- 79
20T-54-84840	K0210-02A0	12	K0- 19
20T-54-84840	K0210-14A0	3	K0- 79
20U-54-25190	K0210-02A0	21	K0- 19
20U-54-25190	K0210-02B0	21	K0- 21
20U-62-41740	H5200-07A0A	10	H0- 71
20U-62-41940	H5210-02B0	4	H0- 87
20U-62-41940	H5210-02B0	14	H0- 87
20Y-04-11160	D0100-01A0A	8	D0- 3
20Y-06-23471	K1110-20B0	13	K0- 157
20Y-06-27170	E0202-02A2	15	E0- 15
20Y-06-29670	E0340-01A0	2	E0- 37
20Y-54-11611	K0210-02A0	4	K0- 19
20Y-54-11611	K0210-02B0	4	K0- 21
20Y-60-21311	H0110-01A0A	25	H0- 3
20Y-60-22371	H5200-02A0A	12	H0- 55
21J-54-13620	K0210-03A0	12	K0- 23
21J-54-13620	K0210-03B0	13	K0- 27
21J-54-16190	K0210-02A0	19	K0- 19
21J-54-16190	K0210-02B0	19	K0- 21
21W-62-42411	H5210-02B0	1	H0- 87
21W-62-42411	H5210-02B0	17	H0- 87
21W-62-42640	F4700-01A0A	21	F0- 77
21W-62-42640	F4700-01A0A	30	F0- 77
21W-62-42640	F4700-01A1A	21	F0- 81
21W-62-42640	F4700-01A1A	30	F0- 81
21W-62-42640	F5350-63A0	5	F0- 117
21W-62-42640	F5350-65A0	6	F0- 121
21W-62-42640	H6290-01A0A	1	H0- 109
21W-62-42920	H5200-04A0A	5	H0- 63
21W-62-42920	H5200-06A0A	18	H0- 67
21W-62-43980	H5200-07A0A	4	H0- 71
21W-62-45210	H5200-04A0A	23	H0- 63

PARTS	FIG NO.	INDEX	PAGE
21W-979-4110	Y1979-02A0	1	Y0- 99
21W-979-4110	Y1979-03A0	1	Y0- 103
22B-979-1640	K0710-01A0A	8	K0- 103
22B-979-1650	K0710-01A0A	1	K0- 103
22T-55-11630	K0210-02A0	14	K0- 19
22T-55-11630	K0210-02B0	14	K0- 21
22T-55-11630	K0210-13A0	9	K0- 77
22T-55-11630	K0210-14A0	5	K0- 79
22T-55-11630	K0210-14B0	5	K0- 81
22T-62-27381	H5200-03A0A	3	H0- 59
22U-04-21131	D0200-01A2	25	D0- 5
22U-979-1711	K0710-01A0A	15	K0- 103
22U-979-1720	K1110-23B1	1	K0- 165
22U-979-1720	Y1979-01A0	1	Y0- 95
22U-979-1720	Y1979-02A0	1	Y0- 99
22U-979-1720	Y1979-03A0	1	Y0- 103
22W-06-13220	E0120-01A0	12	E0- 5
22W-61-12220	H5200-06A0A	16	H0- 67
22W-61-12220	K1110-17B0	3	K0- 149
22W-62-13420	H5200-11A1A	4	H0- 79
22X-22-11280	M4510-01A0	4	M0- 25
22X-22-11280	M4510-01A1	4	M0- 27
232-06-11960	E0120-02A0A	15	E0- 7
232-06-11960	E0202-02A2	28	E0- 15
232-14-67150	K1110-03B0	7	K0- 117
232-14-67150	K1110-03B1	7	K0- 119
232-25-51170	F4500-10A0	24	F0- 47
232-25-51170	F4500-10A1	24	F0- 51
232-25-51170	F4500-11A0	24	F0- 55
232-25-51170	F4500-11A1	24	F0- 59
232-25-51430	F4500-10A0	21	F0- 47
232-25-51430	F4500-10A1	21	F0- 51
232-25-51430	F4500-11A0	21	F0- 55
232-25-51430	F4500-11A1	21	F0- 59
232-25-51770	F4500-08A0	10	F0- 39
232-25-51770	F4500-09A0	10	F0- 43
232-30-54340	S0100-01C2	5	S0- 3
232-30-54340	S0100-01C2	5	S0- 3
232-30-54340	S0100-01C2	5	S0- 3
232-30-54340	S0100-01C2	5	S0- 5
232-30-54340	S0500-01C1	3	S0- 9
232-43-18281	U0100-01A0	21	U0- 3
232-43-42330	K1110-03B0	18	K0- 117
232-43-42330	K1110-03B1	17	K0- 119
232-43-52170	K1110-10B0	22	K0- 141
232-43-58360	F4500-06A1A	27	F0- 35
232-53-62710	U0100-01A0	51	U0- 5
232-60-54730	H5120-08A0	3	H0- 51
232-70-12480	T5120-01A0	12	T0- 9
232-70-12480	T5120-01A1	14	T0- 11

PARTS	FIG NO.	INDEX	PAGE
232-70-12480	T5120-01A2	12	T0- 13
232-70-12480	T5120-01A3	14	T0- 15
232-70-12480	T5120-01B0	12	T0- 17
232-70-12480	T5120-01B1	14	T0- 19
232-70-12480	T5120-01B2	12	T0- 21
232-70-12480	T5120-01B3	14	T0- 23
232-70-12550	T5120-01A0	11	T0- 9
232-70-12550	T5120-01A1	12	T0- 11
232-70-12550	T5120-01A2	11	T0- 13
232-70-12550	T5120-01A3	12	T0- 15
232-70-12550	T5120-01B0	11	T0- 17
232-70-12550	T5120-01B1	12	T0- 19
232-70-12550	T5120-01B2	11	T0- 21
232-70-12550	T5120-01B3	12	T0- 23
232-70-12560	T5120-01A1	13	T0- 11
232-70-12560	T5120-01A3	13	T0- 15
232-70-12560	T5120-01B1	13	T0- 19
232-70-12560	T5120-01B3	13	T0- 23
232-70-13142	T5175-01A0	4	T0- 57
232-70-13210	T5170-01A0	23	T0- 53
232-70-52380	T5123-01A0	25	T0- 25
232-70-53133	T5115-01A0	9	T0- 5
232-70-53141	T5115-01A0	18	T0- 5
232-70-53160	T5115-01A0	15	T0- 5
232-70-53271	T5115-01A0	10	T0- 5
232-71-11330	T5170-01A7	43	T0- 55
232-71-11340	T5170-01A8	44	T0- 55
232-71-13151	T5130-12A1	31	T0- 35
232-71-51220	T5170-01A0	30	T0- 53
232-71-51310	T5175-01A0	1	T0- 57
232-71-51320	T5175-01A0	2	T0- 57
232-71-51330	T5175-01A0	3	T0- 57
232-735-1340	U0100-01A0	22	U0- 3
232-745-2131	H5200-12A1A	9	H0- 81
232-785-1411	U0100-01A0	32	U0- 3
232-856-5120	K0350-01A0	1	K0- 97
232-856-5120	K0350-01A1	1	K0- 99
232-856-5130	K0350-01A0	2	K0- 97
232-856-5130	K0350-01A1	2	K0- 99
232-856-5130	K0350-01A1	8	K0- 99
232-856-5140	K0350-01A0	3	K0- 97
232-856-5140	K0350-01A1	3	K0- 99
232-856-5140	K0350-01A1	9	K0- 99
232-856-5160	K0350-01A0	4	K0- 97
232-856-5160	K0350-01A1	4	K0- 99
232-856-5160	K0350-01A1	10	K0- 99
232-856-5170	K0350-01A0	6	K0- 97
232-856-5170	K0350-01A1	6	K0- 99
232-856-5170	K0350-01A1	12	K0- 99
232-856-5260	K0350-01A0	5	K0- 97

PARTS	FIG NO.	INDEX	PAGE
232-856-5260	K0350-01A1	5	K0- 99
232-856-5260	K0350-01A1	11	K0- 99
232-950-2291	K1110-05B0	34	K0- 123
232-950-5700	K0350-01A0	1	K0- 97
232-950-5700	K0350-01A1	1	K0- 99
232-957-9710	K0210-13A0	12	K0- 77
233-71-16410	T5170-01A0	12	T0- 53
234-06-32240	E0120-01A0	14	E0- 5
234-06-41320	E0120-02A0A	20	E0- 7
234-25-31142	F4500-08A1	3	F0- 41
234-25-31142	F4500-09A1	3	F0- 45
234-25-31150	F4500-08A1	9	F0- 41
234-25-31150	F4500-09A1	9	F0- 45
234-25-31160	F4500-08A1	10	F0- 41
234-25-31160	F4500-09A1	10	F0- 45
234-25-31172	F4500-08A1	11	F0- 41
234-25-31172	F4500-09A1	11	F0- 45
234-30-22120	S0100-01C2	3	S0- 3
234-30-22120	S0100-01C2	3	S0- 3
234-30-22120	S0100-01C2	3	S0- 3
234-30-22120	S0100-01C2	3	S0- 5
234-30-22130	S0100-01C2	4	S0- 3
234-30-22130	S0100-01C2	4	S0- 3
234-30-22130	S0100-01C2	4	S0- 3
234-30-22130	S0100-01C2	4	S0- 5
234-40-31201	K1110-16B0	1	K0- 147
234-40-31210	K1110-16B0	1	K0- 147
234-40-31231	K1110-16B0	5	K0- 147
234-43-38440	K1110-02B0	8	K0- 113
234-43-38440	K1110-02B0	9	K0- 113
234-43-38440	K1110-02B0	10	K0- 113
234-43-38440	K1110-02B0	11	K0- 113
234-43-38440	K1110-02B1	8	K0- 115
234-43-38440	K1110-02B1	9	K0- 115
234-43-38440	K1110-02B1	10	K0- 115
234-43-38440	K1110-02B1	11	K0- 115
234-43-39250	T5115-01A0	40	T0- 7
234-53-32321	U0100-01A0	23	U0- 3
234-53-32330	U0100-01A0	24	U0- 3
234-53-32340	U0100-01A0	25	U0- 3
234-54-13252	F4500-06A1A	25	F0- 35
234-54-13252	M4230-01A0A	21	M0- 13
234-54-13252	M4230-01A1	21	M0- 15
234-835-2230	K1110-05B0	20	K0- 123
234-885-1610	K1110-05B0	5	K0- 123
234-885-1610	K1110-06B0	5	K0- 127
234-885-1610	K1110-06B0	6	K0- 127
234-885-1610	K1110-06B0	7	K0- 127
234-885-1610	K1110-06B0	8	K0- 127
234-885-1610	K1110-06B0	9	K0- 127

PARTS	FIG NO.	INDEX	PAGE
234-885-1610	K1110-06B1	5	K0- 129
234-885-1610	K1110-06B1	6	K0- 129
234-885-1610	K1110-06B1	7	K0- 129
234-885-1610	K1110-06B1	8	K0- 129
234-885-1610	K1110-06B1	9	K0- 129
234-885-1620	K1110-05B0	6	K0- 123
235-06-15150	E0202-01A2	4	E0- 13
235-25-11360	F4500-10A0	22	F0- 47
235-25-11360	F4500-10A1	22	F0- 51
235-25-11360	F4500-11A0	22	F0- 55
235-25-11360	F4500-11A1	22	F0- 59
235-27-11240	F4400-01A0	6	F0- 7
235-27-11750	F4400-01A0	14	F0- 7
235-40-11220	K1110-16B0	3	K0- 147
235-40-11230	K1110-16B0	2	K0- 147
235-40-11240	K1110-16B0	4	K0- 147
235-43-18380	K1110-02B0	14	K0- 113
235-43-18380	K1110-02B1	14	K0- 115
235-43-18380	K1110-06B0	2	K0- 127
235-43-18380	K1110-06B1	2	K0- 129
235-54-11540	K1110-11B0	11	K0- 143
235-54-32130	M4310-01A0	6	M0- 23
235-54-32130	M4310-01A0	10	M0- 23
235-60-15480	H5200-02A0A	2	H0- 55
235-60-15480	H5200-06A0A	4	H0- 67
235-61-11110	H5200-13A1	1	H0- 83
235-61-11120	H5211-02A0	18	H0- 103
235-61-11140	H5120-03A0	7	H0- 33
235-61-11140	H5120-03A0	15	H0- 33
235-61-11140	H5120-04A0	4	H0- 35
235-61-11140	H5120-05A0	4	H0- 37
235-61-11140	H5120-05A0	12	H0- 37
235-61-11140	H5120-06A0	7	H0- 39
235-61-11140	H5120-06A0	15	H0- 39
235-61-11140	H5120-06A1	7	H0- 41
235-61-11140	H5120-06A1	15	H0- 41
235-61-11140	H5120-07A0	7	H0- 43
235-61-11140	H5120-07A0	15	H0- 43
235-61-11140	H5120-07A1	7	H0- 47
235-61-11140	H5120-07A1	15	H0- 47
235-61-11140	H5200-13A1	7	H0- 83
235-61-11140	H5211-02A0	3	H0- 103
235-61-11140	H5211-02A0	11	H0- 103
235-61-11140	H5215-02A0	4	H0- 107
235-61-11150	H5120-03A0	8	H0- 33
235-61-11150	H5120-03A0	16	H0- 33
235-61-11150	H5120-04A0	5	H0- 35
235-61-11150	H5120-05A0	5	H0- 37
235-61-11150	H5120-05A0	13	H0- 37
235-61-11150	H5120-06A0	8	H0- 39

PARTS	FIG NO.	INDEX	PAGE
235-61-11150	H5120-06A0	16	H0- 39
235-61-11150	H5120-06A1	8	H0- 41
235-61-11150	H5120-06A1	16	H0- 41
235-61-11150	H5120-07A0	8	H0- 43
235-61-11150	H5120-07A0	16	H0- 43
235-61-11150	H5120-07A1	8	H0- 47
235-61-11150	H5120-07A1	16	H0- 47
235-61-11150	H5200-13A1	6	H0- 83
235-61-11150	H5211-02A0	4	H0- 103
235-61-11150	H5211-02A0	12	H0- 103
235-61-11150	H5215-02A0	5	H0- 107
235-61-11210	H5200-13A1	11	H0- 83
235-61-11210	H5215-02A0	21	H0- 107
235-61-11220	H5200-13A1	10	H0- 83
235-61-11220	H5215-02A0	2	H0- 107
235-61-11230	H5200-13A1	12	H0- 83
235-61-11400	H5120-03A0	14	H0- 33
235-61-11400	H5120-04A0	3	H0- 35
235-61-11400	H5120-05A0	3	H0- 37
235-61-11400	H5200-13A1	2	H0- 83
235-61-11400	H5211-02A0	2	H0- 103
235-61-11500	H5120-05A0	11	H0- 37
235-61-11620	H5120-07A0	28	H0- 43
235-61-11620	H5120-07A1	28	H0- 47
235-61-11620	H5211-02A0	25	H0- 103
235-61-11620	H5215-02A0	17	H0- 107
235-61-12200	H5215-02A0	3	H0- 107
235-61-12300	H5200-12A1A	24	H0- 81
235-61-12300	H5200-13A1	1	H0- 83
235-61-13210	H5211-02A0	1	H0- 103
235-61-13210	H5215-02A0	1	H0- 107
235-61-13220	H5120-07A0	29	H0- 43
235-61-13220	H5120-07A1	29	H0- 47
235-61-13220	H5211-02A0	26	H0- 103
235-61-13220	H5215-02A0	11	H0- 107
235-61-13230	H5120-07A0	32	H0- 43
235-61-13230	H5120-07A1	32	H0- 47
235-61-13230	H5211-02A0	27	H0- 103
235-61-13230	H5215-02A0	12	H0- 107
235-61-13240	H5120-07A0	27	H0- 43
235-61-13240	H5120-07A1	27	H0- 47
235-61-13240	H5215-02A0	13	H0- 107
235-61-13250	H5120-07A0	26	H0- 43
235-61-13250	H5120-07A1	26	H0- 47
235-61-13250	H5211-02A0	23	H0- 103
235-61-13250	H5215-02A0	14	H0- 107
235-61-13260	H5120-07A0	23	H0- 43
235-61-13260	H5120-07A1	23	H0- 47
235-61-13260	H5215-02A0	15	H0- 107
235-61-13270	H5120-07A0	33	H0- 43

PARTS	FIG NO.	INDEX	PAGE
235-61-13270	H5120-07A1	33	H0- 47
235-61-13270	H5211-02A0	31	H0- 103
235-61-13270	H5215-02A0	16	H0- 107
235-61-13700	H5120-01A0A	7	H0- 27
235-61-13700	H5120-01A1A	8	H0- 29
235-61-13700	H5120-04A0	1	H0- 35
235-61-13710	H5120-03A0	1	H0- 33
235-61-13710	H5120-05A0	1	H0- 37
235-61-13710	H5120-06A0	1	H0- 39
235-61-13720	H5120-03A0	2	H0- 33
235-61-13720	H5120-06A0	2	H0- 39
235-61-13720	H5120-06A1	2	H0- 41
235-61-13720	H5120-07A0	2	H0- 43
235-61-13720	H5120-07A1	2	H0- 47
235-61-13740	H5120-06A1	22	H0- 41
235-61-13740	H5120-07A0	22	H0- 43
235-61-13740	H5120-07A1	22	H0- 47
235-61-13800	H5120-01A0A	8	H0- 27
235-61-13800	H5120-01A1A	9	H0- 29
235-61-13800	H5120-05A0	1	H0- 37
235-61-14300	H5120-03A0	6	H0- 33
235-61-14300	H5120-06A0	6	H0- 39
235-61-14300	H5120-06A1	6	H0- 41
235-61-14300	H5120-07A0	14	H0- 43
235-61-14300	H5120-07A1	14	H0- 47
235-61-14300	H5211-02A0	10	H0- 103
235-61-14310	H5120-03A0	9	H0- 33
235-61-14310	H5120-06A0	9	H0- 39
235-61-14350	H5120-06A0	14	H0- 39
235-61-14350	H5120-06A1	14	H0- 41
235-61-14350	H5120-07A0	6	H0- 43
235-61-14350	H5120-07A1	6	H0- 47
235-61-15200	H5120-01A0A	6	H0- 27
235-61-15200	H5120-01A1A	7	H0- 29
235-61-15200	H5120-03A0	1	H0- 33
235-70-15850	T5130-12A1	11	T0- 35
235-70-15860	T5130-12A1	12	T0- 35
235-70-15870	T5130-12A1	12	T0- 35
235-70-15880	T5130-12A1	12	T0- 35
235-70-45260	T5130-11A1	8	T0- 33
235-70-45270	T5130-11A1	11	T0- 33
235-70-45330	T5130-11A1	18	T0- 33
235-70-45340	T5130-11A1	18	T0- 33
235-70-45360	T5130-11A1	12	T0- 33
235-70-45420	T5130-11A1	10	T0- 33
235-950-1790	K0215-01A0	6	K0- 93
237-01-11170	M4230-02A0	2	M0- 17
237-01-11180	M4230-02A0	2	M0- 17
237-06-15190	D0100-01A0A	15	D0- 3
237-23-11142	F4500-08A1	2	F0- 41

PARTS	FIG NO.	INDEX	PAGE
237-23-11142	F4500-09A1	2	F0- 45
237-43-17420	K1110-05B0	38	K0- 125
237-43-17420	K1110-06B0	11	K0- 127
237-43-17420	K1110-06B1	11	K0- 129
237-43-17440	K1110-06B0	10	K0- 127
237-43-17440	K1110-06B1	10	K0- 129
237-43-17480	K1110-07B0	15	K0- 131
237-43-17480	K1110-07B1	17	K0- 133
237-43-17490	K1110-07B0	16	K0- 131
237-43-17490	K1110-07B1	18	K0- 133
237-46-11250	J4120-01A0A	5	J0- 5
237-54-13211	U0100-01A0	27	U0- 3
237-54-13221	U0100-01A0	28	U0- 3
237-54-13231	U0100-01A0	29	U0- 3
237-54-13271	U0100-01A0	52	U0- 5
238-04-11140	D0100-01A0A	13	D0- 3
238-04-12110	D0200-01A2	1	D0- 5
238-04-12130	D0100-01A0A	4	D0- 3
238-22-11371	F4500-05A1	7	F0- 31
238-22-11371	F4500-10A0	2	F0- 47
238-22-11371	F4500-10A1	2	F0- 51
238-22-11371	F4500-11A0	2	F0- 55
238-22-11371	F4500-11A1	2	F0- 59
238-23-11121	F4500-08A0	12	F0- 39
238-23-11121	F4500-09A0	12	F0- 43
238-23-11130	F4500-08A0	9	F0- 39
238-23-11130	F4500-09A0	9	F0- 43
238-23-16132	F4500-08A0	3	F0- 39
238-23-16132	F4500-09A0	3	F0- 43
238-25-16360	F4500-10A0	13	F0- 47
238-25-16360	F4500-10A1	13	F0- 51
238-25-16360	F4500-11A0	13	F0- 55
238-25-16360	F4500-11A1	13	F0- 59
238-25-16760	F4500-08A0	11	F0- 39
238-25-16760	F4500-09A0	11	F0- 43
238-43-12310	K1110-10B0	8	K0- 141
238-70-11180	T5110-01A0A	10	T0- 3
238-70-16210	T5130-12A1	21	T0- 35
238-70-16220	T5130-12A1	21	T0- 35
238-70-16240	T5130-12A1	21	T0- 35
238-71-11210	T5170-01A0	36	T0- 53
238-735-1280	T5123-01A0	11	T0- 25
238-785-1330	T5125-01A0	28	T0- 29
238-785-1330	T5126-01A0	4	T0- 31
23A-01-33110	B0100-01A0	1	B0- 3
23A-01-33311	A2170-01A0	1	AA- 51
23A-01-33341	A2170-01A0	6	AA- 51
23A-02-31210	B0200-06A1	2	B0- 27
23A-02-31220	B0200-06A1	5	B0- 27
23A-02-31410	B0300-03A0	8	B0- 35

PARTS	FIG NO.	INDEX	PAGE
23A-02-32170	B0200-02A0A	1	B0- 17
23A-02-32210	B0200-04A0	1	B0- 23
23A-02-33122	B0200-03A0A	8	B0- 21
23A-02-33181	B0300-01A0A	4	B0- 29
23A-02-34250	B0200-05A0	11	B0- 25
23A-02-34260	B0200-05A0	13	B0- 25
23A-02-35110	B0200-03A0A	5	B0- 21
23A-02-35130	B0300-01A0A	14	B0- 29
23A-02-35150	B0200-03A0A	3	B0- 21
23A-02-35170	B0200-03A0A	1	B0- 21
23A-02-36111	B0300-01A0A	12	B0- 29
23A-02-36220	B0300-01A0A	38	B0- 31
23A-02-38210	B0300-01A0A	24	B0- 29
23A-03-31160	C0310-01A0A	7	C0- 17
23A-03-31170	C0110-01A0A	1A	C0- 7
23A-03-31662	C0120-01A0B	15	C0- 11
23A-03-31731	C0120-01A0B	23	C0- 11
23A-03-31751	C0120-01A0B	17	C0- 11
23A-03-33111	C0110-01A0A	1	C0- 7
23A-03-33120	C0110-01A0A	1	C0- 7
23A-03-33180	C0110-01A0A	7	C0- 7
23A-03-33310	C0310-01A0A	1	C0- 17
23A-03-33320	C0310-01A0A	2	C0- 17
23A-03-33500	C0110-01A0A	1	C0- 7
23A-03-33611	C0120-01A0B	1	C0- 11
23A-03-33710	C0120-01A0B	3	C0- 11
23A-03-33881	B0300-03A0	1	B0- 35
23A-04-32111	D0200-01A2	28	D0- 5
23A-06-21390	E0120-01A0	21	E0- 5
23A-06-21400	E0302-01A0	1	E0- 31
23A-06-21410	E0302-01A0	5	E0- 31
23A-06-21420	E0302-01A0	6	E0- 31
23A-06-21430	E0302-01A0	7	E0- 31
23A-06-21440	E0302-01A0	8	E0- 31
23A-06-21500	E0302-01A0	1	E0- 31
23A-06-21510	E0302-01A0	5	E0- 31
23A-06-21520	E0302-01A0	6	E0- 31
23A-06-21530	E0302-01A0	7	E0- 31
23A-06-41141	E0120-02A0A	27	E0- 7
23A-06-41150	E0120-02A0A	5	E0- 7
23A-06-41150	E0120-02A0A	10	E0- 7
23A-06-41361	E0202-05A2	2	E0- 23
23A-06-41374	E0202-02A2	1	E0- 15
23A-06-43711	E0120-01A0	4	E0- 5
23A-06-43931	E0310-02A1	5	E0- 35
23A-06-44361	E0202-02A2	18	E0- 15
23A-06-44370	E0202-02A2	31	E0- 15
23A-06-45750	E0120-01A0	1	E0- 5
23A-22-11150	F4500-02A0	7	F0- 19
23A-22-11160	F4500-02A0	7	F0- 19

PARTS	FIG NO.	INDEX	PAGE
23A-22-11170	F4500-02A0	7	F0- 19
23A-22-11260	F4500-02A0	7	F0- 19
23A-22-11380	F4500-05A0	5	F0- 29
23A-22-11410	F4500-05A0	8	F0- 29
23A-22-11420	F4500-05A0	9	F0- 29
23A-22-11430	F4500-05A0	11	F0- 29
23A-22-11590	F4500-05A0	10	F0- 29
23A-22-11670	F4500-02A0	3	F0- 19
23A-22-11680	F4500-02A0	3	F0- 19
23A-22-11690	F4500-02A0	3	F0- 19
23A-22-11740	F4500-03A1	5	F0- 23
23A-22-11740	F4500-03A1	15	F0- 23
23A-23-11161	F4500-08A0	2	F0- 39
23A-23-11161	F4500-09A0	2	F0- 43
23A-23-11310	F4500-05A1	8	F0- 31
23A-23-11310	F4500-10A0	3	F0- 47
23A-23-11310	F4500-10A1	3	F0- 51
23A-23-11310	F4500-11A0	3	F0- 55
23A-23-11310	F4500-11A1	3	F0- 59
23A-23-11320	F4500-05A1	8	F0- 31
23A-23-11320	F4500-10A0	3	F0- 47
23A-23-11320	F4500-10A1	3	F0- 51
23A-23-11320	F4500-11A0	3	F0- 55
23A-23-11320	F4500-11A1	3	F0- 59
23A-23-11330	F4500-05A1	8	F0- 31
23A-23-11330	F4500-10A0	3	F0- 47
23A-23-11330	F4500-10A1	3	F0- 51
23A-23-11330	F4500-11A0	3	F0- 55
23A-23-11330	F4500-11A1	3	F0- 59
23A-23-11500	F4500-12A0	3	F0- 63
23A-25-31211	F4500-08A1	4	F0- 41
23A-25-31211	F4500-09A1	4	F0- 45
23A-25-31220	F4500-08A0	4	F0- 39
23A-25-31220	F4500-09A0	4	F0- 43
23A-27-11160	F4400-01A0	15	F0- 7
23A-27-11170	F4400-02A0	5	F0- 11
23A-27-11180	F4400-02A0	23	F0- 11
23A-27-11190	F4400-02A0	20	F0- 11
23A-27-11250	F4400-02A0	10	F0- 11
23A-27-11260	F4400-02A0	11	F0- 11
23A-27-11270	F4400-02A0	12	F0- 11
23A-27-11281	F4400-02A0	13	F0- 11
23A-27-11310	F4400-01A0	16	F0- 7
23A-27-11330	F4400-01A0	17	F0- 7
23A-27-11340	F4400-01A0	18	F0- 7
23A-27-11360	F4400-02A0	16	F0- 11
23A-27-11390	F4400-01A0	22	F0- 7
23A-27-11530	F4400-01A0	40	F0- 9
23A-27-11620	F4400-01A0	48	F0- 9
23A-27-11630	F4400-01A0	21	F0- 7

PARTS	FIG NO.	INDEX	PAGE
23A-27-11640	F4400-01A0	23	F0- 7
23A-27-11640	F4400-01A0	44	F0- 9
23A-27-11650	F4400-01A0	50	F0- 9
23A-27-11860	F4400-02A0	21	F0- 11
23A-27-11870	F4400-02A0	21	F0- 11
23A-27-11880	F4400-02A0	21	F0- 11
23A-27-11890	F4400-02A0	19	F0- 11
23A-27-31112	F4400-01A0	1	F0- 7
23A-27-31130	F4400-02A0	4	F0- 11
23A-27-31140	F4400-02A0	1	F0- 11
23A-27-31150	F4400-02A0	2	F0- 11
23A-27-31232	F4400-01A0	39	F0- 9
23A-27-31233	F4400-01A0	39	F0- 9
23A-27-31350	F4400-01A0	29	F0- 7
23A-27-31520	F4400-01A0	43	F0- 9
23A-30-11601	S0100-01C2	2	S0- 3
23A-30-11601	S0100-01C2	2	S0- 3
23A-30-11601	S0100-01C2	2	S0- 3
23A-30-11601	S0100-01C2	2	S0- 5
23A-30-11601	S0500-01C1	2	S0- 9
23A-30-11611	S0100-01C2	2	S0- 3
23A-30-11611	S0100-01C2	2	S0- 3
23A-30-11611	S0100-01C2	2	S0- 3
23A-30-11611	S0100-01C2	2	S0- 5
23A-40-43110	H4410-01A0A	10	H0- 19
23A-40-43120	H4410-01A0A	11	H0- 19
23A-43-12220	K1110-10B0	16	K0- 141
23A-43-31221	K1110-26B0	1	K0- 171
23A-43-31240	B0110-04A0A	1	B0- 11
23A-43-31250	B0110-04A0A	4	B0- 11
23A-46-31106	J4110-01A0	1	J0- 3
23A-46-33100	J4120-01A0A	1	J0- 5
23A-53-11550	U0100-01A0	33	U0- 3
23A-53-31113	U0100-01A0	62	U0- 5
23A-53-31140	U0100-01A0	63	U0- 5
23A-54-11180	M4230-02A0	5	M0- 17
23A-54-31810	M4100-02A0A	17	M0- 5
23A-54-31820	M4100-02A0A	18	M0- 5
23A-54-31912	M4230-01A1	10	M0- 15
23A-54-31922	M4230-01A1	11	M0- 15
23A-54-31930	M4230-01A0A	10	M0- 13
23A-54-31940	M4230-01A0A	11	M0- 13
23A-60-42110	H5215-01A0A	4	H0- 105
23A-60-42120	H5215-01A0A	3	H0- 105
23A-60-43110	H5210-01B0	1	H0- 85
23A-60-43120	H5215-01A0A	1	H0- 105
23A-60-43130	H5215-01A0A	2	H0- 105
23A-70-12150	T5120-01A0	6	T0- 9
23A-70-12150	T5120-01A1	6	T0- 11
23A-70-12150	T5120-01A2	6	T0- 13

PARTS	FIG NO.	INDEX	PAGE
23A-70-12150	T5120-01A3	6	T0- 15
23A-70-12150	T5120-01B0	6	T0- 17
23A-70-12150	T5120-01B1	6	T0- 19
23A-70-12150	T5120-01B2	6	T0- 21
23A-70-12150	T5120-01B3	6	T0- 23
23A-70-12150	T5123-01A0	35	T0- 25
23A-70-13180	T5123-01A0	33	T0- 25
23A-70-13190	T5123-01A0	34	T0- 25
23A-70-14210	T5115-01A0	7	T0- 5
23A-70-31514	T5110-01A0A	2	T0- 3
23A-71-11160	T5170-01A0	2	T0- 53
23A-71-11270	T5170-01A0	3	T0- 53
23A-71-31160	T5170-01A0	35	T0- 53
23A-71-31294	T5170-01A0	20	T0- 53
23A-71-31312	T5170-01A0	1	T0- 53
23A-71-31324	T5170-01A0	21	T0- 53
23A-71-31420	T5170-01A0	26	T0- 53
23A-735-3112	T5110-01A0A	1	T0- 3
23A-785-3111	T5125-01A0	1	T0- 29
23A-785-3121	T5125-01A0	2	T0- 29
23A-785-3150	T5125-01A0	25	T0- 29
23A-785-3150	T5126-01A0	1	T0- 31
23A-785-3160	T5125-01A0	18	T0- 29
23A-80-99310	K0710-01A0A	17	K0- 103
23A-809-9320	K0710-01A0A	20	K0- 103
23A-809-9330	K0710-01A0A	21	K0- 103
23A-80-99340	K0710-01A0A	36	K0- 103
23A-846-3240	M4510-01A0	1	M0- 25
23A-846-3250	M4510-01A1	1	M0- 27
23A-846-3260	M4520-01A0	1	M0- 29
23A-952-1112	K0210-01A0	1	K0- 11
23A-952-1121	K0210-01A0	2	K0- 11
23A-952-1131	K0210-01A0	3	K0- 11
23A-952-1141	K0210-01A0	4	K0- 11
23A-952-1151	K0210-01A0	5	K0- 11
23A-952-1160	K0210-01A0	6	K0- 11
23A-952-1160	K0210-01A0	8	K0- 11
23A-952-1171	K0210-01A0	7	K0- 11
23A-952-1192	K0210-01A0	9	K0- 11
23A-952-1192	K0210-01B0	9	K0- 15
23A-952-1212	K0210-01A0	17	K0- 11
23A-952-1212	K0210-01B0	17	K0- 15
23A-952-1221	K0210-01A0	24	K0- 11
23A-952-1221	K0210-01B0	24	K0- 15
23A-952-1241	K0210-13A0	13	K0- 77
23A-952-1271	K0210-01A0	25	K0- 11
23A-952-1271	K0210-01B0	25	K0- 15
23A-952-1291	K0210-13A0	14	K0- 77
23A-952-1312	K0210-01A0	29	K0- 11
23A-952-1312	K0210-01B0	29	K0- 15

PARTS	FIG NO.	INDEX	PAGE
23A-952-1322	K0210-01A0	30	K0- 11
23A-952-1322	K0210-01B0	30	K0- 15
23A-952-1330	K0210-01A5	35	K0- 13
23A-952-1330	K0210-01B0	35	K0- 17
23A-952-1340	K0210-01A6	36	K0- 13
23A-952-1340	K0210-01B0	36	K0- 17
23A-952-1351	K0210-01A2	32	K0- 13
23A-952-1351	K0210-01B0	32	K0- 17
23A-952-1361	K0210-01A3	33	K0- 13
23A-952-1361	K0210-01B0	33	K0- 17
23A-952-1370	K0210-01A8	38	K0- 13
23A-952-1380	K0210-01A9	39	K0- 13
23A-952-1380	K0210-01B0	39	K0- 17
23A-952-1391	K0210-02A0	1	K0- 19
23A-952-1410	K0210-02A0	2	K0- 19
23A-952-1410	K0210-02B0	2	K0- 21
23A-952-1420	K0210-02A0	3	K0- 19
23A-952-1420	K0210-02B0	3	K0- 21
23A-952-1440	K0210-02A0	6	K0- 19
23A-952-1440	K0210-02B0	6	K0- 21
23A-952-1450	K0210-02A0	7	K0- 19
23A-952-1450	K0210-02B0	7	K0- 21
23A-952-1460	K0210-14A0	7	K0- 79
23A-952-1480	K0355-01A0	9	K0- 101
23A-952-1490	K0355-01A0	1	K0- 101
23A-952-1510	K0355-01A0	3	K0- 101
23A-952-1521	K0210-02A0	15	K0- 19
23A-952-1531	K0210-13A0	11	K0- 77
23A-952-1541	K0210-13A0	10	K0- 77
23A-952-1541	K0210-14A0	6	K0- 79
23A-952-1550	K0210-02A0	16	K0- 19
23A-952-1550	K0210-02B0	16	K0- 21
23A-952-1550	K0210-14A0	11	K0- 79
23A-952-1550	K0210-14B0	8	K0- 81
23A-952-1561	K0210-09A0	2	K0- 67
23A-952-1570	K0210-08B0	4	K0- 63
23A-952-1580	K0210-13A0	7	K0- 77
23A-952-1590	K0210-13A0	6	K0- 77
23A-952-1611	K0210-03A0	20	K0- 23
23A-952-1620	K0210-03A0	22	K0- 23
23A-952-1630	K0210-03A0	24	K0- 23
23A-952-1630	K0210-03B0	25	K0- 27
23A-952-1640	K0210-03A0	25	K0- 23
23A-952-1640	K0210-03B0	26	K0- 27
23A-952-1650	K0210-03A0	31	K0- 25
23A-952-1650	K0210-03B0	32	K0- 29
23A-952-1681	K0215-01A0	1	K0- 93
23A-952-1691	K0215-01A0	2	K0- 93
23A-952-1722	E0300-01A1A	1	E0- 29
23A-952-1730	E0300-01A1A	3	E0- 29

PARTS	FIG NO.	INDEX	PAGE
23A-952-1751	K0210-06A0	5	K0- 43
23A-952-1751	K0210-06B0	5	K0- 47
23A-952-1761	K0210-08A0	5	K0- 59
23A-952-1761	K0210-08B0	5	K0- 63
23A-952-1771	K0210-06A0	11	K0- 43
23A-952-1771	K0210-06B0	11	K0- 47
23A-952-1781	K0210-08A0	11	K0- 59
23A-952-1781	K0210-08B0	11	K0- 63
23A-952-1792	K0210-06A0	1	K0- 43
23A-952-1792	K0210-06B0	1	K0- 47
23A-952-1812	K0210-08A0	1	K0- 59
23A-952-1812	K0210-08B0	1	K0- 63
23A-952-1841	K0210-06A0	3	K0- 43
23A-952-1841	K0210-06B0	3	K0- 47
23A-952-1841	K0210-08A0	3	K0- 59
23A-952-1841	K0210-08B0	3	K0- 63
23A-952-1851	K0210-06A0	4	K0- 43
23A-952-1851	K0210-06B0	4	K0- 47
23A-952-1851	K0210-08A0	4	K0- 59
23A-952-1860	K0210-06A0	9	K0- 43
23A-952-1860	K0210-06B0	9	K0- 47
23A-952-1860	K0210-08A0	9	K0- 59
23A-952-1860	K0210-08B0	9	K0- 63
23A-952-1871	K0210-06A0	10	K0- 43
23A-952-1871	K0210-06B0	10	K0- 47
23A-952-1871	K0210-08A0	10	K0- 59
23A-952-1871	K0210-08B0	10	K0- 63
23A-952-1882	K0210-06A0	15	K0- 43
23A-952-1882	K0210-06B0	15	K0- 47
23A-952-1890	K0210-02A0	22	K0- 19
23A-952-1890	K0210-02B0	22	K0- 21
23A-952-1911	K0355-01A0	1	K0- 101
23A-952-1920	K0210-06A0	39	K0- 45
23A-952-1920	K0210-06B0	39	K0- 49
23A-952-1920	K0210-08A0	40	K0- 61
23A-952-1920	K0210-08B0	40	K0- 65
23A-952-1931	K0210-06A0	21	K0- 43
23A-952-1931	K0210-06B0	21	K0- 47
23A-952-1941	K0210-08A0	22	K0- 59
23A-952-1941	K0210-08B0	22	K0- 63
23A-952-1950	K0210-06A0	29	K0- 43
23A-952-1950	K0210-06B0	29	K0- 47
23A-952-1950	K0210-08A0	30	K0- 59
23A-952-1950	K0210-08B0	30	K0- 63
23A-952-1962	K0210-06A0	27	K0- 43
23A-952-1962	K0210-06B0	27	K0- 47
23A-952-1972	K0210-08A0	28	K0- 59
23A-952-1972	K0210-08B0	28	K0- 63
23A-952-1980	K0210-06A0	32	K0- 45
23A-952-1980	K0210-06B0	32	K0- 49

PARTS	FIG NO.	INDEX	PAGE
23A-952-1980	K0210-08A0	33	K0- 61
23A-952-1980	K0210-08B0	33	K0- 65
23A-952-1990	K0210-06A0	41	K0- 45
23A-952-1990	K0210-06B0	41	K0- 49
23A-952-1990	K0210-08A0	42	K0- 61
23A-952-1990	K0210-08B0	42	K0- 65
23A-952-2140	M4230-01A0A	22	M0- 13
23A-952-2140	M4230-01A1	22	M0- 15
23A-952-2150	M4230-01A0A	23	M0- 13
23A-952-2150	M4230-01A1	23	M0- 15
23A-953-1110	K0210-01B0	1	K0- 15
23A-953-1120	K0210-01B0	2	K0- 15
23A-953-1130	K0210-01B0	3	K0- 15
23A-953-1140	K0210-01B0	4	K0- 15
23A-953-1150	K0210-01B0	5	K0- 15
23A-953-1160	K0210-01B0	6	K0- 15
23A-953-1160	K0210-01B0	8	K0- 15
23A-953-1170	K0210-01B0	7	K0- 15
23A-953-1370	K0210-01B0	38	K0- 17
23A-953-1390	K0210-02B0	1	K0- 21
23A-953-1520	K0210-02B0	15	K0- 21
23A-953-1540	K0210-14B0	6	K0- 81
23A-953-1560	K0210-09B0	2	K0- 69
23A-953-1610	K0210-03B0	21	K0- 27
23A-953-1620	K0210-03B0	23	K0- 27
23B-01-31720	K0713-01A0A	8	K0- 109
23B-01-33211	F4810-01A0	1	F0- 85
23B-01-33221	F4810-01A0	2	F0- 85
23B-01-33350	A2170-01A0	4	AA- 51
23B-02-31131	C0100-02A0	2	C0- 5
23B-02-31141	C0100-02A0	1	C0- 5
23B-02-31161	C0100-02A0	3	C0- 5
23B-02-31170	C0100-01A0	30	C0- 3
23B-02-31180	B0200-06A1	1	B0- 27
23B-02-31231	C0100-02A0	5	C0- 5
23B-02-31241	C0100-01A0	6	C0- 3
23B-02-31250	C0100-01A0	12	C0- 3
23B-02-31260	C0100-01A0	7	C0- 3
23B-02-31312	C0100-01A0	1	C0- 3
23B-02-31341	C0100-01A0	15	C0- 3
23B-02-31350	C0100-01A0	16	C0- 3
23B-02-31350	K0710-01A0A	29	K0- 103
23B-02-31360	C0100-01A0	29	C0- 3
23B-02-31370	C0100-01A0	26	C0- 3
23B-02-31370	K0710-01A0A	24	K0- 103
23B-02-33160	B0300-01A0A	32	B0- 29
23B-02-34120	C0110-01A0A	2	C0- 7
23B-02-34210	B0200-05A0	3	B0- 25
23B-02-34220	B0200-05A0	1	B0- 25
23B-02-34230	B0200-05A0	5	B0- 25

PARTS	FIG NO.	INDEX	PAGE
23B-02-34240	B0200-05A0	8	B0- 25
23B-02-34280	A1310-01A3	1	AA- 17
23B-02-36121	B0300-02A0	1	B0- 33
23B-03-31180	C0120-03A0A	2	C0- 13
23B-03-31270	K0710-02A0A	35	K0- 107
23B-03-31351	C0120-03A0A	20	C0- 13
23B-03-31450	C0120-03A0A	35	C0- 13
23B-03-31511	C0110-01A0A	34	C0- 9
23B-03-31790	C0120-01A0B	30	C0- 11
23B-03-31962	C0120-03A0A	10	C0- 13
23B-03-32130	C0120-01A0B	19	C0- 11
23B-03-33130	C0110-01A0A	5	C0- 7
23B-03-33140	C0110-01A0A	11	C0- 7
23B-03-33150	C0110-01A0A	13	C0- 7
23B-03-33170	C0110-01A0A	9	C0- 7
23B-03-33210	C0110-01A0A	15	C0- 7
23B-03-33220	C0110-01A0A	16	C0- 7
23B-03-33230	C0110-01A0A	19	C0- 7
23B-03-33240	C0110-01A0A	20	C0- 7
23B-03-33260	C0110-01A0A	21	C0- 7
23B-03-33270	C0110-01A0A	22	C0- 7
23B-03-33280	C0110-01A0A	24	C0- 7
23B-03-33290	C0110-01A0A	23	C0- 7
23B-03-33411	C0120-03A0A	23	C0- 13
23B-03-33621	C0120-01A0B	7	C0- 11
23B-03-33630	C0120-01A0B	11	C0- 11
23B-03-33641	C0120-01A0B	13	C0- 11
23B-03-33780	C0120-01A0B	9	C0- 11
23B-03-33812	C0120-03A0A	1	C0- 13
23B-03-33970	C0110-01A0A	25	C0- 7
23B-03-34200	C0120-03A0A	7	C0- 13
23B-04-31322	D0100-01A0A	9	D0- 3
23B-04-31333	D0100-01A0A	10	D0- 3
23B-04-31511	D0100-01A0A	1	D0- 3
23B-04-32130	D0200-01A2	8	D0- 5
23B-04-32220	D0200-01A8	42	D0- 7
23B-06-31180	K1110-21B0	18	K0- 159
23B-06-41151	E0120-02A0A	19	E0- 7
23B-06-41212	E0300-01A0	7	E0- 27
23B-06-41256	K1110-19A0	5	K0- 153
23B-06-41256	K1110-19B0	5	K0- 155
23B-06-41315	K1110-21B0	1	K0- 159
23B-06-41348	K1110-21B0	2	K0- 159
23B-06-41352	E0200-01A0A	2	E0- 9
23B-06-41352	E0200-01A1A	2	E0- 11
23B-06-41421	E0200-01A0A	1	E0- 9
23B-06-41421	E0200-01A1A	1	E0- 11
23B-06-41430	E0200-01A1A	28	E0- 11
23B-06-41472	E0202-03A2	8	E0- 19
23B-06-41520	K1110-21B0	19	K0- 159

PARTS	FIG NO.	INDEX	PAGE
23B-06-41540	K1110-20B0	26	K0- 157
23B-06-41718	K1110-21B0	25	K0- 159
23B-06-41734	E0202-03A2	18	E0- 19
23B-06-41753	E0202-03A2	11	E0- 19
23B-06-41861	K1110-22B0	5	K0- 161
23B-06-41861	K1110-22B1	3	K0- 163
23B-06-42110	E0260-01A1	2	E0- 25
23B-06-42170	E0202-04A0A	1	E0- 21
23B-06-42310	K1110-20B0	14	K0- 157
23B-06-42320	K1110-22B1	8	K0- 163
23B-06-42431	K1110-20B0	11	K0- 157
23B-06-42460	E0300-01A0	6	E0- 27
23B-06-42460	E0300-01A1A	8	E0- 29
23B-06-42512	F4500-01A1A	9	F0- 17
23B-06-42570	K1110-20B0	4	K0- 157
23B-06-42580	K1110-22B1	4	K0- 163
23B-06-42590	K1110-22B1	5	K0- 163
23B-06-42610	E0202-01A2	7	E0- 13
23B-06-42650	D0100-01A0A	14	D0- 3
23B-06-42710	E0260-01A1	3	E0- 25
23B-06-43380	E0202-04A0A	3	E0- 21
23B-06-43650	E0120-01A0	9	E0- 5
23B-06-43931	E0310-01A0	2	E0- 33
23B-06-44110	E0300-01A0	3	E0- 27
23B-06-44241	E0202-02A2	20	E0- 15
23B-06-44250	E0202-02A2	23	E0- 15
23B-06-44260	E0202-01A2	8	E0- 13
23B-06-44270	K1110-22B0	1	K0- 161
23B-06-44270	K1110-22B1	1	K0- 163
23B-06-44331	E0202-03A2	22	E0- 19
23B-06-44331	K1110-21B0	4	K0- 159
23B-06-44350	E0202-03A2	12	E0- 19
23B-06-44383	E0202-04A0A	11	E0- 21
23B-06-44393	K1110-20B0	5	K0- 157
23B-06-44411	K1110-21B0	5	K0- 159
23B-06-44421	K1110-19A0	1	K0- 153
23B-06-44421	K1110-19B0	1	K0- 155
23B-06-44431	K1110-21B0	6	K0- 159
23B-06-44471	E0202-04A0A	17	E0- 21
23B-06-44480	E0202-04A0A	10	E0- 21
23B-06-44710	E0510-01A0	1	E0- 41
23B-06-44720	E0510-01A0	6	E0- 41
23B-06-45110	E0260-01A1	4	E0- 25
23B-06-45120	E0260-01A1	5	E0- 25
23B-06-45130	E0260-01A1	6	E0- 25
23B-06-45140	E0260-01A1	7	E0- 25
23B-06-45150	E0260-01A1	8	E0- 25
23B-06-45160	E0260-01A1	2	E0- 25
23B-06-45400	E0260-01A1	1	E0- 25
23B-06-45410	E0260-01A1	9	E0- 25

PARTS	FIG NO.	INDEX	PAGE
23B-06-45440	E0202-03A2	1	E0- 19
23B-12-31210	B0110-01A0	1	B0- 5
23B-16-31211	F4700-01A0A	1	F0- 77
23B-16-31211	F4700-01A1A	1	F0- 81
23B-16-31272	F4700-01A0A	13	F0- 77
23B-16-31321	F4700-01A0A	17	F0- 77
23B-16-31321	F4700-01A1A	17	F0- 81
23B-16-31411	F4700-01A1A	13	F0- 81
23B-16-31462	F4320-01A0A	8	F0- 5
23B-16-31512	F4700-01A0A	5	F0- 77
23B-16-31512	F4700-01A1A	5	F0- 81
23B-16-31562	F4320-01A0A	2	F0- 5
23B-16-31651	F4700-01A0A	29	F0- 77
23B-16-31651	F4700-01A1A	29	F0- 81
23B-16-31661	F4700-01A0A	33	F0- 77
23B-16-31661	F4700-01A1A	33	F0- 81
23B-16-31720	F4700-01A0A	37	F0- 79
23B-16-31720	F4700-01A1A	37	F0- 83
23B-16-31730	F4700-01A0A	23	F0- 77
23B-16-31730	F4700-01A1A	23	F0- 81
23B-16-31740	H6290-01A0A	6	H0- 109
23B-16-31760	H6290-01A0A	5	H0- 109
23B-16-31770	F4320-01A0A	15	F0- 5
23B-16-31780	F4320-01A0A	1	F0- 5
23B-16-31781	F4320-01A0A	1	F0- 5
23B-16-33110	F4700-01A0A	34	F0- 77
23B-16-33110	F4700-01A1A	34	F0- 81
23B-20-31100	F4200-01A0	1	F0- 3
23B-20-31110	F4200-01A0	2	F0- 3
23B-22-11270	F4500-03A0	16	F0- 21
23B-22-11280	F4500-03A0	16	F0- 21
23B-22-11290	F4500-03A0	16	F0- 21
23B-22-11310	F4500-03A0	15	F0- 21
23B-22-11320	F4500-03A0	15	F0- 21
23B-22-11330	F4500-03A0	15	F0- 21
23B-22-11420	F4500-02A0	9	F0- 19
23B-22-11590	F4500-03A1	13	F0- 23
23B-22-11900	F4500-03A0	5	F0- 21
23B-22-11910	F4500-03A0	5	F0- 21
23B-22-11920	F4500-03A0	6	F0- 21
23B-22-11930	F4500-03A0	7	F0- 21
23B-22-11940	F4500-03A0	8	F0- 21
23B-22-11950	F4500-03A0	9	F0- 21
23B-22-12160	F4500-05A0	6	F0- 29
23B-22-21190	F4500-04A1	15	F0- 27
23B-22-21190	F4500-05A0	15	F0- 29
23B-22-21450	F4500-03A1	10	F0- 23
23B-22-21460	F4500-03A1	6	F0- 23
23B-22-22231	F4500-06A1A	1	F0- 35
23B-22-22390	F4500-06A1A	18	F0- 35

PARTS	FIG NO.	INDEX	PAGE
23B-22-23140	F4500-05A0	23	F0- 29
23B-22-23150	F4500-05A0	25	F0- 29
23B-22-31112	F4500-01A0	1	F0- 15
23B-22-31121	F4500-05A0	1	F0- 29
23B-22-31130	F4500-05A0	14	F0- 29
23B-22-31130	F4500-05A0	14	F0- 29
23B-22-31140	F4500-02A0	6	F0- 19
23B-22-31151	F4500-02A0	1	F0- 19
23B-22-31201	F4500-03A0	1	F0- 21
23B-22-31230	F4500-05A0	4	F0- 29
23B-22-31231	F4500-05A0	4	F0- 29
23B-22-31242	F4500-05A0	16	F0- 29
23B-22-31254	F4500-01A0	2	F0- 15
23B-22-31300	F4500-02A0	15	F0- 19
23B-22-31330	F4500-05A0	19	F0- 29
23B-22-31380	F4500-03A0	12	F0- 21
23B-22-31390	F4500-03A0	13	F0- 21
23B-22-31413	F4500-06A1A	20	F0- 35
23B-22-31431	F4500-06A1A	11	F0- 35
23B-22-31461	F4500-06A0A	1	F0- 33
23B-22-31471	F4500-06A1A	22	F0- 35
23B-22-31480	F4500-06A0A	4	F0- 33
23B-22-31480	F4500-06A1A	21	F0- 35
23B-22-31511	F4500-01A1A	1	F0- 17
23B-22-31521	F4500-04A1	10	F0- 27
23B-22-31522	F4500-04A1	10	F0- 27
23B-22-31530	F4500-04A1	14	F0- 27
23B-22-31540	F4500-04A1	31	F0- 27
23B-22-31550	F4500-04A1	7	F0- 27
23B-22-31560	F4500-05A1	5	F0- 31
23B-22-31601	F4500-03A1	1	F0- 23
23B-22-31611	F4500-03A1	1	F0- 23
23B-22-31621	F4500-03A1	2	F0- 23
23B-22-31630	F4500-03A1	14	F0- 23
23B-22-31640	F4500-03A1	28	F0- 23
23B-22-31651	F4500-03A3	32	F0- 25
23B-22-31661	F4500-03A1	11	F0- 23
23B-22-31670	F4500-03A1	12	F0- 23
23B-22-31680	F4500-03A1	7	F0- 23
23B-22-31690	F4500-03A1	8	F0- 23
23B-22-31700	F4500-03A1	14	F0- 23
23B-22-31710	F4500-03A1	9	F0- 23
23B-22-31721	F4500-03A1	19	F0- 23
23B-22-31730	F4500-03A1	20	F0- 23
23B-22-31740	F4500-03A1	21	F0- 23
23B-22-31751	F4500-03A1	22	F0- 23
23B-22-31761	F4500-03A1	23	F0- 23
23B-22-31770	F4500-03A1	29	F0- 23
23B-22-31780	F4500-03A1	26	F0- 23
23B-22-31790	F4500-03A1	27	F0- 23

PARTS	FIG NO.	INDEX	PAGE
23B-22-31810	F4500-03A1	29	F0- 23
23B-22-31820	F4500-03A1	29	F0- 23
23B-22-31830	F4500-03A1	29	F0- 23
23B-22-31840	F4500-04A1	1	F0- 27
23B-22-31850	F4500-04A1	2	F0- 27
23B-22-31860	F4500-04A1	3	F0- 27
23B-22-31870	F4500-04A1	4	F0- 27
23B-22-31880	F4500-04A1	5	F0- 27
23B-22-31890	F4500-04A1	6	F0- 27
23B-22-31910	F4500-05A1	1	F0- 31
23B-22-31920	F4500-05A1	2	F0- 31
23B-22-31930	F4500-04A1	16	F0- 27
23B-22-31940	F4500-04A1	17	F0- 27
23B-22-31950	F4500-04A1	18	F0- 27
23B-22-31960	F4500-04A1	8	F0- 27
23B-22-31970	F4500-05A1	6	F0- 31
23B-22-31980	F4500-04A1	30	F0- 27
23B-22-32113	F4500-01A1A	2	F0- 17
23B-22-32210	F4500-03A4	33	F0- 25
23B-22-32220	F4500-03A5	33	F0- 25
23B-22-32230	F4500-03A6	33	F0- 25
23B-22-32250	F4500-05A1	3	F0- 31
23B-22-32260	F4500-05A1	3	F0- 31
23B-22-32270	F4500-05A1	3	F0- 31
23B-22-32290	F4500-03A7	33	F0- 25
23B-22-32512	F4500-06A1A	14	F0- 35
23B-22-32541	F4500-06A1A	7	F0- 35
23B-22-32562	F4500-01A1A	10	F0- 17
23B-22-32601	F4500-06A1A	28	F0- 35
23B-22-32601	F4500-51A1	1	F0- 75
23B-22-32610	F4500-51A1	1	F0- 75
23B-22-32620	F4500-51A1	2	F0- 75
23B-22-32630	F4500-51A1	3	F0- 75
23B-22-32640	F4500-51A1	4	F0- 75
23B-22-32650	F4500-51A1	5	F0- 75
23B-22-32660	F4500-51A1	6	F0- 75
23B-23-21170	F4500-10A0	11	F0- 47
23B-23-21170	F4500-10A1	11	F0- 51
23B-23-21170	F4500-11A0	11	F0- 55
23B-23-21170	F4500-11A1	11	F0- 59
23B-23-21180	F4500-10A0	12	F0- 47
23B-23-21180	F4500-10A1	12	F0- 51
23B-23-21180	F4500-11A0	12	F0- 55
23B-23-21180	F4500-11A1	12	F0- 59
23B-25-11350	F4500-10A0	14	F0- 47
23B-25-11350	F4500-10A1	14	F0- 51
23B-25-11350	F4500-11A0	14	F0- 55
23B-25-11350	F4500-11A1	14	F0- 59
23B-25-21210	F4500-10A0	9	F0- 47
23B-25-21210	F4500-10A1	9	F0- 51

PARTS	FIG NO.	INDEX	PAGE
23B-25-21210	F4500-11A0	9	F0- 55
23B-25-21210	F4500-11A1	9	F0- 59
23B-25-31132	F4500-11A0	1	F0- 55
23B-25-31132	F4500-11A1	1	F0- 59
23B-25-31142	F4500-10A0	1	F0- 47
23B-25-31150	F4500-10A0	5	F0- 47
23B-25-31150	F4500-11A0	5	F0- 55
23B-25-31160	F4500-10A0	18	F0- 47
23B-25-31160	F4500-10A1	18	F0- 51
23B-25-31160	F4500-11A0	18	F0- 55
23B-25-31160	F4500-11A1	18	F0- 59
23B-25-31171	F4500-10A0	8	F0- 47
23B-25-31171	F4500-10A1	8	F0- 51
23B-25-31171	F4500-11A0	8	F0- 55
23B-25-31171	F4500-11A1	8	F0- 59
23B-25-31180	F4500-10A0	40	F0- 49
23B-25-31190	F4500-10A0	7	F0- 47
23B-25-31190	F4500-10A1	7	F0- 51
23B-25-31190	F4500-11A0	7	F0- 55
23B-25-31190	F4500-11A1	7	F0- 59
23B-25-31211	F4500-08A0	1	F0- 39
23B-25-31311	F4500-09A0	1	F0- 43
23B-25-31352	F4500-13A0	1	F0- 67
23B-25-31362	F4500-13A0	2	F0- 67
23B-25-31432	F4500-10A1	1	F0- 51
23B-25-31450	F4500-10A1	5	F0- 51
23B-25-31450	F4500-11A1	5	F0- 59
23B-25-31480	F4500-10A1	40	F0- 53
23B-25-31500	F4500-12A1	3	F0- 65
23B-25-31510	F4500-12A1	3	F0- 65
23B-25-31520	F4500-12A1	3	F0- 65
23B-25-31610	F4500-08A1	1	F0- 41
23B-25-31710	F4500-09A1	1	F0- 45
23B-25-31840	F4500-13A0	6	F0- 67
23B-25-31850	F4500-13A0	7	F0- 67
23B-25-33111	F4500-10A0	17	F0- 47
23B-25-33111	F4500-10A1	17	F0- 51
23B-25-33111	F4500-11A0	17	F0- 55
23B-25-33111	F4500-11A1	17	F0- 59
23B-25-33121	F4500-10A0	23	F0- 47
23B-25-33121	F4500-10A1	23	F0- 51
23B-25-33121	F4500-11A0	23	F0- 55
23B-25-33121	F4500-11A1	23	F0- 59
23B-25-33132	F4500-10A0	26	F0- 47
23B-25-33132	F4500-10A1	26	F0- 51
23B-25-33132	F4500-11A0	26	F0- 55
23B-25-33132	F4500-11A1	26	F0- 59
23B-25-33150	F4500-10A0	25	F0- 47
23B-25-33150	F4500-10A1	25	F0- 51
23B-25-33150	F4500-11A0	25	F0- 55

PARTS	FIG NO.	INDEX	PAGE
23B-25-33150	F4500-11A1	25	F0- 59
23B-25-33210	F4500-10A0	33	F0- 47
23B-25-33210	F4500-10A1	33	F0- 51
23B-25-33210	F4500-11A0	33	F0- 55
23B-25-33210	F4500-11A1	33	F0- 59
23B-25-33220	F4500-10A0	31	F0- 47
23B-25-33220	F4500-10A1	31	F0- 51
23B-25-33220	F4500-11A0	31	F0- 55
23B-25-33220	F4500-11A1	31	F0- 59
23B-25-33610	F4500-10A0	28	F0- 47
23B-25-33610	F4500-10A1	28	F0- 51
23B-25-33610	F4500-11A0	28	F0- 55
23B-25-33610	F4500-11A1	28	F0- 59
23B-25-41110	F4500-14A0A	4	F0- 69
23B-25-41120	F4500-14A0A	7	F0- 69
23B-25-41130	F4500-14A0A	10	F0- 69
23B-25-41140	F4500-14A0A	13	F0- 69
23B-27-11360	F4400-01A0	9	F0- 7
23B-27-11360	F4400-01A0	9	F0- 7
23B-27-11360	F4400-03A0	9D	F0- 13
23B-27-11441	F4400-03A0	1	F0- 13
23B-27-11450	F4400-03A0	4	F0- 13
23B-27-11460	F4400-03A0	3	F0- 13
23B-27-11553	F4400-03A0	9	F0- 13
23B-27-11564	F4400-01A0	4	F0- 7
23B-27-11660	F4400-01A0	32	F0- 9
23B-27-11680	F4400-01A0	11	F0- 7
23B-27-11680	F4400-01A0	41	F0- 9
23B-27-11800	F4400-01A0	7	F0- 7
23B-27-11800	F4400-03A0	6	F0- 13
23B-27-11910	F4400-03A0	8	F0- 13
23B-27-11920	F4400-03A0	8	F0- 13
23B-27-31410	F4400-03A0	2	F0- 13
23B-27-31480	F4400-01A0	13	F0- 7
23B-27-31540	F4400-01A0	10	F0- 7
23B-27-31550	F4400-01A0	4B	F0- 7
23B-27-31550	F4400-03A0	9B	F0- 13
23B-27-31570	F4400-01A0	8	F0- 7
23B-27-31570	F4400-03A0	7	F0- 13
23B-27-31580	F4400-01A0	4	F0- 7
23B-27-31590	F4400-03A0	9	F0- 13
23B-27-31690	F4400-03A0		F0- 13
23B-27-31840	F4400-01A0	3	F0- 7
23B-27-31840	F4400-03A0	8	F0- 13
23B-30-31400	S0100-01C2	1	S0- 3
23B-30-31400	S0100-01C2	1	S0- 3
23B-30-31400	S0500-01C1	1	S0- 9
23B-30-31420	S0100-01C2	1	S0- 3
23B-30-31420	S0100-01C2	1	S0- 3
23B-30-31420	S0100-01C2	1	S0- 3

PARTS	FIG NO.	INDEX	PAGE
23B-30-31420	S0500-01C1	1	S0- 9
23B-30-31500	S0100-01C2	1	S0- 3
23B-30-31500	S0100-01C2	1	S0- 5
23B-30-32100	S0100-01D0	1	S0- 7
23B-30-32100	S0100-01D0	1	S0- 7
23B-30-32100	S0500-01D0	1	S0- 11
23B-30-32110	S0100-01D0	2	S0- 7
23B-30-32110	S0100-01D0	2	S0- 7
23B-30-32110	S0500-01D0	2	S0- 11
23B-30-32120	S0100-01D0	1	S0- 7
23B-30-32120	S0100-01D0	1	S0- 7
23B-30-32120	S0500-01D0	1	S0- 11
23B-32-31301	F4500-15A0	1	F0- 71
23B-32-31301	F4500-16A0	1	F0- 73
23B-32-31311	F4500-15A0	2	F0- 71
23B-32-31321	F4500-15A0	5	F0- 71
23B-32-31340	F4500-16A0	2	F0- 73
23B-32-31351	F4500-16A0	3	F0- 73
23B-32-31370	F4500-16A0	5	F0- 73
23B-32-31380	F4500-16A0	6	F0- 73
23B-32-31510	F4500-16A0	11	F0- 73
23B-32-31520	F4500-16A0	12	F0- 73
23B-32-31530	F4500-16A0	13	F0- 73
23B-32-31550	F4500-16A0	15	F0- 73
23B-32-31560	F4500-16A0	16	F0- 73
23B-32-31570	F4500-16A0	17	F0- 73
23B-32-31580	F4500-16A0	18	F0- 73
23B-32-31590	F4500-16A0	19	F0- 73
23B-32-31610	F4500-16A0	20	F0- 73
23B-32-31620	F4500-16A0	21	F0- 73
23B-32-31630	F4500-16A0	22	F0- 73
23B-32-31640	F4500-16A0	23	F0- 73
23B-32-31650	F4500-16A0	24	F0- 73
23B-32-31660	F4500-16A0	25	F0- 73
23B-32-31670	F4500-16A0	32	F0- 73
23B-40-05110	H4410-51A0A	28	H0- 21
23B-40-05120	H4410-51A0A	27	H0- 21
23B-40-41102	K1110-16B0	15	K0- 147
23B-40-41102	Y1689-01A0	1	Y0- 91
23B-40-42100	H4410-01A0A	1	H0- 19
23B-40-42110	H4410-01A0A	14	H0- 19
23B-40-43130	H4410-01A0A	24	H0- 19
23B-40-43170	K1110-17B0	10	K0- 149
23B-40-43180	K1110-17B0	11	K0- 149
23B-40-43210	H4410-01A0A	31	H0- 19
23B-40-44101	H4410-01A0A	7	H0- 19
23B-40-44101	H4410-51A0A	1	H0- 21
23B-40-44110	H4410-51A0A	2	H0- 21
23B-40-44120	H4410-51A0A	3	H0- 21

PARTS	FIG NO.	INDEX	PAGE
23B-40-44130	H4410-51A0A	4	H0- 21
23B-40-44140	H4410-51A0A	5	H0- 21
23B-40-44150	H4410-51A0A	6	H0- 21
23B-40-44160	H4410-51A0A	7	H0- 21
23B-40-44170	H4410-51A0A	8	H0- 21
23B-40-44180	H4410-51A0A	9	H0- 21
23B-40-44190	H4410-51A0A	11	H0- 21
23B-40-44210	H4410-51A0A	12	H0- 21
23B-40-44220	H4410-51A0A	13	H0- 21
23B-40-44230	H4410-51A0A	14	H0- 21
23B-40-44240	H4410-51A0A	15	H0- 21
23B-40-44280	H4410-51A0A	19	H0- 21
23B-40-44290	H4410-51A0A	20	H0- 21
23B-40-44330	H4410-51A0A	23	H0- 21
23B-40-44340	H4410-51A0A	24	H0- 21
23B-40-44360	H4410-51A0A	26	H0- 21
23B-40-44380	H4410-51A0A	27	H0- 21
23B-40-44390	H4410-51A0A	28	H0- 21
23B-40-44420	H4410-51A0A	17	H0- 21
23B-40-44430	H4410-51A0A	18	H0- 21
23B-40-44440	H4410-51A0A	21	H0- 21
23B-40-44450	H4410-51A0A	25	H0- 21
23B-40-44460	H4410-51A0A	1	H0- 21
23B-40-44470	H4410-51A0A	29	H0- 21
23B-40-44480	H4410-51A0A	30	H0- 21
23B-40-44490	H4410-51A0A	31	H0- 21
23B-40-44510	H4410-51A0A	16	H0- 21
23B-43-31102	K1110-03B0	1	K0- 117
23B-43-31102	K1110-03B1	1	K0- 119
23B-43-31113	K1110-03B0	7	K0- 117
23B-43-31113	K1110-03B1	7	K0- 119
23B-43-31180	K1110-03B0	10	K0- 117
23B-43-31180	K1110-03B1	10	K0- 119
23B-43-31220	K1110-03B0	20	K0- 117
23B-43-31220	K1110-03B1	19	K0- 119
23B-43-31283	K1110-10B0	9	K0- 141
23B-43-31380	K1110-10B0	20	K0- 141
23B-43-31410	K1110-10B0	21	K0- 141
23B-43-31451	K1110-10B0	23	K0- 141
23B-43-31480	K1110-10B0	24	K0- 141
23B-43-31491	K1110-03B0	23	K0- 117
23B-43-31491	K1110-03B1	22	K0- 119
23B-43-31590	K1110-26B0	2	K0- 171
23B-43-31613	K1110-10B0	12	K0- 141
23B-43-32101	K1110-15B0	1	K0- 145
23B-43-32200	K1110-05B0	39	K0- 125
23B-43-32312	K4470-01A0	1	K0- 177
23B-43-32321	K4470-02A0A	6	K0- 179
23B-43-32443	F4500-13A0	10	F0- 67
23B-43-32481	F4500-13A0	13	F0- 67

PARTS	FIG NO.	INDEX	PAGE
23B-43-32711	K4470-05A0A	1	K0- 185
23B-43-33321	K1110-02B0	6	K0- 113
23B-43-33321	K1110-02B1	6	K0- 115
23B-43-33332	K1110-02B0	8	K0- 113
23B-43-33332	K1110-02B0	10	K0- 113
23B-43-33332	K1110-02B1	8	K0- 115
23B-43-33332	K1110-02B1	10	K0- 115
23B-43-33343	K1110-02B0	11	K0- 113
23B-43-33343	K1110-02B1	11	K0- 115
23B-43-33410	K1110-07B0	4	K0- 131
23B-43-33410	K1110-07B1	4	K0- 133
23B-43-33662	K1110-02B0	9	K0- 113
23B-43-33662	K1110-02B1	9	K0- 115
23B-43-34387	K1110-09B0	1	K0- 139
23B-43-34574	K1110-09B0	8	K0- 139
23B-43-34615	K1110-09B0	11	K0- 139
23B-43-34640	K1110-09B0	2	K0- 139
23B-43-35110	T5115-01A0	23	T0- 5
23B-43-35150	T5115-01A0	27	T0- 5
23B-43-35160	T5115-01A0	32	T0- 5
23B-43-35170	T5115-01A0	36	T0- 7
23B-43-35180	T5115-01A0	28	T0- 5
23B-43-35190	T5115-01A0	29	T0- 5
23B-43-35212	K1110-09B0	5	K0- 139
23B-43-35270	T5115-01A0	24	T0- 5
23B-43-35320	K1110-05B0	31	K0- 123
23B-43-35330	K1110-05B0	36	K0- 125
23B-43-35360	K1110-05B0	1	K0- 123
23B-43-35393	K1110-04B0	1	K0- 121
23B-43-35412	K1110-05B0	32	K0- 123
23B-43-35420	K1110-05B0	33	K0- 123
23B-43-35430	K1110-05B0	37	K0- 125
23B-43-35451	K1110-06B0	5	K0- 127
23B-43-35451	K1110-06B1	5	K0- 129
23B-43-35462	K1110-06B0	6	K0- 127
23B-43-35462	K1110-06B1	6	K0- 129
23B-43-35471	K1110-06B0	7	K0- 127
23B-43-35471	K1110-06B1	7	K0- 129
23B-43-35482	K1110-06B0	8	K0- 127
23B-43-35482	K1110-06B1	8	K0- 129
23B-43-35491	K1110-06B0	9	K0- 127
23B-43-35491	K1110-06B1	9	K0- 129
23B-43-35513	K1110-07B0	5	K0- 131
23B-43-35513	K1110-07B1	5	K0- 133
23B-43-35525	K1110-07B0	7	K0- 131
23B-43-35525	K1110-07B1	7	K0- 133
23B-43-35535	K1110-07B0	8	K0- 131
23B-43-35535	K1110-07B1	8	K0- 133
23B-43-35545	K1110-07B0	9	K0- 131
23B-43-35545	K1110-07B1	9	K0- 133

PARTS	FIG NO.	INDEX	PAGE
23B-43-35555	K1110-07B0	10	K0- 131
23B-43-35555	K1110-07B1	10	K0- 133
23B-43-35641	K1110-07B0	21	K0- 131
23B-43-35641	K1110-07B1	19	K0- 133
23B-43-35650	K1110-02B0	5	K0- 113
23B-43-35650	K1110-02B1	5	K0- 115
23B-43-35660	K1110-05B0	29	K0- 123
23B-43-35672	K1110-02B0	1	K0- 113
23B-43-35672	K1110-02B1	1	K0- 115
23B-43-35682	K1110-02B0	2	K0- 113
23B-43-35682	K1110-02B1	2	K0- 115
23B-43-35810	K1110-05B0	43	K0- 125
23B-43-35810	K1110-06B0	12	K0- 127
23B-43-35810	K1110-06B1	12	K0- 129
23B-43-35820	K1110-05B0	40	K0- 125
23B-43-35881	K1110-07B0	19	K0- 131
23B-43-35881	K1110-07B1	20	K0- 133
23B-43-36210	K1110-05B0	8	K0- 123
23B-43-36220	K1110-05B0	21	K0- 123
23B-43-36230	K1110-05B0	7	K0- 123
23B-43-36240	K1110-05B0	5	K0- 123
23B-43-36250	K1110-05B0	6	K0- 123
23B-43-36270	K1110-05B0	44	K0- 125
23B-43-36341	K1110-05B0	4	K0- 123
23B-43-36410	K1110-08B0	18	K0- 135
23B-43-42110	K4470-03A0A	11	K0- 181
23B-43-42121	K4470-03A0A	14	K0- 181
23B-43-42130	K4470-03A0A	19	K0- 181
23B-43-42140	K4470-04A0A	11	K0- 183
23B-43-42150	K4470-03A0A	21	K0- 181
23B-43-42160	K4470-04A0A	13	K0- 183
23B-43-42170	K4470-04A0A	3	K0- 183
23B-43-42180	K4470-04A0A	7	K0- 183
23B-43-42190	K4470-04A0A	4	K0- 183
23B-43-42210	K4470-04A0A	9	K0- 183
23B-43-42511	H5200-08A0A	26	H0- 73
23B-45-31802	K1110-09B0	16	K0- 139
23B-45-32102	K1110-03B0	4	K0- 117
23B-45-32102	K1110-03B1	4	K0- 119
23B-46-11220	F4400-03A0	11	F0- 13
23B-46-31361	J4110-01A0	2	J0- 3
23B-46-31381	J4120-01A0A	2	J0- 5
23B-46-31423	J4110-01A0	5	J0- 3
23B-46-31540	J4710-01A0A	1	J0- 11
23B-46-31551	J4710-01A0A	2	J0- 11
23B-46-31570	J4710-01A0A	3	J0- 11
23B-46-31810	F4400-03A0	14	F0- 13
23B-46-32510	J4710-01A0A	9	J0- 11
23B-46-33110	J4130-01A0	12	J0- 7
23B-46-33120	J4130-01A0	13	J0- 7

PARTS	FIG NO.	INDEX	PAGE
23B-46-33130	J4130-01A0	13	J0- 7
23B-46-33140	J4130-01A0	19	J0- 7
23B-46-33150	J4130-01A0	18	J0- 7
23B-46-33160	J4130-01A0	13	J0- 7
23B-53-31350	U0100-01A0	50	U0- 5
23B-53-31450	U0100-01A0	56	U0- 5
23B-53-31513	U0100-01A0	36	U0- 3
23B-53-31670	U0100-01A0	35	U0- 3
23B-53-31690	U0100-01A0	57	U0- 5
23B-53-31740	U0100-01A0	58	U0- 5
23B-53-32210	U0100-01A0	60	U0- 5
23B-53-32240	U0100-01A0	61	U0- 5
23B-54-31421	K1110-11B0	19	K0- 143
23B-54-31523	M4230-01A0A	14	M0- 13
23B-54-31523	M4230-01A1	14	M0- 15
23B-54-31534	M4230-01A0A	15	M0- 13
23B-54-31534	M4230-01A1	15	M0- 15
23B-54-31573	M4230-01A0A	18	M0- 13
23B-54-31573	M4230-01A1	18	M0- 15
23B-54-31583	M4230-01A0A	19	M0- 13
23B-54-31583	M4230-01A1	19	M0- 15
23B-54-31653	M4230-01A0A	1	M0- 13
23B-54-31653	M4230-01A1	1	M0- 15
23B-54-31763	C0110-01A0A	27	C0- 7
23B-54-31781	M4100-04A0A	6	M0- 11
23B-54-31891	M4100-02A0A	1	M0- 5
23B-54-31891	M4100-02A0A	2	M0- 5
23B-54-31951	M4100-01A0A	5	M0- 3
23B-54-31960	M4100-03A0A	14	M0- 9
23B-54-31990	M4230-01A0A	3	M0- 13
23B-54-31990	M4230-01A1	3	M0- 15
23B-54-32118	K1110-01B0	1	K0- 111
23B-54-32130	M4230-02A0	1	M0- 17
23B-54-32140	M4230-02A0	3	M0- 17
23B-54-32151	M4230-02A0	4	M0- 17
23B-54-32160	M4230-02A0	6	M0- 17
23B-54-32203	M4310-01A0	3	M0- 23
23B-54-32203	M4310-01A0	3	M0- 23
23B-54-32215	M4310-01A0	1	M0- 23
23B-54-32225	M4310-01A0	2	M0- 23
23B-54-32232	M4310-01A0	4	M0- 23
23B-54-32241	M4310-01A0	3	M0- 23
23B-54-32241	M4310-01A0	3	M0- 23
23B-54-32261	M4310-01A0	18	M0- 23
23B-54-32315	K0310-01A0	1	K0- 95
23B-54-32511	K1110-01B0	2	K0- 111
23B-54-32522	H5120-01A1A	21	H0- 29
23B-54-32532	H5120-01A1A	22	H0- 29
23B-54-32540	H5120-01A1A	20	H0- 29
23B-54-32552	H5120-01A0A	17	H0- 27

PARTS	FIG NO.	INDEX	PAGE
23B-54-32562	H5120-01A0A	18	H0- 27
23B-54-32810	K1110-11B0	18	K0- 143
23B-54-33114	K1110-11B0	1	K0- 143
23B-54-33183	K1110-11B0	4	K0- 143
23B-54-33273	K1110-11B0	7	K0- 143
23B-54-33323	K1110-11B0	10	K0- 143
23B-54-33410	K1110-08B0	1	K0- 135
23B-54-33420	K1110-08B0	4	K0- 135
23B-54-33430	K1110-08B0	7	K0- 135
23B-54-33441	K1110-08B0	10	K0- 135
23B-54-33452	K1110-08B0	13	K0- 135
23B-54-33452	K1110-08B1	1	K0- 137
23B-54-33660	M4230-01A0A	2	M0- 13
23B-54-33660	M4230-01A1	2	M0- 15
23B-54-33680	M4230-01A0A	8	M0- 13
23B-54-33680	M4230-01A1	8	M0- 15
23B-54-33690	M4230-01A0A	9	M0- 13
23B-54-33690	M4230-01A1	9	M0- 15
23B-54-34162	M4100-03A0A	1	M0- 9
23B-54-34173	M4100-03A0A	2	M0- 9
23B-54-34245	M4100-02A0A	1	M0- 5
23B-54-34245	M4100-02A1A	1	M0- 7
23B-54-34254	M4100-02A0A	2	M0- 5
23B-54-34254	M4100-02A1A	2	M0- 7
23B-54-34381	M4100-02A0A	6	M0- 5
23B-54-34381	M4100-02A1A	6	M0- 7
23B-54-34390	M4100-02A0A	7	M0- 5
23B-54-34390	M4100-02A1A	7	M0- 7
23B-54-34430	M4100-02A0A	15	M0- 5
23B-54-34480	M4100-03A0A	11	M0- 9
23B-54-34520	M4100-01A0A	19	M0- 3
23B-54-34540	M4100-01A0A	1	M0- 3
23B-54-35111	M4100-01A0A	9	M0- 3
23B-54-35171	K1110-11B0	12	K0- 143
23B-54-35181	K1110-11B0	13	K0- 143
23B-54-36130	M4100-01A0A	17	M0- 3
23B-54-36140	M4100-01A0A	2	M0- 3
23B-54-36151	M4100-01A0A	1	M0- 3
23B-54-36181	M4100-03A0A	5	M0- 9
23B-54-36191	M4100-03A0A	6	M0- 9
23B-54-36730	M4100-04A0A	1	M0- 11
23B-54-36740	M4100-04A0A	2	M0- 11
23B-54-36770	M4100-04A0A	5	M0- 11
23B-54-41750	C0110-01A0A	26	C0- 7
23B-57-31111	K0110-01A0	15	K0- 3
23B-57-31112	K0110-01A0	15	K0- 3
23B-57-31113	K0110-01A0	15	K0- 3
23B-57-31143	K0110-01A1	2	K0- 5
23B-57-31201	K0110-01A0	1	K0- 3
23B-57-31210	K0110-01A0	1	K0- 3

PARTS	FIG NO.	INDEX	PAGE
23B-57-31220	K0110-01A1	6	K0- 5
23B-57-31301	K0110-01A1	1	K0- 5
23B-60-32111	H0110-01A0A	19	H0- 3
23B-60-32121	H0110-01A0A	24	H0- 3
23B-60-32312	H5200-01A0	1	H0- 53
23B-60-32342	H5200-01A0	3	H0- 53
23B-60-32350	H0110-01A0A	41	H0- 5
23B-60-32451	H5200-03A0A	17	H0- 59
23B-60-32770	J4110-01A0	6	J0- 3
23B-60-32780	J4110-01A0	7	J0- 3
23B-60-32970	H5200-03A0A	1	H0- 59
23B-60-33111	H5200-02A0A	1	H0- 55
23B-60-33134	H5200-06A0A	1	H0- 67
23B-60-33240	F4700-01A0A	24	F0- 77
23B-60-33240	F4700-01A0A	31	F0- 77
23B-60-33240	F4700-01A0A	38	F0- 79
23B-60-33240	F4700-01A1A	24	F0- 81
23B-60-33240	F4700-01A1A	31	F0- 81
23B-60-33240	F4700-01A1A	38	F0- 83
23B-60-33240	H5200-02A0A	3	H0- 55
23B-60-33240	H5200-02A0A	28	H0- 55
23B-60-33240	H5200-03A0A	7	H0- 59
23B-60-33240	H5200-03A0A	22	H0- 59
23B-60-33240	H5200-03A0A	40	H0- 61
23B-60-33240	H6290-01A0A	7	H0- 109
23B-60-33542	H5200-02A0A	4	H0- 55
23B-60-33590	H5200-02A0A	23	H0- 55
23B-60-34351	Y1620-01A0A	23	Y0- 25
23B-60-34371	Y1620-01A0A	23	Y0- 25
23B-60-34451	H5120-02A0A	5	H0- 31
23B-60-34513	H5210-03B0	1	H0- 89
23B-60-34521	H5210-03B0	4	H0- 89
23B-60-34530	H5210-03B0	7	H0- 89
23B-60-34970	H5210-01B0	14	H0- 85
23B-60-35211	H5200-07A0A	13	H0- 71
23B-60-35272	H5200-02A0A	15	H0- 55
23B-60-35350	H5210-03B0	31	H0- 89
23B-60-35360	H5210-05B0	13	H0- 93
23B-60-35361	H5200-09A0	30	H0- 75
23B-60-35410	H5200-09A0	4	H0- 75
23B-60-35420	H5200-09A0	3	H0- 75
23B-60-35430	H5200-09A0	1	H0- 75
23B-60-35442	H5200-09A0	6	H0- 75
23B-60-35451	H5200-09A0	8	H0- 75
23B-60-35463	H5200-09A0	9	H0- 75
23B-60-35472	H5200-09A0	11	H0- 75
23B-60-35482	H5200-09A0	13	H0- 75
23B-60-35492	H5200-09A0	14	H0- 75
23B-60-35510	H5200-09A0	16	H0- 75
23B-60-35520	H5200-09A0	18	H0- 75

PARTS	FIG NO.	INDEX	PAGE
23B-60-35530	H5200-09A0	22	H0- 75
23B-60-35541	H5200-09A0	20	H0- 75
23B-60-35551	H5200-09A0	24	H0- 75
23B-60-35590	H5200-09A0	26	H0- 75
23B-60-35610	H5200-09A0	28	H0- 75
23B-60-35620	H5200-09A0	32	H0- 75
23B-60-35641	H5200-09A0	34	H0- 75
23B-60-35841	J4110-01A0	8	J0- 3
23B-60-41150	K1110-17B0	1	K0- 149
23B-60-41170	H5120-01A0A	21	H0- 27
23B-60-41170	H5120-01A1A	25	H0- 29
23B-60-41170	H5215-01A0A	11	H0- 105
23B-60-41190	H4410-01A0A	25	H0- 19
23B-60-41210	K1110-17B0	5	K0- 149
23B-60-41220	H5200-12A1A	1	H0- 81
23B-60-41220	H5215-01A0A	16	H0- 105
23B-60-41240	H5210-02B0	7	H0- 87
23B-60-41240	H5211-01A0A	1	H0- 101
23B-60-41250	H5200-04A0A	10	H0- 63
23B-60-41260	N1220-01A0A	10	N0- 3
23B-60-41270	K1110-25B0	5	K0- 169
23B-60-41310	H5200-03A0A	33	H0- 59
23B-60-41330	H5200-08A0A	12	H0- 73
23B-60-41350	H5200-06A0A	27	H0- 67
23B-60-41360	H5200-06A0A	15	H0- 67
23B-60-41380	F4500-06A1A	32	F0- 35
23B-60-42210	H5200-03A0A	8	H0- 59
23B-60-42230	H5200-03A0A	41	H0- 61
23B-60-42250	H5200-03A0A	35	H0- 59
23B-60-42270	H5200-03A0A	19	H0- 59
23B-60-42280	H0110-02A0A	4	H0- 7
23B-60-42290	H5200-05A0A	7	H0- 65
23B-60-42310	H5200-04A0A	4	H0- 63
23B-60-42320	H5200-04A0A	8	H0- 63
23B-60-42330	H5200-06A0A	11	H0- 67
23B-60-42410	H5210-01B0	10	H0- 85
23B-60-42420	H5210-01B0	9	H0- 85
23B-60-42700	H5120-02A0A	1	H0- 31
23B-60-42700	H5120-08A0	1	H0- 51
23B-60-42710	H5120-08A0	2	H0- 51
23B-60-43120	H5200-04A0A	30	H0- 63
23B-60-43130	H5200-04A0A	13	H0- 63
23B-60-43140	K4470-02A0A	1	K0- 179
23B-60-43150	K4470-02A0A	2	K0- 179
23B-60-43161	H5200-10A0A	1	H0- 77
23B-60-43170	H5200-12A1A	5	H0- 81
23B-60-43180	H5200-12A1A	6	H0- 81
23B-60-43190	H5200-03A0A	14	H0- 59
23B-60-43210	H5200-05A0A	14	H0- 65
23B-60-43221	K4470-03A0A	5	K0- 181

PARTS	FIG NO.	INDEX	PAGE
23B-60-43231	K4470-03A0A	4	K0- 181
23B-60-43241	K4470-03A0A	6	K0- 181
23B-60-43250	K4470-02A0A	11	K0- 179
23B-60-43260	K4470-02A0A	12	K0- 179
23B-60-43270	H5200-04A0A	26	H0- 63
23B-60-43280	H5200-04A0A	20	H0- 63
23B-60-43290	K4470-03A0A	18	K0- 181
23B-60-43340	H5200-04A0A	3	H0- 63
23B-60-43350	H5200-04A0A	1	H0- 63
23B-60-43361	H5200-04A0A	2	H0- 63
23B-60-43390	H5210-07B0	2	H0- 97
23B-60-43430	H5210-07B0	1	H0- 97
23B-60-43460	H5210-04B0	6	H0- 91
23B-60-43470	H5210-04B0	5	H0- 91
23B-60-43520	K1110-17B0	14	K0- 149
23B-60-43530	H5210-01B0	2	H0- 85
23B-61-31300	H5215-01A0A	19	H0- 105
23B-61-31300	H5215-02A0	1	H0- 107
23B-61-31400	H5211-01A0A	20	H0- 101
23B-61-31400	H5211-02A0	1	H0- 103
23B-61-31510	H5120-07A0	1	H0- 43
23B-61-31801	H5120-01A1A	16	H0- 29
23B-61-31801	H5120-07A1	1	H0- 47
23B-61-31810	H5120-07A1	1	H0- 47
23B-61-31901	H5120-01A1A	12	H0- 29
23B-61-31901	H5120-06A1	1	H0- 41
23B-61-31910	H5120-06A1	1	H0- 41
23B-61-32210	H5120-06A1	23	H0- 41
23B-61-32210	H5120-07A4	36	H0- 49
23B-61-41110	H5200-05A0A	31	H0- 65
23B-61-42100	H5110-01A0	4	H0- 25
23B-61-42130	H4410-51A0A	28	H0- 21
23B-61-42150	H4410-51A0A	28	H0- 21
23B-61-43100	H5120-01A0A	14	H0- 27
23B-61-43100	H5120-06A0	1	H0- 39
23B-61-43200	H5120-01A0A	11	H0- 27
23B-61-43200	H5120-07A0	1	H0- 43
23B-62-31100	T5130-12A1	30	T0- 35
23B-63-18121	Y1620-31A0A	12	Y0- 31
23B-70-16240	T5130-12A1	29	T0- 35
23B-70-31140	T5110-01A0A	9	T0- 3
23B-70-31161	T5120-01A0	1	T0- 9
23B-70-31161	T5120-01A1	1	T0- 11
23B-70-31161	T5120-01A2	1	T0- 13
23B-70-31161	T5120-01A3	1	T0- 15
23B-70-31170	T5120-01B0	1	T0- 17
23B-70-31170	T5120-01B1	1	T0- 19
23B-70-31170	T5120-01B2	1	T0- 21
23B-70-31170	T5120-01B3	1	T0- 23
23B-70-31220	T5120-01A0	1	T0- 9

PARTS	FIG NO.	INDEX	PAGE
23B-70-31220	T5120-01A1	1	T0- 11
23B-70-31220	T5120-01A2	1	T0- 13
23B-70-31220	T5120-01A3	1	T0- 15
23B-70-31220	T5120-01B1	1	T0- 19
23B-70-31220	T5120-01B2	1	T0- 21
23B-70-31220	T5120-01B3	1	T0- 23
23B-70-31230	T5120-01A0	1	T0- 9
23B-70-31230	T5120-01A1	1	T0- 11
23B-70-31230	T5120-01A2	1	T0- 13
23B-70-31230	T5120-01A3	1	T0- 15
23B-70-31230	T5120-01B1	1	T0- 19
23B-70-31230	T5120-01B2	1	T0- 21
23B-70-31230	T5120-01B3	1	T0- 23
23B-70-31260	T5120-01A0	2	T0- 9
23B-70-31260	T5120-01A1	2	T0- 11
23B-70-31260	T5120-01A2	2	T0- 13
23B-70-31260	T5120-01A3	2	T0- 15
23B-70-31260	T5120-01B0	2	T0- 17
23B-70-31260	T5120-01B1	2	T0- 19
23B-70-31260	T5120-01B2	2	T0- 21
23B-70-31260	T5120-01B3	2	T0- 23
23B-70-31310	T5120-01A0	10	T0- 9
23B-70-31310	T5120-01A1	10	T0- 11
23B-70-31331	T5123-01A9	45	T0- 27
23B-70-31340	T5120-01A1	11	T0- 11
23B-70-31340	T5120-01B1	11	T0- 19
23B-70-31350	T5115-01A0	1	T0- 5
23B-70-31360	T5115-01A0	2	T0- 5
23B-70-31451	T5123-01A10	46	T0- 27
23B-70-31460	T5120-01B0	10	T0- 17
23B-70-31460	T5120-01B1	10	T0- 19
23B-70-31470	T5120-01A2	10	T0- 13
23B-70-31470	T5120-01A3	10	T0- 15
23B-70-31480	T5120-01B2	10	T0- 21
23B-70-31480	T5120-01B3	10	T0- 23
23B-70-31490	T5120-01A3	11	T0- 15
23B-70-31490	T5120-01B3	11	T0- 23
23B-70-31523	T5110-01A0A	3	T0- 3
23B-70-31540	T5110-01A0A	4	T0- 3
23B-70-31610	T5110-01A0A	16	T0- 3
23B-70-31620	T5110-01A0A	16	T0- 3
23B-70-31630	T5110-01A0A	15	T0- 3
23B-70-31640	T5123-01A0	6	T0- 25
23B-70-31640	T5123-01A0	28	T0- 25
23B-70-31660	T5120-01A0	9	T0- 9
23B-70-31660	T5120-01A1	9	T0- 11
23B-70-31660	T5120-01A2	9	T0- 13
23B-70-31660	T5120-01A3	9	T0- 15
23B-70-31660	T5120-01B0	9	T0- 17
23B-70-31660	T5120-01B1	9	T0- 19

PARTS	FIG NO.	INDEX	PAGE
23B-70-31660	T5120-01B2	9	T0- 21
23B-70-31660	T5120-01B3	9	T0- 23
23B-70-31730	T5123-01A0	23	T0- 25
23B-70-31790	T5115-01A0	3	T0- 5
23B-70-31G80	T5120-01B0	1	T0- 17
23B-70-31G90	T5120-01B0	1	T0- 17
23B-70-51550	T5110-01A0A	13	T0- 3
23B-70-51560	T5110-01A0A	14	T0- 3
23B-70-52110	T5130-12A1	1	T0- 35
23B-70-52121	T5130-12A1	15	T0- 35
23B-70-52130	T5130-11A1	1	T0- 33
23B-70-52140	T5130-11A1	4	T0- 33
23B-70-52180	T5130-11A1	7	T0- 33
23B-70-52190	T5130-12A1	8	T0- 35
23B-70-52210	T5130-11A1	13	T0- 33
23B-70-52220	T5130-12A1	9	T0- 35
23B-70-52230	T5130-11A1	15	T0- 33
23B-70-52240	T5130-11A1	14	T0- 33
23B-70-52250	T5130-12A1	22	T0- 35
23B-70-52282	T5130-11A1	6	T0- 33
23B-70-52290	T5130-12A1	7	T0- 35
23B-70-52311	T5130-11A1	5	T0- 33
23B-70-52320	T5130-12A1	19	T0- 35
23B-70-52470	T5130-12A1	21	T0- 35
23B-71-31113	T5170-01A0	27	T0- 53
23B-71-31131	T5170-01A0	22	T0- 53
23B-71-31190	T5170-01A0	16	T0- 53
23B-735-1240	T5123-01A0	20	T0- 25
23B-735-3151	T5123-01A0	1	T0- 25
23B-735-3210	T5123-01A5	41	T0- 27
23B-735-3221	T5123-01A6	42	T0- 27
23B-735-3240	T5123-01A0	31	T0- 25
23B-735-3250	T5123-01A0	3	T0- 25
23B-735-3283	T5123-01A3	39	T0- 27
23B-735-3293	T5123-01A4	40	T0- 27
23B-735-3320	T5123-01A11	47	T0- 27
23B-735-3350	T5123-01A12	48	T0- 27
23B-735-3360	T5123-01A0	16	T0- 25
23B-735-5132	T5123-01A0	21	T0- 25
23B-735-5142	T5123-01A0	22	T0- 25
23B-735-5160	T5123-01A0	2	T0- 25
23B-785-3141	T5125-01A0	24	T0- 29
23B-807-3510	K1110-08B0	16	K0- 135
23B-809-3200	K0210-17A0	1	K0- 87
23B-809-7340	K0713-01A0A	2	K0- 109
23B-809-7340	K0713-01A0A	17	K0- 109
23B-809-7340	K0713-01A0A	29	K0- 109
23B-809-7350	K0713-01A0A	31	K0- 109
23B-809-7362	K0710-02A0A	3	K0- 107
23B-809-7371	K0713-01A0A	33	K0- 109

PARTS	FIG NO.	INDEX	PAGE
23B-809-7383	K1110-24B1	1	K0- 167
23B-809-7454	K1110-24B1	10	K0- 167
23B-809-7651	K1110-24B1	4	K0- 167
23B-809-7742	K0710-01A0A	2	K0- 103
23B-809-7783	K0710-02A0A	12	K0- 107
23B-809-7793	K0710-02A0A	13	K0- 107
23B-809-7811	K0710-02A0A	2	K0- 107
23B-809-7822	K0710-02A0A	1	K0- 107
23B-809-7832	K0210-11A0	1	K0- 71
23B-809-7890	K0210-11B0	1	K0- 73
23B-809-8220	K1110-24B1	1	K0- 167
23B-809-8240	K1110-24B1	1	K0- 167
23B-809-8321	K1110-24B1	7	K0- 167
23B-809-8622	K1110-24B1	15	K0- 167
23B-809-8632	K1110-24B1	14	K0- 167
23B-809-8670	K0210-16A0	26	K0- 85
23B-809-8680	K0210-16A0	27	K0- 85
23B-809-8730	K0713-01A0A	34	K0- 109
23B-809-8740	K0710-02A0A	4	K0- 107
23B-809-8772	K1110-23B1	5	K0- 165
23B-809-8831	K0210-16A0	1	K0- 85
23B-809-8841	K0210-16A0	2	K0- 85
23B-809-8871	K0210-16A0	6	K0- 85
23B-809-8881	K0210-16A0	7	K0- 85
23B-809-8891	K0210-16A0	10	K0- 85
23B-809-8911	K0210-16A0	19	K0- 85
23B-809-8921	K0210-16A0	12	K0- 85
23B-809-8930	K0210-16A0	25	K0- 85
23B-809-8970	K1110-23B1	2	K0- 165
23B-809-8980	K0210-16A0	11	K0- 85
23B-809-8990	K0210-16A0	13	K0- 85
23B-809-9110	K0710-01A0A	9	K0- 103
23B-809-9120	K0710-01A0A	10	K0- 103
23B-809-9132	K1110-24B1	18	K0- 167
23B-809-9150	K1110-24B1	11	K0- 167
23B-809-9160	K0710-02A0A	20	K0- 107
23B-809-9170	K0710-02A0A	19	K0- 107
23B-809-9180	K0710-02A0A	18	K0- 107
23B-809-9190	K0710-02A0A	17	K0- 107
23B-809-9210	K1110-24B1	11	K0- 167
23B-809-9310	K1110-24B1	20	K0- 167
23B-833-3561	H5210-09B0	16	H0- 99
23B-833-3630	H5210-09B0	19	H0- 99
23B-833-4110	H5210-09B0	10	H0- 99
23B-833-4210	H5210-09B0	9	H0- 99
23B-915-3113	M4231-01A0	1	M0- 19
23B-950-2810	K0350-01A1	7	K0- 99
23B-950-2820	K0350-01A1	7	K0- 99
23B-952-1161	K0210-13A0	20	K0- 77
23B-952-1170	K0210-05A0A	40	K0- 37

PARTS	FIG NO.	INDEX	PAGE
23B-952-1170	K0210-05B0A	40	K0- 41
23B-952-1170	K0210-07A0A	40	K0- 53
23B-952-1170	K0210-07B0A	40	K0- 57
23B-952-1180	K0210-05A0A	42	K0- 37
23B-952-1180	K0210-05B0A	42	K0- 41
23B-952-1180	K0210-07A0A	42	K0- 53
23B-952-1180	K0210-07B0A	42	K0- 57
23B-952-1190	K0210-05A0A	43	K0- 37
23B-952-1190	K0210-05B0A	43	K0- 41
23B-952-1190	K0210-07A0A	43	K0- 53
23B-952-1190	K0210-07B0A	43	K0- 57
23B-952-1341	K0210-05A0A	6	K0- 35
23B-952-1341	K0210-05B0A	6	K0- 39
23B-952-1341	K0210-07A0A	6	K0- 51
23B-952-1341	K0210-07B0A	6	K0- 55
23B-952-1350	K0210-05A0A	9	K0- 35
23B-952-1350	K0210-05B0A	9	K0- 39
23B-952-1361	K0210-05A0A	11	K0- 35
23B-952-1361	K0210-05B0A	11	K0- 39
23B-952-1370	K0210-05A0A	16	K0- 35
23B-952-1370	K0210-05B0A	16	K0- 39
23B-952-1370	K0210-07A0A	16	K0- 51
23B-952-1370	K0210-07B0A	16	K0- 55
23B-952-1380	K0210-05A0A	17	K0- 35
23B-952-1380	K0210-05B0A	17	K0- 39
23B-952-1380	K0210-07A0A	17	K0- 51
23B-952-1380	K0210-07B0A	17	K0- 55
23B-952-1391	K0210-05A0A	19	K0- 35
23B-952-1391	K0210-05B0A	19	K0- 39
23B-952-1421	K0210-03A0	4	K0- 23
23B-952-1421	K0210-03B0	5	K0- 27
23B-952-1431	K0210-03A0	3	K0- 23
23B-952-1440	K0210-04A0	1	K0- 31
23B-952-1450	K0210-04A0	3	K0- 31
23B-952-1461	K0210-04A0	4	K0- 31
23B-952-1470	K0210-04A0	5	K0- 31
23B-952-1511	K0210-03A0	16	K0- 23
23B-952-1521	K0210-03A0	17	K0- 23
23B-952-1551	K0210-03A0	10	K0- 23
23B-952-1551	K0210-03B0	11	K0- 27
23B-952-1560	K0210-03A0	7	K0- 23
23B-952-1560	K0210-03B0	8	K0- 27
23B-952-1561	K0210-03A0	7	K0- 23
23B-952-1561	K0210-03B0	8	K0- 27
23B-952-1570	K0210-03A0	8	K0- 23
23B-952-1570	K0210-03B0	9	K0- 27
23B-952-1571	K0210-03A0	8	K0- 23
23B-952-1571	K0210-03B0	9	K0- 27
23B-952-1580	K0210-11B0	3	K0- 73
23B-952-1590	K0210-04A0	20	K0- 31

PARTS	FIG NO.	INDEX	PAGE
23B-952-1620	K0210-05A0A	29	K0- 35
23B-952-1620	K0210-05B0A	29	K0- 39
23B-952-1620	K0210-07A0A	29	K0- 51
23B-952-1620	K0210-07B0A	29	K0- 55
23B-952-1632	K0210-05A0A	30	K0- 35
23B-952-1632	K0210-05B0A	30	K0- 39
23B-952-1632	K0210-07A0A	30	K0- 51
23B-952-1632	K0210-07B0A	30	K0- 55
23B-952-1670	K0210-07A0A	9	K0- 51
23B-952-1670	K0210-07B0A	9	K0- 55
23B-952-1681	K0210-07A0A	11	K0- 51
23B-952-1681	K0210-07B0A	11	K0- 55
23B-952-1712	K0210-04A0	6	K0- 31
23B-952-1712	K0210-04B0	5	K0- 33
23B-952-1723	K0210-04A0	9	K0- 31
23B-952-1723	K0210-04B0	8	K0- 33
23B-952-1752	K0210-04A0	16	K0- 31
23B-952-1752	K0210-04B0	15	K0- 33
23B-952-1762	K0210-04A0	17	K0- 31
23B-952-1762	K0210-04B0	16	K0- 33
23B-952-1771	K0210-04A0	18	K0- 31
23B-952-1810	K0210-04A0	27	K0- 31
23B-952-1810	K0210-04B0	26	K0- 33
23B-952-1821	K0210-04A0	25	K0- 31
23B-952-1821	K0210-04B0	24	K0- 33
23B-952-1830	K0210-18A0	11	K0- 89
23B-952-1830	K0210-18B0	11	K0- 91
23B-952-1842	K0210-18A0	12	K0- 89
23B-952-1842	K0210-18B0	12	K0- 91
23B-952-1850	K0210-06A0	20	K0- 43
23B-952-1850	K0210-06B0	20	K0- 47
23B-952-1850	K0210-08A0	20	K0- 59
23B-952-1850	K0210-08B0	20	K0- 63
23B-952-1860	K0210-01A10	40	K0- 13
23B-952-1871	K0210-02A0	23	K0- 19
23B-952-1871	K0210-02B0	23	K0- 21
23B-952-1881	K0210-06A0	37	K0- 45
23B-952-1881	K0210-06B0	37	K0- 49
23B-952-1891	K0210-08A0	38	K0- 61
23B-952-1891	K0210-08B0	38	K0- 65
23B-952-1910	K0210-06A0	47	K0- 45
23B-952-1910	K0210-06B0	47	K0- 49
23B-952-1910	K0210-08A0	48	K0- 61
23B-952-1910	K0210-08B0	48	K0- 65
23B-952-1921	K0210-07A0A	19	K0- 51
23B-952-1921	K0210-07B0A	19	K0- 55
23B-952-1931	K0210-05A0A	44	K0- 37
23B-952-1931	K0210-05B0A	44	K0- 41
23B-952-1941	K0210-07A0A	44	K0- 53
23B-952-1941	K0210-07B0A	44	K0- 57

PARTS	FIG NO.	INDEX	PAGE
23B-952-1951	K0210-05A0A	41	K0- 37
23B-952-1951	K0210-05B0A	41	K0- 41
23B-952-1961	K0210-07A0A	41	K0- 53
23B-952-1961	K0210-07B0A	41	K0- 57
23B-952-1971	K0210-05A0A	37	K0- 37
23B-952-1971	K0210-05B0A	37	K0- 41
23B-952-1971	K0210-07A0A	37	K0- 53
23B-952-1971	K0210-07B0A	37	K0- 57
23B-952-1980	K0210-05A0A	36	K0- 37
23B-952-1980	K0210-05B0A	36	K0- 41
23B-952-1980	K0210-07A0A	36	K0- 53
23B-952-1980	K0210-07B0A	36	K0- 57
23B-952-1990	K0210-05A0A	34	K0- 37
23B-952-1990	K0210-05B0A	34	K0- 41
23B-952-1990	K0210-07A0A	34	K0- 53
23B-952-1990	K0210-07B0A	34	K0- 57
23B-952-2120	K0210-01A0	14	K0- 11
23B-952-2120	K0210-01A0	20	K0- 11
23B-952-2120	K0210-01A0	28	K0- 11
23B-952-2120	K0210-01B0	14	K0- 15
23B-952-2120	K0210-01B0	20	K0- 15
23B-952-2120	K0210-01B0	28	K0- 15
23B-952-2160	K0210-01A0	10	K0- 11
23B-952-2160	K0210-01B0	10	K0- 15
23B-952-2171	K0210-13A0	23	K0- 77
23B-952-2220	K0210-03A0	28	K0- 25
23B-952-2220	K0210-03B0	29	K0- 29
23B-952-2240	K0210-04A0	2	K0- 31
23B-952-2250	K0210-02A0	24	K0- 19
23B-952-2250	K0210-02B0	24	K0- 21
23B-952-2261	K0210-08A0	15	K0- 59
23B-952-2261	K0210-08B0	15	K0- 63
23B-952-2270	K0210-13A0	24	K0- 77
23B-952-2280	K0210-04A0	10	K0- 31
23B-952-2280	K0210-04B0	9	K0- 33
23B-952-2290	E0340-01A0	3	E0- 37
23B-952-2310	K0210-18A0	13	K0- 89
23B-952-2310	K0210-18B0	13	K0- 91
23B-952-2360	K0210-09A0	7	K0- 67
23B-952-2360	K0210-09B0	7	K0- 69
23B-952-2360	K0210-12A0	2	K0- 75
23B-952-2360	K0210-12A0	5	K0- 75
23B-952-2512	K0210-05A0A	1	K0- 35
23B-952-2531	K0210-05A0A	1	K0- 35
23B-952-2541	K0210-05A0A	2	K0- 35
23B-952-2541	K0210-05B0A	2	K0- 39
23B-952-2550	K0210-05A0A	3	K0- 35
23B-952-2550	K0210-07A0A	3	K0- 51
23B-952-2560	K0210-05A0A	4	K0- 35
23B-952-2560	K0210-05B0A	4	K0- 39

PARTS	FIG NO.	INDEX	PAGE
23B-952-2560	K0210-07A0A	4	K0- 51
23B-952-2560	K0210-07B0A	4	K0- 55
23B-952-2582	K0210-05A0A	27	K0- 35
23B-952-2582	K0210-05B0A	27	K0- 39
23B-952-2612	K0210-07A0A	1	K0- 51
23B-952-2631	K0210-07A0A	1	K0- 51
23B-952-2641	K0210-07A0A	2	K0- 51
23B-952-2641	K0210-07B0A	2	K0- 55
23B-952-2682	K0210-07A0A	27	K0- 51
23B-952-2682	K0210-07B0A	27	K0- 55
23B-952-2740	K0210-02A0	4	K0- 19
23B-952-2740	K0210-02B0	4	K0- 21
23B-952-3020	K0210-01A0	1	K0- 11
23B-952-3020	K0210-02A0	1	K0- 19
23B-952-3020	K0210-03A0	1	K0- 23
23B-952-3020	K0210-04A0	1	K0- 31
23B-952-3020	K0210-06A0	1	K0- 43
23B-952-3020	K0210-08A0	1	K0- 59
23B-952-3020	K0210-09A0	1	K0- 67
23B-952-3020	K0210-11A0	1	K0- 71
23B-952-3020	K0210-12A0	1	K0- 75
23B-952-3020	K0210-13A0	1	K0- 77
23B-952-3020	K0210-14A0	1	K0- 79
23B-952-3020	K0210-15A0	1	K0- 83
23B-952-3021	K0210-01A0	1	K0- 11
23B-952-3021	K0210-02A0	1	K0- 19
23B-952-3021	K0210-03A0	1	K0- 23
23B-952-3021	K0210-04A0	1	K0- 31
23B-952-3021	K0210-05A0A	1	K0- 35
23B-952-3021	K0210-06A0	1	K0- 43
23B-952-3021	K0210-07A0A	1	K0- 51
23B-952-3021	K0210-08A0	1	K0- 59
23B-952-3021	K0210-09A0	1	K0- 67
23B-952-3021	K0210-11A0	1	K0- 71
23B-952-3021	K0210-12A0	1	K0- 75
23B-952-3021	K0210-13A0	1	K0- 77
23B-952-3021	K0210-14A0	1	K0- 79
23B-952-3021	K0210-15A0	1	K0- 83
23B-952-3022	K0210-01A0	1	K0- 11
23B-952-3022	K0210-02A0	1	K0- 19
23B-952-3022	K0210-03A0	1	K0- 23
23B-952-3022	K0210-04A0	1	K0- 31
23B-952-3022	K0210-05A0A	1	K0- 35
23B-952-3022	K0210-06A0	1	K0- 43
23B-952-3022	K0210-07A0A	1	K0- 51
23B-952-3022	K0210-08A0	1	K0- 59
23B-952-3022	K0210-09A0	1	K0- 67
23B-952-3022	K0210-11A0	1	K0- 71
23B-952-3022	K0210-12A0	1	K0- 75
23B-952-3022	K0210-13A0	1	K0- 77

PARTS	FIG NO.	INDEX	PAGE
23B-952-3022	K0210-14A0	1	K0- 79
23B-952-3022	K0210-15A0	1	K0- 83
23B-952-3022	K0210-16A0	1	K0- 85
23B-952-3022	K0210-17A0	1	K0- 87
23B-952-4080	K0210-01A0	1	K0- 11
23B-952-4080	K0210-02A0	1	K0- 19
23B-952-4080	K0210-03A0	1	K0- 23
23B-952-4080	K0210-04A0	1	K0- 31
23B-952-4080	K0210-05A0A	1	K0- 35
23B-952-4080	K0210-06A0	1	K0- 43
23B-952-4080	K0210-07A0A	1	K0- 51
23B-952-4080	K0210-08A0	1	K0- 59
23B-952-4080	K0210-09A0	1	K0- 67
23B-952-4080	K0210-11A0	1	K0- 71
23B-952-4080	K0210-12A0	1	K0- 75
23B-952-4080	K0210-13A0	1	K0- 77
23B-952-4080	K0210-14A0	1	K0- 79
23B-952-4080	K0210-15A0	1	K0- 83
23B-952-4080	K0210-16A0	1	K0- 85
23B-952-4080	K0210-17A0	1	K0- 87
23B-953-1130	K0210-02B0	10	K0- 21
23B-953-1130	K0210-14B0	1	K0- 81
23B-953-1430	K0210-03B0	3	K0- 27
23B-953-1440	K0210-04B0	1	K0- 33
23B-953-1450	K0210-04B0	2	K0- 33
23B-953-1460	K0210-04B0	3	K0- 33
23B-953-1470	K0210-04B0	4	K0- 33
23B-953-1510	K0210-03B0	17	K0- 27
23B-953-1520	K0210-03B0	18	K0- 27
23B-953-1590	K0210-04B0	19	K0- 33
23B-953-1770	K0210-04B0	17	K0- 33
23B-953-1860	K0210-01B0	40	K0- 17
23B-953-2420	K0210-09B0	9	K0- 69
23B-953-2430	K0210-09B0	12	K0- 69
23B-953-2440	K0210-09B0	15	K0- 69
23B-953-2510	K0210-05B0A	1	K0- 39
23B-953-2530	K0210-05B0A	1	K0- 39
23B-953-2550	K0210-05B0A	3	K0- 39
23B-953-2550	K0210-07B0A	3	K0- 55
23B-953-2610	K0210-07B0A	1	K0- 55
23B-953-2630	K0210-07B0A	1	K0- 55
23B-953-3020	K0210-01B0	1	K0- 15
23B-953-3020	K0210-02B0	1	K0- 21
23B-953-3020	K0210-03B0	1	K0- 27
23B-953-3020	K0210-04B0	1	K0- 33
23B-953-3020	K0210-06B0	1	K0- 47
23B-953-3020	K0210-08B0	1	K0- 63
23B-953-3020	K0210-09B0	1	K0- 69
23B-953-3020	K0210-11B0	1	K0- 73
23B-953-3020	K0210-12A0	1	K0- 75

PARTS	FIG NO.	INDEX	PAGE
23B-953-3020	K0210-13A0	1	K0- 77
23B-953-3020	K0210-14B0	1	K0- 81
23B-953-3020	K0210-15A0	1	K0- 83
23B-953-3021	K0210-01B0	1	K0- 15
23B-953-3021	K0210-02B0	1	K0- 21
23B-953-3021	K0210-03B0	1	K0- 27
23B-953-3021	K0210-04B0	1	K0- 33
23B-953-3021	K0210-05B0A	1	K0- 39
23B-953-3021	K0210-06B0	1	K0- 47
23B-953-3021	K0210-07B0A	1	K0- 55
23B-953-3021	K0210-08B0	1	K0- 63
23B-953-3021	K0210-09B0	1	K0- 69
23B-953-3021	K0210-11B0	1	K0- 73
23B-953-3021	K0210-12A0	1	K0- 75
23B-953-3021	K0210-13A0	1	K0- 77
23B-953-3021	K0210-14B0	1	K0- 81
23B-953-3021	K0210-15A0	1	K0- 83
23B-953-3022	K0210-01B0	1	K0- 15
23B-953-3022	K0210-02B0	1	K0- 21
23B-953-3022	K0210-03B0	1	K0- 27
23B-953-3022	K0210-04B0	1	K0- 33
23B-953-3022	K0210-05B0A	1	K0- 39
23B-953-3022	K0210-06B0	1	K0- 47
23B-953-3022	K0210-07B0A	1	K0- 55
23B-953-3022	K0210-08B0	1	K0- 63
23B-953-3022	K0210-09B0	1	K0- 69
23B-953-3022	K0210-11B0	1	K0- 73
23B-953-3022	K0210-12A0	1	K0- 75
23B-953-3022	K0210-13A0	1	K0- 77
23B-953-3022	K0210-14B0	1	K0- 81
23B-953-3022	K0210-15A0	1	K0- 83
23B-953-3022	K0210-16A0	1	K0- 85
23B-953-3022	K0210-17A0	1	K0- 87
23B-953-4080	K0210-01B0	1	K0- 15
23B-953-4080	K0210-02B0	1	K0- 21
23B-953-4080	K0210-03B0	1	K0- 27
23B-953-4080	K0210-04B0	1	K0- 33
23B-953-4080	K0210-05B0A	1	K0- 39
23B-953-4080	K0210-06B0	1	K0- 47
23B-953-4080	K0210-07B0A	1	K0- 55
23B-953-4080	K0210-08B0	1	K0- 63
23B-953-4080	K0210-09B0	1	K0- 69
23B-953-4080	K0210-11B0	1	K0- 73
23B-953-4080	K0210-12A0	1	K0- 75
23B-953-4080	K0210-13A0	1	K0- 77
23B-953-4080	K0210-14B0	1	K0- 81
23B-953-4080	K0210-15A0	1	K0- 83
23B-953-4080	K0210-16A0	1	K0- 85
23B-953-4080	K0210-17A0	1	K0- 87
23B-957-4510	K0210-18A0	1	K0- 89

PARTS	FIG NO.	INDEX	PAGE
23B-957-4510	K0210-18B0	1	K0- 91
23B-957-4521	K0210-18A0	2	K0- 89
23B-957-4521	K0210-18B0	2	K0- 91
23B-957-4530	K0210-18A0	3	K0- 89
23B-957-4530	K0210-18B0	3	K0- 91
23B-957-4570	K0210-18A0	4	K0- 89
23B-957-4570	K0210-18B0	4	K0- 91
23B-957-5510	K0210-18A0	1	K0- 89
23B-957-5510	K0210-18B0	1	K0- 91
23B-957-5520	K0210-18A0	2	K0- 89
23B-957-5520	K0210-18B0	2	K0- 91
23B-957-5530	K0210-18A0	3	K0- 89
23B-957-5530	K0210-18B0	3	K0- 91
23B-957-5570	K0210-18A0	4	K0- 89
23B-957-5570	K0210-18B0	4	K0- 91
23B-981-1310	V0300-01A0	19	V0- 3
23B-98-31121	M4240-01A0	1	M0- 21
23D-06-31370	K1110-21B0	14	K0- 159
23D-06-33280	K1110-20B0	24	K0- 157
23D-22-11650	F4500-05A0	12	F0- 29
23D-40-11100	K1110-16B0	9	K0- 147
23D-40-11110	K1110-22B1	6	K0- 163
23D-40-11120	K1110-16B0	11	K0- 147
23D-40-11130	K1110-16B0	10	K0- 147
23D-43-31430	K1110-03B0	19	K0- 117
23D-43-31430	K1110-03B1	18	K0- 119
23D-43-33120	K1110-05B0	24	K0- 123
23D-43-33332	K1110-05B0	22	K0- 123
23D-43-33530	K1110-02B0	16	K0- 113
23D-43-33530	K1110-02B1	16	K0- 115
23D-43-33550	K1110-05B0	23	K0- 123
23D-57-31120	K0110-01A0	2	K0- 3
23D-846-3190	M4510-01A0	2	M0- 25
23D-846-3190	M4510-01A1	2	M0- 27
23D-950-8260	K0210-05A0A	32	K0- 37
23D-950-8260	K0210-05B0A	32	K0- 41
23D-950-8260	K0210-07A0A	32	K0- 53
23D-950-8260	K0210-07B0A	32	K0- 57
23D-950-8310	K0210-05A0A	13	K0- 35
23D-950-8310	K0210-05B0A	13	K0- 39
23D-950-8310	K0210-07A0A	13	K0- 51
23D-950-8310	K0210-07B0A	13	K0- 55
23E-57-11442	K0110-01A0	6	K0- 3
23E-57-11450	K0110-01A0	12	K0- 3
23E-57-11460	K0110-01A0	13	K0- 3
23E-57-11470	K0110-01A0	11	K0- 3
23E-57-11480	K0110-01A0	3	K0- 3
23E-57-11490	K0110-01A0	5	K0- 3
23E-735-1420	H5120-08A0	1	H0- 51
23S-06-54111	E0300-01A0	1	E0- 27

PARTS	FIG NO.	INDEX	PAGE
23S-06-54111	E0300-01A1A	6	E0- 29
23S-06-54121	E0300-01A0	1	E0- 27
23S-06-54121	E0300-01A1A	6	E0- 29
23S-13-47210	F5350-69A0	5	F0- 129
23S-54-54750	M4100-03A0A	18	M0- 9
23S-55-51840	K0210-05A0A	5	K0- 35
23S-55-51840	K0210-05B0A	5	K0- 39
23S-55-51840	K0210-07A0A	5	K0- 51
23S-55-51840	K0210-07B0A	5	K0- 55
23S-55-51970	K0210-01A0	16	K0- 11
23S-55-51970	K0210-01B0	16	K0- 15
23S-55-51970	K0210-03A0	6	K0- 23
23S-55-51970	K0210-03A0	19	K0- 23
23S-55-51970	K0210-03A0	30	K0- 25
23S-55-51970	K0210-03B0	7	K0- 27
23S-55-51970	K0210-03B0	20	K0- 27
23S-55-51970	K0210-03B0	31	K0- 29
23S-55-51970	K0210-04A0	8	K0- 31
23S-55-51970	K0210-04A0	12	K0- 31
23S-55-51970	K0210-04A0	22	K0- 31
23S-55-51970	K0210-04B0	7	K0- 33
23S-55-51970	K0210-04B0	11	K0- 33
23S-55-51970	K0210-04B0	21	K0- 33
23S-55-51970	K0210-06A0	13	K0- 43
23S-55-51970	K0210-06B0	13	K0- 47
23S-55-51970	K0210-08A0	13	K0- 59
23S-55-51970	K0210-08B0	13	K0- 63
23S-55-51970	K0210-09B0	14	K0- 69
23S-55-51970	K0210-13A0	22	K0- 77
23S-55-51970	K0210-16A0	9	K0- 85
23S-55-51970	K0210-16A0	16	K0- 85
23S-55-51970	K0210-16A0	21	K0- 85
23S-55-51970	K1110-05B0	3	K0- 123
23S-55-51970	K1110-09B0	7	K0- 139
23S-61-24870	D0200-01A2	15	D0- 5
23S-71-51410	T5125-01A0	15	T0- 29
262-60-74340	K4470-03A0A	23	K0- 181
262-60-74340	K4470-04A0A	15	K0- 183
26A-06-11570	K1110-20B0	21	K0- 157
273-06-63130	K1110-22B0	4	K0- 161
273-43-12120	K1110-10B0	14	K0- 141
281-01-13180	F4700-01A0A	25	F0- 77
281-01-13180	F4700-01A0A	39	F0- 79
281-01-13180	F4700-01A1A	25	F0- 81
281-01-13180	F4700-01A1A	39	F0- 83
281-15-13431	F5350-67A0	10	F0- 125
281-15-13470	F5350-67A0	6	F0- 125
281-15-13480	F5350-67A0	7	F0- 125
281-15-13820	F5350-67A0	8	F0- 125
281-15-13820	Y0100-01A0	1	Y0- 3

PARTS	FIG NO.	INDEX	PAGE
287-43-13721	K0210-06A0	19	K0- 43
287-43-13721	K0210-06B0	19	K0- 47
287-43-13721	K0210-08A0	19	K0- 59
287-43-13721	K0210-08B0	19	K0- 63
362-15-19520	F5350-52A0	8	F0- 89
362-15-19520	F5350-53A0	7	F0- 93
362-56-42261	K0210-15A0	8	K0- 83
363-04-11130	D0200-01A2	19	D0- 5
391-62-19250	H4410-01A0A	12	H0- 19
415-03-11150	C0110-01A0A	1B	C0- 7
415-03-11210	C0110-01A0A	32	C0- 7
415-54-11980	M4100-01A0A	12	M0- 3
415-54-11980	M4100-03A0A	10	M0- 9
415-62-13710	B0300-01A0A	31	B0- 29
415-62-13710	D0200-01A2	33	D0- 5
415-62-13710	H4410-01A0A	35	H0- 19
416-03-11210	C0110-01A0A	31	C0- 7
416-03-11250	C0110-01A0A	40	C0- 9
416-03-11260	C0110-01A0A	38	C0- 9
416-03-11270	C0110-01A0A	39	C0- 9
416-03-11282	C0110-01A0A	35	C0- 9
416-06-22250	K1110-22B1	9	K0- 163
416-09-11120	T5125-01A0	20	T0- 29
416-09-11130	T5123-01A0	24	T0- 25
416-09-11140	T5125-01A0	11	T0- 29
416-09-12220	M4100-01A0A	1	M0- 3
416-54-21710	M4100-01A0A	14	M0- 3
416-62-11480	H5200-10A0A	5	H0- 77
416-62-11480	K1110-17B0	6	K0- 149
416-70-11810	T5125-01A0	10	T0- 29
417-03-21150	C0120-03A0A	21	C0- 13
417-15-13810	F5350-57A0	19	F0- 103
417-15-13810	Y0100-01A0	1	Y0- 3
417-15-14660	F5350-63A0	3	F0- 117
417-43-16210	K4470-03A0A	16	K0- 181
418-01-11111	F4810-01A0	5	F0- 85
418-01-11112	B0100-01A0	4	B0- 3
418-01-11120	F4810-01A0	5	F0- 85
418-01-11121	B0100-01A0	4	B0- 3
418-01-11131	B0100-01A0	5	B0- 3
418-01-11131	F4810-01A0	6	F0- 85
418-03-11390	C0110-01A0A	30	C0- 7
418-62-11620	F4500-06A1A	33	F0- 35
418-62-11620	N1220-01A0A	11	N0- 3
418-923-1270	K0210-02B0	12	K0- 21
418-923-1270	K0210-14B0	3	K0- 81
418-923-2760	K0210-01A0	22	K0- 11
418-923-2760	K0210-01B0	22	K0- 15
418-923-2770	K0210-01A0	21	K0- 11
418-923-2770	K0210-01B0	21	K0- 15

PARTS	FIG NO.	INDEX	PAGE
418-967-2150	K0210-15A0	5	K0- 83
418-967-2230	K0210-15A0	6	K0- 83
418-S67-2211	K0210-15A0	2	K0- 83
419-01-11162	B0100-01A0	6	B0- 3
419-01-11162	F4810-01A0	7	F0- 85
419-09-11110	J4130-01A0	7	J0- 7
419-09-11130	M4510-01A0	3	M0- 25
419-09-11130	M4510-01A1	3	M0- 27
419-15-12122	F5350-52A1	30	F0- 91
419-15-12122	F5350-53A0	31	F0- 95
419-15-12122	F5350-54A0	23	F0- 97
419-15-12122	F5350-55A0	20	F0- 99
419-15-12133	F5350-52A0	12	F0- 89
419-15-12133	F5350-53A0	12	F0- 93
419-15-12133	F5350-54A0	10	F0- 97
419-15-12133	F5350-55A0	8	F0- 99
419-15-12140	F5350-52A0	5	F0- 89
419-15-12140	F5350-53A0	9	F0- 93
419-15-12140	F5350-54A0	7	F0- 97
419-15-12140	F5350-55A0	5	F0- 99
419-15-12640	F5350-52A0	17	F0- 89
419-15-12640	F5350-53A0	19	F0- 93
419-15-12650	F5350-52A0	18	F0- 89
419-15-12650	F5350-53A0	20	F0- 93
419-15-17541	H5210-03B0	28	H0- 89
419-15-18131	F5350-51A0	19	F0- 87
419-15-18131	Y0100-01A0	1	Y0- 3
419-15-18220	F5350-66A0	9	F0- 123
419-15-18241	F5350-66A0	5	F0- 123
419-15-18251	F5350-66A0	7	F0- 123
419-22-12570	F4500-04A1	9	F0- 27
419-43-17920	C0110-01A0A	37	C0- 9
419-43-27670	F4500-06A1A	29	F0- 35
419-54-12670	K0210-04A0	14	K0- 31
419-54-12670	K0210-04B0	13	K0- 33
419-54-12850	T5125-01A0	5	T0- 29
419-54-12860	T5125-01A0	5	T0- 29
419-70-11490	F4400-03A0	15	F0- 13
419-70-11820	J4130-01A0	9	J0- 7
41G-06-13210	E0300-01A0	6	E0- 27
41G-06-13210	E0300-01A1A	8	E0- 29
41G-06-13220	E0300-01A0	6	E0- 27
41G-06-13220	E0300-01A1A	8	E0- 29
41G-06-13230	E0300-01A0	6	E0- 27
41G-06-13230	E0300-01A1A	8	E0- 29
421-06-11221	E0120-01A0	7	E0- 5
421-06-22820	E0120-01A0	22	E0- 5
421-06-22840	E0120-01A0	20	E0- 5
421-06-22880	E0120-01A0	19	E0- 5
421-06-22910	E0120-01A0	24	E0- 5

PARTS	FIG NO.	INDEX	PAGE
421-06-22920	E0120-01A0	23	E0- 5
421-06-23320	E0310-01A0	1	E0- 33
421-06-23320	E0310-02A1	1	E0- 35
421-06-23330	E0310-01A0	1	E0- 33
421-06-23330	E0310-02A1	1	E0- 35
421-06-23350	E0310-01A0	1	E0- 33
421-06-23350	E0310-02A1	1	E0- 35
421-06-24230	M4100-02A0A	11	M0- 5
421-06-24230	M4100-02A1A	11	M0- 7
421-06-26210	K0210-03A0	1	K0- 23
421-06-26210	K0210-03B0	1	K0- 27
421-06-26250	K0210-03A0	1	K0- 23
421-06-26250	K0210-03B0	1	K0- 27
421-06-26260	K0210-03A0	1	K0- 23
421-06-26260	K0210-03B0	1	K0- 27
421-06-26310	K0210-15A0	4	K0- 83
421-07-23870	K0210-16A0	5	K0- 85
421-07-23870	K0210-16A0	18	K0- 85
421-07-23870	K0210-16A0	22	K0- 85
421-07-23870	K1110-24B1	17	K0- 167
421-09-11310	J4130-01A0	2	J0- 7
421-09-12540	J4710-01A0A	4	J0- 11
421-09-12540	J4710-01A0A	10	J0- 11
421-09-21420	K0210-03A0	23	K0- 23
421-09-21420	K0210-03B0	24	K0- 27
421-09-31140	H6290-01A0A	11	H0- 109
421-33-31730	F4500-10A0	35	F0- 49
421-33-31730	F4500-10A1	35	F0- 53
421-33-31730	F4500-11A0	35	F0- 57
421-33-31730	F4500-11A1	35	F0- 61
421-40-12440	H5210-09B0	20	H0- 99
421-40-12440	K4470-01A0	7	K0- 177
421-43-22360	K4470-01A0	5	K0- 177
421-46-11361	J4130-01A0	8	J0- 7
421-46-11371	J4130-01A0	3	J0- 7
421-46-11381	J4130-01A0	3	J0- 7
421-46-11710	J4130-01A0	1	J0- 7
421-54-11364	M4100-03A0A	1	M0- 9
421-54-11364	M4100-03A0A	2	M0- 9
421-54-11364	M4100-03A0A	5	M0- 9
421-54-11364	M4100-03A0A	6	M0- 9
421-54-22520	K0210-04A0	13	K0- 31
421-54-22520	K0210-04B0	12	K0- 33
421-54-32611	K1110-11B0	14	K0- 143
421-56-21720	K0210-09A0	8	K0- 67
421-56-21720	K0210-09B0	8	K0- 69
421-60-11622	H0110-01A0A	9	H0- 3
421-70-11280	J4130-01A0	21	J0- 7
421-925-3140	K0210-15A0	2	K0- 83
423-07-31110	K0713-01A0A	1	K0- 109

PARTS	FIG NO.	INDEX	PAGE
423-09-11110	F4500-02A0	4	F0- 19
423-09-12110	J4710-01A0A	5	J0- 11
423-09-12110	J4710-01A0A	11	J0- 11
423-20-12630	F4200-01A0	3	F0- 3
423-20-12710	F4200-01A0	4	F0- 3
423-22-11240	F4500-02A0	2	F0- 19
423-22-21750	F4500-02A0	11	F0- 19
423-56-21910	K0210-04A0	19	K0- 31
423-56-21910	K0210-04B0	18	K0- 33
424-01-11110	A2170-01A0	5	AA- 51
424-06-12910	K0355-01A0	7	K0- 101
424-06-23230	E0300-01A0	1	E0- 27
424-06-23230	E0300-01A1A	6	E0- 29
424-09-12650	B0200-06A1	4	B0- 27
424-09-12650	M4100-01A0A	11	M0- 3
424-15-12711	F5350-69A0	8	F0- 129
424-35-15201	K4460-01A0	2	K0- 173
424-35-15201	K4460-02A0	1	K0- 175
424-35-15220	K4460-02A0	3	K0- 175
424-35-15230	K4460-02A0	4	K0- 175
424-35-15240	K4460-02A0	5	K0- 175
424-35-15250	K4460-02A0	6	K0- 175
424-35-15260	K4460-02A0	7	K0- 175
424-35-15270	K4460-02A0	8	K0- 175
424-35-15280	K4460-02A0	2	K0- 175
424-43-37370	H5210-07B0	6	H0- 97
424-43-37510	H5210-01B0	6	H0- 85
424-46-11160	J4130-01A0	11	J0- 7
424-46-11171	J4130-01A0	6	J0- 7
424-46-11182	J4130-01A0	10	J0- 7
424-926-2170	K0210-06A0	18	K0- 43
424-926-2170	K0210-06B0	18	K0- 47
424-926-2170	K0210-08A0	18	K0- 59
424-926-2170	K0210-08B0	18	K0- 63
425-43-11180	K4470-03A0A	24	K0- 181
425-43-11180	K4470-04A0A	16	K0- 183
425-S67-2150	K0210-15A0	1	K0- 83
425-S67-2180	K0210-15A0	1	K0- 83
426-15-15480	F5350-58A0	9	F0- 107
426-15-15490	F5350-58A0	7	F0- 107
426-15-15810	F5350-58A0	13	F0- 107
426-15-16261	F5350-58A0	12	F0- 107
426-54-22780	K1110-11B0	16	K0- 143
426-54-22790	K1110-11B0	15	K0- 143
426-U53-2160	K0210-13A0	5	K0- 77
427-54-11760	K0210-04A0	15	K0- 31
427-54-11760	K0210-04B0	14	K0- 33
428-04-11120	D0100-01A0A	5	D0- 3
42C-06-11320	K1110-19B0	6	K0- 155
42C-06-11350	K1110-20B0	17	K0- 157

PARTS	FIG NO.	INDEX	PAGE
42C-06-11350	K1110-22B1	13	K0- 163
42C-06-11410	K1110-20B0	16	K0- 157
42C-43-12941	K1110-18B0	1	K0- 151
42C-56-11380	K0210-13A0	2	K0- 77
42C-56-11390	K0210-13A0	1	K0- 77
561-15-55910	F5350-62A0	17	F0- 115
561-15-55940	F5350-62A0	16	F0- 115
561-88-68950	T5115-01A0	4	T0- 5
562-15-16110	F5350-58A0	8	F0- 107
565-06-13212	A1010-01C9	2	AA- 5
566-32-11430	F4500-10A0	38	F0- 49
566-32-11430	F4500-10A1	38	F0- 53
566-32-11430	F4500-11A0	38	F0- 57
566-32-11430	F4500-11A1	38	F0- 61
566-32-11620	F4500-10A0	39	F0- 49
566-32-11620	F4500-10A1	39	F0- 53
566-32-11620	F4500-11A0	39	F0- 57
566-32-11620	F4500-11A1	39	F0- 61
567-15-41270	F5350-51A0	11	F0- 87
567-15-41280	F5350-51A0	12	F0- 87
567-15-45230	F5350-58A0	6	F0- 107
568-15-12850	F5350-69A0	7	F0- 129
568-15-12850	Y0100-01A0	1	Y0- 3
569-06-61960	K0210-03A0	13	K0- 23
569-06-61960	K0210-03B0	14	K0- 27
569-06-61960	K1110-20B0	6	K0- 157
569-06-61960	K1110-22B1	14	K0- 163
569-06-61970	K1110-20B0	7	K0- 157
569-06-61970	K1110-22B1	11	K0- 163
569-07-61790	K4470-03A0A	2	K0- 181
569-15-33370	F5350-67A0	11	F0- 125
56B-15-16000	F5350-58A0	2	F0- 107
56B-15-16250	F5350-58A0	11	F0- 107
56B-43-17210	F4500-01A0	9	F0- 15
56B-43-17210	F4500-01A1A	11	F0- 17
56B-43-17210	F4500-06A1A	6	F0- 35
56B-43-17360	H5200-11A1A	3	H0- 79
56B-61-13760	F4500-06A1A	36	F0- 37
56B-61-13960	F4500-06A1A	5	F0- 35
56B-88-12310	H5200-11A1A	8	H0- 79
56D-15-19410	F5350-57A0	6	F0- 103
56D-15-19420	F5350-57A0	3	F0- 103
56D-15-19630	F5350-57A0	2	F0- 103
56D-61-11360	K1110-17B0	2	K0- 149
581-32-12140	F4500-10A0	37	F0- 49
581-32-12140	F4500-10A1	37	F0- 53
581-32-12140	F4500-11A0	37	F0- 57
581-32-12140	F4500-11A1	37	F0- 61
600-181-3860	B0200-06A1	1	B0- 27
600-184-1310	B0200-01A0	5	B0- 13

PARTS	FIG NO.	INDEX	PAGE
600-184-1310	B0200-01A1	5	B0- 15
600-184-1310	B9999-01S9	5	AA- 177
600-184-1350	B0200-01A0	6	B0- 13
600-184-1350	B0200-01A1	6	B0- 15
600-184-1350	B9999-01S9	6	AA- 177
600-184-1370	B0200-01A0	4	B0- 13
600-184-1370	B0200-01A1	4	B0- 15
600-184-1370	B9999-01S9	4	AA- 177
600-184-2810	B9999-01S9	5	AA- 177
600-185-3100	B0200-01A0	2	B0- 13
600-185-3100	B0200-01A1	2	B0- 15
600-185-3100	B9999-01S9	2	AA- 177
600-185-3110	B0200-01A0	2	B0- 13
600-185-3110	B0200-01A1	2	B0- 15
600-185-3110	B9999-01S9	2	AA- 177
600-185-3120	B0200-01A0	3	B0- 13
600-815-2170	B0110-03A0A	1	B0- 9
600-815-7870	B0110-03A0A	2	B0- 9
600-815-8950	B0110-03A0A	4	B0- 9
600-815-8951	B9999-01S8	2	AA- 175
600-815-9260	A4510-01A5	1	AA- 125
600-815-9270	B0110-03A0A	3	B0- 9
600-815-9270	B9999-01S8	1	AA- 175
600-861-5110	A601P-01A7	1	AA- 143
600-861-5110	A601P-02A7	1	AA- 145
6127-11-5180	B0300-01A0A	8	B0- 29
6130-32-1361	A408P-01B0	9	AA- 111
6131-11-4520	B0200-02A0A	2	B0- 17
6131-11-4520	B0200-02A1A	1	B0- 19
6132-11-4690	F4500-06A1A	30	F0- 35
613-62-17120	F4320-01A0A	3	F0- 5
6136-21-7120	F4500-06A0A	2	F0- 33
6136-21-7120	F4500-06A1A	12	F0- 35
6136-21-7180	F4500-06A0A	2	F0- 33
6136-21-7180	F4500-06A1A	12	F0- 35
613-62-17190	F4320-01A0A	4	F0- 5
6136-21-7190	F4500-06A0A	3	F0- 33
6136-21-7190	F4500-06A1A	13	F0- 35
6138-11-5790	B0300-01A0A	2	B0- 29
6138-81-8660	B0300-03A0	6	B0- 35
6141-71-1710	A417P-01B4	7	AA- 119
6151-11-5751	B0300-01A0A	7	B0- 29
615-15-15490	F4320-01A0A	16	F0- 5
6152-11-4970	A5030-01C4	1	AA- 139
6162-63-1440	A502P-01D2	5	AA- 133
6166-51-8231	K4470-03A0A	7	K0- 181
6204-81-9640	A4510-01A5	8	AA- 125
6206-71-5940	A423V-01A1	1	AA- 123
6207-51-7690	A1539-01C0	4	AA- 29
6207-51-7690	A8127-01A1	1	AA- 169

PARTS	FIG NO.	INDEX	PAGE
6207-81-6980	A601T-01A6	4	AA- 149
6215-81-6150	C0100-01A0	20	C0- 3
6215-81-6150	K0710-01A0A	33	K0- 103
6215-81-9510	A2019-01A2	16	AA- 37
6215-81-9710	A2019-01A2	17	AA- 37
6215-81-9710	A201V-01A3	2	AA- 35
6215-81-9710	A408P-01B0	12	AA- 111
6215-81-9710	A8127-02A1	2	AA- 171
6222-83-6740	C0100-01A0	21	C0- 3
6222-83-6740	K0710-01A0A	26	K0- 103
6354-81-6930	K0713-01A0A	16	K0- 109
6643-11-4641	B0200-02A0A	3	B0- 17
6643-11-4641	B0200-02A1A	2	B0- 19
6643-11-4641	B0300-01A0A	3	B0- 29
6731-21-1190	A2019-01A2	10	AA- 37
6731-21-1190	A8127-02A1	2	AA- 171
6731-21-1210	A2019-01A2	9	AA- 37
6731-21-1270	A2019-01A2	1	AA- 37
6731-21-1810	A2019-01A2	8	AA- 37
6731-21-4220	A8127-02A1	2	AA- 171
6731-21-6231	A2219-01B5	2	AA- 55
6731-31-2410	A2359-01A2	2	AA- 65
6731-41-4511	A1009-01A4	14	AA- 3
6731-51-1111	A301P-01A2	2	AA- 81
6731-61-2151	A331P-01B2	8	AA- 83
6731-71-5860	A401R-01B6	15	AA- 107
6731-71-5860	A408P-01B0	14	AA- 111
6731-81-8121	A401R-01B6	12	AA- 107
6732-11-1170	A1009-01A4	3	AA- 3
6732-11-1180	A1009-01A4	4	AA- 3
6732-11-1610	A1009-01A4	15	AA- 3
6732-11-1620	A1009-01A4	16	AA- 3
6732-11-1640	A241P-01A0	11	AA- 67
6732-11-1710	A105P-01A1	1	AA- 7
6732-11-1720	A105P-01A1	2	AA- 7
6732-11-1910	A1009-01A4	5	AA- 3
6732-11-1910	A131V-01A0	1	AA- 15
6732-11-1910	A2019-01A2	13	AA- 37
6732-11-1910	A207P-01A2	8	AA- 45
6732-11-1910	A501S-01A0Z	1	AA- 129
6732-11-1920	A1009-01A4	6	AA- 3
6732-11-1920	A131P-01B1	2	AA- 11
6732-11-1920	A2019-01A2	23	AA- 37
6732-11-1920	A2219-01B5	9	AA- 55
6732-11-1930	A1009-01A4	7	AA- 3
6732-11-1930	A331P-01B2	1	AA- 83
6732-11-3850	A4219-01A41	6	AA- 121
6732-11-3850	A8127-01A1	1	AA- 169
6732-11-4160	A131V-01A0	4	AA- 15
6732-11-4811	A8127-01A1	1	AA- 169

PARTS	FIG NO.	INDEX	PAGE
6732-11-4812	A131P-01B2	3	AA- 11
6732-11-4812	A131R-01A1	2	AA- 13
6732-11-8130	A111P-01A3	1	AA- 9
6732-11-8140	A1010-01C9	3	AA- 5
6732-11-8150	A111P-01A3	5	AA- 9
6732-11-8150	A206P-01A7	2	AA- 41
6732-11-8181	A111P-01A3	3	AA- 9
6732-11-8181	A8127-01A1	1	AA- 169
6732-11-8210	A111P-01A3	4	AA- 9
6732-11-8210	A206P-01A7	1	AA- 41
6732-11-8210	A8127-01A1	1	AA- 169
6732-11-8210	A8127-02A1	2	AA- 171
6732-21-1310	A2219-01B5	3	AA- 55
6732-21-1411	A2019-01A2	5	AA- 37
6732-21-1611	A2019-01A2	6	AA- 37
6732-21-1820	A2019-01A2	7	AA- 37
6732-21-1910	A2019-01A2	3	AA- 37
6732-21-1910	A2019-01A2	11	AA- 37
6732-21-1930	A2019-01A2	22	AA- 37
6732-21-1960	A2019-01A2	16	AA- 37
6732-21-3120	A2019-01A2	26	AA- 37
6732-21-3120	A411S-01C1	30	AA- 117
6732-21-3140	A2049-01A1	5	AA- 39
6732-21-3150	A2049-01A1	6	AA- 39
6732-21-3160	A2049-01A1	10	AA- 39
6732-21-3180	A2049-01A1	8	AA- 39
6732-21-3220	A281P-01A1	3	AA- 77
6732-21-3220	A8127-02A1	2	AA- 171
6732-21-3380	A261P-01A1	3	AA- 73
6732-21-3380	A8127-02A1	2	AA- 171
6732-21-3811	A8127-02A1	2	AA- 171
6732-21-3812	A2049-01A1	2	AA- 39
6732-21-3870	A2049-01A1	7	AA- 39
6732-21-3870	A8127-02A1	2	AA- 171
6732-21-3880	A2049-01A1	9	AA- 39
6732-21-3880	A8127-02A1	2	AA- 171
6732-21-3990	A4510-01A5	16	AA- 125
6732-21-4130	A2219-01B5	8	AA- 55
6732-21-4150	A2219-01B5	11	AA- 55
6732-21-4161	A2219-01B5	12	AA- 55
6732-21-4161	A8127-02A1	2	AA- 171
6732-21-4170	A2219-01B5	4	AA- 55
6732-21-4171	A8127-02A1	2	AA- 171
6732-21-4220	A2219-01B5	7	AA- 55
6732-21-4290	A2219-01B5	5	AA- 55
6732-21-5160	A211R-01A5	3	AA- 47
6732-21-5160	A601T-01A6	2	AA- 149
6732-21-5170	A2119-01B9	6	AA- 49
6732-21-5190	A2119-01B9	8	AA- 49
6732-21-5210	A2119-01B9	5	AA- 49

PARTS	FIG NO.	INDEX	PAGE
6732-21-5530	A2019-01A2	20	AA- 37
6732-21-5530	A219P-01A7	1	AA- 53
6732-21-6120	A2019-01A2	12	AA- 37
6732-21-6130	A2019-01A2	19	AA- 37
6732-21-6140	A2019-01A2	9	AA- 37
6732-21-6150	A2319-01A0	2	AA- 61
6732-21-6160	A2019-01A2	21	AA- 37
6732-21-6610	A211R-01A5	1	AA- 47
6732-21-6920	A207P-01A2	5	AA- 45
6732-21-8180	A2319-01A0	6	AA- 61
6732-21-9310	A261P-01A1	2	AA- 73
6732-31-1211	A2319-01A0	3	AA- 61
6732-31-2420	A2359-01A2	3	AA- 65
6732-31-3132	A2359-01A2	8	AA- 65
6732-31-3320	A2359-01A2	9	AA- 65
6732-31-3420	A2359-01A2	10	AA- 65
6732-31-4120	A223P-01C3	3	AA- 57
6732-31-4130	A223P-01C3	4	AA- 57
6732-31-8120	A233P-01A0	1	AA- 63
6732-41-1220	A2419-01A0	4	AA- 71
6732-41-1231	A2419-01A0	2	AA- 71
6732-41-1260	A2419-01A0	5	AA- 71
6732-41-1260	A5019-01A0Z	3	AA- 131
6732-41-1280	A2419-01A0	3	AA- 71
6732-41-2112	A241R-01A0	1	AA- 69
6732-41-3111	A241P-01A0	12	AA- 67
6732-41-4430	A1009-01A4	13	AA- 3
6732-41-4520	A1009-01A4	10	AA- 3
6732-41-4520	A1009-01A4	12	AA- 3
6732-41-4540	A8127-01A1	1	AA- 169
6732-41-4541	A1009-01A4	8	AA- 3
6732-41-5160	A241P-01A0	3	AA- 67
6732-41-5170	A241P-01A0	2	AA- 67
6732-41-5180	A241P-01A0	1	AA- 67
6732-41-5200	A241P-01A0	7	AA- 67
6732-41-5400	A241P-01A0	4	AA- 67
6732-51-4420	A331P-01B2	7	AA- 83
6732-51-4420	A8127-02A1	2	AA- 171
6732-51-4432	A331P-01B2	9	AA- 83
6732-51-4432	A8127-02A1	2	AA- 171
6732-51-5130	A261P-01A1	1	AA- 73
6732-51-8180	A153T-01C2	6	AA- 25
6732-51-8330	A153T-01C2	4	AA- 25
6732-51-8330	A8127-02A1	2	AA- 171
6732-51-8410	A153T-01C2	1	AA- 25
6732-51-8441	A153T-01C2	9	AA- 25
6732-51-8451	A153T-01C2	9	AA- 25
6732-51-8461	A153T-01C2	10	AA- 25
6732-61-2311	A331P-01B2	11	AA- 83
6732-61-2311	A8127-02A1	2	AA- 171

PARTS	FIG NO.	INDEX	PAGE
6732-61-3110	A408P-01B0	2	AA- 111
6732-61-3170	A502P-01D2	9	AA- 133
6732-61-3503	A502P-01D2	1	AA- 133
6732-61-3533	A502P-01D2	2	AA- 133
6732-61-3542	A502P-01D2	6	AA- 133
6732-61-3750	A502P-01D2	8	AA- 133
6732-61-4120	A502R-01A2	1	AA- 135
6732-61-4120	A601S-01B4	1	AA- 147
6732-61-4220	A601S-01B4	4	AA- 147
6732-61-6130	A501R-01A4	3	AA- 127
6732-61-6130	A8127-02A1	2	AA- 171
6732-61-6140	A173P-01A5	1	AA- 31
6732-61-6140	A331P-01B2	12	AA- 83
6732-61-6140	A411P-01A0	4	AA- 113
6732-61-6171	A173P-01A5	10	AA- 31
6732-61-6180	A173P-01A5	2	AA- 31
6732-61-6231	A173P-01A5	4	AA- 31
6732-61-6240	A173P-01A5	6	AA- 31
6732-61-6240	A8127-01A1	1	AA- 169
6732-61-6250	A173P-01A5	5	AA- 31
6732-61-6250	A8127-01A1	1	AA- 169
6732-61-6270	A173P-01A5	8	AA- 31
6732-61-6280	A173P-01A5	7	AA- 31
6732-61-6350	A501R-01A4	2	AA- 127
6732-61-6910	K0713-01A0A	15	K0- 109
6732-62-3220	A502P-01D2	10	AA- 133
6732-71-3210	A411S-01C1	33	AA- 117
6732-71-3220	A153T-01C2	2	AA- 25
6732-71-3220	A206P-01A7	14	AA- 41
6732-71-3220	A2119-01B9	3	AA- 49
6732-71-3220	A411S-01C1	32	AA- 117
6732-71-3220	A417P-01B4	1	AA- 119
6732-71-3220	A601T-01A6	11	AA- 149
6732-71-5450	A408P-01B0	11	AA- 111
6732-71-5740	A4010-01B0	1	AA- 109
6732-71-5760	A411S-01C1	26	AA- 117
6732-71-6112	A411P-01A0	1	AA- 113
6732-71-6240	A411S-01C1	2	AA- 117
6732-71-6260	A411S-01C1	3	AA- 117
6732-71-6260	A4219-01A40	5	AA- 121
6732-71-6260	A8127-01A1	1	AA- 169
6732-71-6510	A417P-01B4	5	AA- 119
6732-71-6650	A411P-01A0	2	AA- 113
6732-81-2810	A267P-01A0	1	AA- 75
6732-81-3111	A201V-01A3	1	AA- 35
6732-81-3180	A201V-01A3	3	AA- 35
6732-81-3190	A201V-01A3	2	AA- 35
6732-81-3551	A601S-01B4	2	AA- 147
6732-81-5250	A281P-01A1	1	AA- 77
6732-81-5870	A9850-01A5	1	AA- 173

PARTS	FIG NO.	INDEX	PAGE
6732-81-6490	A601T-01A6	7	AA- 149
6732-81-6530	A601T-01A6	8	AA- 149
6732-81-6540	A601T-01A6	9	AA- 149
6732-81-6650	A601T-01A6	1	AA- 149
6732-81-6811	A8127-02A1	2	AA- 171
6732-81-8150	A401R-01B6	17	AA- 107
6732-81-8220	A151R-01A0	1	AA- 19
6732-81-8220	A8127-01A1	1	AA- 169
6732-81-8810	A1539-01C0	1	AA- 29
6732-81-8820	A1539-01C0	2	AA- 29
6732-81-8830	A1539-01C0	5	AA- 29
6732-81-8830	A8127-01A1	1	AA- 169
6732-81-8850	A153T-01C2	7	AA- 25
6732-81-8860	A153T-01C2	8	AA- 25
6732-81-8860	A153T-01C2	13	AA- 25
6732-81-8860	A8127-01A1	1	AA- 169
6732-81-9511	A4510-01A5	5	AA- 125
6732-81-9520	A4510-01A5	4	AA- 125
6733-21-5520	A8127-02A1	2	AA- 171
6733-21-5521	A2119-01B9	2	AA- 49
6734-11-3610	A4219-01A9	3	AA- 121
6734-11-3620	A4219-01A10	3	AA- 121
6734-11-3630	A4219-01A11	3	AA- 121
6734-11-3640	A4219-01A12	3	AA- 121
6734-11-3650	A4219-01A13	3	AA- 121
6734-11-3660	A4219-01A14	3	AA- 121
6734-11-3670	A4219-01A15	3	AA- 121
6734-11-3680	A4219-01A16	3	AA- 121
6734-11-3690	A4219-01A17	3	AA- 121
6734-11-3710	A4219-01A18	3	AA- 121
6734-11-3720	A4219-01A19	3	AA- 121
6734-11-3730	A4219-01A20	3	AA- 121
6734-11-3740	A4219-01A21	3	AA- 121
6734-11-3750	A4219-01A22	3	AA- 121
6734-11-3760	A4219-01A23	3	AA- 121
6734-11-3770	A4219-01A24	3	AA- 121
6734-11-3780	A4219-01A25	3	AA- 121
6734-11-3790	A4219-01A26	3	AA- 121
6734-11-3810	A4219-01A27	3	AA- 121
6734-11-3820	A4219-01A28	3	AA- 121
6734-11-3830	A4219-01A29	3	AA- 121
6734-11-3840	A4219-01A30	3	AA- 121
6734-11-3850	A4219-01A31	3	AA- 121
6734-11-3860	A4219-01A32	3	AA- 121
6734-11-3870	A4219-01A33	3	AA- 121
6734-11-3880	A4219-01A34	3	AA- 121
6734-11-3890	A4219-01A35	3	AA- 121
6734-11-3910	A4219-01A36	3	AA- 121
6734-11-3920	A4219-01A37	3	AA- 121
6734-11-3930	A4219-01A38	3	AA- 121

PARTS	FIG NO.	INDEX	PAGE
6734-11-5210	A131P-01B3	4	AA- 11
6734-11-5210	A411S-01C1	27	AA- 117
6734-61-3940	A601S-01B4	5	AA- 147
6734-71-5520	A411S-01C1	10	AA- 117
6734-71-5520	A411S-01C1	21	AA- 117
6734-71-5610	A408P-01B0	5	AA- 111
6734-71-5710	A411S-01C1	7	AA- 117
6734-71-5710	A411S-01C1	18	AA- 117
6734-71-5720	A411S-01C1	9	AA- 117
6734-71-5720	A411S-01C1	20	AA- 117
6734-71-5741	A411S-01C1	11	AA- 117
6734-71-5741	A411S-01C1	22	AA- 117
6735-11-1103	A1009-01A4	1	AA- 3
6735-11-1821	A1009-01A4	17	AA- 3
6735-11-1821	A8127-01A1	1	AA- 169
6735-11-1840	A8110-01A9	4	AA- 159
6735-11-1870	A8110-01A9	4	AA- 159
6735-11-1920	A173P-01A5	3	AA- 31
6735-11-4110	A131V-01A0	2	AA- 15
6735-11-4150	A151T-01A3	2	AA- 21
6735-11-4811	A131V-01A0	3	AA- 15
6735-11-4812	A131V-01A0	3	AA- 15
6735-11-4812	A8127-01A1	1	AA- 169
6735-11-5120	A151V-01A0	1	AA- 23
6735-11-8120	A111P-01A3	2	AA- 9
6735-21-1910	A2019-01A2	14	AA- 37
6735-21-1920	A2019-01A2	14	AA- 37
6735-21-1930	A2019-01A2	15	AA- 37
6735-21-1930	A8127-02A1	2	AA- 171
6735-21-1940	A2019-01A2	24	AA- 37
6735-21-1950	A2019-01A2	24	AA- 37
6735-21-1960	A2019-01A2	25	AA- 37
6735-21-1960	A8127-02A1	2	AA- 171
6735-21-3410	A281P-01A1	7	AA- 77
6735-21-3420	A281P-01A1	5	AA- 77
6735-21-3430	A281P-01A1	2	AA- 77
6735-21-3450	A281P-01A1	4	AA- 77
6735-21-3511	A2049-01A1	11	AA- 39
6735-21-3710	A2250-01A0	2	AA- 59
6735-21-3720	A2250-01A0	1	AA- 59
6735-21-4120	A2219-01B5	10	AA- 55
6735-21-4130	A2219-01B5	6	AA- 55
6735-21-4160	A2219-01B5	14	AA- 55
6735-21-4170	A2219-01B5	13	AA- 55
6735-21-4191	A2219-01B5	1	AA- 55
6735-21-4191	A8127-02A1	2	AA- 171
6735-21-5130	A2119-01B9	4	AA- 49
6735-21-5151	A283P-01A0	1	AA- 79
6735-21-5350	A219P-01A7	2	AA- 53
6735-21-5360	A219P-01A7	3	AA- 53

PARTS	FIG NO.	INDEX	PAGE
6735-21-5530	A2019-01A2	18	AA- 37
6735-21-5661	A211R-01A5	2	AA- 47
6735-21-7130	A207P-01A2	1	AA- 45
6735-21-8110	A2319-01A0	4	AA- 61
6735-21-8210	A2319-01A0	5	AA- 61
6735-26-8100	A8110-03A9	3	AA- 163
6735-27-8100	A8110-03A9	3	AA- 163
6735-28-8100	A8110-03A9	3	AA- 163
6735-28-8200	A8110-03A9	5	AA- 163
6735-29-8100	A8110-03A9	3	AA- 163
6735-31-8120	A233P-01A0	2	AA- 63
6735-41-1111	A2419-01A0	1	AA- 71
6735-41-5550	A241P-01A0	6	AA- 67
6735-41-5550	A241P-01A0	9	AA- 67
6735-41-5560	A241P-01A0	5	AA- 67
6735-41-5560	A241P-01A0	8	AA- 67
6735-51-1120	A301P-01A2	1	AA- 81
6735-51-8140	A153T-01C2	5	AA- 25
6735-51-8180	A153T-01C2	3	AA- 25
6735-61-1502	A5019-01A0Z	1	AA- 131
6735-61-2120	A601T-01A6	3	AA- 149
6735-61-2140	A331P-01B2	2	AA- 83
6735-61-2160	A331P-01B2	5	AA- 83
6735-61-2190	A331P-01B2	6	AA- 83
6735-61-6411	A417P-01B4	3	AA- 119
6735-61-6411	A8127-02A1	2	AA- 171
6735-61-6471	A173R-01A0	1	AA- 33
6735-62-2110	A331P-01B2	10	AA- 83
6735-71-3220	A408P-01B0	4	AA- 111
6735-71-3840	A411R-01A7	4	AA- 115
6735-71-5160	A411R-01A7	1	AA- 115
6735-71-5170	A411R-01A7	5	AA- 115
6735-71-5180	A411R-01A7	6	AA- 115
6735-71-5190	A411R-01A7	7	AA- 115
6735-71-5371	A417P-01B4	4	AA- 119
6735-71-5411	A408P-01B0	15	AA- 111
6735-71-5420	A401R-01B6	14	AA- 107
6735-71-5420	A408P-01B0	16	AA- 111
6735-71-5430	A408P-01B0	17	AA- 111
6735-71-5643	A411S-01C1	15	AA- 117
6735-71-5653	A411S-01C1	16	AA- 117
6735-71-5663	A411S-01C1	17	AA- 117
6735-71-5820	A411S-01C1	12	AA- 117
6735-71-5820	A411S-01C1	23	AA- 117
6735-71-5830	A411S-01C1	8	AA- 117
6735-71-5830	A411S-01C1	19	AA- 117
6735-71-5840	A411S-01C1	13	AA- 117
6735-71-5840	A411S-01C1	24	AA- 117
6735-71-5860	A411S-01C1	14	AA- 117
6735-71-5860	A411S-01C1	25	AA- 117

PARTS	FIG NO.	INDEX	PAGE
6735-71-6230	A411P-01A0	3	AA- 113
6735-71-6510	A411R-01A7	2	AA- 115
6735-71-6530	A411R-01A7	2	AA- 115
6735-71-6750	A411R-01A7	3	AA- 115
6735-81-6170	A621S-01A8	3	AA- 155
6735-81-6180	A621S-01A8	1	AA- 155
6735-83-2120	A9850-01A5	2	AA- 173
6736-11-1150	A1009-01A4	2	AA- 3
6736-11-3430	A4219-01A39	4	AA- 121
6736-11-3430	A8127-01A1	1	AA- 169
6736-11-4530	A401R-01B6	10	AA- 107
6736-11-5820	A151T-01A2	1	AA- 21
6736-11-5820	A8127-01A1	1	AA- 169
6736-18-1310	A8110-01A9	3	AA- 159
6736-19-1310	A8110-01A9	1	AA- 159
6736-19-1410	A8110-01A9	2	AA- 159
6736-21-1810	A2019-01A2	2	AA- 37
6736-21-3210	A2049-01A1	3	AA- 39
6736-21-3310	A2049-01A1	12	AA- 39
6736-21-3360	A207P-01A2	6	AA- 45
6736-21-3450	A2049-01A1	13	AA- 39
6736-21-3450	A8127-02A1	2	AA- 171
6736-21-4220	A2219-01B5	3	AA- 55
6736-21-4220	A8127-02A1	2	AA- 171
6736-21-5310	A2049-01A1	4	AA- 39
6736-21-5310	A2049-01A1	15	AA- 39
6736-21-5310	A2049-01A1	17	AA- 39
6736-21-5320	A2119-01B9	7	AA- 49
6736-21-5350	A207P-01A2	7	AA- 45
6736-21-5510	A2119-01B9	1	AA- 49
6736-21-7120	A281P-01A1	6	AA- 77
6736-21-7210	A207P-01A2	2	AA- 45
6736-21-7220	A207P-01A2	3	AA- 45
6736-27-8620	A8110-03A9	5	AA- 163
6736-28-8620	A8110-03A9	5	AA- 163
6736-28-8700	A8110-03A9	5	AA- 163
6736-29-1410	A8110-02A9	1	AA- 161
6736-29-1420	A8110-02A9	2	AA- 161
6736-29-2110	A8110-02A9	3	AA- 161
6736-29-8610	A8110-03A9	5	AA- 163
6736-29-8700	A8110-03A9	5	AA- 163
6736-31-1100	A2319-01A0	1	AA- 61
6736-31-4180	A223P-01C3	1	AA- 57
6736-36-3400	A8110-04A9	1	AA- 167
6736-37-3400	A8110-04A9	1	AA- 167
6736-38-3400	A8110-04A9	1	AA- 167
6736-39-1130	A8110-03A9	2	AA- 163
6736-39-1220	A8110-03A9	1	AA- 163
6736-39-3400	A8110-04A9	1	AA- 167
6736-41-4110	A1009-01A4	9	AA- 3

PARTS	FIG NO.	INDEX	PAGE
6736-41-4210	A1009-01A4	11	AA- 3
6736-41-5110	A241P-01A0	10	AA- 67
6736-51-5142	A331P-01B2	13	AA- 83
6736-51-8710	A153T-01C2	6	AA- 25
6736-51-8710	A153T-01C2	14	AA- 25
6736-51-8710	A8127-01A1	1	AA- 169
6736-61-1520	A5019-01A0Z	2	AA- 131
6736-61-1520	A8127-02A1	2	AA- 171
6736-61-4120	A601S-01B4	3	AA- 147
6736-61-5180	A331P-01B2	3	AA- 83
6736-71-5811	A417P-01B4	2	AA- 119
6736-81-2110	A207P-01A2	4	AA- 45
6736-81-4810	A621S-01A8	2	AA- 155
6736-81-6170	A408P-01B0	7	AA- 111
6736-81-6170	A621S-01A8	4	AA- 155
6736-81-7100	B0200-01A0	1	B0- 13
6736-81-7100	B9999-01S9	1	AA- 177
6736-81-7110	B0200-01A0	1	B0- 13
6736-81-7110	B9999-01S9	1	AA- 177
6736-81-7300	B0200-01A1	1	B0- 15
6736-81-7310	B0200-01A1	1	B0- 15
6736-81-8730	A131P-01B4	5	AA- 11
6737-32-3120	A2359-01A2	7	AA- 65
6738-11-3090	A4219-01A6	1	AA- 121
6738-11-3100	A4219-01A7	1	AA- 121
6738-11-3120	A4219-01A8	2	AA- 121
6738-11-4370	A1539-01C0	6	AA- 29
6738-11-4370	A153V-01A1	1	AA- 27
6738-11-4370	A8127-01A1	1	AA- 169
6738-11-4380	A153V-01A1	2	AA- 27
6738-11-4390	A153V-01A1	3	AA- 27
6738-11-4450	A131P-01B0	1	AA- 11
6738-11-5550	B0300-01A0A	1	B0- 29
6738-11-5550	B9999-01T0	1	AA- 179
6738-11-8210	A206P-01A7	1	AA- 41
6738-21-3110	A2049-01A1	1	AA- 39
6738-21-6100	A206P-01A7	4	AA- 41
6738-21-6180	A206P-01A7	15	AA- 41
6738-21-6180	A8127-02A1	2	AA- 171
6738-21-6280	A206P-01A7	3	AA- 41
6738-21-6610	A206P-01A7	10	AA- 41
6738-21-6620	A206P-01A7	10	AA- 41
6738-21-6650	A206P-01A7	11	AA- 41
6738-21-6650	A8127-02A1	2	AA- 171
6738-21-6660	A206P-01A7	12	AA- 41
6738-21-6660	A8127-02A1	2	AA- 171
6738-21-6670	A206P-01A7	13	AA- 41
6738-21-6680	A206P-01A7	16	AA- 41
6738-21-7710	A206P-01A7	5	AA- 41
6738-21-7780	A206P-01A7	6	AA- 41

PARTS	FIG NO.	INDEX	PAGE
6738-21-7810	A206P-01A7	9	AA- 41
6738-31-2031	A2359-01A2	4	AA- 65
6738-31-2111	A2359-01A2	1	AA- 65
6738-38-2030	A8110-04A9	2	AA- 167
6738-38-2031	A8110-04A9	2	AA- 167
6738-38-2110	A8110-04A9	6	AA- 167
6738-38-2111	A8110-04A9	6	AA- 167
6738-39-2030	A8110-04A9	2	AA- 167
6738-39-2031	A8110-04A9	2	AA- 167
6738-39-2110	A8110-04A9	5	AA- 167
6738-39-2111	A8110-04A9	5	AA- 167
6738-51-5120	A331P-01B2	4	AA- 83
6738-61-3610	A504P-01A4	1	AA- 141
6738-71-1190	A401P-01H7	1	AA- 85
6738-71-1190	A401P-02H7	1	AA- 87
6738-71-1190	A401P-03H7	1	AA- 91
6738-71-1190	A401P-04H7	1	AA- 95
6738-71-1190	A401P-05H7	1	AA- 99
6738-71-1190	A401P-06H7	1	AA- 101
6738-71-1190	A401P-07H7	1	AA- 105
6738-71-3100	A408P-01B0	8	AA- 111
6738-71-3120	A408P-01B0	6	AA- 111
6738-71-3610	A408P-01B0	3	AA- 111
6738-71-3620	A408P-01B0	1	AA- 111
6738-71-5110	A411S-01C1	4	AA- 117
6738-71-5120	A411S-01C1	5	AA- 117
6738-71-5130	A411S-01C1	6	AA- 117
6738-71-5510	A411S-01C1	1	AA- 117
6738-71-5570	A411S-01C1	28	AA- 117
6738-71-9210	A401R-01B6	1	AA- 107
6738-71-9220	A401R-01B6	5	AA- 107
6738-71-9230	A401R-01B6	6	AA- 107
6738-71-9240	A401R-01B6	9	AA- 107
6738-71-9250	A401R-01B6	16	AA- 107
6738-71-9300	A401R-01B6	18	AA- 107
6738-81-2110	A9850-01A5	2	AA- 173
6738-81-6140	A6010-01B2	1	AA- 151
6738-81-6170	A6010-01B2	2	AA- 151
6738-81-6180	A6010-01B2	3	AA- 151
6738-81-8160	A1539-01C0	3	AA- 29
6738-81-8220	A401R-01B6	13	AA- 107
6738-82-6810	A621P-01A1	1	AA- 153
6738-K1-1300	A8127-01A1	1	AA- 169
6738-K2-1300	A8127-02A1	2	AA- 171
6742-01-0540	A2049-01A1	14	AA- 39
6742-01-2010	A503P-01A1	1	AA- 137
6742-01-5545	A223P-01C3	1	AA- 57
6742-11-4360	A401R-01B6	11	AA- 107
6743-81-7530	B0200-04A0	4	B0- 23
6743-81-9240	A401R-01B6	4	AA- 107

PARTS	FIG NO.	INDEX	PAGE
6743-81-9310	A401R-01B6	18	AA- 107
6743-81-9320	A401R-01B6	19	AA- 107
6743-81-9330	A401R-01B6	20	AA- 107
6743-81-9340	A401R-01B6	21	AA- 107
6743-81-9350	A401R-01B6	22	AA- 107
6743-82-4110	A131R-01A0	1	AA- 13
700-11-31940	F5350-59A0	7	F0- 109
700-11-31940	F5350-61A0	17	F0- 113
700-20-63141	Y1664-13A0	5	Y0- 61
700-20-63150	Y1664-13A0	4	Y0- 61
700-22-11410	Y1664-14A0	7	Y0- 63
700-26-11150	Y1664-03A0	12	Y0- 51
700-26-11150	Y1665-03A0	12	Y0- 71
700-26-11150	Y1665-23A0	12	Y0- 81
702-16-54880	Y1679-01A0	8	Y0- 89
702-21-55620	Y1664-03A0	10	Y0- 51
702-21-55620	Y1665-03A0	10	Y0- 71
702-21-55620	Y1665-23A0	10	Y0- 81
705-17-02022	Y1610-01A0	1	Y0- 19
705-17-02022	Y1610-11A0	1	Y0- 21
705-17-02122	Y1610-01A0	4	Y0- 19
705-17-02220	Y1610-11A0	3	Y0- 21
705-17-02353	Y1610-01A0	2	Y0- 19
705-17-02353	Y1610-01A0	5	Y0- 19
705-17-02353	Y1610-11A0	1	Y0- 21
705-17-02353	Y1610-11A0	3	Y0- 21
705-17-02360	Y1610-01A0	11	Y0- 19
705-17-02360	Y1610-11A0	9	Y0- 21
705-17-02420	Y1610-12A0	16	Y0- 23
705-17-02430	Y1610-01A0	9	Y0- 19
705-17-02430	Y1610-11A0	7	Y0- 21
705-17-02460	Y1610-01A0	10	Y0- 19
705-17-02460	Y1610-11A0	8	Y0- 21
705-17-02612	Y1610-01A0	8	Y0- 19
705-17-02612	Y1610-11A0	6	Y0- 21
705-17-02830	Y1610-01A0	16	Y0- 19
705-17-02830	Y1610-11A0	14	Y0- 21
705-17-02870	Y1610-01A0	15	Y0- 19
705-17-02870	Y1610-11A0	13	Y0- 21
705-17-02870	Y1610-12A0	14	Y0- 23
705-18-36050	Y1610-01A0	3	Y0- 19
705-18-36050	Y1610-11A0	2	Y0- 21
705-18-36710	Y1610-01A0	6	Y0- 19
705-18-36820	Y1610-01A0	7	Y0- 19
705-18-36820	Y1610-11A0	5	Y0- 21
705-22-36260	H0210-01A0	5	H0- 15
705-22-36260	Y1610-01A0	1	Y0- 19
705-22-36270	Y1610-11A0	1	Y0- 21
705-29-36660	Y1610-11A0	4	Y0- 21
705-40-22020	Y1610-12A0	2	Y0- 23

PARTS	FIG NO.	INDEX	PAGE
705-40-22511	Y1610-12A0	5	Y0- 23
705-40-22760	Y1610-12A0	4	Y0- 23
705-40-80610	Y1610-12A0	1	Y0- 23
705-40-80610	Y1610-12A0	3	Y0- 23
705-40-80620	Y1610-12A0	1	Y0- 23
705-40-80620	Y1610-12A0	3	Y0- 23
705-40-80770	Y1610-12A0	7	Y0- 23
705-40-81820	Y1610-12A0	13	Y0- 23
705-40-81870	Y1610-12A0	12	Y0- 23
705-40-83720	Y1610-12A0	6	Y0- 23
705-41-05460	Y1610-12A0	1	Y0- 23
705-41-80830	Y1610-12A0	9	Y0- 23
705-41-83050	Y1610-12A0	1	Y0- 23
705-41-83110	Y1610-12A0	3	Y0- 23
705-52-21160	H0210-01A1	5	H0- 17
705-52-21160	Y1610-11A0	1	Y0- 21
705-52-21160	Y1610-12A0	1	Y0- 23
705-67-01330	Y1610-12A0	15	Y0- 23
707-00-07G00	T5141-01A0A	1	T0- 41
707-00-07G00	Y1620-11A0A	1	Y0- 27
707-00-07G20	T5155-01A0A	1	T0- 45
707-00-07G20	Y1620-21A0A	1	Y0- 29
707-00-0C140	T5141-01A0A	1	T0- 41
707-00-0C140	Y1620-11A0A	1	Y0- 27
707-00-0C150	Y1620-31A0A	1	Y0- 31
707-00-0C160	T5155-01A0A	1	T0- 45
707-00-0C160	Y1620-21A0A	1	Y0- 29
707-00-0C170	T5160-01A0A	1	T0- 51
707-00-0C170	Y1622-21A0A	1	Y0- 41
707-00-0C180	T5160-01A0A	3	T0- 51
707-00-0C180	Y1622-21A0A	1	Y0- 41
707-00-0C200	Y1622-01A0A	1	Y0- 37
707-00-0C210	Y1622-01A0A	1	Y0- 37
707-00-0C240	Y1622-11A0A	1	Y0- 39
707-00-0C250	Y1620-51A0A	1	Y0- 33
707-00-X7D10	T5151-01A0	1	T0- 43
707-00-X7D60	T5156-01A0	1	T0- 47
707-00-X7G10	T5151-01A0	1	T0- 43
707-00-X7G10	Y1620-31A0A		Y0- 31
707-00-X7G30	T5160-01A0A	1	T0- 51
707-00-X7G40	T5160-01A0A	3	T0- 51
707-00-X7G50	J4140-01A0	1	J0- 9
707-00-X7G60	J4140-01A0	2	J0- 9
707-00-X7G90	J5110-01A0	1	J0- 13
707-00-X7H00	Y1620-51A0A		Y0- 33
707-00-XC150	Y1620-31A0A	G1	Y0- 31
707-00-XC170	T5160-01A0A	1	T0- 51
707-00-XC170	Y1622-21A0A	G1	Y0- 41
707-00-XC180	T5160-01A0A	3	T0- 51
707-00-XC200	Y1622-01A0A	G1	Y0- 37

PARTS	FIG NO.	INDEX	PAGE
707-00-XC240	Y1622-11A0A	G1	Y0- 39
707-00-XC250	T5156-01A0	1	T0- 47
707-00-XC250	Y1620-51A0A	G1	Y0- 33
707-02-00140	Y1620-01A0A	1	Y0- 25
707-02-00170	T5157-01A0A	1	T0- 49
707-02-00170	Y1620-71A0A	1	Y0- 35
707-02-07340	T5157-01A0A	1	T0- 49
707-02-07340	Y1620-71A0A	1	Y0- 35
707-02-X0140	Y1620-01A0A	G1	Y0- 25
707-02-X7030	T5140-01A0	1	T0- 39
707-02-X7040	T5140-01A0	2	T0- 39
707-02-X7310	T5140-01A0	1	T0- 39
707-02-X7320	T5140-01A0	2	T0- 39
707-11-80C20	Y1620-11A0A	1	Y0- 27
707-11-80C30	Y1620-31A0A	1	Y0- 31
707-11-80C40	Y1620-21A0A	1	Y0- 29
707-11-80C60	Y1620-51A0A	1	Y0- 33
707-12-10150	Y1620-71A0A	1	Y0- 35
707-12-80160	Y1620-01A0A	1	Y0- 25
707-29-10921	Y1620-71A0A	2	Y0- 35
707-29-50981	Y1622-01A0A	6	Y0- 37
707-29-70820	Y1622-11A0A	5	Y0- 39
707-29-80740	Y1620-01A0A	2	Y0- 25
707-29-80740	Y1620-51A0A	5	Y0- 33
707-29-80820	Y1620-31A0A	4	Y0- 31
707-29-80840	Y1620-11A0A	4	Y0- 27
707-29-80930	Y1620-21A0A	9	Y0- 29
707-29-90730	Y1622-21A0A	4	Y0- 41
707-35-91020	Y1629-01A0	8	Y0- 43
707-35-91020	Y1629-11A0	8	Y0- 45
707-35-99500	Y1622-01A0A	12	Y0- 37
707-36-10950	Y1620-71A0A	13	Y0- 35
707-36-50400	Y1622-01A0A	16	Y0- 37
707-36-70930	Y1622-11A0A	13	Y0- 39
707-36-80070	Y1620-01A0A	18	Y0- 25
707-36-80911	Y1620-11A0A	15	Y0- 27
707-36-80911	Y1620-21A0A	25	Y0- 29
707-36-80970	Y1620-31A0A	15	Y0- 31
707-36-80970	Y1620-51A0A	17	Y0- 33
707-36-90930	Y1622-21A0A	15	Y0- 41
707-44-10070	Y1620-71A0A	15	Y0- 35
707-44-50070	Y1622-01A0A	18	Y0- 37
707-44-70070	Y1622-11A0A	14	Y0- 39
707-44-80070	Y1620-11A0A	17	Y0- 27
707-44-80070	Y1620-21A0A	27	Y0- 29
707-44-80070	Y1620-31A0A	17	Y0- 31
707-44-80070	Y1620-51A0A	19	Y0- 33
707-44-80180	Y1620-01A0A	20	Y0- 25
707-44-90070	Y1622-21A0A	17	Y0- 41
707-45-80910	Y1620-11A0A	19	Y0- 27

PARTS	FIG NO.	INDEX	PAGE
707-51-35210	Y1622-01A0A	8	Y0- 37
707-51-35210	Y1622-11A0A	8	Y0- 39
707-51-40210	Y1620-31A0A	6	Y0- 31
707-51-45210	Y1620-21A0A	11	Y0- 29
707-51-50210	Y1620-71A0A	4	Y0- 35
707-51-50211	Y1620-01A0A	4	Y0- 25
707-51-50211	Y1620-11A0A	6	Y0- 27
707-51-50211	Y1620-51A0A	7	Y0- 33
707-51-50211	Y1622-21A0A	6	Y0- 41
707-58-50400	Y1620-11A0A	12	Y0- 27
707-60-45010	Y1620-21A0A	17	Y0- 29
707-60-50020	Y1620-01A0A	10	Y0- 25
707-61-35040	Y1622-01A0A	14	Y0- 37
707-76-35010	Y1622-01A0A	3	Y0- 37
707-76-45120	Y1622-11A0A	17	Y0- 39
707-86-38100	Y1622-01A0A	20	Y0- 37
707-86-38200	Y1622-01A0A	20	Y0- 37
707-86-38940	Y1622-21A0A	20	Y0- 41
707-86-38950	Y1622-21A0A	20	Y0- 41
707-86-38960	Y1622-11A0A	23	Y0- 39
707-86-38980	Y1620-31A0A	20	Y0- 31
707-88-45770	Y1629-01A0	11	Y0- 43
707-88-45770	Y1629-11A0	11	Y0- 45
707-88-81480	Y1629-01A0	12	Y0- 43
707-88-81480	Y1629-11A0	12	Y0- 45
707-98-05450	Y1622-01A0A	K	Y0- 37
707-98-12690	Y1622-11A0A	K	Y0- 39
707-98-23170	Y1620-31A0A	K	Y0- 31
707-98-24320	Y1620-21A0A	K	Y0- 29
707-98-25330	Y1620-11A0A	K	Y0- 27
707-98-25340	Y1620-51A0A	K	Y0- 33
707-98-25680	Y1622-21A0A	K	Y0- 41
708-1W-00610	H0210-01A0	1	H0- 15
708-1W-00610	H0210-01A1	1	H0- 17
708-1W-00610	Y1600-01A0	1	Y0- 7
708-1W-00610	Y1600-02A0	1	Y0- 9
708-1W-00610	Y1600-03A0	1	Y0- 11
708-1W-00610	Y1600-05A0	1	Y0- 15
708-1W-00610	Y1600-06A0	1	Y0- 17
708-1W-00620	H0210-01A0	1	H0- 15
708-1W-00620	H0210-01A1	1	H0- 17
708-1W-00620	Y1600-01A0	1	Y0- 7
708-1W-00620	Y1600-02A0	1	Y0- 9
708-1W-00620	Y1600-03A0	1	Y0- 11
708-1W-00620	Y1600-04A0	1	Y0- 13
708-1W-00620	Y1600-05A0	1	Y0- 15
708-1W-00620	Y1600-06A0	1	Y0- 17
708-1W-01610	Y1600-01A0	1	Y0- 7
708-1W-01610	Y1600-02A0	1	Y0- 9
708-1W-01610	Y1600-03A0	1	Y0- 11

PARTS	FIG NO.	INDEX	PAGE
708-1W-04190	Y1600-02A0	1	Y0- 9
708-1W-04210	Y1600-01A0	1	Y0- 7
708-1W-04250	Y1600-02A0	12	Y0- 9
708-1W-04260	Y1600-02A0	12	Y0- 9
708-1W-04540	Y1600-04A0	1	Y0- 13
708-1W-04840	Y1600-05A0	1	Y0- 15
708-1W-21510	Y1600-01A0	7	Y0- 7
708-1W-22140	Y1600-01A0	12	Y0- 7
708-1W-22160	Y1600-01A0	18	Y0- 7
708-1W-22310	Y1600-01A0	11	Y0- 7
708-1W-22320	Y1600-01A0	16	Y0- 7
708-1W-23130	Y1600-02A0	7	Y0- 9
708-1W-23140	Y1600-02A0	8	Y0- 9
708-1W-23150	Y1600-02A0	6	Y0- 9
708-1W-23351	Y1600-02A0	4	Y0- 9
708-1W-23450	Y1600-02A0	14	Y0- 9
708-1W-24160	Y1600-03A0	1	Y0- 11
708-1W-24250	Y1600-03A0	3	Y0- 11
708-1W-24311	Y1600-03A0	5	Y0- 11
708-1W-24350	Y1600-03A0	7	Y0- 11
708-1W-24450	Y1600-03A0	2	Y0- 11
708-1W-25110	Y1600-04A0	1	Y0- 13
708-1W-25140	Y1600-04A0	3	Y0- 13
708-1W-25150	Y1600-04A0	2	Y0- 13
708-1W-25160	Y1600-04A0	4	Y0- 13
708-1W-25170	Y1600-04A0	9	Y0- 13
708-1W-25181	Y1600-04A0	5	Y0- 13
708-1W-25192	Y1600-04A0	6	Y0- 13
708-1W-25311	Y1600-04A0	11	Y0- 13
708-1W-25351	Y1600-04A0	10	Y0- 13
708-1W-25513	Y1600-05A0	2	Y0- 15
708-1W-25523	Y1600-05A0	1	Y0- 15
708-1W-25550	Y1600-05A0	3	Y0- 15
708-1W-25580	Y1600-05A0	10	Y0- 15
708-1W-25591	Y1600-05A0	9	Y0- 15
708-1W-25630	Y1600-05A0	11	Y0- 15
708-1W-25680	Y1600-05A0	4	Y0- 15
708-1W-25740	Y1600-06A0	1	Y0- 17
708-1W-25840	Y1600-03A0	8	Y0- 11
708-1W-26113	Y1600-03A0	10	Y0- 11
708-1W-26132	Y1600-03A0	9	Y0- 11
708-1W-26210	Y1600-03A0	14	Y0- 11
708-1W-26221	Y1600-03A0	15	Y0- 11
708-1W-26230	Y1600-03A0	16	Y0- 11
708-1W-26510	Y1600-04A0	7	Y0- 13
708-1W-28750	Y1600-06A0	3	Y0- 17
708-1W-33310	Y1600-02A0	11	Y0- 9
708-1W-33340	Y1600-02A0	10	Y0- 9
708-23-05011	Y1600-01A0	13	Y0- 7
708-23-12840	Y1600-01A0	14	Y0- 7

PARTS	FIG NO.	INDEX	PAGE
708-7L-13360	Y1600-02A0	5	Y0- 9
708-7R-11220	Y1679-01A0	6	Y0- 89
708-8D-12221	Y1600-01A0	17	Y0- 7
708-8E-16150	Y1600-01A0	9	Y0- 7
708-8E-16250	Y1664-05A0	3	Y0- 55
708-8E-16250	Y1664-15A0	3	Y0- 65
708-8E-16250	Y1665-05A0	3	Y0- 75
708-8E-16250	Y1665-25A0	3	Y0- 87
709-25-11390	H5200-03A0A	34	H0- 59
709-32-11530	Y1664-02A0	11	Y0- 49
709-32-11530	Y1664-12A0	8	Y0- 59
709-32-11530	Y1665-02A0	11	Y0- 69
709-32-11530	Y1665-22A0	11	Y0- 79
709-32-11840	Y1665-05A0	10	Y0- 75
709-74-91520	Y1664-05A0	7	Y0- 55
709-74-91520	Y1664-15A0	7	Y0- 65
709-74-91520	Y1665-05A0	7	Y0- 75
709-74-91520	Y1665-25A0	7	Y0- 87
711-16-11560	F5350-68A0	2	F0- 127
711-35-14120	F5350-57A0	9	F0- 103
711-35-14230	F5350-57A0	8	F0- 103
711-35-17151	F5350-69A0	6	F0- 129
711-53-11770	F5350-69A0	2	F0- 129
711-61-12120	F5350-68A0	7	F0- 127
711-61-12140	F5350-68A0	8	F0- 127
711-61-12160	F5350-68A0	9	F0- 127
711-61-21210	F5350-69A0	11	F0- 129
711-61-42110	F5350-68A0	6	F0- 127
711-61-42680	F5350-68A0	15	F0- 127
711-90-11000	F5350-68A0	1	F0- 127
711-90-11000	F5350-69A0	1	F0- 129
711-90-11000	F5350-70A0	1	F0- 131
711-90-11121	F5350-68A0	1	F0- 127
711-90-11131	F5350-68A0	14	F0- 127
711-90-11142	F5350-70A0	1	F0- 131
711-90-11191	F5350-70A0	4	F0- 131
711-90-11253	F5350-69A0	12	F0- 129
711-90-11511	F5350-68A0	5	F0- 127
711-90-12511	F5350-68A0	11	F0- 127
711-90-17112	F5350-69A0	4	F0- 129
711-90-19310	F5350-69A0	1	F0- 129
714-07-12290	F5350-52A0	29	F0- 89
714-07-12680	T5130-11A1	9	T0- 33
714-07-13210	F5350-57A0	30	F0- 103
714-07-14120	F4500-02A0	10	F0- 19
714-07-14521	F5350-63A0	1	F0- 117
714-07-14641	F5350-63A0	1	F0- 117
714-07-14652	F5350-63A0	2	F0- 117
714-07-19320	F5350-52A0	15	F0- 89
714-07-19320	F5350-53A0	16	F0- 93

PARTS	FIG NO.	INDEX	PAGE
714-07-19320	F5350-54A0	13	F0- 97
714-07-19320	F5350-55A0	11	F0- 99
714-07-19320	Y0100-01A0	1	Y0- 3
714-07-19320	Y0100-01A0	1	Y0- 3
714-07-19320	Y0100-01A0	1	Y0- 3
714-07-19320	Y0100-01A0	1	Y0- 3
714-07-28702	F4700-01A0A	44	F0- 79
714-07-28702	F4700-01A1A	44	F0- 83
714-07-28712	F4700-01A0A	44	F0- 79
714-07-28712	F4700-01A1A	44	F0- 83
714-08-12950	F5350-54A0	3	F0- 97
714-08-19220	F5350-53A0	14	F0- 93
714-08-19220	Y0100-01A0	1	Y0- 3
714-08-19560	F5350-52A0	16	F0- 89
714-08-19560	F5350-53A0	17	F0- 93
714-08-19570	F5350-53A0	18	F0- 93
714-08-19570	F5350-54A0	14	F0- 97
714-08-19570	F5350-55A0	12	F0- 99
714-11-14320	F5350-56A0	2	F0- 101
714-11-19230	F5350-52A0	14	F0- 89
714-11-19390	F5350-52A0	3	F0- 89
714-11-19390	F5350-53A0	2	F0- 93
714-11-19390	F5350-54A0	2	F0- 97
714-12-12610	F5350-52A0	13	F0- 89
714-12-12610	F5350-53A0	13	F0- 93
714-12-12610	F5350-54A0	11	F0- 97
714-12-12610	F5350-55A0	9	F0- 99
714-12-12740	F5350-52A0	22	F0- 89
714-12-12740	F5350-53A0	24	F0- 93
714-12-12760	F5350-52A0	19	F0- 89
714-12-12760	F5350-53A0	21	F0- 93
714-12-17161	F4500-10A0	27	F0- 47
714-12-17161	F4500-10A1	27	F0- 51
714-12-17161	F4500-11A0	27	F0- 55
714-12-17161	F4500-11A1	27	F0- 59
714-12-19120	Y0100-01A0	1	Y0- 3
714-12-19121	F5350-56A0	5	F0- 101
714-12-19170	F5350-56A0	4	F0- 101
714-12-19170	Y0100-01A0	1	Y0- 3
714-12-19340	F5350-54A0	18	F0- 97
714-12-19520	F5350-54A0	21	F0- 97
714-12-19711	F5350-52A0	10	F0- 89
714-12-19711	F5350-53A0	10	F0- 93
714-12-19711	F5350-54A0	8	F0- 97
714-12-19711	F5350-55A0	6	F0- 99
714-16-19220	F5350-53A0	15	F0- 93
714-16-19220	F5350-54A0	12	F0- 97
714-16-19220	F5350-55A0	10	F0- 99
714-16-19730	F5350-52A0	11	F0- 89
714-16-19730	F5350-53A0	11	F0- 93

PARTS	FIG NO.	INDEX	PAGE
714-16-19730	F5350-54A0	9	F0- 97
714-16-19730	F5350-55A0	7	F0- 99
714-21-19810	F5350-52A2	31	F0- 91
714-23-05000	Y0100-01A0	1	Y0- 3
714-23-05010	Y0100-01A0	2	Y0- 3
714-23-05020	Y0100-01A0	3	Y0- 5
714-23-10020	F4320-01A0A	23	F0- 5
714-23-10020	F5350-51A0	1	F0- 87
714-23-10020	F5350-52A0	1	F0- 89
714-23-10020	F5350-53A0	1	F0- 93
714-23-10020	F5350-54A0	1	F0- 97
714-23-10020	F5350-55A0	1	F0- 99
714-23-10020	F5350-56A0	1	F0- 101
714-23-10020	F5350-57A0	1	F0- 103
714-23-10020	F5350-58A0	1	F0- 107
714-23-10020	F5350-59A0	1	F0- 109
714-23-10020	F5350-60A0	1	F0- 111
714-23-10020	F5350-61A0	1	F0- 113
714-23-10020	F5350-62A0	1	F0- 115
714-23-10020	F5350-63A0	1	F0- 117
714-23-10020	F5350-64A0	1	F0- 119
714-23-10020	F5350-65A0	1	F0- 121
714-23-10020	F5350-66A0	1	F0- 123
714-23-10020	F5350-67A0	1	F0- 125
714-23-10020	F5350-68A0	1	F0- 127
714-23-10020	F5350-69A0	1	F0- 129
714-23-10020	F5350-70A0	1	F0- 131
714-23-11114	F5350-51A0	1	F0- 87
714-23-11124	F5350-51A0	7	F0- 87
714-23-11125	F5350-51A0	7	F0- 87
714-23-11310	F5350-67A0	16	F0- 125
714-23-11720	F5350-61A0	10	F0- 113
714-23-11730	F5350-61A0	11	F0- 113
714-23-12012	F5350-52A0	1	F0- 89
714-23-12022	F5350-53A0	1	F0- 93
714-23-12032	F5350-54A0	1	F0- 97
714-23-12041	F5350-55A0	1	F0- 99
714-23-12112	F5350-52A0	1	F0- 89
714-23-12122	F5350-53A0	1	F0- 93
714-23-12132	F5350-54A0	1	F0- 97
714-23-12240	F5350-55A0	1	F0- 99
714-23-12411	F5350-52A0	25	F0- 89
714-23-12420	F5350-52A0	28	F0- 89
714-23-12431	F5350-53A0	26	F0- 93
714-23-12441	F5350-53A0	27	F0- 93
714-23-12451	F5350-54A0	19	F0- 97
714-23-12460	F5350-54A0	22	F0- 97
714-23-12492	F5350-57A0	1	F0- 103
714-23-12531	F5350-52A0	26	F0- 89
714-23-12540	F5350-54A0	20	F0- 97

PARTS	FIG NO.	INDEX	PAGE
714-23-12550	F5350-55A0	16	F0- 99
714-23-12561	F5350-53A0	30	F0- 93
714-23-12591	F5350-55A0	3	F0- 99
714-23-12640	F5350-52A0	6	F0- 89
714-23-12650	F5350-53A0	4	F0- 93
714-23-12660	F5350-54A0	6	F0- 97
714-23-12670	F5350-53A0	5	F0- 93
714-23-12680	F5350-52A0	9	F0- 89
714-23-12690	F5350-53A0	8	F0- 93
714-23-12690	F5350-54A0	5	F0- 97
714-23-12690	F5350-55A0	4	F0- 99
714-23-12710	F5350-54A0	16	F0- 97
714-23-12710	F5350-55A0	15	F0- 99
714-23-12730	F5350-57A0	31	F0- 103
714-23-12740	F5350-57A0	29	F0- 103
714-23-13210	F5350-57A0	12	F0- 103
714-23-13221	F5350-57A0	22	F0- 103
714-23-13231	F5350-57A0	25	F0- 103
714-23-13261	F5350-57A0	33	F0- 103
714-23-13410	F5350-57A0	7	F0- 103
714-23-13421	F5350-57A0	32	F0- 103
714-23-14110	F5350-56A0	1	F0- 101
714-23-14220	F5350-57A0	13	F0- 103
714-23-14671	F5350-67A0	5	F0- 125
714-23-14681	F5350-67A0	1	F0- 125
714-23-14810	F5350-56A0	3	F0- 101
714-23-14910	F5350-56A0	9	F0- 101
714-23-14920	F5350-56A0	10	F0- 101
714-23-15002	F5350-61A0	1	F0- 113
714-23-15101	F5350-58A0	1	F0- 107
714-23-15102	F5350-58A0	1	F0- 107
714-23-15112	F5350-59A0	1	F0- 109
714-23-15130	F5350-58A0	1	F0- 107
714-23-15131	F5350-58A0	1	F0- 107
714-23-15142	F5350-61A0	1	F0- 113
714-23-15151	F5350-60A0	1	F0- 111
714-23-15160	F5350-65A0	17	F0- 121
714-23-15202	F5350-59A0	1	F0- 109
714-23-15203	F5350-59A0	1	F0- 109
714-23-15500	F5350-59A0	2	F0- 109
714-23-15500	F5350-61A0	6	F0- 113
714-23-15501	F5350-59A0	2	F0- 109
714-23-15560	Y0100-01A0	2	Y0- 5
714-23-15560	Y0100-01A0	2	Y0- 5
714-23-15810	F5350-62A0	1	F0- 115
714-23-15821	F5350-62A0	15	F0- 115
714-23-15910	F5350-60A0	2	F0- 111
714-23-15910	Y0100-01A0	2	Y0- 5
714-23-17320	F5350-51A0	5	F0- 87
714-23-17320	F5350-51A0	15	F0- 87

PARTS	FIG NO.	INDEX	PAGE
714-23-17330	F5350-65A0	2	F0- 121
714-23-18110	F5350-64A0	4	F0- 119
714-23-18121	F5350-64A0	7	F0- 119
714-23-18131	F5350-64A0	10	F0- 119
714-23-18140	F5350-64A0	13	F0- 119
714-23-18151	F5350-64A0	16	F0- 119
714-23-18160	F5350-64A0	19	F0- 119
714-23-18170	F5350-65A0	8	F0- 121
714-23-18180	F5350-64A0	22	F0- 119
714-23-18192	F5350-65A0	11	F0- 121
714-23-18211	F5350-63A0	18	F0- 117
714-23-18222	F5350-63A0	23	F0- 117
714-23-18232	F5350-63A0	7	F0- 117
714-23-18280	F5350-66A0	2	F0- 123
714-23-18311	F5350-65A0	1	F0- 121
714-23-18750	F5350-65A0	20	F0- 121
714-23-19210	F5350-55A0	14	F0- 99
714-23-19310	F5350-52A0	24	F0- 89
714-23-19320	F5350-52A0	23	F0- 89
714-23-19320	F5350-53A0	25	F0- 93
714-23-19330	F5350-53A0	29	F0- 93
714-23-19410	F5350-52A0	21	F0- 89
714-23-19410	F5350-53A0	23	F0- 93
714-23-19420	F5350-52A0	20	F0- 89
714-23-19430	F5350-54A0	15	F0- 97
714-23-19430	F5350-55A0	13	F0- 99
714-23-19631	F5350-53A0	22	F0- 93
720-68-19610	Y1600-02A0	3	Y0- 9
720-68-19760	Y1664-03A0	9	Y0- 51
720-68-19760	Y1665-03A0	9	Y0- 71
720-68-19760	Y1665-23A0	9	Y0- 81
720-68-19870	Y1600-01A0	5	Y0- 7
721-10-10240	Y1629-11A0	1	Y0- 45
721-10-10260	Y1629-01A0	1	Y0- 43
721-11-50470	Y1622-01A0A	1	Y0- 37
721-11-70690	Y1622-11A0A	1	Y0- 39
721-11-90370	Y1622-21A0A	1	Y0- 41
721-11-90380	Y1622-21A0A	1	Y0- 41
721-26-10050	Y1629-01A0	5	Y0- 43
721-26-10050	Y1629-11A0	5	Y0- 45
721-29-10090	Y1629-01A0	6	Y0- 43
721-29-10090	Y1629-11A0	6	Y0- 45
721-32-08151	H5120-01A1A	1	H0- 29
721-32-08151	Y1629-11A0	1	Y0- 45
721-32-10241	K4460-01A0	1	K0- 173
721-32-10241	Y1629-01A0	1	Y0- 43
721-32-10251	Y1629-11A0	1	Y0- 45
721-36-10030	Y1629-01A0	2	Y0- 43
721-36-10030	Y1629-11A0	2	Y0- 45
721-47-12020	Y1629-01A0	3	Y0- 43

PARTS	FIG NO.	INDEX	PAGE
721-47-12020	Y1629-11A0	3	Y0- 45
721-47-12080	Y1629-01A0	4	Y0- 43
721-47-12080	Y1629-11A0	4	Y0- 45
721-58-35310	Y1622-11A0A	4	Y0- 39
721-58-50500	Y1622-21A0A	12	Y0- 41
721-58-50800	Y1620-51A0A	13	Y0- 33
721-58-50900	Y1620-71A0A	10	Y0- 35
721-89-10053	Y1629-01A0	13	Y0- 43
721-89-10053	Y1629-11A0	13	Y0- 45
721-89-12010	Y1629-01A0	7	Y0- 43
721-89-12010	Y1629-11A0	7	Y0- 45
723-10-13700	H5110-01A0	1	H0- 25
723-10-13700	Y1679-01A0	1	Y0- 89
723-10-16903	Y1664-14A0	1	Y0- 63
723-10-17100	Y1664-04A0	1	Y0- 53
723-10-17100	Y1665-04A0	1	Y0- 73
723-10-17100	Y1665-24A0	1	Y0- 85
723-10-17200	Y1665-04A0	16	Y0- 73
723-10-17802	Y1664-13A0	3	Y0- 61
723-11-15110	Y1664-02A0	23	Y0- 49
723-11-15110	Y1664-12A0	20	Y0- 59
723-11-15110	Y1665-02A0	23	Y0- 69
723-11-15110	Y1665-22A0	23	Y0- 79
723-11-15130	Y1664-02A0	18	Y0- 49
723-11-15130	Y1664-12A0	14	Y0- 59
723-11-15130	Y1665-02A0	18	Y0- 69
723-11-15130	Y1665-22A0	18	Y0- 79
723-11-16130	Y1664-02A0	22	Y0- 49
723-11-16130	Y1664-12A0	18	Y0- 59
723-11-16130	Y1665-02A0	22	Y0- 69
723-11-16130	Y1665-22A0	22	Y0- 79
723-11-16760	Y1679-01A0	3	Y0- 89
723-11-17130	Y1664-02A0	10	Y0- 49
723-11-17130	Y1664-12A0	7	Y0- 59
723-11-17130	Y1665-02A0	10	Y0- 69
723-11-17130	Y1665-22A0	10	Y0- 79
723-11-17150	Y1664-02A0	8	Y0- 49
723-11-17150	Y1664-12A0	5	Y0- 59
723-11-17150	Y1665-02A0	8	Y0- 69
723-11-17150	Y1665-22A0	8	Y0- 79
723-11-17930	Y1664-02A0	12	Y0- 49
723-11-17930	Y1664-12A0	9	Y0- 59
723-11-17930	Y1665-02A0	12	Y0- 69
723-11-17930	Y1665-22A0	12	Y0- 79
723-11-18150	Y1664-03A0	7	Y0- 51
723-11-18150	Y1664-13A0	2	Y0- 61
723-11-18150	Y1664-13A0	11	Y0- 61
723-11-18150	Y1665-03A0	7	Y0- 71
723-11-18150	Y1665-23A0	7	Y0- 81
723-11-18160	Y1664-03A0	8	Y0- 51

PARTS	FIG NO.	INDEX	PAGE
723-11-18160	Y1664-13A0	10	Y0- 61
723-11-18160	Y1665-03A0	8	Y0- 71
723-11-18160	Y1665-23A0	8	Y0- 81
723-11-18170	Y1679-01A0	9	Y0- 89
723-11-18180	Y1679-01A0	10	Y0- 89
723-11-18190	Y1664-05A0	5	Y0- 55
723-11-18190	Y1664-15A0	5	Y0- 65
723-11-18190	Y1665-05A0	5	Y0- 75
723-11-18190	Y1665-25A0	5	Y0- 87
723-11-18190	Y1679-01A0	11	Y0- 89
723-11-18420	Y1664-01A0	7	Y0- 47
723-11-18420	Y1664-11A0	6	Y0- 57
723-11-18420	Y1665-01A0	8	Y0- 67
723-11-18420	Y1665-21A0	8	Y0- 77
723-11-18430	Y1664-01A0	13	Y0- 47
723-11-18430	Y1664-11A0	12	Y0- 57
723-11-18430	Y1665-01A0	14	Y0- 67
723-11-18430	Y1665-21A0	14	Y0- 77
723-11-19110	Y1664-01A0	10	Y0- 47
723-11-19110	Y1664-11A0	9	Y0- 57
723-11-19110	Y1665-01A0	11	Y0- 67
723-11-19110	Y1665-21A0	11	Y0- 77
723-11-19150	Y1664-01A0	11	Y0- 47
723-11-19150	Y1664-11A0	10	Y0- 57
723-11-19150	Y1665-01A0	12	Y0- 67
723-11-19150	Y1665-21A0	12	Y0- 77
723-11-19620	Y1665-05A0	9	Y0- 75
723-11-26170	Y1679-01A0	4	Y0- 89
723-11-26350	Y1664-12A0	19	Y0- 59
723-11-26350	Y1665-02A0	22A	Y0- 69
723-11-32720	Y1664-03A0	5	Y0- 51
723-11-32720	Y1665-03A0	5	Y0- 71
723-11-32720	Y1665-23A0	5	Y0- 81
723-11-32730	Y1664-03A0	4	Y0- 51
723-11-32730	Y1665-03A0	4	Y0- 71
723-11-32730	Y1665-23A0	4	Y0- 81
723-11-32760	Y1664-11A0	13	Y0- 57
723-11-32780	Y1664-01A0	14	Y0- 47
723-11-32780	Y1665-01A0	15	Y0- 67
723-11-32780	Y1665-21A0	15	Y0- 77
723-11-32790	Y1664-11A0	14	Y0- 57
723-11-32790	Y1665-01A0	16	Y0- 67
723-11-32790	Y1665-21A0	16	Y0- 77
723-11-32810	Y1664-02A0	4	Y0- 49
723-11-32810	Y1664-12A0	3	Y0- 59
723-11-32810	Y1665-02A0	4	Y0- 69
723-11-32810	Y1665-22A0	4	Y0- 79
723-11-32820	Y1664-02A0	4	Y0- 49
723-11-32820	Y1664-12A0	3	Y0- 59
723-11-32820	Y1665-02A0	4	Y0- 69

PARTS	FIG NO.	INDEX	PAGE
723-11-32820	Y1665-22A0	4	Y0- 79
723-11-32830	Y1664-02A0	4	Y0- 49
723-11-32830	Y1664-12A0	3	Y0- 59
723-11-32830	Y1665-02A0	4	Y0- 69
723-11-32830	Y1665-22A0	4	Y0- 79
723-11-32840	Y1664-02A0	5	Y0- 49
723-11-32840	Y1665-02A0	5	Y0- 69
723-11-32840	Y1665-22A0	5	Y0- 79
723-11-32850	Y1664-02A0	5	Y0- 49
723-11-32850	Y1665-02A0	5	Y0- 69
723-11-32850	Y1665-22A0	5	Y0- 79
723-11-32860	Y1664-02A0	5	Y0- 49
723-11-32860	Y1665-02A0	5	Y0- 69
723-11-32860	Y1665-22A0	5	Y0- 79
723-14-11701	H0120-01A0	1	H0- 9
723-14-11701	Y1664-01A0	1	Y0- 47
723-14-11701	Y1664-02A0	1	Y0- 49
723-14-11701	Y1664-03A0	1	Y0- 51
723-14-11701	Y1664-04A0	1	Y0- 53
723-14-11701	Y1664-05A0	1	Y0- 55
723-14-11803	H0120-01A0	4	H0- 9
723-14-11803	H0120-01A1	4	H0- 11
723-14-11803	H0120-01A2	4	H0- 13
723-14-11803	Y1664-11A0	1	Y0- 57
723-14-11803	Y1664-12A0	1	Y0- 59
723-14-11803	Y1664-13A0	1	Y0- 61
723-14-11803	Y1664-14A0	1	Y0- 63
723-14-11803	Y1664-15A0	1	Y0- 65
723-15-11801	H0120-01A2	1	H0- 13
723-15-11801	Y1665-21A0	1	Y0- 77
723-15-11801	Y1665-22A0	1	Y0- 79
723-15-11801	Y1665-23A0	1	Y0- 81
723-15-11801	Y1665-24A0	1	Y0- 85
723-15-11801	Y1665-25A0	1	Y0- 87
723-15-12600	H0120-01A1	1	H0- 11
723-15-12600	Y1665-01A0	1	Y0- 67
723-15-12600	Y1665-02A0	1	Y0- 69
723-15-12600	Y1665-03A0	1	Y0- 71
723-15-12600	Y1665-04A0	1	Y0- 73
723-15-12600	Y1665-05A0	1	Y0- 75
723-26-15230	Y1664-05A0	1	Y0- 55
723-26-15230	Y1664-15A0	1	Y0- 65
723-26-15230	Y1665-05A0	1	Y0- 75
723-26-15230	Y1665-25A0	1	Y0- 87
723-60-21130	Y1664-13A0	12	Y0- 61
723-60-21140	Y1664-13A0	13	Y0- 61
7700-85-8610	A1010-01C9	1	AA- 5
7700-85-8610	E0202-05A2	1	E0- 23
7821-25-1001	K1110-20B0	1	K0- 157
7861-93-2330	E0202-01A2	1	E0- 13

PARTS	FIG NO.	INDEX	PAGE
7861-93-3320	E0202-01A2	2	E0- 13
799-101-5160	F4700-01A0A	43	F0- 79
799-101-5160	F4700-01A1A	43	F0- 83
8255-62-4230	H5210-03B0	12	H0- 89
8255-62-4250	N1220-01A0A	5	N0- 3
DK010038-1840	A401P-04H7	48	AA- 97
DK010235-1640	A401P-04H7	15	AA- 95
DK013030-6040	A401P-05H7	12	AA- 99
DK014010-8140	A401P-04H7	52	AA- 97
DK014110-6440	A401P-05H7	15	AA- 99
DK014110-6440	A401P-05H7	19	AA- 99
DK014110-8440	A401P-04H7	51	AA- 97
DK016010-0540	A401P-04H7	37	AA- 97
DK016010-0740	A401P-04H7	3	AA- 95
DK016010-1640	A401P-06H7	23	AA- 101
DK016520-2210	A401P-04H7	11	AA- 95
DK016630-2030	A401P-02H7	12	AA- 87
DK016640-2030	A401P-02H7	13	AA- 87
DK020006-1640	A401P-06H7	11	AA- 101
DK020006-1640	A401P-06H7	12	AA- 101
DK020006-1640	A401P-06H7	13	AA- 101
DK020006-1640	A401P-06H7	14	AA- 101
DK020006-1840	A401P-06H7	34	AA- 103
DK020106-1640	A401P-05H7	17	AA- 99
DK020106-1840	A401P-04H7	23	AA- 95
DK020106-3840	A401P-06H7	9	AA- 101
DK025803-1310	A401P-06H7	28	AA- 101
DK026505-0940	A401P-02H7	20	AA- 89
DK026506-1040	A401P-05H7	11	AA- 99
DK026508-1140	A401P-06H7	39	AA- 103
DK026512-1540	A401P-06H7	18	AA- 101
DK026518-2240	A401P-04H7	27	AA- 95
DK026518-2240	A401P-04H7	45	AA- 97
DK028201-7020	A401P-02H7	12	AA- 87
DK028202-0020	A401P-02H7	13	AA- 87
DK029010-6810	A401P-02H7	23	AA- 89
DK029010-6810	A401P-04H7	22	AA- 95
DK029040-6020	A401P-02H7	2	AA- 87
DK029050-5010	A401P-02H7	19	AA- 89
DK029111-2090	A401P-05H7	7	AA- 99
DK029201-6010	A401P-04H7	35	AA- 97
DK029231-2030	A401P-04H7	30	AA- 97
DK029311-0010	A401P-04H7	32	AA- 97
DK029311-0020	A401P-03H7	15	AA- 91
DK029311-0030	A401P-03H7	15	AA- 91
DK029311-0040	A401P-03H7	15	AA- 91
DK029311-0050	A401P-03H7	15	AA- 91
DK029311-0060	A401P-03H7	15	AA- 91
DK029311-0070	A401P-03H7	15	AA- 91
DK029311-0080	A401P-03H7	15	AA- 93

PARTS	FIG NO.	INDEX	PAGE
DK029311-0090	A401P-03H7	15	AA- 93
DK029311-0110	A401P-03H7	15	AA- 93
DK029311-0120	A401P-03H7	15	AA- 93
DK029311-0130	A401P-03H7	15	AA- 93
DK029311-0140	A401P-03H7	15	AA- 93
DK029311-0180	A401P-04H7	32	AA- 97
DK029311-0190	A401P-04H7	32	AA- 97
DK029311-0210	A401P-04H7	32	AA- 97
DK029311-0220	A401P-06H7	36	AA- 103
DK029311-0230	A401P-06H7	36	AA- 103
DK029311-0270	A401P-03H7	15	AA- 91
DK029311-0280	A401P-03H7	15	AA- 91
DK029311-0290	A401P-03H7	15	AA- 91
DK029311-0310	A401P-03H7	15	AA- 91
DK029311-0320	A401P-03H7	15	AA- 93
DK029311-0330	A401P-03H7	15	AA- 93
DK029311-0340	A401P-03H7	15	AA- 93
DK029311-0350	A401P-03H7	15	AA- 93
DK029311-0490	A401P-03H7	15	AA- 93
DK029311-0500	A401P-03H7	15	AA- 93
DK029311-0580	A401P-03H7	15	AA- 91
DK029311-0590	A401P-03H7	15	AA- 91
DK029311-0600	A401P-03H7	15	AA- 91
DK029311-0610	A401P-03H7	15	AA- 91
DK029311-0620	A401P-03H7	15	AA- 93
DK029311-0630	A401P-03H7	15	AA- 93
DK029311-0710	A401P-03H7	15	AA- 93
DK029311-1070	A401P-06H7	26	AA- 101
DK029311-7010	A401P-02H7	17	AA- 87
DK029311-7020	A401P-02H7	17	AA- 87
DK029311-7030	A401P-02H7	17	AA- 87
DK029311-7040	A401P-02H7	17	AA- 87
DK029311-7050	A401P-02H7	17	AA- 89
DK029311-7060	A401P-02H7	17	AA- 89
DK029311-7070	A401P-02H7	17	AA- 89
DK029311-7090	A401P-02H7	17	AA- 89
DK029311-7210	A401P-02H7	17	AA- 89
DK029311-7220	A401P-02H7	17	AA- 89
DK029312-0310	A401P-02H7	16	AA- 87
DK029312-0320	A401P-02H7	16	AA- 87
DK029312-0330	A401P-02H7	16	AA- 87
DK029312-0340	A401P-02H7	16	AA- 87
DK029312-0350	A401P-02H7	16	AA- 87
DK029312-0360	A401P-02H7	16	AA- 87
DK029312-0370	A401P-02H7	16	AA- 87
DK029312-0380	A401P-02H7	16	AA- 87
DK029321-2020	A401P-04H7	29	AA- 95
DK029331-2130	A401P-05H7	6	AA- 99
DK029332-6030	A401P-07H7	5	AA- 105
DK029340-6020	A401P-02H7	8	AA- 87

PARTS	FIG NO.	INDEX	PAGE
DK029341-0110	A401P-02H7	30	AA- 89
DK029341-0110	A401P-04H7	16	AA- 95
DK029341-0110	A401P-05H7	20	AA- 99
DK029341-4130	A401P-02H7	27	AA- 89
DK029341-4130	A401P-07H7	18	AA- 105
DK029341-4130	A401P-07H7	19	AA- 105
DK029622-0190	A401P-02H7	21	AA- 89
DK029631-0030	A401P-06H7	35	AA- 103
DK029631-6060	A401P-07H7	13	AA- 105
DK029631-8020	A401P-06H7	22	AA- 101
DK029633-1010	A401P-02H7	10	AA- 87
DK029635-2020	A401P-06H7	38	AA- 103
DK029637-5030	A401P-02H7	28	AA- 89
DK029731-0120	A401P-02H7	29	AA- 89
DK029731-0120	A401P-04H7	17	AA- 95
DK029731-0120	A401P-05H7	21	AA- 99
DK029731-4680	A401P-07H7	17	AA- 105
DK101062-9340	A401P-02H7	1	AA- 87
DK101062-9340	A401P-03H7	1	AA- 91
DK105220-5960	A401P-07H7	1	AA- 105
DK105404-6150	A401P-04H7	1	AA- 95
DK105404-6150	A401P-05H7	1	AA- 99
DK105404-6150	A401P-06H7	1	AA- 101
DK131002-2000	A401P-02H7	4	AA- 87
DK131011-0800	A401P-02H7	6	AA- 87
DK131017-1000	A401P-02H7	7	AA- 87
DK131028-6020	A401P-02H7	5	AA- 87
DK131034-1401	A401P-03H7	1	AA- 91
DK131073-9120	A401P-02H7	1	AA- 87
DK131110-7720	A401P-03H7	3	AA- 91
DK131112-5600	A401P-03H7	4	AA- 91
DK131115-1600	A401P-03H7	5	AA- 91
DK131116-8420	A401P-03H7	6	AA- 91
DK131117-3100	A401P-03H7	7	AA- 91
DK131122-0520	A401P-03H7	8	AA- 91
DK131154-6520	A401P-03H7	2	AA- 91
DK131200-2820	A401P-03H7	10	AA- 91
DK131203-0800	A401P-03H7	11	AA- 91
DK131204-1000	A401P-03H7	12	AA- 91
DK131205-0500	A401P-03H7	13	AA- 91
DK131206-0200	A401P-03H7	14	AA- 91
DK131215-2500	A401P-03H7	16	AA- 93
DK131216-0100	A401P-03H7	17	AA- 93
DK131217-0200	A401P-03H7	18	AA- 93
DK131226-0300	A401P-03H7	20	AA- 93
DK131240-0100	A401P-03H7	21	AA- 93
DK131241-0100	A401P-03H7	22	AA- 93
DK131242-0100	A401P-03H7	23	AA- 93
DK131256-0900	A401P-03H7	19	AA- 93
DK131302-1300	A401P-02H7	14	AA- 87

PARTS	FIG NO.	INDEX	PAGE
DK131302-1700	A401P-02H7	15	AA- 87
DK131306-1000	A401P-02H7	18	AA- 89
DK131321-1900	A401P-02H7	24	AA- 89
DK131330-6400	A401P-02H7	22	AA- 89
DK131371-4900	A401P-02H7	11	AA- 87
DK131401-0020	A401P-02H7	26	AA- 89
DK131424-3420	A401P-02H7	25	AA- 89
DK134026-0000	A401P-02H7	3	AA- 87
DK139006-7100	A401P-06H7	7	AA- 101
DK139206-0400	A401P-02H7	9	AA- 87
DK139208-0400	A401P-06H7	5	AA- 101
DK139406-1400	A401P-04H7	8	AA- 95
DK139410-0000	A401P-04H7	32	AA- 97
DK139410-0100	A401P-04H7	32	AA- 97
DK139410-3000	A401P-04H7	32	AA- 97
DK139410-3100	A401P-04H7	32	AA- 97
DK139410-3200	A401P-04H7	32	AA- 97
DK139411-0000	A401P-06H7	25	AA- 101
DK139417-0000	A401P-02H7	17	AA- 89
DK139611-0000	A401P-06H7	24	AA- 101
DK139717-0100	A401P-03H7	9	AA- 91
DK144415-1800	A401P-05H7	10	AA- 99
DK146711-0000	A401P-05H7	4	AA- 99
DK152003-1020	A401P-07H7	1	AA- 105
DK152100-1120	A401P-07H7	2	AA- 105
DK152102-1600	A401P-07H7	3	AA- 105
DK152105-1600	A401P-07H7	4	AA- 105
DK152111-2820	A401P-07H7	6	AA- 105
DK152112-0100	A401P-07H7	7	AA- 105
DK152113-0700	A401P-07H7	8	AA- 105
DK152114-0400	A401P-07H7	9	AA- 105
DK152115-0500	A401P-07H7	10	AA- 105
DK152116-0200	A401P-07H7	11	AA- 105
DK152118-0900	A401P-07H7	12	AA- 105
DK152121-0200	A401P-07H7	14	AA- 105
DK152200-5420	A401P-07H7	15	AA- 105
DK152300-5920	A401P-07H7	16	AA- 105
DK152320-0100	A401P-07H7	20	AA- 105
DK154010-0200	A401P-06H7	8	AA- 101
DK154011-0100	A401P-06H7	1	AA- 101
DK154011-2700	A401P-06H7	17	AA- 101
DK154011-4900	A401P-04H7	25	AA- 95
DK154013-4000	A401P-04H7	24	AA- 95
DK154031-4700	A401P-06H7	4	AA- 101
DK154035-1600	A401P-05H7	13	AA- 99
DK154035-2900	A401P-06H7	41	AA- 103
DK154036-0300	A401P-06H7	6	AA- 101
DK154062-2720	A401P-05H7	23	AA- 99
DK154062-2900	A401P-05H7	14	AA- 99
DK154062-3520	A401P-04H7	54	AA- 97

PARTS	FIG NO.	INDEX	PAGE
DK154062-3900	A401P-06H7	42	AA- 103
DK154062-4020	A401P-06H7	43	AA- 103
DK154062-5001	A401P-05H7	18	AA- 99
DK154063-8400	A401P-06H7	10	AA- 101
DK154123-2320	A401P-04H7	31	AA- 97
DK154150-0400	A401P-06H7	15	AA- 101
DK154154-5200	A401P-04H7	33	AA- 97
DK154158-1220	A401P-06H7	16	AA- 101
DK154159-1200	A401P-06H7	19	AA- 101
DK154177-0720	A401P-04H7	34	AA- 97
DK154200-7020	A401P-06H7	20	AA- 101
DK154204-4300	A401P-06H7	21	AA- 101
DK154204-4400	A401P-06H7	27	AA- 101
DK154206-0200	A401P-06H7	30	AA- 101
DK154206-2800	A401P-06H7	29	AA- 101
DK154218-1620	A401P-04H7	36	AA- 97
DK154222-5800	A401P-04H7	40	AA- 97
DK154232-3200	A401P-04H7	39	AA- 97
DK154235-4720	A401P-04H7	38	AA- 97
DK154236-4100	A401P-04H7	42	AA- 97
DK154237-1100	A401P-06H7	31	AA- 103
DK154321-0400	A401P-06H7	3	AA- 101
DK154322-0600	A401P-06H7	40	AA- 103
DK154326-5120	A401P-04H7	55	AA- 97
DK154342-2320	A401P-06H7	32	AA- 103
DK154375-9020	A401P-04H7	21	AA- 95
DK154382-3720	A401P-06H7	33	AA- 103
DK154390-0000	A401P-04H7	43	AA- 97
DK154390-0300	A401P-06H7	37	AA- 103
DK154400-9520	A401P-05H7	2	AA- 99
DK154404-5600	A401P-05H7	9	AA- 99
DK154411-7300	A401P-05H7	22	AA- 99
DK154413-2600	A401P-05H7	8	AA- 99
DK154415-1200	A401P-05H7	3	AA- 99
DK154415-1300	A401P-05H7	5	AA- 99
DK154415-3320	A401P-04H7	4	AA- 95
DK154415-3400	A401P-04H7	5	AA- 95
DK154422-7101	A401P-05H7	1	AA- 99
DK154422-7820	A401P-05H7	1	AA- 99
DK154500-8020	A401P-06H7	2	AA- 101
DK154620-0020	A401P-04H7	1	AA- 95
DK154620-0820	A401P-04H7	1	AA- 95
DK154620-1500	A401P-04H7	49	AA- 97
DK154620-1600	A401P-04H7	14	AA- 95
DK154620-3200	A401P-05H7	16	AA- 99
DK154620-4700	A401P-04H7	50	AA- 97
DK154620-7900	A401P-04H7	20	AA- 95
DK154620-8800	A401P-04H7	46	AA- 97
DK154620-8901	A401P-04H7	47	AA- 97
DK154621-2120	A401P-04H7	28	AA- 95

PARTS	FIG NO.	INDEX	PAGE
DK154621-3000	A401P-04H7	44	AA-97
DK154621-3200	A401P-04H7	53	AA-97
DK154621-3500	A401P-04H7	12	AA-95
DK154621-3600	A401P-04H7	10	AA-95
DK154621-3701	A401P-04H7	2	AA-95
DK154621-3800	A401P-04H7	6	AA-95
DK154621-3900	A401P-04H7	13	AA-95
DK154621-4100	A401P-04H7	19	AA-95
DK154621-4300	A401P-04H7	18	AA-95
DK154621-4400	A401P-04H7	7	AA-95
DK155402-3800	A401P-04H7	41	AA-97
DK155404-5120	A401P-04H7	26	AA-95
DK160100-0540	A401P-04H7	9	AA-95
E6731-21-1260	A2019-01A2	4	AA-37
KD0-0055-05202	A601P-02A7	26	AA-145
KD0-0056-05302	A601P-02A7	27	AA-145
KD0-0275-06802	A601P-02A7	13	AA-145
KD0-0280-16022	A601P-02A7	33	AA-145
KD0-09011-3270	A601P-02A7	25	AA-145
KD0-09120-0770	A601P-02A7	18	AA-145
KD0-09201-0880	A601P-02A7	9	AA-145
KD0-09201-0980	A601P-02A7	4	AA-145
KD0-33902-0080	A601P-02A7	29	AA-145
KD0-33902-0090	A601P-02A7	28	AA-145
KD0-35100-0300	A601P-02A7	1	AA-145
KD0-35120-0210	A601P-02A7	11	AA-145
KD0-35200-0430	A601P-02A7	12	AA-145
KD0-35300-0190	A601P-02A7	5	AA-145
KD0-35411-0640	A601P-02A7	30	AA-145
KD0-35421-0170	A601P-02A7	31	AA-145
KD0-35700-0750	A601P-02A7	14	AA-145
KD0-35710-0870	A601P-02A7	14	AA-145
KD0-35719-0200	A601P-02A7	16	AA-145
KD0-35730-0510	A601P-02A7	15	AA-145
KD0-35761-0220	A601P-02A7	34	AA-145
KD0-35784-0240	A601P-02A7	19	AA-145
KD0-35923-0130	A601P-02A7	20	AA-145
KD0-35923-0160	A601P-02A7	2	AA-145
KD0-35926-0060	A601P-02A7	7	AA-145
KD0-35926-0070	A601P-02A7	6	AA-145
KD0-35926-0090	A601P-02A7	8	AA-145
KD0-35943-0140	A601P-02A7	21	AA-145
KD0-35943-0150	A601P-02A7	22	AA-145
KD0-35943-0160	A601P-02A7	23	AA-145
KD0-35943-0170	A601P-02A7	24	AA-145
KD1-0331-06013	A601P-02A7	17	AA-145
KD1-0335-16002	A601P-02A7	32	AA-145
KD1-33923-0790	A601P-02A7	3	AA-145
KD1-33926-0730	A601P-02A7	10	AA-145
ST14317	Y1689-01A0	20	Y0-91

PARTS	FIG NO.	INDEX	PAGE
ST15	Y1689-01A0	3	Y0-91
ST18015	Y1689-01A0	25	Y0-91
ST21785	Y1689-01A0	23	Y0-91
ST230313	Y1689-01A0	24	Y0-91
ST230327	Y1689-01A0	2	Y0-91
ST5126	Y1689-01A0	5	Y0-91
ST5389-1	Y1689-01A0	11	Y0-91
ST5389R-001	Y1689-01A0	12	Y0-91
ST5544	Y1689-01A0	16	Y0-91
ST64009	Y1689-01A0	15	Y0-91
ST6901S-9	Y1689-01A0	7	Y0-91
ST7970	Y1689-01A0	4	Y0-91
ST8329	Y1689-01A0	15	Y0-91
ST8436-3	Y1689-01A0	6	Y0-91
ST8438S-1	Y1689-01A0	8	Y0-91
ST8703	Y1689-01A0	19	Y0-91
STBA0096A	Y1689-01A0	14	Y0-91
STBA0097A	Y1689-01A0	13	Y0-91
STBA0273A	Y1689-01A1	1	Y0-93
TW012114-1240	Y1979-02A0	8	Y0-99
TW012153-0640	Y1979-02A0	40	Y0-101
TW012155-1440	Y1979-01A0	14	Y0-95
TW012514-1640	Y1979-01A0	11	Y0-95
TW012514-1640	Y1979-01A0	21	Y0-95
TW012514-1640	Y1979-01A0	32	Y0-95
TW012514-1640	Y1979-02A0	24	Y0-99
TW012514-1640	Y1979-02A0	36	Y0-101
TW020046-3040	Y1979-02A0	13	Y0-99
TW020046-3540	Y1979-01A0	35	Y0-97
TW020058-3040	Y1979-02A0	12	Y0-99
TW029200-6240	Y1979-02A0	44	Y0-101
TW502700-2520	Y1979-01A0	23	Y0-95
TW502725-1730	Y1979-02A0	17	Y0-99
TW502752-3250	Y1979-02A0	26	Y0-99
TW503700-3990	Y1979-02A0	5	Y0-99
TW503700-3990	Y1979-03A0	1	Y0-103
TW523100-0700	Y1979-02A0	25	Y0-99
TW524120-1720	Y1979-01A0	26	Y0-95
TW534057-3520	Y1979-02A0	9	Y0-99
TW534057-3620	Y1979-02A0	10	Y0-99
TW534057-3720	Y1979-02A0	10	Y0-99
TW534102-6000	Y1979-01A0	10	Y0-95
TW534104-4300	Y1979-02A0	32	Y0-99
TW534104-4400	Y1979-02A0	33	Y0-101
TW534104-5000	Y1979-02A0	34	Y0-101
TW534104-7300	Y1979-02A0	42	Y0-101
TW534104-7500	Y1979-02A0	43	Y0-101
TW534104-8400	Y1979-01A0	16	Y0-95
TW534136-9221	Y1979-01A0	1	Y0-95
TW534136-9321	Y1979-02A0	1	Y0-99

GD555-3C

PARTS	FIG NO.	INDEX	PAGE
TW534189-9200	Y1979-01A0	33	Y0-95
TW534189-9400	Y1979-02A0	4	Y0-99
TW534190-0300	Y1979-02A0	39	Y0-101
TW534190-3100	Y1979-03A0	12	Y0-103
TW534232-2200	Y1979-01A0	22	Y0-95
TW534241-3200	Y1979-02A0	3	Y0-99
TW534270-7920	Y1979-02A0	28	Y0-99
TW534270-8321	Y1979-01A0	27	Y0-95
TW534280-1400	Y1979-01A0	34	Y0-95
TW534280-1500	Y1979-02A0	41	Y0-101
TW534461-8802	Y1979-01A0	2	Y0-95
TW534461-8902	Y1979-02A0	2	Y0-99
TW534470-9100	Y1979-01A0	28	Y0-95
TW534470-9200	Y1979-02A0	29	Y0-99
TW534510-5200	Y1979-02A0	20	Y0-99
TW534540-2200	Y1979-03A0	11	Y0-103
TW536021-5200	Y1979-02A0	22	Y0-99
TW536021-6501	Y1979-01A0	3	Y0-95
TW536160-2100	Y1979-02A0	31	Y0-99
TW536160-2201	Y1979-01A0	31	Y0-95
TW580140-0300	Y1979-02A0	27	Y0-99
TW580140-0600	Y1979-01A0	19	Y0-95
TW580521-6800	Y1979-01A0	29	Y0-95
TW580521-7700	Y1979-02A0	37	Y0-101
TW580529-7000	Y1979-01A0	13	Y0-95
TW580530-0100	Y1979-03A0	4	Y0-103
TW580532-4600	Y1979-03A0	14	Y0-103
TW580534-0400	Y1979-01A0	8	Y0-95
TW580534-1500	Y1979-02A0	6	Y0-99
TW580534-1600	Y1979-02A0	7	Y0-99
TW580534-1900	Y1979-02A0	14	Y0-99
TW580534-2000	Y1979-02A0	15	Y0-99
TW580534-4300	Y1979-01A0	24	Y0-95
TW581520-7700	Y1979-03A0	10	Y0-103
TW582532-0700	Y1979-02A0	11	Y0-99
TW582551-3901	Y1979-03A0	13	Y0-103
TW582571-4300	Y1979-02A0	23	Y0-99
TW582594-3020	Y1979-01A0	16	Y0-95
TW582623-1800	Y1979-01A0	12	Y0-95
TW582623-8500	Y1979-01A0	9	Y0-95
TW582670-2501	Y1979-01A0	20	Y0-95
TW583032-2300	Y1979-01A0	15	Y0-95
TW592022-3600	Y1979-03A0	5	Y0-103
TW592022-3700	Y1979-01A0	5	Y0-95
TW592022-3700	Y1979-01A0	7	Y0-95
TW592022-3700	Y1979-01A0	25	Y0-95
TW592022-3700	Y1979-02A0	16	Y0-99
TW592022-3700	Y1979-02A0	35	Y0-101
TW592024-1800	Y1979-02A0	38	Y0-101
TW592024-3100	Y1979-01A0	4	Y0-95

PARTS	FIG NO.	INDEX	PAGE
TW592050-0500	Y1979-02A0	19	Y0-99
TW592055-0900	Y1979-01A0	30	Y0-95
TW592055-0900	Y1979-02A0	30	Y0-99
TW592405-1700	Y1979-02A0	21	Y0-99
TW593111-8800	Y1979-01A0	17	Y0-95
TW593230-1420	Y1979-01A0	18	Y0-95
TW595324-2600	Y1979-03A0	6	Y0-103
TW595327-8100	Y1979-01A0	6	Y0-95