RUTHZIL TRATOR COMERCIAL DE PEÇAS LTDA 11 97083-6812 ROLANDO CITRANGULO

KEPB161200

PARTS BOOK

KOMATSU

GD655-5
Serial No. B40001 and up

SAA6D107E-1CC
Serial No. 26540705 and up

FOREWORD

When ordering a spare part, specify the part number, part name, and quantity required, and also specify your machine model code, machine serial number, engine serial number and the service meter reading.

This Parts Book describes not only standard items but also optional equipment and attachments. To order a part, please contact your nearest Komatsu distributor.

This Parts Book contains the information and special codes as follows:

ILLUSTRATION AND PARTS LIST

When you open this Parts Book, you will find an illustration following its figure number (FIG.) Each individual part in the illustration is given an index number. Following the illustration, the component parts of the unit are listed in the order of the index numbers shown in the illustration. The part number, part name, quantity and applicable serial number are given for each part as a parts list.

FIGURE NUMBER (FIG.)

The figure number (FIG.) is the number which shows the figure of the page. It is not the spare part number. The numbers are not always continuous.

PARTS LIST

Spare parts information are listed in the parts list page as follows:

Index:

This is the same as the index number in the illustration. The parts are listed in index number order.

Code:

Codes are used in this column and represent as follows:

A1 This part and the part specified in the line immediately above are interchangeable.

A2 The part specified in the line above can be used instead of this part.

A3 This part can be used instead of the part specified in the line immediately above.

A4 The part specified in the description column can be used instead of this part if it is used as a set.

B1 This shows discontinued part. The part specified in the above line is supplied instead.

B2 This shows a discontinued part. The part specified in the description column is supplied instead as a set.

C1 This part cannot be supplied as an individual part. It is supplied as an assembly.

C2 This part is supplied for authorized Komatsu distributors only. It cannot be supplied as an individual part. It is supplied as an assembly.

C3 This indicates a part supplied as semi-finished. It requires additional work before installation.

Part Number:

The number given in the part number column is the part number for the part shown. It is the identification code used when ordering that part. It is important that there be no mistake in this code number when ordering.

Description:

This gives the name of part that has the part number listed. The mark "•" is put in front of the component part name of an assembly part and the item is entered following the assembly. If a part marked with "•" is a sub assembly, its components are marked with "••".

Example: Tank Assembly
- •Tank
- •Cap
- ••Packing

Furthermore, the following marks and abbreviations are used in this column.

Kit	This indicates kit parts. For kit parts, refer to the section FIELD REPAIR SERVICE PARTS in this Parts Book.
D	Diameter
L	Length
LHS	Left-hand side
RHS	Right-hand side
T	Thickness
W	Width

Quantity (Qty):

This specifies the number of pieces used for one machine. However, if a part is included in the assembly and/or component, the quantity per such assembly and/or component is specified.
Code AR (as required) shall be used in the Quantity column if the part cannot be specified numbers requires per machine and/or component. In such case, any number of quantities may be ordered depend on the field service requirement.

Serial Numbers:

Applicable engine serial number is indicated for the engine volume. In the chassis volume, this indicates the machine serial number in which the part is used.

If the serial number is enclosed in parenthesis, it shows that it is the applicable serial number for exclusive use of the equipment of figure number (FIG.)

AVANT-PROPOS

Lorsque vous passez une commande d'une pièce de rechange, vous êtes prié de spécifier le numéro de la pièce, la désignation de la pièce et la quantité requise et d'indiquer également le code du modèle de la machine, le numéro de série de la machine, le numéro de série du moteur et la lecture du compteur de service du véhicule.

Sur le présent catalogue des pièces figurent non seulement les équipements standard, mais également les équipements et accessoires en option. Si vous désirez un équipement ou une pièce quelconque, vous êtes prié de prendre contact avec le concessionnaire Komatsu le plus proche.

Ce catalogue des pièces comprend les informations et codes spéciaux de la manière suivante:

FIGURES ET LISTES DES PIÈCES

Lorsque vous ouvrez le présent catalogue, vous pouvez rechercher les figures en fonction du numéro de figure (FIG.). Chaque pièce individuelle dans la figure est fournie d'un numéro de référence. D'après la figure, les éléments de l'unité sont énumérés dans l'ordre des numéros de référence montrés sur la figure. Le numéro de la pièce, la désignation de la pièce, la quantité et le numéro de série utilisés sont indiqués pour chaque pièce comme liste des pièces.

NUMÉRO DE FIGURE (FIG.)

Le numéro de figure (FIG.) est un numéro qui permet d'identifier une figure sur une page. Il ne représente pas le numéro de la pièce de rechange. Les numéros ne sont pas toujours séquentiels.

LISTE DES PIÈCES DE RECHANGE

Les informations des pièces de rechange sont données dans la page de la liste des pièces comme ci-après:

Numéro de référence (Index):

Les numéros de référence correspondent aux numéros de référence notés sur la figure et sont énumérés dans l'ordre des numéros de référence.

Codification (Code):

Les codes sont utilisés dans cette colonne et représentent comme ci-après:

A1 Cette pièce et la pièce qui figure sur la ligne juste au-dessus sont interchangeables.

A2 La pièce indiquée sur la ligne au-dessus peut être utilisée au lieu de cette pièce.

A3 Cette pièce peut être utilisée au lieu de la pièce indiquée sur la ligne juste au-dessus.

A4 La pièce indiquée dans la colonne de description peut être utilisée au lieu de cette pièce si elle est utilisée comme ensemble.

B1 Ceci montre la pièce dont la production est interrompue. La pièce indiquée dans la ligne au-dessus est fournie à sa place.

B2 Ceci montre la pièce dont la production est interrompue. La pièce indiquée dans la colonne de description est fournie à sa place comme ensemble.

C1 Cette pièce ne peut pas être fournie comme pièce individuelle. Elle est fournie en tant qu'ensemble.

C2 Cette pièce est fournie pour les distributeurs autorisés de Komatsu seulement. Elle ne peut pas être fournie comme pièce individuelle. Elle est fournie en tant qu'ensemble.

C3 Ceci indique une pièce fournie à l'état semi-fini. Ceci exige un travail additionnel avant l'installation.

Numéros de pièce (Part Number):

Les numéros indiqués dans cette colonne correspondent aux numéros des pièces représentées et constituent les codes à spécifier pour toute commande de pièce. Il est important de ne pas faire d'erreur avec ce code au moment de la commande.

Description (Description):

Ceci indique le nom de la pièce qui montre le numéro de la pièce énumérée. La marque "•" est placée devant le nom de la pièce du composant d'une pièce d'ensemble et l'item est introduit suivant l'ensemble. Si une pièce marquée avec "•" est un sous-ensemble, ses composants sont marqués avec "• •".
Exemple: Tank Assembly (Ensemble de réservoir)
• Tank
• Cap
• • Packing

En outre, les marques et abréviations suivantes sont utilisées dans cette colonne.

Kit Ceci indique les pièces de kit. Pour les pièces de kit, se référer à la Section FIELD REPAIR SERVICE PARTS de ce Catalogue des Pièces.
D Diamètre
L Longueur
LHS Côté gauche
RHS Côté droit
T Épaisseur
W Largeur

Quantité (Qty):

Ceci spécifie le nombre de pièces nécessaires pour l'équipement en question. S'il s'agit de pièces comprises dans un ensemble et/ou composant, et la quantité indiquée est le nombre de pièces nécessaires pour l'ensemble et/ou le composant en question.
Le code AR (comme requis) sera utilisé dans la colonne de Quantité si la pièce ne peut pas se présenter en nombres indiqués comme requis par machine et/ou composant. Dans ce cas, tout nombre de quantités peut être commandé selon la condition de service de champ.

Numéros de série (Serial Numbers):

Le numéro de série du moteur applicable est indiqué pour le volume du moteur. Dans le volume de la carrosserie, ceci indique le numéro de série de l'équipement sur lequel la pièce est utilisée.

Si le numéro de série est placé entre parenthèses, cela signifie qu'il s'agit d'un numéro de série destiné exclusivement à l'utilisation de l'équipement mentionné dans le numéro de figure (FIG.).

Quando fate un ordinazione di una parte di ricambio, siete pregati di precisare il numero della parte, la designazione della parte e la quantità necessaria ed indicare anche il codice del modello della macchina, il numero di serie della macchina, il numero di serie del motore e la lettura dell'indicatore di servizio del veicolo.

Sul presente catalogo delle parti appaiono non solo le attrezzature standard, ma anche le attrezzature ed accessori in opzione. Se desiderate un'attrezzatura o una parte qualunque, siete pregati di prendere contatto con il concessionario Komatsu più vicino.

Questo catalogo delle parti comprende le informazioni ed i codici speciali nel modo seguente:

ILLUSTRAZIONI ED ELENCO DELLE PARTI

Quando aprite il presente catalogo, troverete una figura secondo il suo numero di figura (FIG.). Ogni parte individuale nella figura è fornita di un numero di riferimento. Secondo la figura, gli elementi dell'unità sono enumerati nell'ordine dei numeri di riferimento mostrati sulla figura. Il numero della parte, la designazione della parte, la quantità ed il numero di serie utilizzati sono indicati per ogni parte come elenco delle parti.

NUMERO DI FIGURA (FIG.)

Il numero di figura (FIG.) è il numero che indica la figura della pagina. Non rappresenta il numero della parte di ricambio. I numeri non sono sempre continui.

ELENCO DELLE PARTI DI RICAMBIO

Le informazioni dei pezzi di ricambio sono elencate nella pagina dell'elenco dei pezzi come segue:

Numero di riferimento (Index):

I numeri di riferimento corrispondono ai numeri di riferimento notati sulla figura e sono enumerati nell'ordine dei numeri di riferimento.

Codice (Code):

I codici sono usati in questa colonna e rappresentano come segue:

A1 Questa parte ed la parte specificata nella linea immediatamente sopra sono intercambiabili.

A2 La parte specificata nella linea sopra può essere usata anziché questa parte.

A3 Questa parte può essere usata anziché la parte specificata nella linea immediatamente sopra.

A4 La parte specificata nella colonna di descrizione può essere usata anziché questa parte se è usata come insieme.

B1 Ciò mostra la parte non più in produzione. La parte specificata nella suddetta linea è invece fornita.

B2 Ciò mostra una parte non più in produzione. La parte specificata nella colonna di descrizione è fornita invece come insieme.

C1 Questa parte non può essere fornita come pezzo individuale. È fornita come insieme.

C2 Questa parte è destinata solo ai distributori autorizzati Komatsu. Non può essere fornita come parte individuale. È fornita come insieme.

C3 Ciò indica una parte fornita come semifinito. Richiede un lavoro supplementare prima dell'installazione.

Numeri di parte (Part Number):

I numeri indicati in questa colonna corrispondono ai numeri delle parti rappresentate e costituiscono i codici da precisare per qualsiasi ordinazione di parte. È importante non fare un errore con questo codice al momento dell'ordinazione.

Descrizione (Description):

Ciò dà il nome della parte che presenta il numero di parte elencato. Il contrassegno "•" è messo davanti al nome della parte componente di una parte di gruppo e l'articolo è inserito dopo il gruppo. Se un pezzo segnato con "•" è un sotto-gruppo, i suoi componenti sono segnati con "• •".
Esempio: Tank Assembly
• Tank
• Cap
• • Packing

Inoltre, i seguenti contrassegni ed abbreviazioni sono usati in questa colonna.

Kit Ciò indica le parti di kit. Per le parti di kit, riferirsi alla sezione PARTI DI RICAMBIO PER SERVIZIO DI RIPARAZIONE IN SEDE in questo Catalogo delle Parti.
D Diametro
L Lunghezza
LHS Lato a sinistra
RHS Lato a destra
T Spessore
W Larghezza

Quantità (Qty):

Questo precisa il numero di parti necessarie per l'attrezzatura in questione. Se si tratta di parti comprese in un insieme e/o componente, e la quantità indicata è il numero di parti necessarie per l'insieme e/o il componente in questione.
Il codice AR (come richiesto) sarà utilizzato nella colonna di Quantità se la parte non può presentarsi in numeri indicati come richiesto per macchina e/o componente. In questo caso, qualsiasi numero di quantità può essere ordinato secondo la condizione di servizio di campo.

Numeri di serie (Serial Numbers):

Il numero di serie del motore applicabile è indicato per il volume del motore. Nel volume della carrozzeria, questo indica il numero di serie dell'attrezzatura sulla quale la parte è utilizzata.

Se il numero seriale è racchiuso tra parentesi, indica che è il numero di serie applicabile per uso esclusivo dell'attrezzatura del numero di figura (FIG.)

Bei der Bestellung von Teilen bitte die Teilenummer, die Teilebezeichnung und die Menge des jeweiligen Teils sowie die Modellnummer, die Seriennummer der Maschine, die Seriennummer des Motors und den Stand des Betriebsstundenzählers angeben.

In dieser Ersatzteilliste ist nicht nur das Standardzubehör aufgeführt, sondern auch als Sonderausstattung erhältliche Teile und Einrichtungen. Bestellungen nimmt Ihr zuständiger Komatsu-Händler entgegen.

Die folgenden Informationen und Kodes sind in der Ersatzteilliste enthalten:

Bilder und Ersatzteilliste

Beim Aufschlagen des Ersatzteilkatalogs finden Sie nach der Bildnummer (BILD) geordnete Bilder. Jedes Einzelteil einer Baugruppe ist mit einer Kennzahl versehen. Ausgehend von den Bildern sind die Bauteile der Baugruppe aufgeführt, und zwar geordnet nach den in den Bildern angegebenen Kennzahlen. Jedes Einzelteil wird mit Teilenummer, Teilebezeichnung und entsprechender Seriennummer angegeben.

Bildnummer (BILD)

Mit der Bildnummer (BILD) können Bilder auf einer Seite identifiziert werden. Es handelt sich dabei nicht um die Nummer des Lieferteils. Auch sind die Bilder nicht fortlaufend nummeriert.

Ersatzteilliste

Angaben zu den Ersatzteilen sind auf der Auflistungsseite wie folgt dargestellt::

Kennzahl (Index):

Hierbei handelt es sich um die Kennzahlen aus den Bildern. Die Bauteile sind nach diesen Kennzahlen geordnet aufgeführt.

Kode (Code):

In dieser Spalte werden Kodes mit den folgenden Bedeutungen benutzt:

A1 Dieses Teil ist mit dem in der vorangegangenen Zeile aufgeführten Teil austauschbar.

A2 Das in der vorangegangen Zeile aufgeführte Teil kann anstelle dieses Teils verwendet werden.

A3 Dieses Teil kann anstelle des in der vorangegangenen Zeile aufgeführten Teils verwendet werden.

A4 Anstelle dieses Teils kann das in der Spalte „Beschreibung“ aufgeführte Teil verwendet werden, wenn das Teil zusammen mit anderen Teilen als ein Bauteilsatz verwendet wird.

B1 Dieses Teil kann nicht mehr geliefert werden. Stattdessen wird das in der vorangegangenen Zeile aufgeführte Teil geliefert.

B2 Dieses Teil kann nicht mehr geliefert werden. Stattdessen wird das in der Spalte „Beschreibung“ aufgeführte Teil als ein Bauteilsatz geliefert.

C1 Dieses Teil kann nicht als Einzelteil, sondern nur als Baugruppe geliefert werden.

C2 Dieses Teil wird nur an autorisierte Komatsu-Händler geliefert. Es kann nicht als Einzelteil, sondern nur als Baugruppe geliefert werden.

C3 Hiermit werden Teile gekennzeichnet, die in vorbearbeitetem Zustand geliefert werden und für den Einbau nachbearbeitet werden müssen.

Teilenummer (Part Number):

Die in der Spalte „Teilenummer“ aufgeführte Nummer entspricht der Teilenummer für das betreffende Teil. Diese Nummer dient zur Identifizierung des Teils bei einer Bestellung. Deshalb sollte bei der Bestellung stets auf die genaue Angabe der Teilenummer geachtet werden.

Beschreibung (Description):

Hierunter wird die Bezeichnung des Teils mit der aufgeführten Teilenummer angegeben. Jedes Baugruppen-Bauteil ist mit dem vorangestellten Symbol „·“ gekennzeichnet und wird hinter der entsprechenden Baugruppe aufgeführt. Handelt es sich bei dem mit „·“ gekennzeichneten Bauteil um eine Baugruppe, sind die Bauteile dieser Baugruppe mit „· ·“ gekennzeichnet.
Beispiel: Tank Assembly
· Tank
· Cap
· · Packing

Zusätzlich werden die folgenden Zeichen und Abkürzungen in dieser Spalte verwendet:

Kit Hiermit werden Teile gekennzeichnet, die nur als Satz erhältlich sind. Siehe dazu den Abschnitt „FIELD REPAIR SERVICE PARTS“ dieses Ersatzteilkatalogs.
D Durchmesser
L Länge
LHS linke Seite
RHS Rechte Seite
T Dicke
W Breite

Menge (Qty):

Hierunter wird die Anzahl der Bauteile für eine Maschine angegeben. Im Falle einer Baugruppe oder eines Aggregats wird allerdings die Anzahl der Teile pro Baugruppe angegeben.
Der Kode AR (nach Bedarf) wird in dieser Spalte dann benutzt, wenn keine genaue Angabe darüber möglich ist, wie groß der Mengenbedarf pro Maschine und/oder Baugruppe ist. In diesem Fall kann eine beliebige Menge je nach Bedarf bestellt werden.

Serial Numbers (Seriennummern):

Im Ersatzteilkatalog für den Motor versteht man hierunter die Seriennummer des Motors, in den das betreffende Teil eingebaut ist. Im Ersatzteilkatalog für die Maschine versteht man hierunter die Seriennummer der Maschine, in die das entsprechende Teil eingebaut ist.
Wenn die Seriennummer in Klammern angegeben ist, ist diese Seriennummer ausschließlich für das in der Bildnummer (BILD) angegebene Zubehör bestimmt.

Ao solicitar uma peça, informe o número, nome e quantidade da peça necessária, bem como o código de modelo da máquina e seu número de série, o número do motor e a leitura do medidor de serviço.

Este catálogo de peças não somente especifica os acessórios padrões mas também as peças opcionais e aditamentos. Para pedir uma peça, entre em contato com o revendedor Komatsu mais próximo.

Este catálogo de peças contém as seguintes informações e códigos especiais:

LISTA DE PEÇAS E ILUSTRAÇÕES

Ao abrir este catálogo de peças, encontrar-se-á uma ilustração seguida do número da figura (FIG.). A cada peça individual na ilustração corresponde um número de índice. Seguindo a ilustração, as peças componentes da unidade são listadas na ordem dos números de índice nela indicados. O número, nome, quantidade e número de série aplicável da peça são aprsentados como uma lista de peças.

NÚMERO DA FIGURA (FIG.)

O número da figura (FIG.) é o número que mostra a ilustração da página. Não é um número para fornecimento de peças sobressalentes. Os números nem sempre são contínuos.ebene Zubehör bestimmt.

LISTA DE PEÇAS

As informações das peças sobressalentes são relacionadas na página com a lista de peças de acordo com o seguinte:

Índice (Index):

Este é o mesmo que o número de índice na ilustração. As peças são relacionadas na ordem dos números de índice.

Código (Code):

Códigos são utilizados nesta coluna e significam o seguinte:

A1 Esta peça e a peça especificada na linha imediatamente acima são intercambiáveis.

A2 A peça especificada na linha acima pode ser utilizada no lugar desta peça.

A3 Esta peça pode ser utilizada no lugar da peça especificada na linha imediatamente acima.

A4 A peça especificada na coluna “Descrição” pode ser utilizada no lugar desta peça se usada como um conjunto.

B1 Indica peça descontinuada. A peça especificada na linha acima é fornecida em seu lugar.

B2 Indica peça descontinuada. A peça especificada na coluna “Descrição” é fornecida em seu lugar como um conjunto.

C1 Esta peça não pode ser fornecida como peça individual. Ela é fornecida como um conjunto.

C2 Esta peça é fornecida somente para revendedores Komatsu autorizados. Não pode ser fornecida como peça individual. Ela é fornecida como um conjunto.

C3 Indica peça fornecida em condição semiacabada. Requer trabalho adicional antes da instalação.

Número da peça (Part Number):

O número indicado na coluna de números de peça corresponde ao número da peça exibida. É o código de identificação usado para o pedido da peça. É importante não enganar-se de número de código ao pedir a peça.

Descrição (Description):

Indica o nome da peça que tem o seu número de peça relacionado. O símbolo "•" é colocado na frente do nome peça do componente de uma peça de conjunto, e o item é lançado seguindo o conjunto. Se uma peça indicada com "•" é um subconjunto, os seus componentes são indicados por "• •".
Exemplo: Tank Assembly
• Tank
• Cap
• • Packing

Além disso, os seguintes símbolos e abreviações são usados nesta coluna.

Kit Indica peças de um jogo. Para peças de jogo, referir-se à seção "FIELD REPAIR SERVICE PARTS" neste catálogo de peças.

D Diâmetro
L Comprimento
LHS Lado esquerdo
RHS Lado direito
T Espessura
W Largura

Quantidade (Qty):

Indica o número de peças utilizadas em uma máquina. Contudo, se uma peça é incluída no conjunto e/ou componente, a quantidade por conjunto e/ou componente é especificada.
O código AR (como requerido) usar-se-á na coluna "Quantitade" caso o número de peças por máquina e/ou componente não possa ser especificado. Em tal caso, qualquer número de peças pode ser pedido dependendo dos requisitos de serviço em campo.

Números de série (Serial Numbers):

O número de série do motor aplicável é indicado para o volume do motor. No volume da carroceria, indica o número de série da máquina na qual a peça é utilizada.

Se o número de série está entre parêntesis, mostra que é o número de série aplicável para uso exclusivo do equipamento do número da figura (FIG.)

订购零件时，请注明需要零件的货号、品名、数量以及使用机器的车辆编号、发动机型号和系列号、工作时数。

此零件明细表上不仅记载了标准装备零件，还记载了选购零件、附件零件。如果您需要订货，请与最近的小松代理店联系。

为了清楚明了，零件手册中有如下规定：

图表

打开此零件清单后，可以看到附带图号（FIG.）的零件明细表图示。在图示上标有各种零件的索引号码。除图之外，还按索引号码的顺序列表表示货号、品名、数量、适用机型。

图号（FIG.）

图号表示该页图的号码。它不是补充零件用的货号。此号码不一定是连续号码。

零件表

从左栏开始按以下顺序显示零件的明细。

索引 (Index):

与图的索引号码一致，按索引号码顺序编制为表格形式。

代号 (Code):

此栏使用的代号如下所示：

A1　此行零件可与紧挨着的上一行零件互换使用。

A2　上一行的零件可取代此行零件来使用。

A3　此行零件可代替紧挨着的上一行零件使用。

A4　品名栏内的零件配套后，可取代此行零件来使用。

B1　该行零件已停止供应，用上一行的零件代替使用。

B2　该行零件已停止供应，品名栏内的零件配套后代替此行零件供应。

C1　此行零件拟成套供应，不以单一零件供应。

C2　此行零件主要面向特定的代理。不以单一零件供应，只拟成套供应。

C3　此行零件以半成品的形式供应，使用前必需再加工。

货号 (Part Number):

此栏所示的编号是图示零件的货号。它是在订货时需要标明的特定代号，是非常重要的。

品名 (Description):
表示相当于货号的零件名称。构成组装品的零件，在品名的前面有 “·” 标记，记载在组装品之后。
另外，如果标记 “·” 的零件是组装品，则该构成零件的品名前标有 “· ·” 标记。
例： TANK ASSEMBLY
· TANK
· CAP
· · PACKING

另外，说明栏可能显示以下代号。

Kit 表示修理包。关于修理包构件详情，请参考此零件清单中 “现场修理服务零件” 部分的内容。
D 直径
L 全长
LHS 左侧
RHS 右侧
T 厚度
W 全宽

数量 (Qty):

表示一台机器中需要使用的该零件数量。但是，如果是组装零件的构成零件时，表示其组装件的件数。
如果不能指定每个机器以及（或者）组装零件中必须的零件数量时，可以在零件数量栏中使用代码 AR。
此时，数量由现场的服务要件决定，然后进行定购。

适用机型 (Serial Numbers):

发动机篇中表示该使用零件的发动机型号，在机体篇中表示该使用零件的车辆号码。

如果适用机型位于括号中，表明该适用机型专门用于图号 (FIG.) 中所指的设备。

ПРЕДИСЛОВИЕ

При заказе запчасти укажите номер части, наименование части и нужное количество; кроме того, укажите код модели вашей машины, серийный номер машины, серийный номер двигателя и показания счетчика мото-часов.

В Каталоге приведены не только стандартные изделия, но и дополнительное оборудование и принадлежности. Для заказа запчасти пожалуйста обратитесь к ближайшему дилеру "Комацу".

Содержащаяся в Каталоге информация и специальные коды разъясняются ниже:

РИСУНОК И ПЕРЕЧЕНЬ ЧАСТЕЙ

Раскрыв Каталог, вы увидите рисунок после номера рисунка (ПОЗ). Каждой отдельной части на рисунке присвоен позиционный номер. За рисунком следует перечень составных частей устройства в порядке номеров позиций рисунка. Перечень частей указывает для каждой части ее номер, наименование, количество и применимый серийный номер.

НОМЕР РИСУНКА (ПОЗ)

Номер рисунка (ПОЗ) – это номер, который указывает рисунок на странице. Он не является номером запчасти. Последовательность номеров не обязательно непрерывна.

ПЕРЕЧЕНЬ ЧАСТЕЙ

Данные запасных частей приведены на странице перечня частей следующим образом:

Индекс (Index):

То же, что номер позиции на рисунке. Части перечислены в порядке их позиционных номеров.

Код: (Code):

В этой колонке находятся коды, обозначающие следующее:

A1 Данная часть и часть, указанная в предыдущей строке, взаимозаменяемы.

A2 Вместо данной части можно использовать часть, указанную в предыдущей строке.

A3 Данную часть можно использовать вместо части, указанной в предыдущей строке.

A4 В комплекте, вместо данной части можно использовать указанную в колонке описания.

B1 Поставки этой части прекращены. Взамен поставляется часть, указанная в предыдущей строке.

B2 Поставки этой части прекращены. Взамен комплектом поставляется часть, указанная в колонке описания.

C1 Данная часть отдельно не поставляется. Она поставляется с узлом.

C2 Данная часть поставляется лишь уполномоченным дилерам "Комацу". Отдельно не поставляется. Поставляется с узлом.

C3 Обозначает часть, поставляемую без доводки. Требует предустановочной подготовки.

Номер части (Part Number):

Приведенный в колонке номеров частей номер является номером изображенной части. Это код-идентификатор для заказа данной части. Важно, чтобы при заказе этот кодовый номер был указан без ошибок.

Описание (Description):

Здесь приводится наименование части, обозначенной номером в перечне. Значок "·" ставится перед наименованием детали компонента, причем деталь записана после узла. Если помеченная "·" часть является подсборкой узла, то ее составные части обозначаются значком "··".

Пример: Tank Assembly
·Tank
·Cap
··Packing

Далее, в этой колонке используются следующие обозначения и сокращения.

Kit	Указывает на элементы комплекта. Элементы комплекта смотри в разделе ЗАПАСНЫЕ ЧАСТИ ДЛЯ РЕМОНТА В УСЛОВИЯХ ЭКСПЛУАТАЦИИ данного Каталога.
D	Диаметр
L	Длина
LHS	Левая сторона
RHS	Правая сторона
T	Толщина
W	Ширина

Количество (Qty):

Указывает общее число изделий в одной машине. Если же изделие является частью узла и/или устройства, то указывается количество в таком узле и/или устройстве.
При невозможности указать количество частей на машину и/или устройство, в колонке Количество проставляется код AR (по потребности). В таком случае можно заказывать любые количества в зависимости от потребностей обслуживания на месте.

Серийные номера (Serial Numbers):

В книге по двигателю приводится соответствующий серийный номер двигателя. В книге по шасси указывает на серийный номер машины, где используется данная часть.

Серийный номер, заключенный в круглые скобки означает, что он применяется только для оборудования с номером рисунка (ПОЗ.)

. رقم القطعة (Part Number)

الرقم الوارد في عمود رقم القطعة هو رقم القطعة الخاص بالقطعة المبينة. وهو الرمز المستخدم لطلب تلك القطعة. ومن الضروري عدم ارتكاب اي خطأ في تحديد هذا الرقم عند طلب القطع.

. الوصف (Description)

يعطي اسم القطعة المدرج رقمها في القائمة. توضع العلامة "٠" امام اسم المكون لمجموعة ما ويدرج البند بعد المجموعة. اذا كانت القطعة المشار اليها بالعلامة "٠" هي نفسها عبارة عن مجموعة مكونات, فان كلا من مكوناتها يشار اليها بالعلامة "٠٠".
مثال

Tank Assembly
٠Tank
٠Cap
٠٠Packing

بالاضافة الى ذلك, العلامات والمختصرات التالية تستخدم في هذا العمود.

Kit هذا يشير الى قطع الطقم. حول قطع الطقم, راجع قسم "قطع غيار خدمة الإصلاح الميداني" في كتاب القطع هذا.
D قطر
L طول
LHS جانب اليد اليسارى
RHS جانب اليد اليمنى
T السمك
W العرض

. الكمية (Qty)

هذا هو عدد القطع المستخدمة لآلية واحدة. اما بالنسبة لمجموعات المكونات ومجموعات القطع فانه يتم تحديد عدد القطع لكل مجموعة.
الرمز AR (حسب الطلب) سوف يستخدم في عمود الكمية اذا لم يتم تحديد عدد القطع المطلوبة لكل مانكة و/او للمجموعة. في مثل هذه الحالة, فان اي عدد من الكميات ربما يتم طلبه بشكل يعتمد على متطلبات مجال الخدمة.

. الرقم التسلسلي (Serial Numbers)

في كتاب قطع المحرك يشير هذا الرقم الى الرقم التسلسلي للمحرك الذي تستخدم فيه القطعة. قي كتاب قطع الآلية, يشير هذا الرقم الى الرقم التسلسلي للآلية التي تستخدم فيها القطع.

في حالة وضع الرقم التسلسلي بين الأقواس، فهذا يعني أن هذا هو الرقم التسلسلي الساري للاستخدام الحصري للقطعة الموضحة بالشكل.

عند طلب القطع, يرجى تحديد رقم القطعة واسم القطعة والكمية المطلوبة من القطعة, مع تحديد رقم الموديل والرقم التسلسلي وقراءة عداد الخدمة.

قائمة القطع هذه لا تقتصر على الكميات القياسية فقط بل تشمل ايضاً القطع والملحقات الاختيارية. لطلب القطع, يرجى الاتصال بأقرب موزع لمنتجات كوماتسو.

كتاب القطع هذا يحتوي على المعلومات ورموز التخصيص وكما مبين ادناه:

الشكل والقائمة

عندما تفتح كتاب القطع هذا, سوف تجد رسومًا توضيحية تتضمن رقم الشكل (الشكل). كل قطعة مفردة في الرسم يعطى لها رقم فهرس. في الرسم التالي, قطع المجموعة للوحدة تم ادراجها حسب ترتيب ارقام الفهرس المبينة في الرسم.. رقم القطعة, اسم القطعة, الكمية والرقم التسلسلي المطابق يعطى لكل قطعة حسب تسلسل القطع في القائمة.

رقم الشكل (الشكل)

رقم الشكل (الشكل) هو الرقم الذي يميز شكل ما داخل الصفحة. إنه ليس رقم القطعة, وليست الأرقام متتابعة دائمًا.

قائمة القطع

معلومات قطع الغيار مثبتة في صفحة قائمة القطع وكالاتي:

. الفهرست (Index)

هذا الرقم هو نفس رقم الفهرس الوارد في الشكل التوضيحي. تدرج القطع في القائمة مرتبة تبعاً لارقام الفهرس.

. الرمز (Code)

الرموز تستخدم في هذا العمود وتوصف كلاتي:

A1 هذه القطعة والقطعة المذكورة في السطر السابق مباشرة يمكن لكل منهما ان تحل محل الاخرى.

A2 القطعة المذكورة في السطر السابق يمكن استعمالها بدلاً من هذه القطعة.

A3 هذه القطعة يمكن استعمالها بدلاً من القطعة المذكورة في السطر السابق مباشرة.

A4 القطعة المذكورة في عمود الوصف يمكن استعمالها بدلاً من هذه القطعة اذا استخدمت كطقم.

B1 هذه القطعة توقف توريدها. يتم توريد القطعة المذكورة في السطر السابق بدلاً منها.

B2 هذه القطعة توقف توريدها. يتم توريد القطعة المذكورة في عمود "الوصف" بدلاً منها كطقم.

C1 هذه القطعة لا يمكن توريدها كقطعة منفردة. يتم توريدها كمجموعة.

C2 هذه القطعة يتم تجهيزها من قبل موزعين كوماتسو المرخصين فقط. لا يمكن تجهيزها كقطعة مفردة. يتم تجهيزها كمجموعة.

C3 هذا يشير الى قطعة موردة شبه مكتملة التصنيع. تتطلب استكمال تصنيعها قبل الاستعمال.

CONTENTS

CONTENTS

	FIG. NO	PAGE
ENGINE CYLINDER HEAD AND ITS RELATED PARTS		
Exhaust Muffler and Mounting Bracket (#26540705-.)	A1610-001001	A001001
Exhaust Connector Clamp	AXS00-001001	A002001
Cylinder Head	A1009-001001	A003001
Cylinder Head Cover	AVC00-001001	A004001
Breather	ABR00-001001	A005001
Air Intake Port Cover	AIM00-001001	A006001
Air Intake Connector	AIC00-001001	A007001
Air Intake Connector, Tube (#26540705-.)	A1310-001001	A008001
Air Intake Connector Mounting	AIC20-001001	A009001
Air Intake Heater	AAH00-001001	A010001
Air Transfer Connection	AIT00-001001	A011001
Exhaust Manifold	ATB30-001001	A012001
Turbocharger	A1539-001001	A013001
Turbocharger Oil Piping	ATP00-001001	A014001
Heat Shield (#26540705-.)	A1570-001001	A015001
Lifting Arrangement, Mounting Bolt	ALA10-001001	A016001
Lifting Arrangement, Bracket	ALA00-001001	A017001
ENGINE CYLINDER BLOCK AND ITS RELATED PARTS		
Front Gear Cover	AGG00-001001	B001001
Spare Parts	B9999-504001	B002001
Spare Parts, For 90Amp. Alternator	B9999-505001	B003001
Rocker Arm	ARL00-001001	B004001
Tappet and Block Plate	ABB00-001001	B005001
Accessory Drive Pulley	APA00-001001	B006001
Flywheel Housing	A2219-001001	B007001
Flywheel	AFW00-001001	B008001
Flywheel Mounting	AFW10-001001	B009001
Engine Oil Pan	AOP10-001001	B010001
Engine Oil Pan Drain (#26540707-.)	A2170-001001	B011001
Engine Oil Level Sensor	ASD00-001001	B012001
Cylinder Block, Plate and Tappet	A2019-001001	B013001
Breather Hose (#26540705-.)	A2080-001001	B014001
Cabin Heater Plug, Plugs	AHC00-001001	B015001
Crankshaft	A2319-001001	B016001
Vibration Damper	ADA00-001001	B017001
Piston and Connecting Rod	A2359-001001	B018001
Engine Oil Filler	AOB10-001001	B019001
Oil Level Gauge	ALG00-001001	B020001
Rear Gear Housing	ABB20-001001	B021001
Rear Gear Housing Accessory	ADR20-001001	B022001
Drive Cover	AHD20-001001	B023001
ENGINE LUBRICATING SYSTEM		
Engine Oil Pump	ALP00-001001	C001001
Engine Oil Filter	ALF00-001001	C002001
Engine Oil Cooler	ALC00-001001	C003001
ENGINE FUEL SYSTEM		
Fuel Filter Piping	AFF20-001001	D001001
Fuel System Cover	AFS20-001001	D002001
Fuel System Related Parts	AFP10-001001	D003001
Fuel Injection Pump	A4019-001001	D004001
Fuel Injector	A4219-001001	D005001
Fuel Control	A4719-001001	D006001
Fuel Injection Controller Related Parts	APH00-001001	D007001
Fuel Piping	AFT00-001001	D008001
Fuel Filter Cartridge	A4119-002001	D009001
Fuel Filter	AFF10-001001	D010001
ENGINE COOLING SYSTEM		
Cooling Fan Drive Mounting	AFA20-001001	E001001
Cooling Fan Drive Pulley	AFA10-002001	E002001

	FIG. NO	PAGE
Cooling Fan Belt	AWP10-001001	E003001
Cooling Fan Belt Tensioner	AWP20-001001	E004001
Water Pump	A5019-001001	E005001
Water Pump Drive Belt, For 90Amp. Alternator	AWP10-002001	E006001
Water Outlet Connector	AWO00-001001	E007001
Water Inlet Connector	AWI10-001001	E008001
Water Inlet Connector, For 90Amp. Alternator	AWI10-002001	E009001
Thermostat	AEC00-001001	E010001
Coolant Heater Plug	ACH00-001001	E011001
ENGINE ELECTRICAL SYSTEM		
Alternator Mounting	AEH10-001001	F001001
Alternator, 90Amp. (#26540705-.)	AEE00-002001	F002001
Alternator, 90Amp., Guard (#26540705-.)	A6010-002001	F003001
Alternator, Installation Parts (#26540705-.)	A6020-001001	F004001
Starting Motor Mounting	ASM00-001001	F005001
Starting Motor, 5.5KW (#26540705-.)	AST00-001001	F006001
Wiring Harness (#26540705-.)	A6810-001001	F007001
Engine Wiring Harness	AWR00-002001	F008001
ENGINE ACCESSORIES AND OTHERS		
Parts Performance		
Camshaft	APP10-001001	G001001
Common Rail	APP10-001002	G001002
ENGINE MARKS AND PLATES		
Date Plate, For Turkey Exhaust Emissions 3rd Regulations	A9850-001001	I001001
Caution Plates, For EU Safety Regulation	A9810-001001	I002001
FIELD REPAIR SERVICE PARTS		
Repair Service Parts	A8110-001001	Y001001
ENGINE RELATED PARTS		
Air Intake Connector, Tube (#B40016-)	A1310-001001	B001001

	FIG. NO	PAGE
Heat Shield (#B40016-)	A1570-001001	B002001
Exhaust Muffler and Mounting Bracket (#B40016-)	A1610-001001	B003001
Breather Hose (#B40016-)	A2080-001001	B004001
Engine Oil Pan Drain (#B40016-)	A2170-001001	B005001
Flywheel Housing (#B40016-)	A2219-001001	B006001
Alternator, 90Amp. (#B40016-)	AEE00-002001	B007001
Alternator, 90Amp., Guard (#B40016-)	A6010-002001	B008001
Alternator, Installation Parts (#B40016-)	A6020-001001	B009001
Starting Motor, 5.5KW (#B40016-)	AST00-001001	B010001
Wiring Harness (#B40016-)	A6810-001001	B011001
Engine Drain Hose	A9999-501001	B012001
Engine Mounting	B0100-001001	B013001
Engine Accessory	B0110-001001	B014001
Air Intake Piping	B0200-001001	B015001
Exhaust Pipe	B0300-001001	B016001
COOLING SYSTEM		
Radiator, Without Tire Inflation Kit		
Radiator	C0110-001001	C001001
Oil Cooler	C0110-001002	C001002
Fan Guard	C0110-001003	C001003
Cooling Fan Motor (1/3)	C0110-001004	C001004
Cooling Fan Motor (2/3)	C0110-001005	C001005
Cooling Fan Motor (3/3)	C0110-001006	C001006
Fan Motor Related Parts	C0110-001007	C001007
Air Condenser	C0110-001008	C001008
Mounting Parts	C0110-001009	C001009
Cooling Piping	C0120-001001	C002001
FUEL SYSTEM		
Fuel Tank	D0100-001001	D001001
Fuel Piping, Without Extra Bad Fuel and Poor Fuel Arrangement, Water+Dust, Additional Filter		
Fuel Filter Piping	D0200-001001	D002001
Filter Assembly	D0200-001002	D002002

	FIG. NO	PAGE
Fuel Filter Mounting	D0200-001003	D002003
ELECTRICAL SYSTEM		
Battery	E0110-001001	E001001
Battery Box, With 90Amp. Alternator		
Bracket	E0120-001001	E002001
Relay and Fuse	E0120-001002	E002002
Battery Cable	E0120-001003	E002003
Disconnect Switch	E0120-001004	E002004
Electric Wiring Harness		
Wiring Harness	E0200-001001	E003001
Head Lamp	E0200-001002	E003002
Rear Wiring Harness		
Rear Wiring Harness	E0202-001001	E004001
Wiring Harness, Engine	E0202-001002	E004002
Transmission Wiring Harness	E0202-001003	E004003
Differential Lock Wiring Harness	E0202-001004	E004004
Front Lamp	E0300-001001	E005001
Front Working Lamp and Rear Working Lamp	E0310-001001	E006001
Horn	E0410-001001	E007001
POWER TRANSMITTING SYSTEM		
Propeller Shaft	F4200-001001	F001001
Transmission		
Oil Filler	F4320-001001	F002001
Case	F4320-001002	F002002
Forward Low Speed and Reverse Clutch	F4320-001003	F002003
Forward High and 1st Speed Clutch	F4320-001004	F002004
2nd and 3rd Housing	F4320-001005	F002005
4th Speed Clutch	F4320-001006	F002006
Output Coupling	F4320-001007	F002007
Power takeoff Gear	F4320-001008	F002008
Relief Valve	F4320-001009	F002009
Control Valve	F4320-001010	F002010

	FIG. NO	PAGE
Piping	F4320-001011	F002011
Accessory	F4320-001012	F002012
Forward High and 1st Speed Gear	F4320-001013	F002013
Torque Converter (1/3)	F4320-001014	F002014
Torque Converter (2/3)	F4320-001015	F002015
Torque Converter (3/3)	F4320-001016	F002016
Front Axle, Without Steering Cylinder Guard		
Axle Support	F4400-001001	F003001
Housing	F4400-001002	F003002
Rod	F4400-001003	F003003
Inner Parts, Leaning Cylinder	F4400-001004	F003004
Inner Parts, LHS	F4400-001005	F003005
Inner Parts, Reduction Gear	F4400-001006	F003006
Shaft	F4400-001007	F003007
Related Parts	F4400-001008	F003008
Rear Axle, Differential Lock Type		
Final Drive, Center Case	F4500-001001	F004001
Final Drive, Bevel Gear	F4500-001002	F004002
Final Drive, Differential	F4500-001003	F004003
Final Drive, Torque Shaft (1/2)	F4500-001004	F004004
Final Drive, Torque Shaft (2/2)	F4500-001005	F004005
Final Drive, Solenoid Valve and Piping	F4500-001006	F004006
Parking Brake	F4500-001007	F004007
Case	F4500-001008	F004008
Tandem, Tube	F4500-001009	F004009
Tandem, Sprocket Chain	F4500-001010	F004010
Mounting Bolt	F4500-001011	F004011
Inner Parts, Brake Caliper	F4500-001012	F004012
Tandem, A Drive	F4500-001013	F004013
Tandem, B Drive	F4500-001014	F004014
Tube	F4500-001015	F004015
Transmission Oil Filter, With Rear Axle, Differential Lock Type	F4700-001001	F005001
Torque Converter and Transmission Mounting	F4810-001001	F006001

	FIG. NO	PAGE
HYDRAULIC SYSTEM		
Hydraulic Tank		
Tank	H0110-001001	H001001
Tank Related Parts	H0110-001002	H001002
Main Control Valve, With 9 Spool Valve		
Inner Parts (1/10)	H0120-001001	H002001
Inner Parts (2/10)	H0120-001002	H002002
Inner Parts (3/10)	H0120-001003	H002003
Inner Parts (4/10)	H0120-001004	H002004
Inner Parts (5/10)	H0120-001005	H002005
Inner Parts (6/10)	H0120-001006	H002006
Inner Parts (7/10)	H0120-001007	H002007
Inner Parts (8/10)	H0120-001008	H002008
Inner Parts (9/10)	H0120-001009	H002009
Inner Parts (10/10)	H0120-001010	H002010
Mounting Parts	H0120-001011	H002011
Main Control Valve, With 10 Spool Valve		
Inner Parts (1/10)	H0120-002001	H003001
Inner Parts (2/10)	H0120-002002	H003002
Inner Parts (3/10)	H0120-002003	H003003
Inner Parts (4/10)	H0120-002004	H003004
Inner Parts (5/10)	H0120-002005	H003005
Inner Parts (6/10)	H0120-002006	H003006
Inner Parts (7/10)	H0120-002007	H003007
Inner Parts (8/10)	H0120-002008	H003008
Inner Parts (9/10)	H0120-002009	H003009
Inner Parts (10/10)	H0120-002010	H003010
Mounting Parts	H0120-002011	H003011
Hydraulic Pump, With Rear Axle, Differential Lock Type		
Inner Parts, Pump (1/4)	H0210-001001	H004001
Inner Parts, Pump (2/4)	H0210-001002	H004002
Inner Parts, Pump (3/4)	H0210-001003	H004003
Inner Parts, Pump (4/4)	H0210-001004	H004004
Piston Pump Related Parts	H0210-001005	H004005
Inner Parts, Gear Pump (1/2)	H0210-001006	H004006
Inner Parts, Gear Pump (2/2)	H0210-001007	H004007
Gear Pump Related Parts	H0210-001008	H004008
Inner Parts, Cooling Fan Pump	H0210-001009	H004009
Cooling Fan Pump Related Parts	H0210-001010	H004010
Steering Hydraulic Piping	H4410-001001	H005001
Floor Valve		
Inner Parts	H5110-001001	H006001
Mounting Parts	H5110-001002	H006002
Front Frame Valve, Without Blade Accumulator		
Swivel Joint, 4-Way Type	H5120-002001	H007001
Blade Cylinder Piping	H5120-002002	H007002
Hydraulic Piping, For Ripper Configuration, Differential Lock Type		
Piston Pump to Hydraulic Tank	H5200-004001	H008001
Piston Pump Related Parts	H5200-004002	H008002
Priority Valve	H5200-004003	H008003
Priority Valve Piping	H5200-004004	H008004
Piping (1/2)	H5200-004005	H008005
Return Piping (1/2)	H5200-004006	H008006
Return Piping (2/2)	H5200-004007	H008007
Inner Parts, Charge Valve	H5200-004008	H008008
Charge Valve Related Parts	H5200-004009	H008009
Parking Brake Valve	H5200-004010	H008010
Charge Valve Piping	H5200-004011	H008011
Hose Clamp	H5200-004012	H008012
Drive Case	H5200-004013	H008013
Fan Motor Piping	H5200-004014	H008014
Parking Brake Piping	H5200-004015	H008015
LS Piping (1/3)	H5200-004016	H008016
LS Piping (2/3)	H5200-004017	H008017
LS Piping (3/3)	H5200-004018	H008018
Differential Lock Piping	H5200-004019	H008019
Piping (2/2)	H5200-004020	H008020
Front Hydraulic Piping, Without Scarifier, Front, 11-Shanks and Tooth		

	FIG. NO	PAGE
Frame Piping	H5210-001001	H009001
Control Valve Related Parts	H5210-001002	H009002
Front Wiring Harness	H5210-001003	H009003
Drawbar Piping	H5210-001004	H009004
Articulate Cylinder Piping	H5210-001005	H009005
Transmission Cooling Piping	H6290-001001	H010001
FRAME AND ITS RELATED PARTS		
Front Frame	J4110-001001	J001001
Rear Frame, Without Tire Inflation Kit	J4120-001001	J002001
Hinge Pin	J4130-001001	J003001
OPERATOR'S COMPARTMENT AND CONTROL SYSTEM		
Operator's Seat	K0110-001001	K001001
ROPS Cab, With Low Height, KOMTRAX		
Cab	K0210-002001	K002001
Inner Parts	K0210-002002	K002002
Cab Wiring Harness	K0210-002003	K002003
Air Pulling Out Device	K0210-002004	K002004
Glass Windows, Front	K0210-002005	K002005
Wipers, Front and Rear	K0210-002006	K002006
Door, LHS	K0210-002007	K002007
Door Lock, LHS	K0210-002008	K002008
Door Open Lock, LHS	K0210-002009	K002009
Seal and Sheet (1/2)	K0210-002010	K002010
Door, RHS	K0210-002011	K002011
Door Lock, RHS	K0210-002012	K002012
Door Open Lock, RHS	K0210-002013	K002013
Seal and Sheet (2/2)	K0210-002014	K002014
Door Lock Striker	K0210-002015	K002015
Air Conditioner Duct	K0210-002016	K002016
KOMTRAX Antenna	K0210-002017	K002017
Glass Windows and Bracket	K0210-002018	K002018
Rearview Mirror	K0215-001001	K003001

	FIG. NO	PAGE
Floor Mat	K0310-001001	K004001
Window Washer	K0350-001001	K005001
Air Conditioner Unit		
Air Conditioner Unit Mounting	K0710-001001	K006001
Air Conditioner Piping	K0710-001002	K006002
Cab Heater Piping	K0713-001001	K007001
Radio, With AM-FM Radio, South America	K0810-002001	K008001
Floor Frame, With 9 Spool Valve, KOMTRAX		
Steering Post Cover	K1110-001001	K009001
Rod	K1110-001002	K009002
Steering Post	K1110-001003	K009003
Lever	K1110-001004	K009004
Switch and Plate	K1110-001005	K009005
Blade Float Piping	K1110-001006	K009006
Steering Piping	K1110-001007	K009007
Monitor	K1110-001008	K009008
Steering Wheel	K1110-001009	K009009
Platform	K1110-001010	K009010
Console Box	K1110-001011	K009011
Bracket	K1110-001012	K009012
Wiring Harness	K1110-001013	K009013
12V converter	K1110-001014	K009014
Gear Shift Lever	K1110-001015	K009015
Console Cover, RHS	K1110-001016	K009016
Accelerator Pedal	K1110-001017	K009017
Accelerator Pedal Mounting	K1110-001018	K009018
Inching Pedal and Brake Pedal	K1110-001019	K009019
Brake Valve	K1110-001020	K009020
Air Conditioner Duct	K1110-001021	K009021
Air Conditioner Related Parts	K1110-001022	K009022
Air Conditioner Piping	K1110-001023	K009023
Operator's Seat Mounting	K1110-001024	K009024
Transmission Controller	K1110-001025	K009025
KOMTRAX Controller	K1110-001026	K009026

	FIG. NO	PAGE
Wiring Harness Clamp	K1110-001027	K009027
Floor, Window Washer Hose	K1110-001028	K009028
Cab In Parts, Air Duct	K1110-001029	K009029
Platform Related Parts	K1110-001030	K009030
Controller Cover	K1110-001031	K009031
Air Conditioner Drain Hose Clip	K1110-001032	K009032
Brake Control		
Brake Accumulator	K4460-001001	K010001
Related Parts	K4460-001002	K010002
Bracket	K4460-001003	K010003
Adjust Cylinder	K4460-001004	K010004
Mounting Parts	K4460-001005	K010005
Brake Piping		
Brake Piping	K4470-001001	K011001
Main Piping	K4470-001002	K011002
GUARDS AND COVERS		
Engine Hood, With Pre-cleaner Auto Dust Eject		
Hood	M4100-002001	M001001
Hood Side Cover	M4100-002002	M001002
Head Cover	M4100-002003	M001003
Grille, Mask and Radiator Cover	M4100-002004	M001004
Rear Combination Lamp	M4100-002005	M001005
Air Cleaner Related Parts (1/2)	M4100-002006	M001006
Air Cleaner	M4100-002007	M001007
Air Cleaner Related Parts (2/2)	M4100-002008	M001008
Wiring Harness	M4100-002009	M001009
Front Frame Cover		
Floor Cover	M4230-001001	M002001
Front Cover	M4230-001002	M002002
Under Cover	M4231-001001	M003001
Tool Box	M4240-001001	M004001
Ladder	M4310-001001	M005001
Pusher and Weight	M4510-001001	M006001

	FIG. NO	PAGE
WHEEL AND ITS RELATED PARTS		
Tire and Rim, 17.5-25-12PR TubeLess Tires		
Front, RHS	S0100-001001	S001001
Front, LHS	S0100-001002	S001002
Rear, LHS	S0100-001003	S001003
Rear, RHS	S0100-001004	S001004
WORK EQUIPMENT		
Drawbar and Circle	T5110-001001	T001001
Blade and Circle Lifter	T5115-001001	T002001
Blade, 3.7m Width, 19mm Thickness, Overlay, Edge Height 152mm	T5120-004001	T003001
Blade, 4.3m Width, 19mm Thickness, Overlay, Edge Height 152mm	T5120-003001	T004001
Power Tilt Cylinder	T5123-001001	T005001
Ripper		
Inner Parts, Blade Angle Cylinder	T5125-001001	T006001
Mounting Parts	T5125-001002	T006002
Ripper Shank	T5126-001001	T007001
Circle Revolving Unit		
(1/2)	T5130-001001	T008001
(2/2)	T5130-001002	T008002
Blade Lift Cylinder, Inner Parts, Blade Lift Cylinder	T5140-001001	T009001
Blade Shift Cylinder	T5141-001001	T010001
Power Tilt Cylinder	T5151-001001	T011001
Drawbar Shift Cylinder	T5155-001001	T012001
Articulate Cylinder	T5160-001001	T013001
MARKS AND PLATES		
Marks and Plates, Portuguese, Pictorial Type		
(1/3)	U0100-002001	U001001
(2/3)	U0100-002002	U001002
(3/3)	U0100-002003	U001003
Marks and Plates, Spanish-English		
(1/3)	U0100-004001	U002001
(2/3)	U0100-004002	U002002

	FIG. NO	PAGE
(3/3)	U0100-004003	U002003
Caution Plates	U0205-001001	U003001

AUXILIARY PARTS AND TOOL

General Tool Set	V0300-001001	V001001

FIELD REPAIR SERVICE PARTS

Service Kit Parts	KIT	Y001001

NUMERICAL INDEX

NUMERICAL INDEX	ZZ	ZZ-2

ENGINE CYLINDER HEAD AND ITS RELATED PARTS

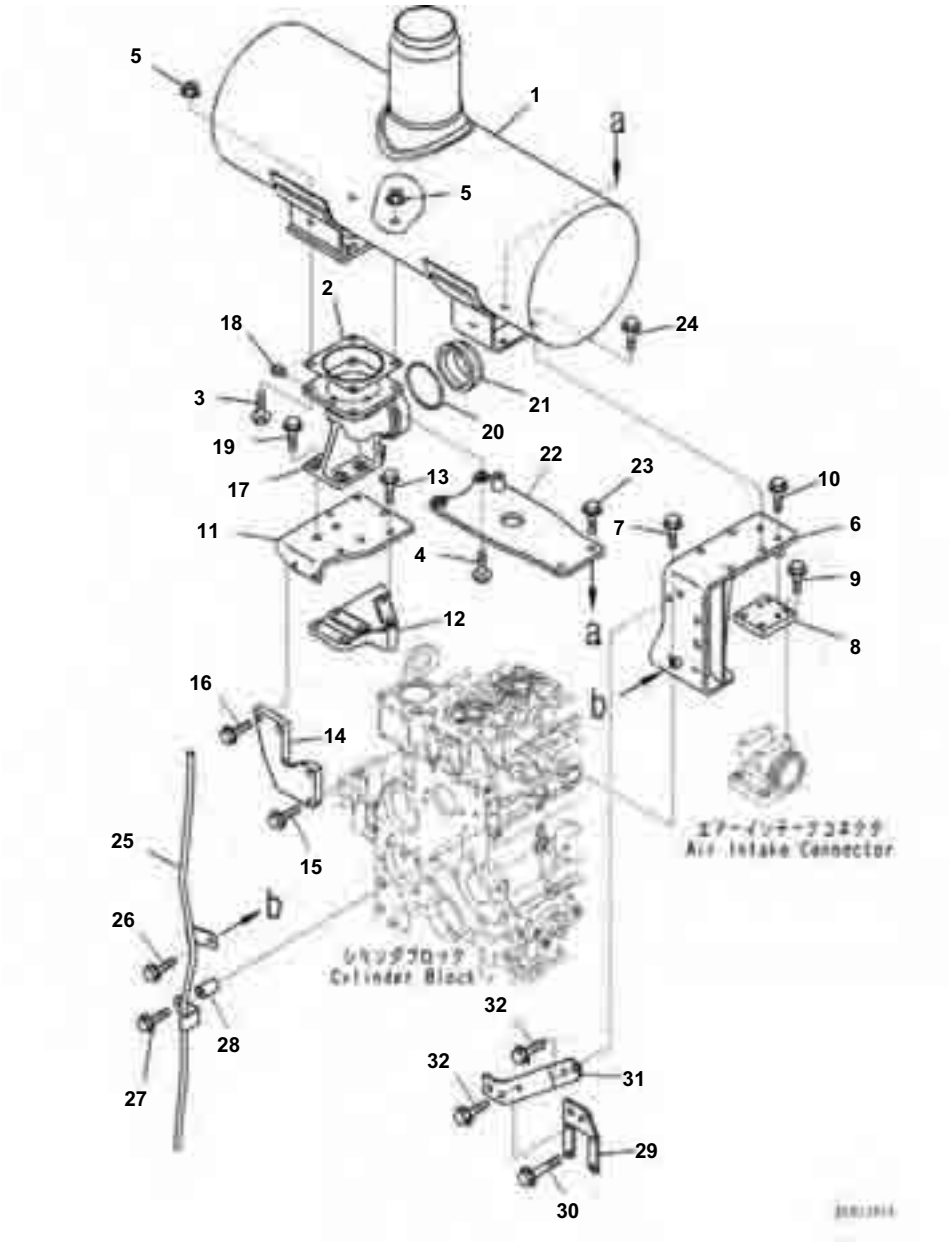

Exhaust Muffler and Mounting Bracket (#26540705-.)

Index	Code	Part Number	Description	Qty	Serial No.
1		6754-11-5160	Muffler	1	26540705-.
2		6151-11-5751	Gasket	1	26540705-.
3		01435-01035	Bolt	2	26540705-.
4		01435-01050	Bolt	2	26540705-.
5		01584-01008	Nut	4	26540705-.
6		6754-11-5170	Bracket	1	26540705-.
7		01435-01025	Bolt	2	26540705-.
8		6754-11-5530	Plate	1	26540705-.
9		01435-00830	Bolt	4	26540705-.
10		01435-00845	Bolt	2	26540705-.
11		6754-11-5180	Bracket	1	26540705-.
12		6754-11-5280	Spacer	1	26540705-.
13		01435-01075	Bolt	2	26540705-.
14		6754-11-5580	Plate	1	26540705-.
15		6754-11-5130	Bolt	2	26540705-.
16		01435-01030	Bolt	2	26540705-.
17		6754-11-5610	Elbow	1	26540705-.
18		07042-20108	Plug	1	26540705-.
19		01435-01035	Bolt	4	26540705-.
20		6137-11-5291	Seal Ring	1	26540705-.
21		6754-11-5620	Tube	1	26540705-.
22		6754-11-5190	Bracket	1	26540705-.
23		01435-01035	Bolt	2	26540705-.
24		01435-01030	Bolt	2	26540705-.
25		6754-11-5230	Tube	1	26540705-.
26		01435-00820	Bolt	1	26540705-.
27		01435-00850	Bolt	1	26540705-.
28		6150-81-6920	Spacer	1	26540705-.
29		6754-11-5240	Bracket	1	26540705-.
30		01435-00845	Bolt	4	26540705-.
31		6754-11-5250	Plate	1	26540705-.
32		01435-01025	Bolt	4	26540705-.

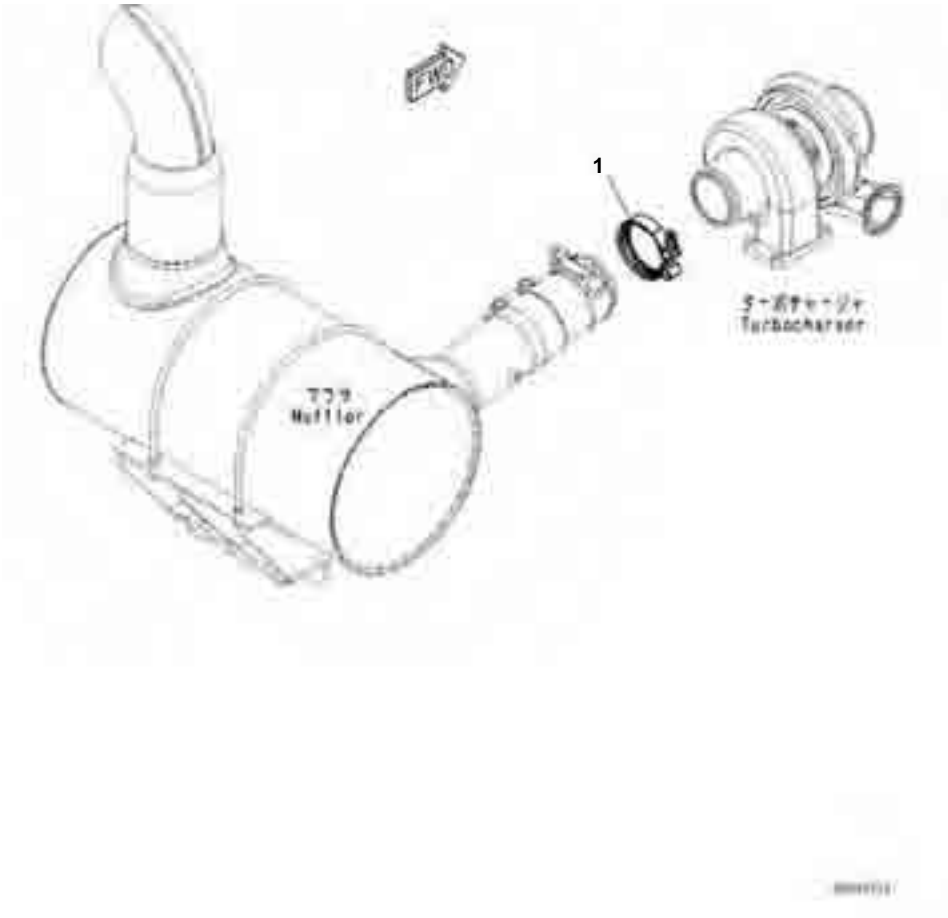

Index	Code	Part Number	Description	Qty	Serial No.
1		6732-81-8220	Clamp	1	26540705-

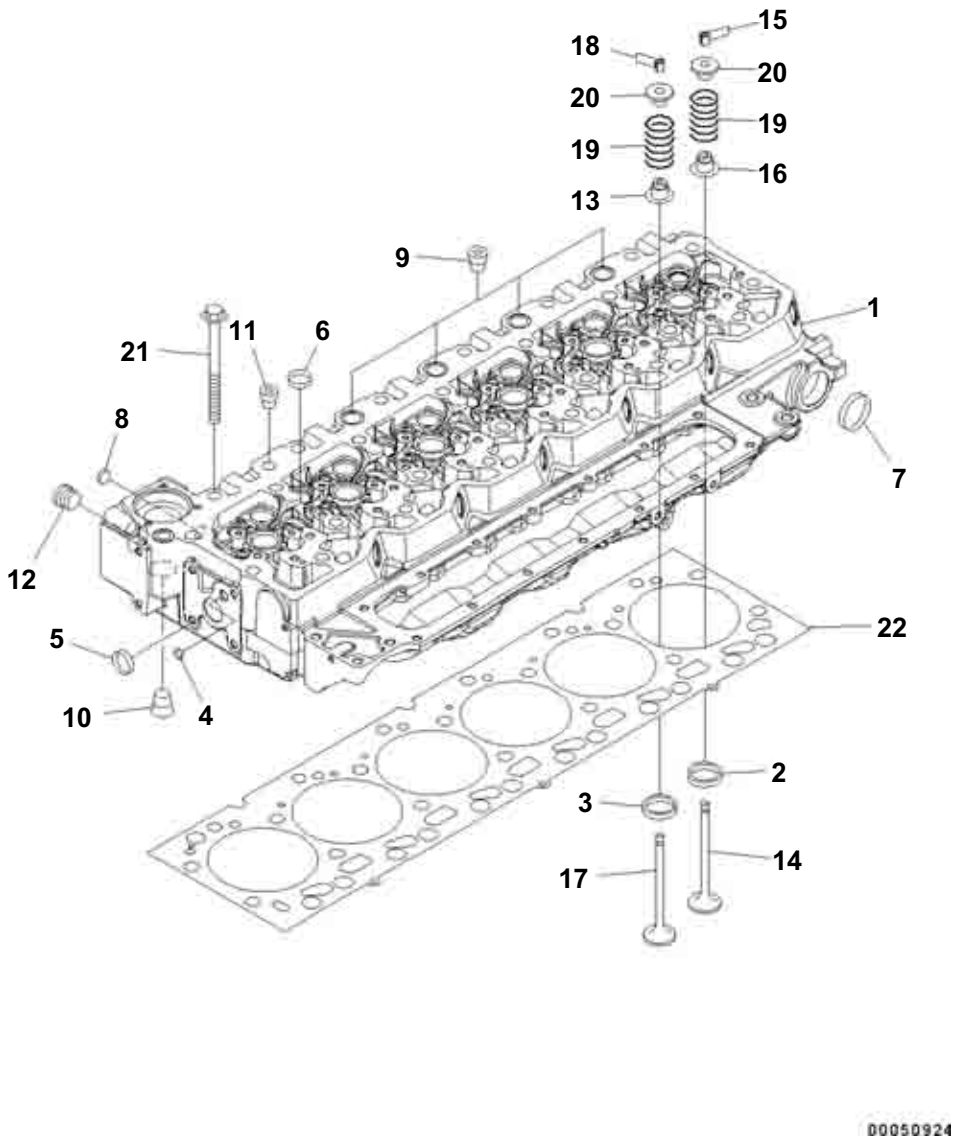

Index	Code	Part Number	Description	Qty	Serial No.
		6754-11-1211	Cylinder Head Assembly	1	26540705-
		6754-11-1101	· Head Assembly, Cylinder	1	26540705-
1	C1		· · Cylinder Head	1	26540705-
2		6754-11-1170	· · Insert, Intake	12	26540705-
3		6754-11-1180	· · Insert, Exhaust	12	26540705-
4		6754-11-1150	· · Plug	7	26540705-
5		6732-21-1820	· · Plug	13	26540705-
6		6735-21-5530	· · Plug	11	26540705-
7		6744-11-1070	· · Plug	2	26540705-
8		6754-11-1160	· · Plug	2	26540705-
9		6732-11-1910	· Plug	4	26540705-
10		6732-11-1920	· Plug	3	26540705-
11		6732-61-2240	· Plug	1	26540705-
12		6216-14-6820	· Plug Assembly	1	26540705-
		6216-14-6860	· · O-ring	1	26540705-
13		6754-41-4540	Seal	12	26540705-
		6754-41-4100	Valve Kit, Intake	12	26540705-
14	C1		· Valve	1	26540705-
15		6744-11-1020	· Collet	2	26540705-
16		6754-41-4540	· Seal	1	26540705-
		6754-41-4200	Valve Kit, Exhaust	12	26540705-
17	C1		· Valve	1	26540705-
18		6744-11-1020	· Collet	2	26540705-
19		6754-41-4430	Spring	24	26540705-
20		6754-41-4510	Retainer	24	26540705-
21		6754-11-1610	Bolt	26	26540705-
22		6754-11-1811	Gasket	1	26540705-

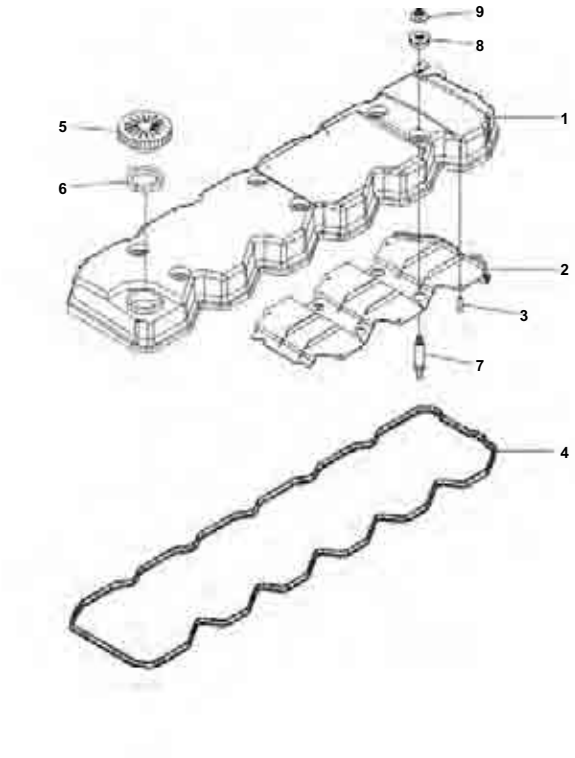

Cylinder Head Cover

Index	Code	Part Number	Description	Qty	Serial No.
		6754-11-8202	Cover Assembly	1	26540705-
1	C1		▪ Cover	1	26540705-
2	C1		▪ Baffle	1	26540705-
3	C1		▪ Rivet	8	26540705-
4	C1		Packing	1	26540705-
		6754-11-8230	Cap, Filler	1	26540705-
5	C1		▪ Cap, Filler	1	26540705-
6	C1		▪ Gasket	1	26540705-
7		6754-11-8150	Stud	6	26540705-
8		6754-11-8210	Isolator	6	26540705-
9		6754-11-8160	Nut	6	26540705-

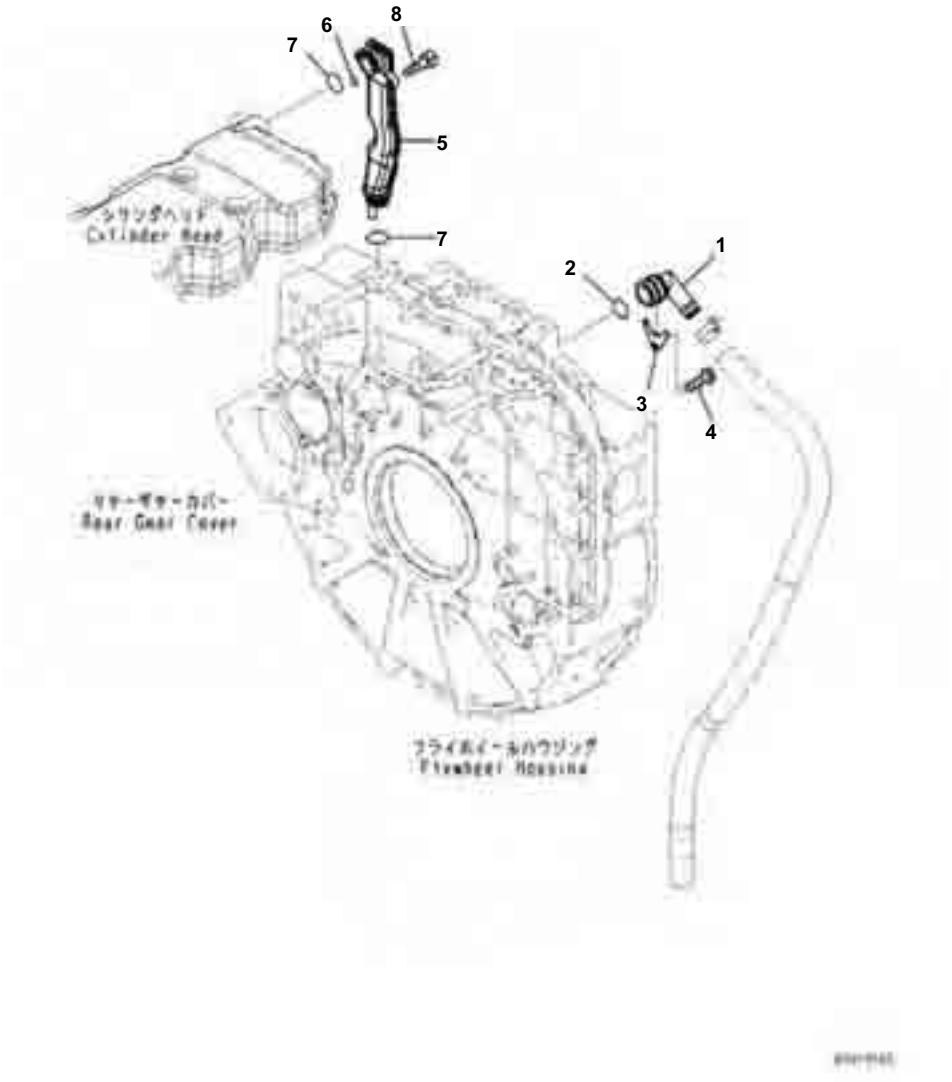

Breather

Index	Code	Part Number	Description	Qty	Serial No.
1		6754-21-6140	Breather	1	26540705-
2		1241155H1	O-ring	1	26540705-
3		6754-21-6150	Plate	1	26540705-
4		6754-21-6160	Bolt	1	26540705-
		6754-21-6100	Tube Assembly	1	26540705-
5	C1		▪ Tube	1	26540705-
6		6754-21-6250	▪ O-ring	1	26540705-
7		6754-21-6240	▪ O-ring	2	26540705-
8		6754-21-6280	Bolt	2	26540705-

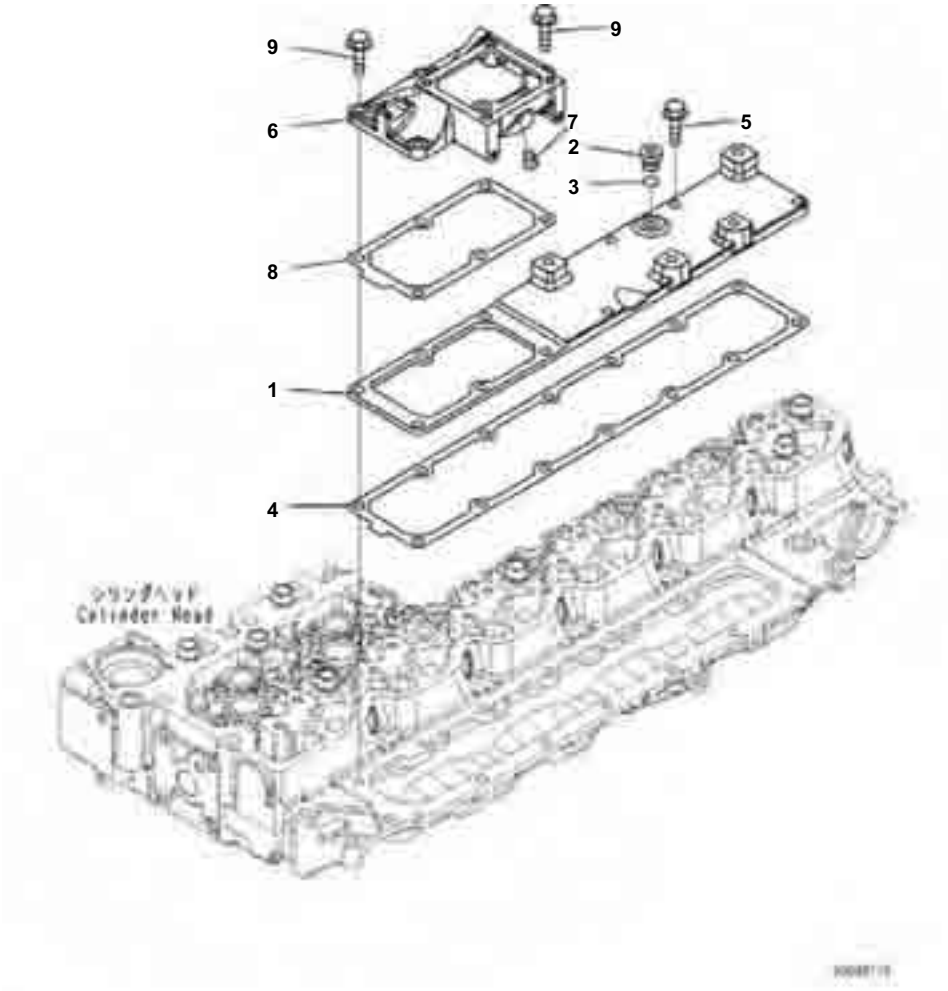

Air Intake Port Cover

Index	Code	Part Number	Description	Qty	Serial No.
1		6754-11-4230	Cover	1	26540705-
		6735-21-1910	Plug Assembly	1	26540705-
2		6735-21-1920	▪ Plug	1	26540705-
3		6735-21-1930	▪ O-ring	1	26540705-
4		6754-11-4280	Gasket	1	26540705-
5		6732-11-4160	Bolt	4	26540705-
6		6754-11-4240	Connector	1	26540705-
7		6732-11-1920	Plug	1	26540705-
8		6754-11-4430	Gasket	1	26540705-
9		6743-12-4110	Bolt	6	26540705-

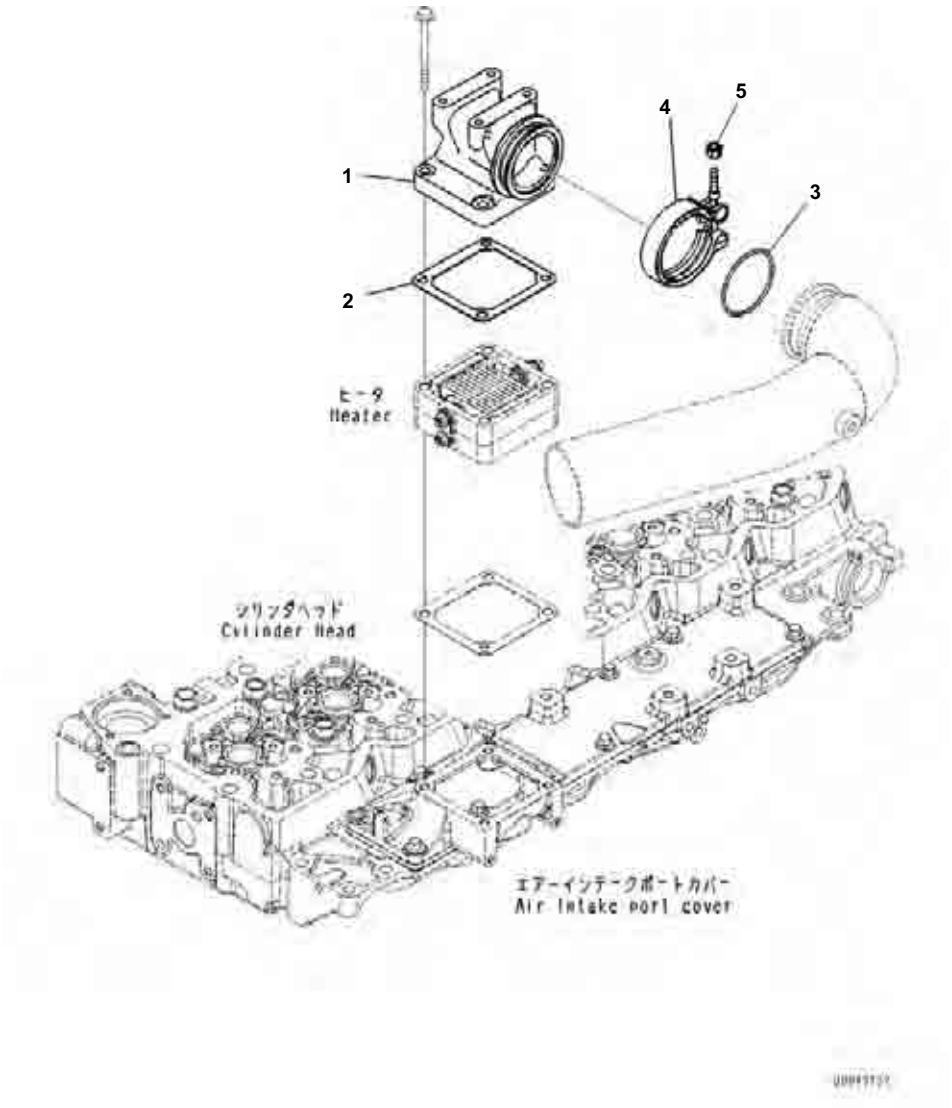

Air Intake Connector

Index	Code	Part Number	Description	Qty	Serial No.
1		6754-11-4310	Connector	1	26540705-
2		6754-11-4120	Gasket	1	26540705-
3		6738-11-4370	O-ring	1	26540705-
4		6738-11-4380	Clamp	1	26540705-
5		6738-11-4390	Nut	1	26540705-

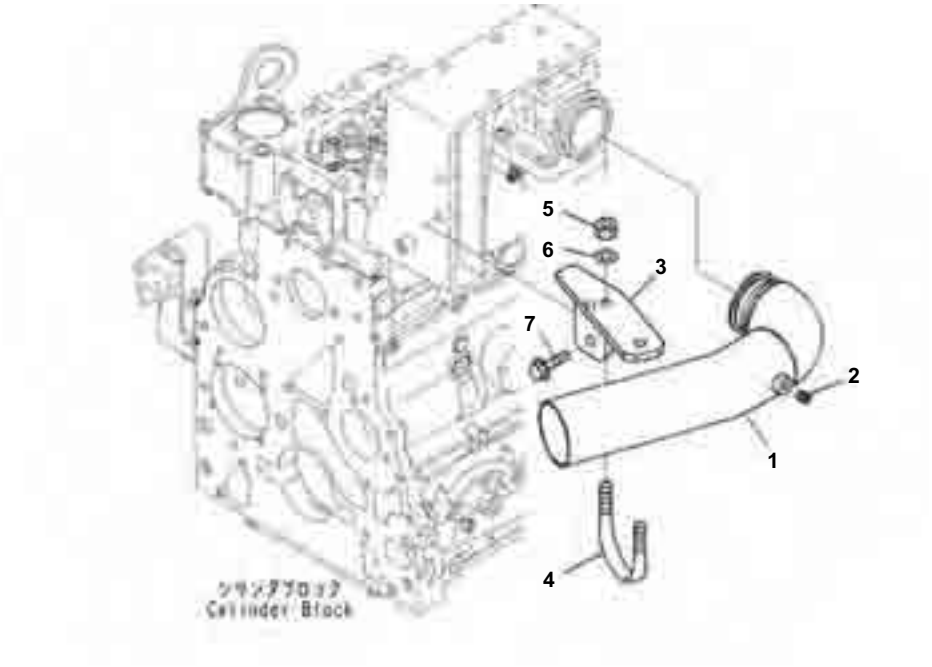

Air Intake Connector, Tube (#26540705-.)

Index	Code	Part Number	Description	Qty	Serial No.
1		6754-11-4320	Tube	1	26540705-.
2		07043-70108	Plug	1	26540705-.
3		6754-11-4880	Bracket	1	26540705-.
4		07283-37671	Clip	1	26540705-.
5		01597-01009	Nut	2	26540705-.
6		01643-31032	Washer	2	26540705-.
7		01435-01030	Bolt	2	26540705-.

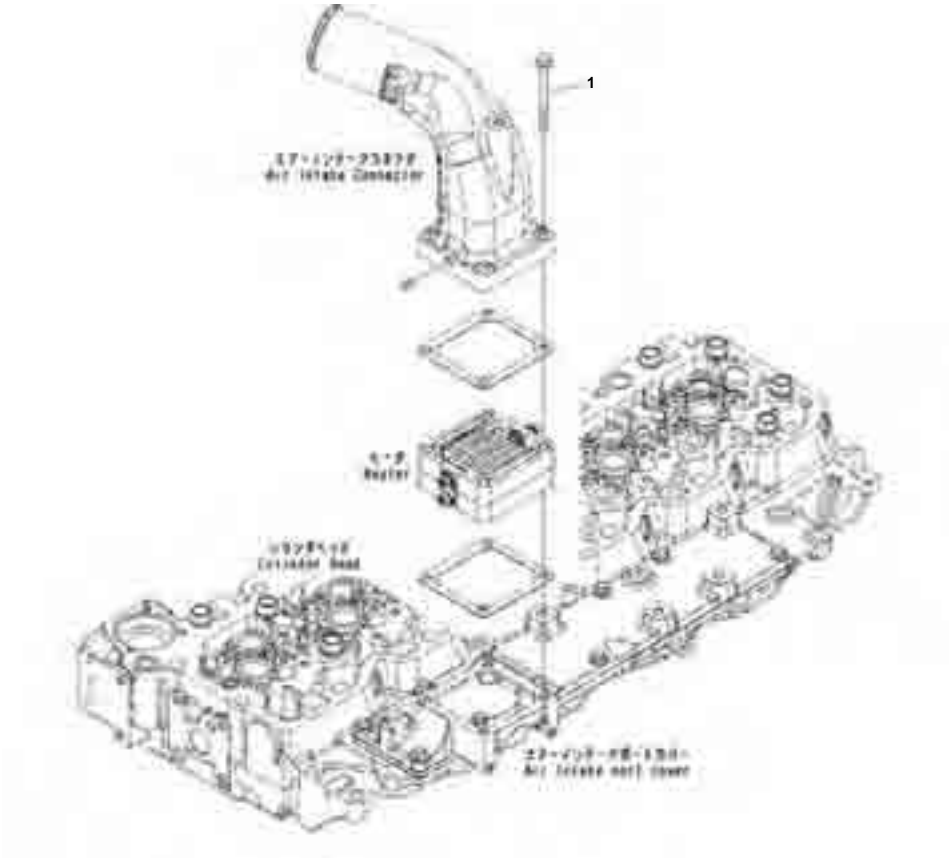

Air Intake Connector Mounting

Index	Code	Part Number	Description	Qty	Serial No.
1		1304898H1	Screw	4	26540705-

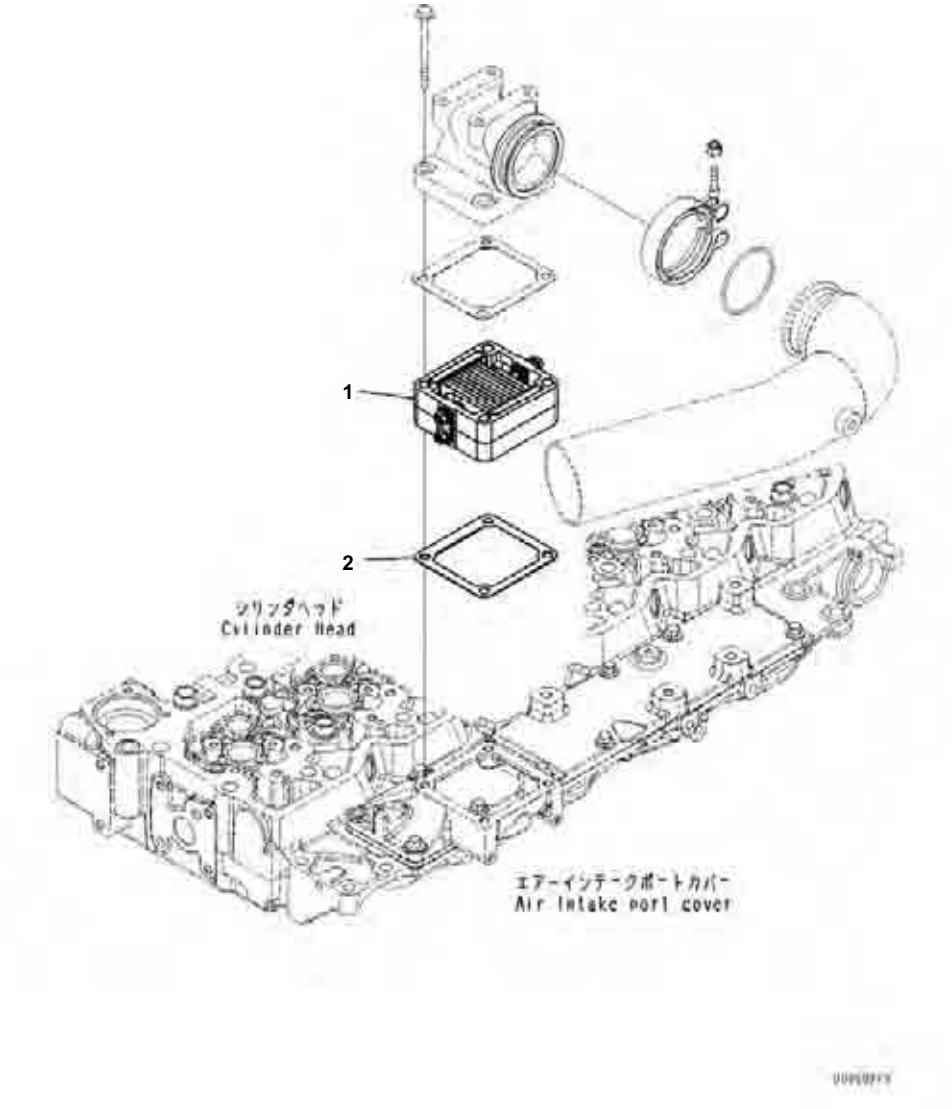

Air Intake Heater

Index	Code	Part Number	Description	Qty	Serial No.
1		6754-81-5110	Heater	1	26540705-
2		6754-11-4120	Gasket	1	26540705-

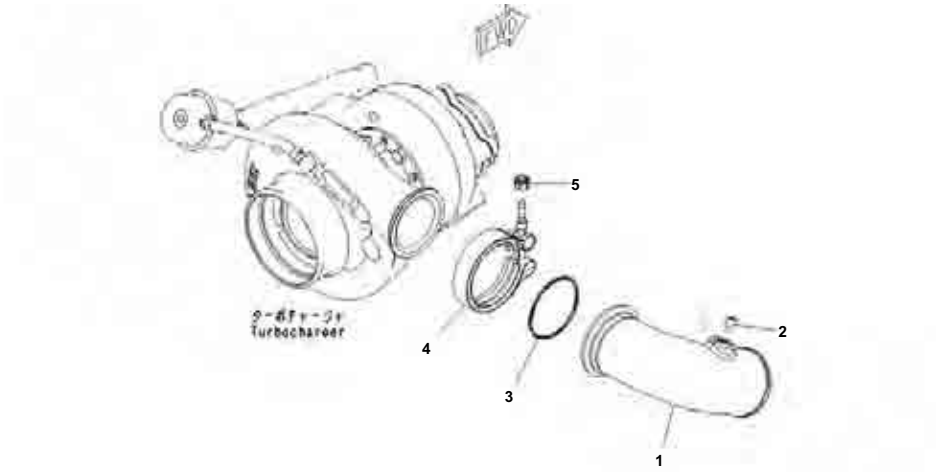

Air Transfer Connection

Index	Code	Part Number	Description	Qty	Serial No.
1		6738-11-4320	Pipe	1	26540705-
2		07043-70108	Plug	1	26540705-
3		6738-11-4370	O-ring	1	26540705-
4		6738-11-4380	Clamp	1	26540705-
5		6738-11-4390	Nut	1	26540705-

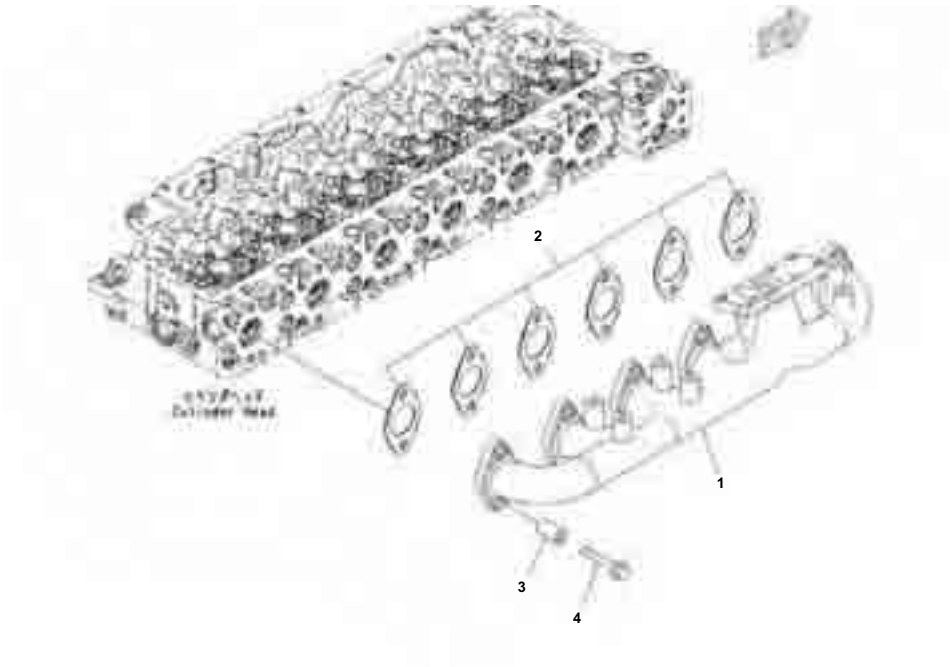

SAA6D107E-1CC S/N 26540705-UP (For GD655-5)

Exhaust Manifold

Index	Code	Part Number	Description	Qty	Serial No.
1		6754-11-5120	Manifold, Exhaust	1	26540705-
2		6754-11-5140	Gasket	6	26540705-
3		6754-11-5150	Spacer	12	26540705-
4		6732-11-5860	Bolt	12	26540705-

Reference:ATB30-001001 Page:A012001

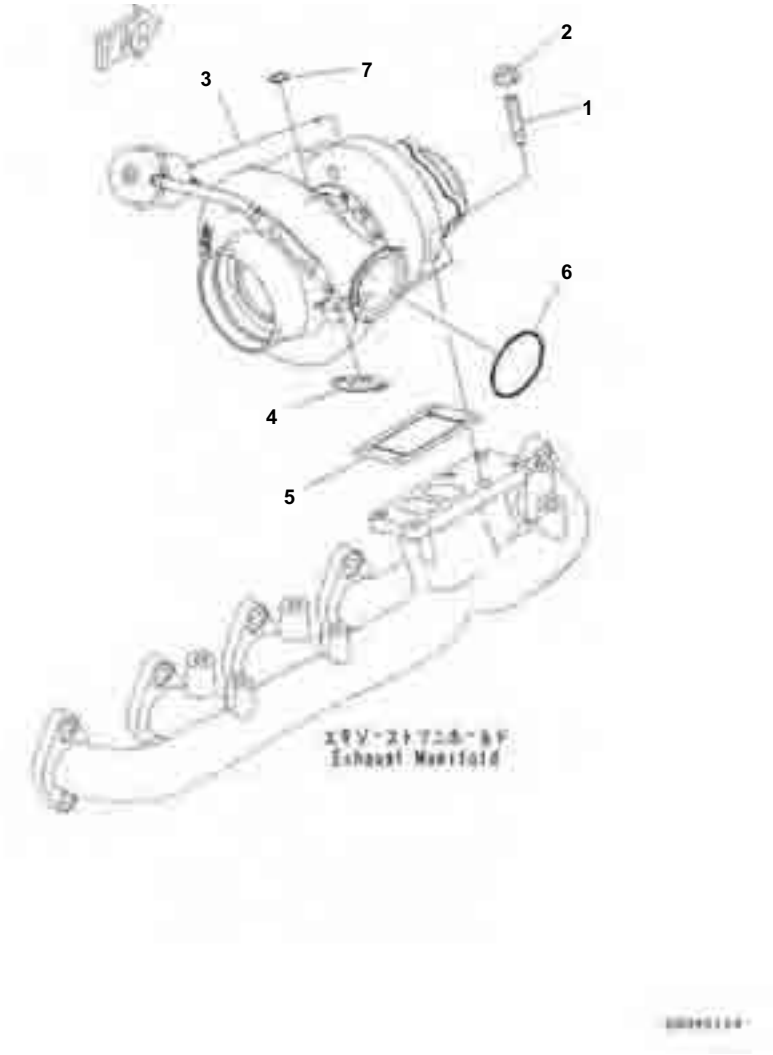

Turbocharger

Index	Code	Part Number	Description	Qty	Serial No.
1		6732-81-8810	Stud	4	26540705-
2		6732-81-8820	Nut	4	26540705-
		6754-81-8240	Turbocharger Kit	1	26540705-
3	C1		▪ Turbocharger	1	26540705-
4		6754-51-8120	▪ Gasket	1	26540705-
5		6754-81-8710	▪ Gasket	1	26540705-
6		6738-11-4370	▪ O-ring	1	26540705-
7		6736-51-8710	▪ O-ring	1	26540705-

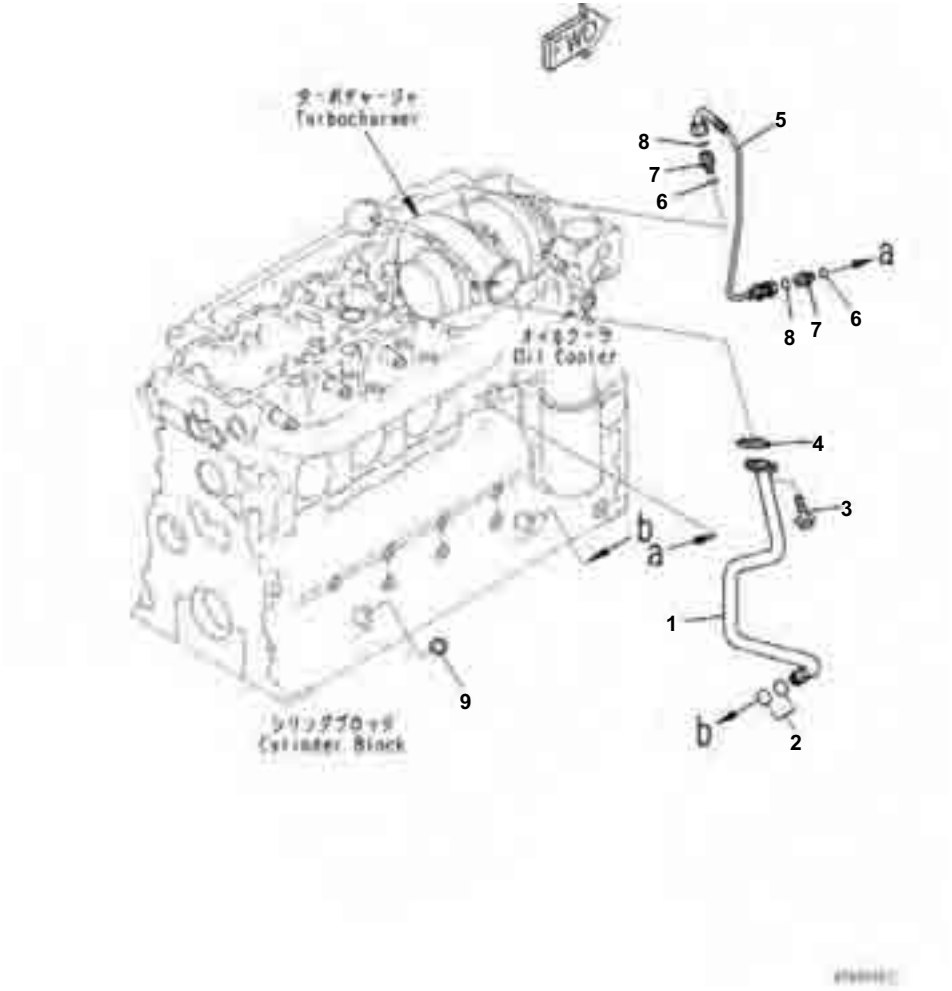

Turbocharger Oil Piping

Index	Code	Part Number	Description	Qty	Serial No.
		6754-51-8200	Tube Assembly	1	26540705-
1	C1		▪ Tube	1	26540705-
2		6732-51-8330	▪ O-ring	2	26540705-
3		6731-61-1370	Bolt	2	26540705-
4		6754-51-8121	Gasket	1	26540705-
5		6754-51-8220	Hose	1	26540705-
6		6736-51-8710	O-ring	2	26540705-
7		6732-81-8850	Connector	2	26540705-
8		6732-81-8860	O-ring	2	26540705-
9		6735-21-5530	Plug	1	26540705-

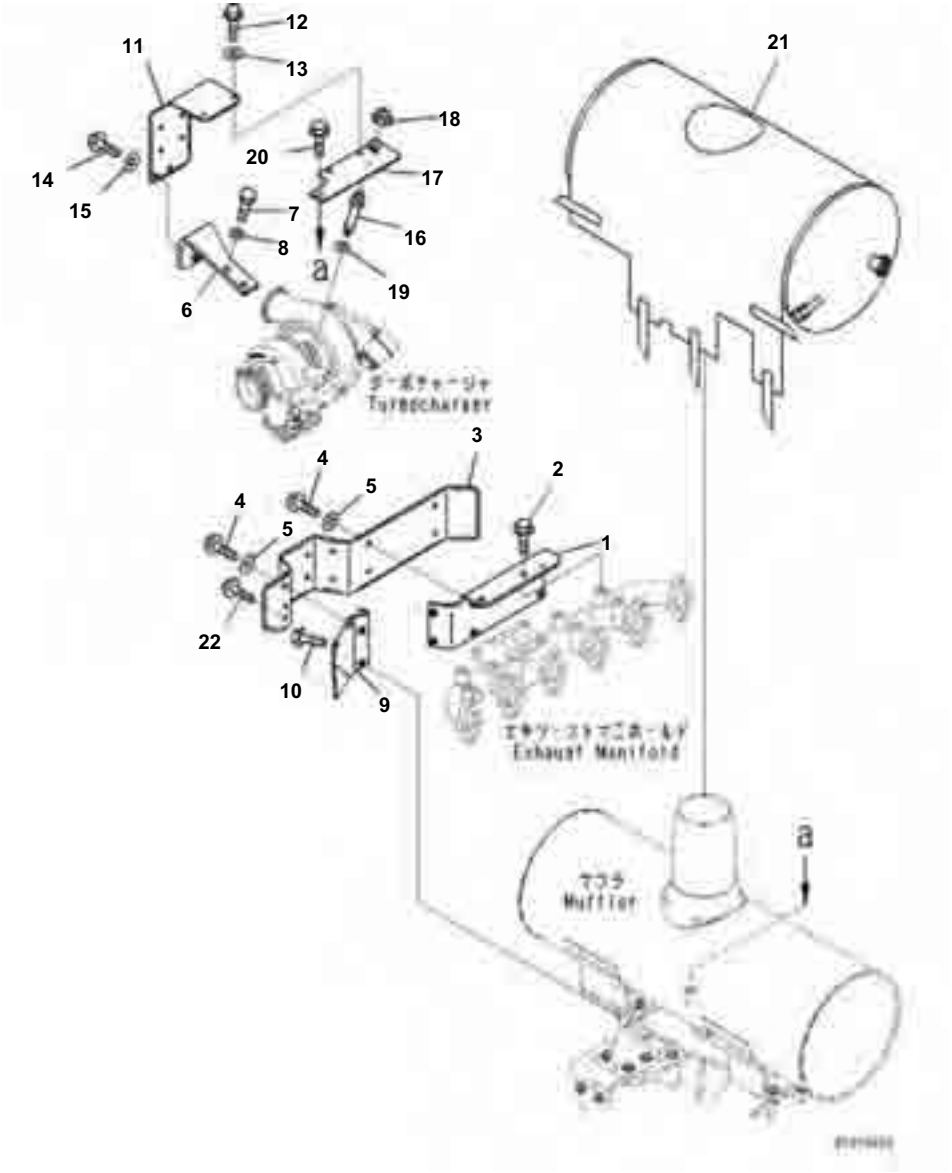

Heat Shield (#26540705-.)

Index	Code	Part Number	Description	Qty	Serial No.
1		6754-81-8941	Bracket	1	26540705-.
2		01435-01020	Bolt	2	26540705-.
3		6754-81-8812	Cover	1	26540705-.
4		01435-00820	Bolt	9	26540705-.
5		154-61-16570	Washer	9	26540705-.
6		6754-81-8750	Bracket	1	26540705-.
7		01010-E1030	Bolt	2	26540705-.
8		01643-31032	Washer	2	26540705-.
9		6754-81-8270	Bracket	1	26540705-.
10		01435-01020	Bolt	2	26540705-.
11		6754-81-8820	Cover	1	26540705-.
12		01435-00820	Bolt	2	26540705-.
13		154-61-16570	Washer	2	26540705-.
14		01435-00825	Bolt	2	26540705-.
15		154-61-16570	Washer	2	26540705-.
16		6754-81-8970	Rod	1	26540705-.
17		6754-81-8960	Bracket	1	26540705-.
18		01584-00806	Nut	1	26540705-.
19		01643-50823	Washer	1	26540705-.
20		01435-00820	Bolt	1	26540705-.
21		6754-81-5840	Cover	1	26540705-.
22		01435-00825	Bolt	1	26540705-.

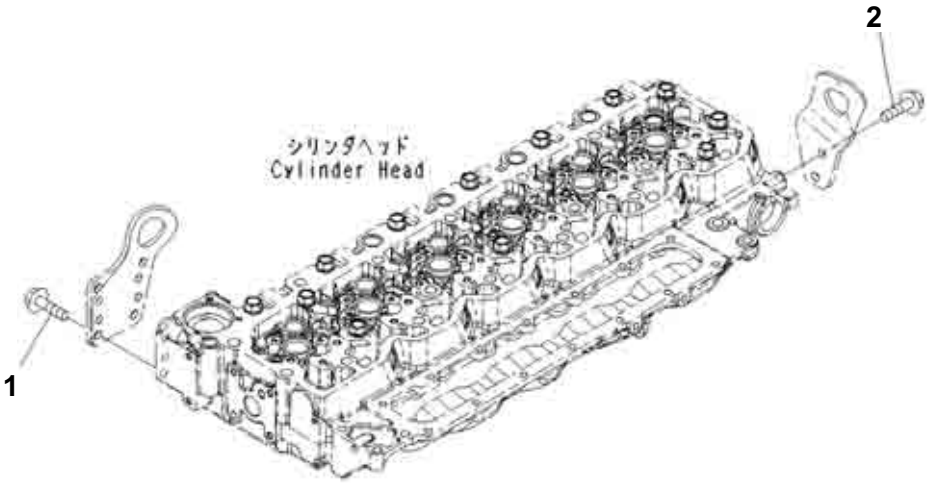

Index	Code	Part Number	Description	Qty	Serial No.
1		6735-71-3220	Bolt	4	26540705-
2		6732-61-3140	Bolt	2	26540705-

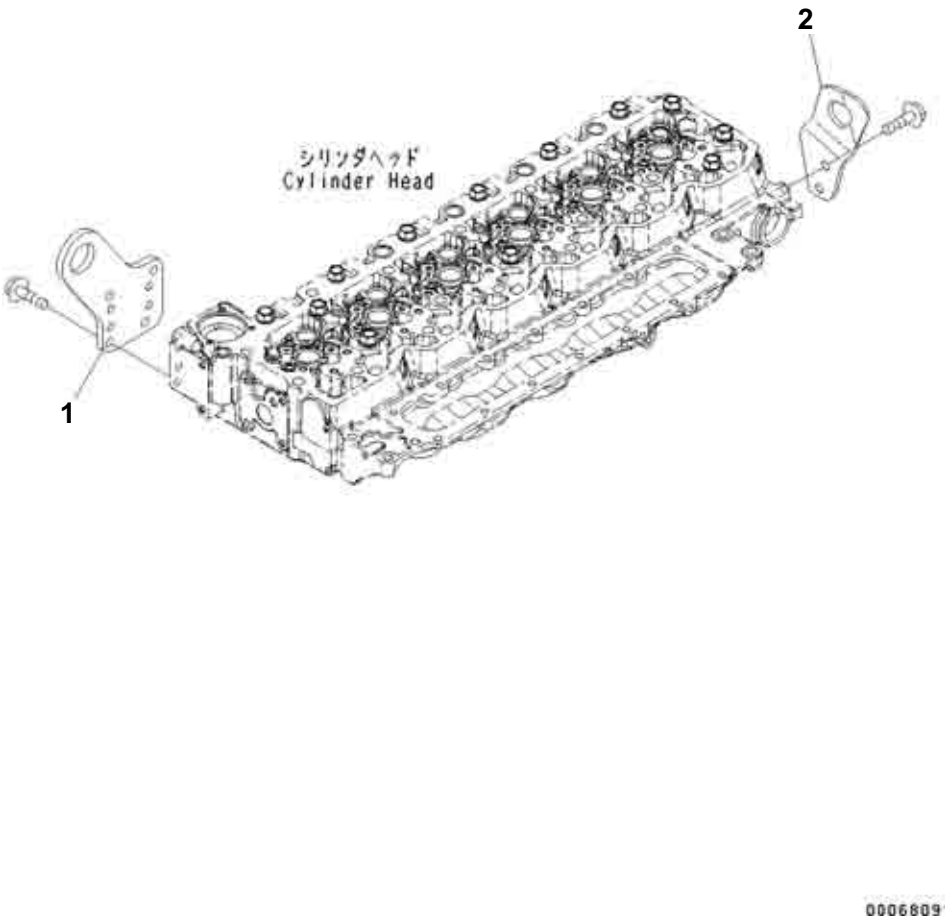

Index	Code	Part Number	Description	Qty	Serial No.
1		6754-11-1970	Bracket,Front	1	26540705-
2		6754-11-1940	Bracket, Rear,Rear	1	26540705-

ENGINE CYLINDER BLOCK AND ITS RELATED PARTS

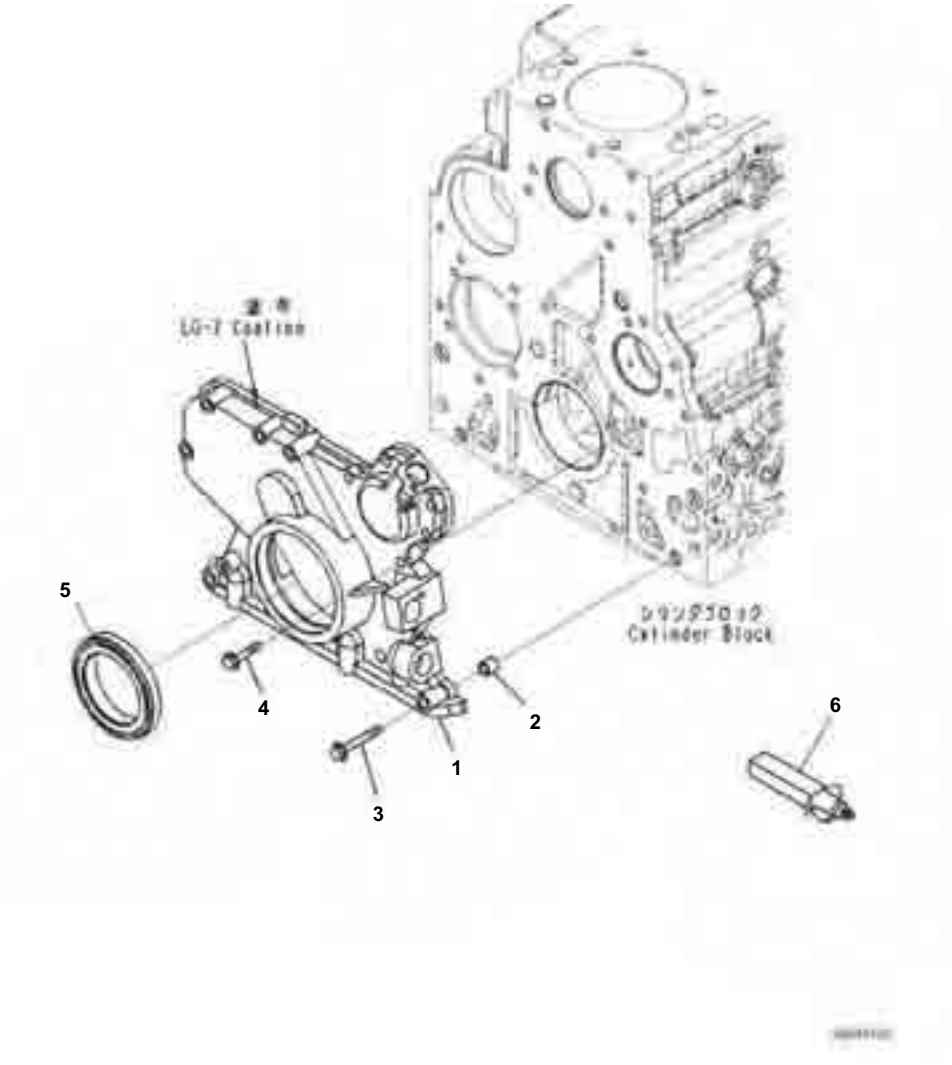

Front Gear Cover

Index	Code	Part Number	Description	Qty	Serial No.
1		6754-21-6211	Cover, Front	1	26540705-
2		6754-21-6220	Ring	2	26540705-
3		6735-61-2120	Bolt	6	26540705-
4		6732-21-6630	Screw	7	26540705-
5		6754-21-6230	Seal	1	26540705-
6		09920-00150	Liquid gasket, LG-7, 150G	AR	26540705-

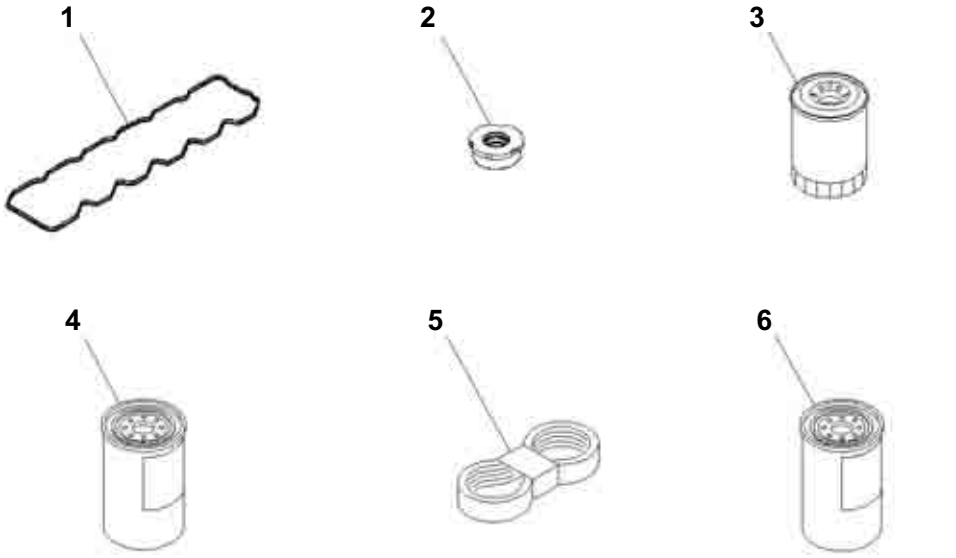

SAA6D107E-1CC S/N 26540705-UP (For GD655-5)

Spare Parts

Index	Code	Part Number	Description	Qty	Serial No.
1		6754-11-8180	Packing	1	26547799-
2		6754-11-8210	Isolator	6	26547799-
3		6736-51-5142	Cartridge	1	26547799-
4		600-319-3750	Cartridge	1	26547799-
5		6732-82-3680	Belt	1	26547799-
6		600-319-3610	Cartridge Assembly	1	26547799-

Reference:B9999-504001 Page:B002001

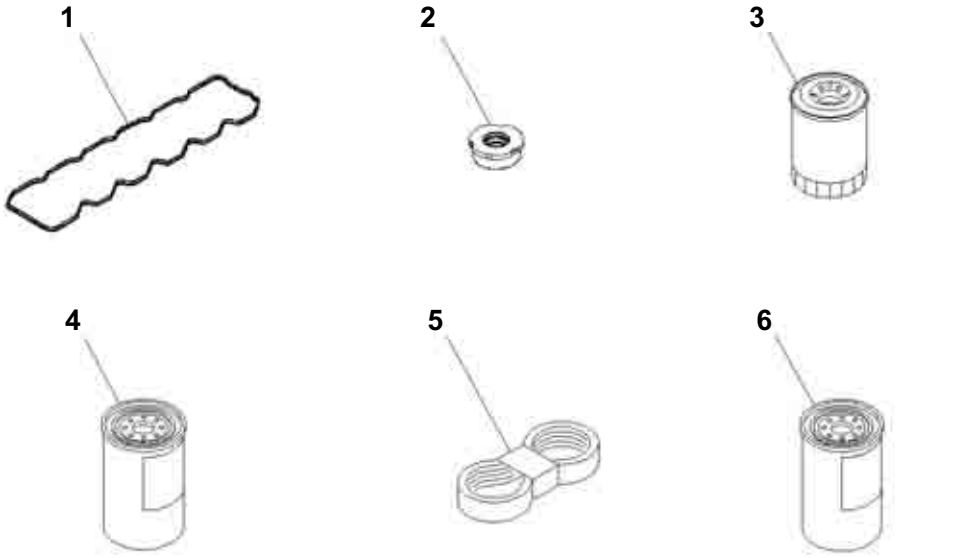

SAA6D107E-1CC S/N 26540705-UP (For GD655-5)
Spare Parts, For 90Amp. Alternator

Index	Code	Part Number	Description	Qty	Serial No.
1		6754-11-8180	Packing	1	26544799-
2		6754-11-8210	Isolator	6	26544799-
3		6736-51-5142	Cartridge	1	26544799-
4		600-319-3750	Cartridge	1	26544799-
5		6732-81-3461	Belt	1	26544799-
6		600-319-3610	Cartridge Assembly	1	26544799-

Reference:B9999-505001 Page:B003001

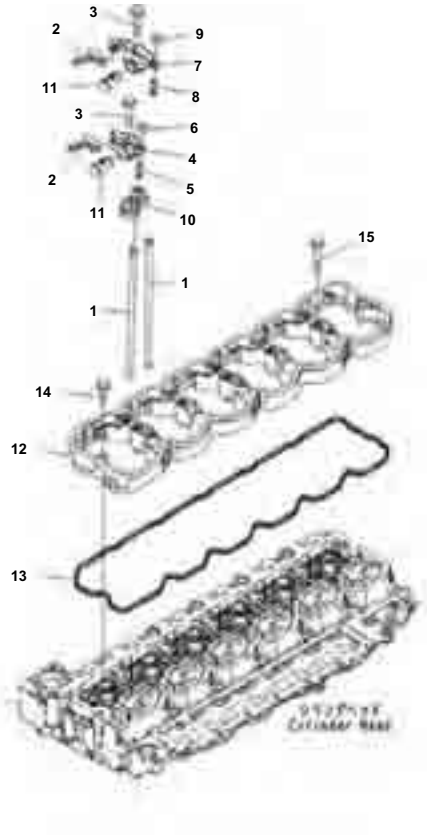

Rocker Arm

Index	Code	Part Number	Description	Qty	Serial No.
1		6754-41-3110	Rod	12	26540705-
2		6754-41-5310	Crosshead	12	26540705-
3		6754-41-5180	Bolt	12	26540705-
		6754-41-5211	Arm Assembly, Intake	6	26540705-
4	C1		▪ Lever Assembly, Intake	1	26540705-
5		6754-41-5140	▪ ▪ Screw	1	26540705-
6		6735-41-5550	▪ ▪ Nut	1	26540705-
		6754-41-5111	Arm Assembly, Exhaust	6	26540705-
7	C1		▪ Lever Assembly, Exhaust	1	26540705-
8		6754-41-5140	▪ ▪ Screw	1	26540705-
9		6735-41-5550	▪ ▪ Nut	1	26540705-
10		6754-41-5260	Support	6	26540705-
11		6754-41-5190	Shaft	12	26540705-
12		6754-11-7110	Housing Assembly	1	26540705-
13		6754-11-7120	Gasket	1	26540705-
14		6736-21-3210	Bolt	2	26540705-
15		6732-61-6150	Bolt	5	26540705-

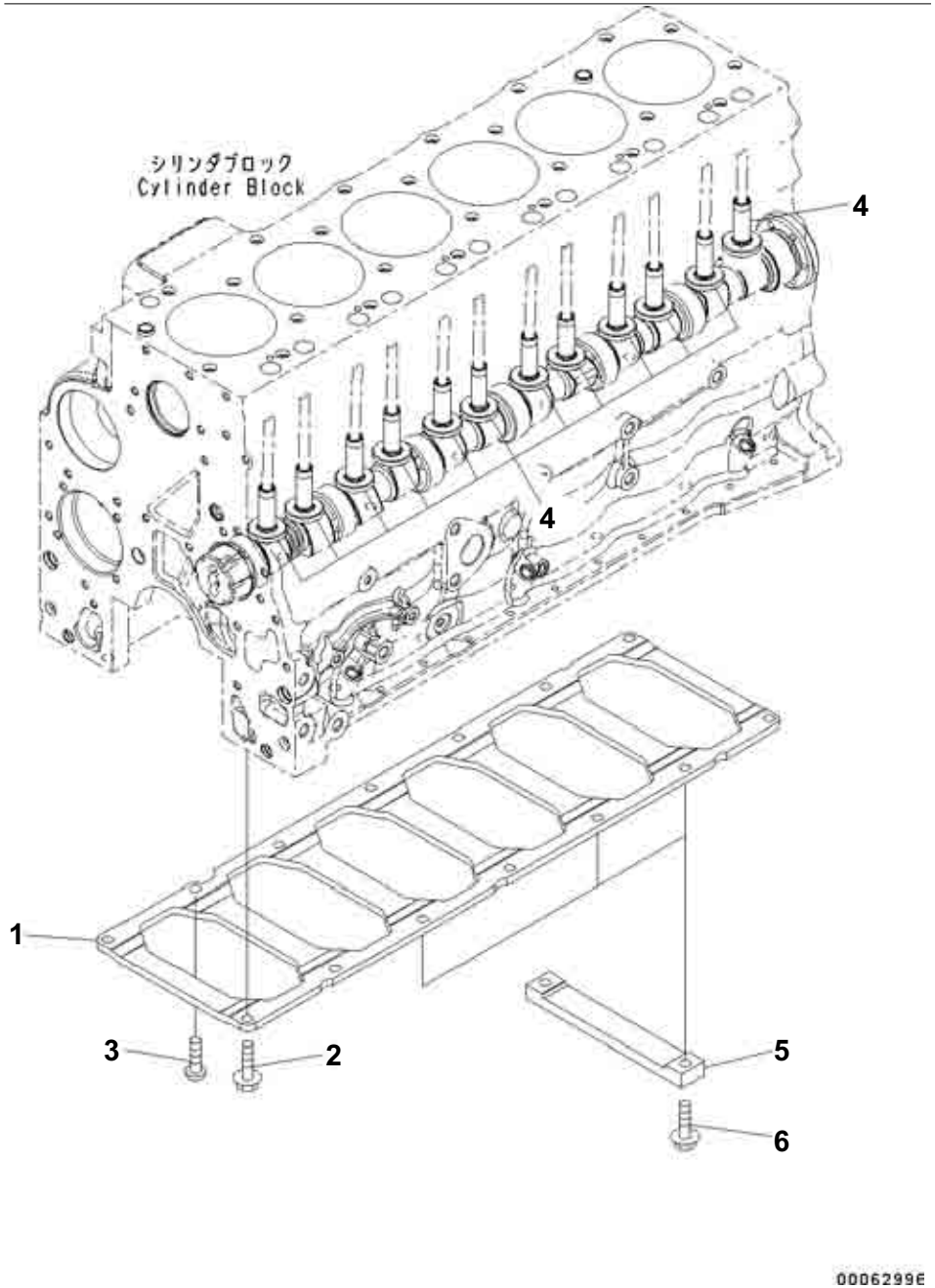

Tappet and Block Plate

Index	Code	Part Number	Description	Qty	Serial No.
1		6754-21-5150	Plate	1	26540705-
2		6735-71-3220	Bolt	7	26540705-
3		6754-21-1920	Bolt	1	26540705-
4		6754-41-2110	Tappet	12	26540705-
5		6754-21-5170	Plate	3	26540705-
6		6742-01-5504	Bolt	6	26540705-

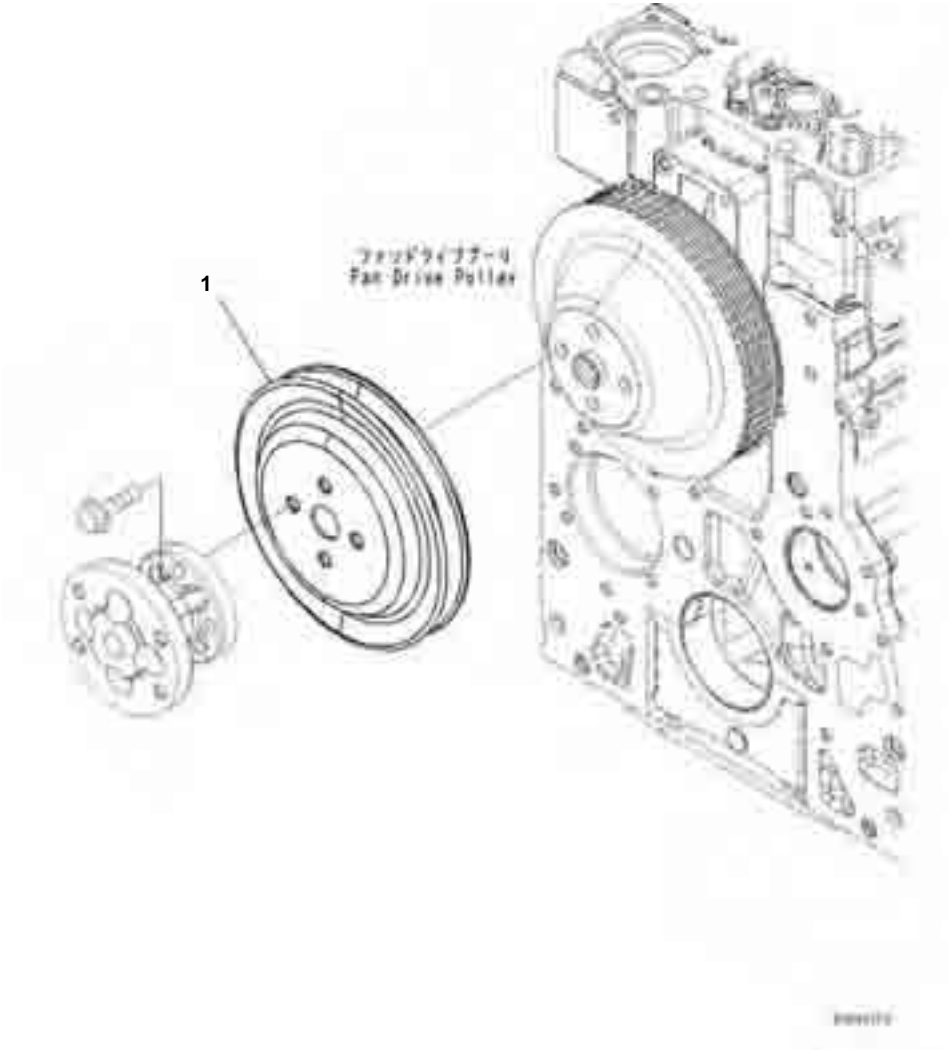

Index	Code	Part Number	Description	Qty	Serial No.
1		6738-91-1510	Pulley, Accessoy	1	26540705-

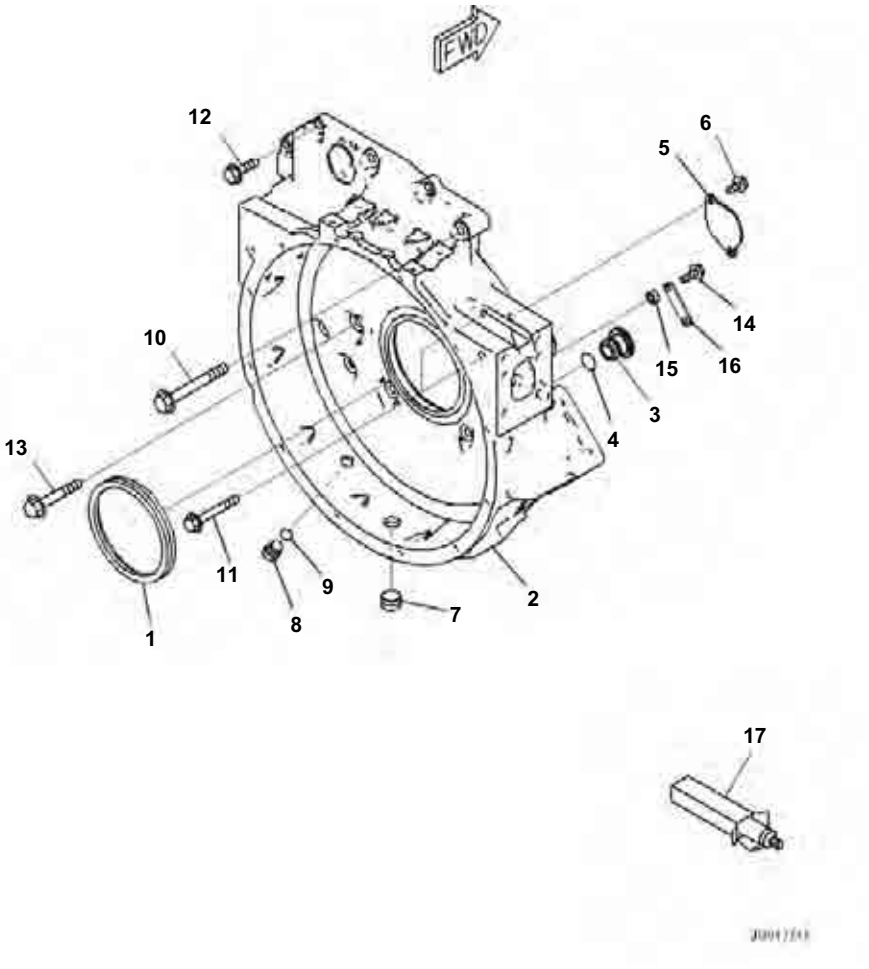

Flywheel Housing

Index	Code	Part Number	Description	Qty	Serial No.
1		6736-21-4221	Seal	1	26540705-
2		6754-21-4150	Housing, Flywheel	1	26540705-
3		6732-21-4150	Plug	1	26540705-
4		6732-21-4161	O-ring	1	26540705-
5		6732-21-4130	Plate	1	26540705-
6		6736-21-5310	Bolt	2	26540705-
7		6732-11-1920	Plug	1	26540705-
		6735-21-4150	Plug Assembly	1	26540705-
8		6735-21-4170	▪ Plug	1	26540705-
9		6735-21-4160	▪ O-ring	1	26540705-
10		6754-21-4210	Bolt	2	26540705-
11		6732-61-6120	Bolt	2	26540705-
12		6742-01-5504	Bolt	10	26540705-
13		6736-21-5350	Bolt	6	26540705-
14		6732-21-6630	Screw	1	26540705-.
15		6167-11-6640	Spacer	1	26540705-.
16		6301-11-4630	Plate	1	26540705-.
17		09920-00150	Liquid gasket, LG-7, 150G	AR	26540705-

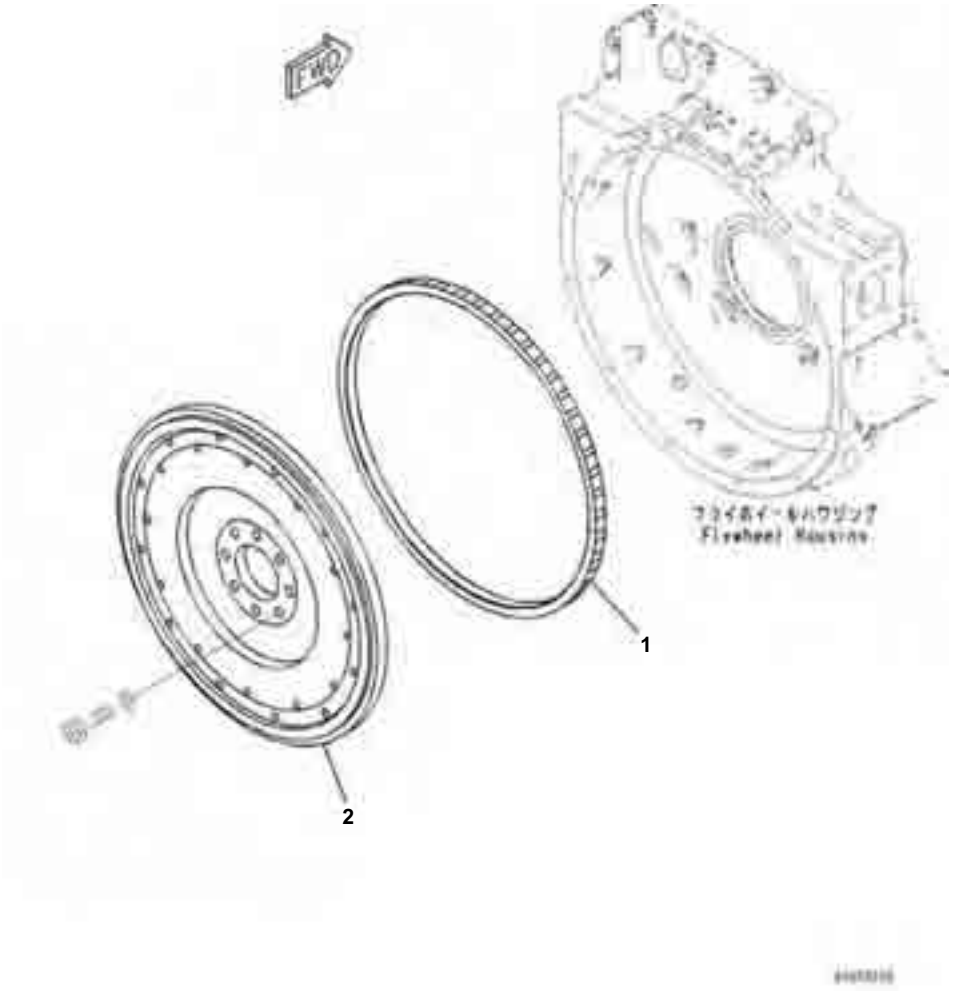

Flywheel

Index	Code	Part Number	Description	Qty	Serial No.
		6743-31-4150	Flywheel Assembly	1	26540705-
1		6736-31-4180	▪ Gear, Ring	1	26540705-
2	C1		▪ Flywheel	1	26540705-

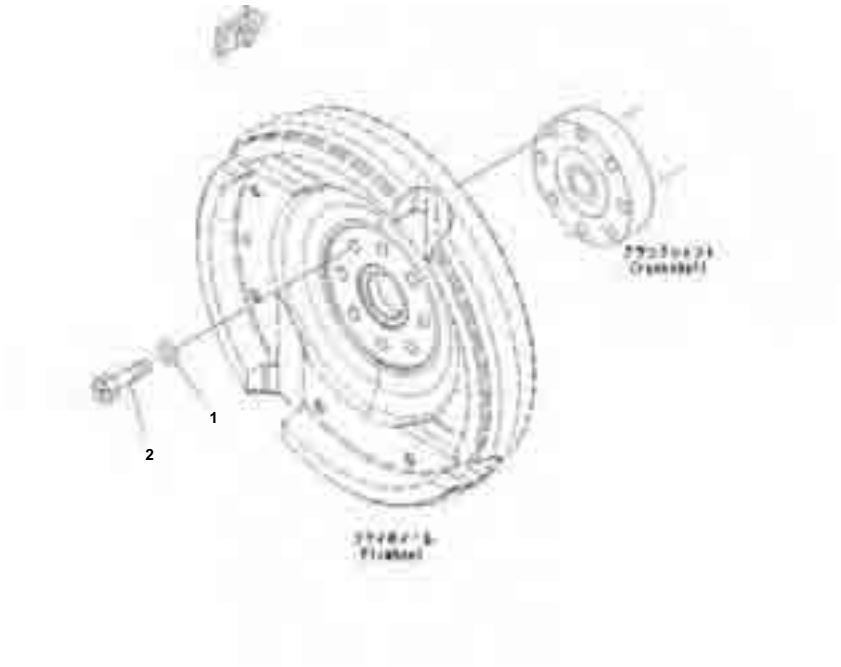

Flywheel Mounting

Index	Code	Part Number	Description	Qty	Serial No.
1		6732-31-4120	Washer	8	26540705-
2		6732-31-4130	Bolt	8	26540705-

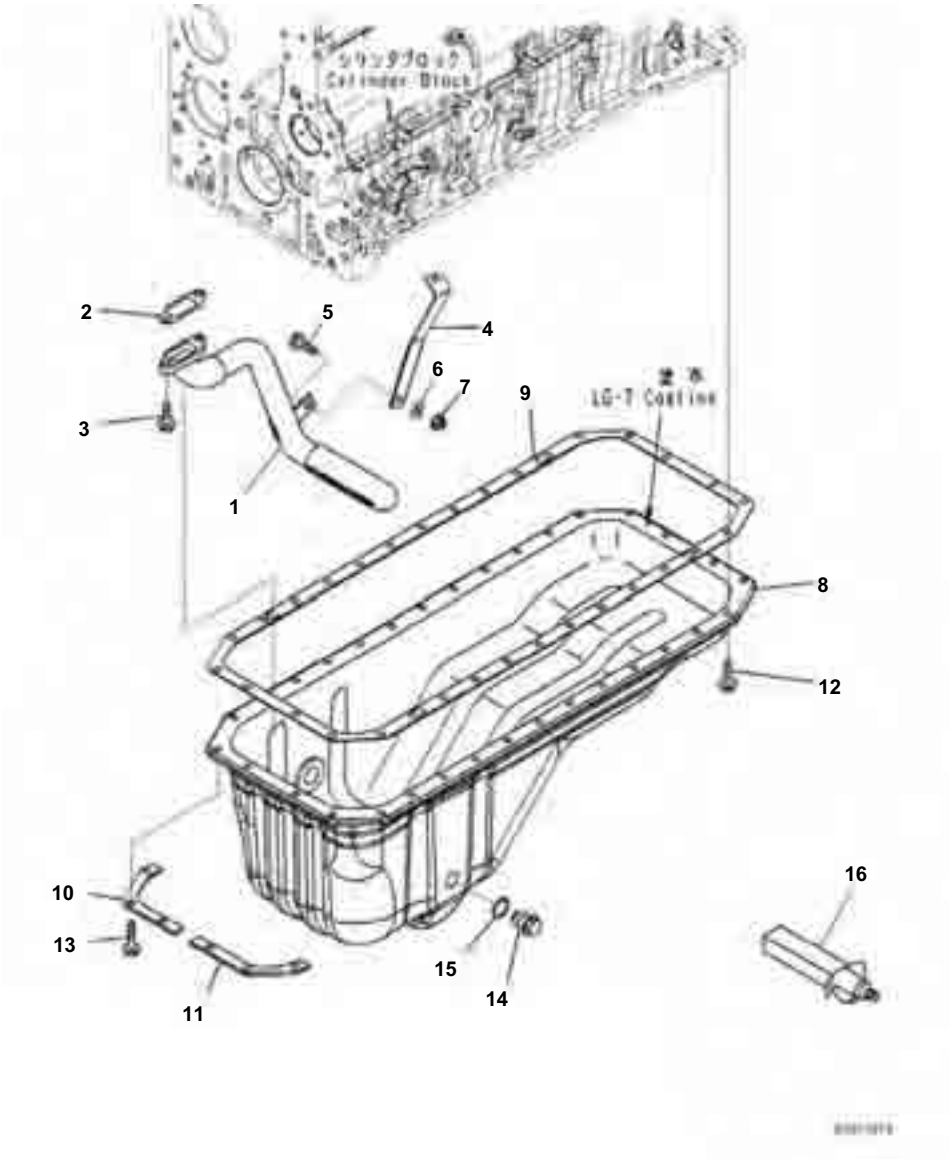

Engine Oil Pan

Index	Code	Part Number	Description	Qty	Serial No.
1		6754-21-5510	Tube, Suction	1	26540705-
2		6754-21-5530	Gasket	1	26540705-
3		6732-21-5160	Bolt	2	26540705-
4		6754-21-5520	Bracket	1	26540705-
5		6735-71-5190	Bolt	1	26540705-
6		6742-01-2690	Washer	1	26540705-
7		01584-00605	Nut	1	26540705-
8		6754-21-5120	Oil Pan	1	26540705-
9		6754-21-5830	Gasket	1	26540705-
10		6754-21-5130	Plate	1	26540705-
11		6754-21-5140	Plate	1	26540705-
12		6735-21-5540	Bolt	26	26540705-
13		6732-21-6610	Bolt	6	26540705-
14		6736-21-5320	Plug	1	26540705-
15		6732-21-5170	Gasket	1	26540705-
16		09920-00150	Liquid gasket, LG-7, 150G	AR	26540705-

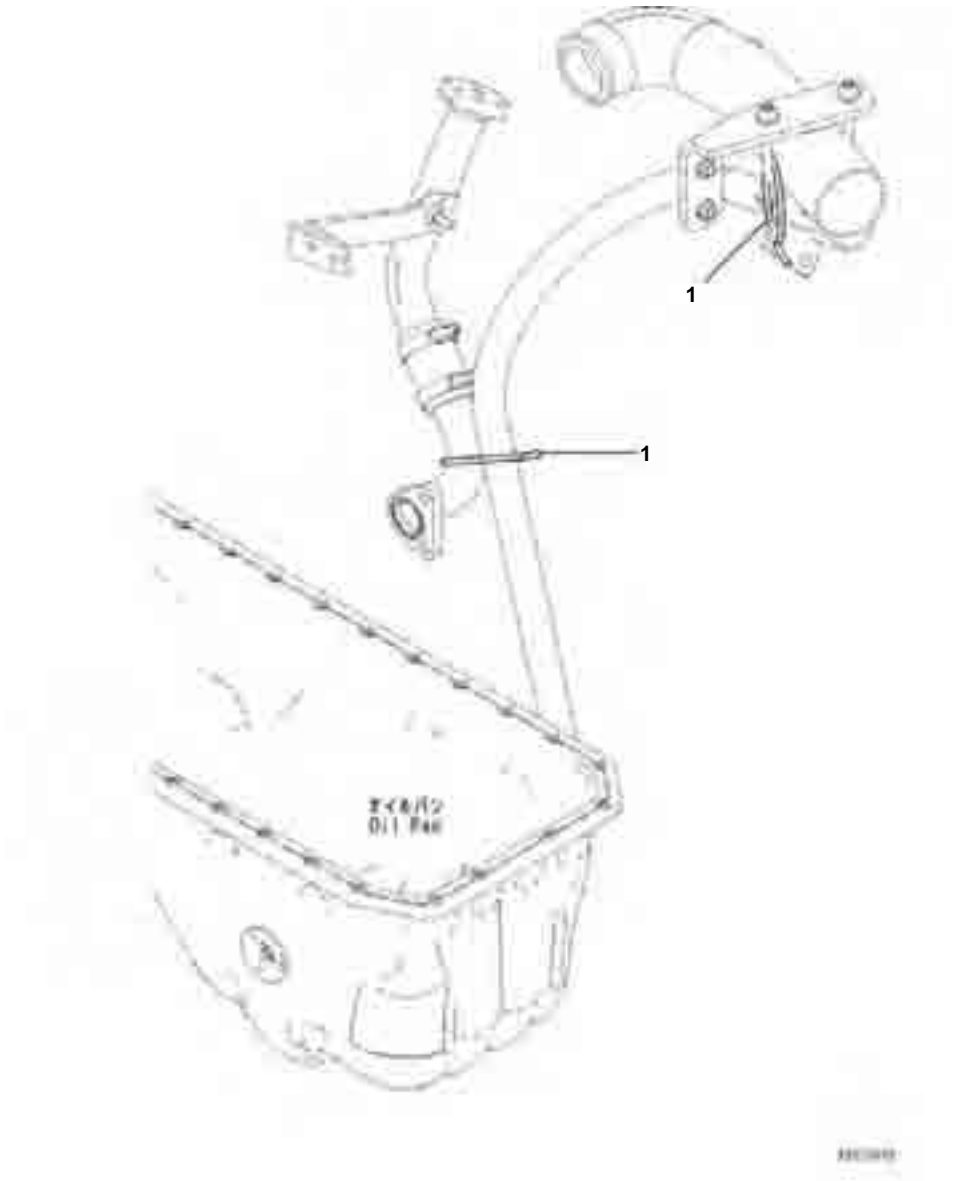

Engine Oil Pan Drain (#26540707-.)

Index	Code	Part Number	Description	Qty	Serial No.
1		08034-20536	Band	2	26540707.-

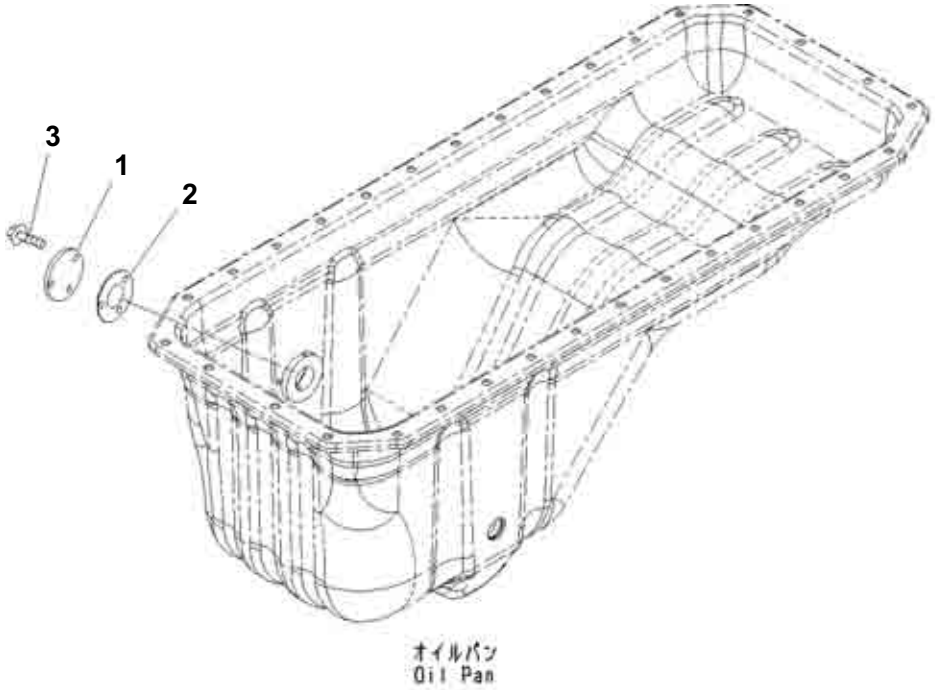

Engine Oil Level Sensor

Index	Code	Part Number	Description	Qty	Serial No.
1		6136-21-5770	Plate	1	26540705-
2		6136-21-5870	Gasket	1	26540705-
3		6733-71-5680	Bolt	3	26540705-

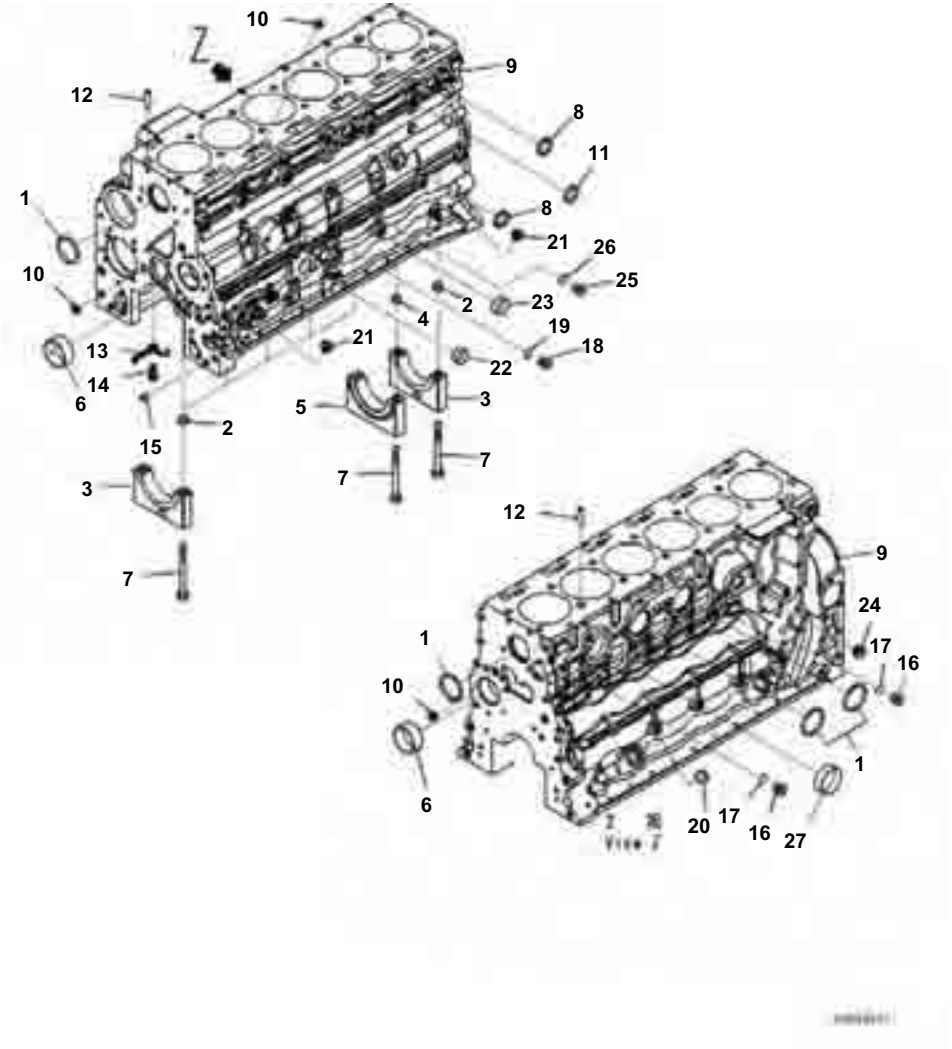

Cylinder Block, Plate and Tappet

Index	Code	Part Number	Description	Qty	Serial No.
		6754-21-1310	Cylinder Block Assembly	1	26540705-
	C1		· Block Assembly	1	26540705-
	C1		· · Block Assembly	1	26540705-
1		6732-21-1831	· · · Plug	4	26540705-
	C3	6754-21-1220	· · · Cap Assembly	6	26540705-
2	C1		· · · · Ring	2	26540705-
3	C1		· · · · Cap	1	26540705-
	C3	6754-21-1240	· · · Cap Assembly	1	26540705-
4	C1		· · · · Ring	2	26540705-
5	C1		· · · · Cap	1	26540705-
6		6732-21-1411	· · · Bushing	2	26540705-
7		6732-21-1611	· · · Bolt	14	26540705-
8		6742-01-1420	· · · Plug	2	26540705-
9	C1		· · · Block	1	26540705-
10		6732-21-1812	· · Plug	2	26540705-
11		6732-21-1820	· · Plug	3	26540705-
		6754-21-1320	· Block Kit	1	26540705-
12		6732-21-6140	· · Ring	2	26540705-
13		6754-21-1191	· · Nozzle	6	26540705-
14		6754-21-1180	· · Joint	6	26540705-
15		6754-21-6220	· · Ring	2	26540705-
		6560-81-7110	· · Plug Assembly	2	26540705-
16		6560-81-7120	· · · Plug	1	26540705-
17		6560-81-7130	· · · O-ring	1	26540705-
		6732-21-1960	· · Plug Assembly	1	26540705-
18		6215-81-9510	· · · Plug	1	26540705-
19		6215-81-9710	· · · O-ring	1	26540705-
20		6735-21-5530	· · Plug	1	26540705-
21		6732-21-5530	· · Plug	4	26540705-
22		6732-21-6160	· · Plug	1	26540705-
23		6742-01-1420	· · Plug	1	26540705-
24		6732-11-1920	· · Plug	1	26540705-
		6216-24-5130	· · Plug Assembly	1	26540705-
25	C1		· · · Plug	1	26540705-
26		6735-21-1930	· · · O-ring	1	26540705-
27		6732-21-1831	· · Plug	1	26540705-

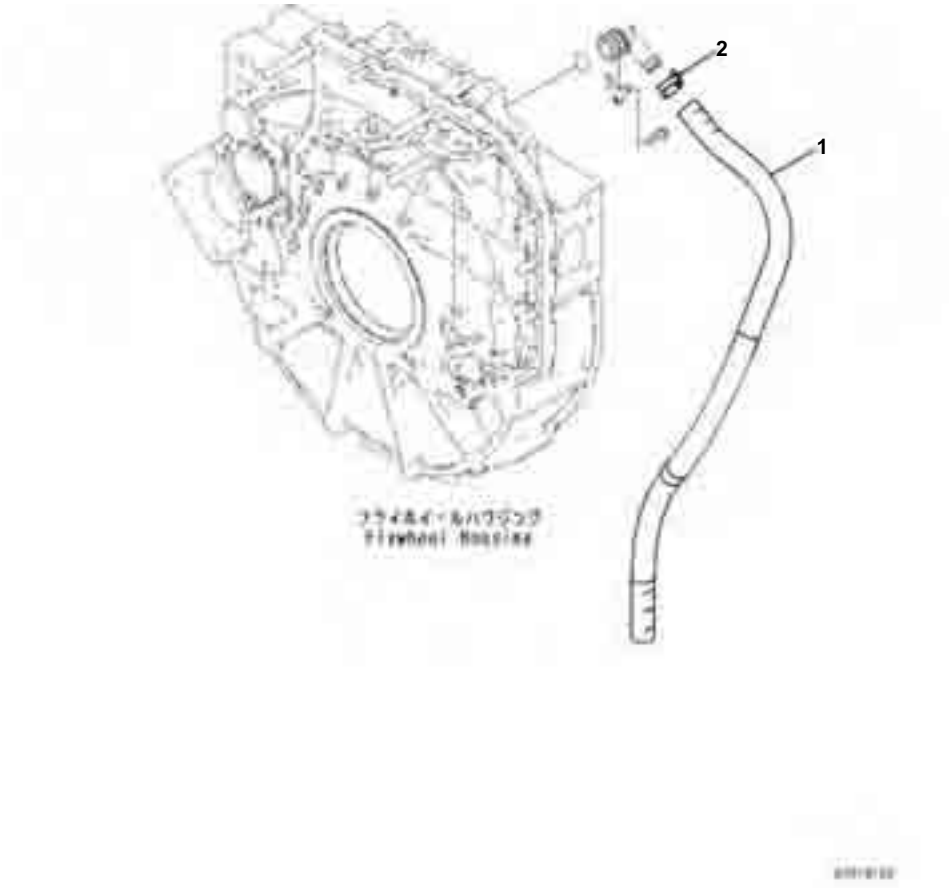

Index	Code	Part Number	Description	Qty	Serial No.
1		07287-01911	Hose	1	26540705-.
2		07285-00220	Clip	1	26540705-.

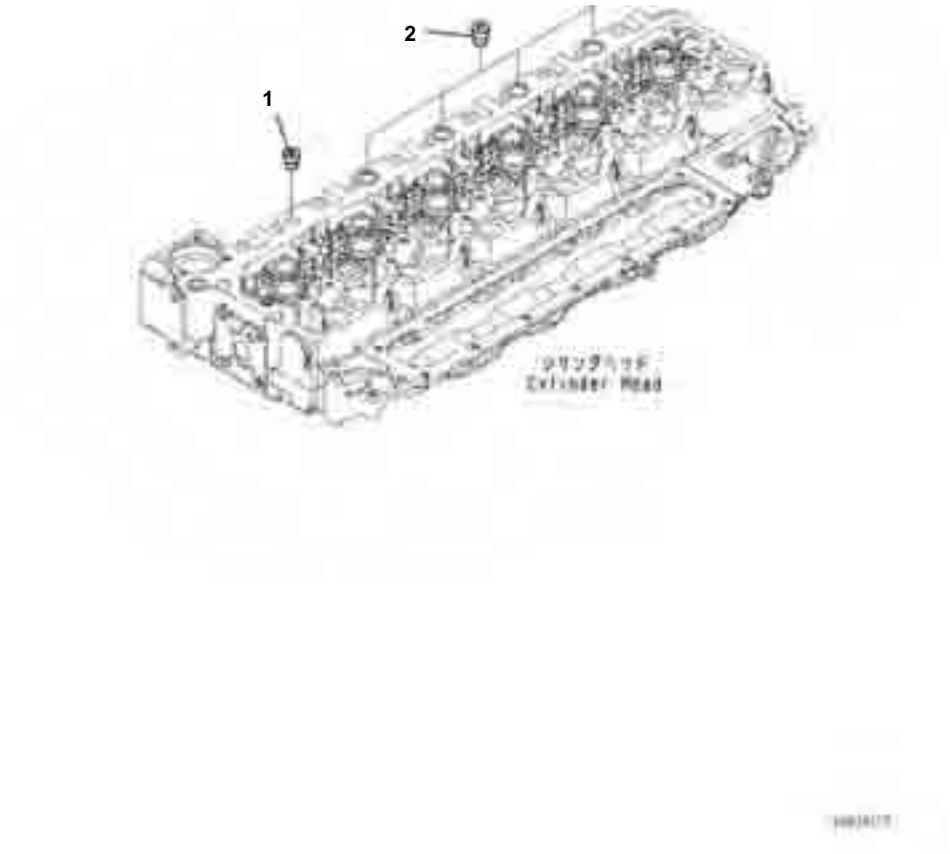

Cabin Heater Plug, Plugs

Index	Code	Part Number	Description	Qty	Serial No.
1		6732-11-1920	Plug	1	26540705-
2		6732-21-1980	Plug	4	26540705-

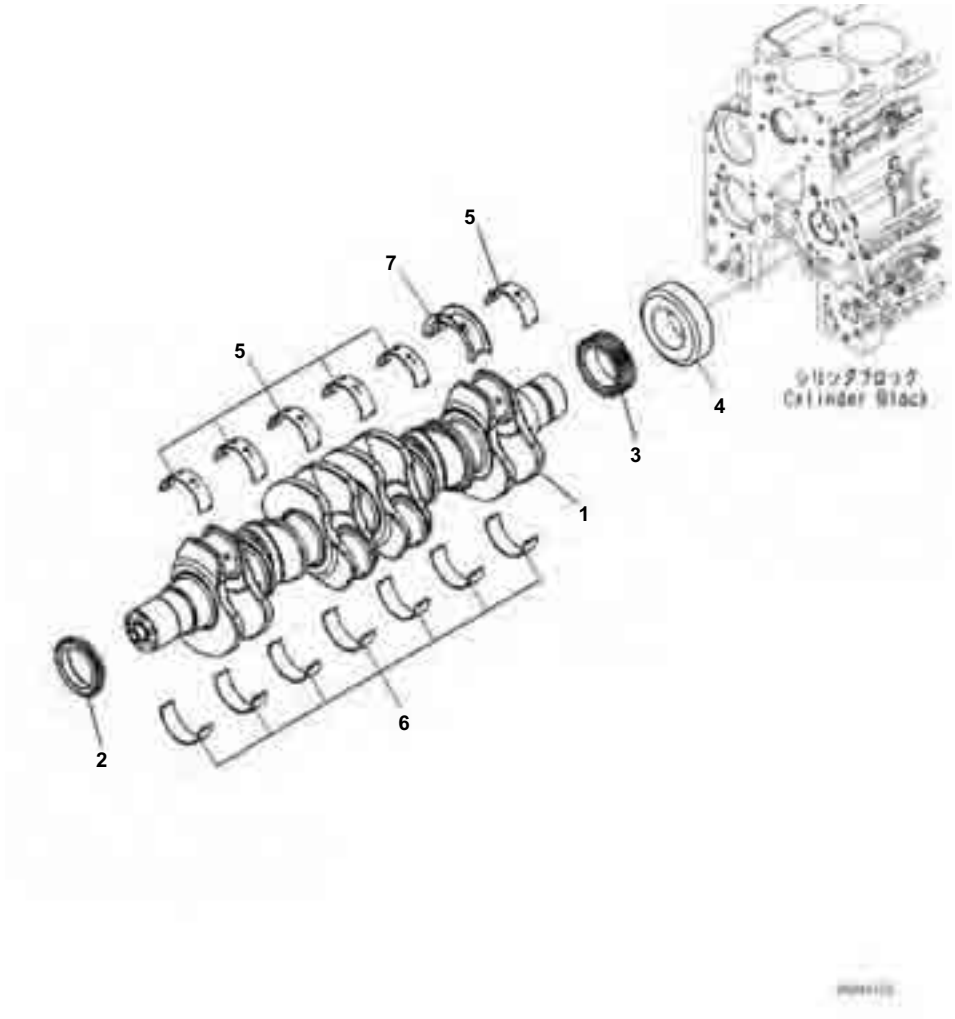

Crankshaft

Index	Code	Part Number	Description	Qty	Serial No.
		6754-01-1310	Crankshaft Assembly	1	26540705-
1	C1		▪ Crankshaft	1	26540705-
2	C1		▪ Gear	1	26540705-
3	C1		▪ Gear	1	26540705-
4	C1		▪ Collar	1	26540705-
		6754-22-8100	Main Metal Assembly	1	26540705-
5	C1		▪ Metal	6	26540705-
6	C1		▪ Metal	7	26540705-
7	C1		▪ Bearing, Thrust	1	26540705-

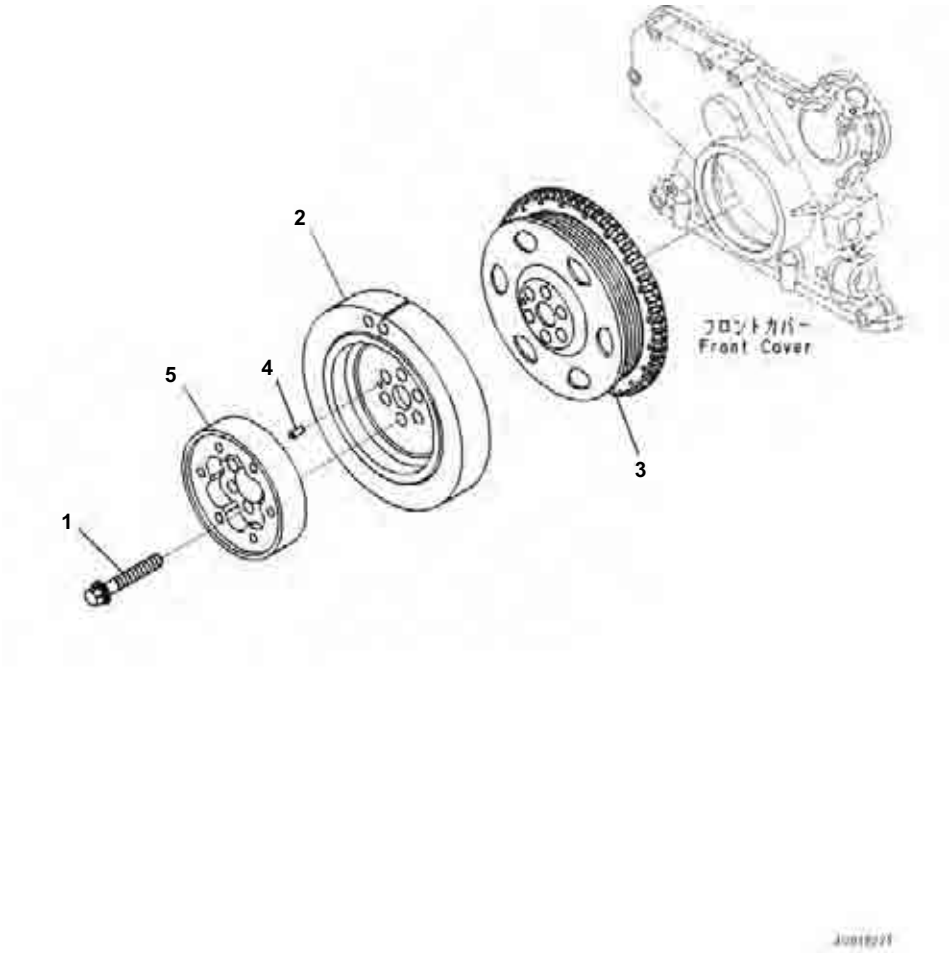

Vibration Damper

Index	Code	Part Number	Description	Qty	Serial No.
1		6754-31-8120	Bolt	6	26540705-
2		6754-31-8210	Damper	1	26540705-
3		6751-81-2611	Pulley, Crankshaft	1	26542464-
4		6754-31-8130	Pin	1	26540705-
5		6754-31-8150	Flange	1	26540705-

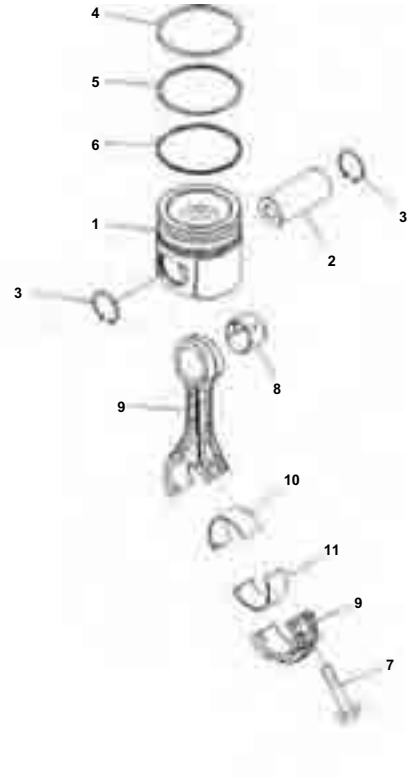

Piston and Connecting Rod

Index	Code	Part Number	Description	Qty	Serial No.
1		6754-31-2111	Piston	6	26540705-
2		6754-31-2410	Pin	6	26540705-
3		6732-31-2420	Ring	12	26540705-
		6754-31-2010	Ring Assembly	6	26540705-
4	C1		▪ Ring, Top	1	26540705-
5	C1		▪ Ring, 2nd	1	26540705-
6	C1		▪ Ring, Oil	1	26540705-
		6737-32-3121	Rod Assembly	6	26540705-
7		6732-31-3320	▪ Screw	2	26540705-
8		6732-31-3132	▪ Bushing	1	26540705-
9	C1		▪ Rod	1	26540705-
10		6754-31-3410	Metal,Upper	6	26540705-
11		6732-31-3420	Metal,Lower	6	26540705-

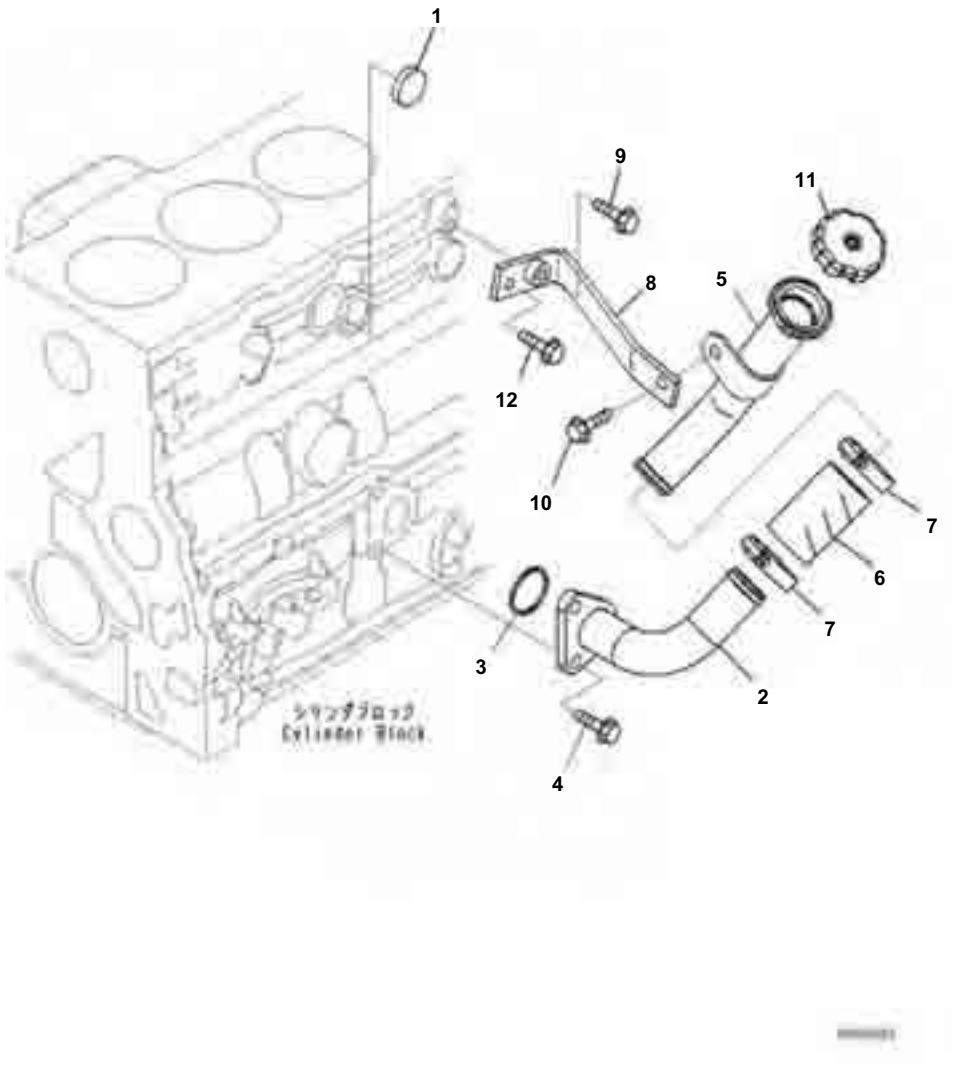

Engine Oil Filler

Index	Code	Part Number	Description	Qty	Serial No.
1		6742-01-1420	Plug	1	26540705-
2		6754-21-7420	Tube, Filler	1	26540705-
3		6736-21-3360	Seal Ring	1	26540705-
4		6732-11-1720	Bolt	2	26540705-
5		6754-21-7440	Filler	1	26540705-
6		6127-61-6421	Hose	1	26540705-
7		07281-00549	Clamp	2	26540705-
8		6754-21-7510	Brace	1	26540705-
9		01435-00845	Bolt	1	26540705-
10		6735-71-3220	Bolt	1	26540705-
11		6136-21-7120	Cap Assembly	1	26540705-
12		6732-21-6630	Screw	1	26540705-

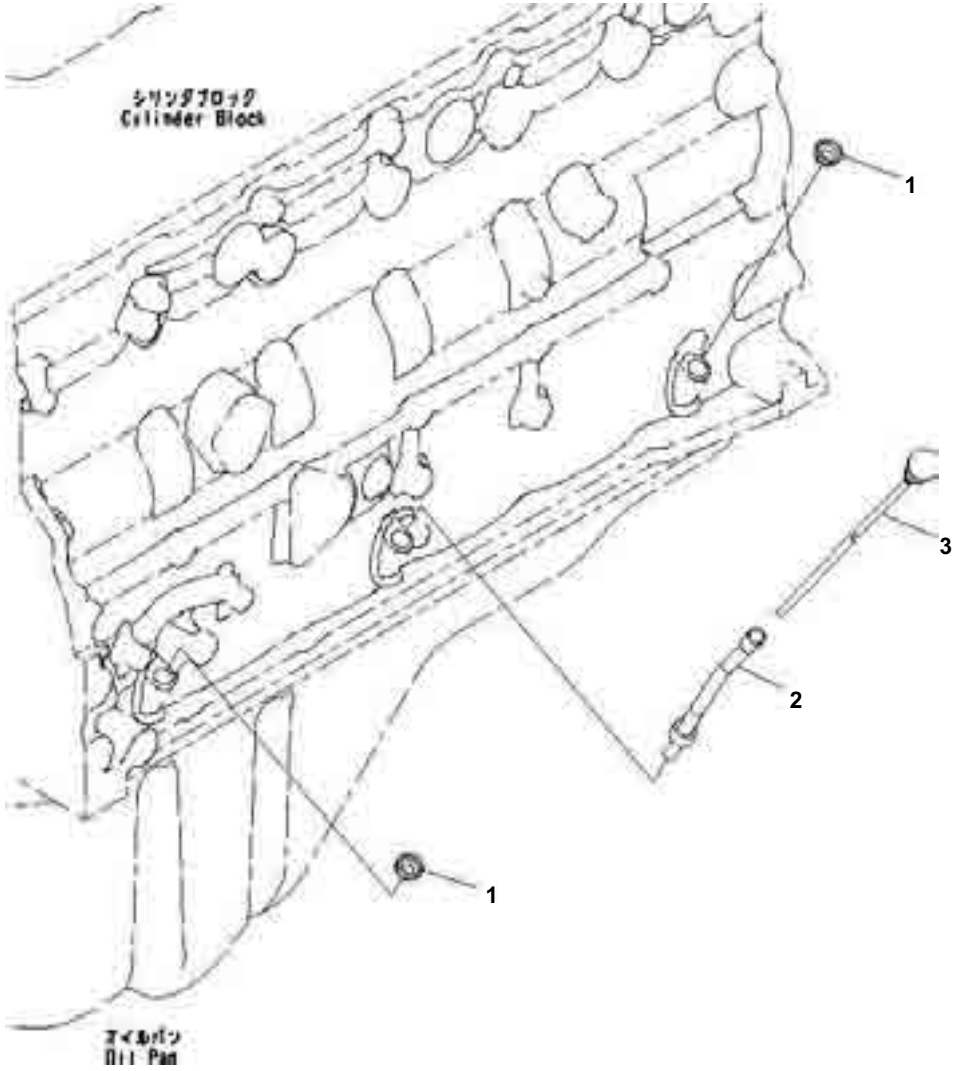

Oil Level Gauge

Index	Code	Part Number	Description	Qty	Serial No.
1		6732-21-5530	Plug	4	26540705-
2		6754-21-5411	Guide	1	26540705-
3		6754-21-5420	Gauge	1	26540705-

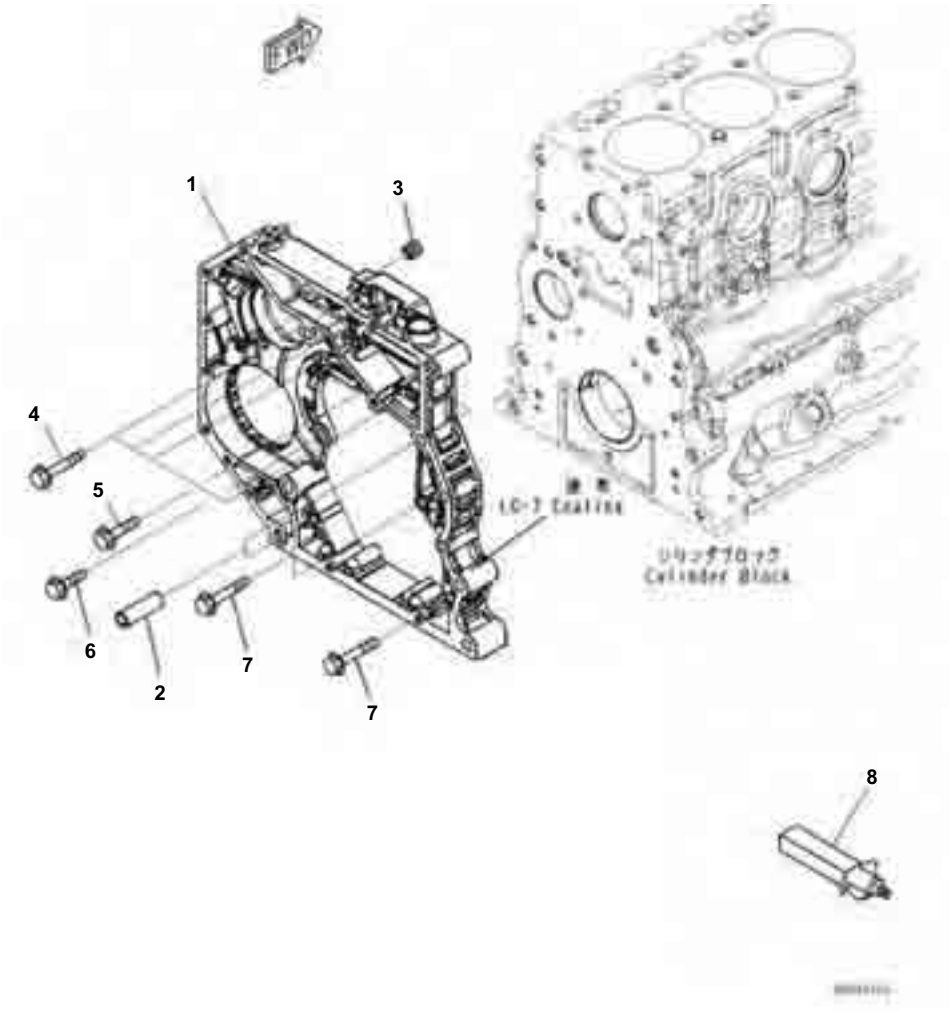

Index	Code	Part Number	Description	Qty	Serial No.
		6754-21-3102	Housing Assembly, Rear Gear	1	26540705-
1	C1		▪ Housing, Rear Gear	1	26540705-
2		6754-21-3120	▪ Pin	2	26540705-
3		6754-21-3150	▪ Insert	2	26540705-
4		6735-61-2120	Bolt	4	26540705-
5		6735-61-3810	Bolt	2	26540705-
6		6732-11-1720	Bolt	1	26540705-
7		6754-21-3140	Bolt	3	26540705-
8		09920-00150	Liquid gasket, LG-7, 150G	AR	26540705-

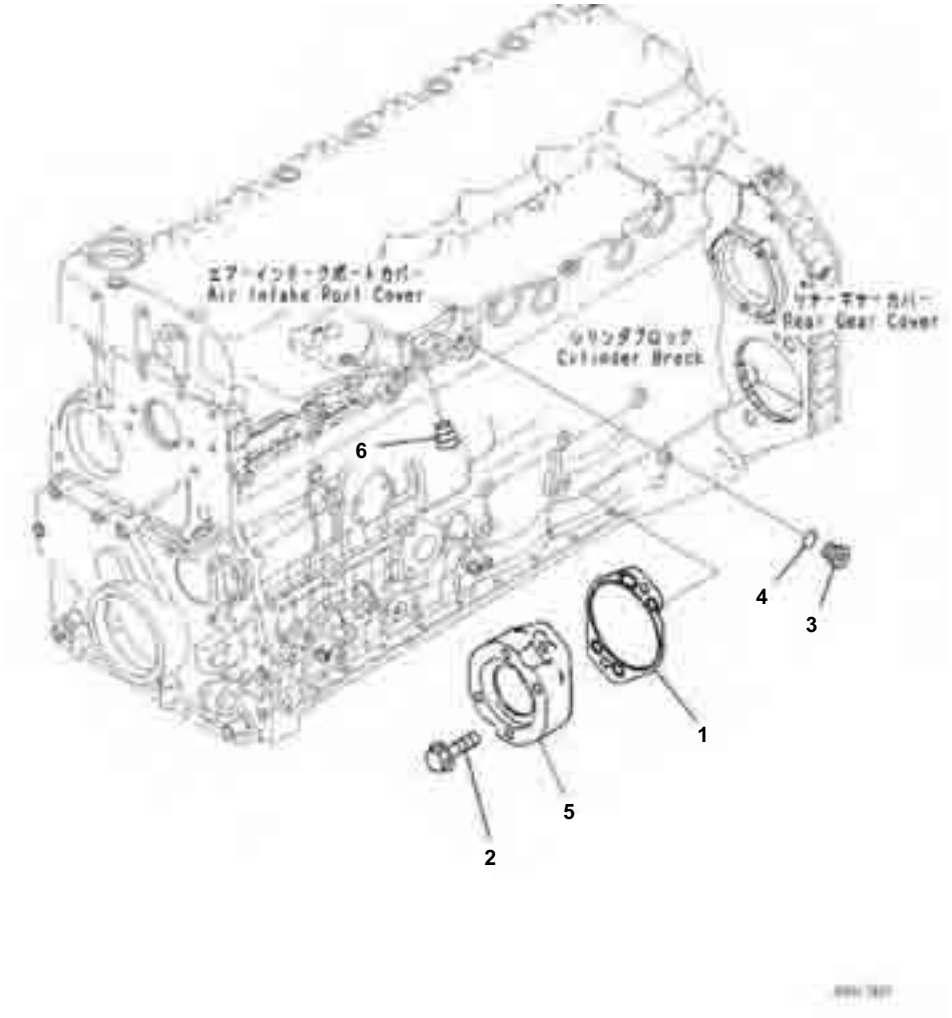

Index	Code	Part Number	Description	Qty	Serial No.
1		6754-22-9110	Gasket	1	26540705-
2		6732-21-6920	Bolt	2	26540705-
		6216-14-6830	Plug Assembly	1	26540705-
3		6216-14-6890	▪ Plug	1	26540705-
4		6216-14-6840	▪ Seal	1	26540705-
5		6754-21-9140	Adapter	1	26540705-
6		6732-11-1920	Plug	1	26540705-

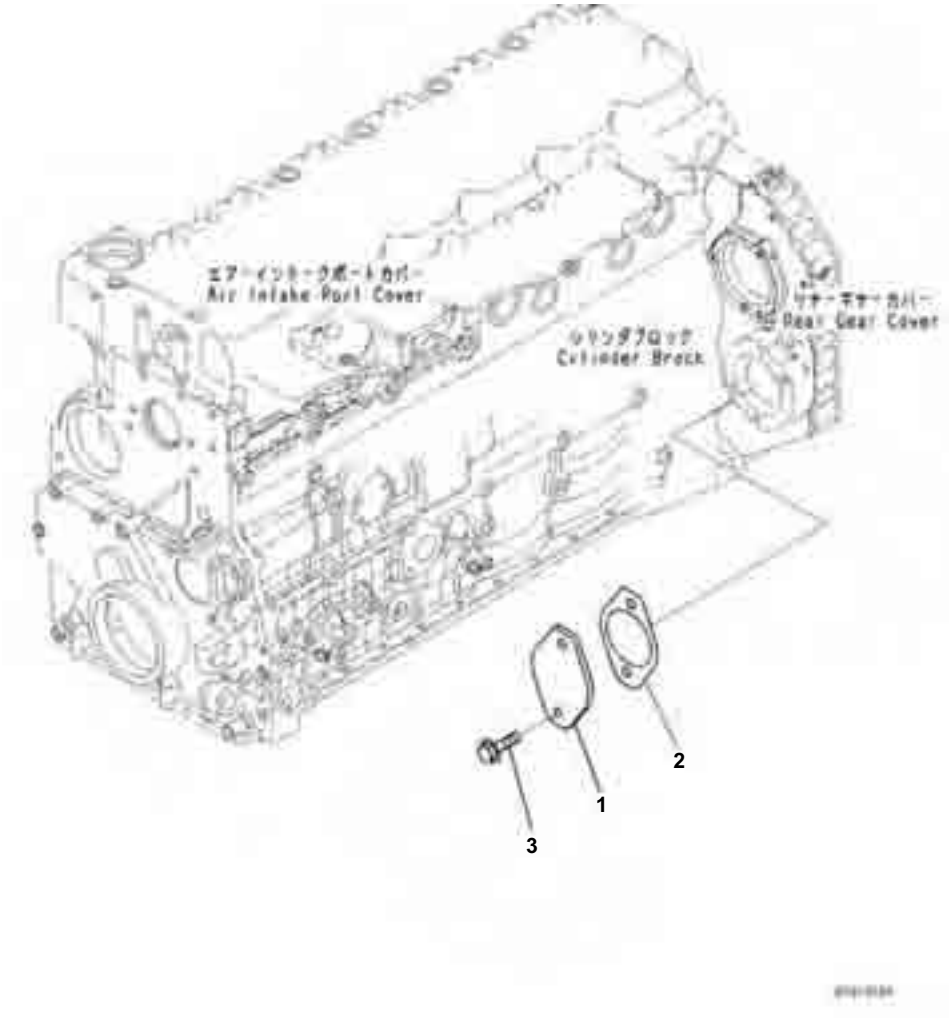

Drive Cover

Index	Code	Part Number	Description	Qty	Serial No.
1		6732-21-6310	Plate	1	26540705-
2		6732-22-3620	Gasket	1	26550843-
3		6732-61-3140	Bolt	2	26540705-

ENGINE LUBRICATING SYSTEM

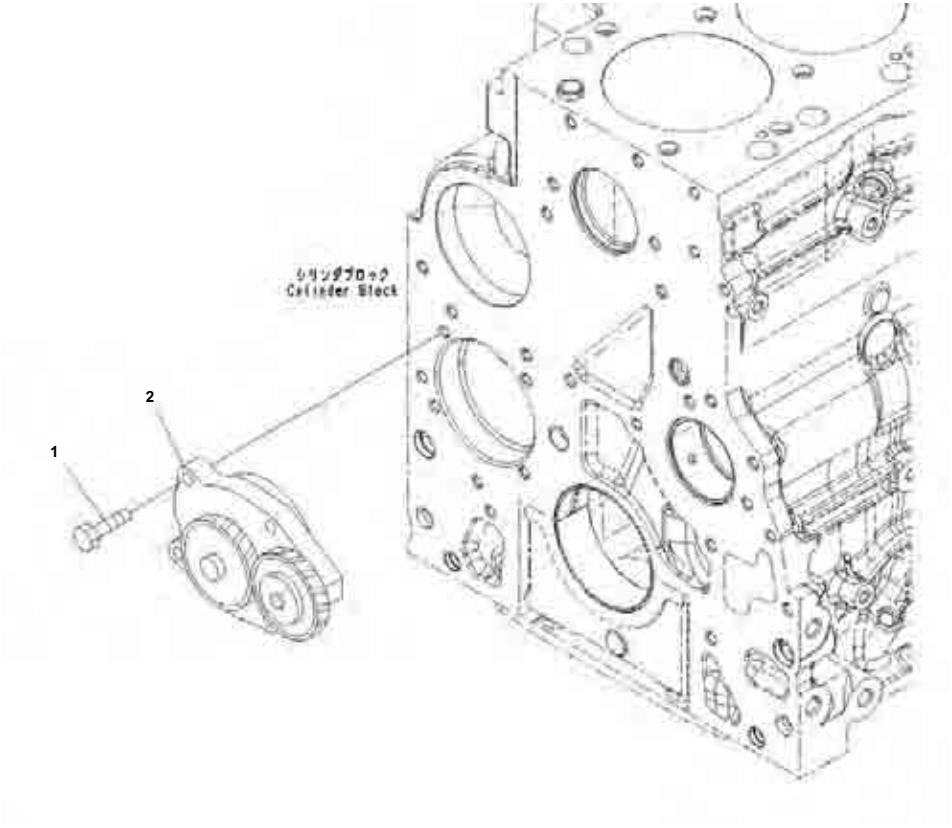

Engine Oil Pump

Index	Code	Part Number	Description	Qty	Serial No.
1		6735-51-1120	Bolt	4	26540705-
2		6754-51-1110	Pump Assembly, Oil	1	26540705-

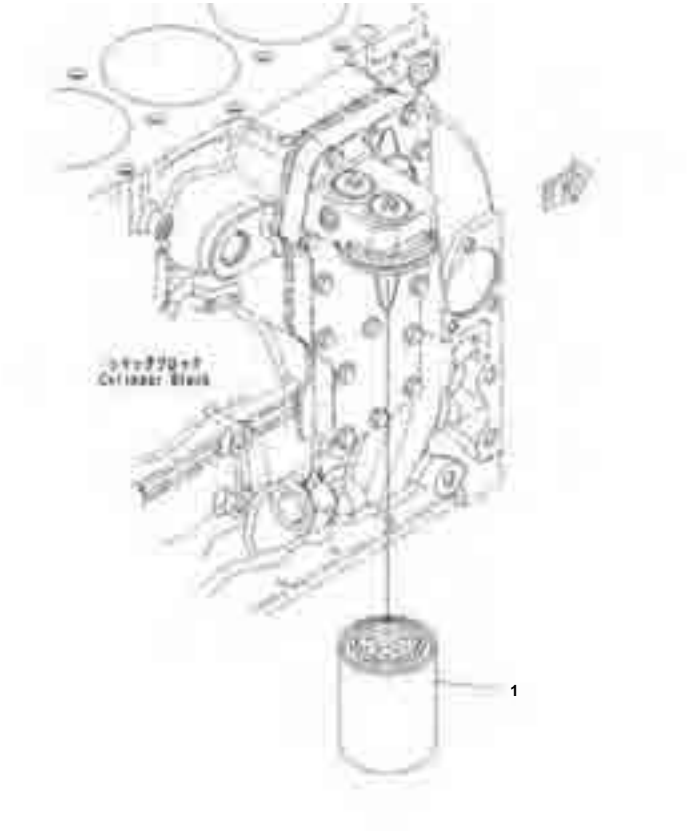

Engine Oil Filter

Index	Code	Part Number	Description	Qty	Serial No.
1		6736-51-5142	Cartridge	1	26540705-

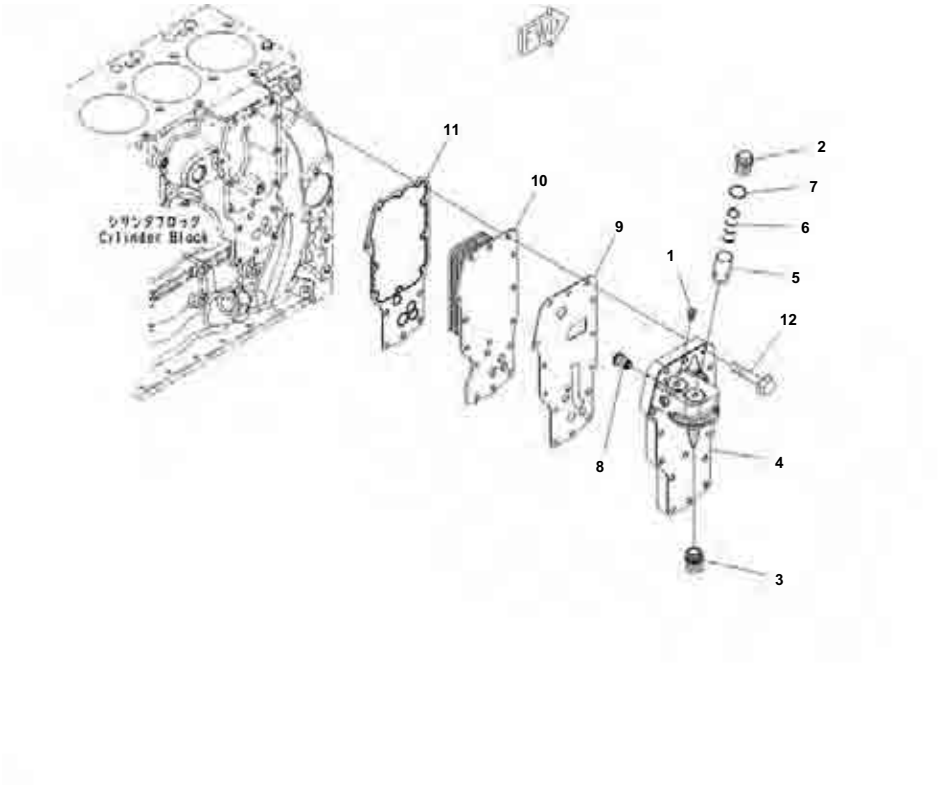

Engine Oil Cooler

Index	Code	Part Number	Description	Qty	Serial No.
1		6732-11-1930	Plug	2	26540705-
2		6754-61-2260	Plug, Threaded	1	26540705-
		6754-61-2230	Head Assembly	1	26540705-
3		6736-61-5180	▪ Adapter	1	26540705-
4	C1		▪ Head	1	26540705-
5		6754-61-2250	Plunger	1	26540705-
6		6735-61-2190	Spring	1	26540705-
7		6732-51-4420	O-ring	1	26540705-
8		6731-61-2151	Valve	1	26540705-
9		6754-51-4440	Gasket	1	26540705-
10		6754-61-2110	Core, Cooler	1	26540705-
11		6754-61-2320	Gasket	1	26540705-
12		6735-61-2120	Bolt	15	26540705-

ENGINE FUEL SYSTEM

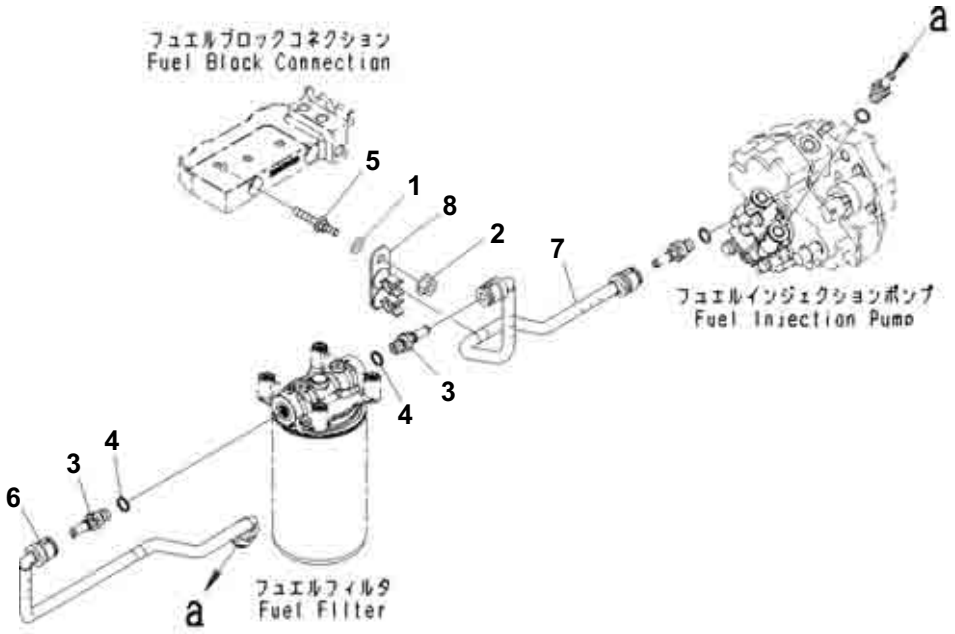

Fuel Filter Piping

Index	Code	Part Number	Description	Qty	Serial No.
1		01643-30823	Washer	1	26540705-
2		6732-71-3210	Nut	1	26540705-
3		6754-71-5340	Connector	2	26540705-
4		6754-71-5350	Washer	2	26540705-
5		6754-71-5380	Bolt	1	26540705-
6		6754-71-5311	Tube	1	26540705-
7		6754-71-5321	Tube	1	26540705-
8		6754-71-5360	Bracket	1	26540705-

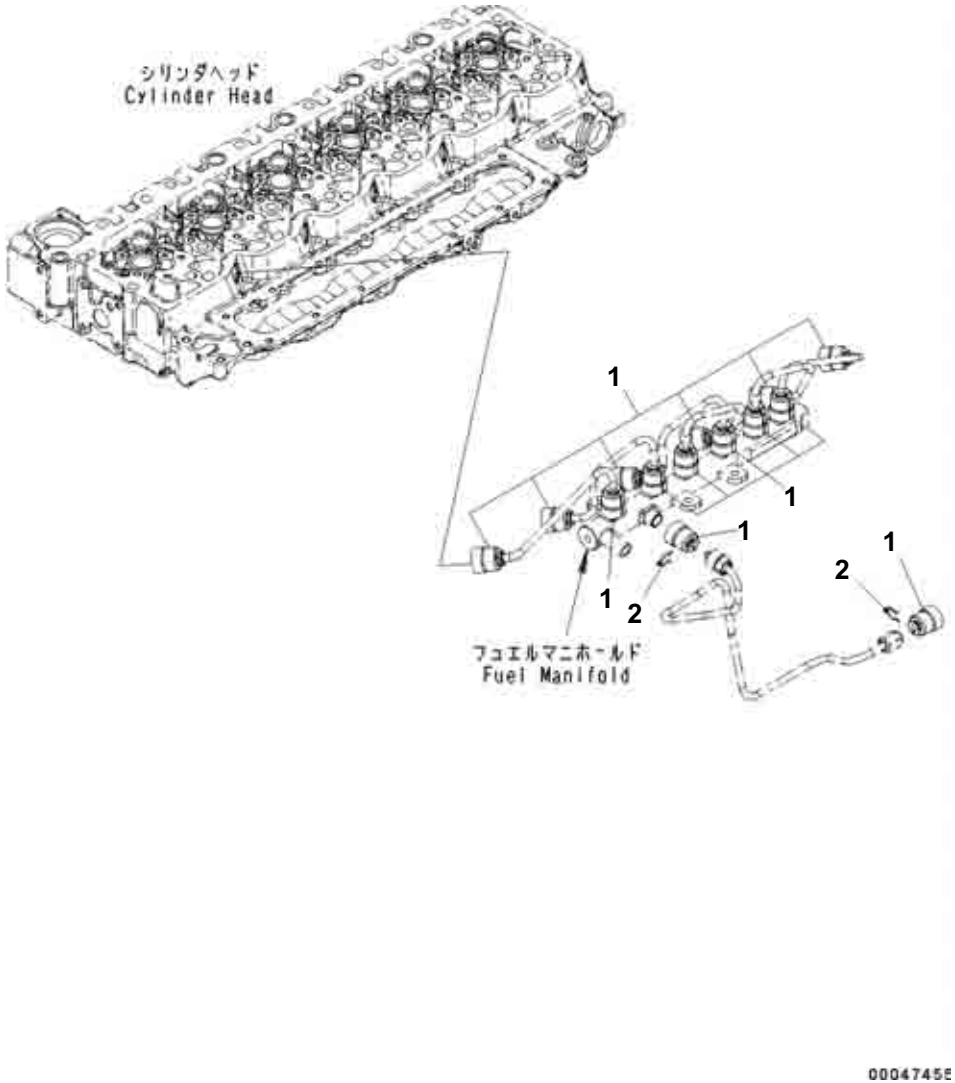

Fuel System Cover

Index	Code	Part Number	Description	Qty	Serial No.
1		6754-71-9710	Cover	14	26540705-
2		6217-71-5770	Clamp	14	26540705-

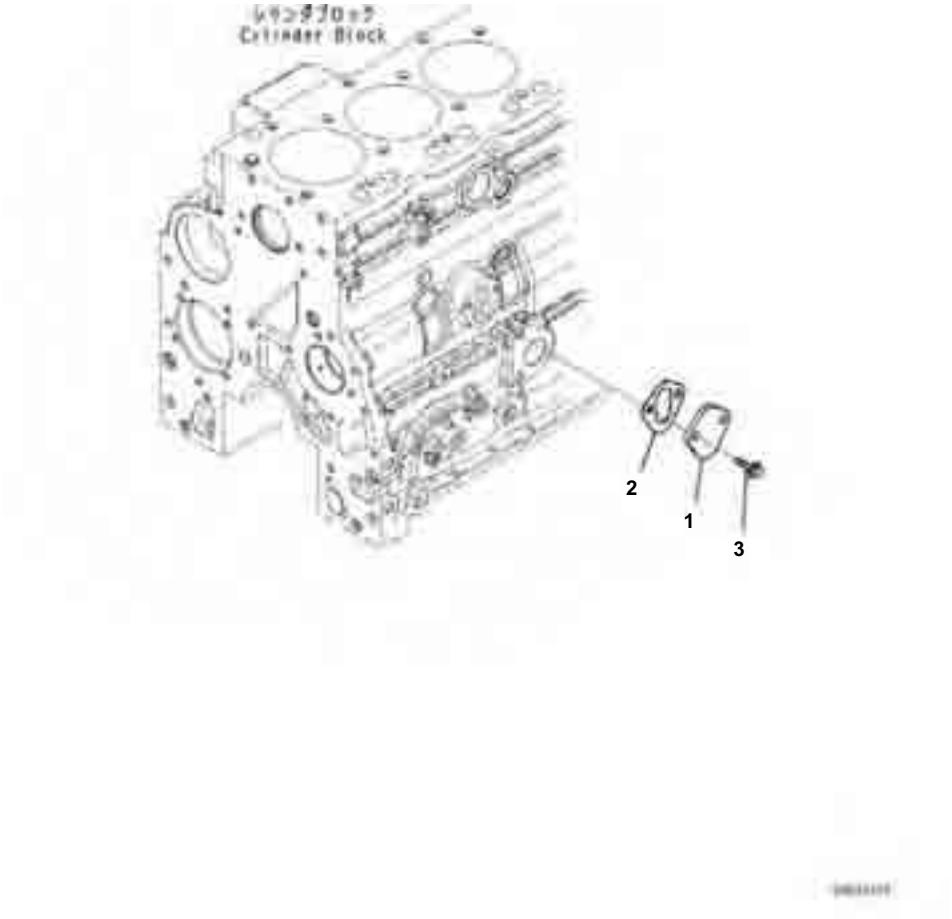

Fuel System Related Parts

Index	Code	Part Number	Description	Qty	Serial No.
1		6736-71-5811	Plate	1	26540705-
2		6735-61-6411	Gasket	1	26540705-
3		6732-71-3220	Bolt	2	26540705-

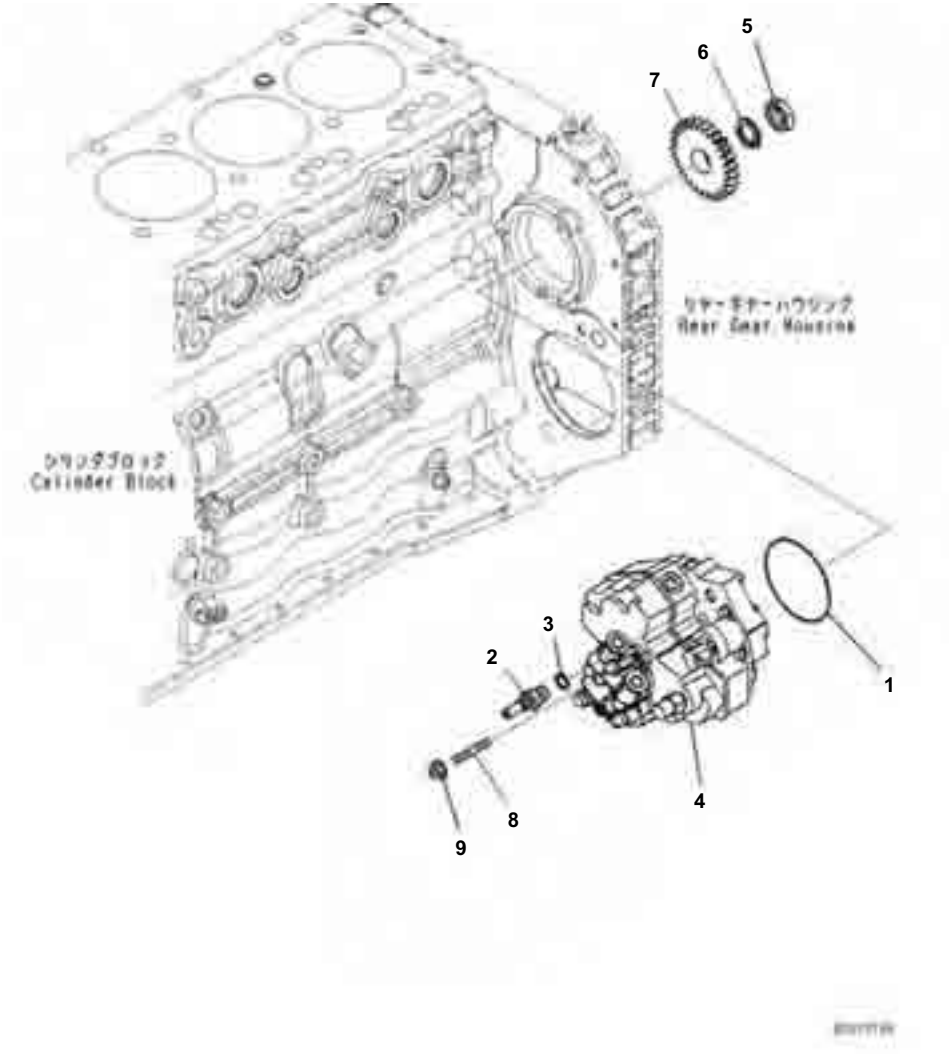

Fuel Injection Pump

Index	Code	Part Number	Description	Qty	Serial No.
		6754-71-1012	Fuel Supply Pump Assembly	1	26540705-
		6754-72-1012	・ Pump Assembly	1	26540705-
1		6754-71-1320	・・ O-ring	1	26540705-
2		6754-71-1330	・・ Connector	1	26540705-
3		6754-71-5350	・・ Washer	1	26540705-
4	C1		・・ Pump	1	26540705-
5		6754-71-1340	・・ Nut	1	26540705-
6		6754-71-1350	・・ Washer, Spring	1	26540705-
7		6754-71-3110	・ Gear	1	26540705-
8		6754-71-3131	Stud	3	26548462-
9		6732-71-3210	Nut	3	26540705-

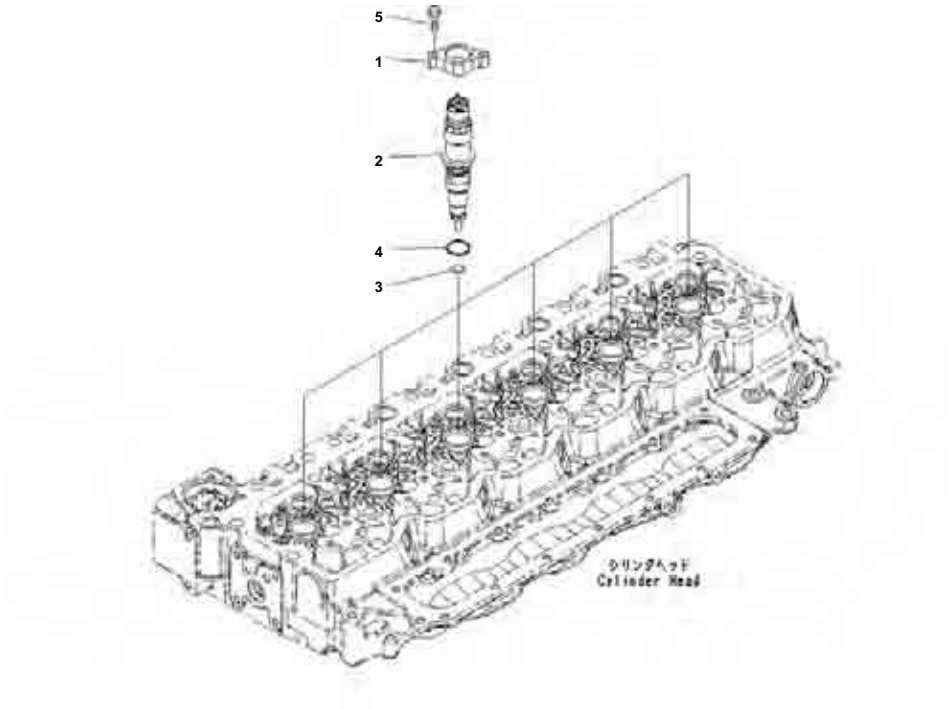

Fuel Injector

Index	Code	Part Number	Description	Qty	Serial No.
		6754-11-3011	Injector Assembly	6	26540705-
1	C1		▪ Clamp	1	26540705-
2	C1		▪ Injector	1	26559096-
3		6754-11-3130	Gasket	1	26540705-
4		6754-11-3140	O-ring	1	26540705-
5		6742-01-2630	Bolt	12	26540705-

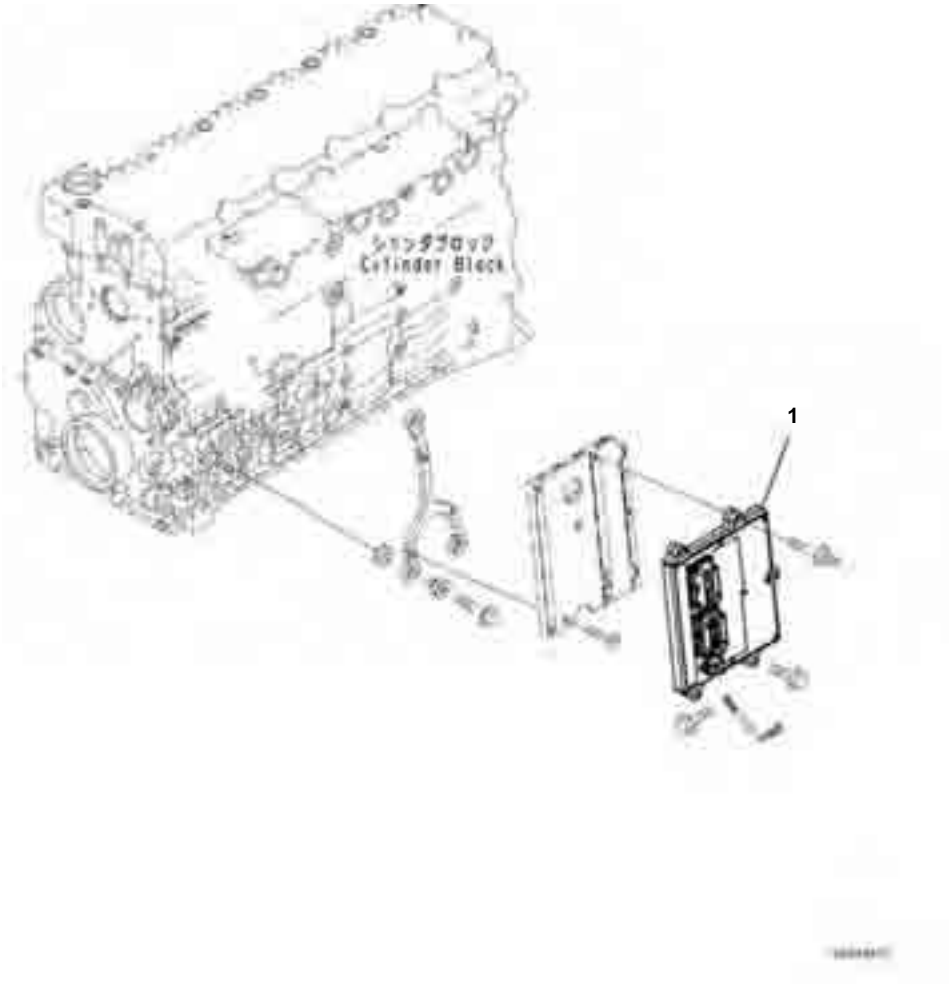

Index	Code	Part Number	Description	Qty	Serial No.
1		600-467-2500	Controller Assembly	1	26540705-

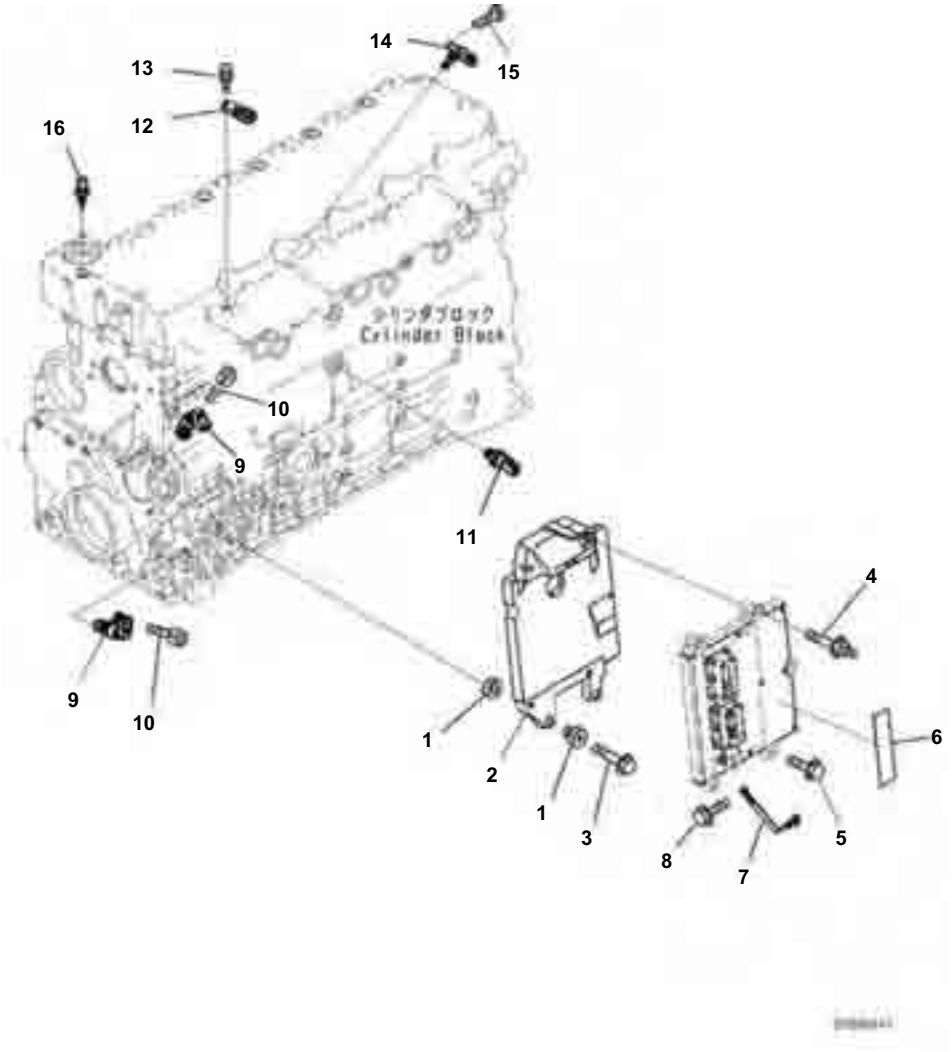

Fuel Injection Controller Related Parts

Index	Code	Part Number	Description	Qty	Serial No.
1		6754-81-9470	Isolator	3	26540705-
2		6754-81-9460	Bracket	1	26540705-
3		6735-61-2120	Bolt	3	26540705-
4		6754-81-9160	Bolt	3	26540705-
5		6732-61-3110	Bolt	2	26540705-
6		6216-84-2130	Plate	1	26540705-
7		6754-81-9170	Wire	1	26540705-
8		6216-74-6180	Bolt	1	26540705-
9		6271-81-9201	Sensor Assembly, Position	2	26544799-
	C2	6754-81-9410	▪ Sensor Assembly	1	26540705-
		6271-81-9220	▪ O-ring	1	26540705-
10		6216-84-9220	Bolt	2	26540705-
11		6744-81-4010	Switch, Oil Pressure	1	26540705-
		6219-81-1990	▪ O-ring	1	26540705-
12		6261-81-1900	Sensor, Ambient Pressure	1	26540705-
13		6734-71-5520	Bolt	1	26540705-
14		6754-81-2701	Sensor, Boost Pressure	1	26540705-
		6754-81-2710	▪ O-ring	1	26540705-
15		6754-81-9180	Screw	1	26540705-
16		6261-81-6901	Sensor Assembly, Water Temperature	1	26540705-
		6216-84-9740	▪ Seal	1	26540705-

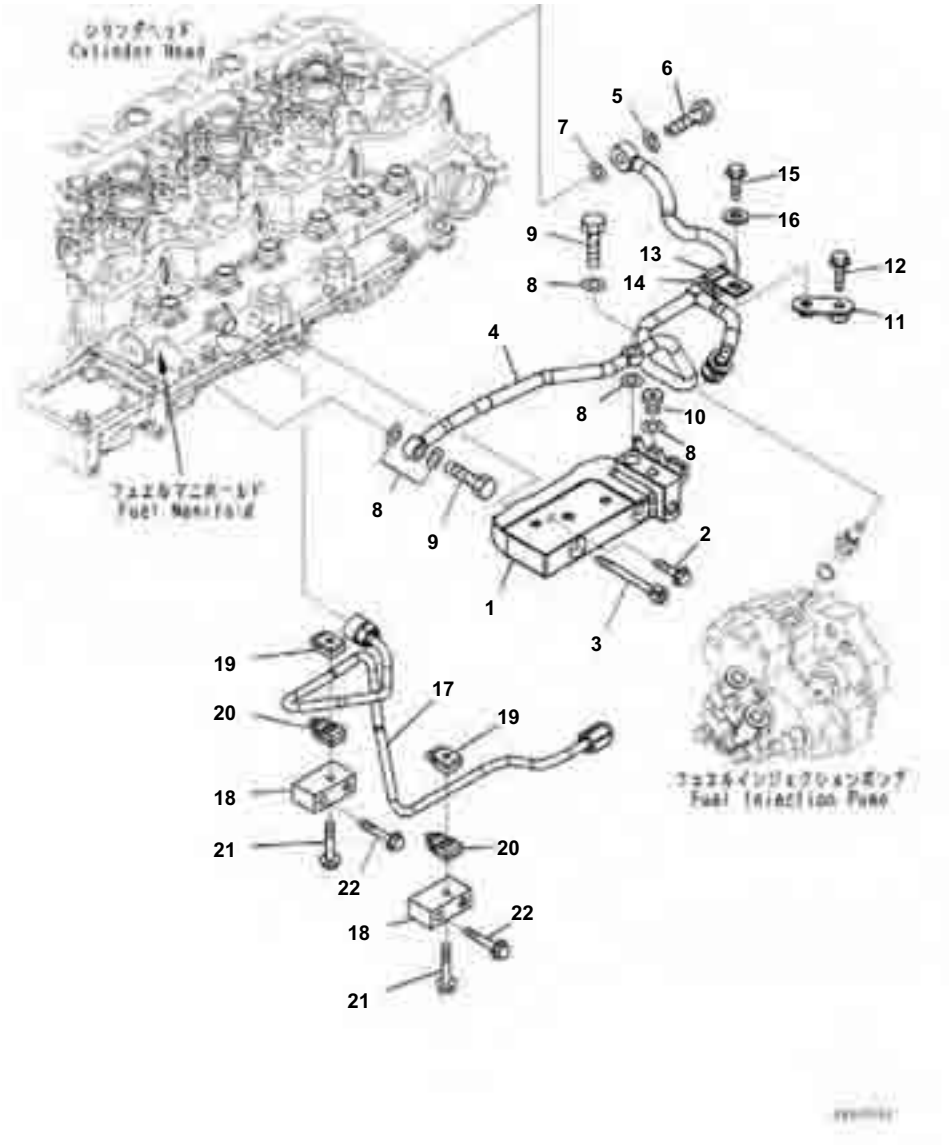

Fuel Piping

Index	Code	Part Number	Description	Qty	Serial No.
1		6754-71-5410	Connector	1	26540705-
2		6732-61-6140	Bolt	1	26540705-26544798
3		6736-81-8730	Bolt	2	26540705-
4		6754-71-5421	Tube	1	26544799-
5		6735-71-3821	Seal	1	26540705-
6		6754-71-5430	Valve, Check	1	26540705-
7		6745-71-1130	Washer	1	26559096-
8		07005-01212	Seal, Washer	5	26559096-
9		6732-71-6510	Bolt	2	26540705-
10		6754-71-5150	Plug, Threaded	1	26540705-
11		6754-71-5450	Bracket	1	26540705-
12		6732-21-6630	Screw	1	26540705-
13		04434-51708	Clip	1	26540705-
14		07095-20211	Cushion	1	26540705-
15		6732-21-3120	Bolt	1	26540705-
16		154-61-16570	Washer	1	26540705-
		6754-71-5120	Tube Assembly	1	26540705-
17		6754-71-5130	▪ Tube	1	26540705-
18		6754-71-5140	▪ Plate	2	26540705-
19		6217-71-6670	▪ Clamp	2	26540705-
20		6217-71-6660	▪ Clamp	2	26540705-
21		6733-71-5830	▪ Bolt	2	26540705-
22		6732-61-3110	Bolt	1	26540705-

1



00060576

Fuel Filter Cartridge

Index	Code	Part Number	Description	Qty	Serial No.
1		600-319-3750	Cartridge	1	26541736-

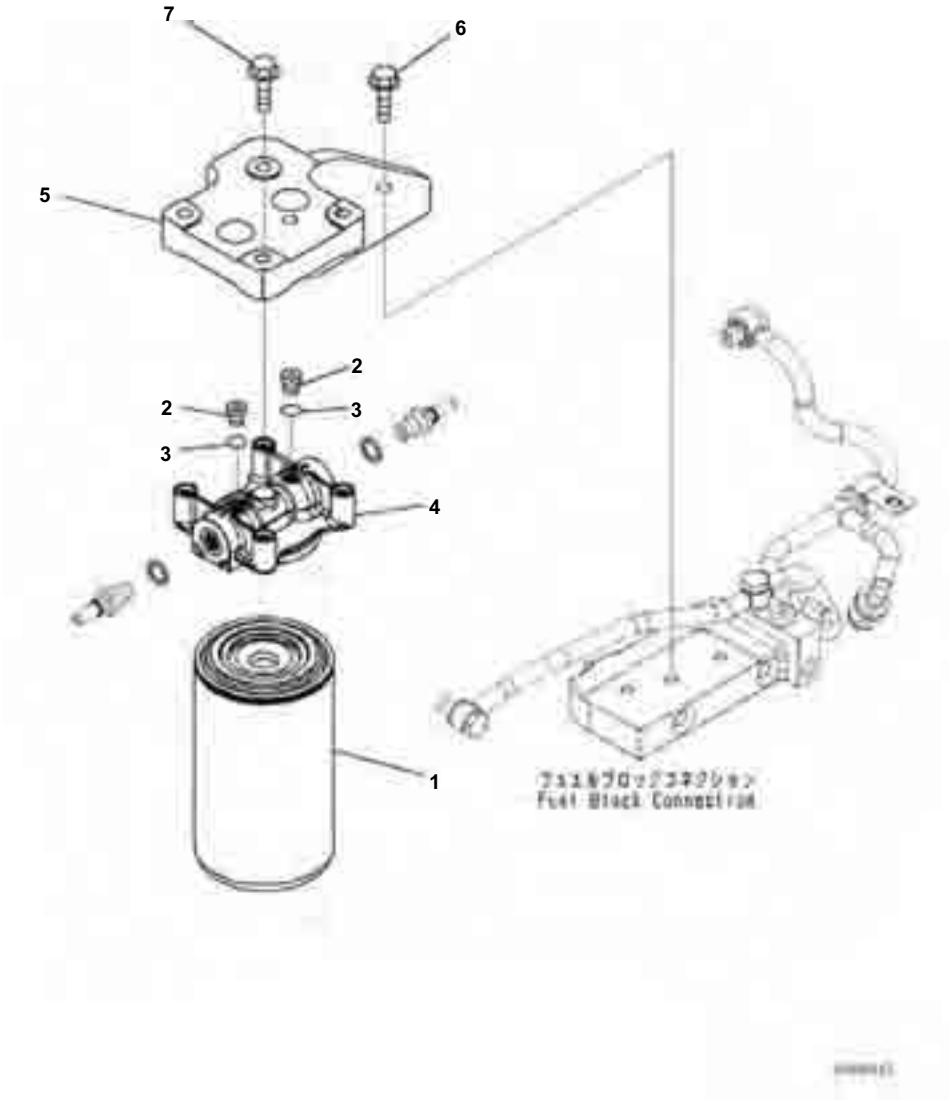

Fuel Filter

Index	Code	Part Number	Description	Qty	Serial No.
		6754-71-6370	Filter Assembly	1	26540705-
1	C1		・ Filter	1	26540705-
		6732-21-1960	・ Plug Assembly	2	26540705-
2		6215-81-9510	・ ・ Plug	1	26540705-
3		6215-81-9710	・ ・ O-ring	1	26540705-
4		6754-71-6360	・ Head	1	26540705-
5		6754-71-5441	Support	1	26540705-
6		6732-61-6140	Bolt	3	26540705-
7		6735-61-2120	Bolt	4	26540705-

ENGINE COOLING SYSTEM

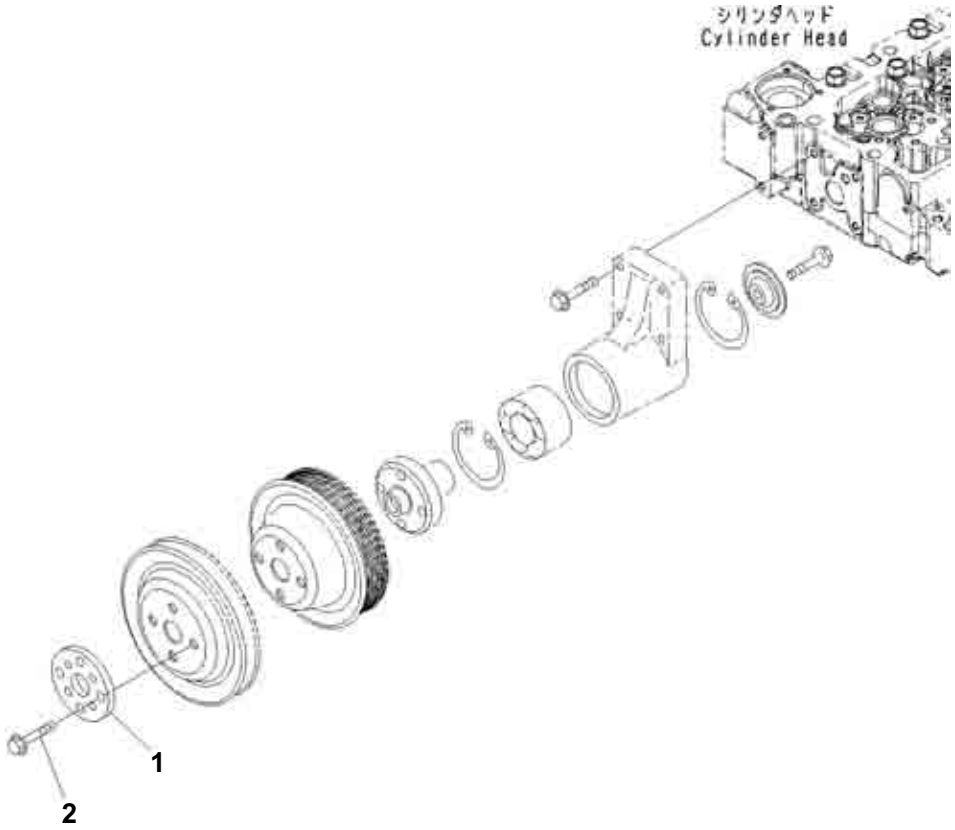

Index	Code	Part Number	Description	Qty	Serial No.
1		6732-61-3160	Plate	1	26540705-
2		6735-71-3220	Bolt	4	26540705-

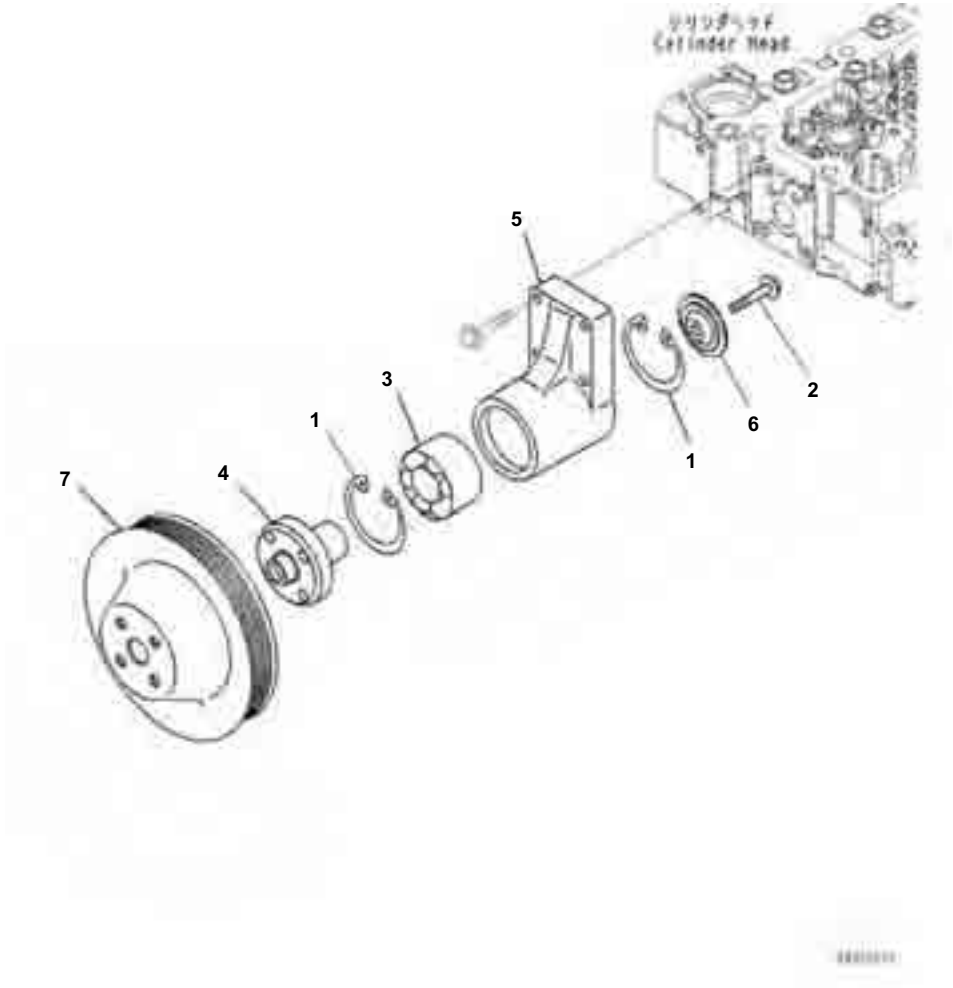

Cooling Fan Drive Pulley

Index	Code	Part Number	Description	Qty	Serial No.
1		6732-61-3120	Support Assembly	1	26541736-
2		6732-61-3450	▪ Ring, Snap	2	26541736-
3		6732-61-3440	▪ Bolt	1	26541736-
4		6732-61-3420	▪ Bearing, Ball	1	26541736-
5		6732-61-3410	▪ Hub	1	26541736-
6		6732-61-3430	▪ Retainer	1	26541736-
7		6732-61-3750	Pulley, D=158mm	1	26541736-



Cooling Fan Belt

Index	Code	Part Number	Description	Qty	Serial No.
1		6732-82-3680	Belt	1	26540705-

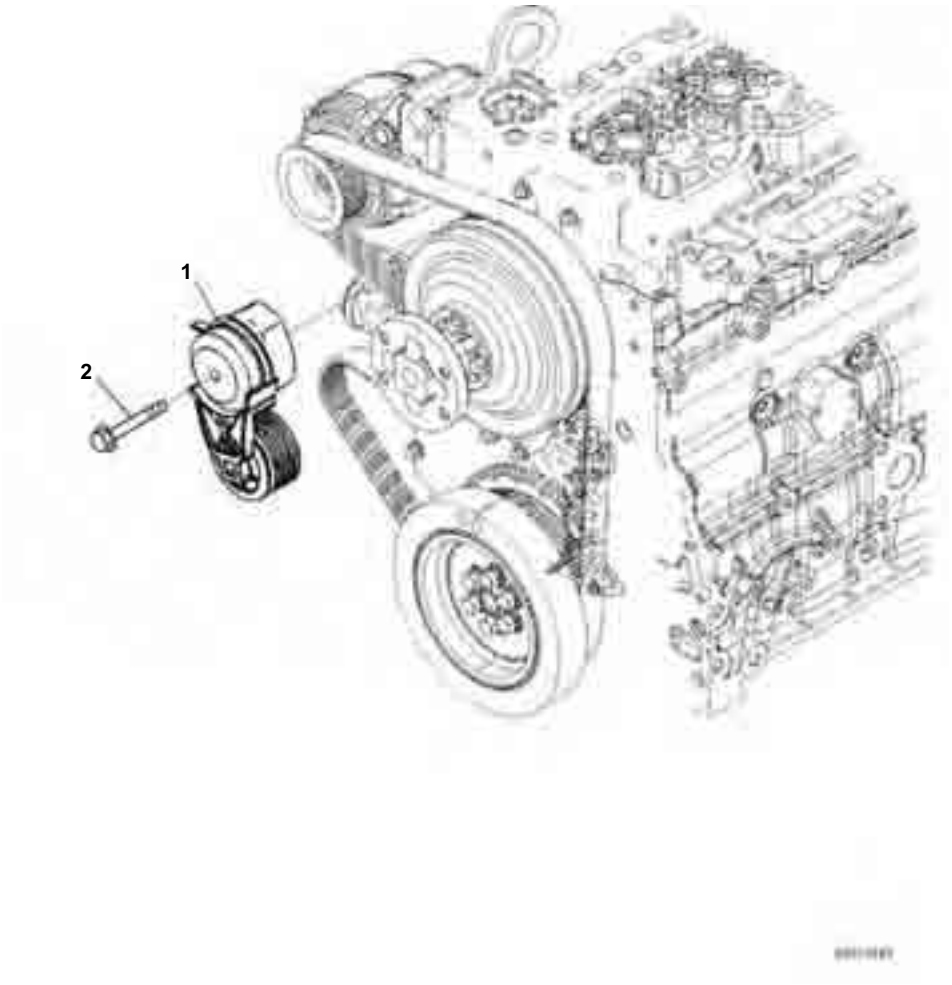

Cooling Fan Belt Tensioner

Index	Code	Part Number	Description	Qty	Serial No.
1		6754-61-4111	Tensioner, Belt	1	26540705-
2		6731-21-6220	Bolt	1	26540705-

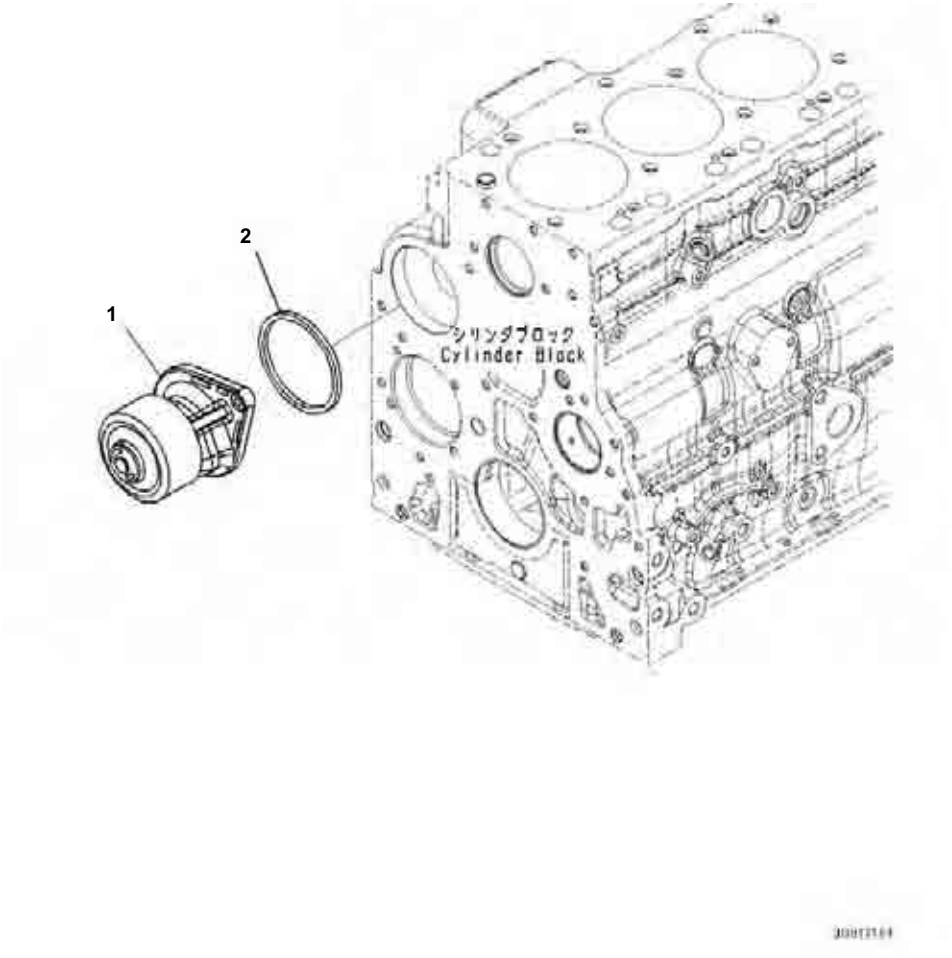

Index	Code	Part Number	Description	Qty	Serial No.
		6754-61-1010	Pump Kit	1	26540705-
1		6754-61-1100	▪ Pump Assembly	1	26540705-
2		6736-61-1520	▪ Seal	1	26540705-

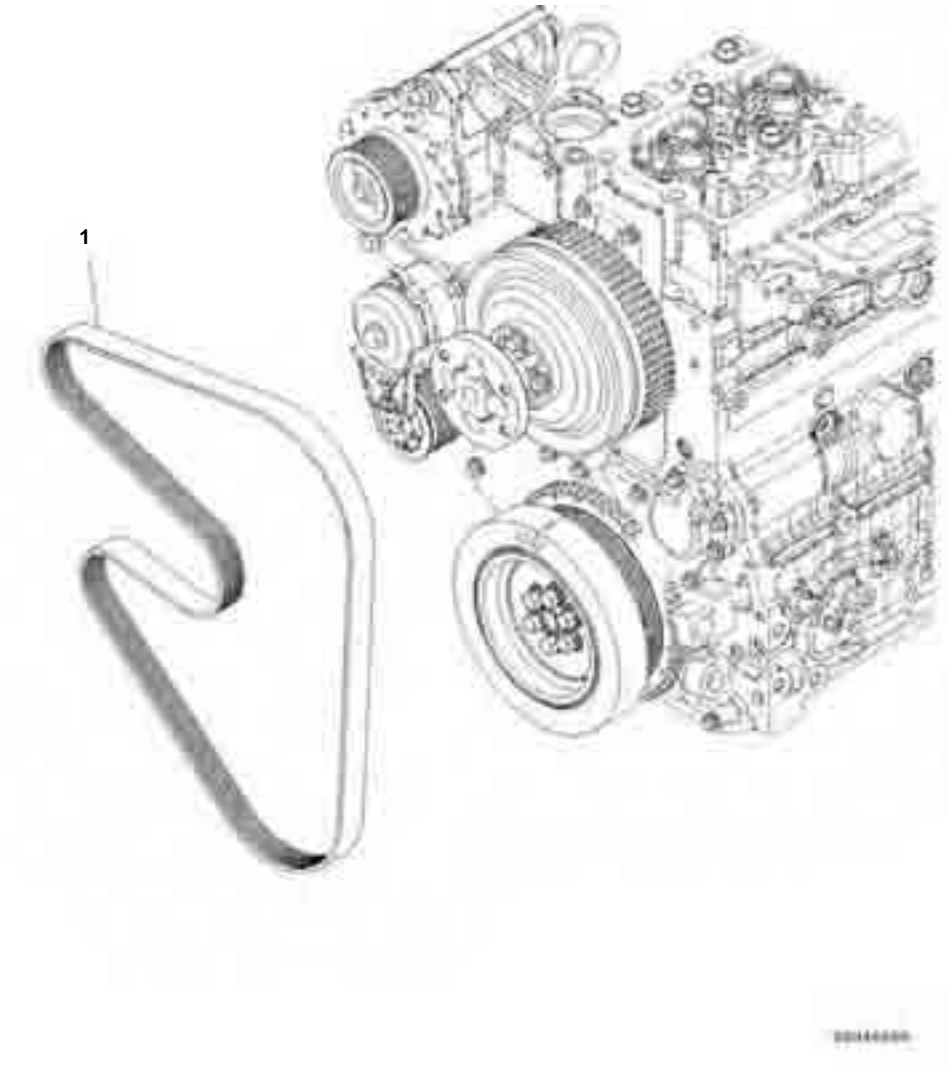

Index	Code	Part Number	Description	Qty	Serial No.
1		6732-81-3461	Belt	1	26540705-

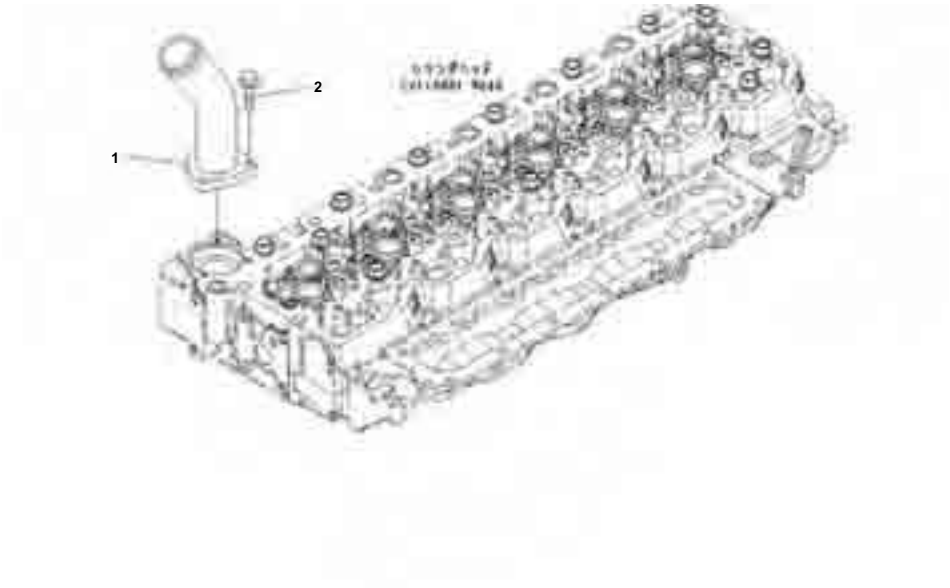

Water Outlet Connector

Index	Code	Part Number	Description	Qty	Serial No.
1		6754-11-6310	Connector, Outlet	1	26540705-
2		6735-71-5190	Bolt	3	26540705-

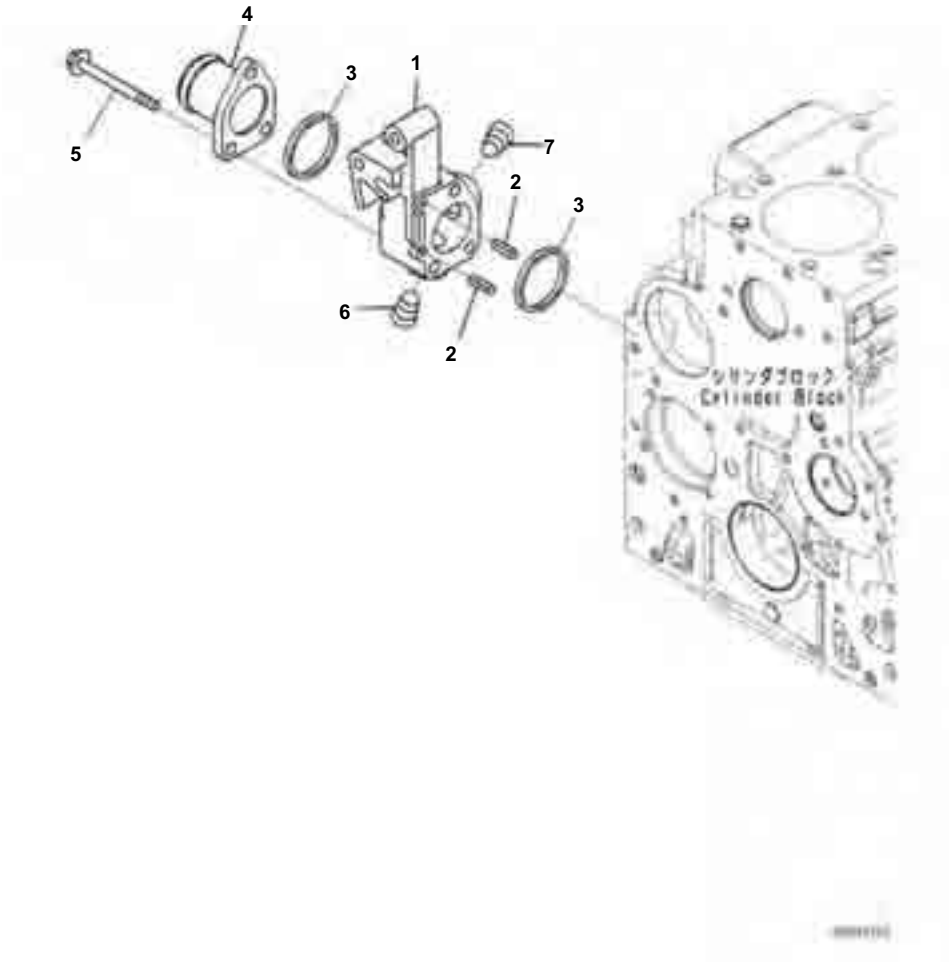

Water Inlet Connector

Index	Code	Part Number	Description	Qty	Serial No.
		6737-62-6220	Connector Assembly	1	26540705-
1	C1		▪ Connection	1	26540705-
2		6737-32-2110	▪ Pin	2	26540705-
3		6732-61-6131	Seal Ring	2	26540705-
4		6754-61-6130	Connector	1	26540705-
5		6731-21-6220	Bolt	3	26540705-
6		6732-11-1910	Plug	1	26540705-
7		6732-11-1920	Plug	1	26540705-

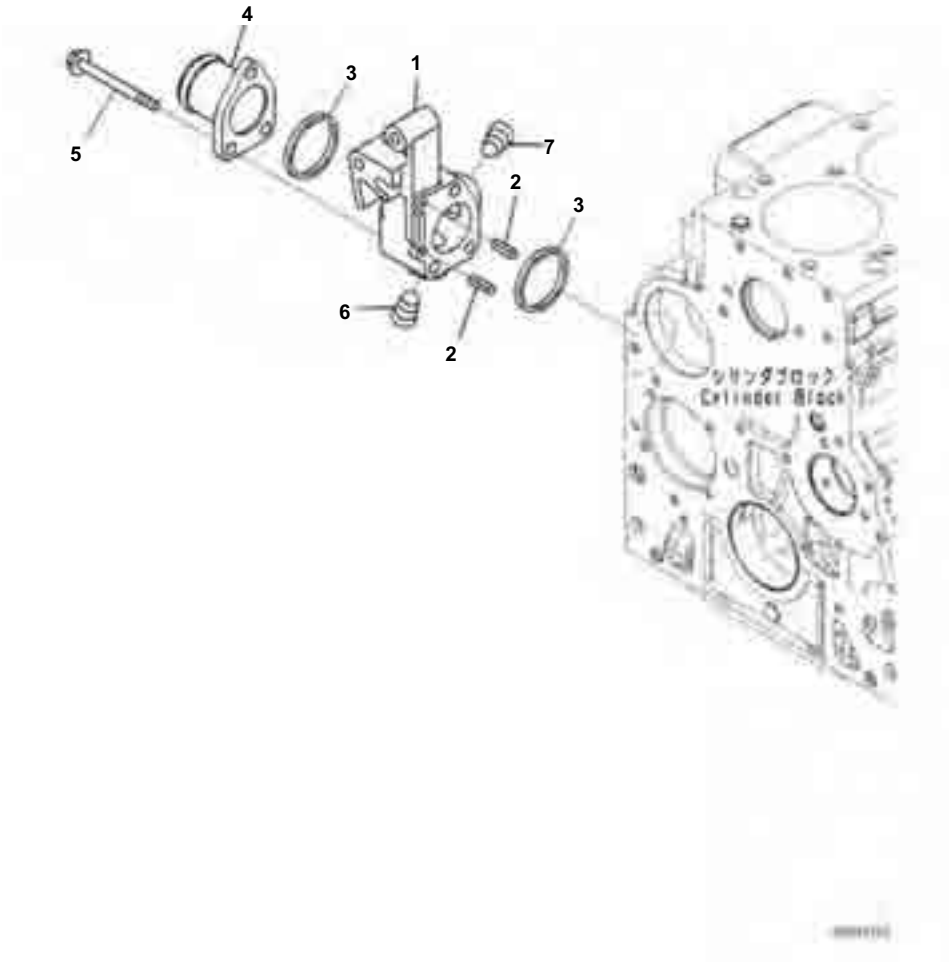

Water Inlet Connector, For 90Amp. Alternator

Index	Code	Part Number	Description	Qty	Serial No.
		6754-61-6280	Connector Assembly	1	26540705-
1	C1		▪ Connection	1	26540705-
2		6737-32-2110	▪ Pin	2	26540705-
3		6732-61-6131	Seal Ring	2	26540705-
4		6754-61-6130	Connector	1	26540705-
5		6731-21-6220	Bolt	3	26540705-
6		6732-11-1910	Plug	1	26540705-
7		6732-11-1920	Plug	1	26540705-

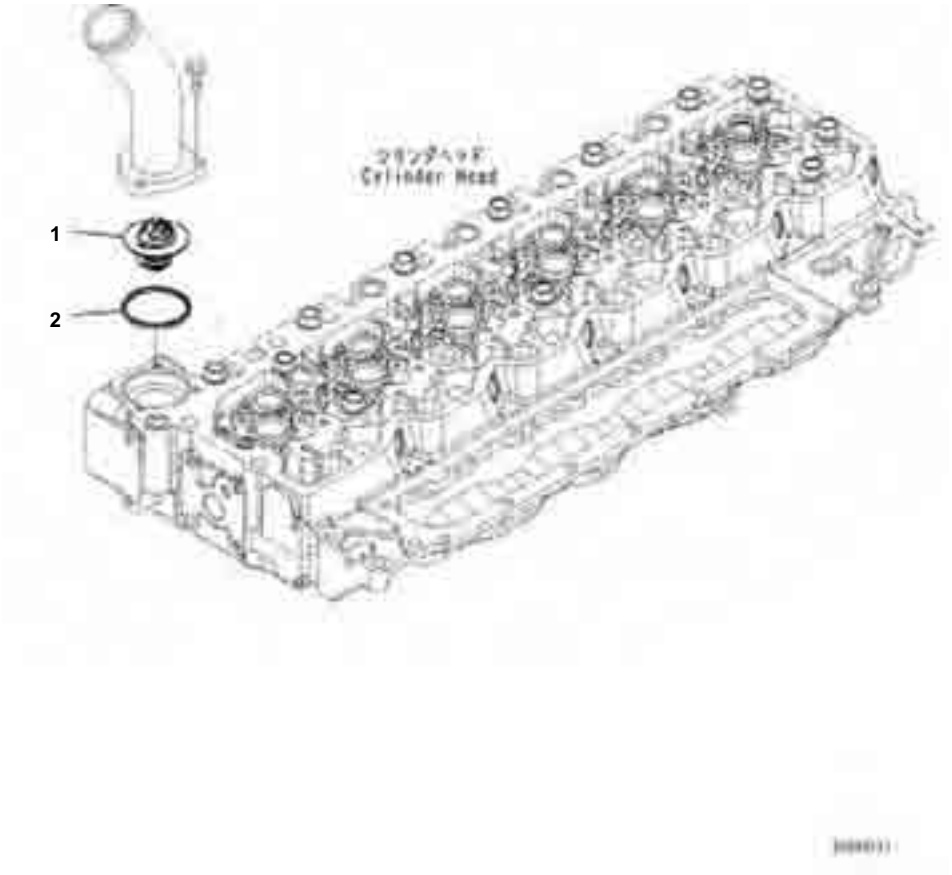

Thermostat

Index	Code	Part Number	Description	Qty	Serial No.
		6754-61-6211	Thermostat Assembly	1	26540705-
1	C1		▪ Thermostat	1	26540705-
2		6754-61-6230	▪ Seal	1	26540705-

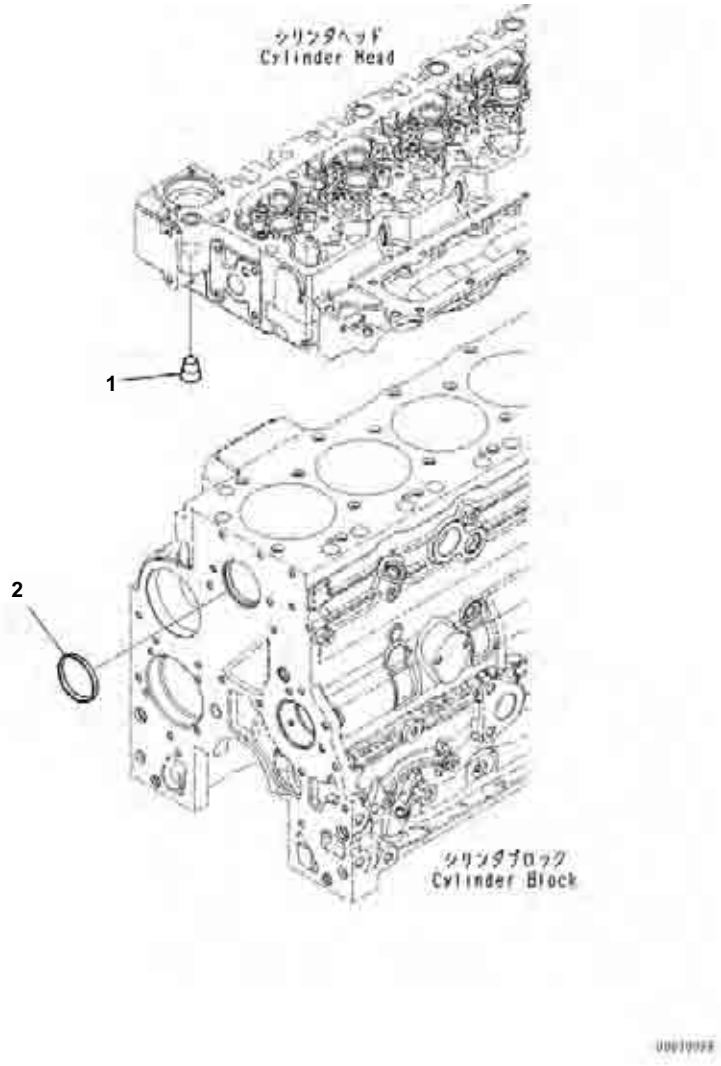

Index	Code	Part Number	Description	Qty	Serial No.
1		6732-11-1920	Plug	1	26540705-
2		6732-21-1831	Plug	1	26540705-

ENGINE ELECTRICAL SYSTEM

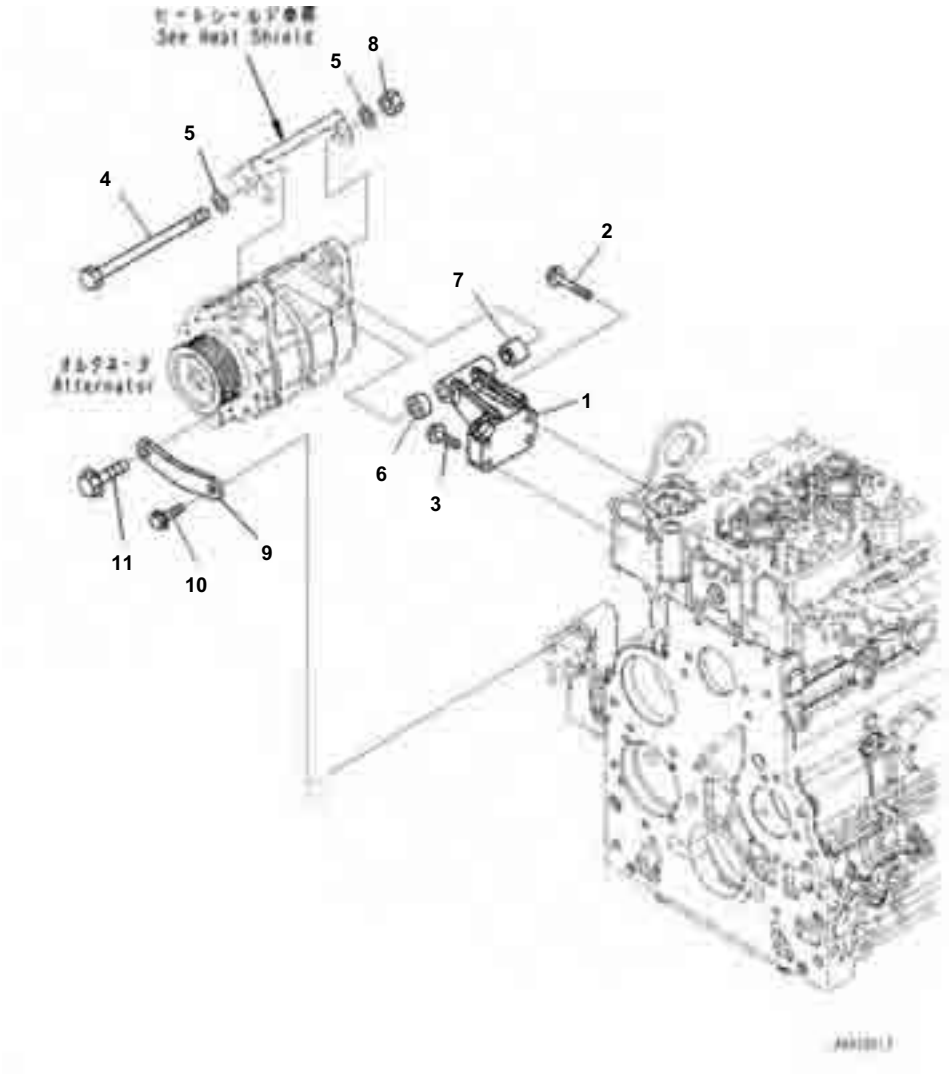

Alternator Mounting

Index	Code	Part Number	Description	Qty	Serial No.
1		6754-81-6140	Support Assembly	1	26540705-
2		6742-01-2441	Bolt	1	26540705-
3		6732-61-3110	Bolt	3	26540705-
4		6207-81-6980	Bolt	1	26540705-
5		01641-21223	Washer	2	26540705-
6		6732-81-6490	Spacer	1	26540705-
7		6732-81-6530	Spacer	1	26540705-
8		01580-11210	Nut	1	26540705-
9		6754-81-6150	Bracket	1	26540705-
10		6735-71-3220	Bolt	1	26540705-
11		01050-31230	Bolt	1	26540705-

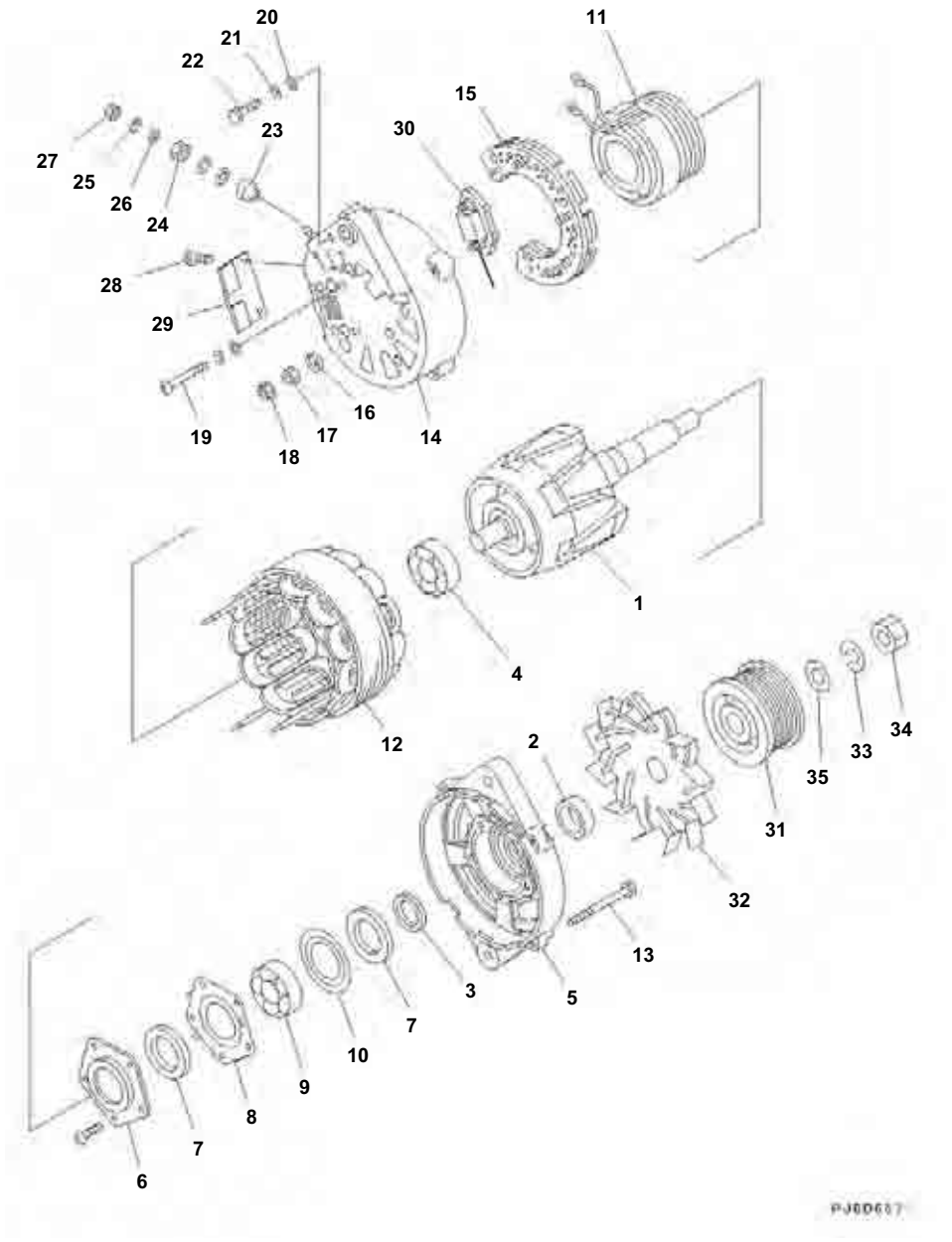

Index	Code	Part Number	Description	Qty	Serial No.
		600-861-9120	Alternator Assembly, 90Amp.	1	26540705-.
1		KD0-35100-0310	· Rotor Assembly	1	26540705-.
2		KD1-33923-0890	· Collar	1	26540705-.
3		KD1-35923-0030	· Collar	1	26540705-.
4		KD0-09201-0770	· Bearing, Ball	1	26540705-.
5		KD0-35300-0200	· Bracket Assembly	1	26540705-.
6		KD0-35926-0080	· Retainer	1	26540705-.
7		KD0-35951-0080	· Packing	2	26540705-.
8		KD1-33926-0660	· Retainer	1	26540705-.
9		KD0-09201-0760	· Bearing, Ball	1	26540705-.
10		KD1-33926-0790	· Retainer	1	26540705-.
11		KD0-35120-0250	· Coil Assembly, Field	1	26540705-.
12		KD0-35200-0320	· Stator Assembly	1	26540705-.
13		KD0-0083-08802	· Bolt	4	26540705-.
		KD0-35700-0970	· Bracket Assembly	1	26540705-.
14		KD0-35710-1190	· · Bracket	1	26540705-.
15		KD0-35730-0162	· · Rectifier Assembly	1	26540705-.
16		KD0-35943-0210	· · Bushing	1	26540705-.
17		KD0-33902-0090	· · Nut	1	26540705-.
18		KD0-33902-0080	· · Nut	6	26540705-.
19		KD1-0020-06452	· · Screw	4	26540705-.
20		KD1-0330-06012	· · Washer, Prain	5	26540705-.
21		KD1-0335-06002	· · Washer, Spring	5	26540705-.
22		KD0-0080-06142	· · Bolt	1	26540705-.
23		KD0-35943-0100	· · Bushing	1	26540705-.
24		KD0-33902-0100	· · Nut	1	26540705-.
25		KD1-0335-08002	· · Washer, Spring	2	26540705-.
26		KD1-0331-08020	· · Washer	2	26540705-.
27		KD0-0291-08010	· · Nut	1	26540705-.
28		KD0-0055-05122	· · Screw	2	26540705-.
29		KD0-35761-0190	· · Cover	1	26540705-.
30		KD7-35719-0181	· · Regulator Assembly	1	26540705-.
31		KD0-35411-0650	· Pulley	1	26540705-.
32		KD0-35421-0190	· Fan	1	26540705-.
33		KD1-0335-20002	· Washer, Spring	1	26540705-.
34		KD0-0290-20022	· Nut	1	26540705-.
35		KD1-35921-0010	· Washer	1	26540705-.

Reference:AEE00-002001 Page:F002001

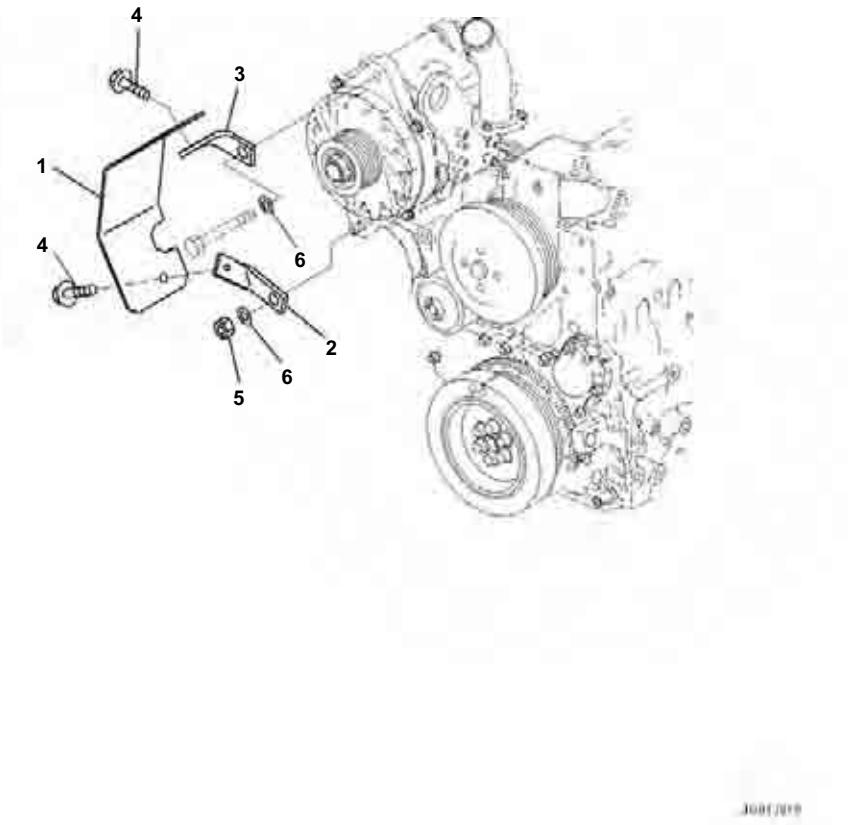

Alternator, 90Amp., Guard (#26540705-.)

Index	Code	Part Number	Description	Qty	Serial No.
1		6754-81-6390	Cover	1	26540705-.
2		6754-81-6330	Plate	1	26540705-.
3		6754-81-6340	Plate	1	26540705-.
4		01435-00812	Bolt	2	26540705-.
5		01582-11210	Nut	1	26540705-.
6		01640-21323	Washer	2	26540705-.

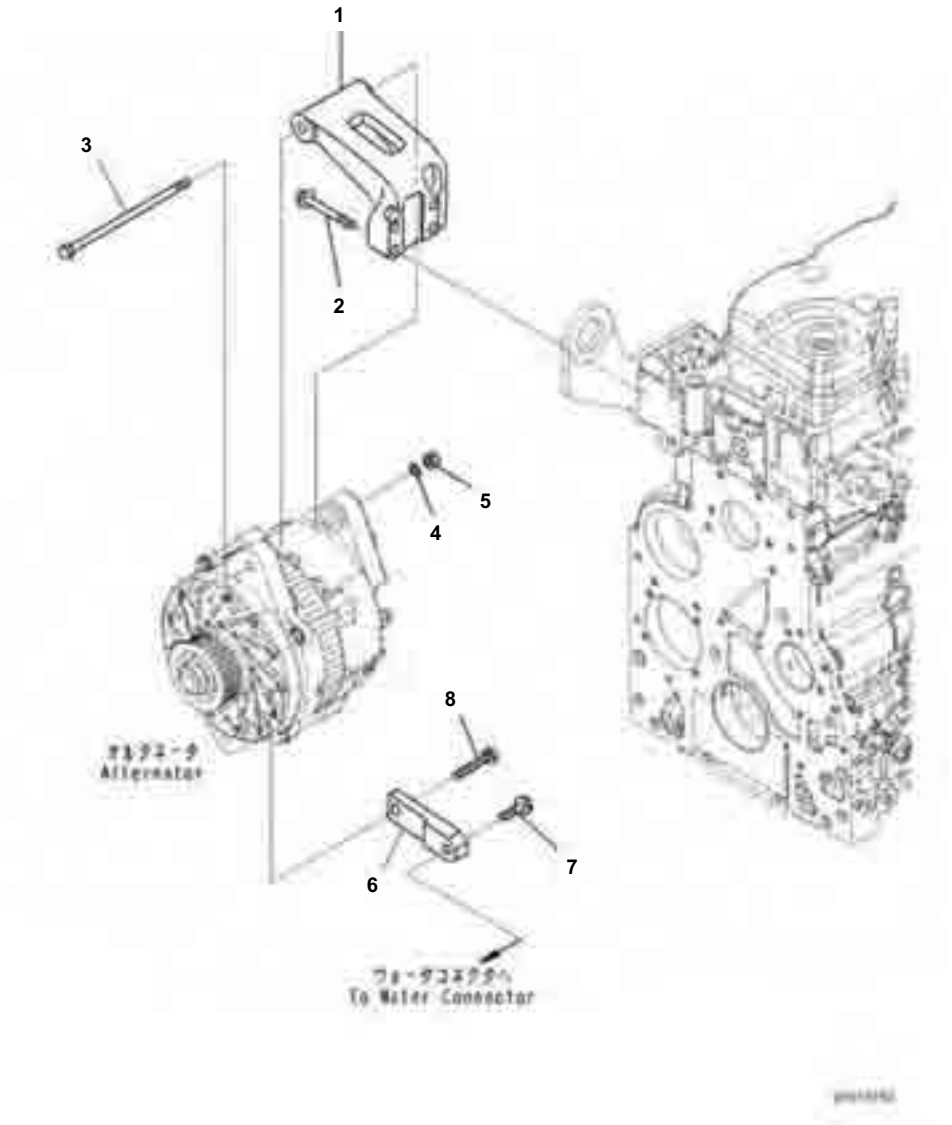

Alternator, Installation Parts (#26540705-.)

Index	Code	Part Number	Description	Qty	Serial No.
1		6754-81-6320	Support	1	26540705-.
2		6736-21-3210	Bolt	4	26540705-.
3		6732-81-6840	Bolt	1	26540705-.
4		01641-21223	Washer	1	26540705-.
5		01582-11210	Nut	1	26540705-.
6		6754-81-6280	Brace	1	26540705-.
7		6735-61-3810	Bolt	1	26540705-.
8		6754-81-6280	Brace	1	26540705-.

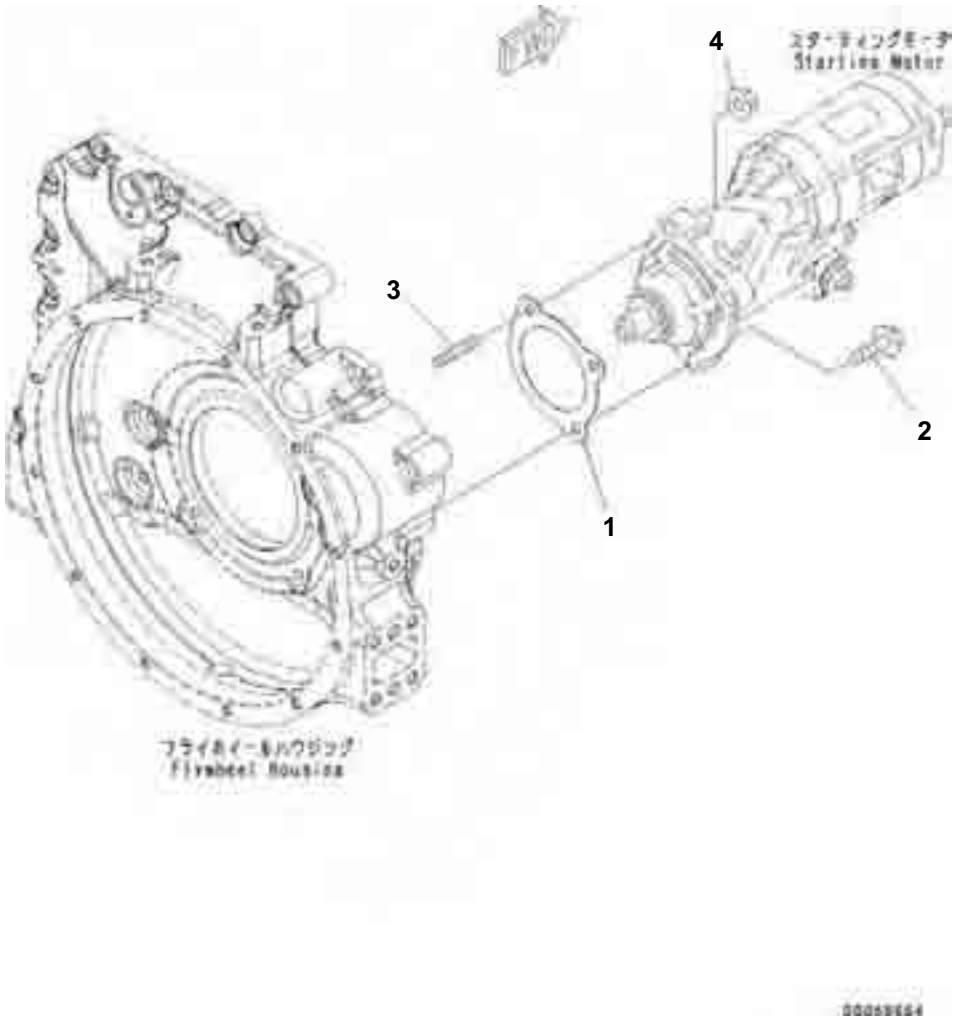

Starting Motor Mounting

Index	Code	Part Number	Description	Qty	Serial No.
1		6754-81-6810	Gasket	1	26540705-
2		6731-82-6810	Bolt	2	26540705-
3		6735-81-6170	Stud	1	26540705-
4		6736-81-6170	Nut	1	26540705-

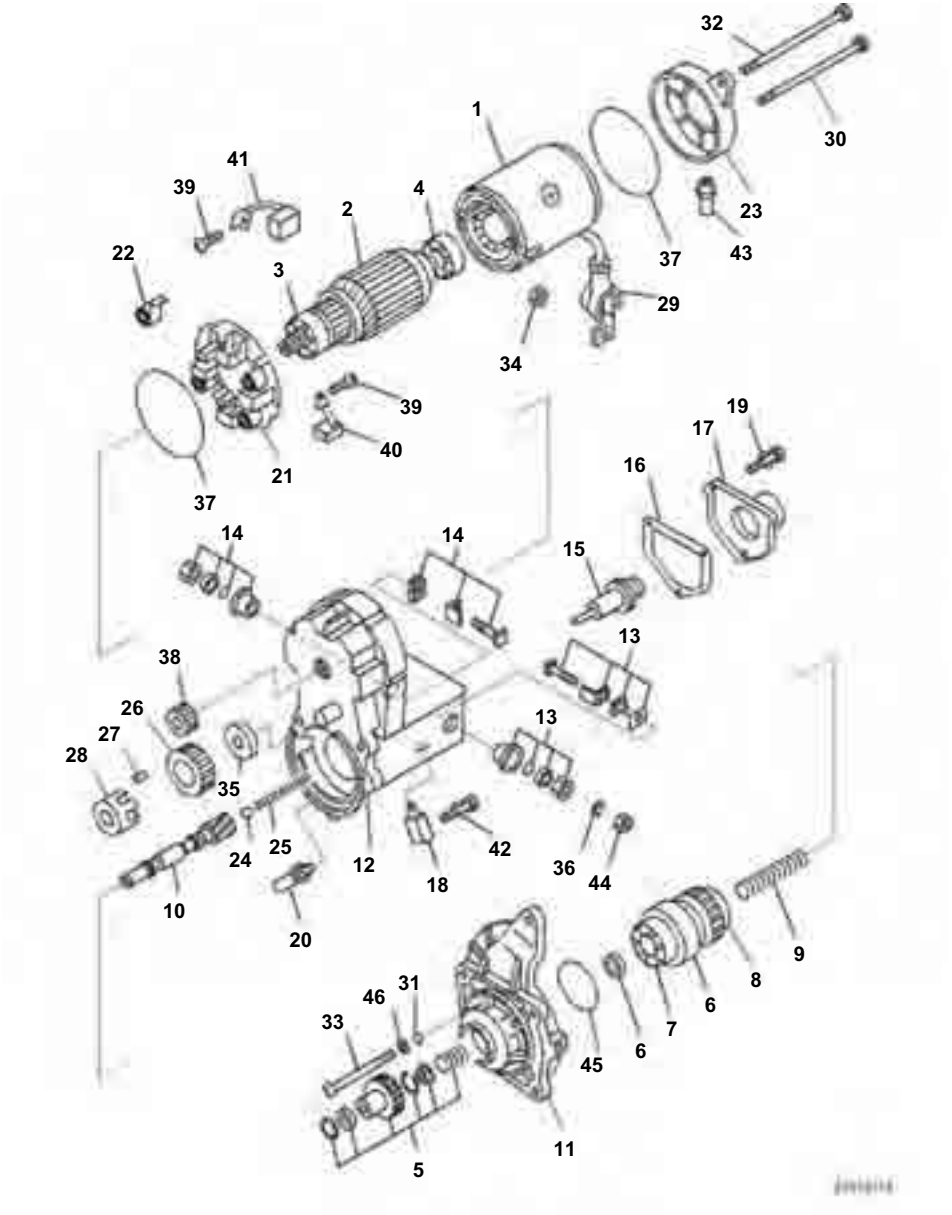

Index	Code	Part Number	Description	Qty	Serial No.
		600-863-5111	Starting Motor Assembly	1	26540705-.
1		ND028100-5410	' Yoke Assembly	1	26540705-.
2		ND028200-5250	' Armature Assembly	1	26540705-.
3		ND949100-3161	' ' Bearing, Ball	1	26540705-.
		ND949100-5290	' ' Bearing, Ball	1	26540705-.
4		ND949100-3540	' ' Bearing, Ball	1	26540705-.
		ND028300-6551	' Clutch Assembly	1	26540705-.
5		ND028099-3270	' ' Starting Motor Kit	1	26540705-.
6		ND028300-6751	' ' Clutch Assembly	1	26540705-.
7		ND949100-4500	' ' ' Bearing, Ball	1	26540705-.
8		ND949100-1920	' ' ' Bearing, Ball	1	26540705-.
9		ND949170-4040	' ' Spring	1	26540705-.
10		ND028381-0071	' ' Shaft	1	26540705-.
11		ND128401-5621	' Housing	1	26540705-.
12		ND153400-6740	' Switch Assembly, Magnetic	1	26540705-.
13		ND128099-5770	' ' Starting Motor Kit	1	26540705-.
14		ND028099-5100	' ' Starting Motor Kit	1	26540705-.
15		ND053660-0443	' ' Plunger	1	26540705-.
16		ND053404-0240	' ' Gasket	1	26540705-.
17		ND053505-0290	' ' Cover	1	26540705-.
18		ND053480-7560	' ' Bolt Assembly	1	26540705-.
19		ND949047-4440	' ' Bolt	3	26540705-.
20		ND028065-0250	' ' Bushing	1	26540705-.
21		ND028510-0880	' Holder Assembly, Brush	1	26540705-.
22		ND028520-0011	' ' Spring	4	26540705-.
23		ND028501-7711	' Frame	1	26540705-.
24		ND128961-0010	' Ball, Steel	1	26540705-.
25		ND949170-4070	' Spring	1	26540705-.
26		ND028371-3210	' Pinion	1	26540705-.
27		ND028306-0070	' Roller	5	26540705-.
28		ND028063-0030	' Retainer	1	26540705-.
29		ND028062-0130	' Cover	1	26540705-.
30		ND949042-3680	' Bolt	1	26540705-.
31		ND90801-10050	' O-ring	3	26540705-.
32		ND949042-3690	' Bolt	1	26540705-.
33		ND949006-4720	' Screw	3	26540705-.
34		ND949056-4480	' Nut	1	26540705-.
35		ND028327-0171	' Retainer	1	26540705-.
36		ND90258-10001	' Washer	1	26540705-.
37		ND028901-0361	' Seal	2	26540705-.
38		ND028371-3200	' Pinion	1	26540705-.
39		ND949007-6530	' Screw	4	26540705-.
40		ND028530-1090	' Brush Assembly	2	26540705-.
41		ND028530-1100	' Brush Assembly	2	26540705-.
42		ND949007-6850	' Screw	1	26540705-.
43		ND028062-5790	' Cover	1	26540705-.

SAA6D107E-1CC S/N 26540705-UP (For GD655-5)
Starting Motor, 5.5KW (#26540705-.)

Index	Code	Part Number	Description	Qty	Serial No.
44		ND90170-10061	' Nut	1	26540705-.
45		ND028901-5190	' Seal	1	26540705-.
46		ND90200-06241	' Washer	3	26540705-.

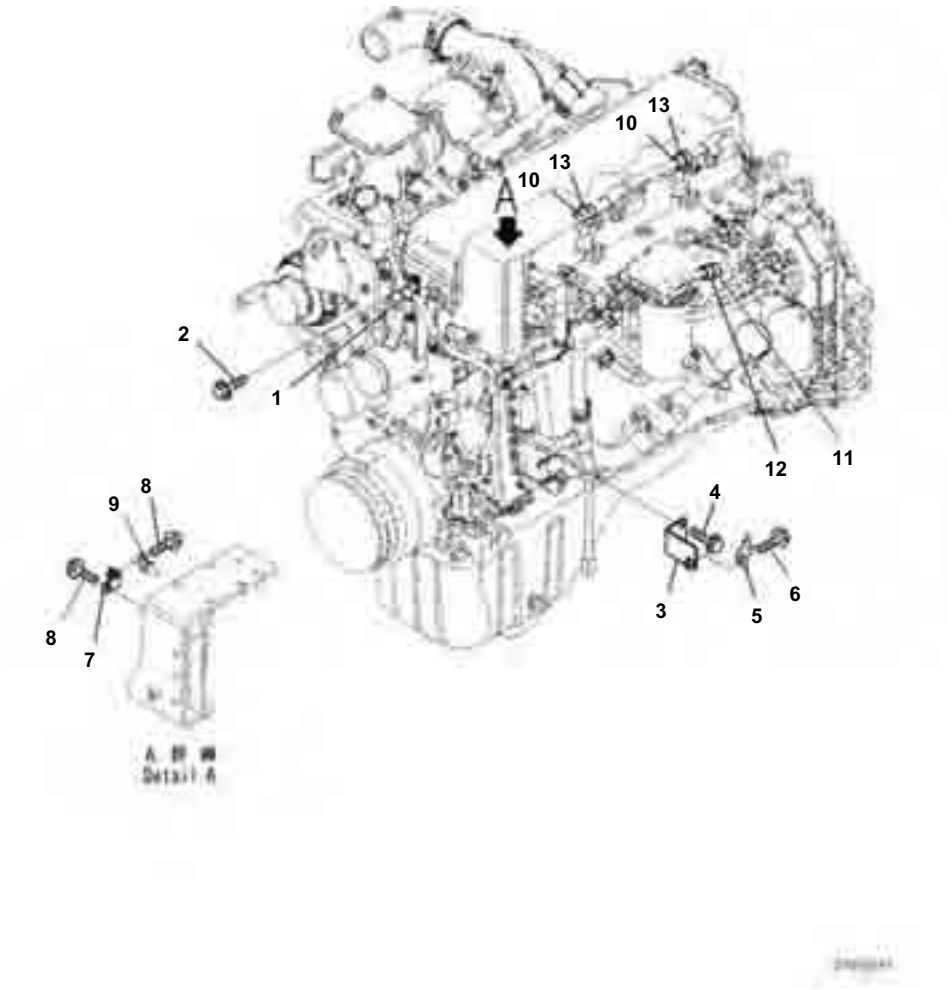

Index	Code	Part Number	Description	Qty	Serial No.
1		600-051-2120	Clip	1	26540705-.
2		01435-00816	Bolt	1	26540705-.
3		6754-81-9350	Plate	1	26540705-.
4		01435-00816	Bolt	1	26540705-.
5		08193-20010	Clip	1	26540705-.
6		01435-01016	Bolt	1	26540705-.
7		6151-11-8920	Stay	1	26540705-.
8		01435-01016	Bolt	2	26540705-.
9		600-051-2210	Clip	1	26540705-.
10		6754-81-9360	Cover	2	26540705-.
11		6754-81-9370	Cover	2	26540705-.
12		08034-40521	Band	1	26540705-.
13		6754-81-9230	Clip	2	26540705-.

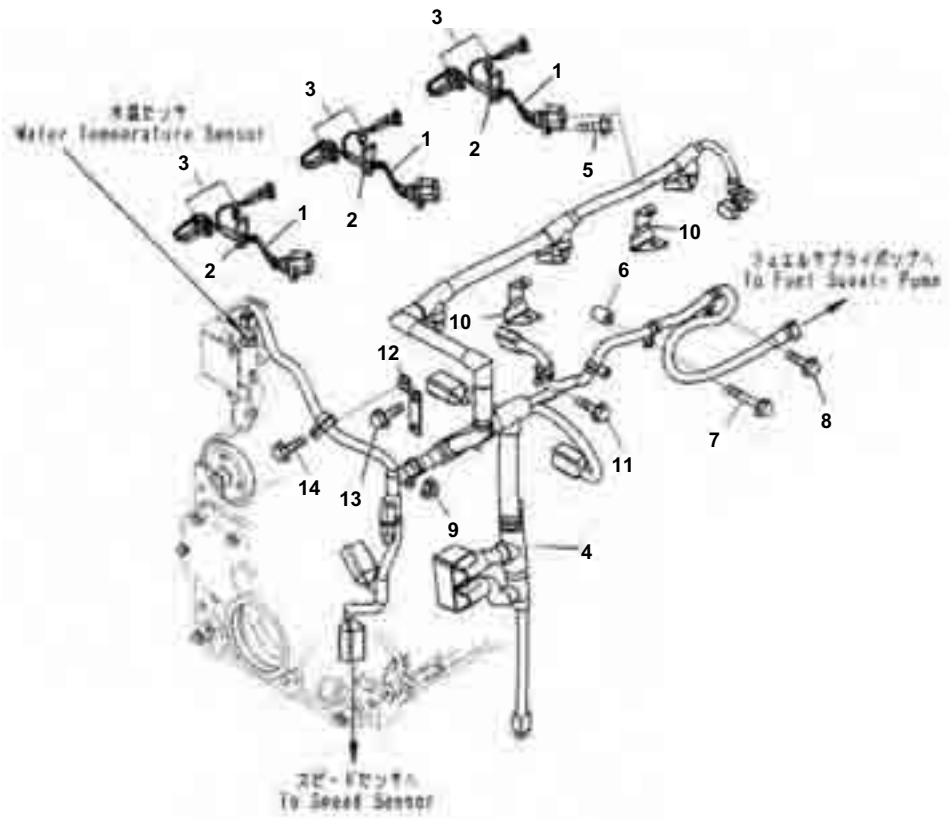

Engine Wiring Harness

Index	Code	Part Number	Description	Qty	Serial No.
1		6754-81-9450	Wiring Harness	3	26541736-
2		6754-81-9220	Clip	3	26541736-
3		6754-81-9230	Clip	6	26541736-
4		6754-81-9440	Wiring Harness	1	26541736-
5		6732-21-4180	Bolt	3	26541736-
6		6162-23-5770	Spacer	1	26541736-
7		6732-61-6140	Bolt	1	26541736-
8		6216-74-6180	Bolt	1	26541736-
9		01584-00605	Nut	3	26541736-
10		6754-81-9340	Bracket	2	26541736-
11		6736-81-5110	Bolt	2	26541736-
12		6754-81-9280	Bracket	1	26541736-
13		6732-21-3120	Bolt	2	26541736-
14		6733-71-5680	Bolt	1	26541736-

ENGINE ACCESSORIES AND OTHERS

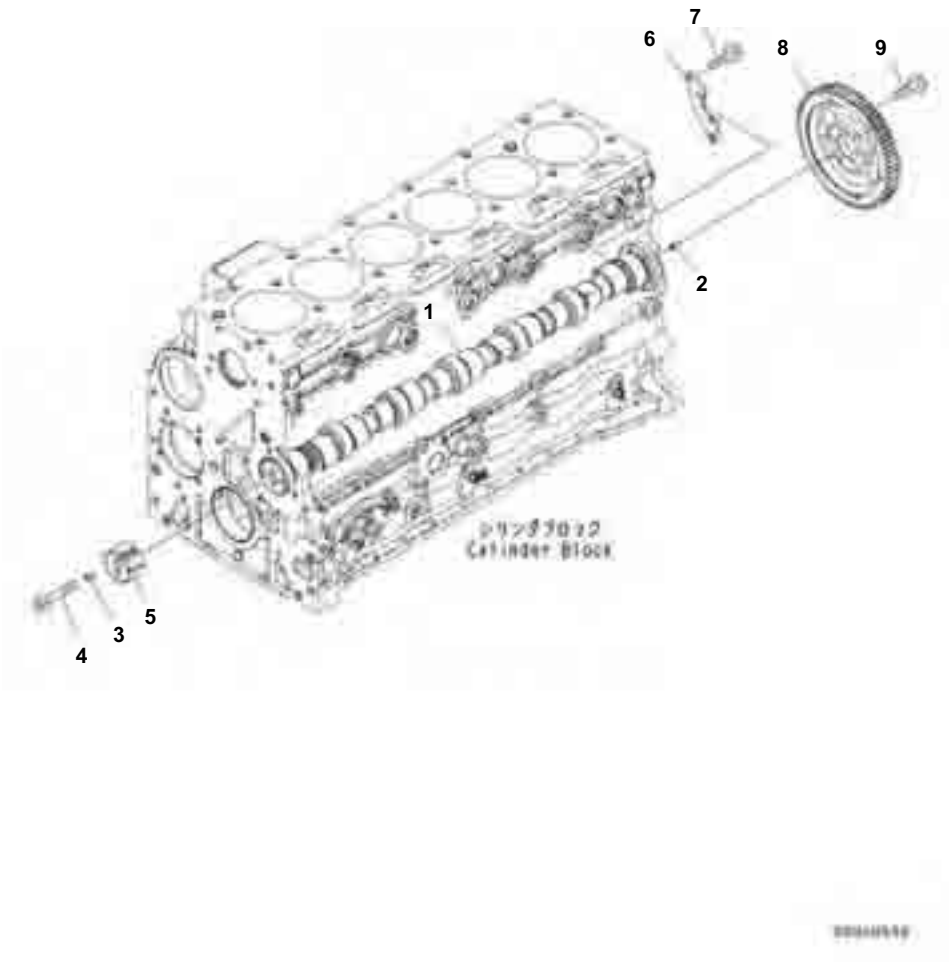

Parts Performance, Camshaft

Index	Code	Part Number	Description	Qty	Serial No.
		6754-41-1100	Camshaft Assembly	1	26540705-
		6754-41-1170	▪ Camshaft Assembly	1	26540705-
1	C1		▪ ▪ Camshaft	1	26540705-
2	C1		▪ ▪ Pin, Dowel	1	26540705-
3		6754-41-1120	▪ Ring	1	26540705-
4		6754-41-1130	▪ Bolt	2	26540705-
5		6754-41-1140	▪ Ring	1	26540705-
6		6754-41-1161	Support	1	26563163-
7		6736-21-5310	Bolt	2	26540705-
8		6754-41-1150	Gear	1	26540705-
9		01435-00825	Bolt	6	26540705-

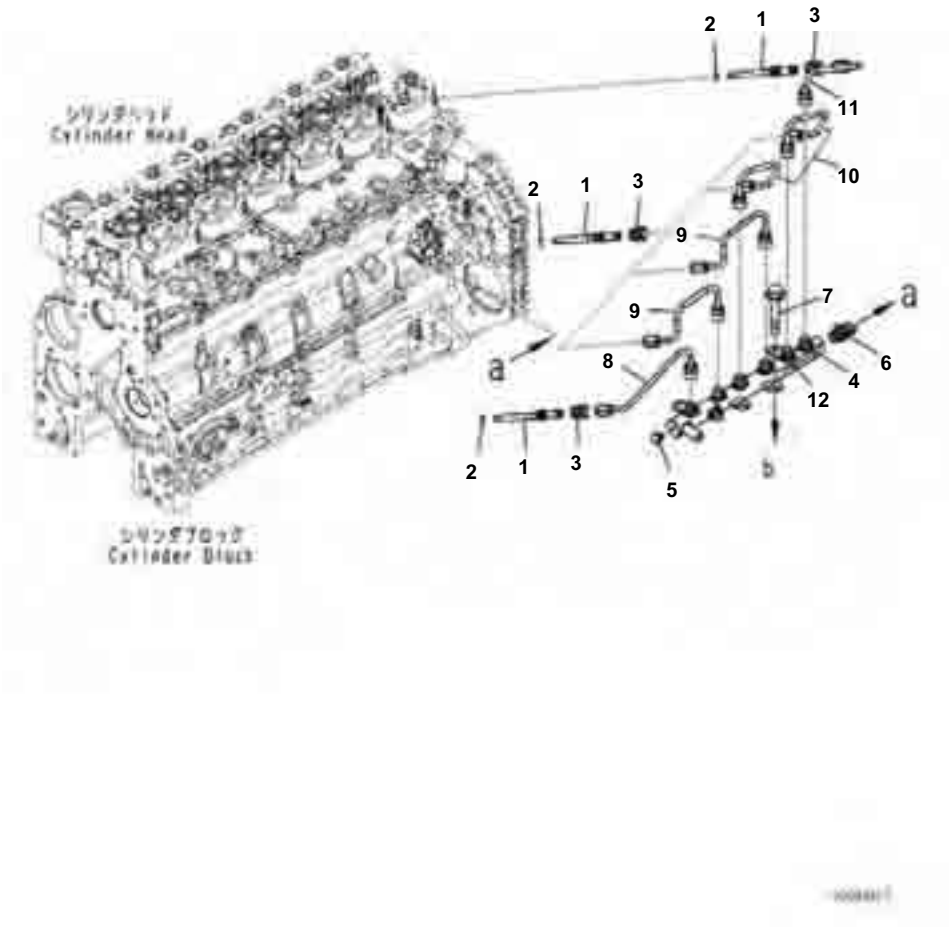

Parts Performance, Common Rail

Index	Code	Part Number	Description	Qty	Serial No.
		6754-71-5511	Connector Assembly	6	26563163-
1	C1		▪ Connector	1	26540705-
2		6754-71-5530	▪ O-ring	1	26540705-
3		6754-71-5541	Retainer	6	26563163-
		6754-71-1210	Rail Assembly	1	26540705-
4	C1		▪ Common Rail	1	26540705-
5		6754-72-1220	▪ Valve	1	26540705-
6		6754-72-1210	▪ Sensor, Pressure	1	26540705-
7		6733-11-4150	Bolt	4	26540705-
8		6754-71-5210	Tube	1	26540705-
9		6754-71-5220	Tube	2	26540705-
10		6754-71-5230	Tube	2	26540705-
11		6754-71-5240	Tube	1	26540705-
12		6754-71-1991	Decal	1	26540705-

ENGINE MARKS AND PLATES

1



Date Plate, For Turkey Exhaust Emissions 3rd Regulations

Index	Code	Part Number	Description	Qty	Serial No.
1		6732-81-2611	Plate	1	26861357-

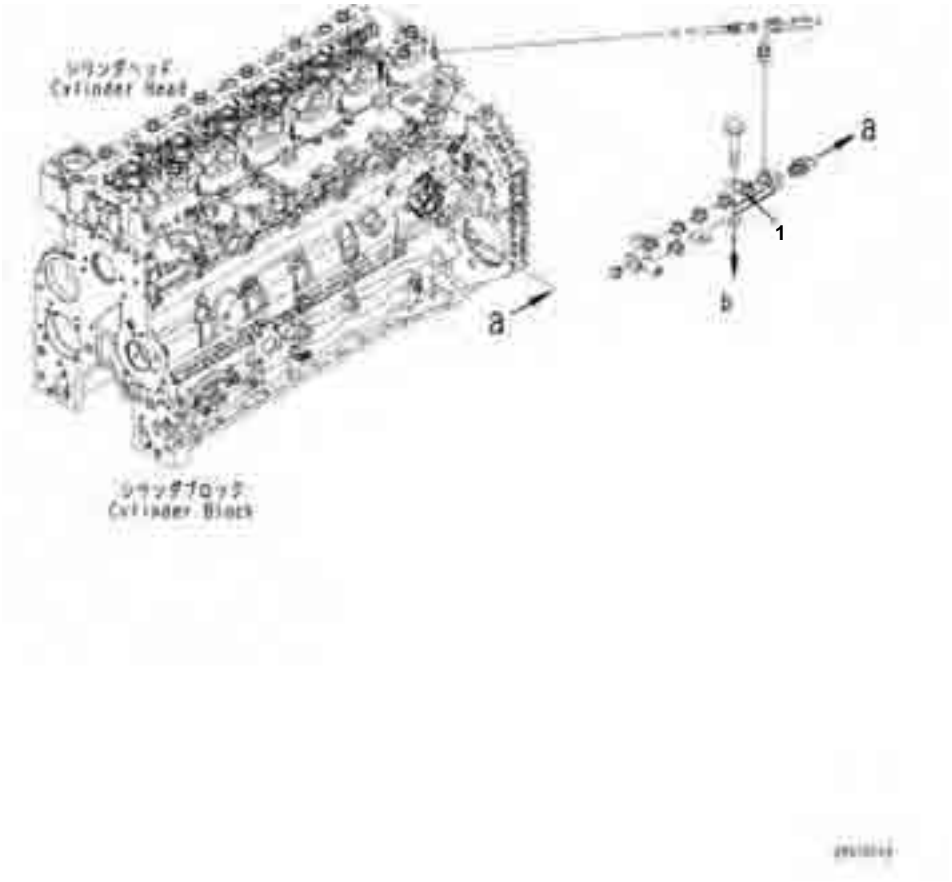

Caution Plates, For EU Safety Regulation

Index	Code	Part Number	Description	Qty	Serial No.
1		6271-81-2980	Plate, Caution	1	26544798-

FIELD REPAIR SERVICE PARTS

Index	Code	Part Number	Description	Qty	Serial No.
1		6736-29-1410	Bushing	1	26540705-
2		6736-29-1420	Bushing	1	26540705-
		6736-39-1130	Sleeve	1	26540705-
3		6736-39-1160	▪ Sleeve	1	26540705-
4		6736-39-1170	▪ Seal	1	26540705-
		6754-29-8320	Bearing, T=0.25mm	6	26540705-
5	C1		▪ Bearing	1	26540705-
6	C1		▪ Bearing	1	26540705-
		6754-29-8310	Bearing, Thrust, T=0.25mm	1	26540705-
7	C1		▪ Bearing, Thrust	1	26540705-
8	C1		▪ Bearing	1	26540705-
		6754-28-8320	Bearing, T=0.50mm	6	26540705-
9	C1		▪ Bearing	1	26540705-
10	C1		▪ Bearing, T=0.50mm	1	26540705-
		6754-28-8310	Bearing, Thrust, T=0.50mm	1	26540705-
11	C1		▪ Bearing, Thrust	1	26540705-
12	C1		▪ Bearing, T=0.50mm	1	26540705-
		6754-27-8320	Bearing, T=0.75mm	6	26540705-
13	C1		▪ Bearing	1	26540705-
14	C1		▪ Bearing	1	26540705-
		6754-27-8310	Bearing, Thrust, T=0.75mm	1	26540705-
15	C1		▪ Bearing, Thrust	1	26540705-
16	C1		▪ Bearing	1	26540705-
		6754-26-8320	Bearing, T=1.00mm	6	26540705-
17	C1		▪ Bearing	1	26540705-
18	C1		▪ Bearing, T=1.00mm	1	26540705-
		6754-26-8310	Bearing, Thrust, T=1.00mm	1	26540705-
19	C1		▪ Bearing, Thrust	1	26540705-
20	C1		▪ Bearing, T=1.00mm	1	26540705-
		6754-28-8410	Bearing, Thrust	1	26540705-
21	C1		▪ Bearing, Thrust, T=0.50/0.50mm	1	26540705-
22	C1		▪ Bearing, T=0.50mm	1	26540705-
		6754-26-8410	Bearing, Thrust	1	26540705-
23	C1		▪ Bearing, Thrust, T=1.00/1.00mm	1	26540705-
24	C1		▪ Bearing, T=1.00mm	1	26540705-
25	C1		Metal	6	26540705-
26	C1		Metal	6	26540705-
27	C1		Metal	6	26540705-
28	C1		Metal	6	26540705-
29		6754-39-2111	Piston	6	26540705-
		6754-39-2010	Ring Assembly, Piston	6	26540705-
30	C1		▪ Ring, T=0.05mm	1	26540705-
31	C1		▪ Ring	1	26540705-
32	C1		▪ Ring, Oil	1	26540705-
33		6754-39-3410	Bearing	6	26540705-
34		6754-38-3410	Bearing	6	26540705-

SAA6D107E-1CC S/N 26540705-UP (For GD655-5)
Repair Service Parts

Index	Code	Part Number	Description	Qty	Serial No.
35		6754-37-3410	Bearing	6	26540705-
36		6754-36-3410	Bearing	6	26540705-

Reference:A8110-001001 Page:Y001001

ENGINE RELATED PARTS

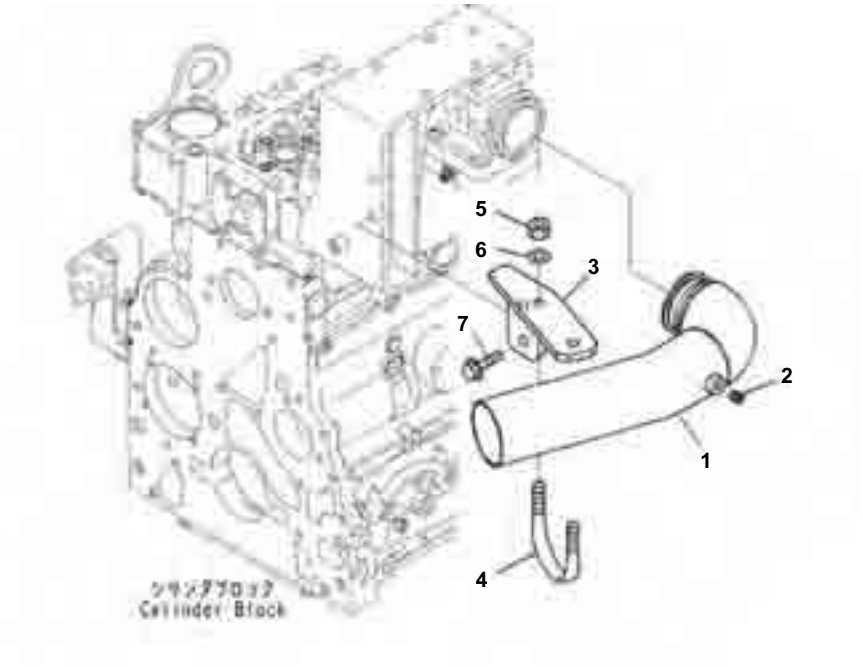

Air Intake Connector, Tube (#B40016-)

Index	Code	Part Number	Description	Qty	Serial No.
1		6754-11-4320	Tube	1	B40016-
2		07043-70108	Plug	1	B40016-
3		6754-11-4880	Bracket	1	B40016-
4		07283-37671	Clip	1	B40016-
5		01597-01009	Nut	2	B40016-
6		01643-31032	Washer	2	B40016-
7		01435-01030	Bolt	2	B40016-

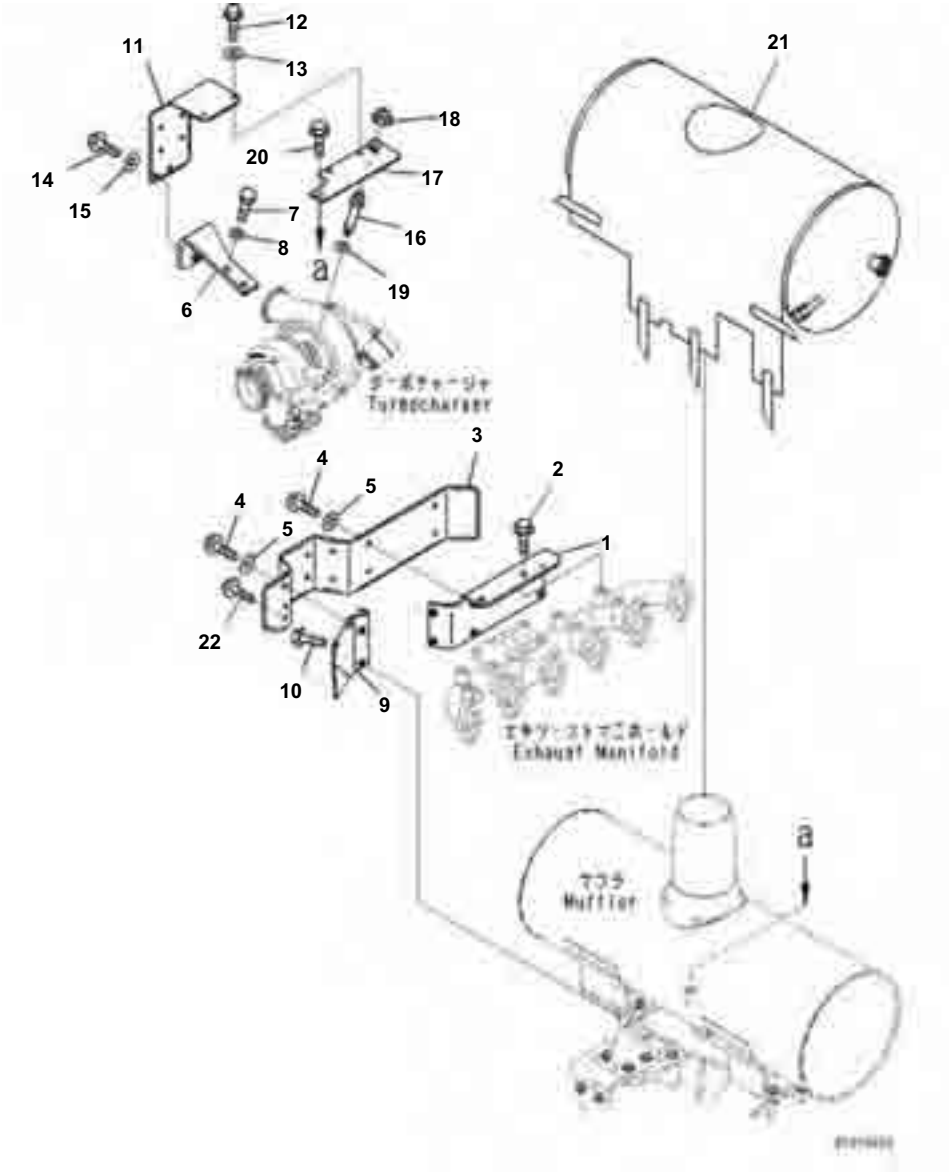

Index	Code	Part Number	Description	Qty	Serial No.
1		6754-81-8941	Bracket	1	B40016-
2		01435-01020	Bolt	2	B40016-
3		6754-81-8812	Cover	1	B40016-
4		01435-00820	Bolt	9	B40016-
5		154-61-16570	Washer	9	B40016-
6		6754-81-8750	Bracket	1	B40016-
7		01010-E1030	Bolt	2	B40016-
8		01643-31032	Washer	2	B40016-
9		6754-81-8270	Bracket	1	B40016-
10		01435-01020	Bolt	2	B40016-
11		6754-81-8820	Cover	1	B40016-
12		01435-00820	Bolt	2	B40016-
13		154-61-16570	Washer	2	B40016-
14		01435-00825	Bolt	2	B40016-
15		154-61-16570	Washer	2	B40016-
16		6754-81-8970	Rod	1	B40016-
17		6754-81-8960	Bracket	1	B40016-
18		01584-00806	Nut	1	B40016-
19		01643-50823	Washer	1	B40016-
20		01435-00820	Bolt	1	B40016-
21		6754-81-5840	Cover	1	B40016-
22		01435-00825	Bolt	1	B40016-

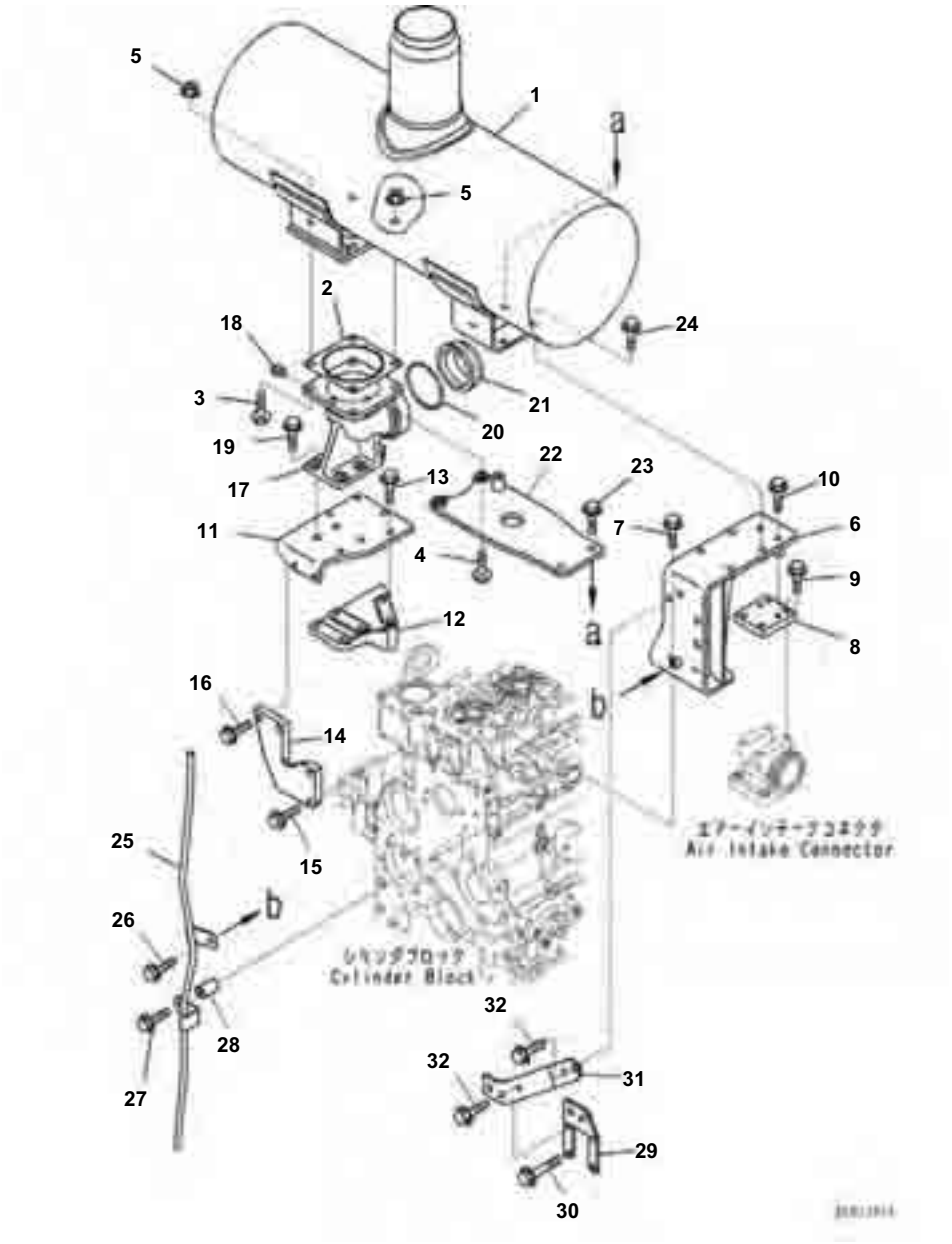

Exhaust Muffler and Mounting Bracket (#B40016-)

Index	Code	Part Number	Description	Qty	Serial No.
1		6754-11-5160	Muffler	1	B40016-
2		6151-11-5751	Gasket	1	B40016-
3		01435-01035	Bolt	2	B40016-
4		01435-01050	Bolt	2	B40016-
5		01584-01008	Nut	4	B40016-
6		6754-11-5170	Bracket	1	B40016-
7		01435-01025	Bolt	2	B40016-
8		6754-11-5530	Plate	1	B40016-
9		01435-00830	Bolt	4	B40016-
10		01435-00845	Bolt	2	B40016-
11		6754-11-5180	Bracket	1	B40016-
12		6754-11-5280	Spacer	1	B40016-
13		01435-01075	Bolt	2	B40016-
14		6754-11-5580	Plate	1	B40016-
15		6754-11-5130	Bolt	2	B40016-
16		01435-01030	Bolt	2	B40016-
17		6754-11-5610	Elbow	1	B40016-
18		07042-20108	Plug	1	B40016-
19		01435-01035	Bolt	4	B40016-
20		6137-11-5291	Seal Ring	1	B40016-
21		6754-11-5620	Tube	1	B40016-
22		6754-11-5190	Bracket	1	B40016-
23		01435-01035	Bolt	2	B40016-
24		01435-01030	Bolt	2	B40016-
25		6754-11-5230	Tube	1	B40016-
26		01435-00820	Bolt	1	B40016-
27		01435-00850	Bolt	1	B40016-
28		6150-81-6920	Spacer	1	B40016-
29		6754-11-5240	Bracket	1	B40016-
30		01435-00845	Bolt	4	B40016-
31		6754-11-5250	Plate	1	B40016-
32		01435-01025	Bolt	4	B40016-

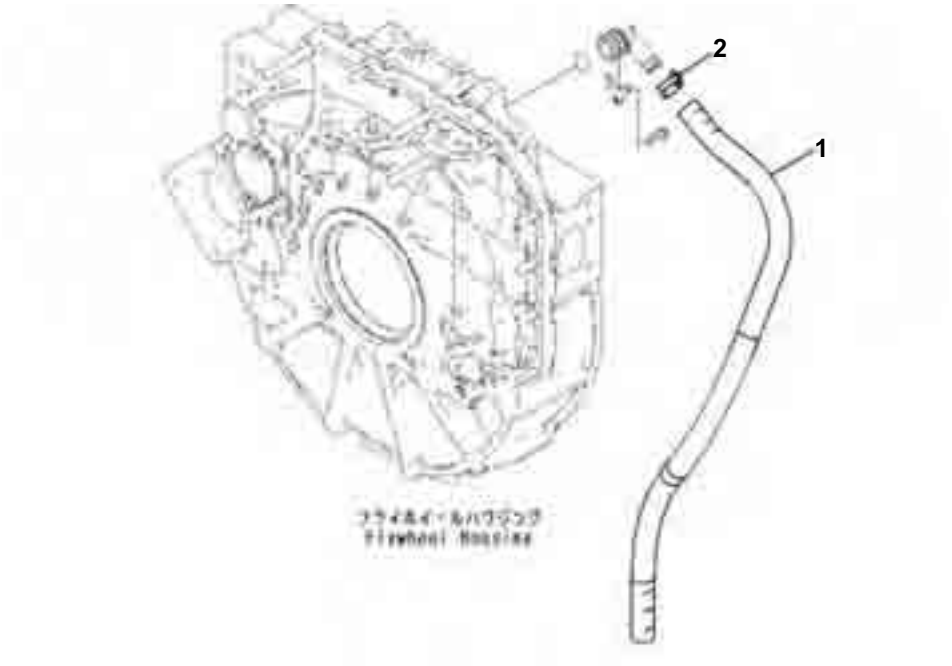

Breather Hose (#B40016-)

Index	Code	Part Number	Description	Qty	Serial No.
1		07287-01911	Hose	1	B40016-
2		07285-00220	Clip	1	B40016-

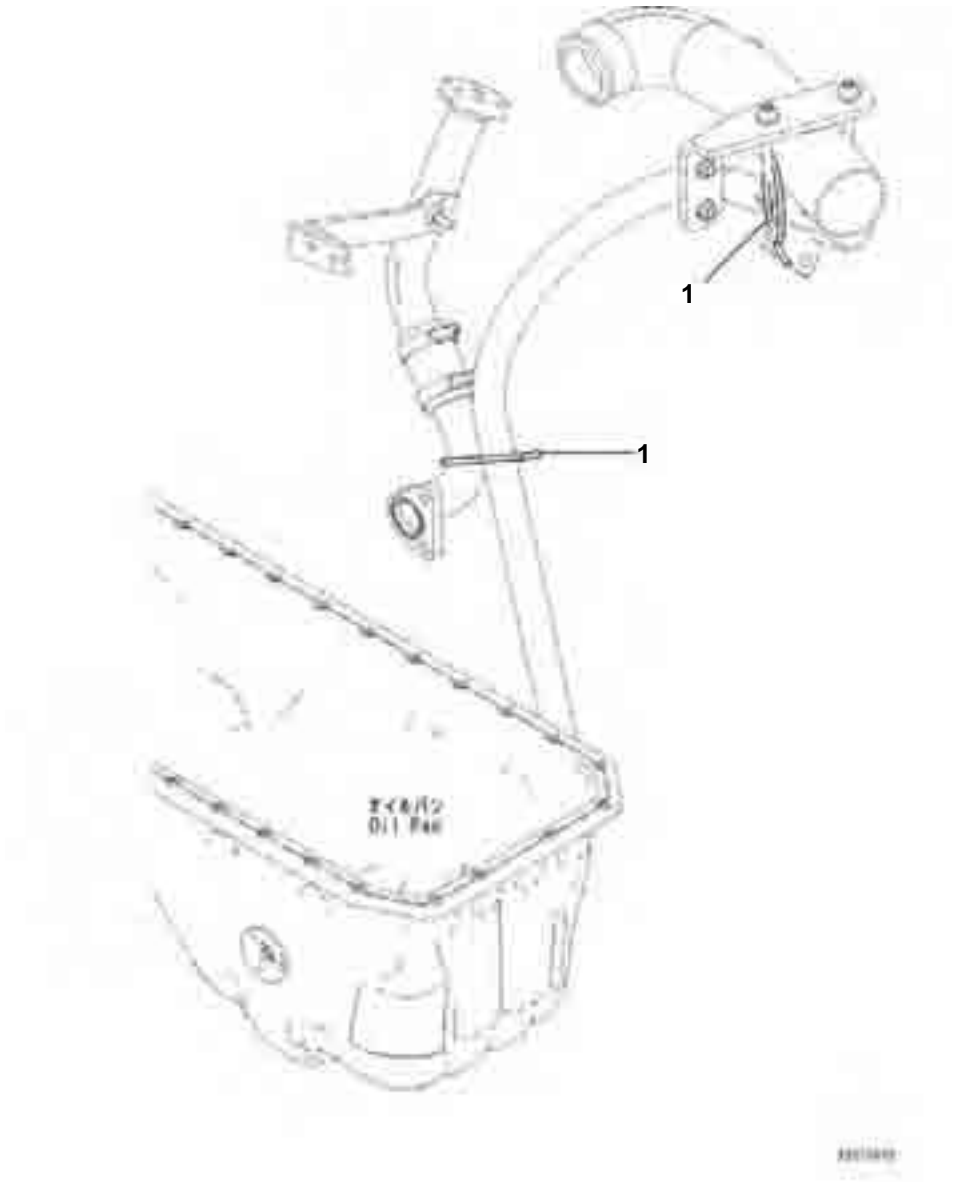

Engine Oil Pan Drain (#B40016-)

Index	Code	Part Number	Description	Qty	Serial No.
1		08034-20536	Band	2	B40016-

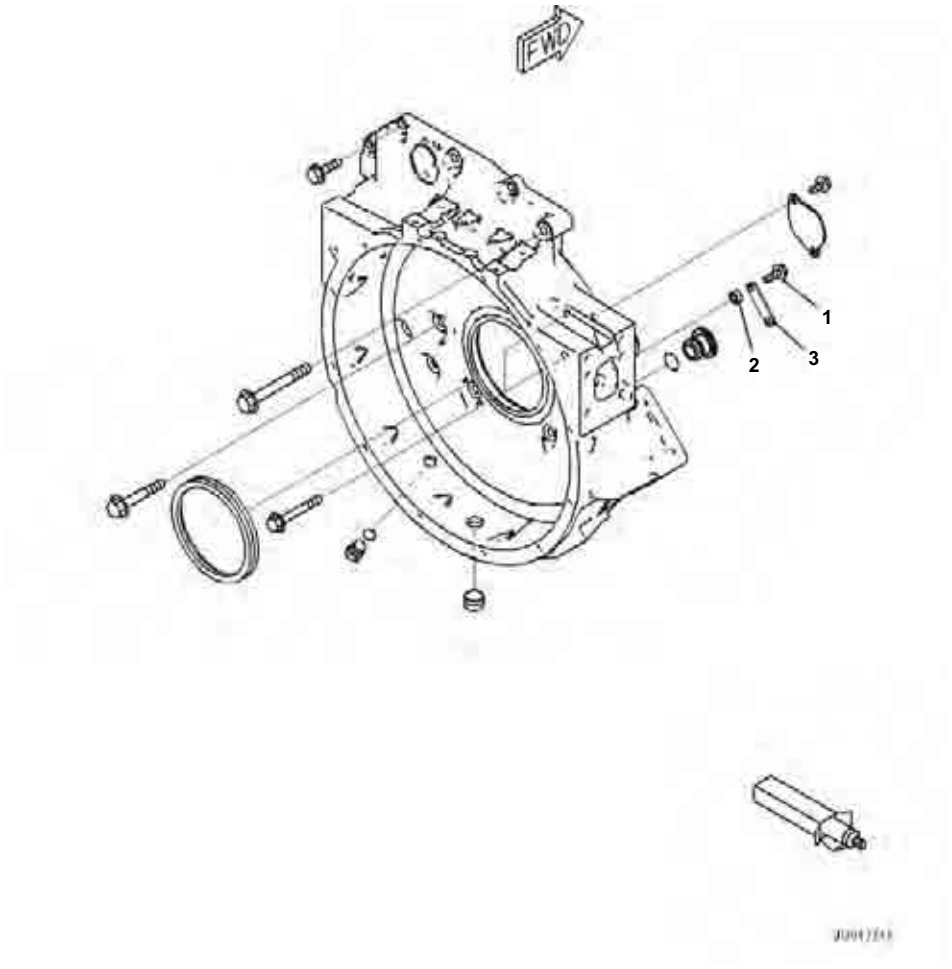

Index	Code	Part Number	Description	Qty	Serial No.
1		6732-21-6630	Screw	1	B40016-
2		6167-11-6640	Spacer	1	B40016-
3		6301-11-4630	Plate	1	B40016-

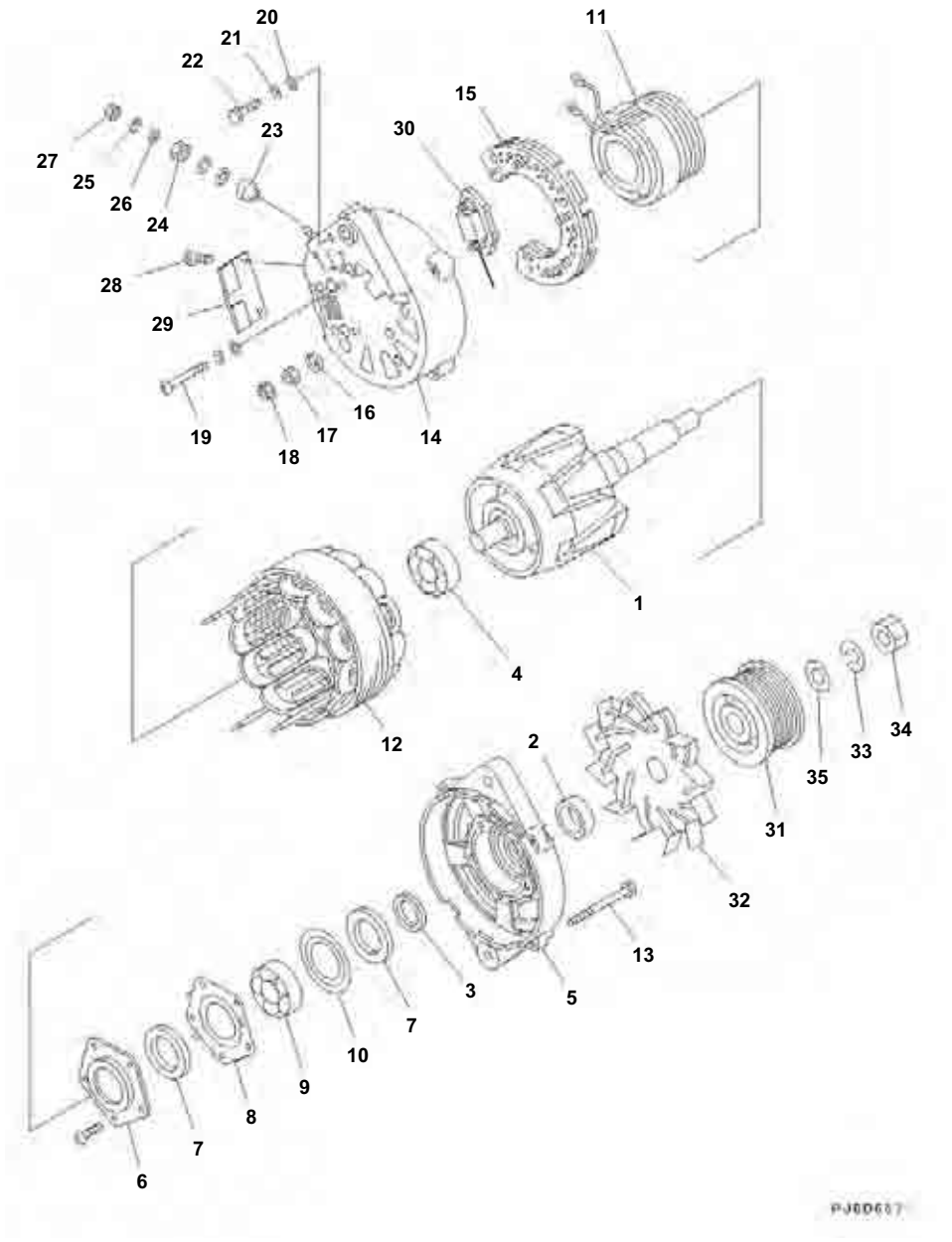

Alternator, 90Amp. (#B40016-)

Index	Code	Part Number	Description	Qty	Serial No.
		600-861-9120	Alternator Assembly, 90Amp.	1	B40016-
1		KD0-35100-0310	· Rotor Assembly	1	B40016-
2		KD1-33923-0890	· Collar	1	B40016-
3		KD1-35923-0030	· Collar	1	B40016-
4		KD0-09201-0770	· Bearing, Ball	1	B40016-
5		KD0-35300-0200	· Bracket Assembly	1	B40016-
6		KD0-35926-0080	· Retainer	1	B40016-
7		KD0-35951-0080	· Packing	2	B40016-
8		KD1-33926-0660	· Retainer	1	B40016-
9		KD0-09201-0760	· Bearing, Ball	1	B40016-
10		KD1-33926-0790	· Retainer	1	B40016-
11		KD0-35120-0250	· Coil Assembly, Field	1	B40016-
12		KD0-35200-0320	· Stator Assembly	1	B40016-
13		KD0-0083-08802	· Bolt	4	B40016-
		KD0-35700-0970	· Bracket Assembly	1	B40016-
14		KD0-35710-1190	· · Bracket	1	B40016-
15		KD0-35730-0162	· · Rectifier Assembly	1	B40016-
16		KD0-35943-0210	· · Bushing	1	B40016-
17		KD0-33902-0090	· · Nut	1	B40016-
18		KD0-33902-0080	· · Nut	6	B40016-
19		KD1-0020-06452	· · Screw	4	B40016-
20		KD1-0330-06012	· · Washer, Prain	5	B40016-
21		KD1-0335-06002	· · Washer, Spring	5	B40016-
22		KD0-0080-06142	· · Bolt	1	B40016-
23		KD0-35943-0100	· · Bushing	1	B40016-
24		KD0-33902-0100	· · Nut	1	B40016-
25		KD1-0335-08002	· · Washer, Spring	2	B40016-
26		KD1-0331-08020	· · Washer	2	B40016-
27		KD0-0291-08010	· · Nut	1	B40016-
28		KD0-0055-05122	· · Screw	2	B40016-
29		KD0-35761-0190	· · Cover	1	B40016-
30		KD7-35719-0181	· · Regulator Assembly	1	B40016-
31		KD0-35411-0650	· Pulley	1	B40016-
32		KD0-35421-0190	· Fan	1	B40016-
33		KD1-0335-20002	· Washer, Spring	1	B40016-
34		KD0-0290-20022	· Nut	1	B40016-
35		KD1-35921-0010	· Washer	1	B40016-

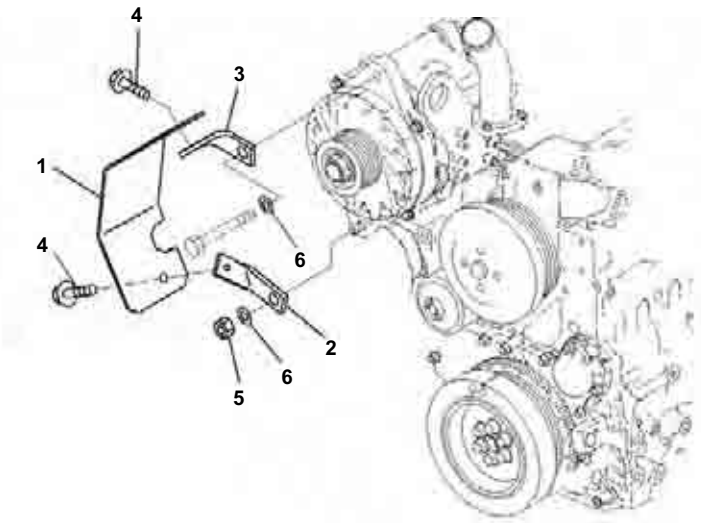

Alternator, 90Amp., Guard (#B40016-)

Index	Code	Part Number	Description	Qty	Serial No.
1		6754-81-6390	Cover	1	B40016-
2		6754-81-6330	Plate	1	B40016-
3		6754-81-6340	Plate	1	B40016-
4		01435-00812	Bolt	2	B40016-
5		01582-11210	Nut	1	B40016-
6		01640-21323	Washer	2	B40016-

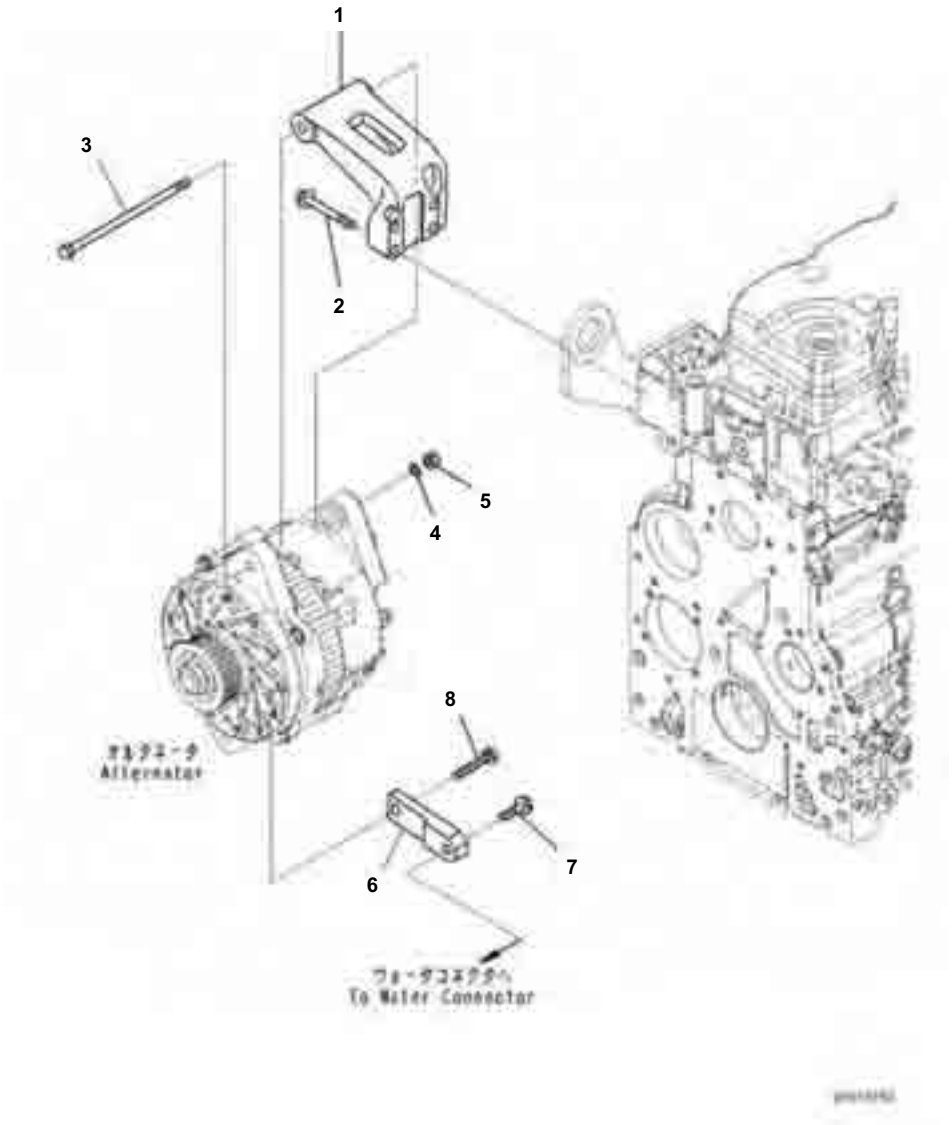

Alternator, Installation Parts (#B40016-)

Index	Code	Part Number	Description	Qty	Serial No.
1		6754-81-6320	Support	1	B40016-
2		6736-21-3210	Bolt	4	B40016-
3		6732-81-6840	Bolt	1	B40016-
4		01641-21223	Washer	1	B40016-
5		01582-11210	Nut	1	B40016-
6		6754-81-6960	Brace	1	B40016-
7		6735-61-3810	Bolt	1	B40016-
8		6754-81-6280	Brace	1	B40016-

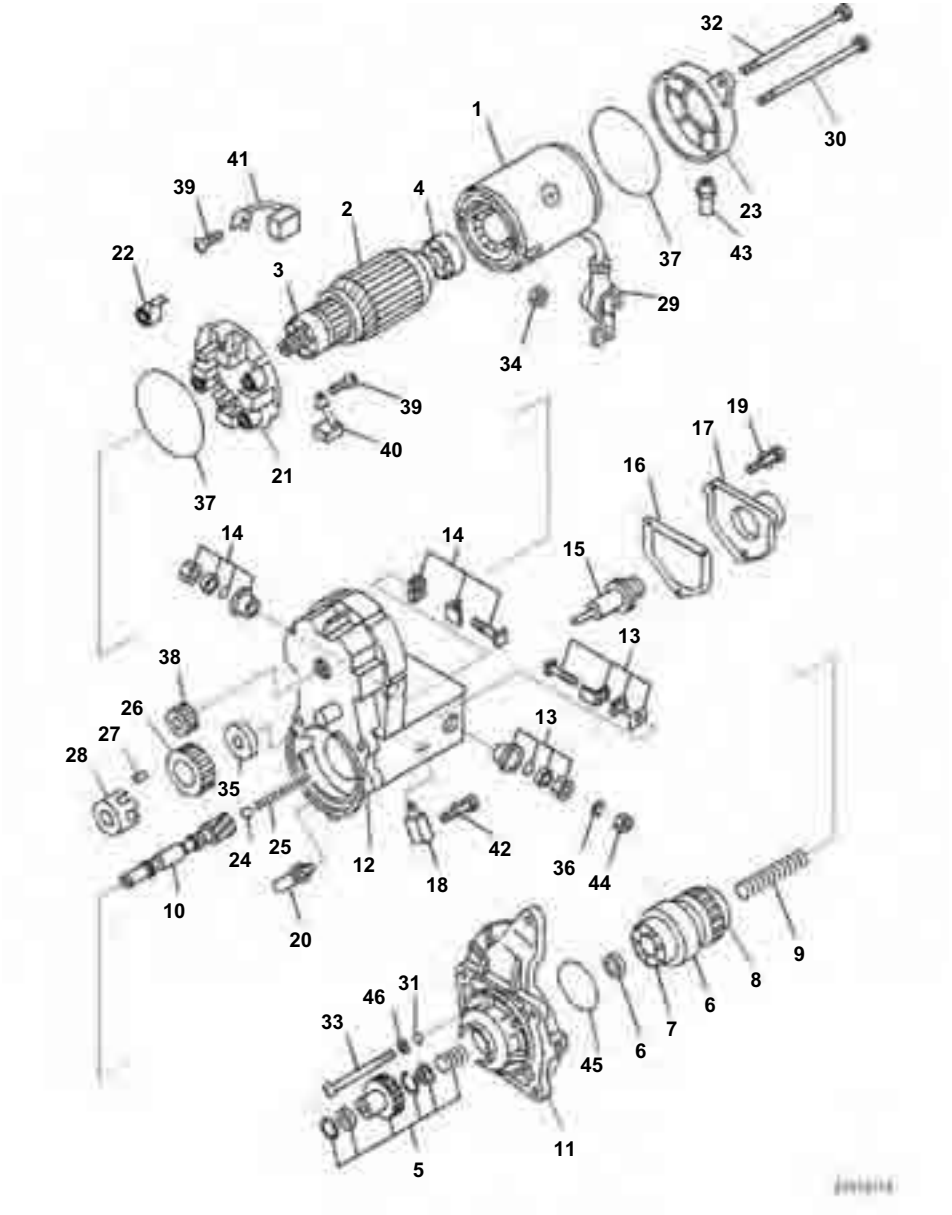

Starting Motor, 5.5KW (#B40016-)

Index	Code	Part Number	Description	Qty	Serial No.
		600-863-5111	Starting Motor Assembly	1	B40016-
1		ND028100-5410	· Yoke Assembly	1	B40016-
2		ND028200-5250	· Armature Assembly	1	B40016-
3		ND949100-3161	· · Bearing, Ball	1	B40016-
		ND949100-5290	· · Bearing, Ball	1	B40016-
4		ND949100-3540	· · Bearing, Ball	1	B40016-
		ND028300-6551	· Clutch Assembly	1	B40016-
5		ND028099-3270	· · Starting Motor Kit	1	B40016-
6		ND028300-6751	· · Clutch Assembly	1	B40016-
7		ND949100-4500	· · · Bearing, Ball	1	B40016-
8		ND949100-1920	· · · Bearing, Ball	1	B40016-
9		ND949170-4040	· · Spring	1	B40016-
10		ND028381-0071	· · Shaft	1	B40016-
11		ND128401-5621	· Housing	1	B40016-
12		ND153400-6740	· Switch Assembly, Magnetic	1	B40016-
13		ND128099-5770	· · Starting Motor Kit	1	B40016-
14		ND028099-5100	· · Starting Motor Kit	1	B40016-
15		ND053660-0443	· · Plunger	1	B40016-
16		ND053404-0240	· · Gasket	1	B40016-
17		ND053505-0290	· · Cover	1	B40016-
18		ND053480-7560	· · Bolt Assembly	1	B40016-
19		ND949047-4440	· · Bolt	3	B40016-
20		ND028065-0250	· · Bushing	1	B40016-
21		ND028510-0880	· Holder Assembly, Brush	1	B40016-
22		ND028520-0011	· · Spring	4	B40016-
23		ND028501-7711	· Frame	1	B40016-
24		ND128961-0010	· Ball, Steel	1	B40016-
25		ND949170-4070	· Spring	1	B40016-
26		ND028371-3210	· Pinion	1	B40016-
27		ND028306-0070	· Roller	5	B40016-
28		ND028063-0030	· Retainer	1	B40016-
29		ND028062-0130	· Cover	1	B40016-
30		ND949042-3680	· Bolt	1	B40016-
31		ND90801-10050	· O-ring	3	B40016-
32		ND949042-3690	· Bolt	1	B40016-
33		ND949006-4720	· Screw	3	B40016-
34		ND949056-4480	· Nut	1	B40016-
35		ND028327-0171	· Retainer	1	B40016-
36		ND90258-10001	· Washer	1	B40016-
37		ND028901-0361	· Seal	2	B40016-
38		ND028371-3200	· Pinion	1	B40016-
39		ND949007-6530	· Screw	4	B40016-
40		ND028530-1090	· Brush Assembly	2	B40016-
41		ND028530-1100	· Brush Assembly	2	B40016-
42		ND949007-6850	· Screw	1	B40016-
43		ND028062-5790	· Cover	1	B40016-

GD655-5 S/N B40001-UP

Starting Motor, 5.5KW (#B40016-)

Index	Code	Part Number	Description	Qty	Serial No.
44		ND90170-10061	Nut	1	B40016-
45		ND028901-5190	Seal	1	B40016-
46		ND90200-06241	Washer	3	B40016-

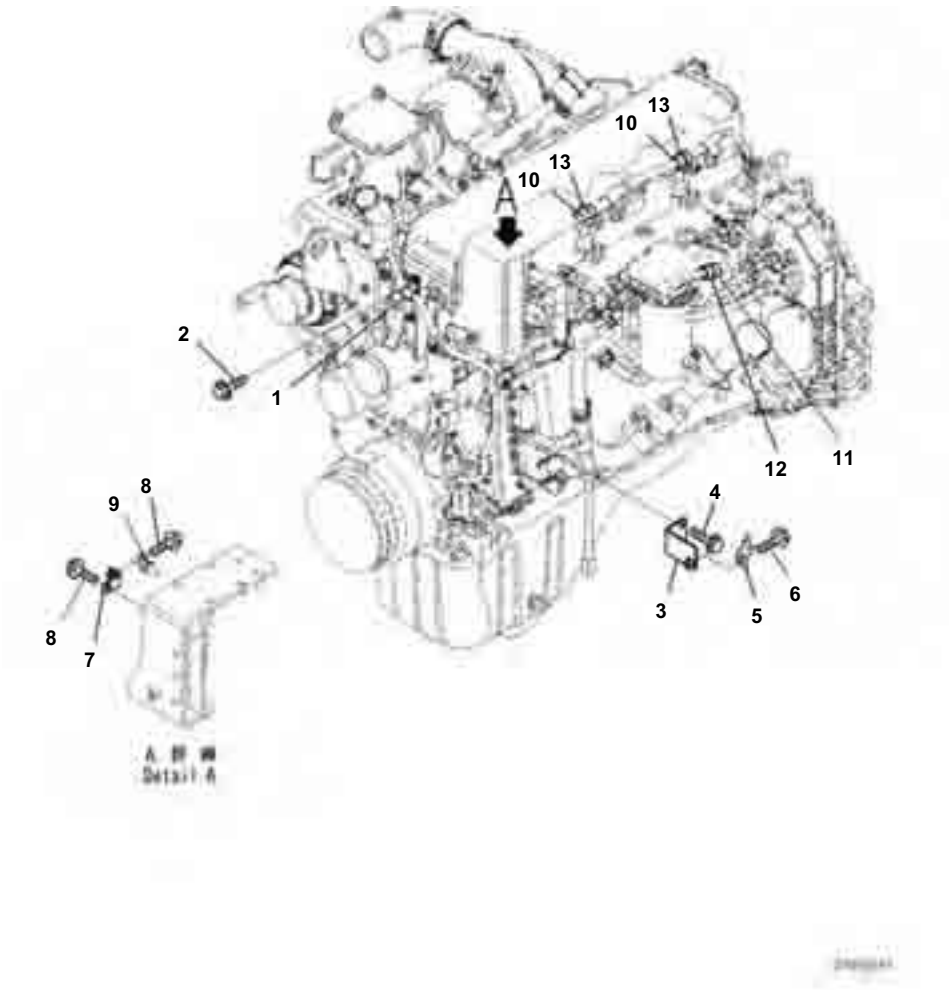

Index	Code	Part Number	Description	Qty	Serial No.
1		600-051-2120	Clip	1	B40016-
2		01435-00816	Bolt	1	B40016-
3		6754-81-9350	Plate	1	B40016-
4		01435-00816	Bolt	1	B40016-
5		08193-20010	Clip	1	B40016-
6		01435-01016	Bolt	1	B40016-
7		6151-11-8920	Stay	1	B40016-
8		01435-01016	Bolt	2	B40016-
9		600-051-2210	Clip	1	B40016-
10		6754-81-9360	Cover	2	B40016-
11		6754-81-9370	Cover	2	B40016-
12		08034-40521	Band	1	B40016-
13		6754-81-9230	Clip	2	B40016-

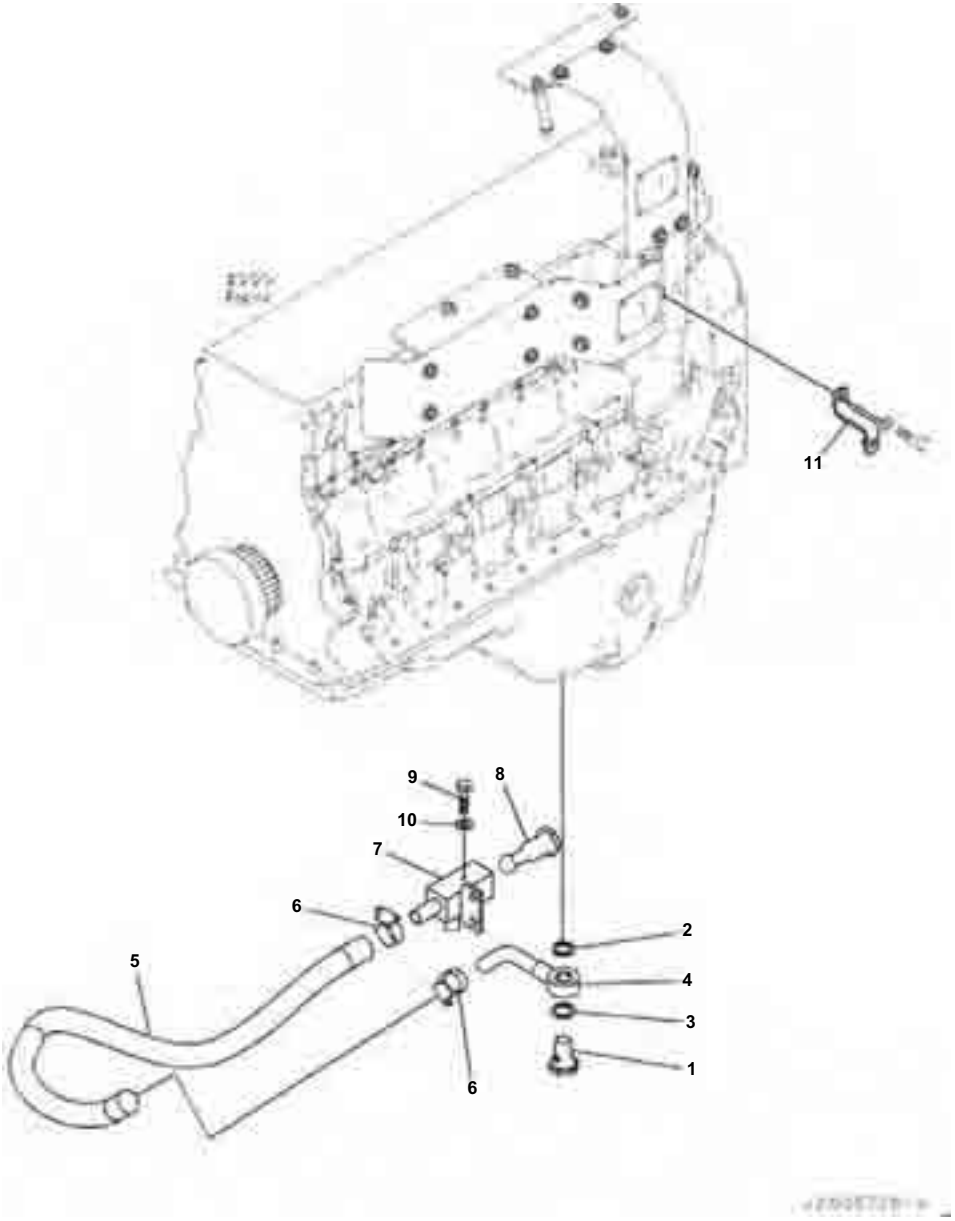

Engine Drain Hose

Index	Code	Part Number	Description	Qty	Serial No.
1		417-01-11931	Joint	1	B40001-
2		07005-02216	Gasket	1	B40001-
3		07005-02416	Gasket	1	B40001-
4		23B-01-71140	Tube	1	B40001-
5		23B-01-71160	Hose	1	B40001-
6		07289-00035	Clamp	2	B40001-
7		423-01-31620	Tube	1	B40001-
8		423-01-31610	Plug	1	B40001-
9		01010-80612	Bolt	1	B40001-
10		01643-30623	Washer	1	B40001-
11		23B-06-71750	Plate	1	B40001-

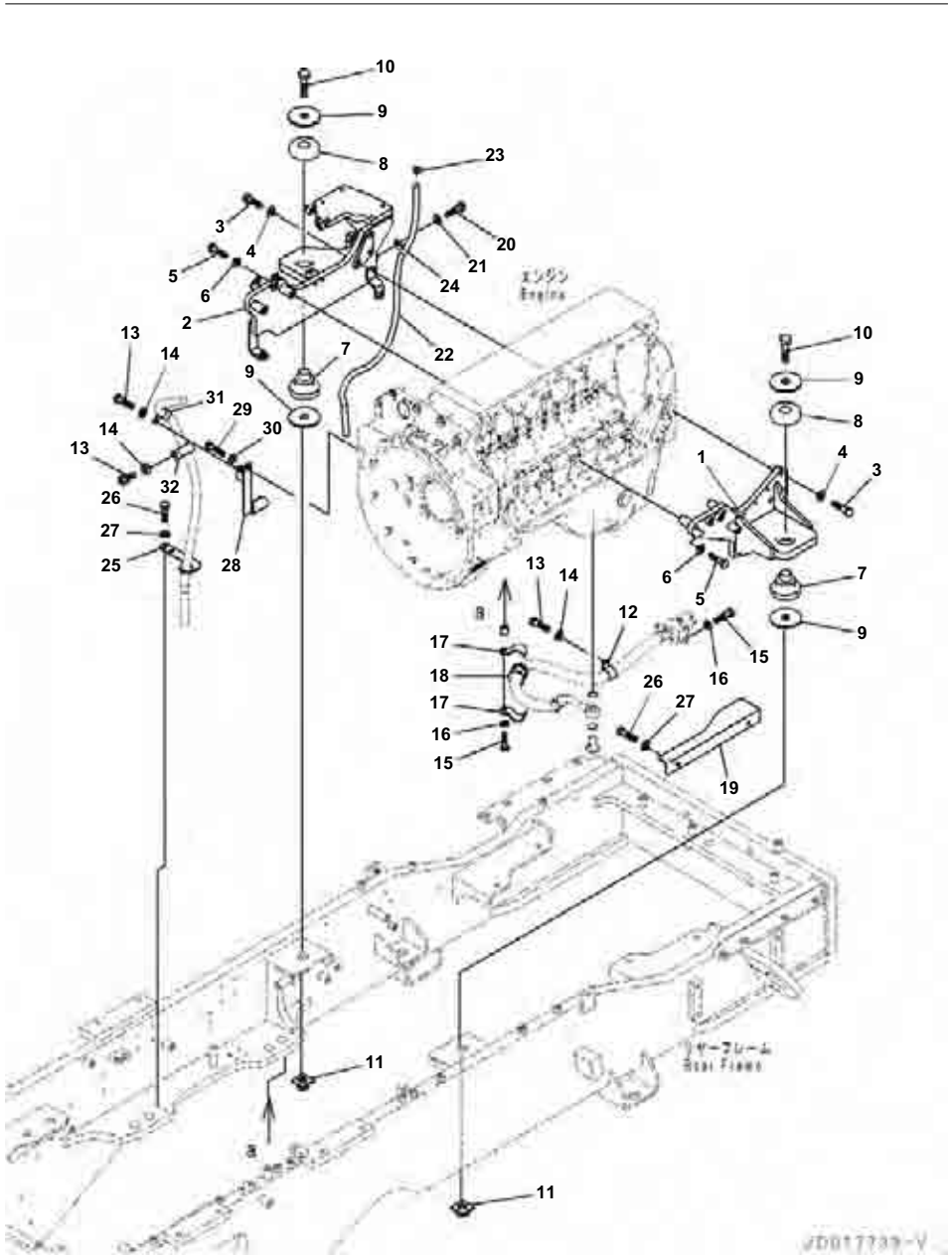

Engine Mounting

Index	Code	Part Number	Description	Qty	Serial No.
1		23B-01-71310	Bracket	1	B40001-
2		23B-01-71321	Bracket	1	B40001-
3		01010-81250	Bolt	6	B40001-
4		01643-31232	Washer	6	B40001-
5		01010-81285	Bolt	4	B40001-
6		01643-31232	Washer	4	B40001-
		418-01-11112	Cushion	2	B40001-
7		418-01-11121	･ Cushion	1	B40001-
8		418-01-11131	･ Cushion	1	B40001-
9		419-01-11162	Washer	4	B40001-
10		01011-82220	Bolt	2	B40001-
11		23B-01-71350	Plate	2	B40001-
12		04434-52711	Clip	1	B40001-
13		01010-81020	Bolt	3	B40001-
14		01643-31032	Washer	3	B40001-
15		01010-81025	Bolt	3	B40001-
16		01643-31032	Washer	3	B40001-
17		23B-60-75210	Clamp	2	B40001-
18		07095-00630	Cushion	1	B40001-
19		23B-04-71160	Cover	1	B40001-
20		01010-81020	Bolt	1	B40001-
21		01643-31032	Washer	1	B40001-
22		09483-10310	Hose	1	B40001-
23		07285-00155	Clip	1	B40001-
24		04434-51610	Clip	1	B40001-
25		23B-01-71410	Plate	1	B40001-
26		01010-81020	Bolt	4	B40001-
27		01643-31032	Washer	4	B40001-
28		23B-01-71420	Bracket	1	B40001-
29		01010-81220	Bolt	1	B40001-
30		01643-31232	Washer	1	B40001-
31		04434-52310	Clip	1	B40001-
32		04434-53211	Clip	1	B40001-

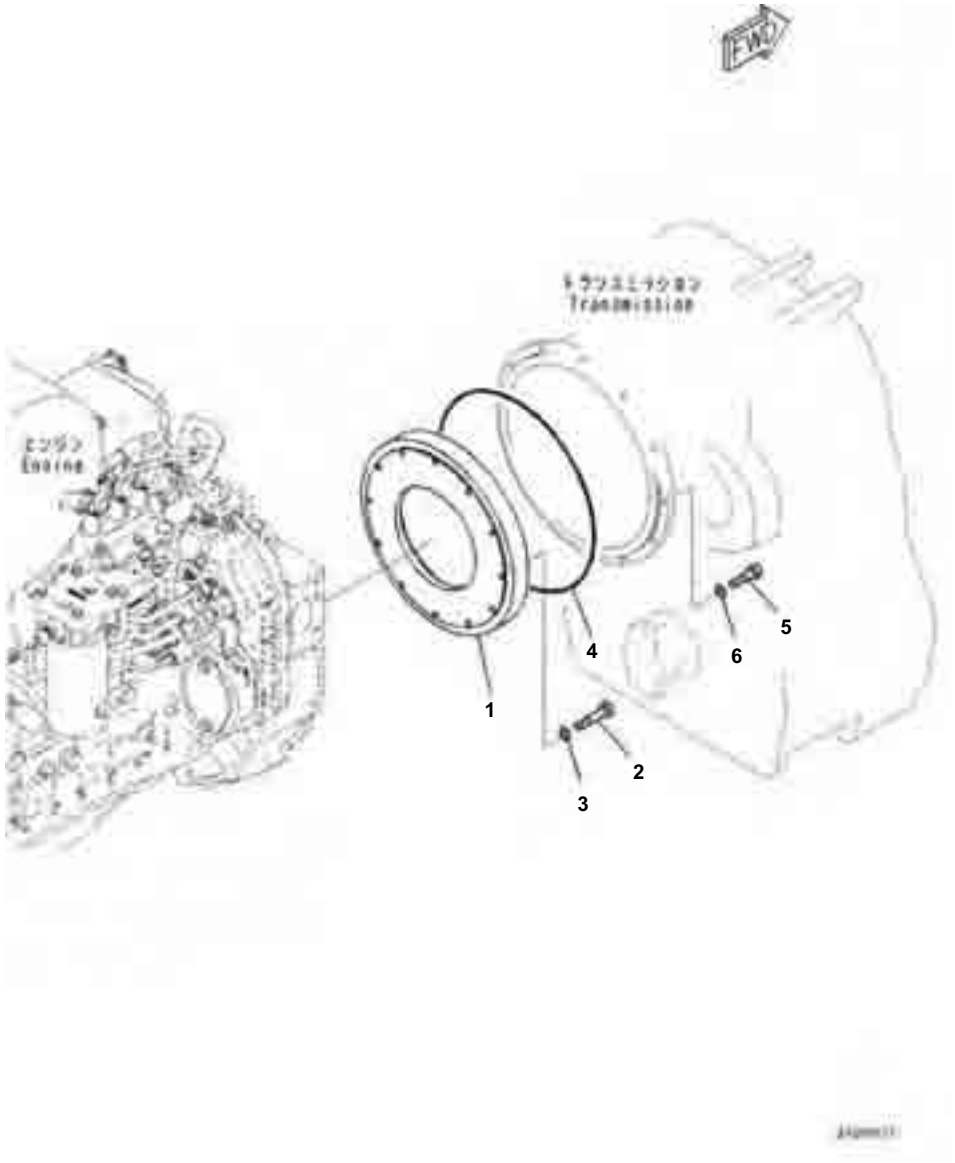

Index	Code	Part Number	Description	Qty	Serial No.
1		23B-12-31210	Gear	1	B40001-
2		02010-70657	Bolt, Unified	12	B40001-
3		01643-31032	Washer	12	B40001-
4		120-10-31120	O-ring	1	B40001-
5		01010-81040	Bolt	12	B40001-
6		01643-31032	Washer	12	B40001-

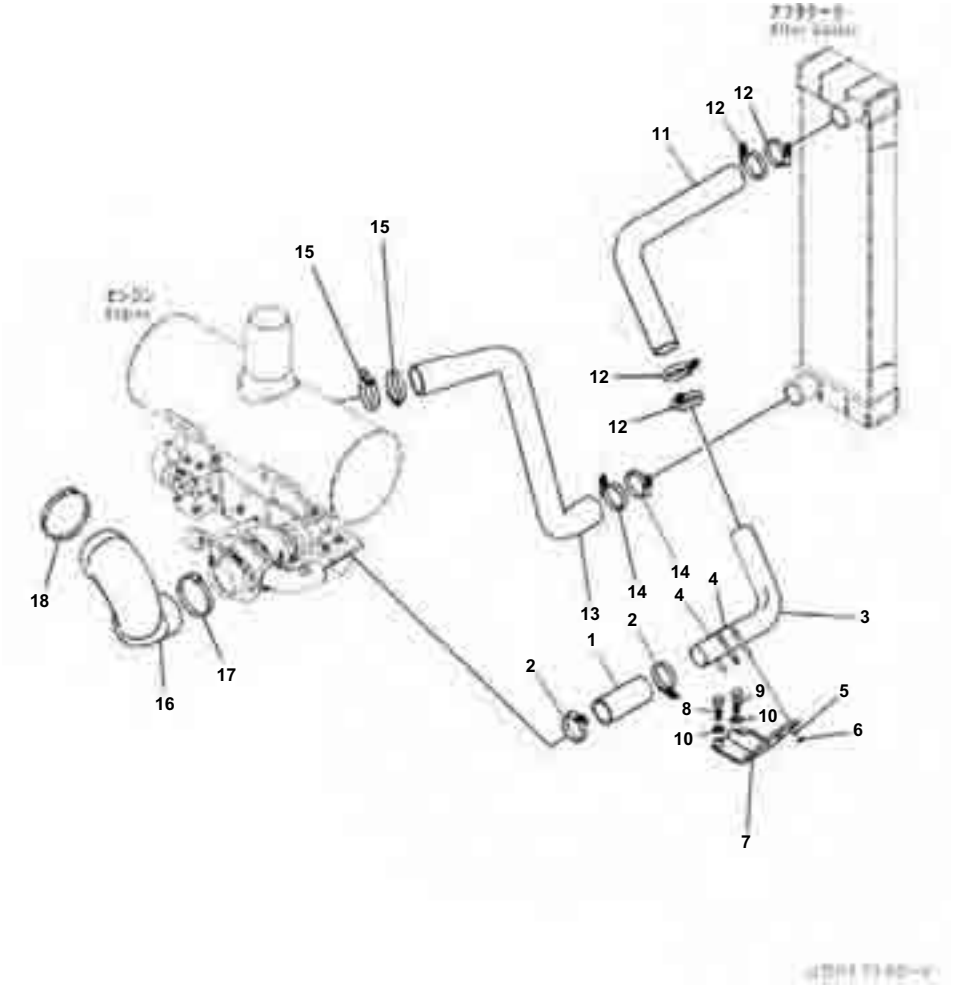

Air Intake Piping

Index	Code	Part Number	Description	Qty	Serial No.
1		423-03-41850	Hose	1	B40001-
2		07299-00070	Clamp	2	B40001-
3		23B-02-71130	Tube	1	B40001-
4		203-01-67580	Clip	2	B40001-
5		01643-31032	Washer	4	B40001-
6		01597-01009	Nut	4	B40001-
7		23B-02-71160	Bracket	1	B40001-
8		01010-E1040	Bolt	1	B40001-
9		01010-E1025	Bolt	1	B40001-
10		01643-31032	Washer	2	B40001-
11		23B-02-71111	Hose	1	B40001-
12		07299-00070	Clamp	4	B40001-
13		23B-02-71120	Hose	1	B40001-
14		07299-00070	Clamp	2	B40001-
15		07299-00080	Clamp	2	B40001-
16		23B-02-71140	Hose	1	B40001-
17		07289-00120	Clamp	1	B40001-
18		07289-00145	Clamp	1	B40001-

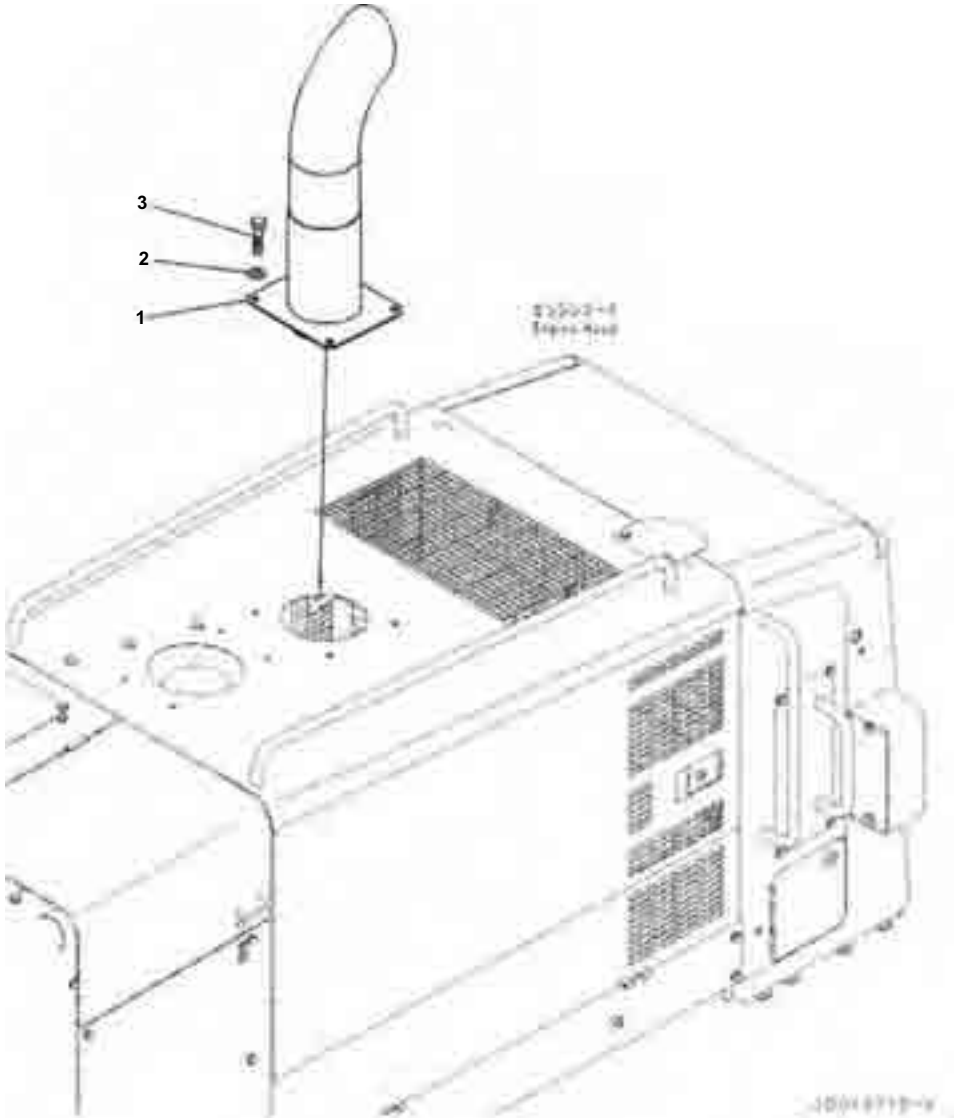

Exhaust Pipe

Index	Code	Part Number	Description	Qty	Serial No.
1		23B-02-71310	Pipe	1	B40001-
2		124-54-26540	Washer	4	B40001-
3		01010-81230	Bolt	4	B40001-

COOLING SYSTEM

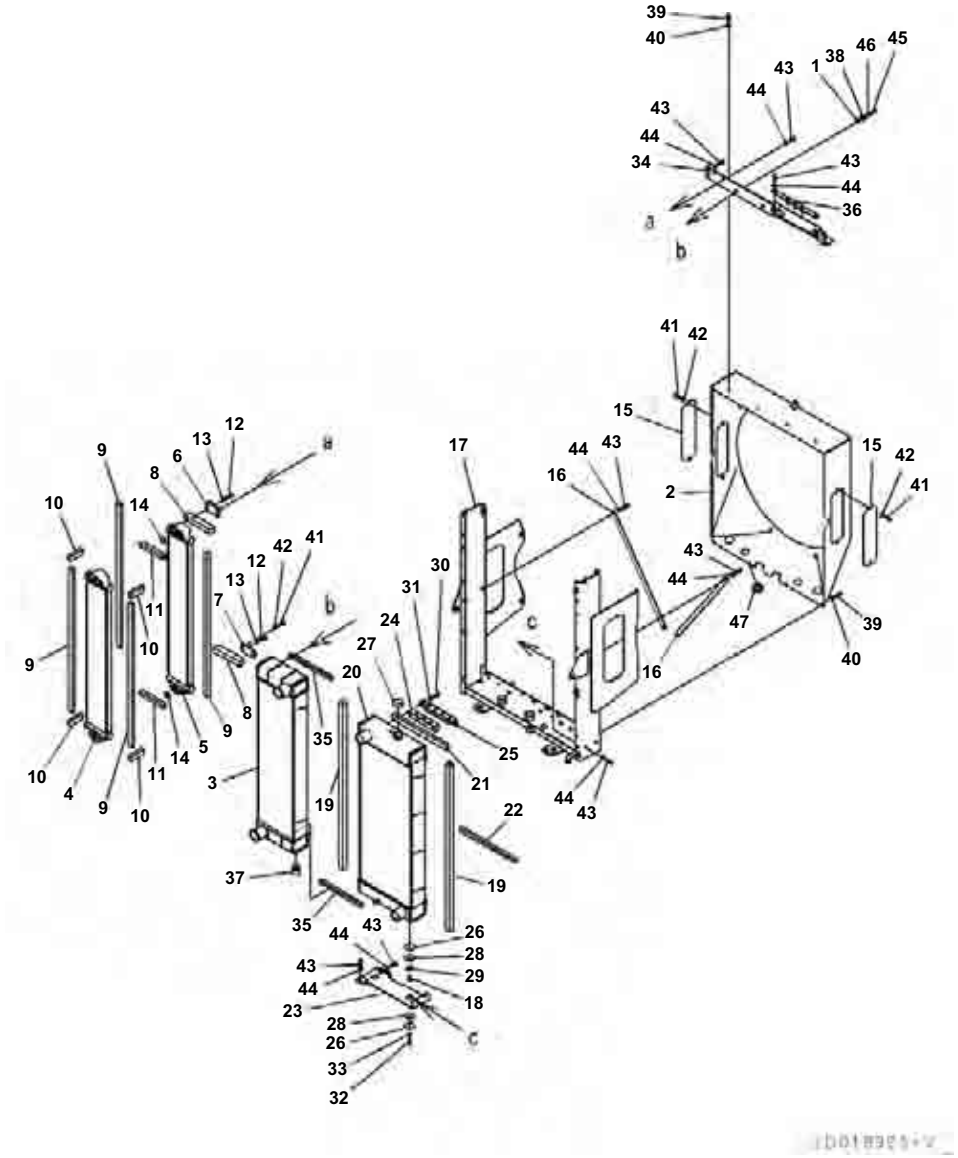

Index	Code	Part Number	Description	Qty	Serial No.
		23B-03-73101	Radiator and Oil Cooler Assembly	1	B40001-
1		22U-03-22860	· Cushion	2	B40001-
2		23B-03-71120	· Shroud	1	B40001-
3		23B-03-71150	· Aftercooler	1	B40001-
		23B-03-71160	· Core Assembly	1	B40001-
4		23B-03-71170	· · Oil Cooler Assembly	1	B40001-
5		23B-03-71180	· · Oil Cooler Assembly	1	B40001-
6		23B-03-71190	· · Plate	1	B40001-
7		23B-03-71210	· · Plate	1	B40001-
8		23B-03-71280	· · Seal, Bonded	2	B40001-
9		23B-03-71310	· · Seal, Bonded	4	B40001-
10		23B-03-71320	· · Seal, Bonded	4	B40001-
11		423-03-41280	· · Seal, Bonded	2	B40001-
12		01010-81080	· · Bolt	4	B40001-
13		01643-31032	· · Washer	4	B40001-
14		07000-13035	· · O-ring	2	B40001-
15		23B-03-71230	· Plate	2	B40001-
16		23B-03-71350	· Plate	2	B40001-
17		23B-03-73110	· Frame	1	B40001-
		23B-03-73131	· Radiator	1	B40001-
18		22T-56-23290	· · Spacer	2	B40001-
19		23B-03-71270	· · Seal, Bonded	2	B40001-
20		23B-03-73141	· · Core	1	B40001-
21		23B-03-73330	· · Seal	1	B40001-
22		23B-03-73340	· · Seal	1	B40001-
23		23B-03-73410	· · Bracket	1	B40001-
24		23B-03-73420	· · Seal	1	B40001-
25		23B-03-73430	· · Plate	1	B40001-
26		23B-03-73460	· · Washer	4	B40001-
27		416-S14-2270	· · Cap	1	B40001-
28		423-03-41370	· · Cushion	4	B40001-
29		423-03-41430	· · Cushion	2	B40001-
30		01010-81030	· · Bolt	2	B40001-
31		01643-31032	· · Washer	2	B40001-
32		01010-81045	· · Bolt	2	B40001-
33		01643-31032	· · Washer	2	B40001-
34		23B-03-73220	· Bracket	1	B40001-
35		23B-03-73260	· Seal	2	B40001-
36		23B-03-73440	· Plate	1	B40001-
37		23C-03-51751	· Cushion	2	B40001-
38		6738-61-4952	· Collar	2	B40001-
39		01010-80820	· Bolt	8	B40001-
40		01643-30823	· Washer	8	B40001-
41		01010-81020	· Bolt	6	B40001-
42		01643-31032	· Washer	6	B40001-
43		01010-81025	· Bolt	16	B40001-

Reference:C0110-001001 Page:C001001

GD655-5 S/N B40001-UP

Radiator, Without Tire Inflation Kit, Radiator

Index	Code	Part Number	Description	Qty	Serial No.
44		01643-31032	· Washer	16	B40001-
45		01010-81030	· Bolt	2	B40001-
46		01643-31032	· Washer	2	B40001-
47		09415-03614	· Cap	4	B40001-

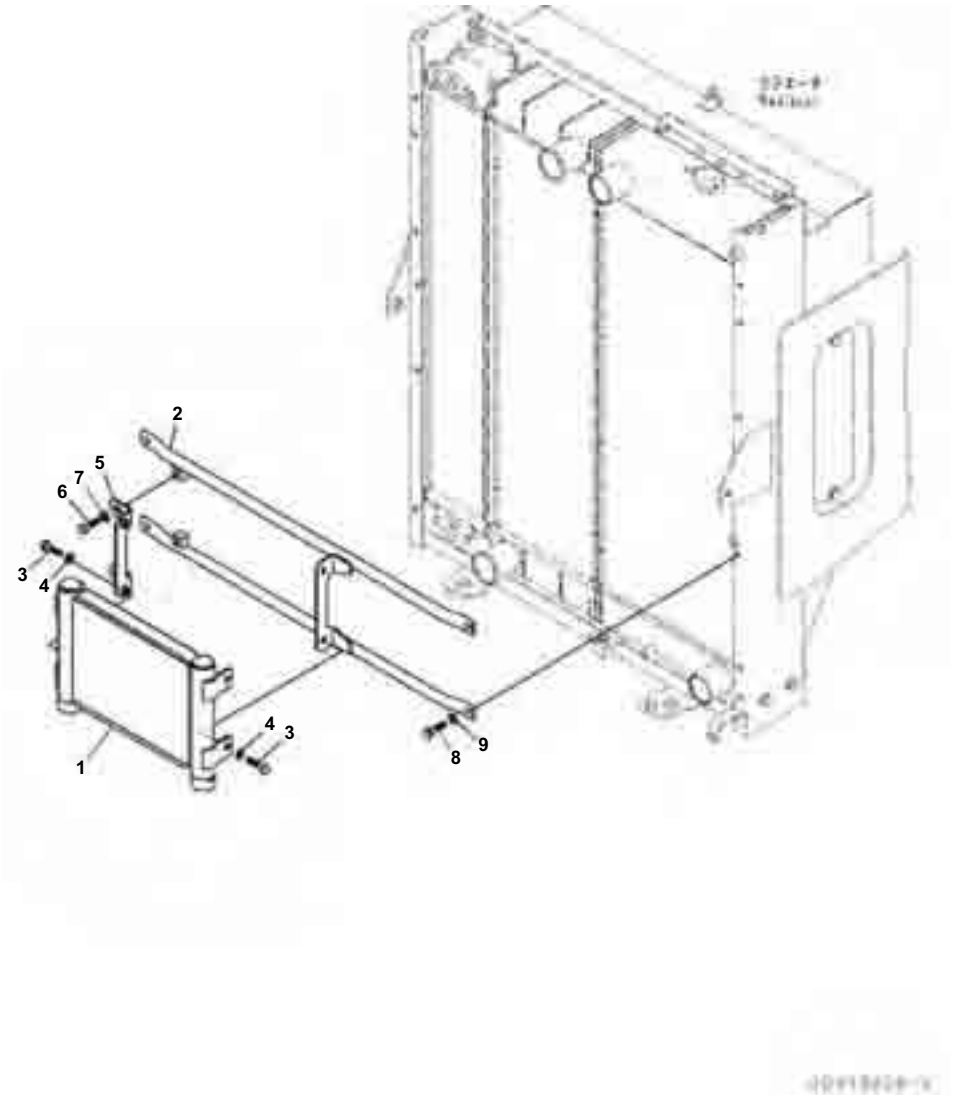

Radiator, Without Tire Inflation Kit, Oil Cooler

Index	Code	Part Number	Description	Qty	Serial No.
1		419-14-31220	Oil Cooler	1	B40001-
2		23B-03-71610	Bracket	1	B40001-
3		01010-81025	Bolt	4	B40001-
4		01643-31032	Washer	4	B40001-
5		23B-03-71660	Plate	1	B40001-
6		01010-81025	Bolt	2	B40001-
7		01643-31032	Washer	2	B40001-
8		01010-81025	Bolt	4	B40001-
9		01643-31032	Washer	4	B40001-

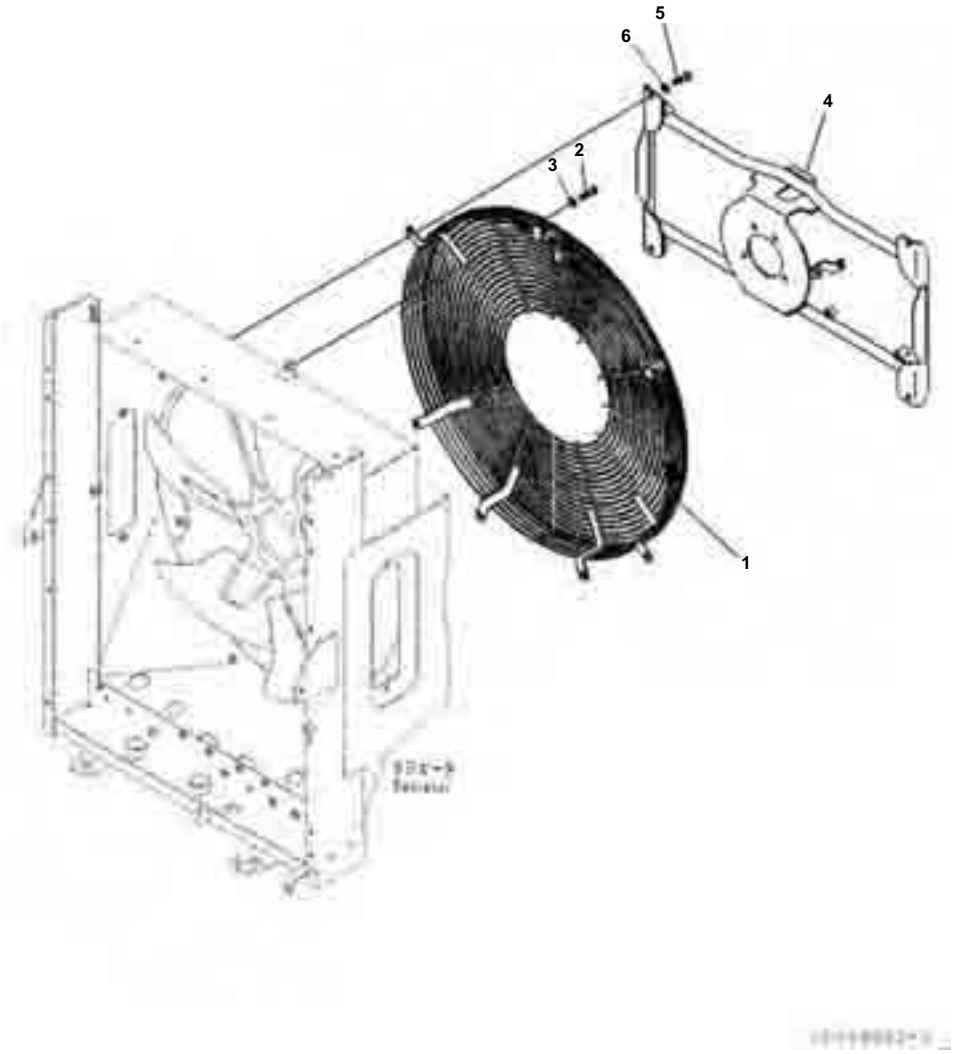

Radiator, Without Tire Inflation Kit, Fan Guard

Index	Code	Part Number	Description	Qty	Serial No.
1		423-03-43370	Guard	1	B40001-
2		01010-81020	Bolt	7	B40001-
3		01643-31032	Washer	7	B40001-
4		23B-03-71510	Bracket	1	B40001-
5		01010-81230	Bolt	4	B40001-
6		01643-31232	Washer	4	B40001-

Reference:C0110-001003 Page:C001003

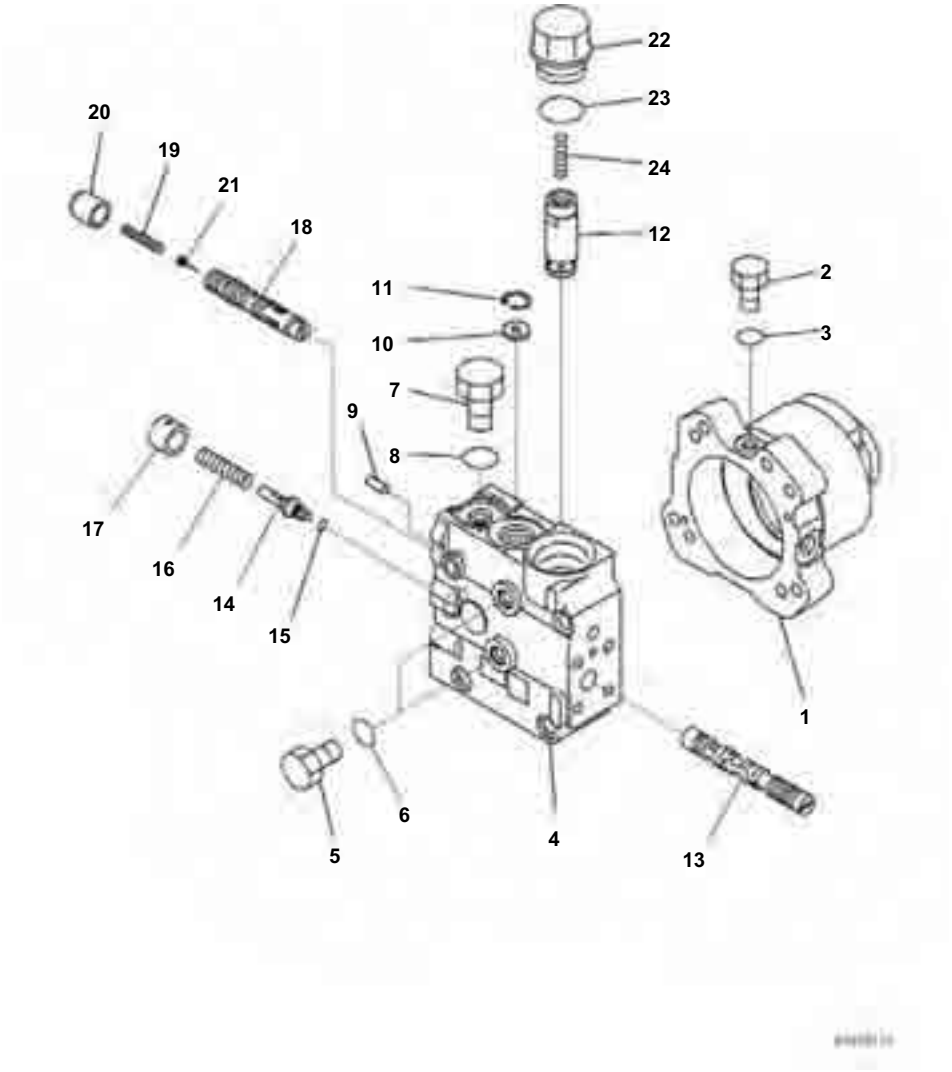

Radiator, Without Tire Inflation Kit, Cooling Fan Motor (1/3)

Index	Code	Part Number	Description	Qty	Serial No.
		708-7S-00670	Motor Assembly	1	B40001-
1	C2	708-7S-11780	· Case	1	B40001-
2		07040-11007	· Plug	1	B40001-
3		07002-21023	· O-ring	1	B40001-
	C2	708-7S-01550	· Cover Subassembly	1	B40001-
4	C2	708-7S-11641	· · Cover	1	B40001-
5		708-7R-11220	· · Plug	4	B40001-
6		07002-21223	· · O-ring	4	B40001-
7		07040-11409	· · Plug	1	B40001-
8		07002-21423	· · O-ring	1	B40001-
9	C2	720-68-19610	· · Pin	2	B40001-
10		708-7R-18660	· · Orifice	1	B40001-
11		04065-01610	· · Ring, Snap	1	B40001-
12		720-2T-03230	· · Valve, Relief	1	B40001-
13	C2	708-7S-18420	· · Spool	1	B40001-
14	C2	708-7R-18121	· · Plug	1	B40001-
15	C2	07002-20823	· · O-ring	1	B40001-
16	C2	708-7S-18120	· · Spring	1	B40001-
17	C2	708-7S-18130	· · Spacer	1	B40001-
18	C2	708-7R-18132	· · Spool	1	B40001-
19	C2	708-7S-18390	· · Spring	1	B40001-
20	C2	708-7S-18560	· · Retainer	1	B40001-
21	C2	723-30-51130	· · Orifice	1	B40001-
22		708-7R-21110	· · Plug	1	B40001-
23		07002-23334	· · O-ring	1	B40001-
24		708-7R-21120	· · Spring	1	B40001-

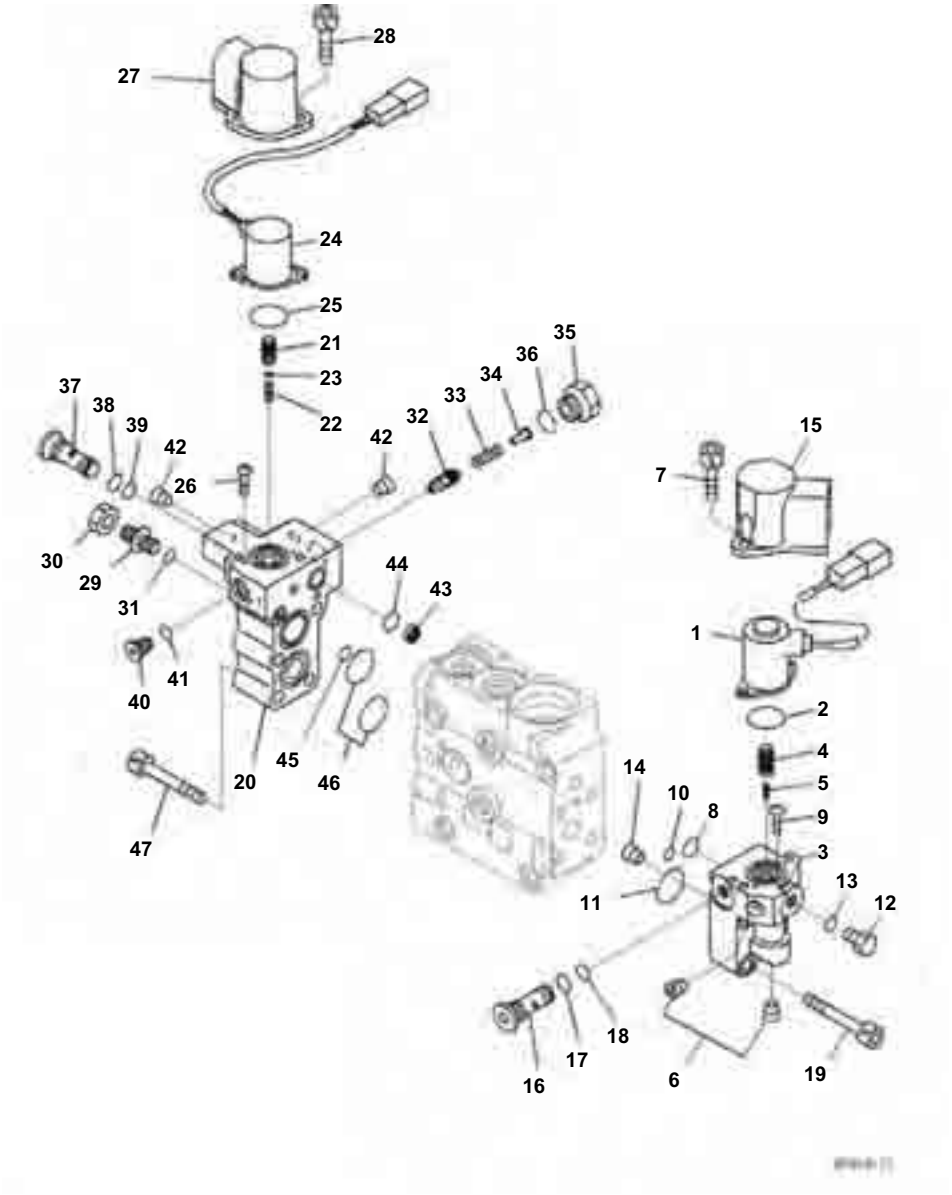

Radiator, Without Tire Inflation Kit, Cooling Fan Motor (2/3)

Index	Code	Part Number	Description	Qty	Serial No.
		708-7S-00670	Motor Assembly	1	B40001-
	C2	708-7S-01550	· Cover Subassembly	1	B40001-
		708-7S-01330	· · Valve Assembly, Pilot	1	B40001-
1	C2	702-21-56241	· · · Solenoid	1	B40001-
2	C2	702-21-55870	· · · O-ring	1	B40001-
3	C2	708-7R-18240	· · · Case	1	B40001-
4	C2	708-7R-18251	· · · Spool	1	B40001-
5	C2	708-7R-18270	· · · Spring	1	B40001-
6	C2	708-21-12541	· · · Plug	2	B40001-
7		01252-60616	· · · Bolt, Hexagon Socket Head	2	B40001-
8		708-7S-18360	· · · O-ring	1	B40001-
9	C2	702-21-54180	· · · Screw	2	B40001-
10		07000-F1008	· · · O-ring	1	B40001-
11		708-7S-18230	· · · O-ring	1	B40001-
12		07040-11007	· · · Plug	1	B40001-
13		07002-21023	· · · O-ring	1	B40001-
14	C2	708-2L-29460	· · · Orifice	1	B40001-
15		708-1S-18180	· · · Cover	1	B40001-
16	C2	708-7R-18230	· · · Filter	1	B40001-
17	C2	07002-21423	· · · O-ring	1	B40001-
18	C2	07000-F1009	· · · O-ring	1	B40001-
19		01252-60835	· · Bolt	4	B40001-
	C2	708-7S-01340	· · Valve Assembly, Pilot	1	B40001-
20	C2	708-7R-18210	· · · Case	1	B40001-
21	C2	702-21-54150	· · · Spool	1	B40001-
22	C2	702-21-54160	· · · Spring	1	B40001-
23	C2	702-21-54210	· · · Shim, T=1.0mm	1	B40001-
	C2	702-21-54220	· · · Shim, T=1.2mm	1	B40001-
	C2	702-21-54230	· · · Shim, T=1.4mm	1	B40001-
	C2	702-21-54240	· · · Shim, T=0.8mm	1	B40001-
	C2	702-21-54250	· · · Shim, T=0.6mm	1	B40001-
24	C2	702-21-57410	· · · Solenoid	1	B40001-
25	C2	702-21-55870	· · · O-ring	1	B40001-
26	C2	702-21-54180	· · · Screw	2	B40001-
27		708-1S-18180	· · · Cover	1	B40001-
28		01252-60616	· · · Bolt, Hexagon Socket Head	2	B40001-
29	C2	708-7R-18160	· · · Plug	1	B40001-
30	C2	01582-11008	· · · Nut	1	B40001-
31	C2	07002-21023	· · · O-ring	1	B40001-
32	C2	708-7R-18170	· · · Spool	1	B40001-
33	C2	708-7R-18180	· · · Spring	1	B40001-
34	C2	708-7R-18220	· · · Retainer	1	B40001-
35	C2	708-7R-18190	· · · Plug	1	B40001-
36	C2	07002-21623	· · · O-ring	1	B40001-
37	C2	708-7R-18230	· · · Filter	1	B40001-
38	C2	07002-21423	· · · O-ring	1	B40001-

GD655-5 S/N B40001-UP

Radiator, Without Tire Inflation Kit, Cooling Fan Motor (2/3)

Index	Code	Part Number	Description	Qty	Serial No.
39	C2	07000-E1009	· · · O-ring	1	B40001-
40	C2	702-21-54190	· · · Filter	1	B40001-
41	C2	07002-21023	· · · O-ring	1	B40001-
42	C2	708-21-12541	· · · Plug	2	B40001-
43	C2	708-2L-25480	· · · Filter	1	B40001-
44	C2	708-7S-18360	· · · O-ring	1	B40001-
45	C2	07000-E1010	· · · O-ring	1	B40001-
46	C2	708-7S-18230	· · · O-ring	2	B40001-
47	C2	01252-60845	· · Bolt, Hexagon Socket Head	4	B40001-

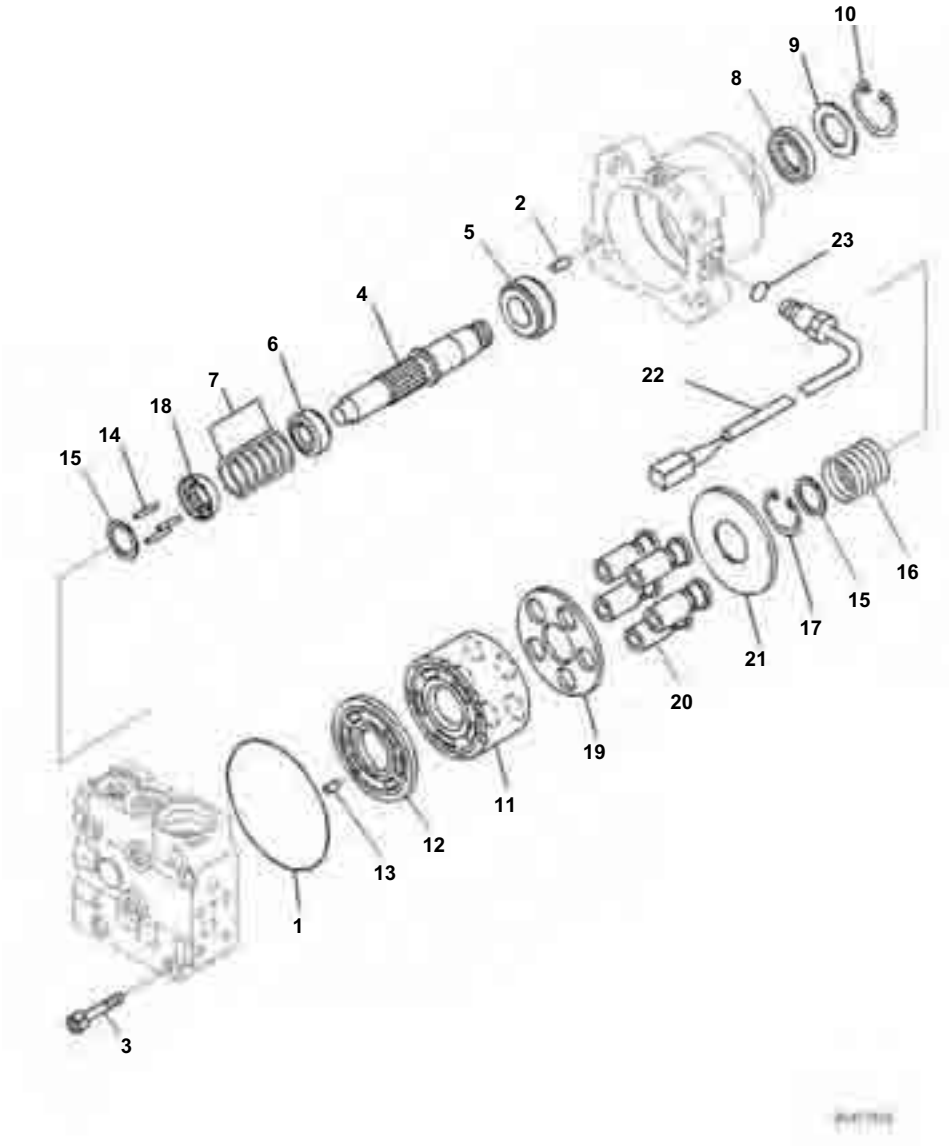

Radiator, Without Tire Inflation Kit, Cooling Fan Motor (3/3)

Index	Code	Part Number	Description	Qty	Serial No.
		708-7S-00670	Motor Assembly	1	B40001-
1	C2	07000-E2110	· O-ring	1	B40001-
2	C2	04020-00616	· Pin, Dowel	2	B40001-
3	C2	01010-81270	· Bolt	4	B40001-
4	C2	708-7S-12330	· Shaft	1	B40001-
5	C2	708-7S-12140	· Bearing	1	B40001-
6	C2	708-7S-12220	· Bearing	1	B40001-
7	C2	708-7S-05110	· Shim Kit	1	B40001-
	C1		· · Shim, T=0.85mm	1	B40001-
	C1		· · Shim, T=1.05mm	1	B40001-
	C1		· · Shim, T=1.25mm	1	B40001-
	C1		· · Shim, T=0.75mm	1	B40001-
	C1		· · Shim, T=0.95mm	1	B40001-
	C1		· · Shim, T=1.15mm	1	B40001-
8		708-7T-12330	· Seal, Oil	1	B40001-
9		708-1S-11890	· Spacer	1	B40001-
10		04065-04518	· Ring, Snap	1	B40001-
11	C2	708-7S-13130	· Cylinder Block	1	B40001-
12	C2	708-7S-13250	· Plate, Valve	1	B40001-
13	C2	720-68-19610	· Pin	1	B40001-
14	C2	708-2L-23360	· Pin	3	B40001-
15	C2	708-7S-13530	· Spacer	2	B40001-
16	C2	708-7S-13560	· Spring	1	B40001-
17	C2	04065-03212	· Ring	1	B40001-
18	C2	708-7S-13550	· Guide, Retainer	1	B40001-
19	C2	708-7S-13360	· Retainer, Shoe	1	B40001-
20	C2	708-7S-13350	· Piston Subassembly	5	B40001-
21	C2	708-7S-13420	· Plate, Thrust	1	B40001-
22		729-11-41000	· Sensor	1	B40001-
23	C2	07002-21423	· O-ring	1	B40001-

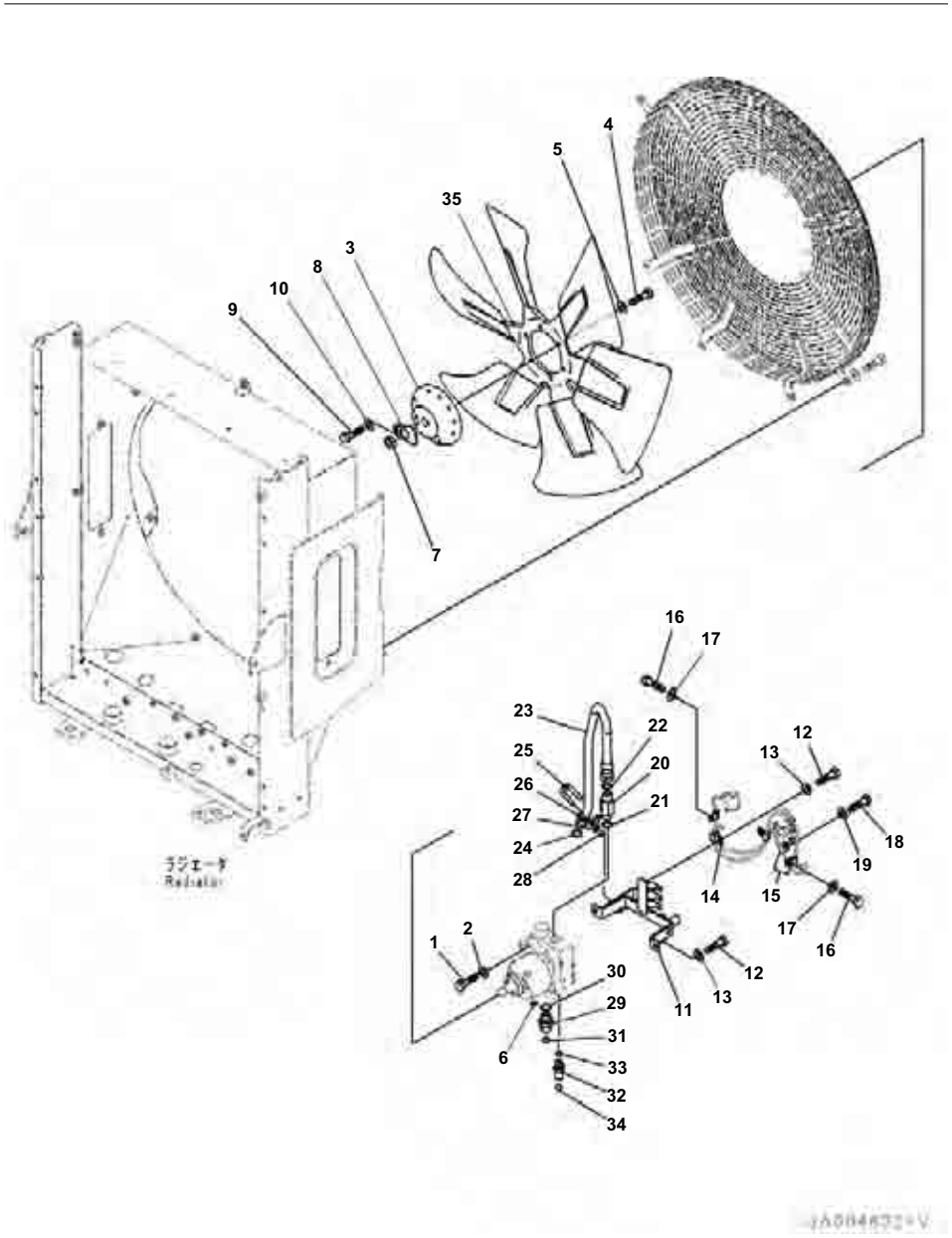

Radiator, Without Tire Inflation Kit, Fan Motor Related Parts

Index	Code	Part Number	Description	Qty	Serial No.
1		01010-81235	Bolt	4	B40001-
2		01643-31232	Washer	4	B40001-
3		423-03-31710	Boss	1	B40001-
4		01010-81030	Bolt	6	B40001-
5		01643-31032	Washer	6	B40001-
6		04010-00722	Key	1	B40001-
7		01583-12012	Nut	1	B40001-
8		154-03-72270	Lock	1	B40001-
9		01010-81020	Bolt	1	B40001-
10		01643-31032	Washer	1	B40001-
11		23B-03-71530	Bracket	1	B40001-
12		01010-81020	Bolt	2	B40001-
13		01643-31032	Washer	2	B40001-
14		04434-50610	Clip	5	B40001-
15		04434-50510	Clip	2	B40001-
16		01010-81016	Bolt	2	B40001-
17		01643-31032	Washer	2	B40001-
18		01010-81020	Bolt	2	B40001-
19		01643-31032	Washer	2	B40001-
20		21W-62-42481	Nipple	1	B40001-
21		07002-12434	O-ring	1	B40001-
22		02896-11015	O-ring	1	B40001-
23		23B-03-71520	Tube	1	B40001-
24		02896-11015	O-ring	1	B40001-
25		07283-32244	Clip	1	B40001-
26		07283-52232	Seat	1	B40001-
27		01643-31032	Washer	2	B40001-
28		01597-01009	Nut	2	B40001-
29		02783-10522	Elbow	1	B40001-
30		07002-12434	O-ring	1	B40001-
31		02896-11015	O-ring	1	B40001-
32		20U-62-41610	Elbow	1	B40001-
33		07002-11823	O-ring	1	B40001-
34		02896-11012	O-ring	1	B40001-
35		600-645-7850	Fan	1	B40001-

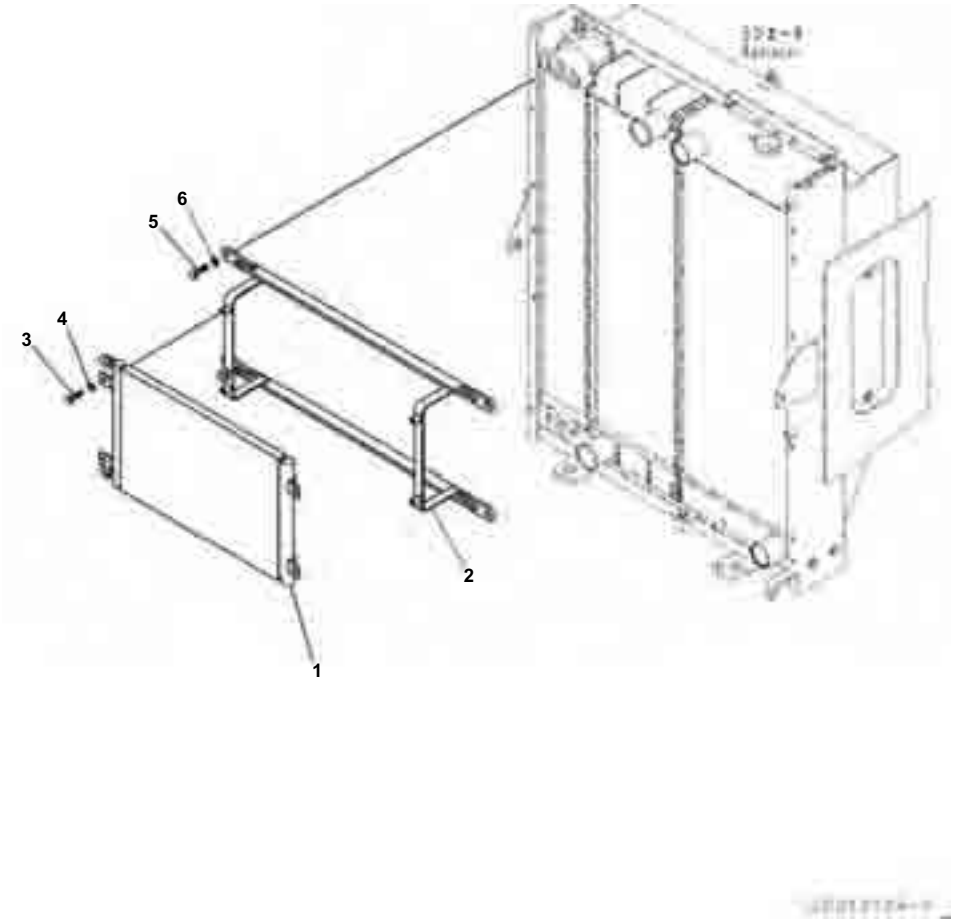

Radiator, Without Tire Inflation Kit, Air Condenser

Index	Code	Part Number	Description	Qty	Serial No.
1		56E-07-21132	Condenser Assembly	1	B40001-
2		23B-03-71621	Bracket	1	B40001-
3		01010-80816	Bolt	4	B40001-
4		01643-30823	Washer	4	B40001-
5		01010-81030	Bolt	4	B40001-
6		01643-31032	Washer	4	B40001-

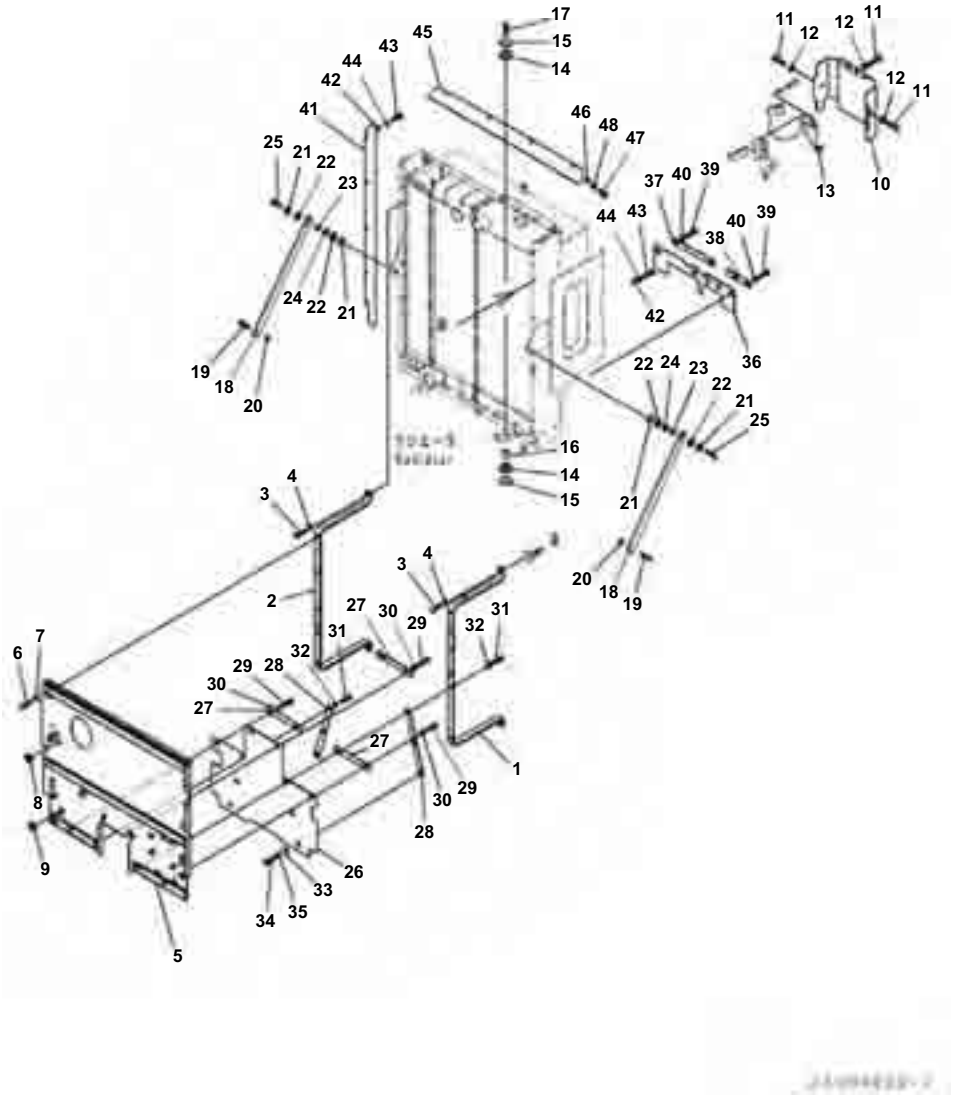

Radiator, Without Tire Inflation Kit, Mounting Parts

Index	Code	Part Number	Description	Qty	Serial No.
1		23B-03-71570	Bracket,LHS	1	B40001-
2		23B-03-71580	Bracket,RHS	1	B40001-
3		01010-81030	Bolt	4	B40001-
4		01643-31032	Washer	4	B40001-
5		23B-03-71591	Cover	1	B40001-
6		01010-81025	Bolt	8	B40001-
7		01643-31032	Washer	8	B40001-
8		08037-02512	Grommet	1	B40001-
9		205-06-62230	Grommet	1	B40001-
10		23B-03-71540	Cover	1	B40001-
11		01010-81020	Bolt	5	B40001-
12		01643-31032	Washer	5	B40001-
13		08034-40521	Band	1	B40001-
14		418-03-11390	Cushion	8	B40001-
15		416-03-11210	Washer	8	B40001-
16		23B-03-71770	Spacer	4	B40001-
17		01010-81265	Bolt	4	B40001-
18		23B-03-71550	Plate	2	B40001-
19		416-03-11281	Bolt	2	B40001-
20		01643-31232	Washer	2	B40001-
21		419-43-17920	Washer	4	B40001-
22		416-03-11260	Cushion	4	B40001-
23		416-03-11270	Spacer	2	B40001-
24		416-03-11250	Cushion	2	B40001-
25		01010-81250	Bolt	2	B40001-
26		23B-03-71680	Sheet	1	B40001-
27		23B-03-71690	Plate	3	B40001-
28		23B-03-71750	Plate	2	B40001-
29		01010-81025	Bolt	4	B40001-
30		01643-31032	Washer	4	B40001-
31		01010-81030	Bolt	2	B40001-
32		01643-31032	Washer	2	B40001-
33		415-64-13120	Washer	4	B40001-
34		01010-81025	Bolt	4	B40001-
35		01643-31032	Washer	4	B40001-
36		23B-03-71810	Sheet	1	B40001-
37		23B-03-71820	Plate	1	B40001-
38		23B-03-71830	Plate	1	B40001-
39		01010-81025	Bolt	4	B40001-
40		01643-31032	Washer	4	B40001-
41		23B-03-71710	Sheet	2	B40001-
42		20Y-53-12310	Collar	10	B40001-
43		01010-80620	Bolt	10	B40001-
44		01643-30623	Washer	10	B40001-
45		23B-03-71840	Sheet	1	B40001-
46		20Y-53-12310	Collar	4	B40001-

GD655-5 S/N B40001-UP

Radiator, Without Tire Inflation Kit, Mounting Parts

Index	Code	Part Number	Description	Qty	Serial No.
47		01010-80620	Bolt	4	B40001-
48		01643-30623	Washer	4	B40001-

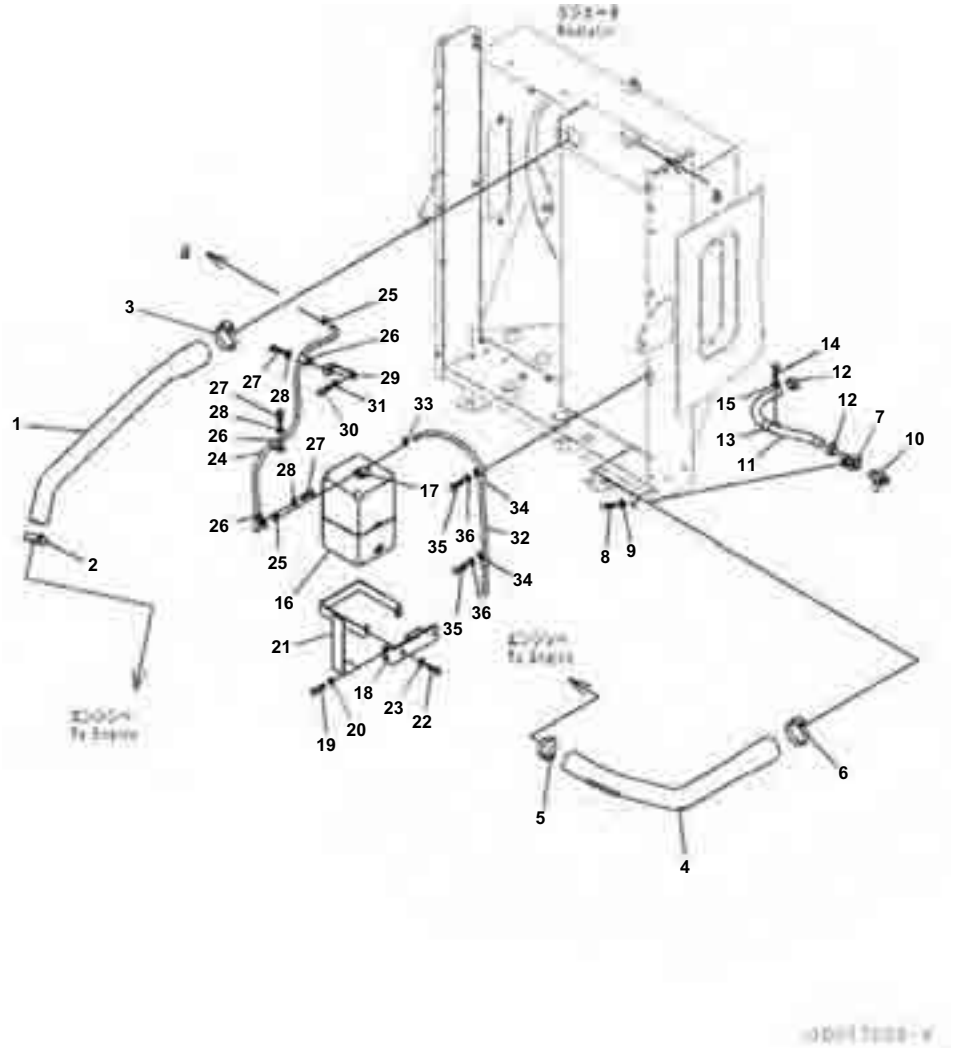

Cooling Piping

Index	Code	Part Number	Description	Qty	Serial No.
1		23B-03-72111	Hose	1	B40001-
2		07289-00055	Clamp	1	B40001-
3		07289-00070	Clamp	1	B40001-
4		23B-03-72120	Hose	1	B40001-
5		07289-00055	Clamp	1	B40001-
6		07289-00070	Clamp	1	B40001-
7		232-03-56111	Nipple	1	B40001-
8		01010-81020	Bolt	1	B40001-
9		01643-31032	Washer	1	B40001-
10		07730-50004	Valve	1	B40001-
11		07260-21436	Hose	1	B40001-
12		09479-02400	Clamp	2	B40001-
13		04434-52310	Clip	1	B40001-
14		01010-81020	Bolt	1	B40001-
15		01643-31032	Washer	1	B40001-
16		17A-03-14111	Tank	1	B40001-
17		17A-03-14120	Cap	1	B40001-
18		23B-03-72130	Bracket	1	B40001-
19		01010-81030	Bolt	2	B40001-
20		01643-31032	Washer	2	B40001-
21		23B-03-72140	Bracket	1	B40001-
22		01010-80820	Bolt	2	B40001-
23		01643-30823	Washer	2	B40001-
24		20Y-03-18140	Hose	1	B40001-
25		206-03-43340	Clip	2	B40001-
26		04434-51210	Clip	3	B40001-
27		01010-81020	Bolt	3	B40001-
28		01643-31032	Washer	3	B40001-
29		23B-03-72160	Bracket	1	B40001-
30		01010-81020	Bolt	1	B40001-
31		01643-31032	Washer	1	B40001-
32		23B-03-72150	Hose	1	B40001-
33		206-03-43340	Clip	1	B40001-
34		04434-51210	Clip	2	B40001-
35		01010-81020	Bolt	2	B40001-
36		01643-31032	Washer	2	B40001-

FUEL SYSTEM

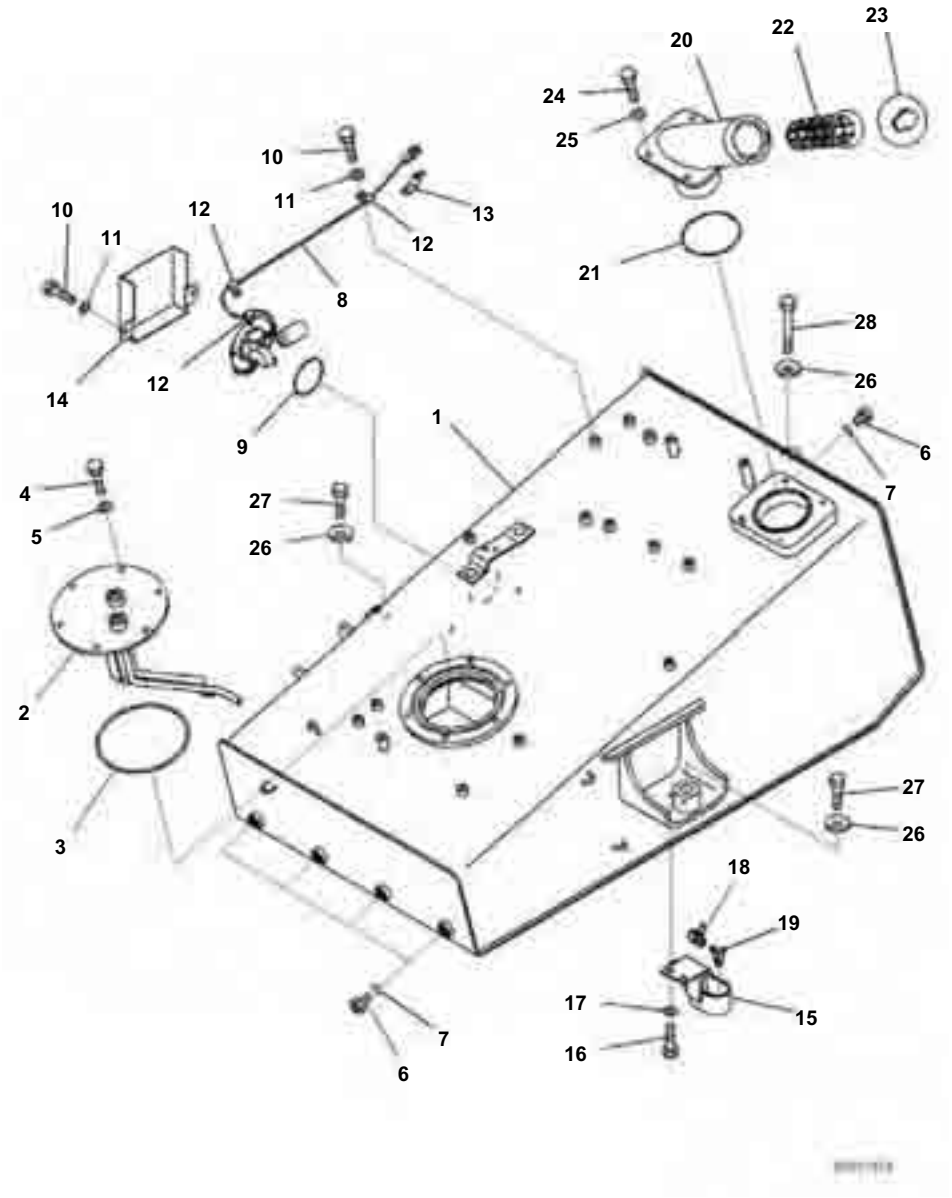

Index	Code	Part Number	Description	Qty	Serial No.
		23B-04-71101	Tank Assembly, Fuel	1	B40001-
1		23B-04-71110	· Tank, Fuel	1	B40001-
2		23B-04-71130	· Cover	1	B40001-
3		07000-15200	· O-ring	1	B40001-
4		01010-81025	· Bolt	6	B40001-
5		01643-31032	· Washer	6	B40001-
6		07040-12412	· Plug	5	B40001-
7		07002-12434	· O-ring	5	B40001-
8		7861-93-4832	· Sensor	1	B40001-
9		07000-12085	· O-ring	1	B40001-
10		01010-81020	· Bolt	10	B40001-
11		01643-31032	· Washer	10	B40001-
12		04434-50610	· Clip	5	B40001-
13		08193-21012	· Clip	1	B40001-
14		23B-04-71140	· Cover	1	B40001-
15		23B-04-71190	· Cover	1	B40001-
16		01010-81020	· Bolt	2	B40001-
17		01643-31032	· Washer	2	B40001-
18		07700-50240	· Valve	1	B40001-
19		07217-71013	· Elbow	1	B40001-
20		23B-04-71120	Filler	1	B40001-
21		07000-12130	O-ring	1	B40001-
22		07056-18422	Strainer	1	B40001-
23		20Y-04-11161	Cap	1	B40001-
24		01010-81025	Bolt	4	B40001-
25		01643-31032	Washer	4	B40001-
26		23D-27-11940	Washer	3	B40001-
27		01010-82495	Bolt	2	B40001-
28		01011-82415	Bolt	1	B40001-

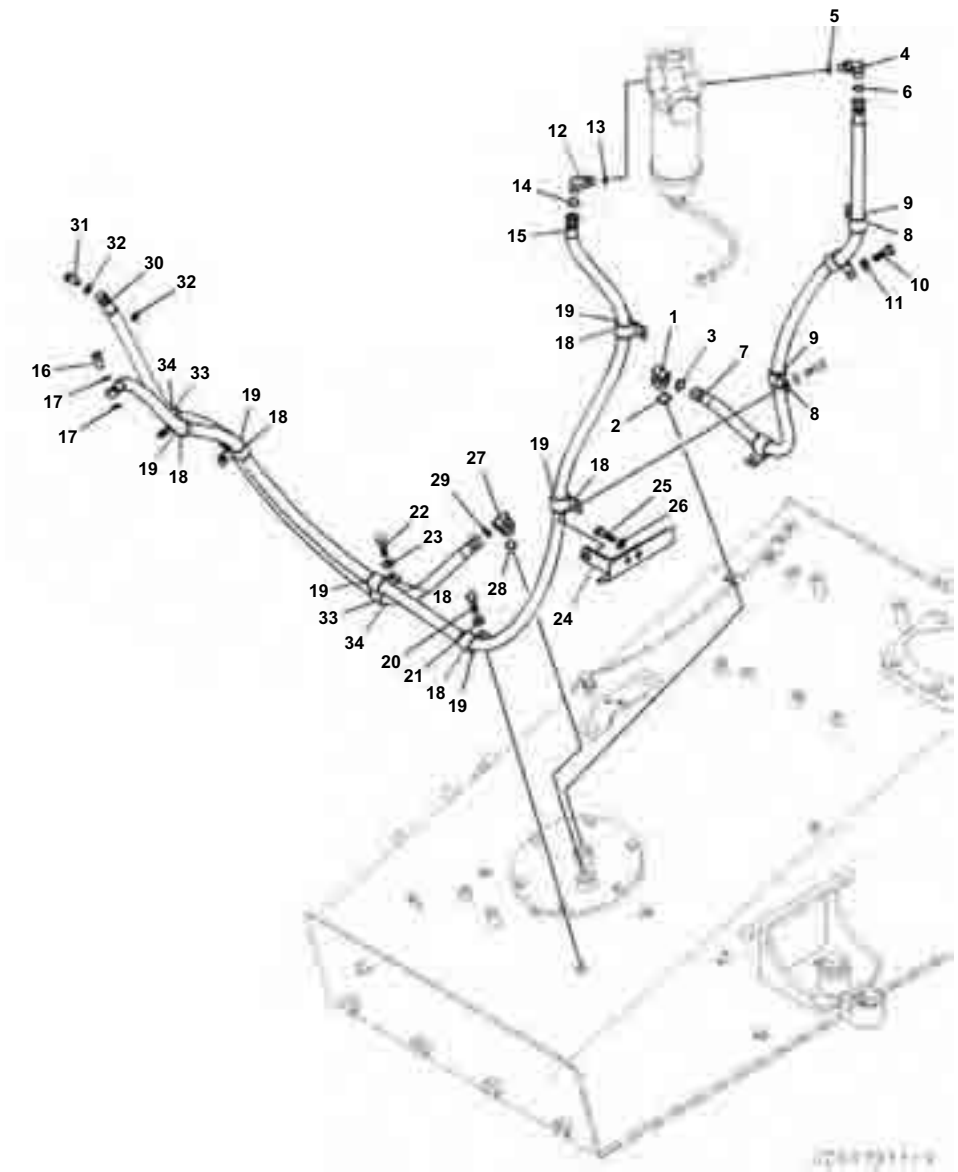

GD655-5 S/N B40001-UP

Fuel Piping, Without Extra Bad Fuel and Poor Fuel Arrangement, Water+Dust, Additional Filter, Fuel Filter Piping

Index	Code	Part Number	Description	Qty	Serial No.
1		02782-10315	Elbow	1	B40001-
2		07002-12034	O-ring	1	B40001-
3		02896-11009	O-ring	1	B40001-
4		02782-10311	Elbow	1	B40001-
5		07002-11423	O-ring	1	B40001-
6		02896-11009	O-ring	1	B40001-
7		23B-04-72110	Hose	1	B40001-
8		04434-52711	Clip	4	B40001-
9		07095-20420	Cushion	4	B40001-
10		01010-81020	Bolt	3	B40001-
11		01643-31032	Washer	3	B40001-
12		02782-10311	Elbow	1	B40001-
13		07002-11423	O-ring	1	B40001-
14		02896-11009	O-ring	1	B40001-
15		23B-04-72120	Hose	1	B40001-
16		07206-30812	Bolt, Joint	1	B40001-
17		07005-01212	Seal, Washer	2	B40001-
18		04434-52711	Clip	6	B40001-
19		07095-20420	Cushion	6	B40001-
20		01010-81020	Bolt	1	B40001-
21		01643-31032	Washer	1	B40001-
22		01010-81025	Bolt	3	B40001-
23		01643-31032	Washer	3	B40001-
24		23B-04-72160	Plate	1	B40001-
25		01010-81025	Bolt	2	B40001-
26		01643-31032	Washer	2	B40001-
27		02782-10315	Elbow	1	B40001-
28		07002-12034	O-ring	1	B40001-
29		02896-11009	O-ring	1	B40001-
30		23B-04-72130	Hose	1	B40001-
31		07206-30812	Bolt, Joint	1	B40001-
32		07005-01212	Seal, Washer	2	B40001-
33		04434-52711	Clip	3	B40001-
34		07095-20420	Cushion	3	B40001-

Reference:D0200-001001 Page:D002001

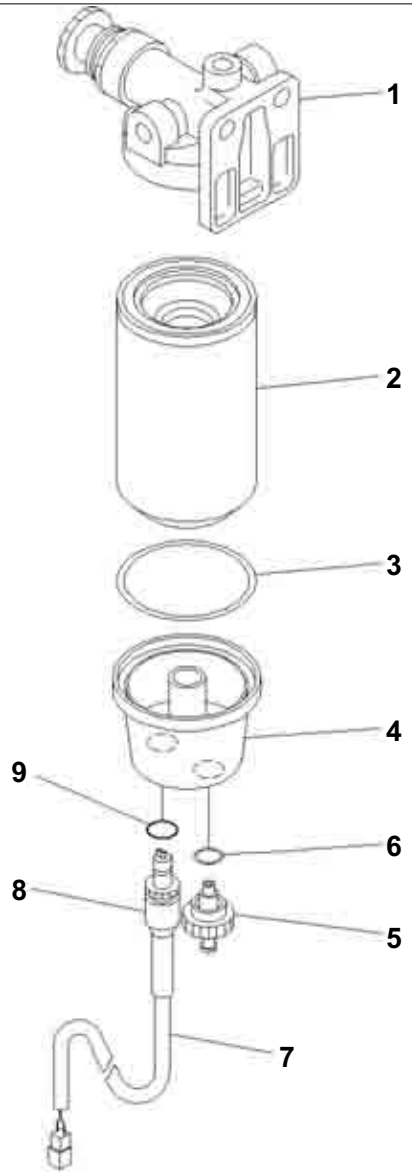

Fuel Piping, Without Extra Bad Fuel and Poor Fuel Arrangement, Water+Dust, Additional Filter, Filter Assembly

Index	Code	Part Number	Description	Qty	Serial No.
		6754-71-7402	Filter Assembly	1	B40001-
1		6754-71-7200	· Head	1	B40001-
		600-311-3602	· Filter Assembly	1	B40001-
		600-311-3610	· · Cartridge Assembly	1	B40001-
2	C1		· · · Cartridge	1	B40001-
3		600-311-3630	· · · Seal	1	B40001-
4		600-311-3640	· · Bowl	1	B40001-
		600-311-3660	· · Valve Assembly	1	B40001-
5		600-311-3711	· · · Valve	1	B40001-
6		600-311-3670	· · · Seal	1	B40001-
		600-311-3722	· · Sensor	1	B40001-
7	C1		· · · Tube	1	B40001-
8	C1		· · · Sensor	1	B40001-
9		600-311-3690	· · · O-ring	1	B40001-

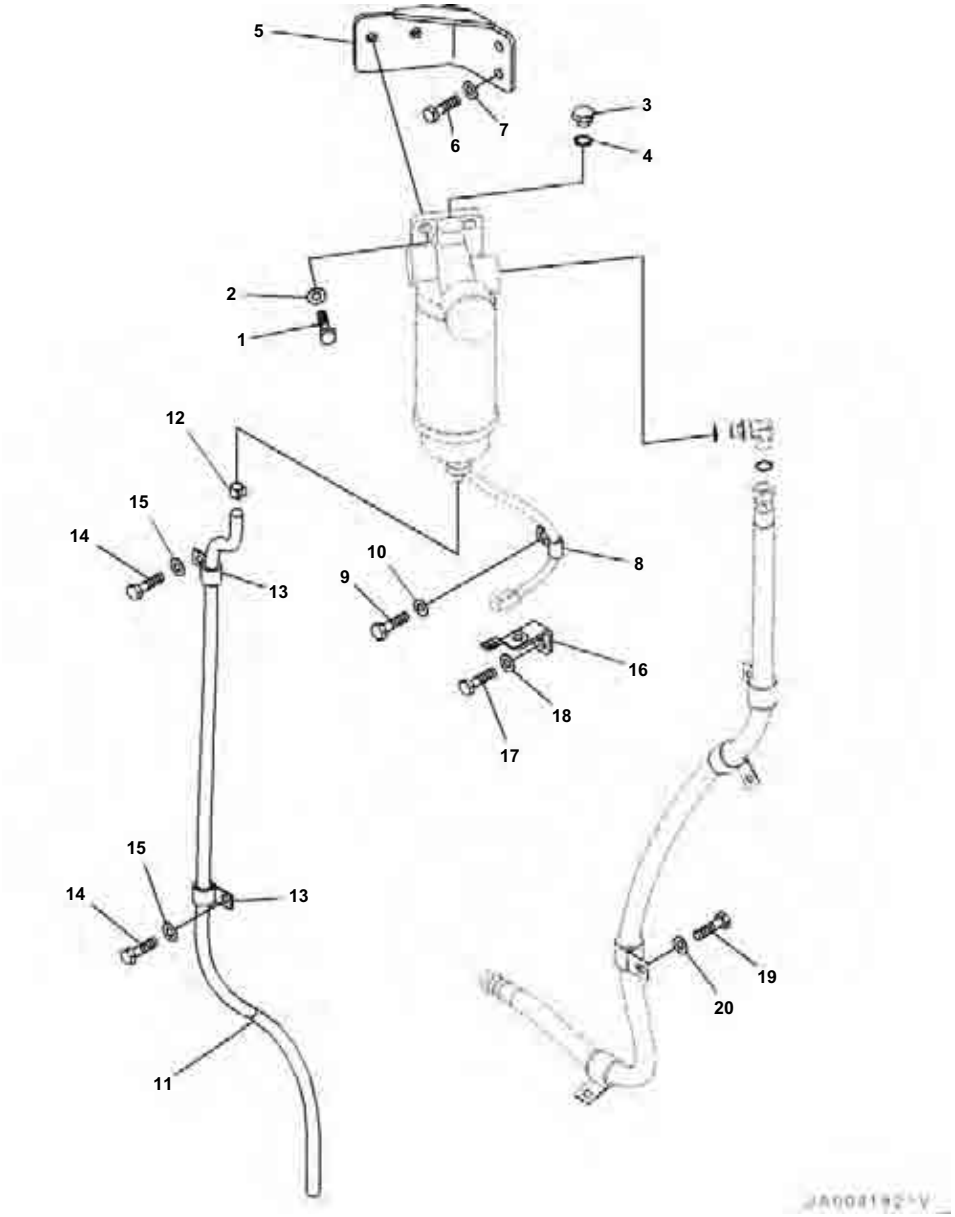

Fuel Piping, Without Extra Bad Fuel and Poor Fuel Arrangement, Water+Dust, Additional Filter, Fuel Filter Mounting

Index	Code	Part Number	Description	Qty	Serial No.
1		01010-81035	Bolt	2	B40001-
2		01643-31032	Washer	2	B40001-
3		07040-11409	Plug	1	B40001-
4		07002-11423	O-ring	1	B40001-
5		23B-04-72150	Bracket	1	B40001-
6		01010-81030	Bolt	2	B40001-
7		01643-31032	Washer	2	B40001-
8		04434-51010	Clip	1	B40001-
9		01010-81020	Bolt	1	B40001-
10		01643-31032	Washer	1	B40001-
11		07270-41013	Tube	1	B40001-
12		07285-00130	Clip	1	B40001-
13		04434-51710	Clip	2	B40001-
14		01010-81020	Bolt	2	B40001-
15		01643-31032	Washer	2	B40001-
16		23B-04-72170	Bracket	1	B40001-
17		01010-81020	Bolt	1	B40001-
18		01643-31032	Washer	1	B40001-
19		01010-81025	Bolt	1	B40001-
20		01643-31032	Washer	1	B40001-

ELECTRICAL SYSTEM

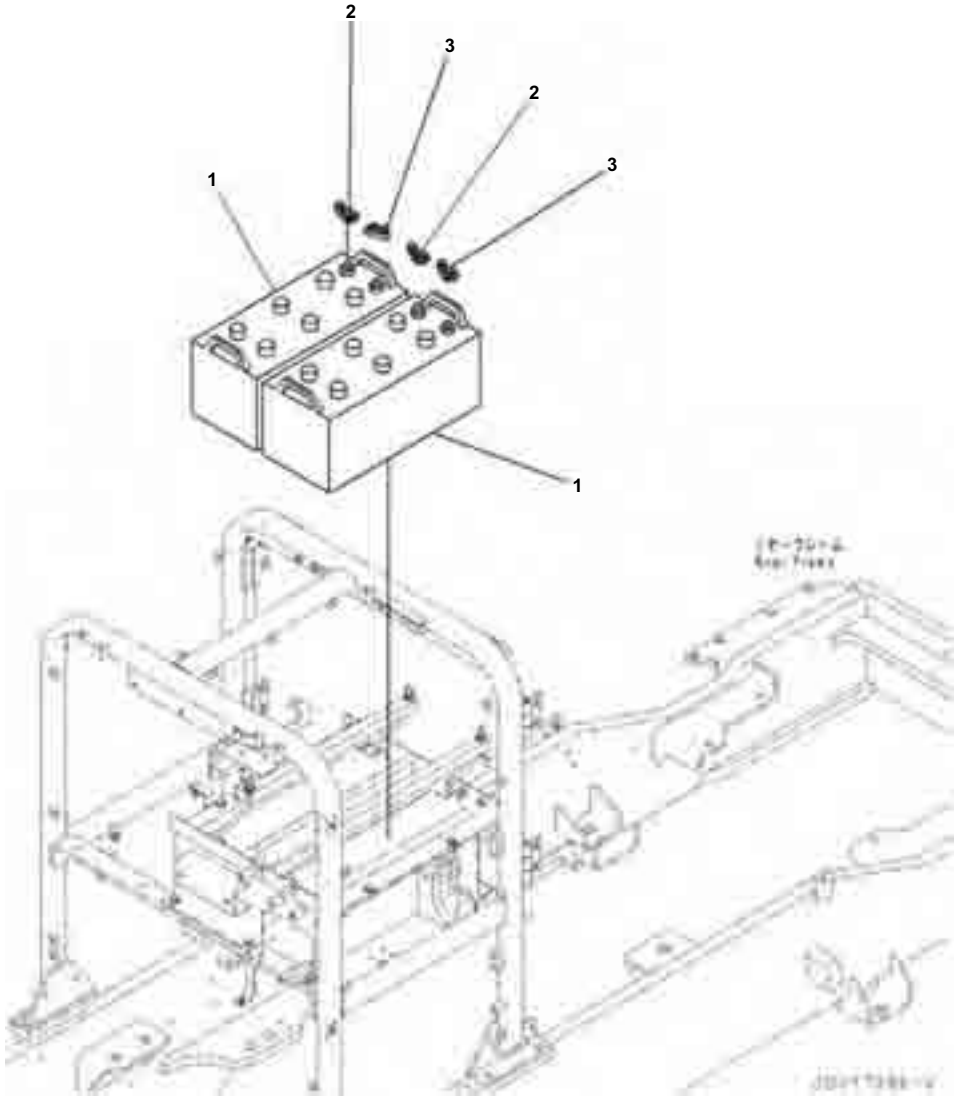

Battery

Index	Code	Part Number	Description	Qty	Serial No.
1		134-06-61540	Battery, Wet	2	B40001-
2		08000-00000	▪ Terminal	1	B40001-
3		08000-00001	▪ Terminal	1	B40001-

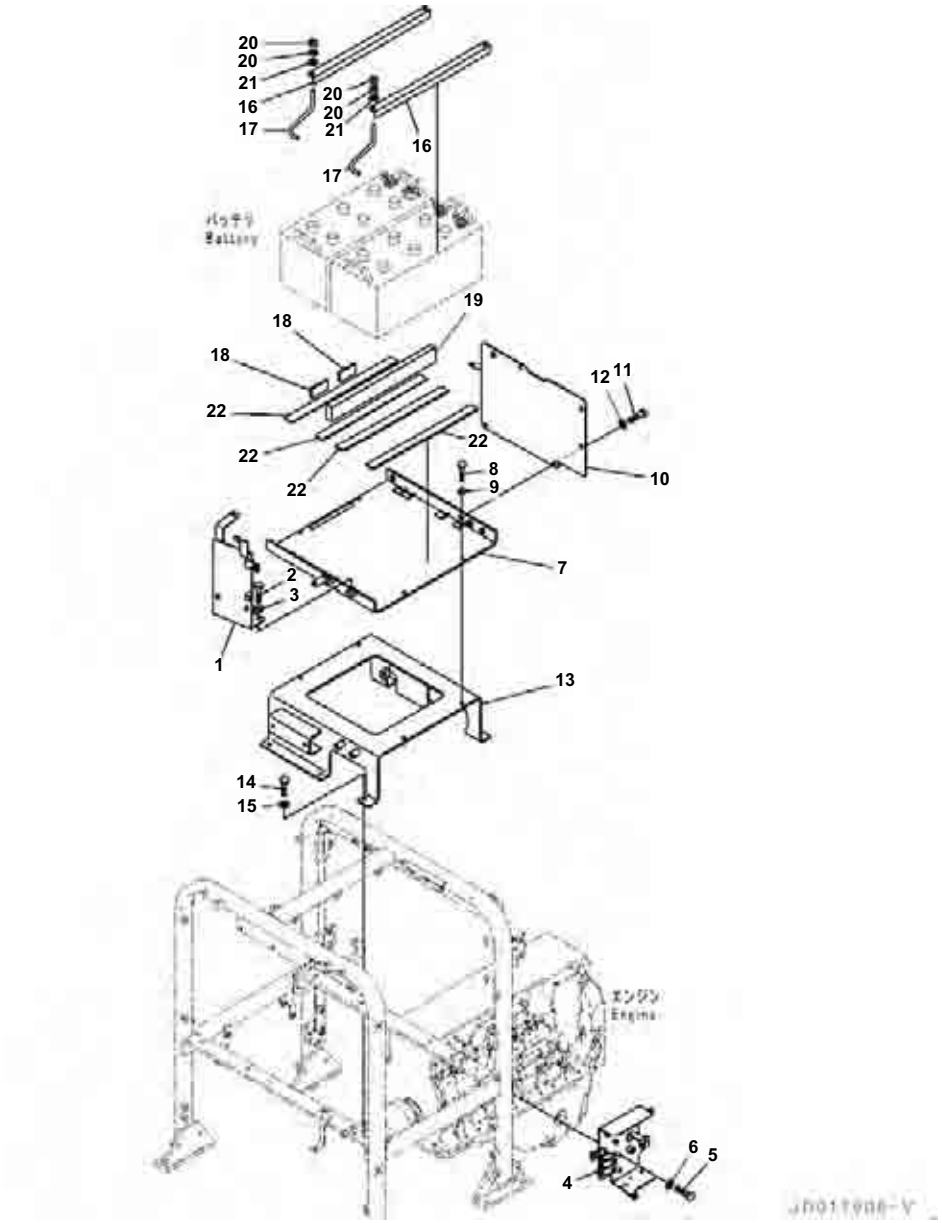

Battery Box, With 90Amp. Alternator, Bracket

Index	Code	Part Number	Description	Qty	Serial No.
1		23B-06-71430	Bracket	1	B40001-
2		01010-81020	Bolt	3	B40001-
3		01643-31032	Washer	3	B40001-
4		23B-06-71490	Bracket	1	B40001-
5		01010-81225	Bolt	3	B40001-
6		01643-31232	Washer	3	B40001-
7		23B-06-B3110	Bracket	1	B40001-
8		01010-81025	Bolt	4	B40001-
9		01643-31032	Washer	4	B40001-
10		23B-06-71440	Plate	1	B40001-
11		01010-81025	Bolt	4	B40001-
12		01643-31032	Washer	4	B40001-
13		23B-06-71410	Bracket	1	B40001-
14		01010-81025	Bolt	6	B40001-
15		01643-31032	Washer	6	B40001-
16		120-06-31141	Holder	2	B40001-
17		120-06-31151	Bolt	4	B40001-
18		23B-06-43650	Rubber, T=6.0mm	2	B40001-
19		08007-26050	Cushion	1	B40001-
20		01580-11008	Nut	8	B40001-
21		01643-31032	Washer	4	B40001-
22		14S-46-25140	Cushion	4	B40001-

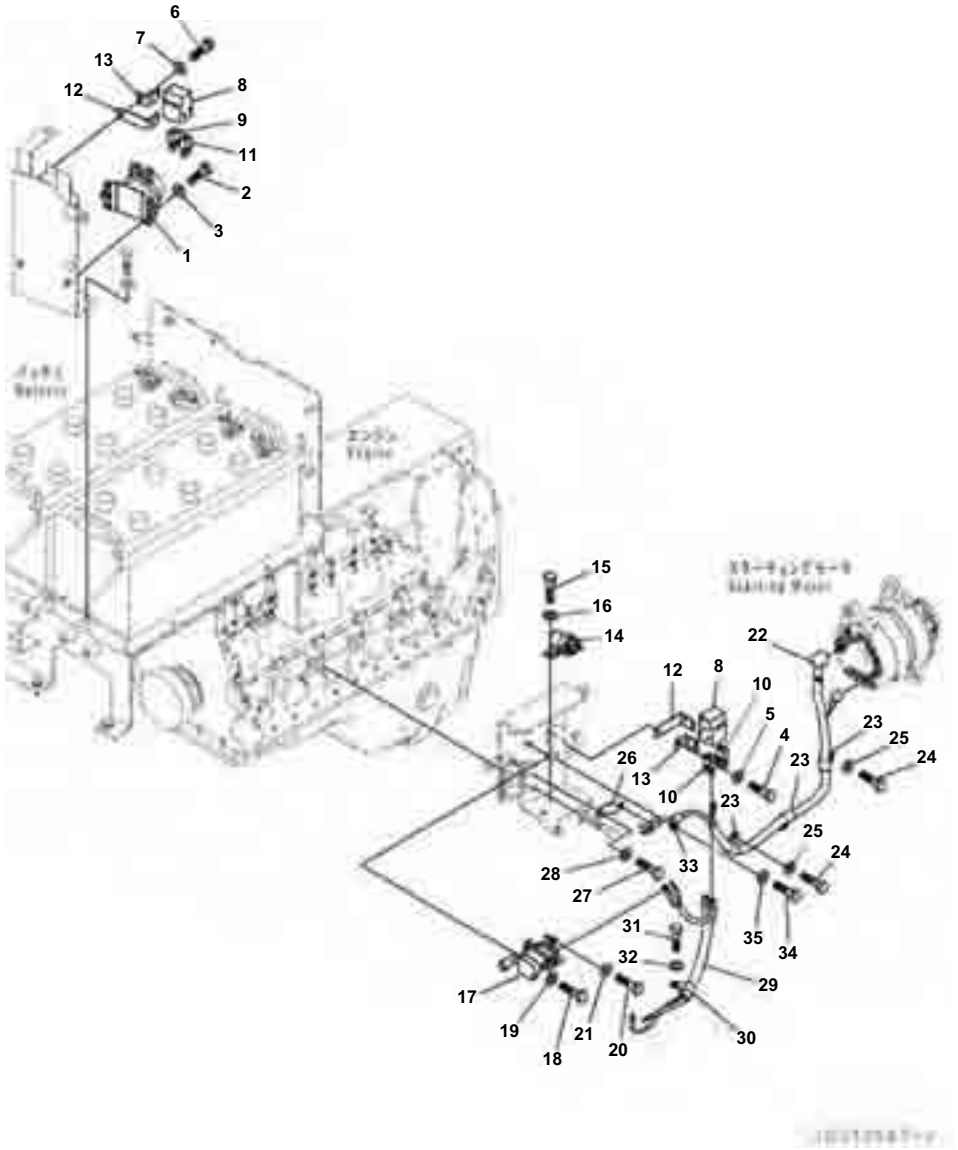

Battery Box, With 90Amp. Alternator, Relay and Fuse

Index	Code	Part Number	Description	Qty	Serial No.
1		22W-06-13220	Switch	1	B40001-
2		01010-80830	Bolt	2	B40001-
3		01643-30823	Washer	2	B40001-
4		01010-80820	Bolt	1	B40001-
5		01643-30823	Washer	1	B40001-
6		01010-80816	Bolt	1	B40001-
7		01643-30823	Washer	1	B40001-
8		421-06-22880	Holder	2	B40001-
9		421-06-22840	Fuse, 30Amp.	1	B40001-
10		421-06-22830	Fuse, 120Amp.	2	B40001-
11		23B-06-42370	Fuse, 60Amp.	1	B40001-
12		421-06-22920	Bracket	2	B40001-
13		421-06-22910	Bracket	2	B40001-
14		600-815-2170	Switch, Heater	1	B40001-
15		01010-80616	Bolt	2	B40001-
16		01643-30623	Washer	2	B40001-
17		11Y-06-11391	Switch	1	B40001-
18		01010-80612	Bolt	2	B40001-
19		01643-30623	Washer	2	B40001-
20		01010-80816	Bolt	1	B40001-
21		01643-30823	Washer	1	B40001-
22		23B-06-71190	Wiring Harness	1	B40001-
23		600-051-2160	Clip	3	B40001-
24		01010-81020	Bolt	2	B40001-
25		01643-31032	Washer	2	B40001-
26		08193-21012	Clip	1	B40001-
27		01010-81016	Bolt	1	B40001-
28		01643-31032	Washer	1	B40001-
29		23B-06-71220	Wiring Harness	1	B40001-
30		600-051-2190	Clip	1	B40001-
31		01010-81020	Bolt	1	B40001-
32		01643-31032	Washer	1	B40001-
33		600-051-2080	Clip	1	B40001-
34		01010-81020	Bolt	1	B40001-
35		01643-31032	Washer	1	B40001-

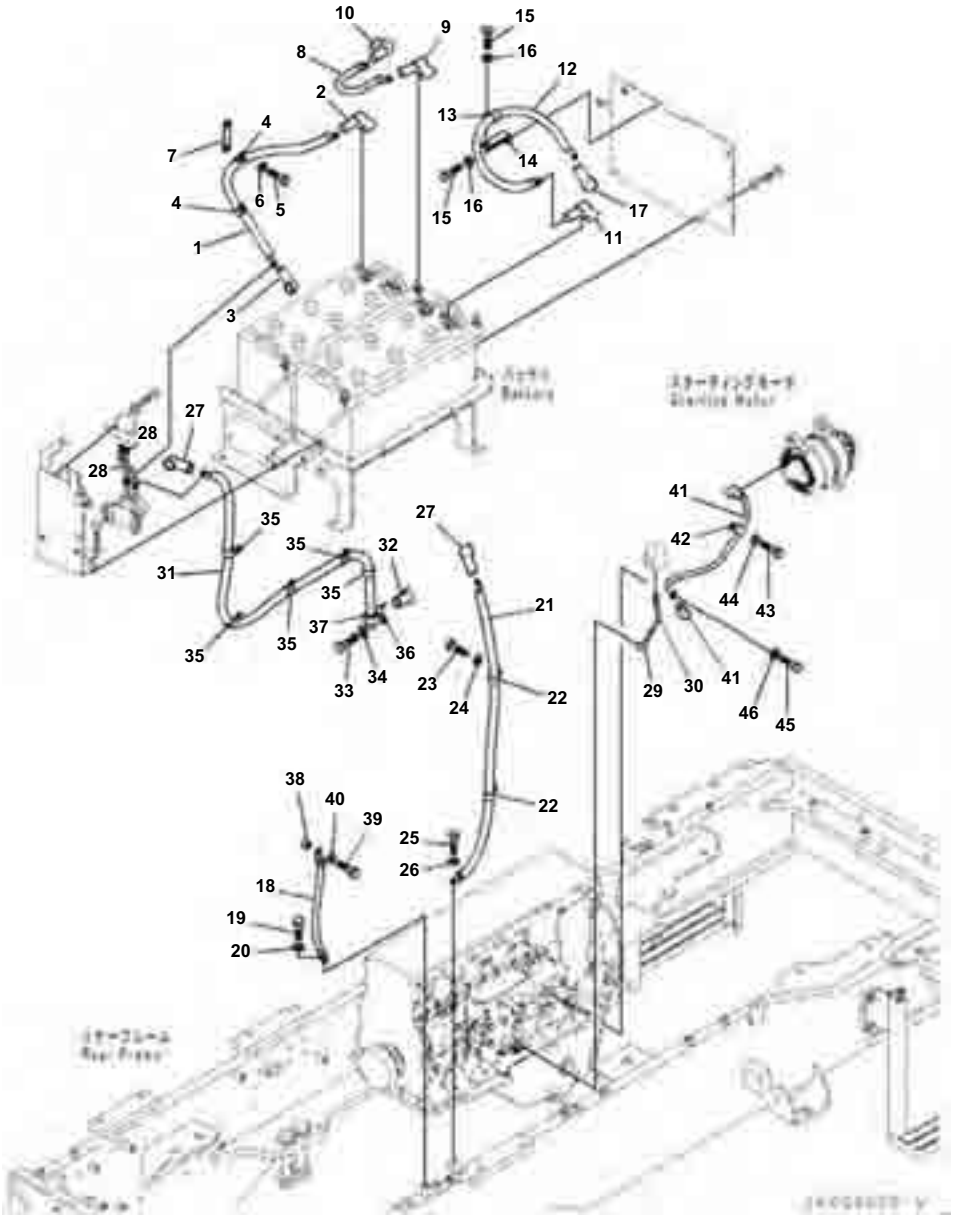

Battery Box, With 90Amp. Alternator, Battery Cable

Index	Code	Part Number	Description	Qty	Serial No.
1		23B-06-71270	Cable	1	B40001-
2		14X-06-12280	Cover	1	B40001-
3		08038-00035	Cap, Terminal	1	B40001-
4		04434-52310	Clip	2	B40001-
5		01010-81020	Bolt	2	B40001-
6		01643-31032	Washer	2	B40001-
7		421-62-11940	Plate	1	B40001-
8		08028-64011	Cable, Ground	1	B40001-
9		14X-06-12280	Cover	1	B40001-
10		14X-06-12290	Cover	1	B40001-
11		14X-06-12260	Cover	1	B40001-
12		23B-06-71330	Cable	1	B40001-
13		04434-52310	Clip	1	B40001-
14		23S-44-14540	Plate	1	B40001-
15		01010-81020	Bolt	2	B40001-
16		01643-31032	Washer	2	B40001-
17		08038-00035	Cap, Terminal	1	B40001-
18		23B-06-71380	Cable	1	B40001-
19		01010-81220	Bolt	1	B40001-
20		01643-31232	Washer	1	B40001-
21		23B-06-71290	Cable	1	B40001-
22		04434-52310	Clip	2	B40001-
23		01010-81020	Bolt	2	B40001-
24		01643-31032	Washer	2	B40001-
25		01010-81016	Bolt	1	B40001-
26		01643-31032	Washer	1	B40001-
27		08038-00035	Cap, Terminal	2	B40001-
28		23B-06-71350	Cable	2	B40001-
29		08038-00519	Cap	1	B40001-
30		23B-06-71370	Cable	1	B40001-
31		23B-06-71280	Cable	1	B40001-
32		23B-06-42660	Cap	1	B40001-
33		01010-81020	Bolt	6	B40001-
34		01643-31032	Washer	6	B40001-
35		04434-52310	Clip	5	B40001-
36		04434-53211	Clip	1	B40001-
37		07095-20523	Cushion	1	B40001-
38		22M-60-22130	Collar	1	B40001-
39		01010-81240	Bolt	1	B40001-
40		01643-31232	Washer	1	B40001-
41		423-Z91-4152	Cable	1	B40001-
42		600-051-2180	Clip	1	B40001-
43		01010-81020	Bolt	1	B40001-
44		01643-31032	Washer	1	B40001-
45		01010-81220	Bolt	1	B40001-
46		01643-31232	Washer	1	B40001-

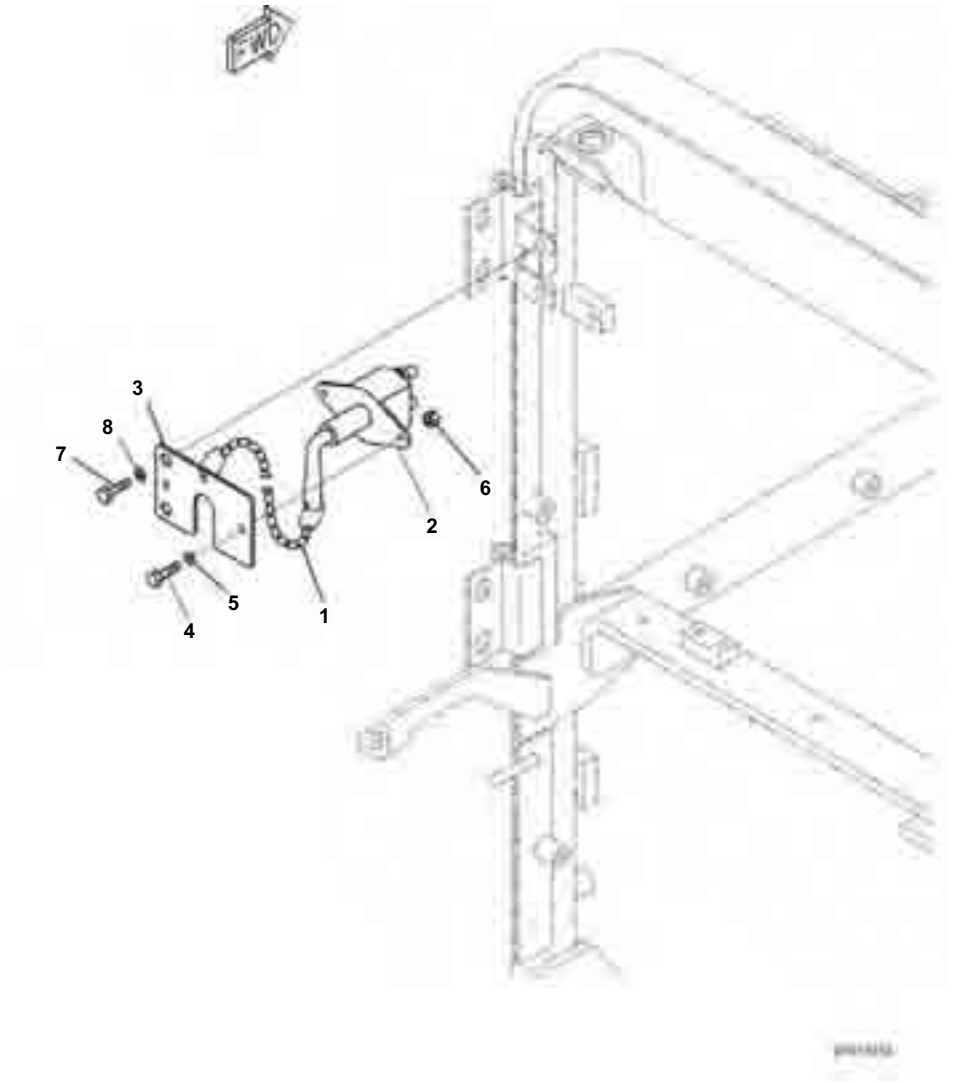

Battery Box, With 90Amp. Alternator, Disconnect Switch

Index	Code	Part Number	Description	Qty	Serial No.
1		565-44-11460	Chain	2	B40001-
2		561-86-69110	Switch	1	B40001-
3		23B-06-71760	Plate	1	B40001-
4		01010-80616	Bolt	2	B40001-
5		01643-30623	Washer	2	B40001-
6		01580-10605	Nut	2	B40001-
7		01010-81020	Bolt	2	B40001-
8		01643-31032	Washer	2	B40001-

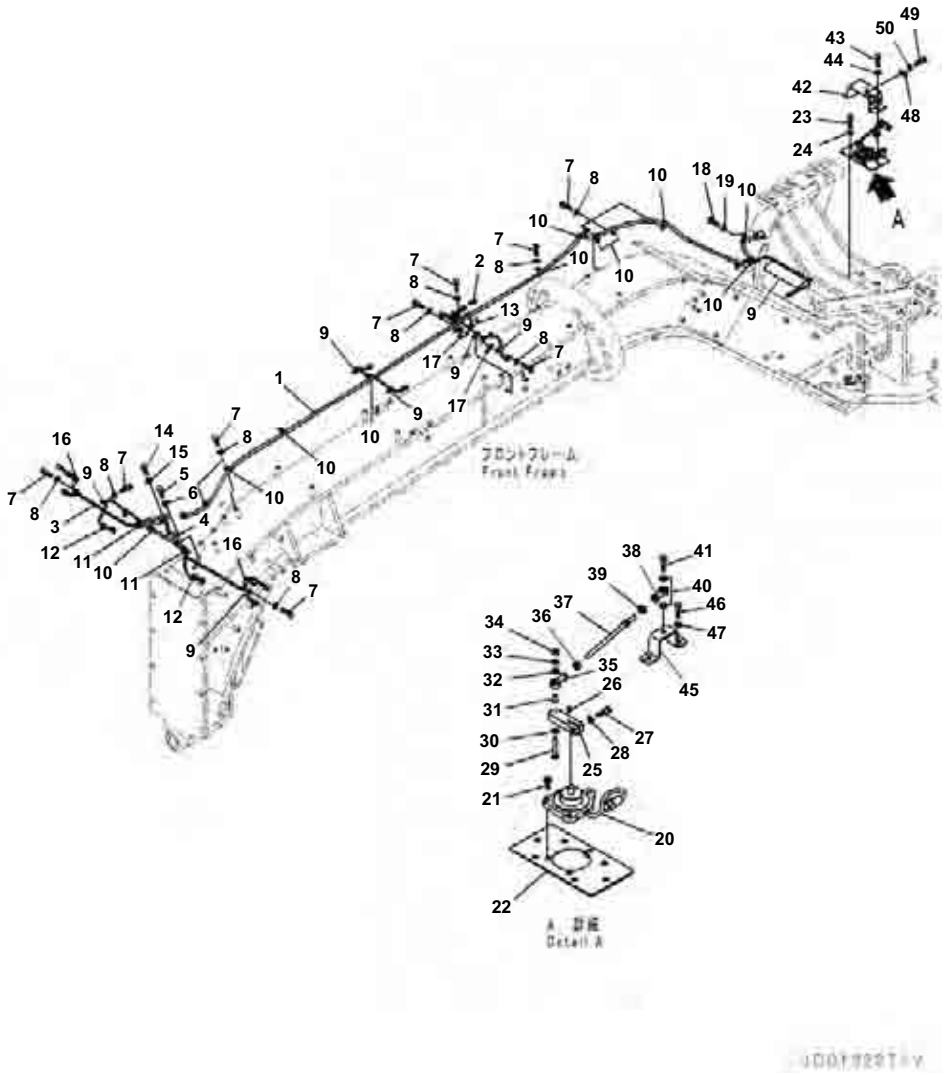

Index	Code	Part Number	Description	Qty	Serial No.
1		23B-06-71110	Wiring Harness	1	B40001-
2		21J-06-13661	Diode	1	B40001-
3		23B-06-71240	Wiring Harness	1	B40001-
4		08193-21012	Clip	1	B40001-
5		01010-81016	Bolt	1	B40001-
6		01643-31032	Washer	1	B40001-
7		01010-81020	Bolt	25	B40001-
8		01643-31032	Washer	25	B40001-
9		04434-50810	Clip	14	B40001-
10		04434-51410	Clip	15	B40001-
11		08037-02512	Grommet	2	B40001-
12		08037-01610	Grommet	2	B40001-
13		08193-21012	Clip	2	B40001-
14		01010-81016	Bolt	1	B40001-
15		01643-31032	Washer	1	B40001-
16		04435-50810	Clip	2	B40001-
17		08193-21012	Clip	2	B40001-
18		01010-81016	Bolt	2	B40001-
19		01643-31032	Washer	2	B40001-
20		7861-93-8710	Sensor	1	B40001-
21		01435-01030	Bolt	3	B40001-
22		23B-06-71460	Plate	1	B40001-
23		01010-81020	Bolt	4	B40001-
24		01643-31032	Washer	4	B40001-
25		23C-06-62150	Lever	1	B40001-
26		04010-00310	Key, Woodruff	1	B40001-
27		01010-80830	Bolt	1	B40001-
28		01643-30823	Washer	1	B40001-
29		01023-10535	Screw	1	B40001-
30		01640-20508	Washer	1	B40001-
31		23B-06-43380	Spacer	1	B40001-
32		04254-10823	Spacer	1	B40001-
33		01640-20508	Washer	1	B40001-
34		01580-10504	Nut	1	B40001-
35		04250-90847	Rod End	1	B40001-
36		01508-40805	Nut	1	B40001-
37		04248-30819	Rod	1	B40001-
38		04250-80847	Rod End	1	B40001-
39		01580-10806	Nut	1	B40001-
40		04254-10823	Spacer	2	B40001-
41		01010-80825	Bolt	1	B40001-
42		23B-06-71470	Cover	1	B40001-
43		01010-81020	Bolt	2	B40001-
44		01643-31032	Washer	2	B40001-
45		23B-06-71480	Bracket	1	B40001-
46		01010-81020	Bolt	2	B40001-

GD655-5 S/N B40001-UP

Electric Wiring Harness, Wiring Harness

Index	Code	Part Number	Description	Qty	Serial No.
47		01643-31032	Washer	2	B40001-
48		04434-51010	Clip	1	B40001-
49		01010-81020	Bolt	1	B40001-
50		01643-31032	Washer	1	B40001-

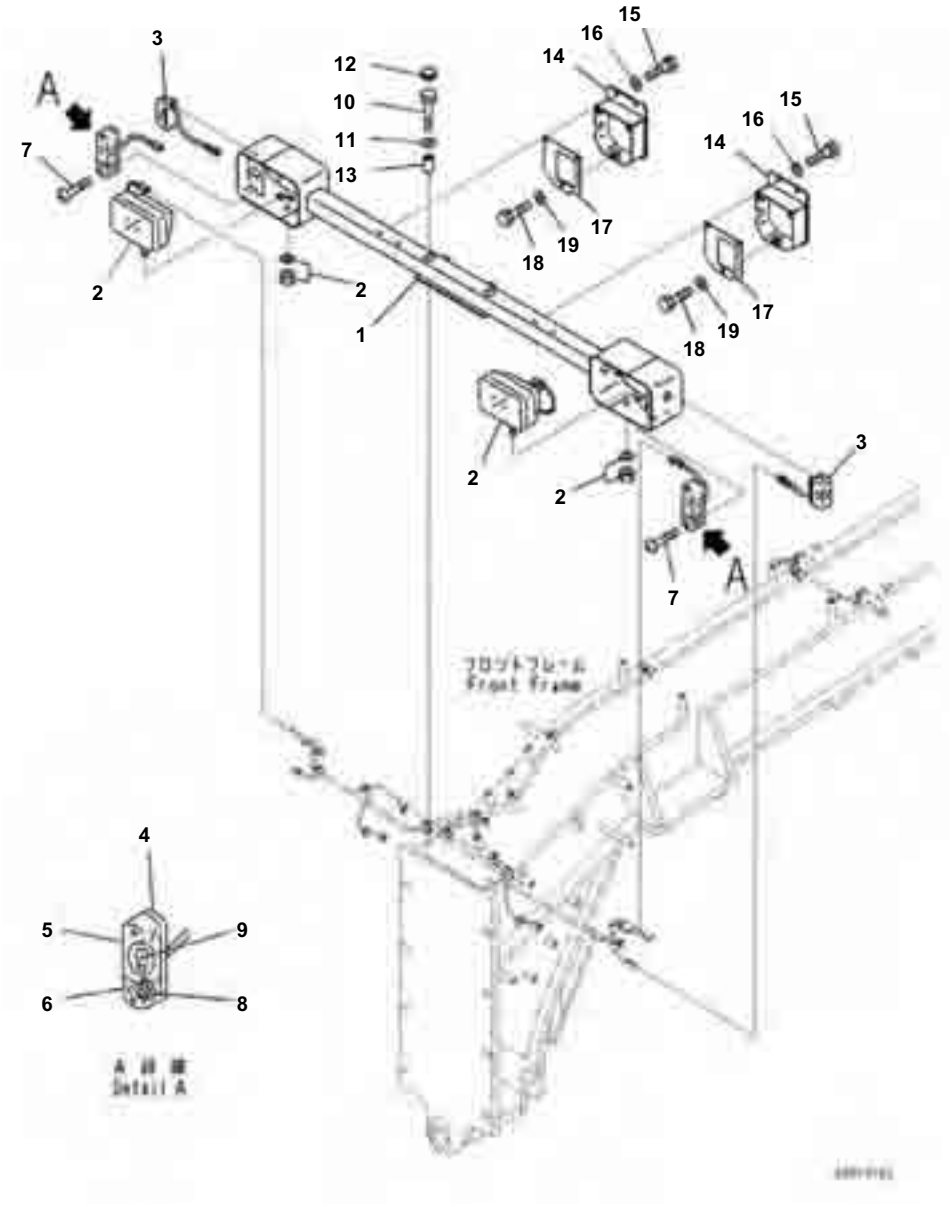

Electric Wiring Harness, Head Lamp

Index	Code	Part Number	Description	Qty	Serial No.
1		23B-06-71810	Bracket	1	B40001-
2		417-06-43110	Light Assembly, Head	2	B40001-
		424-06-23230	▪ Bulb, 75/70watt	1	B40001-
		23S-06-54121	▪ Lens Assembly	1	B40001-
3		56B-06-11641	Lamp	2	B40001-
4		56D-06-21810	Lamp	2	B40001-
5		56D-06-21820	▪ Lens	1	B40001-
6		56D-06-21830	▪ Lens	1	B40001-
7		56D-06-21840	▪ Screw	2	B40001-
8		41G-06-13230	▪ Bulb, 5watt	1	B40001-
9		08105-12420	▪ Bulb, 25watt	1	B40001-
10		01010-81065	Bolt	2	B40001-
11		01643-31032	Washer	2	B40001-
12		09415-02512	Cap	2	B40001-
13		205-03-71330	Collar	2	B40001-
14		23C-06-62720	Bracket	2	B40001-
15		01010-81020	Bolt	4	B40001-
16		01643-31032	Washer	4	B40001-
17		23C-06-62730	Cover	2	B40001-
18		01010-81020	Bolt	6	B40001-
19		01643-31032	Washer	6	B40001-

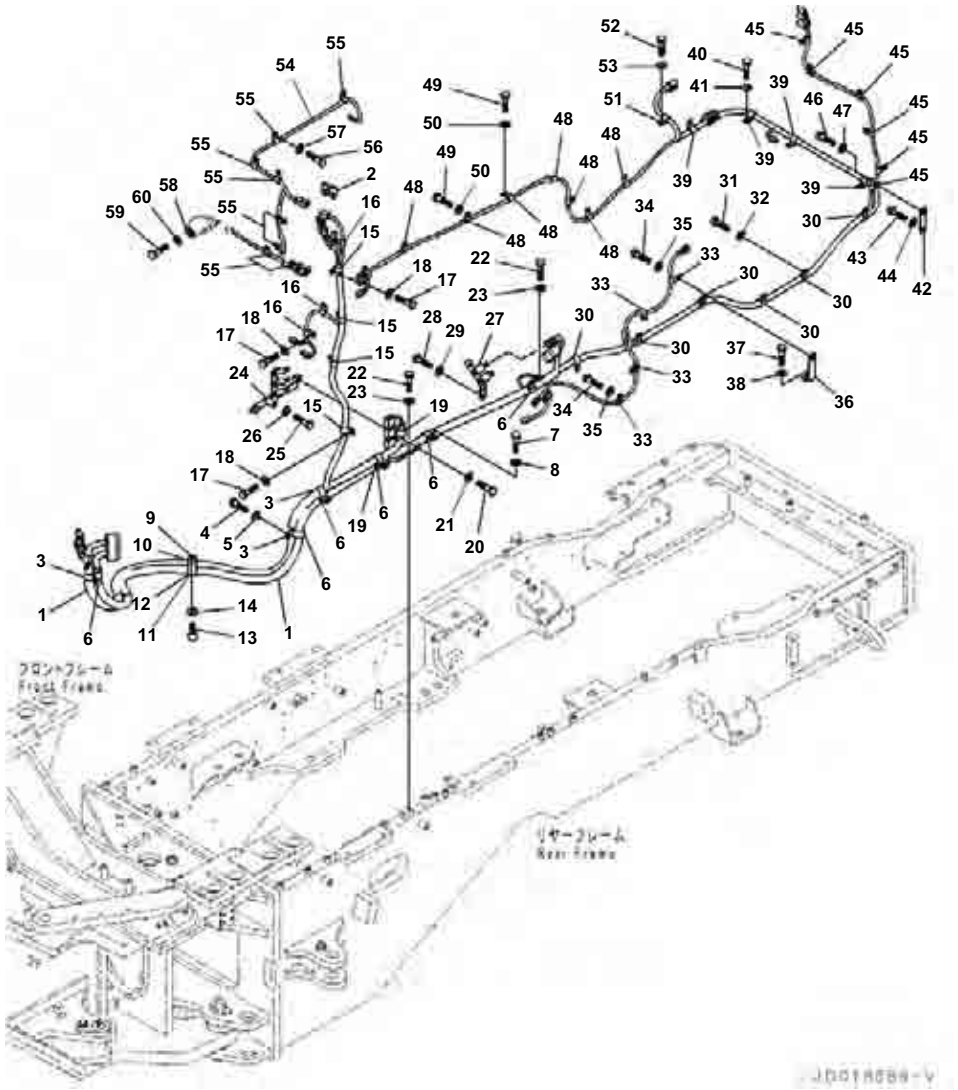

Rear Wiring Harness, Rear Wiring Harness

Index	Code	Part Number	Description	Qty	Serial No.
1		23B-06-71122	Wiring Harness	1	B40001-
2		21J-06-13661	Diode	2	B40001-
3		04434-52712	Clip	3	B40001-
4		01010-81020	Bolt	3	B40001-
5		01643-31032	Washer	3	B40001-
6		04434-52711	Clip	6	B40001-
7		01010-81020	Bolt	3	B40001-
8		01643-31032	Washer	3	B40001-
9		04434-53411	Clip	1	B40001-
10		07095-20627	Cushion	1	B40001-
11		04434-53211	Clip	1	B40001-
12		07095-20523	Cushion	1	B40001-
13		01010-81025	Bolt	1	B40001-
14		01643-31032	Washer	1	B40001-
15		04434-51910	Clip	4	B40001-
16		04434-51010	Clip	3	B40001-
17		01010-81020	Bolt	7	B40001-
18		01643-31032	Washer	7	B40001-
19		04434-52310	Clip	2	B40001-
20		01010-81020	Bolt	1	B40001-
21		01643-31032	Washer	1	B40001-
22		01010-81016	Bolt	4	B40001-
23		01643-31032	Washer	4	B40001-
24		23B-06-71720	Bracket	1	B40001-
25		01010-81025	Bolt	1	B40001-
26		01643-31032	Washer	1	B40001-
27		23B-06-71780	Bracket	1	B40001-
28		01010-81020	Bolt	2	B40001-
29		01643-31032	Washer	2	B40001-
30		04434-51910	Clip	6	B40001-
31		01010-81020	Bolt	6	B40001-
32		01643-31032	Washer	6	B40001-
33		04434-51010	Clip	5	B40001-
34		01010-81020	Bolt	5	B40001-
35		01643-31032	Washer	5	B40001-
36		363-43-37350	Bracket	1	B40001-
37		01010-81020	Bolt	1	B40001-
38		01643-31032	Washer	1	B40001-
39		04434-51710	Clip	4	B40001-
40		01010-81020	Bolt	4	B40001-
41		01643-31032	Washer	4	B40001-
42		421-62-11940	Plate	1	B40001-
43		01010-81020	Bolt	1	B40001-
44		01643-31032	Washer	1	B40001-
45		04434-51010	Clip	6	B40001-
46		01010-81020	Bolt	6	B40001-

GD655-5 S/N B40001-UP

Rear Wiring Harness, Rear Wiring Harness

Index	Code	Part Number	Description	Qty	Serial No.
47		01643-31032	Washer	6	B40001-
48		04434-51010	Clip	8	B40001-
49		01010-81020	Bolt	8	B40001-
50		01643-31032	Washer	8	B40001-
51		04434-51410	Clip	1	B40001-
52		01010-81020	Bolt	1	B40001-
53		01643-31032	Washer	1	B40001-
54		23B-06-71150	Wiring Harness	1	B40001-
55		04434-51010	Clip	8	B40001-
56		01010-81020	Bolt	8	B40001-
57		01643-31032	Washer	8	B40001-
58		04434-50510	Clip	1	B40001-
59		01010-81020	Bolt	1	B40001-
60		01643-31032	Washer	1	B40001-

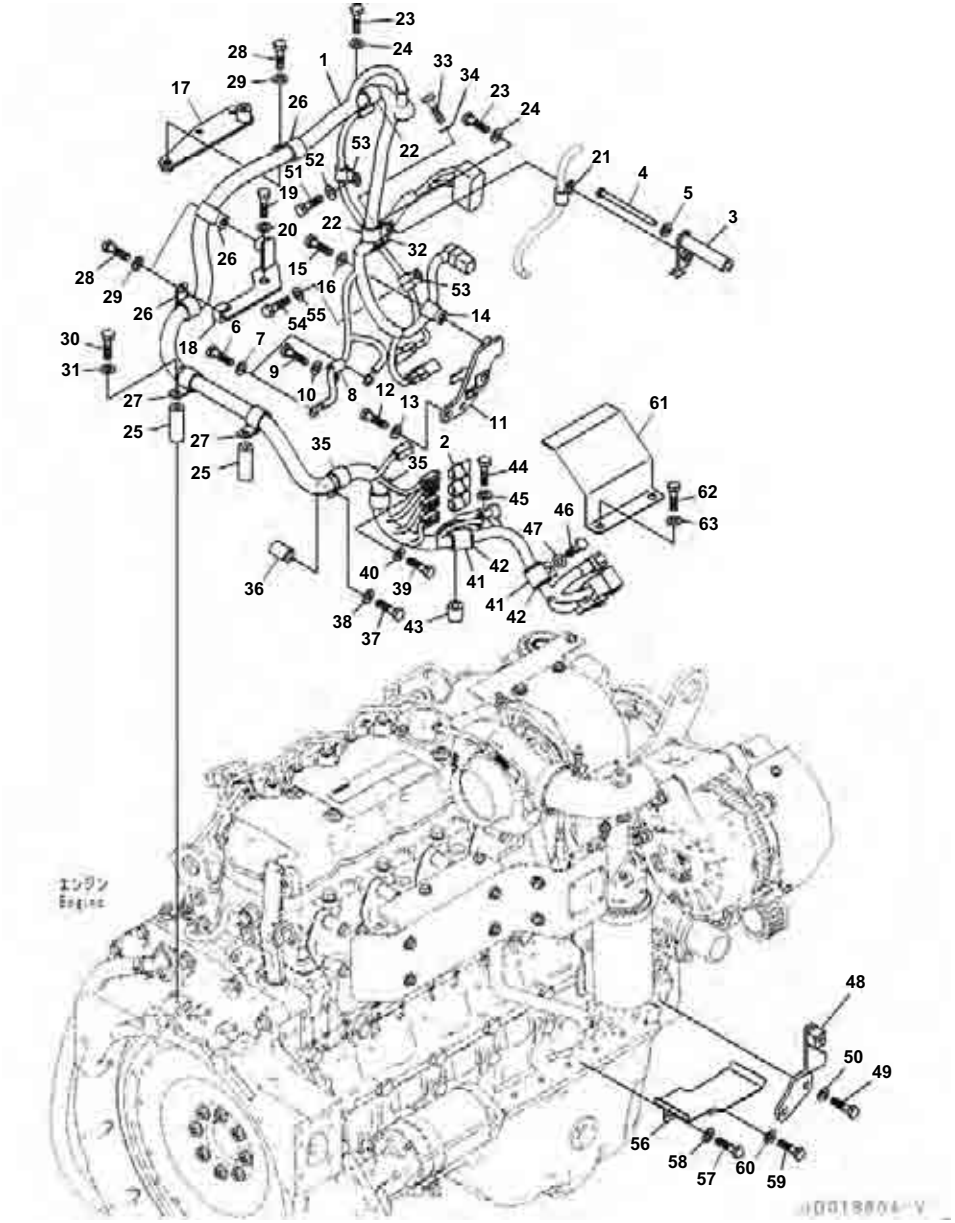

Rear Wiring Harness, Wiring Harness, Engine

Index	Code	Part Number	Description	Qty	Serial No.
1		23B-06-71230	Wiring Harness	1	B40001-
2		21J-06-13661	▪ Diode	3	B40001-
3		423-06-42540	Bracket	1	B40001-
4		6132-11-4690	Bolt	1	B40001-
5		01643-30823	Washer	1	B40001-
6		01010-81220	Bolt	2	B40001-
7		01643-31232	Washer	2	B40001-
8		600-051-2100	Clip	1	B40001-
9		01010-81016	Bolt	1	B40001-
10		01643-31032	Washer	1	B40001-
11		423-06-42530	Plate	1	B40001-
12		01010-81025	Bolt	2	B40001-
13		01643-31032	Washer	2	B40001-
14		600-051-2140	Clip	1	B40001-
15		01010-81020	Bolt	1	B40001-
16		01643-31032	Washer	1	B40001-
17		423-06-42560	Plate	1	B40001-
18		23B-06-71770	Bracket	1	B40001-
19		01010-81230	Bolt	1	B40001-
20		01643-31232	Washer	1	B40001-
21		600-051-2120	Clip	1	B40001-
22		600-051-2200	Clip	2	B40001-
23		01010-81020	Bolt	2	B40001-
24		01643-31032	Washer	2	B40001-
25		23B-06-71820	Spacer	2	B40001-
26		600-051-2240	Clip	3	B40001-
27		600-051-1240	Clip	2	B40001-
28		01010-81020	Bolt	3	B40001-
29		01643-31032	Washer	3	B40001-
30		01010-80880	Bolt	2	B40001-
31		01643-30823	Washer	2	B40001-
32		600-051-2180	Clip	1	B40001-
33		01010-81020	Bolt	1	B40001-
34		01643-31032	Washer	1	B40001-
35		600-051-2240	Clip	2	B40001-
36		23B-06-61810	Spacer	1	B40001-
37		01010-81050	Bolt	1	B40001-
38		01643-31032	Washer	1	B40001-
39		01010-81020	Bolt	1	B40001-
40		01643-31032	Washer	1	B40001-
41		04434-52511	Clip	2	B40001-
42		07095-20318	Cushion	2	B40001-
43		21W-01-41320	Spacer	1	B40001-
44		01010-81045	Bolt	1	B40001-
45		01643-31032	Washer	1	B40001-
46		01010-81020	Bolt	1	B40001-

GD655-5 S/N B40001-UP

Rear Wiring Harness, Wiring Harness, Engine

Index	Code	Part Number	Description	Qty	Serial No.
47		01643-31032	Washer	1	B40001-
48		423-06-42570	Plate	1	B40001-
49		01010-81025	Bolt	2	B40001-
50		01643-31032	Washer	2	B40001-
51		01010-81016	Bolt	1	B40001-
52		01643-31032	Washer	1	B40001-
53		600-051-2100	Clip	2	B40001-
54		01010-81020	Bolt	1	B40001-
55		01643-31032	Washer	1	B40001-
56		23B-06-71790	Cover	1	B40001-
57		01010-81020	Bolt	1	B40001-
58		01643-31032	Washer	1	B40001-
59		01010-81025	Bolt	1	B40001-
60		01643-31032	Washer	1	B40001-
61		23B-06-71840	Plate	1	B40001-
62		01010-81016	Bolt	2	B40001-
63		01643-31032	Washer	2	B40001-

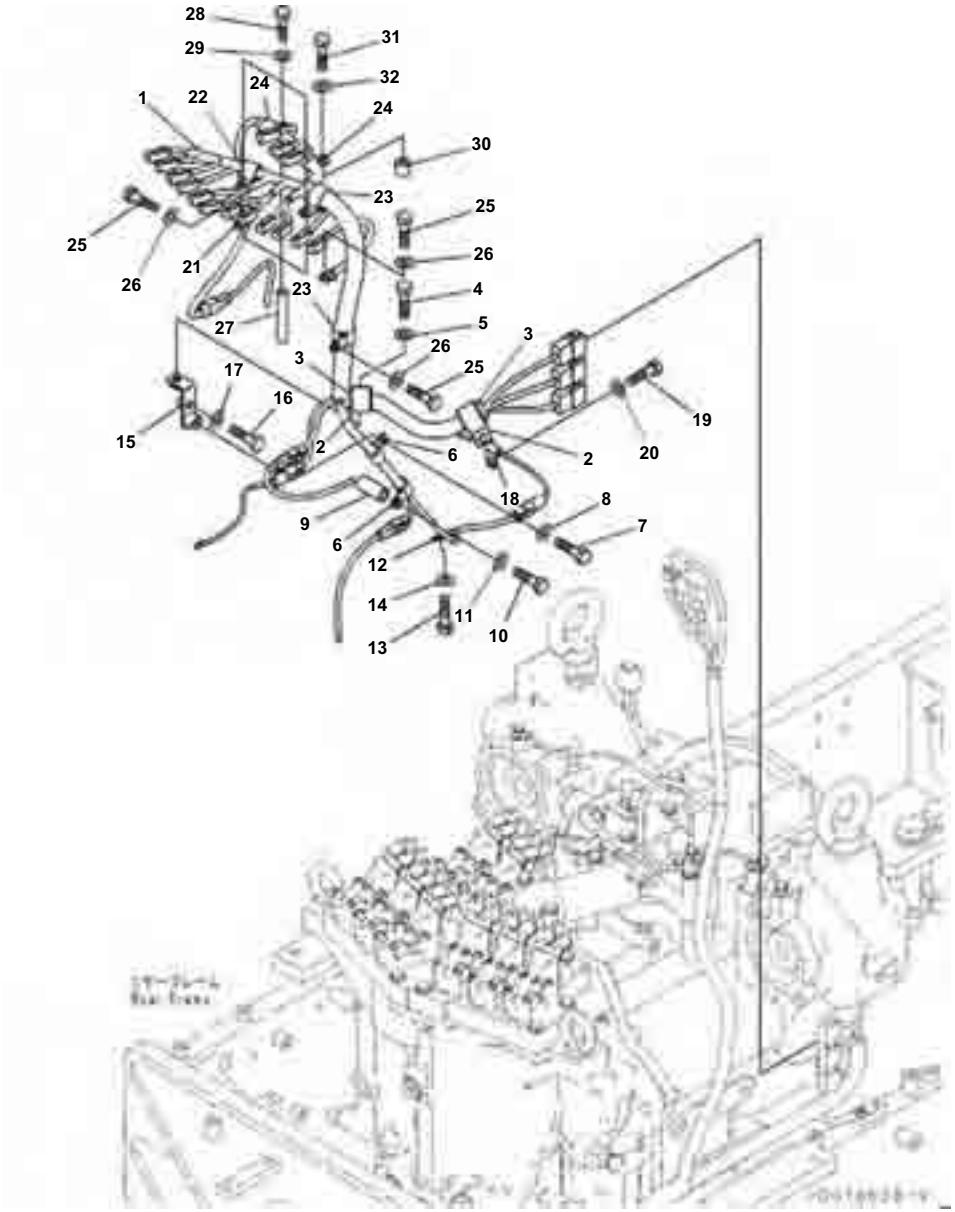

Index	Code	Part Number	Description	Qty	Serial No.
1		23B-06-71140	Wiring Harness	1	B40001-
2		04434-53212	Clip	2	B40001-
3		07095-20523	Cushion	2	B40001-
4		01010-81020	Bolt	2	B40001-
5		01643-31032	Washer	2	B40001-
6		600-051-2140	Clip	2	B40001-
7		01010-81020	Bolt	1	B40001-
8		01643-31032	Washer	1	B40001-
9		421-03-31421	Spacer	1	B40001-
10		01010-81065	Bolt	1	B40001-
11		01643-31032	Washer	1	B40001-
12		600-051-2080	Clip	1	B40001-
13		01010-81020	Bolt	1	B40001-
14		01643-31032	Washer	1	B40001-
15		23B-06-71880	Bracket	1	B40001-
16		01010-81035	Bolt	1	B40001-
17		01643-31032	Washer	1	B40001-
18		600-051-2050	Clip	1	B40001-
19		01010-81020	Bolt	1	B40001-
20		01643-31032	Washer	1	B40001-
21		600-051-2080	Clip	1	B40001-
22		600-051-2180	Clip	1	B40001-
23		600-051-2260	Clip	2	B40001-
24		600-051-2160	Clip	2	B40001-
25		01010-81020	Bolt	3	B40001-
26		01643-31032	Washer	3	B40001-
27		421-62-23820	Spacer	3	B40001-
28		01011-81010	Bolt	3	B40001-
29		01643-31032	Washer	3	B40001-
30		175-79-83760	Spacer	1	B40001-
31		01010-81035	Bolt	1	B40001-
32		01643-31032	Washer	1	B40001-

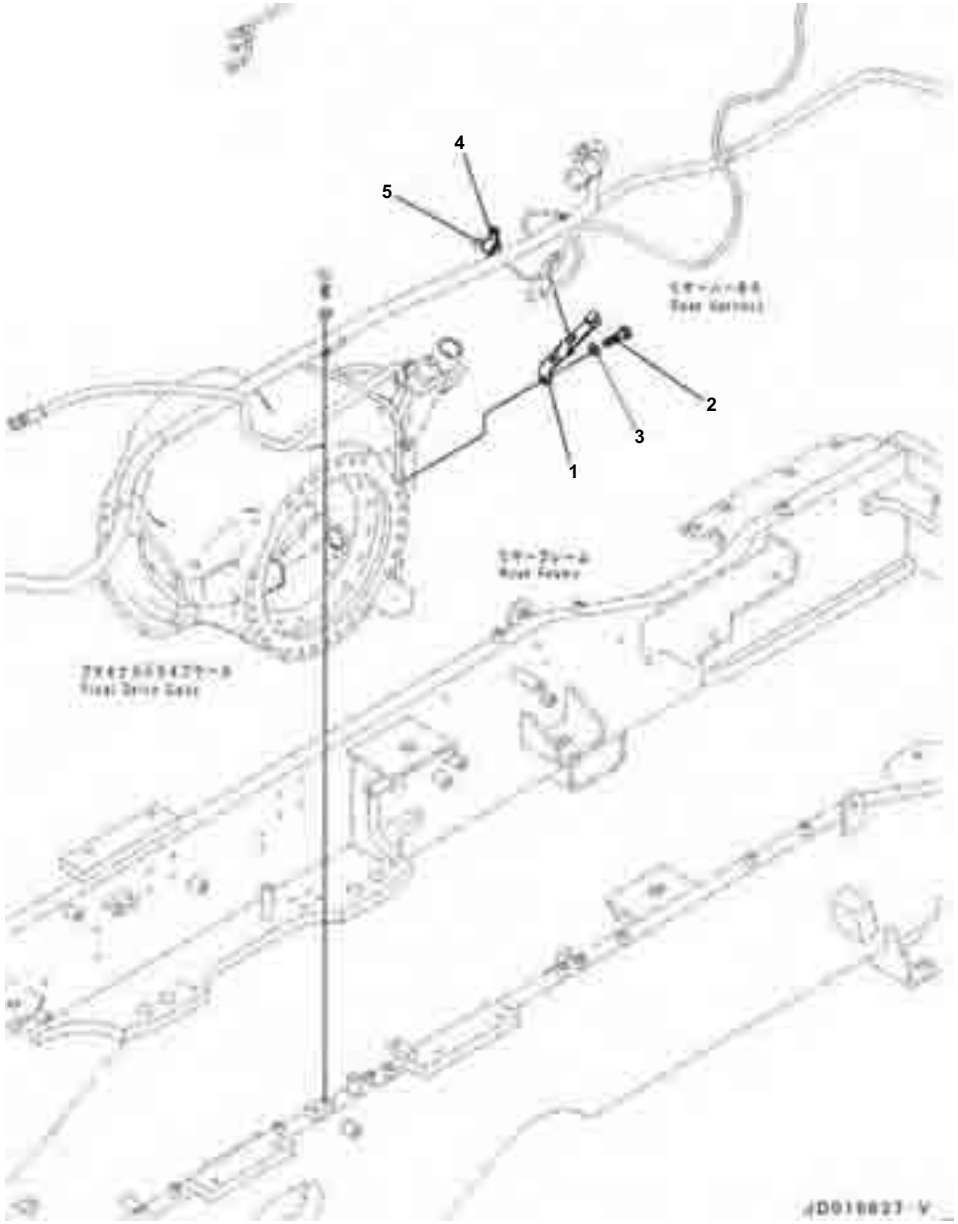

Rear Wiring Harness, Differential Lock Wiring Harness

Index	Code	Part Number	Description	Qty	Serial No.
1		23B-06-71740	Bracket	1	B40001-
2		01010-81020	Bolt	1	B40001-
3		01643-31032	Washer	1	B40001-
4		04434-51710	Clip	1	B40001-
5		07095-20211	Cushion	1	B40001-

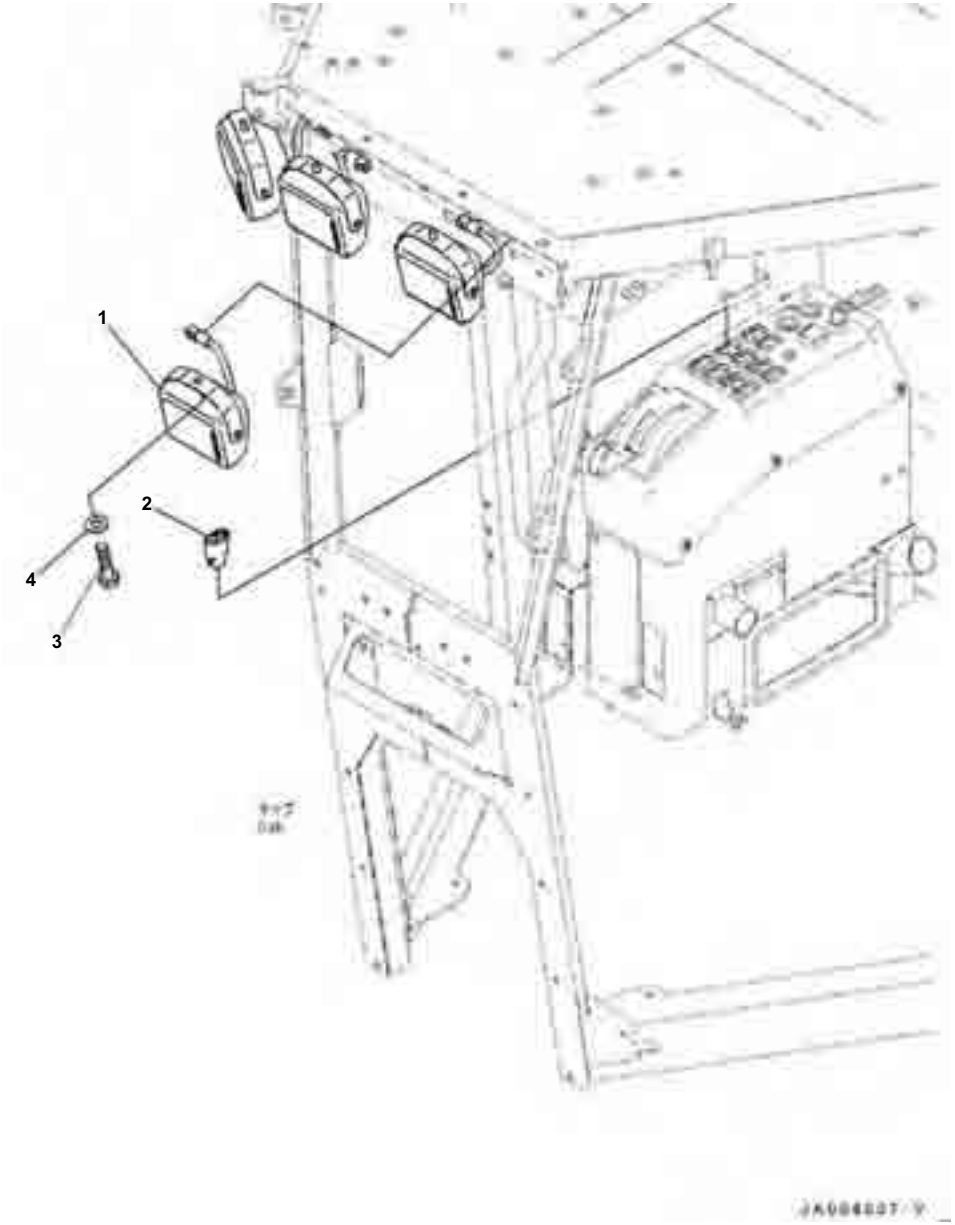

Front Lamp

Index	Code	Part Number	Description	Qty	Serial No.
1		423-06-33130	Lamp Assembly, Working	4	B40001-
		421-06-23320	▪ Lens	1	B40001-
		421-06-23330	▪ Bulb, 70watt	1	B40001-
2		423-06-45350	Switch	1	B40001-
3		01010-D1020	Bolt	4	B40001-
4		01643-71032	Washer	4	B40001-

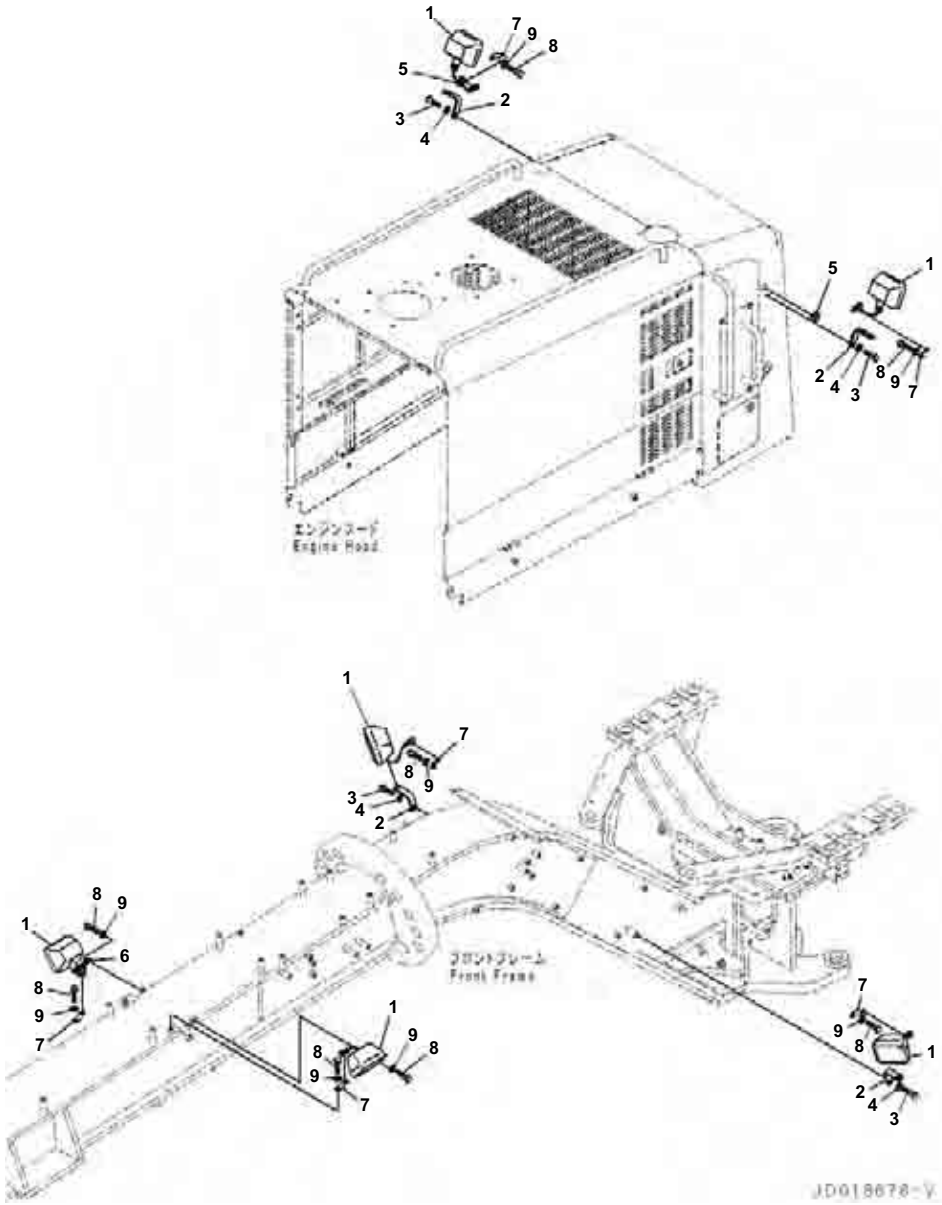

Front Working Lamp and Rear Working Lamp

Index	Code	Part Number	Description	Qty	Serial No.
1		11Y-06-11372	Light Assembly, Working	6	B40001-
		421-06-23330	･ Bulb, 70watt	1	B40001-
2		23B-06-71940	Bracket	4	B40001-
3		01010-81225	Bolt	4	B40001-
4		01643-31232	Washer	4	B40001-
5		08037-02512	Grommet	2	B40001-
6		04434-50610	Clip	2	B40001-
7		08193-21012	Clip	6	B40001-
8		01010-81016	Bolt	8	B40001-
9		01643-31032	Washer	8	B40001-

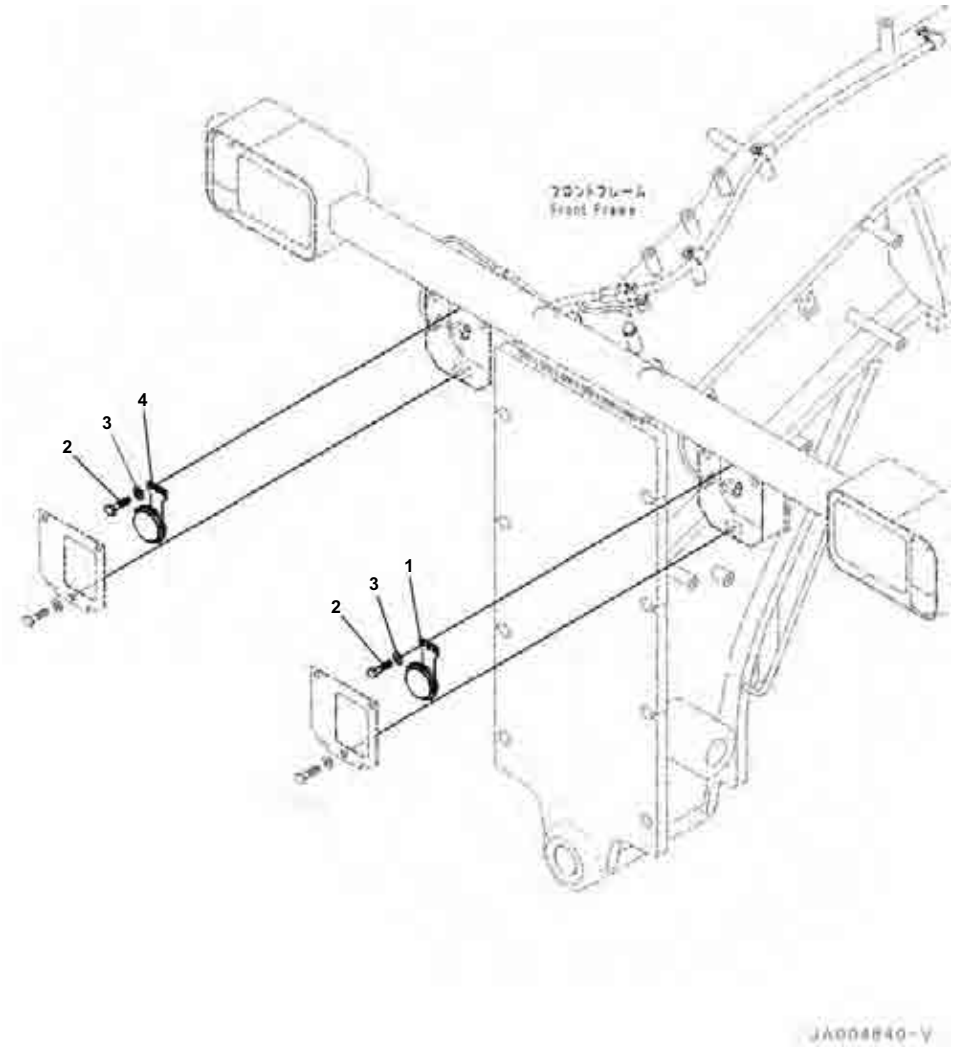

Horn

Index	Code	Part Number	Description	Qty	Serial No.
1		23C-06-63410	Horn	1	B40001-
2		01010-80816	Bolt	4	B40001-
3		01643-30823	Washer	4	B40001-
4		23C-06-63420	Horn	1	B40001-

POWER TRANSMITTING SYSTEM

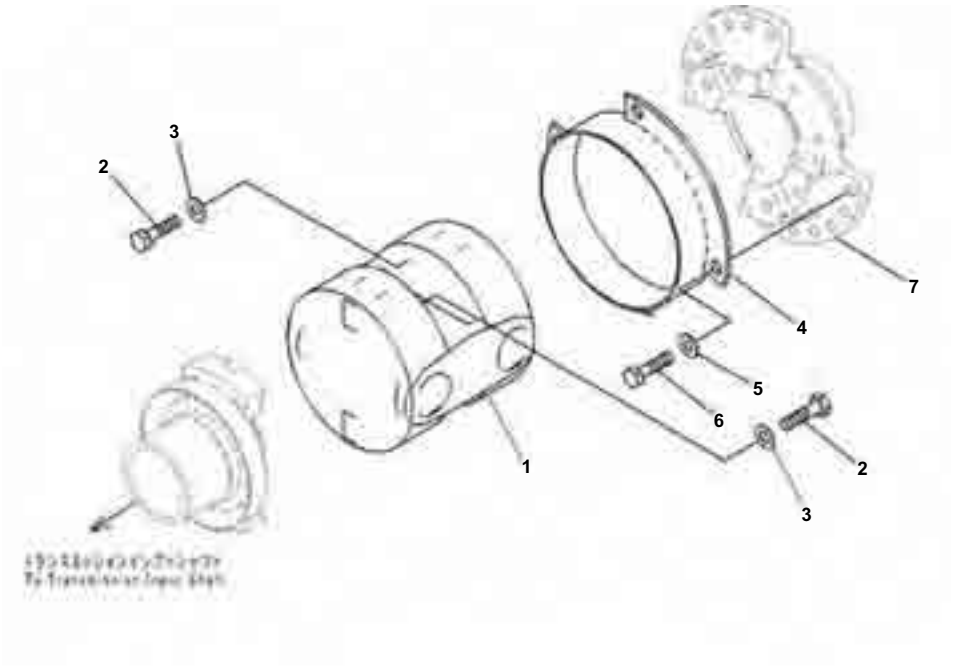

Propeller Shaft

Index	Code	Part Number	Description	Qty	Serial No.
1		423-20-34111	Propeller Shaft	1	B40001-
2		01010-61255	Bolt	8	B40001-
3		01643-51232	Washer	8	B40001-
4		23B-32-71330	Cover	1	B40001-
5		01643-31232	Washer	4	B40001-
6		01010-61235	Bolt	4	B40001-
7		(23B-22-71150)	Coupling		

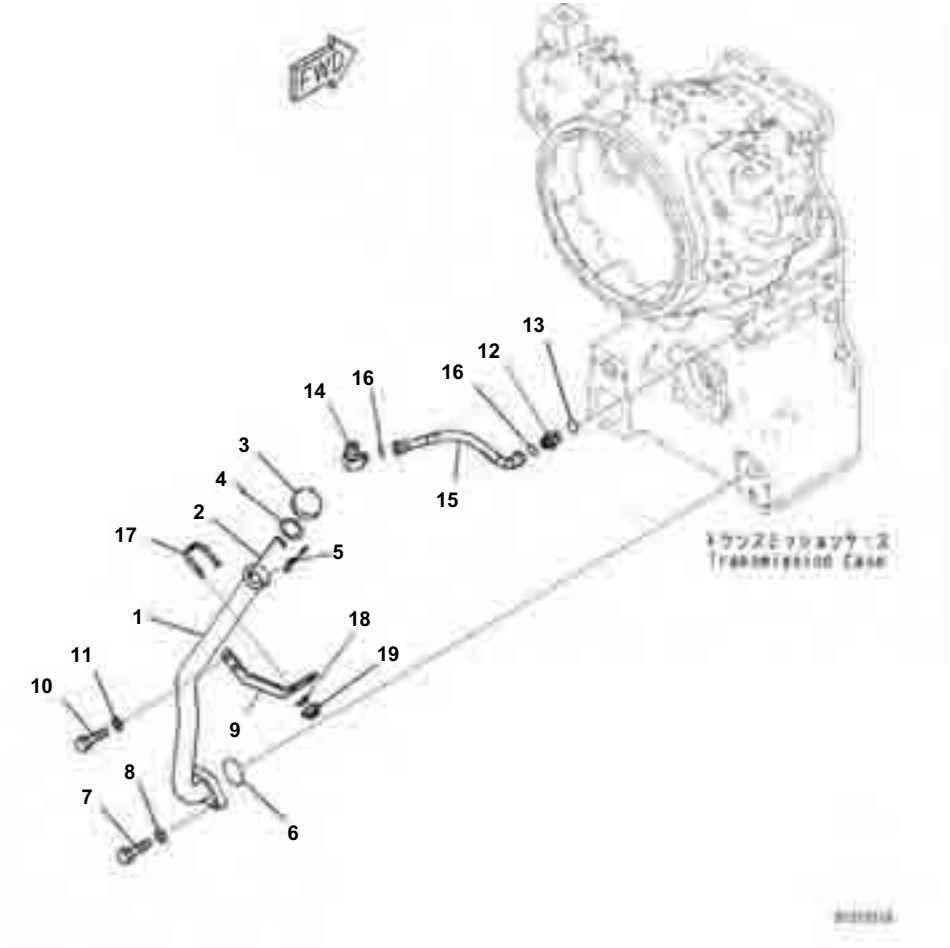

Index	Code	Part Number	Description	Qty	Serial No.
1		23B-16-71780	Tube	1	B40001-
2		23B-16-71820	Gauge	1	B40001-
3		6136-21-7120	Cap Assembly	1	B40001-
4		6136-21-7180	ｰ Gasket	1	B40001-
5		6136-21-7190	Chain	1	B40001-
6		07000-A3045	O-ring	1	B40001-
7		01010-81240	Bolt	2	B40001-
8		01643-31232	Washer	2	B40001-
9		23B-16-71460	Plate	1	B40001-
10		01010-81020	Bolt	2	B40001-
11		01643-31032	Washer	2	B40001-
12		02781-0042A	Joint	1	B40001-
13		07002-22434	O-ring	1	B40001-
14		23B-16-31770	Elbow	1	B40001-
15		23B-16-71810	Hose	1	B40001-
16		02896-21012	O-ring	2	B40001-
17		07283-34346	Clip	1	B40001-
18		01643-31032	Washer	2	B40001-
19		01597-01009	Nut	2	B40001-

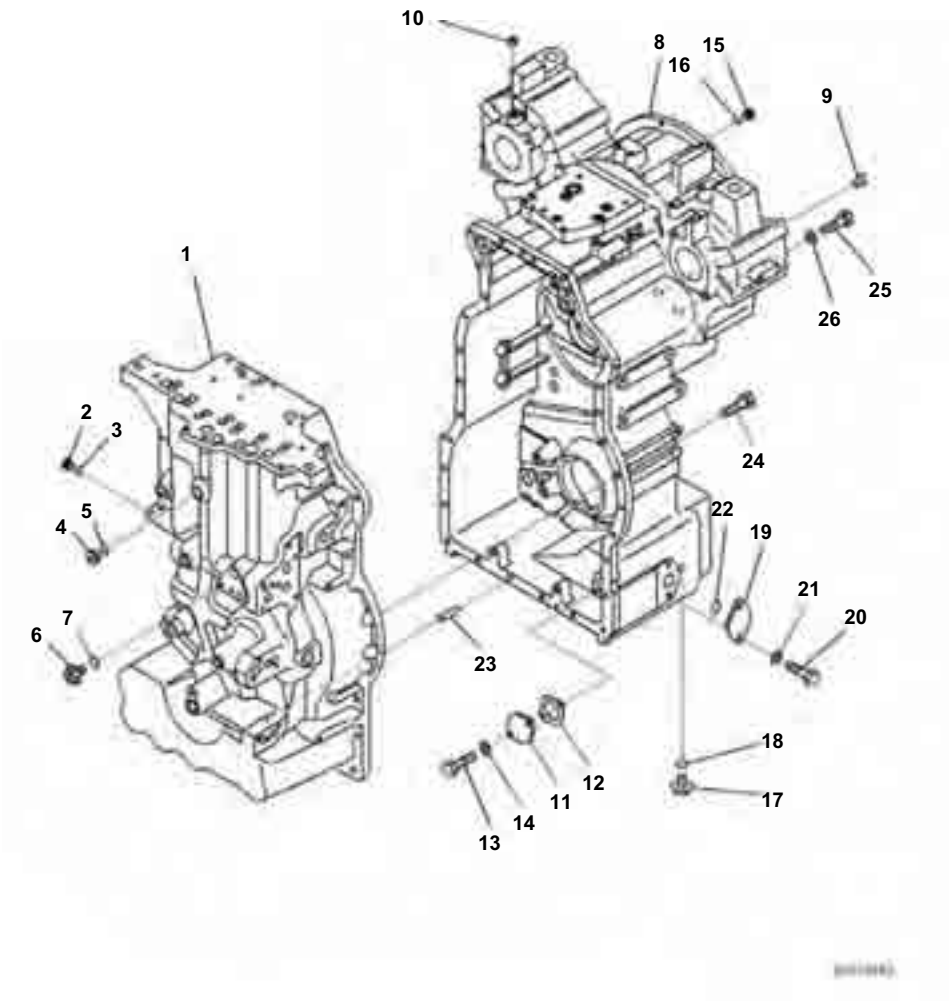

Index	Code	Part Number	Description	Qty	Serial No.
		23B-13-70000	Transmission Assembly	1	B40001-
		23B-15-71110	· Case Assembly,Front	1	B40001-
1	C1		· · Case,Front	1	B40001-
2		714-24-25190	· · Plug	2	B40001-
3		07002-61423	· · O-ring, (Kit : K01)	2	B40001-
4		720-2M-15270	· · Plug	6	B40001-
5		07002-62434	· · O-ring, (Kit : K01)	6	B40001-
6		708-8E-16150	· · Plug	1	B40001-
7		07002-61023	· · O-ring, (Kit : K01)	1	B40001-
		23B-15-71120	· Case Assembly,Rear	1	B40001-
8	C1		· · Case,Rear	1	B40001-
9		07043-71019	· · Plug	2	B40001-
10		714-23-17320	· · Plug	3	B40001-
11		6245-11-4220	· · Cover	1	B40001-
12		6166-61-6341	· · Gasket, (Kit : K01)	1	B40001-
13		01010-81030	· · Bolt	2	B40001-
14		01643-31032	· · Washer	2	B40001-
15		714-24-25190	· · Plug	5	B40001-
16		07002-61423	· · O-ring, (Kit : K01)	5	B40001-
17		708-8E-16150	· · Plug	1	B40001-
18		07002-61023	· · O-ring, (Kit : K01)	1	B40001-
19		561-33-71860	· Plate	1	B40001-
20		01010-81230	· Bolt	2	B40001-
21		01643-31232	· Washer	2	B40001-
22		07000-73048	· O-ring, (Kit : K01)	1	B40001-
23		04020-01228	· Pin, Dowel	2	B40001-
24		01010-81240	· Bolt	30	B40001-
25		01010-81245	· Bolt	8	B40001-
26		01643-31232	· Washer	8	B40001-

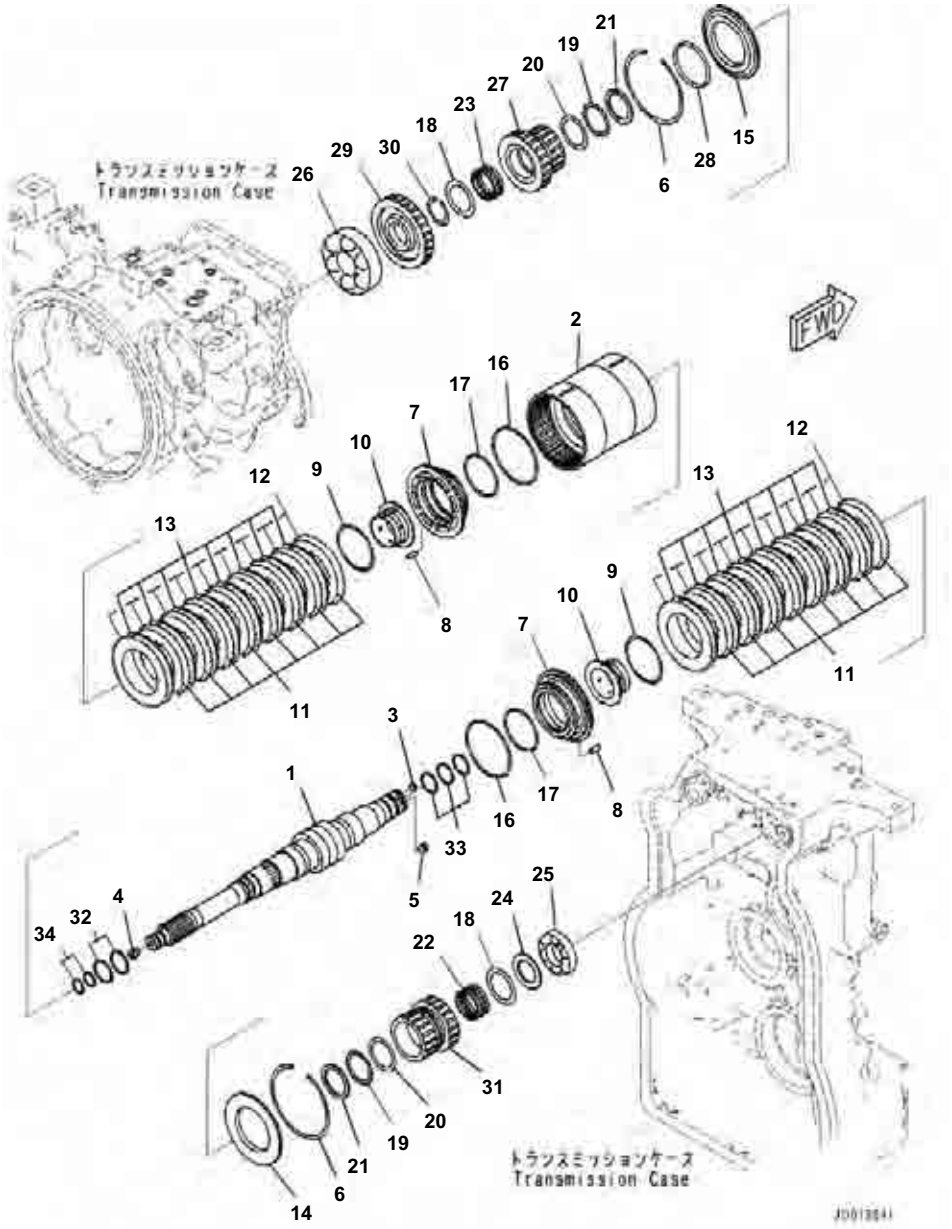

Transmission, Forward Low Speed and Reverse Clutch

Index	Code	Part Number	Description	Qty	Serial No.
		23B-13-70000	Transmission Assembly	1	B40001-
		23B-15-72010	· Clutch Assembly	1	B40001-
		23B-15-72111	· · Shaft and Cylinder Assembly	1	B40001-
1	C1		· · · Shaft,Input	1	B40001-
2	C1		· · · Housing	1	B40001-
3		56D-15-29790	· · · Plug	2	B40001-
4		07043-70211	· · · Plug	1	B40001-
5		23B-15-72910	· · · Orifice	1	B40001-
6		419-15-12140	· · Ring, Snap	2	B40001-
7		714-23-12640	· · Piston	2	B40001-
8		04020-00514	· · Pin, Dowel	4	B40001-
9		362-15-19520	· · Ring, Snap	2	B40001-
10		714-23-12680	· · Piston	2	B40001-
11		714-12-19711	· · Disc, T=2.2mm	16	B40001-
12		714-16-19730	· · Plate, T=1.7mm, Separate	18	B40001-
13		56D-15-12710	· · Spring, Wave	16	B40001-
14		714-12-12610	· · Plate, End	1	B40001-
15		23B-15-72610	· · Plate, End	1	B40001-
16		714-11-19230	· · Seal Ring, (Kit : K01)	2	B40001-
17		714-07-19320	· · Seal Ring, (Kit : K01)	2	B40001-
18		714-08-19560	· · Washer, Thrust	2	B40001-
19		419-15-12640	· · Bearing	2	B40001-
20		419-15-12650	· · Washer, Thrust	2	B40001-
21		714-12-12760	· · Washer	2	B40001-
22		714-23-19420	· · Bearing, Needle	1	B40001-
23		714-23-19410	· · Bearing, Needle	1	B40001-
24		714-12-12740	· · Spacer	1	B40001-
25		714-23-19320	· · Bearing	1	B40001-
26		714-23-19310	· · Bearing	1	B40001-
27		23B-15-72410	· · Gear, Forward Low	1	B40001-
28		427-15-19220	· · Ring	1	B40001-
29		23B-15-72530	· · Gear,Input	1	B40001-
30		04066-00062	· · Ring, Snap, for Shaft Side	1	B40001-
31		714-23-12420	· · Gear,Reverse	1	B40001-
32		714-12-39230	· Seal Ring, (Kit : K01)	2	B40001-
33		714-12-39230	· Seal Ring, (Kit : K01)	3	B40001-
34		714-21-19810	· Seal Ring, (Kit : K01)	2	B40001-

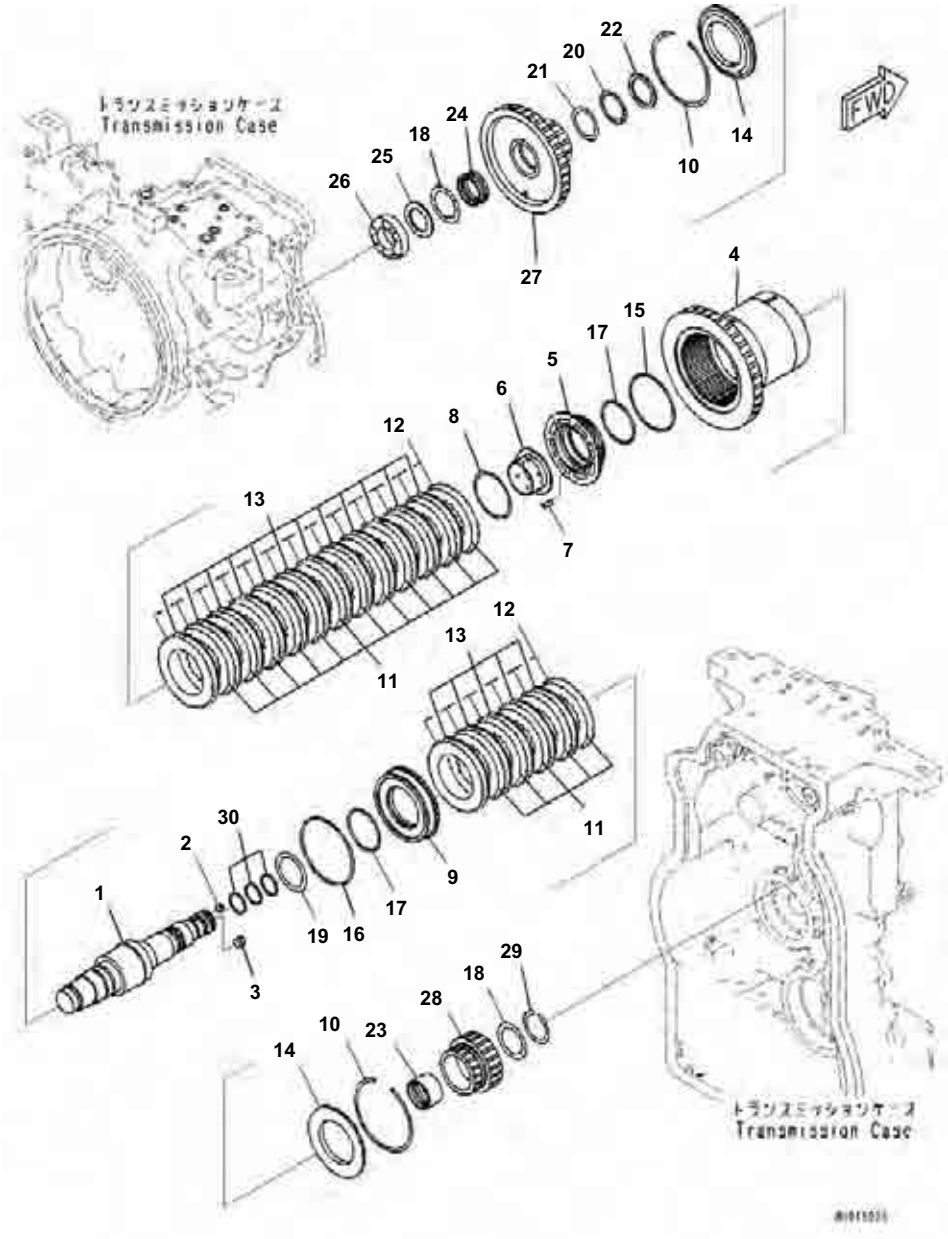

Transmission, Forward High and 1st Speed Clutch

Index	Code	Part Number	Description	Qty	Serial No.
		23B-13-70000	Transmission Assembly	1	B40001-
		23B-15-72020	· Clutch Assembly	1	B40001-
		23B-15-72121	· · Shaft and Cylinder Assembly	1	B40001-
1	C1		· · · Shaft,Upper	1	B40001-
2		56D-15-29790	· · · Plug	2	B40001-
3		23B-15-72920	· · · Orifice	1	B40001-
4	C1		· · · Housing	1	B40001-
5		714-23-12651	· · Piston	1	B40001-
6		23B-15-72670	· · Piston	1	B40001-
7		04020-00514	· · Pin, Dowel	2	B40001-
8		362-15-19520	· · Ring, Snap	1	B40001-
9		714-23-12690	· · Piston, Range	1	B40001-
10		419-15-12140	· · Ring, Snap	2	B40001-
11		714-12-19711	· · Disc, T=2.2mm	17	B40001-
12		714-16-19730	· · Plate, T=1.7mm, Separate	19	B40001-
13		56D-15-12710	· · Spring, Wave	17	B40001-
14		714-12-12610	· · Plate, End	2	B40001-
15		714-08-19220	· · Seal Ring, (Kit : K01)	1	B40001-
16		714-16-19220	· · Seal Ring, (Kit : K01)	1	B40001-
17		714-07-19320	· · Seal Ring, (Kit : K01)	2	B40001-
18		714-08-19560	· · Washer, Thrust	2	B40001-
19		714-08-19570	· · Washer, Thrust	1	B40001-
20		419-15-12640	· · Bearing	1	B40001-
21		419-15-12650	· · Washer, Thrust	1	B40001-
22		714-12-12760	· · Washer	1	B40001-
23		714-23-19631	· · Bushing,1st	1	B40001-
24		714-23-19410	· · Bearing, Needle	1	B40001-
25		714-12-12740	· · Spacer	1	B40001-
26		714-23-19320	· · Bearing	1	B40001-
27		23B-15-72430	· · Gear, Forward High	1	B40001-
28		714-23-12441	· · Gear,1st	1	B40001-
29		04066-00062	· · Ring, Snap, for Shaft Side	1	B40001-
30		714-12-39230	· Seal Ring, (Kit : K01)	3	B40001-

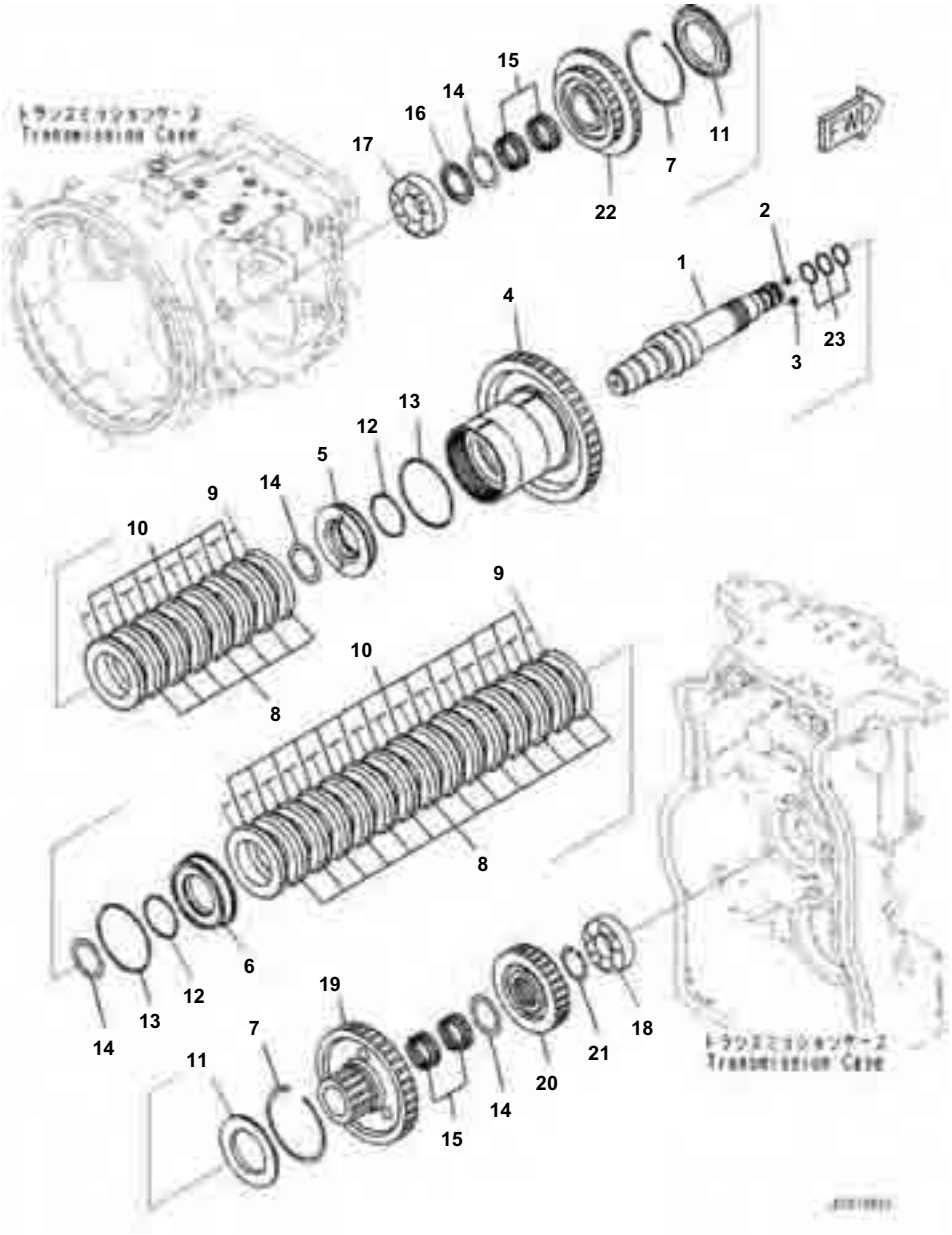

Transmission, 2nd and 3rd Housing

Index	Code	Part Number	Description	Qty	Serial No.
		23B-13-70000	Transmission Assembly	1	B40001-
		23B-15-72030	· Clutch Assembly	1	B40001-
		23B-15-72132	· · Shaft and Cylinder Assembly	1	B40001-
1	C1		· · · Shaft,Lower	1	B40001-
2		56D-15-29790	· · · Plug	2	B40001-
3		714-08-12950	· · · Orifice	1	B40001-
4	C1		· · · Housing,2nd	1	B40001-
5		23B-15-72691	· · Piston, Range	1	B40001-
6		23B-15-72661	· · Piston, Range	1	B40001-
7		419-15-12140	· · Ring, Snap	2	B40001-
8		714-12-19711	· · Disc, T=2.2mm	21	B40001-
9		714-16-19730	· · Plate, T=1.7mm, Separate	23	B40001-
10		56D-15-12710	· · Spring, Wave	21	B40001-
11		714-12-12610	· · Plate, End	2	B40001-
12		714-16-19220	· · Seal Ring, (Kit : K01)	2	B40001-
13		714-07-19320	· · Seal Ring, (Kit : K01)	2	B40001-
14		714-08-19570	· · Washer, Thrust	4	B40001-
15		714-23-19430	· · Bearing, Needle	4	B40001-
16		714-23-12710	· · Spacer	1	B40001-
17		06040-06313	· · Bearing	1	B40001-
18		714-12-19340	· · Bearing, Roller	1	B40001-
19		23B-15-72450	· · Gear,2nd	1	B40001-
20		23B-15-72540	· · Gear,Lower	1	B40001-
21		714-12-19520	· · Ring	1	B40001-
22		714-23-12460	· · Gear,3rd	1	B40001-
23		419-15-12122	· Ring, (Kit : K01)	3	B40001-

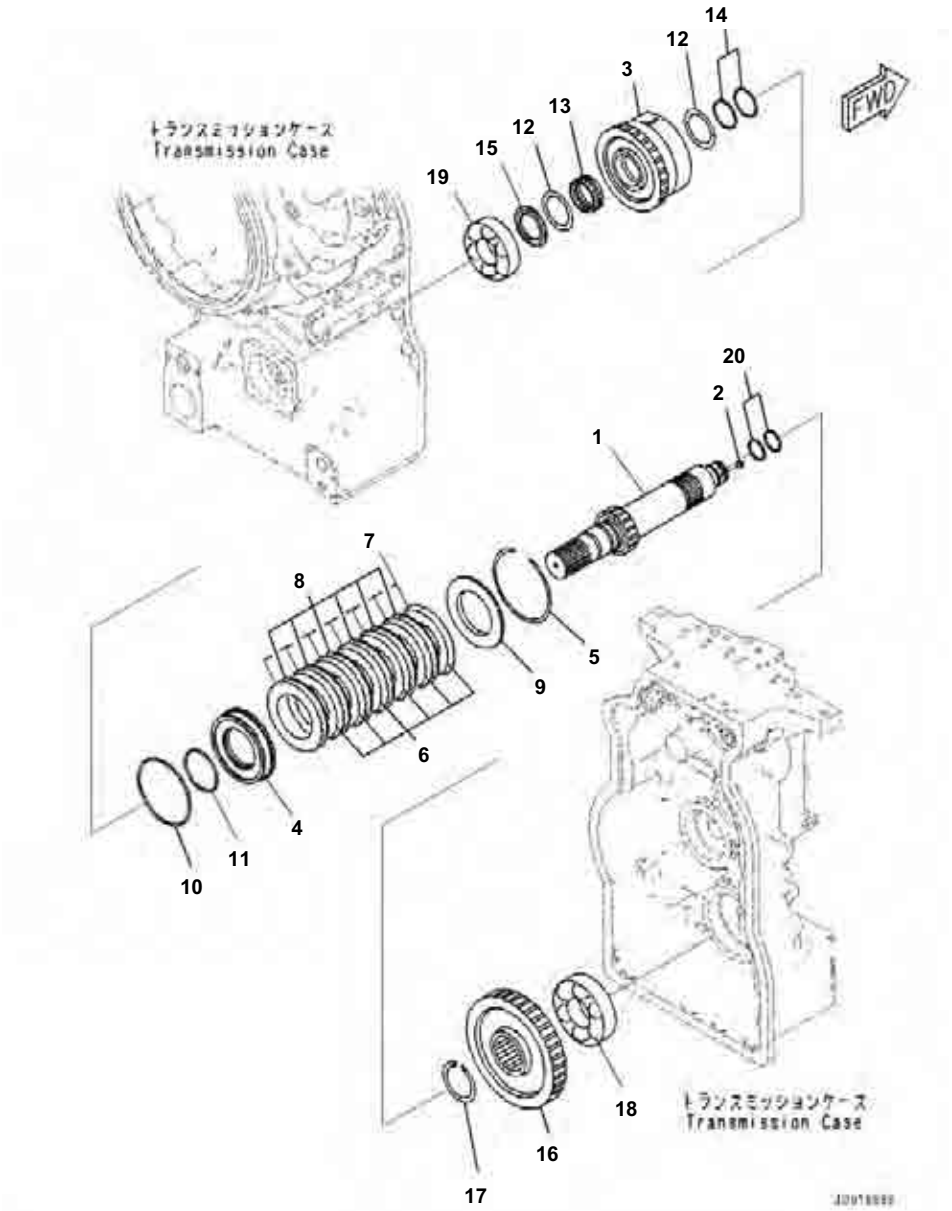

Transmission, 4th Speed Clutch

Index	Code	Part Number	Description	Qty	Serial No.
		23B-13-70000	Transmission Assembly	1	B40001-
		23B-15-72040	· Clutch Assembly	1	B40001-
1		23B-15-72241	· · Shaft,Output	1	B40001-
2		56D-15-29790	· · Plug	1	B40001-
3		23B-15-72590	· · Housing,4th	1	B40001-
4		714-23-12690	· · Piston, Range	1	B40001-
5		419-15-12140	· · Ring, Snap	1	B40001-
6		714-12-19711	· · Disc, T=2.2mm	6	B40001-
7		714-16-19730	· · Plate, T=1.7mm, Separate	7	B40001-
8		56D-15-12710	· · Spring, Wave	6	B40001-
9		714-12-12610	· · Plate, End	1	B40001-
10		714-16-19220	· · Seal Ring, (Kit : K01)	1	B40001-
11		714-07-19320	· · Seal Ring, (Kit : K01)	1	B40001-
12		714-08-19570	· · Washer, Thrust	2	B40001-
13		714-23-19430	· · Bearing, Needle	1	B40001-
14		714-23-19210	· · Seal Ring, (Kit : K01)	2	B40001-
15		714-23-12710	· · Spacer	1	B40001-
16		23B-15-72550	· · Gear,Output	1	B40001-
17		04064-08530	· · Ring, Snap	1	B40001-
18		06040-06315	· · Bearing	1	B40001-
19		06040-06313	· · Bearing	1	B40001-
20		419-15-12122	· Ring, (Kit : K01)	2	B40001-

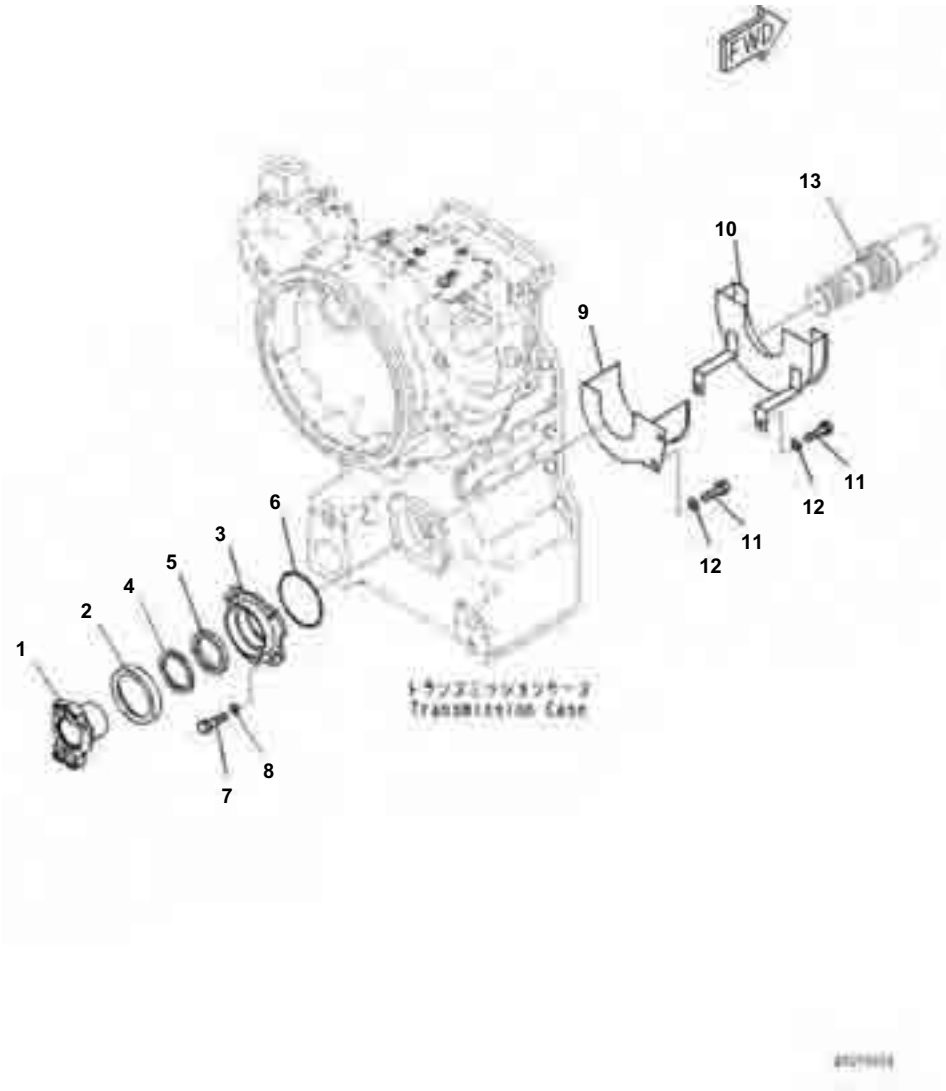

Transmission, Output Coupling

Index	Code	Part Number	Description	Qty	Serial No.
		23B-13-70000	Transmission Assembly	1	B40001-
		23B-15-74110	･ Coupling Assembly	1	B40001-
1	C1		･ ･ Coupling,Output	1	B40001-
2		23B-15-74310	･ ･ Cover	1	B40001-
3		23B-15-74810	･ Retainer,Output	1	B40001-
4		714-12-19170	･ Seal, Dust, (Kit : K01)	1	B40001-
5		714-12-19121	･ Seal, Oil, (Kit : K01)	1	B40001-
6		07000-72120	･ O-ring, (Kit : K01)	1	B40001-
7		01010-81230	･ Bolt	4	B40001-
8		01643-31232	･ Washer	4	B40001-
9		714-23-14910	･ Shroud	1	B40001-
10		23B-15-74920	･ Shroud	1	B40001-
11		01010-81230	･ Bolt	4	B40001-
12		01643-31232	･ Washer	4	B40001-
13		(23B-15-72241)	Shaft		

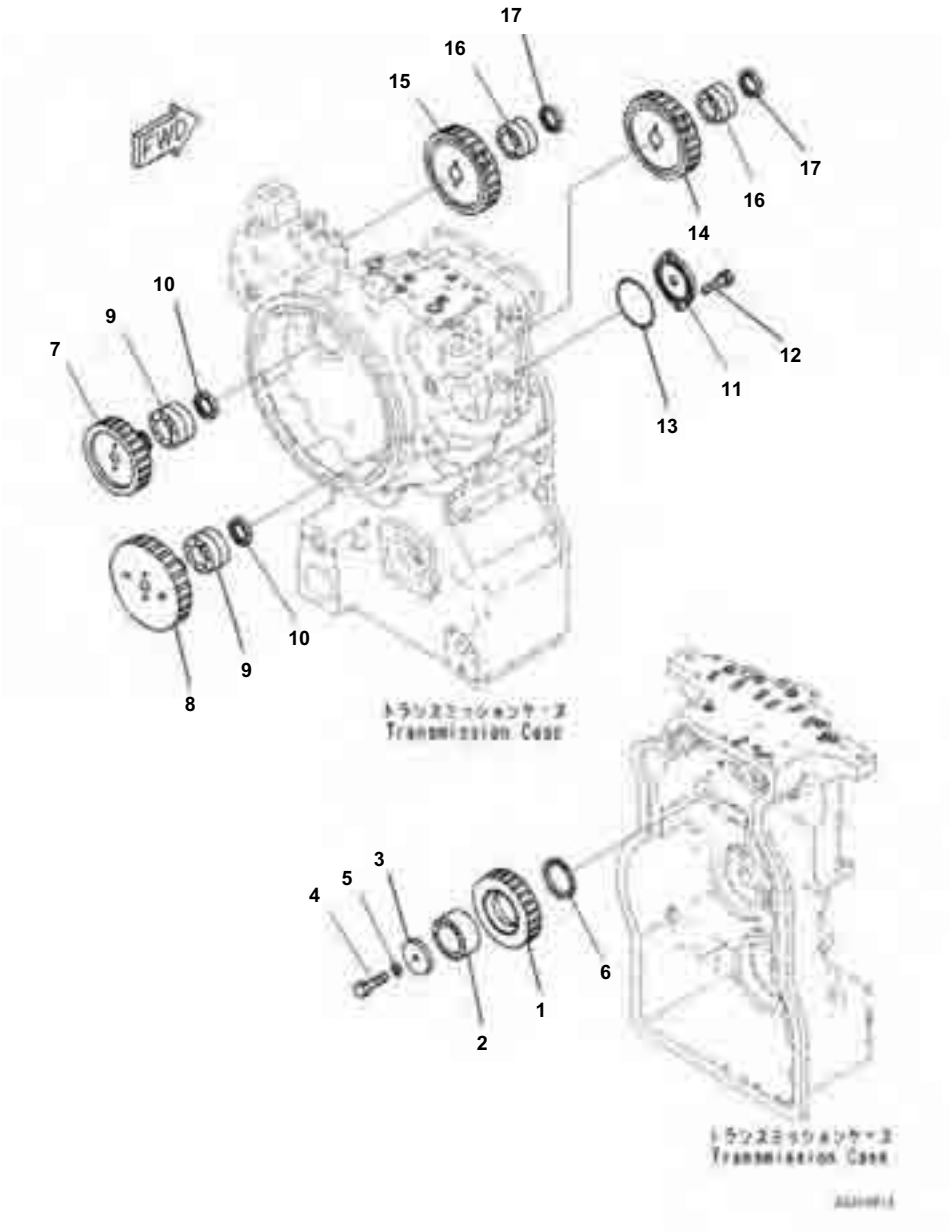

Transmission, Power takeoff Gear

Index	Code	Part Number	Description	Qty	Serial No.
		23B-13-70000	Transmission Assembly	1	B40001-
1		714-23-12492	・ Gear	1	B40001-
2		56D-15-19630	・ Bearing	1	B40001-
3		56D-15-19420	・ Holder	1	B40001-
4		01010-81265	・ Bolt	1	B40001-
5		01643-31232	・ Washer	1	B40001-
6		56D-15-19410	・ Collar	1	B40001-
7		23B-13-73440	・ Gear	1	B40001-
8		23B-13-73411	・ Gear	1	B40001-
9		23B-13-79320	・ Bearing	2	B40001-
10		01530-04812	・ Nut, Lock	2	B40001-
11		23B-15-73230	・ Cover	1	B40001-
12		01010-81030	・ Bolt	2	B40001-
13		07000-72100	・ O-ring, (Kit : K01)	1	B40001-
14		23B-13-73420	・ Gear	1	B40001-
15		23B-13-73430	・ Gear	1	B40001-
16		23B-13-79310	・ Bearing	2	B40001-
17		01530-04812	・ Nut, Lock	2	B40001-

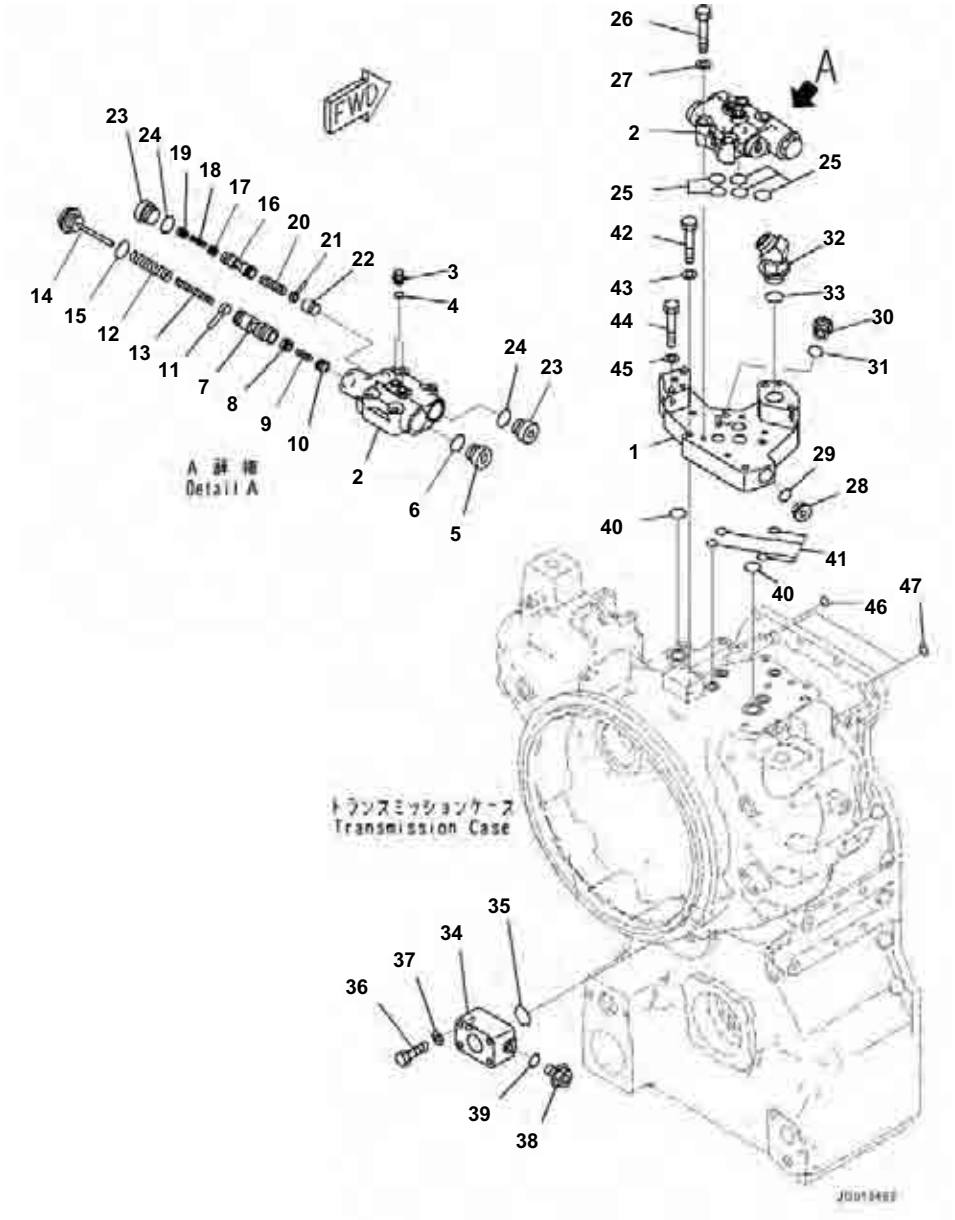

Index	Code	Part Number	Description	Qty	Serial No.
		23B-13-70000	Transmission Assembly	1	B40001-
		23B-15-75100	· Valve Assembly	1	B40001-
1		23B-15-75131	· · Seat, Valve	1	B40001-
		23C-15-66000	· · Valve Assembly, Relief	1	B40001-
2	C1		· · · Valve Body	1	B40001-
3		708-8E-16150	· · · Plug	2	B40001-
4		07002-61023	· · · O-ring, (Kit : K02)	2	B40001-
5		14X-15-15850	· · · Plug	1	B40001-
6		07002-63034	· · · O-ring, (Kit : K02)	1	B40001-
7	C1		· · · Valve	1	B40001-
8		426-15-15490	· · · Valve	1	B40001-
9		562-15-16110	· · · Spring	1	B40001-
10		426-15-15480	· · · Valve	1	B40001-
11		56B-15-16660	· · · Shim, T=0.50mm	7	B40001-
12		56B-15-16250	· · · Spring	1	B40001-
13		426-15-16261	· · · Spring, L=108.0mm	1	B40001-
14		426-15-15810	· · · Plug	1	B40001-
15		07002-63034	· · · O-ring, (Kit : K02)	1	B40001-
16	C1		· · · Spool	1	B40001-
17		104-15-25490	· · · Valve	1	B40001-
18		125-15-15290	· · · Spring	1	B40001-
19		104-15-25480	· · · Valve	1	B40001-
20		14X-15-16210	· · · Spring	1	B40001-
21		175-15-56470	· · · Shim, T=0.50mm	2	B40001-
22		12H-15-14140	· · · Guide	1	B40001-
23		14X-15-15850	· · · Plug	2	B40001-
24		07002-63034	· · · O-ring, (Kit : K02)	2	B40001-
25		07000-73030	· · O-ring, (Kit : K02)	5	B40001-
26		01010-81070	· · Bolt	4	B40001-
27		01643-31032	· · Washer	4	B40001-
28		720-2M-15270	· · Plug	3	B40001-
29		07002-62434	· · O-ring, (Kit : K02)	3	B40001-
30		708-7R-11220	· · Plug	1	B40001-
31		07002-61223	· · O-ring, (Kit : K02)	1	B40001-
32		419-62-31530	· · Elbow	1	B40001-
33		07002-63334	· · O-ring, (Kit : K02)	1	B40001-
34		23B-15-75151	· Block	1	B40001-
35		07000-73045	· O-ring, (Kit : K01)	1	B40001-
36		01010-81070	· Bolt	4	B40001-
37		01643-31032	· Washer	4	B40001-
38		708-8E-16150	· Plug	1	B40001-
39		07002-61023	· O-ring, (Kit : K01)	1	B40001-
40		07000-73032	· O-ring, (Kit : K01)	2	B40001-
41		07000-72022	· O-ring, (Kit : K01)	4	B40001-
42		01010-81060	· Bolt	2	B40001-
43		01643-31032	· Washer	2	B40001-

GD655-5 S/N B40001-UP
Transmission, Relief Valve

Index	Code	Part Number	Description	Qty	Serial No.
44		01011-81005	Bolt	4	B40001-
45		01643-31032	Washer	4	B40001-
46		07000-73032	O-ring, (Kit : K01)	1	B40001-
47		07000-72022	O-ring, (Kit : K01)	2	B40001-

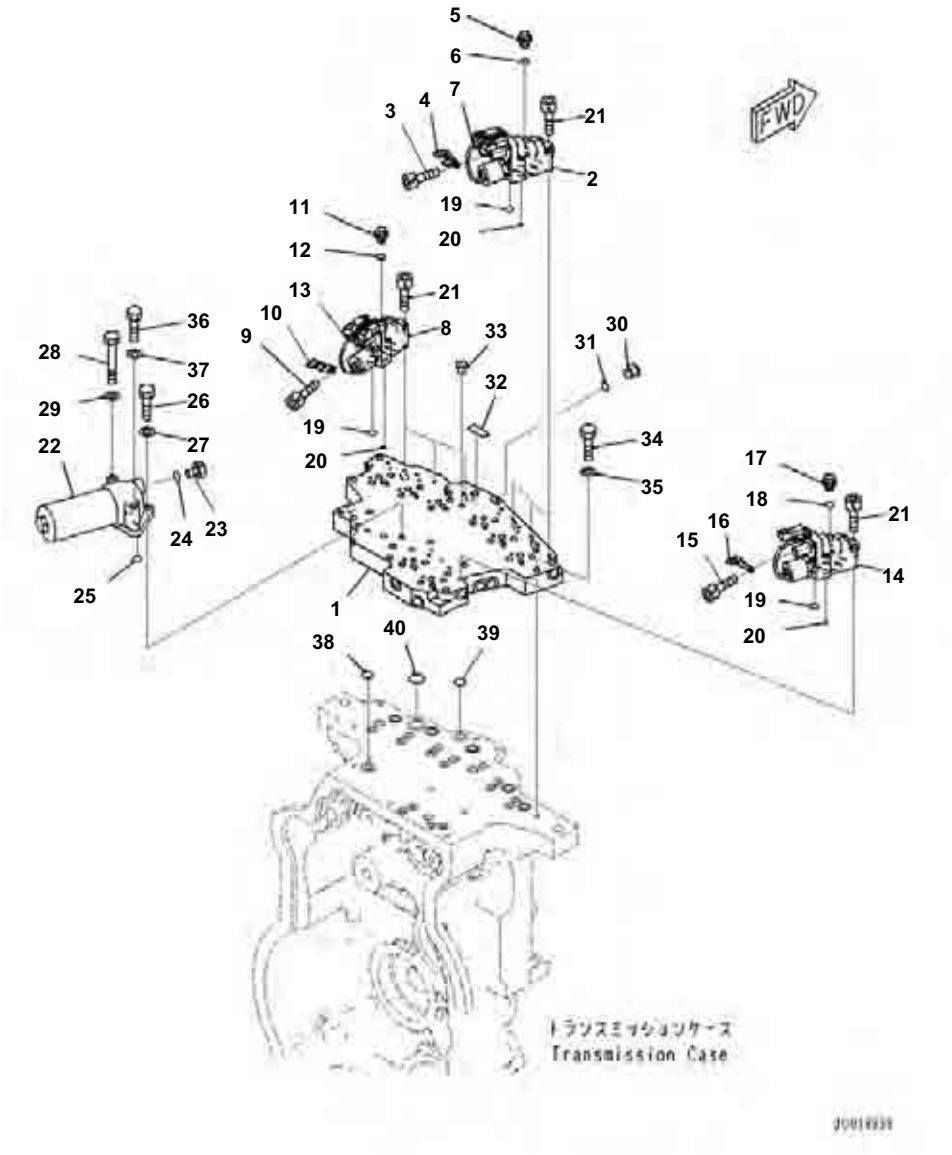

Index	Code	Part Number	Description	Qty	Serial No.
		23B-13-70000	Transmission Assembly	1	B40001-
		23B-15-75000	· Valve Assembly	1	B40001-
1	C1		· · Seat, Valve	1	B40001-
2		23C-15-65200	· · Valve Assembly	4	B40001-
3		01252-60510	· · · Bolt	4	B40001-
4		714-23-15690	· · · Bracket	1	B40001-
5		708-8E-16150	· · · Plug	1	B40001-
6		07002-61023	· · · O-ring, (Kit : K02)	1	B40001-
7		08034-00310	· · · Band	1	B40001-
8		14X-15-55600	· · ECMV Assembly	3	B40001-
9		01252-60510	· · · Bolt	4	B40001-
10		714-23-15690	· · · Bracket	1	B40001-
11		708-8E-16150	· · · Plug	1	B40001-
12		07002-61023	· · · O-ring, (Kit : K02)	1	B40001-
13		08034-00310	· · · Band	1	B40001-
14		714-07-45600	· · ECMV Assembly	1	B40001-
15		01252-60510	· · · Bolt	4	B40001-
16		425-15-35330	· · · Bracket	1	B40001-
17		708-8E-16150	· · · Plug	1	B40001-
18		07002-61023	· · · O-ring, (Kit : K02)	1	B40001-
19		07000-72015	· · O-ring, (Kit : K02)	32	B40001-
20		07000-71007	· · O-ring, (Kit : K02)	8	B40001-
21		01252-70650	· · Bolt	32	B40001-
22		569-15-51721	· · Filter Assembly	1	B40001-
		569-15-51732	· · · Element Assembly	1	B40001-
		07000-A2060	· · · O-ring, (Kit : K02)	1	B40001-
23		07040-11812	· · Plug	1	B40001-
24		07002-61823	· · O-ring, (Kit : K02)	1	B40001-
25		07000-73022	· · O-ring, (Kit : K02)	2	B40001-
26		01010-81030	· · Bolt	1	B40001-
27		01643-31032	· · Washer	1	B40001-
28		01010-81080	· · Bolt	1	B40001-
29		01643-31032	· · Washer	1	B40001-
30		708-7R-11220	· · Plug	16	B40001-
31		07002-61223	· · O-ring, (Kit : K02)	16	B40001-
32	C2	700-11-31940	· · Plate, Name (Limited Supply)	1	B40001-
33		07049-01012	· · Plug	1	B40001-
34		01010-81060	· Bolt	10	B40001-
35		01643-31032	· Washer	10	B40001-
36		01011-81020	· Bolt	1	B40001-
37		01643-31032	· Washer	1	B40001-
38		07000-72015	· O-ring, (Kit : K01)	19	B40001-
39		07000-72022	· O-ring, (Kit : K01)	7	B40001-
40		07000-73028	· O-ring, (Kit : K01)	1	B40001-

Reference:F4320-001010 Page:F002010

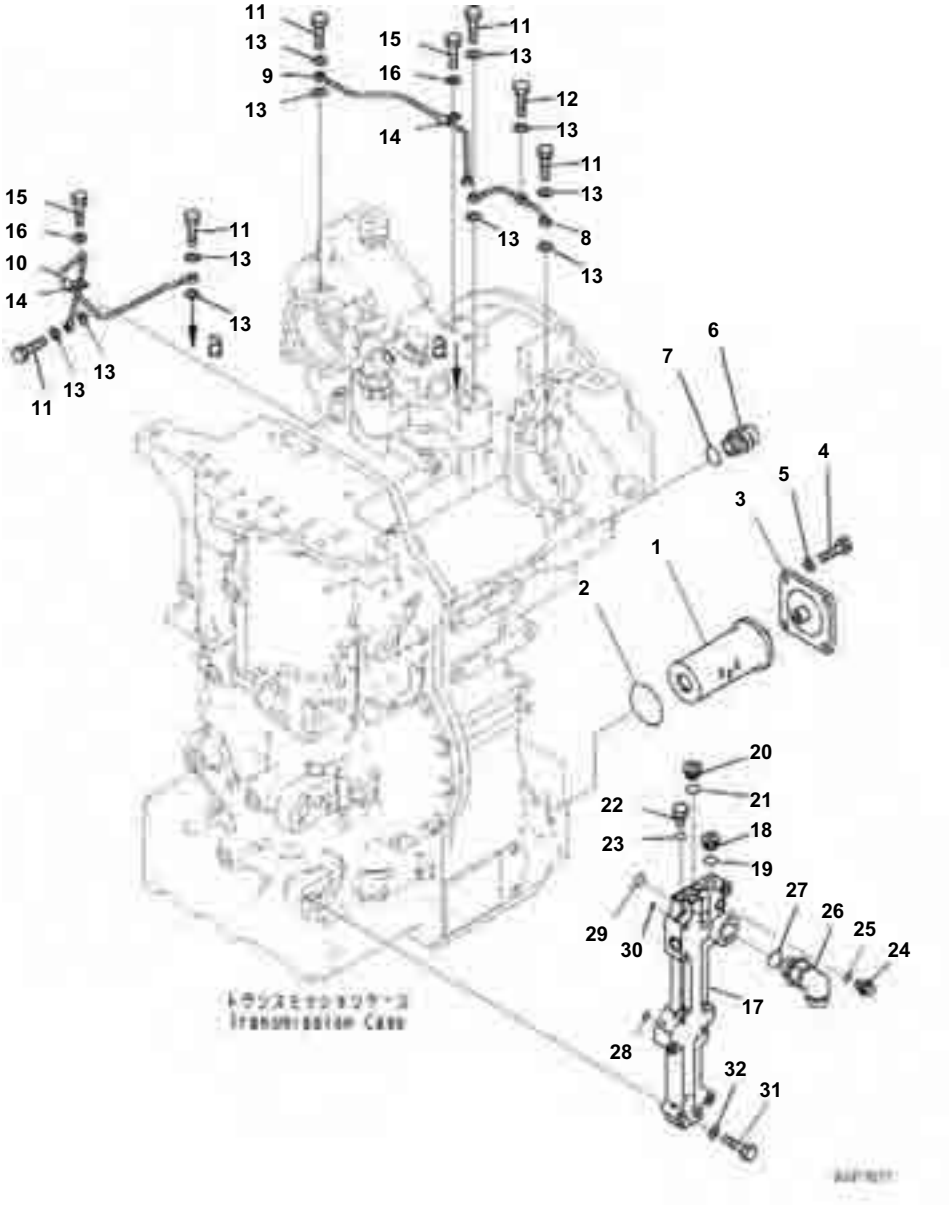

Transmission, Piping

Index	Code	Part Number	Description	Qty	Serial No.
		23B-13-70000	Transmission Assembly	1	B40001-
1		56D-15-19311	･ Strainer	1	B40001-
2		07000-72105	･ O-ring, (Kit : K01)	1	B40001-
3		14X-49-12340	･ Cover	1	B40001-
4		01010-81240	･ Bolt	4	B40001-
5		01643-31232	･ Washer	4	B40001-
6		20U-62-41720	･ Nipple	1	B40001-
7		07002-63334	･ O-ring, (Kit : K03)	1	B40001-
8		23B-13-78111	･ Tube	2	B40001-
9		23B-13-78120	･ Tube	1	B40001-
10		23B-13-78131	･ Tube	1	B40001-
11		07206-30710	･ Bolt, Joint	6	B40001-
12		23B-15-79810	･ Bolt, Joint	1	B40001-
13		07005-01012	･ Seal, Washer, (Kit : K03)	15	B40001-
14		04434-50610	･ Clip	2	B40001-
15		01010-81020	･ Bolt	2	B40001-
16		01643-31032	･ Washer	2	B40001-
		23B-15-75200	･ Seat Assembly	1	B40001-
17		23B-15-75161	･ ･ Seat	1	B40001-
18		720-2M-15270	･ ･ Plug	1	B40001-
19		07002-62434	･ ･ O-ring, (Kit : K01)	1	B40001-
20		723-11-15110	･ ･ Plug	4	B40001-
21		07002-61623	･ ･ O-ring, (Kit : K01)	4	B40001-
22		708-7R-11220	･ ･ Plug	5	B40001-
23		07002-61223	･ ･ O-ring, (Kit : K01)	5	B40001-
24		708-8E-16150	･ ･ Plug	1	B40001-
25		07002-61023	･ ･ O-ring, (Kit : K01)	1	B40001-
26		21W-62-42640	･ Elbow	1	B40001-
27		07002-63334	･ O-ring, (Kit : K03)	1	B40001-
28		07000-72022	･ O-ring, (Kit : K01)	1	B40001-
29		07000-73028	･ O-ring, (Kit : K01)	3	B40001-
30		07000-72015	･ O-ring, (Kit : K01)	7	B40001-
31		01010-81060	･ Bolt	10	B40001-
32		01643-31032	･ Washer	10	B40001-

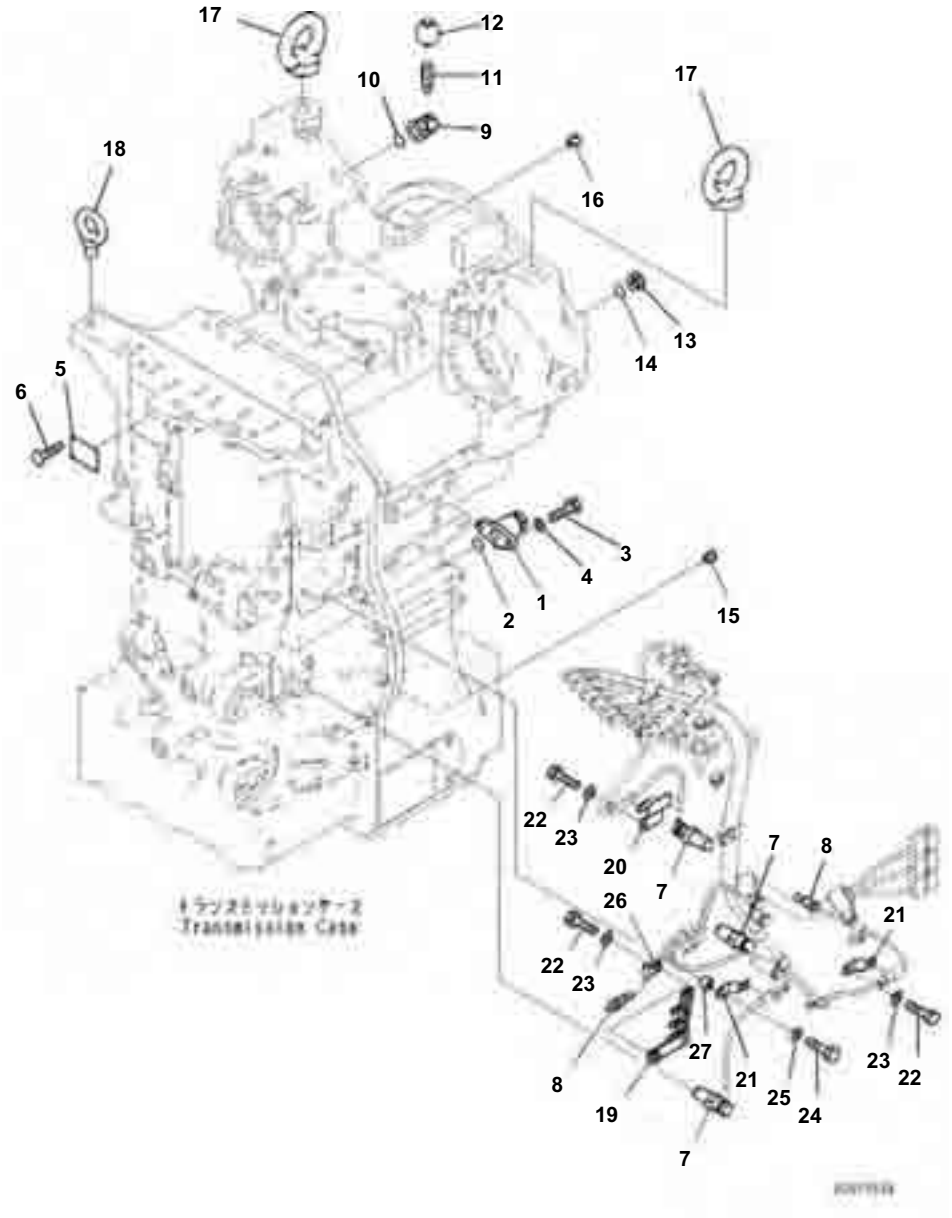

Index	Code	Part Number	Description	Qty	Serial No.
		23B-13-70000	Transmission Assembly	1	B40001-
1		6693-22-5600	· Valve Assembly	1	B40001-
2		07000-73028	· O-ring, (Kit : K01)	1	B40001-
3		01010-81030	· Bolt	2	B40001-
4		01643-31032	· Washer	2	B40001-
5	C2	09608-05080	· Plate, Name (Limited Supply)	1	B40001-
6		04418-13060	· Screw	4	B40001-
7		7861-93-2330	· Sensor	3	B40001-
8		7861-93-3320	· Sensor, Temperature	2	B40001-
9		714-23-18280	· Elbow	1	B40001-
10		07002-62434	· O-ring, (Kit : K01)	1	B40001-
11		170-21-11190	· Elbow	1	B40001-
12		07030-00252	· Breather	1	B40001-
13		720-2M-15270	· Plug	1	B40001-
14		07002-62434	· O-ring, (Kit : K01)	1	B40001-
15		07049-01215	· Plug	5	B40001-
16		07049-01012	· Plug	2	B40001-
17		04530-13045	· Bolt	2	B40001-
18		04530-12030	· Bolt, Eye	2	B40001-
19		23B-06-71871	· Bracket	1	B40001-
20		23B-06-71710	· Bracket	1	B40001-
21		08193-21012	· Clip	2	B40001-
22		01010-81020	· Bolt	4	B40001-
23		01643-31032	· Washer	4	B40001-
24		01010-81035	· Bolt	1	B40001-
25		01643-31032	· Washer	1	B40001-
26		600-051-2050	· Clip	1	B40001-
27		201-03-29160	· Spacer	1	B40001-

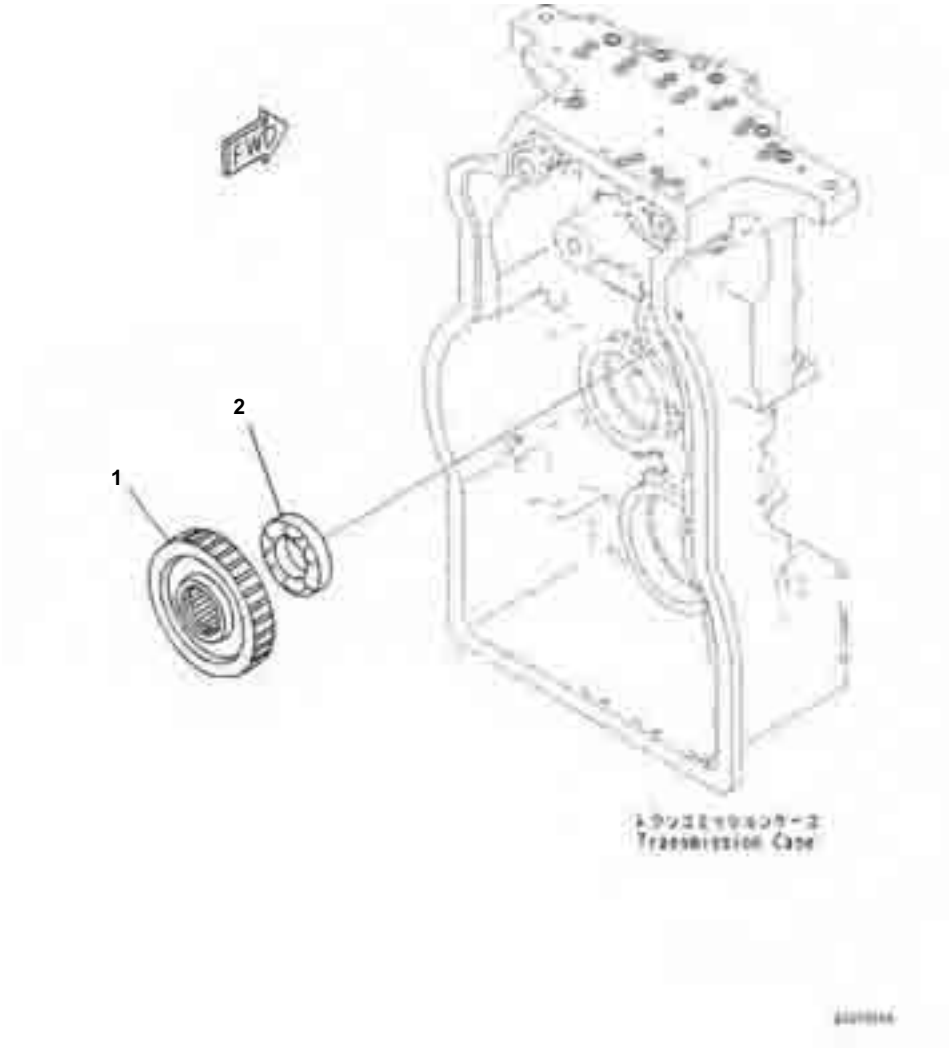

Transmission, Forward High and 1st Speed Gear

Index	Code	Part Number	Description	Qty	Serial No.
		23B-13-70000	Transmission Assembly	1	B40001-
1		23B-15-72560	' Gear,Upper	1	B40001-
2		714-23-19330	' Bearing	1	B40001-

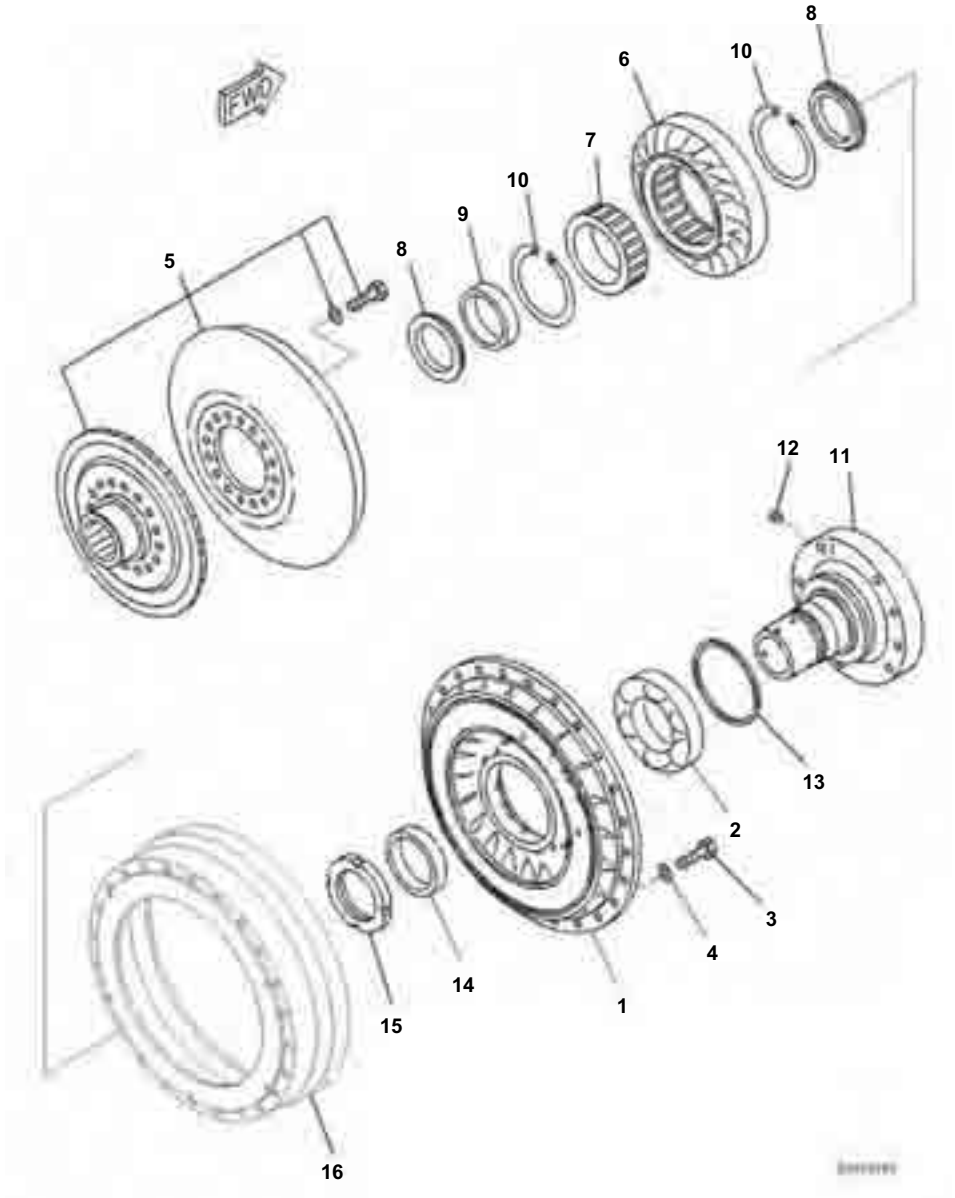

Transmission, Torque Converter (1/3)

Index	Code	Part Number	Description	Qty	Serial No.
		23B-13-70000	Transmission Assembly	1	B40001-
		23B-13-71000	· Converter Assembly	1	B40001-
1		23B-13-71120	· · Pump	1	B40001-
2		711-16-11560	· · Bearing	1	B40001-
3		01010-81030	· · Bolt	24	B40001-
4		01643-31032	· · Washer	24	B40001-
5		23B-13-71511	· · Turbine	1	B40001-
	C1		· · · Turbine	1	B40001-
	C1		· · · Boss	1	B40001-
	C1		· · · Bolt	16	B40001-
	C1		· · · Washer	16	B40001-
6		23B-13-72110	· · Stator	1	B40001-
7		711-61-12120	· · Race	1	B40001-
8		23B-13-72140	· · Bushing	2	B40001-
9		711-61-12160	· · Free Wheel	1	B40001-
10		04077-00120	· · Ring	2	B40001-
		23B-13-72510	· · Shaft	1	B40001-
11	C1		· · · Shaft	1	B40001-
12		07043-70108	· · · Plug	2	B40001-
13		07018-31255	· · Ring	1	B40001-
14		711-90-11131	· · Spacer	1	B40001-
15		711-61-42680	· · Nut	1	B40001-
16		(711-90-19310)	Bearing		

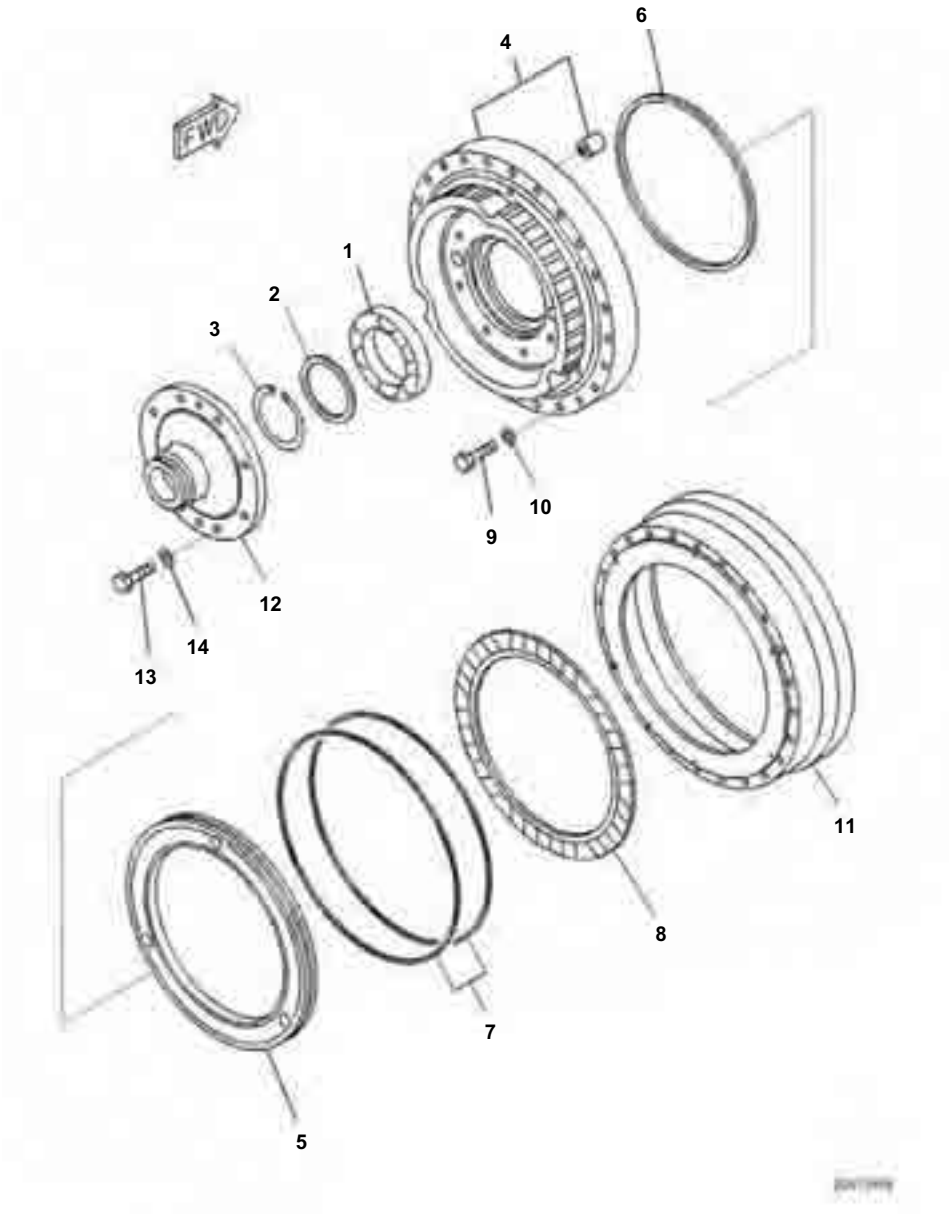

Transmission, Torque Converter (2/3)

Index	Code	Part Number	Description	Qty	Serial No.
		23B-13-70000	Transmission Assembly	1	B40001-
		23B-13-71000	· Converter Assembly	1	B40001-
1		711-90-19310	· · Bearing	1	B40001-
2		711-53-11770	· · Plate	1	B40001-
3		04064-08025	· · Ring, Snap	1	B40001-
4		23B-13-77110	· · Housing	1	B40001-
	C1		· · · Housing	1	B40001-
	C1		· · · Pin	3	B40001-
5		23B-13-77210	· · Piston	1	B40001-
6		566-15-49210	· · Ring	2	B40001-
7		568-15-12850	· · Seal Ring	2	B40001-
8		424-15-12711	· · Disc	1	B40001-
9		01010-81060	· · Bolt	24	B40001-
10		01643-31032	· · Washer	24	B40001-
11		23B-13-71210	· · Case	1	B40001-
12		711-90-11253	· · Pilot	1	B40001-
13		01010-81040	· · Bolt	8	B40001-
14		01643-31032	· · Washer	8	B40001-

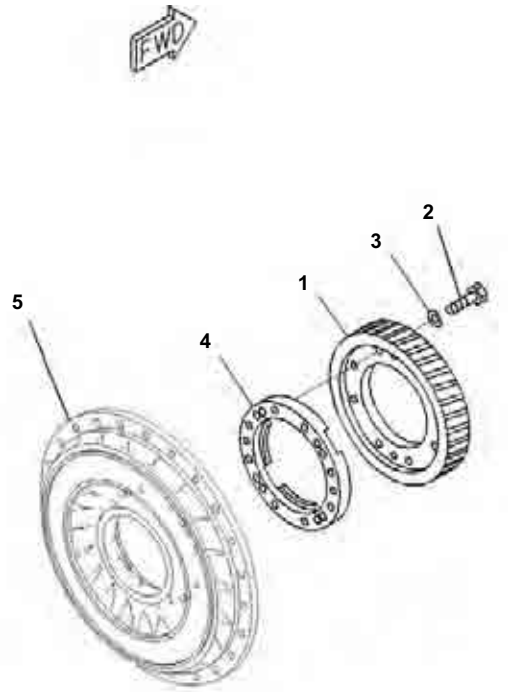

Transmission, Torque Converter (3/3)

Index	Code	Part Number	Description	Qty	Serial No.
		23B-13-70000	Transmission Assembly	1	B40001-
		23B-13-71000	' Converter Assembly	1	B40001-
1		711-90-11142	' ' Gear	1	B40001-
2		01010-81060	' ' Bolt	8	B40001-
3		01643-31032	' ' Washer	8	B40001-
4		23B-13-71190	' ' Guide	1	B40001-
5		(23B-13-71120)	Pump		

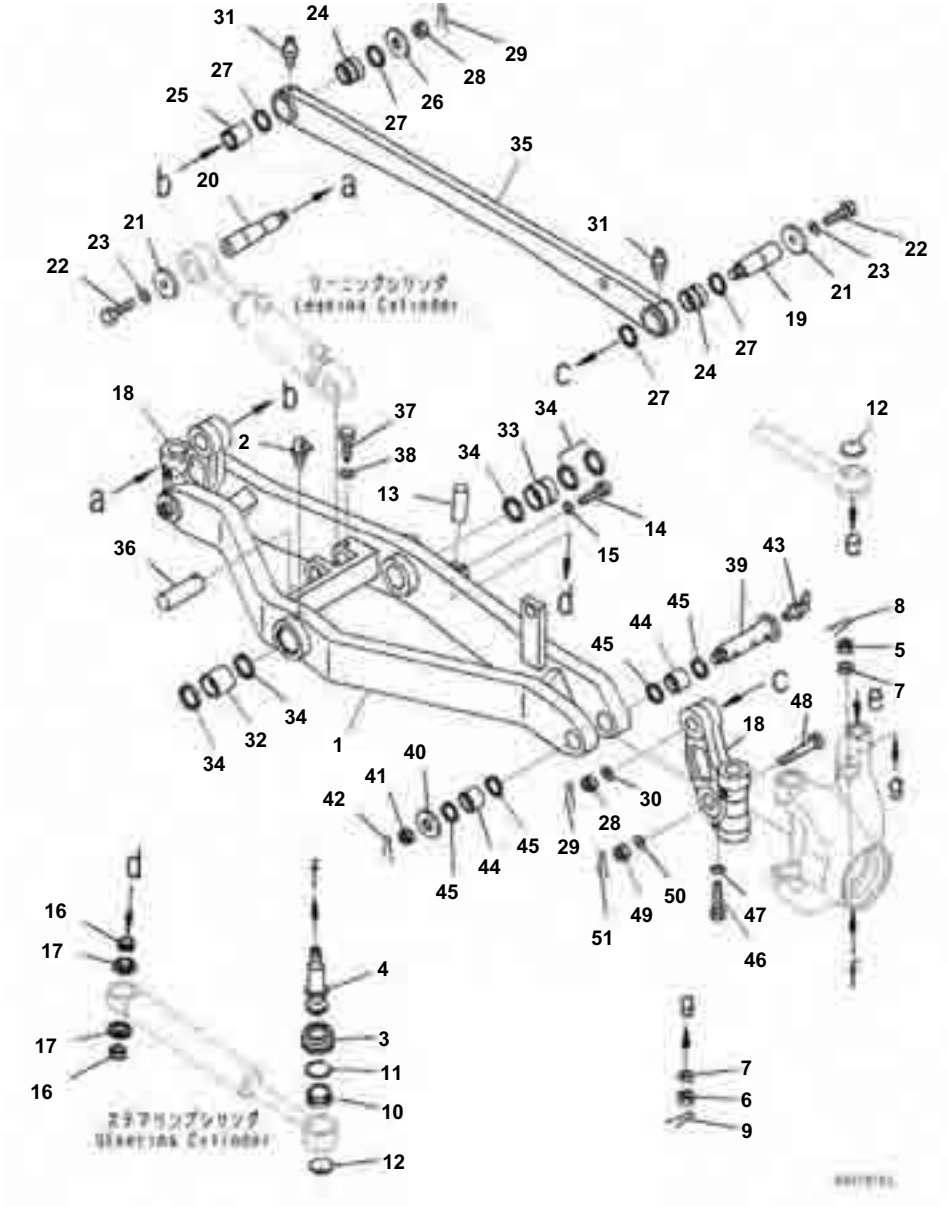

Front Axle, Without Steering Cylinder Guard, Axle Support

Index	Code	Part Number	Description	Qty	Serial No.
1		23B-27-31113	Support, Axle	1	B40001-
2		07020-00900	Fitting, Grease	1	B40001-
3		23B-27-31840	Boot	2	B40001-
4		23C-27-51141	Stud, Ball	2	B40001-
5		01592-32427	Nut, Slotted	2	B40001-
6		01593-32414	Nut, Slotted	2	B40001-
7		23D-27-11940	Washer	4	B40001-
8		04050-15045	Pin, Cotter	2	B40001-
9		04050-15035	Pin, Cotter	2	B40001-
10		23B-27-11800	Bushing Assembly	2	B40001-
11		23B-27-31570	Ring	2	B40001-
12		23B-27-11360	Plug	4	B40001-
13		23B-27-31540	Pin	2	B40001-
14		23B-27-11680	Bolt	2	B40001-
15		01643-31232	Washer	2	B40001-
16		23B-27-31480	Spacer	4	B40001-
17		235-27-11750	Boot	4	B40001-
18		23B-27-71161	Bracket	2	B40001-
19		23B-27-11310	Pin	1	B40001-
20		23B-27-11330	Pin	1	B40001-
21		23B-27-11340	Holder	2	B40001-
22		01016-52045	Bolt	2	B40001-
23		01643-32060	Washer	2	B40001-
24		23B-27-11630	Bushing	2	B40001-
25		23B-27-11390	Spacer	1	B40001-
26		23B-27-11640	Washer	1	B40001-
27		07145-00050	Seal, Dust	4	B40001-
28		01593-33018	Nut, Slotted	2	B40001-
29		04050-16045	Pin, Cotter	2	B40001-
30		01643-33080	Washer	1	B40001-
31		07020-00000	Fitting, Grease	2	B40001-
32		23B-27-11610	Bushing	1	B40001-
33		23B-27-11670	Bushing	1	B40001-
34		07145-00055	Seal, Dust	5	B40001-
35		23B-27-31234	Rod, Leaning	1	B40001-
36		23B-27-11530	Pin	1	B40001-
37		23B-27-11680	Bolt	1	B40001-
38		01643-31232	Washer	1	B40001-
39		23B-27-31520	Pin	2	B40001-
40		23B-27-11640	Washer	2	B40001-
41		01593-33018	Nut, Slotted	2	B40001-
42		04050-16045	Pin, Cotter	2	B40001-
43		07020-00675	Fitting, Grease	2	B40001-
44		23B-27-11620	Bushing	4	B40001-
45		07145-00045	Seal, Dust	8	B40001-
46		23B-27-71650	Bolt	2	B40001-

GD655-5 S/N B40001-UP

Front Axle, Without Steering Cylinder Guard, Axle Support

Index	Code	Part Number	Description	Qty	Serial No.
47		01643-31645	Washer	2	B40001-
48		01093-51200	Bolt, Reamer	2	B40001-
49		01593-31210	Nut, Slotted	2	B40001-
50		01643-31232	Washer	2	B40001-
51		04050-13020	Pin, Cotter	2	B40001-

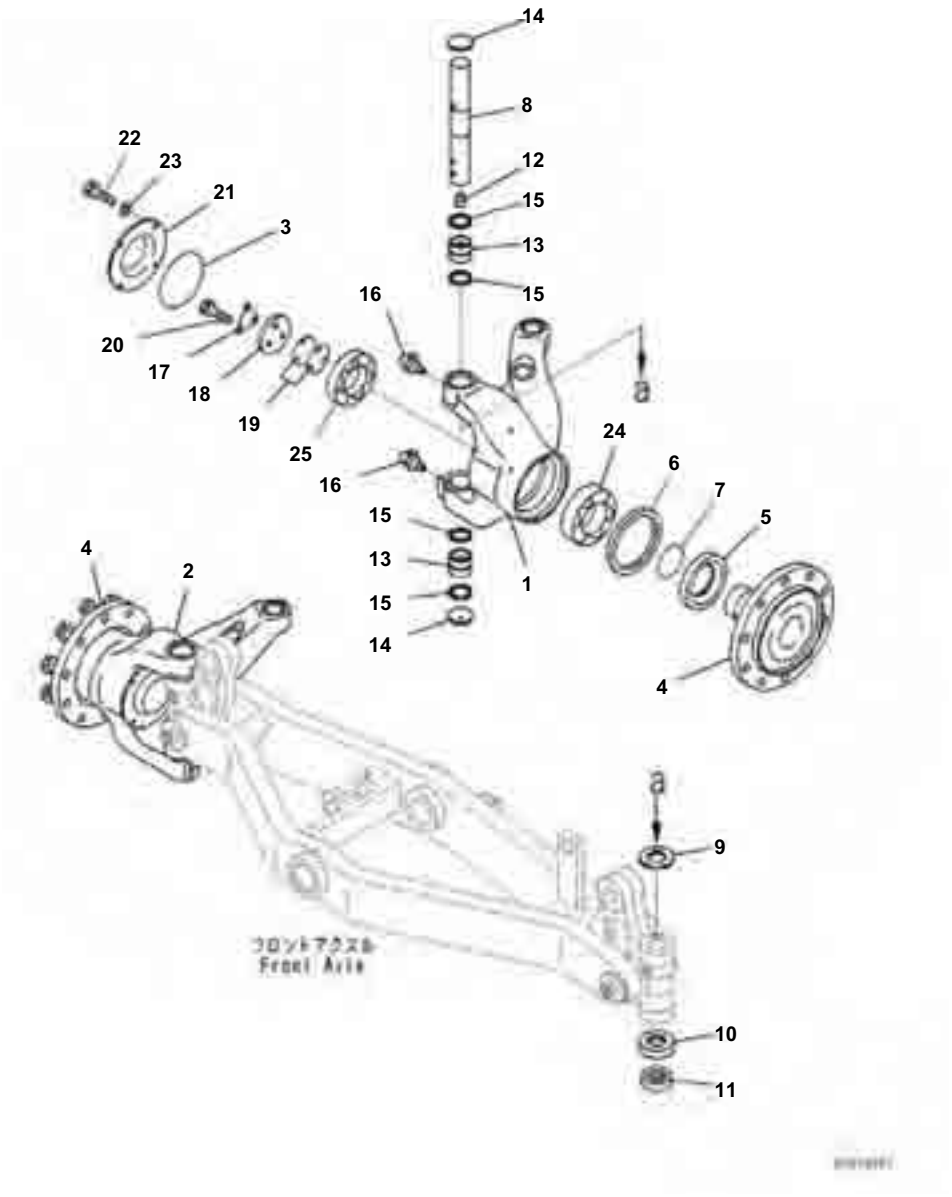

Front Axle, Without Steering Cylinder Guard, Housing

Index	Code	Part Number	Description	Qty	Serial No.
1		23B-27-71141	Housing,LHS	1	B40001-
2		23B-27-71151	Housing,RHS	1	B40001-
3		07000-12145	O-ring	2	B40001-
4		23B-27-31130	Shaft	2	B40001-
5		23B-27-11170	Spacer	2	B40001-
6		07012-10145	Seal, Oil	2	B40001-
7		07000-12085	O-ring	2	B40001-
8		23B-27-11250	Pin	2	B40001-
9		23B-27-11260	Spacer	2	B40001-
10		23B-27-11270	Cover	2	B40001-
11		23B-27-11281	Bearing	2	B40001-
12		07043-00108	Plug, Taper	2	B40001-
13		07144-10405	Bushing	4	B40001-
14		23B-27-11360	Plug	4	B40001-
15		07145-00045	Seal, Dust	8	B40001-
16		07020-00900	Fitting, Grease	4	B40001-
17		23B-27-11890	Plate	2	B40001-
18		23B-27-11190	Holder	2	B40001-
19		23B-27-11860	Shim, T=0.1mm	8	B40001-
		23B-27-11870	Shim, T=0.3mm	4	B40001-
		23B-27-11880	Shim, T=0.5mm	4	B40001-
20		01010-81230	Bolt	6	B40001-
21		23B-27-11180	Cap	2	B40001-
22		01010-81020	Bolt	8	B40001-
23		01643-31032	Washer	8	B40001-
24		06002-32217	Bearing	2	B40001-
25		06002-32216	Bearing	2	B40001-

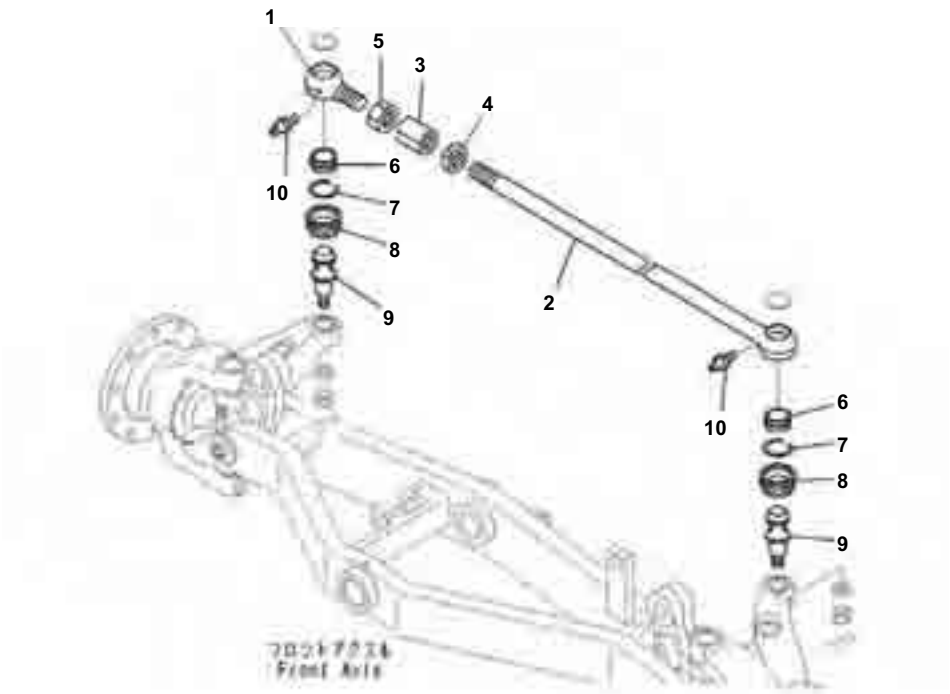

Front Axle, Without Steering Cylinder Guard, Rod

Index	Code	Part Number	Description	Qty	Serial No.
1		23B-27-11441	Rod End,RHS	1	B40001-
2		23B-27-31410	Rod, Tie	1	B40001-
3		23B-27-11460	Joint	1	B40001-
4		23B-27-11450	Nut	1	B40001-
5		01583-13923	Nut	1	B40001-
6		23B-27-11800	Bushing Assembly	2	B40001-
7		23B-27-31570	Ring	2	B40001-
8		23B-27-31840	Boot	2	B40001-
		23B-27-11910	･ Ring, Snap	1	B40001-
		23B-27-11920	･ Ring, Snap	1	B40001-
9		23C-27-51152	Stud, Ball	2	B40001-
10		07020-00000	Fitting, Grease	2	B40001-

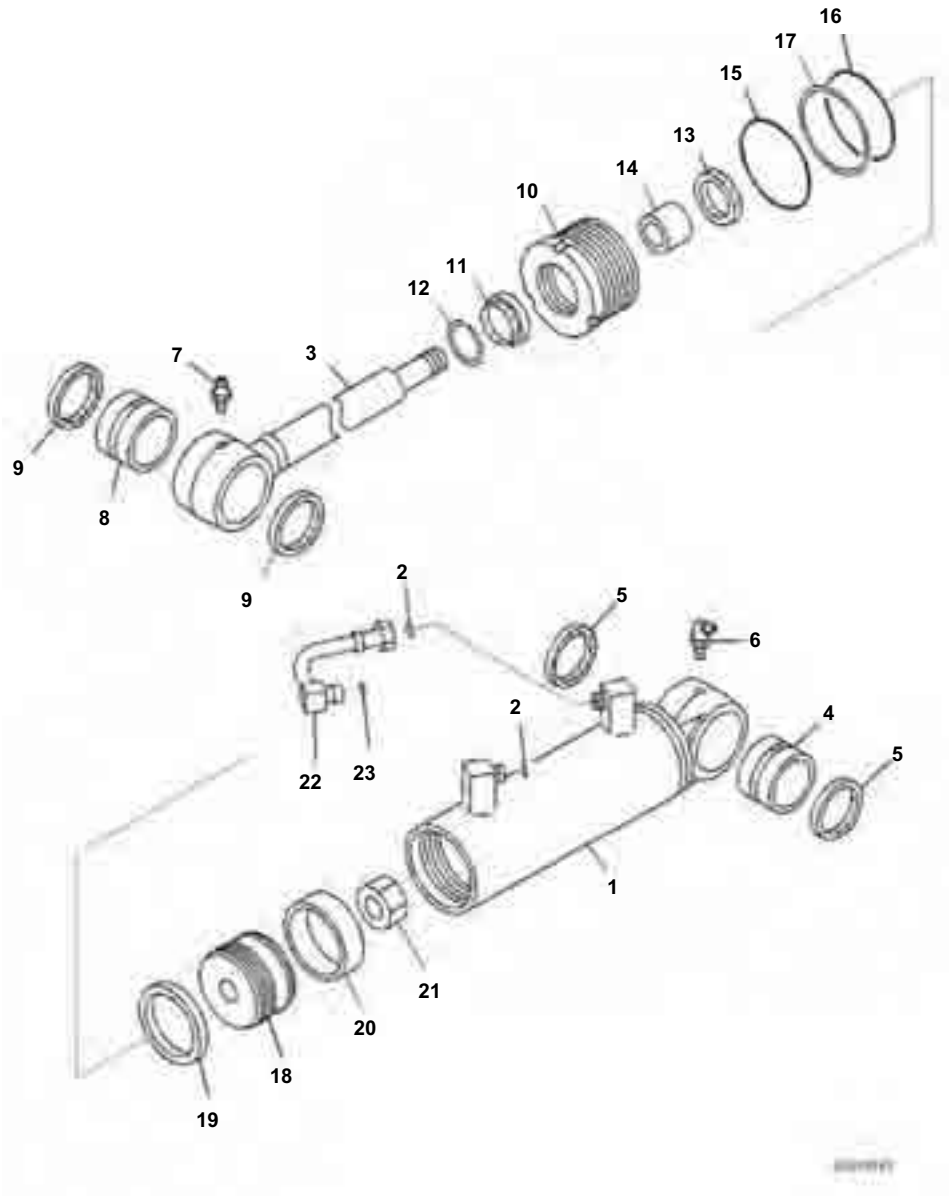

Front Axle, Without Steering Cylinder Guard, Inner Parts, Leaning Cylinder

Index	Code	Part Number	Description	Qty	Serial No.
		707-00-0J470	Cylinder Assembly	1	B40001-
1		707-11-80J60	▪ Cylinder	1	B40001-
2		02896-11009	▪ O-ring, (Kit : K04)	2	B40001-
3		707-58-40J60	▪ Rod, Piston	1	B40001-
4		07144-10405	▪ Bushing	1	B40001-
5		07145-00045	▪ Seal, Dust, (Kit : K04)	2	B40001-
6		07020-00675	▪ Fitting, Grease	1	B40001-
7		07020-00000	▪ Fitting, Grease	1	B40001-
8		707-76-50240	▪ Bushing	1	B40001-
9		07145-00050	▪ Seal, Dust, (Kit : K04)	2	B40001-
10		707-29-80820	▪ Head, Cylinder	1	B40001-
11		707-56-40740	▪ Seal, Dust, (Kit : K04)	1	B40001-
12		07179-12052	▪ Ring, Snap	1	B40001-
13		707-51-40210	▪ Packing, Rod, (Kit : K04)	1	B40001-
14		707-52-15130	▪ Bushing	1	B40001-
15		07000-12080	▪ O-ring, (Kit : K04)	1	B40001-
16		07000-12075	▪ O-ring, (Kit : K04)	1	B40001-
17		07146-02076	▪ Ring, Back-up, (Kit : K04)	1	B40001-
18		707-36-80970	▪ Piston	1	B40001-
19		707-44-80070	▪ Ring, Piston, (Kit : K04)	1	B40001-
20		07156-00810	▪ Ring, Wear, (Kit : K04)	1	B40001-
21		707-67-27030	▪ Nut, Nylon	1	B40001-
22		707-86-38960	Tube	1	B40001-
23		02896-11009	O-ring, (Kit : K04)	1	B40001-

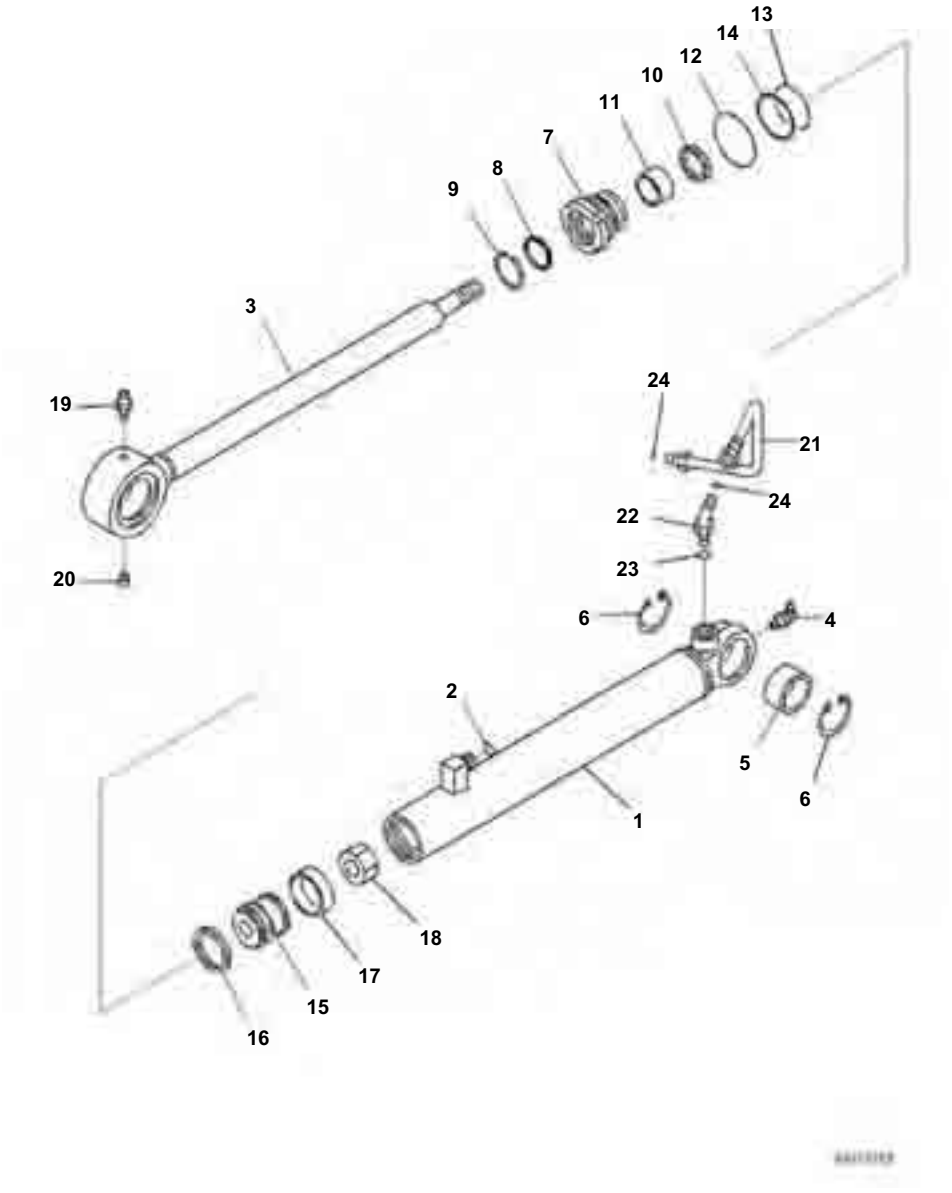

Front Axle, Without Steering Cylinder Guard, Inner Parts, LHS

Index	Code	Part Number	Description	Qty	Serial No.
		707-00-0J430	Cylinder Assembly,LHS	1	B40001-
1		721-11-50660	· Cylinder	1	B40001-
2		02896-11009	· O-ring, (Kit : K05)	1	B40001-
3		707-61-35760	· Rod, Piston	1	B40001-
4		07020-00900	· Fitting, Grease	1	B40001-
5		707-76-35010	· Bushing	1	B40001-
6		04065-05520	· Ring, Snap, for Hole Side	2	B40001-
7		707-29-50981	· Head, Cylinder	1	B40001-
8		707-56-35740	· Seal, Dust, (Kit : K05)	1	B40001-
9		07179-00054	· Ring, Snap	1	B40001-
10		707-51-35210	· Packing, Rod, (Kit : K05)	1	B40001-
11		707-52-15110	· Bushing	1	B40001-
12		07000-13048	· O-ring, (Kit : K05)	1	B40001-
13		07000-13045	· O-ring, (Kit : K05)	1	B40001-
14		707-35-99500	· Ring, Back-up, (Kit : K05)	1	B40001-
15		707-36-50400	· Piston	1	B40001-
16		707-44-50070	· Ring, Piston, (Kit : K05)	1	B40001-
17		10E-63-32390	· Ring, Wear, (Kit : K05)	1	B40001-
18		707-67-20020	· Nut, Nylon	1	B40001-
19		07020-00000	Fitting, Grease	1	B40001-
20		07043-70108	Plug	1	B40001-
21		707-86-38100	Tube,LHS	1	B40001-
22		02782-10315	Elbow	1	B40001-
23		07002-12034	O-ring, (Kit : K05)	1	B40001-
24		02896-11009	O-ring, (Kit : K05)	2	B40001-

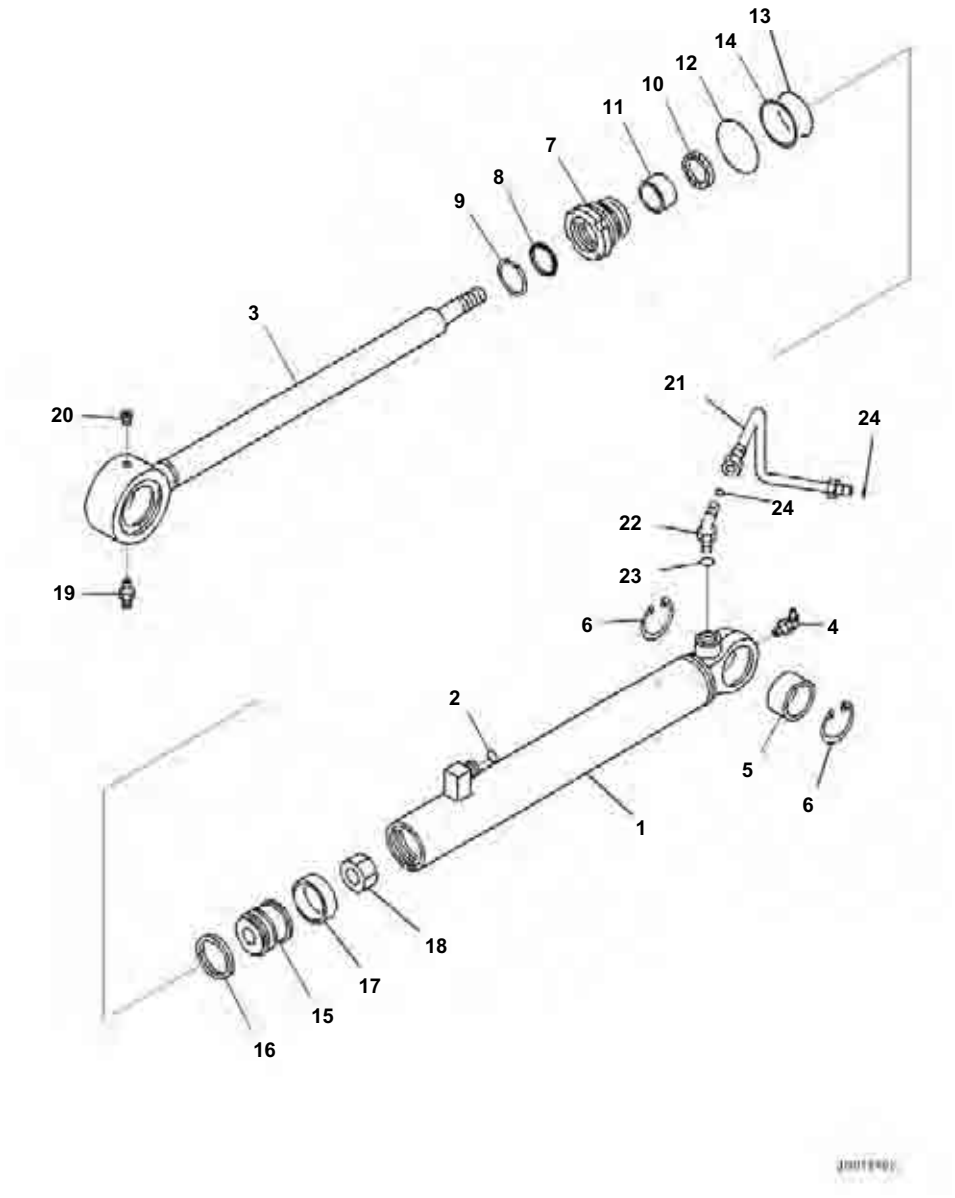

Front Axle, Without Steering Cylinder Guard, Inner Parts, Reduction Gear

Index	Code	Part Number	Description	Qty	Serial No.
		707-00-0J430	Cylinder Group,RHS	1	B40001-
1		721-11-50660	ㆍCylinder	1	B40001-
2		02896-11009	ㆍO-ring, (Kit : K05)	1	B40001-
3		707-61-35760	ㆍRod, Piston	1	B40001-
4		07020-00900	ㆍFitting, Grease	1	B40001-
5		707-76-35010	ㆍBushing	1	B40001-
6		04065-05520	ㆍRing, Snap, for Hole Side	2	B40001-
7		707-29-50981	ㆍHead, Cylinder	1	B40001-
8		707-56-35740	ㆍSeal, Dust, (Kit : K05)	1	B40001-
9		07179-00054	ㆍRing, Snap	1	B40001-
10		707-51-35210	ㆍPacking, Rod, (Kit : K05)	1	B40001-
11		707-52-15110	ㆍBushing	1	B40001-
12		07000-13048	ㆍO-ring, (Kit : K05)	1	B40001-
13		07000-13045	ㆍO-ring, (Kit : K05)	1	B40001-
14		707-35-99500	ㆍRing, Back-up, (Kit : K05)	1	B40001-
15		707-36-50400	ㆍPiston	1	B40001-
16		707-44-50070	ㆍRing, Piston, (Kit : K05)	1	B40001-
17		10E-63-32390	ㆍRing, Wear, (Kit : K05)	1	B40001-
18		707-67-20020	ㆍNut, Nylon	1	B40001-
19		07020-00000	Fitting, Grease	1	B40001-
20		07043-70108	Plug	1	B40001-
21		707-86-38200	Tube,RHS	1	B40001-
22		02782-10315	Elbow	1	B40001-
23		07002-12034	O-ring, (Kit : K05)	1	B40001-
24		02896-11009	O-ring, (Kit : K05)	2	B40001-

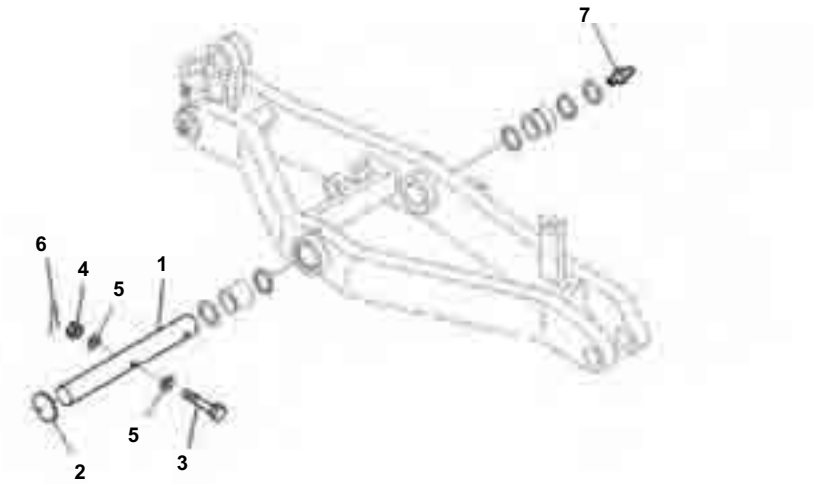

Front Axle, Without Steering Cylinder Guard, Shaft

Index	Code	Part Number	Description	Qty	Serial No.
1		23B-27-11351	Shaft	1	B40001-
2		23B-27-11660	Plug	1	B40001-
3		01093-51640	Bolt, Reamer	1	B40001-
4		01593-31613	Nut, Slotted	1	B40001-
5		01643-31645	Washer	2	B40001-
6		04050-14025	Pin, Cotter	1	B40001-
7		07020-00000	Fitting, Grease	1	B40001-

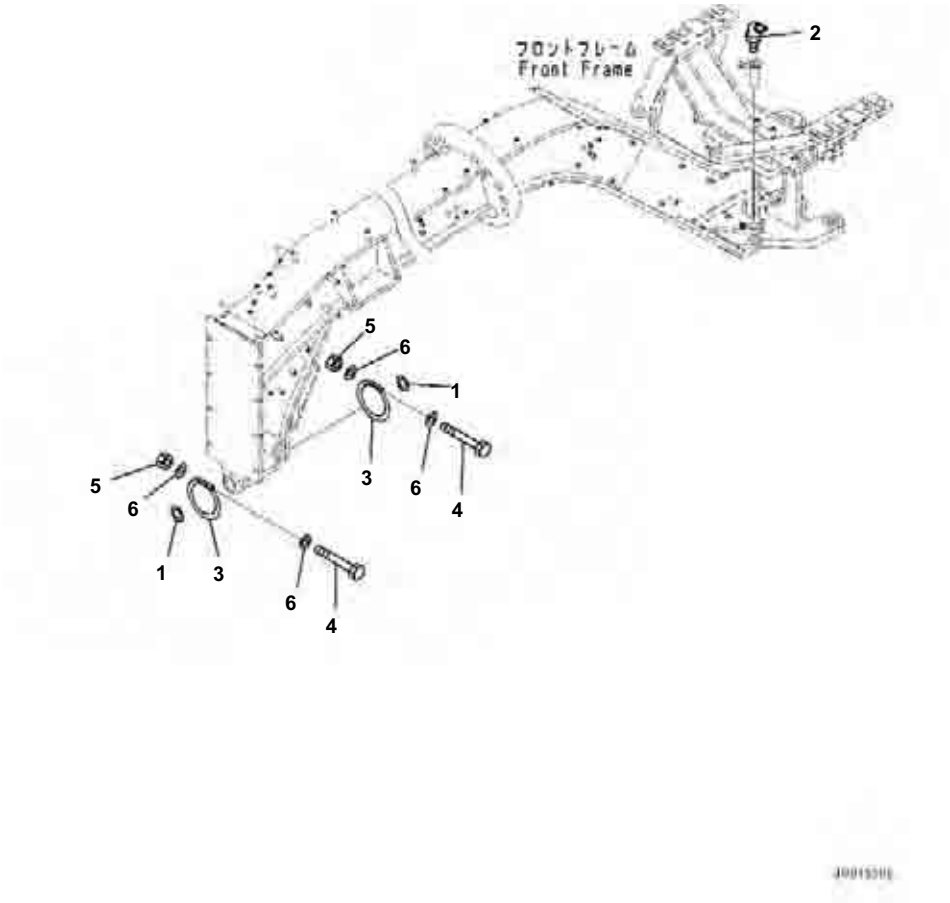

Front Axle, Without Steering Cylinder Guard, Related Parts

Index	Code	Part Number	Description	Qty	Serial No.
1		23B-46-11220	Washer	2	B40001-
2		07020-00675	Fitting, Grease	1	B40001-
3		23B-46-31810	O-ring	2	B40001-
4		419-70-11490	Bolt	2	B40001-
5		01596-00606	Nut	2	B40001-
6		01640-20610	Washer	4	B40001-

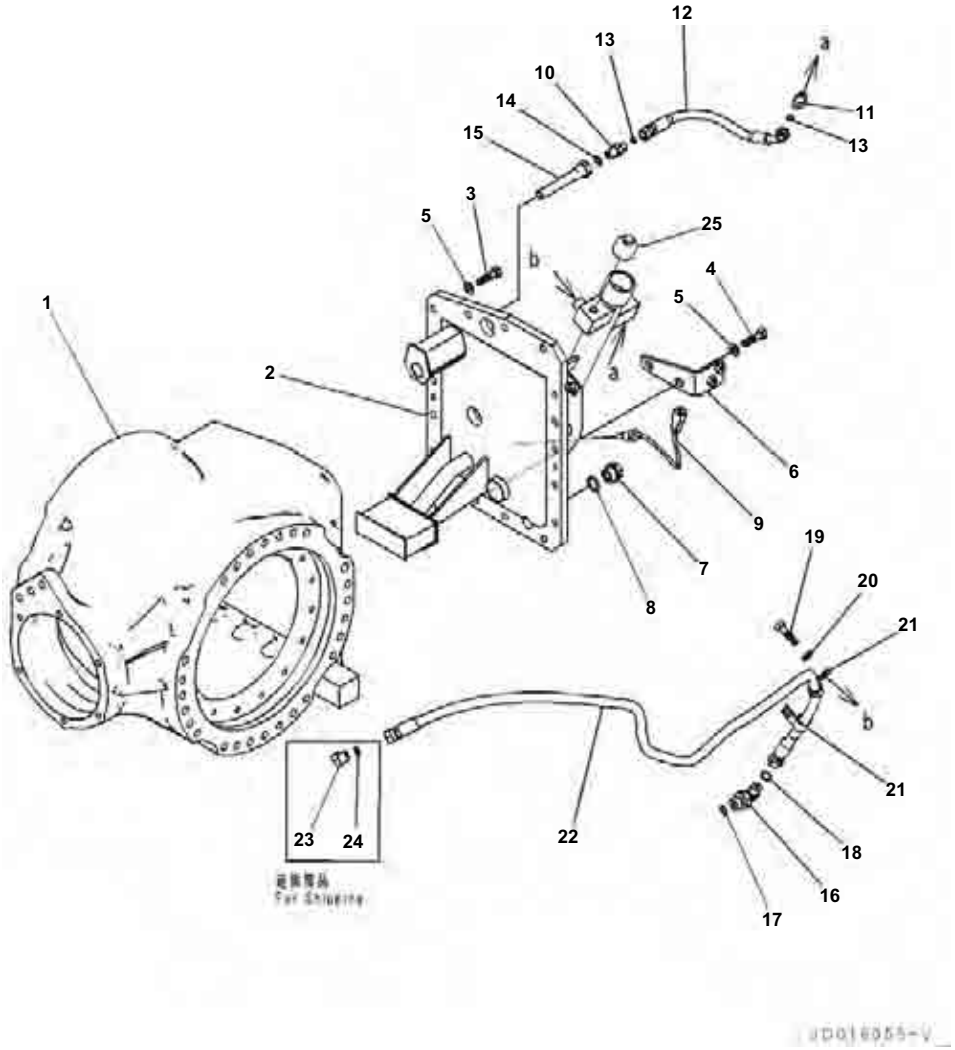

Index	Code	Part Number	Description	Qty	Serial No.
		23B-22-72001	Final Drive Assembly	1	B40001-
1		23B-22-71510	· Case,Center	1	B40001-
2		23B-22-72110	· Cover	1	B40001-
3		01010-61240	· Bolt	15	B40001-
4		01010-61245	· Bolt	2	B40001-
5		01643-31232	· Washer	17	B40001-
6		23B-60-74730	· Bracket	1	B40001-
7		07044-12412	· Plug	1	B40001-
8		07002-22434	· O-ring	1	B40001-
9		7861-93-3320	· Sensor, Temperature	1	B40001-
10		02781-0021D	· Union	1	B40001-
11		56B-43-17210	· Nipple	1	B40001-
12		02767-00204	· Hose, Face Seal Type	1	B40001-
13		02896-21008	· O-ring	2	B40001-
14		07002-21423	· O-ring	1	B40001-
15		23C-22-51260	· Adapter	1	B40001-
16		02782-10315	· Elbow	1	B40001-
17		07002-22034	· O-ring	1	B40001-
18		02896-21009	· O-ring	1	B40001-
19		01010-81020	· Bolt	2	B40001-
20		01643-31032	· Washer	2	B40001-
21		04434-51712	· Clip	2	B40001-
22		23B-60-74330	· Hose	1	B40001-
23		07376-70315	· Plug	1	B40001-
24		02896-11009	· O-ring	1	B40001-
25		07030-00252	· Breather	1	B40001-

Reference:F4500-001001 Page:F004001

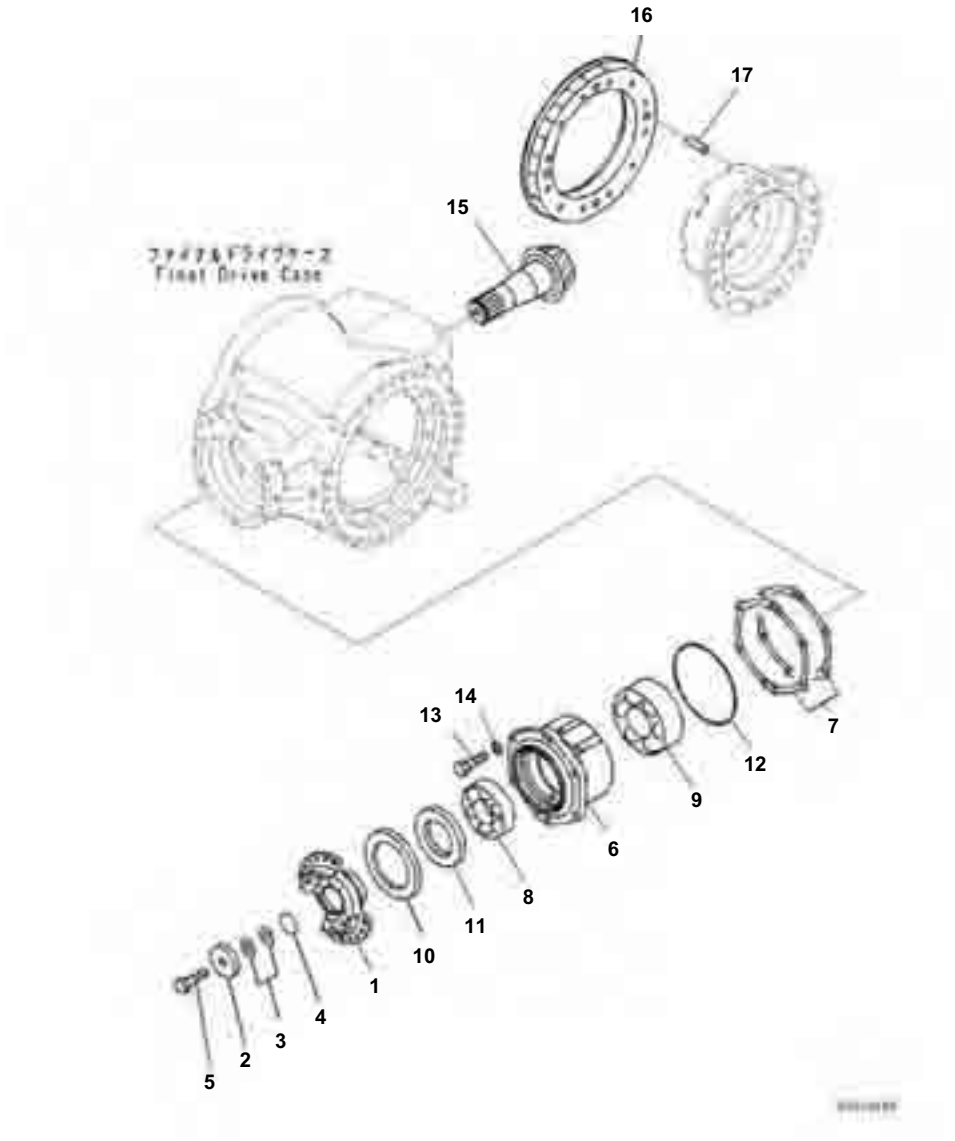

Rear Axle, Differential Lock Type, Final Drive, Bevel Gear

Index	Code	Part Number	Description	Qty	Serial No.
		23B-22-72001	Final Drive Assembly	1	B40001-
1		23B-22-71150	· Coupling	1	B40001-
2		423-22-11240	· Holder	1	B40001-
3		23A-22-00161	· Shim Assembly	1	B40001-
		23A-22-11660	· · Shim, T=0.15mm	1	B40001-
		23A-22-11670	· · Shim, T=0.5mm	6	B40001-
		23A-22-11680	· · Shim, T=0.2mm	2	B40001-
		23A-22-11690	· · Shim, T=0.1mm	1	B40001-
4		07000-A5050	· O-ring	1	B40001-
5		01010-61680	· Bolt	1	B40001-
6		23B-22-71140	· Cage	1	B40001-
7		23B-22-71200	· Shim Assembly	1	B40001-
		23B-22-71250	· · Shim, T=0.5mm	4	B40001-
		23B-22-71260	· · Shim, T=0.2mm	3	B40001-
		23B-22-71270	· · Shim, T=0.1mm	1	B40001-
		23B-22-71280	· · Shim, T=0.05mm	1	B40001-
8		06303-30312	· Bearing	1	B40001-
9		423-22-21820	· Bearing	1	B40001-
10		714-07-14120	· Deflector	1	B40001-
11		423-22-21750	· Seal	1	B40001-
12		07000-75190	· O-ring	1	B40001-
13		01010-61245	· Bolt	6	B40001-
14		01643-31232	· Washer	6	B40001-
		23B-22-71301	· Pinion and Gear Assembly	1	B40001-
15	C1		· · Pinion	1	B40001-
16	C1		· · Gear	1	B40001-
17		04020-01434	· Pin, Dowel	4	B40001-

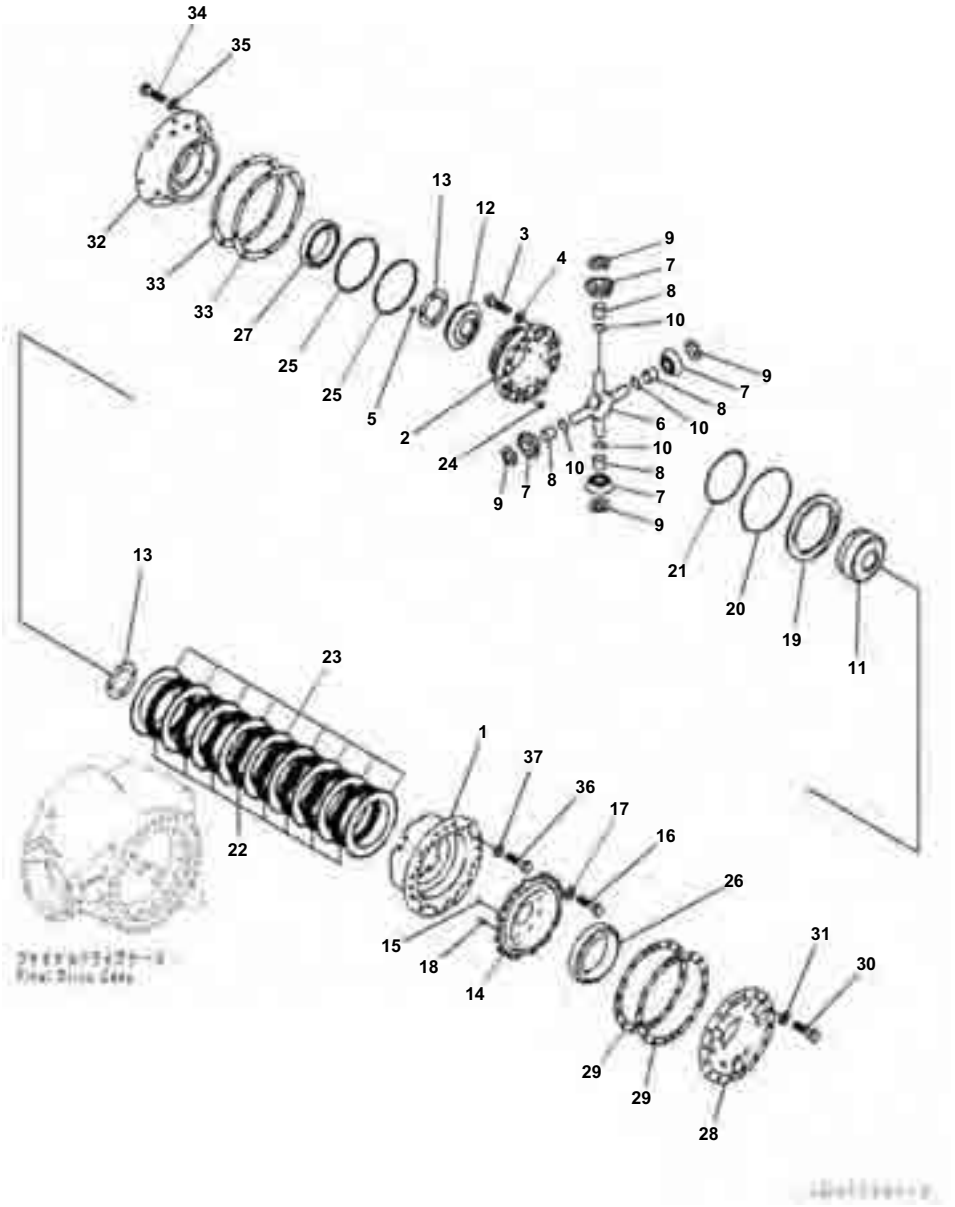

Rear Axle, Differential Lock Type, Final Drive, Differential

Index	Code	Part Number	Description	Qty	Serial No.
		23B-22-72001	Final Drive Assembly	1	B40001-
		23B-22-71600	· Case Assembly	1	B40001-
1		23B-22-71610	· · Case	1	B40001-
2		23B-22-71620	· · Case	1	B40001-
3		01010-61255	· · Bolt	16	B40001-
4		01643-31232	· · Washer	16	B40001-
5		175-21-12180	· · Pin	2	B40001-
6		23B-22-21460	· Shaft	1	B40001-
7		23B-22-71680	· Gear	4	B40001-
8		23B-22-31690	· Bushing	4	B40001-
9		23B-22-71710	· Washer	4	B40001-
10		23B-22-21450	· Ring, Snap	4	B40001-
11		23B-22-71660	· Gear	1	B40001-
12		23B-22-31670	· Gear	1	B40001-
13		23B-22-11590	· Washer	2	B40001-
		23B-22-71700	· Cage Assembly	1	B40001-
14		23B-22-71630	· · Cage	1	B40001-
15		175-21-12180	· · Pin	2	B40001-
16		01010-61230	· Bolt	16	B40001-
17		01643-31232	· Washer	16	B40001-
18		04020-01228	· Pin, Dowel	1	B40001-
19		23B-22-71720	· Piston	1	B40001-
20		23B-22-31730	· Seal Ring	1	B40001-
21		23B-22-31740	· Seal Ring	1	B40001-
22		23B-22-31751	· Disc	8	B40001-
23		23B-22-31761	· Plate	9	B40001-
24		07000-72011	· O-ring	2	B40001-
25		07018-02005	· Seal Ring	2	B40001-
26		23B-22-31780	· Bearing	1	B40001-
27		23B-22-31790	· Bearing	1	B40001-
28		23B-22-71640	· Cage,LHS	1	B40001-
29		23B-22-31800	· Shim Assembly	1	B40001-
		23B-22-31810	· · Shim, T=0.5mm	4	B40001-
		23B-22-31820	· · Shim, T=0.2mm	4	B40001-
		23B-22-31830	· · Shim, T=0.1mm	2	B40001-
		23B-22-31770	· · Shim, T=0.05mm	1	B40001-
30		01010-61235	· Bolt	16	B40001-
31		01643-31232	· Washer	16	B40001-
32		23B-22-71650	· Cage,RHS	1	B40001-
33		23B-22-32200	· Shim Assembly	1	B40001-
		23B-22-32210	· · Shim, T=0.5mm	4	B40001-
		23B-22-32220	· · Shim, T=0.2mm	4	B40001-
		23B-22-32230	· · Shim, T=0.1mm	2	B40001-
		23B-22-32290	· · Shim, T=0.05mm	1	B40001-
34		01010-61235	· Bolt	8	B40001-
35		01643-31232	· Washer	8	B40001-

Rear Axle, Differential Lock Type, Final Drive, Differential

Index	Code	Part Number	Description	Qty	Serial No.
36		01010-61435	' Bolt	12	B40001-
37		01643-31445	' Washer	12	B40001-

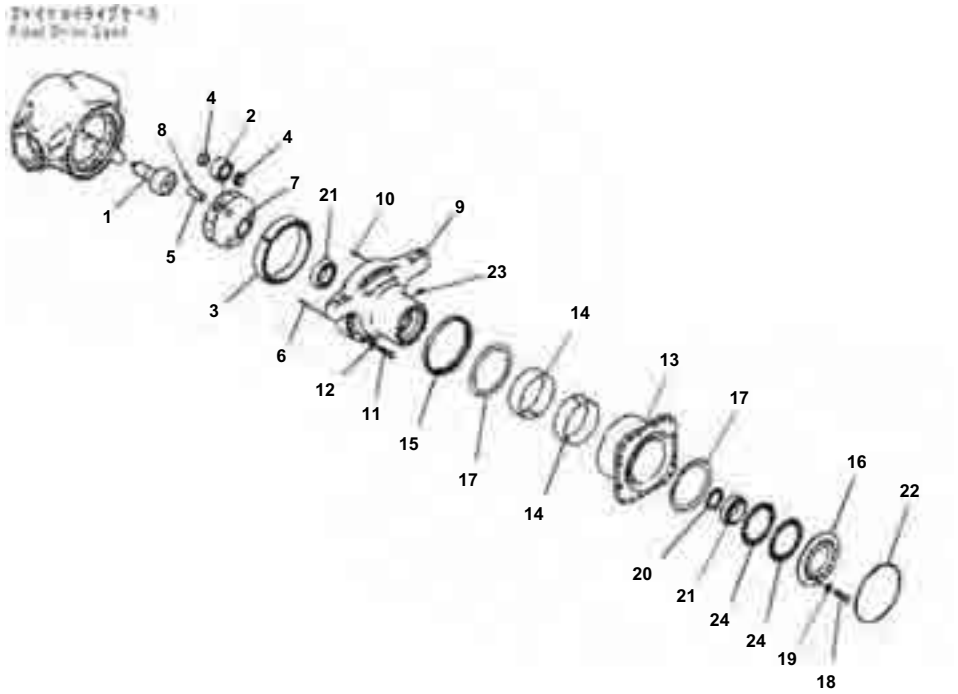

Rear Axle, Differential Lock Type, Final Drive, Torque Shaft (1/2)

Index	Code	Part Number	Description	Qty	Serial No.
		23B-22-72001	Final Drive Assembly	1	B40001-
1		23B-22-31840	· Shaft	2	B40001-
2		23B-22-31850	· Gear	6	B40001-
3		23B-22-71860	· Gear	2	B40001-
4		23B-22-31870	· Bearing	12	B40001-
5		23B-22-31880	· Pin, L=107mm	6	B40001-
6		417-22-12580	· Pin, Dowel	8	B40001-
7		23B-22-71550	· Carrier	2	B40001-
8		419-22-12570	· Pin	6	B40001-
9		23B-22-71520	· Case,Side	2	B40001-
10		04020-01638	· Pin, Dowel	4	B40001-
11		01011-61620	· Bolt	48	B40001-
12		01643-31645	· Washer	48	B40001-
13		23B-22-71530	· Flange	2	B40001-
14		23B-22-71190	· Bushing	4	B40001-
15		23B-22-71930	· Seal	2	B40001-
16		23B-22-71940	· Plate	2	B40001-
17		23B-22-71950	· Washer	4	B40001-
18		01010-61665	· Bolt	38	B40001-
19		01643-31645	· Washer	38	B40001-
20		07012-00095	· Seal, Oil	2	B40001-
21		06302-32218	· Bearing	4	B40001-
22		07000-75335	· O-ring	2	B40001-
23		07043-A0108	· Plug	2	B40001-
24		23B-22-71100	· Shim Assembly	2	B40001-
		23B-22-71160	· · Shim, T=0.1mm	1	B40001-
		23B-22-71170	· · Shim, T=0.2mm	2	B40001-
		23B-22-71180	· · Shim, T=0.5mm	3	B40001-

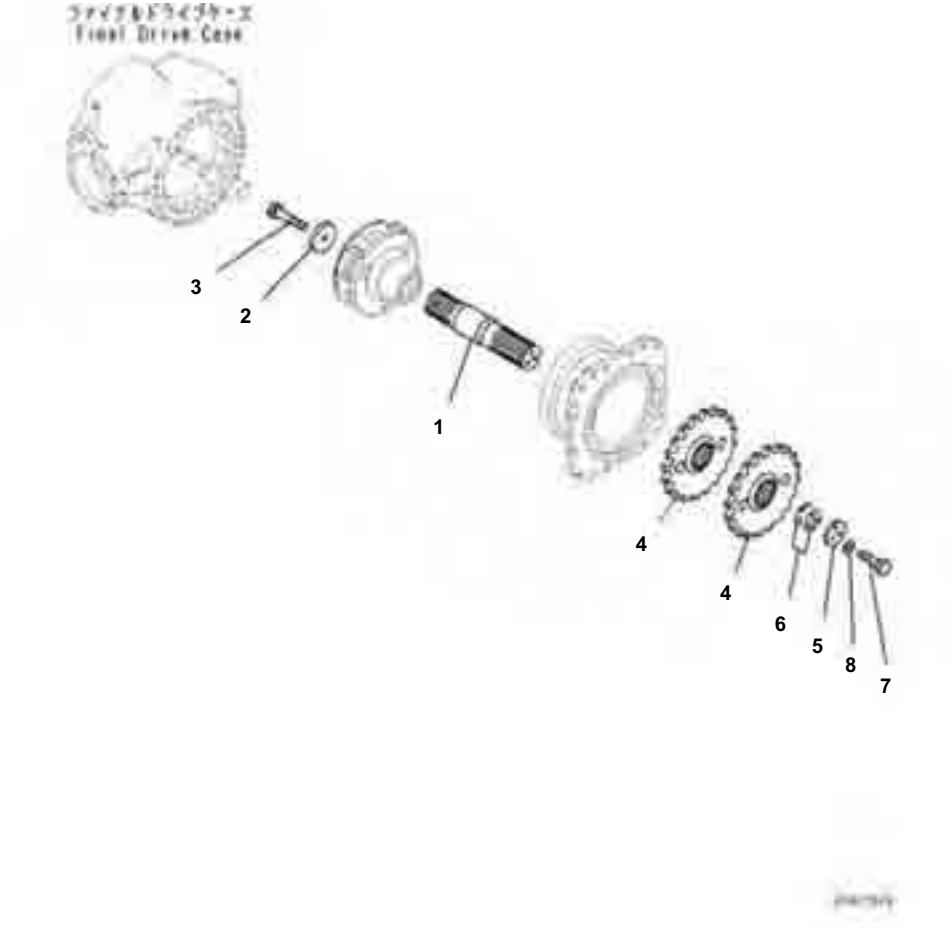

Rear Axle, Differential Lock Type, Final Drive, Torque Shaft (2/2)

Index	Code	Part Number	Description	Qty	Serial No.
		23B-22-72001	Final Drive Assembly	1	B40001-
1		23B-22-71910	・ Shaft	2	B40001-
2		23B-22-31920	・ Plate	2	B40001-
3		01011-62005	・ Bolt	2	B40001-
4		23B-22-71560	・ Sprocket	4	B40001-
5		23B-22-71371	・ Holder	2	B40001-
6		23B-22-70300	・ Shim Assembly	2	B40001-
		23A-23-11330	・ ・ Shim, T=0.1mm	1	B40001-
		23A-23-11320	・ ・ Shim, T=0.2mm	2	B40001-
		23A-23-11310	・ ・ Shim, T=0.5mm	6	B40001-
7		01010-61250	・ Bolt	6	B40001-
8		01643-31232	・ Washer	6	B40001-

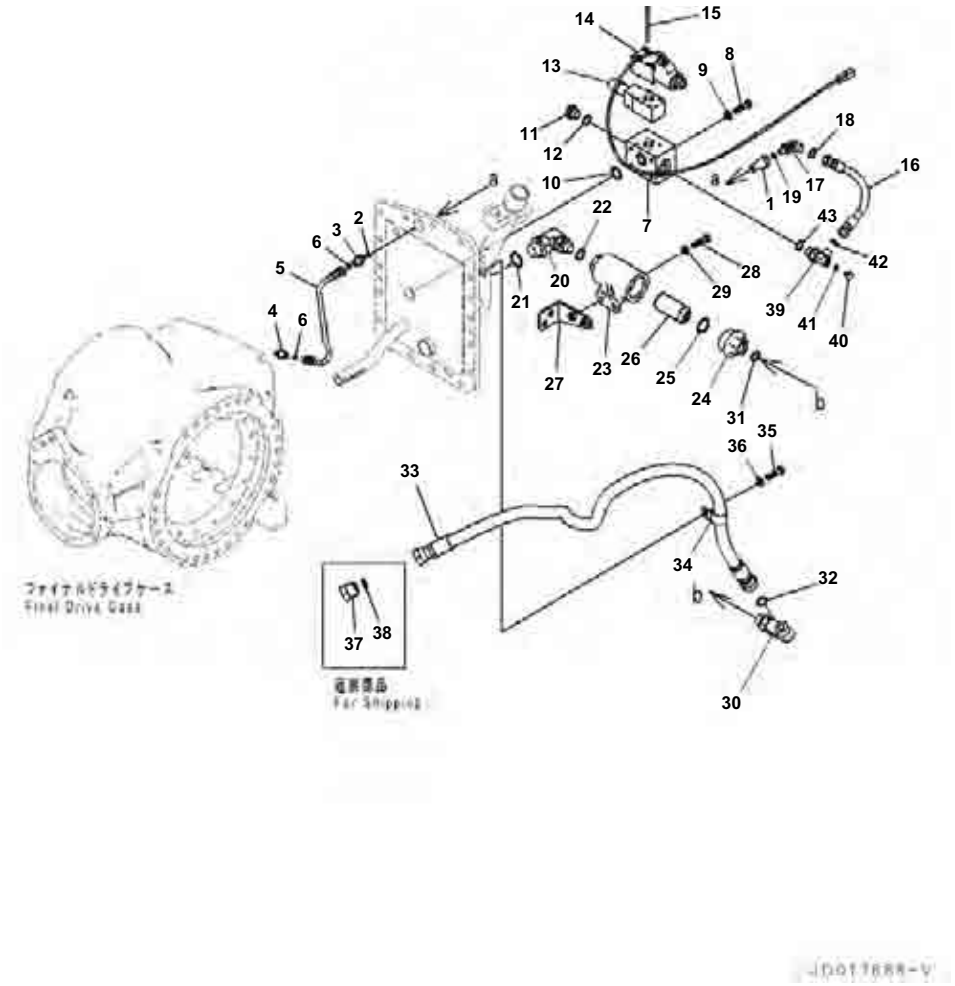

Rear Axle, Differential Lock Type, Final Drive, Solenoid Valve and Piping

Index	Code	Part Number	Description	Qty	Serial No.
		23B-22-72001	Final Drive Assembly	1	B40001-
1		23B-22-71360	・ Adapter	1	B40001-
2		07002-21023	・ O-ring	1	B40001-
3		23B-60-41250	・ Union	1	B40001-
4		56B-43-17210	・ Nipple	1	B40001-
5		23B-22-72540	・ Tube	1	B40001-
6		02896-21008	・ O-ring	2	B40001-
7		23B-22-71810	・ Block	1	B40001-
8		01010-80880	・ Bolt	4	B40001-
9		01643-30823	・ Washer	4	B40001-
10		07000-73025	・ O-ring	1	B40001-
11		07040-12012	・ Plug	1	B40001-
12		07002-22034	・ O-ring	1	B40001-
13		23B-22-71840	・ Valve	1	B40001-
14		23B-22-71830	・ Valve	1	B40001-
15		56B-88-12370	・ Bolt	4	B40001-
16		11Y-62-13680	・ Hose	1	B40001-
17		11Y-62-12510	・ Elbow	1	B40001-
18		02896-21009	・ O-ring	1	B40001-
19		07002-21423	・ O-ring	1	B40001-
20		23B-60-74720	・ Elbow	1	B40001-
21		07002-23334	・ O-ring	1	B40001-
22		07002-22434	・ O-ring	1	B40001-
23		421-43-22562	・ Case	1	B40001-
24		421-43-22571	・ Cap	1	B40001-
25		07002-25234	・ O-ring	1	B40001-
26		421-43-27920	・ Strainer	1	B40001-
27		23B-60-74740	・ Bracket	1	B40001-
28		01010-81030	・ Bolt	4	B40001-
29		01643-31032	・ Washer	4	B40001-
30		02782-10630	・ Elbow	1	B40001-
31		07002-22434	・ O-ring	1	B40001-
32		02896-21018	・ O-ring	1	B40001-
33		23B-60-74440	・ Hose	1	B40001-
34		04434-52711	・ Clip	1	B40001-
35		01010-81020	・ Bolt	1	B40001-
36		01643-31032	・ Washer	1	B40001-
37		07376-70628	・ Plug	1	B40001-
38		02896-11018	・ O-ring	1	B40001-
39		02782-50315	・ Elbow	1	B40001-
40		07040-11007	・ Plug	1	B40001-
41		07002-21023	・ O-ring	1	B40001-
42		02896-21009	・ O-ring	1	B40001-
43		07002-22034	・ O-ring	1	B40001-

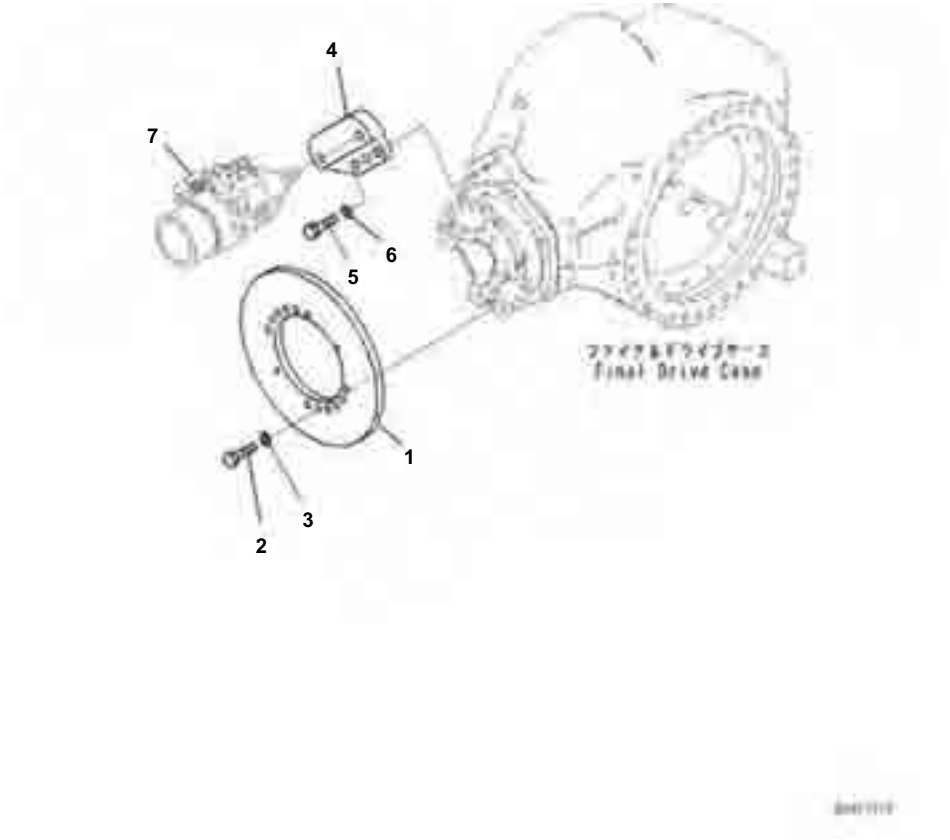

Rear Axle, Differential Lock Type, Parking Brake

Index	Code	Part Number	Description	Qty	Serial No.
1		23B-32-71310	Disc	1	B40001-
2		01010-61230	Bolt	8	B40001-
3		01643-31232	Washer	8	B40001-
4		23B-32-71320	Bracket	1	B40001-
5		01010-61645	Bolt	3	B40001-
6		01643-31645	Washer	3	B40001-
7		(23B-32-31302)	Caliper Assembly		

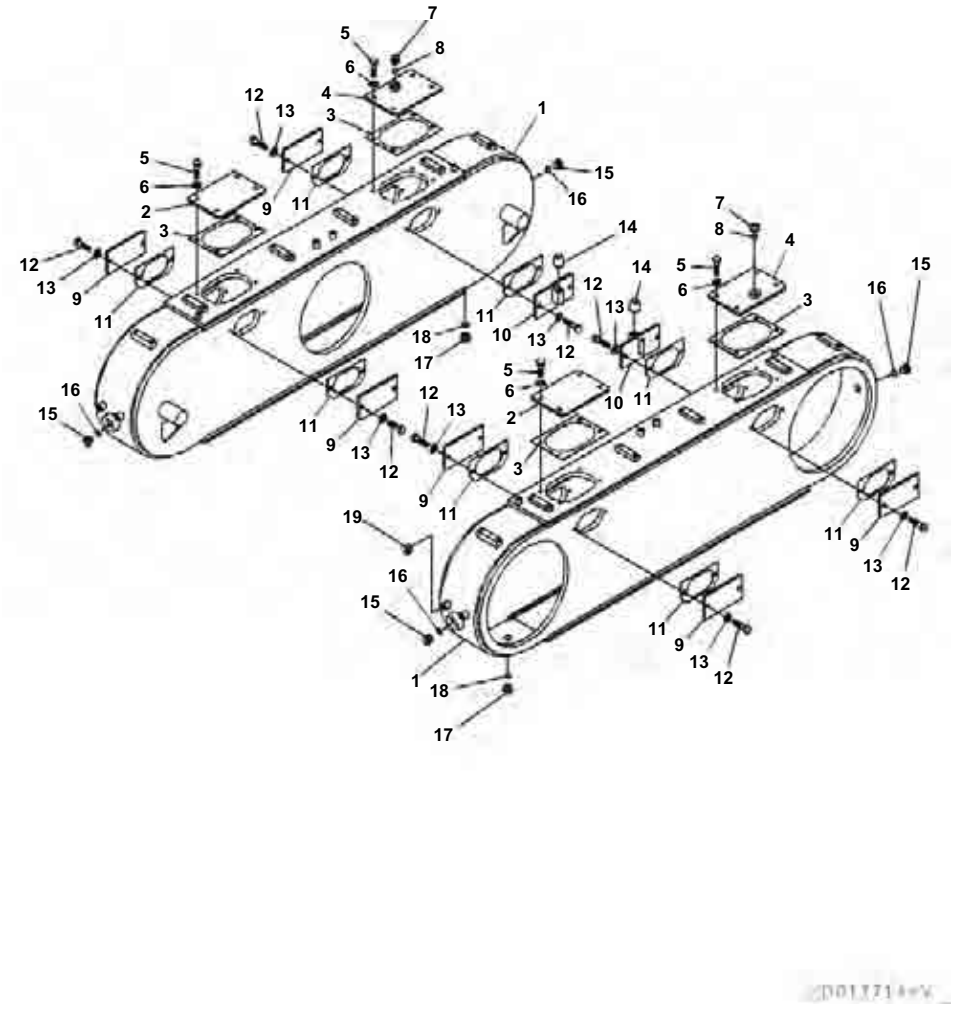

Rear Axle, Differential Lock Type, Case

Index	Code	Part Number	Description	Qty	Serial No.
1		23B-25-71610	Case	2	B40001-
2		237-23-11142	Plate	2	B40001-
3		234-25-31142	Gasket	4	B40001-
4		23A-25-31211	Cover	2	B40001-
5		01010-61230	Bolt	16	B40001-
6		01643-31232	Washer	16	B40001-
7		07040-12412	Plug	2	B40001-
8		07002-12434	O-ring	2	B40001-
9		234-25-31150	Plate	6	B40001-
10		234-25-31160	Cover	2	B40001-
11		234-25-31172	Gasket	8	B40001-
12		01010-61230	Bolt	16	B40001-
13		01643-31232	Washer	16	B40001-
14		07030-00252	Breather	2	B40001-
15		07040-12412	Plug	4	B40001-
16		07002-12434	O-ring	4	B40001-
17		07044-12412	Plug	2	B40001-
18		07002-12434	O-ring	2	B40001-
19		07049-01215	Plug	4	B40001-

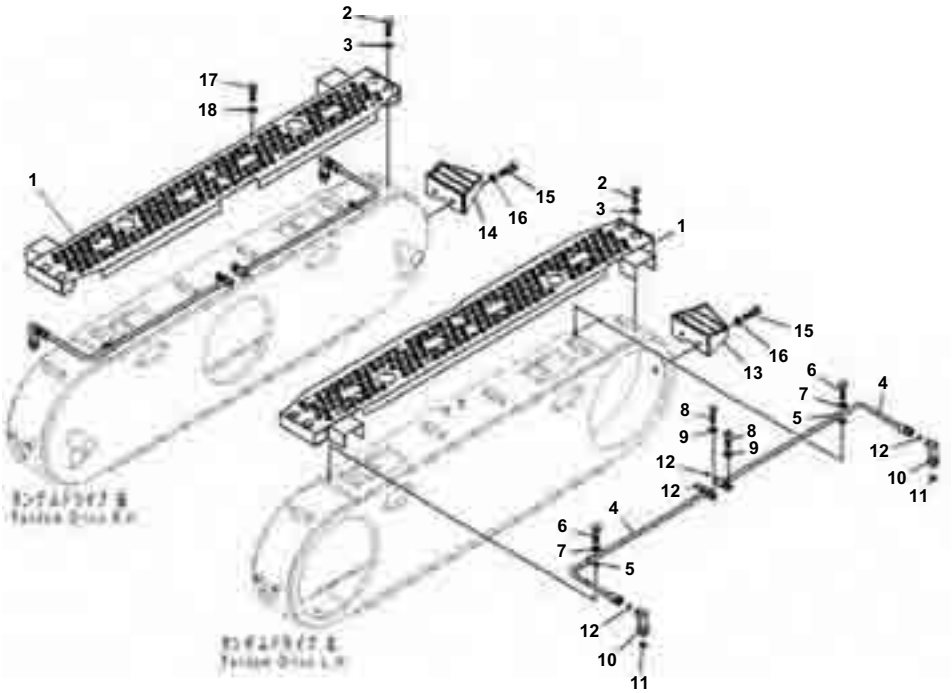

Rear Axle, Differential Lock Type, Tandem, Tube

Index	Code	Part Number	Description	Qty	Serial No.
1		23B-25-71351	Cover	2	B40001-
2		01010-81020	Bolt	24	B40001-
3		01643-31032	Washer	24	B40001-
4		23B-25-71810	Tube	4	B40001-
5		04434-51510	Clip	4	B40001-
6		01010-81020	Bolt	4	B40001-
7		01643-31032	Washer	4	B40001-
8		01010-81025	Bolt	4	B40001-
9		01643-31032	Washer	4	B40001-
10		02782-10426	Elbow	4	B40001-
11		07002-12434	O-ring	4	B40001-
12		02896-11012	O-ring	8	B40001-
13		23B-25-71851	Step	1	B40001-
14		23B-25-71841	Step	1	B40001-
15		01010-81235	Bolt	4	B40001-
16		01643-31232	Washer	4	B40001-
17		01010-D1016	Bolt	4	B40001-
18		01643-71032	Washer	4	B40001-

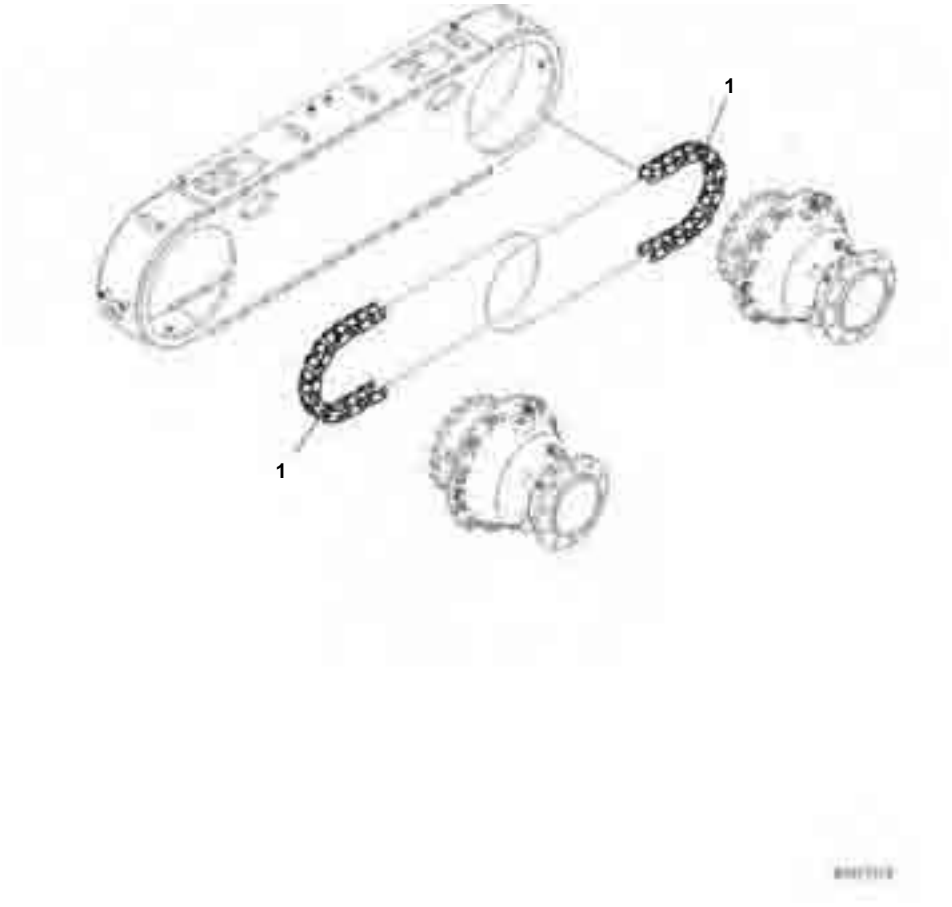

Rear Axle, Differential Lock Type, Tandem, Sprocket Chain

Index	Code	Part Number	Description	Qty	Serial No.
1		23B-25-31500	Chain	4	B40001-
		23B-25-31520	･ Chain Assembly	1	B40001-
		23B-25-31510	･ Joint Assembly	1	B40001-

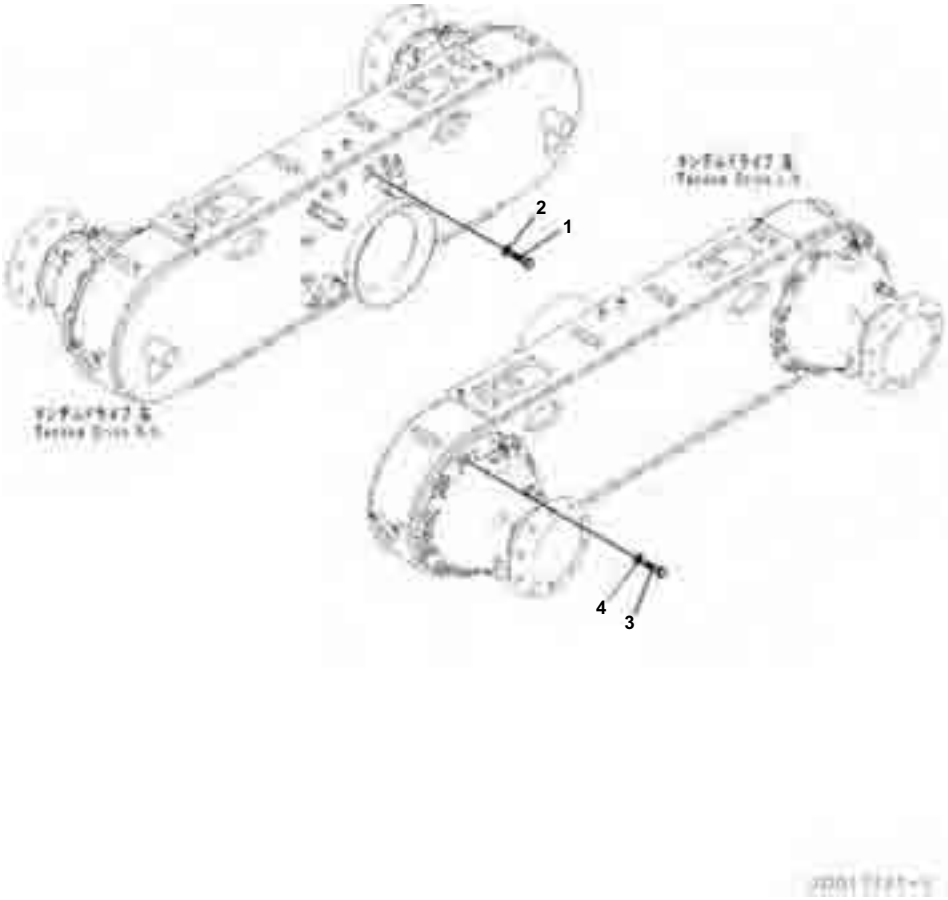

Rear Axle, Differential Lock Type, Mounting Bolt

Index	Code	Part Number	Description	Qty	Serial No.
1		01010-B1655	Bolt	34	B40001-
2		01643-31645	Washer	34	B40001-
3		01010-B1660	Bolt	48	B40001-
4		01643-31645	Washer	48	B40001-

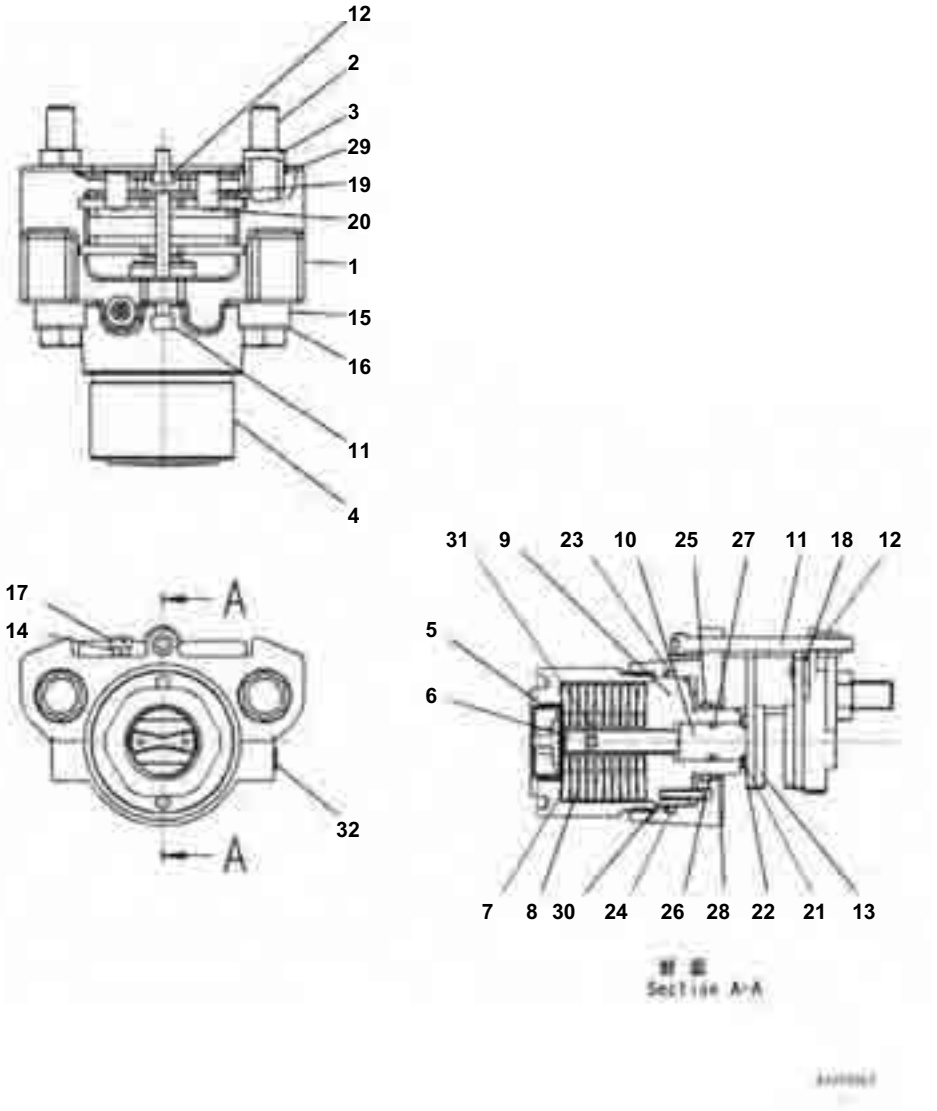

Rear Axle, Differential Lock Type, Inner Parts, Brake Caliper

Index	Code	Part Number	Description	Qty	Serial No.
		23B-32-31302	Caliper Assembly, Parking Brake	1	B40001-
1	C1		· Plate	1	B40001-
2		23B-32-31340	· Bolt	2	B40001-
3		23B-32-31351	· Nut	2	B40001-
4	C1		· Housing	1	B40001-
5		23B-32-31371	· Plug	1	B40001-
6		23B-32-31381	· Bolt, Adjusting	1	B40001-
7	C1		· Shim	1	B40001-
8	C1		· Spring	10	B40001-
9	C1		· Piston	1	B40001-
10	C1		· Piston	1	B40001-
11		23B-32-31510	· Bolt	1	B40001-
12		23B-32-31520	· Nut	2	B40001-
13		23B-32-31530	· Carrier Assembly	1	B40001-
14	C1		· Bleeder	1	B40001-
15		23B-32-31550	· Spring	2	B40001-
16		23B-32-31560	· Washer	2	B40001-
17		23B-32-31590	· Cap	1	B40001-
18		23B-32-31610	· Spacer	1	B40001-
19		23B-32-31622	· Spring	1	B40001-
20		23B-32-31630	· Screw	2	B40001-
21		23B-32-31641	· Spring	1	B40001-
22		23B-32-31650	· Ring	1	B40001-
		23B-32-31680	· Service Kit	1	B40001-
23	C1		· · O-ring	1	B40001-
24	C1		· · Ring, Back-up	1	B40001-
25	C1		· · O-ring	1	B40001-
26	C1		· · Ring, Back-up	1	B40001-
27	C1		· · O-ring	1	B40001-
28	C1		· · Wiper	1	B40001-
29		23B-32-31670	· · O-ring	2	B40001-
30		23B-32-31710	· Pin	1	B40001-
31		23B-32-31720	· Nut	1	B40001-
32		23B-32-31730	· Plug	1	B40001-

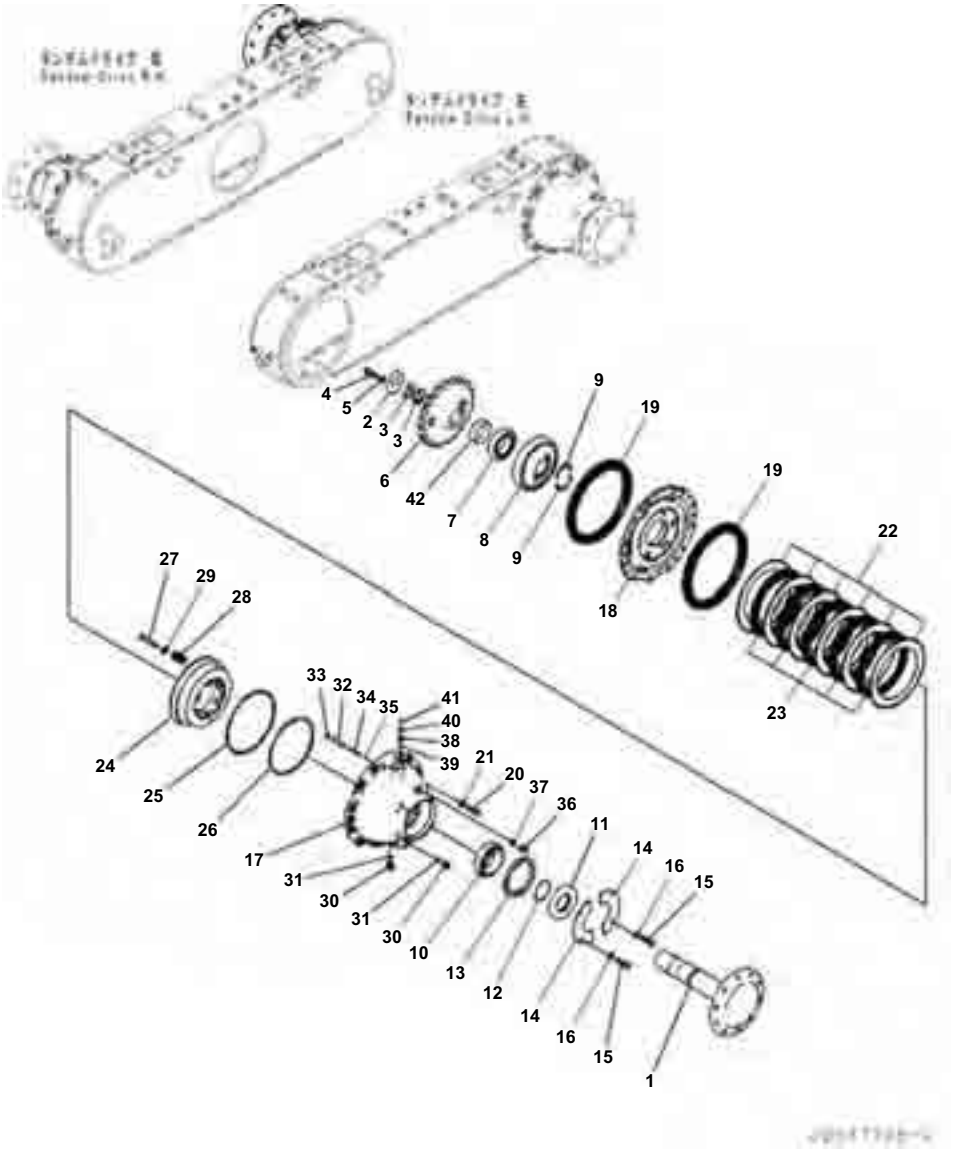

Rear Axle, Differential Lock Type, Tandem, A Drive

Index	Code	Part Number	Description	Qty	Serial No.
1		23B-25-71140	Shaft	2	B40001-
2		23B-22-71371	Holder	2	B40001-
3		23B-25-71300	Shim Assembly	2	B40001-
		23A-23-11310	･ Shim, T=0.5mm	6	B40001-
		23A-23-11320	･ Shim, T=0.2mm	2	B40001-
		23A-23-11330	･ Shim, T=0.1mm	1	B40001-
4		01010-61245	Bolt	6	B40001-
5		01643-31232	Washer	6	B40001-
6		23B-25-71450	Sprocket	2	B40001-
7		06302-32217	Bearing	2	B40001-
8		23B-25-71170	Gear	2	B40001-
9		23B-25-21210	Collar	4	B40001-
10		06302-32218	Bearing	2	B40001-
11		23B-23-21170	Spacer	2	B40001-
12		23B-23-21180	O-ring	2	B40001-
13		23B-25-76360	Seal, Oil	2	B40001-
14		23B-25-71490	Cover	4	B40001-
15		01010-81025	Bolt	8	B40001-
16		01643-31032	Washer	8	B40001-
17		23B-25-71111	Cage	2	B40001-
18		23B-25-71160	Cage	2	B40001-
19		07000-15395	O-ring	4	B40001-
20		01010-61635	Bolt	4	B40001-
21		01643-31645	Washer	4	B40001-
22		23B-25-71430	Plate	12	B40001-
23		23B-25-71360	Disc	10	B40001-
24		23B-25-71120	Piston	2	B40001-
25		23B-25-73170	O-ring	2	B40001-
26		23B-25-71150	O-ring	2	B40001-
27		23B-25-33132	Guide	12	B40001-
28		714-12-17161	Spring,Outer	12	B40001-
29		23B-25-33610	Washer	12	B40001-
30		07044-12412	Plug	4	B40001-
31		07002-12434	O-ring	4	B40001-
32		23B-25-33220	Guide	2	B40001-
33		07000-12018	O-ring	2	B40001-
34		23B-25-71210	Shaft	2	B40001-
35		07000-11005	O-ring	2	B40001-
36		421-33-31730	Cap	2	B40001-
37		01583-11610	Nut	2	B40001-
38		569-33-72140	Joint	2	B40001-
39		07002-11223	O-ring	2	B40001-
40		566-32-11430	Bleeder	2	B40001-
41		566-32-11620	Cap	2	B40001-
42		23B-25-71480	Collar	2	B40001-

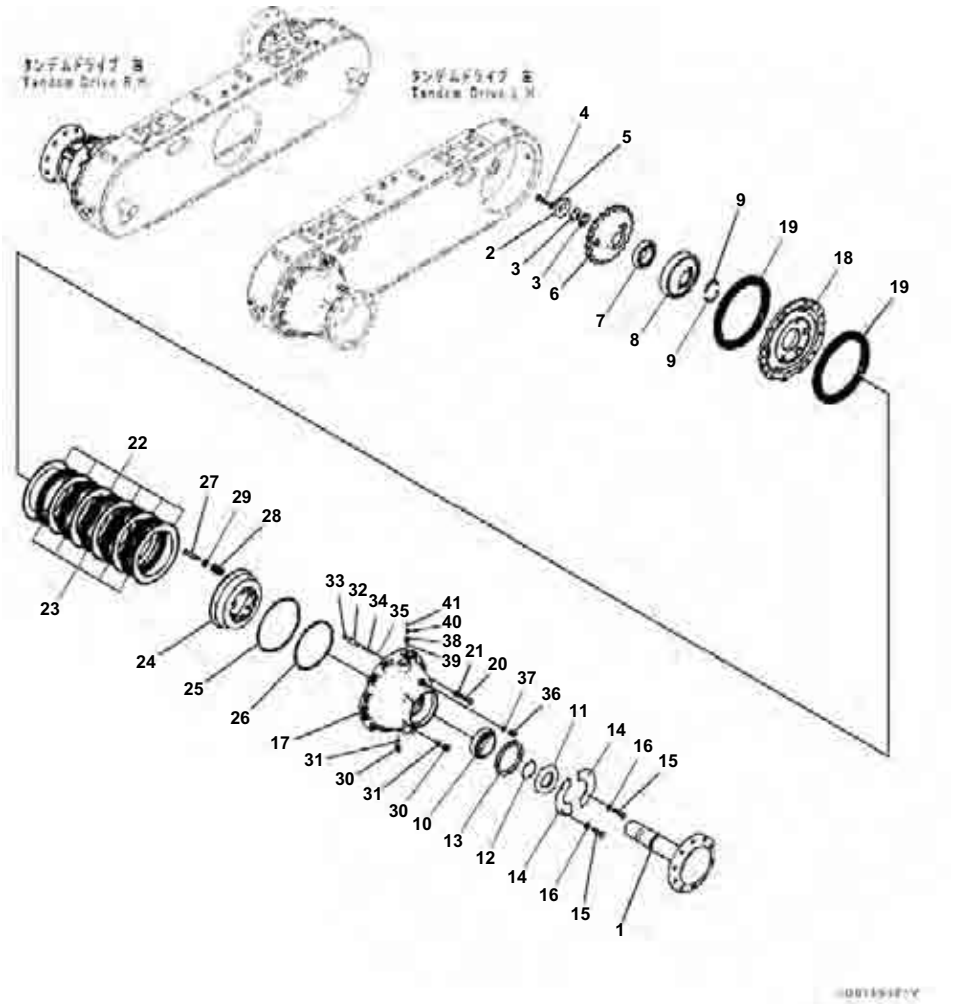

Rear Axle, Differential Lock Type, Tandem, B Drive

Index	Code	Part Number	Description	Qty	Serial No.
1		23B-25-71130	Shaft	2	B40001-
2		23B-22-71371	Holder	2	B40001-
3		23B-25-71300	Shim Assembly	2	B40001-
		23A-23-11310	･ Shim, T=0.5mm	6	B40001-
		23A-23-11320	･ Shim, T=0.2mm	2	B40001-
		23A-23-11330	･ Shim, T=0.1mm	1	B40001-
4		01010-61245	Bolt	6	B40001-
5		01643-31232	Washer	6	B40001-
6		23B-25-71450	Sprocket	2	B40001-
7		06302-32217	Bearing	2	B40001-
8		23B-25-71170	Gear	2	B40001-
9		23B-25-21210	Collar	4	B40001-
10		06302-32218	Bearing	2	B40001-
11		23B-23-71170	Spacer	2	B40001-
12		23B-23-21180	O-ring	2	B40001-
13		23B-25-76360	Seal, Oil	2	B40001-
14		23B-25-71490	Cover	4	B40001-
15		01010-81025	Bolt	8	B40001-
16		01643-31032	Washer	8	B40001-
17		23B-25-71111	Cage	2	B40001-
18		23B-25-71160	Cage	2	B40001-
19		07000-15395	O-ring	4	B40001-
20		01010-61635	Bolt	4	B40001-
21		01643-31645	Washer	4	B40001-
22		23B-25-71430	Plate	12	B40001-
23		23B-25-71360	Disc	10	B40001-
24		23B-25-71120	Piston	2	B40001-
25		23B-25-73170	O-ring	2	B40001-
26		23B-25-71150	O-ring	2	B40001-
27		23B-25-33132	Guide	12	B40001-
28		714-12-17161	Spring,Outer	12	B40001-
29		23B-25-33610	Washer	12	B40001-
30		07044-12412	Plug	4	B40001-
31		07002-12434	O-ring	4	B40001-
32		23B-25-33220	Guide	2	B40001-
33		07000-12018	O-ring	2	B40001-
34		23B-25-71210	Shaft	2	B40001-
35		07000-11005	O-ring	2	B40001-
36		421-33-31730	Cap	2	B40001-
37		01583-11610	Nut	2	B40001-
38		569-33-72140	Joint	2	B40001-
39		07002-11223	O-ring	2	B40001-
40		566-32-11430	Bleeder	2	B40001-
41		566-32-11620	Cap	2	B40001-

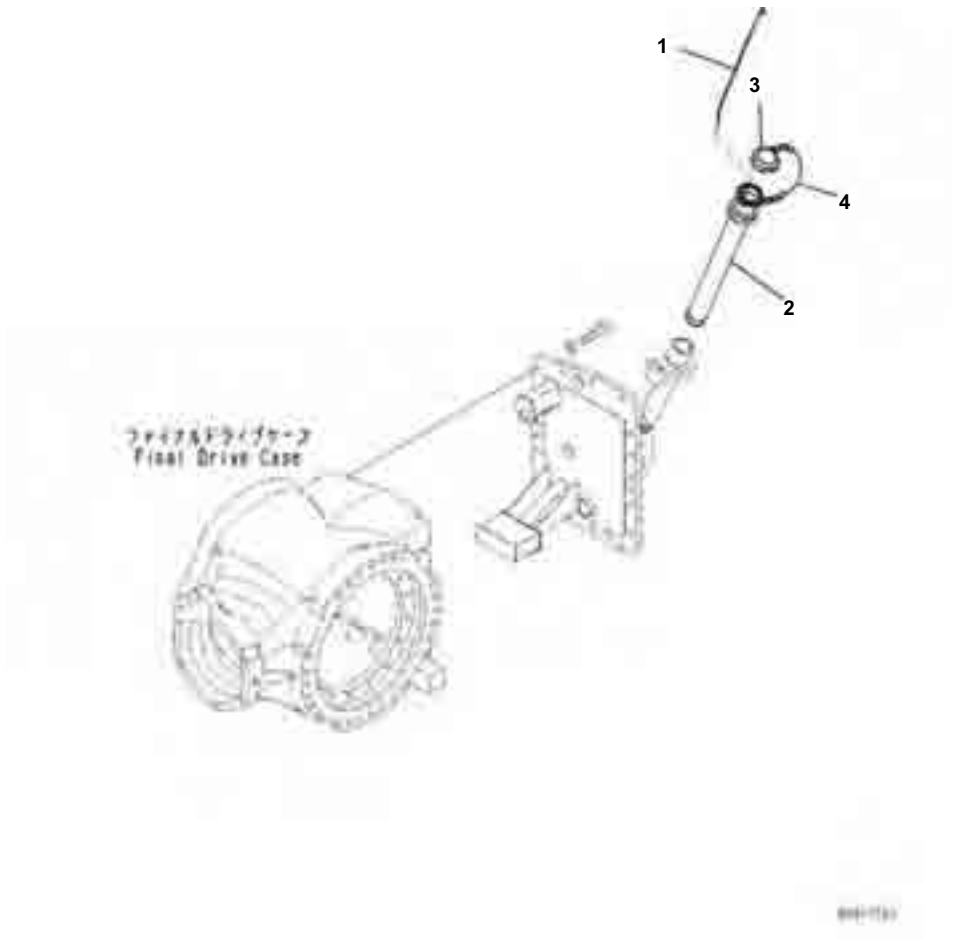

Rear Axle, Differential Lock Type, Tube

Index	Code	Part Number	Description	Qty	Serial No.
1		23B-22-71430	Gauge	1	B40001-
2		23B-22-31480	Tube	1	B40001-
3		6136-21-7120	Cap Assembly	1	B40001-
		6136-21-7180	･ Gasket	1	B40001-
4		6136-21-7190	Chain	1	B40001-

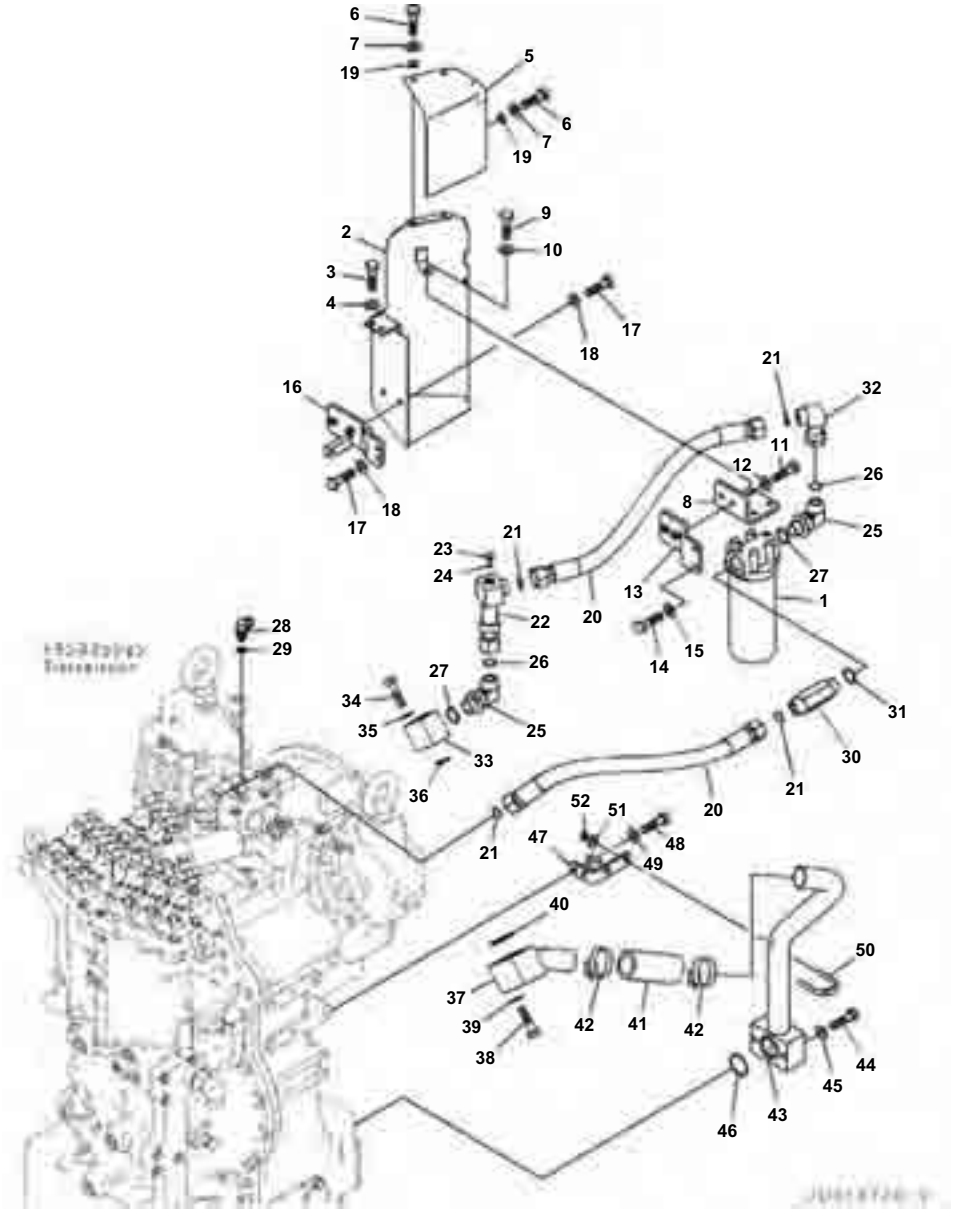

GD655-5 S/N B40001-UP
Transmission Oil Filter, With Rear Axle, Differential Lock Type

Index	Code	Part Number	Description	Qty	Serial No.
1		714-07-28703	Filter Assembly	1	B40001-
		714-07-28713	▪ Cartridge	1	B40001-
2		23B-16-71220	Cover	1	B40001-
3		01010-81020	Bolt	2	B40001-
4		01643-31032	Washer	2	B40001-
5		23B-16-71840	Sheet	1	B40001-
6		01010-80616	Bolt	3	B40001-
7		01643-30623	Washer	3	B40001-
8		23B-16-71250	Plate	1	B40001-
9		01010-81030	Bolt	4	B40001-
10		01643-31032	Washer	4	B40001-
11		01010-81030	Bolt	2	B40001-
12		01643-31032	Washer	2	B40001-
13		23B-16-71240	Bracket	1	B40001-
14		01010-81025	Bolt	2	B40001-
15		01643-31032	Washer	2	B40001-
16		23B-16-71230	Bracket	1	B40001-
17		01010-81025	Bolt	4	B40001-
18		01643-31032	Washer	4	B40001-
19		20Y-53-12310	Collar	3	B40001-
20		23B-16-71190	Hose	2	B40001-
21		23B-60-33240	O-ring	4	B40001-
22		23B-16-31651	Tube	1	B40001-
23		07040-11007	Plug	1	B40001-
24		07002-21023	O-ring	1	B40001-
25		21W-62-42640	Elbow	2	B40001-
26		23B-60-33240	O-ring	2	B40001-
27		07002-23334	O-ring	2	B40001-
28		799-101-5220	Nipple	2	B40001-
29		07002-11023	O-ring	2	B40001-
30		23B-16-71270	Union	1	B40001-
31		07002-23334	O-ring	1	B40001-
32		23B-16-71650	Elbow	1	B40001-
33		23B-16-71320	Block	1	B40001-
34		01010-80880	Bolt	4	B40001-
35		01643-30823	Washer	4	B40001-
36		07000-13028	O-ring	1	B40001-
37		23B-16-71430	Tube	1	B40001-
38		01010-81290	Bolt	4	B40001-
39		01643-31232	Washer	4	B40001-
40		07000-13045	O-ring	1	B40001-
41		07260-04714	Hose	1	B40001-
42		07289-00070	Clamp	2	B40001-
43		23B-16-71830	Tube	1	B40001-
44		01010-81280	Bolt	2	B40001-
45		01643-31232	Washer	2	B40001-

Reference:F4700-001001 Page:F005001

GD655-5 S/N B40001-UP

Transmission Oil Filter, With Rear Axle, Differential Lock Type

Index	Code	Part Number	Description	Qty	Serial No.
46		07000-13050	O-ring	1	B40001-
47		23B-16-71260	Bracket	1	B40001-
48		01010-81025	Bolt	2	B40001-
49		01643-31032	Washer	2	B40001-
50		07283-34949	Clip	1	B40001-
51		01643-31032	Washer	2	B40001-
52		01597-01009	Nut	2	B40001-

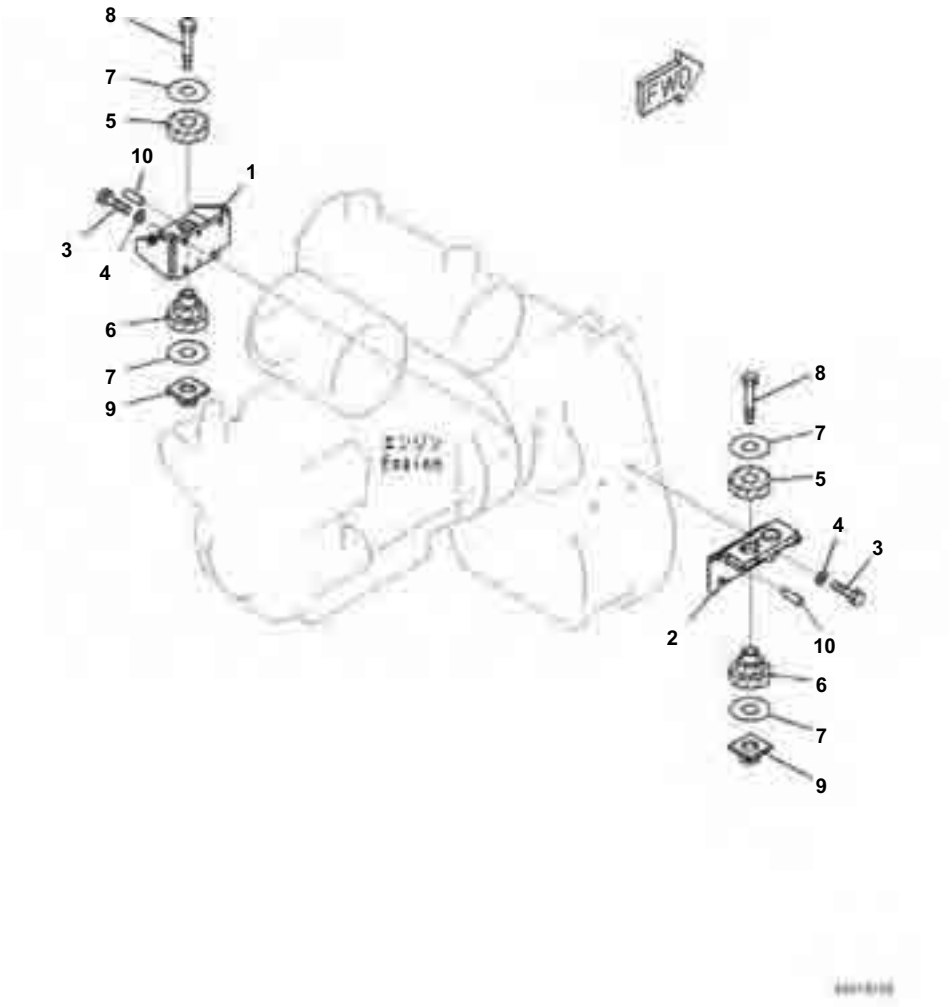

Torque Converter and Transmission Mounting

Index	Code	Part Number	Description	Qty	Serial No.
1		23B-01-71330	Bracket,LHS	1	B40001-
2		23B-01-71340	Bracket,RHS	1	B40001-
3		01010-81650	Bolt	8	B40001-
4		01643-31645	Washer	8	B40001-
		418-01-11112	Cushion	4	B40001-
5		418-01-11121	･ Cushion	1	B40001-
6		418-01-11131	･ Cushion	1	B40001-
7		419-01-11162	Washer	8	B40001-
8		01011-82220	Bolt	4	B40001-
9		23B-01-71350	Plate	4	B40001-
10		04020-01228	Pin, Dowel	4	B40001-

HYDRAULIC SYSTEM

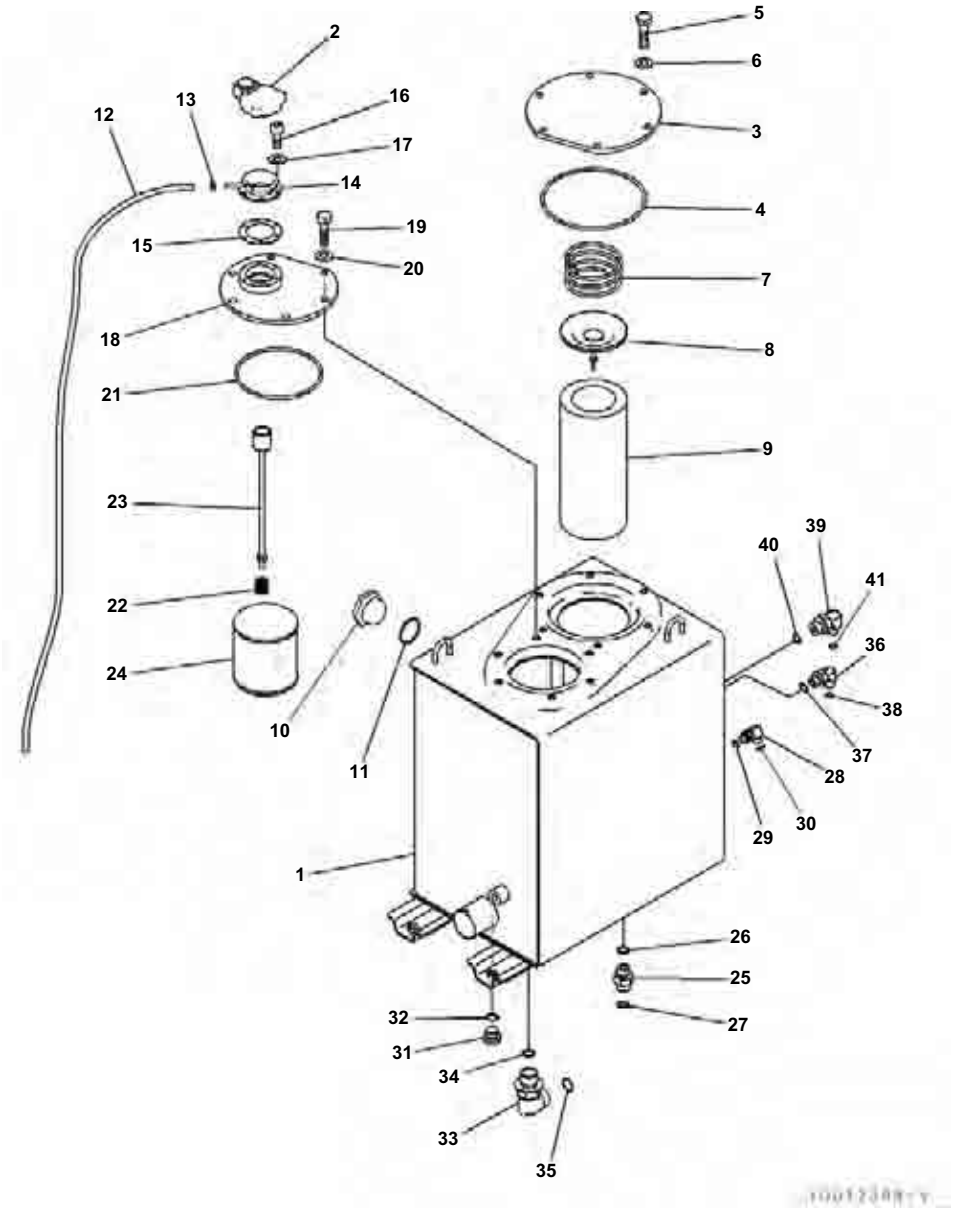

Index	Code	Part Number	Description	Qty	Serial No.
1		23B-60-71110	Tank, Hydraulic Oil	1	B40001-
2		14X-60-11130	Cap Assembly	1	B40001-
3		22U-60-21232	Cover	1	B40001-
4		07000-15195	O-ring	1	B40001-
5		01010-81225	Bolt	6	B40001-
6		01643-31232	Washer	6	B40001-
7		175-60-27340	Spring	1	B40001-
8		203-60-52250	Valve Assembly	1	B40001-
9		07063-51100	Element	1	B40001-
10		421-60-11622	Gauge	1	B40001-
11		07002-15234	O-ring	1	B40001-
12		23B-60-71430	Tube	1	B40001-
13		07285-00100	Clip	1	B40001-
14		201-60-12172	Filler	1	B40001-
15		20Y-60-21340	Gasket	1	B40001-
16		01252-70516	Bolt	6	B40001-
17		01601-20513	Washer	6	B40001-
18		20Y-60-41162	Cover	1	B40001-
19		01010-81225	Bolt	6	B40001-
20		01643-31232	Washer	6	B40001-
21		07000-15160	O-ring	1	B40001-
22		12R-60-11230	Spring	1	B40001-
23		23B-60-71130	Rod	1	B40001-
24		22B-60-11160	Strainer	1	B40001-
25		02781-00522	Union	1	B40001-
26		07002-12434	O-ring	1	B40001-
27		02896-11015	O-ring	1	B40001-
28		207-62-72141	Elbow	1	B40001-
29		07002-11423	O-ring	1	B40001-
30		02896-11008	O-ring	2	B40001-
31		07040-12412	Plug	1	B40001-
32		07002-12434	O-ring	1	B40001-
33		21W-62-42640	Elbow	1	B40001-
34		07002-13334	O-ring	1	B40001-
35		23B-60-33240	O-ring	1	B40001-
36		02782-10422	Elbow	1	B40001-
37		07002-12034	O-ring	1	B40001-
38		02896-11012	O-ring	1	B40001-
39		02782-10425	Elbow	1	B40001-
40		07002-12434	O-ring	1	B40001-
41		02896-11012	O-ring	1	B40001-

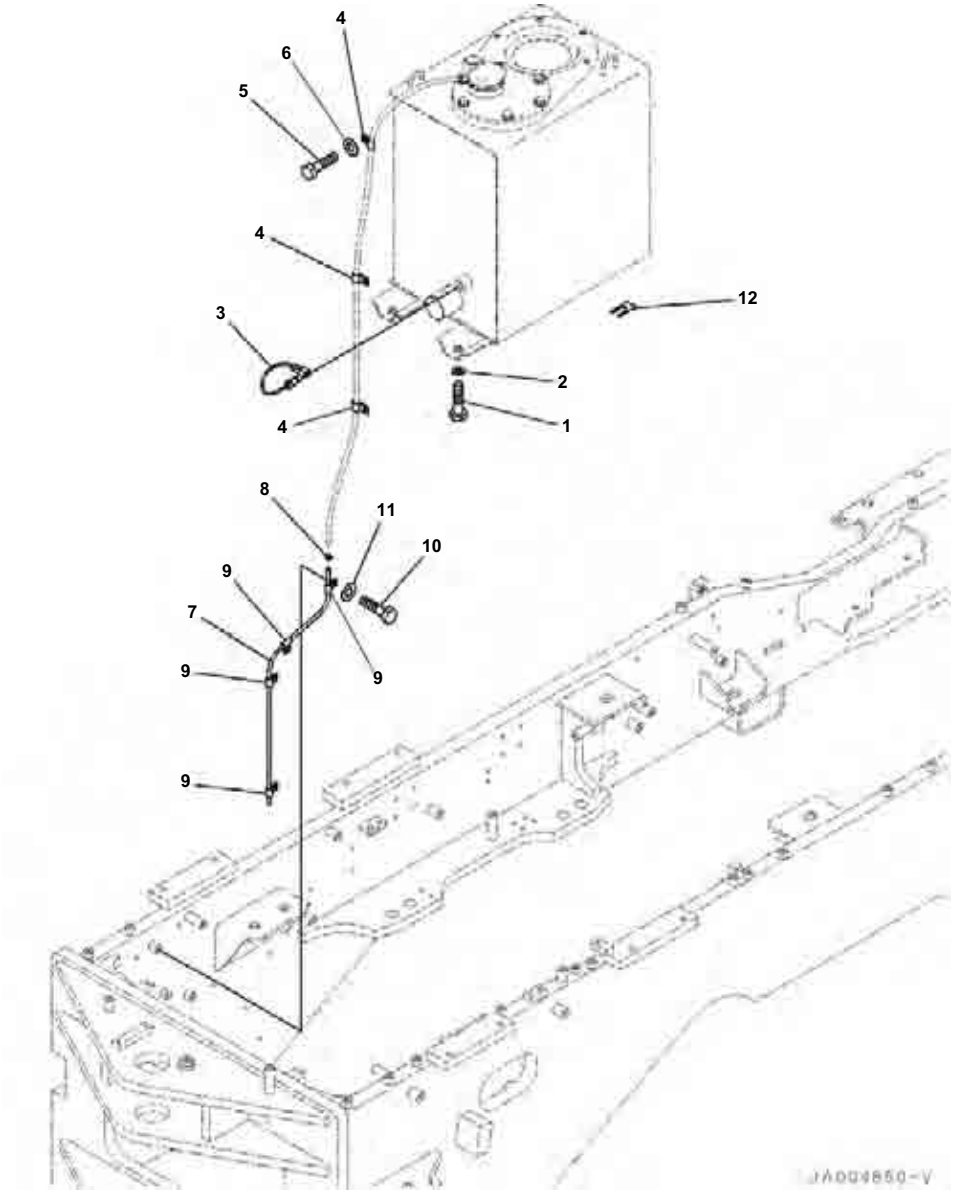

Hydraulic Tank, Tank Related Parts

Index	Code	Part Number	Description	Qty	Serial No.
1		01010-81235	Bolt	4	B40001-
2		01643-31232	Washer	4	B40001-
3		7861-93-3320	Sensor, Temperature	1	B40001-
4		04434-51010	Clip	3	B40001-
5		01010-81020	Bolt	3	B40001-
6		01643-31032	Washer	3	B40001-
7		23B-60-71420	Tube	1	B40001-
8		07285-00100	Clip	1	B40001-
9		04434-50810	Clip	4	B40001-
10		01010-81020	Bolt	4	B40001-
11		01643-31032	Washer	4	B40001-
12		23B-60-71440	Shim, T=0.5mm	6	B40001-

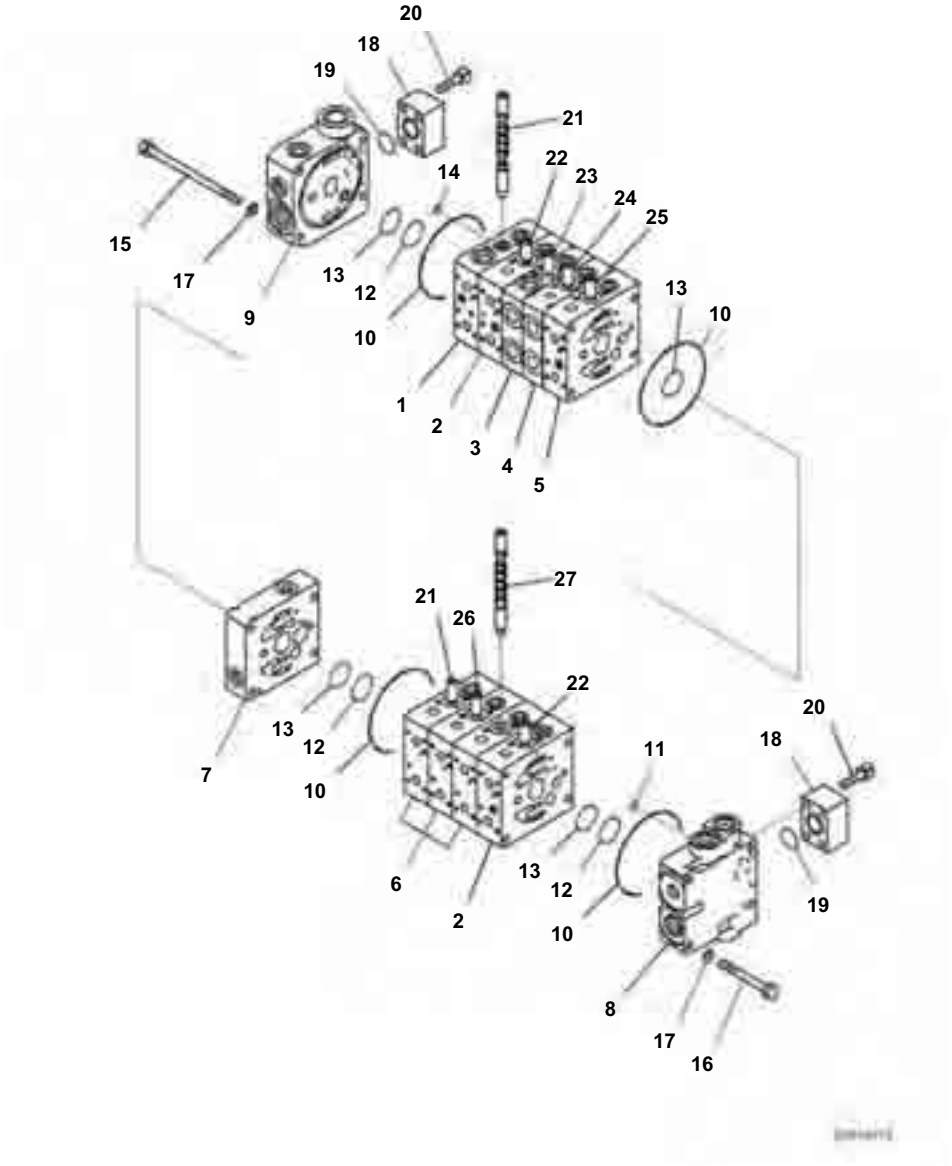

Main Control Valve, With 9 Spool Valve, Inner Parts (1/10)

Index	Code	Part Number	Description	Qty	Serial No.
		723-19-17801	Valve Assembly, Control	1	B40001-
1	C1		· Valve Body	1	B40001-
2	C1		· Valve Body	2	B40001-
3	C1		· Valve Body	1	B40001-
4	C1		· Valve Body	1	B40001-
5	C1		· Valve Body	1	B40001-
6	C1		· Valve Body	3	B40001-
7		723-11-23540	· Block	1	B40001-
8	C1		· Valve Body	1	B40001-
9	C1		· Cover	1	B40001-
10		07000-12100	· O-ring	11	B40001-
11		07000-11008	· O-ring	1	B40001-
12		723-11-19110	· O-ring	9	B40001-
13		723-11-19130	· O-ring	11	B40001-
14		07000-11007	· O-ring	10	B40001-
15		723-11-38650	· Bolt	4	B40001-
16		723-11-38660	· Bolt	4	B40001-
17		01643-50823	· Washer	8	B40001-
18		723-11-18420	· Block	2	B40001-
19		723-11-18430	· O-ring	2	B40001-
20		01252-60830	· Bolt	8	B40001-
21	C1		· Spool	2	B40001-
22	C1		· Spool	2	B40001-
23	C1		· Spool	1	B40001-
24	C1		· Spool	1	B40001-
25	C1		· Spool	1	B40001-
26	C1		· Spool	1	B40001-
27	C1		· Spool	1	B40001-

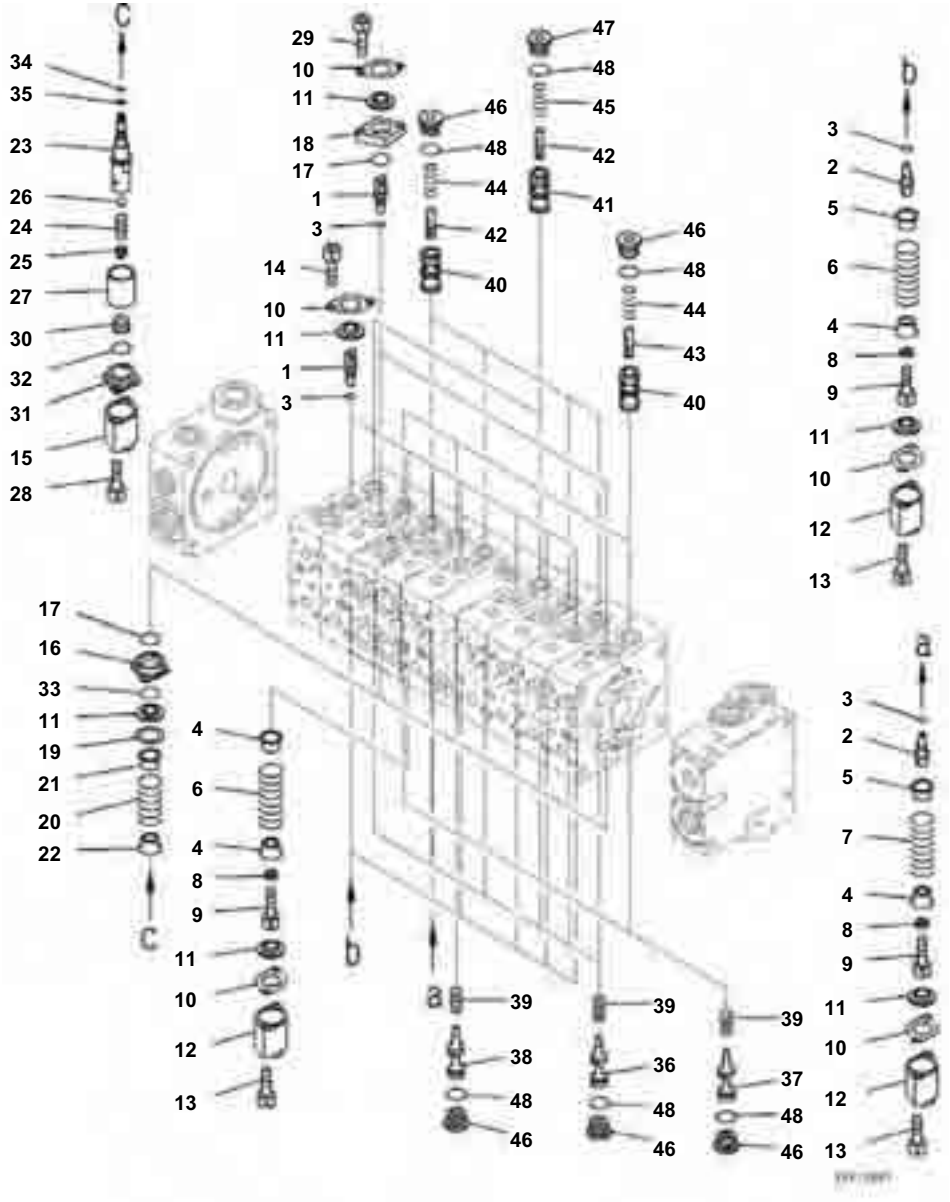

Main Control Valve, With 9 Spool Valve, Inner Parts (2/10)

Index	Code	Part Number	Description	Qty	Serial No.
		723-19-17801	Valve Assembly, Control	1	B40001-
1	C1		· Plug	9	B40001-
2	C1		· Plug	6	B40001-
3	C1		· O-ring	15	B40001-
4	C1		· Retainer	13	B40001-
	C1		· Retainer, L=9.8mm	13	B40001-
	C1		· Retainer, L=9.6mm	13	B40001-
5	C1		· Retainer, L=9.7mm	1	B40001-
	C1		· Retainer, L=9.8mm	1	B40001-
	C1		· Retainer, L=9.6mm	1	B40001-
6		723-11-17810	· Spring	6	B40001-
7		723-11-32740	· Spring	1	B40001-
8		723-11-37870	· Washer	7	B40001-
9		01252-60610	· Bolt, Hexagon Socket Head	7	B40001-
10		723-11-17130	· Plate	16	B40001-
11		709-32-11530	· Seal	18	B40001-
12		723-11-37840	· Case	7	B40001-
13		01252-60640	· Bolt, Hexagon Socket Head	14	B40001-
14		01252-60610	· Bolt, Hexagon Socket Head	14	B40001-
15	C1		· Case	2	B40001-
16	C1		· Plate	2	B40001-
17		722-12-19120	· O-ring	4	B40001-
18		723-11-38530	· Plate	2	B40001-
19	C1		· Plate	2	B40001-
20	C1		· Spring	2	B40001-
21	C1		· Retainer, L=11.4mm	2	B40001-
	C1		· Retainer, L=11.3mm	2	B40001-
	C1		· Retainer, L=11.5mm	2	B40001-
22		723-11-37990	· Retainer	2	B40001-
23	C1		· Plug	2	B40001-
24	C1		· Spring	2	B40001-
25	C1		· Guide	2	B40001-
26	C1		· Ball	6	B40001-
27	C1		· Detent	2	B40001-
28		01252-60620	· Bolt, Hexagon Socket Head	4	B40001-
29		702-16-54760	· Bolt	4	B40001-
30	C1		· Plug	2	B40001-
31		723-11-38590	· Plate	2	B40001-
32		709-25-11620	· O-ring	2	B40001-
33		702-21-38460	· O-ring	2	B40001-
34		07000-11003	· O-ring	2	B40001-
35		07001-01003	· Ring, Back-up	2	B40001-
36	C1		· Valve	6	B40001-
37	C1		· Valve	2	B40001-
38	C1		· Valve	1	B40001-
39		723-11-15130	· Spring	9	B40001-

GD655-5 S/N B40001-UP

Main Control Valve, With 9 Spool Valve, Inner Parts (2/10)

Index	Code	Part Number	Description	Qty	Serial No.
40	C1		▪ Valve	7	B40001-
41	C1		▪ Valve	2	B40001-
42	C1		▪ Piston	6	B40001-
43	C1		▪ Piston	3	B40001-
44		723-11-16130	▪ Spring	7	B40001-
45		723-11-26750	▪ Spring	2	B40001-
46		723-11-15110	▪ Plug	16	B40001-
47		723-11-26170	▪ Plug	2	B40001-
48		07002-11623	▪ O-ring	18	B40001-

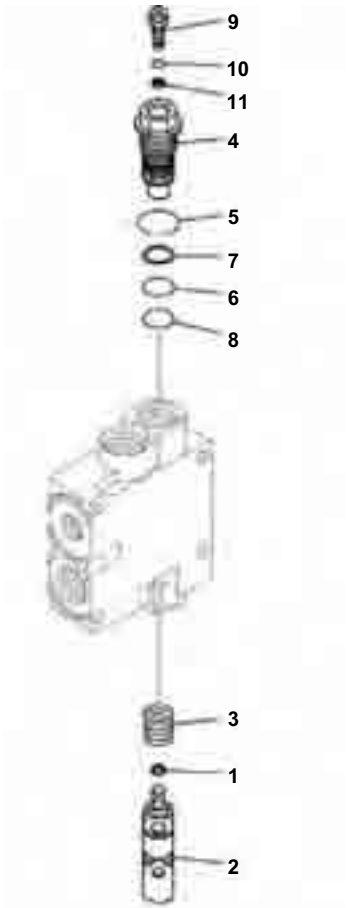

Main Control Valve, With 9 Spool Valve, Inner Parts (3/10)

Index	Code	Part Number	Description	Qty	Serial No.
		723-19-17801	Valve Assembly, Control	1	B40001-
1		723-11-18240	· Seal	1	B40001-
2	C1		· Spool	1	B40001-
3		723-11-32730	· Spring	1	B40001-
4		723-11-38610	· Sleeve	1	B40001-
5		07002-12434	· O-ring	1	B40001-
6		723-11-18150	· O-ring	1	B40001-
7		723-11-18160	· Ring	1	B40001-
8		720-68-19760	· O-ring	1	B40001-
9		723-11-14250	· Orifice	1	B40001-
10		07002-10823	· O-ring	1	B40001-
11		722-12-15160	· Ring	1	B40001-

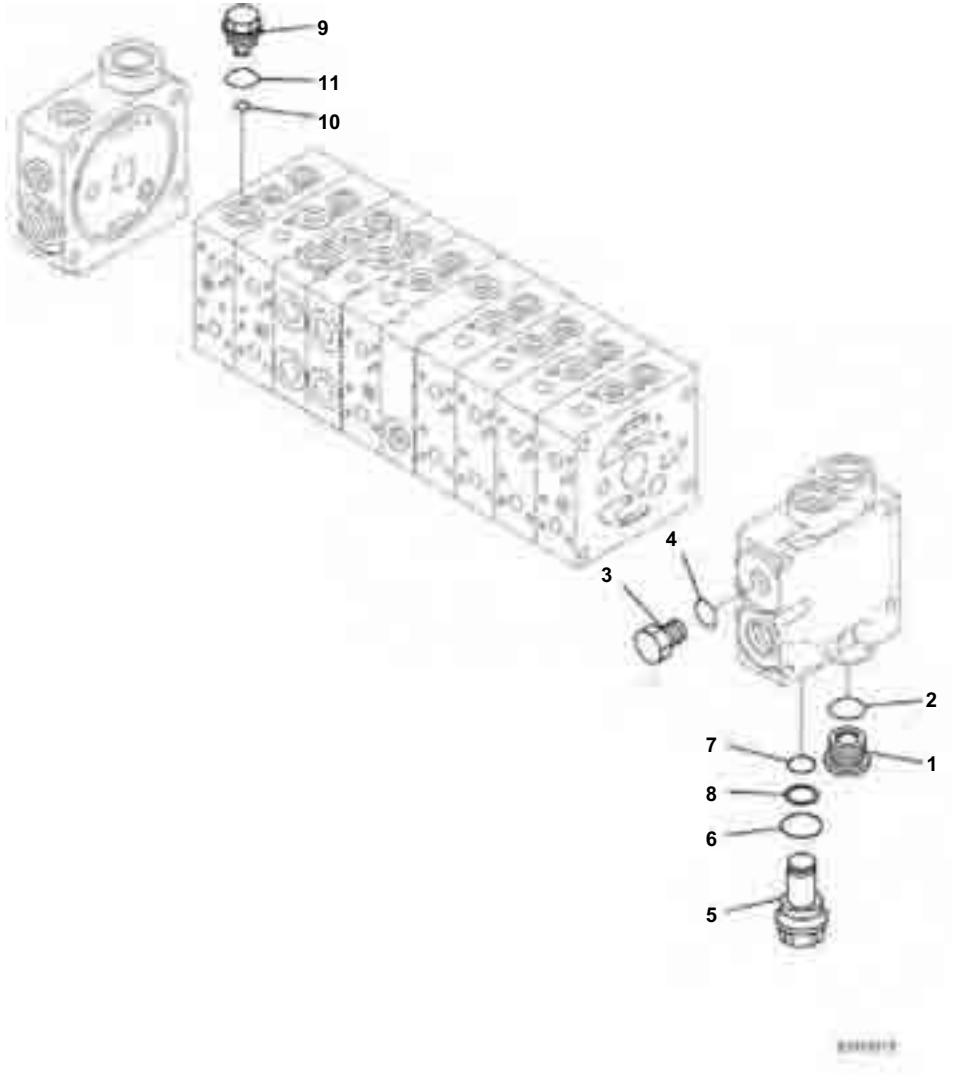

Main Control Valve, With 9 Spool Valve, Inner Parts (4/10)

Index	Code	Part Number	Description	Qty	Serial No.
		723-19-17801	Valve Assembly, Control	1	B40001-
1		723-26-15230	· Plug	1	B40001-
2		07002-12434	· O-ring	1	B40001-
3		708-8E-16250	· Plug	1	B40001-
4		07002-11823	· O-ring	1	B40001-
5		723-11-29361	· Plug	1	B40001-
6		07000-13024	· O-ring	1	B40001-
7		700-22-11410	· O-ring	1	B40001-
8		700-80-64220	· Ring	1	B40001-
9		723-11-19620	· Plug	1	B40001-
10		709-32-11840	· O-ring	1	B40001-
11		07002-12034	· O-ring	1	B40001-

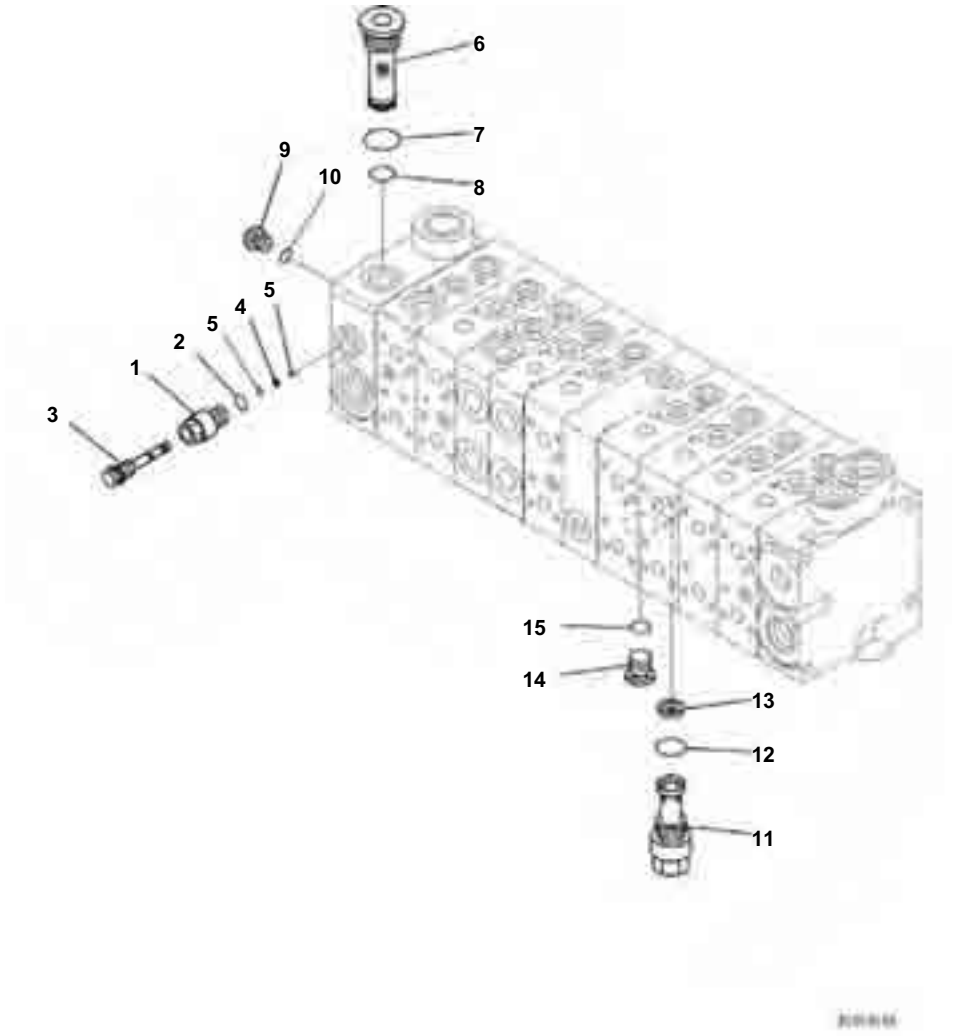

Main Control Valve, With 9 Spool Valve, Inner Parts (5/10)

Index	Code	Part Number	Description	Qty	Serial No.
		723-19-17801	Valve Assembly, Control	1	B40001-
1		723-11-38620	· Plug	1	B40001-
2		07002-11223	· O-ring	1	B40001-
3		723-11-38630	· Plug	1	B40001-
4		07001-01003	· Ring, Back-up	1	B40001-
5		07000-11003	· O-ring	2	B40001-
6		723-11-14390	· Filter	1	B40001-
7		07002-12434	· O-ring	1	B40001-
8		723-11-19130	· O-ring	1	B40001-
9		708-8E-16160	· Plug	2	B40001-
10		07002-11023	· O-ring	2	B40001-
11		723-11-38670	· Plug	1	B40001-
12		07002-12034	· O-ring	1	B40001-
13		702-21-53120	· Filter	1	B40001-
14		702-21-55620	· Plug	1	B40001-
15		07002-11423	· O-ring	1	B40001-

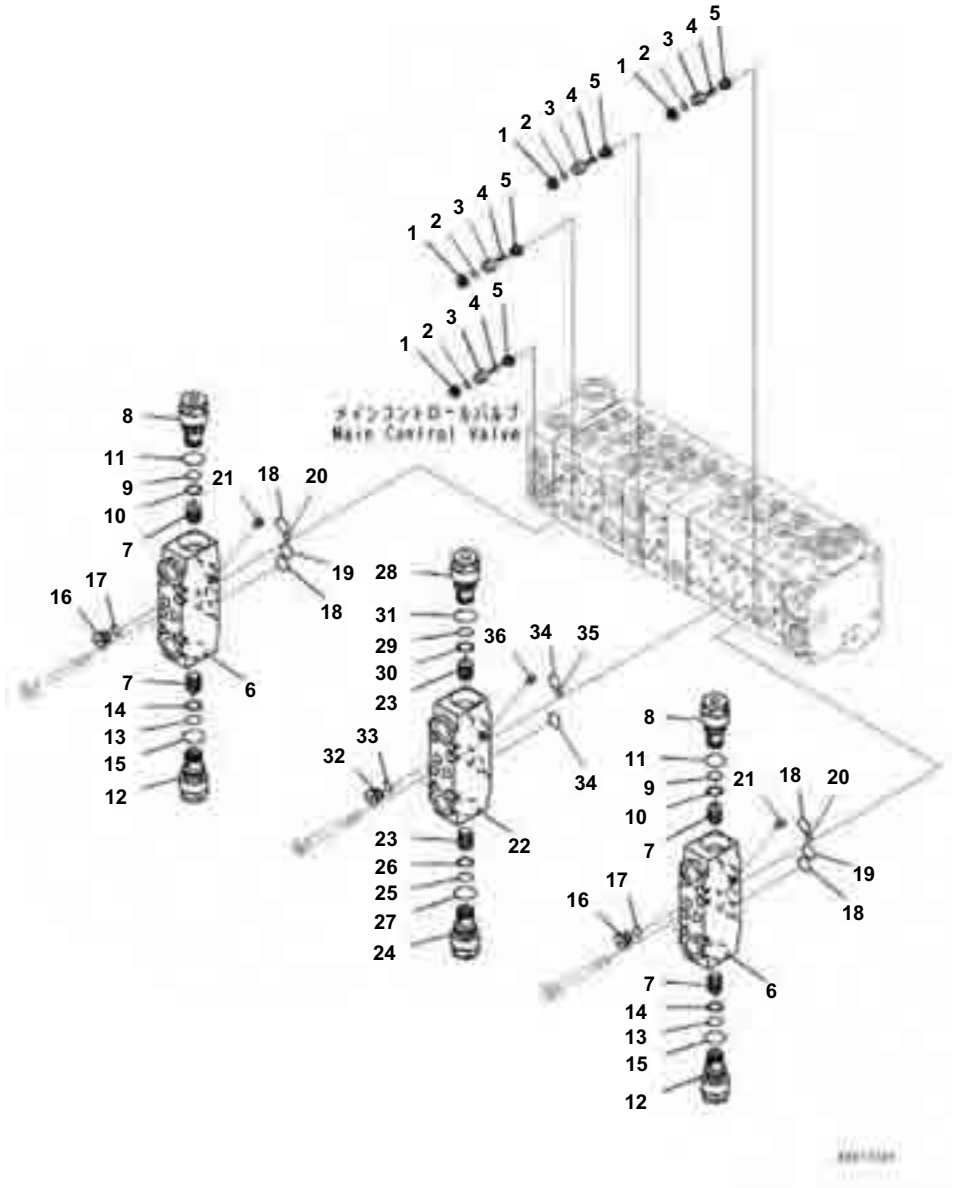

Main Control Valve, With 9 Spool Valve, Inner Parts (6/10)

Index	Code	Part Number	Description	Qty	Serial No.
		723-19-17801	Valve Assembly, Control	1	B40001-
1	C1		· Seat	4	B40001-
2		723-11-19960	· O-ring	4	B40001-
3	C1		· Valve	4	B40001-
4		723-11-18540	· Spring	4	B40001-
5		723-11-18550	· Retainer	4	B40001-
		723-11-02850	· Valve, Pilot Check	2	B40001-
6	C1		· · Valve Body	1	B40001-
7	C1		· · Piston	2	B40001-
8		723-11-03150	· · Valve, Check	1	B40001-
9		07000-12015	· · · O-ring	1	B40001-
10		07001-02015	· · · Ring, Back-up	1	B40001-
11		07002-12434	· · · O-ring	1	B40001-
12		723-11-03190	· · Valve, Check	1	B40001-
13		07000-12015	· · · O-ring	1	B40001-
14		07001-02015	· · · Ring, Back-up	1	B40001-
15		07002-12434	· · · O-ring	1	B40001-
16		723-26-15220	· · Plug	2	B40001-
17		07002-11223	· · O-ring	2	B40001-
18		723-11-19130	· · O-ring	2	B40001-
19		723-11-19970	· · O-ring	1	B40001-
20		07000-11007	· · O-ring	1	B40001-
21	C1		· · Orifice	1	B40001-
		723-11-02860	· Valve, Pilot Check	1	B40001-
22	C1		· · Valve Body	1	B40001-
23	C1		· · Piston	2	B40001-
24		723-11-03150	· · Valve, Check	1	B40001-
25		07000-12015	· · · O-ring	1	B40001-
26		07001-02015	· · · Ring, Back-up	1	B40001-
27		07002-12434	· · · O-ring	1	B40001-
28		723-11-03180	· · Valve, Check	1	B40001-
29		07000-12015	· · · O-ring	1	B40001-
30		07001-02015	· · · Ring, Back-up	1	B40001-
31		07002-12434	· · · O-ring	1	B40001-
32		723-26-15220	· · Plug	2	B40001-
33		07002-11223	· · O-ring	2	B40001-
34		723-11-19130	· · O-ring	2	B40001-
35		07000-11007	· · O-ring	1	B40001-
36	C1		· · Orifice	1	B40001-

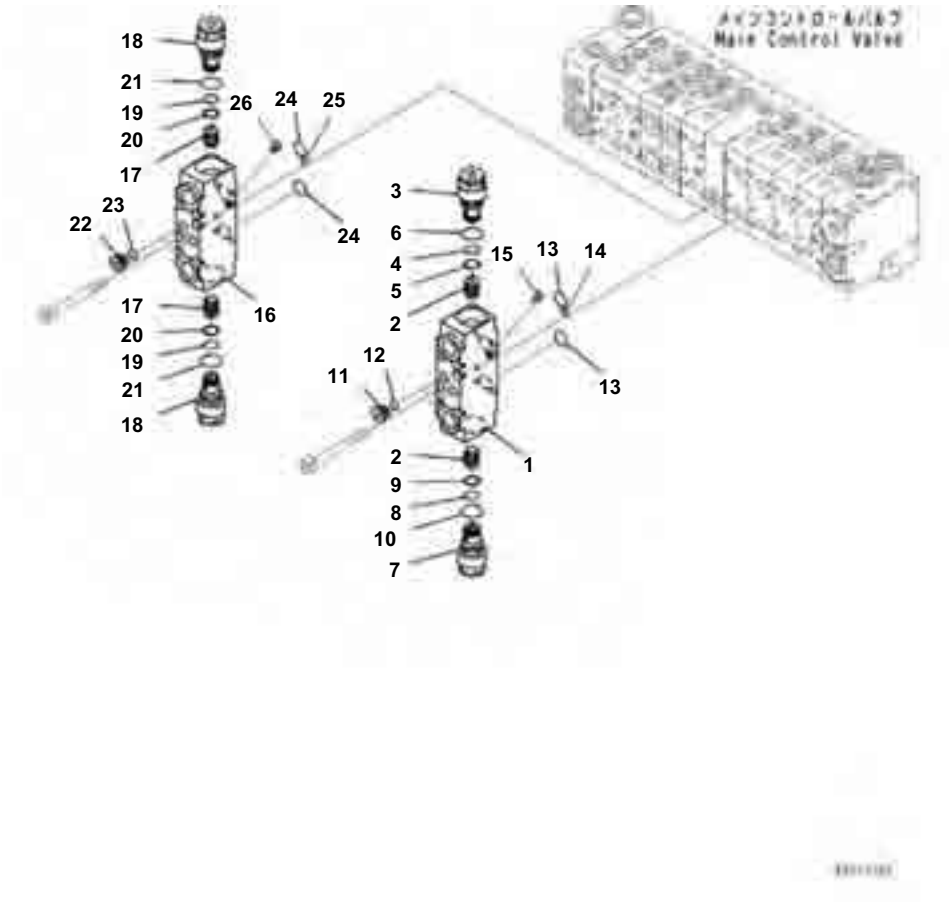

Main Control Valve, With 9 Spool Valve, Inner Parts (7/10)

Index	Code	Part Number	Description	Qty	Serial No.
		723-19-17801	Valve Assembly, Control	1	B40001-
		723-11-02870	· Valve, Pilot Check	1	B40001-
1	C1		· · Valve Body	1	B40001-
2	C1		· · Piston	2	B40001-
3		723-11-03160	· · Valve, Check	1	B40001-
4		07000-12015	· · · O-ring	1	B40001-
5		07001-02015	· · · Ring, Back-up	1	B40001-
6		07002-12434	· · · O-ring	1	B40001-
7		723-11-03170	· · Valve, Check	1	B40001-
8		07000-12015	· · · O-ring	1	B40001-
9		07001-02015	· · · Ring, Back-up	1	B40001-
10		07002-12434	· · · O-ring	1	B40001-
11		723-26-15220	· · Plug	2	B40001-
12		07002-11223	· · O-ring	2	B40001-
13		723-11-19130	· · O-ring	2	B40001-
14		07000-11007	· · O-ring	1	B40001-
15	C1		· · Orifice	1	B40001-
		723-11-02880	· Valve, Pilot Check	1	B40001-
16	C1		· · Valve Body	1	B40001-
17	C1		· · Piston	2	B40001-
18		723-11-03170	· · Valve, Check	2	B40001-
19		07000-12015	· · · O-ring	1	B40001-
20		07001-02015	· · · Ring, Back-up	1	B40001-
21		07002-12434	· · · O-ring	1	B40001-
22		723-26-15220	· · Plug	2	B40001-
23		07002-11223	· · O-ring	2	B40001-
24		723-11-19130	· · O-ring	2	B40001-
25		07000-11007	· · O-ring	1	B40001-
26	C1		· · Orifice	1	B40001-

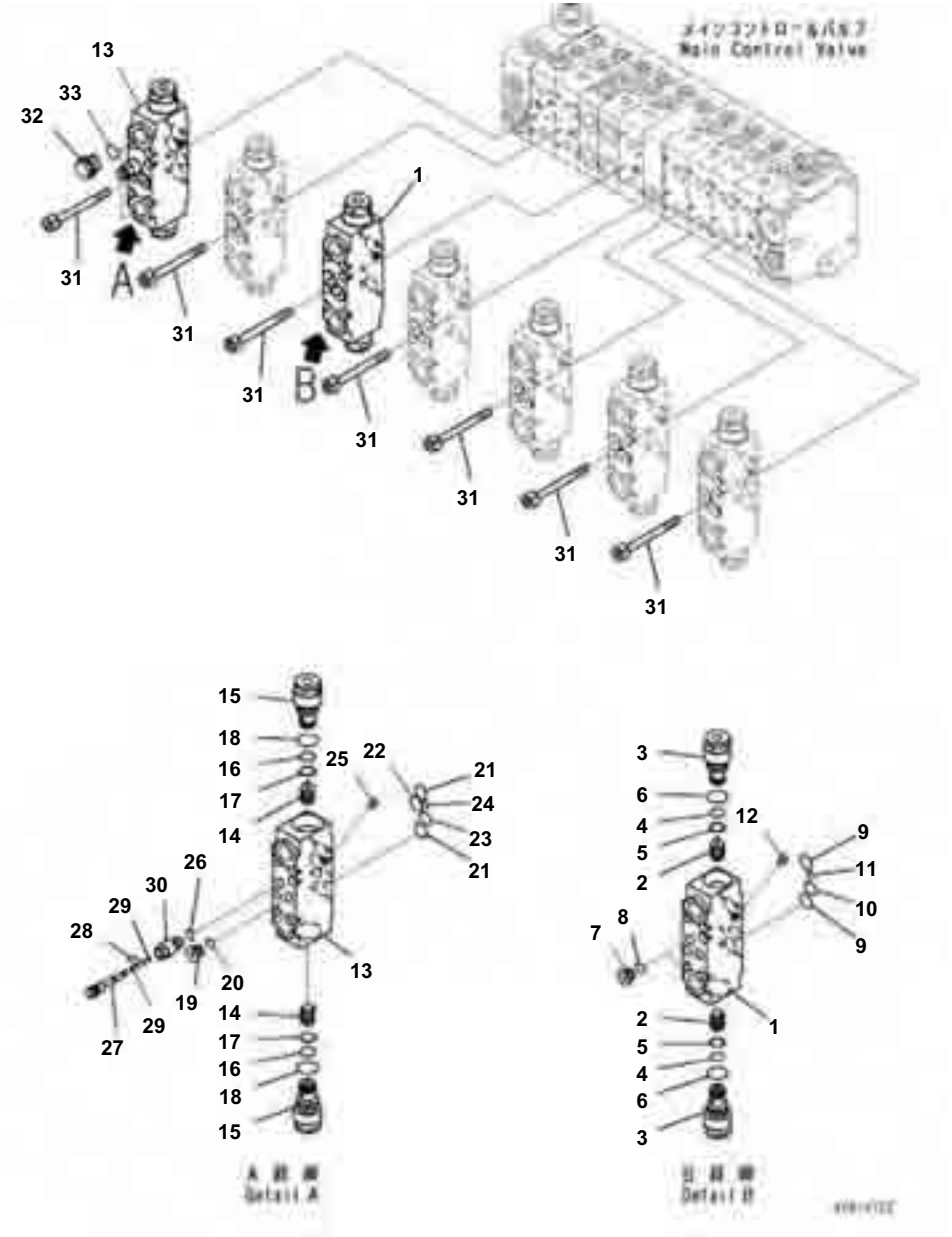

Main Control Valve, With 9 Spool Valve, Inner Parts (8/10)

Index	Code	Part Number	Description	Qty	Serial No.
		723-19-17801	Valve Assembly, Control	1	B40001-
		723-11-02890	· Valve, Pilot Check	1	B40001-
1	C1		· · Valve Body	1	B40001-
2	C1		· · Piston	2	B40001-
3		723-11-03170	· · Valve, Check	2	B40001-
4		07000-12015	· · · O-ring	1	B40001-
5		07001-02015	· · · Ring, Back-up	1	B40001-
6		07002-12434	· · · O-ring	1	B40001-
7		723-26-15220	· · Plug	2	B40001-
8		07002-11223	· · O-ring	2	B40001-
9		723-11-19130	· · O-ring	2	B40001-
10		723-11-19970	· · O-ring	1	B40001-
11		07000-11007	· · O-ring	1	B40001-
12	C1		· · Orifice	1	B40001-
		723-11-02950	· Valve, Pilot Check	1	B40001-
13	C1		· · Valve Body	1	B40001-
14	C1		· · Piston	2	B40001-
15		723-11-03170	· · Valve, Check	2	B40001-
16		07000-12015	· · · O-ring	1	B40001-
17		07001-02015	· · · Ring, Back-up	1	B40001-
18		07002-12434	· · · O-ring	1	B40001-
19		723-26-15220	· · Plug	1	B40001-
20		07002-11223	· · O-ring	1	B40001-
21		723-11-19130	· · O-ring	2	B40001-
22		723-11-19970	· · O-ring	1	B40001-
23		07000-12011	· · O-ring	1	B40001-
24		07000-11007	· · O-ring	1	B40001-
25	C1		· · Plug	1	B40001-
26		07002-11223	· · O-ring	1	B40001-
27		723-11-38640	· · Plug	1	B40001-
28		07000-11003	· · O-ring	2	B40001-
29		07001-01003	· · Ring, Back-up	2	B40001-
30		723-11-28260	· · Orifice	1	B40001-
31		700-22-11910	· Bolt	42	B40001-
32		709-32-11930	· Plug	2	B40001-
33		07002-11823	· O-ring	2	B40001-

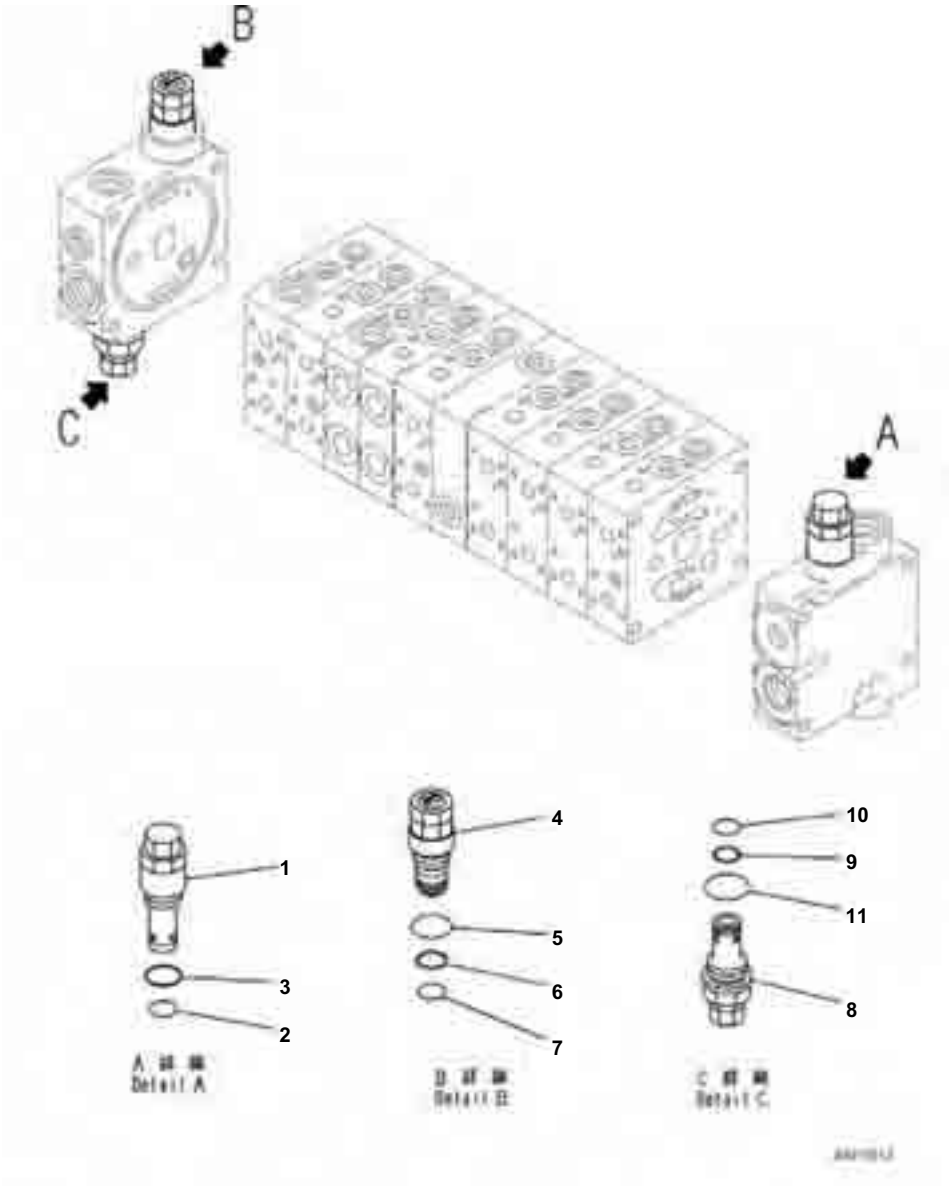

Main Control Valve, With 9 Spool Valve, Inner Parts (9/10)

Index	Code	Part Number	Description	Qty	Serial No.
		723-19-17801	Valve Assembly, Control	1	B40001-
1		723-10-16903	· Valve, Relief	1	B40001-
2		700-22-11410	· · O-ring	1	B40001-
3		07002-12434	· · O-ring	1	B40001-
4		723-10-17802	· Valve, Relief	1	B40001-
5		07002-12434	· · O-ring	1	B40001-
6		723-11-18160	· · Ring	1	B40001-
7		723-11-18150	· · O-ring	1	B40001-
8		723-10-19300	· Valve, Relief	1	B40001-
9		700-80-64220	· · Ring	1	B40001-
10		700-22-11410	· · O-ring	1	B40001-
11		709-25-11390	· · O-ring	1	B40001-

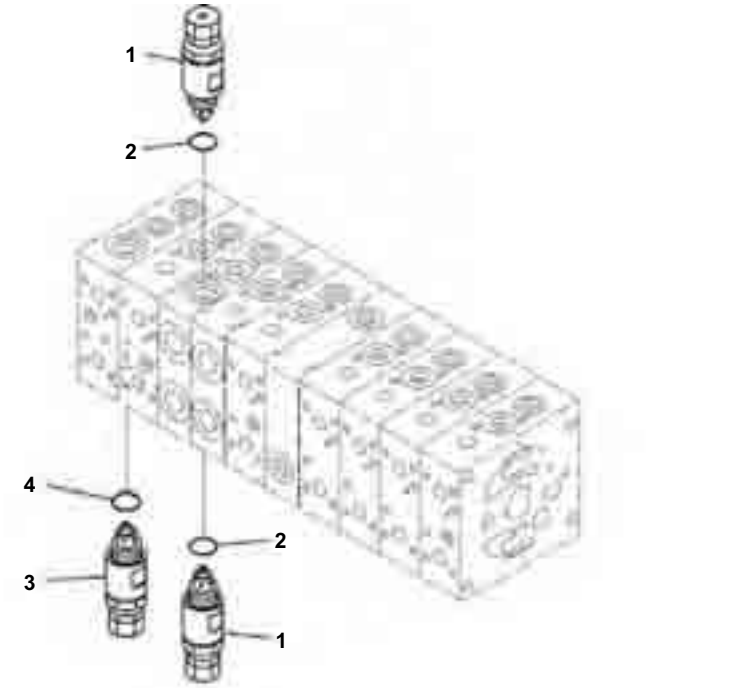

Main Control Valve, With 9 Spool Valve, Inner Parts (10/10)

Index	Code	Part Number	Description	Qty	Serial No.
		723-19-17801	Valve Assembly, Control	1	B40001-
1		723-10-17100	· Valve Assembly, Suction and Relief	2	B40001-
2		07002-12034	· · O-ring	2	B40001-
3		723-10-17200	· Valve Assembly, Suction and Relief	1	B40001-
4		07002-12034	· · O-ring	2	B40001-

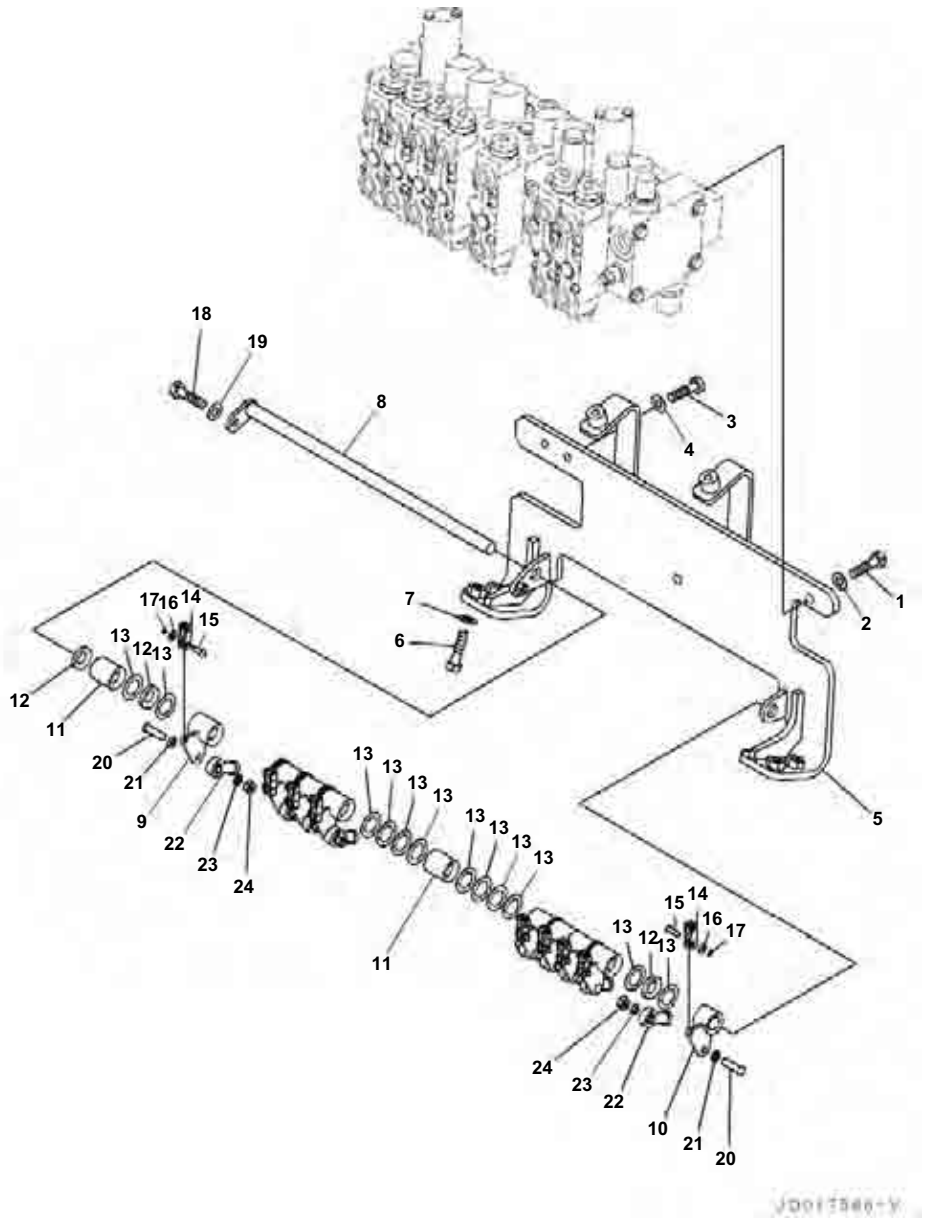

Main Control Valve, With 9 Spool Valve, Mounting Parts

Index	Code	Part Number	Description	Qty	Serial No.
1		01010-81025	Bolt	2	B40001-
2		01643-31032	Washer	2	B40001-
3		01010-80820	Bolt	1	B40001-
4		01643-30823	Washer	1	B40001-
5		23B-60-71311	Bracket	1	B40001-
6		01010-81235	Bolt	4	B40001-
7		01643-31232	Washer	4	B40001-
8		23B-60-71320	Shaft	1	B40001-
9		23B-60-71330	Lever	8	B40001-
10		23B-60-71341	Lever	1	B40001-
11		23B-60-71350	Collar	2	B40001-
12		01643-51645	Washer	6	B40001-
13		237-43-17420	Washer	28	B40001-
14		23B-60-71360	Yoke	9	B40001-
15		04205-10516	Pin	18	B40001-
16		01640-20508	Washer	18	B40001-
17		04050-11210	Pin, Cotter	18	B40001-
18		01010-80820	Bolt	1	B40001-
19		01643-30823	Washer	1	B40001-
20		235-43-18380	Bolt	9	B40001-
21		04254-10823	Spacer	9	B40001-
22		04250-90847	Rod End	9	B40001-
23		04254-10823	Spacer	9	B40001-
24		01580-10806	Nut	9	B40001-

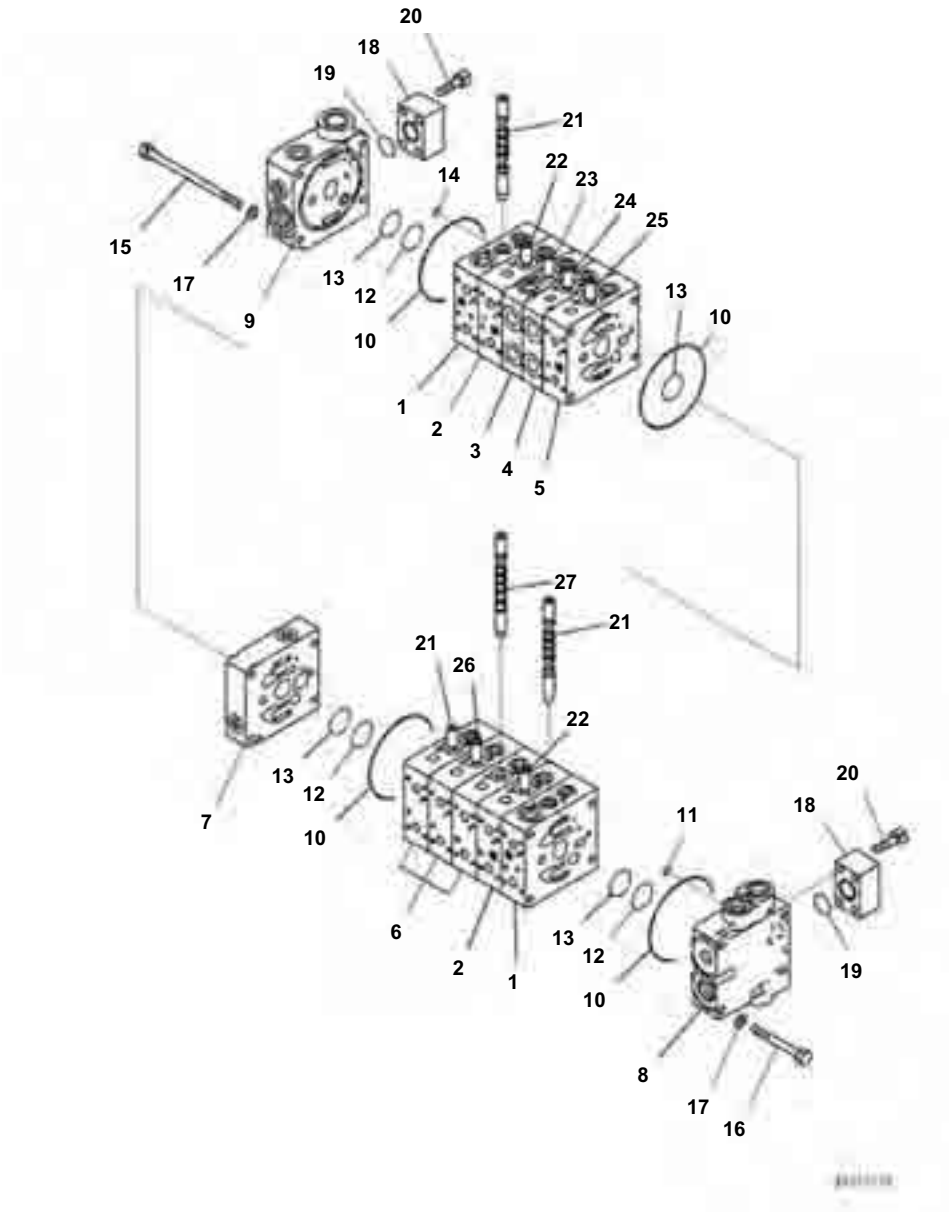

Main Control Valve, With 10 Spool Valve, Inner Parts (1/10)

Index	Code	Part Number	Description	Qty	Serial No.
		723-1A-17101	Valve Assembly, Control	1	B40001-
1	C1		· Valve Body	2	B40001-
2	C1		· Valve Body	2	B40001-
3	C1		· Valve Body	1	B40001-
4	C1		· Valve Body	1	B40001-
5	C1		· Valve Body	1	B40001-
6	C1		· Valve Body	3	B40001-
7		723-11-23540	· Block	1	B40001-
8	C1		· Valve Body	1	B40001-
9	C1		· Cover	1	B40001-
10		07000-12100	· O-ring	12	B40001-
11		07000-11008	· O-ring	1	B40001-
12		723-11-19110	· O-ring	10	B40001-
13		723-11-19130	· O-ring	12	B40001-
14		07000-11007	· O-ring	11	B40001-
15		723-11-38650	· Bolt	4	B40001-
16		723-11-38850	· Bolt	4	B40001-
17		01643-50823	· Washer	8	B40001-
18		723-11-18420	· Block	2	B40001-
19		723-11-18430	· O-ring	2	B40001-
20		01252-60830	· Bolt	8	B40001-
21	C1		· Spool	3	B40001-
22	C1		· Spool	2	B40001-
23	C1		· Spool	1	B40001-
24	C1		· Spool	1	B40001-
25	C1		· Spool	1	B40001-
26	C1		· Spool	1	B40001-
27	C1		· Spool	1	B40001-

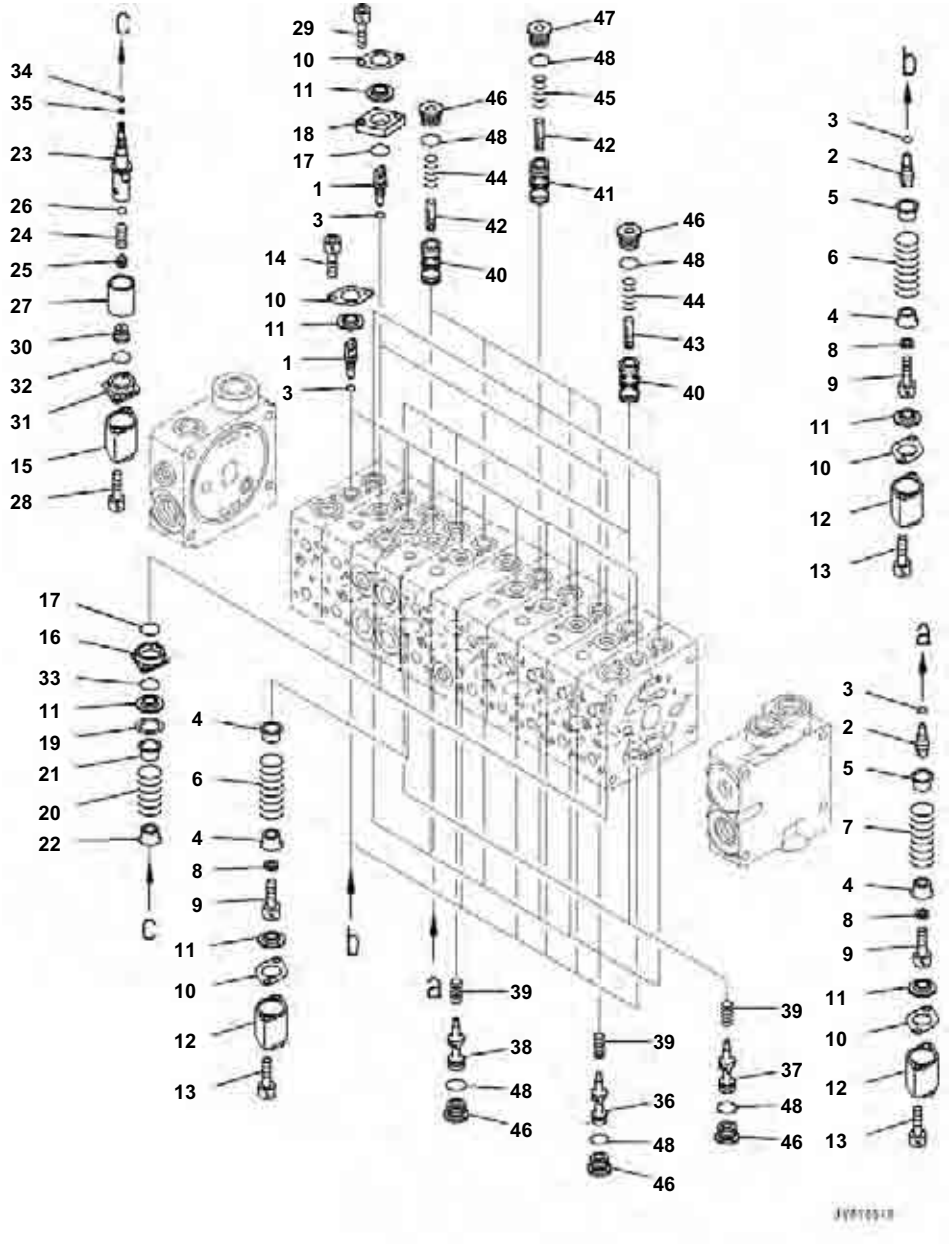

GD655-5 S/N B40001-UP
Main Control Valve, With 10 Spool Valve, Inner Parts (2/10)

Index	Code	Part Number	Description	Qty	Serial No.
		723-1A-17101	Valve Assembly, Control	1	B40001-
1	C1		· Plug	10	B40001-
2	C1		· Plug	7	B40001-
3	C1		· O-ring	17	B40001-
4	C1		· Retainer	15	B40001-
	C1		· Retainer, L=9.8mm	15	B40001-
	C1		· Retainer, L=9.6mm	15	B40001-
5	C1		· Retainer, L=9.7mm	1	B40001-
	C1		· Retainer, L=9.8mm	1	B40001-
	C1		· Retainer, L=9.6mm	1	B40001-
6		723-11-17810	· Spring	7	B40001-
7		723-11-32740	· Spring	1	B40001-
8		723-11-37870	· Washer	8	B40001-
9		01252-60610	· Bolt, Hexagon Socket Head	8	B40001-
10		723-11-17130	· Plate	18	B40001-
11		709-32-11530	· Seal	20	B40001-
12		723-11-37840	· Case	8	B40001-
13		01252-60640	· Bolt, Hexagon Socket Head	16	B40001-
14		01252-60610	· Bolt, Hexagon Socket Head	16	B40001-
15	C1		· Case	2	B40001-
16	C1		· Plate	2	B40001-
17		722-12-19120	· O-ring	4	B40001-
18		723-11-38530	· Plate	2	B40001-
19	C1		· Plate	2	B40001-
20	C1		· Spring	2	B40001-
21	C1		· Retainer, L=11.4mm	2	B40001-
	C1		· Retainer, L=11.3mm	2	B40001-
	C1		· Retainer, L=11.5mm	2	B40001-
22		723-11-37990	· Retainer	2	B40001-
23	C1		· Plug	2	B40001-
24	C1		· Spring	2	B40001-
25	C1		· Guide	2	B40001-
26	C1		· Ball	6	B40001-
27	C1		· Detent	2	B40001-
28		01252-60620	· Bolt, Hexagon Socket Head	4	B40001-
29		702-16-54760	· Bolt	4	B40001-
30	C1		· Plug	2	B40001-
31		723-11-38590	· Plate	2	B40001-
32		709-25-11620	· O-ring	2	B40001-
33		702-21-38460	· O-ring	2	B40001-
34		07000-11003	· O-ring	2	B40001-
35		07001-01003	· Ring, Back-up	2	B40001-
36	C1		· Valve	7	B40001-
37	C1		· Valve	2	B40001-
38	C1		· Valve	1	B40001-
39		723-11-15130	· Spring	10	B40001-

Reference:H0120-002002 Page:H003002

GD655-5 S/N B40001-UP

Main Control Valve, With 10 Spool Valve, Inner Parts (2/10)

Index	Code	Part Number	Description	Qty	Serial No.
40	C1		' Valve	7	B40001-
41	C1		' Valve	3	B40001-
42	C1		' Piston	7	B40001-
43	C1		' Piston	3	B40001-
44		723-11-16130	' Spring	7	B40001-
45		723-11-26750	' Spring	3	B40001-
46		723-11-15110	' Plug	17	B40001-
47		723-11-26170	' Plug	3	B40001-
48		07002-11623	' O-ring	20	B40001-

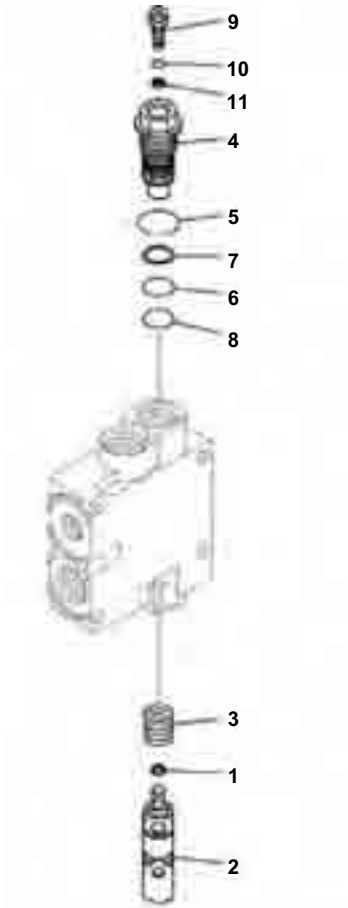

Main Control Valve, With 10 Spool Valve, Inner Parts (3/10)

Index	Code	Part Number	Description	Qty	Serial No.
		723-1A-17101	Valve Assembly, Control	1	B40001-
1		723-11-18240	· Seal	1	B40001-
2	C1		· Spool	1	B40001-
3		723-11-32730	· Spring	1	B40001-
4		723-11-38610	· Sleeve	1	B40001-
5		07002-12434	· O-ring	1	B40001-
6		723-11-18150	· O-ring	1	B40001-
7		723-11-18160	· Ring	1	B40001-
8		720-68-19760	· O-ring	1	B40001-
9		723-11-14250	· Orifice	1	B40001-
10		07002-10823	· O-ring	1	B40001-
11		722-12-15160	· Ring	1	B40001-

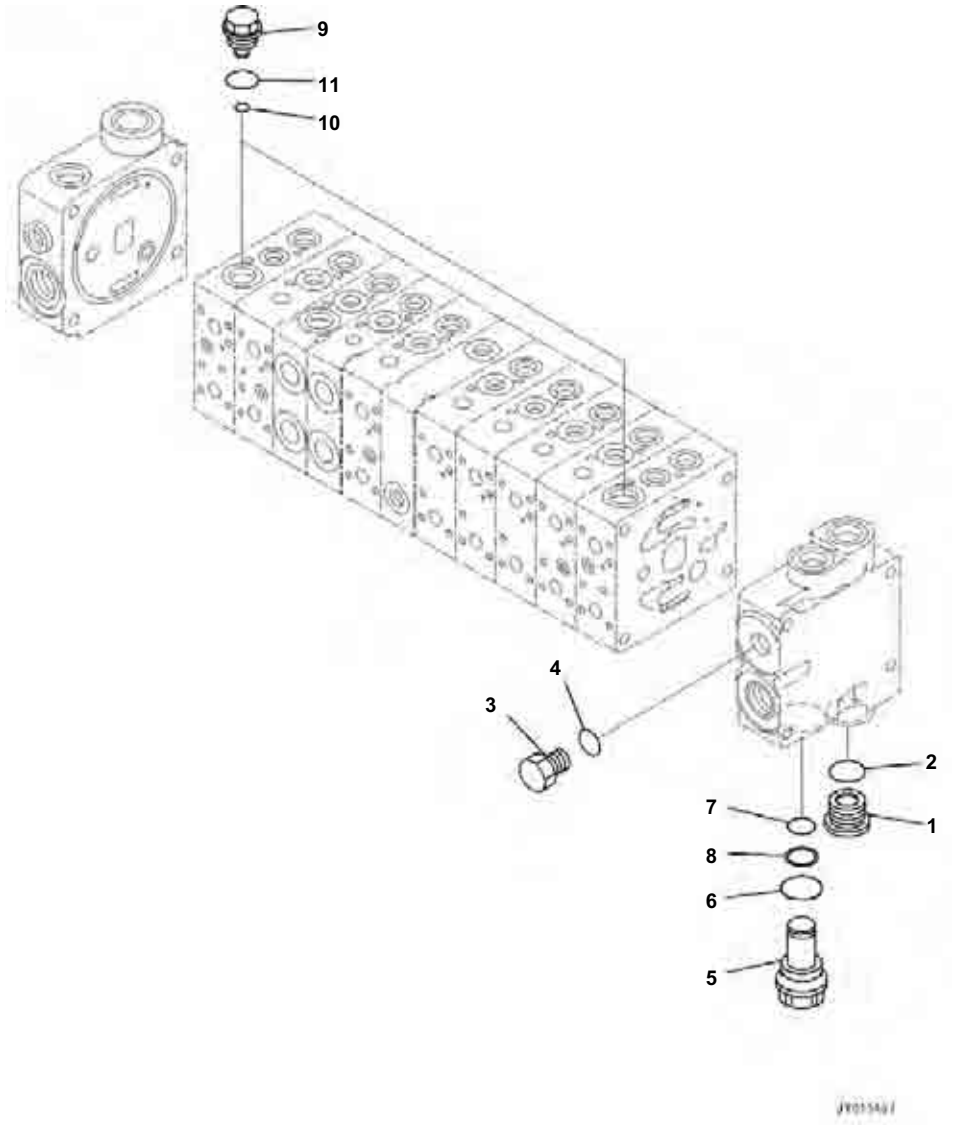

Main Control Valve, With 10 Spool Valve, Inner Parts (4/10)

Index	Code	Part Number	Description	Qty	Serial No.
		723-1A-17101	Valve Assembly, Control	1	B40001-
1		723-26-15230	' Plug	1	B40001-
2		07002-12434	' O-ring	1	B40001-
3		708-8E-16250	' Plug	1	B40001-
4		07002-11823	' O-ring	1	B40001-
5		723-11-29361	' Plug	1	B40001-
6		07000-13024	' O-ring	1	B40001-
7		700-22-11410	' O-ring	1	B40001-
8		700-80-64220	' Ring	1	B40001-
9		723-11-19620	' Plug	2	B40001-
10		709-32-11840	' O-ring	2	B40001-
11		07002-12034	' O-ring	2	B40001-

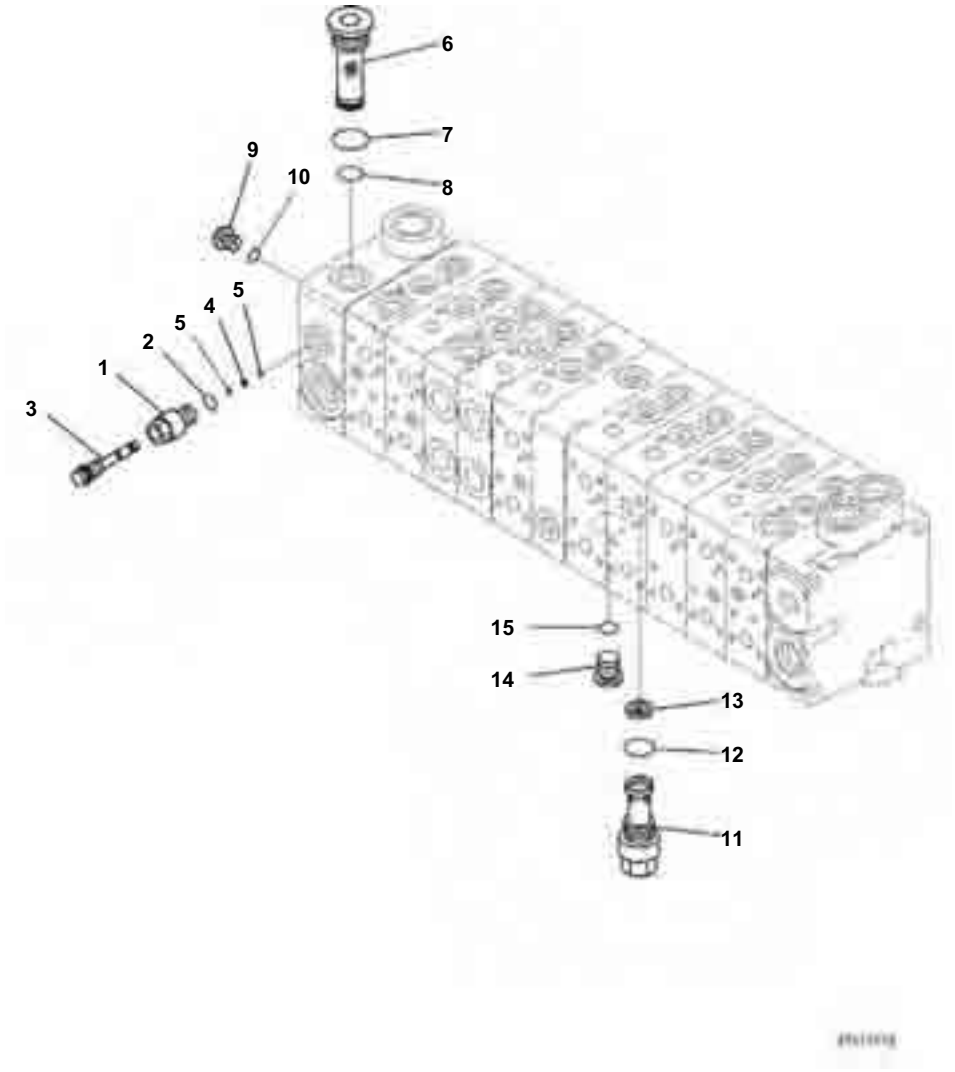

Main Control Valve, With 10 Spool Valve, Inner Parts (5/10)

Index	Code	Part Number	Description	Qty	Serial No.
		723-1A-17101	Valve Assembly, Control	1	B40001-
1		723-11-38620	Plug	1	B40001-
2		07002-11223	· O-ring	1	B40001-
3		723-11-38630	· Plug	1	B40001-
4		07001-01003	· Ring, Back-up	1	B40001-
5		07000-11003	· O-ring	2	B40001-
6		723-11-14390	· Filter	1	B40001-
7		07002-12434	· O-ring	1	B40001-
8		723-11-19130	· O-ring	1	B40001-
9		708-8E-16160	· Plug	2	B40001-
10		07002-11023	· O-ring	2	B40001-
11		723-11-38670	· Plug	1	B40001-
12		07002-12034	· O-ring	1	B40001-
13		702-21-53120	· Filter	1	B40001-
14		702-21-55620	· Plug	1	B40001-
15		07002-11423	· O-ring	1	B40001-

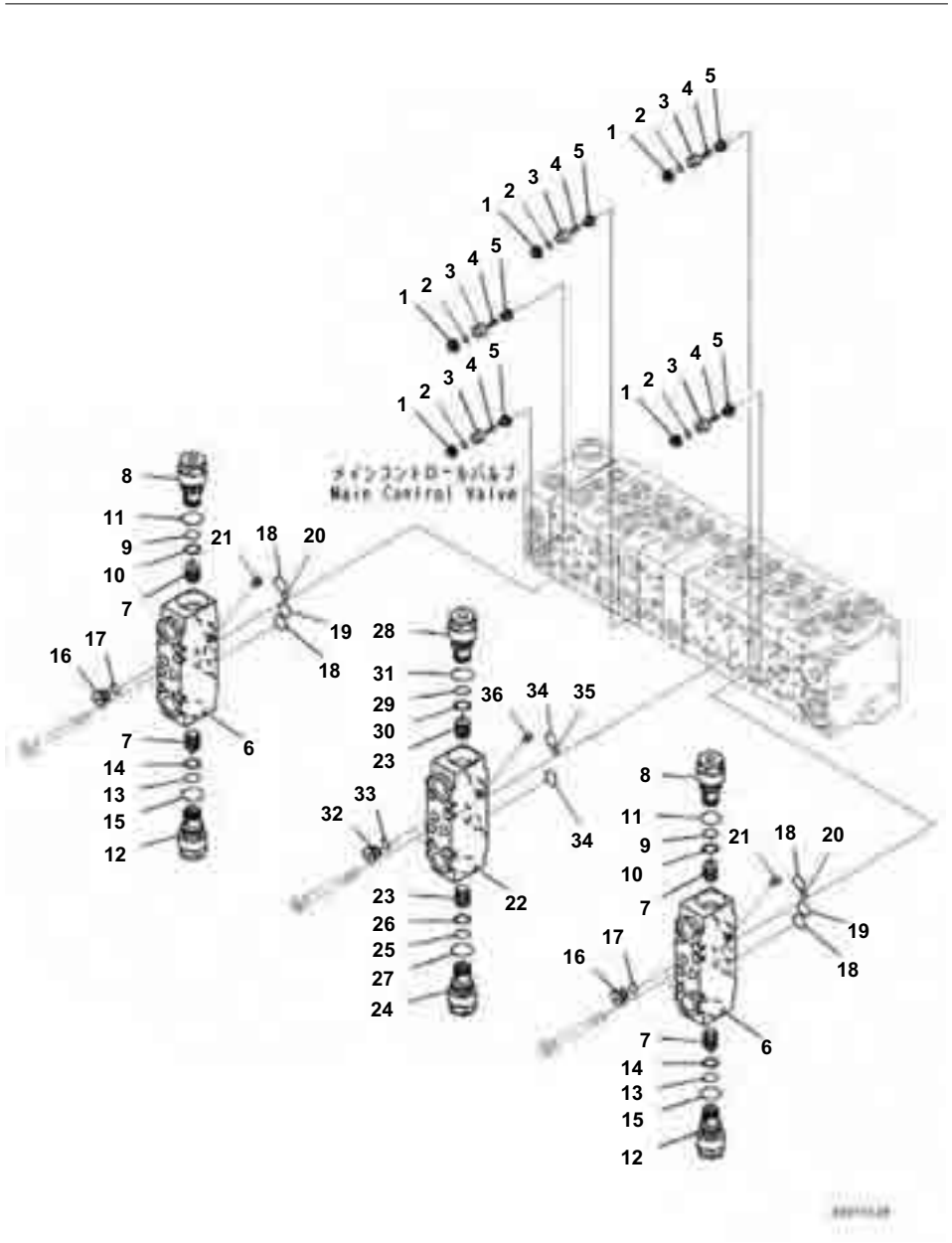

Main Control Valve, With 10 Spool Valve, Inner Parts (6/10)

Index	Code	Part Number	Description	Qty	Serial No.
		723-1A-17101	Valve Assembly, Control	1	B40001-
1	C1		· Seat	4	B40001-
2		723-11-19960	· O-ring	4	B40001-
3	C1		· Valve	4	B40001-
4		723-11-18540	· Spring	4	B40001-
5		723-11-18550	· Retainer	4	B40001-
		723-11-02850	· Valve, Pilot Check	2	B40001-
6	C1		· · Valve Body	1	B40001-
7	C1		· · Piston	2	B40001-
8		723-11-03150	· · Valve, Check	1	B40001-
9		07000-12015	· · · O-ring	1	B40001-
10		07001-02015	· · · Ring, Back-up	1	B40001-
11		07002-12434	· · · O-ring	1	B40001-
12		723-11-03190	· · Valve, Check	1	B40001-
13		07000-12015	· · · O-ring	1	B40001-
14		07001-02015	· · · Ring, Back-up	1	B40001-
15		07002-12434	· · · O-ring	1	B40001-
16		723-26-15220	· · Plug	2	B40001-
17		07002-11223	· · O-ring	2	B40001-
18		723-11-19130	· · O-ring	2	B40001-
19		723-11-19970	· · O-ring	1	B40001-
20		07000-11007	· · O-ring	1	B40001-
21	C1		· · Orifice	1	B40001-
		723-11-02860	· Valve, Pilot Check	1	B40001-
22	C1		· · Valve Body	1	B40001-
23	C1		· · Piston	2	B40001-
24		723-11-03150	· · Valve, Check	1	B40001-
25		07000-12015	· · · O-ring	1	B40001-
26		07001-02015	· · · Ring, Back-up	1	B40001-
27		07002-12434	· · · O-ring	1	B40001-
28		723-11-03180	· · Valve, Check	1	B40001-
29		07000-12015	· · · O-ring	1	B40001-
30		07001-02015	· · · Ring, Back-up	1	B40001-
31		07002-12434	· · · O-ring	1	B40001-
32		723-26-15220	· · Plug	2	B40001-
33		07002-11223	· · O-ring	2	B40001-
34		723-11-19130	· · O-ring	2	B40001-
35		07000-11007	· · O-ring	1	B40001-
36	C1		· · Orifice	1	B40001-

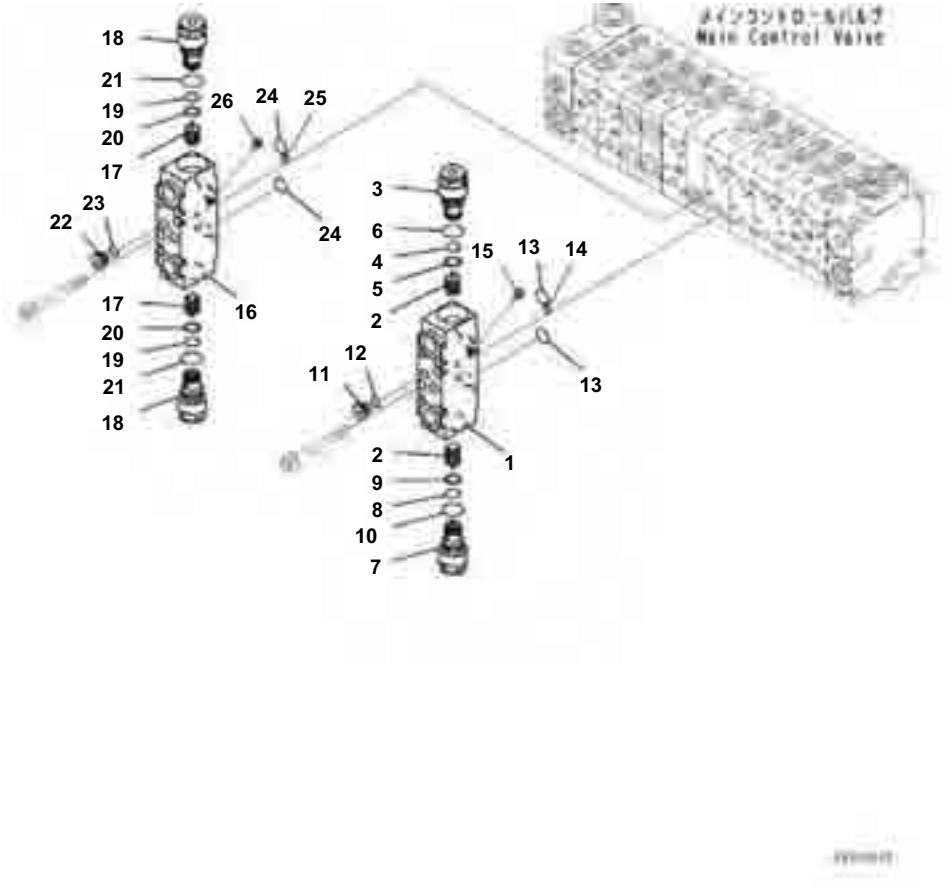

Main Control Valve, With 10 Spool Valve, Inner Parts (7/10)

Index	Code	Part Number	Description	Qty	Serial No.
		723-1A-17101	Valve Assembly, Control	1	B40001-
		723-11-02870	· Valve, Pilot Check	1	B40001-
1	C1		· · Valve Body	1	B40001-
2	C1		· · Piston	2	B40001-
3		723-11-03160	· · Valve, Check	1	B40001-
4		07000-12015	· · · O-ring	1	B40001-
5		07001-02015	· · · Ring, Back-up	1	B40001-
6		07002-12434	· · · O-ring	1	B40001-
7		723-11-03170	· · Valve, Check	1	B40001-
8		07000-12015	· · · O-ring	1	B40001-
9		07001-02015	· · · Ring, Back-up	1	B40001-
10		07002-12434	· · · O-ring	1	B40001-
11		723-26-15220	· · Plug	2	B40001-
12		07002-11223	· · O-ring	2	B40001-
13		723-11-19130	· · O-ring	2	B40001-
14		07000-11007	· · O-ring	1	B40001-
15	C1		· · Orifice	1	B40001-
		723-11-02880	· Valve, Pilot Check	1	B40001-
16	C1		· · Valve Body	1	B40001-
17	C1		· · Piston	2	B40001-
18		723-11-03170	· · Valve, Check	2	B40001-
19		07000-12015	· · · O-ring	1	B40001-
20		07001-02015	· · · Ring, Back-up	1	B40001-
21		07002-12434	· · · O-ring	1	B40001-
22		723-26-15220	· · Plug	2	B40001-
23		07002-11223	· · O-ring	2	B40001-
24		723-11-19130	· · O-ring	2	B40001-
25		07000-11007	· · O-ring	1	B40001-
26	C1		· · Orifice	1	B40001-

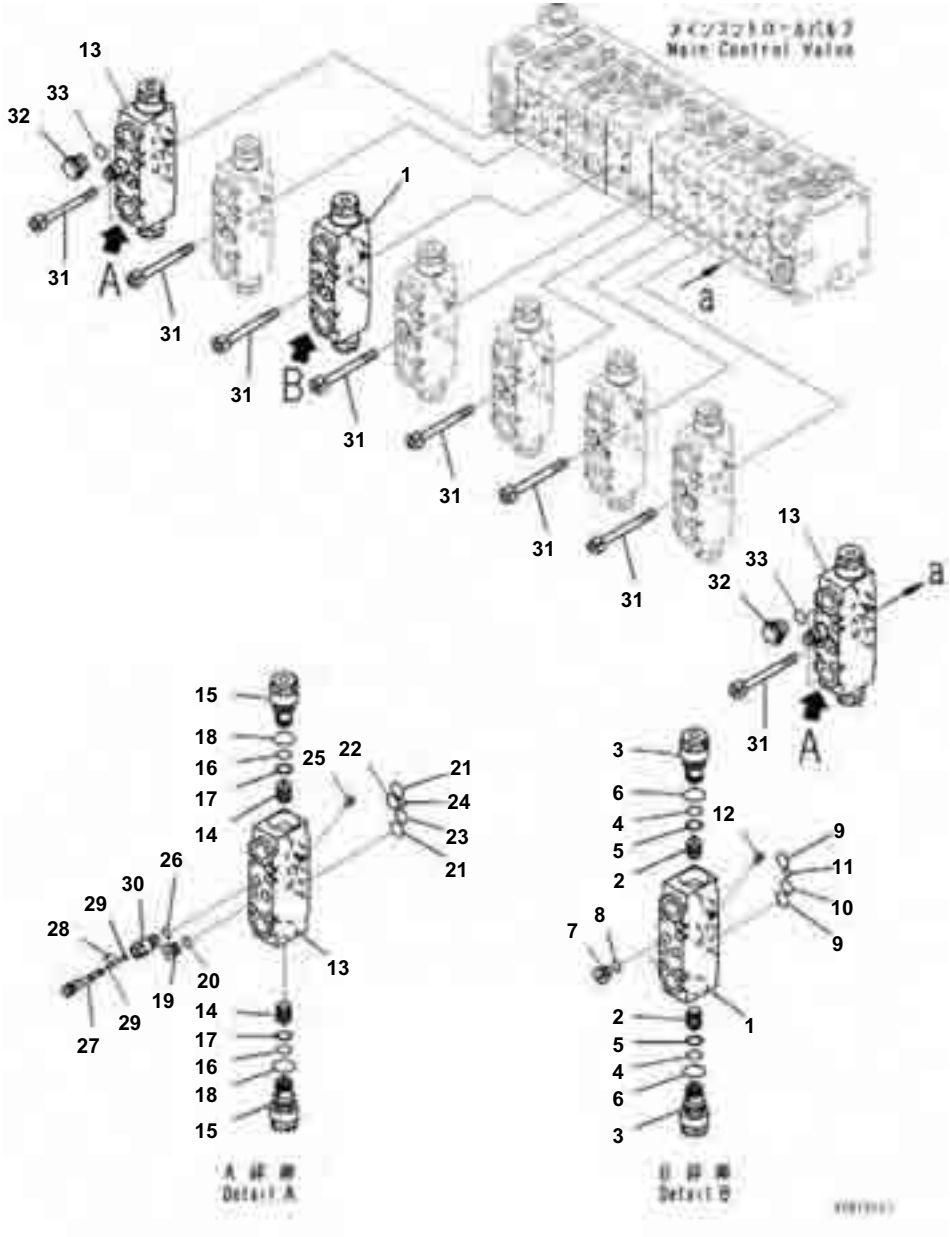

Main Control Valve, With 10 Spool Valve, Inner Parts (8/10)

Index	Code	Part Number	Description	Qty	Serial No.
		723-1A-17101	Valve Assembly, Control	1	B40001-
		723-11-02890	· Valve, Pilot Check	1	B40001-
1	C1		· · Valve Body	1	B40001-
2	C1		· · Piston	2	B40001-
3		723-11-03170	· · Valve, Check	2	B40001-
4		07000-12015	· · · O-ring	1	B40001-
5		07001-02015	· · · Ring, Back-up	1	B40001-
6		07002-12434	· · · O-ring	1	B40001-
7		723-26-15220	· · Plug	2	B40001-
8		07002-11223	· · O-ring	2	B40001-
9		723-11-19130	· · O-ring	2	B40001-
10		723-11-19970	· · O-ring	1	B40001-
11		07000-11007	· · O-ring	1	B40001-
12	C1		· · Orifice	1	B40001-
		723-11-02950	· Valve, Pilot Check	2	B40001-
13	C1		· · Valve Body	1	B40001-
14	C1		· · Piston	2	B40001-
15		723-11-03170	· · Valve, Check	2	B40001-
16		07000-12015	· · · O-ring	1	B40001-
17		07001-02015	· · · Ring, Back-up	1	B40001-
18		07002-12434	· · · O-ring	1	B40001-
19		723-26-15220	· · Plug	1	B40001-
20		07002-11223	· · O-ring	1	B40001-
21		723-11-19130	· · O-ring	2	B40001-
22		723-11-19970	· · O-ring	1	B40001-
23		07000-12011	· · O-ring	1	B40001-
24		07000-11007	· · O-ring	1	B40001-
25	C1		· · Plug	1	B40001-
26		07002-11223	· · O-ring	1	B40001-
27		723-11-38640	· · Plug	1	B40001-
28		07000-11003	· · O-ring	2	B40001-
29		07001-01003	· · Ring, Back-up	2	B40001-
30		723-11-28260	· · Orifice	1	B40001-
31		700-22-11910	· Bolt	48	B40001-
32		709-32-11930	· Plug	4	B40001-
33		07002-11823	· O-ring	4	B40001-

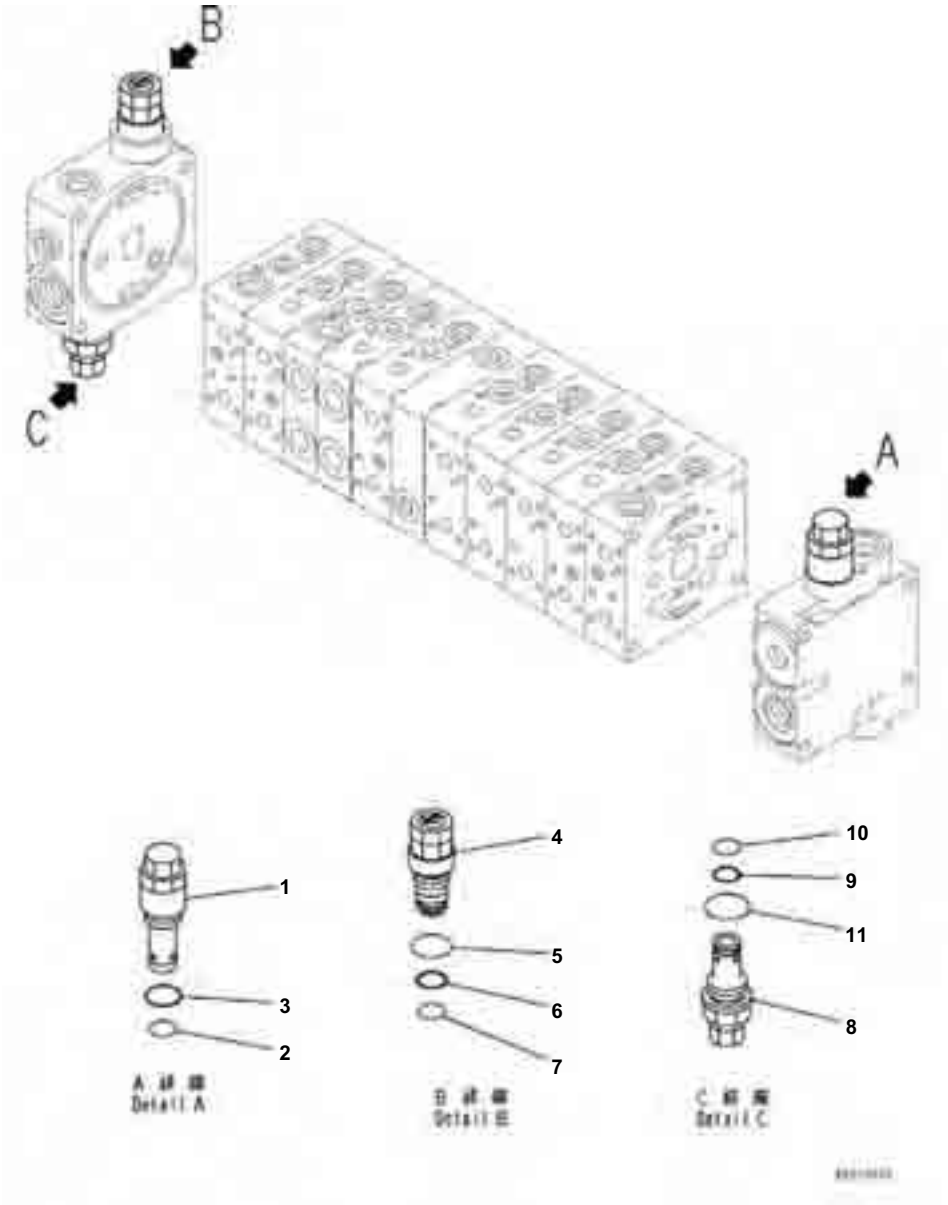

Main Control Valve, With 10 Spool Valve, Inner Parts (9/10)

Index	Code	Part Number	Description	Qty	Serial No.
		723-1A-17101	Valve Assembly, Control	1	B40001-
1		723-10-16903	· Valve, Relief	1	B40001-
2		700-22-11410	· · O-ring	1	B40001-
3		07002-12434	· · O-ring	1	B40001-
4		723-10-17802	· Valve, Relief	1	B40001-
5		07002-12434	· · O-ring	1	B40001-
6		723-11-18160	· · Ring	1	B40001-
7		723-11-18150	· · O-ring	1	B40001-
8		723-10-19300	· Valve, Relief	1	B40001-
9		700-80-64220	· · Ring	1	B40001-
10		700-22-11410	· · O-ring	1	B40001-
11		709-25-11390	· · O-ring	1	B40001-

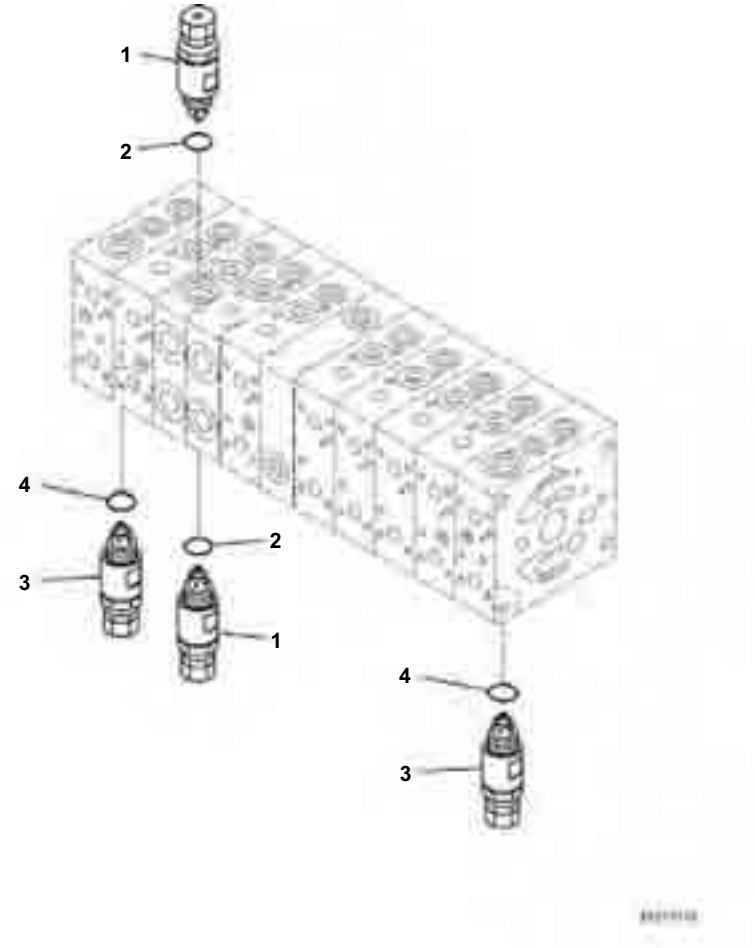

Main Control Valve, With 10 Spool Valve, Inner Parts (10/10)

Index	Code	Part Number	Description	Qty	Serial No.
		723-1A-17101	Valve Assembly, Control	1	B40001-
1		723-10-17100	· Valve Assembly, Suction and Relief	2	B40001-
2		07002-12034	· · O-ring	2	B40001-
3		723-10-17200	· Valve Assembly, Suction and Relief	2	B40001-
4		07002-12034	· · O-ring	2	B40001-

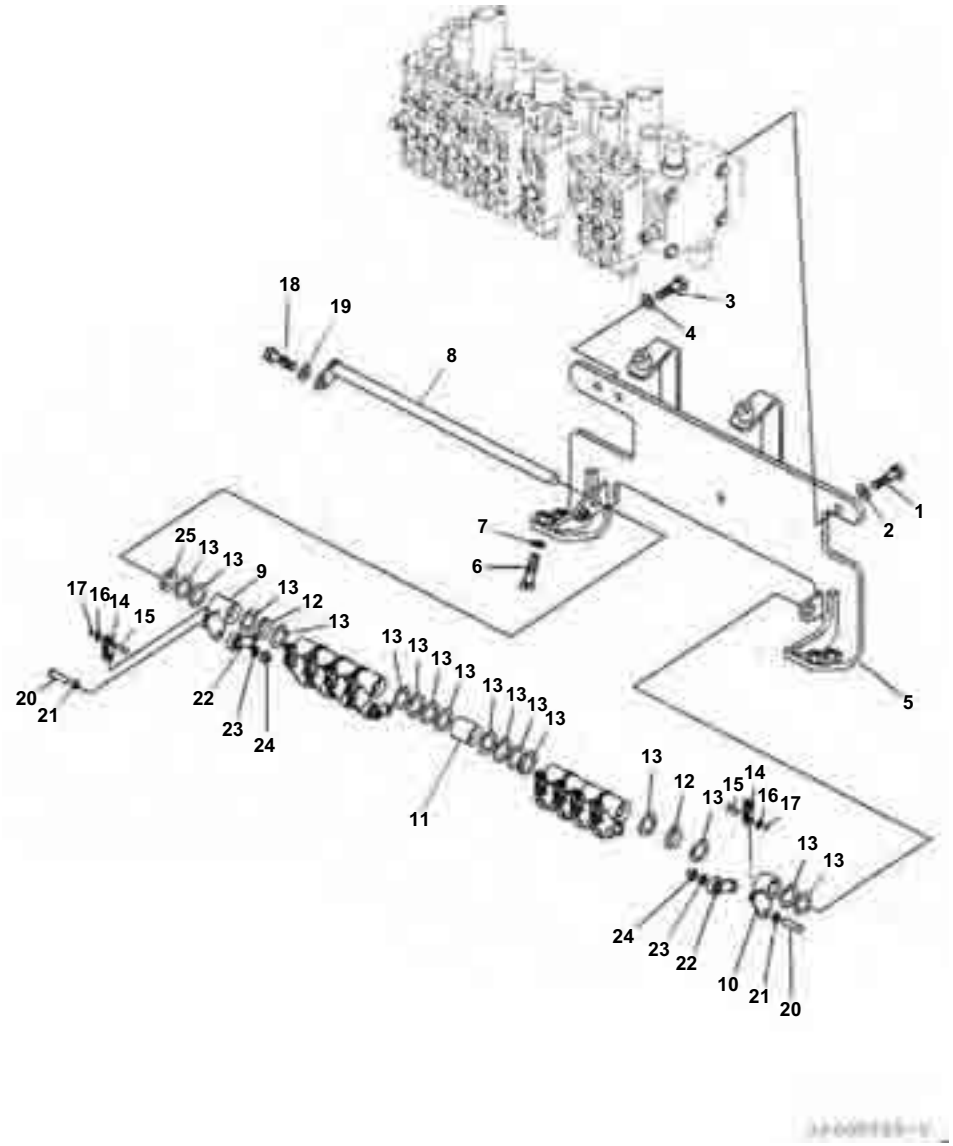

Main Control Valve, With 10 Spool Valve, Mounting Parts

Index	Code	Part Number	Description	Qty	Serial No.
1		01010-81025	Bolt	2	B40001-
2		01643-31032	Washer	2	B40001-
3		01010-80820	Bolt	1	B40001-
4		01643-30823	Washer	1	B40001-
5		23B-60-71311	Bracket	1	B40001-
6		01010-81235	Bolt	4	B40001-
7		01643-31232	Washer	4	B40001-
8		23B-60-71320	Shaft	1	B40001-
9		23B-60-71330	Lever	9	B40001-
10		23B-60-71341	Lever	1	B40001-
11		23B-60-71350	Collar	1	B40001-
12		01643-51645	Washer	5	B40001-
13		237-43-17420	Washer	30	B40001-
14		23B-60-71360	Yoke	10	B40001-
15		04205-10516	Pin	20	B40001-
16		01640-20508	Washer	20	B40001-
17		04050-11210	Pin, Cotter	20	B40001-
18		01010-80820	Bolt	1	B40001-
19		01643-30823	Washer	1	B40001-
20		235-43-18380	Bolt	10	B40001-
21		04254-10823	Spacer	10	B40001-
22		04250-90847	Rod End	10	B40001-
23		04254-10823	Spacer	10	B40001-
24		01580-10806	Nut	10	B40001-
25		01640-21626	Washer, Flat	1	B40001-

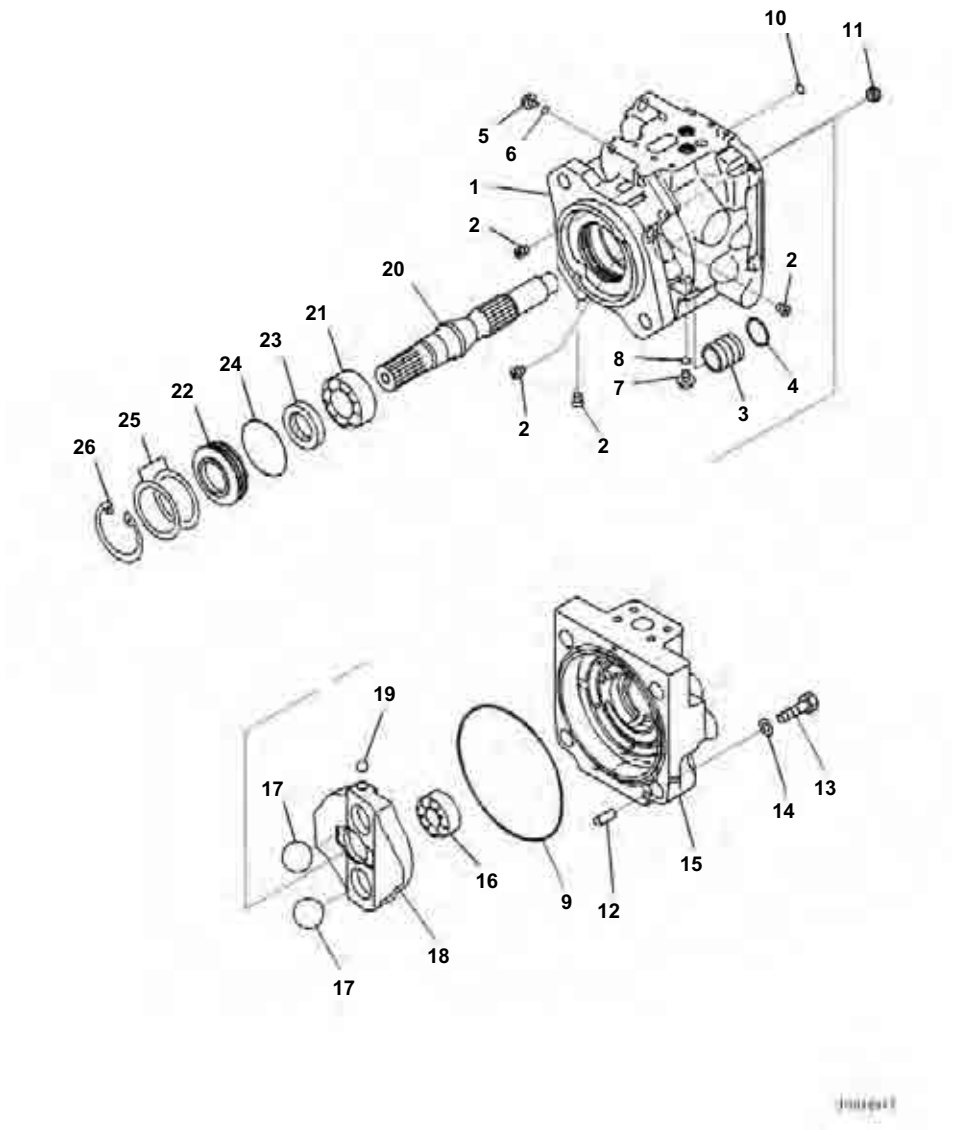

Hydraulic Pump, With Rear Axle, Differential Lock Type, Inner Parts, Pump (1/4)

Index	Code	Part Number	Description	Qty	Serial No.
		708-1W-00152	Pump Assembly	1	B40001-
		708-1W-01152	· Pump Subassembly	1	B40001-
	C2	708-1W-04120	· · Case Assembly	1	B40001-
1	C1		· · · Case, Pump	1	B40001-
2	C1		· · · Plug	10	B40001-
3	C1		· · · Sleeve	1	B40001-
4	C1		· · · Ring	1	B40001-
5		708-8E-16160	· · Plug	2	B40001-
6		07002-11023	· · O-ring	2	B40001-
7		07040-11409	· · Plug	1	B40001-
8		07002-11423	· · O-ring	1	B40001-
9	C2	706-73-42370	· · O-ring	1	B40001-
10	C2	07000-B1009	· · O-ring	1	B40001-
11	C2	708-1L-29340	· · Orifice	1	B40001-
12	C2	04020-01024	· · Pin, Dowel	1	B40001-
13	C2	01010-61470	· · Bolt	4	B40001-
14	C2	01643-31445	· · Washer	4	B40001-
15	C2	708-1W-41621	· · Cap, End	1	B40001-
16	C2	708-1W-42120	· · Bearing	1	B40001-
17	C2	708-1U-13461	· · Ball	2	B40001-
18	C2	708-1W-43450	· · Cam, Rocker	1	B40001-
19	C2	04260-01270	· · Ball	1	B40001-
20	C2	708-1U-12110	· · Shaft	1	B40001-
21	C2	708-1W-42110	· · Bearing	1	B40001-
22		708-1W-42140	· · Case, Seal	1	B40001-
23		708-1W-42130	· · Seal, Oil	1	B40001-
24		07000-B2060	· · O-ring	1	B40001-
25	C2	708-1W-05821	· · Spacer Kit	1	B40001-
	C1		· · · Spacer, T=2.5mm	1	B40001-
	C1		· · · Spacer, T=2.55mm	1	B40001-
	C1		· · · Spacer, T=2.6mm	1	B40001-
	C1		· · · Spacer, T=2.65mm	1	B40001-
	C1		· · · Spacer, T=2.7mm	1	B40001-
	C1		· · · Spacer, T=2.75mm	1	B40001-
	C1		· · · Spacer, T=2.8mm	1	B40001-
	C1		· · · Spacer, T=2.85mm	1	B40001-
	C1		· · · Spacer, T=2.9mm	1	B40001-
26		04065-06825	· · Ring, Snap	1	B40001-

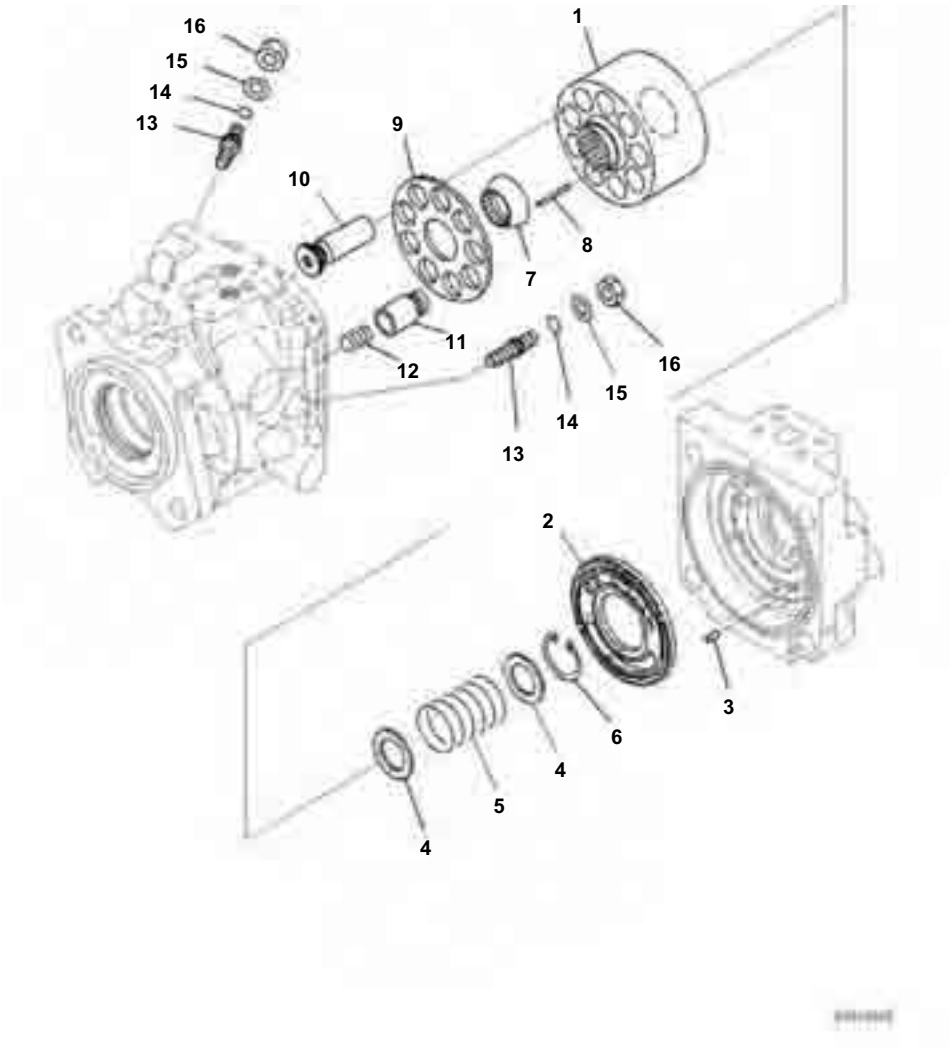

Hydraulic Pump, With Rear Axle, Differential Lock Type, Inner Parts, Pump (2/4)

Index	Code	Part Number	Description	Qty	Serial No.
		708-1W-00152	Pump Assembly	1	B40001-
	C2	708-1W-01152	· Pump Subassembly	1	B40001-
1	C2	708-1W-43310	· · Block, Cylinder	1	B40001-
2	C2	708-1W-43620	· · Plate, Valve	1	B40001-
3	C2	720-68-19610	· · Pin	1	B40001-
4	C2	708-1W-43130	· · Seat	2	B40001-
5	C2	708-1W-43140	· · Spring	1	B40001-
6	C2	04065-04818	· · Ring, Snap	1	B40001-
7	C2	708-1W-43320	· · Guide, Retainer	1	B40001-
8	C2	708-3T-13360	· · Pin	3	B40001-
9	C2	708-1W-43341	· · Retainer, Shoe	1	B40001-
10	C2	708-1U-13310	· · Piston Subassembly	9	B40001-
11		708-1W-44130	· · Piston	1	B40001-
12	C2	708-3T-14120	· · Spring	1	B40001-
13	C2	708-1U-14240	· · Screw	2	B40001-
14	C2	07000-12011	· · O-ring	2	B40001-
15	C2	01643-31232	· · Washer	2	B40001-
16	C2	01582-11210	· · Nut	2	B40001-

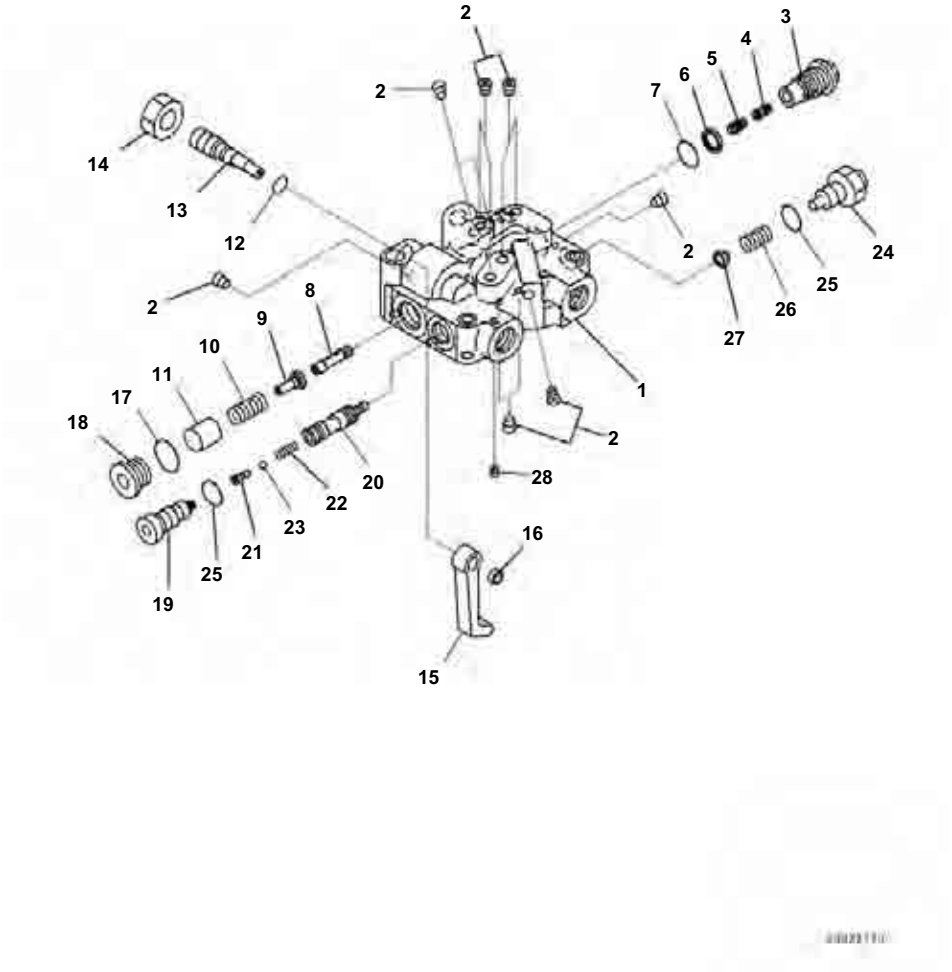

Hydraulic Pump, With Rear Axle, Differential Lock Type, Inner Parts, Pump (3/4)

Index	Code	Part Number	Description	Qty	Serial No.
		708-1W-00152	Pump Assembly	1	B40001-
	C2	708-1W-03620	· Valve Assembly	1	B40001-
	C1		· · Body Assembly	1	B40001-
1	C1		· · · Body	1	B40001-
2	C1		· · · Plug	11	B40001-
	C1		· · Sleeve Subassembly	1	B40001-
3	C1		· · · Sleeve	1	B40001-
4	C1		· · · Piston	1	B40001-
5	C1		· · · Piston	1	B40001-
6	C1		· · · Seal	1	B40001-
7	C1		· · · O-ring	1	B40001-
8	C1		· · Spool	1	B40001-
9	C1		· · Seat	1	B40001-
10	C1		· · Spring	1	B40001-
11	C1		· · Retainer	1	B40001-
12	C1		· · O-ring	1	B40001-
13	C1		· · Plug	1	B40001-
14	C1		· · Nut	1	B40001-
15	C1		· · Lever	1	B40001-
16	C1		· · Spacer	1	B40001-
17		07002-11623	· · O-ring	1	B40001-
18		723-56-31630	· · Plug	1	B40001-
19	C1		· · Plug	1	B40001-
	C1		· · Spool Subassembly	1	B40001-
20	C1		· · · Spool	1	B40001-
21	C1		· · · Plug	1	B40001-
22	C1		· · · Spring	1	B40001-
23	C1		· · · Ball	1	B40001-
24	C1		· · Plug	1	B40001-
25	C1		· · O-ring	2	B40001-
26	C1		· · Spring	1	B40001-
27	C1		· · Seat	1	B40001-
28	C1		· · Orifice	1	B40001-

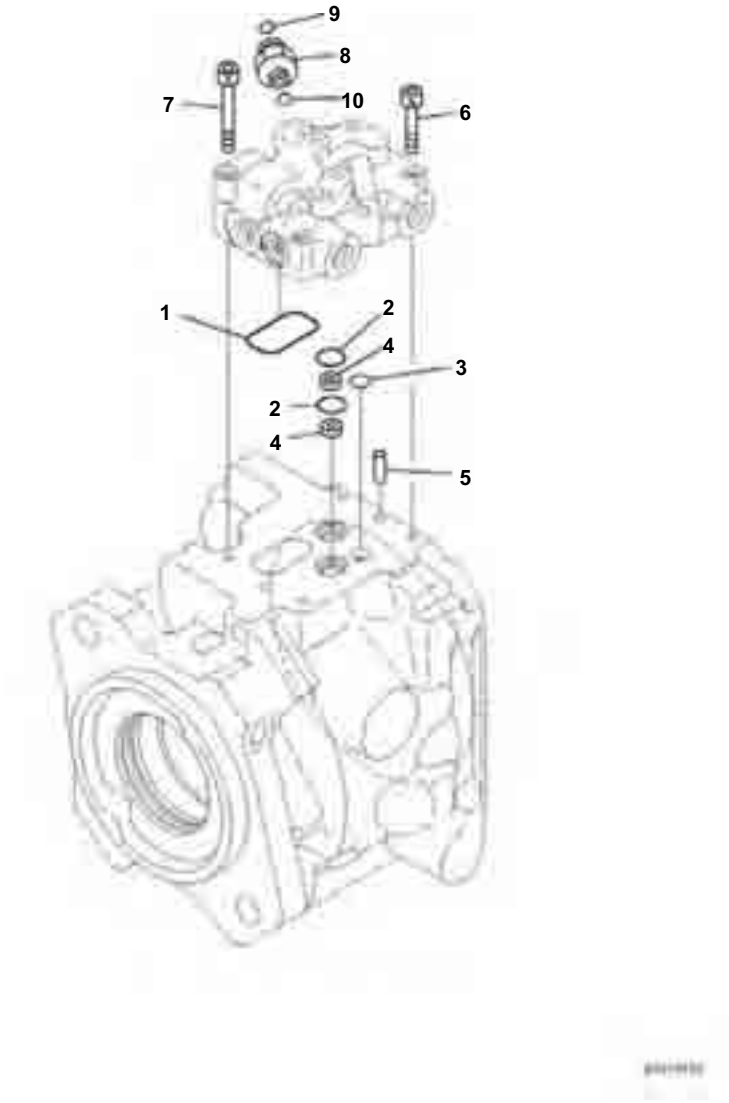

Hydraulic Pump, With Rear Axle, Differential Lock Type, Inner Parts, Pump (4/4)

Index	Code	Part Number	Description	Qty	Serial No.
		708-1W-00152	Pump Assembly	1	B40001-
1	C2	07000-13040	· O-ring	1	B40001-
2	C2	07000-B2014	· O-ring	2	B40001-
3	C2	07000-B1009	· O-ring	2	B40001-
4	C2	708-2L-25480	· Filter	2	B40001-
5	C2	04020-00616	· Pin, Dowel	2	B40001-
6		01252-60630	· Bolt, Hexagon Socket Head	3	B40001-
7		01252-60645	· Bolt, Hexagon Socket Head	1	B40001-
8		708-1W-45340	· Union	1	B40001-
9		07002-11023	· O-ring	1	B40001-
10		02896-11008	· O-ring	1	B40001-

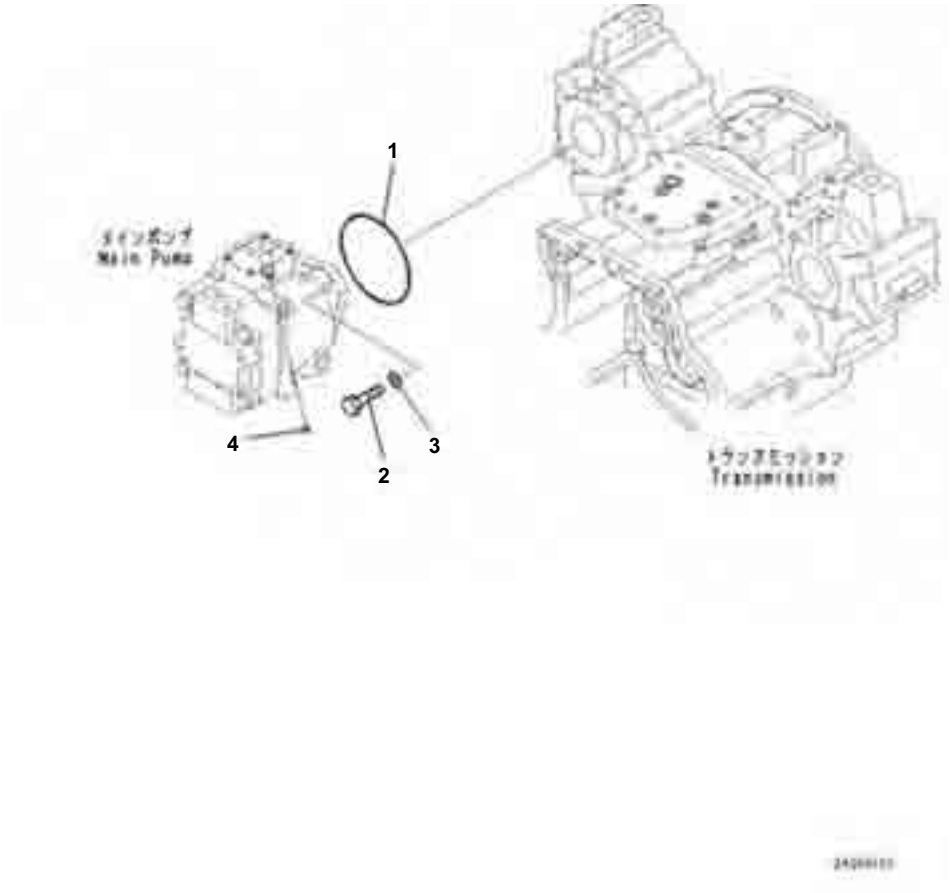

Hydraulic Pump, With Rear Axle, Differential Lock Type, Piston Pump Related Parts

Index	Code	Part Number	Description	Qty	Serial No.
1		07000-12130	O-ring	1	B40001-
2		01010-81640	Bolt	2	B40001-
3		01643-31645	Washer	2	B40001-
4		02896-11008	O-ring	1	B40001-

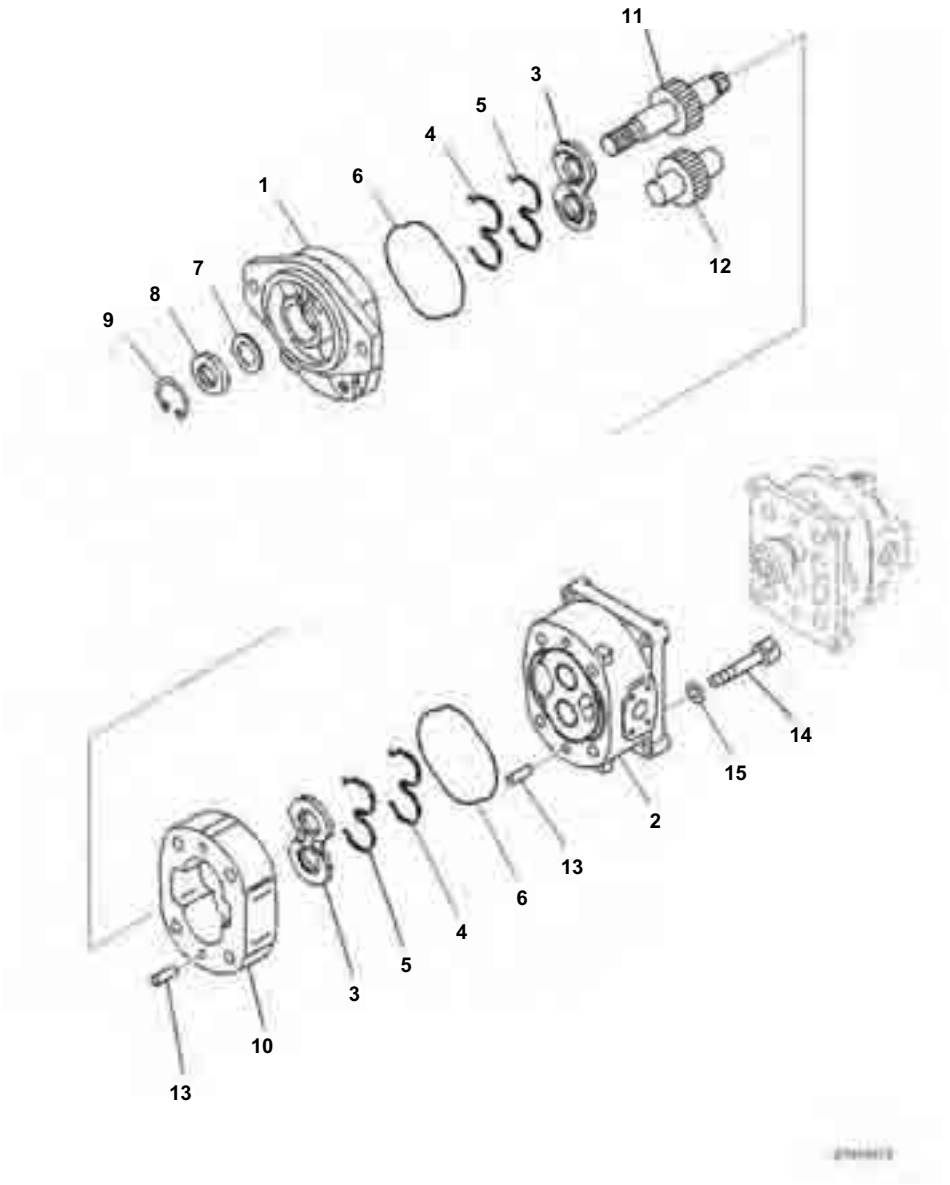

Hydraulic Pump, With Rear Axle, Differential Lock Type, Inner Parts, Gear Pump (1/2)

Index	Code	Part Number	Description	Qty	Serial No.
		705-52-21250	Pump Assembly, Gear	1	B40001-
		705-24-36260	· Pump Assembly, Gear, SAR (2) 63-A1SSF	1	B40001-
1	C2	705-18-02820	· · Bracket Assembly	1	B40001-
	C2	705-17-02353	· · · Bushing, Plane	2	B40001-
2	C2	705-18-02240	· · Carrier Assembly	1	B40001-
	C2	705-17-02353	· · · Bushing, Plane	2	B40001-
3		705-17-02612	· · Plate, Side	2	B40001-
4		705-17-02430	· · Ring, Back-up	2	B40001-
5		705-17-02460	· · Seal Ring	2	B40001-
6		705-17-02360	· · O-ring	2	B40001-
7		705-17-02870	· · Plate	1	B40001-
8		705-17-02830	· · Seal, Oil	1	B40001-
9		04065-04018	· · Ring, Snap	1	B40001-
10	C2	705-18-36120	· · Gear Case	1	B40001-
11	C2	705-29-36660	· · Gear, Drive	1	B40001-
12	C2	705-18-36820	· · Gear, Driven	1	B40001-
13		04020-01024	· · Pin, Dowel	4	B40001-
14		01253-61425	· · Bolt, Hexagon Socket Head	4	B40001-
15		705-17-04980	· · Washer	4	B40001-

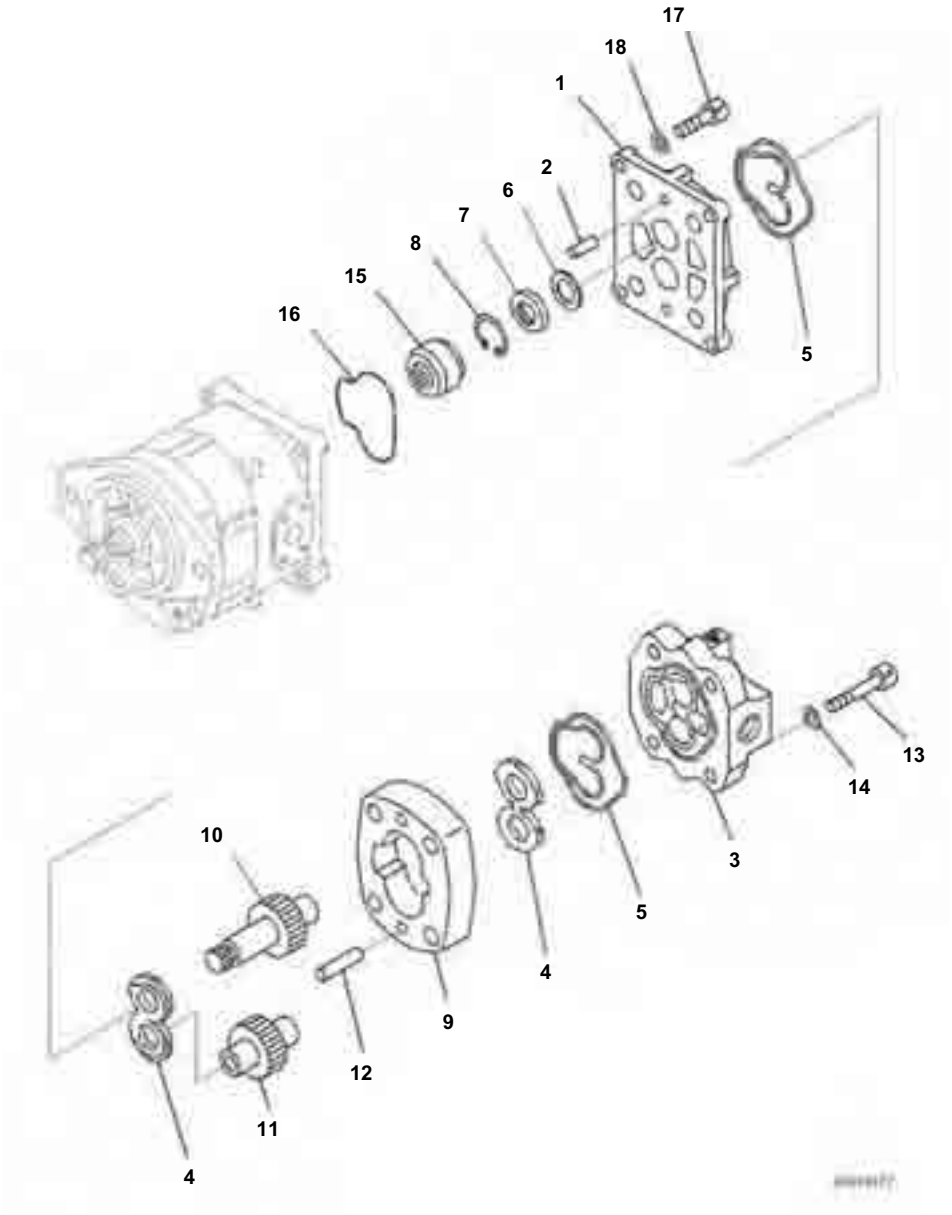

Hydraulic Pump, With Rear Axle, Differential Lock Type, Inner Parts, Gear Pump (2/2)

Index	Code	Part Number	Description	Qty	Serial No.
		705-52-21250	Pump Assembly, Gear	1	B40001-
		705-41-05910	· Pump Assembly, Gear, SBR1-10-A3SSR	1	B40001-
1		705-41-83050	· · Bracket Assembly	1	B40001-
		705-40-80610	· · · Bushing, Plane	1	B40001-
		705-40-80620	· · · Bushing, Plane	1	B40001-
2		04020-01024	· · Pin, Dowel	2	B40001-
3		705-41-83110	· · Cover Assembly	1	B40001-
		705-40-80610	· · · Bushing, Plane	1	B40001-
		705-40-80620	· · · Bushing, Plane	1	B40001-
4		705-40-83720	· · Plate, Side	2	B40001-
5		705-40-80770	· · Seal Ring	2	B40001-
6		705-40-81870	· · Plate	1	B40001-
7		705-40-81820	· · Seal, Oil	1	B40001-
8		705-17-02870	· · Plate	1	B40001-
9		705-40-22011	· · Gear Case	1	B40001-
10		705-40-22760	· · Gear, Drive	1	B40001-
11		705-40-22511	· · Gear, Driven	1	B40001-
12		04020-00820	· · Pin, Dowel	4	B40001-
13		01252-71265	· · Bolt, Hexagon Socket Head	4	B40001-
14		01643-51232	· · Washer	4	B40001-
15		705-67-01330	· Coupling Assembly	1	B40001-
16		705-17-02360	· O-ring, Ring	1	B40001-
17		01252-61035	· Bolt	4	B40001-
18		01643-51032	· Washer	4	B40001-

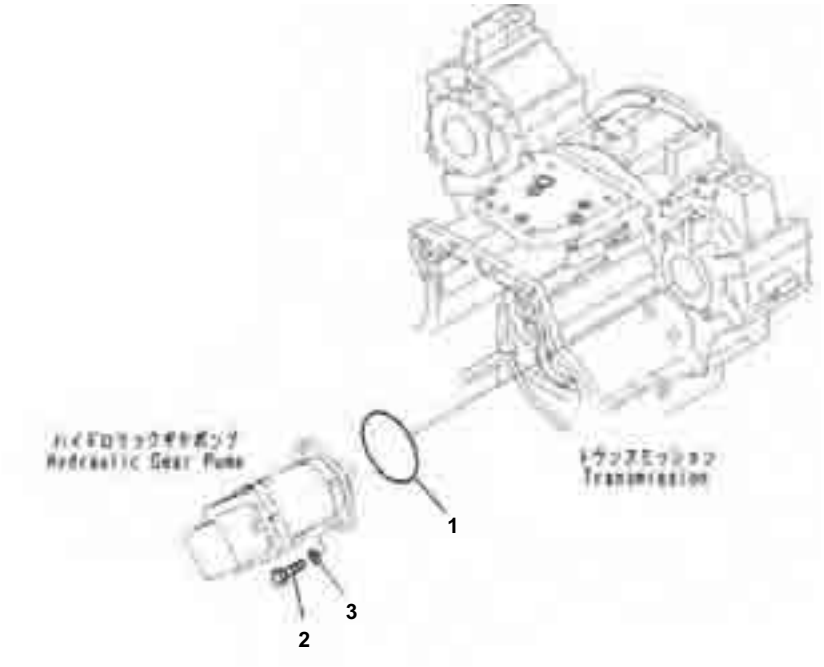

Hydraulic Pump, With Rear Axle, Differential Lock Type, Gear Pump Related Parts

Index	Code	Part Number	Description	Qty	Serial No.
1		07000-12105	O-ring	1	B40001-
2		01010-81235	Bolt	2	B40001-
3		01643-31232	Washer	2	B40001-

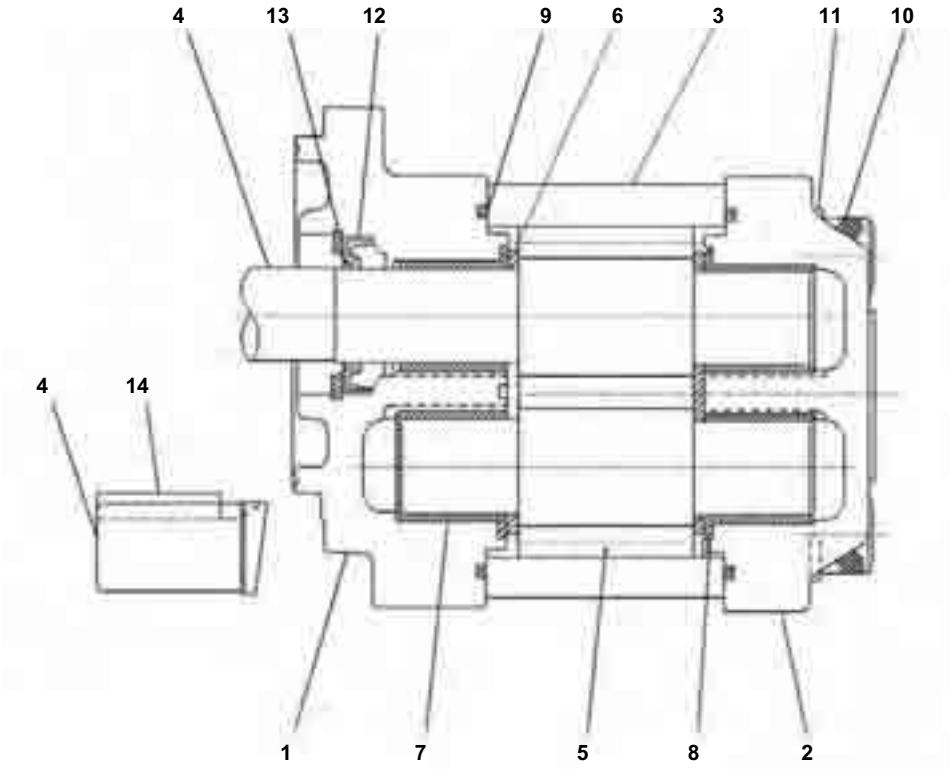

Hydraulic Pump, With Rear Axle, Differential Lock Type, Inner Parts, Cooling Fan Pump

Index	Code	Part Number	Description	Qty	Serial No.
		23B-60-71210	Pump	1	B40001-
1	C1		· Cover,Front	1	B40001-
2	C1		· Cover,Rear	1	B40001-
3	C1		· Body	1	B40001-
4	C1		· Gear, Drive	1	B40001-
5	C1		· Gear, Driven	1	B40001-
6	C1		· Plate,Side	2	B40001-
7	C1		· Bushing	4	B40001-
8	C1		· Gasket, (Kit : K06)	2	B40001-
9	C1		· Gasket, (Kit : K06)	2	B40001-
10	C1		· Bolt	4	B40001-
11	C1		· Washer	4	B40001-
12	C1		· Seal, Oil, (Kit : K06)	1	B40001-
13	C1		· Ring, (Kit : K06)	1	B40001-
14	C1		· Key	1	B40001-

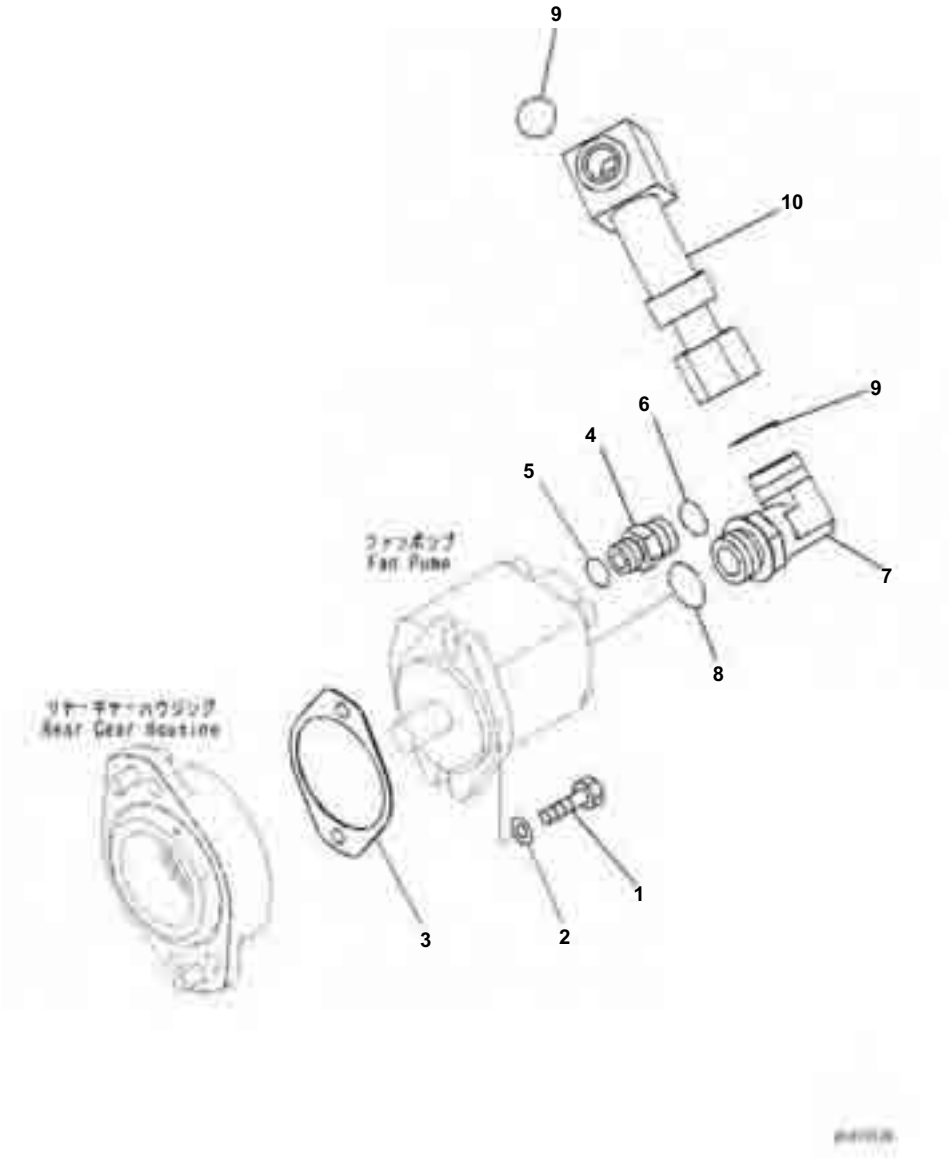

Hydraulic Pump, With Rear Axle, Differential Lock Type, Cooling Fan Pump Related Parts

Index	Code	Part Number	Description	Qty	Serial No.
1		01010-81035	Bolt	2	B40001-
2		01643-31032	Washer	2	B40001-
3		6732-22-3620	Gasket	1	B40001-
4		21N-64-36620	Nipple	1	B40001-
5		07000-12018	O-ring	1	B40001-
6		02896-11015	O-ring	1	B40001-
7		14S-62-21690	Elbow	1	B40001-
8		07000-13029	O-ring	1	B40001-
9		23B-60-33240	O-ring	2	B40001-
10		23B-60-74540	Tube	1	B40001-

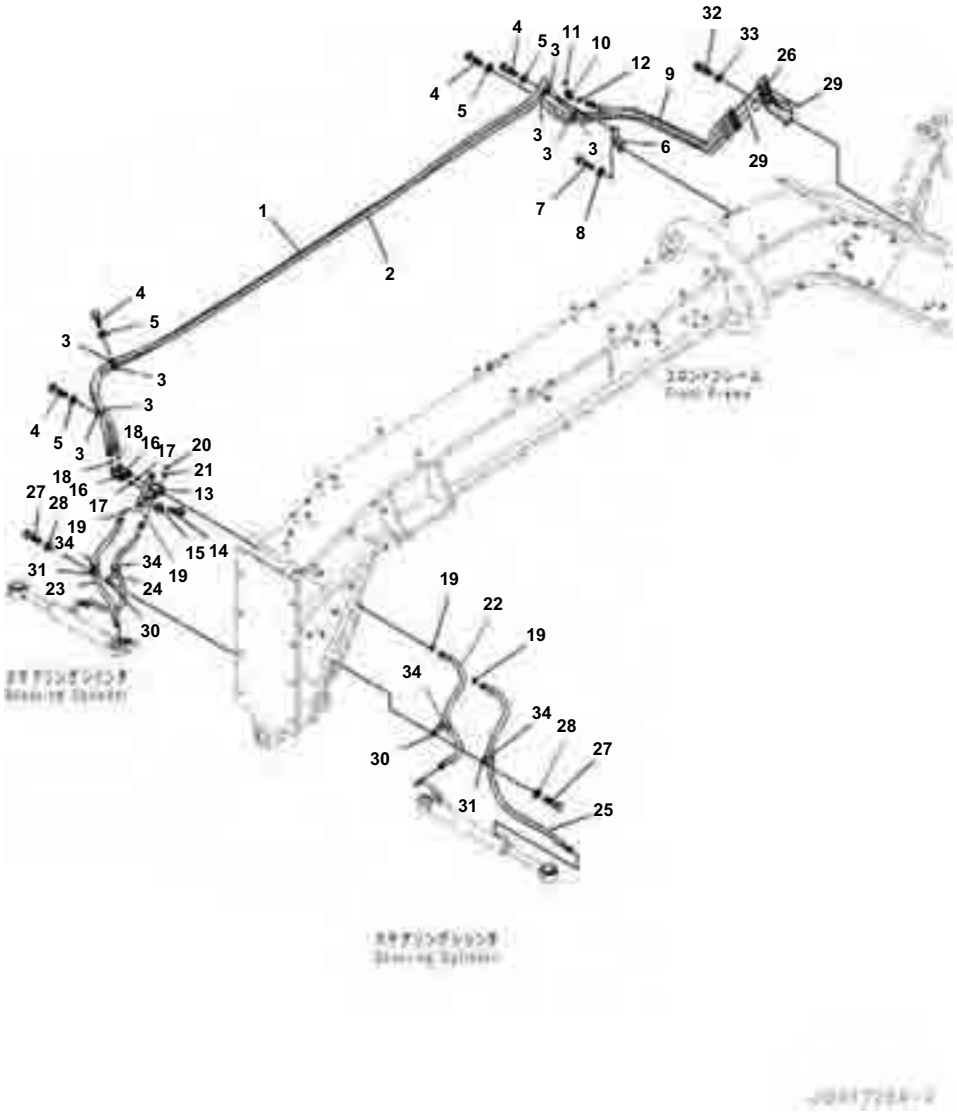

Index	Code	Part Number	Description	Qty	Serial No.
1		23B-40-72220	Hose, Gray	1	B40001-
2		23B-40-72230	Hose, Orange	1	B40001-
3		04434-51912	Clip	8	B40001-
4		01010-81020	Bolt	4	B40001-
5		01643-31032	Washer	4	B40001-
6		23B-40-71130	Bracket	1	B40001-
7		01010-81020	Bolt	1	B40001-
8		01643-31032	Washer	1	B40001-
9		23B-40-72240	Hose, White	1	B40001-
10		02783-10422	Elbow	1	B40001-
11		07002-12034	O-ring	1	B40001-
12		02896-11012	O-ring	1	B40001-
13		23B-40-71110	Bracket	1	B40001-
14		01010-81020	Bolt	2	B40001-
15		01643-31032	Washer	2	B40001-
16		02782-10423	Elbow	2	B40001-
17		07002-12034	O-ring	2	B40001-
18		02896-11012	O-ring	2	B40001-
19		02896-11009	O-ring	4	B40001-
20		07040-11007	Plug	2	B40001-
21		07002-11023	O-ring	2	B40001-
22		23B-40-43221	Hose	1	B40001-
23		23B-40-43231	Hose	1	B40001-
24		23B-40-43141	Hose	1	B40001-
25		23B-40-43131	Hose	1	B40001-
26		23B-40-71120	Joint	1	B40001-
27		01010-81020	Bolt	2	B40001-
28		01643-31032	Washer	2	B40001-
29		02896-11012	O-ring	6	B40001-
30		23B-40-43210	Clip	2	B40001-
31		04434-53212	Clip	2	B40001-
32		01010-81020	Bolt	2	B40001-
33		01643-31032	Washer	2	B40001-
34		07095-20522	Cushion	4	B40001-

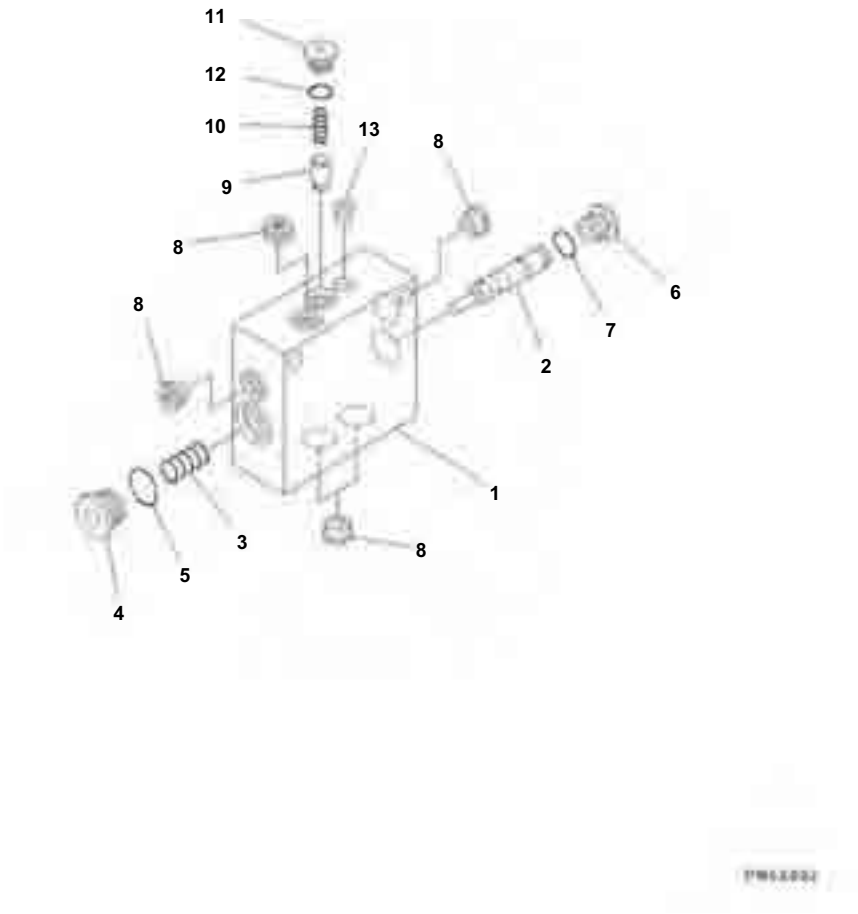

Floor Valve, Inner Parts

Index	Code	Part Number	Description	Qty	Serial No.
		723-10-13700	Valve Assembly	1	B40001-
1	C1		· Block	1	B40001-
2	C1		· Spool Subassembly	1	B40001-
3		723-11-16760	· Spring	1	B40001-
4		723-11-26170	· Plug	1	B40001-
5		07002-11623	· O-ring	1	B40001-
6		708-7R-11220	· Plug	1	B40001-
7		07002-11223	· O-ring	1	B40001-
8		702-16-54880	· Filter	5	B40001-
9		723-11-18170	· Valve	1	B40001-
10		723-11-18180	· Spring	1	B40001-
11		723-11-18190	· Plug	1	B40001-
12		07002-11023	· O-ring	1	B40001-
13	C1		· Plug	1	B40001-

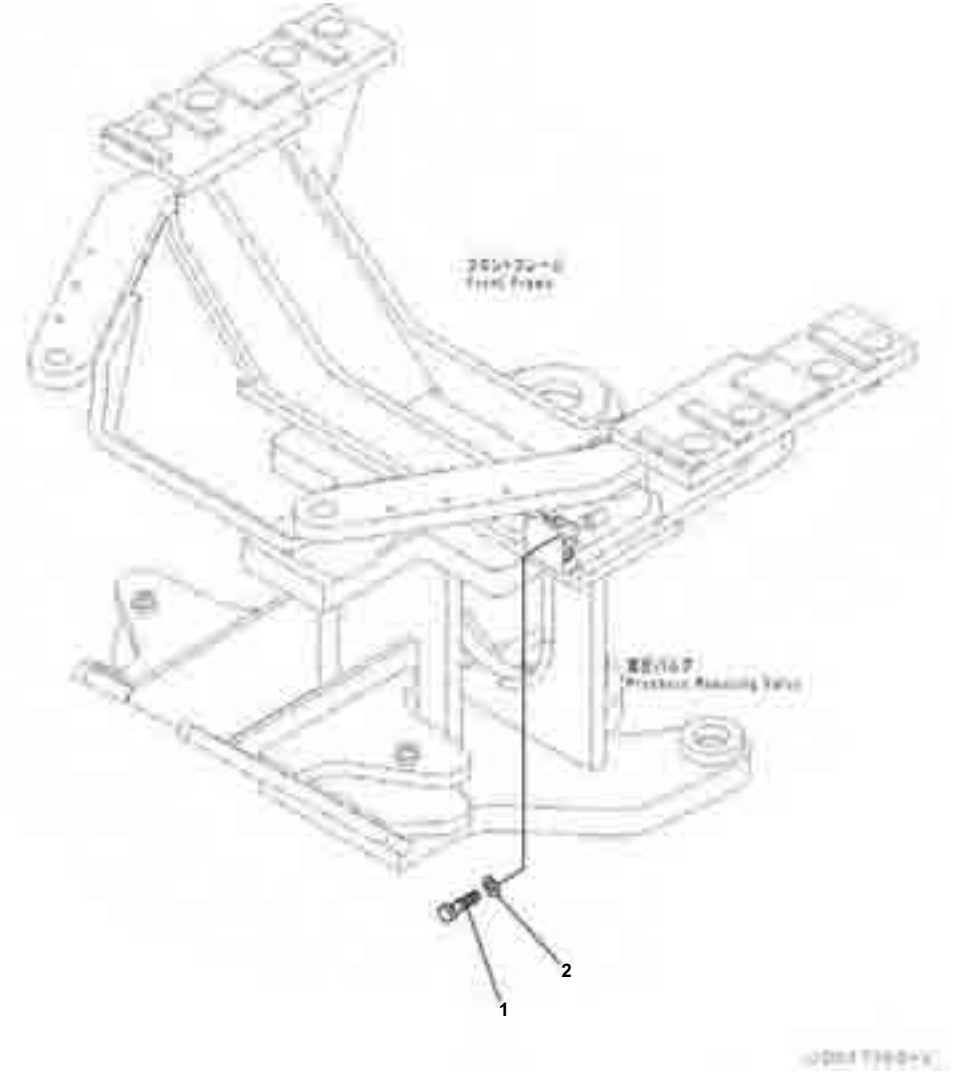

Floor Valve, Mounting Parts

Index	Code	Part Number	Description	Qty	Serial No.
1		01010-80850	Bolt	2	B40001-
2		01643-30823	Washer	2	B40001-

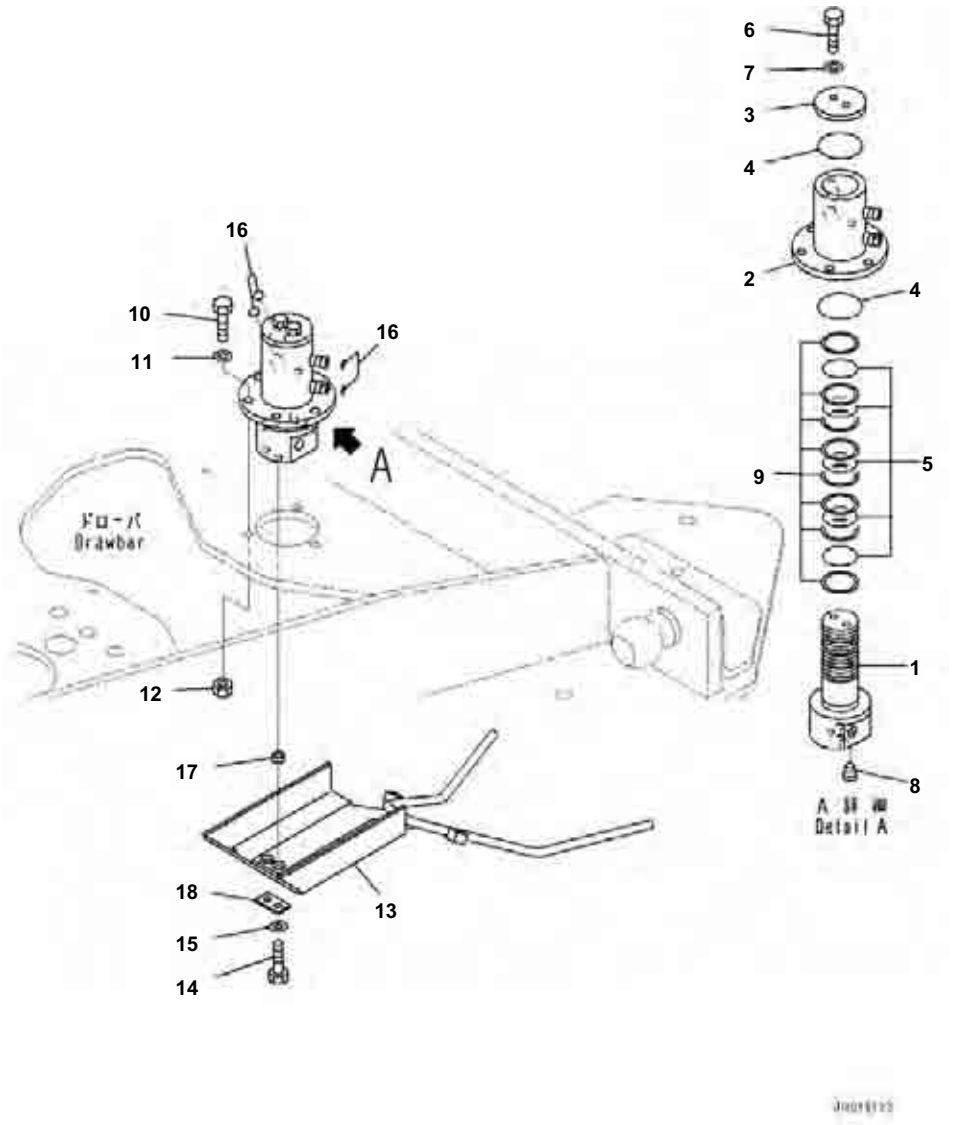

Front Frame Valve, Without Blade Accumulator, Swivel Joint, 4-Way Type

Index	Code	Part Number	Description	Qty	Serial No.
		23B-60-42701	Swivel Joint Assembly	1	B40001-
1		23E-735-1421	･ Flange	1	B40001-
2		23B-60-42711	･ Case	1	B40001-
3		232-60-54730	･ Plate	1	B40001-
4		07000-12065	･ O-ring	2	B40001-
5		07000-13050	･ O-ring	5	B40001-
6		01010-81225	･ Bolt	2	B40001-
7		01643-31232	･ Washer	2	B40001-
8		07043-00211	･ Plug, Taper	4	B40001-
9		07001-03050	･ Ring, Back-up	8	B40001-
10		01010-81255	Bolt	3	B40001-
11		01643-31232	Washer	3	B40001-
12		01580-11210	Nut	3	B40001-
13		23B-60-72941	Cover	1	B40001-
14		01010-81235	Bolt	2	B40001-
15		01643-31232	Washer	2	B40001-
16		02896-11009	O-ring	4	B40001-
17		23B-60-34470	Collar	2	B40001-
18		23B-60-34480	Plate	1	B40001-

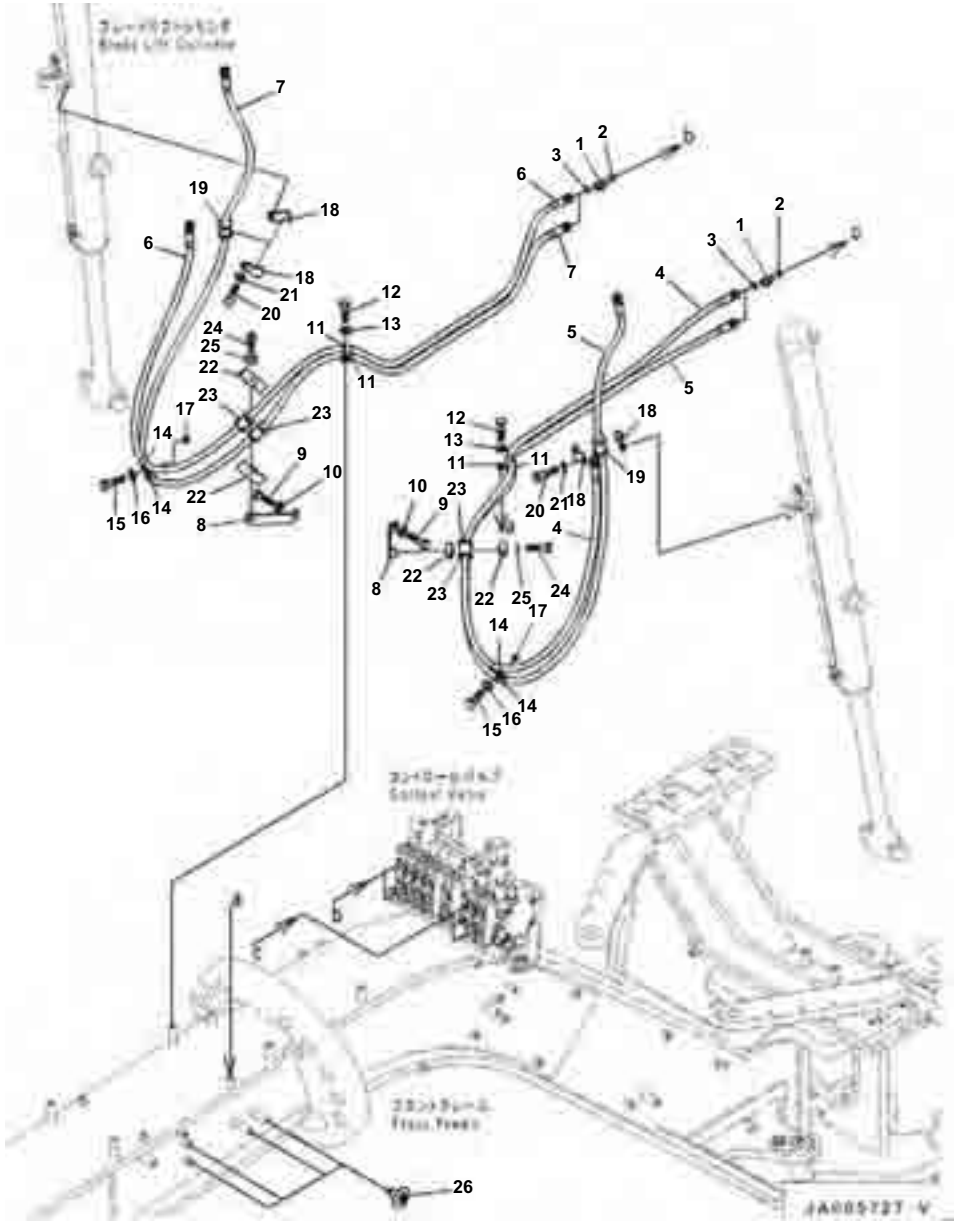

Front Frame Valve, Without Blade Accumulator, Blade Cylinder Piping

Index	Code	Part Number	Description	Qty	Serial No.
1		02781-00313	Union	4	B40001-
2		07002-11823	O-ring	4	B40001-
3		02896-11009	O-ring	4	B40001-
4		23B-60-72270	Hose	1	B40001-
5		23B-60-74860	Hose	1	B40001-
6		23B-60-72330	Hose	1	B40001-
7		23B-60-74870	Hose	1	B40001-
8		23B-60-72490	Bracket	2	B40001-
9		01010-81020	Bolt	2	B40001-
10		01643-31032	Washer	2	B40001-
11		04434-51712	Clip	4	B40001-
12		01010-81020	Bolt	2	B40001-
13		01643-31032	Washer	2	B40001-
14		04434-51712	Clip	4	B40001-
15		01010-81020	Bolt	2	B40001-
16		01643-31032	Washer	2	B40001-
17		01580-11008	Nut	2	B40001-
18		23B-60-71410	Clamp	4	B40001-
19		07095-00317	Cushion	2	B40001-
20		01010-81025	Bolt	2	B40001-
21		01643-31032	Washer	2	B40001-
22		22P-62-13540	Clamp	4	B40001-
23		07095-00317	Cushion	4	B40001-
24		01010-81255	Bolt	2	B40001-
25		01643-31232	Washer	2	B40001-
26		416-54-34230	Plug	8	B40001-

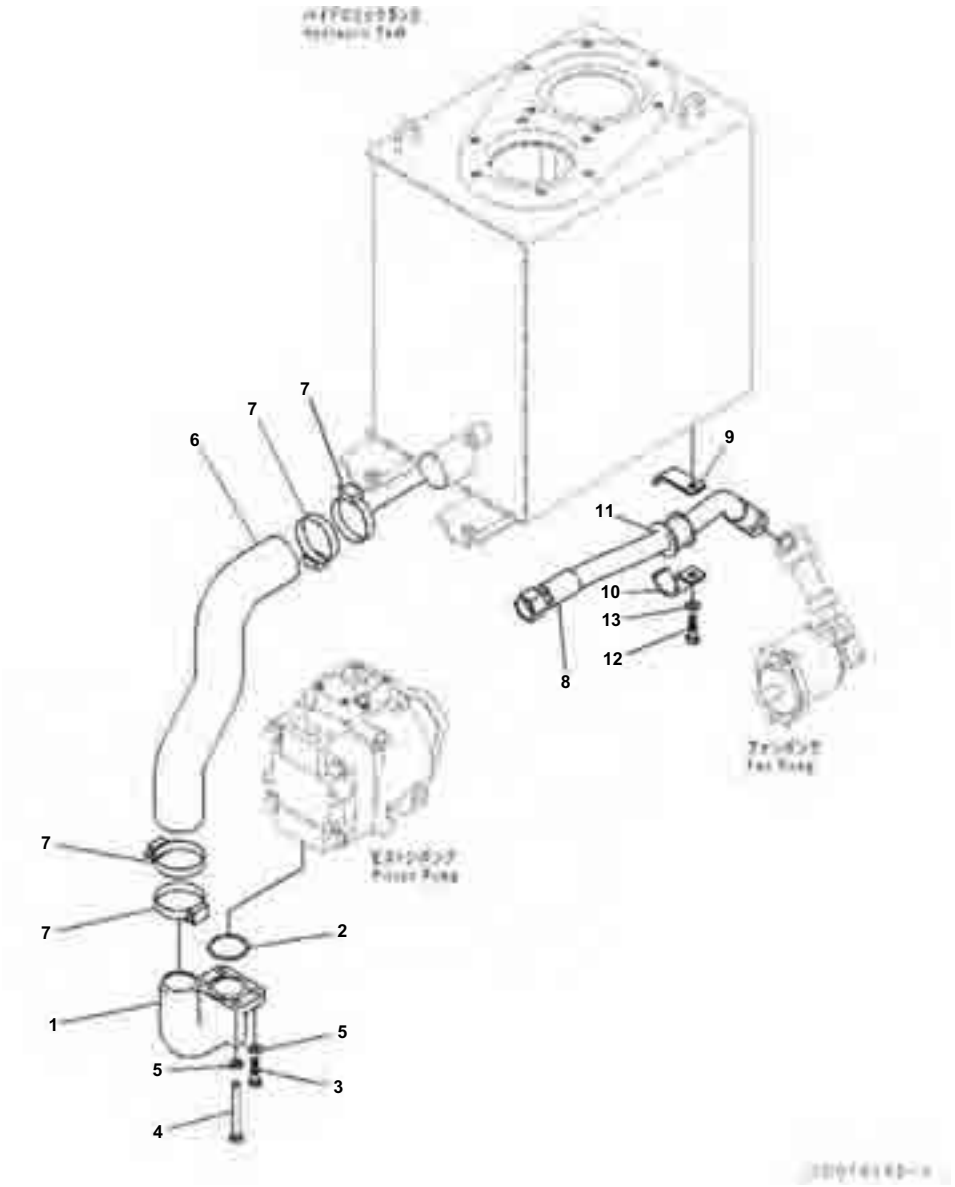

Hydraulic Piping, For Ripper Configuration, Differential Lock Type, Piston Pump to Hydraulic Tank

Index	Code	Part Number	Description	Qty	Serial No.
1		23B-60-73110	Elbow	1	B40001-
2		07000-12060	O-ring	1	B40001-
3		01010-81240	Bolt	2	B40001-
4		01011-81200	Bolt	2	B40001-
5		01643-51232	Washer	4	B40001-
6		23B-60-73120	Hose	1	B40001-
7		07289-00080	Clamp	4	B40001-
8		23B-60-74550	Hose	1	B40001-
9		418-62-32550	Clamp	1	B40001-
10		418-62-32560	Clamp	1	B40001-
11		21T-62-76840	Cushion	1	B40001-
12		01010-81025	Bolt	1	B40001-
13		01643-31032	Washer	1	B40001-

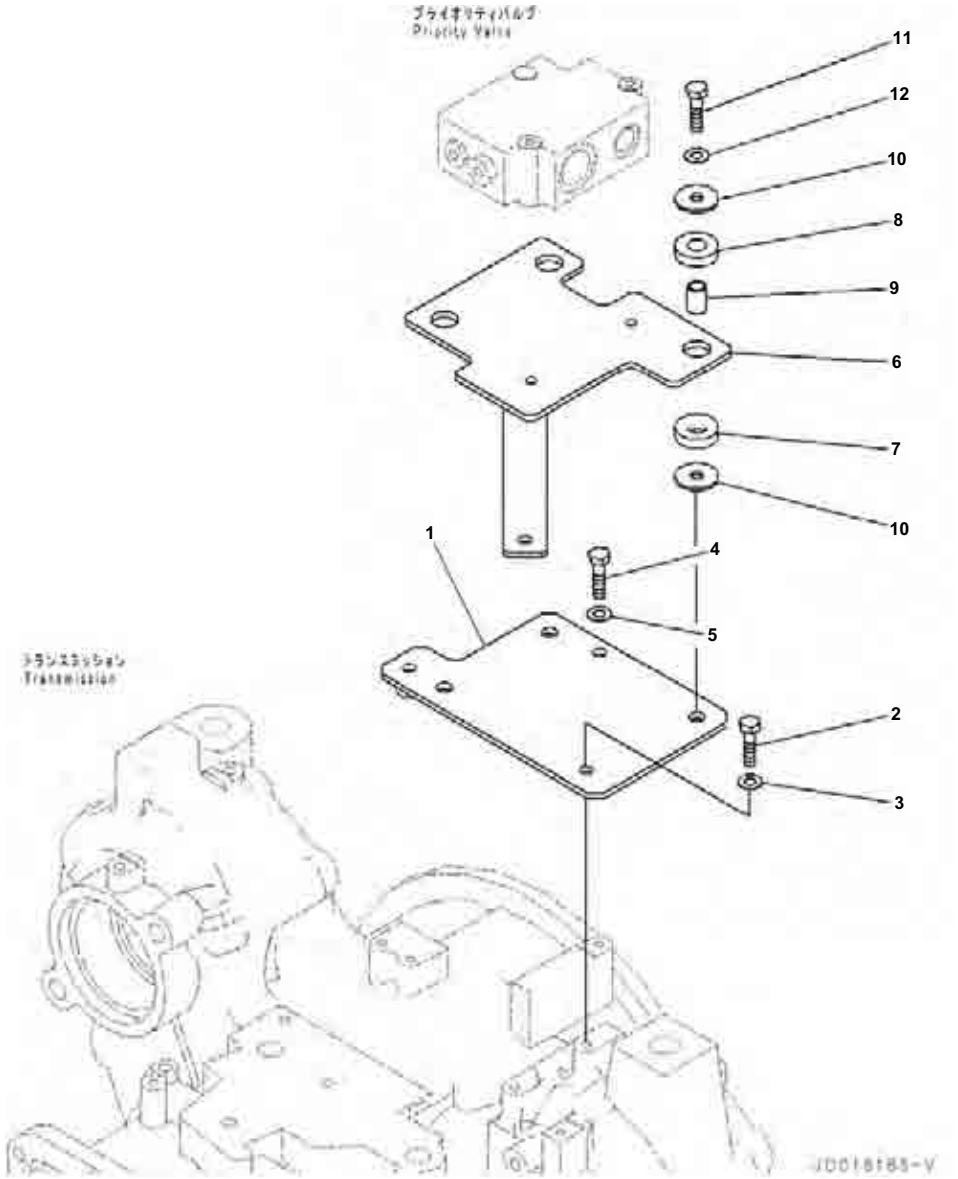

Hydraulic Piping, For Ripper Configuration, Differential Lock Type, Piston Pump Related Parts

Index	Code	Part Number	Description	Qty	Serial No.
1		23B-60-73570	Bracket	1	B40001-
2		01010-81025	Bolt	1	B40001-
3		01643-31032	Washer	1	B40001-
4		01010-81045	Bolt	2	B40001-
5		01643-31032	Washer	2	B40001-
6		23B-60-73580	Bracket	1	B40001-
7		415-64-13130	Cushion	3	B40001-
8		419-43-17930	Cushion	3	B40001-
9		417-54-13470	Spacer	3	B40001-
10		419-43-17920	Washer	6	B40001-
11		01010-81255	Bolt	3	B40001-
12		01643-31232	Washer	3	B40001-

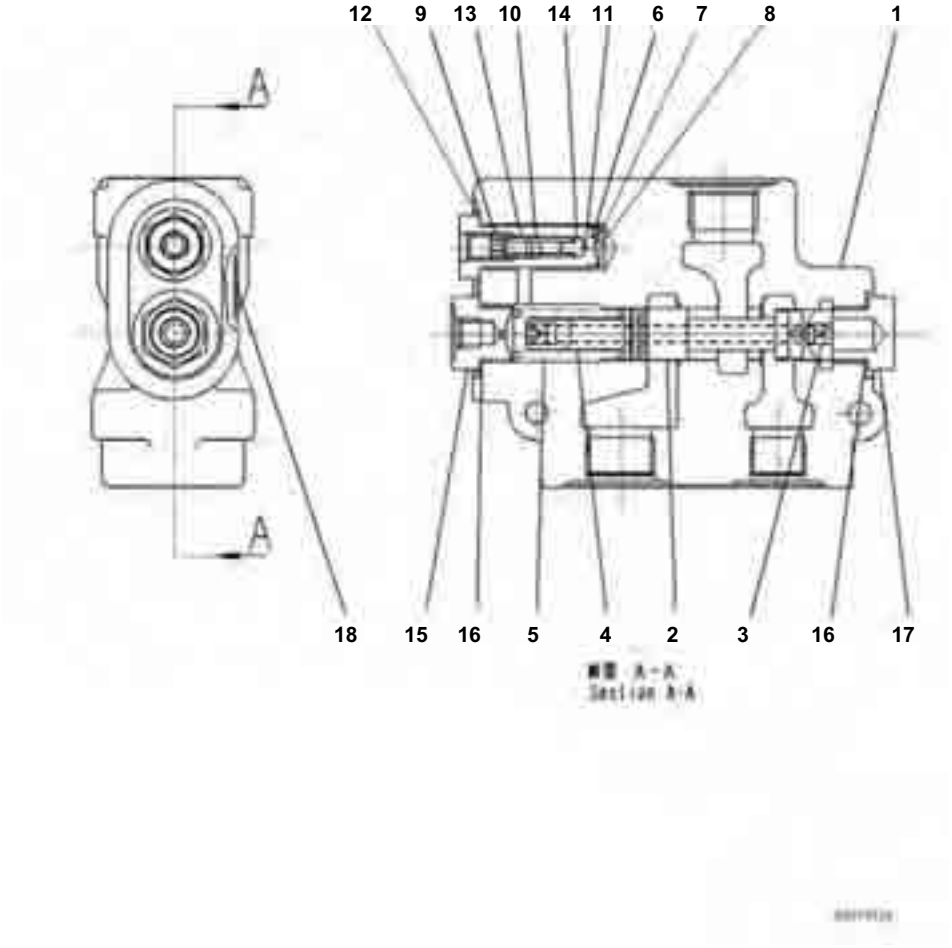

Hydraulic Piping, For Ripper Configuration, Differential Lock Type, Priority Valve

Index	Code	Part Number	Description	Qty	Serial No.
		23B-60-74910	Valve Assembly, Priority	1	B40001-
1	C1		· Housing	1	B40001-
	C1		· Spool Assembly	1	B40001-
2	C1		· · Spool	1	B40001-
3	C1		· · Screw	1	B40001-
4	C1		· · Screw	1	B40001-
5	C1		· Spring	1	B40001-
	C1		· Orifice	1	B40001-
	C1		· · Body Subassembly	1	B40001-
6	C1		· · · Body	1	B40001-
7	C1		· · · Ring	1	B40001-
8	C1		· · · Screen	1	B40001-
9	C1		· · Screw	1	B40001-
10	C1		· · Spring	1	B40001-
11	C1		· · Ball	1	B40001-
12	C1		· · O-ring, (Kit : K07)	1	B40001-
13	C1		· · Guide	1	B40001-
14	C1		· · Holder	1	B40001-
15	C1		· Plug	1	B40001-
16	C1		· O-ring, (Kit : K07)	2	B40001-
17	C1		· Plug	1	B40001-
18	C1		· Plate, Name	1	B40001-

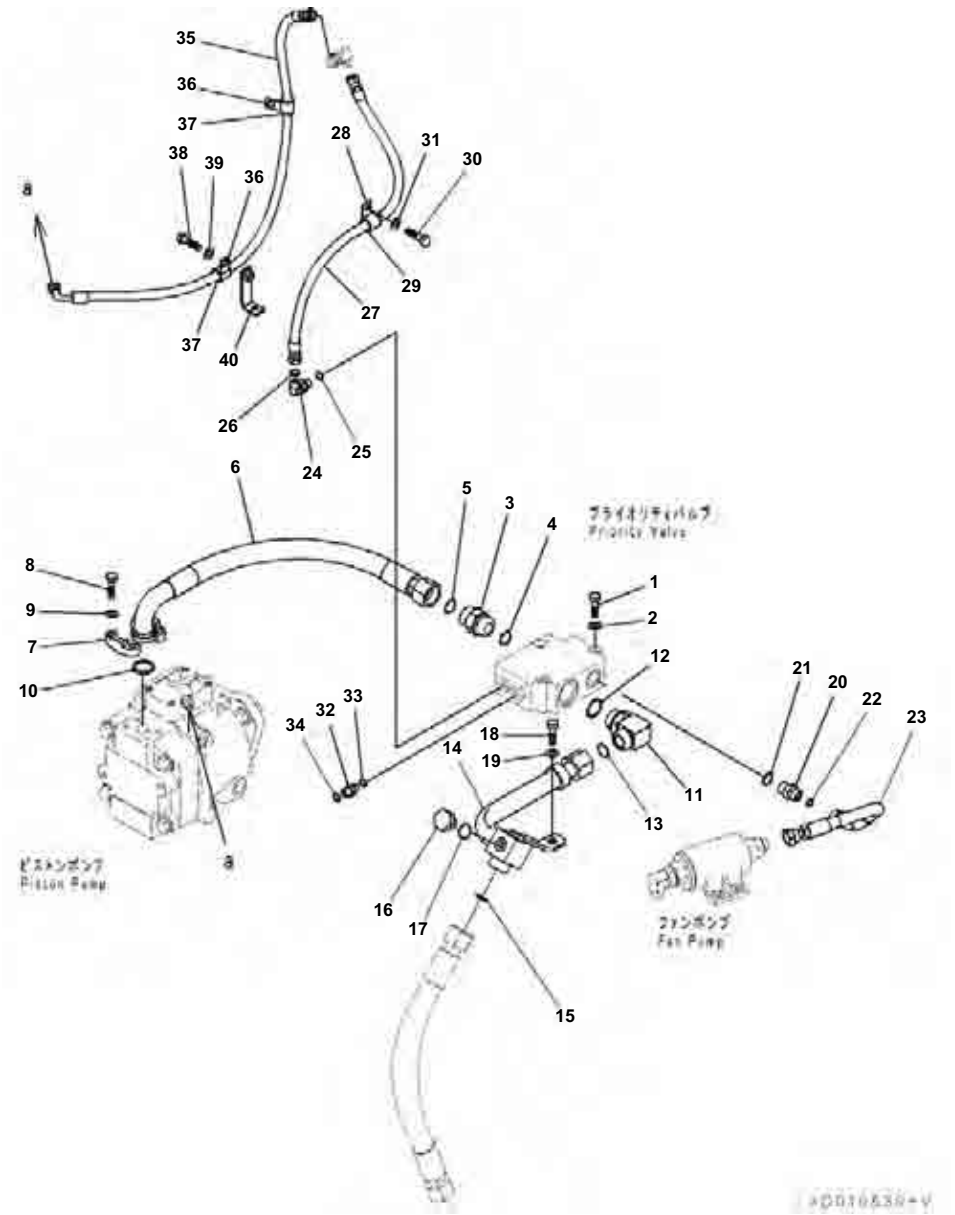

Hydraulic Piping, For Ripper Configuration, Differential Lock Type, Priority Valve Piping

Index	Code	Part Number	Description	Qty	Serial No.
1		01010-80880	Bolt	2	B40001-
2		01643-30823	Washer	2	B40001-
3		418-62-32172	Nipple	1	B40001-
4		418-62-11630	O-ring	1	B40001-
5		23B-60-33240	O-ring	1	B40001-
6		23B-60-73280	Hose	1	B40001-
7		07371-31049	Flange, Split	2	B40001-
8		07372-21035	Bolt	4	B40001-
9		01643-51032	Washer	4	B40001-
10		07000-13032	O-ring	1	B40001-
11		23B-60-33112	Elbow	1	B40001-
12		235-60-15480	O-ring	1	B40001-
13		23B-60-33240	O-ring	1	B40001-
14		23B-60-73590	Tube	1	B40001-
15		23B-60-33240	O-ring	1	B40001-
16		07040-11007	Plug	1	B40001-
17		07002-11023	O-ring	1	B40001-
18		01010-81030	Bolt	1	B40001-
19		01643-31032	Washer	1	B40001-
20		23C-60-52140	Union	1	B40001-
21		418-62-11620	O-ring	1	B40001-
22		02896-11012	O-ring	1	B40001-
23		02767-00404	Hose, Face Seal Type	1	B40001-
24		418-62-32162	Elbow	1	B40001-
25		416-62-11480	O-ring	1	B40001-
26		02896-11008	O-ring	1	B40001-
27		23B-60-73910	Hose	1	B40001-
28		04434-51710	Clip	1	B40001-
29		07095-20211	Cushion	1	B40001-
30		01010-81020	Bolt	1	B40001-
31		01643-31032	Washer	1	B40001-
32		418-62-32110	Nipple	1	B40001-
33		416-62-11480	O-ring	1	B40001-
34		02896-11008	O-ring	1	B40001-
35		23B-60-73520	Hose	1	B40001-
36		04434-51710	Clip	2	B40001-
37		07095-20211	Cushion	2	B40001-
38		01010-81020	Bolt	2	B40001-
39		01643-31032	Washer	2	B40001-
40		425-03-11420	Plate	1	B40001-

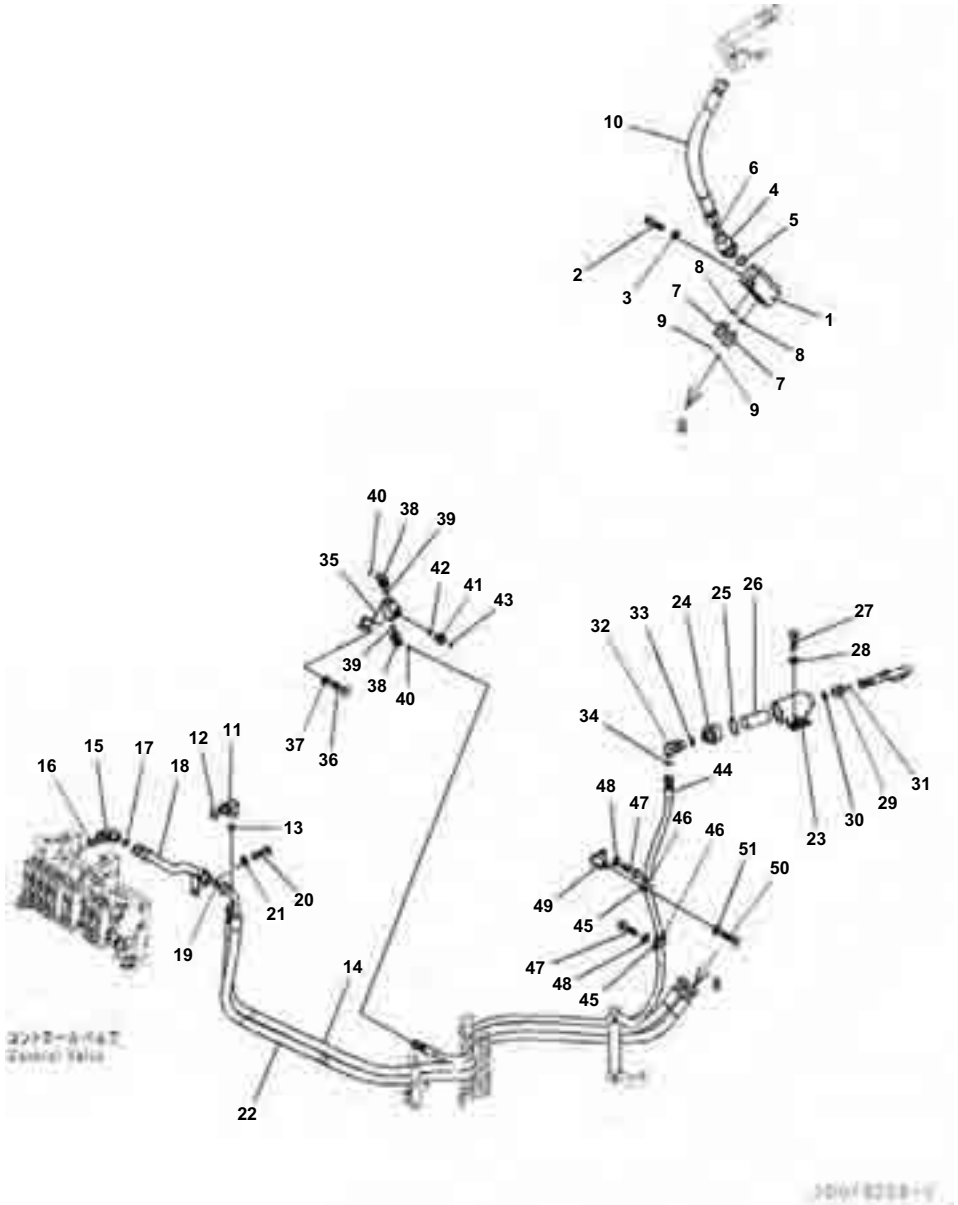

Hydraulic Piping, For Ripper Configuration, Differential Lock Type, Piping (1/2)

Index	Code	Part Number	Description	Qty	Serial No.
1		23B-60-73310	Block	1	B40001-
2		01010-81065	Bolt	2	B40001-
3		01643-31032	Washer	2	B40001-
4		23B-60-73350	Elbow	1	B40001-
5		07002-13334	O-ring	1	B40001-
6		23B-60-33240	O-ring	1	B40001-
7		02781-00628	Union	2	B40001-
8		07002-12434	O-ring	2	B40001-
9		02896-11018	O-ring	2	B40001-
10		23B-60-73250	Hose	1	B40001-
11		02782-10628	Elbow	1	B40001-
12		07002-12434	O-ring	1	B40001-
13		02896-11018	O-ring	1	B40001-
14		23B-60-73320	Hose, Red	1	B40001-
15		02782-10628	Elbow	1	B40001-
16		07002-12434	O-ring	1	B40001-
17		02896-11018	O-ring	1	B40001-
18		23B-60-73340	Tube	1	B40001-
19		02896-11018	O-ring	1	B40001-
20		01010-81020	Bolt	1	B40001-
21		01643-31032	Washer	1	B40001-
22		23B-60-73330	Hose, Green	1	B40001-
23		421-43-22562	Case	1	B40001-
24		421-43-22571	Cap	1	B40001-
25		07002-15234	O-ring	1	B40001-
26		421-43-27920	Strainer	1	B40001-
27		01010-81020	Bolt	2	B40001-
28		01643-31032	Washer	2	B40001-
29		8255-62-4220	Union	1	B40001-
30		07002-12434	O-ring	1	B40001-
31		02896-11012	O-ring	1	B40001-
32		11Y-62-12630	Elbow	1	B40001-
33		07002-12434	O-ring	1	B40001-
34		02896-11012	O-ring	1	B40001-
35		23B-60-73370	Block	1	B40001-
36		01010-81020	Bolt	2	B40001-
37		01643-31032	Washer	2	B40001-
38		02783-10422	Elbow	2	B40001-
39		07002-12034	O-ring	2	B40001-
40		02896-11012	O-ring	2	B40001-
41		20Y-62-43460	Nipple	1	B40001-
42		07002-12034	O-ring	1	B40001-
43		02896-11008	O-ring	1	B40001-
44		23B-60-73360	Hose, Brown	1	B40001-
45		04434-52711	Clip	2	B40001-
46		07095-20419	Cushion	2	B40001-

GD655-5 S/N B40001-UP

Hydraulic Piping, For Ripper Configuration, Differential Lock Type, Piping (1/2)

Index	Code	Part Number	Description	Qty	Serial No.
47		01010-81020	Bolt	2	B40001-
48		01643-31032	Washer	2	B40001-
49		23B-60-74280	Bracket	1	B40001-
50		01010-81020	Bolt	1	B40001-
51		01643-31032	Washer	1	B40001-

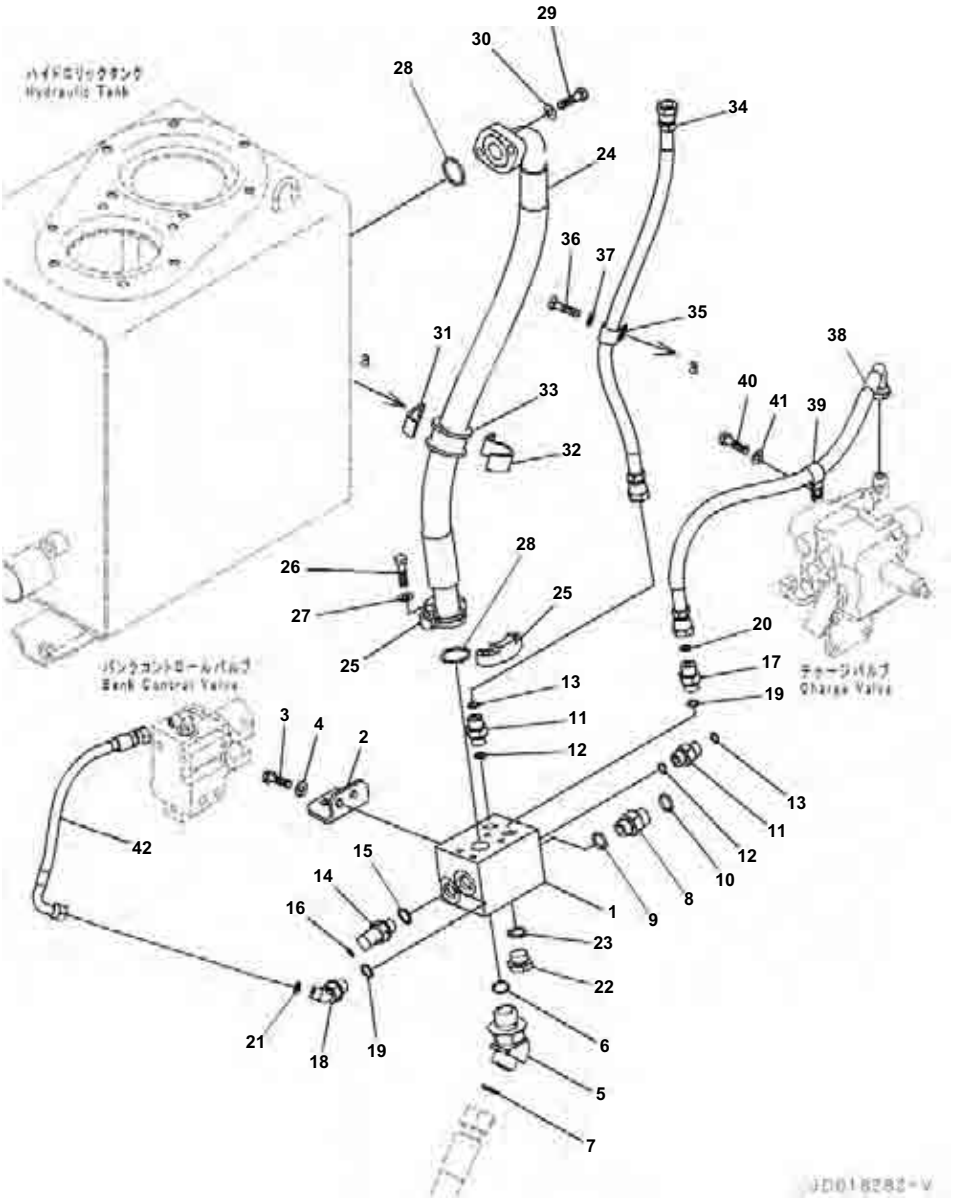

Hydraulic Piping, For Ripper Configuration, Differential Lock Type, Return Piping (1/2)

Index	Code	Part Number	Description	Qty	Serial No.
1		23B-60-73410	Block	1	B40001-
2		23B-60-73420	Plate	1	B40001-
3		01010-81030	Bolt	4	B40001-
4		01643-31032	Washer	4	B40001-
5		419-62-31530	Elbow	1	B40001-
6		07002-13334	O-ring	1	B40001-
7		23B-60-33240	O-ring	1	B40001-
8		02781-00522	Union	1	B40001-
9		07002-12434	O-ring	1	B40001-
10		02896-11015	O-ring	1	B40001-
11		02781-00422	Union	2	B40001-
12		07002-12034	O-ring	2	B40001-
13		02896-11012	O-ring	2	B40001-
14		02783-10422	Elbow	1	B40001-
15		07002-12034	O-ring	1	B40001-
16		02896-11012	O-ring	1	B40001-
17		02781-00422	Union	1	B40001-
18		02783-10315	Elbow	1	B40001-
19		07002-12034	O-ring	2	B40001-
20		02896-11012	O-ring	1	B40001-
21		02896-11009	O-ring	1	B40001-
22		07040-12412	Plug	1	B40001-
23		07002-12434	O-ring	1	B40001-
24		23B-60-73490	Hose	1	B40001-
25		07371-31255	Flange, Split	2	B40001-
26		07372-21035	Bolt	4	B40001-
27		01643-51032	Washer	4	B40001-
28		07000-13038	O-ring	2	B40001-
29		01010-81040	Bolt	2	B40001-
30		01643-31032	Washer	2	B40001-
31		419-62-32130	Clamp	1	B40001-
32		419-62-32140	Clamp	1	B40001-
33		419-62-32150	Cushion	1	B40001-
34		23B-60-73510	Hose	1	B40001-
35		04434-51912	Clip	1	B40001-
36		01010-81030	Bolt	1	B40001-
37		01643-31032	Washer	1	B40001-
38		23B-60-73530	Hose	1	B40001-
39		04434-51912	Clip	1	B40001-
40		01010-81020	Bolt	1	B40001-
41		01643-31032	Washer	1	B40001-
42		23B-60-74920	Hose	1	B40001-

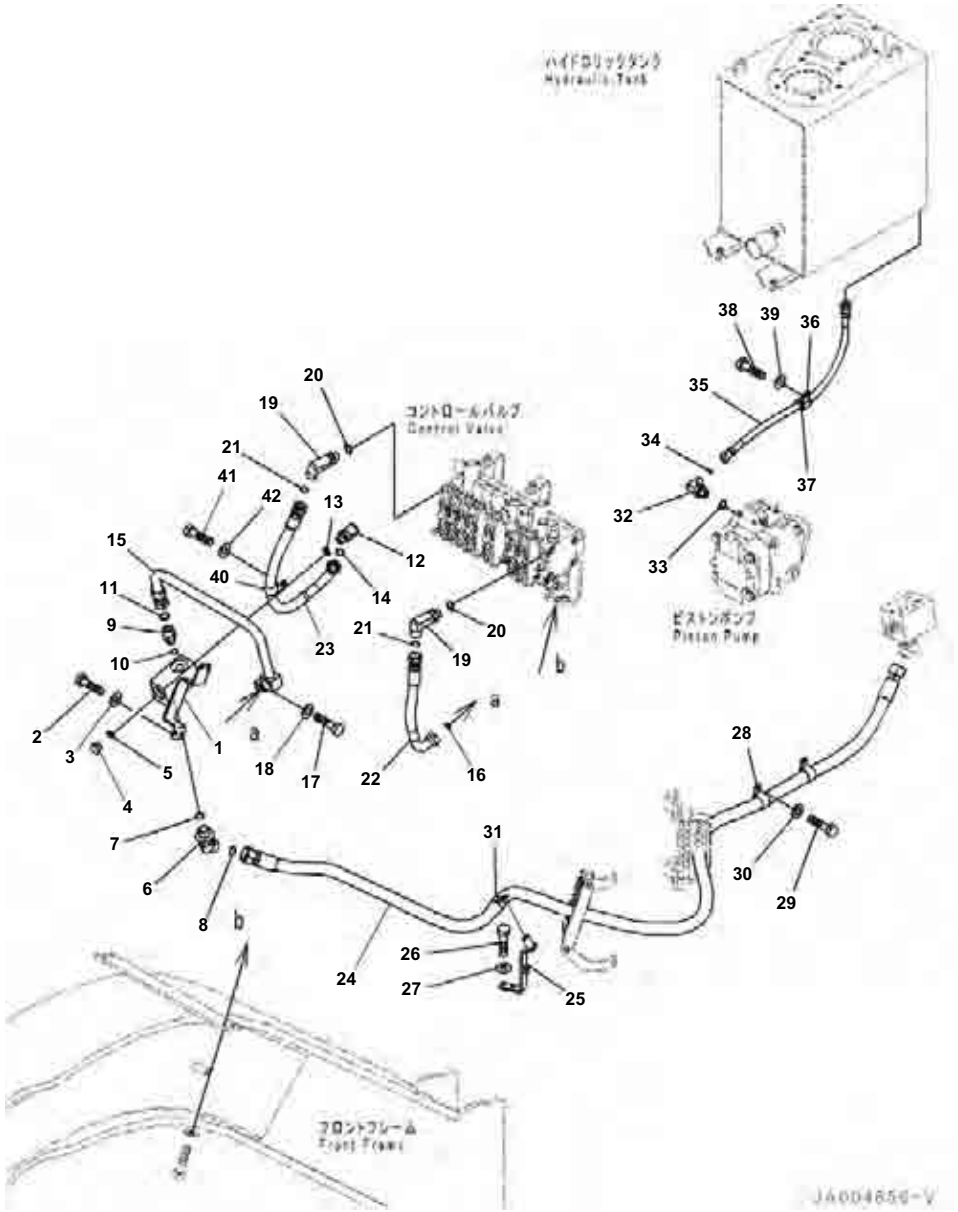

Hydraulic Piping, For Ripper Configuration, Differential Lock Type, Return Piping (2/2)

Index	Code	Part Number	Description	Qty	Serial No.
1		23B-60-73441	Block	1	B40001-
2		01010-81020	Bolt	4	B40001-
3		01643-31032	Washer	4	B40001-
4		07040-12012	Plug	1	B40001-
5		07002-12034	O-ring	1	B40001-
6		419-62-31530	Elbow	1	B40001-
7		07002-13334	O-ring	1	B40001-
8		23B-60-33240	O-ring	1	B40001-
9		02781-00628	Union	1	B40001-
10		07002-12434	O-ring	1	B40001-
11		02896-11018	O-ring	1	B40001-
12		02782-10628	Elbow	1	B40001-
13		07002-12434	O-ring	1	B40001-
14		02896-11018	O-ring	1	B40001-
15		23B-60-73430	Tube	1	B40001-
16		02896-11018	O-ring	1	B40001-
17		01010-81020	Bolt	1	B40001-
18		01643-31032	Washer	1	B40001-
19		23B-60-74750	Elbow	2	B40001-
20		07002-12434	O-ring	2	B40001-
21		02896-11018	O-ring	2	B40001-
22		02763-006A3	Hose, Face Seal Type	1	B40001-
23		23B-60-73460	Hose	1	B40001-
24		23B-60-73470	Hose, White	1	B40001-
25		23B-60-73480	Bracket	1	B40001-
26		01010-81020	Bolt	2	B40001-
27		01643-31032	Washer	2	B40001-
28		04434-53411	Clip	2	B40001-
29		01010-81025	Bolt	2	B40001-
30		01643-31032	Washer	2	B40001-
31		04434-53412	Clip	1	B40001-
32		02782-10425	Elbow	1	B40001-
33		07002-12434	O-ring	1	B40001-
34		02896-11012	O-ring	1	B40001-
35		02762-004A6	Hose	1	B40001-
36		04434-52711	Clip	1	B40001-
37		07095-20418	Cushion	1	B40001-
38		01010-81020	Bolt	1	B40001-
39		01643-31032	Washer	1	B40001-
40		04434-52711	Clip	1	B40001-
41		01010-81020	Bolt	1	B40001-
42		01643-31032	Washer	1	B40001-

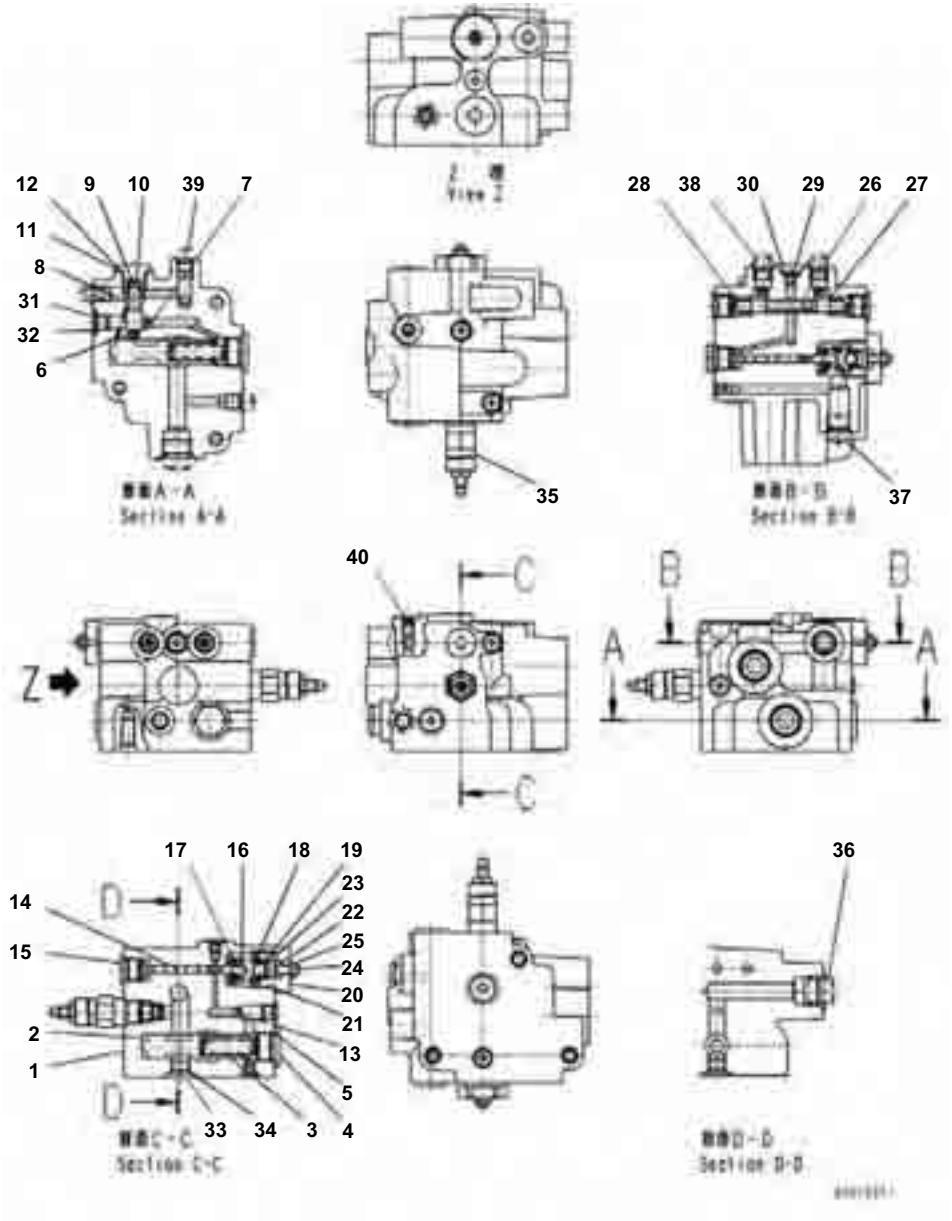

Hydraulic Piping, For Ripper Configuration, Differential Lock Type, Inner Parts, Charge Valve

Index	Code	Part Number	Description	Qty	Serial No.
		23B-60-73210	Valve	1	B40001-
1	C1		· Body	1	B40001-
2		421-43-48550	· Spool	1	B40001-
3		423-43-37560	· Spring	1	B40001-
4		423-43-37570	· Plug	1	B40001-
5		423-43-37580	· O-ring	1	B40001-
6	C1		· Orifice	3	B40001-
7	C1		· Orifice	1	B40001-
8	C1		· Seat, Valve	1	B40001-
9		417-43-37560	· Plug	1	B40001-
10		417-43-37570	· Spring	1	B40001-
11		417-43-37580	· Plug	1	B40001-
12		417-43-37550	· O-ring	4	B40001-
13	C1		· Orifice	1	B40001-
14		XK2627512170	· Plunger	1	B40001-
15		417-43-37540	· Plug	3	B40001-
16		417-43-37660	· Valve	1	B40001-
17		417-43-37670	· Spring	1	B40001-
18		417-43-37680	· Spring	1	B40001-
19		417-43-37690	· Spring	1	B40001-
20		417-43-37710	· Plug	1	B40001-
21		417-43-37720	· O-ring	1	B40001-
22		417-43-37730	· Seat	1	B40001-
23		417-43-37740	· O-ring	1	B40001-
24		417-43-37750	· Screw	1	B40001-
25		417-43-37760	· Nut	1	B40001-
26		423-43-37630	· Spool	1	B40001-
27		417-43-37780	· Washer	2	B40001-
28		417-43-37790	· Spring	2	B40001-
29		XK2629120330	· Plug	6	B40001-
30		XK0401008000	· O-ring	6	B40001-
31		XK2105002990	· Plug	2	B40001-
32		XK0401011000	· O-ring	2	B40001-
33		XK2629170330	· Plug	1	B40001-
34		XK0401014000	· O-ring	1	B40001-
35		421-43-48640	· Valve, Relief	1	B40001-
36	C1		· Cap	2	B40001-
37	C1		· Cap	1	B40001-
38	C1		· Cap	2	B40001-
39	C1		· Cap	3	B40001-
40	C1		· Plug	1	B40001-

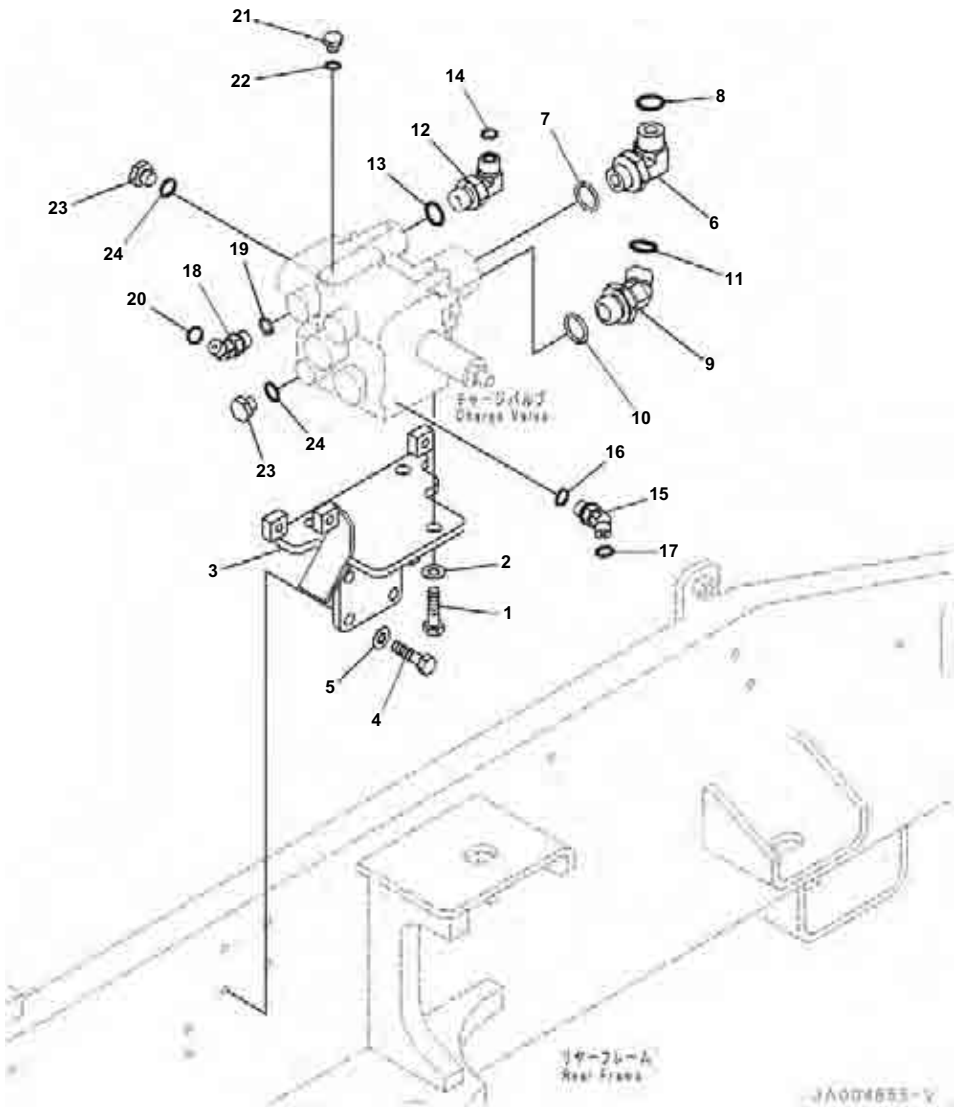

Hydraulic Piping, For Ripper Configuration, Differential Lock Type, Charge Valve Related Parts

Index	Code	Part Number	Description	Qty	Serial No.
1		01010-81230	Bolt	3	B40001-
2		01643-31232	Washer	3	B40001-
3		23B-60-73230	Bracket	1	B40001-
4		01010-81025	Bolt	4	B40001-
5		01643-31032	Washer	4	B40001-
6		56B-43-17360	Elbow	1	B40001-
7		22W-62-13420	O-ring	1	B40001-
8		02896-11015	O-ring	1	B40001-
9		423-43-37120	Elbow	1	B40001-
10		22W-62-13420	O-ring	1	B40001-
11		02896-11015	O-ring	1	B40001-
12		418-62-35111	Elbow	1	B40001-
13		07000-12018	O-ring	1	B40001-
14		02896-11012	O-ring	1	B40001-
15		02783-10210	Elbow	1	B40001-
16		07002-11423	O-ring	1	B40001-
17		02896-11008	O-ring	1	B40001-
18		8296-62-2140	Elbow	2	B40001-
19		07000-12014	O-ring	2	B40001-
20		02896-11008	O-ring	2	B40001-
21		07040-11007	Plug	1	B40001-
22		07002-11023	O-ring	1	B40001-
23		07040-11409	Plug	2	B40001-
24		07002-11423	O-ring	2	B40001-

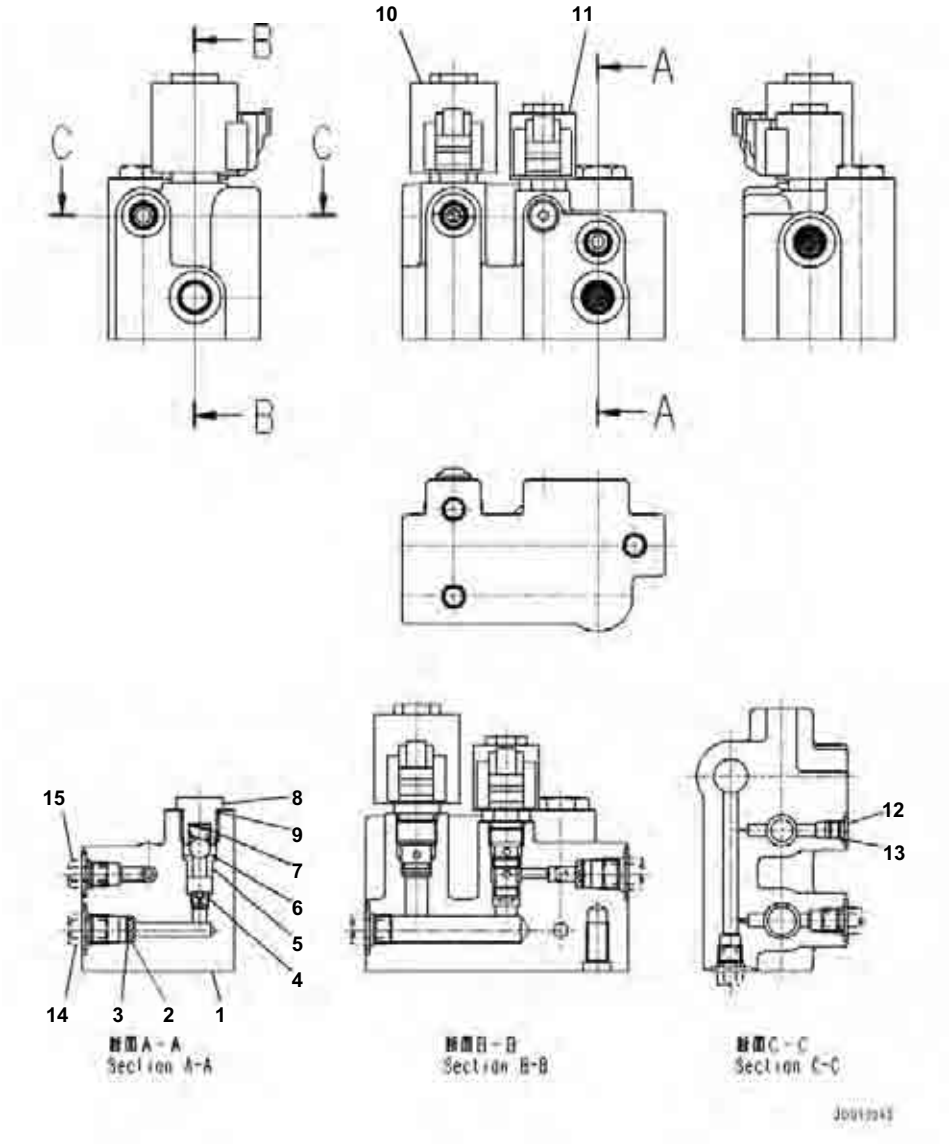

Hydraulic Piping, For Ripper Configuration, Differential Lock Type, Parking Brake Valve

Index	Code	Part Number	Description	Qty	Serial No.
		23B-60-73220	Block Assembly	1	B40001-
1	C1		· Body	1	B40001-
2		23C-61-52120	· Filter, Oil	2	B40001-
3		04065-01410	· Ring	2	B40001-
4	C1		· Orifice	1	B40001-
5	C1		· Seat, Valve	1	B40001-
6		417-43-37560	· Plug	1	B40001-
7		417-43-37570	· Spring	1	B40001-
8		417-43-37580	· Plug	1	B40001-
9		417-43-37550	· O-ring	1	B40001-
10		23B-61-42110	· Valve, Solenoid	1	B40001-
11		23B-61-42140	· Valve, Solenoid	1	B40001-
12		XK2629120330	· Plug	1	B40001-
13		XK0401008000	· O-ring	1	B40001-
14	C1		· Cap	3	B40001-
15	C1		· Cap	3	B40001-

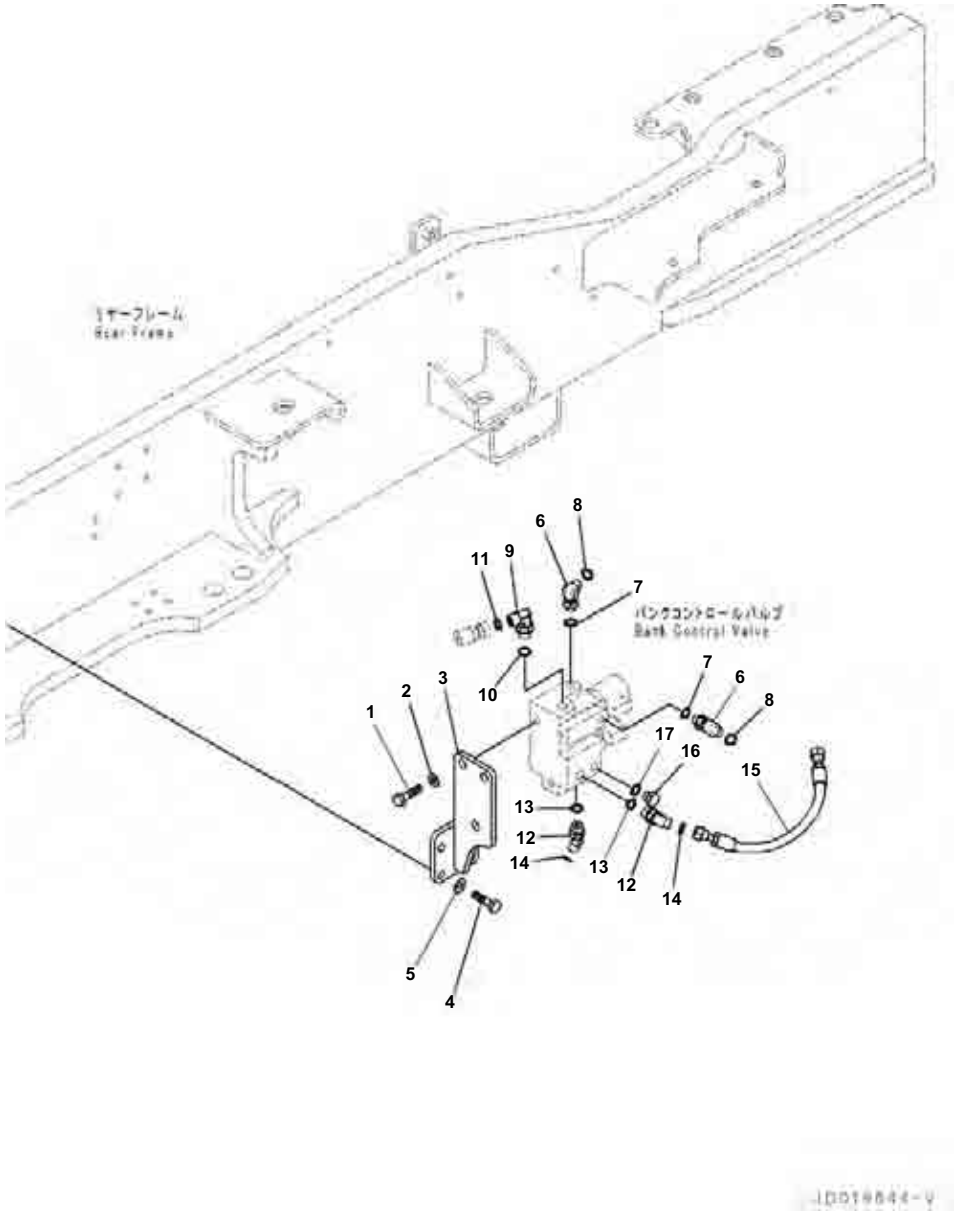

Hydraulic Piping, For Ripper Configuration, Differential Lock Type, Charge Valve Piping

Index	Code	Part Number	Description	Qty	Serial No.
1		01010-81230	Bolt	3	B40001-
2		01643-31232	Washer	3	B40001-
3		23B-60-73240	Bracket	1	B40001-
4		01010-81025	Bolt	4	B40001-
5		01643-31032	Washer	4	B40001-
6		21W-62-43980	Elbow	2	B40001-
7		07000-12011	O-ring	2	B40001-
8		02896-11008	O-ring	2	B40001-
9		56B-88-12320	Elbow	1	B40001-
10		07000-12014	O-ring	1	B40001-
11		02896-11009	O-ring	1	B40001-
12		8296-62-2140	Elbow	2	B40001-
13		07000-12014	O-ring	2	B40001-
14		02896-11008	O-ring	2	B40001-
15		02765-00203	Hose, Face Seal Type	1	B40001-
16		23B-60-73190	Plug	1	B40001-
17		07000-12011	O-ring	1	B40001-

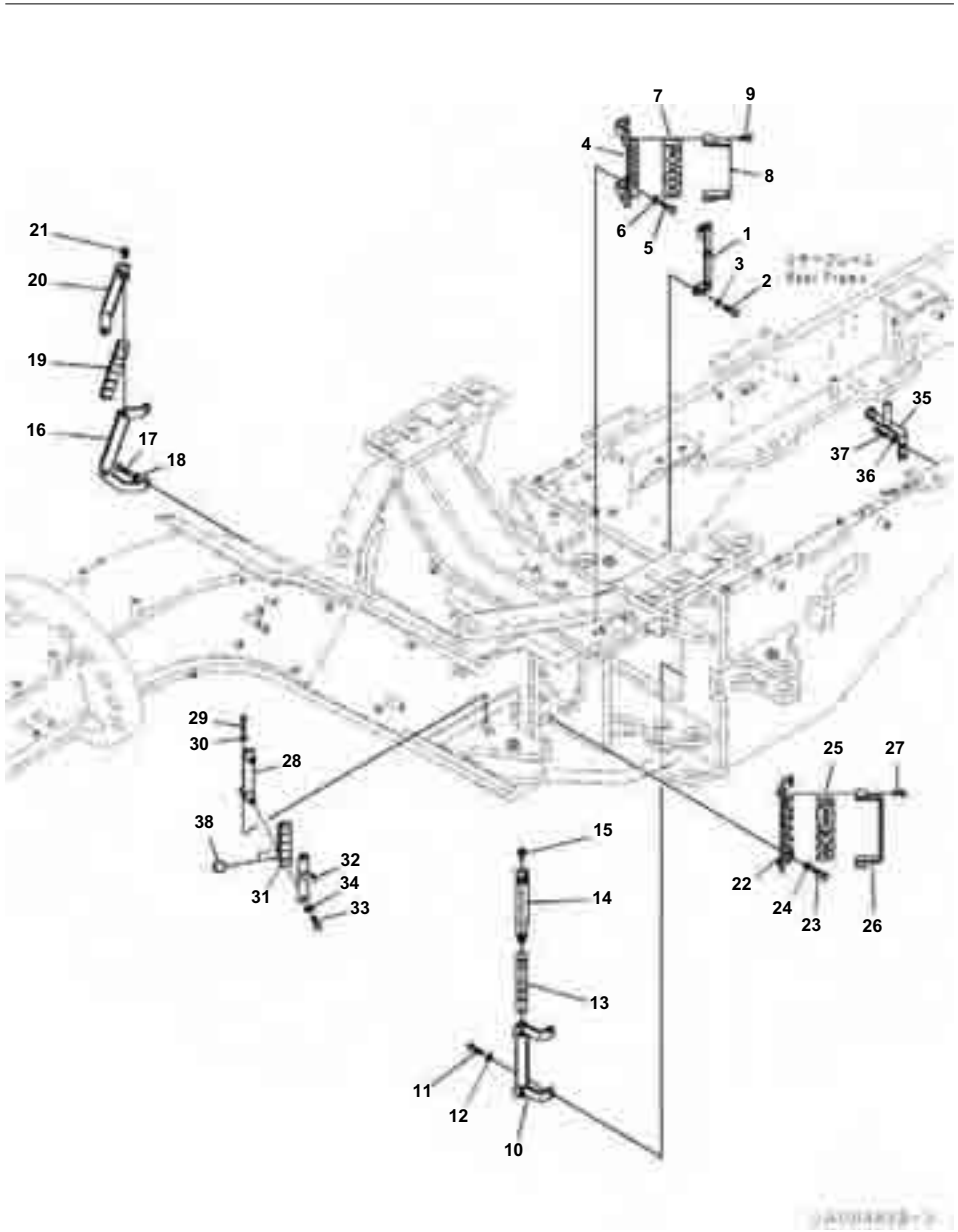

Hydraulic Piping, For Ripper Configuration, Differential Lock Type, Hose Clamp

Index	Code	Part Number	Description	Qty	Serial No.
1		23B-60-73670	Bracket	2	B40001-
2		01010-81025	Bolt	4	B40001-
3		01643-31032	Washer	4	B40001-
4		23B-60-73680	Bracket,RHS	1	B40001-
5		01010-81025	Bolt	2	B40001-
6		01643-31032	Washer	2	B40001-
7		23B-60-73740	Cushion	1	B40001-
8		23B-60-73760	Bracket,RHS	1	B40001-
9		01435-01065	Bolt	2	B40001-
10		23B-60-73690	Bracket,LHS	1	B40001-
11		01010-81025	Bolt	2	B40001-
12		01643-31032	Washer	2	B40001-
13		23B-60-73750	Cushion	1	B40001-
14		23B-60-73760	Bracket,LHS	1	B40001-
15		01435-01065	Bolt	2	B40001-
16		23B-60-73770	Bracket	1	B40001-
17		01010-81025	Bolt	2	B40001-
18		01643-31032	Washer	2	B40001-
19		23B-60-73790	Cushion	1	B40001-
20		23B-60-73760	Bracket,RHS	1	B40001-
21		01435-01055	Bolt	2	B40001-
22		23B-60-73810	Plate	1	B40001-
23		01010-81025	Bolt	2	B40001-
24		01643-31032	Washer	2	B40001-
25		23B-60-73820	Cushion	1	B40001-
26		23B-60-73760	Bracket,LHS	1	B40001-
27		01435-01055	Bolt	2	B40001-
28		23B-60-73840	Bracket	1	B40001-
29		01010-81020	Bolt	2	B40001-
30		01643-31032	Washer	2	B40001-
31		23B-60-73850	Cushion	1	B40001-
32		23B-60-73860	Bracket	1	B40001-
33		01010-81025	Bolt	2	B40001-
34		01643-31032	Washer	2	B40001-
35		23B-60-74340	Bracket	1	B40001-
36		01010-81025	Bolt	2	B40001-
37		01643-31032	Washer	2	B40001-
38		22B-958-6890	Plug	2	B40001-

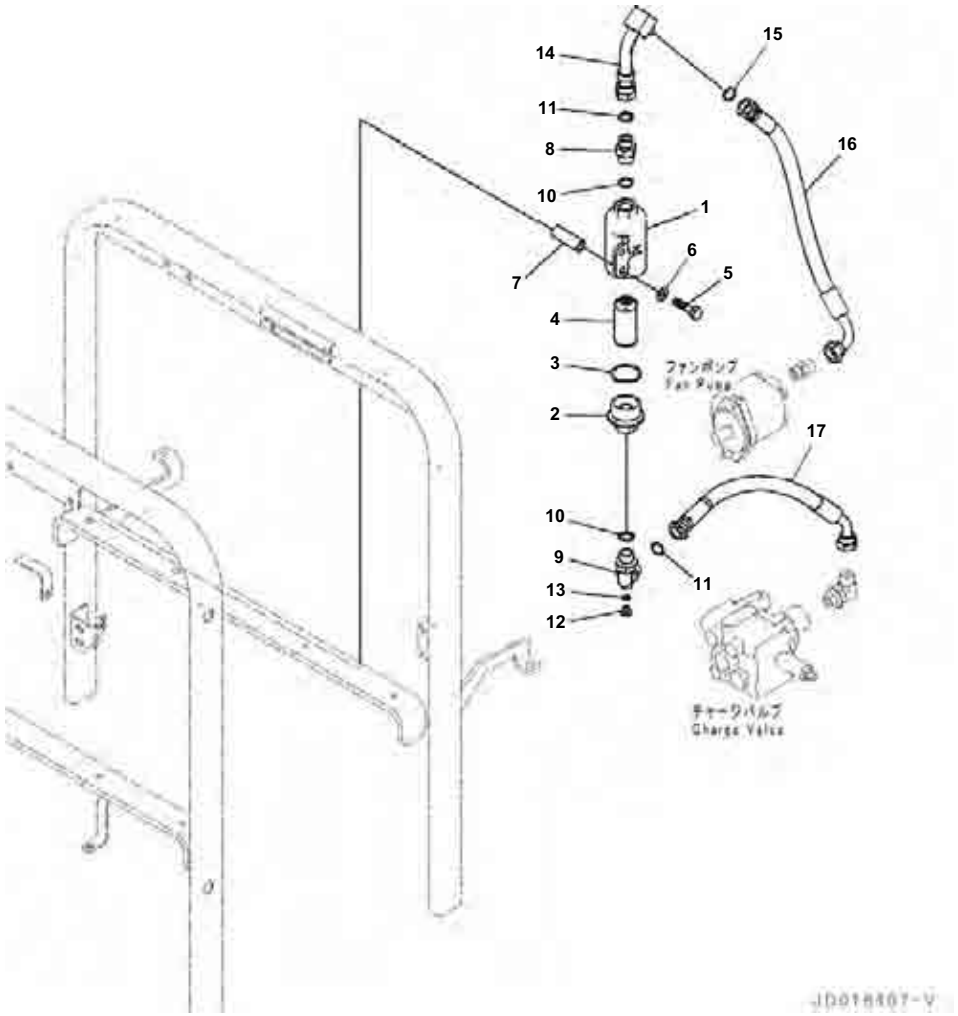

Hydraulic Piping, For Ripper Configuration, Differential Lock Type, Drive Case

Index	Code	Part Number	Description	Qty	Serial No.
1		421-43-22562	Case	1	B40001-
2		421-43-22571	Cap	1	B40001-
3		07002-15234	O-ring	1	B40001-
4		421-43-27920	Strainer	1	B40001-
5		01010-81090	Bolt	2	B40001-
6		01643-31032	Washer	2	B40001-
7		23B-07-61550	Spacer	2	B40001-
8		02781-00522	Union	1	B40001-
9		02782-50522	Elbow	1	B40001-
10		07002-12434	O-ring	2	B40001-
11		02896-11015	O-ring	2	B40001-
12		07040-11007	Plug	1	B40001-
13		07002-11023	O-ring	1	B40001-
14		23B-60-74530	Tube	1	B40001-
15		02896-11015	O-ring	1	B40001-
16		23B-60-73260	Hose	1	B40001-
17		23B-60-73270	Hose	1	B40001-

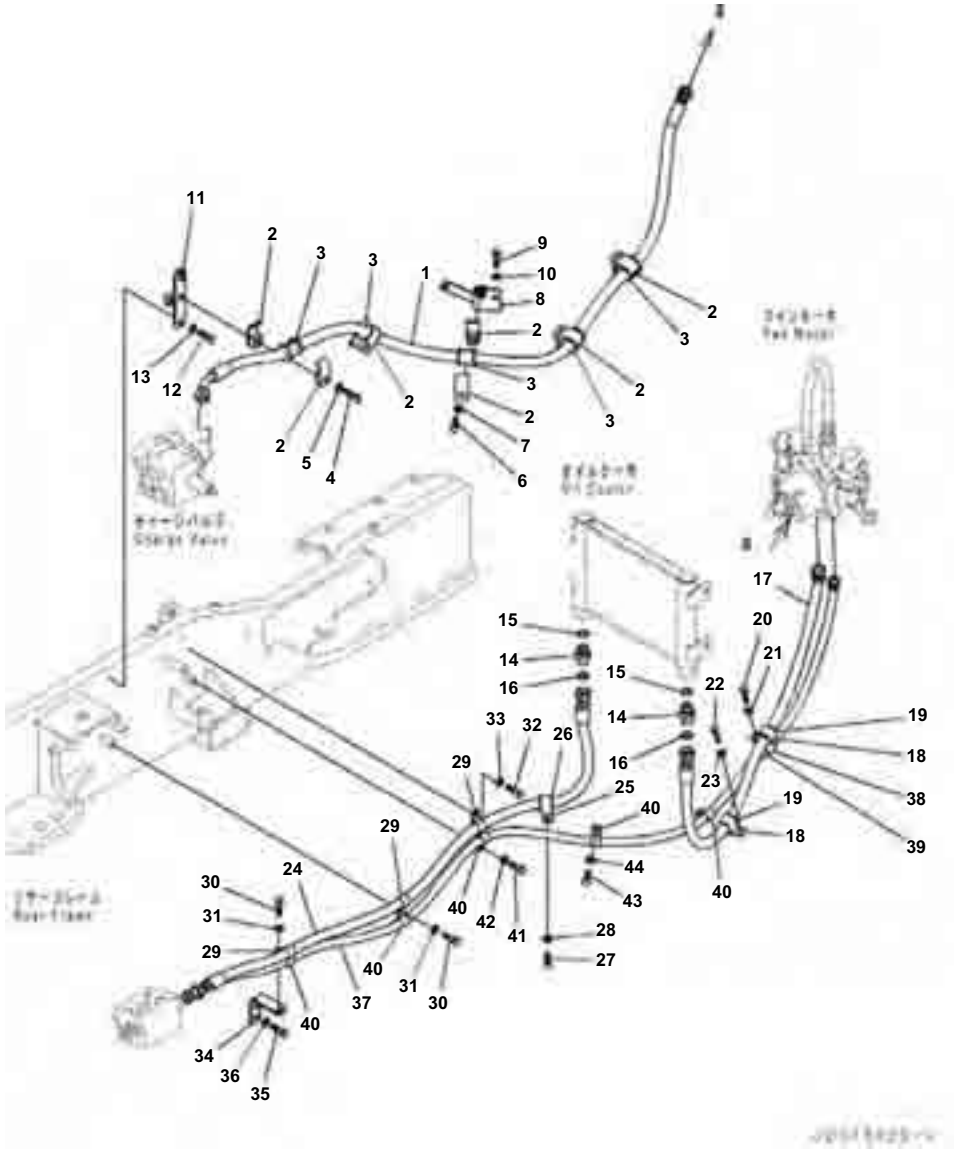

GD655-5 S/N B40001-UP
Hydraulic Piping, For Ripper Configuration, Differential Lock Type, Fan Motor Piping

Index	Code	Part Number	Description	Qty	Serial No.
1		23B-60-73610	Hose, White	1	B40001-
2		07094-10518	Clamp	10	B40001-
3		07095-00524	Cushion	5	B40001-
4		01010-81265	Bolt	4	B40001-
5		01643-31232	Washer	4	B40001-
6		01010-81275	Bolt	1	B40001-
7		01643-31232	Washer	1	B40001-
8		23B-60-73650	Bracket	1	B40001-
9		01010-81025	Bolt	2	B40001-
10		01643-31032	Washer	2	B40001-
11		23B-60-74410	Bracket	1	B40001-
12		01010-81025	Bolt	1	B40001-
13		01643-31032	Washer	1	B40001-
14		02781-00522	Union	2	B40001-
15		07002-12434	O-ring	2	B40001-
16		02896-11015	O-ring	2	B40001-
17		23B-60-73620	Hose, White	1	B40001-
18		04434-53211	Clip	2	B40001-
19		07095-20523	Cushion	2	B40001-
20		01010-81025	Bolt	1	B40001-
21		01643-31032	Washer	1	B40001-
22		01010-81020	Bolt	1	B40001-
23		01643-31032	Washer	1	B40001-
24		23B-60-73630	Hose, White	1	B40001-
25		04434-53211	Clip	1	B40001-
26		07095-20523	Cushion	1	B40001-
27		01010-81025	Bolt	1	B40001-
28		01643-31032	Washer	1	B40001-
29		04434-52210	Clip	3	B40001-
30		01010-81025	Bolt	2	B40001-
31		01643-31032	Washer	2	B40001-
32		01010-81020	Bolt	1	B40001-
33		01643-31032	Washer	1	B40001-
34		23B-60-73660	Bracket	1	B40001-
35		01010-81020	Bolt	2	B40001-
36		01643-31032	Washer	2	B40001-
37		23B-60-73641	Hose	1	B40001-
38		04434-52711	Clip	1	B40001-
39		07095-20419	Cushion	1	B40001-
40		04434-51912	Clip	5	B40001-
41		01010-81020	Bolt	2	B40001-
42		01643-31032	Washer	2	B40001-
43		01010-81025	Bolt	1	B40001-
44		01643-31032	Washer	1	B40001-

Reference:H5200-004014 Page:H008014

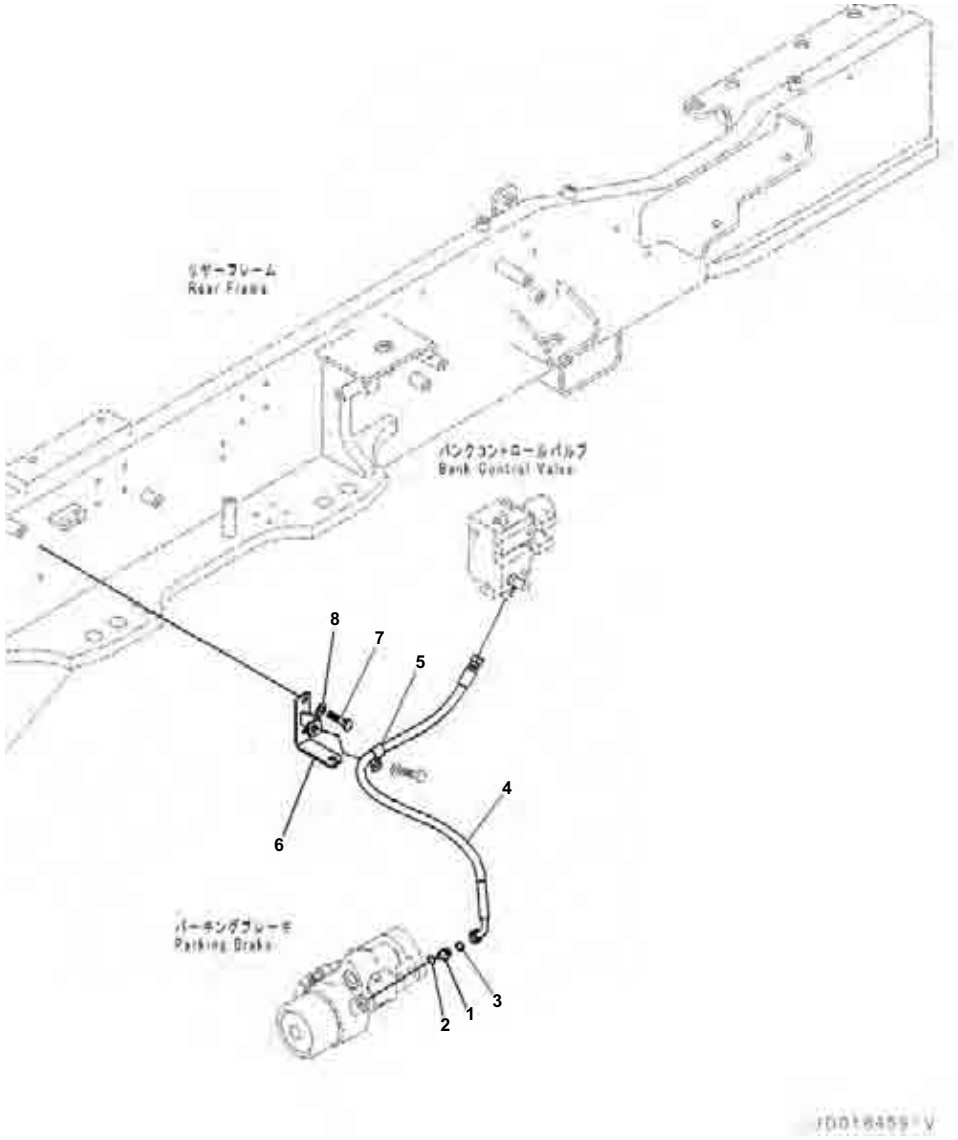

Hydraulic Piping, For Ripper Configuration, Differential Lock Type, Parking Brake Piping

Index	Code	Part Number	Description	Qty	Serial No.
1		11Y-62-12120	Nipple	1	B40001-
2		416-62-11480	O-ring	1	B40001-
3		02896-11008	O-ring	1	B40001-
4		23B-60-73550	Hose	1	B40001-
5		04434-51310	Clip	1	B40001-
6		23B-60-74710	Bracket	1	B40001-
7		01010-81020	Bolt	2	B40001-
8		01643-31032	Washer	2	B40001-

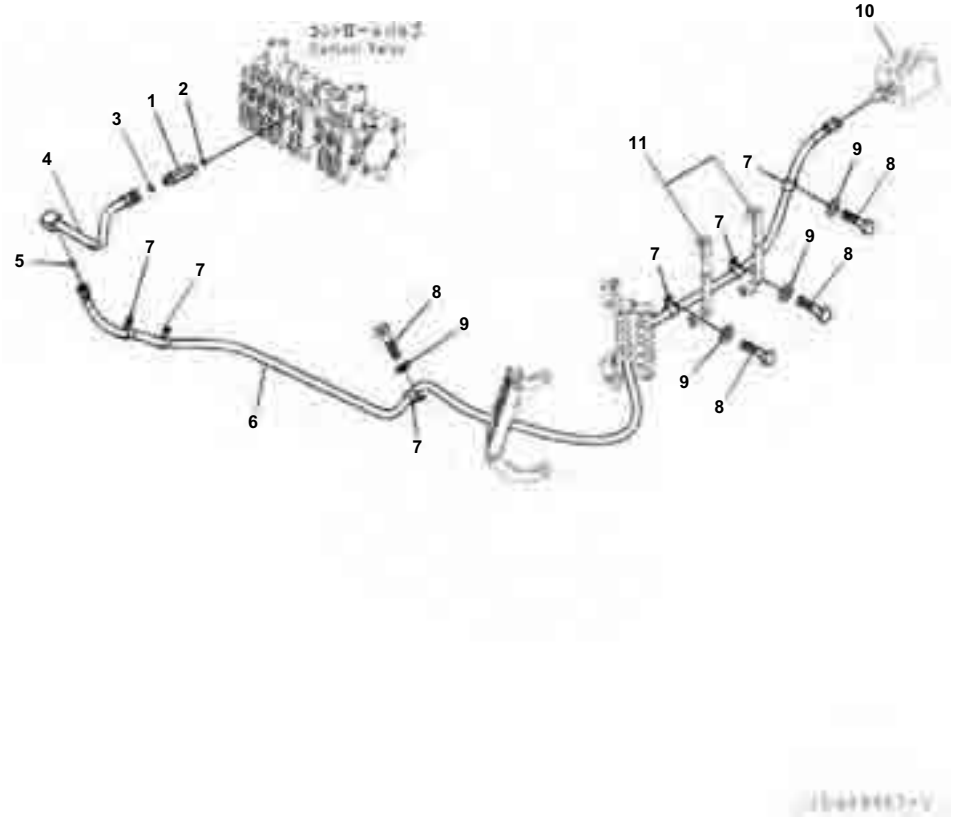

Hydraulic Piping, For Ripper Configuration, Differential Lock Type, LS Piping (1/3)

Index	Code	Part Number	Description	Qty	Serial No.
1		23B-60-73990	Union	1	B40001-
2		07002-11423	O-ring	1	B40001-
3		02896-11012	O-ring	1	B40001-
4		23B-60-74770	Tube	1	B40001-
5		02896-11012	O-ring	1	B40001-
6		23B-60-73870	Hose, Gray	1	B40001-
7		04434-51912	Clip	6	B40001-
8		01010-81025	Bolt	4	B40001-
9		01643-31032	Washer	4	B40001-
10		(23B-60-73410)	Block		
11		(23B-60-73670)	Bracket		

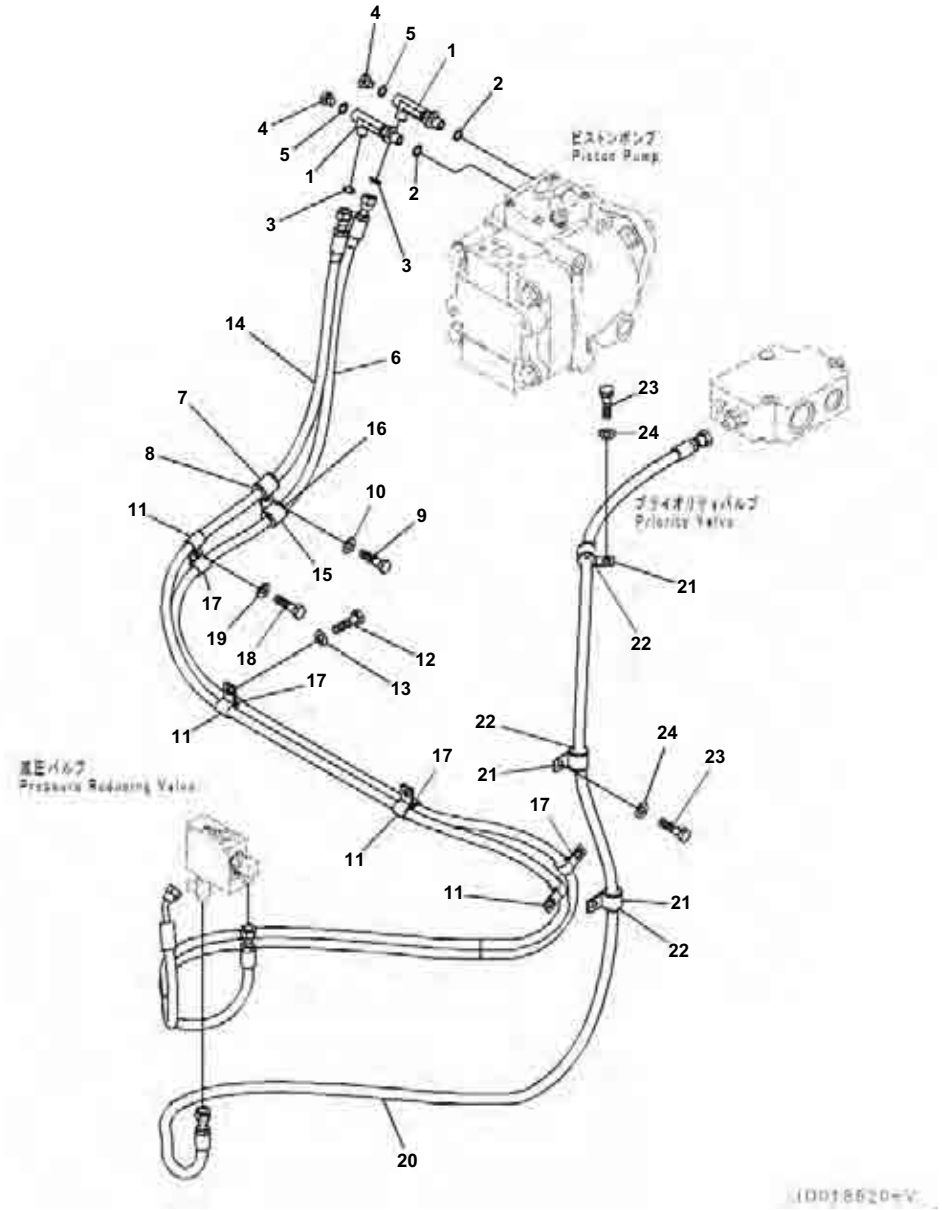

Hydraulic Piping, For Ripper Configuration, Differential Lock Type, LS Piping (2/3)

Index	Code	Part Number	Description	Qty	Serial No.
1		22L-62-22151	Elbow	2	B40001-
2		07002-11423	O-ring	2	B40001-
3		02896-11008	O-ring	2	B40001-
4		07040-11007	Plug	2	B40001-
5		07002-11023	O-ring	2	B40001-
6		23B-60-73880	Hose, Orange	1	B40001-
7		04434-51910	Clip	1	B40001-
8		07095-20213	Cushion	1	B40001-
9		01010-81020	Bolt	1	B40001-
10		01643-31032	Washer	1	B40001-
11		04434-51310	Clip	4	B40001-
12		01010-81020	Bolt	4	B40001-
13		01643-31032	Washer	4	B40001-
14		23B-60-73890	Hose, Blue	1	B40001-
15		04434-51910	Clip	1	B40001-
16		07095-20213	Cushion	1	B40001-
17		04434-51310	Clip	4	B40001-
18		01010-81020	Bolt	1	B40001-
19		01643-31032	Washer	1	B40001-
20		23B-60-73920	Hose, White	1	B40001-
21		04434-51910	Clip	3	B40001-
22		07095-20213	Cushion	3	B40001-
23		01010-81020	Bolt	2	B40001-
24		01643-31032	Washer	2	B40001-

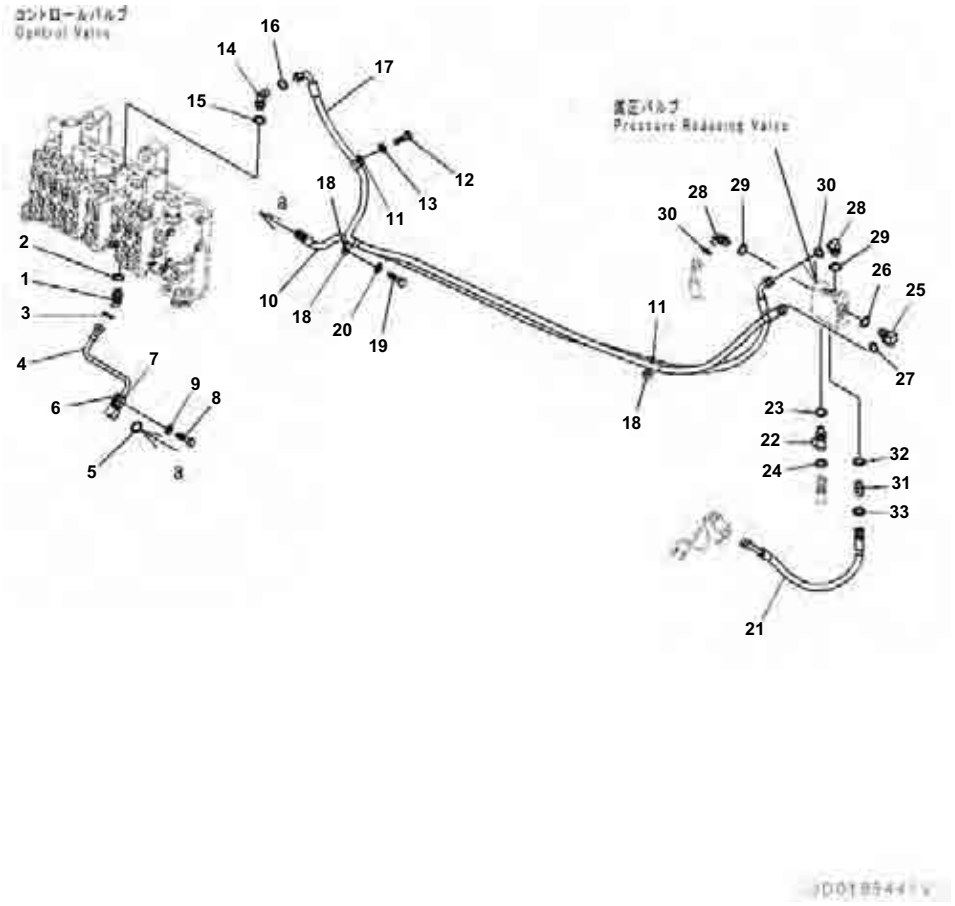

Hydraulic Piping, For Ripper Configuration, Differential Lock Type, LS Piping (3/3)

Index	Code	Part Number	Description	Qty	Serial No.
1		02783-10210	Elbow	1	B40001-
2		07002-11423	O-ring	1	B40001-
3		02896-11008	O-ring	1	B40001-
4		23B-60-73960	Tube	1	B40001-
5		02896-11008	O-ring	1	B40001-
6		04434-51710	Clip	1	B40001-
7		07095-20211	Cushion	1	B40001-
8		01010-81020	Bolt	1	B40001-
9		01643-31032	Washer	1	B40001-
10		23B-60-73930	Hose, Gray	1	B40001-
11		04434-51310	Clip	2	B40001-
12		01010-81025	Bolt	1	B40001-
13		01643-31032	Washer	1	B40001-
14		02782-10210	Elbow	1	B40001-
15		07002-11423	O-ring	1	B40001-
16		02896-11008	O-ring	1	B40001-
17		23B-60-73940	Hose, Yellow	1	B40001-
18		04434-51310	Clip	3	B40001-
19		01010-81020	Bolt	1	B40001-
20		01643-31032	Washer	1	B40001-
21		23B-60-73950	Hose	1	B40001-
22		20U-62-41740	Tee	1	B40001-
23		07000-12011	O-ring	1	B40001-
24		02896-11008	O-ring	2	B40001-
25		207-62-82790	Elbow	1	B40001-
26		07000-12011	O-ring	1	B40001-
27		02896-11008	O-ring	2	B40001-
28		21W-62-43980	Elbow	2	B40001-
29		07000-12011	O-ring	2	B40001-
30		02896-11008	O-ring	2	B40001-
31		11Y-62-12140	Nipple	1	B40001-
32		07000-12011	O-ring	1	B40001-
33		02896-11008	O-ring	1	B40001-

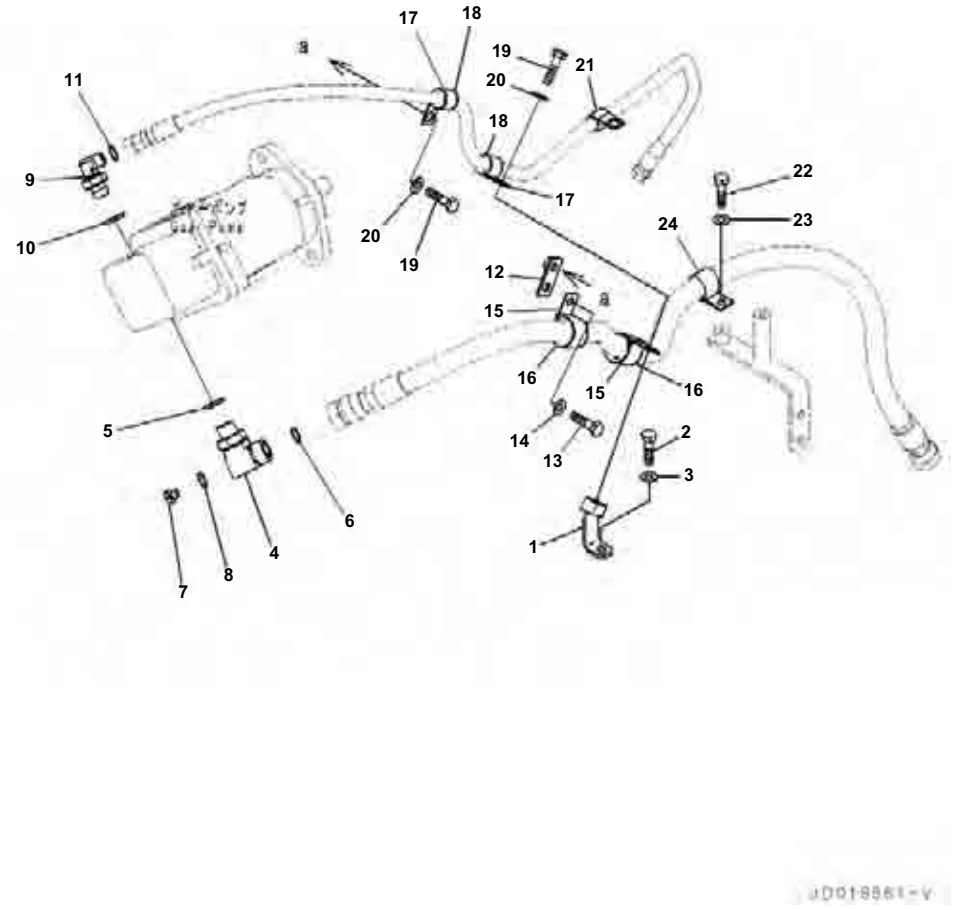

Hydraulic Piping, For Ripper Configuration, Differential Lock Type, Differential Lock Piping

Index	Code	Part Number	Description	Qty	Serial No.
1		23B-60-74420	Bracket	1	B40001-
2		01010-81020	Bolt	1	B40001-
3		01643-31032	Washer	1	B40001-
4		8260-62-1190	Elbow	1	B40001-
5		22W-62-13420	O-ring	1	B40001-
6		02896-11018	O-ring	1	B40001-
7		07040-11007	Plug	1	B40001-
8		07002-11023	O-ring	1	B40001-
9		56B-88-12310	Elbow	1	B40001-
10		07000-12018	O-ring	1	B40001-
11		02896-11009	O-ring	1	B40001-
12		426-01-11310	Bracket	1	B40001-
13		01010-81020	Bolt	1	B40001-
14		01643-31032	Washer	1	B40001-
15		04434-53411	Clip	2	B40001-
16		07095-20627	Cushion	2	B40001-
17		04434-52512	Clip	2	B40001-
18		07095-20318	Cushion	2	B40001-
19		01010-81020	Bolt	2	B40001-
20		01643-31032	Washer	2	B40001-
21		04434-51712	Clip	1	B40001-
22		01010-81020	Bolt	1	B40001-
23		01643-31032	Washer	1	B40001-
24		04434-52711	Clip	1	B40001-

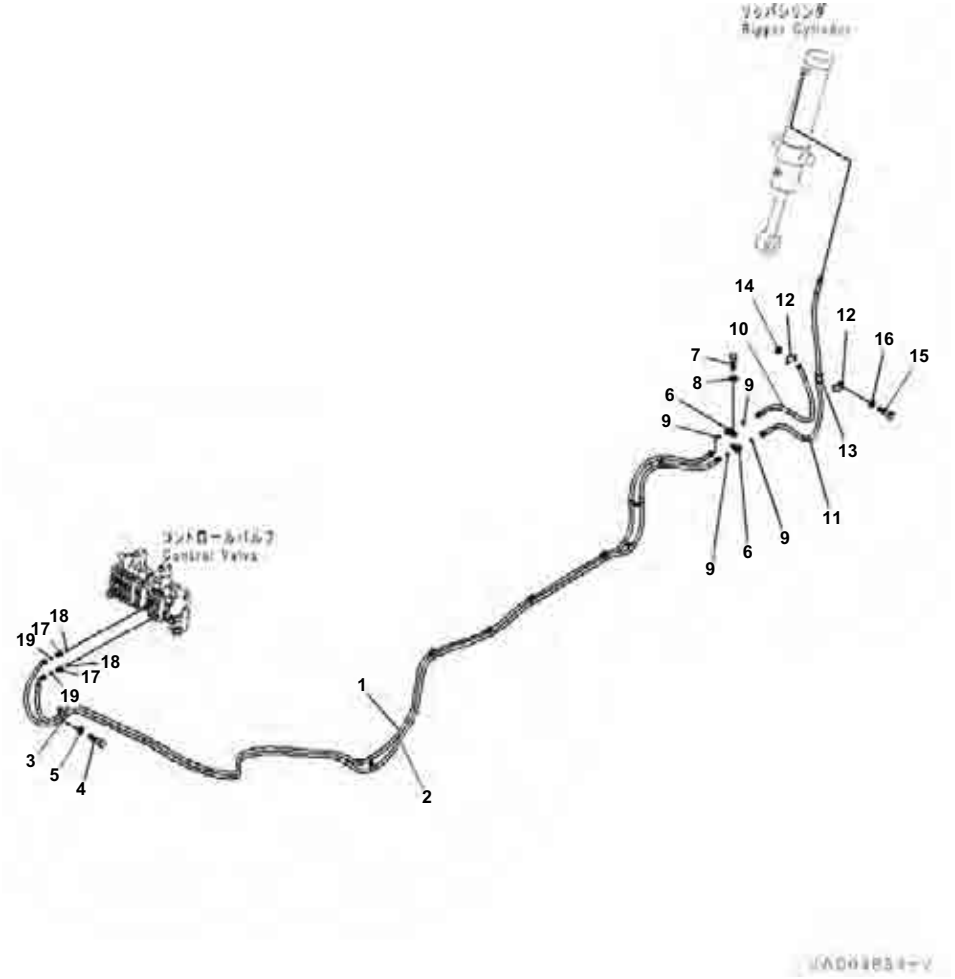

Hydraulic Piping, For Ripper Configuration, Differential Lock Type, Piping (2/2)

Index	Code	Part Number	Description	Qty	Serial No.
1		23B-60-73380	Hose, White	1	B40001-
2		23B-60-73391	Hose, Red	1	B40001-
3		04434-51712	Clip	22	B40001-
4		01010-81020	Bolt	12	B40001-
5		01643-31032	Washer	12	B40001-
6		8255-62-4240	Connector	2	B40001-
7		01010-81025	Bolt	1	B40001-
8		01643-31032	Washer	1	B40001-
9		02896-11009	O-ring	4	B40001-
10		23B-60-74520	Hose	1	B40001-
11		23B-60-74510	Hose	1	B40001-
12		22P-62-13510	Clamp	2	B40001-
13		07095-00317	Cushion	1	B40001-
14		01643-31232	Washer	1	B40001-
15		01010-81280	Bolt	1	B40001-
16		01643-31232	Washer	1	B40001-
17		02781-00313	Union	2	B40001-
18		07002-11823	O-ring	2	B40001-
19		02896-11009	O-ring	2	B40001-

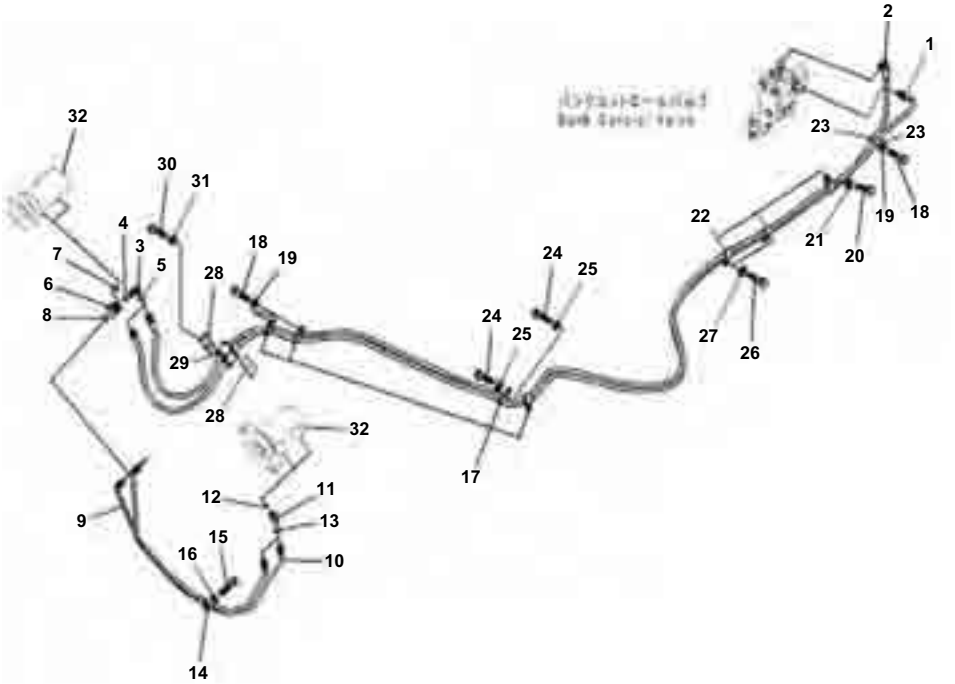

Front Hydraulic Piping, Without Scarifier, Front, 11-Shanks and Tooth, Frame Piping

Index	Code	Part Number	Description	Qty	Serial No.
1		23B-60-72560	Hose, White	1	B40001-
2		23B-60-72550	Hose, Red	1	B40001-
3		02782-10210	Elbow	2	B40001-
4		07002-11423	O-ring	2	B40001-
5		02896-11008	O-ring	2	B40001-
6		424-43-37510	Tee	2	B40001-
7		07002-11423	O-ring	2	B40001-
8		02896-11008	O-ring	2	B40001-
9		23B-60-72250	Tube	1	B40001-
10		23B-60-72240	Tube	1	B40001-
11		02783-10210	Elbow	2	B40001-
12		07002-11423	O-ring	2	B40001-
13		02896-11008	O-ring	2	B40001-
14		23B-60-34970	Clip	1	B40001-
15		01010-81020	Bolt	1	B40001-
16		01643-31032	Washer	1	B40001-
17		04435-51410	Clip	4	B40001-
18		01010-81020	Bolt	3	B40001-
19		01643-31032	Washer	3	B40001-
20		01010-81025	Bolt	1	B40001-
21		01643-31032	Washer	1	B40001-
22		04435-51410	Clip	3	B40001-
23		04434-51410	Clip	2	B40001-
24		01010-81020	Bolt	2	B40001-
25		01643-31032	Washer	2	B40001-
26		01010-81025	Bolt	2	B40001-
27		01643-31032	Washer	2	B40001-
28		22P-62-13540	Clamp	2	B40001-
29		07095-00314	Cushion	2	B40001-
30		01010-81260	Bolt	1	B40001-
31		01643-31232	Washer	1	B40001-
32		(23B-43-35270)	Case		

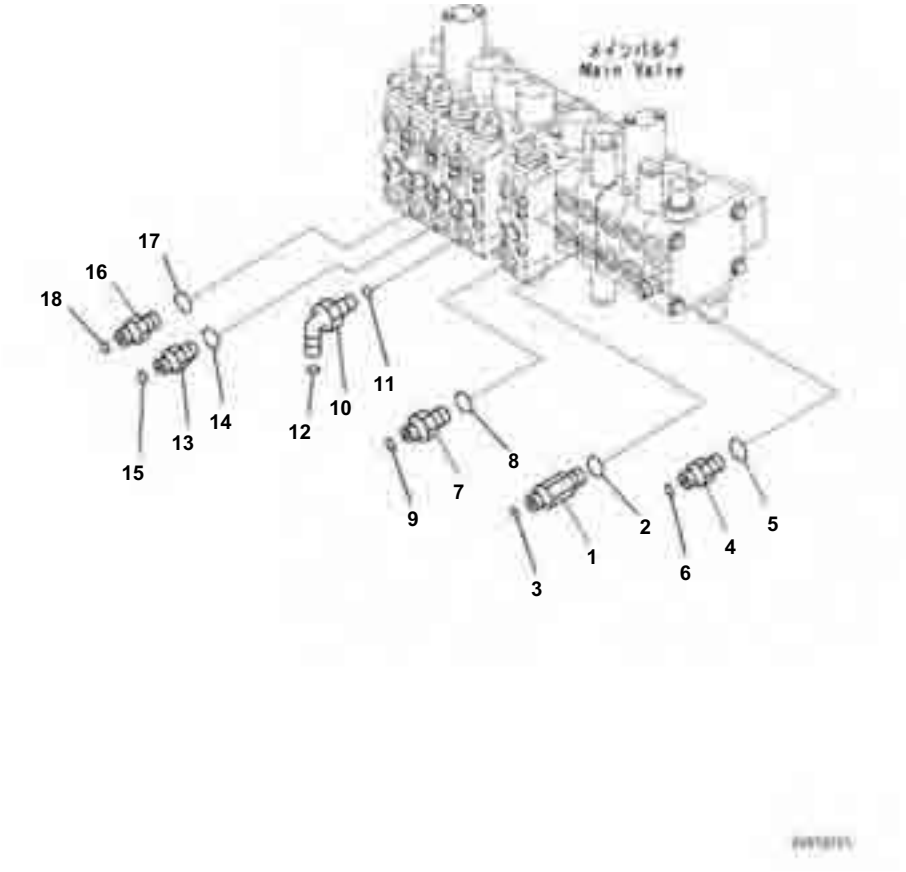

Front Hydraulic Piping, Without Scarifier, Front, 11-Shanks and Tooth, Control Valve Related Parts

Index	Code	Part Number	Description	Qty	Serial No.
1		23B-60-72280	Union	2	B40001-
2		07002-11823	O-ring	2	B40001-
3		02896-11009	O-ring	2	B40001-
4		23B-60-73980	Union	2	B40001-
5		07002-11823	O-ring	2	B40001-
6		02896-11012	O-ring	2	B40001-
7		02781-00313	Union	2	B40001-
8		07002-11823	O-ring	2	B40001-
9		02896-11009	O-ring	2	B40001-
10		21W-62-43390	Elbow	2	B40001-
11		07002-11823	O-ring	2	B40001-
12		02896-11009	O-ring	2	B40001-
13		02781-00313	Union	2	B40001-
14		07002-11823	O-ring	2	B40001-
15		02896-11009	O-ring	2	B40001-
16		02781-00313	Union	2	B40001-
17		07002-11823	O-ring	2	B40001-
18		02896-11009	O-ring	2	B40001-

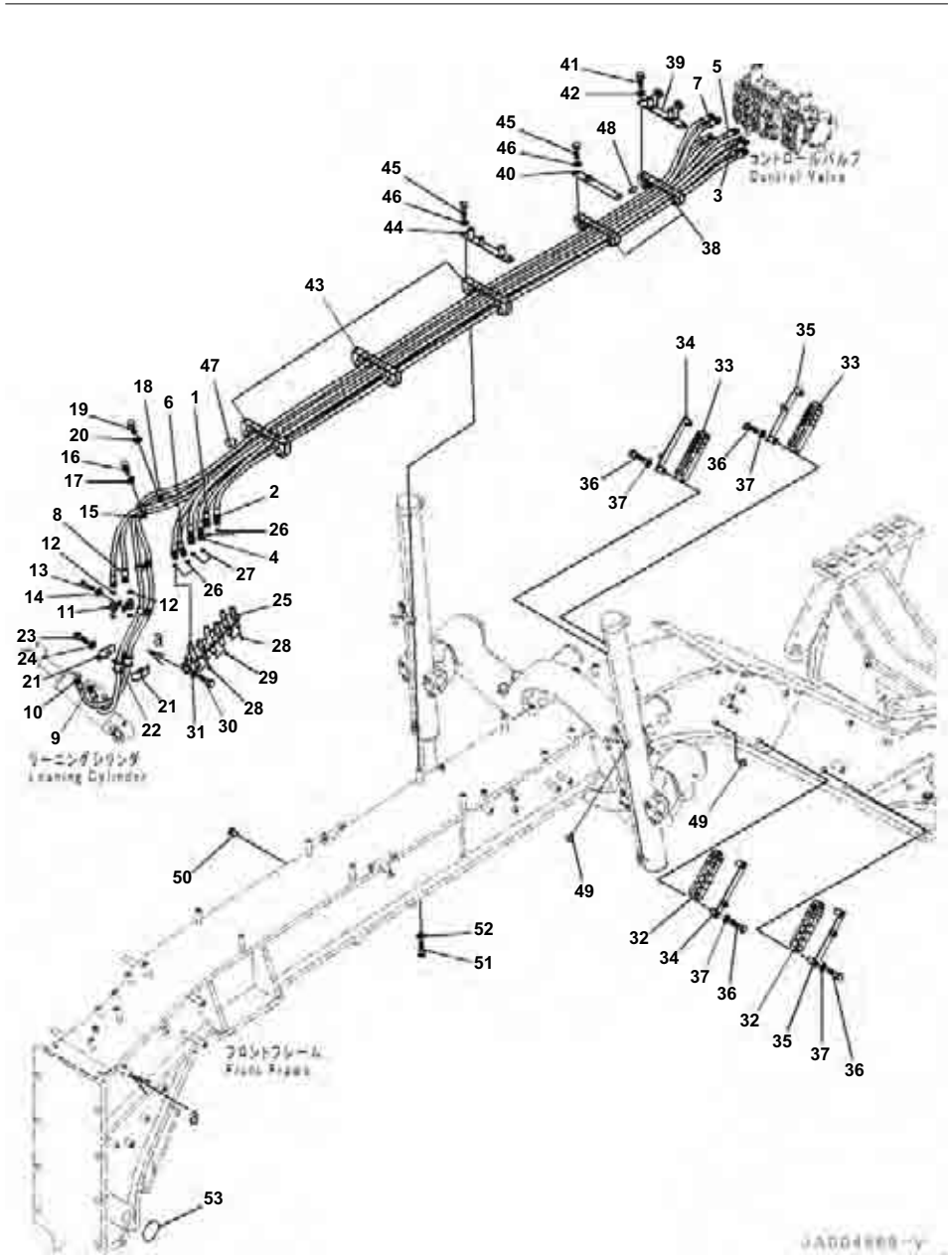

Front Hydraulic Piping, Without Scarifier, Front, 11-Shanks and Tooth, Front Wiring Harness

Index	Code	Part Number	Description	Qty	Serial No.
1		23B-60-72380	Hose, Orange	1	B40001-
2		23B-60-72390	Hose, Gray	1	B40001-
3		23B-60-72410	Hose, Blue	1	B40001-
4		23B-60-72420	Hose, Yellow	1	B40001-
5		23B-60-72630	Hose, Red	1	B40001-
6		23B-60-72640	Hose, White	1	B40001-
7		23B-60-72430	Hose, Green	1	B40001-
8		23B-60-72440	Hose, Brown	1	B40001-
9		23B-60-72450	Hose, Blue	1	B40001-
10		23B-60-72460	Hose, Yellow	1	B40001-
11		8255-62-4240	Connector	2	B40001-
12		02896-11009	O-ring	4	B40001-
13		01010-81235	Bolt	1	B40001-
14		01643-31232	Washer	1	B40001-
15		04434-51712	Clip	2	B40001-
16		01010-81020	Bolt	1	B40001-
17		01643-31032	Washer	1	B40001-
18		04434-51712	Clip	6	B40001-
19		01010-81020	Bolt	3	B40001-
20		01643-31032	Washer	3	B40001-
21		22P-62-13540	Clamp	2	B40001-
22		07095-00317	Cushion	2	B40001-
23		01010-81255	Bolt	1	B40001-
24		01643-31232	Washer	1	B40001-
25		23B-60-74800	Bracket	1	B40001-
26		02896-11009	O-ring	4	B40001-
27		02896-11012	O-ring	2	B40001-
28		02896-11009	O-ring	4	B40001-
29		02896-11012	O-ring	2	B40001-
30		01010-81020	Bolt	4	B40001-
31		01643-31032	Washer	4	B40001-
32		23B-60-72150	Cushion	2	B40001-
33		23B-60-72160	Cushion	2	B40001-
34		23B-60-72190	Plate	2	B40001-
35		23B-60-72290	Plate	2	B40001-
36		01010-81050	Bolt	8	B40001-
37		01643-31032	Washer	8	B40001-
38		23B-60-72170	Cushion	2	B40001-
39		23B-60-72210	Bracket	1	B40001-
40		23B-60-72220	Plate	1	B40001-
41		01010-81020	Bolt	4	B40001-
42		01643-31032	Washer	4	B40001-
43		23B-60-72180	Cushion	3	B40001-
44		23B-60-72230	Plate	3	B40001-
45		01010-81020	Bolt	6	B40001-
46		01643-31032	Washer	6	B40001-

GD655-5 S/N B40001-UP

Front Hydraulic Piping, Without Scarifier, Front, 11-Shanks and Tooth, Front Wiring Harness

Index	Code	Part Number	Description	Qty	Serial No.
47		22B-958-6890	Plug	12	B40001-
48		23B-60-74470	Plug	10	B40001-
49		416-54-34230	Plug	15	B40001-
50		22L-46-12150	Cap	1	B40001-
51		01010-80812	Bolt	2	B40001-
52		01643-30823	Washer	2	B40001-
53		23B-46-71410	Plate	2	B40001-

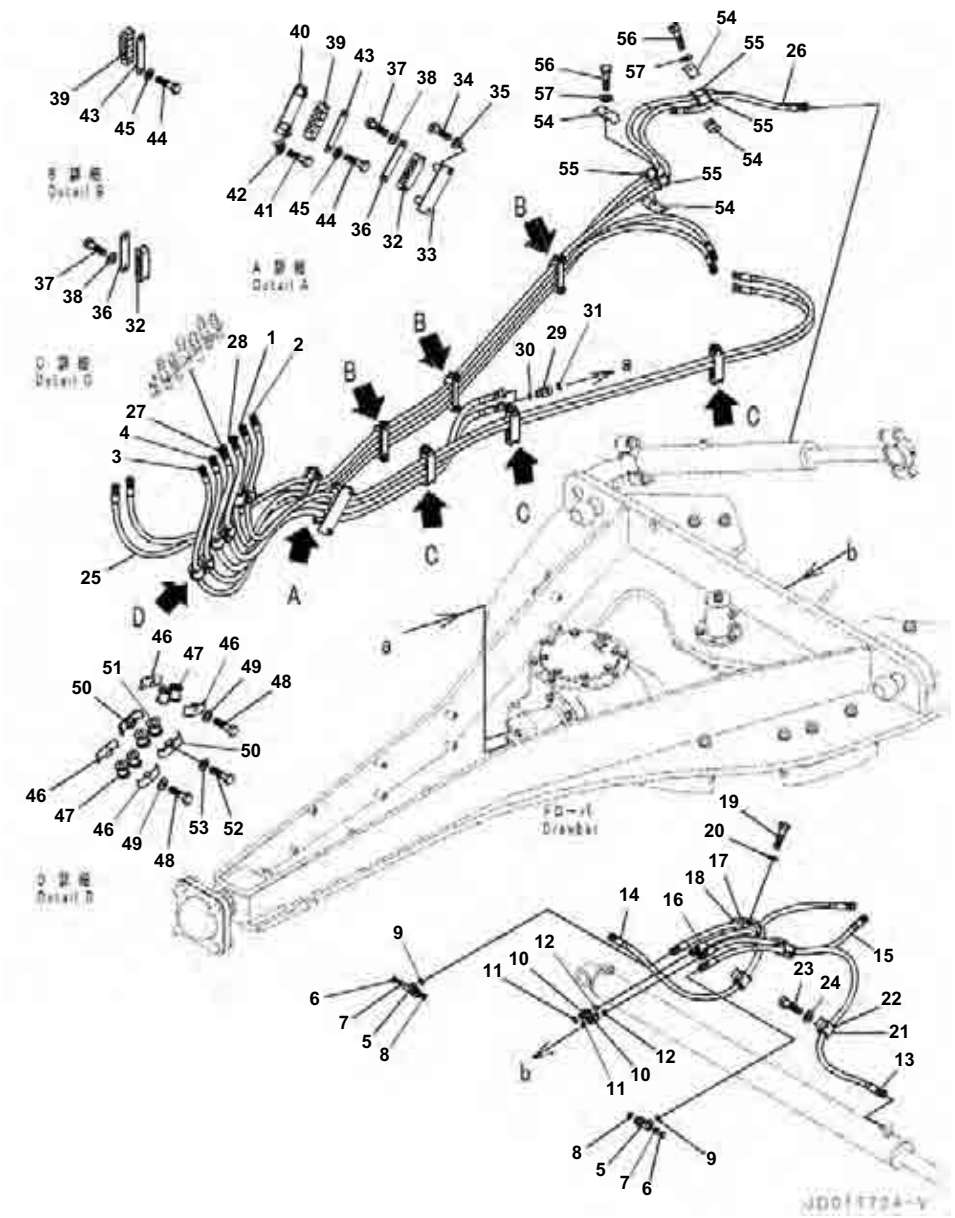

Front Hydraulic Piping, Without Scarifier, Front, 11-Shanks and Tooth, Drawbar Piping

Index	Code	Part Number	Description	Qty	Serial No.
1		23B-60-72470	Hose, Orange	1	B40001-
2		23B-60-72480	Hose, Gray	1	B40001-
3		23B-60-72650	Hose, Red	1	B40001-
4		23B-60-72660	Hose, White	1	B40001-
5		02782-50315	Elbow	2	B40001-
6		07040-11007	Plug	2	B40001-
7		07002-11023	O-ring	2	B40001-
8		07002-12034	O-ring	2	B40001-
9		02896-11009	O-ring	2	B40001-
10		02781-00315	Union	2	B40001-
11		07002-12034	O-ring	2	B40001-
12		02896-11009	O-ring	2	B40001-
13		23B-60-72360	Hose, Orange	1	B40001-
14		23B-60-72370	Hose, Gray	1	B40001-
15		23B-60-72980	Hose, Red	1	B40001-
16		23B-60-72970	Hose, White	1	B40001-
17		22P-62-13540	Clamp	4	B40001-
18		07095-00317	Cushion	4	B40001-
19		01010-81260	Bolt	2	B40001-
20		01643-31232	Washer	2	B40001-
21		22P-62-13510	Clamp	4	B40001-
22		07095-00317	Cushion	2	B40001-
23		01010-81260	Bolt	2	B40001-
24		01643-31232	Washer	2	B40001-
25		23B-60-72530	Hose, Green	1	B40001-
26		23B-60-72540	Hose, Brown	1	B40001-
27		23B-60-72510	Hose, Bule	1	B40001-
28		23B-60-72520	Hose, Yellow	1	B40001-
29		23B-60-41260	Union	2	B40001-
30		02896-11012	O-ring	2	B40001-
31		418-62-11620	O-ring	2	B40001-
32		23C-60-52451	Cushion	4	B40001-
33		23B-60-72120	Plate	1	B40001-
34		01010-81020	Bolt	2	B40001-
35		01643-31032	Washer	2	B40001-
36		23B-60-72930	Plate	4	B40001-
37		01010-81025	Bolt	8	B40001-
38		01643-31032	Washer	8	B40001-
39		23C-60-52461	Cushion	4	B40001-
40		23B-60-72130	Plate	1	B40001-
41		01010-81020	Bolt	2	B40001-
42		01643-31032	Washer	2	B40001-
43		23B-60-72930	Plate	4	B40001-
44		01010-81025	Bolt	8	B40001-
45		01643-31032	Washer	8	B40001-
46		22P-62-13540	Clamp	4	B40001-

Reference:H5210-001004 Page:H009004

GD655-5 S/N B40001-UP

Front Hydraulic Piping, Without Scarifier, Front, 11-Shanks and Tooth, Drawbar Piping

Index	Code	Part Number	Description	Qty	Serial No.
47		07095-00317	Cushion	4	B40001-
48		01010-81260	Bolt	2	B40001-
49		01643-31232	Washer	2	B40001-
50		07094-30417	Clamp	2	B40001-
51		07095-00420	Cushion	2	B40001-
52		01010-81260	Bolt	1	B40001-
53		01643-31232	Washer	1	B40001-
54		22P-62-13540	Clamp	4	B40001-
55		07095-00317	Cushion	4	B40001-
56		01010-81255	Bolt	2	B40001-
57		01643-31232	Washer	2	B40001-

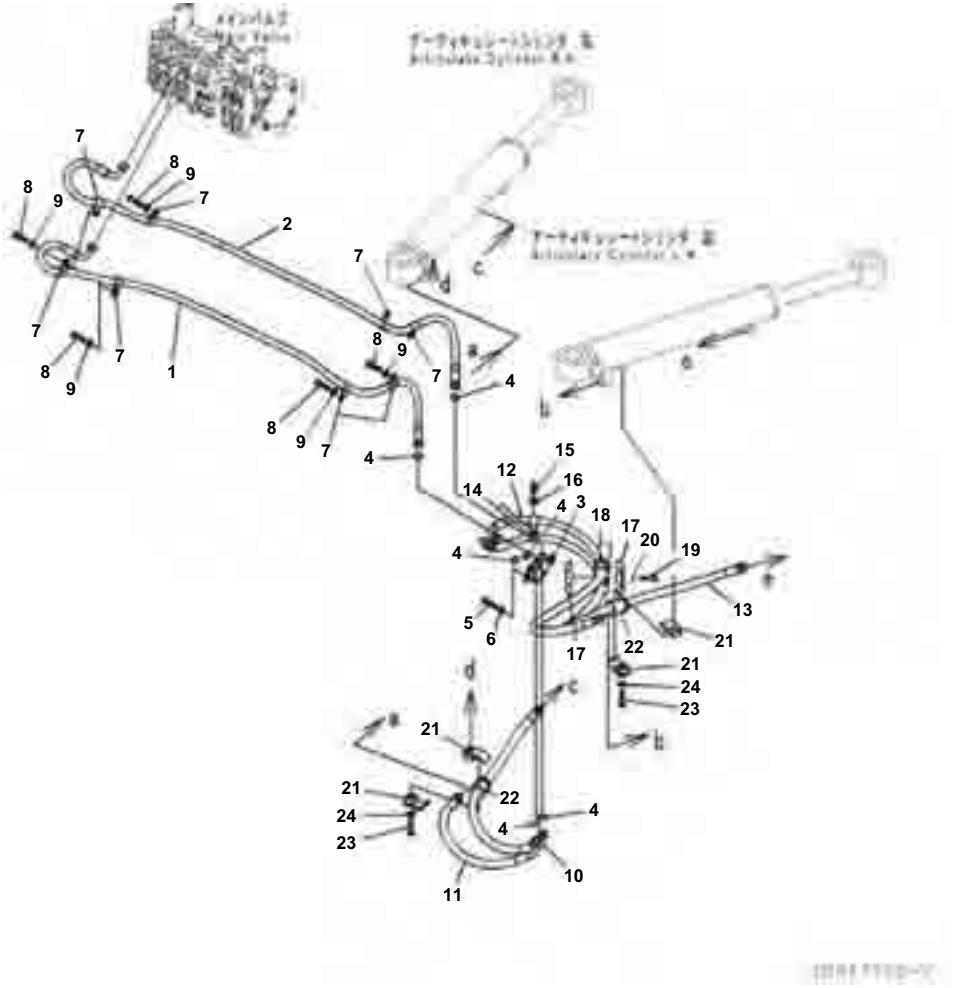

Front Hydraulic Piping, Without Scarifier, Front, 11-Shanks and Tooth, Articulate Cylinder Piping

Index	Code	Part Number	Description	Qty	Serial No.
1		23B-60-72580	Hose,LHS	1	B40001-
2		23B-60-72570	Hose,RHS	1	B40001-
3		423-43-38120	Tee	2	B40001-
4		02896-11009	O-ring	6	B40001-
5		01010-81020	Bolt	2	B40001-
6		01643-31032	Washer	2	B40001-
7		04434-51712	Clip	8	B40001-
8		01010-81020	Bolt	5	B40001-
9		01643-31032	Washer	5	B40001-
10		23B-60-72590	Hose,RHS	1	B40001-
11		23B-60-72260	Hose,LHS	1	B40001-
12		23B-60-72610	Hose,LHS	1	B40001-
13		23B-60-72621	Hose	1	B40001-
14		04434-51712	Clip	2	B40001-
15		01010-81025	Bolt	1	B40001-
16		01643-31032	Washer	1	B40001-
17		22P-62-13540	Clamp	2	B40001-
18		07095-00317	Cushion	2	B40001-
19		01010-81260	Bolt	1	B40001-
20		01643-31232	Washer	1	B40001-
21		418-03-43880	Clamp	4	B40001-
22		07095-00421	Cushion	2	B40001-
23		01010-81260	Bolt	2	B40001-
24		01643-31232	Washer	2	B40001-

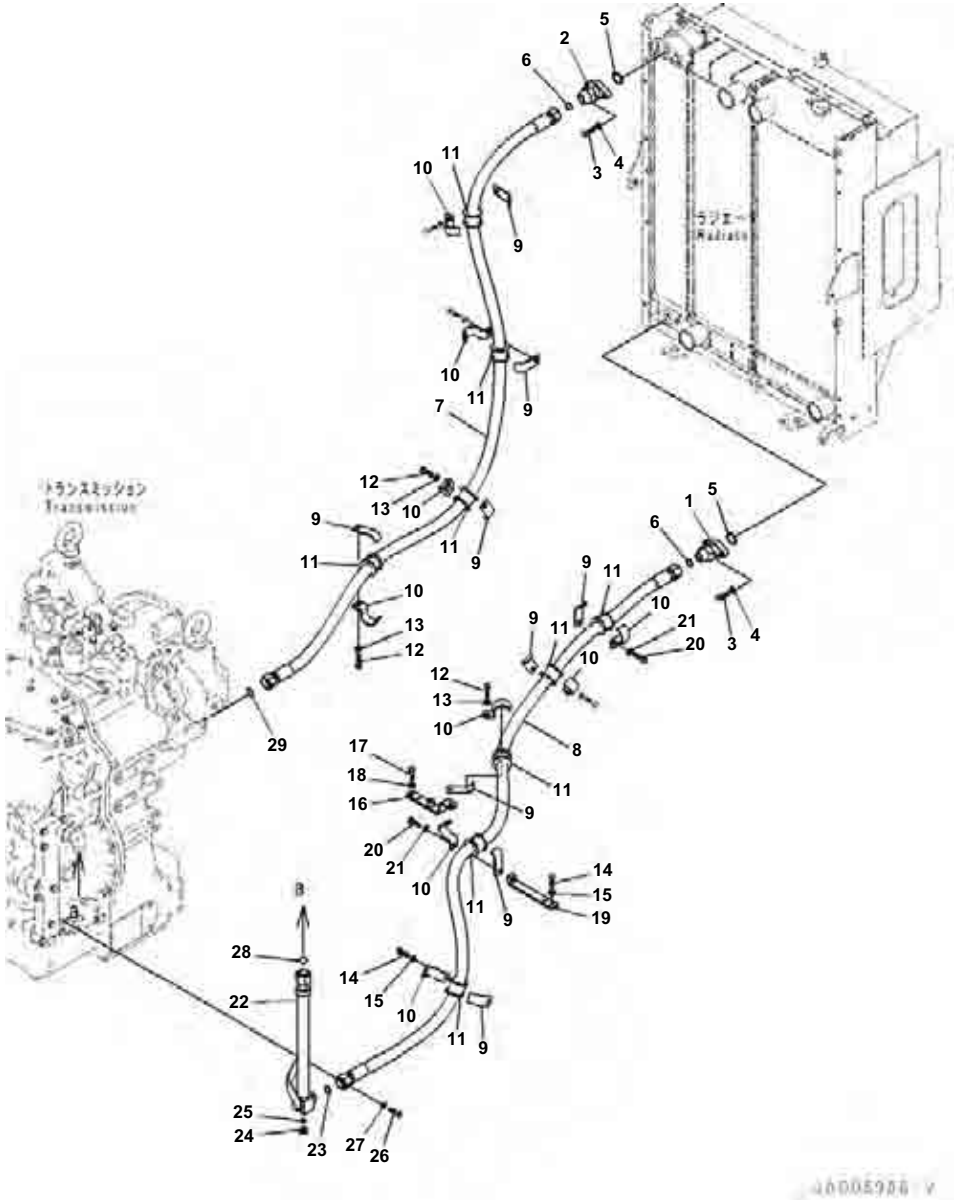

Transmission Cooling Piping

Index	Code	Part Number	Description	Qty	Serial No.
1		23B-16-61111	Joint	1	B40001-
2		23B-16-61240	Joint	1	B40001-
3		01010-81040	Bolt	4	B40001-
4		01643-31032	Washer	4	B40001-
5		07000-B3035	O-ring	2	B40001-
6		23B-60-33240	O-ring	2	B40001-
7		23B-60-74610	Hose	1	B40001-
8		23B-60-74620	Hose	1	B40001-
9		418-62-32550	Clamp	9	B40001-
10		418-62-32560	Clamp	9	B40001-
11		21T-62-76840	Cushion	9	B40001-
12		01010-81030	Bolt	3	B40001-
13		01643-31032	Washer	3	B40001-
14		01010-81025	Bolt	6	B40001-
15		01643-31032	Washer	6	B40001-
16		23B-60-73180	Bracket	1	B40001-
17		01010-81025	Bolt	2	B40001-
18		01643-31032	Washer	2	B40001-
19		23B-60-74650	Bracket	1	B40001-
20		01010-81025	Bolt	2	B40001-
21		01643-31032	Washer	2	B40001-
22		23B-60-73170	Tube	1	B40001-
23		23B-60-33240	O-ring	1	B40001-
24		07040-11007	Plug	1	B40001-
25		07002-11023	O-ring	1	B40001-
26		01010-81016	Bolt	1	B40001-
27		01643-31032	Washer	1	B40001-
28		23B-60-33240	O-ring	1	B40001-
29		23B-60-33240	O-ring	1	B40001-

FRAME AND ITS RELATED PARTS

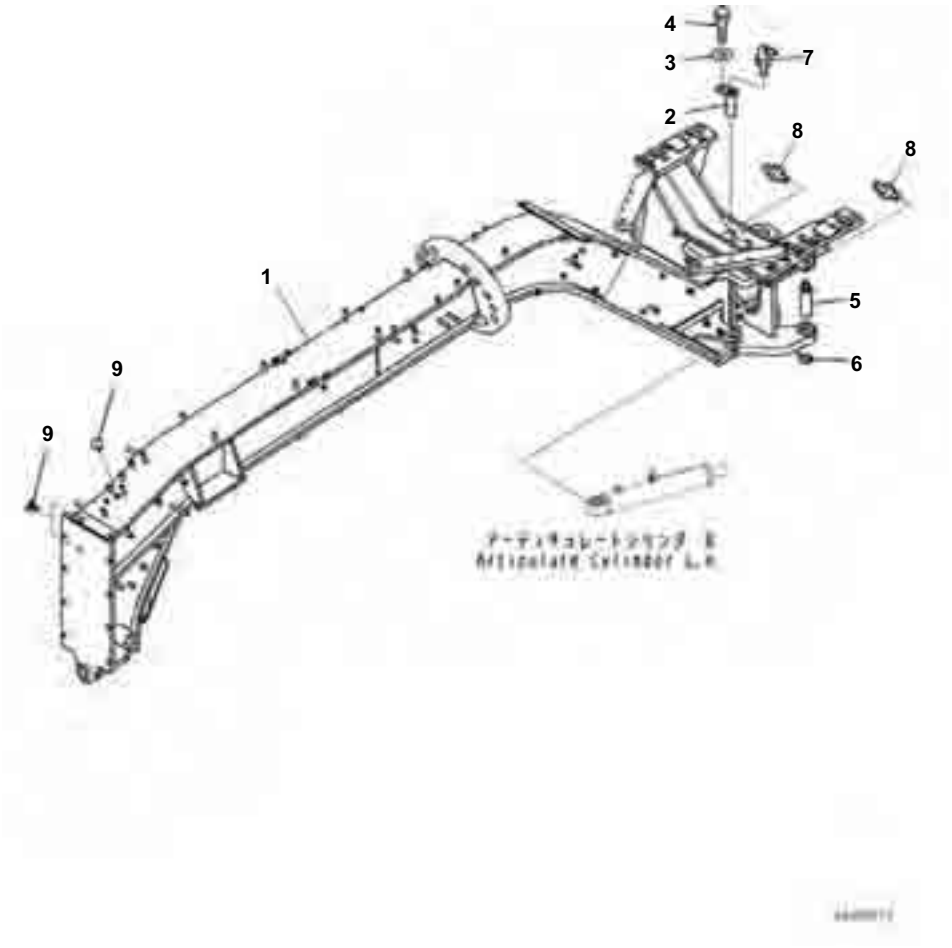

Front Frame

Index	Code	Part Number	Description	Qty	Serial No.
1		23B-46-B3110	Frame Assembly	1	B40001-
2		23B-46-31361	Pin	2	B40001-
3		175-54-34170	Washer	2	B40001-
4		01010-81220	Bolt	2	B40001-
5		23C-46-52371	Pin	1	B40001-
6		569-74-61470	Pin, Linch	1	B40001-
7		07020-00675	Fitting, Grease	2	B40001-
8		07020-00000	Fitting, Grease	2	B40001-
9		416-54-34230	Plug	3	B40001-

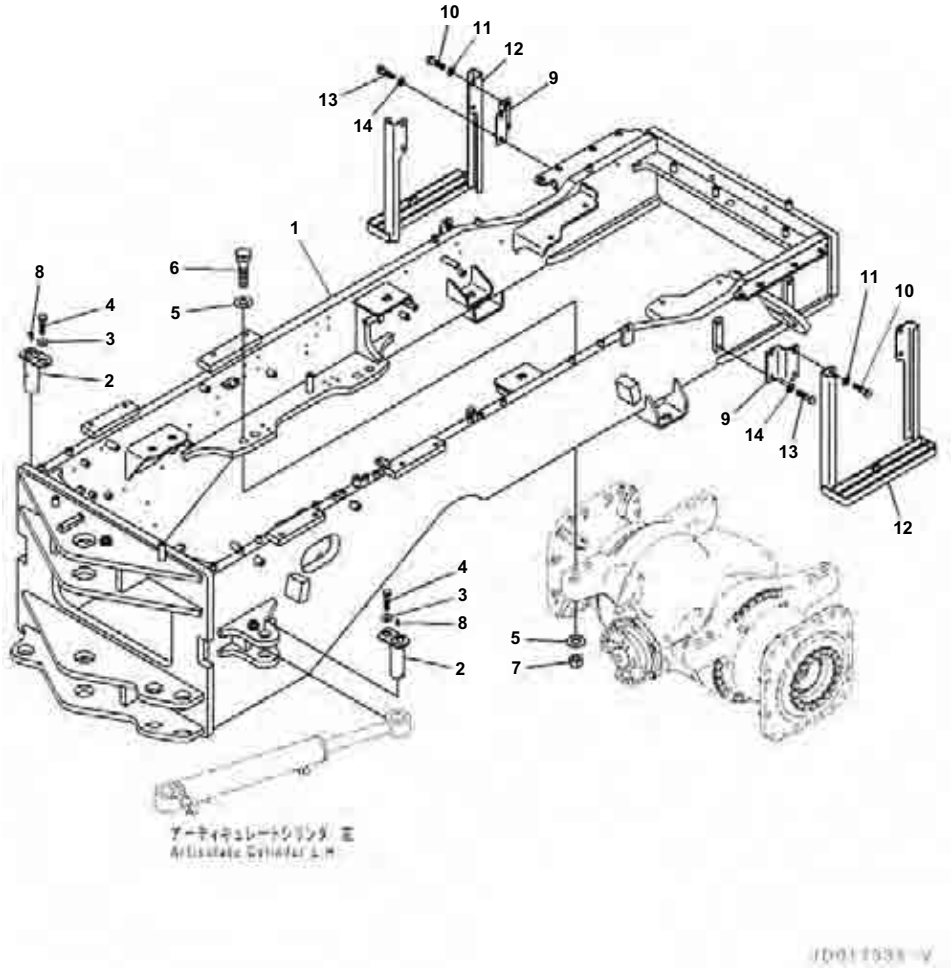

Rear Frame, Without Tire Inflation Kit

Index	Code	Part Number	Description	Qty	Serial No.
1		23B-46-72102	Frame	1	B40001-
2		23B-46-31381	Pin	2	B40001-
3		175-54-34170	Washer	2	B40001-
4		01010-81220	Bolt	2	B40001-
5		01643-32780	Washer	16	B40001-
6		01011-62770	Bolt	8	B40001-
7		01580-02722	Nut	8	B40001-
8		07020-00675	Fitting, Grease	2	B40001-
9		23B-46-72510	Bracket	4	B40001-
10		01010-81225	Bolt	8	B40001-
11		01643-31232	Washer	8	B40001-
12		424-46-42121	Step	2	B40001-
13		01010-81225	Bolt	8	B40001-
14		01643-31232	Washer	8	B40001-

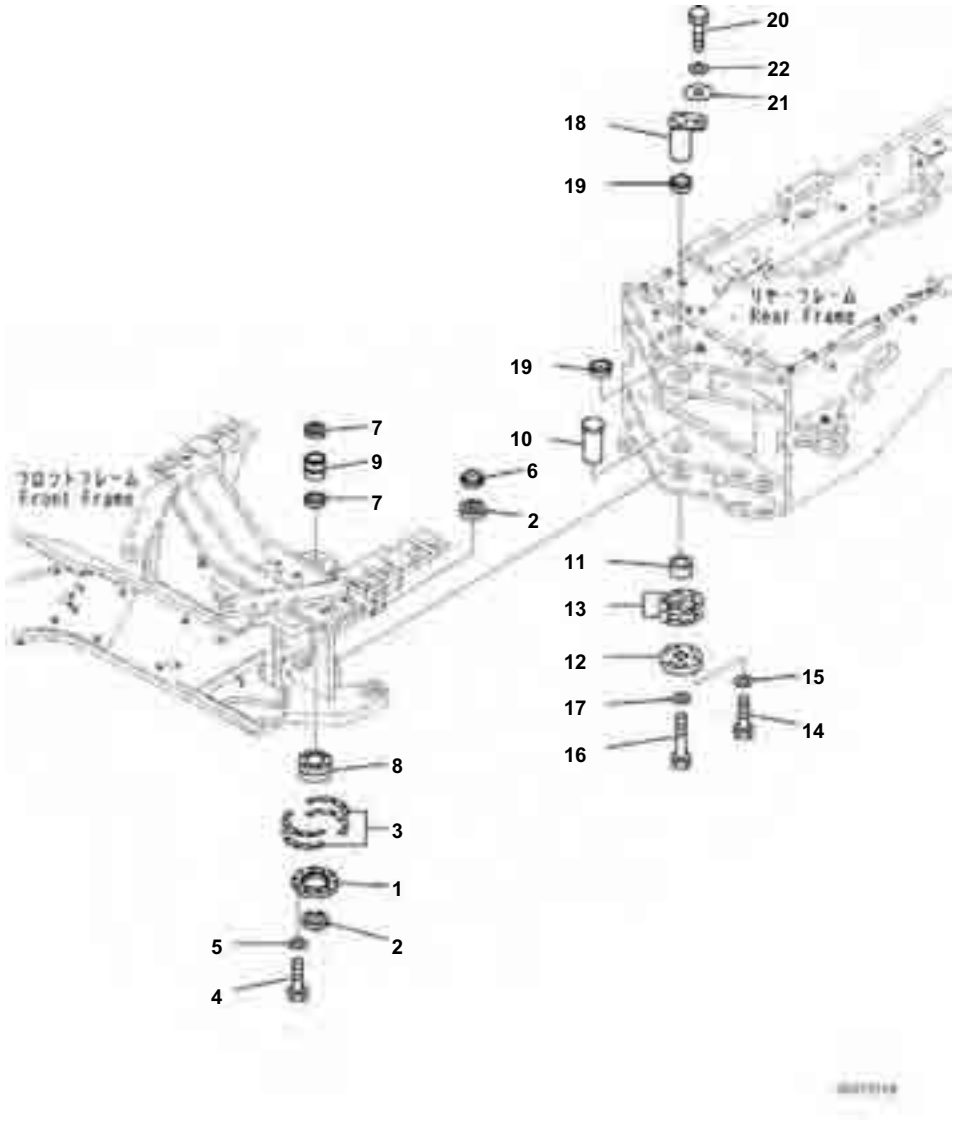

Hinge Pin

Index	Code	Part Number	Description	Qty	Serial No.
1		421-46-11710	Retainer	1	B40001-
2		421-09-11310	Seal, Dust	2	B40001-
3		421-46-11371	Shim, T=0.1mm	20	B40001-
		421-46-11381	Shim, T=0.5mm	20	B40001-
4		01010-81240	Bolt	10	B40001-
5		01643-31232	Washer	10	B40001-
6		424-46-11171	Spacer	1	B40001-
7		419-09-11110	Seal, Dust	2	B40001-
8		421-46-11361	Bearing	1	B40001-
9		419-70-11820	Bushing	1	B40001-
10		424-46-11182	Pin	1	B40001-
11		424-46-11160	Spacer	1	B40001-
12		23B-46-33110	Cover	1	B40001-
13		23B-46-33120	Shim, T=0.2mm	10	B40001-
		23B-46-33130	Shim, T=0.5mm	8	B40001-
		23B-46-33160	Shim, T=1.0mm	4	B40001-
14		01010-81250	Bolt	6	B40001-
15		01643-31232	Washer	6	B40001-
16		01010-81695	Bolt	4	B40001-
17		01643-31645	Washer	4	B40001-
18		23B-46-33150	Shaft	1	B40001-
19		23B-46-33140	Bushing	2	B40001-
20		01010-81625	Bolt	1	B40001-
21		421-70-11280	Washer	1	B40001-
22		01643-31645	Washer	1	B40001-

OPERATOR'S COMPARTMENT AND CONTROL SYSTEM

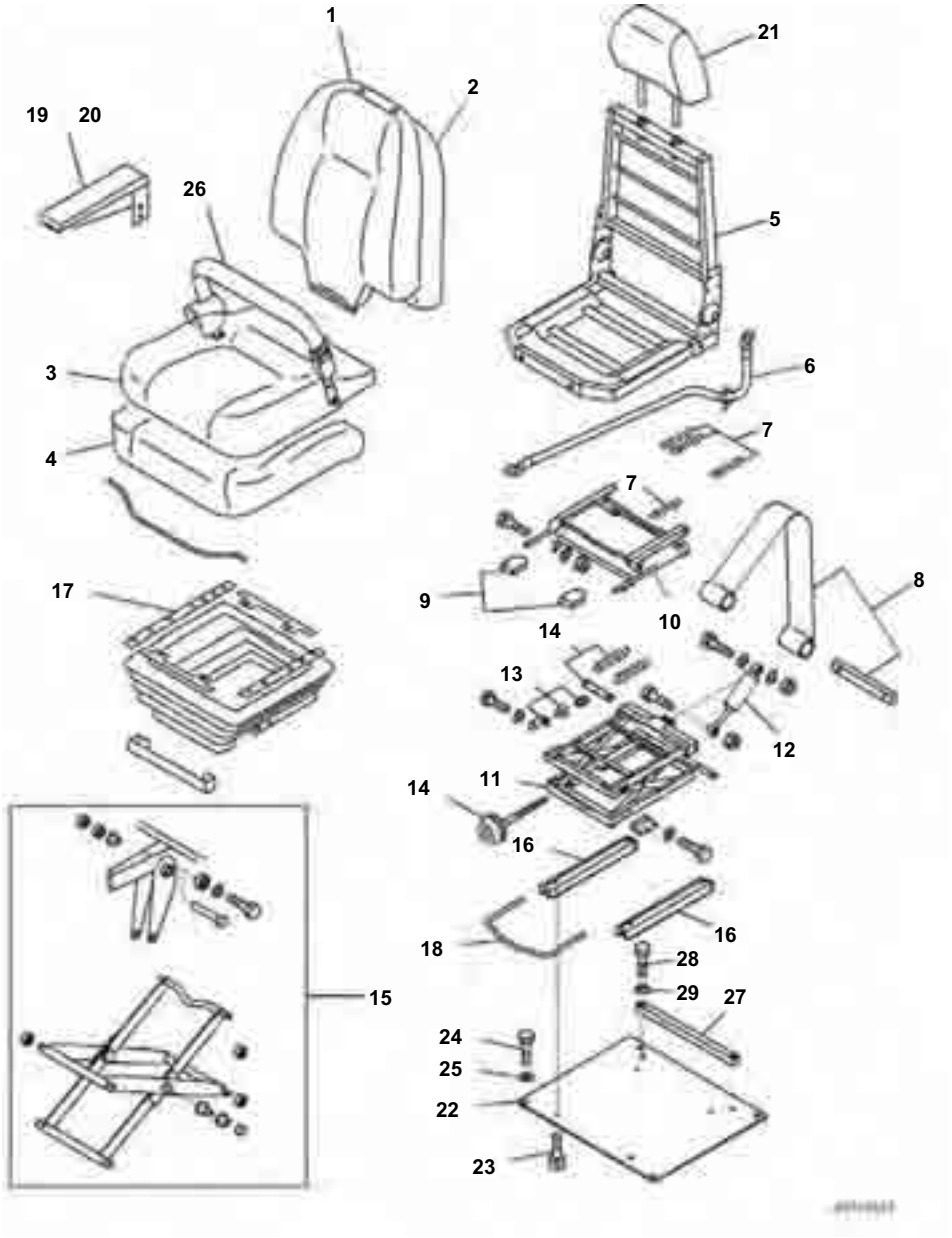

Index	Code	Part Number	Description	Qty	Serial No.
		23B-57-31301	Operator's Seat Assembly	1	B40001-
		AS182321	· Upper Assembly	1	B40001-
1		AS182322	· · Cover Assembly	1	B40001-
2		AS160167	· · Back Seat Foam Kit	1	B40001-
3		AS182323	· · Seat Cover Kit	1	B40001-
4		AS157154	· · Seat Foam Kit	1	B40001-
5		AS182324	· · Frame Kit	1	B40001-
6		AS162032	· Cable Kit	1	B40001-
7		AS156713	· Spring Kit	1	B40001-
8		AS172287	· Plate	1	B40001-
9		AS162036	· Handle Kit	1	B40001-
10		AS164959	· Lifter Assembly	1	B40001-
11		AS182325	· Suspension Assembly	1	B40001-
12		AS156718	· · Damper Assembly	1	B40001-
13		AS156717	· · Up Stop And Bump Stop Kit	1	B40001-
14		AS156737	· · Weight Adjuster Kit	1	B40001-
15		AS156738	· · Bearing Kit	1	B40001-
16		AS172639	· Adjuster Kit	1	B40001-
17		AS162047	· Cover Kit	1	B40001-
18		AS168853	· Handle Kit	1	B40001-
19		AS174752	· Arm Rest	1	B40001-
20		AS174753	· Arm Rest	1	B40001-
21		AS182326	· Rest	1	B40001-
22		23B-57-71130	Bracket	1	B40001-
23		01252-70820	Bolt	4	B40001-
24		01010-81225	Bolt	4	B40001-
25		01643-31232	Washer	4	B40001-
26		09409-70000	Seat Belt Kit, Lap	1	B40001-
27		23B-57-31220	Plate, L=366mm	1	B40001-
28		01010-81240	Bolt	2	B40001-
29		01643-31232	Washer	2	B40001-

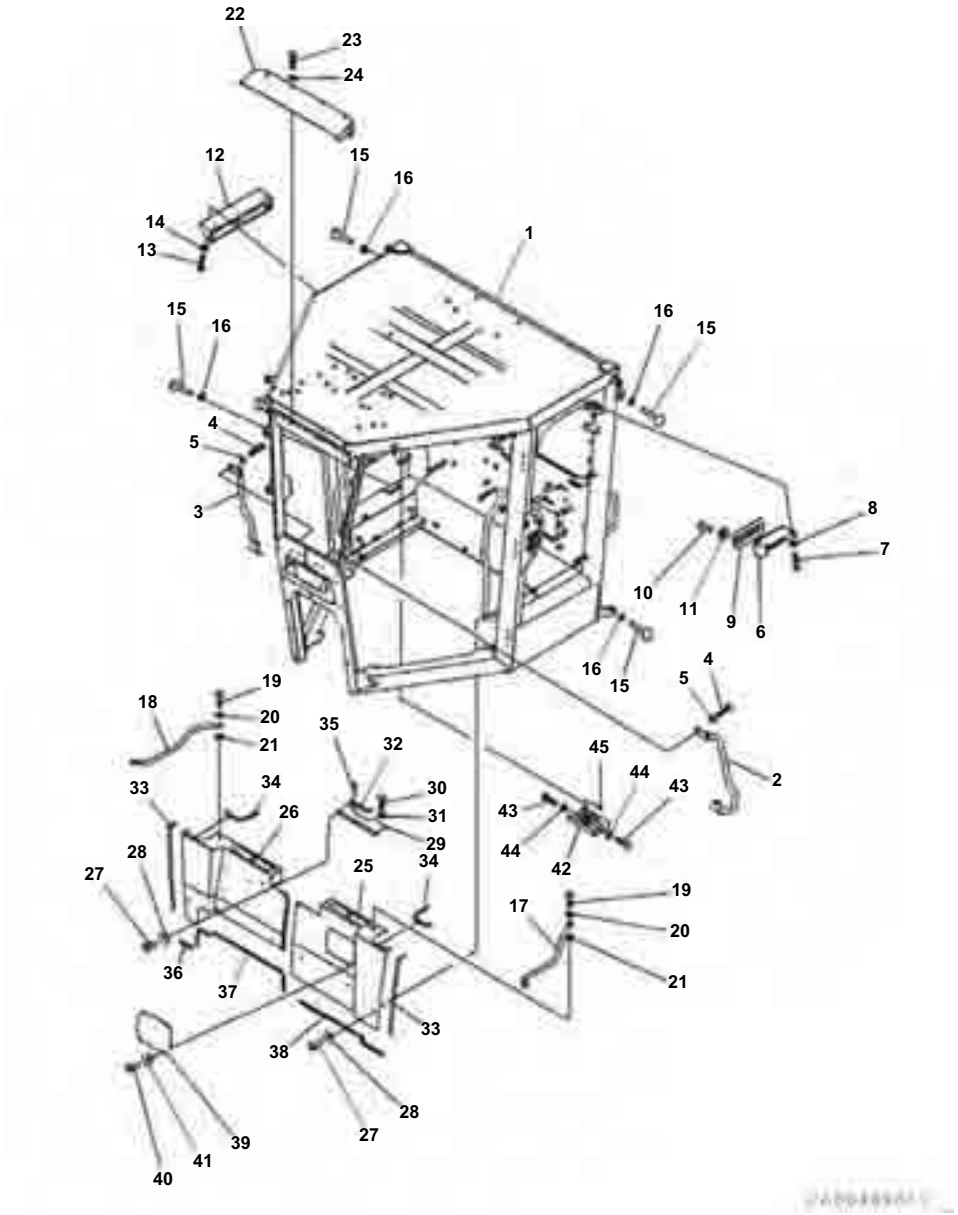

Index	Code	Part Number	Description	Qty	Serial No.
1		23A-952-8111	Cab	1	B40001-
2		23A-952-7850	Handrail	1	B40001-
3		23A-952-7860	Handrail	1	B40001-
4		01010-D1025	Bolt	8	B40001-
5		01643-71032	Washer	8	B40001-
6		23A-952-7940	Bracket	1	B40001-
7		01010-80612	Bolt	4	B40001-
8		01643-30623	Washer	4	B40001-
9		23B-952-7130	Plate	1	B40001-
10		01225-70620	Screw, Philips Head	4	B40001-
11		23S-55-51970	Washer	4	B40001-
12		23A-952-7910	Bracket	1	B40001-
13		01010-80612	Bolt	6	B40001-
14		01643-30623	Washer	6	B40001-
15		20T-54-75290	Stopper	4	B40001-
16		20T-54-74550	Nut	4	B40001-
17		23A-952-7660	Handrail	1	B40001-
18		23A-952-7670	Handrail	1	B40001-
19		01010-D1030	Bolt	4	B40001-
20		01643-71032	Washer	4	B40001-
21		01643-71032	Washer	2	B40001-
22		23A-952-7960	Cover	1	B40001-
23		01010-D1020	Bolt	6	B40001-
24		01643-71032	Washer	6	B40001-
25		23A-952-7890	Cover	1	B40001-
26		23A-952-7990	Cover	1	B40001-
27		01225-70616	Screw, Philips Head	14	B40001-
28		23S-55-51970	Washer	14	B40001-
29		23A-952-7650	Cover	1	B40001-
30		01010-80620	Bolt	2	B40001-
31		01643-30623	Washer	2	B40001-
32		423-944-4391	Finisher, L=170mm	1	B40001-
33		423-54-32370	Finisher	2	B40001-
34		423-54-42680	Finisher	2	B40001-
35		423-06-42640	Finisher	1	B40001-
36		423-944-4720	Finisher	1	B40001-
37		23B-952-7630	Finisher	1	B40001-
38		23B-952-7640	Finisher	1	B40001-
39		23A-952-8520	Cover	1	B40001-
40		01225-70616	Screw, Philips Head	4	B40001-
41		23S-55-51970	Washer	4	B40001-
42		23B-952-7530	Bracket	1	B40001-
43		01010-80612	Bolt	2	B40001-
44		01643-30623	Washer	2	B40001-
45		01580-10605	Nut	1	B40001-

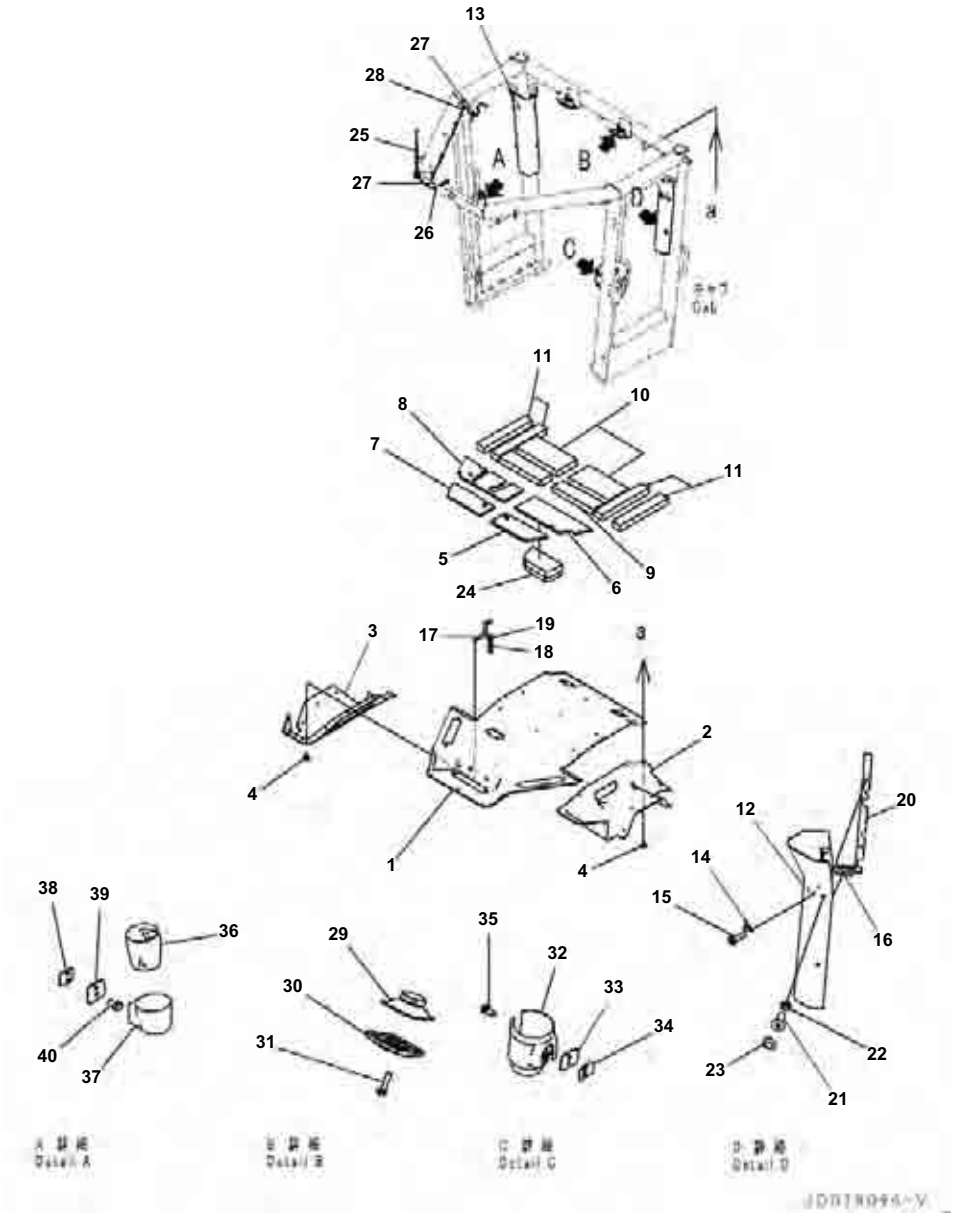

ROPS Cab, With Low Height, KOMTRAX, Inner Parts

Index	Code	Part Number	Description	Qty	Serial No.
1		23A-952-7170	Pad	1	B40001-
2		23A-952-7810	Pad	1	B40001-
3		23A-952-7820	Pad	1	B40001-
4		23A-952-7290	Button	39	B40001-
5		23A-952-7530	Sheet, Bonded	1	B40001-
6		23A-952-7870	Sheet, Bonded	1	B40001-
7		23A-952-7680	Sheet, Bonded	1	B40001-
8		23A-952-7880	Sheet, Bonded	1	B40001-
9		23A-952-7540	Sheet, Bonded	2	B40001-
10		23A-952-7560	Sheet, Bonded	2	B40001-
11		23A-952-7550	Sheet, Bonded	4	B40001-
12		23B-952-7831	Cover	1	B40001-
13		23B-952-7560	Cover	1	B40001-
14		205-54-51250	Hanger	1	B40001-
15		01225-70412	Screw	2	B40001-
16		423-54-32340	Finisher	2	B40001-
17		23A-952-8690	Plate	2	B40001-
18		01010-81020	Bolt	4	B40001-
19		01643-31032	Washer	4	B40001-
20		23A-952-8560	Plate	4	B40001-
21		01240-00616	Screw	8	B40001-
22		423-925-5851	Washer	8	B40001-
23		423-925-5860	Cap	8	B40001-
24		23A-952-8620	Sheet, Bonded	1	B40001-
25		198-Z11-4610	Rubber Antenna	1	B40001-
26		08037-10610	Grommet	2	B40001-
27		08034-40521	Band	3	B40001-
28		08059-00310	Clip	3	B40001-
29		20Y-06-42180	Speaker	2	B40001-
30		20Y-53-12221	Cover	2	B40001-
31		01023-20416	Screw	8	B40001-
32		208-53-12991	Holder	1	B40001-
33		421-926-4780	Plate	1	B40001-
34		426-925-3890	Plate	1	B40001-
35		01023-10614	Screw	2	B40001-
36		20Y-43-41491	Ashtray	1	B40001-
37		425-926-3751	Holder	1	B40001-
38		426-925-3890	Plate	1	B40001-
39		421-926-4780	Plate	1	B40001-
40		01023-10614	Screw	2	B40001-

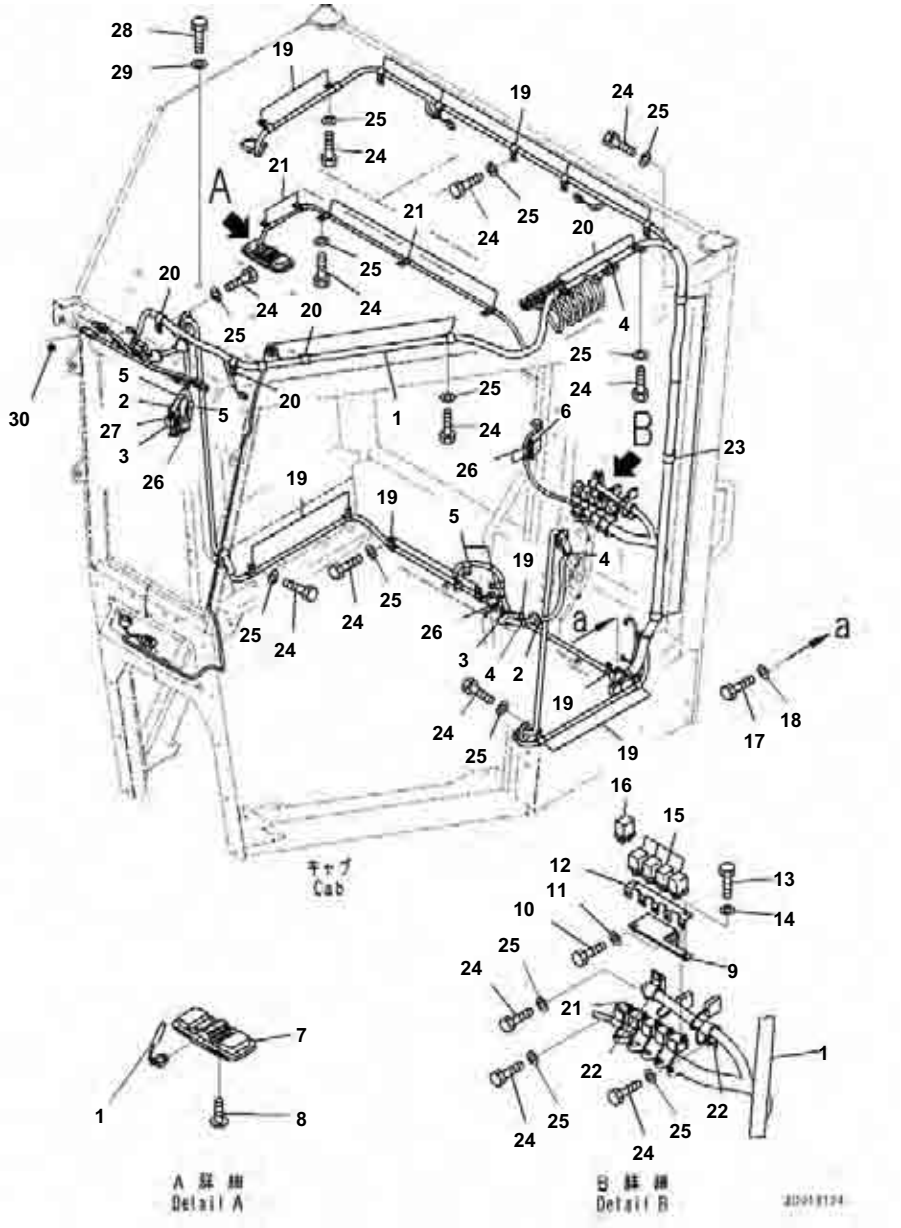

Index	Code	Part Number	Description	Qty	Serial No.
1		23B-952-7111	Wiring Harness	1	B40001-
2		207-54-16860	Grommet	2	B40001-
3		14X-Y79-3341	Grommet	2	B40001-
4		08034-20414	Band	6	B40001-
5		04434-51012	Clip	4	B40001-
6		20U-54-46520	Hook, Sticker Type	2	B40001-
7		421-06-26210	Room Lamp	1	B40001-
8		01023-70514	Screw	2	B40001-
9		23A-952-7950	Bracket	1	B40001-
10		01010-81020	Bolt	2	B40001-
11		01643-31032	Washer	2	B40001-
12		569-06-61180	Bracket	1	B40001-
13		01010-80616	Bolt	2	B40001-
14		01643-30623	Washer	2	B40001-
15		569-06-61960	Relay	4	B40001-
16		569-06-61970	Relay	1	B40001-
17		01010-80812	Bolt	1	B40001-
18		01643-30823	Washer	1	B40001-
19		04434-51412	Clip	14	B40001-
20		04434-51912	Clip	7	B40001-
21		04434-51012	Clip	6	B40001-
22		04434-51712	Clip	4	B40001-
23		04434-52712	Clip	3	B40001-
24		01010-81020	Bolt	34	B40001-
25		01643-31032	Washer	34	B40001-
26		08034-40521	Band	4	B40001-
27		08034-20414	Band	1	B40001-
28		01010-D0812	Bolt	19	B40001-
29		01643-70823	Washer	19	B40001-
30		09415-01008	Cap	1	B40001-

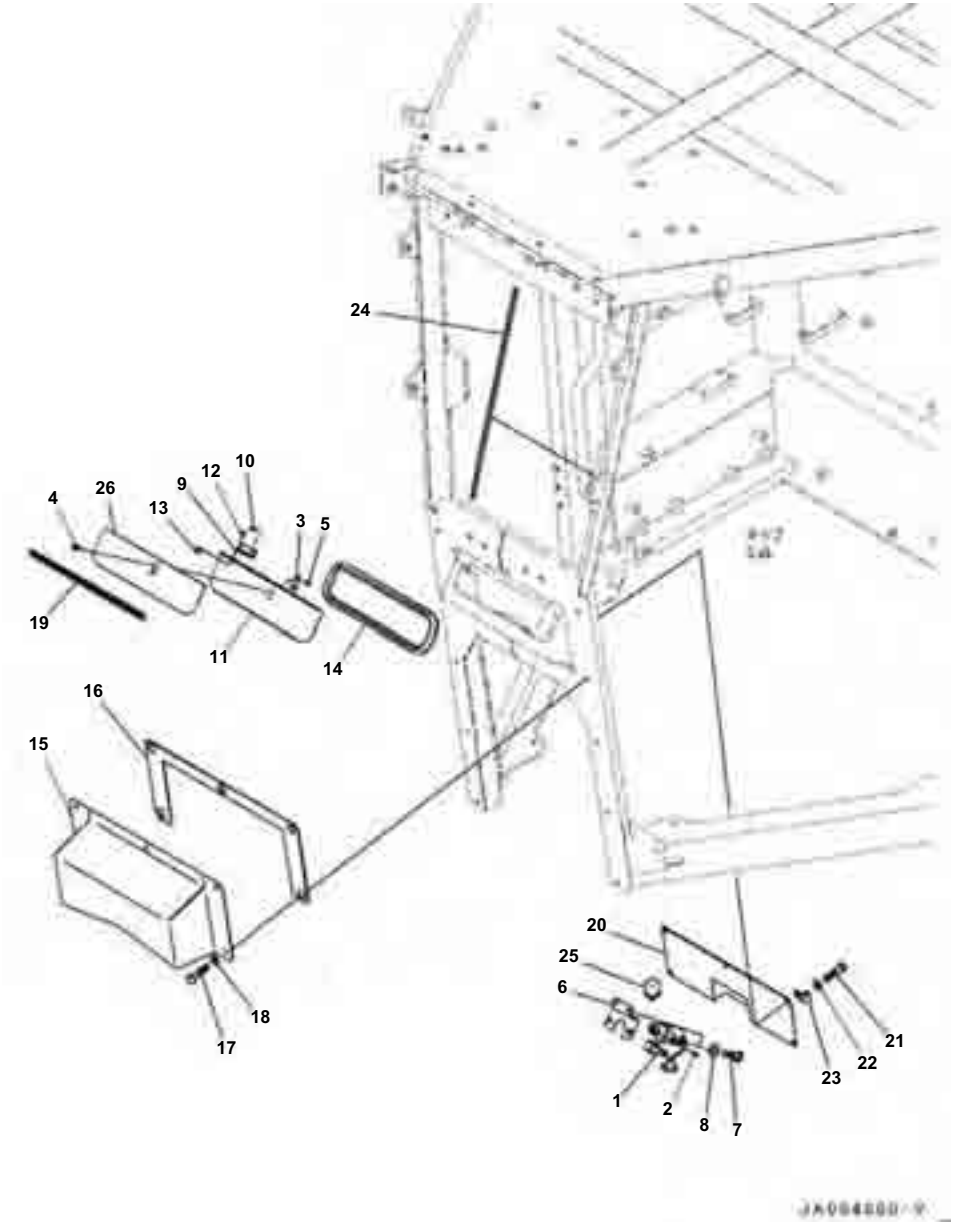

Index	Code	Part Number	Description	Qty	Serial No.
1		56D-54-36410	Solenoid Assembly	1	B40001-
2		04025-00312	Pin, Spring	1	B40001-
3		23A-952-8930	Bracket	1	B40001-
4		01023-10410	Screw	2	B40001-
5		01580-60403	Nut	2	B40001-
6		23A-952-8910	Bracket	1	B40001-
7		01010-D0616	Bolt	4	B40001-
8		01643-70623	Washer	4	B40001-
9		569-54-8B100	Hinge	2	B40001-
10		01023-10420	Screw	4	B40001-
11		23B-952-7280	Plate	1	B40001-
12		01023-10410	Screw	4	B40001-
13		01580-60403	Nut	4	B40001-
14		23A-952-8980	Seal	1	B40001-
15		23A-952-7831	Cover	1	B40001-
16		23B-952-7290	Sheet	1	B40001-
17		01010-D0820	Bolt	5	B40001-
18		01643-70823	Washer	5	B40001-
19		423-921-4340	Finisher	1	B40001-
20		23A-952-7840	Cover	1	B40001-
21		01010-D0816	Bolt	5	B40001-
22		01643-70823	Washer	5	B40001-
23		04434-50810	Clip	2	B40001-
24		23A-952-8890	Duct	1	B40001-
25		569-06-61960	Relay	1	B40001-
26		23A-952-8410	Sheet	1	B40001-

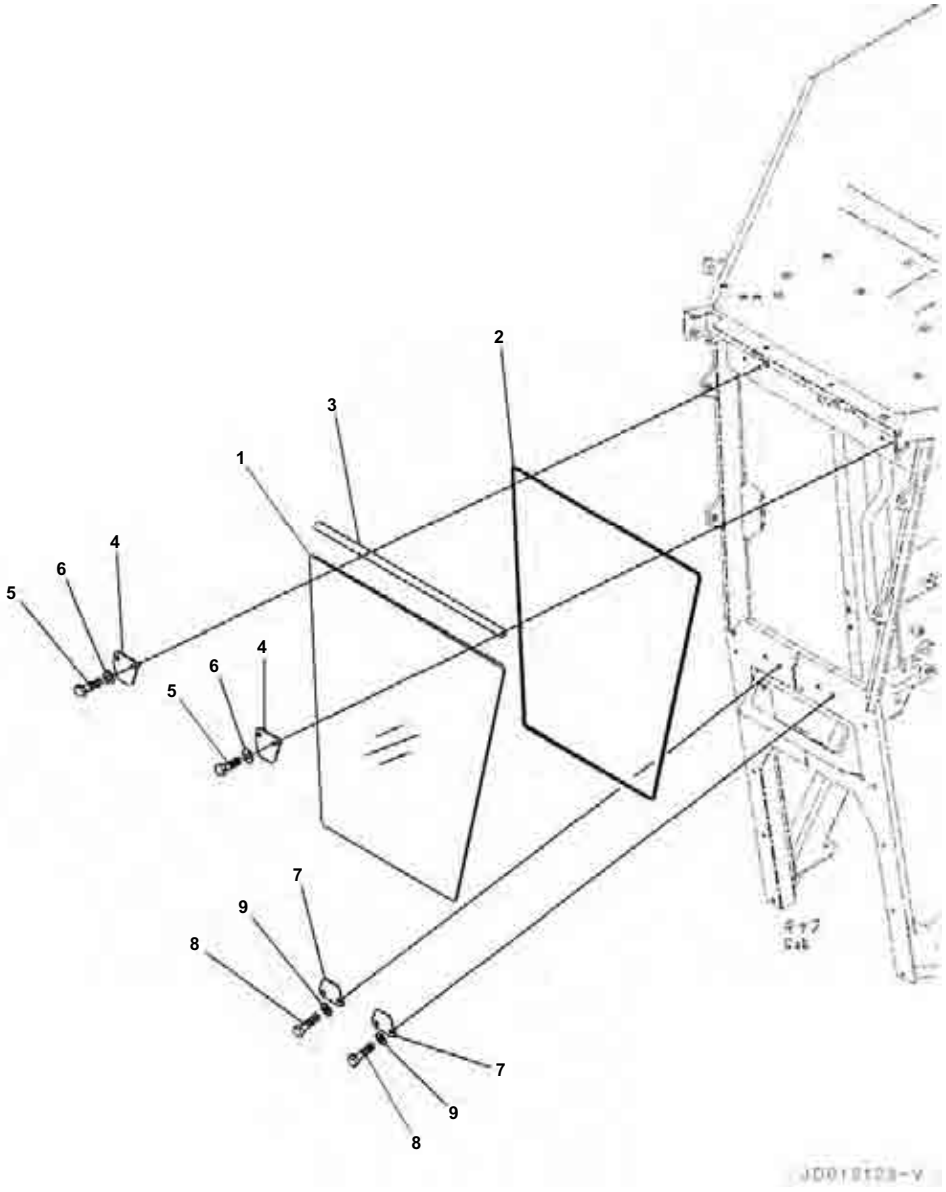

ROPS Cab, With Low Height, KOMTRAX, Glass Windows, Front

Index	Code	Part Number	Description	Qty	Serial No.
1		23A-952-7310	Glass	1	B40001-
2		23B-952-7910	Rubber	1	B40001-
3		23A-952-7240	Finisher	1	B40001-
4		23A-952-7250	Plate	2	B40001-
5		01010-D0835	Bolt	4	B40001-
6		01643-70823	Washer	4	B40001-
7		23A-952-7260	Plate	2	B40001-
8		01010-D0825	Bolt	4	B40001-
9		01643-70823	Washer	4	B40001-

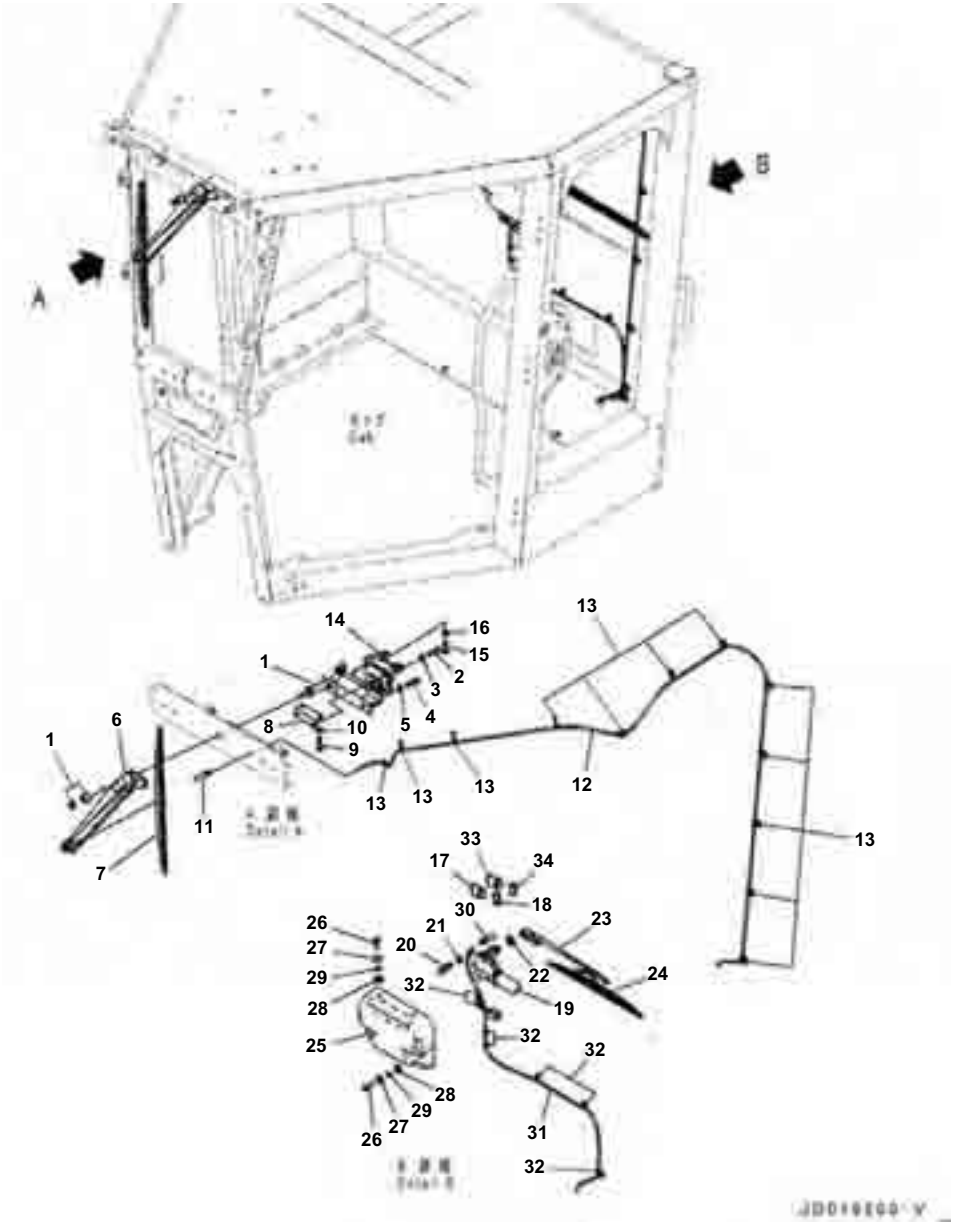

ROPS Cab, With Low Height, KOMTRAX, Wipers, Front and Rear

Index	Code	Part Number	Description	Qty	Serial No.
1		23B-952-7440	Motor	1	B40001-
2		01010-80616	Bolt	2	B40001-
3		01643-30623	Washer	2	B40001-
4		01010-80620	Bolt	2	B40001-
5		01643-30623	Washer	2	B40001-
6		23B-952-7450	Arm	1	B40001-
7		362-56-42690	Wiper Blade	1	B40001-
8		23A-952-7470	Plate	1	B40001-
9		01010-80612	Bolt	2	B40001-
10		01643-30623	Washer	2	B40001-
11		22T-55-11630	Nozzle Assembly	1	B40001-
12		569-54-83290	Hose	1	B40001-
13		08034-40521	Band	14	B40001-
14		04434-50812	Clip	1	B40001-
15		01010-81020	Bolt	1	B40001-
16		01643-31032	Washer	1	B40001-
17		17A-06-42210	Switch	1	B40001-
18		418-926-4530	Spacer	1	B40001-
19		23A-952-8210	Motor, Wiper	1	B40001-
20		01010-80816	Bolt	3	B40001-
21		01643-30823	Washer	3	B40001-
22		417-926-3650	Spacer	1	B40001-
23		20T-54-84840	Arm, Wiper	1	B40001-
24		20T-54-74990	Wiper Blade	1	B40001-
25		421-926-4311	Cover	1	B40001-
26		01225-70620	Screw, Philips Head	4	B40001-
27		23S-55-51970	Washer	4	B40001-
28		426-56-31870	Washer	4	B40001-
29		426-56-31890	Collar	4	B40001-
30		22T-55-11630	Nozzle Assembly	1	B40001-
31		418-07-36140	Hose	1	B40001-
32		08034-40521	Band	7	B40001-
33		42C-06-33130	Switch	1	B40001-
34		418-926-4530	Spacer	1	B40001-

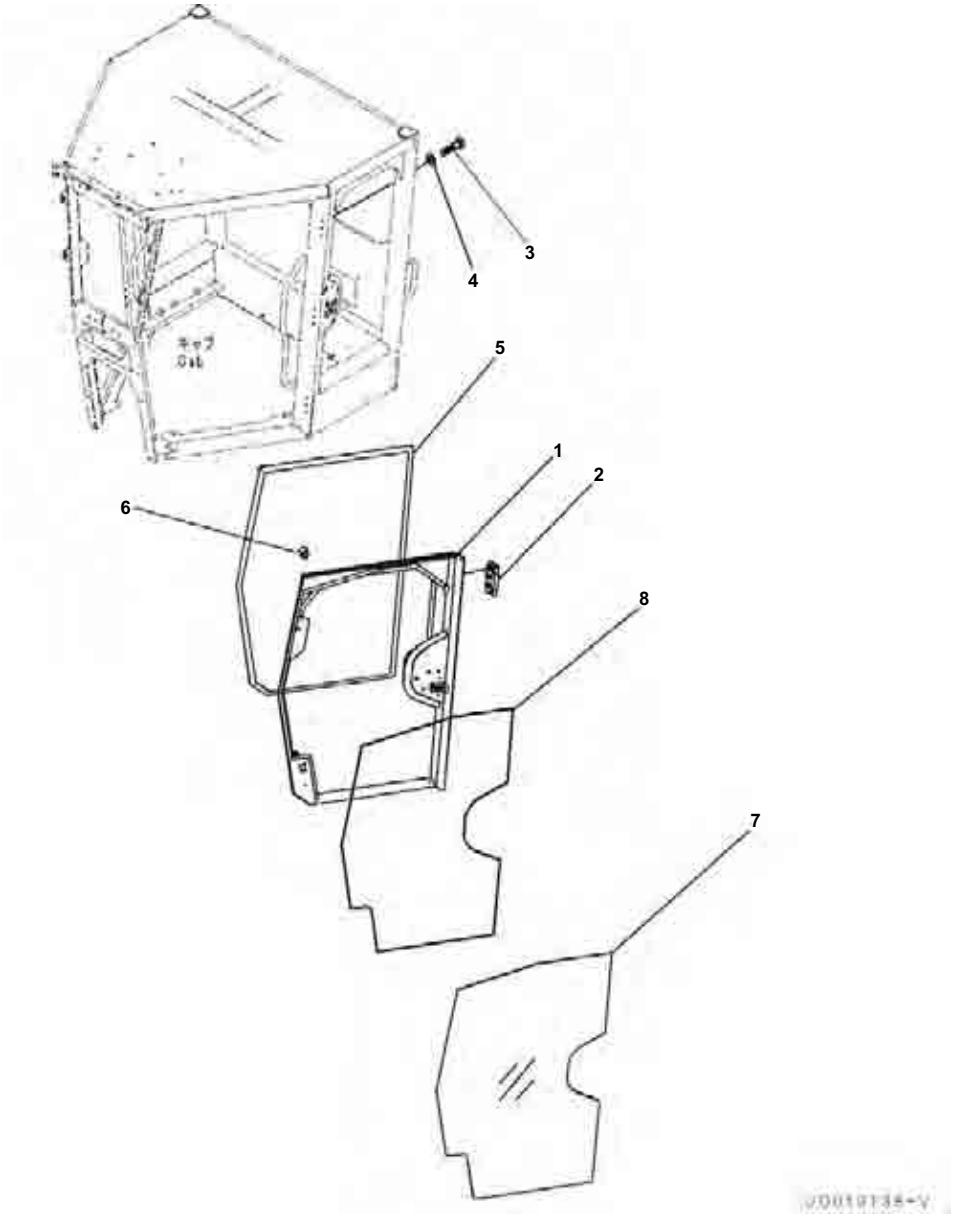

Index	Code	Part Number	Description	Qty	Serial No.
1		23A-952-7210	Door	1	B40001-
2		14X-911-1330	Hinge	3	B40001-
3		01010-D1025	Bolt	18	B40001-
4		01643-71032	Washer	18	B40001-
5		23B-952-7940	Seal	1	B40001-
6		417-923-3950	Stopper	1	B40001-
7		23A-952-7351	Glass	1	B40001-
8		23B-952-7930	Rubber	1	B40001-

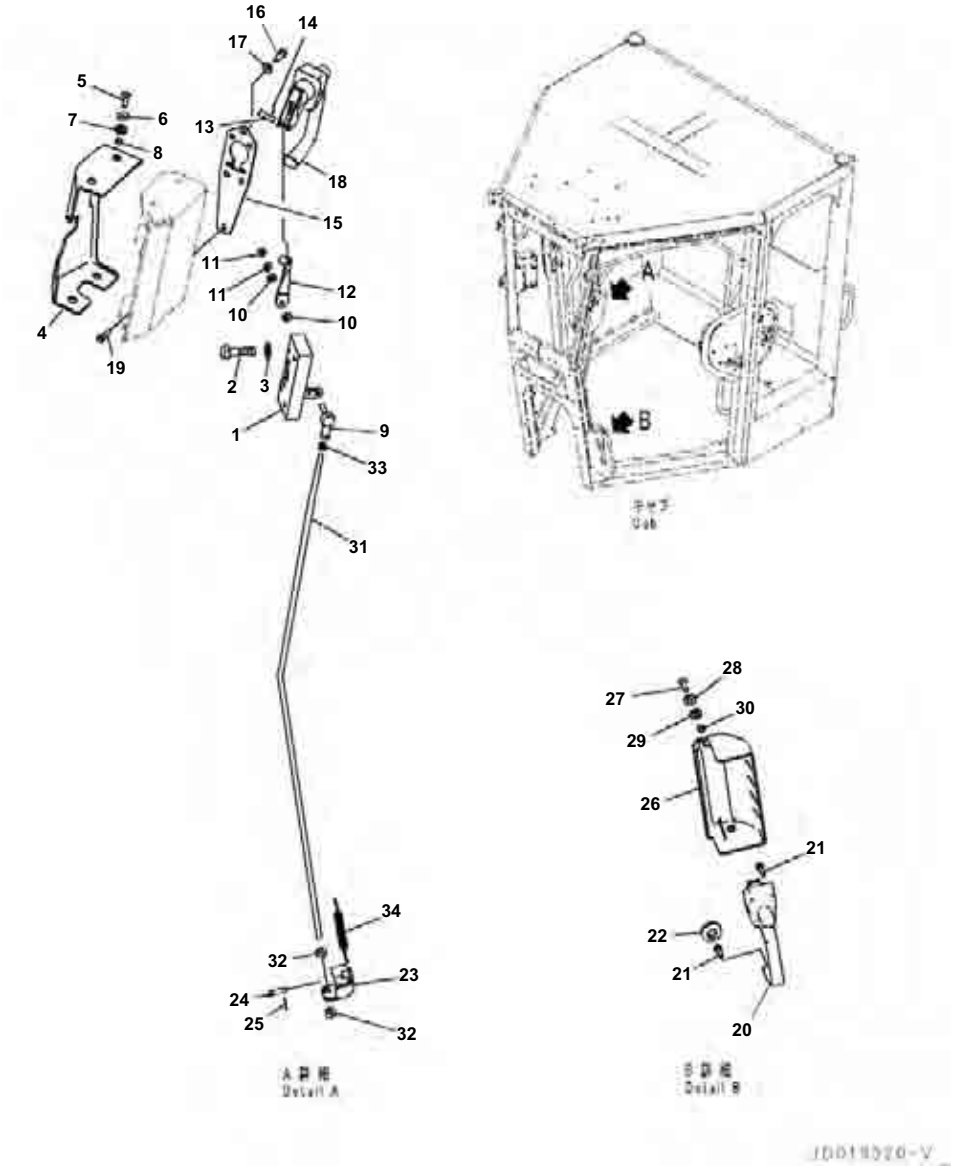

Index	Code	Part Number	Description	Qty	Serial No.
1		195-Z11-4510	Lock	1	B40001-
2		01010-D0635	Bolt	4	B40001-
3		01643-70623	Washer	4	B40001-
4		23A-952-7581	Cover	1	B40001-
5		01225-70620	Screw, Philips Head	4	B40001-
6		23S-55-51970	Washer	4	B40001-
7		426-56-31870	Washer	4	B40001-
8		426-56-31890	Collar	4	B40001-
9		04256-40622	Joint, Ball	1	B40001-
10		23B-952-7480	Packing	2	B40001-
11		01580-10605	Nut	2	B40001-
12		23A-952-8720	Bracket	1	B40001-
13		04205-10622	Pin	1	B40001-
14		04050-11612	Pin, Cotter	1	B40001-
15		23A-952-8710	Plate	1	B40001-
16		01245-00620	Screw	3	B40001-
17		01643-70623	Washer	3	B40001-
18		23A-952-8510	Handle Assembly	1	B40001-
19		01023-70525	Screw	5	B40001-
20		198-Z11-3710	Handle Assembly	1	B40001-
21		01023-70520	Screw	5	B40001-
22		09415-01610	Cap	1	B40001-
23		23B-952-7380	Bracket	1	B40001-
24		04205-10622	Pin	1	B40001-
25		04050-11612	Pin, Cotter	1	B40001-
26		23A-952-7270	Cover	1	B40001-
27		01225-70616	Screw, Philips Head	2	B40001-
28		23S-55-51970	Washer	2	B40001-
29		426-56-31870	Washer	2	B40001-
30		426-56-31890	Collar	2	B40001-
31		23A-952-7480	Rod	1	B40001-
32		01580-10806	Nut	2	B40001-
33		01580-10605	Nut	1	B40001-
34		23A-952-7770	Spring	1	B40001-

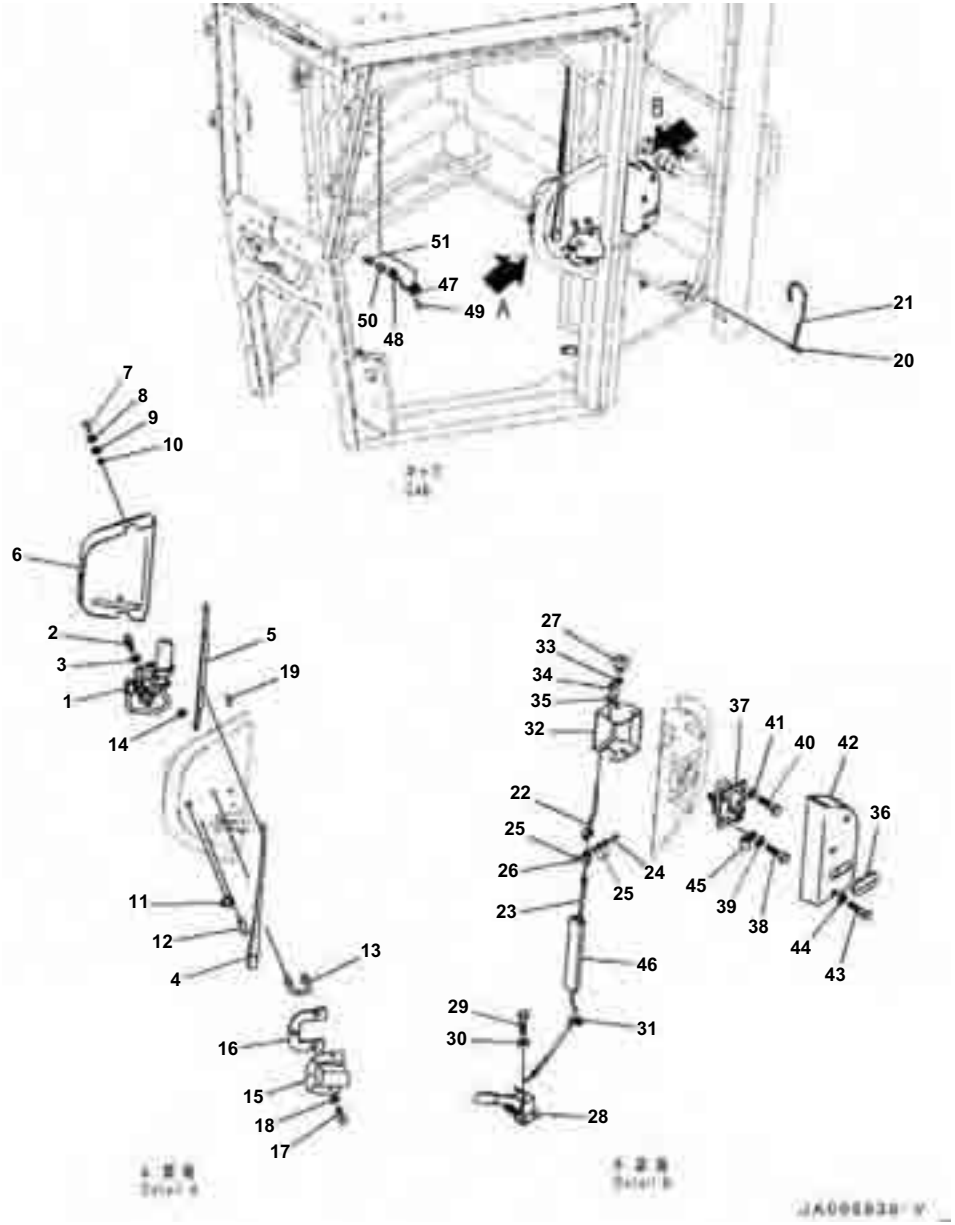

ROPS Cab, With Low Height, KOMTRAX, Door Open Lock, LHS

Index	Code	Part Number	Description	Qty	Serial No.
1		23B-952-7470	Motor	1	B40001-
2		01010-80816	Bolt	3	B40001-
3		01643-30823	Washer	3	B40001-
4		23B-952-7540	Arm	1	B40001-
5		20T-54-74990	Wiper Blade	1	B40001-
6		23B-952-7330	Cover	1	B40001-
7		01225-70620	Screw, Philips Head	3	B40001-
8		23S-55-51970	Washer	3	B40001-
9		426-56-31870	Washer	3	B40001-
10		426-56-31890	Collar	3	B40001-
11		424-926-3890	Spacer	1	B40001-
12		22T-55-11630	Nozzle Assembly	1	B40001-
13		23A-952-8580	Striker	1	B40001-
14		01580-11008	Nut	2	B40001-
15		23B-952-7160	Cover	1	B40001-
16		23B-952-7170	Sheet, Bonded	1	B40001-
17		01010-D0612	Bolt	3	B40001-
18		01643-70623	Washer	3	B40001-
19		423-06-42430	Finisher	1	B40001-
20		232-957-9710	Connector	1	B40001-
21		423-944-4670	Hose	1	B40001-
22		23B-952-7360	Rod,LHS	1	B40001-
23		23A-952-8860	Cable	1	B40001-
24		203-06-41560	Pin	1	B40001-
25		01640-20508	Washer	4	B40001-
26		04050-11210	Pin, Cotter	1	B40001-
27		417-926-3370	Knob	1	B40001-
28		23A-952-8871	Lever,LHS	1	B40001-
29		01010-D0616	Bolt	3	B40001-
30		01643-70623	Washer	3	B40001-
31		08059-00310	Clip	2	B40001-
32		23B-952-7720	Cover,LHS	1	B40001-
33		20Y-06-16170	Grommet	1	B40001-
34		01225-70616	Screw, Philips Head	2	B40001-
35		23S-55-51970	Washer	2	B40001-
36		423-926-3860	Grommet	1	B40001-
37		23A-952-8761	Lock Assembly	1	B40001-
38		01010-D0816	Bolt	2	B40001-
39		01643-70823	Washer	2	B40001-
40		01010-D0820	Bolt	2	B40001-
41		01643-70823	Washer	2	B40001-
42		23B-952-7350	Cover	1	B40001-
43		01010-D0816	Bolt	3	B40001-
44		01643-70823	Washer	3	B40001-
45		04434-51412	Clip	1	B40001-
46		23A-952-7690	Duct	1	B40001-

GD655-5 S/N B40001-UP

ROPS Cab, With Low Height, KOMTRAX, Door Open Lock, LHS

Index	Code	Part Number	Description	Qty	Serial No.
47		424-926-3490	Switch	1	B40001-
48		08034-40521	Band	1	B40001-
49		419-923-2130	Screw	1	B40001-
50		08056-00111	Connector Body, Male	1	B40001-
51		08056-00130	Holder, Male	1	B40001-

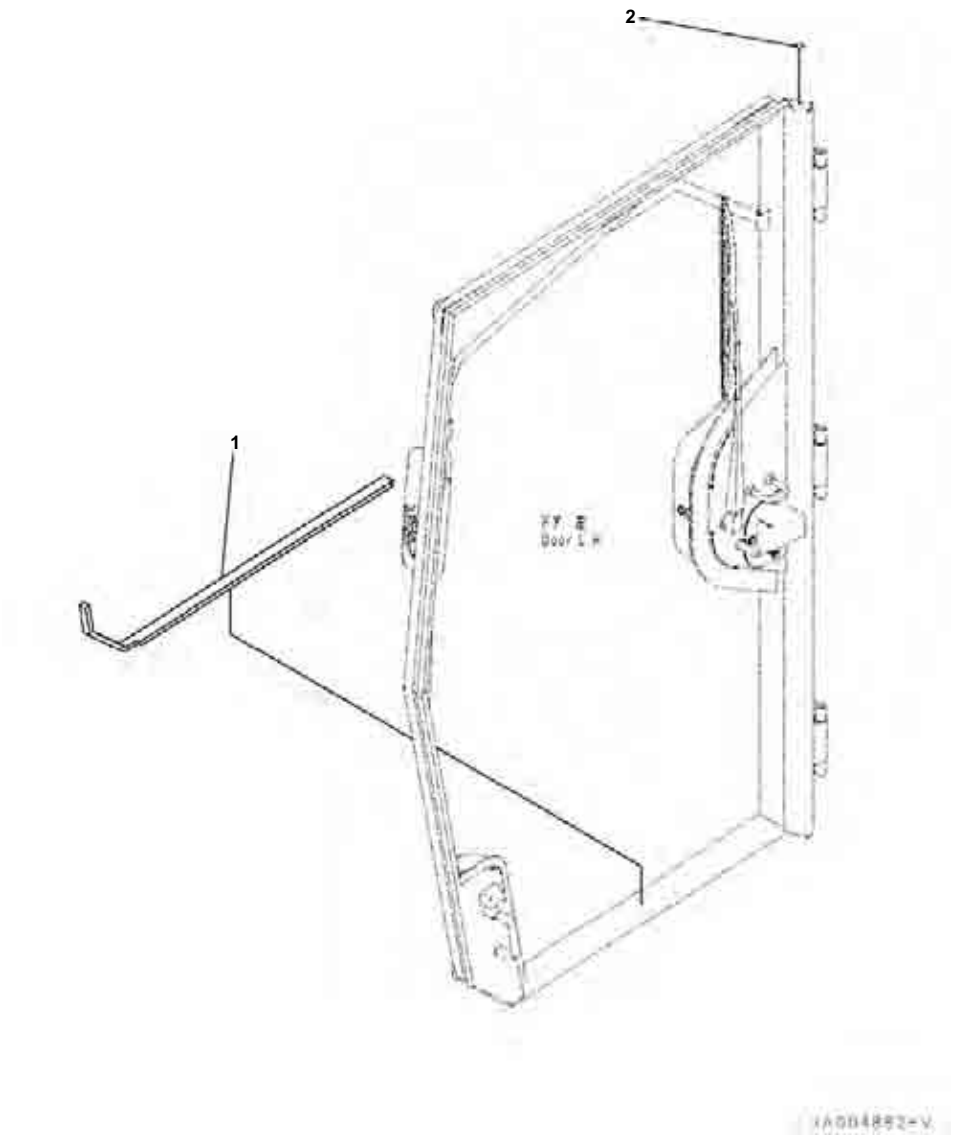

ROPS Cab, With Low Height, KOMTRAX, Seal and Sheet (1/2)

Index	Code	Part Number	Description	Qty	Serial No.
1		23A-952-8770	Sheet,Bonded	1	B40001-
2		22B-54-17290	Seal	1	B40001-

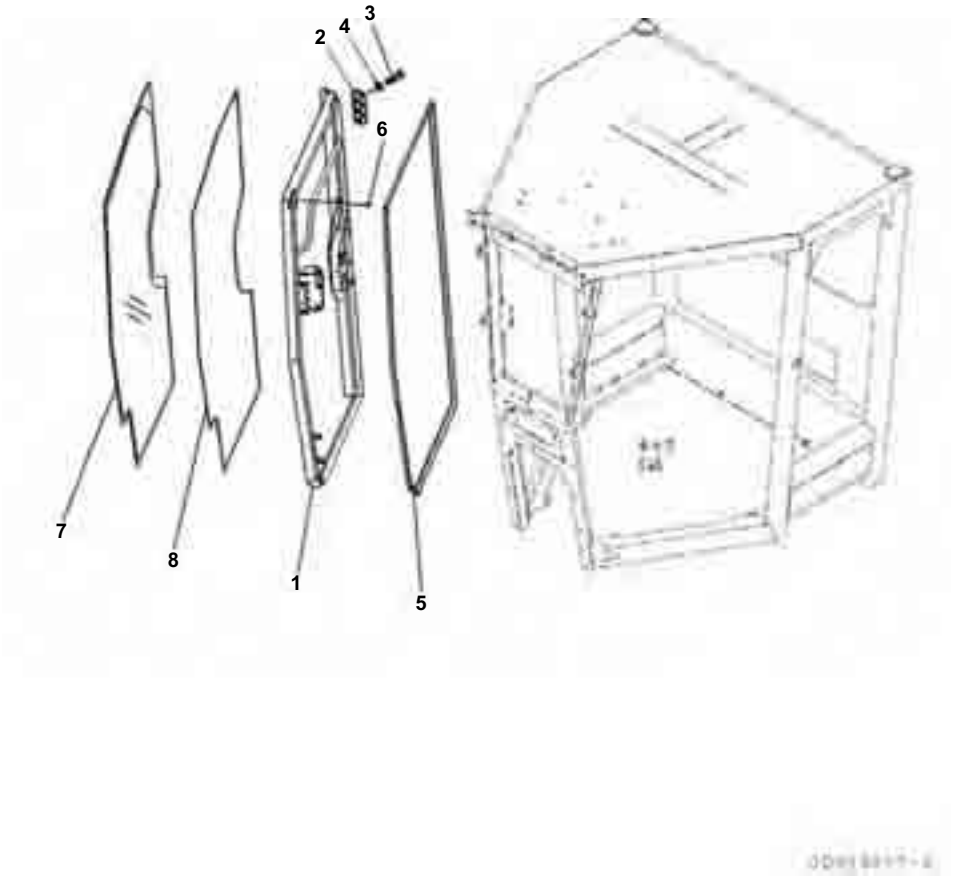

Index	Code	Part Number	Description	Qty	Serial No.
1		23A-952-7220	Door	1	B40001-
2		14X-911-1330	Hinge	3	B40001-
3		01010-D1025	Bolt	18	B40001-
4		01643-71032	Washer	18	B40001-
5		23B-952-7950	Seal	1	B40001-
6		417-923-3950	Stopper	1	B40001-
7		23A-952-7361	Glass	1	B40001-
8		23B-952-7930	Rubber	1	B40001-

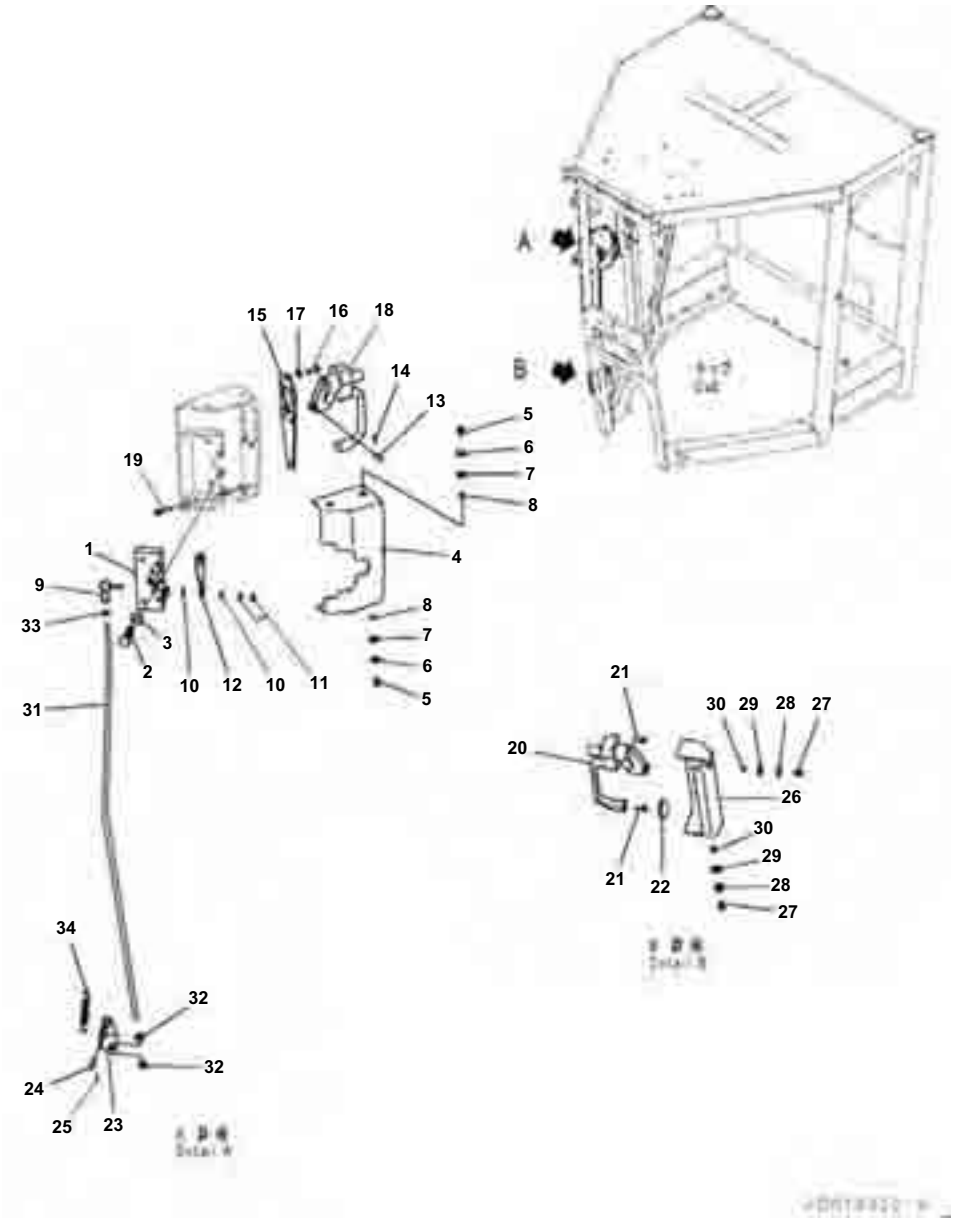

ROPS Cab, With Low Height, KOMTRAX, Door Lock, RHS

Index	Code	Part Number	Description	Qty	Serial No.
1		195-Z11-4520	Lock	1	B40001-
2		01010-D0635	Bolt	4	B40001-
3		01643-70623	Washer	4	B40001-
4		23A-952-7591	Cover	1	B40001-
5		01225-70620	Screw, Philips Head	4	B40001-
6		23S-55-51970	Washer	4	B40001-
7		426-56-31870	Washer	4	B40001-
8		426-56-31890	Collar	4	B40001-
9		04256-40622	Joint, Ball	1	B40001-
10		23B-952-7480	Packing	2	B40001-
11		01580-10605	Nut	2	B40001-
12		23A-952-8730	Bracket	1	B40001-
13		04205-10622	Pin	1	B40001-
14		04050-11612	Pin, Cotter	1	B40001-
15		23A-952-8710	Plate	1	B40001-
16		01245-00620	Screw	3	B40001-
17		01643-70623	Washer	3	B40001-
18		23A-952-8510	Handle Assembly	1	B40001-
19		01023-60525	Screw	5	B40001-
20		198-Z11-3710	Handle Assembly	1	B40001-
21		01023-70520	Screw	5	B40001-
22		09415-01610	Cap	1	B40001-
23		23B-952-7390	Bracket	1	B40001-
24		04205-10622	Pin	1	B40001-
25		04050-11612	Pin, Cotter	1	B40001-
26		23A-952-7280	Cover	1	B40001-
27		01225-70616	Screw, Philips Head	2	B40001-
28		23S-55-51970	Washer	2	B40001-
29		426-56-31870	Washer	2	B40001-
30		426-56-31890	Collar	2	B40001-
31		23A-952-7490	Rod	1	B40001-
32		01580-10806	Nut	2	B40001-
33		01580-10605	Nut	1	B40001-
34		23A-952-7770	Spring	1	B40001-

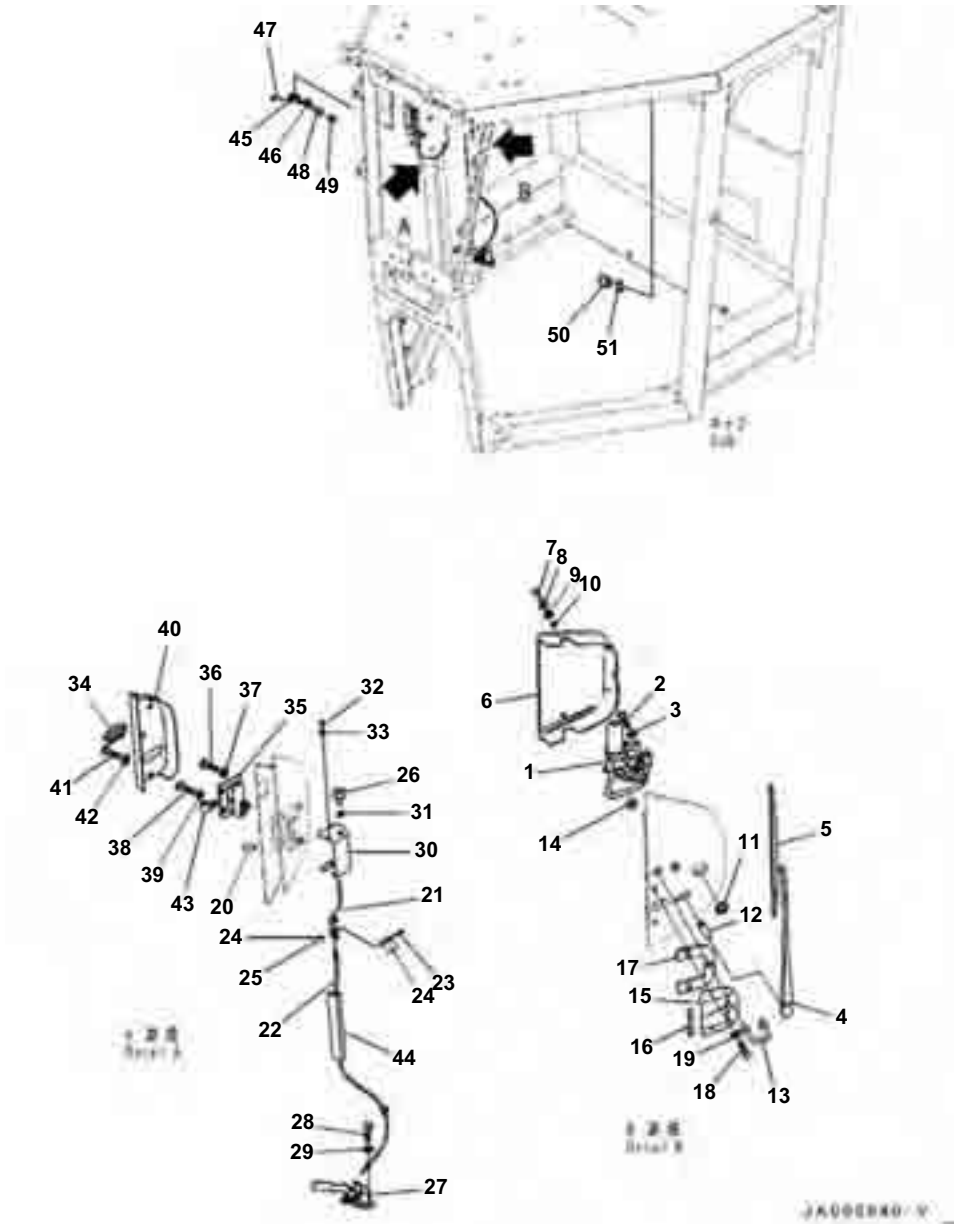

Index	Code	Part Number	Description	Qty	Serial No.
1		421-926-3612	Motor, Wiper	1	B40001-
2		01010-80816	Bolt	3	B40001-
3		01643-30823	Washer	3	B40001-
4		23B-952-7540	Arm	1	B40001-
5		20T-54-74990	Wiper Blade	1	B40001-
6		23B-952-7330	Cover	1	B40001-
7		01225-70620	Screw, Philips Head	3	B40001-
8		23S-55-51970	Washer	3	B40001-
9		426-56-31870	Washer	3	B40001-
10		426-56-31890	Collar	3	B40001-
11		424-926-3890	Spacer	1	B40001-
12		22T-55-11630	Nozzle Assembly	1	B40001-
13		23A-952-8580	Striker	1	B40001-
14		01580-11008	Nut	2	B40001-
15		23B-952-7160	Cover	1	B40001-
16		23B-952-7180	Sheet, Bonded	1	B40001-
17		23B-952-7170	Sheet, Bonded	1	B40001-
18		01010-D0612	Bolt	3	B40001-
19		01643-70623	Washer	3	B40001-
20		423-06-42430	Finisher	1	B40001-
21		23A-952-7610	Rod	1	B40001-
22		23A-952-8860	Cable	1	B40001-
23		203-06-41560	Pin	1	B40001-
24		01640-20508	Washer	4	B40001-
25		04050-11210	Pin, Cotter	1	B40001-
26		417-926-3370	Knob	1	B40001-
27		23A-952-8881	Lever	1	B40001-
28		01010-D0616	Bolt	3	B40001-
29		01643-70623	Washer	3	B40001-
30		23B-952-7760	Cover	1	B40001-
31		20Y-06-16170	Grommet	1	B40001-
32		01225-70616	Screw, Philips Head	2	B40001-
33		23S-55-51970	Washer	2	B40001-
34		423-926-3860	Grommet	1	B40001-
35		23A-952-8761	Lock Assembly	1	B40001-
36		01010-D0820	Bolt	2	B40001-
37		01643-70823	Washer	2	B40001-
38		01010-D0816	Bolt	2	B40001-
39		01643-70823	Washer	2	B40001-
40		23B-952-7370	Cover	1	B40001-
41		01010-D0816	Bolt	3	B40001-
42		01643-70823	Washer	3	B40001-
43		04434-51412	Clip	1	B40001-
44		23A-952-7690	Duct	1	B40001-
45		424-926-3490	Switch	1	B40001-
46		08034-40521	Band	1	B40001-

GD655-5 S/N B40001-UP

ROPS Cab, With Low Height, KOMTRAX, Door Open Lock, RHS

Index	Code	Part Number	Description	Qty	Serial No.
47		419-923-2130	Screw	1	B40001-
48		08056-00111	Connector Body, Male	1	B40001-
49		08056-00130	Holder, Male	1	B40001-
50		17A-06-42210	Switch	1	B40001-
51		418-926-4530	Spacer	1	B40001-

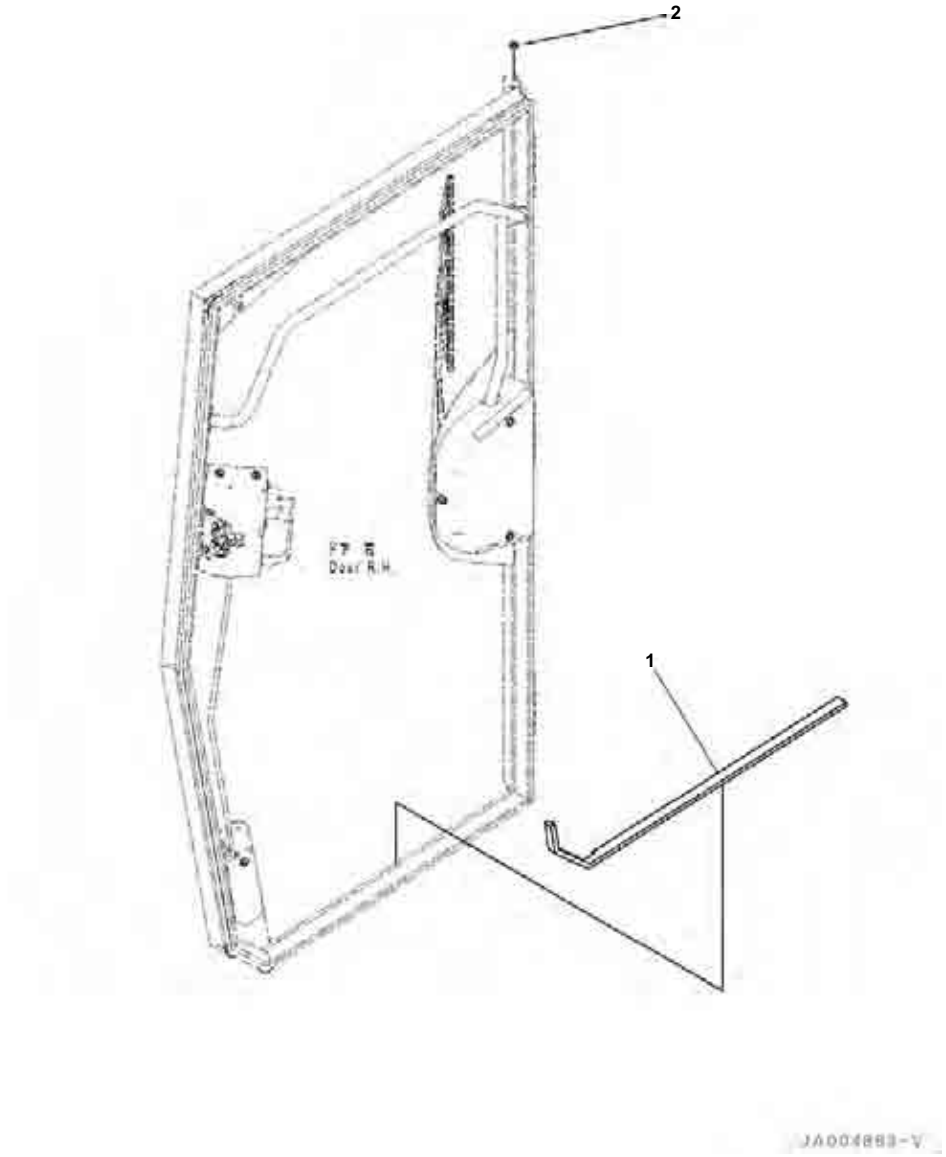

ROPS Cab, With Low Height, KOMTRAX, Seal and Sheet (2/2)

Index	Code	Part Number	Description	Qty	Serial No.
1		23A-952-8840	Sheet,Bonded	1	B40001-
2		22B-54-17290	Seal	1	B40001-

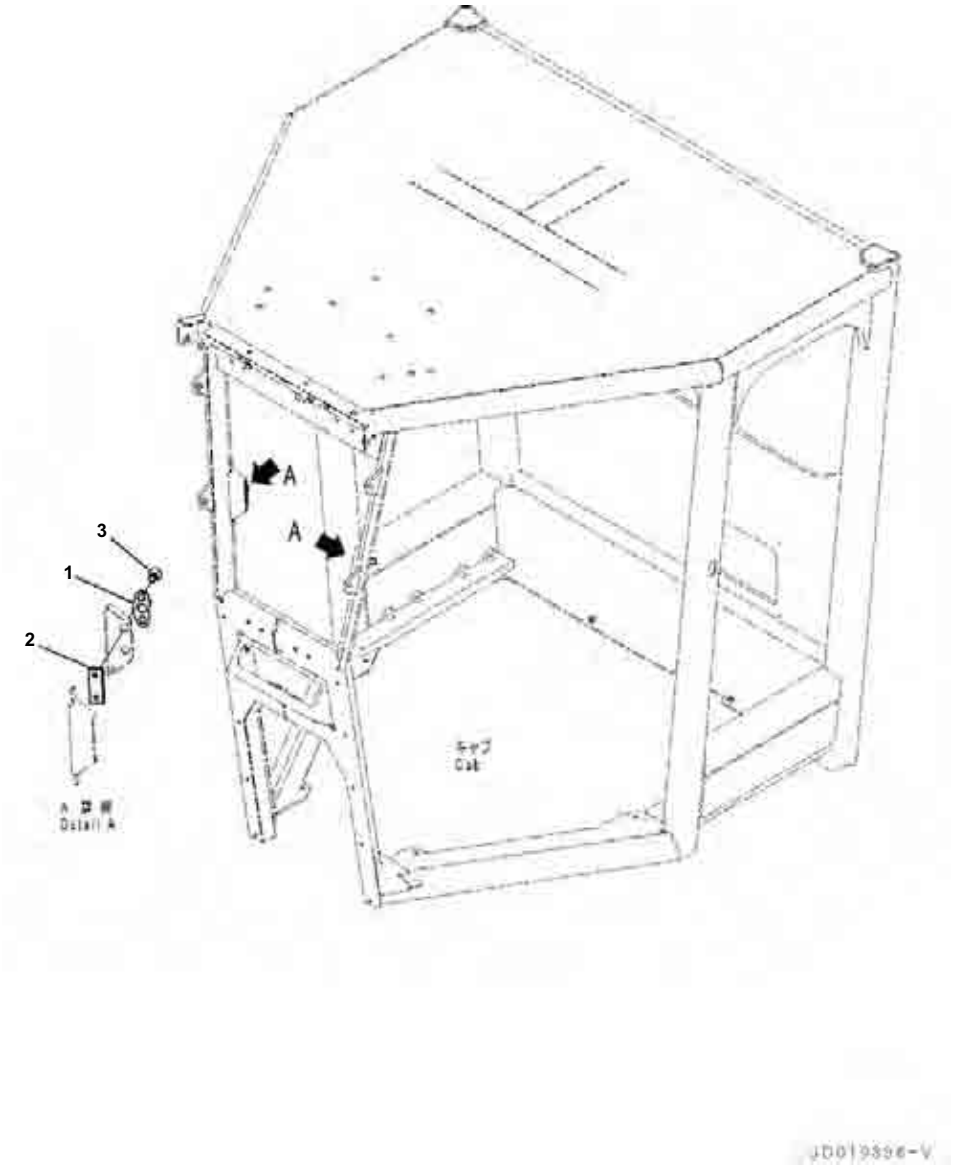

ROPS Cab, With Low Height, KOMTRAX, Door Lock Striker

Index	Code	Part Number	Description	Qty	Serial No.
1		21J-54-16190	Striker	2	B40001-
2		23A-952-1890	Plate	2	B40001-
3		01240-01020	Screw, Hexagon Socket Head	4	B40001-

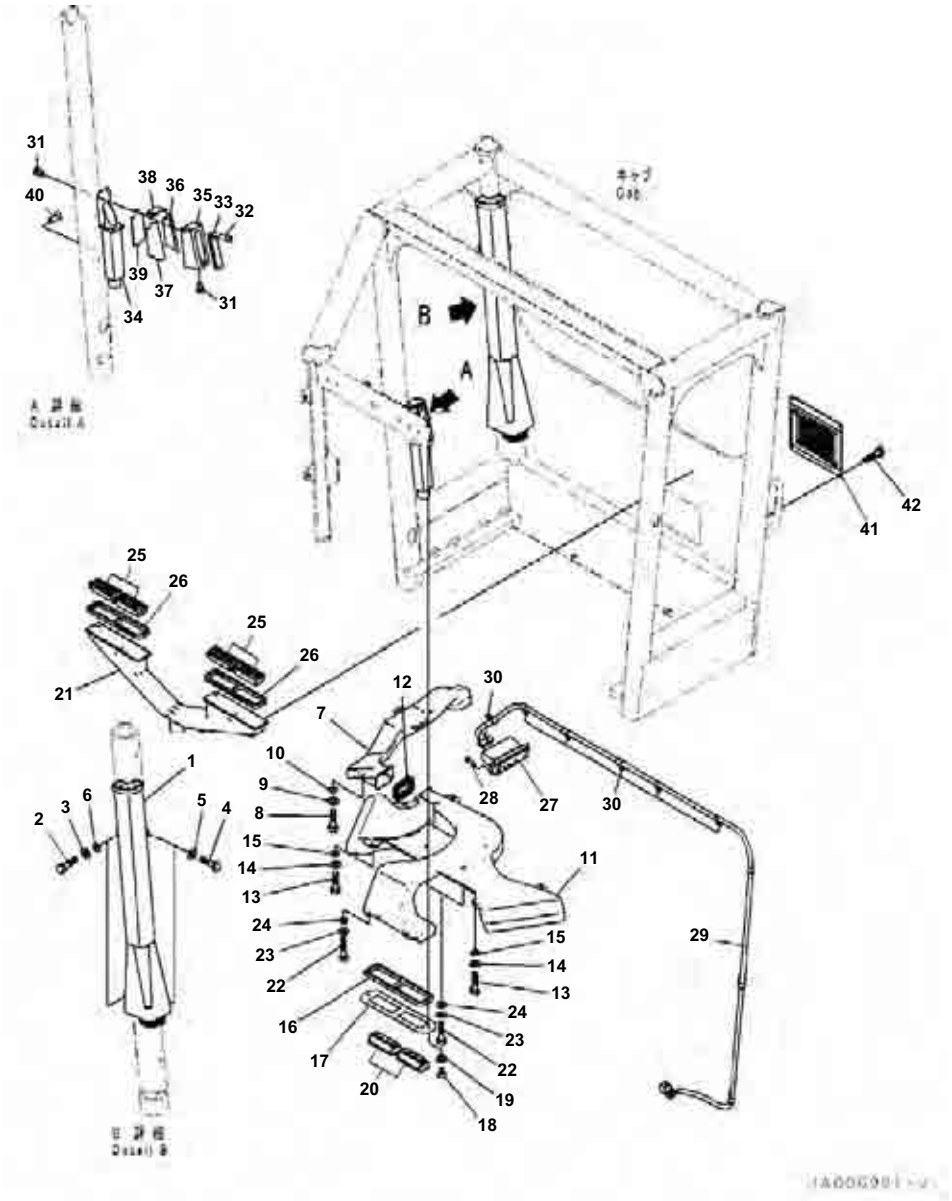

ROPS Cab, With Low Height, KOMTRAX, Air Conditioner Duct

Index	Code	Part Number	Description	Qty	Serial No.
1		23A-952-7741	Duct	1	B40001-
2		01010-80620	Bolt	2	B40001-
3		01643-30623	Washer	2	B40001-
4		01010-80616	Bolt	2	B40001-
5		01643-30623	Washer	2	B40001-
6		20Y-53-12310	Collar	2	B40001-
7		23A-952-7750	Duct	1	B40001-
8		01010-80620	Bolt	3	B40001-
9		01643-30623	Washer	3	B40001-
10		20Y-53-12310	Collar	3	B40001-
11		23A-952-7760	Duct	1	B40001-
12		23B-952-7220	Seal, T=15mm, Bonded	2	B40001-
13		01010-80620	Bolt	9	B40001-
14		01643-30623	Washer	9	B40001-
15		20Y-53-12310	Collar	9	B40001-
16		23B-952-7250	Seal, T=15mm, Bonded	3	B40001-
17		23B-952-7680	Plate	3	B40001-
18		01225-70620	Screw, Philips Head	6	B40001-
19		23S-55-51970	Washer	6	B40001-
20		421-07-12512	Grille Assembly	6	B40001-
21		23A-952-7510	Duct	1	B40001-
22		01010-80620	Bolt	4	B40001-
23		01643-30623	Washer	4	B40001-
24		20Y-53-12310	Collar	4	B40001-
25		421-07-12512	Grille Assembly	4	B40001-
26		23B-952-7260	Seal, T=15mm, Bonded	2	B40001-
27		23B-07-73110	Panel	1	B40001-
28		01023-70414	Screw	4	B40001-
29		23B-952-7120	Wiring Harness	1	B40001-
30		04434-51712	Clip	9	B40001-
		23A-952-8420	Duct	1	B40001-
31		01023-10612	' Screw	4	B40001-
32		01370-40412	' Screw	2	B40001-
33		12Y-978-2320	' Louver	1	B40001-
34	C1		' Duct	1	B40001-
35	C1		' Duct	1	B40001-
36		23A-952-8450	' Seal	1	B40001-
37		23A-952-8460	' Seal	1	B40001-
38		23A-952-8470	' Seal	1	B40001-
39		23A-952-8480	' Seal	1	B40001-
40		01225-70616	Screw, Philips Head	2	B40001-
41		23B-07-74190	Louver	1	B40001-
42		01434-10616	Bolt, Wing	4	B40001-

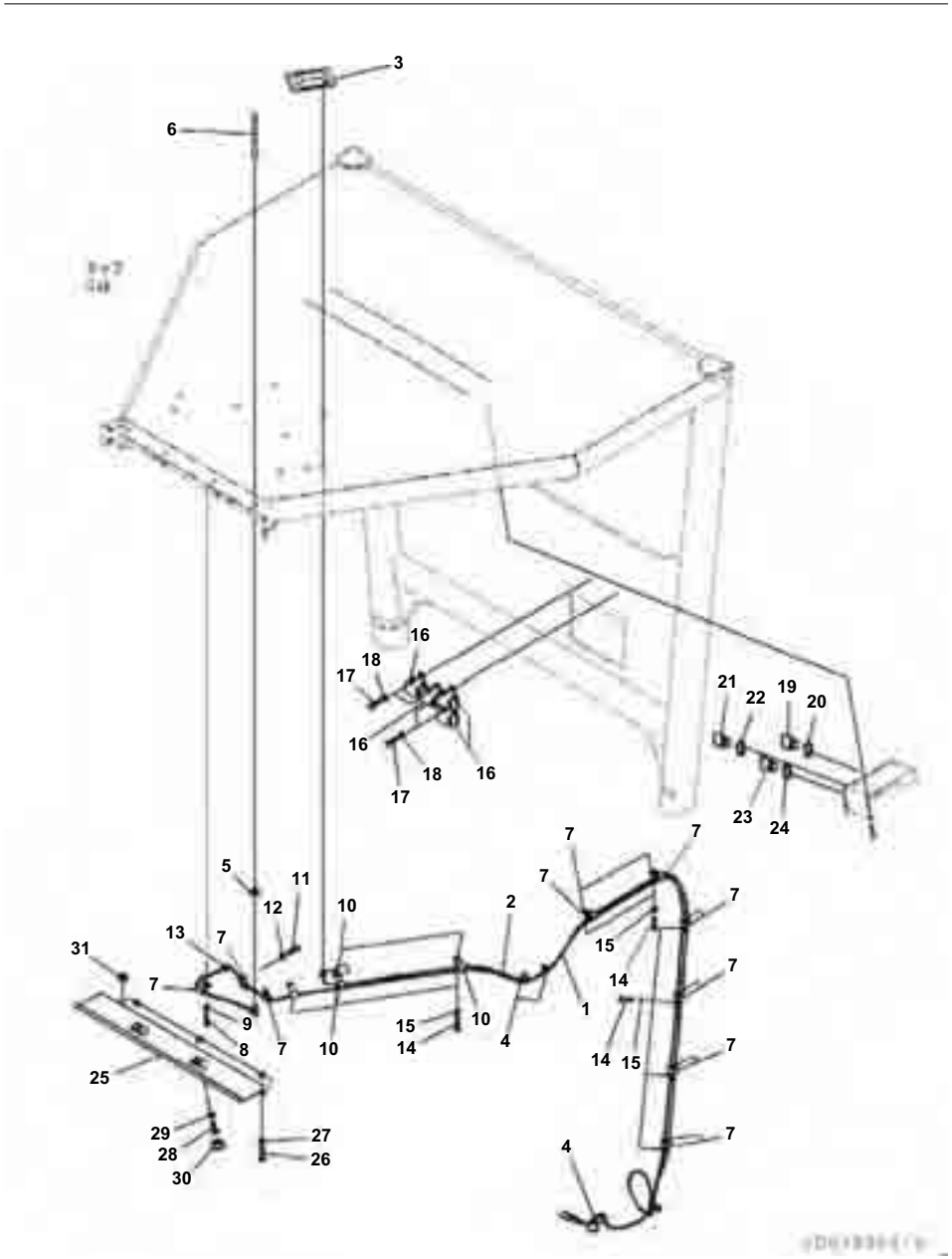

Index	Code	Part Number	Description	Qty	Serial No.
1		23A-952-7160	Cable	1	B40001-
2		23B-953-3441	Antenna Assembly	1	B40001-
3		56D-54-23470	Cover	1	B40001-
4		08034-40521	Band	3	B40001-
5		01640-21626	Washer, Flat	1	B40001-
6		8A13-10-2100	Antenna	1	B40001-
7		04434-51012	Clip	15	B40001-
8		01010-80816	Bolt	1	B40001-
9		01643-30823	Washer	1	B40001-
10		515-35-11941	Clip	5	B40001-
11		01010-81020	Bolt	1	B40001-
12		01643-31032	Washer	1	B40001-
13		175-06-81610	Grommet	1	B40001-
14		01010-81016	Bolt	8	B40001-
15		01643-31032	Washer	8	B40001-
16		17A-Z11-2420	Relay	4	B40001-
17		01010-80612	Bolt	4	B40001-
18		01643-30623	Washer	4	B40001-
19		17A-06-42220	Switch	1	B40001-
20		418-926-4530	Spacer	1	B40001-
21		20Y-06-42190	Cover	1	B40001-
22		418-926-4530	Spacer	1	B40001-
23		20Y-06-42190	Cover	1	B40001-
24		418-926-4530	Spacer	1	B40001-
25		23B-952-7670	Cover	1	B40001-
26		01010-D0825	Bolt	3	B40001-
27		01643-70823	Washer	3	B40001-
28		01010-81016	Bolt	2	B40001-
29		01643-31032	Washer	2	B40001-
30		09415-02512	Cap	2	B40001-
31		09415-01610	Cap	1	B40001-

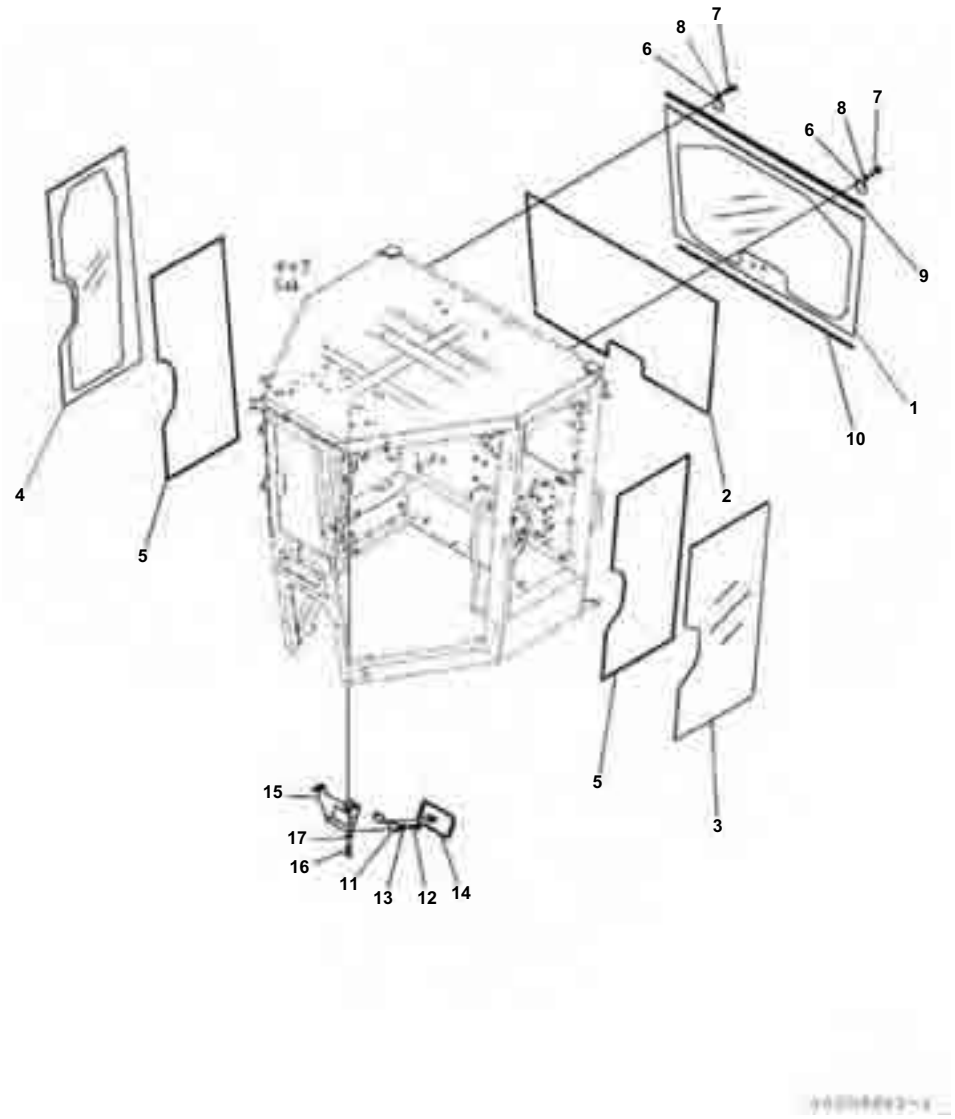

ROPS Cab, With Low Height, KOMTRAX, Glass Windows and Bracket

Index	Code	Part Number	Description	Qty	Serial No.
1		23A-952-7320	Glass	1	B40001-
2		23B-952-7920	Rubber	1	B40001-
3		23A-952-7330	Glass	1	B40001-
4		23A-952-7340	Glass	1	B40001-
5		23B-952-7960	Rubber	2	B40001-
6		23A-952-7230	Plate	2	B40001-
7		01010-D0820	Bolt	4	B40001-
8		01643-70823	Washer	4	B40001-
9		23B-952-7490	Finisher	1	B40001-
10		23B-952-7590	Finisher	1	B40001-
11		23A-952-8610	Bracket	1	B40001-
12		01010-D1030	Bolt	2	B40001-
13		01643-71032	Washer	2	B40001-
14		195-Z11-2180	Mirror	1	B40001-
15		23B-952-7690	Bracket	1	B40001-
16		01010-81020	Bolt	4	B40001-
17		01643-31032	Washer	4	B40001-

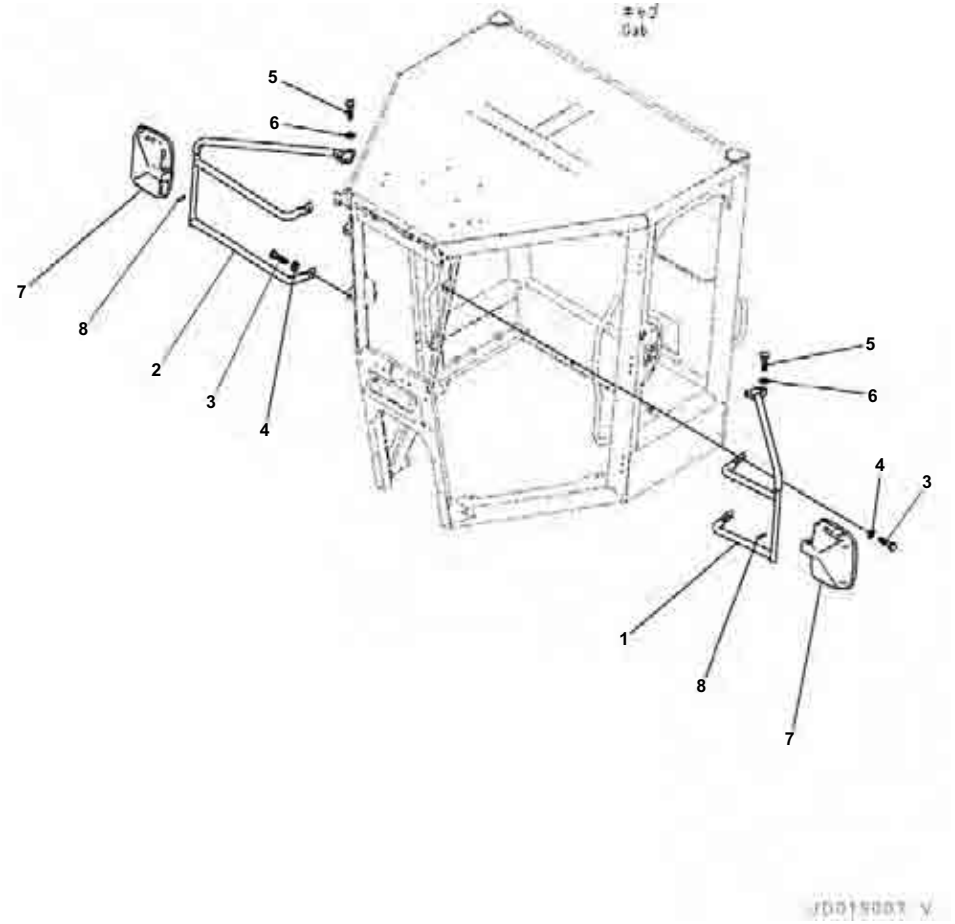

Index	Code	Part Number	Description	Qty	Serial No.
1		23A-952-7180	Stay,LHS	1	B40001-
2		23A-952-7190	Stay,RHS	1	B40001-
3		01010-D1030	Bolt	4	B40001-
4		01643-71032	Washer	4	B40001-
5		01010-D0820	Bolt	4	B40001-
6		01643-70823	Washer	4	B40001-
7		421-54-25610	Mirror	2	B40001-
8		04025-00632	Pin, Spring	2	B40001-

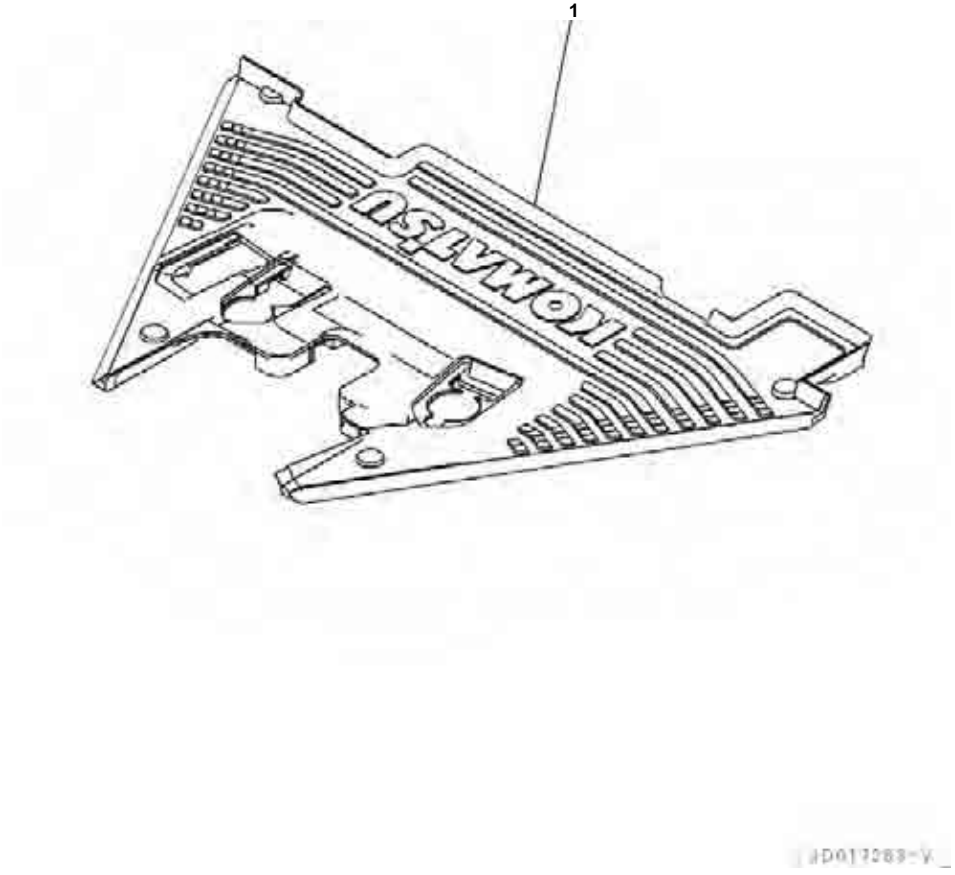

Index	Code	Part Number	Description	Qty	Serial No.
1		23B-54-72510	Mat	1	B40001-

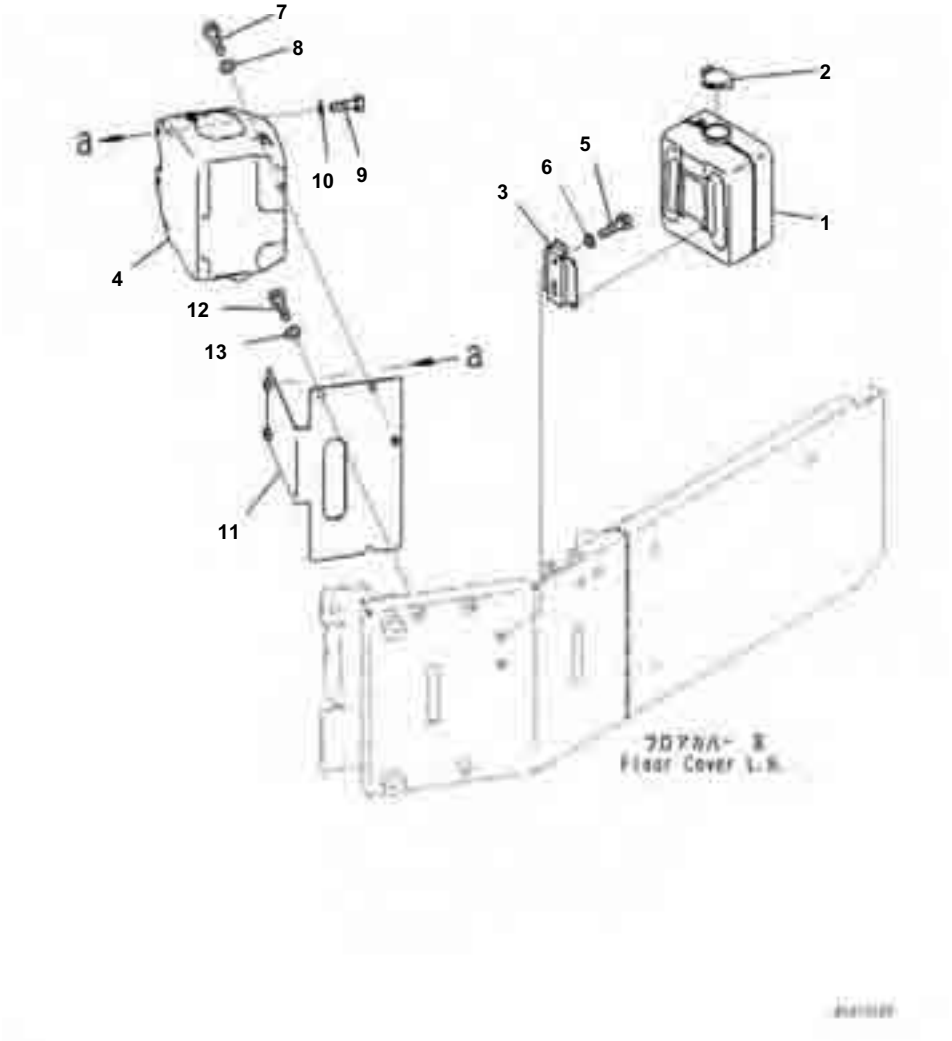

Window Washer

Index	Code	Part Number	Description	Qty	Serial No.
1		21W-06-42130	Tank Assembly	1	B40001-
2		21W-06-42140	▪ Cap	1	B40001-
3		203-03-41620	▪ Bracket	1	B40001-
4		14X-Y11-2110	Tank Assembly	1	B40001-
5		01010-80816	Bolt	2	B40001-
6		01643-30823	Washer	2	B40001-
7		01010-80616	Bolt	1	B40001-
8		01643-30623	Washer	1	B40001-
9		01010-80616	Bolt	2	B40001-
10		01643-30623	Washer	2	B40001-
11		23B-54-73410	Bracket	1	B40001-
12		01010-80816	Bolt	3	B40001-
13		01643-30823	Washer	3	B40001-

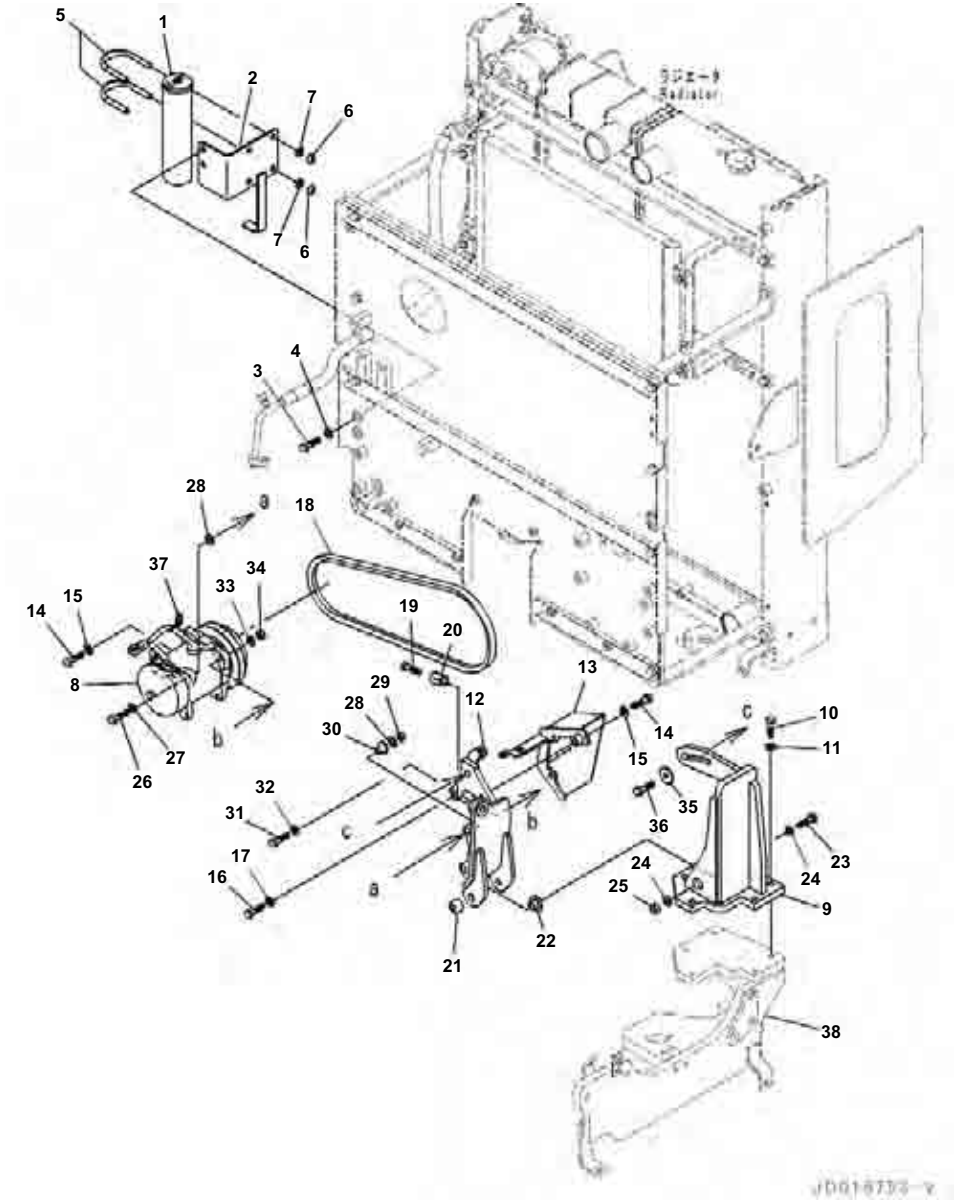

Air Conditioner Unit, Air Conditioner Unit Mounting

Index	Code	Part Number	Description	Qty	Serial No.
1		423-07-31571	Receiver	1	B40001-
2		23B-07-71510	Bracket	1	B40001-
3		01010-81030	Bolt	2	B40001-
4		01643-31032	Washer	2	B40001-
5		07283-36155	Clip, Pipe	2	B40001-
6		01597-01009	Nut	4	B40001-
7		01643-31032	Washer	4	B40001-
8		23B-07-61112	Compressor	1	B40001-
9		23B-07-71210	Bracket	1	B40001-
10		01010-81035	Bolt	5	B40001-
11		01643-31032	Washer	5	B40001-
12		23B-07-71310	Bracket	1	B40001-
13		23B-07-71410	Cover	1	B40001-
14		01010-80835	Bolt	2	B40001-
15		01643-30823	Washer	2	B40001-
16		01010-80845	Bolt	1	B40001-
17		01643-30823	Washer	1	B40001-
18		04120-21751	V-belt	1	B40001-
19		01017-51630	Bolt	1	B40001-
20		23B-07-71360	Joint	1	B40001-
21		154-03-76490	Spacer	1	B40001-
22		419-07-11761	Collar	1	B40001-
23		01011-81225	Bolt	1	B40001-
24		01643-31232	Washer	2	B40001-
25		01580-11210	Nut	1	B40001-
26		01010-81055	Bolt	2	B40001-
27		01643-31032	Washer	2	B40001-
28		01643-31032	Washer	4	B40001-
29		01580-11008	Nut	2	B40001-
30		425-S62-3160	Collar	2	B40001-
31		01010-81045	Bolt	2	B40001-
32		01643-31032	Washer	2	B40001-
33		01643-31032	Washer	2	B40001-
34		01580-11008	Nut	2	B40001-
35		175-54-34170	Washer	1	B40001-
36		01010-81240	Bolt	1	B40001-
37		08034-40521	Band	1	B40001-
38		(23B-01-71321)	Bracket		

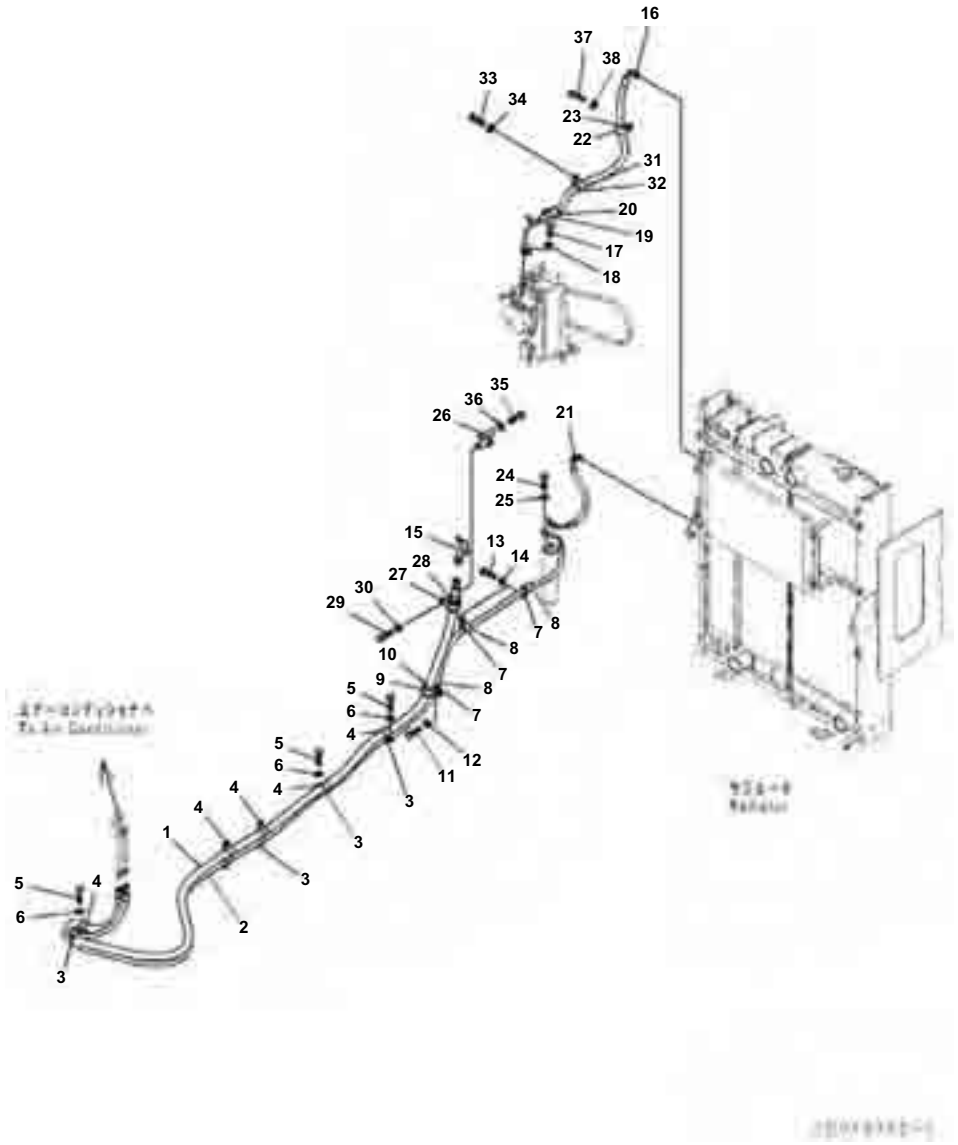

Air Conditioner Unit, Air Conditioner Piping

Index	Code	Part Number	Description	Qty	Serial No.
1		23B-07-71290	Hose	1	B40001-
2		23B-07-71350	Hose	1	B40001-
3		04434-51910	Clip	5	B40001-
4		6150-51-9490	Clip	5	B40001-
5		01010-81025	Bolt	3	B40001-
6		01643-31032	Washer	3	B40001-
7		04434-52711	Clip	3	B40001-
8		07095-20419	Cushion	3	B40001-
9		208-06-19170	Clip	1	B40001-
10		07095-00630	Cushion	1	B40001-
11		01010-81025	Bolt	1	B40001-
12		01643-31032	Washer	1	B40001-
13		01010-81020	Bolt	2	B40001-
14		01643-31032	Washer	2	B40001-
15		23B-07-71430	Tube	1	B40001-
16		23B-07-71320	Hose	1	B40001-
17		01010-80830	Bolt	2	B40001-
18		01643-30823	Washer	2	B40001-
19		04434-53211	Clip	1	B40001-
20		07095-20523	Cushion	1	B40001-
21		23B-07-71330	Hose	1	B40001-
22		04434-53211	Clip	1	B40001-
23		07095-20523	Cushion	1	B40001-
24		01010-80625	Bolt	2	B40001-
25		01643-30623	Washer	2	B40001-
26		23B-07-71550	Bracket	1	B40001-
27		208-06-19170	Clip	1	B40001-
28		07095-00630	Cushion	1	B40001-
29		01010-81020	Bolt	1	B40001-
30		01643-31032	Washer	1	B40001-
31		04434-53211	Clip	1	B40001-
32		07095-20523	Cushion	1	B40001-
33		01010-81020	Bolt	1	B40001-
34		01643-31032	Washer	1	B40001-
35		01010-81030	Bolt	1	B40001-
36		01643-31032	Washer	1	B40001-
37		01010-81020	Bolt	2	B40001-
38		01643-31032	Washer	2	B40001-

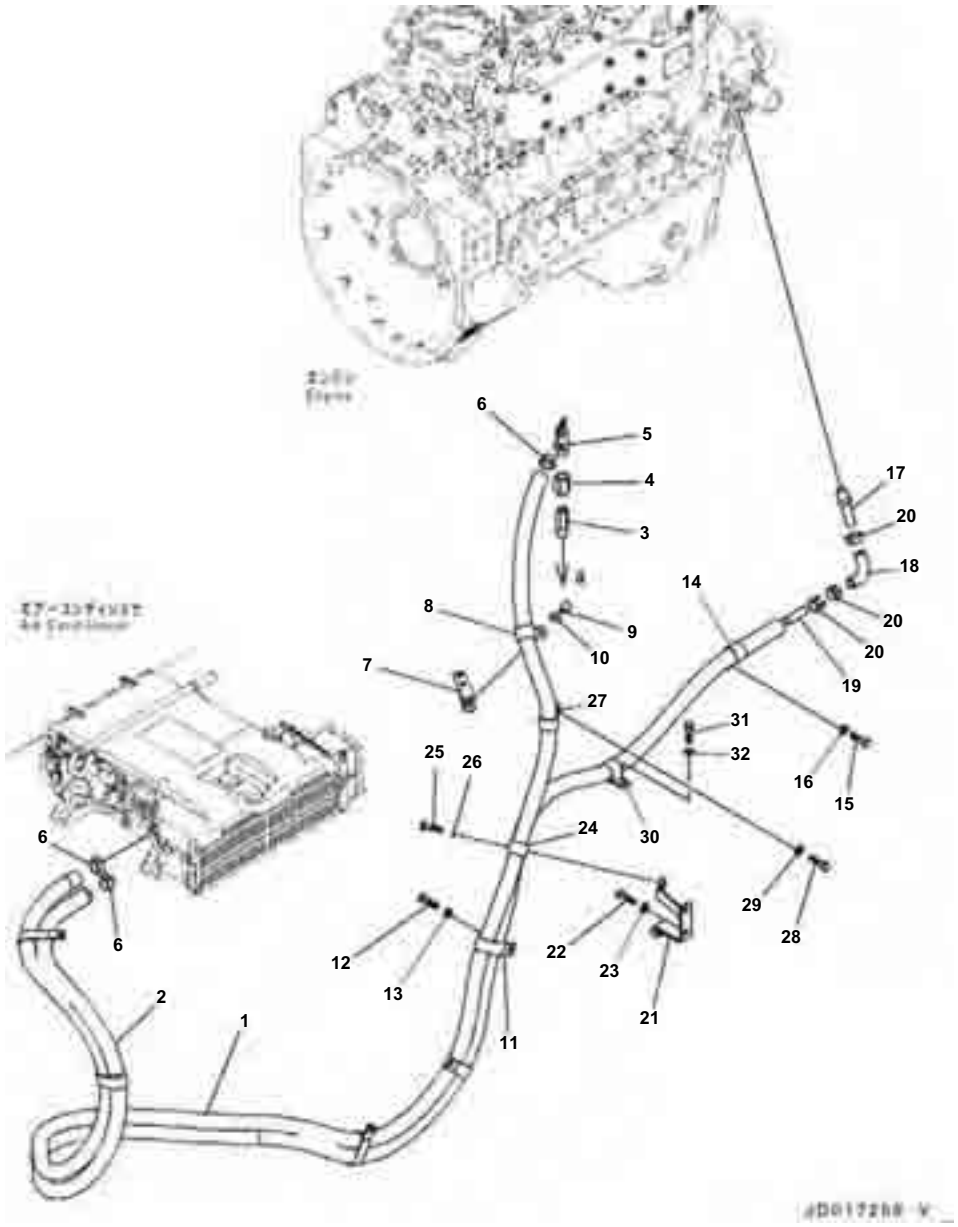

Cab Heater Piping

Index	Code	Part Number	Description	Qty	Serial No.
1		23B-07-71610	Hose	1	B40001-
2		23B-07-71620	Hose	1	B40001-
3		6732-11-6130	Adapter	1	B40001-
4		23B-07-71680	Bushing	1	B40001-
5		09482-10000	Valve	1	B40001-
6		09479-02400	Clamp	3	B40001-
7		23B-07-71660	Plate	1	B40001-
8		04434-53411	Clip	1	B40001-
9		01010-81020	Bolt	3	B40001-
10		01643-31032	Washer	3	B40001-
11		569-06-61980	Clip	5	B40001-
12		01010-81020	Bolt	5	B40001-
13		01643-31032	Washer	5	B40001-
14		04434-53411	Clip	1	B40001-
15		01010-81020	Bolt	1	B40001-
16		01643-31032	Washer	1	B40001-
17		23B-07-71630	Joint	1	B40001-
18		09483-30550	Hose	1	B40001-
19		09484-00560	Connector	1	B40001-
20		09479-02400	Clamp	3	B40001-
21		23B-07-71690	Bracket	1	B40001-
22		01010-81020	Bolt	2	B40001-
23		01643-31032	Washer	2	B40001-
24		569-06-61980	Clip	1	B40001-
25		01010-81020	Bolt	1	B40001-
26		01643-31032	Washer	1	B40001-
27		04434-53411	Clip	1	B40001-
28		01010-81020	Bolt	1	B40001-
29		01643-31032	Washer	1	B40001-
30		04434-53411	Clip	1	B40001-
31		01010-81020	Bolt	1	B40001-
32		01643-31032	Washer	1	B40001-

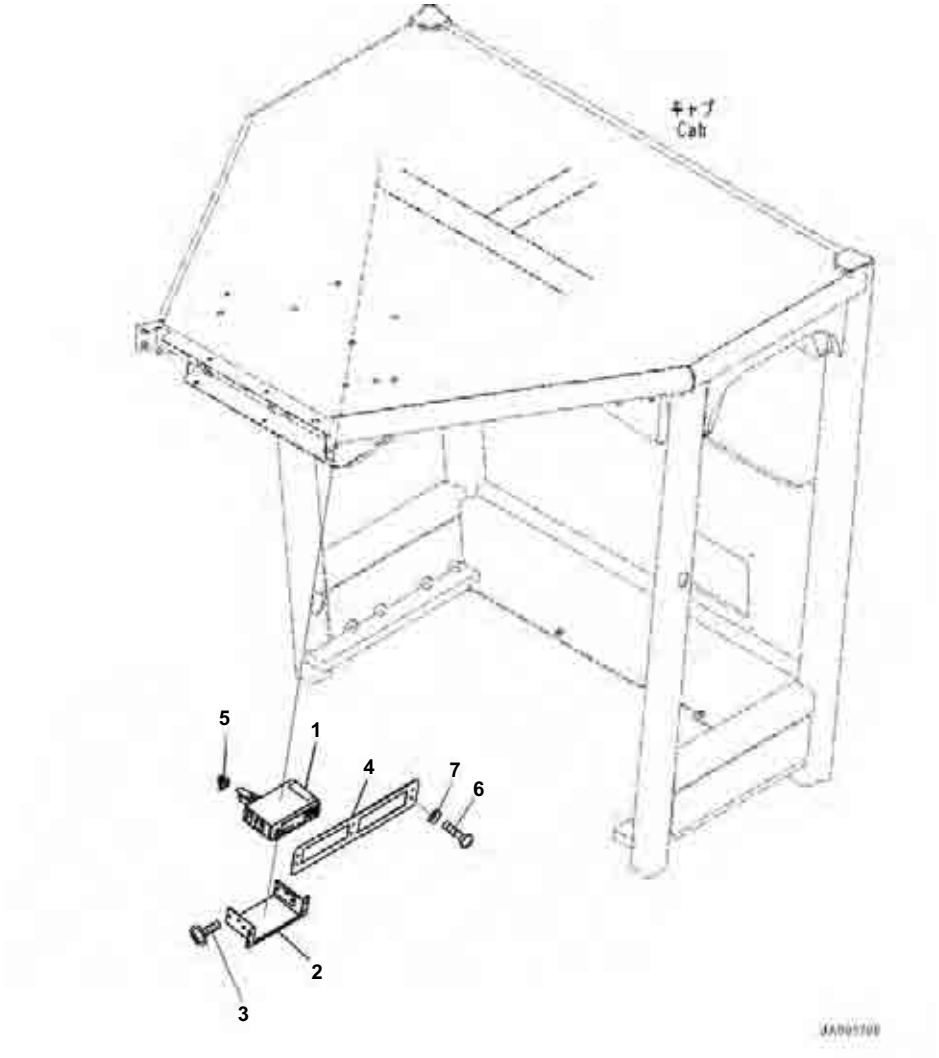

Radio, With AM-FM Radio, South America

Index	Code	Part Number	Description	Qty	Serial No.
1		425-07-24133	Radio, AM-FM	1	B40001-
		425-S67-2180	' Knob Kit	1	B40001-
2		23A-952-7920	Bracket	1	B40001-
3		01023-10510	Screw	6	B40001-
4		23B-952-7140	Plate	1	B40001-
5		08034-40521	Band	1	B40001-
6		01225-70620	Screw, Philips Head	6	B40001-
7		23S-55-51970	Washer	6	B40001-

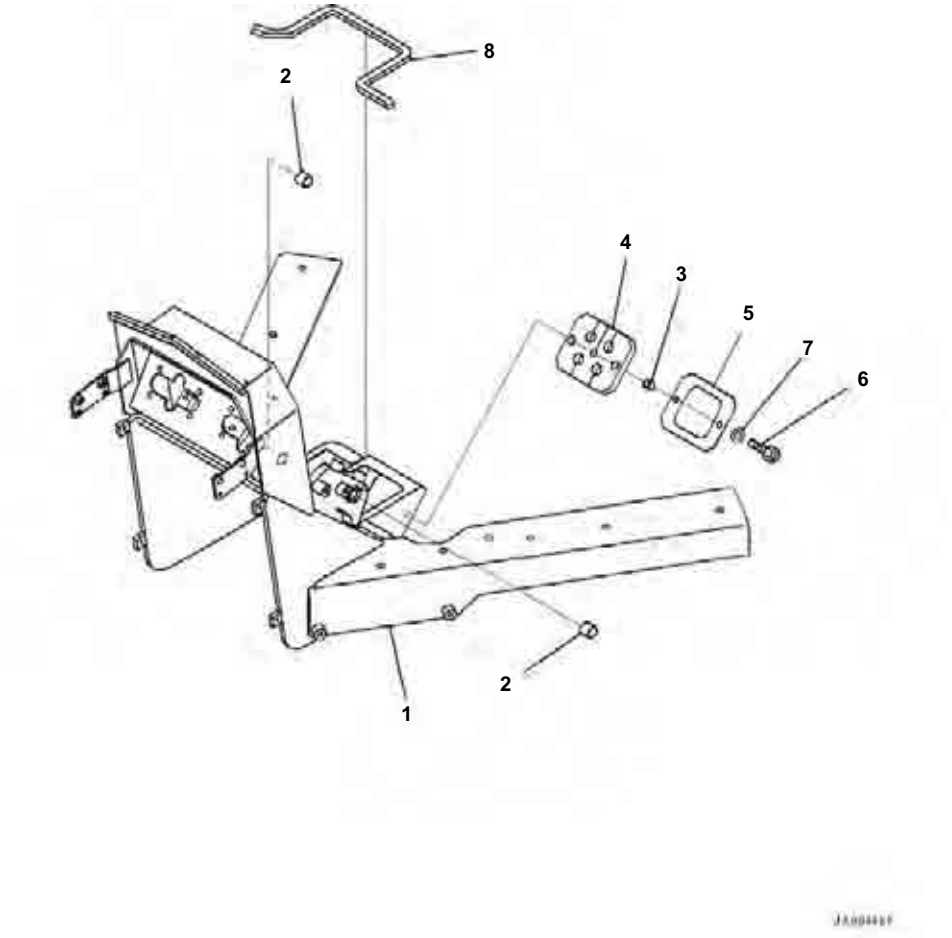

Floor Frame, With 9 Spool Valve, KOMTRAX, Steering Post Cover

Index	Code	Part Number	Description	Qty	Serial No.
1		23B-43-72532	Bracket	1	B40001-
2		234-885-1620	Bushing	4	B40001-
3		41H-879-1250	Spacer	2	B40001-
4		23B-43-72550	Cushion	1	B40001-
5		23B-43-72540	Plate	1	B40001-
6		01010-80830	Bolt	2	B40001-
7		01643-30823	Washer	2	B40001-
8		23B-54-72320	Sheet, Bonded	1	B40001-

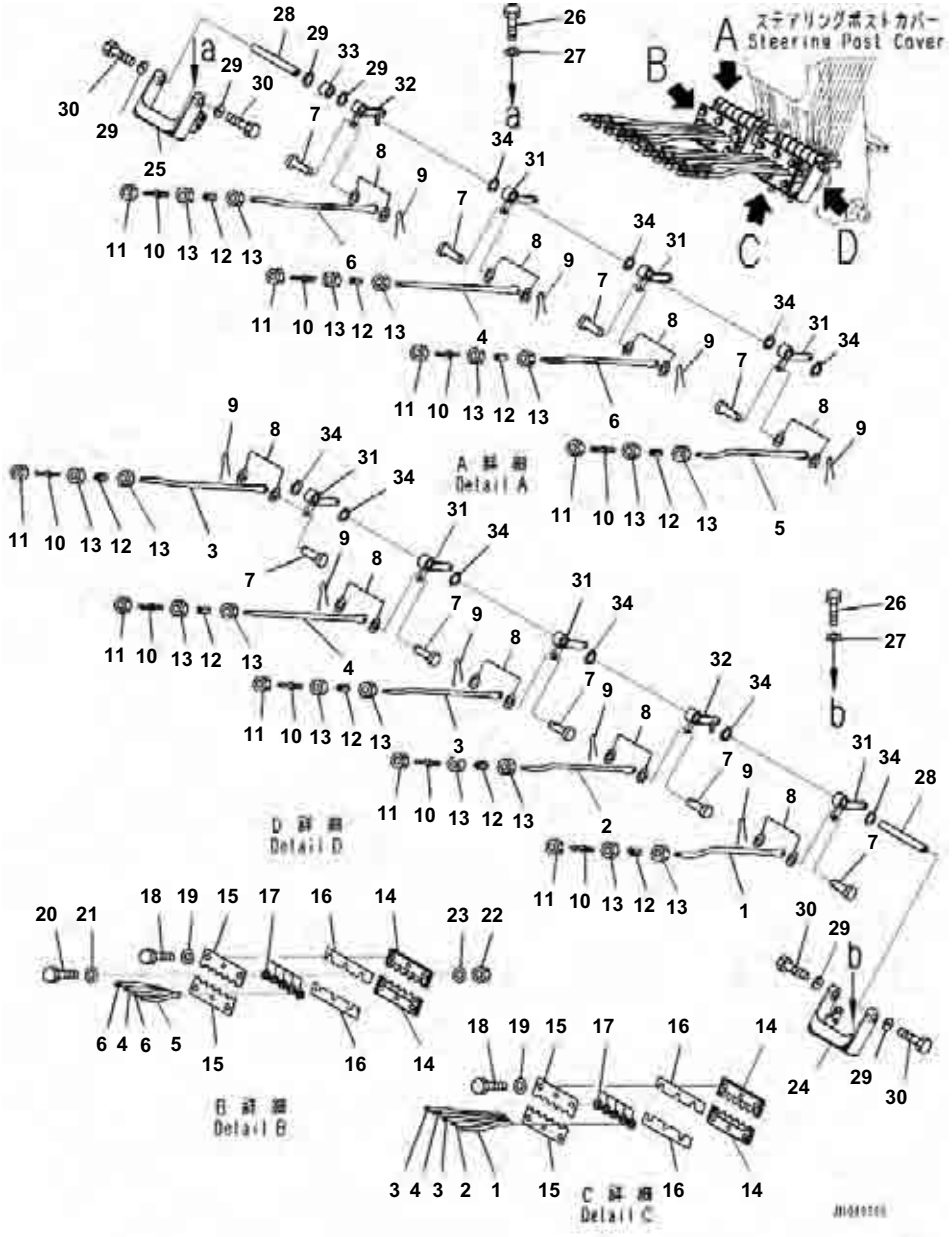

Floor Frame, With 9 Spool Valve, KOMTRAX, Rod

Index	Code	Part Number	Description	Qty	Serial No.
1		23B-43-72110	Rod	1	B40001-
2		23B-43-72120	Rod	1	B40001-
3		23B-43-72130	Rod	2	B40001-
4		23B-43-72140	Rod	2	B40001-
5		23B-43-72160	Rod	1	B40001-
6		23B-43-72170	Rod	2	B40001-
7		04205-10516	Pin	9	B40001-
8		01640-20508	Washer	18	B40001-
9		04050-11210	Pin, Cotter	9	B40001-
10		04248-30808	Rod	9	B40001-
11		01508-40805	Nut	9	B40001-
12		23B-43-72770	Joint	9	B40001-
13		01580-10806	Nut	18	B40001-
14		23B-54-72140	Plate	4	B40001-
15		23B-54-72130	Plate	4	B40001-
16		23B-54-72150	Shim, T=0.2mm	12	B40001-
17		23B-54-72160	Washer	10	B40001-
18		01010-80820	Bolt	12	B40001-
19		01643-30823	Washer	12	B40001-
20		01010-81025	Bolt	1	B40001-
21		01643-31032	Washer	1	B40001-
22		01580-11008	Nut	1	B40001-
23		01643-31032	Washer	1	B40001-
24		23B-43-72180	Bracket	1	B40001-
25		23B-43-72820	Bracket	1	B40001-
26		01010-81020	Bolt	4	B40001-
27		01643-31032	Washer	4	B40001-
28		23B-43-72190	Shaft	2	B40001-
29		175-61-23220	Washer	4	B40001-
30		01010-80816	Bolt	4	B40001-
31		23B-43-72220	Lever	7	B40001-
32		23B-43-72210	Lever	2	B40001-
33		23B-43-72380	Collar	1	B40001-
34		237-43-17420	Washer	18	B40001-

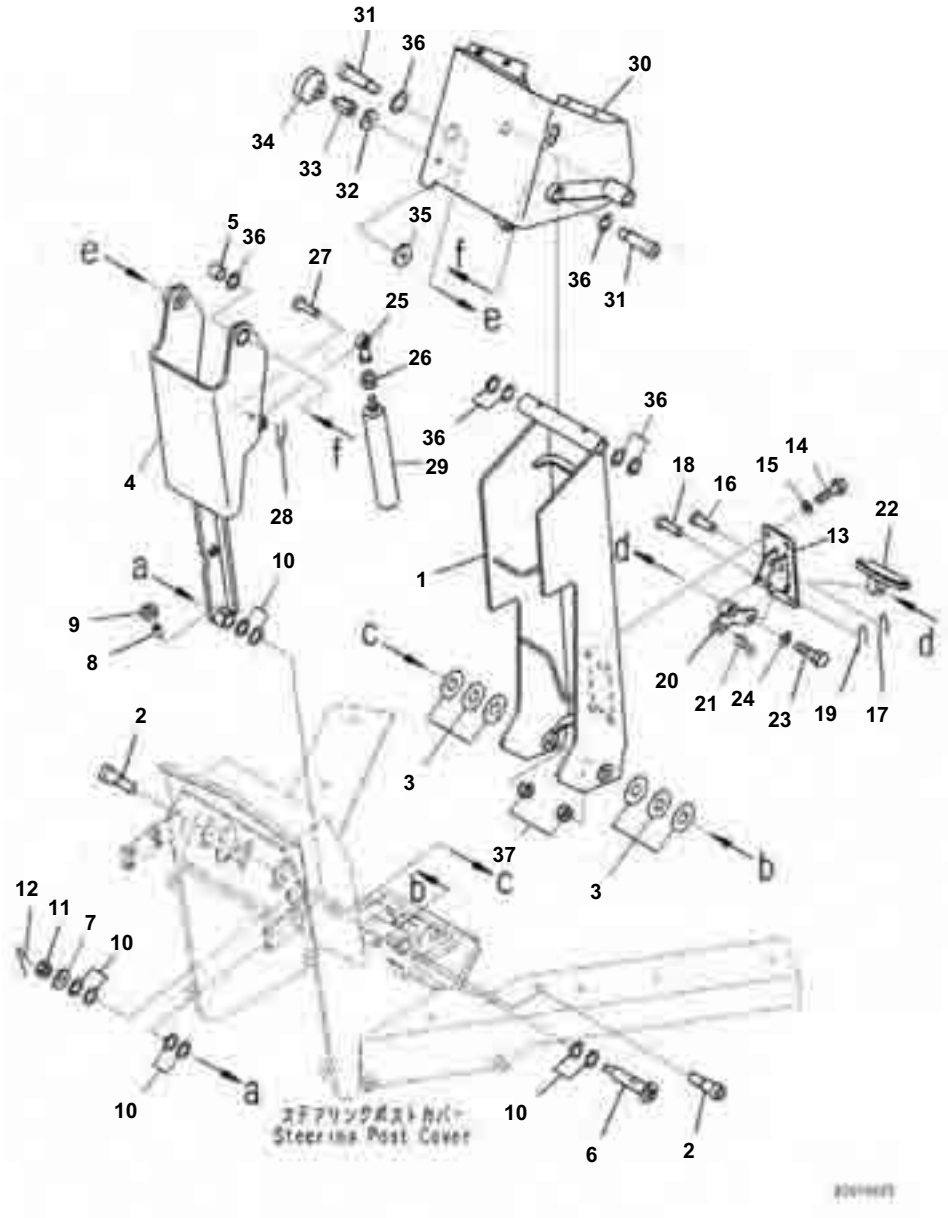

Floor Frame, With 9 Spool Valve, KOMTRAX, Steering Post

Index	Code	Part Number	Description	Qty	Serial No.
1		23B-43-72430	Bracket	1	B40001-
2		23B-43-72830	Joint	2	B40001-
3		23B-43-36350	Spacer	6	B40001-
4		23B-43-72440	Bracket	1	B40001-
5		234-885-1620	Bushing	1	B40001-
6		23B-43-72520	Shaft	1	B40001-
7		175-54-34170	Washer	1	B40001-
8		01310-20816	Screw	1	B40001-
9		01580-10806	Nut	1	B40001-
10		237-43-17420	Washer	8	B40001-
11		01590-31215	Nut, Slotted	1	B40001-
12		04050-13022	Pin, Cotter	1	B40001-
13		23B-43-72480	Bracket	1	B40001-
14		01010-81025	Bolt	4	B40001-
15		01643-31032	Washer	4	B40001-
16		04205-11238	Pin	1	B40001-
17		04052-21253	Pin, Snap	1	B40001-
18		23B-43-72470	Pin	1	B40001-
19		04052-20833	Pin	1	B40001-
20		23B-43-72450	Bracket	1	B40001-
21		6127-81-9741	Spring	1	B40001-
22		232-43-13130	Pedal	1	B40001-
23		01010-81025	Bolt	1	B40001-
24		01643-31032	Washer	1	B40001-
25		04250-81056	End	1	B40001-
26		01582-11008	Nut	1	B40001-
27		23B-43-72390	Pin	1	B40001-
28		04052-21038	Pin, Snap	1	B40001-
29		23B-43-36380	Dumper	1	B40001-
30		23B-43-72420	Cover	1	B40001-
31		23B-43-72990	Joint	2	B40001-
32		175-54-34170	Washer	1	B40001-
33		23B-43-72850	Pole	1	B40001-
34		232-950-2291	Knob	1	B40001-
35		23B-43-35820	Plate	1	B40001-
36		237-43-17420	Washer	7	B40001-
37		23B-43-72840	Nut	2	B40001-

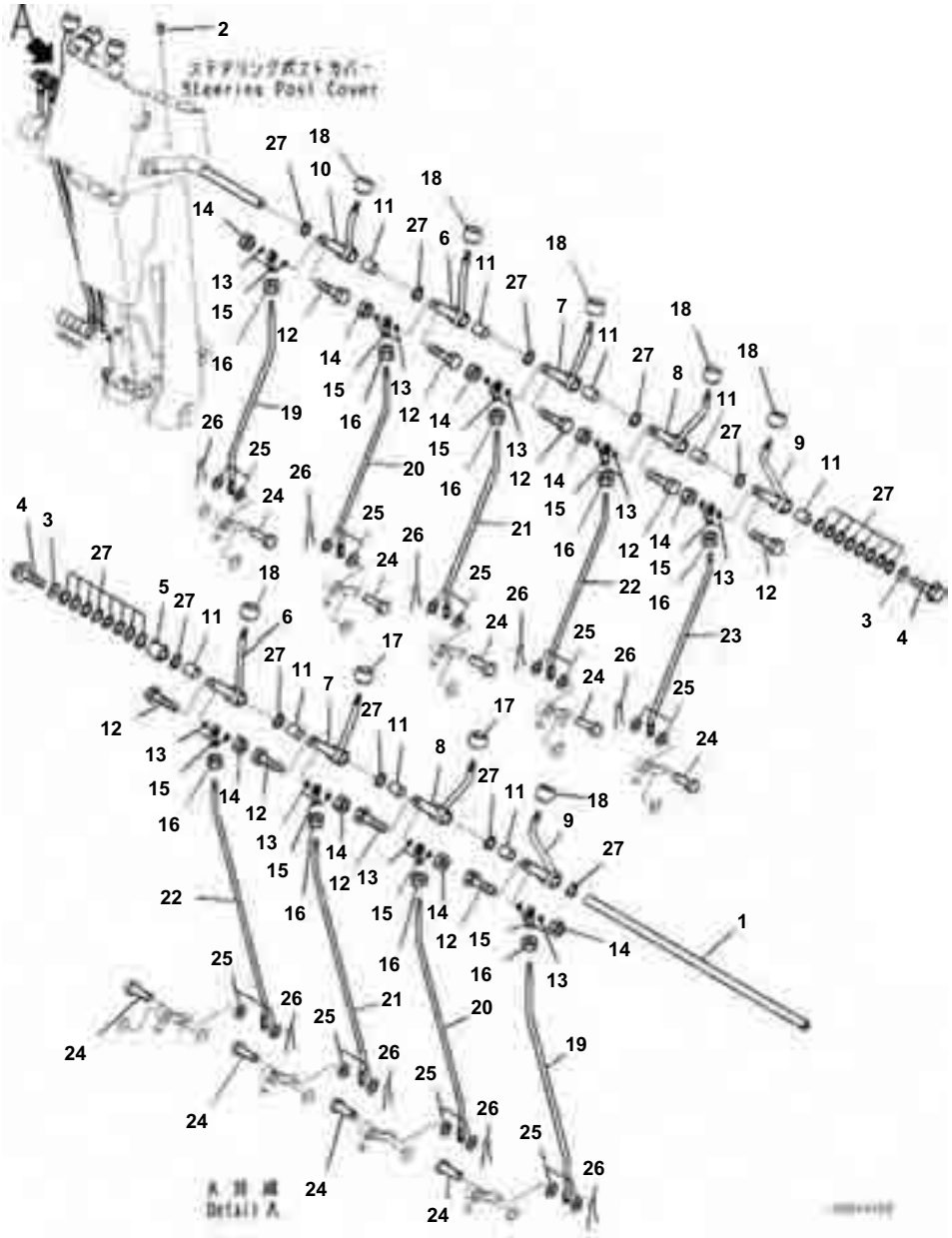

Floor Frame, With 9 Spool Valve, KOMTRAX, Lever

Index	Code	Part Number	Description	Qty	Serial No.
1		23B-43-72560	Bar	1	B40001-
2		01310-20812	Screw	2	B40001-
3		23B-43-35810	Plate	2	B40001-
4		01435-00816	Bolt	2	B40001-
5		237-43-17440	Collar	1	B40001-
6		23B-43-72290	Lever	2	B40001-
7		23B-43-72310	Lever	2	B40001-
8		23B-43-72320	Lever	2	B40001-
9		23B-43-72330	Lever	2	B40001-
10		23B-43-72280	Lever	1	B40001-
11		234-885-1610	Bushing	9	B40001-
12		235-43-18380	Bolt	9	B40001-
13		04254-10823	Spacer	18	B40001-
14		01580-10806	Nut	9	B40001-
15		04250-80847	Rod End	9	B40001-
16		01580-10806	Nut	9	B40001-
17		237-43-17490	Knob	2	B40001-
18		237-43-17480	Knob	7	B40001-
19		23B-43-72270	Rod	2	B40001-
20		23B-43-72260	Rod	2	B40001-
21		23B-43-72250	Rod	2	B40001-
22		23B-43-72240	Rod	2	B40001-
23		23B-43-72230	Rod	1	B40001-
24		04205-10516	Pin	9	B40001-
25		01640-20508	Washer	18	B40001-
26		04050-11210	Pin, Cotter	9	B40001-
27		237-43-17420	Washer	26	B40001-

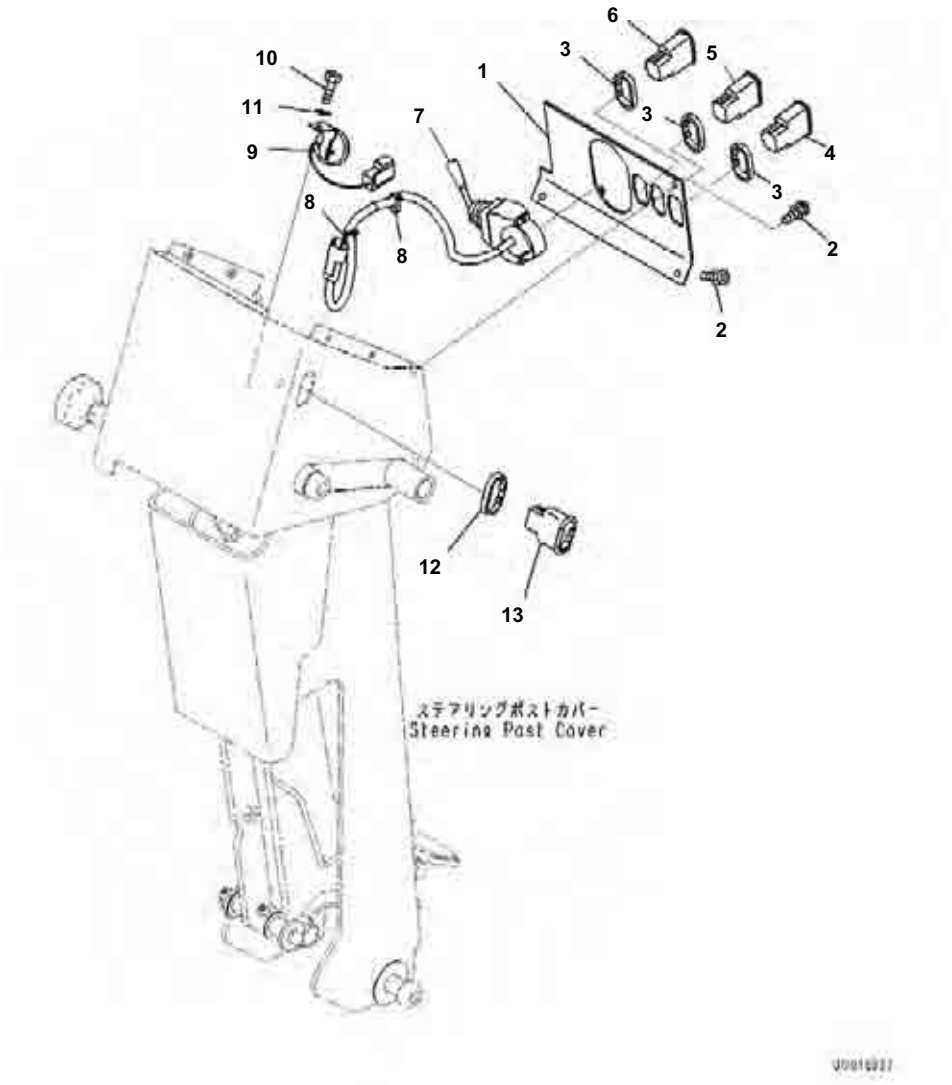

Floor Frame, With 9 Spool Valve, KOMTRAX, Switch and Plate

Index	Code	Part Number	Description	Qty	Serial No.
1		23B-43-72410	Plate	1	B40001-
2		01023-10612	Screw	3	B40001-
3		418-926-4530	Spacer	3	B40001-
4		423-06-45410	Switch	1	B40001-
5		423-06-45390	Switch	1	B40001-
6		20Y-06-42190	Cover	1	B40001-
7		23B-06-42590	Switch, Turn Signal	1	B40001-
8		08034-20519	Band	2	B40001-
9		203-06-56230	Buzzer	1	B40001-
10		01010-80612	Bolt	1	B40001-
11		01643-30623	Washer	1	B40001-
12		418-926-4530	Spacer	1	B40001-
13		23B-06-71610	Switch	1	B40001-

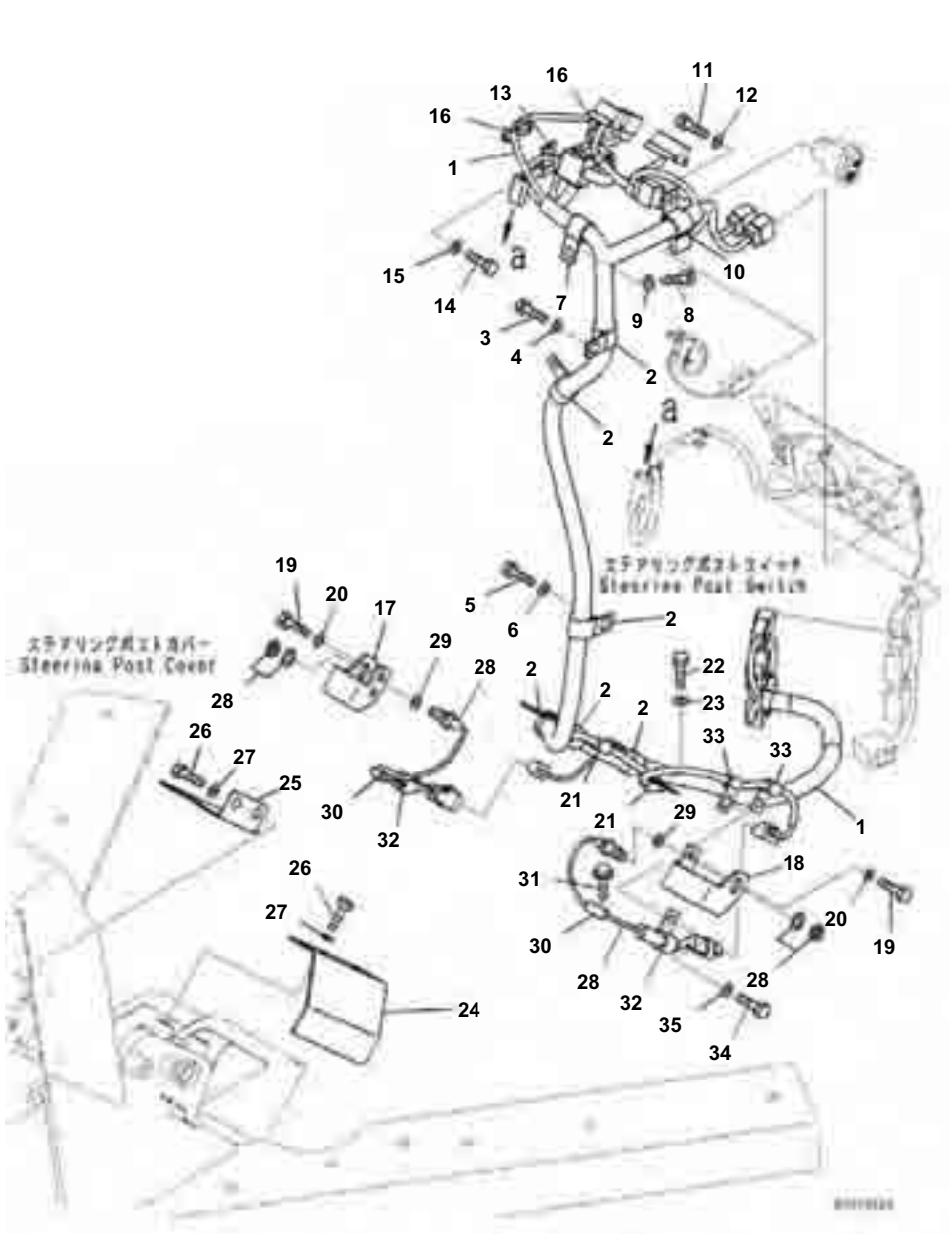

Floor Frame, With 9 Spool Valve, KOMTRAX, Blade Float Piping

Index	Code	Part Number	Description	Qty	Serial No.
1		23B-06-71252	Wiring Harness	1	B40001-
2		04434-51910	Clip	6	B40001-
3		01010-81020	Bolt	5	B40001-
4		01643-31032	Washer	5	B40001-
5		01010-81030	Bolt	1	B40001-
6		01643-31032	Washer	1	B40001-
7		04434-51708	Clip	1	B40001-
8		01010-80816	Bolt	1	B40001-
9		01643-30823	Washer	1	B40001-
10		04434-51908	Clip	1	B40001-
11		01010-80816	Bolt	1	B40001-
12		01643-30823	Washer	1	B40001-
13		04434-51008	Clip	1	B40001-
14		01010-80816	Bolt	1	B40001-
15		01643-30823	Washer	1	B40001-
16		08034-40521	Band	2	B40001-
17		23B-43-72730	Bracket	1	B40001-
18		23B-43-72720	Bracket	1	B40001-
19		01010-80820	Bolt	2	B40001-
20		01643-30823	Washer	2	B40001-
21		04434-50810	Clip	2	B40001-
22		01010-81020	Bolt	2	B40001-
23		01643-31032	Washer	2	B40001-
24		23B-43-72740	Cover	1	B40001-
25		23B-43-72750	Cover	1	B40001-
26		01010-81020	Bolt	4	B40001-
27		01643-31032	Washer	4	B40001-
28		23B-06-71690	Switch	2	B40001-
29		01640-21223	Washer, Flat	2	B40001-
30		04434-50508	Clip	2	B40001-
31		01435-00812	Bolt	2	B40001-
32		04434-51410	Clip	2	B40001-
33		04434-50810	Clip	2	B40001-
34		01010-81020	Bolt	3	B40001-
35		01643-31032	Washer	3	B40001-

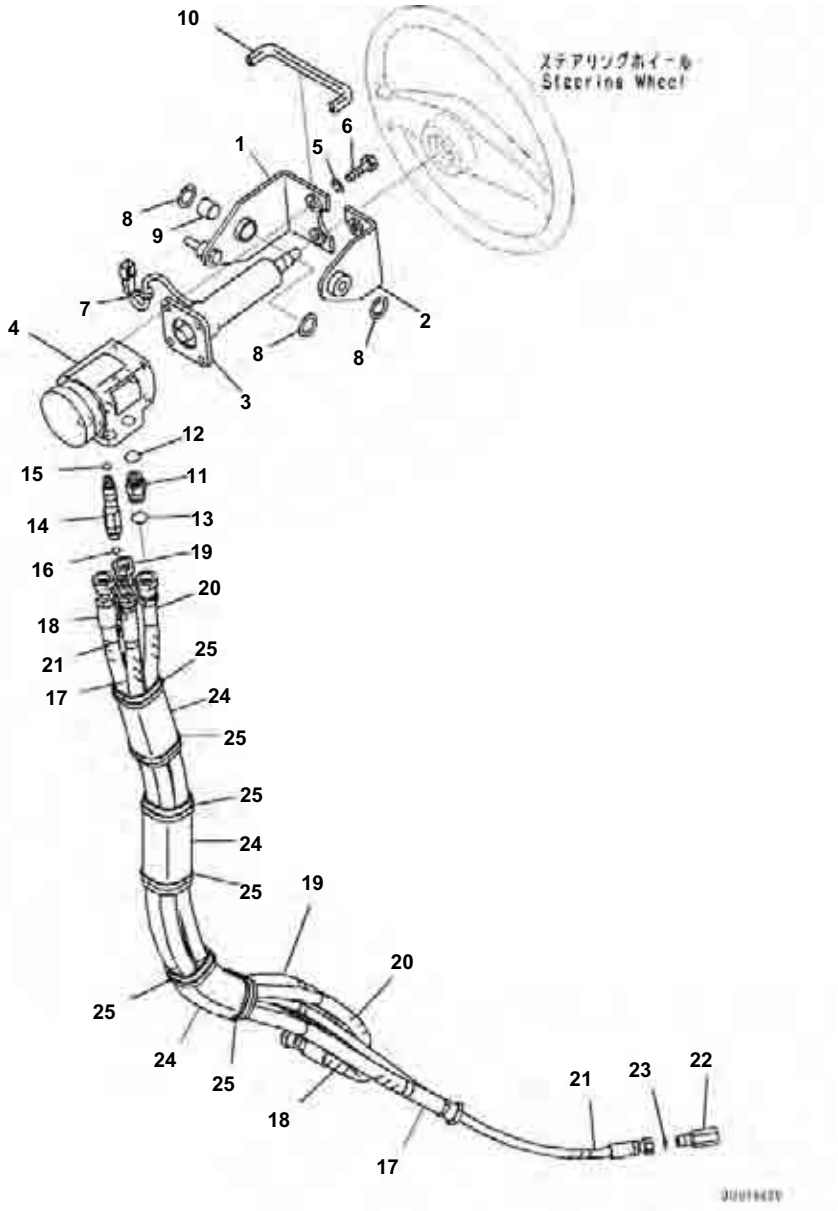

Floor Frame, With 9 Spool Valve, KOMTRAX, Steering Piping

Index	Code	Part Number	Description	Qty	Serial No.
1		23B-43-72490	Bracket	1	B40001-
2		23B-43-72510	Bracket	1	B40001-
3		23B-40-31501	Column Assembly	1	B40001-
4		23B-40-41102	Orbitrol Steering Control Assembly	1	B40001-
5		01602-21030	Washer, Spring	4	B40001-
6		01010-81035	Bolt	4	B40001-
7		08034-20519	Band	1	B40001-
8		237-43-17420	Washer	3	B40001-
9		234-885-1620	Bushing	1	B40001-
10		23B-43-72860	Seal	1	B40001-
11		417-62-31120	Nipple	4	B40001-
12		22W-61-12220	O-ring	4	B40001-
13		02896-11012	O-ring	4	B40001-
14		23B-40-72300	Valve	1	B40001-
15		416-62-11480	O-ring	1	B40001-
16		02896-11008	O-ring	1	B40001-
17		23B-40-72110	Hose, Brown	1	B40001-
18		23B-40-72120	Hose, Gray	1	B40001-
19		23B-40-72130	Hose, Orange	1	B40001-
20		23B-40-72140	Hose, White	1	B40001-
21		23B-40-72150	Hose, White	1	B40001-
22		23C-40-54130	Union	1	B40001-
23		02896-11008	O-ring	1	B40001-
24		135-49-33370	Tape, Vinyl	3	B40001-
25		08034-20834	Band	6	B40001-

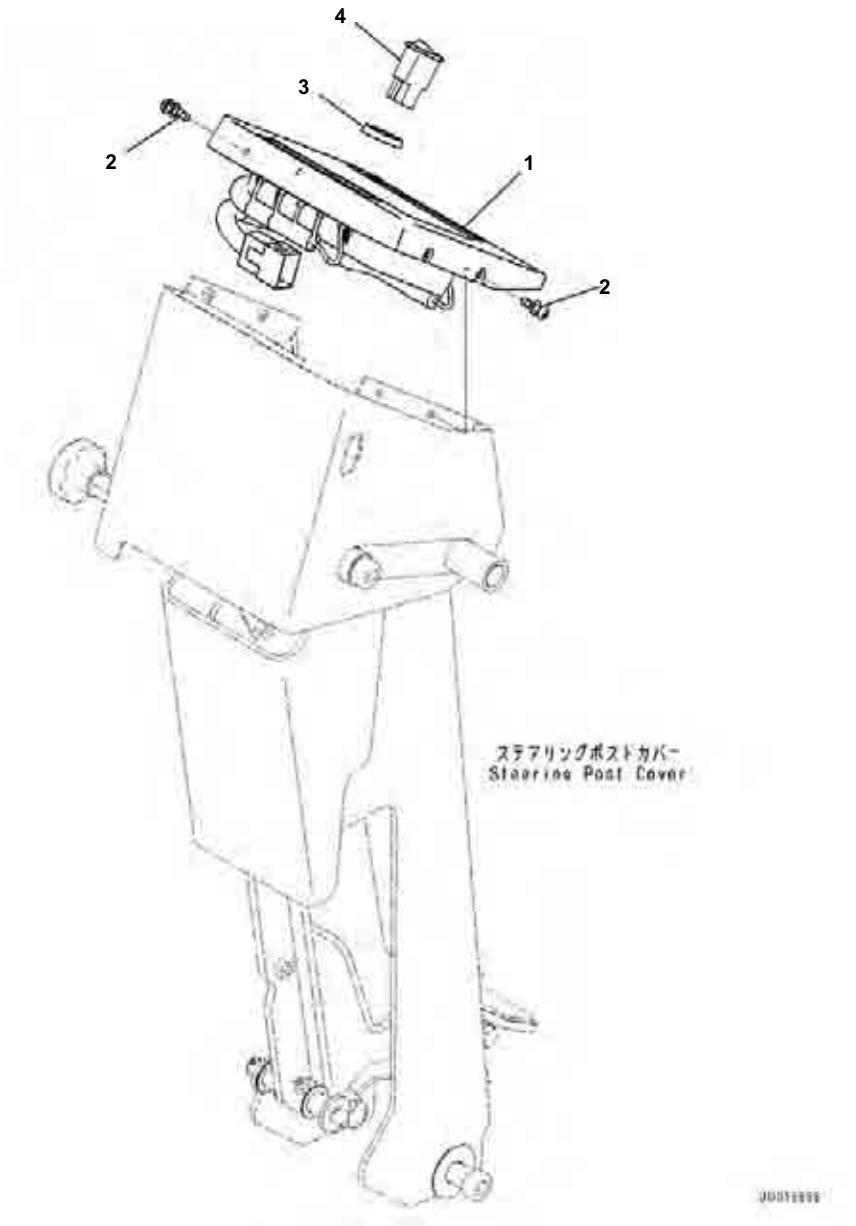

Index	Code	Part Number	Description	Qty	Serial No.
1		23B-06-71903	Monitor	1	B40001-
2		01023-70614	Screw	4	B40001-
3		418-926-4530	Spacer	1	B40001-
4		23B-06-71640	Switch, Defferential Lock	1	B40001-

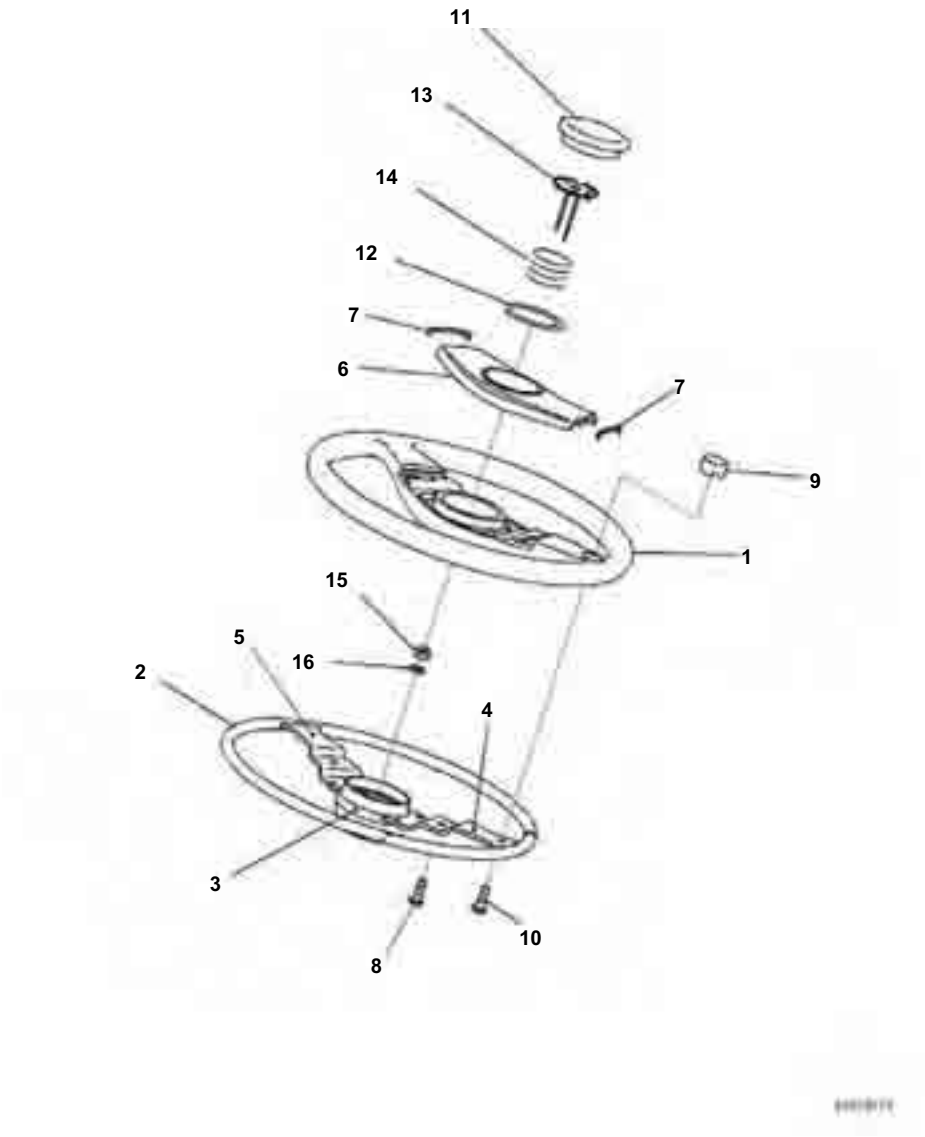

Floor Frame, With 9 Spool Valve, KOMTRAX, Steering Wheel

Index	Code	Part Number	Description	Qty	Serial No.
		23C-40-61500	Steering Wheel Assembly	1	B40001-
		23C-40-61510	· Wheel	1	B40001-
1		421-40-42350	· · Steering Wheel Assembly	1	B40001-
2		421-40-42310	· · · Steering Wheel Assembly	1	B40001-
3		421-40-42320	· · · · Boss	1	B40001-
4		421-40-42330	· · · · Plate	1	B40001-
5		421-40-42340	· · · · Plate	1	B40001-
		421-40-42360	· · Cover Assembly	1	B40001-
6		421-40-42370	· · · Cover	1	B40001-
7		421-40-42380	· · · Seal	2	B40001-
8		421-40-42390	· · Screw	1	B40001-
9		23C-40-61610	· · Cap	1	B40001-
10		23C-40-61620	· · Screw, Tapping	1	B40001-
		421-40-42230	· Pad Assembly	1	B40001-
11		421-40-42510	· · Pad	1	B40001-
12		421-40-42520	· · Spring	1	B40001-
		421-40-42240	· Needle Assembly	1	B40001-
13		421-40-42530	· · Needle	1	B40001-
14		421-40-42540	· · Spring	1	B40001-
15		421-40-12440	Nut	1	B40001-
16		421-40-12450	Washer	1	B40001-

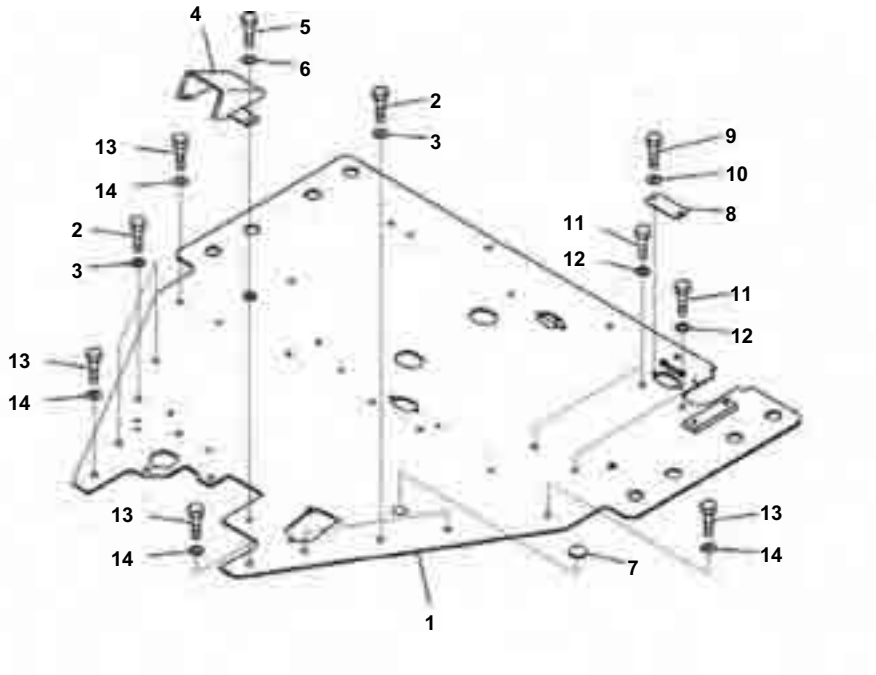

Floor Frame, With 9 Spool Valve, KOMTRAX, Platform

Index	Code	Part Number	Description	Qty	Serial No.
1		23B-54-72111	Platform	1	B40001-
2		01010-81025	Bolt	6	B40001-
3		01643-31032	Washer	6	B40001-
4		23B-54-72120	Cover	1	B40001-
5		01010-81020	Bolt	2	B40001-
6		01643-31032	Washer	2	B40001-
7		09415-02110	Cap	1	B40001-
8		23B-54-61180	Plate	1	B40001-
9		01010-80616	Bolt	2	B40001-
10		01643-30623	Washer	2	B40001-
11		01010-81020	Bolt	4	B40001-
12		01643-31032	Washer	4	B40001-
13		01010-81040	Bolt	4	B40001-
14		01643-31032	Washer	4	B40001-

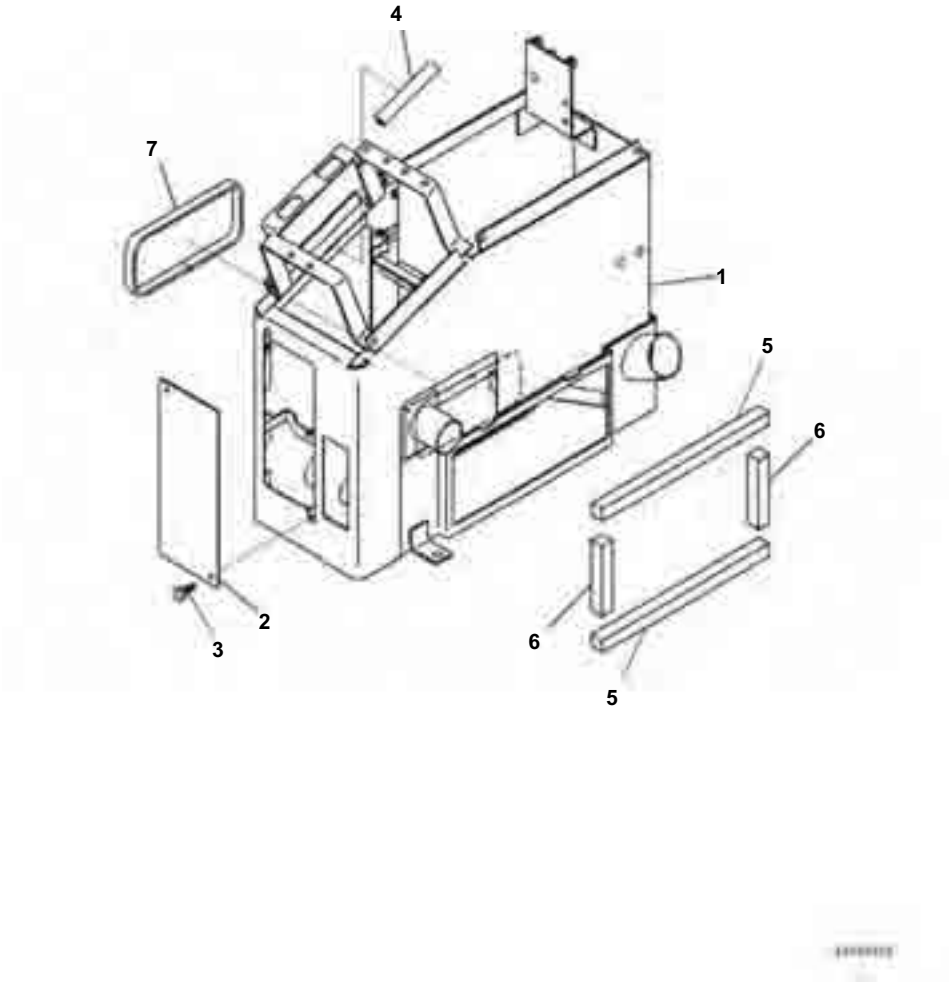

Floor Frame, With 9 Spool Valve, KOMTRAX, Console Box

Index	Code	Part Number	Description	Qty	Serial No.
1		23B-54-72171	Cover	1	B40001-
2		23B-54-72240	Plate	1	B40001-
3		235-54-11540	Knob	2	B40001-
4		21W-54-42630	Trim	1	B40001-
5		23B-54-72331	Cushion	2	B40001-
6		23B-54-72360	Cushion	2	B40001-
7		23B-54-72370	Cushion	1	B40001-

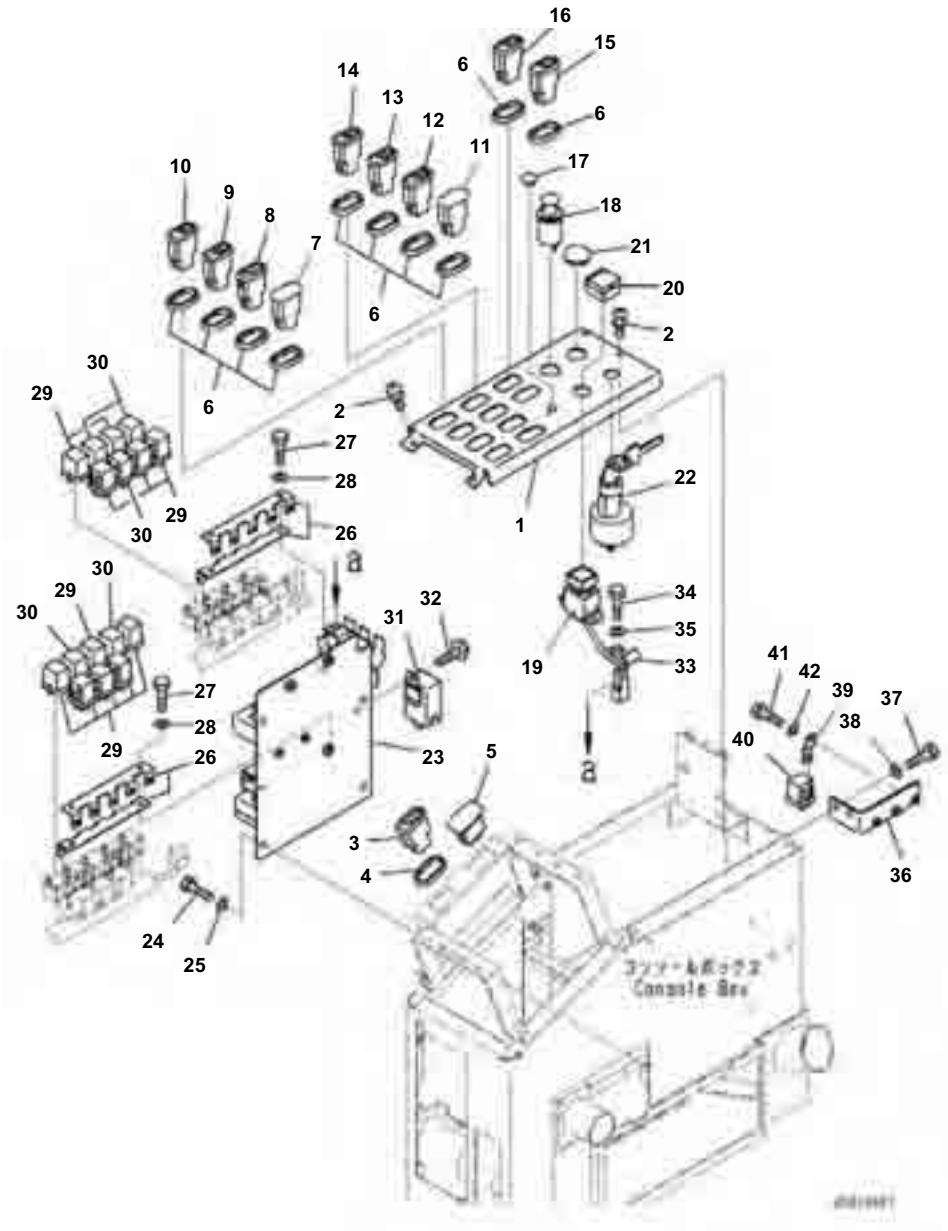

Floor Frame, With 9 Spool Valve, KOMTRAX, Bracket

Index	Code	Part Number	Description	Qty	Serial No.
1		23B-06-72110	Panel	1	B40001-
2		01023-70614	Screw	4	B40001-
3		23B-06-71620	Switch, RPM Set	1	B40001-
4		418-926-4530	Spacer	1	B40001-
5		23B-06-61311	Switch, RPM Resume	1	B40001-
6		418-926-4530	Spacer	10	B40001-
7		20Y-06-42190	Cover	1	B40001-
8		418-06-46130	Switch, Hazard Lamp	1	B40001-
9		23B-06-71650	Switch, TM Mode	1	B40001-
10		23B-06-72630	Switch, Accumulator	1	B40001-
11		20Y-06-42190	Cover	1	B40001-
12		23B-06-71660	Switch, Head Lamp	1	B40001-
13		423-06-45360	Switch, Work Lamp, Front, Front Work Lamp	1	B40001-
14		423-06-45350	Switch, Rear Work Lamp	1	B40001-
15		423-06-45521	Switch, Power Mode	1	B40001-
16		423-06-45550	Switch, Reverse Fan	1	B40001-
17		130-911-1640	Plug	1	B40001-
18		20Y-06-23472	Cigarette Lighter	1	B40001-
19		23B-06-42570	Switch, Lifter Lock	1	B40001-
20		23B-06-71670	Cover	1	B40001-
21		09415-02110	Cap	1	B40001-
22		08086-20100	Switch, Starting	1	B40001-
23		23B-06-71530	Bracket	1	B40001-
24		01010-80816	Bolt	4	B40001-
25		01643-30823	Washer	4	B40001-
26		569-06-61180	Bracket	4	B40001-
27		01010-80616	Bolt	4	B40001-
28		01643-30623	Washer	4	B40001-
29		569-06-61960	Relay	11	B40001-
30		569-06-61970	Relay	5	B40001-
31		416-06-22250	Flasher	1	B40001-
32		01435-00608	Bolt	1	B40001-
33		04434-50612	Clip	1	B40001-
34		01010-80816	Bolt	1	B40001-
35		01643-30823	Washer	1	B40001-
36		23B-06-71570	Bracket	1	B40001-
37		01010-80820	Bolt	2	B40001-
38		01643-30823	Washer	2	B40001-
39		287-06-16420	Bracket	3	B40001-
40		569-06-61960	Relay	3	B40001-
41		01010-80612	Bolt	3	B40001-
42		01643-30623	Washer	3	B40001-

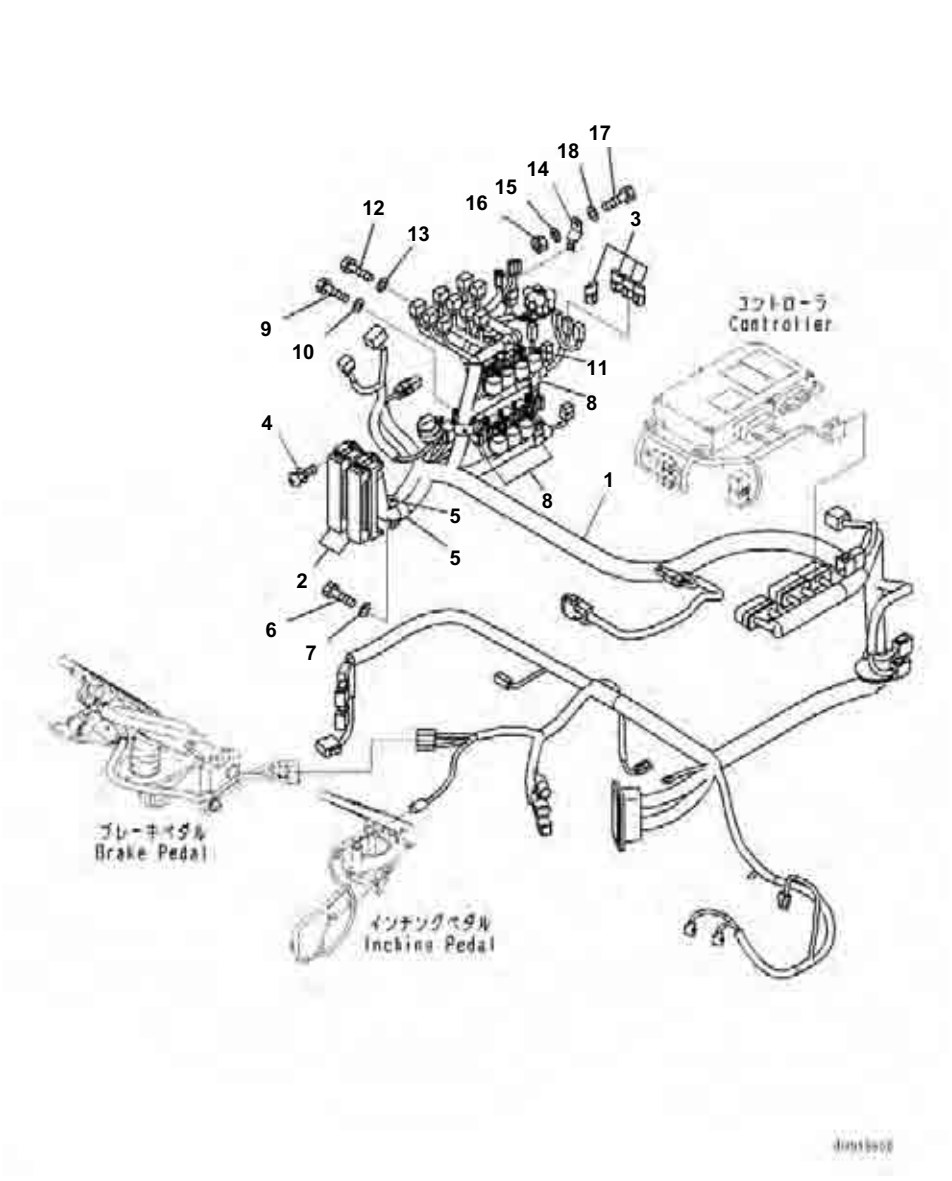

Floor Frame, With 9 Spool Valve, KOMTRAX, Wiring Harness

Index	Code	Part Number	Description	Qty	Serial No.
1		23B-06-71173	Wiring Harness	1	B40001-
		08041-00500	･ Fuse, 5Amp.	6	B40001-
		08041-01000	･ Fuse, 10Amp.	16	B40001-
		08041-01500	･ Fuse, 15Amp.	9	B40001-
		08041-02000	･ Fuse, 20Amp.	4	B40001-
		08041-03000	･ Fuse, 30Amp.	2	B40001-
2		08044-01500	･ Box, Fuse	2	B40001-
3		21J-06-13661	･ Diode	4	B40001-
4		01023-10620	Screw	4	B40001-
5		04434-52310	Clip	2	B40001-
6		01010-81020	Bolt	1	B40001-
7		01643-31032	Washer	1	B40001-
8		04434-52310	Clip	3	B40001-
9		01010-80816	Bolt	3	B40001-
10		01643-30823	Washer	3	B40001-
11		04434-51908	Clip	1	B40001-
12		01010-80816	Bolt	1	B40001-
13		01643-30823	Washer	1	B40001-
14		08193-21012	Clip	1	B40001-
15		01643-31032	Washer	1	B40001-
16		01580-11008	Nut	1	B40001-
17		01010-81020	Bolt	1	B40001-
18		01643-31032	Washer	1	B40001-

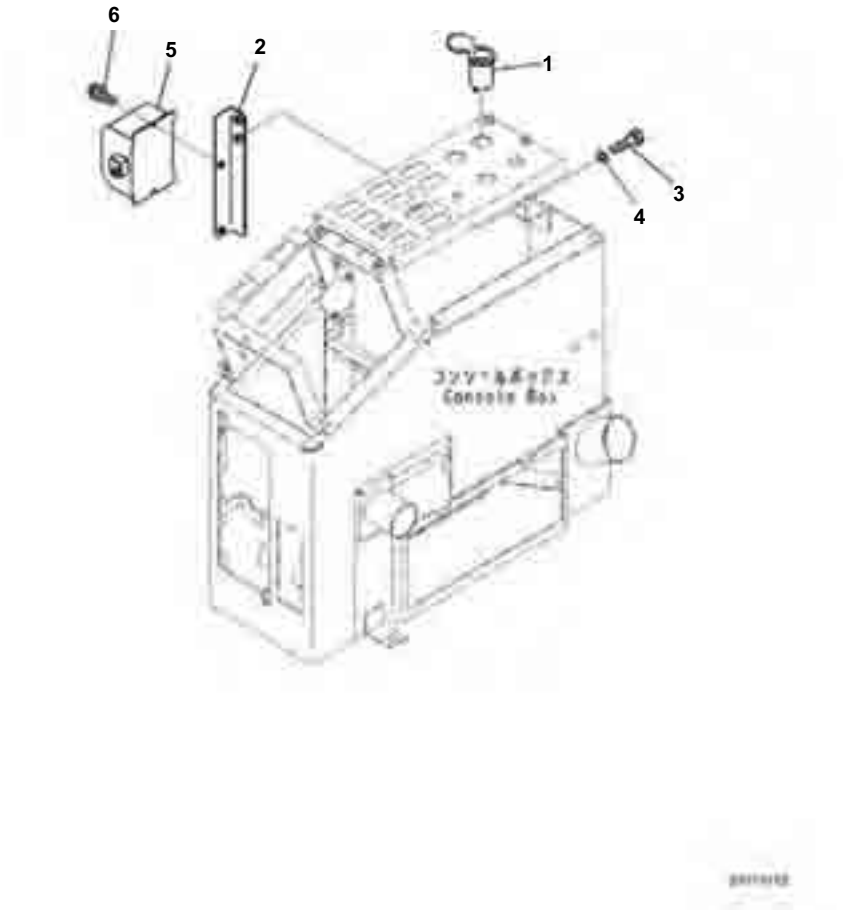

Floor Frame, With 9 Spool Valve, KOMTRAX, 12V converter

Index	Code	Part Number	Description	Qty	Serial No.
1		198-Z11-6890	Socket Assembly	1	B40001-
2		23B-06-71550	Bracket	1	B40001-
3		01010-80616	Bolt	2	B40001-
4		01643-30623	Washer	2	B40001-
5		12Y-06-11650	Converter	1	B40001-
6		01023-70512	Screw	2	B40001-

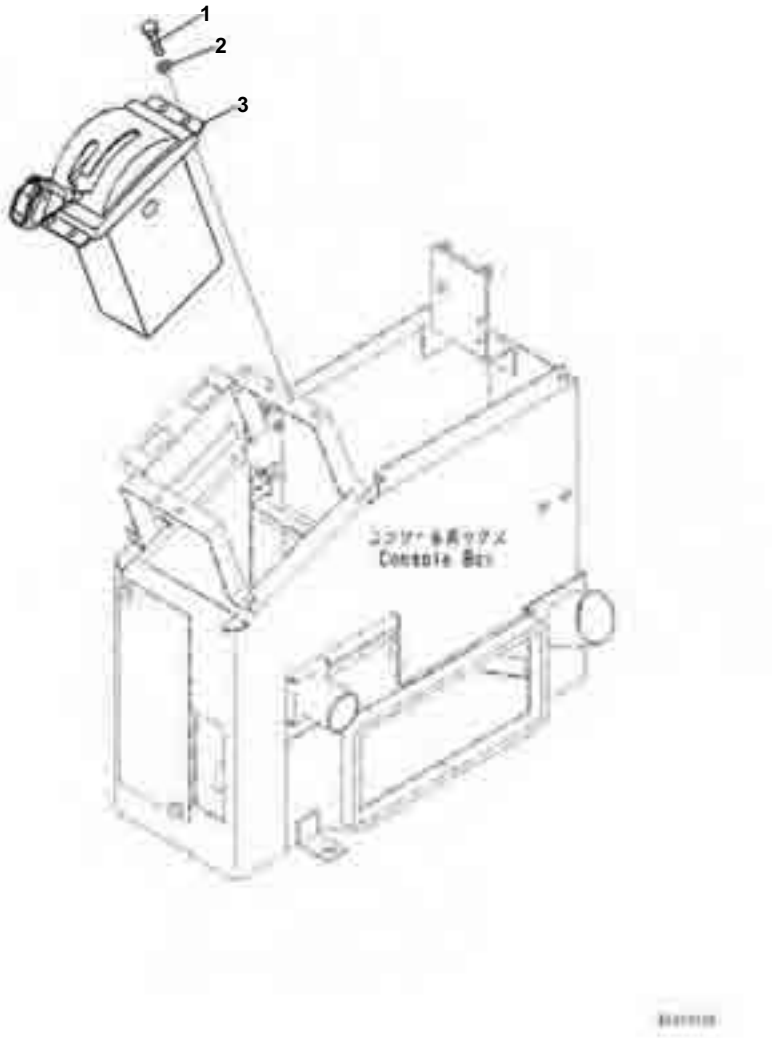

Floor Frame, With 9 Spool Valve, KOMTRAX, Gear Shift Lever

Index	Code	Part Number	Description	Qty	Serial No.
1		01010-80616	Bolt	4	B40001-
2		01643-30623	Washer	4	B40001-
3		23C-45-61100	Lever Assembly	1	B40001-

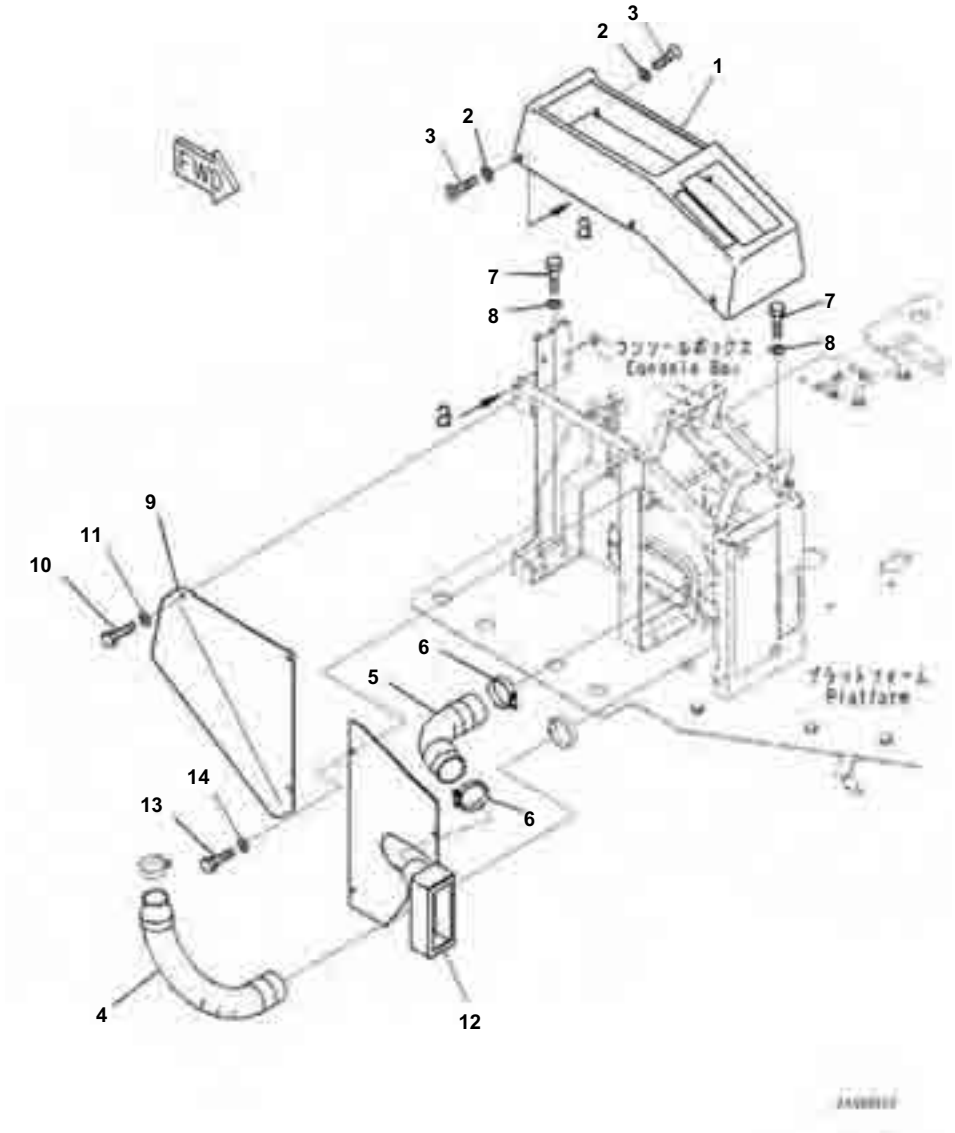

Floor Frame, With 9 Spool Valve, KOMTRAX, Console Cover, RHS

Index	Code	Part Number	Description	Qty	Serial No.
1		23B-43-61150	Cover	1	B40001-
2		23S-55-51970	Washer	6	B40001-
3		01225-70616	Screw, Philips Head	6	B40001-
4		23A-952-8741	Hose	1	B40001-
5		23A-952-8750	Hose	1	B40001-
6		07281-00549	Clamp	2	B40001-
7		01010-81025	Bolt	5	B40001-
8		01643-31032	Washer	5	B40001-
9		23B-54-72180	Plate	1	B40001-
10		01010-80616	Bolt	3	B40001-
11		01643-30623	Washer	3	B40001-
12		23B-54-72231	Cover	1	B40001-
13		01010-80616	Bolt	4	B40001-
14		01643-30623	Washer	4	B40001-

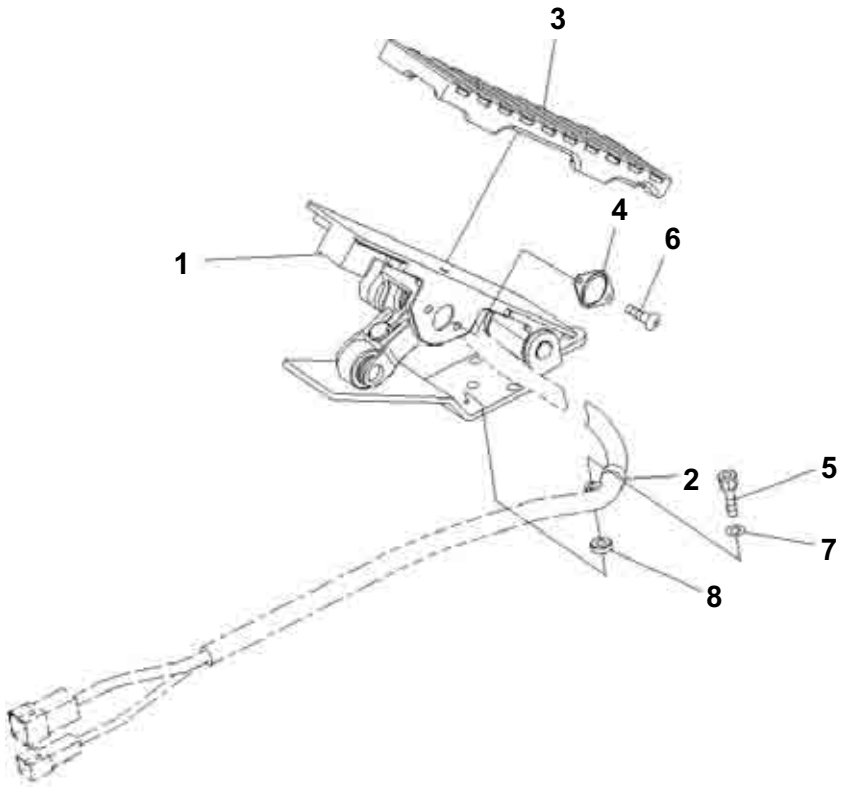

Floor Frame, With 9 Spool Valve, KOMTRAX, Accelerator Pedal

Index	Code	Part Number	Description	Qty	Serial No.
1		702-16-07022	Pedal Assembly	1	B40001-
2		702-16-74120	▪ Clip	1	B40001-
3		702-16-73960	▪ Cover	1	B40001-
4		702-16-73950	▪ Plate	1	B40001-
5		702-16-74130	▪ Bolt	1	B40001-
6		702-16-74150	▪ Screw	2	B40001-
7		01640-20408	▪ Washer, Flat	1	B40001-
8		702-16-74160	▪ Spacer, T=3.5mm	1	B40001-
		702-16-74330	▪ Spacer, T=4.0mm	1	B40001-

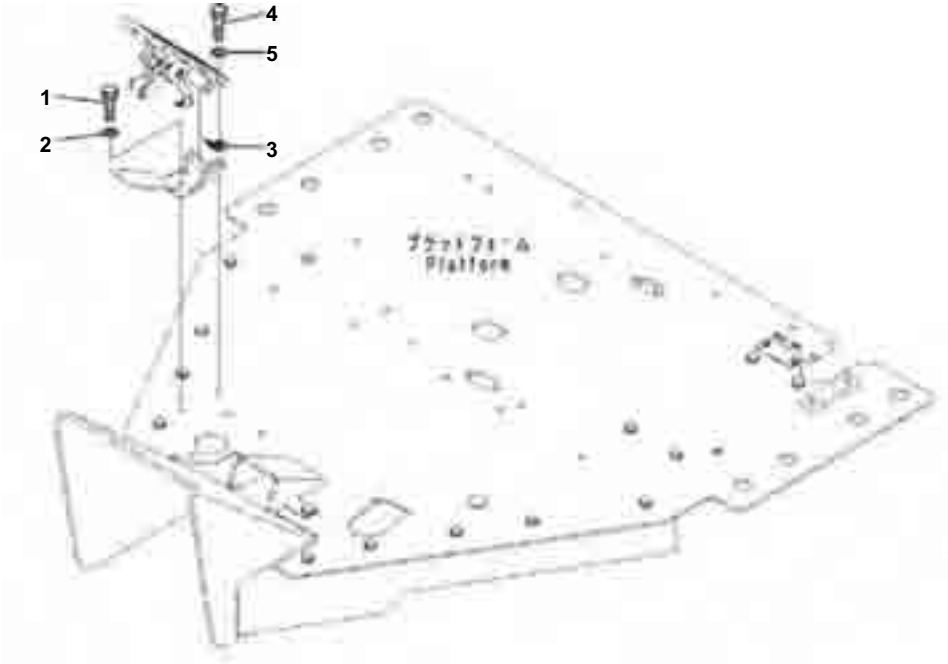

Floor Frame, With 9 Spool Valve, KOMTRAX, Accelerator Pedal Mounting

Index	Code	Part Number	Description	Qty	Serial No.
1		01010-80820	Bolt	2	B40001-
2		01643-30823	Washer	2	B40001-
3		42C-54-22330	Plate	1	B40001-
4		01010-80820	Bolt	1	B40001-
5		01643-30823	Washer	1	B40001-

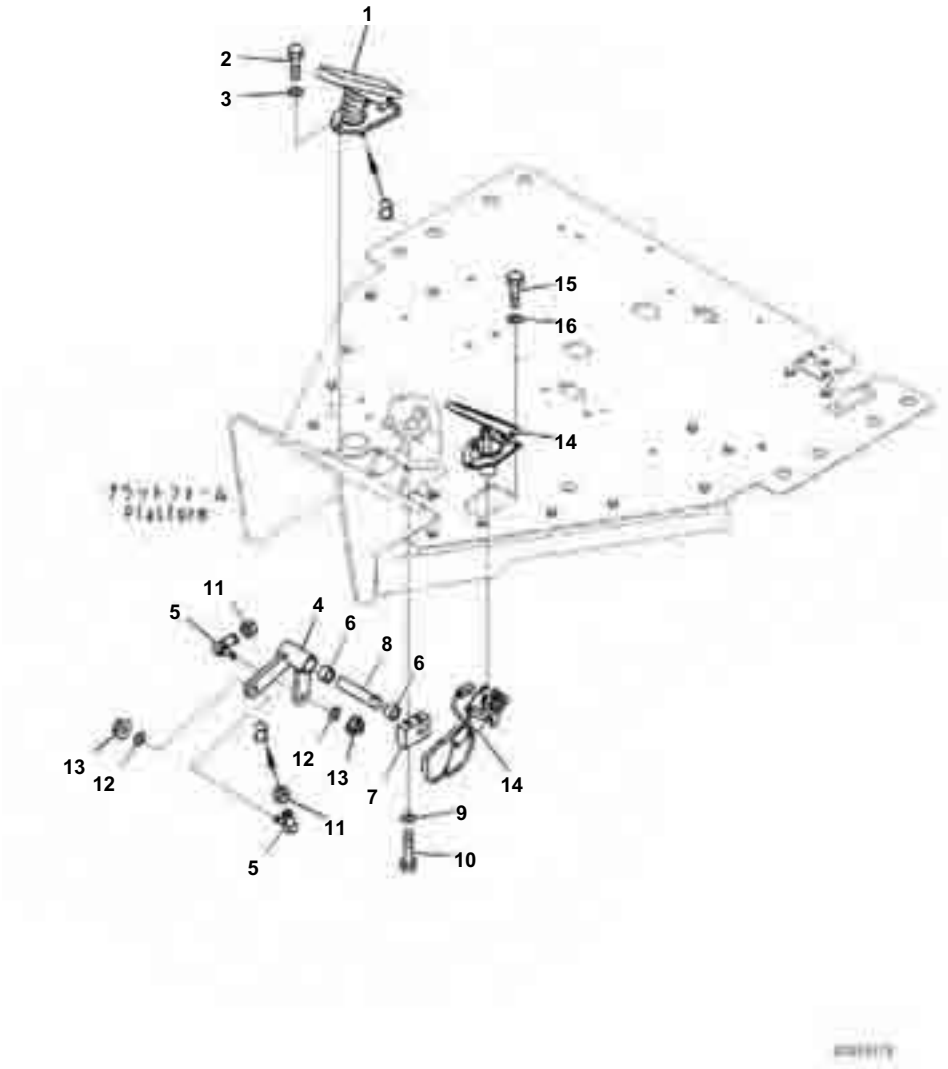

Floor Frame, With 9 Spool Valve, KOMTRAX, Inching Pedal and Brake Pedal

Index	Code	Part Number	Description	Qty	Serial No.
1		23B-43-72340	Pedal	1	B40001-
2		01010-81030	Bolt	3	B40001-
3		01643-31032	Washer	3	B40001-
4		23B-43-72350	Lever	1	B40001-
5		04256-41230	Joint, Ball	2	B40001-
6		06124-02520	Bearing	2	B40001-
7		418-43-37130	Plate	1	B40001-
8		23B-43-72360	Pin	1	B40001-
9		01643-31232	Washer	2	B40001-
10		01010-81270	Bolt	2	B40001-
11		01582-11210	Nut	2	B40001-
12		01643-31232	Washer	2	B40001-
13		01595-01210	Nut, Flanged	2	B40001-
14		23B-45-72100	Pedal	1	B40001-
15		01010-80620	Bolt	3	B40001-
16		01643-30623	Washer	3	B40001-

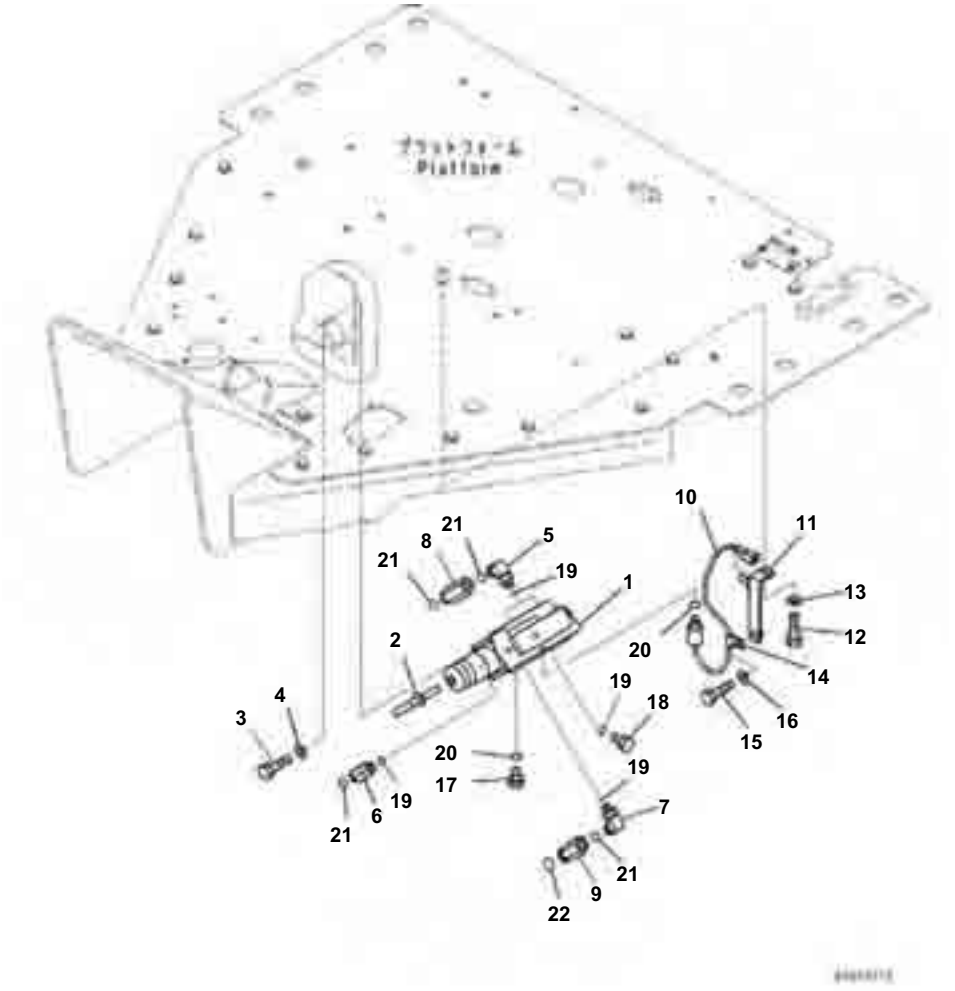

Index	Code	Part Number	Description	Qty	Serial No.
1		23B-43-71610	Valve Assembly	1	B40001-
2		418-43-37140	Rod	1	B40001-
3		01010-80825	Bolt	4	B40001-
4		01643-30823	Washer	4	B40001-
5		423-43-37260	Elbow	2	B40001-
6		23B-43-72790	Union	2	B40001-
7		423-43-37260	Elbow	1	B40001-
8		23B-43-72780	Union	2	B40001-
9		23B-43-72690	Union	1	B40001-
10		418-43-37230	Switch, Pressure	1	B40001-
11		23B-43-72370	Bracket	1	B40001-
12		01010-81020	Bolt	1	B40001-
13		01643-31032	Washer	1	B40001-
14		04434-50510	Clip	1	B40001-
15		01010-81020	Bolt	1	B40001-
16		01643-31032	Washer	1	B40001-
17		07040-11409	Plug	1	B40001-
18		07040-11612	Plug	1	B40001-
19		07002-11623	O-ring	6	B40001-
20		07002-11423	O-ring	2	B40001-
21		02896-11012	O-ring	7	B40001-
22		02896-11015	O-ring	1	B40001-

Reference:K1110-001020 Page:K009020

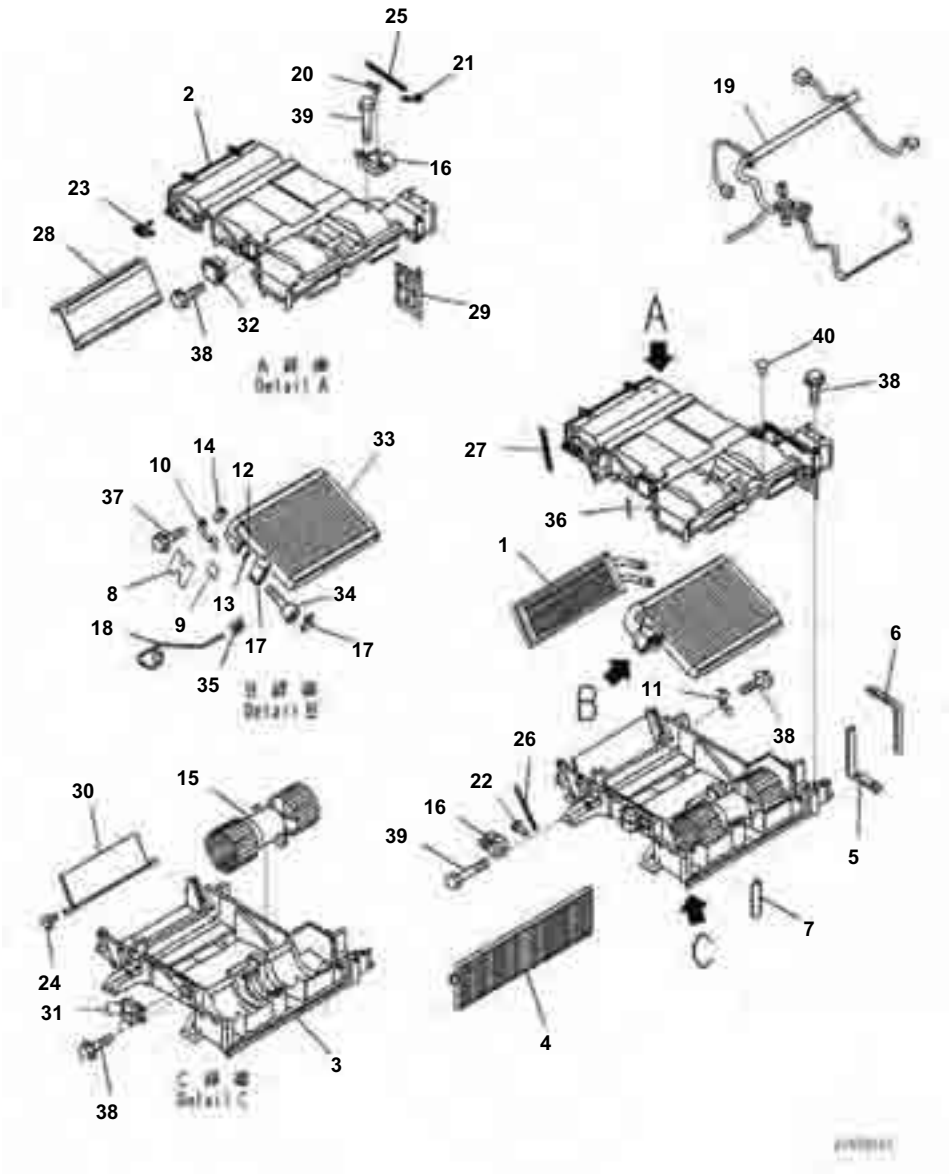

GD655-5 S/N B40001-UP
Floor Frame, With 9 Spool Valve, KOMTRAX, Air Conditioner Duct

Index	Code	Part Number	Description	Qty	Serial No.
		23B-07-74111	Air Conditioner	1	B40001-
1		AN51141-10491	· Heater Core Assembly	1	B40001-
2		AN51150-12571	· Case Assembly	1	B40001-
3		AN51150-12581	· Case Assembly	1	B40001-
4		AN51186-10430	· Filter	1	B40001-
5		AN51191-59570	· Packing	1	B40001-
6		AN51191-59580	· Packing	1	B40001-
7		AN51191-59810	· Packing	1	B40001-
8		AN51194-54000	· Packing	1	B40001-
9		AN51194-60201	· Packing	1	B40001-
10		AN51240-43650	· Bracket	1	B40001-
11		AN51243-41510	· Holder	1	B40001-
12		AN51439-D0041	· O-ring	1	B40001-
13		AN51439-D0051	· O-ring	1	B40001-
14		AN51451-45970	· Retainer	1	B40001-
15		AN51500-10980	· Blower Assembly	1	B40001-
16		AN51502-15140	· Motor	2	B40001-
17		AN51515-A0600	· Valve, Expansion	1	B40001-
18		AN51532-41281	· Thermistor	1	B40001-
19		AN51550-19140	· Wiring Harness	1	B40001-
20		AN51571-43930	· Lever	1	B40001-
21		AN51571-43940	· Lever	1	B40001-
22		AN51571-43950	· Lever	1	B40001-
23		AN51571-43961	· Lever	1	B40001-
24		AN51571-43970	· Lever	1	B40001-
25		AN51571-44050	· Rod	1	B40001-
26		AN51571-44060	· Rod	1	B40001-
27		AN51571-44070	· Rod	1	B40001-
28		AN51573-11760	· Door	1	B40001-
29		AN51573-11780	· Door	1	B40001-
30		AN51573-12070	· Door	1	B40001-
31		AN51580-41010	· Relay	2	B40001-
32		AN51589-17800	· Controller	1	B40001-
33		AN51700-A0370	· Evaporator Assembly	1	B40001-
34		AN51851-42580	· Bolt	2	B40001-
35		AN51873-40340	· Holder	1	B40001-
36		AN51901-E0590	· Decal	1	B40001-
37		ANBA00612DAA	· Bolt	1	B40001-
38		ANTB105160TA	· Bolt	16	B40001-
39		ANTN104300TA	· Bolt	6	B40001-
40		AN51872-40850	· Clip	1	B40001-

Reference:K1110-001021 Page:K009021

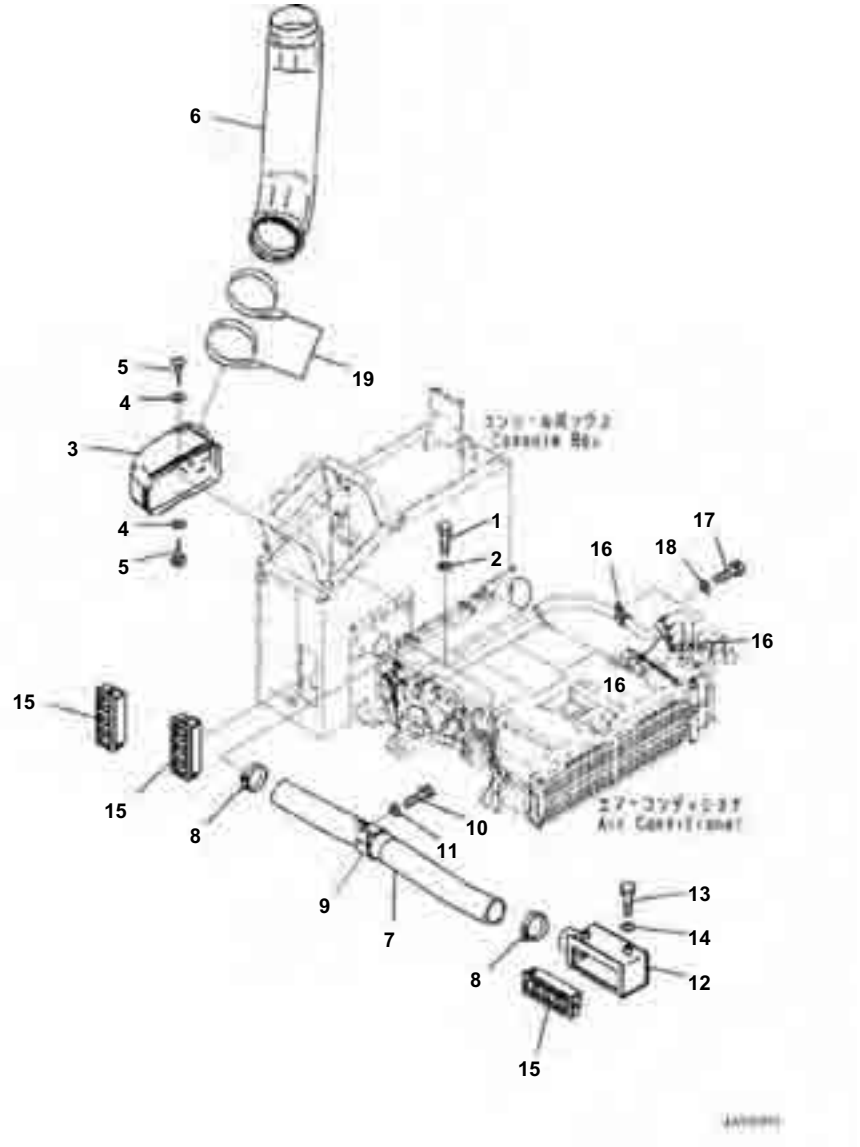

Floor Frame, With 9 Spool Valve, KOMTRAX, Air Conditioner Related Parts

Index	Code	Part Number	Description	Qty	Serial No.
1		01010-80820	Bolt	4	B40001-
2		01643-30823	Washer	4	B40001-
3		21T-979-4380	Duct	1	B40001-
4		01640-20508	Washer	2	B40001-
5		01370-00512	Screw	2	B40001-
6		208-53-12220	Duct	1	B40001-
7		23B-07-74130	Hose	1	B40001-
8		07281-00609	Clamp	2	B40001-
9		23S-56-21150	Clip	1	B40001-
10		01010-81020	Bolt	1	B40001-
11		01643-31032	Washer	1	B40001-
12		23B-07-74160	Duct	1	B40001-
13		01010-80816	Bolt	2	B40001-
14		01643-30823	Washer	2	B40001-
15		421-07-23870	Grille	3	B40001-
16		04434-51910	Clip	3	B40001-
17		01010-81020	Bolt	2	B40001-
18		01643-31032	Washer	2	B40001-
19		08034-20536	Band	2	B40001-

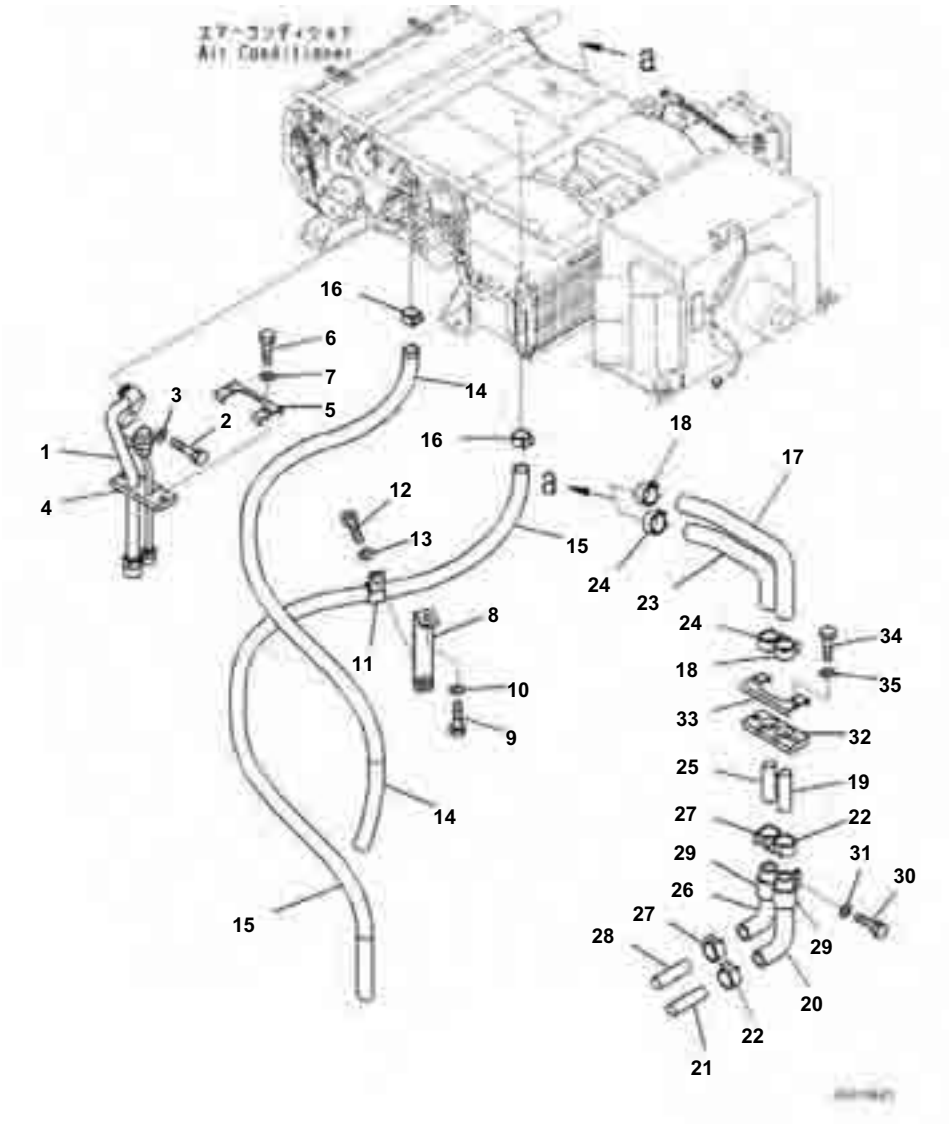

Floor Frame, With 9 Spool Valve, KOMTRAX, Air Conditioner Piping

Index	Code	Part Number	Description	Qty	Serial No.
1		23B-07-74210	Tube	1	B40001-
2		01010-80630	Bolt	1	B40001-
3		01643-30623	Washer	1	B40001-
4		23B-07-74290	Sheet	1	B40001-
5		23B-809-5470	Plate	1	B40001-
6		01010-80625	Bolt	2	B40001-
7		01643-30623	Washer	2	B40001-
8		427-04-11130	Plate	1	B40001-
9		01010-81020	Bolt	1	B40001-
10		01643-31032	Washer	1	B40001-
11		04434-52110	Clip	1	B40001-
12		01010-81020	Bolt	1	B40001-
13		01643-31032	Washer	1	B40001-
14		09483-10411	Hose	1	B40001-
15		09483-10413	Hose	1	B40001-
16		07285-00180	Clip	2	B40001-
17		23B-07-74230	Hose	1	B40001-
18		09479-02400	Clamp	2	B40001-
19		09484-00560	Connector	1	B40001-
20		23B-809-5460	Hose	1	B40001-
21		09484-00560	Connector	1	B40001-
22		09479-02400	Clamp	2	B40001-
23		23B-07-74120	Hose	1	B40001-
24		09479-02400	Clamp	2	B40001-
25		09484-00560	Connector	1	B40001-
26		23B-07-74220	Hose	1	B40001-
27		09479-02400	Clamp	2	B40001-
28		09484-00560	Connector	1	B40001-
29		04434-52511	Clip	2	B40001-
30		01010-81020	Bolt	1	B40001-
31		01643-31032	Washer	1	B40001-
32		23C-07-62480	Sheet	1	B40001-
33		23B-809-5470	Plate	1	B40001-
34		01010-80625	Bolt	2	B40001-
35		01643-30623	Washer	2	B40001-

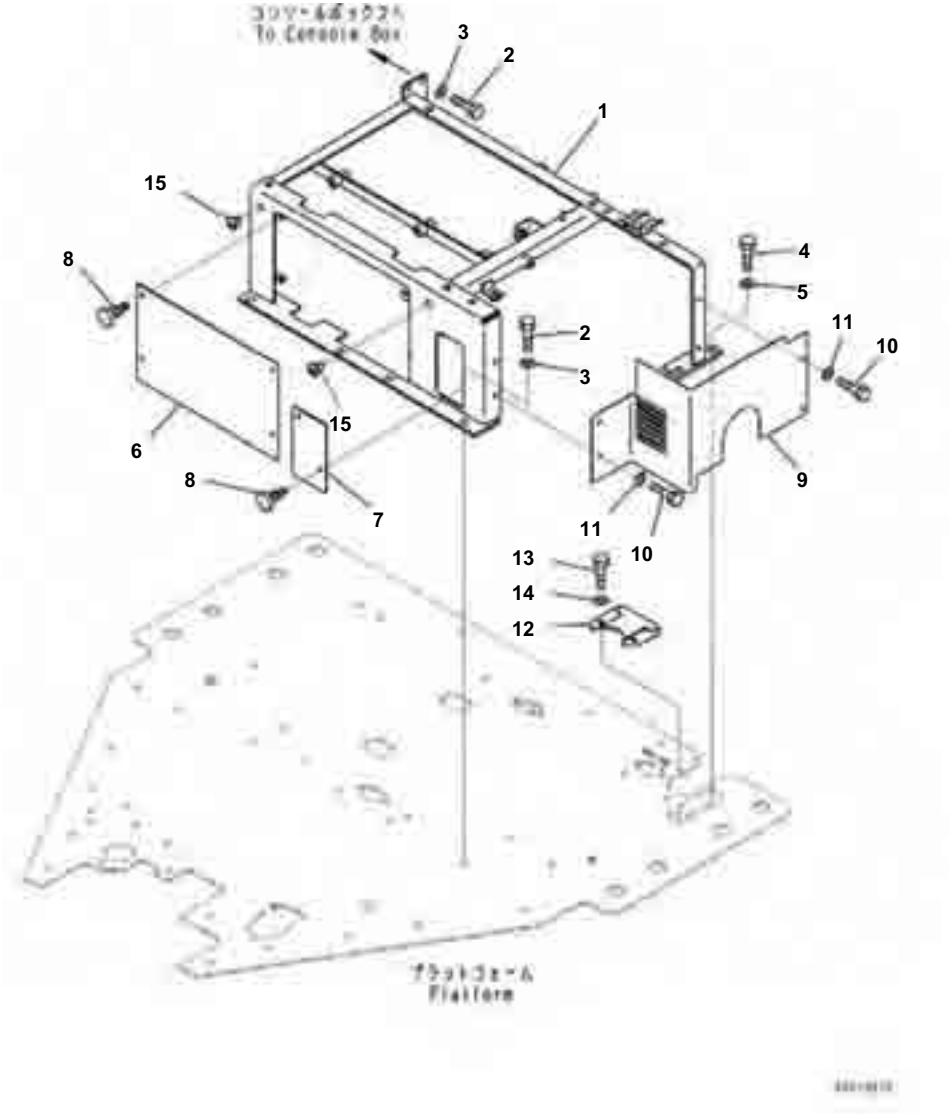

Floor Frame, With 9 Spool Valve, KOMTRAX, Operator's Seat Mounting

Index	Code	Part Number	Description	Qty	Serial No.
1		23B-54-72191	Bracket	1	B40001-
2		01010-81025	Bolt	6	B40001-
3		01643-31032	Washer	6	B40001-
4		01010-81030	Bolt	2	B40001-
5		01643-31032	Washer	2	B40001-
6		23B-54-72250	Cover	1	B40001-
7		23B-54-72260	Plate	1	B40001-
8		235-54-11540	Knob	6	B40001-
9		23B-54-72220	Cover	1	B40001-
10		01010-80620	Bolt	4	B40001-
11		01643-30623	Washer	4	B40001-
12		23B-54-72310	Bracket	1	B40001-
13		01010-80820	Bolt	2	B40001-
14		01643-30823	Washer	2	B40001-
15		22L-46-12150	Cap	2	B40001-

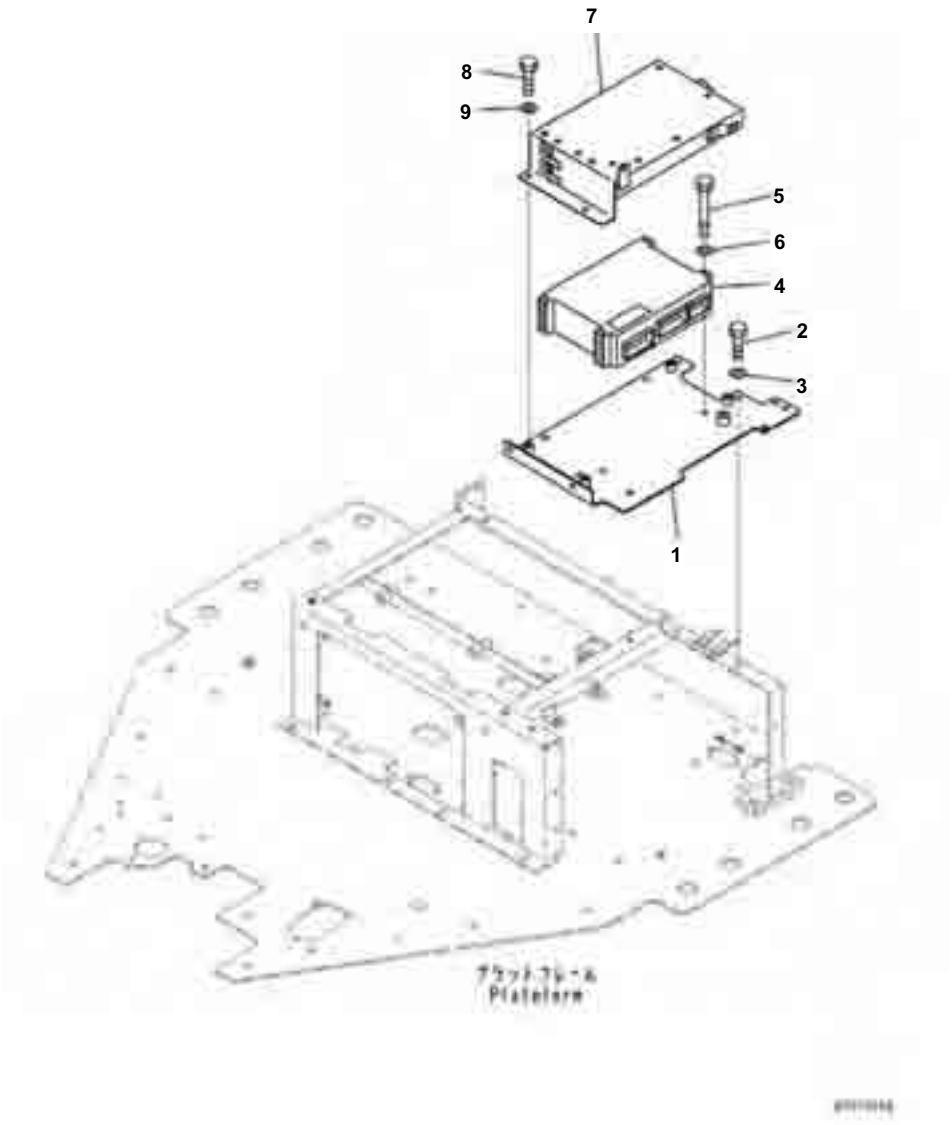

Floor Frame, With 9 Spool Valve, KOMTRAX, Transmission Controller

Index	Code	Part Number	Description	Qty	Serial No.
1		23B-54-72270	Bracket	1	B40001-
2		01010-81025	Bolt	3	B40001-
3		01643-31032	Washer	3	B40001-
4		7821-26-6001	Controller	1	B40001-
5		01643-30823	Washer	4	B40001-
6		01010-80885	Bolt	4	B40001-
7		23B-06-71540	Cover	1	B40001-
8		01010-80816	Bolt	4	B40001-
9		01643-30823	Washer	4	B40001-

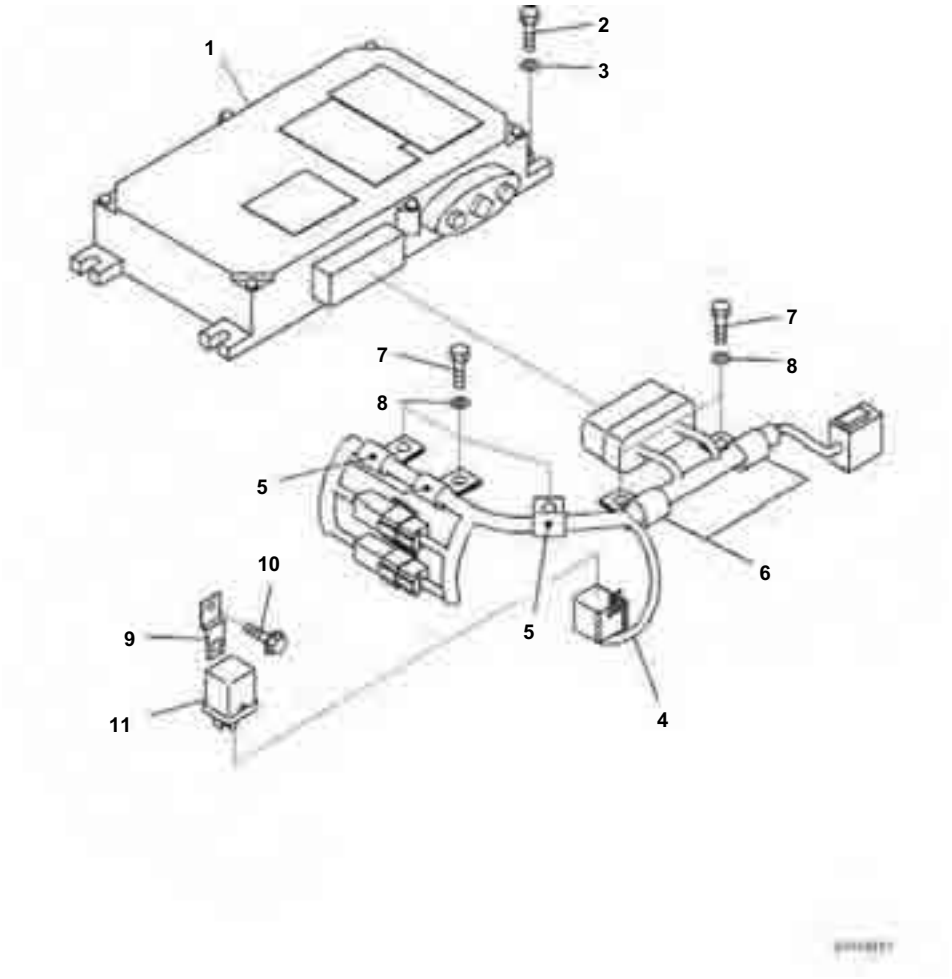

Floor Frame, With 9 Spool Valve, KOMTRAX, KOMTRAX Controller

Index	Code	Part Number	Description	Qty	Serial No.
1		7826-20-7037	Controller	1	B40001-
2		01010-80825	Bolt	4	B40001-
3		01643-30823	Washer	4	B40001-
4		23B-06-71310	Wiring Harness	1	B40001-
5		04434-51008	Clip	3	B40001-
6		04434-51408	Clip	2	B40001-
7		01010-80816	Bolt	5	B40001-
8		01643-30823	Washer	5	B40001-
9		287-06-16420	Bracket	1	B40001-
10		01435-00608	Bolt	1	B40001-
11		569-06-61960	Relay	1	B40001-

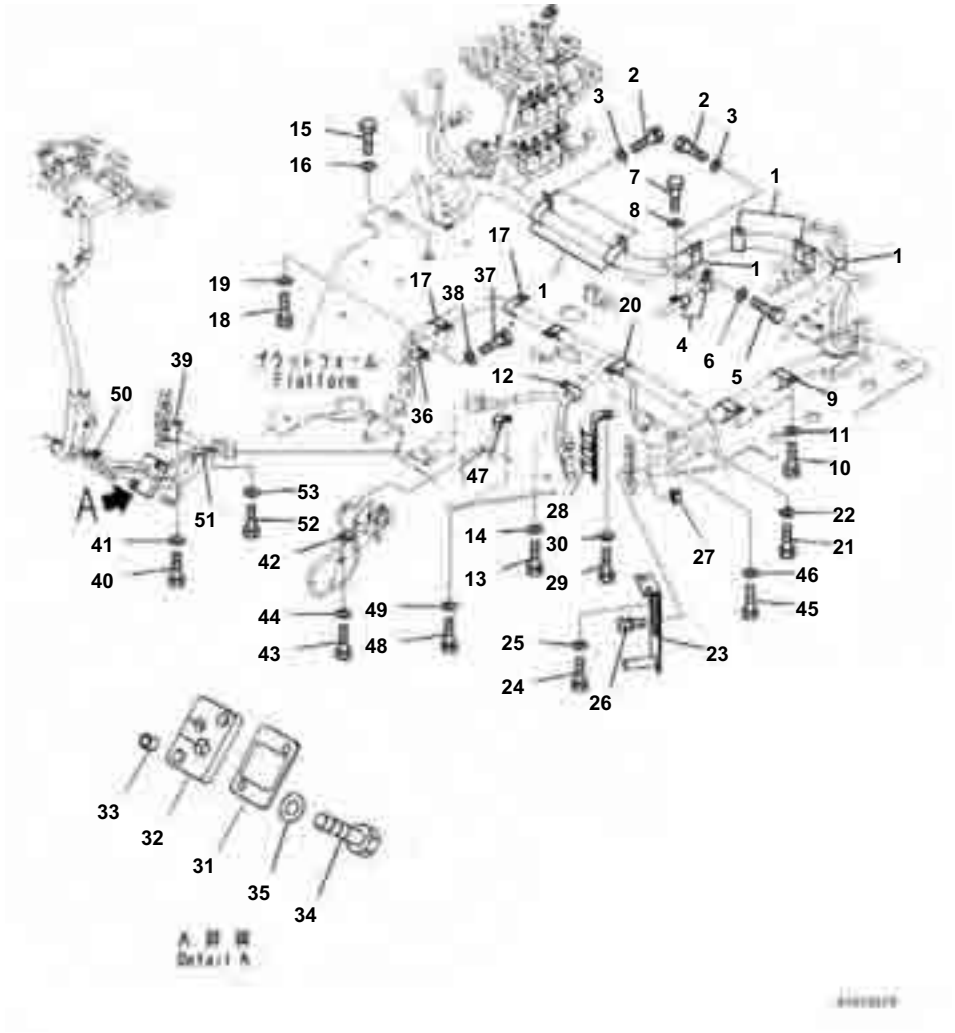

Floor Frame, With 9 Spool Valve, KOMTRAX, Wiring Harness Clamp

Index	Code	Part Number	Description	Qty	Serial No.
1		04434-53411	Clip	7	B40001-
2		01010-81020	Bolt	7	B40001-
3		01643-31032	Washer	7	B40001-
4		04434-51410	Clip	2	B40001-
5		01010-81020	Bolt	1	B40001-
6		01643-31032	Washer	1	B40001-
7		01010-81025	Bolt	1	B40001-
8		01643-31032	Washer	1	B40001-
9		281-01-13180	Clip	2	B40001-
10		01010-81020	Bolt	2	B40001-
11		01643-31032	Washer	2	B40001-
12		04434-51910	Clip	1	B40001-
13		01010-81020	Bolt	1	B40001-
14		01643-31032	Washer	1	B40001-
15		01010-81016	Bolt	1	B40001-
16		01643-31032	Washer	1	B40001-
17		04434-52310	Clip	3	B40001-
18		01010-81020	Bolt	3	B40001-
19		01643-31032	Washer	3	B40001-
20		04434-52712	Clip	1	B40001-
21		01010-81020	Bolt	1	B40001-
22		01643-31032	Washer	1	B40001-
23		23B-06-71510	Bracket	1	B40001-
24		01010-81020	Bolt	2	B40001-
25		01643-31032	Washer	2	B40001-
26		01023-60420	Screw	4	B40001-
27		01580-60403	Nut	4	B40001-
28		23B-06-71520	Bracket	1	B40001-
29		01010-81020	Bolt	1	B40001-
30		01643-31032	Washer	1	B40001-
31		23B-43-72580	Plate	1	B40001-
32		23B-43-72590	Cushion	1	B40001-
33		41H-879-1250	Spacer	2	B40001-
34		01010-80830	Bolt	2	B40001-
35		01643-30823	Washer	2	B40001-
36		04434-51710	Clip	1	B40001-
37		01010-81020	Bolt	1	B40001-
38		01643-31032	Washer	1	B40001-
39		04434-51910	Clip	1	B40001-
40		01010-81020	Bolt	1	B40001-
41		01643-31032	Washer	1	B40001-
42		04434-50610	Clip	1	B40001-
43		01010-81020	Bolt	1	B40001-
44		01643-31032	Washer	1	B40001-
45		01010-81016	Bolt	1	B40001-
46		01643-31032	Washer	1	B40001-

GD655-5 S/N B40001-UP

Floor Frame, With 9 Spool Valve, KOMTRAX, Wiring Harness Clamp

Index	Code	Part Number	Description	Qty	Serial No.
47		04434-50810	Clip	1	B40001-
48		01010-81020	Bolt	1	B40001-
49		01643-31032	Washer	1	B40001-
50		04434-51310	Clip	1	B40001-
51		04434-51910	Clip	1	B40001-
52		01010-81020	Bolt	1	B40001-
53		01643-31032	Washer	1	B40001-

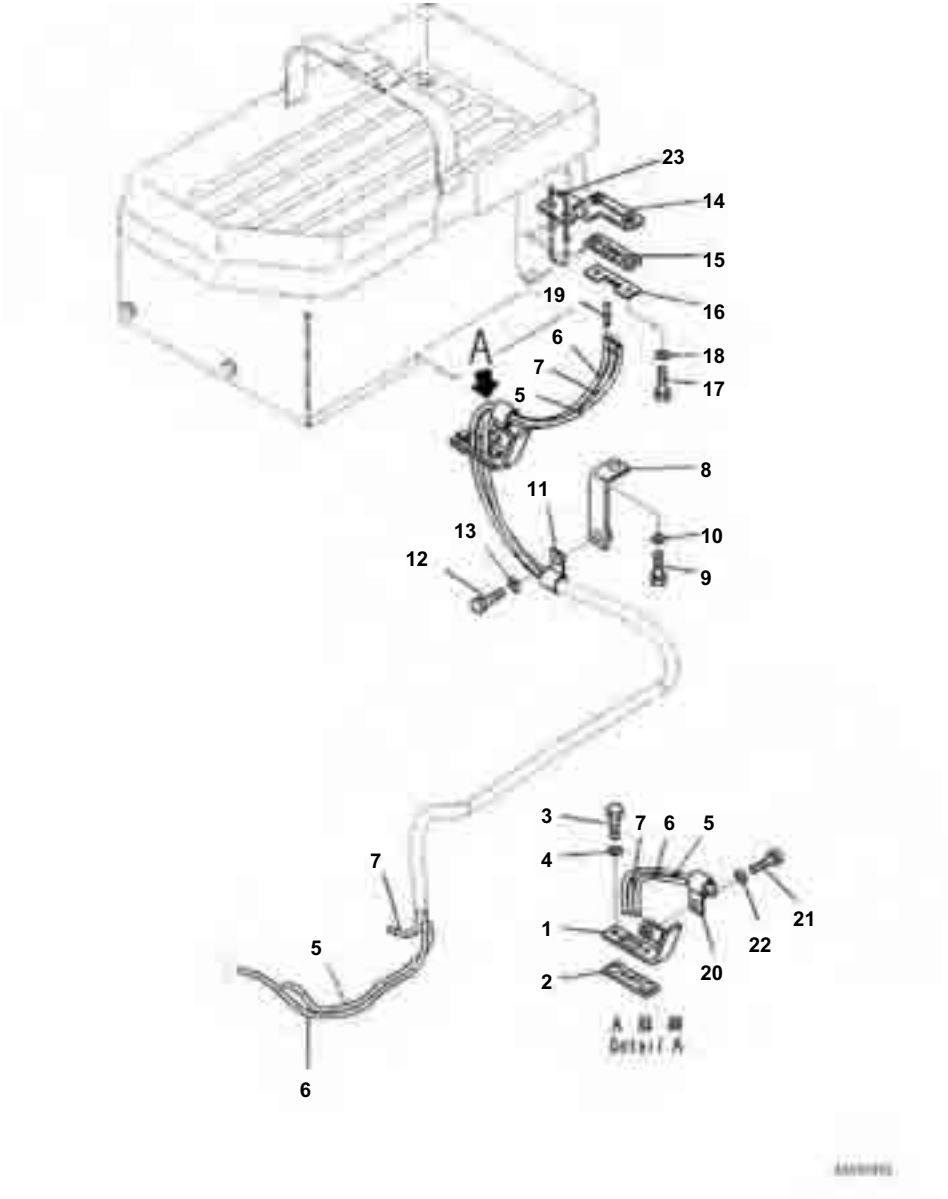

Floor Frame, With 9 Spool Valve, KOMTRAX, Floor, Window Washer Hose

Index	Code	Part Number	Description	Qty	Serial No.
1		23B-54-72430	Bracket	1	B40001-
2		23B-54-72440	Cushion	1	B40001-
3		01010-80620	Bolt	2	B40001-
4		01643-30623	Washer	2	B40001-
5		23B-54-72490	Hose, White	1	B40001-
6		23B-54-72480	Hose, Gray	1	B40001-
7		23B-54-72470	Hose, Orange	1	B40001-
8		23S-44-14540	Plate	1	B40001-
9		01010-81020	Bolt	1	B40001-
10		01643-31032	Washer	1	B40001-
11		04434-51410	Clip	1	B40001-
12		01010-81020	Bolt	1	B40001-
13		01643-31032	Washer	1	B40001-
14		23B-54-72530	Bracket	1	B40001-
15		23B-54-72450	Cushion	1	B40001-
16		23B-54-72460	Plate	1	B40001-
17		01010-80620	Bolt	2	B40001-
18		01643-30623	Washer	2	B40001-
19		207-06-61490	Valve	3	B40001-
20		04434-51408	Clip	1	B40001-
21		01010-80820	Bolt	1	B40001-
22		01643-30823	Washer	1	B40001-
23		08034-20834	Band	1	B40001-

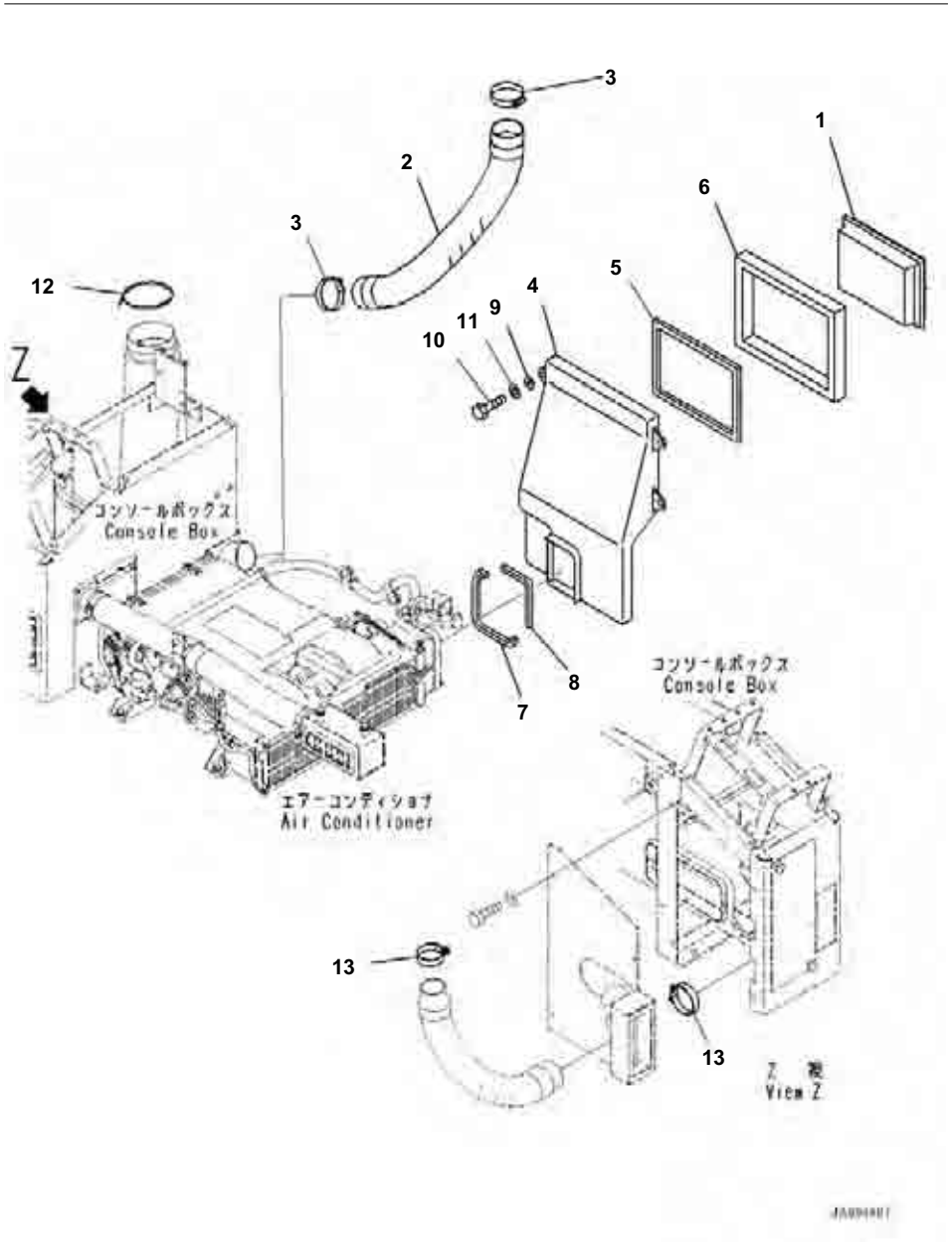

Floor Frame, With 9 Spool Valve, KOMTRAX, Cab In Parts, Air Duct

Index	Code	Part Number	Description	Qty	Serial No.
1		17M-911-3530	Element	1	B40001-
2		09485-06507	Hose, Air	1	B40001-
3		07281-00709	Clamp	2	B40001-
4		23B-07-74140	Duct	1	B40001-
5		23B-07-74250	Sheet, Bonded	1	B40001-
6		23B-07-74260	Sheet, Bonded	1	B40001-
7		23B-07-74310	Sheet, Bonded	1	B40001-
8		23B-07-74320	Sheet, Bonded	1	B40001-
9		20Y-53-12310	Collar	4	B40001-
10		01010-80616	Bolt	4	B40001-
11		01643-30623	Washer	4	B40001-
12		08034-20536	Band	1	B40001-
13		07281-00549	Clamp	2	B40001-

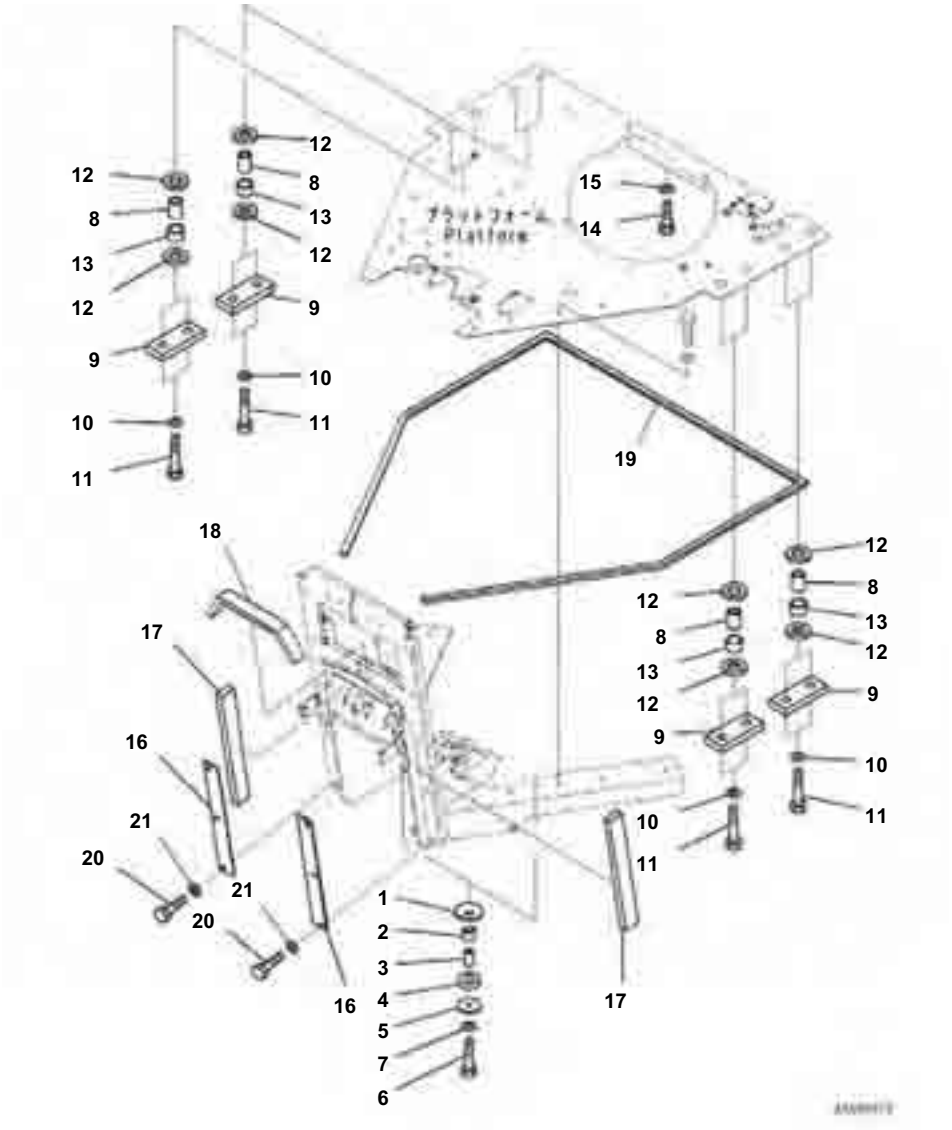

Floor Frame, With 9 Spool Valve, KOMTRAX, Platform Related Parts

Index	Code	Part Number	Description	Qty	Serial No.
1		23B-54-72540	Cushion, T=15mm	2	B40001-
2		23B-54-32140	Cushion	2	B40001-
3		23B-54-32151	Spacer	2	B40001-
4		23A-54-11180	Cushion, T=23mm	2	B40001-
5		23B-54-32160	Plate	2	B40001-
6		01010-81280	Bolt	2	B40001-
7		01643-31232	Washer	2	B40001-
8		23B-957-5510	Spacer	8	B40001-
9		23B-54-72521	Plate	4	B40001-
10		01643-32780	Washer	8	B40001-
11		01011-82730	Bolt	8	B40001-
12		23B-957-7510	Cushion	16	B40001-
13		23B-957-5520	Cushion	8	B40001-
14		01010-81030	Bolt	2	B40001-
15		01643-31032	Washer	2	B40001-
16		23B-952-7410	Plate	2	B40001-
17		23B-952-7420	Seal	2	B40001-
18		23B-952-7430	Seal	1	B40001-
19		23B-952-7520	Seal	1	B40001-
20		01010-D0820	Bolt	6	B40001-
21		01643-70823	Washer	6	B40001-

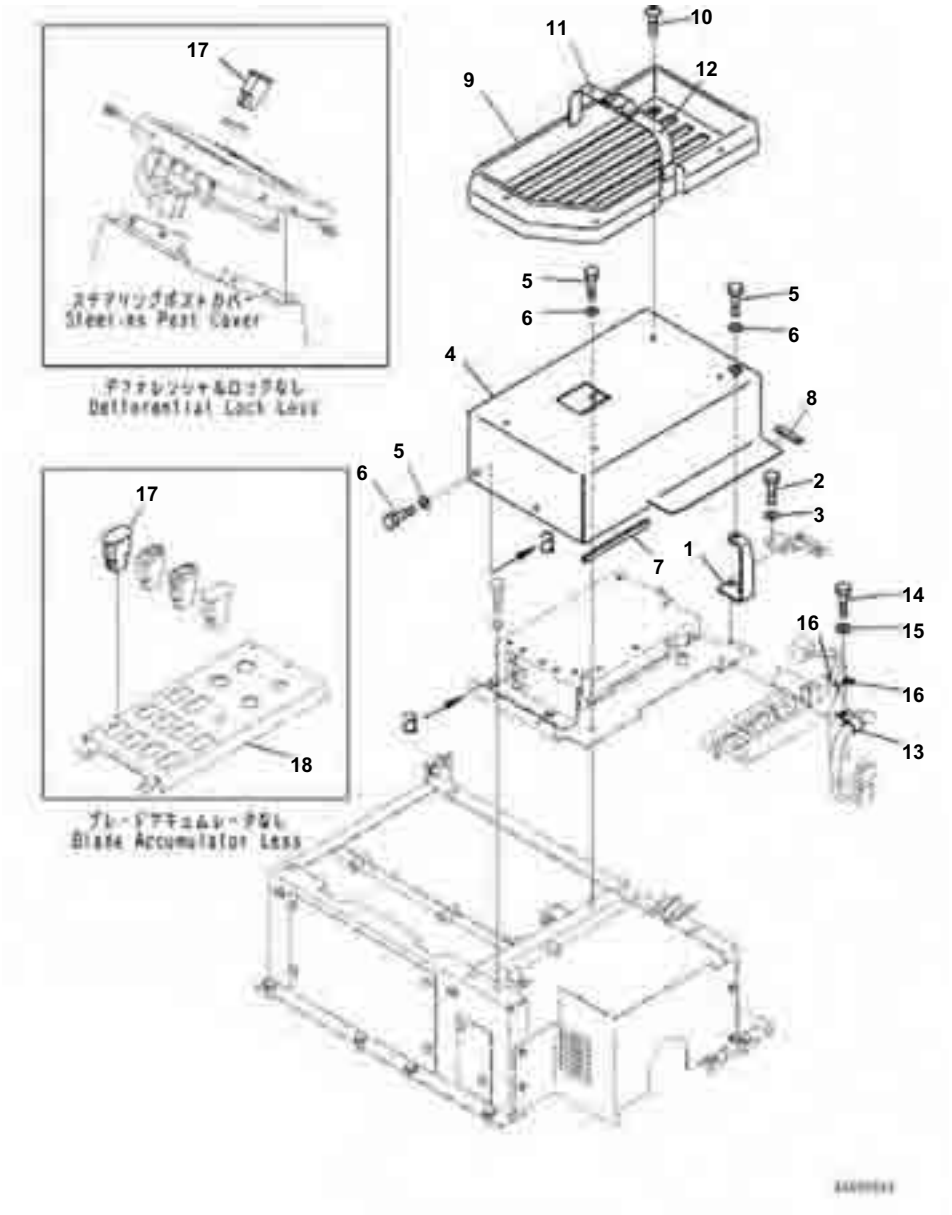

Floor Frame, With 9 Spool Valve, KOMTRAX, Controller Cover

Index	Code	Part Number	Description	Qty	Serial No.
1		23B-54-72350	Bracket	1	B40001-
2		01010-80825	Bolt	2	B40001-
3		01643-30823	Washer	2	B40001-
4		23B-54-72280	Cover	1	B40001-
5		01010-80820	Bolt	4	B40001-
6		01643-30823	Washer	4	B40001-
7		423-944-4391	Finisher, L=170mm	1	B40001-
8		423-54-32340	Finisher	1	B40001-
9		421-54-32611	Tray	1	B40001-
10		01023-10616	Screw	4	B40001-
11		426-54-22780	Band	1	B40001-
12		426-54-22790	Band	1	B40001-
13		04434-51708	Clip	1	B40001-
14		01010-80820	Bolt	1	B40001-
15		01643-30823	Washer	1	B40001-
16		08034-40521	Band	2	B40001-
17		20Y-06-42190	Cover	2	B40001-
18		(23B-06-72110)	Panel		

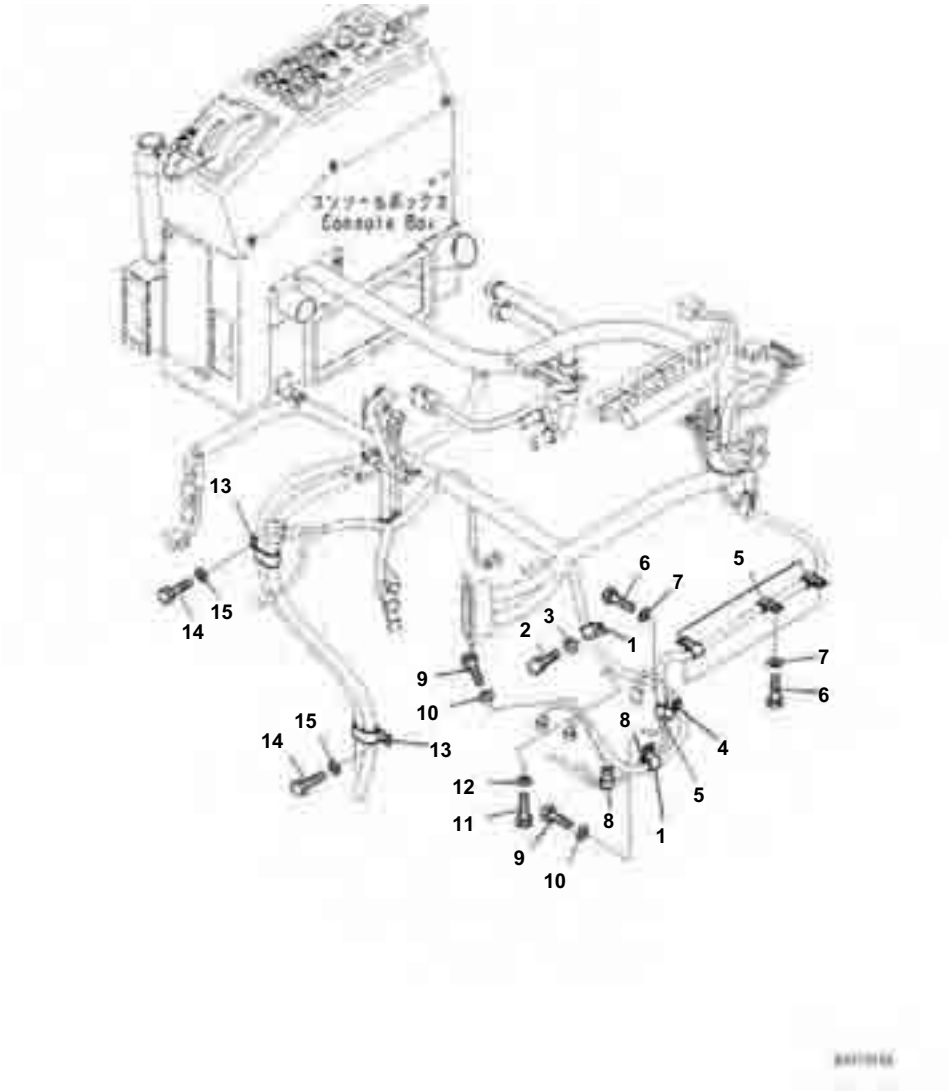

Floor Frame, With 9 Spool Valve, KOMTRAX, Air Conditioner Drain Hose Clip

Index	Code	Part Number	Description	Qty	Serial No.
1		04434-51410	Clip	2	B40001-
2		01010-81020	Bolt	1	B40001-
3		01643-31032	Washer	1	B40001-
4		04434-50810	Clip	1	B40001-
5		04434-51410	Clip	4	B40001-
6		01010-81020	Bolt	4	B40001-
7		01643-31032	Washer	4	B40001-
8		04435-50610	Clip	2	B40001-
9		01010-81020	Bolt	2	B40001-
10		01643-31032	Washer	2	B40001-
11		01010-81016	Bolt	1	B40001-
12		01643-31032	Washer	1	B40001-
13		04435-52110	Clip	2	B40001-
14		01010-81020	Bolt	2	B40001-
15		01643-31032	Washer	2	B40001-

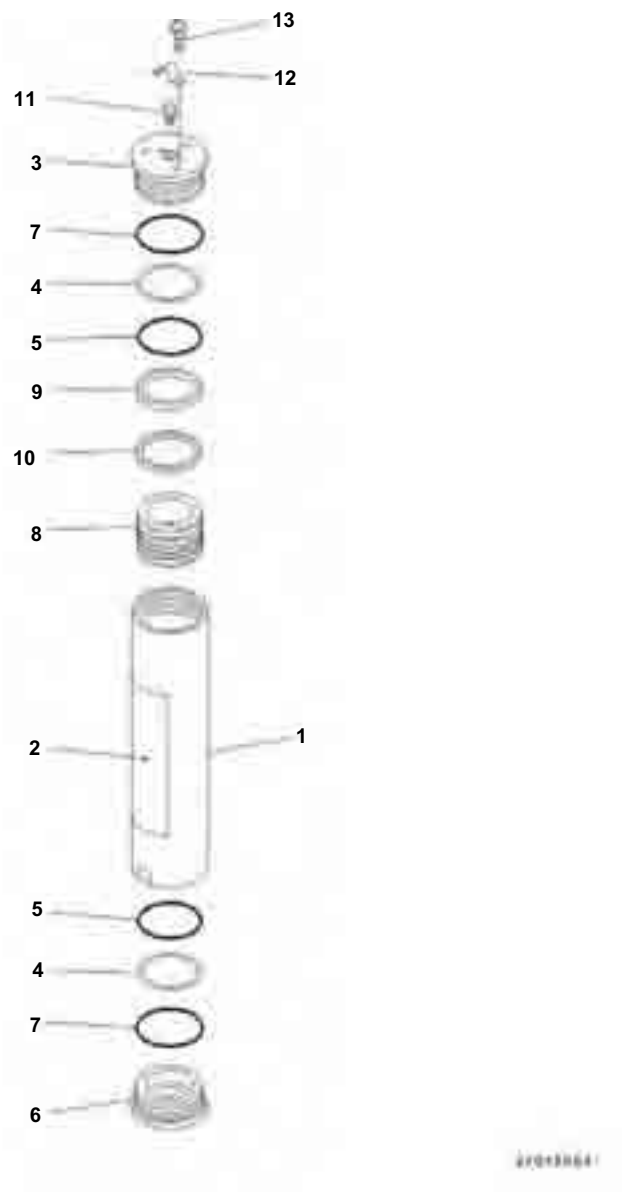

Brake Control, Brake Accumulator

Index	Code	Part Number	Description	Qty	Serial No.
		23B-43-72700	Brake Subassembly	1	B40001-
		721-32-10680	· Accumulator Assembly	2	B40001-
1		721-10-10330	· · Cylinder	1	B40001-
2		721-89-10053	· · Plate, Service Instruction	1	B40001-
3		721-29-10090	· · Cover	1	B40001-
4		707-35-91020	· · Ring, Back-up	2	B40001-
5		07000-15090	· · O-ring	2	B40001-
6		721-26-10050	· · Cover	1	B40001-
7		07000-12100	· · O-ring	2	B40001-
8		721-36-10030	· · Piston	1	B40001-
9		721-47-12080	· · Seal	1	B40001-
10		721-47-12020	· · Ring	1	B40001-
11		721-89-12011	· · Valve	1	B40001-
12		707-88-45770	· · Cover	1	B40001-
13		707-88-81480	· · Screw	2	B40001-

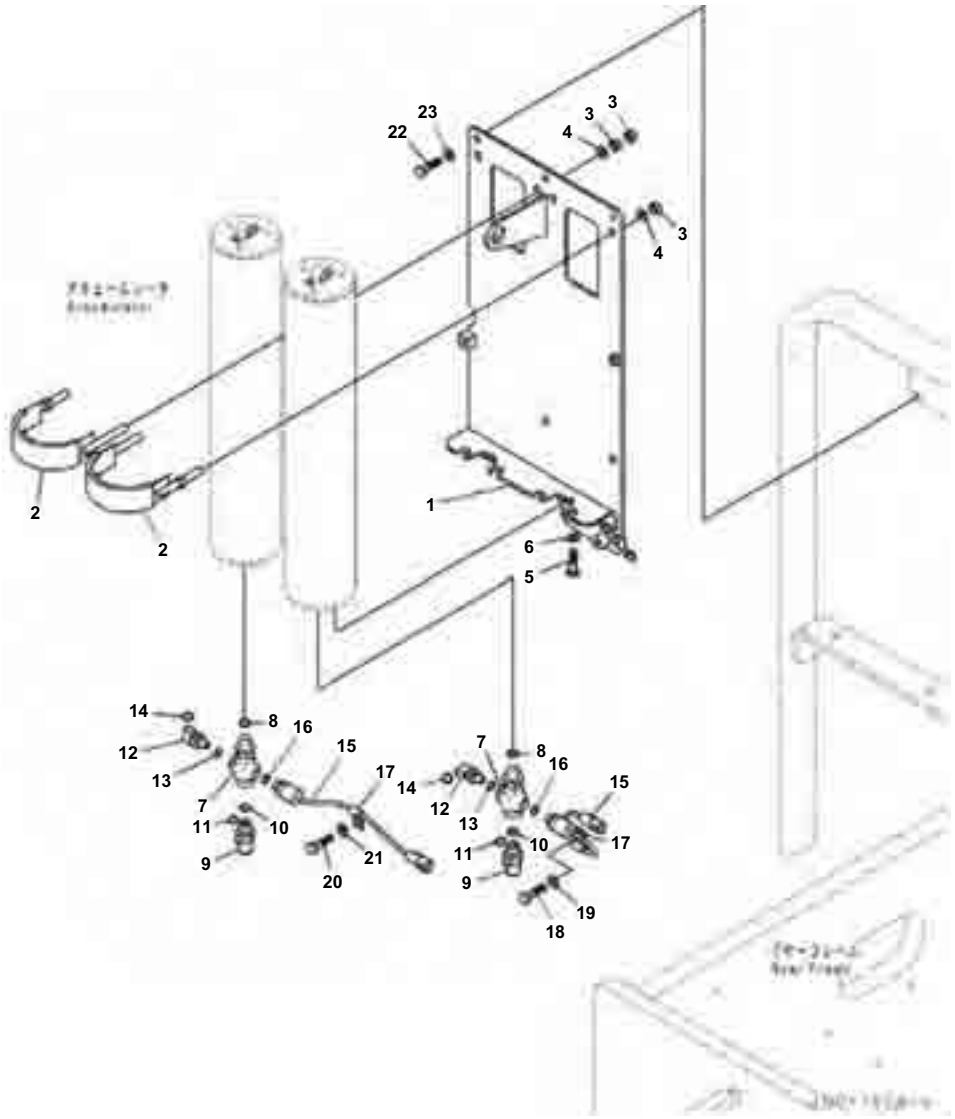

Brake Control, Related Parts

Index	Code	Part Number	Description	Qty	Serial No.
		23B-43-72700	Brake Subassembly	1	B40001-
1		23B-43-71110	· Bracket	1	B40001-
2		421-43-22360	· Band	2	B40001-
3		421-40-12440	· Nut	6	B40001-
4		01643-31232	· Washer	4	B40001-
5		01010-81225	· Bolt	4	B40001-
6		01643-31232	· Washer	4	B40001-
7		23B-43-71120	· Tee	2	B40001-
8		07002-12034	· O-ring	2	B40001-
9		02782-10422	· Elbow	2	B40001-
10		07002-12034	· O-ring	2	B40001-
11		02896-11012	· O-ring	2	B40001-
12		21W-62-43920	· Elbow	2	B40001-
13		07002-11423	· O-ring	2	B40001-
14		02896-11008	· O-ring	2	B40001-
15		421-43-32912	· Switch, Pressure	2	B40001-
16		07002-11423	· O-ring	2	B40001-
17		04434-50610	· Clip	2	B40001-
18		01010-81016	· Bolt	1	B40001-
19		01643-31032	· Washer	1	B40001-
20		01010-81025	· Bolt	1	B40001-
21		01643-31032	· Washer	1	B40001-
22		01010-81025	Bolt	5	B40001-
23		01643-31032	Washer	5	B40001-

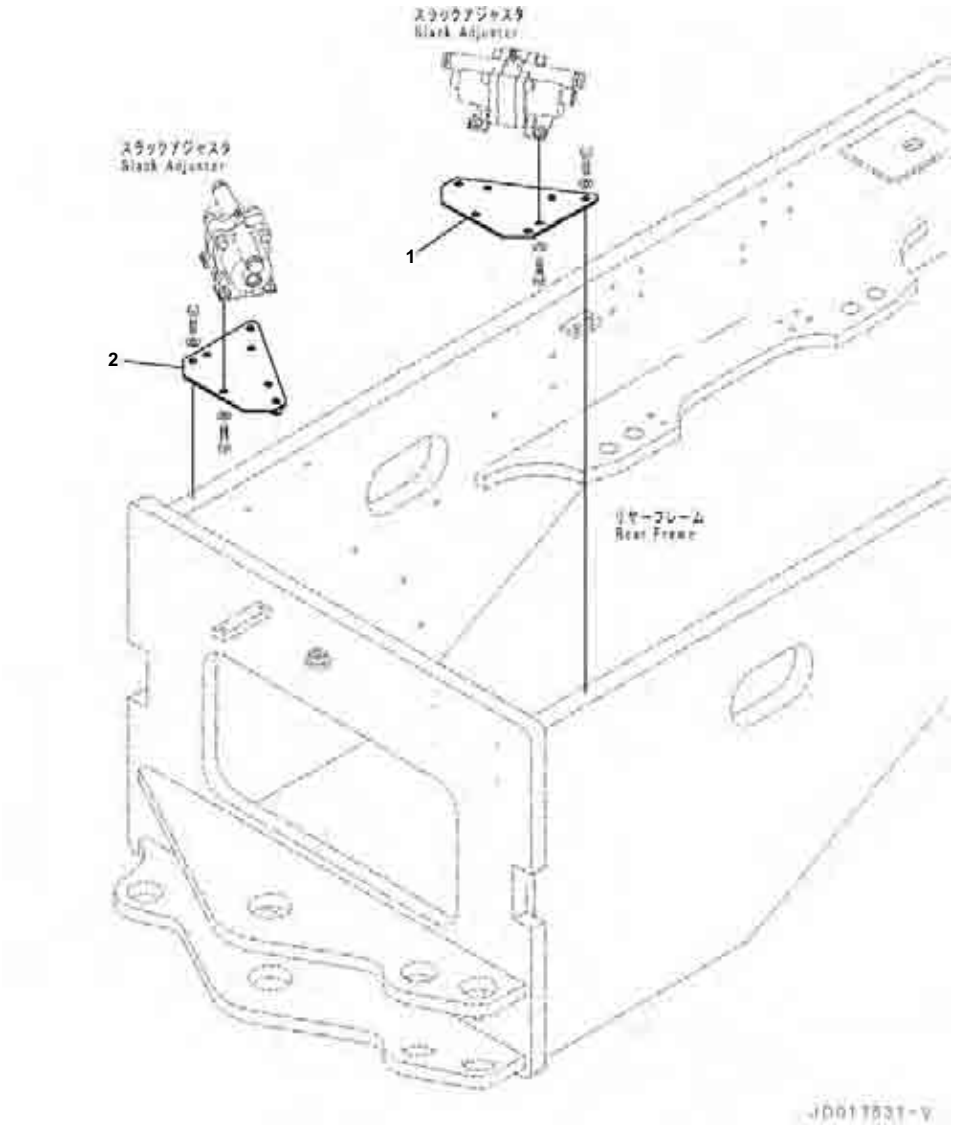

Brake Control, Bracket

Index	Code	Part Number	Description	Qty	Serial No.
1		23B-43-71540	Bracket,LHS	1	B40001-
2		23B-43-71550	Bracket,RHS	1	B40001-

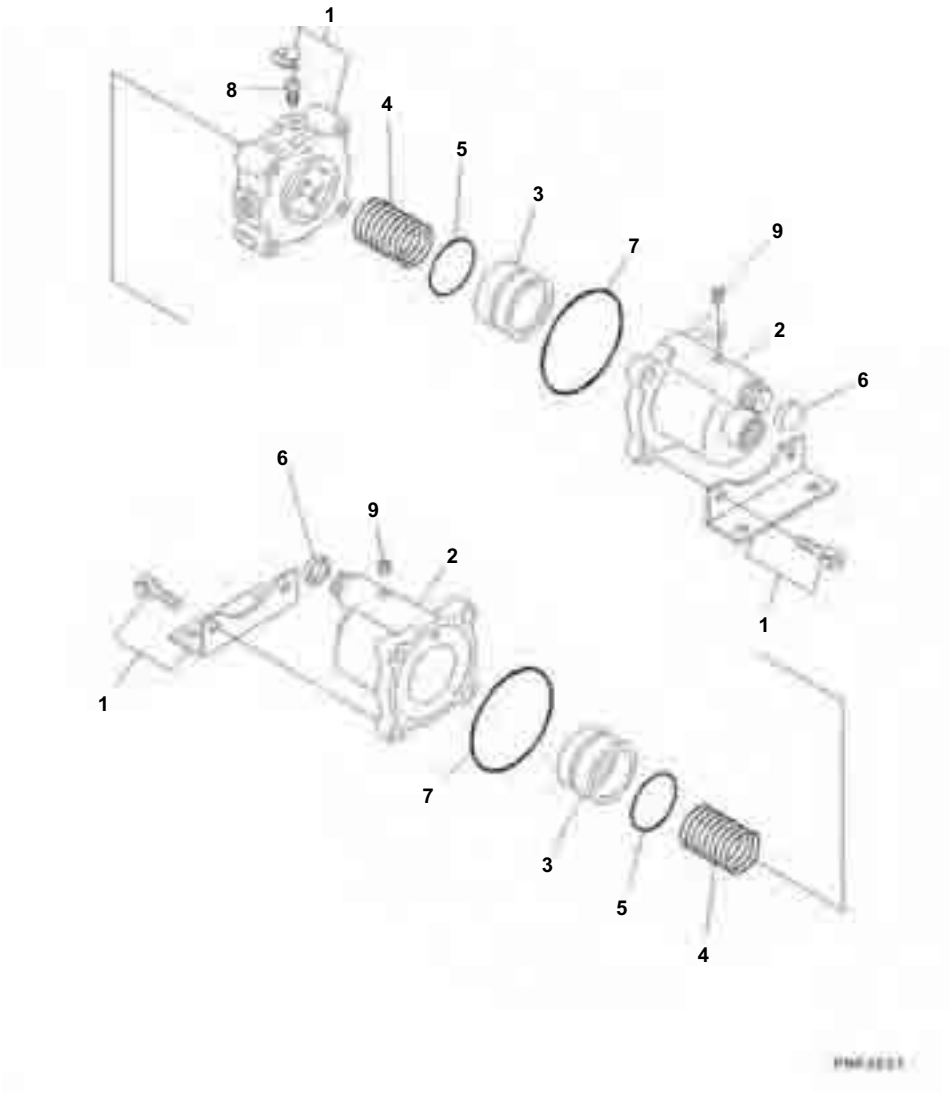

Index	Code	Part Number	Description	Qty	Serial No.
1		424-35-15201	Slack Adjuster	2	B40001-
2	C1		· Cylinder Assembly	2	B40001-
		424-35-15280	· · O-ring	1	B40001-
3		424-35-15220	· Piston	2	B40001-
4		424-35-15230	· Spring	2	B40001-
5		424-35-15240	· O-ring	2	B40001-
6		424-35-15250	· Cover	2	B40001-
7		424-35-15260	· O-ring	2	B40001-
8		424-35-15270	· Valve	1	B40001-
9		07043-70108	· Plug	2	B40001-

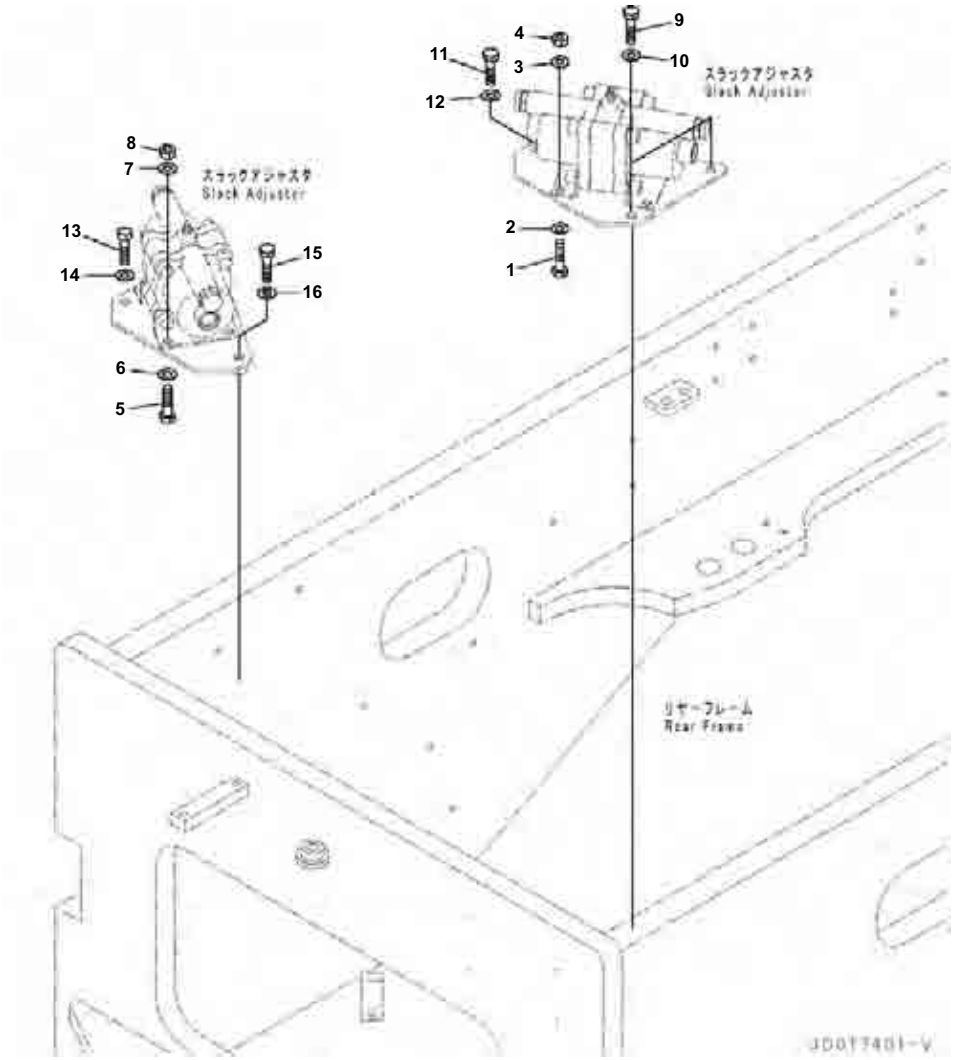

Brake Control, Mounting Parts

Index	Code	Part Number	Description	Qty	Serial No.
1		01010-81025	Bolt	4	B40001-
2		01643-31032	Washer	4	B40001-
3		01643-31032	Washer	4	B40001-
4		01580-11008	Nut	4	B40001-
5		01010-81025	Bolt	4	B40001-
6		01643-31032	Washer	4	B40001-
7		01643-31032	Washer	4	B40001-
8		01580-11008	Nut	4	B40001-
9		01010-81020	Bolt	2	B40001-
10		01643-31032	Washer	2	B40001-
11		01010-81035	Bolt	1	B40001-
12		01643-31032	Washer	1	B40001-
13		01010-81020	Bolt	2	B40001-
14		01643-31032	Washer	2	B40001-
15		01010-81035	Bolt	1	B40001-
16		01643-31032	Washer	1	B40001-

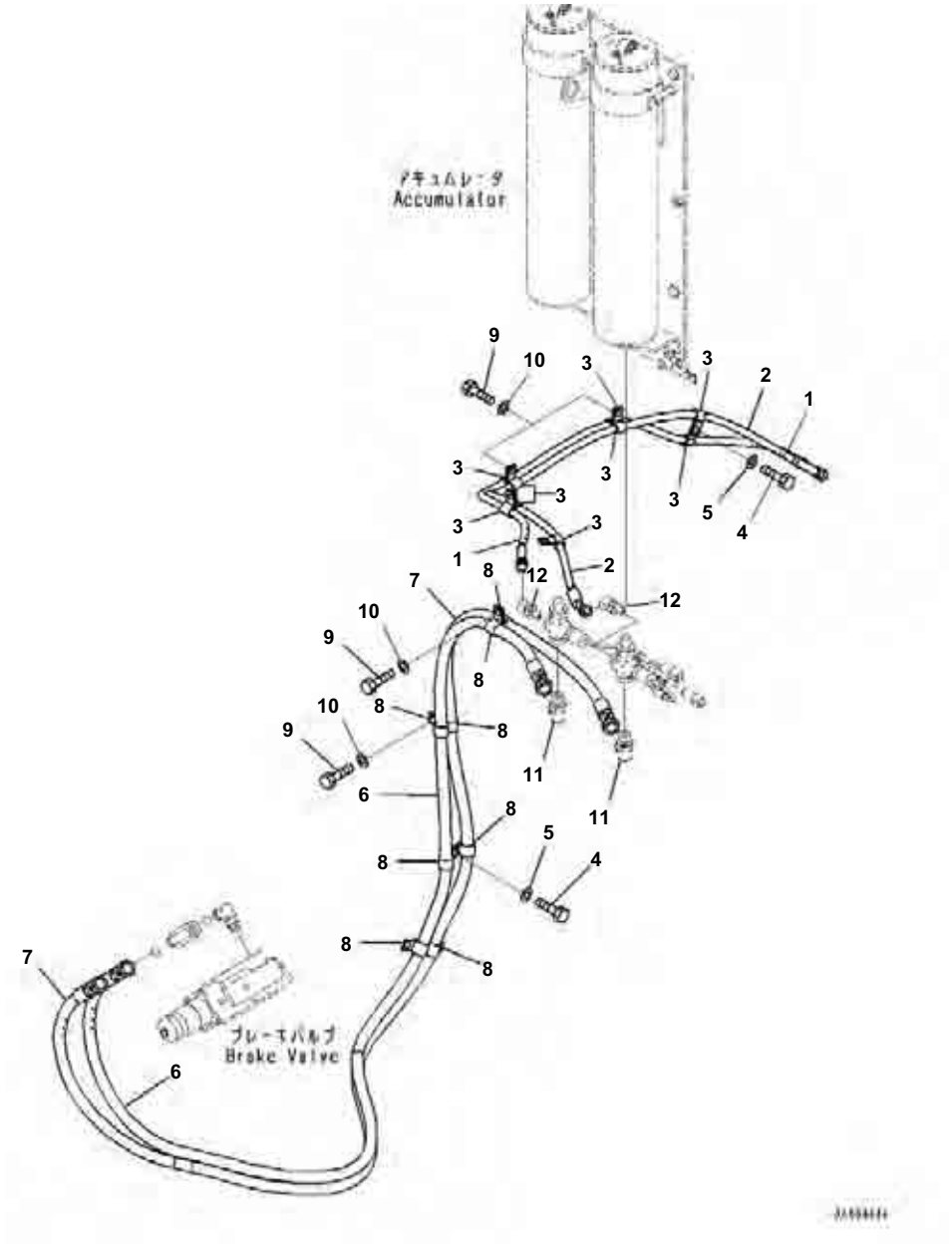

Brake Piping, Brake Piping

Index	Code	Part Number	Description	Qty	Serial No.
1		23B-43-71170	Hose, White	1	B40001-
2		23B-43-71160	Hose, Red	1	B40001-
3		04434-51310	Clip	9	B40001-
4		01010-81020	Bolt	6	B40001-
5		01643-31032	Washer	6	B40001-
6		23B-43-71130	Hose, White	1	B40001-
7		23B-43-71370	Hose, Red	1	B40001-
8		04434-51912	Clip	8	B40001-
9		01010-81025	Bolt	4	B40001-
10		01643-31032	Washer	4	B40001-
11		(02782-10422)	Elbow		
12		(21W-62-43920)	Elbow		

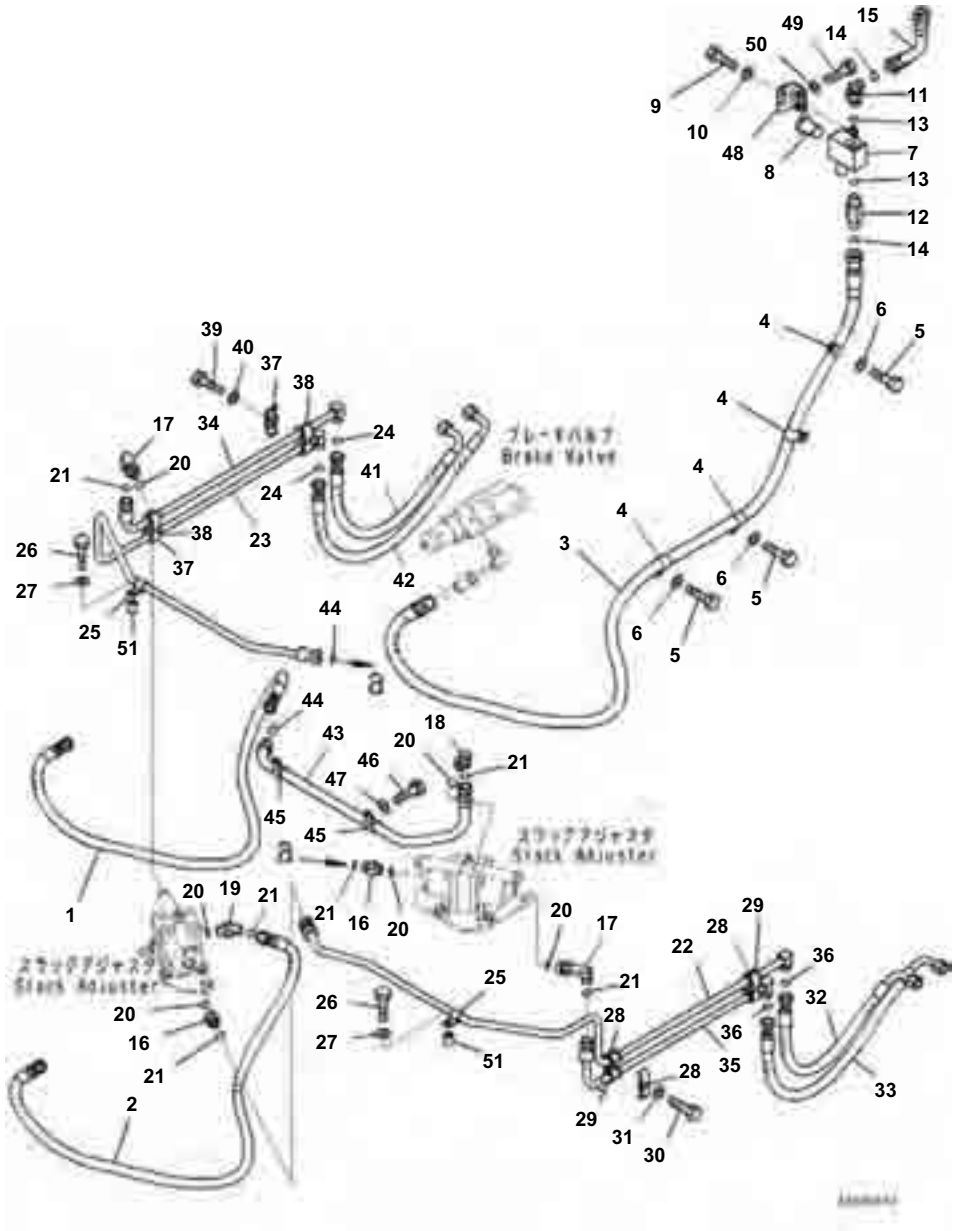

Index	Code	Part Number	Description	Qty	Serial No.
1		23B-43-71150	Hose, Blue	1	B40001-
2		23B-43-71140	Hose, Yellow	1	B40001-
3		23B-43-71310	Hose, Black	1	B40001-
4		04434-52210	Clip	4	B40001-
5		01010-81020	Bolt	3	B40001-
6		01643-31032	Washer	3	B40001-
7		23B-43-71280	Block	1	B40001-
8		424-01-11110	Plug	1	B40001-
9		01010-81025	Bolt	2	B40001-
10		01643-31032	Washer	2	B40001-
11		02783-10522	Elbow	1	B40001-
12		21W-62-42481	Nipple	1	B40001-
13		07002-12434	O-ring	2	B40001-
14		02896-11015	O-ring	2	B40001-
15		23B-43-71270	Tube	1	B40001-
16		02781-00422	Union	2	B40001-
17		02782-10423	Elbow	2	B40001-
18		02782-10422	Elbow	1	B40001-
19		02783-10422	Elbow	1	B40001-
20		07002-12034	O-ring	6	B40001-
21		02896-11012	O-ring	6	B40001-
22		23B-43-71340	Tube	1	B40001-
23		23B-43-71360	Tube	1	B40001-
24		02896-11012	O-ring	2	B40001-
25		04434-51510	Clip	2	B40001-
26		01010-81040	Bolt	2	B40001-
27		01643-31032	Washer	2	B40001-
28		262-60-74340	Clamp	4	B40001-
29		425-43-11180	Grommet	4	B40001-
30		01010-81250	Bolt	2	B40001-
31		01643-31232	Washer	2	B40001-
32		23B-43-71250	Hose	1	B40001-
33		23B-43-71260	Hose	1	B40001-
34		23B-43-71350	Tube	1	B40001-
35		23B-43-71480	Tube	1	B40001-
36		02896-11012	O-ring	2	B40001-
37		262-60-74340	Clamp	4	B40001-
38		425-43-11180	Grommet	4	B40001-
39		01010-81250	Bolt	2	B40001-
40		01643-31232	Washer	2	B40001-
41		23B-43-71250	Hose	1	B40001-
42		23B-43-71260	Hose	1	B40001-
43		23B-43-71330	Tube	1	B40001-
44		02896-11012	O-ring	1	B40001-
45		04434-52110	Clip	2	B40001-
46		01010-81020	Bolt	2	B40001-

GD655-5 S/N B40001-UP
Brake Piping, Main Piping

Index	Code	Part Number	Description	Qty	Serial No.
47		01643-31032	Washer	2	B40001-
48		23B-43-71510	Bracket	1	B40001-
49		01010-81025	Bolt	2	B40001-
50		01643-31032	Washer	2	B40001-
51		22T-56-23290	Spacer	2	B40001-

GUARDS AND COVERS

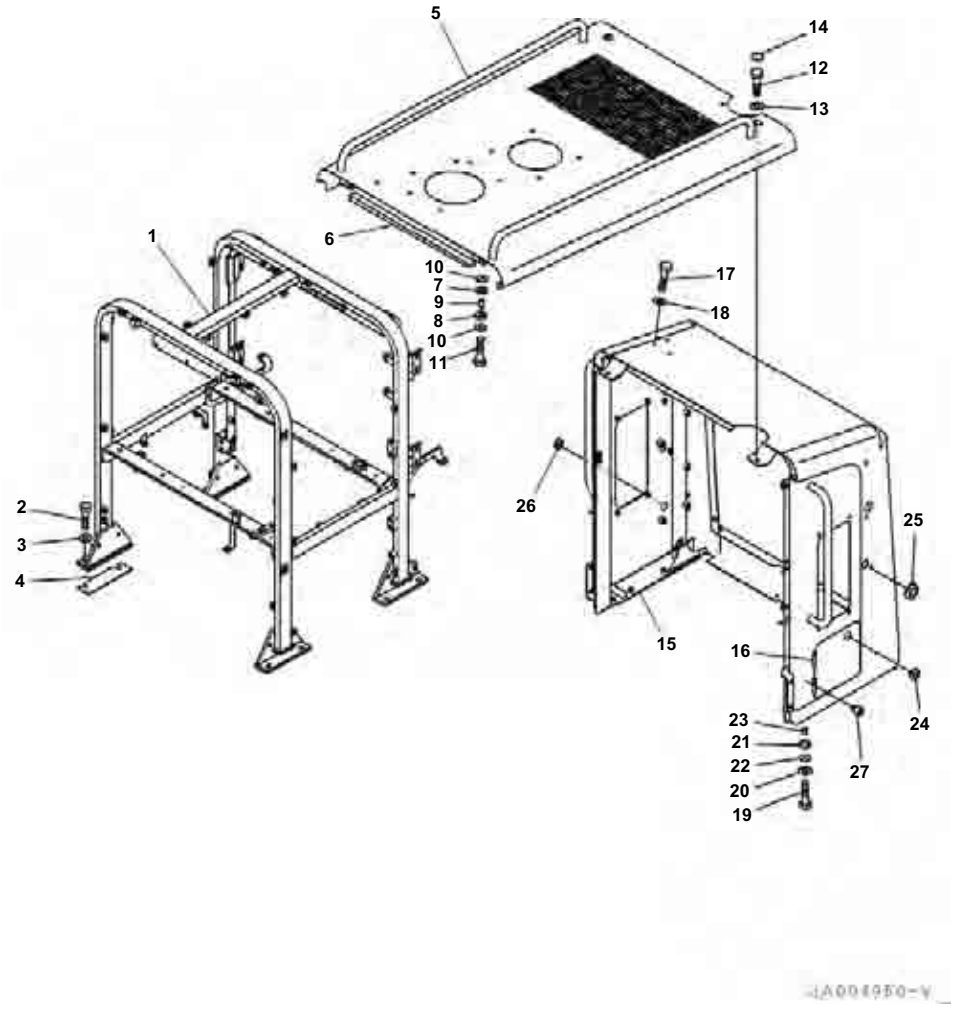

Engine Hood, With Pre-cleaner Auto Dust Eject, Hood

Index	Code	Part Number	Description	Qty	Serial No.
1		23B-60-71122	Frame	1	B40001-
2		01010-81640	Bolt	8	B40001-
3		01643-31645	Washer	8	B40001-
4		23B-60-71160	Shim, T=0.5mm	3	B40001-
		23B-54-71630	Hood	1	B40001-
5		23B-54-71110	‧ Hood	1	B40001-
6		23B-54-71610	‧ Sheet,Bonded	1	B40001-
7		419-43-17930	Cushion	2	B40001-
8		417-62-13620	Cushion	2	B40001-
9		417-62-14130	Spacer	2	B40001-
10		419-43-17920	Washer	4	B40001-
11		01010-81250	Bolt	2	B40001-
12		01010-81235	Bolt	2	B40001-
13		01643-31232	Washer	2	B40001-
14		09415-02512	Cap	2	B40001-
15		23B-54-71931	Grille	1	B40001-
16		23B-54-71550	‧ Hinge,Welded	2	B40001-
17		01010-D1020	Bolt	3	B40001-
18		01643-71032	Washer	3	B40001-
19		01010-81040	Bolt	8	B40001-
20		01643-31032	Washer	8	B40001-
21		56B-40-13440	Cushion	8	B40001-
22		415-64-13120	Washer	8	B40001-
23		23B-54-63251	Spacer	8	B40001-
24		08037-02512	Grommet	1	B40001-
25		08037-03614	Grommet	2	B40001-
26		09415-02512	Cap	1	B40001-
27		415-54-11980	Cushion	1	B40001-

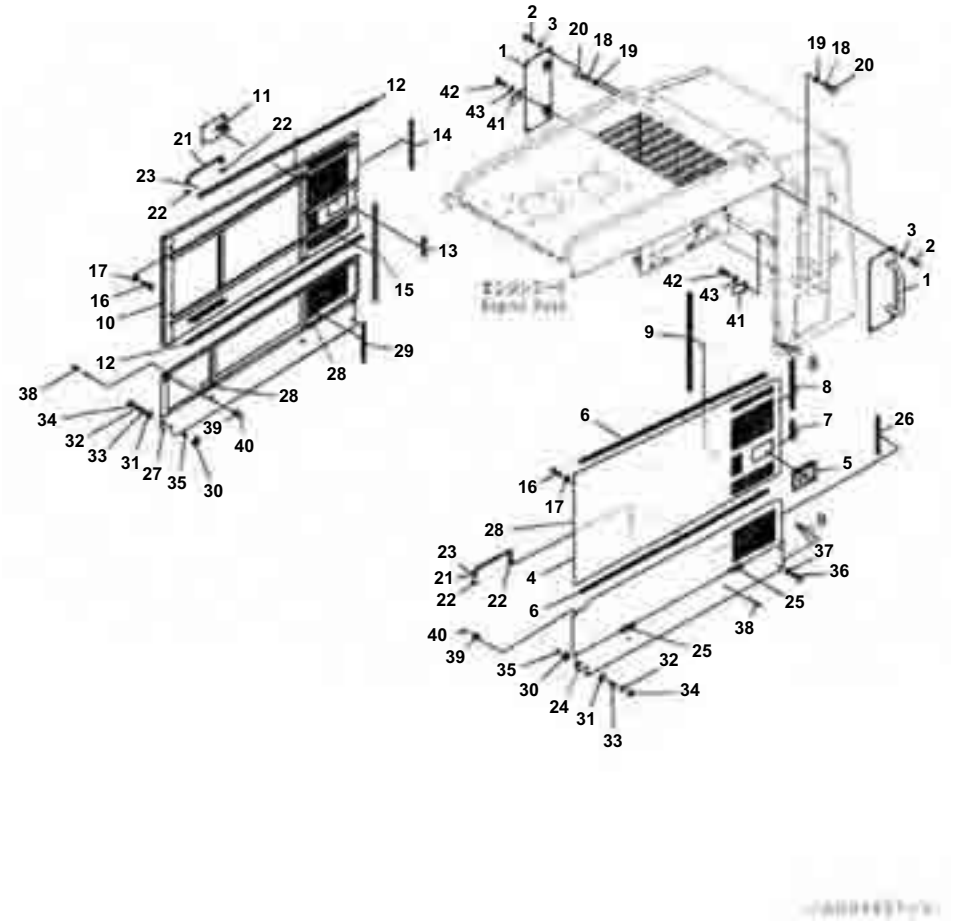

GD655-5 S/N B40001-UP
Engine Hood, With Pre-cleaner Auto Dust Eject, Hood Side Cover

Index	Code	Part Number	Description	Qty	Serial No.
1		23B-54-71560	Cover	2	B40001-
2		01010-81020	Bolt	8	B40001-
3		01643-31032	Washer	8	B40001-
4		23B-54-71410	Cover,LHS	1	B40001-
5		20Y-54-74172	▪ Lock	1	B40001-
6		23B-54-71460	▪ Seal	2	B40001-
7		23B-54-71470	▪ Seal	1	B40001-
8		23B-54-71480	▪ Seal	1	B40001-
9		23B-54-71490	▪ Seal	1	B40001-
10		23B-54-71420	Cover,RHS	1	B40001-
11		20Y-54-74172	▪ Lock	1	B40001-
12		23B-54-71460	▪ Seal	2	B40001-
13		23B-54-71470	▪ Seal	1	B40001-
14		23B-54-71480	▪ Seal	1	B40001-
15		23B-54-71490	▪ Seal	1	B40001-
16		01010-81220	Bolt	8	B40001-
17		01643-31232	Washer	8	B40001-
18		20Y-54-14290	Stopper	4	B40001-
19		01580-11008	Nut	4	B40001-
20		20Y-00-11350	Plate	4	B40001-
21		23B-54-71390	Bar	2	B40001-
22		01643-31032	Washer	4	B40001-
23		04050-12020	Pin, Cotter	4	B40001-
24		23B-54-71431	Cover	1	B40001-
25		23B-54-71810	▪ Hinge,Welded	2	B40001-
26		23B-54-71510	▪ Seal	1	B40001-
27		23B-54-71441	Cover	1	B40001-
28		23B-54-71810	▪ Hinge,Welded	2	B40001-
29		23B-54-71510	▪ Seal	1	B40001-
30		417-62-13620	Cushion	2	B40001-
31		415-64-13120	Washer	2	B40001-
32		01643-31032	Washer	2	B40001-
33		01435-01030	Bolt	2	B40001-
34		421-54-34910	Cap	2	B40001-
35		23B-54-71450	Spacer	2	B40001-
36		01010-81020	Bolt	4	B40001-
37		01643-31032	Washer	4	B40001-
38		20Y-54-14290	Stopper	4	B40001-
39		20R-54-11460	Spring	4	B40001-
40		01023-60512	Screw	8	B40001-
41		23B-54-71260	Plate	2	B40001-
42		01010-81025	Bolt	4	B40001-
43		01643-31032	Washer	4	B40001-

Reference:M4100-002002 Page:M001002

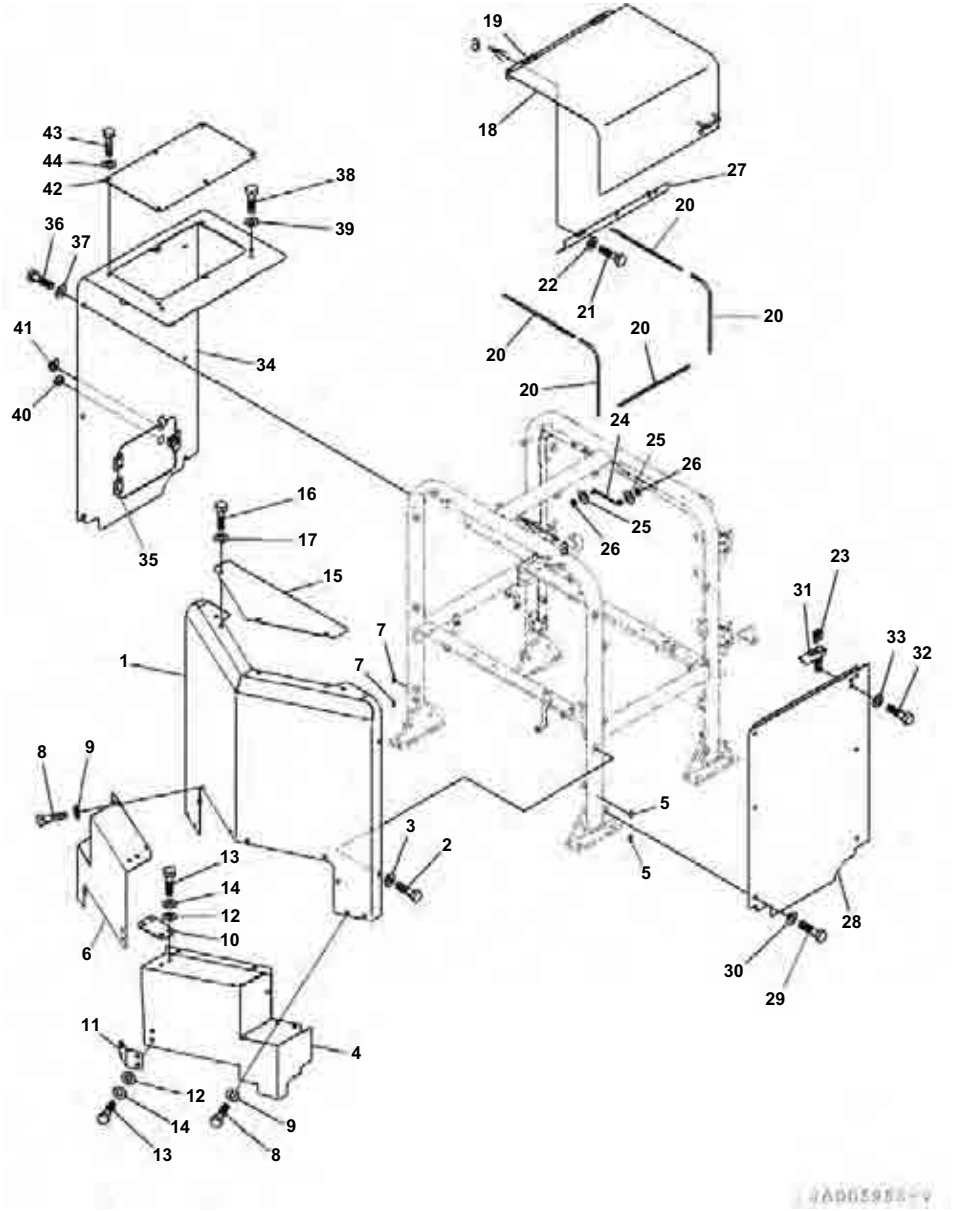

Engine Hood, With Pre-cleaner Auto Dust Eject, Head Cover

Index	Code	Part Number	Description	Qty	Serial No.
1		23B-54-71170	Cover	1	B40001-
2		01010-D1020	Bolt	6	B40001-
3		01643-71032	Washer	6	B40001-
4		23B-54-71780	Cover	1	B40001-
5		421-09-21420	‧ Sheet	2	B40001-
6		23B-54-71790	Cover	1	B40001-
7		421-09-21420	‧ Sheet	2	B40001-
8		01010-D1020	Bolt	10	B40001-
9		01643-71032	Washer	10	B40001-
10		23B-54-71650	Plate	1	B40001-
11		23B-54-71660	Plate	1	B40001-
12		201-54-72910	Washer	8	B40001-
13		01010-D1020	Bolt	8	B40001-
14		01643-71032	Washer	8	B40001-
15		23B-54-71370	Cover	1	B40001-
16		01010-D1020	Bolt	3	B40001-
17		01643-71032	Washer	3	B40001-
18		23B-54-71761	Cover	1	B40001-
19		23B-54-71550	‧ Hinge	2	B40001-
20		23B-54-71710	‧ Sheet, Bonded	5	B40001-
21		01010-81020	Bolt	3	B40001-
22		01643-31032	Washer	3	B40001-
23		23B-54-34540	Lock	1	B40001-
24		203-54-56630	Rod	1	B40001-
25		01643-30623	Washer	2	B40001-
26		04050-11612	Pin, Cotter	2	B40001-
27		23B-54-71670	Cover	1	B40001-
28		23B-54-71190	Cover	1	B40001-
29		01010-81020	Bolt	6	B40001-
30		01643-31032	Washer	6	B40001-
31		23B-54-71540	Bracket	1	B40001-
32		01010-81020	Bolt	2	B40001-
33		01643-31032	Washer	2	B40001-
34		23B-54-71210	Cover	1	B40001-
35		23B-54-71550	‧ Hinge	2	B40001-
36		01010-81020	Bolt	6	B40001-
37		01643-31032	Washer	6	B40001-
38		01010-D1020	Bolt	2	B40001-
39		01643-71032	Washer	2	B40001-
40		08037-02512	Grommet	1	B40001-
41		205-60-71220	Lock Assembly	1	B40001-
42		23B-54-71220	Cover	1	B40001-
43		01010-D1020	Bolt	6	B40001-
44		01643-71032	Washer	6	B40001-

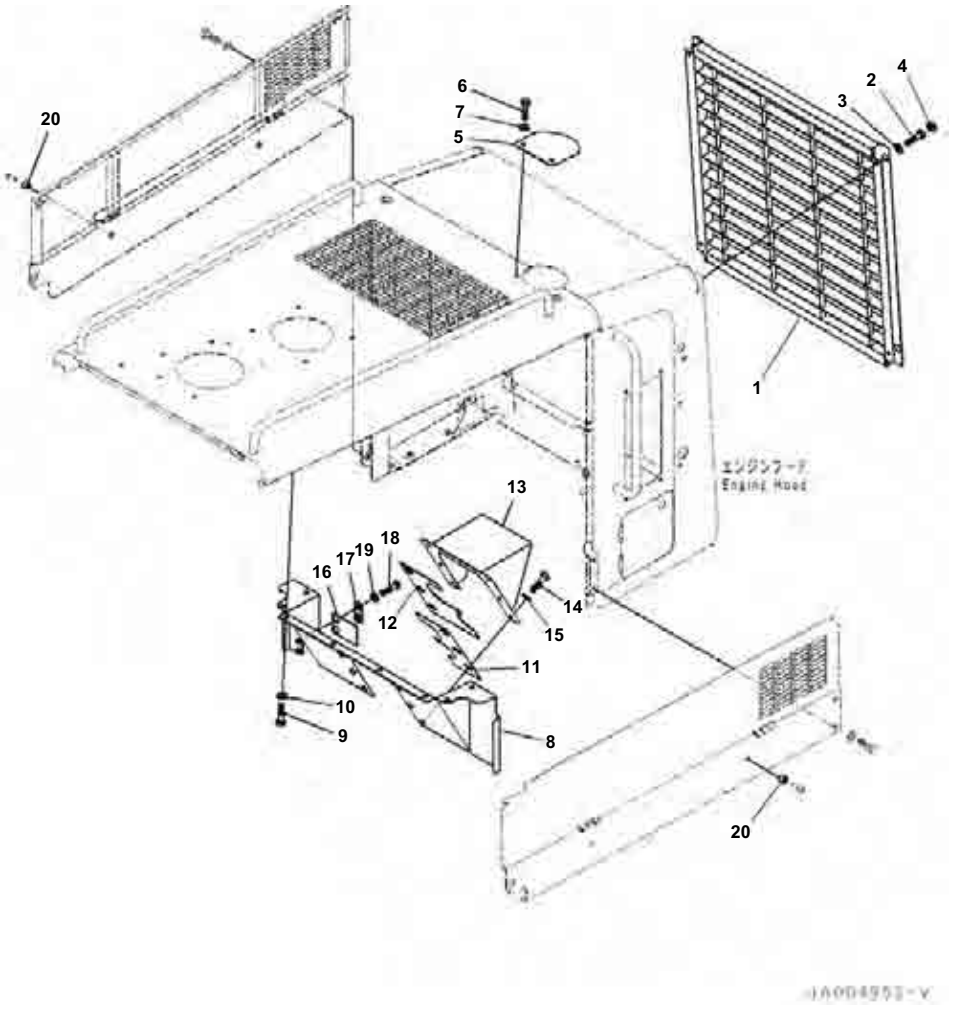

Engine Hood, With Pre-cleaner Auto Dust Eject, Grille, Mask and Radiator Cover

Index	Code	Part Number	Description	Qty	Serial No.
1		23B-54-71250	Mask	1	B40001-
2		01016-51055	Bolt	4	B40001-
3		01643-31032	Washer	4	B40001-
4		09415-02110	Cap	4	B40001-
5		23B-54-71381	Cover	1	B40001-
6		01010-D1020	Bolt	2	B40001-
7		01643-71032	Washer	2	B40001-
8		23B-54-71270	Cover	1	B40001-
9		01010-81020	Bolt	8	B40001-
10		01643-31032	Washer	8	B40001-
11		23B-54-71320	Sheet	1	B40001-
12		23B-54-71330	Sheet	1	B40001-
13		23B-54-71310	Cover	1	B40001-
14		01010-81025	Bolt	6	B40001-
15		01643-31032	Washer	6	B40001-
16		23B-54-71340	Sheet	1	B40001-
17		23B-54-71350	Plate	1	B40001-
18		01010-81025	Bolt	2	B40001-
19		01643-31032	Washer	2	B40001-
20		01580-11008	Nut	4	B40001-

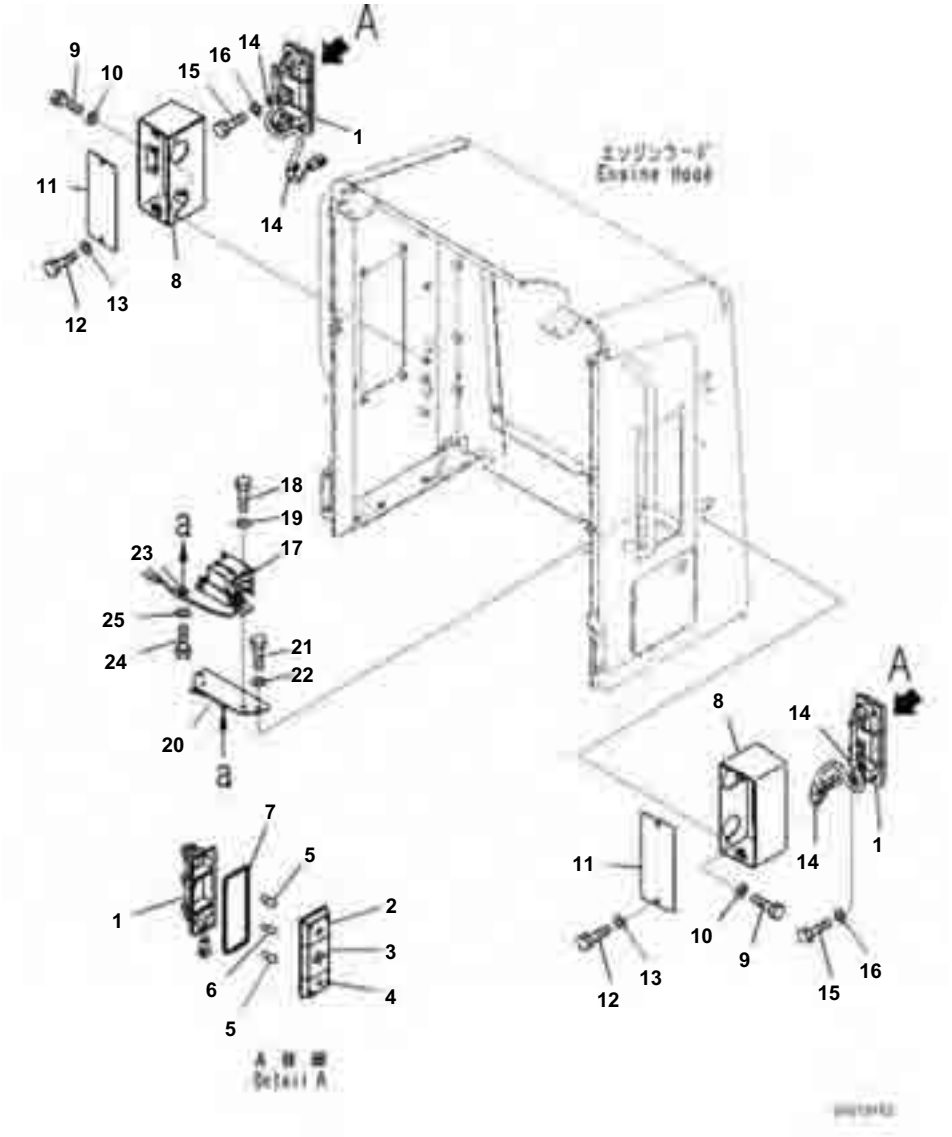

Engine Hood, With Pre-cleaner Auto Dust Eject, Rear Combination Lamp

Index	Code	Part Number	Description	Qty	Serial No.
1		424-06-43241	Lamp	2	B40001-
2		23A-06-21510	･ Lens, Turn Signal	1	B40001-
3		424-06-43320	･ Lens, Red, Tail And Stop	1	B40001-
4		23A-06-21530	･ Lens, Back-up	1	B40001-
5		424-06-43330	･ Bulb, 21watt	2	B40001-
6		424-06-43340	･ Bulb, 21/5watt	1	B40001-
7		23A-06-21440	･ Gasket	1	B40001-
8		23B-06-73310	Bracket	2	B40001-
9		01010-81025	Bolt	4	B40001-
10		01643-31032	Washer	4	B40001-
11		23B-06-73321	Plate	2	B40001-
12		01010-81020	Bolt	4	B40001-
13		01643-31032	Washer	4	B40001-
14		04434-51410	Clip	4	B40001-
15		01010-81016	Bolt	2	B40001-
16		01643-31032	Washer	2	B40001-
17		20Y-06-41812	Alarm, Back-up	1	B40001-
18		01010-80820	Bolt	2	B40001-
19		01643-30823	Washer	2	B40001-
20		23B-54-71530	Bracket	1	B40001-
21		01010-81020	Bolt	2	B40001-
22		01643-31032	Washer	2	B40001-
23		04434-50610	Clip	1	B40001-
24		01010-81020	Bolt	1	B40001-
25		01643-31032	Washer	1	B40001-

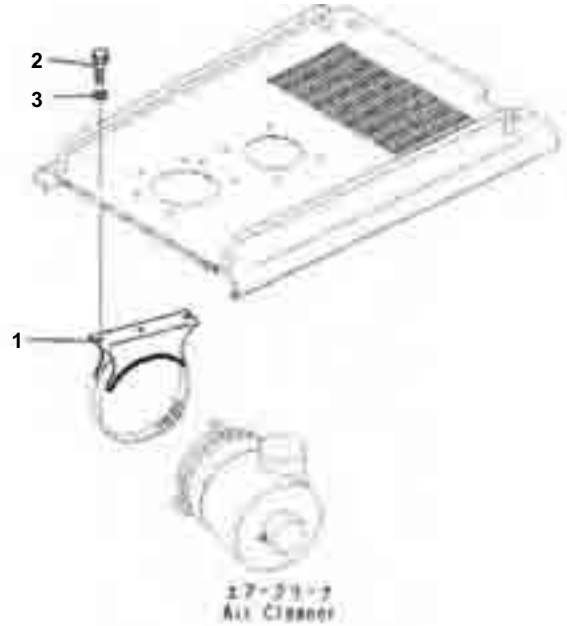

Engine Hood, With Pre-cleaner Auto Dust Eject, Air Cleaner Related Parts (1/2)

Index	Code	Part Number	Description	Qty	Serial No.
1		23B-54-71290	Bracket	1	B40001-
2		01010-D1225	Bolt	3	B40001-
3		01643-71232	Washer	3	B40001-

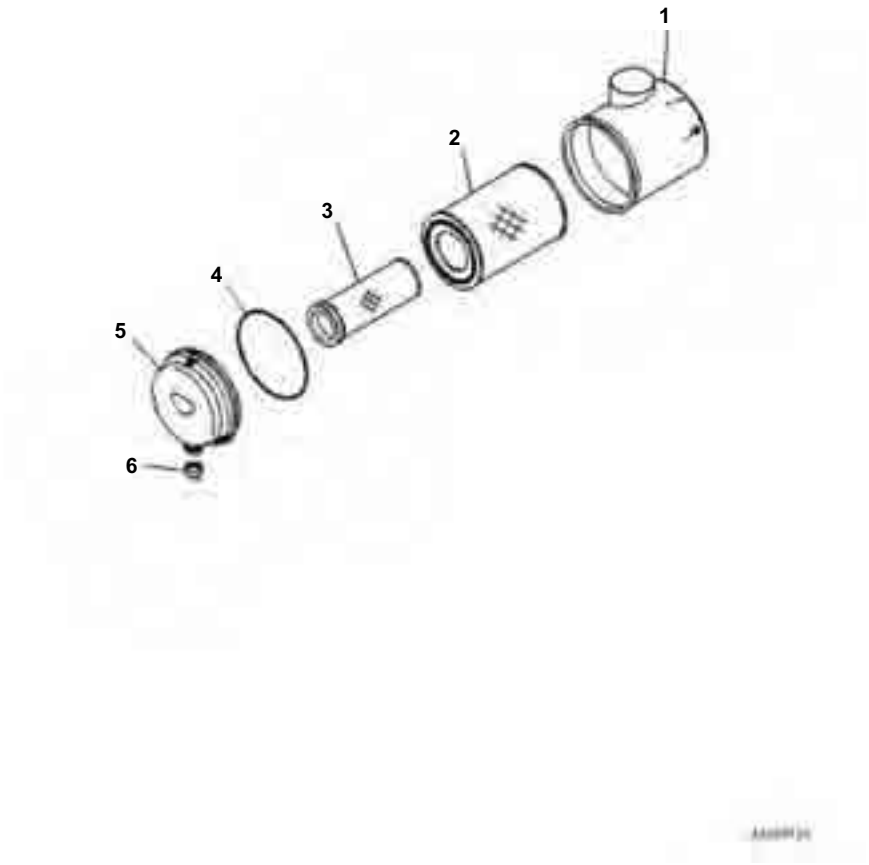

Engine Hood, With Pre-cleaner Auto Dust Eject, Air Cleaner

Index	Code	Part Number	Description	Qty	Serial No.
		6155-81-7100	Air Cleaner	1	B40001-
1		6155-81-7110	· Body	1	B40001-
		600-185-5100	· Element Assembly	1	B40001-
2		600-185-5110	· · Element	1	B40001-
3	C1		· · Element	1	B40001-
4		600-184-1570	· · O-ring	1	B40001-
5		600-184-1510	· Cover Assembly	1	B40001-
6		600-184-1350	· Valve, Vaquator	1	B40001-

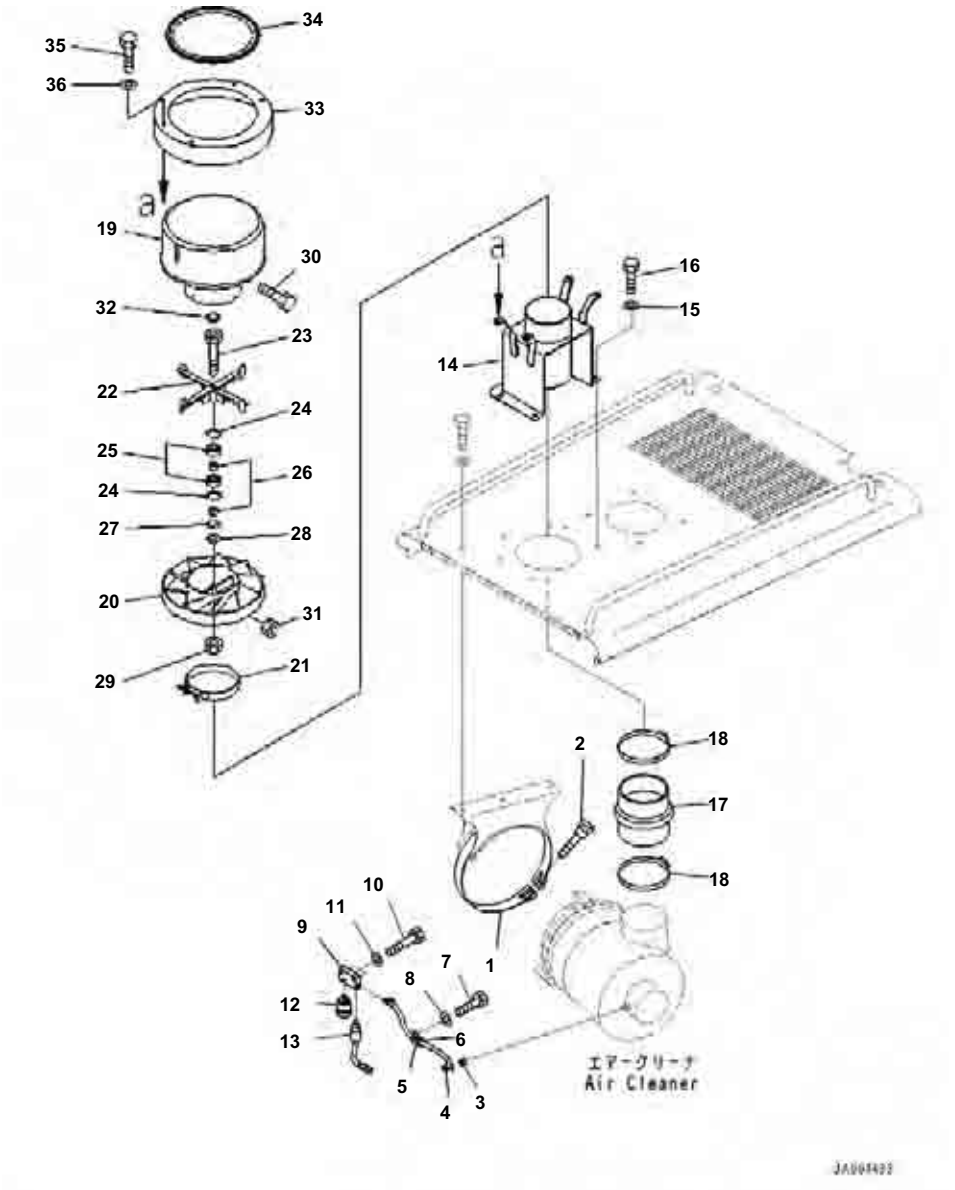

Engine Hood, With Pre-cleaner Auto Dust Eject, Air Cleaner Related Parts (2/2)

Index	Code	Part Number	Description	Qty	Serial No.
1		6151-11-4840	Band	1	B40001-
2		6643-11-4641	Bolt	1	B40001-
3		6743-81-7530	Adapter	1	B40001-
4		08671-50040	Hose	1	B40001-
5		04434-52112	Clip	1	B40001-
6		07095-20314	Cushion	1	B40001-
7		01010-81020	Bolt	1	B40001-
8		01643-31032	Washer	1	B40001-
9		423-06-42720	Block	1	B40001-
10		01010-81040	Bolt	2	B40001-
11		01643-31032	Washer	2	B40001-
12		08672-01000	Indicator, Dust	1	B40001-
13		423-06-43160	Indicator	1	B40001-
14		23B-54-71680	Bracket	1	B40001-
15		424-09-12650	Washer	4	B40001-
16		01010-81025	Bolt	4	B40001-
17		600-181-0670	Hose	1	B40001-
18		07289-00170	Clamp, Hose	2	B40001-
		423-U12-3100	Pre-cleaner	1	B40001-
19	C1		· Hood, Pre-cleaner	1	B40001-
20		423-U12-3130	· Body, Pre-cleaner	1	B40001-
21		421-U12-3140	· Clamp	1	B40001-
22		423-U12-3150	· Rotor	1	B40001-
23		421-U12-3160	· Bolt	1	B40001-
24		421-U12-3170	· Ring, Snap	2	B40001-
25		421-U12-3180	· Bearing, Ball	2	B40001-
26		421-U12-3190	· Bushing, Spacer	2	B40001-
27		421-U12-3210	· Washer	1	B40001-
28		421-U12-3220	· Washer	1	B40001-
29		421-U12-3230	· Nut	1	B40001-
30		421-U12-3240	· Bolt	4	B40001-
31		421-U12-3250	· Nut	4	B40001-
32		421-U12-3260	· Plug	1	B40001-
33		423-U12-4120	Cover	1	B40001-
34		423-U12-4130	Seal	1	B40001-
35		01010-81020	Bolt	4	B40001-
36		01643-31032	Washer	4	B40001-

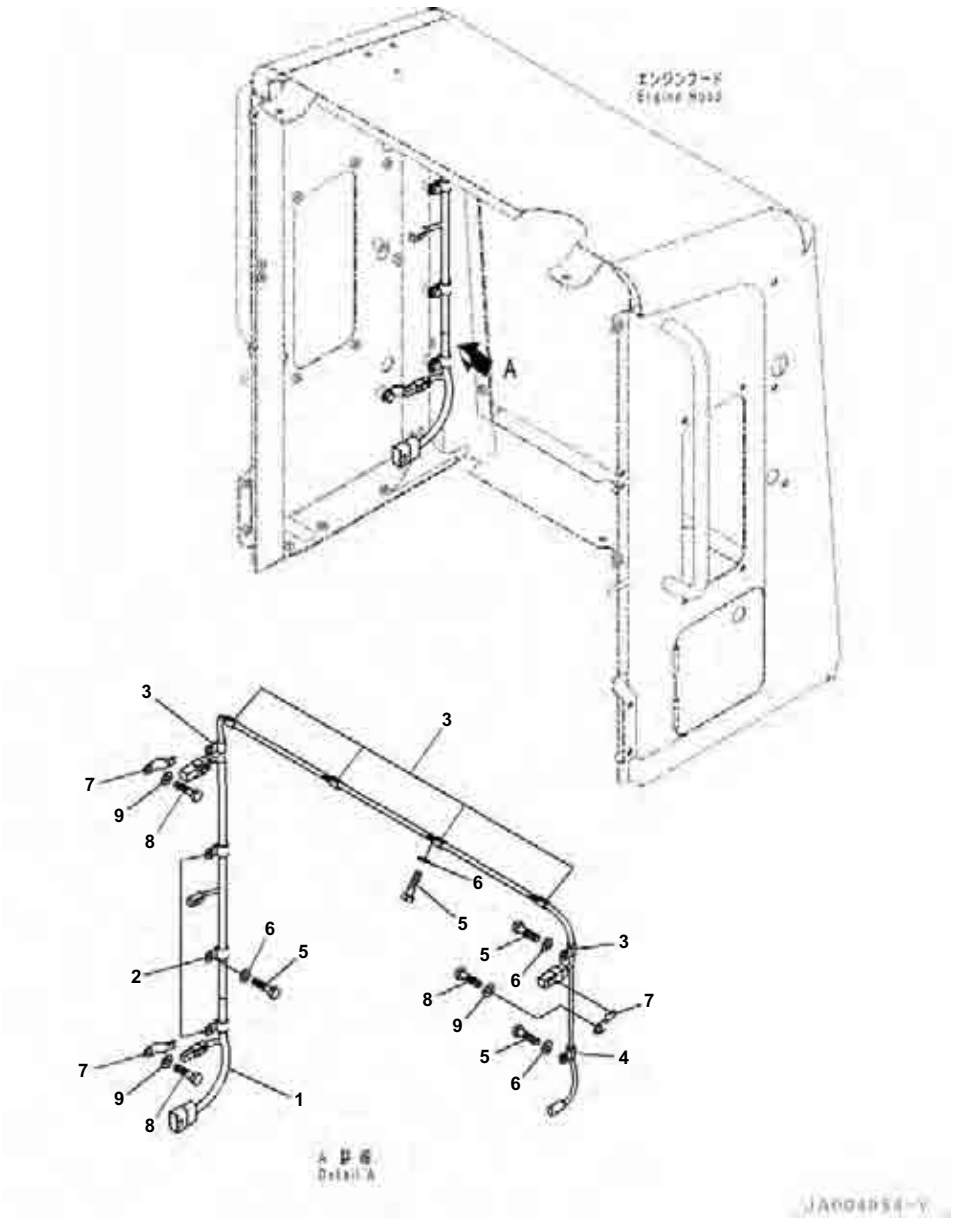

Engine Hood, With Pre-cleaner Auto Dust Eject, Wiring Harness

Index	Code	Part Number	Description	Qty	Serial No.
1		23B-06-73510	Wiring Harness	1	B40001-
2		04434-51410	Clip	3	B40001-
3		04434-51010	Clip	6	B40001-
4		04434-50810	Clip	1	B40001-
5		01010-81020	Bolt	15	B40001-
6		01643-31032	Washer	15	B40001-
7		08193-21012	Clip	3	B40001-
8		01010-81020	Bolt	3	B40001-
9		01643-31032	Washer	3	B40001-

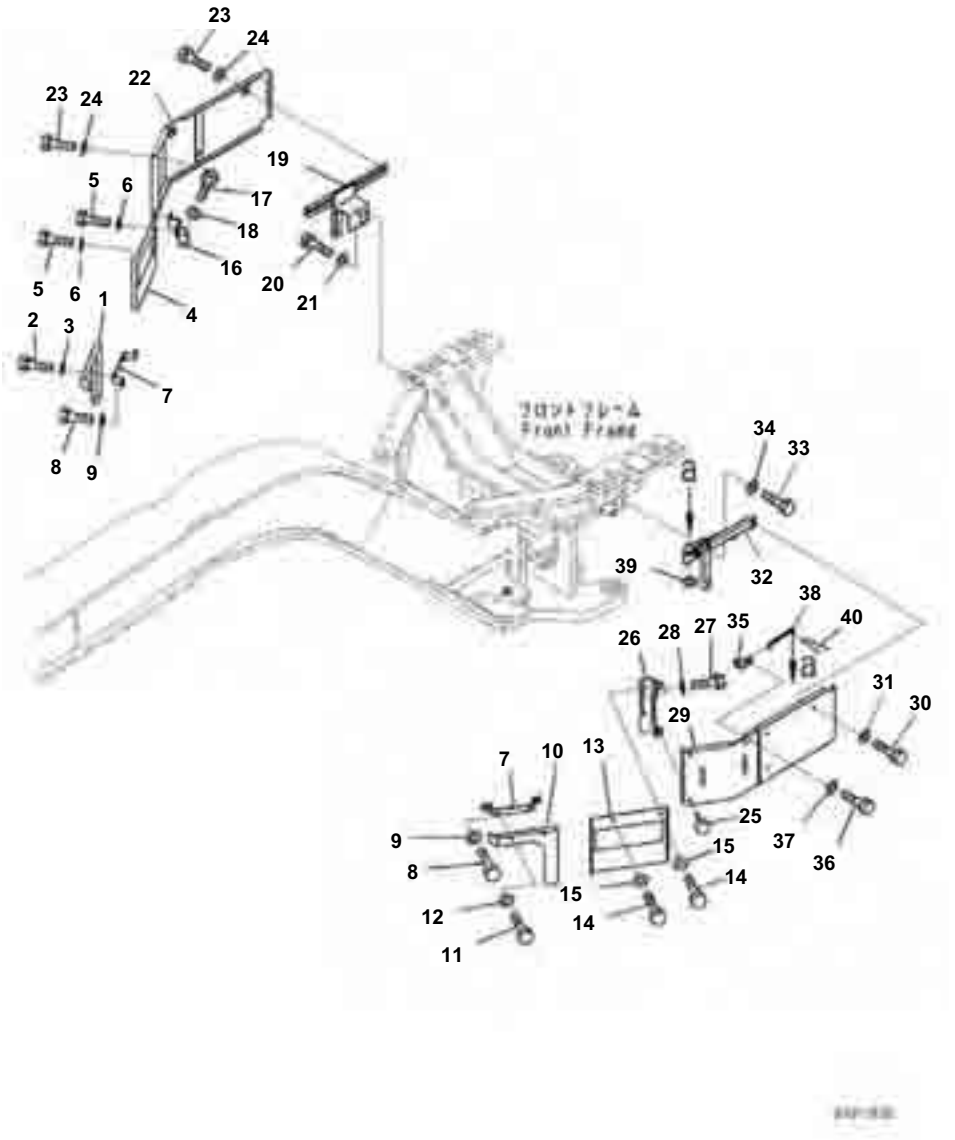

Front Frame Cover, Floor Cover

Index	Code	Part Number	Description	Qty	Serial No.
1		23B-54-73111	Cover	1	B40001-
2		01010-D1020	Bolt	2	B40001-
3		01643-71032	Washer	2	B40001-
4		23B-54-73290	Cover	1	B40001-
5		01010-D1020	Bolt	2	B40001-
6		01643-71032	Washer	2	B40001-
7		23B-54-73241	Bracket	2	B40001-
8		01010-D1020	Bolt	4	B40001-
9		01643-71032	Washer	4	B40001-
10		23B-54-73121	Cover	1	B40001-
11		01010-D1020	Bolt	2	B40001-
12		01643-71032	Washer	2	B40001-
13		23B-54-73280	Cover	1	B40001-
14		01010-D1020	Bolt	2	B40001-
15		01643-71032	Washer	2	B40001-
16		23B-54-73260	Bracket	1	B40001-
17		01010-D1025	Bolt	2	B40001-
18		01643-71032	Washer	2	B40001-
19		23B-54-73270	Bracket,RHS	1	B40001-
20		01010-D1030	Bolt	4	B40001-
21		01643-71032	Washer	4	B40001-
22		23B-54-73230	Cover	1	B40001-
23		01010-D1025	Bolt	4	B40001-
24		01643-71032	Washer	4	B40001-
25		23B-54-31990	Screw	2	B40001-
26		23B-54-73141	Bracket	1	B40001-
27		01010-D1025	Bolt	2	B40001-
28		01643-71032	Washer	2	B40001-
29		23B-54-73130	Cover	1	B40001-
30		01010-D1025	Bolt	3	B40001-
31		01643-71032	Washer	3	B40001-
32		23B-54-73250	Bracket,LHS	1	B40001-
33		01010-D1030	Bolt	4	B40001-
34		01643-71032	Washer	4	B40001-
35		23B-54-73420	Bracket	1	B40001-
36		01010-D1025	Bolt	2	B40001-
37		01643-71032	Washer	2	B40001-
38		22B-46-24170	Rod	1	B40001-
39		01643-80823	Washer	1	B40001-
40		04050-12015	Pin, Cotter	1	B40001-

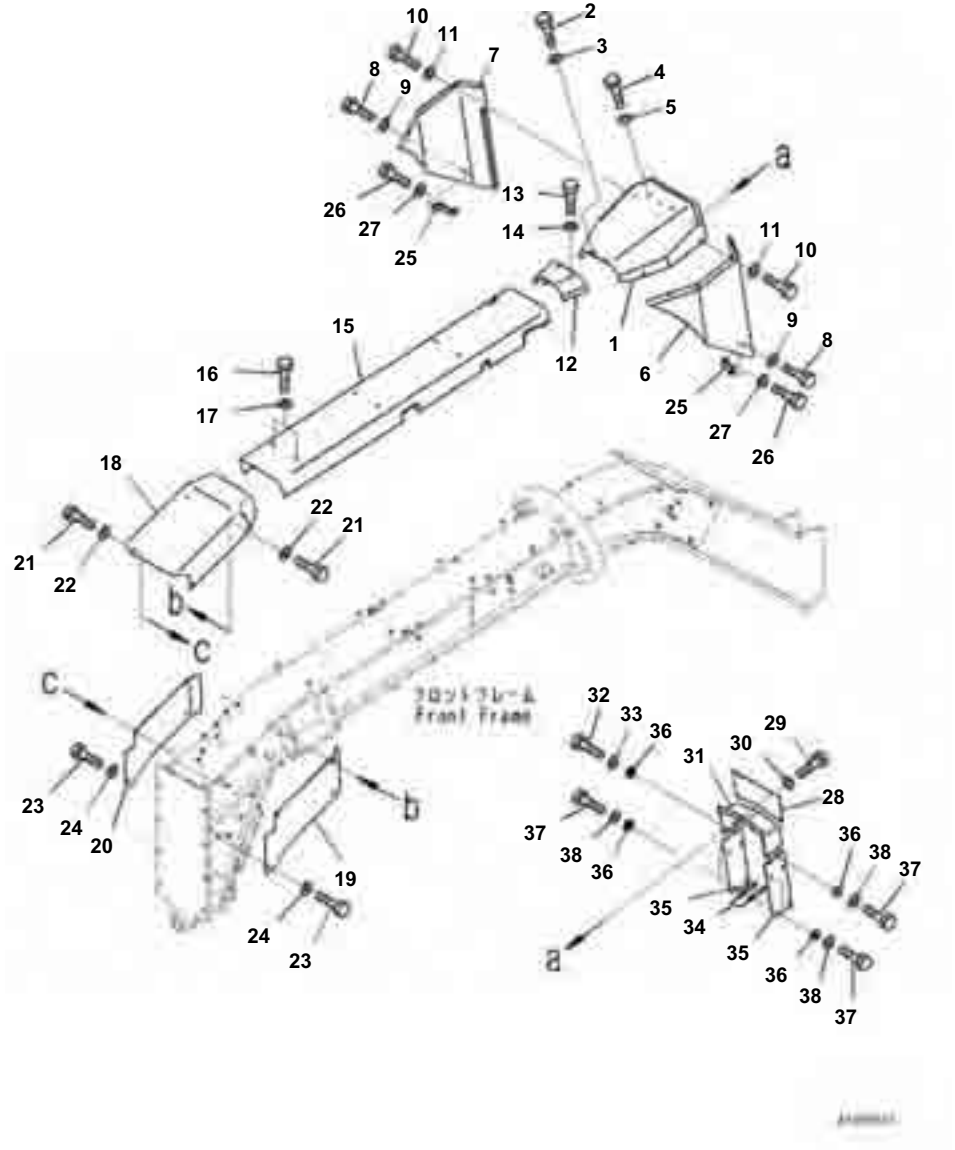

Front Frame Cover, Front Cover

Index	Code	Part Number	Description	Qty	Serial No.
1		23B-54-73681	Cover	1	B40001-
2		01010-D1016	Bolt	2	B40001-
3		01643-71032	Washer	2	B40001-
4		01010-D1016	Bolt	2	B40001-
5		421-54-34550	Washer	2	B40001-
6		23B-54-73660	Cover,LHS	1	B40001-
7		23B-54-73670	Cover,RHS	1	B40001-
8		01010-D1016	Bolt	2	B40001-
9		01643-71032	Washer	2	B40001-
10		01010-D1020	Bolt	4	B40001-
11		01643-71032	Washer	4	B40001-
12		23B-54-73180	Cover	1	B40001-
13		01010-D1020	Bolt	2	B40001-
14		01643-71032	Washer	2	B40001-
15		23B-54-73340	Cover	1	B40001-
16		01010-D1020	Bolt	6	B40001-
17		01643-71032	Washer	6	B40001-
18		23B-54-73440	Cover	1	B40001-
19		23B-54-73190	Cover	1	B40001-
20		23B-54-73320	Cover	1	B40001-
21		01010-81016	Bolt	4	B40001-
22		01643-31032	Washer	4	B40001-
23		01010-D1016	Bolt	4	B40001-
24		01643-71032	Washer	4	B40001-
25		23B-54-73310	Bracket	2	B40001-
26		01010-81020	Bolt	2	B40001-
27		01643-31032	Washer	2	B40001-
28		23B-54-73450	Cover	1	B40001-
29		01010-D1020	Bolt	2	B40001-
30		01643-71032	Washer	2	B40001-
31		23B-54-73360	Cover	1	B40001-
32		01010-D1020	Bolt	4	B40001-
33		01643-71032	Washer	4	B40001-
34		23B-54-73351	Bracket	4	B40001-
35		23B-54-73380	Plate	2	B40001-
36		20Y-53-12310	Collar	12	B40001-
37		01010-D0620	Bolt	12	B40001-
38		01643-70623	Washer	12	B40001-

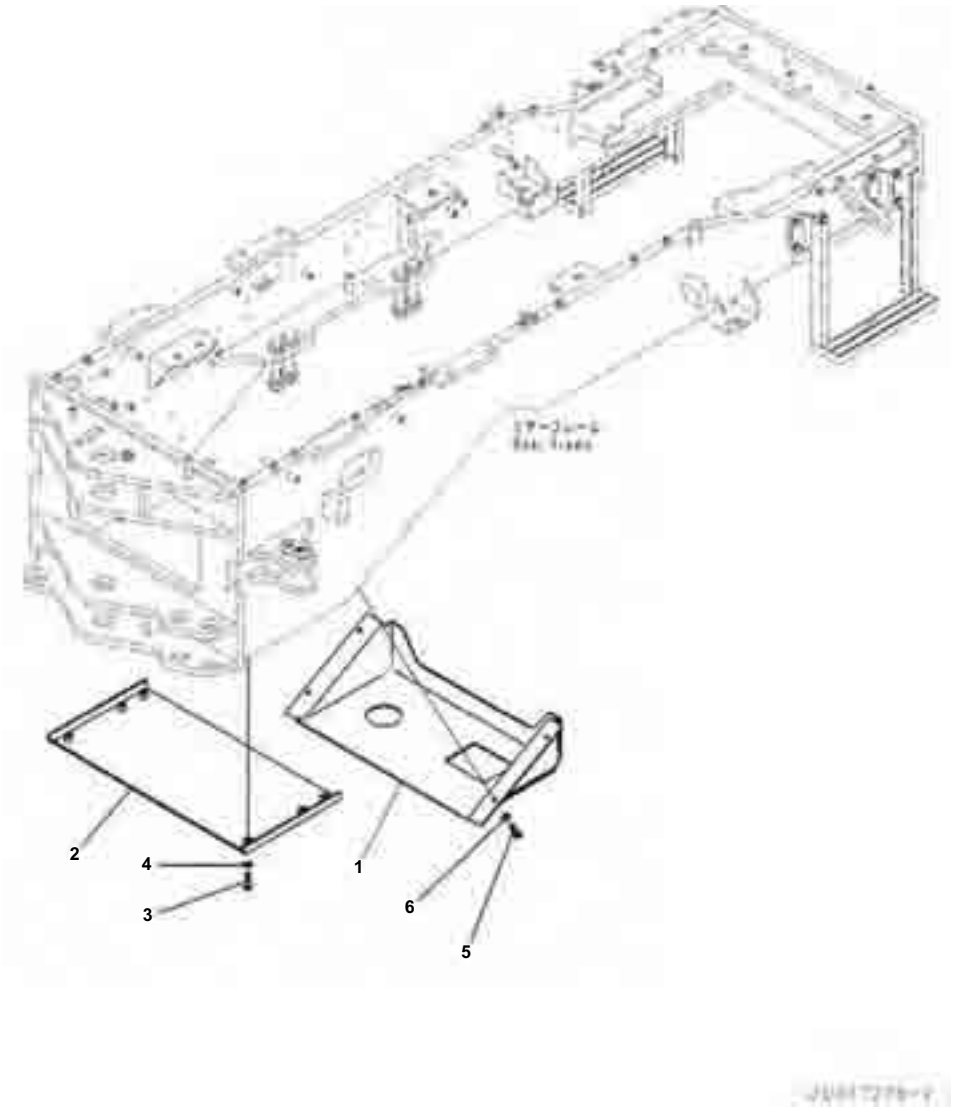

Index	Code	Part Number	Description	Qty	Serial No.
1		23B-915-7110	Cover	1	B40001-
2		23B-915-7120	Cover	1	B40001-
3		01010-81245	Bolt	6	B40001-
4		01643-31232	Washer	6	B40001-
5		01010-81225	Bolt	4	B40001-
6		01643-31232	Washer	4	B40001-

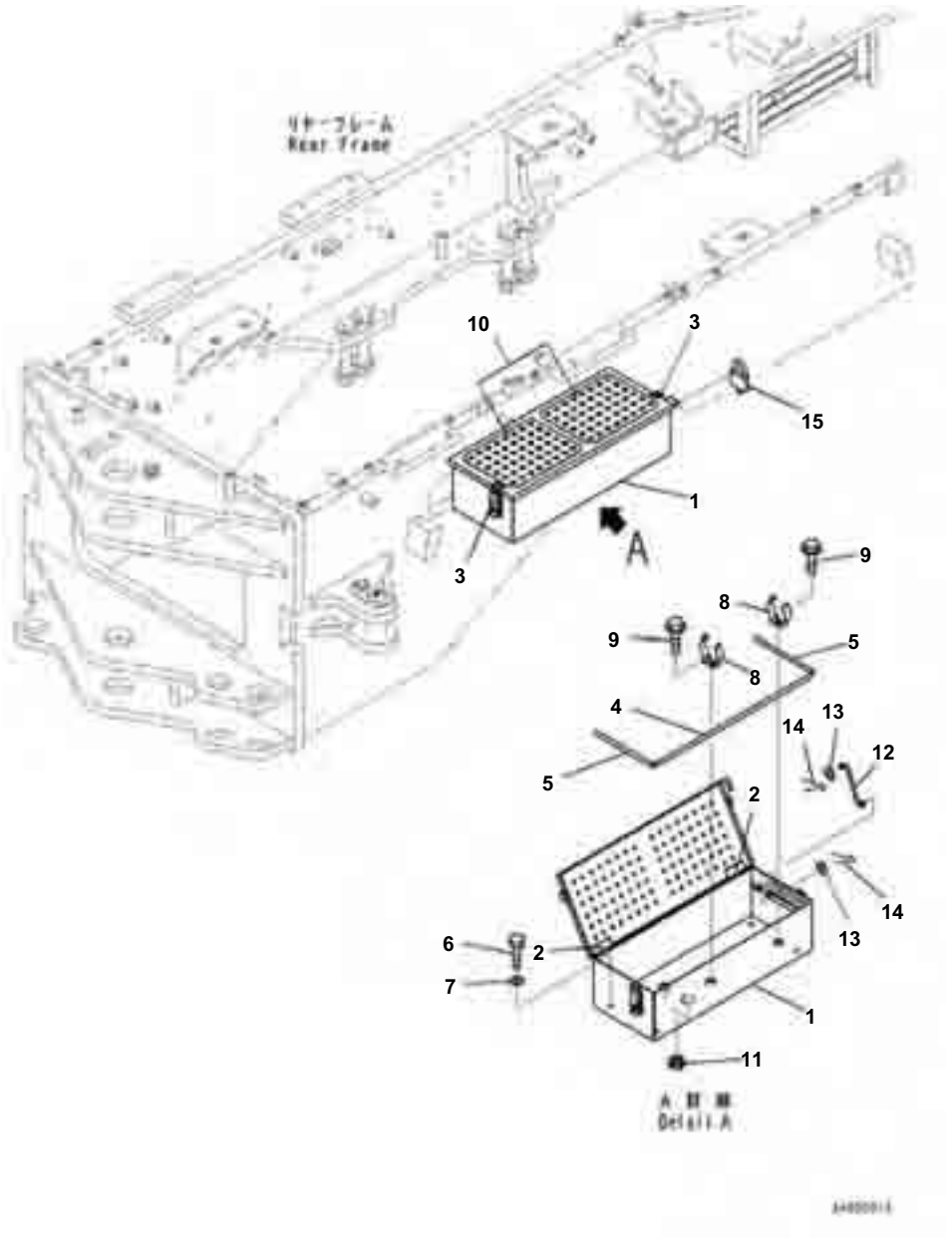

Tool Box

Index	Code	Part Number	Description	Qty	Serial No.
		23B-98-71100	Box, Tool	1	B40001-
1		23B-98-71111	･ Box, Tool	1	B40001-
2		232-54-54720	･ ･ Hinge	2	B40001-
3		238-06-12331	･ ･ Lock	2	B40001-
4		23B-98-71130	･ Trim	1	B40001-
5		23B-98-71141	･ Trim	2	B40001-
6		01010-81020	Bolt	4	B40001-
7		01643-31032	Washer	4	B40001-
8		417-54-21460	Spring	2	B40001-
9		01435-00812	Bolt	2	B40001-
10		23B-98-71120	Sheet	2	B40001-
11		09415-02512	Cap	2	B40001-
12		203-54-56630	Rod	1	B40001-
13		01643-30623	Washer	2	B40001-
14		04050-11612	Pin, Cotter	2	B40001-
15		09460-00000	Lock	1	B40001-

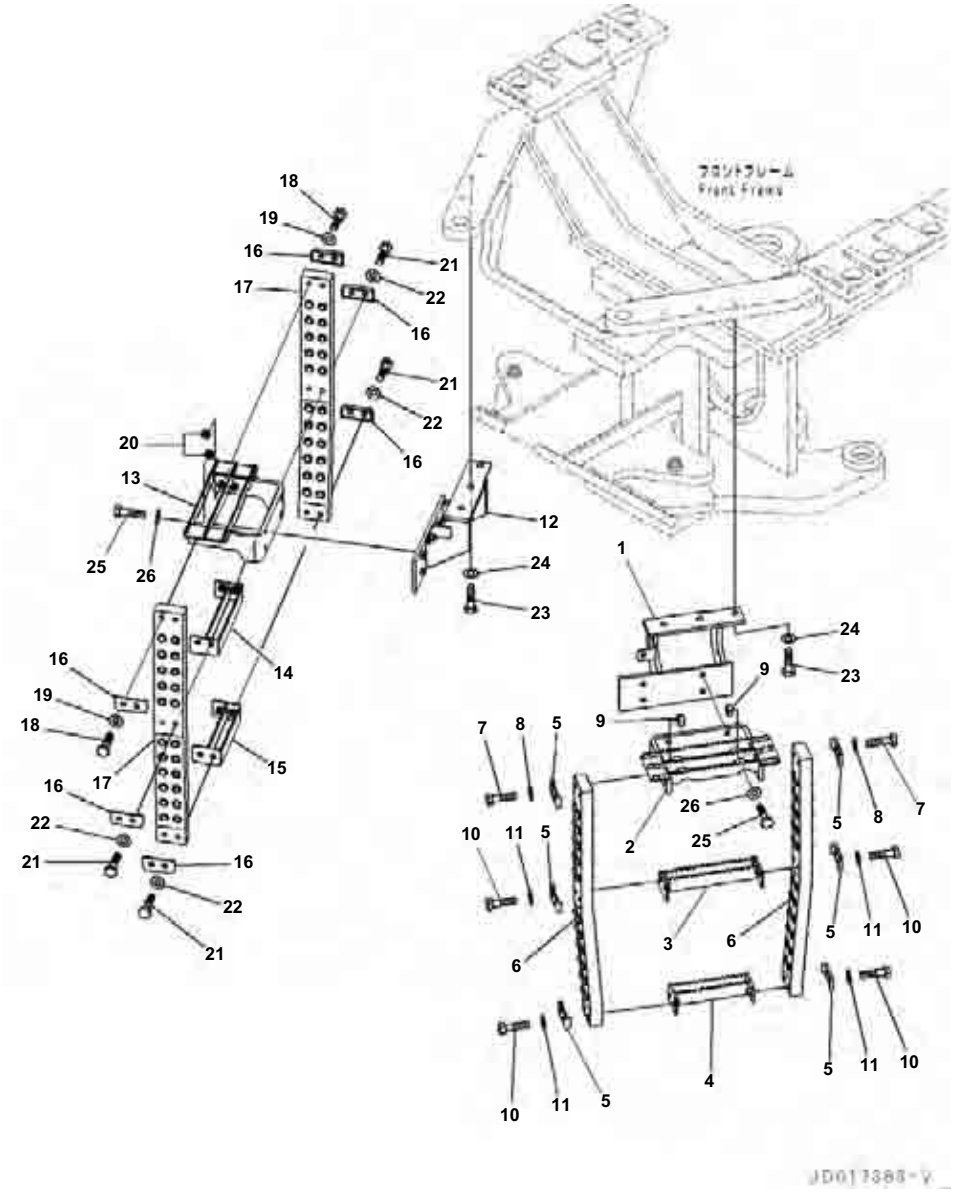

Ladder

Index	Code	Part Number	Description	Qty	Serial No.
1		23B-54-73150	Bracket,RHS,LHS	1	B40001-
		23B-54-32208	Step Assembly	1	B40001-
2		23B-54-33991	･ Bracket	1	B40001-
3		23B-54-33971	･ Step	1	B40001-
4		23B-54-33980	･ Step	1	B40001-
5		23B-54-34850	･ Plate	6	B40001-
6		23B-54-34841	･ Rubber	2	B40001-
7		01010-81070	･ Bolt	4	B40001-
8		01643-31032	･ Washer	4	B40001-
9		01580-11008	･ Nut	4	B40001-
10		01010-81060	･ Bolt	8	B40001-
11		01643-31032	･ Washer	8	B40001-
12		23B-54-73160	Bracket	1	B40001-
		23B-54-32208	Step Assembly	1	B40001-
13		23B-54-33991	･ Bracket	1	B40001-
14		23B-54-33971	･ Step	1	B40001-
15		23B-54-33980	･ Step	1	B40001-
16		23B-54-34850	･ Plate	6	B40001-
17		23B-54-34841	･ Rubber	2	B40001-
18		01010-81070	･ Bolt	4	B40001-
19		01643-31032	･ Washer	4	B40001-
20		01580-11008	･ Nut	4	B40001-
21		01010-81060	･ Bolt	8	B40001-
22		01643-31032	･ Washer	8	B40001-
23		01010-81235	Bolt	6	B40001-
24		01643-31232	Washer	6	B40001-
25		01010-D1035	Bolt	8	B40001-
26		01643-71032	Washer	8	B40001-

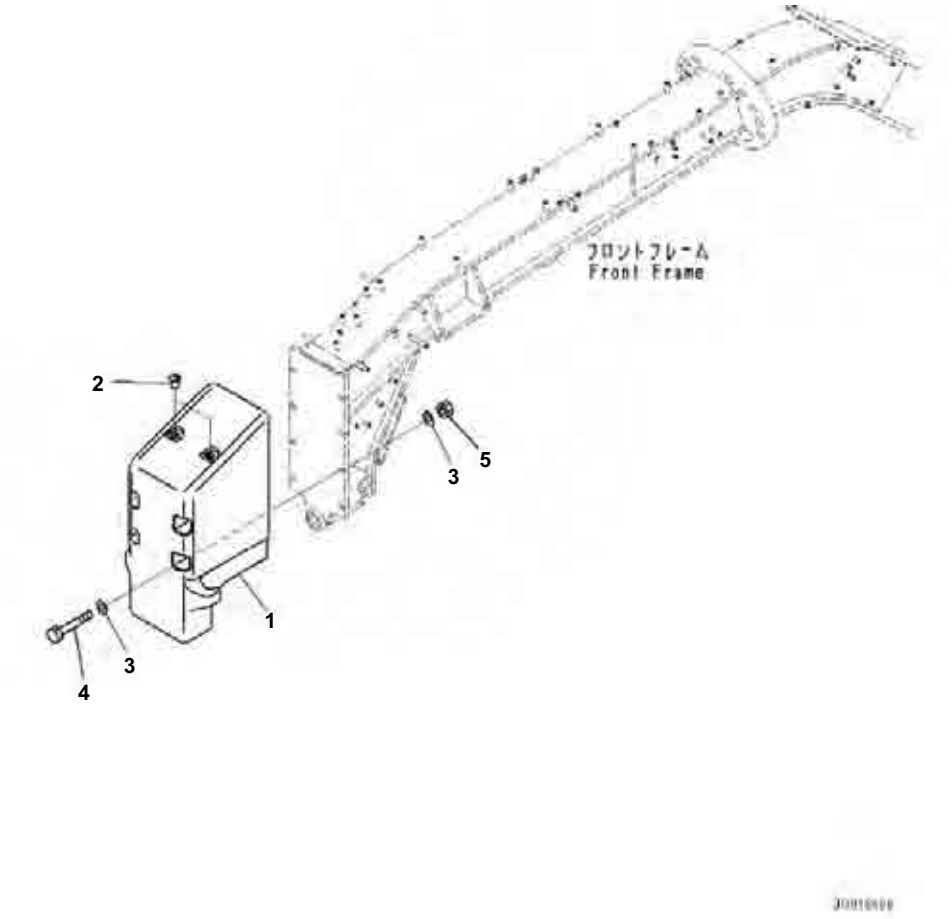

Index	Code	Part Number	Description	Qty	Serial No.
1		23B-846-7250	Pusher	1	B40001-
2		23D-846-3190	Plug	2	B40001-
3		22X-22-11280	Washer	8	B40001-
4		419-09-11130	Bolt	4	B40001-
5		01580-12419	Nut	4	B40001-

WHEEL AND ITS RELATED PARTS

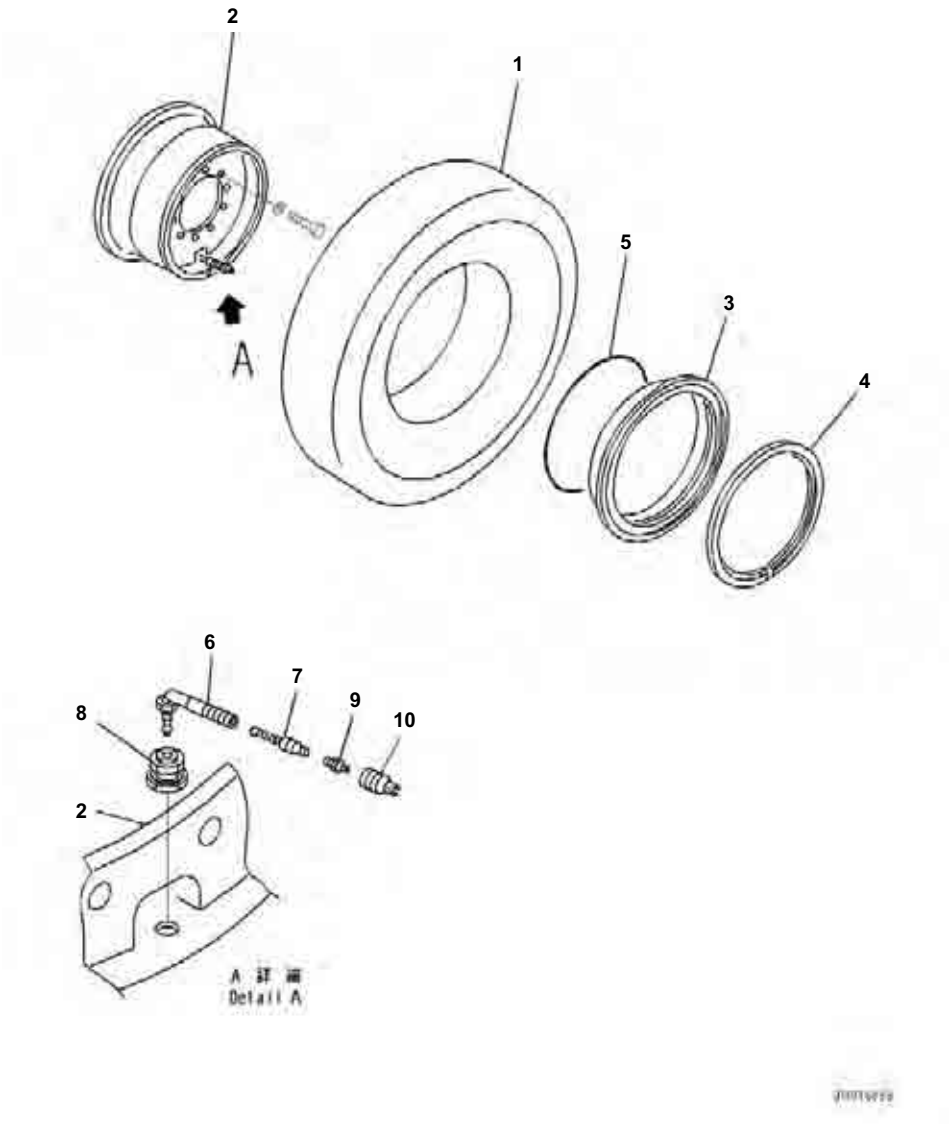

Tire and Rim, 17.5-25-12PR TubeLess Tires, Front, RHS

Index	Code	Part Number	Description	Qty	Serial No.
		23B-30-B1110	Wheel Assembly, Front, RHS	1	B40001-
1		419-X13-A110	· Tire	1	B40001-
		23A-30-B2100	· Rim Assembly	1	B40001-
2		23A-30-B2110	· · Rim, Wheel	1	B40001-
3		234-30-14920	· · Ring,Side	1	B40001-
4		234-30-14930	· · Ring, Lock	1	B40001-
5		232-30-55220	· O-ring	1	B40001-
		09280-10040	· Valve Assembly, Tire	1	B40001-
6		09280-10130	· · Stem	1	B40001-
7		09281-00041	· · Core, Valve	1	B40001-
8		09283-00000	· · Seat, Valve	1	B40001-
9		09285-00000	· · Adapter	1	B40001-
10		09282-00017	· · Cap, Valve	1	B40001-

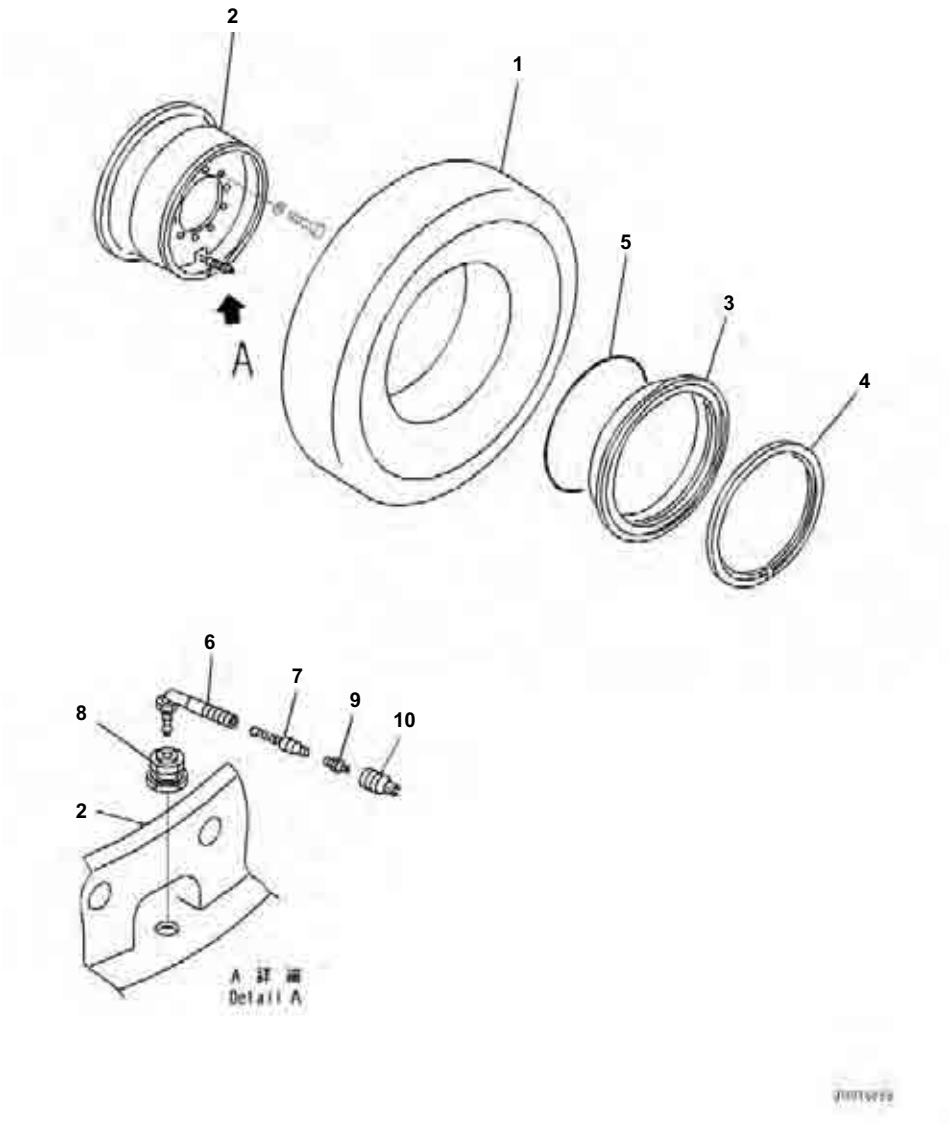

Tire and Rim, 17.5-25-12PR TubeLess Tires, Front, LHS

Index	Code	Part Number	Description	Qty	Serial No.
		23B-30-B1100	Wheel Assembly,Front,LHS	1	B40001-
1		419-X13-A110	· Tire	1	B40001-
		23A-30-B2100	· Rim Assembly	1	B40001-
2		23A-30-B2110	· · Rim, Wheel	1	B40001-
3		234-30-14920	· · Ring,Side	1	B40001-
4		234-30-14930	· · Ring, Lock	1	B40001-
5		232-30-55220	· O-ring	1	B40001-
		09280-10040	· Valve Assembly, Tire	1	B40001-
6		09280-10130	· · Stem	1	B40001-
7		09281-00041	· · Core, Valve	1	B40001-
8		09283-00000	· · Seat, Valve	1	B40001-
9		09285-00000	· · Adapter	1	B40001-
10		09282-00017	· · Cap, Valve	1	B40001-

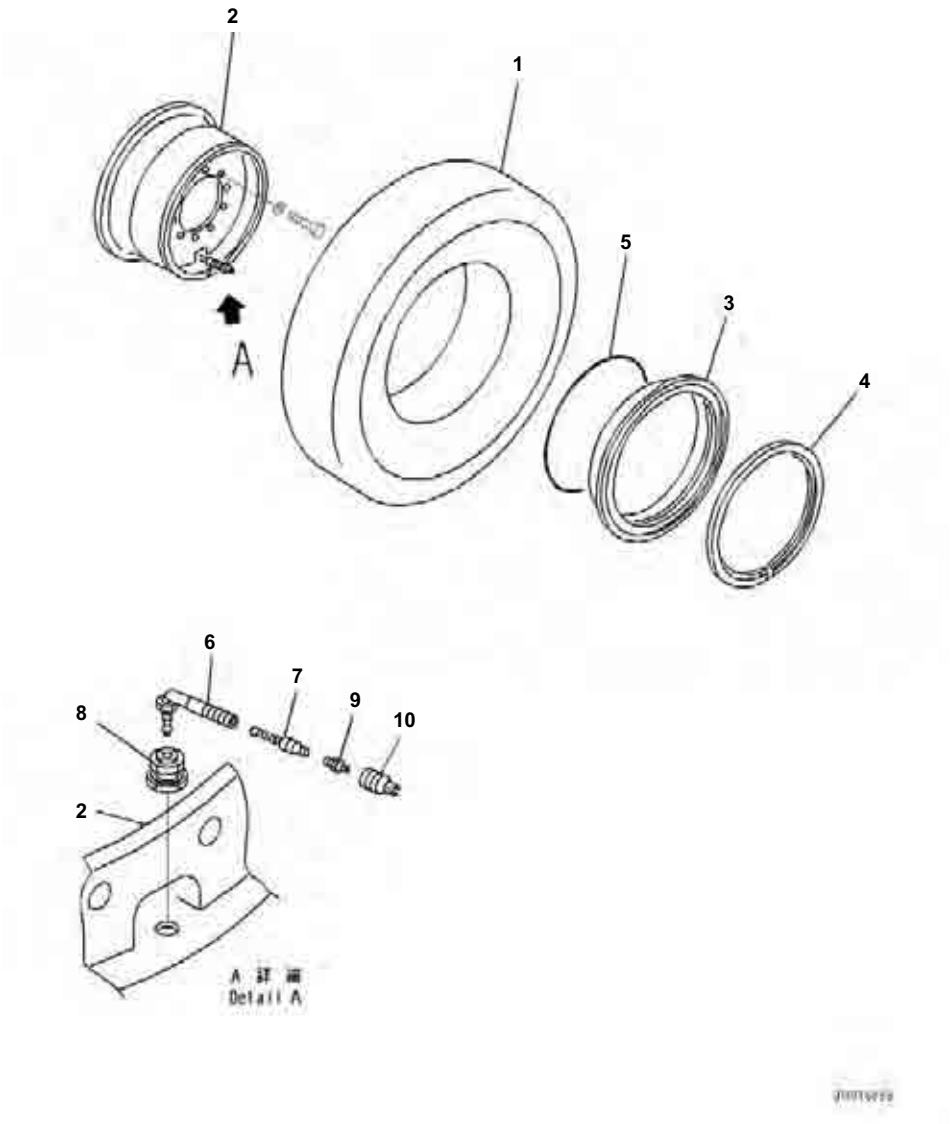

Tire and Rim, 17.5-25-12PR TubeLess Tires, Rear, LHS

Index	Code	Part Number	Description	Qty	Serial No.
		23B-30-B1110	Wheel Assembly, Rear, LHS	2	B40001-
1		419-X13-A110	· Tire	1	B40001-
		23A-30-B2100	· Rim Assembly	1	B40001-
2		23A-30-B2110	· · Rim, Wheel	1	B40001-
3		234-30-14920	· · Ring,Side	1	B40001-
4		234-30-14930	· · Ring, Lock	1	B40001-
5		232-30-55220	· O-ring	1	B40001-
		09280-10040	· Valve Assembly, Tire	1	B40001-
6		09280-10130	· · Stem	1	B40001-
7		09281-00041	· · Core, Valve	1	B40001-
8		09283-00000	· · Seat, Valve	1	B40001-
9		09285-00000	· · Adapter	1	B40001-
10		09282-00017	· · Cap, Valve	1	B40001-

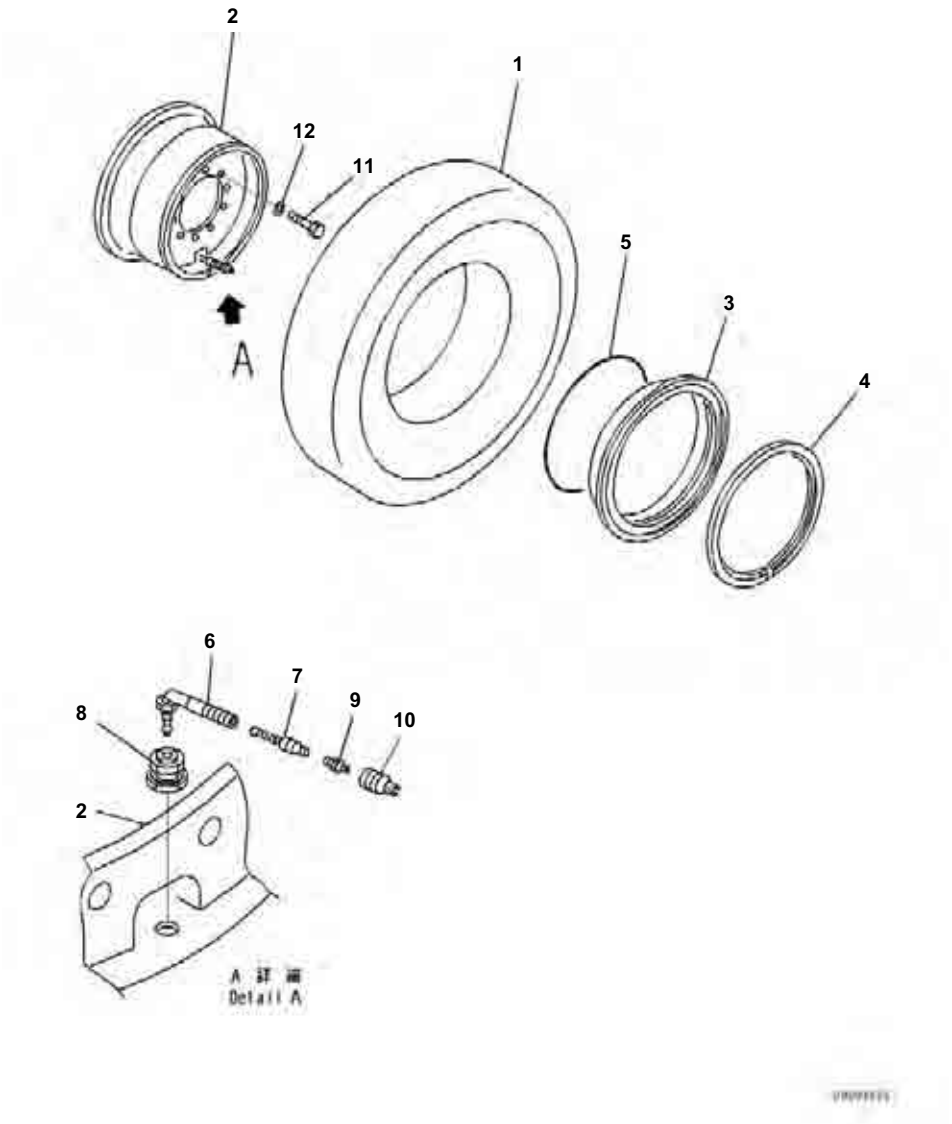

Tire and Rim, 17.5-25-12PR TubeLess Tires, Rear, RHS

Index	Code	Part Number	Description	Qty	Serial No.
		23B-30-B1100	Wheel Assembly, Rear, RHS	2	B40001-
1		419-X13-A110	· Tire	1	B40001-
		23A-30-B2100	· Rim Assembly	1	B40001-
2		23A-30-B2110	· · Rim, Wheel	1	B40001-
3		234-30-14920	· · Ring,Side	1	B40001-
4		234-30-14930	· · Ring, Lock	1	B40001-
5		232-30-55220	· O-ring	1	B40001-
		09280-10040	· Valve Assembly, Tire	1	B40001-
6		09280-10130	· · Stem	1	B40001-
7		09281-00041	· · Core, Valve	1	B40001-
8		09283-00000	· · Seat, Valve	1	B40001-
9		09285-00000	· · Adapter	1	B40001-
10		09282-00017	· · Cap, Valve	1	B40001-
11		01010-62250	Bolt	60	B40001-
12		01643-32260	Washer	60	B40001-

WORK EQUIPMENT

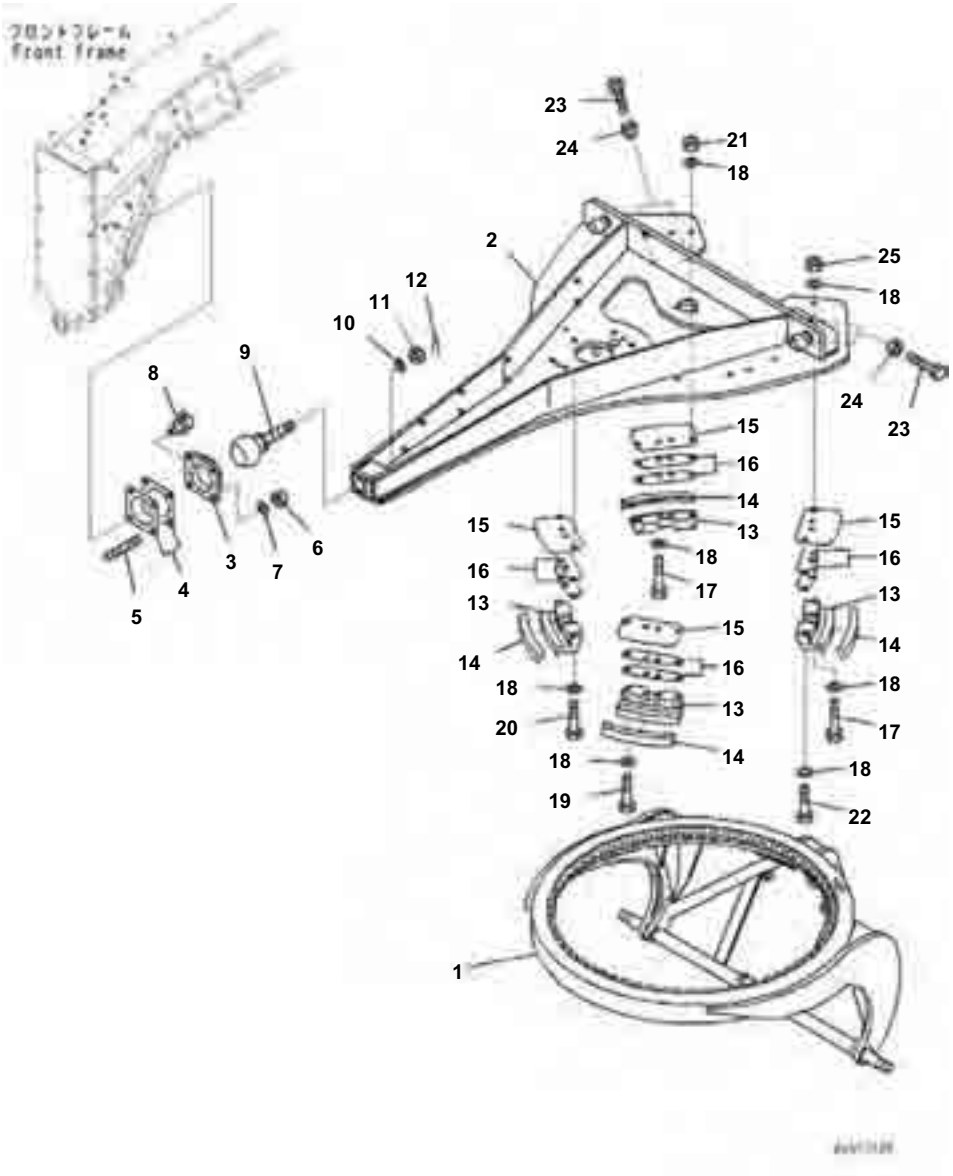

Drawbar and Circle

Index	Code	Part Number	Description	Qty	Serial No.
1		23B-735-3113	Support	1	B40001-
2		23B-70-71121	Drawbar	1	B40001-
3		23A-70-71130	Holder	1	B40001-
4		23B-70-31540	Shim, T=0.3mm	16	B40001-
5		01124-52460	Stud	4	B40001-
6		01580-12419	Nut	4	B40001-
7		01643-32460	Washer	4	B40001-
8		07020-00675	Fitting, Grease	1	B40001-
9		23B-70-31140	Stud	1	B40001-
10		238-70-11180	Washer	1	B40001-
11		01590-34548	Nut, Slotted	1	B40001-
12		04050-18080	Pin, Cotter	1	B40001-
13		23B-70-51550	Guide	6	B40001-
14		23B-70-51560	Guide	6	B40001-
15		23B-70-31680	Plate, T=7mm	6	B40001-
16		23B-70-31610	Shim, T=1.0mm	35	B40001-
		23B-70-31620	Shim, T=0.5mm	6	B40001-
17		01011-82050	Bolt	15	B40001-
18		01643-32060	Washer	33	B40001-
19		01011-82035	Bolt	1	B40001-
20		01011-82050	Bolt	1	B40001-
21		01580-12016	Nut	14	B40001-
22		01011-82050	Bolt	1	B40001-
23		01016-52470	Bolt	12	B40001-
24		01580-12419	Nut	12	B40001-
25		01580-12016	Nut	1	B40001-

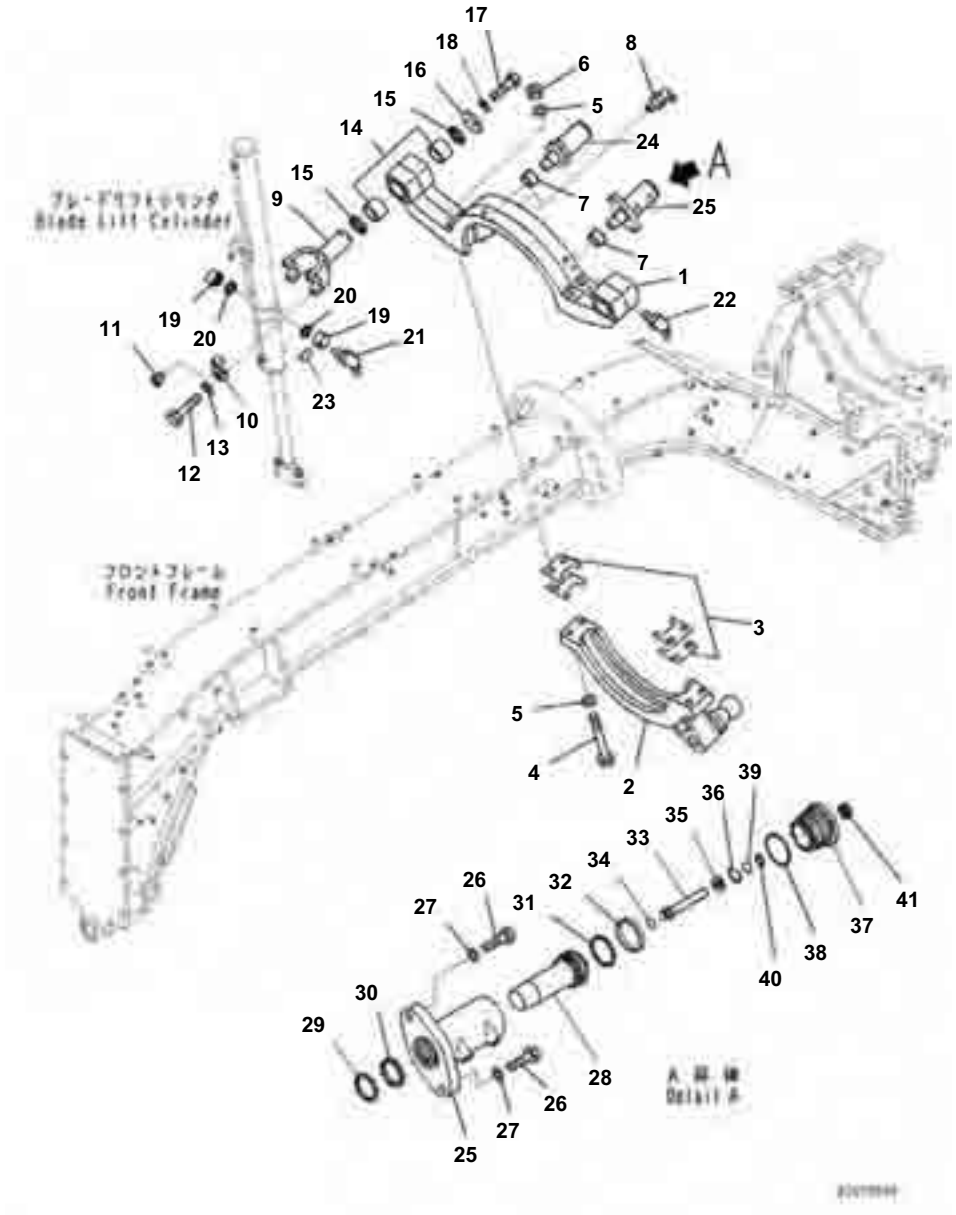

Index	Code	Part Number	Description	Qty	Serial No.
1		23B-70-31350	Bracket	1	B40001-
2		23B-70-31360	Bracket	1	B40001-
3		23B-70-31790	Shim, T=1.0mm	8	B40001-
4		561-88-68950	Bolt	4	B40001-
5		01643-32460	Washer	8	B40001-
6		01580-12419	Nut	4	B40001-
7		23A-70-14210	Bushing	2	B40001-
8		07020-00675	Fitting, Grease	3	B40001-
9		232-70-53134	Yoke	2	B40001-
10		232-70-53271	Cap	4	B40001-
11		07043-70108	Plug	4	B40001-
12		01010-81255	Bolt	8	B40001-
13		01643-31232	Washer	8	B40001-
14		19N-72-11220	Bushing	4	B40001-
15		07145-00075	Seal, Dust	4	B40001-
16		232-70-53160	Holder	2	B40001-
17		01010-81635	Bolt	4	B40001-
18		01643-31645	Washer	4	B40001-
19		232-70-53141	Bushing	4	B40001-
20		07145-00045	Seal, Dust	4	B40001-
21		07020-00675	Fitting, Grease	4	B40001-
22		07020-00900	Fitting, Grease	2	B40001-
23		144-70-15251	Pin, Dowel	4	B40001-
24		23B-43-35110	Case,RHS	1	B40001-
25		23B-43-35270	Case,LHS	1	B40001-
26		01010-81455	Bolt	4	B40001-
27		01643-31645	Washer	4	B40001-
28		23B-43-35150	Rod	2	B40001-
29		23B-43-35180	Seal	2	B40001-
30		23B-43-35190	Packing	2	B40001-
31		07161-00070	Ring, Piston	2	B40001-
32		07156-00710	Ring, Wear	2	B40001-
33		23B-43-35160	Shaft	2	B40001-
34		07000-12014	O-ring	2	B40001-
35		01643-31645	Washer	2	B40001-
36		04065-03212	Ring	2	B40001-
37		23B-43-35170	Cover	2	B40001-
38		07000-12065	O-ring	2	B40001-
39		07000-12016	O-ring	2	B40001-
40		07001-02016	Ring, Back-up	2	B40001-
41		234-43-39250	Seal	2	B40001-

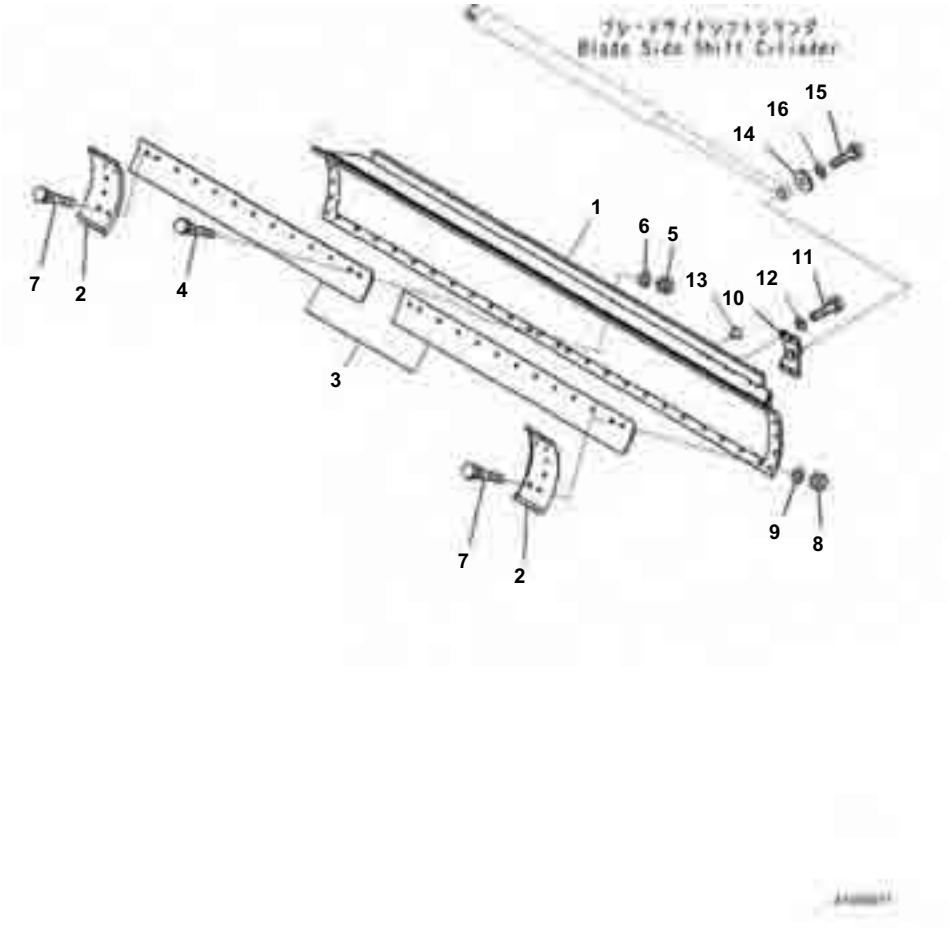

Blade, 3.7m Width, 19mm Thickness, Overlay, Edge Height 152mm

Index	Code	Part Number	Description	Qty	Serial No.
1		23B-70-31830	Blade	1	B40001-
2		232-70-52190	End Bit	2	B40001-
3		232-70-12143	Edge	2	B40001-
4		232-70-12450	Bolt	28	B40001-
5		232-70-12480	Nut	28	B40001-
6		01643-31645	Washer	28	B40001-
7		232-70-12460	Bolt	4	B40001-
8		232-70-12480	Nut	4	B40001-
9		01643-31645	Washer	4	B40001-
10		23B-70-71260	Bracket	1	B40001-
11		01010-81640	Bolt	4	B40001-
12		01643-31645	Washer	4	B40001-
13		07048-01510	Plug, Plastic	8	B40001-
14		23A-70-12150	Washer	1	B40001-
15		01010-81225	Bolt	1	B40001-
16		01643-31232	Washer	1	B40001-

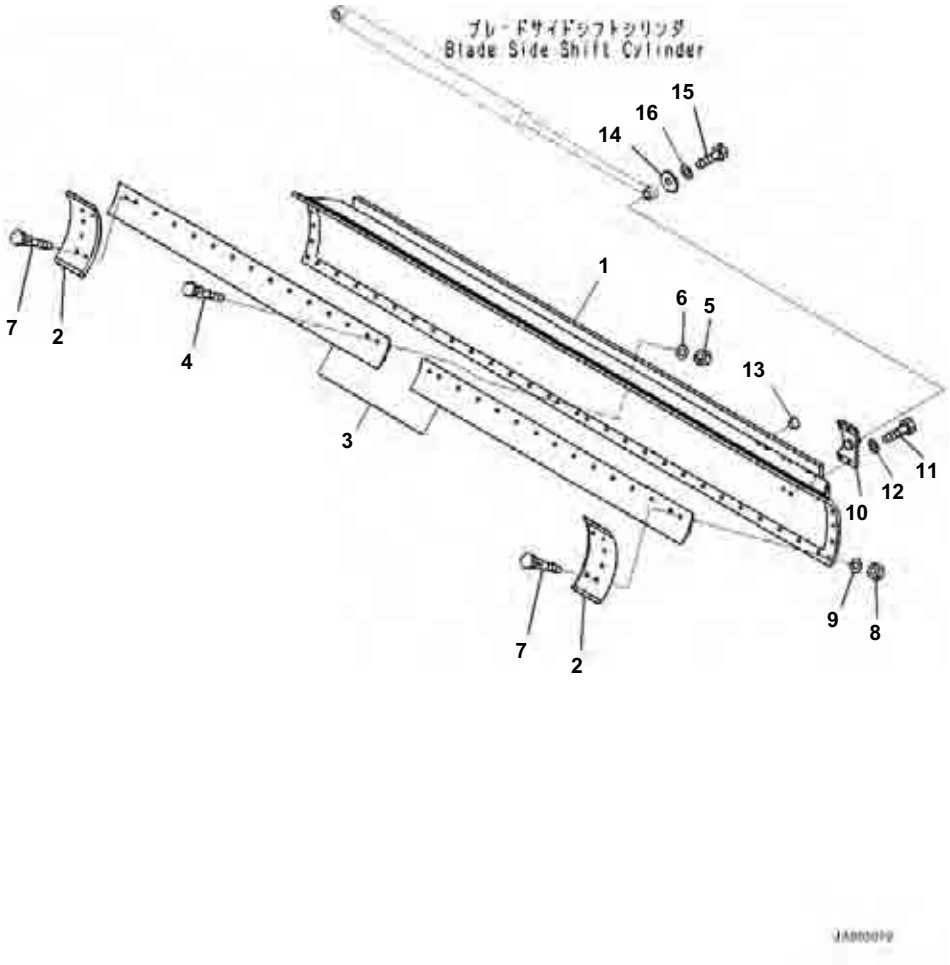

Blade, 4.3m Width, 19mm Thickness, Overlay, Edge Height 152mm

Index	Code	Part Number	Description	Qty	Serial No.
1		23B-70-31290	Blade	1	B40001-
2		232-70-52190	End Bit	2	B40001-
3		234-70-12193	Edge	2	B40001-
4		232-70-12450	Bolt	32	B40001-
5		232-70-12480	Nut	32	B40001-
6		01643-31645	Washer	32	B40001-
7		232-70-12460	Bolt	4	B40001-
8		232-70-12480	Nut	4	B40001-
9		01643-31645	Washer	4	B40001-
10		23B-70-71260	Bracket	1	B40001-
11		01010-81640	Bolt	4	B40001-
12		01643-31645	Washer	4	B40001-
13		07048-01510	Plug, Plastic	8	B40001-
14		23A-70-12150	Washer	1	B40001-
15		01010-81225	Bolt	1	B40001-
16		01643-31232	Washer	1	B40001-

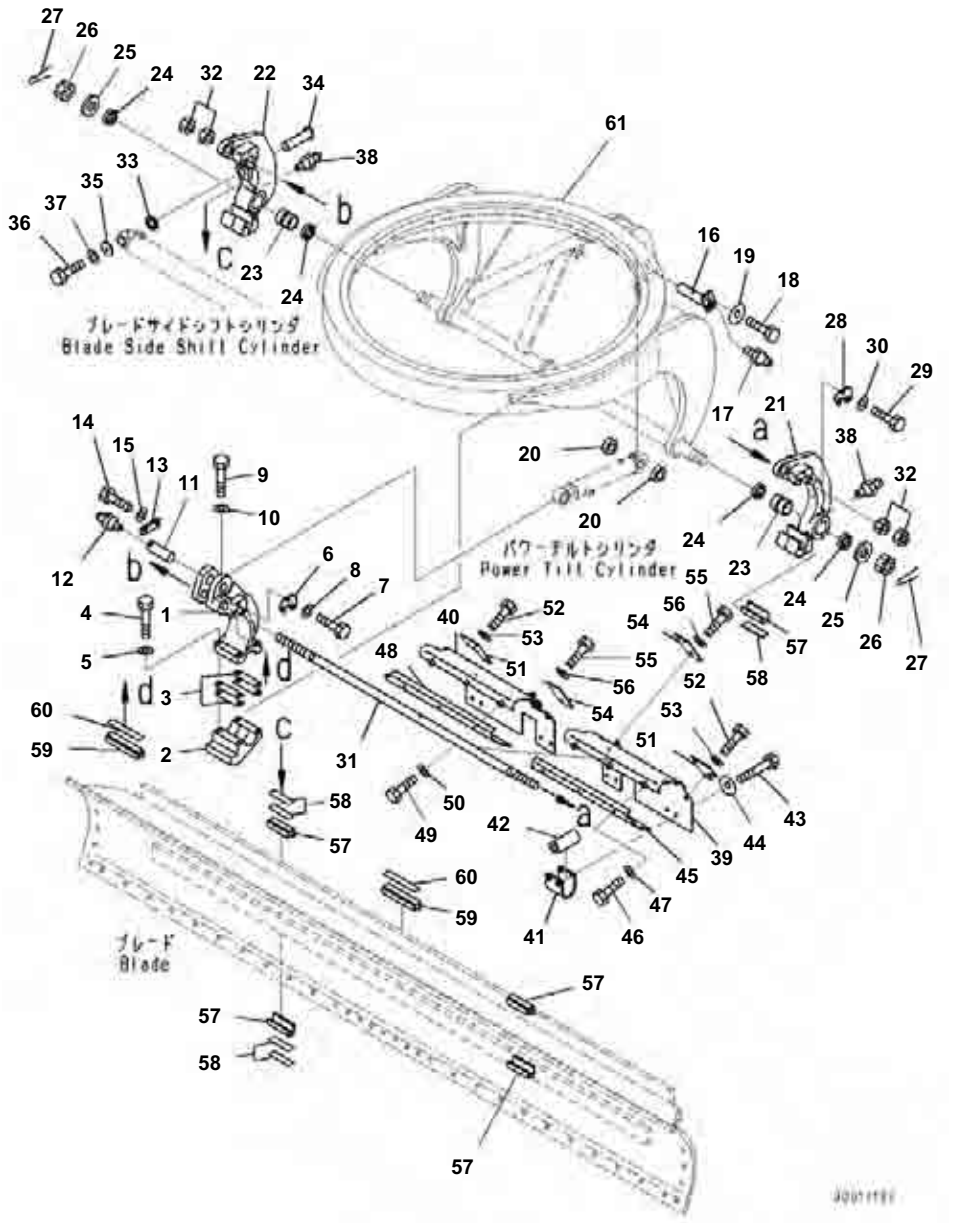

Power Tilt Cylinder

Index	Code	Part Number	Description	Qty	Serial No.
1		23B-735-3151	Bracket	1	B40001-
2		23B-735-5160	Bracket	1	B40001-
3		23B-735-3250	Shim, T=0.5mm	10	B40001-
4		01010-81670	Bolt	4	B40001-
5		01643-31645	Washer	4	B40001-
6		23B-70-31640	Plate	2	B40001-
7		01010-81025	Bolt	6	B40001-
8		01643-31032	Washer	6	B40001-
9		01010-81270	Bolt	1	B40001-
10		01643-31232	Washer	1	B40001-
11		238-735-1280	Pin	1	B40001-
12		07020-00000	Fitting, Grease	1	B40001-
13		04082-00212	Lock	1	B40001-
14		01010-81225	Bolt	2	B40001-
15		01643-31232	Washer	2	B40001-
16		23B-735-3360	Pin	1	B40001-
17		07020-00000	Fitting, Grease	1	B40001-
18		01010-81225	Bolt	1	B40001-
19		175-54-34170	Washer	1	B40001-
20		23B-735-1240	Collar	2	B40001-
21		23B-735-5132	Adjuster,LHS	1	B40001-
22		23B-735-5142	Adjuster,RHS	1	B40001-
23		23B-70-31730	Bushing	2	B40001-
24		416-09-11130	Seal, Dust	4	B40001-
25		232-70-52380	Washer	2	B40001-
26		01590-14548	Nut, Slotted	2	B40001-
27		04050-18080	Pin, Cotter	2	B40001-
28		23B-70-31640	Plate	8	B40001-
29		01010-81025	Bolt	24	B40001-
30		01643-31032	Washer	24	B40001-
31		23B-735-3240	Rod	1	B40001-
32		01580-13629	Nut	4	B40001-
33		23A-70-13180	Collar	1	B40001-
34		23A-70-13190	Shaft	1	B40001-
35		23A-70-12150	Washer	1	B40001-
36		01010-81225	Bolt	1	B40001-
37		01643-31232	Washer	1	B40001-
38		07020-00000	Fitting, Grease	2	B40001-
39		23B-735-7130	Cover,LHS	1	B40001-
40		23B-735-7140	Cover,RHS	1	B40001-
41		23B-735-3210	Bracket	4	B40001-
42		23B-735-3221	Spacer	8	B40001-
43		01011-81210	Bolt	8	B40001-
44		175-54-34170	Washer	8	B40001-
45		23B-735-7150	Cover	1	B40001-
46		01010-81016	Bolt	3	B40001-

GD655-5 S/N B40001-UP

Power Tilt Cylinder

Index	Code	Part Number	Description	Qty	Serial No.
47		01643-31032	Washer	3	B40001-
48		23B-735-7160	Cover	1	B40001-
49		01010-81016	Bolt	3	B40001-
50		01643-31032	Washer	3	B40001-
51		23B-735-7210	Plate	2	B40001-
52		01010-81025	Bolt	4	B40001-
53		01643-31032	Washer	4	B40001-
54		23B-735-7220	Plate	2	B40001-
55		01010-81025	Bolt	4	B40001-
56		01643-31032	Washer	4	B40001-
57		23B-70-31331	Guide	4	B40001-
58		23B-70-31451	Shim, T=1.0mm	12	B40001-
59		23B-735-3320	Guide	1	B40001-
60		23B-735-3350	Shim, T=1.0mm	2	B40001-
61		(23B-735-3113)	Support		

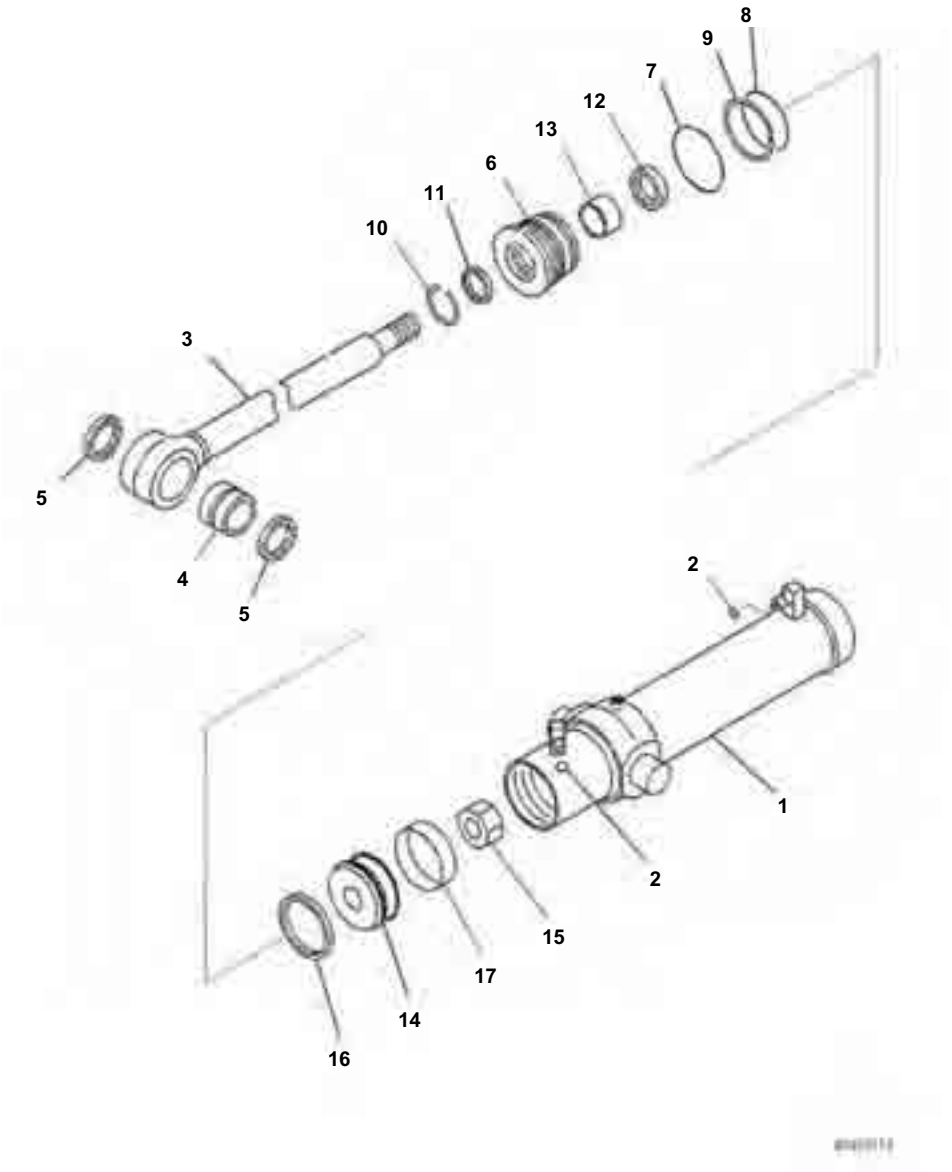

Ripper, Inner Parts, Blade Angle Cylinder

Index	Code	Part Number	Description	Qty	Serial No.
		707-02-08120	Cylinder Assembly	1	B40001-
1		707-12-12220	▪ Cylinder	1	B40001-
2		02896-11009	▪ O-ring, (Kit : K09)	2	B40001-
3		721-58-55160	▪ Rod	1	B40001-
4		07143-10606	▪ Bushing	1	B40001-
5		07145-00060	▪ Seal, Dust, (Kit : K09)	2	B40001-
6		707-29-12100	▪ Head, Cylinder	1	B40001-
7		07000-12120	▪ O-ring, (Kit : K09)	1	B40001-
8		07000-12115	▪ O-ring, (Kit : K09)	1	B40001-
9		07146-02116	▪ Ring, Back-up, (Kit : K09)	1	B40001-
10		07179-12069	▪ Ring, Snap	1	B40001-
11		707-56-55740	▪ Seal, Dust, (Kit : K09)	1	B40001-
12		707-51-55211	▪ Packing, Rod, (Kit : K09)	1	B40001-
13		707-52-15310	▪ Bushing	1	B40001-
14		707-36-12990	▪ Piston	1	B40001-
15		707-67-39020	▪ Nut	1	B40001-
16		707-44-12180	▪ Ring, Piston, (Kit : K09)	1	B40001-
17		07156-01215	▪ Ring, Wear, (Kit : K09)	1	B40001-

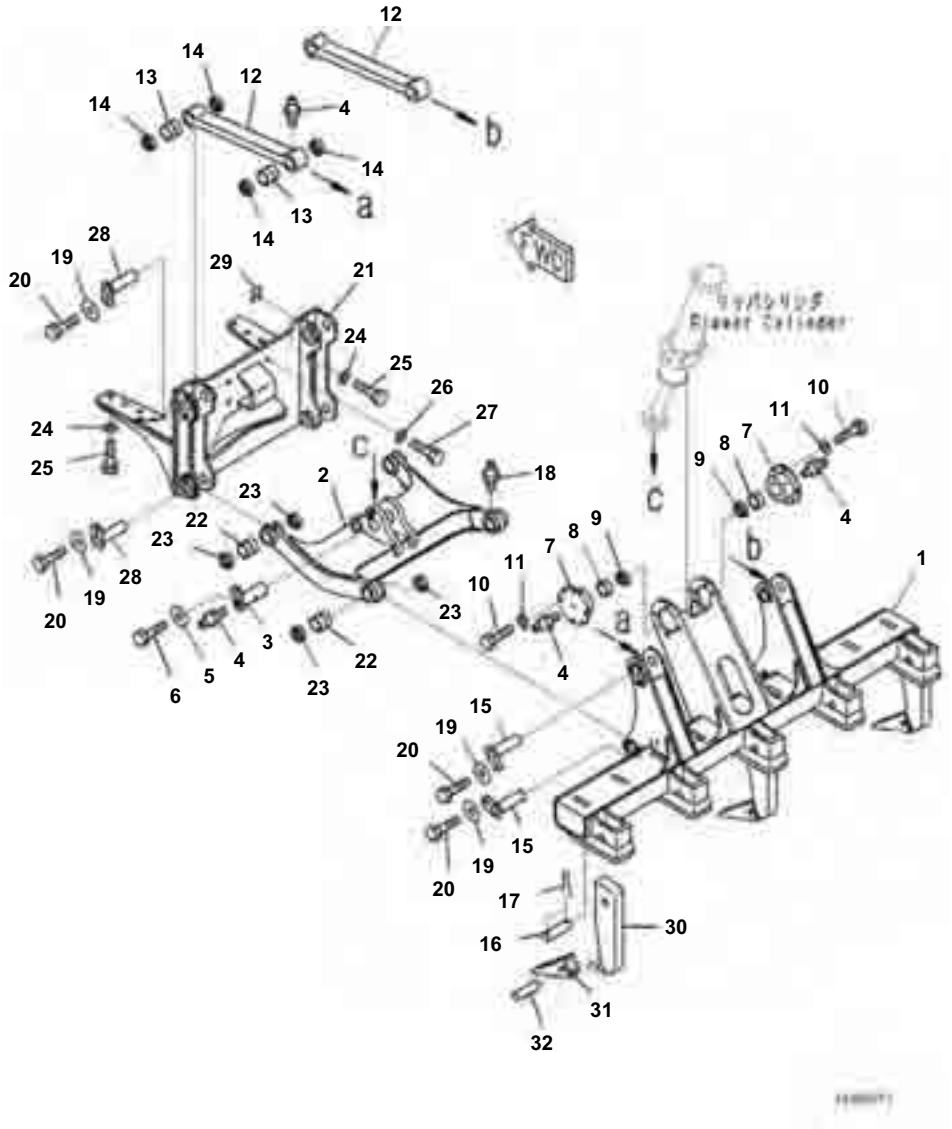

Index	Code	Part Number	Description	Qty	Serial No.
1		23B-785-3111	Bracket	1	B40001-
2		23B-785-3122	Link	1	B40001-
3		417-70-11970	Pin	1	B40001-
4		07020-00000	Fitting, Grease	7	B40001-
5		175-54-34170	Washer	5	B40001-
6		01010-81225	Bolt	5	B40001-
7		23B-785-3231	Support	2	B40001-
8		07144-10603	Bushing	2	B40001-
9		416-09-11120	Seal, Dust	2	B40001-
10		01010-81240	Bolt	8	B40001-
11		01643-31232	Washer	8	B40001-
12		23B-785-3351	Rod	2	B40001-
13		416-70-11810	Bushing	4	B40001-
14		416-09-11140	Seal, Dust	8	B40001-
15		23B-785-3150	Pin	4	B40001-
16		232-785-1310	Pin	3	B40001-
17		04050-10070	Pin, Cotter	6	B40001-
18		07020-00000	Fitting, Grease	4	B40001-
19		175-54-34170	Washer	4	B40001-
20		01010-81225	Bolt	4	B40001-
21		23B-785-7110	Bracket	1	B40001-
22		416-70-11810	Bushing	4	B40001-
23		416-09-11140	Seal, Dust	8	B40001-
24		01643-32460	Washer	14	B40001-
25		01010-82455	Bolt	14	B40001-
26		01643-32060	Washer	4	B40001-
27		01010-82060	Bolt	4	B40001-
28		23B-785-3141	Pin	4	B40001-
29		23B-785-7170	Shim, T=0.5mm	4	B40001-
30		232-785-1291	Shank	3	B40001-
31		234-785-1121	Point	3	B40001-
32		113-78-21170	Pin	3	B40001-

Reference:T5125-001002 Page:T006002

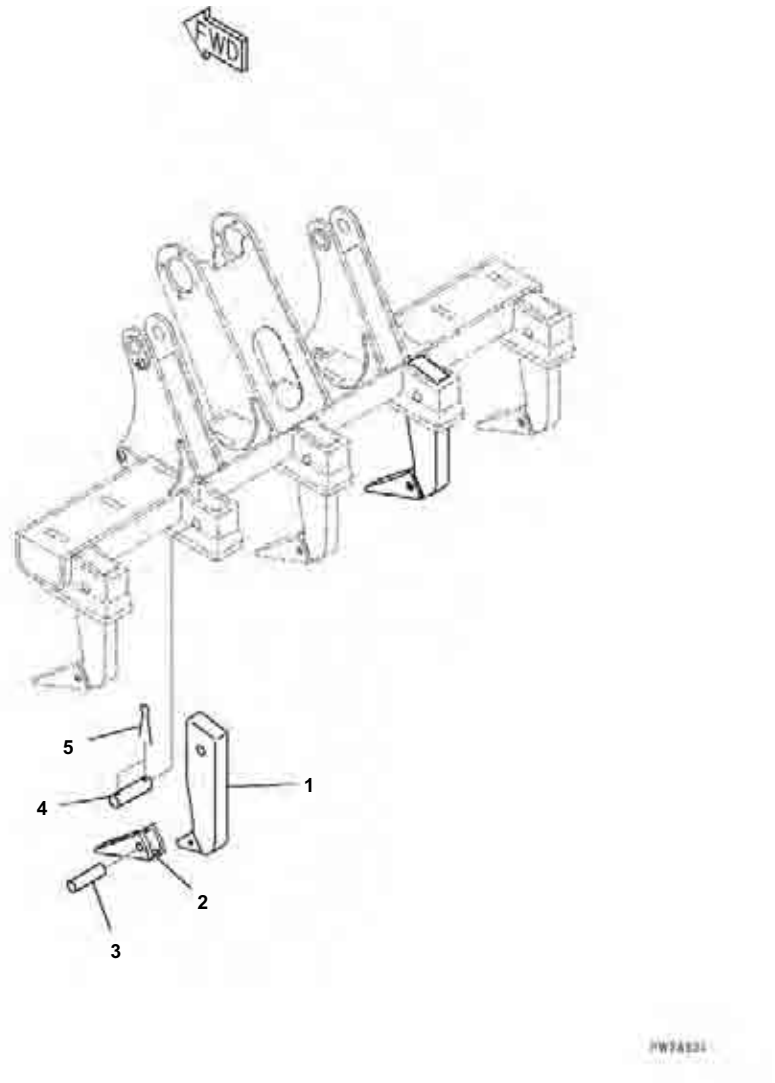

Ripper Shank

Index	Code	Part Number	Description	Qty	Serial No.
1		232-785-1291	Shank	2	B40001-
2		234-785-1121	Point	2	B40001-
3		113-78-21170	Pin	2	B40001-
4		232-785-1310	Pin	2	B40001-
5		04050-10070	Pin, Cotter	4	B40001-

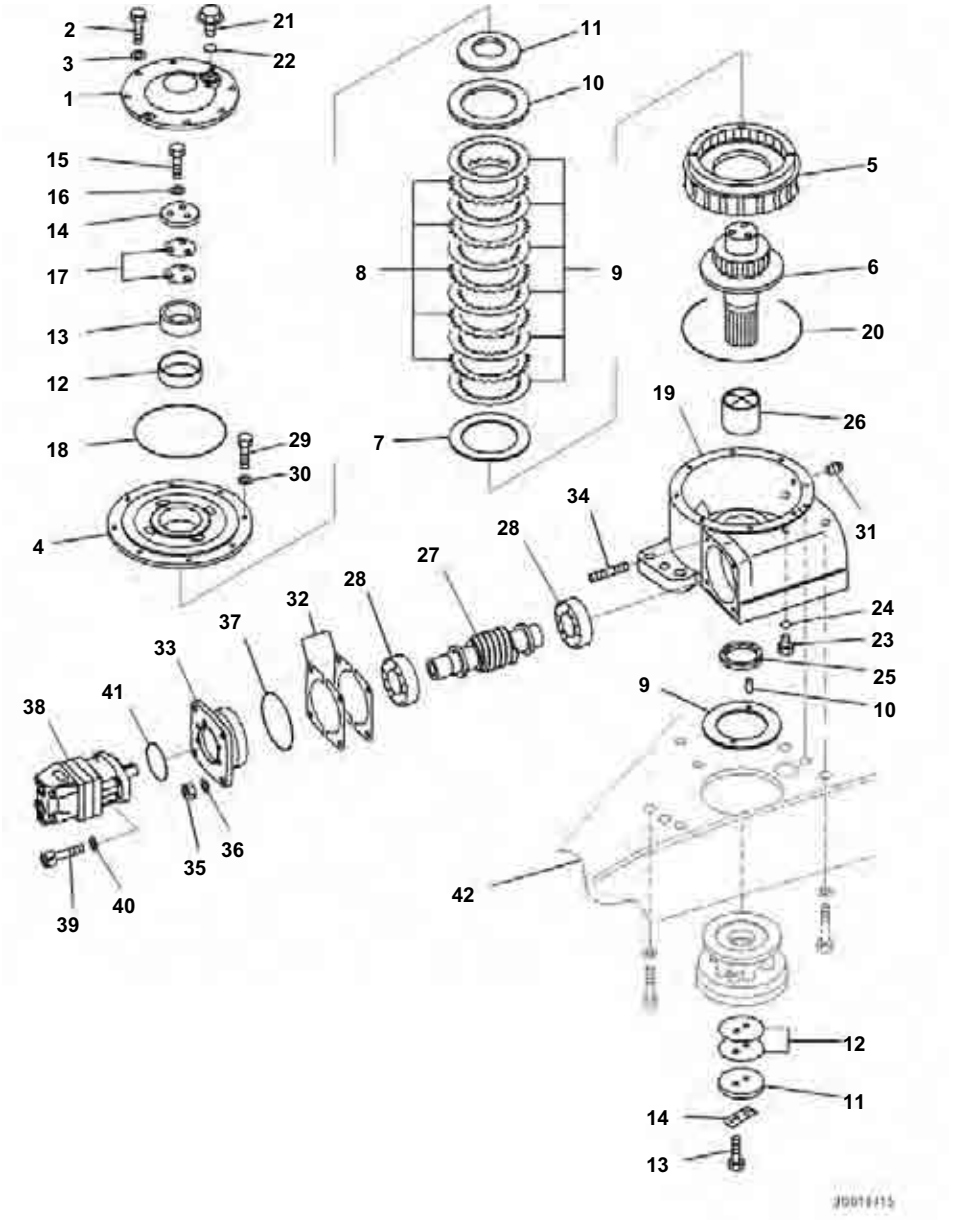

Index	Code	Part Number	Description	Qty	Serial No.
1		23B-70-52130	Cover	1	B40001-
2		01010-81025	Bolt	8	B40001-
3		01643-31032	Washer	8	B40001-
4		23B-70-52140	Cover	1	B40001-
5		23B-70-52311	Wheel, Worm	1	B40001-
6		23B-70-52180	Shaft	1	B40001-
7		235-70-45260	Spacer	1	B40001-
8		714-07-12680	Plate, Separate	5	B40001-
9		235-70-45420	Disc	6	B40001-
10		235-70-45270	Spacer	1	B40001-
11		235-70-45360	Spring	1	B40001-
12		23B-70-52210	Bushing	1	B40001-
13		23B-70-52240	Collar	1	B40001-
14		23B-70-52230	Plate	1	B40001-
15		01010-81240	Bolt	3	B40001-
16		01643-31232	Washer	3	B40001-
17		235-70-45330	Shim, T=0.5mm	6	B40001-
		235-70-45340	Shim, T=0.2mm	8	B40001-
18		07000-15195	O-ring	1	B40001-
19		23B-70-52110	Case	1	B40001-
20		07000-15260	O-ring	1	B40001-
21		07041-13012	Plug	1	B40001-
22		07002-13034	O-ring	1	B40001-
23		07040-11812	Plug	1	B40001-
24		07002-11823	O-ring	1	B40001-
25		23B-70-52290	Seal	1	B40001-
26		23B-70-72190	Bushing	1	B40001-
27		23B-70-52121	Worm	1	B40001-
28		06002-30310	Bearing	2	B40001-
29		01010-81030	Bolt	8	B40001-
30		01643-31032	Washer	8	B40001-
31		07042-70108	Plug	1	B40001-
32		238-70-16210	Shim, T=0.1mm	8	B40001-
		238-70-16220	Shim, T=0.2mm	12	B40001-
		238-70-16240	Shim, T=1.0mm	4	B40001-
		23B-70-52470	Shim, T=0.05mm	4	B40001-
33		23B-70-52250	Housing	1	B40001-
34		01140-81235	Stud	4	B40001-
35		01582-11210	Nut	4	B40001-
36		01643-31232	Washer	4	B40001-
37		07000-12130	O-ring	1	B40001-
38		23B-62-31100	Motor Assembly	8	B40001-
39		01252-41035	Bolt, Hexagon Socket Head	32	B40001-
40		01643-31032	Washer	32	B40001-
41		23B-70-16240	O-ring	8	B40001-
42		(23B-70-71121)	Drawbar		

Reference:T5130-001001 Page:T008001

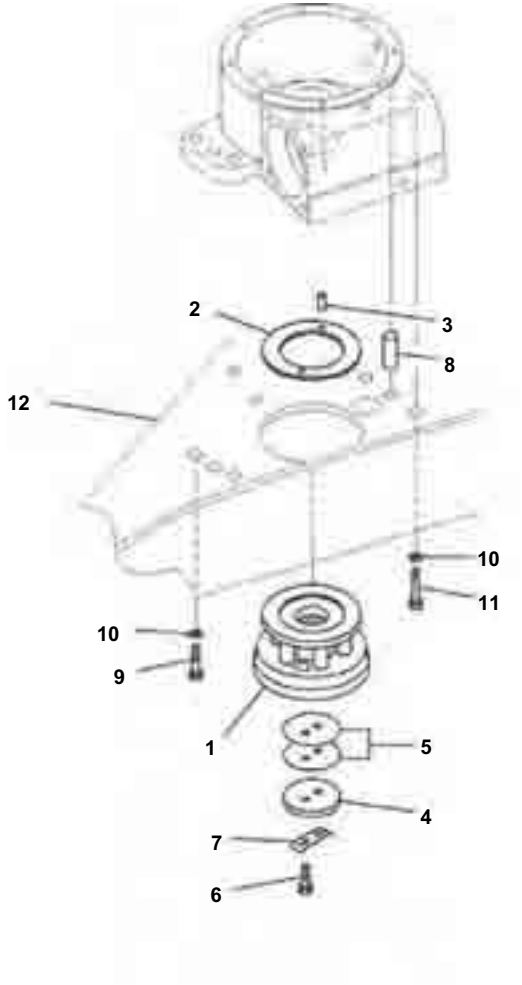

Index	Code	Part Number	Description	Qty	Serial No.
1		23B-70-52282	Gear	1	B40001-
2		23B-70-52220	Plate	1	B40001-
3		04020-01024	Pin, Dowel	2	B40001-
4		235-70-15850	Holder	1	B40001-
5		235-70-15870	Shim, T=0.5mm	6	B40001-
		235-70-15860	Shim, T=1.0mm	4	B40001-
		235-70-15880	Shim, T=0.2mm	5	B40001-
6		01010-81235	Bolt	2	B40001-
7		04081-05512	Lock	1	B40001-
8		232-71-13151	Pin	2	B40001-
9		01010-82465	Bolt	2	B40001-
10		01643-32460	Washer	4	B40001-
11		01010-82470	Bolt	2	B40001-
12		(23B-70-71120)	Drawbar		

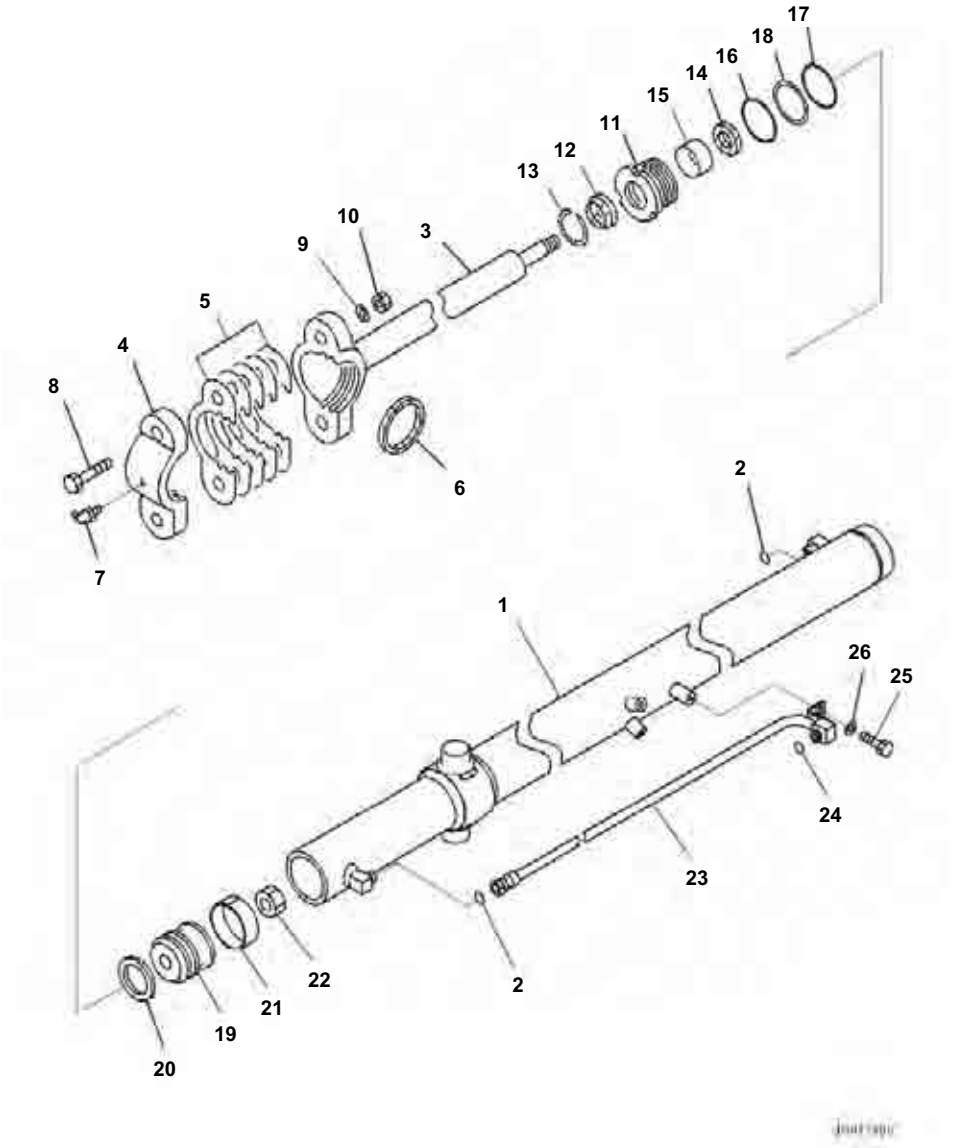

Blade Lift Cylinder, Inner Parts, Blade Lift Cylinder

Index	Code	Part Number	Description	Qty	Serial No.
		707-02-00100	Cylinder Assembly	2	B40001-
1		707-12-80230	▪ Cylinder	1	B40001-
2		02896-11009	▪ O-ring, (Kit : K10)	2	B40001-
3		707-58-50J00	▪ Rod	1	B40001-
4		07138-00980	▪ Cap	1	B40001-
5		07139-00905	▪ Shim, T=0.5mm	2	B40001-
		07139-00902	▪ Shim, T=0.2mm	3	B40001-
6		07141-00090	▪ Seal, Dust, (Kit : K10)	1	B40001-
7		07020-00900	▪ Fitting, Grease	1	B40001-
8		01010-82075	▪ Bolt	2	B40001-
9		01643-32060	▪ Washer	2	B40001-
10		01580-12016	▪ Nut	2	B40001-
11		707-29-80740	▪ Head, Cylinder	1	B40001-
12		707-56-50740	▪ Seal, Dust, (Kit : K10)	1	B40001-
13		07179-12062	▪ Ring, Snap	1	B40001-
14		707-51-50211	▪ Packing, Rod, (Kit : K10)	1	B40001-
15		707-52-15230	▪ Bushing	1	B40001-
16		07000-12080	▪ O-ring, (Kit : K10)	1	B40001-
17		07000-12075	▪ O-ring, (Kit : K10)	1	B40001-
18		07146-02076	▪ Ring, Back-up, (Kit : K10)	1	B40001-
19		707-36-80070	▪ Piston	1	B40001-
20		707-44-80180	▪ Ring, Piston, (Kit : K10)	1	B40001-
21		07156-00810	▪ Ring, Wear, (Kit : K10)	1	B40001-
22		707-67-27030	▪ Nut	1	B40001-
23		707-86-01090	Tube	2	B40001-
24		02896-11009	O-ring, (Kit : K10)	2	B40001-
25		01010-81020	Bolt	2	B40001-
26		01643-31032	Washer	2	B40001-

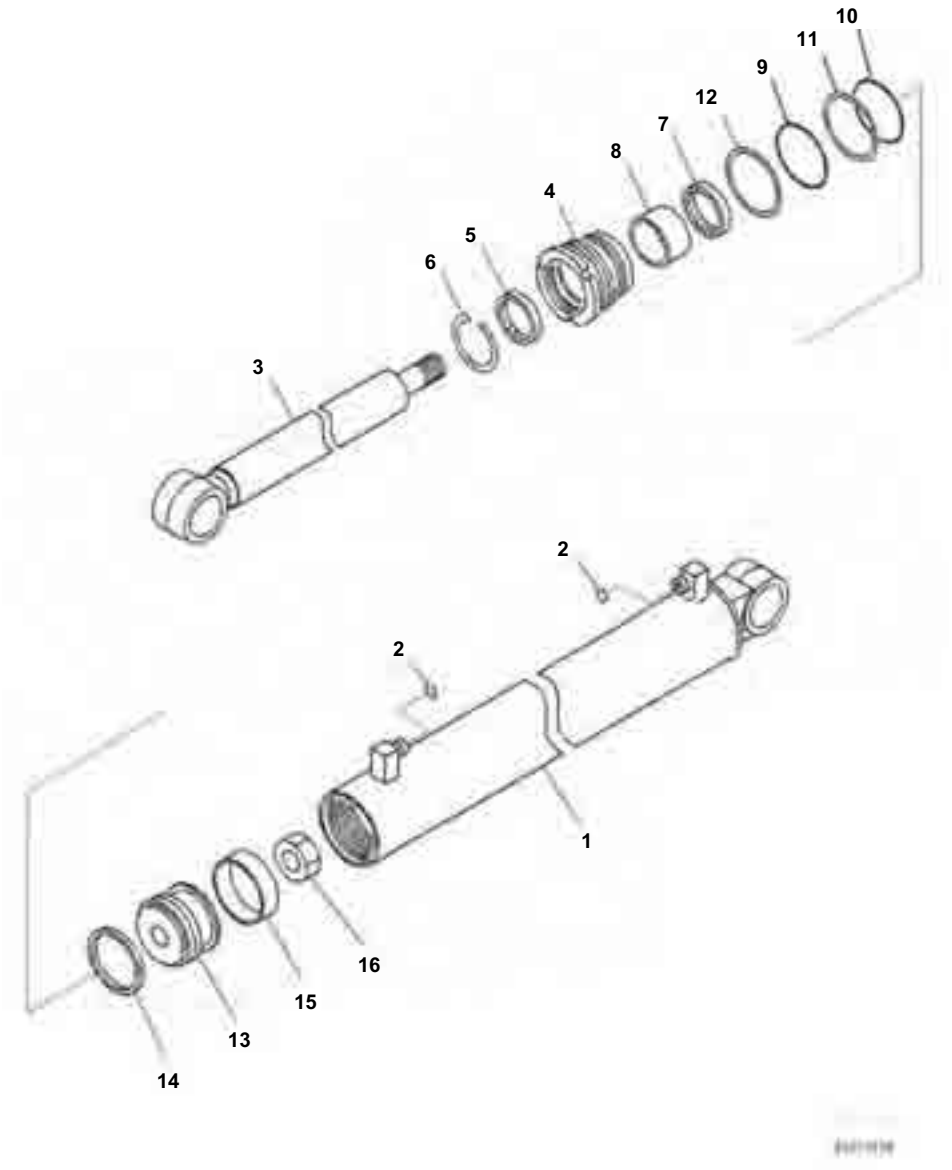

Index	Code	Part Number	Description	Qty	Serial No.
1		707-11-80K10	Cylinder	1	B40001-
2		02896-11009	O-ring, (Kit : K11)	2	B40001-
3		707-58-50C30	Rod	1	B40001-
4		707-29-80840	Head, Cylinder	1	B40001-
5		707-56-50740	Seal, Dust, (Kit : K11)	1	B40001-
6		07179-12062	Ring, Snap	1	B40001-
7		707-51-50211	Packing, Rod, (Kit : K11)	1	B40001-
8		707-52-15230	Bushing	1	B40001-
9		07000-12080	O-ring, (Kit : K11)	1	B40001-
10		07000-12075	O-ring, (Kit : K11)	1	B40001-
11		07146-02076	Ring, Back-up, (Kit : K11)	1	B40001-
12		707-45-80910	Lock	1	B40001-
13		707-36-80911	Piston	1	B40001-
14		707-44-80070	Ring, Piston, (Kit : K11)	1	B40001-
15		07155-00820	Ring, Wear, (Kit : K11)	1	B40001-
16		707-67-27030	Nut	1	B40001-

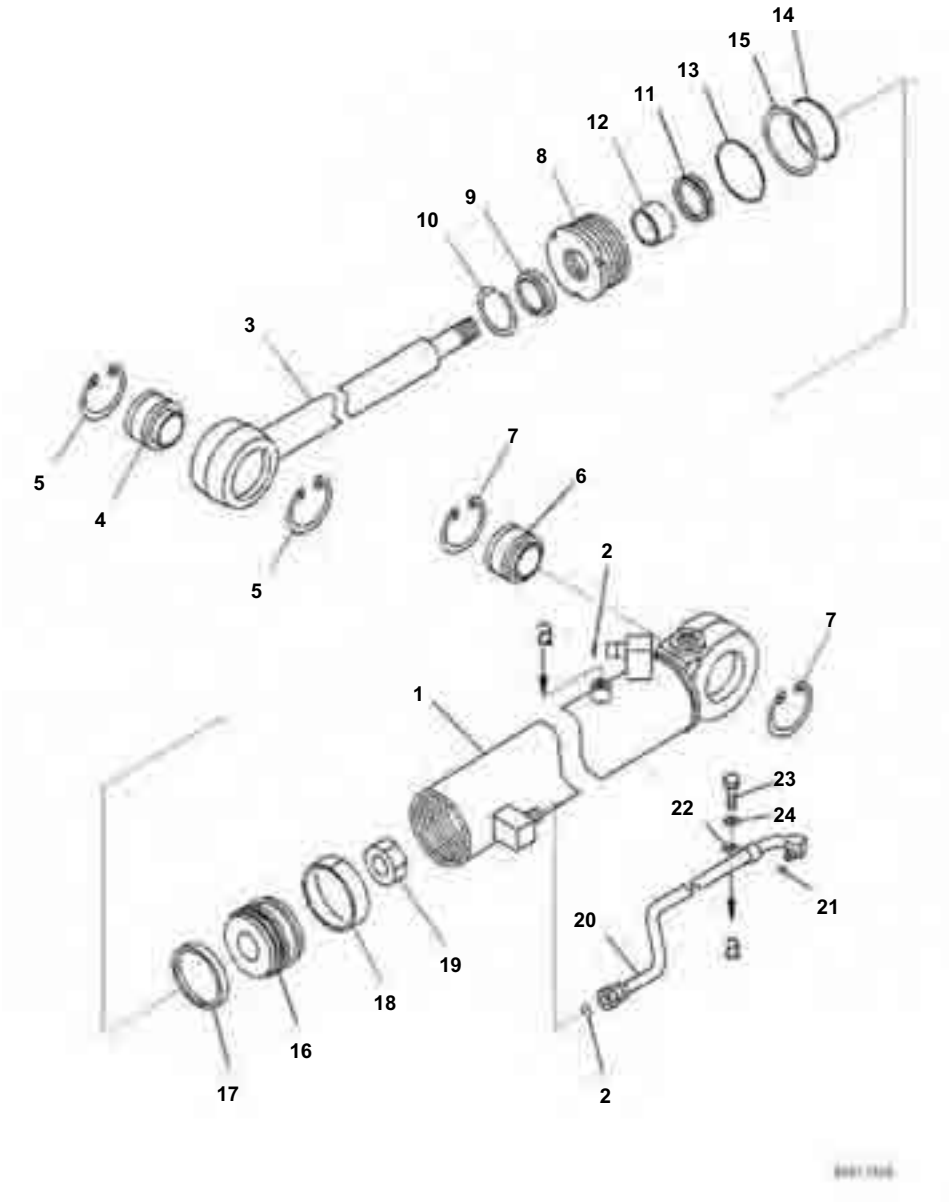

Index	Code	Part Number	Description	Qty	Serial No.
		707-00-0J450	Cylinder Assembly	1	B40001-
1		707-11-80J70	▪ Cylinder	1	B40001-
2		02896-11009	▪ O-ring, (Kit : K12)	2	B40001-
3		707-58-40J50	▪ Rod	1	B40001-
4		114-63-55170	▪ Bushing	1	B40001-
5		04065-06220	▪ Ring, Snap	2	B40001-
6		114-63-55170	▪ Bushing	1	B40001-
7		04065-06220	▪ Ring, Snap	2	B40001-
8		707-29-80820	▪ Head, Cylinder	1	B40001-
9		707-56-40740	▪ Seal, Dust, (Kit : K12)	1	B40001-
10		07179-12052	▪ Ring, Snap	1	B40001-
11		707-51-40210	▪ Packing, Rod, (Kit : K12)	1	B40001-
12		707-52-15130	▪ Bushing	1	B40001-
13		07000-12080	▪ O-ring, (Kit : K12)	1	B40001-
14		07000-12075	▪ O-ring, (Kit : K12)	1	B40001-
15		07146-02076	▪ Ring, Back-up, (Kit : K12)	1	B40001-
16		707-36-80970	▪ Piston	1	B40001-
17		707-44-80070	▪ Ring, Piston, (Kit : K12)	1	B40001-
18		07156-00810	▪ Ring, Wear, (Kit : K12)	1	B40001-
19		707-67-27030	▪ Nut	1	B40001-
20		707-86-01080	Tube	1	B40001-
21		02896-11009	O-ring	1	B40001-
22		04434-51510	Clip	1	B40001-
23		01010-81020	Bolt	1	B40001-
24		01643-31032	Washer	1	B40001-

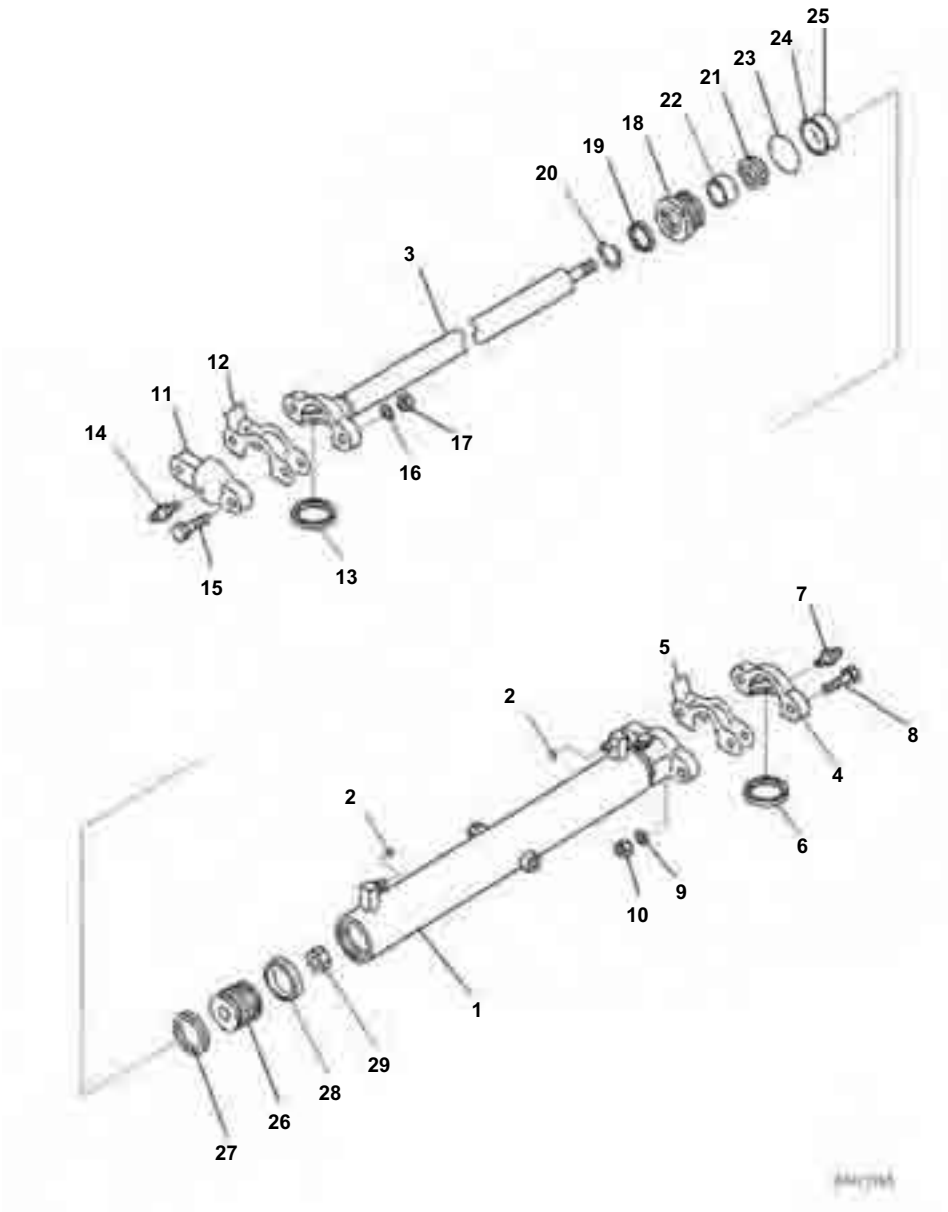

Index	Code	Part Number	Description	Qty	Serial No.
		707-00-08E20	Cylinder Assembly	1	B40001-
1		707-11-80J80	· Cylinder	1	B40001-
2		02896-11009	· O-ring, (Kit : K13)	2	B40001-
3		707-60-45020	· Rod	1	B40001-
4		07138-00980	· Cap	1	B40001-
5		07139-00905	· Shim, T=0.5mm	2	B40001-
		07139-00902	· Shim, T=0.2mm	3	B40001-
6		07141-00090	· Seal, Dust	1	B40001-
7		07020-00000	· Fitting, Grease	1	B40001-
8		01010-82075	· Bolt	2	B40001-
9		01643-32060	· Washer	2	B40001-
10		01580-12016	· Nut	2	B40001-
11		07138-00980	· Cap	1	B40001-
12		07139-00905	· Shim, T=0.5mm	2	B40001-
		07139-00902	· Shim, T=0.2mm	3	B40001-
13		07141-00090	· Seal, Dust	1	B40001-
14		07020-00000	· Fitting, Grease	1	B40001-
15		01010-82075	· Bolt	2	B40001-
16		01643-32060	· Washer	2	B40001-
17		01580-12016	· Nut	2	B40001-
18		707-29-80830	· Head, Cylinder	1	B40001-
19		707-56-45740	· Seal, Dust, (Kit : K13)	1	B40001-
20		07179-12057	· Ring, Snap	1	B40001-
21		707-51-45210	· Packing, Rod, (Kit : K13)	1	B40001-
22		707-52-15210	· Bushing	1	B40001-
23		07000-12080	· O-ring, (Kit : K13)	1	B40001-
24		07000-12075	· O-ring, (Kit : K13)	1	B40001-
25		07146-02076	· Ring, Back-up, (Kit : K13)	1	B40001-
26		707-36-80970	· Piston	1	B40001-
27		707-44-80070	· Ring, Piston, (Kit : K13)	1	B40001-
28		07156-00810	· Ring, Wear, (Kit : K13)	1	B40001-
29		707-67-27030	· Nut	1	B40001-

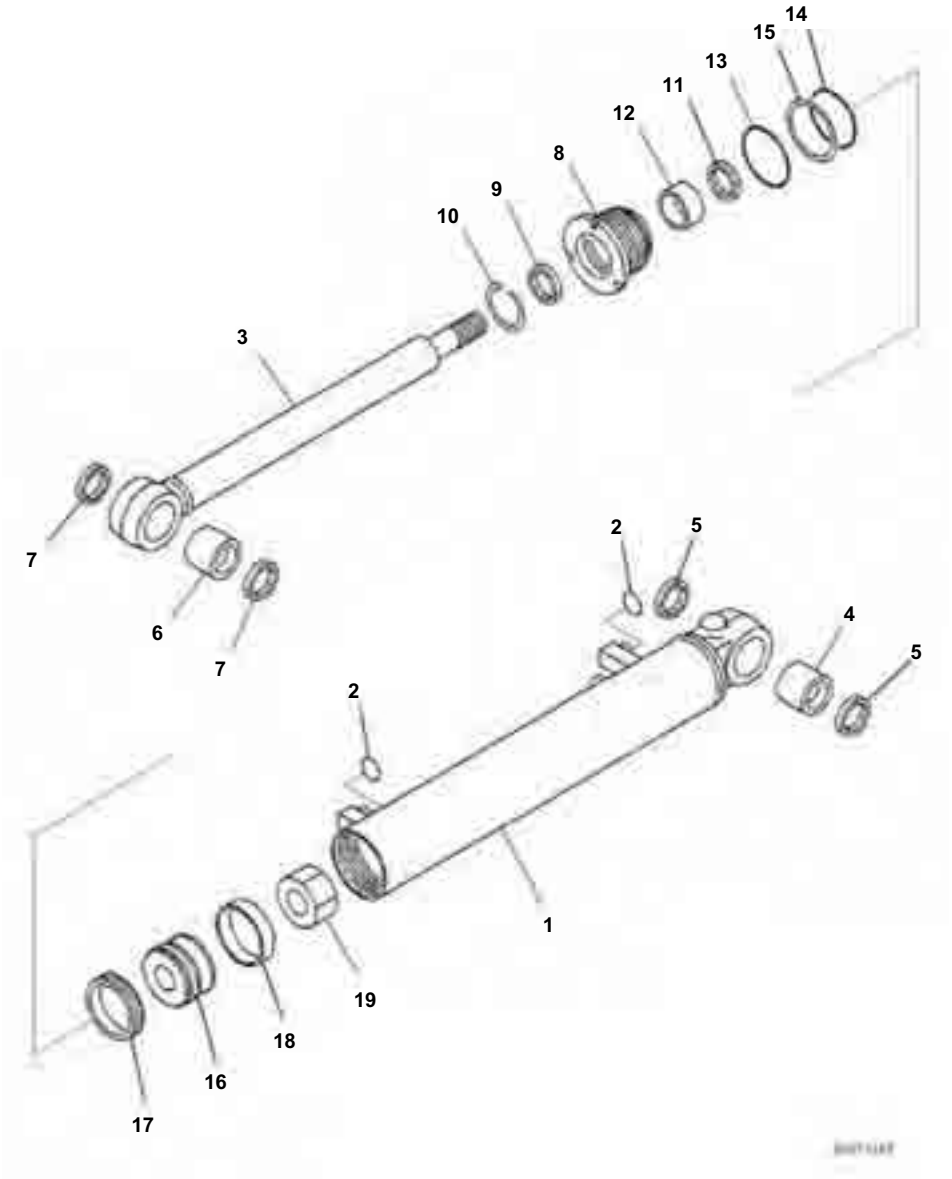

Index	Code	Part Number	Description	Qty	Serial No.
		707-00-08E30	Cylinder Assembly	2	B40001-
1		707-11-80J90	· Cylinder	1	B40001-
2		02896-11009	· O-ring, (Kit : K15)	2	B40001-
3		721-58-45780	· Rod	1	B40001-
4		07143-10505	· Bushing	1	B40001-
5		07145-00050	· Seal, Dust, (Kit : K15)	2	B40001-
6		07143-10505	· Bushing	1	B40001-
7		07145-00050	· Seal, Dust, (Kit : K15)	2	B40001-
8		707-29-80830	· Head, Cylinder	1	B40001-
9		707-56-45740	· Seal, Dust, (Kit : K15)	1	B40001-
10		07179-12057	· Ring, Snap	1	B40001-
11		707-51-45210	· Packing, Rod, (Kit : K15)	1	B40001-
12		707-52-15210	· Bushing	1	B40001-
13		07000-12080	· O-ring, (Kit : K15)	1	B40001-
14		07000-12075	· O-ring, (Kit : K15)	1	B40001-
15		07146-02076	· Ring, Back-up, (Kit : K15)	1	B40001-
16		707-36-80920	· Piston	1	B40001-
17		707-44-80070	· Ring, Piston, (Kit : K15)	1	B40001-
18		07156-00810	· Ring, Wear, (Kit : K15)	1	B40001-
19		707-67-33040	· Nut	1	B40001-

MARKS AND PLATES

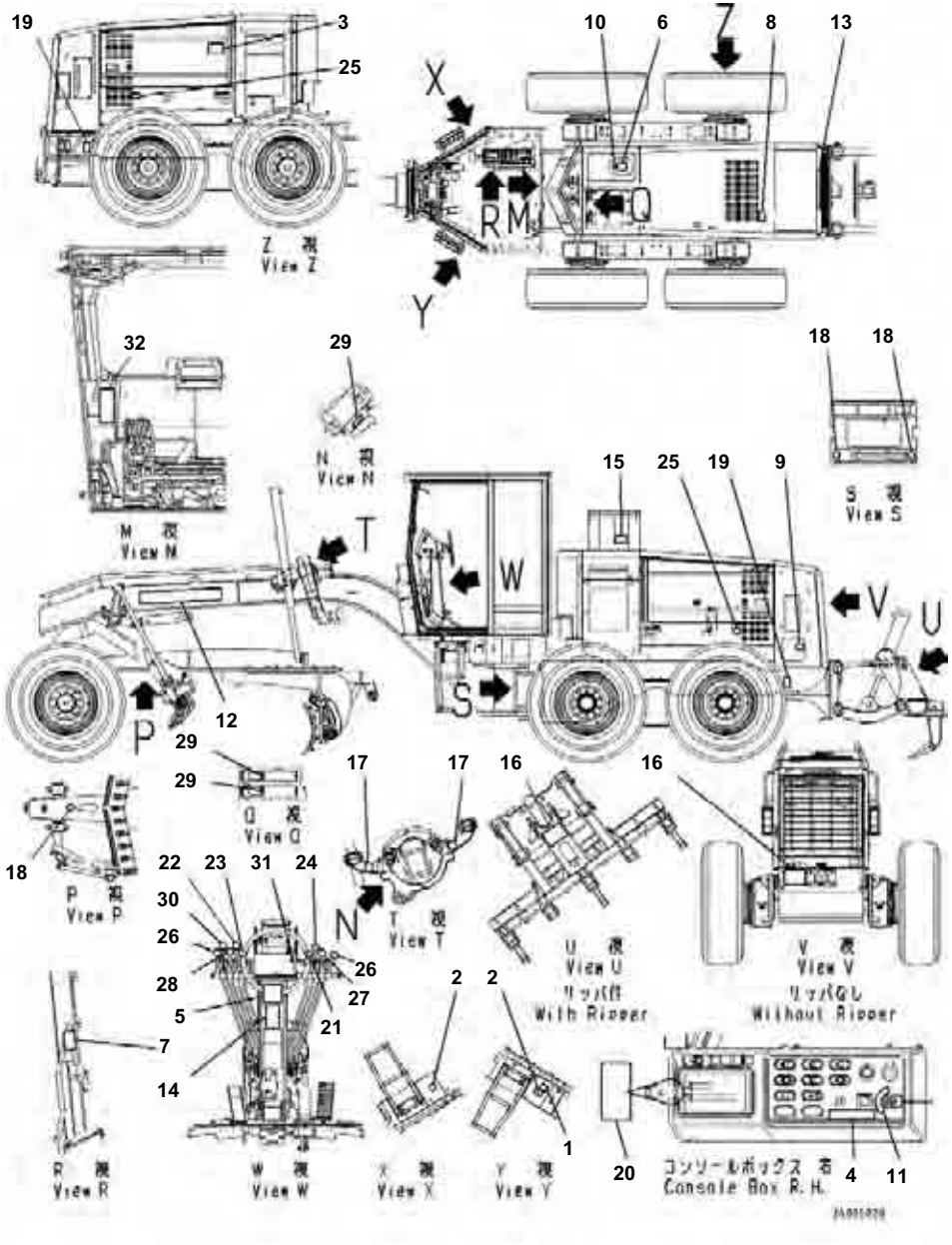

Marks and Plates, Portuguese, Pictorial Type, (1/3)

Index	Code	Part Number	Description	Qty	Serial No.
1		09161-37100	Plate	1	B40001-
2		09162-37001	Decal, Danger, Keep Off	2	B40001-
3		09637-51263	Decal, Service Instruction, Air Cleaner	1	B40001-
4		09649-07002	Plate, Engine Stop	1	B40001-
5		09651-07001	Plate, Safety, Read Operation Manual	1	B40001-
6		09653-07101	Plate, Warning, High Temperature	1	B40001-
7		23B-53-71180	Plate, Caution, MT/AT Velocity Range	1	B40001-
8		09668-07101	Plate, Warning, High Temperature	1	B40001-
9		09669-0000E	Plate, Symbol, Fuel Filler	1	B40001-
10		09669-0000C	Plate, Symbol, Oil Filler	1	B40001-
11		09683-0000A	Plate, Starter	1	B40001-
12		09690-P0900	Mark, Komatsu Logo	2	B40001-
13		09690-F0400	Decal, Komatsu Logo	1	B40001-
14		09802-47100	Decal, Warning, Before Operation and Traveling	1	B40001-
15		09808-07100	Plate, Warning, Battery Cables	1	B40001-
16		09812-17000	Decal, Danger, Keep Away from Machine	1	B40001-
17		09960-00801	Decal, Lift Point Mark	2	B40001-
18		09960-00602	Decal, Tie Down Point Mark, Handling	3	B40001-
19		09960-01201	Mark, Handling	2	B40001-
20		09963-07001	Tag, Danger, Do Not Operate	1	B40001-
21		232-43-18281	Plate, Mark, Drawber Shift	1	B40001-
22		232-735-1340	Plate, Mark, Power Tilt	1	B40001-
23		234-53-32321	Plate, Mark, Circle Revolution	1	B40001-
24		234-53-32330	Plate, Articulate	1	B40001-
25		09667-07101	Plate, Caution, Rotating Object	2	B40001-
26		237-54-13211	Plate, Mark, Blade Lift	2	B40001-
27		237-54-13221	Plate, Mark, Leaning	1	B40001-
28		237-54-13231	Plate, Mark, Blade Shift	1	B40001-
29		09659-57100	Plate, Warning, Explosive Hazard	4	B40001-
30		232-785-1411	Plate, Ripper	1	B40001-
31		23A-53-11550	Decal, Mark, Turn Signal	1	B40001-
32		23B-53-B1220	Plate, Caution, Shift Down Capable Speed	1	B40001-

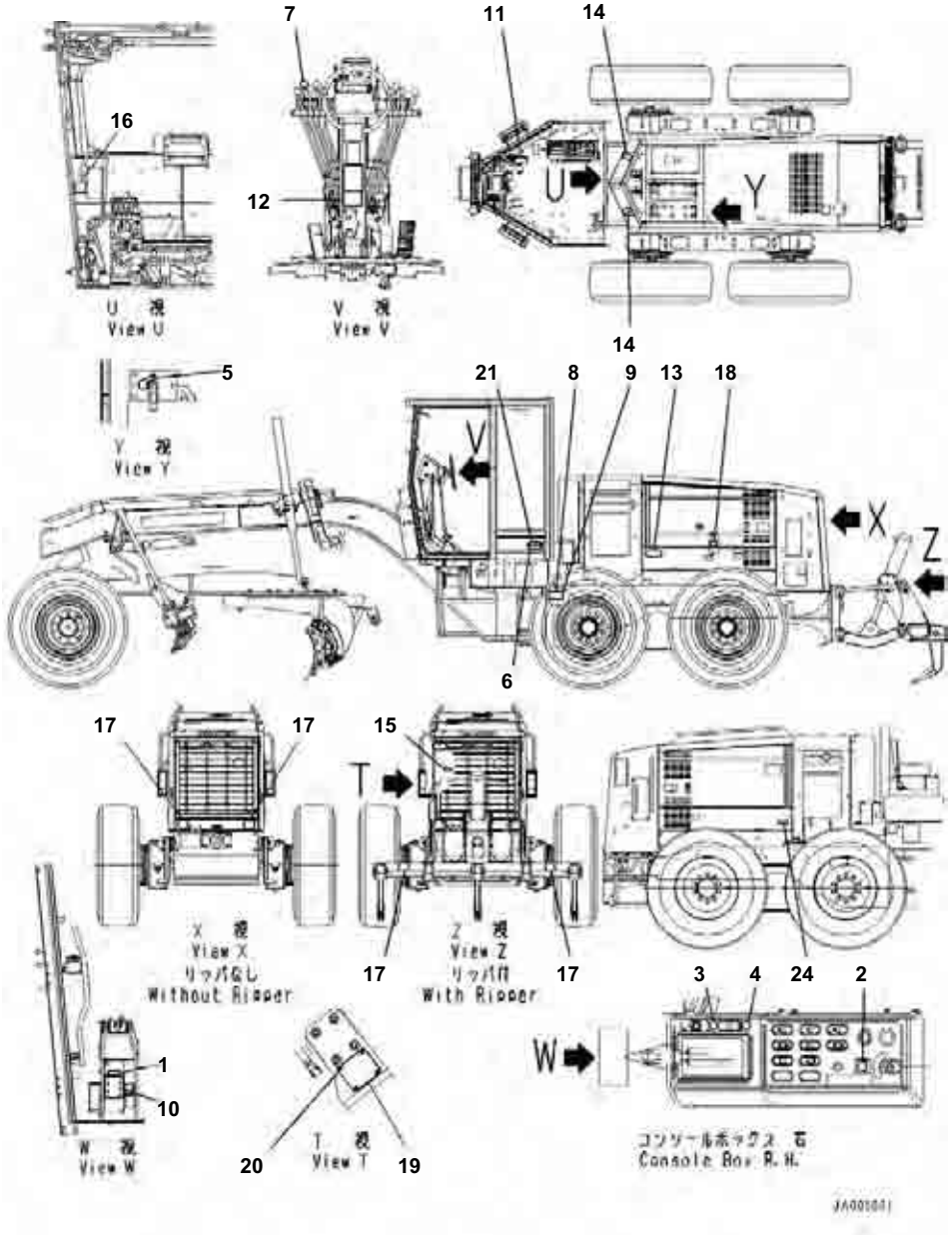

Marks and Plates, Portuguese, Pictorial Type, (2/3)

Index	Code	Part Number	Description	Qty	Serial No.
		23B-53-71240	Plate	1	B40001-
1	C1		･ Plate, Fuse Box	1	B40001-
2	C1		･ Plate, Lifter Lock Switch	1	B40001-
3	C1		･ Plate, RPM Set Switch	1	B40001-
4	C1		･ Plate, RPM Set Switch	1	B40001-
5		425-93-41310	･ Plate, Disconnection Switch	1	B40001-
6		205-00-72430	Rivet	4	B40001-
7		237-54-13271	Plate, Scarifire	1	B40001-
8	C2	09602-12051	Plate, Name (Limited Supply)	1	B40001-
9		04418-13060	Screw	4	B40001-
10		09801-47001	Decal, Danger, High Voltage Hazard	1	B40001-
11		23B-53-B1150	Tag, Danger, Do Not Operate	1	B40001-
		23B-53-B1141	Plate	1	B40001-
12	C1		･ Plate, Start Caution	1	B40001-
13		20Y-00-41530	Plate, Symbol, Ecot3	1	B40001-
14		09805-17100	Plate, Caution, Do not Get On	2	B40001-
15		09642-17000	Plate, Service Instruction, Engine Coolant AF-NAC	1	B40001-
16		09819-07000	Decal, Warning, Bank Control	1	B40001-
17		14X-98-35181	Plate, Reflector	2	B40001-
18		09667-27101	Plate, Caution, Rotating Object	1	B40001-
19		09817-A0753	Plate, Warning, High Temperature	1	B40001-
20		01023-10406	Screw	4	B40001-
21	C2	09620-A2160	Plate, Name, ROPS/FOPS (Limited Supply)	1	B40001-

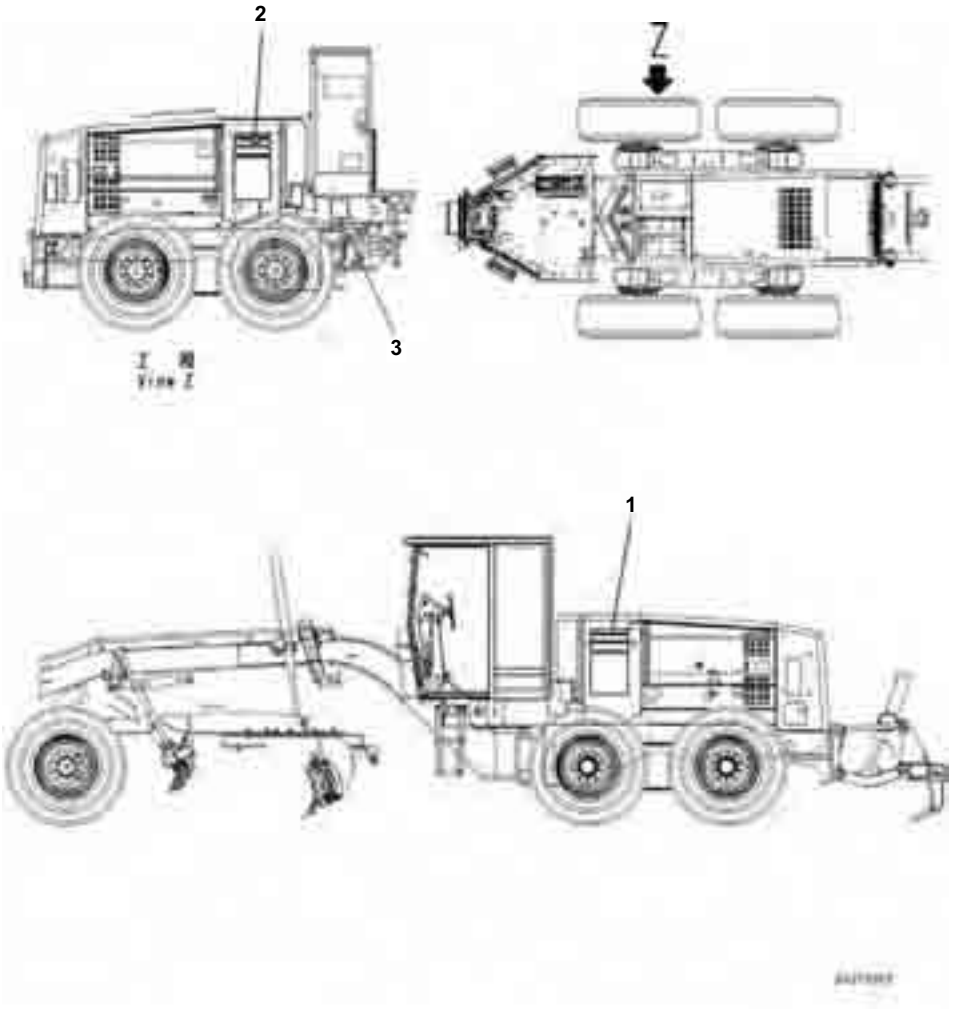

Marks and Plates, Portuguese, Pictorial Type, (3/3)

Index	Code	Part Number	Description	Qty	Serial No.
1		23B-53-71150	Plate,LHS	1	B40001-
2		23B-53-71160	Plate,RHS	1	B40001-
3		23B-53-71111	Oil Chart	1	B40001-

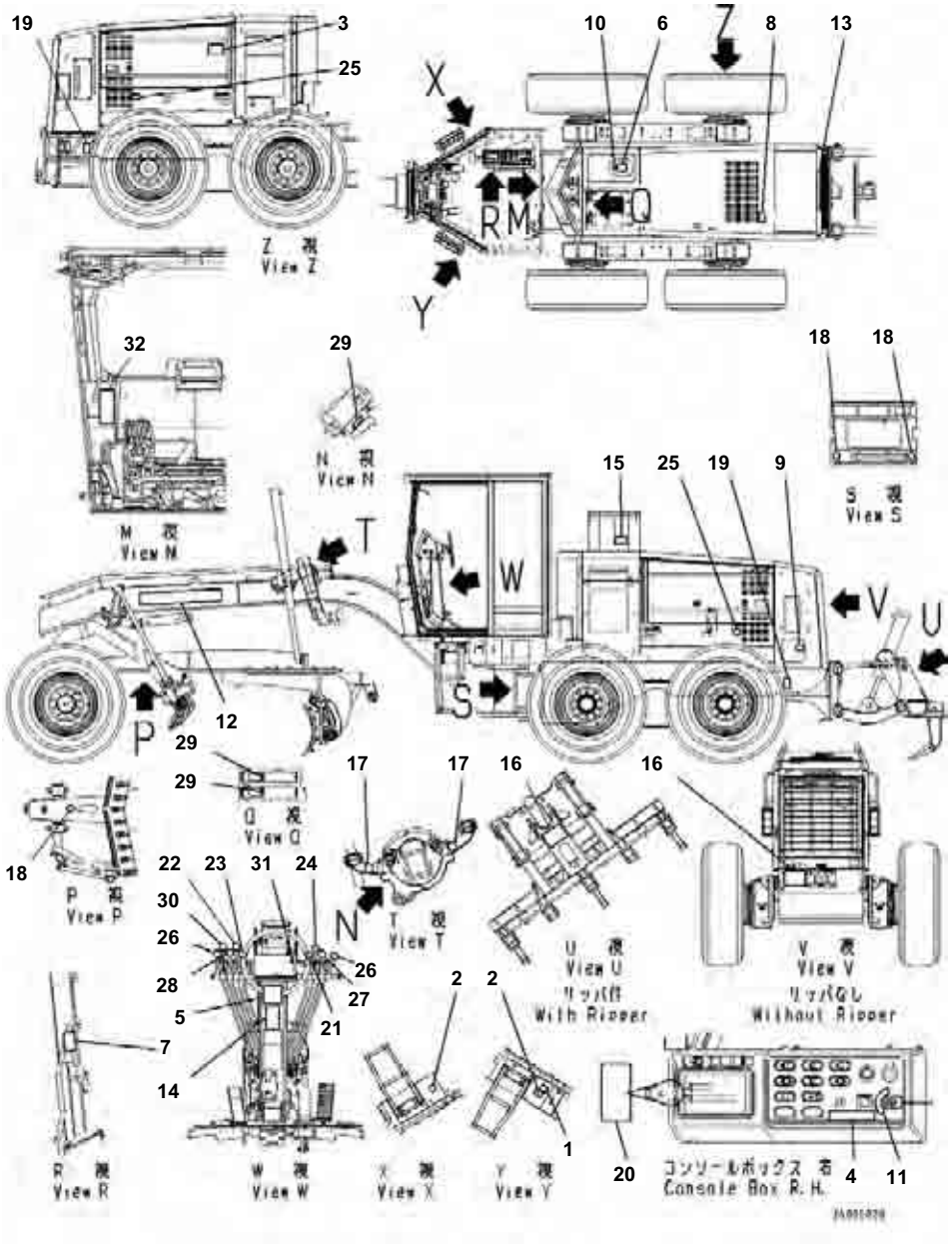

Marks and Plates, Spanish-English, (1/3)

Index	Code	Part Number	Description	Qty	Serial No.
1		09161-31000	Plate, Warning, Articulation Lock	1	B40001-
2		09162-31001	Plate, Danger, Keep Off	2	B40001-
3		09637-70163	Decal, Service Instruction, Air Cleaner	1	B40001-
4		09649-01012	Plate, Engine Stop	1	B40001-
5		09651-01001	Plate, Warning, Read Manual Before Operating	1	B40001-
6		09653-01001	Plate, Warning, High Temperature	1	B40001-
7		23B-53-71290	Plate, MT/AT Velocity Range	1	B40001-
8		09668-01001	Plate, Warning, Hot Water	1	B40001-
9		09669-0000E	Plate, Symbol, Fuel Filler	1	B40001-
10		09669-0000C	Plate, Symbol, Oil Filler	1	B40001-
11		09683-0000A	Plate, Starter	1	B40001-
12		09690-P0900	Mark, Komatsu Logo	2	B40001-
13		09690-F0400	Decal, Komatsu Logo	1	B40001-
14		09802-41000	Decal, Warning, Before Operation and Traveling	1	B40001-
15		09808-01000	Plate, Warning, Battery Cables	1	B40001-
16		09812-11000	Plate, Danger, Keep a Safe Distance	1	B40001-
17		09960-00801	Decal, Lift Point Mark	2	B40001-
18		09960-00602	Decal, Tie Down Point Mark, Handling	3	B40001-
19		09960-01201	Mark, Handling	2	B40001-
20		09963-01001	Tag, Danger, Do Not Operate	1	B40001-
21		232-43-18281	Plate, Mark, Drawber Shift	1	B40001-
22		232-735-1340	Plate, Mark, Power Tilt	1	B40001-
23		234-53-32321	Plate, Mark, Circle Revolution	1	B40001-
24		234-53-32330	Plate, Articulate	1	B40001-
25		09667-01001	Plate, Caution, Rotating Object	2	B40001-
26		237-54-13211	Plate, Mark, Blade Lift	2	B40001-
27		237-54-13221	Plate, Mark, Leaning	1	B40001-
28		237-54-13231	Plate, Mark, Blade Shift	1	B40001-
29		09659-51000	Plate, Warning, Explosive Hazard	4	B40001-
30		232-785-1411	Plate, Ripper	1	B40001-
31		23A-53-11550	Decal, Mark, Turn Signal	1	B40001-
32		23B-53-71280	Plate, Shift Down Capable Speed	1	B40001-

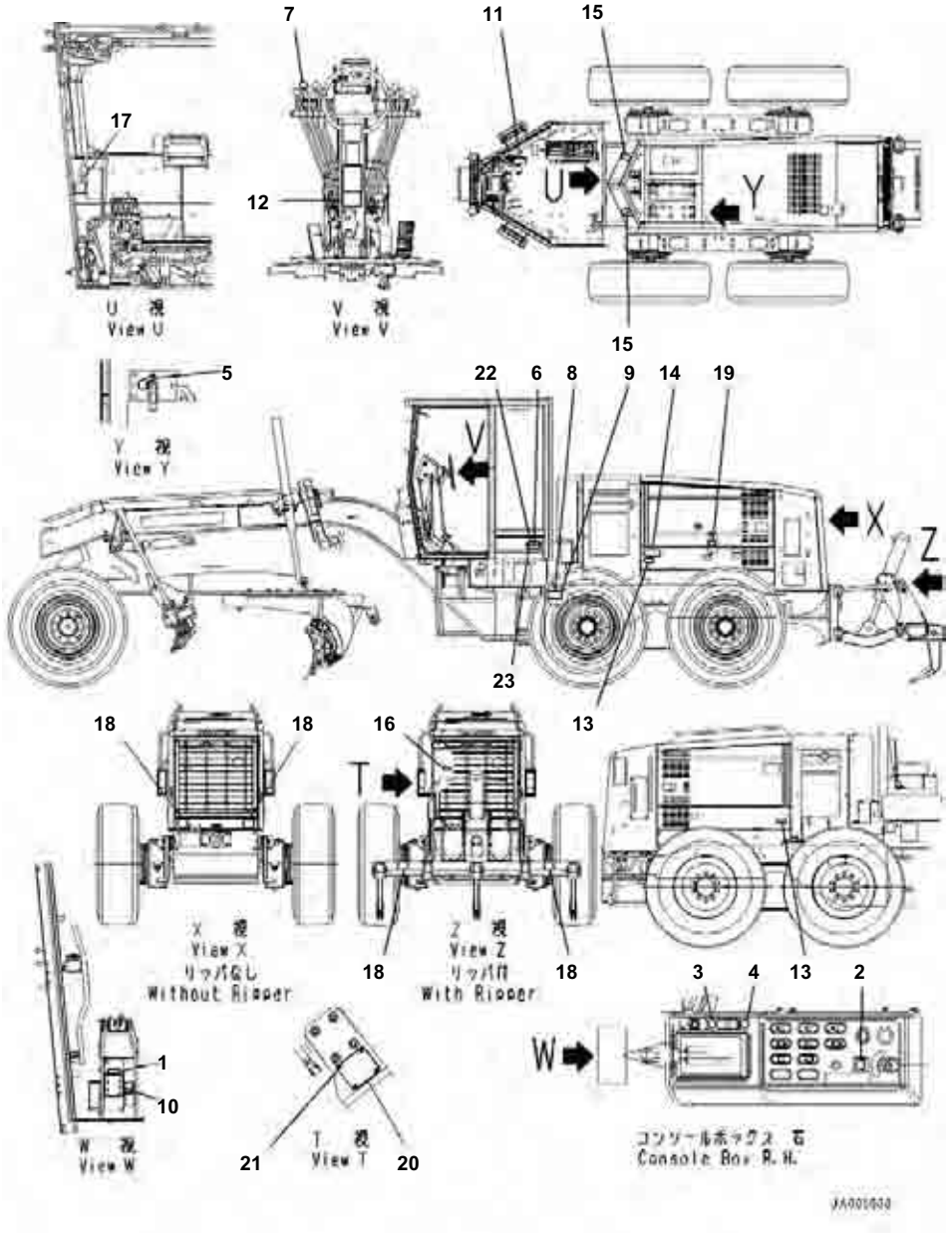

Marks and Plates, Spanish-English, (2/3)

Index	Code	Part Number	Description	Qty	Serial No.
		23B-53-71240	Plate	1	B40001-
1	C1		･ Plate, Fuse Box	1	B40001-
2	C1		･ Plate, Lifter Lock Switch	1	B40001-
3	C1		･ Plate, RPM Set Switch	1	B40001-
4	C1		･ Plate, RPM Set Switch	1	B40001-
5		425-93-41310	･ Plate, Disconnection Switch	1	B40001-
6		09620-A2070	Plate, Certification Mark	1	B40001-
7		237-54-13271	Plate, Scarifire	1	B40001-
8	C2	09602-10002	Plate, Name (Limited Supply)	1	B40001-
9		04418-13060	Screw	4	B40001-
10		09801-41001	Decal, Danger, High Voltage Hazard	1	B40001-
11		23B-53-31940	Tag, Danger, Do Not Operate	1	B40001-
		23B-53-31911	Plate	1	B40001-
12	C1		･ Plate, Start Caution	1	B40001-
13	C1		･ Plate, Don't Walk	2	B40001-
14		20Y-00-41530	Plate, Symbol, Ecot3	1	B40001-
15		09805-11000	Plate, Caution, Hood	2	B40001-
16		09642-11000	Plate, Service Instruction, Engine Coolant AF-NAC	1	B40001-
17		09819-01000	Decal, Warning, Bank Control	1	B40001-
18		14X-98-35181	Plate, Reflector	2	B40001-
19		09667-21001	Decal, Caution, Rotating Object	1	B40001-
20		09817-A0753	Plate, Warning, High Temperature	1	B40001-
21		01023-10406	Screw	4	B40001-
22	C2	09620-A2000	Plate, Name, ROPS/FOPS (Limited Supply)	1	B40001-
23		205-00-72430	Rivet	4	B40001-

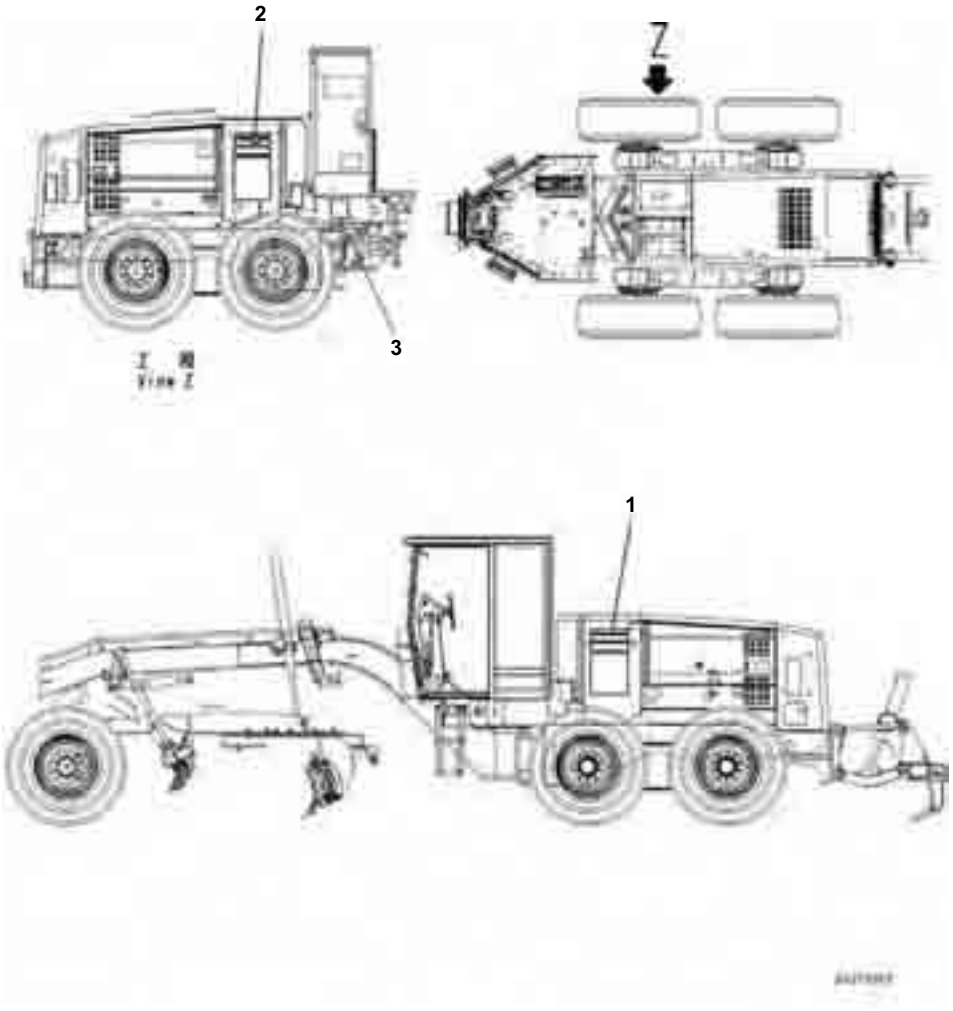

Marks and Plates, Spanish-English, (3/3)

Index	Code	Part Number	Description	Qty	Serial No.
1		23B-53-71150	Plate,LHS	1	B40001-
2		23B-53-71160	Plate,RHS	1	B40001-
3		23B-53-71111	Oil Chart	1	B40001-

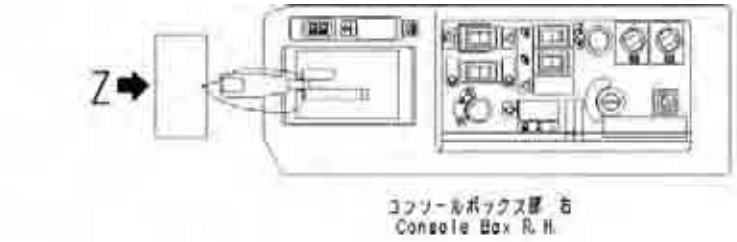



Index	Code	Part Number	Description	Qty	Serial No.
1		09845-00480	Plate, Caution, Blast Site	1	B40001-

AUXILIARY PARTS AND TOOL

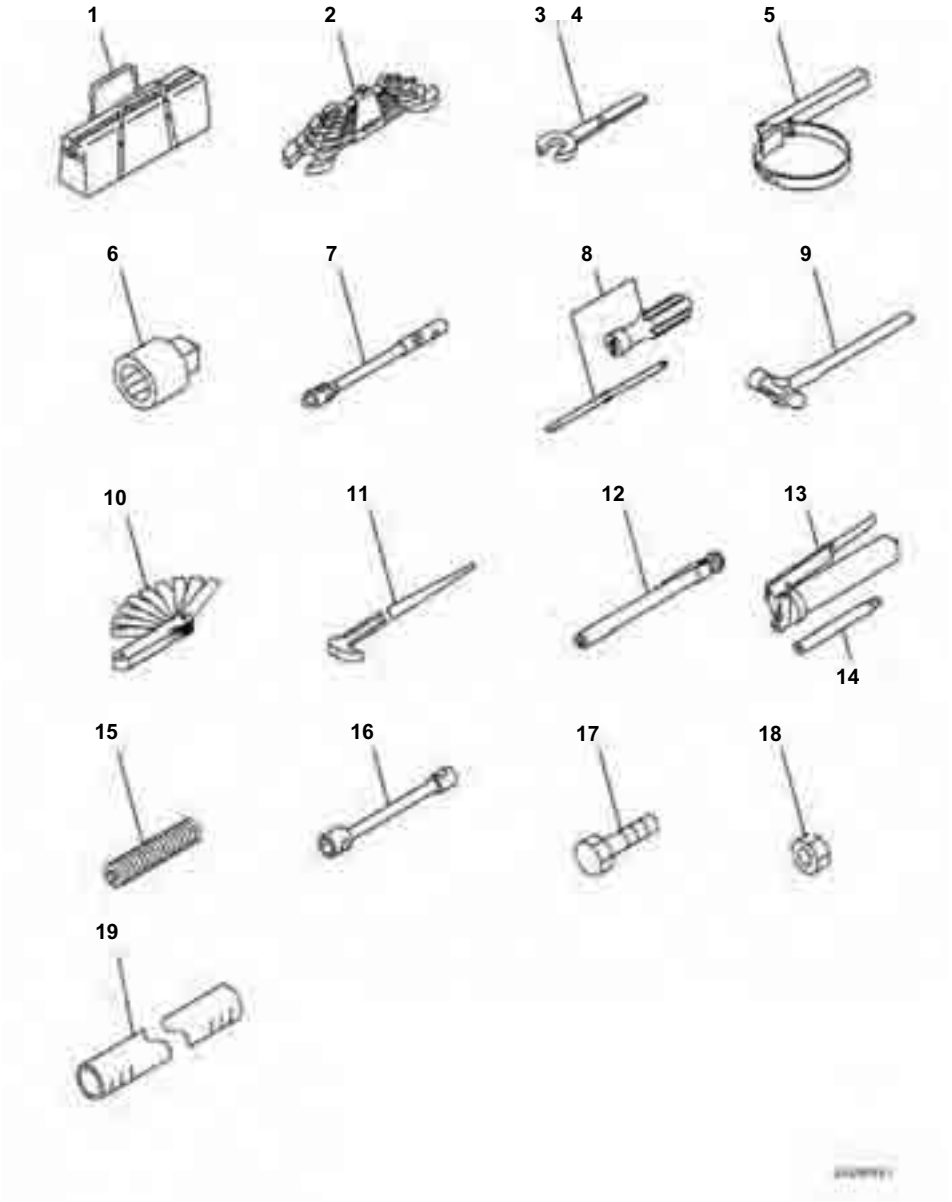

Index	Code	Part Number	Description	Qty	Serial No.
1		09056-05513	Tool Bag	1	B40001-
2		09000-30006	Wrench Set	1	B40001-
3		09001-00700	Wrench	1	B40001-
4		09001-03600	Wrench	1	B40001-
5		09019-28036	Wrench	1	B40001-
6		09021-01725	Socket, W=17mm	1	B40001-
7		09023-00300	Handle	1	B40001-
8		09033-00190	Driver	1	B40001-
9		09039-00150	Hammer	1	B40001-
10		09054-00009	Gauge, Filler	1	B40001-
11		09055-10390	Bar	1	B40001-
12		09289-00000	Gauge, Tire Inflation Pressure	1	B40001-
		07952-70004	Pump Assembly	1	B40001-
13		07950-10450	･ Pump	1	B40001-
14		07951-41017	･ Nozzle	1	B40001-
15		07950-90403	Cartridge	1	B40001-
16		23B-981-1310	Wrench	1	B40001-
17		01011-82405	Bolt	1	B40001-
18		01580-12419	Nut	1	B40001-
19		07286-01990	Hose	1	B40001-

FIELD REPAIR SERVICE PARTS

GD655-5 S/N B40001-UP
Service Kit Parts

Index	Code	Part Number	Description	Qty	Serial No.
K01		23B-13-05000	Service Kit, Transmission		B40001-
		07000-72015	･ O-ring	26	-
		07000-72022	･ O-ring	10	-
		07000-72100	･ O-ring	1	-
		07000-72105	･ O-ring	1	-
		07000-72120	･ O-ring	1	-
		07000-73028	･ O-ring	6	-
		07000-73032	･ O-ring	3	-
		07000-73045	･ O-ring	1	-
		07000-73048	･ O-ring	1	-
		07002-61023	･ O-ring	4	-
		07002-61223	･ O-ring	5	-
		07002-61423	･ O-ring	7	-
		07002-61623	･ O-ring	4	-
		07002-62434	･ O-ring	9	-
		07018-31255	･ Ring	1	-
		419-15-12122	･ Ring	5	-
		566-15-49210	･ Ring	2	-
		568-15-12850	･ Seal Ring	2	-
		6166-61-6341	･ Gasket	1	-
		714-07-19320	･ Seal Ring	7	-
		714-08-19220	･ Seal Ring	1	-
		714-11-19230	･ Seal Ring	2	-
		714-12-19121	･ Seal, Oil	1	-
		714-12-19170	･ Seal, Dust	1	-
		714-12-39230	･ Seal Ring	8	-
		714-16-19220	･ Seal Ring	4	-
		714-21-19810	･ Seal Ring	2	-
		714-23-19210	･ Seal Ring	2	-
K02		23B-13-05010	Service Kit, Transmission Control Valve		B40001-
		07000-71007	･ O-ring	8	-
		07000-72015	･ O-ring	32	-
		07000-73022	･ O-ring	2	-
		07000-73030	･ O-ring	5	-
		07000-A2060	･ O-ring	1	-
		07002-61023	･ O-ring	10	-
		07002-61223	･ O-ring	17	-
		07002-61823	･ O-ring	1	-
		07002-62434	･ O-ring	3	-
		07002-63034	･ O-ring	5	-
		07002-63334	･ O-ring	1	-
K03		23B-13-05020	Service Kit, Transmission Piping		B40001-
		07002-63334	･ O-ring	2	-
		07005-01012	･ Seal, Washer	15	-
K04		707-98-23270	Service Kit, Leaning Cylinder		B40001-
		02896-11009	･ O-ring	1	-

GD655-5 S/N B40001-UP
Service Kit Parts

Index	Code	Part Number	Description	Qty	Serial No.
		07000-12075	･ O-ring	1	-
		07000-12080	･ O-ring	1	-
		07145-00045	･ Seal, Dust	2	-
		07145-00050	･ Seal, Dust	2	-
		07146-02076	･ Ring, Back-up	1	-
		07156-00810	･ Ring, Wear	1	-
		707-44-80070	･ Ring, Piston	1	-
		707-51-40210	･ Packing, Rod	1	-
		707-56-40740	･ Seal, Dust	1	-
K05		707-98-05470	Service Kit, Steering Cylinder		B40001-
		02896-11009	･ O-ring	3	-
		07000-13045	･ O-ring	1	-
		07000-13048	･ O-ring	1	-
		07002-12034	･ O-ring	1	-
		10E-63-32390	･ Ring, Wear	1	-
		707-35-99500	･ Ring, Back-up	1	-
		707-44-50070	･ Ring, Piston	1	-
		707-51-35210	･ Packing, Rod	1	-
		707-56-35740	･ Seal, Dust	1	-
K06		SM403-21988	Seal Kit		B40001-
	C1		･ Gasket	2	-
	C1		･ Gasket	2	-
	C1		･ Seal, Oil	1	-
	C1		･ Ring	1	-
K07		STBA0069A	Seal Kit		B40001-
	C1		･ O-ring	1	-
	C1		･ O-ring	2	-
K08		707-98-22510	Service Kit, Front Blade Cylinder		B40001-
		02896-11009	･ O-ring	3	-
		07000-12085	･ O-ring	1	-
		07000-12090	･ O-ring	1	-
		07145-00050	･ Seal, Dust	4	-
		07146-02086	･ Ring, Back-up	1	-
		07156-00912	･ Ring, Wear	1	-
		707-44-90180	･ Ring, Piston	1	-
		707-51-45210	･ Packing, Rod	1	-
		707-56-45740	･ Seal, Dust	1	-
K09		707-98-40050	Service Kit, Ripper Cylinder		B40001-
		02896-11009	･ O-ring	2	-
		07000-12115	･ O-ring	1	-
		07000-12120	･ O-ring	1	-
		07145-00060	･ Seal, Dust	2	-
		07146-02116	･ Ring, Back-up	1	-
		07156-01215	･ Ring, Wear	1	-
		707-44-12180	･ Ring, Piston	1	-
		707-51-55211	･ Packing, Rod	1	-

GD655-5 S/N B40001-UP
Service Kit Parts

Index	Code	Part Number	Description	Qty	Serial No.
		707-56-55740	· Seal, Dust	1	-
K10		707-98-25400	Service Kit, Blade Lift Cylinder		B40001-
		02896-11009	· O-ring	3	-
		07000-12075	· O-ring	1	-
		07000-12080	· O-ring	1	-
		07141-00090	· Seal, Dust	1	-
		07146-02076	· Ring, Back-up	1	-
		07156-00810	· Ring, Wear	1	-
		707-44-80180	· Ring, Piston	1	-
		707-51-50211	· Packing, Rod	1	-
		707-56-50740	· Seal, Dust	1	-
K11		707-98-26060	Service Kit, Blade Side Shift Cylinder		B40001-
		02896-11009	· O-ring	2	-
		07000-12075	· O-ring	1	-
		07000-12080	· O-ring	1	-
		07146-02076	· Ring, Back-up	1	-
		07155-00820	· Ring, Wear	1	-
		707-44-80070	· Ring, Piston	1	-
		707-51-50211	· Packing, Rod	1	-
		707-56-50740	· Seal, Dust	1	-
K12		707-98-27650	Service Kit, Power Tilt Cylinder		B40001-
		02896-11009	· O-ring	2	-
		07000-12075	· O-ring	1	-
		07000-12080	· O-ring	1	-
		07146-02076	· Ring, Back-up	1	-
		07156-00810	· Ring, Wear	1	-
		707-44-80070	· Ring, Piston	1	-
		707-51-40210	· Packing, Rod	1	-
		707-56-40740	· Seal, Dust	1	-
K13		707-98-24400	Service Kit, Drawbar Side Shift Cylinder		B40001-
		02896-11009	· O-ring	2	-
		07000-12075	· O-ring	1	-
		07000-12080	· O-ring	1	-
		07141-00090	· Seal, Dust	1	-
		07146-02076	· Ring, Back-up	1	-
		07156-00810	· Ring, Wear	1	-
		707-44-80070	· Ring, Piston	1	-
		707-51-45210	· Packing, Rod	1	-
		707-56-45740	· Seal, Dust	1	-
K14		707-98-29430	Service Kit, Scarifier Cylinder		B40001-
		02896-11009	· O-ring	2	-
		07000-12085	· O-ring	1	-
		07000-12090	· O-ring	1	-
		07145-00050	· Seal, Dust	4	-
		07146-02086	· Ring, Back-up	1	-
		07156-00912	· Ring, Wear	1	-

GD655-5 S/N B40001-UP
Service Kit Parts

Index	Code	Part Number	Description	Qty	Serial No.
		707-44-90070	· Ring, Piston	1	-
		707-51-50211	· Packing, Rod	1	-
		707-56-50740	· Seal, Dust	1	-
K15		707-98-27660	Service Kit, Articulate Cylinder		B40001-
		02896-11009	· O-ring	2	-
		07000-12075	· O-ring	1	-
		07000-12080	· O-ring	1	-
		07145-00050	· Seal, Dust	4	-
		07146-02076	· Ring, Back-up	1	-
		07156-00810	· Ring, Wear	1	-
		707-44-80070	· Ring, Piston	1	-
		707-51-45210	· Packing, Rod	1	-
		707-56-45740	· Seal, Dust	1	-

NUMERICAL INDEX

PARTS Nº	FIG. Nº	INDEX	PAGE
01010-61230	F4500-001003	16	F004003
01010-61230	F4500-001007	2	F004007
01010-61230	F4500-001008	5	F004008
01010-61230	F4500-001008	12	F004008
01010-61235	F4200-001001	6	F001001
01010-61235	F4500-001003	30	F004003
01010-61235	F4500-001003	34	F004003
01010-61240	F4500-001001	3	F004001
01010-61245	F4500-001001	4	F004001
01010-61245	F4500-001002	13	F004002
01010-61245	F4500-001013	4	F004013
01010-61245	F4500-001014	4	F004014
01010-61250	F4500-001005	7	F004005
01010-61255	F4200-001001	2	F001001
01010-61255	F4500-001003	3	F004003
01010-61435	F4500-001003	36	F004003
01010-61470	H0210-001001	13	H004001
01010-61635	F4500-001013	20	F004013
01010-61635	F4500-001014	20	F004014
01010-61645	F4500-001007	5	F004007
01010-61665	F4500-001004	18	F004004
01010-61680	F4500-001002	5	F004002
01010-62250	S0100-001004	11	S001004
01010-80612	A9999-501001	9	B012001
01010-80612	E0120-001002	18	E002002
01010-80612	K0210-002001	7	K002001
01010-80612	K0210-002001	13	K002001
01010-80612	K0210-002001	43	K002001
01010-80612	K0210-002006	9	K002006
01010-80612	K0210-002017	17	K002017
01010-80612	K1110-001005	10	K009005
01010-80612	K1110-001012	41	K009012
01010-80616	E0120-001002	15	E002002
01010-80616	E0120-001004	4	E002004
01010-80616	F4700-001001	6	F005001
01010-80616	K0210-002003	13	K002003
01010-80616	K0210-002006	2	K002006
01010-80616	K0210-002016	4	K002016
01010-80616	K0350-001001	7	K005001
01010-80616	K0350-001001	9	K005001
01010-80616	K1110-001010	9	K009010
01010-80616	K1110-001012	27	K009012
01010-80616	K1110-001014	3	K009014
01010-80616	K1110-001015	1	K009015
01010-80616	K1110-001016	10	K009016
01010-80616	K1110-001016	13	K009016
01010-80616	K1110-001029	10	K009029
01010-80620	C0110-001009	43	C001009
01010-80620	C0110-001009	47	C001009
01010-80620	K0210-002001	30	K002001
01010-80620	K0210-002006	4	K002006
01010-80620	K0210-002016	2	K002016
01010-80620	K0210-002016	8	K002016
01010-80620	K0210-002016	13	K002016
01010-80620	K0210-002016	22	K002016
01010-80620	K1110-001019	15	K009019
01010-80620	K1110-001024	10	K009024
01010-80620	K1110-001028	3	K009028
01010-80620	K1110-001028	17	K009028
01010-80625	K0710-001002	24	K006002
01010-80625	K1110-001023	6	K009023
01010-80625	K1110-001023	34	K009023
01010-80630	K1110-001023	2	K009023
01010-80812	H5210-001003	51	H009003
01010-80812	K0210-002003	17	K002003
01010-80816	C0110-001008	3	C001008
01010-80816	E0120-001002	6	E002002
01010-80816	E0120-001002	20	E002002
01010-80816	E0410-001001	2	E007001
01010-80816	K0210-002006	20	K002006
01010-80816	K0210-002009	2	K002009
01010-80816	K0210-002013	2	K002013
01010-80816	K0210-002017	8	K002017
01010-80816	K0350-001001	5	K005001
01010-80816	K0350-001001	12	K005001
01010-80816	K1110-001002	30	K009002
01010-80816	K1110-001006	8	K009006
01010-80816	K1110-001006	11	K009006
01010-80816	K1110-001006	14	K009006
01010-80816	K1110-001012	24	K009012
01010-80816	K1110-001012	34	K009012
01010-80816	K1110-001013	9	K009013
01010-80816	K1110-001013	12	K009013
01010-80816	K1110-001022	13	K009022
01010-80816	K1110-001025	8	K009025
01010-80816	K1110-001026	7	K009026
01010-80820	C0110-001001	39	C001001
01010-80820	C0120-001001	22	C002001
01010-80820	E0120-001002	4	E002002
01010-80820	H0120-001011	3	H002011
01010-80820	H0120-001011	18	H002011
01010-80820	H0120-002011	3	H003011
01010-80820	H0120-002011	18	H003011
01010-80820	K1110-001002	18	K009002
01010-80820	K1110-001006	19	K009006
01010-80820	K1110-001012	37	K009012
01010-80820	K1110-001018	1	K009018
01010-80820	K1110-001018	4	K009018
01010-80820	K1110-001022	1	K009022
01010-80820	K1110-001024	13	K009024
01010-80820	K1110-001028	21	K009028
01010-80820	K1110-001031	5	K009031
01010-80820	K1110-001031	14	K009031
01010-80820	M4100-002005	18	M001005
01010-80825	E0200-001001	41	E003001
01010-80825	K1110-001020	3	K009020
01010-80825	K1110-001026	2	K009026
01010-80825	K1110-001031	2	K009031
01010-80830	E0120-001002	2	E002002
01010-80830	E0200-001001	27	E003001
01010-80830	K0710-001002	17	K006002
01010-80830	K1110-001001	6	K009001
01010-80830	K1110-001027	34	K009027
01010-80835	K0710-001001	14	K006001
01010-80845	K0710-001001	16	K006001
01010-80850	H5110-001002	1	H006002
01010-80880	E0202-001002	30	E004002
01010-80880	F4500-001006	8	F004006
01010-80880	F4700-001001	34	F005001
01010-80880	H5200-004004	1	H008004
01010-80885	K1110-001025	6	K009025
01010-81016	C0110-001007	16	C001007
01010-81016	E0120-001002	27	E002002
01010-81016	E0120-001003	25	E002003
01010-81016	E0200-001001	5	E003001
01010-81016	E0200-001001	14	E003001
01010-81016	E0200-001001	18	E003001
01010-81016	E0202-001001	22	E004001
01010-81016	E0202-001002	9	E004002
01010-81016	E0202-001002	51	E004002
01010-81016	E0202-001002	62	E004002
01010-81016	E0310-001001	8	E006001
01010-81016	H6290-001001	26	H010001
01010-81016	K0210-002017	14	K002017
01010-81016	K0210-002017	28	K002017
01010-81016	K1110-001027	15	K009027
01010-81016	K1110-001027	45	K009027
01010-81016	K1110-001032	11	K009032
01010-81016	K4460-001002	18	K010002
01010-81016	M4100-002005	15	M001005
01010-81016	M4230-001002	21	M002002
01010-81016	T5123-001001	46	T005001
01010-81016	T5123-001001	49	T005001
01010-81020	B0100-001001	13	B013001
01010-81020	B0100-001001	20	B013001
01010-81020	B0100-001001	26	B013001
01010-81020	C0110-001001	41	C001001
01010-81020	C0110-001003	2	C001003
01010-81020	C0110-001007	9	C001007
01010-81020	C0110-001007	12	C001007

PARTS Nº	FIG. Nº	INDEX	PAGE
01010-81020	C0110-001007	18	C001007
01010-81020	C0110-001009	11	C001009
01010-81020	C0120-001001	8	C002001
01010-81020	C0120-001001	14	C002001
01010-81020	C0120-001001	27	C002001
01010-81020	C0120-001001	30	C002001
01010-81020	C0120-001001	35	C002001
01010-81020	D0100-001001	10	D001001
01010-81020	D0100-001001	16	D001001
01010-81020	D0200-001001	10	D002001
01010-81020	D0200-001001	20	D002001
01010-81020	D0200-001003	9	D002003
01010-81020	D0200-001003	14	D002003
01010-81020	D0200-001003	17	D002003
01010-81020	E0120-001001	2	E002001
01010-81020	E0120-001002	24	E002002
01010-81020	E0120-001002	31	E002002
01010-81020	E0120-001002	34	E002002
01010-81020	E0120-001003	5	E002003
01010-81020	E0120-001003	15	E002003
01010-81020	E0120-001003	23	E002003
01010-81020	E0120-001003	33	E002003
01010-81020	E0120-001003	43	E002003
01010-81020	E0120-001004	7	E002004
01010-81020	E0200-001001	7	E003001
01010-81020	E0200-001001	23	E003001
01010-81020	E0200-001001	43	E003001
01010-81020	E0200-001001	46	E003001
01010-81020	E0200-001001	49	E003001
01010-81020	E0200-001002	15	E003002
01010-81020	E0200-001002	18	E003002
01010-81020	E0202-001001	4	E004001
01010-81020	E0202-001001	7	E004001
01010-81020	E0202-001001	17	E004001
01010-81020	E0202-001001	20	E004001
01010-81020	E0202-001001	28	E004001
01010-81020	E0202-001001	31	E004001
01010-81020	E0202-001001	34	E004001
01010-81020	E0202-001001	37	E004001
01010-81020	E0202-001001	40	E004001
01010-81020	E0202-001001	43	E004001
01010-81020	E0202-001001	46	E004001
01010-81020	E0202-001001	49	E004001
01010-81020	E0202-001001	52	E004001
01010-81020	E0202-001001	56	E004001
01010-81020	E0202-001001	59	E004001
01010-81020	E0202-001002	15	E004002
01010-81020	E0202-001002	23	E004002
01010-81020	E0202-001002	28	E004002
01010-81020	E0202-001002	33	E004002
01010-81020	E0202-001002	39	E004002
01010-81020	E0202-001002	46	E004002
01010-81020	E0202-001002	54	E004002
01010-81020	E0202-001002	57	E004002
01010-81020	E0202-001003	4	E004003
01010-81020	E0202-001003	7	E004003
01010-81020	E0202-001003	13	E004003
01010-81020	E0202-001003	19	E004003
01010-81020	E0202-001003	25	E004003
01010-81020	E0202-001004	2	E004004
01010-81020	F4320-001001	10	F002001
01010-81020	F4320-001011	15	F002011
01010-81020	F4320-001012	22	F002012
01010-81020	F4400-001002	22	F003002
01010-81020	F4500-001001	19	F004001
01010-81020	F4500-001006	35	F004006
01010-81020	F4500-001009	2	F004009
01010-81020	F4500-001009	6	F004009
01010-81020	F4700-001001	3	F005001
01010-81020	H0110-001002	5	H001002
01010-81020	H0110-001002	10	H001002
01010-81020	H4410-001001	4	H005001
01010-81020	H4410-001001	7	H005001
01010-81020	H4410-001001	14	H005001
01010-81020	H4410-001001	27	H005001
01010-81020	H4410-001001	32	H005001
01010-81020	H5120-002002	9	H007002
01010-81020	H5120-002002	12	H007002
01010-81020	H5120-002002	15	H007002
01010-81020	H5200-004004	30	H008004
01010-81020	H5200-004004	38	H008004
01010-81020	H5200-004005	20	H008005
01010-81020	H5200-004005	27	H008005
01010-81020	H5200-004005	36	H008005
01010-81020	H5200-004005	47	H008005
01010-81020	H5200-004005	50	H008005
01010-81020	H5200-004006	40	H008006
01010-81020	H5200-004007	2	H008007
01010-81020	H5200-004007	17	H008007
01010-81020	H5200-004007	26	H008007
01010-81020	H5200-004007	38	H008007
01010-81020	H5200-004007	41	H008007
01010-81020	H5200-004012	29	H008012
01010-81020	H5200-004014	22	H008014
01010-81020	H5200-004014	32	H008014
01010-81020	H5200-004014	35	H008014
01010-81020	H5200-004014	41	H008014
01010-81020	H5200-004015	7	H008015
01010-81020	H5200-004017	9	H008017
01010-81020	H5200-004017	12	H008017
01010-81020	H5200-004017	18	H008017
01010-81020	H5200-004017	23	H008017
01010-81020	H5200-004018	8	H008018
01010-81020	H5200-004018	19	H008018
01010-81020	H5200-004019	2	H008019
01010-81020	H5200-004019	13	H008019
01010-81020	H5200-004019	19	H008019
01010-81020	H5200-004019	22	H008019
01010-81020	H5200-004020	4	H008020
01010-81020	H5210-001001	15	H009001
01010-81020	H5210-001001	18	H009001
01010-81020	H5210-001001	24	H009001
01010-81020	H5210-001003	16	H009003
01010-81020	H5210-001003	19	H009003
01010-81020	H5210-001003	30	H009003
01010-81020	H5210-001003	41	H009003
01010-81020	H5210-001003	45	H009003
01010-81020	H5210-001004	34	H009004
01010-81020	H5210-001004	41	H009004
01010-81020	H5210-001005	5	H009005
01010-81020	H5210-001005	8	H009005
01010-81020	K0210-002002	18	K002002
01010-81020	K0210-002003	10	K002003
01010-81020	K0210-002003	24	K002003
01010-81020	K0210-002006	15	K002006
01010-81020	K0210-002017	11	K002017
01010-81020	K0210-002018	16	K002018
01010-81020	K0710-001002	13	K006002
01010-81020	K0710-001002	29	K006002
01010-81020	K0710-001002	33	K006002
01010-81020	K0710-001002	37	K006002
01010-81020	K0713-001001	9	K007001
01010-81020	K0713-001001	12	K007001
01010-81020	K0713-001001	15	K007001
01010-81020	K0713-001001	22	K007001
01010-81020	K0713-001001	25	K007001
01010-81020	K0713-001001	28	K007001
01010-81020	K0713-001001	31	K007001
01010-81020	K1110-001002	26	K009002
01010-81020	K1110-001006	3	K009006
01010-81020	K1110-001006	22	K009006
01010-81020	K1110-001006	26	K009006
01010-81020	K1110-001006	34	K009006
01010-81020	K1110-001010	5	K009010
01010-81020	K1110-001010	11	K009010
01010-81020	K1110-001013	6	K009013
01010-81020	K1110-001013	17	K009013
01010-81020	K1110-001020	12	K009020
01010-81020	K1110-001020	15	K009020
01010-81020	K1110-001022	10	K009022

PARTS Nº	FIG. Nº	INDEX	PAGE
01010-81020	K1110-001022	17	K009022
01010-81020	K1110-001023	9	K009023
01010-81020	K1110-001023	12	K009023
01010-81020	K1110-001023	30	K009023
01010-81020	K1110-001027	2	K009027
01010-81020	K1110-001027	5	K009027
01010-81020	K1110-001027	10	K009027
01010-81020	K1110-001027	13	K009027
01010-81020	K1110-001027	18	K009027
01010-81020	K1110-001027	21	K009027
01010-81020	K1110-001027	24	K009027
01010-81020	K1110-001027	29	K009027
01010-81020	K1110-001027	37	K009027
01010-81020	K1110-001027	40	K009027
01010-81020	K1110-001027	43	K009027
01010-81020	K1110-001027	48	K009027
01010-81020	K1110-001027	52	K009027
01010-81020	K1110-001028	9	K009028
01010-81020	K1110-001028	12	K009028
01010-81020	K1110-001032	2	K009032
01010-81020	K1110-001032	6	K009032
01010-81020	K1110-001032	9	K009032
01010-81020	K1110-001032	14	K009032
01010-81020	K4460-001005	9	K010005
01010-81020	K4460-001005	13	K010005
01010-81020	K4470-001001	4	K011001
01010-81020	K4470-001002	5	K011002
01010-81020	K4470-001002	46	K011002
01010-81020	M4100-002002	2	M001002
01010-81020	M4100-002002	36	M001002
01010-81020	M4100-002003	21	M001003
01010-81020	M4100-002003	29	M001003
01010-81020	M4100-002003	32	M001003
01010-81020	M4100-002003	36	M001003
01010-81020	M4100-002004	9	M001004
01010-81020	M4100-002005	12	M001005
01010-81020	M4100-002005	21	M001005
01010-81020	M4100-002005	24	M001005
01010-81020	M4100-002008	7	M001008
01010-81020	M4100-002008	35	M001008
01010-81020	M4100-002009	5	M001009
01010-81020	M4100-002009	8	M001009
01010-81020	M4230-001002	26	M002002
01010-81020	M4240-001001	6	M004001
01010-81020	T5140-001001	25	T009001
01010-81020	T5151-001001	23	T011001
01010-81025	B0100-001001	15	B013001
01010-81025	C0110-001001	43	C001001
01010-81025	C0110-001002	3	C001002
01010-81025	C0110-001002	6	C001002
01010-81025	C0110-001002	8	C001002
01010-81025	C0110-001009	6	C001009
01010-81025	C0110-001009	29	C001009
01010-81025	C0110-001009	34	C001009
01010-81025	C0110-001009	39	C001009
01010-81025	D0100-001001	4	D001001
01010-81025	D0100-001001	24	D001001
01010-81025	D0200-001001	22	D002001
01010-81025	D0200-001001	25	D002001
01010-81025	D0200-001003	19	D002003
01010-81025	E0120-001001	8	E002001
01010-81025	E0120-001001	11	E002001
01010-81025	E0120-001001	14	E002001
01010-81025	E0202-001001	13	E004001
01010-81025	E0202-001001	25	E004001
01010-81025	E0202-001002	12	E004002
01010-81025	E0202-001002	49	E004002
01010-81025	E0202-001002	59	E004002
01010-81025	F4500-001009	8	F004009
01010-81025	F4500-001013	15	F004013
01010-81025	F4500-001014	15	F004014
01010-81025	F4700-001001	14	F005001
01010-81025	F4700-001001	17	F005001
01010-81025	F4700-001001	48	F005001
01010-81025	H0120-001011	1	H002011
01010-81025	H0120-002011	1	H003011
01010-81025	H5120-002002	20	H007002
01010-81025	H5200-004001	12	H008001
01010-81025	H5200-004002	2	H008002
01010-81025	H5200-004007	29	H008007
01010-81025	H5200-004009	4	H008009
01010-81025	H5200-004011	4	H008011
01010-81025	H5200-004012	2	H008012
01010-81025	H5200-004012	5	H008012
01010-81025	H5200-004012	11	H008012
01010-81025	H5200-004012	17	H008012
01010-81025	H5200-004012	23	H008012
01010-81025	H5200-004012	33	H008012
01010-81025	H5200-004012	36	H008012
01010-81025	H5200-004014	9	H008014
01010-81025	H5200-004014	12	H008014
01010-81025	H5200-004014	20	H008014
01010-81025	H5200-004014	27	H008014
01010-81025	H5200-004014	30	H008014
01010-81025	H5200-004014	43	H008014
01010-81025	H5200-004016	8	H008016
01010-81025	H5200-004018	12	H008018
01010-81025	H5200-004020	7	H008020
01010-81025	H5210-001001	20	H009001
01010-81025	H5210-001001	26	H009001
01010-81025	H5210-001004	37	H009004
01010-81025	H5210-001004	44	H009004
01010-81025	H5210-001005	15	H009005
01010-81025	H6290-001001	14	H010001
01010-81025	H6290-001001	17	H010001
01010-81025	H6290-001001	20	H010001
01010-81025	K0710-001002	5	K006002
01010-81025	K0710-001002	11	K006002
01010-81025	K1110-001002	20	K009002
01010-81025	K1110-001003	14	K009003
01010-81025	K1110-001003	23	K009003
01010-81025	K1110-001010	2	K009010
01010-81025	K1110-001016	7	K009016
01010-81025	K1110-001024	2	K009024
01010-81025	K1110-001025	2	K009025
01010-81025	K1110-001027	7	K009027
01010-81025	K4460-001002	20	K010002
01010-81025	K4460-001002	22	K010002
01010-81025	K4460-001005	1	K010005
01010-81025	K4460-001005	5	K010005
01010-81025	K4470-001001	9	K011001
01010-81025	K4470-001002	9	K011002
01010-81025	K4470-001002	49	K011002
01010-81025	M4100-002002	42	M001002
01010-81025	M4100-002004	14	M001004
01010-81025	M4100-002004	18	M001004
01010-81025	M4100-002005	9	M001005
01010-81025	M4100-002008	16	M001008
01010-81025	T5123-001001	7	T005001
01010-81025	T5123-001001	29	T005001
01010-81025	T5123-001001	52	T005001
01010-81025	T5123-001001	55	T005001
01010-81025	T5130-001001	2	T008001
01010-81030	C0110-001001	30	C001001
01010-81030	C0110-001001	45	C001001
01010-81030	C0110-001007	4	C001007
01010-81030	C0110-001008	5	C001008
01010-81030	C0110-001009	3	C001009
01010-81030	C0110-001009	31	C001009
01010-81030	C0120-001001	19	C002001
01010-81030	D0200-001003	6	D002003
01010-81030	F4320-001002	13	F002002
01010-81030	F4320-001008	12	F002008
01010-81030	F4320-001010	26	F002010
01010-81030	F4320-001012	3	F002012
01010-81030	F4320-001014	3	F002014
01010-81030	F4500-001006	28	F004006
01010-81030	F4700-001001	9	F005001
01010-81030	F4700-001001	11	F005001
01010-81030	H5200-004004	18	H008004

PARTS Nº	FIG. Nº	INDEX	PAGE
01010-81030	H5200-004006	3	H008006
01010-81030	H5200-004006	36	H008006
01010-81030	H6290-001001	12	H010001
01010-81030	K0710-001001	3	K006001
01010-81030	K0710-001002	35	K006002
01010-81030	K1110-001006	5	K009006
01010-81030	K1110-001019	2	K009019
01010-81030	K1110-001024	4	K009024
01010-81030	K1110-001030	14	K009030
01010-81030	T5130-001001	29	T008001
01010-81035	D0200-001003	1	D002003
01010-81035	E0202-001003	16	E004003
01010-81035	E0202-001003	31	E004003
01010-81035	F4320-001012	24	F002012
01010-81035	H0210-001010	1	H004010
01010-81035	K0710-001001	10	K006001
01010-81035	K1110-001007	6	K009007
01010-81035	K4460-001005	11	K010005
01010-81035	K4460-001005	15	K010005
01010-81040	B0110-001001	5	B014001
01010-81040	F4320-001015	13	F002015
01010-81040	H5200-004006	29	H008006
01010-81040	H6290-001001	3	H010001
01010-81040	K1110-001010	13	K009010
01010-81040	K4470-001002	26	K011002
01010-81040	M4100-002001	19	M001001
01010-81040	M4100-002008	10	M001008
01010-81045	C0110-001001	32	C001001
01010-81045	E0202-001002	44	E004002
01010-81045	H5200-004002	4	H008002
01010-81045	K0710-001001	31	K006001
01010-81050	E0202-001002	37	E004002
01010-81050	H5210-001003	36	H009003
01010-81055	K0710-001001	26	K006001
01010-81060	F4320-001009	42	F002009
01010-81060	F4320-001010	34	F002010
01010-81060	F4320-001011	31	F002011
01010-81060	F4320-001015	9	F002015
01010-81060	F4320-001016	2	F002016
01010-81060	M4310-001001	10	M005001
01010-81060	M4310-001001	21	M005001
01010-81065	E0200-001002	10	E003002
01010-81065	E0202-001003	10	E004003
01010-81065	H5200-004005	2	H008005
01010-81070	F4320-001009	26	F002009
01010-81070	F4320-001009	36	F002009
01010-81070	M4310-001001	7	M005001
01010-81070	M4310-001001	18	M005001
01010-81080	C0110-001001	12	C001001
01010-81080	F4320-001010	28	F002010
01010-81090	H5200-004013	5	H008013
01010-81220	B0100-001001	29	B013001
01010-81220	E0120-001003	19	E002003
01010-81220	E0120-001003	45	E002003
01010-81220	E0202-001002	6	E004002
01010-81220	J4110-001001	4	J001001
01010-81220	J4120-001001	4	J002001
01010-81220	M4100-002002	16	M001002
01010-81225	E0120-001001	5	E002001
01010-81225	E0310-001001	3	E006001
01010-81225	H0110-001001	5	H001001
01010-81225	H0110-001001	19	H001001
01010-81225	H5120-002001	6	H007001
01010-81225	J4120-001001	10	J002001
01010-81225	J4120-001001	13	J002001
01010-81225	K0110-001001	24	K001001
01010-81225	K4460-001002	5	K010002
01010-81225	M4231-001001	5	M003001
01010-81225	T5120-004001	15	T003001
01010-81225	T5120-003001	15	T004001
01010-81225	T5123-001001	14	T005001
01010-81225	T5123-001001	18	T005001
01010-81225	T5123-001001	36	T005001
01010-81225	T5125-001002	6	T006002
01010-81225	T5125-001002	20	T006002
01010-81230	B0300-001001	3	B016001
01010-81230	C0110-001003	5	C001003
01010-81230	E0202-001002	19	E004002
01010-81230	F4320-001002	20	F002002
01010-81230	F4320-001007	7	F002007
01010-81230	F4320-001007	11	F002007
01010-81230	F4400-001002	20	F003002
01010-81230	H5200-004009	1	H008009
01010-81230	H5200-004011	1	H008011
01010-81235	C0110-001007	1	C001007
01010-81235	F4500-001009	15	F004009
01010-81235	H0110-001002	1	H001002
01010-81235	H0120-001011	6	H002011
01010-81235	H0120-002011	6	H003011
01010-81235	H0210-001008	2	H004008
01010-81235	H5120-002001	14	H007001
01010-81235	H5210-001003	13	H009003
01010-81235	M4100-002001	12	M001001
01010-81235	M4310-001001	23	M005001
01010-81235	T5130-001002	6	T008002
01010-81240	E0120-001003	39	E002003
01010-81240	F4320-001001	7	F002001
01010-81240	F4320-001002	24	F002002
01010-81240	F4320-001011	4	F002011
01010-81240	H5200-004001	3	H008001
01010-81240	J4130-001001	4	J003001
01010-81240	K0110-001001	28	K001001
01010-81240	K0710-001001	36	K006001
01010-81240	T5125-001002	10	T006002
01010-81240	T5130-001001	15	T008001
01010-81245	F4320-001002	25	F002002
01010-81245	M4231-001001	3	M003001
01010-81250	B0100-001001	3	B013001
01010-81250	C0110-001009	25	C001009
01010-81250	J4130-001001	14	J003001
01010-81250	K4470-001002	30	K011002
01010-81250	K4470-001002	39	K011002
01010-81250	M4100-002001	11	M001001
01010-81255	H5120-002001	10	H007001
01010-81255	H5120-002002	24	H007002
01010-81255	H5200-004002	11	H008002
01010-81255	H5210-001003	23	H009003
01010-81255	H5210-001004	56	H009004
01010-81255	T5115-001001	12	T002001
01010-81260	H5210-001001	30	H009001
01010-81260	H5210-001004	19	H009004
01010-81260	H5210-001004	23	H009004
01010-81260	H5210-001004	48	H009004
01010-81260	H5210-001004	52	H009004
01010-81260	H5210-001005	19	H009005
01010-81260	H5210-001005	23	H009005
01010-81265	C0110-001009	17	C001009
01010-81265	F4320-001008	4	F002008
01010-81265	H5200-004014	4	H008014
01010-81270	C0110-001006	3	C001006
01010-81270	K1110-001019	10	K009019
01010-81270	T5123-001001	9	T005001
01010-81275	H5200-004014	6	H008014
01010-81280	F4700-001001	44	F005001
01010-81280	H5200-004020	15	H008020
01010-81280	K1110-001030	6	K009030
01010-81285	B0100-001001	5	B013001
01010-81290	F4700-001001	38	F005001
01010-81455	T5115-001001	26	T002001
01010-81625	J4130-001001	20	J003001
01010-81635	T5115-001001	17	T002001
01010-81640	H0210-001005	2	H004005
01010-81640	M4100-002001	2	M001001
01010-81640	T5120-004001	11	T003001
01010-81640	T5120-003001	11	T004001
01010-81650	F4810-001001	3	F006001
01010-81670	T5123-001001	4	T005001
01010-81695	J4130-001001	16	J003001
01010-82060	T5125-001002	27	T006002
01010-82075	T5140-001001	8	T009001

PARTS Nº	FIG. Nº	INDEX	PAGE
01010-82075	T5155-001001	8	T012001
01010-82075	T5155-001001	15	T012001
01010-82455	T5125-001002	25	T006002
01010-82465	T5130-001002	9	T008002
01010-82470	T5130-001002	11	T008002
01010-82495	D0100-001001	27	D001001
01010-B1655	F4500-001011	1	F004011
01010-B1660	F4500-001011	3	F004011
01010-D0612	K0210-002009	17	K002009
01010-D0612	K0210-002013	18	K002013
01010-D0616	K0210-002004	7	K002004
01010-D0616	K0210-002009	29	K002009
01010-D0616	K0210-002013	28	K002013
01010-D0620	M4230-001002	37	M002002
01010-D0635	K0210-002008	2	K002008
01010-D0635	K0210-002012	2	K002012
01010-D0812	K0210-002003	28	K002003
01010-D0816	K0210-002004	21	K002004
01010-D0816	K0210-002009	38	K002009
01010-D0816	K0210-002009	43	K002009
01010-D0816	K0210-002013	38	K002013
01010-D0816	K0210-002013	41	K002013
01010-D0820	K0210-002004	17	K002004
01010-D0820	K0210-002009	40	K002009
01010-D0820	K0210-002013	36	K002013
01010-D0820	K0210-002018	7	K002018
01010-D0820	K0215-001001	5	K003001
01010-D0820	K1110-001030	20	K009030
01010-D0825	K0210-002005	8	K002005
01010-D0825	K0210-002017	26	K002017
01010-D0835	K0210-002005	5	K002005
01010-D1016	F4500-001009	17	F004009
01010-D1016	M4230-001002	2	M002002
01010-D1016	M4230-001002	4	M002002
01010-D1016	M4230-001002	8	M002002
01010-D1016	M4230-001002	23	M002002
01010-D1020	E0300-001001	3	E005001
01010-D1020	K0210-002001	23	K002001
01010-D1020	M4100-002001	17	M001001
01010-D1020	M4100-002003	2	M001003
01010-D1020	M4100-002003	8	M001003
01010-D1020	M4100-002003	13	M001003
01010-D1020	M4100-002003	16	M001003
01010-D1020	M4100-002003	38	M001003
01010-D1020	M4100-002003	43	M001003
01010-D1020	M4100-002004	6	M001004
01010-D1020	M4230-001001	2	M002001
01010-D1020	M4230-001001	5	M002001
01010-D1020	M4230-001001	8	M002001
01010-D1020	M4230-001001	11	M002001
01010-D1020	M4230-001001	14	M002001
01010-D1020	M4230-001002	10	M002002
01010-D1020	M4230-001002	13	M002002
01010-D1020	M4230-001002	16	M002002
01010-D1020	M4230-001002	29	M002002
01010-D1020	M4230-001002	32	M002002
01010-D1025	K0210-002001	4	K002001
01010-D1025	K0210-002007	3	K002007
01010-D1025	K0210-002011	3	K002011
01010-D1025	M4230-001001	17	M002001
01010-D1025	M4230-001001	23	M002001
01010-D1025	M4230-001001	27	M002001
01010-D1025	M4230-001001	30	M002001
01010-D1025	M4230-001001	36	M002001
01010-D1030	K0210-002001	19	K002001
01010-D1030	K0210-002018	12	K002018
01010-D1030	K0215-001001	3	K003001
01010-D1030	M4230-001001	20	M002001
01010-D1030	M4230-001001	33	M002001
01010-D1035	M4310-001001	25	M005001
01010-D1225	M4100-002006	2	M001006
01010-E1025	B0200-001001	9	B015001
01010-E1030	A1570-001001	7	A015001
01010-E1030	A1570-001001	7	B002001
01010-E1040	B0200-001001	8	B015001
01011-61620	F4500-001004	11	F004004
01011-62005	F4500-001005	3	F004005
01011-62770	J4120-001001	6	J002001
01011-81005	F4320-001009	44	F002009
01011-81010	E0202-001003	28	E004003
01011-81020	F4320-001010	36	F002010
01011-81200	H5200-004001	4	H008001
01011-81210	T5123-001001	43	T005001
01011-81225	K0710-001001	23	K006001
01011-82035	T5110-001001	19	T001001
01011-82050	T5110-001001	17	T001001
01011-82050	T5110-001001	20	T001001
01011-82050	T5110-001001	22	T001001
01011-82220	B0100-001001	10	B013001
01011-82220	F4810-001001	8	F006001
01011-82405	V0300-001001	17	V001001
01011-82415	D0100-001001	28	D001001
01011-82730	K1110-001030	11	K009030
01016-51055	M4100-002004	2	M001004
01016-52045	F4400-001001	22	F003001
01016-52470	T5110-001001	23	T001001
01017-51630	K0710-001001	19	K006001
01023-10406	U0100-002002	20	U001002
01023-10406	U0100-004002	21	U002002
01023-10410	K0210-002004	4	K002004
01023-10410	K0210-002004	12	K002004
01023-10420	K0210-002004	10	K002004
01023-10510	K0810-002001	3	K008001
01023-10535	E0200-001001	29	E003001
01023-10612	K0210-002016	31	K002016
01023-10612	K1110-001005	2	K009005
01023-10614	K0210-002002	35	K002002
01023-10614	K0210-002002	40	K002002
01023-10616	K1110-001031	10	K009031
01023-10620	K1110-001013	4	K009013
01023-20416	K0210-002002	31	K002002
01023-60420	K1110-001027	26	K009027
01023-60512	M4100-002002	40	M001002
01023-60525	K0210-002012	19	K002012
01023-70414	K0210-002016	28	K002016
01023-70512	K1110-001014	6	K009014
01023-70514	K0210-002003	8	K002003
01023-70520	K0210-002008	21	K002008
01023-70520	K0210-002012	21	K002012
01023-70525	K0210-002008	19	K002008
01023-70614	K1110-001008	2	K009008
01023-70614	K1110-001012	2	K009012
01050-31230	AEH10-001001	11	F001001
01093-51200	F4400-001001	48	F003001
01093-51640	F4400-001007	3	F003007
01124-52460	T5110-001001	5	T001001
01140-81235	T5130-001001	34	T008001
01225-70412	K0210-002002	15	K002002
01225-70616	K0210-002001	27	K002001
01225-70616	K0210-002001	40	K002001
01225-70616	K0210-002008	27	K002008
01225-70616	K0210-002009	34	K002009
01225-70616	K0210-002012	27	K002012
01225-70616	K0210-002013	32	K002013
01225-70616	K0210-002016	40	K002016
01225-70616	K1110-001016	3	K009016
01225-70620	K0210-002001	10	K002001
01225-70620	K0210-002006	26	K002006
01225-70620	K0210-002008	5	K002008
01225-70620	K0210-002009	7	K002009
01225-70620	K0210-002012	5	K002012
01225-70620	K0210-002013	7	K002013
01225-70620	K0210-002016	18	K002016
01225-70620	K0810-002001	6	K008001
01240-00616	K0210-002002	21	K002002
01240-01020	K0210-002015	3	K002015
01245-00620	K0210-002008	16	K002008
01245-00620	K0210-002012	16	K002012
01252-41035	T5130-001001	39	T008001
01252-60510	F4320-001010	3	F002010

PARTS Nº	FIG. Nº	INDEX	PAGE
01252-60510	F4320-001010	9	F002010
01252-60510	F4320-001010	15	F002010
01252-60610	H0120-001002	9	H002002
01252-60610	H0120-001002	14	H002002
01252-60610	H0120-002002	9	H003002
01252-60610	H0120-002002	14	H003002
01252-60616	C0110-001005	7	C001005
01252-60616	C0110-001005	28	C001005
01252-60620	H0120-001002	28	H002002
01252-60620	H0120-002002	28	H003002
01252-60630	H0210-001004	6	H004004
01252-60640	H0120-001002	13	H002002
01252-60640	H0120-002002	13	H003002
01252-60645	H0210-001004	7	H004004
01252-60830	H0120-001001	20	H002001
01252-60830	H0120-002001	20	H003001
01252-60835	C0110-001005	19	C001005
01252-60845	C0110-001005	47	C001005
01252-61035	H0210-001007	17	H004007
01252-70516	H0110-001001	16	H001001
01252-70650	F4320-001010	21	F002010
01252-70820	K0110-001001	23	K001001
01252-71265	H0210-001007	13	H004007
01253-61425	H0210-001006	14	H004006
01310-20812	K1110-001004	2	K009004
01310-20816	K1110-001003	8	K009003
01370-00512	K1110-001022	5	K009022
01370-40412	K0210-002016	32	K002016
01434-10616	K0210-002016	42	K002016
01435-00608	K1110-001012	32	K009012
01435-00608	K1110-001026	10	K009026
01435-00812	A6010-002001	4	F003001
01435-00812	A6010-002001	4	B008001
01435-00812	K1110-001006	31	K009006
01435-00812	M4240-001001	9	M004001
01435-00816	A6810-001001	2	F007001
01435-00816	A6810-001001	4	F007001
01435-00816	A6810-001001	2	B011001
01435-00816	A6810-001001	4	B011001
01435-00816	K1110-001004	4	K009004
01435-00820	A1610-001001	26	A001001
01435-00820	A1570-001001	4	A015001
01435-00820	A1570-001001	12	A015001
01435-00820	A1570-001001	20	A015001
01435-00820	A1570-001001	4	B002001
01435-00820	A1570-001001	12	B002001
01435-00820	A1570-001001	20	B002001
01435-00820	A1610-001001	26	B003001
01435-00825	A1570-001001	14	A015001
01435-00825	A1570-001001	22	A015001
01435-00825	APP10-001001	9	G001001
01435-00825	A1570-001001	14	B002001
01435-00825	A1570-001001	22	B002001
01435-00830	A1610-001001	9	A001001
01435-00830	A1610-001001	9	B003001
01435-00845	A1610-001001	10	A001001
01435-00845	A1610-001001	30	A001001
01435-00845	AOB10-001001	9	B019001
01435-00845	A1610-001001	10	B003001
01435-00845	A1610-001001	30	B003001
01435-00850	A1610-001001	27	A001001
01435-00850	A1610-001001	27	B003001
01435-01016	A6810-001001	6	F007001
01435-01016	A6810-001001	8	F007001
01435-01016	A6810-001001	6	B011001
01435-01016	A6810-001001	8	B011001
01435-01020	A1570-001001	2	A015001
01435-01020	A1570-001001	10	A015001
01435-01020	A1570-001001	2	B002001
01435-01020	A1570-001001	10	B002001
01435-01025	A1610-001001	7	A001001
01435-01025	A1610-001001	32	A001001
01435-01025	A1610-001001	7	B003001
01435-01025	A1610-001001	32	B003001
01435-01030	A1610-001001	16	A001001
01435-01030	A1610-001001	24	A001001
01435-01030	A1310-001001	7	A008001
01435-01030	A1310-001001	7	B001001
01435-01030	A1610-001001	16	B003001
01435-01030	A1610-001001	24	B003001
01435-01030	E0200-001001	21	E003001
01435-01030	M4100-002002	33	M001002
01435-01035	A1610-001001	3	A001001
01435-01035	A1610-001001	19	A001001
01435-01035	A1610-001001	23	A001001
01435-01035	A1610-001001	3	B003001
01435-01035	A1610-001001	19	B003001
01435-01035	A1610-001001	23	B003001
01435-01050	A1610-001001	4	A001001
01435-01050	A1610-001001	4	B003001
01435-01055	H5200-004012	21	H008012
01435-01055	H5200-004012	27	H008012
01435-01065	H5200-004012	9	H008012
01435-01065	H5200-004012	15	H008012
01435-01075	A1610-001001	13	A001001
01435-01075	A1610-001001	13	B003001
01508-40805	E0200-001001	36	E003001
01508-40805	K1110-001002	11	K009002
01530-04812	F4320-001008	10	F002008
01530-04812	F4320-001008	17	F002008
01580-02722	J4120-001001	7	J002001
01580-10504	E0200-001001	34	E003001
01580-10605	E0120-001004	6	E002004
01580-10605	K0210-002001	45	K002001
01580-10605	K0210-002008	11	K002008
01580-10605	K0210-002008	33	K002008
01580-10605	K0210-002012	11	K002012
01580-10605	K0210-002012	33	K002012
01580-10806	E0200-001001	39	E003001
01580-10806	H0120-001011	24	H002011
01580-10806	H0120-002011	24	H003011
01580-10806	K0210-002008	32	K002008
01580-10806	K0210-002012	32	K002012
01580-10806	K1110-001002	13	K009002
01580-10806	K1110-001003	9	K009003
01580-10806	K1110-001004	14	K009004
01580-10806	K1110-001004	16	K009004
01580-11008	E0120-001001	20	E002001
01580-11008	H5120-002002	17	H007002
01580-11008	K0210-002009	14	K002009
01580-11008	K0210-002013	14	K002013
01580-11008	K0710-001001	29	K006001
01580-11008	K0710-001001	34	K006001
01580-11008	K1110-001002	22	K009002
01580-11008	K1110-001013	16	K009013
01580-11008	K4460-001005	4	K010005
01580-11008	K4460-001005	8	K010005
01580-11008	M4100-002002	19	M001002
01580-11008	M4100-002004	20	M001004
01580-11008	M4310-001001	9	M005001
01580-11008	M4310-001001	20	M005001
01580-11210	AEH10-001001	8	F001001
01580-11210	H5120-002001	12	H007001
01580-11210	K0710-001001	25	K006001
01580-12016	T5110-001001	21	T001001
01580-12016	T5110-001001	25	T001001
01580-12016	T5140-001001	10	T009001
01580-12016	T5155-001001	10	T012001
01580-12016	T5155-001001	17	T012001
01580-12419	M4510-001001	5	M006001
01580-12419	T5110-001001	6	T001001
01580-12419	T5110-001001	24	T001001
01580-12419	T5115-001001	6	T002001
01580-12419	V0300-001001	18	V001001
01580-13629	T5123-001001	32	T005001
01580-60403	K0210-002004	5	K002004
01580-60403	K0210-002004	13	K002004
01580-60403	K1110-001027	27	K009027
01582-11008	C0110-001005	30	C001005
01582-11008	K1110-001003	26	K009003

PARTS Nº	FIG. Nº	INDEX	PAGE
01582-11210	A6010-002001	5	F003001
01582-11210	A6020-001001	5	F004001
01582-11210	A6010-002001	5	B008001
01582-11210	A6020-001001	5	B009001
01582-11210	H0210-001002	16	H004002
01582-11210	K1110-001019	11	K009019
01582-11210	T5130-001001	35	T008001
01583-11610	F4500-001013	37	F004013
01583-11610	F4500-001014	37	F004014
01583-12012	C0110-001007	7	C001007
01583-13923	F4400-001003	5	F003003
01584-00605	AOP10-001001	7	B010001
01584-00605	AWR00-002001	9	F008001
01584-00806	A1570-001001	18	A015001
01584-00806	A1570-001001	18	B002001
01584-01008	A1610-001001	5	A001001
01584-01008	A1610-001001	5	B003001
01590-14548	T5123-001001	26	T005001
01590-31215	K1110-001003	11	K009003
01590-34548	T5110-001001	11	T001001
01592-32427	F4400-001001	5	F003001
01593-31210	F4400-001001	49	F003001
01593-31613	F4400-001007	4	F003007
01593-32414	F4400-001001	6	F003001
01593-33018	F4400-001001	28	F003001
01593-33018	F4400-001001	41	F003001
01595-01210	K1110-001019	13	K009019
01596-00606	F4400-001008	5	F003008
01597-01009	A1310-001001	5	A008001
01597-01009	A1310-001001	5	B001001
01597-01009	B0200-001001	6	B015001
01597-01009	C0110-001007	28	C001007
01597-01009	F4320-001001	19	F002001
01597-01009	F4700-001001	52	F005001
01597-01009	K0710-001001	6	K006001
01601-20513	H0110-001001	17	H001001
01602-21030	K1110-001007	5	K009007
01640-20408	K1110-001017	7	K009017
01640-20508	E0200-001001	30	E003001
01640-20508	E0200-001001	33	E003001
01640-20508	H0120-001011	16	H002011
01640-20508	H0120-002011	16	H003011
01640-20508	K0210-002009	25	K002009
01640-20508	K0210-002013	24	K002013
01640-20508	K1110-001002	8	K009002
01640-20508	K1110-001004	25	K009004
01640-20508	K1110-001022	4	K009022
01640-20610	F4400-001008	6	F003008
01640-21223	K1110-001006	29	K009006
01640-21323	A6010-002001	6	F003001
01640-21323	A6010-002001	6	B008001
01640-21626	H0120-002011	25	H003011
01640-21626	K0210-002017	5	K002017
01641-21223	AEH10-001001	5	F001001
01641-21223	A6020-001001	4	F004001
01641-21223	A6020-001001	4	B009001
01643-30623	A9999-501001	10	B012001
01643-30623	C0110-001009	44	C001009
01643-30623	C0110-001009	48	C001009
01643-30623	E0120-001002	16	E002002
01643-30623	E0120-001002	19	E002002
01643-30623	E0120-001004	5	E002004
01643-30623	F4700-001001	7	F005001
01643-30623	K0210-002001	8	K002001
01643-30623	K0210-002001	14	K002001
01643-30623	K0210-002001	31	K002001
01643-30623	K0210-002001	44	K002001
01643-30623	K0210-002003	14	K002003
01643-30623	K0210-002006	3	K002006
01643-30623	K0210-002006	5	K002006
01643-30623	K0210-002006	10	K002006
01643-30623	K0210-002016	3	K002016
01643-30623	K0210-002016	5	K002016
01643-30623	K0210-002016	9	K002016
01643-30623	K0210-002016	14	K002016
01643-30623	K0210-002016	23	K002016
01643-30623	K0210-002017	18	K002017
01643-30623	K0350-001001	8	K005001
01643-30623	K0350-001001	10	K005001
01643-30623	K0710-001002	25	K006002
01643-30623	K1110-001005	11	K009005
01643-30623	K1110-001010	10	K009010
01643-30623	K1110-001012	28	K009012
01643-30623	K1110-001012	42	K009012
01643-30623	K1110-001014	4	K009014
01643-30623	K1110-001015	2	K009015
01643-30623	K1110-001016	11	K009016
01643-30623	K1110-001016	14	K009016
01643-30623	K1110-001019	16	K009019
01643-30623	K1110-001023	3	K009023
01643-30623	K1110-001023	7	K009023
01643-30623	K1110-001023	35	K009023
01643-30623	K1110-001024	11	K009024
01643-30623	K1110-001028	4	K009028
01643-30623	K1110-001028	18	K009028
01643-30623	K1110-001029	11	K009029
01643-30623	M4100-002003	25	M001003
01643-30623	M4240-001001	13	M004001
01643-30823	AFF20-001001	1	D001001
01643-30823	C0110-001001	40	C001001
01643-30823	C0110-001008	4	C001008
01643-30823	C0120-001001	23	C002001
01643-30823	E0120-001002	3	E002002
01643-30823	E0120-001002	5	E002002
01643-30823	E0120-001002	7	E002002
01643-30823	E0120-001002	21	E002002
01643-30823	E0200-001001	28	E003001
01643-30823	E0202-001002	5	E004002
01643-30823	E0202-001002	31	E004002
01643-30823	E0410-001001	3	E007001
01643-30823	F4500-001006	9	F004006
01643-30823	F4700-001001	35	F005001
01643-30823	H0120-001011	4	H002011
01643-30823	H0120-001011	19	H002011
01643-30823	H0120-002011	4	H003011
01643-30823	H0120-002011	19	H003011
01643-30823	H5110-001002	2	H006002
01643-30823	H5200-004004	2	H008004
01643-30823	H5210-001003	52	H009003
01643-30823	K0210-002003	18	K002003
01643-30823	K0210-002006	21	K002006
01643-30823	K0210-002009	3	K002009
01643-30823	K0210-002013	3	K002013
01643-30823	K0210-002017	9	K002017
01643-30823	K0350-001001	6	K005001
01643-30823	K0350-001001	13	K005001
01643-30823	K0710-001001	15	K006001
01643-30823	K0710-001001	17	K006001
01643-30823	K0710-001002	18	K006002
01643-30823	K1110-001001	7	K009001
01643-30823	K1110-001002	19	K009002
01643-30823	K1110-001006	9	K009006
01643-30823	K1110-001006	12	K009006
01643-30823	K1110-001006	15	K009006
01643-30823	K1110-001006	20	K009006
01643-30823	K1110-001012	25	K009012
01643-30823	K1110-001012	35	K009012
01643-30823	K1110-001012	38	K009012
01643-30823	K1110-001013	10	K009013
01643-30823	K1110-001013	13	K009013
01643-30823	K1110-001018	2	K009018
01643-30823	K1110-001018	5	K009018
01643-30823	K1110-001020	4	K009020
01643-30823	K1110-001022	2	K009022
01643-30823	K1110-001022	14	K009022
01643-30823	K1110-001024	14	K009024
01643-30823	K1110-001025	5	K009025
01643-30823	K1110-001025	9	K009025
01643-30823	K1110-001026	3	K009026
01643-30823	K1110-001026	8	K009026

PARTS Nº	FIG. Nº	INDEX	PAGE
01643-30823	K1110-001027	35	K009027
01643-30823	K1110-001028	22	K009028
01643-30823	K1110-001031	3	K009031
01643-30823	K1110-001031	6	K009031
01643-30823	K1110-001031	15	K009031
01643-30823	M4100-002005	19	M001005
01643-31032	A1310-001001	6	A008001
01643-31032	A1570-001001	8	A015001
01643-31032	A1310-001001	6	B001001
01643-31032	A1570-001001	8	B002001
01643-31032	B0100-001001	14	B013001
01643-31032	B0100-001001	16	B013001
01643-31032	B0100-001001	21	B013001
01643-31032	B0100-001001	27	B013001
01643-31032	B0110-001001	3	B014001
01643-31032	B0110-001001	6	B014001
01643-31032	B0200-001001	5	B015001
01643-31032	B0200-001001	10	B015001
01643-31032	C0110-001001	13	C001001
01643-31032	C0110-001001	31	C001001
01643-31032	C0110-001001	33	C001001
01643-31032	C0110-001001	42	C001001
01643-31032	C0110-001001	44	C001001
01643-31032	C0110-001001	46	C001001
01643-31032	C0110-001002	4	C001002
01643-31032	C0110-001002	7	C001002
01643-31032	C0110-001002	9	C001002
01643-31032	C0110-001003	3	C001003
01643-31032	C0110-001007	5	C001007
01643-31032	C0110-001007	10	C001007
01643-31032	C0110-001007	13	C001007
01643-31032	C0110-001007	17	C001007
01643-31032	C0110-001007	19	C001007
01643-31032	C0110-001007	27	C001007
01643-31032	C0110-001008	6	C001008
01643-31032	C0110-001009	4	C001009
01643-31032	C0110-001009	7	C001009
01643-31032	C0110-001009	12	C001009
01643-31032	C0110-001009	30	C001009
01643-31032	C0110-001009	32	C001009
01643-31032	C0110-001009	35	C001009
01643-31032	C0110-001009	40	C001009
01643-31032	C0120-001001	9	C002001
01643-31032	C0120-001001	15	C002001
01643-31032	C0120-001001	20	C002001
01643-31032	C0120-001001	28	C002001
01643-31032	C0120-001001	31	C002001
01643-31032	C0120-001001	36	C002001
01643-31032	D0100-001001	5	D001001
01643-31032	D0100-001001	11	D001001
01643-31032	D0100-001001	17	D001001
01643-31032	D0100-001001	25	D001001
01643-31032	D0200-001001	11	D002001
01643-31032	D0200-001001	21	D002001
01643-31032	D0200-001001	23	D002001
01643-31032	D0200-001001	26	D002001
01643-31032	D0200-001003	2	D002003
01643-31032	D0200-001003	7	D002003
01643-31032	D0200-001003	10	D002003
01643-31032	D0200-001003	15	D002003
01643-31032	D0200-001003	18	D002003
01643-31032	D0200-001003	20	D002003
01643-31032	E0120-001001	3	E002001
01643-31032	E0120-001001	9	E002001
01643-31032	E0120-001001	12	E002001
01643-31032	E0120-001001	15	E002001
01643-31032	E0120-001001	21	E002001
01643-31032	E0120-001002	25	E002002
01643-31032	E0120-001002	28	E002002
01643-31032	E0120-001002	32	E002002
01643-31032	E0120-001002	35	E002002
01643-31032	E0120-001003	6	E002003
01643-31032	E0120-001003	16	E002003
01643-31032	E0120-001003	24	E002003
01643-31032	E0120-001003	26	E002003
01643-31032	E0120-001003	34	E002003
01643-31032	E0120-001003	44	E002003
01643-31032	E0120-001004	8	E002004
01643-31032	E0200-001001	6	E003001
01643-31032	E0200-001001	8	E003001
01643-31032	E0200-001001	15	E003001
01643-31032	E0200-001001	19	E003001
01643-31032	E0200-001001	24	E003001
01643-31032	E0200-001001	44	E003001
01643-31032	E0200-001001	47	E003001
01643-31032	E0200-001001	50	E003001
01643-31032	E0200-001002	11	E003002
01643-31032	E0200-001002	16	E003002
01643-31032	E0200-001002	19	E003002
01643-31032	E0202-001001	5	E004001
01643-31032	E0202-001001	8	E004001
01643-31032	E0202-001001	14	E004001
01643-31032	E0202-001001	18	E004001
01643-31032	E0202-001001	21	E004001
01643-31032	E0202-001001	23	E004001
01643-31032	E0202-001001	26	E004001
01643-31032	E0202-001001	29	E004001
01643-31032	E0202-001001	32	E004001
01643-31032	E0202-001001	35	E004001
01643-31032	E0202-001001	38	E004001
01643-31032	E0202-001001	41	E004001
01643-31032	E0202-001001	44	E004001
01643-31032	E0202-001001	47	E004001
01643-31032	E0202-001001	50	E004001
01643-31032	E0202-001001	53	E004001
01643-31032	E0202-001001	57	E004001
01643-31032	E0202-001001	60	E004001
01643-31032	E0202-001002	10	E004002
01643-31032	E0202-001002	13	E004002
01643-31032	E0202-001002	16	E004002
01643-31032	E0202-001002	24	E004002
01643-31032	E0202-001002	29	E004002
01643-31032	E0202-001002	34	E004002
01643-31032	E0202-001002	38	E004002
01643-31032	E0202-001002	40	E004002
01643-31032	E0202-001002	45	E004002
01643-31032	E0202-001002	47	E004002
01643-31032	E0202-001002	50	E004002
01643-31032	E0202-001002	52	E004002
01643-31032	E0202-001002	55	E004002
01643-31032	E0202-001002	58	E004002
01643-31032	E0202-001002	60	E004002
01643-31032	E0202-001002	63	E004002
01643-31032	E0202-001003	5	E004003
01643-31032	E0202-001003	8	E004003
01643-31032	E0202-001003	11	E004003
01643-31032	E0202-001003	14	E004003
01643-31032	E0202-001003	17	E004003
01643-31032	E0202-001003	20	E004003
01643-31032	E0202-001003	26	E004003
01643-31032	E0202-001003	29	E004003
01643-31032	E0202-001003	32	E004003
01643-31032	E0202-001004	3	E004004
01643-31032	E0310-001001	9	E006001
01643-31032	F4320-001001	11	F002001
01643-31032	F4320-001001	18	F002001
01643-31032	F4320-001002	14	F002002
01643-31032	F4320-001009	27	F002009
01643-31032	F4320-001009	37	F002009
01643-31032	F4320-001009	43	F002009
01643-31032	F4320-001009	45	F002009
01643-31032	F4320-001010	27	F002010
01643-31032	F4320-001010	29	F002010
01643-31032	F4320-001010	35	F002010
01643-31032	F4320-001010	37	F002010
01643-31032	F4320-001011	16	F002011
01643-31032	F4320-001011	32	F002011
01643-31032	F4320-001012	4	F002012
01643-31032	F4320-001012	23	F002012
01643-31032	F4320-001012	25	F002012

PARTS Nº	FIG. Nº	INDEX	PAGE
01643-31032	F4320-001014	4	F002014
01643-31032	F4320-001015	10	F002015
01643-31032	F4320-001015	14	F002015
01643-31032	F4320-001016	3	F002016
01643-31032	F4400-001002	23	F003002
01643-31032	F4500-001001	20	F004001
01643-31032	F4500-001006	29	F004006
01643-31032	F4500-001006	36	F004006
01643-31032	F4500-001009	3	F004009
01643-31032	F4500-001009	7	F004009
01643-31032	F4500-001009	9	F004009
01643-31032	F4500-001013	16	F004013
01643-31032	F4500-001014	16	F004014
01643-31032	F4700-001001	4	F005001
01643-31032	F4700-001001	10	F005001
01643-31032	F4700-001001	12	F005001
01643-31032	F4700-001001	15	F005001
01643-31032	F4700-001001	18	F005001
01643-31032	F4700-001001	49	F005001
01643-31032	F4700-001001	51	F005001
01643-31032	H0110-001002	6	H001002
01643-31032	H0110-001002	11	H001002
01643-31032	H0120-001011	2	H002011
01643-31032	H0120-002011	2	H003011
01643-31032	H0210-001010	2	H004010
01643-31032	H4410-001001	5	H005001
01643-31032	H4410-001001	8	H005001
01643-31032	H4410-001001	15	H005001
01643-31032	H4410-001001	28	H005001
01643-31032	H4410-001001	33	H005001
01643-31032	H5120-002002	10	H007002
01643-31032	H5120-002002	13	H007002
01643-31032	H5120-002002	16	H007002
01643-31032	H5120-002002	21	H007002
01643-31032	H5200-004001	13	H008001
01643-31032	H5200-004002	3	H008002
01643-31032	H5200-004002	5	H008002
01643-31032	H5200-004004	19	H008004
01643-31032	H5200-004004	31	H008004
01643-31032	H5200-004004	39	H008004
01643-31032	H5200-004005	3	H008005
01643-31032	H5200-004005	21	H008005
01643-31032	H5200-004005	28	H008005
01643-31032	H5200-004005	37	H008005
01643-31032	H5200-004005	48	H008005
01643-31032	H5200-004005	51	H008005
01643-31032	H5200-004006	4	H008006
01643-31032	H5200-004006	30	H008006
01643-31032	H5200-004006	37	H008006
01643-31032	H5200-004006	41	H008006
01643-31032	H5200-004007	3	H008007
01643-31032	H5200-004007	18	H008007
01643-31032	H5200-004007	27	H008007
01643-31032	H5200-004007	30	H008007
01643-31032	H5200-004007	39	H008007
01643-31032	H5200-004007	42	H008007
01643-31032	H5200-004009	5	H008009
01643-31032	H5200-004011	5	H008011
01643-31032	H5200-004012	3	H008012
01643-31032	H5200-004012	6	H008012
01643-31032	H5200-004012	12	H008012
01643-31032	H5200-004012	18	H008012
01643-31032	H5200-004012	24	H008012
01643-31032	H5200-004012	30	H008012
01643-31032	H5200-004012	34	H008012
01643-31032	H5200-004012	37	H008012
01643-31032	H5200-004013	6	H008013
01643-31032	H5200-004014	10	H008014
01643-31032	H5200-004014	13	H008014
01643-31032	H5200-004014	21	H008014
01643-31032	H5200-004014	23	H008014
01643-31032	H5200-004014	28	H008014
01643-31032	H5200-004014	31	H008014
01643-31032	H5200-004014	33	H008014
01643-31032	H5200-004014	36	H008014
01643-31032	H5200-004014	42	H008014
01643-31032	H5200-004014	44	H008014
01643-31032	H5200-004015	8	H008015
01643-31032	H5200-004016	9	H008016
01643-31032	H5200-004017	10	H008017
01643-31032	H5200-004017	13	H008017
01643-31032	H5200-004017	19	H008017
01643-31032	H5200-004017	24	H008017
01643-31032	H5200-004018	9	H008018
01643-31032	H5200-004018	13	H008018
01643-31032	H5200-004018	20	H008018
01643-31032	H5200-004019	3	H008019
01643-31032	H5200-004019	14	H008019
01643-31032	H5200-004019	20	H008019
01643-31032	H5200-004019	23	H008019
01643-31032	H5200-004020	5	H008020
01643-31032	H5200-004020	8	H008020
01643-31032	H5210-001001	16	H009001
01643-31032	H5210-001001	19	H009001
01643-31032	H5210-001001	21	H009001
01643-31032	H5210-001001	25	H009001
01643-31032	H5210-001001	27	H009001
01643-31032	H5210-001003	17	H009003
01643-31032	H5210-001003	20	H009003
01643-31032	H5210-001003	31	H009003
01643-31032	H5210-001003	37	H009003
01643-31032	H5210-001003	42	H009003
01643-31032	H5210-001003	46	H009003
01643-31032	H5210-001004	35	H009004
01643-31032	H5210-001004	38	H009004
01643-31032	H5210-001004	42	H009004
01643-31032	H5210-001004	45	H009004
01643-31032	H5210-001005	6	H009005
01643-31032	H5210-001005	9	H009005
01643-31032	H5210-001005	16	H009005
01643-31032	H6290-001001	4	H010001
01643-31032	H6290-001001	13	H010001
01643-31032	H6290-001001	15	H010001
01643-31032	H6290-001001	18	H010001
01643-31032	H6290-001001	21	H010001
01643-31032	H6290-001001	27	H010001
01643-31032	K0210-002002	19	K002002
01643-31032	K0210-002003	11	K002003
01643-31032	K0210-002003	25	K002003
01643-31032	K0210-002006	16	K002006
01643-31032	K0210-002017	12	K002017
01643-31032	K0210-002017	15	K002017
01643-31032	K0210-002017	29	K002017
01643-31032	K0210-002018	17	K002018
01643-31032	K0710-001001	4	K006001
01643-31032	K0710-001001	7	K006001
01643-31032	K0710-001001	11	K006001
01643-31032	K0710-001001	27	K006001
01643-31032	K0710-001001	28	K006001
01643-31032	K0710-001001	32	K006001
01643-31032	K0710-001001	33	K006001
01643-31032	K0710-001002	6	K006002
01643-31032	K0710-001002	12	K006002
01643-31032	K0710-001002	14	K006002
01643-31032	K0710-001002	30	K006002
01643-31032	K0710-001002	34	K006002
01643-31032	K0710-001002	36	K006002
01643-31032	K0710-001002	38	K006002
01643-31032	K0713-001001	10	K007001
01643-31032	K0713-001001	13	K007001
01643-31032	K0713-001001	16	K007001
01643-31032	K0713-001001	23	K007001
01643-31032	K0713-001001	26	K007001
01643-31032	K0713-001001	29	K007001
01643-31032	K0713-001001	32	K007001
01643-31032	K1110-001002	21	K009002
01643-31032	K1110-001002	23	K009002
01643-31032	K1110-001002	27	K009002
01643-31032	K1110-001003	15	K009003
01643-31032	K1110-001003	24	K009003

PARTS Nº	FIG. Nº	INDEX	PAGE
01643-31032	K1110-001006	4	K009006
01643-31032	K1110-001006	6	K009006
01643-31032	K1110-001006	23	K009006
01643-31032	K1110-001006	27	K009006
01643-31032	K1110-001006	35	K009006
01643-31032	K1110-001010	3	K009010
01643-31032	K1110-001010	6	K009010
01643-31032	K1110-001010	12	K009010
01643-31032	K1110-001010	14	K009010
01643-31032	K1110-001013	7	K009013
01643-31032	K1110-001013	15	K009013
01643-31032	K1110-001013	18	K009013
01643-31032	K1110-001016	8	K009016
01643-31032	K1110-001019	3	K009019
01643-31032	K1110-001020	13	K009020
01643-31032	K1110-001020	16	K009020
01643-31032	K1110-001022	11	K009022
01643-31032	K1110-001022	18	K009022
01643-31032	K1110-001023	10	K009023
01643-31032	K1110-001023	13	K009023
01643-31032	K1110-001023	31	K009023
01643-31032	K1110-001024	3	K009024
01643-31032	K1110-001024	5	K009024
01643-31032	K1110-001025	3	K009025
01643-31032	K1110-001027	3	K009027
01643-31032	K1110-001027	6	K009027
01643-31032	K1110-001027	8	K009027
01643-31032	K1110-001027	11	K009027
01643-31032	K1110-001027	14	K009027
01643-31032	K1110-001027	16	K009027
01643-31032	K1110-001027	19	K009027
01643-31032	K1110-001027	22	K009027
01643-31032	K1110-001027	25	K009027
01643-31032	K1110-001027	30	K009027
01643-31032	K1110-001027	38	K009027
01643-31032	K1110-001027	41	K009027
01643-31032	K1110-001027	44	K009027
01643-31032	K1110-001027	46	K009027
01643-31032	K1110-001027	49	K009027
01643-31032	K1110-001027	53	K009027
01643-31032	K1110-001028	10	K009028
01643-31032	K1110-001028	13	K009028
01643-31032	K1110-001030	15	K009030
01643-31032	K1110-001032	3	K009032
01643-31032	K1110-001032	7	K009032
01643-31032	K1110-001032	10	K009032
01643-31032	K1110-001032	12	K009032
01643-31032	K1110-001032	15	K009032
01643-31032	K4460-001002	19	K010002
01643-31032	K4460-001002	21	K010002
01643-31032	K4460-001002	23	K010002
01643-31032	K4460-001005	2	K010005
01643-31032	K4460-001005	3	K010005
01643-31032	K4460-001005	6	K010005
01643-31032	K4460-001005	7	K010005
01643-31032	K4460-001005	10	K010005
01643-31032	K4460-001005	12	K010005
01643-31032	K4460-001005	14	K010005
01643-31032	K4460-001005	16	K010005
01643-31032	K4470-001001	5	K011001
01643-31032	K4470-001001	10	K011001
01643-31032	K4470-001002	6	K011002
01643-31032	K4470-001002	10	K011002
01643-31032	K4470-001002	27	K011002
01643-31032	K4470-001002	47	K011002
01643-31032	K4470-001002	50	K011002
01643-31032	M4100-002001	20	M001001
01643-31032	M4100-002002	3	M001002
01643-31032	M4100-002002	22	M001002
01643-31032	M4100-002002	32	M001002
01643-31032	M4100-002002	37	M001002
01643-31032	M4100-002002	43	M001002
01643-31032	M4100-002003	22	M001003
01643-31032	M4100-002003	30	M001003
01643-31032	M4100-002003	33	M001003
01643-31032	M4100-002003	37	M001003
01643-31032	M4100-002004	3	M001004
01643-31032	M4100-002004	10	M001004
01643-31032	M4100-002004	15	M001004
01643-31032	M4100-002004	19	M001004
01643-31032	M4100-002005	10	M001005
01643-31032	M4100-002005	13	M001005
01643-31032	M4100-002005	16	M001005
01643-31032	M4100-002005	22	M001005
01643-31032	M4100-002005	25	M001005
01643-31032	M4100-002008	8	M001008
01643-31032	M4100-002008	11	M001008
01643-31032	M4100-002008	36	M001008
01643-31032	M4100-002009	6	M001009
01643-31032	M4100-002009	9	M001009
01643-31032	M4230-001002	22	M002002
01643-31032	M4230-001002	27	M002002
01643-31032	M4240-001001	7	M004001
01643-31032	M4310-001001	8	M005001
01643-31032	M4310-001001	11	M005001
01643-31032	M4310-001001	19	M005001
01643-31032	M4310-001001	22	M005001
01643-31032	T5123-001001	8	T005001
01643-31032	T5123-001001	30	T005001
01643-31032	T5123-001001	47	T005001
01643-31032	T5123-001001	50	T005001
01643-31032	T5123-001001	53	T005001
01643-31032	T5130-001001	3	T008001
01643-31032	T5130-001001	30	T008001
01643-31032	T5130-001001	40	T008001
01643-31032	T5140-001001	26	T009001
01643-31032	T5151-001001	24	T011001
01643-31232	B0100-001001	4	B013001
01643-31232	B0100-001001	6	B013001
01643-31232	B0100-001001	30	B013001
01643-31232	C0110-001003	6	C001003
01643-31232	C0110-001007	2	C001007
01643-31232	C0110-001009	20	C001009
01643-31232	E0120-001001	6	E002001
01643-31232	E0120-001003	20	E002003
01643-31232	E0120-001003	40	E002003
01643-31232	E0120-001003	46	E002003
01643-31232	E0202-001002	7	E004002
01643-31232	E0202-001002	20	E004002
01643-31232	E0310-001001	4	E006001
01643-31232	F4200-001001	5	F001001
01643-31232	F4320-001001	8	F002001
01643-31232	F4320-001002	21	F002002
01643-31232	F4320-001002	26	F002002
01643-31232	F4320-001007	8	F002007
01643-31232	F4320-001007	12	F002007
01643-31232	F4320-001008	5	F002008
01643-31232	F4320-001011	5	F002011
01643-31232	F4400-001001	15	F003001
01643-31232	F4400-001001	38	F003001
01643-31232	F4400-001001	50	F003001
01643-31232	F4500-001001	5	F004001
01643-31232	F4500-001002	14	F004002
01643-31232	F4500-001003	4	F004003
01643-31232	F4500-001003	17	F004003
01643-31232	F4500-001003	31	F004003
01643-31232	F4500-001003	35	F004003
01643-31232	F4500-001005	8	F004005
01643-31232	F4500-001007	3	F004007
01643-31232	F4500-001008	6	F004008
01643-31232	F4500-001008	13	F004008
01643-31232	F4500-001009	16	F004009
01643-31232	F4500-001013	5	F004013
01643-31232	F4500-001014	5	F004014
01643-31232	F4700-001001	39	F005001
01643-31232	F4700-001001	45	F005001
01643-31232	H0110-001001	6	H001001
01643-31232	H0110-001001	20	H001001
01643-31232	H0110-001002	2	H001002

PARTS Nº	FIG. Nº	INDEX	PAGE
01643-31232	H0120-001011	7	H002011
01643-31232	H0120-002011	7	H003011
01643-31232	H0210-001002	15	H004002
01643-31232	H0210-001008	3	H004008
01643-31232	H5120-002001	7	H007001
01643-31232	H5120-002001	11	H007001
01643-31232	H5120-002001	15	H007001
01643-31232	H5120-002002	25	H007002
01643-31232	H5200-004002	12	H008002
01643-31232	H5200-004009	2	H008009
01643-31232	H5200-004011	2	H008011
01643-31232	H5200-004014	5	H008014
01643-31232	H5200-004014	7	H008014
01643-31232	H5200-004020	14	H008020
01643-31232	H5200-004020	16	H008020
01643-31232	H5210-001001	31	H009001
01643-31232	H5210-001003	14	H009003
01643-31232	H5210-001003	24	H009003
01643-31232	H5210-001004	20	H009004
01643-31232	H5210-001004	24	H009004
01643-31232	H5210-001004	49	H009004
01643-31232	H5210-001004	53	H009004
01643-31232	H5210-001004	57	H009004
01643-31232	H5210-001005	20	H009005
01643-31232	H5210-001005	24	H009005
01643-31232	J4120-001001	11	J002001
01643-31232	J4120-001001	14	J002001
01643-31232	J4130-001001	5	J003001
01643-31232	J4130-001001	15	J003001
01643-31232	K0110-001001	25	K001001
01643-31232	K0110-001001	29	K001001
01643-31232	K0710-001001	24	K006001
01643-31232	K1110-001019	9	K009019
01643-31232	K1110-001019	12	K009019
01643-31232	K1110-001030	7	K009030
01643-31232	K4460-001002	4	K010002
01643-31232	K4460-001002	6	K010002
01643-31232	K4470-001002	31	K011002
01643-31232	K4470-001002	40	K011002
01643-31232	M4100-002001	13	M001001
01643-31232	M4100-002002	17	M001002
01643-31232	M4231-001001	4	M003001
01643-31232	M4231-001001	6	M003001
01643-31232	M4310-001001	24	M005001
01643-31232	T5115-001001	13	T002001
01643-31232	T5120-004001	16	T003001
01643-31232	T5120-003001	16	T004001
01643-31232	T5123-001001	10	T005001
01643-31232	T5123-001001	15	T005001
01643-31232	T5123-001001	37	T005001

PARTS Nº	FIG. Nº	INDEX	PAGE
01643-31232	T5125-001002	11	T006002
01643-31232	T5130-001001	16	T008001
01643-31232	T5130-001001	36	T008001
01643-31445	F4500-001003	37	F004003
01643-31445	H0210-001001	14	H004001
01643-31645	F4400-001001	47	F003001
01643-31645	F4400-001007	5	F003007
01643-31645	F4500-001004	12	F004004
01643-31645	F4500-001004	19	F004004
01643-31645	F4500-001007	6	F004007
01643-31645	F4500-001011	2	F004011
01643-31645	F4500-001011	4	F004011
01643-31645	F4500-001013	21	F004013
01643-31645	F4500-001014	21	F004014
01643-31645	F4810-001001	4	F006001
01643-31645	H0210-001005	3	H004005
01643-31645	J4130-001001	17	J003001
01643-31645	J4130-001001	22	J003001
01643-31645	M4100-002001	3	M001001
01643-31645	T5115-001001	18	T002001
01643-31645	T5115-001001	27	T002001
01643-31645	T5115-001001	35	T002001
01643-31645	T5120-004001	6	T003001
01643-31645	T5120-004001	9	T003001
01643-31645	T5120-004001	12	T003001
01643-31645	T5120-003001	6	T004001
01643-31645	T5120-003001	9	T004001
01643-31645	T5120-003001	12	T004001
01643-31645	T5123-001001	5	T005001
01643-32060	F4400-001001	23	F003001
01643-32060	T5110-001001	18	T001001
01643-32060	T5125-001002	26	T006002
01643-32060	T5140-001001	9	T009001
01643-32060	T5155-001001	9	T012001
01643-32060	T5155-001001	16	T012001
01643-32260	S0100-001004	12	S001004
01643-32460	T5110-001001	7	T001001
01643-32460	T5115-001001	5	T002001
01643-32460	T5125-001002	24	T006002
01643-32460	T5130-001002	10	T008002
01643-32780	J4120-001001	5	J002001
01643-32780	K1110-001030	10	K009030
01643-33080	F4400-001001	30	F003001
01643-50823	A1570-001001	19	A015001
01643-50823	A1570-001001	19	B002001
01643-50823	H0120-001001	17	H002001
01643-50823	H0120-002001	17	H003001
01643-51032	H0210-001007	18	H004007
01643-51032	H5200-004004	9	H008004
01643-51032	H5200-004006	27	H008006

PARTS Nº	FIG. Nº	INDEX	PAGE
01643-51232	F4200-001001	3	F001001
01643-51232	H0210-001007	14	H004007
01643-51232	H5200-004001	5	H008001
01643-51645	H0120-001011	12	H002011
01643-51645	H0120-002011	12	H003011
01643-70623	K0210-002004	8	K002004
01643-70623	K0210-002008	3	K002008
01643-70623	K0210-002008	17	K002008
01643-70623	K0210-002009	18	K002009
01643-70623	K0210-002009	30	K002009
01643-70623	K0210-002012	3	K002012
01643-70623	K0210-002012	17	K002012
01643-70623	K0210-002013	19	K002013
01643-70623	K0210-002013	29	K002013
01643-70623	M4230-001002	38	M002002
01643-70823	K0210-002003	29	K002003
01643-70823	K0210-002004	18	K002004
01643-70823	K0210-002004	22	K002004
01643-70823	K0210-002005	6	K002005
01643-70823	K0210-002005	9	K002005
01643-70823	K0210-002009	39	K002009
01643-70823	K0210-002009	41	K002009
01643-70823	K0210-002009	44	K002009
01643-70823	K0210-002013	37	K002013
01643-70823	K0210-002013	39	K002013
01643-70823	K0210-002013	42	K002013
01643-70823	K0210-002017	27	K002017
01643-70823	K0210-002018	8	K002018
01643-70823	K0215-001001	6	K003001
01643-70823	K1110-001030	21	K009030
01643-71032	E0300-001001	4	E005001
01643-71032	F4500-001009	18	F004009
01643-71032	K0210-002001	5	K002001
01643-71032	K0210-002001	20	K002001
01643-71032	K0210-002001	21	K002001
01643-71032	K0210-002001	24	K002001
01643-71032	K0210-002007	4	K002007
01643-71032	K0210-002011	4	K002011
01643-71032	K0210-002018	13	K002018
01643-71032	K0215-001001	4	K003001
01643-71032	M4100-002001	18	M001001
01643-71032	M4100-002003	3	M001003
01643-71032	M4100-002003	9	M001003
01643-71032	M4100-002003	14	M001003
01643-71032	M4100-002003	17	M001003
01643-71032	M4100-002003	39	M001003
01643-71032	M4100-002003	44	M001003
01643-71032	M4100-002004	7	M001004
01643-71032	M4230-001001	3	M002001
01643-71032	M4230-001001	6	M002001

PARTS Nº	FIG. Nº	INDEX	PAGE
01643-71032	M4230-001001	9	M002001
01643-71032	M4230-001001	12	M002001
01643-71032	M4230-001001	15	M002001
01643-71032	M4230-001001	18	M002001
01643-71032	M4230-001001	21	M002001
01643-71032	M4230-001001	24	M002001
01643-71032	M4230-001001	28	M002001
01643-71032	M4230-001001	31	M002001
01643-71032	M4230-001001	34	M002001
01643-71032	M4230-001001	37	M002001
01643-71032	M4230-001002	3	M002002
01643-71032	M4230-001002	9	M002002
01643-71032	M4230-001002	11	M002002
01643-71032	M4230-001002	14	M002002
01643-71032	M4230-001002	17	M002002
01643-71032	M4230-001002	24	M002002
01643-71032	M4230-001002	30	M002002
01643-71032	M4230-001002	33	M002002
01643-71032	M4310-001001	26	M005001
01643-71232	M4100-002006	3	M001006
01643-80823	M4230-001001	39	M002001
02010-70657	B0110-001001	2	B014001
02762-004A6	H5200-004007	35	H008007
02763-006A3	H5200-004007	22	H008007
02765-00203	H5200-004011	15	H008011
02767-00204	F4500-001001	12	F004001
02767-00404	H5200-004004	23	H008004
02781-0021D	F4500-001001	10	F004001
02781-00313	H5120-002002	1	H007002
02781-00313	H5200-004020	17	H008020
02781-00313	H5210-001002	7	H009002
02781-00313	H5210-001002	13	H009002
02781-00313	H5210-001002	16	H009002
02781-00315	H5210-001004	10	H009004
02781-00422	H5200-004006	11	H008006
02781-00422	H5200-004006	17	H008006
02781-00422	K4470-001002	16	K011002
02781-0042A	F4320-001001	12	F002001
02781-00522	H0110-001001	25	H001001
02781-00522	H5200-004006	8	H008006
02781-00522	H5200-004013	8	H008013
02781-00522	H5200-004014	14	H008014
02781-00628	H5200-004005	7	H008005
02781-00628	H5200-004007	9	H008007
02782-10210	H5200-004018	14	H008018
02782-10210	H5210-001001	3	H009001
02782-10311	D0200-001001	4	D002001
02782-10311	D0200-001001	12	D002001
02782-10315	D0200-001001	1	D002001
02782-10315	D0200-001001	27	D002001

PARTS Nº	FIG. Nº	INDEX	PAGE
02782-10315	F4400-001005	22	F003005
02782-10315	F4400-001006	22	F003006
02782-10315	F4500-001001	16	F004001
02782-10422	K4470-001001	11	K011001
02782-10422	H0110-001001	36	H001001
02782-10422	K4460-001002	9	K010002
02782-10422	K4470-001002	18	K011002
02782-10423	H4410-001001	16	H005001
02782-10423	K4470-001002	17	K011002
02782-10425	H0110-001001	39	H001001
02782-10425	H5200-004007	32	H008007
02782-10426	F4500-001009	10	F004009
02782-10628	H5200-004005	11	H008005
02782-10628	H5200-004005	15	H008005
02782-10628	H5200-004007	12	H008007
02782-10630	F4500-001006	30	F004006
02782-50315	F4500-001006	39	F004006
02782-50315	H5210-001004	5	H009004
02782-50522	H5200-004013	9	H008013
02783-10210	H5200-004009	15	H008009
02783-10210	H5200-004018	1	H008018
02783-10210	H5210-001001	11	H009001
02783-10315	H5200-004006	18	H008006
02783-10422	H4410-001001	10	H005001
02783-10422	H5200-004005	38	H008005
02783-10422	H5200-004006	14	H008006
02783-10422	K4470-001002	19	K011002
02783-10522	C0110-001007	29	C001007
02783-10522	K4470-001002	11	K011002
02896-11008	H0110-001001	30	H001001
02896-11008	H0210-001004	10	H004004
02896-11008	H0210-001005	4	H004005
02896-11008	H5200-004004	26	H008004
02896-11008	H5200-004004	34	H008004
02896-11008	H5200-004005	43	H008005
02896-11008	H5200-004009	17	H008009
02896-11008	H5200-004009	20	H008009
02896-11008	H5200-004011	8	H008011
02896-11008	H5200-004011	14	H008011
02896-11008	H5200-004015	3	H008015
02896-11008	H5200-004017	3	H008017
02896-11008	H5200-004018	3	H008018
02896-11008	H5200-004018	5	H008018
02896-11008	H5200-004018	16	H008018
02896-11008	H5200-004018	24	H008018
02896-11008	H5200-004018	27	H008018
02896-11008	H5200-004018	30	H008018
02896-11008	H5200-004018	33	H008018
02896-11008	H5210-001001	5	H009001
02896-11008	H5210-001001	8	H009001

PARTS Nº	FIG. Nº	INDEX	PAGE
02896-11008	H5210-001001	13	H009001
02896-11008	K1110-001007	16	K009007
02896-11008	K1110-001007	23	K009007
02896-11008	K4460-001002	14	K010002
02896-11009	D0200-001001	3	D002001
02896-11009	D0200-001001	6	D002001
02896-11009	D0200-001001	14	D002001
02896-11009	D0200-001001	29	D002001
02896-11009	F4400-001004	2	F003004
02896-11009	F4400-001004	23	F003004
02896-11009	F4400-001005	2	F003005
02896-11009	F4400-001005	24	F003005
02896-11009	F4400-001006	2	F003006
02896-11009	F4400-001006	24	F003006
02896-11009	F4500-001001	24	F004001
02896-11009	H4410-001001	19	H005001
02896-11009	H5120-002001	16	H007001
02896-11009	H5120-002002	3	H007002
02896-11009	H5200-004006	21	H008006
02896-11009	H5200-004011	11	H008011
02896-11009	H5200-004019	11	H008019
02896-11009	H5200-004020	9	H008020
02896-11009	H5200-004020	19	H008020
02896-11009	H5210-001002	3	H009002
02896-11009	H5210-001002	9	H009002
02896-11009	H5210-001002	12	H009002
02896-11009	H5210-001002	15	H009002
02896-11009	H5210-001002	18	H009002
02896-11009	H5210-001003	12	H009003
02896-11009	H5210-001003	26	H009003
02896-11009	H5210-001003	28	H009003
02896-11009	H5210-001004	9	H009004
02896-11009	H5210-001004	12	H009004
02896-11009	H5210-001005	4	H009005
02896-11009	T5125-001001	2	T006001
02896-11009	T5140-001001	2	T009001
02896-11009	T5140-001001	24	T009001
02896-11009	T5141-001001	2	T010001
02896-11009	T5151-001001	2	T011001
02896-11009	T5151-001001	21	T011001
02896-11009	T5155-001001	2	T012001
02896-11009	T5160-001001	2	T013001
02896-11009	KIT	K04	Y001001
02896-11009	KIT	K05	Y001001
02896-11009	KIT	K08	Y001001
02896-11009	KIT	K09	Y001001
02896-11009	KIT	K10	Y001001
02896-11009	KIT	K11	Y001001
02896-11009	KIT	K12	Y001001
02896-11009	KIT	K13	Y001001

PARTS Nº	FIG. Nº	INDEX	PAGE
02896-11009	KIT	K14	Y001001
02896-11009	KIT	K15	Y001001
02896-11012	C0110-001007	34	C001007
02896-11012	F4500-001009	12	F004009
02896-11012	H0110-001001	38	H001001
02896-11012	H0110-001001	41	H001001
02896-11012	H4410-001001	12	H005001
02896-11012	H4410-001001	18	H005001
02896-11012	H4410-001001	29	H005001
02896-11012	H5200-004004	22	H008004
02896-11012	H5200-004005	31	H008005
02896-11012	H5200-004005	34	H008005
02896-11012	H5200-004005	40	H008005
02896-11012	H5200-004006	13	H008006
02896-11012	H5200-004006	16	H008006
02896-11012	H5200-004006	20	H008006
02896-11012	H5200-004007	34	H008007
02896-11012	H5200-004009	14	H008009
02896-11012	H5200-004016	3	H008016
02896-11012	H5200-004016	5	H008016
02896-11012	H5210-001002	6	H009002
02896-11012	H5210-001003	27	H009003
02896-11012	H5210-001003	29	H009003
02896-11012	H5210-001004	30	H009004
02896-11012	K1110-001007	13	K009007
02896-11012	K1110-001020	21	K009020
02896-11012	K4460-001002	11	K010002
02896-11012	K4470-001002	21	K011002
02896-11012	K4470-001002	24	K011002
02896-11012	K4470-001002	36	K011002
02896-11012	K4470-001002	44	K011002
02896-11015	C0110-001007	22	C001007
02896-11015	C0110-001007	24	C001007
02896-11015	C0110-001007	31	C001007
02896-11015	H0110-001001	27	H001001
02896-11015	H0210-001010	6	H004010
02896-11015	H5200-004006	10	H008006
02896-11015	H5200-004009	8	H008009
02896-11015	H5200-004009	11	H008009
02896-11015	H5200-004013	11	H008013
02896-11015	H5200-004013	15	H008013
02896-11015	H5200-004014	16	H008014
02896-11015	K1110-001020	22	K009020
02896-11015	K4470-001002	14	K011002
02896-11018	F4500-001006	38	F004006
02896-11018	H5200-004005	9	H008005
02896-11018	H5200-004005	13	H008005
02896-11018	H5200-004005	17	H008005
02896-11018	H5200-004005	19	H008005
02896-11018	H5200-004007	11	H008007
02896-11018	H5200-004007	14	H008007
02896-11018	H5200-004007	16	H008007
02896-11018	H5200-004007	21	H008007
02896-11018	H5200-004019	6	H008019
02896-21008	F4500-001001	13	F004001
02896-21008	F4500-001006	6	F004006
02896-21009	F4500-001001	18	F004001
02896-21009	F4500-001006	18	F004006
02896-21009	F4500-001006	42	F004006
02896-21012	F4320-001001	16	F002001
02896-21018	F4500-001006	32	F004006
04010-00310	E0200-001001	26	E003001
04010-00722	C0110-001007	6	C001007
04020-00514	F4320-001003	8	F002003
04020-00514	F4320-001004	7	F002004
04020-00616	C0110-001006	2	C001006
04020-00616	H0210-001004	5	H004004
04020-00820	H0210-001007	12	H004007
04020-01024	H0210-001001	12	H004001
04020-01024	H0210-001006	13	H004006
04020-01024	H0210-001007	2	H004007
04020-01024	T5130-001002	3	T008002
04020-01228	F4320-001002	23	F002002
04020-01228	F4500-001003	18	F004003
04020-01228	F4810-001001	10	F006001
04020-01434	F4500-001002	17	F004002
04020-01638	F4500-001004	10	F004004
04025-00312	K0210-002004	2	K002004
04025-00632	K0215-001001	8	K003001
04050-10070	T5125-001002	17	T006002
04050-10070	T5126-001001	5	T007001
04050-11210	H0120-001011	17	H002011
04050-11210	H0120-002011	17	H003011
04050-11210	K0210-002009	26	K002009
04050-11210	K0210-002013	25	K002013
04050-11210	K1110-001002	9	K009002
04050-11210	K1110-001004	26	K009004
04050-11612	K0210-002008	14	K002008
04050-11612	K0210-002008	25	K002008
04050-11612	K0210-002012	14	K002012
04050-11612	K0210-002012	25	K002012
04050-11612	M4100-002003	26	M001003
04050-11612	M4240-001001	14	M004001
04050-12015	M4230-001001	40	M002001
04050-12020	M4100-002002	23	M001002
04050-13020	F4400-001001	51	F003001
04050-13022	K1110-001003	12	K009003
04050-14025	F4400-001007	6	F003007
04050-15035	F4400-001001	9	F003001
04050-15045	F4400-001001	8	F003001
04050-16045	F4400-001001	29	F003001
04050-16045	F4400-001001	42	F003001
04050-18080	T5110-001001	12	T001001
04050-18080	T5123-001001	27	T005001
04052-20833	K1110-001003	19	K009003
04052-21038	K1110-001003	28	K009003
04052-21253	K1110-001003	17	K009003
04064-08025	F4320-001015	3	F002015
04064-08530	F4320-001006	17	F002006
04065-01410	H5200-004010	3	H008010
04065-01610	C0110-001004	11	C001004
04065-03212	C0110-001006	17	C001006
04065-03212	T5115-001001	36	T002001
04065-04018	H0210-001006	9	H004006
04065-04518	C0110-001006	10	C001006
04065-04818	H0210-001002	6	H004002
04065-05520	F4400-001005	6	F003005
04065-05520	F4400-001006	6	F003006
04065-06220	T5151-001001	5	T011001
04065-06220	T5151-001001	7	T011001
04065-06825	H0210-001001	26	H004001
04066-00062	F4320-001003	30	F002003
04066-00062	F4320-001004	29	F002004
04077-00120	F4320-001014	10	F002014
04081-05512	T5130-001002	7	T008002
04082-00212	T5123-001001	13	T005001
04120-21751	K0710-001001	18	K006001
04205-10516	H0120-001011	15	H002011
04205-10516	H0120-002011	15	H003011
04205-10516	K1110-001002	7	K009002
04205-10516	K1110-001004	24	K009004
04205-10622	K0210-002008	13	K002008
04205-10622	K0210-002008	24	K002008
04205-10622	K0210-002012	13	K002012
04205-10622	K0210-002012	24	K002012
04205-11238	K1110-001003	16	K009003
04248-30808	K1110-001002	10	K009002
04248-30819	E0200-001001	37	E003001
04250-80847	E0200-001001	38	E003001
04250-80847	K1110-001004	15	K009004
04250-81056	K1110-001003	25	K009003
04250-90847	E0200-001001	35	E003001
04250-90847	H0120-001011	22	H002011
04250-90847	H0120-002011	22	H003011
04254-10823	E0200-001001	32	E003001
04254-10823	E0200-001001	40	E003001
04254-10823	H0120-001011	21	H002011
04254-10823	H0120-001011	23	H002011
04254-10823	H0120-002011	21	H003011
04254-10823	H0120-002011	23	H003011

PARTS Nº	FIG. Nº	INDEX	PAGE
04254-10823	K1110-001004	13	K009004
04256-40622	K0210-002008	9	K002008
04256-40622	K0210-002012	9	K002012
04256-41230	K1110-001019	5	K009019
04260-01270	H0210-001001	19	H004001
04418-13060	F4320-001012	6	F002012
04418-13060	U0100-002002	9	U001002
04418-13060	U0100-004002	9	U002002
04434-50508	K1110-001006	30	K009006
04434-50510	C0110-001007	15	C001007
04434-50510	E0202-001001	58	E004001
04434-50510	K1110-001020	14	K009020
04434-50610	C0110-001007	14	C001007
04434-50610	D0100-001001	12	D001001
04434-50610	E0310-001001	6	E006001
04434-50610	F4320-001011	14	F002011
04434-50610	K1110-001027	42	K009027
04434-50610	K4460-001002	17	K010002
04434-50610	M4100-002005	23	M001005
04434-50612	K1110-001012	33	K009012
04434-50810	E0200-001001	9	E003001
04434-50810	H0110-001002	9	H001002
04434-50810	K0210-002004	23	K002004
04434-50810	K1110-001006	21	K009006
04434-50810	K1110-001006	33	K009006
04434-50810	K1110-001027	47	K009027
04434-50810	K1110-001032	4	K009032
04434-50810	M4100-002009	4	M001009
04434-50812	K0210-002006	14	K002006
04434-51008	K1110-001006	13	K009006
04434-51008	K1110-001026	5	K009026
04434-51010	D0200-001003	8	D002003
04434-51010	E0200-001001	48	E003001
04434-51010	E0202-001001	16	E004001
04434-51010	E0202-001001	33	E004001
04434-51010	E0202-001001	45	E004001
04434-51010	E0202-001001	48	E004001
04434-51010	E0202-001001	55	E004001
04434-51010	H0110-001002	4	H001002
04434-51010	M4100-002009	3	M001009
04434-51012	K0210-002003	5	K002003
04434-51012	K0210-002003	21	K002003
04434-51012	K0210-002017	7	K002017
04434-51210	C0120-001001	26	C002001
04434-51210	C0120-001001	34	C002001
04434-51310	H5200-004015	5	H008015
04434-51310	H5200-004017	11	H008017
04434-51310	H5200-004017	17	H008017
04434-51310	H5200-004018	11	H008018
04434-51310	H5200-004018	18	H008018
04434-51310	K1110-001027	50	K009027
04434-51310	K4470-001001	3	K011001
04434-51408	K1110-001026	6	K009026
04434-51408	K1110-001028	20	K009028
04434-51410	E0200-001001	10	E003001
04434-51410	E0202-001001	51	E004001
04434-51410	H5210-001001	23	H009001
04434-51410	K1110-001006	32	K009006
04434-51410	K1110-001027	4	K009027
04434-51410	K1110-001028	11	K009028
04434-51410	K1110-001032	1	K009032
04434-51410	K1110-001032	5	K009032
04434-51410	M4100-002005	14	M001005
04434-51410	M4100-002009	2	M001009
04434-51412	K0210-002003	19	K002003
04434-51412	K0210-002009	45	K002009
04434-51412	K0210-002013	43	K002013
04434-51510	F4500-001009	5	F004009
04434-51510	K4470-001002	25	K011002
04434-51510	T5151-001001	22	T011001
04434-51610	B0100-001001	24	B013001
04434-51708	AFT00-001001	13	D008001
04434-51708	K1110-001006	7	K009006
04434-51708	K1110-001031	13	K009031
04434-51710	D0200-001003	13	D002003
04434-51710	E0202-001001	39	E004001
04434-51710	E0202-001004	4	E004004
04434-51710	H5200-004004	28	H008004
04434-51710	H5200-004004	36	H008004
04434-51710	H5200-004018	6	H008018
04434-51710	K1110-001027	36	K009027
04434-51712	F4500-001001	21	F004001
04434-51712	H5120-002002	11	H007002
04434-51712	H5120-002002	14	H007002
04434-51712	H5200-004019	21	H008019
04434-51712	H5200-004020	3	H008020
04434-51712	H5210-001003	15	H009003
04434-51712	H5210-001003	18	H009003
04434-51712	H5210-001005	7	H009005
04434-51712	H5210-001005	14	H009005
04434-51712	K0210-002003	22	K002003
04434-51712	K0210-002016	30	K002016
04434-51908	K1110-001006	10	K009006
04434-51908	K1110-001013	11	K009013
04434-51910	E0202-001001	15	E004001
04434-51910	E0202-001001	30	E004001
04434-51910	H5200-004017	7	H008017
04434-51910	H5200-004017	15	H008017
04434-51910	H5200-004017	21	H008017
04434-51910	K0710-001002	3	K006002
04434-51910	K1110-001006	2	K009006
04434-51910	K1110-001022	16	K009022
04434-51910	K1110-001027	12	K009027
04434-51910	K1110-001027	39	K009027
04434-51910	K1110-001027	51	K009027
04434-51912	H4410-001001	3	H005001
04434-51912	H5200-004006	35	H008006
04434-51912	H5200-004006	39	H008006
04434-51912	H5200-004014	40	H008014
04434-51912	H5200-004016	7	H008016
04434-51912	K0210-002003	20	K002003
04434-51912	K4470-001001	8	K011001
04434-52110	K1110-001023	11	K009023
04434-52110	K4470-001002	45	K011002
04434-52112	M4100-002008	5	M001008
04434-52210	H5200-004014	29	H008014
04434-52210	K4470-001002	4	K011002
04434-52310	B0100-001001	31	B013001
04434-52310	C0120-001001	13	C002001
04434-52310	E0120-001003	4	E002003
04434-52310	E0120-001003	13	E002003
04434-52310	E0120-001003	22	E002003
04434-52310	E0120-001003	35	E002003
04434-52310	E0202-001001	19	E004001
04434-52310	K1110-001013	5	K009013
04434-52310	K1110-001013	8	K009013
04434-52310	K1110-001027	17	K009027
04434-52511	E0202-001002	41	E004002
04434-52511	K1110-001023	29	K009023
04434-52512	H5200-004019	17	H008019
04434-52711	B0100-001001	12	B013001
04434-52711	D0200-001001	8	D002001
04434-52711	D0200-001001	18	D002001
04434-52711	D0200-001001	33	D002001
04434-52711	E0202-001001	6	E004001
04434-52711	F4500-001006	34	F004006
04434-52711	H5200-004005	45	H008005
04434-52711	H5200-004007	36	H008007
04434-52711	H5200-004007	40	H008007
04434-52711	H5200-004014	38	H008014
04434-52711	H5200-004019	24	H008019
04434-52711	K0710-001002	7	K006002
04434-52712	E0202-001001	3	E004001
04434-52712	K0210-002003	23	K002003
04434-52712	K1110-001027	20	K009027
04434-53211	B0100-001001	32	B013001
04434-53211	E0120-001003	36	E002003
04434-53211	E0202-001001	11	E004001
04434-53211	H5200-004014	18	H008014
04434-53211	H5200-004014	25	H008014

PARTS Nº	FIG. Nº	INDEX	PAGE
04434-53211	K0710-001002	19	K006002
04434-53211	K0710-001002	22	K006002
04434-53211	K0710-001002	31	K006002
04434-53212	E0202-001003	2	E004003
04434-53212	H4410-001001	31	H005001
04434-53411	E0202-001001	9	E004001
04434-53411	H5200-004007	28	H008007
04434-53411	H5200-004019	15	H008019
04434-53411	K0713-001001	8	K007001
04434-53411	K0713-001001	14	K007001
04434-53411	K0713-001001	27	K007001
04434-53411	K0713-001001	30	K007001
04434-53411	K1110-001027	1	K009027
04434-53412	H5200-004007	31	H008007
04435-50610	K1110-001032	8	K009032
04435-50810	E0200-001001	16	E003001
04435-51410	H5210-001001	17	H009001
04435-51410	H5210-001001	22	H009001
04435-52110	K1110-001032	13	K009032
04530-12030	F4320-001012	18	F002012
04530-13045	F4320-001012	17	F002012
06002-30310	T5130-001001	28	T008001
06002-32216	F4400-001002	25	F003002
06002-32217	F4400-001002	24	F003002
06040-06313	F4320-001005	17	F002005
06040-06313	F4320-001006	19	F002006
06040-06315	F4320-001006	18	F002006
06124-02520	K1110-001019	6	K009019
06302-32217	F4500-001013	7	F004013
06302-32217	F4500-001014	7	F004014
06302-32218	F4500-001004	21	F004004
06302-32218	F4500-001013	10	F004013
06302-32218	F4500-001014	10	F004014
06303-30312	F4500-001002	8	F004002
07000-11003	H0120-001002	34	H002002
07000-11003	H0120-001005	5	H002005
07000-11003	H0120-001008	28	H002008
07000-11003	H0120-002002	34	H003002
07000-11003	H0120-002005	5	H003005
07000-11003	H0120-002008	28	H003008
07000-11005	F4500-001013	35	F004013
07000-11005	F4500-001014	35	F004014
07000-11007	H0120-001001	14	H002001
07000-11007	H0120-001006	20	H002006
07000-11007	H0120-001006	35	H002006
07000-11007	H0120-001007	14	H002007
07000-11007	H0120-001007	25	H002007
07000-11007	H0120-001008	11	H002008
07000-11007	H0120-001008	24	H002008
07000-11007	H0120-002001	14	H003001
07000-11007	H0120-002006	20	H003006
07000-11007	H0120-002006	35	H003006
07000-11007	H0120-002007	14	H003007
07000-11007	H0120-002007	25	H003007
07000-11007	H0120-002008	11	H003008
07000-11007	H0120-002008	24	H003008
07000-11008	H0120-001001	11	H002001
07000-11008	H0120-002001	11	H003001
07000-12011	H0120-001008	23	H002008
07000-12011	H0120-002008	23	H003008
07000-12011	H0210-001002	14	H004002
07000-12011	H5200-004011	7	H008011
07000-12011	H5200-004011	17	H008011
07000-12011	H5200-004018	23	H008018
07000-12011	H5200-004018	26	H008018
07000-12011	H5200-004018	29	H008018
07000-12011	H5200-004018	32	H008018
07000-12014	H5200-004009	19	H008009
07000-12014	H5200-004011	10	H008011
07000-12014	H5200-004011	13	H008011
07000-12014	T5115-001001	34	T002001
07000-12015	H0120-001006	9	H002006
07000-12015	H0120-001006	13	H002006
07000-12015	H0120-001006	25	H002006
07000-12015	H0120-001006	29	H002006
07000-12015	H0120-001007	4	H002007
07000-12015	H0120-001007	8	H002007
07000-12015	H0120-001007	19	H002007
07000-12015	H0120-001008	4	H002008
07000-12015	H0120-001008	16	H002008
07000-12015	H0120-002006	9	H003006
07000-12015	H0120-002006	13	H003006
07000-12015	H0120-002006	25	H003006
07000-12015	H0120-002006	29	H003006
07000-12015	H0120-002007	4	H003007
07000-12015	H0120-002007	8	H003007
07000-12015	H0120-002007	19	H003007
07000-12015	H0120-002008	4	H003008
07000-12015	H0120-002008	16	H003008
07000-12016	T5115-001001	39	T002001
07000-12018	F4500-001013	33	F004013
07000-12018	F4500-001014	33	F004014
07000-12018	H0210-001010	5	H004010
07000-12018	H5200-004009	13	H008009
07000-12018	H5200-004019	10	H008019
07000-12060	H5200-004001	2	H008001
07000-12065	H5120-002001	4	H007001
07000-12065	T5115-001001	38	T002001
07000-12075	F4400-001004	16	F003004
07000-12075	T5140-001001	17	T009001
07000-12075	T5141-001001	10	T010001
07000-12075	T5151-001001	14	T011001
07000-12075	T5155-001001	24	T012001
07000-12075	T5160-001001	14	T013001
07000-12075	KIT	K04	Y001001
07000-12075	KIT	K10	Y001001
07000-12075	KIT	K11	Y001001
07000-12075	KIT	K12	Y001001
07000-12075	KIT	K13	Y001001
07000-12075	KIT	K15	Y001001
07000-12080	F4400-001004	15	F003004
07000-12080	T5140-001001	16	T009001
07000-12080	T5141-001001	9	T010001
07000-12080	T5151-001001	13	T011001
07000-12080	T5155-001001	23	T012001
07000-12080	T5160-001001	13	T013001
07000-12080	KIT	K04	Y001001
07000-12080	KIT	K10	Y001001
07000-12080	KIT	K11	Y001001
07000-12080	KIT	K12	Y001001
07000-12080	KIT	K13	Y001001
07000-12080	KIT	K15	Y001001
07000-12085	D0100-001001	9	D001001
07000-12085	F4400-001002	7	F003002
07000-12085	KIT	K08	Y001001
07000-12085	KIT	K14	Y001001
07000-12090	KIT	K08	Y001001
07000-12090	KIT	K14	Y001001
07000-12100	H0120-001001	10	H002001
07000-12100	H0120-002001	10	H003001
07000-12100	K4460-001001	7	K010001
07000-12105	H0210-001008	1	H004008
07000-12115	T5125-001001	8	T006001
07000-12115	KIT	K09	Y001001
07000-12120	T5125-001001	7	T006001
07000-12120	KIT	K09	Y001001
07000-12130	D0100-001001	21	D001001
07000-12130	H0210-001005	1	H004005
07000-12130	T5130-001001	37	T008001
07000-12145	F4400-001002	3	F003002
07000-13024	H0120-001004	6	H002004
07000-13024	H0120-002004	6	H003004
07000-13028	F4700-001001	36	F005001
07000-13029	H0210-001010	8	H004010
07000-13032	H5200-004004	10	H008004
07000-13035	C0110-001001	14	C001001
07000-13038	H5200-004006	28	H008006
07000-13040	H0210-001004	1	H004004
07000-13045	F4400-001005	13	F003005
07000-13045	F4400-001006	13	F003006

PARTS Nº	FIG. Nº	INDEX	PAGE
07000-13045	F4700-001001	40	F005001
07000-13045	KIT	K05	Y001001
07000-13048	F4400-001005	12	F003005
07000-13048	F4400-001006	12	F003006
07000-13048	KIT	K05	Y001001
07000-13050	F4700-001001	46	F005001
07000-13050	H5120-002001	5	H007001
07000-15090	K4460-001001	5	K010001
07000-15160	H0110-001001	21	H001001
07000-15195	H0110-001001	4	H001001
07000-15195	T5130-001001	18	T008001
07000-15200	D0100-001001	3	D001001
07000-15260	T5130-001001	20	T008001
07000-15395	F4500-001013	19	F004013
07000-15395	F4500-001014	19	F004014
07000-71007	F4320-001010	20	F002010
07000-71007	KIT	K02	Y001001
07000-72011	F4500-001003	24	F004003
07000-72015	F4320-001010	19	F002010
07000-72015	F4320-001010	38	F002010
07000-72015	F4320-001011	30	F002011
07000-72015	KIT	K01	Y001001
07000-72015	KIT	K02	Y001001
07000-72022	F4320-001009	41	F002009
07000-72022	F4320-001009	47	F002009
07000-72022	F4320-001010	39	F002010
07000-72022	F4320-001011	28	F002011
07000-72022	KIT	K01	Y001001
07000-72100	F4320-001008	13	F002008
07000-72100	KIT	K01	Y001001
07000-72105	F4320-001011	2	F002011
07000-72105	KIT	K01	Y001001
07000-72120	F4320-001007	6	F002007
07000-72120	KIT	K01	Y001001
07000-73022	F4320-001010	25	F002010
07000-73022	KIT	K02	Y001001
07000-73025	F4500-001006	10	F004006
07000-73028	F4320-001010	40	F002010
07000-73028	F4320-001011	29	F002011
07000-73028	F4320-001012	2	F002012
07000-73028	KIT	K01	Y001001
07000-73030	F4320-001009	25	F002009
07000-73030	KIT	K02	Y001001
07000-73032	F4320-001009	40	F002009
07000-73032	F4320-001009	46	F002009
07000-73032	KIT	K01	Y001001
07000-73045	F4320-001009	35	F002009
07000-73045	KIT	K01	Y001001
07000-73048	F4320-001002	22	F002002
07000-73048	KIT	K01	Y001001
07000-75190	F4500-001002	12	F004002
07000-75335	F4500-001004	22	F004004
07000-A2060	F4320-001010	22	F002010
07000-A2060	KIT	K02	Y001001
07000-A3045	F4320-001001	6	F002001
07000-A5050	F4500-001002	4	F004002
07000-B1009	H0210-001001	10	H004001
07000-B1009	H0210-001004	3	H004004
07000-B2014	H0210-001004	2	H004004
07000-B2060	H0210-001001	24	H004001
07000-B3035	H6290-001001	5	H010001
07000-E1009	C0110-001005	39	C001005
07000-E1010	C0110-001005	45	C001005
07000-E2110	C0110-001006	1	C001006
07000-F1008	C0110-001005	10	C001005
07000-F1009	C0110-001005	18	C001005
07001-01003	H0120-001002	35	H002002
07001-01003	H0120-001005	4	H002005
07001-01003	H0120-001008	29	H002008
07001-01003	H0120-002002	35	H003002
07001-01003	H0120-002005	4	H003005
07001-01003	H0120-002008	29	H003008
07001-02015	H0120-001006	10	H002006
07001-02015	H0120-001006	14	H002006
07001-02015	H0120-001006	26	H002006
07001-02015	H0120-001006	30	H002006
07001-02015	H0120-001007	5	H002007
07001-02015	H0120-001007	9	H002007
07001-02015	H0120-001007	20	H002007
07001-02015	H0120-001008	5	H002008
07001-02015	H0120-001008	17	H002008
07001-02015	H0120-002006	10	H003006
07001-02015	H0120-002006	14	H003006
07001-02015	H0120-002006	26	H003006
07001-02015	H0120-002006	30	H003006
07001-02015	H0120-002007	5	H003007
07001-02015	H0120-002007	9	H003007
07001-02015	H0120-002007	20	H003007
07001-02015	H0120-002008	5	H003008
07001-02015	H0120-002008	17	H003008
07001-02016	T5115-001001	40	T002001
07001-03050	H5120-002001	9	H007001
07002-10823	H0120-001003	10	H002003
07002-10823	H0120-002003	10	H003003
07002-11023	F4700-001001	29	F005001
07002-11023	H0120-001005	10	H002005
07002-11023	H0120-002005	10	H003005
07002-11023	H0210-001004	1	H004004
07002-11023	H0210-001010	2	H004010
07002-11023	H4410-001001	21	H005001
07002-11023	H5110-001001	12	H006001
07002-11023	H5200-004004	17	H008004
07002-11023	H5200-004009	22	H008009
07002-11023	H5200-004013	13	H008013
07002-11023	H5200-004017	5	H008017
07002-11023	H5200-004019	8	H008019
07002-11023	H5210-001004	7	H009004
07002-11023	H6290-001001	25	H010001
07002-11223	F4500-001013	39	F004013
07002-11223	F4500-001014	39	F004014
07002-11223	H0120-001005	2	H002005
07002-11223	H0120-001006	17	H002006
07002-11223	H0120-001006	33	H002006
07002-11223	H0120-001007	12	H002007
07002-11223	H0120-001007	23	H002007
07002-11223	H0120-001008	8	H002008
07002-11223	H0120-001008	20	H002008
07002-11223	H0120-001008	26	H002008
07002-11223	H0120-002005	2	H003005
07002-11223	H0120-002006	17	H003006
07002-11223	H0120-002006	33	H003006
07002-11223	H0120-002007	12	H003007
07002-11223	H0120-002007	23	H003007
07002-11223	H0120-002008	8	H003008
07002-11223	H0120-002008	20	H003008
07002-11223	H0120-002008	26	H003008
07002-11223	H5110-001001	7	H006001
07002-11423	D0200-001001	5	D002001
07002-11423	D0200-001001	13	D002001
07002-11423	D0200-001003	4	D002003
07002-11423	H0110-001001	29	H001001
07002-11423	H0120-001005	15	H002005
07002-11423	H0120-002005	15	H003005
07002-11423	H0210-001001	8	H004001
07002-11423	H5200-004009	16	H008009
07002-11423	H5200-004009	24	H008009
07002-11423	H5200-004016	2	H008016
07002-11423	H5200-004017	2	H008017
07002-11423	H5200-004018	2	H008018
07002-11423	H5200-004018	15	H008018
07002-11423	H5210-001001	4	H009001
07002-11423	H5210-001001	7	H009001
07002-11423	H5210-001001	12	H009001
07002-11423	K1110-001020	20	K009020
07002-11423	K4460-001002	13	K010002
07002-11423	K4460-001002	16	K010002
07002-11623	H0120-001002	48	H002002
07002-11623	H0120-002002	48	H003002
07002-11623	H0210-001003	17	H004003
07002-11623	H5110-001001	5	H006001

PARTS Nº	FIG. Nº	INDEX	PAGE
07002-11623	K1110-001020	19	K009020
07002-11823	C0110-001007	33	C001007
07002-11823	H0120-001004	4	H002004
07002-11823	H0120-001008	33	H002008
07002-11823	H0120-002004	4	H003004
07002-11823	H0120-002008	33	H003008
07002-11823	H5120-002002	2	H007002
07002-11823	H5200-004020	18	H008020
07002-11823	H5210-001002	2	H009002
07002-11823	H5210-001002	5	H009002
07002-11823	H5210-001002	8	H009002
07002-11823	H5210-001002	11	H009002
07002-11823	H5210-001002	14	H009002
07002-11823	H5210-001002	17	H009002
07002-11823	T5130-001001	24	T008001
07002-12034	D0200-001001	2	D002001
07002-12034	D0200-001001	28	D002001
07002-12034	F4400-001005	23	F003005
07002-12034	F4400-001006	23	F003006
07002-12034	H0110-001001	37	H001001
07002-12034	H0120-001004	11	H002004
07002-12034	H0120-001005	12	H002005
07002-12034	H0120-001010	2	H002010
07002-12034	H0120-001010	4	H002010
07002-12034	H0120-002004	11	H003004
07002-12034	H0120-002005	12	H003005
07002-12034	H0120-002010	2	H003010
07002-12034	H0120-002010	4	H003010
07002-12034	H4410-001001	11	H005001
07002-12034	H4410-001001	17	H005001
07002-12034	H5200-004005	39	H008005
07002-12034	H5200-004005	42	H008005
07002-12034	H5200-004006	12	H008006
07002-12034	H5200-004006	15	H008006
07002-12034	H5200-004006	19	H008006
07002-12034	H5200-004007	5	H008007
07002-12034	H5210-001004	8	H009004
07002-12034	H5210-001004	11	H009004
07002-12034	K4460-001002	8	K010002
07002-12034	K4460-001002	10	K010002
07002-12034	K4470-001002	20	K011002
07002-12034	KIT	K05	Y001001
07002-12434	C0110-001007	21	C001007
07002-12434	C0110-001007	30	C001007
07002-12434	D0100-001001	7	D001001
07002-12434	F4500-001008	8	F004008
07002-12434	F4500-001008	16	F004008
07002-12434	F4500-001008	18	F004008
07002-12434	F4500-001009	11	F004009
07002-12434	F4500-001013	31	F004013
07002-12434	F4500-001014	31	F004014
07002-12434	H0110-001001	26	H001001
07002-12434	H0110-001001	32	H001001
07002-12434	H0110-001001	40	H001001
07002-12434	H0120-001003	5	H002003
07002-12434	H0120-001004	2	H002004
07002-12434	H0120-001005	7	H002005
07002-12434	H0120-001006	11	H002006
07002-12434	H0120-001006	15	H002006
07002-12434	H0120-001006	27	H002006
07002-12434	H0120-001006	31	H002006
07002-12434	H0120-001007	6	H002007
07002-12434	H0120-001007	10	H002007
07002-12434	H0120-001007	21	H002007
07002-12434	H0120-001008	6	H002008
07002-12434	H0120-001008	18	H002008
07002-12434	H0120-001009	3	H002009
07002-12434	H0120-001009	5	H002009
07002-12434	H0120-002003	5	H003003
07002-12434	H0120-002004	2	H003004
07002-12434	H0120-002005	7	H003005
07002-12434	H0120-002006	11	H003006
07002-12434	H0120-002006	15	H003006
07002-12434	H0120-002006	27	H003006
07002-12434	H0120-002006	31	H003006
07002-12434	H0120-002007	6	H003007
07002-12434	H0120-002007	10	H003007
07002-12434	H0120-002007	21	H003007
07002-12434	H0120-002008	6	H003008
07002-12434	H0120-002008	18	H003008
07002-12434	H0120-002009	3	H003009
07002-12434	H0120-002009	5	H003009
07002-12434	H5200-004005	8	H008005
07002-12434	H5200-004005	12	H008005
07002-12434	H5200-004005	16	H008005
07002-12434	H5200-004005	30	H008005
07002-12434	H5200-004005	33	H008005
07002-12434	H5200-004006	9	H008006
07002-12434	H5200-004006	23	H008006
07002-12434	H5200-004007	10	H008007
07002-12434	H5200-004007	13	H008007
07002-12434	H5200-004007	20	H008007
07002-12434	H5200-004007	33	H008007
07002-12434	H5200-004013	10	H008013
07002-12434	H5200-004014	15	H008014
07002-12434	K4470-001002	13	K011002
07002-13034	T5130-001001	22	T008001
07002-13334	H0110-001001	34	H001001
07002-13334	H5200-004005	5	H008005
07002-13334	H5200-004006	6	H008006
07002-13334	H5200-004007	7	H008007
07002-15234	H0110-001001	11	H001001
07002-15234	H5200-004005	25	H008005
07002-15234	H5200-004013	3	H008013
07002-20823	C0110-001004	15	C001004
07002-21023	C0110-001004	3	C001004
07002-21023	C0110-001005	13	C001005
07002-21023	C0110-001005	31	C001005
07002-21023	C0110-001005	41	C001005
07002-21023	F4500-001006	2	F004006
07002-21023	F4500-001006	41	F004006
07002-21023	F4700-001001	24	F005001
07002-21223	C0110-001004	6	C001004
07002-21423	C0110-001004	8	C001004
07002-21423	C0110-001005	17	C001005
07002-21423	C0110-001005	38	C001005
07002-21423	C0110-001006	23	C001006
07002-21423	F4500-001001	14	F004001
07002-21423	F4500-001006	19	F004006
07002-21623	C0110-001005	36	C001005
07002-22034	F4500-001001	17	F004001
07002-22034	F4500-001006	12	F004006
07002-22034	F4500-001006	43	F004006
07002-22434	F4320-001001	13	F002001
07002-22434	F4500-001001	8	F004001
07002-22434	F4500-001006	22	F004006
07002-22434	F4500-001006	31	F004006
07002-23334	C0110-001004	23	C001004
07002-23334	F4500-001006	21	F004006
07002-23334	F4700-001001	27	F005001
07002-23334	F4700-001001	31	F005001
07002-25234	F4500-001006	25	F004006
07002-61023	F4320-001002	7	F002002
07002-61023	F4320-001002	18	F002002
07002-61023	F4320-001009	4	F002009
07002-61023	F4320-001009	39	F002009
07002-61023	F4320-001010	6	F002010
07002-61023	F4320-001010	12	F002010
07002-61023	F4320-001010	18	F002010
07002-61023	F4320-001011	25	F002011
07002-61023	KIT	K01	Y001001
07002-61023	KIT	K02	Y001001
07002-61223	F4320-001009	31	F002009
07002-61223	F4320-001010	31	F002010
07002-61223	F4320-001011	23	F002011
07002-61223	KIT	K01	Y001001
07002-61223	KIT	K02	Y001001
07002-61423	F4320-001002	3	F002002
07002-61423	F4320-001002	16	F002002
07002-61423	KIT	K01	Y001001

PARTS Nº	FIG. Nº	INDEX	PAGE
07002-61623	F4320-001011	21	F002011
07002-61623	KIT	K01	Y001001
07002-61823	F4320-001010	24	F002010
07002-61823	KIT	K02	Y001001
07002-62434	F4320-001002	5	F002002
07002-62434	F4320-001009	29	F002009
07002-62434	F4320-001011	19	F002011
07002-62434	F4320-001012	10	F002012
07002-62434	F4320-001012	14	F002012
07002-62434	KIT	K01	Y001001
07002-62434	KIT	K02	Y001001
07002-63034	F4320-001009	6	F002009
07002-63034	F4320-001009	15	F002009
07002-63034	F4320-001009	24	F002009
07002-63034	KIT	K02	Y001001
07002-63334	F4320-001009	33	F002009
07002-63334	F4320-001011	7	F002011
07002-63334	F4320-001011	27	F002011
07002-63334	KIT	K02	Y001001
07002-63334	KIT	K03	Y001001
07005-01012	F4320-001011	13	F002011
07005-01012	KIT	K03	Y001001
07005-01212	AFT00-001001	8	D008001
07005-01212	D0200-001001	17	D002001
07005-01212	D0200-001001	32	D002001
07005-02216	A9999-501001	2	B012001
07005-02416	A9999-501001	3	B012001
07012-00095	F4500-001004	20	F004004
07012-10145	F4400-001002	6	F003002
07018-02005	F4500-001003	25	F004003
07018-31255	F4320-001014	13	F002014
07018-31255	KIT	K01	Y001001
07020-00000	F4400-001001	31	F003001
07020-00000	F4400-001003	10	F003003
07020-00000	F4400-001004	7	F003004
07020-00000	F4400-001005	19	F003005
07020-00000	F4400-001006	19	F003006
07020-00000	F4400-001007	7	F003007
07020-00000	J4110-001001	8	J001001
07020-00000	T5123-001001	12	T005001
07020-00000	T5123-001001	17	T005001
07020-00000	T5123-001001	38	T005001
07020-00000	T5125-001002	4	T006002
07020-00000	T5125-001002	18	T006002
07020-00000	T5155-001001	7	T012001
07020-00000	T5155-001001	14	T012001
07020-00675	F4400-001001	43	F003001
07020-00675	F4400-001004	6	F003004
07020-00675	F4400-001008	2	F003008
07020-00675	J4110-001001	7	J001001
07020-00675	J4120-001001	8	J002001
07020-00675	T5110-001001	8	T001001
07020-00675	T5115-001001	8	T002001
07020-00675	T5115-001001	21	T002001
07020-00900	F4400-001001	2	F003001
07020-00900	F4400-001002	16	F003002
07020-00900	F4400-001005	4	F003005
07020-00900	F4400-001006	4	F003006
07020-00900	T5115-001001	22	T002001
07020-00900	T5140-001001	7	T009001
07030-00252	F4320-001012	12	F002012
07030-00252	F4500-001001	25	F004001
07030-00252	F4500-001008	14	F004008
07040-11007	C0110-001004	2	C001004
07040-11007	C0110-001005	12	C001005
07040-11007	F4500-001006	40	F004006
07040-11007	F4700-001001	23	F005001
07040-11007	H4410-001001	20	H005001
07040-11007	H5200-004004	16	H008004
07040-11007	H5200-004009	21	H008009
07040-11007	H5200-004013	12	H008013
07040-11007	H5200-004017	4	H008017
07040-11007	H5200-004019	7	H008019
07040-11007	H5210-001004	6	H009004
07040-11007	H6290-001001	24	H010001
07040-11409	C0110-001004	7	C001004
07040-11409	D0200-001003	3	D002003
07040-11409	H0210-001001	7	H004001
07040-11409	H5200-004009	23	H008009
07040-11409	K1110-001020	17	K009020
07040-11612	K1110-001020	18	K009020
07040-11812	F4320-001010	23	F002010
07040-11812	T5130-001001	23	T008001
07040-12012	F4500-001006	11	F004006
07040-12012	H5200-004007	4	H008007
07040-12412	D0100-001001	6	D001001
07040-12412	F4500-001008	7	F004008
07040-12412	F4500-001008	15	F004008
07040-12412	H0110-001001	31	H001001
07040-12412	H5200-004006	22	H008006
07041-13012	T5130-001001	21	T008001
07042-20108	A1610-001001	18	A001001
07042-20108	A1610-001001	18	B003001
07042-70108	T5130-001001	31	T008001
07043-00108	F4400-001002	12	F003002
07043-00211	H5120-002001	8	H007001
07043-70108	A1310-001001	2	A008001
07043-70108	AIT00-001001	2	A011001
07043-70108	A1310-001001	2	B001001
07043-70108	F4320-001014	12	F002014
07043-70108	F4400-001005	20	F003005
07043-70108	F4400-001006	20	F003006
07043-70108	K4460-001004	9	K010004
07043-70108	T5115-001001	11	T002001
07043-70211	F4320-001003	4	F002003
07043-71019	F4320-001002	9	F002002
07043-A0108	F4500-001004	23	F004004
07044-12412	F4500-001001	7	F004001
07044-12412	F4500-001008	17	F004008
07044-12412	F4500-001013	30	F004013
07044-12412	F4500-001014	30	F004014
07048-01510	T5120-004001	13	T003001
07048-01510	T5120-003001	13	T004001
07049-01012	F4320-001010	33	F002010
07049-01012	F4320-001012	16	F002012
07049-01215	F4320-001012	15	F002012
07049-01215	F4500-001008	19	F004008
07056-18422	D0100-001001	22	D001001
07063-51100	H0110-001001	9	H001001
07094-10518	H5200-004014	2	H008014
07094-30417	H5210-001004	50	H009004
07095-00314	H5210-001001	29	H009001
07095-00317	H5120-002002	19	H007002
07095-00317	H5120-002002	23	H007002
07095-00317	H5200-004020	13	H008020
07095-00317	H5210-001003	22	H009003
07095-00317	H5210-001004	18	H009004
07095-00317	H5210-001004	22	H009004
07095-00317	H5210-001004	47	H009004
07095-00317	H5210-001004	55	H009004
07095-00317	H5210-001005	18	H009005
07095-00420	H5210-001004	51	H009004
07095-00421	H5210-001005	22	H009005
07095-00524	H5200-004014	3	H008014
07095-00630	B0100-001001	18	B013001
07095-00630	K0710-001002	10	K006002
07095-00630	K0710-001002	28	K006002
07095-20211	AFT00-001001	14	D008001
07095-20211	E0202-001004	5	E004004
07095-20211	H5200-004004	29	H008004
07095-20211	H5200-004004	37	H008004
07095-20211	H5200-004018	7	H008018
07095-20213	H5200-004017	8	H008017
07095-20213	H5200-004017	16	H008017
07095-20213	H5200-004017	22	H008017
07095-20314	M4100-002008	6	M001008
07095-20318	E0202-001002	42	E004002
07095-20318	H5200-004019	18	H008019
07095-20418	H5200-004007	37	H008007
07095-20419	H5200-004005	46	H008005

PARTS Nº	FIG. Nº	INDEX	PAGE
07095-20419	H5200-004014	39	H008014
07095-20419	K0710-001002	8	K006002
07095-20420	D0200-001001	9	D002001
07095-20420	D0200-001001	19	D002001
07095-20420	D0200-001001	34	D002001
07095-20522	H4410-001001	34	H005001
07095-20523	E0120-001003	37	E002003
07095-20523	E0202-001001	12	E004001
07095-20523	E0202-001003	3	E004003
07095-20523	H5200-004014	19	H008014
07095-20523	H5200-004014	26	H008014
07095-20523	K0710-001002	20	K006002
07095-20523	K0710-001002	23	K006002
07095-20523	K0710-001002	32	K006002
07095-20627	E0202-001001	10	E004001
07095-20627	H5200-004019	16	H008019
07138-00980	T5140-001001	4	T009001
07138-00980	T5155-001001	4	T012001
07138-00980	T5155-001001	11	T012001
07139-00902	T5140-001001	5	T009001
07139-00902	T5155-001001	5	T012001
07139-00902	T5155-001001	12	T012001
07139-00905	T5140-001001	5	T009001
07139-00905	T5155-001001	5	T012001
07139-00905	T5155-001001	12	T012001
07141-00090	T5140-001001	6	T009001
07141-00090	T5155-001001	6	T012001
07141-00090	T5155-001001	13	T012001
07141-00090	KIT	K10	Y001001
07141-00090	KIT	K13	Y001001
07143-10505	T5160-001001	4	T013001
07143-10505	T5160-001001	6	T013001
07143-10606	T5125-001001	4	T006001
07144-10405	F4400-001002	13	F003002
07144-10405	F4400-001004	4	F003004
07144-10603	T5125-001002	8	T006002
07145-00045	F4400-001001	45	F003001
07145-00045	F4400-001002	15	F003002
07145-00045	F4400-001004	5	F003004
07145-00045	T5115-001001	20	T002001
07145-00045	KIT	K04	Y001001
07145-00050	F4400-001001	27	F003001
07145-00050	F4400-001004	9	F003004
07145-00050	T5160-001001	5	T013001
07145-00050	T5160-001001	7	T013001
07145-00050	KIT	K04	Y001001
07145-00050	KIT	K08	Y001001
07145-00050	KIT	K14	Y001001
07145-00050	KIT	K15	Y001001
07145-00055	F4400-001001	34	F003001
07145-00060	T5125-001001	5	T006001
07145-00060	KIT	K09	Y001001
07145-00075	T5115-001001	15	T002001
07146-02076	F4400-001004	17	F003004
07146-02076	T5140-001001	18	T009001
07146-02076	T5141-001001	11	T010001
07146-02076	T5151-001001	15	T011001
07146-02076	T5155-001001	25	T012001
07146-02076	T5160-001001	15	T013001
07146-02076	KIT	K04	Y001001
07146-02076	KIT	K10	Y001001
07146-02076	KIT	K11	Y001001
07146-02076	KIT	K12	Y001001
07146-02076	KIT	K13	Y001001
07146-02076	KIT	K15	Y001001
07146-02086	KIT	K08	Y001001
07146-02086	KIT	K14	Y001001
07146-02116	T5125-001001	9	T006001
07146-02116	KIT	K09	Y001001
07155-00820	T5141-001001	15	T010001
07155-00820	KIT	K11	Y001001
07156-00710	T5115-001001	32	T002001
07156-00810	F4400-001004	20	F003004
07156-00810	T5140-001001	21	T009001
07156-00810	T5151-001001	18	T011001
07156-00810	T5155-001001	28	T012001
07156-00810	T5160-001001	18	T013001
07156-00810	KIT	K04	Y001001
07156-00810	KIT	K10	Y001001
07156-00810	KIT	K12	Y001001
07156-00810	KIT	K13	Y001001
07156-00810	KIT	K15	Y001001
07156-00810	KIT	K08	Y001001
07156-00912	KIT	K08	Y001001
07156-00912	KIT	K14	Y001001
07156-01215	T5125-001001	17	T006001
07156-01215	KIT	K09	Y001001
07161-00070	T5115-001001	31	T002001
07179-00054	F4400-001005	9	F003005
07179-00054	F4400-001006	9	F003006
07179-12052	F4400-001004	12	F003004
07179-12052	T5151-001001	10	T011001
07179-12057	T5155-001001	20	T012001
07179-12057	T5160-001001	10	T013001
07179-12062	T5140-001001	13	T009001
07179-12062	T5141-001001	6	T010001
07179-12069	T5125-001001	10	T006001
07206-30710	F4320-001011	11	F002011
07206-30812	D0200-001001	16	D002001
07206-30812	D0200-001001	31	D002001
07217-71013	D0100-001001	19	D001001
07260-04714	F4700-001001	41	F005001
07260-21436	C0120-001001	11	C002001
07270-41013	D0200-001003	11	D002003
07281-00549	AOB10-001001	7	B019001
07281-00549	K1110-001016	6	K009016
07281-00549	K1110-001029	13	K009029
07281-00609	K1110-001022	8	K009022
07281-00709	K1110-001029	3	K009029
07283-32244	C0110-001007	25	C001007
07283-34346	F4320-001001	17	F002001
07283-34949	F4700-001001	50	F005001
07283-36155	K0710-001001	5	K006001
07283-37671	A1310-001001	4	A008001
07283-37671	A1310-001001	4	B001001
07283-52232	C0110-001007	26	C001007
07285-00100	H0110-001001	13	H001001
07285-00100	H0110-001002	8	H001002
07285-00130	D0200-001003	12	D002003
07285-00155	B0100-001001	23	B013001
07285-00180	K1110-001023	16	K009023
07285-00220	A2080-001001	2	B014001
07285-00220	A2080-001001	2	B004001
07286-01990	V0300-001001	19	V001001
07287-01911	A2080-001001	1	B014001
07287-01911	A2080-001001	1	B004001
07289-00035	A9999-501001	6	B012001
07289-00055	C0120-001001	2	C002001
07289-00055	C0120-001001	5	C002001
07289-00070	C0120-001001	3	C002001
07289-00070	C0120-001001	6	C002001
07289-00070	F4700-001001	42	F005001
07289-00080	H5200-004001	7	H008001
07289-00120	B0200-001001	17	B015001
07289-00145	B0200-001001	18	B015001
07289-00170	M4100-002008	18	M001008
07299-00070	B0200-001001	2	B015001
07299-00070	B0200-001001	12	B015001
07299-00070	B0200-001001	14	B015001
07299-00080	B0200-001001	15	B015001
07371-31049	H5200-004004	7	H008004
07371-31255	H5200-004006	25	H008006
07372-21035	H5200-004004	8	H008004
07372-21035	H5200-004006	26	H008006
07376-70315	F4500-001001	23	F004001
07376-70628	F4500-001006	37	F004006
07700-50240	D0100-001001	18	D001001
07730-50004	C0120-001001	10	C002001
07950-10450	V0300-001001	13	V001001
07950-90403	V0300-001001	15	V001001
07951-41017	V0300-001001	14	V001001

PARTS Nº	FIG. Nº	INDEX	PAGE
07952-70004	V0300-001001	13	V001001
08000-00000	E0110-001001	2	E001001
08000-00001	E0110-001001	3	E001001
08007-26050	E0120-001001	19	E002001
08028-64011	E0120-001003	8	E002003
08034-00310	F4320-001010	7	F002010
08034-00310	F4320-001010	13	F002010
08034-20414	K0210-002003	4	K002003
08034-20414	K0210-002003	27	K002003
08034-20519	K1110-001005	8	K009005
08034-20519	K1110-001007	7	K009007
08034-20536	A2170-001001	1	B011001
08034-20536	A2170-001001	1	B005001
08034-20536	K1110-001022	19	K009022
08034-20536	K1110-001029	12	K009029
08034-20834	K1110-001007	25	K009007
08034-20834	K1110-001028	23	K009028
08034-40521	A6810-001001	12	F007001
08034-40521	A6810-001001	12	B011001
08034-40521	C0110-001009	13	C001009
08034-40521	K0210-002002	27	K002002
08034-40521	K0210-002003	26	K002003
08034-40521	K0210-002006	13	K002006
08034-40521	K0210-002006	32	K002006
08034-40521	K0210-002009	48	K002009
08034-40521	K0210-002013	46	K002013
08034-40521	K0210-002017	4	K002017
08034-40521	K0710-001001	37	K006001
08034-40521	K0810-002001	5	K008001
08034-40521	K1110-001006	16	K009006
08034-40521	K1110-001031	16	K009031
08037-01610	E0200-001001	12	E003001
08037-02512	C0110-001009	8	C001009
08037-02512	E0200-001001	11	E003001
08037-02512	E0310-001001	5	E006001
08037-02512	M4100-002001	24	M001001
08037-02512	M4100-002003	40	M001003
08037-03614	M4100-002001	25	M001001
08037-10610	K0210-002002	26	K002002
08038-00035	E0120-001003	3	E002003
08038-00035	E0120-001003	17	E002003
08038-00035	E0120-001003	27	E002003
08038-00519	E0120-001003	29	E002003
08041-00500	K1110-001013	1	K009013
08041-01000	K1110-001013	1	K009013
08041-01500	K1110-001013	1	K009013
08041-02000	K1110-001013	1	K009013
08041-03000	K1110-001013	1	K009013
08044-01500	K1110-001013	2	K009013
08056-00111	K0210-002009	50	K002009
08056-00111	K0210-002013	48	K002013
08056-00130	K0210-002009	51	K002009
08056-00130	K0210-002013	49	K002013
08059-00310	K0210-002002	28	K002002
08059-00310	K0210-002009	31	K002009
08086-20100	K1110-001012	22	K009012
08105-12420	E0200-001002	9	E003002
08193-20010	A6810-001001	5	F007001
08193-20010	A6810-001001	5	B011001
08193-21012	D0100-001001	13	D001001
08193-21012	E0120-001002	26	E002002
08193-21012	E0200-001001	4	E003001
08193-21012	E0200-001001	13	E003001
08193-21012	E0200-001001	17	E003001
08193-21012	E0310-001001	7	E006001
08193-21012	F4320-001012	21	F002012
08193-21012	K1110-001013	14	K009013
08193-21012	M4100-002009	7	M001009
08671-50040	M4100-002008	4	M001008
08672-01000	M4100-002008	12	M001008
09000-30006	V0300-001001	2	V001001
09001-00700	V0300-001001	3	V001001
09001-03600	V0300-001001	4	V001001
09019-28036	V0300-001001	5	V001001
09021-01725	V0300-001001	6	V001001
09023-00300	V0300-001001	7	V001001
09033-00190	V0300-001001	8	V001001
09039-00150	V0300-001001	9	V001001
09054-00009	V0300-001001	10	V001001
09055-10390	V0300-001001	11	V001001
09056-05513	V0300-001001	1	V001001
09161-31000	U0100-004001	1	U002001
09161-37100	U0100-002001	1	U001001
09162-31001	U0100-004001	2	U002001
09162-37001	U0100-002001	2	U001001
09280-10040	S0100-001001	6	S001001
09280-10040	S0100-001002	6	S001002
09280-10040	S0100-001003	6	S001003
09280-10040	S0100-001004	6	S001004
09280-10130	S0100-001001	6	S001001
09280-10130	S0100-001002	6	S001002
09280-10130	S0100-001003	6	S001003
09280-10130	S0100-001004	6	S001004
09281-00041	S0100-001001	7	S001001
09281-00041	S0100-001002	7	S001002
09281-00041	S0100-001003	7	S001003
09281-00041	S0100-001004	7	S001004
09282-00017	S0100-001001	10	S001001
09282-00017	S0100-001002	10	S001002
09282-00017	S0100-001003	10	S001003
09282-00017	S0100-001004	10	S001004
09283-00000	S0100-001001	8	S001001
09283-00000	S0100-001002	8	S001002
09283-00000	S0100-001003	8	S001003
09283-00000	S0100-001004	8	S001004
09285-00000	S0100-001001	9	S001001
09285-00000	S0100-001002	9	S001002
09285-00000	S0100-001003	9	S001003
09285-00000	S0100-001004	9	S001004
09289-00000	V0300-001001	12	V001001
09409-70000	K0110-001001	26	K001001
09415-01008	K0210-002003	30	K002003
09415-01610	K0210-002008	22	K002008
09415-01610	K0210-002012	22	K002012
09415-01610	K0210-002017	31	K002017
09415-02110	K1110-001010	7	K009010
09415-02110	K1110-001012	21	K009012
09415-02110	M4100-002004	4	M001004
09415-02512	E0200-001002	12	E003002
09415-02512	K0210-002017	30	K002017
09415-02512	M4100-002001	14	M001001
09415-02512	M4100-002001	26	M001001
09415-02512	M4240-001001	11	M004001
09415-03614	C0110-001001	47	C001001
09460-00000	M4240-001001	15	M004001
09479-02400	C0120-001001	12	C002001
09479-02400	K0713-001001	6	K007001
09479-02400	K0713-001001	20	K007001
09479-02400	K1110-001023	18	K009023
09479-02400	K1110-001023	22	K009023
09479-02400	K1110-001023	24	K009023
09479-02400	K1110-001023	27	K009023
09482-10000	K0713-001001	5	K007001
09483-10310	B0100-001001	22	B013001
09483-10411	K1110-001023	14	K009023
09483-10413	K1110-001023	15	K009023
09483-30550	K0713-001001	18	K007001
09484-00560	K0713-001001	19	K007001
09484-00560	K1110-001023	19	K009023
09484-00560	K1110-001023	21	K009023
09484-00560	K1110-001023	25	K009023
09484-00560	K1110-001023	28	K009023
09485-06507	K1110-001029	2	K009029
09602-10002	U0100-004002	8	U002002
09602-12051	U0100-002002	8	U001002
09608-05080	F4320-001012	5	F002012
09620-A2000	U0100-004002	22	U002002
09620-A2070	U0100-004002	6	U002002
09620-A2160	U0100-002002	21	U001002
09637-51263	U0100-002001	3	U001001

PARTS Nº	FIG. Nº	INDEX	PAGE
09637-70163	U0100-004001	3	U002001
09642-11000	U0100-004002	16	U002002
09642-17000	U0100-002002	15	U001002
09649-01012	U0100-004001	4	U002001
09649-07002	U0100-002001	4	U001001
09651-01001	U0100-004001	5	U002001
09651-07001	U0100-002001	5	U001001
09653-01001	U0100-004001	6	U002001
09653-07101	U0100-002001	6	U001001
09659-51000	U0100-004001	29	U002001
09659-57100	U0100-002001	29	U001001
09667-01001	U0100-004001	25	U002001
09667-07101	U0100-002001	25	U001001
09667-21001	U0100-004002	19	U002002
09667-27101	U0100-002002	18	U001002
09668-01001	U0100-004001	8	U002001
09668-07101	U0100-002001	8	U001001
09669-0000C	U0100-002001	10	U001001
09669-0000C	U0100-004001	10	U002001
09669-0000E	U0100-002001	9	U001001
09669-0000E	U0100-004001	9	U002001
09683-0000A	U0100-002001	11	U001001
09683-0000A	U0100-004001	11	U002001
09690-F0400	U0100-002001	13	U001001
09690-F0400	U0100-004001	13	U002001
09690-P0900	U0100-002001	12	U001001
09690-P0900	U0100-004001	12	U002001
09801-41001	U0100-004002	10	U002002
09801-47001	U0100-002002	10	U001002
09802-41000	U0100-004001	14	U002001
09802-47100	U0100-002001	14	U001001
09805-11000	U0100-004002	15	U002002
09805-17100	U0100-002002	14	U001002
09808-01000	U0100-004001	15	U002001
09808-07100	U0100-002001	15	U001001
09812-11000	U0100-004001	16	U002001
09812-17000	U0100-002001	16	U001001
09817-A0753	U0100-002002	19	U001002
09817-A0753	U0100-004002	20	U002002
09819-01000	U0100-004002	17	U002002
09819-07000	U0100-002002	16	U001002
09845-00480	U0205-001001	1	U003001
09920-00150	AGG00-001001	6	B001001
09920-00150	A2219-001001	17	B007001
09920-00150	AOP10-001001	16	B010001
09920-00150	ABB20-001001	8	B021001
09960-00602	U0100-002001	18	U001001
09960-00602	U0100-004001	18	U002001
09960-00801	U0100-002001	17	U001001
09960-00801	U0100-004001	17	U002001
09960-01201	U0100-002001	19	U001001
09960-01201	U0100-004001	19	U002001
09963-01001	U0100-004001	20	U002001
09963-07001	U0100-002001	20	U001001
104-15-25480	F4320-001009	19	F002009
104-15-25490	F4320-001009	17	F002009
10E-63-32390	F4400-001005	17	F003005
10E-63-32390	F4400-001006	17	F003006
10E-63-32390	KIT	K05	Y001001
113-78-21170	T5125-001002	32	T006002
113-78-21170	T5126-001001	3	T007001
114-63-55170	T5151-001001	4	T011001
114-63-55170	T5151-001001	6	T011001
11Y-06-11372	E0310-001001	1	E006001
11Y-06-11391	E0120-001002	17	E002002
11Y-62-12120	H5200-004015	1	H008015
11Y-62-12140	H5200-004018	31	H008018
11Y-62-12510	F4500-001006	17	F004006
11Y-62-12630	H5200-004005	32	H008005
11Y-62-13680	F4500-001006	16	F004006
120-06-31141	E0120-001001	16	E002001
120-06-31151	E0120-001001	17	E002001
120-10-31120	B0110-001001	4	B014001
1241155H1	ABR00-001001	2	A005001
124-54-26540	B0300-001001	2	B016001
125-15-15290	F4320-001009	18	F002009
12H-15-14140	F4320-001009	22	F002009
12R-60-11230	H0110-001001	22	H001001
12Y-06-11650	K1110-001014	5	K009014
12Y-978-2320	K0210-002016	33	K002016
1304898H1	AIC20-001001	1	A009001
130-911-1640	K1110-001012	17	K009012
134-06-61540	E0110-001001	1	E001001
135-49-33370	K1110-001007	24	K009007
144-70-15251	T5115-001001	23	T002001
14S-46-25140	E0120-001001	22	E002001
14S-62-21690	H0210-001010	7	H004010
14X-06-12260	E0120-001003	11	E002003
14X-06-12280	E0120-001003	2	E002003
14X-06-12280	E0120-001003	9	E002003
14X-06-12290	E0120-001003	10	E002003
14X-15-15850	F4320-001009	5	F002009
14X-15-15850	F4320-001009	23	F002009
14X-15-16210	F4320-001009	20	F002009
14X-15-55600	F4320-001010	8	F002010
14X-49-12340	F4320-001011	3	F002011
14X-60-11130	H0110-001001	2	H001001
14X-911-1330	K0210-002007	2	K002007
14X-911-1330	K0210-002011	2	K002011
14X-98-35181	U0100-002002	17	U001002
14X-98-35181	U0100-004002	18	U002002
14X-Y11-2110	K0350-001001	4	K005001
14X-Y79-3341	K0210-002003	3	K002003
154-03-72270	C0110-001007	8	C001007
154-03-76490	K0710-001001	21	K006001
154-61-16570	A1570-001001	5	A015001
154-61-16570	A1570-001001	13	A015001
154-61-16570	A1570-001001	15	A015001
154-61-16570	AFT00-001001	16	D008001
154-61-16570	A1570-001001	5	B002001
154-61-16570	A1570-001001	13	B002001
154-61-16570	A1570-001001	15	B002001
170-21-11190	F4320-001012	11	F002012
175-06-81610	K0210-002017	13	K002017
175-15-56470	F4320-001009	21	F002009
175-21-12180	F4500-001003	5	F004003
175-21-12180	F4500-001003	15	F004003
175-54-34170	J4110-001001	3	J001001
175-54-34170	J4120-001001	3	J002001
175-54-34170	K0710-001001	35	K006001
175-54-34170	K1110-001003	7	K009003
175-54-34170	K1110-001003	32	K009003
175-54-34170	T5123-001001	19	T005001
175-54-34170	T5123-001001	44	T005001
175-54-34170	T5125-001002	5	T006002
175-54-34170	T5125-001002	19	T006002
175-60-27340	H0110-001001	7	H001001
175-61-23220	K1110-001002	29	K009002
175-79-83760	E0202-001003	30	E004003
17A-03-14111	C0120-001001	16	C002001
17A-03-14120	C0120-001001	17	C002001
17A-06-42210	K0210-002006	17	K002006
17A-06-42210	K0210-002013	50	K002013
17A-06-42220	K0210-002017	19	K002017
17A-Z11-2420	K0210-002017	16	K002017
17M-911-3530	K1110-001029	1	K009029
195-Z11-2180	K0210-002018	14	K002018
195-Z11-4510	K0210-002008	1	K002008
195-Z11-4520	K0210-002012	1	K002012
198-Z11-3710	K0210-002008	20	K002008
198-Z11-3710	K0210-002012	20	K002012
198-Z11-4610	K0210-002002	25	K002002
198-Z11-6890	K1110-001014	1	K009014
19N-72-11220	T5115-001001	14	T002001
201-03-29160	F4320-001012	27	F002012
201-54-72910	M4100-002003	12	M001003
201-60-12172	H0110-001001	14	H001001
203-01-67580	B0200-001001	4	B015001
203-03-41620	K0350-001001	3	K005001
203-06-41560	K0210-002009	24	K002009

PARTS Nº	FIG. Nº	INDEX	PAGE
203-06-41560	K0210-002013	23	K002013
203-06-56230	K1110-001005	9	K009005
203-54-56630	M4100-002003	24	M001003
203-54-56630	M4240-001001	12	M004001
203-60-52250	H0110-001001	8	H001001
205-00-72430	U0100-002002	6	U001002
205-00-72430	U0100-004002	23	U002002
205-03-71330	E0200-001002	13	E003002
205-06-62230	C0110-001009	9	C001009
205-54-51250	K0210-002002	14	K002002
205-60-71220	M4100-002003	41	M001003
206-03-43340	C0120-001001	25	C002001
206-03-43340	C0120-001001	33	C002001
207-06-61490	K1110-001028	19	K009028
207-54-16860	K0210-002003	2	K002003
207-62-72141	H0110-001001	28	H001001
207-62-82790	H5200-004018	25	H008018
208-06-19170	K0710-001002	9	K006002
208-06-19170	K0710-001002	27	K006002
208-53-12220	K1110-001022	6	K009022
208-53-12991	K0210-002002	32	K002002
20R-54-11460	M4100-002002	39	M001002
20T-54-74550	K0210-002001	16	K002001
20T-54-74990	K0210-002006	24	K002006
20T-54-74990	K0210-002009	5	K002009
20T-54-74990	K0210-002013	5	K002013
20T-54-75290	K0210-002001	15	K002001
20T-54-84840	K0210-002006	23	K002006
20U-54-46520	K0210-002003	6	K002003
20U-62-41610	C0110-001007	32	C001007
20U-62-41720	F4320-001011	6	F002011
20U-62-41740	H5200-004018	22	H008018
20Y-00-11350	M4100-002002	20	M001002
20Y-00-41530	U0100-002002	13	U001002
20Y-00-41530	U0100-004002	14	U002002
20Y-03-18140	C0120-001001	24	C002001
20Y-04-11161	D0100-001001	23	D001001
20Y-06-16170	K0210-002009	33	K002009
20Y-06-16170	K0210-002013	31	K002013
20Y-06-23472	K1110-001012	18	K009012
20Y-06-41812	M4100-002005	17	M001005
20Y-06-42180	K0210-002002	29	K002002
20Y-06-42190	K0210-002017	21	K002017
20Y-06-42190	K0210-002017	23	K002017
20Y-06-42190	K1110-001005	6	K009005
20Y-06-42190	K1110-001012	7	K009012
20Y-06-42190	K1110-001012	11	K009012
20Y-06-42190	K1110-001031	17	K009031
20Y-43-41491	K0210-002002	36	K002002
20Y-53-12221	K0210-002002	30	K002002
20Y-53-12310	C0110-001009	42	C001009
20Y-53-12310	C0110-001009	46	C001009
20Y-53-12310	F4700-001001	19	F005001
20Y-53-12310	K0210-002016	6	K002016
20Y-53-12310	K0210-002016	10	K002016
20Y-53-12310	K0210-002016	15	K002016
20Y-53-12310	K0210-002016	24	K002016
20Y-53-12310	K1110-001029	9	K009029
20Y-53-12310	M4230-001002	36	M002002
20Y-54-14290	M4100-002002	18	M001002
20Y-54-14290	M4100-002002	38	M001002
20Y-54-74172	M4100-002002	5	M001002
20Y-54-74172	M4100-002002	11	M001002
20Y-60-21340	H0110-001001	15	H001001
20Y-60-41162	H0110-001001	18	H001001
20Y-62-43460	H5200-004005	41	H008005
21J-06-13661	E0200-001001	2	E003001
21J-06-13661	E0202-001001	2	E004001
21J-06-13661	E0202-001002	2	E004002
21J-06-13661	K1110-001013	3	K009013
21J-54-16190	K0210-002015	1	K002015
21N-64-36620	H0210-001010	4	H004010
21T-62-76840	H5200-004001	11	H008001
21T-62-76840	H6290-001001	11	H010001
21T-979-4380	K1110-001022	3	K009022
21W-01-41320	E0202-001002	43	E004002
21W-06-42130	K0350-001001	1	K005001
21W-06-42140	K0350-001001	2	K005001
21W-54-42630	K1110-001011	4	K009011
21W-62-42481	C0110-001007	20	C001007
21W-62-42481	K4470-001002	12	K011002
21W-62-42640	F4320-001011	26	F002011
21W-62-42640	F4700-001001	25	F005001
21W-62-42640	H0110-001001	33	H001001
21W-62-43390	H5210-001002	10	H009002
21W-62-43920	K4470-001001	12	K011001
21W-62-43920	K4460-001002	12	K010002
21W-62-43980	H5200-004011	6	H008011
21W-62-43980	H5200-004018	28	H008018
22B-46-24170	M4230-001001	38	M002001
22B-54-17290	K0210-002010	2	K002010
22B-54-17290	K0210-002014	2	K002014
22B-60-11160	H0110-001001	24	H001001
22B-958-6890	H5200-004012	38	H008012
22B-958-6890	H5210-001003	47	H009003
22L-46-12150	H5210-001003	50	H009003
22L-46-12150	K1110-001024	15	K009024
22L-62-22151	H5200-004017	1	H008017
22M-60-22130	E0120-001003	38	E002003
22P-62-13510	H5200-004020	12	H008020
22P-62-13510	H5210-001004	21	H009004
22P-62-13540	H5120-002002	22	H007002
22P-62-13540	H5210-001001	28	H009001
22P-62-13540	H5210-001003	21	H009003
22P-62-13540	H5210-001004	17	H009004
22P-62-13540	H5210-001004	46	H009004
22P-62-13540	H5210-001004	54	H009004
22P-62-13540	H5210-001005	17	H009005
22T-55-11630	K0210-002006	11	K002006
22T-55-11630	K0210-002006	30	K002006
22T-55-11630	K0210-002009	12	K002009
22T-55-11630	K0210-002013	12	K002013
22T-56-23290	C0110-001001	18	C001001
22T-56-23290	K4470-001002	51	K011002
22U-03-22860	C0110-001001	1	C001001
22U-60-21232	H0110-001001	3	H001001
22W-06-13220	E0120-001002	1	E002002
22W-61-12220	K1110-001007	12	K009007
22W-62-13420	H5200-004009	7	H008009
22W-62-13420	H5200-004009	10	H008009
22W-62-13420	H5200-004019	5	H008019
22X-22-11280	M4510-001001	3	M006001
232-03-56111	C0120-001001	7	C002001
232-30-55220	S0100-001001	5	S001001
232-30-55220	S0100-001002	5	S001002
232-30-55220	S0100-001003	5	S001003
232-30-55220	S0100-001004	5	S001004
232-43-13130	K1110-001003	22	K009003
232-43-18281	U0100-002001	21	U001001
232-43-18281	U0100-004001	21	U002001
232-54-54720	M4240-001001	2	M004001
232-60-54730	H5120-002001	3	H007001
232-70-12143	T5120-004001	3	T003001
232-70-12450	T5120-004001	4	T003001
232-70-12450	T5120-003001	4	T004001
232-70-12460	T5120-004001	7	T003001
232-70-12460	T5120-003001	7	T004001
232-70-12480	T5120-004001	5	T003001
232-70-12480	T5120-004001	8	T003001
232-70-12480	T5120-003001	5	T004001
232-70-12480	T5120-003001	8	T004001
232-70-52190	T5120-004001	2	T003001
232-70-52190	T5120-003001	2	T004001
232-70-52380	T5123-001001	25	T005001
232-70-53134	T5115-001001	9	T002001
232-70-53141	T5115-001001	19	T002001
232-70-53160	T5115-001001	16	T002001
232-70-53271	T5115-001001	10	T002001
232-71-13151	T5130-001002	8	T008002
232-735-1340	U0100-002001	22	U001001

PARTS Nº	FIG. Nº	INDEX	PAGE
232-735-1340	U0100-004001	22	U002001
232-785-1291	T5125-001002	30	T006002
232-785-1291	T5126-001001	1	T007001
232-785-1310	T5125-001002	16	T006002
232-785-1310	T5126-001001	4	T007001
232-785-1411	U0100-002001	30	U001001
232-785-1411	U0100-004001	30	U002001
232-950-2291	K1110-001003	34	K009003
232-957-9710	K0210-002009	20	K002009
234-25-31142	F4500-001008	3	F004008
234-25-31150	F4500-001008	9	F004008
234-25-31160	F4500-001008	10	F004008
234-25-31172	F4500-001008	11	F004008
234-30-14920	S0100-001001	3	S001001
234-30-14920	S0100-001002	3	S001002
234-30-14920	S0100-001003	3	S001003
234-30-14920	S0100-001004	3	S001004
234-30-14930	S0100-001001	4	S001001
234-30-14930	S0100-001002	4	S001002
234-30-14930	S0100-001003	4	S001003
234-30-14930	S0100-001004	4	S001004
234-43-39250	T5115-001001	41	T002001
234-53-32321	U0100-002001	23	U001001
234-53-32321	U0100-004001	23	U002001
234-53-32330	U0100-002001	24	U001001
234-53-32330	U0100-004001	24	U002001
234-70-12193	T5120-003001	3	T004001
234-785-1121	T5125-001002	31	T006002
234-785-1121	T5126-001001	2	T007001
234-885-1610	K1110-001004	11	K009004
234-885-1620	K1110-001001	2	K009001
234-885-1620	K1110-001003	5	K009003
234-885-1620	K1110-001007	9	K009007
235-27-11750	F4400-001001	17	F003001
235-43-18380	H0120-001011	20	H002011
235-43-18380	H0120-002011	20	H003011
235-43-18380	K1110-001004	12	K009004
235-54-11540	K1110-001011	3	K009011
235-54-11540	K1110-001024	8	K009024
235-60-15480	H5200-004004	12	H008004
235-70-15850	T5130-001002	4	T008002
235-70-15860	T5130-001002	5	T008002
235-70-15870	T5130-001002	5	T008002
235-70-15880	T5130-001002	5	T008002
235-70-45260	T5130-001001	7	T008001
235-70-45270	T5130-001001	10	T008001
235-70-45330	T5130-001001	17	T008001
235-70-45340	T5130-001001	17	T008001
235-70-45360	T5130-001001	11	T008001
235-70-45420	T5130-001001	9	T008001

PARTS Nº	FIG. Nº	INDEX	PAGE
237-23-11142	F4500-001008	2	F004008
237-43-17420	H0120-001011	13	H002011
237-43-17420	H0120-002011	13	H003011
237-43-17420	K1110-001002	34	K009002
237-43-17420	K1110-001003	10	K009003
237-43-17420	K1110-001003	36	K009003
237-43-17420	K1110-001004	27	K009004
237-43-17420	K1110-001007	8	K009007
237-43-17440	K1110-001004	5	K009004
237-43-17480	K1110-001004	18	K009004
237-43-17490	K1110-001004	17	K009004
237-54-13211	U0100-002001	26	U001001
237-54-13211	U0100-004001	26	U002001
237-54-13221	U0100-002001	27	U001001
237-54-13221	U0100-004001	27	U002001
237-54-13231	U0100-002001	28	U001001
237-54-13231	U0100-004001	28	U002001
237-54-13271	U0100-002002	7	U001002
237-54-13271	U0100-004002	7	U002002
238-06-12331	M4240-001001	3	M004001
238-70-11180	T5110-001001	10	T001001
238-70-16210	T5130-001001	32	T008001
238-70-16220	T5130-001001	32	T008001
238-70-16240	T5130-001001	32	T008001
238-735-1280	T5123-001001	11	T005001
23A-06-21440	M4100-002005	7	M001005
23A-06-21510	M4100-002005	2	M001005
23A-06-21530	M4100-002005	4	M001005
23A-22-00161	F4500-001002	3	F004002
23A-22-11660	F4500-001002	3	F004002
23A-22-11670	F4500-001002	3	F004002
23A-22-11680	F4500-001002	3	F004002
23A-22-11690	F4500-001002	3	F004002
23A-23-11310	F4500-001005	6	F004005
23A-23-11310	F4500-001013	3	F004013
23A-23-11310	F4500-001014	3	F004014
23A-23-11320	F4500-001005	6	F004005
23A-23-11320	F4500-001013	3	F004013
23A-23-11320	F4500-001014	3	F004014
23A-23-11330	F4500-001005	6	F004005
23A-23-11330	F4500-001013	3	F004013
23A-23-11330	F4500-001014	3	F004014
23A-25-31211	F4500-001008	4	F004008
23A-30-B2100	S0100-001001	2	S001001
23A-30-B2100	S0100-001002	2	S001002
23A-30-B2100	S0100-001003	2	S001003
23A-30-B2100	S0100-001004	2	S001004
23A-30-B2110	S0100-001001	2	S001001
23A-30-B2110	S0100-001002	2	S001002
23A-30-B2110	S0100-001003	2	S001003

PARTS Nº	FIG. Nº	INDEX	PAGE
23A-30-B2110	S0100-001004	2	S001004
23A-53-11550	U0100-002001	31	U001001
23A-53-11550	U0100-004001	31	U002001
23A-54-11180	K1110-001030	4	K009030
23A-70-12150	T5120-004001	14	T003001
23A-70-12150	T5120-003001	14	T004001
23A-70-12150	T5123-001001	35	T005001
23A-70-13180	T5123-001001	33	T005001
23A-70-13190	T5123-001001	34	T005001
23A-70-14210	T5115-001001	7	T002001
23A-70-71130	T5110-001001	3	T001001
23A-952-1890	K0210-002015	2	K002015
23A-952-7160	K0210-002017	1	K002017
23A-952-7170	K0210-002002	1	K002002
23A-952-7180	K0215-001001	1	K003001
23A-952-7190	K0215-001001	2	K003001
23A-952-7210	K0210-002007	1	K002007
23A-952-7220	K0210-002011	1	K002011
23A-952-7230	K0210-002018	6	K002018
23A-952-7240	K0210-002005	3	K002005
23A-952-7250	K0210-002005	4	K002005
23A-952-7260	K0210-002005	7	K002005
23A-952-7270	K0210-002008	26	K002008
23A-952-7280	K0210-002012	26	K002012
23A-952-7290	K0210-002002	4	K002002
23A-952-7310	K0210-002005	1	K002005
23A-952-7320	K0210-002018	1	K002018
23A-952-7330	K0210-002018	3	K002018
23A-952-7340	K0210-002018	4	K002018
23A-952-7351	K0210-002007	7	K002007
23A-952-7361	K0210-002011	7	K002011
23A-952-7470	K0210-002006	8	K002006
23A-952-7480	K0210-002008	31	K002008
23A-952-7490	K0210-002012	31	K002012
23A-952-7510	K0210-002016	21	K002016
23A-952-7530	K0210-002002	5	K002002
23A-952-7540	K0210-002002	9	K002002
23A-952-7550	K0210-002002	11	K002002
23A-952-7560	K0210-002002	10	K002002
23A-952-7581	K0210-002008	4	K002008
23A-952-7591	K0210-002012	4	K002012
23A-952-7610	K0210-002013	21	K002013
23A-952-7650	K0210-002001	29	K002001
23A-952-7660	K0210-002001	17	K002001
23A-952-7670	K0210-002001	18	K002001
23A-952-7680	K0210-002002	7	K002002
23A-952-7690	K0210-002009	46	K002009
23A-952-7690	K0210-002013	44	K002013
23A-952-7741	K0210-002016	1	K002016
23A-952-7750	K0210-002016	7	K002016

PARTS Nº	FIG. Nº	INDEX	PAGE
23A-952-7760	K0210-002016	11	K002016
23A-952-7770	K0210-002008	34	K002008
23A-952-7770	K0210-002012	34	K002012
23A-952-7810	K0210-002002	2	K002002
23A-952-7820	K0210-002002	3	K002002
23A-952-7831	K0210-002004	15	K002004
23A-952-7840	K0210-002004	20	K002004
23A-952-7850	K0210-002001	2	K002001
23A-952-7860	K0210-002001	3	K002001
23A-952-7870	K0210-002002	6	K002002
23A-952-7880	K0210-002002	8	K002002
23A-952-7890	K0210-002001	25	K002001
23A-952-7910	K0210-002001	12	K002001
23A-952-7920	K0810-002001	2	K008001
23A-952-7940	K0210-002001	6	K002001
23A-952-7950	K0210-002003	9	K002003
23A-952-7960	K0210-002001	22	K002001
23A-952-7990	K0210-002001	26	K002001
23A-952-8111	K0210-002001	1	K002001
23A-952-8210	K0210-002006	19	K002006
23A-952-8410	K0210-002004	26	K002004
23A-952-8420	K0210-002016	31	K002016
23A-952-8450	K0210-002016	36	K002016
23A-952-8460	K0210-002016	37	K002016
23A-952-8470	K0210-002016	38	K002016
23A-952-8480	K0210-002016	39	K002016
23A-952-8510	K0210-002008	18	K002008
23A-952-8510	K0210-002012	18	K002012
23A-952-8520	K0210-002001	39	K002001
23A-952-8560	K0210-002002	20	K002002
23A-952-8580	K0210-002009	13	K002009
23A-952-8580	K0210-002013	13	K002013
23A-952-8610	K0210-002018	11	K002018
23A-952-8620	K0210-002002	24	K002002
23A-952-8690	K0210-002002	17	K002002
23A-952-8710	K0210-002008	15	K002008
23A-952-8710	K0210-002012	15	K002012
23A-952-8720	K0210-002008	12	K002008
23A-952-8730	K0210-002012	12	K002012
23A-952-8741	K1110-001016	4	K009016
23A-952-8750	K1110-001016	5	K009016
23A-952-8761	K0210-002009	37	K002009
23A-952-8761	K0210-002013	35	K002013
23A-952-8770	K0210-002010	1	K002010
23A-952-8840	K0210-002014	1	K002014
23A-952-8860	K0210-002009	23	K002009
23A-952-8860	K0210-002013	22	K002013
23A-952-8871	K0210-002009	28	K002009
23A-952-8881	K0210-002013	27	K002013
23A-952-8890	K0210-002004	24	K002004

PARTS Nº	FIG. Nº	INDEX	PAGE
23A-952-8910	K0210-002004	6	K002004
23A-952-8930	K0210-002004	3	K002004
23A-952-8980	K0210-002004	14	K002004
23B-01-71140	A9999-501001	4	B012001
23B-01-71160	A9999-501001	5	B012001
23B-01-71310	B0100-001001	1	B013001
23B-01-71321	K0710-001001	38	K006001
23B-01-71321	B0100-001001	2	B013001
23B-01-71330	F4810-001001	1	F006001
23B-01-71340	F4810-001001	2	F006001
23B-01-71350	B0100-001001	11	B013001
23B-01-71350	F4810-001001	9	F006001
23B-01-71410	B0100-001001	25	B013001
23B-01-71420	B0100-001001	28	B013001
23B-02-71111	B0200-001001	11	B015001
23B-02-71120	B0200-001001	13	B015001
23B-02-71130	B0200-001001	3	B015001
23B-02-71140	B0200-001001	16	B015001
23B-02-71160	B0200-001001	7	B015001
23B-02-71310	B0300-001001	1	B016001
23B-03-71120	C0110-001001	2	C001001
23B-03-71150	C0110-001001	3	C001001
23B-03-71160	C0110-001001	4	C001001
23B-03-71170	C0110-001001	4	C001001
23B-03-71180	C0110-001001	5	C001001
23B-03-71190	C0110-001001	6	C001001
23B-03-71210	C0110-001001	7	C001001
23B-03-71230	C0110-001001	15	C001001
23B-03-71270	C0110-001001	19	C001001
23B-03-71280	C0110-001001	8	C001001
23B-03-71310	C0110-001001	9	C001001
23B-03-71320	C0110-001001	10	C001001
23B-03-71350	C0110-001001	16	C001001
23B-03-71510	C0110-001003	4	C001003
23B-03-71520	C0110-001007	23	C001007
23B-03-71530	C0110-001007	11	C001007
23B-03-71540	C0110-001009	10	C001009
23B-03-71550	C0110-001009	18	C001009
23B-03-71570	C0110-001009	1	C001009
23B-03-71580	C0110-001009	2	C001009
23B-03-71591	C0110-001009	5	C001009
23B-03-71610	C0110-001002	2	C001002
23B-03-71621	C0110-001008	2	C001008
23B-03-71660	C0110-001002	5	C001002
23B-03-71680	C0110-001009	26	C001009
23B-03-71690	C0110-001009	27	C001009
23B-03-71710	C0110-001009	41	C001009
23B-03-71750	C0110-001009	28	C001009
23B-03-71770	C0110-001009	16	C001009
23B-03-71810	C0110-001009	36	C001009

PARTS Nº	FIG. Nº	INDEX	PAGE
23B-03-71820	C0110-001009	37	C001009
23B-03-71830	C0110-001009	38	C001009
23B-03-71840	C0110-001009	45	C001009
23B-03-72111	C0120-001001	1	C002001
23B-03-72120	C0120-001001	4	C002001
23B-03-72130	C0120-001001	18	C002001
23B-03-72140	C0120-001001	21	C002001
23B-03-72150	C0120-001001	32	C002001
23B-03-72160	C0120-001001	29	C002001
23B-03-73101	C0110-001001	1	C001001
23B-03-73110	C0110-001001	17	C001001
23B-03-73131	C0110-001001	18	C001001
23B-03-73141	C0110-001001	20	C001001
23B-03-73220	C0110-001001	34	C001001
23B-03-73260	C0110-001001	35	C001001
23B-03-73330	C0110-001001	21	C001001
23B-03-73340	C0110-001001	22	C001001
23B-03-73410	C0110-001001	23	C001001
23B-03-73420	C0110-001001	24	C001001
23B-03-73430	C0110-001001	25	C001001
23B-03-73440	C0110-001001	36	C001001
23B-03-73460	C0110-001001	26	C001001
23B-04-71101	D0100-001001	1	D001001
23B-04-71110	D0100-001001	1	D001001
23B-04-71120	D0100-001001	20	D001001
23B-04-71130	D0100-001001	2	D001001
23B-04-71140	D0100-001001	14	D001001
23B-04-71160	B0100-001001	19	B013001
23B-04-71190	D0100-001001	15	D001001
23B-04-72110	D0200-001001	7	D002001
23B-04-72120	D0200-001001	15	D002001
23B-04-72130	D0200-001001	30	D002001
23B-04-72150	D0200-001003	5	D002003
23B-04-72160	D0200-001001	24	D002001
23B-04-72170	D0200-001003	16	D002003
23B-06-42370	E0120-001002	11	E002002
23B-06-42570	K1110-001012	19	K009012
23B-06-42590	K1110-001005	7	K009005
23B-06-42660	E0120-001003	32	E002003
23B-06-43380	E0200-001001	31	E003001
23B-06-43650	E0120-001001	18	E002001
23B-06-61311	K1110-001012	5	K009012
23B-06-61810	E0202-001002	36	E004002
23B-06-71110	E0200-001001	1	E003001
23B-06-71122	E0202-001001	1	E004001
23B-06-71140	E0202-001003	1	E004003
23B-06-71150	E0202-001001	54	E004001
23B-06-71173	K1110-001013	1	K009013
23B-06-71190	E0120-001002	22	E002002
23B-06-71220	E0120-001002	29	E002002

PARTS Nº	FIG. Nº	INDEX	PAGE
23B-06-71230	E0202-001002	1	E004002
23B-06-71240	E0200-001001	3	E003001
23B-06-71252	K1110-001006	1	K009006
23B-06-71270	E0120-001003	1	E002003
23B-06-71280	E0120-001003	31	E002003
23B-06-71290	E0120-001003	21	E002003
23B-06-71310	K1110-001026	4	K009026
23B-06-71330	E0120-001003	12	E002003
23B-06-71350	E0120-001003	28	E002003
23B-06-71370	E0120-001003	30	E002003
23B-06-71380	E0120-001003	18	E002003
23B-06-71410	E0120-001001	13	E002001
23B-06-71430	E0120-001001	1	E002001
23B-06-71440	E0120-001001	10	E002001
23B-06-71460	E0200-001001	22	E003001
23B-06-71470	E0200-001001	42	E003001
23B-06-71480	E0200-001001	45	E003001
23B-06-71490	E0120-001001	4	E002001
23B-06-71510	K1110-001027	23	K009027
23B-06-71520	K1110-001027	28	K009027
23B-06-71530	K1110-001012	23	K009012
23B-06-71540	K1110-001025	7	K009025
23B-06-71550	K1110-001014	2	K009014
23B-06-71570	K1110-001012	36	K009012
23B-06-71610	K1110-001005	13	K009005
23B-06-71620	K1110-001012	3	K009012
23B-06-71640	K1110-001008	4	K009008
23B-06-71650	K1110-001012	9	K009012
23B-06-71660	K1110-001012	12	K009012
23B-06-71670	K1110-001012	20	K009012
23B-06-71690	K1110-001006	28	K009006
23B-06-71710	F4320-001012	20	F002012
23B-06-71720	E0202-001001	24	E004001
23B-06-71740	E0202-001004	1	E004004
23B-06-71750	A9999-501001	11	B012001
23B-06-71760	E0120-001004	3	E002004
23B-06-71770	E0202-001002	18	E004002
23B-06-71780	E0202-001001	27	E004001
23B-06-71790	E0202-001002	56	E004002
23B-06-71810	E0200-001002	1	E003002
23B-06-71820	E0202-001002	25	E004002
23B-06-71840	E0202-001002	61	E004002
23B-06-71871	F4320-001012	19	F002012
23B-06-71880	E0202-001003	15	E004003
23B-06-71903	K1110-001008	1	K009008
23B-06-71940	E0310-001001	2	E006001
23B-06-72110	K1110-001031	18	K009031
23B-06-72110	K1110-001012	1	K009012
23B-06-72630	K1110-001012	10	K009012
23B-06-73310	M4100-002005	8	M001005

PARTS Nº	FIG. Nº	INDEX	PAGE
23B-06-73321	M4100-002005	11	M001005
23B-06-73510	M4100-002009	1	M001009
23B-06-B3110	E0120-001001	7	E002001
23B-07-61112	K0710-001001	8	K006001
23B-07-61550	H5200-004013	7	H008013
23B-07-71210	K0710-001001	9	K006001
23B-07-71290	K0710-001002	1	K006002
23B-07-71310	K0710-001001	12	K006001
23B-07-71320	K0710-001002	16	K006002
23B-07-71330	K0710-001002	21	K006002
23B-07-71350	K0710-001002	2	K006002
23B-07-71360	K0710-001001	20	K006001
23B-07-71410	K0710-001001	13	K006001
23B-07-71430	K0710-001002	15	K006002
23B-07-71510	K0710-001001	2	K006001
23B-07-71550	K0710-001002	26	K006002
23B-07-71610	K0713-001001	1	K007001
23B-07-71620	K0713-001001	2	K007001
23B-07-71630	K0713-001001	17	K007001
23B-07-71660	K0713-001001	7	K007001
23B-07-71680	K0713-001001	4	K007001
23B-07-71690	K0713-001001	21	K007001
23B-07-73110	K0210-002016	27	K002016
23B-07-74111	K1110-001021	1	K009021
23B-07-74120	K1110-001023	23	K009023
23B-07-74130	K1110-001022	7	K009022
23B-07-74140	K1110-001029	4	K009029
23B-07-74160	K1110-001022	12	K009022
23B-07-74190	K0210-002016	41	K002016
23B-07-74210	K1110-001023	1	K009023
23B-07-74220	K1110-001023	26	K009023
23B-07-74230	K1110-001023	17	K009023
23B-07-74250	K1110-001029	5	K009029
23B-07-74260	K1110-001029	6	K009029
23B-07-74290	K1110-001023	4	K009023
23B-07-74310	K1110-001029	7	K009029
23B-07-74320	K1110-001029	8	K009029
23B-12-31210	B0110-001001	1	B014001
23B-13-05000	KIT	K01	Y001001
23B-13-05010	KIT	K02	Y001001
23B-13-05020	KIT	K03	Y001001
23B-13-70000	F4320-001002	1	F002002
23B-13-70000	F4320-001003	1	F002003
23B-13-70000	F4320-001004	1	F002004
23B-13-70000	F4320-001005	1	F002005
23B-13-70000	F4320-001006	1	F002006
23B-13-70000	F4320-001007	1	F002007
23B-13-70000	F4320-001008	1	F002008
23B-13-70000	F4320-001010	1	F002010

PARTS Nº	FIG. Nº	INDEX	PAGE
23B-13-70000	F4320-001011	1	F002011
23B-13-70000	F4320-001012	1	F002012
23B-13-70000	F4320-001013	1	F002013
23B-13-70000	F4320-001014	1	F002014
23B-13-70000	F4320-001015	1	F002015
23B-13-70000	F4320-001016	1	F002016
23B-13-71000	F4320-001014	1	F002014
23B-13-71000	F4320-001015	1	F002015
23B-13-71000	F4320-001016	1	F002016
23B-13-71120	F4320-001016	5	F002016
23B-13-71120	F4320-001014	1	F002014
23B-13-71190	F4320-001016	4	F002016
23B-13-71210	F4320-001015	11	F002015
23B-13-71511	F4320-001014	5	F002014
23B-13-72110	F4320-001014	6	F002014
23B-13-72140	F4320-001014	8	F002014
23B-13-72510	F4320-001014	11	F002014
23B-13-73411	F4320-001008	8	F002008
23B-13-73420	F4320-001008	14	F002008
23B-13-73430	F4320-001008	15	F002008
23B-13-73440	F4320-001008	7	F002008
23B-13-77110	F4320-001015	4	F002015
23B-13-77210	F4320-001015	5	F002015
23B-13-78111	F4320-001011	8	F002011
23B-13-78120	F4320-001011	9	F002011
23B-13-78131	F4320-001011	10	F002011
23B-13-79310	F4320-001008	16	F002008
23B-13-79320	F4320-001008	9	F002008
23B-15-71110	F4320-001002	1	F002002
23B-15-71120	F4320-001002	8	F002002
23B-15-72010	F4320-001003	1	F002003
23B-15-72020	F4320-001004	1	F002004
23B-15-72030	F4320-001005	1	F002005
23B-15-72040	F4320-001006	1	F002006
23B-15-72111	F4320-001003	1	F002003
23B-15-72121	F4320-001004	1	F002004
23B-15-72132	F4320-001005	1	F002005
23B-15-72241	F4320-001007	13	F002007
23B-15-72241	F4320-001006	1	F002006
23B-15-72410	F4320-001003	27	F002003
23B-15-72430	F4320-001004	27	F002004
23B-15-72450	F4320-001005	19	F002005
23B-15-72530	F4320-001003	29	F002003
23B-15-72540	F4320-001005	20	F002005
23B-15-72550	F4320-001006	16	F002006
23B-15-72560	F4320-001013	1	F002013
23B-15-72590	F4320-001006	3	F002006
23B-15-72610	F4320-001003	15	F002003
23B-15-72661	F4320-001005	6	F002005
23B-15-72670	F4320-001004	6	F002004

PARTS Nº	FIG. Nº	INDEX	PAGE
23B-15-72691	F4320-001005	5	F002005
23B-15-72910	F4320-001003	5	F002003
23B-15-72920	F4320-001004	3	F002004
23B-15-73230	F4320-001008	11	F002008
23B-15-74110	F4320-001007	1	F002007
23B-15-74310	F4320-001007	2	F002007
23B-15-74810	F4320-001007	3	F002007
23B-15-74920	F4320-001007	10	F002007
23B-15-75000	F4320-001010	1	F002010
23B-15-75100	F4320-001009	1	F002009
23B-15-75131	F4320-001009	1	F002009
23B-15-75151	F4320-001009	34	F002009
23B-15-75161	F4320-001011	17	F002011
23B-15-75200	F4320-001011	17	F002011
23B-15-79810	F4320-001011	12	F002011
23B-16-31651	F4700-001001	22	F005001
23B-16-31770	F4320-001001	14	F002001
23B-16-61111	H6290-001001	1	H010001
23B-16-61240	H6290-001001	2	H010001
23B-16-71190	F4700-001001	20	F005001
23B-16-71220	F4700-001001	2	F005001
23B-16-71230	F4700-001001	16	F005001
23B-16-71240	F4700-001001	13	F005001
23B-16-71250	F4700-001001	8	F005001
23B-16-71260	F4700-001001	47	F005001
23B-16-71270	F4700-001001	30	F005001
23B-16-71320	F4700-001001	33	F005001
23B-16-71430	F4700-001001	37	F005001
23B-16-71460	F4320-001001	9	F002001
23B-16-71650	F4700-001001	32	F005001
23B-16-71780	F4320-001001	1	F002001
23B-16-71810	F4320-001001	15	F002001
23B-16-71820	F4320-001001	2	F002001
23B-16-71830	F4700-001001	43	F005001
23B-16-71840	F4700-001001	5	F005001
23B-22-11590	F4500-001003	13	F004003
23B-22-21450	F4500-001003	10	F004003
23B-22-21460	F4500-001003	6	F004003
23B-22-31480	F4500-001015	2	F004015
23B-22-31670	F4500-001003	12	F004003
23B-22-31690	F4500-001003	8	F004003
23B-22-31730	F4500-001003	20	F004003
23B-22-31740	F4500-001003	21	F004003
23B-22-31751	F4500-001003	22	F004003
23B-22-31761	F4500-001003	23	F004003
23B-22-31770	F4500-001003	29	F004003
23B-22-31780	F4500-001003	26	F004003
23B-22-31790	F4500-001003	27	F004003
23B-22-31800	F4500-001003	29	F004003
23B-22-31810	F4500-001003	29	F004003

PARTS Nº	FIG. Nº	INDEX	PAGE
23B-22-31820	F4500-001003	29	F004003
23B-22-31830	F4500-001003	29	F004003
23B-22-31840	F4500-001004	1	F004004
23B-22-31850	F4500-001004	2	F004004
23B-22-31870	F4500-001004	4	F004004
23B-22-31880	F4500-001004	5	F004004
23B-22-31920	F4500-001005	2	F004005
23B-22-32200	F4500-001003	33	F004003
23B-22-32210	F4500-001003	33	F004003
23B-22-32220	F4500-001003	33	F004003
23B-22-32230	F4500-001003	33	F004003
23B-22-32290	F4500-001003	33	F004003
23B-22-70300	F4500-001005	6	F004005
23B-22-71100	F4500-001004	24	F004004
23B-22-71140	F4500-001002	6	F004002
23B-22-71150	F4200-001001	7	F001001
23B-22-71150	F4500-001002	1	F004002
23B-22-71160	F4500-001004	24	F004004
23B-22-71170	F4500-001004	24	F004004
23B-22-71180	F4500-001004	24	F004004
23B-22-71190	F4500-001004	14	F004004
23B-22-71200	F4500-001002	7	F004002
23B-22-71250	F4500-001002	7	F004002
23B-22-71260	F4500-001002	7	F004002
23B-22-71270	F4500-001002	7	F004002
23B-22-71280	F4500-001002	7	F004002
23B-22-71301	F4500-001002	15	F004002
23B-22-71360	F4500-001006	1	F004006
23B-22-71371	F4500-001005	5	F004005
23B-22-71371	F4500-001013	2	F004013
23B-22-71371	F4500-001014	2	F004014
23B-22-71430	F4500-001015	1	F004015
23B-22-71510	F4500-001001	1	F004001
23B-22-71520	F4500-001004	9	F004004
23B-22-71530	F4500-001004	13	F004004
23B-22-71550	F4500-001004	7	F004004
23B-22-71560	F4500-001005	4	F004005
23B-22-71600	F4500-001003	1	F004003
23B-22-71610	F4500-001003	1	F004003
23B-22-71620	F4500-001003	2	F004003
23B-22-71630	F4500-001003	14	F004003
23B-22-71640	F4500-001003	28	F004003
23B-22-71650	F4500-001003	32	F004003
23B-22-71660	F4500-001003	11	F004003
23B-22-71680	F4500-001003	7	F004003
23B-22-71700	F4500-001003	14	F004003
23B-22-71710	F4500-001003	9	F004003
23B-22-71720	F4500-001003	19	F004003
23B-22-71810	F4500-001006	7	F004006
23B-22-71830	F4500-001006	14	F004006

PARTS Nº	FIG. Nº	INDEX	PAGE
23B-22-71840	F4500-001006	13	F004006
23B-22-71860	F4500-001004	3	F004004
23B-22-71910	F4500-001005	1	F004005
23B-22-71930	F4500-001004	15	F004004
23B-22-71940	F4500-001004	16	F004004
23B-22-71950	F4500-001004	17	F004004
23B-22-72001	F4500-001001	1	F004001
23B-22-72001	F4500-001002	1	F004002
23B-22-72001	F4500-001003	1	F004003
23B-22-72001	F4500-001004	1	F004004
23B-22-72001	F4500-001005	1	F004005
23B-22-72001	F4500-001006	1	F004006
23B-22-72110	F4500-001001	2	F004001
23B-22-72540	F4500-001006	5	F004006
23B-23-21170	F4500-001013	11	F004013
23B-23-21180	F4500-001013	12	F004013
23B-23-21180	F4500-001014	12	F004014
23B-23-71170	F4500-001014	11	F004014
23B-25-21210	F4500-001013	9	F004013
23B-25-21210	F4500-001014	9	F004014
23B-25-31500	F4500-001010	1	F004010
23B-25-31510	F4500-001010	1	F004010
23B-25-31520	F4500-001010	1	F004010
23B-25-33132	F4500-001013	27	F004013
23B-25-33132	F4500-001014	27	F004014
23B-25-33220	F4500-001013	32	F004013
23B-25-33220	F4500-001014	32	F004014
23B-25-33610	F4500-001013	29	F004013
23B-25-33610	F4500-001014	29	F004014
23B-25-71111	F4500-001013	17	F004013
23B-25-71111	F4500-001014	17	F004014
23B-25-71120	F4500-001013	24	F004013
23B-25-71120	F4500-001014	24	F004014
23B-25-71130	F4500-001014	1	F004014
23B-25-71140	F4500-001013	1	F004013
23B-25-71150	F4500-001013	26	F004013
23B-25-71150	F4500-001014	26	F004014
23B-25-71160	F4500-001013	18	F004013
23B-25-71160	F4500-001014	18	F004014
23B-25-71170	F4500-001013	8	F004013
23B-25-71170	F4500-001014	8	F004014
23B-25-71210	F4500-001013	34	F004013
23B-25-71210	F4500-001014	34	F004014
23B-25-71300	F4500-001013	3	F004013
23B-25-71300	F4500-001014	3	F004014
23B-25-71351	F4500-001009	1	F004009
23B-25-71360	F4500-001013	23	F004013
23B-25-71360	F4500-001014	23	F004014
23B-25-71430	F4500-001013	22	F004013
23B-25-71430	F4500-001014	22	F004014

PARTS Nº	FIG. Nº	INDEX	PAGE
23B-25-71450	F4500-001013	6	F004013
23B-25-71450	F4500-001014	6	F004014
23B-25-71480	F4500-001013	42	F004013
23B-25-71490	F4500-001013	14	F004013
23B-25-71490	F4500-001014	14	F004014
23B-25-71610	F4500-001008	1	F004008
23B-25-71810	F4500-001009	4	F004009
23B-25-71841	F4500-001009	14	F004009
23B-25-71851	F4500-001009	13	F004009
23B-25-73170	F4500-001013	25	F004013
23B-25-73170	F4500-001014	25	F004014
23B-25-76360	F4500-001013	13	F004013
23B-25-76360	F4500-001014	13	F004014
23B-27-11170	F4400-001002	5	F003002
23B-27-11180	F4400-001002	21	F003002
23B-27-11190	F4400-001002	18	F003002
23B-27-11250	F4400-001002	8	F003002
23B-27-11260	F4400-001002	9	F003002
23B-27-11270	F4400-001002	10	F003002
23B-27-11281	F4400-001002	11	F003002
23B-27-11310	F4400-001001	19	F003001
23B-27-11330	F4400-001001	20	F003001
23B-27-11340	F4400-001001	21	F003001
23B-27-11351	F4400-001007	1	F003007
23B-27-11360	F4400-001001	12	F003001
23B-27-11360	F4400-001002	14	F003002
23B-27-11390	F4400-001001	25	F003001
23B-27-11441	F4400-001003	1	F003003
23B-27-11450	F4400-001003	4	F003003
23B-27-11460	F4400-001003	3	F003003
23B-27-11530	F4400-001001	36	F003001
23B-27-11610	F4400-001001	32	F003001
23B-27-11620	F4400-001001	44	F003001
23B-27-11630	F4400-001001	24	F003001
23B-27-11640	F4400-001001	26	F003001
23B-27-11640	F4400-001001	40	F003001
23B-27-11660	F4400-001007	2	F003007
23B-27-11670	F4400-001001	33	F003001
23B-27-11680	F4400-001001	14	F003001
23B-27-11680	F4400-001001	37	F003001
23B-27-11800	F4400-001001	10	F003001
23B-27-11800	F4400-001003	6	F003003
23B-27-11860	F4400-001002	19	F003002
23B-27-11870	F4400-001002	19	F003002
23B-27-11880	F4400-001002	19	F003002
23B-27-11890	F4400-001002	17	F003002
23B-27-11910	F4400-001003	8	F003003
23B-27-11920	F4400-001003	8	F003003
23B-27-31113	F4400-001001	1	F003001
23B-27-31130	F4400-001002	4	F003002
23B-27-31234	F4400-001001	35	F003001
23B-27-31410	F4400-001003	2	F003003
23B-27-31480	F4400-001001	16	F003001
23B-27-31520	F4400-001001	39	F003001
23B-27-31540	F4400-001001	13	F003001
23B-27-31570	F4400-001001	11	F003001
23B-27-31570	F4400-001003	7	F003003
23B-27-31840	F4400-001001	3	F003001
23B-27-31840	F4400-001003	8	F003003
23B-27-71141	F4400-001002	1	F003002
23B-27-71151	F4400-001002	2	F003002
23B-27-71161	F4400-001001	18	F003001
23B-27-71650	F4400-001001	46	F003001
23B-30-B1100	S0100-001002	1	S001002
23B-30-B1100	S0100-001004	1	S001004
23B-30-B1110	S0100-001001	1	S001001
23B-30-B1110	S0100-001003	1	S001003
23B-32-31302	F4500-001007	7	F004007
23B-32-31302	F4500-001012	1	F004012
23B-32-31340	F4500-001012	2	F004012
23B-32-31351	F4500-001012	3	F004012
23B-32-31371	F4500-001012	5	F004012
23B-32-31381	F4500-001012	6	F004012
23B-32-31510	F4500-001012	11	F004012
23B-32-31520	F4500-001012	12	F004012
23B-32-31530	F4500-001012	13	F004012
23B-32-31550	F4500-001012	15	F004012
23B-32-31560	F4500-001012	16	F004012
23B-32-31590	F4500-001012	17	F004012
23B-32-31610	F4500-001012	18	F004012
23B-32-31622	F4500-001012	19	F004012
23B-32-31630	F4500-001012	20	F004012
23B-32-31641	F4500-001012	21	F004012
23B-32-31650	F4500-001012	22	F004012
23B-32-31670	F4500-001012	29	F004012
23B-32-31680	F4500-001012	23	F004012
23B-32-31710	F4500-001012	30	F004012
23B-32-31720	F4500-001012	31	F004012
23B-32-31730	F4500-001012	32	F004012
23B-32-71310	F4500-001007	1	F004007
23B-32-71320	F4500-001007	4	F004007
23B-32-71330	F4200-001001	4	F001001
23B-40-31501	K1110-001007	3	K009007
23B-40-41102	K1110-001007	4	K009007
23B-40-43131	H4410-001001	25	H005001
23B-40-43141	H4410-001001	24	H005001
23B-40-43210	H4410-001001	30	H005001
23B-40-43221	H4410-001001	22	H005001
23B-40-43231	H4410-001001	23	H005001
23B-40-71110	H4410-001001	13	H005001
23B-40-71120	H4410-001001	26	H005001
23B-40-71130	H4410-001001	6	H005001
23B-40-72110	K1110-001007	17	K009007
23B-40-72120	K1110-001007	18	K009007
23B-40-72130	K1110-001007	19	K009007
23B-40-72140	K1110-001007	20	K009007
23B-40-72150	K1110-001007	21	K009007
23B-40-72220	H4410-001001	1	H005001
23B-40-72230	H4410-001001	2	H005001
23B-40-72240	H4410-001001	9	H005001
23B-40-72300	K1110-001007	14	K009007
23B-43-35110	T5115-001001	24	T002001
23B-43-35150	T5115-001001	28	T002001
23B-43-35160	T5115-001001	33	T002001
23B-43-35170	T5115-001001	37	T002001
23B-43-35180	T5115-001001	29	T002001
23B-43-35190	T5115-001001	30	T002001
23B-43-35270	H5210-001001	32	H009001
23B-43-35270	T5115-001001	25	T002001
23B-43-35810	K1110-001004	3	K009004
23B-43-35820	K1110-001003	35	K009003
23B-43-36350	K1110-001003	3	K009003
23B-43-36380	K1110-001003	29	K009003
23B-43-61150	K1110-001016	1	K009016
23B-43-71110	K4460-001002	1	K010002
23B-43-71120	K4460-001002	7	K010002
23B-43-71130	K4470-001001	6	K011001
23B-43-71140	K4470-001002	2	K011002
23B-43-71150	K4470-001002	1	K011002
23B-43-71160	K4470-001001	2	K011001
23B-43-71170	K4470-001001	1	K011001
23B-43-71250	K4470-001002	32	K011002
23B-43-71250	K4470-001002	41	K011002
23B-43-71260	K4470-001002	33	K011002
23B-43-71260	K4470-001002	42	K011002
23B-43-71270	K4470-001002	15	K011002
23B-43-71280	K4470-001002	7	K011002
23B-43-71310	K4470-001002	3	K011002
23B-43-71330	K4470-001002	43	K011002
23B-43-71340	K4470-001002	22	K011002
23B-43-71350	K4470-001002	34	K011002
23B-43-71360	K4470-001002	23	K011002
23B-43-71370	K4470-001001	7	K011001
23B-43-71480	K4470-001002	35	K011002
23B-43-71510	K4470-001002	48	K011002
23B-43-71540	K4460-001003	1	K010003
23B-43-71550	K4460-001003	2	K010003
23B-43-71610	K1110-001020	1	K009020
23B-43-72110	K1110-001002	1	K009002
23B-43-72120	K1110-001002	2	K009002

PARTS Nº	FIG. Nº	INDEX	PAGE
23B-43-72130	K1110-001002	3	K009002
23B-43-72140	K1110-001002	4	K009002
23B-43-72160	K1110-001002	5	K009002
23B-43-72170	K1110-001002	6	K009002
23B-43-72180	K1110-001002	24	K009002
23B-43-72190	K1110-001002	28	K009002
23B-43-72210	K1110-001002	32	K009002
23B-43-72220	K1110-001002	31	K009002
23B-43-72230	K1110-001004	23	K009004
23B-43-72240	K1110-001004	22	K009004
23B-43-72250	K1110-001004	21	K009004
23B-43-72260	K1110-001004	20	K009004
23B-43-72270	K1110-001004	19	K009004
23B-43-72280	K1110-001004	10	K009004
23B-43-72290	K1110-001004	6	K009004
23B-43-72310	K1110-001004	7	K009004
23B-43-72320	K1110-001004	8	K009004
23B-43-72330	K1110-001004	9	K009004
23B-43-72340	K1110-001019	1	K009019
23B-43-72350	K1110-001019	4	K009019
23B-43-72360	K1110-001019	8	K009019
23B-43-72370	K1110-001020	11	K009020
23B-43-72380	K1110-001002	33	K009002
23B-43-72390	K1110-001003	27	K009003
23B-43-72410	K1110-001005	1	K009005
23B-43-72420	K1110-001003	30	K009003
23B-43-72430	K1110-001003	1	K009003
23B-43-72440	K1110-001003	4	K009003
23B-43-72450	K1110-001003	20	K009003
23B-43-72470	K1110-001003	18	K009003
23B-43-72480	K1110-001003	13	K009003
23B-43-72490	K1110-001007	1	K009007
23B-43-72510	K1110-001007	2	K009007
23B-43-72520	K1110-001003	6	K009003
23B-43-72532	K1110-001001	1	K009001
23B-43-72540	K1110-001001	5	K009001
23B-43-72550	K1110-001001	4	K009001
23B-43-72560	K1110-001004	1	K009004
23B-43-72580	K1110-001027	31	K009027
23B-43-72590	K1110-001027	32	K009027
23B-43-72690	K1110-001020	9	K009020
23B-43-72700	K4460-001001	1	K010001
23B-43-72700	K4460-001002	1	K010002
23B-43-72720	K1110-001006	18	K009006
23B-43-72730	K1110-001006	17	K009006
23B-43-72740	K1110-001006	24	K009006
23B-43-72750	K1110-001006	25	K009006
23B-43-72770	K1110-001002	12	K009002
23B-43-72780	K1110-001020	8	K009020
23B-43-72790	K1110-001020	6	K009020
23B-43-72820	K1110-001002	25	K009002
23B-43-72830	K1110-001003	2	K009003
23B-43-72840	K1110-001003	37	K009003
23B-43-72850	K1110-001003	33	K009003
23B-43-72860	K1110-001007	10	K009007
23B-43-72990	K1110-001003	31	K009003
23B-45-72100	K1110-001019	14	K009019
23B-46-11220	F4400-001008	1	F003008
23B-46-31361	J4110-001001	2	J001001
23B-46-31381	J4120-001001	2	J002001
23B-46-31810	F4400-001008	3	F003008
23B-46-33110	J4130-001001	12	J003001
23B-46-33120	J4130-001001	13	J003001
23B-46-33130	J4130-001001	13	J003001
23B-46-33140	J4130-001001	19	J003001
23B-46-33150	J4130-001001	18	J003001
23B-46-33160	J4130-001001	13	J003001
23B-46-71410	H5210-001003	53	H009003
23B-46-72102	J4120-001001	1	J002001
23B-46-72510	J4120-001001	9	J002001
23B-46-B3110	J4110-001001	1	J001001
23B-53-31911	U0100-004002	12	U002002
23B-53-31940	U0100-004002	11	U002002
23B-53-71111	U0100-002003	3	U001003
23B-53-71111	U0100-004003	3	U002003
23B-53-71150	U0100-002003	1	U001003
23B-53-71150	U0100-004003	1	U002003
23B-53-71160	U0100-002003	2	U001003
23B-53-71160	U0100-004003	2	U002003
23B-53-71180	U0100-002001	7	U001001
23B-53-71240	U0100-002002	1	U001002
23B-53-71240	U0100-004002	1	U002002
23B-53-71280	U0100-004001	32	U002001
23B-53-71290	U0100-004001	7	U002001
23B-53-B1141	U0100-002002	12	U001002
23B-53-B1150	U0100-002002	11	U001002
23B-53-B1220	U0100-002001	32	U001001
23B-54-31990	M4230-001001	25	M002001
23B-54-32140	K1110-001030	2	K009030
23B-54-32151	K1110-001030	3	K009030
23B-54-32160	K1110-001030	5	K009030
23B-54-32208	M4310-001001	1	M005001
23B-54-32208	M4310-001001	13	M005001
23B-54-33971	M4310-001001	3	M005001
23B-54-33971	M4310-001001	14	M005001
23B-54-33980	M4310-001001	4	M005001
23B-54-33980	M4310-001001	15	M005001
23B-54-33991	M4310-001001	2	M005001
23B-54-33991	M4310-001001	13	M005001
23B-54-34540	M4100-002003	23	M001003
23B-54-34841	M4310-001001	6	M005001
23B-54-34841	M4310-001001	17	M005001
23B-54-34850	M4310-001001	5	M005001
23B-54-34850	M4310-001001	16	M005001
23B-54-61180	K1110-001010	8	K009010
23B-54-63251	M4100-002001	23	M001001
23B-54-71110	M4100-002001	5	M001001
23B-54-71170	M4100-002003	1	M001003
23B-54-71190	M4100-002003	28	M001003
23B-54-71210	M4100-002003	34	M001003
23B-54-71220	M4100-002003	42	M001003
23B-54-71250	M4100-002004	1	M001004
23B-54-71260	M4100-002002	41	M001002
23B-54-71270	M4100-002004	8	M001004
23B-54-71290	M4100-002006	1	M001006
23B-54-71310	M4100-002004	13	M001004
23B-54-71320	M4100-002004	11	M001004
23B-54-71330	M4100-002004	12	M001004
23B-54-71340	M4100-002004	16	M001004
23B-54-71350	M4100-002004	17	M001004
23B-54-71370	M4100-002003	15	M001003
23B-54-71381	M4100-002004	5	M001004
23B-54-71390	M4100-002002	21	M001002
23B-54-71410	M4100-002002	4	M001002
23B-54-71420	M4100-002002	10	M001002
23B-54-71431	M4100-002002	24	M001002
23B-54-71441	M4100-002002	27	M001002
23B-54-71450	M4100-002002	35	M001002
23B-54-71460	M4100-002002	6	M001002
23B-54-71460	M4100-002002	12	M001002
23B-54-71470	M4100-002002	7	M001002
23B-54-71470	M4100-002002	13	M001002
23B-54-71480	M4100-002002	8	M001002
23B-54-71480	M4100-002002	14	M001002
23B-54-71490	M4100-002002	9	M001002
23B-54-71490	M4100-002002	15	M001002
23B-54-71510	M4100-002002	26	M001002
23B-54-71510	M4100-002002	29	M001002
23B-54-71530	M4100-002005	20	M001005
23B-54-71540	M4100-002003	31	M001003
23B-54-71550	M4100-002001	16	M001001
23B-54-71550	M4100-002003	19	M001003
23B-54-71550	M4100-002003	35	M001003
23B-54-71560	M4100-002002	1	M001002
23B-54-71610	M4100-002001	6	M001001
23B-54-71630	M4100-002001	5	M001001
23B-54-71650	M4100-002003	10	M001003
23B-54-71660	M4100-002003	11	M001003
23B-54-71670	M4100-002003	27	M001003
23B-54-71680	M4100-002008	14	M001008

PARTS Nº	FIG. Nº	INDEX	PAGE
23B-54-71710	M4100-002003	20	M001003
23B-54-71761	M4100-002003	18	M001003
23B-54-71780	M4100-002003	4	M001003
23B-54-71790	M4100-002003	6	M001003
23B-54-71810	M4100-002002	25	M001002
23B-54-71810	M4100-002002	28	M001002
23B-54-71931	M4100-002001	15	M001001
23B-54-72111	K1110-001010	1	K009010
23B-54-72120	K1110-001010	4	K009010
23B-54-72130	K1110-001002	15	K009002
23B-54-72140	K1110-001002	14	K009002
23B-54-72150	K1110-001002	16	K009002
23B-54-72160	K1110-001002	17	K009002
23B-54-72171	K1110-001011	1	K009011
23B-54-72180	K1110-001016	9	K009016
23B-54-72191	K1110-001024	1	K009024
23B-54-72220	K1110-001024	9	K009024
23B-54-72231	K1110-001016	12	K009016
23B-54-72240	K1110-001011	2	K009011
23B-54-72250	K1110-001024	6	K009024
23B-54-72260	K1110-001024	7	K009024
23B-54-72270	K1110-001025	1	K009025
23B-54-72280	K1110-001031	4	K009031
23B-54-72310	K1110-001024	12	K009024
23B-54-72320	K1110-001001	8	K009001
23B-54-72331	K1110-001011	5	K009011
23B-54-72350	K1110-001031	1	K009031
23B-54-72360	K1110-001011	6	K009011
23B-54-72370	K1110-001011	7	K009011
23B-54-72430	K1110-001028	1	K009028
23B-54-72440	K1110-001028	2	K009028
23B-54-72450	K1110-001028	15	K009028
23B-54-72460	K1110-001028	16	K009028
23B-54-72470	K1110-001028	7	K009028
23B-54-72480	K1110-001028	6	K009028
23B-54-72490	K1110-001028	5	K009028
23B-54-72510	K0310-001001	1	K004001
23B-54-72521	K1110-001030	9	K009030
23B-54-72530	K1110-001028	14	K009028
23B-54-72540	K1110-001030	1	K009030
23B-54-73111	M4230-001001	1	M002001
23B-54-73121	M4230-001001	10	M002001
23B-54-73130	M4230-001001	29	M002001
23B-54-73141	M4230-001001	26	M002001
23B-54-73150	M4310-001001	1	M005001
23B-54-73160	M4310-001001	12	M005001
23B-54-73180	M4230-001002	12	M002002
23B-54-73190	M4230-001002	19	M002002
23B-54-73230	M4230-001001	22	M002001
23B-54-73241	M4230-001001	7	M002001
23B-54-73250	M4230-001001	32	M002001
23B-54-73260	M4230-001001	16	M002001
23B-54-73270	M4230-001001	19	M002001
23B-54-73280	M4230-001001	13	M002001
23B-54-73290	M4230-001001	4	M002001
23B-54-73310	M4230-001002	25	M002002
23B-54-73320	M4230-001002	20	M002002
23B-54-73340	M4230-001002	15	M002002
23B-54-73351	M4230-001002	34	M002002
23B-54-73360	M4230-001002	31	M002002
23B-54-73380	M4230-001002	35	M002002
23B-54-73410	K0350-001001	11	K005001
23B-54-73420	M4230-001001	35	M002001
23B-54-73440	M4230-001002	18	M002002
23B-54-73450	M4230-001002	28	M002002
23B-54-73660	M4230-001002	6	M002002
23B-54-73670	M4230-001002	7	M002002
23B-54-73681	M4230-001002	1	M002002
23B-57-31220	K0110-001001	27	K001001
23B-57-31301	K0110-001001	1	K001001
23B-57-71130	K0110-001001	22	K001001
23B-60-33112	H5200-004004	11	H008004
23B-60-33240	F4700-001001	21	F005001
23B-60-33240	F4700-001001	26	F005001
23B-60-33240	H0110-001001	35	H001001
23B-60-33240	H0210-001010	9	H004010
23B-60-33240	H5200-004004	5	H008004
23B-60-33240	H5200-004004	13	H008004
23B-60-33240	H5200-004004	15	H008004
23B-60-33240	H5200-004005	6	H008005
23B-60-33240	H5200-004006	7	H008006
23B-60-33240	H5200-004007	8	H008007
23B-60-33240	H6290-001001	6	H010001
23B-60-33240	H6290-001001	23	H010001
23B-60-33240	H6290-001001	28	H010001
23B-60-33240	H6290-001001	29	H010001
23B-60-34470	H5120-002001	17	H007001
23B-60-34480	H5120-002001	18	H007001
23B-60-34970	H5210-001001	14	H009001
23B-60-41250	F4500-001006	3	F004006
23B-60-41260	H5210-001004	29	H009004
23B-60-42701	H5120-002001	1	H007001
23B-60-42711	H5120-002001	2	H007001
23B-60-71110	H0110-001001	1	H001001
23B-60-71122	M4100-002001	1	M001001
23B-60-71130	H0110-001001	23	H001001
23B-60-71160	M4100-002001	4	M001001
23B-60-71210	H0210-001009	1	H004009
23B-60-71311	H0120-001011	5	H002011
23B-60-71311	H0120-002011	5	H003011
23B-60-71320	H0120-001011	8	H002011
23B-60-71320	H0120-002011	8	H003011
23B-60-71330	H0120-001011	9	H002011
23B-60-71330	H0120-002011	9	H003011
23B-60-71341	H0120-001011	10	H002011
23B-60-71341	H0120-002011	10	H003011
23B-60-71350	H0120-001011	11	H002011
23B-60-71350	H0120-002011	11	H003011
23B-60-71360	H0120-001011	14	H002011
23B-60-71360	H0120-002011	14	H003011
23B-60-71410	H5120-002002	18	H007002
23B-60-71420	H0110-001002	7	H001002
23B-60-71430	H0110-001001	12	H001001
23B-60-71440	H0110-001002	12	H001002
23B-60-72120	H5210-001004	33	H009004
23B-60-72130	H5210-001004	40	H009004
23B-60-72150	H5210-001003	32	H009003
23B-60-72160	H5210-001003	33	H009003
23B-60-72170	H5210-001003	38	H009003
23B-60-72180	H5210-001003	43	H009003
23B-60-72190	H5210-001003	34	H009003
23B-60-72210	H5210-001003	39	H009003
23B-60-72220	H5210-001003	40	H009003
23B-60-72230	H5210-001003	44	H009003
23B-60-72240	H5210-001001	10	H009001
23B-60-72250	H5210-001001	9	H009001
23B-60-72260	H5210-001005	11	H009005
23B-60-72270	H5120-002002	4	H007002
23B-60-72280	H5210-001002	1	H009002
23B-60-72290	H5210-001003	35	H009003
23B-60-72330	H5120-002002	6	H007002
23B-60-72360	H5210-001004	13	H009004
23B-60-72370	H5210-001004	14	H009004
23B-60-72380	H5210-001003	1	H009003
23B-60-72390	H5210-001003	2	H009003
23B-60-72410	H5210-001003	3	H009003
23B-60-72420	H5210-001003	4	H009003
23B-60-72430	H5210-001003	7	H009003
23B-60-72440	H5210-001003	8	H009003
23B-60-72450	H5210-001003	9	H009003
23B-60-72460	H5210-001003	10	H009003
23B-60-72470	H5210-001004	1	H009004
23B-60-72480	H5210-001004	2	H009004
23B-60-72490	H5120-002002	8	H007002
23B-60-72510	H5210-001004	27	H009004
23B-60-72520	H5210-001004	28	H009004
23B-60-72530	H5210-001004	25	H009004
23B-60-72540	H5210-001004	26	H009004
23B-60-72550	H5210-001001	2	H009001
23B-60-72560	H5210-001001	1	H009001

PARTS Nº	FIG. Nº	INDEX	PAGE
23B-60-72570	H5210-001005	2	H009005
23B-60-72580	H5210-001005	1	H009005
23B-60-72590	H5210-001005	10	H009005
23B-60-72610	H5210-001005	12	H009005
23B-60-72621	H5210-001005	13	H009005
23B-60-72630	H5210-001003	5	H009003
23B-60-72640	H5210-001003	6	H009003
23B-60-72650	H5210-001004	3	H009004
23B-60-72660	H5210-001004	4	H009004
23B-60-72930	H5210-001004	36	H009004
23B-60-72930	H5210-001004	43	H009004
23B-60-72941	H5120-002001	13	H007001
23B-60-72970	H5210-001004	16	H009004
23B-60-72980	H5210-001004	15	H009004
23B-60-73110	H5200-004001	1	H008001
23B-60-73120	H5200-004001	6	H008001
23B-60-73170	H6290-001001	22	H010001
23B-60-73180	H6290-001001	16	H010001
23B-60-73190	H5200-004011	16	H008011
23B-60-73210	H5200-004008	1	H008008
23B-60-73220	H5200-004010	1	H008010
23B-60-73230	H5200-004009	3	H008009
23B-60-73240	H5200-004011	3	H008011
23B-60-73250	H5200-004005	10	H008005
23B-60-73260	H5200-004013	16	H008013
23B-60-73270	H5200-004013	17	H008013
23B-60-73280	H5200-004004	6	H008004
23B-60-73310	H5200-004005	1	H008005
23B-60-73320	H5200-004005	14	H008005
23B-60-73330	H5200-004005	22	H008005
23B-60-73340	H5200-004005	18	H008005
23B-60-73350	H5200-004005	4	H008005
23B-60-73360	H5200-004005	44	H008005
23B-60-73370	H5200-004005	35	H008005
23B-60-73380	H5200-004020	1	H008020
23B-60-73391	H5200-004020	2	H008020
23B-60-73410	H5200-004016	10	H008016
23B-60-73410	H5200-004006	1	H008006
23B-60-73420	H5200-004006	2	H008006
23B-60-73430	H5200-004007	15	H008007
23B-60-73441	H5200-004007	1	H008007
23B-60-73460	H5200-004007	23	H008007
23B-60-73470	H5200-004007	24	H008007
23B-60-73480	H5200-004007	25	H008007
23B-60-73490	H5200-004006	24	H008006
23B-60-73510	H5200-004006	34	H008006
23B-60-73520	H5200-004004	35	H008004
23B-60-73530	H5200-004006	38	H008006
23B-60-73550	H5200-004015	4	H008015
23B-60-73570	H5200-004002	1	H008002
23B-60-73580	H5200-004002	6	H008002
23B-60-73590	H5200-004004	14	H008004
23B-60-73610	H5200-004014	1	H008014
23B-60-73620	H5200-004014	17	H008014
23B-60-73630	H5200-004014	24	H008014
23B-60-73641	H5200-004014	37	H008014
23B-60-73650	H5200-004014	8	H008014
23B-60-73660	H5200-004014	34	H008014
23B-60-73670	H5200-004016	11	H008016
23B-60-73670	H5200-004012	1	H008012
23B-60-73680	H5200-004012	4	H008012
23B-60-73690	H5200-004012	10	H008012
23B-60-73740	H5200-004012	7	H008012
23B-60-73750	H5200-004012	13	H008012
23B-60-73760	H5200-004012	8	H008012
23B-60-73760	H5200-004012	14	H008012
23B-60-73760	H5200-004012	20	H008012
23B-60-73760	H5200-004012	26	H008012
23B-60-73770	H5200-004012	16	H008012
23B-60-73790	H5200-004012	19	H008012
23B-60-73810	H5200-004012	22	H008012
23B-60-73820	H5200-004012	25	H008012
23B-60-73840	H5200-004012	28	H008012
23B-60-73850	H5200-004012	31	H008012
23B-60-73860	H5200-004012	32	H008012
23B-60-73870	H5200-004016	6	H008016
23B-60-73880	H5200-004017	6	H008017
23B-60-73890	H5200-004017	14	H008017
23B-60-73910	H5200-004004	27	H008004
23B-60-73920	H5200-004017	20	H008017
23B-60-73930	H5200-004018	10	H008018
23B-60-73940	H5200-004018	17	H008018
23B-60-73950	H5200-004018	21	H008018
23B-60-73960	H5200-004018	4	H008018
23B-60-73980	H5210-001002	4	H009002
23B-60-73990	H5200-004016	1	H008016
23B-60-74280	H5200-004005	49	H008005
23B-60-74330	F4500-001001	22	F004001
23B-60-74340	H5200-004012	35	H008012
23B-60-74410	H5200-004014	11	H008014
23B-60-74420	H5200-004019	1	H008019
23B-60-74440	F4500-001006	33	F004006
23B-60-74470	H5210-001003	48	H009003
23B-60-74510	H5200-004020	11	H008020
23B-60-74520	H5200-004020	10	H008020
23B-60-74530	H5200-004013	14	H008013
23B-60-74540	H0210-001010	10	H004010
23B-60-74550	H5200-004001	8	H008001
23B-60-74610	H6290-001001	7	H010001
23B-60-74620	H6290-001001	8	H010001
23B-60-74650	H6290-001001	19	H010001
23B-60-74710	H5200-004015	6	H008015
23B-60-74720	F4500-001006	20	F004006
23B-60-74730	F4500-001001	6	F004001
23B-60-74740	F4500-001006	27	F004006
23B-60-74750	H5200-004007	19	H008007
23B-60-74770	H5200-004016	4	H008016
23B-60-74800	H5210-001003	25	H009003
23B-60-74860	H5120-002002	5	H007002
23B-60-74870	H5120-002002	7	H007002
23B-60-74910	H5200-004003	1	H008003
23B-60-74920	H5200-004006	42	H008006
23B-60-75210	B0100-001001	17	B013001
23B-61-42110	H5200-004010	10	H008010
23B-61-42140	H5200-004010	11	H008010
23B-62-31100	T5130-001001	38	T008001
23B-70-16240	T5130-001001	41	T008001
23B-70-31140	T5110-001001	9	T001001
23B-70-31290	T5120-003001	1	T004001
23B-70-31331	T5123-001001	57	T005001
23B-70-31350	T5115-001001	1	T002001
23B-70-31360	T5115-001001	2	T002001
23B-70-31451	T5123-001001	58	T005001
23B-70-31540	T5110-001001	4	T001001
23B-70-31610	T5110-001001	16	T001001
23B-70-31620	T5110-001001	16	T001001
23B-70-31640	T5123-001001	6	T005001
23B-70-31640	T5123-001001	28	T005001
23B-70-31680	T5110-001001	15	T001001
23B-70-31730	T5123-001001	23	T005001
23B-70-31790	T5115-001001	3	T002001
23B-70-31830	T5120-004001	1	T003001
23B-70-51550	T5110-001001	13	T001001
23B-70-51560	T5110-001001	14	T001001
23B-70-52110	T5130-001001	19	T008001
23B-70-52121	T5130-001001	27	T008001
23B-70-52130	T5130-001001	1	T008001
23B-70-52140	T5130-001001	4	T008001
23B-70-52180	T5130-001001	6	T008001
23B-70-52210	T5130-001001	12	T008001
23B-70-52220	T5130-001002	2	T008002
23B-70-52230	T5130-001001	14	T008001
23B-70-52240	T5130-001001	13	T008001
23B-70-52250	T5130-001001	33	T008001
23B-70-52282	T5130-001002	1	T008002
23B-70-52290	T5130-001001	25	T008001
23B-70-52311	T5130-001001	5	T008001
23B-70-52470	T5130-001001	32	T008001
23B-70-71121	T5130-001001	42	T008001
23B-70-71121	T5130-001002	12	T008002

PARTS Nº	FIG. Nº	INDEX	PAGE
23B-70-71121	T5110-001001	2	T001001
23B-70-71260	T5120-004001	10	T003001
23B-70-71260	T5120-003001	10	T004001
23B-70-72190	T5130-001001	26	T008001
23B-735-1240	T5123-001001	20	T005001
23B-735-3113	T5123-001001	61	T005001
23B-735-3113	T5110-001001	1	T001001
23B-735-3151	T5123-001001	1	T005001
23B-735-3210	T5123-001001	41	T005001
23B-735-3221	T5123-001001	42	T005001
23B-735-3240	T5123-001001	31	T005001
23B-735-3250	T5123-001001	3	T005001
23B-735-3320	T5123-001001	59	T005001
23B-735-3350	T5123-001001	60	T005001
23B-735-3360	T5123-001001	16	T005001
23B-735-5132	T5123-001001	21	T005001
23B-735-5142	T5123-001001	22	T005001
23B-735-5160	T5123-001001	2	T005001
23B-735-7130	T5123-001001	39	T005001
23B-735-7140	T5123-001001	40	T005001
23B-735-7150	T5123-001001	45	T005001
23B-735-7160	T5123-001001	48	T005001
23B-735-7210	T5123-001001	51	T005001
23B-735-7220	T5123-001001	54	T005001
23B-785-3111	T5125-001002	1	T006002
23B-785-3122	T5125-001002	2	T006002
23B-785-3141	T5125-001002	28	T006002
23B-785-3150	T5125-001002	15	T006002
23B-785-3231	T5125-001002	7	T006002
23B-785-3351	T5125-001002	12	T006002
23B-785-7110	T5125-001002	21	T006002
23B-785-7170	T5125-001002	29	T006002
23B-809-5460	K1110-001023	20	K009023
23B-809-5470	K1110-001023	5	K009023
23B-809-5470	K1110-001023	33	K009023
23B-846-7250	M4510-001001	1	M006001
23B-915-7110	M4231-001001	1	M003001
23B-915-7120	M4231-001001	2	M003001
23B-952-7111	K0210-002003	1	K002003
23B-952-7120	K0210-002016	29	K002016
23B-952-7130	K0210-002001	9	K002001
23B-952-7140	K0810-002001	4	K008001
23B-952-7160	K0210-002009	15	K002009
23B-952-7160	K0210-002013	15	K002013
23B-952-7170	K0210-002009	16	K002009
23B-952-7170	K0210-002013	17	K002013
23B-952-7180	K0210-002013	16	K002013
23B-952-7220	K0210-002016	12	K002016
23B-952-7250	K0210-002016	16	K002016
23B-952-7260	K0210-002016	26	K002016
23B-952-7280	K0210-002004	11	K002004
23B-952-7290	K0210-002004	16	K002004
23B-952-7330	K0210-002009	6	K002009
23B-952-7330	K0210-002013	6	K002013
23B-952-7350	K0210-002009	42	K002009
23B-952-7360	K0210-002009	22	K002009
23B-952-7370	K0210-002013	40	K002013
23B-952-7380	K0210-002008	23	K002008
23B-952-7390	K0210-002012	23	K002012
23B-952-7410	K1110-001030	16	K009030
23B-952-7420	K1110-001030	17	K009030
23B-952-7430	K1110-001030	18	K009030
23B-952-7440	K0210-002006	1	K002006
23B-952-7450	K0210-002006	6	K002006
23B-952-7470	K0210-002009	1	K002009
23B-952-7480	K0210-002008	10	K002008
23B-952-7480	K0210-002012	10	K002012
23B-952-7490	K0210-002018	9	K002018
23B-952-7520	K1110-001030	19	K009030
23B-952-7530	K0210-002001	42	K002001
23B-952-7540	K0210-002009	4	K002009
23B-952-7540	K0210-002013	4	K002013
23B-952-7560	K0210-002002	13	K002002
23B-952-7590	K0210-002018	10	K002018
23B-952-7630	K0210-002001	37	K002001
23B-952-7640	K0210-002001	38	K002001
23B-952-7670	K0210-002017	25	K002017
23B-952-7680	K0210-002016	17	K002016
23B-952-7690	K0210-002018	15	K002018
23B-952-7720	K0210-002009	32	K002009
23B-952-7760	K0210-002013	30	K002013
23B-952-7831	K0210-002002	12	K002002
23B-952-7910	K0210-002005	2	K002005
23B-952-7920	K0210-002018	2	K002018
23B-952-7930	K0210-002007	8	K002007
23B-952-7930	K0210-002011	8	K002011
23B-952-7940	K0210-002007	5	K002007
23B-952-7950	K0210-002011	5	K002011
23B-952-7960	K0210-002018	5	K002018
23B-953-3441	K0210-002017	2	K002017
23B-957-5510	K1110-001030	8	K009030
23B-957-5520	K1110-001030	13	K009030
23B-957-7510	K1110-001030	12	K009030
23B-981-1310	V0300-001001	16	V001001
23B-98-71100	M4240-001001	1	M004001
23B-98-71111	M4240-001001	1	M004001
23B-98-71120	M4240-001001	10	M004001
23B-98-71130	M4240-001001	4	M004001
23B-98-71141	M4240-001001	5	M004001
23C-03-51751	C0110-001001	37	C001001
23C-06-62150	E0200-001001	25	E003001
23C-06-62720	E0200-001002	14	E003002
23C-06-62730	E0200-001002	17	E003002
23C-06-63410	E0410-001001	1	E007001
23C-06-63420	E0410-001001	4	E007001
23C-07-62480	K1110-001023	32	K009023
23C-15-65200	F4320-001010	2	F002010
23C-15-66000	F4320-001009	2	F002009
23C-22-51260	F4500-001001	15	F004001
23C-27-51141	F4400-001001	4	F003001
23C-27-51152	F4400-001003	9	F003003
23C-40-54130	K1110-001007	22	K009007
23C-40-61500	K1110-001009	1	K009009
23C-40-61510	K1110-001009	1	K009009
23C-40-61610	K1110-001009	9	K009009
23C-40-61620	K1110-001009	10	K009009
23C-45-61100	K1110-001015	3	K009015
23C-46-52371	J4110-001001	5	J001001
23C-60-52140	H5200-004004	20	H008004
23C-60-52451	H5210-001004	32	H009004
23C-60-52461	H5210-001004	39	H009004
23C-61-52120	H5200-004010	2	H008010
23D-27-11940	D0100-001001	26	D001001
23D-27-11940	F4400-001001	7	F003001
23D-846-3190	M4510-001001	2	M006001
23E-735-1421	H5120-002001	1	H007001
23S-06-54121	E0200-001002	2	E003002
23S-44-14540	E0120-001003	14	E002003
23S-44-14540	K1110-001028	8	K009028
23S-55-51970	K0210-002001	11	K002001
23S-55-51970	K0210-002001	28	K002001
23S-55-51970	K0210-002001	41	K002001
23S-55-51970	K0210-002006	27	K002006
23S-55-51970	K0210-002008	6	K002008
23S-55-51970	K0210-002008	28	K002008
23S-55-51970	K0210-002009	8	K002009
23S-55-51970	K0210-002009	35	K002009
23S-55-51970	K0210-002012	6	K002012
23S-55-51970	K0210-002012	28	K002012
23S-55-51970	K0210-002013	8	K002013
23S-55-51970	K0210-002013	33	K002013
23S-55-51970	K0210-002016	19	K002016
23S-55-51970	K0810-002001	7	K008001
23S-55-51970	K1110-001016	2	K009016
23S-56-21150	K1110-001022	9	K009022
262-60-74340	K4470-001002	28	K011002
262-60-74340	K4470-001002	37	K011002
281-01-13180	K1110-001027	9	K009027
287-06-16420	K1110-001012	39	K009012
287-06-16420	K1110-001026	9	K009026

PARTS Nº	FIG. Nº	INDEX	PAGE
362-15-19520	F4320-001003	9	F002003
362-15-19520	F4320-001004	8	F002004
362-56-42690	K0210-002006	7	K002006
363-43-37350	E0202-001001	36	E004001
415-54-11980	M4100-002001	27	M001001
415-64-13120	C0110-001009	33	C001009
415-64-13120	M4100-002001	22	M001001
415-64-13120	M4100-002002	31	M001002
415-64-13130	H5200-004002	7	H008002
416-03-11210	C0110-001009	15	C001009
416-03-11250	C0110-001009	24	C001009
416-03-11260	C0110-001009	22	C001009
416-03-11270	C0110-001009	23	C001009
416-03-11281	C0110-001009	19	C001009
416-06-22250	K1110-001012	31	K009012
416-09-11120	T5125-001002	9	T006002
416-09-11130	T5123-001001	24	T005001
416-09-11140	T5125-001002	14	T006002
416-09-11140	T5125-001002	23	T006002
416-54-34230	H5120-002002	26	H007002
416-54-34230	H5210-001003	49	H009003
416-54-34230	J4110-001001	9	J001001
416-62-11480	H5200-004004	25	H008004
416-62-11480	H5200-004004	33	H008004
416-62-11480	H5200-004015	2	H008015
416-62-11480	K1110-001007	15	K009007
416-70-11810	T5125-001002	13	T006002
416-70-11810	T5125-001002	22	T006002
416-S14-2270	C0110-001001	27	C001001
417-01-11931	A9999-501001	1	B012001
417-06-43110	E0200-001002	2	E003002
417-22-12580	F4500-001004	6	F004004
417-43-37540	H5200-004008	15	H008008
417-43-37550	H5200-004008	12	H008008
417-43-37550	H5200-004010	9	H008010
417-43-37560	H5200-004008	9	H008008
417-43-37560	H5200-004010	6	H008010
417-43-37570	H5200-004008	10	H008008
417-43-37570	H5200-004010	7	H008010
417-43-37580	H5200-004008	11	H008008
417-43-37580	H5200-004010	8	H008010
417-43-37660	H5200-004008	16	H008008
417-43-37670	H5200-004008	17	H008008
417-43-37680	H5200-004008	18	H008008
417-43-37690	H5200-004008	19	H008008
417-43-37710	H5200-004008	20	H008008
417-43-37720	H5200-004008	21	H008008
417-43-37730	H5200-004008	22	H008008
417-43-37740	H5200-004008	23	H008008
417-43-37750	H5200-004008	24	H008008
417-43-37760	H5200-004008	25	H008008
417-43-37780	H5200-004008	27	H008008
417-43-37790	H5200-004008	28	H008008
417-54-13470	H5200-004002	9	H008002
417-54-21460	M4240-001001	8	M004001
417-62-13620	M4100-002001	8	M001001
417-62-13620	M4100-002002	30	M001002
417-62-14130	M4100-002001	9	M001001
417-62-31120	K1110-001007	11	K009007
417-70-11970	T5125-001002	3	T006002
417-923-3950	K0210-002007	6	K002007
417-923-3950	K0210-002011	6	K002011
417-926-3370	K0210-002009	27	K002009
417-926-3370	K0210-002013	26	K002013
417-926-3650	K0210-002006	22	K002006
418-01-11112	B0100-001001	7	B013001
418-01-11112	F4810-001001	5	F006001
418-01-11121	B0100-001001	7	B013001
418-01-11121	F4810-001001	5	F006001
418-01-11131	B0100-001001	8	B013001
418-01-11131	F4810-001001	6	F006001
418-03-11390	C0110-001009	14	C001009
418-03-43880	H5210-001005	21	H009005
418-06-46130	K1110-001012	8	K009012
418-07-36140	K0210-002006	31	K002006
418-43-37130	K1110-001019	7	K009019
418-43-37140	K1110-001020	2	K009020
418-43-37230	K1110-001020	10	K009020
418-62-11620	H5200-004004	21	H008004
418-62-11620	H5210-001004	31	H009004
418-62-11630	H5200-004004	4	H008004
418-62-32110	H5200-004004	32	H008004
418-62-32162	H5200-004004	24	H008004
418-62-32172	H5200-004004	3	H008004
418-62-32550	H5200-004001	9	H008001
418-62-32550	H6290-001001	9	H010001
418-62-32560	H5200-004001	10	H008001
418-62-32560	H6290-001001	10	H010001
418-62-35111	H5200-004009	12	H008009
418-926-4530	K0210-002006	18	K002006
418-926-4530	K0210-002006	34	K002006
418-926-4530	K0210-002013	51	K002013
418-926-4530	K0210-002017	20	K002017
418-926-4530	K0210-002017	22	K002017
418-926-4530	K0210-002017	24	K002017
418-926-4530	K1110-001005	3	K009005
418-926-4530	K1110-001005	12	K009005
418-926-4530	K1110-001008	3	K009008
418-926-4530	K1110-001012	4	K009012
418-926-4530	K1110-001012	6	K009012
419-01-11162	B0100-001001	9	B013001
419-01-11162	F4810-001001	7	F006001
419-07-11761	K0710-001001	22	K006001
419-09-11110	J4130-001001	7	J003001
419-09-11130	M4510-001001	4	M006001
419-14-31220	C0110-001002	1	C001002
419-15-12122	F4320-001005	23	F002005
419-15-12122	F4320-001006	20	F002006
419-15-12122	KIT	K01	Y001001
419-15-12140	F4320-001003	6	F002003
419-15-12140	F4320-001004	10	F002004
419-15-12140	F4320-001005	7	F002005
419-15-12140	F4320-001006	5	F002006
419-15-12640	F4320-001003	19	F002003
419-15-12640	F4320-001004	20	F002004
419-15-12650	F4320-001003	20	F002003
419-15-12650	F4320-001004	21	F002004
419-22-12570	F4500-001004	8	F004004
419-43-17920	C0110-001009	21	C001009
419-43-17920	H5200-004002	10	H008002
419-43-17920	M4100-002001	10	M001001
419-43-17930	H5200-004002	8	H008002
419-43-17930	M4100-002001	7	M001001
419-62-31530	F4320-001009	32	F002009
419-62-31530	H5200-004006	5	H008006
419-62-31530	H5200-004007	6	H008007
419-62-32130	H5200-004006	31	H008006
419-62-32140	H5200-004006	32	H008006
419-62-32150	H5200-004006	33	H008006
419-70-11490	F4400-001008	4	F003008
419-70-11820	J4130-001001	9	J003001
419-923-2130	K0210-002009	49	K002009
419-923-2130	K0210-002013	47	K002013
419-X13-A110	S0100-001001	1	S001001
419-X13-A110	S0100-001002	1	S001002
419-X13-A110	S0100-001003	1	S001003
419-X13-A110	S0100-001004	1	S001004
41G-06-13230	E0200-001002	8	E003002
41H-879-1250	K1110-001001	3	K009001
41H-879-1250	K1110-001027	33	K009027
421-03-31421	E0202-001003	9	E004003
421-06-22830	E0120-001002	10	E002002
421-06-22840	E0120-001002	9	E002002
421-06-22880	E0120-001002	8	E002002
421-06-22910	E0120-001002	13	E002002
421-06-22920	E0120-001002	12	E002002
421-06-23320	E0300-001001	1	E005001
421-06-23330	E0300-001001	1	E005001
421-06-23330	E0310-001001	1	E006001
421-06-26210	K0210-002003	7	K002003

PARTS Nº	FIG. Nº	INDEX	PAGE
421-07-12512	K0210-002016	20	K002016
421-07-12512	K0210-002016	25	K002016
421-07-23870	K1110-001022	15	K009022
421-09-11310	J4130-001001	2	J003001
421-09-21420	M4100-002003	5	M001003
421-09-21420	M4100-002003	7	M001003
421-33-31730	F4500-001013	36	F004013
421-33-31730	F4500-001014	36	F004014
421-40-12440	K1110-001009	15	K009009
421-40-12440	K4460-001002	3	K010002
421-40-12450	K1110-001009	16	K009009
421-40-42230	K1110-001009	11	K009009
421-40-42240	K1110-001009	13	K009009
421-40-42310	K1110-001009	2	K009009
421-40-42320	K1110-001009	3	K009009
421-40-42330	K1110-001009	4	K009009
421-40-42340	K1110-001009	5	K009009
421-40-42350	K1110-001009	1	K009009
421-40-42360	K1110-001009	6	K009009
421-40-42370	K1110-001009	6	K009009
421-40-42380	K1110-001009	7	K009009
421-40-42390	K1110-001009	8	K009009
421-40-42510	K1110-001009	11	K009009
421-40-42520	K1110-001009	12	K009009
421-40-42530	K1110-001009	13	K009009
421-40-42540	K1110-001009	14	K009009
421-43-22360	K4460-001002	2	K010002
421-43-22562	F4500-001006	23	F004006
421-43-22562	H5200-004005	23	H008005
421-43-22562	H5200-004013	1	H008013
421-43-22571	F4500-001006	24	F004006
421-43-22571	H5200-004005	24	H008005
421-43-22571	H5200-004013	2	H008013
421-43-27920	F4500-001006	26	F004006
421-43-27920	H5200-004005	26	H008005
421-43-27920	H5200-004013	4	H008013
421-43-32912	K4460-001002	15	K010002
421-43-48550	H5200-004008	2	H008008
421-43-48640	H5200-004008	35	H008008
421-46-11361	J4130-001001	8	J003001
421-46-11371	J4130-001001	3	J003001
421-46-11381	J4130-001001	3	J003001
421-46-11710	J4130-001001	1	J003001
421-54-25610	K0215-001001	7	K003001
421-54-32611	K1110-001031	9	K009031
421-54-34550	M4230-001002	5	M002002
421-54-34910	M4100-002002	34	M001002
421-60-11622	H0110-001001	10	H001001
421-62-11940	E0120-001003	7	E002003
421-62-11940	E0202-001001	42	E004001
421-62-23820	E0202-001003	27	E004003
421-70-11280	J4130-001001	21	J003001
421-926-3612	K0210-002013	1	K002013
421-926-4311	K0210-002006	25	K002006
421-926-4780	K0210-002002	33	K002002
421-926-4780	K0210-002002	39	K002002
421-U12-3140	M4100-002008	21	M001008
421-U12-3160	M4100-002008	23	M001008
421-U12-3170	M4100-002008	24	M001008
421-U12-3180	M4100-002008	25	M001008
421-U12-3190	M4100-002008	26	M001008
421-U12-3210	M4100-002008	27	M001008
421-U12-3220	M4100-002008	28	M001008
421-U12-3230	M4100-002008	29	M001008
421-U12-3240	M4100-002008	30	M001008
421-U12-3250	M4100-002008	31	M001008
421-U12-3260	M4100-002008	32	M001008
423-01-31610	A9999-501001	8	B012001
423-01-31620	A9999-501001	7	B012001
423-03-31710	C0110-001007	3	C001007
423-03-41280	C0110-001001	11	C001001
423-03-41370	C0110-001001	28	C001001
423-03-41430	C0110-001001	29	C001001
423-03-41850	B0200-001001	1	B015001
423-03-43370	C0110-001003	1	C001003
423-06-33130	E0300-001001	1	E005001
423-06-42430	K0210-002009	19	K002009
423-06-42430	K0210-002013	20	K002013
423-06-42530	E0202-001002	11	E004002
423-06-42540	E0202-001002	3	E004002
423-06-42560	E0202-001002	17	E004002
423-06-42570	E0202-001002	48	E004002
423-06-42640	K0210-002001	35	K002001
423-06-42720	M4100-002008	9	M001008
423-06-43160	M4100-002008	13	M001008
423-06-45350	E0300-001001	2	E005001
423-06-45350	K1110-001012	14	K009012
423-06-45360	K1110-001012	13	K009012
423-06-45390	K1110-001005	5	K009005
423-06-45410	K1110-001005	4	K009005
423-06-45521	K1110-001012	15	K009012
423-06-45550	K1110-001012	16	K009012
423-07-31571	K0710-001001	1	K006001
423-20-34111	F4200-001001	1	F001001
423-22-11240	F4500-001002	2	F004002
423-22-21750	F4500-001002	11	F004002
423-22-21820	F4500-001002	9	F004002
423-43-37120	H5200-004009	9	H008009
423-43-37260	K1110-001020	5	K009020
423-43-37260	K1110-001020	7	K009020
423-43-37560	H5200-004008	3	H008008
423-43-37570	H5200-004008	4	H008008
423-43-37580	H5200-004008	5	H008008
423-43-37630	H5200-004008	26	H008008
423-43-38120	H5210-001005	3	H009005
423-54-32340	K0210-002002	16	K002002
423-54-32340	K1110-001031	8	K009031
423-54-32370	K0210-002001	33	K002001
423-54-42680	K0210-002001	34	K002001
423-921-4340	K0210-002004	19	K002004
423-925-5851	K0210-002002	22	K002002
423-925-5860	K0210-002002	23	K002002
423-926-3860	K0210-002009	36	K002009
423-926-3860	K0210-002013	34	K002013
423-944-4391	K0210-002001	32	K002001
423-944-4391	K1110-001031	7	K009031
423-944-4670	K0210-002009	21	K002009
423-944-4720	K0210-002001	36	K002001
423-U12-3100	M4100-002008	19	M001008
423-U12-3130	M4100-002008	20	M001008
423-U12-3150	M4100-002008	22	M001008
423-U12-4120	M4100-002008	33	M001008
423-U12-4130	M4100-002008	34	M001008
423-Z91-4152	E0120-001003	41	E002003
424-01-11110	K4470-001002	8	K011002
424-06-23230	E0200-001002	2	E003002
424-06-43241	M4100-002005	1	M001005
424-06-43320	M4100-002005	3	M001005
424-06-43330	M4100-002005	5	M001005
424-06-43340	M4100-002005	6	M001005
424-09-12650	M4100-002008	15	M001008
424-15-12711	F4320-001015	8	F002015
424-35-15201	K4460-001004	1	K010004
424-35-15220	K4460-001004	3	K010004
424-35-15230	K4460-001004	4	K010004
424-35-15240	K4460-001004	5	K010004
424-35-15250	K4460-001004	6	K010004
424-35-15260	K4460-001004	7	K010004
424-35-15270	K4460-001004	8	K010004
424-35-15280	K4460-001004	2	K010004
424-43-37510	H5210-001001	6	H009001
424-46-11160	J4130-001001	11	J003001
424-46-11171	J4130-001001	6	J003001
424-46-11182	J4130-001001	10	J003001
424-46-42121	J4120-001001	12	J002001
424-926-3490	K0210-002009	47	K002009
424-926-3490	K0210-002013	45	K002013
424-926-3890	K0210-002009	11	K002009
424-926-3890	K0210-002013	11	K002013
425-03-11420	H5200-004004	40	H008004

PARTS Nº	FIG. Nº	INDEX	PAGE
425-07-24133	K0810-002001	1	K008001
425-15-35330	F4320-001010	16	F002010
425-43-11180	K4470-001002	29	K011002
425-43-11180	K4470-001002	38	K011002
425-926-3751	K0210-002002	37	K002002
425-93-41310	U0100-002002	5	U001002
425-93-41310	U0100-004002	5	U002002
425-S62-3160	K0710-001001	30	K006001
425-S67-2180	K0810-002001	1	K008001
426-01-11310	H5200-004019	12	H008019
426-15-15480	F4320-001009	10	F002009
426-15-15490	F4320-001009	8	F002009
426-15-15810	F4320-001009	14	F002009
426-15-16261	F4320-001009	13	F002009
426-54-22780	K1110-001031	11	K009031
426-54-22790	K1110-001031	12	K009031
426-56-31870	K0210-002006	28	K002006
426-56-31870	K0210-002008	7	K002008
426-56-31870	K0210-002008	29	K002008
426-56-31870	K0210-002009	9	K002009
426-56-31870	K0210-002012	7	K002012
426-56-31870	K0210-002012	29	K002012
426-56-31870	K0210-002013	9	K002013
426-56-31890	K0210-002006	29	K002006
426-56-31890	K0210-002008	8	K002008
426-56-31890	K0210-002008	30	K002008
426-56-31890	K0210-002009	10	K002009
426-56-31890	K0210-002012	8	K002012
426-56-31890	K0210-002012	30	K002012
426-56-31890	K0210-002013	10	K002013
426-925-3890	K0210-002002	34	K002002
426-925-3890	K0210-002002	38	K002002
427-04-11130	K1110-001023	8	K009023
427-15-19220	F4320-001003	28	F002003
42C-06-33130	K0210-002006	33	K002006
42C-54-22330	K1110-001018	3	K009018
515-35-11941	K0210-002017	10	K002017
561-33-71860	F4320-001002	19	F002002
561-86-69110	E0120-001004	2	E002004
561-88-68950	T5115-001001	4	T002001
562-15-16110	F4320-001009	9	F002009
565-44-11460	E0120-001004	1	E002004
566-15-49210	F4320-001015	6	F002015
566-15-49210	KIT	K01	Y001001
566-32-11430	F4500-001013	40	F004013
566-32-11430	F4500-001014	40	F004014
566-32-11620	F4500-001013	41	F004013
566-32-11620	F4500-001014	41	F004014
568-15-12850	F4320-001015	7	F002015
568-15-12850	KIT	K01	Y001001
569-06-61180	K0210-002003	12	K002003
569-06-61180	K1110-001012	26	K009012
569-06-61960	K0210-002003	15	K002003
569-06-61960	K0210-002004	25	K002004
569-06-61960	K1110-001012	29	K009012
569-06-61960	K1110-001012	40	K009012
569-06-61960	K1110-001026	11	K009026
569-06-61970	K0210-002003	16	K002003
569-06-61970	K1110-001012	30	K009012
569-06-61980	K0713-001001	11	K007001
569-06-61980	K0713-001001	24	K007001
569-15-51721	F4320-001010	22	F002010
569-15-51732	F4320-001010	22	F002010
569-33-72140	F4500-001013	38	F004013
569-33-72140	F4500-001014	38	F004014
569-54-83290	K0210-002006	12	K002006
569-54-8B100	K0210-002004	9	K002004
569-74-61470	J4110-001001	6	J001001
56B-06-11641	E0200-001002	3	E003002
56B-15-16250	F4320-001009	12	F002009
56B-15-16660	F4320-001009	11	F002009
56B-40-13440	M4100-002001	21	M001001
56B-43-17210	F4500-001001	11	F004001
56B-43-17210	F4500-001006	4	F004006
56B-43-17360	H5200-004009	6	H008009
56B-43-17360	H5200-004019	9	H008019
56B-88-12310	H5200-004011	9	H008011
56B-88-12320	H5200-004011	9	H008011
56B-88-12370	F4500-001006	15	F004006
56D-06-21810	E0200-001002	4	E003002
56D-06-21820	E0200-001002	5	E003002
56D-06-21830	E0200-001002	6	E003002
56D-06-21840	E0200-001002	7	E003002
56D-15-12710	F4320-001003	13	F002003
56D-15-12710	F4320-001004	13	F002004
56D-15-12710	F4320-001005	10	F002005
56D-15-12710	F4320-001006	8	F002006
56D-15-19311	F4320-001011	1	F002011
56D-15-19410	F4320-001008	6	F002008
56D-15-19420	F4320-001008	3	F002008
56D-15-19630	F4320-001008	2	F002008
56D-15-29790	F4320-001003	3	F002003
56D-15-29790	F4320-001004	2	F002004
56D-15-29790	F4320-001005	2	F002005
56D-15-29790	F4320-001006	2	F002006
56D-54-23470	K0210-002017	3	K002017
56D-54-36410	K0210-002004	1	K002004
56E-07-21132	C0110-001008	1	C001008
600-051-1240	E0202-001002	27	E004002
600-051-2050	E0202-001003	18	E004003
600-051-2050	F4320-001012	26	F002012
600-051-2080	E0120-001002	33	E002002
600-051-2080	E0202-001003	12	E004003
600-051-2080	E0202-001003	21	E004003
600-051-2100	E0202-001002	8	E004002
600-051-2100	E0202-001002	53	E004002
600-051-2120	A6810-001001	1	F007001
600-051-2120	A6810-001001	1	B011001
600-051-2120	E0202-001002	21	E004002
600-051-2140	E0202-001002	14	E004002
600-051-2140	E0202-001003	6	E004003
600-051-2160	E0120-001002	23	E002002
600-051-2160	E0202-001003	24	E004003
600-051-2180	E0120-001003	42	E002003
600-051-2180	E0202-001002	32	E004002
600-051-2180	E0202-001003	22	E004003
600-051-2190	E0120-001002	30	E002002
600-051-2200	E0202-001002	22	E004002
600-051-2210	A6810-001001	9	F007001
600-051-2210	A6810-001001	9	B011001
600-051-2240	E0202-001002	26	E004002
600-051-2240	E0202-001002	35	E004002
600-051-2260	E0202-001003	23	E004003
600-181-0670	M4100-002008	17	M001008
600-184-1350	M4100-002007	6	M001007
600-184-1510	M4100-002007	5	M001007
600-184-1570	M4100-002007	4	M001007
600-185-5100	M4100-002007	1	M001007
600-185-5110	M4100-002007	2	M001007
600-311-3602	D0200-001002	2	D002002
600-311-3610	D0200-001002	2	D002002
600-311-3630	D0200-001002	3	D002002
600-311-3640	D0200-001002	4	D002002
600-311-3660	D0200-001002	5	D002002
600-311-3670	D0200-001002	6	D002002
600-311-3690	D0200-001002	9	D002002
600-311-3711	D0200-001002	5	D002002
600-311-3722	D0200-001002	7	D002002
600-319-3610	B9999-504001	6	B002001
600-319-3610	B9999-505001	6	B003001
600-319-3750	B9999-504001	4	B002001
600-319-3750	B9999-505001	4	B003001
600-319-3750	A4119-002001	1	D009001
600-467-2500	A4719-001001	1	D006001
600-645-7850	C0110-001007	35	C001007
600-815-2170	E0120-001002	14	E002002
600-861-9120	AEE00-002001	1	F002001
600-861-9120	AEE00-002001	1	B007001
600-863-5111	AST00-001001	1	F006001
600-863-5111	AST00-001001	1	B010001
6127-61-6421	AOB10-001001	6	B019001

PARTS Nº	FIG. Nº	INDEX	PAGE
6127-81-9741	K1110-001003	21	K009003
6132-11-4690	E0202-001002	4	E004002
6136-21-5770	ASD00-001001	1	B012001
6136-21-5870	ASD00-001001	2	B012001
6136-21-7120	AOB10-001001	11	B019001
6136-21-7120	F4320-001001	3	F002001
6136-21-7120	F4500-001015	3	F004015
6136-21-7180	F4320-001001	4	F002001
6136-21-7180	F4500-001015		F004015
6136-21-7190	F4320-001001	5	F002001
6136-21-7190	F4500-001015	4	F004015
6137-11-5291	A1610-001001	20	A001001
6137-11-5291	A1610-001001	20	B003001
6150-51-9490	K0710-001002	4	K006002
6150-81-6920	A1610-001001	28	A001001
6150-81-6920	A1610-001001	28	B003001
6151-11-4840	M4100-002008	1	M001008
6151-11-5751	A1610-001001	2	A001001
6151-11-5751	A1610-001001	2	B003001
6151-11-8920	A6810-001001	7	F007001
6151-11-8920	A6810-001001	7	B011001
6155-81-7100	M4100-002007	1	M001007
6155-81-7110	M4100-002007	1	M001007
6162-23-5770	AWR00-002001	6	F008001
6166-61-6341	F4320-001002	12	F002002
6166-61-6341	KIT	K01	Y001001
6167-11-6640	A2219-001001	15	B007001
6167-11-6640	A2219-001001	2	B006001
6207-81-6980	AEH10-001001	4	F001001
6215-81-9510	A2019-001001	18	B013001
6215-81-9510	AFF10-001001	2	D010001
6215-81-9710	A2019-001001	19	B013001
6215-81-9710	AFF10-001001	3	D010001
6216-14-6820	A1009-001001	12	A003001
6216-14-6830	ADR20-001001	3	B022001
6216-14-6840	ADR20-001001	4	B022001
6216-14-6860	A1009-001001	12	A003001
6216-14-6890	ADR20-001001	3	B022001
6216-24-5130	A2019-001001	25	B013001
6216-74-6180	APH00-001001	8	D007001
6216-74-6180	AWR00-002001	8	F008001
6216-84-2130	APH00-001001	6	D007001
6216-84-9220	APH00-001001	10	D007001
6216-84-9740	APH00-001001	16	D007001
6217-71-5770	AFS20-001001	2	D002001
6217-71-6660	AFT00-001001	20	D008001
6217-71-6670	AFT00-001001	19	D008001
6219-81-1990	APH00-001001	11	D007001
6245-11-4220	F4320-001002	11	F002002
6261-81-1900	APH00-001001	12	D007001
6261-81-6901	APH00-001001	16	D007001
6271-81-2980	A9810-001001	1	I002001
6271-81-9201	APH00-001001	9	D007001
6271-81-9220	APH00-001001	9	D007001
6301-11-4630	A2219-001001	16	B007001
6301-11-4630	A2219-001001	3	B006001
6560-81-7110	A2019-001001	16	B013001
6560-81-7120	A2019-001001	16	B013001
6560-81-7130	A2019-001001	17	B013001
6643-11-4641	M4100-002008	2	M001008
6693-22-5600	F4320-001012	1	F002012
6731-21-6220	AWP20-001001	2	E004001
6731-21-6220	AWI10-001001	5	E008001
6731-21-6220	AWI10-002001	5	E009001
6731-61-1370	ATP00-001001	3	A014001
6731-61-2151	ALC00-001001	8	C003001
6731-82-6810	ASM00-001001	2	F005001
6732-11-1720	AOB10-001001	4	B019001
6732-11-1720	ABB20-001001	6	B021001
6732-11-1910	A1009-001001	9	A003001
6732-11-1910	AWI10-001001	6	E008001
6732-11-1910	AWI10-002001	6	E009001
6732-11-1920	A1009-001001	10	A003001
6732-11-1920	AIM00-001001	7	A006001
6732-11-1920	A2219-001001	7	B007001
6732-11-1920	A2019-001001	24	B013001
6732-11-1920	AHC00-001001	1	B015001
6732-11-1920	ADR20-001001	6	B022001
6732-11-1920	AWI10-001001	7	E008001
6732-11-1920	AWI10-002001	7	E009001
6732-11-1920	ACH00-001001	1	E011001
6732-11-1930	ALC00-001001	1	C003001
6732-11-4160	AIM00-001001	5	A006001
6732-11-5860	ATB30-001001	4	A012001
6732-11-6130	K0713-001001	3	K007001
6732-21-1411	A2019-001001	6	B013001
6732-21-1611	A2019-001001	7	B013001
6732-21-1812	A2019-001001	10	B013001
6732-21-1820	A1009-001001	5	A003001
6732-21-1820	A2019-001001	11	B013001
6732-21-1831	A2019-001001	1	B013001
6732-21-1831	A2019-001001	27	B013001
6732-21-1831	ACH00-001001	2	E011001
6732-21-1960	A2019-001001	18	B013001
6732-21-1960	AFF10-001001	2	D010001
6732-21-1980	AHC00-001001	2	B015001
6732-21-3120	AFT00-001001	15	D008001
6732-21-3120	AWR00-002001	13	F008001
6732-21-4130	A2219-001001	5	B007001
6732-21-4150	A2219-001001	3	B007001
6732-21-4161	A2219-001001	4	B007001
6732-21-4180	AWR00-002001	5	F008001
6732-21-5160	AOP10-001001	3	B010001
6732-21-5170	AOP10-001001	15	B010001
6732-21-5530	A2019-001001	21	B013001
6732-21-5530	ALG00-001001	1	B020001
6732-21-6140	A2019-001001	12	B013001
6732-21-6160	A2019-001001	22	B013001
6732-21-6310	AHD20-001001	1	B023001
6732-21-6610	AOP10-001001	13	B010001
6732-21-6630	AGG00-001001	4	B001001
6732-21-6630	A2219-001001	14	B007001
6732-21-6630	AOB10-001001	12	B019001
6732-21-6630	AFT00-001001	12	D008001
6732-21-6630	A2219-001001	1	B006001
6732-21-6920	ADR20-001001	2	B022001
6732-22-3620	AHD20-001001	2	B023001
6732-22-3620	H0210-001010	3	H004010
6732-31-2420	A2359-001001	3	B018001
6732-31-3132	A2359-001001	8	B018001
6732-31-3320	A2359-001001	7	B018001
6732-31-3420	A2359-001001	11	B018001
6732-31-4120	AFW10-001001	1	B009001
6732-31-4130	AFW10-001001	2	B009001
6732-51-4420	ALC00-001001	7	C003001
6732-51-8330	ATP00-001001	2	A014001
6732-61-2240	A1009-001001	11	A003001
6732-61-3110	APH00-001001	5	D007001
6732-61-3110	AFT00-001001	22	D008001
6732-61-3110	AEH10-001001	3	F001001
6732-61-3120	AFA10-002001	1	E002001
6732-61-3140	ALA10-001001	2	A016001
6732-61-3140	AHD20-001001	3	B023001
6732-61-3160	AFA20-001001	1	E001001
6732-61-3410	AFA10-002001	5	E002001
6732-61-3420	AFA10-002001	4	E002001
6732-61-3430	AFA10-002001	6	E002001
6732-61-3440	AFA10-002001	3	E002001
6732-61-3450	AFA10-002001	2	E002001
6732-61-3750	AFA10-002001	7	E002001
6732-61-6120	A2219-001001	11	B007001
6732-61-6131	AWI10-001001	3	E008001
6732-61-6131	AWI10-002001	3	E009001
6732-61-6140	AFT00-001001	2	D008001
6732-61-6140	AFF10-001001	6	D010001
6732-61-6140	AWR00-002001	7	F008001
6732-61-6150	ARL00-001001	15	B004001
6732-71-3210	AFF20-001001	2	D001001
6732-71-3210	A4019-001001	9	D004001
6732-71-3220	AFP10-001001	3	D003001

PARTS Nº	FIG. Nº	INDEX	PAGE
6732-71-6510	AFT00-001001	9	D008001
6732-81-2611	A9850-001001	1	I001001
6732-81-3461	B9999-505001	5	B003001
6732-81-3461	AWP10-002001	1	E006001
6732-81-6490	AEH10-001001	6	F001001
6732-81-6530	AEH10-001001	7	F001001
6732-81-6840	A6020-001001	3	F004001
6732-81-6840	A6020-001001	3	B009001
6732-81-8220	AXS00-001001	1	A002001
6732-81-8810	A1539-001001	1	A013001
6732-81-8820	A1539-001001	2	A013001
6732-81-8850	ATP00-001001	7	A014001
6732-81-8860	ATP00-001001	8	A014001
6732-82-3680	B9999-504001	5	B002001
6732-82-3680	AWP10-001001	1	E003001
6733-11-4150	APP10-001002	7	G001002
6733-71-5680	ASD00-001001	3	B012001
6733-71-5680	AWR00-002001	14	F008001
6733-71-5830	AFT00-001001	21	D008001
6734-71-5520	APH00-001001	13	D007001
6735-21-1910	AIM00-001001	2	A006001
6735-21-1920	AIM00-001001	2	A006001
6735-21-1930	AIM00-001001	3	A006001
6735-21-1930	A2019-001001	26	B013001
6735-21-4150	A2219-001001	8	B007001
6735-21-4160	A2219-001001	9	B007001
6735-21-4170	A2219-001001	8	B007001
6735-21-5530	A1009-001001	6	A003001
6735-21-5530	ATP00-001001	9	A014001
6735-21-5530	A2019-001001	20	B013001
6735-21-5540	AOP10-001001	12	B010001
6735-41-5550	ARL00-001001	6	B004001
6735-41-5550	ARL00-001001	9	B004001
6735-51-1120	ALP00-001001	1	C001001
6735-61-2120	AGG00-001001	3	B001001
6735-61-2120	ABB20-001001	4	B021001
6735-61-2120	ALC00-001001	12	C003001
6735-61-2120	APH00-001001	3	D007001
6735-61-2120	AFF10-001001	7	D010001
6735-61-2190	ALC00-001001	6	C003001
6735-61-3810	ABB20-001001	5	B021001
6735-61-3810	A6020-001001	7	F004001
6735-61-3810	A6020-001001	7	B009001
6735-61-6411	AFP10-001001	2	D003001
6735-71-3220	ALA10-001001	1	A016001
6735-71-3220	ABB00-001001	2	B005001
6735-71-3220	AOB10-001001	10	B019001
6735-71-3220	AFA20-001001	2	E001001
6735-71-3220	AEH10-001001	10	F001001
6735-71-3821	AFT00-001001	5	D008001
6735-71-5190	AOP10-001001	5	B010001
6735-71-5190	AWO00-001001	2	E007001
6735-81-6170	ASM00-001001	3	F005001
6736-21-3210	ARL00-001001	14	B004001
6736-21-3210	A6020-001001	2	F004001
6736-21-3210	A6020-001001	2	B009001
6736-21-3360	AOB10-001001	3	B019001
6736-21-4221	A2219-001001	1	B007001
6736-21-5310	A2219-001001	6	B007001
6736-21-5310	APP10-001001	7	G001001
6736-21-5320	AOP10-001001	14	B010001
6736-21-5350	A2219-001001	13	B007001
6736-29-1410	A8110-001001	1	Y001001
6736-29-1420	A8110-001001	2	Y001001
6736-31-4180	AFW00-001001	1	B008001
6736-39-1130	A8110-001001	3	Y001001
6736-39-1160	A8110-001001	3	Y001001
6736-39-1170	A8110-001001	4	Y001001
6736-51-5142	B9999-504001	3	B002001
6736-51-5142	B9999-505001	3	B003001
6736-51-5142	ALF00-001001	1	C002001
6736-51-8710	A1539-001001	7	A013001
6736-51-8710	ATP00-001001	6	A014001
6736-61-1520	A5019-001001	2	E005001
6736-61-5180	ALC00-001001	3	C003001
6736-71-5811	AFP10-001001	1	D003001
6736-81-5110	AWR00-002001	11	F008001
6736-81-6170	ASM00-001001	4	F005001
6736-81-8730	AFT00-001001	3	D008001
6737-32-2110	AWI10-001001	2	E008001
6737-32-2110	AWI10-002001	2	E009001
6737-32-3121	A2359-001001	7	B018001
6737-62-6220	AWI10-001001	1	E008001
6738-11-4320	AIT00-001001	1	A011001
6738-11-4370	AIC00-001001	3	A007001
6738-11-4370	AIT00-001001	3	A011001
6738-11-4370	A1539-001001	6	A013001
6738-11-4380	AIC00-001001	4	A007001
6738-11-4380	AIT00-001001	4	A011001
6738-11-4390	AIC00-001001	5	A007001
6738-11-4390	AIT00-001001	5	A011001
6738-61-4952	C0110-001001	38	C001001
6738-91-1510	APA00-001001	1	B006001
6742-01-1420	A2019-001001	8	B013001
6742-01-1420	A2019-001001	23	B013001
6742-01-1420	AOB10-001001	1	B019001
6742-01-2441	AEH10-001001	2	F001001
6742-01-2630	A4219-001001	5	D005001
6742-01-2690	AOP10-001001	6	B010001
6742-01-5504	ABB00-001001	6	B005001
6742-01-5504	A2219-001001	12	B007001
6743-12-4110	AIM00-001001	9	A006001
6743-31-4150	AFW00-001001	1	B008001
6743-81-7530	M4100-002008	3	M001008
6744-11-1020	A1009-001001	15	A003001
6744-11-1020	A1009-001001	18	A003001
6744-11-1070	A1009-001001	7	A003001
6744-81-4010	APH00-001001	11	D007001
6745-71-1130	AFT00-001001	7	D008001
6751-81-2611	ADA00-001001	3	B017001
6754-01-1310	A2319-001001	1	B016001
6754-11-1101	A1009-001001	1	A003001
6754-11-1150	A1009-001001	4	A003001
6754-11-1160	A1009-001001	8	A003001
6754-11-1170	A1009-001001	2	A003001
6754-11-1180	A1009-001001	3	A003001
6754-11-1211	A1009-001001	1	A003001
6754-11-1610	A1009-001001	21	A003001
6754-11-1811	A1009-001001	22	A003001
6754-11-1940	ALA00-001001	2	A017001
6754-11-1970	ALA00-001001	1	A017001
6754-11-3011	A4219-001001	1	D005001
6754-11-3130	A4219-001001	3	D005001
6754-11-3140	A4219-001001	4	D005001
6754-11-4120	AIC00-001001	2	A007001
6754-11-4120	AAH00-001001	2	A010001
6754-11-4230	AIM00-001001	1	A006001
6754-11-4240	AIM00-001001	6	A006001
6754-11-4280	AIM00-001001	4	A006001
6754-11-4310	AIC00-001001	1	A007001
6754-11-4320	A1310-001001	1	A008001
6754-11-4320	A1310-001001	1	B001001
6754-11-4430	AIM00-001001	8	A006001
6754-11-4880	A1310-001001	3	A008001
6754-11-4880	A1310-001001	3	B001001
6754-11-5120	ATB30-001001	1	A012001
6754-11-5130	A1610-001001	15	A001001
6754-11-5130	A1610-001001	15	B003001
6754-11-5140	ATB30-001001	2	A012001
6754-11-5150	ATB30-001001	3	A012001
6754-11-5160	A1610-001001	1	A001001
6754-11-5160	A1610-001001	1	B003001
6754-11-5170	A1610-001001	6	A001001
6754-11-5170	A1610-001001	6	B003001
6754-11-5180	A1610-001001	11	A001001
6754-11-5180	A1610-001001	11	B003001
6754-11-5190	A1610-001001	22	A001001
6754-11-5190	A1610-001001	22	B003001
6754-11-5230	A1610-001001	25	A001001
6754-11-5230	A1610-001001	25	B003001

PARTS Nº	FIG. Nº	INDEX	PAGE
6754-11-5240	A1610-001001	29	A001001
6754-11-5240	A1610-001001	29	B003001
6754-11-5250	A1610-001001	31	A001001
6754-11-5250	A1610-001001	31	B003001
6754-11-5280	A1610-001001	12	A001001
6754-11-5280	A1610-001001	12	B003001
6754-11-5530	A1610-001001	8	A001001
6754-11-5530	A1610-001001	8	B003001
6754-11-5580	A1610-001001	14	A001001
6754-11-5580	A1610-001001	14	B003001
6754-11-5610	A1610-001001	17	A001001
6754-11-5610	A1610-001001	17	B003001
6754-11-5620	A1610-001001	21	A001001
6754-11-5620	A1610-001001	21	B003001
6754-11-6310	AWO00-001001	1	E007001
6754-11-7110	ARL00-001001	12	B004001
6754-11-7120	ARL00-001001	13	B004001
6754-11-8150	AVC00-001001	7	A004001
6754-11-8160	AVC00-001001	9	A004001
6754-11-8180	B9999-504001	1	B002001
6754-11-8180	B9999-505001	1	B003001
6754-11-8202	AVC00-001001	1	A004001
6754-11-8210	AVC00-001001	8	A004001
6754-11-8210	B9999-504001	2	B002001
6754-11-8210	B9999-505001	2	B003001
6754-11-8230	AVC00-001001	5	A004001
6754-21-1180	A2019-001001	14	B013001
6754-21-1191	A2019-001001	13	B013001
6754-21-1220	A2019-001001	1	B013001
6754-21-1240	A2019-001001	4	B013001
6754-21-1310	A2019-001001	1	B013001
6754-21-1320	A2019-001001	12	B013001
6754-21-1920	ABB00-001001	3	B005001
6754-21-3102	ABB20-001001	1	B021001
6754-21-3120	ABB20-001001	2	B021001
6754-21-3140	ABB20-001001	7	B021001
6754-21-3150	ABB20-001001	3	B021001
6754-21-4150	A2219-001001	2	B007001
6754-21-4210	A2219-001001	10	B007001
6754-21-5120	AOP10-001001	8	B010001
6754-21-5130	AOP10-001001	10	B010001
6754-21-5140	AOP10-001001	11	B010001
6754-21-5150	ABB00-001001	1	B005001
6754-21-5170	ABB00-001001	5	B005001
6754-21-5411	ALG00-001001	2	B020001
6754-21-5420	ALG00-001001	3	B020001
6754-21-5510	AOP10-001001	1	B010001
6754-21-5520	AOP10-001001	4	B010001
6754-21-5530	AOP10-001001	2	B010001
6754-21-5830	AOP10-001001	9	B010001
6754-21-6100	ABR00-001001	5	A005001
6754-21-6140	ABR00-001001	1	A005001
6754-21-6150	ABR00-001001	3	A005001
6754-21-6160	ABR00-001001	4	A005001
6754-21-6211	AGG00-001001	1	B001001
6754-21-6220	AGG00-001001	2	B001001
6754-21-6220	A2019-001001	15	B013001
6754-21-6230	AGG00-001001	5	B001001
6754-21-6240	ABR00-001001	7	A005001
6754-21-6250	ABR00-001001	6	A005001
6754-21-6280	ABR00-001001	8	A005001
6754-21-7420	AOB10-001001	2	B019001
6754-21-7440	AOB10-001001	5	B019001
6754-21-7510	AOB10-001001	8	B019001
6754-21-9140	ADR20-001001	5	B022001
6754-22-8100	A2319-001001	5	B016001
6754-22-9110	ADR20-001001	1	B022001
6754-26-8310	A8110-001001	19	Y001001
6754-26-8320	A8110-001001	17	Y001001
6754-26-8410	A8110-001001	23	Y001001
6754-27-8310	A8110-001001	15	Y001001
6754-27-8320	A8110-001001	13	Y001001
6754-28-8310	A8110-001001	11	Y001001
6754-28-8320	A8110-001001	9	Y001001
6754-28-8410	A8110-001001	21	Y001001
6754-29-8310	A8110-001001	7	Y001001
6754-29-8320	A8110-001001	5	Y001001
6754-31-2010	A2359-001001	4	B018001
6754-31-2111	A2359-001001	1	B018001
6754-31-2410	A2359-001001	2	B018001
6754-31-3410	A2359-001001	10	B018001
6754-31-8120	ADA00-001001	1	B017001
6754-31-8130	ADA00-001001	4	B017001
6754-31-8150	ADA00-001001	5	B017001
6754-31-8210	ADA00-001001	2	B017001
6754-36-3410	A8110-001001	36	Y001001
6754-37-3410	A8110-001001	35	Y001001
6754-38-3410	A8110-001001	34	Y001001
6754-39-2010	A8110-001001	30	Y001001
6754-39-2111	A8110-001001	29	Y001001
6754-39-3410	A8110-001001	33	Y001001
6754-41-1100	APP10-001001	1	G001001
6754-41-1120	APP10-001001	3	G001001
6754-41-1130	APP10-001001	4	G001001
6754-41-1140	APP10-001001	5	G001001
6754-41-1150	APP10-001001	8	G001001
6754-41-1161	APP10-001001	6	G001001
6754-41-1170	APP10-001001	1	G001001
6754-41-2110	ABB00-001001	4	B005001
6754-41-3110	ARL00-001001	1	B004001
6754-41-4100	A1009-001001	14	A003001
6754-41-4200	A1009-001001	17	A003001
6754-41-4430	A1009-001001	19	A003001
6754-41-4510	A1009-001001	20	A003001
6754-41-4540	A1009-001001	13	A003001
6754-41-4540	A1009-001001	16	A003001
6754-41-5111	ARL00-001001	7	B004001
6754-41-5140	ARL00-001001	5	B004001
6754-41-5140	ARL00-001001	8	B004001
6754-41-5180	ARL00-001001	3	B004001
6754-41-5190	ARL00-001001	11	B004001
6754-41-5211	ARL00-001001	4	B004001
6754-41-5260	ARL00-001001	10	B004001
6754-41-5310	ARL00-001001	2	B004001
6754-51-1110	ALP00-001001	2	C001001
6754-51-4440	ALC00-001001	9	C003001
6754-51-8120	A1539-001001	4	A013001
6754-51-8121	ATP00-001001	4	A014001
6754-51-8200	ATP00-001001	1	A014001
6754-51-8220	ATP00-001001	5	A014001
6754-61-1010	A5019-001001	1	E005001
6754-61-1100	A5019-001001	1	E005001
6754-61-2110	ALC00-001001	10	C003001
6754-61-2230	ALC00-001001	3	C003001
6754-61-2250	ALC00-001001	5	C003001
6754-61-2260	ALC00-001001	2	C003001
6754-61-2320	ALC00-001001	11	C003001
6754-61-4111	AWP20-001001	1	E004001
6754-61-6130	AWI10-001001	4	E008001
6754-61-6130	AWI10-002001	4	E009001
6754-61-6211	AEC00-001001	1	E010001
6754-61-6230	AEC00-001001	2	E010001
6754-61-6280	AWI10-002001	1	E009001
6754-71-1012	A4019-001001	1	D001001
6754-71-1210	APP10-001002	4	G001002
6754-71-1320	A4019-001001	1	D004001
6754-71-1330	A4019-001001	2	D004001
6754-71-1340	A4019-001001	5	D004001
6754-71-1350	A4019-001001	6	D004001
6754-71-1991	APP10-001002	12	G001002
6754-71-3110	A4019-001001	7	D004001
6754-71-3131	A4019-001001	8	D004001
6754-71-5120	AFT00-001001	17	D008001
6754-71-5130	AFT00-001001	17	D008001
6754-71-5140	AFT00-001001	18	D008001
6754-71-5150	AFT00-001001	10	D008001
6754-71-5210	APP10-001002	8	G001002
6754-71-5220	APP10-001002	9	G001002
6754-71-5230	APP10-001002	10	G001002
6754-71-5240	APP10-001002	11	G001002

PARTS Nº	FIG. Nº	INDEX	PAGE
6754-71-5311	AFF20-001001	6	D001001
6754-71-5321	AFF20-001001	7	D001001
6754-71-5340	AFF20-001001	3	D001001
6754-71-5350	AFF20-001001	4	D001001
6754-71-5350	A4019-001001	3	D004001
6754-71-5360	AFF20-001001	8	D001001
6754-71-5380	AFF20-001001	5	D001001
6754-71-5410	AFT00-001001	1	D008001
6754-71-5421	AFT00-001001	4	D008001
6754-71-5430	AFT00-001001	6	D008001
6754-71-5441	AFF10-001001	5	D010001
6754-71-5450	AFT00-001001	11	D008001
6754-71-5511	APP10-001002	1	G001002
6754-71-5530	APP10-001002	2	G001002
6754-71-5541	APP10-001002	3	G001002
6754-71-6360	AFF10-001001	4	D010001
6754-71-6370	AFF10-001001	1	D010001
6754-71-7200	D0200-001002	1	D002002
6754-71-7402	D0200-001002	1	D002002
6754-71-9710	AFS20-001001	1	D002001
6754-72-1012	A4019-001001	1	D004001
6754-72-1210	APP10-001002	6	G001002
6754-72-1220	APP10-001002	5	G001002
6754-81-2701	APH00-001001	14	D007001
6754-81-2710	APH00-001001	14	D007001
6754-81-5110	AAH00-001001	1	A010001
6754-81-5840	A1570-001001	21	A015001
6754-81-5840	A1570-001001	21	B002001
6754-81-6140	AEH10-001001	1	F001001
6754-81-6150	AEH10-001001	9	F001001
6754-81-6280	A6020-001001	6	F004001
6754-81-6280	A6020-001001	8	F004001
6754-81-6280	A6020-001001	8	B009001
6754-81-6320	A6020-001001	1	F004001
6754-81-6320	A6020-001001	1	B009001
6754-81-6330	A6010-002001	2	F003001
6754-81-6330	A6010-002001	2	B008001
6754-81-6340	A6010-002001	3	F003001
6754-81-6340	A6010-002001	3	B008001
6754-81-6390	A6010-002001	1	F003001
6754-81-6390	A6010-002001	1	B008001
6754-81-6810	ASM00-001001	1	F005001
6754-81-6960	A6020-001001	6	B009001
6754-81-8240	A1539-001001	3	A013001
6754-81-8270	A1570-001001	9	A015001
6754-81-8270	A1570-001001	9	B002001
6754-81-8710	A1539-001001	5	A013001
6754-81-8750	A1570-001001	6	A015001
6754-81-8750	A1570-001001	6	B002001
6754-81-8812	A1570-001001	3	A015001
6754-81-8812	A1570-001001	3	B002001
6754-81-8820	A1570-001001	11	A015001
6754-81-8820	A1570-001001	11	B002001
6754-81-8941	A1570-001001	1	A015001
6754-81-8941	A1570-001001	1	B002001
6754-81-8960	A1570-001001	17	A015001
6754-81-8960	A1570-001001	17	B002001
6754-81-8970	A1570-001001	16	A015001
6754-81-8970	A1570-001001	16	B002001
6754-81-9160	APH00-001001	4	D007001
6754-81-9170	APH00-001001	7	D007001
6754-81-9180	APH00-001001	15	D007001
6754-81-9220	AWR00-002001	2	F008001
6754-81-9230	A6810-001001	13	F007001
6754-81-9230	AWR00-002001	3	F008001
6754-81-9230	A6810-001001	13	B011001
6754-81-9280	AWR00-002001	12	F008001
6754-81-9340	AWR00-002001	10	F008001
6754-81-9350	A6810-001001	3	F007001
6754-81-9350	A6810-001001	3	B011001
6754-81-9360	A6810-001001	10	F007001
6754-81-9360	A6810-001001	10	B011001
6754-81-9370	A6810-001001	11	F007001
6754-81-9370	A6810-001001	11	B011001
6754-81-9410	APH00-001001	9	D007001
6754-81-9440	AWR00-002001	4	F008001
6754-81-9450	AWR00-002001	1	F008001
6754-81-9460	APH00-001001	2	D007001
6754-81-9470	APH00-001001	1	D007001
700-11-31940	F4320-001010	32	F002010
700-22-11410	H0120-001004	7	H002004
700-22-11410	H0120-001009	2	H002009
700-22-11410	H0120-001009	10	H002009
700-22-11410	H0120-002004	7	H003004
700-22-11410	H0120-002009	2	H003009
700-22-11410	H0120-002009	10	H003009
700-22-11910	H0120-001008	31	H002008
700-22-11910	H0120-002008	31	H003008
700-80-64220	H0120-001004	8	H002004
700-80-64220	H0120-001009	9	H002009
700-80-64220	H0120-002004	8	H003004
700-80-64220	H0120-002009	9	H003009
702-16-07022	K1110-001017	1	K009017
702-16-54760	H0120-001002	29	H002002
702-16-54760	H0120-002002	29	H003002
702-16-54880	H5110-001001	8	H006001
702-16-73950	K1110-001017	4	K009017
702-16-73960	K1110-001017	3	K009017
702-16-74120	K1110-001017	2	K009017
702-16-74130	K1110-001017	5	K009017
702-16-74150	K1110-001017	6	K009017
702-16-74160	K1110-001017	8	K009017
702-16-74330	K1110-001017	8	K009017
702-21-38460	H0120-001002	33	H002002
702-21-38460	H0120-002002	33	H003002
702-21-53120	H0120-001005	13	H002005
702-21-53120	H0120-002005	13	H003005
702-21-54150	C0110-001005	21	C001005
702-21-54160	C0110-001005	22	C001005
702-21-54180	C0110-001005	9	C001005
702-21-54180	C0110-001005	26	C001005
702-21-54190	C0110-001005	40	C001005
702-21-54210	C0110-001005	23	C001005
702-21-54220	C0110-001005	23	C001005
702-21-54230	C0110-001005	23	C001005
702-21-54240	C0110-001005	23	C001005
702-21-54250	C0110-001005	23	C001005
702-21-55620	H0120-001005	14	H002005
702-21-55620	H0120-002005	14	H003005
702-21-55870	C0110-001005	2	C001005
702-21-55870	C0110-001005	25	C001005
702-21-56241	C0110-001005	1	C001005
702-21-57410	C0110-001005	24	C001005
705-17-02353	H0210-001006	1	H004006
705-17-02353	H0210-001006	2	H004006
705-17-02360	H0210-001006	6	H004006
705-17-02360	H0210-001007	16	H004007
705-17-02430	H0210-001006	4	H004006
705-17-02460	H0210-001006	5	H004006
705-17-02612	H0210-001006	3	H004006
705-17-02830	H0210-001006	8	H004006
705-17-02870	H0210-001006	7	H004006
705-17-02870	H0210-001007	8	H004007
705-17-04980	H0210-001006	15	H004006
705-18-02240	H0210-001006	2	H004006
705-18-02820	H0210-001006	1	H004006
705-18-36120	H0210-001006	10	H004006
705-18-36820	H0210-001006	12	H004006
705-24-36260	H0210-001006	1	H004006
705-29-36660	H0210-001006	11	H004006
705-40-22011	H0210-001007	9	H004007
705-40-22511	H0210-001007	11	H004007
705-40-22760	H0210-001007	10	H004007
705-40-80610	H0210-001007	1	H004007
705-40-80610	H0210-001007	3	H004007
705-40-80620	H0210-001007	1	H004007
705-40-80620	H0210-001007	3	H004007
705-40-80770	H0210-001007	5	H004007
705-40-81820	H0210-001007	7	H004007
705-40-81870	H0210-001007	6	H004007

PARTS Nº	FIG. Nº	INDEX	PAGE
705-40-83720	H0210-001007	4	H004007
705-41-05910	H0210-001007	1	H004007
705-41-83050	H0210-001007	1	H004007
705-41-83110	H0210-001007	3	H004007
705-52-21250	H0210-001006	1	H004006
705-52-21250	H0210-001007	1	H004007
705-67-01330	H0210-001007	15	H004007
706-73-42370	H0210-001001	9	H004001
707-00-08E20	T5155-001001	1	T012001
707-00-08E30	T5160-001001	1	T013001
707-00-0J430	F4400-001005	1	F003005
707-00-0J430	F4400-001006	1	F003006
707-00-0J450	T5151-001001	1	T011001
707-00-0J470	F4400-001004	1	F003004
707-02-00100	T5140-001001	1	T009001
707-02-08120	T5125-001001	1	T006001
707-11-80J60	F4400-001004	1	F003004
707-11-80J70	T5151-001001	1	T011001
707-11-80J80	T5155-001001	1	T012001
707-11-80J90	T5160-001001	1	T013001
707-11-80K10	T5141-001001	1	T010001
707-12-12220	T5125-001001	1	T006001
707-12-80230	T5140-001001	1	T009001
707-29-12100	T5125-001001	6	T006001
707-29-50981	F4400-001005	7	F003005
707-29-50981	F4400-001006	7	F003006
707-29-80740	T5140-001001	11	T009001
707-29-80820	F4400-001004	10	F003004
707-29-80820	T5151-001001	8	T011001
707-29-80830	T5155-001001	18	T012001
707-29-80830	T5160-001001	8	T013001
707-29-80840	T5141-001001	4	T010001
707-35-91020	K4460-001001	4	K010001
707-35-99500	F4400-001005	14	F003005
707-35-99500	F4400-001006	14	F003006
707-35-99500	KIT	K05	Y001001
707-36-12990	T5125-001001	14	T006001
707-36-50400	F4400-001005	15	F003005
707-36-50400	F4400-001006	15	F003006
707-36-80070	T5140-001001	19	T009001
707-36-80911	T5141-001001	13	T010001
707-36-80920	T5160-001001	16	T013001
707-36-80970	F4400-001004	18	F003004
707-36-80970	T5151-001001	16	T011001
707-36-80970	T5155-001001	26	T012001
707-44-12180	T5125-001001	16	T006001
707-44-12180	KIT	K09	Y001001
707-44-50070	F4400-001005	16	F003005
707-44-50070	F4400-001006	16	F003006
707-44-50070	KIT	K05	Y001001
707-44-80070	F4400-001004	19	F003004
707-44-80070	T5141-001001	14	T010001
707-44-80070	T5151-001001	17	T011001
707-44-80070	T5155-001001	27	T012001
707-44-80070	T5160-001001	17	T013001
707-44-80070	KIT	K04	Y001001
707-44-80070	KIT	K11	Y001001
707-44-80070	KIT	K12	Y001001
707-44-80070	KIT	K13	Y001001
707-44-80070	KIT	K15	Y001001
707-44-80180	T5140-001001	20	T009001
707-44-80180	KIT	K10	Y001001
707-44-90070	KIT	K14	Y001001
707-44-90180	KIT	K08	Y001001
707-45-80910	T5141-001001	12	T010001
707-51-35210	F4400-001005	10	F003005
707-51-35210	F4400-001006	10	F003006
707-51-35210	KIT	K05	Y001001
707-51-40210	F4400-001004	13	F003004
707-51-40210	T5151-001001	11	T011001
707-51-40210	KIT	K04	Y001001
707-51-40210	KIT	K12	Y001001
707-51-45210	T5155-001001	21	T012001
707-51-45210	T5160-001001	11	T013001
707-51-45210	KIT	K08	Y001001
707-51-45210	KIT	K13	Y001001
707-51-45210	KIT	K15	Y001001
707-51-50211	T5140-001001	14	T009001
707-51-50211	T5141-001001	7	T010001
707-51-50211	KIT	K10	Y001001
707-51-50211	KIT	K11	Y001001
707-51-50211	KIT	K14	Y001001
707-51-55211	T5125-001001	12	T006001
707-51-55211	KIT	K09	Y001001
707-52-15110	F4400-001005	11	F003005
707-52-15110	F4400-001006	11	F003006
707-52-15130	F4400-001004	14	F003004
707-52-15130	T5151-001001	12	T011001
707-52-15210	T5155-001001	22	T012001
707-52-15210	T5160-001001	12	T013001
707-52-15230	T5140-001001	15	T009001
707-52-15230	T5141-001001	8	T010001
707-52-15310	T5125-001001	13	T006001
707-56-35740	F4400-001005	8	F003005
707-56-35740	F4400-001006	8	F003006
707-56-35740	KIT	K05	Y001001
707-56-40740	F4400-001004	11	F003004
707-56-40740	T5151-001001	9	T011001
707-56-40740	KIT	K04	Y001001
707-56-40740	KIT	K12	Y001001
707-56-45740	T5155-001001	19	T012001
707-56-45740	T5160-001001	9	T013001
707-56-45740	KIT	K08	Y001001
707-56-45740	KIT	K13	Y001001
707-56-45740	KIT	K15	Y001001
707-56-50740	T5140-001001	12	T009001
707-56-50740	T5141-001001	5	T010001
707-56-50740	KIT	K10	Y001001
707-56-50740	KIT	K11	Y001001
707-56-50740	KIT	K14	Y001001
707-56-55740	T5125-001001	11	T006001
707-56-55740	KIT	K09	Y001001
707-58-40J50	T5151-001001	3	T011001
707-58-40J60	F4400-001004	3	F003004
707-58-50C30	T5141-001001	3	T010001
707-58-50J00	T5140-001001	3	T009001
707-60-45020	T5155-001001	3	T012001
707-61-35760	F4400-001005	3	F003005
707-61-35760	F4400-001006	3	F003006
707-67-20020	F4400-001005	18	F003005
707-67-20020	F4400-001006	18	F003006
707-67-27030	F4400-001004	21	F003004
707-67-27030	T5140-001001	22	T009001
707-67-27030	T5141-001001	16	T010001
707-67-27030	T5151-001001	19	T011001
707-67-27030	T5155-001001	29	T012001
707-67-33040	T5160-001001	19	T013001
707-67-39020	T5125-001001	15	T006001
707-76-35010	F4400-001005	5	F003005
707-76-35010	F4400-001006	5	F003006
707-76-50240	F4400-001004	8	F003004
707-86-01080	T5151-001001	20	T011001
707-86-01090	T5140-001001	23	T009001
707-86-38100	F4400-001005	21	F003005
707-86-38200	F4400-001006	21	F003006
707-86-38960	F4400-001004	22	F003004
707-88-45770	K4460-001001	12	K010001
707-88-81480	K4460-001001	13	K010001
707-98-05470	KIT	K05	Y001001
707-98-22510	KIT	K08	Y001001
707-98-23270	KIT	K04	Y001001
707-98-24400	KIT	K13	Y001001
707-98-25400	KIT	K10	Y001001
707-98-26060	KIT	K11	Y001001
707-98-27650	KIT	K12	Y001001
707-98-27660	KIT	K15	Y001001
707-98-29430	KIT	K14	Y001001
707-98-40050	KIT	K09	Y001001
708-1L-29340	H0210-001001	11	H004001
708-1S-11890	C0110-001006	9	C001006

PARTS Nº	FIG. Nº	INDEX	PAGE
708-1S-18180	C0110-001005	15	C001005
708-1S-18180	C0110-001005	27	C001005
708-1U-12110	H0210-001001	20	H004001
708-1U-13310	H0210-001002	10	H004002
708-1U-13461	H0210-001001	17	H004001
708-1U-14240	H0210-001002	13	H004002
708-1W-00152	H0210-001001	1	H004001
708-1W-00152	H0210-001002	1	H004002
708-1W-00152	H0210-001003	1	H004003
708-1W-00152	H0210-001004	1	H004004
708-1W-01152	H0210-001001	1	H004001
708-1W-01152	H0210-001002	1	H004002
708-1W-03620	H0210-001003	1	H004003
708-1W-04120	H0210-001001	1	H004001
708-1W-05821	H0210-001001	25	H004001
708-1W-41621	H0210-001001	15	H004001
708-1W-42110	H0210-001001	21	H004001
708-1W-42120	H0210-001001	16	H004001
708-1W-42130	H0210-001001	23	H004001
708-1W-42140	H0210-001001	22	H004001
708-1W-43130	H0210-001002	4	H004002
708-1W-43140	H0210-001002	5	H004002
708-1W-43310	H0210-001002	1	H004002
708-1W-43320	H0210-001002	7	H004002
708-1W-43341	H0210-001002	9	H004002
708-1W-43450	H0210-001001	18	H004001
708-1W-43620	H0210-001002	2	H004002
708-1W-44130	H0210-001002	11	H004002
708-1W-45340	H0210-001004	8	H004004
708-21-12541	C0110-001005	6	C001005
708-21-12541	C0110-001005	42	C001005
708-2L-23360	C0110-001006	14	C001006
708-2L-25480	C0110-001005	43	C001005
708-2L-25480	H0210-001004	4	H004004
708-2L-29460	C0110-001005	14	C001005
708-3T-13360	H0210-001002	8	H004002
708-3T-14120	H0210-001002	12	H004002
708-7R-11220	C0110-001004	5	C001004
708-7R-11220	F4320-001009	30	F002009
708-7R-11220	F4320-001010	30	F002010
708-7R-11220	F4320-001011	22	F002011
708-7R-11220	H5110-001001	6	H006001
708-7R-18121	C0110-001004	14	C001004
708-7R-18132	C0110-001004	18	C001004
708-7R-18160	C0110-001005	29	C001005
708-7R-18170	C0110-001005	32	C001005
708-7R-18180	C0110-001005	33	C001005
708-7R-18190	C0110-001005	35	C001005
708-7R-18210	C0110-001005	20	C001005
708-7R-18220	C0110-001005	34	C001005
708-7R-18230	C0110-001005	16	C001005
708-7R-18230	C0110-001005	37	C001005
708-7R-18240	C0110-001005	3	C001005
708-7R-18251	C0110-001005	4	C001005
708-7R-18270	C0110-001005	5	C001005
708-7R-18660	C0110-001004	10	C001004
708-7R-21110	C0110-001004	22	C001004
708-7R-21120	C0110-001004	24	C001004
708-7S-00670	C0110-001004	1	C001004
708-7S-00670	C0110-001005	1	C001005
708-7S-00670	C0110-001006	1	C001006
708-7S-01330	C0110-001005	1	C001005
708-7S-01340	C0110-001005	20	C001005
708-7S-01550	C0110-001004	4	C001004
708-7S-01550	C0110-001005	1	C001005
708-7S-05110	C0110-001006	7	C001006
708-7S-11641	C0110-001004	4	C001004
708-7S-11780	C0110-001004	1	C001004
708-7S-12140	C0110-001006	5	C001006
708-7S-12220	C0110-001006	6	C001006
708-7S-12330	C0110-001006	4	C001006
708-7S-13130	C0110-001006	11	C001006
708-7S-13250	C0110-001006	12	C001006
708-7S-13350	C0110-001006	20	C001006
708-7S-13360	C0110-001006	19	C001006
708-7S-13420	C0110-001006	21	C001006
708-7S-13530	C0110-001006	15	C001006
708-7S-13550	C0110-001006	18	C001006
708-7S-13560	C0110-001006	16	C001006
708-7S-18120	C0110-001004	16	C001004
708-7S-18130	C0110-001004	17	C001004
708-7S-18230	C0110-001005	11	C001005
708-7S-18230	C0110-001005	46	C001005
708-7S-18360	C0110-001005	8	C001005
708-7S-18360	C0110-001005	44	C001005
708-7S-18390	C0110-001004	19	C001004
708-7S-18420	C0110-001004	13	C001004
708-7S-18560	C0110-001004	20	C001004
708-7T-12330	C0110-001006	8	C001006
708-8E-16150	F4320-001002	6	F002002
708-8E-16150	F4320-001002	17	F002002
708-8E-16150	F4320-001009	3	F002009
708-8E-16150	F4320-001009	38	F002009
708-8E-16150	F4320-001010	5	F002010
708-8E-16150	F4320-001010	11	F002010
708-8E-16150	F4320-001010	17	F002010
708-8E-16150	F4320-001011	24	F002011
708-8E-16160	H0120-001005	9	H002005
708-8E-16160	H0120-002005	9	H003005
708-8E-16160	H0210-001001	5	H004001
708-8E-16250	H0120-001004	3	H002004
708-8E-16250	H0120-002004	3	H003004
709-25-11390	H0120-001009	11	H002009
709-25-11390	H0120-002009	11	H003009
709-25-11620	H0120-001002	32	H002002
709-25-11620	H0120-002002	32	H003002
709-32-11530	H0120-001002	11	H002002
709-32-11530	H0120-002002	11	H003002
709-32-11840	H0120-001004	10	H002004
709-32-11840	H0120-002004	10	H003004
709-32-11930	H0120-001008	32	H002008
709-32-11930	H0120-002008	32	H003008
711-16-11560	F4320-001014	2	F002014
711-53-11770	F4320-001015	2	F002015
711-61-12120	F4320-001014	7	F002014
711-61-12160	F4320-001014	9	F002014
711-61-42680	F4320-001014	15	F002014
711-90-11131	F4320-001014	14	F002014
711-90-11142	F4320-001016	1	F002016
711-90-11253	F4320-001015	12	F002015
711-90-19310	F4320-001014	16	F002014
711-90-19310	F4320-001015	1	F002015
714-07-12680	T5130-001001	8	T008001
714-07-14120	F4500-001002	10	F004002
714-07-19320	F4320-001003	17	F002003
714-07-19320	F4320-001004	17	F002004
714-07-19320	F4320-001005	13	F002005
714-07-19320	F4320-001006	11	F002006
714-07-19320	KIT	K01	Y001001
714-07-28703	F4700-001001	1	F005001
714-07-28713	F4700-001001	1	F005001
714-07-45600	F4320-001010	14	F002010
714-08-12950	F4320-001005	3	F002005
714-08-19220	F4320-001004	15	F002004
714-08-19220	KIT	K01	Y001001
714-08-19560	F4320-001003	18	F002003
714-08-19560	F4320-001004	18	F002004
714-08-19570	F4320-001004	19	F002004
714-08-19570	F4320-001005	14	F002005
714-08-19570	F4320-001006	12	F002006
714-11-19230	F4320-001003	16	F002003
714-11-19230	KIT	K01	Y001001
714-12-12610	F4320-001003	14	F002003
714-12-12610	F4320-001004	14	F002004
714-12-12610	F4320-001005	11	F002005
714-12-12610	F4320-001006	9	F002006
714-12-12740	F4320-001003	24	F002003
714-12-12740	F4320-001004	25	F002004
714-12-12760	F4320-001003	21	F002003
714-12-12760	F4320-001004	22	F002004

PARTS Nº	FIG. Nº	INDEX	PAGE
714-12-17161	F4500-001013	28	F004013
714-12-17161	F4500-001014	28	F004014
714-12-19121	F4320-001007	5	F002007
714-12-19121	KIT	K01	Y001001
714-12-19170	F4320-001007	4	F002007
714-12-19170	KIT	K01	Y001001
714-12-19340	F4320-001005	18	F002005
714-12-19520	F4320-001005	21	F002005
714-12-19711	F4320-001003	11	F002003
714-12-19711	F4320-001004	11	F002004
714-12-19711	F4320-001005	8	F002005
714-12-19711	F4320-001006	6	F002006
714-12-39230	F4320-001003	32	F002003
714-12-39230	F4320-001003	33	F002003
714-12-39230	F4320-001004	30	F002004
714-12-39230	KIT	K01	Y001001
714-16-19220	F4320-001004	16	F002004
714-16-19220	F4320-001005	12	F002005
714-16-19220	F4320-001006	10	F002006
714-16-19220	KIT	K01	Y001001
714-16-19730	F4320-001003	12	F002003
714-16-19730	F4320-001004	12	F002004
714-16-19730	F4320-001005	9	F002005
714-16-19730	F4320-001006	7	F002006
714-21-19810	F4320-001003	34	F002003
714-21-19810	KIT	K01	Y001001
714-23-12420	F4320-001003	31	F002003
714-23-12441	F4320-001004	28	F002004
714-23-12460	F4320-001005	22	F002005
714-23-12492	F4320-001008	1	F002008
714-23-12640	F4320-001003	7	F002003
714-23-12651	F4320-001004	5	F002004
714-23-12680	F4320-001003	10	F002003
714-23-12690	F4320-001004	9	F002004
714-23-12690	F4320-001006	4	F002006
714-23-12710	F4320-001005	16	F002005
714-23-12710	F4320-001006	15	F002006
714-23-14910	F4320-001007	9	F002007
714-23-15690	F4320-001010	4	F002010
714-23-15690	F4320-001010	10	F002010
714-23-17320	F4320-001002	10	F002002
714-23-18280	F4320-001012	9	F002012
714-23-19210	F4320-001006	14	F002006
714-23-19210	KIT	K01	Y001001
714-23-19310	F4320-001003	26	F002003
714-23-19320	F4320-001003	25	F002003
714-23-19320	F4320-001004	26	F002004
714-23-19330	F4320-001013	2	F002013
714-23-19410	F4320-001003	23	F002003
714-23-19410	F4320-001004	24	F002004
714-23-19420	F4320-001003	22	F002003
714-23-19430	F4320-001005	15	F002005
714-23-19430	F4320-001006	13	F002006
714-23-19631	F4320-001004	23	F002004
714-24-25190	F4320-001002	2	F002002
714-24-25190	F4320-001002	15	F002002
720-2M-15270	F4320-001002	4	F002002
720-2M-15270	F4320-001009	28	F002009
720-2M-15270	F4320-001011	18	F002011
720-2M-15270	F4320-001012	13	F002012
720-2T-03230	C0110-001004	12	C001004
720-68-19610	C0110-001004	9	C001004
720-68-19610	C0110-001006	13	C001006
720-68-19610	H0210-001002	3	H004002
720-68-19760	H0120-001003	8	H002003
720-68-19760	H0120-002003	8	H003003
721-10-10330	K4460-001001	1	K010001
721-11-50660	F4400-001005	1	F003005
721-11-50660	F4400-001006	1	F003006
721-26-10050	K4460-001001	6	K010001
721-29-10090	K4460-001001	3	K010001
721-32-10680	K4460-001001	1	K010001
721-36-10030	K4460-001001	8	K010001
721-47-12020	K4460-001001	10	K010001
721-47-12080	K4460-001001	9	K010001
721-58-45780	T5160-001001	3	T013001
721-58-55160	T5125-001001	3	T006001
721-89-10053	K4460-001001	2	K010001
721-89-12011	K4460-001001	11	K010001
722-12-15160	H0120-001003	11	H002003
722-12-15160	H0120-002003	11	H003003
722-12-19120	H0120-001002	17	H002002
722-12-19120	H0120-002002	17	H003002
723-10-13700	H5110-001001	1	H006001
723-10-16903	H0120-001009	1	H002009
723-10-16903	H0120-002009	1	H003009
723-10-17100	H0120-001010	1	H002010
723-10-17100	H0120-002010	1	H003010
723-10-17200	H0120-001010	3	H002010
723-10-17200	H0120-002010	3	H003010
723-10-17802	H0120-001009	4	H002009
723-10-17802	H0120-002009	4	H003009
723-10-19300	H0120-001009	8	H002009
723-10-19300	H0120-002009	8	H003009
723-11-02850	H0120-001006	6	H002006
723-11-02850	H0120-002006	6	H003006
723-11-02860	H0120-001006	22	H002006
723-11-02860	H0120-002006	22	H003006
723-11-02870	H0120-001007	1	H002007
723-11-02870	H0120-002007	1	H003007
723-11-02880	H0120-001007	16	H002007
723-11-02880	H0120-002007	16	H003007
723-11-02890	H0120-001008	1	H002008
723-11-02890	H0120-002008	1	H003008
723-11-02950	H0120-001008	13	H002008
723-11-02950	H0120-002008	13	H003008
723-11-03150	H0120-001006	8	H002006
723-11-03150	H0120-001006	24	H002006
723-11-03150	H0120-002006	8	H003006
723-11-03150	H0120-002006	24	H003006
723-11-03160	H0120-001007	3	H002007
723-11-03160	H0120-002007	3	H003007
723-11-03170	H0120-001007	7	H002007
723-11-03170	H0120-001007	18	H002007
723-11-03170	H0120-001008	3	H002008
723-11-03170	H0120-001008	15	H002008
723-11-03170	H0120-002007	7	H003007
723-11-03170	H0120-002007	18	H003007
723-11-03170	H0120-002008	3	H003008
723-11-03170	H0120-002008	15	H003008
723-11-03180	H0120-001006	28	H002006
723-11-03180	H0120-002006	28	H003006
723-11-03190	H0120-001006	12	H002006
723-11-03190	H0120-002006	12	H003006
723-11-14250	H0120-001003	9	H002003
723-11-14250	H0120-002003	9	H003003
723-11-14390	H0120-001005	6	H002005
723-11-14390	H0120-002005	6	H003005
723-11-15110	F4320-001011	20	F002011
723-11-15110	H0120-001002	46	H002002
723-11-15110	H0120-002002	46	H003002
723-11-15130	H0120-001002	39	H002002
723-11-15130	H0120-002002	39	H003002
723-11-16130	H0120-001002	44	H002002
723-11-16130	H0120-002002	44	H003002
723-11-16760	H5110-001001	3	H006001
723-11-17130	H0120-001002	10	H002002
723-11-17130	H0120-002002	10	H003002
723-11-17810	H0120-001002	6	H002002
723-11-17810	H0120-002002	6	H003002
723-11-18150	H0120-001003	6	H002003
723-11-18150	H0120-001009	7	H002009
723-11-18150	H0120-002003	6	H003003
723-11-18150	H0120-002009	7	H003009
723-11-18160	H0120-001003	7	H002003
723-11-18160	H0120-001009	6	H002009
723-11-18160	H0120-002003	7	H003003
723-11-18160	H0120-002009	6	H003009
723-11-18170	H5110-001001	9	H006001
723-11-18180	H5110-001001	10	H006001

PARTS Nº	FIG. Nº	INDEX	PAGE
723-11-18190	H5110-001001	11	H006001
723-11-18240	H0120-001003	1	H002003
723-11-18240	H0120-002003	1	H003003
723-11-18420	H0120-001001	18	H002001
723-11-18420	H0120-002001	18	H003001
723-11-18430	H0120-001001	19	H002001
723-11-18430	H0120-002001	19	H003001
723-11-18540	H0120-001006	4	H002006
723-11-18540	H0120-002006	4	H003006
723-11-18550	H0120-001006	5	H002006
723-11-18550	H0120-002006	5	H003006
723-11-19110	H0120-001001	12	H002001
723-11-19110	H0120-002001	12	H003001
723-11-19130	H0120-001001	13	H002001
723-11-19130	H0120-001005	8	H002005
723-11-19130	H0120-001006	18	H002006
723-11-19130	H0120-001006	34	H002006
723-11-19130	H0120-001007	13	H002007
723-11-19130	H0120-001007	24	H002007
723-11-19130	H0120-001008	9	H002008
723-11-19130	H0120-001008	21	H002008
723-11-19130	H0120-002001	13	H003001
723-11-19130	H0120-002005	8	H003005
723-11-19130	H0120-002006	18	H003006
723-11-19130	H0120-002006	34	H003006
723-11-19130	H0120-002007	13	H003007
723-11-19130	H0120-002007	24	H003007
723-11-19130	H0120-002008	9	H003008
723-11-19130	H0120-002008	21	H003008
723-11-19620	H0120-001004	9	H002004
723-11-19620	H0120-002004	9	H003004
723-11-19960	H0120-001006	2	H002006
723-11-19960	H0120-002006	2	H003006
723-11-19970	H0120-001006	19	H002006
723-11-19970	H0120-001008	10	H002008
723-11-19970	H0120-001008	22	H002008
723-11-19970	H0120-002006	19	H003006
723-11-19970	H0120-002008	10	H003008
723-11-19970	H0120-002008	22	H003008
723-11-23540	H0120-001001	7	H002001
723-11-23540	H0120-002001	7	H003001
723-11-26170	H0120-001002	47	H002002
723-11-26170	H0120-002002	47	H003002
723-11-26170	H5110-001001	4	H006001
723-11-26750	H0120-001002	45	H002002
723-11-26750	H0120-002002	45	H003002
723-11-28260	H0120-001008	30	H002008
723-11-28260	H0120-002008	30	H003008
723-11-29361	H0120-001004	5	H002004
723-11-29361	H0120-002004	5	H003004
723-11-32730	H0120-001003	3	H002003
723-11-32730	H0120-002003	3	H003003
723-11-32740	H0120-001002	7	H002002
723-11-32740	H0120-002002	7	H003002
723-11-37840	H0120-001002	12	H002002
723-11-37840	H0120-002002	12	H003002
723-11-37870	H0120-001002	8	H002002
723-11-37870	H0120-002002	8	H003002
723-11-37990	H0120-001002	22	H002002
723-11-37990	H0120-002002	22	H003002
723-11-38530	H0120-001002	18	H002002
723-11-38530	H0120-002002	18	H003002
723-11-38590	H0120-001002	31	H002002
723-11-38590	H0120-002002	31	H003002
723-11-38610	H0120-001003	4	H002003
723-11-38610	H0120-002003	4	H003003
723-11-38620	H0120-001005	1	H002005
723-11-38620	H0120-002005	1	H003005
723-11-38630	H0120-001005	3	H002005
723-11-38630	H0120-002005	3	H003005
723-11-38640	H0120-001008	27	H002008
723-11-38640	H0120-002008	27	H003008
723-11-38650	H0120-001001	15	H002001
723-11-38650	H0120-002001	15	H003001
723-11-38660	H0120-001001	16	H002001
723-11-38670	H0120-001005	11	H002005
723-11-38670	H0120-002005	11	H003005
723-11-38850	H0120-002001	16	H003001
723-19-17801	H0120-001001	1	H002001
723-19-17801	H0120-001002	1	H002002
723-19-17801	H0120-001003	1	H002003
723-19-17801	H0120-001004	1	H002004
723-19-17801	H0120-001005	1	H002005
723-19-17801	H0120-001006	1	H002006
723-19-17801	H0120-001007	1	H002007
723-19-17801	H0120-001008	1	H002008
723-19-17801	H0120-001009	1	H002009
723-19-17801	H0120-001010	1	H002010
723-1A-17101	H0120-002001	1	H003001
723-1A-17101	H0120-002002	1	H003002
723-1A-17101	H0120-002003	1	H003003
723-1A-17101	H0120-002004	1	H003004
723-1A-17101	H0120-002005	1	H003005
723-1A-17101	H0120-002006	1	H003006
723-1A-17101	H0120-002007	1	H003007
723-1A-17101	H0120-002008	1	H003008
723-1A-17101	H0120-002009	1	H003009
723-1A-17101	H0120-002010	1	H003010
723-26-15220	H0120-001006	16	H002006
723-26-15220	H0120-001007	11	H002007
723-26-15220	H0120-001007	22	H002007
723-26-15220	H0120-001008	7	H002008
723-26-15220	H0120-001008	19	H002008
723-26-15220	H0120-002006	16	H003006
723-26-15220	H0120-002006	32	H003006
723-26-15220	H0120-002007	11	H003007
723-26-15220	H0120-002007	22	H003007
723-26-15220	H0120-002008	7	H003008
723-26-15220	H0120-002008	19	H003008
723-26-15230	H0120-001004	1	H002004
723-26-15230	H0120-002004	1	H003004
723-30-51130	C0110-001004	21	C001004
723-56-31630	H0210-001003	18	H004003
729-11-41000	C0110-001006	22	C001006
7821-26-6001	K1110-001025	4	K009025
7826-20-7037	K1110-001026	1	K009026
7861-93-2330	F4320-001012	7	F002012
7861-93-3320	F4320-001012	8	F002012
7861-93-3320	F4500-001001	9	F004001
7861-93-3320	H0110-001002	3	H001002
7861-93-4832	D0100-001001	8	D001001
7861-93-8710	E0200-001001	20	E003001
799-101-5220	F4700-001001	28	F005001
8255-62-4220	H5200-004005	29	H008005
8255-62-4240	H5200-004020	6	H008020
8255-62-4240	H5210-001003	11	H009003
8260-62-1190	H5200-004019	4	H008019
8296-62-2140	H5200-004009	18	H008009
8296-62-2140	H5200-004011	12	H008011
8A13-10-2100	K0210-002017	6	K002017
AN51141-10491	K1110-001021	1	K009021
AN51150-12571	K1110-001021	2	K009021
AN51150-12581	K1110-001021	3	K009021
AN51186-10430	K1110-001021	4	K009021
AN51191-59570	K1110-001021	5	K009021
AN51191-59580	K1110-001021	6	K009021
AN51191-59810	K1110-001021	7	K009021
AN51194-54000	K1110-001021	8	K009021
AN51194-60201	K1110-001021	9	K009021
AN51240-43650	K1110-001021	10	K009021
AN51243-41510	K1110-001021	11	K009021
AN51439-D0041	K1110-001021	12	K009021
AN51439-D0051	K1110-001021	13	K009021
AN51451-45970	K1110-001021	14	K009021
AN51500-10980	K1110-001021	15	K009021
AN51502-15140	K1110-001021	16	K009021
AN51515-A0600	K1110-001021	17	K009021
AN51532-41281	K1110-001021	18	K009021
AN51550-19140	K1110-001021	19	K009021

PARTS Nº	FIG. Nº	INDEX	PAGE
AN51571-43930	K1110-001021	20	K009021
AN51571-43940	K1110-001021	21	K009021
AN51571-43950	K1110-001021	22	K009021
AN51571-43961	K1110-001021	23	K009021
AN51571-43970	K1110-001021	24	K009021
AN51571-44050	K1110-001021	25	K009021
AN51571-44060	K1110-001021	26	K009021
AN51571-44070	K1110-001021	27	K009021
AN51573-11760	K1110-001021	28	K009021
AN51573-11780	K1110-001021	29	K009021
AN51573-12070	K1110-001021	30	K009021
AN51580-41010	K1110-001021	31	K009021
AN51589-17800	K1110-001021	32	K009021
AN51700-A0370	K1110-001021	33	K009021
AN51851-42580	K1110-001021	34	K009021
AN51872-40850	K1110-001021	40	K009021
AN51873-40340	K1110-001021	35	K009021
AN51901-E0590	K1110-001021	36	K009021
ANBA00612DAA	K1110-001021	37	K009021
ANTB105160TA	K1110-001021	38	K009021
ANTN104300TA	K1110-001021	39	K009021
AS156713	K0110-001001	7	K001001
AS156717	K0110-001001	13	K001001
AS156718	K0110-001001	12	K001001
AS156737	K0110-001001	14	K001001
AS156738	K0110-001001	15	K001001
AS157154	K0110-001001	4	K001001
AS160167	K0110-001001	2	K001001
AS162032	K0110-001001	6	K001001
AS162036	K0110-001001	9	K001001
AS162047	K0110-001001	17	K001001
AS164959	K0110-001001	10	K001001
AS168853	K0110-001001	18	K001001
AS172287	K0110-001001	8	K001001
AS172639	K0110-001001	16	K001001
AS174752	K0110-001001	19	K001001
AS174753	K0110-001001	20	K001001
AS182321	K0110-001001	1	K001001
AS182322	K0110-001001	1	K001001
AS182323	K0110-001001	3	K001001
AS182324	K0110-001001	5	K001001
AS182325	K0110-001001	11	K001001
AS182326	K0110-001001	21	K001001
KD0-0055-05122	AEE00-002001	28	F002001
KD0-0055-05122	AEE00-002001	28	B007001
KD0-0080-06142	AEE00-002001	22	F002001
KD0-0080-06142	AEE00-002001	22	B007001
KD0-0083-08802	AEE00-002001	13	F002001
KD0-0083-08802	AEE00-002001	13	B007001
KD0-0290-20022	AEE00-002001	34	F002001
KD0-0290-20022	AEE00-002001	34	B007001
KD0-0291-08010	AEE00-002001	27	F002001
KD0-0291-08010	AEE00-002001	27	B007001
KD0-09201-0760	AEE00-002001	9	F002001
KD0-09201-0760	AEE00-002001	9	B007001
KD0-09201-0770	AEE00-002001	4	F002001
KD0-09201-0770	AEE00-002001	4	B007001
KD0-33902-0080	AEE00-002001	18	F002001
KD0-33902-0080	AEE00-002001	18	B007001
KD0-33902-0090	AEE00-002001	17	F002001
KD0-33902-0090	AEE00-002001	17	B007001
KD0-33902-0100	AEE00-002001	24	F002001
KD0-33902-0100	AEE00-002001	24	B007001
KD0-35100-0310	AEE00-002001	1	F002001
KD0-35100-0310	AEE00-002001	1	B007001
KD0-35120-0250	AEE00-002001	11	F002001
KD0-35120-0250	AEE00-002001	11	B007001
KD0-35200-0320	AEE00-002001	12	F002001
KD0-35200-0320	AEE00-002001	12	B007001
KD0-35300-0200	AEE00-002001	5	F002001
KD0-35300-0200	AEE00-002001	5	B007001
KD0-35411-0650	AEE00-002001	31	F002001
KD0-35411-0650	AEE00-002001	31	B007001
KD0-35421-0190	AEE00-002001	32	F002001
KD0-35421-0190	AEE00-002001	32	B007001
KD0-35700-0970	AEE00-002001	14	F002001
KD0-35700-0970	AEE00-002001	14	B007001
KD0-35710-1190	AEE00-002001	14	F002001
KD0-35710-1190	AEE00-002001	14	B007001
KD0-35730-0162	AEE00-002001	15	F002001
KD0-35730-0162	AEE00-002001	15	B007001
KD0-35761-0190	AEE00-002001	29	F002001
KD0-35761-0190	AEE00-002001	29	B007001
KD0-35926-0080	AEE00-002001	6	F002001
KD0-35926-0080	AEE00-002001	6	B007001
KD0-35943-0100	AEE00-002001	23	F002001
KD0-35943-0100	AEE00-002001	23	B007001
KD0-35943-0210	AEE00-002001	16	F002001
KD0-35943-0210	AEE00-002001	16	B007001
KD0-35951-0080	AEE00-002001	7	F002001
KD0-35951-0080	AEE00-002001	7	B007001
KD1-0020-06452	AEE00-002001	19	F002001
KD1-0020-06452	AEE00-002001	19	B007001
KD1-0330-06012	AEE00-002001	20	F002001
KD1-0330-06012	AEE00-002001	20	B007001
KD1-0331-08020	AEE00-002001	26	F002001
KD1-0331-08020	AEE00-002001	26	B007001
KD1-0335-06002	AEE00-002001	21	F002001
KD1-0335-06002	AEE00-002001	21	B007001
KD1-0335-08002	AEE00-002001	25	F002001
KD1-0335-08002	AEE00-002001	25	B007001
KD1-0335-20002	AEE00-002001	33	F002001
KD1-0335-20002	AEE00-002001	33	B007001
KD1-33923-0890	AEE00-002001	2	F002001
KD1-33923-0890	AEE00-002001	2	B007001
KD1-33926-0660	AEE00-002001	8	F002001
KD1-33926-0660	AEE00-002001	8	B007001
KD1-33926-0790	AEE00-002001	10	F002001
KD1-33926-0790	AEE00-002001	10	B007001
KD1-35921-0010	AEE00-002001	35	F002001
KD1-35921-0010	AEE00-002001	35	B007001
KD1-35923-0030	AEE00-002001	3	F002001
KD1-35923-0030	AEE00-002001	3	B007001
KD7-35719-0181	AEE00-002001	30	F002001
KD7-35719-0181	AEE00-002001	30	B007001
ND028062-0130	AST00-001001	29	F006001
ND028062-0130	AST00-001001	29	B010001
ND028062-5790	AST00-001001	43	F006001
ND028062-5790	AST00-001001	43	B010001
ND028063-0030	AST00-001001	28	F006001
ND028063-0030	AST00-001001	28	B010001
ND028065-0250	AST00-001001	20	F006001
ND028065-0250	AST00-001001	20	B010001
ND028099-3270	AST00-001001	5	F006001
ND028099-3270	AST00-001001	5	B010001
ND028099-5100	AST00-001001	14	F006001
ND028099-5100	AST00-001001	14	B010001
ND028100-5410	AST00-001001	1	F006001
ND028100-5410	AST00-001001	1	B010001
ND028200-5250	AST00-001001	2	F006001
ND028200-5250	AST00-001001	2	B010001
ND028300-6551	AST00-001001	5	F006001
ND028300-6551	AST00-001001	5	B010001
ND028300-6751	AST00-001001	6	F006001
ND028300-6751	AST00-001001	6	B010001
ND028306-0070	AST00-001001	27	F006001
ND028306-0070	AST00-001001	27	B010001
ND028327-0171	AST00-001001	35	F006001
ND028327-0171	AST00-001001	35	B010001
ND028371-3200	AST00-001001	38	F006001
ND028371-3200	AST00-001001	38	B010001
ND028371-3210	AST00-001001	26	F006001
ND028371-3210	AST00-001001	26	B010001
ND028381-0071	AST00-001001	10	F006001
ND028381-0071	AST00-001001	10	B010001
ND028501-7711	AST00-001001	23	F006001
ND028501-7711	AST00-001001	23	B010001
ND028510-0880	AST00-001001	21	F006001
ND028510-0880	AST00-001001	21	B010001
ND028520-0011	AST00-001001	22	F006001

PARTS Nº	FIG. Nº	INDEX	PAGE
ND028520-0011	AST00-001001	22	B010001
ND028530-1090	AST00-001001	40	F006001
ND028530-1090	AST00-001001	40	B010001
ND028530-1100	AST00-001001	41	F006001
ND028530-1100	AST00-001001	41	B010001
ND028901-0361	AST00-001001	37	F006001
ND028901-0361	AST00-001001	37	B010001
ND028901-5190	AST00-001001	45	F006001
ND028901-5190	AST00-001001	45	B010001
ND053404-0240	AST00-001001	16	F006001
ND053404-0240	AST00-001001	16	B010001
ND053480-7560	AST00-001001	18	F006001
ND053480-7560	AST00-001001	18	B010001
ND053505-0290	AST00-001001	17	F006001
ND053505-0290	AST00-001001	17	B010001
ND053660-0443	AST00-001001	15	F006001
ND053660-0443	AST00-001001	15	B010001
ND128099-5770	AST00-001001	13	F006001
ND128099-5770	AST00-001001	13	B010001
ND128401-5621	AST00-001001	11	F006001
ND128401-5621	AST00-001001	11	B010001
ND128961-0010	AST00-001001	24	F006001
ND128961-0010	AST00-001001	24	B010001
ND153400-6740	AST00-001001	12	F006001
ND153400-6740	AST00-001001	12	B010001
ND90170-10061	AST00-001001	44	F006001
ND90170-10061	AST00-001001	44	B010001
ND90200-06241	AST00-001001	46	F006001
ND90200-06241	AST00-001001	46	B010001
ND90258-10001	AST00-001001	36	F006001
ND90258-10001	AST00-001001	36	B010001
ND90801-10050	AST00-001001	31	F006001
ND90801-10050	AST00-001001	31	B010001
ND949006-4720	AST00-001001	33	F006001
ND949006-4720	AST00-001001	33	B010001
ND949007-6530	AST00-001001	39	F006001
ND949007-6530	AST00-001001	39	B010001
ND949007-6850	AST00-001001	42	F006001
ND949007-6850	AST00-001001	42	B010001
ND949042-3680	AST00-001001	30	F006001
ND949042-3680	AST00-001001	30	B010001
ND949042-3690	AST00-001001	32	F006001
ND949042-3690	AST00-001001	32	B010001
ND949047-4440	AST00-001001	19	F006001
ND949047-4440	AST00-001001	19	B010001
ND949056-4480	AST00-001001	34	F006001
ND949056-4480	AST00-001001	34	B010001
ND949100-1920	AST00-001001	8	F006001
ND949100-1920	AST00-001001	8	B010001
ND949100-3161	AST00-001001	3	F006001
ND949100-3161	AST00-001001	3	B010001
ND949100-3540	AST00-001001	4	F006001
ND949100-3540	AST00-001001	4	B010001
ND949100-4500	AST00-001001	7	F006001
ND949100-4500	AST00-001001	7	B010001
ND949100-5290	AST00-001001	3	F006001
ND949100-5290	AST00-001001	3	B010001
ND949170-4040	AST00-001001	9	F006001
ND949170-4040	AST00-001001	9	B010001
ND949170-4070	AST00-001001	25	F006001
ND949170-4070	AST00-001001	25	B010001
SM403-21988	KIT	K06	Y001001
STBA0069A	KIT	K07	Y001001
XK0401008000	H5200-004008	30	H008008
XK0401008000	H5200-004010	13	H008010
XK0401011000	H5200-004008	32	H008008
XK0401014000	H5200-004008	34	H008008
XK2105002990	H5200-004008	31	H008008
XK2627512170	H5200-004008	14	H008008
XK2629120330	H5200-004008	29	H008008
XK2629120330	H5200-004010	12	H008010
XK2629170330	H5200-004008	33	H008008

GD655-5 Motor Grader
Form No. KEPB161200

©2011 KOMATSU
All Rights Reserved
Printed in Brazil 05-11