GD705-5 KOMATSU

MOTONIVELADORA

FEN04875-00

RUTHZIL TRATOR COMERCIAL DE PEÇAS LTDA 11 97083-6812 ROLANDO CITRANGULO

PARTS BOOK

GD705-5
Serial No. 26480 and up

SAA6D114E-3H
Serial No. 26884044 and up

FOREWORD

When ordering replacement parts, specify the part number, part name, and quantity required, and also specify your machine model code, machine serial number, engine serial number and the service meter reading of which the parts are needed. This Parts Book contains not only standard replacement parts but also optional equipment, tools and field repair service parts.

To order these items, please contact your nearest Komatsu distributor.

NOTE
The illustrations, parts configuration, parts number or parts name in this publication may differ from your machine unit, and these are subject to change without notice for continuous product improvement.
Whenever concerns and questions arise regarding items in this publication and your machine unit or when you order there replacement parts, please consult your nearest Komatsu distributor for the latest information.

This Parts Book contains the information and special codes as follows:

ILLUSTRATION AND PARTS LIST

When you open this Parts Book, you will find an illustration following its figure number (FIG.) Each individual
part in the illustration is given an index number. Following the illustration, the component parts of the unit are listed in the order of the index numbers shown in the illustration. The part number, part name, quantity and applicable serial number are given for each part as a parts list.

FIGURE NUMBER (FIG.)

The figure number (FIG.) is the number which shows the figure of the page. It is not the spare part number.
The numbers are not always continuous.

PARTS LIST

Spare parts information are listed in the parts list page as follows:

Index:

This is the same as the index number in the illustration. The parts are listed in index number order.

Code:

Codes are used in this column and represent as follows:

A1 This part and the part specified in the line immediately above are interchangeable.
A2 The part specified in the line above can be used instead of this part.
A3 This part can be used instead of the part specified in the line immediately above.
A4 The part specified in the description column can be used instead of this part if it is used as a set.
B1 This shows discontinued part. The part specified in the above line is supplied instead.
B2 This shows a discontinued part. The part specified in the description column is supplied instead as a set.

C1 This part cannot be supplied as an individual part. It is supplied as an assembly.
C2 This part is supplied for authorized Komatsu distributors only. It cannot be supplied as an individual part. It is supplied as an assembly.
C3 This indicates a part supplied as semi-finished. It requires additional work before installation.

Part Number:

The number given in the part number column is the part number for the part shown. It is the identification
code used when ordering that part. It is important that there be no mistake in this code number when ordering.

Description:

This gives the name of part that has the part number listed. The mark "･" is put in front of the component part name of an assembly part and the item is entered following the assembly. If a part marked with "･" is a sub assembly, its components are marked with "･･".

Example: Tank Assembly
･Tank
･Cap
･･Packing

Furthermore, the following marks and abbreviations are used in this column.

Kit This indicates kit parts. For kit parts, refer to the section FIELD REPAIR SERVICE PARTS in this Parts Book.
D Diameter
L Length
L.H. Left-hand side
R.H. Right-hand side
T Thickness
W Width

Quantity (Qty):

This specifies the number of pieces used for one machine. However, if a part is included in the assembly and/or component, the quantity per such assembly and/or component is specified.
Code AR (as required) shall be used in the Quantity column if the part cannot be specified numbers requires per machine and/or component. In such case, any number of quantities may be ordered depend on the field service requirement.

Serial Numbers:

Applicable engine serial number is indicated for the engine volume. In the chassis volume, this indicates the machine serial number in which the part is used.
If the serial number is enclosed in parenthesis, it shows that it is the applicable serial number for exclusive use of the equipment of figure number (FIG.)

AVANT-PROPOS

Lorsque vous passez une commande d'une pièce de rechange, vous êtes prié de spécifier le numéro de la pièce, la désignation de la pièce et la quantité requise et d'indiquer également le code du modèle de la machine, le numéro de série de la machine, le numéro de série du moteur et la lecture du compteur de service du véhicule.

Sur le présent catalogue des pièces figurent non seulement les équipements standard, mais également les équipements et accessoires en option. Si vous désirez un équipement ou une pièce quelconque, vous êtes prié de prendre contact avec le concessionnaire Komatsu le plus proche.

Ce catalogue des pièces comprend les informations et codes spéciaux de la manière suivante:

FIGURES ET LISTES DES PIÈCES

Lorsque vous ouvrez le présent catalogue, vous pouvez rechercher les figures en fonction du numéro de figure (FIG.). Chaque pièce individuelle dans la figure est fournie d'un numéro de référence. D'après la figure, les éléments de l'unité sont énumérés dans l'ordre des numéros de référence montrés sur la figure. Le numéro de la pièce, la désignation de la pièce, la quantité et le numéro de série utilisés sont indiqués pour chaque pièce comme liste des pièces.

NUMÉRO DE FIGURE (FIG.)

Le numéro de figure (FIG.) est un numéro qui permet d'identifier une figure sur une page. Il ne représente pas le numéro de la pièce de rechange. Les numéros ne sont pas toujours séquentiels.

LISTE DES PIÈCES DE RECHANGE

Les informations des pièces de rechange sont données dans la page de la liste des pièces comme ci-après:

Numéro de référence (Index):

Les numéros de référence correspondent aux numéros de référence notés sur la figure et sont énumérés dans l'ordre des numéros de référence.

Codification (Code):

Les codes sont utilisés dans cette colonne et représentent comme ci-après:

A1 Cette pièce et la pièce qui figure sur la ligne juste au-dessus sont interchangeables.

A2 La pièce indiquée sur la ligne au-dessus peut être utilisée au lieu de cette pièce.

A3 Cette pièce peut être utilisée au lieu de la pièce indiquée sur la ligne juste au-dessus.

A4 La pièce indiquée dans la colonne de description peut être utilisée au lieu de cette pièce si elle est utilisée comme ensemble.

B1 Ceci montre la pièce dont la production est interrompue. La pièce indiquée dans la ligne au-dessus est fournie à sa place.

B2 Ceci montre la pièce dont la production est interrompue. La pièce indiquée dans la colonne de description est fournie à sa place comme ensemble.

C1 Cette pièce ne peut pas être fournie comme pièce individuelle. Elle est fournie en tant qu'ensemble.

C2 Cette pièce est fournie pour les distributeurs autorisés de Komatsu seulement. Elle ne peut pas être fournie comme pièce individuelle. Elle est fournie en tant qu'ensemble.

C3 Ceci indique une pièce fournie à l'état semi-fini. Ceci exige un travail additionnel avant l'installation.

Numéros de pièce (Part Number):

Les numéros indiqués dans cette colonne correspondent aux numéros des pièces représentées et constituent les codes à spécifier pour toute commande de pièce. Il est important de ne pas faire d'erreur avec ce code au moment de la commande.

Description (Description):

Ceci indique le nom de la pièce qui montre le numéro de la pièce énumérée. La marque "·" est placée devant le nom de la pièce du composant d'une pièce d'ensemble et l'item est introduit suivant l'ensemble. Si une pièce marquée avec "·" est un sous-ensemble, ses composants sont marqués avec "· ·".
Exemple: Tank Assembly (Ensemble de réservoir)
· Tank
· Cap
· · Packing

En outre, les marques et abréviations suivantes sont utilisées dans cette colonne.

Kit Ceci indique les pièces de kit. Pour les pièces de kit, se référer à la Section FIELD REPAIR SERVICE PARTS de ce Catalogue des Pièces.
D Diamètre
L Longueur
L.H. Côté gauche
R.H. Côté droit
T Épaisseur
W Largeur

Quantité (Qty):

Ceci spécifie le nombre de pièces nécessaires pour l'équipement en question. S'il s'agit de pièces comprises dans un ensemble et/ou composant, et la quantité indiquée est le nombre de pièces nécessaires pour l'ensemble et/ou le composant en question.
Le code AR (comme requis) sera utilisé dans la colonne de Quantité si la pièce ne peut pas se présenter en nombres indiqués comme requis par machine et/ou composant. Dans ce cas, tout nombre de quantités peut être commandé selon la condition de service de champ.

Numéros de série (Serial Numbers):

Le numéro de série du moteur applicable est indiqué pour le volume du moteur. Dans le volume de la carrosserie, ceci indique le numéro de série de l'équipement sur lequel la pièce est utilisée.

Si le numéro de série est placé entre parenthèses, cela signifie qu'il s'agit d'un numéro de série destiné exclusivement à l'utilisation de l'équipement mentionné dans le numéro de figure (FIG.).

PREFAZIONE

Quando fate un ordinazione di una parte di ricambio, siete pregati di precisare il numero della parte, la designazione della parte e la quantità necessaria ed indicare anche il codice del modello della macchina, il numero di serie della macchina, il numero di serie del motore e la lettura dell'indicatore di servizio del veicolo.

Sul presente catalogo delle parti appaiono non solo le attrezzature standard, ma anche le attrezzature ed accessori in opzione. Se desiderate un'attrezzatura o una parte qualunque, siete pregati di prendere contatto con il concessionario Komatsu più vicino.

Questo catalogo delle parti comprende le informazioni ed i codici speciali nel modo seguente:

ILLUSTRAZIONI ED ELENCO DELLE PARTI

Quando aprite il presente catalogo, troverete una figura secondo il suo numero di figura (FIG.). Ogni parte individuale nella figura è fornita di un numero di riferimento. Secondo la figura, gli elementi dell'unità sono enumerati nell'ordine dei numeri di riferimento mostrati sulla figura. Il numero della parte, la designazione della parte, la quantità ed il numero di serie utilizzati sono indicati per ogni parte come elenco delle parti.

NUMERO DI FIGURA (FIG.)

Il numero di figura (FIG.) è il numero che indica la figura della pagina. Non rappresenta il numero della parte di ricambio. I numeri non sono sempre continui.

ELENCO DELLE PARTI DI RICAMBIO

Le informazioni dei pezzi di ricambio sono elencate nella pagina dell'elenco dei pezzi come segue:

Numero di riferimento (Index):

I numeri di riferimento corrispondono ai numeri di riferimento notati sulla figura e sono enumerati nell'ordine dei numeri di riferimento.

Codice (Code):

I codici sono usati in questa colonna e rappresentano come segue:

A1 Questa parte ed la parte specificata nella linea immediatamente sopra sono intercambiabili.

A2 La parte specificata nella linea sopra può essere usata anziché questa parte.

A3 Questa parte può essere usata anziché la parte specificata nella linea immediatamente sopra.

A4 La parte specificata nella colonna di descrizione può essere usata anziché questa parte se è usata come insieme.

B1 Ciò mostra la parte non più in produzione. La parte specificata nella suddetta linea è invece fornita.

B2 Ciò mostra una parte non più in produzione. La parte specificata nella colonna di descrizione è fornita invece come insieme.

C1 Questa parte non può essere fornita come pezzo individuale. È fornita come insieme.

C2 Questa parte è destinata solo ai distributori autorizzati Komatsu. Non può essere fornita come parte individuale. È fornita come insieme.

C3 Ciò indica una parte fornita come semifinito. Richiede un lavoro supplementare prima dell'installazione.

Numeri di parte (Part Number):

I numeri indicati in questa colonna corrispondono ai numeri delle parti rappresentate e costituiscono i codici da precisare per qualsiasi ordinazione di parte. È importante non fare un errore con questo codice al momento dell'ordinazione.

Descrizione (Description):

Ciò dà il nome della parte che presenta il numero di parte elencato. Il contrassegno "·" è messo davanti al nome della parte componente di una parte di gruppo e l'articolo è inserito dopo il gruppo. Se un pezzo segnato con "·" è un sotto-gruppo, i suoi componenti sono segnati con "· ·".

Esempio: Tank Assembly
· Tank
· Cap
· · Packing

Inoltre, i seguenti contrassegni ed abbreviazioni sono usati in questa colonna.

Kit Ciò indica le parti di kit. Per le parti di kit, riferirsi alla sezione PARTI DI RICAMBIO PER SERVIZIO DI RIPARAZIONE IN SEDE in questo Catalogo delle Parti.
D Diametro
L Lunghezza
L.H. Lato a sinistra
R.H. Lato a destra
T Spessore
W Larghezza

Quantità (Qty):

Questo precisa il numero di parti necessarie per l'attrezzatura in questione. Se si tratta di parti comprese in un insieme e/o componente, e la quantità indicata è il numero di parti necessarie per l'insieme e/o il componente in questione.
Il codice AR (come richiesto) sarà utilizzato nella colonna di Quantità se la parte non può presentarsi in numeri indicati come richiesto per macchina e/o componente. In questo caso, qualsiasi numero di quantità può essere ordinato secondo la condizione di servizio di campo.

Numeri di serie (Serial Numbers):

Il numero di serie del motore applicabile è indicato per il volume del motore. Nel volume della carrozzeria, questo indica il numero di serie dell'attrezzatura sulla quale la parte è utilizzata.

Se il numero seriale è racchiuso tra parentesi, indica che è il numero di serie applicabile per uso esclusivo dell'attrezzatura del numero di figura (FIG.)

Bei der Bestellung von Teilen bitte die Teilenummer, die Teilebezeichnung und die Menge des jeweiligen Teils sowie die Modellnummer, die Seriennummer der Maschine, die Seriennummer des Motors und den Stand des Betriebsstundenzählers angeben.

In dieser Ersatzteilliste ist nicht nur das Standardzubehör aufgeführt, sondern auch als Sonderausstattung erhältliche Teile und Einrichtungen. Bestellungen nimmt Ihr zuständiger Komatsu-Händler entgegen.

Die folgenden Informationen und Kodes sind in der Ersatzteilliste enthalten:

Bilder und Ersatzteilliste

Beim Aufschlagen des Ersatzteilkatalogs finden Sie nach der Bildnummer (BILD) geordnete Bilder. Jedes Einzelteil einer Baugruppe ist mit einer Kennzahl versehen. Ausgehend von den Bildern sind die Bauteile der Baugruppe aufgeführt, und zwar geordnet nach den in den Bildern angegebenen Kennzahlen. Jedes Einzelteil wird mit Teilenummer, Teilebezeichnung und entsprechender Seriennummer angegeben.

Bildnummer (BILD)

Mit der Bildnummer (BILD) können Bilder auf einer Seite identifiziert werden. Es handelt sich dabei nicht um die Nummer des Lieferteils. Auch sind die Bilder nicht fortlaufend nummeriert.

Ersatzteilliste

Angaben zu den Ersatzteilen sind auf der Auflistungsseite wie folgt dargestellt::

Kennzahl (Index):

Hierbei handelt es sich um die Kennzahlen aus den Bildern. Die Bauteile sind nach diesen Kennzahlen geordnet aufgeführt.

Kode (Code):

In dieser Spalte werden Kodes mit den folgenden Bedeutungen benutzt:

A1 Dieses Teil ist mit dem in der vorangegangenen Zeile aufgeführten Teil austauschbar.

A2 Das in der vorangegangen Zeile aufgeführte Teil kann anstelle dieses Teils verwendet werden.

A3 Dieses Teil kann anstelle des in der vorangegangenen Zeile aufgeführten Teils verwendet werden.

A4 Anstelle dieses Teils kann das in der Spalte „Beschreibung“ aufgeführte Teil verwendet werden, wenn das Teil zusammen mit anderen Teilen als ein Bauteilsatz verwendet wird.

B1 Dieses Teil kann nicht mehr geliefert werden. Stattdessen wird das in der vorangegangenen Zeile aufgeführte Teil geliefert.

B2 Dieses Teil kann nicht mehr geliefert werden. Stattdessen wird das in der Spalte „Beschreibung“ aufgeführte Teil als ein Bauteilsatz geliefert.

C1 Dieses Teil kann nicht als Einzelteil, sondern nur als Baugruppe geliefert werden.

C2 Dieses Teil wird nur an autorisierte Komatsu-Händler geliefert. Es kann nicht als Einzelteil, sondern nur als Baugruppe geliefert werden.

C3 Hiermit werden Teile gekennzeichnet, die in vorbearbeitetem Zustand geliefert werden und für den Einbau nachbearbeitet werden müssen.

Teilenummer (Part Number):

Die in der Spalte „Teilenummer“ aufgeführte Nummer entspricht der Teilenummer für das betreffende Teil. Diese Nummer dient zur Identifizierung des Teils bei einer Bestellung. Deshalb sollte bei der Bestellung stets auf die genaue Angabe der Teilenummer geachtet werden.

Beschreibung (Description):

Hierunter wird die Bezeichnung des Teils mit der aufgeführten Teilenummer angegeben. Jedes Baugruppen-Bauteil ist mit dem vorangestellten Symbol „·“ gekennzeichnet und wird hinter der entsprechenden Baugruppe aufgeführt. Handelt es sich bei dem mit „·“ gekennzeichneten Bauteil um eine Baugruppe, sind die Bauteile dieser Baugruppe mit „· ·“ gekennzeichnet.
Beispiel: Tank Assembly
· Tank
· Cap
· · Packing

Zusätzlich werden die folgenden Zeichen und Abkürzungen in dieser Spalte verwendet:

Kit Hiermit werden Teile gekennzeichnet, die nur als Satz erhältlich sind. Siehe dazu den Abschnitt „FIELD REPAIR SERVICE PARTS“ dieses Ersatzteilkatalogs.
D Durchmesser
L Länge
L.H. linke Seite
R.H. Rechte Seite
T Dicke
W Breite

Menge (Qty):

Hierunter wird die Anzahl der Bauteile für eine Maschine angegeben. Im Falle einer Baugruppe oder eines Aggregats wird allerdings die Anzahl der Teile pro Baugruppe angegeben.
Der Kode AR (nach Bedarf) wird in dieser Spalte dann benutzt, wenn keine genaue Angabe darüber möglich ist, wie groß der Mengenbedarf pro Maschine und/oder Baugruppe ist. In diesem Fall kann eine beliebige Menge je nach Bedarf bestellt werden.

Serial Numbers (Seriennummern):

Im Ersatzteilkatalog für den Motor versteht man hierunter die Seriennummer des Motors, in den das betreffende Teil eingebaut ist. Im Ersatzteilkatalog für die Maschine versteht man hierunter die Seriennummer der Maschine, in die das entsprechende Teil eingebaut ist.
Wenn die Seriennummer in Klammern angegeben ist, ist diese Seriennummer ausschließlich für das in der Bildnummer (BILD) angegebene Zubehör bestimmt.

INTRODUÇÃO

Ao solicitar uma peça, informe o número, nome e quantidade da peça necessária, bem como o código de modelo da máquina e seu número de série, o número do motor e a leitura do medidor de serviço.

Este catálogo de peças não somente especifica os acessórios padrões mas também as peças opcionais e aditamentos. Para pedir uma peça, entre em contato com o revendedor Komatsu mais próximo.

Este catálogo de peças contém as seguintes informações e códigos especiais:

LISTA DE PEÇAS E ILUSTRAÇÕES

Ao abrir este catálogo de peças, encontrar-se-á uma ilustração seguida do número da figura (FIG.). A cada peça individual na ilustração corresponde um número de índice. Seguindo a ilustração, as peças componentes da unidade são listadas na ordem dos números de índice nela indicados. O número, nome, quantidade e número de série aplicável da peça são aprsentados como uma lista de peças.

NÚMERO DA FIGURA (FIG.)

O número da figura (FIG.) é o número que mostra a ilustração da página. Não é um número para fornecimento de peças sobressalentes. Os números nem sempre são contínuos.ebene Zubehör bestimmt.

LISTA DE PEÇAS

As informações das peças sobressalentes são relacionadas na página com a lista de peças de acordo com o seguinte:

Índice (Index):

Este é o mesmo que o número de índice na ilustração. As peças são relacionadas na ordem dos números de índice.

Código (Code):

Códigos são utilizados nesta coluna e significam o seguinte:

A1 Esta peça e a peça especificada na linha imediatamente acima são intercambiáveis.

A2 A peça especificada na linha acima pode ser utilizada no lugar desta peça.

A3 Esta peça pode ser utilizada no lugar da peça especificada na linha imediatamente acima.

A4 A peça especificada na coluna “Descrição” pode ser utilizada no lugar desta peça se usada como um conjunto.

B1 Indica peça descontinuada. A peça especificada na linha acima é fornecida em seu lugar.

B2 Indica peça descontinuada. A peça especificada na coluna “Descrição” é fornecida em seu lugar como um conjunto.

C1 Esta peça não pode ser fornecida como peça individual. Ela é fornecida como um conjunto.

C2 Esta peça é fornecida somente para revendedores Komatsu autorizados. Não pode ser fornecida como peça individual. Ela é fornecida como um conjunto.

C3 Indica peça fornecida em condição semiacabada. Requer trabalho adicional antes da instalação.

Número da peça (Part Number):

O número indicado na coluna de números de peça corresponde ao número da peça exibida. É o código de identificação usado para o pedido da peça. É importante não enganar-se de número de código ao pedir a peça.

Descrição (Description):

Indica o nome da peça que tem o seu número de peça relacionado. O símbolo "·" é colocado na frente do nome peça do componente de uma peça de conjunto, e o item é lançado seguindo o conjunto. Se uma peça indicada com "·" é um subconjunto, os seus componentes são indicados por "· ·".

Exemplo: Tank Assembly
· Tank
· Cap
· · Packing

Além disso, os seguintes símbolos e abreviações são usados nesta coluna.

Kit Indica peças de um jogo. Para peças de jogo, referir-se à seção "FIELD REPAIR SERVICE PARTS" neste catálogo de peças.

D Diâmetro
L Comprimento
L.H. Lado esquerdo
R.H. Lado direito
T Espessura
W Largura

Quantidade (Qty):

Indica o número de peças utilizadas em uma máquina. Contudo, se uma peça é incluída no conjunto e/ou componente, a quantidade por conjunto e/ou componente é especificada.
O código AR (como requerido) usar-se-á na coluna "Quantitade" caso o número de peças por máquina e/ou componente não possa ser especificado. Em tal caso, qualquer número de peças pode ser pedido dependendo dos requisitos de serviço em campo.

Números de série (Serial Numbers):

O número de série do motor aplicável é indicado para o volume do motor. No volume da carroceria, indica o número de série da máquina na qual a peça é utilizada.

Se o número de série está entre parêntesis, mostra que é o número de série aplicável para uso exclusivo do equipamento do número da figura (FIG.)

订购零件时，请注明需要零件的货号、品名、数量以及使用机器的车辆编号、发动机型号和系列号、工作时数。

此零件明细表上不仅记载了标准装备零件，还记载了选购零件、附件零件。如果您需要订货，请与最近的小松代理店联系。

为了清楚明了，零件手册中有如下规定：

图表

打开此零件清单后，可以看到附带图号（FIG.）的零件明细表图示。在图示上标有各种零件的索引号码。除图之外，还按索引号码的顺序列表表示货号、品名、数量、适用机型。

图号（FIG.）

图号表示该页图的号码。它不是补充零件用的货号。此号码不一定是连续号码。

零件表

从左栏开始按以下顺序显示零件的明细。

索引 (Index):

与图的索引号码一致，按索引号码顺序编制为表格形式。

代号 (Code):

此栏使用的代号如下所示：

A1　此行零件可与紧挨着的上一行零件互换使用。

A2　上一行的零件可取代此行零件来使用。

A3　此行零件可代替紧挨着的上一行零件使用。

A4　品名栏内的零件配套后，可取代此行零件来使用。

B1　该行零件已停止供应，用上一行的零件代替使用。

B2　该行零件已停止供应，品名栏内的零件配套后代替此行零件供应。

C1　此行零件拟成套供应，不以单一零件供应。

C2　此行零件主要面向特定的代理。不以单一零件供应，只拟成套供应。

C3　此行零件以半成品的形式供应，使用前必需再加工。

货号 (Part Number):

此栏所示的编号是图示零件的货号。它是在订货时需要标明的特定代号，是非常重要的。

品名 (Description):

表示相当于货号的零件名称。构成组装品的零件，在品名的前面有 “·” 标记，记载在组装品之后。另外，如果标记 “·” 的零件是组装品，则该构成零件的品名前标有 “· ·” 标记。

例： TANK ASSEMBLY
· TANK
· CAP
· · PACKING

另外，说明栏可能显示以下代号。

Kit 表示修理包。关于修理包构件详情，请参考此零件清单中 “现场修理服务零件” 部分的内容。
D 直径
L 全长
L.H. 左侧
R.H. 右侧
T 厚度
W 全宽

数量 (Qty):

表示一台机器中需要使用的该零件数量。但是，如果是组装零件的构成零件时，表示其组装件的件数。如果不能指定每个机器以及（或者）组装零件中必须的零件数量时，可以在零件数量栏中使用代码 AR。此时，数量由现场的服务要件决定，然后进行定购。

适用机型 (Serial Numbers):

发动机篇中表示该使用零件的发动机型号，在机体篇中表示该使用零件的车辆号码。

如果适用机型位于括号中，表明该适用机型专门用于图号 (FIG.) 中所指的设备。

ПРЕДИСЛОВИЕ

При заказе запчасти укажите номер части, наименование части и нужное количество; кроме того, укажите код модели вашей машины, серийный номер машины, серийный номер двигателя и показания счетчика мото-часов.

В Каталоге приведены не только стандартные изделия, но и дополнительное оборудование и принадлежности. Для заказа запчасти пожалуйста обратитесь к ближайшему дилеру "Комацу".

Содержащаяся в Каталоге информация и специальные коды разъясняются ниже:

РИСУНОК И ПЕРЕЧЕНЬ ЧАСТЕЙ

Раскрыв Каталог, вы увидите рисунок после номера рисунка (ПОЗ). Каждой отдельной части на рисунке присвоен позиционный номер. За рисунком следует перечень составных частей устройства в порядке номеров позиций рисунка. Перечень частей указывает для каждой части ее номер, наименование, количество и применимый серийный номер.

НОМЕР РИСУНКА (ПОЗ)

Номер рисунка (ПОЗ) – это номер, который указывает рисунок на странице. Он не является номером запчасти. Последовательность номеров не обязательно непрерывна.

ПЕРЕЧЕНЬ ЧАСТЕЙ

Данные запасных частей приведены на странице перечня частей следующим образом:

Индекс (Index):

То же, что номер позиции на рисунке. Части перечислены в порядке их позиционных номеров.

Код: (Code):

В этой колонке находятся коды, обозначающие следующее:

A1 Данная часть и часть, указанная в предыдущей строке, взаимозаменяемы.

A2 Вместо данной части можно использовать часть, указанную в предыдущей строке.

A3 Данную часть можно использовать вместо части, указанной в предыдущей строке.

A4 В комплекте, вместо данной части можно использовать указанную в колонке описания.

B1 Поставки этой части прекращены. Взамен поставляется часть, указанная в предыдущей строке.

B2 Поставки этой части прекращены. Взамен комплектом поставляется часть, указанная в колонке описания.

C1 Данная часть отдельно не поставляется. Она поставляется с узлом.

C2 Данная часть поставляется лишь уполномоченным дилерам "Комацу". Отдельно не поставляется. Поставляется с узлом.

C3 Обозначает часть, поставляемую без доводки. Требует предустановочной подготовки.

Номер части (Part Number):

Приведенный в колонке номеров частей номер является номером изображенной части. Это код-идентификатор для заказа данной части. Важно, чтобы при заказе этот кодовый номер был указан без ошибок.

Описание (Description):

Здесь приводится наименование части, обозначенной номером в перечне. Значок "·" ставится перед наименованием детали компонента, причем деталь записана после узла. Если помеченная "·" часть является подсборкой узла, то ее составные части обозначаются значком "··".

Пример: Tank Assembly
·Tank
·Cap
··Packing

Далее, в этой колонке используются следующие обозначения и сокращения.

Kit	Указывает на элементы комплекта. Элементы комплекта смотри в разделе ЗАПАСНЫЕ ЧАСТИ ДЛЯ РЕМОНТА В УСЛОВИЯХ ЭКСПЛУАТАЦИИ данного Каталога.
D	Диаметр
L	Длина
L.H.	Левая сторона
R.H.	Правая сторона
T	Толщина
W	Ширина

Количество (Qty):

Указывает общее число изделий в одной машине. Если же изделие является частью узла и/или устройства, то указывается количество в таком узле и/или устройстве.
При невозможности указать количество частей на машину и/или устройство, в колонке Количество проставляется код AR (по потребности). В таком случае можно заказывать любые количества в зависимости от потребностей обслуживания на месте.

Серийные номера (Serial Numbers):

В книге по двигателю приводится соответствующий серийный номер двигателя. В книге по шасси указывает на серийный номер машины, где используется данная часть.

Серийный номер, заключенный в круглые скобки означает, что он применяется только для оборудования с номером рисунка (ПОЗ.)

. رقم القطعة (Part Number)

الرقم الوارد في عمود رقم القطعة هو رقم القطعة الخاص بالقطعة المبينة. وهو الرمز المستخدم لطلب تلك القطعة. ومن الضروري عدم ارتكاب اي خطأ في تحديد هذا الرقم عند طلب القطع.

. الوصف (Description)

يعطي اسم القطعة المدرج رقمها في القائمة. توضع العلامة "٠" امام اسم المكون لمجموعة ما ويدرج البند بعد المجموعة. اذا كانت القطعة المشار اليها بالعلامة "٠" هي نفسها عبارة عن مجموعة مكونات, فان كلا من مكوناتها يشار اليها بالعلامة "٠٠".
مثال

Tank Assembly
٠Tank
٠Cap
٠٠Packing

بالاضافة الى ذلك, العلامات والمختصرات التالية تستخدم في هذا العمود.

Kit	هذا يشير الى قطع الطقم. حول قطع الطقم, راجع قسم "قطع غيار خدمة الإصلاح الميداني" في كتاب القطع هذا.
D	قطر
L	طول
L.H.	جانب اليد اليسارى
R.H.	جانب اليد اليمنى
T	السمك
W	العرض

. الكمية (Qty)

هذا هو عدد القطع المستخدمة لآلية واحدة. اما بالنسبة لمجموعات المكونات ومجموعات القطع فانه يتم تحديد عدد القطع لكل مجموعة.
الرمز AR (حسب الطلب) سوف يستخدم في عمود الكمية اذا لم يتم تحديد عدد القطع المطلوبة لكل مانكة و/او للمجموعة. في مثل هذه الحالة, فان اي عدد من الكميات ربما يتم طلبه بشكل يعتمد على متطلبات مجال الخدمة.

. الرقم التسلسلي (Serial Numbers)

في كتاب قطع المحرك يشير هذا الرقم الى الرقم التسلسلي للمحرك الذي تستخدم فيه القطعة. قي كتاب قطع الآلية, يشير هذا الرقم الى الرقم التسلسلي للآلية التي تستخدم فيها القطع.

في حالة وضع الرقم التسلسلي بين الأقواس، فهذا يعني أن هذا هو الرقم التسلسلي الساري للاستخدام الحصري للقطعة الموضحة بالشكل.

عند طلب القطع, يرجى تحديد رقم القطعة واسم القطعة والكمية المطلوبة من القطعة, مع تحديد رقم الموديل والرقم التسلسلي وقراءة عداد الخدمة.

قائمة القطع هذه لا تقتصر على الكميات القياسية فقط بل تشمل ايضاً القطع والملحقات الاختيارية. لطلب القطع, يرجى الاتصال باقرب موزع لمنتجات كوماتسو.

كتاب القطع هذا يحتوي على المعلومات ورموز التخصيص وكما مبين ادناه:

الشكل والقائمة

عندما تفتح كتاب القطع هذا, سوف تجد رسومًا توضيحية تتضمن رقم الشكل (الشكل). كل قطعة مفردة في الرسم يعطى لها رقم فهرس. في الرسم التالي, قطع المجموعة للوحدة تم ادراجها حسب ترتيب ارقام الفهرس المبينة في الرسم.. رقم القطعة, اسم القطعة, الكمية والرقم التسلسلي المطابق يعطى لكل قطعة حسب تسلسل القطع في القائمة.

رقم الشكل (الشكل)

رقم الشكل (الشكل) هو الرقم الذي يميز شكل ما داخل الصفحة. إنه ليس رقم القطعة. وليست الأرقام متتابعة دائمًا.

قائمة القطع

معلومات قطع الغيار مثبتة في صفحة قائمة القطع وكلاتي:

. الفهرست (Index)

هذا الرقم هو نفس رقم الفهرس الوارد في الشكل التوضيحي. تدرج القطع في القائمة مرتبة تبعاً لارقام الفهرس.

. الرمز (Code)

الرموز تستخدم في هذا العمود وتوصف كلاتي:

A1 هذه القطعة والقطعة المذكورة في السطر السابق مباشرة يمكن لكل منهما ان تحل محل الاخرى.

A2 القطعة المذكورة في السطر السابق يمكن استعمالها بدلاً من هذه القطعة.

A3 هذه القطعة يمكن استعمالها بدلاً من القطعة المذكورة في السطر السابق مباشرة.

A4 القطعة المذكورة في عمود الوصف يمكن استعمالها بدلاً من هذه القطعة اذا استخدمت كطقم.

B1 هذه القطعة توقف توريدها. يتم توريد القطعة المذكورة في السطر السابق بدلاً منها.

B2 هذه القطعة توقف توريدها. يتم توريد القطعة المذكورة في عمود "الوصف" بدلاً منها كطقم.

C1 هذه القطعة لا يمكن توريدها كقطعة منفردة. يتم توريدها كمجموعة.

C2 هذه القطعة يتم تجهيزها من قبل موزعين كوماتسو المرخصين فقط. لا يمكن تجهيزها كقطعة مفردة. يتم تجهيزها كمجموعة.

C3 هذا يشير الى قطعة موردة شبه مكتملة التصنيع. تتطلب استكمال تصنيعها قبل الاستعمال.

CONTENTS

FOREWORD 2

	FIG No.	PAGE
ENGINE CYLINDER HEAD AND ITS RELATED PARTS		
Cylinder Head	A1009-001001	32
Cylinder Head Cover	AVC00-001001	33
Air Intake Unit	A1310-001001	34
Breather	ABR00-001001	35
Air Intake Manifold	AIM00-001001	36
Air Intake Connector	AIC00-001001	37
Air Intake Connector Mounting	AIC20-001001	38
Air Intake Heater	AAH00-001001	39
Air Transfer Connection	AIT00-001001	40
Exhaust Manifold	ATB30-001001	41
Turbocharger	A1539-001001	42
Turbocharger Oil Piping	ATP00-001001	43
Heat Shield	A1570-001001	44
Exhaust Pipe	A1670-001001	45
Rocker Arm Housing and Rocker Arm	ARL00-001001	46
Lifting Arrangement	ALA00-001001	47
Lifting Arrangement Bolt	ALA10-001001	48
Coolant Piping	ARP00-001001	49
Exhaust Connector Clamp	AXS00-001001	50
Exhaust Muffler	A1610-001001	51
ENGINE CYLINDER BLOCK AND ITS RELATED PARTS		
Cylinder Block	A2019-001001	54
Cylinder Block Cover	AOB10-001001	56
Engine Oil Filler	AOB20-001001	57
Engine Oil Pan	A2119-001001	58
Engine Oil Pan Drain	A2110-001001	59

Front Gear Cover A2049-001001 60
Tappet ABB00-002001 61
Front Gear Train Cover ADF10-001001 62
Flywheel Housing A2219-001001 63
Flywheel AFW00-001001 64
Flywheel Mounting AFW10-001001 65
Engine Oil Level Sensor ASD00-001001 66
Crankshaft A2319-001001 67
Vibration Damper ADA00-001001 68
Piston and Connecting Rod A2359-001001A 69
Crank Pulley AAF00-001001 70
Breather Hose A2080-001001 71
Cabin Heater Plug AHC00-001001 72
Camshaft A2419-001001 73
Oil Level Gauge ALG00-001001 74
ENGINE LUBRICATION SYSTEM
Engine Oil Pump ALP00-003001 76
Engine Oil Filter ALF00-001001 77
Engine Oil Cooler ALC00-001001A 78
ENGINE FUEL SYSTEM
Fuel Supply Pump .....
Inner Parts A4019-001001 80
Mounting A4019-001002 81
Fuel Supply Pump Mounting AFP20-001001 82
Fuel Filter AFF10-001001 83
Fuel Filter Piping AFF20-001001 84
Fuel Injector A4219-001001 85
Fuel Injection Piping APP50-001001A 86
Fuel Piping AFT00-001001 87
APH10-001001 88
(For Biodiesel Fuel B30) AFT00-002001 89
Fuel Filter Cartridge A4119-001001 90

Fuel Prefilter B9999-504001 91
Fuel Inlet Fitting AFI00-001001 92
(For Biodiesel Fuel B30) AFI00-002001 93
Fuel System Accessory AFS20-001001A 94
Fuel Transfer Pump AFS00-001001 95
ENGINE COOLING SYSTEM
Thermostat AEC00-001001 98
Water Pump A5019-002001 99
Cooling Fan Belt Tensioner AWP20-001001 100
Water Pump Drive Belt AWP10-001001 101
(For 60Amp. Alternator) AWP10-001001 101
(For 90Amp. Alternator) AWP10-002001 102
Water Outlet Connector AWO00-001001 103
Water Inlet Connector AWI10-001001 104
Plug ATK00-001001 105
Water Pump Mounting AWP00-001001 106
ENGINE ELECTRICAL SYSTEM
Alternator AEE00-001001 108
(60Amp.) AEE00-001001 108
Inner Parts (90Amp.) AEE00-002001A 110
Alternator Mounting AEH20-002001 112
(60Amp.) AEH20-002001 112
(90Amp.) AEH20-001001 113
Alternator Cover A6010-001001 114
(60Amp.) A6010-001001 114
(90Amp.) A6010-002001 115
Starting Motor AST00-001001A 116
(7.5KW) AST00-001001A 116
Starting Motor Mounting ASM00-001001 117
(7.5KW,11KW) ASM00-001001 117
Wiring Harness AWR00-001001 118
Wiring Harness Bracket A6810-001001 119
ENGINE ACCESSORIES AND OTHERS
Engine Controller A4719-001001 122
Parts Performance APP10-001001 123
(1/4) APP10-001001 123
(2/4) APP10-001002 124
(3/4) APP10-001003 125
(4/4) APP10-001004 126
Engine Control Module APH00-001001 127
ENGINE MARKS AND PLATES

Caution Plates A9810-001001 130
FIELD REPAIR SERVICE PARTS
Repair Service Parts A8110-001001 132
Spare Parts .....
(For 60Amp. Alternator) B9999-501001 133
(For 90Amp. Alternator) B9999-502001 134
ENGINE RELATED PARTS
Engine Mounting B0100-001001 136
Engine Accessory B0110-001001 137
Air Intake Rain Cap B0200-001001 138
Air Intake Unit .....
(With Pre-cleaner Turbo 2) B0200-002001 139
Mounting (With Pre-cleaner) B0200-003001 140
Pre-cleaner (With Pre-cleaner) B0200-003002 141
Cover (With Pre-cleaner) B0200-003003 142
Exhaust Pipe B0300-001001 143
COOLING SYSTEM
Radiator .....
Radiator Core, Aftercooler and Oil Cooler C0110-001001 146
Radiator Core, Aftercooler and Oil Cooler (For Extra Bad Fuel and Poor Fuel Specification, Water+Dust, Large Fuel Prefilter) C0110-002001 148
Oil Cooler C0110-001002 150
Fan Guard C0110-001003 151
Fan Guard (For Extra Bad Fuel and Poor Fuel Specification, Water+Dust, Large Fuel Prefilter) C0110-002003 152
Fan Motor (1/4) C0110-001004 153
Fan Motor (2/4) C0110-001005 154
Fan Motor (3/4) C0110-001006 155
Fan Motor (4/4) C0110-001007 156
Fan Motor Related Parts C0110-001008 157
Condenser C0110-001009 159
Mounting (For Extra Bad Fuel and Poor Fuel Specification, Water+Dust, Additional Filter) C0110-001010 160
Mounting (For Extra Bad Fuel and Poor Fuel Specification, Water+Dust, Large Fuel Prefilter) C0110-002010 162
Cooling Piping .....
Radiator Piping (For Extra Bad Fuel and Poor Fuel Specification, Water+Dust, Additional Filter) C0120-001001 164
Radiator Piping (For Extra Bad Fuel and Poor Fuel Specification, Water+Dust, Large Fuel Prefilter) C0120-002001 166
Air Cleaner Piping C0120-001002 168
FUEL SYSTEM
Fuel Tank .....
(For Biodiesel Fuel B30) D0100-002001 170
D0100-001001A 172
Fuel Piping .....
Water Separator Piping D0200-001001 174
Water Separator Piping (For Biodiesel Fuel B20) D0200-003001 175
Prefilter Piping (1/2) (With Large Fuel Prefilter) D0200-002001 176
Prefilter Piping (1/2) (With Large Fuel Prefilter,For Biodiesel Fuel B20) D0200-004001 177
Water Separator D0200-001002 178
Prefilter Piping (With Water Separator) D0200-001003 179
Prefilter Piping (With Water Separator,For Biodiesel Fuel B20) D0200-003003 180
Prefilter Piping (2/2) (With Large Fuel Prefilter) D0200-002003 181
Prefilter Piping (2/2) (With Large Fuel Prefilter,For Biodiesel Fuel B20) D0200-004003 182

Prefilter Mounting (With Water Separator) D0200-001004 183
Prefilter Mounting (With Water Separator,For Biodiesel Fuel B20) D0200-003004 184
Prefilter Piping (1/2) (With Large Fuel Prefilter,For Biodiesel Fuel B30) D0200-005001 185
Inner Parts, Fuel Prefilter D0200-002002 186
Inner Parts, Fuel Prefilter (For Biodiesel Fuel B30) D0200-005002 187
Prefilter Piping (2/2) (With Large Fuel Prefilter,For Biodiesel Fuel B30) D0200-005003 188
ELECTRICAL SYSTEM
Battery E0110-001001 190
Battery Box .....
Battery Box Related Parts (With 60Amp. Alternator) E0120-001001 191
Battery Box Related Parts (With 90Amp. Alternator) E0120-002001 192
Battery Relay Switch (With 60Amp. Alternator) E0120-001002 193
Battery Relay Switch (With 90Amp. Alternator) E0120-002002 194
Battery Cable E0120-001003 195
Disconnect Switch E0120-001004 197
Alternator Wiring Harness (With 60Amp. Alternator) E0120-001005 198
Alternator Wiring Harness (With 90Amp. Alternator) E0120-002005 199
Front Wiring Harness .....
Wiring Harness and Mounting E0200-001001 200
Wiring Harness and Mounting (With Front Blade) E0200-003001 201
Mounting E0200-001002 202
Mounting (With Front Blade) E0200-003002 203
Angle Sensor E0200-001003 204
Headlamp E0200-001004 205
Headlamp (With Fog Lamp) E0200-002004 206
Headlamp (With Fog Lamp,Front Blade) E0200-003004 207
Headlamp (With Front Blade) E0200-004004 208
Fog Lamp E0200-002005 209
Rear Wiring Harness .....
Wiring Harness and Mounting (1/2) E0202-001001 210
Wiring Harness and Mounting (2/2) E0202-001002 212
Engine Wiring Harness E0202-001003 213
Transmission Wiring Harness E0202-001004 215
Mounting E0202-001005 217
Front Working Lamp E0300-001001 218
Parts For Less Working Lamp E0300-002001 219
Front Working Lamp and Rear Working Lamp E0310-001001 220
Front Working Lamp E0310-002001 221
Rear Working Lamp E0310-003001 222
Beacon Lamp E0340-001001 223
Horn E0410-001001 224
POWER TRANSMITTING SYSTEM
Propeller Shaft F4200-001001 226
Torque Converter and Transmission .....
Case F4320-001001 227
Forward Low Speed and Reverse Clutch F4320-001002 228
Forward High and 1st Speed Clutch (1/2) F4320-001003 229
2nd and 3rd Housing F4320-001004 230

4th Speed Clutch F4320-001005 231
Output Coupling F4320-001006 232
PTO (Power Take Off) Gear (1/2) F4320-001007 233
Relief Valve F4320-001008 234
Control Valve F4320-001009 236
Piping F4320-001010 238
Accessory F4320-001011 239
Forward High and 1st Speed Clutch (2/2) F4320-001012 240
Pump, Turbine and Damper F4320-001013 241
Drive Case F4320-001014 242
PTO (Power Take Off) Gear (2/2) F4320-001015 243
Oil Filler F4320-001016 244
Front Axle .....
Axle Support F4400-001001 245
Rod F4400-001002 246
Housing F4400-001003 247
Pin F4400-001004 248
Tie Bar F4400-001005 249
Steering Cylinder, R.H. F4400-001006 250
Steering Cylinder, L.H. F4400-001007 251
Leaning Cylinder F4400-001008A 252
Plate F4400-001009 253
Shaft F4400-001010 254
Hub Bolt F4400-001011 255
Rear Axle .....
Final Drive, Center Case F4500-001001 256
Final Drive, Bevel Gear F4500-001002A 257
Final Drive, Differential F4500-001003B 258
Final Drive, Planetary Gear F4500-001004 260
Final Drive, Torque Shaft F4500-001005 261
Final Drive, Solenoid Valve and Piping F4500-001006 262
Parking Brake F4500-001007 264
Tandem, Case, L.H. F4500-001008 265
Tandem, Case, R.H. F4500-001009 266
Tandem, Step and Tube F4500-001010 267
Tandem, Sprocket Chain F4500-001011 268
Tandem, Mounting Bolt F4500-001012 269
Inner Parts, Brake Caliper F4500-001013 270
Tandem, A Drive F4500-001014 271
Tandem, B Drive F4500-001015 273
Gauge F4500-001016 275
Step F4500-001017 276
Torque Converter and Transmission Oil Piping .....
Oil Filter Piping F4700-001001 277
Transmission Oil Filter F4700-001002 279
Tube F4700-001003 280
Torque Converter and Transmission Mounting .....
F4810-001001 281
HYDRAULIC SYSTEM
Hydraulic Tank .....
H0110-001001A 284
Control Valve .....
9-Valve (1/10) H0120-001001 285
9-Valve (2/10) H0120-001002 286
9-Valve (3/10) H0120-001003 287
9-Valve (4/10) H0120-001004 288
9-Valve (5/10) H0120-001005 289

9-Valve (6/10) H0120-001006 290
9-Valve (7/10) H0120-001007 292
9-Valve (8/10) H0120-001008 293
9-Valve (9/10) H0120-001009 294
9-Valve (10/10) H0120-001010 295
10-Valve (1/10) H0120-002001 296
10-Valve (2/10) H0120-002002 297
10-Valve (3/10) H0120-002003 298
10-Valve (4/10) H0120-002004 299
10-Valve (5/10) H0120-002005 300
10-Valve (6/10) H0120-002006 301
10-Valve (7/10) H0120-002007 303
10-Valve (8/10) H0120-002008 304
10-Valve (9/10) H0120-002009 306
10-Valve (10/10) H0120-002010 307
Mounting (With 9 Spool Valve) H0120-001011 308
Mounting (With 10 Spool Valve) H0120-002011 309
Hydraulic Pump .....
Work Equipment Pump (1/4) H0210-001001 310
Work Equipment Pump (2/4) H0210-001002 312
Work Equipment Pump (3/4) H0210-001003 313
Work Equipment Pump (4/4) H0210-001004 314
Piston Pump Related Parts H0210-001005 315
Brake Pump H0210-001006 316
Transmission Pump (1/4) H0210-001007 317
Transmission Pump (2/4) H0210-001008 318
Transmission Pump (3/4) H0210-001009 319
Transmission Pump (4/4) H0210-001010 320
Gear Pump Related Parts H0210-001011 321
Steering Hydraulic Piping .....
H4410-001001 322
(With Front Blade) H4410-002001 324
Floor Valve .....
LS Pressure Reducing Valve H5110-001001 326
Mounting H5110-001002 327
Front Frame Valve .....
Check Valve H5120-002001 328
(With Front Blade) H5120-004001A 329
(Without Blade Accumulator) H5120-001001A 330
Accumulator H5120-002002 331
Accumulator Mounting H5120-002003A 332
Blade Lift Cylinder Piping H5120-002004 333
Blade Lift Cylinder Piping (With Front Blade) H5120-003004 334
Switch H5120-002005 335
Hydraulic Piping .....
Suction Piping H5200-001001 336
Priority Valve (With 10 Spool Valve) H5200-003002 337
Priority Valve (With 9 Spool Valve) H5200-001002 338
Priority Valve Piping (1/2) (With 10 Spool Valve) H5200-003003 339
Priority Valve Piping (1/2) (With 10 Spool Valve,Ripper) H5200-004003 340
Priority Valve Piping (1/2) (With 9 Spool Valve) H5200-001003 341
Priority Valve Piping (2/2) (With 10 Spool Valve) H5200-003004 342
Priority Valve Piping (2/2) (With 9 Spool Valve) H5200-001004 344
Return Piping (1/2) (With 10 Spool Valve) H5200-003005 346
Return Piping (1/2) (With 9 Spool Valve) H5200-001005 348
Return Piping (2/2) (With 10 Spool Valve) H5200-003006 350
Return Piping (2/2) (With 9 Spool Valve) H5200-001006 352

Charge Valve H5200-001007 354
Parking Brake and Bank Control Valve H5200-001008 355
Charge Valve Related Parts H5200-001009 356
Hose Clamp H5200-001010 358
Fan Drive Piping (1/2) H5200-001011 360
Fan Drive Piping (1/2) (With Ripper,10 Spool Valve) H5200-004011 361
Fan Drive Piping (2/2) H5200-001012 362
Parking Brake Piping H5200-001013 363
LS Piping (1/2) H5200-001014 364
LS Piping (2/2) H5200-001015 366
Differential Lock Piping H5200-001016 367
Differential Lock Piping (With Ripper,10 Spool Valve) H5200-004016 368
Engine Starting Aid H5200-001017 369
Plug H5200-002018 370
Ripper Piping H5200-001018 371
Front Hydraulic Piping .....
Parking Brake and Bank Control Valve Piping H5210-001001 372
Control Valve Related Parts H5210-001002 373
Control Valve Related Parts (With Front Blade) H5210-004002 374
Frame Piping H5210-001003 375
Frame Piping (With Front Blade) H5210-004003 376
Drawbar Piping Clamp H5210-001004 377
Articulate Cylinder Piping (With 10 Spool Valve) H5210-002005 378
Articulate Cylinder Piping (With 10 Spool Valve,Front Blade) H5210-004005 379
Articulate Cylinder Piping (With 9 Spool Valve) H5210-001005 380
Articulate Cylinder Piping (With 9 Spool Valve,Scarifier, Front, 11-Shanks and Tooth) H5210-003005 381
Bracket and Cushion H5210-001006 382
Bracket and Cushion (With Front Blade) H5210-004006 383
Bracket and Cushion (With Scarifier, Front, 11-Shanks and Tooth) H5210-003006 384
Safety Valve Mounting H5210-001007 385
Safety Valve H5210-001008 386
Safety Valve Piping (With 10 Spool Valve) H5210-002009 387
Safety Valve Piping (With 10 Spool Valve,Front Blade) H5210-004009 388
Safety Valve Piping (With 9 Spool Valve) H5210-001009 389
Safety Valve Piping (With 9 Spool Valve,Scarifier, Front, 11-Shanks and Tooth) H5210-003009 390
Scarifier Piping H5210-003010 391
Transmission Cooling Piping .....
Piping H6290-001001 393
Mounting H6290-001002 394
FRAME AND ITS RELATED PARTS
Front Frame .....
J4110-001001A 398
(With Scarifier, Front, 11-Shanks and Tooth) J4110-002001A 399
Rear Frame .....
J4120-002001 400
(For Ripper) J4120-001001 401
Hinge Pin .....
J4130-001001 402
OPERATOR'S COMPARTMENT AND CONTROL SYSTEM
Operator's Seat .....
K0110-001001 404
ROPS Cab .....
Body (Low Height) K0210-001001 405
Body (Low Height, Slide Window) K0210-002001 406
Roof Cover (Low Height, Slide Window) K0210-002002 407
Roof Cover, Hanger and Sheet (Low Height) K0210-001002 408
Rubber Antenna K0210-001003 409

Cup Holder and Ashtray K0210-001004 410
Cab Wiring Harness K0210-001005 411
Air Pulling Out Device K0210-001006 413
Glass Window, Front K0210-001007 414
Front and Rear Wiper (With Low Height) K0210-001008 415
Front and Rear Wiper (With Low Height, Slide Window) K0210-002008 417
Door, L.H. K0210-001009 419
Door Lock, L.H. K0210-001010 420
Door Open Lock, L.H. K0210-001011 422
Seal and Sheet (1/2) K0210-001012 424
Door, R.H. K0210-001013 425
Door Lock, R.H. K0210-001014 426
Door Open Lock, R.H. K0210-001015 428
Door Wiper Switch K0210-001016 430
Seal and Sheet (2/2) K0210-001017 431
Door Lock Striker K0210-001018 432
Air Conditioner Duct K0210-001019 433
Wiper Switch K0210-001020 434
Glass Window, Rear (Low Height) K0210-001021 435
Glass Window, Rear (Low Height, Slide Window) K0210-002021 436
Handrail K0210-001022 437
Rearview Mirror K0215-001001 438
Floor Mat K0310-001001 439
Window Washer K0350-001001 440
Air Conditioner Piping .....
Air Compressor K0710-001001 441
Piping K0710-001002 443
Heater Piping K0713-001001 445
Parts For Less Radio K0810-001001 446
Radio .....
(With AM-FM Radio, Europe and Asia) K0810-002001 447
Fire Extinguisher K0830-001001 448
Floor .....
Steering Post Related Parts K1110-001001 449
Rod (With 10 Spool Valve) K1110-004002 450
Rod (With 10 Spool Valve,12volt Converter) K1110-002002 451
Rod (With 9 Spool Valve) K1110-001002 452
Rod (With 9 Spool Valve,12volt Converter) K1110-003002 453
Steering Post K1110-001003A 454
Lever (With 10 Spool Valve) K1110-002004 456
Lever (With 9 Spool Valve) K1110-001004 457
Switch and Plate K1110-001005 458
Wiring Harness, Steering Post K1110-001006 459
Orbitrol Valve Mounting K1110-001007 460
Orbitrol Valve K1110-001008 461
Orbitrol Valve Piping K1110-001009 462
Monitor K1110-001010A 463
Steering Wheel K1110-001011 464
Platform K1110-001012 465
Console Box K1110-001013 466
Switch K1110-001014 467

Switch K1110-004014 469
Wiring Harness (With 10 Spool Valve) K1110-002015 471
Wiring Harness (With 9 Spool Valve) K1110-001015 472
12V converter K1110-002016 473
Connector Plug K1110-001016 474
Gear Shift Lever K1110-001017 475
Console Cover, R.H. K1110-001018 476
Accelerator Pedal K1110-001019 477
Accelerator Pedal K1110-004019 478
Accelerator Pedal Mounting K1110-001020 479
Inching Pedal and Brake Pedal K1110-001021 480
Brake Valve K1110-001022 481
Air Conditioner Unit K1110-001023A 482
Air Conditioner Related Parts K1110-001024 484
Air Conditioner Drain Piping K1110-001025 485
Air Conditioner Piping K1110-001026 486
Air Conditioner Piping K1110-004026 488
Operator's Seat Mounting K1110-001027 490
Transmission Controller K1110-001028 491
Transmission Controller K1110-003028 492
Transmission Controller (With 10 Spool Valve,12volt Converter) K1110-002028 493
Wiring Harness Mounting K1110-001029 494
Window Washer Piping K1110-001030 496
Cab In Parts, Air Duct K1110-001031 497
Platform Related Parts K1110-001032 498
Controller Cover K1110-001033 499
Air Conditioner Drain Piping Mounting K1110-001034 500
Air Conditioner Duct K1110-001035 501
KOMTRAX Controller .....
(ORBCOMM) K4208-001001 502
(3G) K4208-004001A 503
(GPRS) K4208-002001B 504
KOMTRAX Less .....
K4208-003001 505
Brake Control .....
Accumulator Mounting K4460-001001 506
Brake Accumulator K4460-001002 507
Accumulator Related Parts K4460-001003 508
Slack Adjuster Mounting (1/2) K4460-001004 509
Slack Adjuster K4460-001005 510
Slack Adjuster Mounting (2/2) K4460-001006 511
Brake Piping .....
Accumulator Piping K4470-001001 512
Slack Adjuster Piping K4470-001002 513
GUARDS AND COVERS
Engine Hood .....
Hood and Frame M4100-001001 516
Hood and Frame (With Rear Working Lamp) M4100-003001 517
Hood Side Cover M4100-002002 518
Hood Side Cover (With Rear Under View Mirror) M4100-001002 520
Hood Side Cover (With Rear Working Lamp) M4100-004002 522
Hood Side Cover (With Rear Working Lamp,Rear Under View Mirror) M4100-003002 524
Hood Front Cover M4100-001003A 526
Hood Front Cover (With Rear Working Lamp) M4100-003003A 528
Radiator Mask M4100-001004 530
Radiator Mask (With Rear Working Lamp) M4100-003004 531
Rear Combination Lamp M4100-001005 532

Air Cleaner Mounting M4100-001006 533
Air Cleaner Assembly M4100-001007 534
Dust Indicator M4100-001008 535
Wiring Harness and Mirror (With Rear Under View Mirror) M4100-001009 536
Wiring Harness M4100-002009 537
Front Frame Cover .....
Floor Cover (1/2) M4230-001001 538
Floor Cover (1/2) M4230-002001 540
Floor Cover (2/2) M4230-001002 542
Floor Cover (2/2) M4230-002002 543
Front Cover M4230-001003 544
Front Cover (With Front Blade) M4230-003003 546
Front Cover (With Scarifier, Front, 11-Shanks and Tooth) M4230-002003 548
Transmission Under Guard .....
M4231-001001 550
Tool Box .....
M4240-001001 551
Ladder .....
M4310-001001 552
Front Blade .....
Blade M4510-002001 553
Blade Cylinder M4510-002002 554
Piping and Mounting M4510-002003 555
Front Weight .....
M4510-001001 556
WHEEL AND ITS RELATED PARTS
Tire and Rim .....
(20.5-R25-G2, Tubeless Tires, Bridgestone) S0100-003001 558
Front (1/2) (16.00-24-16PR-G2, Tubed Tires, Bridgestone) S0100-002001 559
Front (20.5-R25-E3, Tubeless Tires, Yokohama) S0100-004001 560
Front (20.5-R25-G2 XTLA Pattern, Tubeless Tires, Michelin) S0100-001001 561
Front (20.5-R25-L3, Tubeless Tires, Michelin) S0100-005001 562
Rear (20.5-R25-E3, Tubeless Tires, Yokohama) S0100-004002 563
Rear (20.5-R25-G2 XTLA Pattern, Tubeless Tires, Michelin) S0100-001002 564
Rear (20.5-R25-L3, Tubeless Tires, Michelin) S0100-005002 565
Rear (1/2) (16.00-24-16PR-G2, Tubed Tires, Bridgestone) S0100-002003 566
WORK EQUIPMENT
Circle Drawbar .....
Drawbar T5110-001001 568
Support T5110-001002 569
Drawbar Guide T5110-001003 570
Blade Shift Cylinder T5110-001004 571
Blade Tilt Cylinder T5110-001005 572
Circle Drive T5110-001006 573
Circle Rotation Motor T5110-001007 575
Circle Drive Related Parts T5110-001008 576
Swivel Joint, 4-Way Type T5110-001009 577
Piping T5110-001010 578
Adjuster T5110-001011 580
Shim and Cover T5110-001012A 581
Blade and Circle Lifter .....
Bracket T5115-001001 582
Case T5115-001002A 583
Blade .....
(4.3m Width) T5120-001001 585
(4.3m Width, 25mm Thickness, Overlay, Edge Height 203mm) T5120-003001 586
(4.3m Width, 25mm Thickness, Side Edge, Edge Height 203mm) T5120-002001 587

Ripper .....
Link T5125-002001 588
Ripper Cylinder T5125-002002 589
Bracket T5125-002003 590
Ripper Shank .....
T5126-001001 591
Blade Lift Cylinder .....
T5140-001001 592
Drawbar Shift Cylinder .....
T5155-001001 593
Scarifier Cylinder .....
T5156-001001 594
Articulate Cylinder .....
T5160-001001 595
Scarifier .....
(Front, 11-Shanks and Tooth) T5170-002001 596
(Front, 11-Shanks and Tooth, Adjusting Rod) T5170-001001 598
MARKS AND PLATES
Marks and Plates .....
Mark and Plate (1/2) U0100-001001 602
Mark and Plate (2/2) U0100-001002 603
Decal U0100-001003 604
Caution Plates, KOMTRAX .....
U0205-001001 605
AUXILIARY PARTS AND TOOL
Spare Parts .....
V0100-001001 608
(Extra Bad Fuel and Poor Fuel Specification, Water+Dust, Large Fuel Prefilter) V0100-003001 609
(Extra Bad Fuel and Poor Fuel Specification, Water+Dust, Large Fuel Prefilter,With 90Amp. Alternator) V0100-004001 610
(With 90Amp. Alternator) V0100-002001 611
General Tool Set .....
V0300-001001 612
SPECIAL PRODUCT AND ITS RELATED PARTS
Accessory Parts .....
X5000-001001 614
FIELD REPAIR SERVICE PARTS
Service Kit Parts .....
KIT 616

ENGINE CYLINDER HEAD AND ITS RELATED PARTS

FIG. A1009-001001 Cylinder Head

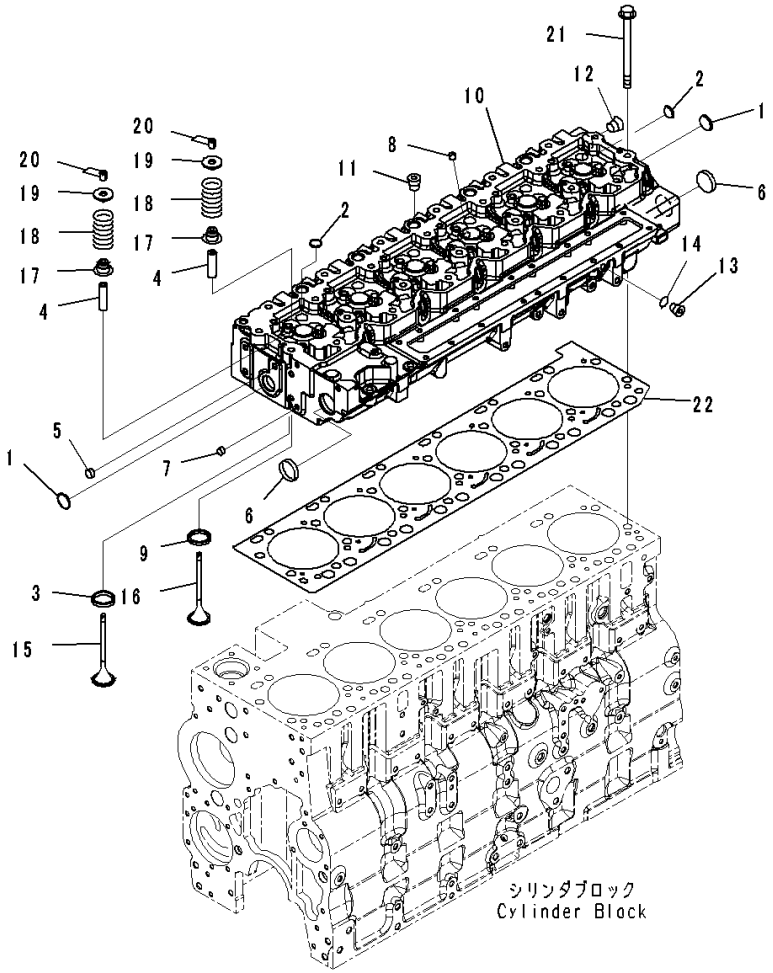

Index	Code	Part Number	Description	Qty	Serial Number
		6745-11-1190	Cylinder Head Assembly	1	26868373-
	C1		• Head, Cylinder	1	26868373-
1		6742-01-2920	• • Plug	2	26868373-
2		6735-21-5531	• • Plug, Expansion	18	26868373-
3		6745-19-4210	• • Insert	12	26868373-
		6745-18-4210	• • Insert	12	26868373-
4		6745-49-4130	• • Guide	24	26868373-
5		6744-41-4110	• • Plug	1	26868373-
6		6744-11-1070	• • Plug, Expansion	2	26868373-
7		6744-41-4120	• • Plug	1	26868373-
8		6754-11-1160	• • Plug, Expansion	6	26868373-
9		6745-19-4220	• • Insert,Exhaust Valve	12	26868373-
		6745-18-4220	• • Insert	12	26868373-
10	C1		• • Head,Cylinder	1	26870364-
	C1		• • Head, Cylinder	1	26868373-26870363
11		6732-11-1910	• Plug	5	26868373-
12		6732-11-1920	• Plug	1	26868373-
		6732-21-1960	• Plug Assembly,(Not Shown)	1	26868373-
13	C1		• • Plug	1	26868373-
14		6735-21-1970	• • O-ring	1	26868373-
15		6745-41-4161	Valve, Intake	12	26868373-
16		6745-41-4151	Valve, Exhaust	12	26868373-
17		6744-41-4081	Seal	24	26881286-
		6744-41-4080	Seal	24	26871612-26881285
	A1	6746-41-4210	Seal	24	26868373-26871611
18		6745-41-4110	Spring	24	26871612-
	A3	6744-41-4033	Spring	24	26868594-26871611
		6744-41-4032	Spring	24	26868373-26868593
19		6744-41-4050	Retainer	24	26868373-
20		6732-41-4520	Collet	48	26868373-
21		6743-11-1610	Bolt	26	26868373-
22		6745-11-1811	Gasket	1	26868373-

FIG. AVC00-001001 Cylinder Head Cover

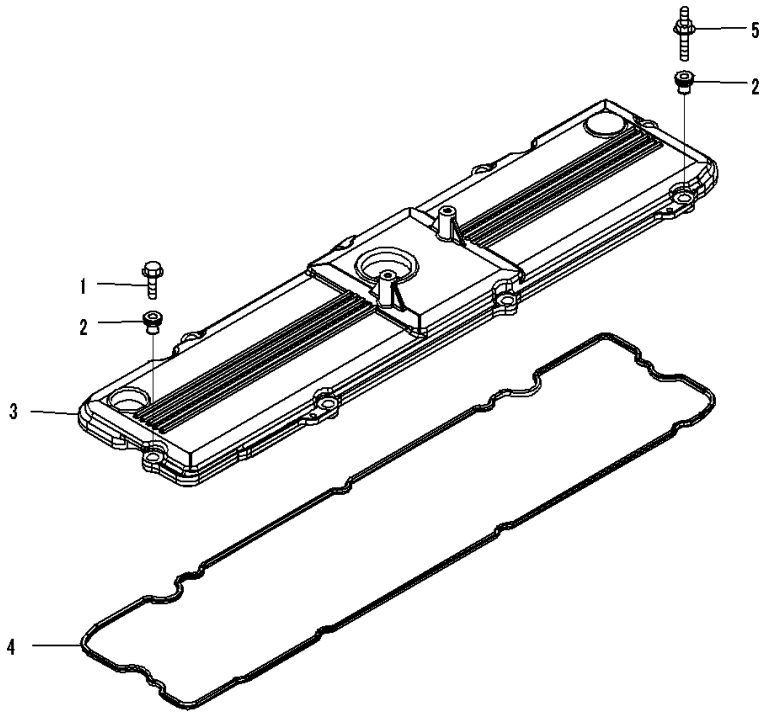

Index	Code	Part Number	Description	Qty	Serial Number
1		01435-60835	Bolt	7	26868373-
2		6745-11-8160	Isolator	8	26868373-
3		6745-11-8310	Cover	1	26868373-
4		6745-11-8810	• Gasket	1	26868373-
5		6745-11-8170	Screw	1	26868373-

FIG. A1310-001001 Air Intake Unit

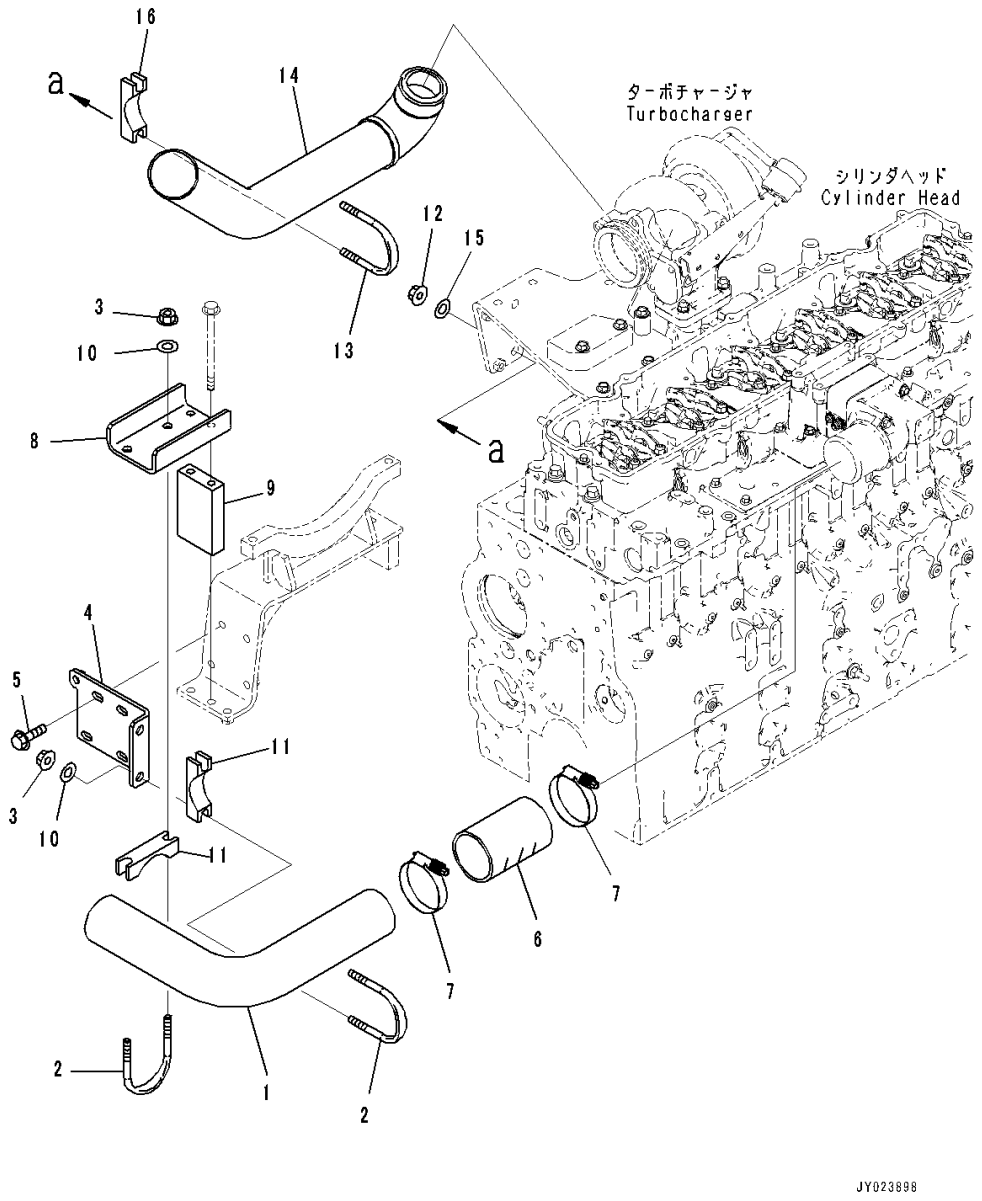

Index	Code	Part Number	Description	Qty	Serial Number
1		234-01-81110	Tube	1	26868373-
2		07283-37671	Clip	2	26868373-
3		01595-01008	Nut	4	26868373-
4		234-01-81120	Bracket	1	26868373-
5		01435-01025	Bolt	4	26868373-
6		234-01-81350	Hose	1	26868373-
7		07299-00080	Clamp, Hose	2	26868373-
8		6745-11-5280	Bracket	1	26868373-
9		6745-11-4340	Plate	1	26868373-
10		01643-31032	Washer	4	26868373-
11		6745-11-4330	Seat	2	26868373-
12		01595-01008	Nut	2	26868373-
13		07283-37671	Clip	1	26868373-
14		424-01-41531	Tube	1	26868373-
15		01643-31032	Washer	2	26868373-
16		6745-11-4330	Seat	1	26868373-

FIG. ABR00-001001 Breather

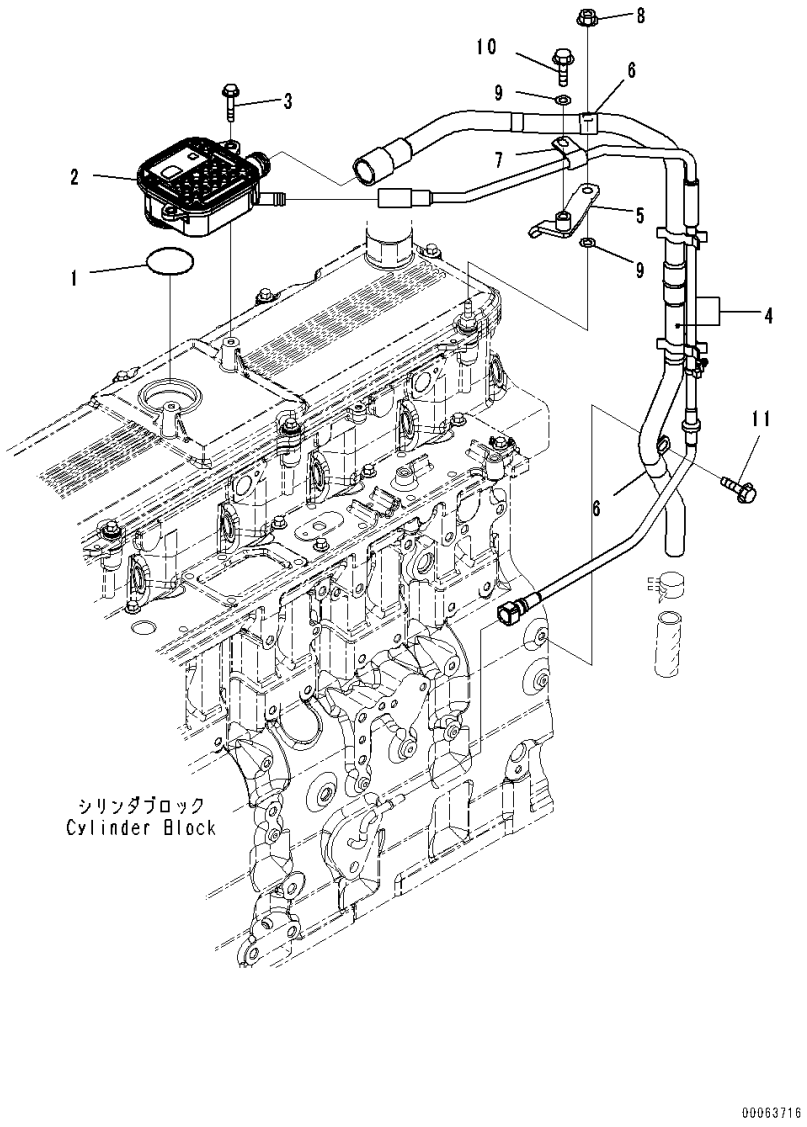

Index	Code	Part Number	Description	Qty	Serial Number
		6745-21-7110	Housing	1	26868373-
1		6745-21-7120	• O-ring	1	26868373-
2		6745-21-7130	• Housing	1	26868373-
3		6735-71-5190	Bolt	2	26868373-
4		6745-21-7181	Tube	1	26868373-
5		6745-11-8250	Brace	1	26868373-
6		6216-24-5730	Clip	2	26868373-
7		04434-51008	Clip	1	26868373-
8		6732-71-3210	Nut	1	26868373-
9		01643-30823	Washer	2	26868373-
10		6731-71-6270	Screw	1	26868373-
11		01435-60816	Bolt	1	26868373-

FIG. AIM00-001001 Air Intake Manifold

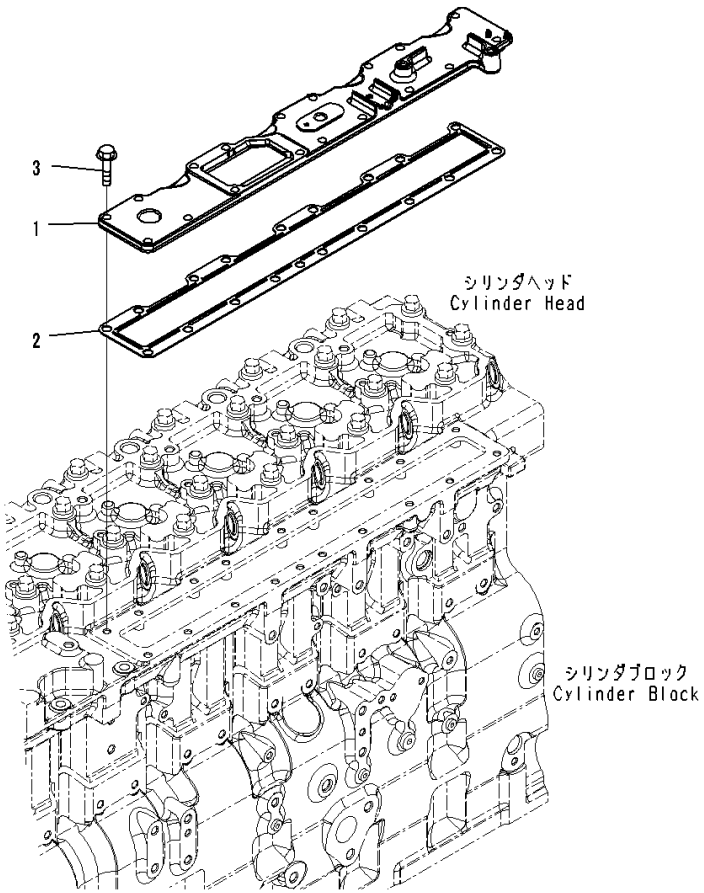

Index	Code	Part Number	Description	Qty	Serial Number
1		6745-11-4110	Cover	1	26868373-
2		6745-11-4120	Gasket	1	26868373-
3		6732-21-6630	Screw	7	26868373-

FIG. AIC00-001001 Air Intake Connector

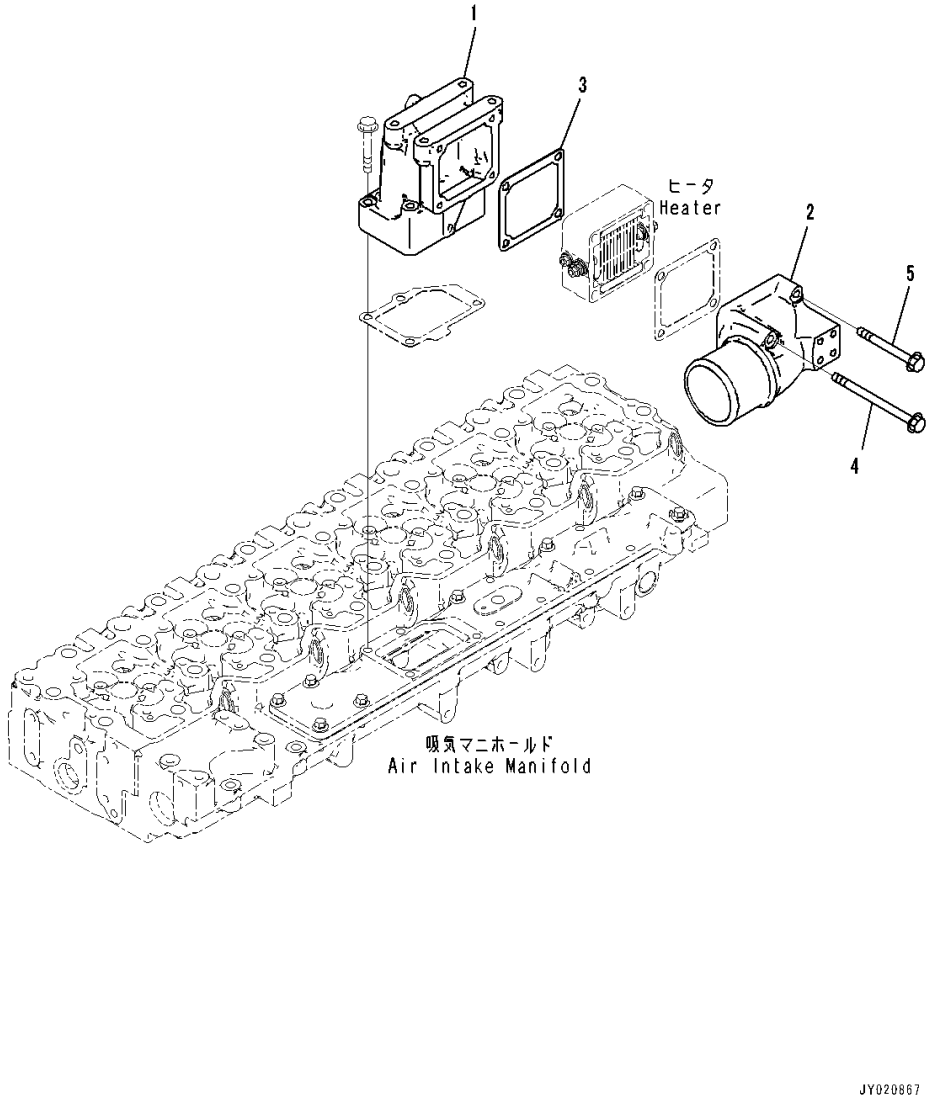

Index	Code	Part Number	Description	Qty	Serial Number
1		6745-11-4310	Connection,Air Intake	1	26868373-
2		6746-11-4230	Pipe	1	26868373-
3		6754-11-4120	Gasket	1	26868373-
4		6746-11-4240	Bolt	2	26868373-
5		01435-60890	Bolt	2	26868373-

FIG. AIC20-001001 Air Intake Connector Mounting

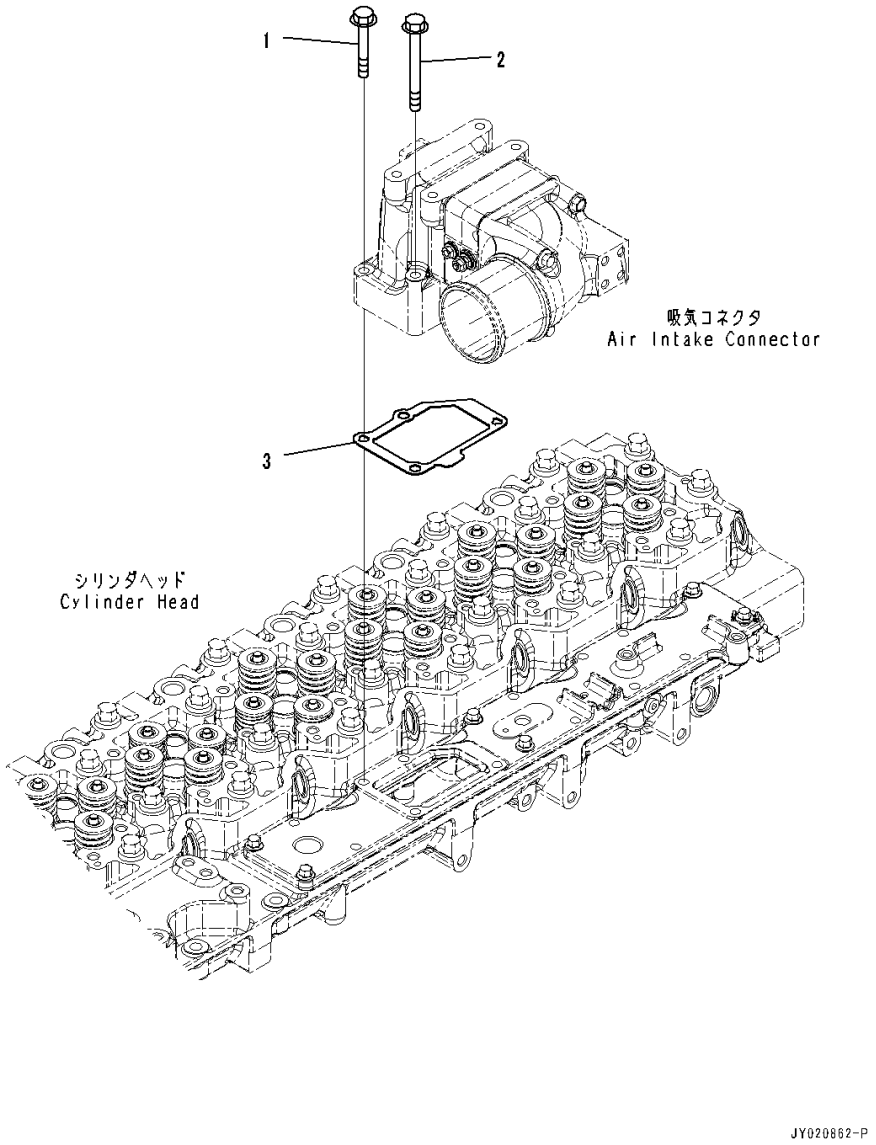

Index	Code	Part Number	Description	Qty	Serial Number
1		6736-21-3230	Bolt	2	26868373-
2		01435-60890	Bolt	2	26868373-
3		6745-81-4120	Gasket	1	26868373-

FIG. AAH00-001001 Air Intake Heater

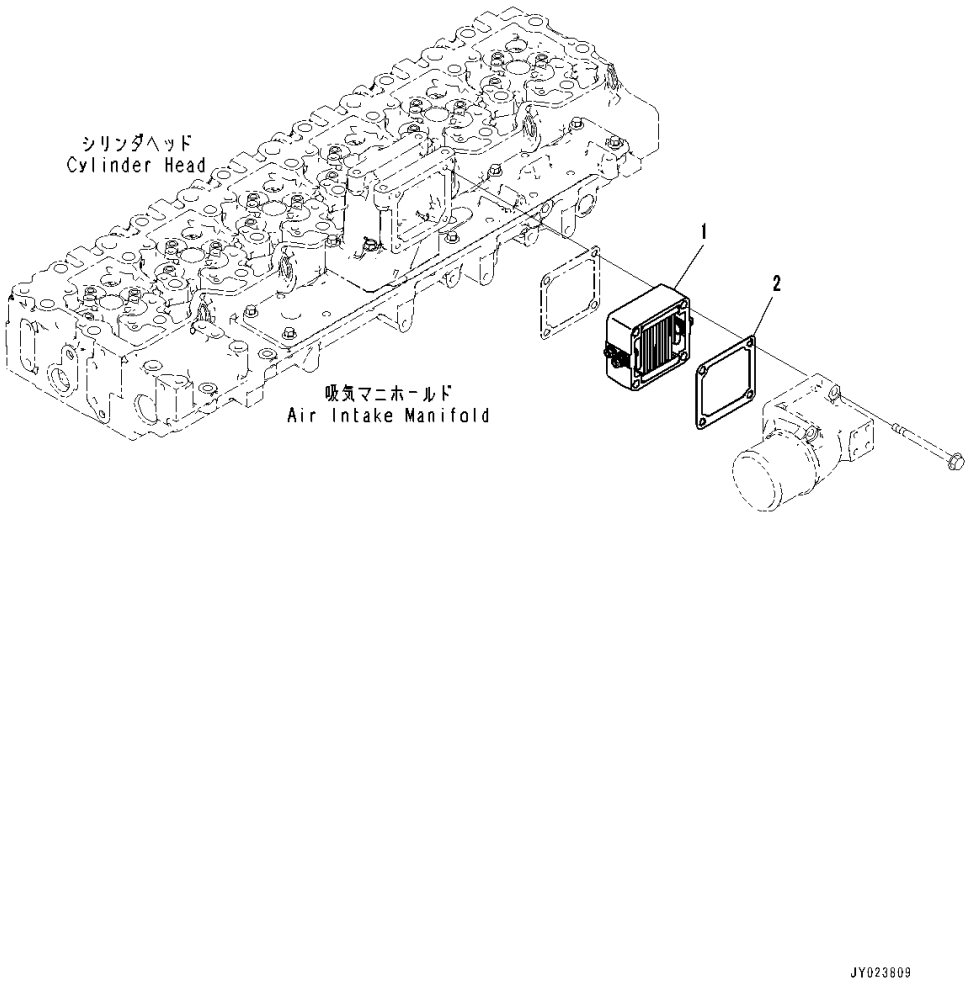

Index	Code	Part Number	Description	Qty	Serial Number
1		600-816-3120	Heater	1	26871771-
	A1	6754-81-5110	Heater	1	26868373-26871770
2		6754-11-4120	Gasket	1	26868373-

FIG. AIT00-001001 Air Transfer Connection

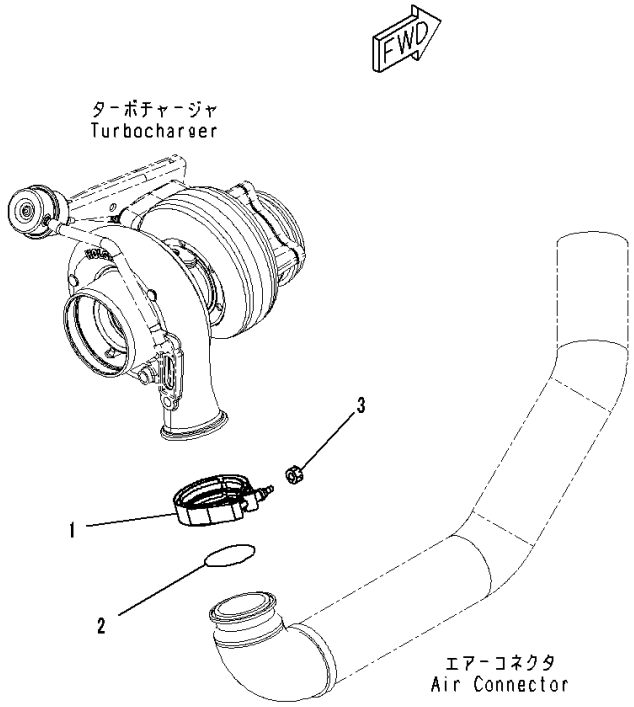

00063718

Index	Code	Part Number	Description	Qty	Serial Number
1		6738-11-4380	Clamp	1	26868373-
2		6738-11-4370	O-ring	1	26868373-
3		6738-11-4390	Nut	1	26868373-

FIG. ATB30-001001 Exhaust Manifold

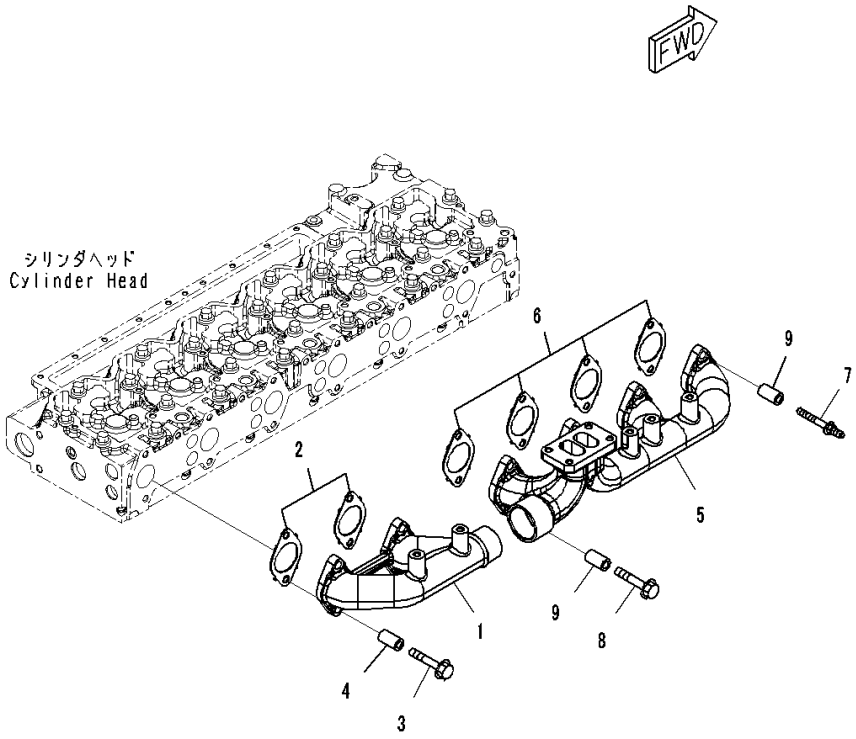

Index	Code	Part Number	Description	Qty	Serial Number
1		6745-11-5110	Manifold	1	26868373-
2		6745-11-5590	Gasket	2	26868373-
	B1	6745-11-5811	Gasket	2	(26868373-26884274)
3		6732-11-5860	Bolt	4	26868373-
4		6754-11-5150	Spacer	4	26868373-
5		6745-11-5210	Manifold	1	26868373-
6		6745-11-5590	Gasket	4	26868373-
	B1	6745-11-5811	Gasket	4	(26868373-26884274)
7		6732-11-5860	Bolt	4	26868373-
8		6745-11-5170	Screw	4	26868373-
9		6754-11-5150	Spacer	8	26868373-

FIG. A1539-001001 Turbocharger

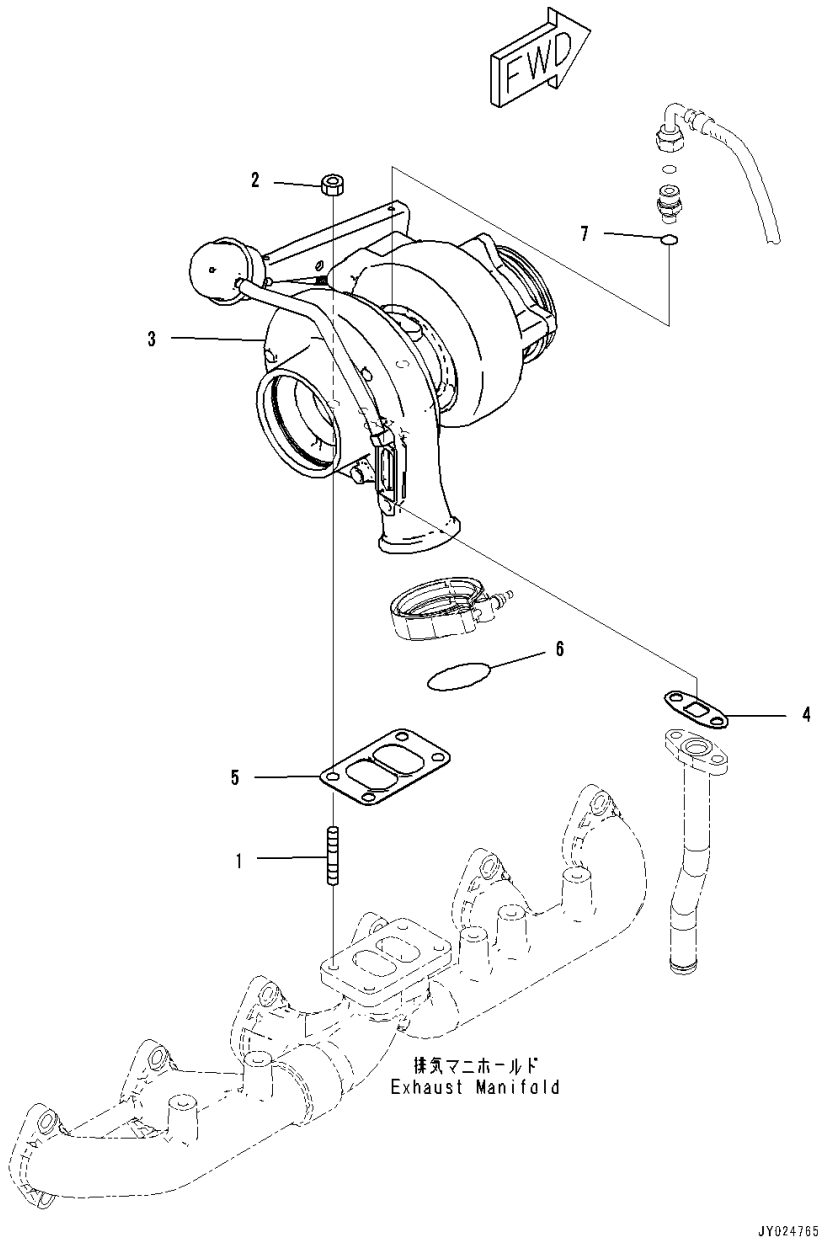

Index	Code	Part Number	Description	Qty	Serial Number
1		6732-81-8810	Stud	4	26868373-
2		6732-81-8820	Nut	4	26868373-
		6745-81-8020	Turbocharger Kit	1	26868373-
3		6745-81-8660	• Turbocharger	1	26868373-
4		6207-51-7690	• Gasket	1	26868373-
5		6732-81-8830	• Gasket	1	26868373-
6		6738-11-4370	• O-ring	1	26868373-
7		6737-51-8770	• O-ring	1	26868373-

FIG. ATP00-001001 Turbocharger Oil Piping

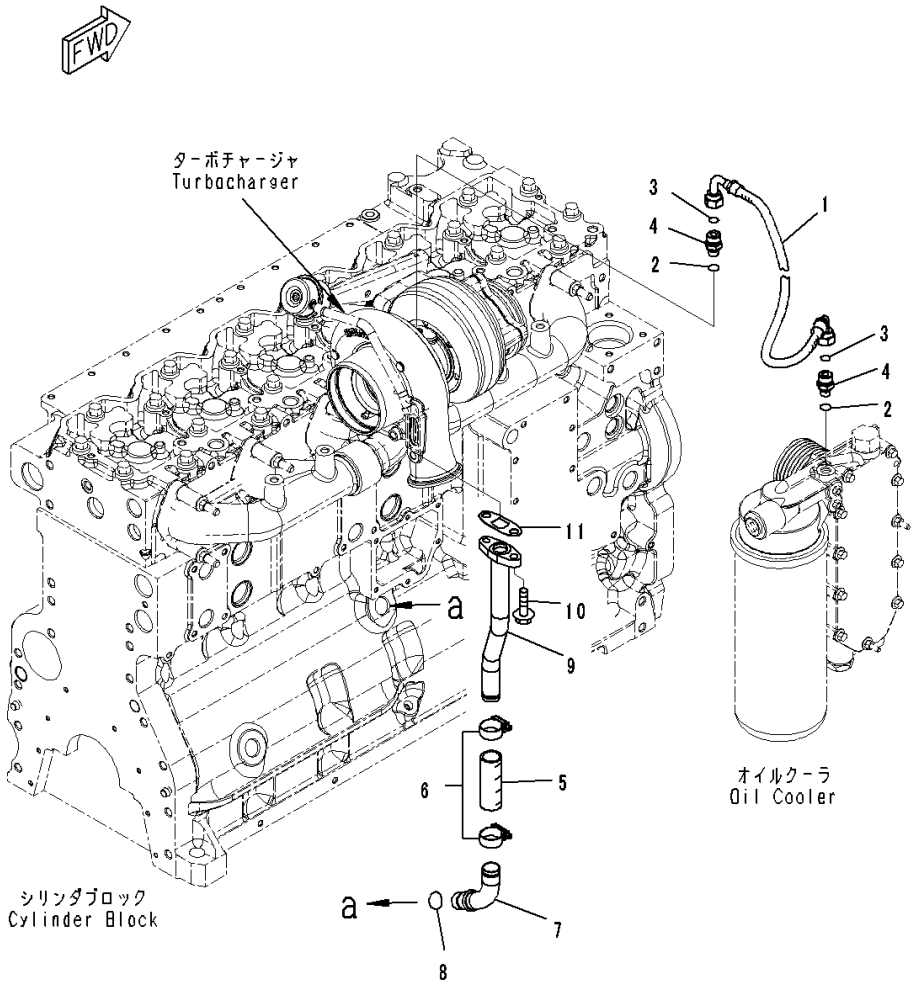

Index	Code	Part Number	Description	Qty	Serial Number
1		6735-51-8230	Hose	1	26868373-
		6745-61-8160	Connector Assembly	2	26868373-
2		6737-51-8770	• O-ring	1	26868373-
3		6732-81-8860	• O-ring	1	26868373-
4		6755-51-8230	• Union	1	26868373-
5		6732-51-8370	Hose	1	26868373-
6		07281-00359	Clamp, Hose	2	26868373-
7		6745-51-8110	Tube	1	26868373-
8		6731-51-8150	O-ring	1	26868373-
9		6745-51-8150	Tube	1	26868373-
10		01435-60820	Bolt	2	26868373-
11		6207-51-7690	Gasket	1	26868373-

FIG. A1570-001001 Heat Shield

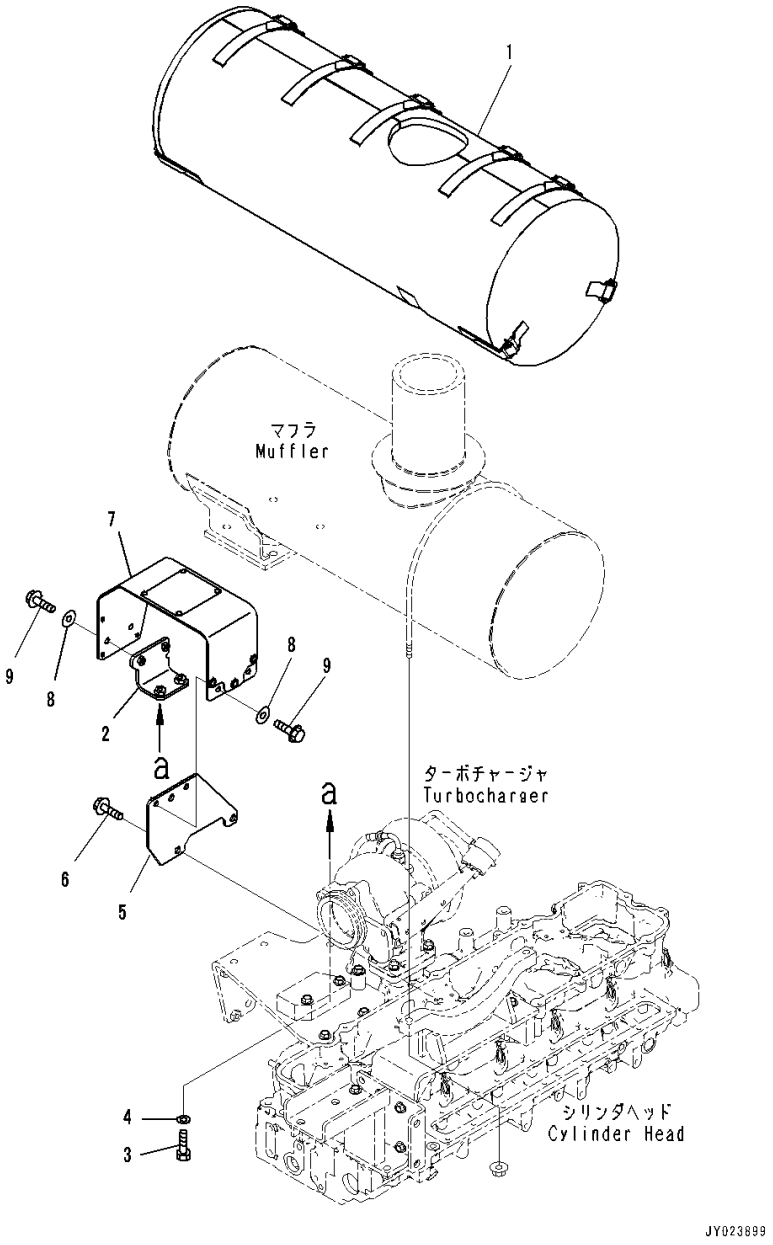

Index	Code	Part Number	Description	Qty	Serial Number
1		6746-11-6290	Cover	1	26868373-
2		6745-81-8610	Bracket	1	26868373-
3		01010-81030	Bolt	2	26868373-
4		01643-31032	Washer	2	26868373-
5		6745-81-8620	Plate	1	26868373-
6		01435-01020	Bolt	2	26868373-
7		6745-81-8630	Cover	1	26868373-
8		154-61-16570	Washer	4	26868373-
9		01435-00820	Bolt, Flanged	4	26868373-

FIG. A1670-001001 Exhaust Pipe

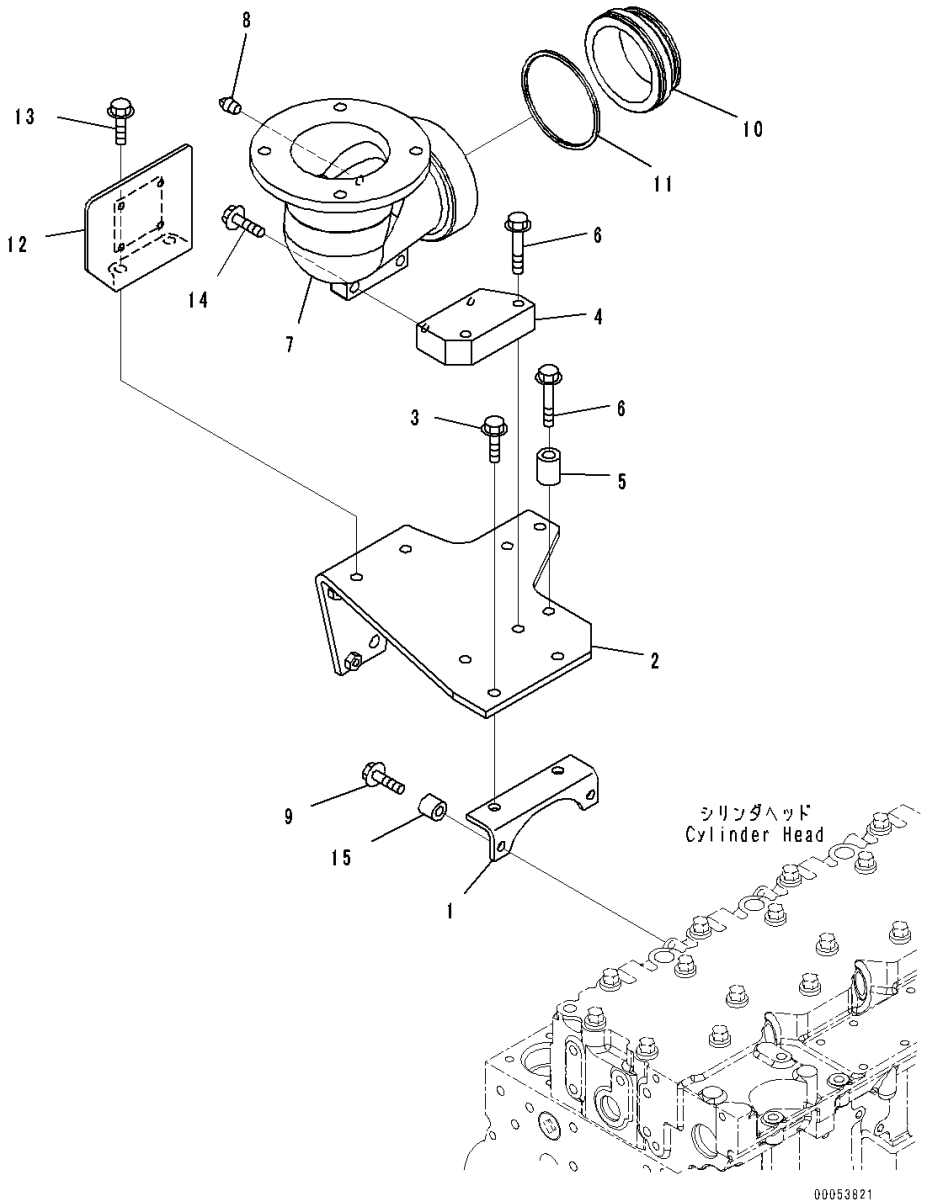

Index	Code	Part Number	Description	Qty	Serial Number
1		6745-11-5250	Bracket	1	26868373-
2		6745-11-4320	Bracket	1	26868373-
3		01435-01025	Bolt	2	26868373-
4		6745-11-5240	Block	1	26868373-
5		205-30-62650	Collar	1	26868373-
6		01435-01065	Bolt	3	26868373-
7		6745-11-5220	Elbow	1	26868373-
8		07042-20108	Plug	1	26868373-
9		01435-01040	Bolt	2	26868373-
10		6745-11-5230	Tube	1	26868373-
11		6164-11-5480	Ring	1	26868373-
12		6745-81-8640	Guard	1	26868373-
13		01435-01030	Bolt	2	26868373-
14		01435-01040	Bolt	2	26868373-
15		6152-11-4970	Spacer	2	26868373-

FIG. ARL00-001001 Rocker Arm Housing and Rocker Arm

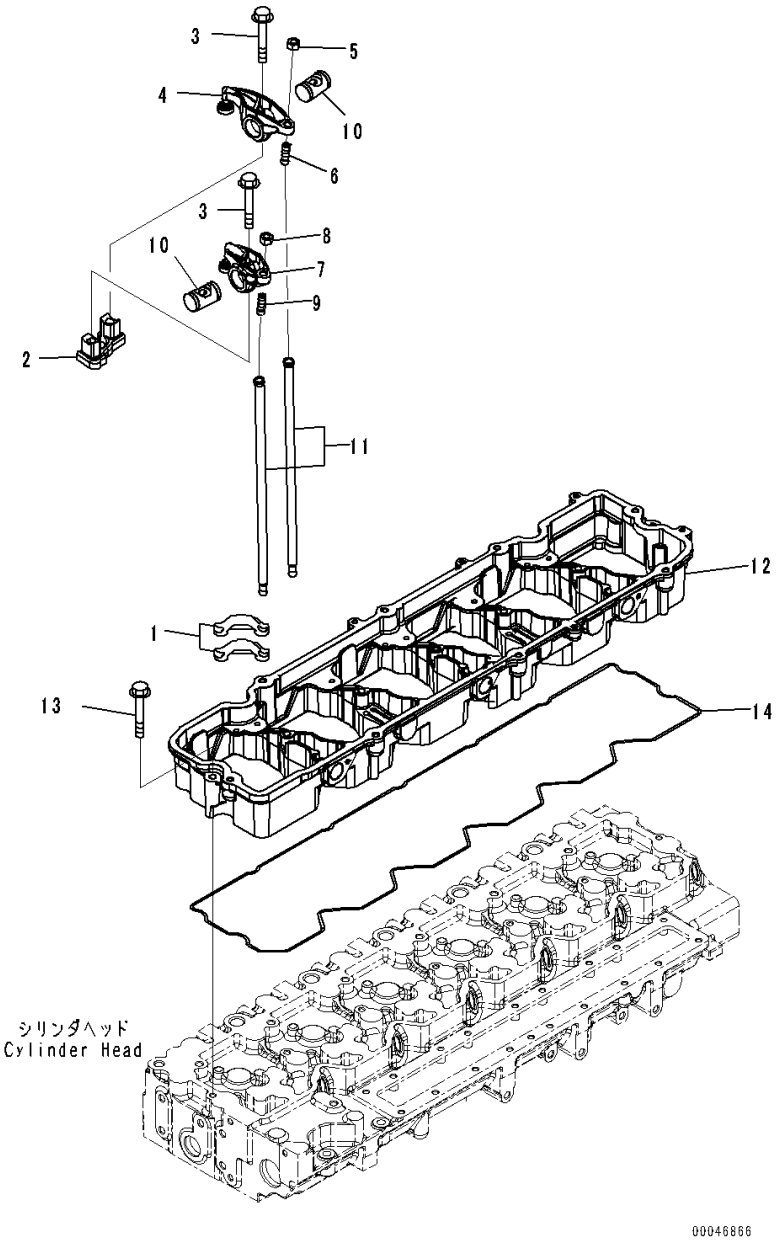

Index	Code	Part Number	Description	Qty	Serial Number
1		6744-41-5010	Crosshead	12	26868373-
2		6744-41-5030	Support	6	26868373-
3		6744-41-3020	Bolt	12	26868373-
4		6745-41-5402	Lever Assembly,Exhaust Valve	6	26869932-
		6745-41-5401	Lever Assembly,Exhaust Valve	6	26868373-26869931
5		6732-41-5430	• Nut	1	26869932-
		6745-41-5420	• Lever	1	26869932-
		6745-41-5402	• Lever Assembly	1	26868373-26869931
6		6745-41-5430	• • Screw	1	26868373-
7		6745-41-5202	Lever Assembly,Intake Valve	6	26869932-
		6745-41-5201	Lever Assembly,Intake Valve	6	26868373-26869931
8		6732-41-5430	• Nut	1	26869932-
9		6745-41-5430	• Screw	1	26868373-
10		6745-41-5110	Shaft	12	26868373-
11		6745-41-3100	Rod,Push	12	26868373-
12		6745-11-7112	Housing	1	26868373-
13		6733-61-3150	Bolt	7	26868373-
14		6745-11-7811	Gasket	1	26868373-

FIG. ALA00-001001 Lifting Arrangement

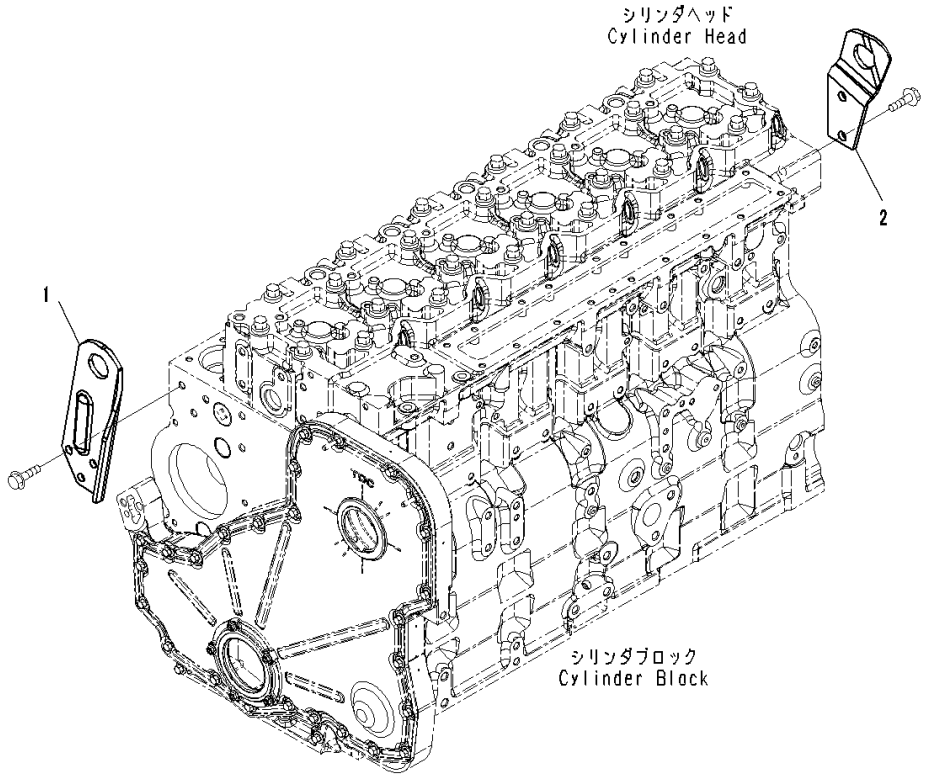

Index	Code	Part Number	Description	Qty	Serial Number
1		6745-21-1311	Bracket	1	26868373-
2		6745-21-1330	Bracket	1	26868373-

FIG. ALA10-001001 Lifting Arrangement Bolt

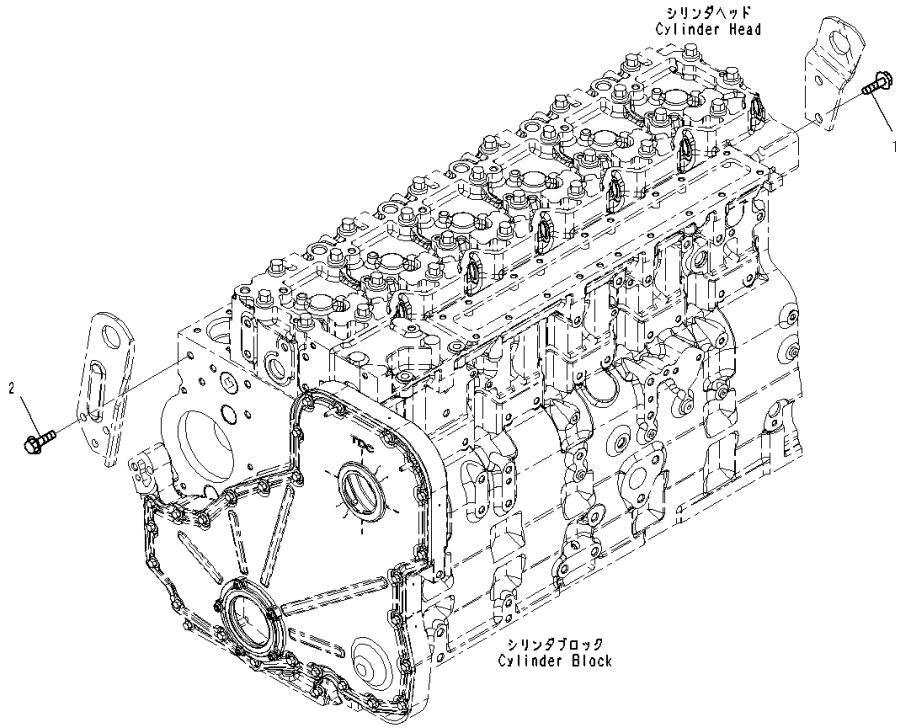

Index	Code	Part Number	Description	Qty	Serial Number
1		6732-51-5130	Bolt	2	26868373-
2		6732-61-3140	Bolt	1	26868373-

FIG. ARP00-001001 Coolant Piping

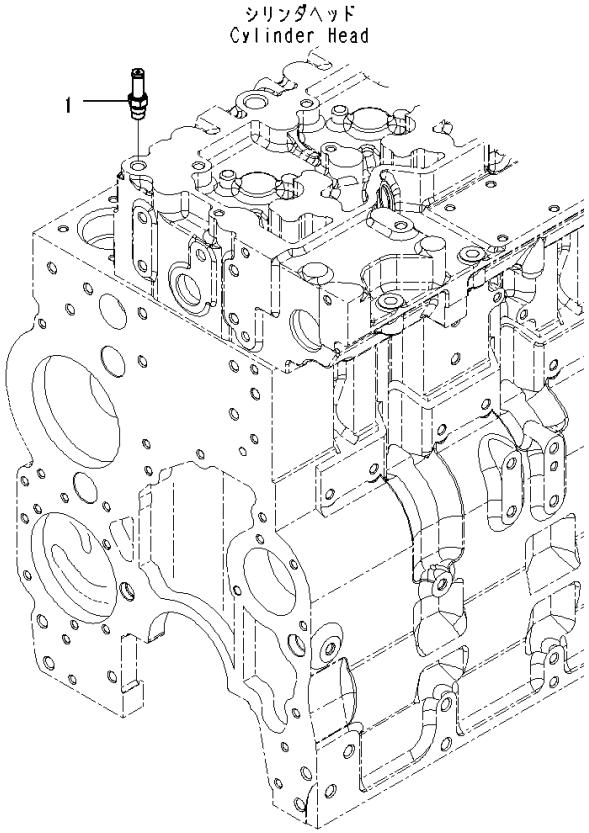

00047258

Index	Code	Part Number	Description	Qty	Serial Number
1		6745-61-6120	Fitting	1	26868373-

FIG. AXS00-001001 Exhaust Connector Clamp

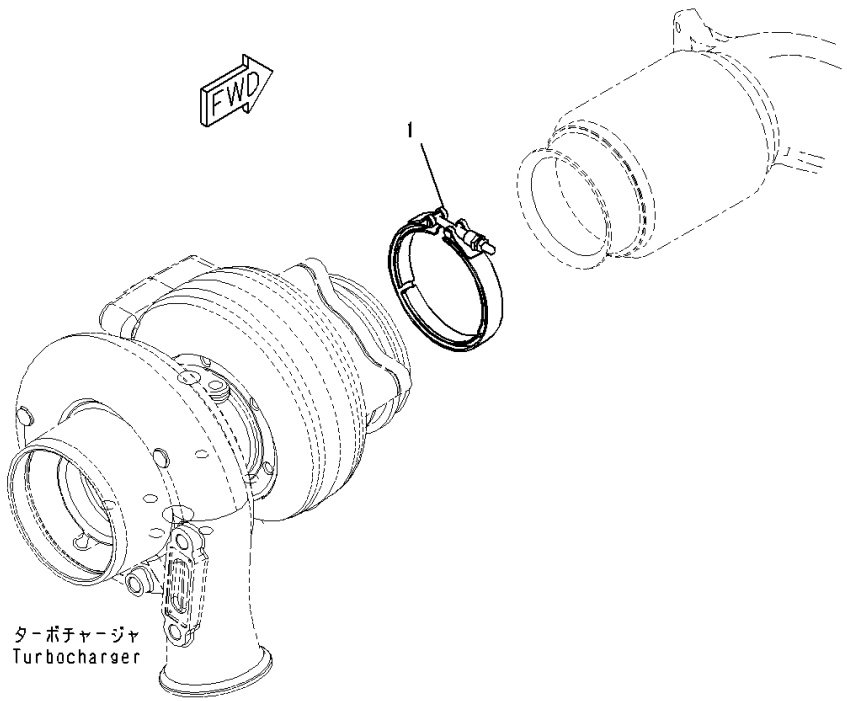

Index	Code	Part Number	Description	Qty	Serial Number
1		6742-01-3620	Clamp	1	26868373-

FIG. A1610-001001 Exhaust Muffler

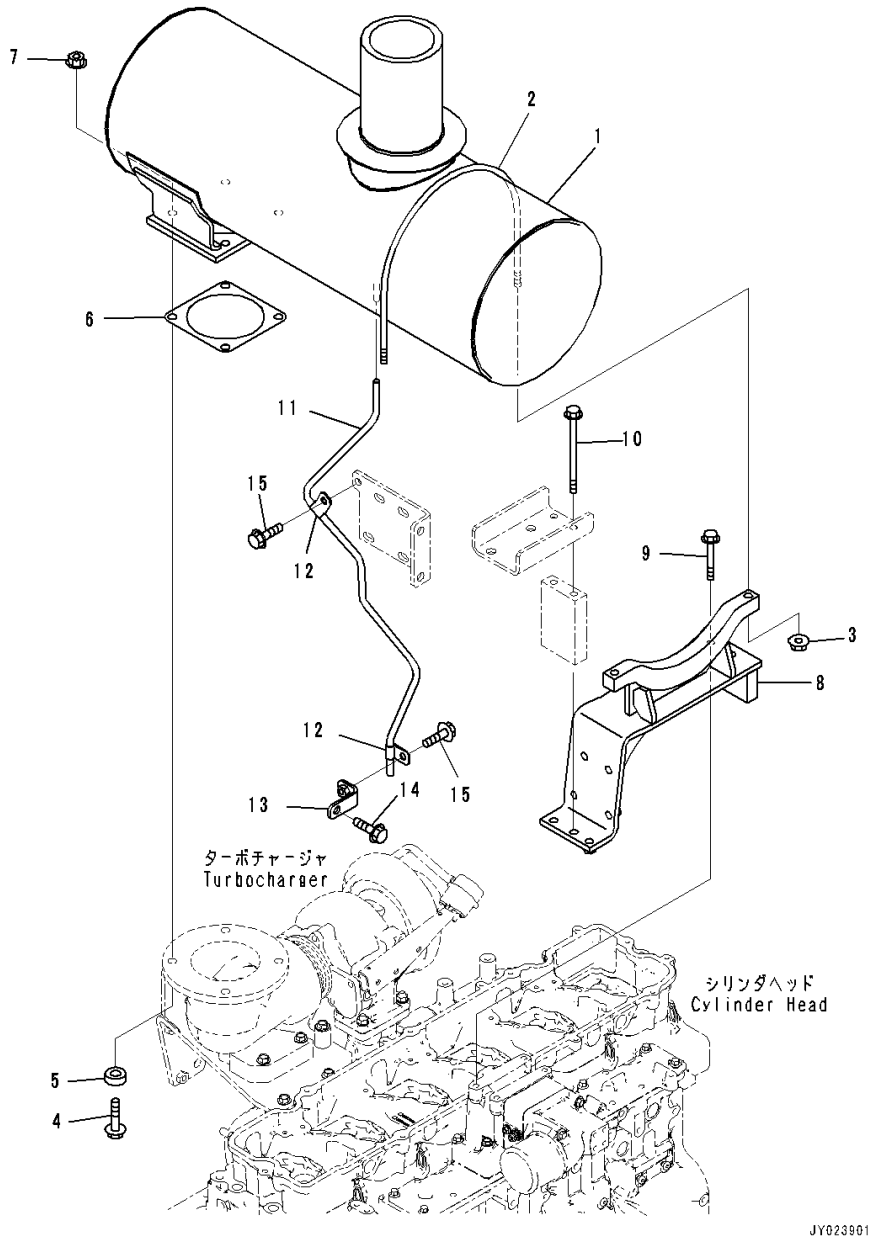

Index	Code	Part Number	Description	Qty	Serial Number
1		6745-11-6280	Muffler	1	26868373-
2		6222-11-5940	U-bolt	1	26868373-
3		01594-01008	Nut	2	26868373-
4		01435-01245	Bolt	4	26868373-
5		6127-11-5180	Washer	4	26868373-
6		6211-11-5490	Gasket	1	26868373-
7		01584-01210	Nut	4	26868373-
8		6745-11-9110	Bracket	1	26868373-
9		01435-01080	Bolt	2	26868373-
10		01436-01045	Bolt	2	26868373-
11		234-01-81130	Tube	1	26868373-
12		6991-11-5990	Clamp	2	26868373-
13		234-01-81190	Bracket	1	26868373-
14		01435-01025	Bolt	1	26868373-
15		01435-01020	Bolt	2	26868373-

ENGINE CYLINDER BLOCK AND ITS RELATED PARTS

FIG. A2019-001001 Cylinder Block

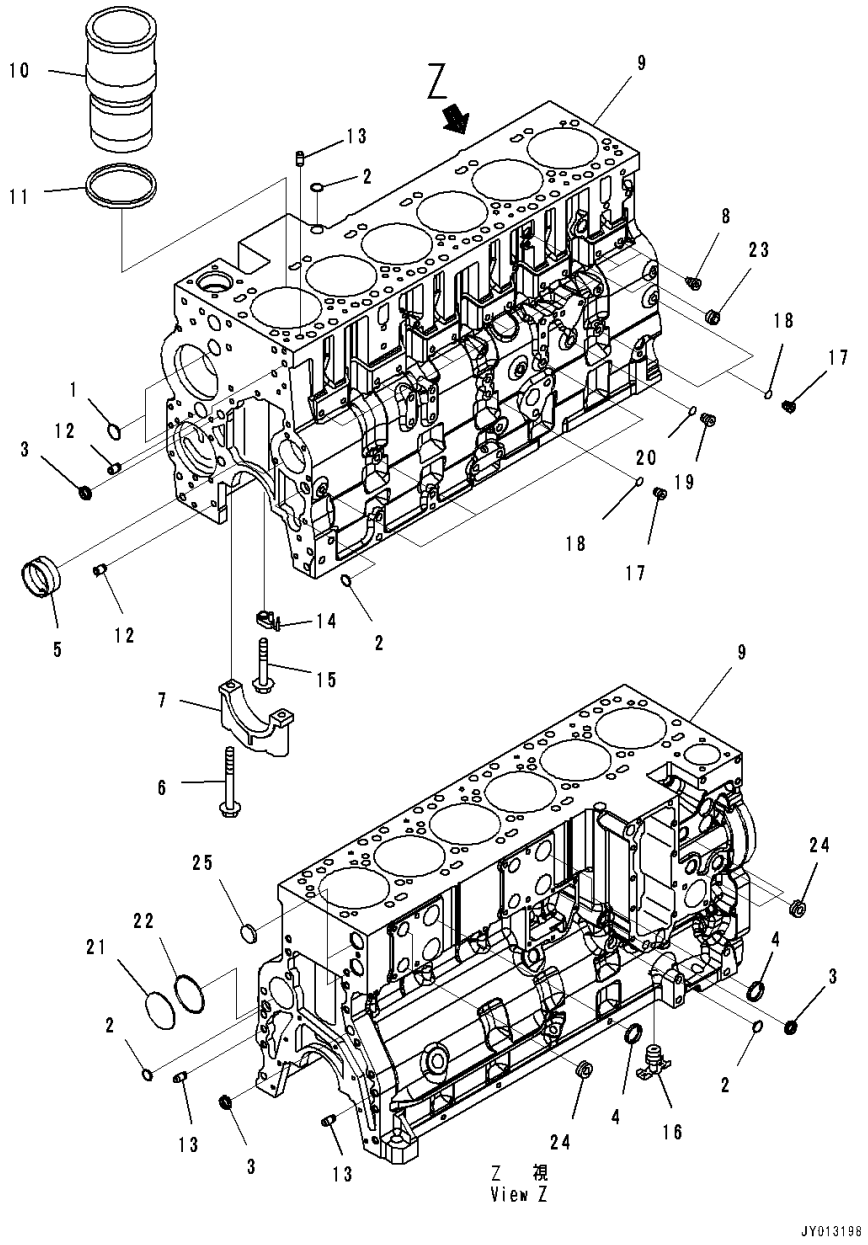

Index	Code	Part Number	Description	Qty	Serial Number
		6745-21-1190	Cylinder Block Assembly	1	26877387-
		6745-21-1108	• Cylinder Block	1	26877387-
	C1		• Cylinder Block	1	26870325-26877386
	C1		• Cylinder Block	1	26868373-26870324
1		6742-01-1360	• • Plug	3	26868373-
2		6742-01-1370	• • Plug	4	26868373-
3		6732-21-1810	• • Plug	3	26868373-
4		6742-01-1420	• • Plug	3	26868373-
5		6746-21-1410	• • Bushing	7	26868373-
6		6741-21-1140	• • Bolt	14	
7	C3	6741-21-1131	• • Cap	7	26871467-
	C3	6741-21-1130	• • Cap	7	26868373-26871466
8		6745-41-2154	• • Guide	12	26875878-
	B1	6745-41-2153	• • Guide	12	(26875878-26877386)
		6745-41-2152	• • Guide	12	26868373-26875877
	B1	6745-41-2151	• • Guide	12	(26868373-26870324)
9	C1		• • Cylinder Block	1	26868373-
		6742-01-5620	Liner Kit	6	26879132-
	A2	6742-01-5159	Liner Kit	6	26868373-26879131
10	C1		• Liner	1	26876514-
	C1		• Liner	1	26868373-26876513
11		6742-01-1520	• Seal	1	26868373-
		6745-21-1290	Cylinder Block	1	26868373-
12		6732-21-6120	• Pin, Dowel	2	26868373-
13		6742-01-1470	• Pin	4	26868373-
14		6745-21-1612	• Nozzle,Piston Cooling	6	26874515-
	A2	6745-21-1611	• Nozzle,Piston Cooling	6	26868373-26874514
15		6736-11-4460	• Bolt	6	26868373-
16		6216-94-3450	• Cock	1	26868373-
		6732-21-1960	• Plug Assembly	6	26868373-
17	C1		• • Plug	1	26868373-
18		6735-21-1970	• • O-ring	1	26868373-
		6735-21-1910	• Plug Assembly	2	26868373-
19		6735-21-1920	• • Plug	1	26868373-
20		6735-21-1930	• • O-ring	1	26868373-
21		6742-01-1480	• Plug	1	26868373-
22		6742-01-4080	• O-ring	1	26868373-
23		6732-21-1981	• Plug, Pipe	1	26882440-
		6732-11-1910	• Plug	1	26868373-26882439
24		6732-11-1920	• Plug	7	26868373-

FIG. A2019-001001 Cylinder Block

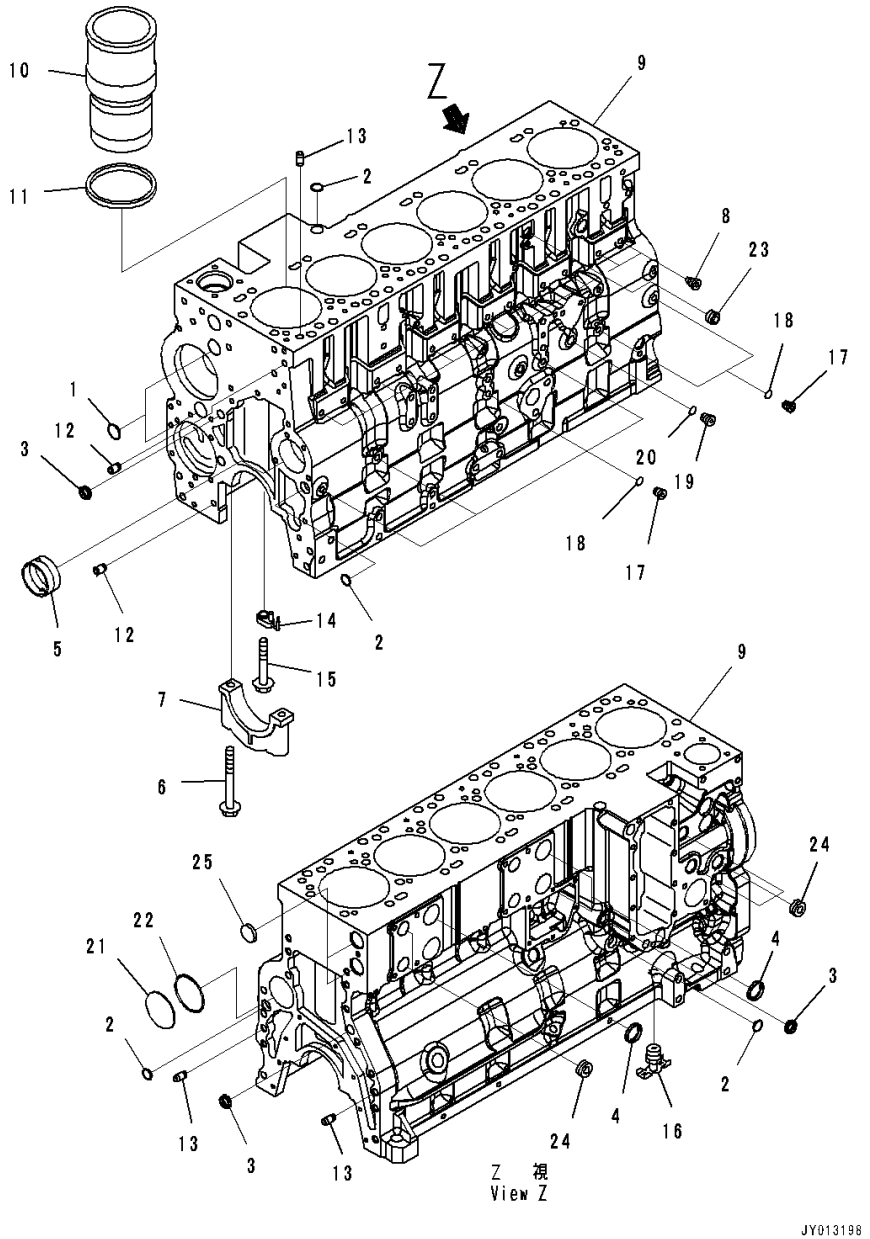

Index	Code	Part Number	Description	Qty	Serial Number
25		6742-01-1380	• Plug	2	26868373-

FIG. AOB10-001001 Cylinder Block Cover

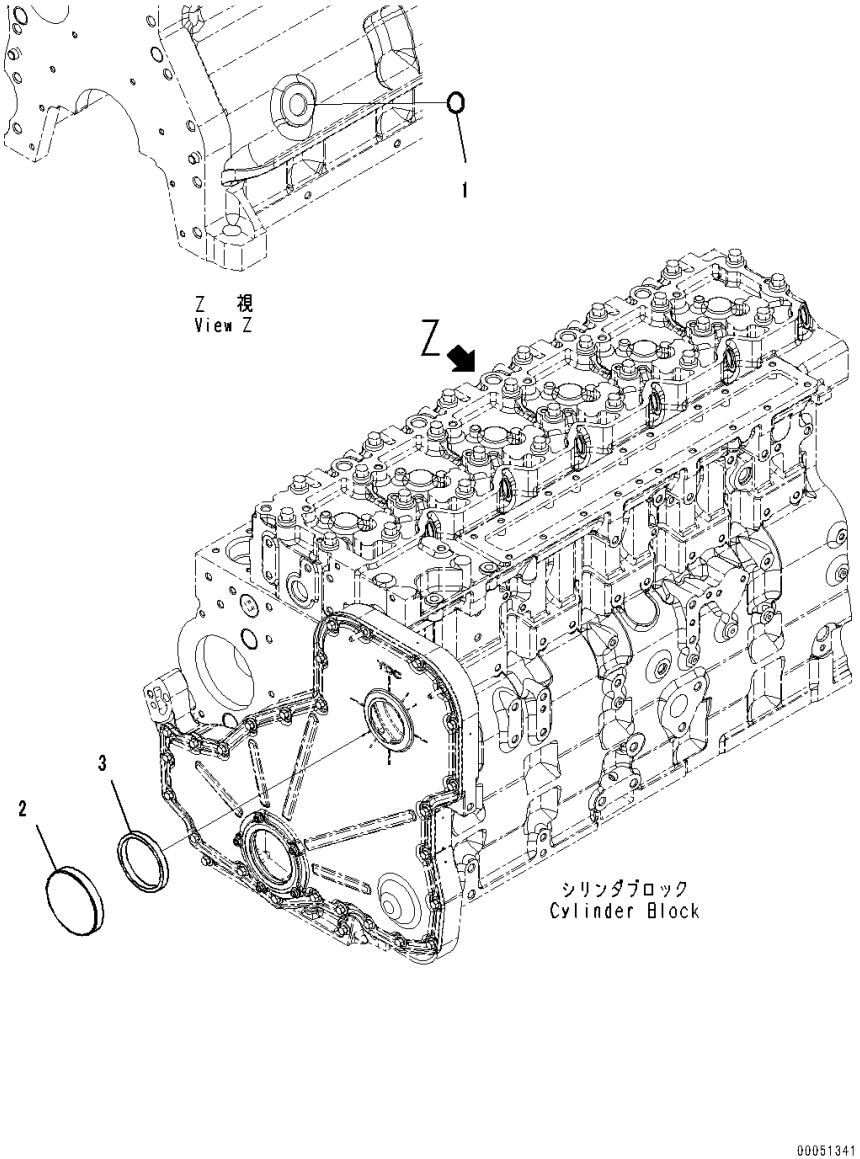

Index	Code	Part Number	Description	Qty	Serial Number
1		6735-21-5530	Plug	1	26868373-
2		6732-21-3190	Cover	1	26868373-
3		6732-21-3220	Seal	1	26868373-

FIG. AOB20-001001 Engine Oil Filler

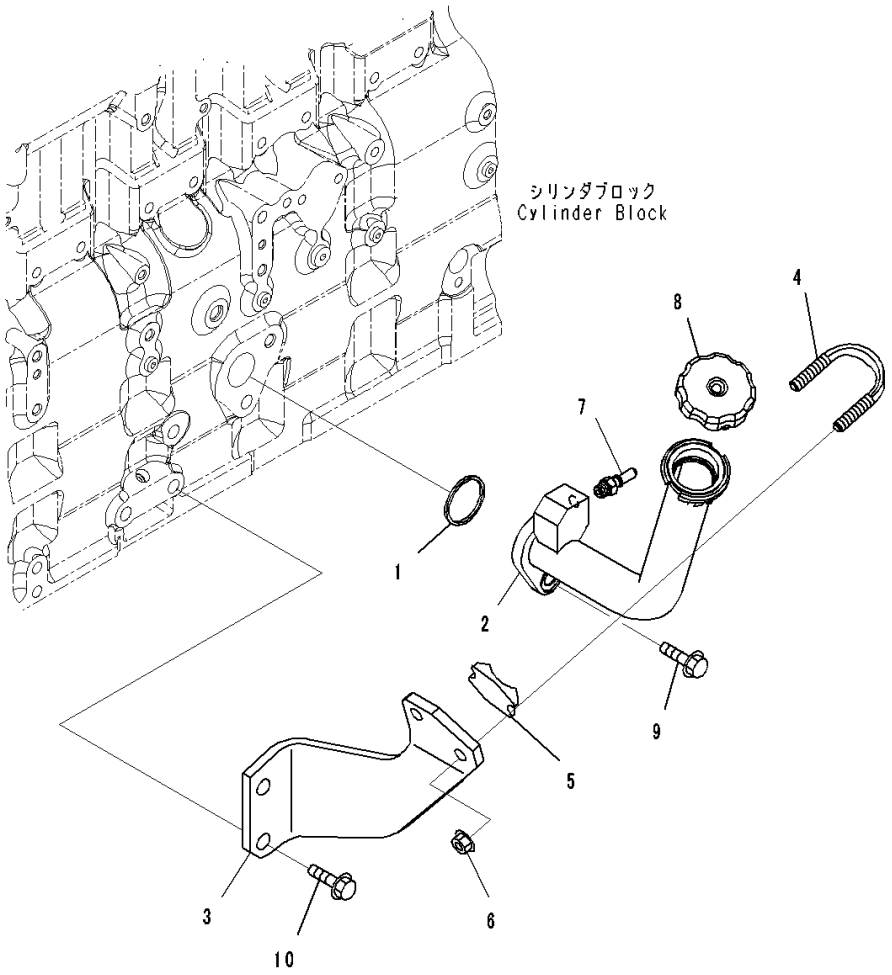

Index	Code	Part Number	Description	Qty	Serial Number
1		6736-21-3360	Seal Ring	1	26868373-
2		6745-21-7250	Tube	1	26868373-
3		6745-21-7260	Brace	1	26868373-
4		07283-34346	U-bolt	1	26868373-
5		07283-54353	Seat	1	26868373-
6		01595-01008	Nut	2	26868373-
7		6745-21-7240	Connector	1	26868373-
8		6136-21-7120	Cap Assembly	1	26868373-
		6136-21-7180	• Gasket	1	26868373-
9		01435-01235	Bolt	2	26868373-
10		01435-01220	Bolt	2	26868373-

FIG. A2119-001001 Engine Oil Pan

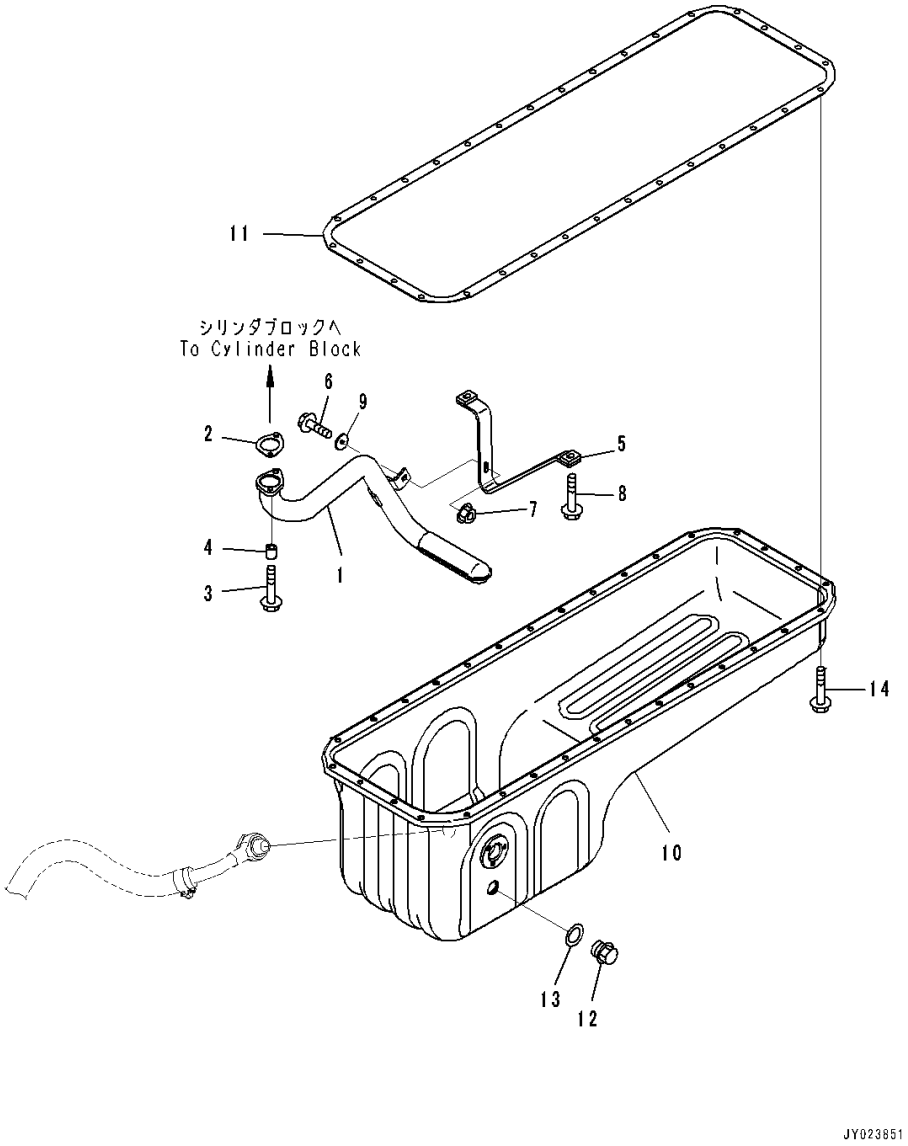

Index	Code	Part Number	Description	Qty	Serial Number
1		6742-01-2620	Connection	1	26868373-
2		6743-51-5550	Gasket	1	26868373-
3		6742-01-2630	Bolt	2	26868373-
4		6742-01-0310	Spacer	2	26868373-
5		6743-51-5530	Brace	1	26868373-
6		6735-71-5190	Bolt	1	26868373-
7		01584-00605	Nut	1	26868373-
8		6735-71-5190	Bolt	2	26868373-
9		6742-01-2690	Washer	1	26868373-
10		6741-21-5121	Pan,Oil	1	26868373-
11		6745-21-5130	Gasket	1	26868373-
12		6736-21-5320	Plug	1	26868373-
13		6732-21-5170	Washer	1	26868373-
14		01435-60820	Bolt	32	26868373-

FIG. A2110-001001 Engine Oil Pan Drain

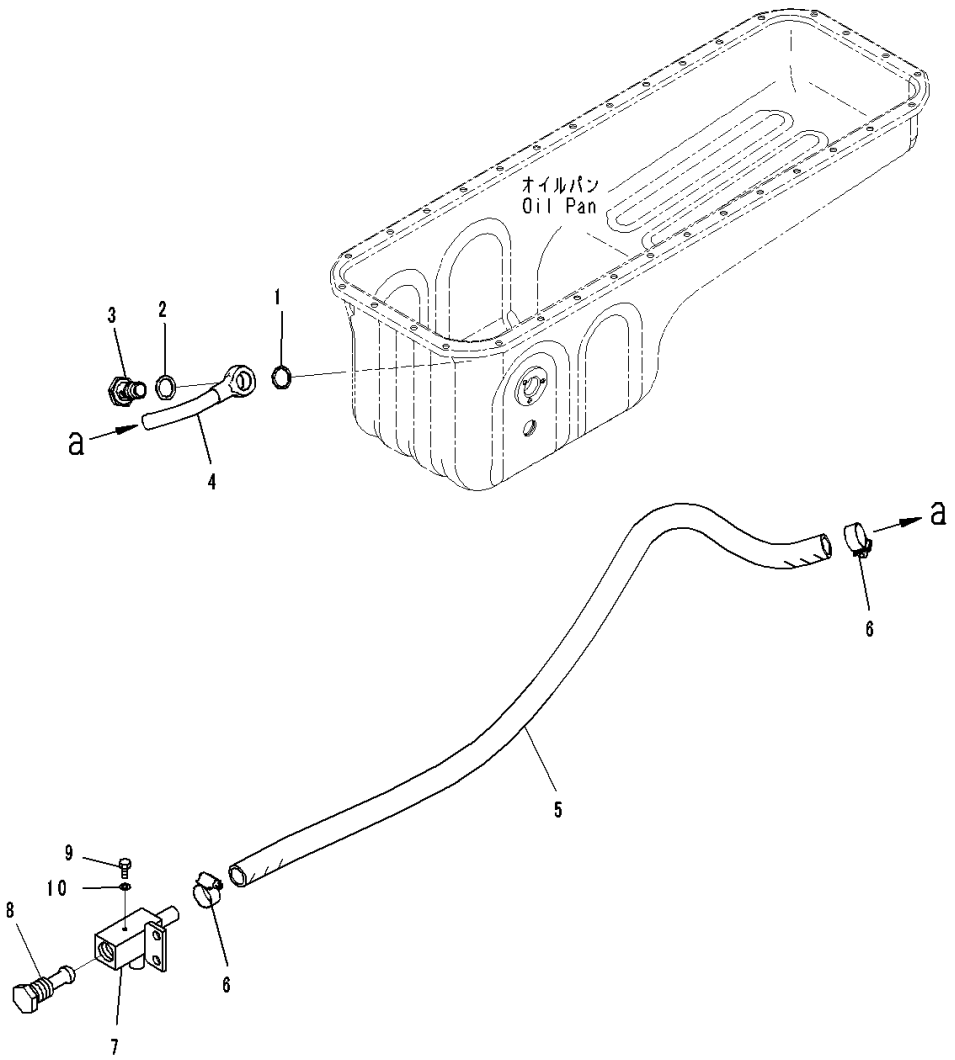

Index	Code	Part Number	Description	Qty	Serial Number
1		07005-02216	Seal, Washer	1	26868373-
2		07005-02416	Seal, Washer	1	26868373-
3		423-01-31310	Joint	1	26868373-
4		419-01-11230	Tube	1	26868373-
5		234-01-81160	Hose	1	26868373-
6		07281-00359	Clamp, Hose	2	26868373-
7		234-01-81181	Tube	1	26868373-
8		423-01-31610	Plug	1	26868373-
9		01010-80612	Bolt	1	26868373-
10		01643-30623	Washer	1	26868373-

FIG. A2049-001001 Front Gear Cover

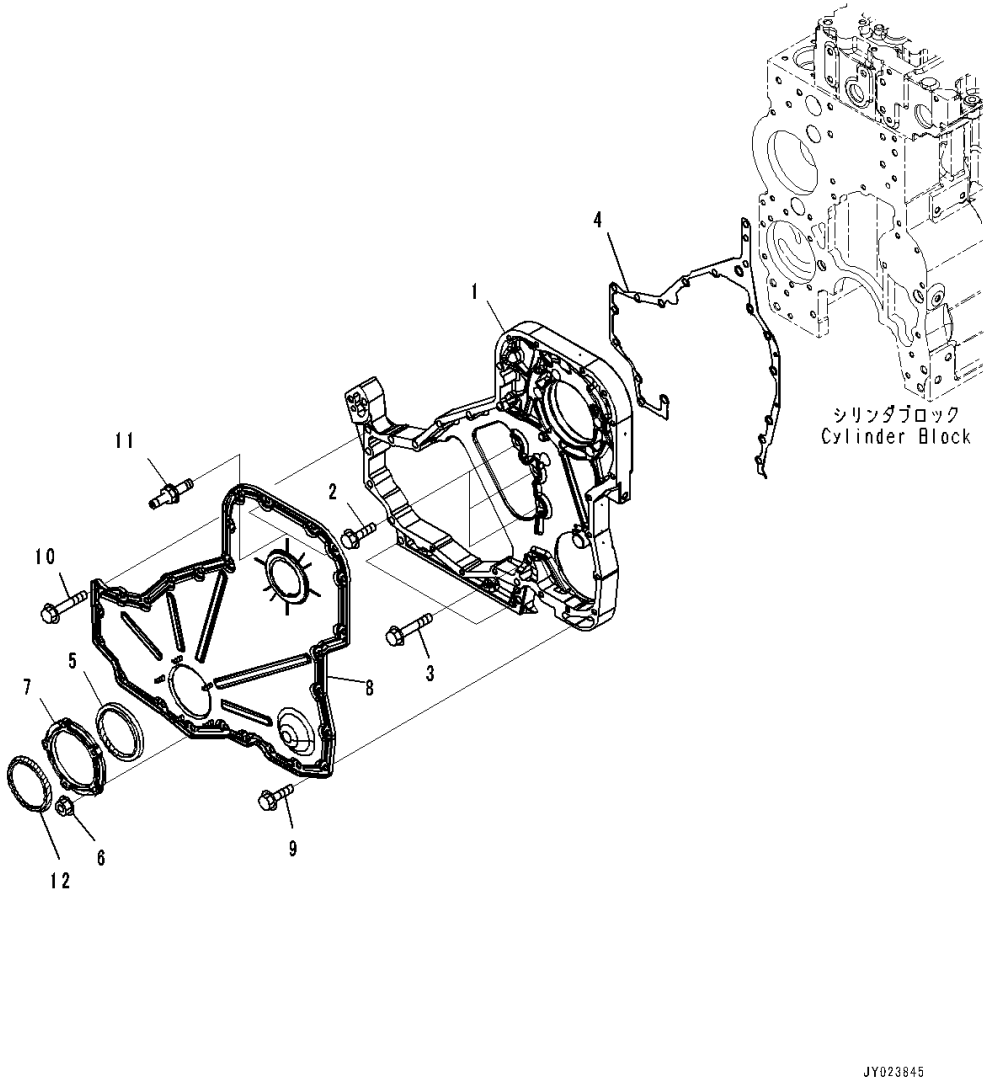

Index	Code	Part Number	Description	Qty	Serial Number
1		6745-21-3111	Housing	1	26868373-
2		6742-01-0540	Bolt	3	26868373-
3		6741-21-3820	Bolt	3	26868373-
4		6741-21-3810	Gasket	1	26868373-
		6742-01-0550	Seal Kit	1	26868373-
5		6742-01-0950	• Seal	1	26868373-
6		6741-21-3541	• Nut	5	26868373-
7		6741-21-3530	Carrier	1	26868373-
8		6745-21-3210	Cover	1	26868373-
9		01435-60816	Bolt	13	26868373-
10		6742-01-0530	Bolt	11	26868373-
11		6735-21-7240	Screw	2	26868373-
12		6742-01-3320	Seal, Dust	1	26868373-

FIG. ABB00-002001 Tappet

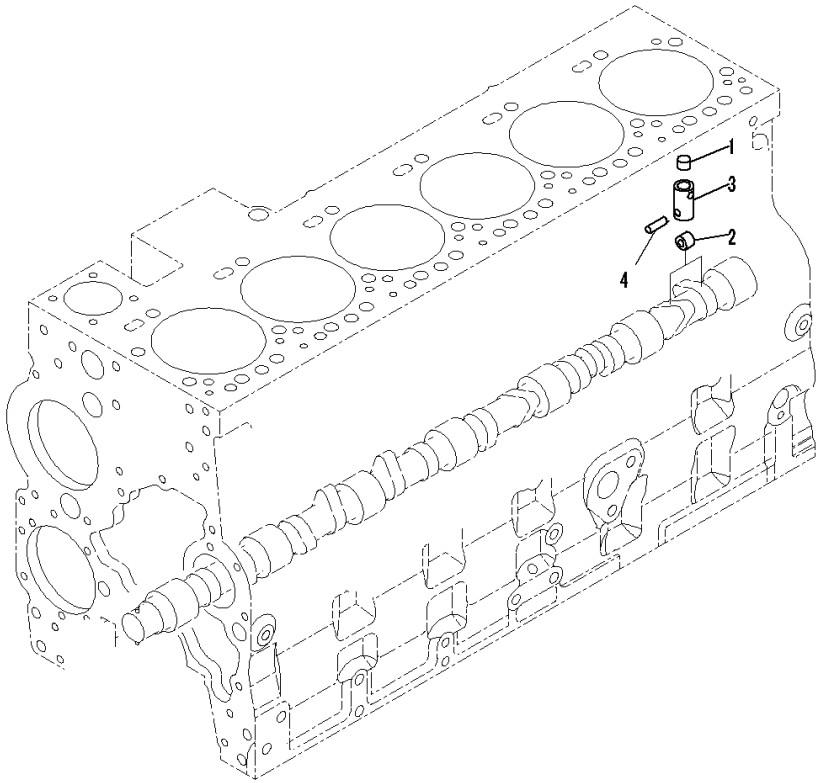

Index	Code	Part Number	Description	Qty	Serial Number
		6745-41-2100	Tappet	12	26868373-
1		6745-41-2110	• Socket	1	26868373-
2		6745-41-2120	• Roller	1	26868373-
3	C1		• Tappet	1	26868373-
4		6745-41-2140	• Pin	1	26868373-

FIG. ADF10-001001 Front Gear Train Cover

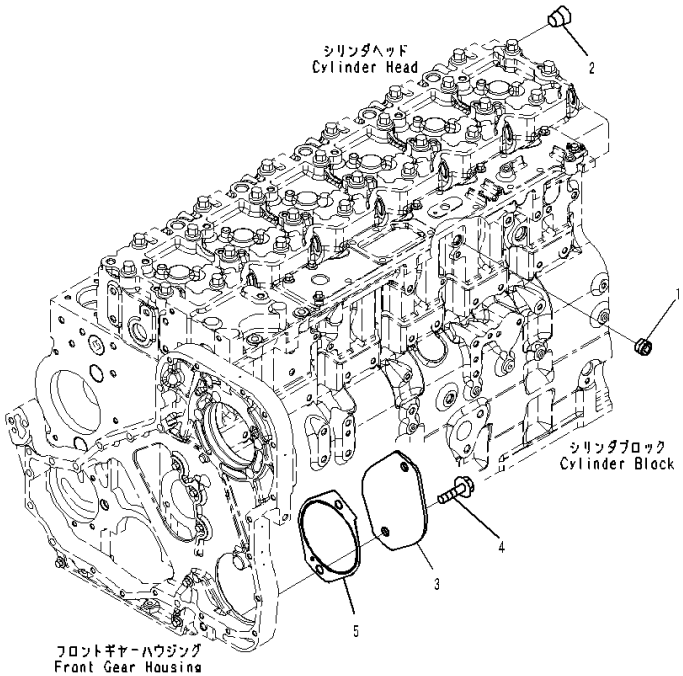

Index	Code	Part Number	Description	Qty	Serial Number
1		6732-11-1910	Plug	2	26868373-
2		6732-11-1920	Plug	1	26868373-
3		6741-21-3320	Plate	1	26868373-
4		6732-51-5130	Bolt	2	26868373-
5		6741-21-3330	Gasket	1	26868373-

FIG. A2219-001001 Flywheel Housing

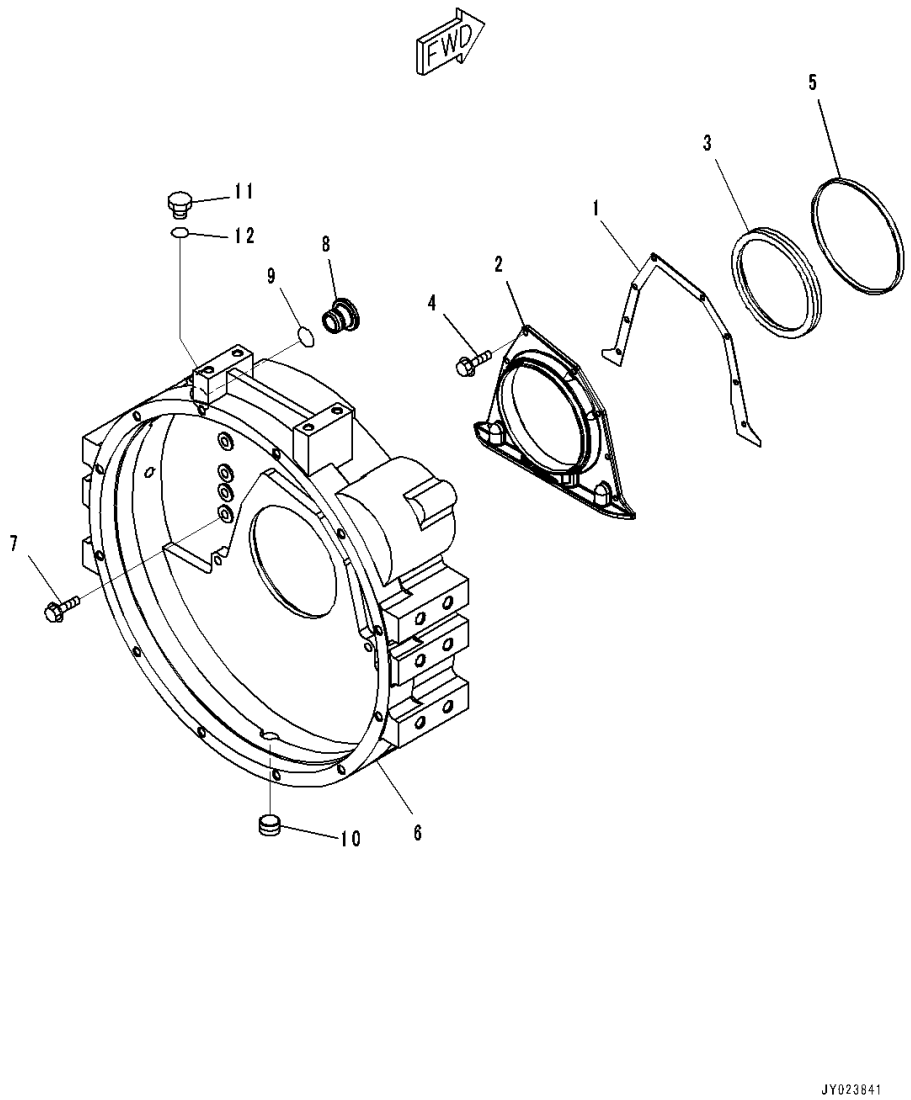

Index	Code	Part Number	Description	Qty	Serial Number
1		6743-21-4190	Gasket	1	26868373-
2		6742-01-5053	Cover	1	26868373-
3		6736-21-4221	Seal	1	26868373-
4		6732-21-4290	Bolt	8	26868373-
5		6732-21-4171	Seal Ring	1	26868373-
6		6741-21-4110	Housing	1	26868373-
7		6732-21-4220	Bolt	12	26868373-
8		6732-21-4150	Plug	1	26868373-
9		6732-21-4161	O-ring	1	26868373-
10		6732-11-1920	Plug	1	26868373-
11		6216-14-6820	Plug Assembly	1	26868373-
		6216-14-6860	• O-ring	1	26868373-
12		6215-81-9730	O-ring	1	26868373-

FIG. AFW00-001001 Flywheel

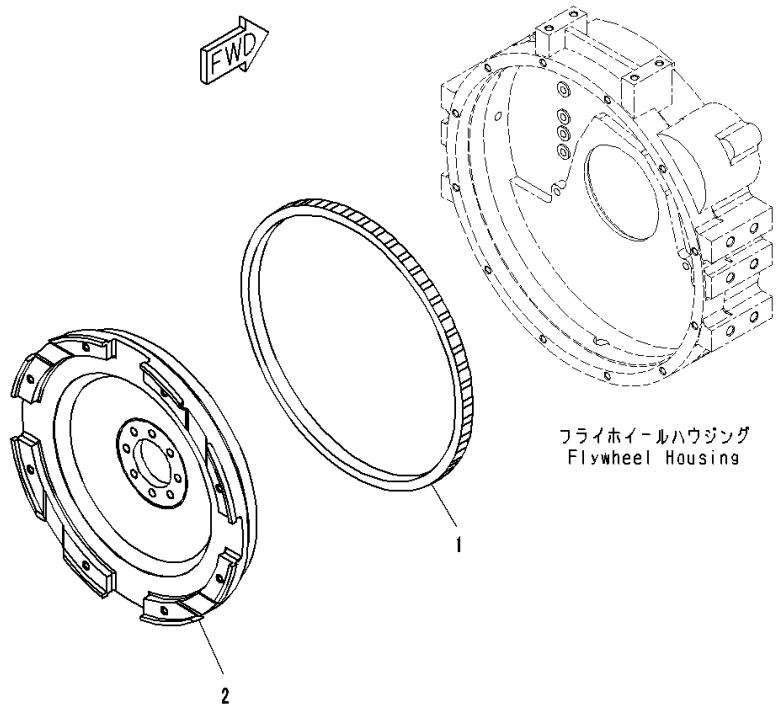

Index	Code	Part Number	Description	Qty	Serial Number
		6741-31-4100	Flywheel Assembly	1	26868373-
1		6741-31-4180	• Gear, Ring	1	26868373-
2	C1		• Flywheel	1	26868373-

FIG. AFW10-001001 Flywheel Mounting

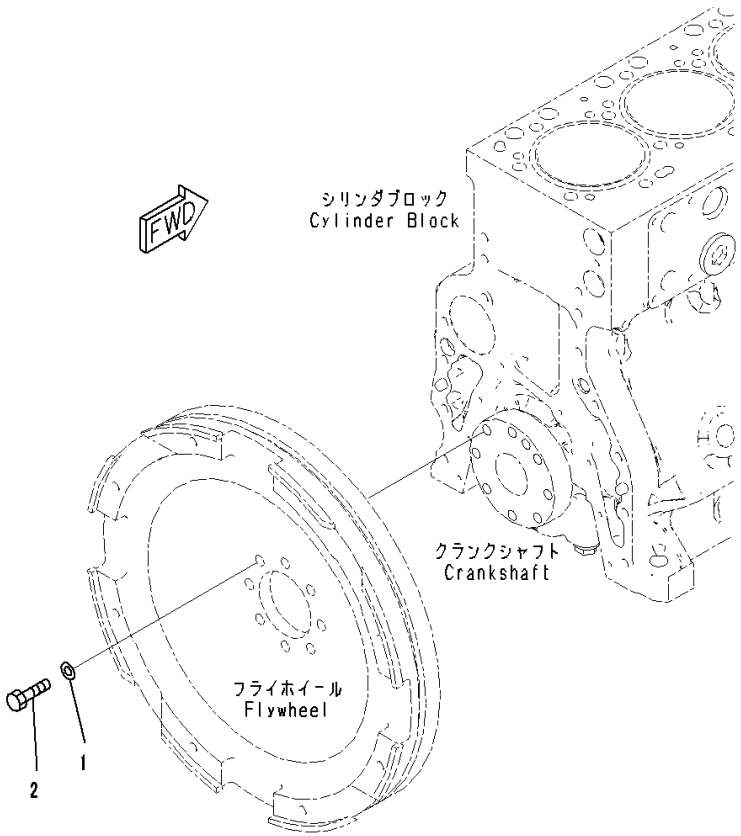

Index	Code	Part Number	Description	Qty	Serial Number
1		6732-31-4120	Washer	8	26868373-
2		6732-31-4130	Bolt	8	26868373-

FIG. ASD00-001001 Engine Oil Level Sensor

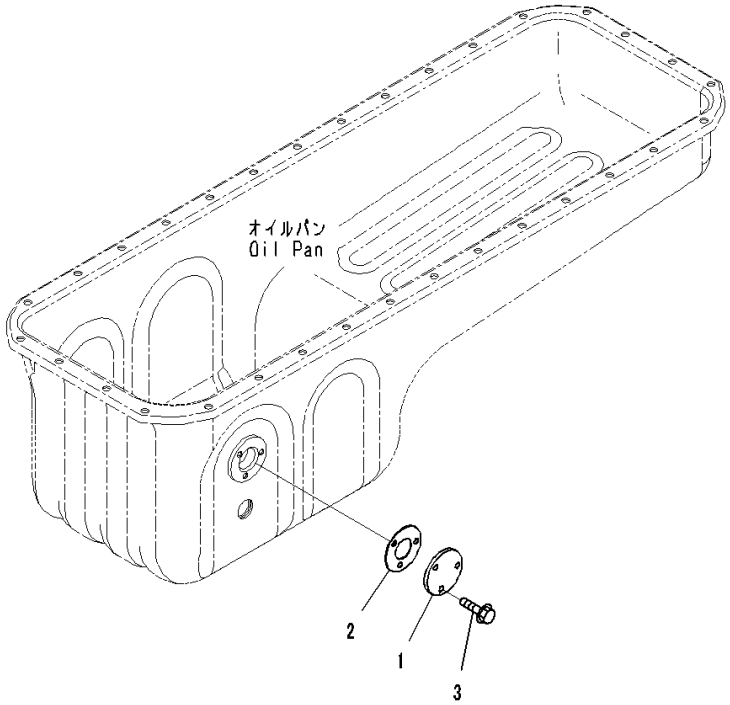

JY023855

Index	Code	Part Number	Description	Qty	Serial Number
1		6136-21-5770	Plate	1	26868373-
2		6136-21-5870	Gasket	1	26868373-
3		01435-60612	Bolt	3	26868373-

FIG. A2319-001001 Crankshaft

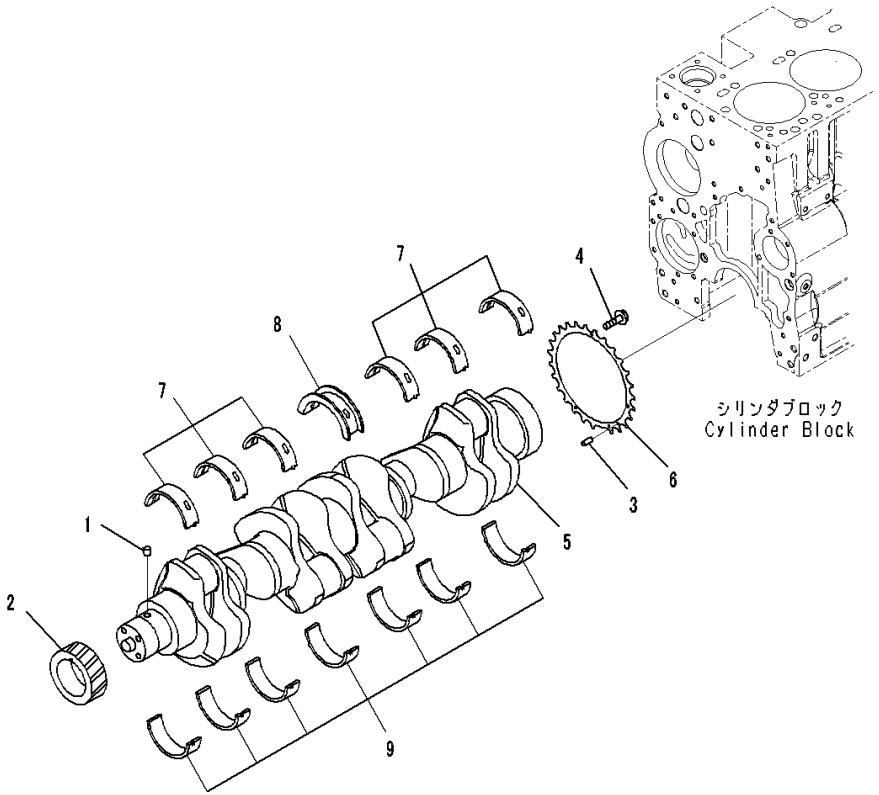

Index	Code	Part Number	Description	Qty	Serial Number
		6745-31-1120	Crankshaft	1	26868373-
1		6732-21-6150	• Pin, Dowel	1	26868373-
2		6742-01-1590	• Gear	1	26868373-
	C1		• Crankshaft Assembly	1	26868373-
3	C1		• • Pin, Dowel	1	26868373-
4		6745-31-1130	• • Bolt	4	26868373-
5	C1		• • Crankshaft	1	26868373-
6		6745-31-1150	• • Ring	1	26868373-
		6742-01-5199	Main Metal Assembly	1	26868373-
7	C1		• Metal,Upper	6	26868373-
8	C1		• Metal,Thrust	1	26868373-
9	C1		• Metal,Lower	7	26868373-
		6742-21-8500	Thrust Metal Assembly	1	26868373-
	C1		• Metal,Thrust	1	26868373-
	C1		• Metal,Lower	1	26868373-

FIG. ADA00-001001 Vibration Damper

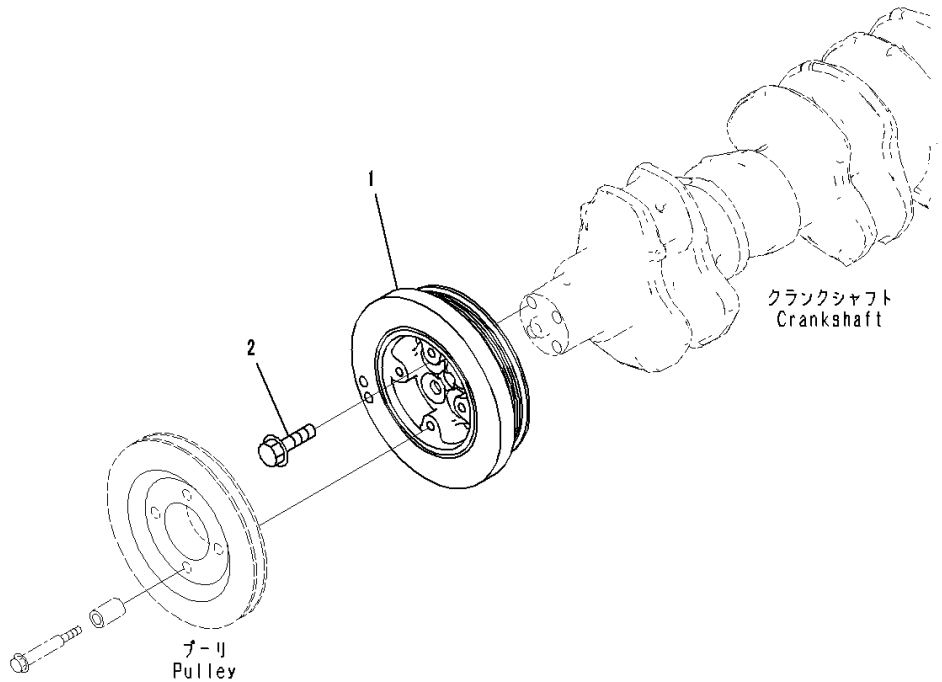

Index	Code	Part Number	Description	Qty	Serial Number
1		6742-01-5289	Damper	1	26868373-
2		6742-01-1890	Bolt	4	26868373-

FIG. A2359-001001A Piston and Connecting Rod

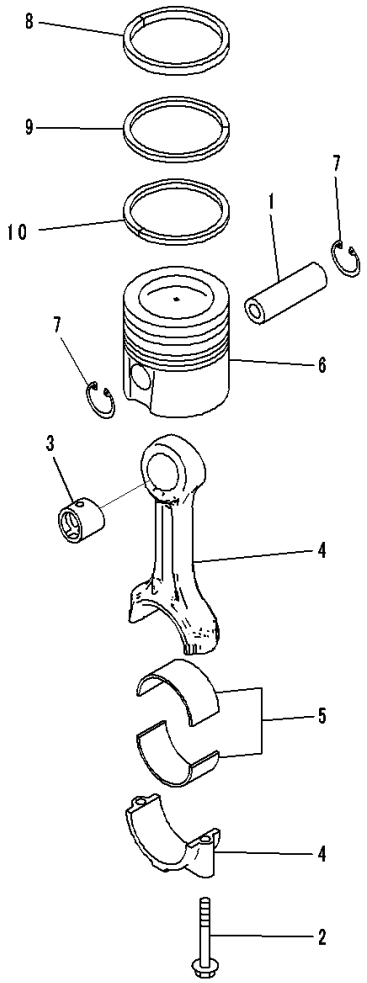

JY104055

Index	Code	Part Number	Description	Qty	Serial Number
1		6745-31-2140	Pin	6	26868373-
		6746-31-3240	Rod Assembly	6	26869652-
2		6746-31-3130	• Screw	2	26869652-
3		6743-31-3121	• Bushing	1	26869652-
4	C1		• Rod	1	26869652-
5		6743-31-3210	Bearing	12	26868373-
		6745-32-2121	Piston Kit	6	26871855-
	A2	6745-32-2120	Piston Kit	6	26868373-26871854
6		6745-31-2111	• Piston	1	26868373-
7		6742-01-5309	• Ring, Snap	2	26868373-
		6745-31-2012	• Piston Ring Assembly	1	26871867-
	A2	6745-31-2011	• Piston Ring Assembly	1	26871855-26871866
	A2	6745-31-2010	• Piston Ring Assembly	1	26868373-26871854
8	C1		• • Ring, Top	1	26871855-
	C1		• • Ring, Top	1	26868373-26871854
9	C1		• • Ring,Second	1	26871855-
	C1		• • Ring,Second	1	26868373-26871854
10	C1		• • Ring,Oil	1	26871855-
	C1		• • Ring,Oil	1	26868373-26871854

FIG. AAF00-001001 Crank Pulley

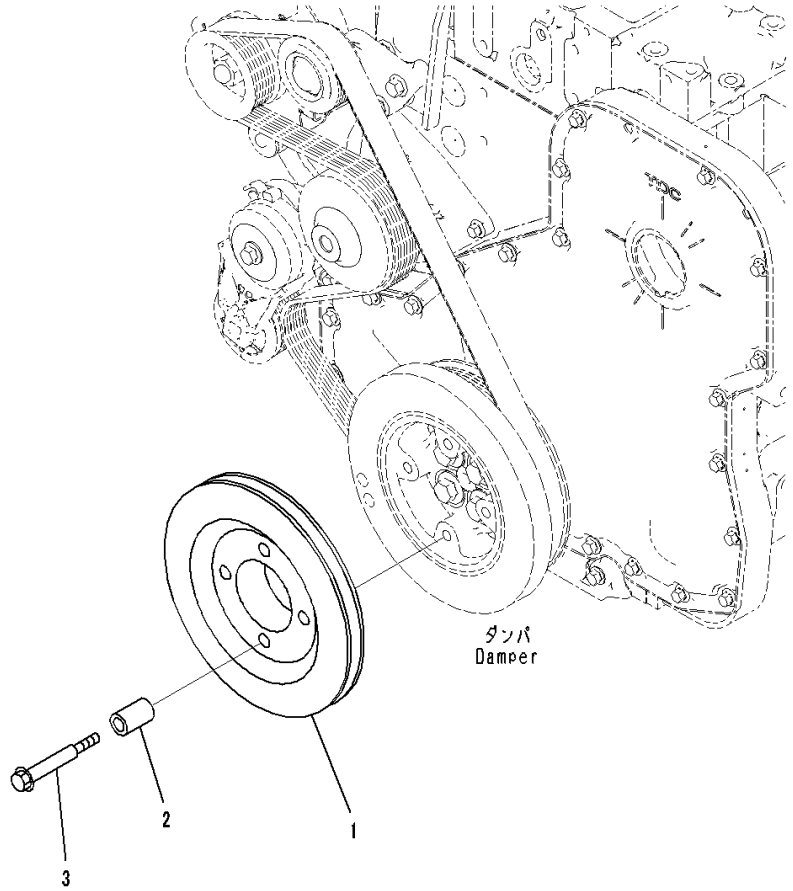

Index	Code	Part Number	Description	Qty	Serial Number
1		6745-31-8140	Pulley	1	26868373-
2		6743-82-8110	Spacer	4	26868373-
3		6735-21-3720	Bolt	4	26868373-

FIG. A2080-001001 Breather Hose

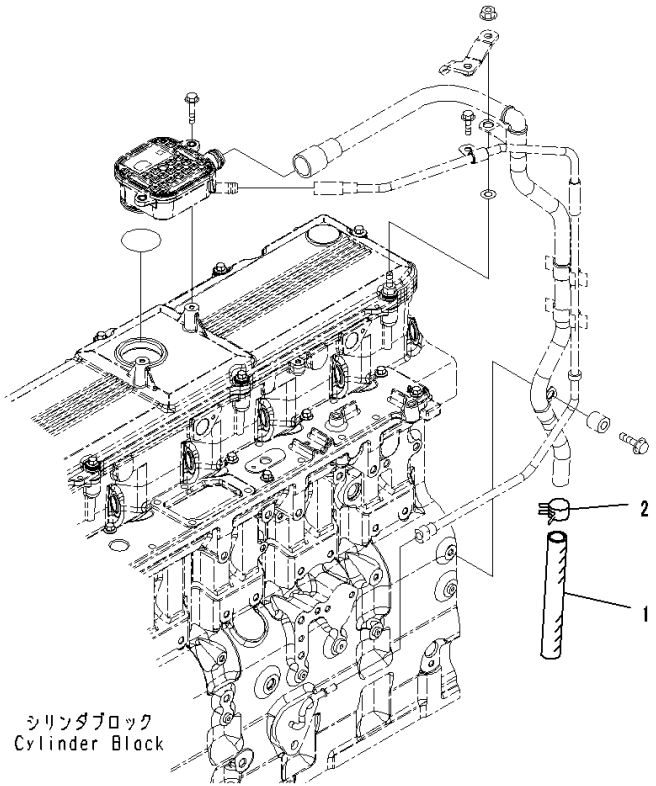

Index	Code	Part Number	Description	Qty	Serial Number
1		07286-01970	Hose	1	26868373-
2		07285-00220	Clip	1	26868373-

FIG. AHC00-001001 Cabin Heater Plug

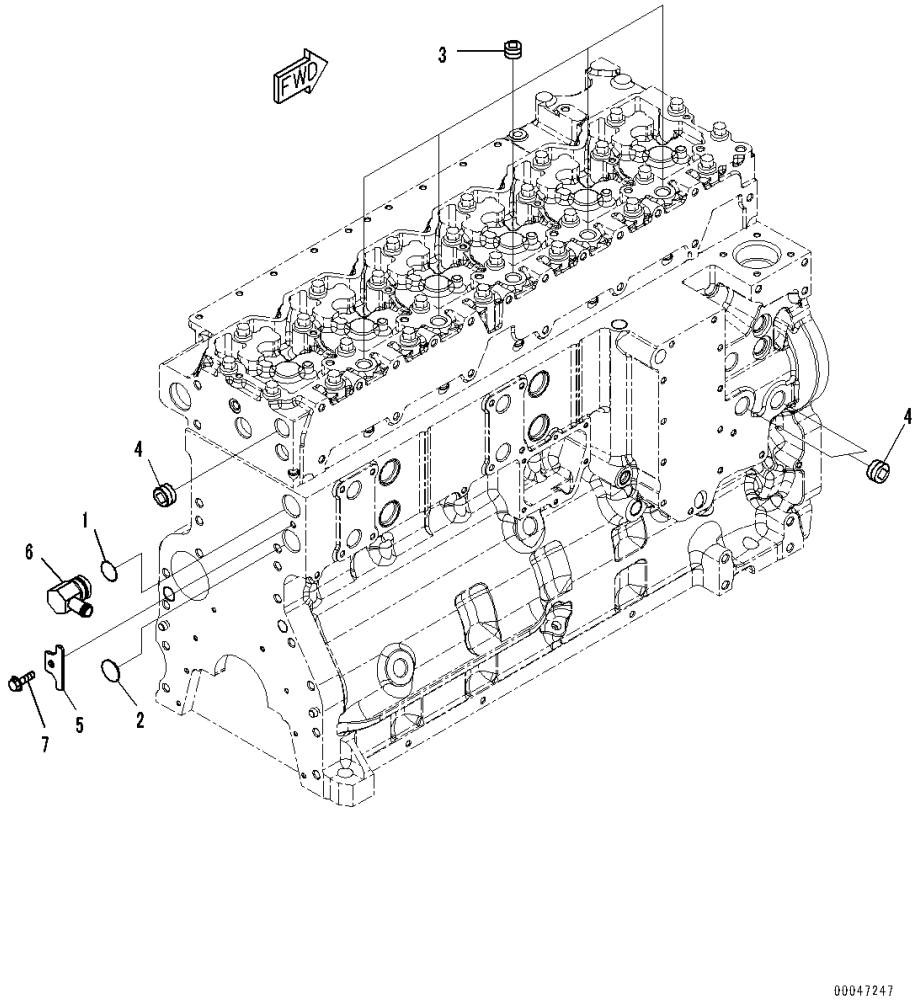

Index	Code	Part Number	Description	Qty	Serial Number
1		1241155H1	O-ring	1	26868373-
2		6742-01-1380	Plug	1	26868373-
3		6732-21-1981	Plug, Pipe	5	26882440-
	A2	6732-11-1910	Plug	5	26868373-26882439
4		6732-11-1920	Plug	3	26868373-
5		1294859H1	Plate	1	26868373-
6		6741-61-7110	Connector	1	26868373-
7		01435-60816	Bolt	1	26868373-

FIG. A2419-001001 Camshaft

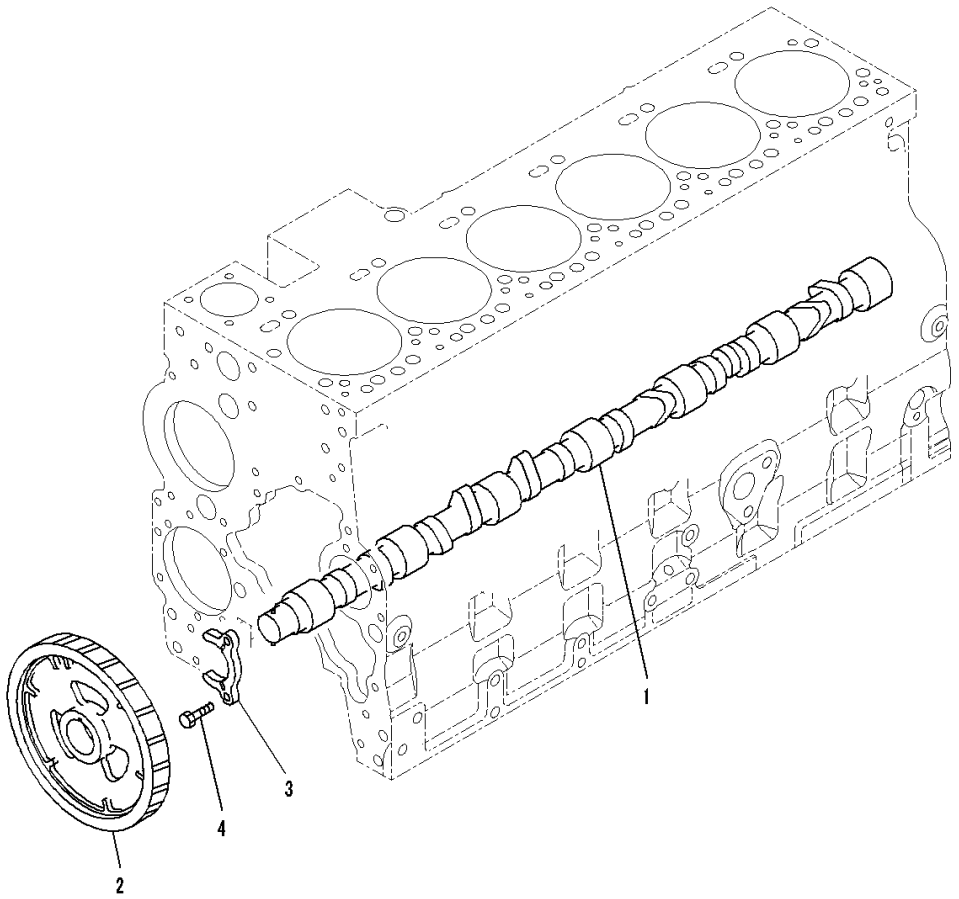

Index	Code	Part Number	Description	Qty	Serial Number
1		6745-41-1110	Camshaft	1	26868373-
2		6745-41-1131	Gear	1	26868373-
3		6744-41-1010	Support	1	26868373-
4		6732-41-1260	Bolt	2	26868373-

FIG. ALG00-001001 Oil Level Gauge

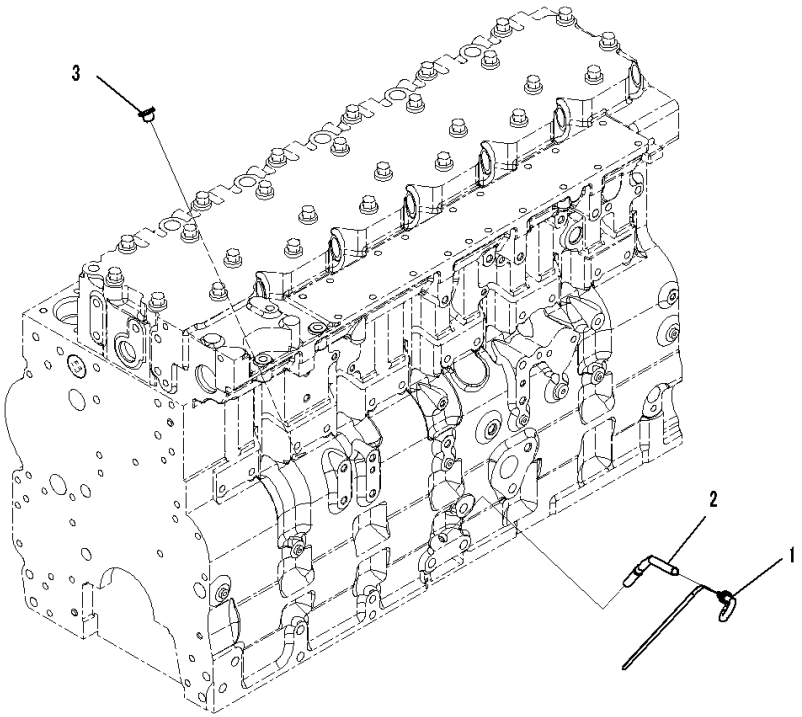

Index	Code	Part Number	Description	Qty	Serial Number
1		6743-21-5513	Gauge,Oil	1	26870080-
	A2	6743-21-5512	Gauge,Oil	1	26868373-26870079
2		6743-21-5521	Tube,Oil Gauge	1	26868373-
3		6732-21-5530	Plug	1	26868373-

ENGINE LUBRICATION SYSTEM

FIG. ALP00-003001 Engine Oil Pump

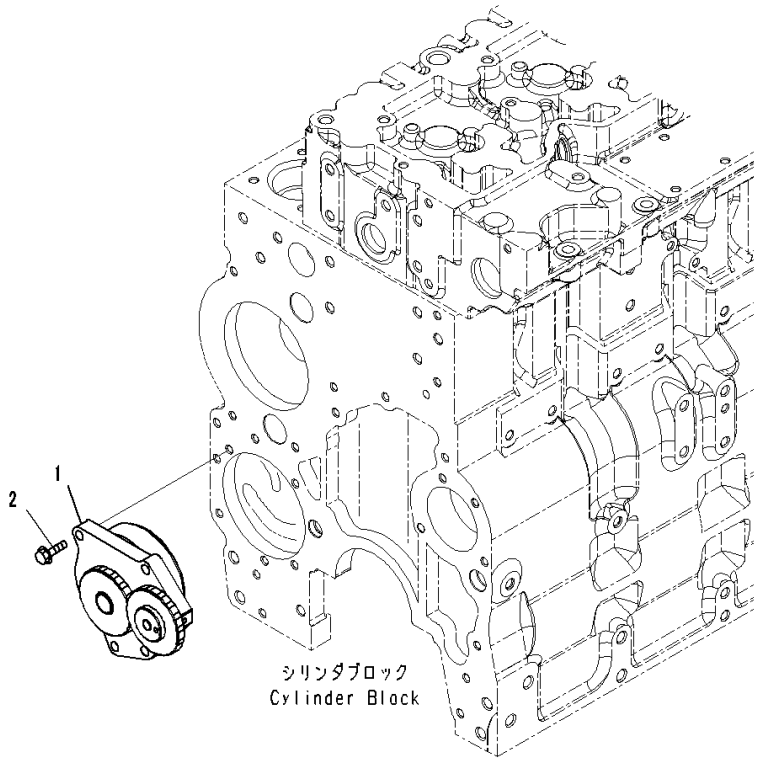

Index	Code	Part Number	Description	Qty	Serial Number
1		6745-51-1113	Pump Assembly, Oil	1	26880814-
2		01010-80830	Bolt	4	26880814-

FIG. ALF00-001001 Engine Oil Filter

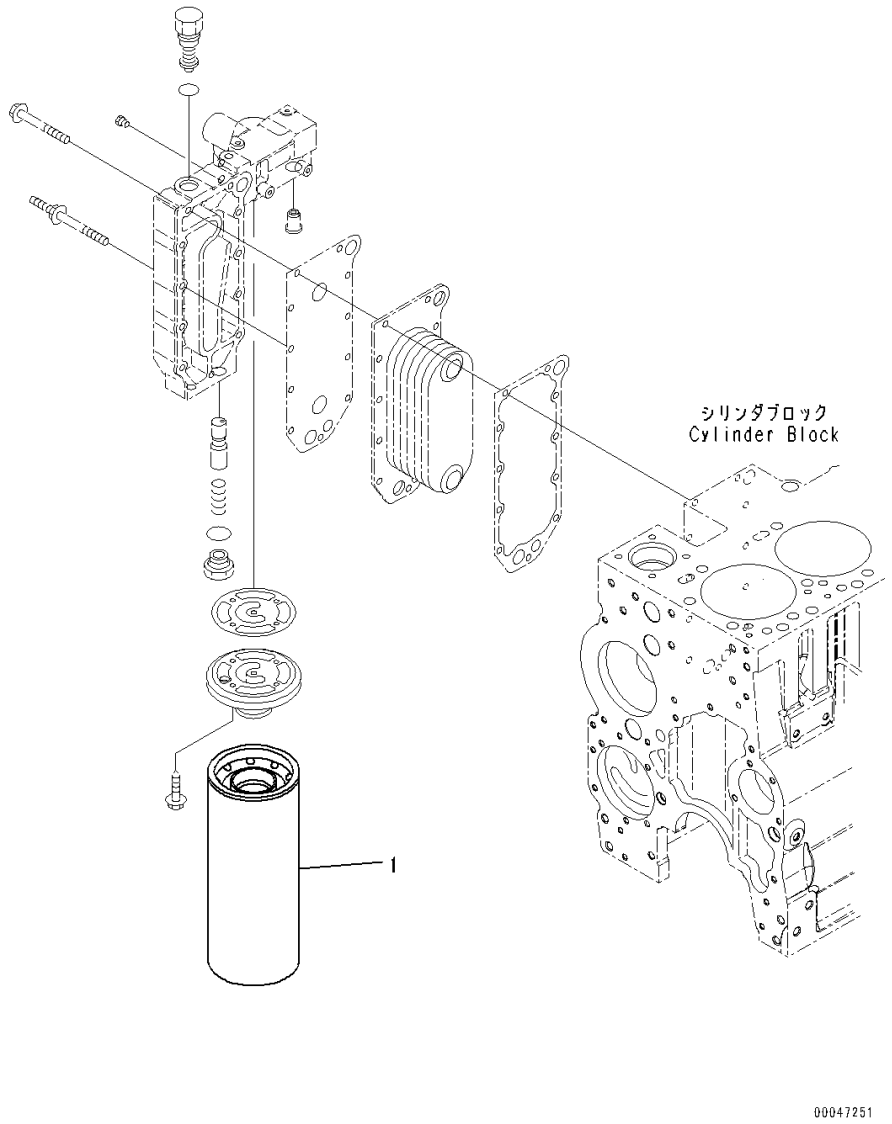

Index	Code	Part Number	Description	Qty	Serial Number
1		6742-01-4540	Cartridge	1	26868373-

FIG. ALC00-001001A Engine Oil Cooler

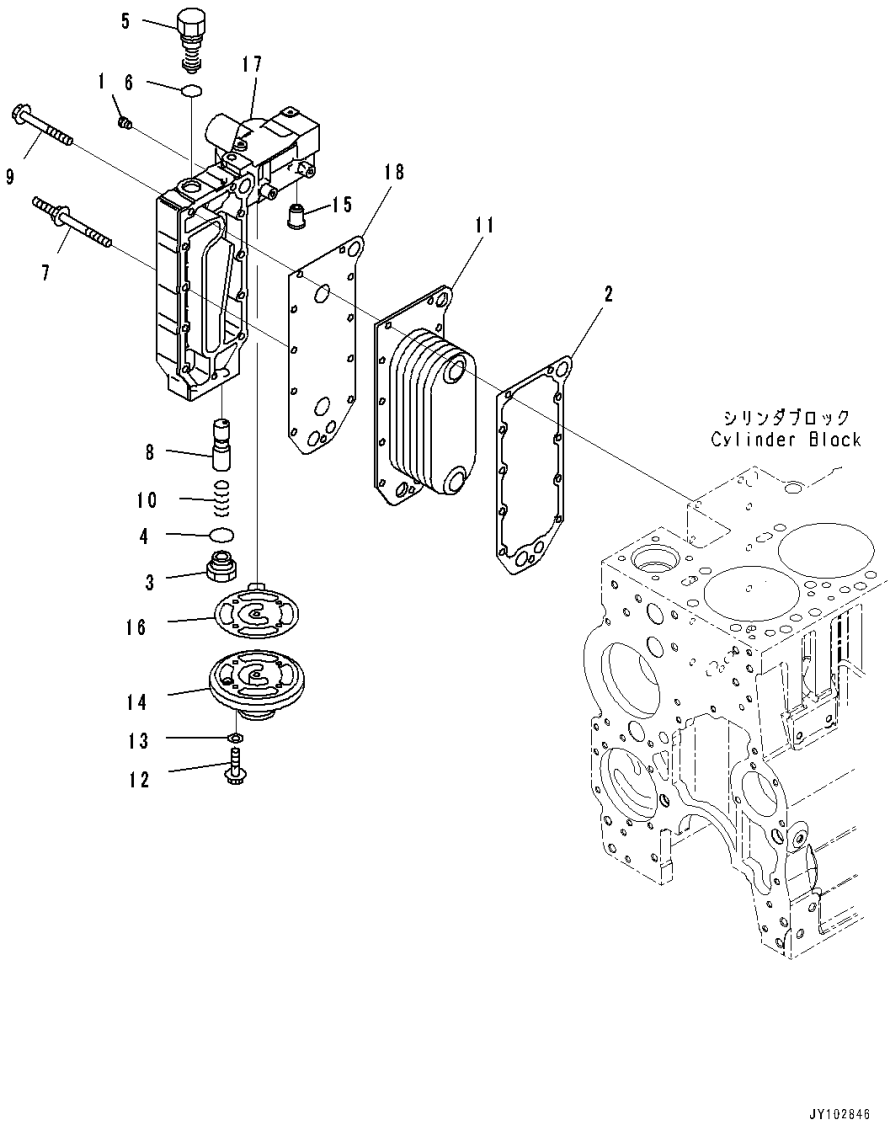

Index	Code	Part Number	Description	Qty	Serial Number
1		6732-11-1930	Plug	2	26868373-
2		6742-01-1080	Gasket	1	26868373-
		6742-01-4220	Plug Assembly	1	26876618-
3	C1		• Plug	1	26876618-
4		6742-01-5118	• Seal	1	26876618-
		6742-01-5117	Valve	1	26868373-
5	C1		• Valve	1	26868373-
6		6742-01-2420	• O-ring	1	26868373-
7		6741-61-6110	Screw	2	26868373-
8		6742-01-5202	Plunger	1	26868373-
9		6742-01-2441	Bolt	9	26868373-
10		6743-61-2150	Spring	1	26868373-
11		6743-61-2210	Core	1	26868373-
12		01437-00825	Bolt	4	26868373-
13		01641-20812	Washer	4	26868373-
14		6742-01-2500	Head	1	26868373-
15		6731-61-2151	Valve	1	26868373-
16		6742-01-2492	Gasket	1	26868373-
17		6743-61-2112	Cover	1	26868373-
18		6743-51-4430	Gasket	1	26868373-

ENGINE FUEL SYSTEM

FIG. A4019-001001 Fuel Supply Pump (Inner Parts)

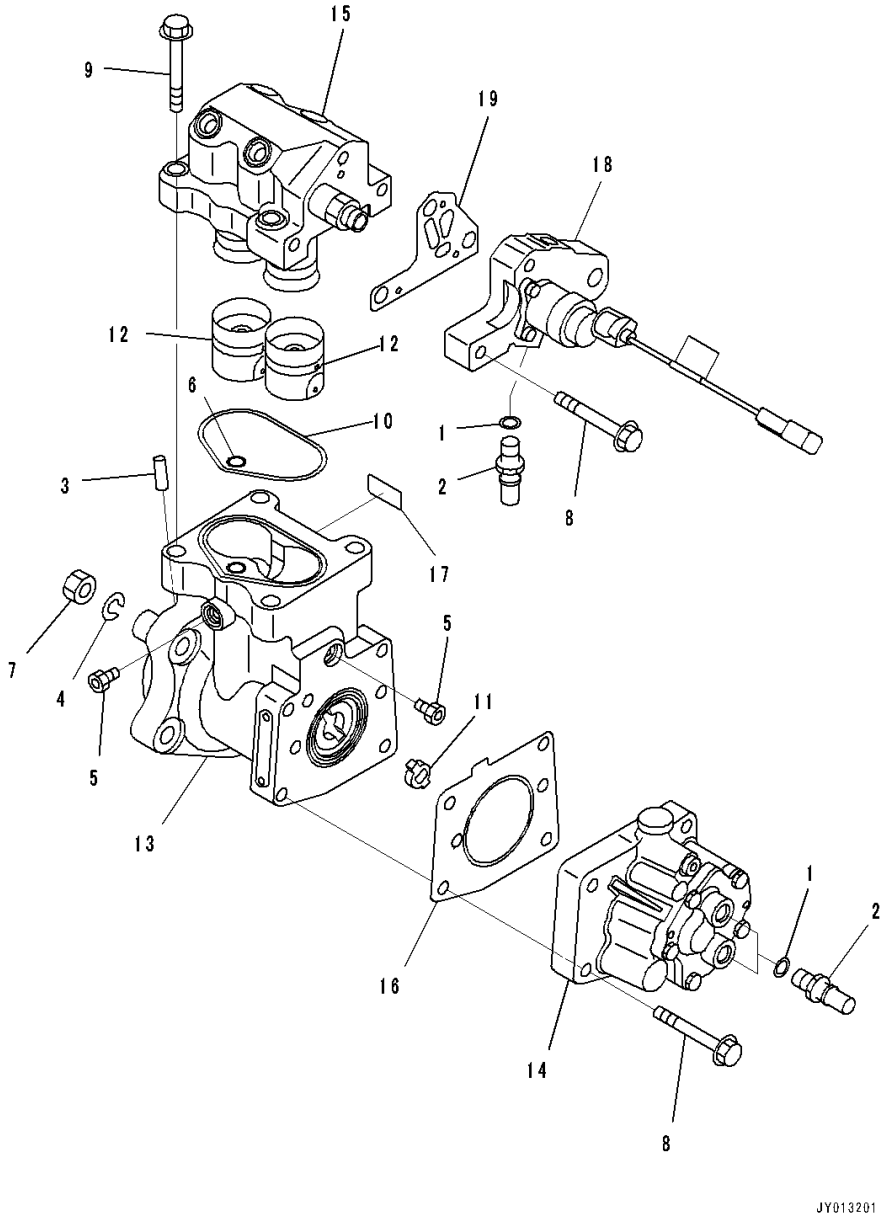

Index	Code	Part Number	Description	Qty	Serial Number
1		6745-71-1130	Seal, Washer	3	26868373-
2		6745-71-6130	Connector	3	26868373-
		6745-71-1171	Pump Assembly	1	26871868-
	A2	6745-71-1170	Pump Assembly	1	26868373-26871867
3		6744-71-1020	• Pin, Dowel	1	26868373-
4		6744-71-1040	• Washer, Spring	1	26868373-
5		6732-21-1960	• Plug Assembly	2	26868373-
6		6560-81-4530	• O-ring	1	26868373-
7		6744-71-1250	• Nut	1	26868373-
8		6732-61-3170	• Bolt	7	26868373-
9		6745-71-1220	• Bolt	4	26868373-
10		6745-71-1230	• Seal	1	26868373-
11	C1		• Hub	1	26868373-
12	C1		• Tappet	2	26868373-
13	C1		• Body	1	26868373-
14		6745-71-1180	• Pump,Fuel	1	26868373-
15		6745-71-1240	• Head	1	26868373-
16		6745-71-1250	• Gasket	1	26868373-
17	C1		• Tag	1	26868373-
18	C1		• Adapter	1	26868373-
19		6745-71-1260	• Gasket	1	26868373-

FIG. A4019-001002 Fuel Supply Pump (Mounting)

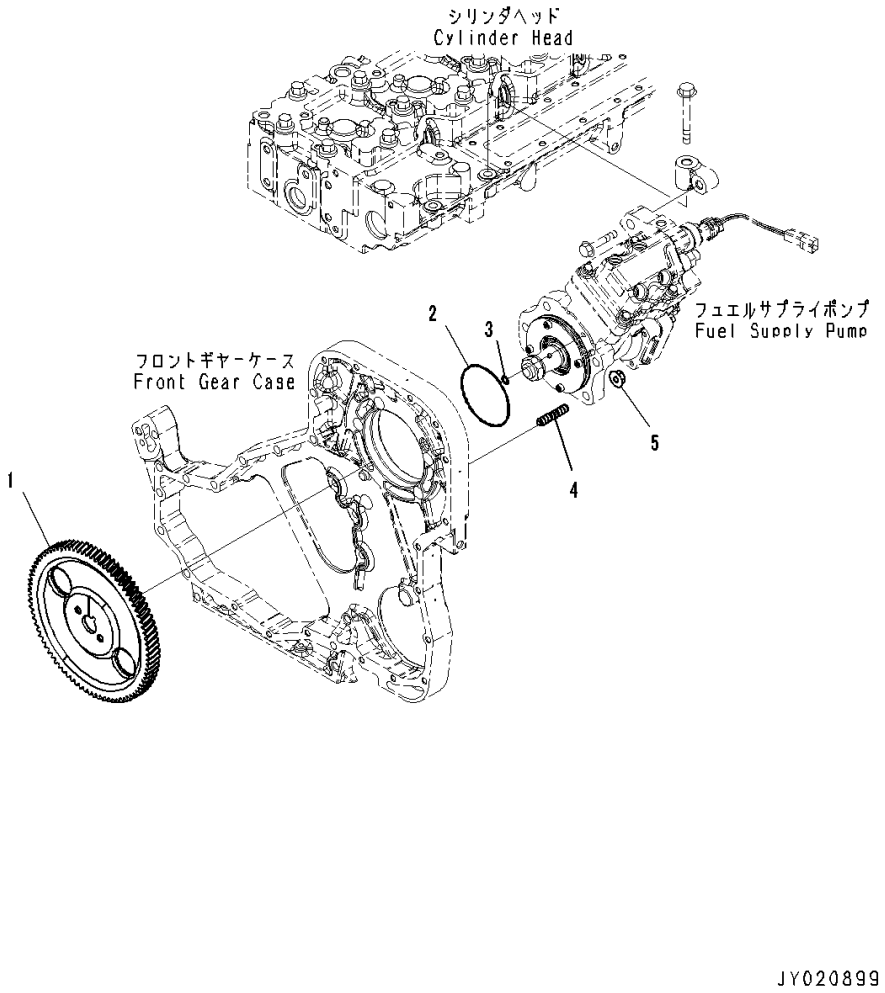

Index	Code	Part Number	Description	Qty	Serial Number
1		6745-71-3212	Gear	1	26876370-
	A2	6745-71-3211	Gear	1	26868373-26876369
2		6741-61-2120	O-ring	1	26868373-
3		6746-71-1230	Seal	1	26868373-
4		6742-01-5047	Stud	4	26868373-
5		6736-81-6170	Nut	4	26868373-

FIG. AFP20-001001 Fuel Supply Pump Mounting

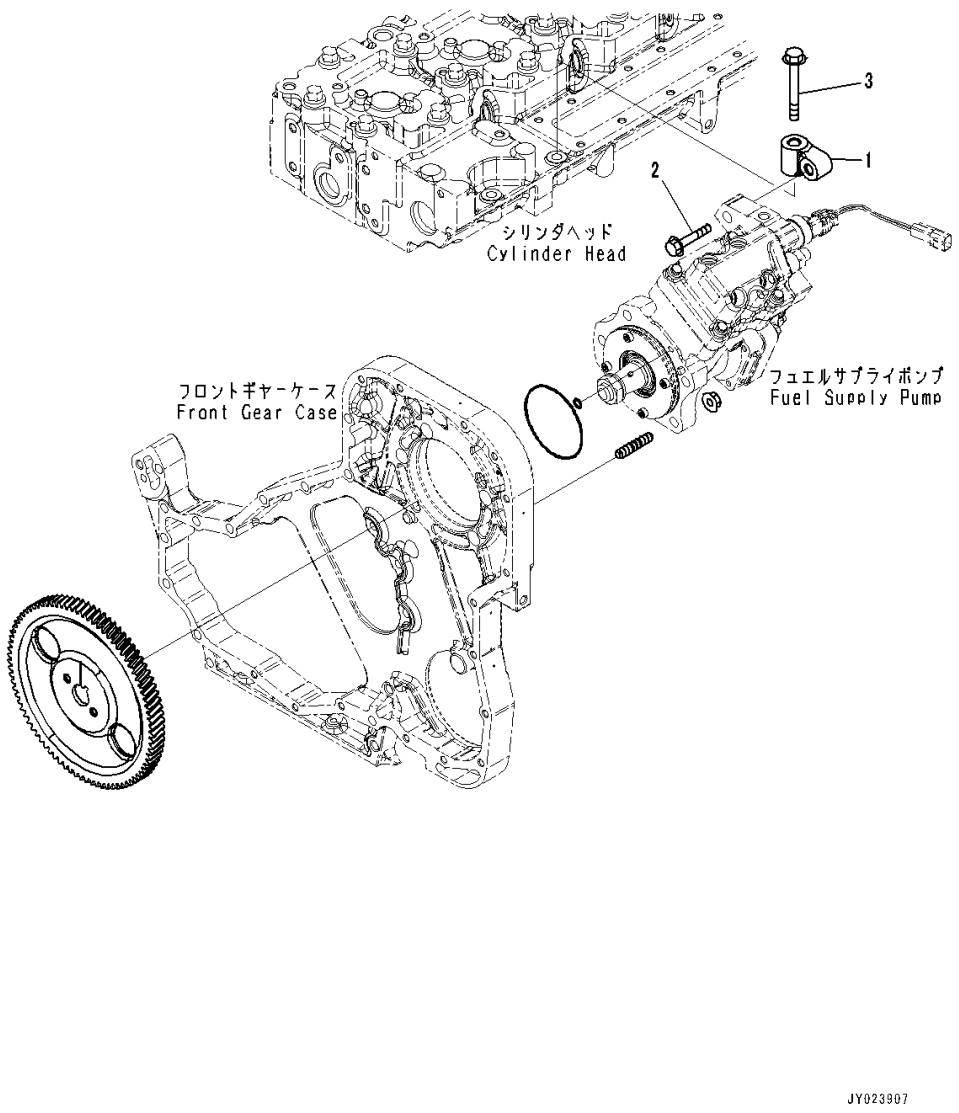

Index	Code	Part Number	Description	Qty	Serial Number
1		6745-71-1210	Support	1	26868373-
2		6742-01-3780	Bolt	1	26868373-
3		6732-61-4120	Bolt	1	26868373-

FIG. AFF10-001001 Fuel Filter

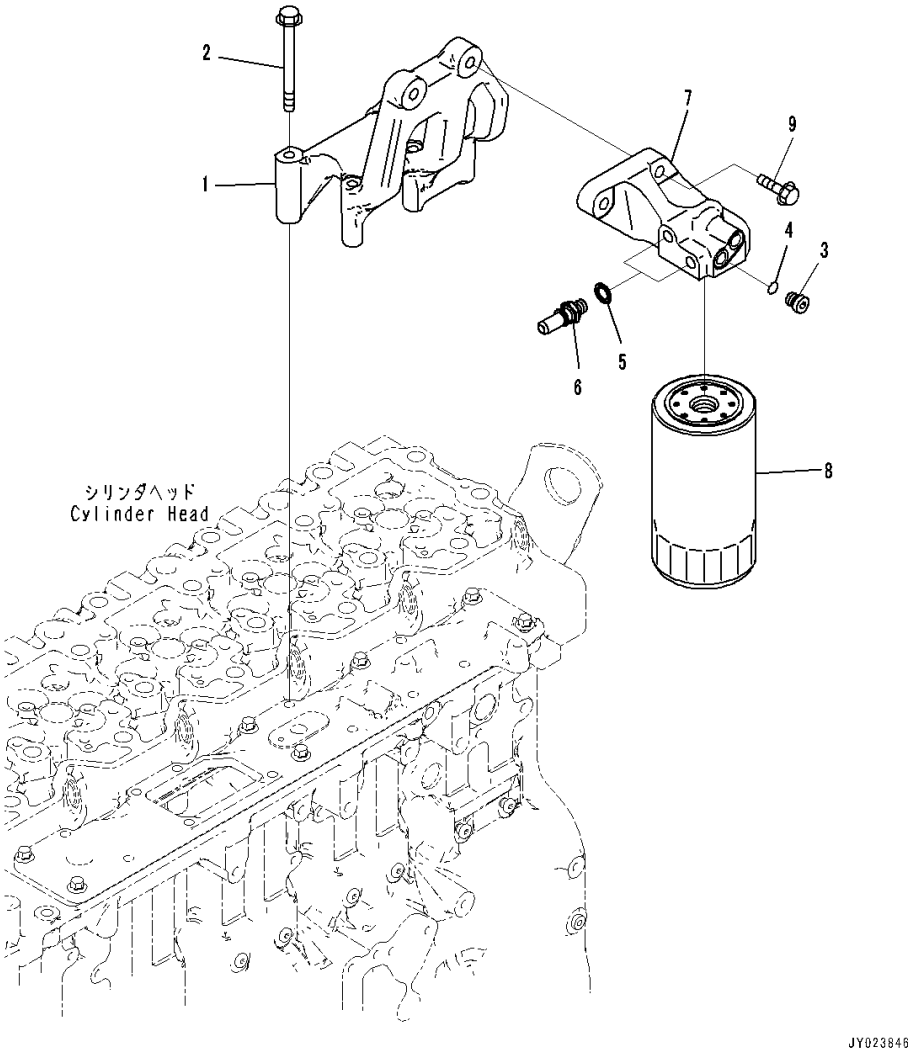

Index	Code	Part Number	Description	Qty	Serial Number
1		6745-71-6410	Support	1	26868373-
2		01435-60890	Bolt	5	26868373-
		6732-21-1960	Plug Assembly	2	26868373-
3	C1		• Plug	1	26868373-
4		6735-21-1970	• O-ring	1	26868373-
5		6745-71-1130	Seal, Washer	2	26868373-
6		6745-71-6130	Connector	2	26868373-
7		6745-71-6190	Head	1	26868373-
8		600-319-3750	Cartridge	1	26868373-
9		6732-22-3110	Bolt	2	26868373-

FIG. AFF20-001001 Fuel Filter Piping

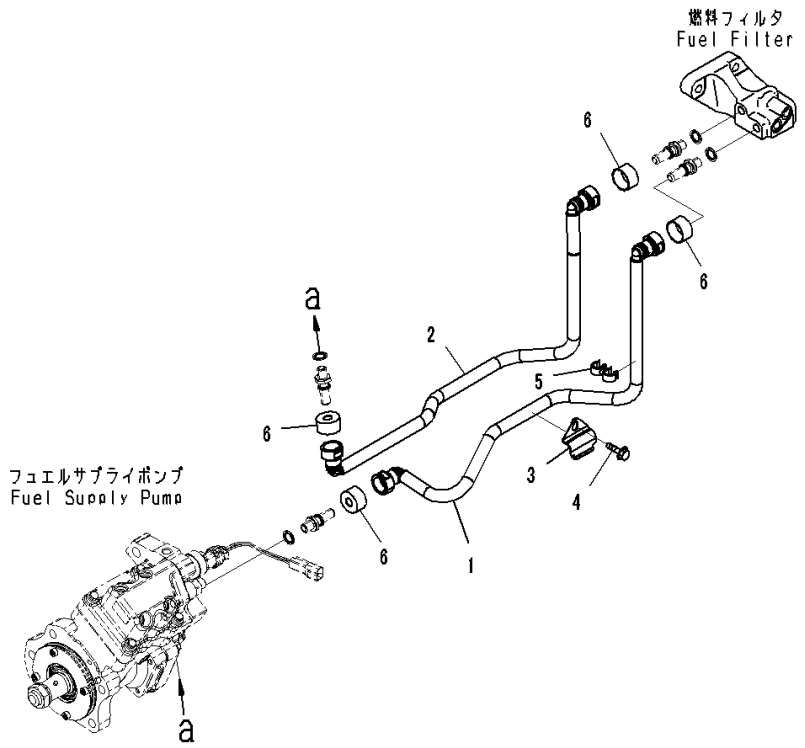

Index	Code	Part Number	Description	Qty	Serial Number
1		6745-71-5110	Tube	1	26868373-
2		6745-71-5120	Tube	1	26868373-
3		6745-71-5210	Brace	1	26868373-
4		01435-60816	Bolt	1	26868373-
5		6745-71-5220	Clamp	1	26868373-
6		6745-71-5160	Cover	4	26868373-

FIG. A4219-001001 Fuel Injector

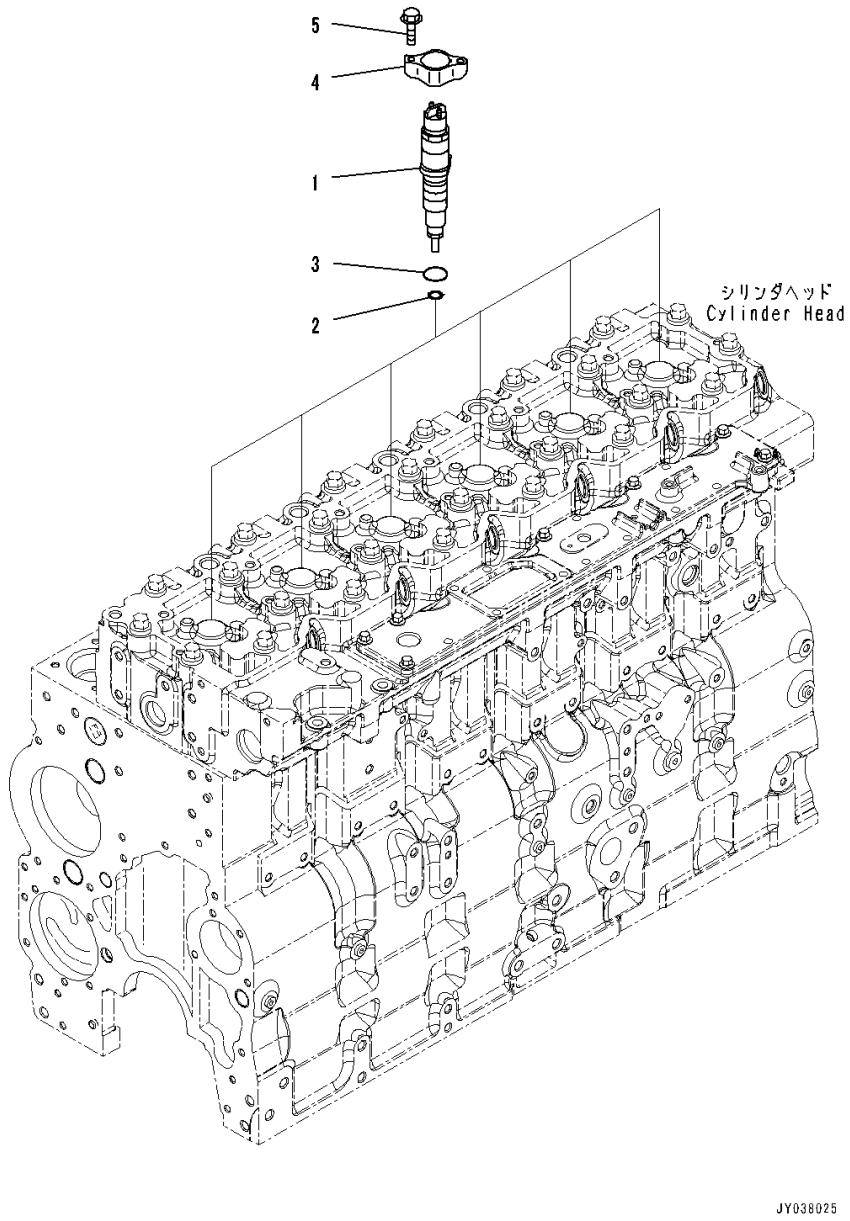

Index	Code	Part Number	Description	Qty	Serial Number
1		6745-12-3100	Injector	6	26868373-
2		6754-11-3130	• Gasket	1	26868373-
3		6754-11-3140	• O-ring	1	26868373-
4		6745-11-3110	Clamp	6	26868373-
5		6745-11-3150	Bolt	12	26868373-

FIG. APP50-001001A Fuel Injection Piping

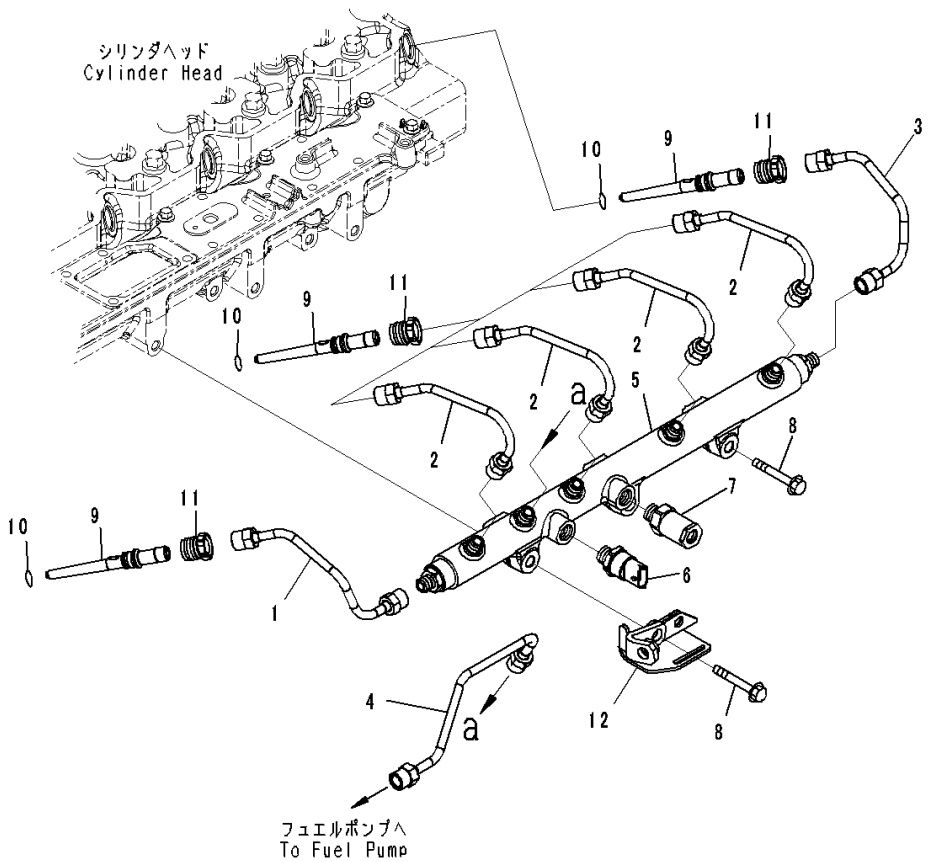

Index	Code	Part Number	Description	Qty	Serial Number
1		6745-71-4111	Tube,Fuel Supply, No.1	1	26883103-
2		6745-72-4210	Tube	4	26883496-
	A1	6745-71-4121	Tube,Fuel Supply,No.2,3,4,5	4	26883103-26883495
3		6745-71-4141	Tube,Fuel Supply, No.6	1	26883103-
4		6745-71-4150	Tube	1	26868373-
5		6745-71-4310	Manifold	1	26868373-
6		6754-72-1212	• Sensor, Pressure	1	26868373-
7		6745-71-4330	• Valve, Relief	1	26868373-
8		6732-61-4120	Bolt	3	26868373-
9		6754-71-5512	Connector Assembly	6	26879983-
10		6754-71-5550	• O-ring	1	26879983-
11		6754-71-5541	Retainer	6	26868373-
12		6745-71-5510	Brace	1	26868373-

FIG. AFT00-001001 Fuel Piping

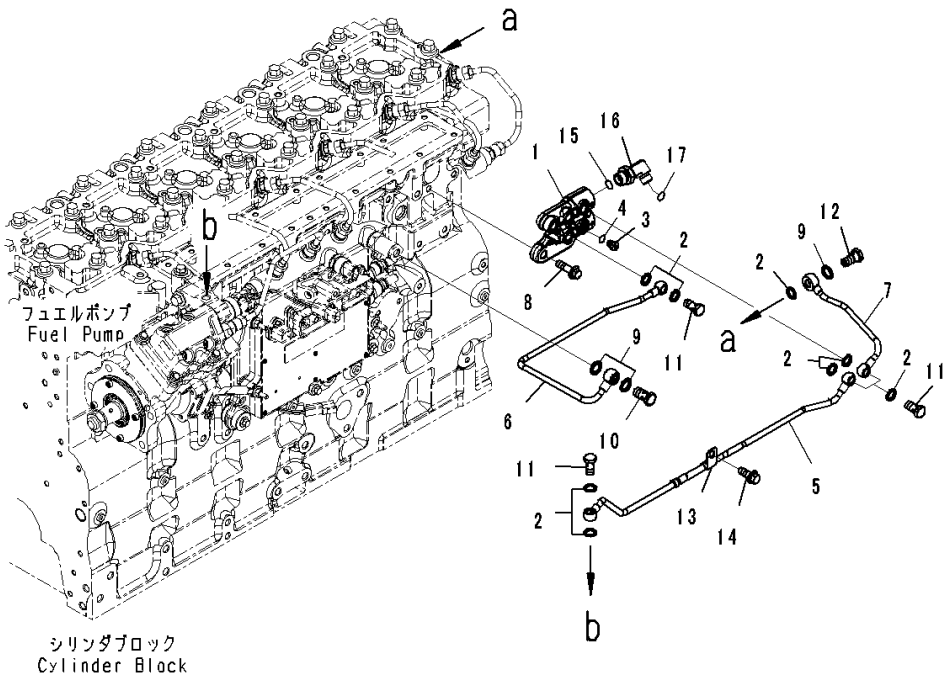

Index	Code	Part Number	Description	Qty	Serial Number
1		6745-71-5610	Connection	1	26868373-
2		6745-71-1130	Seal, Washer	9	26868373-
		6732-21-1960	Plug Assembly	1	26868373-
3	C1		• Plug	1	26868373-
4		6735-21-1970	• O-ring	1	26868373-
5		6745-71-5440	Tube	1	26868373-
6		6745-71-5460	Tube	1	26868373-
7		6745-71-5470	Tube	1	26868373-
8		6732-22-3110	Bolt	2	26868373-
9		6731-74-5910	Seal, Washer	3	26868373-
10		6732-71-5620	Screw	1	26868373-
11		6732-71-6510	Bolt, Joint	4	26868373-
12		6754-71-5430	Valve	1	26868373-
13		6745-71-5450	Clip	1	26868373-
14		6732-61-3140	Bolt	1	26868373-
15		6735-21-4160	O-ring	1	26868373-
16		207-62-83950	Elbow	1	26868373-
17		02896-11009	O-ring	1	26868373-

FIG. APH10-001001 Fuel Piping

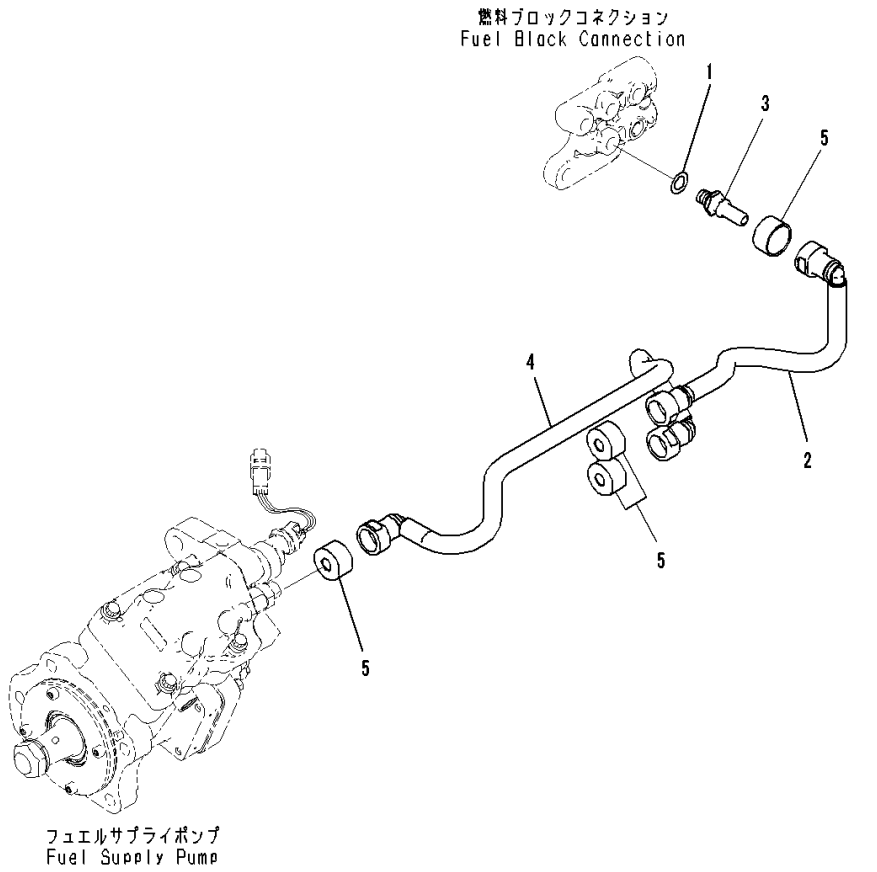

Index	Code	Part Number	Description	Qty	Serial Number
1		6745-71-1130	Seal, Washer	1	26868373-
2		6745-71-5690	Tube	1	26868373-
3		6745-71-6130	Connector	1	26868373-
4		6745-71-5230	Tube	1	26868373-
5		6745-71-5160	Cover	4	26868373-

FIG. AFT00-002001 Fuel Piping (For Biodiesel Fuel B30)

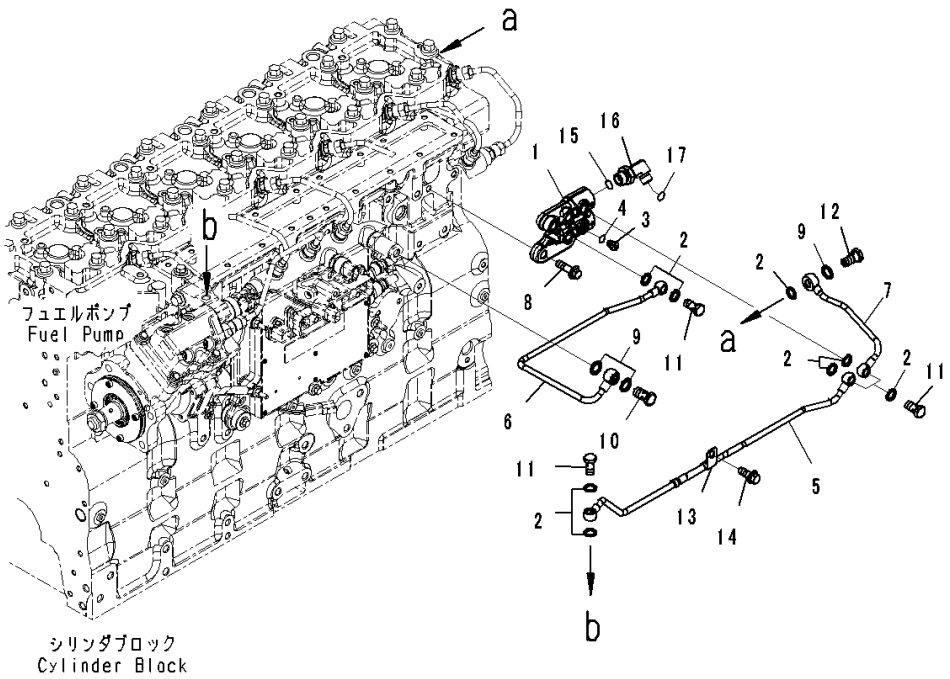

Index	Code	Part Number	Description	Qty	Serial Number
1		6745-71-5610	Connection	1	26884041-
2		6745-71-1130	Seal, Washer	9	26884041-
		6732-21-1960	Plug Assembly	1	26884041-
3	C1		• Plug	1	26884041-
4		6735-21-1970	• O-ring	1	26884041-
5		6745-71-5440	Tube	1	26884041-
6		6745-71-5460	Tube	1	26884041-
7		6745-71-5470	Tube	1	26884041-
8		6732-22-3110	Bolt	2	26884041-
9		6731-74-5910	Seal, Washer	3	26884041-
10		6732-71-5620	Screw	1	26884041-
11		6732-71-6510	Bolt, Joint	4	26884041-
12		6754-71-5430	Valve	1	26884041-
13		6745-71-5450	Clip	1	26884041-
14		6732-61-3140	Bolt	1	26884041-
15		6735-21-4160	O-ring	1	26884041-
16		207-62-83950	Elbow	1	26884041-
17		02896-61009	O-ring	1	26884041-

FIG. A4119-001001 Fuel Filter Cartridge

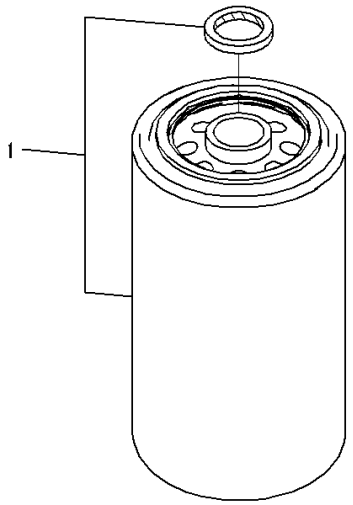

JY020322

Index	Code	Part Number	Description	Qty	Serial Number
1		600-319-3750	Cartridge	1	26868373-

FIG. B9999-504001 Fuel Prefilter

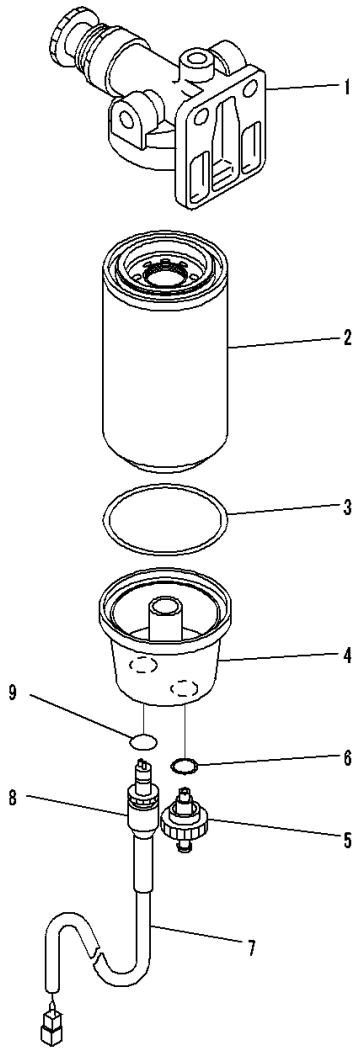

00065763

Index	Code	Part Number	Description	Qty	Serial Number
		6754-71-7402	Filter Assembly	1	
1		6754-71-7200	• Head	1	26868373-
		600-319-3602	• Filter Assembly	1	26868373-
		600-319-3610	• • Cartridge Assembly	1	26868373-
2	C1		• • • Cartridge	1	26868373-
3		600-311-3630	• • • Seal	1	26868373-
4		600-311-3640	• • Bowl	1	26868373-
		600-311-3660	• • Valve Assembly	1	26868373-
5	C1		• • • Valve	1	26868373-
6		600-311-3670	• • • Seal	1	26868373-
		600-311-3722	• • Sensor, Water-in-fuel	1	26868373-
7		600-311-3730	• • • Tube	1	26868373-
8	C1		• • • Sensor	1	26868373-
9		600-311-3690	• • • O-ring	1	26868373-

FIG. AFI00-001001 Fuel Inlet Fitting

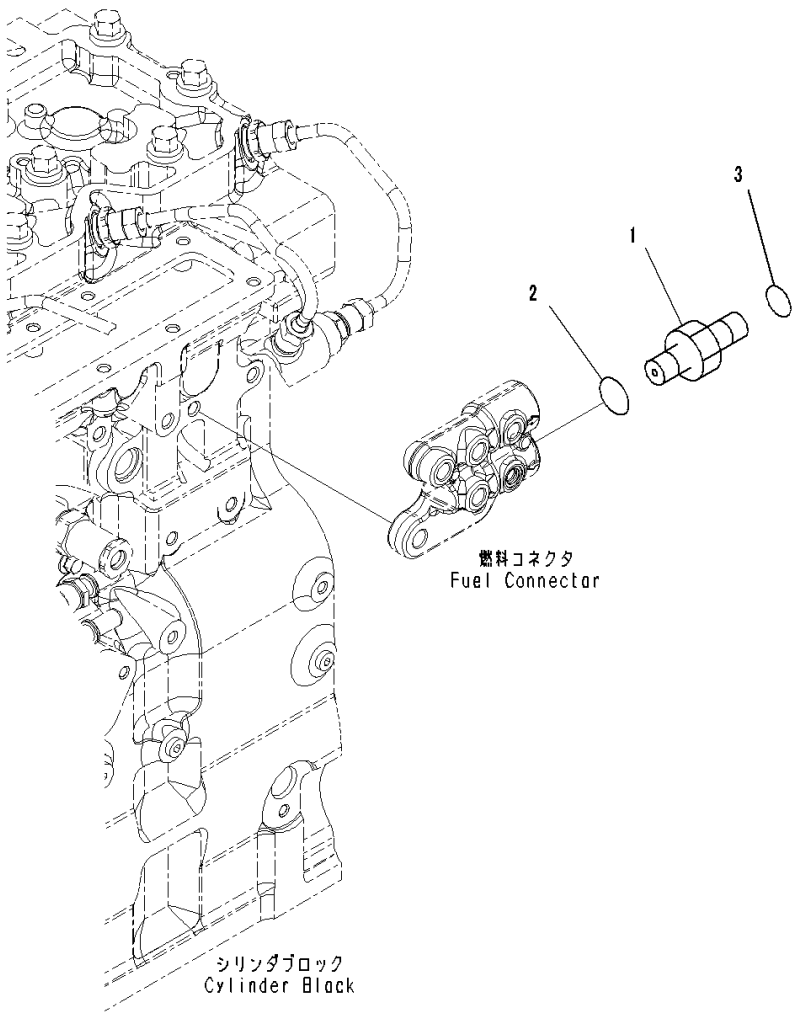

Index	Code	Part Number	Description	Qty	Serial Number
1		6745-71-5630	Union	1	26868373-
2		6216-74-6220	O-ring	1	26868373-
3		02896-11012	O-ring	1	26868373-

FIG. AFI00-002001 Fuel Inlet Fitting (For Biodiesel Fuel B30)

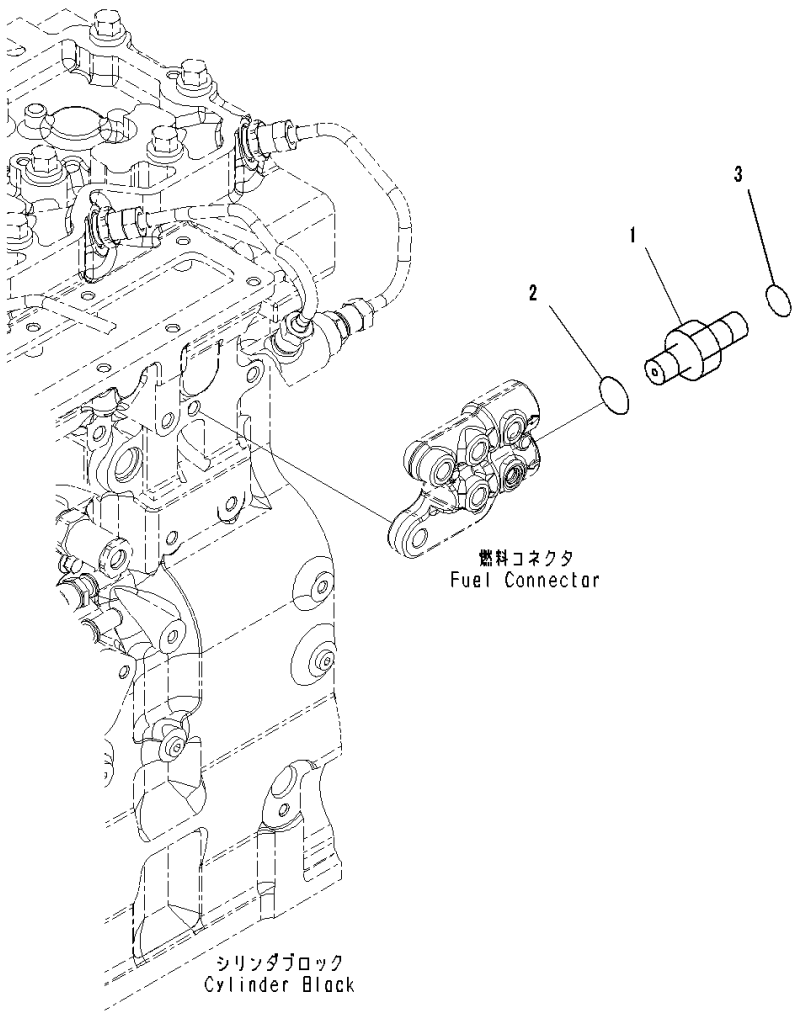

Index	Code	Part Number	Description	Qty	Serial Number
1		6745-71-5630	Union	1	26884041-
2		6216-74-6220	O-ring	1	26884041-
3		02896-61012	O-ring	1	26884041-

FIG. AFS20-001001A Fuel System Accessory

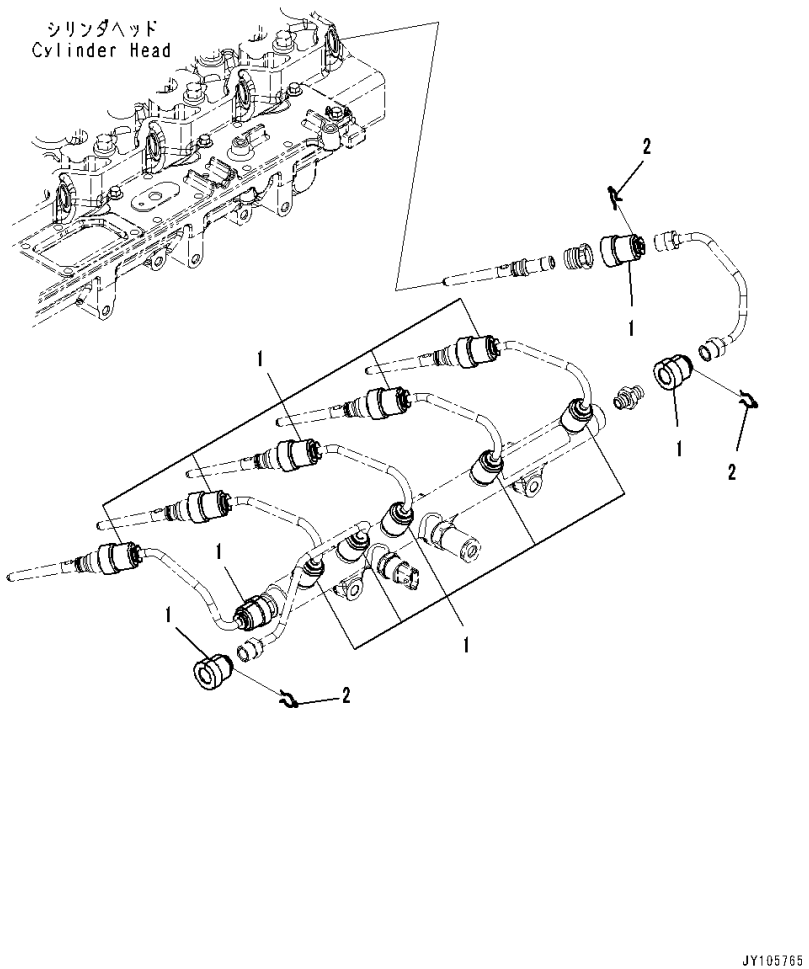

Index	Code	Part Number	Description	Qty	Serial Number
1		6754-71-9710	Cover	14	26884044-
2		6754-71-5750	Clip	14	26868373-

FIG. AFS00-001001 Fuel Transfer Pump

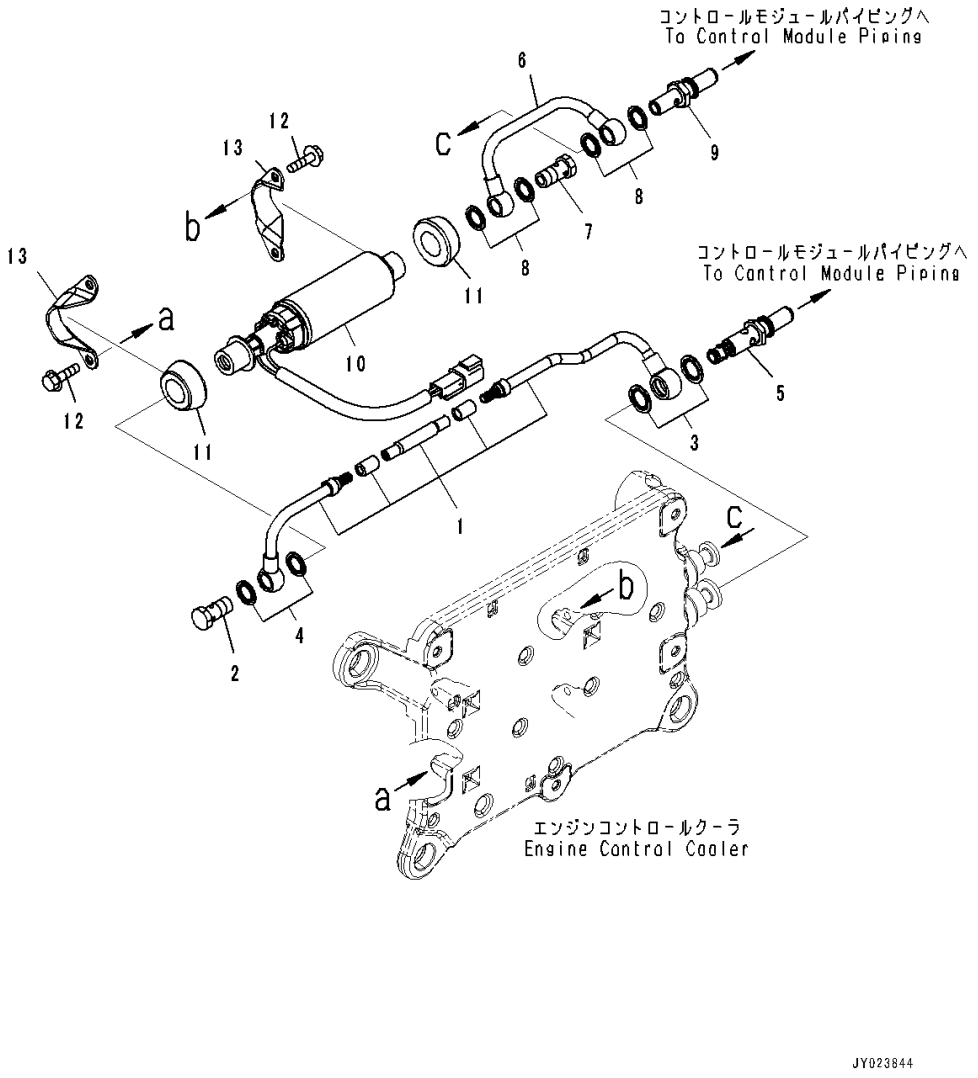

Index	Code	Part Number	Description	Qty	Serial Number
1		6745-71-5311	Tube	1	26868373-
2		6732-71-6510	Bolt, Joint	1	26868373-
3		6745-71-5860	Seal, Washer	2	26868373-
4		6745-71-1130	Seal, Washer	2	26868373-
5		6745-71-5391	Valve, Check	1	26868373-
6		6745-71-5410	Tube	1	26868373-
7		6732-71-6510	Bolt, Joint	1	26868373-
8		6745-71-1130	Seal, Washer	4	26868373-
9		6745-71-5430	Connector	1	26868373-
10		6745-71-1821	Pump Assembly,Fuel	1	26868373-
11		6745-71-1830	• Isolator	2	26868373-
12		6732-21-4180	Bolt	4	26868373-
13		6745-71-1860	Bracket	2	26868373-

ENGINE COOLING SYSTEM

FIG. AEC00-001001 Thermostat

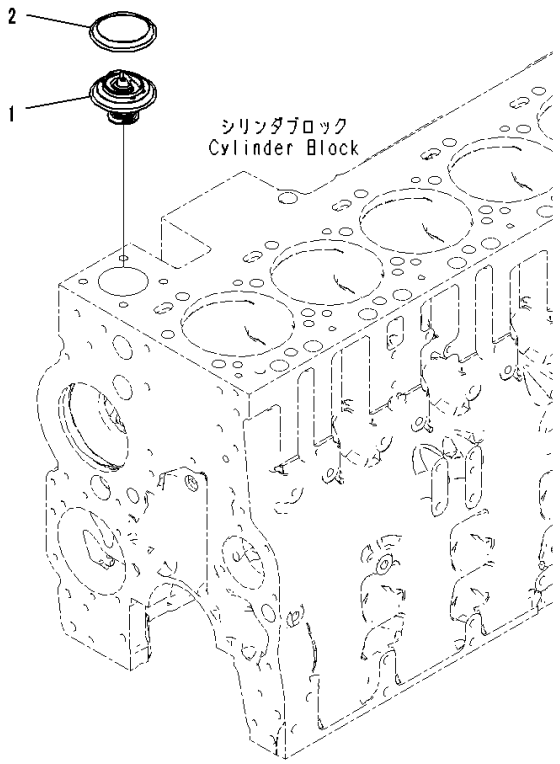

Index	Code	Part Number	Description	Qty	Serial Number
		6746-61-6240	Thermostat	1	26868373-
1	C1		• Thermostat	1	26868373-
2		6746-61-6230	• Seal Ring	1	26868373-

FIG. A5019-002001 Water Pump

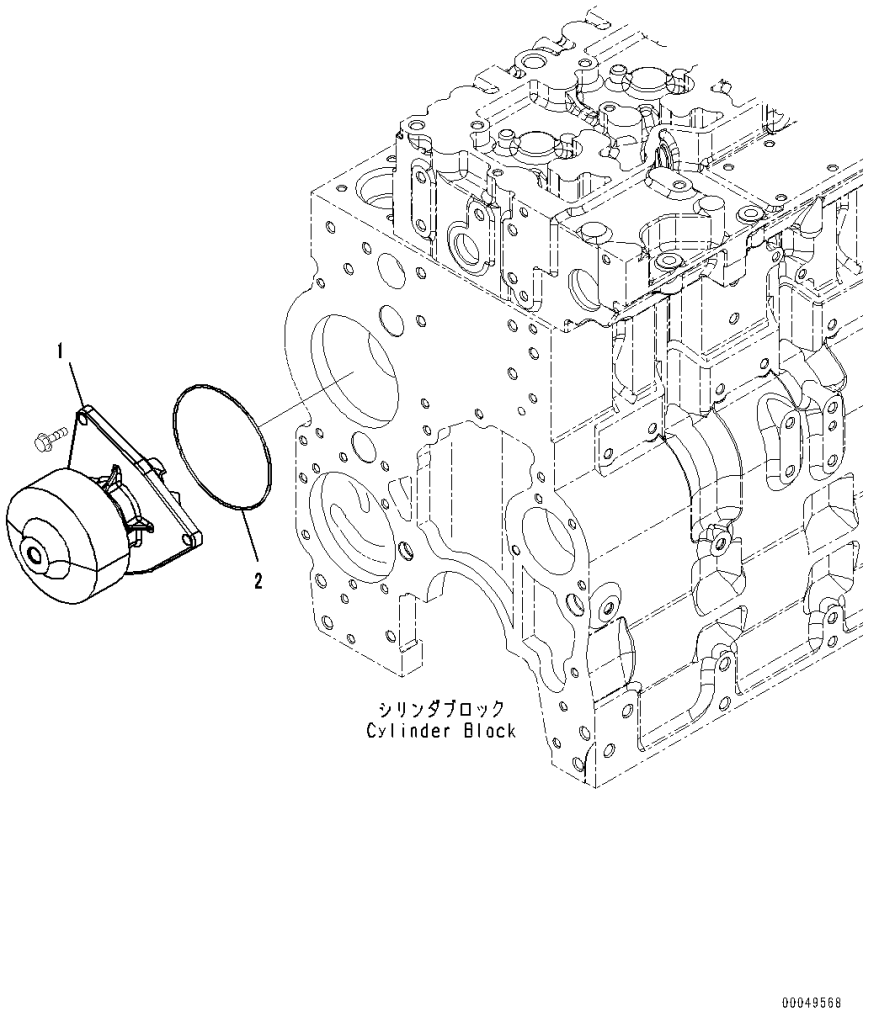

Index	Code	Part Number	Description	Qty	Serial Number
		6743-61-1533	Water Pump Assembly	1	26868373-
1	C1		• Pump	1	26868373-
2		6741-61-1520	• Seal	1	26868373-

FIG. AWP20-001001 Cooling Fan Belt Tensioner

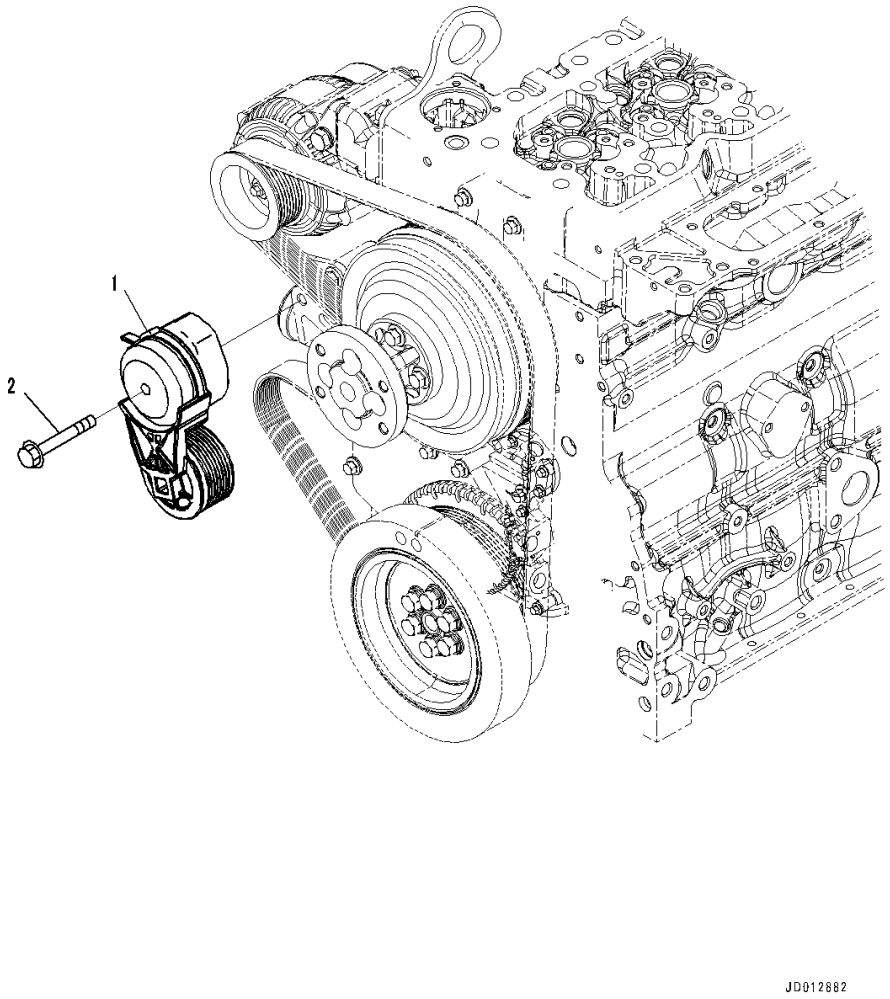

Index	Code	Part Number	Description	Qty	Serial Number
1		6754-61-4111	Tensioner	1	26868373-
2		6732-61-3260	Bolt	1	26868373-

FIG. AWP10-001001 Water Pump Drive Belt (For 60Amp. Alternator)

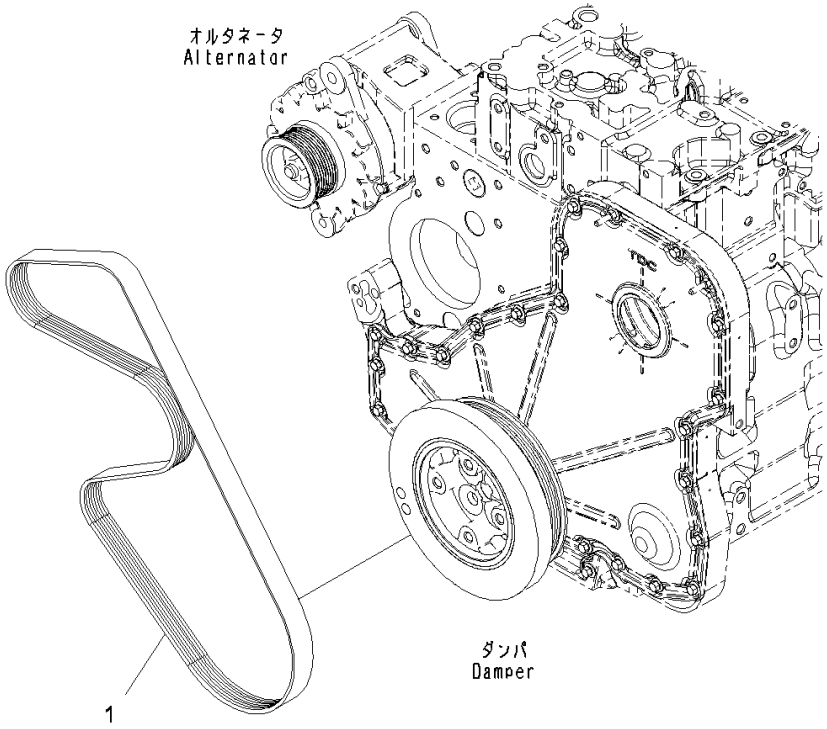

Index	Code	Part Number	Description	Qty	Serial Number
1		6743-62-3710	Belt	1	26868373-

FIG. AWP10-002001 Water Pump Drive Belt (For 90Amp. Alternator)

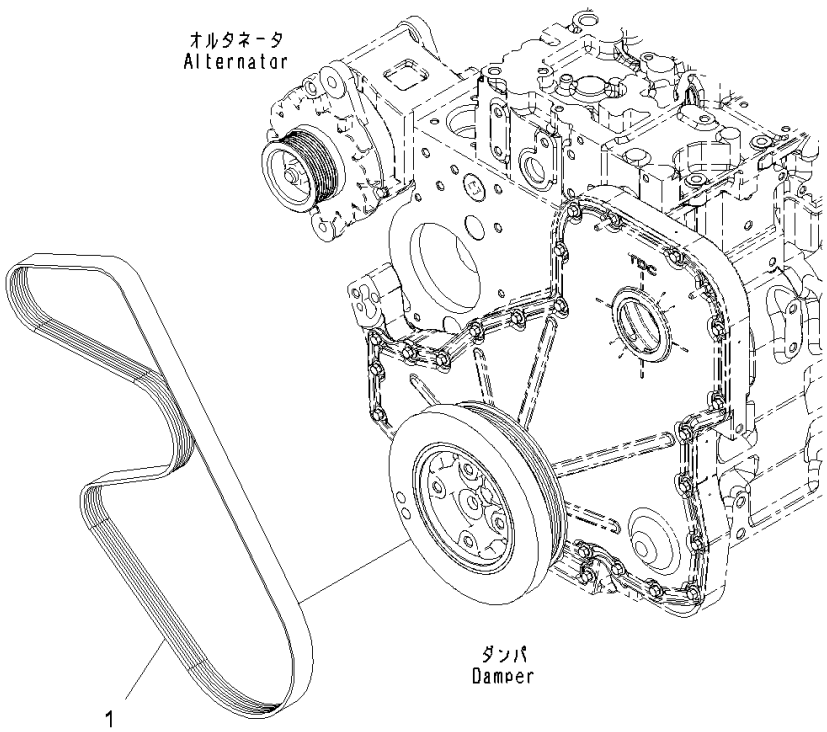

Index	Code	Part Number	Description	Qty	Serial Number
1		6732-82-3540	Belt	1	26868373-

FIG. AWO00-001001 Water Outlet Connector

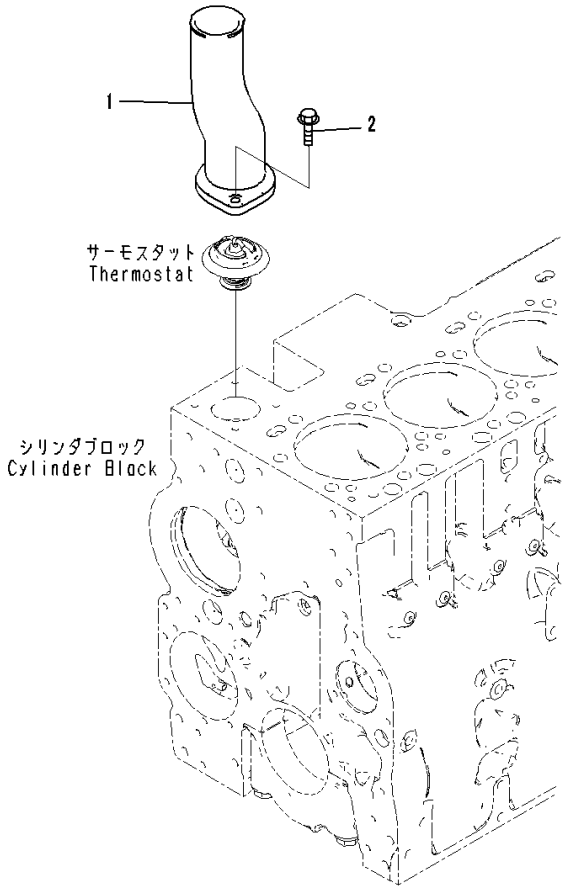

Index	Code	Part Number	Description	Qty	Serial Number
1		6745-61-6130	Connection	1	26868373-
2		01435-60825	Bolt	2	26868373-

FIG. AWI10-001001 Water Inlet Connector

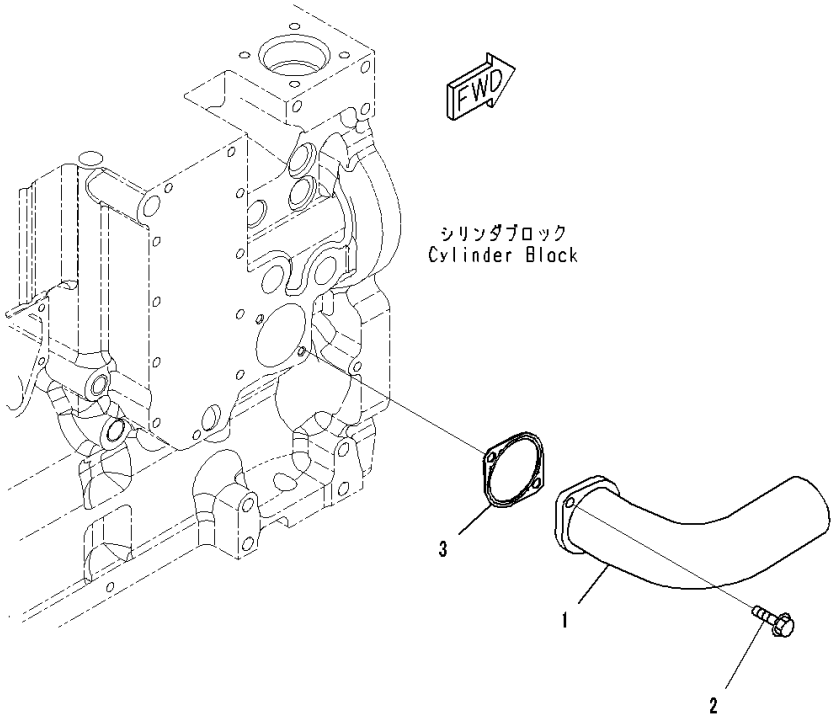

Index	Code	Part Number	Description	Qty	Serial Number
1		6743-61-6110	Connection	1	26868373-
2		01435-60820	Bolt	2	26868373-
3		6741-61-6131	Gasket	1	26879383-
	A2	6741-61-6130	Gasket	1	26868373-26879382

FIG. ATK00-001001 Plug

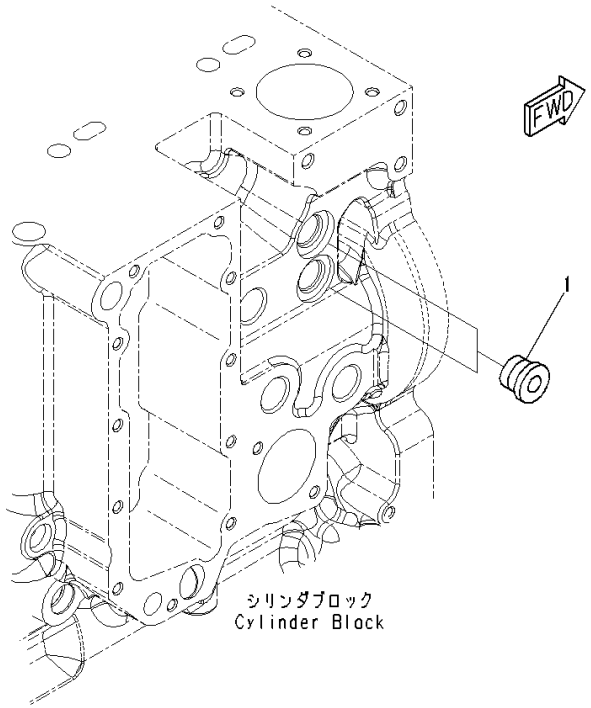

Index	Code	Part Number	Description	Qty	Serial Number
1		6216-14-6820	Plug Assembly	2	26868373-
		6216-14-6860	• O-ring	1	26868373-

FIG. AWP00-001001 Water Pump Mounting

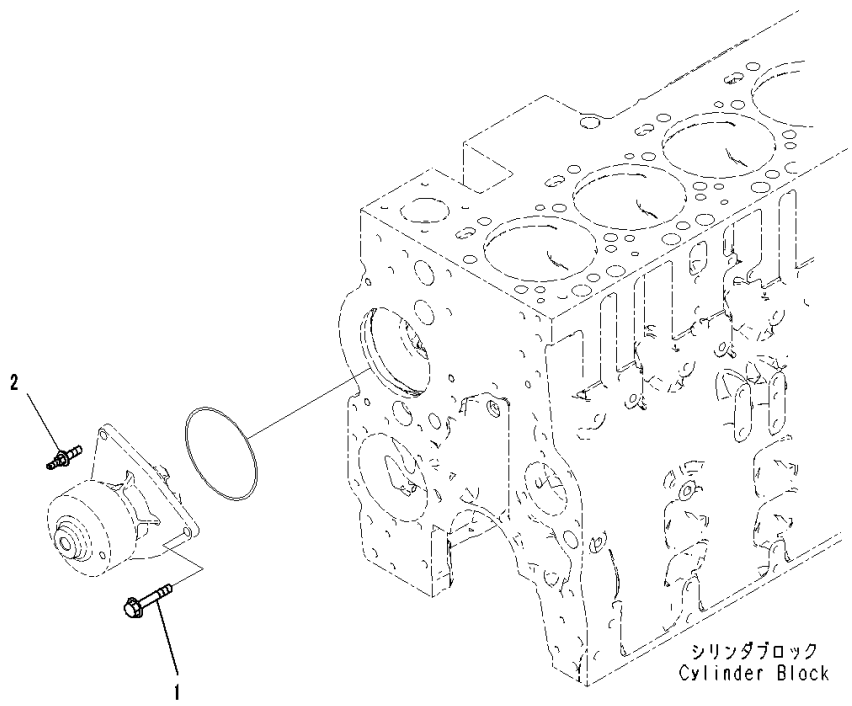

Index	Code	Part Number	Description	Qty	Serial Number
1		01435-00825	Bolt	2	26871855-
2		6742-01-5195	Screw	1	26871855-

ENGINE ELECTRICAL SYSTEM

FIG. AEE00-001001 Alternator (60Amp.)

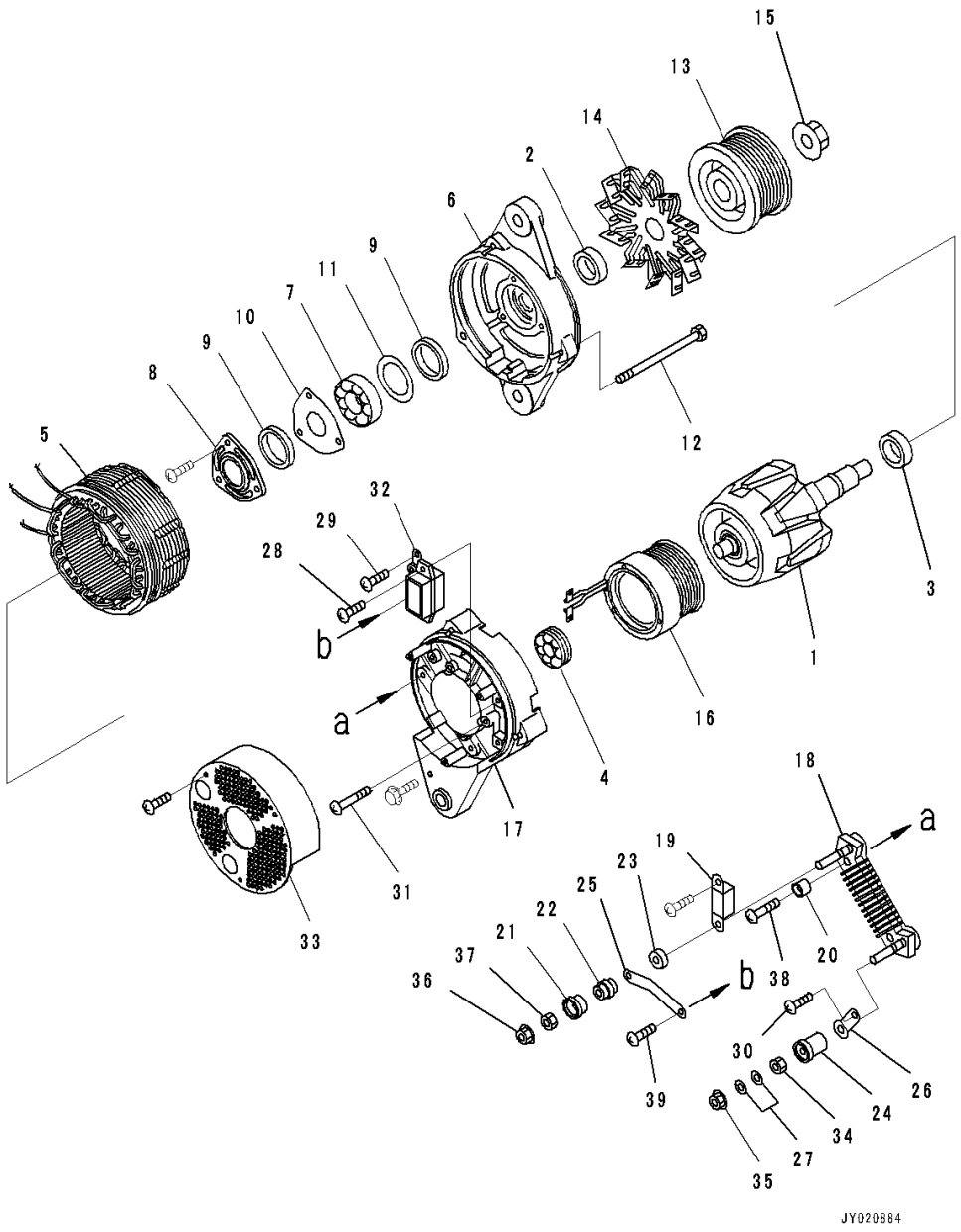

Index	Code	Part Number	Description	Qty	Serial Number
		600-861-6111	Alternator	1	26868373-
1		KD0-35100-0418	• Rotor Assembly	1	26868373-
2		KD0-35943-0240	• Collar	1	26868373-
3		KD0-35923-0160	• Collar	1	26868373-
4		KD0-09201-0980	• Bearing, Ball	1	26868373-
5		KD0-35200-0528	• Stator Assembly	1	26868373-
6		KD0-35300-0450	• Bracket Assembly	1	26868373-
7		KD0-09201-1450	• • Bearing	1	26868373-
8		KD0-35926-0070	• • Retainer	1	26868373-
9		KD0-35951-0060	• • Packing	2	26868373-
10		KD0-35926-0090	• • Retainer	1	26868373-
11		KD1-33926-0730	• • Retainer	1	26868373-
12		KD0-0275-06802	• Bolt	3	26868373-
13		KD0-35411-0648	• Pulley	1	26868373-
14		KD0-35421-0240	• Fan	1	26868373-
15		KD0-09006-0730	• Nut	1	26868373-
16		KD0-35120-0528	• Coil, Field	1	26868373-
		KD0-35700-1140	• Bracket Assembly	1	26868373-
17		KD0-35710-1330	• • Bracket	1	26868373-
18		KD0-35730-0700	• • Rectifier Assembly	1	26868373-
19		KD0-09170-2501	• • Condenser	1	26868373-
20		KD0-35943-0170	• • Bushing	2	26868373-
21		KD0-35943-0154	• • Bushing	1	26868373-
22		KD0-35923-0134	• • Collar	1	26868373-
23		KD0-35943-0160	• • Bushing	1	26868373-
24		KD0-35943-0140	• • Bushing	1	26868373-
25		KD0-35784-0210	• • Bar	1	26868373-
26		KD0-35784-0290	• • Bar,Plate	1	26868373-
27		KD0-09057-0220	• • Washer	2	26868373-
28		KD0-0055-05202	• • Screw	2	26868373-
29		KD0-0055-05122	• • Screw	2	26868373-
30		KD0-09011-3540	• • Screw	1	26868373-
31		KD0-0056-05302	• • Screw	2	26868373-
32		KD0-35719-0201	• • Regulator Assembly	1	26868373-
33		KD0-35761-0308	• Cover	1	26868373-
34		KD0-35902-0010	• • Nut	1	26868373-
35		KD0-09006-0370	• • Nut	1	26868373-
36		KD0-33902-0080	• • Nut	1	26868373-
37		KD0-33902-0090	• • Nut	1	26868373-
38		KD0-0056-05302	• • Screw	3	26868373-

FIG. AEE00-001001 Alternator (60Amp.)

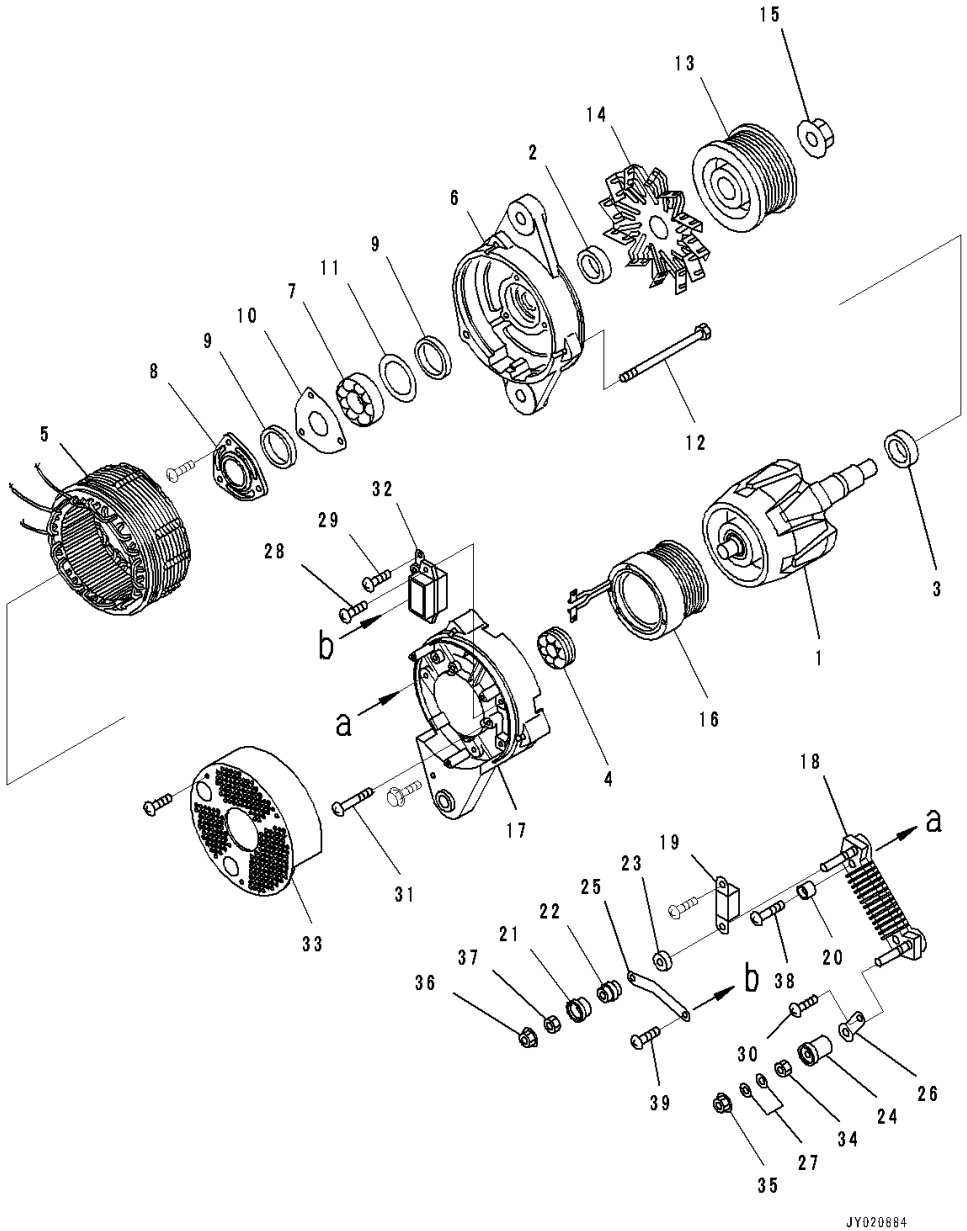

Index	Code	Part Number	Description	Qty	Serial Number
39		KD0-09011-3540	• • Screw	2	26868373-

FIG. AEE00-002001A Alternator (Inner Parts) (90Amp.)

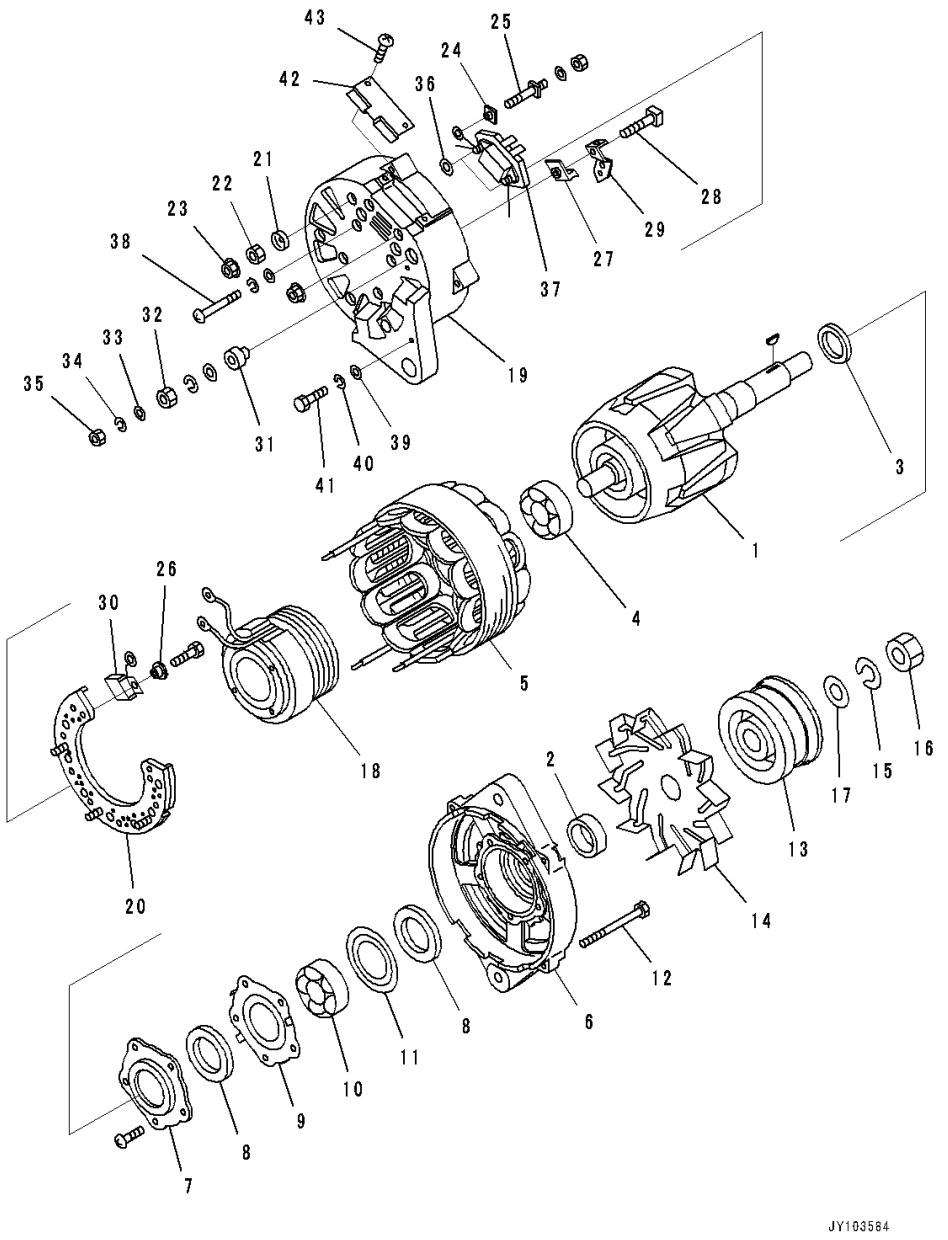

Index	Code	Part Number	Description	Qty	Serial Number
		600-861-9122	Alternator	1	26883496-
1		KD0-35100-0311	• Rotor Assembly	1	26883496-
2		KD1-33923-0890	• Collar	1	26883496-
3		KD1-35923-0030	• Collar	1	26883496-
4		KD0-09201-0770	• Bearing, Ball	1	26883496-
5		KD0-35200-0320	• Stator Assembly	1	26883496-
6		KD0-35300-0201	• Bracket Assembly	1	26883496-
7		KD0-35926-0080	• • Retainer	1	26883496-
8		KD0-35951-0080	• • Packing	2	26883496-
9		KD1-33926-0660	• • Retainer	1	26883496-
10		KD0-09201-1400	• • Bearing, Ball	1	26883496-
11		KD1-33926-0790	• • Retainer	1	26883496-
12		KD0-0083-08802	• Bolt	4	26883496-
13		KD0-35411-0650	• Pulley	1	26883496-
14		KD0-35421-0190	• Fan	1	26883496-
15		KD1-0335-20002	• Washer, Spring	1	26883496-
16		KD0-0290-20022	• Nut	1	26883496-
17		KD1-35921-0010	• Washer	1	26883496-
18		KD0-35120-0250	• Coil Assembly, Field	1	26883496-
		KD0-35700-0765	• Bracket Assembly	1	26883496-
19		KD0-35710-0890	• • Bracket	1	26883496-
20		KD0-35730-1200	• • Rectifier Assembly	1	26883496-
21		KD0-35943-0211	• • Bushing	1	26883496-
22		KD0-33902-0090	• • Nut	1	26883496-
23		KD0-33902-0080	• • Nut	6	26883496-
24		KD1-33943-0870	• • Bushing	1	26883496-
25		KD0-33901-0630	• • Bolt	1	26883496-
26		KD1-33943-0450	• • Bushing	2	26883496-
27		KD0-09103-0451	• • Bushing	1	26883496-
28		KD0-09001-5280	• • Bolt	1	26883496-
29		KD0-35784-0224	• • Bar	1	26883496-
30		KD0-09170-1860	• • Condenser	1	26883496-
31		KD0-35943-0100	• • Bushing	1	26883496-
32		KD0-33902-0100	• • Nut	1	26883496-
33		KD1-0331-08020	• • Washer	2	26883496-
34		KD1-0335-08002	• • Washer, Spring	2	26883496-
35		KD0-0291-08010	• • Nut	1	26883496-
36		KD0-35923-0120	• • Collar	2	26883496-
37		KD7-35719-0183	• • Regulator Assembly	1	26883496-
38		KD1-0020-06452	• Screw	4	26883496-

FIG. AEE00-002001A Alternator (Inner Parts) (90Amp.)

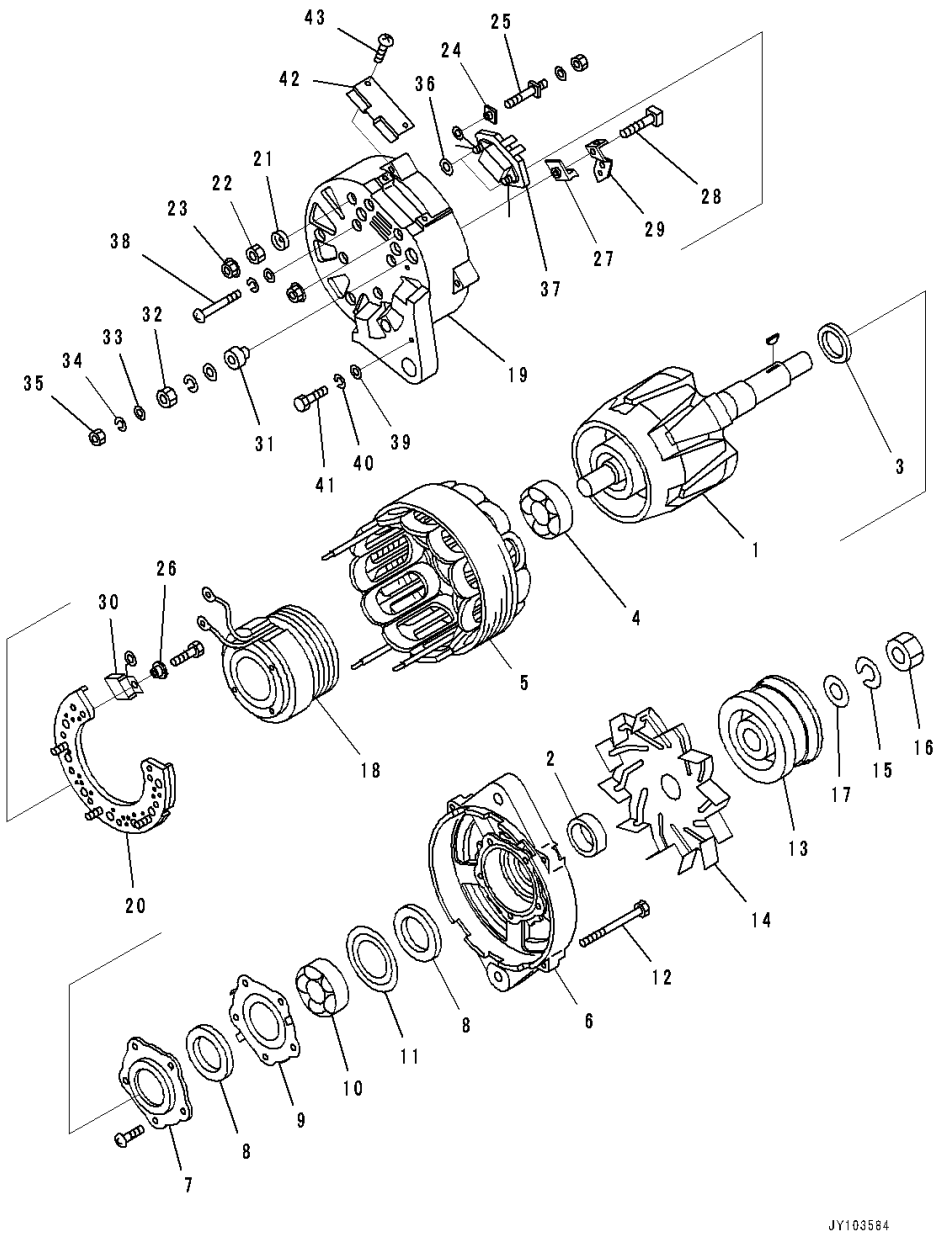

Index	Code	Part Number	Description	Qty	Serial Number
39		KD1-0330-06012	• Washer,Plain	5	26883496-
40		KD1-0335-06002	• Washer, Spring	5	26883496-
41		KD0-0080-06142	• Bolt	1	26883496-
42		KD0-35761-0190	• Cover	1	26883496-
43		KD0-0055-05122	• Screw	2	26883496-

FIG. AEH20-002001 Alternator Mounting (60Amp.)

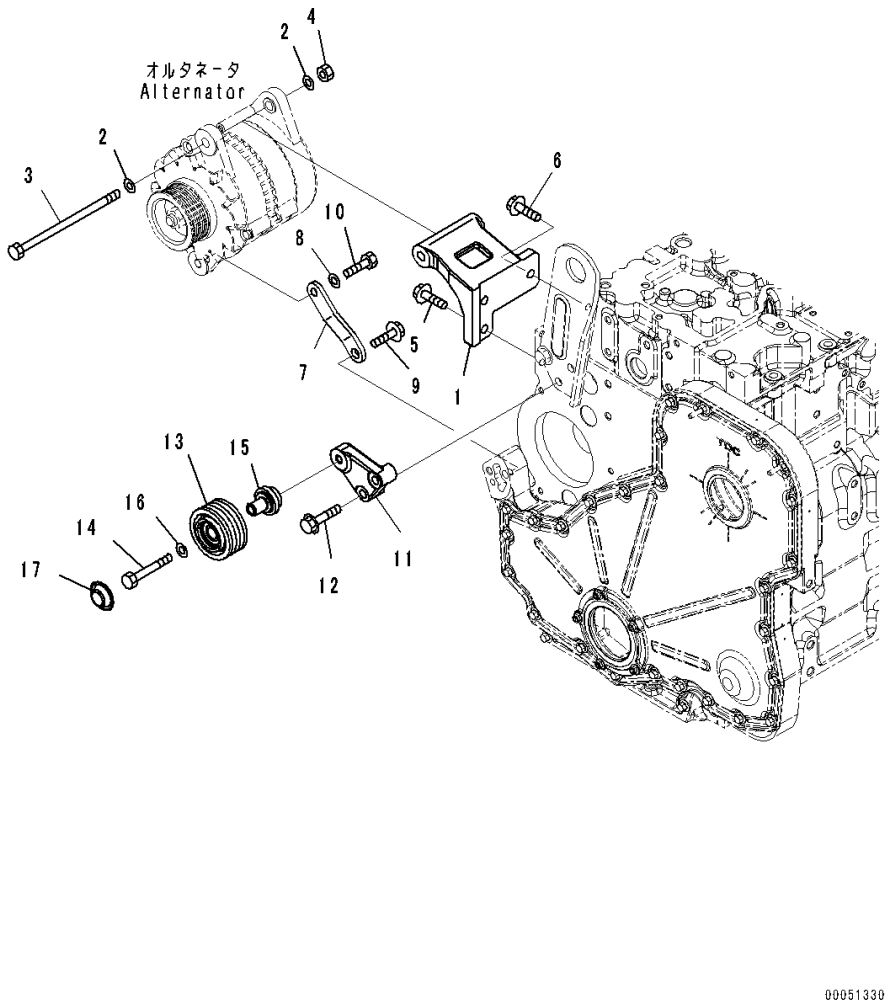

Index	Code	Part Number	Description	Qty	Serial Number
1		6741-81-6520	Bracket	1	26868373-
2		01643-31232	Washer	2	26868373-
3		6745-81-6210	Bolt	1	26868373-
4		01580-11210	Nut	1	26868373-
5		01435-61025	Bolt	1	26868373-
6		01435-61030	Bolt	2	26868373-
7		6741-81-6510	Brace	1	26868373-
8		01643-31232	Washer	1	26868373-
9		01435-01020	Bolt	1	26868373-
10		01050-31230	Bolt	1	26868373-
11		6745-61-4130	Support	1	26868373-
12		6745-61-4230	Screw	2	26868373-
13		6743-61-3441	Pulley	1	26868373-
14		6745-61-4120	Bolt	1	26868373-
15		6742-01-5123	Shaft	1	26868373-
16		01643-31032	Washer	1	26868373-
17		6742-01-4560	Cover	1	26868373-

FIG. AEH20-001001 Alternator Mounting (90Amp.)

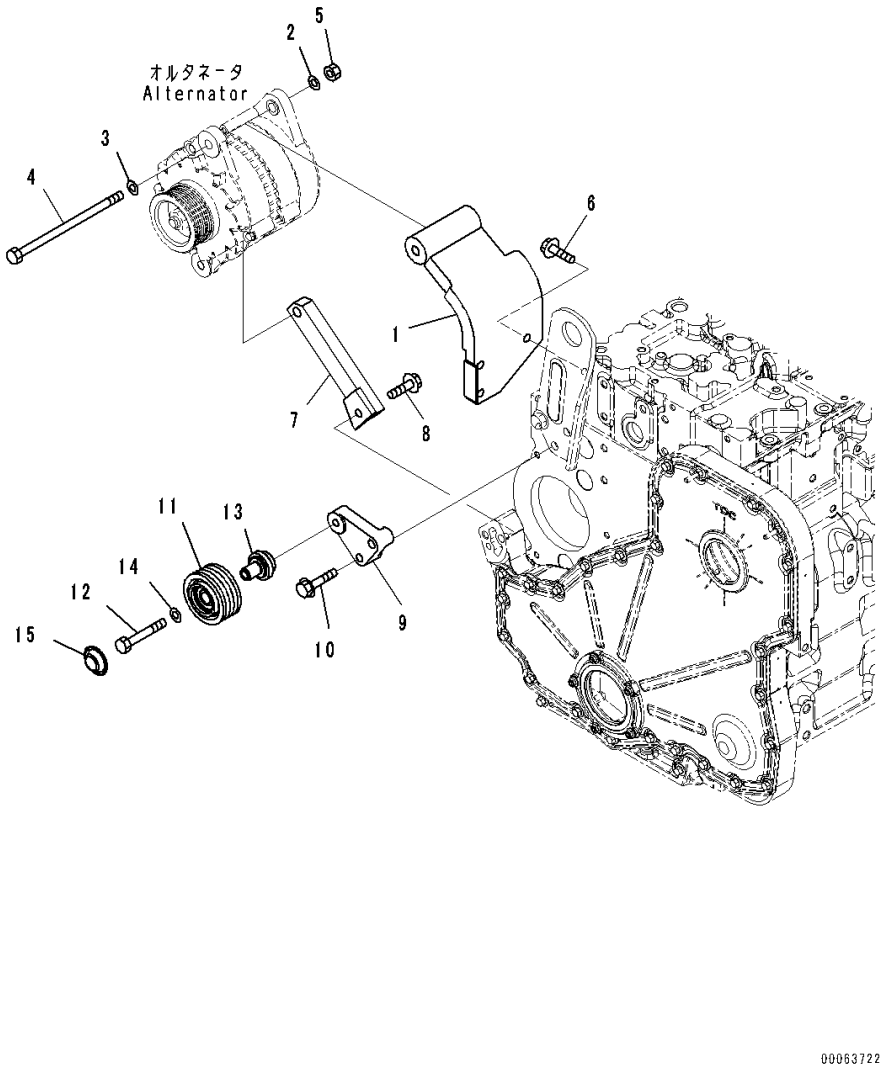

Index	Code	Part Number	Description	Qty	Serial Number
1		6745-81-8140	Bracket	1	26868373-
2		01643-31232	Washer	1	26868373-
3		6732-81-6880	Washer	1	26868373-
4		6745-81-6220	Bolt	1	26868373-
5		01582-11210	Nut	1	26868373-
6		6216-74-6190	Bolt	3	26868373-
7		6745-81-8150	Bracket	1	26868373-
8		01435-01055	Bolt	1	26868373-
9		6745-61-4130	Support	1	26868373-
10		6745-61-4230	Screw	2	26868373-
11		6743-61-3441	Pulley	1	26868373-
12		6745-61-4120	Bolt	1	26868373-
13		6742-01-5123	Shaft	1	26868373-
14		01643-31032	Washer	1	26868373-
15		6742-01-4560	Cover	1	26868373-

FIG. A6010-001001 Alternator Cover (60Amp.)

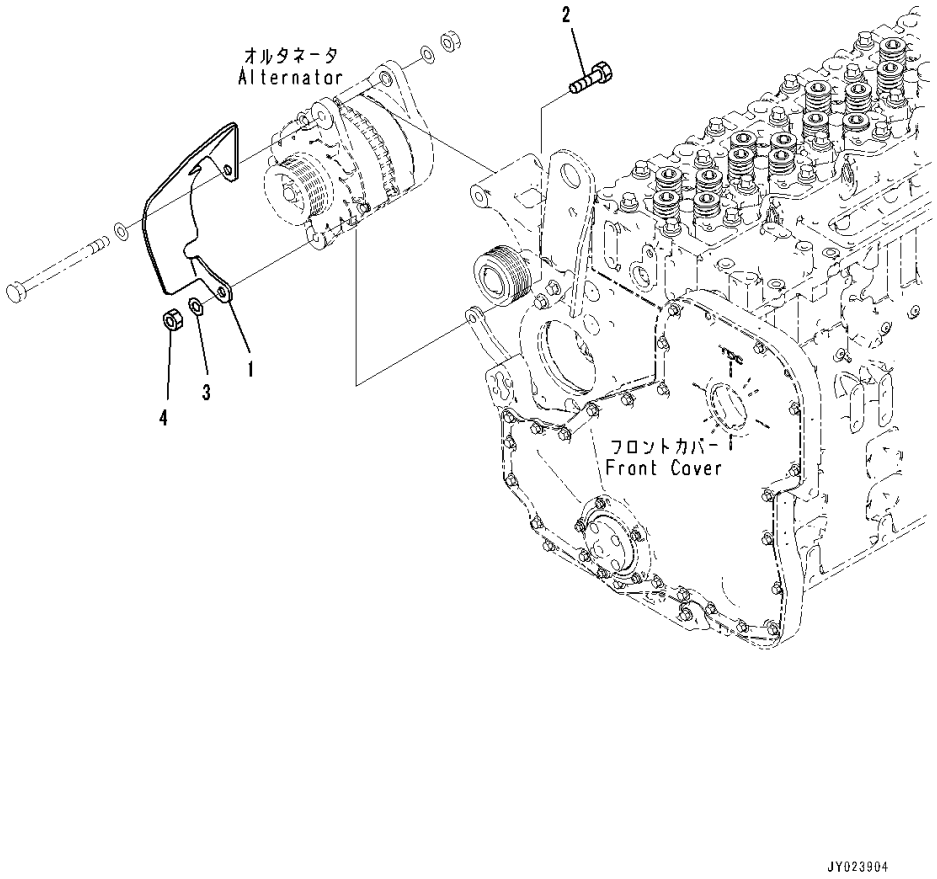

Index	Code	Part Number	Description	Qty	Serial Number
1		6745-81-6260	Cover	1	26868373-
2		6745-81-6230	Bolt	1	26868373-
3		01643-31232	Washer	1	26868373-
4		01582-11210	Nut	1	26868373-

FIG. A6010-002001 Alternator Cover (90Amp.)

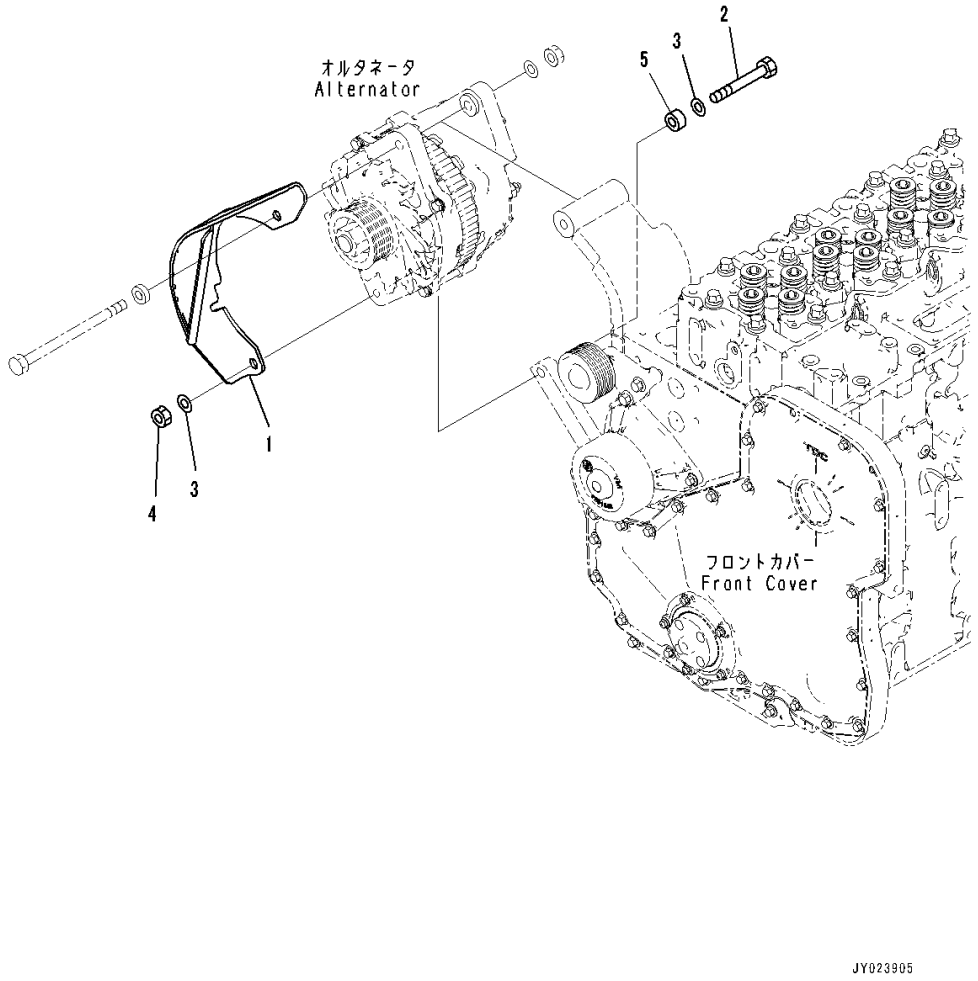

Index	Code	Part Number	Description	Qty	Serial Number
1		6745-81-6250	Cover	1	26868373-
2		6745-81-6240	Bolt	1	26868373-
3		01643-31232	Washer	2	26868373-
4		01582-11210	Nut	1	26868373-
5		6162-63-3910	Spacer	1	26868373-

FIG. AST00-001001A Starting Motor (7.5KW)

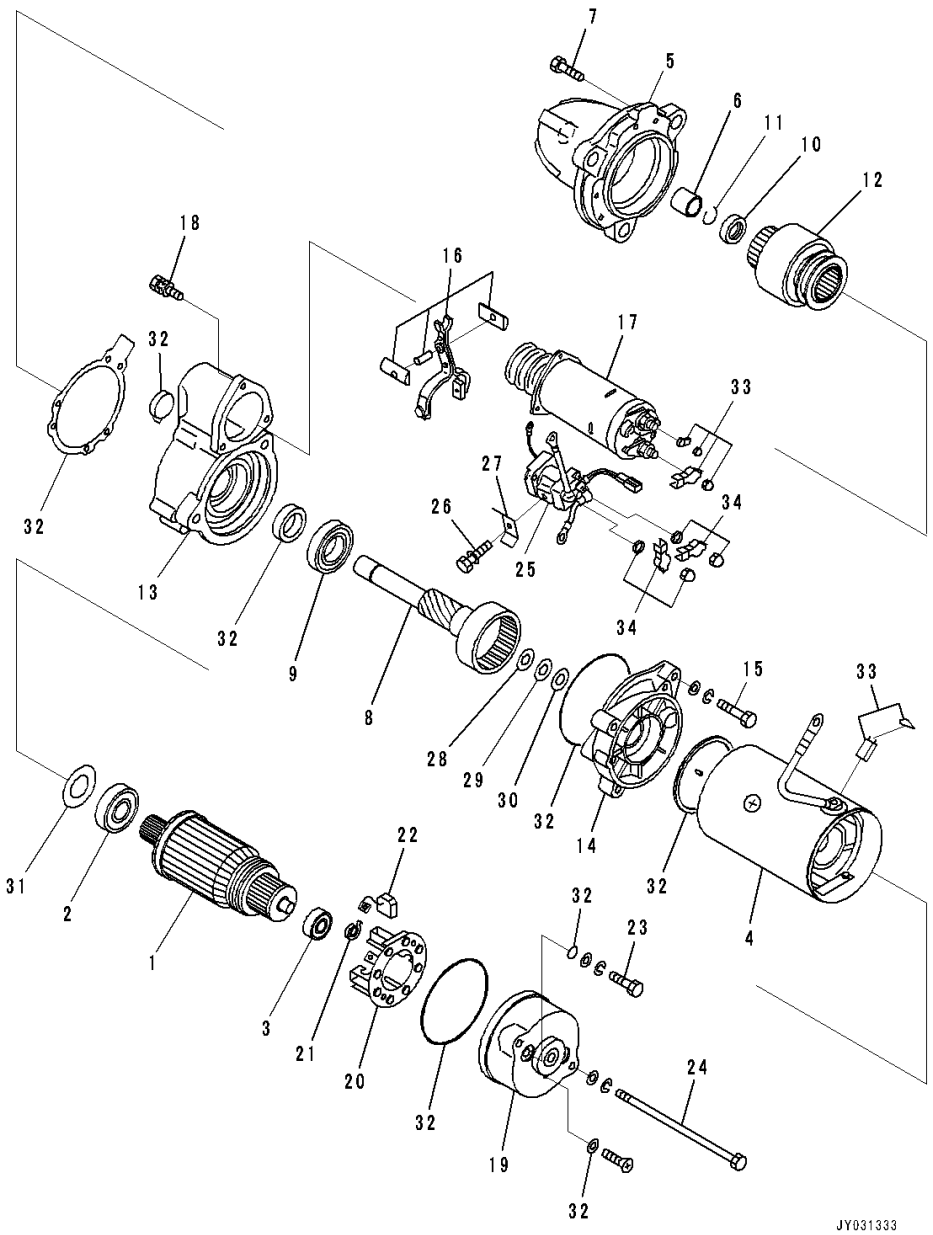

Index	Code	Part Number	Description	Qty	Serial Number
		600-863-5712	Starting Motor Assembly	1	26871811-
1		KD0-23100-0251	• Armature Assembly	1	26871811-
2		KD1-0454-62047	• • Bearing, Ball	1	26871811-
3		KD1-0454-62007	• • Bearing, Ball	1	26871811-
4		KD0-23200-0334	• Yoke Assembly	1	26871811-
5		KD0-23310-1734	• Bracket	1	26871811-
6		KD7-23351-0085	• • Metal	1	26871811-
7		KD1-0240-06305	• • Bolt	6	26871811-
8		KD7-23120-0310	• Shaft Assembly	1	26871811-
9		KD1-0454-60067	• • Bearing, Ball	1	26871811-
10		KD1-23181-0020	• • Stopper	1	26871811-
11		KD1-23914-0020	• • Ring	1	26871811-
12		KD1-23500-0974	• Clutch Assembly	1	26871811-
13		KD0-23600-0460	• Bracket Assembly	1	26871811-
14		KD0-23611-0692	• Bracket	1	26871811-
15		KD1-0240-08405	• Bolt	3	26871811-
16		KD7-23320-0060	• Shift Lever Assembly	1	26871811-
17		KD0-47100-0244	• Switch Assembly, Magnetic	1	26871811-
18		KD0-0274-06202	• Bolt	3	26871811-
		KD7-23700-0524	• Bracket Assembly	1	26871811-
19		KD0-23700-0130	• Bracket Assembly	1	26871811-
20		KD0-23750-0124	• Brush Assembly	1	26871811-
21		KD1-23913-0040	• • Spring	4	26871811-
22		KD0-23740-0254	• • Brush	4	26871811-
23		KD0-23901-0170	• Bolt	2	26871811-
24		KD0-09001-4580	• Bolt	2	26871811-
25		KD0-25000-8333	• Switch	1	26871811-
26		KD0-0270-06402	• Bolt	1	26871811-
27		KD1-47927-1250	• Holder	1	26871811-
28		KD1-23921-0130	• Washer	1	26871811-
29		KD1-23921-0140	• Washer	1	26871811-
30		KD1-23941-0040	• Washer, Insulate	1	26871811-
31		KD0-23921-0230	• Washer	1	26871811-
32		KD7-09210-2830	• Seal Assembly	1	26871811-
33		KD7-47761-0010	• Cover Assembly	1	26871811-
34		KD7-47761-0030	• Cover Assembly	1	26871811-

FIG. ASM00-001001 Starting Motor Mounting (7.5KW,11KW)

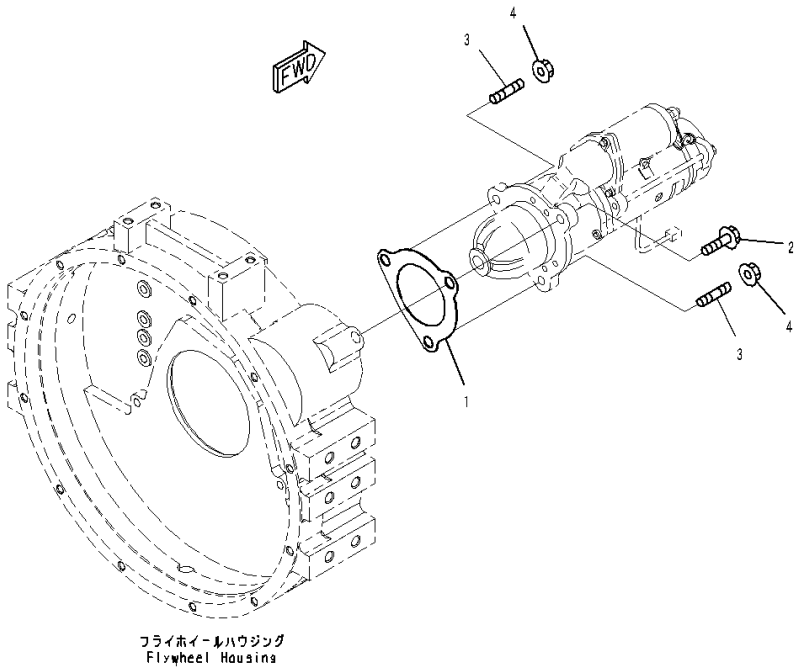

Index	Code	Part Number	Description	Qty	Serial Number
1		6221-81-6810	Gasket	1	26868373-
2		01435-01240	Bolt	1	26868373-
3		6743-81-6310	Stud	2	26868373-
4		01584-01210	Nut	2	26868373-

FIG. AWR00-001001 Wiring Harness

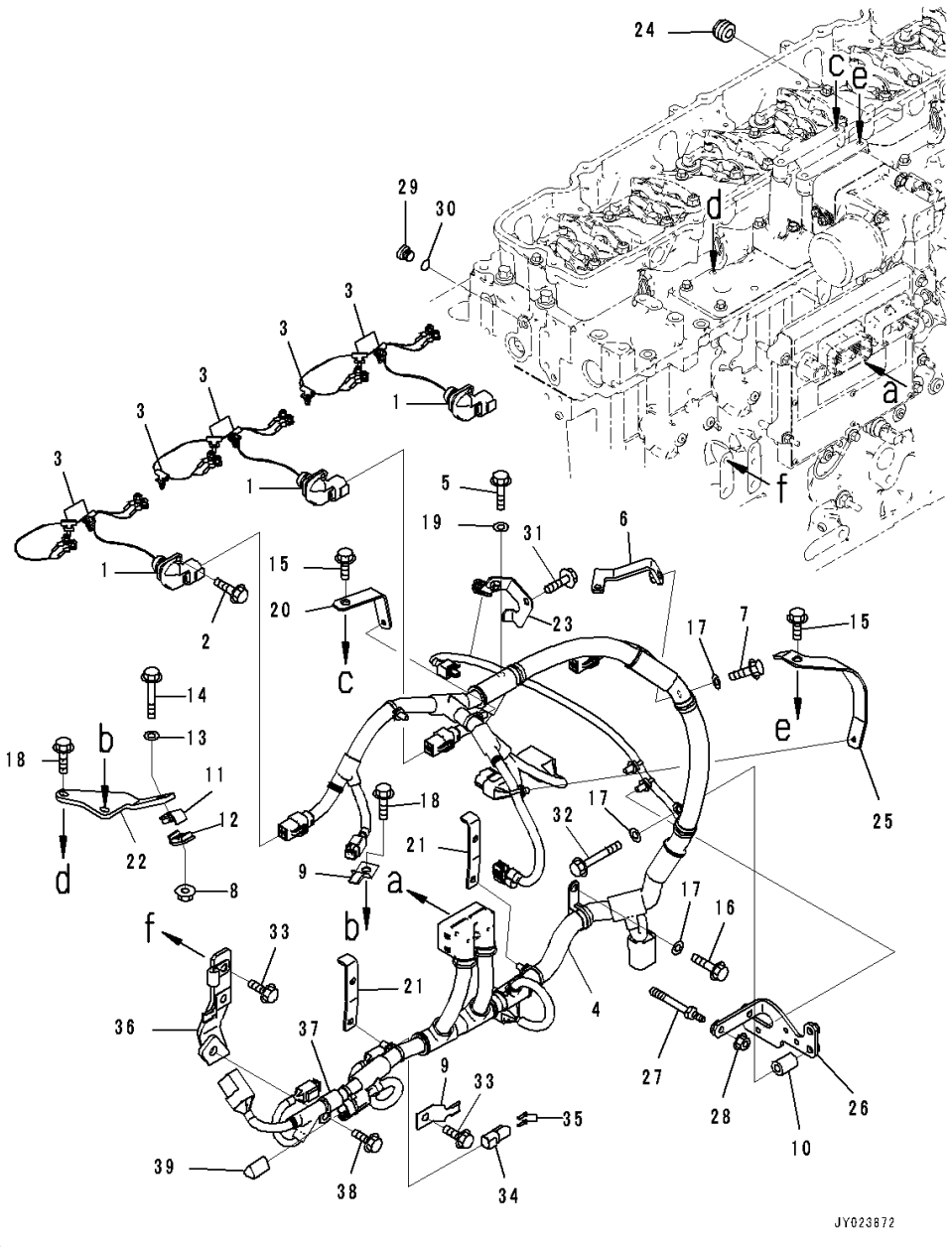

Index	Code	Part Number	Description	Qty	Serial Number
1		6745-81-9240	Wiring Harness	3	26868373-
2		6732-21-4180	Bolt	3	26868373-
3		6745-81-9390	Clip	8	26868373-
4		6745-81-9230	Wiring Harness	1	26868373-
5		6742-01-3770	Bolt	1	26868373-
6		6745-81-9710	Bracket	1	26868373-
7		01435-60820	Bolt	1	26868373-
8		01584-00605	Nut	1	26868373-
9		08193-20010	Clip	2	26868373-
10		6130-12-4581	Spacer	1	26868373-
11		6155-71-5810	Clamp	1	26868373-
12		6155-71-5820	Clamp	1	26868373-
13		01643-30623	Washer	1	26868373-
14		6745-81-9430	Bolt	1	26868373-
15		6732-61-3140	Bolt	2	26868373-
16		01435-60816	Bolt	1	26868373-
17		01640-20816	Washer	3	26868373-
18		01435-60835	Bolt	2	26868373-
19		01640-20716	Washer	1	26868373-
20		6745-81-6160	Brace	1	26868373-
21		6745-81-9740	Bracket	2	26868373-
22		6745-81-9750	Brace	1	26868373-
23		6745-81-9810	Bracket	1	26868373-
24		6745-81-9771	Bushing	1	26868373-
25		6745-81-6170	Brace	1	26868373-
26		6745-81-9790	Brace	1	26868373-
27		6745-81-9580	Bolt	2	26868373-
28		6732-71-3210	Nut	2	26868373-
		6735-21-1910	Plug Assembly	1	26868373-
29		6735-21-1920	• Plug	1	26868373-
30		6735-21-1930	• O-ring	1	26868373-
31		6216-74-6180	Bolt	2	26868373-
32		6754-81-9390	Bolt	1	26868373-
33		6216-54-7320	Bolt	3	26868373-
34	C1		Connector Assembly	1	26868373-
35		08191-00770	Plug, Connector	2	26868373-
36		6745-81-9820	Brace	1	26868373-
37		600-051-2160	Clip	1	26868373-
38		01435-01020	Bolt	1	26868373-
39	C1		Connector Body Assembly	1	26868373-

FIG. A6810-001001 Wiring Harness Bracket

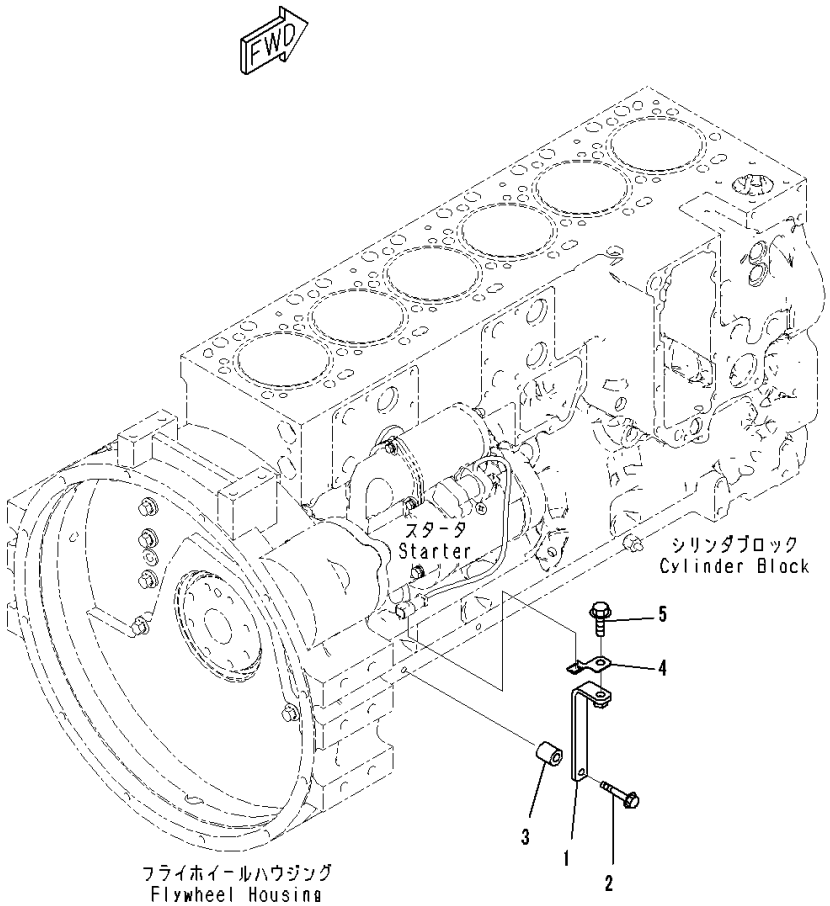

Index	Code	Part Number	Description	Qty	Serial Number
1		6745-81-9830	Bracket	1	26868373-
2		01435-00845	Bolt	1	26868373-
3		144-874-7470	Sheet	1	26868373-
4		08193-20010	Clip	1	26868373-
5		01435-01020	Bolt	1	26868373-

ENGINE ACCESSORIES AND OTHERS

FIG. A4719-001001 Engine Controller

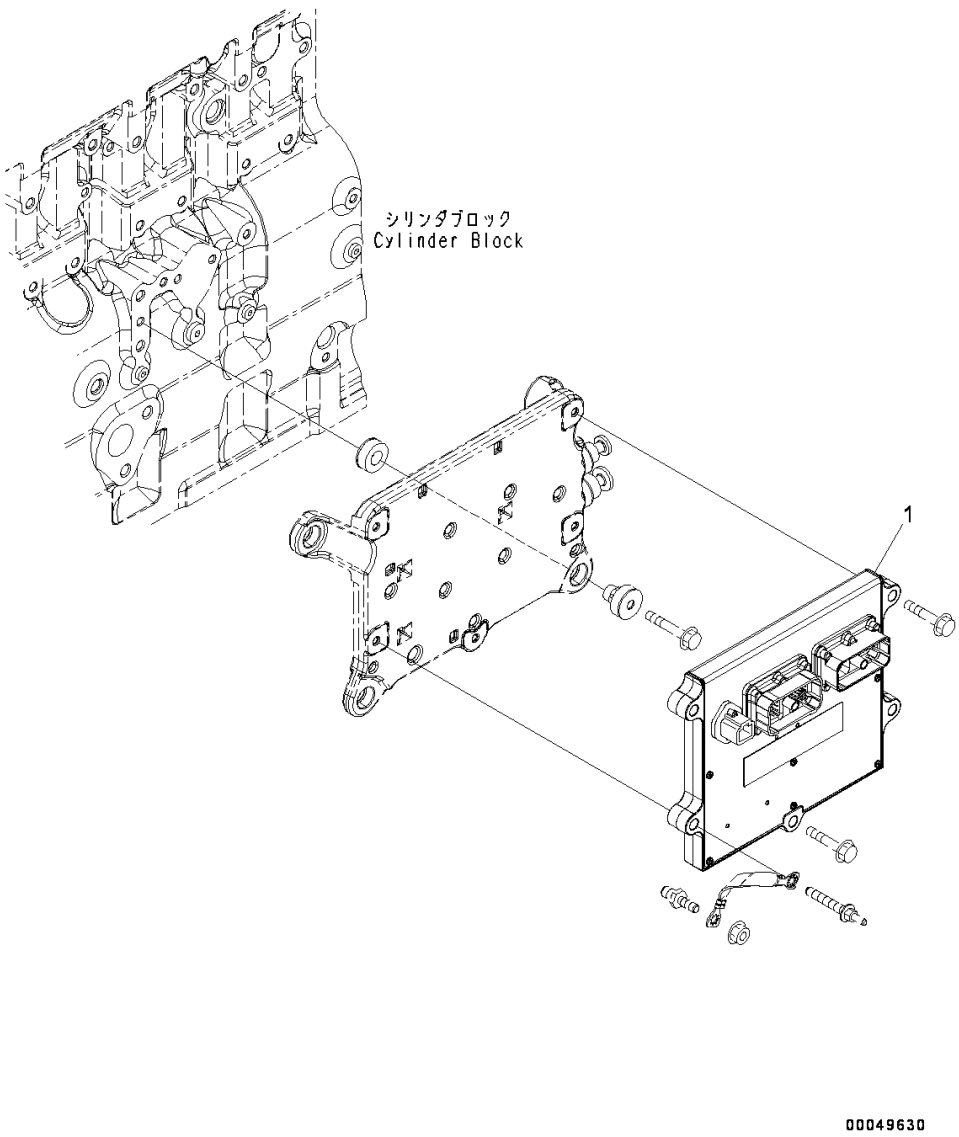

Index	Code	Part Number	Description	Qty	Serial Number
1		600-468-2200	Controller Assembly	1	26868373-

FIG. APP10-001001 Parts Performance

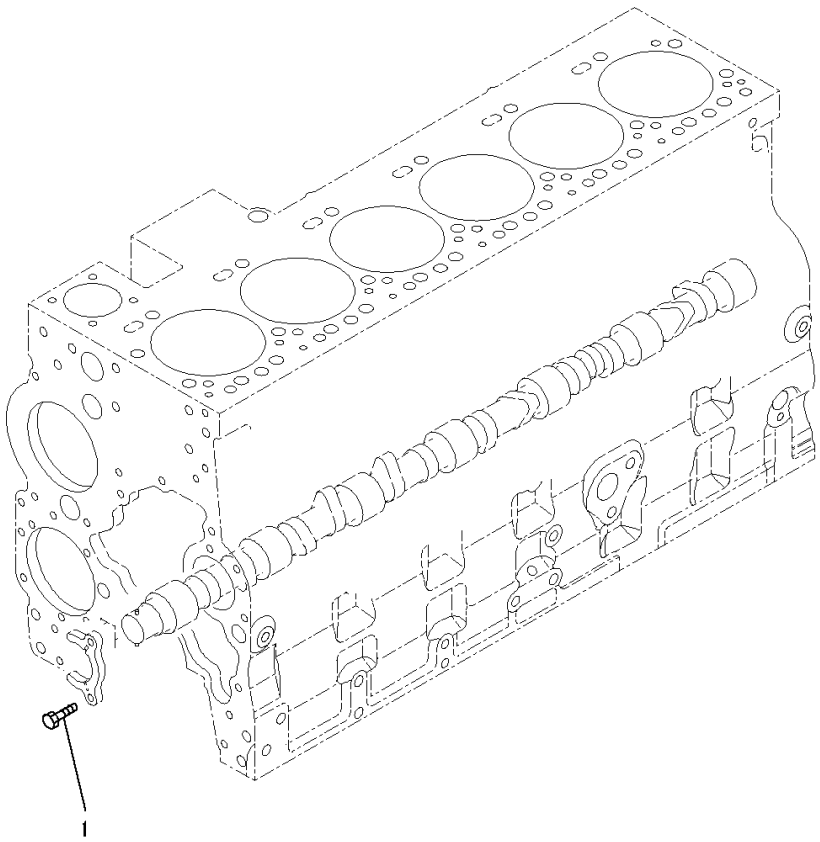

Index	Code	Part Number	Description	Qty	Serial Number
1		6732-41-1260	Bolt	2	26874903-

FIG. APP10-001002 Parts Performance

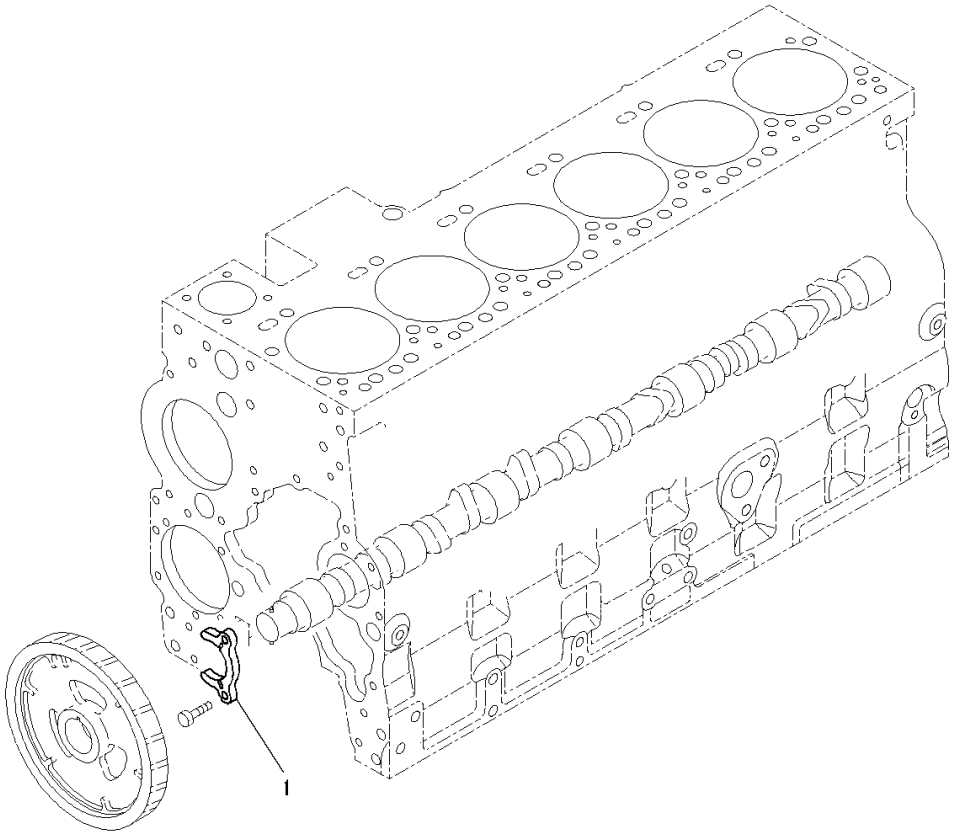

Index	Code	Part Number	Description	Qty	Serial Number
1		6744-41-1010	Support	1	26874903-

FIG. APP10-001003 Parts Performance

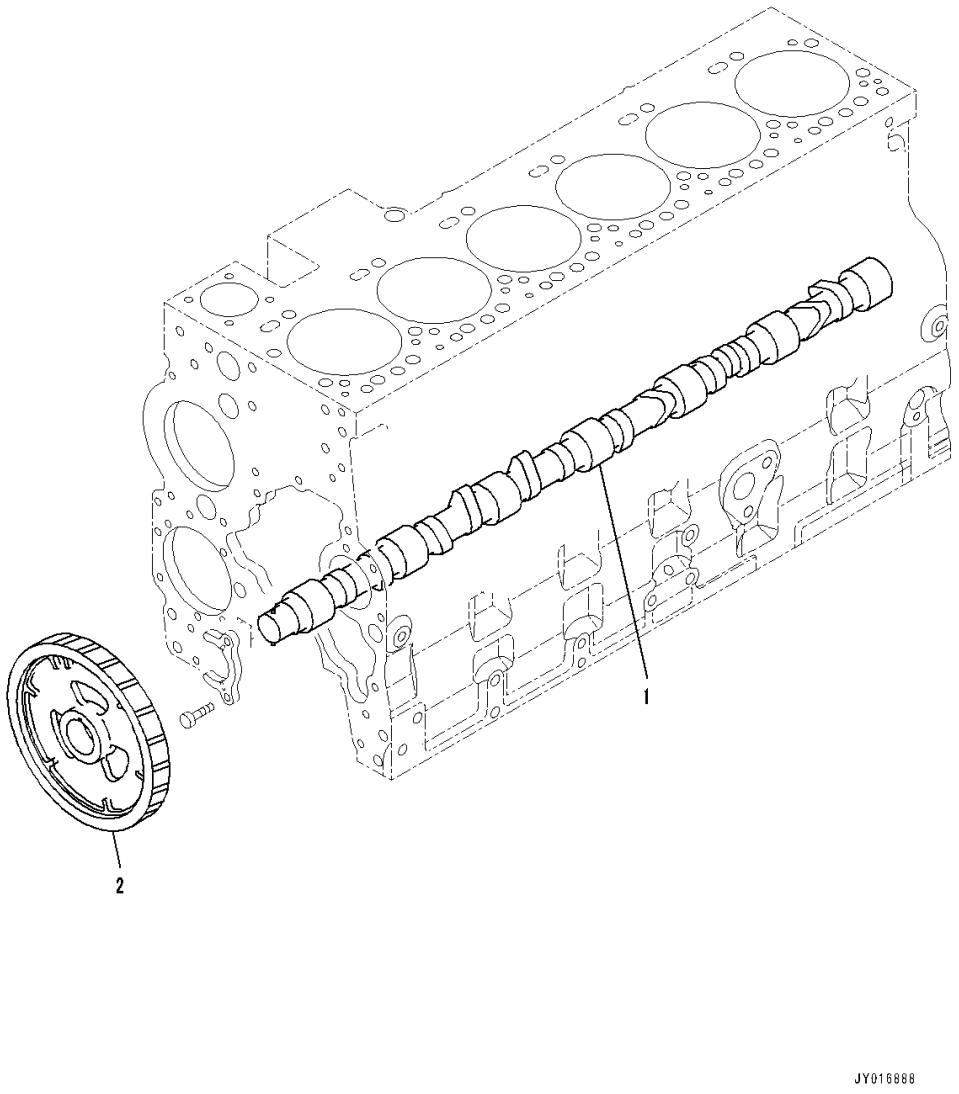

Index	Code	Part Number	Description	Qty	Serial Number
1		6745-41-1110	Camshaft	1	26874903-
2		6745-41-1131	Gear	1	26874903-

FIG. APP10-001004 Parts Performance

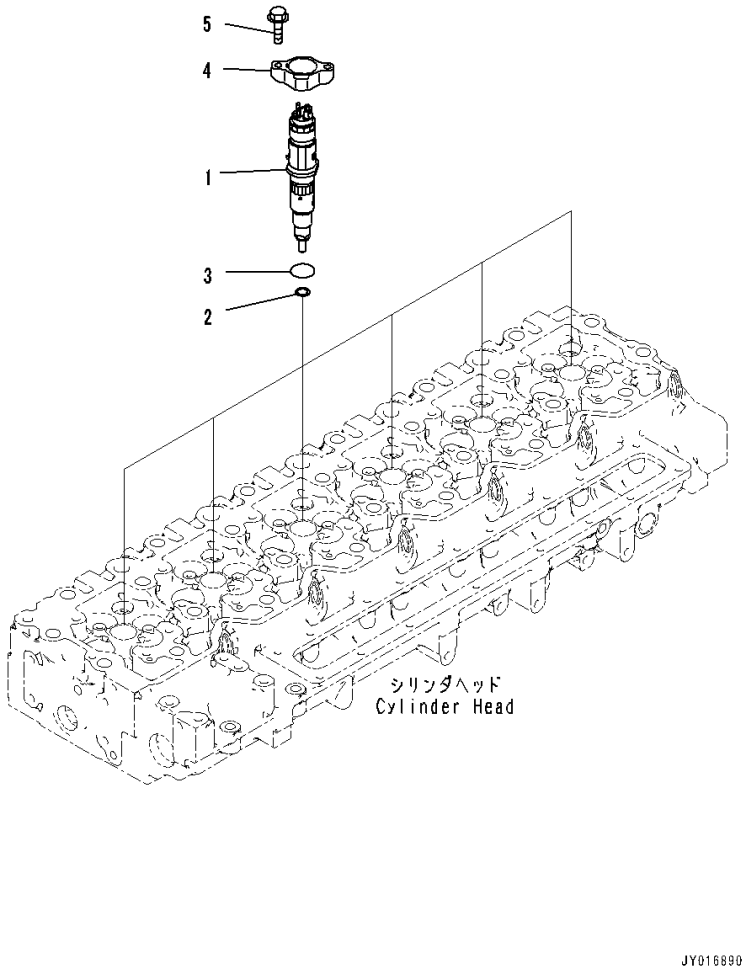

Index	Code	Part Number	Description	Qty	Serial Number
1		6745-12-3100	Injector	6	26874903-
2		6754-11-3130	• Gasket	1	26874903-
3		6754-11-3140	• O-ring	1	26874903-
4		6745-11-3110	Clamp	6	26874903-
5		6745-11-3150	Bolt	12	26874903-

FIG. APH00-001001 Engine Control Module

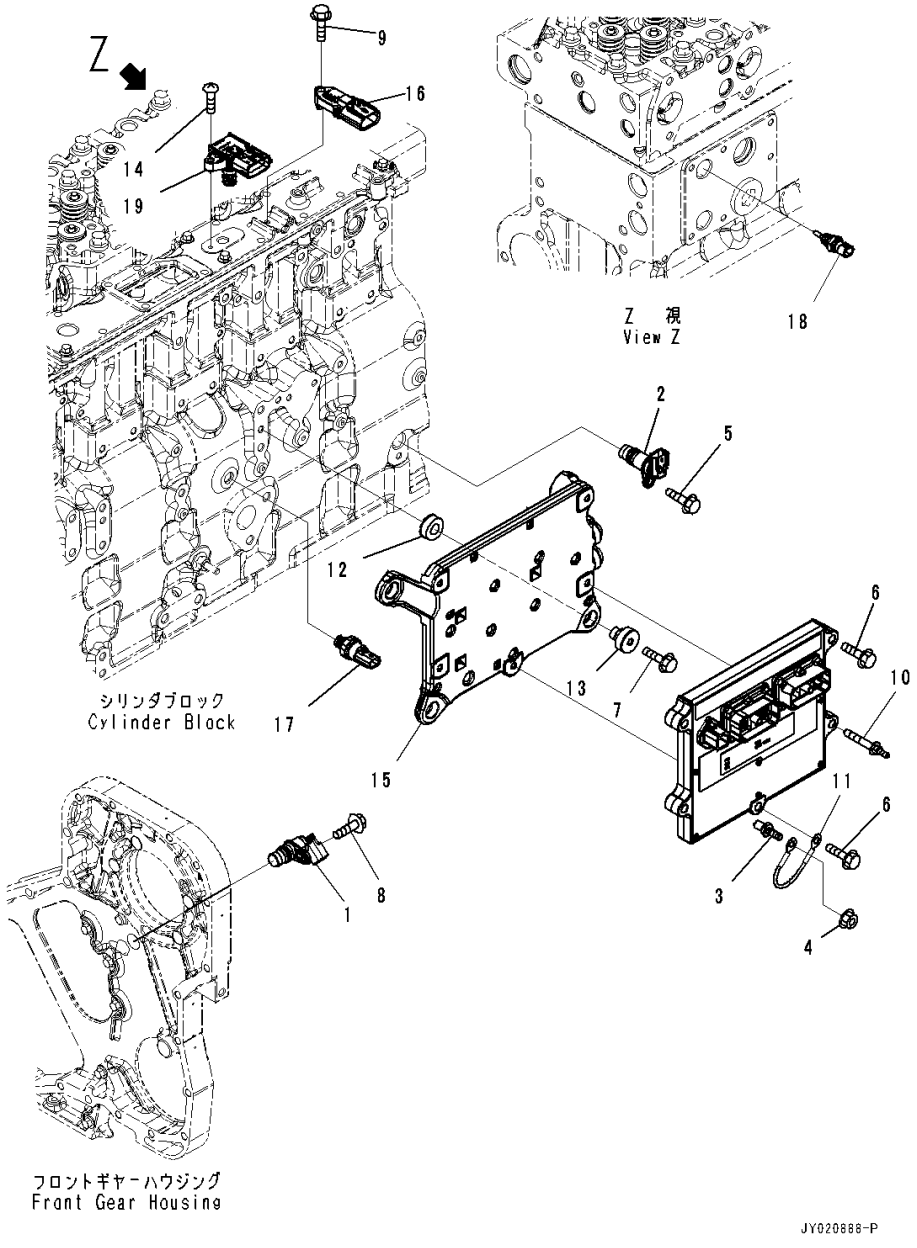

Index	Code	Part Number	Description	Qty	Serial Number
1		6271-81-9201	Sensor, Revolution,Position	1	26868373-
		6271-81-9220	• O-ring	1	26868373-
2		6261-81-2902	Sensor, Revolution,Position	1	26868373-
		6271-81-9220	• O-ring	1	26868373-
3		6745-81-9440	Bolt	1	26868373-
4		6732-71-3210	Nut	1	26868373-
5		01435-60820	Bolt	1	26868373-
6		6732-61-3110	Bolt	2	26868373-
7		6735-61-2120	Bolt	4	26868373-
8		6732-21-4180	Bolt	1	26868373-
9		6734-71-5520	Bolt	1	26868373-
10		6745-81-9560	Bolt	3	26868373-
11		6271-81-4520	Wire	1	26868373-
12		6754-81-9110	Isolator,Vibration	4	26868373-
13		6754-81-9130	Isolator,Vibration	4	26868373-
14		6754-81-9180	Screw	1	26868373-
15		6746-81-9520	Cooler	1	26868373-
16		6755-81-1900	Sensor, Pressure	1	26873798-
	A2	6261-81-1900	Sensor, Pressure,Pressure	1	26871816-26873797
	A2	6755-81-1900	Sensor, Pressure	1	26871225-26871815
		6261-81-1900	Sensor, Pressure,Pressure	1	26868373-26871224
17		6744-81-4010	Switch,Pressure	1	26868373-
18		6261-81-6901	Sensor, Temperature	1	26868373-
19		6754-81-2702	Sensor, Temperature and Pressure,Temperature and Pressure	1	26870588-
		6754-81-2701	Sensor, Temperature and Pressure,Temperature and Pressure	1	26868373-26870587

ENGINE MARKS AND PLATES

FIG. A9810-001001 Caution Plates

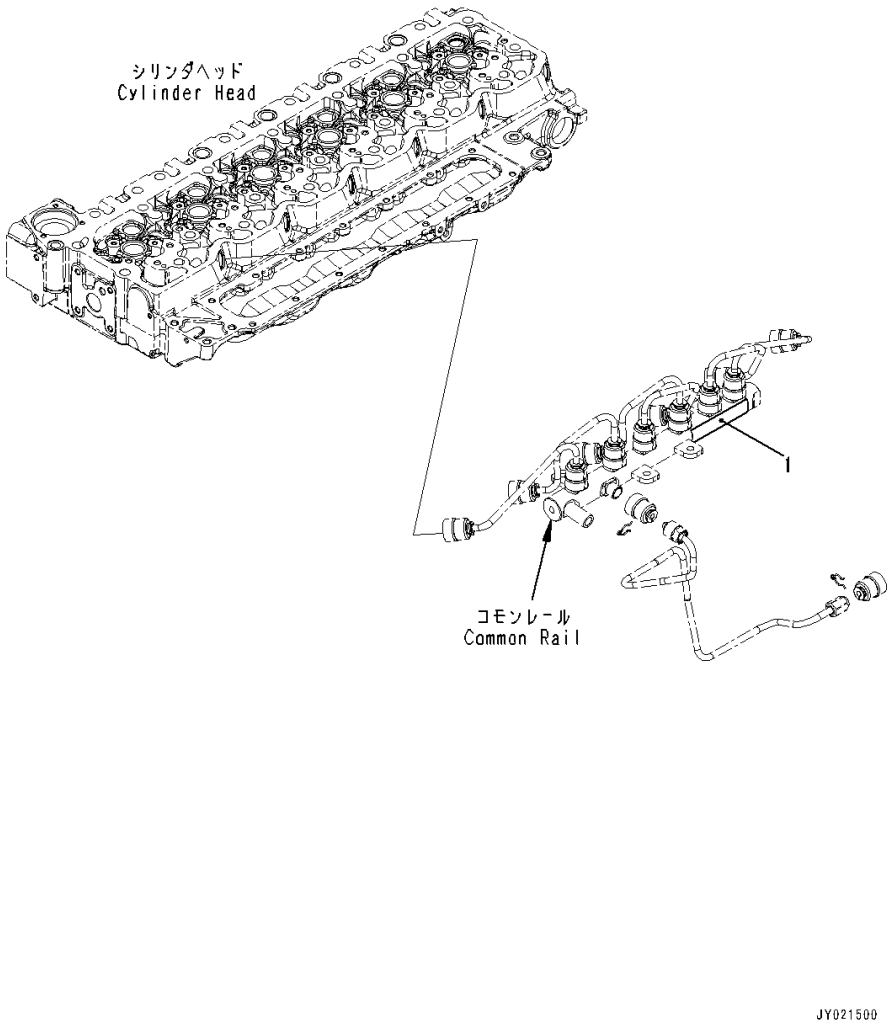

Index	Code	Part Number	Description	Qty	Serial Number
1		6754-71-1992	Plate, Warning	1	26878769-
		6754-71-1991	Plate, Warning	1	26869932-26878768

FIELD REPAIR SERVICE PARTS

Index	Code	Part Number	Description	Qty	Serial Number
1		1295465H92	Seal Assembly	1	26868373-
2		6736-39-1140	Sleeve	1	26868373-
		6742-01-5233	Main Metal Assembly,Undersize,0.25mm	1	26868373-
3	C1		Metal	7	26868373-
4	C1		Metal	6	26868373-
5	C1		Metal	1	26868373-
		6742-01-5240	Main Metal Assembly,Undersize,0.50mm	1	26868373-
	C1		Metal,Lower	7	26868373-
	C1		Metal,Upper	6	26868373-
	C1		Metal,Thrust	1	26868373-
		6742-01-5287	Main Metal Assembly,Undersize,0.75mm	1	26868373-
	C1		Metal,Lower	7	26868373-
	C1		Metal,Upper	6	26868373-
	C1		Metal,Thrust	1	26868373-
		6742-01-5288	Main Metal Assembly,Undersize,1.00mm	1	26868373-
	C1		Metal,Lower	7	26868373-
	C1		Metal,Upper	6	26868373-
	C1		Metal,Thrust	1	26868373-
6		6745-18-4220	Insert,Exhaust Valve, Oversize 0.25mm	12	26868373-
		6745-39-1100	Metal Assembly,Undersize,0.25mm	6	26868373-
7	C1		Metal,Lower	1	26868373-
8	C1		Metal,Upper	1	26868373-
		6745-39-1200	Metal Assembly,Undersize, 0.50mm	6	26868373-
	C1		Metal,Lower	1	26868373-
	C1		Metal,Upper	1	26868373-
		6745-39-1300	Metal Assembly,Undersize,0.75mm	6	26868373-
	C1		Metal,Lower	1	26868373-
	C1		Metal,Upper	1	26868373-
		6745-39-1400	Metal Assembly,Undersize,1.00mm	6	26868373-
	C1		Metal,Lower	1	26868373-
	C1		Metal,Upper	1	26868373-
9		6745-18-4210	Insert,Intake Valve, Oversize 0.25mm	12	26868373-

FIG. B9999-501001 Spare Parts (For 60Amp. Alternator)

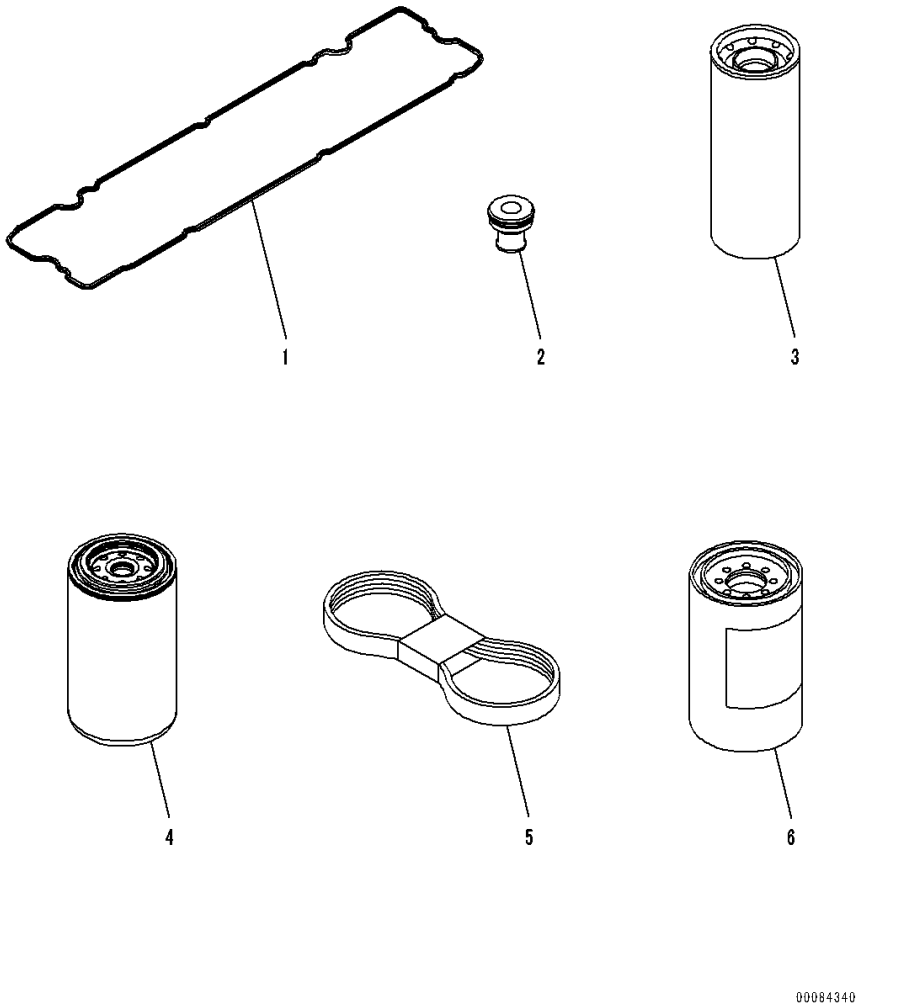

Index	Code	Part Number	Description	Qty	Serial Number
1		6745-11-8810	Gasket	1	26868373-
2		6745-11-8160	Isolator	8	26868373-
3		6742-01-4540	Cartridge,Oil Filter	1	26868373-
4		600-319-3750	Cartridge,Fuel Filter	1	26868373-
5		6743-62-3710	Belt,1612.9mm	1	26868373-
6		600-319-3610	Cartridge Assembly,Fuel Prefilter	1	26868373-

FIG. B9999-502001 Spare Parts (For 90Amp. Alternator)

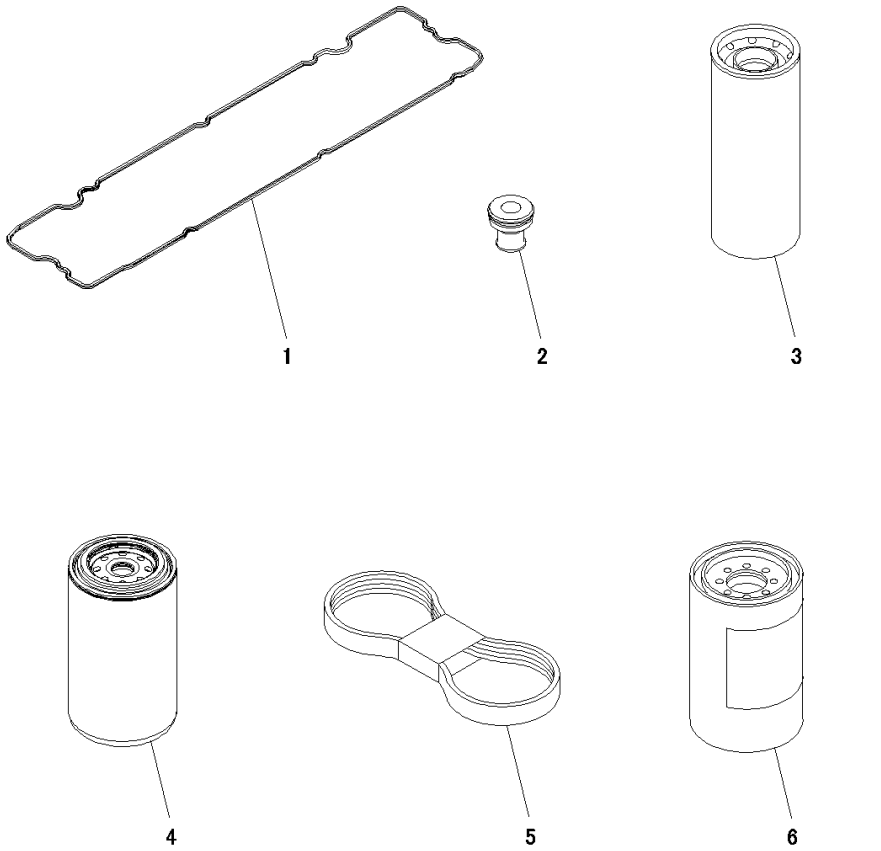

Index	Code	Part Number	Description	Qty	Serial Number
1		6745-11-8810	Gasket	1	26868373-
2		6745-11-8160	Isolator	8	26868373-
3		6742-01-4540	Cartridge,Oil Filter	1	26868373-
4		600-319-3750	Cartridge,Fuel Filter	1	26868373-
5		6732-82-3540	Belt,1663.7mm	1	26868373-
6		600-319-3610	Cartridge Assembly,Fuel Prefilter	1	26868373-

ENGINE RELATED PARTS

FIG. B0100-001001 Engine Mounting

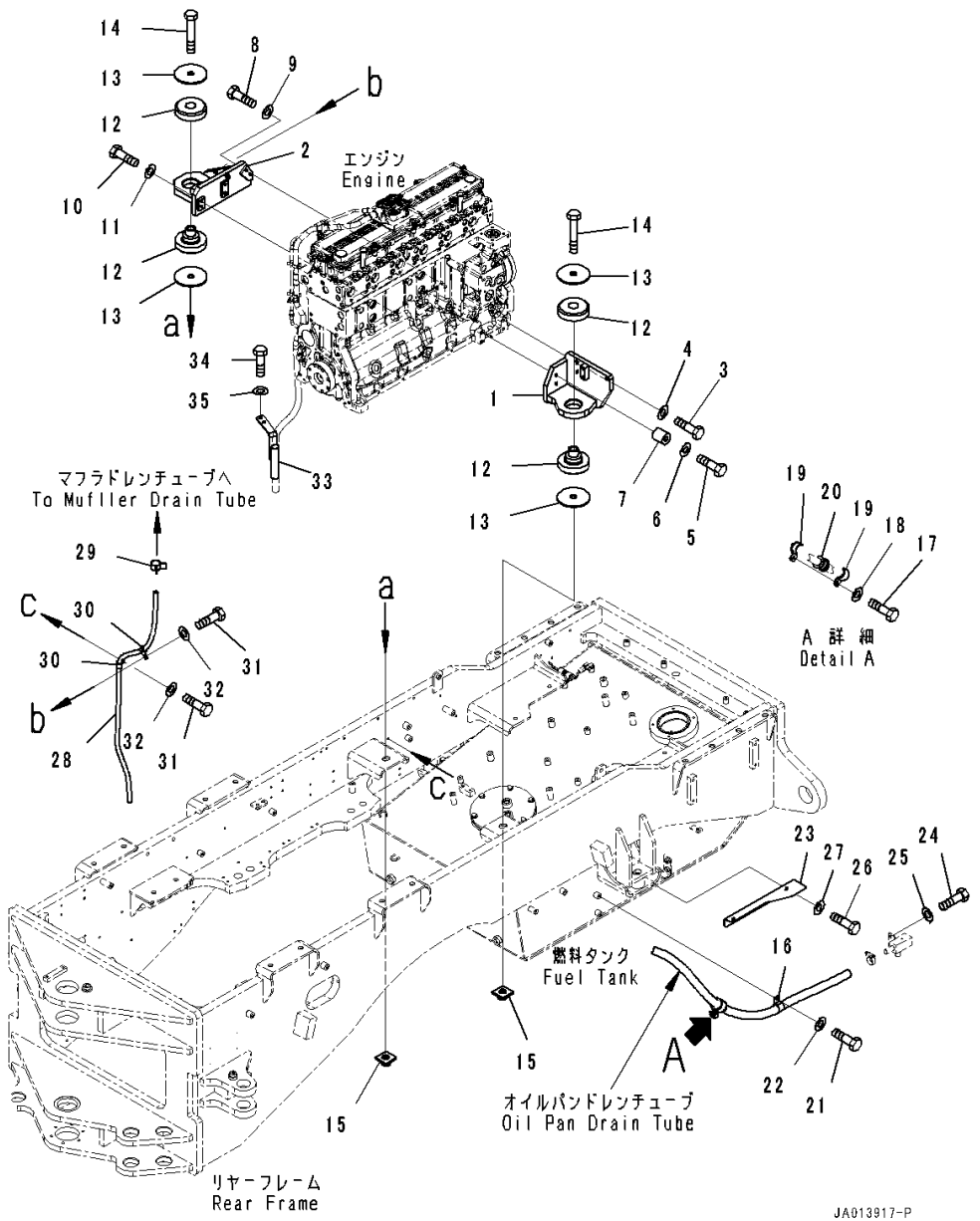

Index	Code	Part Number	Description	Qty	Serial Number
1		234-01-81310	Bracket	1	26001-
2		234-01-81320	Bracket	1	26001-
3		01010-81240	Bolt	2	26001-
4		01643-31232	Washer	2	26001-
5		01010-81275	Bolt	2	26001-
6		01643-31232	Washer	2	26001-
7		195-43-41530	Collar	2	26001-
8		01010-81250	Bolt	4	26001-
9		01643-31232	Washer	4	26001-
10		01010-81050	Bolt	2	26001-
11		01643-31032	Washer	2	26001-
12		424-01-11310	Cushion	2	26001-
13		424-01-41230	Washer	4	26001-
14		01011-82440	Bolt	2	26001-
15		423-01-52120	Bracket	2	26001-
16		04434-53211	Clip	1	26001-
17		01010-81025	Bolt	1	26001-
18		01643-31032	Washer	1	26001-
19		23B-60-75210	Clamp	2	26001-
20		07095-00630	Cushion	1	26001-
21		01010-81025	Bolt	1	26001-
22		01643-31032	Washer	1	26001-
23		234-04-81160	Cover	1	26001-
24		01010-81025	Bolt	2	26001-
25		01643-31032	Washer	2	26001-
26		01010-81020	Bolt	2	26001-
27		01643-31032	Washer	2	26001-
28		09483-10312	Hose	1	26001-
29		07285-00155	Clip	1	26001-
30		04434-51610	Clip	2	26001-
31		01010-81025	Bolt	2	26001-
32		01643-31032	Washer	2	26001-
33		234-01-81410	Bracket	1	26001-
34		01010-81025	Bolt	1	26001-
35		01643-31032	Washer	1	26001-

FIG. B0110-001001 Engine Accessory

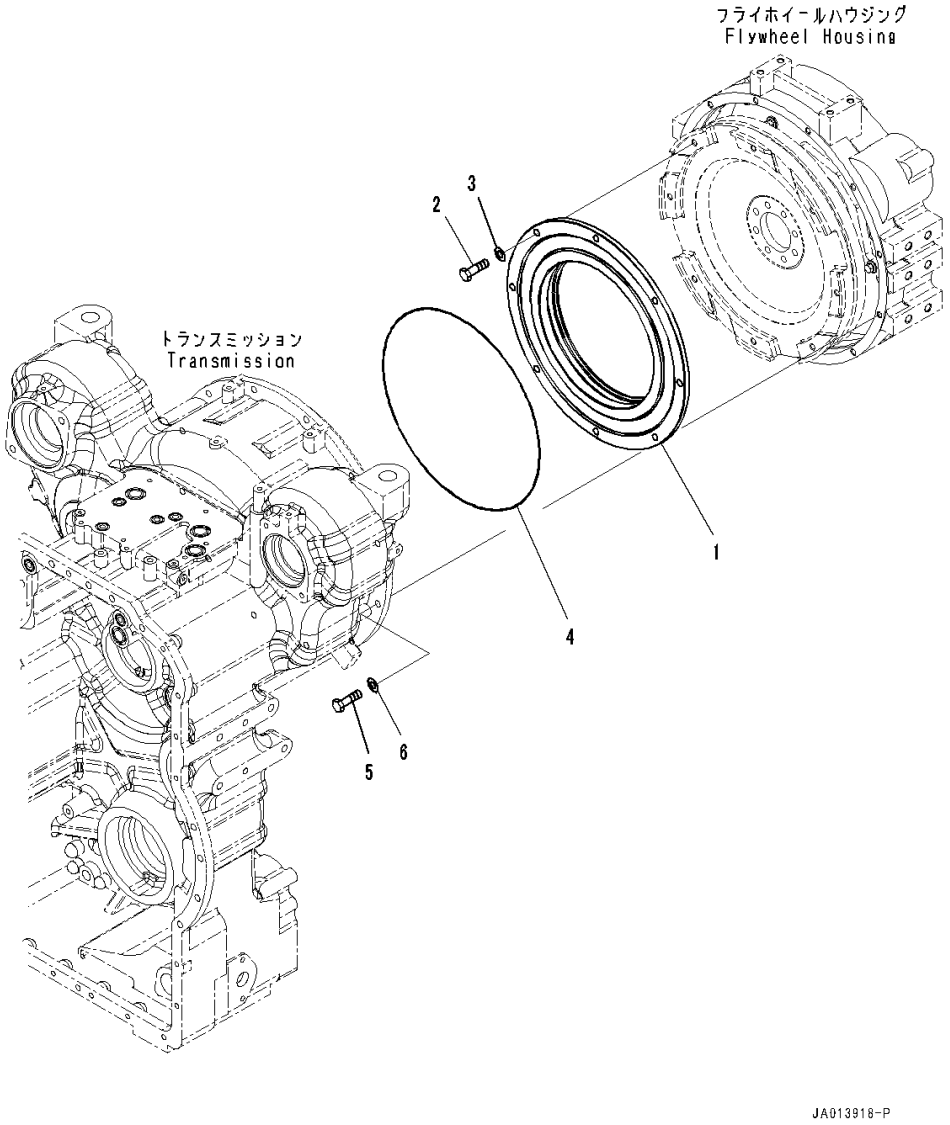

Index	Code	Part Number	Description	Qty	Serial Number
1		234-12-81120	Gear, Ring	1	26001-
2		01010-81235	Bolt	8	26001-
3		01643-31232	Washer	8	26001-
4		07000-75490	O-ring	1	26001-
5		01010-81240	Bolt	12	26001-
6		01643-31232	Washer	12	26001-

FIG. B0200-001001 Air Intake Rain Cap

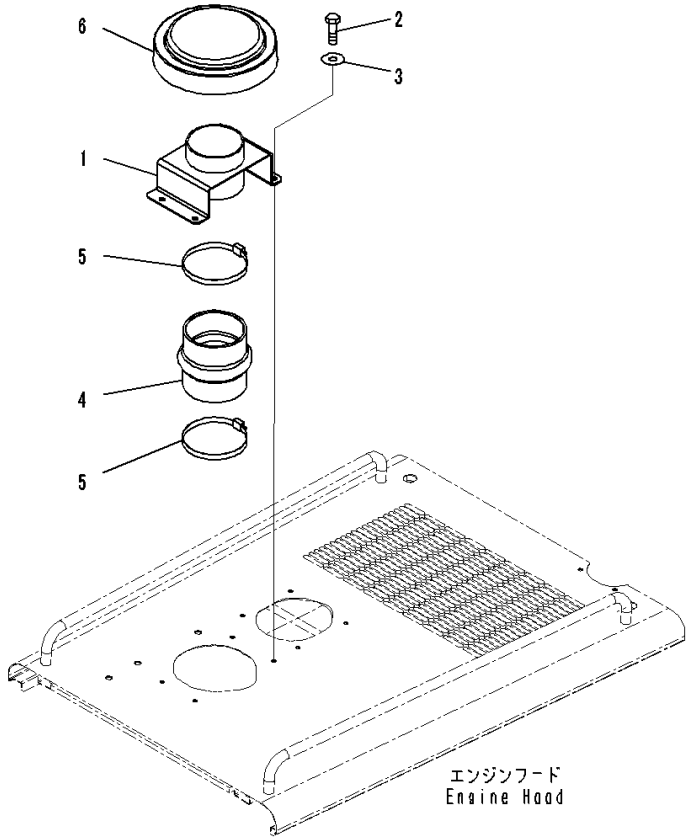

Index	Code	Part Number	Description	Qty	Serial Number
1		234-54-81280	Bracket	1	26001-
2		01010-D1025	Bolt	4	26001-
3		421-54-34550	Washer	4	26001-
4		600-181-0670	Hose	1	26001-
5		07289-00170	Clamp, Hose	2	26001-
6		566-02-42200	Cap Assembly	1	26001-

FIG. B0200-002001 Air Intake Unit (With Pre-cleaner Turbo 2)

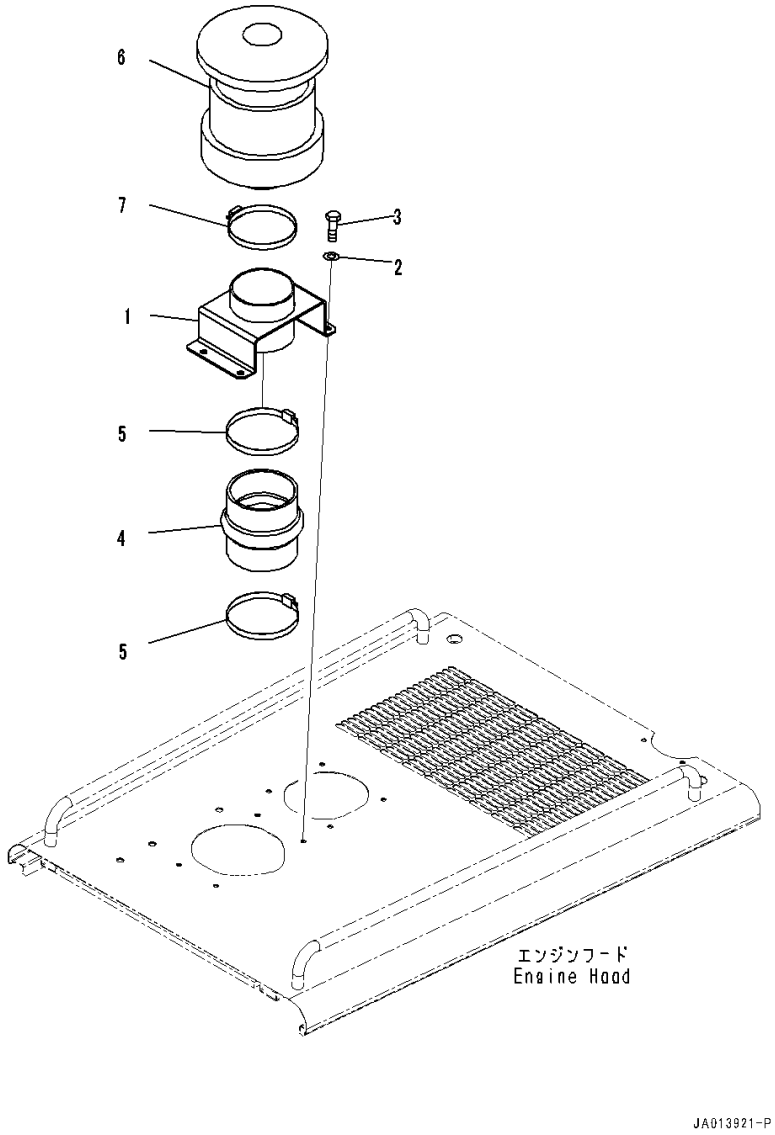

Index	Code	Part Number	Description	Qty	Serial Number
1		234-54-81280	Bracket	1	26001-
2		421-54-34550	Washer	4	26001-
3		01010-D1025	Bolt	4	26001-
4		600-181-0670	Hose	1	26001-
5		07289-00170	Clamp, Hose	2	26001-
6		423-09-H4070	Pre-cleaner	1	26001-
7		07289-00160	Clamp, Hose	1	26001-

FIG. B0200-003001 Air Intake Unit (Mounting) (With Pre-cleaner)

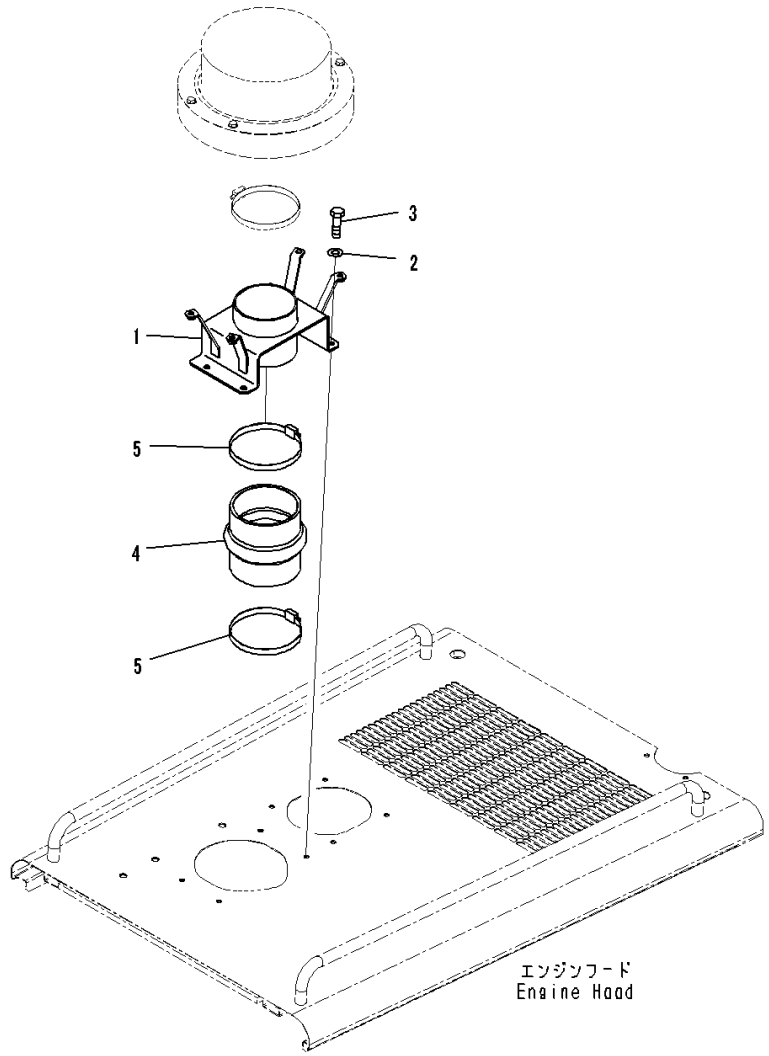

Index	Code	Part Number	Description	Qty	Serial Number
1		234-54-87110	Bracket	1	26001-
2		421-54-34550	Washer	4	26001-
3		01010-D1025	Bolt	4	26001-
4		600-181-0670	Hose	1	26001-
5		07289-00170	Clamp, Hose	2	26001-

FIG. B0200-003002 Air Intake Unit (Pre-cleaner) (With Pre-cleaner)

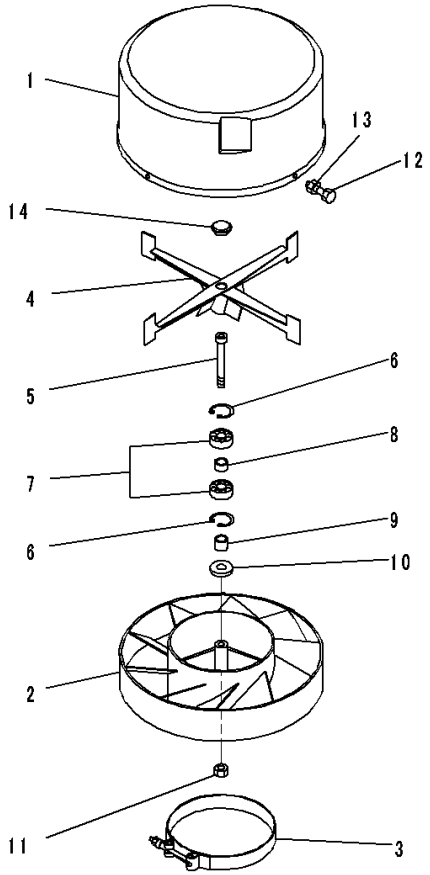

JA008022

Index	Code	Part Number	Description	Qty	Serial Number
		421-U12-3101	Pre-cleaner Assembly	1	26001-
1	C1		• Hood	1	26001-
2		421-U12-3330	• Body	1	26001-
3		421-U12-3140	• Clamp	1	26001-
4		421-U12-3150	• Rotor	1	26001-
5		421-U12-3160	• Bolt	1	26001-
6		421-U12-3170	• Ring, Snap	2	26001-
7		421-U12-3181	• Bearing, Ball	2	26001-
8		421-U12-3190	• Bushing	2	26001-
9		418-U12-3410	• Bushing	1	26001-
10		418-U12-3420	• Shield	1	26001-
11		421-U12-3230	• Nut	1	26001-
12		421-U12-3240	• Bolt	4	26001-
13		421-U12-3250	• Nut	4	26001-
14		421-U12-3260	• Plug, Plastic	1	26001-

FIG. B0200-003003 Air Intake Unit (Cover) (With Pre-cleaner)

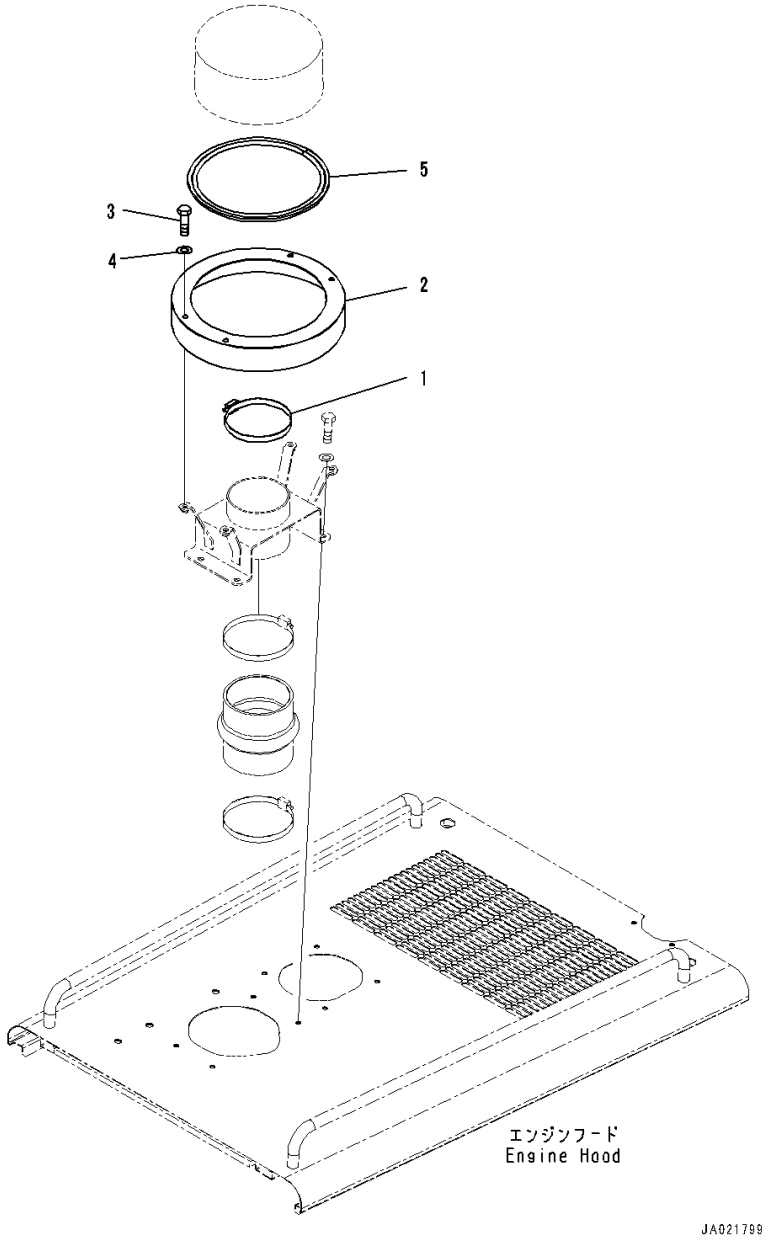

Index	Code	Part Number	Description	Qty	Serial Number
1		07289-00160	Clamp, Hose	1	26001-
2		424-U12-4120	Cover	1	26001-
3		01010-D1025	Bolt	4	26001-
4		01643-71032	Washer	4	26001-
5		424-U12-4130	Seal	1	26001-

FIG. B0300-001001 Exhaust Pipe

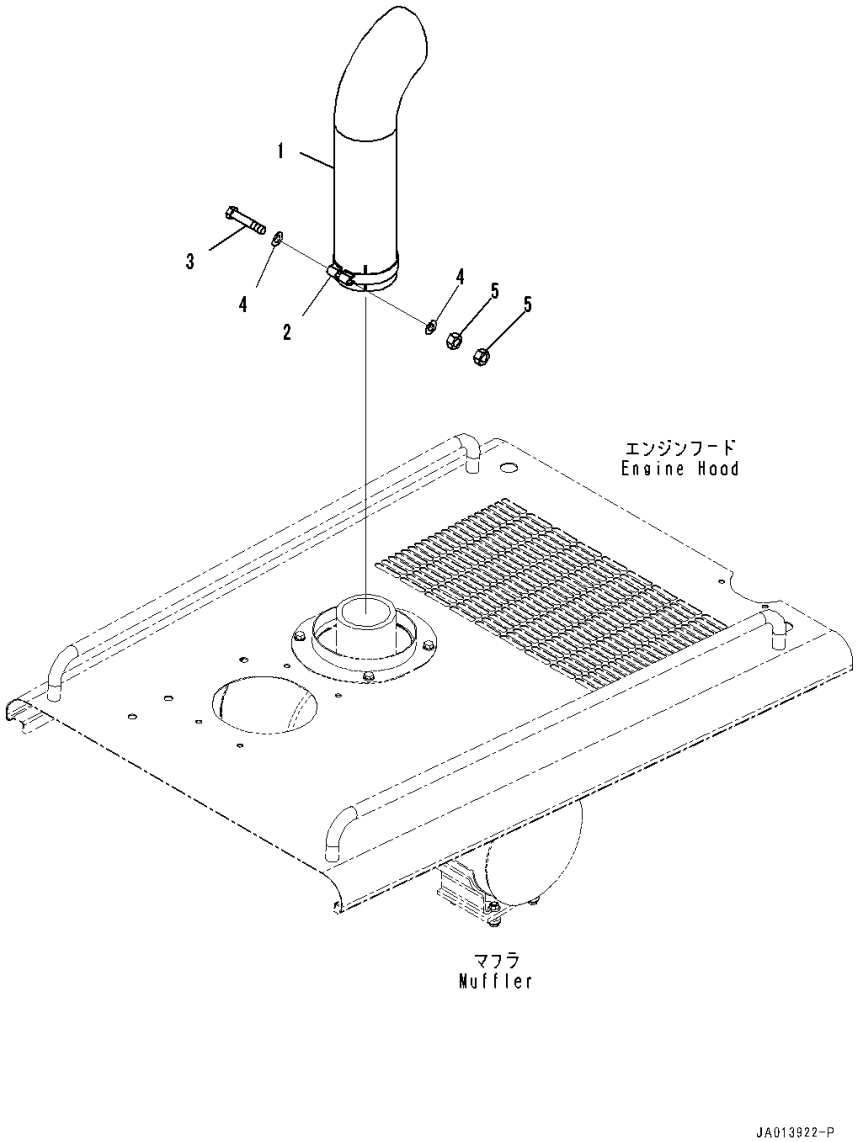

Index	Code	Part Number	Description	Qty	Serial Number
1		421-02-31114	Pipe	1	26001-
2		421-02-31120	Clamp	1	26001-
3		01010-F1285	Bolt	1	26001-
4		01640-41223	Washer, Flat	2	26001-
5		01580-71210	Nut	2	26001-

COOLING SYSTEM

FIG. C0110-001001 Radiator (Radiator Core, Aftercooler and Oil Cooler)

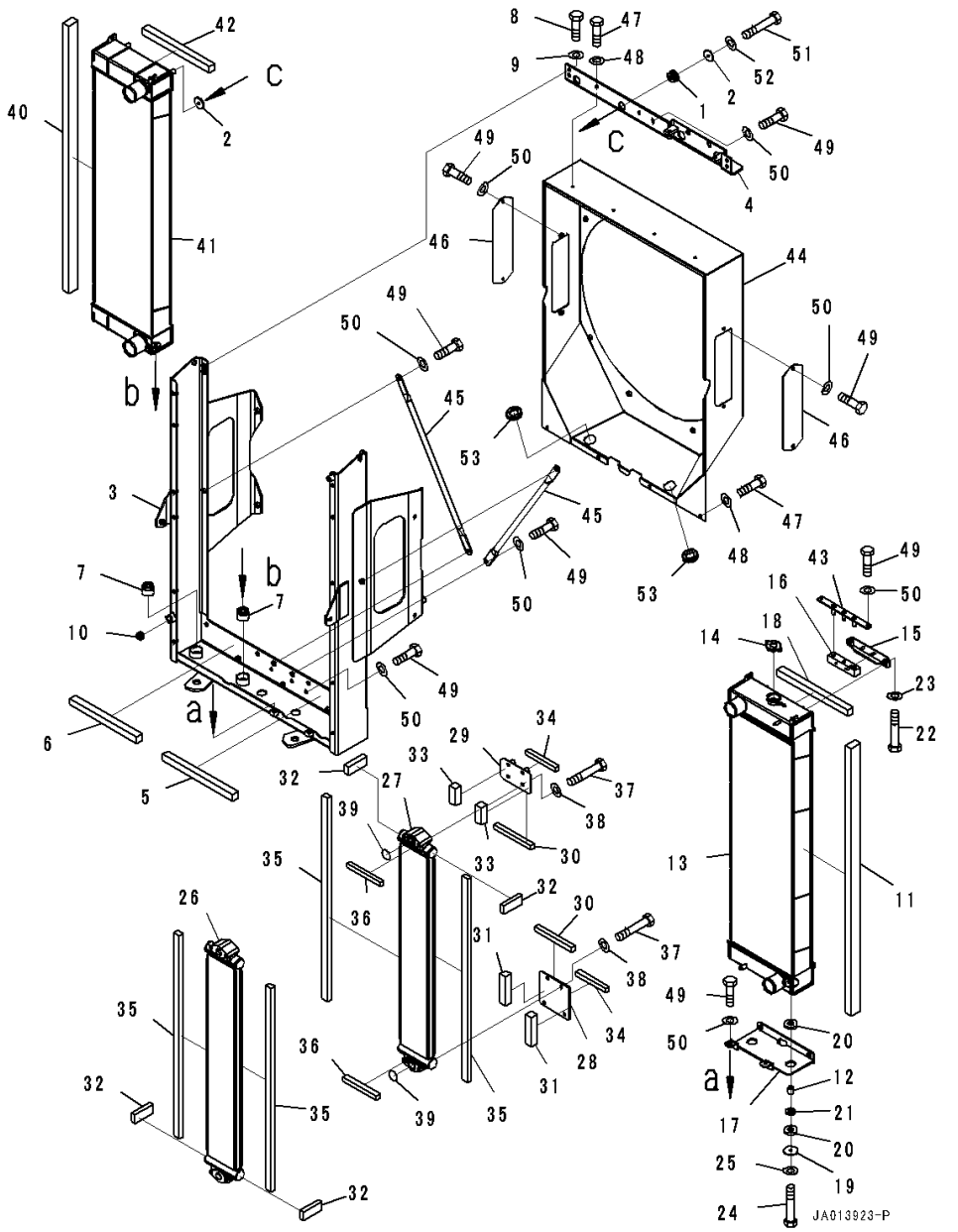

Index	Code	Part Number	Description	Qty	Serial Number
		234-03-81101	Radiator and Oil Cooler Assembly	1	26413-
	A2	234-03-81100	Radiator and Oil Cooler Assembly	1	26001-26412
1		195-03-41380	• Cushion	2	26001-
2		207-03-75590	• Plate	4	26001-
		234-03-81110	• Frame Assembly	1	26001-
3	C1		• • Frame	1	26001-
4		234-03-81271	• • Bracket	1	26001-
5		234-03-81410	• • Seal	1	26001-
6		234-03-81450	• • Seal	1	26001-
7		23C-03-51751	• • Cushion	2	26001-
8		01010-81025	• • Bolt	4	26001-
9		01643-31032	• • Washer	4	26001-
10		08037-01610	• • Grommet	1	26001-
		234-03-81131	• Radiator	1	26413-
	A2	234-03-81130	• Radiator	1	26001-26412
11		17A-03-52520	• • Sheet	1	26001-
12		22T-56-23290	• • Spacer	2	26001-
13	C1		• • Radiator	1	26413-
	C1		• • Radiator	1	26001-26412
14		417-03-62270	• • • Cap	1	26413-
	A2	416-S14-2270	• • • Cap	1	26001-26412
15		234-03-81231	• • Bracket	1	26001-
16		234-03-81240	• • Seal	1	26001-
17		234-03-81251	• • Bracket	1	26001-
18		234-03-81410	• • Seal	1	26001-
19		23B-03-73460	• • Washer	2	26001-
20		423-03-41370	• • Cushion	4	26001-
21		423-03-41430	• • Cushion	2	26001-
22		01010-81030	• • Bolt	2	26001-
23		01643-31032	• • Washer	2	26001-
24		01010-81045	• • Bolt	2	26001-
25		01643-31032	• • Washer	2	26001-
		234-03-81160	• Oil Cooler	1	26001-
26	C1		• • Oil Cooler	1	26001-
27	C1		• • Oil Cooler	1	26001-
28		234-03-81211	• • Plate	1	26001-
29		234-03-81341	• • Plate	1	26001-
30		234-03-81350	• • Seal	2	26001-
31		234-03-81360	• • Seal	2	26001-
32		234-03-81460	• • Seal	4	26001-

FIG. C0110-001001 Radiator (Radiator Core, Aftercooler and Oil Cooler)

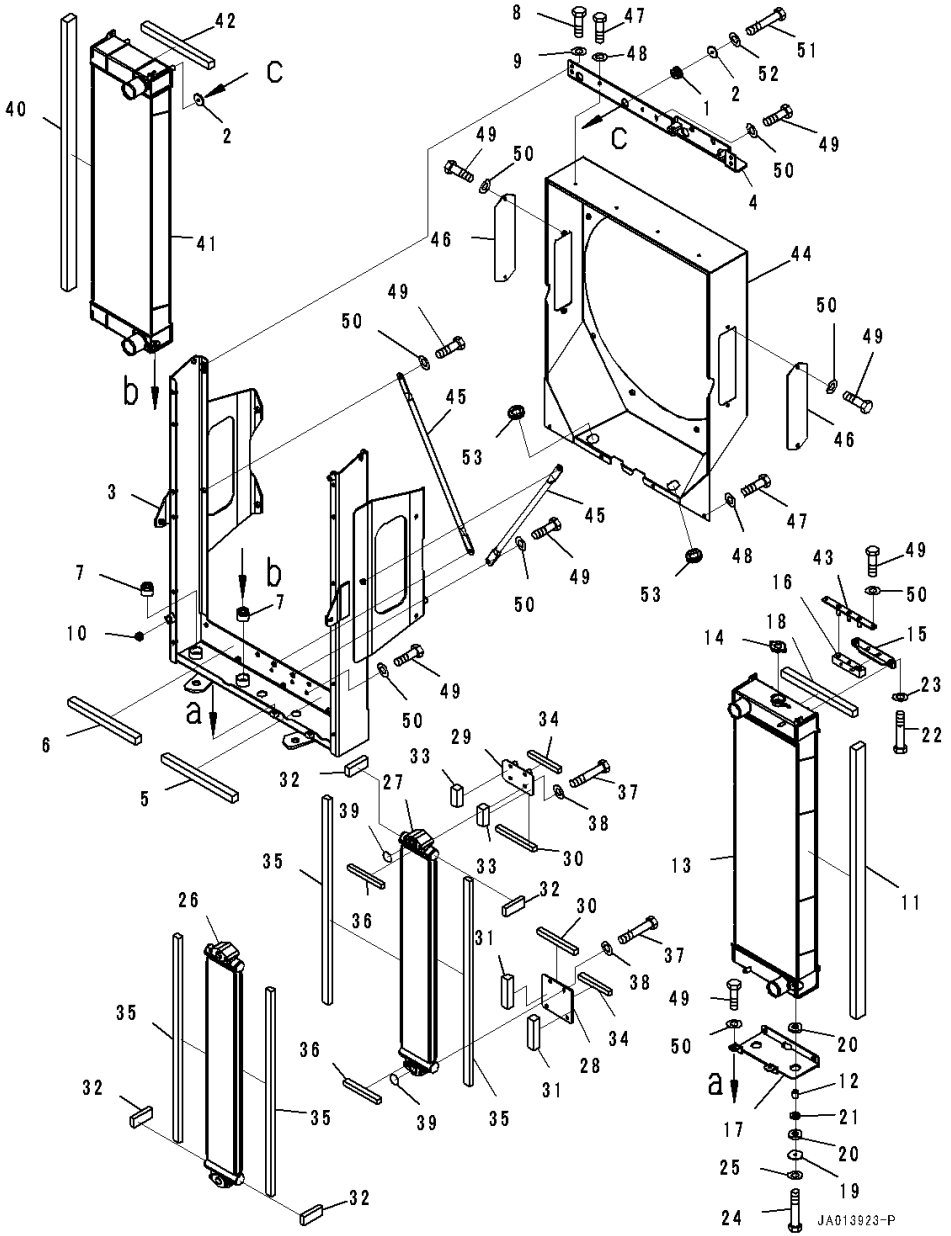

Index	Code	Part Number	Description	Qty	Serial Number
33		234-03-81470	• • Seal	2	26001-
34		234-03-81480	• • Seal	2	26001-
35		23B-03-71310	• • Seal	4	26001-
36	C1		• • Seal	2	26001-
37		01010-81085	• • Bolt	4	26001-
38		01643-31032	• • Washer	4	26001-
39	C1		• • O-ring	2	26001-
		234-03-81190	• Aftercooler Assembly	1	26001-
40		17A-03-52520	• • Sheet	1	26001-
41	C1		• • Aftercooler	1	26001-
42		234-03-81450	• • Seal	1	26001-
43		234-03-81281	• Plate	1	26001-
44		234-03-81291	• Shroud	1	26001-
45		234-03-81310	• Pipe	2	26001-
46		23B-03-71230	• Plate	2	26001-
47		01010-80825	• Bolt	8	26001-
48		01643-30823	• Washer	8	26001-
49		01010-81025	• Bolt	18	26001-
50		01643-31032	• Washer	18	26001-
51		01010-81050	• Bolt	2	26001-
52		01643-31032	• Washer	2	26001-
53		09415-03614	• Cap	2	26001-

FIG. C0110-002001 Radiator (Radiator Core, Aftercooler and Oil Cooler) (For Extra Bad Fuel and Poor Fuel Specification, Water+Dust, Large Fuel Prefilter)

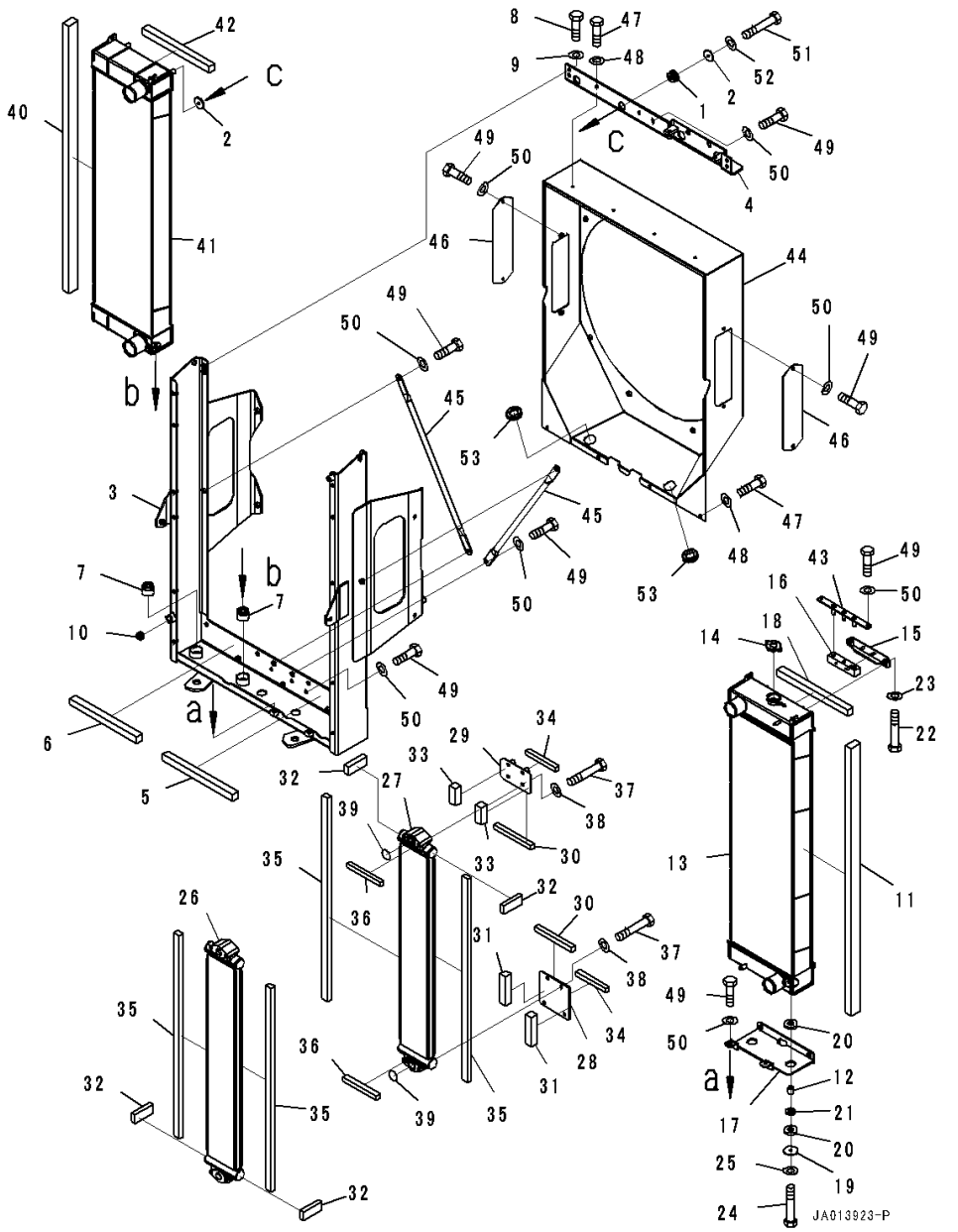

Index	Code	Part Number	Description	Qty	Serial Number
		234-03-81101	Radiator and Oil Cooler Assembly	1	26413-
	A2	234-03-81100	Radiator and Oil Cooler Assembly	1	26001-26412
1		195-03-41380	• Cushion	2	26001-
2		207-03-75590	• Plate	4	26001-
		234-03-81110	• Frame Assembly	1	26001-
3	C1		• • Frame	1	26001-
4		234-03-81271	• • Bracket	1	26001-
5		234-03-81410	• • Seal	1	26001-
6		234-03-81450	• • Seal	1	26001-
7		23C-03-51751	• • Cushion	2	26001-
8		01010-81025	• • Bolt	4	26001-
9		01643-31032	• • Washer	4	26001-
10		08037-01610	• • Grommet	1	26001-
		234-03-81131	• Radiator	1	26413-
	A2	234-03-81130	• Radiator	1	26001-26412
11		17A-03-52520	• • Sheet	1	26001-
12		22T-56-23290	• • Spacer	2	26001-
13	C1		• • Radiator	1	26413-
	C1		• • Radiator	1	26001-26412
14		417-03-62270	• • • Cap	1	26413-
	A2	416-S14-2270	• • • Cap	1	26001-26412
15		234-03-81231	• • Bracket	1	26001-
16		234-03-81240	• • Seal	1	26001-
17		234-03-81251	• • Bracket	1	26001-
18		234-03-81410	• • Seal	1	26001-
19		23B-03-73460	• • Washer	2	26001-
20		423-03-41370	• • Cushion	4	26001-
21		423-03-41430	• • Cushion	2	26001-
22		01010-81030	• • Bolt	2	26001-
23		01643-31032	• • Washer	2	26001-
24		01010-81045	• • Bolt	2	26001-
25		01643-31032	• • Washer	2	26001-
		234-03-81160	• Oil Cooler	1	26001-
26	C1		• • Oil Cooler	1	26001-
27	C1		• • Oil Cooler	1	26001-
28		234-03-81211	• • Plate	1	26001-
29		234-03-81341	• • Plate	1	26001-
30		234-03-81350	• • Seal	2	26001-
31		234-03-81360	• • Seal	2	26001-

FIG. C0110-002001 Radiator (Radiator Core, Aftercooler and Oil Cooler) (For Extra Bad Fuel and Poor Fuel Specification, Water+Dust, Large Fuel Prefilter)

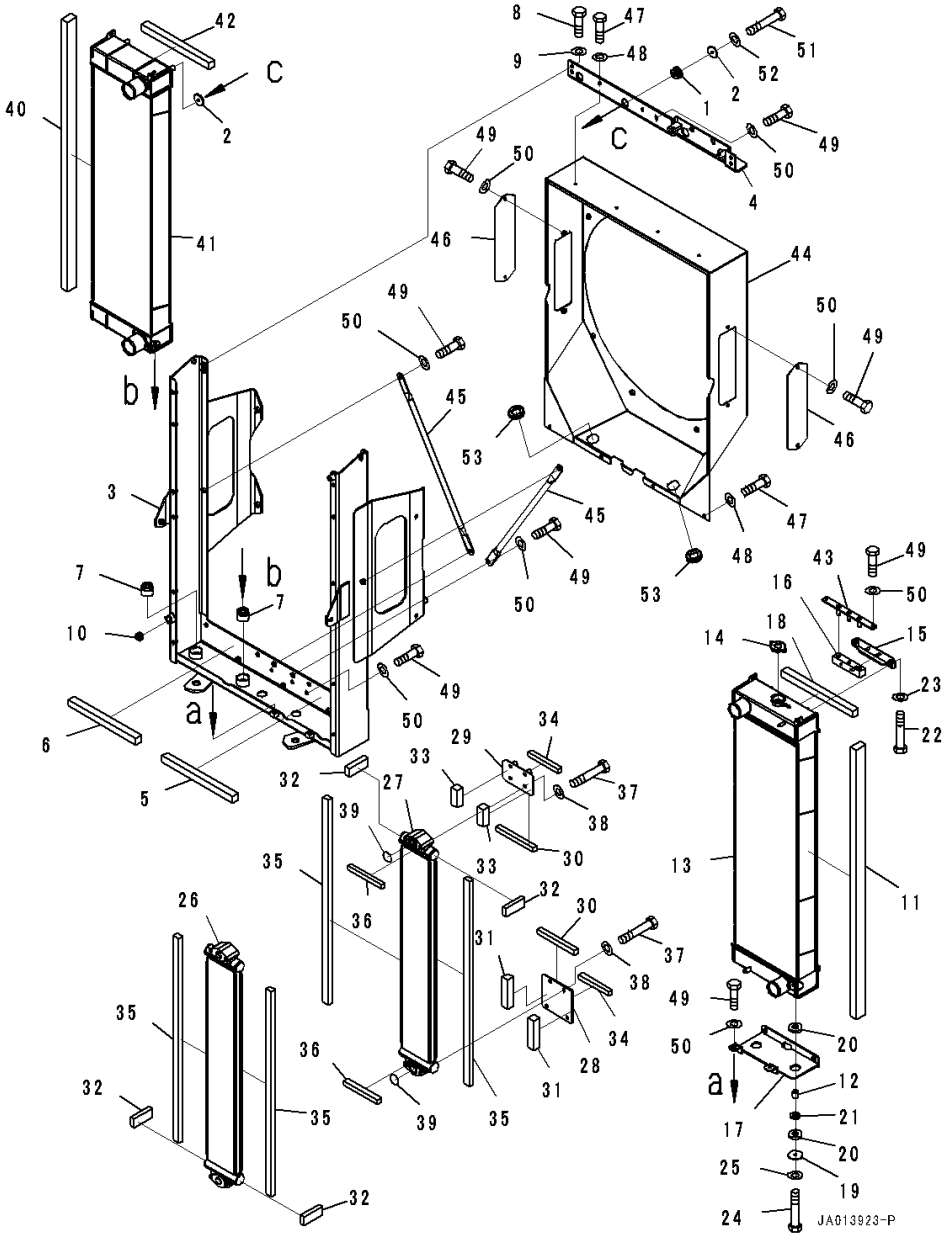

Index	Code	Part Number	Description	Qty	Serial Number
32		234-03-81460	• • Seal	4	26001-
33		234-03-81470	• • Seal	2	26001-
34		234-03-81480	• • Seal	2	26001-
35		23B-03-71310	• • Seal	4	26001-
36	C1		• • Seal	2	26001-
37		01010-81085	• • Bolt	4	26001-
38		01643-31032	• • Washer	4	26001-
39	C1		• • O-ring	2	26001-
		234-03-81190	• Aftercooler Assembly	1	26001-
40		17A-03-52520	• • Sheet	1	26001-
41	C1		• • Aftercooler	1	26001-
42		234-03-81450	• • Seal	1	26001-
43		234-03-81281	• Plate	1	26001-
44		234-03-81291	• Shroud	1	26001-
45		234-03-81310	• Pipe	2	26001-
46		23B-03-71230	• Plate	2	26001-
47		01010-80825	• Bolt	8	26001-
48		01643-30823	• Washer	8	26001-
49		01010-81025	• Bolt	18	26001-
50		01643-31032	• Washer	18	26001-
51		01010-81050	• Bolt	2	26001-
52		01643-31032	• Washer	2	26001-
53		09415-03614	• Cap	2	26001-

FIG. C0110-001002 Radiator (Oil Cooler)

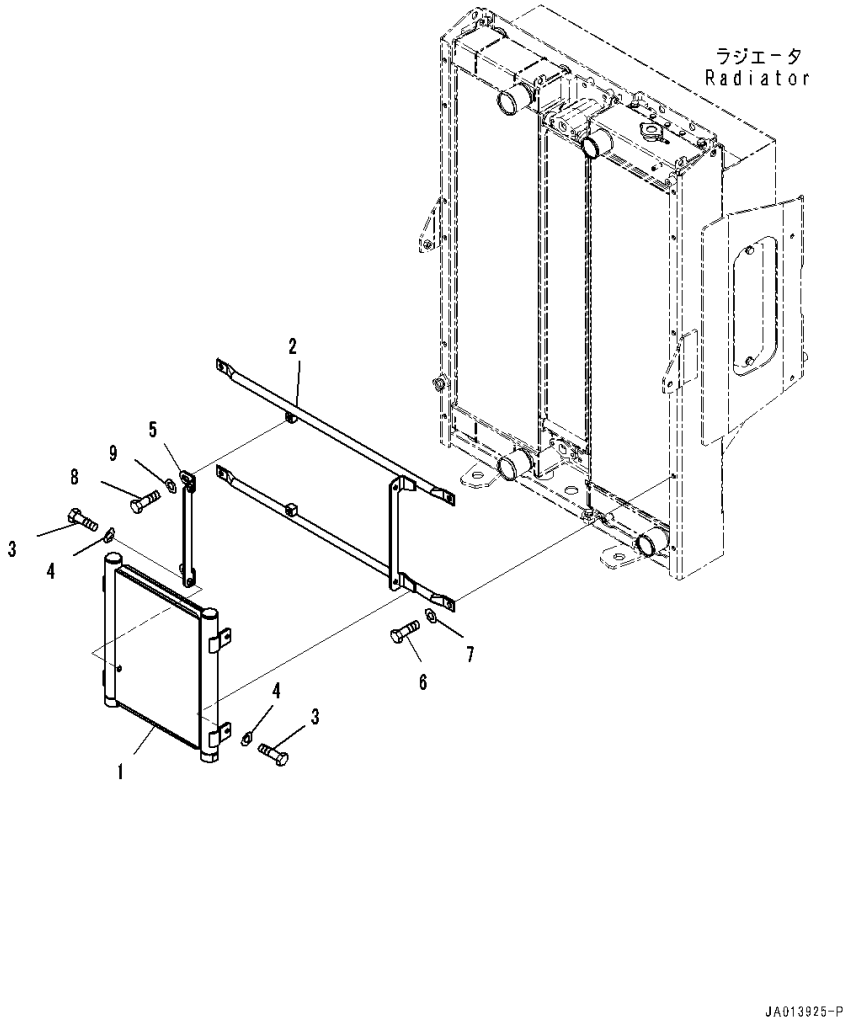

Index	Code	Part Number	Description	Qty	Serial Number
1		234-03-83110	Oil Cooler	1	26001-
2		234-03-81610	Bracket	1	26001-
3		01010-81025	Bolt	4	26001-
4		01643-31032	Washer	4	26001-
5		234-03-81660	Plate	1	26001-
6		01010-81025	Bolt	4	26001-
7		01643-31032	Washer	4	26001-
8		01010-81025	Bolt	2	26001-
9		01643-31032	Washer	2	26001-

FIG. C0110-001003 Radiator (Fan Guard)

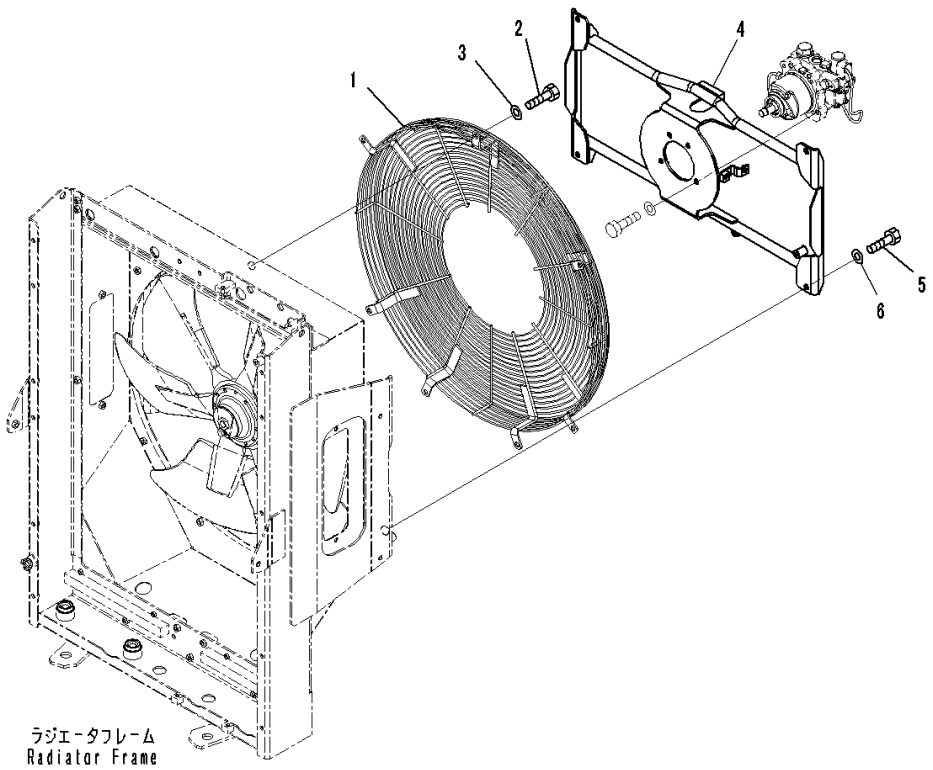

Index	Code	Part Number	Description	Qty	Serial Number
1		234-03-81910	Guard	1	26001-
2		01010-81020	Bolt	7	26001-
3		01643-31032	Washer	7	26001-
4		234-03-81971	Bracket	1	26001-
5		01010-81230	Bolt	4	26001-
6		01643-31232	Washer	4	26001-

FIG. C0110-002003 Radiator (Fan Guard) (For Extra Bad Fuel and Poor Fuel Specification, Water+Dust, Large Fuel Prefilter)

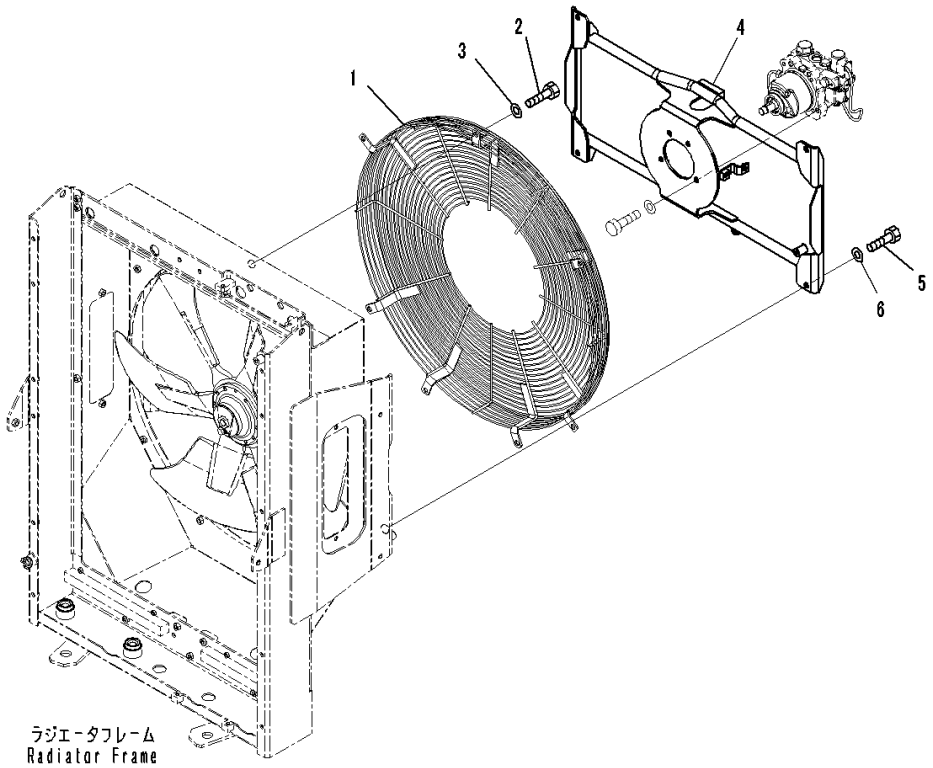

Index	Code	Part Number	Description	Qty	Serial Number
1		234-03-81910	Guard	1	26001-
2		01010-81020	Bolt	7	26001-
3		01643-31032	Washer	7	26001-
4		234-03-81971	Bracket	1	26001-
5		01010-81230	Bolt	4	26001-
6		01643-31232	Washer	4	26001-

FIG. C0110-001004 Radiator (Fan Motor) (1/4)

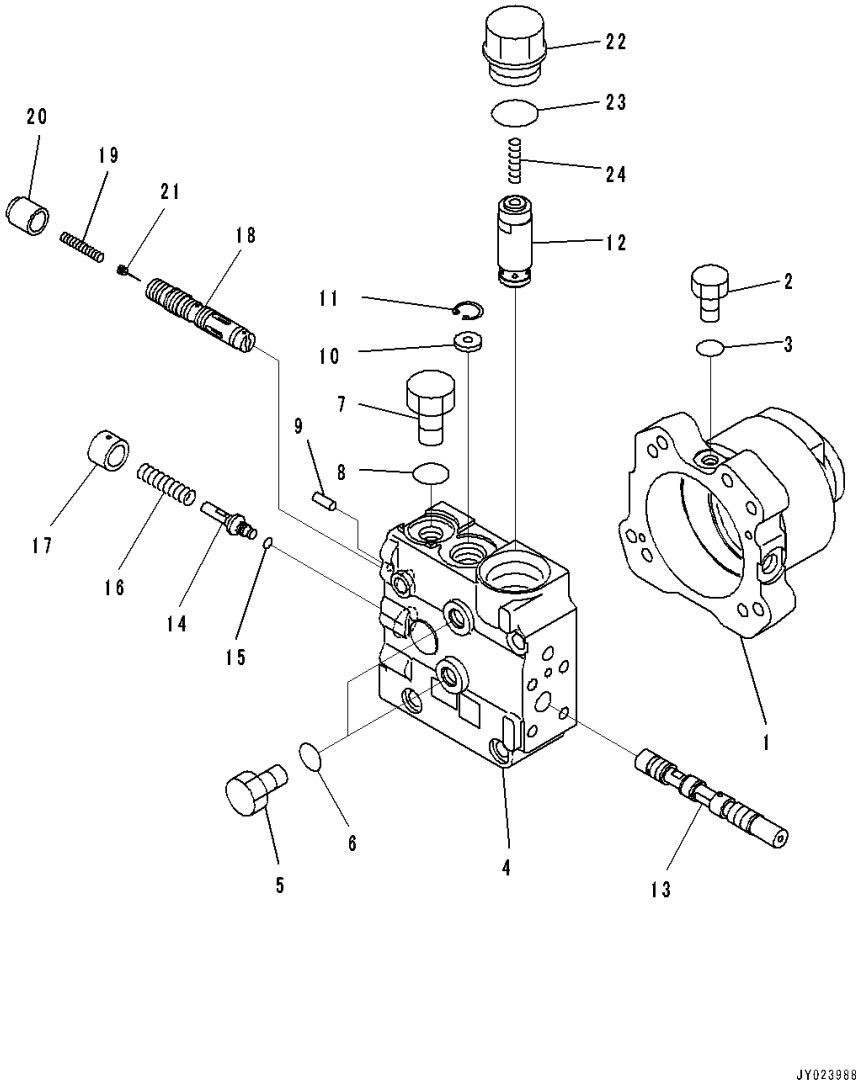

Index	Code	Part Number	Description	Qty	Serial Number
		708-7T-00770	Motor Assembly	1	26001-
1	C2	708-7T-11380	• Case	1	26001-
2		07040-11007	• Plug	1	26001-
3		07002-21023	• O-ring	1	26001-
	C2	708-7T-01440	• Cover Subassembly	1	26001-
4	C1		• • Cover, End	1	26001-
5		708-7R-11220	• • Plug	4	26001-
6		07002-21223	• • O-ring	4	26001-
7		07040-11409	• • Plug	1	26001-
8		07002-21423	• • O-ring	1	26001-
9	C2	720-68-19610	• • Pin	2	26001-
10	C1		• • Orifice	1	26001-
11		04065-01610	• • Ring, Snap	1	26001-
12		702-77-03600	• • Valve, Relief	1	26001-
13	C1		• • Spool	1	26001-
14	C2	708-7T-18130	• • Plug	1	26001-
15		07002-20823	• • O-ring	1	26001-
16	C2	708-7S-18120	• • Spring	1	26001-
17	C2	708-7S-18130	• • Spacer	1	26001-
18	C1		• • Spool	1	26001-
19	C2	708-7T-18140	• • Spring	1	26001-
20	C1		• • Retainer	1	26001-
21	C2	723-30-51130	• • Orifice	1	26001-
22		708-7R-21110	• • Plug	1	26001-
23		07002-23334	• • O-ring	1	26001-
24		708-7R-21120	• • Spring	1	26001-

FIG. C0110-001005 Radiator (Fan Motor) (2/4)

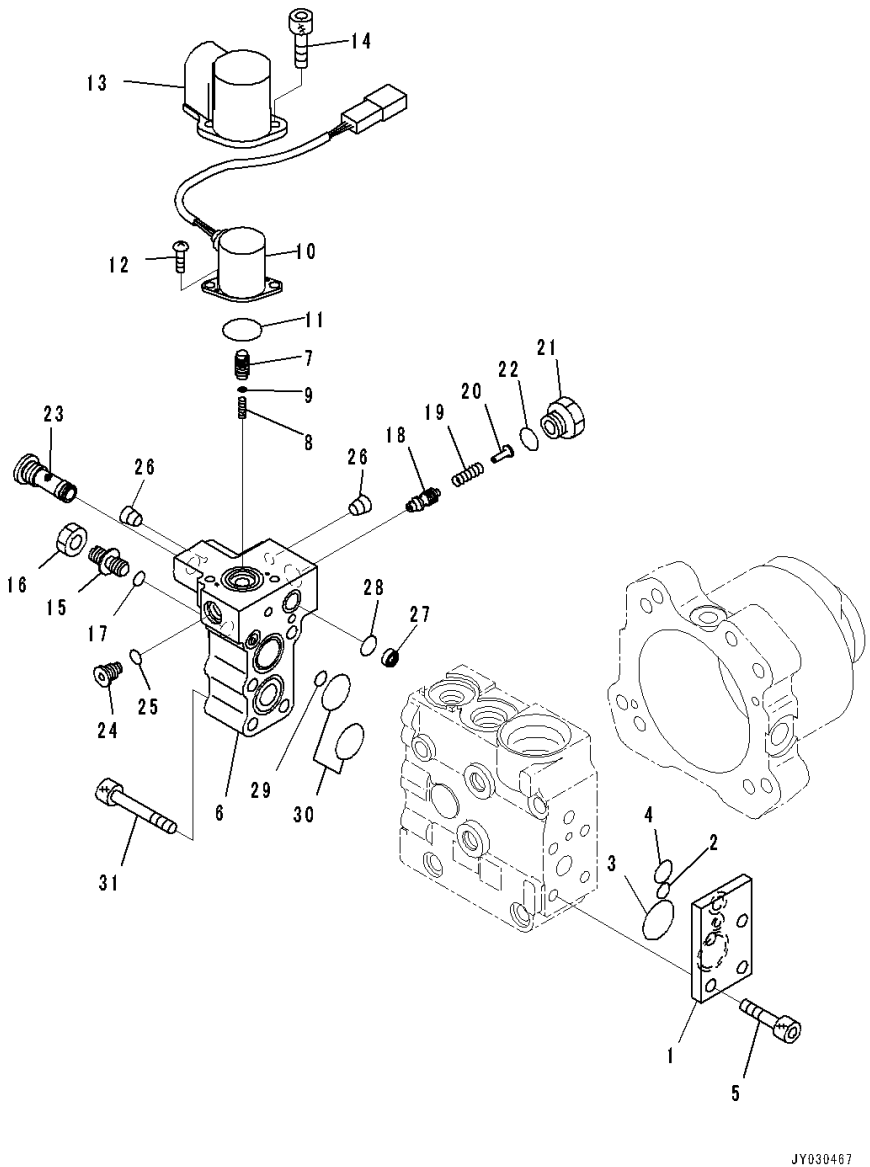

Index	Code	Part Number	Description	Qty	Serial Number
		708-7T-00770	Motor Assembly	1	26001-
	C2	708-7T-01440	• Cover Subassembly	1	26001-
1		708-7S-18350	• • Cover	1	26001-
2		07000-E1008	• • O-ring	1	26001-
3		708-7S-18230	• • O-ring	1	26001-
4		07000-F2012	• • O-ring	1	26001-
5		01252-60820	• • Bolt, Hexagon Socket Head	4	26001-
	C2	708-7S-01340	• • Valve Assembly, Pilot	1	26001-
6	C1		• • • Case	1	26001-
7	C1		• • • Spool	1	26001-
8	C2	702-21-54160	• • • Spring	1	26001-
9	C2	702-21-54210	• • • Shim,T=1.0mm	1	26001-
	C2	702-21-54220	• • • Shim,T=1.2mm	1	26001-
	C2	702-21-54230	• • • Shim,T=1.4mm	1	26001-
	C2	702-21-54240	• • • Shim,T=0.8mm	1	26001-
	C2	702-21-54250	• • • Shim,T=0.6mm	1	26001-
10	C2	702-21-57410	• • • Solenoid	1	26001-
11		702-21-55870	• • • O-ring	1	26001-
12		702-21-54180	• • • Screw	2	26001-
13		708-1S-18180	• • • Cover	1	26001-
14		01252-60616	• • • Bolt, Hexagon Socket Head	2	26001-
15	C2	708-7R-18160	• • • Plug	1	26001-
16	C2	01582-11008	• • • Nut	1	26001-
17	C2	07002-21023	• • • O-ring	1	26001-
18	C1		• • • Spool	1	26001-
19	C2	708-7R-18180	• • • Spring	1	26001-
20	C2	708-7R-18220	• • • Retainer	1	26001-
21	C2	708-7R-18190	• • • Plug	1	26001-
22		07002-21623	• • • O-ring	1	26001-
23		708-7R-04160	• • • Filter Assembly	1	26001-
24		702-21-54190	• • • Filter	1	26001-
25		07002-21023	• • • O-ring	1	26001-
26	C1		• • • Plug, Stocking	2	26001-
27	C2	708-2L-25480	• • • Filter	1	26001-
28	C2	708-7S-18360	• • • O-ring	1	26001-
29		07000-E1010	• • • O-ring	1	26001-
30		708-7S-18230	• • • O-ring	2	26001-
31		01252-60845	• • Bolt, Hexagon Socket Head	4	26001-

FIG. C0110-001006 Radiator (Fan Motor) (3/4)

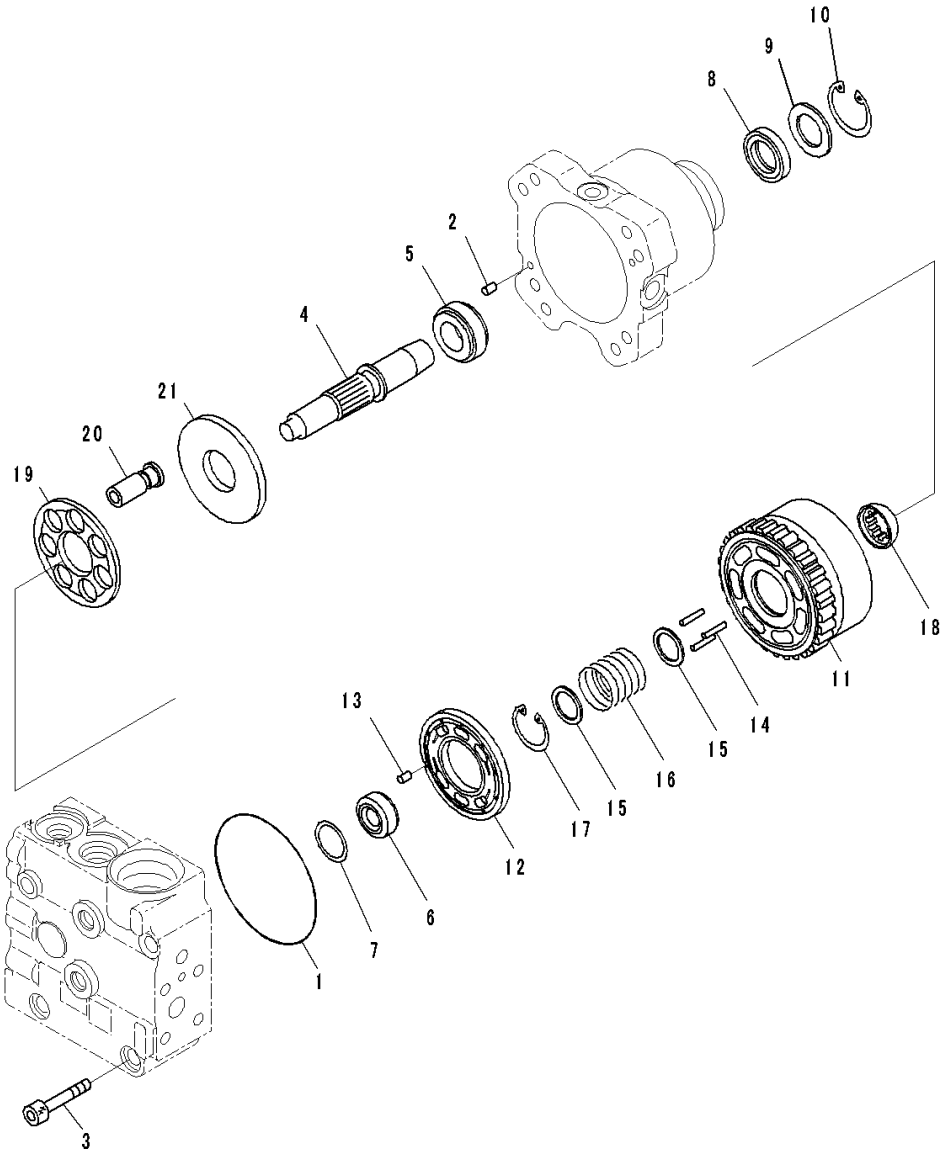

Index	Code	Part Number	Description	Qty	Serial Number
		708-7T-00770	Motor Assembly	1	26001-
1	C2	07000-E2110	• O-ring	1	26001-
2	C2	04020-00616	• Pin, Dowel	2	26001-
3		01010-81270	• Bolt	4	26001-
4	C2	708-7S-12330	• Shaft	1	26001-
5	C2	708-7T-12520	• Bearing	1	26001-
6	C2	708-7T-12530	• Bearing	1	26001-
7	C2	708-7S-05110	• Shim Kit	1	26001-
	C1		• • Shim,T=0.85mm	1	26001-
	C1		• • Shim,T=1.05mm	1	26001-
	C1		• • Shim,T=1.25mm	1	26001-
	C1		• • Shim,T=0.75mm	1	26001-
	C1		• • Shim,T=0.95mm	1	26001-
	C1		• • Shim,T=1.15mm	1	26001-
8	C2	708-7T-12340	• Seal, Oil	1	26001-
9		708-1S-11890	• Spacer	1	26001-
10		04065-04518	• Ring, Snap	1	26001-
11	C2	708-7T-13160	• Cylinder Block	1	26001-
12	C2	708-7T-13830	• Plate, Valve	1	26001-
13	C2	720-68-19610	• Pin	1	26001-
14	C2	708-2L-23360	• Pin	3	26001-
15	C2	708-7S-13530	• Spacer	2	26001-
16	C2	708-7T-13840	• Spring	1	26001-
17	C2	04065-03212	• Ring, Snap	1	26001-
18	C2	708-7T-13820	• Guide, Retainer	1	26001-
19	C2	708-7T-13850	• Retainer	1	26001-
20	C2	708-7S-13350	• Piston Subassembly	7	26001-
21	C2	708-7T-13860	• Plate	1	26001-

FIG. C0110-001007 Radiator (Fan Motor) (4/4)

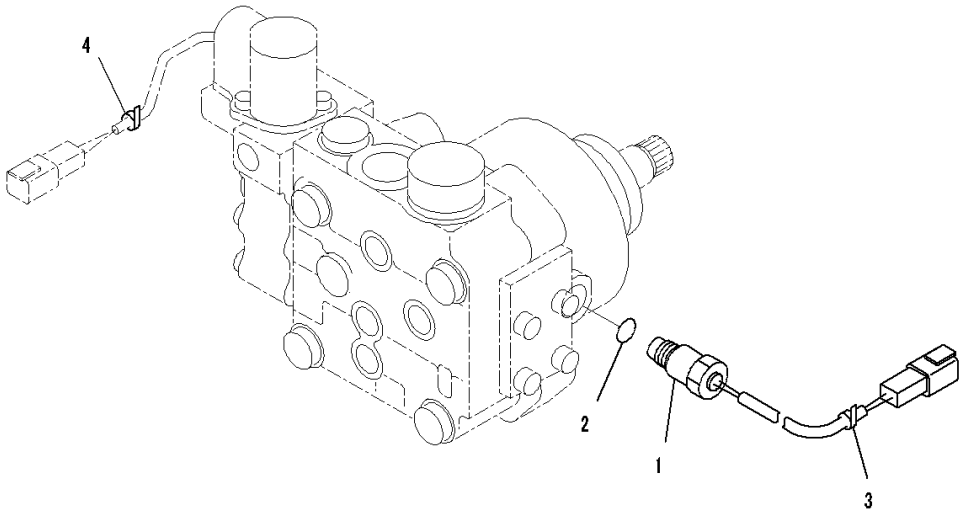

Index	Code	Part Number	Description	Qty	Serial Number
		708-7T-00770	Motor Assembly	1	26001-
1		729-11-41000	• Sensor, Revolution	1	26001-
2		07002-21423	• O-ring	1	26001-
3		20Y-62-22820	• Band,Blue	1	26001-
4		20Y-62-22790	• Band,Red	1	26001-

FIG. C0110-001008 Radiator (Fan Motor Related Parts)

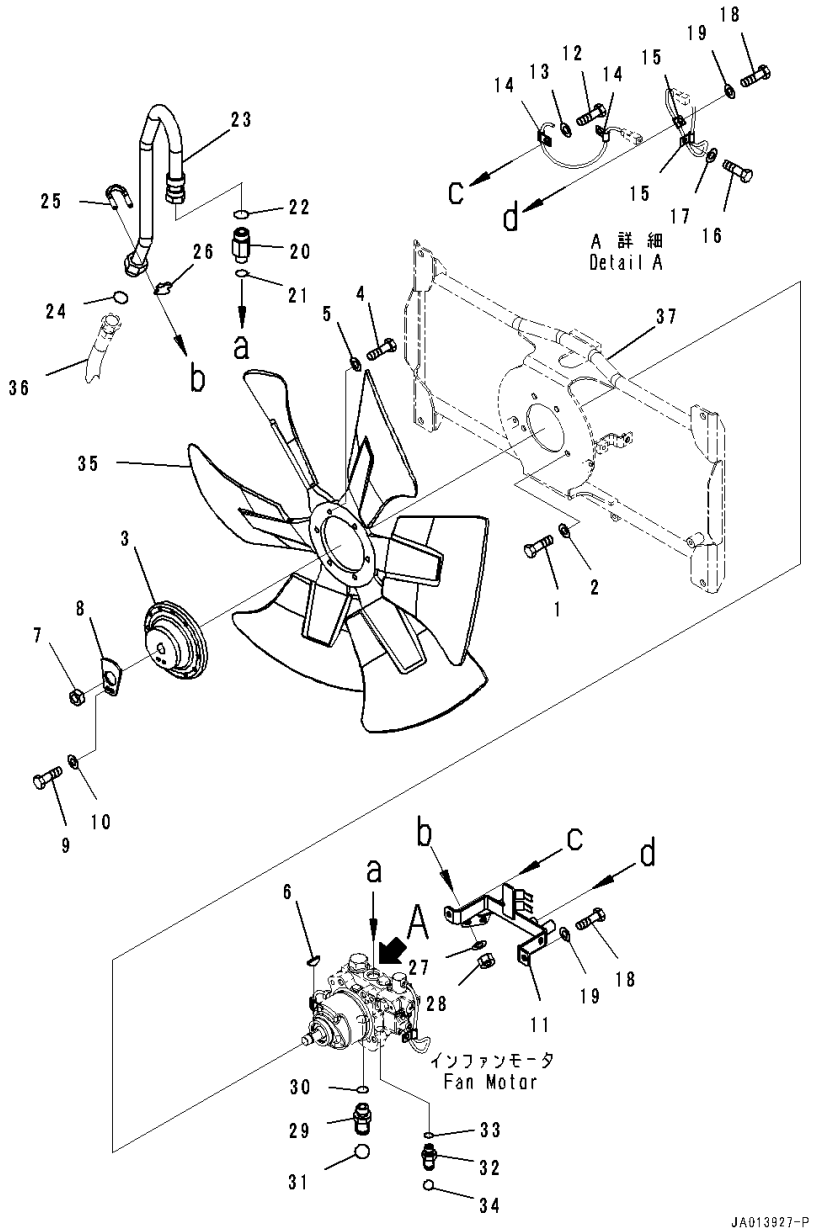

Index	Code	Part Number	Description	Qty	Serial Number
1		01010-81235	Bolt	4	26001-
2		01643-31232	Washer	4	26001-
3		423-03-31710	Boss	1	26001-
4		01010-81030	Bolt	6	26001-
5		01643-31032	Washer	6	26001-
6		04010-00722	Key	1	26001-
7		01583-12012	Nut	1	26001-
8		154-03-72270	Lock	1	26001-
9		01010-81020	Bolt	1	26001-
10		01643-31032	Washer	1	26001-
11		234-03-81530	Bracket	1	26001-
12		01010-81020	Bolt	2	26001-
13		01643-31032	Washer	2	26001-
14		04434-50610	Clip	2	26001-
15		04434-50510	Clip	2	26001-
16		01010-81016	Bolt	1	26001-
17		01643-31032	Washer	1	26001-
18		01010-81020	Bolt	2	26001-
19		01643-31032	Washer	2	26001-
20		234-03-81940	Union	1	26001-
21		07002-12434	O-ring	1	26001-
22		02896-11018	O-ring	1	26001-
23		234-03-81520	Tube	1	26001-
24		02896-11018	O-ring	1	26001-
25		07283-32738	Clip, Pipe	1	26001-
26		07283-52737	Seat	1	26001-
27		01643-31032	Washer	2	26001-
28		01597-01009	Nut	2	26001-
29		02783-10628	Elbow	1	26001-
30		07002-12434	O-ring	1	26001-
31		02896-11018	O-ring	1	26001-
32		20U-62-41610	Elbow	1	26001-
33		07002-11823	O-ring	1	26001-
34		02896-11012	O-ring	1	26001-
35		600-645-7850	Fan	1	26001-
36		(234-60-86840)	Hose(Hydraulic Piping,Fan Drive Piping)(Refer to Page 362)		
37		(234-03-81971)	Bracket(Radiator,Fan Guard)(Refer to Page 151)		

FIG. C0110-001008 Radiator (Fan Motor Related Parts)

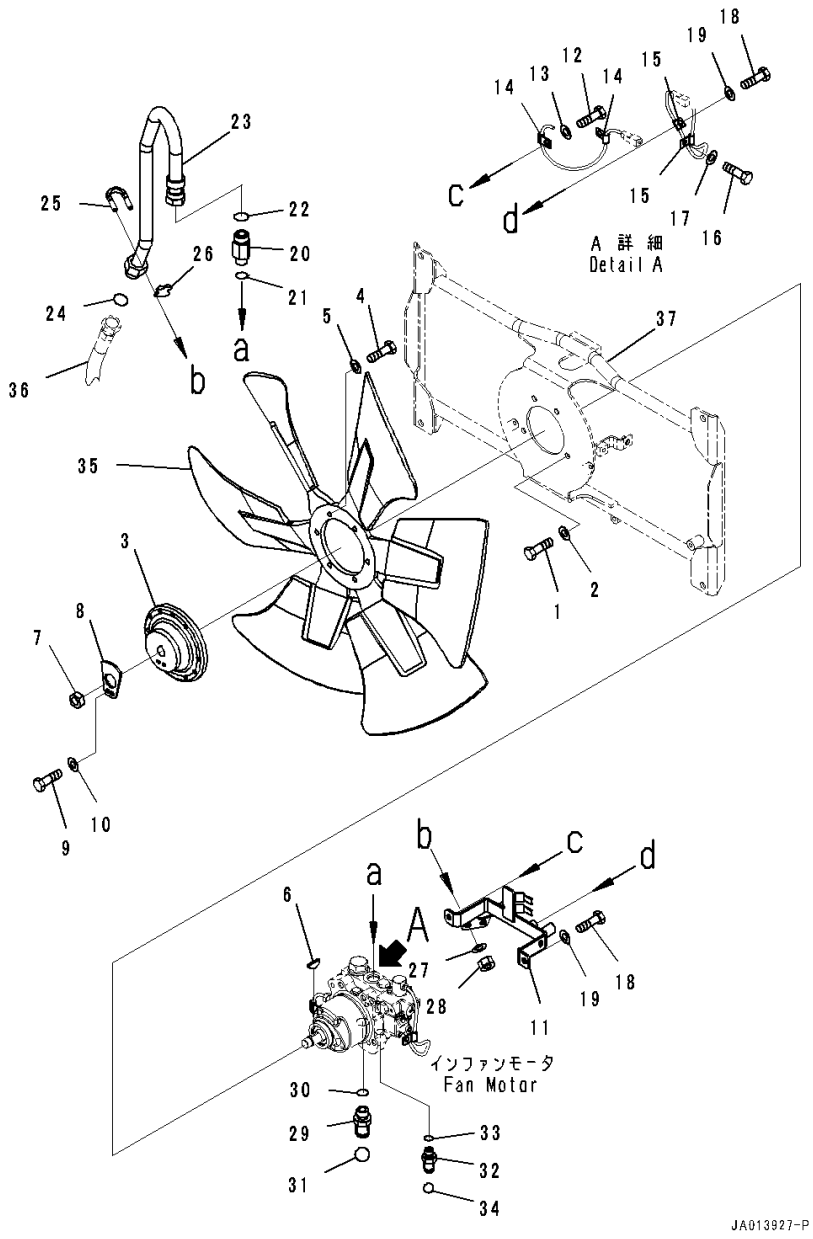

Index	Code	Part Number	Description	Qty	Serial Number
		(234-03-81971)	Bracket(Radiator,Fan Guard,For Extra Bad Fuel and Poor Fuel Specification, Water+Dust, Large Fuel Prefilter)(Refer to Page 152)		

FIG. C0110-001009 Radiator (Condenser)

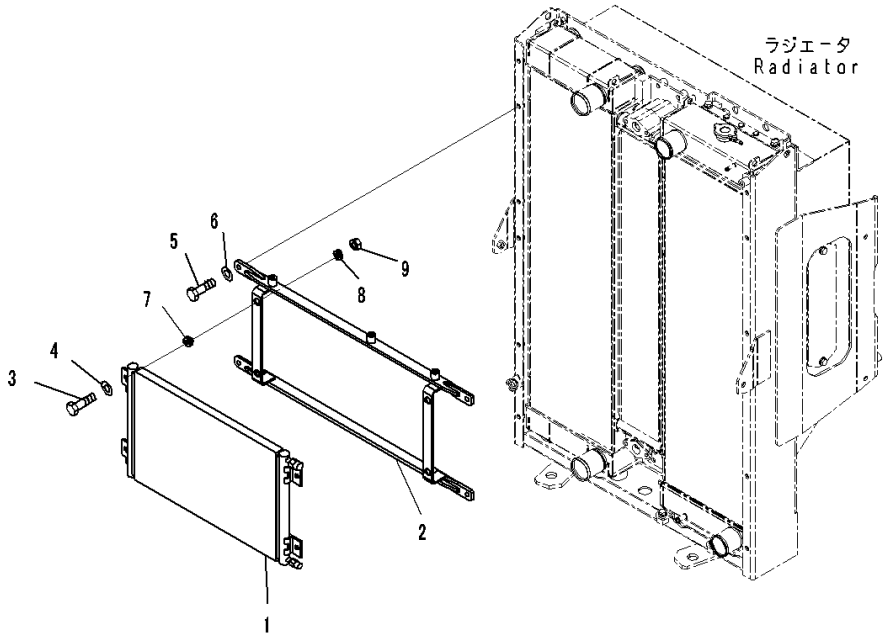

Index	Code	Part Number	Description	Qty	Serial Number
1		56E-07-21133	Condenser Assembly	1	26001-
2		234-03-81620	Bracket	1	26001-
3		01010-80840	Bolt	4	26001-
4		01643-30823	Washer	4	26001-
5		01010-81030	Bolt	4	26001-
6		01643-31032	Washer	4	26001-
7		425-03-37280	Cushion	4	26001-
8		425-03-37290	Cushion	4	26001-
9		01580-10806	Nut	4	26001-

FIG. C0110-001010 Radiator (Mounting) (For Extra Bad Fuel and Poor Fuel Specification, Water+Dust, Additional Filter)

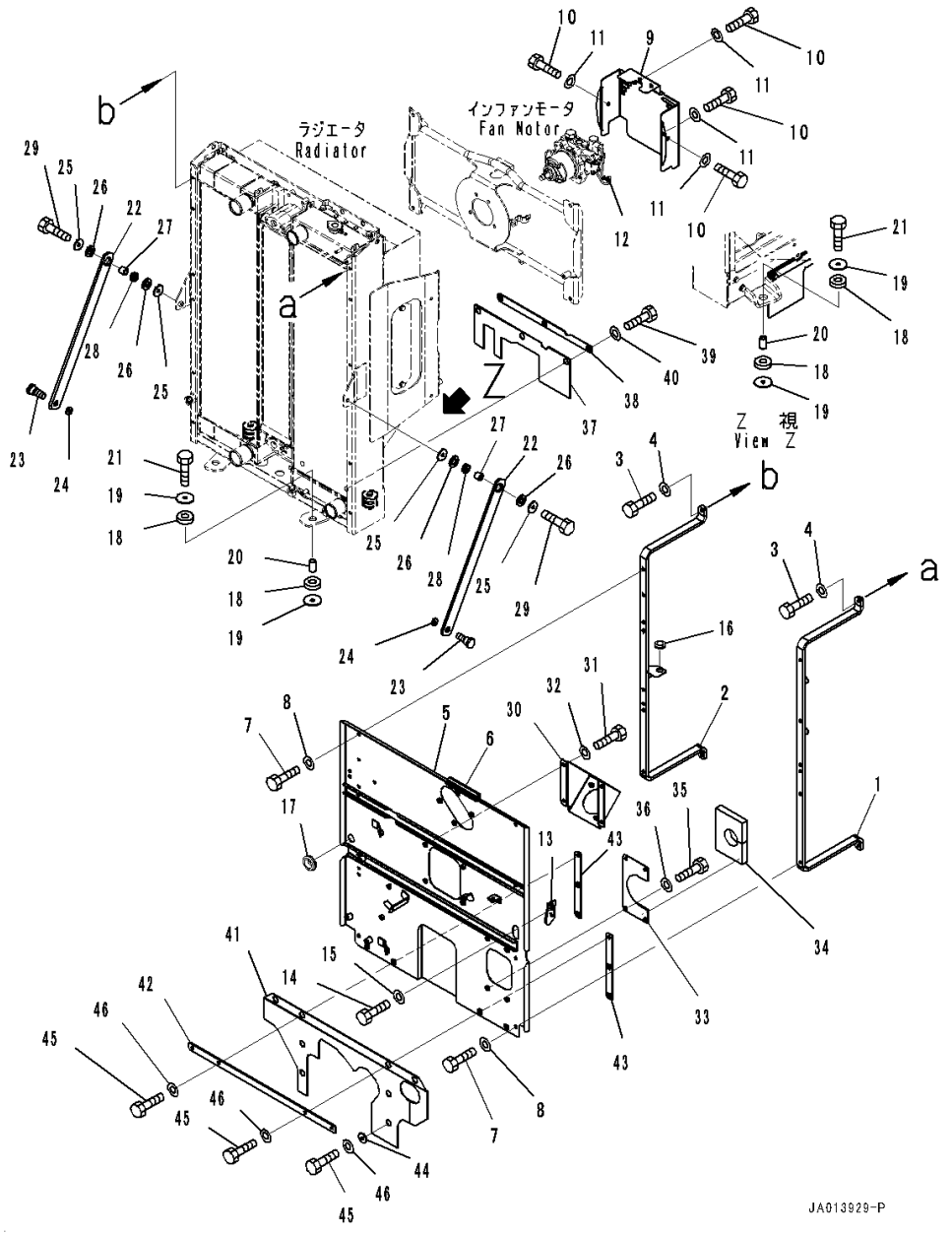

Index	Code	Part Number	Description	Qty	Serial Number
1		234-03-81960	Bracket	1	26001-
2		234-03-81870	Bracket	1	26001-
3		01010-81030	Bolt	4	26001-
4		01643-31032	Washer	4	26001-
5		234-03-81991	Cover	1	26001-
6		234-03-82160	• Seal	1	26001-
7		01010-81030	Bolt	8	26001-
8		01643-31032	Washer	8	26001-
9		234-03-81920	Cover	1	26001-
10		01010-81020	Bolt	5	26001-
11		01643-31032	Washer	5	26001-
12		08034-40521	Band	1	26001-
13		234-03-81980	Bracket	1	26001-
14		01010-81030	Bolt	2	26001-
15		01643-31032	Washer	2	26001-
16		08037-01610	Grommet	1	26001-
17		08037-02512	Grommet	1	26001-
18		418-03-11390	Cushion	8	26001-
19		416-03-11210	Washer	8	26001-
20		23B-03-71770	Spacer	4	26001-
21		01010-81265	Bolt	4	26001-
22		234-03-81551	Plate	2	26001-
23		416-03-11281	Bolt	2	26001-
24		01643-31232	Washer	2	26001-
25		419-43-17920	Washer	4	26001-
26		416-03-11260	Cushion	4	26001-
27		416-03-11270	Spacer	2	26001-
28		416-03-11250	Cushion	2	26001-
29		01010-81250	Bolt	2	26001-
30		234-03-82220	Cover	1	26001-
31		01010-81025	Bolt	4	26001-
32		01643-31032	Washer	4	26001-
33		234-03-82210	Cover	1	26001-
34		234-03-82240	• Sheet	1	26001-
35		01010-81020	Bolt	4	26001-
36		01643-31032	Washer	4	26001-
37		234-03-81810	Sheet	1	26001-
38		234-03-81820	Plate	1	26001-
39		01010-81025	Bolt	3	26001-
40		01643-31032	Washer	3	26001-

FIG. C0110-001010 Radiator (Mounting) (For Extra Bad Fuel and Poor Fuel Specification, Water+Dust, Additional Filter)

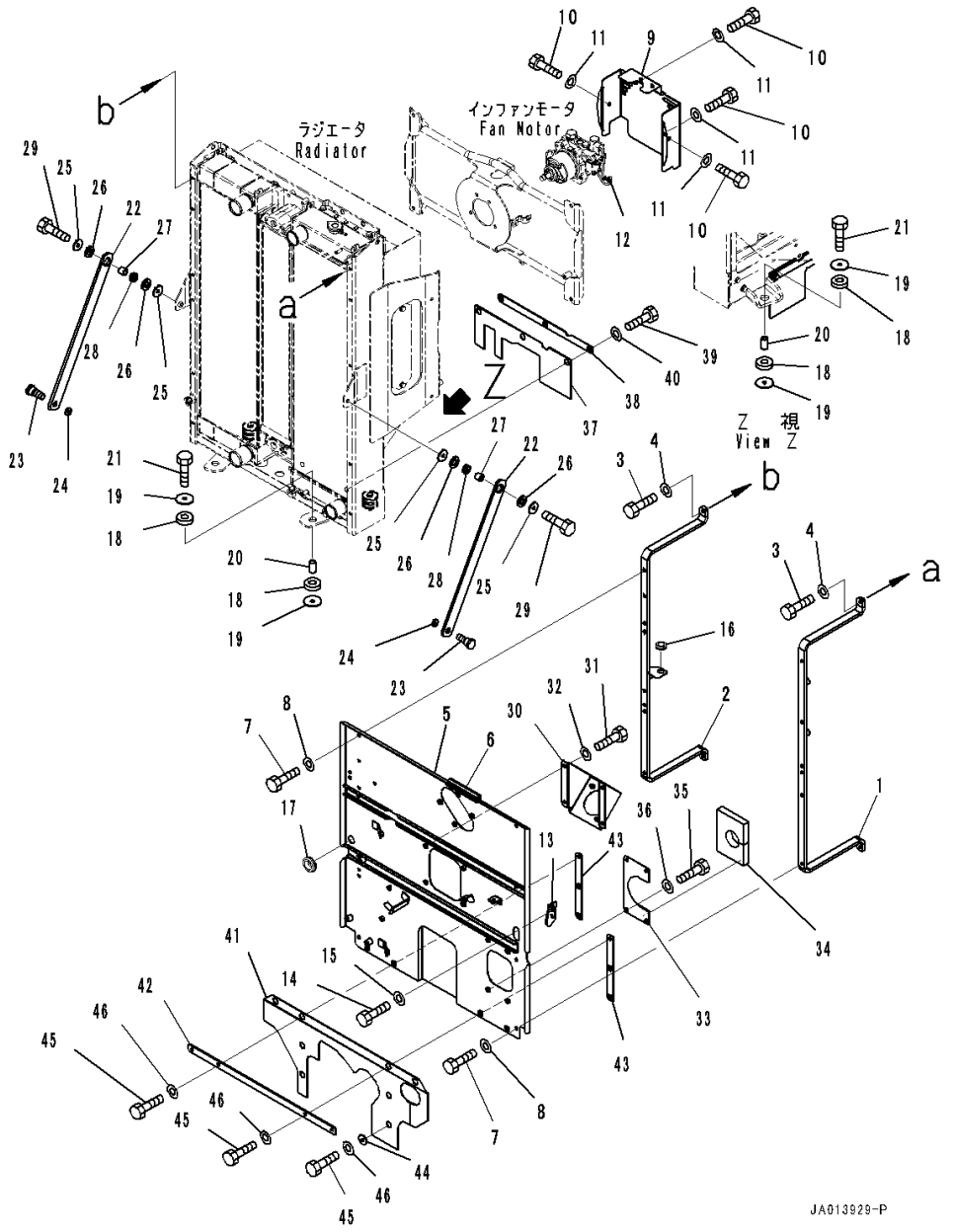

Index	Code	Part Number	Description	Qty	Serial Number
41		234-03-81630	Sheet	1	26001-
42		234-03-81640	Plate	1	26001-
43		234-03-81650	Plate	2	26001-
44		415-64-13120	Washer	4	26001-
45		01010-81025	Bolt	8	26001-
46		01643-31032	Washer	8	26001-

FIG. C0110-002010 Radiator (Mounting) (For Extra Bad Fuel and Poor Fuel Specification, Water+Dust, Large Fuel Prefilter)

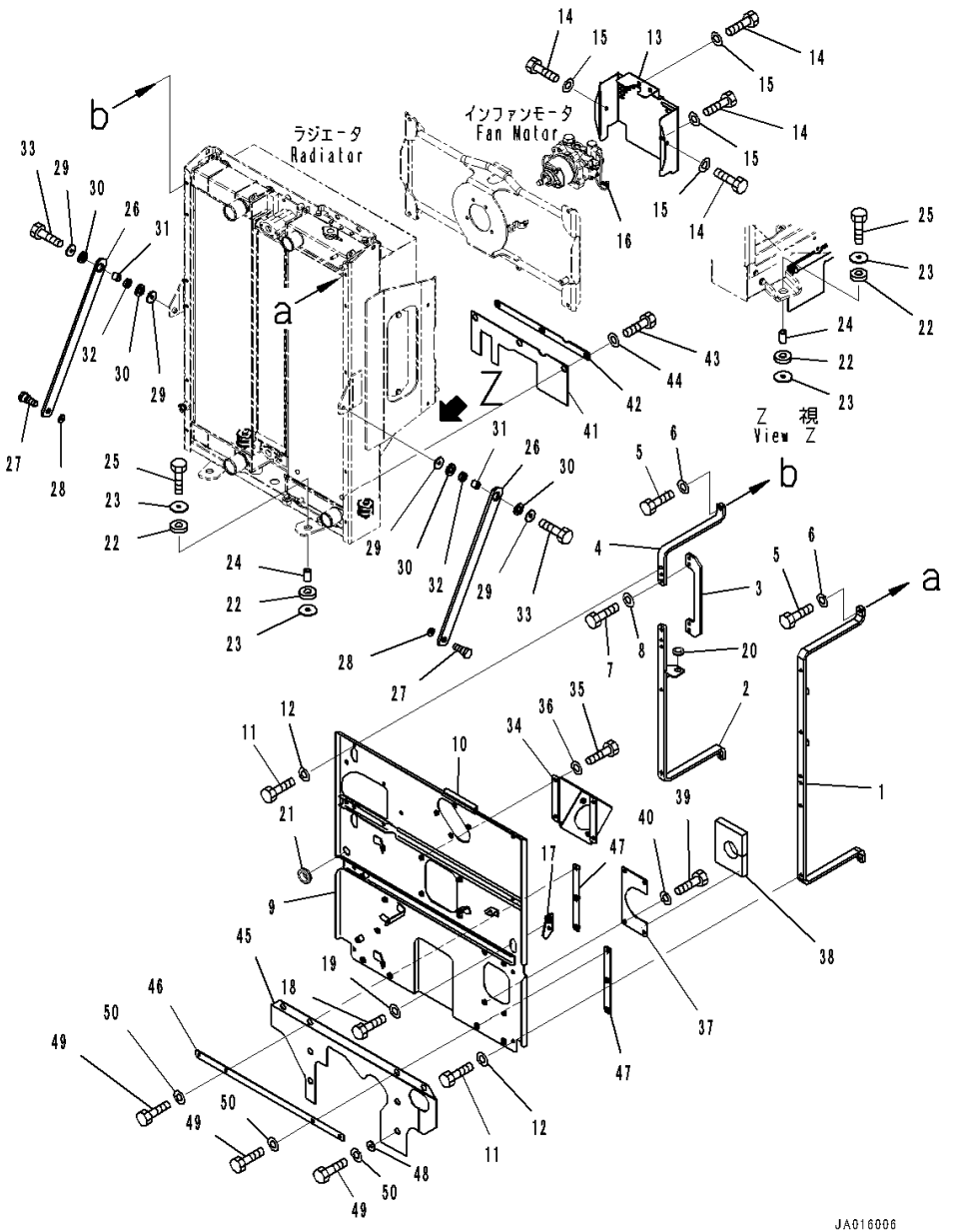

Index	Code	Part Number	Description	Qty	Serial Number
1		234-03-81960	Bracket	1	26001-
2		234-03-82870	Bracket	1	26001-
3		234-03-82880	Bracket	1	26001-
4		234-03-82890	Bracket	1	26001-
5		01010-81030	Bolt	4	26001-
6		01643-31032	Washer	4	26001-
7		01010-81035	Bolt	4	26001-
8		01643-31032	Washer	4	26001-
9		234-03-82991	Cover	1	26001-
10		234-03-82160	• Seal	1	26001-
11		01010-81030	Bolt	8	26001-
12		01643-31032	Washer	8	26001-
13		234-03-81920	Cover	1	26001-
14		01010-81020	Bolt	5	26001-
15		01643-31032	Washer	5	26001-
16		08034-40521	Band	1	26001-
17		234-03-81980	Bracket	1	26001-
18		01010-81030	Bolt	2	26001-
19		01643-31032	Washer	2	26001-
20		08037-01610	Grommet	1	26001-
21		08037-02512	Grommet	1	26001-
22		418-03-11390	Cushion	8	26001-
23		416-03-11210	Washer	8	26001-
24		23B-03-71770	Spacer	4	26001-
25		01010-81265	Bolt	4	26001-
26		234-03-81551	Plate	2	26001-
27		416-03-11281	Bolt	2	26001-
28		01643-31232	Washer	2	26001-
29		419-43-17920	Washer	4	26001-
30		416-03-11260	Cushion	4	26001-
31		416-03-11270	Spacer	2	26001-
32		416-03-11250	Cushion	2	26001-
33		01010-81250	Bolt	2	26001-
34		234-03-82220	Cover	1	26001-
35		01010-81025	Bolt	4	26001-
36		01643-31032	Washer	4	26001-
37		234-03-82210	Cover	1	26001-
38		234-03-82240	• Sheet	1	26001-
39		01010-81020	Bolt	4	26001-

FIG. C0110-002010 Radiator (Mounting) (For Extra Bad Fuel and Poor Fuel Specification, Water+Dust, Large Fuel Prefilter)

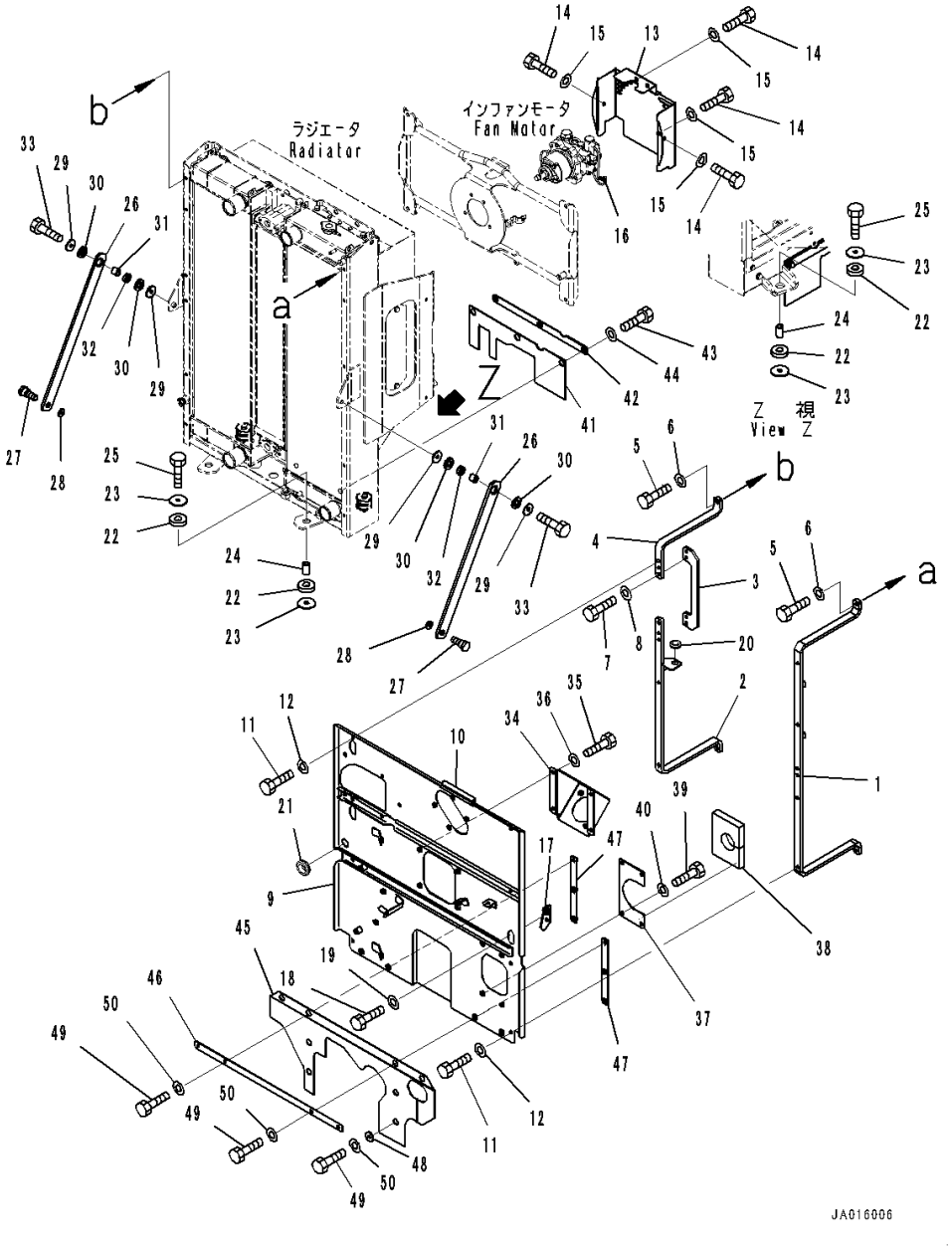

Index	Code	Part Number	Description	Qty	Serial Number
40		01643-31032	Washer	4	26001-
41		234-03-81810	Sheet	1	26001-
42		234-03-81820	Plate	1	26001-
43		01010-81025	Bolt	3	26001-
44		01643-31032	Washer	3	26001-
45		234-03-81630	Sheet	1	26001-
46		234-03-81640	Plate	1	26001-
47		234-03-81650	Plate	2	26001-
48		415-64-13120	Washer	4	26001-
49		01010-81025	Bolt	8	26001-
50		01643-31032	Washer	8	26001-

FIG. C0120-001001 Cooling Piping (Radiator Piping) (For Extra Bad Fuel and Poor Fuel Specification, Water+Dust, Additional Filter)

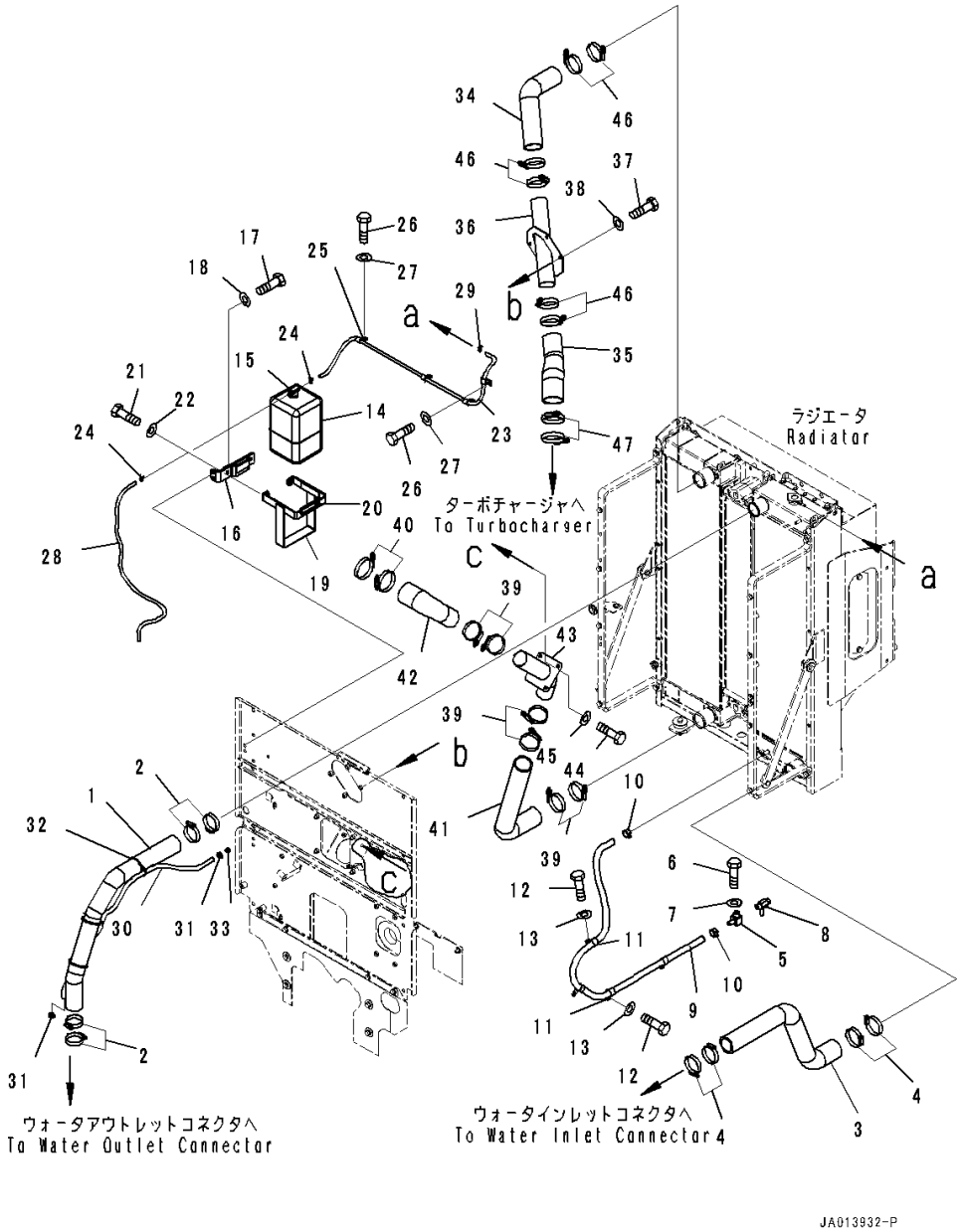

Index	Code	Part Number	Description	Qty	Serial Number
1		234-03-82310	Hose	1	26001-
2		07289-00070	Clamp	4	26001-
3		234-03-82120	Hose	1	26001-
4		07289-00070	Clamp	4	26001-
5		232-03-56111	Nipple	1	26001-
6		01010-81020	Bolt	1	26001-
7		01643-31032	Washer	1	26001-
8		07730-50004	Valve, Drain	1	26001-
9		234-03-82130	Hose	1	26001-
10		09479-02400	Clip	2	26001-
11		04434-52210	Clip	4	26001-
12		01010-81025	Bolt	3	26001-
13		01643-31032	Washer	3	26001-
14		17A-03-14111	Tank	1	26001-
15		17A-03-14120	• Cap	1	26001-
16		234-03-82140	Bracket	1	26001-
17		01010-81030	Bolt	2	26001-
18		01643-31032	Washer	2	26001-
19		234-03-82191	Bracket	1	26001-
20		205-03-71440	• Sheet	1	26001-
21		01010-81025	Bolt	2	26001-
22		01643-31032	Washer	2	26001-
23		234-03-83130	Hose	1	26001-
24		206-03-43340	Clip	2	26001-
25		04434-51210	Clip	4	26001-
26		01010-81025	Bolt	4	26001-
27		01643-31032	Washer	4	26001-
28		234-03-83140	Hose	1	26001-
29		206-03-43340	Clip	1	26001-
30		234-03-83120	Hose	1	26001-
31		11Y-09-11140	Clip	2	26001-
32		134-03-61410	Band	3	26001-
33		424-03-41540	Tube	1	26001-
34		234-02-81210	Hose	1	26001-
35		234-02-81231	Hose	1	26001-
36		234-02-81142	Tube	1	26001-
37		01010-81025	Bolt	4	26001-
38		01643-31032	Washer	4	26001-
39		07299-00070	Clamp	6	26001-

FIG. C0120-001001 Cooling Piping (Radiator Piping) (For Extra Bad Fuel and Poor Fuel Specification, Water+Dust, Additional Filter)

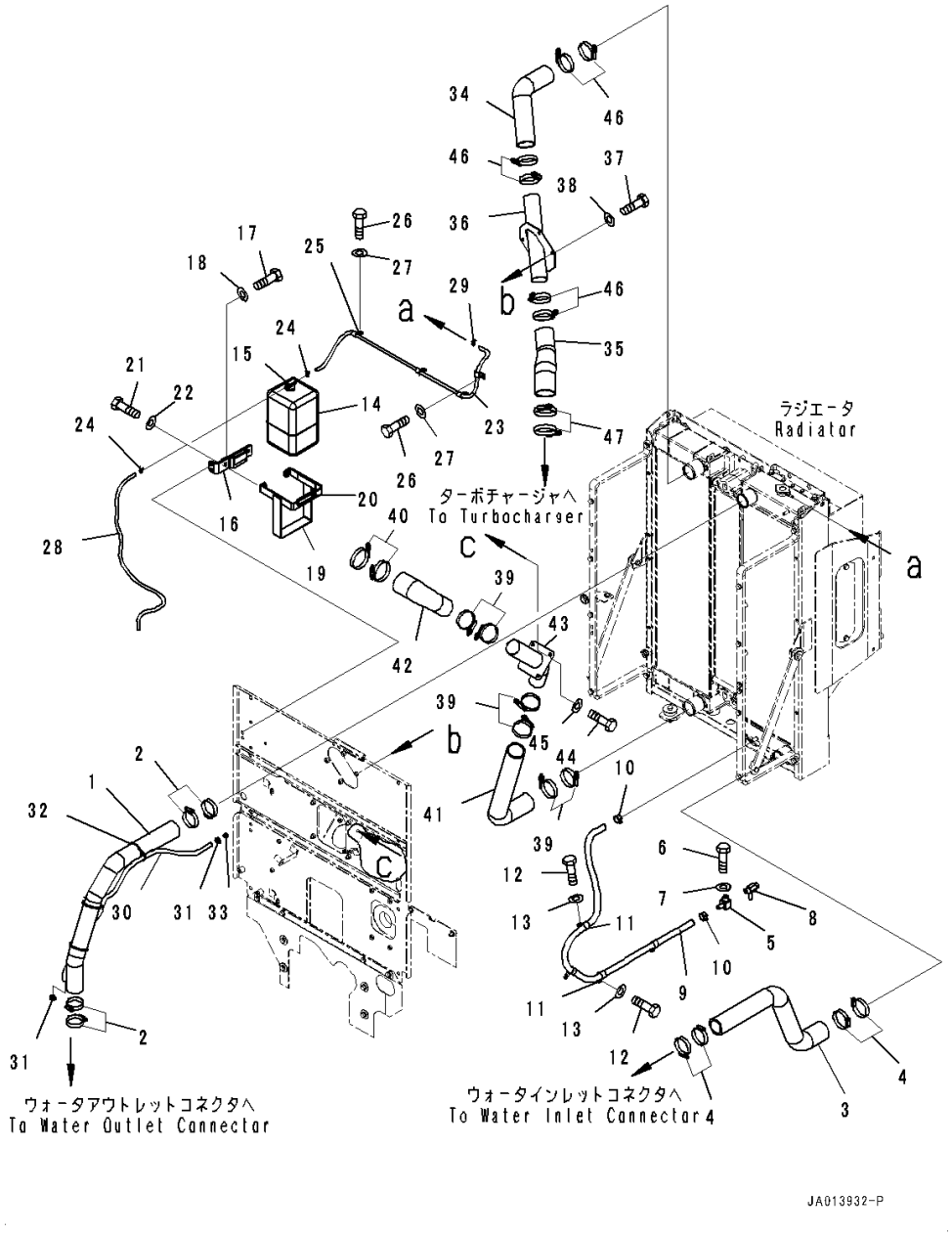

Index	Code	Part Number	Description	Qty	Serial Number
40		07299-00080	Clamp, Hose	2	26001-
41		234-02-81220	Hose	1	26001-
42		234-02-81240	Hose	1	26001-
43		234-02-81131	Tube	1	26001-
44		01010-81025	Bolt	3	26001-
45		01643-31032	Washer	3	26001-
46		07299-00070	Clamp	6	26001-
47		07299-00080	Clamp, Hose	2	26001-

FIG. C0120-002001 Cooling Piping (Radiator Piping) (For Extra Bad Fuel and Poor Fuel Specification, Water+Dust, Large Fuel Prefilter)

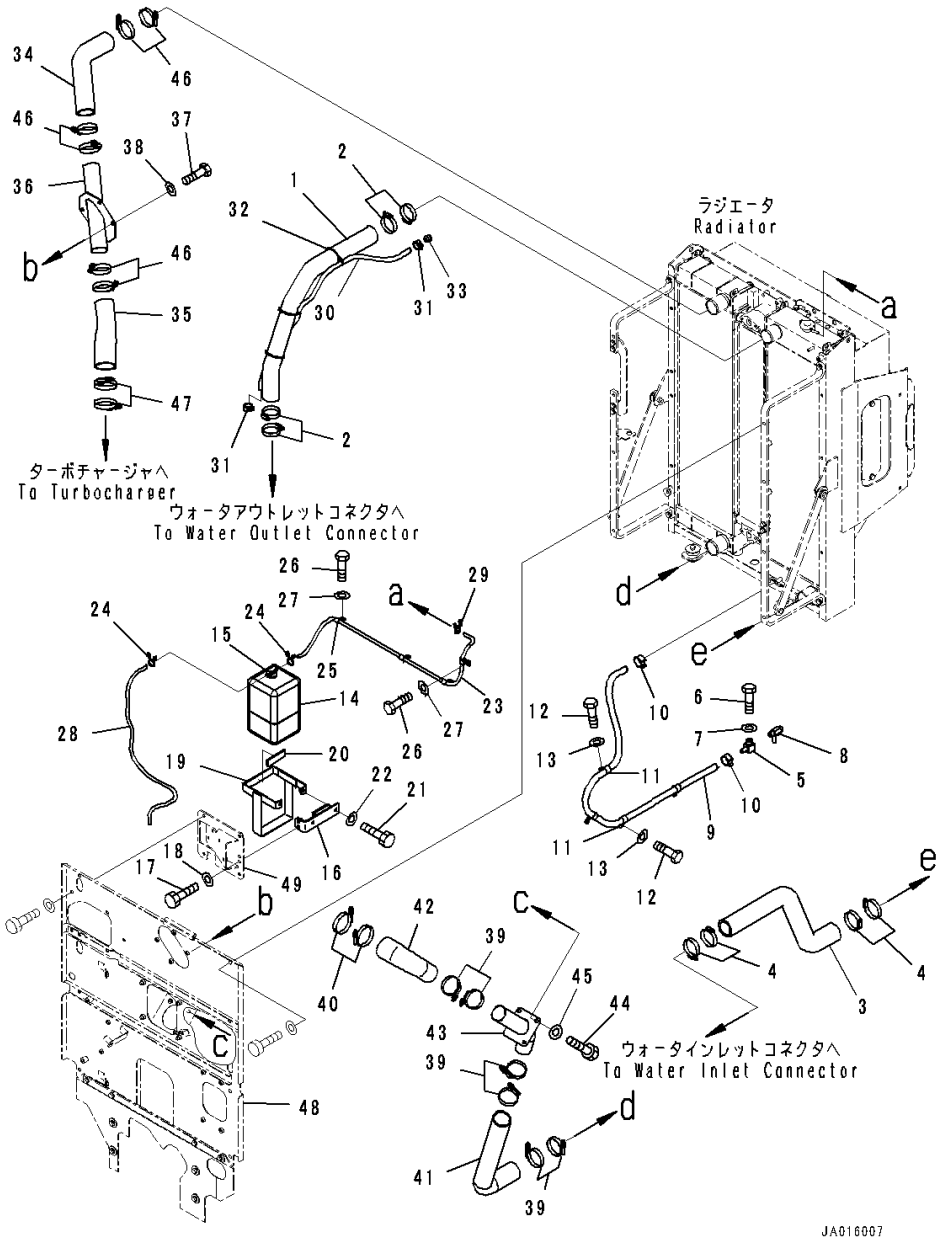

Index	Code	Part Number	Description	Qty	Serial Number
1		234-03-82310	Hose	1	26001-
2		07289-00070	Clamp	4	26001-
3		234-03-82120	Hose	1	26001-
4		07289-00070	Clamp	4	26001-
5		232-03-56111	Nipple	1	26001-
6		01010-81020	Bolt	1	26001-
7		01643-31032	Washer	1	26001-
8		07730-50004	Valve, Drain	1	26001-
9		234-03-82130	Hose	1	26001-
10		09479-02400	Clip	2	26001-
11		04434-52210	Clip	4	26001-
12		01010-81025	Bolt	3	26001-
13		01643-31032	Washer	3	26001-
14		17A-03-14111	Tank	1	26001-
15		17A-03-14120	• Cap	1	26001-
16		234-03-82540	Bracket	1	26001-
17		01010-81025	Bolt	2	26001-
18		01643-31032	Washer	2	26001-
19		234-03-82191	Bracket	1	26001-
20		205-03-71440	• Sheet	1	26001-
21		01010-81025	Bolt	2	26001-
22		01643-31032	Washer	2	26001-
23		234-03-83130	Hose	1	26001-
24		206-03-43340	Clip	2	26001-
25		04434-51210	Clip	4	26001-
26		01010-81025	Bolt	4	26001-
27		01643-31032	Washer	4	26001-
28		234-03-83140	Hose	1	26001-
29		206-03-43340	Clip	1	26001-
30		234-03-83120	Hose	1	26001-
31		11Y-09-11140	Clip	2	26001-
32		134-03-61410	Band	3	26001-
33		424-03-41540	Tube	1	26001-
34		234-02-81210	Hose	1	26001-
35		234-02-81231	Hose	1	26001-
36		234-02-81142	Tube	1	26001-
37		01010-81025	Bolt	4	26001-
38		01643-31032	Washer	4	26001-
39		07299-00070	Clamp	6	26001-

FIG. C0120-002001 Cooling Piping (Radiator Piping) (For Extra Bad Fuel and Poor Fuel Specification, Water+Dust, Large Fuel Prefilter)

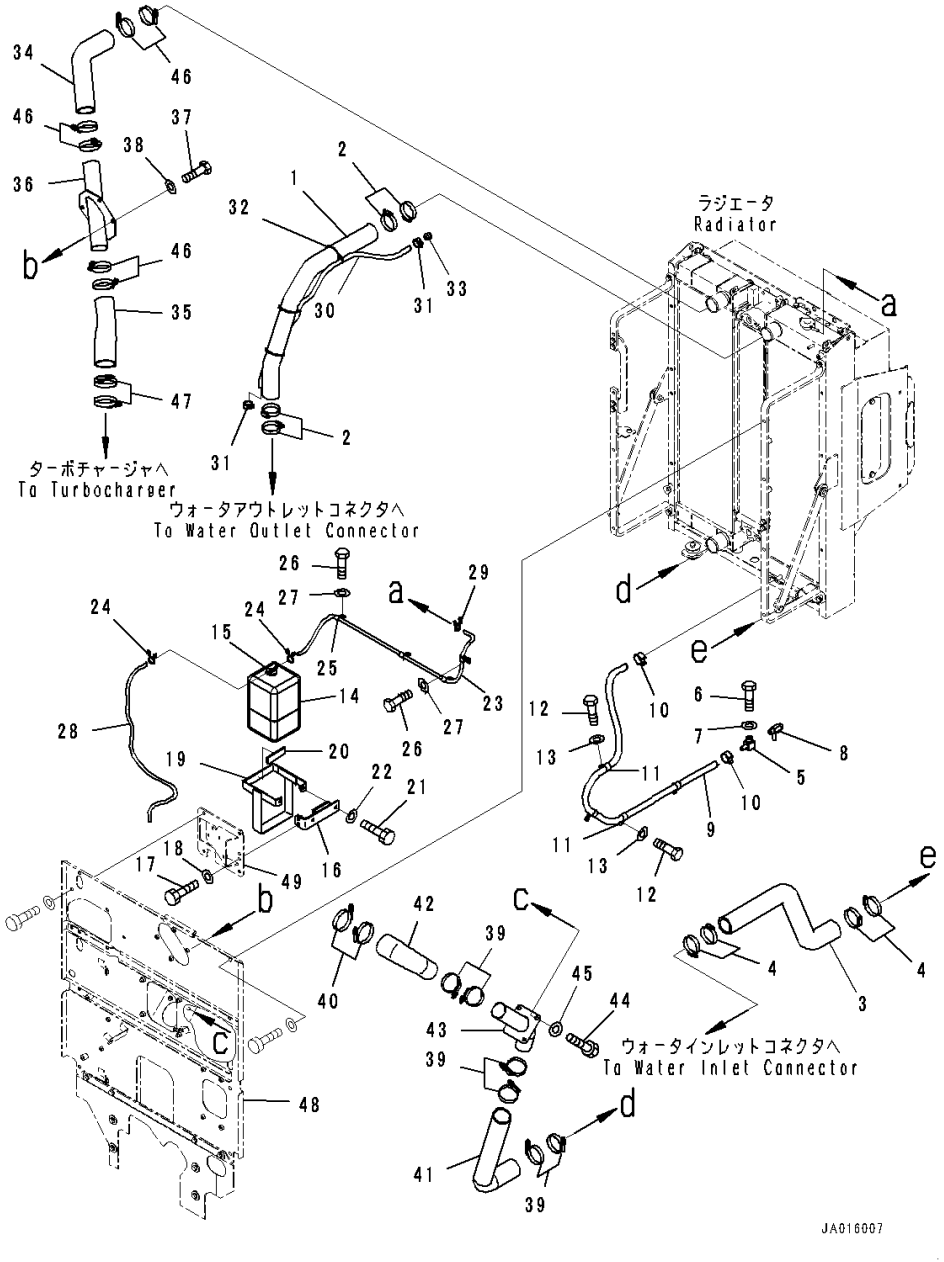

Index	Code	Part Number	Description	Qty	Serial Number
40		07299-00080	Clamp, Hose	2	26001-
41		234-02-81220	Hose	1	26001-
42		234-02-81240	Hose	1	26001-
43		234-02-81131	Tube	1	26001-
44		01010-81025	Bolt	3	26001-
45		01643-31032	Washer	3	26001-
46		07299-00070	Clamp	6	26001-
47		07299-00080	Clamp, Hose	2	26001-
48		(234-03-82991)	Cover(Radiator,Mounting,For Extra Bad Fuel and Poor Fuel Specification, Water+Dust, Large Fuel Prefilter)(Refer to Page 162)		
49		(234-04-82350)	Bracket(Fuel Piping,Prefilter Piping,With Large Fuel Prefilter)(Refer to Page 181)		
		(234-04-82350)	Bracket(Fuel Piping,Prefilter Piping,With Large Fuel Prefilter,For Biodiesel Fuel B20)(Refer to Page 182)		

FIG. C0120-001002 Cooling Piping (Air Cleaner Piping)

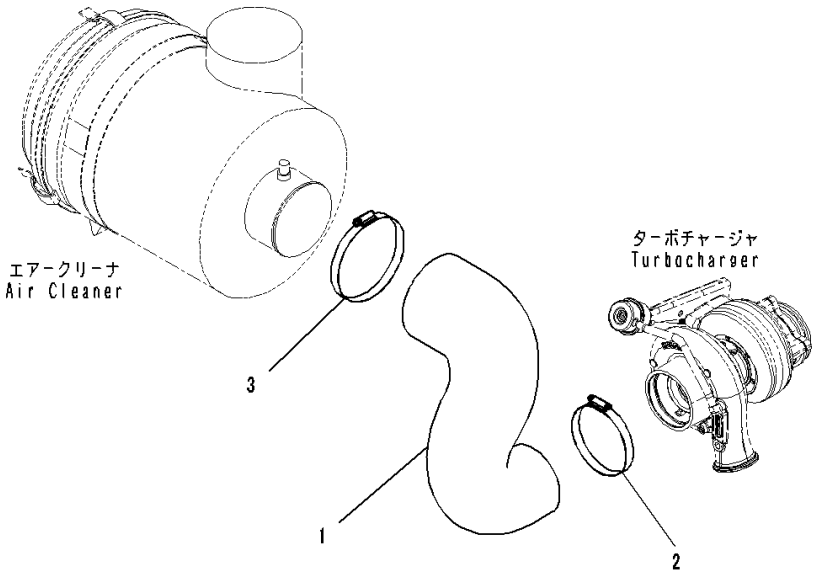

Index	Code	Part Number	Description	Qty	Serial Number
1		424-01-41111	Hose	1	26001-
2		07289-00120	Clamp	1	26001-
3		07289-00145	Clamp	1	26001-

FUEL SYSTEM

FIG. D0100-002001 Fuel Tank (For Biodiesel Fuel B30)

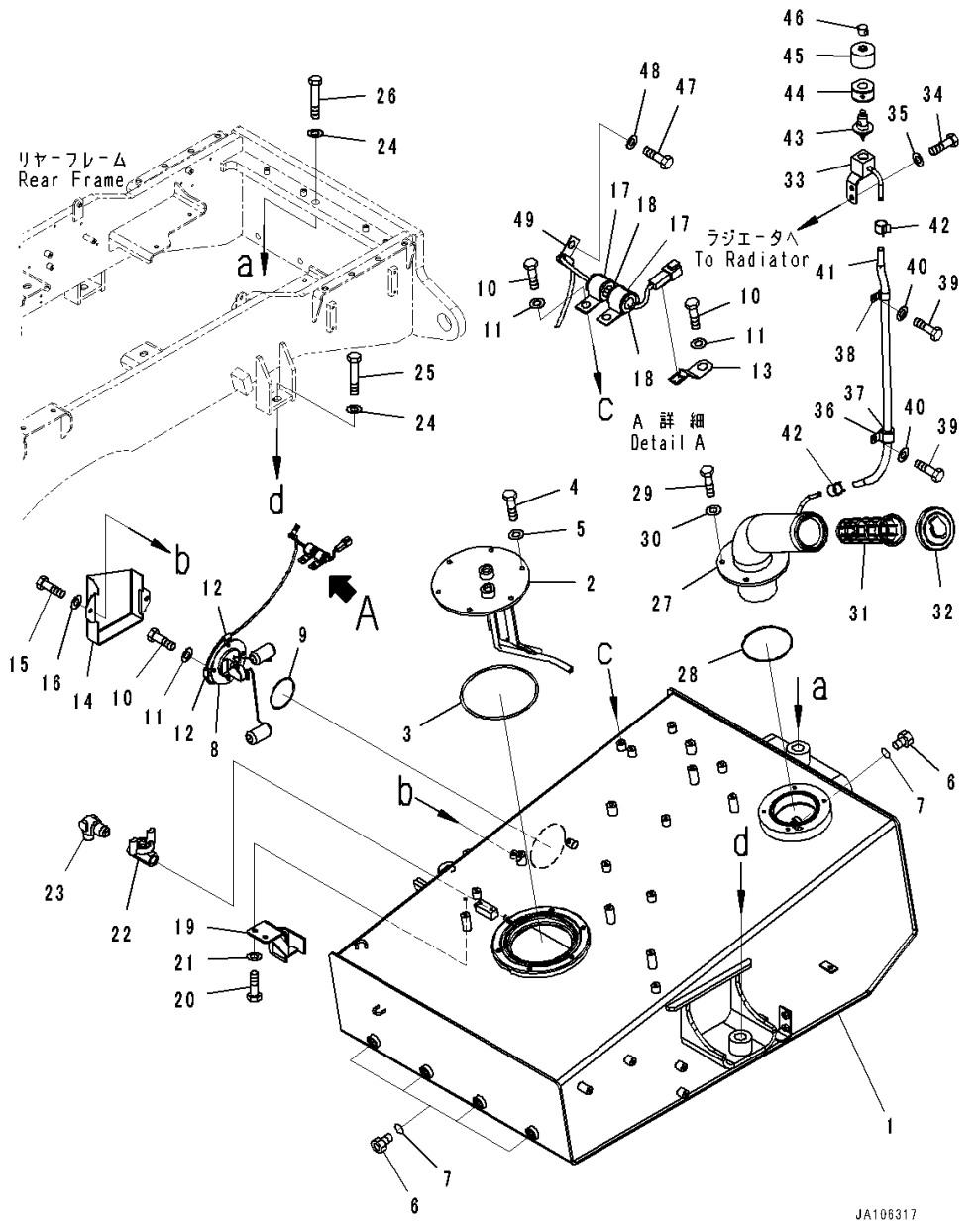

Index	Code	Part Number	Description	Qty	Serial Number
		234-04-81200	Tank Assembly, Fuel	1	26001-
1		234-04-81110	• Tank	1	26001-
2		234-04-81131	• Cover	1	26001-
3		07000-B5200	• O-ring	1	26001-
4		01010-81025	• Bolt	6	26001-
5		01643-31032	• Washer	6	26001-
6		07040-12412	• Plug	5	26001-
7		07002-62434	• O-ring	5	26001-
8		7861-93-4832	• Sensor, Fuel Level	1	26001-
9		07000-B2085	• O-ring	1	26001-
10		01010-81020	• Bolt	8	26001-
11		01643-31032	• Washer	8	26001-
12		04434-50610	• Clip	2	26001-
13		08193-21012	• Clip	1	26001-
14		234-04-81140	• Cover	1	26001-
15		01010-81025	• Bolt	2	26001-
16		01643-31032	• Washer	2	26001-
17		04434-52110	• Clip	2	26001-
18		07095-20314	• Cushion	2	26001-
19		234-04-81190	• Bracket	1	26001-
20		01010-81025	• Bolt	2	26001-
21		01643-31032	• Washer	2	26001-
22		363-04-11130	• Valve	1	26001-
23		07217-71013	• Elbow	1	26001-
24		23D-27-11940	Washer	3	26001-
25		01011-82405	Bolt	2	26001-
26		01011-82430	Bolt	1	26001-
27		234-04-81120	Filler	1	26001-
28		07000-B2130	O-ring	1	26001-
29		01010-81025	Bolt	4	26001-
30		01643-31032	Washer	4	26001-
31		07056-18422	Strainer	1	26001-
32		2A7-04-11260	Cap	1	26001-
33		234-04-82210	Bracket	1	26001-
34		01010-81025	Bolt	2	26001-
35		01643-31032	Washer	2	26001-
36		04434-52712	Clip	1	26001-
37		07095-20419	Cushion	1	26001-
38		04434-51912	Clip	1	26001-
39		01010-81025	Bolt	2	26001-

FIG. D0100-002001 Fuel Tank (For Biodiesel Fuel B30)

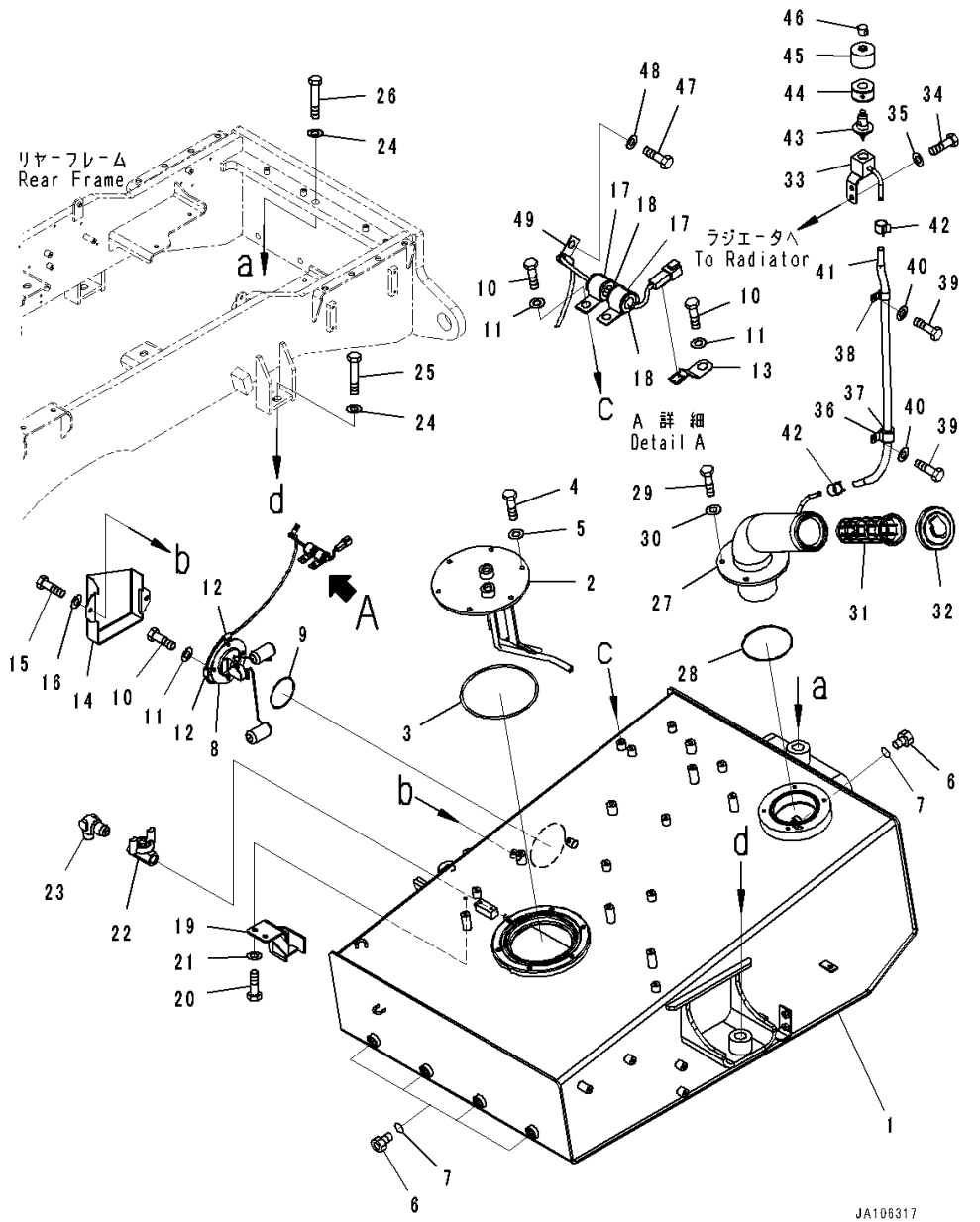

Index	Code	Part Number	Description	Qty	Serial Number
40		01643-31032	Washer	2	26001-
41		234-04-82220	Tube	1	26001-
42		07285-00130	Clip	2	26001-
43		208-04-71780	Breather	1	26001-
44		421-60-35170	• Element	1	26001-
45		421-60-35180	• Cover	1	26001-
46		421-60-35190	• Nut	1	26001-
47		01010-81020	Bolt	1	26001-
48		01643-31032	Washer	1	26001-
49		04434-50610	Clip	1	26001-

FIG. D0100-001001A Fuel Tank

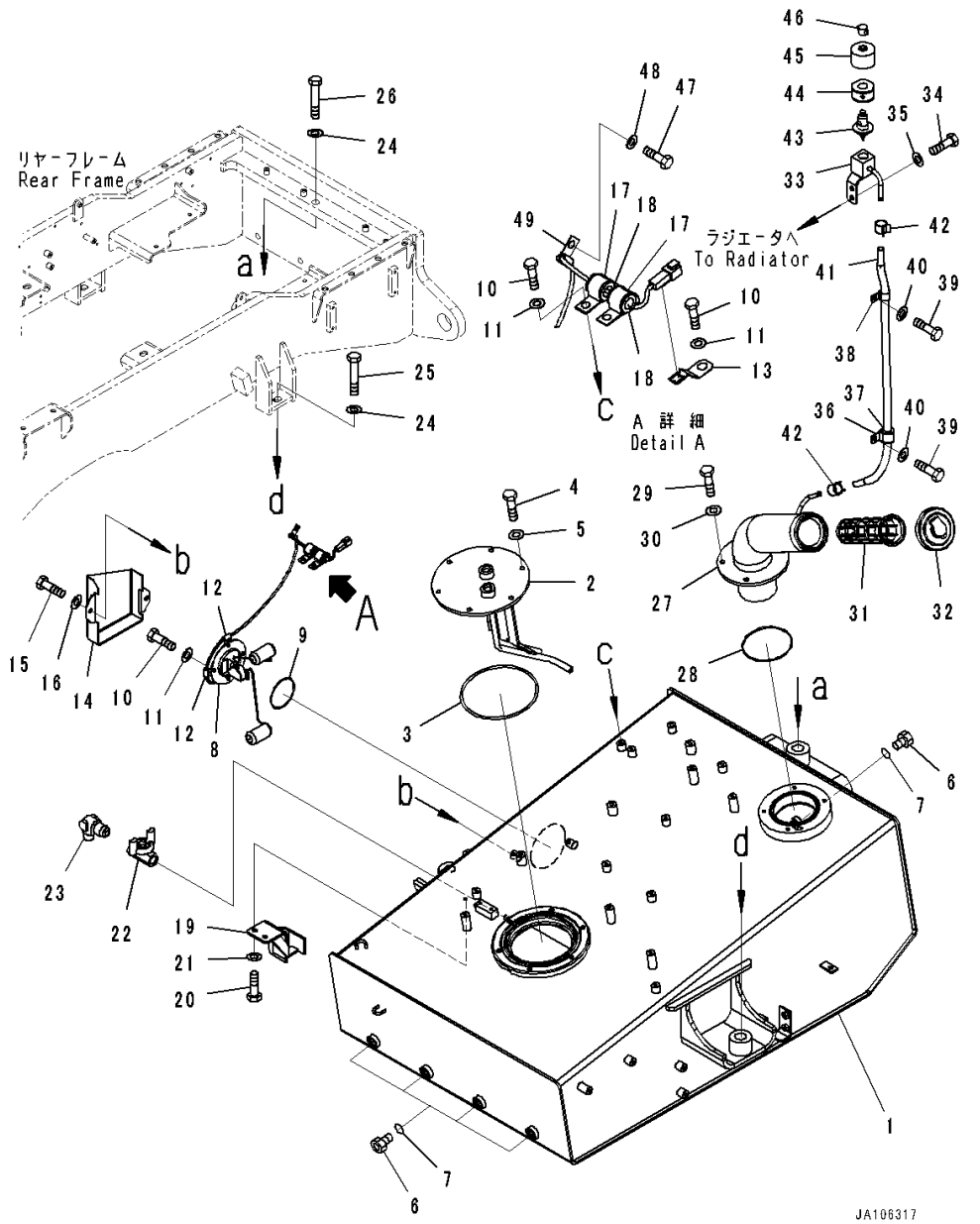

Index	Code	Part Number	Description	Qty	Serial Number
		234-04-81101	Tank Assembly, Fuel	1	26480-
1		234-04-81110	• Tank	1	26001-
2		234-04-81131	• Cover	1	26480-
3		07000-15200	• O-ring	1	26001-
4		01010-81025	• Bolt	6	26001-
5		01643-31032	• Washer	6	26001-
6		07040-12412	• Plug	5	26001-
7		07002-12434	• O-ring	5	26001-
8		7861-93-4832	• Sensor, Fuel Level	1	26001-
9		07000-12085	• O-ring	1	26001-
10		01010-81020	• Bolt	8	26001-
11		01643-31032	• Washer	8	26001-
12		04434-50610	• Clip	2	26001-
13		08193-21012	• Clip	1	26001-
14		234-04-81140	• Cover	1	26001-
15		01010-81025	• Bolt	2	26001-
16		01643-31032	• Washer	2	26001-
17		04434-52110	• Clip	2	26001-
18		07095-20314	• Cushion	2	26001-
19		234-04-81190	• Bracket	1	26001-
20		01010-81025	• Bolt	2	26001-
21		01643-31032	• Washer	2	26001-
22		363-04-11130	• Valve	1	26001-
23		07217-71013	• Elbow	1	26001-
24		23D-27-11940	Washer	3	26001-
25		01011-82405	Bolt	2	26001-
26		01011-82430	Bolt	1	26001-
27		234-04-81120	Filler	1	26001-
28		07000-12130	O-ring	1	26001-
29		01010-81025	Bolt	4	26001-
30		01643-31032	Washer	4	26001-
31		07056-18422	Strainer	1	26001-
32		2A7-04-11260	Cap	1	26324-
33		234-04-82210	Bracket	1	26001-
34		01010-81025	Bolt	2	26001-
35		01643-31032	Washer	2	26001-
36		04434-52712	Clip	1	26001-
37		07095-20419	Cushion	1	26001-
38		04434-51912	Clip	1	26001-
39		01010-81025	Bolt	2	26001-

FIG. D0100-001001A Fuel Tank

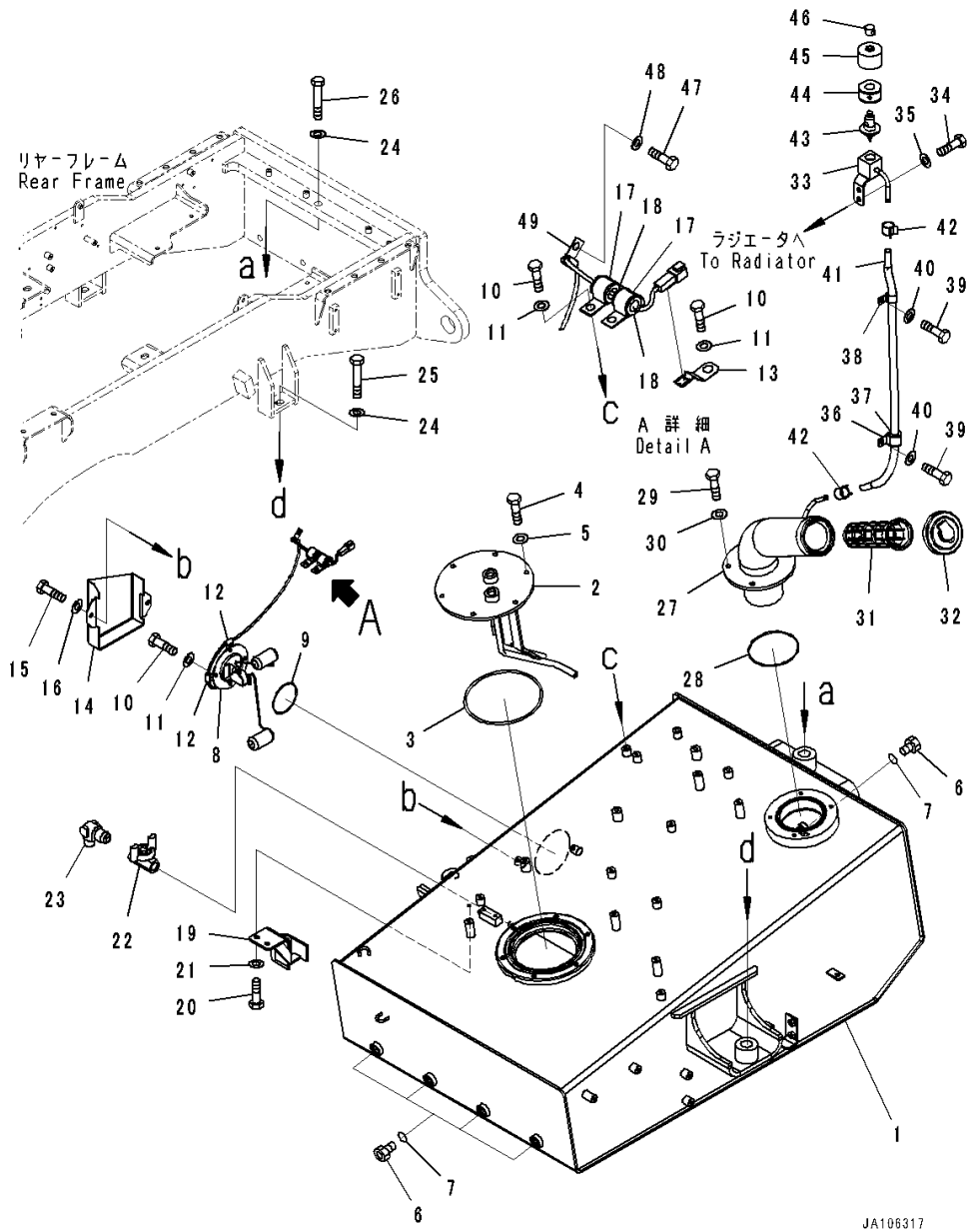

Index	Code	Part Number	Description	Qty	Serial Number
40		01643-31032	Washer	2	26001-
41		234-04-82220	Tube	1	26001-
42		07285-00130	Clip	2	26001-
43		208-04-71780	Breather	1	26001-
44		421-60-35170	• Element	1	26001-
45		421-60-35180	• Cover	1	26001-
46		421-60-35190	• Nut	1	26001-
47		01010-81020	Bolt	1	26001-
48		01643-31032	Washer	1	26001-
49		04434-50610	Clip	1	26001-

FIG. D0200-001001 Fuel Piping (Water Separator Piping)

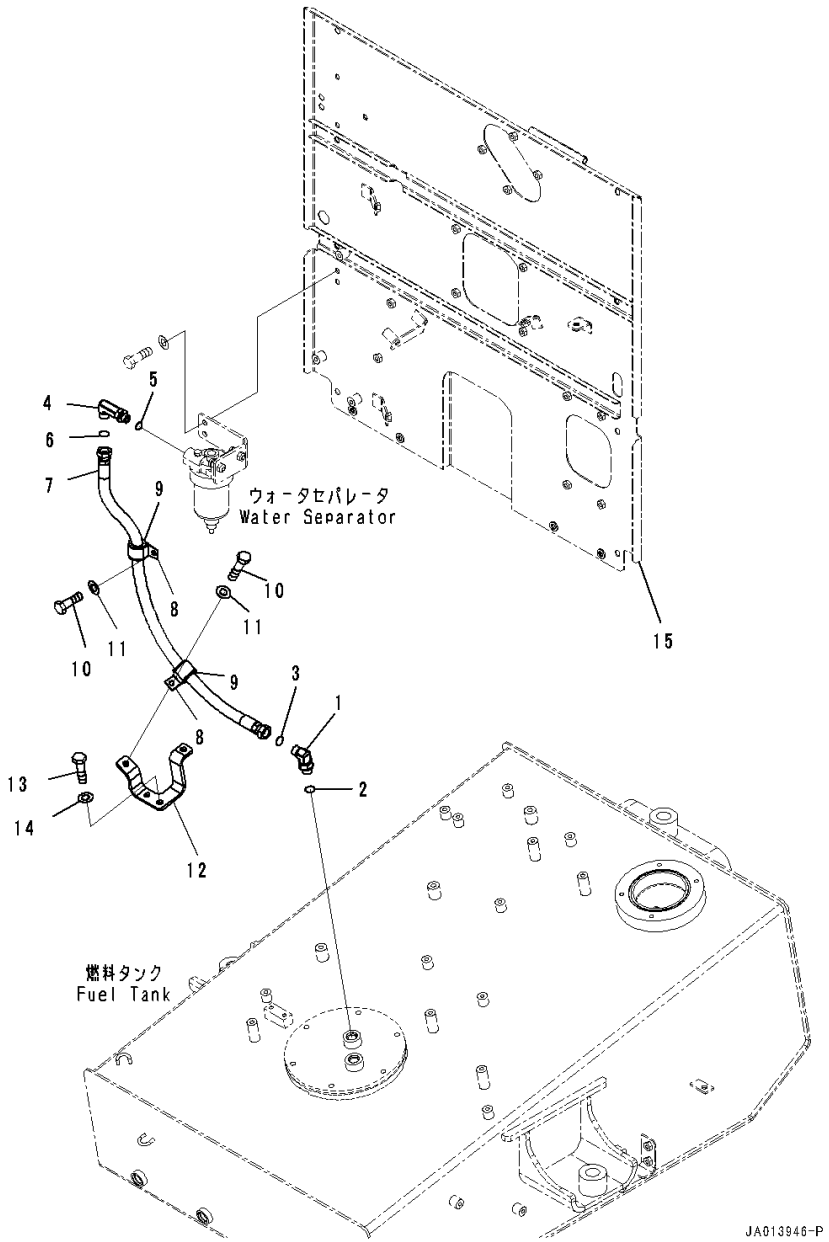

Index	Code	Part Number	Description	Qty	Serial Number
1		02782-10422	Elbow	1	26001-
2		07002-12034	O-ring	1	26001-
3		02896-11012	O-ring	1	26001-
4		02782-10421	Elbow	1	26001-
5		07002-11823	O-ring	1	26001-
6		02896-11012	O-ring	1	26001-
7		234-04-82110	Hose	1	26001-
8		04434-53211	Clip	2	26001-
9		07095-20523	Cushion	2	26001-
10		01010-81025	Bolt	2	26001-
11		01643-31032	Washer	2	26001-
12		234-04-82180	Bracket	1	26001-
13		01010-81025	Bolt	2	26001-
14		01643-31032	Washer	2	26001-
15		(234-03-81991)	Cover(Radiator,Mounting,For Extra Bad Fuel and Poor Fuel Specification, Water+Dust, Additional Filter)(Refer to Page 160)		

FIG. D0200-003001 Fuel Piping (Water Separator Piping) (For Biodiesel Fuel B20)

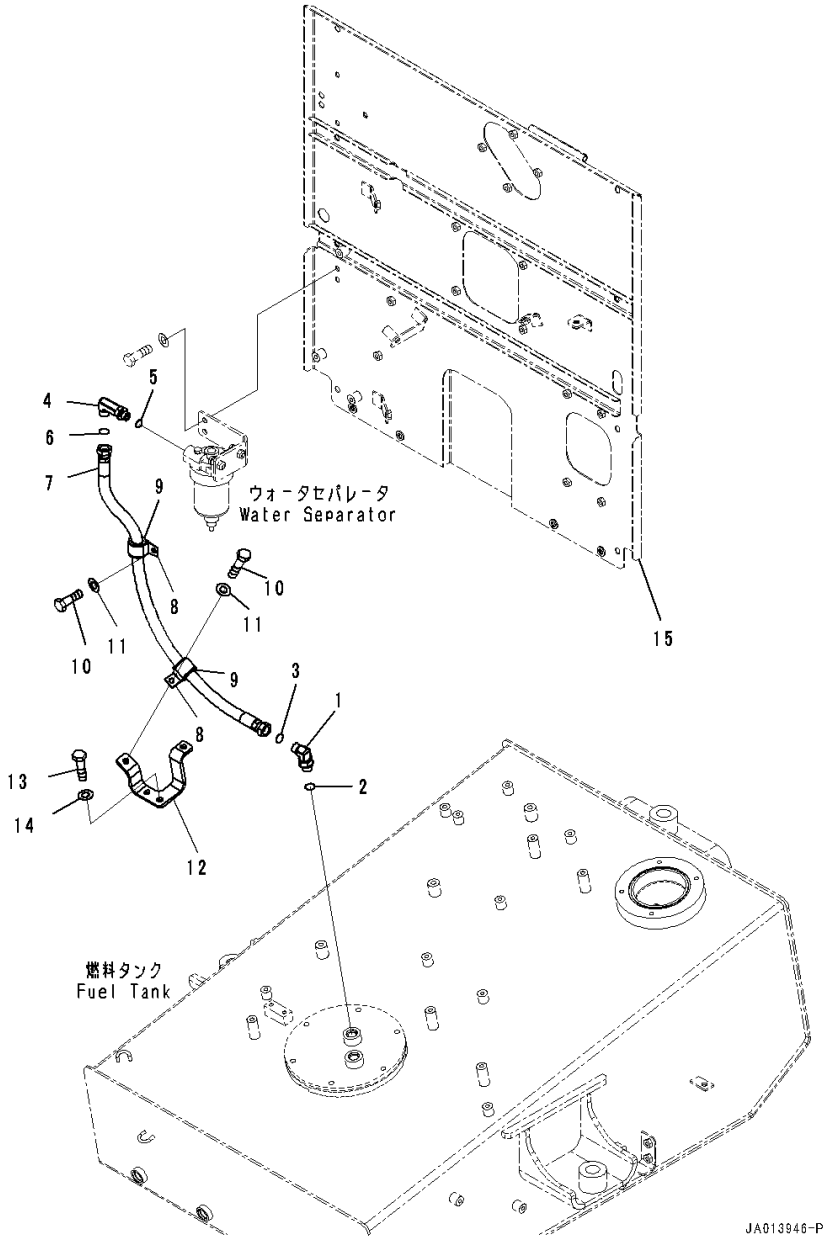

Index	Code	Part Number	Description	Qty	Serial Number
1		02782-10422	Elbow	1	26001-
2		07002-12034	O-ring	1	26001-
3		02896-11012	O-ring	1	26001-
4		02782-10421	Elbow	1	26001-
5		07002-11823	O-ring	1	26001-
6		02896-11012	O-ring	1	26001-
7		234-04-82410	Hose	1	26001-
8		04434-53211	Clip	2	26001-
9		07095-20523	Cushion	2	26001-
10		01010-81025	Bolt	2	26001-
11		01643-31032	Washer	2	26001-
12		234-04-82180	Bracket	1	26001-
13		01010-81025	Bolt	2	26001-
14		01643-31032	Washer	2	26001-
15		(234-03-81991)	Cover(Radiator,Mounting,For Extra Bad Fuel and Poor Fuel Specification, Water+Dust, Additional Filter)(Refer to Page 160)		

FIG. D0200-002001 Fuel Piping (Prefilter Piping) (1/2) (With Large Fuel Prefilter)

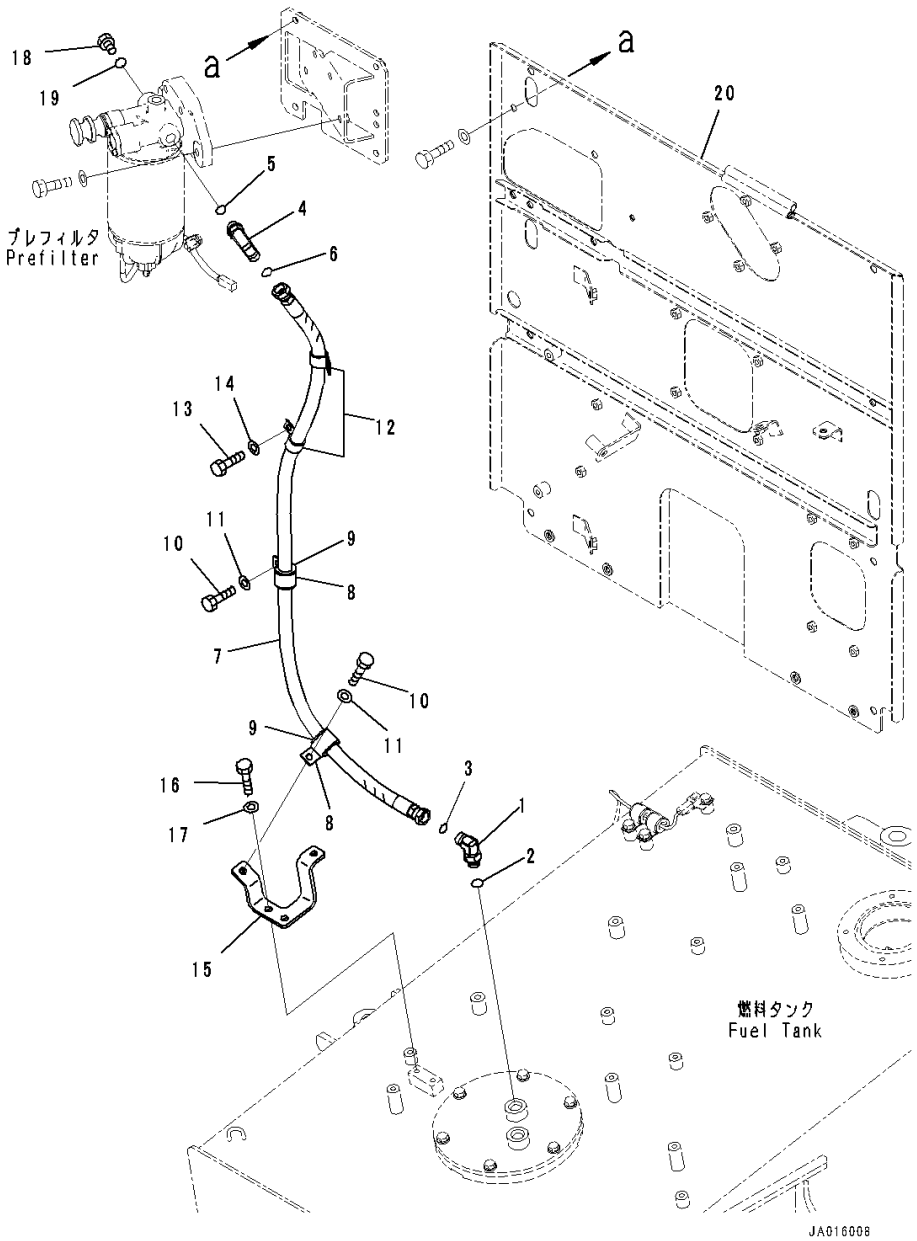

Index	Code	Part Number	Description	Qty	Serial Number
1		02782-10422	Elbow	1	26001-
2		07002-12034	O-ring	1	26001-
3		02896-11012	O-ring	1	26001-
4		02782-10421	Elbow	1	26001-
5		07002-11823	O-ring	1	26001-
6		02896-11012	O-ring	1	26001-
7		234-04-82310	Hose	1	26001-
8		04434-53211	Clip	2	26001-
9		07095-20523	Cushion	2	26001-
10		01010-81025	Bolt	2	26001-
11		01643-31032	Washer	2	26001-
12		04434-52310	Clip	2	26001-
13		01010-81025	Bolt	2	26001-
14		01643-31032	Washer	2	26001-
15		234-04-82180	Bracket	1	26001-
16		01010-81025	Bolt	2	26001-
17		01643-31032	Washer	2	26001-
18		07040-11812	Plug	1	26001-
19		07002-11823	O-ring	1	26001-
20		(234-03-82991)	Cover(Radiator,Mounting,For Extra Bad Fuel and Poor Fuel Specification, Water+Dust, Large Fuel Prefilter)(Refer to Page 162)		

FIG. D0200-004001 Fuel Piping (Prefilter Piping) (1/2) (With Large Fuel Prefilter,For Biodiesel Fuel B20)

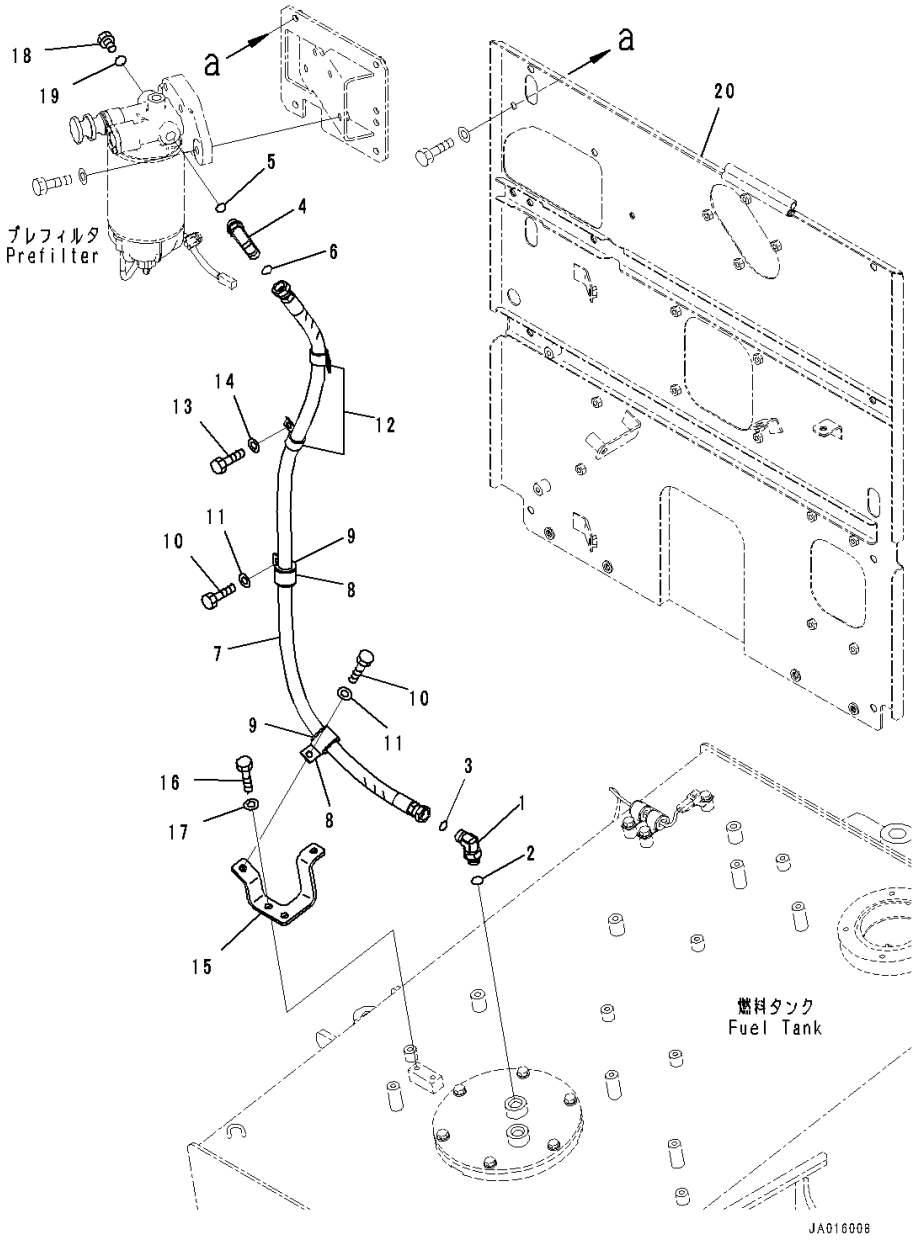

Index	Code	Part Number	Description	Qty	Serial Number
1		02782-10422	Elbow	1	26001-
2		07002-12034	O-ring	1	26001-
3		02896-11012	O-ring	1	26001-
4		02782-10421	Elbow	1	26001-
5		07002-11823	O-ring	1	26001-
6		02896-11012	O-ring	1	26001-
7		234-04-82460	Hose	1	26001-
8		04434-53211	Clip	2	26001-
9		07095-20523	Cushion	2	26001-
10		01010-81025	Bolt	2	26001-
11		01643-31032	Washer	2	26001-
12		04434-52310	Clip	2	26001-
13		01010-81025	Bolt	2	26001-
14		01643-31032	Washer	2	26001-
15		234-04-82180	Bracket	1	26001-
16		01010-81025	Bolt	2	26001-
17		01643-31032	Washer	2	26001-
18		07040-11812	Plug	1	26001-
19		07002-11823	O-ring	1	26001-
20		(234-03-82991)	Cover(Radiator,Mounting,For Extra Bad Fuel and Poor Fuel Specification, Water+Dust, Large Fuel Prefilter)(Refer to Page 162)		

FIG. D0200-001002 Fuel Piping (Water Separator)

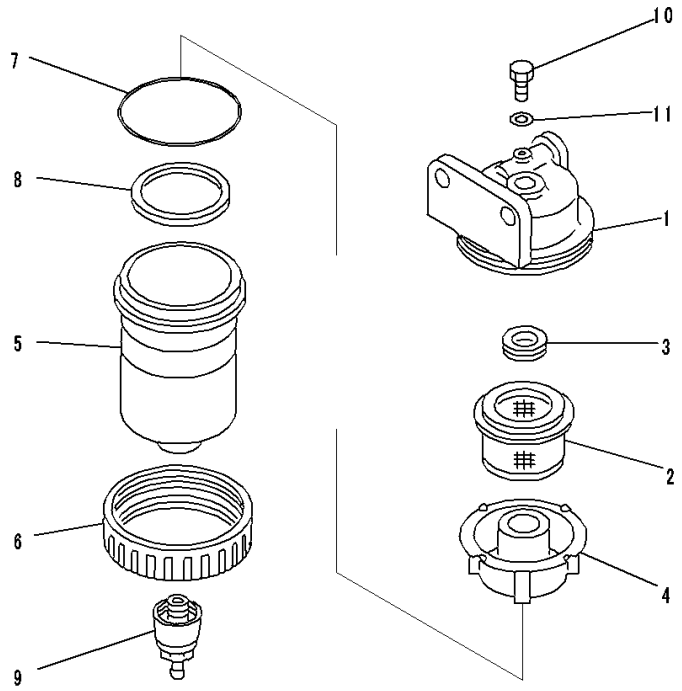

Index	Code	Part Number	Description	Qty	Serial Number
		600-311-7612	Water Separator	1	26001-
1		600-311-9551	• Head	1	26001-
2		600-311-9971	• Screen	1	26001-
3		600-311-9961	• Gasket	1	26001-
4		600-311-9941	• Baffle	1	26001-
5		600-311-7631	• Case	1	26001-
6		600-311-9931	• Nut	1	26001-
7		600-311-9580	• O-ring	1	26001-
8		600-311-9950	• Ring	1	26001-
9		600-311-9591	• Plug	1	26001-
10		6110-73-6231	• Plug	1	26001-
11		07005-00812	• Seal, Washer	1	26001-

FIG. D0200-001003 Fuel Piping (Prefilter Piping) (With Water Separator)

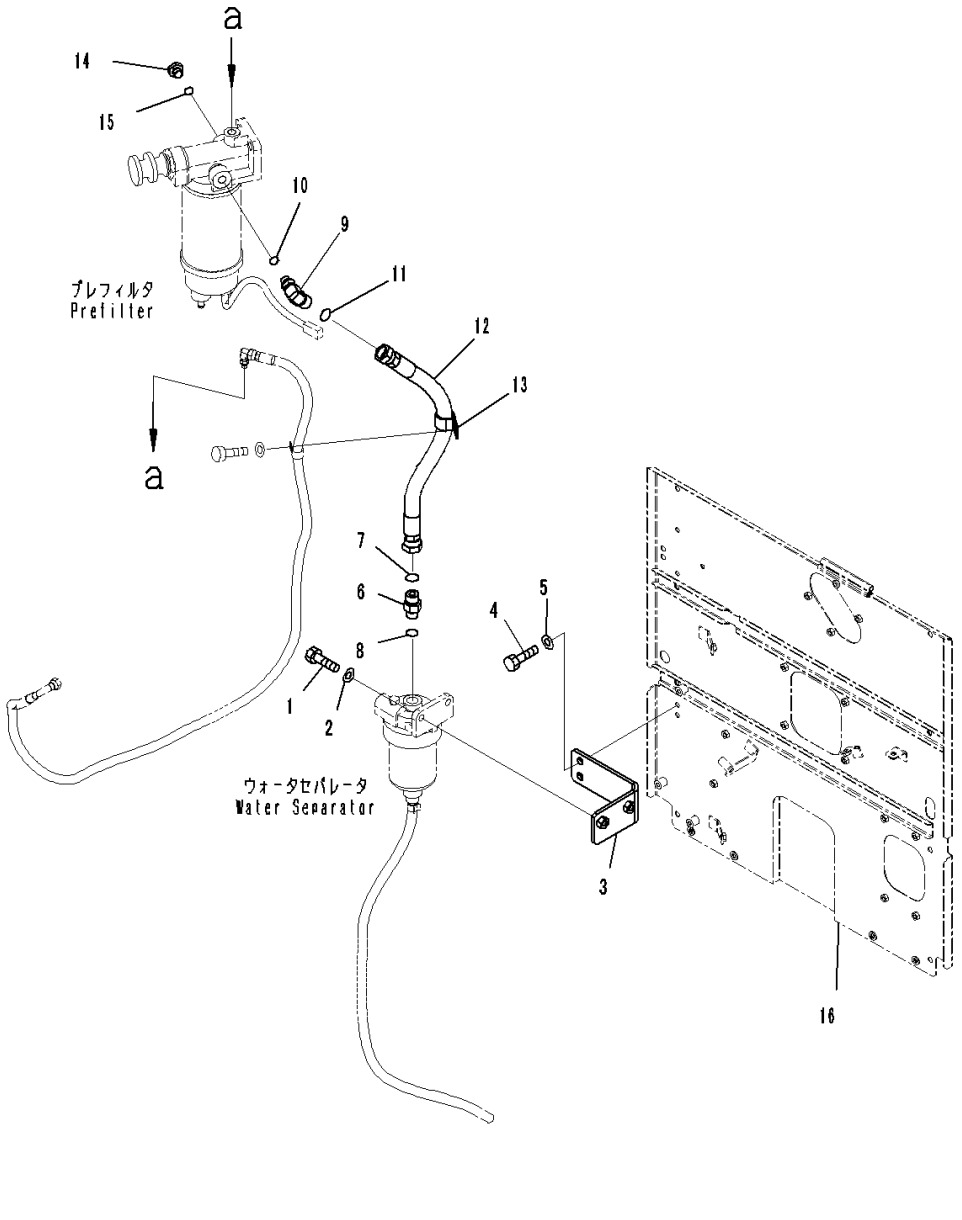

Index	Code	Part Number	Description	Qty	Serial Number
1		01010-81030	Bolt	2	26001-
2		01643-31032	Washer	2	26001-
3		234-04-82160	Bracket	1	26001-
4		01010-81035	Bolt	2	26001-
5		01643-31032	Washer	2	26001-
6		02781-00420	Union	1	26001-
7		02896-11012	O-ring	1	26001-
8		07002-11823	O-ring	1	26001-
9		17M-03-46530	Elbow	1	26001-
10		07002-11423	O-ring	1	26001-
11		02896-11012	O-ring	1	26001-
12		234-04-82140	Hose	1	26001-
13		04434-52310	Clip	1	26001-
14		07040-11409	Plug	1	26001-
15		07002-11423	O-ring	1	26001-
16		(234-03-81991)	Cover(Radiator,Mounting,For Extra Bad Fuel and Poor Fuel Specification, Water+Dust, Additional Filter)(Refer to Page 160)		

FIG. D0200-003003 Fuel Piping (Prefilter Piping) (With Water Separator,For Biodiesel Fuel B20)

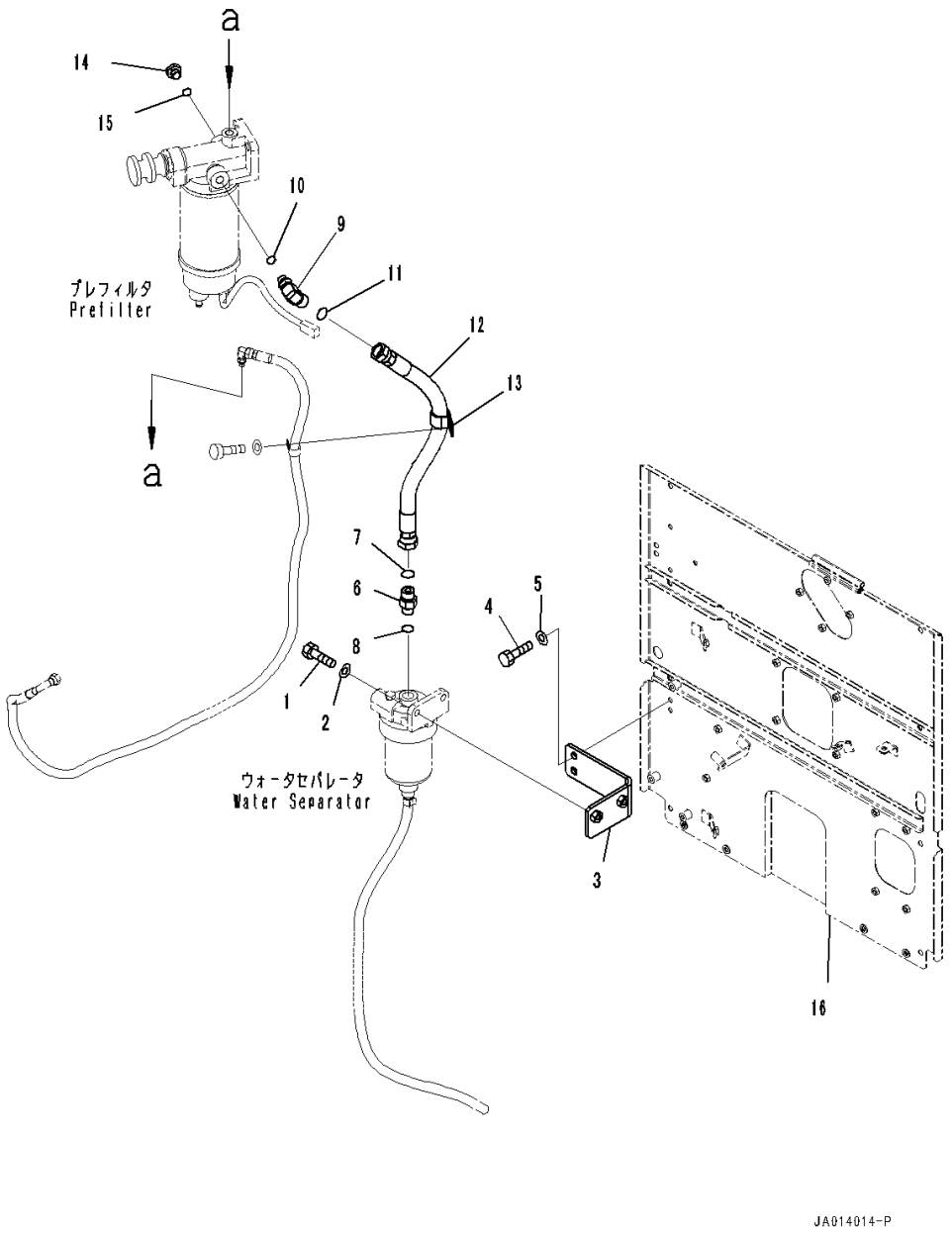

Index	Code	Part Number	Description	Qty	Serial Number
1		01010-81030	Bolt	2	26001-
2		01643-31032	Washer	2	26001-
3		234-04-82160	Bracket	1	26001-
4		01010-81035	Bolt	2	26001-
5		01643-31032	Washer	2	26001-
6		02781-00420	Union	1	26001-
7		02896-11012	O-ring	1	26001-
8		07002-11823	O-ring	1	26001-
9		17M-03-46530	Elbow	1	26001-
10		07002-11423	O-ring	1	26001-
11		02896-11012	O-ring	1	26001-
12		234-04-82440	Hose	1	26001-
13		04434-52310	Clip	1	26001-
14		07040-11409	Plug	1	26001-
15		07002-11423	O-ring	1	26001-
16		(234-03-81991)	Cover(Radiator,Mounting,For Extra Bad Fuel and Poor Fuel Specification, Water+Dust, Additional Filter)(Refer to Page 160)		

FIG. D0200-002003 Fuel Piping (Prefilter Piping) (2/2) (With Large Fuel Prefilter)

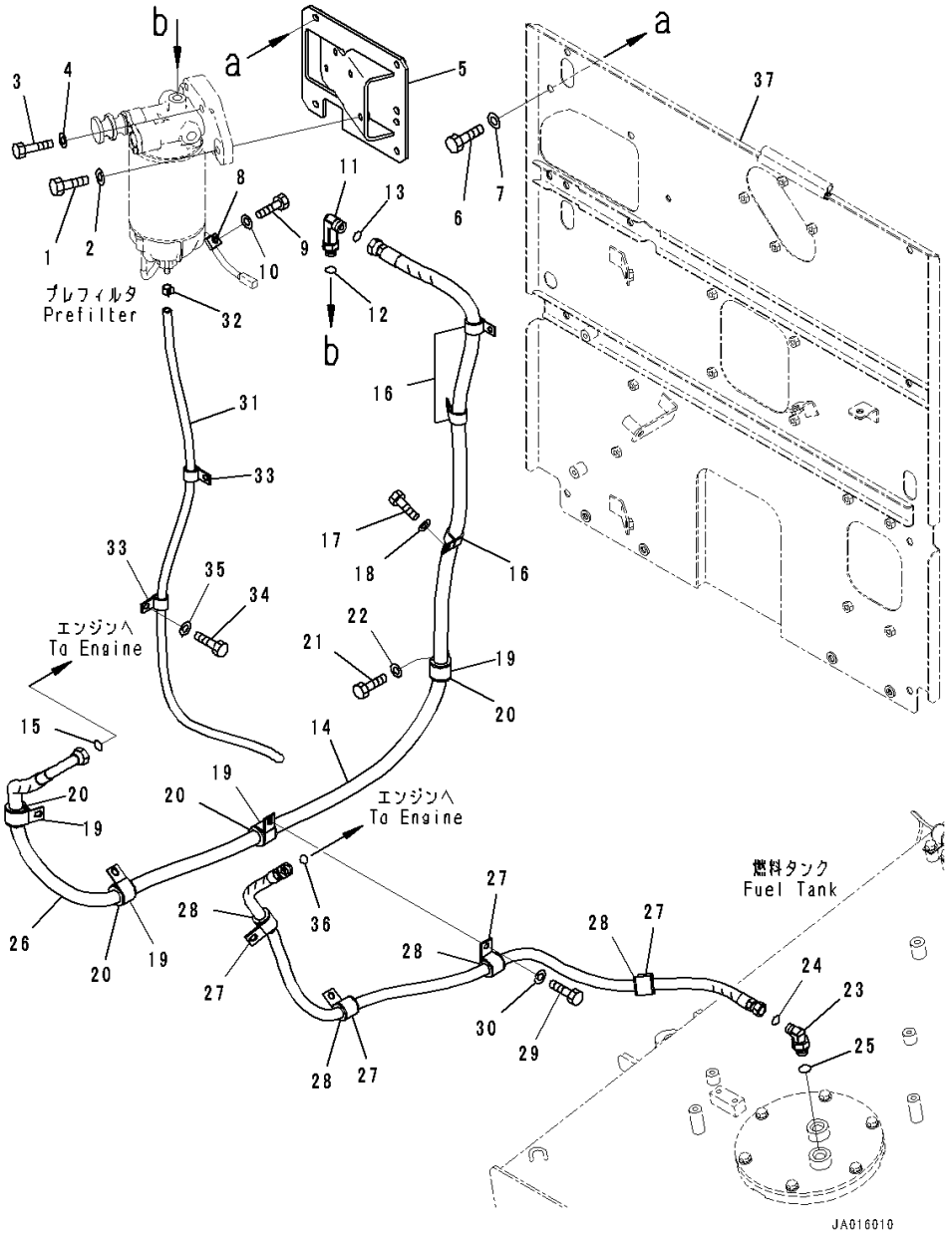

Index	Code	Part Number	Description	Qty	Serial Number
1		01010-81040	Bolt	2	26001-
2		01643-31032	Washer	2	26001-
3		01010-81055	Bolt	2	26001-
4		01643-31032	Washer	2	26001-
5		234-04-82350	Bracket	1	26001-
6		01010-81025	Bolt	4	26001-
7		01643-31032	Washer	4	26001-
8		04434-51010	Clip	1	26001-
9		01010-81025	Bolt	1	26001-
10		01643-31032	Washer	1	26001-
11		02782-10421	Elbow	1	26001-
12		07002-11823	O-ring	1	26001-
13		02896-11012	O-ring	1	26001-
14		234-04-82320	Hose	1	26001-
15		02896-11012	O-ring	1	26001-
16		04434-52310	Clip	3	26001-
17		01010-81025	Bolt	2	26001-
18		01643-31032	Washer	2	26001-
19		04434-53211	Clip	4	26001-
20		07095-20523	Cushion	4	26001-
21		01010-81025	Bolt	1	26001-
22		01643-31032	Washer	1	26001-
23		02782-10315	Elbow	1	26001-
24		02896-11009	O-ring	1	26001-
25		07002-12034	O-ring	1	26001-
26		234-04-82130	Hose	1	26001-
27		04434-52711	Clip	4	26001-
28		07095-20420	Cushion	4	26001-
29		01010-81025	Bolt	4	26001-
30		01643-31032	Washer	4	26001-
31		07270-41014	Tube	1	26001-
32		07285-00130	Clip	1	26001-
33		04434-51710	Clip	2	26001-
34		01010-81025	Bolt	1	26001-
35		01643-31032	Washer	1	26001-
36		02896-11009	O-ring	1	26001-
37		(234-03-82991)	Cover(Radiator,Mounting,For Extra Bad Fuel and Poor Fuel Specification, Water+Dust, Large Fuel Prefilter)(Refer to Page 162)		

FIG. D0200-004003 Fuel Piping (Prefilter Piping) (2/2) (With Large Fuel Prefilter,For Biodiesel Fuel B20)

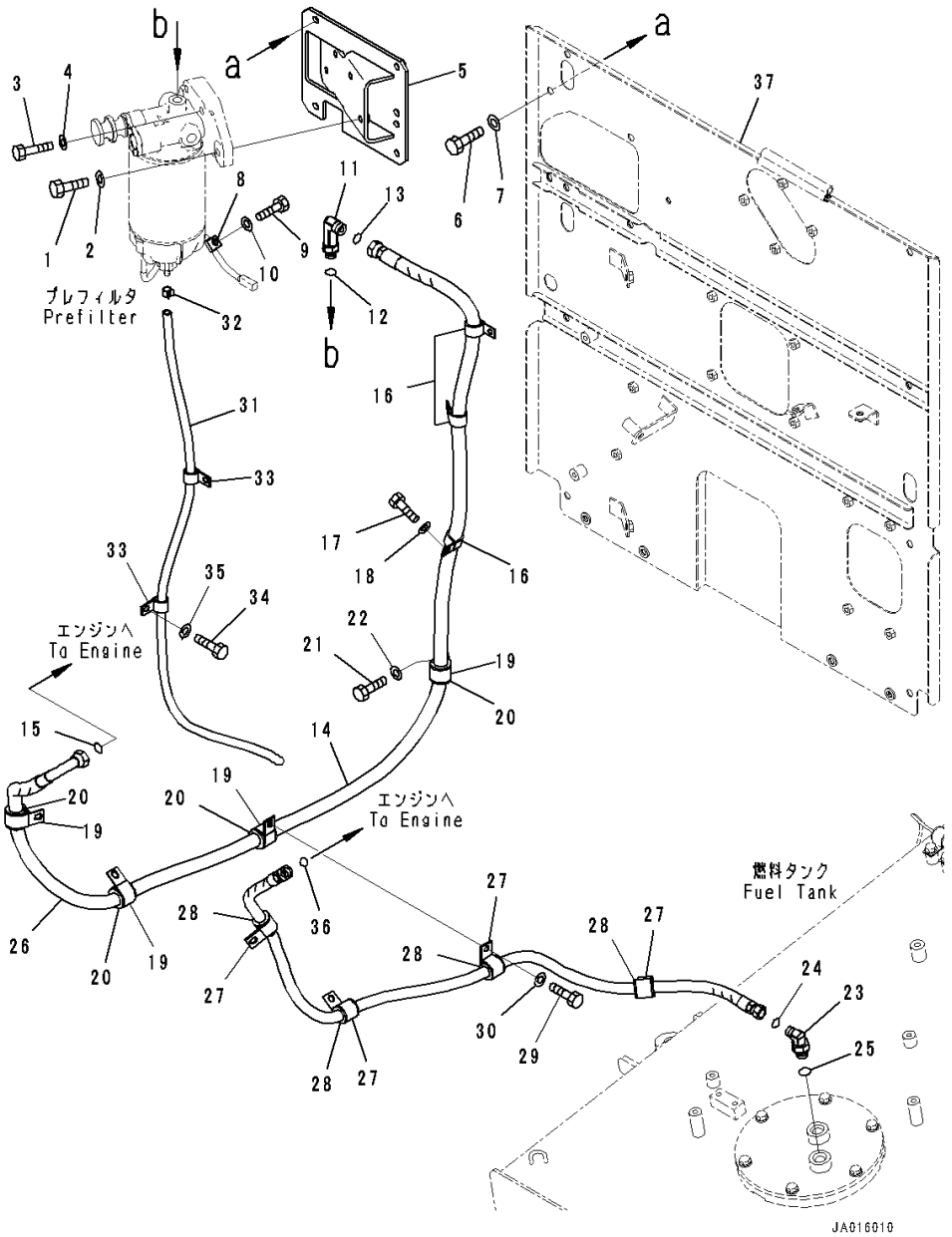

Index	Code	Part Number	Description	Qty	Serial Number
1		01010-81040	Bolt	2	26001-
2		01643-31032	Washer	2	26001-
3		01010-81055	Bolt	2	26001-
4		01643-31032	Washer	2	26001-
5		234-04-82350	Bracket	1	26001-
6		01010-81025	Bolt	4	26001-
7		01643-31032	Washer	4	26001-
8		04434-51010	Clip	1	26001-
9		01010-81025	Bolt	1	26001-
10		01643-31032	Washer	1	26001-
11		02782-10421	Elbow	1	26001-
12		07002-11823	O-ring	1	26001-
13		02896-11012	O-ring	1	26001-
14		234-04-82470	Hose	1	26001-
15		02896-11012	O-ring	1	26001-
16		04434-52310	Clip	3	26001-
17		01010-81025	Bolt	2	26001-
18		01643-31032	Washer	2	26001-
19		04434-53211	Clip	4	26001-
20		07095-20523	Cushion	4	26001-
21		01010-81025	Bolt	1	26001-
22		01643-31032	Washer	1	26001-
23		02782-10315	Elbow	1	26001-
24		02896-11009	O-ring	1	26001-
25		07002-12034	O-ring	1	26001-
26		234-04-82430	Hose	1	26001-
27		04434-52711	Clip	4	26001-
28		07095-20420	Cushion	4	26001-
29		01010-81025	Bolt	4	26001-
30		01643-31032	Washer	4	26001-
31		07270-41014	Tube	1	26001-
32		07285-00130	Clip	1	26001-
33		04434-51710	Clip	2	26001-
34		01010-81025	Bolt	1	26001-
35		01643-31032	Washer	1	26001-
36		02896-11009	O-ring	1	26001-
37		(234-03-82991)	Cover(Radiator,Mounting,For Extra Bad Fuel and Poor Fuel Specification, Water+Dust, Large Fuel Prefilter)(Refer to Page 162)		

FIG. D0200-001004 Fuel Piping (Prefilter Mounting) (With Water Separator)

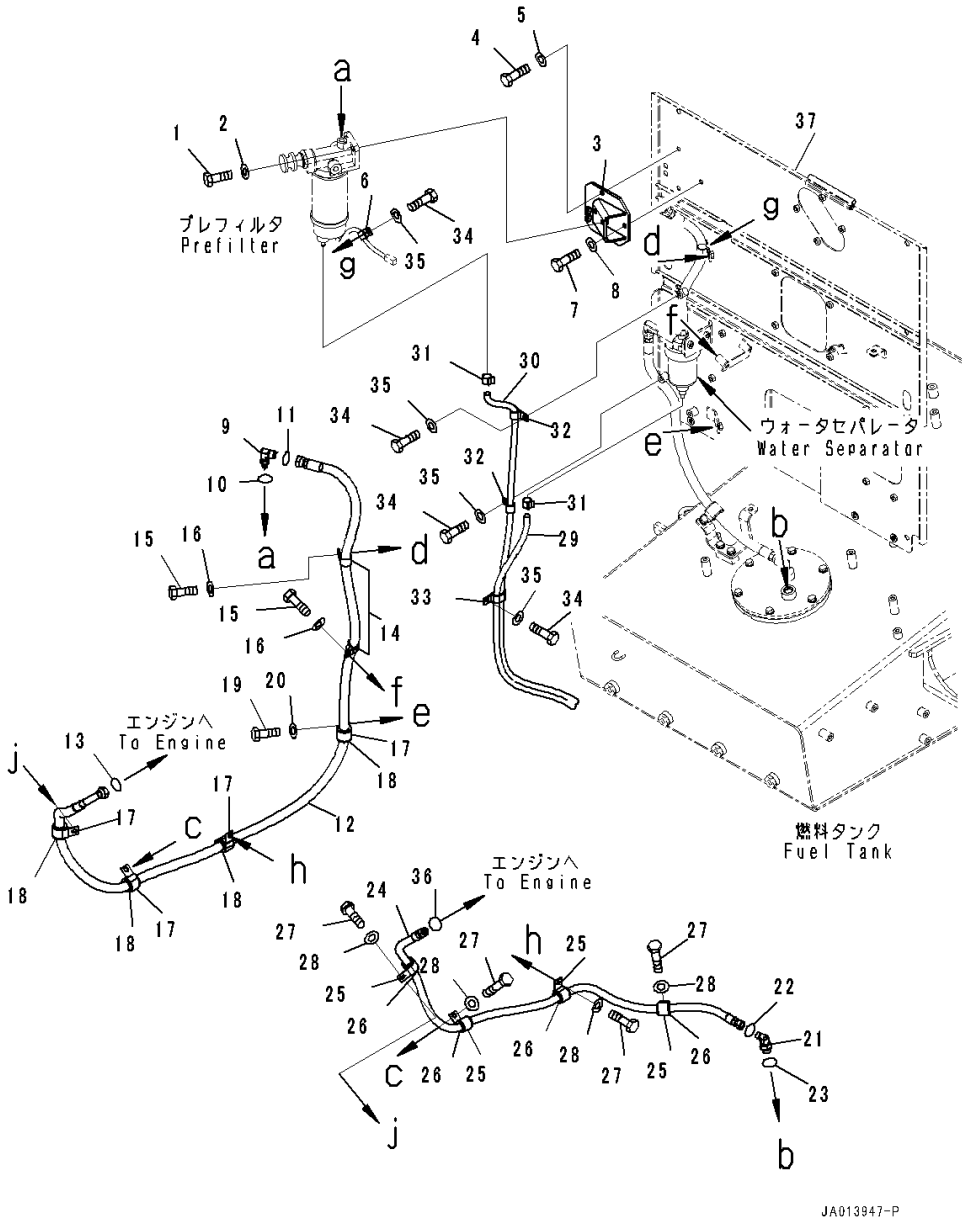

Index	Code	Part Number	Description	Qty	Serial Number
1		01010-81035	Bolt	2	26001-
2		01643-31032	Washer	2	26001-
3		234-04-82150	Bracket	1	26001-
4		01010-81035	Bolt	2	26001-
5		01643-31032	Washer	2	26001-
6		04434-51010	Clip	1	26001-
7		01010-81025	Bolt	1	26001-
8		01643-31032	Washer	1	26001-
9		17M-03-46530	Elbow	1	26001-
10		07002-11423	O-ring	1	26001-
11		02896-11012	O-ring	1	26001-
12		234-04-82120	Hose	1	26001-
13		02896-11012	O-ring	1	26001-
14		04434-52310	Clip	2	26001-
15		01010-81025	Bolt	2	26001-
16		01643-31032	Washer	2	26001-
17		04434-53211	Clip	4	26001-
18		07095-20523	Cushion	4	26001-
19		01010-81025	Bolt	1	26001-
20		01643-31032	Washer	1	26001-
21		02782-10315	Elbow	1	26001-
22		02896-11009	O-ring	1	26001-
23		07002-12034	O-ring	1	26001-
24		234-04-82130	Hose	1	26001-
25		04434-52711	Clip	4	26001-
26		07095-20420	Cushion	4	26001-
27		01010-81025	Bolt	4	26001-
28		01643-31032	Washer	4	26001-
29		07270-41010	Tube	1	26001-
30		07270-41014	Tube	1	26001-
31		07285-00130	Clip	2	26001-
32		04434-51710	Clip	2	26001-
33		04435-51710	Clip	1	26001-
34		01010-81025	Bolt	4	26001-
35		01643-31032	Washer	4	26001-
36		02896-11012	O-ring	1	26001-
37		(234-03-81991)	Cover(Radiator,Mounting,For Extra Bad Fuel and Poor Fuel Specification, Water+Dust, Additional Filter)(Refer to Page 160)		

FIG. D0200-003004 Fuel Piping (Prefilter Mounting) (With Water Separator,For Biodiesel Fuel B20)

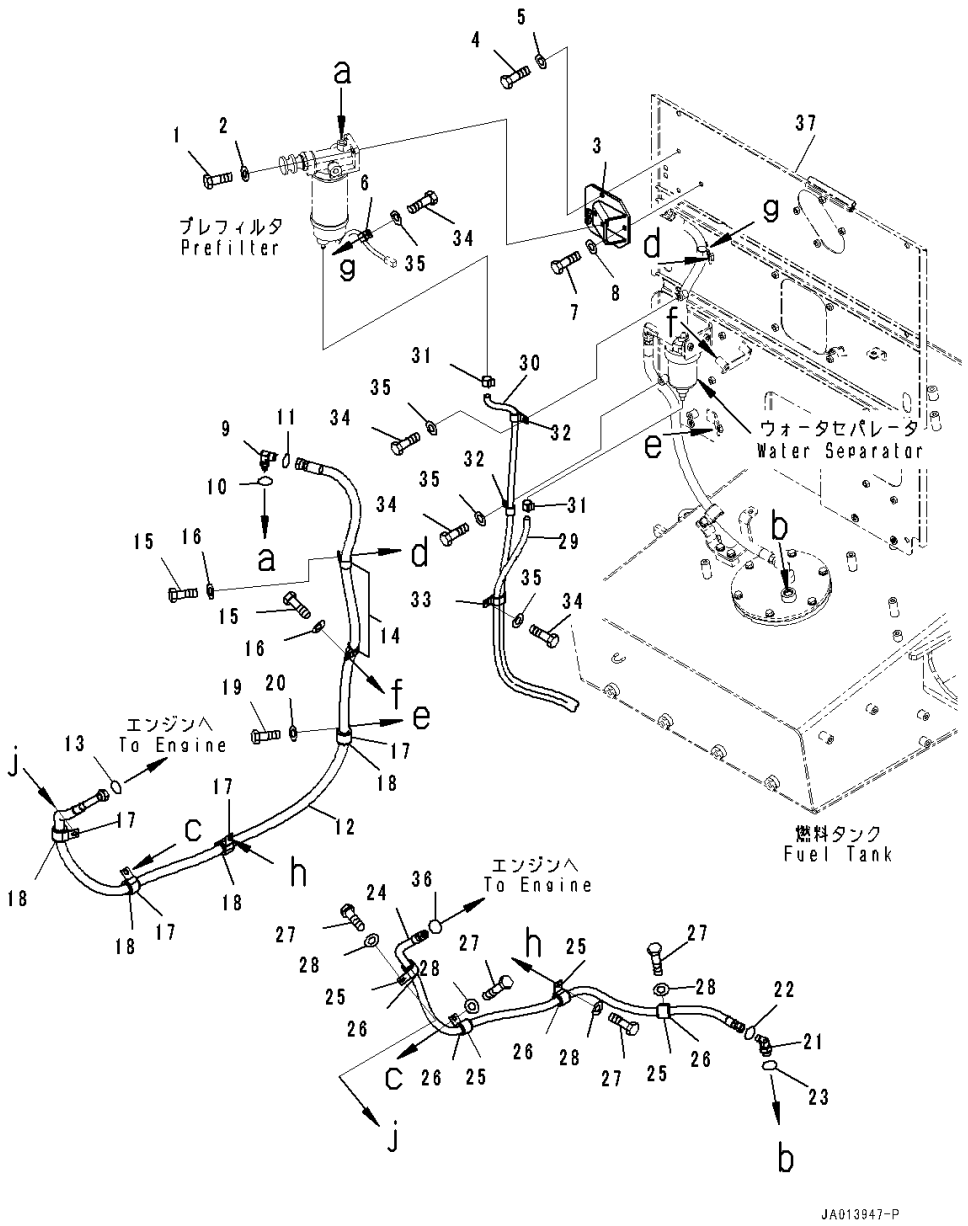

Index	Code	Part Number	Description	Qty	Serial Number
1		01010-81035	Bolt	2	26001-
2		01643-31032	Washer	2	26001-
3		234-04-82150	Bracket	1	26001-
4		01010-81035	Bolt	2	26001-
5		01643-31032	Washer	2	26001-
6		04434-51010	Clip	1	26001-
7		01010-81025	Bolt	1	26001-
8		01643-31032	Washer	1	26001-
9		17M-03-46530	Elbow	1	26001-
10		07002-11423	O-ring	1	26001-
11		02896-11012	O-ring	1	26001-
12		234-04-82420	Hose	1	26001-
13		02896-11012	O-ring	1	26001-
14		04434-52310	Clip	2	26001-
15		01010-81025	Bolt	2	26001-
16		01643-31032	Washer	2	26001-
17		04434-53211	Clip	4	26001-
18		07095-20523	Cushion	4	26001-
19		01010-81025	Bolt	1	26001-
20		01643-31032	Washer	1	26001-
21		02782-10315	Elbow	1	26001-
22		02896-11009	O-ring	1	26001-
23		07002-12034	O-ring	1	26001-
24		234-04-82430	Hose	1	26001-
25		04434-52711	Clip	4	26001-
26		07095-20420	Cushion	4	26001-
27		01010-81025	Bolt	4	26001-
28		01643-31032	Washer	4	26001-
29		07270-41010	Tube	1	26001-
30		07270-41014	Tube	1	26001-
31		07285-00130	Clip	2	26001-
32		04434-51710	Clip	2	26001-
33		04435-51710	Clip	1	26001-
34		01010-81025	Bolt	4	26001-
35		01643-31032	Washer	4	26001-
36		02896-11009	O-ring	1	26001-
37		(234-03-81991)	Cover(Radiator,Mounting,For Extra Bad Fuel and Poor Fuel Specification, Water+Dust, Additional Filter)(Refer to Page 160)		

FIG. D0200-005001 Fuel Piping (Prefilter Piping) (1/2) (With Large Fuel Prefilter,For Biodiesel Fuel B30)

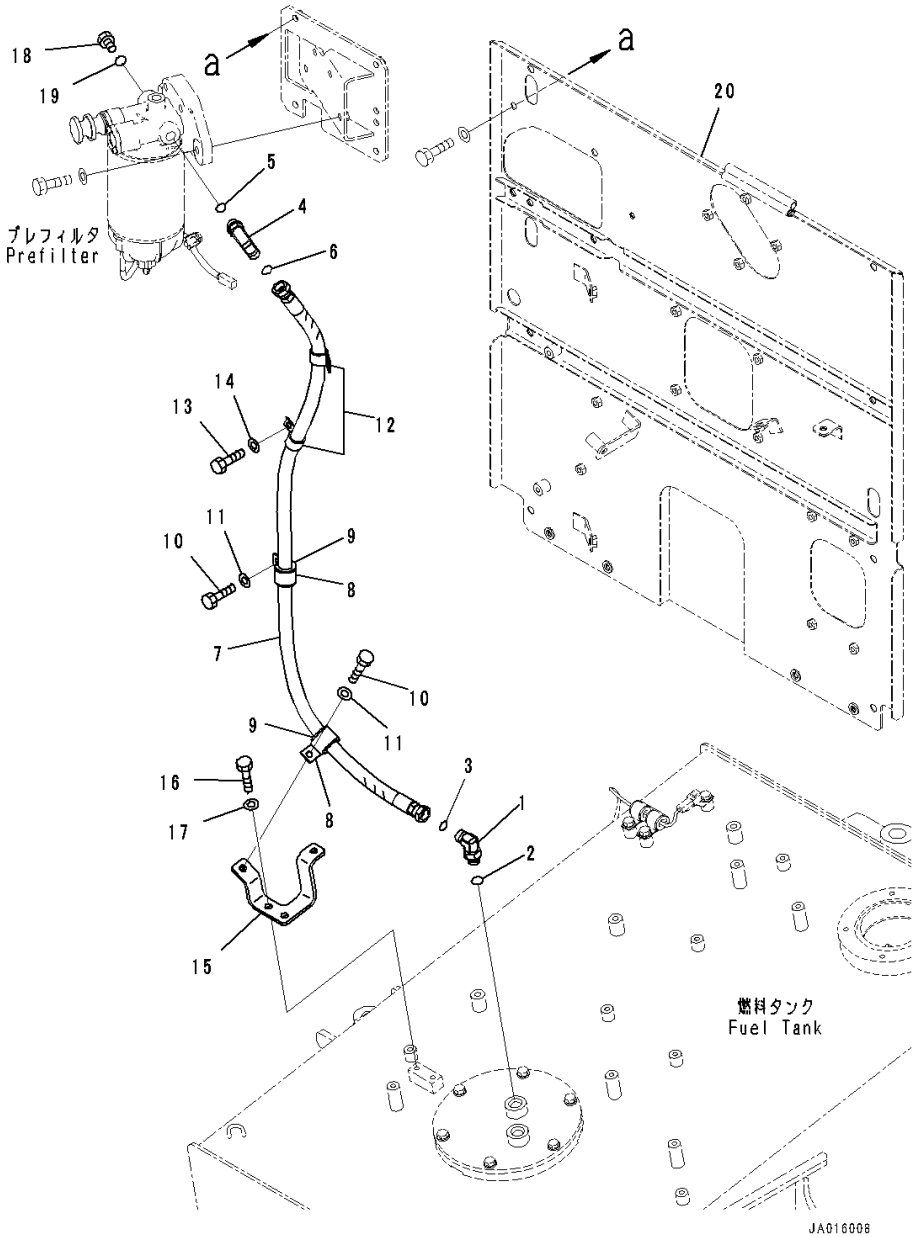

Index	Code	Part Number	Description	Qty	Serial Number
1		02782-10422	Elbow	1	26001-
2		07002-62034	O-ring	1	26001-
3		02896-61012	O-ring	1	26001-
4		02782-10421	Elbow	1	26001-
5		07002-61823	O-ring	1	26001-
6		02896-61012	O-ring	1	26001-
7		234-04-82560	Hose	1	26001-
8		04434-53411	Clip	2	26001-
9		07095-20627	Cushion	2	26001-
10		01010-81025	Bolt	2	26001-
11		01643-31032	Washer	2	26001-
12		04434-52711	Clip	2	26001-
13		01010-81025	Bolt	2	26001-
14		01643-31032	Washer	2	26001-
15		234-04-82180	Bracket	1	26001-
16		01010-81025	Bolt	2	26001-
17		01643-31032	Washer	2	26001-
18		07040-11812	Plug	1	26001-
19		07002-61823	O-ring	1	26001-
20		(234-03-82991)	Cover(Radiator,Mounting,For Extra Bad Fuel and Poor Fuel Specification, Water+Dust, Large Fuel Prefilter)(Refer to Page 162)		

FIG. D0200-002002 Fuel Piping (Inner Parts, Fuel Prefilter)

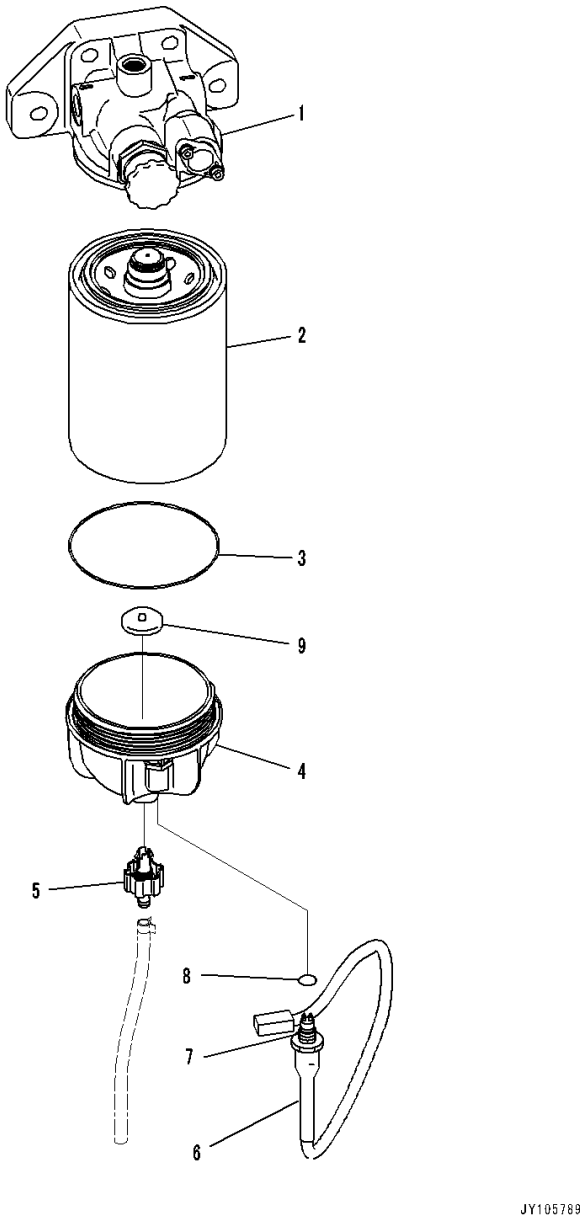

Index	Code	Part Number	Description	Qty	Serial Number
		6754-71-6803	Filter Assembly	1	26001-
1		6754-71-6812	• Head Assembly	1	26001-
		600-319-5602	• Cartridge Assembly	1	26001-
		600-319-5612	• • Cartridge	1	26001-
2	C1		• • • Cartridge	1	26001-
3		600-311-5631	• • • O-ring	1	26001-
4		600-311-5642	• • Bowl	1	26001-
5		600-311-5660	• • Valve Assembly	1	26001-
		600-311-3761	• • Sensor, Temperature	1	26001-
6	C1		• • • Tube	1	26001-
7	C1		• • • Sensor	1	26001-
8		600-311-3690	• • • O-ring	1	26001-
9		600-311-5470	• • Float	1	26001-

FIG. D0200-005002 Fuel Piping (Inner Parts, Fuel Prefilter) (For Biodiesel Fuel B30)

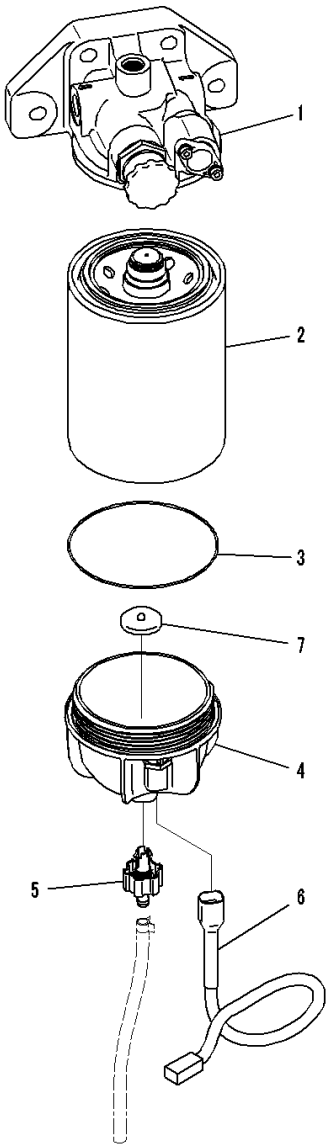

Index	Code	Part Number	Description	Qty	Serial Number
		6754-71-6803	Filter Assembly	1	26001-
1		6754-71-6812	• Head Assembly	1	26001-
		600-319-5602	• Cartridge Assembly	1	26001-
2	C1		• • Cartridge	1	26001-
3		600-311-5631	• • O-ring	1	26001-
4		600-311-5642	• • Bowl	1	26001-
5		600-311-5660	• • Valve Assembly	1	26001-
6		600-311-3760	• • Sensor, Temperature	1	26001-
	C1		• • • Tube	1	26001-
	C1		• • • Sensor	1	26001-
		600-311-3690	• • • O-ring	1	26001-
7		600-311-5470	• • Float	1	26001-

FIG. D0200-005003 Fuel Piping (Prefilter Piping) (2/2) (With Large Fuel Prefilter,For Biodiesel Fuel B30)

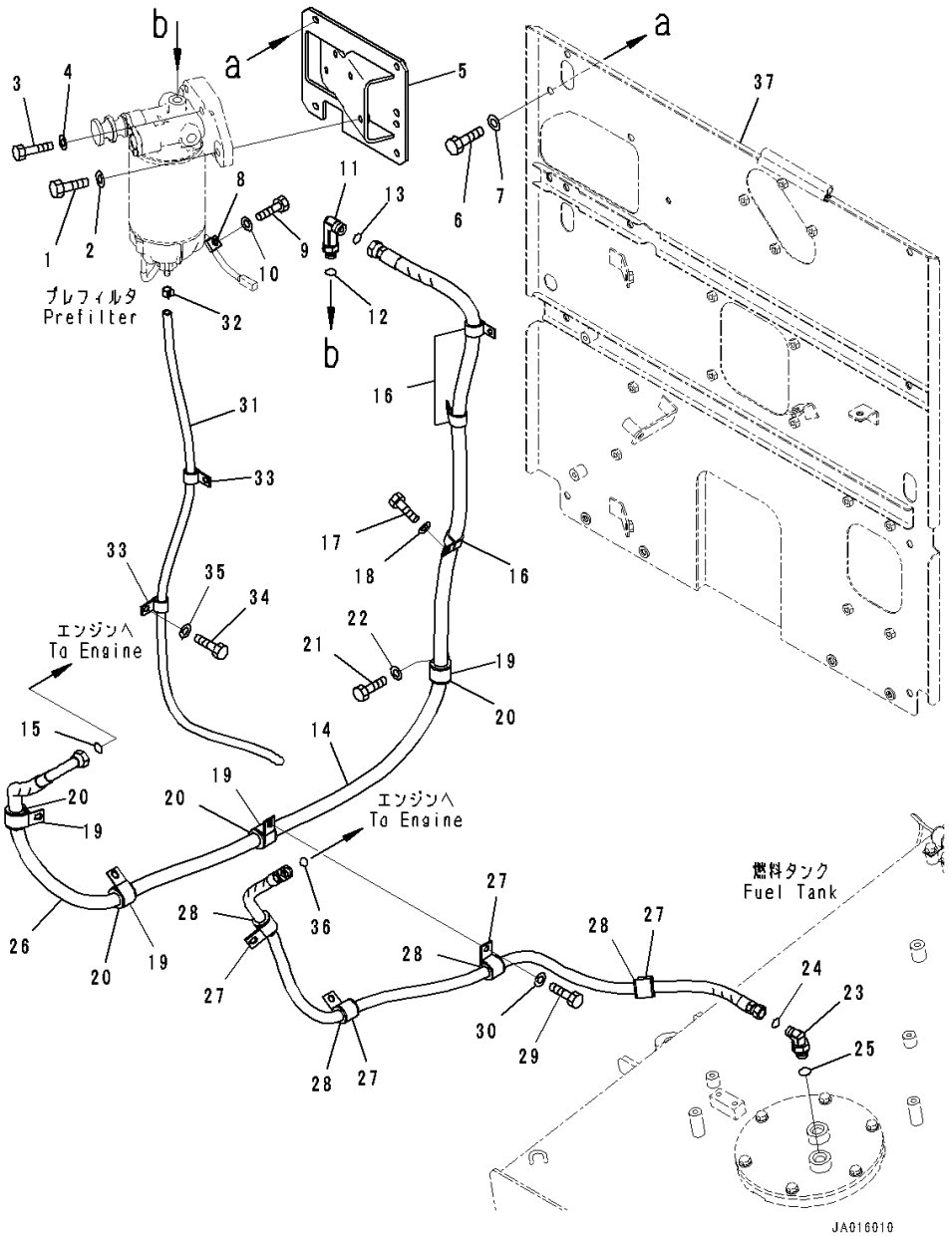

Index	Code	Part Number	Description	Qty	Serial Number
1		01010-81040	Bolt	2	26001-
2		01643-31032	Washer	2	26001-
3		01010-81055	Bolt	2	26001-
4		01643-31032	Washer	2	26001-
5		234-04-82350	Bracket	1	26001-
6		01010-81025	Bolt	4	26001-
7		01643-31032	Washer	4	26001-
8		04434-51010	Clip	1	26001-
9		01010-81025	Bolt	1	26001-
10		01643-31032	Washer	1	26001-
11		02782-10421	Elbow	1	26001-
12		07002-61823	O-ring	1	26001-
13		02896-61012	O-ring	1	26001-
14		234-04-82570	Hose	1	26001-
15		02896-61012	O-ring	1	26001-
16		04434-52711	Clip	3	26001-
17		01010-81025	Bolt	2	26001-
18		01643-31032	Washer	2	26001-
19		04434-53411	Clip	4	26001-
20		07095-20627	Cushion	4	26001-
21		01010-81025	Bolt	1	26001-
22		01643-31032	Washer	1	26001-
23		02782-10315	Elbow	1	26001-
24		02896-61009	O-ring	1	26001-
25		07002-62034	O-ring	1	26001-
26		234-04-82530	Hose	1	26001-
27		04434-53211	Clip	4	26001-
28		07095-20523	Cushion	4	26001-
29		01010-81025	Bolt	4	26001-
30		01643-31032	Washer	4	26001-
31		07270-41014	Tube	1	26001-
32		07285-00130	Clip	1	26001-
33		04434-51710	Clip	2	26001-
34		01010-81025	Bolt	1	26001-
35		01643-31032	Washer	1	26001-
36		02896-61009	O-ring	1	26001-
37		(234-03-82991)	Cover(Radiator,Mounting,For Extra Bad Fuel and Poor Fuel Specification, Water+Dust, Large Fuel Prefilter)(Refer to Page 162)		

ELECTRICAL SYSTEM

FIG. E0110-001001 Battery

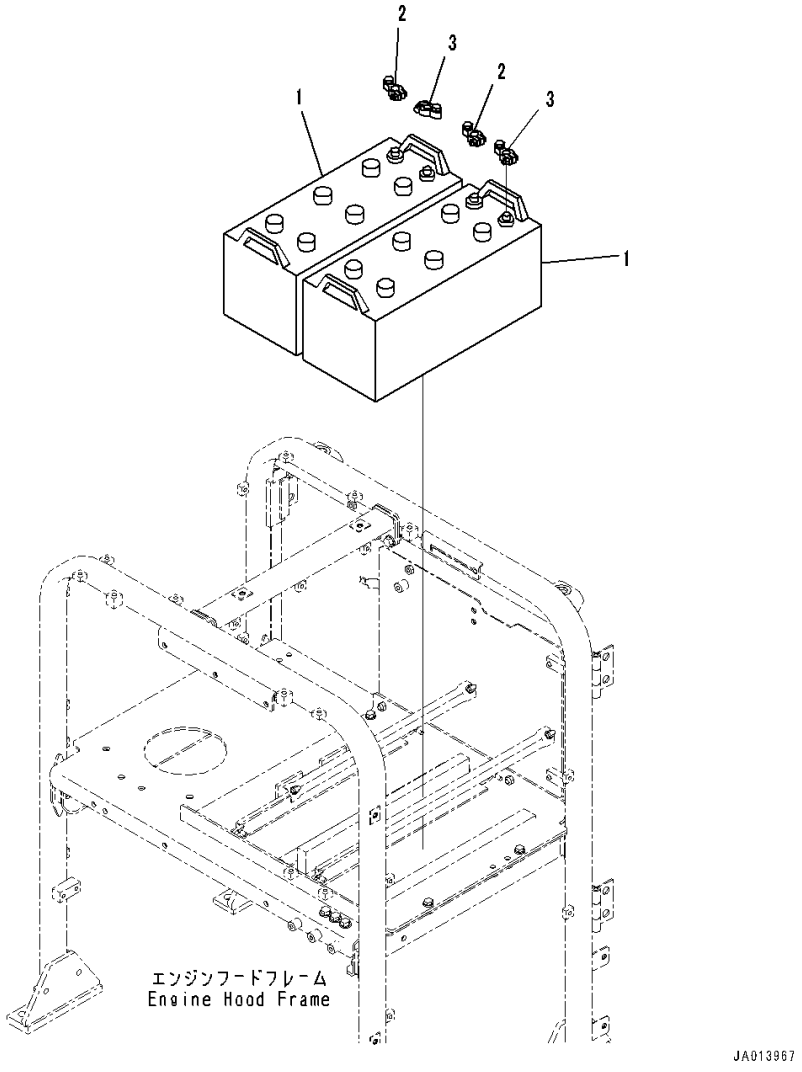

Index	Code	Part Number	Description	Qty	Serial Number
1		08001-3195G	Battery, Wet,(195G51)	2	26001-
2		08000-00020	Terminal,(+)	2	26001-
3		08000-00021	Terminal,(-)	2	26001-

FIG. E0120-001001 Battery Box (Battery Box Related Parts) (With 60Amp. Alternator)

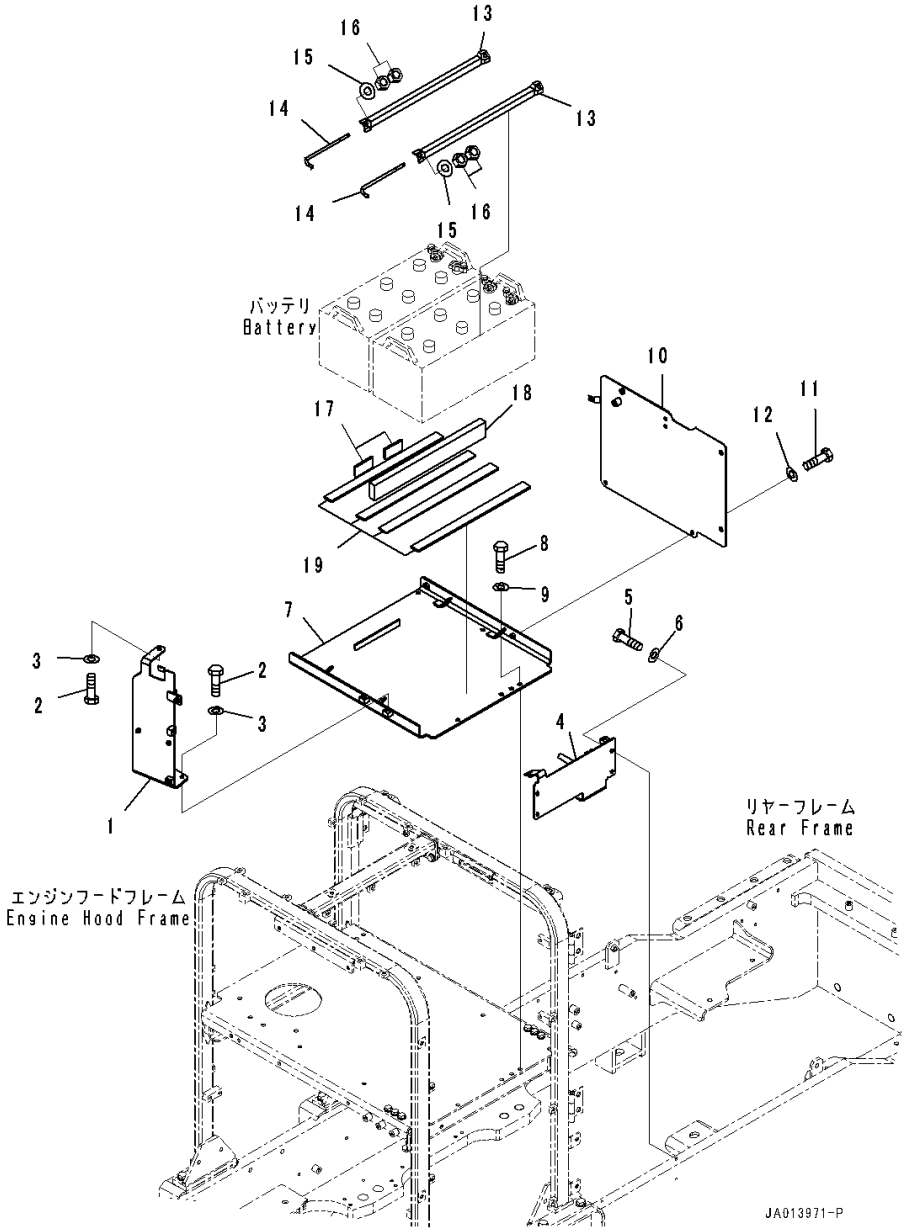

Index	Code	Part Number	Description	Qty	Serial Number
1		234-06-81430	Bracket	1	26001-
2		01010-81025	Bolt	3	26001-
3		01643-31032	Washer	3	26001-
4		234-06-81490	Bracket	1	26001-
5		01010-81025	Bolt	4	26001-
6		01643-31032	Washer	4	26001-
7		234-06-81420	Bracket	1	26001-
8		01010-81025	Bolt	6	26001-
9		01643-31032	Washer	6	26001-
10		234-06-81440	Plate	1	26001-
11		01010-81025	Bolt	4	26001-
12		01643-31032	Washer	4	26001-
13		421-06-11221	Holder	2	26001-
14		419-06-31170	Rod	4	26001-
15		01643-30823	Washer	4	26001-
16		01580-10806	Nut	8	26001-
17		23B-06-43650	Rubber	2	26001-
18		08007-26050	Cushion	1	26001-
19		14S-46-25140	Cushion	4	26001-

FIG. E0120-002001 Battery Box (Battery Box Related Parts) (With 90Amp. Alternator)

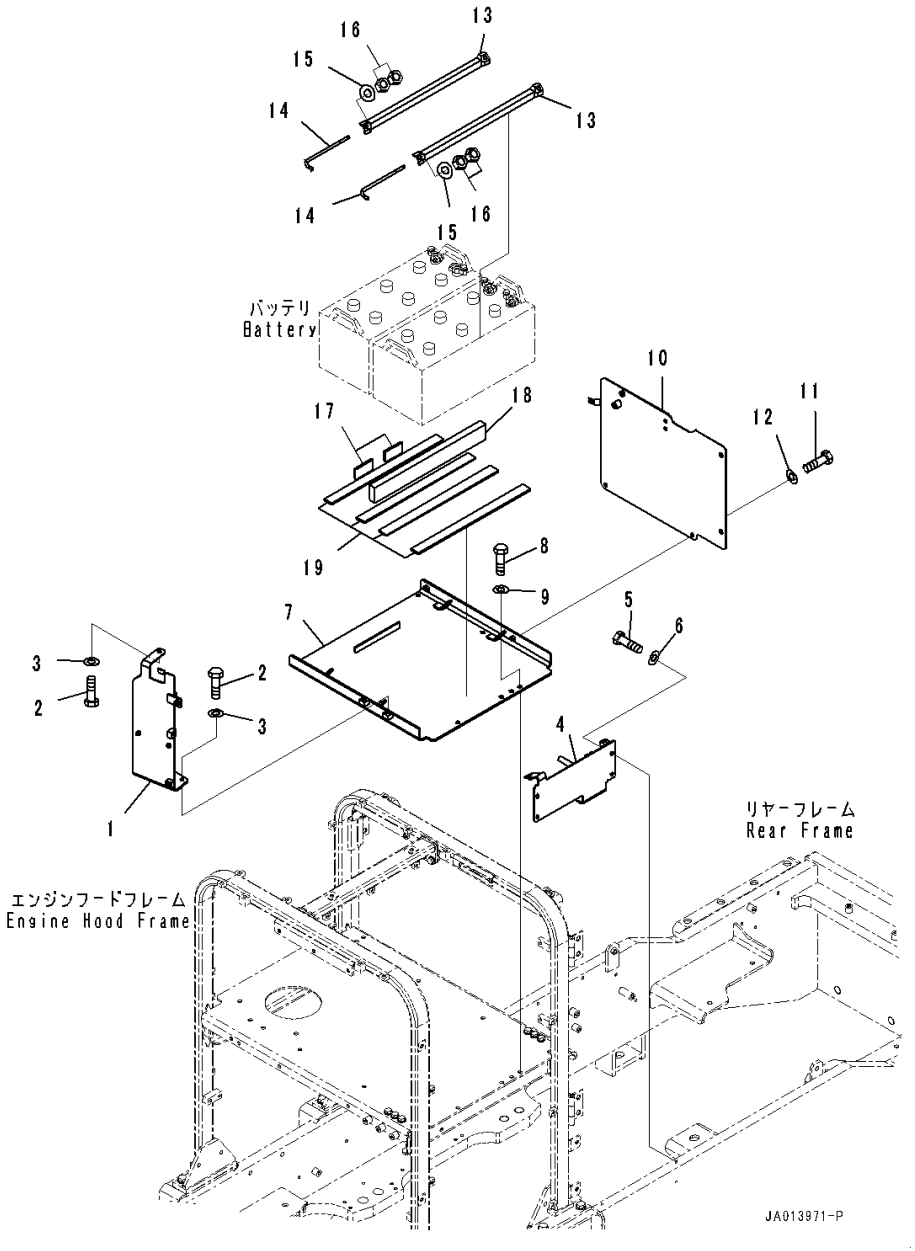

Index	Code	Part Number	Description	Qty	Serial Number
1		234-06-81430	Bracket	1	26001-
2		01010-81025	Bolt	3	26001-
3		01643-31032	Washer	3	26001-
4		234-06-81490	Bracket	1	26001-
5		01010-81025	Bolt	4	26001-
6		01643-31032	Washer	4	26001-
7		234-06-81420	Bracket	1	26001-
8		01010-81025	Bolt	6	26001-
9		01643-31032	Washer	6	26001-
10		234-06-81440	Plate	1	26001-
11		01010-81025	Bolt	4	26001-
12		01643-31032	Washer	4	26001-
13		421-06-11221-KY	Holder	2	26001-
14		419-06-31170	Rod	4	26001-
15		01643-30823	Washer	4	26001-
16		01580-10806	Nut	8	26001-
17		23B-06-43650	Rubber	2	26001-
18		08007-26050	Cushion	1	26001-
19		14S-46-25140	Cushion	4	26001-

FIG. E0120-001002 Battery Box (Battery Relay Switch) (With 60Amp. Alternator)

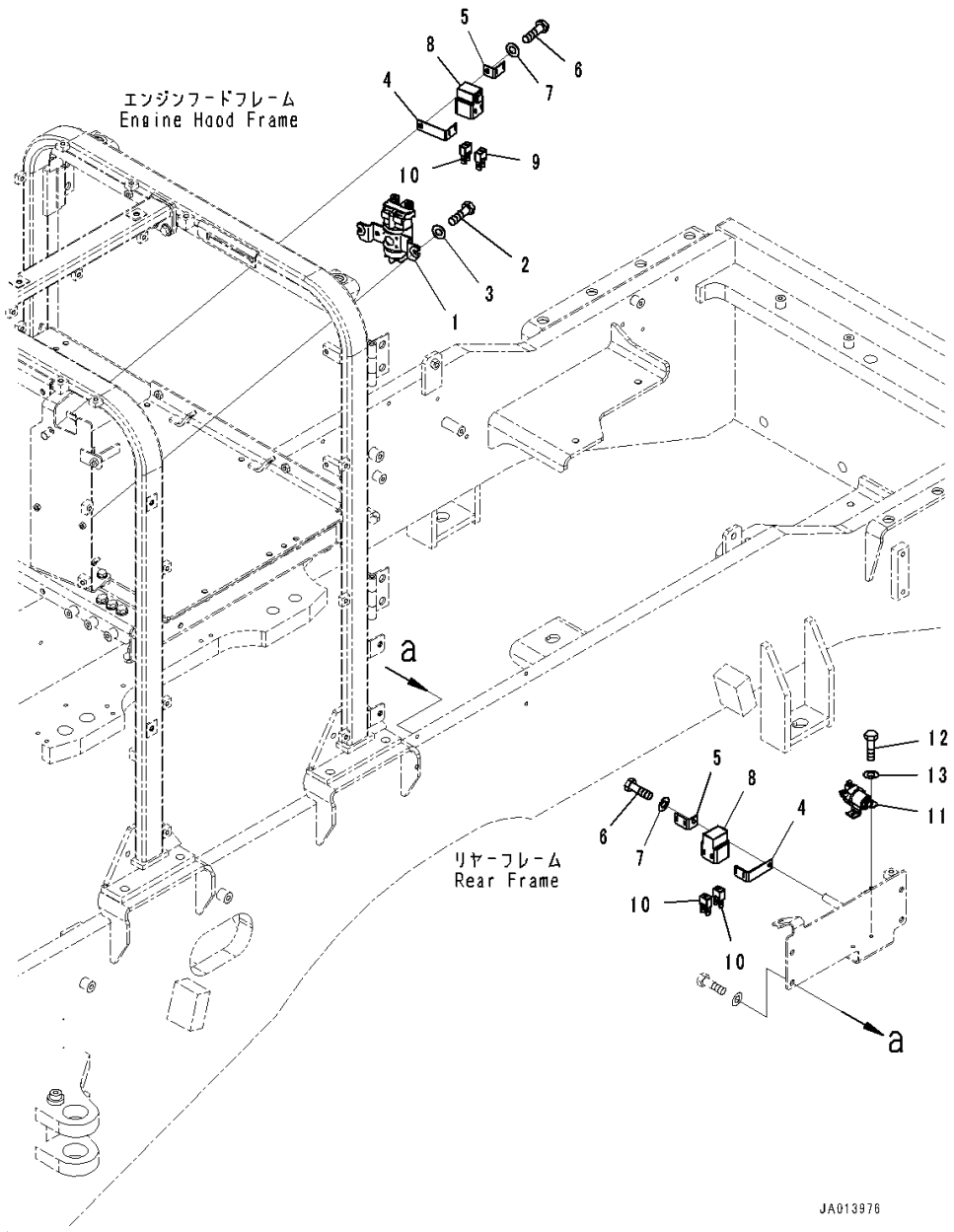

Index	Code	Part Number	Description	Qty	Serial Number
1		08088-60000	Switch, Battery Relay	1	26280-
	A2	22W-06-13220	Switch, Battery Relay	1	26001-26279
2		01010-80830	Bolt	2	26001-
3		01643-30823	Washer	2	26001-
4		421-06-22920	Bracket	2	26001-
5		421-06-22910	Bracket	2	26001-
6		01010-80816	Bolt	2	26001-
7		01643-30823	Washer	2	26001-
8		421-06-22880	Holder	2	26001-
9		421-06-22840	Fuse,30Amp.	1	26001-
10		421-06-22830	Fuse,120Amp.	3	26001-
11		600-815-2170	Switch, Heater	1	26001-
12		01010-80616	Bolt	2	26001-
13		01643-30623	Washer	2	26001-

FIG. E0120-002002 Battery Box (Battery Relay Switch) (With 90Amp. Alternator)

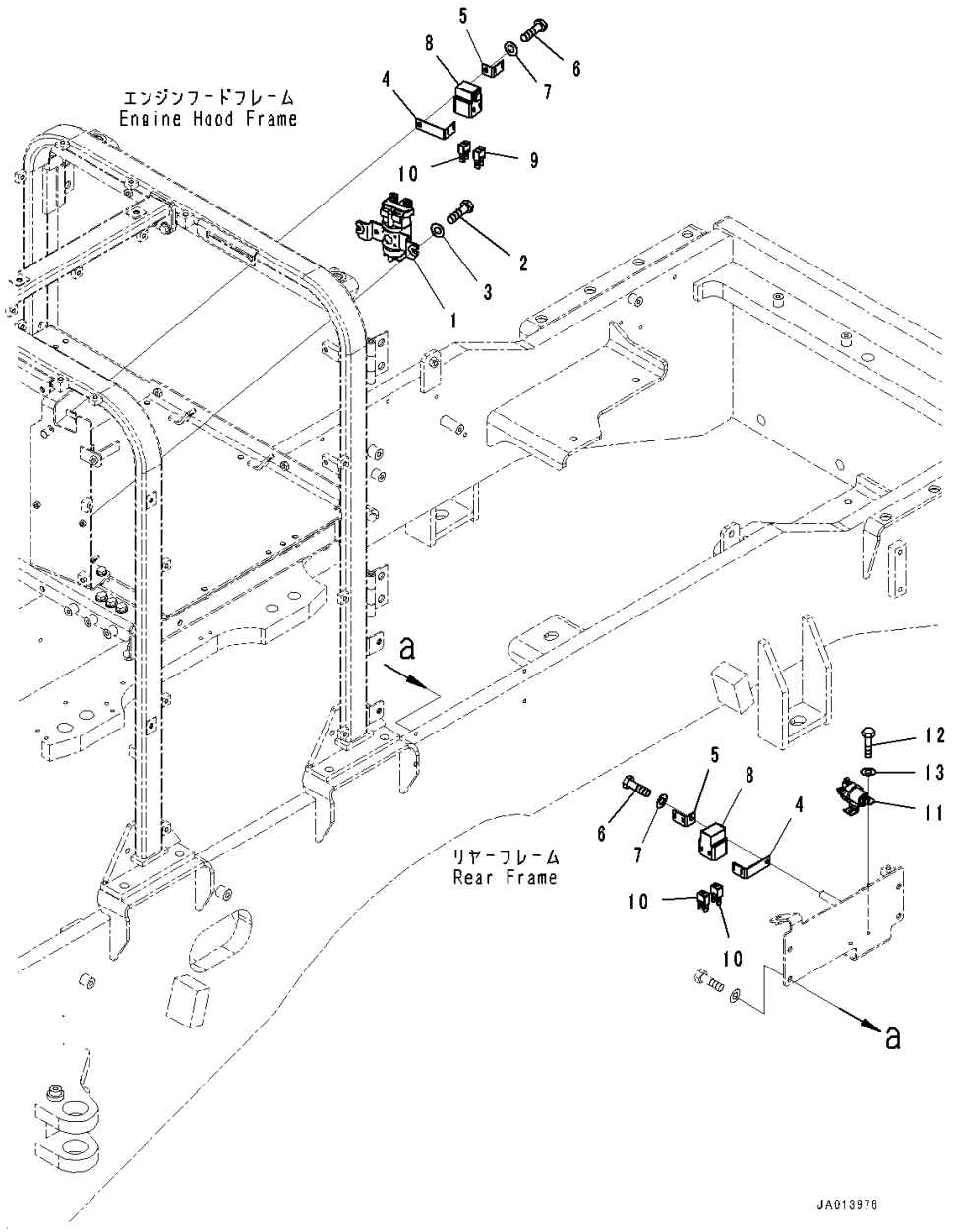

Index	Code	Part Number	Description	Qty	Serial Number
1		08088-60000	Switch, Battery Relay	1	26280-
	A2	22W-06-13220	Switch, Battery Relay	1	26001-26279
2		01010-80830	Bolt	2	26001-
3		01643-30823	Washer	2	26001-
4		421-06-22920	Bracket	2	26001-
5		421-06-22910	Bracket	2	26001-
6		01010-80816	Bolt	2	26001-
7		01643-30823	Washer	2	26001-
8		421-06-22880	Holder	2	26001-
9		421-06-22840	Fuse,30Amp.	1	26001-
10		421-06-22830	Fuse,120Amp.	3	26001-
11		600-815-2170	Switch, Heater	1	26001-
12		01010-80616	Bolt	2	26001-
13		01643-30623	Washer	2	26001-

FIG. E0120-001003 Battery Box (Battery Cable)

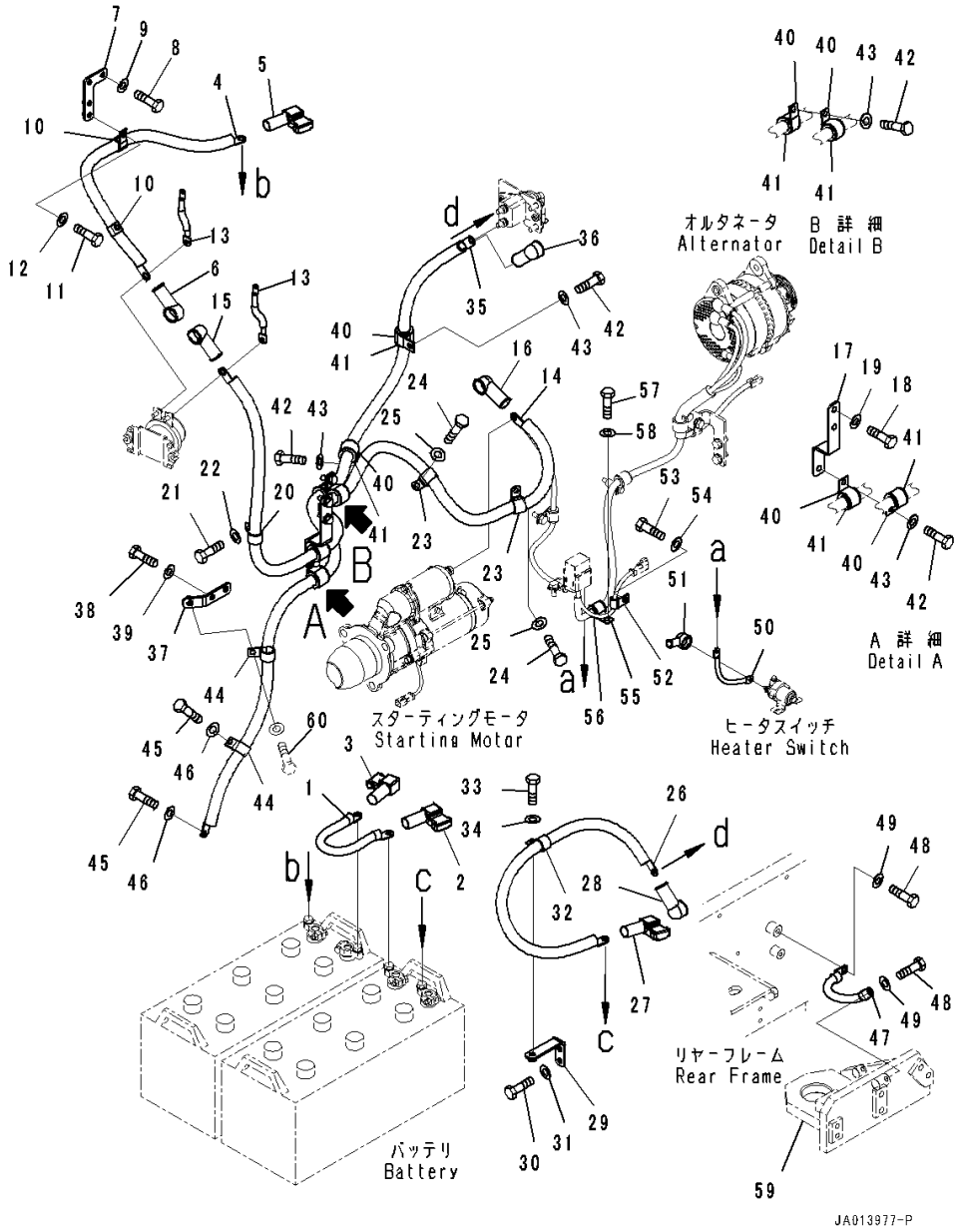

Index	Code	Part Number	Description	Qty	Serial Number
1		08028-64011	Cable, Battery	1	26001-
2		14X-06-12280	Cover	1	26001-
3		14X-06-12290	Cover	1	26001-
4		234-06-81310	Cable	1	26001-
5		14X-06-12280	Cover	1	26001-
6		08038-00035	Cap, Terminal	1	26001-
7		234-06-81790	Bracket	1	26001-
8		01010-81025	Bolt	2	26001-
9		01643-31032	Washer	2	26001-
10		04434-52310	Clip	2	26001-
11		01010-81025	Bolt	2	26001-
12		01643-31032	Washer	2	26001-
13		234-06-81340	Cable	2	26001-
14		234-06-81320	Cable	1	26001-
15		08038-00035	Cap, Terminal	1	26001-
16		08038-10035	Cap	1	26001-
17		234-06-81480	Bracket	1	26001-
18		01010-81025	Bolt	2	26001-
19		01643-31032	Washer	2	26001-
20		04434-52310	Clip	1	26001-
21		01010-81025	Bolt	1	26001-
22		01643-31032	Washer	1	26001-
23		600-051-2240	Clip	2	26001-
24		01010-81025	Bolt	2	26001-
25		01643-31032	Washer	2	26001-
26		234-06-81360	Cable	1	26001-
27		14X-06-12260	Cover	1	26001-
28		08038-00035	Cap, Terminal	1	26001-
29		234-06-81780	Bracket	1	26001-
30		01010-81025	Bolt	2	26001-
31		01643-31032	Washer	2	26001-
32		04434-52310	Clip	1	26001-
33		01010-81025	Bolt	1	26001-
34		01643-31032	Washer	1	26001-
35		234-06-81370	Cable	1	26001-
36		08038-00035	Cap, Terminal	1	26001-
37		234-06-81470	Bracket	1	26001-
38		01010-81025	Bolt	2	26001-
39		01643-31032	Washer	2	26001-
40		04434-53211	Clip	6	26001-

FIG. E0120-001003 Battery Box (Battery Cable)

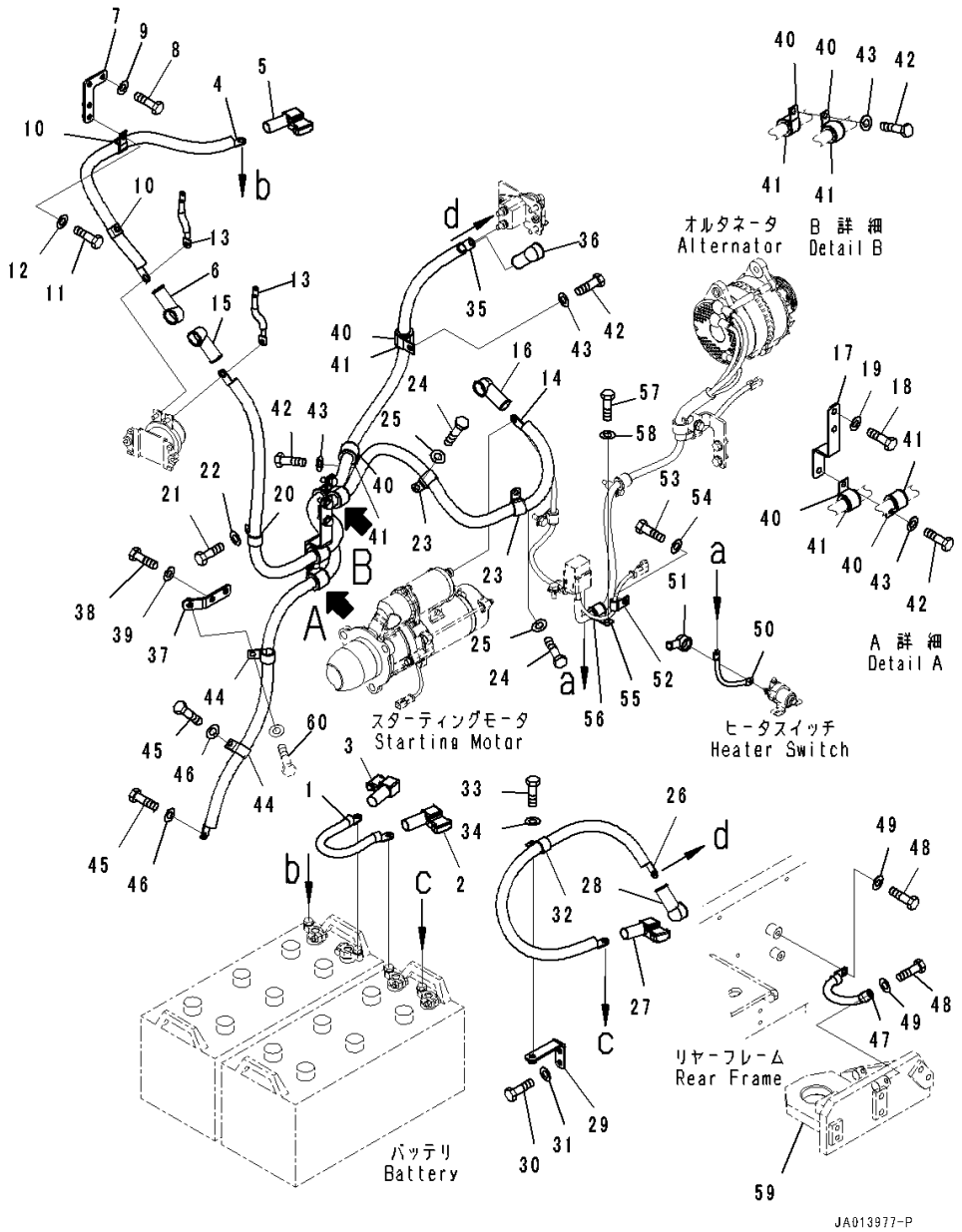

Index	Code	Part Number	Description	Qty	Serial Number
41		07095-20523	Cushion	6	26001-
42		01010-81025	Bolt	4	26001-
43		01643-31032	Washer	4	26001-
44		04434-52310	Clip	2	26001-
45		01010-81025	Bolt	2	26001-
46		01643-31032	Washer	2	26001-
47		234-06-81380	Cable	1	26001-
48		01010-81225	Bolt	2	26001-
49		01643-31232	Washer	2	26001-
50		234-06-81350	Cable	1	26001-
51		08038-02027	Cap	1	26001-
52		04434-51010	Clip	1	26001-
53		01010-81025	Bolt	1	26001-
54		01643-31032	Washer	1	26001-
55		04434-52110	Clip	1	26001-
56		07095-20314	Cushion	1	26001-
57		01010-81025	Bolt	1	26001-
58		01643-31032	Washer	1	26001-
59		(234-01-81320)	Bracket(Engine Mounting)(Refer to Page 136)		
60		(01010-81025)	Bolt(Rear Wiring Harness,Wiring Harness and Mounting)(Refer to Page 210)		

FIG. E0120-001004 Battery Box (Disconnect Switch)

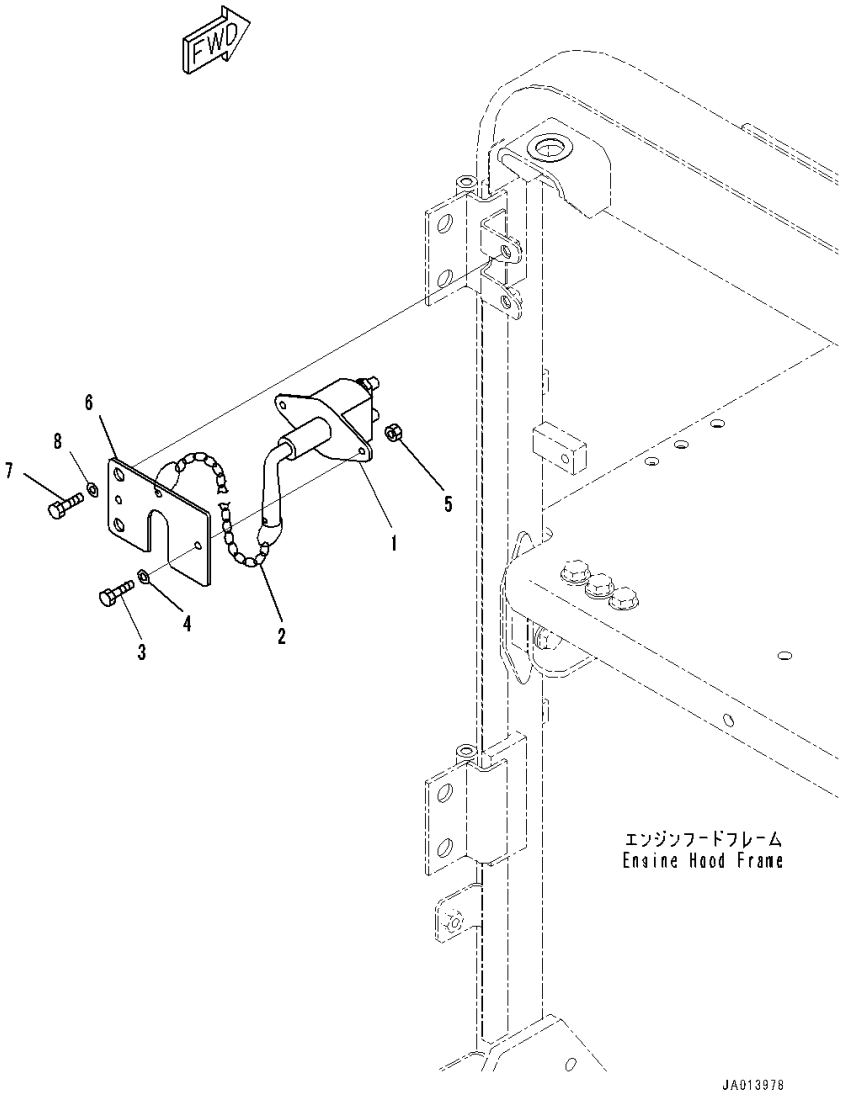

Index	Code	Part Number	Description	Qty	Serial Number
1		561-86-69110	Switch,Battery Disconnect	1	26001-
2		565-44-11460	Chain	2	26001-
3		01010-80616	Bolt	2	26001-
4		01643-30623	Washer	2	26001-
5		01580-10605	Nut	2	26001-
6		23B-06-71760	Plate	1	26001-
7		01010-81025	Bolt	2	26001-
8		01643-31032	Washer	2	26001-

FIG. E0120-001005 Battery Box (Alternator Wiring Harness) (With 60Amp. Alternator)

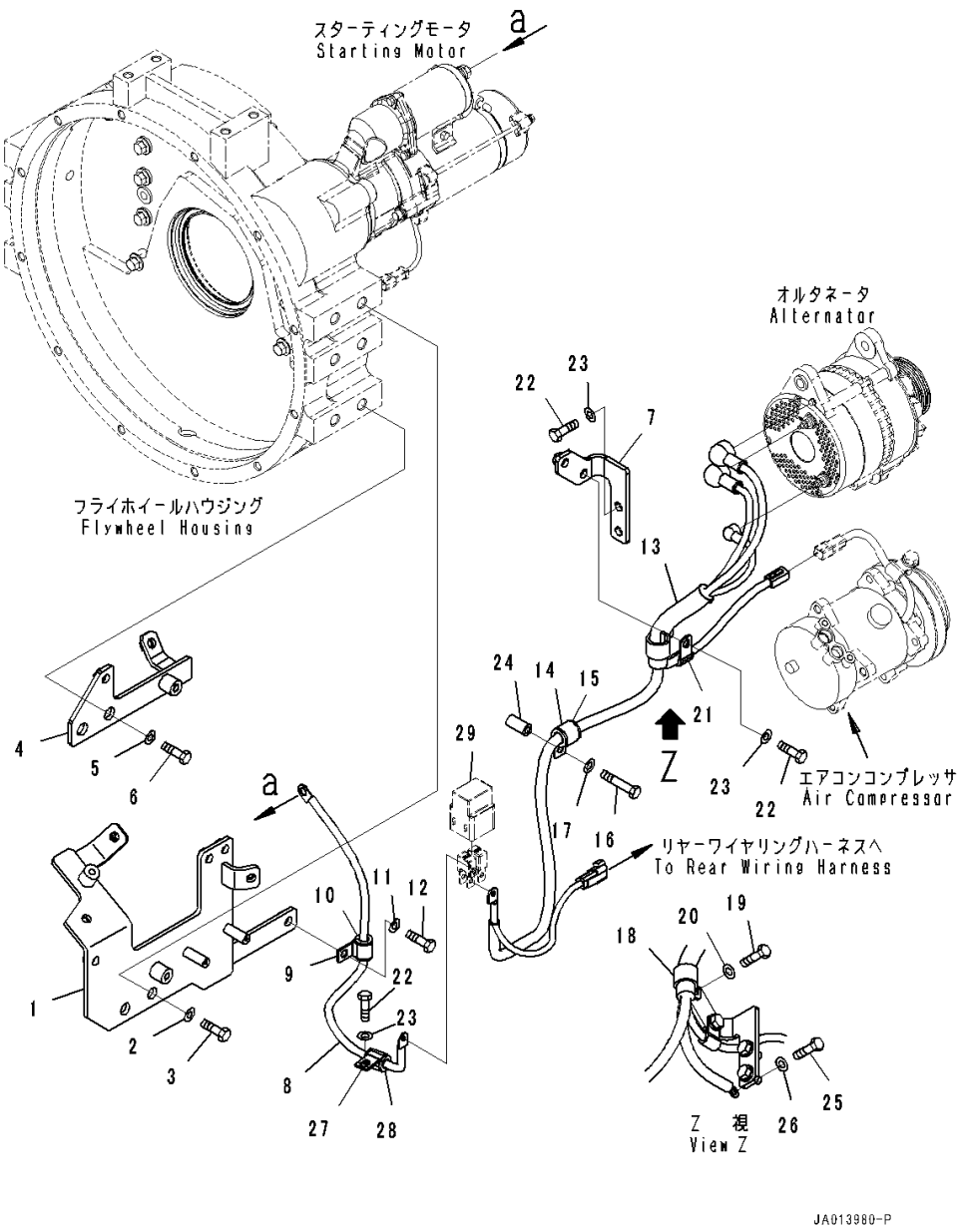

Index	Code	Part Number	Description	Qty	Serial Number
1		234-06-81411	Bracket	1	26001-
2		01643-31645	Washer	2	26001-
3		01010-81635	Bolt	2	26001-
4		234-06-81771	Bracket	1	26001-
5		01643-31645	Washer	2	26001-
6		01010-81635	Bolt	2	26001-
7		234-06-81890	Bracket	1	26001-
8		234-06-81160	Cable	1	26001-
9		04434-51710	Clip	1	26001-
10		07095-20211	Cushion	1	26001-
11		01010-81025	Bolt	1	26001-
12		01643-31032	Washer	1	26001-
13		234-06-81170	Wiring Harness	1	26001-
14		04434-52110	Clip	1	26001-
15		07095-20314	Cushion	1	26001-
16		01010-80850	Bolt	1	26001-
17		01643-30823	Washer	1	26001-
18		600-051-2240	Clip	1	26001-
19		01010-81025	Bolt	1	26001-
20		01643-31032	Washer	1	26001-
21		600-051-2100	Clip	1	26001-
22		01010-81025	Bolt	4	26001-
23		01643-31032	Washer	4	26001-
24		207-62-32890	Collar	1	26001-
25		01010-80816	Bolt	1	26001-
26		01643-30823	Washer	1	26001-
27		04434-51710	Clip	1	26001-
28		07095-20211	Cushion	1	26001-
29		(421-06-22880)	Holder(Battery Box,Battery Relay Switch,With 60Amp. Alternator)(Refer to Page 193)		

FIG. E0120-002005 Battery Box (Alternator Wiring Harness) (With 90Amp. Alternator)

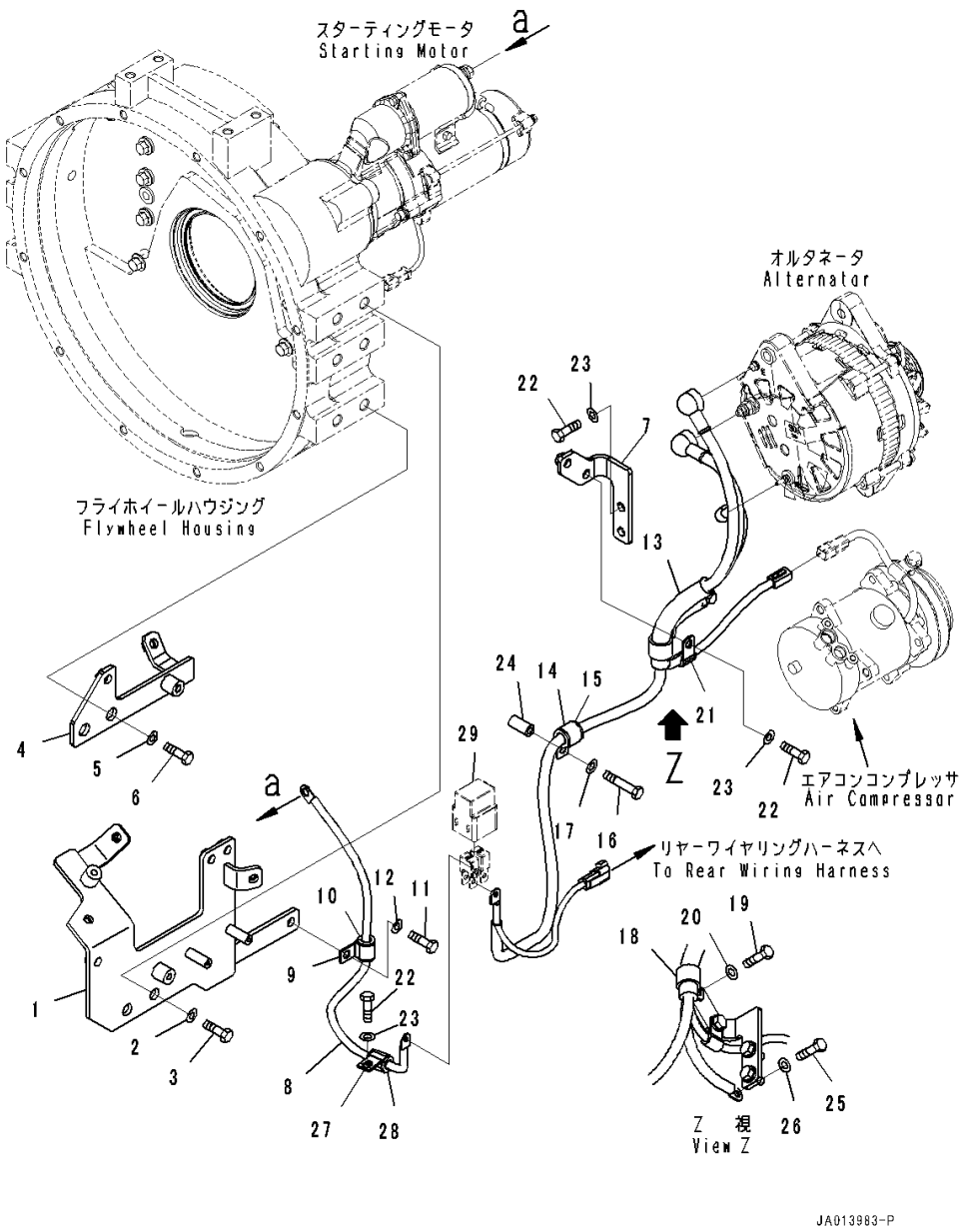

Index	Code	Part Number	Description	Qty	Serial Number
1		234-06-81411	Bracket	1	26001-
2		01643-31645	Washer	2	26001-
3		01010-81635	Bolt	2	26001-
4		234-06-81771	Bracket	1	26001-
5		01643-31645	Washer	2	26001-
6		01010-81635	Bolt	2	26001-
7		234-06-81890	Bracket	1	26001-
8		234-06-81160	Cable	1	26001-
9		04434-51710	Clip	1	26001-
10		07095-20211	Cushion	1	26001-
11		01010-81025	Bolt	1	26001-
12		01643-31032	Washer	1	26001-
13		234-06-81180	Wiring Harness	1	26001-
14		04434-52110	Clip	1	26001-
15		07095-20314	Cushion	1	26001-
16		01010-80850	Bolt	1	26001-
17		01643-30823	Washer	1	26001-
18		600-051-2240	Clip	1	26001-
19		01010-81025	Bolt	1	26001-
20		01643-31032	Washer	1	26001-
21		600-051-2100	Clip	1	26001-
22		01010-81025	Bolt	4	26001-
23		01643-31032	Washer	4	26001-
24		207-62-32890	Collar	1	26001-
25		01010-80816	Bolt	1	26001-
26		01643-30823	Washer	1	26001-
27		04434-51710	Clip	1	26001-
28		07095-20211	Cushion	1	26001-
29		(421-06-22880)	Holder(Battery Box,Battery Relay Switch,With 90Amp. Alternator)(Refer to Page 194)		

FIG. E0200-001001 Front Wiring Harness (Wiring Harness and Mounting)

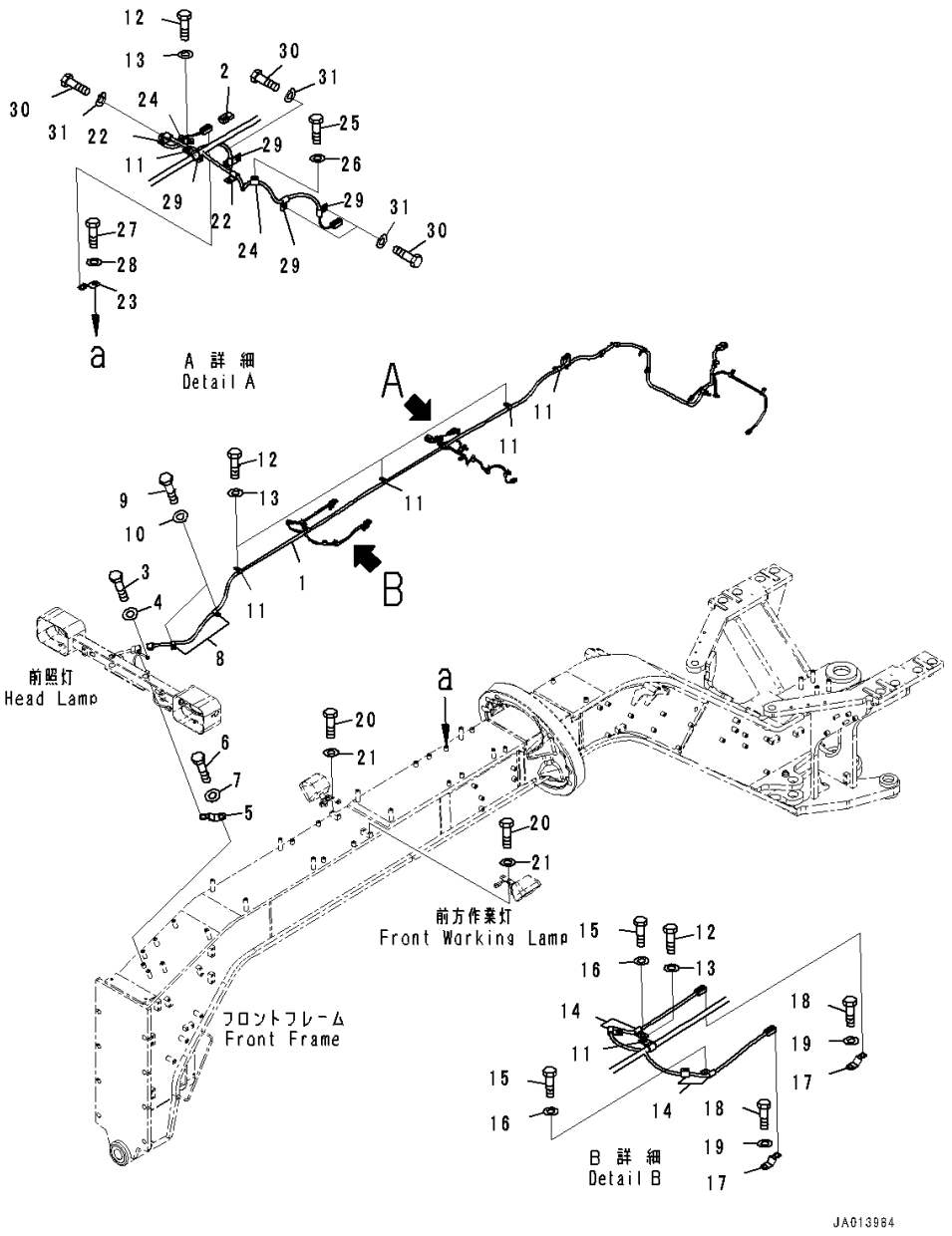

Index	Code	Part Number	Description	Qty	Serial Number
1		234-06-81241	Wiring Harness	1	26001-
2		21J-06-13661	• Diode	1	26001-
3		01010-81020	Bolt	1	26001-
4		01643-31032	Washer	1	26001-
5		08193-21012	Clip	1	26001-
6		01010-81020	Bolt	1	26001-
7		01643-31032	Washer	1	26001-
8		04434-51410	Clip	2	26001-
9		01010-81020	Bolt	2	26001-
10		01643-31032	Washer	2	26001-
11		04434-51410	Clip	6	26001-
12		01010-81025	Bolt	5	26001-
13		01643-31032	Washer	5	26001-
14		04434-50810	Clip	4	26001-
15		01010-81025	Bolt	2	26001-
16		01643-31032	Washer	2	26001-
17		08193-21012	Clip	2	26001-
18		01010-81020	Bolt	2	26001-
19		01643-31032	Washer	2	26001-
20		01010-81025	Bolt	4	26001-
21		01643-31032	Washer	4	26001-
22		04434-50810	Clip	2	26001-
23		08193-21012	Clip	1	26001-
24		04434-50810	Clip	2	26001-
25		01010-81025	Bolt	1	26001-
26		01643-31032	Washer	1	26001-
27		01010-81020	Bolt	1	26001-
28		01643-31032	Washer	1	26001-
29		04434-50810	Clip	4	26001-
30		01010-81025	Bolt	4	26001-
31		01643-31032	Washer	4	26001-

FIG. E0200-003001 Front Wiring Harness (Wiring Harness and Mounting) (With Front Blade)

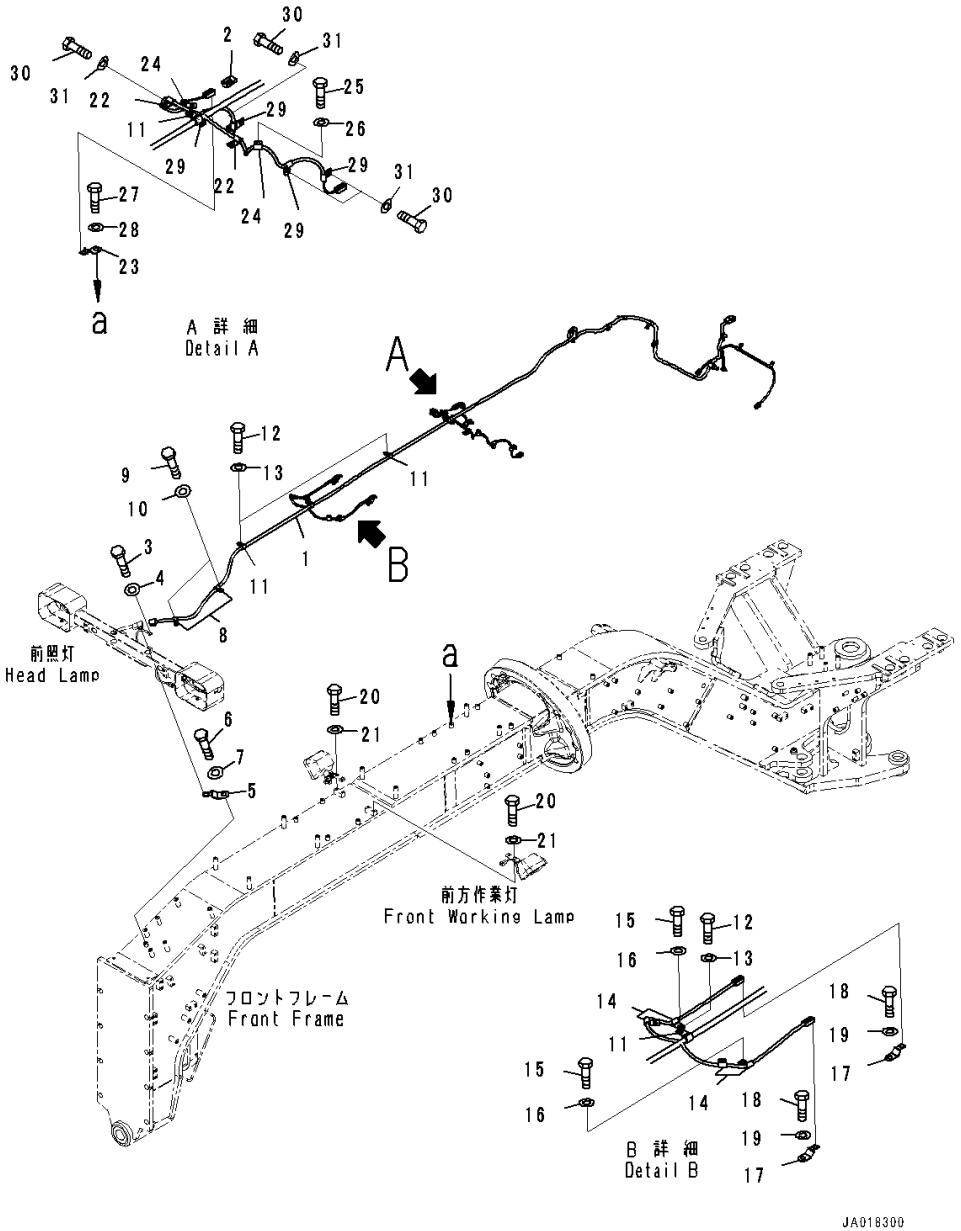

Index	Code	Part Number	Description	Qty	Serial Number
1		234-06-82241	Wiring Harness	1	26001-
2		21J-06-13661	• Diode	1	26001-
3		01010-81020	Bolt	1	26001-
4		01643-31032	Washer	1	26001-
5		08193-21012	Clip	1	26001-
6		01010-81020	Bolt	1	26001-
7		01643-31032	Washer	1	26001-
8		04434-51410	Clip	2	26001-
9		01010-81020	Bolt	2	26001-
10		01643-31032	Washer	2	26001-
11		04434-51410	Clip	4	26001-
12		01010-81025	Bolt	3	26001-
13		01643-31032	Washer	3	26001-
14		04434-50810	Clip	4	26001-
15		01010-81025	Bolt	2	26001-
16		01643-31032	Washer	2	26001-
17		08193-21012	Clip	2	26001-
18		01010-81020	Bolt	2	26001-
19		01643-31032	Washer	2	26001-
20		01010-81025	Bolt	4	26001-
21		01643-31032	Washer	4	26001-
22		04434-50810	Clip	2	26001-
23		08193-21012	Clip	1	26001-
24		04434-50810	Clip	2	26001-
25		01010-81025	Bolt	1	26001-
26		01643-31032	Washer	1	26001-
27		01010-81020	Bolt	1	26001-
28		01643-31032	Washer	1	26001-
29		04434-50810	Clip	4	26001-
30		01010-81025	Bolt	4	26001-
31		01643-31032	Washer	4	26001-

FIG. E0200-001002 Front Wiring Harness (Mounting)

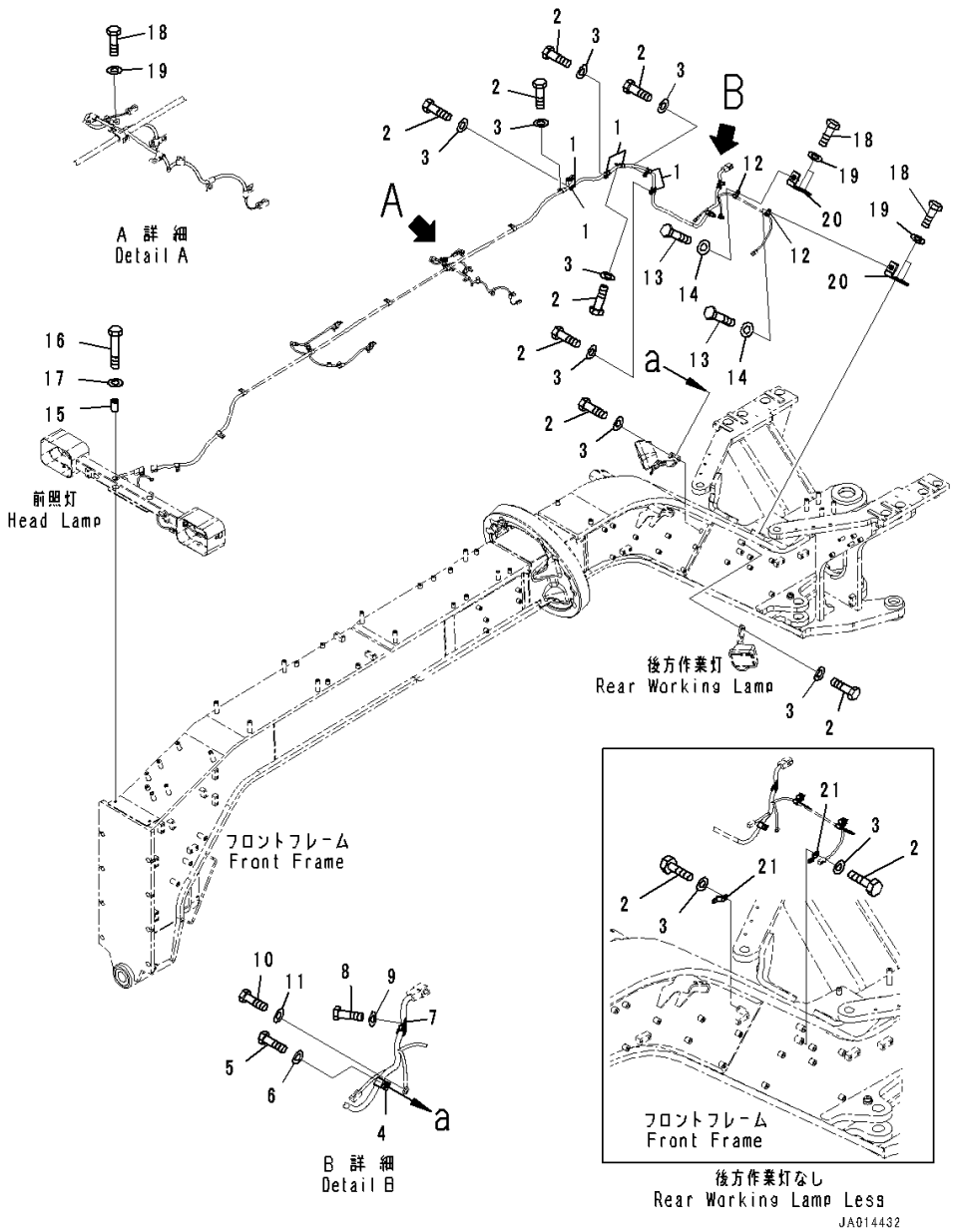

Index	Code	Part Number	Description	Qty	Serial Number
1		04434-51410	Clip	6	26001-
2		01010-81025	Bolt	6	26001-
3		01643-31032	Washer	6	26001-
4		04434-51412	Clip	1	26001-
5		01010-81230	Bolt	4	26001-
6		01643-31232	Washer	4	26001-
7		04434-51410	Clip	1	26001-
8		01010-81025	Bolt	1	26001-
9		01643-31032	Washer	1	26001-
10		01010-81020	Bolt	1	26001-
11		01643-31032	Washer	1	26001-
12		04434-50810	Clip	2	26001-
13		01010-81025	Bolt	2	26001-
14		01643-31032	Washer	2	26001-
15		205-03-71330	Collar	2	26001-
16		01010-81065	Bolt	2	26001-
17		01643-31032	Washer	2	26001-
18		01010-81025	Bolt	5	26001-
19		01643-31032	Washer	5	26001-
20		22X-878-1980	Bracket	2	26001-
21		08193-21012	Clip	2	26001-

FIG. E0200-003002 Front Wiring Harness (Mounting) (With Front Blade)

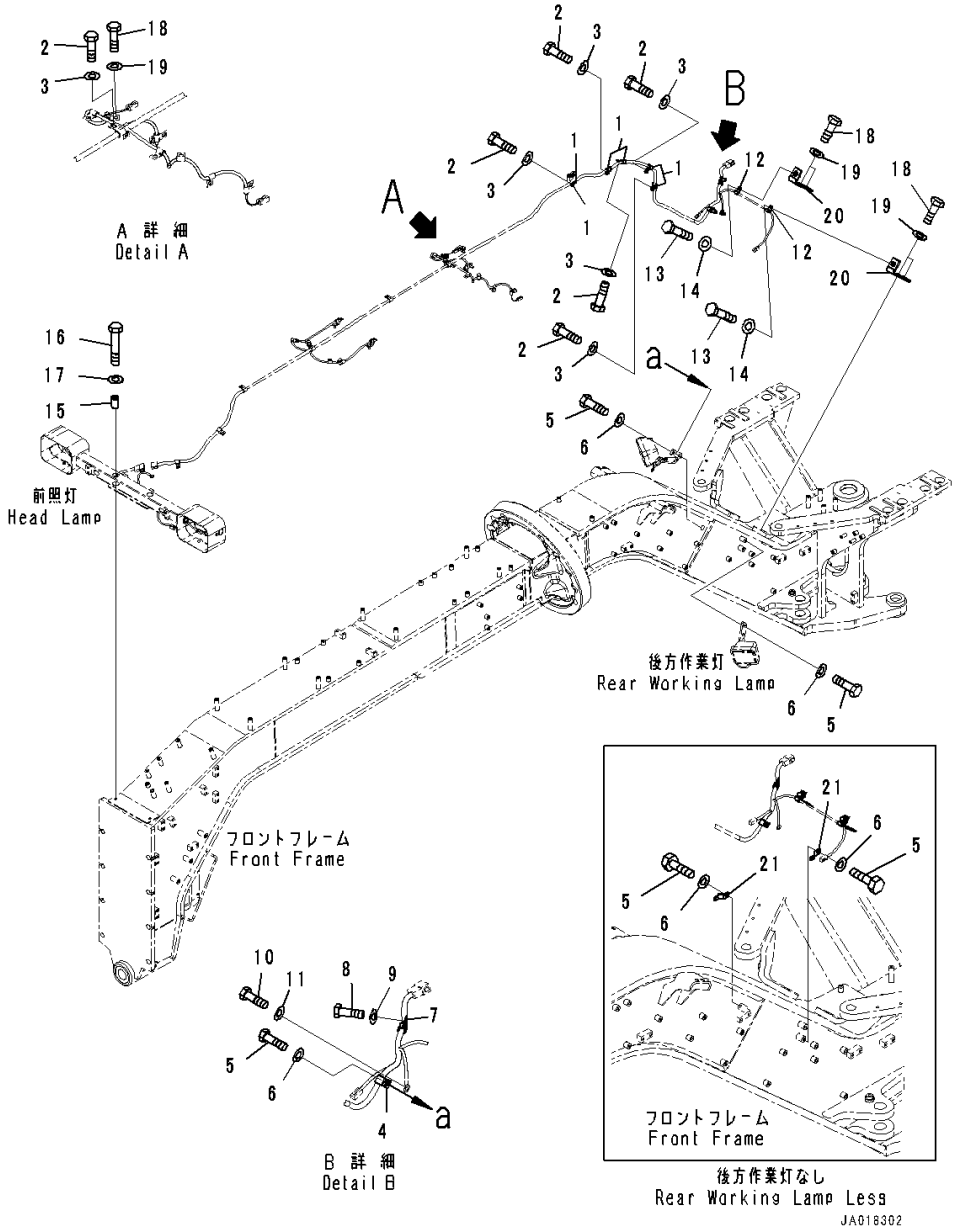

Index	Code	Part Number	Description	Qty	Serial Number
1		04434-51410	Clip	6	26001-
2		01010-81025	Bolt	6	26001-
3		01643-31032	Washer	6	26001-
4		04434-51412	Clip	1	26001-
5		01010-81230	Bolt	4	26001-
6		01643-31232	Washer	4	26001-
7		04434-51410	Clip	1	26001-
8		01010-81025	Bolt	1	26001-
9		01643-31032	Washer	1	26001-
10		01010-81020	Bolt	1	26001-
11		01643-31032	Washer	1	26001-
12		04434-50810	Clip	2	26001-
13		01010-81025	Bolt	2	26001-
14		01643-31032	Washer	2	26001-
15		205-03-71330	Collar	2	26001-
16		01010-81065	Bolt	2	26001-
17		01643-31032	Washer	2	26001-
18		01010-81025	Bolt	5	26001-
19		01643-31032	Washer	5	26001-
20		22X-878-1980	Bracket	2	26001-
21		08193-21012	Clip	2	26001-

FIG. E0200-001003 Front Wiring Harness (Angle Sensor)

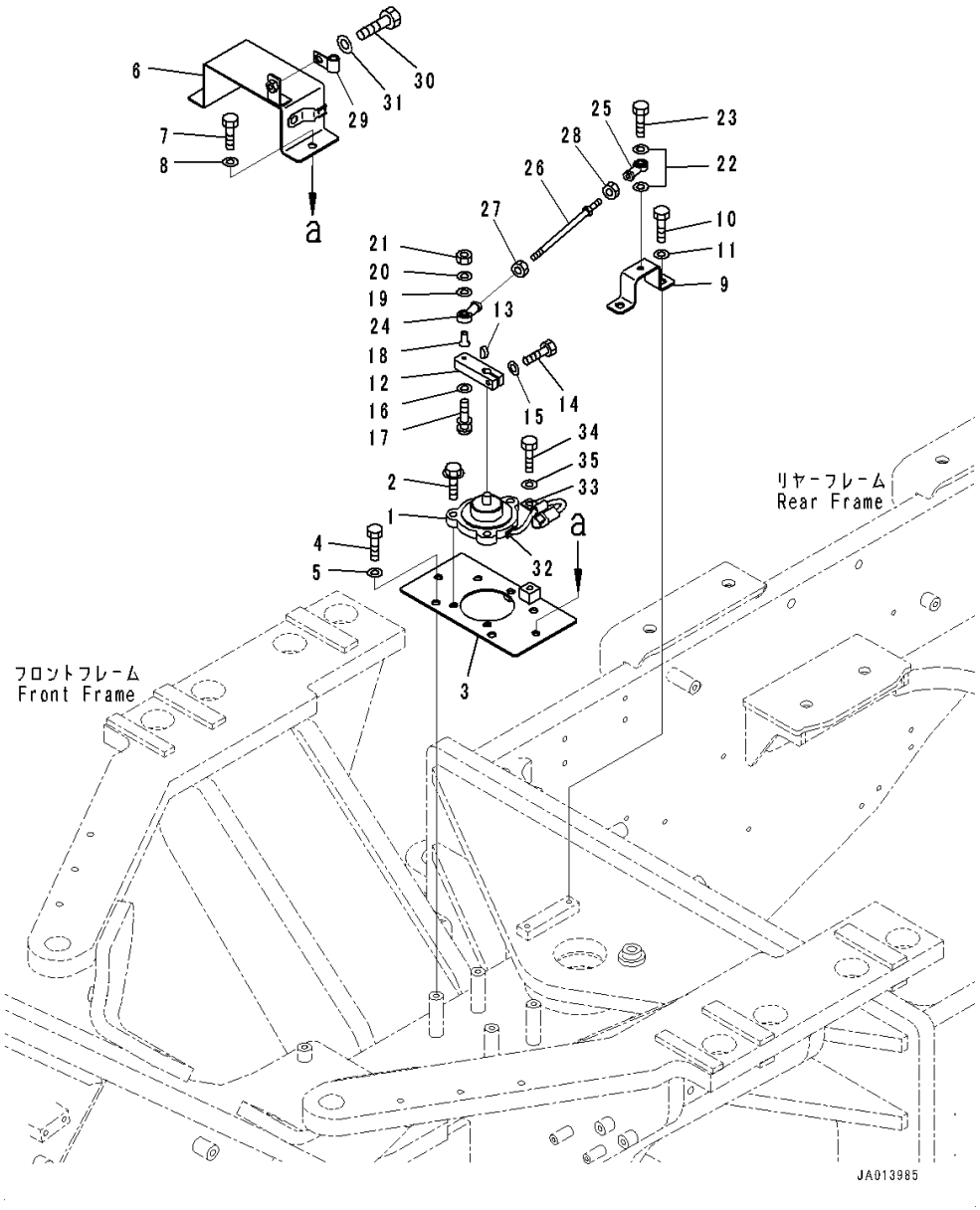

Index	Code	Part Number	Description	Qty	Serial Number
1		7861-93-8710	Sensor, Angle	1	26001-
2		01435-01030	Bolt	3	26001-
3		234-06-81680	Plate	1	26001-
4		01010-81020	Bolt	4	26001-
5		01643-31032	Washer	4	26001-
6		23B-06-71470	Cover	1	26001-
7		01010-81020	Bolt	2	26001-
8		01643-31032	Washer	2	26001-
9		23B-06-71480	Bracket	1	26001-
10		01010-81020	Bolt	2	26001-
11		01643-31032	Washer	2	26001-
12		23C-06-62150	Lever	1	26001-
13		04010-00310	Key, Woodruff	1	26001-
14		01010-80830	Bolt	1	26001-
15		01643-30823	Washer	1	26001-
16		01640-20508	Washer	1	26001-
17		01023-10535	Screw	1	26001-
18		23B-06-43380	Spacer	1	26001-
19		04254-10823	Spacer	1	26001-
20		01640-20508	Washer	1	26001-
21		01580-10504	Nut	1	26001-
22		04254-10823	Spacer	2	26001-
23		01010-80830	Bolt	1	26001-
24		04250-90847	Rod End	1	26001-
25		04250-80847	Rod End	1	26001-
26		04248-30818	Rod	1	26001-
27		01508-40805	Nut	1	26001-
28		01580-10806	Nut	1	26001-
29		04434-51010	Clip	1	26001-
30		01010-81020	Bolt	1	26001-
31		01643-31032	Washer	1	26001-
32		20U-70-41560	Cushion	1	26001-
33		04434-50810	Clip	1	26001-
34		01010-81020	Bolt	1	26001-
35		01643-31032	Washer	1	26001-

FIG. E0200-001004 Front Wiring Harness (Headlamp)

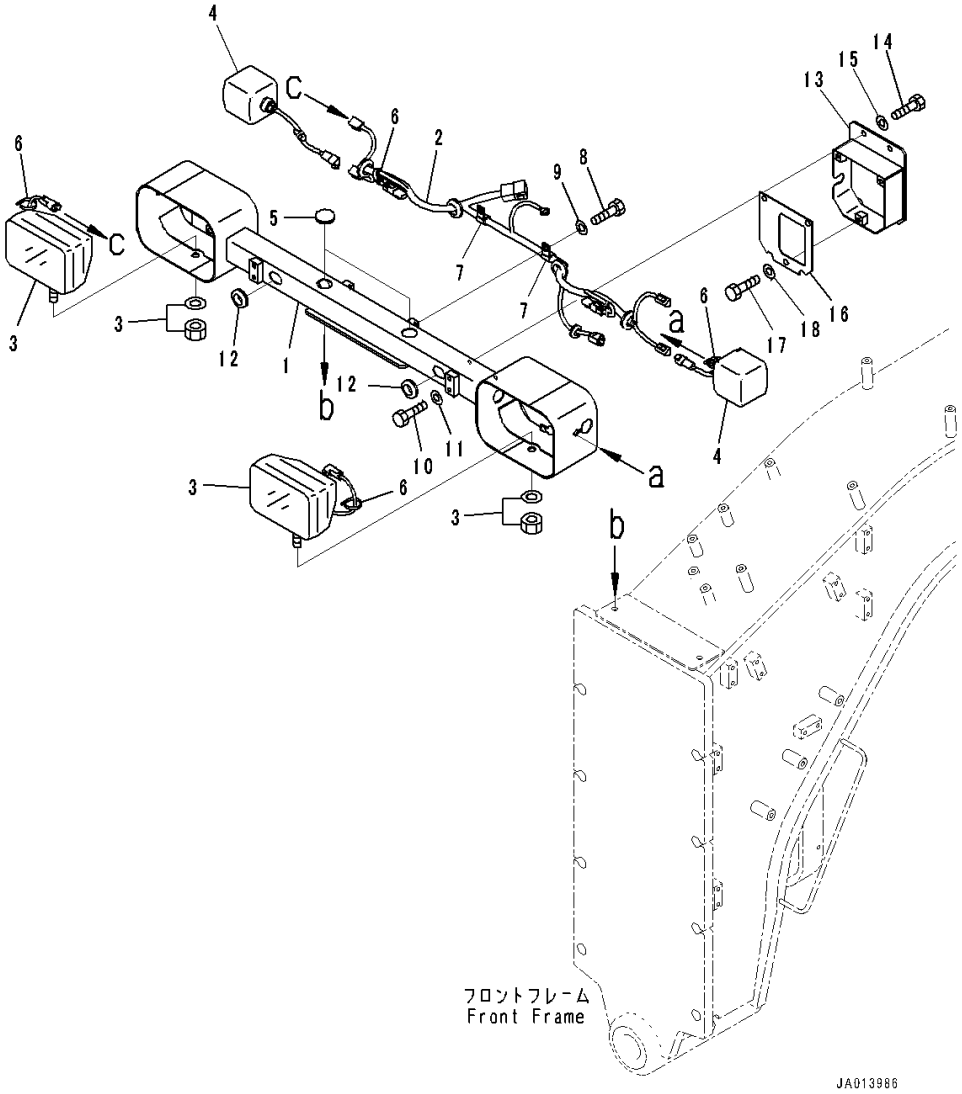

Index	Code	Part Number	Description	Qty	Serial Number
1		234-06-81611	Bracket	1	26001-
2		234-06-81250	Wiring Harness	1	26001-
3		417-06-43110	Lamp Assembly	2	26001-
		424-06-23230	• Bulb,75/70watt	1	26001-
		23S-06-54121	• Lens Assembly,Clear	1	26001-
4		424-06-43221	Lamp	2	26001-
		41G-06-13210	• Lens,Orange,Front	1	26001-
		41G-06-13220	• Lens,Orange,Rear	1	26001-
		41G-06-13230	• Bulb,5watt	1	26001-
		08105-12420	• Bulb,25watt	1	26001-
5		09415-02512	Cap	2	26001-
6		08034-20519	Band	4	26001-
7		04434-51410	Clip	2	26001-
8		01010-81020	Bolt	2	26001-
9		01643-31032	Washer	2	26001-
10		01010-D1016	Bolt	4	26001-
11		01643-71032	Washer	4	26001-
12		08037-02512	Grommet	2	26001-
13		23C-06-62720	Bracket	1	26001-
14		01010-D1025	Bolt	2	26001-
15		01643-71032	Washer	2	26001-
16		23C-06-65730	Cover	1	26001-
17		01010-D1025	Bolt	3	26001-
18		01643-71032	Washer	3	26001-

FIG. E0200-002004 Front Wiring Harness (Headlamp) (With Fog Lamp)

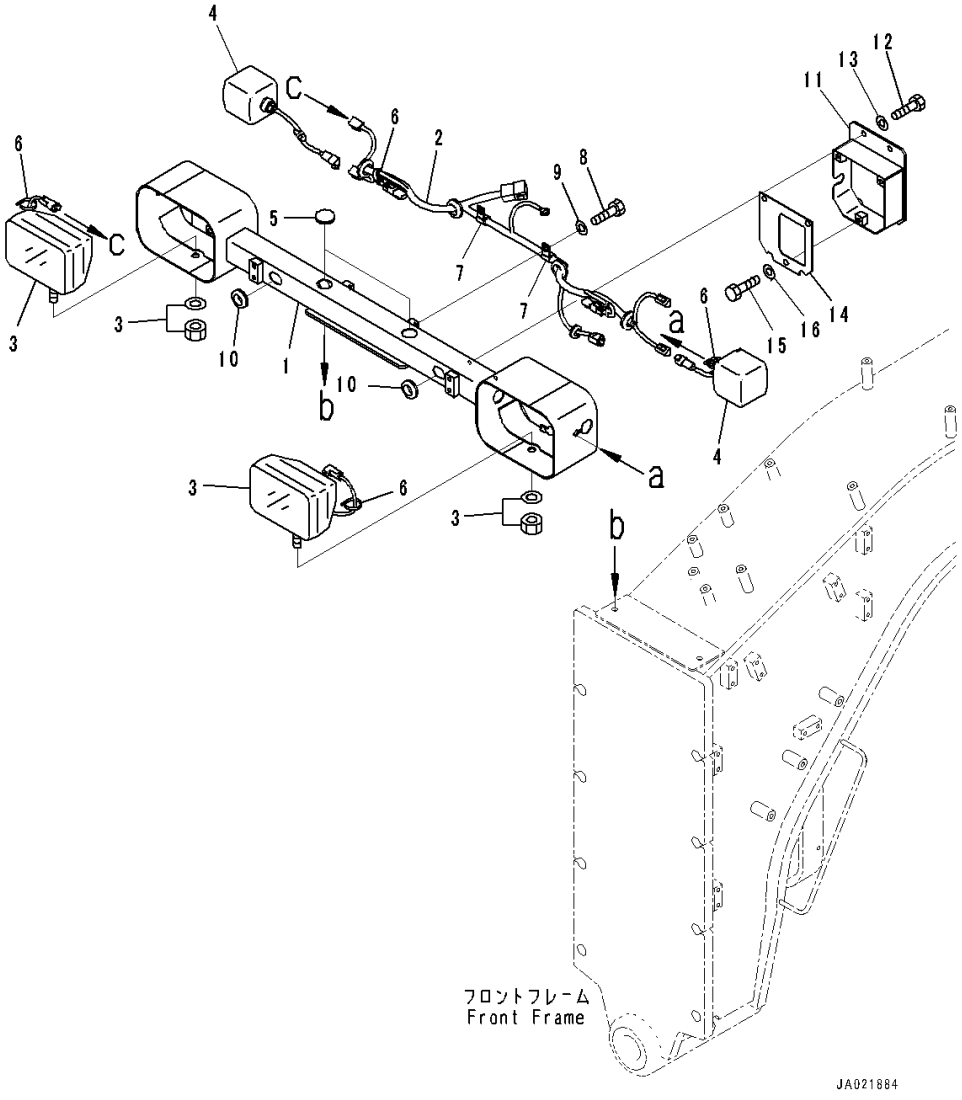

Index	Code	Part Number	Description	Qty	Serial Number
1		234-06-81611	Bracket	1	26001-
2		234-06-81250	Wiring Harness	1	26001-
3		417-06-43110	Lamp Assembly	2	26001-
		424-06-23230	• Bulb,75/70watt	1	26001-
		23S-06-54121	• Lens Assembly,Clear	1	26001-
4		424-06-43221	Lamp	2	26001-
		41G-06-13210	• Lens,Orange	1	26001-
		41G-06-13220	• Lens,Orange	1	26001-
		41G-06-13230	• Bulb,5watt	1	26001-
		08105-12420	• Bulb,25watt	1	26001-
5		09415-02512	Cap	2	26001-
6		08034-20519	Band	4	26001-
7		04434-51410	Clip	2	26001-
8		01010-81020	Bolt	2	26001-
9		01643-31032	Washer	2	26001-
10		08037-02512	Grommet	2	26001-
11		23C-06-62720	Bracket	1	26001-
12		01010-D1025	Bolt	2	26001-
13		01643-71032	Washer	2	26001-
14		23C-06-65730	Cover	1	26001-
15		01010-D1025	Bolt	3	26001-
16		01643-71032	Washer	3	26001-

FIG. E0200-003004 Front Wiring Harness (Headlamp) (With Fog Lamp,Front Blade)

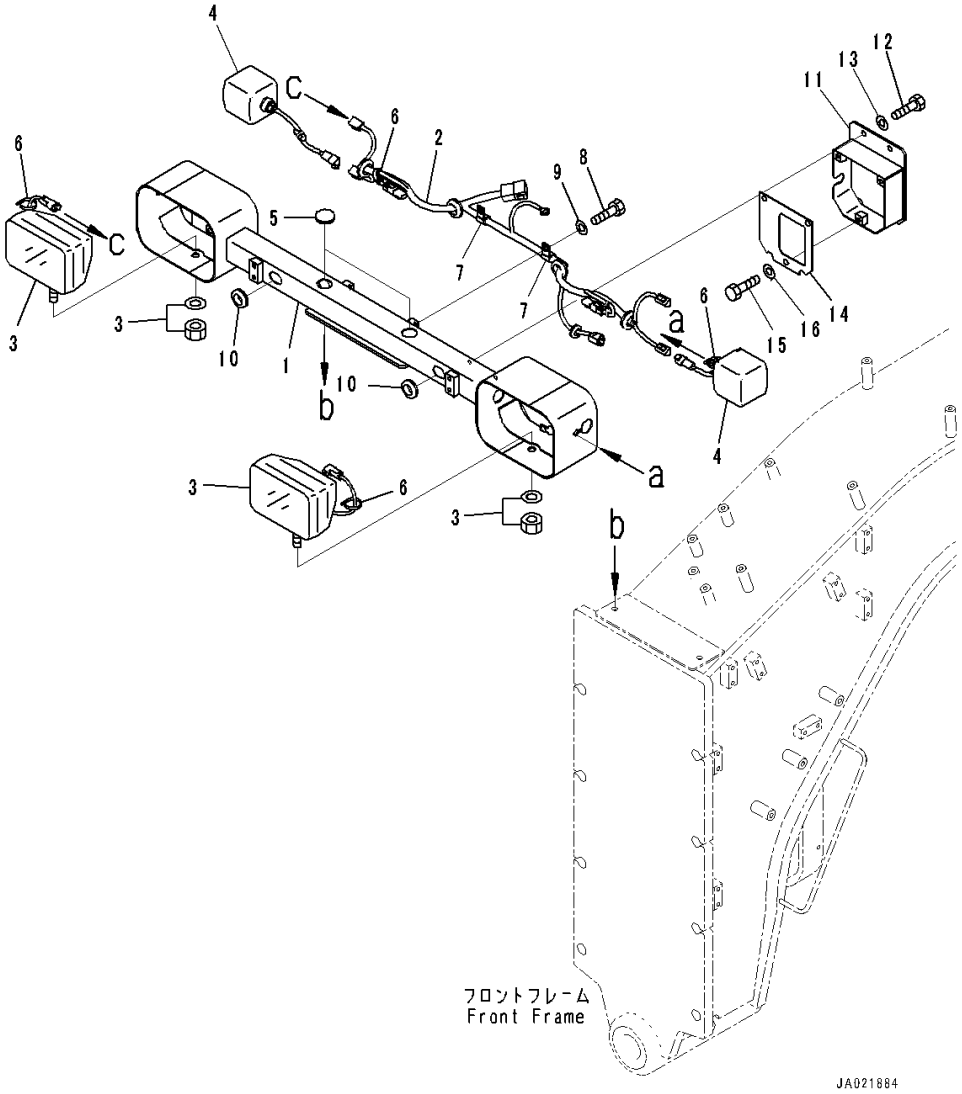

Index	Code	Part Number	Description	Qty	Serial Number
1		234-06-81611	Bracket	1	26001-
2		234-06-81250	Wiring Harness	1	26001-
3		417-06-43110	Lamp Assembly	2	26001-
		424-06-23230	• Bulb,75/70watt	1	26001-
		23S-06-54121	• Lens Assembly,Clear	1	26001-
4		424-06-43221	Lamp	2	26001-
		41G-06-13210	• Lens,Orange	1	26001-
		41G-06-13220	• Lens,Orange	1	26001-
		41G-06-13230	• Bulb,5watt	1	26001-
		08105-12420	• Bulb,25watt	1	26001-
5		09415-02512	Cap	2	26001-
6		08034-20519	Band	4	26001-
7		04434-51410	Clip	2	26001-
8		01010-81020	Bolt	2	26001-
9		01643-31032	Washer	2	26001-
10		08037-02512	Grommet	2	26001-
11		23C-06-62720	Bracket	1	26001-
12		01010-D1025	Bolt	2	26001-
13		01643-71032	Washer	2	26001-
14		23C-06-65730	Cover	1	26001-
15		01010-D1025	Bolt	3	26001-
16		01643-71032	Washer	3	26001-

FIG. E0200-004004 Front Wiring Harness (Headlamp) (With Front Blade)

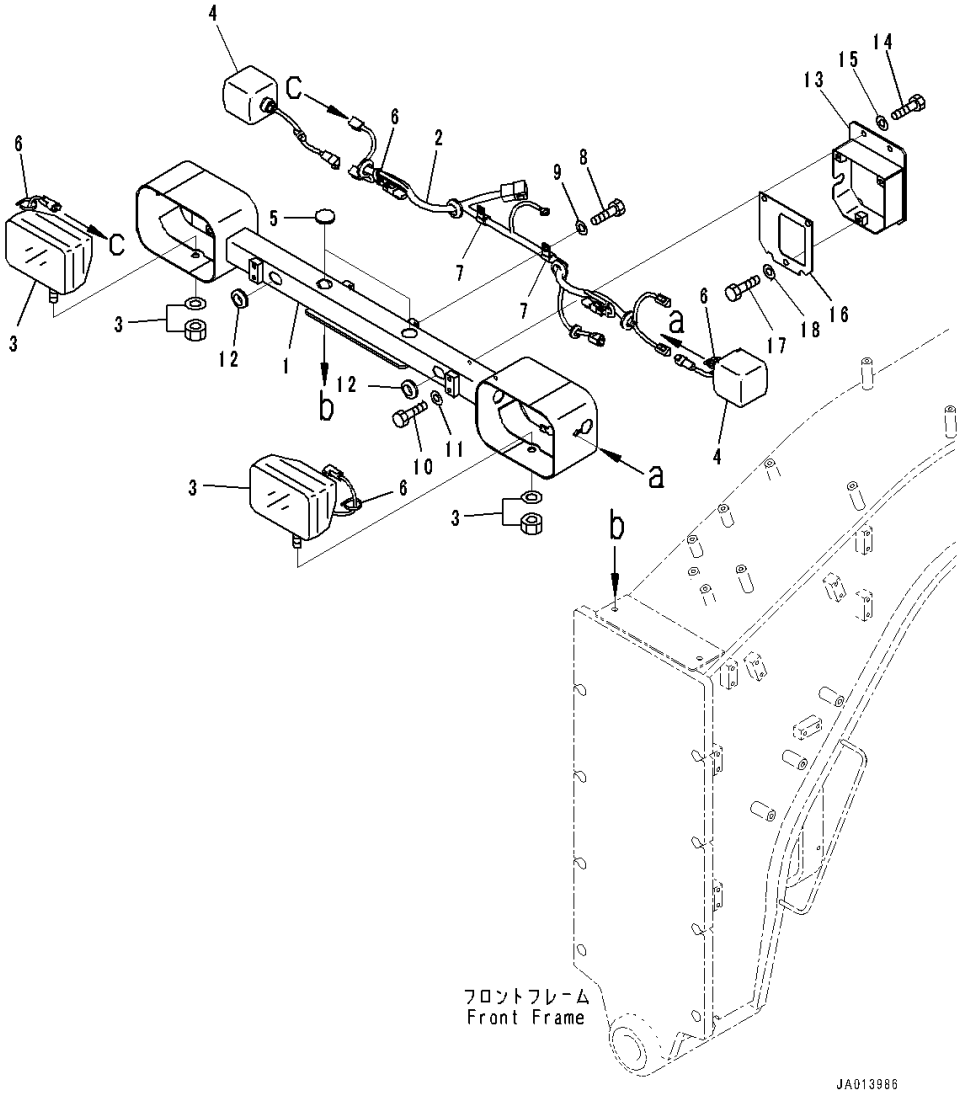

Index	Code	Part Number	Description	Qty	Serial Number
1		234-06-81611	Bracket	1	26001-
2		234-06-81250	Wiring Harness	1	26001-
3		417-06-43110	Lamp Assembly	2	26001-
		424-06-23230	• Bulb,75/70watt	1	26001-
		23S-06-54121	• Lens Assembly,Clear	1	26001-
4		424-06-43221	Lamp	2	26001-
		41G-06-13210	• Lens,Orange,Front	1	26001-
		41G-06-13220	• Lens,Orange,Rear	1	26001-
		41G-06-13230	• Bulb,5watt	1	26001-
		08105-12420	• Bulb,25watt	1	26001-
5		09415-02512	Cap	2	26001-
6		08034-20519	Band	4	26001-
7		04434-51410	Clip	2	26001-
8		01010-81020	Bolt	2	26001-
9		01643-31032	Washer	2	26001-
10		01010-D1016	Bolt	4	26001-
11		01643-71032	Washer	4	26001-
12		08037-02512	Grommet	2	26001-
13		23C-06-62720	Bracket	1	26001-
14		01010-D1025	Bolt	2	26001-
15		01643-71032	Washer	2	26001-
16		23C-06-65730	Cover	1	26001-
17		01010-D1025	Bolt	3	26001-
18		01643-71032	Washer	3	26001-

FIG. E0200-002005 Front Wiring Harness (Fog Lamp)

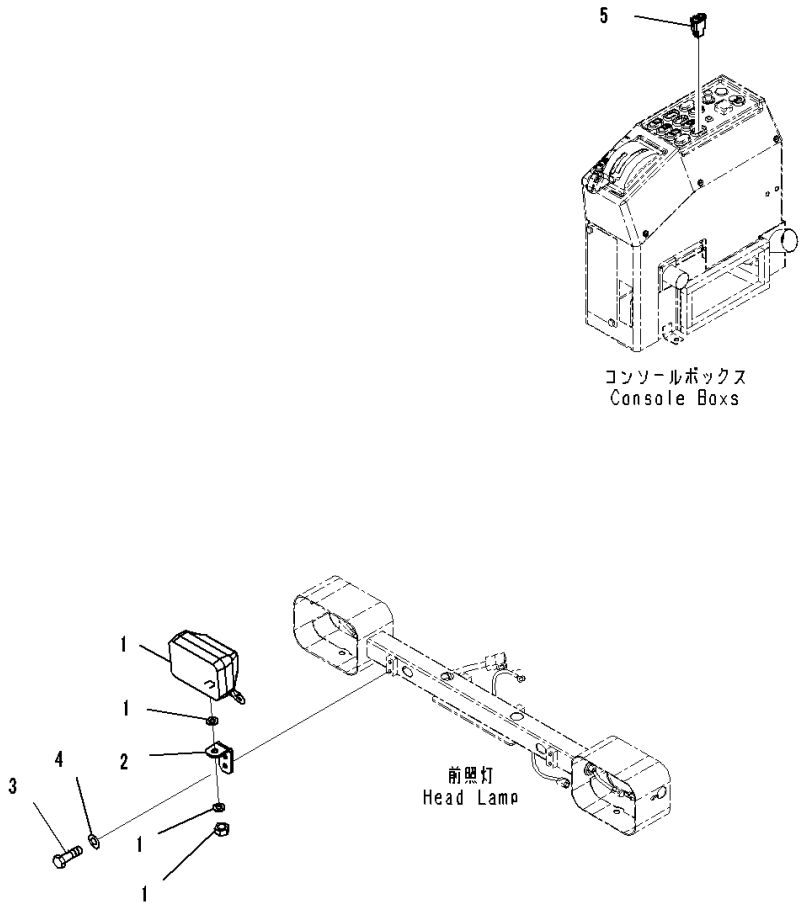

Index	Code	Part Number	Description	Qty	Serial Number
1		424-Z23-4150	Lamp Assembly	2	26001-
		421-06-23330	• Bulb,70watt	1	26001-
2		234-06-81620	Bracket	2	26001-
3		01010-D1025	Bolt	4	26001-
4		01643-71032	Washer	4	26001-
5		234-06-81260	Switch,Fog Lamp	1	26001-

FIG. E0202-001001 Rear Wiring Harness (Wiring Harness and Mounting) (1/2)

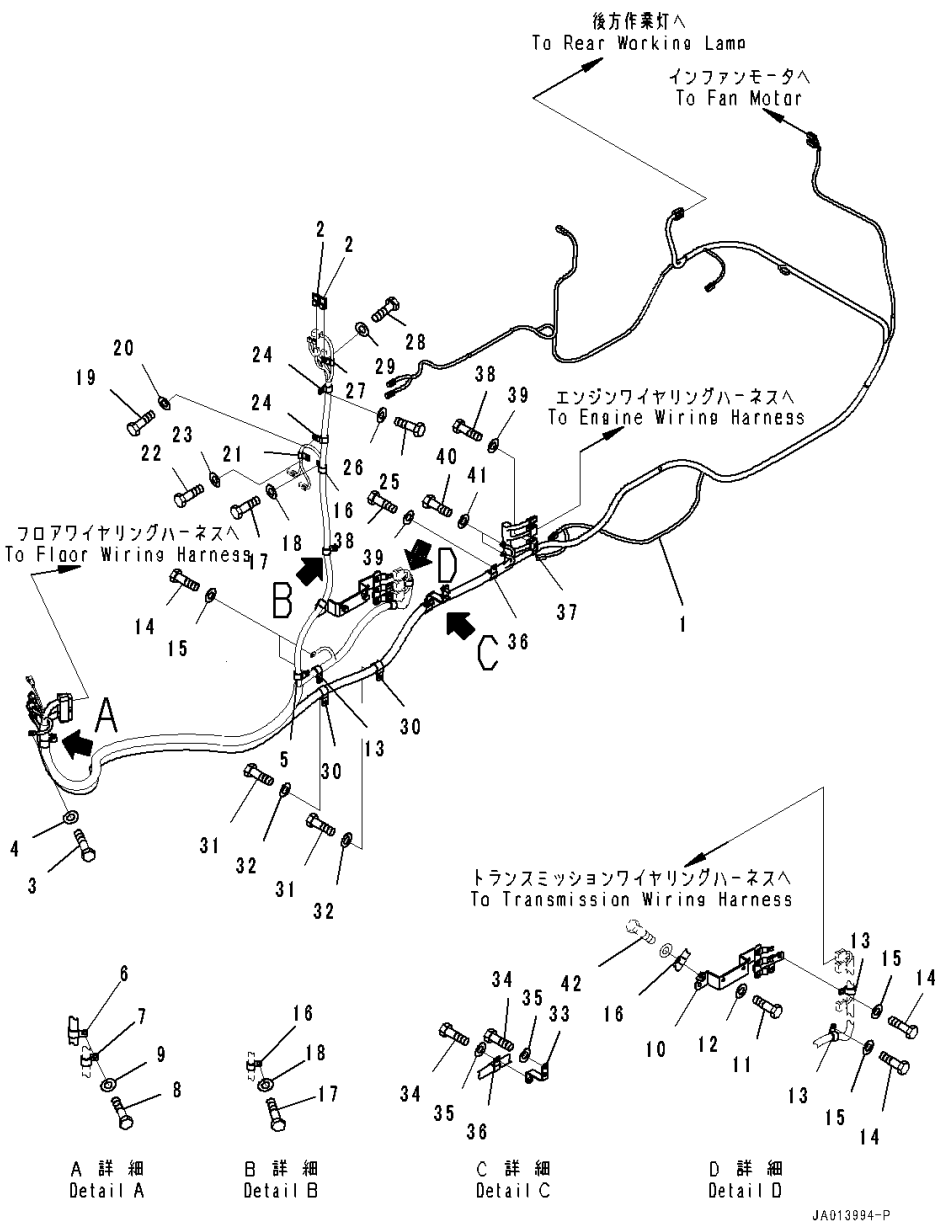

Index	Code	Part Number	Description	Qty	Serial Number
1		234-06-81121	Wiring Harness	1	26001-
2		21J-06-13661	• Diode	2	26001-
3		01010-81020	Bolt	1	26001-
4		01643-31032	Washer	1	26001-
5		04434-52110	Clip	1	26001-
6		04434-52711	Clip	1	26001-
7		04434-52712	Clip	1	26001-
8		01010-81025	Bolt	1	26001-
9		01643-31032	Washer	1	26001-
10		234-06-81720	Bracket	1	26001-
11		01010-81030	Bolt	2	26001-
12		01643-31032	Washer	2	26001-
13		04434-52310	Clip	3	26001-
14		01010-81025	Bolt	4	26001-
15		01643-31032	Washer	4	26001-
16		04434-51910	Clip	3	26001-
17		01010-81025	Bolt	2	26001-
18		01643-31032	Washer	2	26001-
19		01010-81020	Bolt	1	26001-
20		01643-31032	Washer	1	26001-
21		04434-51010	Clip	1	26001-
22		01010-81025	Bolt	1	26001-
23		01643-31032	Washer	1	26001-
24		04434-51910	Clip	2	26001-
25		01010-81025	Bolt	1	26001-
26		01643-31032	Washer	1	26001-
27		04434-51010	Clip	1	26001-
28		01010-81025	Bolt	1	26001-
29		01643-31032	Washer	1	26001-
30		04434-52711	Clip	2	26001-
31		01010-81025	Bolt	2	26001-
32		01643-31032	Washer	2	26001-
33		234-06-81730	Bracket	1	26001-
34		01010-81025	Bolt	3	26001-
35		01643-31032	Washer	3	26001-
36		04434-52711	Clip	2	26001-
37		04434-51910	Clip	1	26001-
38		01010-81025	Bolt	3	26001-
39		01643-31032	Washer	3	26001-
40		01010-81025	Bolt	2	26001-

FIG. E0202-001001 Rear Wiring Harness (Wiring Harness and Mounting) (1/2)

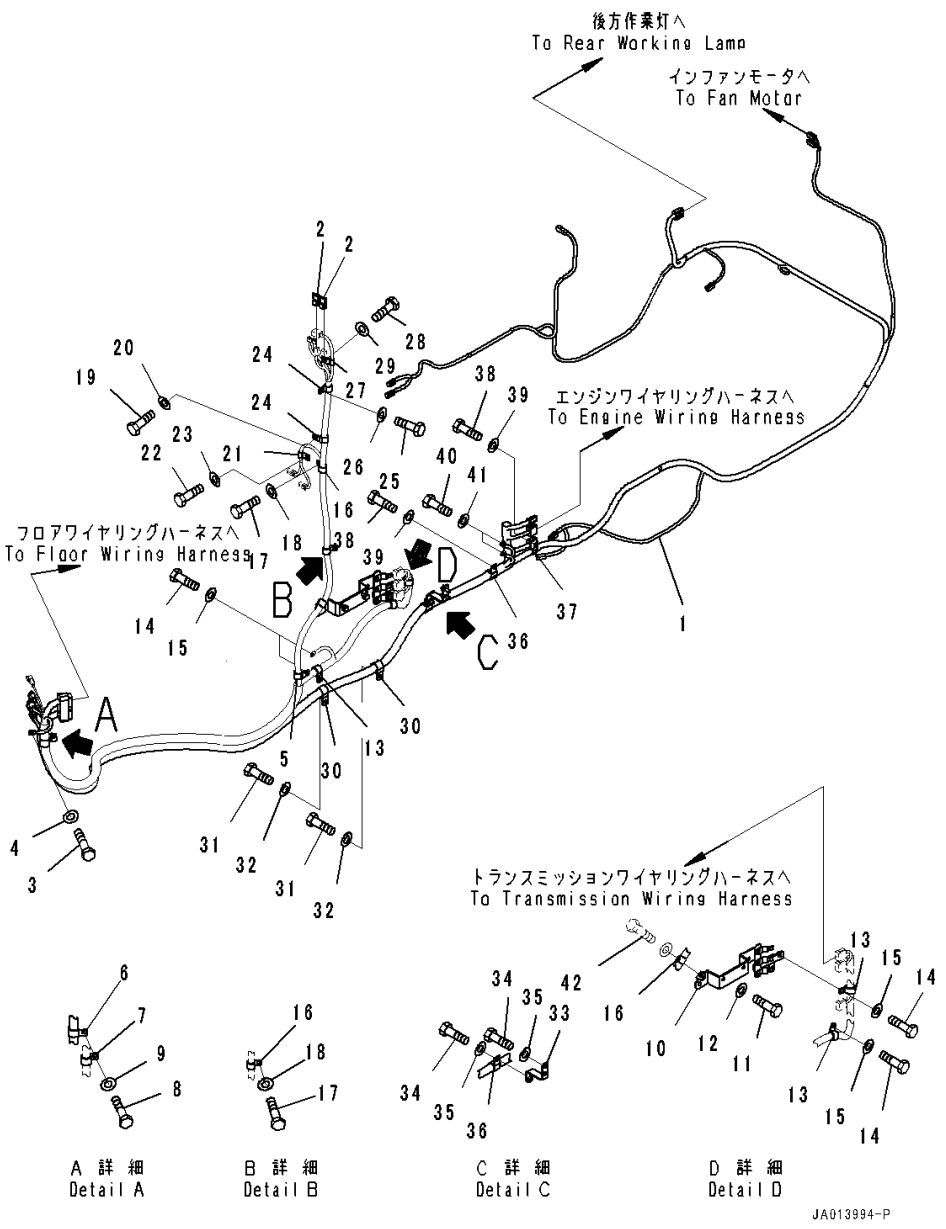

Index	Code	Part Number	Description	Qty	Serial Number
41		01643-31032	Washer	2	26001-
42		(01010-81025)	Bolt(Battery Box,Battery Cable)(Refer to Page 195)		

FIG. E0202-001002 Rear Wiring Harness (Wiring Harness and Mounting) (2/2)

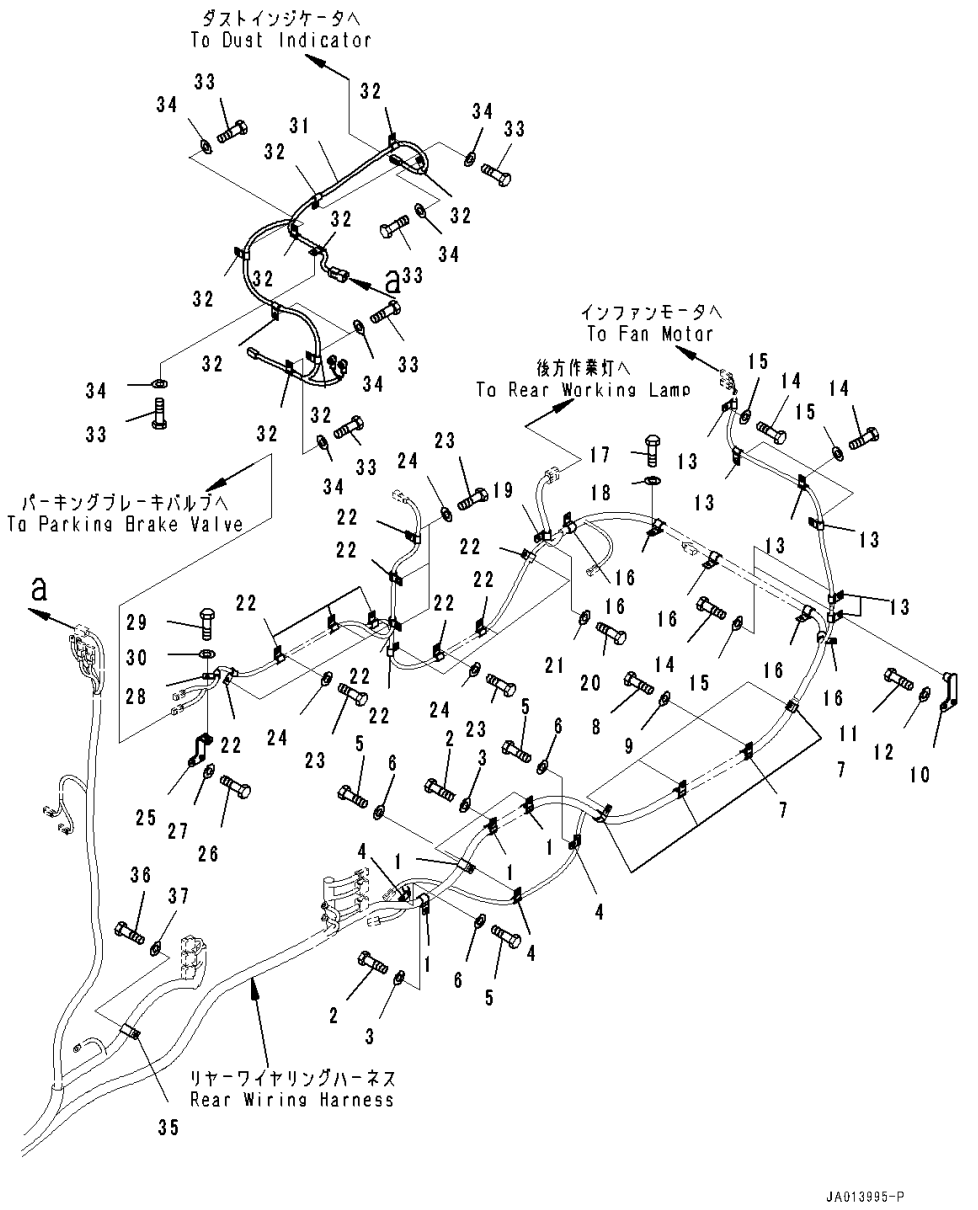

Index	Code	Part Number	Description	Qty	Serial Number
1		04434-51910	Clip	4	26001-
2		01010-81025	Bolt	4	26001-
3		01643-31032	Washer	4	26001-
4		04434-51010	Clip	3	26001-
5		01010-81025	Bolt	3	26001-
6		01643-31032	Washer	3	26001-
7		04434-51910	Clip	4	26001-
8		01010-81025	Bolt	4	26001-
9		01643-31032	Washer	4	26001-
10		234-06-81740	Bracket	1	26001-
11		01010-81025	Bolt	2	26001-
12		01643-31032	Washer	2	26001-
13		04434-51010	Clip	6	26001-
14		01010-81025	Bolt	6	26001-
15		01643-31032	Washer	6	26001-
16		04434-51710	Clip	5	26001-
17		01010-81025	Bolt	5	26001-
18		01643-31032	Washer	5	26001-
19		04434-51410	Clip	1	26001-
20		01010-81025	Bolt	1	26001-
21		01643-31032	Washer	1	26001-
22		04434-51010	Clip	11	26001-
23		01010-81025	Bolt	11	26001-
24		01643-31032	Washer	11	26001-
25		234-06-81750	Bracket	1	26001-
26		01010-81025	Bolt	2	26001-
27		01643-31032	Washer	2	26001-
28		04434-51010	Clip	1	26001-
29		01010-81025	Bolt	1	26001-
30		01643-31032	Washer	1	26001-
31		234-06-81190	Wiring Harness	1	26001-
32		04434-51010	Clip	9	26001-
33		01010-81025	Bolt	9	26001-
34		01643-31032	Washer	9	26001-
35		04434-52310	Clip	1	26001-
36		01010-81025	Bolt	1	26001-
37		01643-31032	Washer	1	26001-

FIG. E0202-001003 Rear Wiring Harness (Engine Wiring Harness)

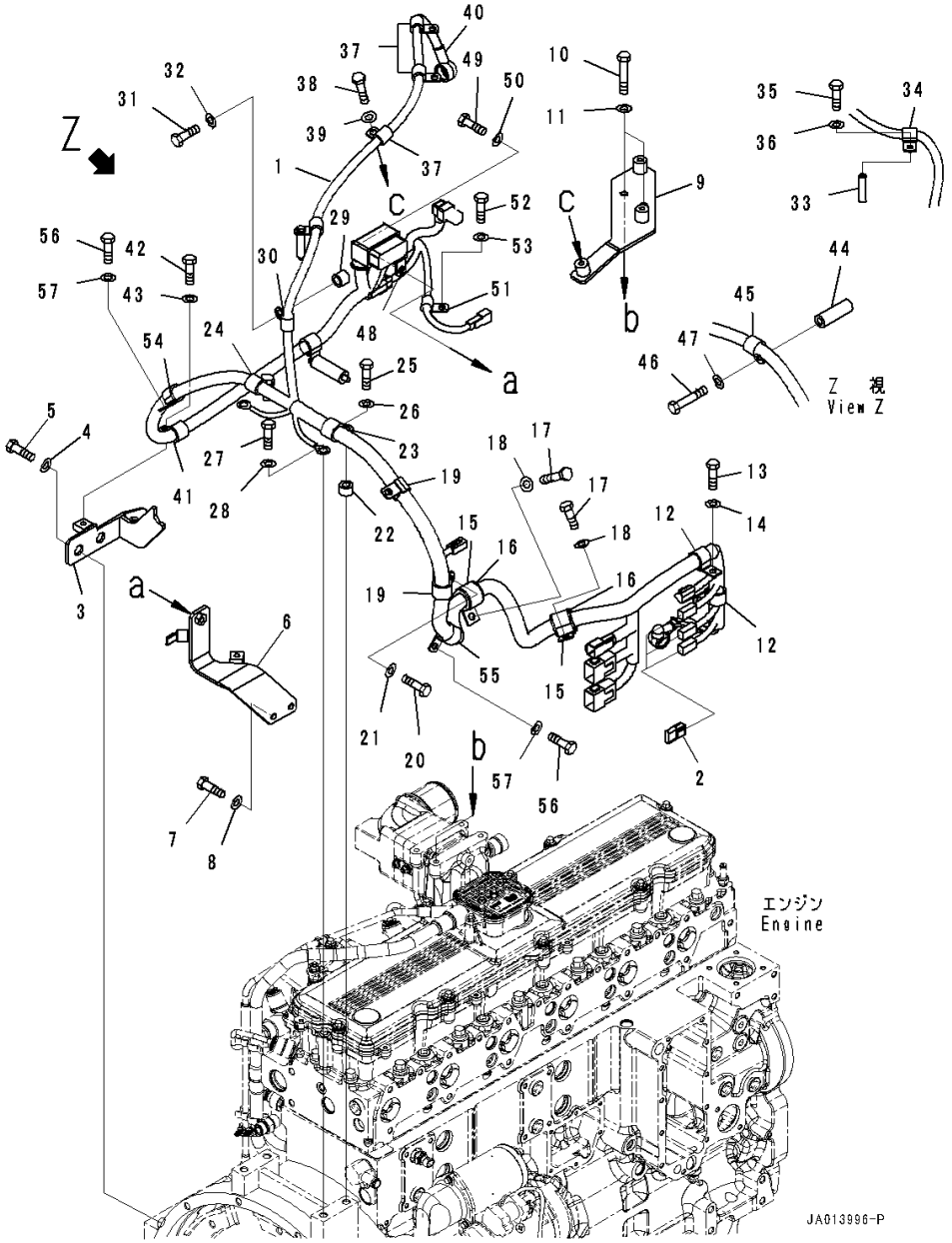

Index	Code	Part Number	Description	Qty	Serial Number
1		234-06-81130	Wiring Harness	1	26001-
2		21J-06-13661	• Diode	3	26001-
3		234-06-81830	Bracket	1	26001-
4		01643-31645	Washer	2	26001-
5		01010-81630	Bolt	2	26001-
6		234-06-81840	Bracket	1	26001-
7		01010-81025	Bolt	2	26001-
8		01643-31032	Washer	2	26001-
9		234-06-81860	Bracket	1	26001-
10		01010-81060	Bolt	2	26001-
11		01643-31032	Washer	2	26001-
12		04434-52310	Clip	2	26001-
13		01010-81025	Bolt	2	26001-
14		01643-31032	Washer	2	26001-
15		04434-53211	Clip	2	26001-
16		07095-20523	Cushion	2	26001-
17		01010-81025	Bolt	2	26001-
18		01643-31032	Washer	2	26001-
19		600-051-2240	Clip	2	26001-
20		01010-81025	Bolt	1	26001-
21		01643-31032	Washer	1	26001-
22		418-09-11130	Spacer	2	26001-
23		600-051-3240	Clip	1	26001-
24		600-051-3190	Clip	1	26001-
25		01010-81235	Bolt	2	26001-
26		01643-31232	Washer	2	26001-
27		01010-81220	Bolt	2	26001-
28		01643-31232	Washer	2	26001-
29		22M-60-22130	Collar	1	26001-
30		600-051-3140	Clip	1	26001-
31		01010-81245	Bolt	1	26001-
32		01643-31232	Washer	1	26001-
33		234-06-81920	Collar	1	26001-
34		600-051-1140	Clip	1	26001-
35		01010-80660	Bolt	1	26001-
36		01643-30623	Washer	1	26001-
37		600-051-2140	Clip	3	26001-
38		01010-81025	Bolt	3	26001-
39		01643-31032	Washer	3	26001-
40		08038-02027	Cap	1	26001-

FIG. E0202-001003 Rear Wiring Harness (Engine Wiring Harness)

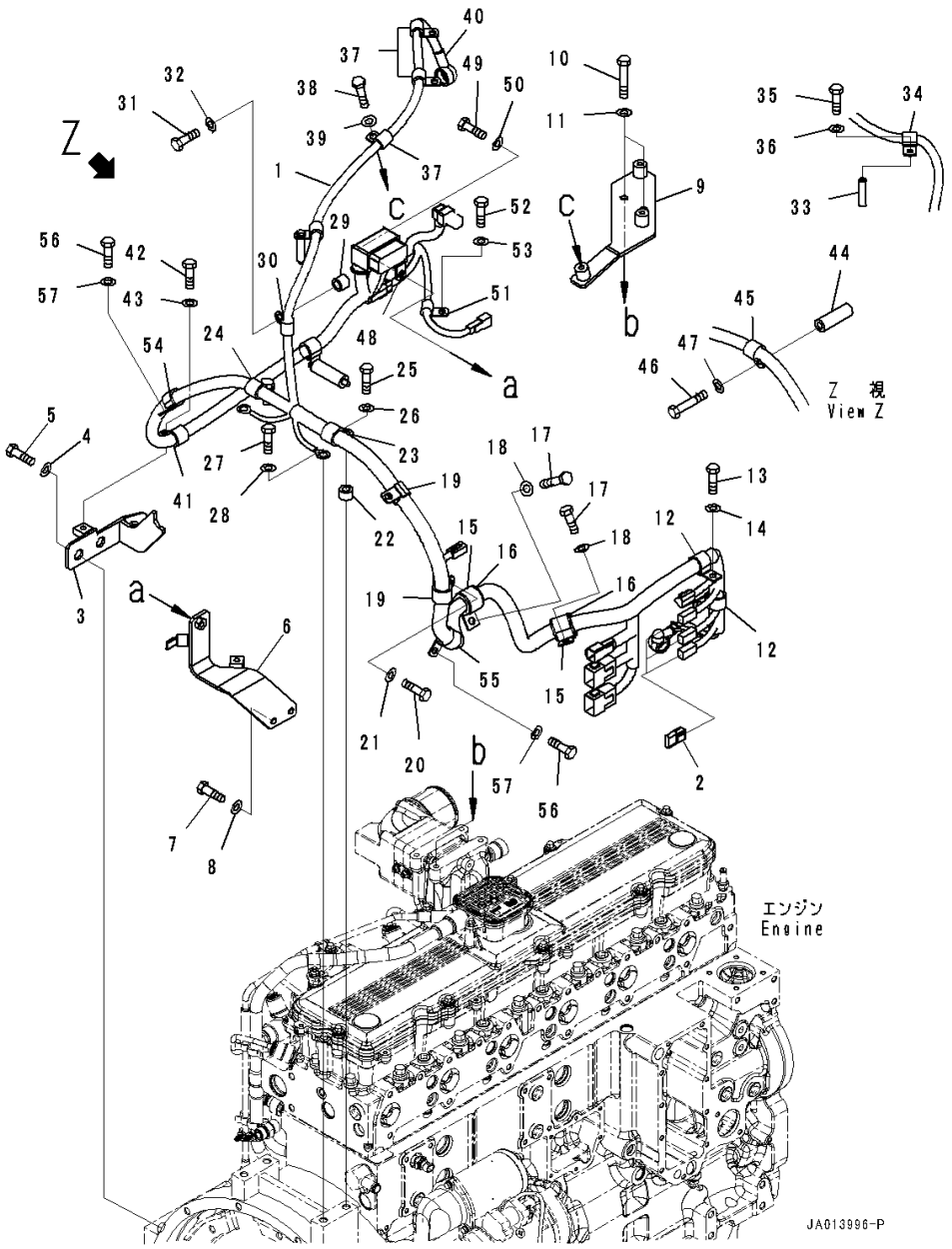

Index	Code	Part Number	Description	Qty	Serial Number
41		600-051-2200	Clip	1	26001-
42		01010-81025	Bolt	1	26001-
43		01643-31032	Washer	1	26001-
44		561-43-43390	Spacer	1	26001-
45		600-051-2200	Clip	1	26001-
46		01010-80880	Bolt	1	26001-
47		01643-30823	Washer	1	26001-
48		600-051-2180	Clip	1	26001-
49		01010-81025	Bolt	1	26001-
50		01643-31032	Washer	1	26001-
51		600-051-2100	Clip	1	26001-
52		01010-81025	Bolt	1	26001-
53		01643-31032	Washer	1	26001-
54		600-051-2200	Clip	1	26001-
55		600-051-2240	Clip	1	26001-
56		01010-81025	Bolt	2	26001-
57		01643-31032	Washer	2	26001-

FIG. E0202-001004 Rear Wiring Harness (Transmission Wiring Harness)

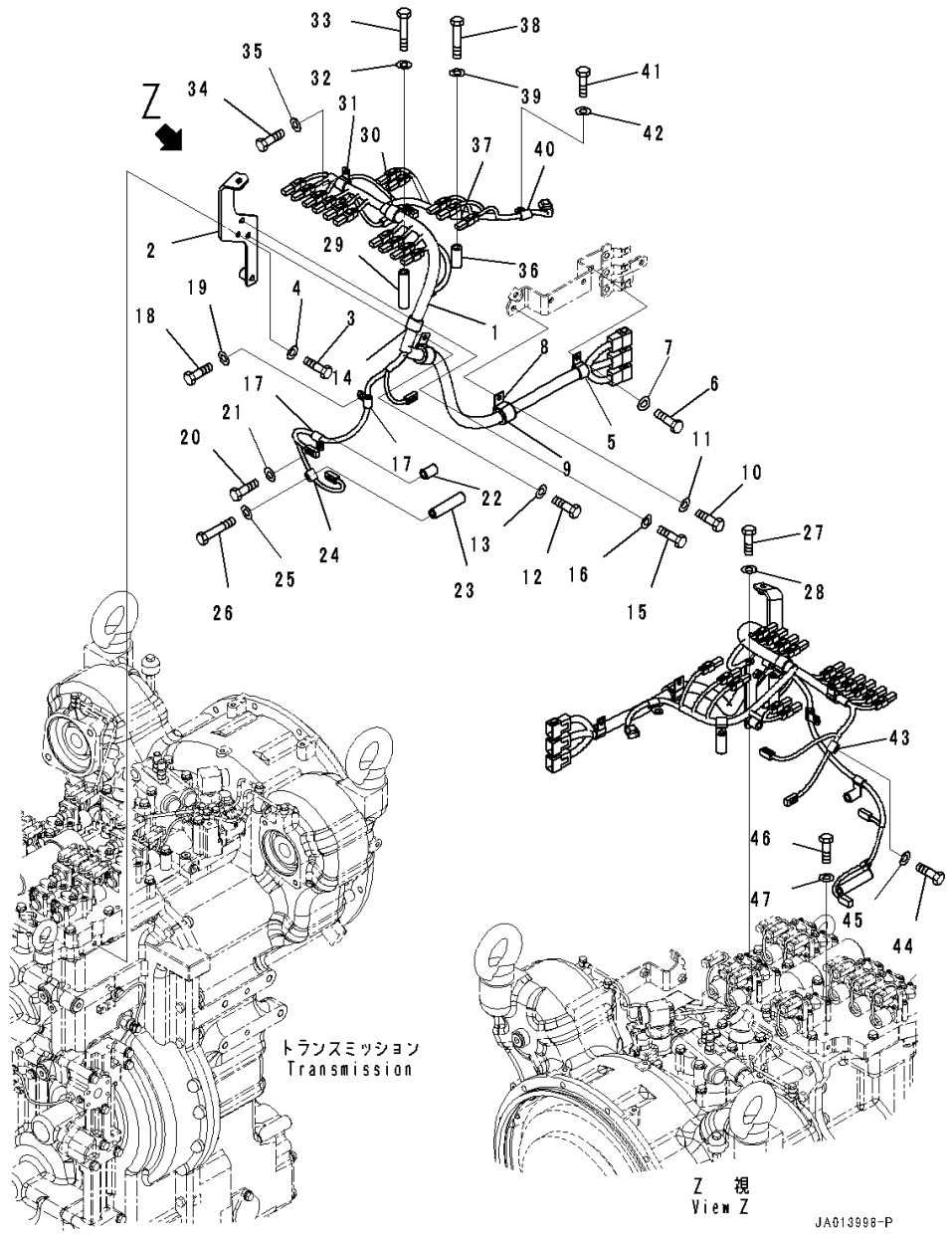

Index	Code	Part Number	Description	Qty	Serial Number
1		234-06-81140	Wiring Harness	1	26001-
2		234-06-81710	Bracket	1	26001-
3		01010-81045	Bolt	1	26001-
4		01643-31032	Washer	1	26001-
5		04434-52310	Clip	1	26001-
6		01010-81025	Bolt	1	26001-
7		01643-31032	Washer	1	26001-
8		04434-53211	Clip	2	26001-
9		07095-20523	Cushion	2	26001-
10		01010-81025	Bolt	1	26001-
11		01643-31032	Washer	1	26001-
12		01010-81020	Bolt	1	26001-
13		01643-31032	Washer	1	26001-
14		600-051-2240	Clip	1	26001-
15		01010-81020	Bolt	1	26001-
16		01643-31032	Washer	1	26001-
17		600-051-2100	Clip	2	26001-
18		01010-81020	Bolt	1	26001-
19		01643-31032	Washer	1	26001-
20		01010-81050	Bolt	1	26001-
21		01643-31032	Washer	1	26001-
22		23B-06-61810	Spacer	1	26001-
23		234-06-81930	Spacer	1	26001-
24		600-051-2080	Clip	1	26001-
25		01643-31032	Washer	1	26001-
26		01011-81010	Bolt	1	26001-
27		01010-81020	Bolt	1	26001-
28		01643-31032	Washer	1	26001-
29		234-06-81930	Spacer	1	26001-
30		600-051-2240	Clip	1	26001-
31		600-051-2180	Clip	1	26001-
32		01643-31032	Washer	1	26001-
33		01011-81010	Bolt	1	26001-
34		01010-81025	Bolt	1	26001-
35		01643-31032	Washer	1	26001-
36		421-03-31421	Spacer	1	26001-
37		600-051-2140	Clip	1	26001-
38		01010-81070	Bolt	1	26001-
39		01643-31032	Washer	1	26001-
40		600-051-2100	Clip	1	26001-

FIG. E0202-001004 Rear Wiring Harness (Transmission Wiring Harness)

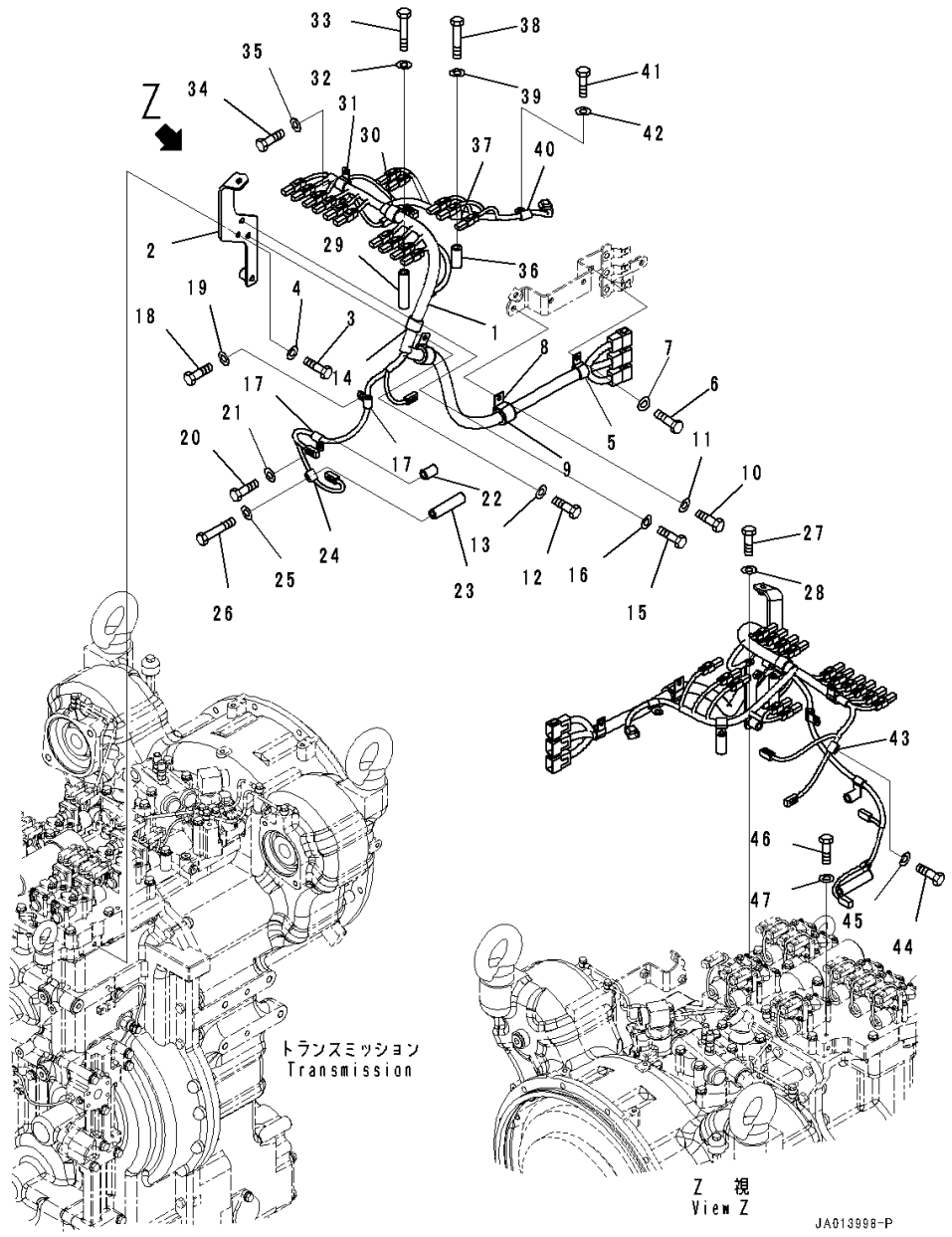

Index	Code	Part Number	Description	Qty	Serial Number
41		01010-81020	Bolt	1	26001-
42		01643-31032	Washer	1	26001-
43		600-051-2080	Clip	1	26001-
44		01010-81025	Bolt	1	26001-
45		01643-31032	Washer	1	26001-
46		01010-81016	Bolt	1	26001-
47		01643-31032	Washer	1	26001-

FIG. E0202-001005 Rear Wiring Harness (Mounting)

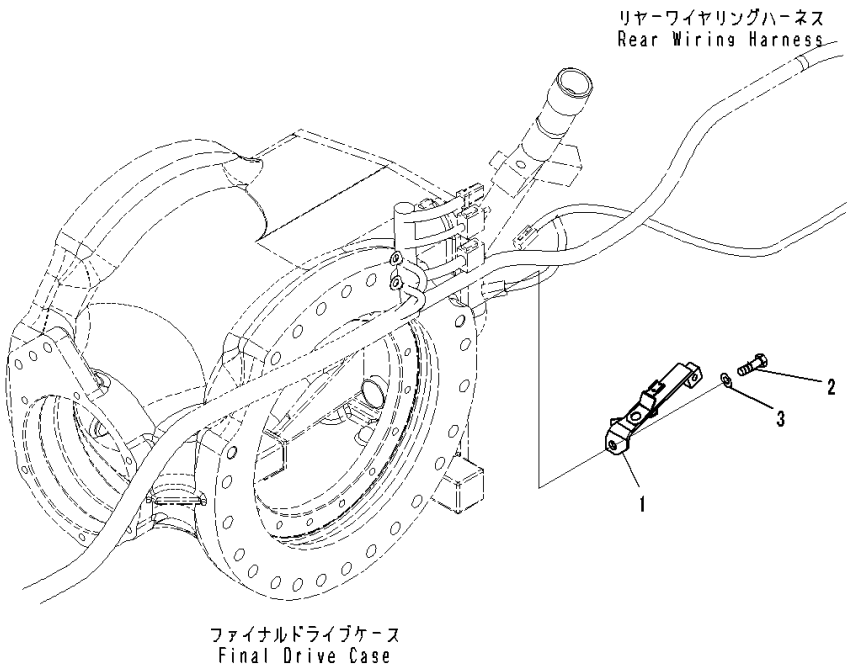

Index	Code	Part Number	Description	Qty	Serial Number
1		234-06-81880	Bracket	1	26001-
2		01010-81020	Bolt	1	26001-
3		01643-31032	Washer	1	26001-

FIG. E0300-001001 Front Working Lamp

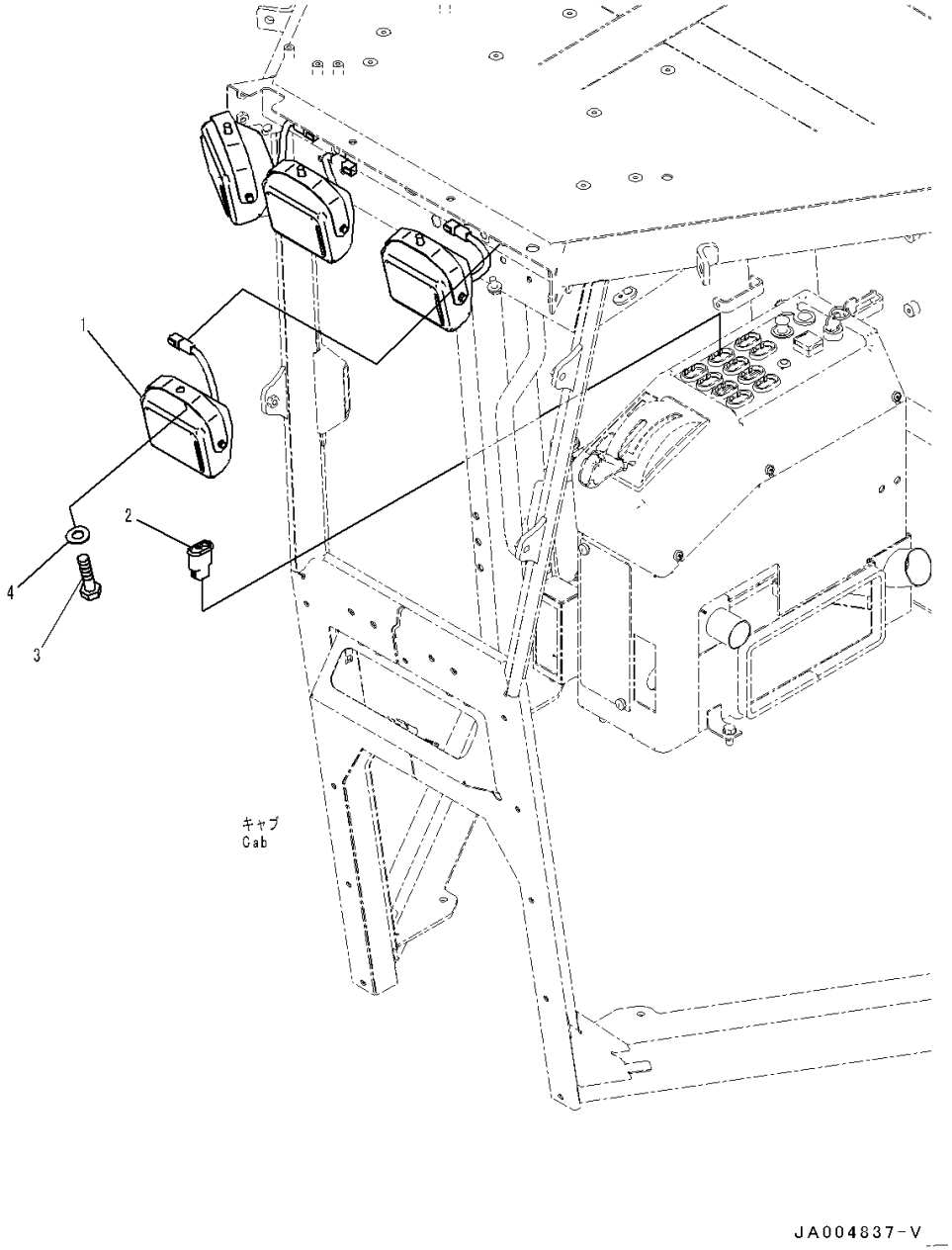

Index	Code	Part Number	Description	Qty	Serial Number
1		423-06-33130	Lamp Assembly, Working	4	26001-
		421-06-23320	• Lens	1	26001-
		421-06-23330	• Bulb,70watt	1	26001-
2		423-06-45350	Switch, Work Lamp,Front	1	26001-
3		01010-D1020	Bolt	4	26001-
4		01643-71032	Washer	4	26001-

FIG. E0300-002001 Parts For Less Working Lamp

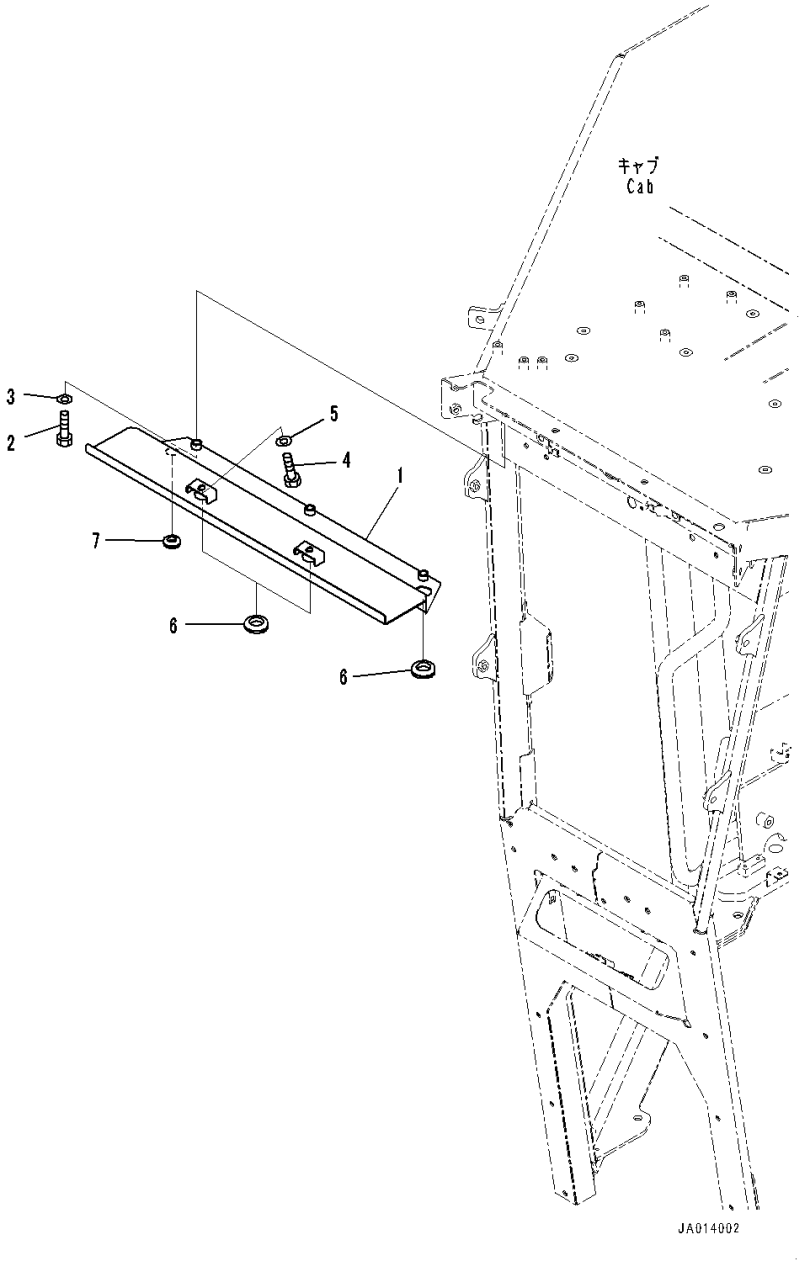

Index	Code	Part Number	Description	Qty	Serial Number
1		234-952-8680	Cover	1	26001-
2		01010-D0825	Bolt	3	26001-
3		01643-70823	Washer	3	26001-
4		01010-81016	Bolt	2	26001-
5		01643-31032	Washer	2	26001-
6		09415-02512	Cap	3	26001-
7		09415-01610	Cap	1	26001-

FIG. E0310-001001 Front Working Lamp and Rear Working Lamp

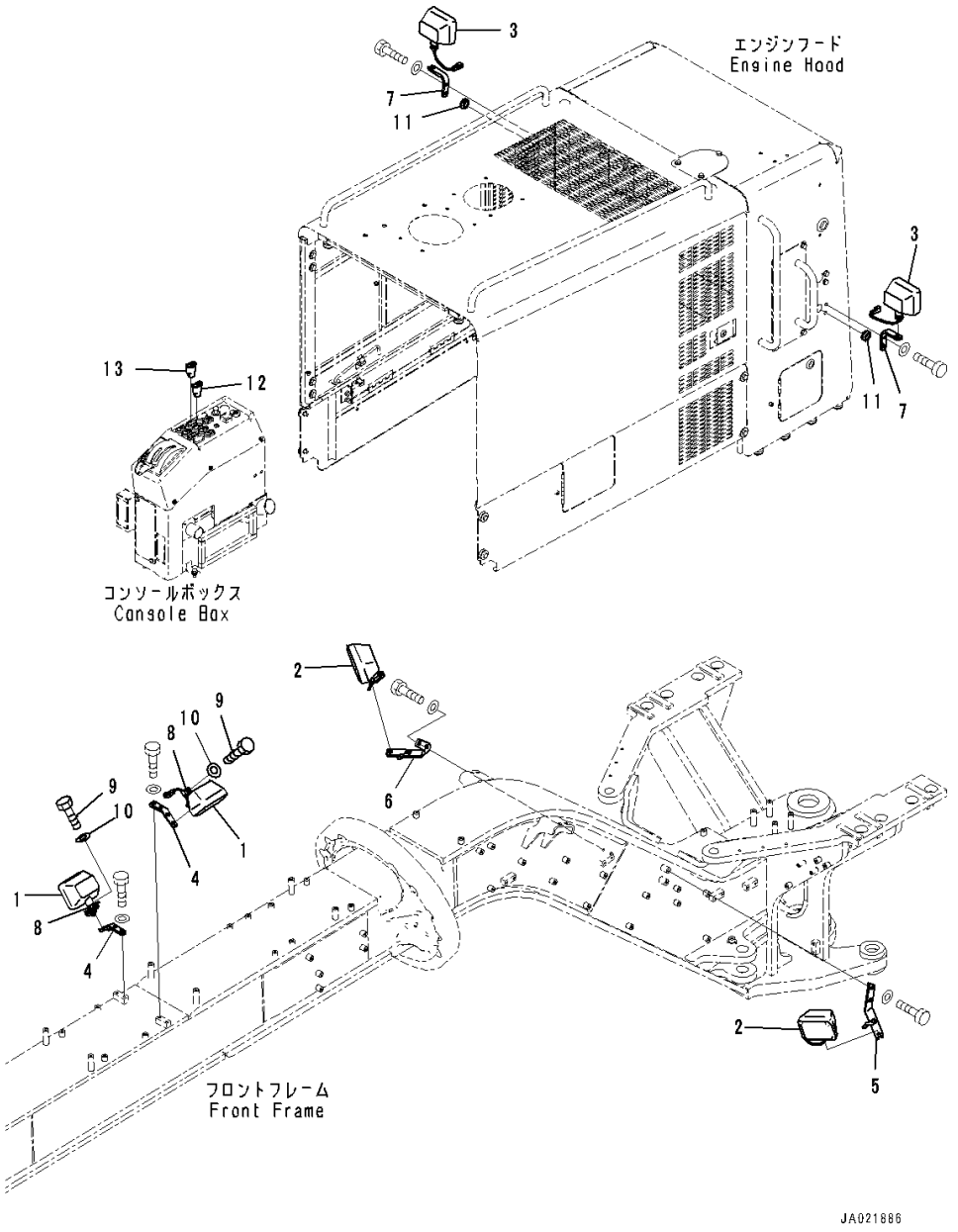

Index	Code	Part Number	Description	Qty	Serial Number
1		11Y-06-11372	Lamp Assembly, Working	2	26001-
		421-06-23330	• Bulb,70watt	1	26001-
2		11Y-06-11372	Lamp Assembly, Working	2	26001-
		421-06-23330	• Bulb,70watt	1	26001-
3		11Y-06-11372	Lamp Assembly, Working	2	26001-
		421-06-23330	• Bulb,70watt	1	26001-
4		234-06-81650	Bracket	2	26001-
5		234-06-81630	Bracket	1	26001-
6		234-06-81640	Bracket	1	26001-
7		234-06-81660	Bracket	2	26001-
8		04434-50610	Clip	2	26001-
9		01010-81025	Bolt	2	26001-
10		01643-31032	Washer	2	26001-
11		08037-02512	Grommet	2	26001-
12		423-06-45360	Switch,Front Working Lamp	1	26001-
13		423-06-45350	Switch, Work Lamp,Rear	1	26001-

FIG. E0310-002001 Front Working Lamp

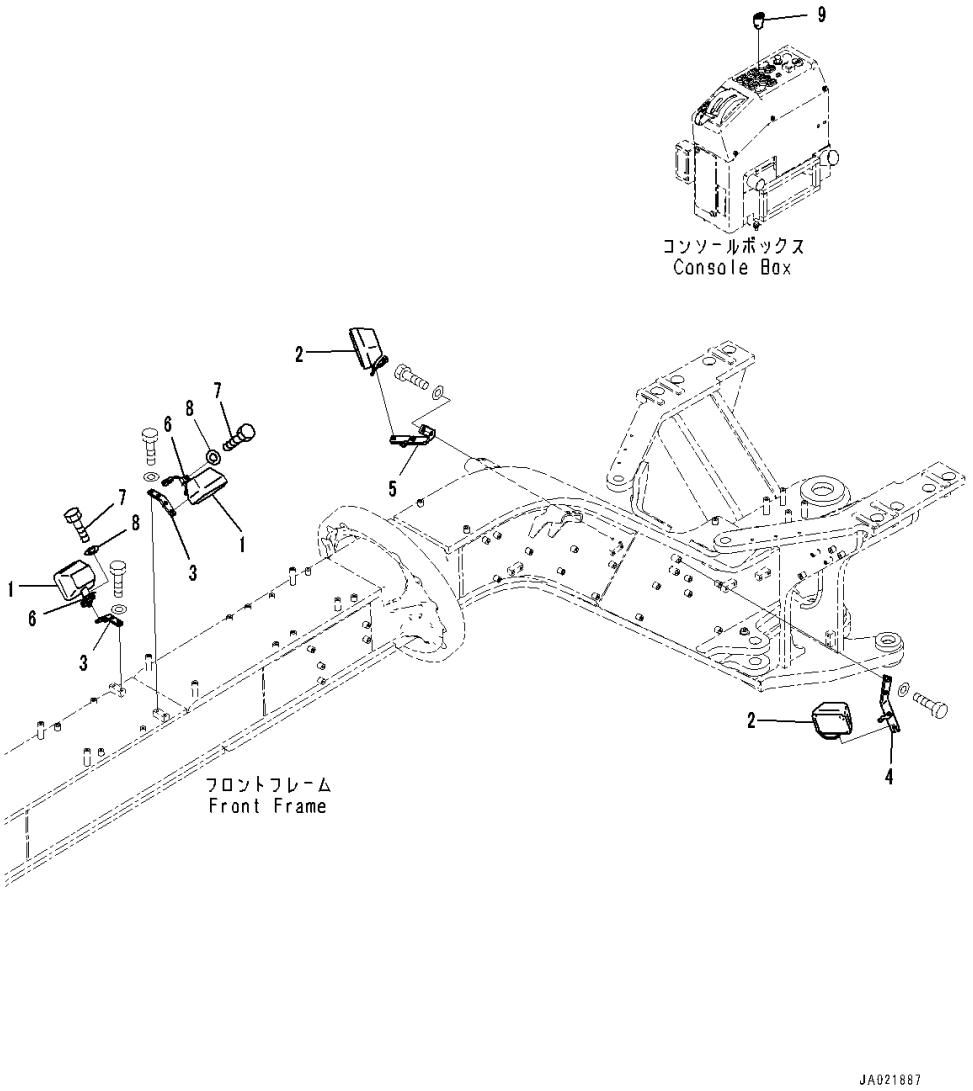

Index	Code	Part Number	Description	Qty	Serial Number
1		11Y-06-11372	Lamp Assembly, Working	2	26001-
		421-06-23330	• Bulb,70watt	1	26001-
2		11Y-06-11372	Lamp Assembly, Working	2	26001-
		421-06-23330	• Bulb,70watt	1	26001-
3		234-06-81650	Bracket	2	26001-
4		234-06-81630	Bracket	1	26001-
5		234-06-81640	Bracket	1	26001-
6		04434-50610	Clip	2	26001-
7		01010-81025	Bolt	2	26001-
8		01643-31032	Washer	2	26001-
9		423-06-45360	Switch,Front Working Lamp	1	26001-

FIG. E0310-003001 Rear Working Lamp

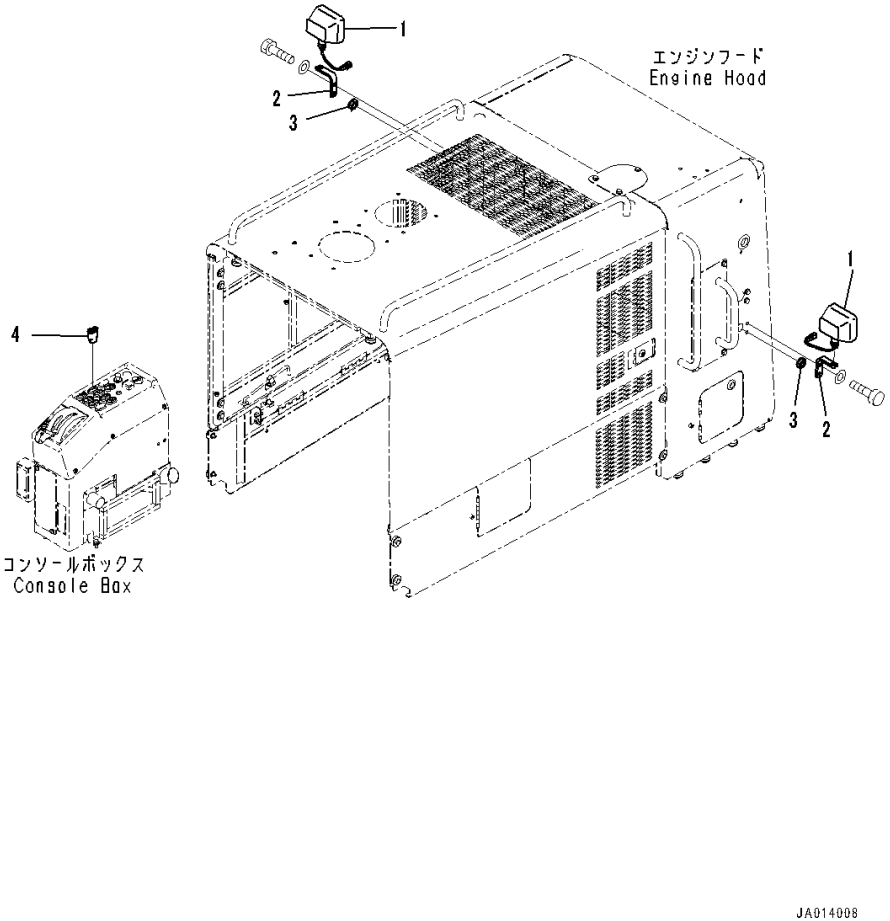

Index	Code	Part Number	Description	Qty	Serial Number
1		11Y-06-11372	Lamp Assembly, Working	2	26001-
		421-06-23330	• Bulb,70watt	1	26001-
2		234-06-81660	Bracket	2	26001-
3		08037-02512	Grommet	2	26001-
4		423-06-45350	Switch, Work Lamp,Rear	1	26001-

FIG. E0340-001001 Beacon Lamp

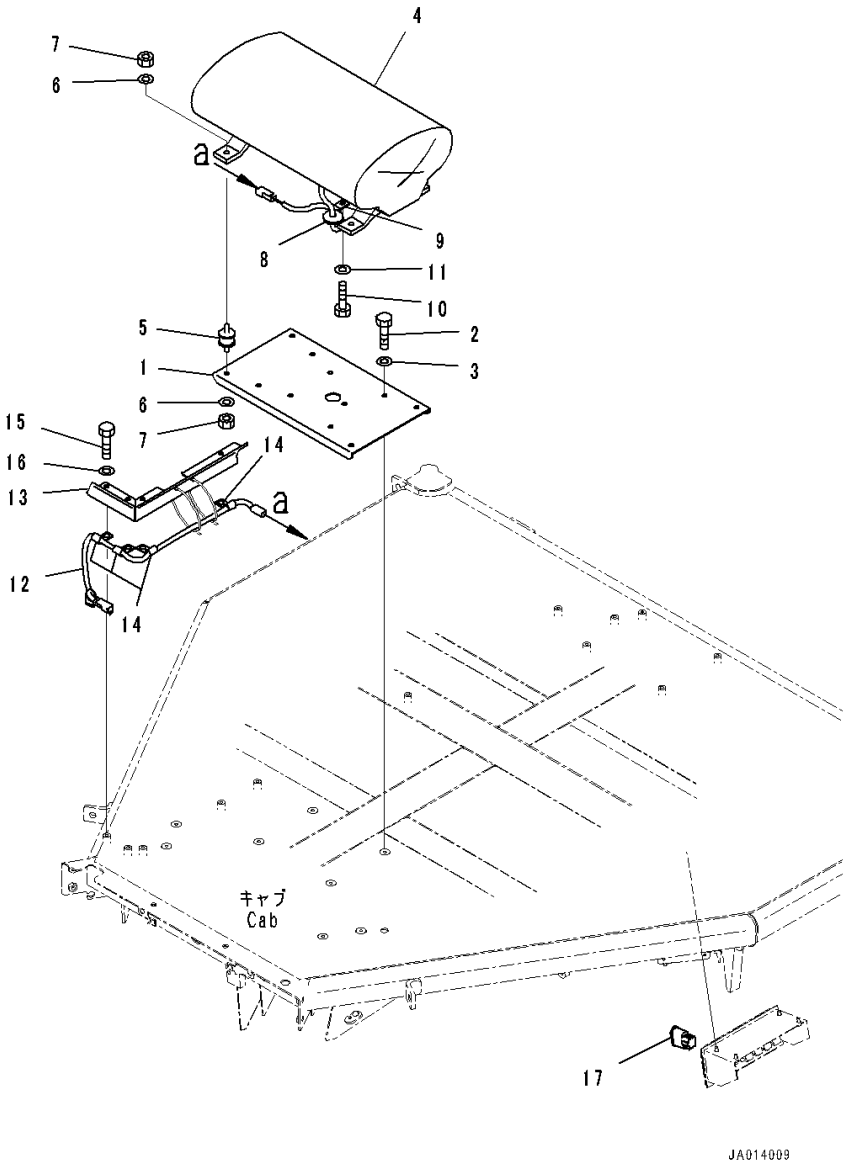

Index	Code	Part Number	Description	Qty	Serial Number
1		423-957-4142	Bracket	1	26001-
2		01010-D0860	Bolt	4	26001-
3		01643-70823	Washer	4	26001-
4		423-957-4120	Beacon Lamp	1	26001-
5		416-S56-1120	Cushion	4	26001-
6		01643-30823	Washer	8	26001-
7		01580-10806	Nut	8	26001-
8		423-43-18430	Grommet	1	26001-
9		04434-51008	Clip	1	26001-
10		01010-80816	Bolt	1	26001-
11		01643-30823	Washer	1	26001-
12		23B-952-7860	Wiring Harness	1	26001-
13		234-952-8320	Cover	1	26001-
14		04434-51012	Clip	4	26001-
15		01010-D0820	Bolt	4	26001-
16		01643-70823	Washer	4	26001-
17		20Y-06-42130	Switch, Beacon Lamp	1	26001-

FIG. E0410-001001 Horn

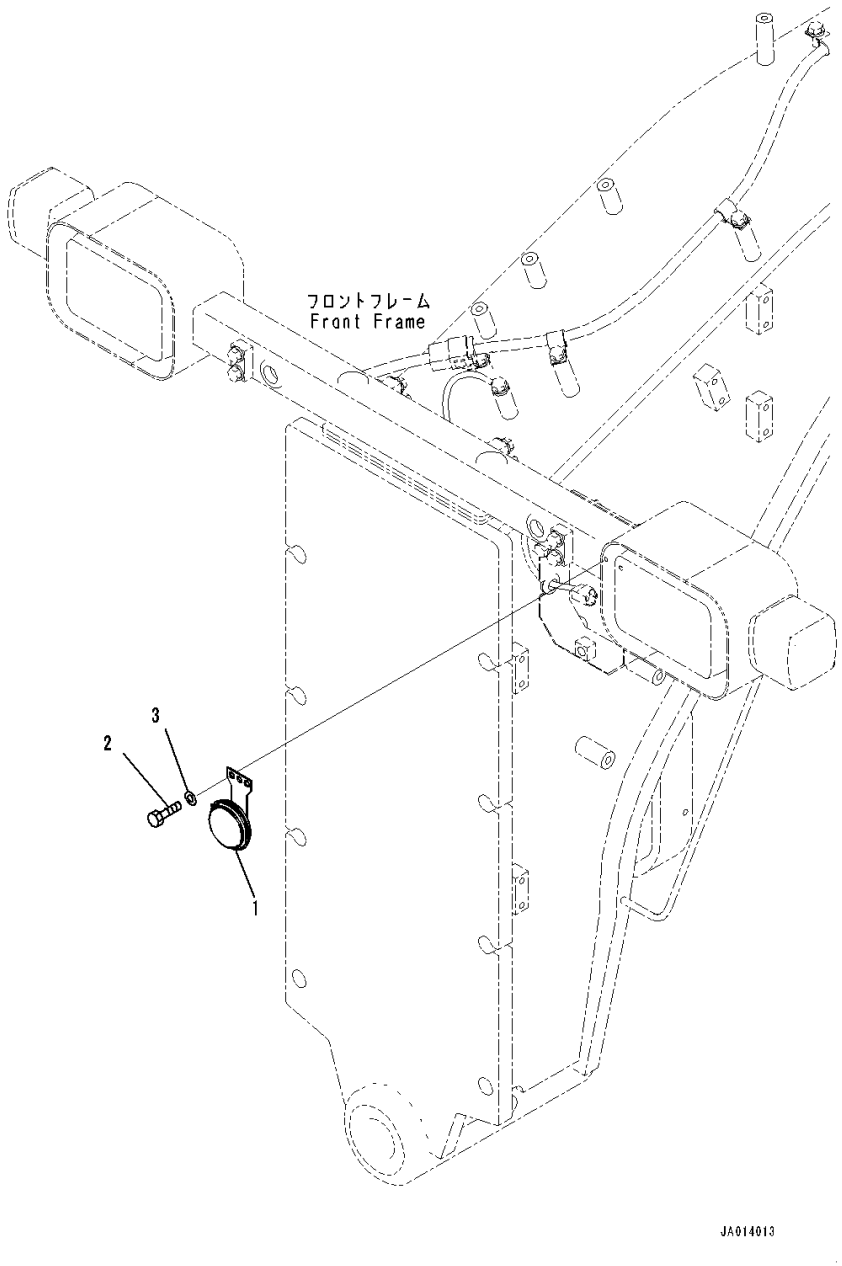

Index	Code	Part Number	Description	Qty	Serial Number
1		23C-06-63410	Horn	1	26001-
2		01010-80816	Bolt	2	26001-
3		01643-30823	Washer	2	26001-

POWER TRANSMITTING SYSTEM

FIG. F4200-001001 Propeller Shaft

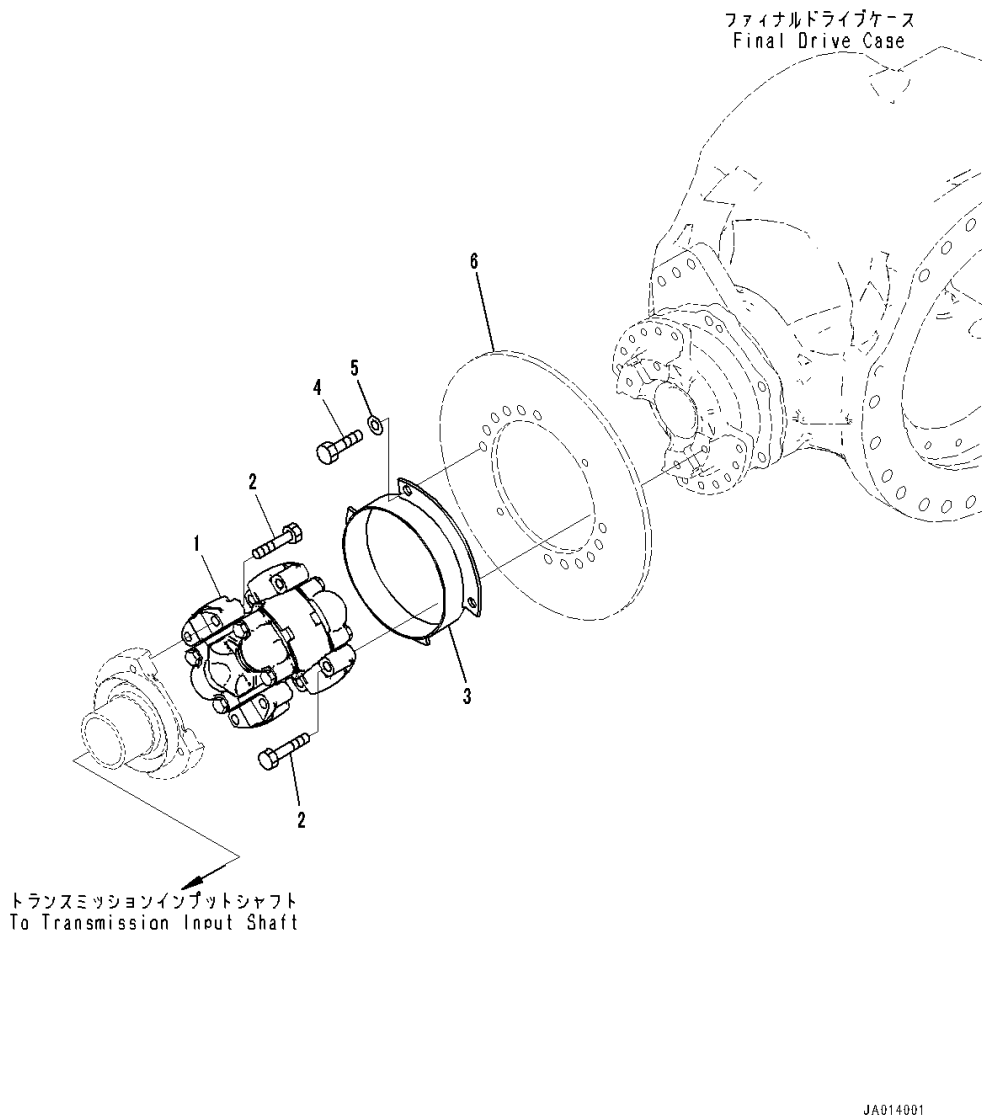

Index	Code	Part Number	Description	Qty	Serial Number
1		154-20-71130	Universal Joint	1	26001-
2		01050-61260	Bolt	8	26001-
3		234-32-81330	Cover	1	26001-
4		01010-61235	Bolt	4	26001-
5		01643-31232	Washer	4	26001-
6		(234-32-81310)	Disc(Rear Axle,Parking Brake)(Refer to Page 264)		

FIG. F4320-001001 Torque Converter and Transmission (Case)

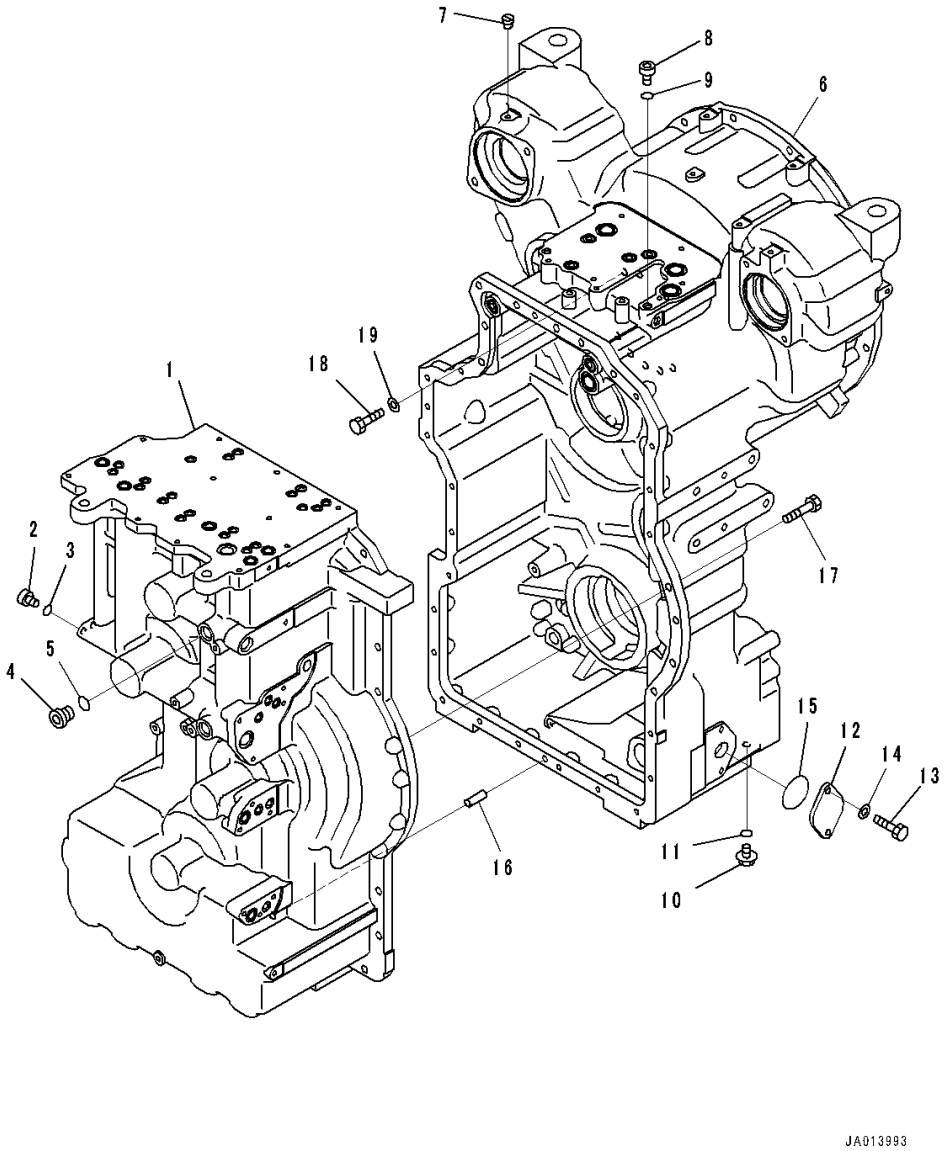

Index	Code	Part Number	Description	Qty	Serial Number
		234-13-80000	Transmission Assembly	1	26001-
		234-15-81110	• Case Assembly	1	26001-
1	C1		• • Case	1	26001-
2		714-24-25190	• • Plug	2	26001-
3		07002-61423	• • O-ring, (Kit : K01,K13)	2	26001-
4		720-2M-15270	• • Plug	3	26001-
5		07002-62434	• • O-ring, (Kit : K01,K13)	3	26001-
		234-15-81120	• Case Assembly	1	26001-
6	C1		• • Case	1	26001-
7		714-23-17320	• • Plug	3	26001-
8		714-24-25190	• • Plug	5	26001-
9		07002-61423	• • O-ring, (Kit : K01,K13)	5	26001-
10		708-8E-16150	• • Plug	1	26001-
11		07002-61023	• • O-ring, (Kit : K01,K13)	1	26001-
12		714-23-13270	• Cover	2	26001-
13		01010-81030	• Bolt	4	26001-
14		01643-31032	• Washer	4	26001-
15		07000-72055	• O-ring, (Kit : K01,K13)	2	26001-
16		04020-01228	• Pin, Dowel	2	26001-
17		01010-81240	• Bolt	32	26001-
18		01010-81255	• Bolt	8	26001-
19		01643-31232	• Washer	8	26001-

FIG. F4320-001002 Torque Converter and Transmission (Forward Low Speed and Reverse Clutch)

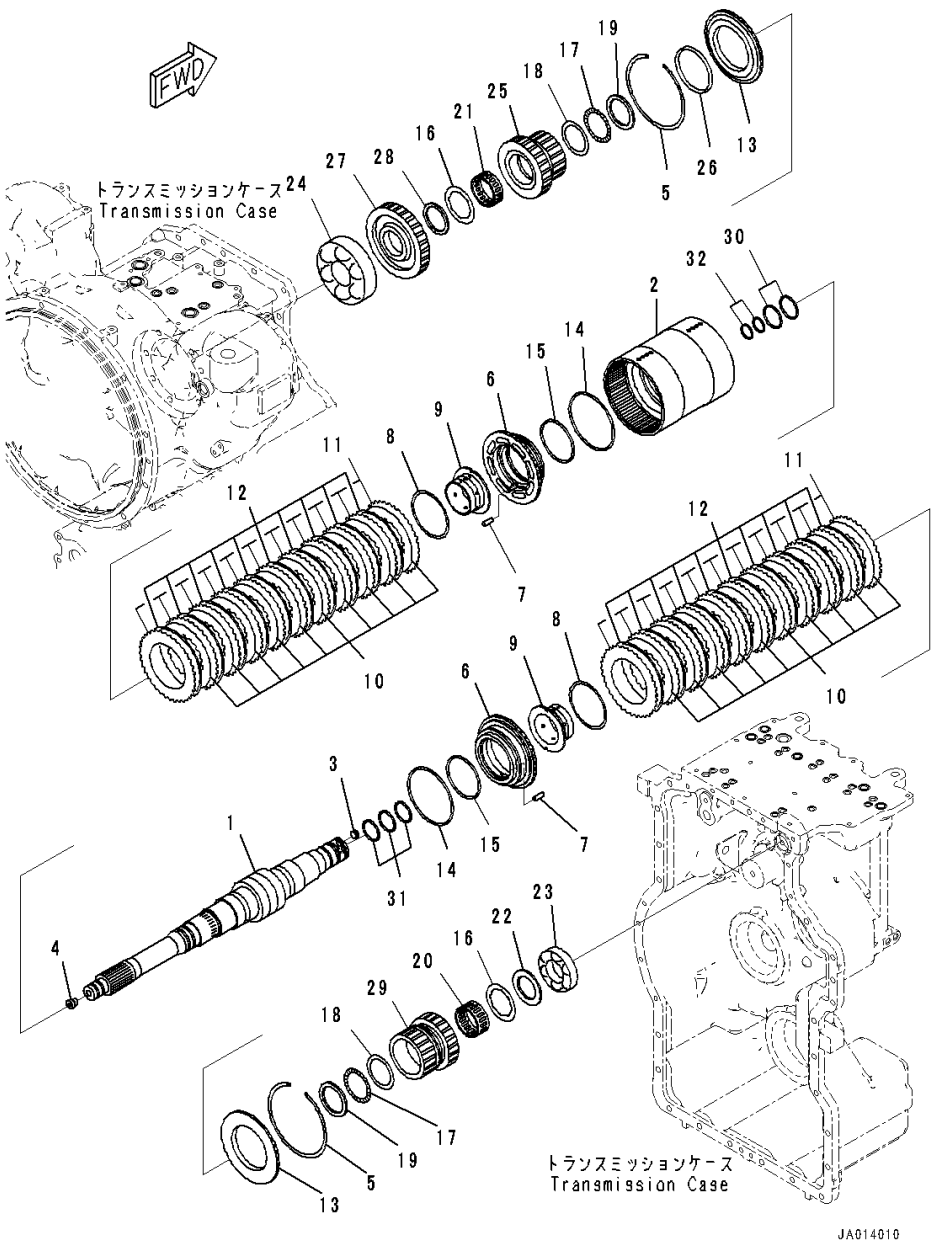

Index	Code	Part Number	Description	Qty	Serial Number
		234-13-80000	Transmission Assembly	1	26001-
		234-15-82010	• Clutch Assembly	1	26001-
		234-15-82110	• • Shaft and Cylinder Assembly	1	26001-
1	C1		• • • Shaft	1	26001-
2	C1		• • • Housing	1	26001-
3		56D-15-29790	• • • Plug	2	26001-
4		07043-70211	• • • Plug	1	26001-
5		419-15-12140	• • Ring, Snap	2	26001-
6		234-15-82610	• • Piston	2	26001-
7		04020-00514	• • Pin, Dowel	4	26001-
8		362-15-19520	• • Ring, Snap	2	26001-
9		234-15-82690	• • Piston	2	26001-
10		714-12-19711	• • Disc	20	26001-
11		714-16-19730	• • Plate	22	26001-
12		56D-15-12710	• • Spring,Wave	20	26001-
13		23B-15-72610	• • Plate	2	26001-
14		714-13-19210	• • Seal Ring, (Kit : K01,K13)	2	26001-
15		714-07-19320	• • Seal Ring, (Kit : K01,K13)	2	26001-
16		714-08-19560	• • Washer, Thrust	2	26001-
17		419-15-12640	• • Bearing, Thrust	2	26001-
18		419-15-12650	• • Washer, Thrust	2	26001-
19		714-12-12760	• • Washer	2	26001-
20		714-23-19420	• • Bearing	1	26001-
21		714-23-19410	• • Bearing	1	26001-
22		714-12-12740	• • Spacer	1	26001-
23		714-12-39340	• • Bearing	1	26001-
24		714-07-29320	• • Bearing	1	26001-
25		234-15-82410	• • Gear	1	26001-
26		427-15-19220	• • Ring	2	26001-
27		234-15-82510	• • Gear	1	26001-
28		714-07-46171	• • Spacer	1	26001-
29		234-15-82420	• • Gear	1	26001-
30		714-12-39210	• Seal Ring, (Kit : K01,K13)	2	26001-
31		714-12-39230	• Seal Ring, (Kit : K01,K13)	3	26001-
32		714-21-19810	• Seal Ring, (Kit : K01,K13)	2	26001-

FIG. F4320-001003 Torque Converter and Transmission (Forward High and 1st Speed Clutch) (1/2)

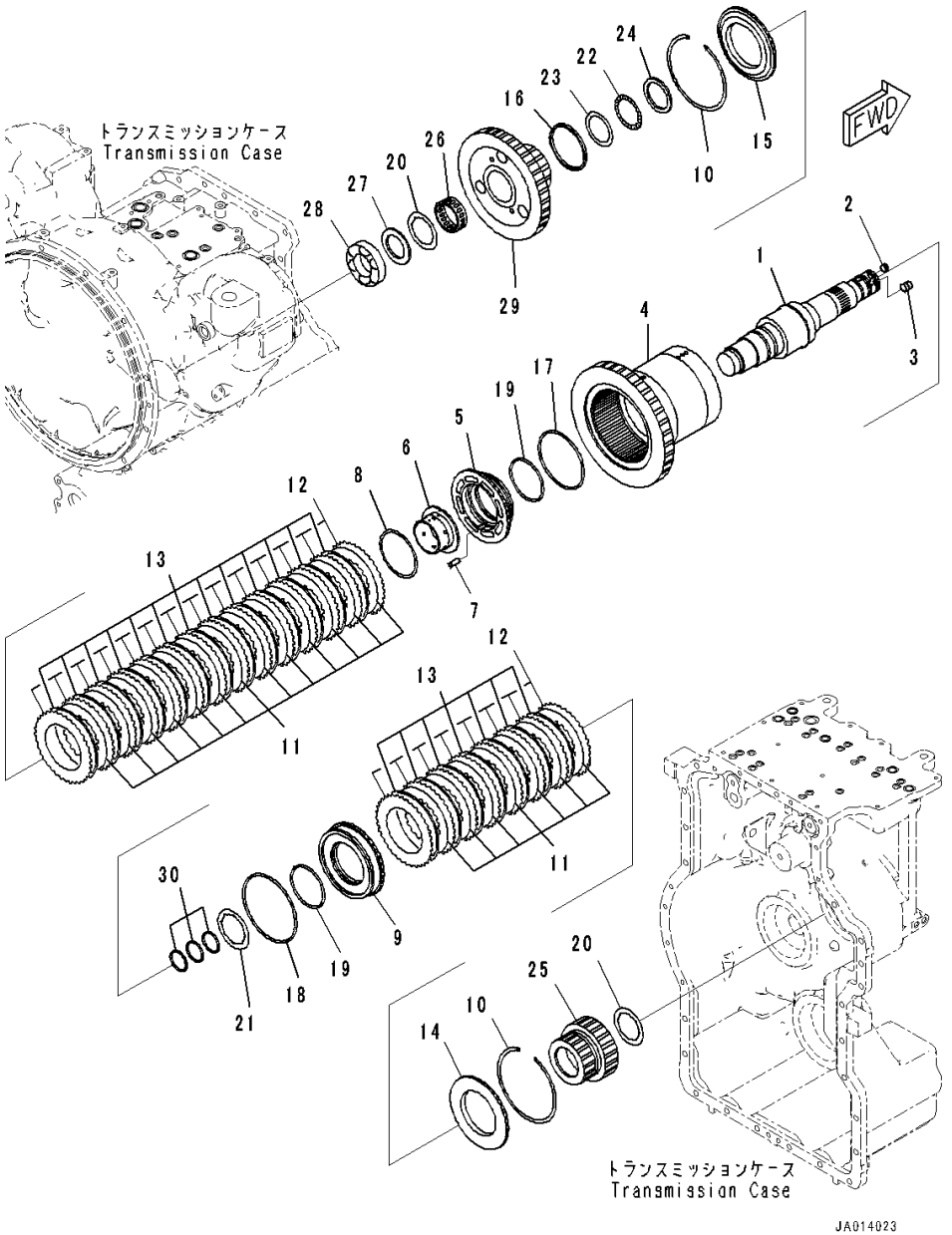

Index	Code	Part Number	Description	Qty	Serial Number
		234-13-80000	Transmission Assembly	1	26001-
		234-15-82020	• Clutch Assembly	1	26001-
		234-15-82120	• • Shaft and Cylinder Assembly	1	26001-
1	C1		• • • Shaft	1	26001-
2		56D-15-29790	• • • Plug	2	26001-
3		23B-15-72910	• • • Orifice	1	26001-
4	C1		• • • Housing	1	26001-
5		234-15-82630	• • Piston	1	26001-
6		234-15-82690	• • Piston	1	26001-
7		04020-00514	• • Pin, Dowel	2	26001-
8		362-15-19520	• • Ring, Snap	1	26001-
9		234-15-82640	• • Piston	1	26001-
10		419-15-12140	• • Ring, Snap	2	26001-
11		714-12-19711	• • Disc	20	26001-
12		714-16-19730	• • Plate	22	26001-
13		56D-15-12710	• • Spring,Wave	20	26001-
14		714-12-12610	• • Plate,End	1	26001-
15		23B-15-72610	• • Plate	1	26001-
16		427-15-19220	• • Ring	1	26001-
17		714-11-19230	• • Seal Ring, (Kit : K01,K13)	1	26001-
18		56D-15-29210	• • Seal Ring, (Kit : K01,K13)	1	26001-
19		714-07-19320	• • Seal Ring, (Kit : K01,K13)	2	26001-
20		714-08-19560	• • Washer, Thrust	2	26001-
21		714-08-19570	• • Washer, Thrust	1	26001-
22		419-15-12640	• • Bearing, Thrust	1	26001-
23		419-15-12650	• • Washer, Thrust	1	26001-
24		714-12-12760	• • Washer	1	26001-
25		234-15-82940	• • Gear	1	26001-
26		714-23-19410	• • Bearing	1	26001-
27		714-12-12740	• • Spacer	1	26001-
28		714-12-39340	• • Bearing	1	26001-
29		234-15-82430	• • Gear	1	26001-
30		714-12-39230	• Seal Ring, (Kit : K01,K13)	3	26001-

FIG. F4320-001004 Torque Converter and Transmission (2nd and 3rd Housing)

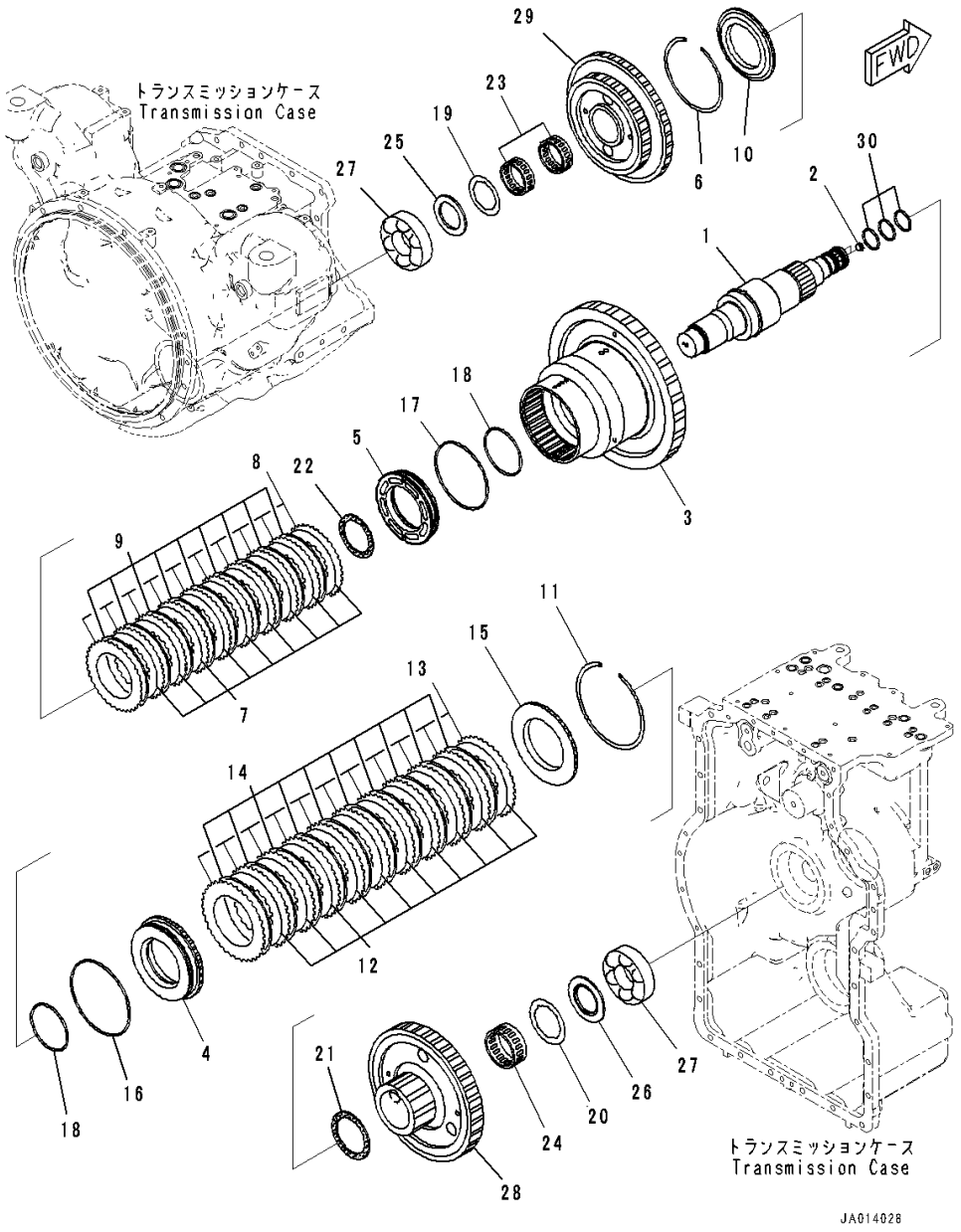

Index	Code	Part Number	Description	Qty	Serial Number
		234-13-80000	Transmission Assembly	1	26001-
		234-15-82030	• Clutch Assembly	1	26001-
		234-15-82130	• • Shaft and Cylinder Assembly	1	26001-
1	C1		• • • Shaft	1	26001-
2		56D-15-29790	• • • Plug	2	26001-
3	C1		• • • Housing	1	26001-
4		234-15-82650	• • Piston	1	26001-
5		234-15-82660	• • Piston	1	26001-
6		419-15-12140	• • Ring, Snap	1	26001-
7		714-12-19711	• • Disc	9	26001-
8		714-16-19730	• • Plate	10	26001-
9		56D-15-12710	• • Spring,Wave	9	26001-
10		714-12-12610	• • Plate,End	1	26001-
11		714-07-12720	• • Ring, Snap	1	26001-
12		714-07-12670	• • Disc	11	26001-
13		714-07-12680	• • Plate	12	26001-
14		714-07-12781	• • Spring	11	26001-
15		714-07-12711	• • Plate	1	26001-
16		56B-15-19210	• • Seal Ring, (Kit : K01,K13)	1	26001-
17		714-16-19220	• • Seal Ring, (Kit : K01,K13)	1	26001-
18		714-16-19210	• • Seal Ring, (Kit : K01,K13)	2	26001-
19		714-08-19570	• • Washer, Thrust	1	26001-
20		714-07-12220	• • Washer, Thrust	1	26001-
21		56B-15-19520	• • Washer, Thrust	1	26001-
22		234-15-89510	• • Washer	1	26001-
23		714-23-19430	• • Bearing, Needle	2	26001-
24		56B-15-19422	• • Bearing, Needle	1	26001-
25		714-23-12710	• • Spacer	1	26001-
26		23C-15-52750	• • Spacer	1	26001-
27		714-12-19340	• • Bearing, Roller	2	26001-
28		234-15-82450	• • Gear	1	26001-
29		234-15-82460	• • Gear	1	26001-
30		419-15-12122	• Ring, (Kit : K01,K13)	3	26001-

FIG. F4320-001005 Torque Converter and Transmission (4th Speed Clutch)

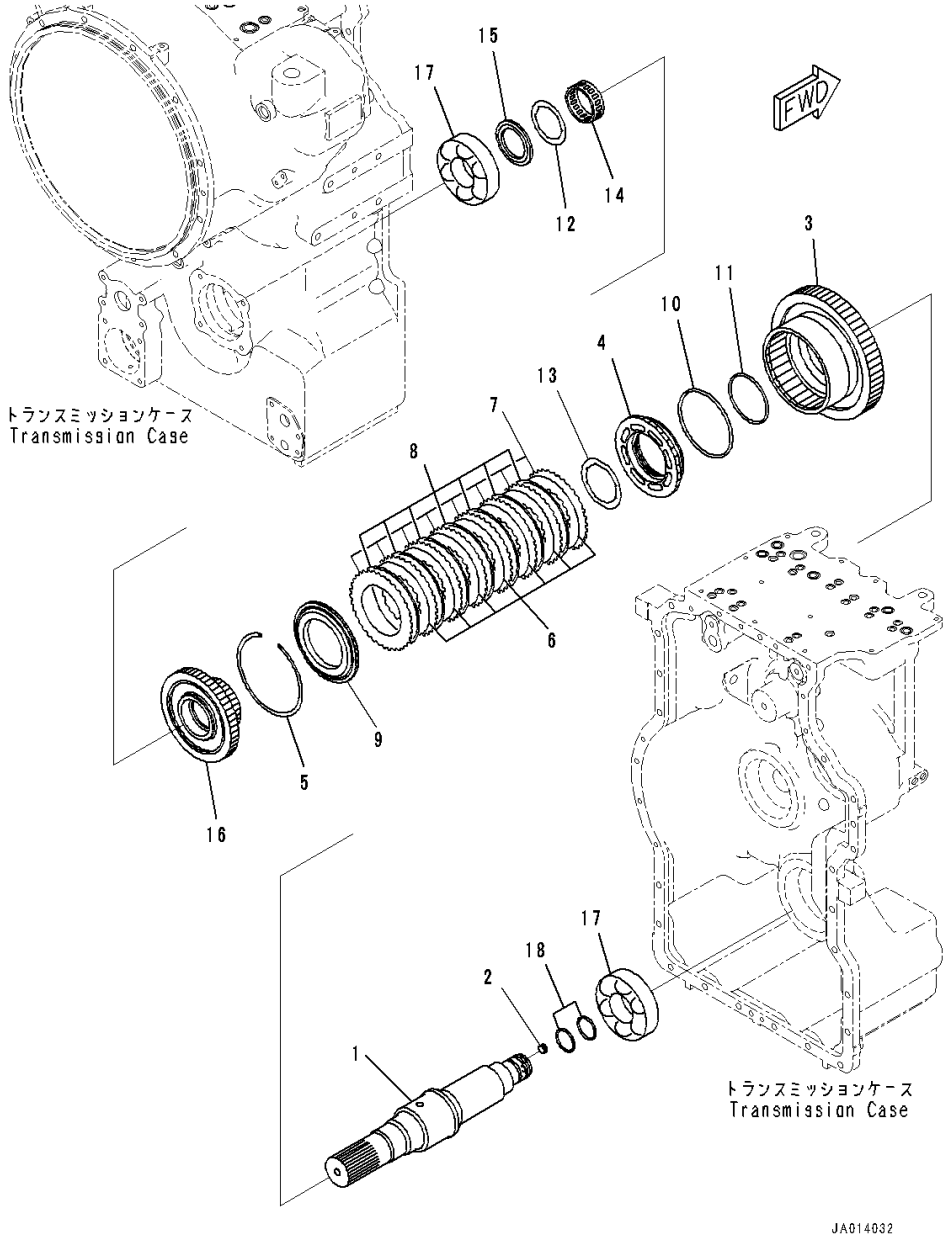

Index	Code	Part Number	Description	Qty	Serial Number
		234-13-80000	Transmission Assembly	1	26001-
		234-15-82040	• Clutch Assembly	1	26001-
		234-15-82140	• • Shaft and Cylinder Assembly	1	26001-
1	C1		• • • Shaft	1	26001-
2		56D-15-29790	• • • Plug	1	26001-
3	C1		• • • Housing	1	26001-
4		234-15-82640	• • Piston	1	26001-
5		419-15-12140	• • Ring, Snap	1	26001-
6		714-12-19711	• • Disc	7	26001-
7		714-16-19730	• • Plate	8	26001-
8		56D-15-12710	• • Spring,Wave	7	26001-
9		714-12-12610	• • Plate,End	1	26001-
10		56D-15-29210	• • Seal Ring, (Kit : K01,K13)	1	26001-
11		714-07-19320	• • Seal Ring, (Kit : K01,K13)	1	26001-
12		714-08-19570	• • Washer, Thrust	1	26001-
13		714-07-12220	• • Washer, Thrust	1	26001-
14		714-23-19430	• • Bearing, Needle	1	26001-
15		714-23-12710	• • Spacer	1	26001-
16		234-15-82470	• • Gear	1	26001-
17		567-13-19110	• • Bearing	2	26001-
18		419-15-12122	• Ring, (Kit : K01,K13)	2	26001-

FIG. F4320-001006 Torque Converter and Transmission (Output Coupling)

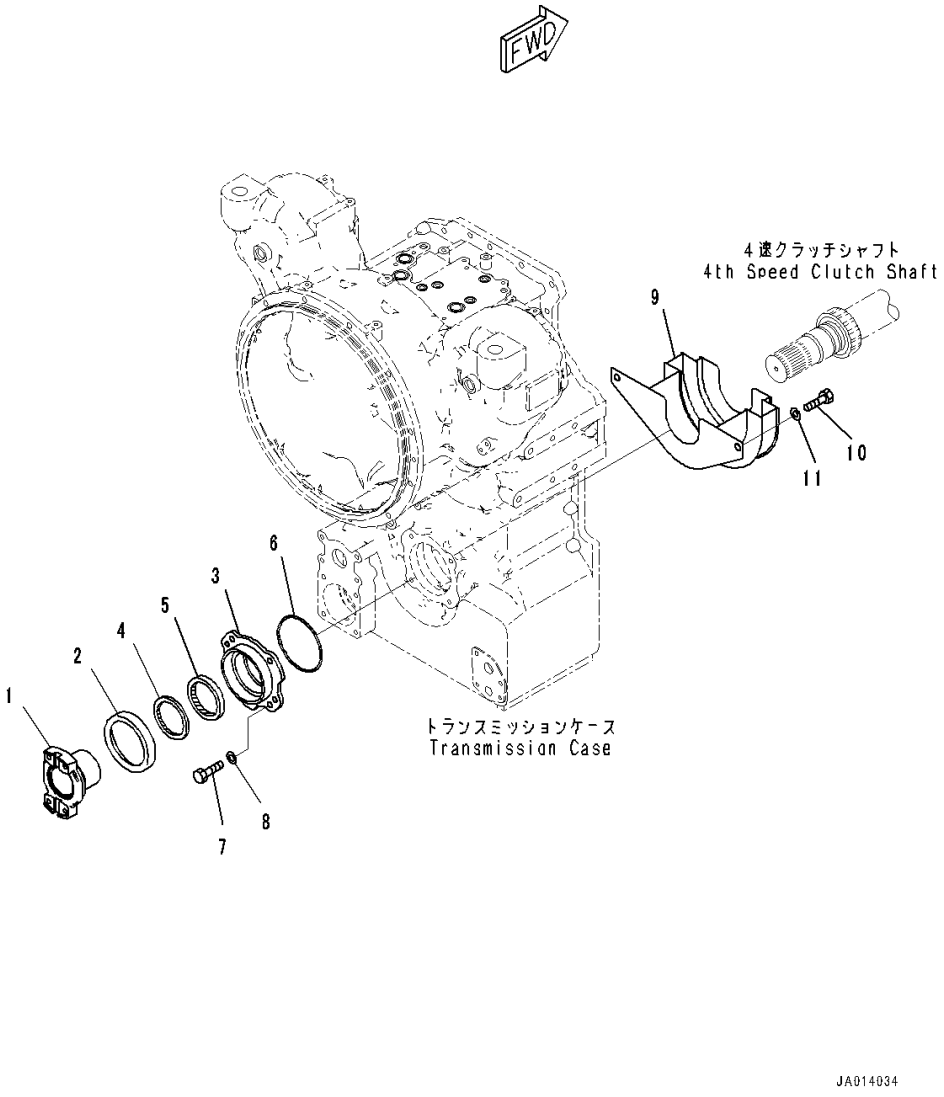

Index	Code	Part Number	Description	Qty	Serial Number
		234-13-80000	Transmission Assembly	1	26001-
		234-15-84110	• Coupling Assembly	1	26001-
1	C1		• • Coupling	1	26001-
2		23B-15-74310	• • Cover	1	26001-
3		234-15-84810	• Retainer	1	26001-
4		714-12-29170	• Seal, Dust, (Kit : K13)	1	26358-
	A2	714-12-19170	• Seal, Dust, (Kit : K01)	1	26001-26357
5		714-12-19121	• Seal, Oil, (Kit : K01,K13)	1	26001-
6		07000-72120	• O-ring, (Kit : K01,K13)	1	26001-
7		01010-81230	• Bolt	4	26001-
8		01643-31232	• Washer	4	26001-
9		234-15-84920	• Shroud	1	26001-
10		01010-81230	• Bolt	2	26001-
11		01643-31232	• Washer	2	26001-

FIG. F4320-001007 Torque Converter and Transmission (PTO (Power Take Off) Gear) (1/2)

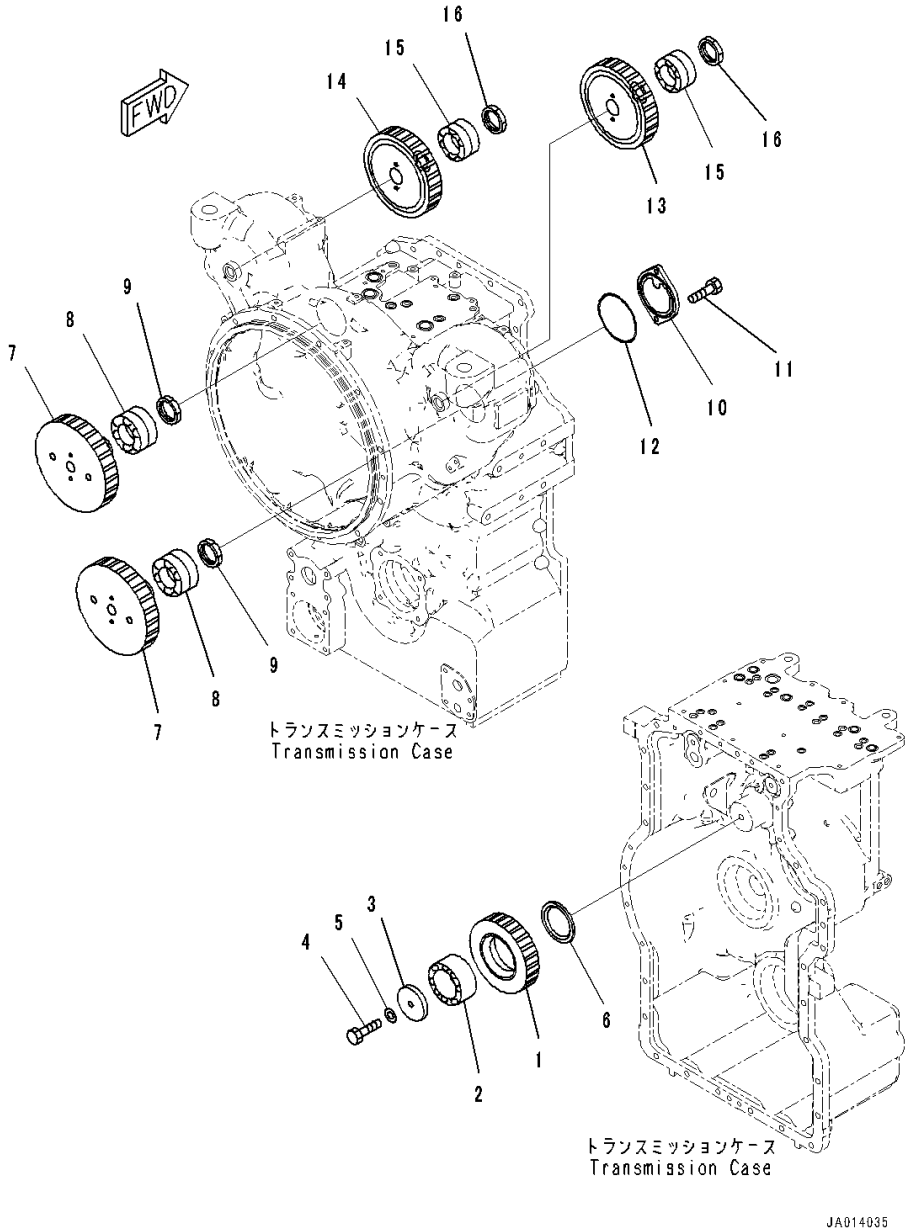

Index	Code	Part Number	Description	Qty	Serial Number
		234-13-80000	Transmission Assembly	1	26001-
1		234-15-82520	• Gear	1	26001-
2		56D-15-19630	• Bearing	1	26001-
3		56D-15-19420	• Holder	1	26001-
4		01010-81265	• Bolt	1	26001-
5		01643-31232	• Washer	1	26001-
6		234-15-89410	• Collar	1	26001-
7		23B-13-73411	• Gear	2	26001-
8		23B-13-79320	• Bearing	2	26001-
9		01530-04812	• Nut, Lock	2	26001-
10		234-15-83230	• Cover	1	26001-
11		01010-81030	• Bolt	2	26001-
12		07000-72100	• O-ring, (Kit : K01,K13)	1	26001-
13		23B-13-73420	• Gear	1	26001-
14		23B-13-73430	• Gear	1	26001-
15		23B-13-79310	• Bearing	2	26001-
16		01530-04812	• Nut, Lock	2	26001-

FIG. F4320-001008 Torque Converter and Transmission (Relief Valve)

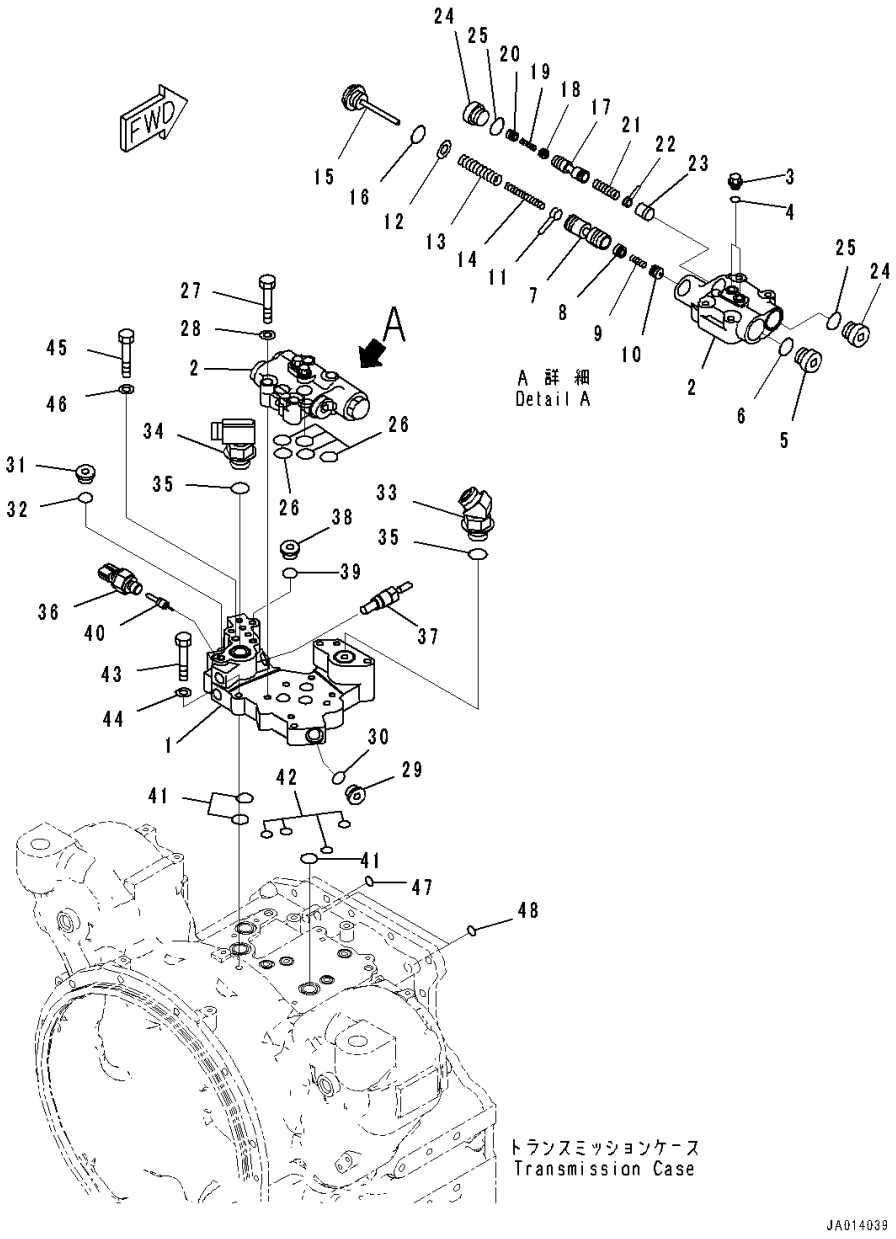

Index	Code	Part Number	Description	Qty	Serial Number
		234-13-80000	Transmission Assembly	1	26001-
		234-15-85020	• Valve Assembly	1	26001-
1		234-15-85120	• • Seat, Valve	1	26001-
		23C-15-66010	• • Valve Assembly, Relief	1	26001-
2	C1		• • • Valve Body	1	26001-
3		708-8E-16150	• • • Plug	2	26001-
4		07002-61023	• • • O-ring, (Kit : K01,K02,K13)	2	26001-
5		14X-15-15850	• • • Plug	1	26001-
6		07002-63034	• • • O-ring, (Kit : K02)	1	26001-
7	C1		• • • Valve	1	26001-
8		426-15-15490	• • • Valve	1	26001-
9		562-15-16110	• • • Spring	1	26001-
10		426-15-15480	• • • Valve	1	26001-
11		56B-15-16660	• • • Shim,T=0.50mm	4	26001-
12		22W-43-17330	• • • Washer	1	26001-
13		56B-15-16250	• • • Spring	1	26001-
14		426-15-16261	• • • Spring	1	26001-
15		426-15-15810	• • • Plug	1	26001-
16		07002-63034	• • • O-ring, (Kit : K02)	1	26001-
17	C1		• • • Spool	1	26001-
18		104-15-25490	• • • Valve	1	26001-
19		125-15-15290	• • • Spring	1	26001-
20		104-15-25480	• • • Valve	1	26001-
21		14X-15-16210	• • • Spring	1	26001-
22		175-15-56470	• • • Shim,T=0.50mm	3	26001-
23		12H-15-14140	• • • Guide	1	26001-
24		14X-15-15850	• • • Plug	2	26001-
25		07002-63034	• • • O-ring, (Kit : K02)	2	26001-
26		07000-73030	• • O-ring, (Kit : K02)	5	26001-
27		01010-81070	• • Bolt	4	26001-
28		01643-31032	• • Washer	4	26001-
29		720-2M-15270	• • Plug	3	26001-
30		07002-62434	• • O-ring, (Kit : K01,K02,K13)	3	26001-
31		708-7R-11220	• • Plug	6	26001-
32		07002-61223	• • O-ring, (Kit : K01,K02,K13)	6	26001-
33		419-62-31530	• • Elbow	1	26001-
34		21W-62-42640	• • Elbow	1	26001-
35		07002-63334	• • O-ring, (Kit : K02)	2	26001-
36		7861-93-1850	• • Sensor, Pressure,Torque Converter	1	26001-

FIG. F4320-001008 Torque Converter and Transmission (Relief Valve)

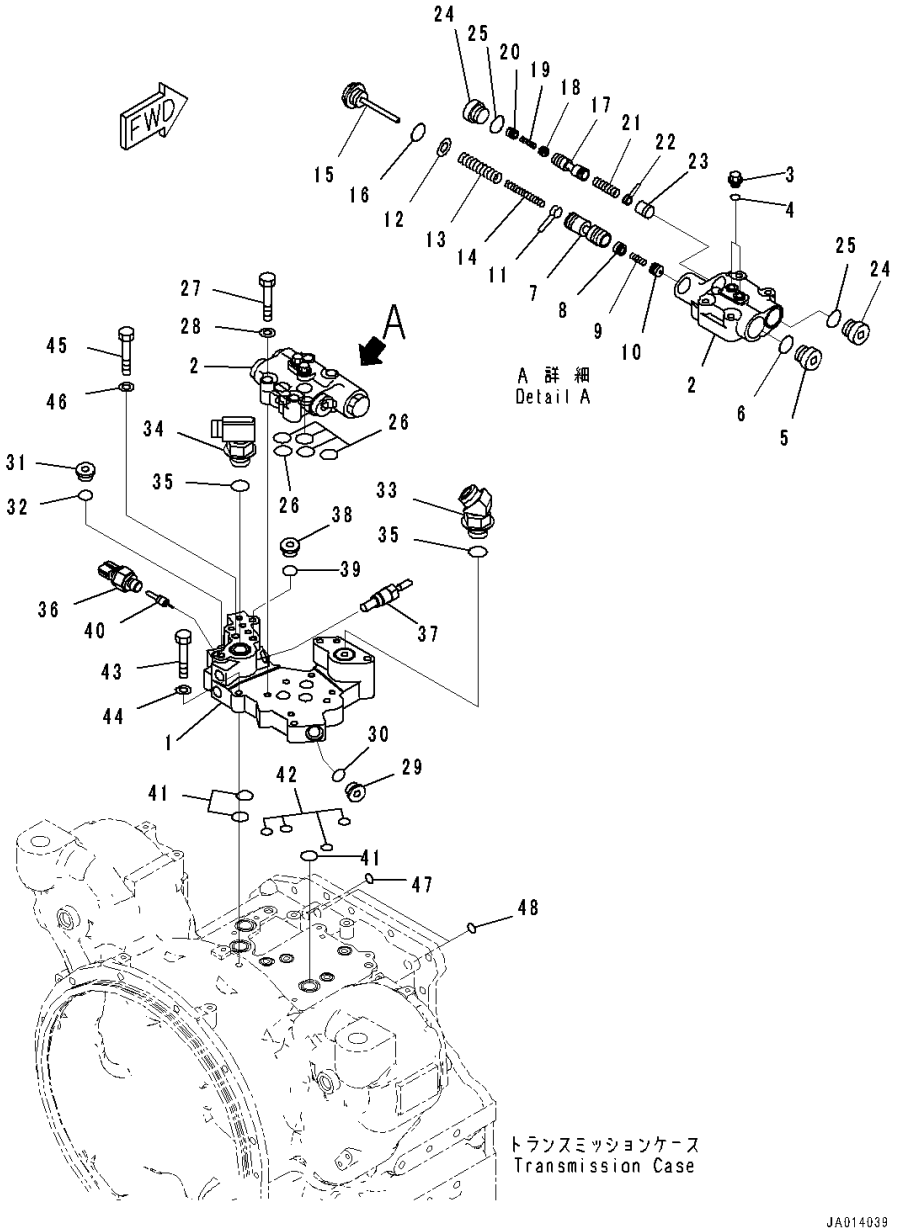

Index	Code	Part Number	Description	Qty	Serial Number
37		7861-93-3320	• • Sensor, Temperature,Torque Converter	1	26001-
38		708-8E-16150	• • Plug	1	26001-
39		07002-61023	• • O-ring, (Kit : K01,K02,K13)	1	26001-
40		14X-49-51520	• • Orifice	1	26001-
41		07000-73032	• O-ring, (Kit : K01,K13)	3	26001-
42		07000-72022	• O-ring, (Kit : K01,K13)	4	26001-
43		01010-81060	• Bolt	2	26001-
44		01643-31032	• Washer	2	26001-
45		01010-81095	• Bolt	4	26001-
46		01643-31032	• Washer	4	26001-
47		07000-73032	• O-ring, (Kit : K01,K13)	1	26001-
48		07000-72022	• O-ring, (Kit : K01,K13)	2	26001-

FIG. F4320-001009 Torque Converter and Transmission (Control Valve)

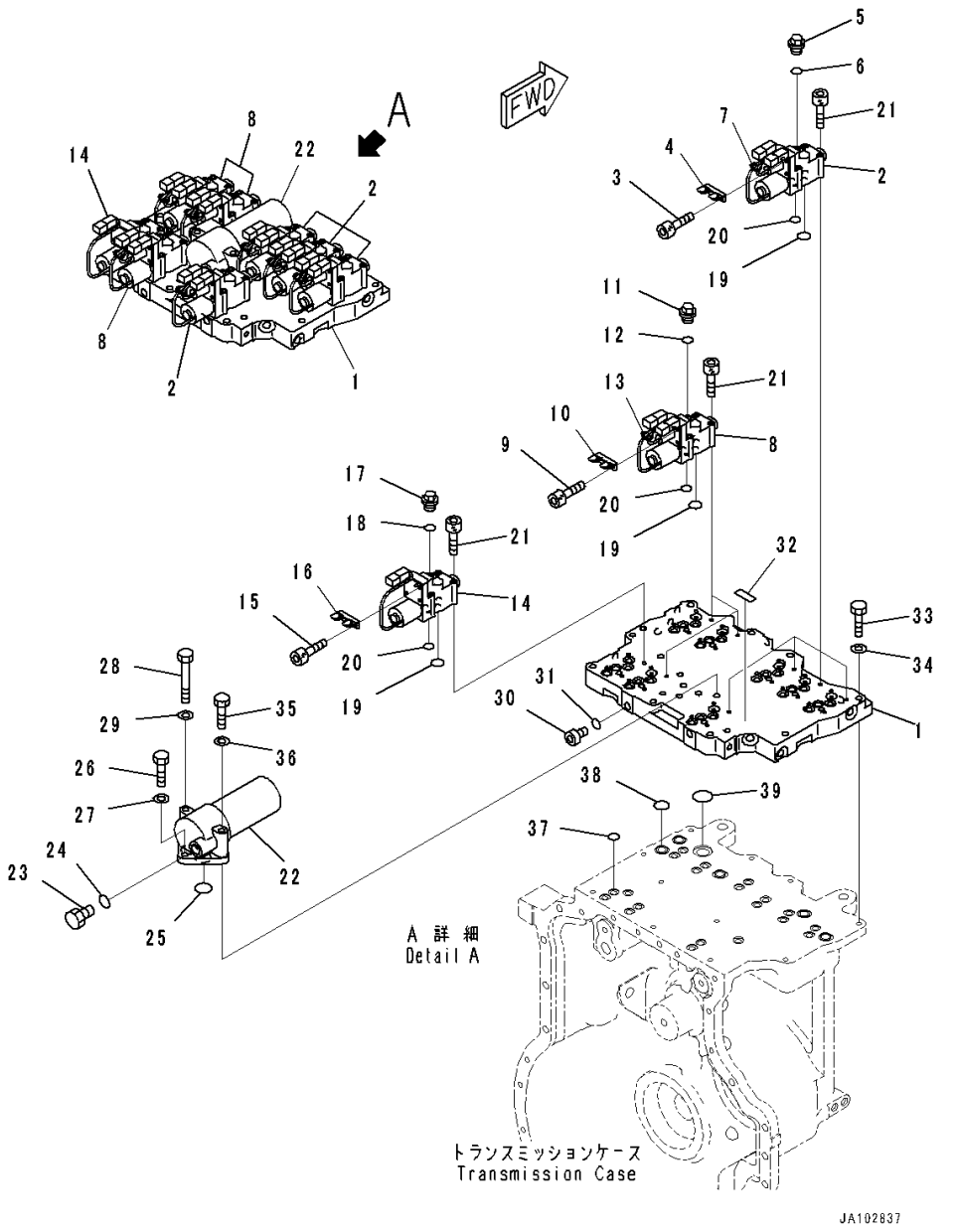

Index	Code	Part Number	Description	Qty	Serial Number
		234-13-80000	Transmission Assembly	1	26001-
		234-15-85011	• Valve Assembly	1	26196-
	A2	234-15-85010	• Valve Assembly	1	26001-26195
1	C1		• • Seat, Valve	1	26001-
2		56D-15-35702	• • ECMV Assembly	4	26196-
	A2	56D-15-35701	• • ECMV Assembly	4	26001-26195
3		01252-90510	• • • Bolt, Hexagon Socket Head	4	26001-
4		714-23-15690	• • • Bracket	1	26001-
5		708-8E-16150	• • • Plug	1	26001-
6		07002-61023	• • • O-ring, (Kit : K01,K02,K13)	1	26001-
7	C1		• • • Band,White	1	26001-
8		17A-13-46201	• • ECMV Assembly	3	26196-
	A2	17A-13-46200	• • ECMV Assembly	3	26001-26195
9		01252-90510	• • • Bolt, Hexagon Socket Head	4	26001-
10		714-23-15690	• • • Bracket	1	26001-
11		708-8E-16150	• • • Plug	1	26001-
12		07002-61023	• • • O-ring, (Kit : K01,K02,K13)	1	26001-
13		08034-00310	• • • Band,White	1	26001-
14		56D-15-35800	• • ECMV Assembly	1	26001-
15		01252-90510	• • • Bolt, Hexagon Socket Head	4	26001-
16		425-15-35330	• • • Bracket	1	26001-
17		708-8E-16150	• • • Plug	1	26001-
18		07002-61023	• • • O-ring, (Kit : K01,K02,K13)	1	26001-
19		07000-72015	• • O-ring, (Kit : K01,K02,K13)	32	26001-
20		07000-71007	• • O-ring, (Kit : K02)	8	26001-
21		01252-A0650	• • Bolt, Hexagon Socket Head	32	26001-
22		569-15-51721	• • Filter Assembly	1	26001-
		569-15-51732	• • • Element Assembly	1	26001-
		07000-A3024	• • • • O-ring	1	26001-
		07000-A2060	• • • O-ring, (Kit : K02)	1	26001-
23		07040-11812	• • Plug	1	26001-
24		07002-61823	• • O-ring, (Kit : K02)	1	26001-
25		07000-73022	• • O-ring, (Kit : K02)	2	26001-
26		01010-81030	• • Bolt	1	26001-
27		01643-31032	• • Washer	1	26001-
28		01010-81080	• • Bolt	1	26001-
29		01643-31032	• • Washer	1	26001-
30		708-7R-11220	• • Plug	14	26001-
31		07002-61223	• • O-ring, (Kit : K01,K02,K13)	14	26001-
32	C2	700-11-31940	• • Plate, Name (Limited Supply)	1	26001-

FIG. F4320-001009 Torque Converter and Transmission (Control Valve)

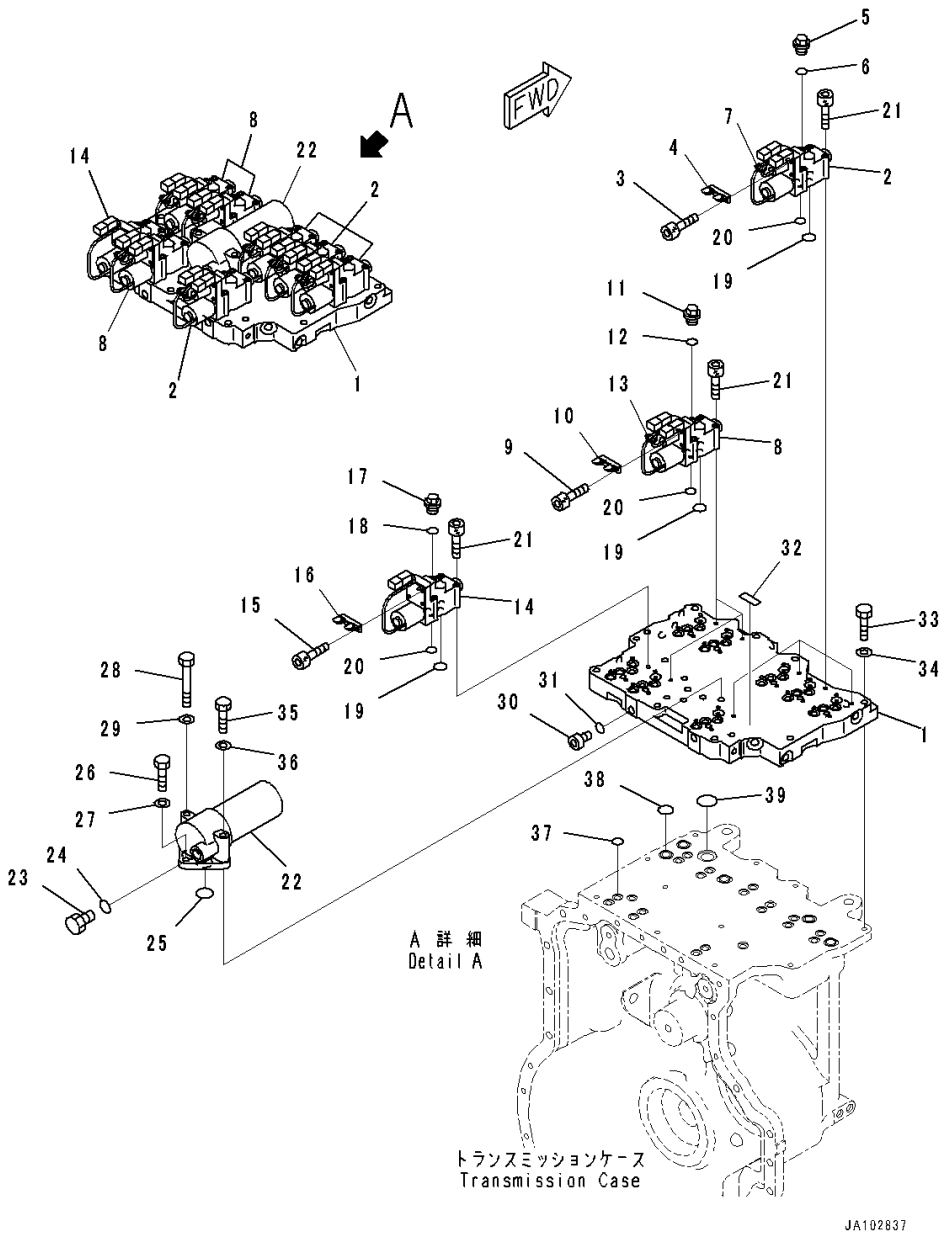

Index	Code	Part Number	Description	Qty	Serial Number
33		01010-81060	• Bolt	10	26001-
34		01643-31032	• Washer	10	26001-
35		01011-81020	• Bolt	1	26001-
36		01643-31032	• Washer	1	26001-
37		07000-72015	• O-ring, (Kit : K01,K02,K13)	19	26001-
38		07000-72022	• O-ring, (Kit : K01,K13)	6	26001-
39		07000-73028	• O-ring, (Kit : K01,K13)	1	26001-

FIG. F4320-001010 Torque Converter and Transmission (Piping)

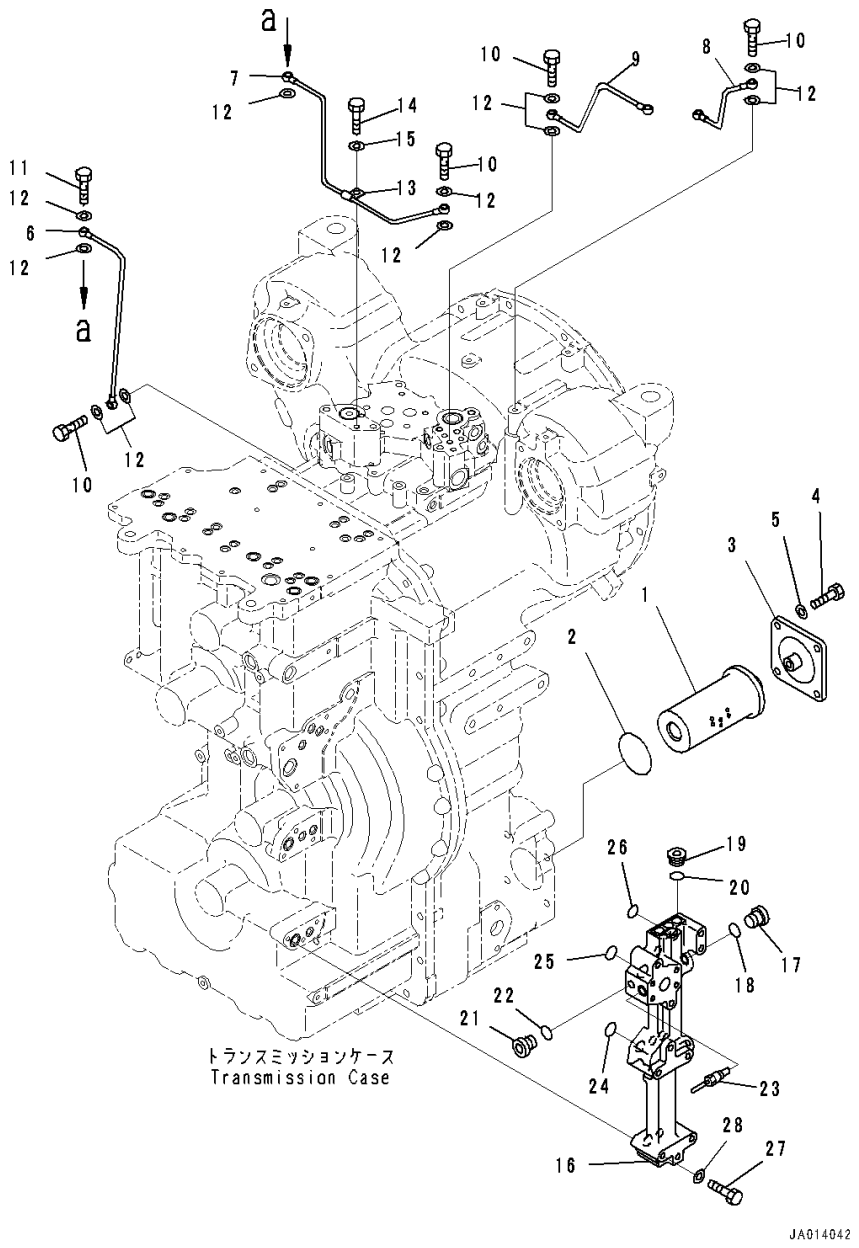

Index	Code	Part Number	Description	Qty	Serial Number
		234-13-80000	Transmission Assembly	1	26001-
1		56D-15-19311	• Strainer	1	26001-
2		07000-72105	• O-ring, (Kit : K01,K13)	1	26001-
3		14X-49-12340	• Cover	1	26001-
4		01010-81240	• Bolt	4	26001-
5		01643-31232	• Washer	4	26001-
6		234-13-88110	• Tube	1	26001-
7		234-13-88120	• Tube	1	26001-
8		234-13-88130	• Tube	1	26001-
9		234-13-88140	• Tube	1	26001-
10		07206-30710	• Bolt, Joint	6	26001-
11		23B-15-79810	• Bolt, Joint	1	26001-
12		07005-01012	• Seal, Washer, (Kit : K01,K13)	15	26001-
13		04434-50610	• Clip	1	26001-
14		01010-81020	• Bolt	1	26001-
15		01643-31032	• Washer	1	26001-
		234-15-85030	• Seat Assembly	1	26001-
16	C1		• • Seat	1	26001-
17		723-11-15110	• • Plug	4	26001-
18		07002-61623	• • O-ring, (Kit : K01,K13)	4	26001-
19		708-7R-11220	• • Plug	5	26001-
20		07002-61223	• • O-ring, (Kit : K01,K13)	5	26001-
21		708-8E-16150	• • Plug	1	26001-
22		07002-61023	• • O-ring, (Kit : K01,K13)	1	26001-
23		7861-93-3320	• • Sensor, Temperature	1	26001-
24		07000-72022	• O-ring, (Kit : K01,K13)	2	26001-
25		07000-73028	• O-ring, (Kit : K01,K13)	1	26001-
26		07000-72015	• O-ring, (Kit : K01,K13)	6	26001-
27		01010-81085	• Bolt	10	26001-
28		01643-31032	• Washer	10	26001-

FIG. F4320-001011 Torque Converter and Transmission (Accessory)

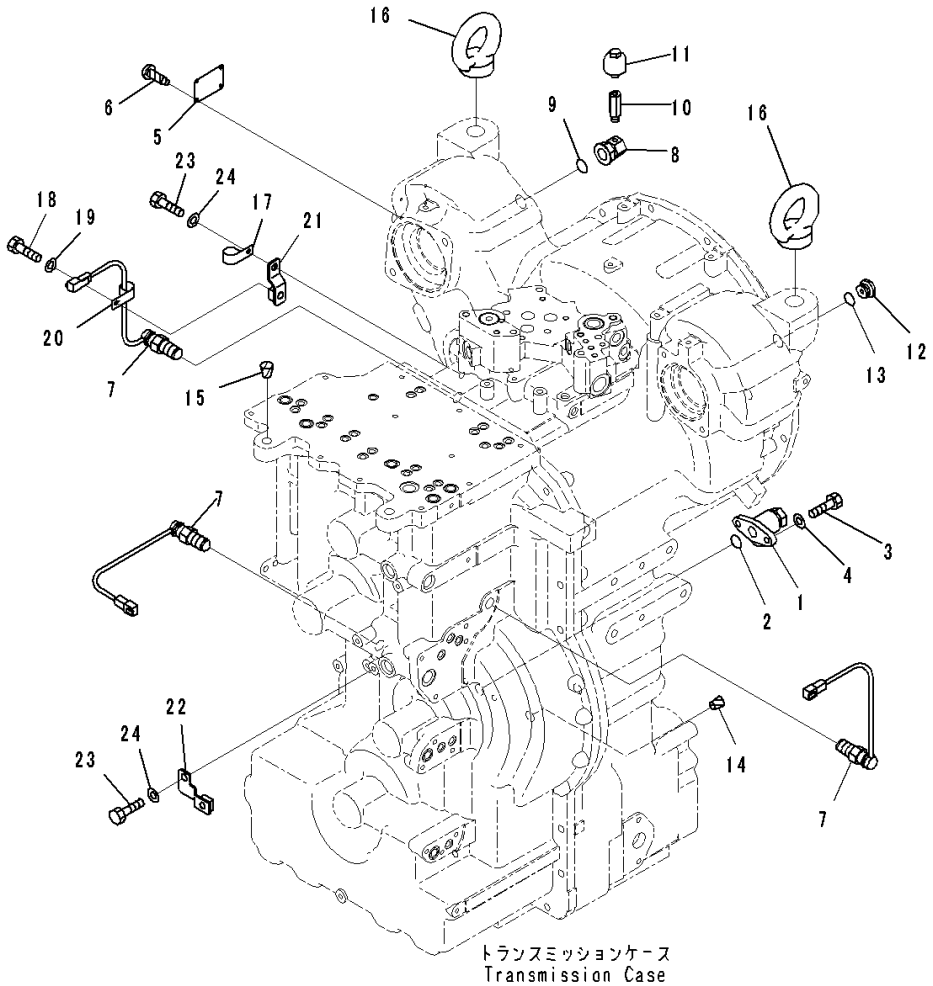

Index	Code	Part Number	Description	Qty	Serial Number
		234-13-80000	Transmission Assembly	1	26001-
1		234-15-85300	• Valve Assembly	1	26001-
2		07000-73028	• O-ring, (Kit : K01,K13)	1	26001-
3		01010-81030	• Bolt	2	26001-
4		01643-31032	• Washer	2	26001-
5	C2	09608-05080	• Plate, Name (Limited Supply)	1	26001-
6		04418-13060	• Screw	4	26001-
7		7861-93-2330	• Sensor	3	26001-
8		714-23-18280	• Elbow	1	26001-
9		07002-62434	• O-ring, (Kit : K01,K13)	1	26001-
10		170-21-11190	• Elbow	1	26001-
11		07030-00252	• Breather	1	26001-
12		720-2M-15270	• Plug	1	26001-
13		07002-62434	• O-ring, (Kit : K01,K13)	1	26001-
14		07049-01215	• Plug	7	26001-
15		07049-02025	• Plug	2	26001-
16		04530-13655	• Bolt, Eye	2	26001-
17		08193-21012	• Clip	5	26001-
18		01010-81020	• Bolt	6	26001-
19		01643-31032	• Washer	6	26001-
20		600-051-2050	• Clip	3	26001-
21		234-15-85810	• Bracket	1	26001-
22		234-15-85820	• Bracket	1	26001-
23		01010-81030	• Bolt	2	26001-
24		01643-31032	• Washer	2	26001-

FIG. F4320-001012 Torque Converter and Transmission (Forward High and 1st Speed Clutch) (2/2)

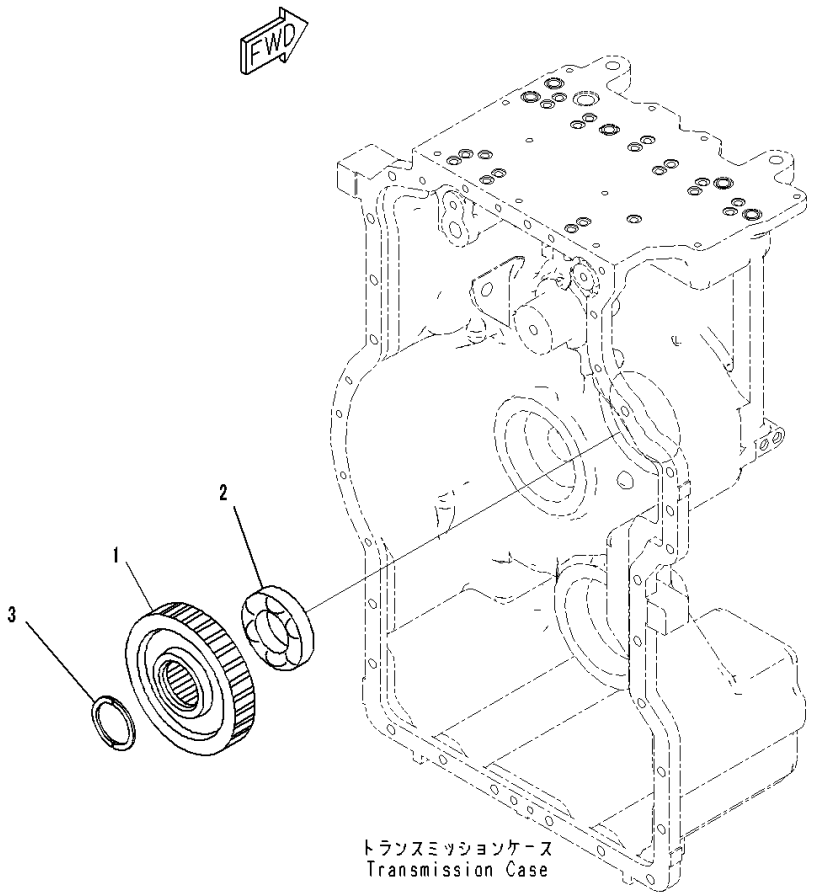

Index	Code	Part Number	Description	Qty	Serial Number
		234-13-80000	Transmission Assembly	1	26001-
1		234-15-82540	• Gear	1	26001-
2		714-12-19340	• Bearing, Roller	1	26001-
3		714-07-46171	• Spacer	1	26001-

FIG. F4320-001013 Torque Converter and Transmission (Pump, Turbine and Damper)

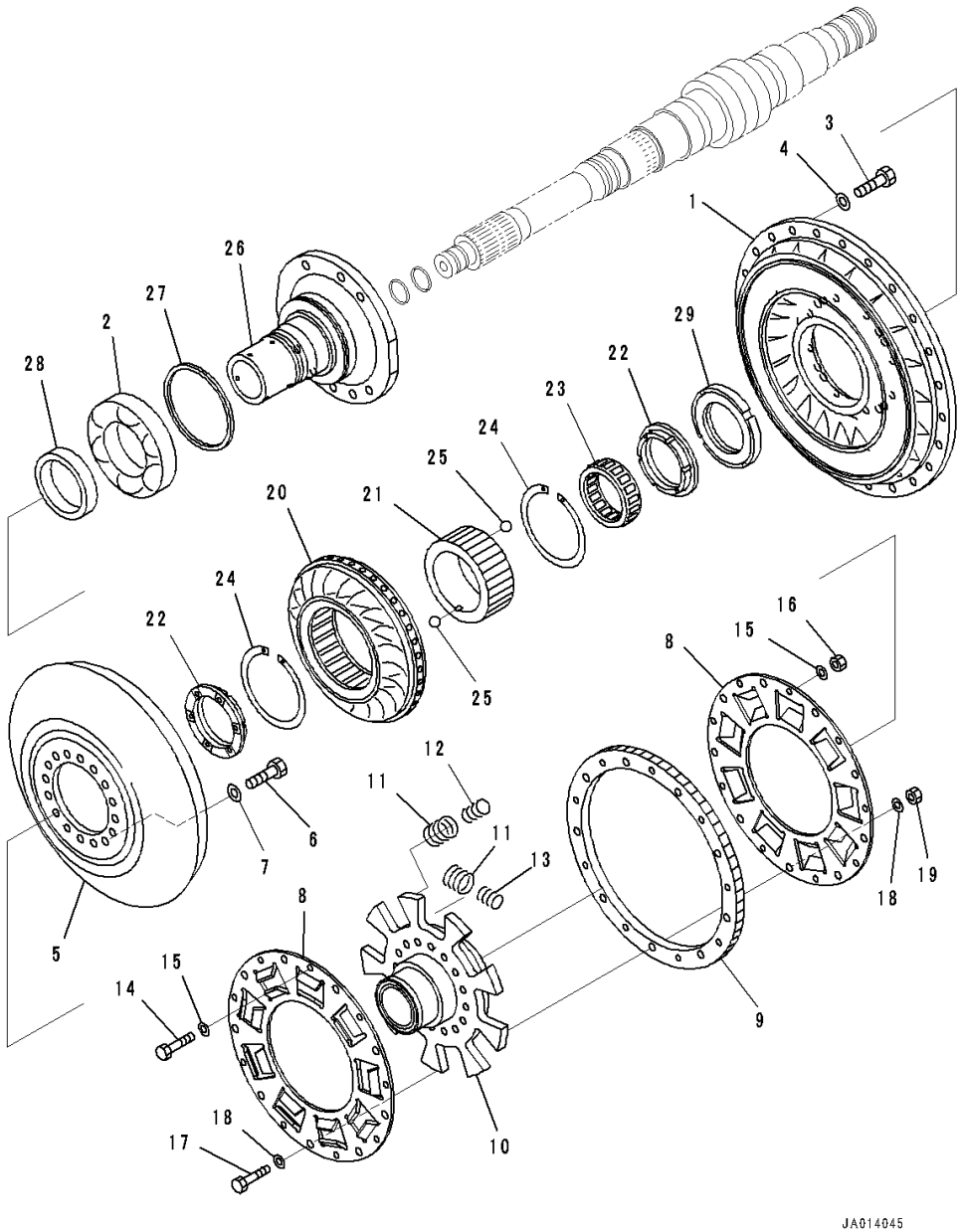

Index	Code	Part Number	Description	Qty	Serial Number
		234-13-80000	Transmission Assembly	1	26001-
		234-13-81000	• Torque Converter Assembly	1	26001-
1		234-13-81120	• • Pump	1	26001-
2		711-16-11560	• • Bearing	1	26001-
3		01010-81030	• • Bolt	24	26001-
4		01643-31032	• • Washer	24	26001-
5		234-13-81520	• • Turbine	1	26001-
6		01010-81030	• • Bolt	16	26001-
7		01643-31032	• • Washer	16	26001-
		234-13-87500	• • Damper Assembly	1	26001-
8		23C-13-57523	• • • Plate	2	26001-
9		23C-13-57511	• • • Drum	1	26001-
10		234-13-87530	• • • Hub	1	26001-
11		23C-13-57540	• • • Spring	9	26001-
12		23C-13-57550	• • • Spring	6	26001-
13		23C-13-57560	• • • Spring	3	26001-
14		01010-80835	• • • Bolt	9	26001-
15		01643-50823	• • • Washer	18	26001-
16		01580-10806	• • • Nut	9	26001-
17		01010-81040	• • • Bolt	9	26001-
18		01643-51032	• • • Washer	18	26001-
19		01580-11008	• • • Nut	9	26001-
20		234-13-82110	• • Stator	1	26001-
21		234-13-82120	• • Race	1	26001-
22		234-13-82140	• • Bushing	2	26001-
23		145-13-12160	• • Bearing	1	26001-
24		04077-00120	• • Ring	2	26001-
25		04260-00635	• • Ball, Steel	2	26001-
26		234-13-82510	• • Shaft	1	26001-
27		07018-31255	• • Ring, (Kit : K01,K13)	1	26001-
28		711-90-11131	• • Spacer	1	26001-
29		711-47-52680	• • Nut	1	26001-

FIG. F4320-001014 Torque Converter and Transmission (Drive Case)

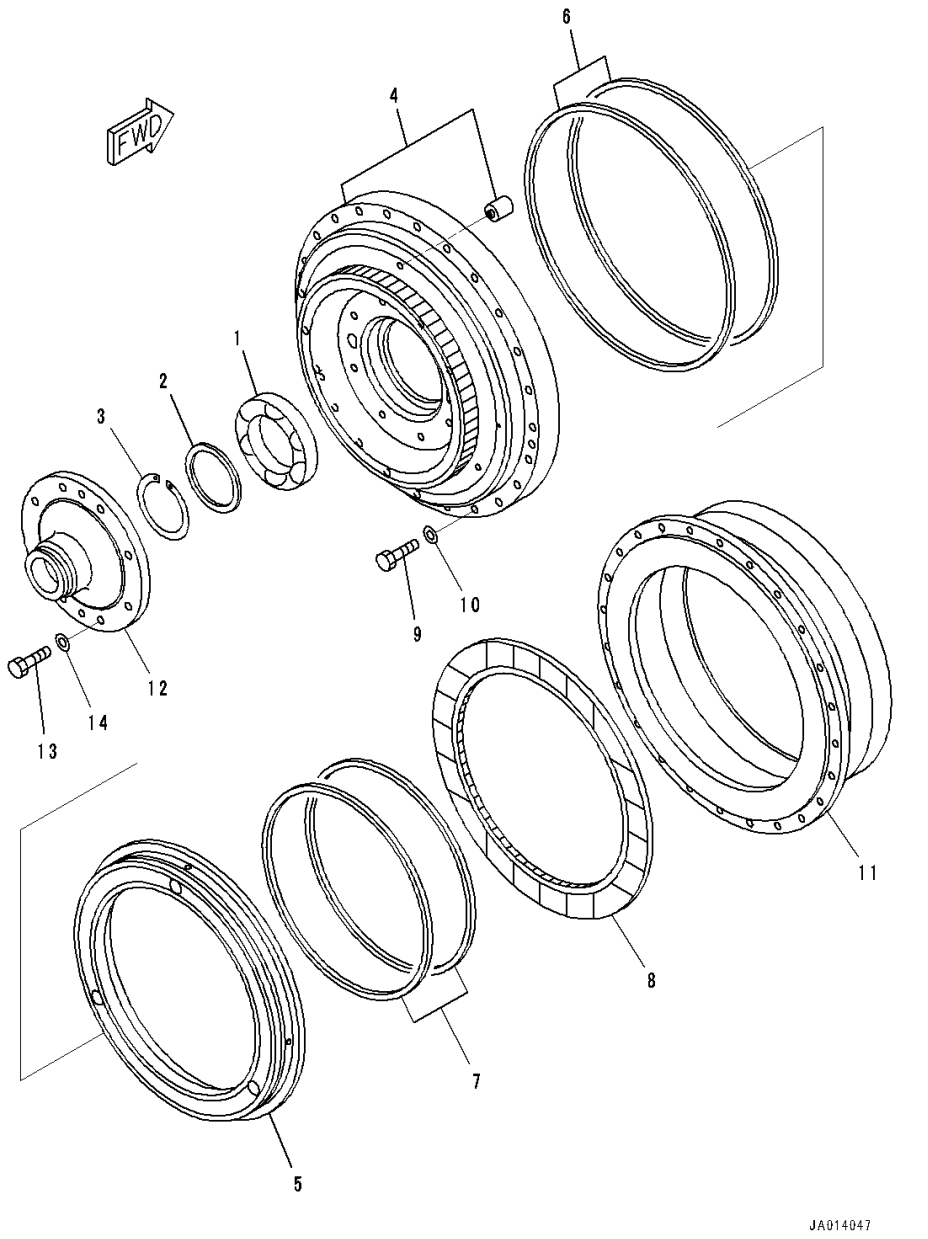

Index	Code	Part Number	Description	Qty	Serial Number
		234-13-80000	Transmission Assembly	1	26001-
		234-13-81000	• Torque Converter Assembly	1	26001-
1		711-90-19310	• • Bearing	1	26001-
2		711-53-11770	• • Plate	1	26001-
3		04064-08025	• • Ring, Snap	1	26001-
4		234-13-87110	• • Housing	1	26001-
	C1		• • • Housing	1	26001-
	C1		• • • Pin	3	26001-
5		234-13-87210	• • Piston	1	26001-
6		198-15-29230	• • Seal Ring, (Kit : K01,K13)	2	26001-
7		232-15-19220	• • Seal Ring, (Kit : K01,K13)	2	26001-
8		195-15-32710	• • Disc	1	26001-
9		01010-81060	• • Bolt	24	26001-
10		01643-31032	• • Washer	24	26001-
11		234-13-81210	• • Case	1	26001-
12		234-13-81250	• • Cover	1	26001-
13		01010-81040	• • Bolt	8	26001-
14		01643-31032	• • Washer	8	26001-

FIG. F4320-001015 Torque Converter and Transmission (PTO (Power Take Off) Gear) (2/2)

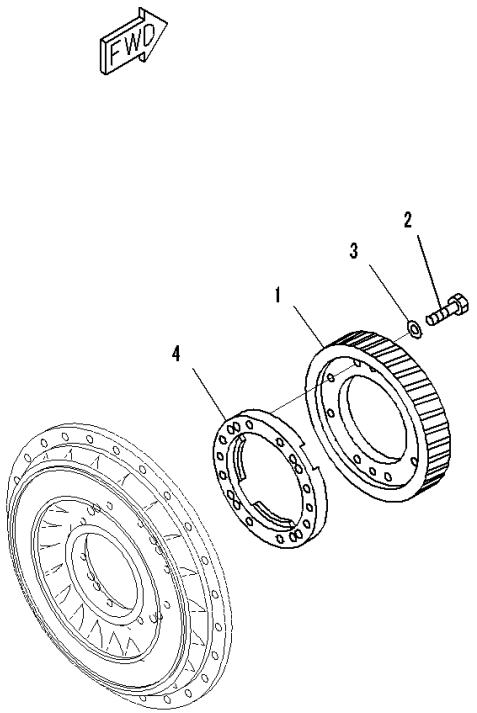

JA014048

Index	Code	Part Number	Description	Qty	Serial Number
		234-13-80000	Transmission Assembly	1	26001-
		234-13-81000	• Torque Converter Assembly	1	26001-
1		711-90-11142	• • Gear	1	26001-
2		01010-81070	• • Bolt	8	26001-
3		01643-31032	• • Washer	8	26001-
4		234-13-81190	• • Guide	1	26001-

FIG. F4320-001016 Torque Converter and Transmission (Oil Filler)

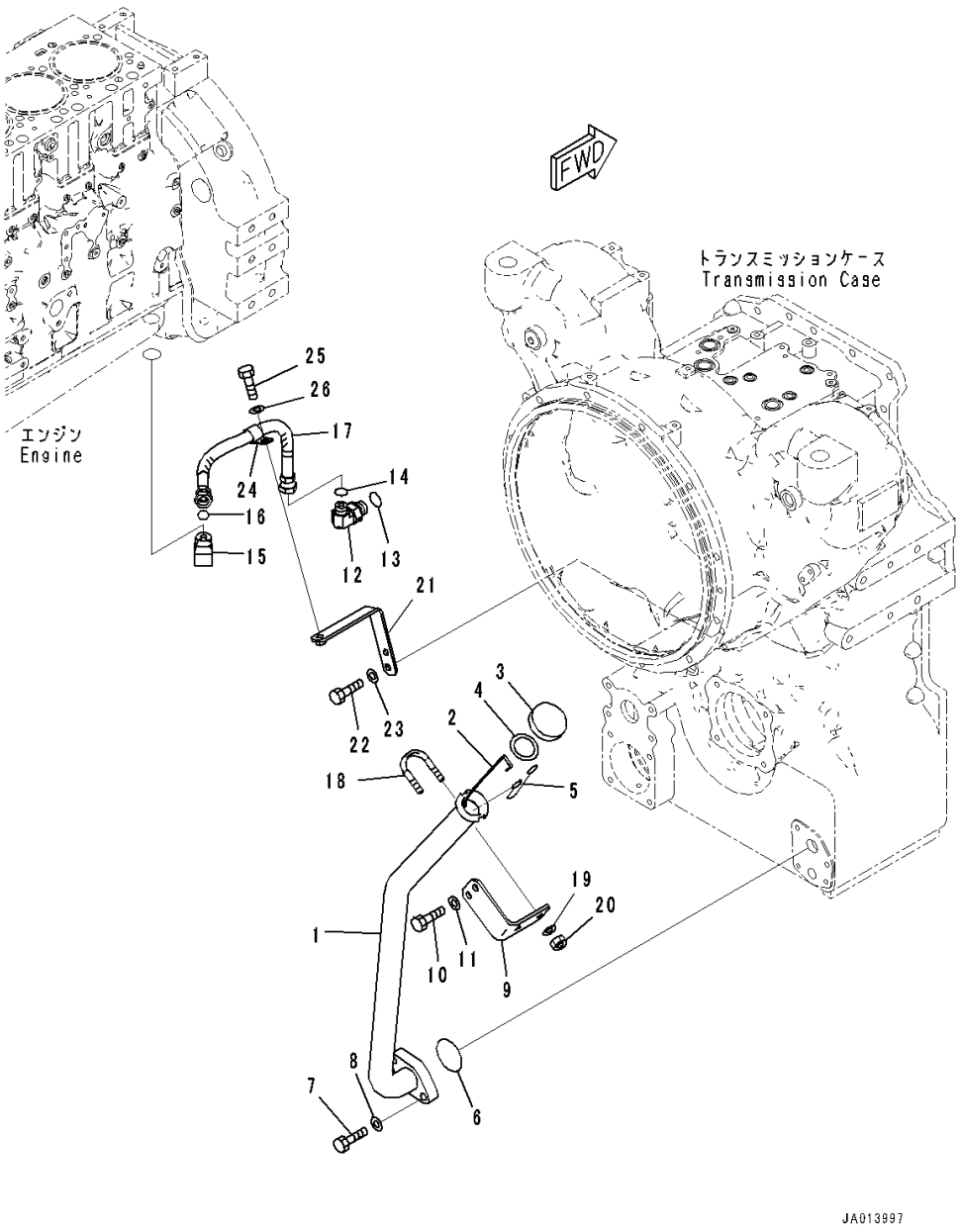

Index	Code	Part Number	Description	Qty	Serial Number
1		234-16-82110	Tube	1	26001-
2		234-16-82130	Gauge	1	26001-
3		6136-21-7120	Cap Assembly	1	26001-
4		6136-21-7180	• Gasket	1	26001-
5		6136-21-7190	Chain	1	26001-
6		07000-A3045	O-ring	1	26001-
7		01010-81245	Bolt	2	26001-
8		01643-31232	Washer	2	26001-
9		234-16-82120	Bracket	1	26001-
10		01010-81025	Bolt	2	26001-
11		01643-31032	Washer	2	26001-
12		02782-10425	Elbow	1	26001-
13		07002-22434	O-ring	1	26001-
14		02896-21012	O-ring	1	26001-
15		23B-16-31770	Elbow	1	26001-
16		02896-21012	O-ring	1	26001-
17		234-16-82271	Hose	1	26001-
18		07283-34346	U-bolt	1	26001-
19		01643-31032	Washer	2	26001-
20		01597-01009	Nut	2	26001-
21		234-16-82260	Bracket	1	26001-
22		01010-81025	Bolt	2	26001-
23		01643-31032	Washer	2	26001-
24		04434-51912	Clip	1	26001-
25		01010-81025	Bolt	1	26001-
26		01643-31032	Washer	1	26001-

FIG. F4400-001001 Front Axle (Axle Support)

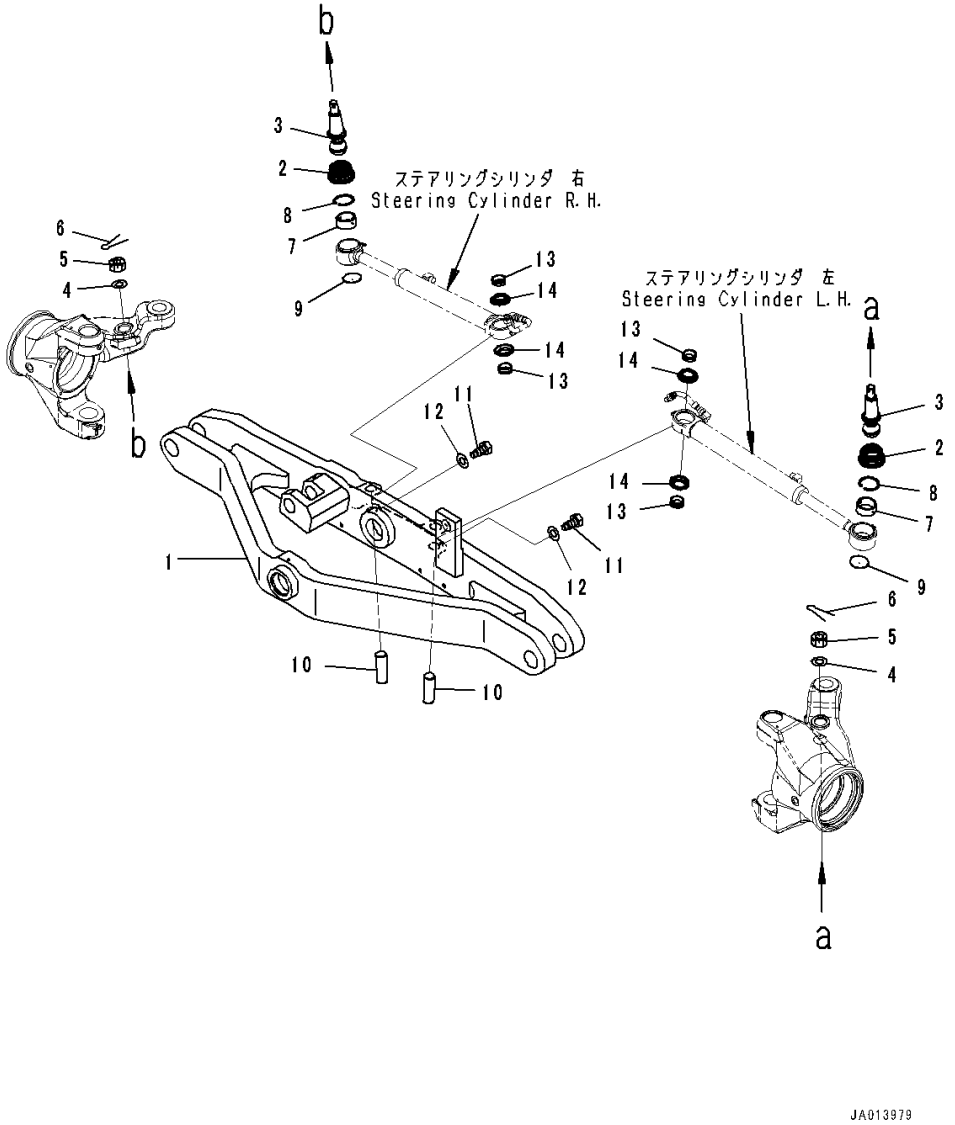

Index	Code	Part Number	Description	Qty	Serial Number
1		234-27-81111	Axle	1	26280-
	A2	234-27-81110	Axle	1	26001-26279
2		23C-27-62190	Boot	2	26001-
3		23C-27-51141	Stud	2	26001-
4		23D-27-11940	Washer	2	26001-
5		01592-32427	Nut, Slotted	2	26001-
6		04050-15045	Pin, Cotter	2	26001-
7		23B-27-11800	Bushing Assembly	2	26001-
	C1		• Race	1	26001-
	C1		• Spring	1	26001-
8		04065-06220	Ring, Snap	2	26001-
9		23B-27-11360	Plug	2	26001-
10		23B-27-31540	Pin	2	26001-
11		23B-27-11680	Bolt	2	26001-
12		01643-31232	Washer	2	26001-
13		23B-27-31480	Spacer	4	26001-
14		235-27-11750	Boot	4	26001-

FIG. F4400-001002 Front Axle (Rod)

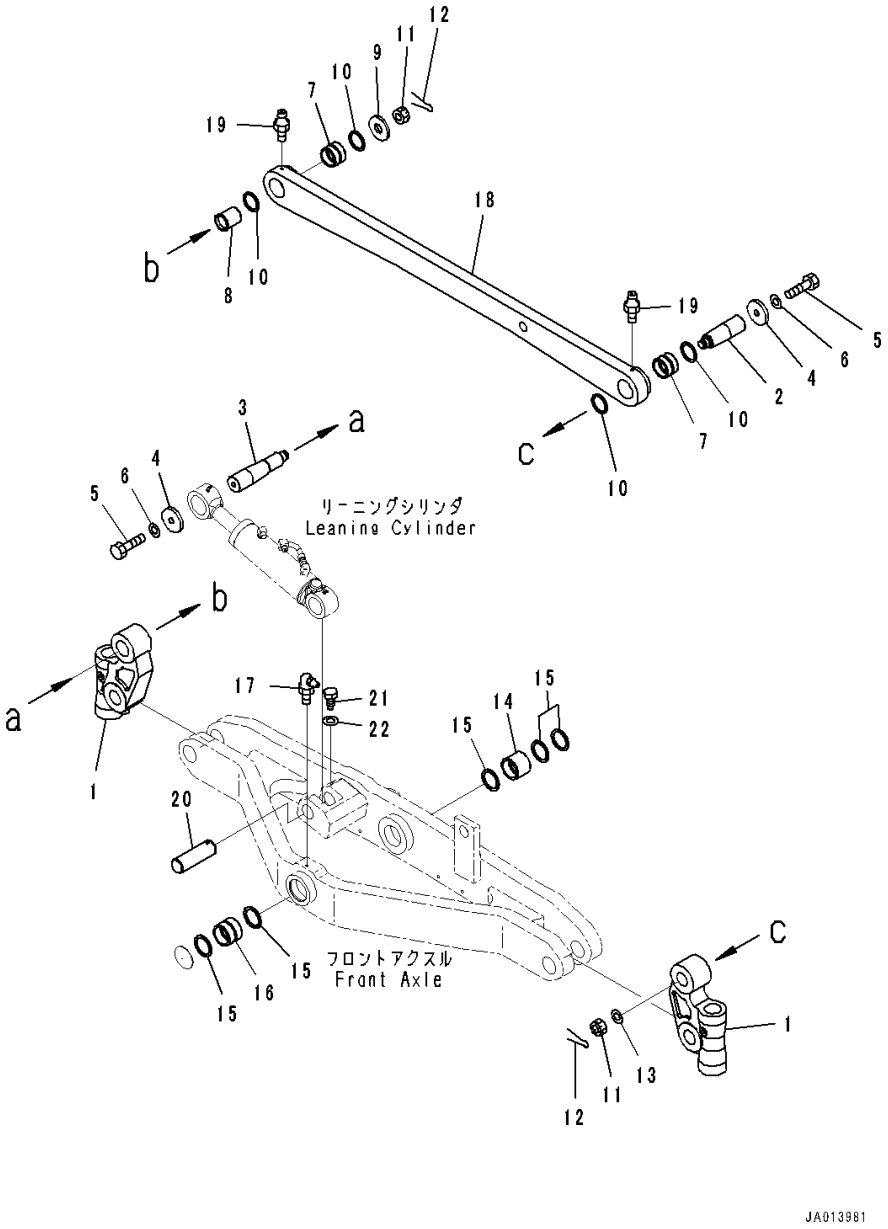

Index	Code	Part Number	Description	Qty	Serial Number
1		234-27-81140	Bracket	2	26001-
2		23C-27-51480	Pin	1	26001-
3		23C-27-51470	Pin	1	26001-
4		23C-27-11340	Holder	2	26001-
5		01016-52045	Bolt	2	26001-
6		01643-32060	Washer	2	26001-
7		23C-27-11630	Bushing	2	26001-
8		23C-27-11390	Spacer	1	26001-
9		205-54-72641	Spacer	1	26001-
10		07145-00055	Seal, Dust	4	26001-
11		01593-33018	Nut, Slotted	2	26001-
12		04050-16045	Pin, Cotter	2	26001-
13		01643-33080	Washer	1	26001-
14		23C-27-61221	Bushing	1	26151-
	A2	23C-27-61220	Bushing	1	26001-26150
15		07145-00060	Seal, Dust	5	26001-
16		23C-27-61211	Bushing	1	26151-
	A2	23C-27-61210	Bushing	1	26001-26150
17		07020-00900	Fitting, Grease	1	26001-
18		234-27-81530	Rod	1	26001-
19		07020-00000	Fitting, Grease	2	26001-
20		23C-27-51490	Pin	1	26001-
21		23B-27-11680	Bolt	1	26001-
22		01643-31232	Washer	1	26001-

FIG. F4400-001003 Front Axle (Housing)

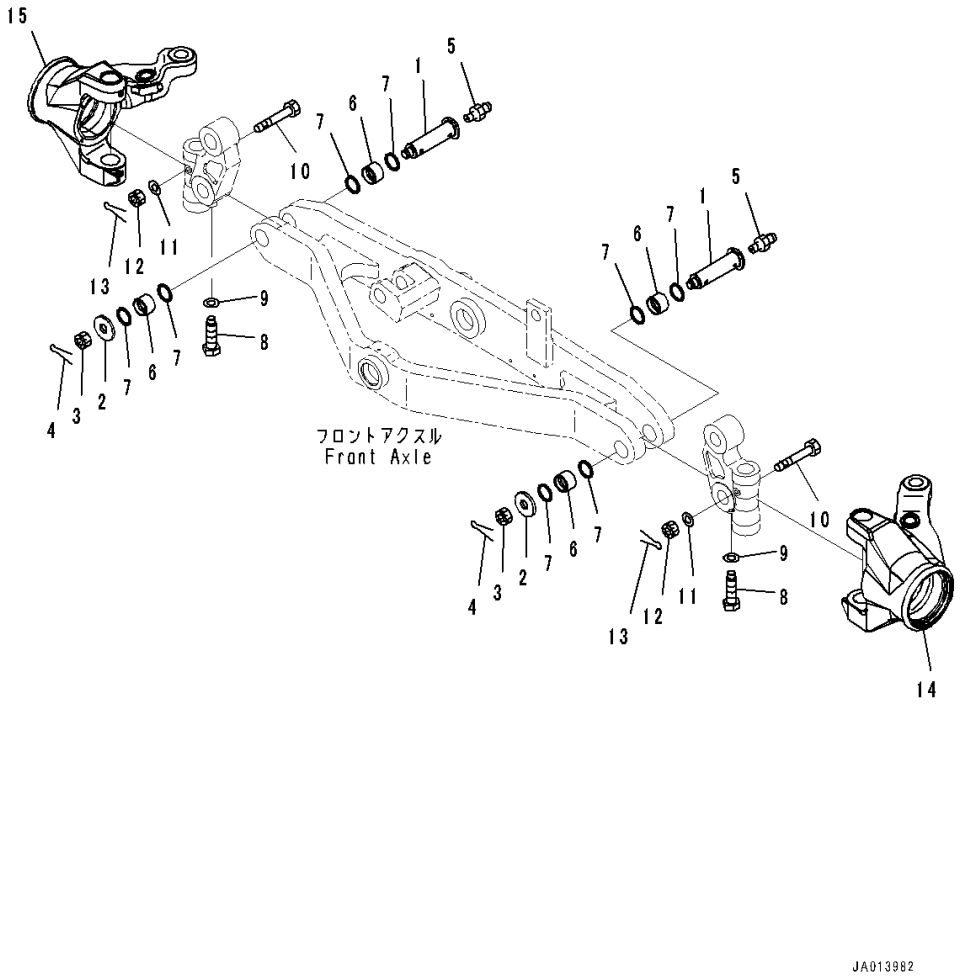

Index	Code	Part Number	Description	Qty	Serial Number
1		23C-27-51160	Pin	2	26001-
2		205-54-72641	Spacer	2	26001-
3		01593-33018	Nut, Slotted	2	26001-
4		04050-16045	Pin, Cotter	2	26001-
5		07020-00000	Fitting, Grease	2	26001-
6		156-72-11210	Bushing	4	26001-
7		07145-00050	Seal, Dust	8	26001-
8		23B-27-11650	Bolt	2	26001-
9		01643-31645	Washer	2	26001-
10		01093-51205	Bolt, Reamer	2	26001-
11		01643-31232	Washer	2	26001-
12		01593-31210	Nut, Slotted	2	26001-
13		04050-13020	Pin, Cotter	2	26001-
14		234-27-81160	Housing	1	26001-
15		234-27-81150	Housing	1	26001-

FIG. F4400-001004 Front Axle (Pin)

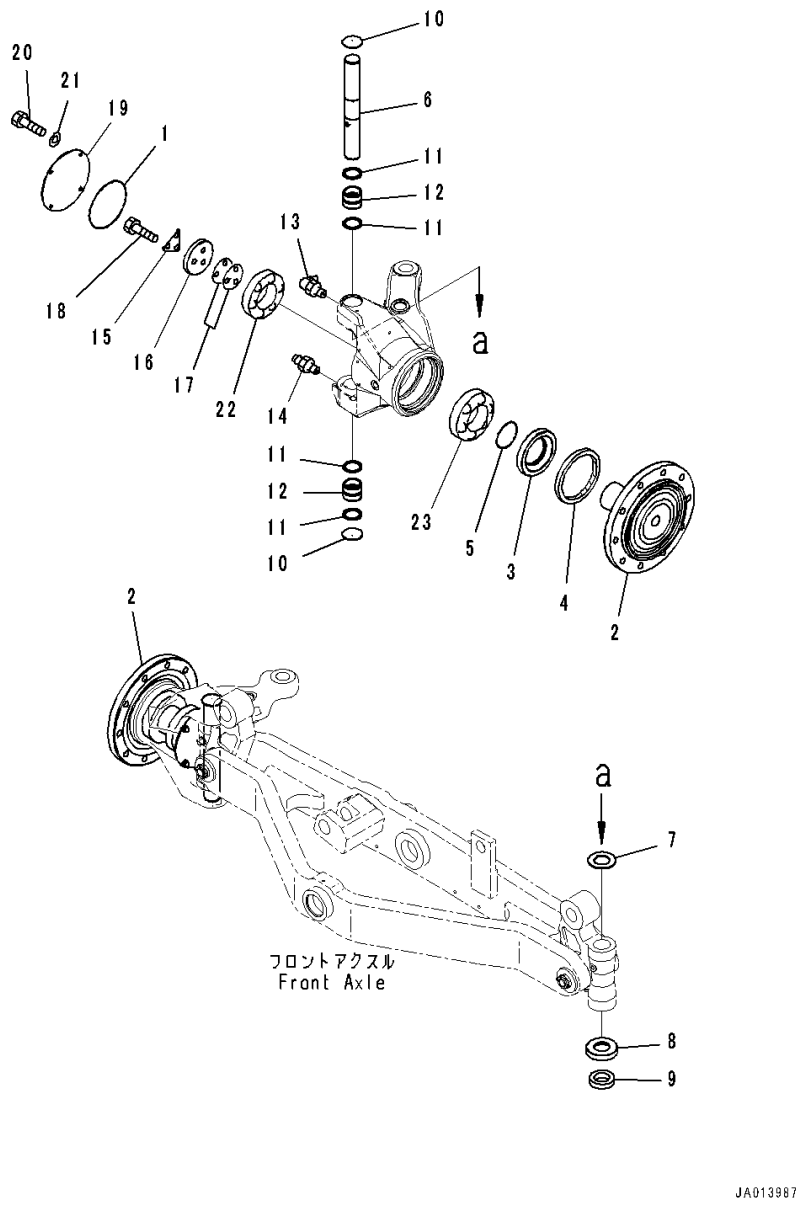

Index	Code	Part Number	Description	Qty	Serial Number
1		234-23-12570	O-ring	2	26001-
2		23C-27-51232	Shaft	2	26001-
3		23C-27-51620	Spacer	2	26001-
4		238-25-16360	Seal, Oil	2	26001-
5		07000-12095	O-ring	2	26001-
6		23C-27-51460	Pin	2	26001-
7		23C-27-11260	Spacer	2	26001-
8		234-27-31260	Cover	2	26001-
9		234-27-31270	Bearing	2	26001-
10		235-27-11670	Plug	4	26001-
11		07145-00050	Seal, Dust	8	26001-
12		23C-27-61230	Bushing	4	26001-
13		07020-00900	Fitting, Grease	2	26001-
14		07020-00000	Fitting, Grease	2	26001-
15		234-27-81180	Lock	2	26001-
16		235-25-11430	Holder	2	26001-
17		23C-27-11850	Shim,T=0.5mm	2	26001-
		23C-27-11860	Shim,T=0.1mm	8	26001-
		23C-27-11870	Shim,T=0.3mm	6	26001-
		23C-27-11880	Shim,T=0.5mm	6	26001-
18		01010-81640	Bolt	6	26001-
19		23C-27-11180	Cap	2	26001-
20		01010-81020	Bolt	8	26001-
21		01643-31032	Washer	8	26001-
22		06002-32218	Bearing	2	26001-
23		06002-32219	Bearing	2	26001-

FIG. F4400-001005 Front Axle (Tie Bar)

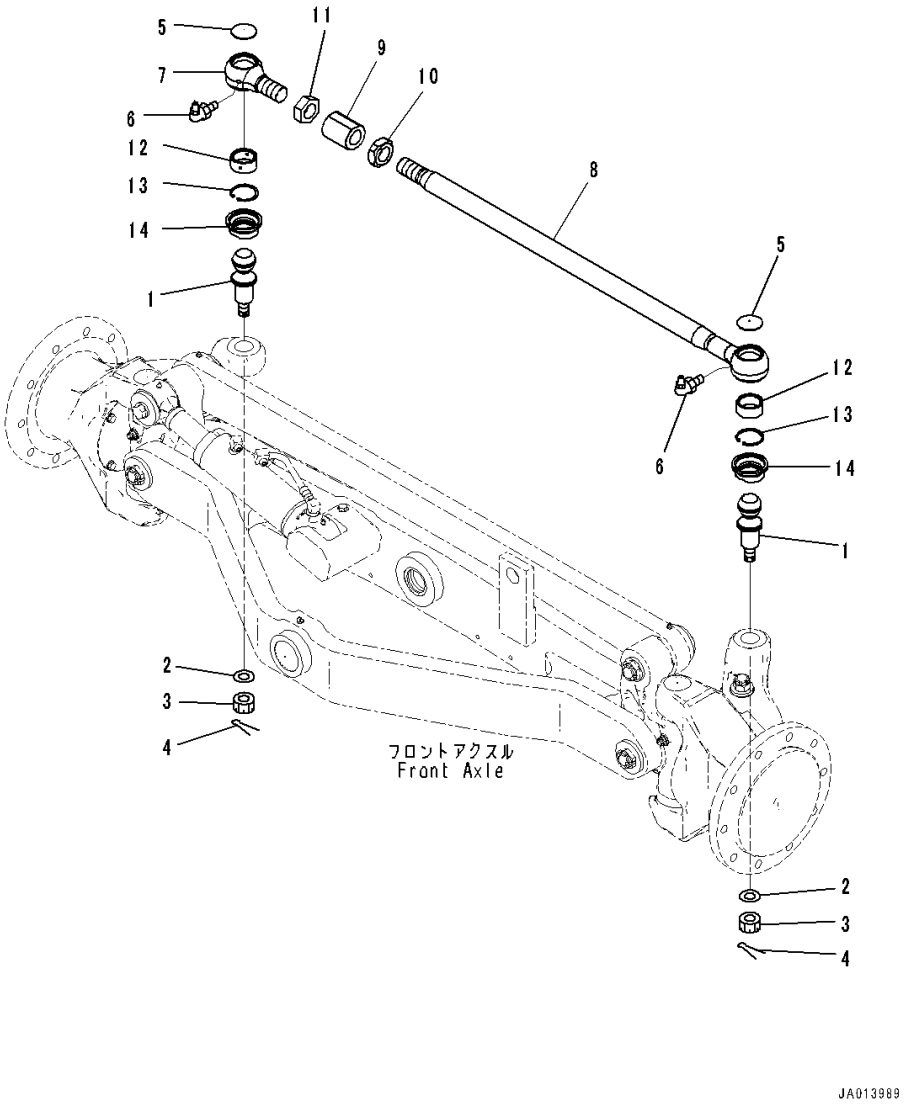

Index	Code	Part Number	Description	Qty	Serial Number
1		23C-27-51152	Stud	2	26001-
2		23D-27-11940	Washer	2	26001-
3		01593-32414	Nut, Slotted	2	26001-
4		04050-15035	Pin, Cotter	2	26001-
5		23B-27-11360	Plug	2	26001-
6		07020-00900	Fitting, Grease	2	26001-
7		23B-27-11441	Rod End	1	26001-
8		234-27-81510	Rod	1	26001-
9		23B-27-11460	Joint	1	26001-
10		23B-27-11450	Nut	1	26001-
11		01583-13923	Nut	1	26001-
12		23B-27-11800	Bushing Assembly	2	26001-
	C1		• Race	1	26001-
	C1		• Spring	1	26001-
13		04065-06220	Ring, Snap	2	26001-
14		23C-27-62180	Boot	2	26001-

FIG. F4400-001006 Front Axle (Steering Cylinder, R.H.)

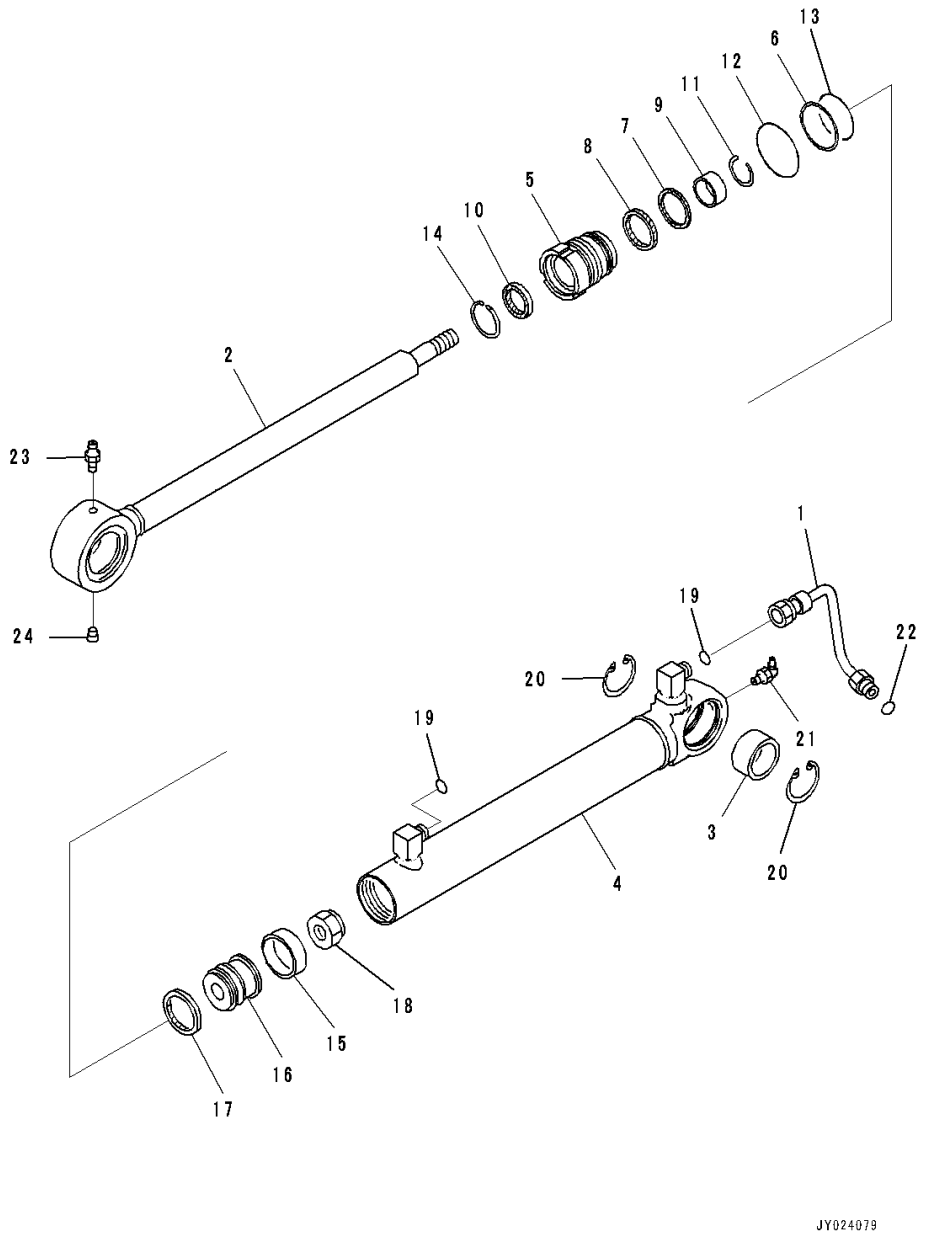

Index	Code	Part Number	Description	Qty	Serial Number
1		707-86-01400	Tube	1	26001-
		707-G0-01070	Cylinder Assembly	1	26001-
2		707-61-35770	• Rod, Piston	1	26001-
3		707-76-35010	• Bushing	1	26001-
4		721-11-50720	• Cylinder	1	26001-
5		707-29-50270	• Head, Cylinder	1	26001-
6		707-35-20450	• Ring, Back-up, (Kit : K03)	1	26001-
7		707-51-35650	• Ring, Buffer, (Kit : K03)	1	26001-
8		707-51-35860	• Packing, Rod, (Kit : K03)	1	26001-
9		707-52-90120	• Bushing	1	26001-
10		707-56-35740	• Seal, Dust, (Kit : K03)	1	26001-
11		707-75-35110	• Ring, Snap	1	26001-
12		07000-13048	• O-ring, (Kit : K03)	1	26001-
13		07000-B3045	• O-ring, (Kit : K03)	1	26001-
14		07179-12047	• Ring, Snap	1	26001-
15		10E-63-32390	• Ring, Wear, (Kit : K03)	1	26001-
16		707-36-50630	• Piston	1	26001-
17		707-44-50060	• Ring, Piston, (Kit : K03)	1	26001-
18		707-67-20020	• Nut	1	26001-
19		02896-11009	• O-ring, (Kit : K03)	2	26001-
20		04065-05520	• Ring, Snap	2	26001-
21		07020-00900	• Fitting, Grease	1	26001-
22		02896-11009	O-ring, (Kit : K03)	1	26001-
23		07020-00000	Fitting, Grease	1	26001-
24		07043-70108	Plug, Taper	1	26001-

FIG. F4400-001007 Front Axle (Steering Cylinder, L.H.)

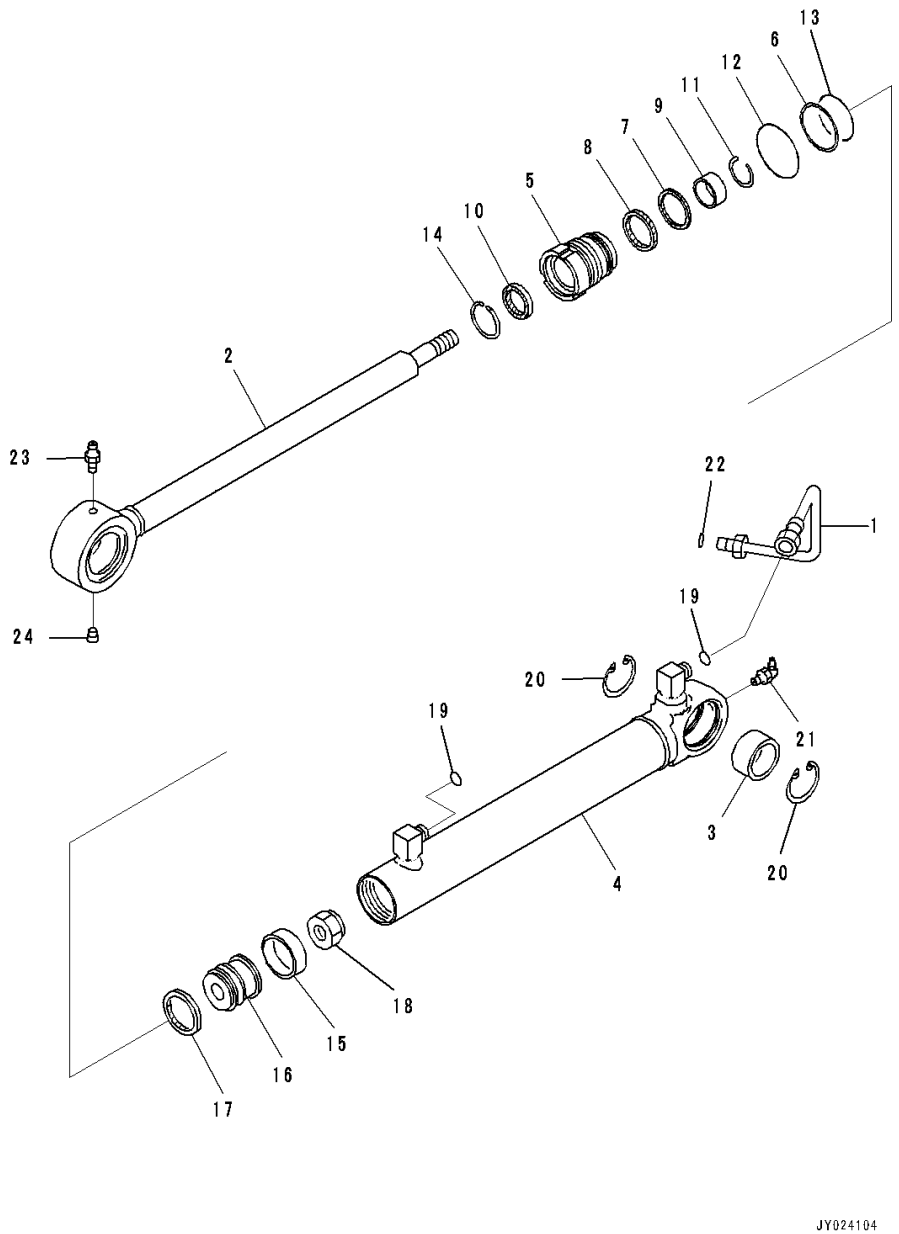

Index	Code	Part Number	Description	Qty	Serial Number
1		707-86-01390	Tube	1	26001-
		707-G0-01060	Cylinder Assembly	1	26001-
2		707-61-35770	• Rod, Piston	1	26001-
3		707-76-35010	• Bushing	1	26001-
4		721-11-50720	• Cylinder	1	26001-
5		707-29-50270	• Head, Cylinder	1	26001-
6		707-35-20450	• Ring, Back-up, (Kit : K03)	1	26001-
7		707-51-35650	• Ring, Buffer, (Kit : K03)	1	26001-
8		707-51-35860	• Packing, Rod, (Kit : K03)	1	26001-
9		707-52-90120	• Bushing	1	26001-
10		707-56-35740	• Seal, Dust, (Kit : K03)	1	26001-
11		707-75-35110	• Ring, Snap	1	26001-
12		07000-13048	• O-ring, (Kit : K03)	1	26001-
13		07000-B3045	• O-ring, (Kit : K03)	1	26001-
14		07179-12047	• Ring, Snap	1	26001-
15		10E-63-32390	• Ring, Wear, (Kit : K03)	1	26001-
16		707-36-50630	• Piston	1	26001-
17		707-44-50060	• Ring, Piston, (Kit : K03)	1	26001-
18		707-67-20020	• Nut	1	26001-
19		02896-11009	• O-ring, (Kit : K03)	2	26001-
20		04065-05520	• Ring, Snap	2	26001-
21		07020-00900	• Fitting, Grease	1	26001-
22		02896-11009	O-ring, (Kit : K03)	1	26001-
23		07020-00000	Fitting, Grease	1	26001-
24		07043-70108	Plug, Taper	1	26001-

FIG. F4400-001008A Front Axle (Leaning Cylinder)

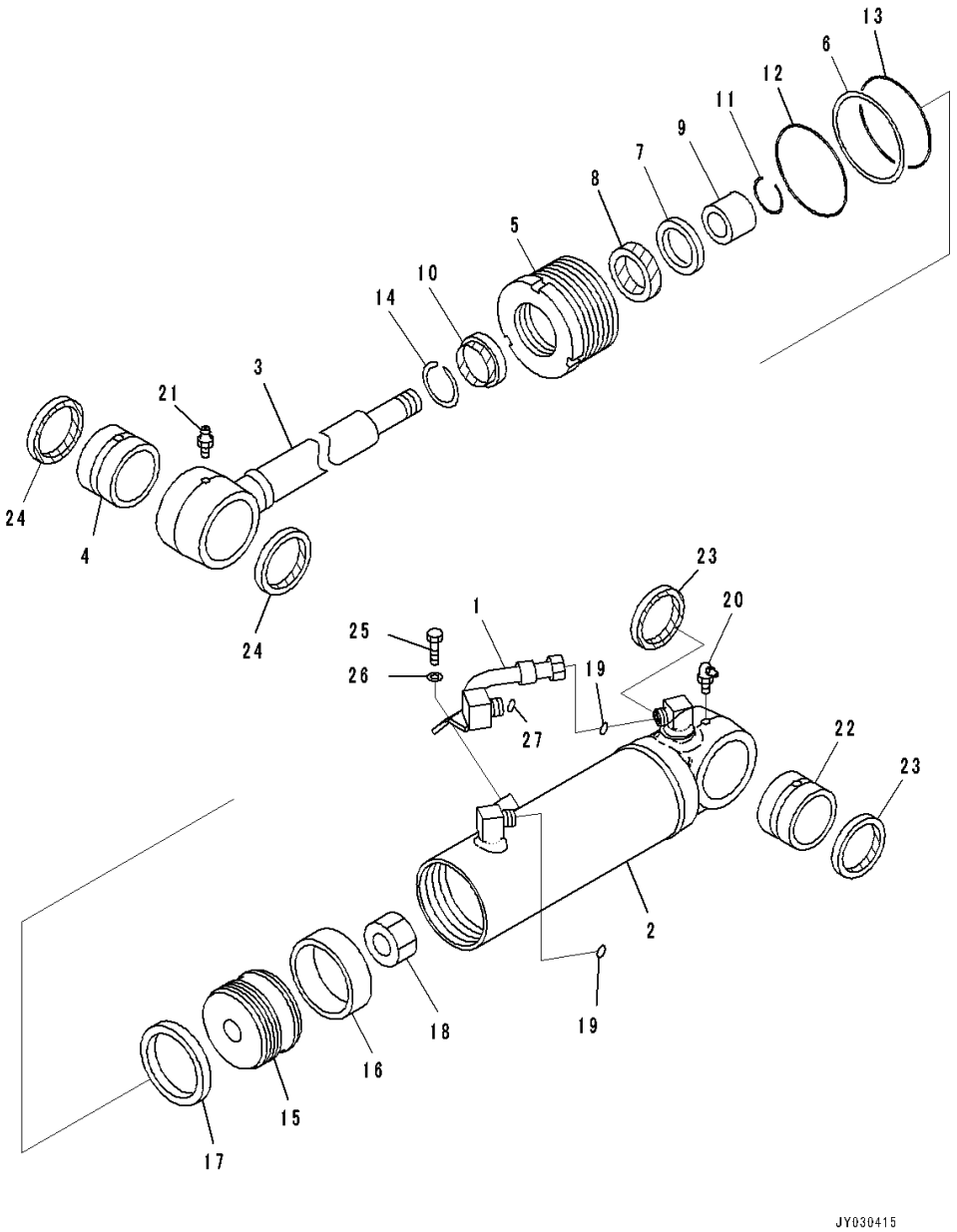

Index	Code	Part Number	Description	Qty	Serial Number
1		707-86-01410	Tube	1	26001-
		707-G0-01081	Cylinder Assembly	1	26119-
2		707-11-85690	• Cylinder	1	26001-
3		707-58-55A50	• Rod, Piston	1	26001-
4		707-76-55120	• Bushing	1	26001-
5		707-29-85370	• Head, Cylinder	1	26001-
6		707-35-10810	• Ring, Back-up, (Kit : K04)	1	26001-
7		707-51-55650	• Ring, Buffer, (Kit : K04)	1	26001-
8		707-51-55860	• Packing, Rod, (Kit : K04)	1	26001-
9		707-52-90301	• Bushing	1	26001-
10		707-56-55740	• Seal, Dust, (Kit : K04)	1	26001-
11		707-75-55110	• Ring, Snap	1	26001-
12		07000-12085	• O-ring, (Kit : K04)	1	26001-
13		07000-B2080	• O-ring, (Kit : K04)	1	26001-
14		07179-12069	• Ring, Snap	1	26001-
15		707-36-85240	• Piston	1	26001-
16		707-39-85120	• Ring, Wear, (Kit : K04)	1	26001-
17		707-44-85151	• Ring, Piston, (Kit : K04)	1	26001-
18		707-67-39020	• Nut	1	26001-
19		02896-11009	• O-ring, (Kit : K04)	2	26001-
20		07020-00000	• Fitting, Grease	1	26119-
21		07020-00675	• Fitting, Grease	1	26119-
22		07144-10505	• Bushing	1	26119-
23		07145-00050	• Seal, Dust, (Kit : K04)	2	26119-
24		07145-00055	• Seal, Dust, (Kit : K04)	2	26119-
25		01010-81020	Bolt	1	26001-
26		01643-31032	Washer	1	26001-
27		02896-11009	O-ring, (Kit : K04)	1	26001-

FIG. F4400-001009 Front Axle (Plate)

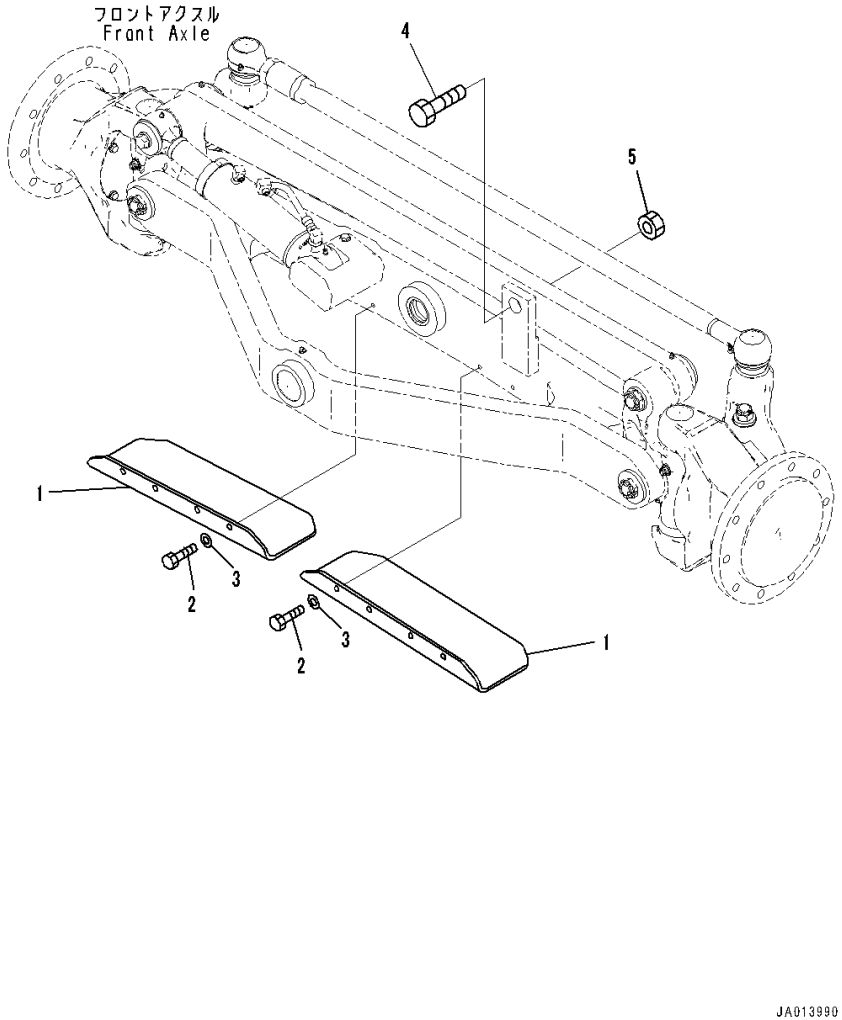

Index	Code	Part Number	Description	Qty	Serial Number
1		234-27-81170	Plate	2	26001-
2		01010-81230	Bolt	6	26001-
3		01643-31232	Washer	6	26001-
4		01011-83010	Bolt	1	26001-
5		01580-03024	Nut	1	26001-

FIG. F4400-001010 Front Axle (Shaft)

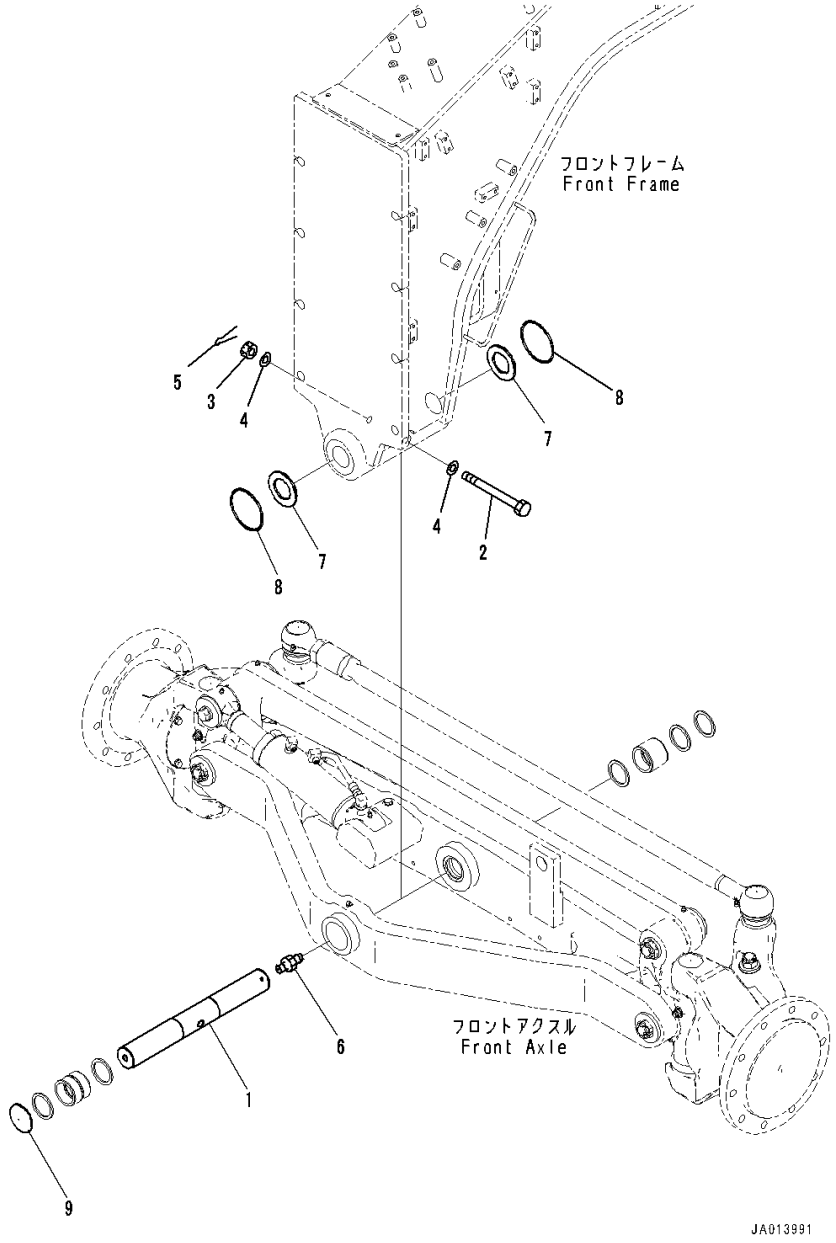

Index	Code	Part Number	Description	Qty	Serial Number
1		23C-27-51450	Shaft	1	26001-
2		01053-61660	Bolt	1	26001-
3		01593-31613	Nut, Slotted	1	26001-
4		01643-31645	Washer	2	26001-
5		04050-14025	Pin, Cotter	1	26001-
6		07020-00000	Fitting, Grease	1	26001-
7		234-46-31280	Bushing	2	26001-
8		07000-F5120	O-ring	2	26001-
9		23B-27-11660	Plug	1	26001-

FIG. F4400-001011 Front Axle (Hub Bolt)

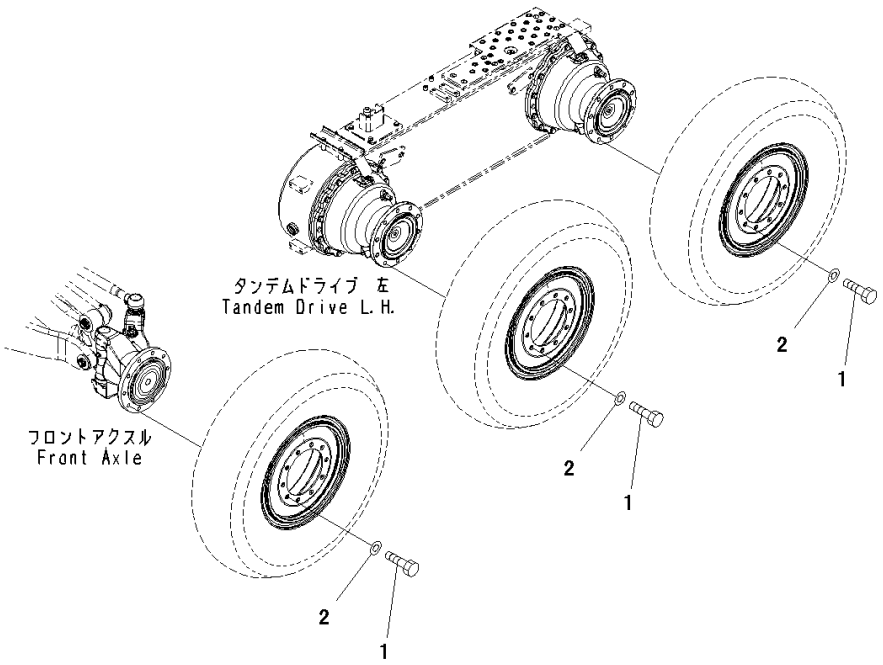

Index	Code	Part Number	Description	Qty	Serial Number
1		01010-62455	Bolt	60	26001-
2		01643-32460	Washer	60	26001-

FIG. F4500-001001 Rear Axle (Final Drive, Center Case)

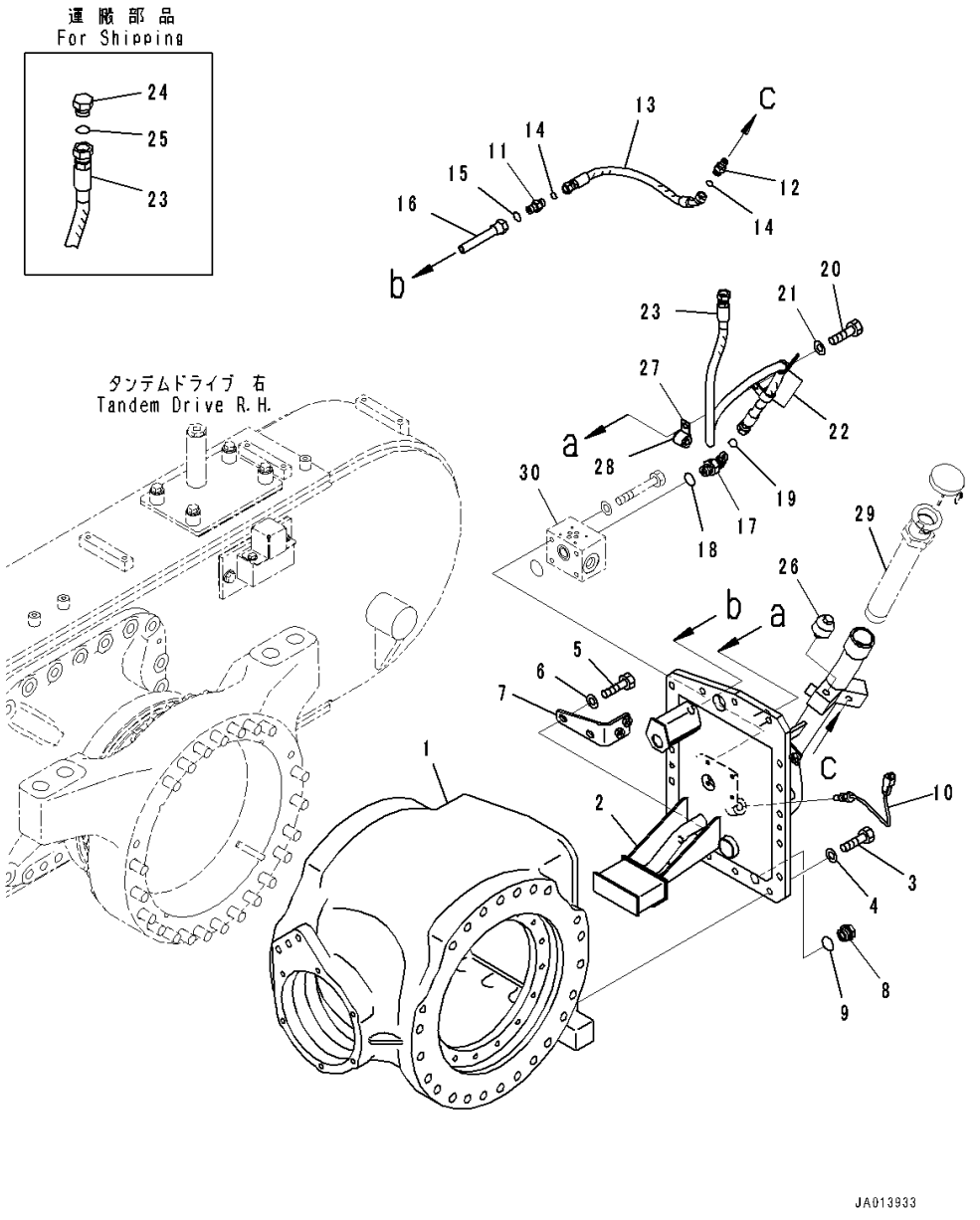

Index	Code	Part Number	Description	Qty	Serial Number
		234-22-80103	Axle Assembly	1	26446-
	A2	234-22-80101	Axle Assembly	1	26324-26445
	A1	234-22-80100	Axle Assembly	1	26001-26323
		234-22-82003	• Final Drive Assembly	1	26446-
	A2	234-22-82001	• Final Drive Assembly	1	26324-26445
	A1	234-22-82000	• Final Drive Assembly	1	26001-26323
1		234-22-81510	• • Case	1	26001-
2		234-22-82110	• • Cover	1	26001-
3		01010-61240	• • Bolt	15	26001-
4		01643-31232	• • Washer	15	26001-
5		01010-61245	• • Bolt	2	26001-
6		01643-31232	• • Washer	2	26001-
7		23B-60-74730	• • Bracket	1	26001-
8		07044-12412	• • Plug	1	26001-
9		07002-22434	• • O-ring	1	26001-
10		7861-93-3320	• • Sensor, Temperature,Differential Oil	1	26001-
11		02781-0021D	• • Union	1	26001-
12		56B-43-17210	• • Nipple	1	26001-
13		02767-00204	• • Hose, Face Seal Type	1	26001-
14		02896-21008	• • O-ring	2	26001-
15		07002-21423	• • O-ring	1	26001-
16		23C-22-51260	• • Adapter	1	26001-
17		02782-10315	• • Elbow	1	26001-
18		07002-22034	• • O-ring	1	26001-
19		02896-21009	• • O-ring	1	26001-
20		01010-81020	• • Bolt	2	26001-
21		01643-31032	• • Washer	2	26001-
22		04434-51712	• • Clip	2	26001-
23		234-60-82330	• • Hose	1	26001-
24		07376-70315	• • Plug	1	26001-
25		02896-11009	• • O-ring	1	26001-
26		07030-00252	• • Breather	1	26001-
27		04434-51710	• • Clip	1	26001-
28		07095-20211	• • Cushion	1	26001-
29		(234-22-81480)	Tube(Rear Axle,Gauge)(Refer to Page 275)		
30		(23B-22-71811)	Block(Rear Axle,Final Drive, Solenoid Valve and Piping)(Refer to Page 262)		

FIG. F4500-001002A Rear Axle (Final Drive, Bevel Gear)

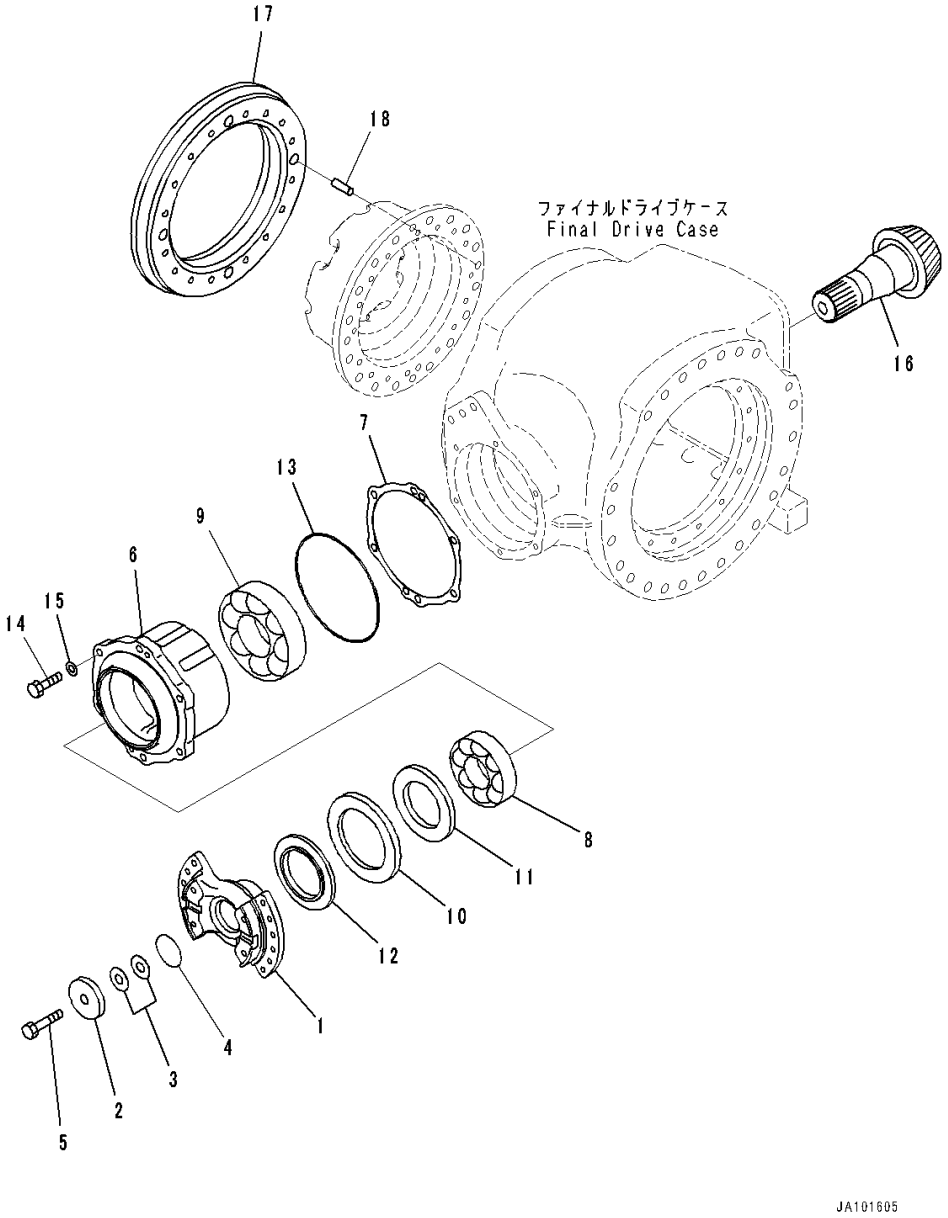

Index	Code	Part Number	Description	Qty	Serial Number
		234-22-80103	Axle Assembly	1	26446-
	A2	234-22-80101	Axle Assembly	1	26324-26445
		234-22-82003	• Final Drive Assembly	1	26446-
	A2	234-22-82001	• Final Drive Assembly	1	26324-26445
1		234-22-81150	• • Coupling	1	26001-
2		423-22-11240	• • Holder	1	26001-
3		23A-22-00161	• • Shim Assembly	1	26001-
		23A-22-11660	• • • Shim,T=0.15mm	1	26001-
		23A-22-11670	• • • Shim,T=0.5mm	6	26001-
		23A-22-11680	• • • Shim,T=0.2mm	2	26001-
		23A-22-11690	• • • Shim,T=0.1mm	1	26001-
4		07000-A5050	• • O-ring	1	26001-
5		01010-61680	• • Bolt	1	26001-
6		234-22-81140	• • Cage	1	26001-
7		23B-22-71200	• • Shim Assembly	1	26001-
		23B-22-71250	• • • Shim,T=0.5mm	4	26001-
		23B-22-71260	• • • Shim,T=0.2mm	3	26001-
		23B-22-71270	• • • Shim,T=0.1mm	1	26001-
		23B-22-71280	• • • Shim,T=0.05mm	1	26001-
8		234-22-81110	• • Bearing	1	26001-
9		234-22-81120	• • Bearing	1	26001-
10		714-07-14120	• • Deflector	1	26001-
11		56B-22-11750	• • Seal	1	26001-
12		56B-22-11760	• • Seal	1	26001-
13		07000-75190	• • O-ring	1	26001-
14		01010-61245	• • Bolt	6	26001-
15		01643-31232	• • Washer	6	26001-
		234-22-81301	• • Pinion and Gear Assembly	1	26324-
16	C1		• • • Pinion	1	26001-
17	C1		• • • Gear	1	26324-
18		04020-01434	• • Pin, Dowel	4	26001-

FIG. F4500-001003B Rear Axle (Final Drive, Differential)

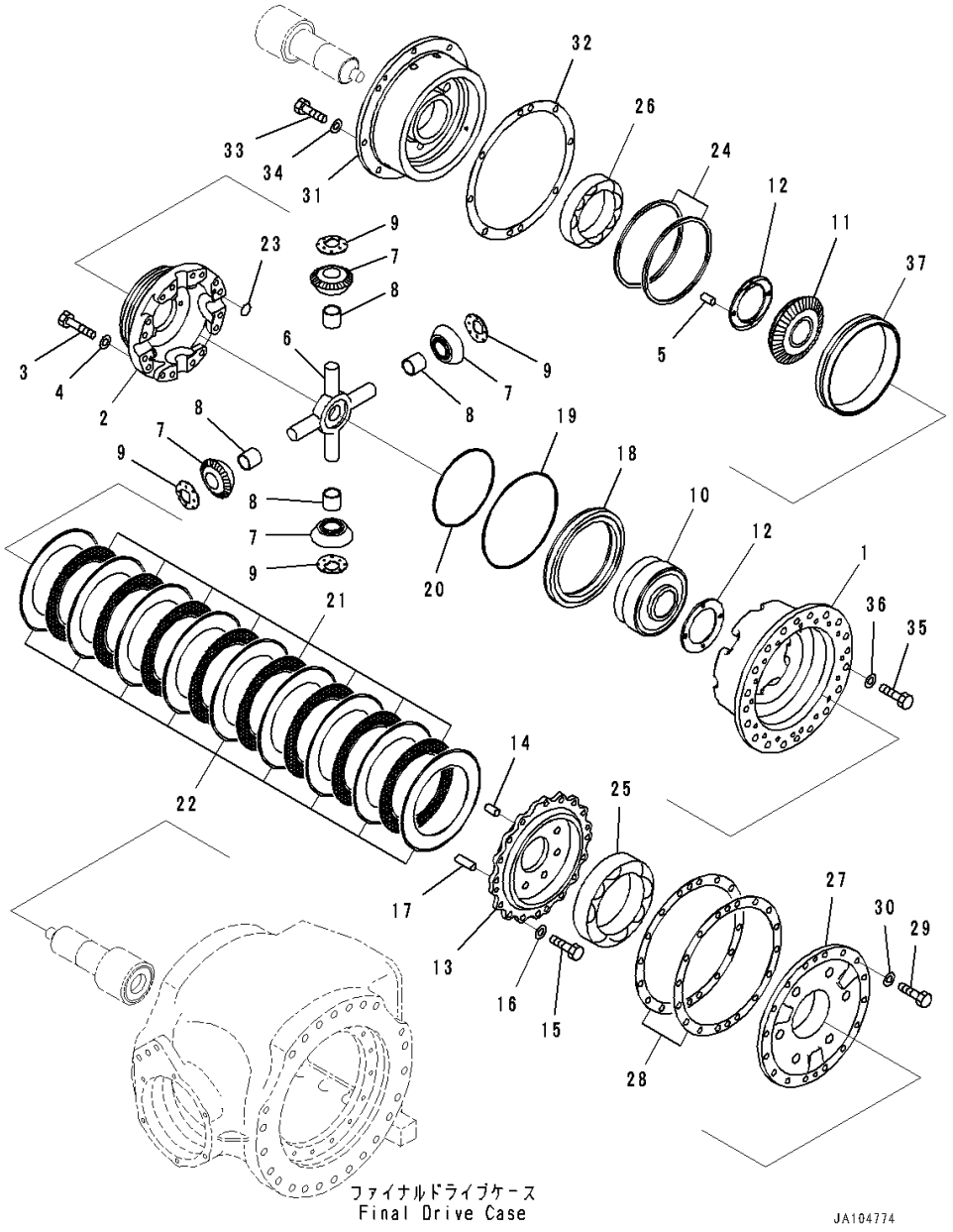

Index	Code	Part Number	Description	Qty	Serial Number
		234-22-80103	Axle Assembly	1	26446-
		234-22-82003	• Final Drive Assembly	1	26446-
		23B-22-81600	• • Case Assembly	1	26324-
1	C1		• • • Case	1	26324-
2		234-22-81620	• • • Case	1	26001-
3		01010-61255	• • • Bolt	16	26001-
4		01643-01232	• • • Washer, Flat	16	26001-
5		175-21-12180	• • • Pin	2	26001-
6		23B-22-21461	• • Shaft	1	26446-
7		23B-22-71681	• • Gear	4	26446-
8		23B-22-31691	• • Bushing	4	26446-
9		23B-22-71711	• • Washer	4	26446-
10		23B-22-71660	• • Gear	1	26001-
11		23B-22-31670	• • Gear	1	26001-
12		23B-22-11590	• • Washer	2	26001-
		23B-22-81700	• • Cage Assembly	1	26324-
13		23B-22-81630	• • • Cage	1	26324-
14		175-21-12180	• • • Pin	2	26001-
15		01010-61230	• • Bolt	16	26001-
16		01643-01232	• • Washer, Flat	16	26001-
17		04020-01228	• • Pin, Dowel	1	26324-
18		23B-22-71720	• • Piston	1	26324-
19		23B-22-31730	• • Seal Ring	1	26324-
20		23B-22-31740	• • Seal Ring	1	26324-
21		23B-22-31751	• • Disc	8	26324-
22		23B-22-31761	• • Plate	9	26324-
23		07000-72011	• • O-ring	2	26324-
24		17A-15-19240	• • Seal Ring	2	26324-
25		234-22-81780	• • Bearing	1	26324-
26		234-22-81790	• • Bearing	1	26324-
27		23B-22-71640	• • Cage	1	26324-
28		23B-22-31800	• • Shim Assembly	1	26324-
		23B-22-31810	• • • Shim,T=0.5mm	4	26324-
		23B-22-31820	• • • Shim,T=0.2mm	4	26324-
		23B-22-31830	• • • Shim,T=0.1mm	2	26324-
		23B-22-31770	• • • Shim,T=0.05mm	1	26324-
29		01010-61235	• • Bolt	16	26324-
30		01643-01232	• • Washer, Flat	16	26324-
31		234-22-81650	• • Cage	1	26324-
32		23B-22-32200	• • Shim Assembly	1	26324-

FIG. F4500-001003B Rear Axle (Final Drive, Differential)

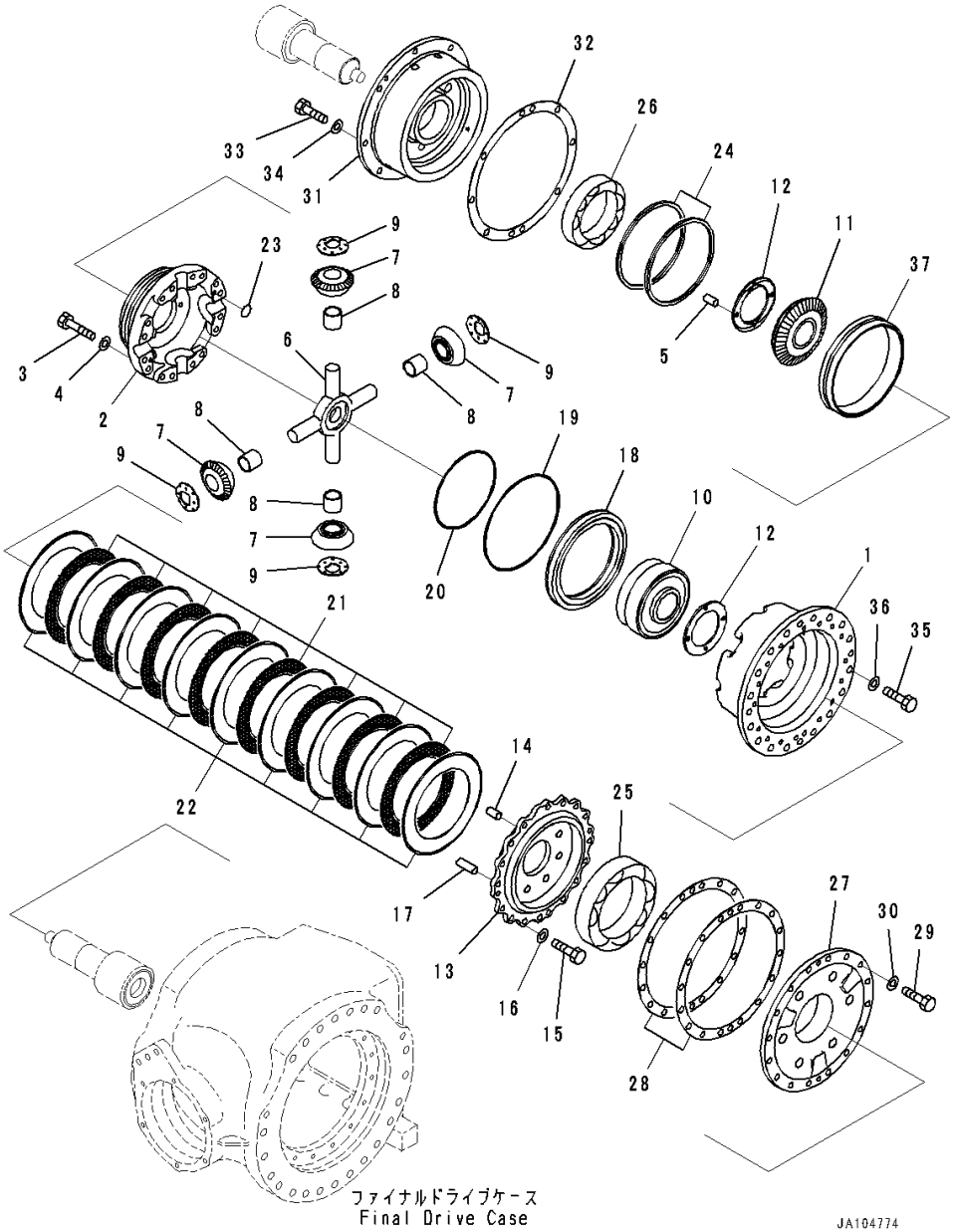

Index	Code	Part Number	Description	Qty	Serial Number
		23B-22-32210	• • • Shim,T=0.5mm	4	26324-
		23B-22-32220	• • • Shim,T=0.2mm	4	26324-
		23B-22-32230	• • • Shim,T=0.1mm	2	26324-
		23B-22-32290	• • • Shim,T=0.05mm	1	26324-
33		01010-61235	• • Bolt	8	26324-
34		01643-01232	• • Washer, Flat	8	26324-
35		01010-61440	• • Bolt	16	26324-
36		209-09-11340	• • Washer	16	26324-
37		234-22-81410	• • Sleeve	1	26324-

FIG. F4500-001004 Rear Axle (Final Drive, Planetary Gear)

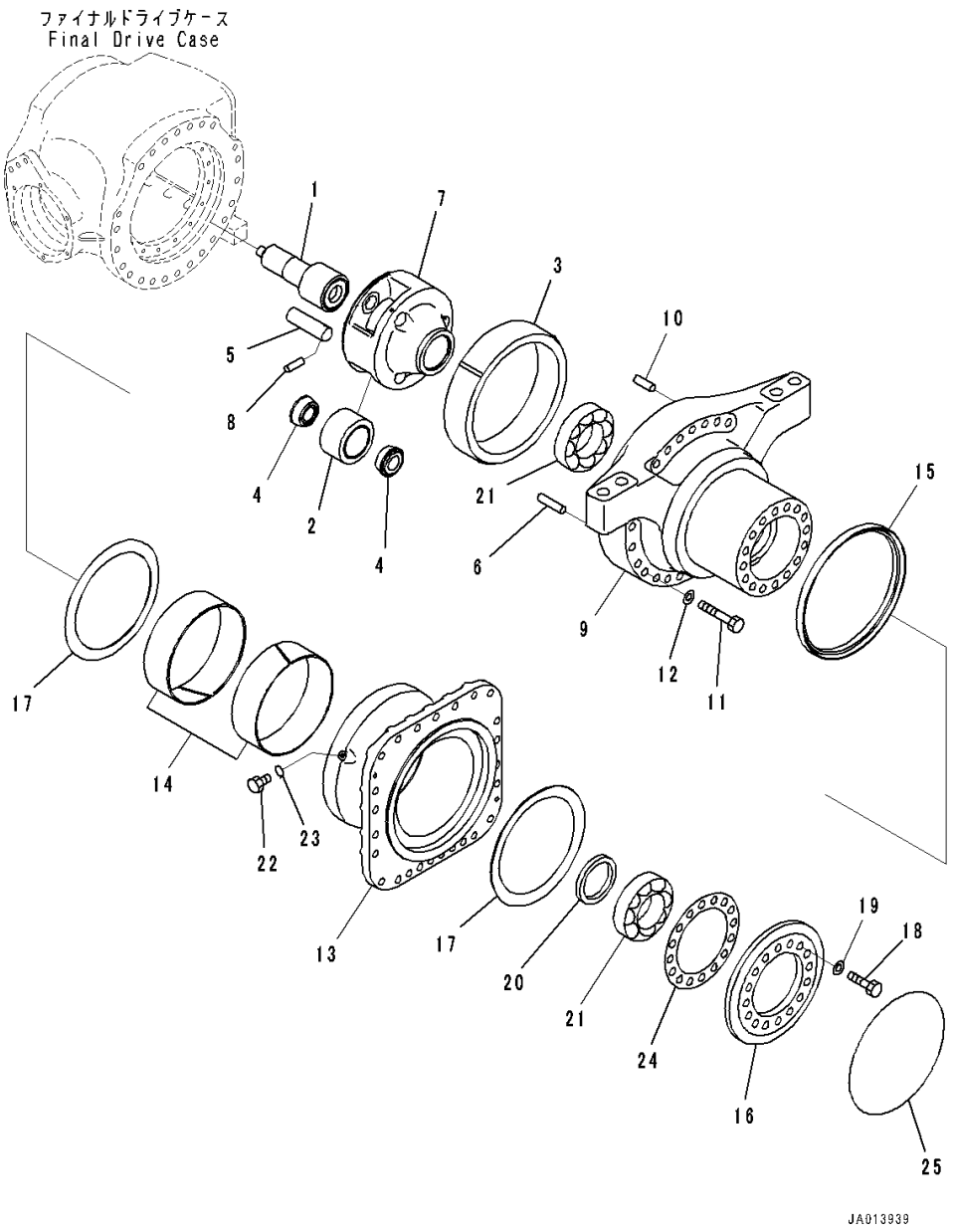

Index	Code	Part Number	Description	Qty	Serial Number
		234-22-80103	Axle Assembly	1	26446-
	A2	234-22-80101	Axle Assembly	1	26324-26445
	A1	234-22-80100	Axle Assembly	1	26001-26323
		234-22-82003	• Final Drive Assembly	1	26446-
	A2	234-22-82001	• Final Drive Assembly	1	26324-26445
	A1	234-22-82000	• Final Drive Assembly	1	26001-26323
1		234-22-81840	• • Shaft	2	26001-
2		234-22-81850	• • Gear	6	26001-
3		234-22-81860	• • Gear	2	26001-
4		234-22-81870	• • Bearing	12	26001-
5		421-23-32511	• • Shaft	6	26001-
6		419-22-12581	• • Pin, Dowel	8	26001-
7		234-22-81550	• • Carrier	2	26001-
8		421-22-32570	• • Pin	6	26001-
9		234-22-81520	• • Case	2	26001-
10		04020-01638	• • Pin, Dowel	4	26001-
11		01011-62040	• • Bolt	44	26001-
12		01643-32060	• • Washer	44	26001-
13		234-22-81530	• • Flange	2	26001-
14		232-22-51741	• • Bushing	4	26280-
	A2	232-22-51740	• • Bushing	4	26001-26279
15		234-22-81930	• • Seal	2	26001-
16		234-22-81940	• • Plate	2	26001-
17		234-22-81950	• • Washer	4	26001-
18		01010-62080	• • Bolt	32	26001-
19		01643-32060	• • Washer	32	26001-
20		07012-00105	• • Seal, Oil	2	26001-
21		234-22-81310	• • Bearing	4	26001-
22		07040-11007	• • Plug	2	26001-
23		07002-11023	• • O-ring	2	26001-
24		234-22-81100	• • Shim Assembly	2	26001-
		234-22-81160	• • • Shim,T=0.1mm	1	26001-
		234-22-81170	• • • Shim,T=0.2mm	2	26001-
		234-22-81180	• • • Shim,T=0.5mm	3	26001-
25		07000-75385	• • O-ring	2	26001-

FIG. F4500-001005 Rear Axle (Final Drive, Torque Shaft)

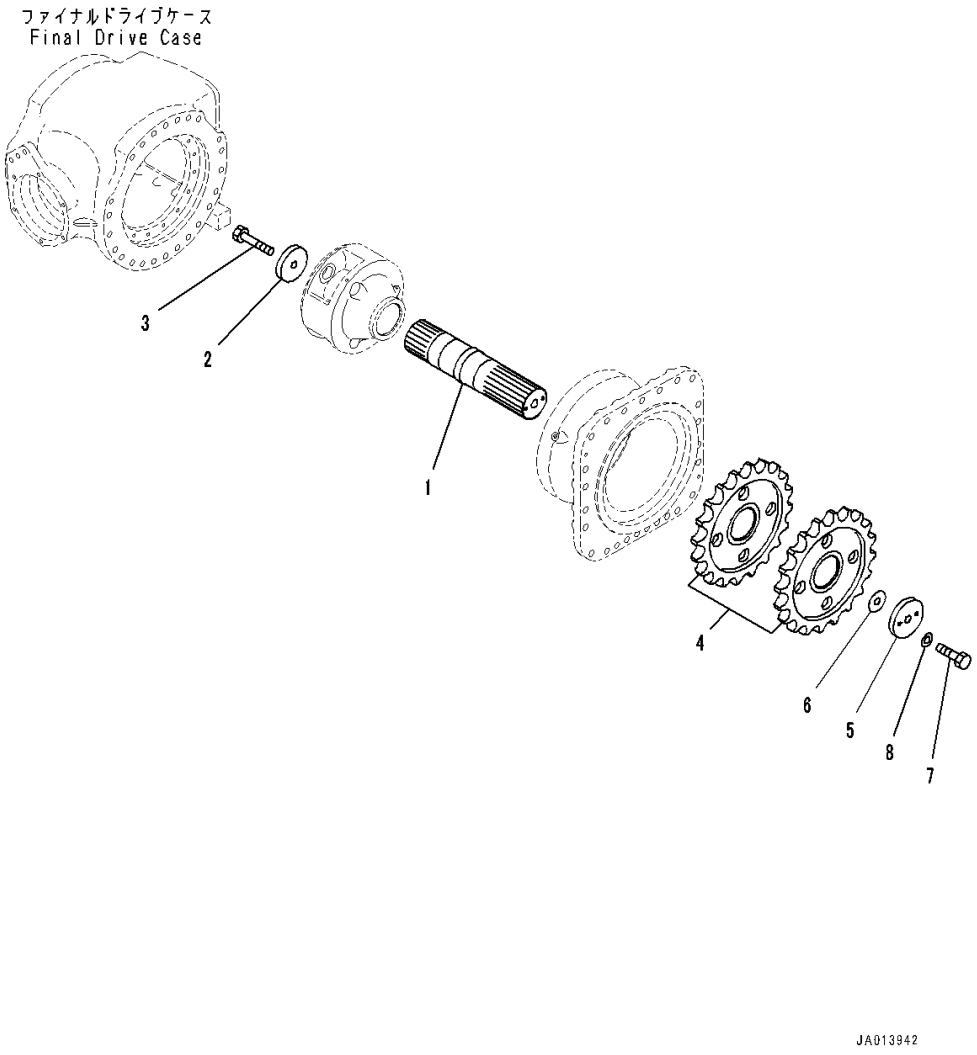

Index	Code	Part Number	Description	Qty	Serial Number
		234-22-80103	Axle Assembly	1	26446-
	A2	234-22-80101	Axle Assembly	1	26324-26445
	A1	234-22-80100	Axle Assembly	1	26001-26323
		234-22-82003	• Final Drive Assembly	1	26446-
	A2	234-22-82001	• Final Drive Assembly	1	26324-26445
	A1	234-22-82000	• Final Drive Assembly	1	26001-26323
1		234-22-81910	• • Shaft	2	26001-
2		234-22-81920	• • Plate	2	26001-
3		01011-62005	• • Bolt	2	26001-
4		234-22-81560	• • Sprocket	4	26001-
5		234-22-81370	• • Holder	2	26001-
6		234-22-81200	• • Shim Assembly	2	26001-
		418-22-21460	• • • Shim,T=0.05mm	3	26001-
		418-22-21470	• • • Shim,T=0.2mm	2	26001-
		418-22-21480	• • • Shim,T=0.5mm	6	26001-
7		01011-62015	• • Bolt	2	26001-
8		01643-32060	• • Washer	2	26001-

FIG. F4500-001006 Rear Axle (Final Drive, Solenoid Valve and Piping)

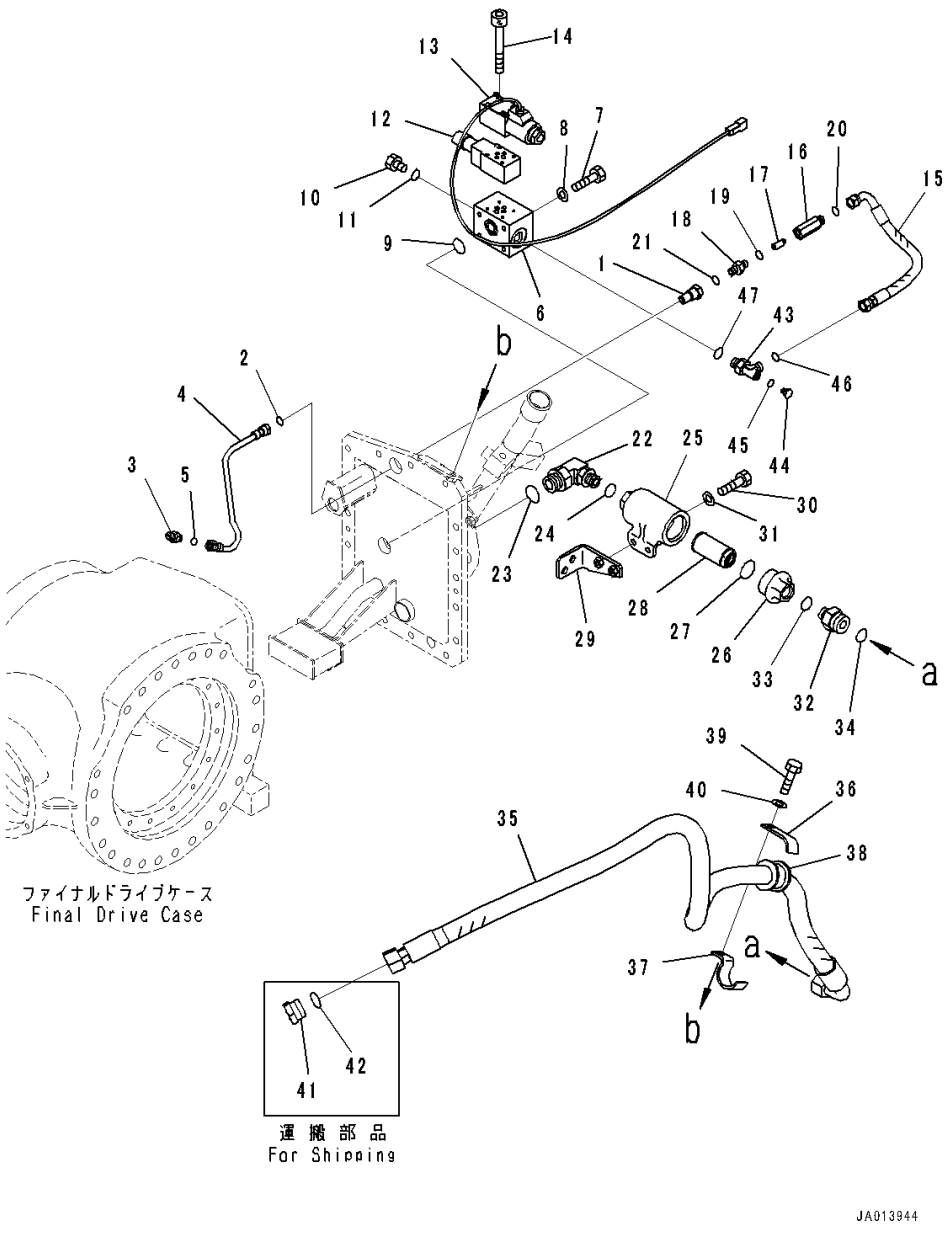

Index	Code	Part Number	Description	Qty	Serial Number
		234-22-80103	Axle Assembly	1	26446-
	A2	234-22-80101	Axle Assembly	1	26324-26445
	A1	234-22-80100	Axle Assembly	1	26001-26323
		234-22-82003	• Final Drive Assembly	1	26446-
	A2	234-22-82001	• Final Drive Assembly	1	26324-26445
	A1	234-22-82000	• Final Drive Assembly	1	26001-26323
1		234-22-81360	• • Adapter	1	26001-
2		07002-22434	• • O-ring	1	26001-
3		56B-43-17210	• • Nipple	1	26001-
4		234-22-82540	• • Tube	1	26001-
5		02896-21008	• • O-ring	2	26001-
6		23B-22-71811	• • Block	1	26001-
7		01010-80880	• • Bolt	4	26001-
8		01643-30823	• • Washer	4	26001-
9		07000-73025	• • O-ring	1	26001-
10		07040-12012	• • Plug	1	26001-
11		07002-22034	• • O-ring	1	26001-
12		23B-22-71841	• • Valve	1	26387-
	A2	23B-22-71840	• • Valve	1	26001-26386
13		23B-22-71830	• • Valve	1	26001-
14		56B-88-12370	• • Bolt	4	26001-
15		02754-003A3	• • Hose	1	26001-
		234-60-82350	• • Valve Assembly	1	26001-
16	C1		• • • Body	1	26001-
17		234-60-82370	• • • Poppet	1	26001-
18		423-43-27490	• • • Nipple	1	26001-
19		07002-21423	• • • O-ring	1	26001-
20		02896-21009	• • O-ring	1	26001-
21		07002-21423	• • O-ring	1	26001-
22		23B-60-74720	• • Elbow	1	26001-
23		07002-23334	• • O-ring	1	26001-
24		07002-22434	• • O-ring	1	26001-
25		421-43-22562	• • Case	1	26001-
26		421-43-22571	• • Cap	1	26001-
27		07002-25234	• • O-ring	1	26001-
28		23H-60-14690	• • Strainer	1	26446-
	A2	421-43-27920	• • Strainer	1	26001-26445
29		23B-60-74740	• • Bracket	1	26001-
30		01010-81030	• • Bolt	4	26001-
31		01643-31032	• • Washer	4	26001-

FIG. F4500-001006 Rear Axle (Final Drive, Solenoid Valve and Piping)

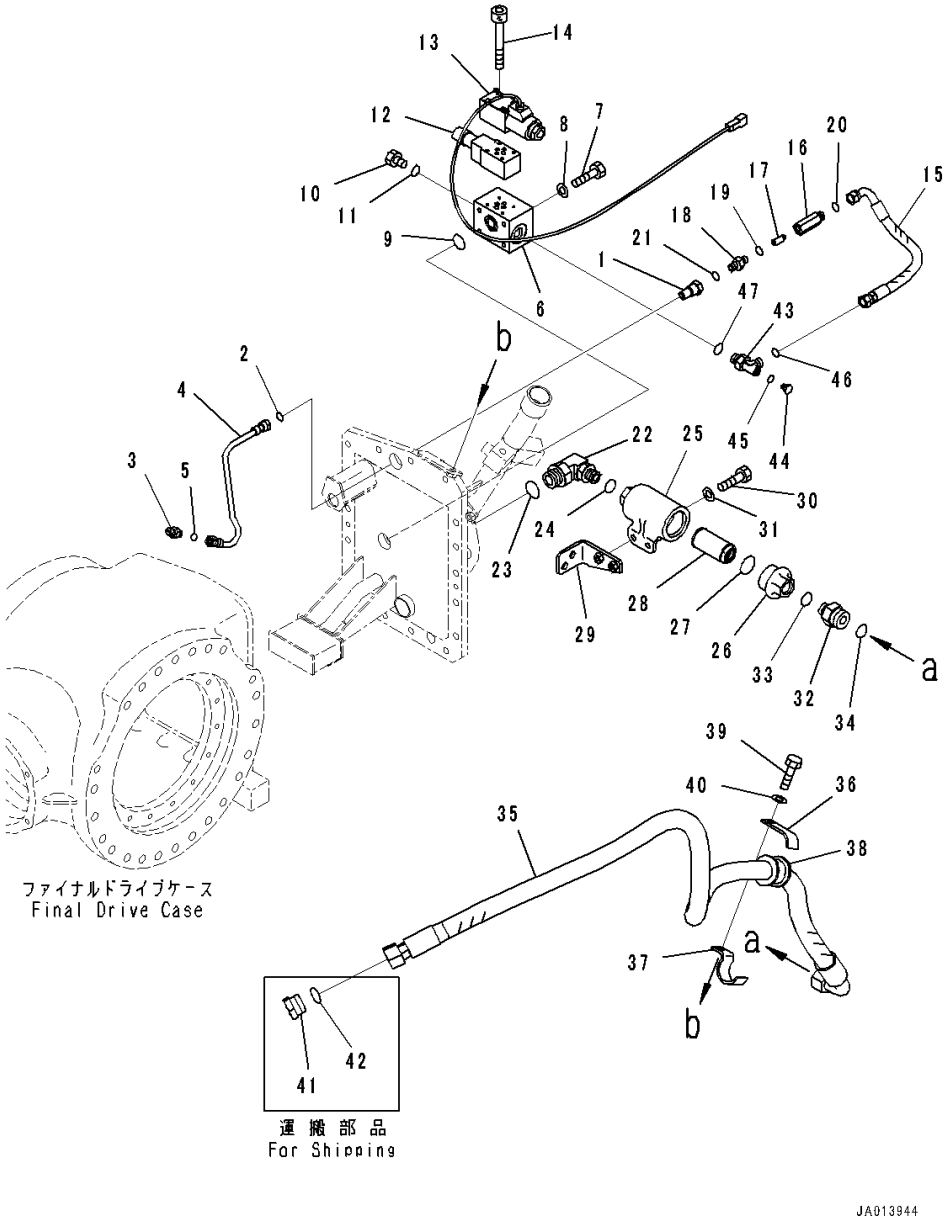

Index	Code	Part Number	Description	Qty	Serial Number
32		20U-62-41810	• • Nipple	1	26001-
33		07002-22434	• • O-ring	1	26001-
34		23B-60-33240	• • O-ring	1	26001-
35		234-60-82340	• • Hose	1	26001-
36		418-62-32550	• • Clamp	1	26001-
37		418-62-32560	• • Clamp	1	26001-
38		21T-62-76840	• • Cushion	1	26001-
39		01010-81030	• • Bolt	1	26001-
40		01643-31032	• • Washer	1	26001-
41		21W-62-99895	• • Plug	1	26001-
42		23B-60-33240	• • O-ring	1	26001-
43		02782-50315	• • Elbow	1	26001-
44		07040-11007	• • Plug	1	26001-
45		07002-21023	• • O-ring	1	26001-
46		02896-21009	• • O-ring	1	26001-
47		07002-22034	• • O-ring	1	26001-

FIG. F4500-001007 Rear Axle (Parking Brake)

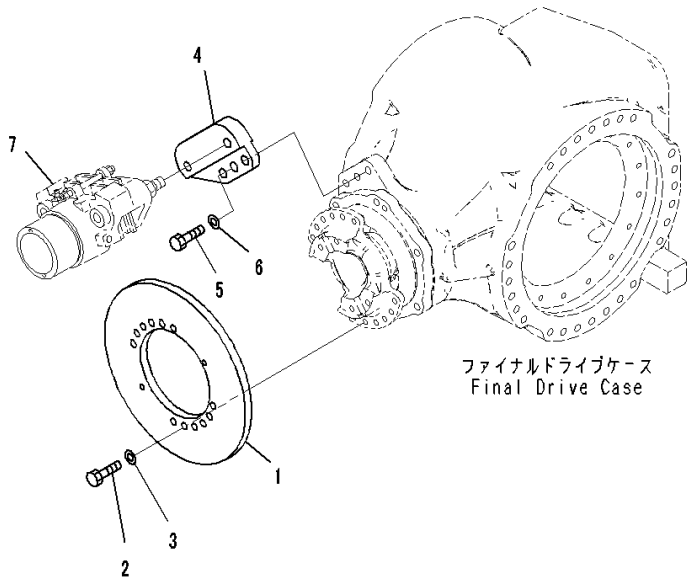

Index	Code	Part Number	Description	Qty	Serial Number
		234-22-80101	Axle Assembly	1	26324-
	A1	234-22-80100	Axle Assembly	1	26001-26323
1		234-32-81310	• Disc	1	26001-
2		01010-61230	• Bolt	8	26001-
3		01643-01232	• Washer, Flat	8	26001-
4		23B-32-71320	• Bracket	1	26001-
5		01010-61645	• Bolt	3	26001-
6		01643-31645	• Washer	3	26001-
7		(23B-32-31333)	Plate(Rear Axle,Inner Parts, Brake Caliper)(Refer to Page 270)		

FIG. F4500-001008 Rear Axle (Tandem, Case, L.H.)

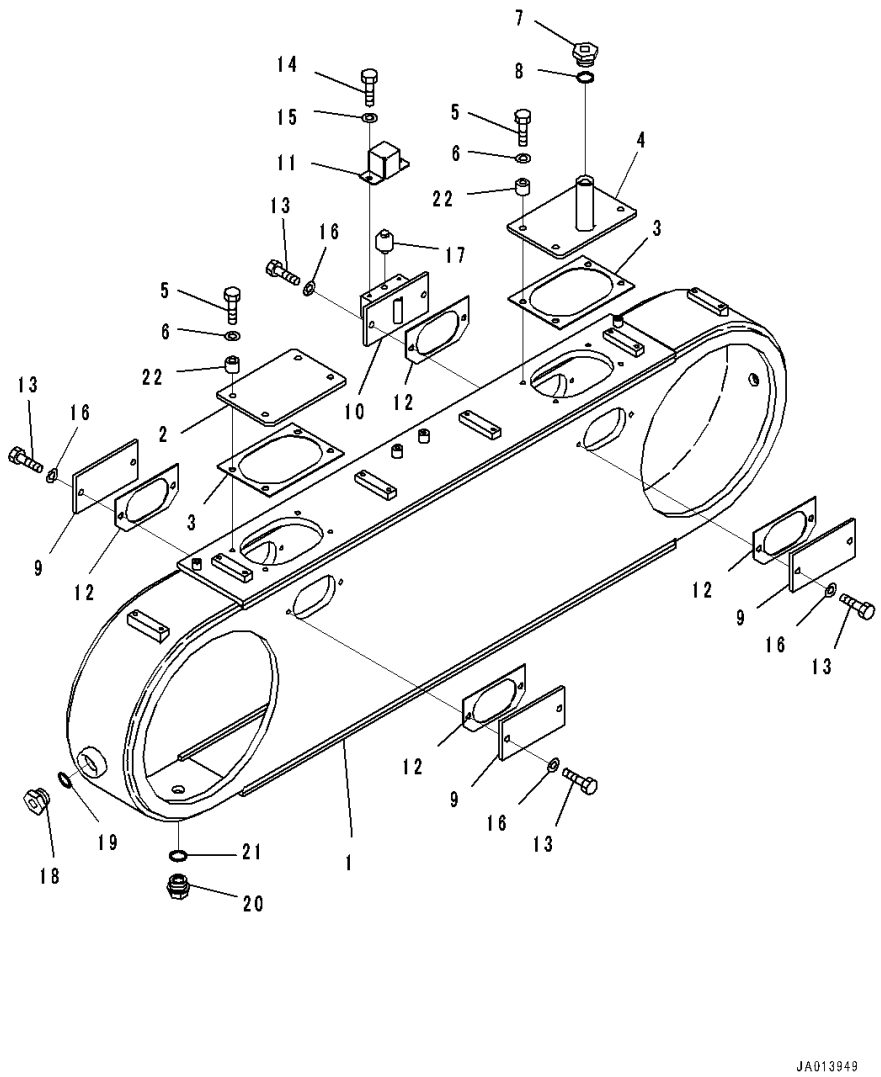

Index	Code	Part Number	Description	Qty	Serial Number
		234-22-80103	Axle Assembly	1	26446-
	A2	234-22-80101	Axle Assembly	1	26324-26445
	A1	234-22-80100	Axle Assembly	1	26001-26323
1		234-25-81610	• Case	1	26001-
2		237-23-11142	• Plate	1	26001-
3		234-25-31142	• Gasket	2	26001-
4		234-25-81450	• Cover	1	26001-
5		01010-81255	• Bolt	8	26001-
6		01643-31232	• Washer	8	26001-
7		07040-12412	• Plug	1	26001-
8		07002-12434	• O-ring	1	26001-
9		234-25-31150	• Plate	3	26001-
10		234-25-81430	• Bracket	1	26001-
11		234-25-81440	• Cover	1	26001-
12		234-25-31172	• Gasket	4	26001-
13		01010-81230	• Bolt	8	26001-
14		01010-80820	• Bolt	2	26001-
15		01643-30823	• Washer	2	26001-
16		01643-31232	• Washer	8	26001-
17		07030-00252	• Breather	1	26001-
18		07040-12412	• Plug	1	26001-
19		07002-12434	• O-ring	1	26001-
20		07044-12412	• Plug	1	26001-
21		07002-12434	• O-ring	1	26001-
22		566-01-12350	• Boss	8	26001-

FIG. F4500-001009 Rear Axle (Tandem, Case, R.H.)

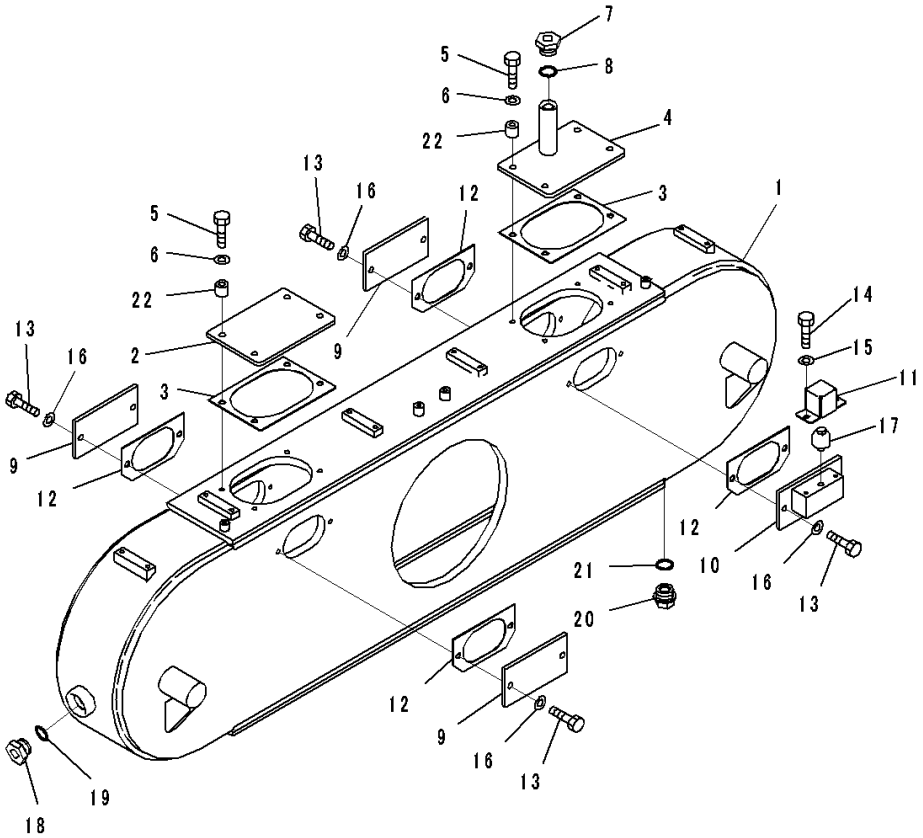

Index	Code	Part Number	Description	Qty	Serial Number
		234-22-80103	Axle Assembly	1	26446-
	A2	234-22-80101	Axle Assembly	1	26324-26445
	A1	234-22-80100	Axle Assembly	1	26001-26323
1		234-25-81710	• Case	1	26001-
2		237-23-11142	• Plate	1	26001-
3		234-25-31142	• Gasket	2	26001-
4		234-25-81450	• Cover	1	26001-
5		01010-81255	• Bolt	8	26001-
6		01643-31232	• Washer	8	26001-
7		07040-12412	• Plug	1	26001-
8		07002-12434	• O-ring	1	26001-
9		234-25-31150	• Plate	3	26001-
10		234-25-81430	• Bracket	1	26001-
11		234-25-81440	• Cover	1	26001-
12		234-25-31172	• Gasket	4	26001-
13		01010-81230	• Bolt	8	26001-
14		01010-80820	• Bolt	2	26001-
15		01643-30823	• Washer	2	26001-
16		01643-31232	• Washer	8	26001-
17		07030-00252	• Breather	1	26001-
18		07040-12412	• Plug	1	26001-
19		07002-12434	• O-ring	1	26001-
20		07044-12412	• Plug	1	26001-
21		07002-12434	• O-ring	1	26001-
22		566-01-12350	• Boss	8	26001-

FIG. F4500-001010 Rear Axle (Tandem, Step and Tube)

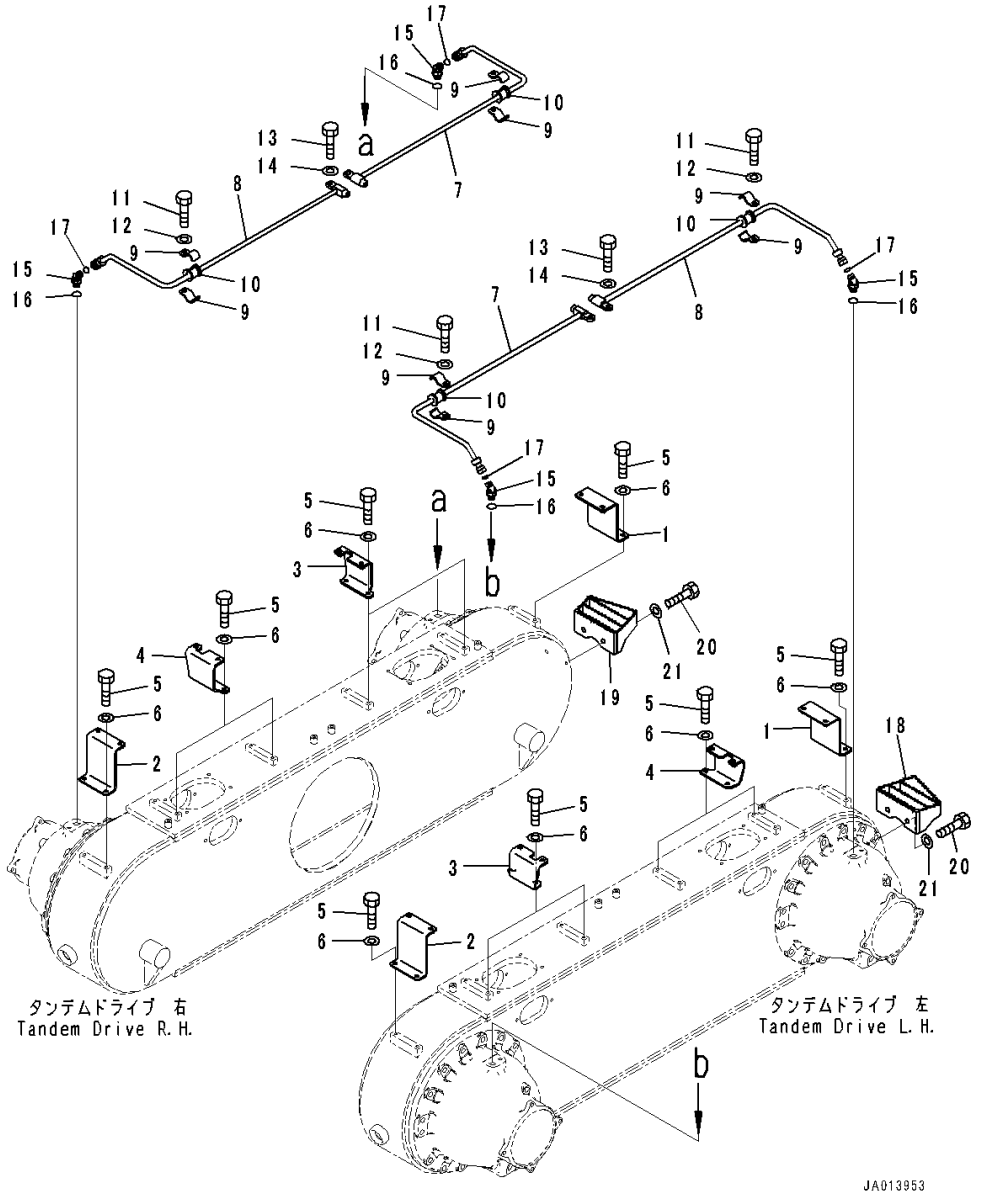

Index	Code	Part Number	Description	Qty	Serial Number
		234-22-80103	Axle Assembly	1	26446-
	A2	234-22-80101	Axle Assembly	1	26324-26445
	A1	234-22-80100	Axle Assembly	1	26001-26323
1		234-25-81510	• Bracket	2	26001-
2		234-25-81460	• Bracket	2	26001-
3		234-25-81380	• Bracket	4	26001-
4		234-25-81390	• Bracket	4	26001-
5		01010-81025	• Bolt	24	26001-
6		01643-31032	• Washer	24	26001-
7		234-25-81810	• Tube	2	26001-
8		234-25-81820	• Tube	2	26001-
9		23B-60-71410	• Clamp	8	26001-
10		07095-00314	• Cushion	4	26001-
11		01010-81025	• Bolt	4	26001-
12		01643-31032	• Washer	4	26001-
13		01010-81025	• Bolt	4	26001-
14		01643-31032	• Washer	4	26001-
15		02783-10422	• Elbow	4	26001-
16		07002-12034	• O-ring	4	26001-
17		02896-11012	• O-ring	8	26001-
18		23B-25-71851	• Step	1	26001-
19		23B-25-71841	• Step	1	26001-
20		01010-81235	• Bolt	4	26001-
21		01643-31232	• Washer	4	26001-

FIG. F4500-001011 Rear Axle (Tandem, Sprocket Chain)

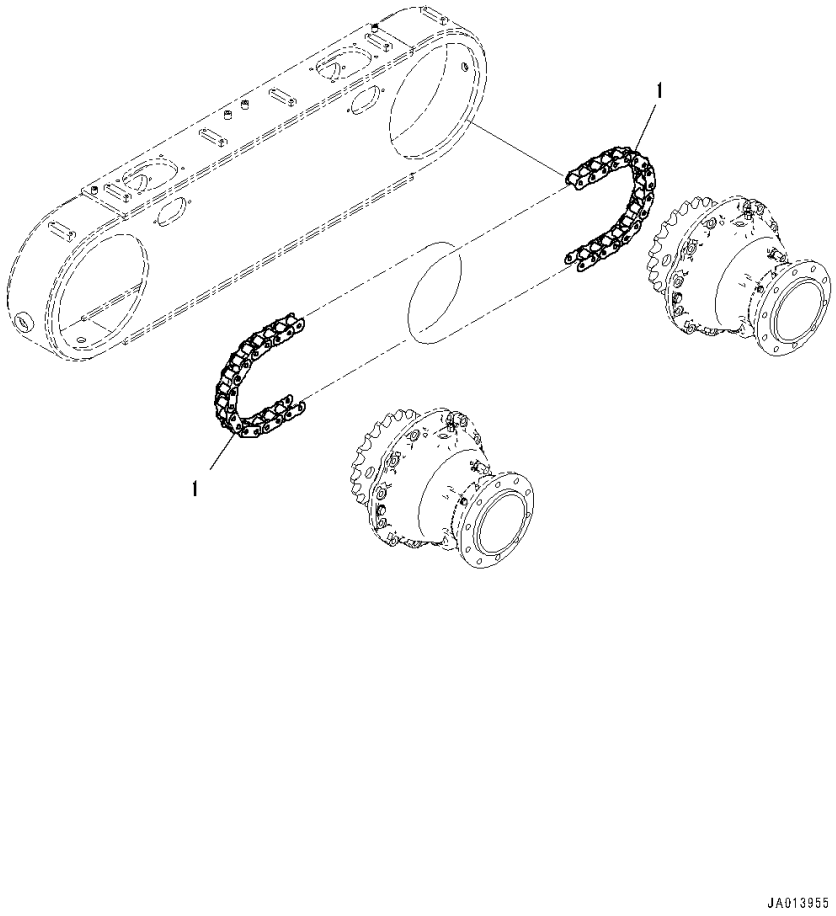

Index	Code	Part Number	Description	Qty	Serial Number
		234-22-80103	Axle Assembly	1	26446-
	A2	234-22-80101	Axle Assembly	1	26324-26445
	A1	234-22-80100	Axle Assembly	1	26001-26323
1		234-25-31400	• Chain Assembly	4	26001-

FIG. F4500-001012 Rear Axle (Tandem, Mounting Bolt)

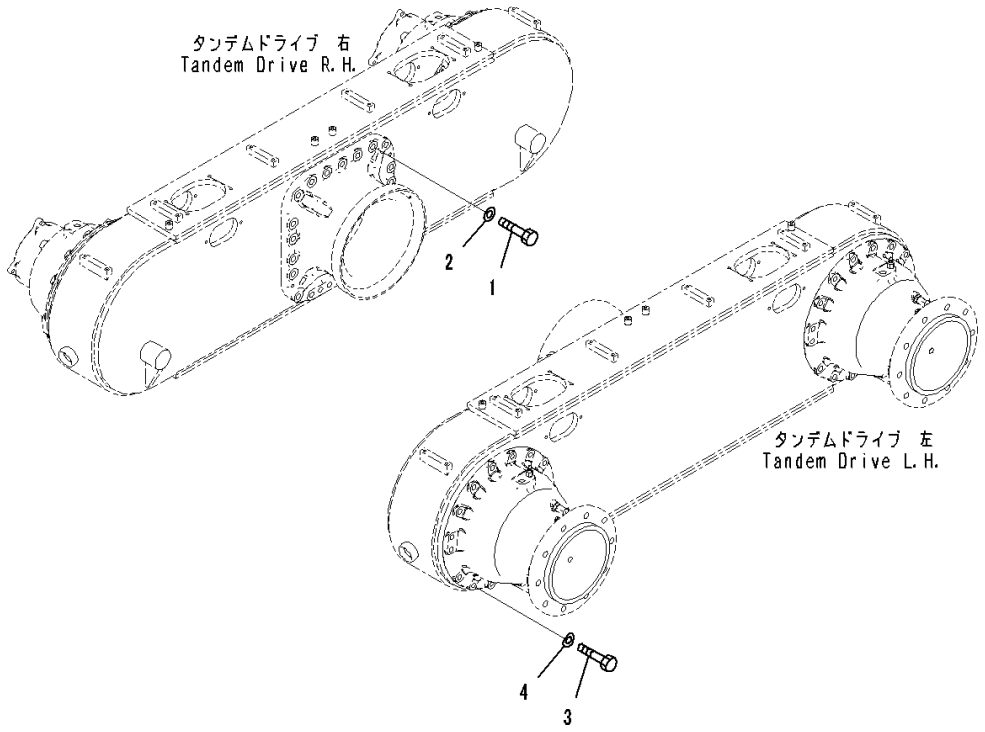

Index	Code	Part Number	Description	Qty	Serial Number
		234-22-80103	Axle Assembly	1	26446-
	A2	234-22-80101	Axle Assembly	1	26324-26445
	A1	234-22-80100	Axle Assembly	1	26001-26323
1		01010-81860	• Bolt	50	26001-
2		01643-31845	• Washer	50	26001-
3		01010-81660	• Bolt	56	26001-
4		01643-31645	• Washer	56	26001-

FIG. F4500-001013 Rear Axle (Inner Parts, Brake Caliper)

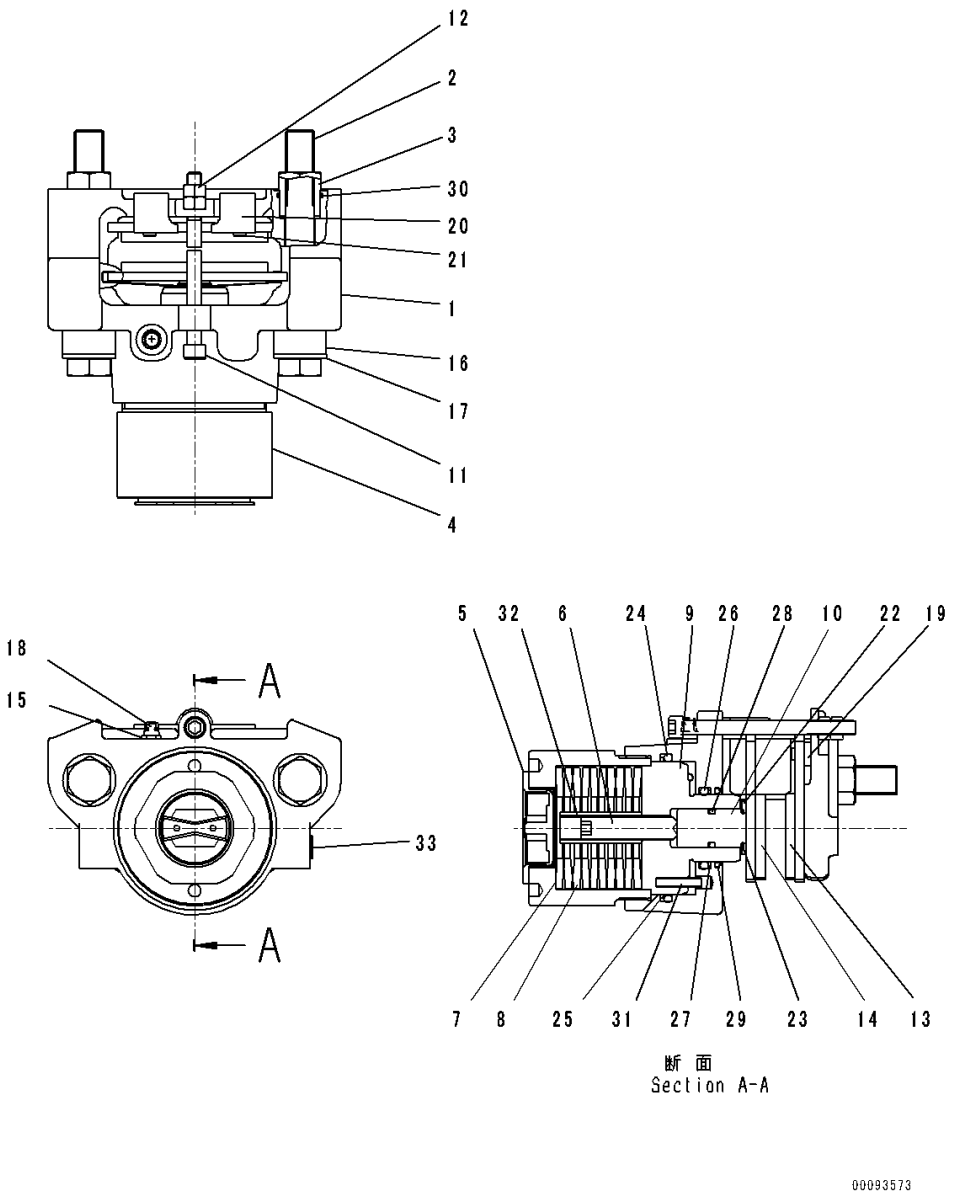

Index	Code	Part Number	Description	Qty	Serial Number
		234-22-80101	Axle Assembly	1	26324-
	A1	234-22-80100	Axle Assembly	1	26001-26323
		23B-32-31302	• Brake Assembly	1	26001-
1	C1		• • Plate	1	26001-
2		23B-32-31340	• • Bolt	2	26001-
3		23B-32-31351	• • Nut	2	26001-
4	C1		• • Housing	1	26001-
5		23B-32-31371	• • Plug	1	26001-
6		23B-32-31381	• • Bolt, Adjusting	1	26001-
7	C1		• • Shim	1	26001-
8	C1		• • Spring	10	26001-
9	C1		• • Piston	1	26001-
10	C1		• • Piston	1	26001-
11		23B-32-31510	• • Bolt	1	26001-
12		23B-32-31520	• • Nut	2	26001-
13		23B-32-31530	• • Carrier Assembly	1	26001-
14		23B-32-31760	• • Carrier Assembly	1	26001-
15	C1		• • Bleeder	1	26001-
16		23B-32-31550	• • Spring	2	26001-
17		23B-32-31560	• • Washer	2	26001-
18		23B-32-31590	• • Cap	1	26001-
19		23B-32-31610	• • Spacer	1	26001-
20		23B-32-31622	• • Spring	1	26001-
21		23B-32-31630	• • Screw	2	26001-
22		23B-32-31641	• • Spring	1	26001-
23		23B-32-31650	• • Ring	1	26001-
		23B-32-31680	• • Service Kit	1	26001-
24	C1		• • • O-ring	1	26001-
25	C1		• • • Ring, Back-up	1	26001-
26	C1		• • • O-ring	1	26001-
27	C1		• • • Ring, Back-up	1	26001-
28	C1		• • • O-ring	1	26001-
29	C1		• • • Wiper	1	26001-
30		23B-32-31670	• • • O-ring	2	26001-
31		23B-32-31710	• • Pin	1	26001-
32		23B-32-31720	• • Nut	1	26001-
33		23B-32-31730	• • Plug	1	26001-

FIG. F4500-001014 Rear Axle (Tandem, A Drive)

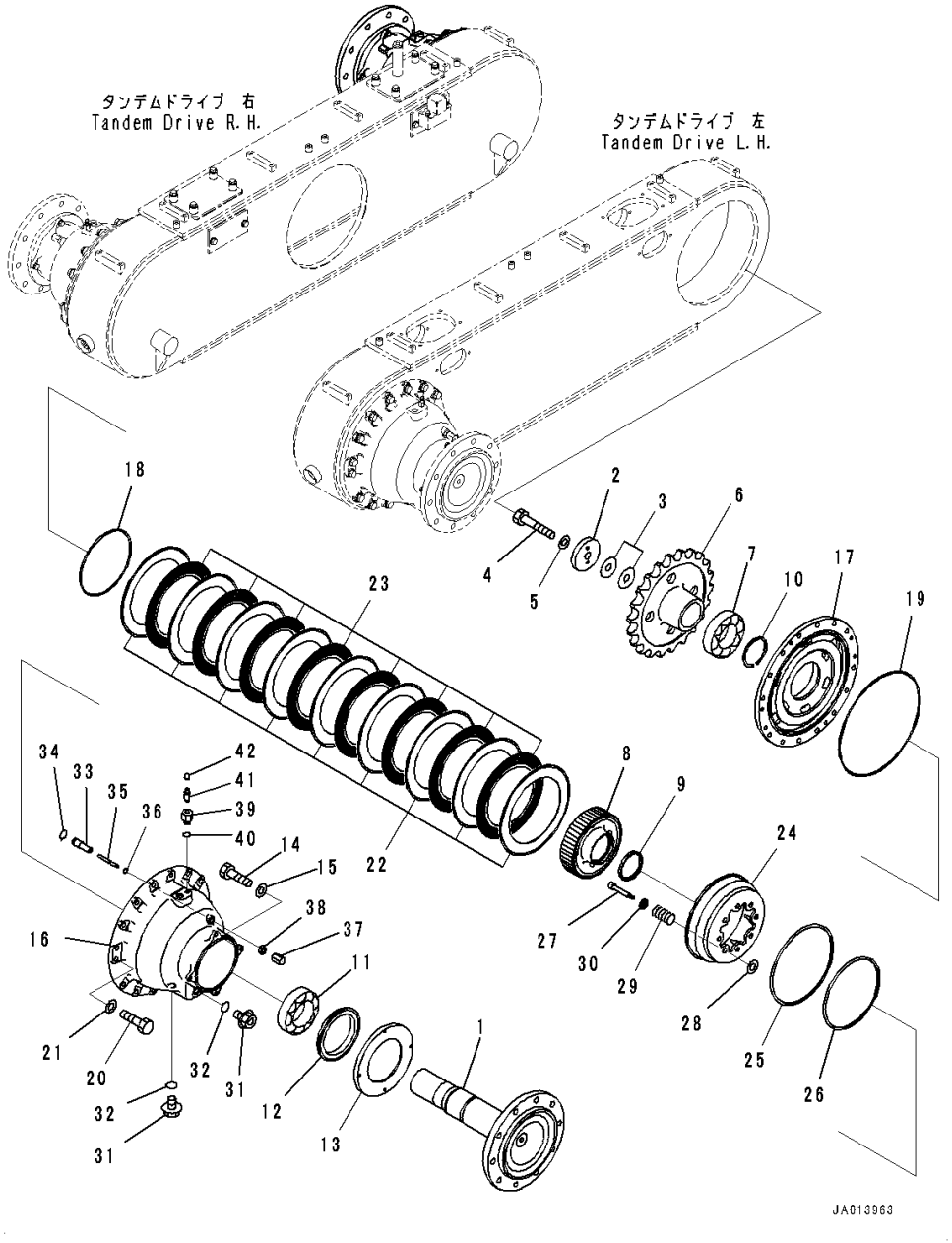

Index	Code	Part Number	Description	Qty	Serial Number
		234-22-80103	Axle Assembly	1	26446-
	A2	234-22-80101	Axle Assembly	1	26324-26445
	A1	234-22-80100	Axle Assembly	1	26001-26323
1		234-25-81130	• Shaft	2	26001-
2		234-25-81370	• Holder	2	26001-
3		234-25-81300	• Shim Assembly	2	26001-
		421-22-32470	• • Shim,T=0.05mm	2	26001-
		421-22-32480	• • Shim,T=0.2mm	3	26001-
		421-22-32490	• • Shim,T=0.5mm	2	26001-
4		01011-62450	• Bolt	2	26001-
5		01643-32460	• Washer	2	26001-
6		234-25-81190	• Sprocket	2	26001-
7		234-25-81330	• Bearing	2	26001-
8		234-25-81170	• Gear	2	26001-
9		234-25-81210	• Collar	4	26001-
10		04070-00105	• Ring, Snap	2	26001-
11		234-25-81340	• Bearing	2	26001-
12		421-22-32460	• Seal	2	26001-
13		234-25-81490	• Cover	2	26001-
14		01010-81030	• Bolt	8	26001-
15		01643-31032	• Washer	8	26001-
16		234-25-81110	• Cage	2	26001-
17		234-25-81160	• Cage	2	26001-
18		07000-15395	• O-ring	2	26001-
19		07000-15405	• O-ring	2	26001-
20		01010-61635	• Bolt	4	26001-
21		01643-31645	• Washer	4	26001-
22		23B-25-71430	• Plate	18	26001-
23		23B-25-71360	• Disc	16	26001-
24		234-25-81120	• Piston	2	26001-
25		23B-25-73170	• O-ring	2	26001-
26		23B-25-71150	• O-ring	2	26001-
27		234-25-81250	• Guide	16	26001-
28		23C-25-61190	• Washer	16	26001-
29		714-12-17161	• Spring	16	26001-
30		23B-25-33610	• Washer	16	26001-
31		07044-12412	• Plug	4	26001-
32		07002-12434	• O-ring	4	26001-
33		23B-25-33220	• Guide	2	26001-
34		07000-12018	• O-ring	2	26001-

FIG. F4500-001014 Rear Axle (Tandem, A Drive)

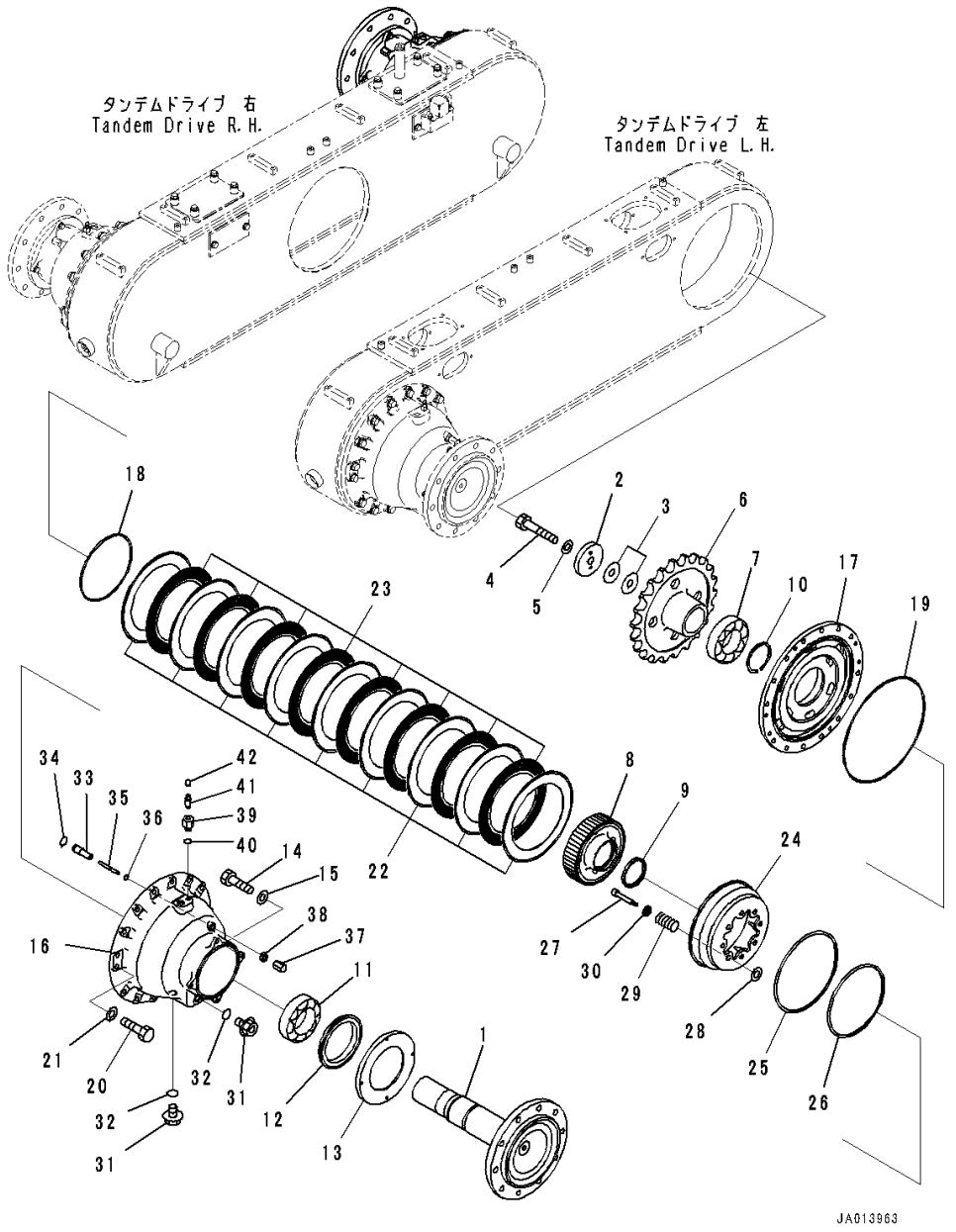

Index	Code	Part Number	Description	Qty	Serial Number
35		23B-25-71210	• Shaft	2	26001-
36		07000-11005	• O-ring	2	26001-
37		421-33-31730	• Cap	2	26001-
38		01583-11610	• Nut	2	26001-
39		569-33-72140	• Joint	2	26001-
40		07002-11223	• O-ring	2	26001-
41		566-32-11431	• Bleeder	2	26413-
	A1	566-32-11430	• Bleeder	2	26001-26412
42		566-32-11620	• Cap	2	26001-

FIG. F4500-001015 Rear Axle (Tandem, B Drive)

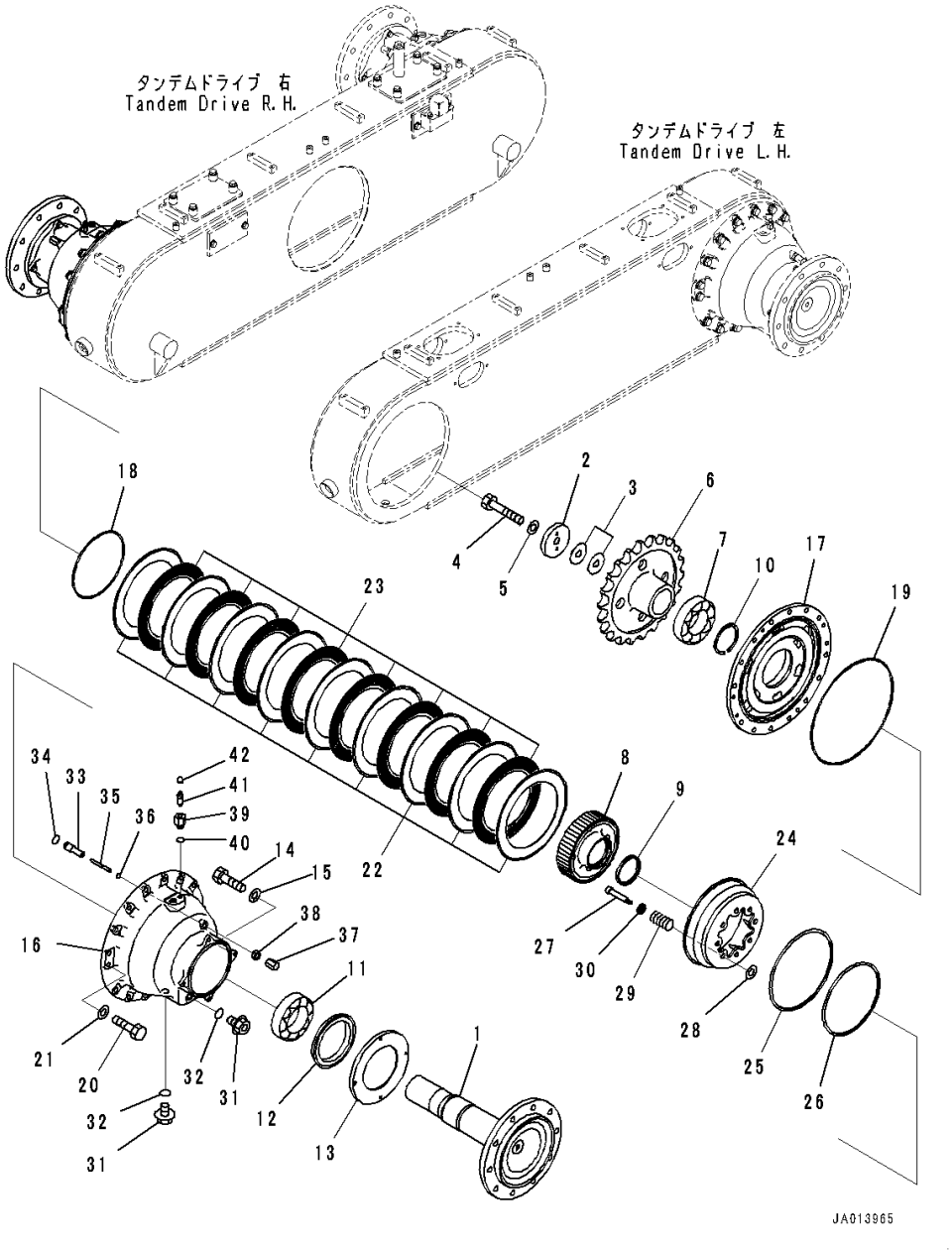

Index	Code	Part Number	Description	Qty	Serial Number
		234-22-80103	Axle Assembly	1	26446-
	A2	234-22-80101	Axle Assembly	1	26324-26445
	A1	234-22-80100	Axle Assembly	1	26001-26323
1		234-25-81130	• Shaft	2	26001-
2		234-25-81370	• Holder	2	26001-
3		234-25-81300	• Shim Assembly	2	26001-
		421-22-32470	• • Shim,T=0.05mm	2	26001-
		421-22-32480	• • Shim,T=0.2mm	3	26001-
		421-22-32490	• • Shim,T=0.5mm	2	26001-
4		01011-62450	• Bolt	2	26001-
5		01643-32460	• Washer	2	26001-
6		234-25-81190	• Sprocket	2	26001-
7		234-25-81330	• Bearing	2	26001-
8		234-25-81170	• Gear	2	26001-
9		234-25-81210	• Collar	4	26001-
10		04070-00105	• Ring, Snap	2	26001-
11		234-25-81340	• Bearing	2	26001-
12		421-22-32460	• Seal	2	26001-
13		234-25-81490	• Cover	2	26001-
14		01010-81030	• Bolt	8	26001-
15		01643-31032	• Washer	8	26001-
16		234-25-81110	• Cage	2	26001-
17		234-25-81160	• Cage	2	26001-
18		07000-15395	• O-ring	2	26001-
19		07000-15405	• O-ring	2	26001-
20		01010-61635	• Bolt	4	26001-
21		01643-31645	• Washer	4	26001-
22		23B-25-71430	• Plate	18	26001-
23		23B-25-71360	• Disc	16	26001-
24		234-25-81120	• Piston	2	26001-
25		23B-25-73170	• O-ring	2	26001-
26		23B-25-71150	• O-ring	2	26001-
27		234-25-81250	• Guide	16	26001-
28		23C-25-61190	• Washer	16	26001-
29		714-12-17161	• Spring	16	26001-
30		23B-25-33610	• Washer	16	26001-
31		07044-12412	• Plug	4	26001-
32		07002-12434	• O-ring	4	26001-
33		23B-25-33220	• Guide	2	26001-
34		07000-12018	• O-ring	2	26001-

FIG. F4500-001015 Rear Axle (Tandem, B Drive)

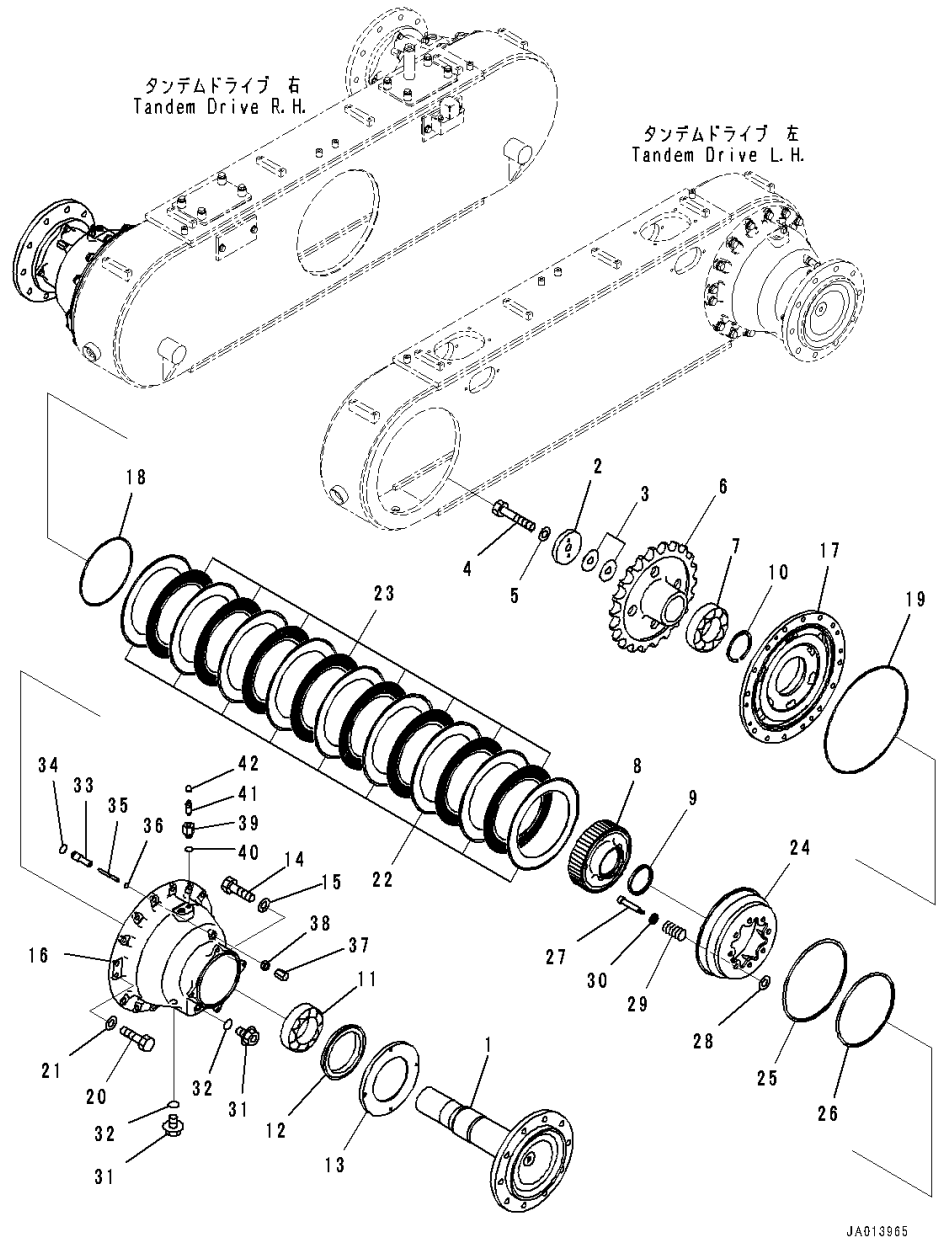

Index	Code	Part Number	Description	Qty	Serial Number
35		23B-25-71210	• Shaft	2	26001-
36		07000-11005	• O-ring	2	26001-
37		421-33-31730	• Cap	2	26001-
38		01583-11610	• Nut	2	26001-
39		569-33-72140	• Joint	2	26001-
40		07002-11223	• O-ring	2	26001-
41		566-32-11431	• Bleeder	2	26413-
	A1	566-32-11430	• Bleeder	2	26001-26412
42		566-32-11620	• Cap	2	26001-

FIG. F4500-001016 Rear Axle (Gauge)

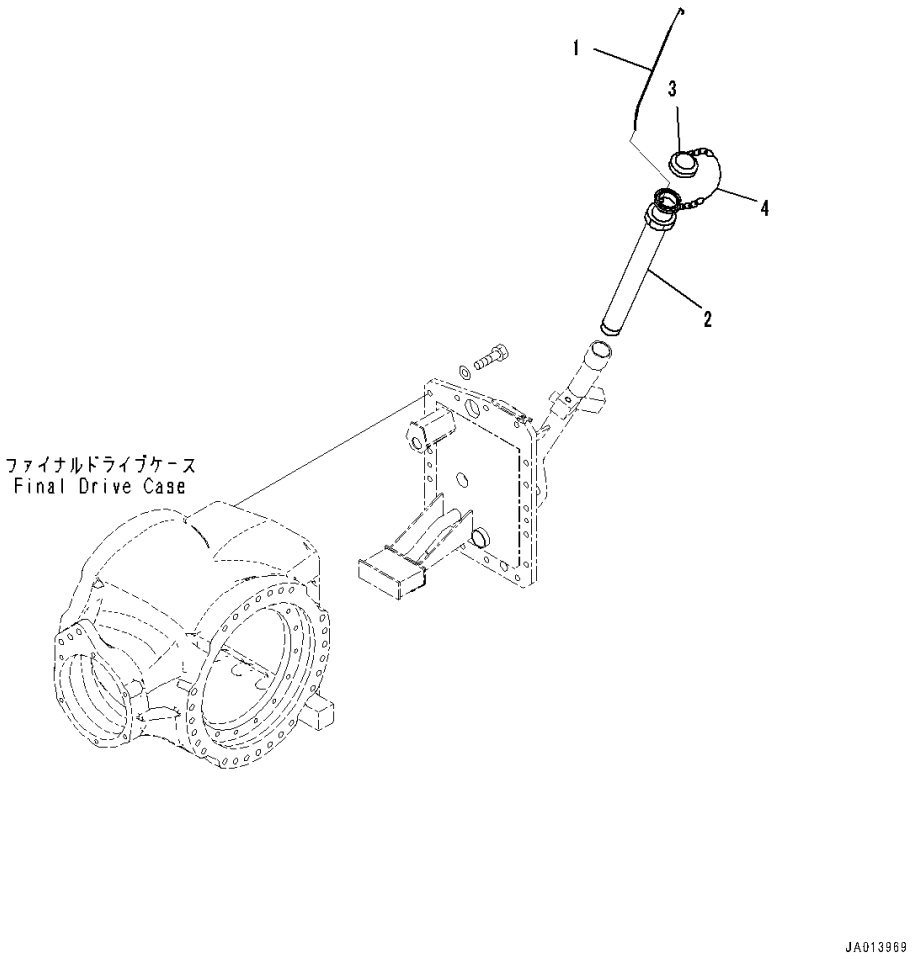

Index	Code	Part Number	Description	Qty	Serial Number
1		234-22-81430	Gauge	1	26001-
2		234-22-81480	Tube	1	26001-
3		6136-21-7120	Cap Assembly	1	26001-
		6136-21-7180	• Gasket	1	26001-
4		6136-21-7190	Chain	1	26001-

FIG. F4500-001017 Rear Axle (Step)

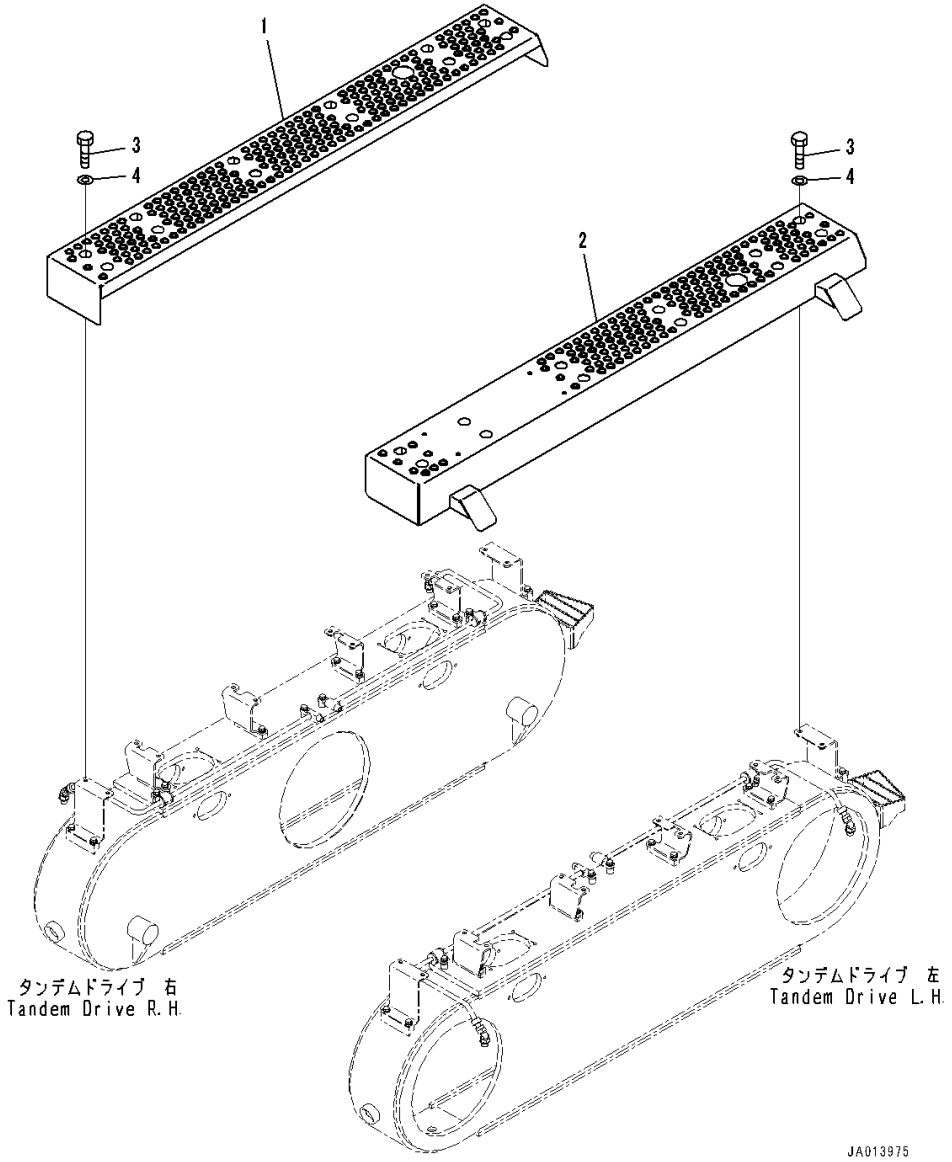

Index	Code	Part Number	Description	Qty	Serial Number
1		234-25-81350	Step	1	26001-
2		234-25-81360	Step	1	26001-
3		01010-81025	Bolt	24	26001-
4		01643-31032	Washer	24	26001-

FIG. F4700-001001 Torque Converter and Transmission Oil Piping (Oil Filter Piping)

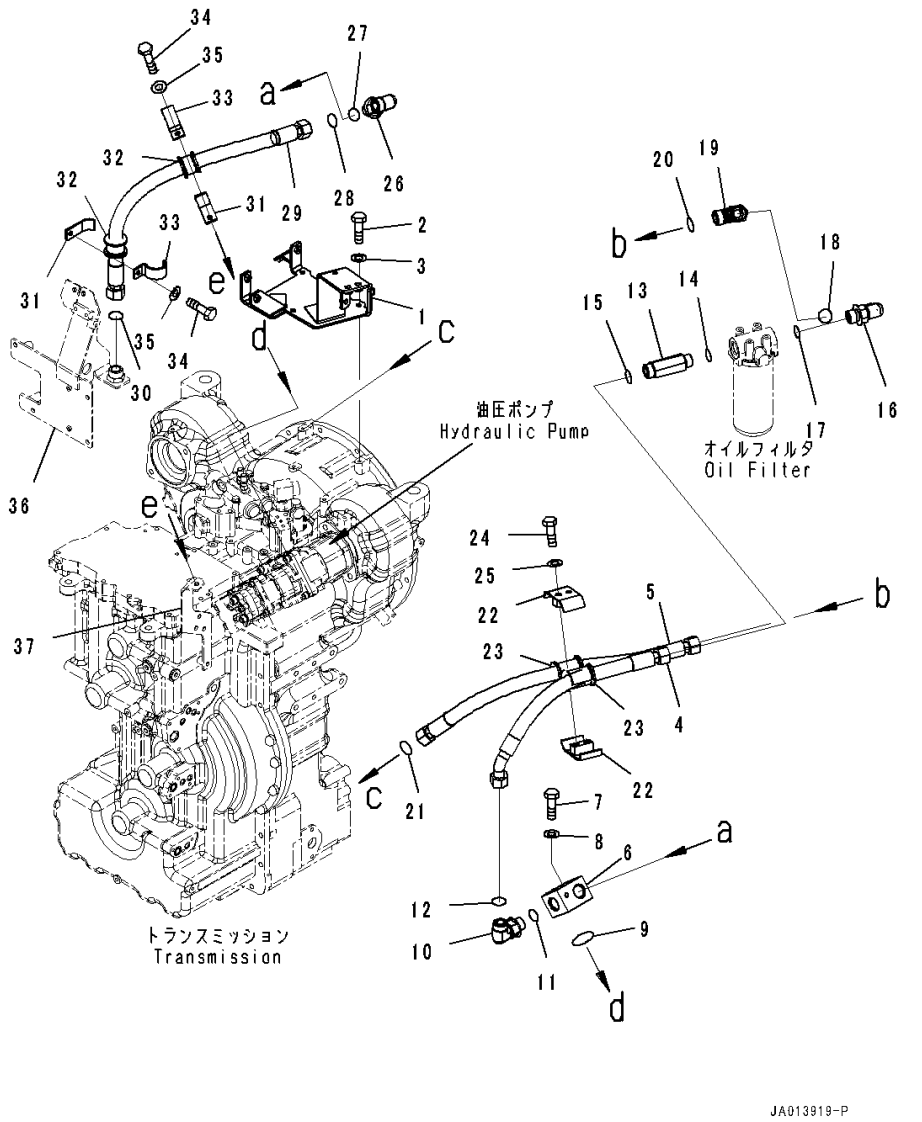

Index	Code	Part Number	Description	Qty	Serial Number
1		234-16-82310	Bracket	1	26001-
2		01010-81025	Bolt	3	26001-
3		01643-31032	Washer	3	26001-
4		234-16-82320	Hose	1	26001-
5		234-16-82330	Hose	1	26001-
6		234-16-81320	Block	1	26001-
7		01010-80880	Bolt	4	26001-
8		01643-30823	Washer	4	26001-
9		07000-B3028	O-ring	1	26001-
10		21W-62-42640	Elbow	1	26001-
11		07002-23334	O-ring	1	26001-
12		23B-60-33240	O-ring	1	26001-
13		23B-16-71270	Union	1	26001-
14		07002-23334	O-ring	1	26001-
15		23B-60-33240	O-ring	1	26001-
16		21W-62-42640	Elbow	1	26001-
17		07002-23334	O-ring	1	26001-
18		23B-60-33240	O-ring	1	26001-
19		23B-16-71650	Elbow	1	26001-
20		23B-60-33240	O-ring	1	26001-
21		23B-60-33240	O-ring	1	26001-
22		07094-31024	Clamp	2	26001-
23		07095-01033	Cushion	2	26001-
24		01010-81280	Bolt	2	26001-
25		01643-31232	Washer	2	26001-
26		421-09-31210	Elbow	1	26001-
27		07002-23334	O-ring	1	26001-
28		23B-60-33240	O-ring	1	26001-
29		234-16-82360	Hose	1	26001-
30		23B-60-33240	O-ring	1	26001-
31		418-62-32550	Clamp	2	26001-
32		21T-62-76840	Cushion	2	26001-
33		418-62-32560	Clamp	2	26001-
34		01010-81030	Bolt	2	26001-
35		01643-31032	Washer	2	26001-
36		(234-60-86250)	Bracket(Hydraulic Piping,Priority Valve,With 9 Spool Valve)(Refer to Page 338)		

FIG. F4700-001001 Torque Converter and Transmission Oil Piping (Oil Filter Piping)

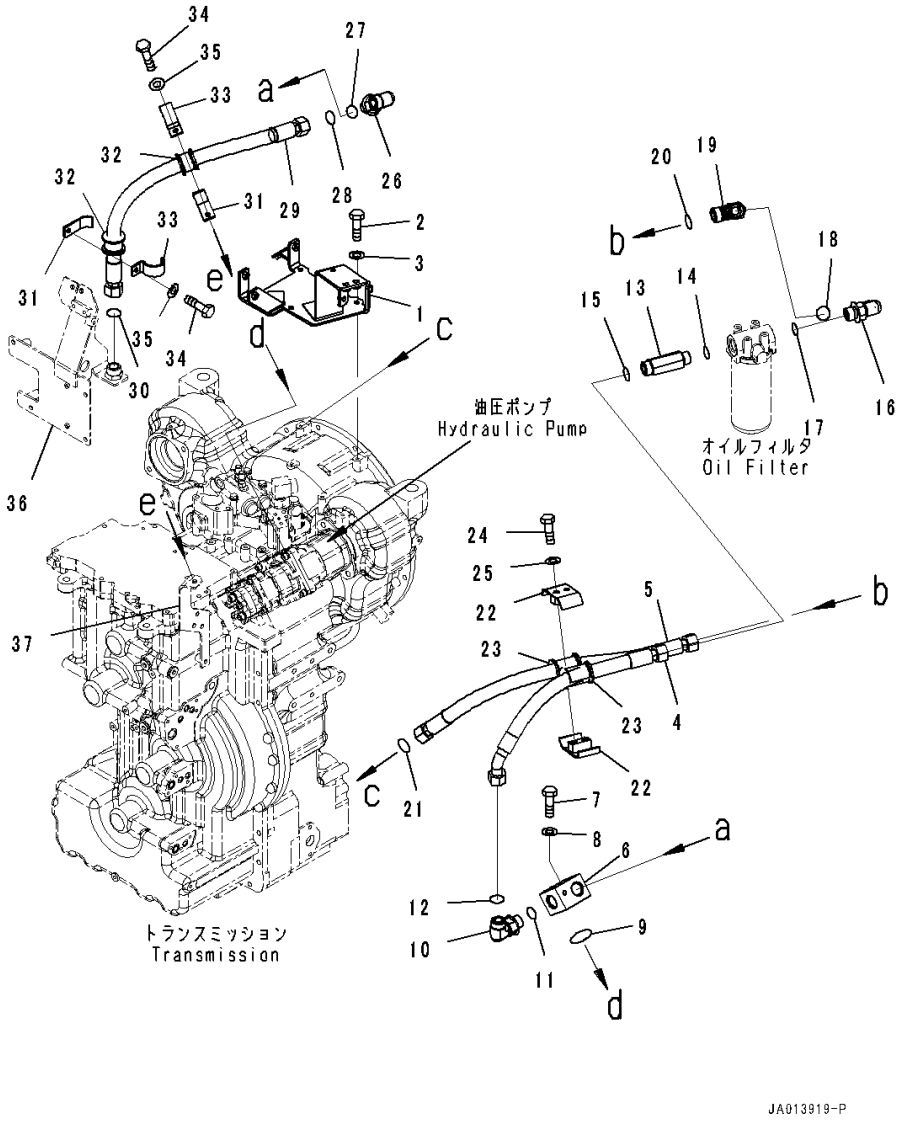

Index	Code	Part Number	Description	Qty	Serial Number
		(234-60-86250)	Bracket(Hydraulic Piping,Priority Valve,With 10 Spool Valve)(Refer to Page 337)		
37		(234-06-81710)	Bracket(Rear Wiring Harness,Transmission Wiring Harness)(Refer to Page 215)		

FIG. F4700-001002 Torque Converter and Transmission Oil Piping (Transmission Oil Filter)

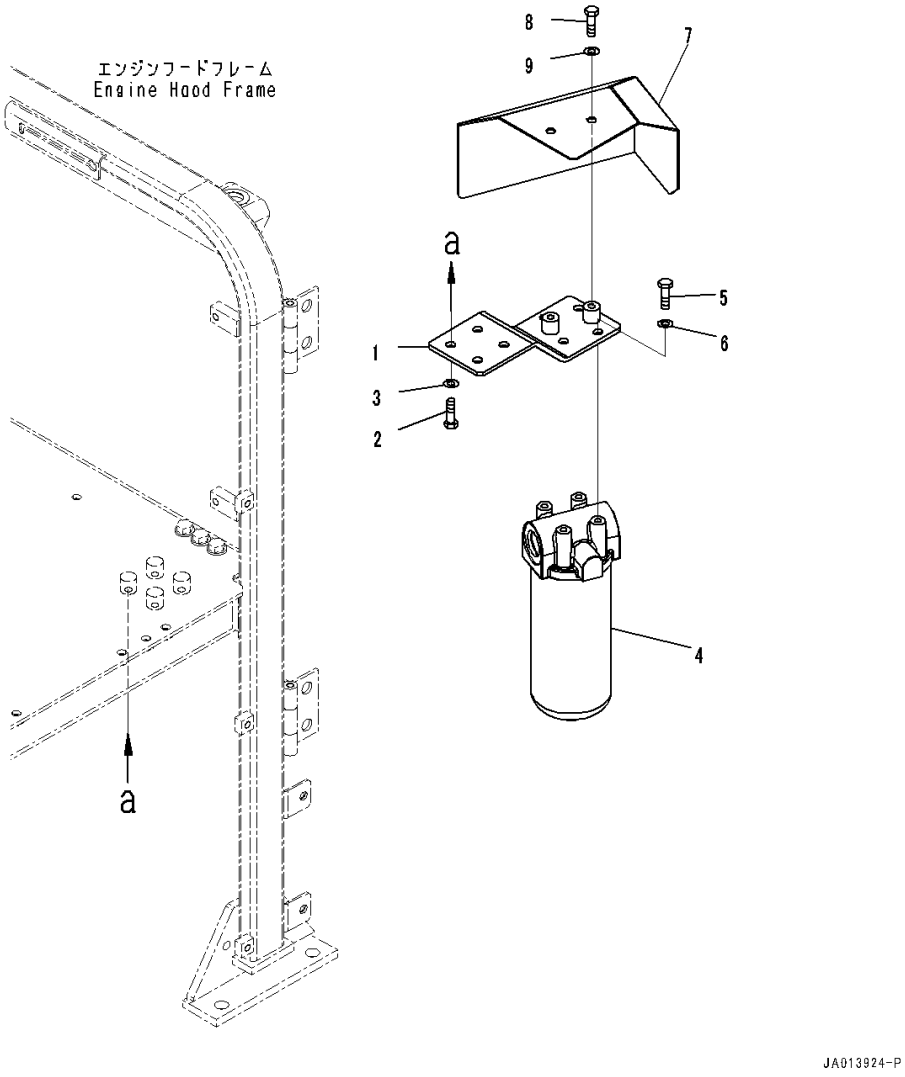

Index	Code	Part Number	Description	Qty	Serial Number
1		234-16-82341	Bracket	1	26001-
2		01010-81025	Bolt	4	26001-
3		01643-31032	Washer	4	26001-
4		714-07-28703	Filter Assembly	1	26001-
		714-07-28713	• Cartridge	1	26001-
5		01010-81030	Bolt	4	26001-
6		01643-31032	Washer	4	26001-
7		234-16-82350	Cover	1	26001-
8		01010-81025	Bolt	2	26001-
9		01643-31032	Washer	2	26001-

FIG. F4700-001003 Torque Converter and Transmission Oil Piping (Tube)

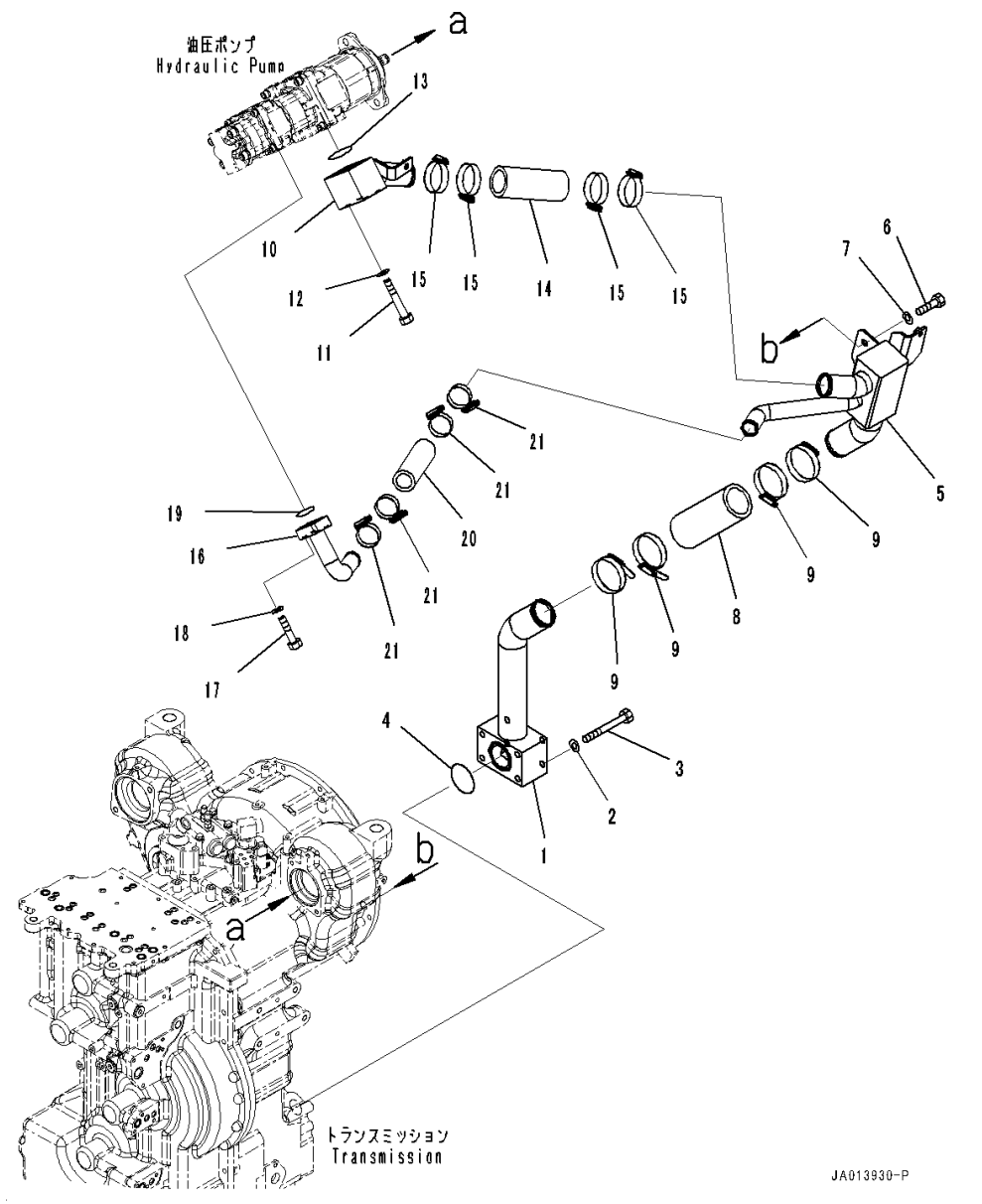

Index	Code	Part Number	Description	Qty	Serial Number
1		234-16-82210	Tube	1	26001-
2		01643-31232	Washer	4	26001-
3		01011-81200	Bolt	4	26001-
4		07000-B2065	O-ring	1	26001-
5		234-16-82221	Tube	1	26001-
6		01010-81025	Bolt	2	26001-
7		01643-31032	Washer	2	26001-
8		07260-05818	Hose	1	26001-
9		07289-00080	Clamp	4	26001-
10		234-16-82230	Tube	1	26001-
11		01010-81295	Bolt	4	26001-
12		01643-31232	Washer	4	26001-
13		07000-B3045	O-ring	1	26001-
14		07260-04716	Hose	1	26001-
15		07289-00070	Clamp	4	26001-
16		234-16-82241	Tube	1	26001-
17		07372-21040	Bolt	4	26001-
18		01643-51032	Washer	4	26001-
19		07000-B3032	O-ring	1	26001-
20		07260-03218	Hose	1	26001-
21		07289-00045	Clamp	4	26001-

FIG. F4810-001001 Torque Converter and Transmission Mounting

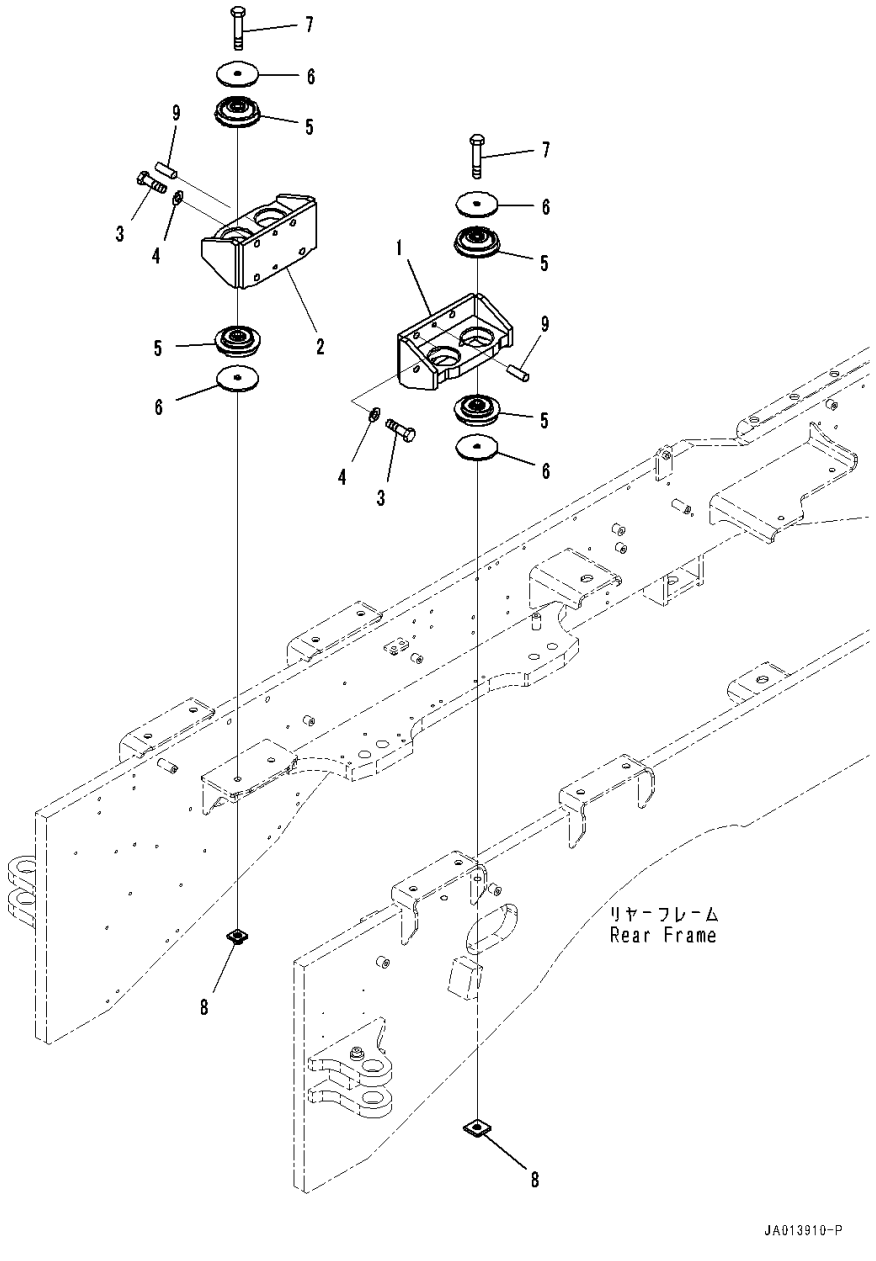

Index	Code	Part Number	Description	Qty	Serial Number
1		234-01-81330	Bracket	1	26001-
2		234-01-81340	Bracket	1	26001-
3		01010-81650	Bolt	8	26001-
4		01643-31645	Washer	8	26001-
5		2A5-01-11330	Cushion	8	26001-
6		234-01-81461	Plate	8	26001-
7		01011-81640	Bolt	4	26001-
8		234-01-81450	Plate	4	26001-
9		04020-01228	Pin, Dowel	4	26001-

HYDRAULIC SYSTEM

FIG. H0110-001001A Hydraulic Tank

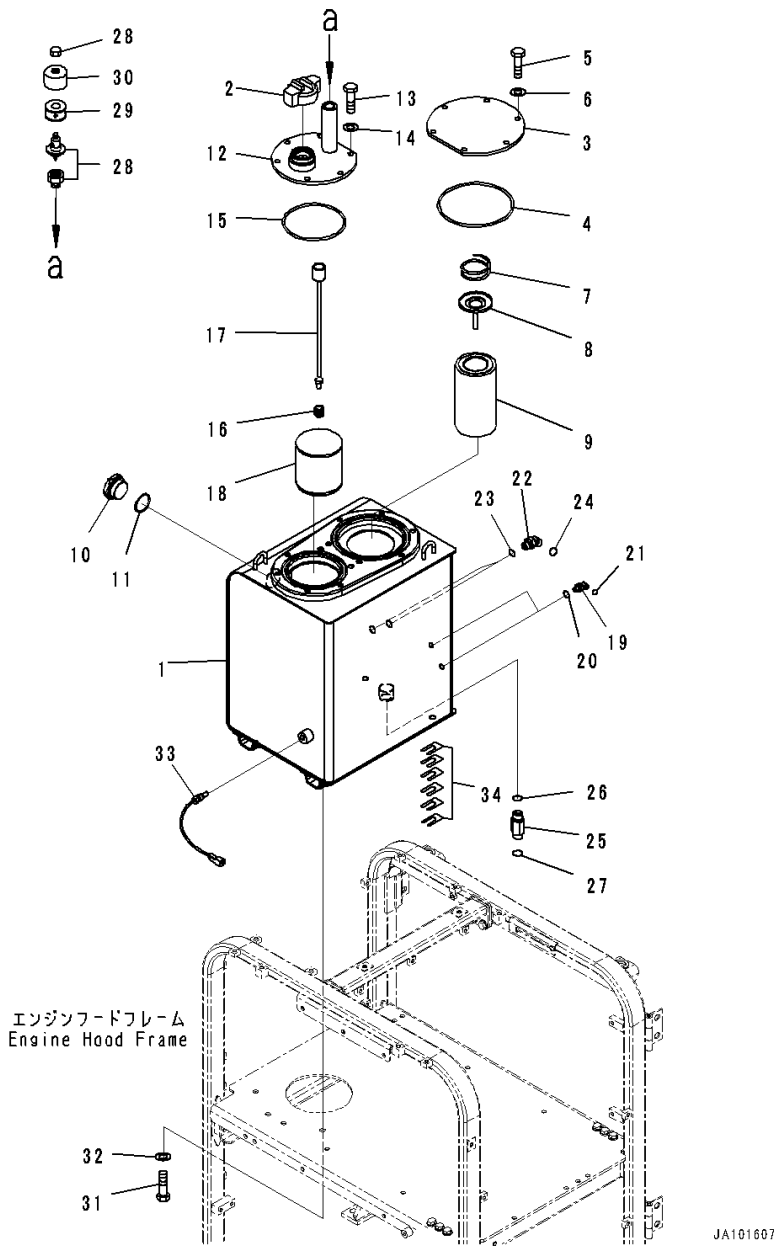

Index	Code	Part Number	Description	Qty	Serial Number
1		234-60-81110	Tank, Hydraulic Oil	1	26001-
2		07092-01000	Cap	1	26001-
		07051-00005	• Gasket	1	26001-
3		234-60-81220	Cover	1	26001-
4		07000-15195	O-ring	1	26001-
5		01010-D1225	Bolt	6	26001-
6		01643-71232	Washer	6	26001-
7		176-62-11650	Spring	1	26001-
8		21W-60-41170	Valve Assembly	1	26001-
9		423-60-45461	Element	1	26405-
	A2	423-60-45460	Element	1	26001-26404
10		421-60-11622	Gauge	1	26001-
11		07002-15234	O-ring	1	26001-
12		234-60-81210	Cover	1	26001-
13		01010-D1225	Bolt	6	26001-
14		01643-71232	Washer	6	26001-
15		07000-15160	O-ring	1	26001-
16		12R-60-11230	Spring	1	26001-
17		234-60-81230	Rod	1	26001-
18		22B-60-11160	Strainer	1	26001-
19		02783-10210	Elbow	2	26001-
20		07002-11423	O-ring	2	26001-
21		02896-11008	O-ring	2	26001-
22		02783-10422	Elbow	2	26001-
23		07002-12034	O-ring	2	26001-
24		02896-11012	O-ring	2	26001-
25		21W-62-42481	Nipple	1	26001-
26		07002-12434	O-ring	1	26001-
27		02896-11015	O-ring	1	26001-
28		14X-60-51240	Breather	1	26324-
29		421-60-35170	• Element	1	26001-
30		421-60-35180	• Cover	1	26001-
31		01010-81230	Bolt	4	26001-
32		01643-31232	Washer	4	26001-
33		7861-93-3320	Sensor, Temperature,Hydraulic Oil	1	26001-
34		23B-60-71440	Shim,T=0.5mm	6	26001-

FIG. H0120-001001 Control Valve (9-Valve) (1/10)

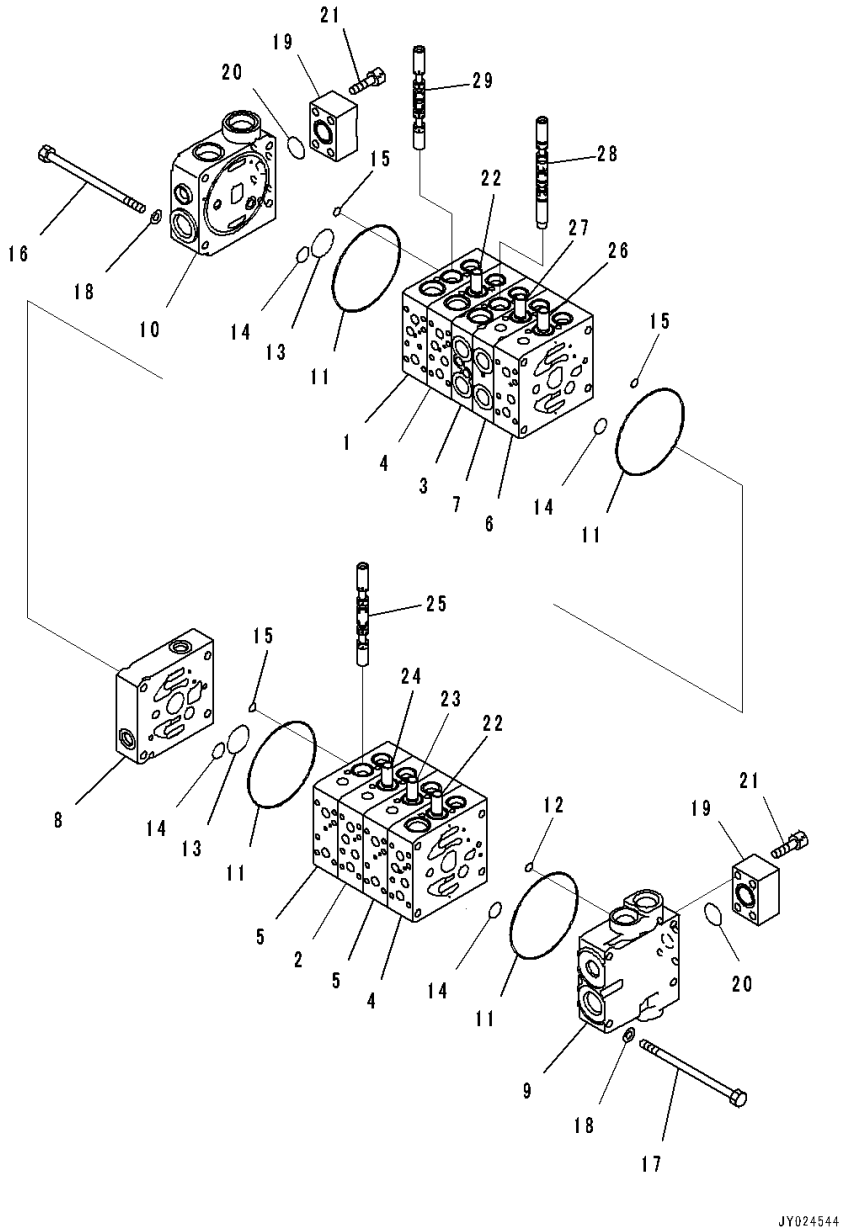

Index	Code	Part Number	Description	Qty	Serial Number
		723-19-18600	Valve, Control	1	26001-
1	C1		• Valve Body	1	26001-
2	C1		• Valve Body	1	26001-
3	C1		• Valve Body	1	26001-
4	C1		• Valve Body	2	26001-
5	C1		• Valve Body	2	26001-
6	C1		• Valve Body	1	26001-
7	C1		• Valve Body	1	26001-
8		723-11-23540	• Block	1	26001-
9	C1		• Valve Body	1	26001-
10	C1		• Cover	1	26001-
11		07000-12100	• O-ring	11	26001-
12		07000-11008	• O-ring	1	26001-
13		723-11-19110	• O-ring	9	26001-
14		723-11-19130	• O-ring	11	26001-
15		07000-11007	• O-ring	10	26001-
16		723-11-38650	• Bolt	4	26001-
17		723-11-38660	• Bolt	4	26001-
18		01643-50823	• Washer	8	26001-
19		723-11-18420	• Block	2	26001-
20		723-11-18430	• O-ring	2	26001-
21		01252-60830	• Bolt, Hexagon Socket Head	8	26001-
22	C1		• Spool	2	26001-
23	C1		• Spool	1	26001-
24	C1		• Spool	1	26001-
25	C1		• Spool	1	26001-
26	C1		• Spool	1	26001-
27	C1		• Spool	1	26001-
28	C1		• Spool	1	26001-
29	C1		• Spool	1	26001-

FIG. H0120-001002 Control Valve (9-Valve) (2/10)

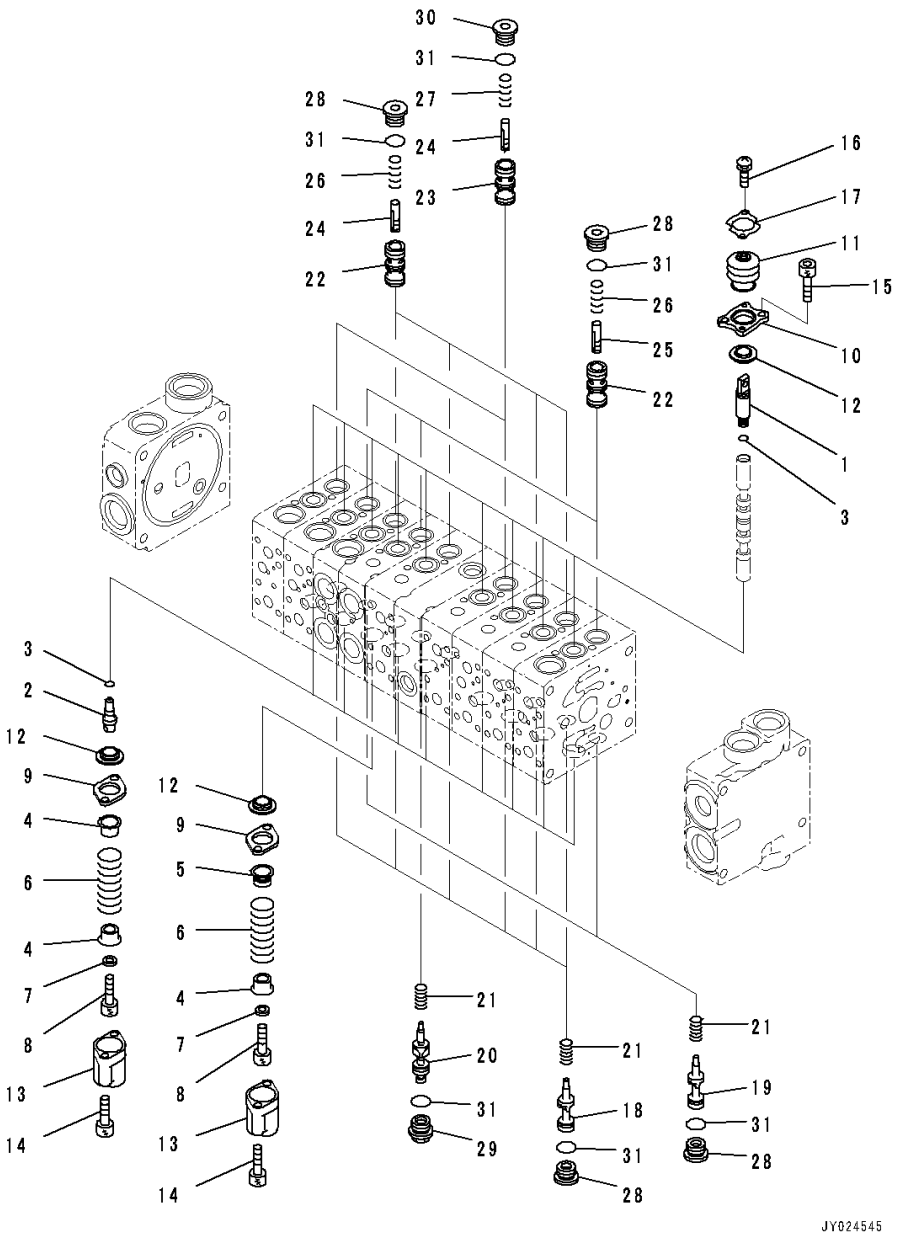

Index	Code	Part Number	Description	Qty	Serial Number
		723-19-18600	Valve, Control	1	26001-
1	C1		• Plug	9	26001-
2	C1		• Plug	8	26001-
3	C1		• O-ring	17	26001-
4	C1		• Retainer,L=9.7mm	17	26001-
	C1		• Retainer,L=9.8mm	17	26001-
	C1		• Retainer,L=9.6mm	17	26001-
5	C1		• Retainer,L=9.7mm	1	26001-
	C1		• Retainer,L=9.8mm	1	26001-
	C1		• Retainer,L=9.6mm	1	26001-
6		723-11-38970	• Spring	9	26001-
7		723-11-37870	• Washer	9	26001-
8		01252-60610	• Bolt, Hexagon Socket Head	9	26001-
9		723-11-37350	• Plate	9	26001-
10		723-11-37321	• Plate	9	26001-
11		723-11-37341	• Boot	9	26001-
12		709-32-11530	• Seal	18	26001-
13		723-11-37840	• Case	9	26001-
14		01252-60640	• Bolt, Hexagon Socket Head	18	26001-
15		01252-60612	• Bolt, Hexagon Socket Head	18	26001-
16		01023-10406	• Screw	18	26001-
17		723-11-37360	• Plate	9	26001-
18	C1		• Valve	6	26001-
19	C1		• Valve	2	26001-
20	C1		• Valve Subassembly	1	26001-
21		723-11-15130	• Spring	9	26001-
22	C1		• Valve	7	26001-
23	C1		• Valve	2	26001-
24	C1		• Piston	6	26001-
25	C1		• Piston	3	26001-
26		723-11-16130	• Spring	7	26001-
27		723-11-26750	• Spring	2	26001-
28		723-11-15110	• Plug	15	26001-
29		723-11-35131	• Plug	1	26001-
30		723-11-26170	• Plug	2	26001-
31		07002-11623	• O-ring	18	26001-

FIG. H0120-001003 Control Valve (9-Valve) (3/10)

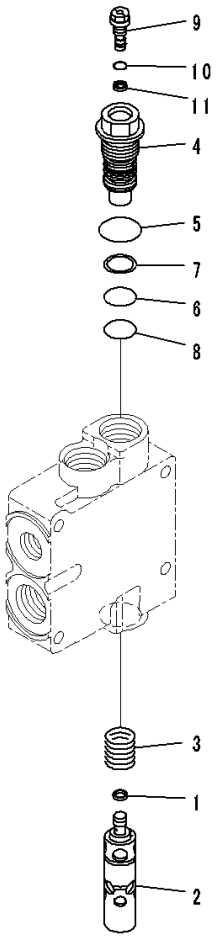

JD018499

Index	Code	Part Number	Description	Qty	Serial Number
		723-19-18600	Valve, Control	1	26001-
1	C1		• Seal	1	26001-
2	C1		• Spool	1	26001-
3		723-11-32730	• Spring	1	26001-
4	C1		• Sleeve	1	26001-
5		07002-12434	• O-ring	1	26001-
6		723-11-18150	• O-ring	1	26001-
7		723-11-18160	• Ring, Back-up	1	26001-
8		720-68-19760	• O-ring	1	26001-
9	C1		• Orifice	1	26001-
10		07002-10823	• O-ring	1	26001-
11	C1		• Seal	1	26001-

FIG. H0120-001004 Control Valve (9-Valve) (4/10)

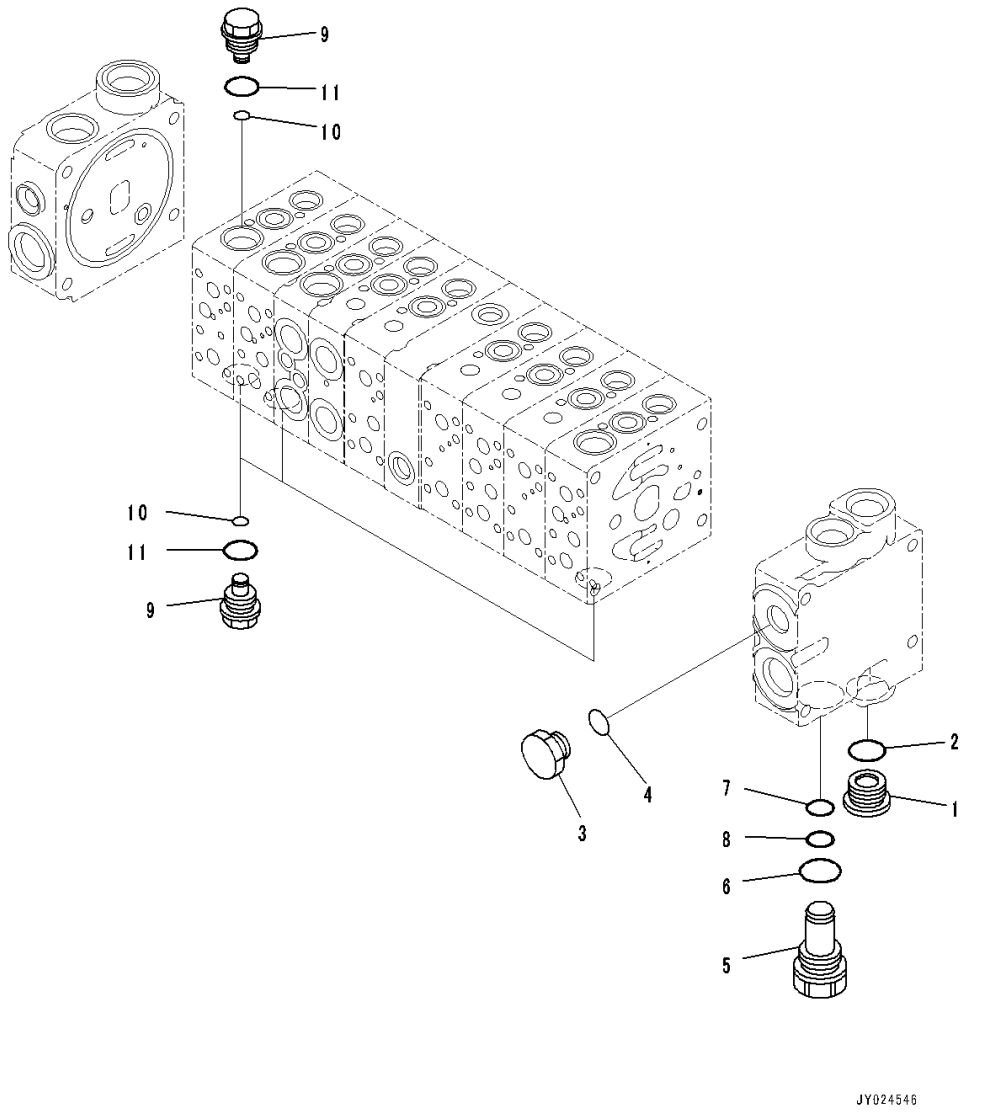

Index	Code	Part Number	Description	Qty	Serial Number
		723-19-18600	Valve, Control	1	26001-
1		723-26-15230	• Plug	1	26001-
2		07002-12434	• O-ring	1	26001-
3		708-8E-16250	• Plug	1	26001-
4		07002-11823	• O-ring	1	26001-
5		723-11-29361	• Plug	1	26001-
6		07000-13024	• O-ring	1	26001-
7		700-22-11410	• O-ring	1	26001-
8		700-80-64220	• Ring, Back-up	1	26001-
9		723-11-19620	• Plug	4	26001-
10		709-32-11840	• O-ring	4	26001-
11		07002-12034	• O-ring	4	26001-

FIG. H0120-001005 Control Valve (9-Valve) (5/10)

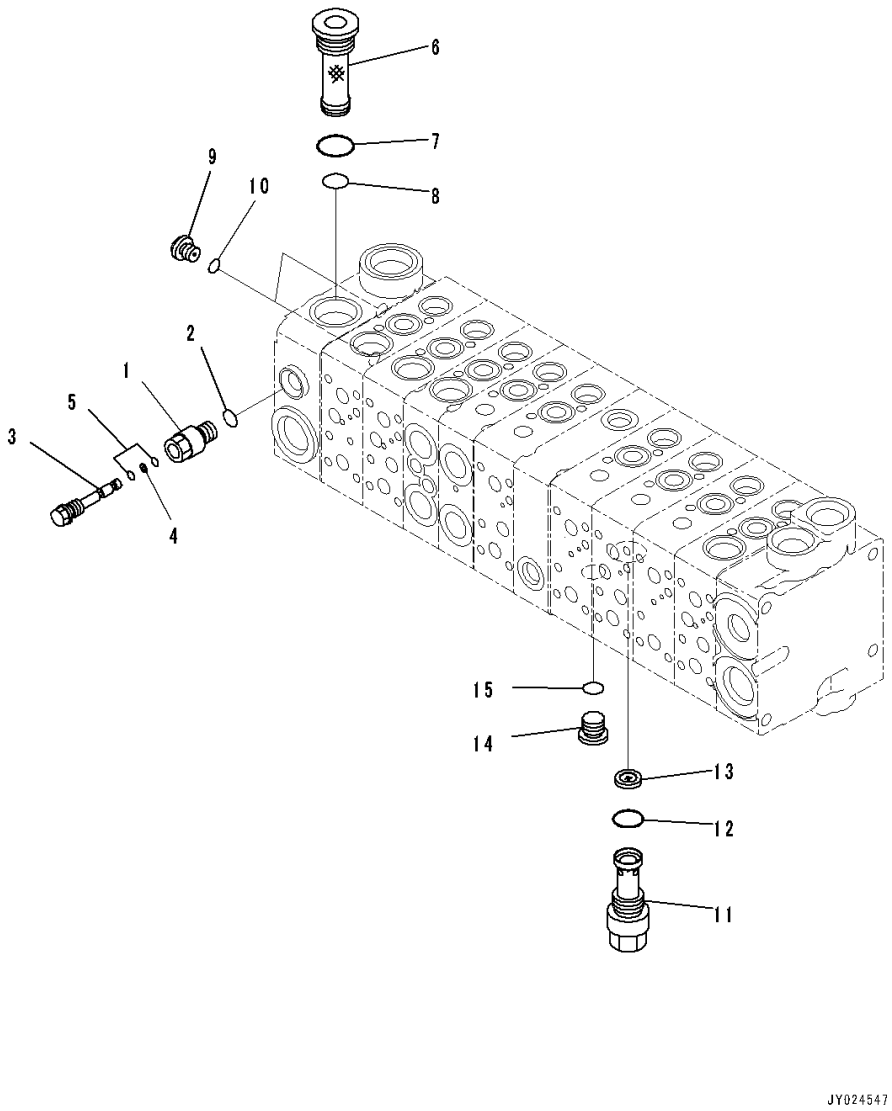

Index	Code	Part Number	Description	Qty	Serial Number
		723-19-18600	Valve, Control	1	26001-
1		723-11-38620	• Plug	1	26001-
2		07002-11223	• O-ring	1	26001-
3		723-11-38630	• Plug	1	26001-
4		07001-01003	• Ring, Back-up	1	26001-
5		07000-11003	• O-ring	2	26001-
6		723-11-14390	• Filter	1	26001-
7		07002-12434	• O-ring	1	26001-
8		723-11-19130	• O-ring	1	26001-
9		708-8E-16160	• Plug	2	26001-
10		07002-11023	• O-ring	2	26001-
11		723-11-38670	• Plug	1	26001-
12		07002-12034	• O-ring	1	26001-
13		702-21-53140	• Filter	1	26001-
14		702-21-55620	• Plug	1	26001-
15		07002-11423	• O-ring	1	26001-

FIG. H0120-001006 Control Valve (9-Valve) (6/10)

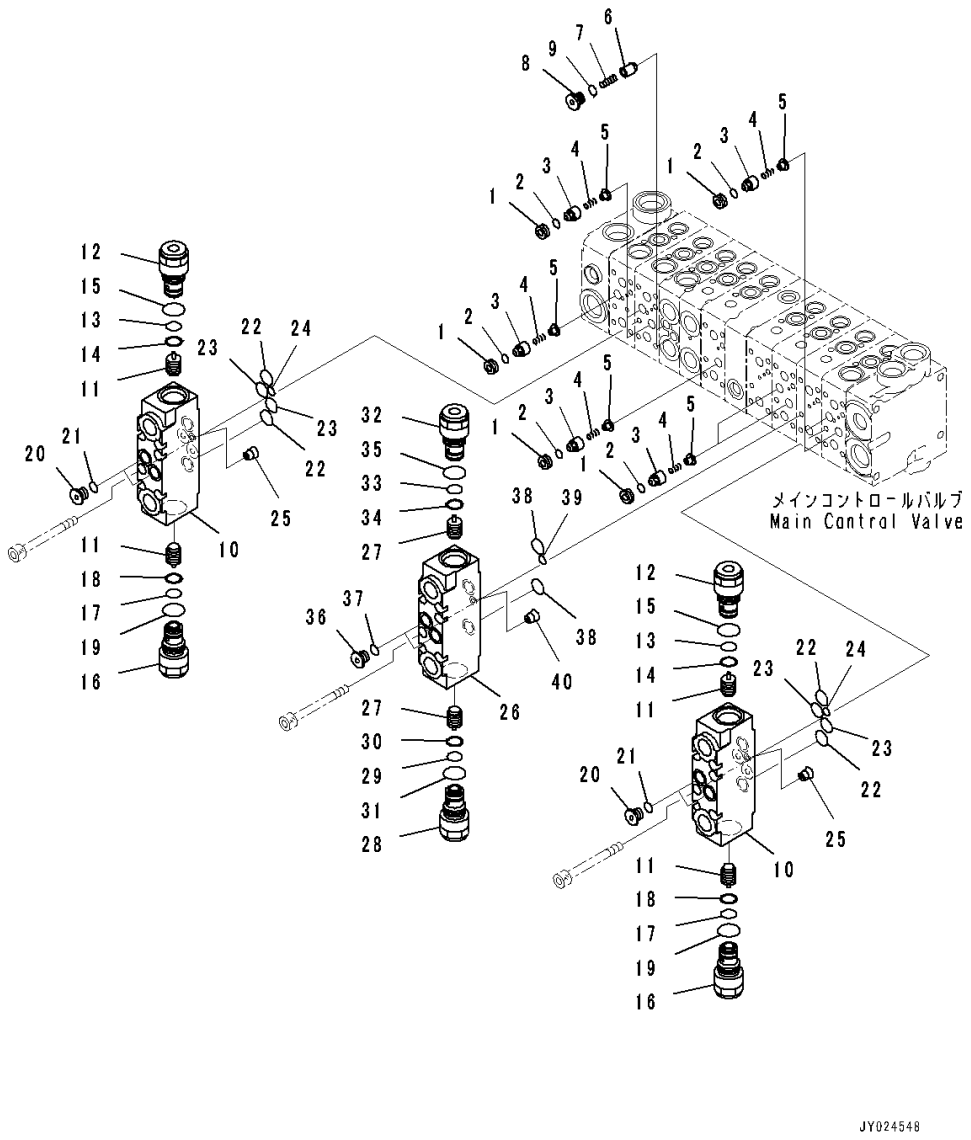

Index	Code	Part Number	Description	Qty	Serial Number
		723-19-18600	Valve, Control	1	26001-
1	C1		• Seat	8	26001-
2		723-11-19960	• O-ring	8	26001-
3	C1		• Valve	8	26001-
4		723-11-18540	• Spring	8	26001-
5		723-11-18550	• Retainer	8	26001-
6		723-11-18170	• Valve	2	26001-
7		723-11-18180	• Spring	2	26001-
8		723-11-18190	• Plug	2	26001-
9		07002-11023	• O-ring	2	26001-
		723-11-03420	• Valve, Pilot Check	2	26001-
10	C1		• • Valve Body	1	26001-
11	C1		• • Piston	2	26001-
12		723-11-03150	• • Valve, Check	1	26001-
13		07000-12015	• • • O-ring	1	26001-
14	C1		• • • Ring, Back-up	1	26001-
15		07002-12434	• • • O-ring	1	26001-
16		723-11-03190	• • Valve, Check	1	26001-
17		07000-12015	• • • O-ring	1	26001-
18	C1		• • • Ring, Back-up	1	26001-
19		07002-12434	• • • O-ring	1	26001-
20		723-26-15220	• • Plug	2	26001-
21		07002-11223	• • O-ring	2	26001-
22		723-11-19130	• • O-ring	2	26001-
23		723-11-19970	• • O-ring	2	26001-
24		07000-11007	• • O-ring	1	26001-
25	C1		• • Orifice	1	26001-
		723-11-02860	• Valve, Pilot Check	1	26001-
26	C1		• • Valve Body	1	26001-
27	C1		• • Piston	2	26001-
28		723-11-03150	• • Valve, Check	1	26001-
29		07000-12015	• • • O-ring	1	26001-
30	C1		• • • Ring, Back-up	1	26001-
31		07002-12434	• • • O-ring	1	26001-
32		723-11-03180	• • Valve, Check	1	26001-
33		07000-12015	• • • O-ring	1	26001-
34	C1		• • • Ring, Back-up	1	26001-
35		07002-12434	• • • O-ring	1	26001-
36		723-26-15220	• • Plug	2	26001-
37		07002-11223	• • O-ring	2	26001-

FIG. H0120-001006 Control Valve (9-Valve) (6/10)

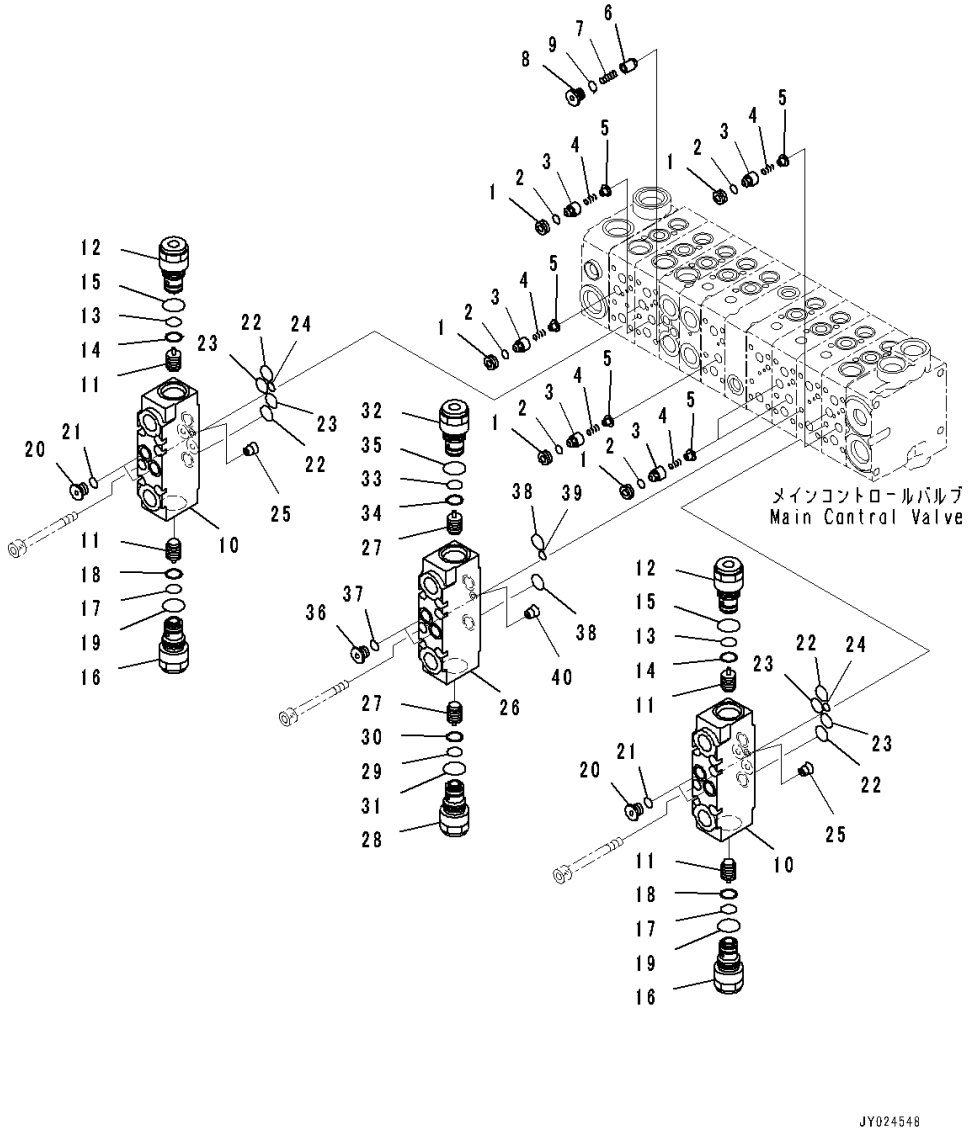

Index	Code	Part Number	Description	Qty	Serial Number
38		723-11-19130	• • O-ring	2	26001-
39		07000-11007	• • O-ring	1	26001-
40	C1		• • Orifice	1	26001-

FIG. H0120-001007 Control Valve (9-Valve) (7/10)

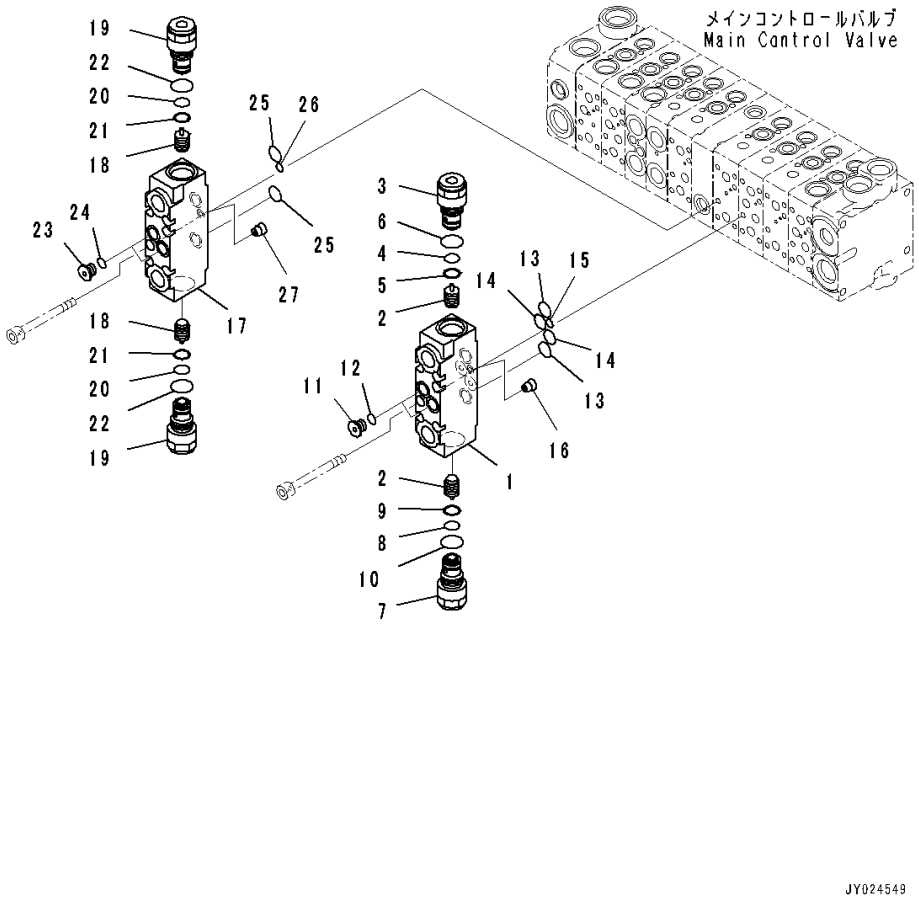

Index	Code	Part Number	Description	Qty	Serial Number
		723-19-18600	Valve, Control	1	26001-
		723-11-03430	• Valve, Pilot Check	1	26001-
1	C1		• • Valve Body	1	26001-
2	C1		• • Piston	2	26001-
3		723-11-03160	• • Valve, Check	1	26001-
4		07000-12015	• • • O-ring	1	26001-
5	C1		• • • Ring, Back-up	1	26001-
6		07002-12434	• • • O-ring	1	26001-
7		723-11-03170	• • Valve, Check	1	26001-
8		07000-12015	• • • O-ring	1	26001-
9	C1		• • • Ring, Back-up	1	26001-
10		07002-12434	• • • O-ring	1	26001-
11		723-26-15220	• • Plug	2	26001-
12		07002-11223	• • O-ring	2	26001-
13		723-11-19130	• • O-ring	2	26001-
14		723-11-19970	• • O-ring	2	26001-
15		07000-11007	• • O-ring	1	26001-
16	C1		• • Orifice	1	26001-
		723-11-02880	• Valve, Pilot Check	1	26001-
17	C1		• • Valve Body	1	26001-
18	C1		• • Piston	2	26001-
19		723-11-03170	• • Valve, Check	2	26001-
20		07000-12015	• • • O-ring	1	26001-
21	C1		• • • Ring, Back-up	1	26001-
22		07002-12434	• • • O-ring	1	26001-
23		723-26-15220	• • Plug	2	26001-
24		07002-11223	• • O-ring	2	26001-
25		723-11-19130	• • O-ring	2	26001-
26		07000-11007	• • O-ring	1	26001-
27	C1		• • Orifice	1	26001-

FIG. H0120-001008 Control Valve (9-Valve) (8/10)

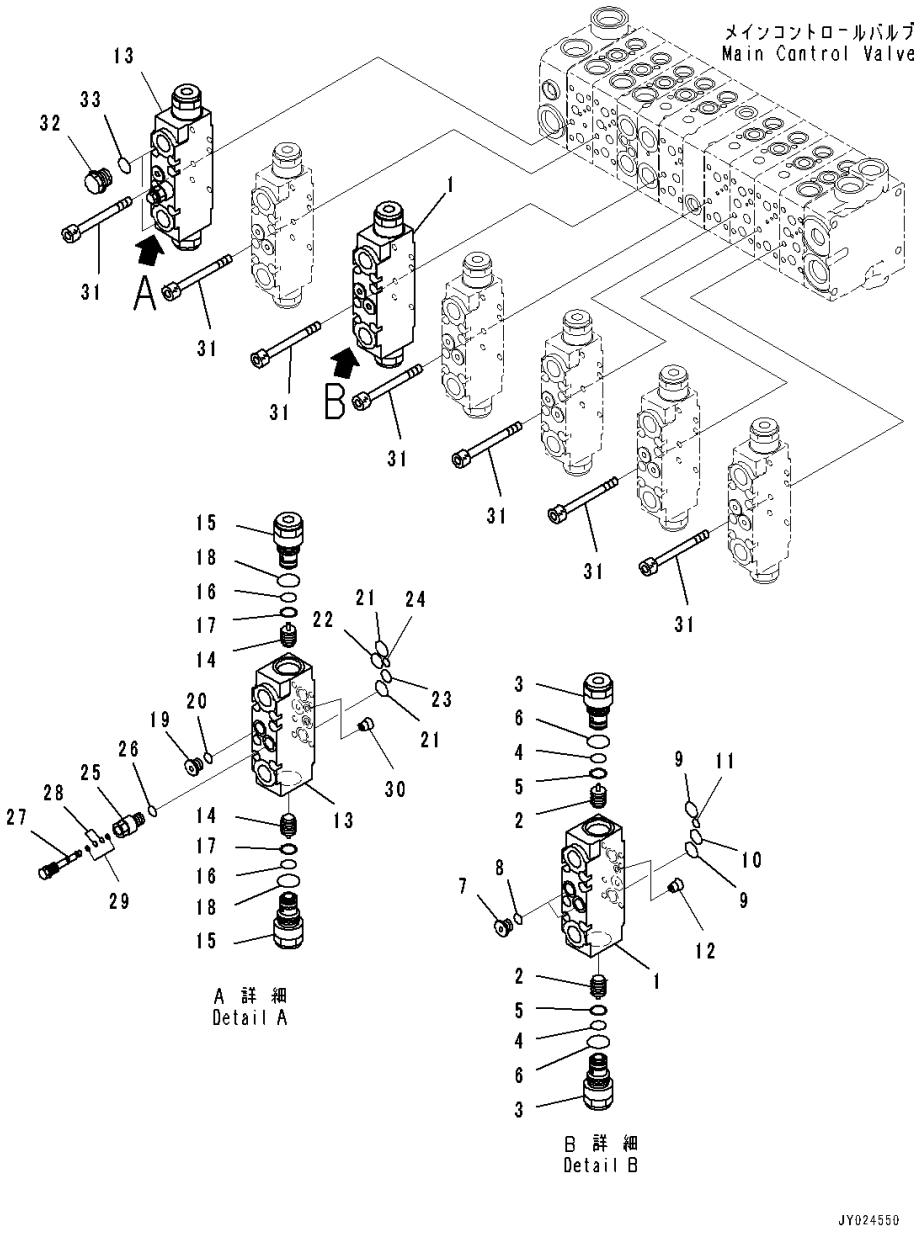

Index	Code	Part Number	Description	Qty	Serial Number
		723-19-18600	Valve, Control	1	26001-
		723-11-02890	• Valve, Pilot Check	1	26001-
1	C1		• • Valve Body	1	26001-
2	C1		• • Piston	2	26001-
3		723-11-03170	• • Valve, Check	2	26001-
4		07000-12015	• • • O-ring	1	26001-
5	C1		• • • Ring, Back-up	1	26001-
6		07002-12434	• • • O-ring	1	26001-
7		723-26-15220	• • Plug	2	26001-
8		07002-11223	• • O-ring	2	26001-
9		723-11-19130	• • O-ring	2	26001-
10		723-11-19970	• • O-ring	1	26001-
11		07000-11007	• • O-ring	1	26001-
12	C1		• • Orifice	1	26001-
		723-11-02950	• Valve, Pilot Check	1	26001-
13	C1		• • Valve Body	1	26001-
14	C1		• • Piston	2	26001-
15		723-11-03170	• • Valve, Check	2	26001-
16		07000-12015	• • • O-ring	1	26001-
17	C1		• • • Ring, Back-up	1	26001-
18		07002-12434	• • • O-ring	1	26001-
19		723-26-15220	• • Plug	1	26001-
20		07002-11223	• • O-ring	1	26001-
21		723-11-19130	• • O-ring	2	26001-
22		723-11-19970	• • O-ring	1	26001-
23		07000-12011	• • O-ring	1	26001-
24		07000-11007	• • O-ring	1	26001-
25		723-11-38620	• • Plug	1	26001-
26		07002-11223	• • O-ring	1	26001-
27		723-11-38640	• • Plug	1	26001-
28		07000-11003	• • O-ring	2	26001-
29		07001-01003	• • Ring, Back-up	2	26001-
30	C1		• • Orifice	1	26001-
31		700-22-11910	• Bolt	42	26001-
32		709-32-11930	• Plug	2	26001-
33		07002-11823	• O-ring	2	26001-

FIG. H0120-001009 Control Valve (9-Valve) (9/10)

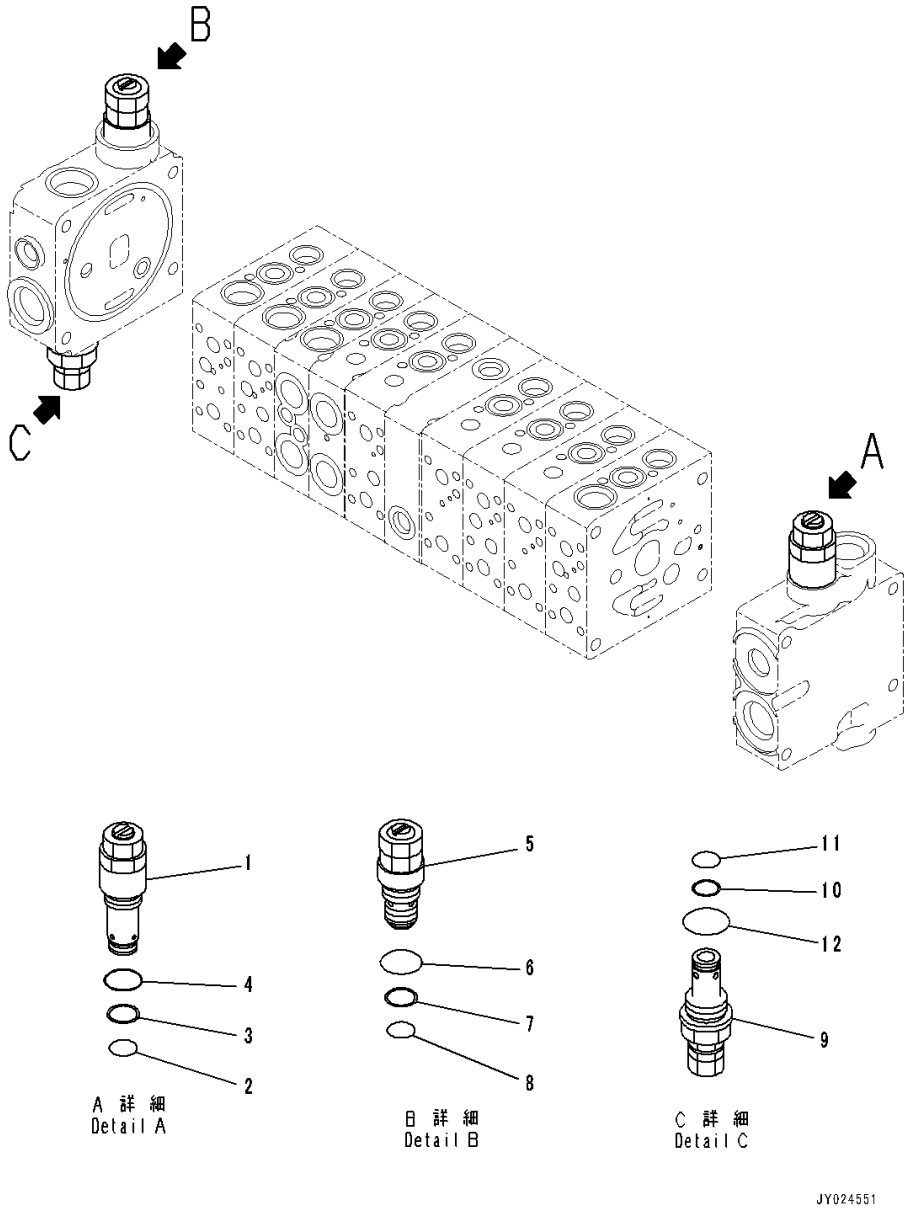

Index	Code	Part Number	Description	Qty	Serial Number
		723-19-18600	Valve, Control	1	26001-
1		723-10-41100	• Valve, Relief	1	26001-
2		700-22-11410	• • O-ring	1	26001-
3		700-80-64220	• • Ring, Back-up	1	26001-
4		07002-12434	• • O-ring	1	26001-
5		723-10-21400	• Valve, Relief	1	26001-
6		07002-12434	• • O-ring	1	26001-
7		723-11-18160	• • Ring, Back-up	1	26001-
8		723-11-18150	• • O-ring	1	26001-
9		723-10-12400	• Valve, Relief	1	26001-
10		700-80-64220	• • Ring, Back-up	1	26001-
11		700-22-11410	• • O-ring	1	26001-
12		709-25-11390	• • O-ring	1	26001-

FIG. H0120-001010 Control Valve (9-Valve) (10/10)

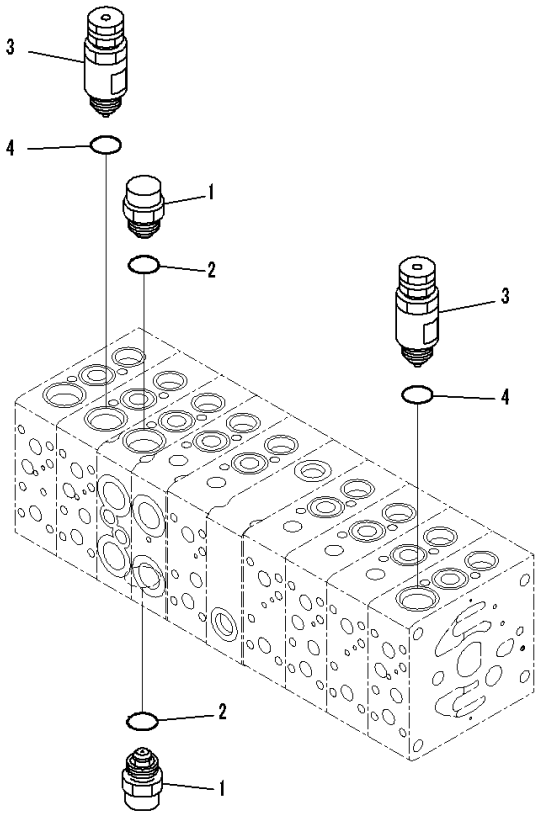

JY024552

Index	Code	Part Number	Description	Qty	Serial Number
		723-19-18600	Valve, Control	1	26001-
1		723-10-80200	• Valve Assembly, Suction	2	26001-
2		07002-12034	• • O-ring	1	26001-
3		723-10-14300	• Valve Assembly, Suction and Relief	2	26001-
4		07002-12034	• • O-ring	1	26001-

FIG. H0120-002001 Control Valve (10-Valve) (1/10)

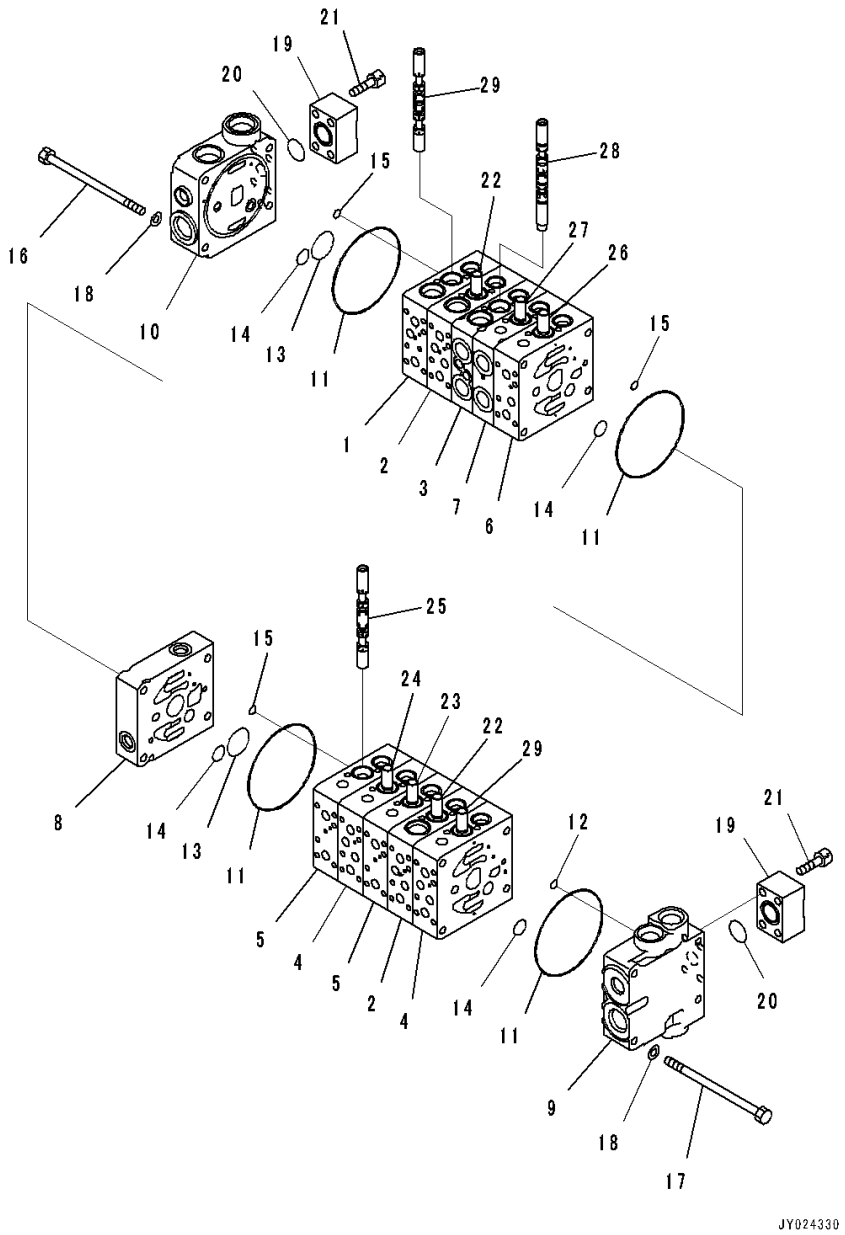

Index	Code	Part Number	Description	Qty	Serial Number
		723-1A-17800	Valve, Control	1	26001-
1	C1		• Valve Body	1	26001-
2	C1		• Valve Body	2	26001-
3	C1		• Valve Body	1	26001-
4	C1		• Valve Body	2	26001-
5	C1		• Valve Body	2	26001-
6	C1		• Valve Body	1	26001-
7	C1		• Valve Body	1	26001-
8		723-11-23540	• Block	1	26001-
9	C1		• Valve Body	1	26001-
10	C1		• Cover	1	26001-
11		07000-12100	• O-ring	12	26001-
12		07000-11008	• O-ring	1	26001-
13		723-11-19110	• O-ring	10	26001-
14		723-11-19130	• O-ring	12	26001-
15		07000-11007	• O-ring	11	26001-
16		723-11-38650	• Bolt	4	26001-
17		723-11-38850	• Bolt	4	26001-
18		01643-50823	• Washer	8	26001-
19		723-11-18420	• Block	2	26001-
20		723-11-18430	• O-ring	2	26001-
21		01252-60830	• Bolt, Hexagon Socket Head	8	26001-
22	C1		• Spool	2	26001-
23	C1		• Spool	1	26001-
24	C1		• Spool	1	26001-
25	C1		• Spool	1	26001-
26	C1		• Spool	1	26001-
27	C1		• Spool	1	26001-
28	C1		• Spool	1	26001-
29	C1		• Spool	2	26001-

FIG. H0120-002002 Control Valve (10-Valve) (2/10)

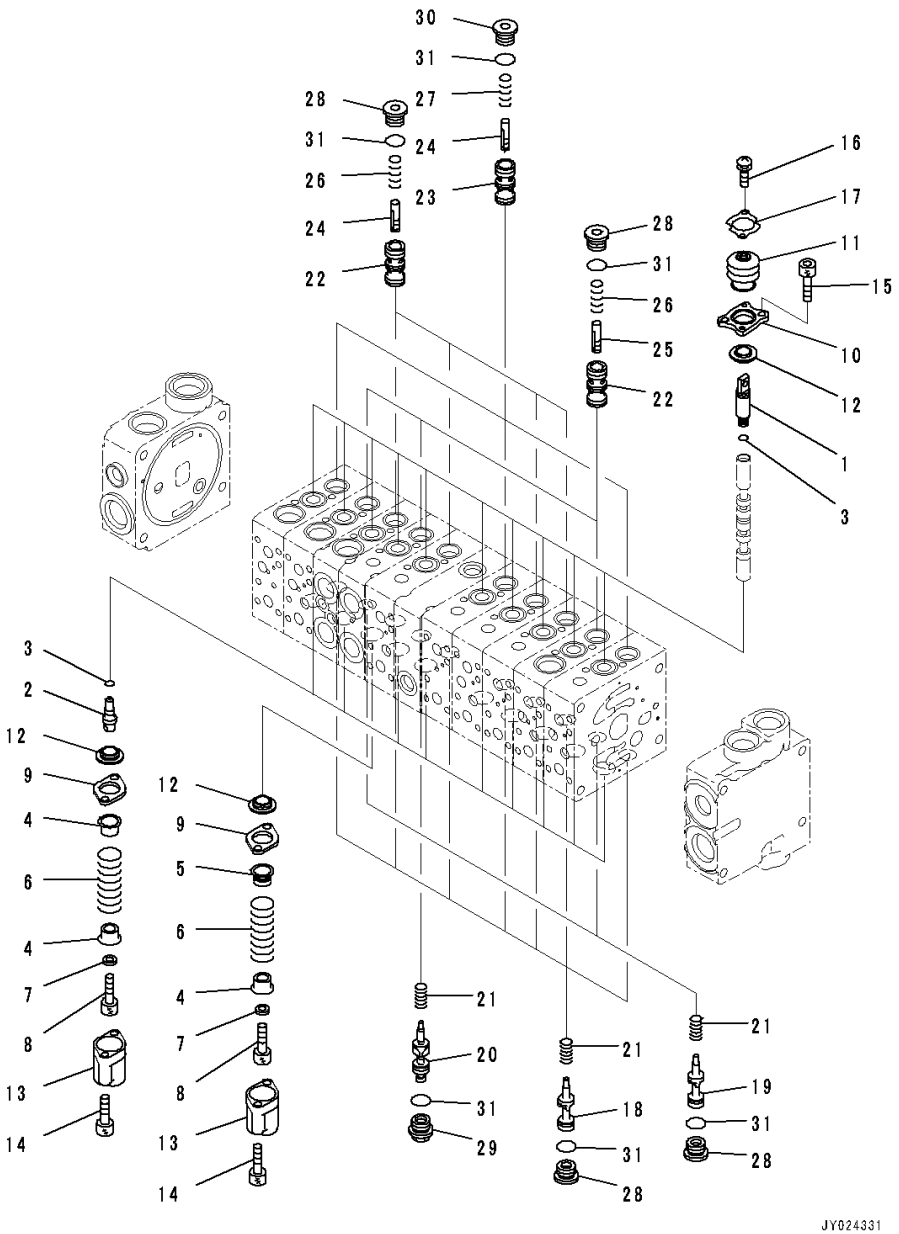

Index	Code	Part Number	Description	Qty	Serial Number
		723-1A-17800	Valve, Control	1	26001-
1	C1		• Plug	10	26001-
2	C1		• Plug	9	26001-
3	C1		• O-ring	19	26001-
4	C1		• Retainer,L=9.7mm	19	26001-
	C1		• Retainer,L=9.8mm	19	26001-
	C1		• Retainer,L=9.6mm	19	26001-
5	C1		• Retainer,L=9.7mm	1	26001-
	C1		• Retainer,L=9.8mm	1	26001-
	C1		• Retainer,L=9.6mm	1	26001-
6		723-11-38970	• Spring	10	26001-
7		723-11-37870	• Washer	10	26001-
8		01252-60610	• Bolt, Hexagon Socket Head	10	26001-
9		723-11-37350	• Plate	10	26001-
10		723-11-37321	• Plate	10	26001-
11		723-11-37341	• Boot	10	26001-
12		709-32-11530	• Seal	20	26001-
13		723-11-37840	• Case	10	26001-
14		01252-60640	• Bolt, Hexagon Socket Head	20	26001-
15		01252-60612	• Bolt, Hexagon Socket Head	20	26001-
16		01023-10406	• Screw	20	26001-
17		723-11-37360	• Plate	10	26001-
18	C1		• Valve	7	26001-
19	C1		• Valve	2	26001-
20	C1		• Valve Subassembly	1	26001-
21		723-11-15130	• Spring	10	26001-
22	C1		• Valve	7	26001-
23	C1		• Valve	3	26001-
24	C1		• Piston	7	26001-
25	C1		• Piston	3	26001-
26		723-11-16130	• Spring	7	26001-
27		723-11-26750	• Spring	3	26001-
28		723-11-15110	• Plug	16	26001-
29		723-11-35131	• Plug	1	26001-
30		723-11-26170	• Plug	3	26001-
31		07002-11623	• O-ring	20	26001-

FIG. H0120-002003 Control Valve (10-Valve) (3/10)

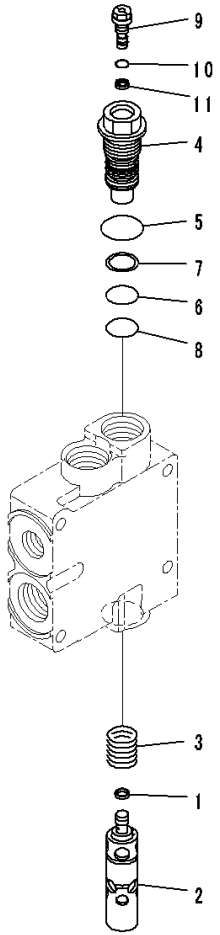

JD018499

Index	Code	Part Number	Description	Qty	Serial Number
		723-1A-17800	Valve, Control	1	26001-
1	C1		• Seal	1	26001-
2	C1		• Spool	1	26001-
3		723-11-32730	• Spring	1	26001-
4	C1		• Sleeve	1	26001-
5		07002-12434	• O-ring	1	26001-
6		723-11-18150	• O-ring	1	26001-
7		723-11-18160	• Ring, Back-up	1	26001-
8		720-68-19760	• O-ring	1	26001-
9	C1		• Orifice	1	26001-
10		07002-10823	• O-ring	1	26001-
11	C1		• Seal	1	26001-

FIG. H0120-002004 Control Valve (10-Valve) (4/10)

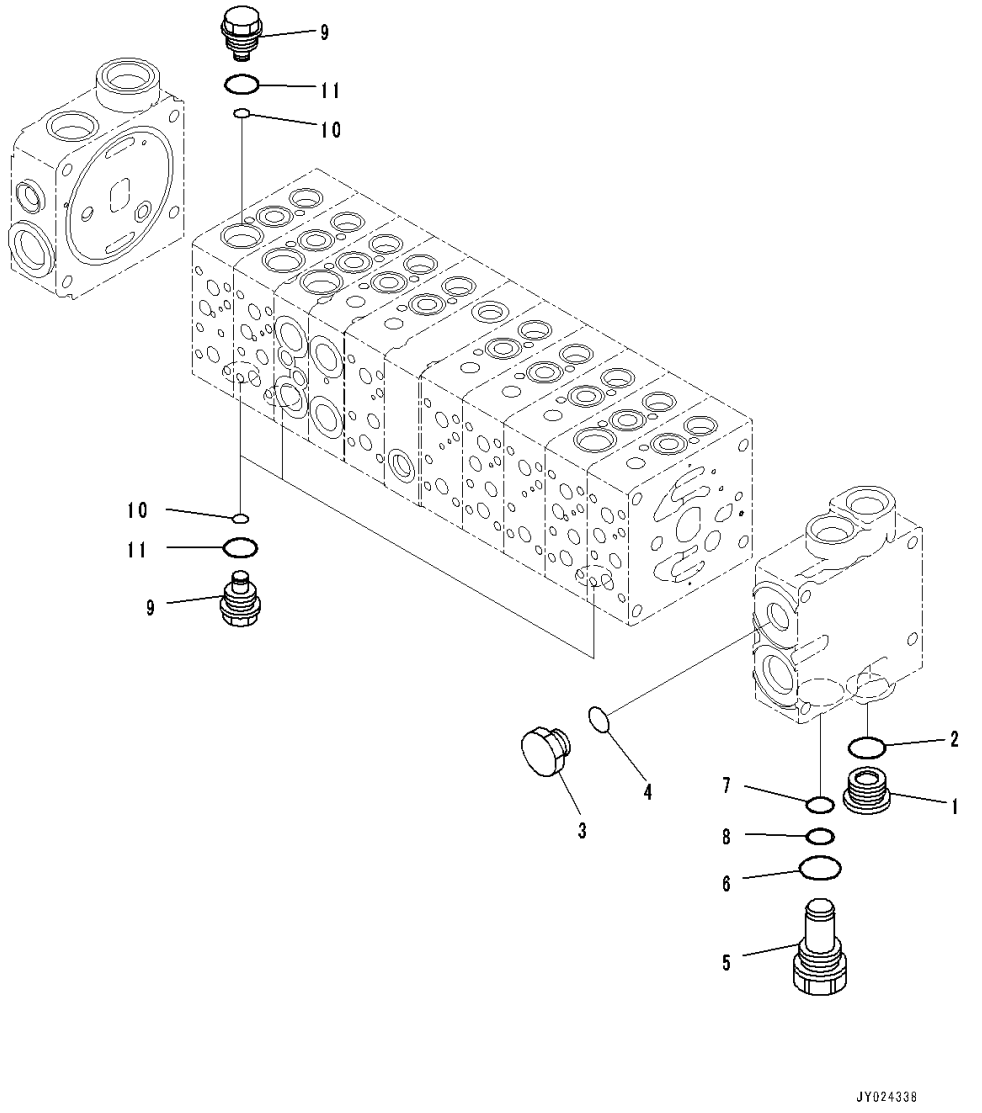

Index	Code	Part Number	Description	Qty	Serial Number
		723-1A-17800	Valve, Control	1	26001-
1		723-26-15230	• Plug	1	26001-
2		07002-12434	• O-ring	1	26001-
3		708-8E-16250	• Plug	1	26001-
4		07002-11823	• O-ring	1	26001-
5		723-11-29361	• Plug	1	26001-
6		07000-13024	• O-ring	1	26001-
7		700-22-11410	• O-ring	1	26001-
8		700-80-64220	• Ring, Back-up	1	26001-
9		723-11-19620	• Plug	4	26001-
10		709-32-11840	• O-ring	4	26001-
11		07002-12034	• O-ring	4	26001-

FIG. H0120-002005 Control Valve (10-Valve) (5/10)

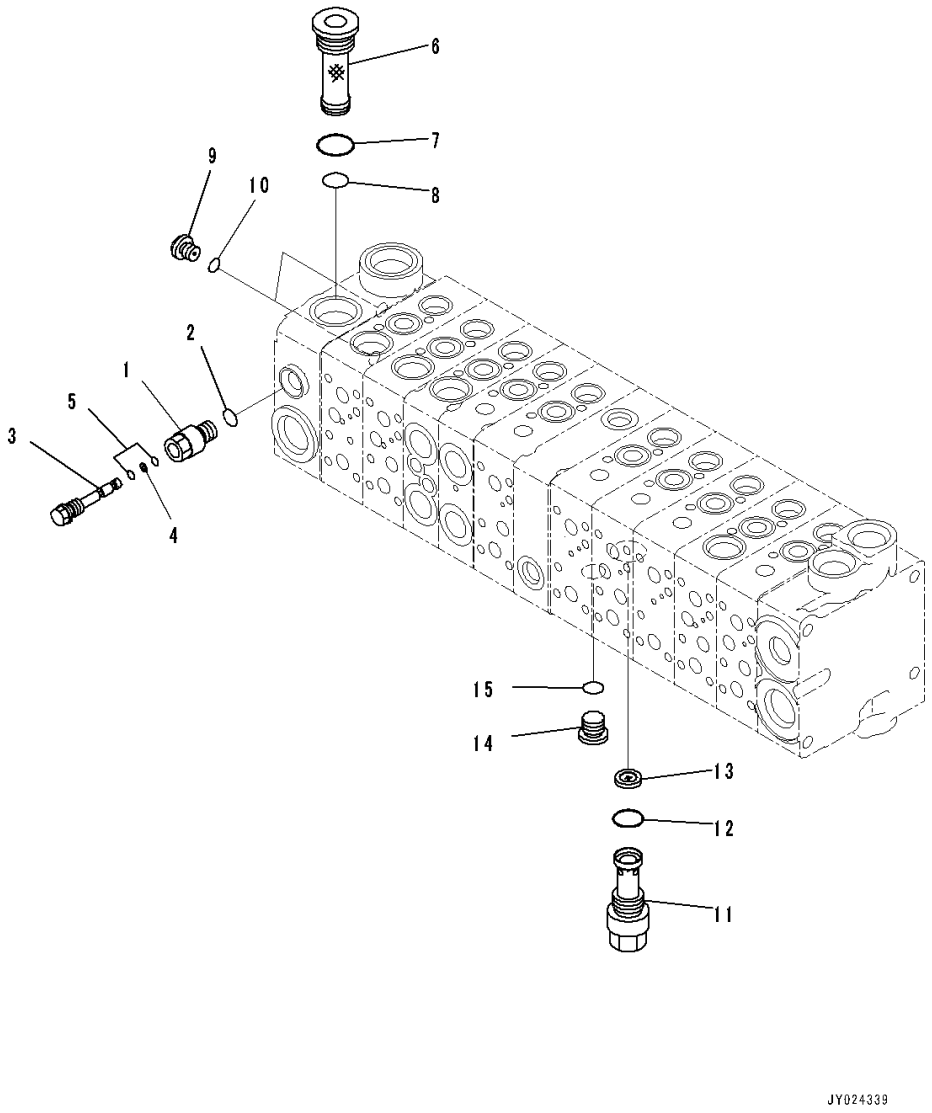

Index	Code	Part Number	Description	Qty	Serial Number
		723-1A-17800	Valve, Control	1	26001-
1		723-11-38620	• Plug	1	26001-
2		07002-11223	• O-ring	1	26001-
3		723-11-38630	• Plug	1	26001-
4		07001-01003	• Ring, Back-up	1	26001-
5		07000-11003	• O-ring	2	26001-
6		723-11-14390	• Filter	1	26001-
7		07002-12434	• O-ring	1	26001-
8		723-11-19130	• O-ring	1	26001-
9		708-8E-16160	• Plug	2	26001-
10		07002-11023	• O-ring	2	26001-
11		723-11-38670	• Plug	1	26001-
12		07002-12034	• O-ring	1	26001-
13		702-21-53140	• Filter	1	26001-
14		702-21-55620	• Plug	1	26001-
15		07002-11423	• O-ring	1	26001-

FIG. H0120-002006 Control Valve (10-Valve) (6/10)

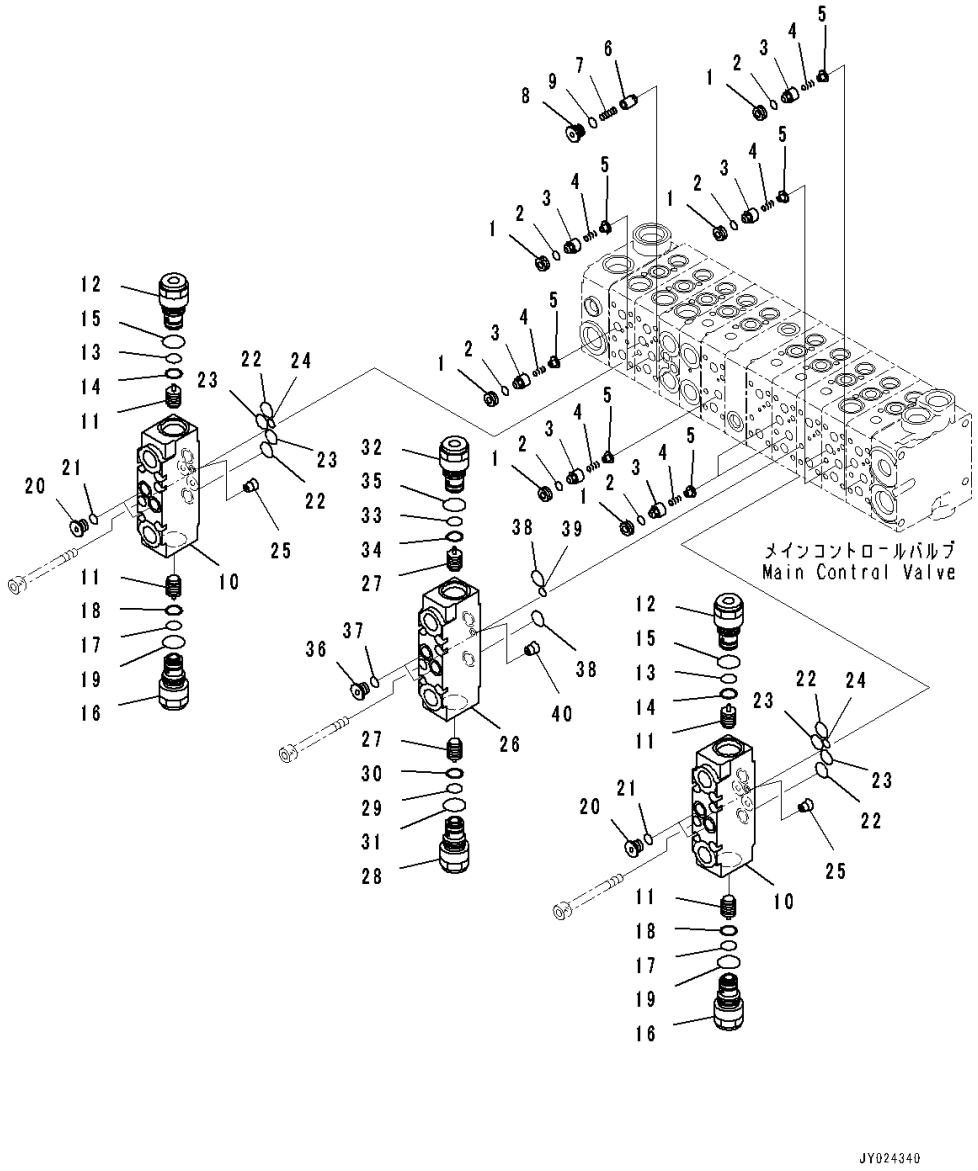

Index	Code	Part Number	Description	Qty	Serial Number
		723-1A-17800	Valve, Control	1	26001-
1	C1		• Seat	10	26001-
2		723-11-19960	• O-ring	10	26001-
3	C1		• Valve	10	26001-
4		723-11-18540	• Spring	10	26001-
5		723-11-18550	• Retainer	10	26001-
6		723-11-18170	• Valve	2	26001-
7		723-11-18180	• Spring	2	26001-
8		723-11-18190	• Plug	2	26001-
9		07002-11023	• O-ring	2	26001-
		723-11-03420	• Valve, Pilot Check	2	26001-
10	C1		• • Valve Body	1	26001-
11	C1		• • Piston	2	26001-
12		723-11-03150	• • Valve, Check	1	26001-
13		07000-12015	• • • O-ring	1	26001-
14	C1		• • • Ring, Back-up	1	26001-
15		07002-12434	• • • O-ring	1	26001-
16		723-11-03190	• • Valve, Check	1	26001-
17		07000-12015	• • • O-ring	1	26001-
18	C1		• • • Ring, Back-up	1	26001-
19		07002-12434	• • • O-ring	1	26001-
20		723-26-15220	• • Plug	2	26001-
21		07002-11223	• • O-ring	2	26001-
22		723-11-19130	• • O-ring	2	26001-
23		723-11-19970	• • O-ring	2	26001-
24		07000-11007	• • O-ring	1	26001-
25	C1		• • Orifice	1	26001-
		723-11-02860	• Valve, Pilot Check	1	26001-
26	C1		• • Valve Body	1	26001-
27	C1		• • Piston	2	26001-
28		723-11-03150	• • Valve, Check	1	26001-
29		07000-12015	• • • O-ring	1	26001-
30	C1		• • • Ring, Back-up	1	26001-
31		07002-12434	• • • O-ring	1	26001-
32		723-11-03180	• • Valve, Check	1	26001-
33		07000-12015	• • • O-ring	1	26001-
34	C1		• • • Ring, Back-up	1	26001-
35		07002-12434	• • • O-ring	1	26001-
36		723-26-15220	• • Plug	2	26001-
37		07002-11223	• • O-ring	2	26001-

FIG. H0120-002006 Control Valve (10-Valve) (6/10)

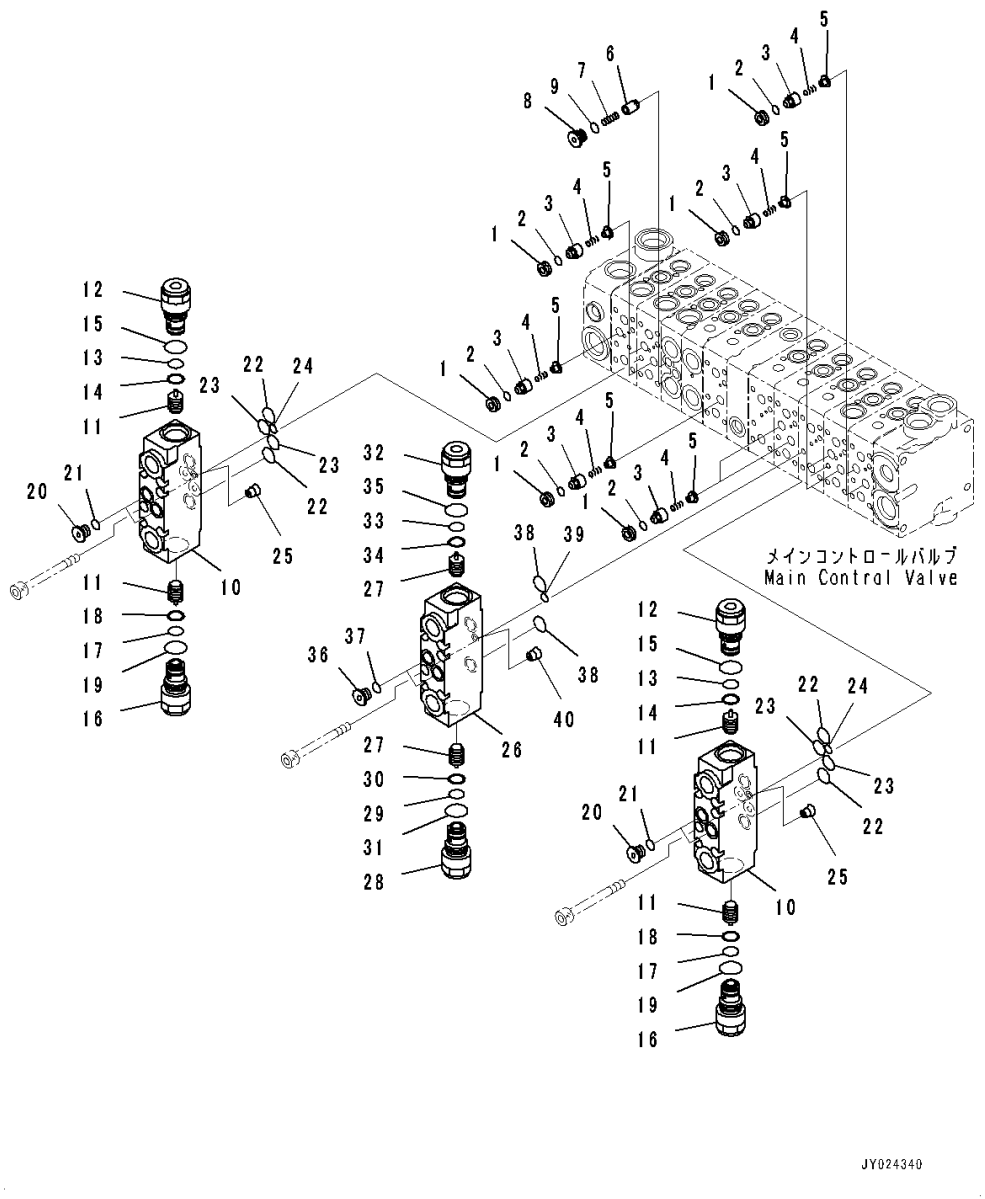

Index	Code	Part Number	Description	Qty	Serial Number
38		723-11-19130	• • O-ring	2	26001-
39		07000-11007	• • O-ring	1	26001-
40	C1		• • Orifice	1	26001-

FIG. H0120-002007 Control Valve (10-Valve) (7/10)

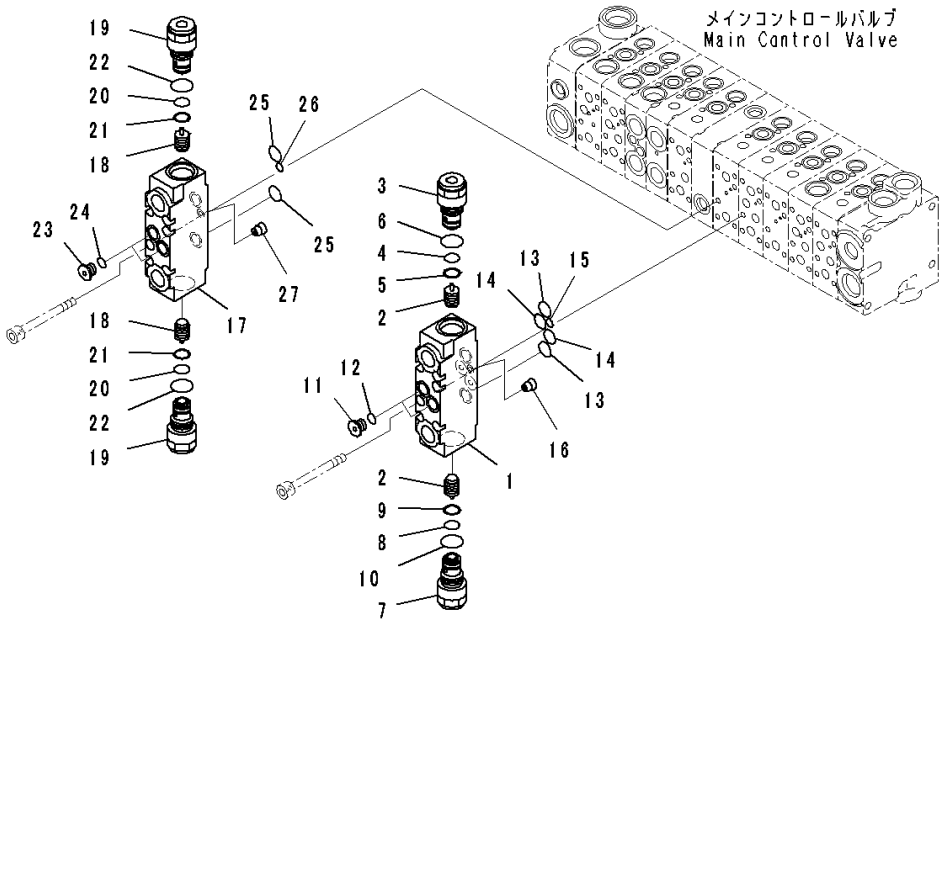

Index	Code	Part Number	Description	Qty	Serial Number
		723-1A-17800	Valve, Control	1	26001-
		723-11-03430	• Valve, Pilot Check	1	26001-
1	C1		• • Valve Body	1	26001-
2	C1		• • Piston	2	26001-
3		723-11-03160	• • Valve, Check	1	26001-
4		07000-12015	• • • O-ring	1	26001-
5	C1		• • • Ring, Back-up	1	26001-
6		07002-12434	• • • O-ring	1	26001-
7		723-11-03170	• • Valve, Check	1	26001-
8		07000-12015	• • • O-ring	1	26001-
9	C1		• • • Ring, Back-up	1	26001-
10		07002-12434	• • • O-ring	1	26001-
11		723-26-15220	• • Plug	2	26001-
12		07002-11223	• • O-ring	2	26001-
13		723-11-19130	• • O-ring	2	26001-
14		723-11-19970	• • O-ring	2	26001-
15		07000-11007	• • O-ring	1	26001-
16	C1		• • Orifice	1	26001-
		723-11-02880	• Valve, Pilot Check	1	26001-
17	C1		• • Valve Body	1	26001-
18	C1		• • Piston	2	26001-
19		723-11-03170	• • Valve, Check	2	26001-
20		07000-12015	• • • O-ring	1	26001-
21	C1		• • • Ring, Back-up	1	26001-
22		07002-12434	• • • O-ring	1	26001-
23		723-26-15220	• • Plug	2	26001-
24		07002-11223	• • O-ring	2	26001-
25		723-11-19130	• • O-ring	2	26001-
26		07000-11007	• • O-ring	1	26001-
27	C1		• • Orifice	1	26001-

FIG. H0120-002008 Control Valve (10-Valve) (8/10)

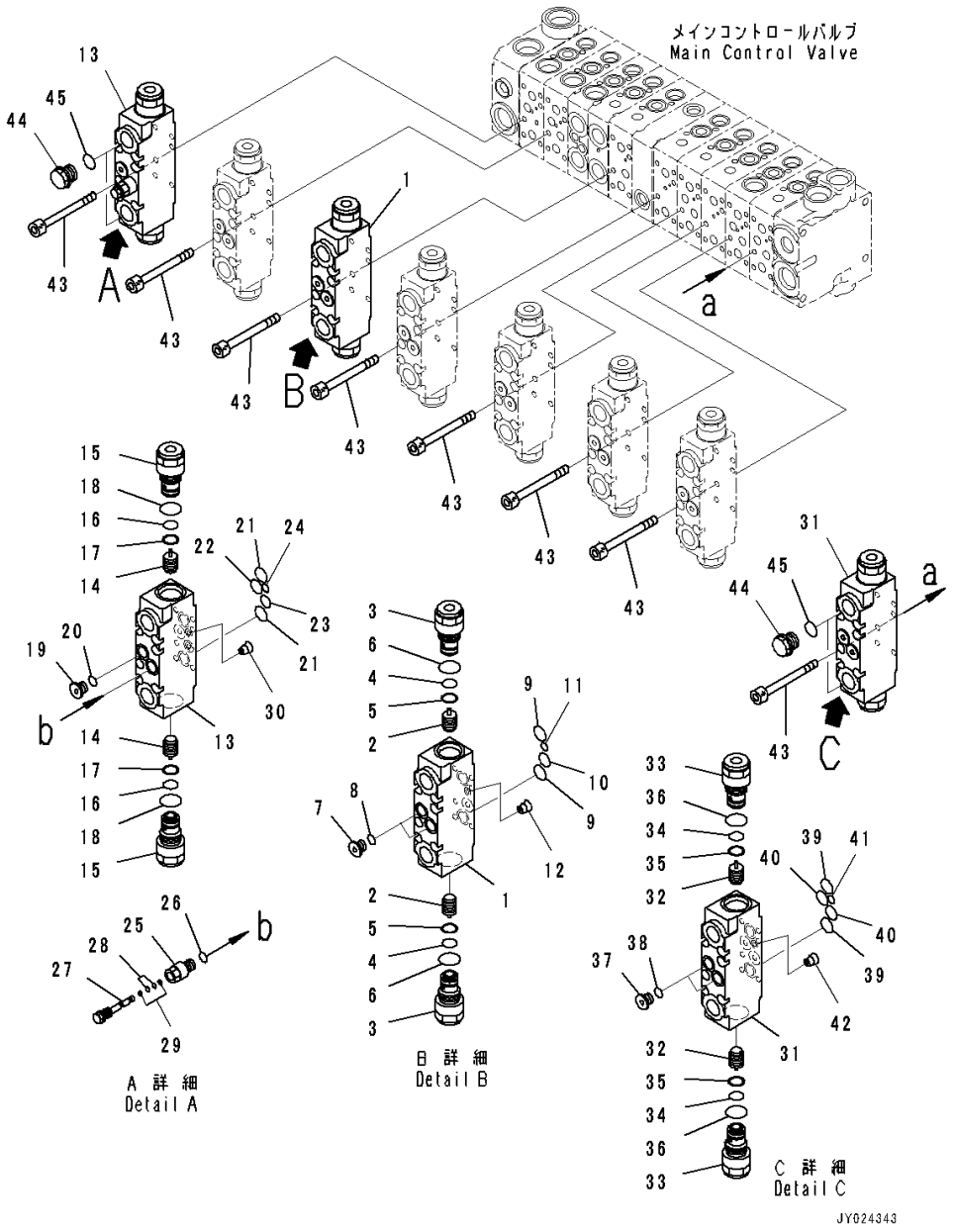

Index	Code	Part Number	Description	Qty	Serial Number
		723-1A-17800	Valve, Control	1	26001-
		723-11-02890	• Valve, Pilot Check	1	26001-
1	C1		• • Valve Body	1	26001-
2	C1		• • Piston	2	26001-
3		723-11-03170	• • Valve, Check	2	26001-
4		07000-12015	• • • O-ring	1	26001-
5	C1		• • • Ring, Back-up	1	26001-
6		07002-12434	• • • O-ring	1	26001-
7		723-26-15220	• • Plug	2	26001-
8		07002-11223	• • O-ring	2	26001-
9		723-11-19130	• • O-ring	2	26001-
10		723-11-19970	• • O-ring	1	26001-
11		07000-11007	• • O-ring	1	26001-
12	C1		• • Orifice	1	26001-
		723-11-02950	• Valve, Pilot Check	1	26001-
13	C1		• • Valve Body	1	26001-
14	C1		• • Piston	2	26001-
15		723-11-03170	• • Valve, Check	2	26001-
16		07000-12015	• • • O-ring	1	26001-
17	C1		• • • Ring, Back-up	1	26001-
18		07002-12434	• • • O-ring	1	26001-
19		723-26-15220	• • Plug	1	26001-
20		07002-11223	• • O-ring	1	26001-
21		723-11-19130	• • O-ring	2	26001-
22		723-11-19970	• • O-ring	1	26001-
23		07000-12011	• • O-ring	1	26001-
24		07000-11007	• • O-ring	1	26001-
25		723-11-38620	• • Plug	1	26001-
26		07002-11223	• • O-ring	1	26001-
27		723-11-38640	• • Plug	1	26001-
28		07000-11003	• • O-ring	2	26001-
29		07001-01003	• • Ring, Back-up	2	26001-
30	C1		• • Orifice	1	26001-
		723-11-03440	• Valve, Pilot Check	1	26001-
31	C1		• • Valve Body	1	26001-
32	C1		• • Piston	2	26001-
33		723-11-03170	• • Valve, Check	2	26001-
34		07000-12015	• • • O-ring	1	26001-
35	C1		• • • Ring, Back-up	1	26001-
36		07002-12434	• • • O-ring	1	26001-

FIG. H0120-002008 Control Valve (10-Valve) (8/10)

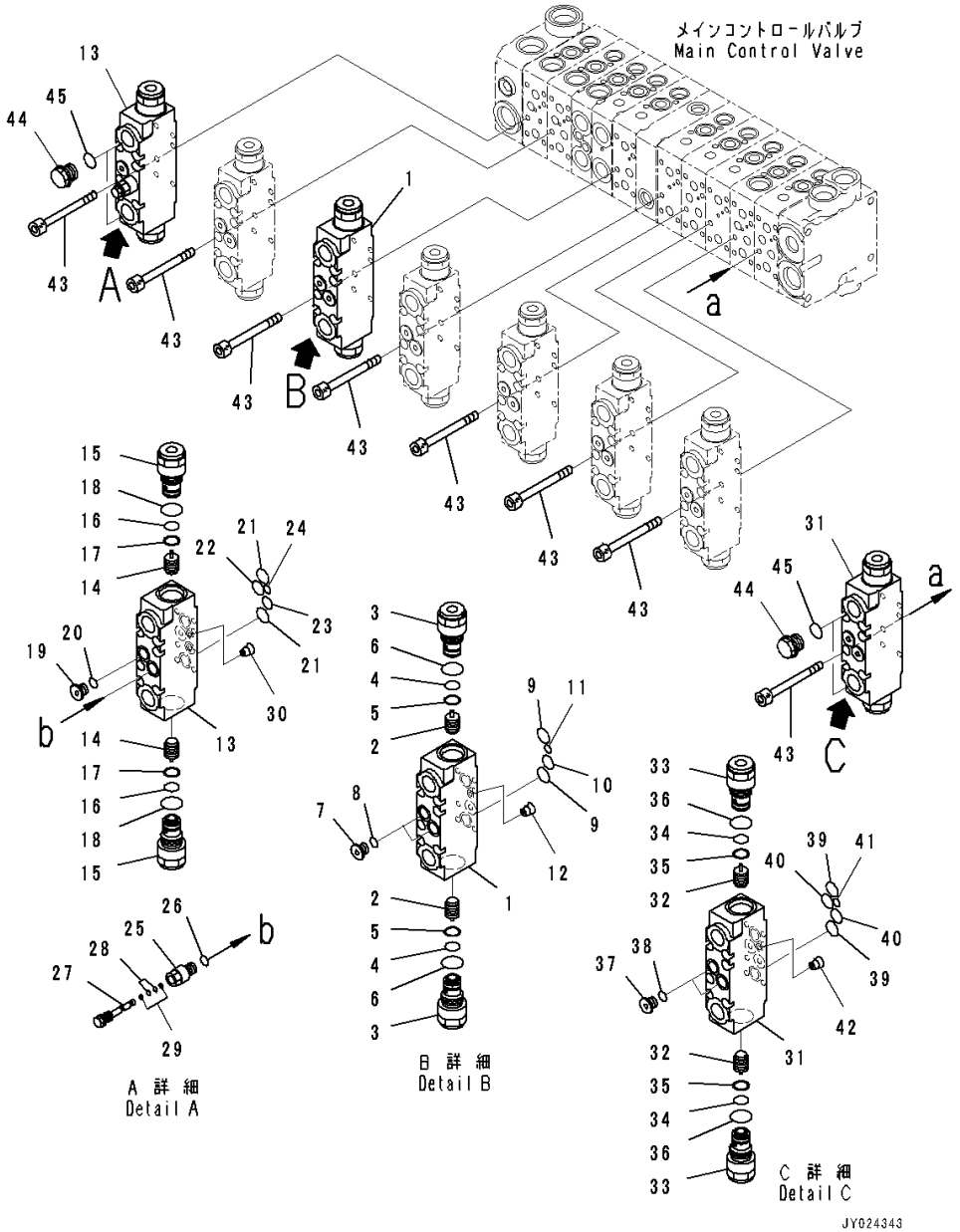

Index	Code	Part Number	Description	Qty	Serial Number
37		723-26-15220	• • Plug	2	26001-
38		07002-11223	• • O-ring	2	26001-
39		723-11-19130	• • O-ring	2	26001-
40		723-11-19970	• • O-ring	2	26001-
41		07000-11007	• • O-ring	1	26001-
42	C1		• • Orifice	1	26001-
43		700-22-11910	• Bolt	48	26001-
44		709-32-11930	• Plug	4	26001-
45		07002-11823	• O-ring	4	26001-

FIG. H0120-002009 Control Valve (10-Valve) (9/10)

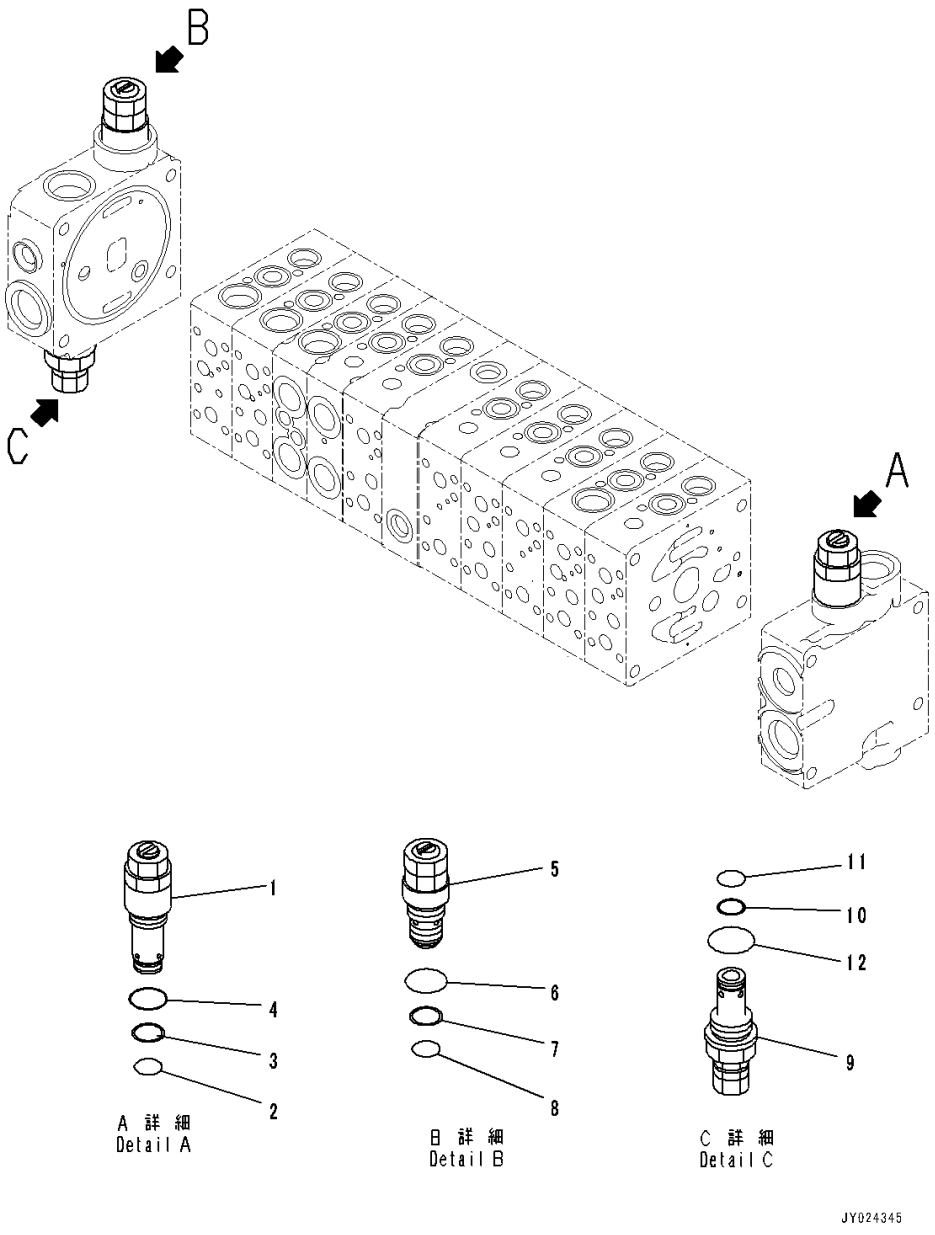

Index	Code	Part Number	Description	Qty	Serial Number
		723-1A-17800	Valve, Control	1	26001-
1		723-10-41100	• Valve, Relief	1	26001-
2		700-22-11410	• • O-ring	1	26001-
3		700-80-64220	• • Ring, Back-up	1	26001-
4		07002-12434	• • O-ring	1	26001-
5		723-10-21400	• Valve, Relief	1	26001-
6		07002-12434	• • O-ring	1	26001-
7		723-11-18160	• • Ring, Back-up	1	26001-
8		723-11-18150	• • O-ring	1	26001-
9		723-10-12400	• Valve, Relief	1	26001-
10		700-80-64220	• • Ring, Back-up	1	26001-
11		700-22-11410	• • O-ring	1	26001-
12		709-25-11390	• • O-ring	1	26001-

FIG. H0120-002010 Control Valve (10-Valve) (10/10)

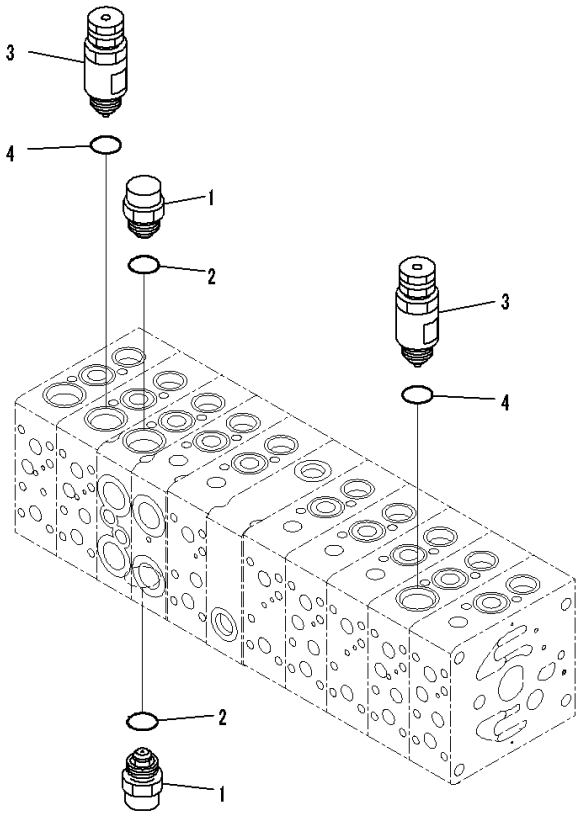

JY024346

Index	Code	Part Number	Description	Qty	Serial Number
		723-1A-17800	Valve, Control	1	26001-
1		723-10-80200	• Valve Assembly, Suction	2	26001-
2		07002-12034	• • O-ring	1	26001-
3		723-10-14300	• Valve Assembly, Suction and Relief	2	26001-
4		07002-12034	• • O-ring	1	26001-

FIG. H0120-001011 Control Valve (Mounting) (With 9 Spool Valve)

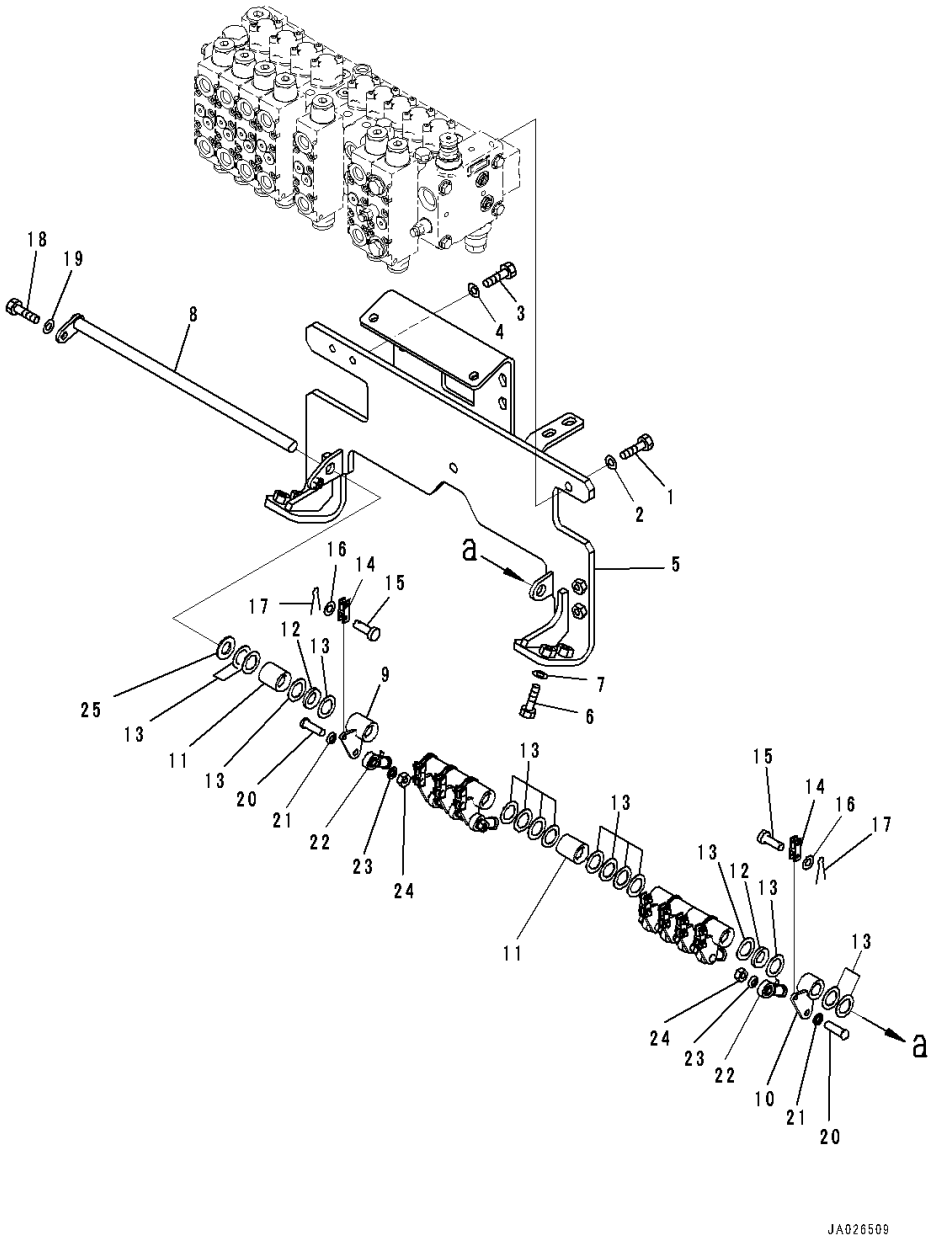

Index	Code	Part Number	Description	Qty	Serial Number
1		01010-81025	Bolt	2	26001-
2		01643-31032	Washer	2	26001-
3		01010-80820	Bolt	1	26001-
4		01643-30823	Washer	1	26001-
5		234-60-84111	Bracket	1	26001-
6		01010-81235	Bolt	4	26001-
7		01643-31232	Washer	4	26001-
8		23B-60-71320	Shaft	1	26001-
9		23B-60-71330	Lever	8	26001-
10		23B-60-71341	Lever	1	26001-
11		23B-60-71350	Collar	2	26001-
12		01643-51645	Washer	5	26001-
13		237-43-17420	Washer	30	26001-
14		23B-60-71360	Yoke	9	26001-
15		04205-10516	Pin	18	26001-
16		01640-20508	Washer	18	26001-
17		04050-11210	Pin, Cotter	18	26001-
18		01010-80820	Bolt	1	26001-
19		01643-30823	Washer	1	26001-
20		235-43-18380	Bolt	9	26001-
21		04254-10823	Spacer	9	26001-
22		04250-60847	Rod End	9	26291-
	A2	04250-90847	Rod End	9	26001-26290
23		04254-10823	Spacer	9	26001-
24		01580-10806	Nut	9	26001-
25		01640-21626	Washer, Flat	1	26001-

FIG. H0120-002011 Control Valve (Mounting) (With 10 Spool Valve)

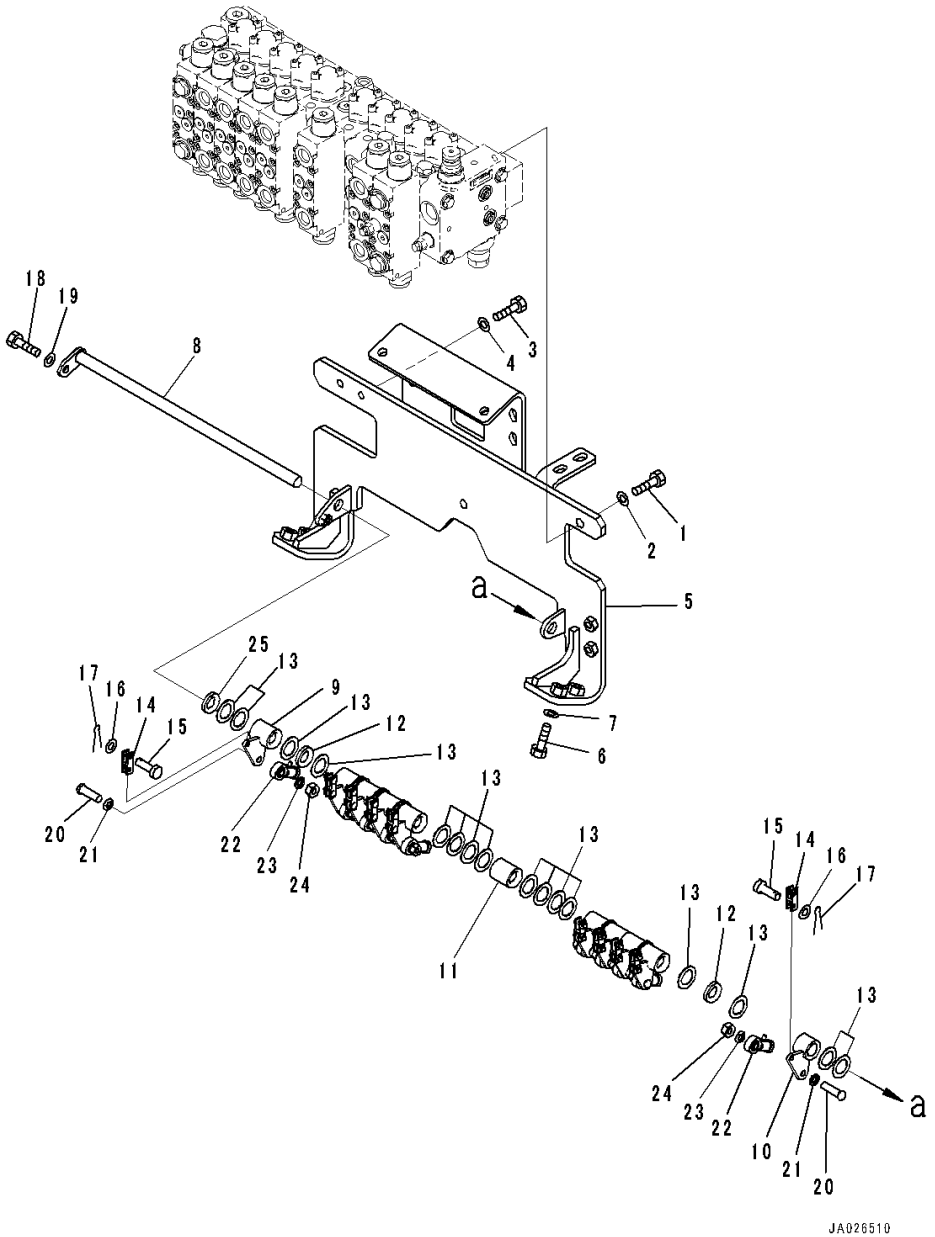

Index	Code	Part Number	Description	Qty	Serial Number
1		01010-81025	Bolt	2	26001-
2		01643-31032	Washer	2	26001-
3		01010-80820	Bolt	1	26001-
4		01643-30823	Washer	1	26001-
5		234-60-84111	Bracket	1	26001-
6		01010-81235	Bolt	4	26001-
7		01643-31232	Washer	4	26001-
8		23B-60-71320	Shaft	1	26001-
9		23B-60-71330	Lever	9	26001-
10		23B-60-71341	Lever	1	26001-
11		23B-60-71350	Collar	1	26001-
12		01643-51645	Washer	5	26001-
13		237-43-17420	Washer	30	26001-
14		23B-60-71360	Yoke	10	26001-
15		04205-10516	Pin	20	26001-
16		01640-20508	Washer	20	26001-
17		04050-11210	Pin, Cotter	20	26001-
18		01010-80820	Bolt	1	26001-
19		01643-30823	Washer	1	26001-
20		235-43-18380	Bolt	10	26001-
21		04254-10823	Spacer	10	26001-
22		04250-60847	Rod End	10	26291-
	A2	04250-90847	Rod End	10	26001-26290
23		04254-10823	Spacer	10	26001-
24		01580-10806	Nut	10	26001-
25		01640-21626	Washer, Flat	1	26001-

FIG. H0210-001001 Hydraulic Pump (Work Equipment Pump) (1/4)

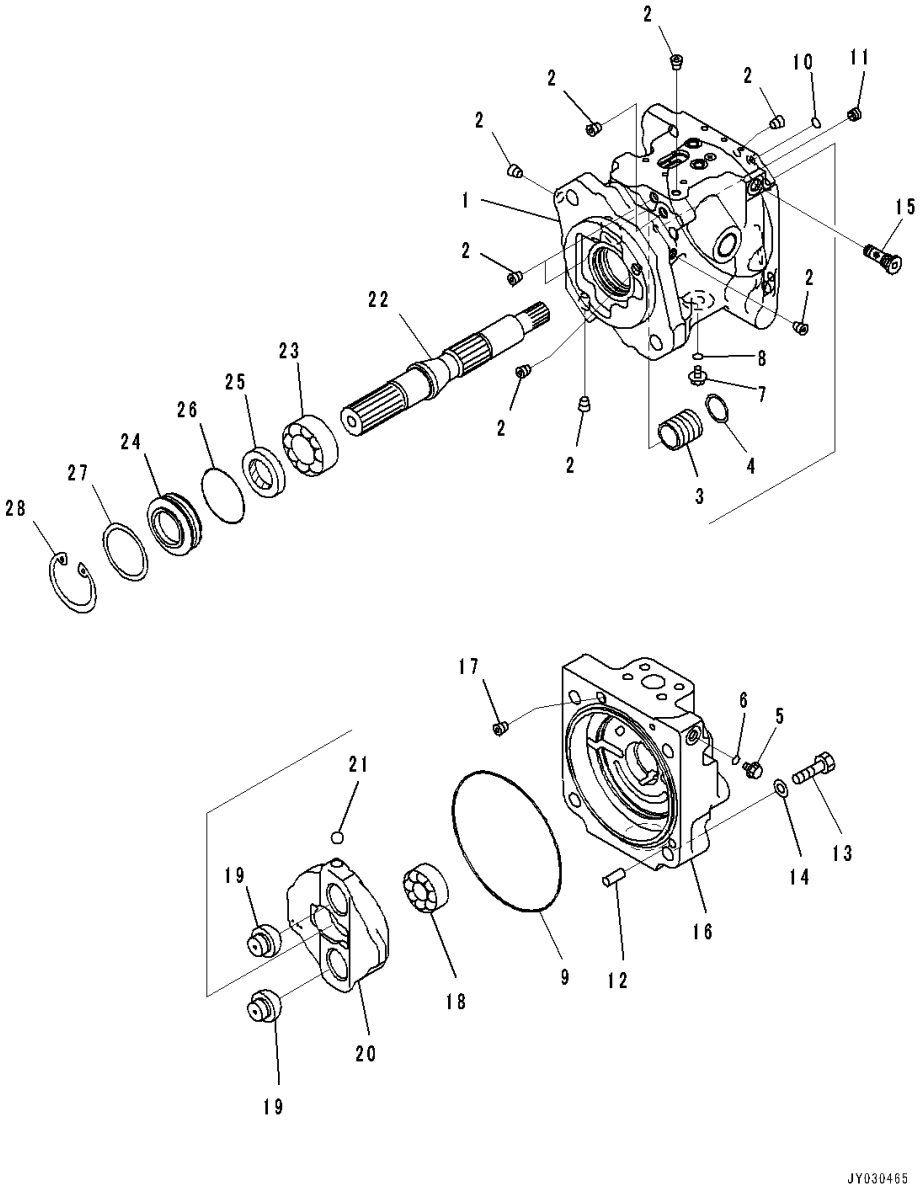

Index	Code	Part Number	Description	Qty	Serial Number
		708-1U-00280	Pump Assembly	1	26001-
	C2	708-1U-01280	• Pump Subassembly	1	26001-
	C2	708-1U-04280	• • Case Assembly	1	26001-
1	C1		• • • Case	1	26001-
2	C1		• • • Plug, Stocking	9	26001-
3	C1		• • • Sleeve	1	26001-
4	C1		• • • Ring	1	26001-
5		708-8E-16160	• • Plug	1	26001-
6		07002-61023	• • O-ring	1	26001-
7		07040-11409	• • Plug	1	26001-
8		07002-61423	• • O-ring	1	26001-
9	C2	708-1W-49170	• • O-ring	1	26001-
10	C2	07000-B1009	• • O-ring	1	26001-
11	C2	708-1L-29340	• • Orifice	1	26001-
12	C2	04020-01024	• • Pin, Dowel	1	26001-
13	C2	01010-61470	• • Bolt	4	26001-
14	C2	01643-31445	• • Washer, Flat	4	26001-
15		708-1W-04320	• • Filter Assembly	1	26001-
	C2	708-1U-04290	• • Cap Subassembly	1	26001-
16	C1		• • • Cap, End	1	26001-
17	C1		• • • Plug, Stocking	1	26001-
18	C2	708-1W-42120	• • Bearing	1	26001-
19	C2	708-1U-13461	• • Ball,Retainer	2	26001-
20	C2	708-1U-13450	• • Cam,Rocker	1	26001-
21	C2	04260-01270	• • Ball	1	26001-
22	C2	708-1U-12250	• • Shaft	1	26001-
23	C2	708-1W-42110	• • Bearing	1	26001-
24	C2	708-1W-42140	• • Case	1	26001-
25		708-1W-42130	• • Seal, Oil	1	26001-
26		07000-B2060	• • O-ring	1	26001-
27	C2	708-1W-05821	• • Spacer Kit	1	26001-
	C1		• • • Spacer,T=2.5mm	1	26001-
	C1		• • • Spacer,T=2.55mm	1	26001-
	C1		• • • Spacer,T=2.6mm	1	26001-
	C1		• • • Spacer,T=2.65mm	1	26001-
	C1		• • • Spacer,T=2.7mm	1	26001-
	C1		• • • Spacer,T=2.75mm	1	26001-
	C1		• • • Spacer,T=2.8mm	1	26001-
	C1		• • • Spacer,T=2.85mm	1	26001-
	C1		• • • Spacer,T=2.9mm	1	26001-

FIG. H0210-001001 Hydraulic Pump (Work Equipment Pump) (1/4)

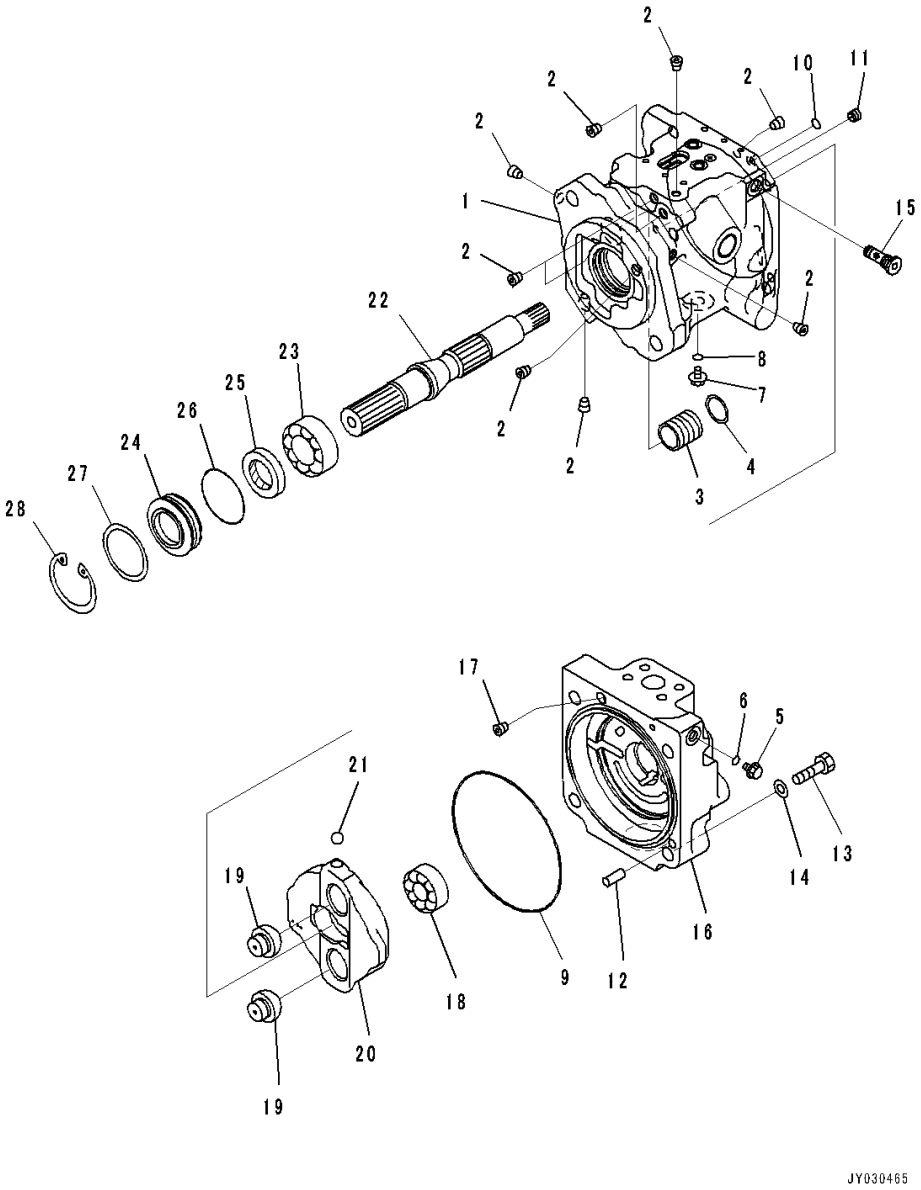

Index	Code	Part Number	Description	Qty	Serial Number
28		04065-06825	• • Ring, Snap	1	26001-

FIG. H0210-001002 Hydraulic Pump (Work Equipment Pump) (2/4)

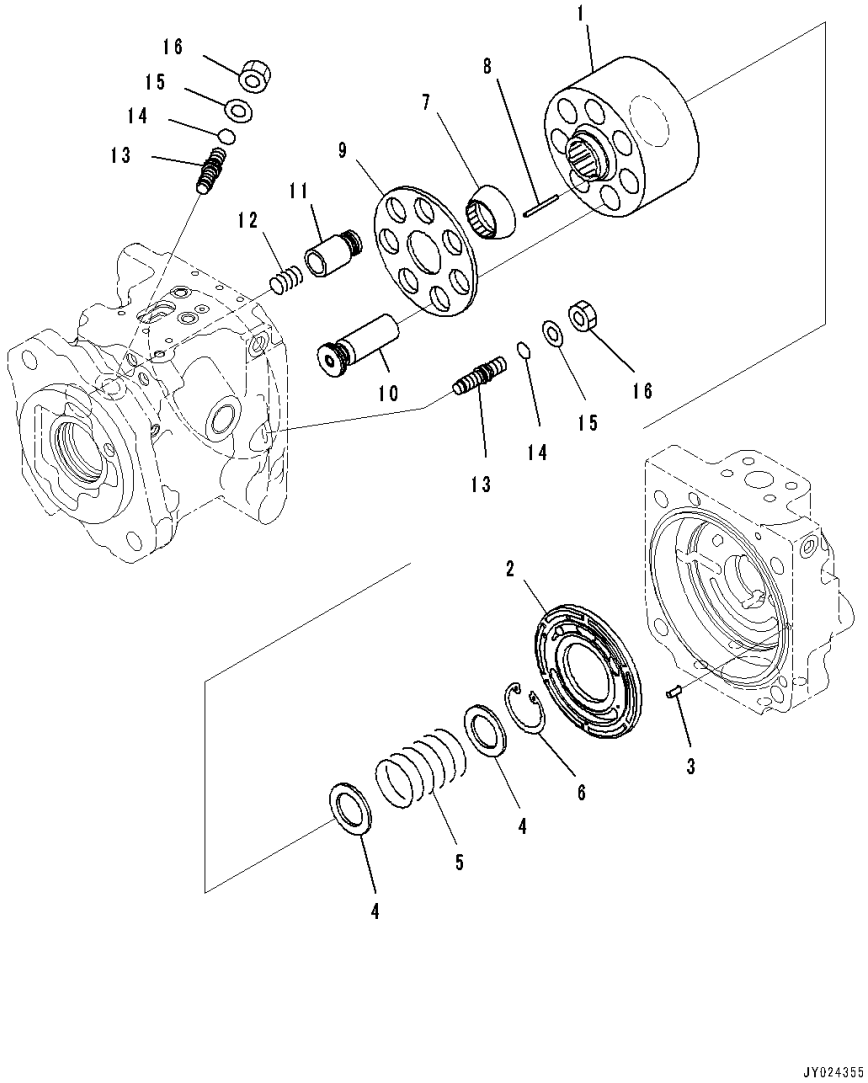

Index	Code	Part Number	Description	Qty	Serial Number
		708-1U-00280	Pump Assembly	1	26001-
	C2	708-1U-01280	• Pump Subassembly	1	26001-
1	C2	708-1U-13110	• • Block, Cylinder	1	26001-
2	C2	708-1U-13211	• • Plate,Valve	1	26001-
3	C2	720-68-19610	• • Pin	1	26001-
4	C2	708-1W-43130	• • Seat	2	26001-
5	C2	708-1W-43140	• • Spring	1	26001-
6	C2	04065-04818	• • Ring, Snap	1	26001-
7	C2	708-1W-43320	• • Guide,Retainer	1	26001-
8	C2	708-3T-13360	• • Pin	3	26001-
9	C2	708-1U-13341	• • Retainer,Shoe	1	26001-
10	C2	708-1U-13310	• • Piston Subassembly	7	26001-
11	C2	708-1W-44130	• • Piston	1	26001-
12	C2	708-3T-14120	• • Spring	1	26001-
13	C2	708-1U-14240	• • Screw	2	26001-
14	C2	07000-B2011	• • O-ring	2	26001-
15	C2	01643-31232	• • Washer	2	26001-
16	C2	01582-11210	• • Nut	2	26001-

FIG. H0210-001003 Hydraulic Pump (Work Equipment Pump) (3/4)

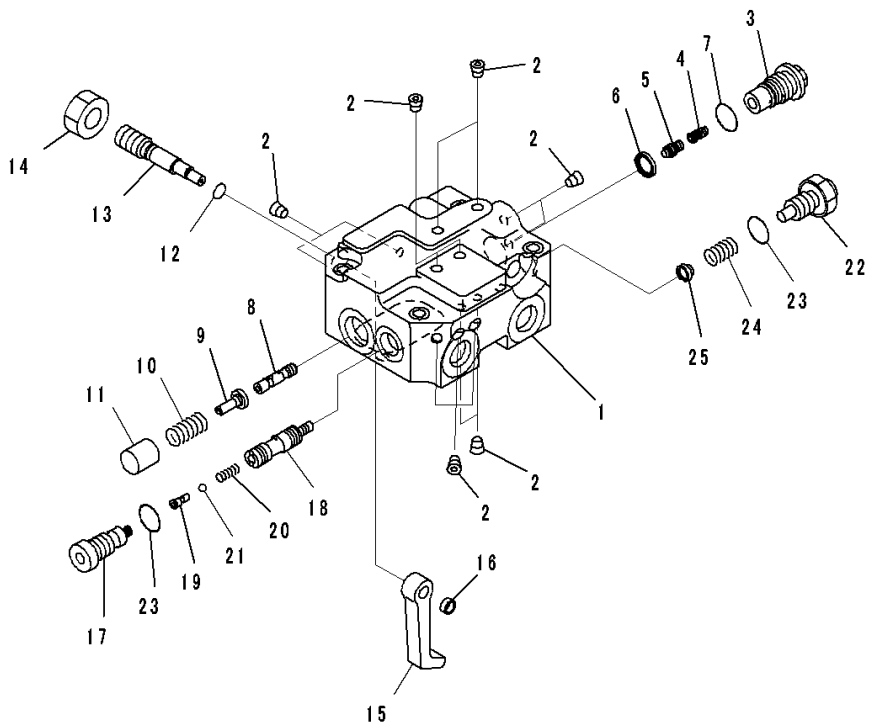

Index	Code	Part Number	Description	Qty	Serial Number
		708-1U-00280	Pump Assembly	1	26001-
	C2	708-1U-03460	• Valve Assembly	1	26001-
	C1		• • Body Assembly	1	26001-
1	C1		• • • Valve Body	1	26001-
2	C1		• • • Plug	13	26001-
	C1		• • Sleeve Subassembly	1	26001-
3	C1		• • • Sleeve	1	26001-
4	C1		• • • Piston	1	26001-
5	C1		• • • Piston	1	26001-
6	C1		• • • Seal	1	26001-
7		07002-61623	• • • O-ring	1	26001-
8	C1		• • Spool	1	26001-
9	C1		• • Seat	1	26001-
10	C1		• • Spring	1	26001-
11	C1		• • Retainer	1	26001-
12	C1		• • O-ring	1	26001-
13	C1		• • Plug	1	26001-
14	C1		• • Nut	1	26001-
15	C1		• • Lever	1	26001-
16	C1		• • Spacer	1	26001-
17	C1		• • Plug	1	26001-
	C1		• • Spool Subassembly	1	26001-
18	C1		• • • Spool	1	26001-
19	C1		• • • Plug	1	26001-
20	C1		• • • Spring	1	26001-
21	C1		• • • Ball	1	26001-
22	C1		• • Plug	1	26001-
23	C1		• • O-ring	2	26001-
24	C1		• • Spring	1	26001-
25	C1		• • Seat	1	26001-

FIG. H0210-001004 Hydraulic Pump (Work Equipment Pump) (4/4)

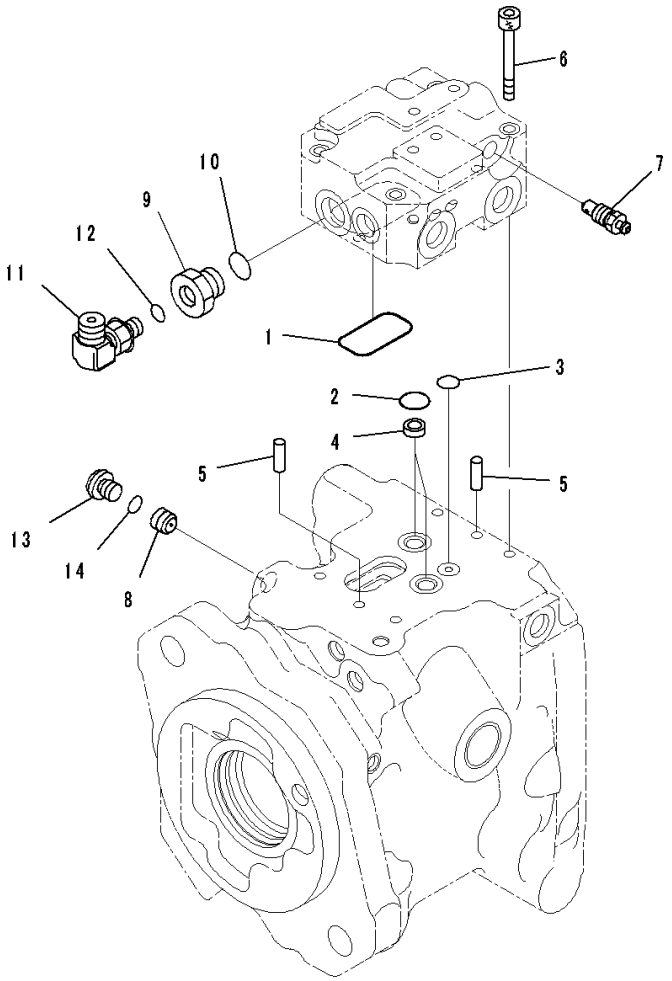

Index	Code	Part Number	Description	Qty	Serial Number
		708-1U-00280	Pump Assembly	1	26001-
1	C2	07000-B3040	• O-ring	1	26001-
2	C2	07000-B2014	• O-ring	2	26001-
3	C2	07000-B1009	• O-ring	1	26001-
4	C2	708-2L-25480	• Filter	2	26001-
5	C2	04020-00616	• Pin, Dowel	2	26001-
6	C2	01252-60645	• Bolt, Hexagon Socket Head	4	26001-
7		20B-27-11210	• Bleeder	1	26001-
8	C2	702-81-21130	• Orifice	1	26001-
9		708-1W-49230	• Plug	1	26001-
10		07002-61623	• O-ring	1	26001-
11		21W-62-42920	• Elbow	1	26001-
12		07002-61023	• O-ring	1	26001-
13		708-8E-16160	• Plug	1	26001-
14		07002-61023	• O-ring	1	26001-

FIG. H0210-001005 Hydraulic Pump (Piston Pump Related Parts)

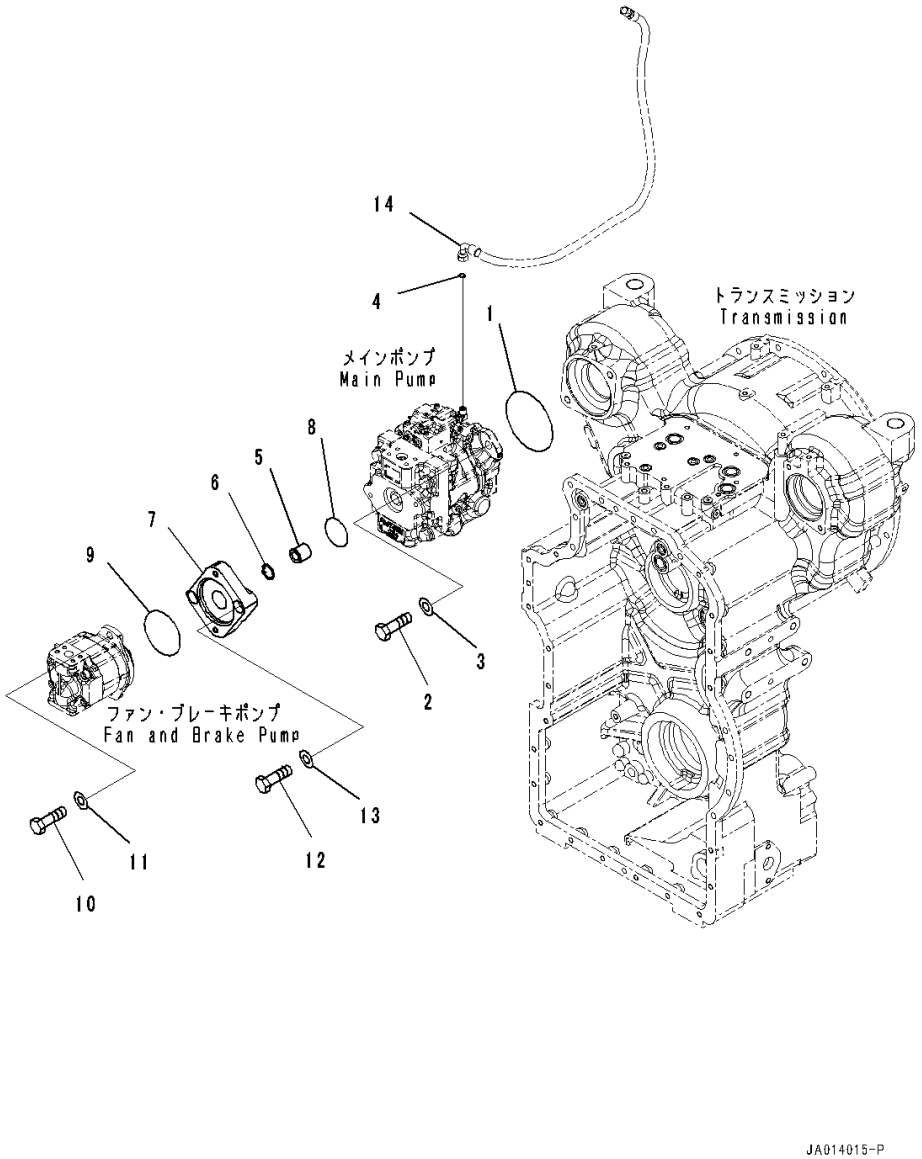

Index	Code	Part Number	Description	Qty	Serial Number
1		07000-12130	O-ring	1	26001-
2		01010-81640	Bolt	2	26001-
3		01643-31645	Washer	2	26001-
4		02896-11008	O-ring	1	26001-
5		708-1W-28150	Coupling	1	26001-
6		04065-02012	Ring, Snap	1	26001-
7		234-60-86110	Plate	1	26001-
8		07000-B2060	O-ring	1	26001-
9		07000-B2100	O-ring	1	26001-
10		07372-21235	Bolt	2	26001-
11		01643-31232	Washer	2	26001-
12		01252-A1245	Bolt, Hexagon Socket Head	2	26001-
13		01643-31232	Washer	2	26001-
14		(234-60-86360)	Hose(Hydraulic Piping,Priority Valve Piping,With 9 Spool Valve)(Refer to Page 341)		
		(234-60-86360)	Hose(Hydraulic Piping,Priority Valve Piping,With 10 Spool Valve)(Refer to Page 339)		
		(234-60-86360)	Hose(Hydraulic Piping,Priority Valve Piping,With 10 Spool Valve,Ripper)(Refer to Page 340)		

FIG. H0210-001006 Hydraulic Pump (Brake Pump)

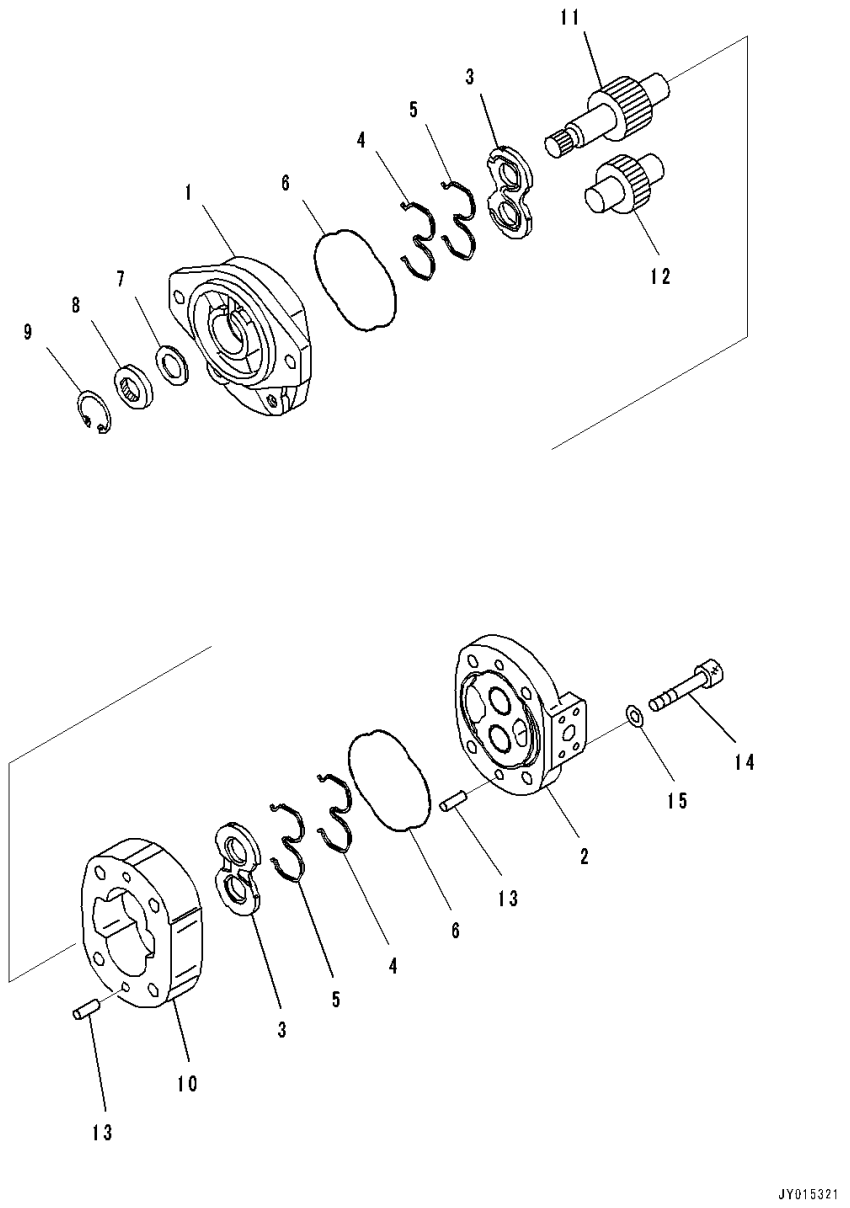

Index	Code	Part Number	Description	Qty	Serial Number
		705-12-32040	Pump Assembly, Gear (SAR 40)	1	26001-
1	C2	705-17-02022	• Bracket Assembly	1	26001-
	C2	705-17-02353	• • Bushing, Plane	2	26001-
2	C2	705-17-02122	• Cover Assembly	1	26001-
	C2	705-17-02353	• • Bushing, Plane	2	26001-
3		705-17-02612	• Plate	2	26001-
4		705-17-02430	• Ring, Back-up	2	26001-
5		705-17-02460	• Seal Ring	2	26001-
6		705-17-02360	• O-ring	2	26001-
7		705-17-02870	• Plate	1	26001-
8		705-17-02830	• Seal, Oil	1	26001-
9		04065-04018	• Ring, Snap	1	26001-
10	C2	705-17-32012	• Gear Case	1	26001-
11	C2	705-17-32412	• Gear, Drive	1	26001-
12	C2	705-17-32512	• Gear, Driven	1	26001-
13		04020-01024	• Pin, Dowel	4	26001-
14		01252-61295	• Bolt, Hexagon Socket Head	4	26001-
15		01643-51232	• Washer	4	26001-

FIG. H0210-001007 Hydraulic Pump (Transmission Pump) (1/4)

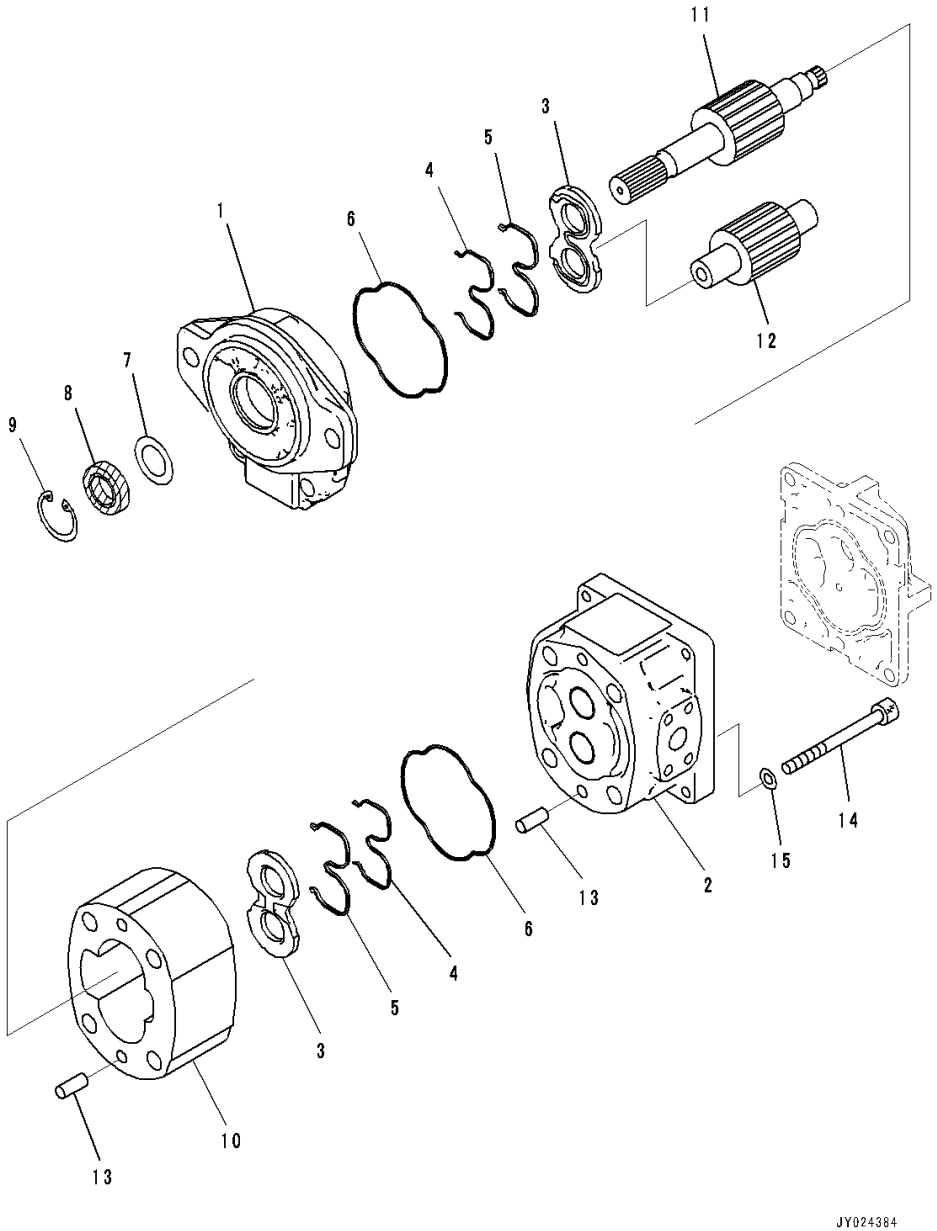

Index	Code	Part Number	Description	Qty	Serial Number
		705-56-24370	Pump Assembly, Gear (SAR 63 + SB 21 + 10)	1	26001-
		705-38-36010	• Pump Assembly, Gear (SAR 63)	1	26001-
1	C2	705-18-02820	• • Bracket Assembly	1	26001-
	C2	705-17-02353	• • • Bushing, Plane	2	26001-
2	C2	705-18-02240	• • Carrier Assembly	1	26001-
	C2	705-17-02353	• • • Bushing, Plane	2	26001-
3		705-17-02612	• • Plate	2	26001-
4		705-17-02430	• • Ring, Back-up	2	26001-
5		705-17-02460	• • Seal Ring	2	26001-
6		705-17-02360	• • O-ring	2	26001-
7		705-17-02870	• • Plate	1	26001-
8		705-17-02830	• • Seal, Oil	1	26001-
9		04065-04018	• • Ring, Snap	1	26001-
10	C2	705-18-36120	• • Gear Case	1	26001-
11	C2	705-29-36430	• • Gear, Drive	1	26001-
12	C2	705-18-36820	• • Gear, Driven	1	26001-
13		04020-01024	• • Pin, Dowel	4	26001-
14		01253-61425	• • Bolt, Hexagon Socket Head	4	26001-
15		705-17-04980	• • Washer	4	26001-

FIG. H0210-001008 Hydraulic Pump (Transmission Pump) (2/4)

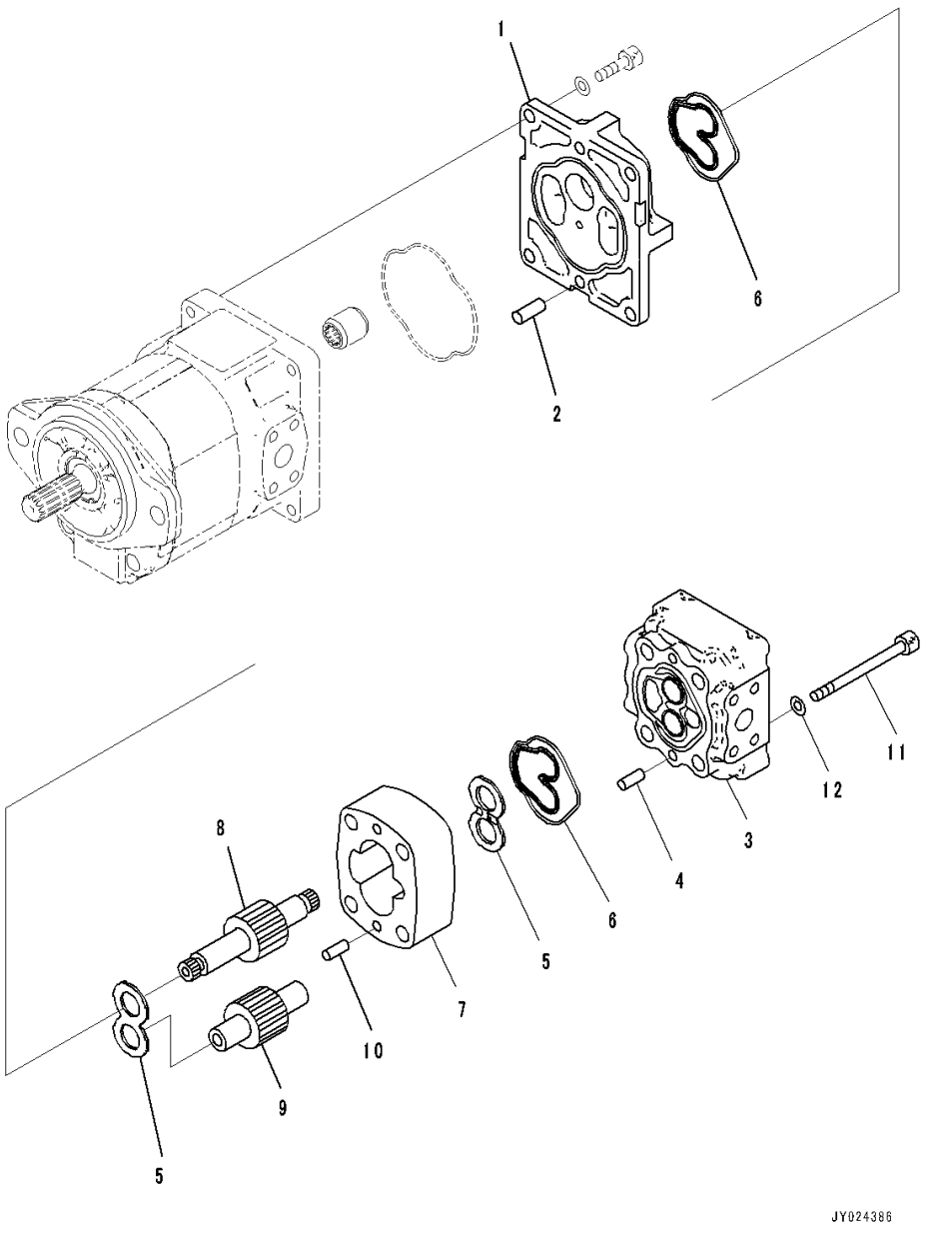

Index	Code	Part Number	Description	Qty	Serial Number
		705-56-24370	Pump Assembly, Gear (SAR 63 + SB 21 + 10)	1	26001-
		705-41-04540	• Pump Assembly, Gear (SBR 21)	1	26001-
1	C2	705-41-83030	• • Bracket Assembly	1	26001-
	C2	705-41-80610	• • • Bearing, Plane	1	26001-
	C2	705-41-80620	• • • Bearing, Plane	1	26001-
2		04020-01024	• • Pin, Dowel	2	26001-
3	C2	705-40-80331	• • Carrier Assembly	1	26001-
	C2	705-41-80610	• • • Bearing, Plane	1	26001-
	C2	705-41-80620	• • • Bearing, Plane	1	26001-
4		705-67-01230	• • Pin, Dowel	2	26001-
5		705-40-83720	• • Plate, Side	2	26001-
6		705-40-80770	• • Seal	2	26001-
7	C2	705-40-33011	• • Gear Case	1	26001-
8	C2	705-40-33860	• • Gear, Drive	1	26001-
9	C2	705-40-33511	• • Gear, Driven	1	26001-
10		04020-00820	• • Pin, Dowel	4	26001-
11		01252-61285	• • Bolt, Hexagon Socket Head	4	26001-
12		01643-51232	• • Washer	4	26001-

FIG. H0210-001009 Hydraulic Pump (Transmission Pump) (3/4)

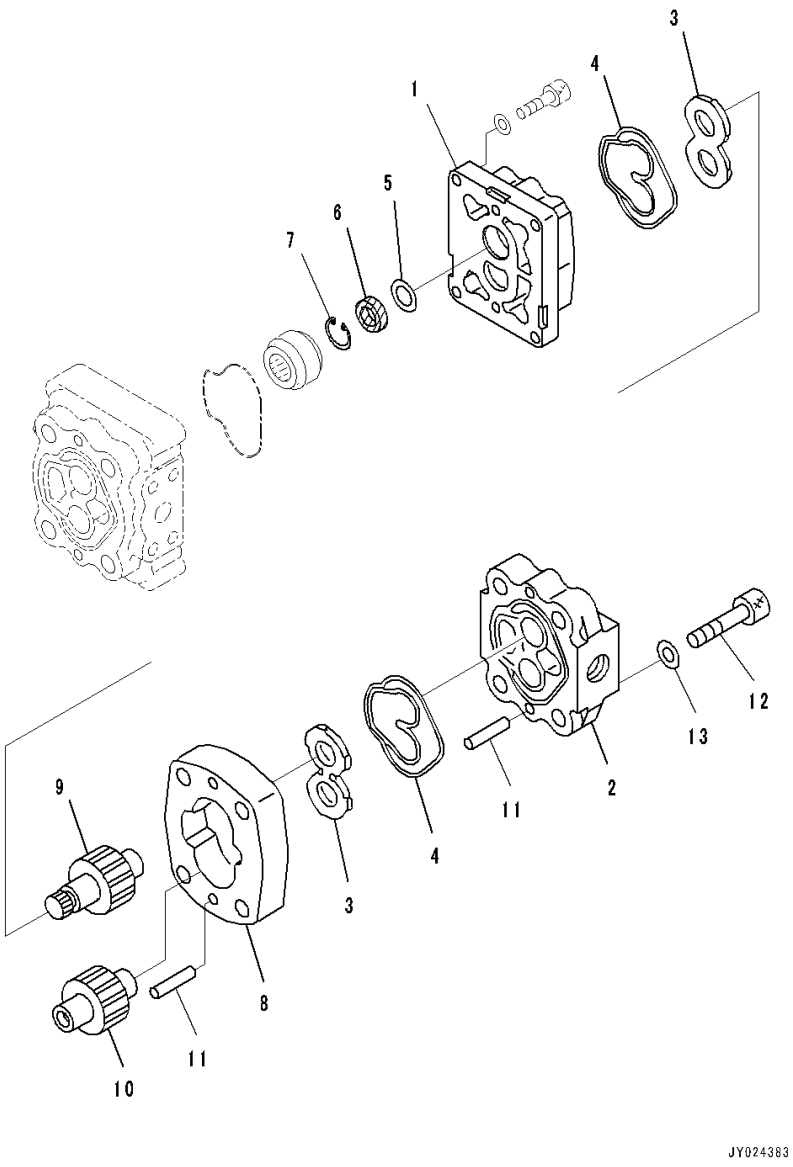

Index	Code	Part Number	Description	Qty	Serial Number
		705-56-24370	Pump Assembly, Gear (SAR 63 + SB 21 + 10)	1	26001-
		705-41-05830	• Pump Assembly, Gear,SBR10	1	26001-
1	C2	705-41-81511	• • Bracket Assembly	1	26001-
	C2	705-40-80610	• • • Bearing, Plane	1	26001-
	C2	705-40-80620	• • • Bearing, Plane	1	26001-
2	C2	705-41-83110	• • Cover Assembly	1	26001-
	C2	705-40-80610	• • • Bearing, Plane	1	26001-
	C2	705-40-80620	• • • Bearing, Plane	1	26001-
3		705-40-83720	• • Plate, Side	2	26001-
4		705-40-80770	• • Seal	2	26001-
5		705-40-81870	• • Plate	1	26001-
6		705-40-81820	• • Seal, Oil	1	26001-
7		04065-03012	• • Ring, Snap	1	26001-
8	C2	705-40-22011	• • Gear Case	1	26001-
9	C2	705-40-22851	• • Gear, Drive	1	26001-
10	C2	705-40-22511	• • Gear, Driven	1	26001-
11		04020-00820	• • Pin, Dowel	4	26001-
12		01252-71265	• • Bolt, Hexagon Socket Head	4	26001-
13		01643-51232	• • Washer	4	26001-

FIG. H0210-001010 Hydraulic Pump (Transmission Pump) (4/4)

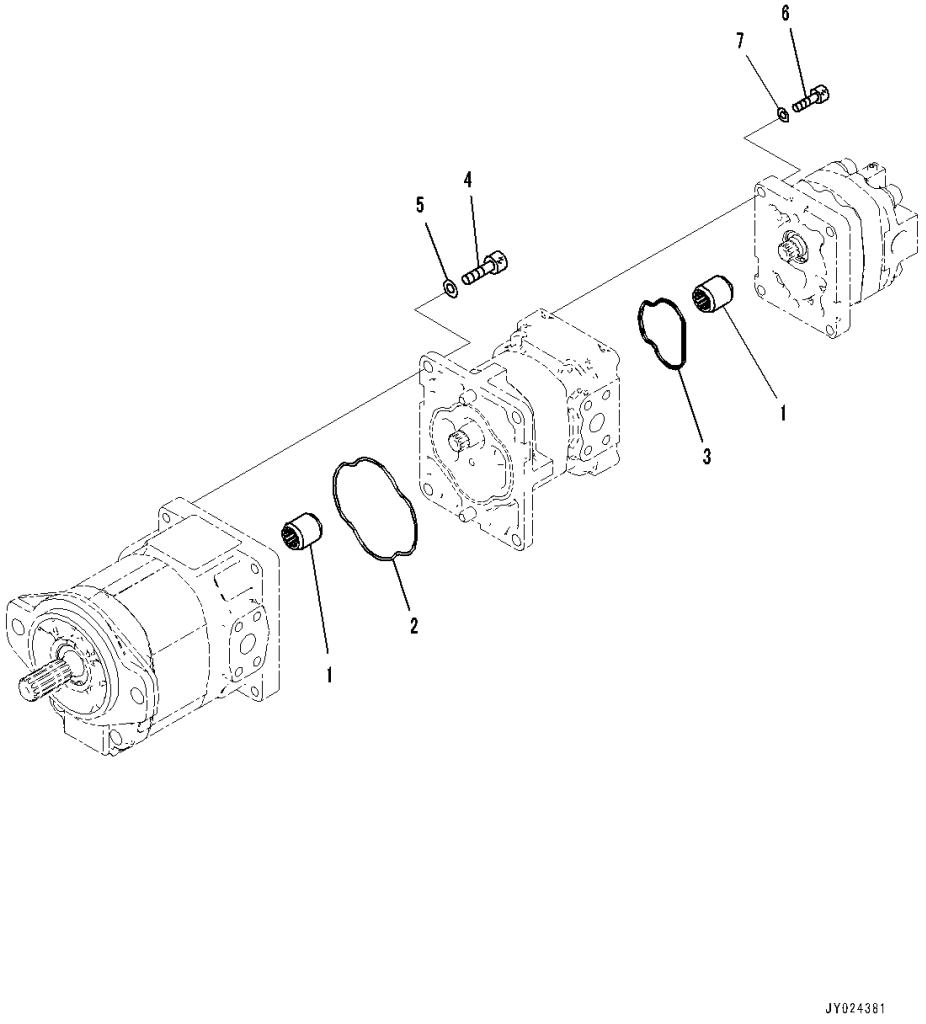

Index	Code	Part Number	Description	Qty	Serial Number
		705-56-24370	Pump Assembly, Gear (SAR 63 + SB 21 + 10)	1	26001-
1		705-67-01330	• Coupling Assembly	2	26001-
2		705-17-02420	• O-ring	1	26001-
3		705-40-80670	• O-ring	1	26001-
4		01252-61035	• Bolt, Hexagon Socket Head	4	26001-
5		01643-51032	• Washer	4	26001-
6		01252-70830	• Bolt, Hexagon Socket Head	4	26001-
7		01643-50823	• Washer	4	26001-

FIG. H0210-001011 Hydraulic Pump (Gear Pump Related Parts)

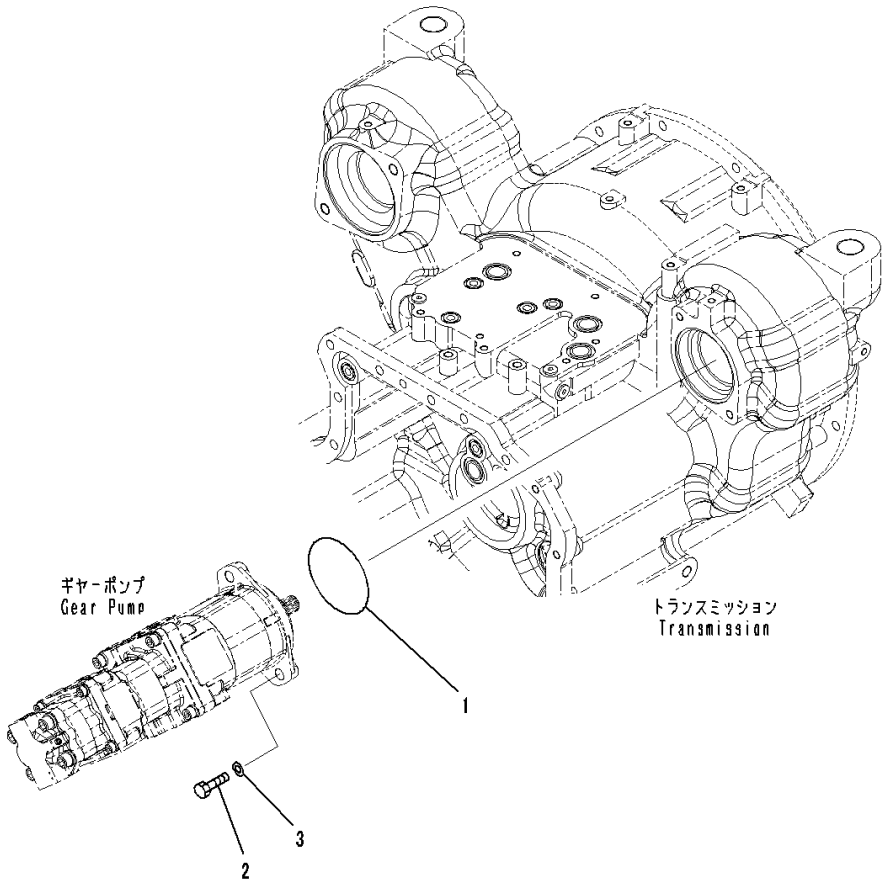

Index	Code	Part Number	Description	Qty	Serial Number
1		07000-B2105	O-ring	1	26001-
2		01010-81235	Bolt	2	26001-
3		01643-31232	Washer	2	26001-

FIG. H4410-001001 Steering Hydraulic Piping

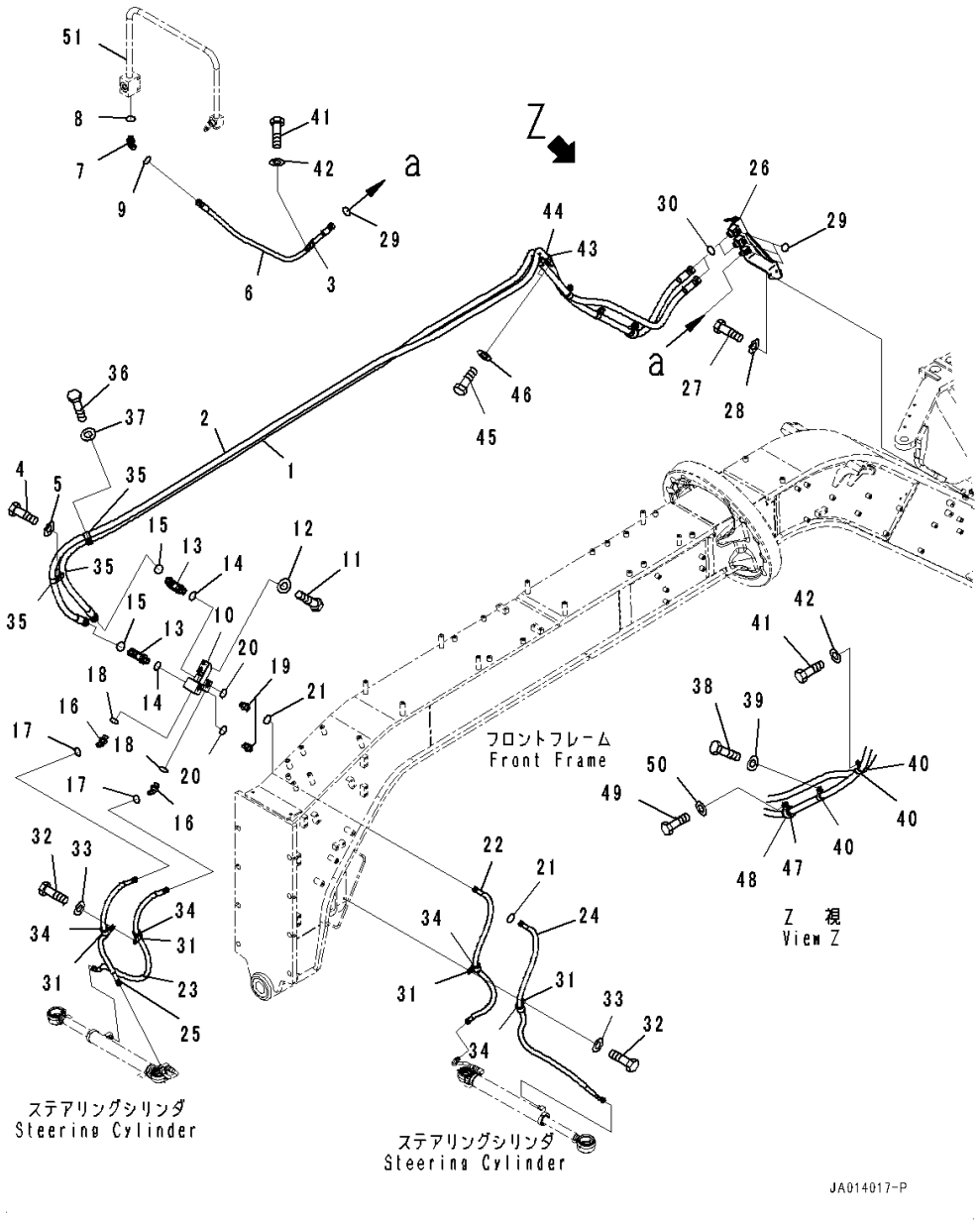

Index	Code	Part Number	Description	Qty	Serial Number
1		234-40-81111	Hose	1	26001-
2		234-40-81121	Hose	1	26001-
3		04434-51912	Clip	1	26001-
4		01010-81020	Bolt	1	26001-
5		01643-31032	Washer	1	26001-
6		234-40-81130	Hose	1	26001-
7		02783-10422	Elbow	1	26001-
8		07002-12034	O-ring	1	26001-
9		02896-11012	O-ring	1	26001-
10		234-40-81530	Block	1	26001-
11		01010-81225	Bolt	2	26001-
12		01643-31232	Washer	2	26001-
13		02782-1062A	Elbow	2	26001-
14		07002-12434	O-ring	2	26001-
15		02896-11018	O-ring	2	26001-
16		02783-10315	Elbow	2	26001-
17		02896-11009	O-ring	2	26001-
18		07002-12034	O-ring	2	26001-
19		02781-00315	Union	2	26001-
20		07002-12034	O-ring	2	26001-
21		02896-11009	O-ring	2	26001-
22		234-40-81140	Hose	1	26001-
23		234-40-81171	Hose	1	26001-
24		234-40-81160	Hose	1	26001-
25		234-40-81151	Hose	1	26001-
26		234-40-81181	Joint	1	26001-
27		01010-81025	Bolt	2	26001-
28		01643-31032	Washer	2	26001-
29		02896-11012	O-ring	4	26001-
30		02896-11018	O-ring	2	26001-
31		04434-53212	Clip	4	26001-
32		01010-81025	Bolt	2	26001-
33		01643-31032	Washer	2	26001-
34		07095-20522	Cushion	4	26001-
35		6150-51-9490	Clip	4	26001-
36		01010-81025	Bolt	1	26001-
37		01643-31032	Washer	1	26001-
38		01010-81020	Bolt	1	26001-
39		01643-31032	Washer	1	26001-
40		6150-51-9490	Clip	3	26001-

FIG. H4410-001001 Steering Hydraulic Piping

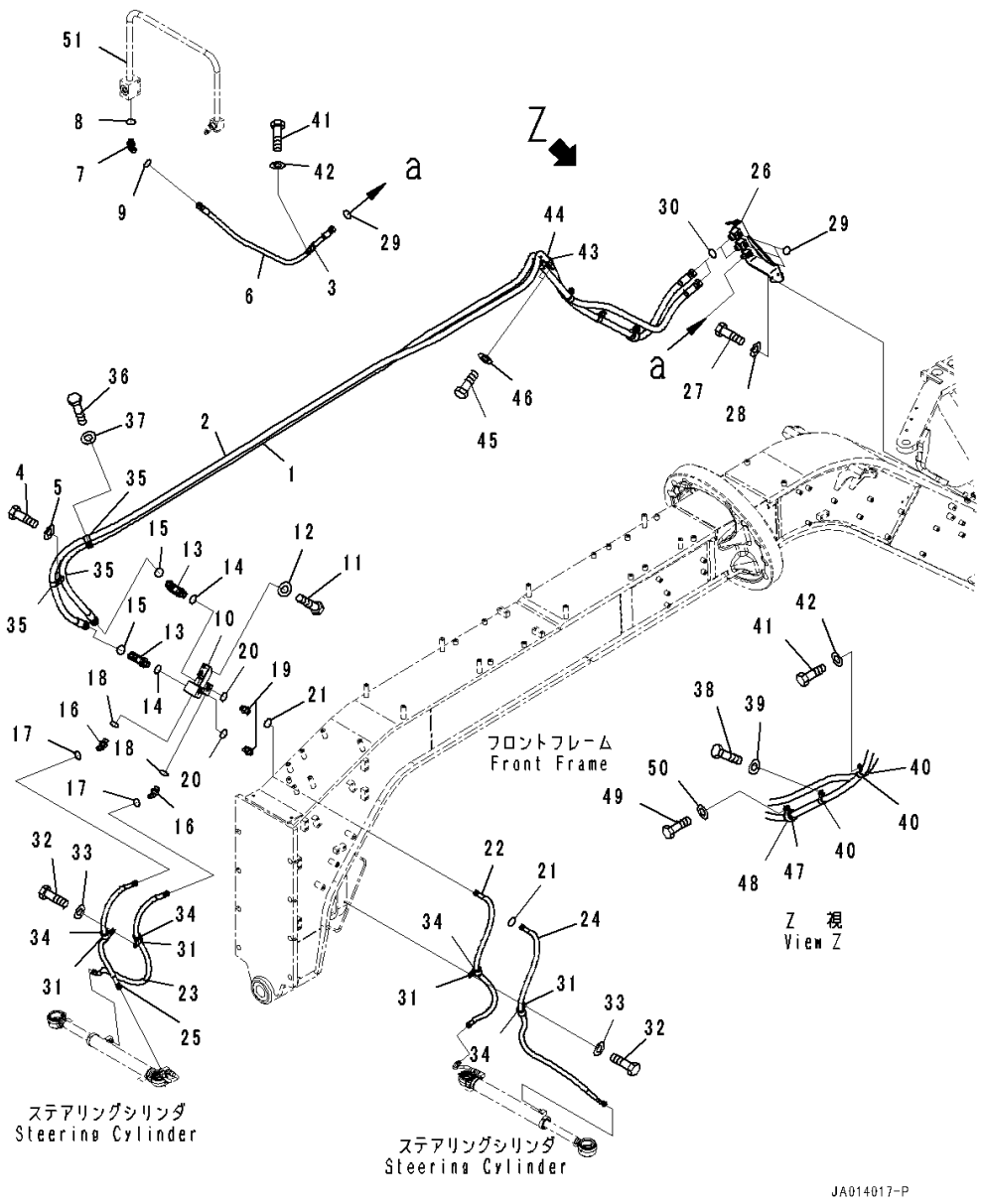

Index	Code	Part Number	Description	Qty	Serial Number
41		01010-81020	Bolt	2	26001-
42		01643-31032	Washer	2	26001-
43		04434-53412	Clip	2	26001-
44		07095-20627	Cushion	2	26001-
45		01010-81030	Bolt	2	26001-
46		01643-31032	Washer	2	26001-
47		23B-60-75210	Clamp	2	26001-
48		07095-00628	Cushion	1	26001-
49		01010-81025	Bolt	1	26001-
50		01643-31032	Washer	1	26001-
51		(234-60-86390)	Tube(Hydraulic Piping,Return Piping,With 9 Spool Valve)(Refer to Page 348)		
		(234-60-86390)	Tube(Hydraulic Piping,Return Piping,With 10 Spool Valve)(Refer to Page 346)		

FIG. H4410-002001 Steering Hydraulic Piping (With Front Blade)

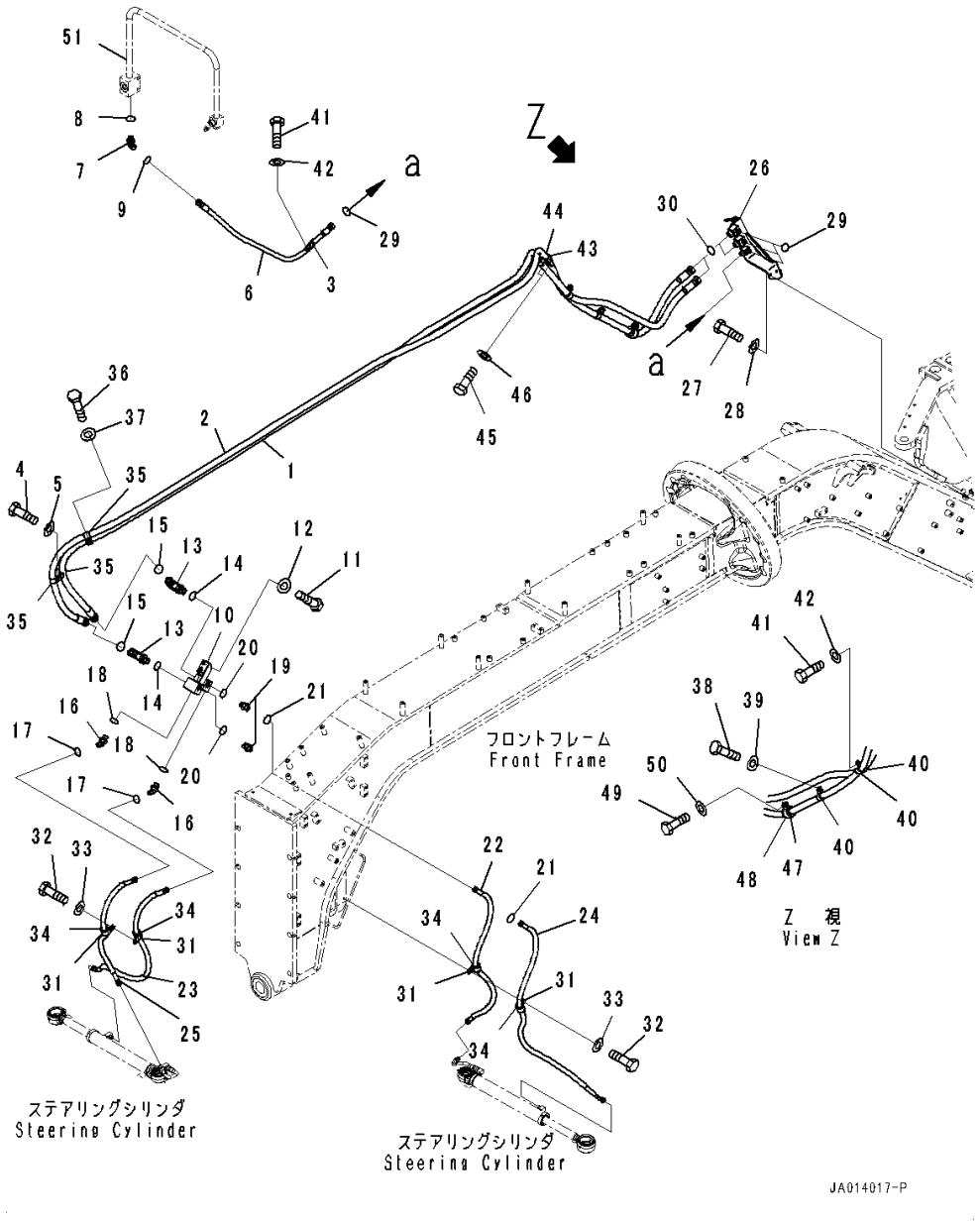

Index	Code	Part Number	Description	Qty	Serial Number
1		234-40-82111	Hose	1	26001-
2		234-40-82121	Hose	1	26001-
3		04434-51912	Clip	1	26001-
4		01010-81020	Bolt	1	26001-
5		01643-31032	Washer	1	26001-
6		234-40-81130	Hose	1	26001-
7		02783-10422	Elbow	1	26001-
8		07002-12034	O-ring	1	26001-
9		02896-11012	O-ring	1	26001-
10		234-40-81530	Block	1	26001-
11		01010-81225	Bolt	2	26001-
12		01643-31232	Washer	2	26001-
13		02782-1062A	Elbow	2	26001-
14		07002-12434	O-ring	2	26001-
15		02896-11018	O-ring	2	26001-
16		02783-10315	Elbow	2	26001-
17		02896-11009	O-ring	2	26001-
18		07002-12034	O-ring	2	26001-
19		02781-00315	Union	2	26001-
20		07002-12034	O-ring	2	26001-
21		02896-11009	O-ring	2	26001-
22		234-40-81140	Hose	1	26001-
23		234-40-81171	Hose	1	26001-
24		234-40-81160	Hose	1	26001-
25		234-40-81151	Hose	1	26001-
26		234-40-81181	Joint	1	26001-
27		01010-81025	Bolt	2	26001-
28		01643-31032	Washer	2	26001-
29		02896-11012	O-ring	4	26001-
30		02896-11018	O-ring	2	26001-
31		04434-53212	Clip	4	26001-
32		01010-81025	Bolt	2	26001-
33		01643-31032	Washer	2	26001-
34		07095-20522	Cushion	4	26001-
35		6150-51-9490	Clip	4	26001-
36		01010-81025	Bolt	1	26001-
37		01643-31032	Washer	1	26001-
38		01010-81020	Bolt	1	26001-
39		01643-31032	Washer	1	26001-
40		6150-51-9490	Clip	3	26001-

FIG. H4410-002001 Steering Hydraulic Piping (With Front Blade)

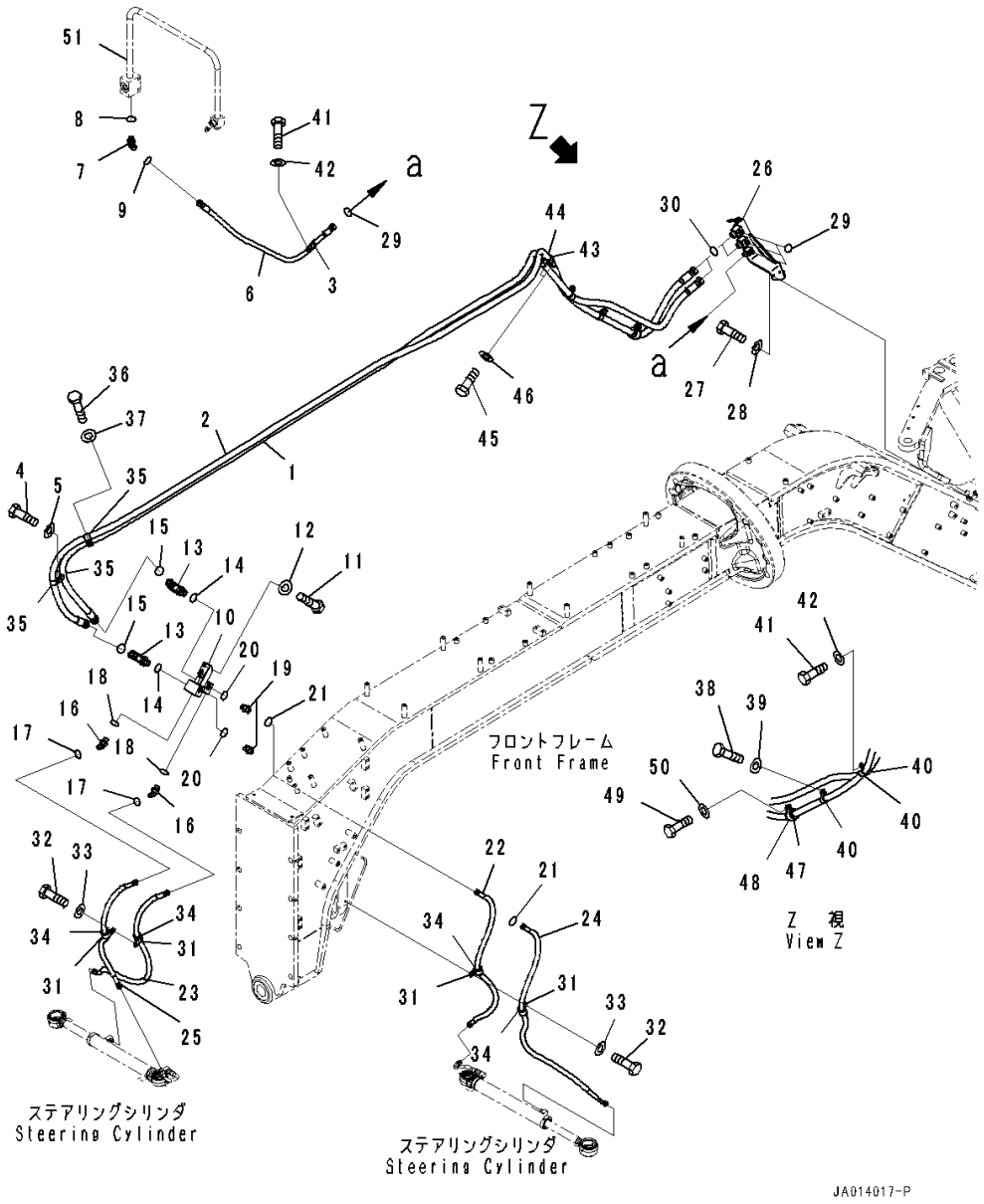

Index	Code	Part Number	Description	Qty	Serial Number
41		01010-81020	Bolt	2	26001-
42		01643-31032	Washer	2	26001-
43		04434-53412	Clip	2	26001-
44		07095-20627	Cushion	2	26001-
45		01010-81030	Bolt	2	26001-
46		01643-31032	Washer	2	26001-
47		23B-60-75210	Clamp	2	26001-
48		07095-00628	Cushion	1	26001-
49		01010-81025	Bolt	1	26001-
50		01643-31032	Washer	1	26001-
51		(234-60-86390)	Tube(Hydraulic Piping,Return Piping,With 9 Spool Valve)(Refer to Page 348)		
		(234-60-86390)	Tube(Hydraulic Piping,Return Piping,With 10 Spool Valve)(Refer to Page 346)		

FIG. H5110-001001 Floor Valve (LS Pressure Reducing Valve)

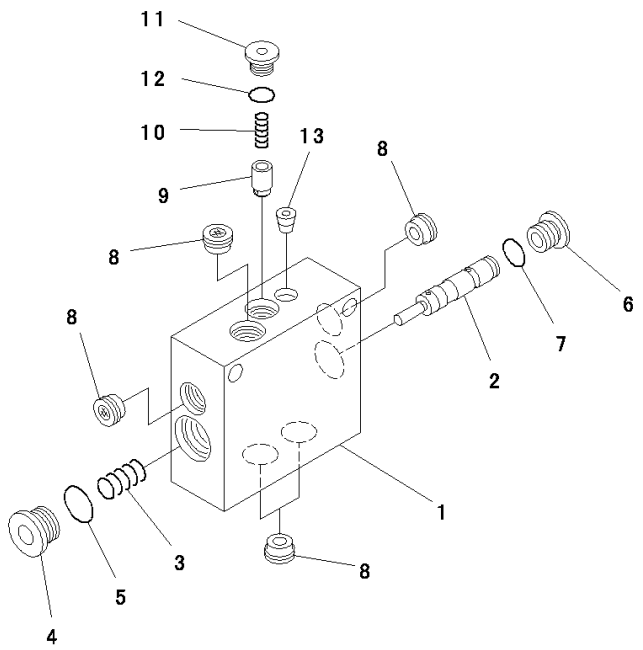

PW5X033

Index	Code	Part Number	Description	Qty	Serial Number
		723-10-13700	Valve Assembly	1	26001-
1	C1		• Block	1	26001-
2	C1		• Spool Subassembly	1	26001-
3		723-11-16760	• Spring	1	26001-
4		723-11-26170	• Plug	1	26001-
5		07002-11623	• O-ring	1	26001-
6		708-7R-11220	• Plug	1	26001-
7		07002-11223	• O-ring	1	26001-
8		702-16-54880	• Filter	5	26001-
9		723-11-18170	• Valve	1	26001-
10		723-11-18180	• Spring	1	26001-
11		723-11-18190	• Plug	1	26001-
12		07002-11023	• O-ring	1	26001-
13	C1		• Plug, Stocking	1	26001-

FIG. H5110-001002 Floor Valve (Mounting)

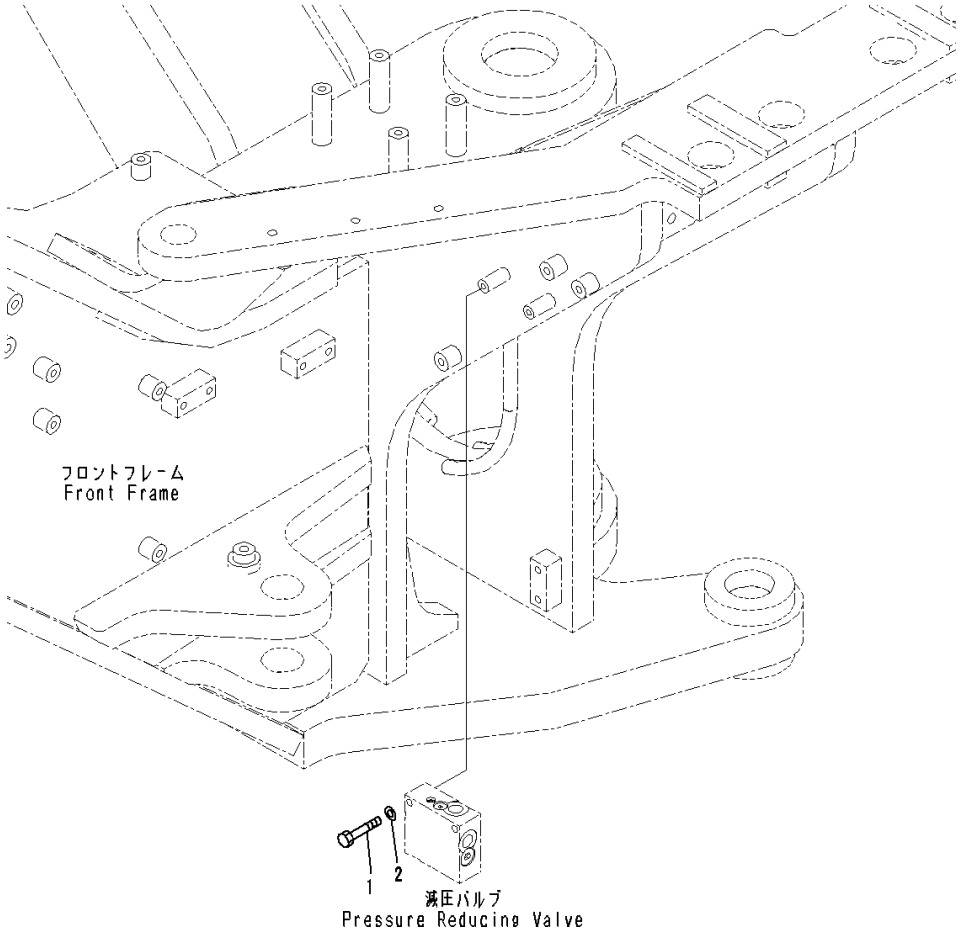

Index	Code	Part Number	Description	Qty	Serial Number
1		01010-80850	Bolt	2	26001-
2		01643-30823	Washer	2	26001-

FIG. H5120-002001 Front Frame Valve (Check Valve)

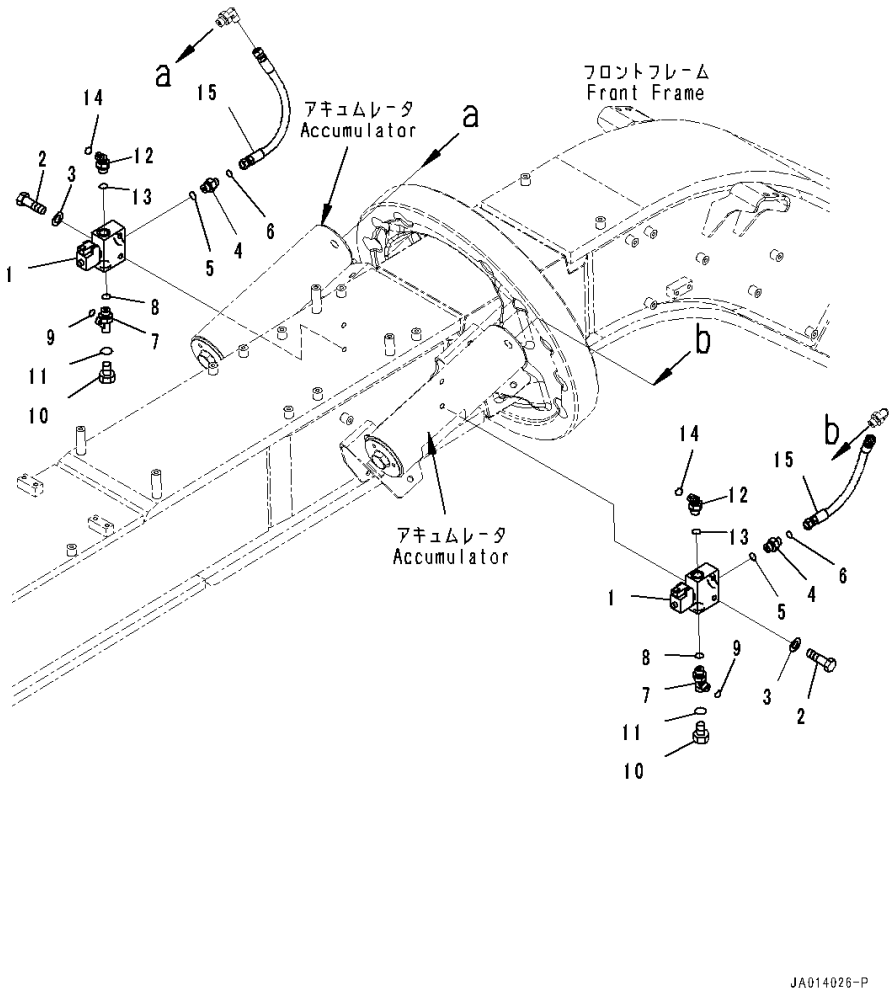

Index	Code	Part Number	Description	Qty	Serial Number
1		23B-60-71220	Valve	2	26001-
2		01010-81055	Bolt	4	26001-
3		01643-31032	Washer	4	26001-
4		02781-00315	Union	2	26001-
5		07002-12034	O-ring	2	26001-
6		02896-11009	O-ring	2	26001-
7		02782-50315	Elbow	2	26001-
8		07002-12034	O-ring	2	26001-
9		02896-11009	O-ring	2	26001-
10		07040-11007	Plug	2	26001-
11		07002-11023	O-ring	2	26001-
12		02783-10315	Elbow	2	26001-
13		07002-12034	O-ring	2	26001-
14		02896-11009	O-ring	2	26001-
15		02765-003A3	Hose, Face Seal Type	2	26001-

FIG. H5120-004001A Front Frame Valve (With Front Blade)

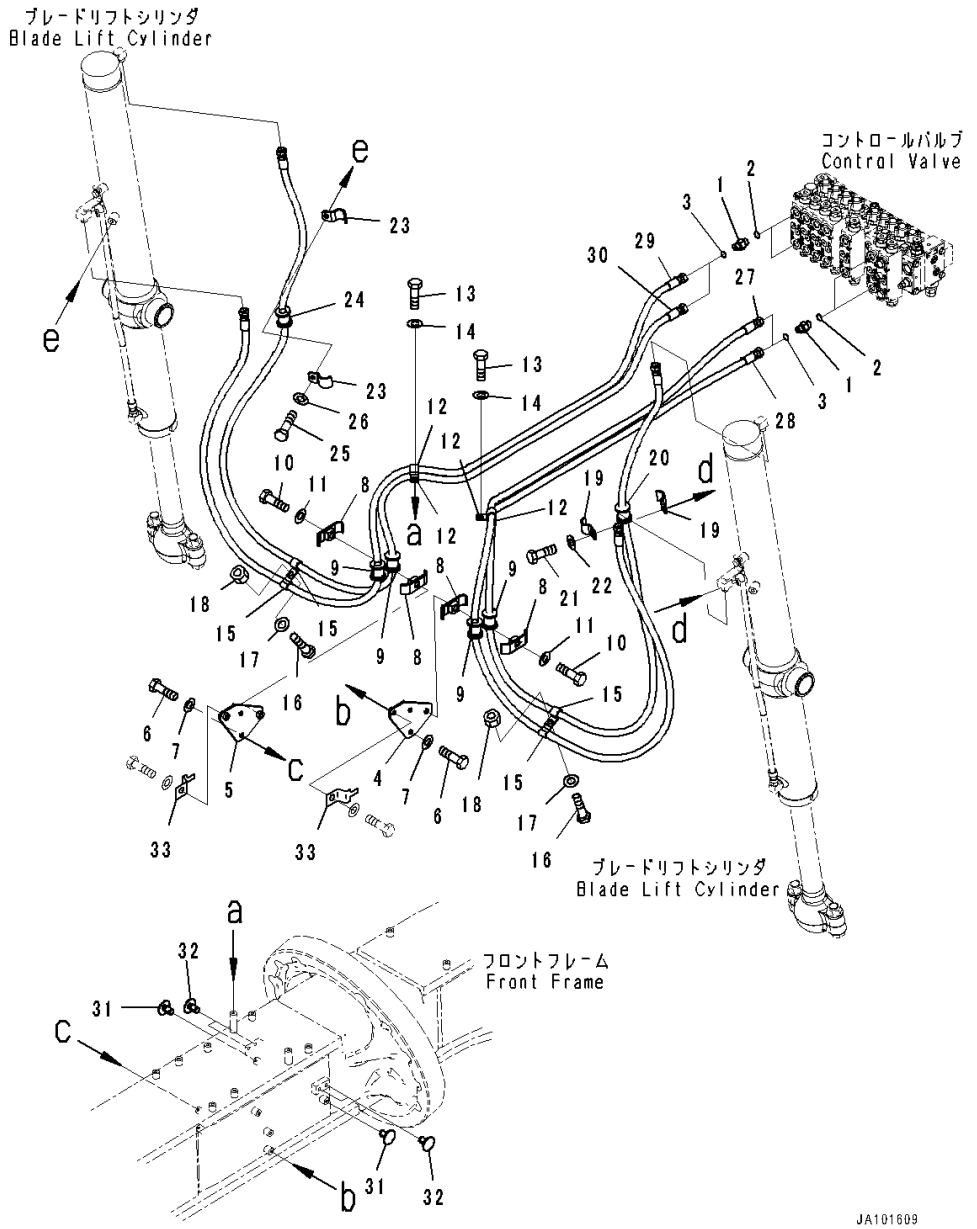

Index	Code	Part Number	Description	Qty	Serial Number
1		02781-00313	Union	4	26001-
2		07002-11823	O-ring	4	26001-
3		02896-11009	O-ring	4	26001-
4		234-833-8270	Bracket	1	26001-
5		234-833-8280	Bracket	1	26001-
6		01010-81025	Bolt	4	26001-
7		01643-31032	Washer	4	26001-
8		22P-62-13540	Clamp	4	26001-
9		07095-00317	Cushion	4	26001-
10		01010-81260	Bolt	2	26001-
11		01643-31232	Washer	2	26001-
12		04434-51712	Clip	4	26001-
13		01010-81025	Bolt	2	26001-
14		01643-31032	Washer	2	26001-
15		04434-51712	Clip	4	26001-
16		01010-81020	Bolt	2	26001-
17		01643-31032	Washer	2	26001-
18		01580-11008	Nut	2	26001-
19		23B-60-71410	Clamp	2	26001-
20		07095-00317	Cushion	1	26001-
21		01010-81025	Bolt	1	26001-
22		01643-31032	Washer	1	26001-
23		23B-60-71410	Clamp	2	26001-
24		07095-00317	Cushion	1	26001-
25		01010-81025	Bolt	1	26001-
26		01643-31032	Washer	1	26001-
27		234-833-8410	Hose	1	26001-
28		234-833-8420	Hose	1	26001-
29		234-833-8430	Hose	1	26001-
30		234-833-8440	Hose	1	26001-
31		416-54-34230	Plug	2	26329-
32		421-54-22990	Plug	4	26329-
33		08193-21012	Clip	2	26001-

FIG. H5120-001001A Front Frame Valve (Without Blade Accumulator)

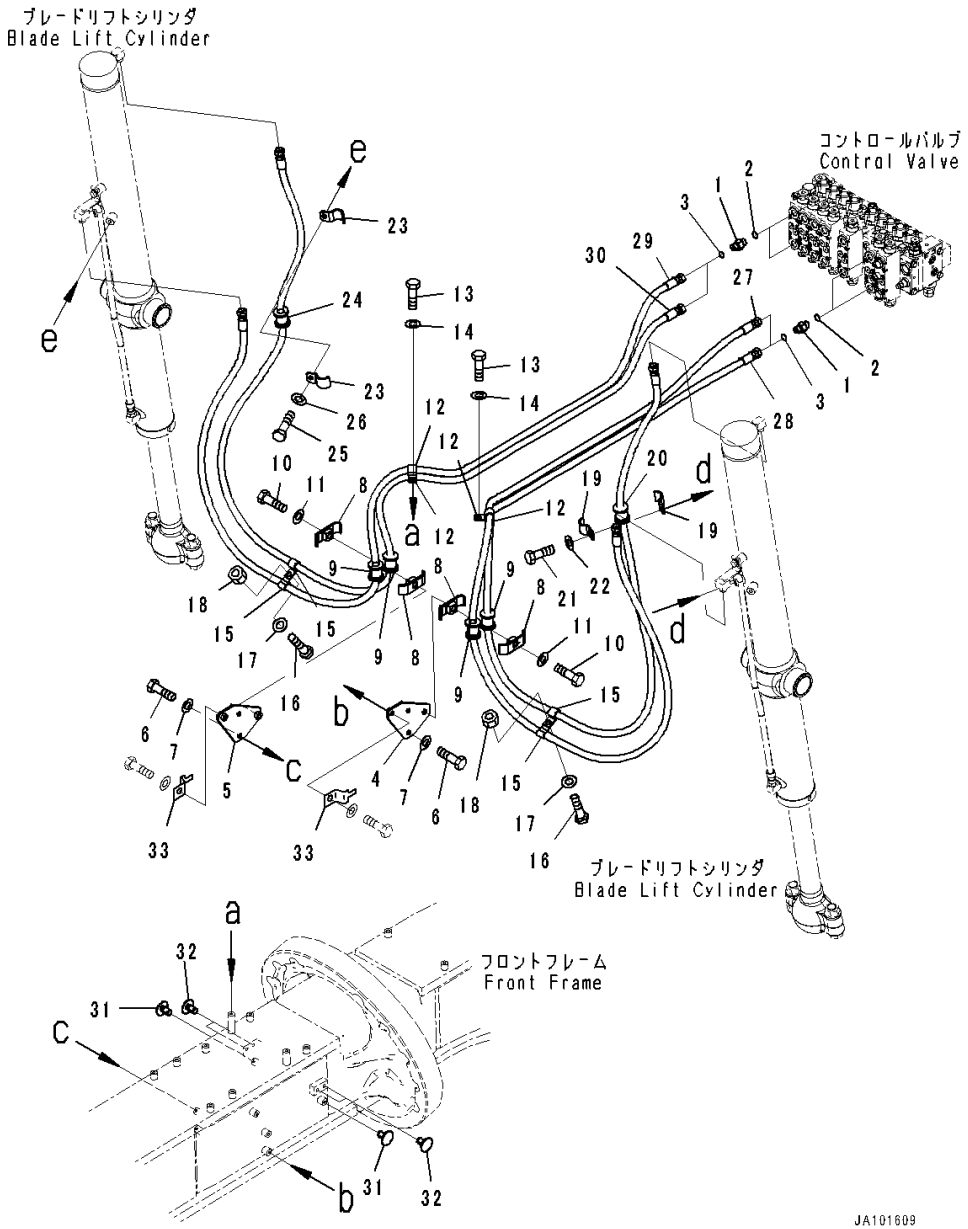

Index	Code	Part Number	Description	Qty	Serial Number
1		02781-00313	Union	4	26001-
2		07002-11823	O-ring	4	26001-
3		02896-11009	O-ring	4	26001-
4		234-833-8270	Bracket	1	26001-
5		234-833-8280	Bracket	1	26001-
6		01010-81025	Bolt	4	26001-
7		01643-31032	Washer	4	26001-
8		22P-62-13540	Clamp	4	26001-
9		07095-00317	Cushion	4	26001-
10		01010-81260	Bolt	2	26001-
11		01643-31232	Washer	2	26001-
12		04434-51712	Clip	4	26001-
13		01010-81025	Bolt	2	26001-
14		01643-31032	Washer	2	26001-
15		04434-51712	Clip	4	26001-
16		01010-81020	Bolt	2	26001-
17		01643-31032	Washer	2	26001-
18		01580-11008	Nut	2	26001-
19		23B-60-71410	Clamp	2	26001-
20		07095-00317	Cushion	1	26001-
21		01010-81025	Bolt	1	26001-
22		01643-31032	Washer	1	26001-
23		23B-60-71410	Clamp	2	26001-
24		07095-00317	Cushion	1	26001-
25		01010-81025	Bolt	1	26001-
26		01643-31032	Washer	1	26001-
27		234-833-8230	Hose	1	26001-
28		234-833-8240	Hose	1	26001-
29		234-833-8250	Hose	1	26001-
30		234-833-8260	Hose	1	26001-
31		416-54-34230	Plug	2	26329-
32		421-54-22990	Plug	4	26329-
33		08193-21012	Clip	2	26001-

FIG. H5120-002002 Front Frame Valve (Accumulator)

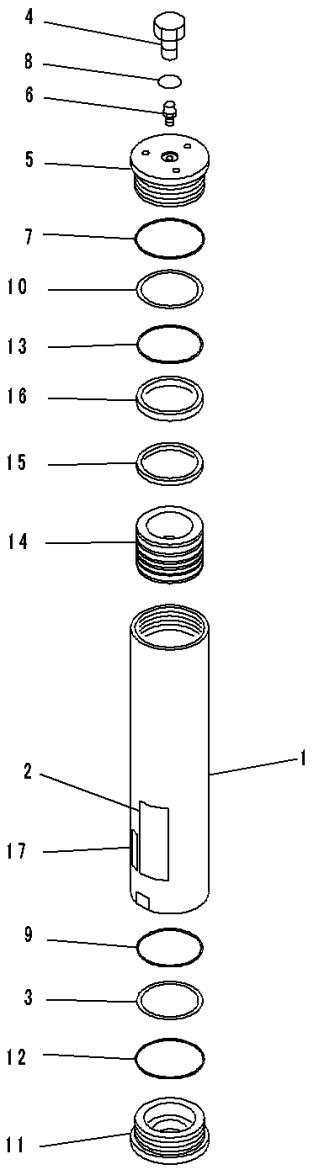

JY024329

Index	Code	Part Number	Description	Qty	Serial Number
		721-32-10100	Accumulator Assembly	2	26001-
1		721-10-10400	• Cylinder	1	26001-
2		721-89-10250	• Plate	1	26001-
3		707-35-91020	• Ring, Back-up	1	26001-
4		707-87-14820	• Plug	1	26001-
5		721-29-10140	• Cover, Top	1	26001-
6		721-89-12011	• Valve, Gas	1	26001-
7		07000-12100	• O-ring	1	26001-
8		07000-13029	• O-ring	1	26001-
9		07000-15090	• O-ring	1	26001-
10		707-35-91020	• Ring, Back-up	1	26001-
11		721-26-10140	• Cover, End	1	26001-
12		07000-12100	• O-ring	1	26001-
13		07000-15090	• O-ring	1	26001-
14		721-36-10070	• Piston	1	26001-
15		721-47-12021	• Seal, Step	1	26001-
16		721-47-12080	• Seal, Piston	1	26001-
17		09659-A057B	• Plate, Warning, Explosion Hazard	1	26001-

FIG. H5120-002003A Front Frame Valve (Accumulator Mounting)

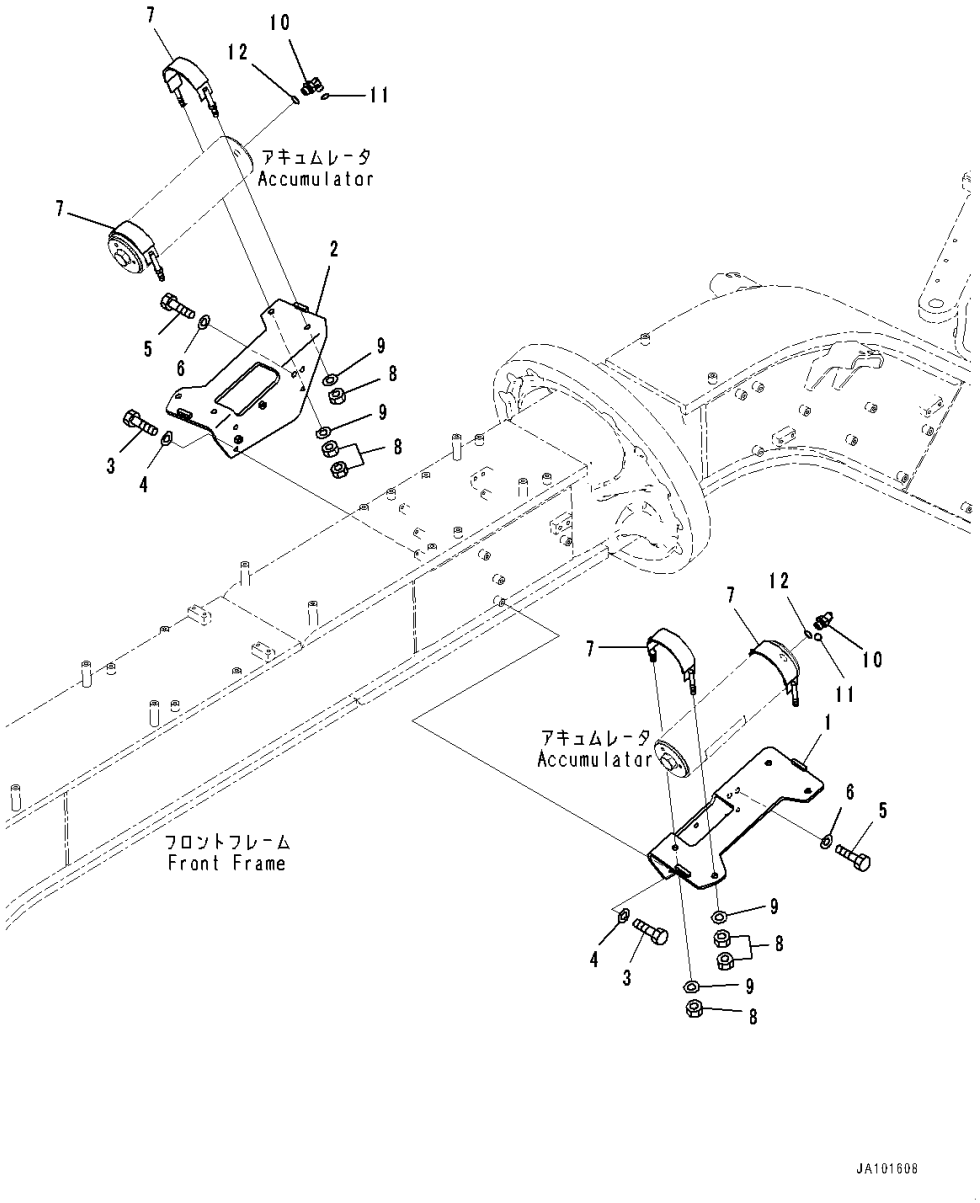

Index	Code	Part Number	Description	Qty	Serial Number
1		234-833-8132	Bracket	1	26329-
2		234-833-8142	Bracket	1	26329-
3		01010-81025	Bolt	6	26329-
4		01643-31032	Washer	6	26329-
5		01010-81230	Bolt	4	26329-
6		01643-31232	Washer	4	26329-
7		234-833-8150	Band	4	26001-
8		421-40-12440	Nut	12	26001-
9		01643-31232	Washer	8	26001-
10		02782-10315	Elbow	2	26001-
11		02896-11009	O-ring	2	26001-
12		07002-12034	O-ring	2	26001-

FIG. H5120-002004 Front Frame Valve (Blade Lift Cylinder Piping)

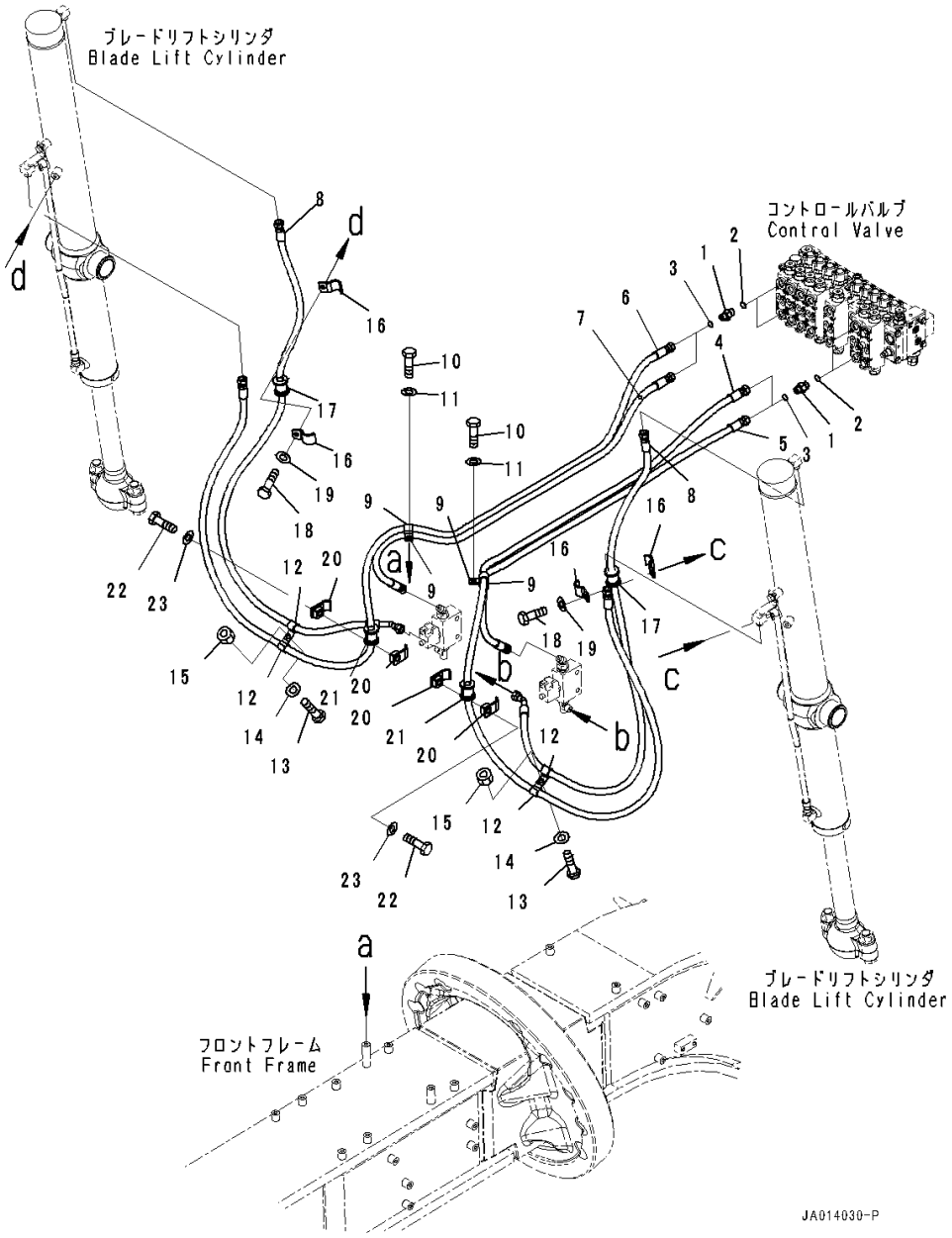

Index	Code	Part Number	Description	Qty	Serial Number
1		02781-00313	Union	4	26001-
2		07002-11823	O-ring	4	26001-
3		02896-11009	O-ring	4	26001-
4		234-833-8160	Hose	1	26001-
5		234-833-8170	Hose	1	26001-
6		234-833-8180	Hose	1	26001-
7		234-833-8190	Hose	1	26001-
8		234-833-8210	Hose	2	26001-
9		04434-51712	Clip	4	26001-
10		01010-81025	Bolt	2	26001-
11		01643-31032	Washer	2	26001-
12		04434-51712	Clip	4	26001-
13		01010-81020	Bolt	2	26001-
14		01643-31032	Washer	2	26001-
15		01580-11008	Nut	2	26001-
16		23B-60-71410	Clamp	4	26001-
17		07095-00317	Cushion	2	26001-
18		01010-81025	Bolt	2	26001-
19		01643-31032	Washer	2	26001-
20		22P-62-13510	Clamp	4	26001-
21		07095-00317	Cushion	2	26001-
22		01010-81260	Bolt	2	26001-
23		01643-31232	Washer	2	26001-

FIG. H5120-003004 Front Frame Valve (Blade Lift Cylinder Piping) (With Front Blade)

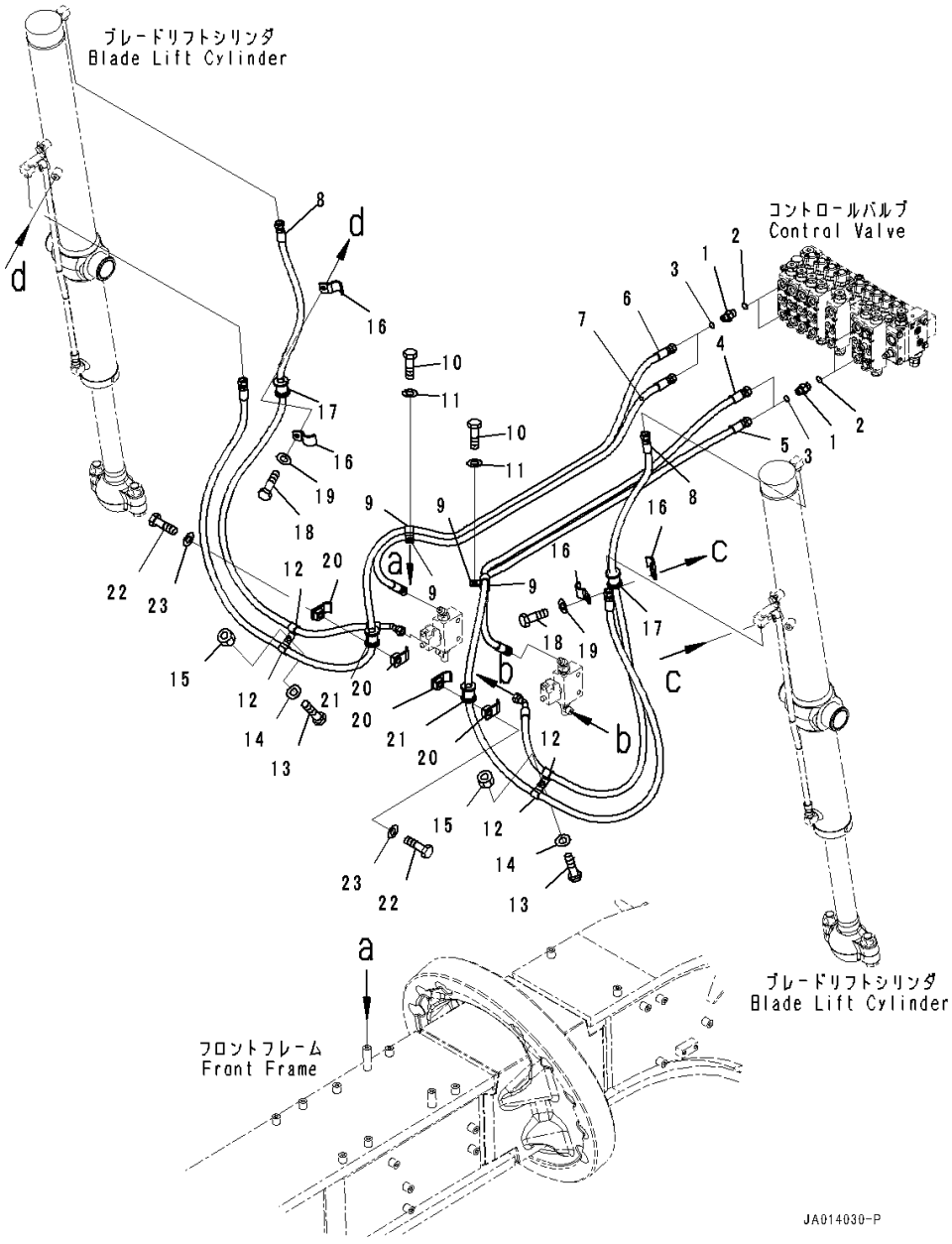

Index	Code	Part Number	Description	Qty	Serial Number
1		02781-00313	Union	4	26001-
2		07002-11823	O-ring	4	26001-
3		02896-11009	O-ring	4	26001-
4		234-833-8310	Hose	1	26001-
5		234-833-8321	Hose	1	26001-
6		234-833-8330	Hose	1	26001-
7		234-833-8341	Hose	1	26001-
8		234-833-8210	Hose	2	26001-
9		04434-51712	Clip	4	26001-
10		01010-81025	Bolt	2	26001-
11		01643-31032	Washer	2	26001-
12		04434-51712	Clip	4	26001-
13		01010-81020	Bolt	2	26001-
14		01643-31032	Washer	2	26001-
15		01580-11008	Nut	2	26001-
16		23B-60-71410	Clamp	4	26001-
17		07095-00317	Cushion	2	26001-
18		01010-81025	Bolt	2	26001-
19		01643-31032	Washer	2	26001-
20		22P-62-13510	Clamp	4	26001-
21		07095-00317	Cushion	2	26001-
22		01010-81260	Bolt	2	26001-
23		01643-31232	Washer	2	26001-

FIG. H5120-002005 Front Frame Valve (Switch)

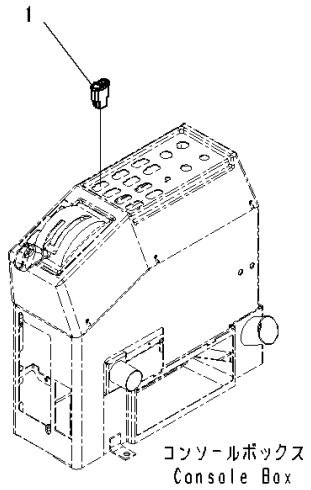

Index	Code	Part Number	Description	Qty	Serial Number
1		23B-06-72630	Switch,Accumulator	1	26001-

FIG. H5200-001001 Hydraulic Piping (Suction Piping)

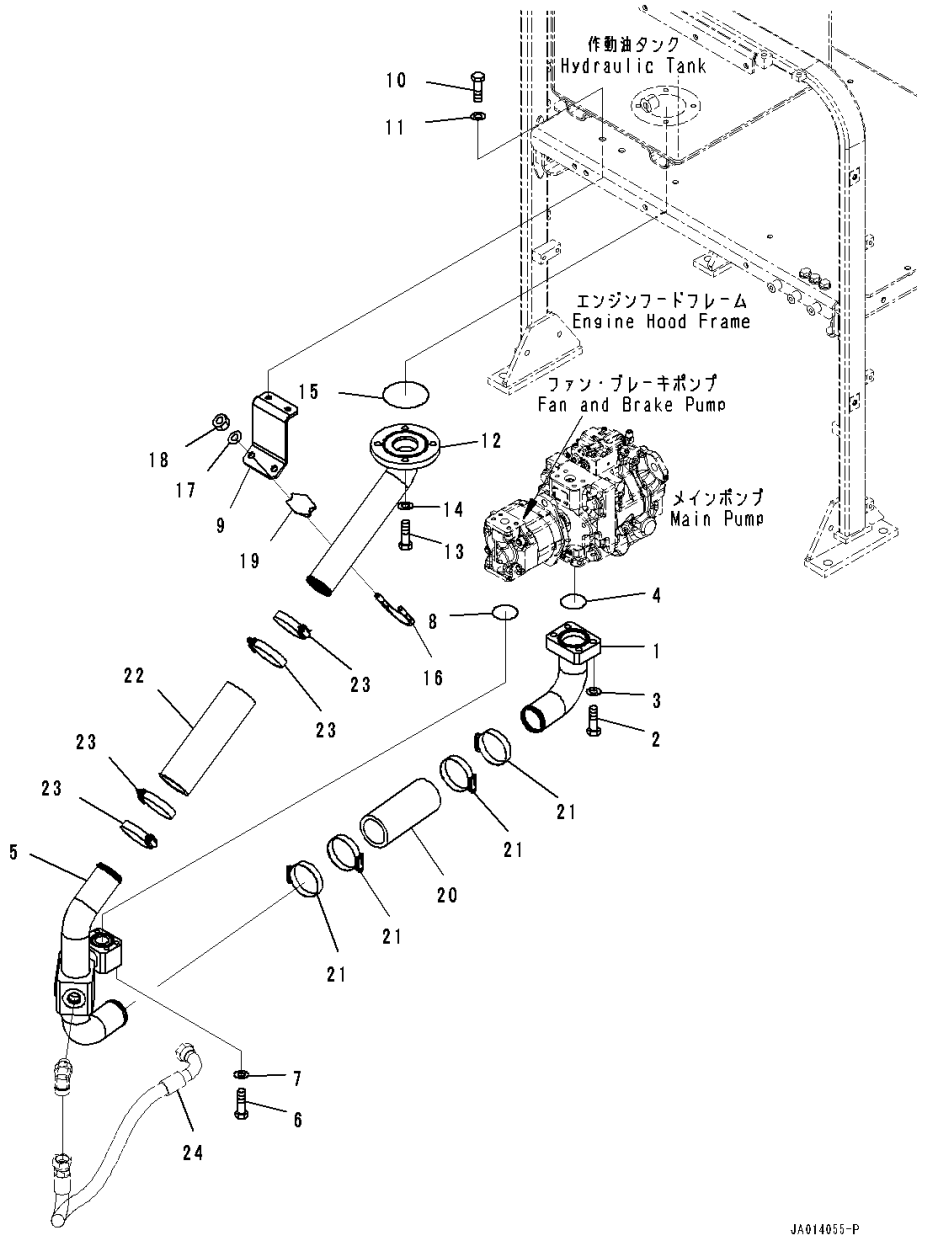

Index	Code	Part Number	Description	Qty	Serial Number
1		234-60-86210	Tube	1	26001-
2		07372-21250	Bolt	4	26001-
3		01643-51232	Washer	4	26001-
4		07000-12060	O-ring	1	26001-
5		234-60-86220	Tube	1	26001-
6		01010-81075	Bolt	4	26001-
7		01643-31032	Washer	4	26001-
8		07000-13042	O-ring	1	26001-
9		234-60-86240	Bracket	1	26001-
10		01010-81025	Bolt	2	26001-
11		01643-31032	Washer	2	26001-
12		234-60-86230	Tube	1	26001-
13		01010-81235	Bolt	4	26001-
14		01643-31232	Washer	4	26001-
15		07000-12090	O-ring	1	26001-
16		07283-36155	Clip	1	26001-
17		01643-31032	Washer	2	26001-
18		01597-01009	Nut	2	26001-
19		07283-56170	Seat, Pipe Clip	1	26001-
20		07260-05818	Hose	1	26001-
21		07289-00080	Clamp	4	26001-
22		07260-05825	Hose	1	26001-
23		07289-00080	Clamp	4	26001-
24		(234-60-87230)	Hose(Hydraulic Piping,Engine Starting Aid)(Refer to Page 369)		

FIG. H5200-003002 Hydraulic Piping (Priority Valve) (With 10 Spool Valve)

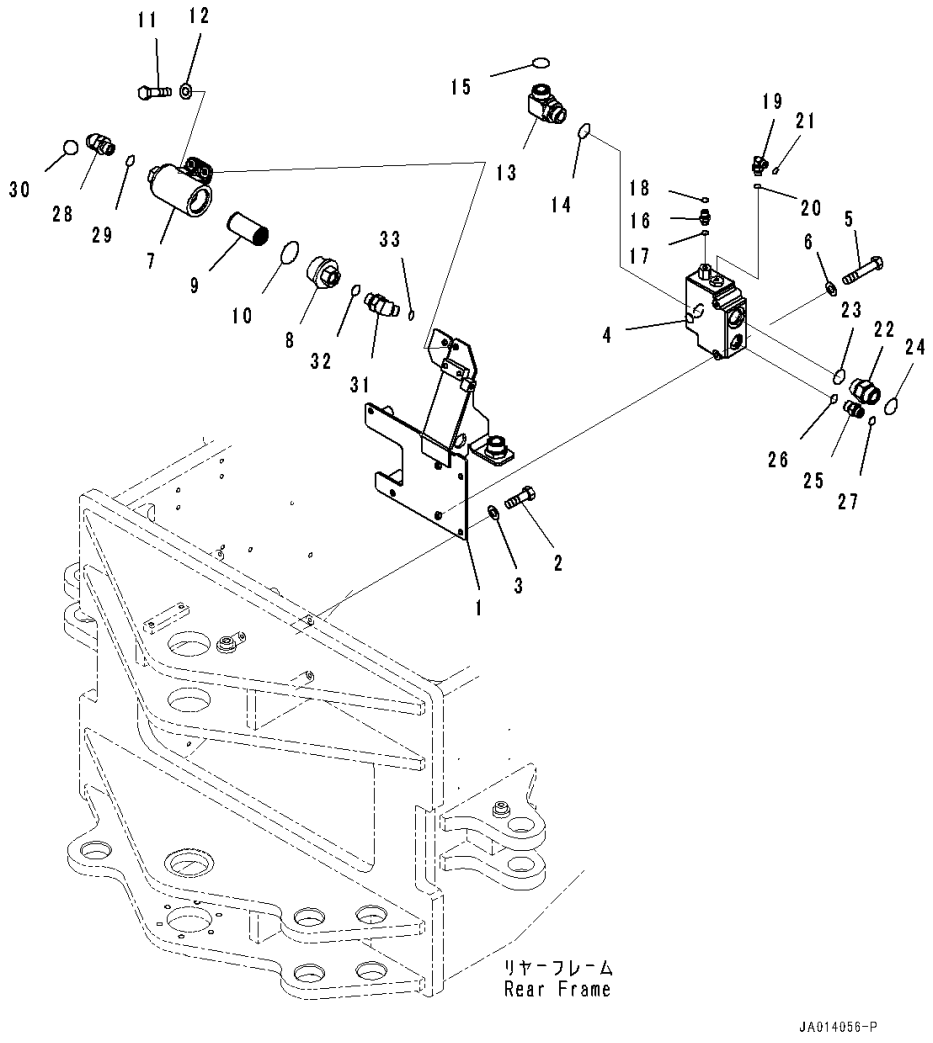

Index	Code	Part Number	Description	Qty	Serial Number
1		234-60-86250	Bracket	1	26001-
2		01010-81025	Bolt	4	26001-
3		01643-31032	Washer	4	26001-
4		234-60-83220	Valve Assembly, Priority	1	26001-
5		01010-80880	Bolt	2	26001-
6		01643-30823	Washer	2	26001-
7		421-43-22562	Case	1	26001-
8		421-43-22571	Cap	1	26001-
9		421-43-27920	Strainer	1	26001-
10		07002-15234	O-ring	1	26001-
11		01010-81025	Bolt	2	26001-
12		01643-31032	Washer	2	26001-
13		23B-60-33112	Elbow	1	26001-
14		235-60-15480	O-ring	1	26001-
15		23B-60-33240	O-ring	1	26001-
16		418-62-32110	Nipple	1	26001-
17		416-62-11480	O-ring	1	26001-
18		02896-11008	O-ring	1	26001-
19		418-62-32162	Elbow	1	26001-
20		416-62-11480	O-ring	1	26001-
21		02896-11008	O-ring	1	26001-
22		418-62-32172	Nipple	1	26001-
23		418-62-11630	O-ring	1	26001-
24		23B-60-33240	O-ring	1	26001-
25		23C-60-52140	Union	1	26001-
26		418-62-11620	O-ring	1	26001-
27		02896-11012	O-ring	1	26001-
28		22B-62-18940	Elbow	1	26001-
29		07002-22434	O-ring	1	26001-
30		02896-21012	O-ring	1	26001-
31		22B-62-18940	Elbow	1	26001-
32		07002-22434	O-ring	1	26001-
33		02896-21012	O-ring	1	26001-

FIG. H5200-001002 Hydraulic Piping (Priority Valve) (With 9 Spool Valve)

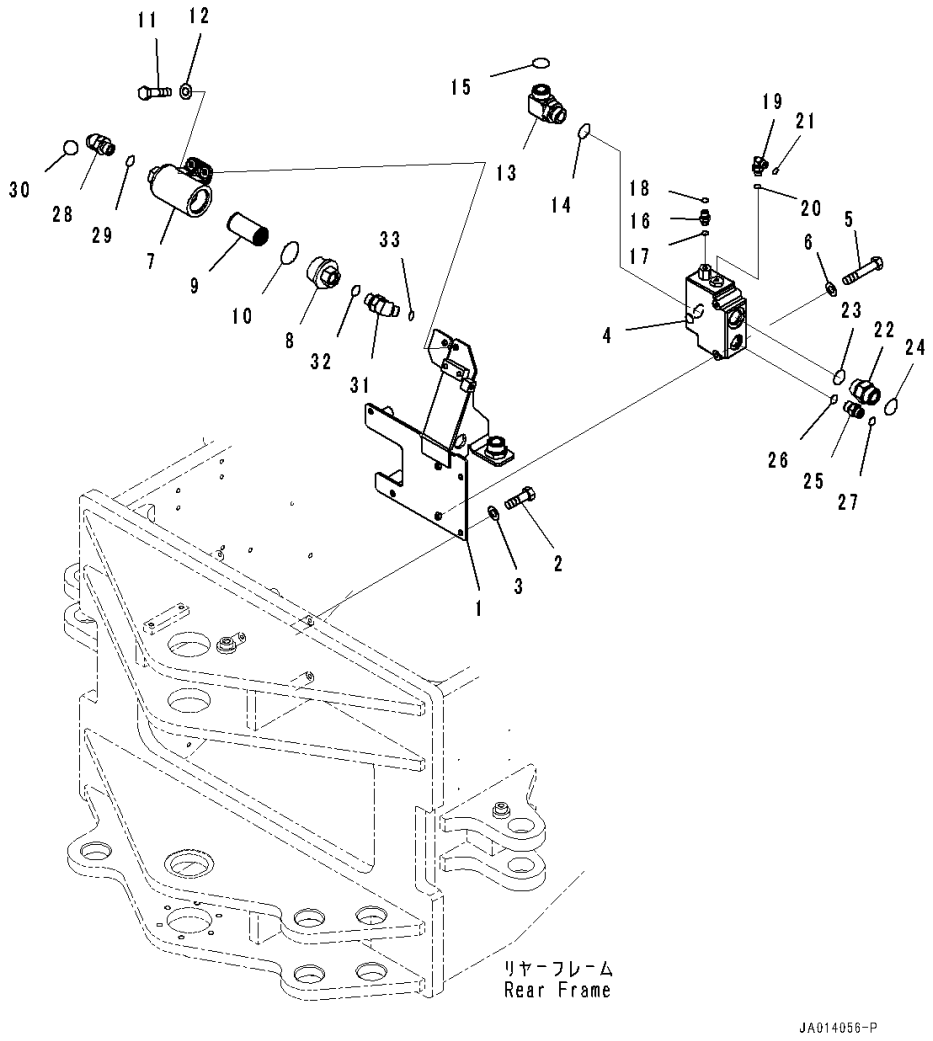

Index	Code	Part Number	Description	Qty	Serial Number
1		234-60-86250	Bracket	1	26001-
2		01010-81025	Bolt	4	26001-
3		01643-31032	Washer	4	26001-
4		234-60-83220	Valve Assembly, Priority	1	26001-
5		01010-80880	Bolt	2	26001-
6		01643-30823	Washer	2	26001-
7		421-43-22562	Case	1	26001-
8		421-43-22571	Cap	1	26001-
9		421-43-27920	Strainer	1	26001-
10		07002-15234	O-ring	1	26001-
11		01010-81025	Bolt	2	26001-
12		01643-31032	Washer	2	26001-
13		23B-60-33112	Elbow	1	26001-
14		235-60-15480	O-ring	1	26001-
15		23B-60-33240	O-ring	1	26001-
16		418-62-32110	Nipple	1	26001-
17		416-62-11480	O-ring	1	26001-
18		02896-11008	O-ring	1	26001-
19		418-62-32162	Elbow	1	26001-
20		416-62-11480	O-ring	1	26001-
21		02896-11008	O-ring	1	26001-
22		418-62-32172	Nipple	1	26001-
23		418-62-11630	O-ring	1	26001-
24		23B-60-33240	O-ring	1	26001-
25		23C-60-52140	Union	1	26001-
26		418-62-11620	O-ring	1	26001-
27		02896-11012	O-ring	1	26001-
28		22B-62-18940	Elbow	1	26001-
29		07002-22434	O-ring	1	26001-
30		02896-21012	O-ring	1	26001-
31		22B-62-18940	Elbow	1	26001-
32		07002-22434	O-ring	1	26001-
33		02896-21012	O-ring	1	26001-

FIG. H5200-003003 Hydraulic Piping (Priority Valve Piping) (1/2) (With 10 Spool Valve)

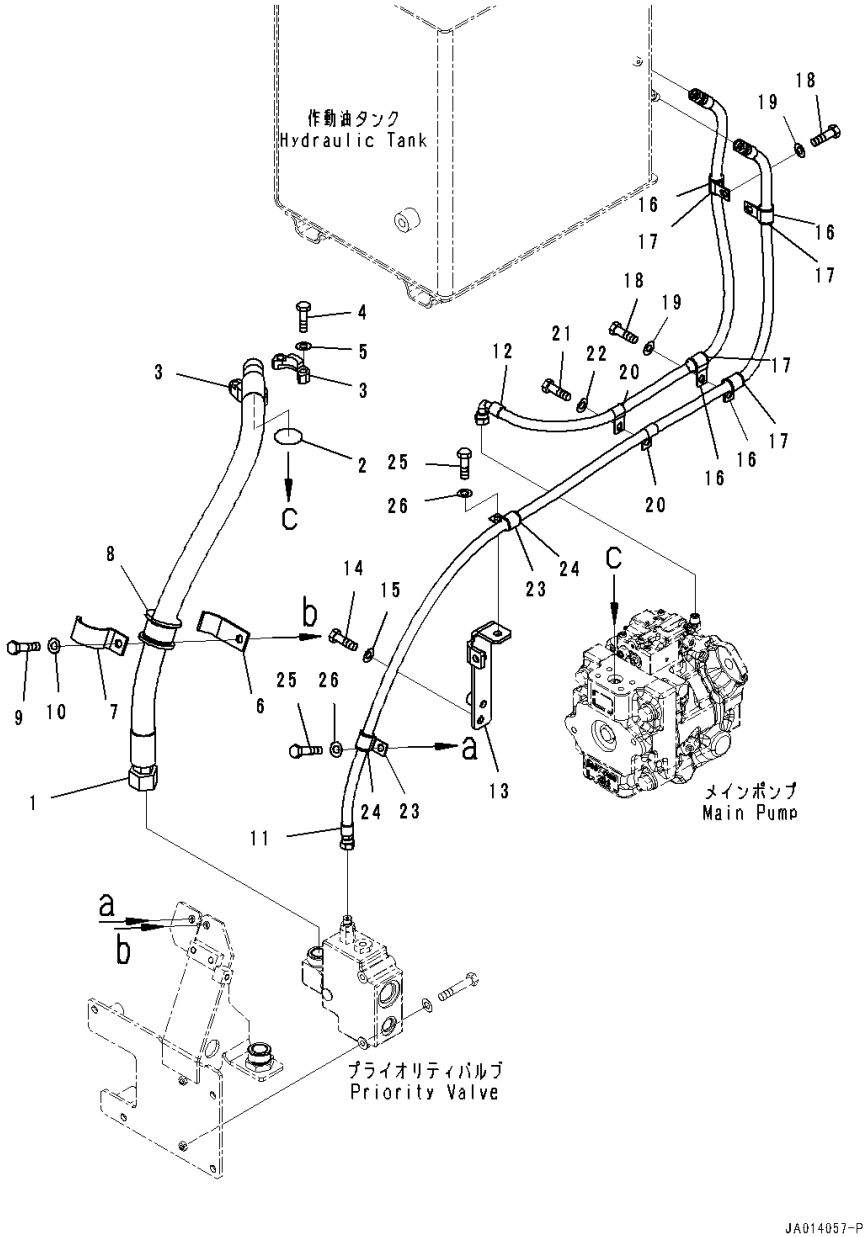

Index	Code	Part Number	Description	Qty	Serial Number
1		234-60-86291	Hose	1	26001-
2		07000-B3032	O-ring	1	26001-
3		07371-31049	Flange, Split	2	26001-
4		07372-21035	Bolt	4	26001-
5		01643-51032	Washer	4	26001-
6		418-62-32550	Clamp	1	26001-
7		418-62-32560	Clamp	1	26001-
8		21T-62-76840	Cushion	1	26001-
9		01010-81030	Bolt	1	26075-
		01010-81025	Bolt	1	26001-26074
10		01643-31032	Washer	1	26001-
11		234-60-86370	Hose	1	26001-
12		234-60-86360	Hose	1	26001-
13		234-60-86350	Bracket	1	26001-
14		01010-81025	Bolt	1	26001-
15		01643-31032	Washer	1	26001-
16		04434-51710	Clip	4	26001-
17		07095-20211	Cushion	4	26001-
18		01010-81025	Bolt	2	26001-
19		01643-31032	Washer	2	26001-
20		04434-51210	Clip	2	26001-
21		01010-81025	Bolt	1	26001-
22		01643-31032	Washer	1	26001-
23		04434-51710	Clip	2	26001-
24		07095-20211	Cushion	2	26001-
25		01010-81025	Bolt	2	26001-
26		01643-31032	Washer	2	26001-

FIG. H5200-004003 Hydraulic Piping (Priority Valve Piping) (1/2) (With 10 Spool Valve,Ripper)

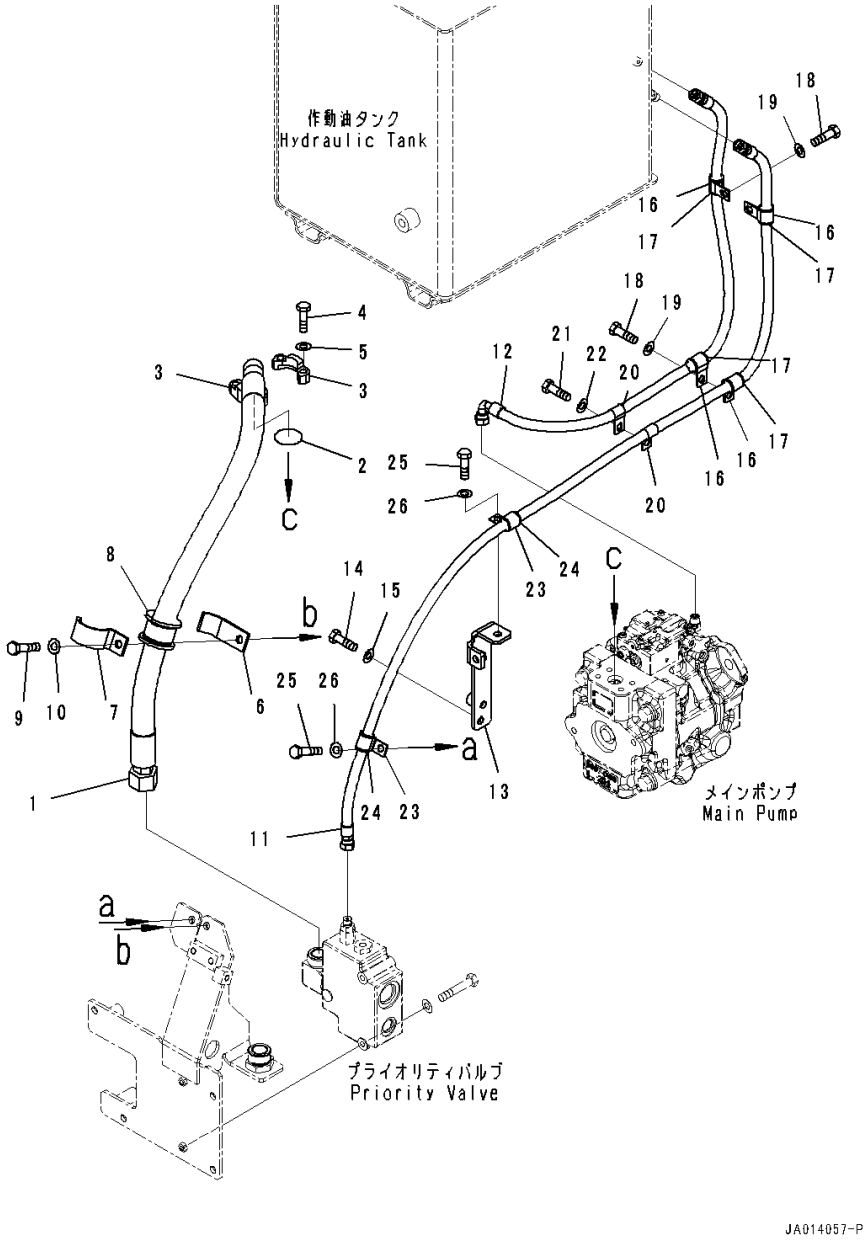

Index	Code	Part Number	Description	Qty	Serial Number
1		234-60-86291	Hose	1	26001-
2		07000-B3032	O-ring	1	26001-
3		07371-31049	Flange, Split	2	26001-
4		07372-21035	Bolt	4	26001-
5		01643-51032	Washer	4	26001-
6		418-62-32550	Clamp	1	26001-
7		418-62-32560	Clamp	1	26001-
8		21T-62-76840	Cushion	1	26001-
9		01010-81030	Bolt	1	26075-
		01010-81025	Bolt	1	26001-26074
10		01643-31032	Washer	1	26001-
11		234-60-86370	Hose	1	26001-
12		234-60-86360	Hose	1	26001-
13		234-60-86350	Bracket	1	26001-
14		01010-81025	Bolt	1	26001-
15		01643-31032	Washer	1	26001-
16		04434-51710	Clip	4	26001-
17		07095-20211	Cushion	4	26001-
18		01010-81025	Bolt	2	26001-
19		01643-31032	Washer	2	26001-
20		04434-51210	Clip	2	26001-
21		01010-81025	Bolt	1	26001-
22		01643-31032	Washer	1	26001-
23		04434-51710	Clip	2	26001-
24		07095-20211	Cushion	2	26001-
25		01010-81025	Bolt	2	26001-
26		01643-31032	Washer	2	26001-

FIG. H5200-001003 Hydraulic Piping (Priority Valve Piping) (1/2) (With 9 Spool Valve)

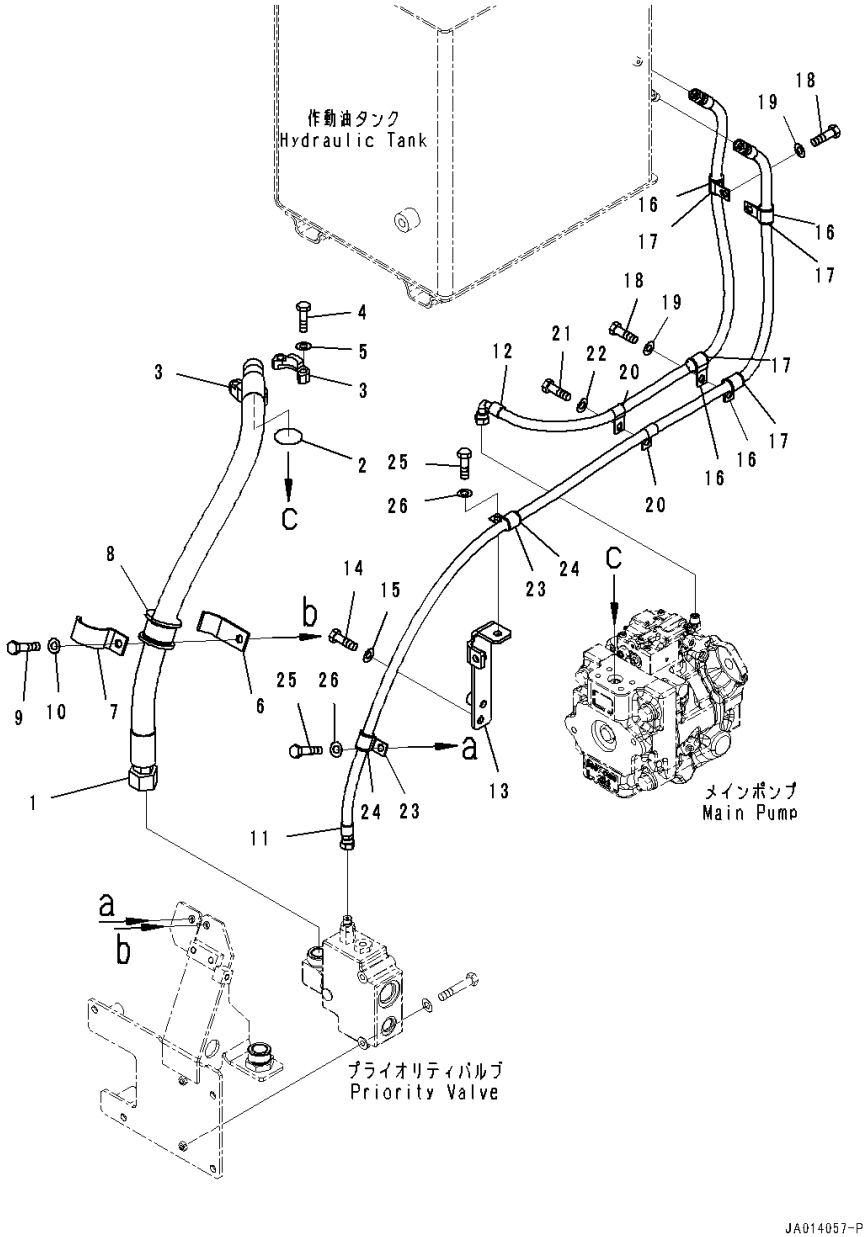

Index	Code	Part Number	Description	Qty	Serial Number
1		234-60-86291	Hose	1	26001-
2		07000-B3032	O-ring	1	26001-
3		07371-31049	Flange, Split	2	26001-
4		07372-21035	Bolt	4	26001-
5		01643-51032	Washer	4	26001-
6		418-62-32550	Clamp	1	26001-
7		418-62-32560	Clamp	1	26001-
8		21T-62-76840	Cushion	1	26001-
9		01010-81030	Bolt	1	26075-
		01010-81025	Bolt	1	26001-26074
10		01643-31032	Washer	1	26001-
11		234-60-86370	Hose	1	26001-
12		234-60-86360	Hose	1	26001-
13		234-60-86350	Bracket	1	26001-
14		01010-81025	Bolt	1	26001-
15		01643-31032	Washer	1	26001-
16		04434-51710	Clip	4	26001-
17		07095-20211	Cushion	4	26001-
18		01010-81025	Bolt	2	26001-
19		01643-31032	Washer	2	26001-
20		04434-51210	Clip	2	26001-
21		01010-81025	Bolt	1	26001-
22		01643-31032	Washer	1	26001-
23		04434-51710	Clip	2	26001-
24		07095-20211	Cushion	2	26001-
25		01010-81025	Bolt	2	26001-
26		01643-31032	Washer	2	26001-

FIG. H5200-003004 Hydraulic Piping (Priority Valve Piping) (2/2) (With 10 Spool Valve)

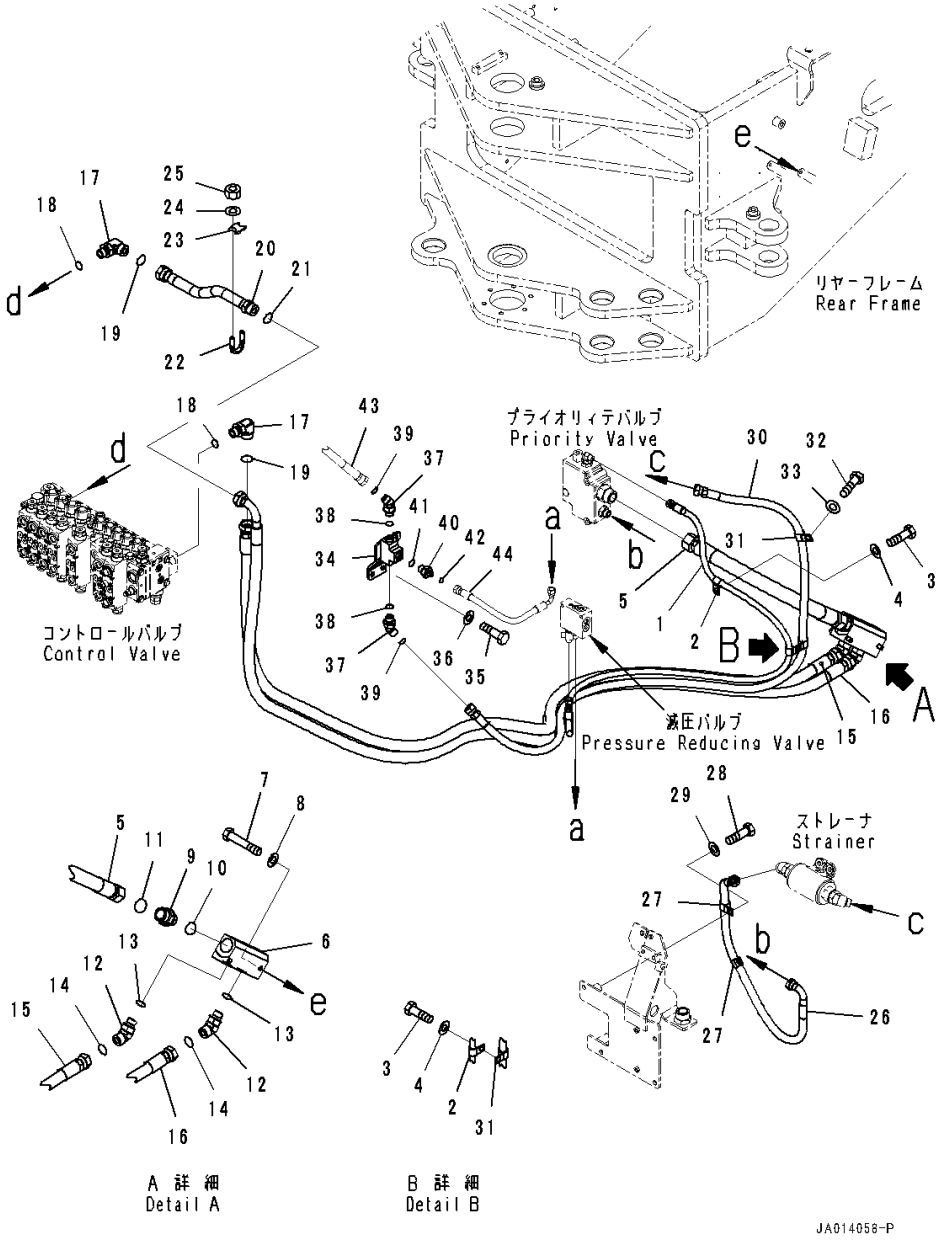

Index	Code	Part Number	Description	Qty	Serial Number
1		234-60-86330	Hose	1	26001-
2		04434-51310	Clip	2	26001-
3		01010-81025	Bolt	2	26001-
4		01643-31032	Washer	2	26001-
5		234-60-86260	Hose	1	26001-
6		23B-60-73310	Block	1	26001-
7		01010-81065	Bolt	2	26001-
8		01643-31032	Washer	2	26001-
9		20U-62-41720	Nipple	1	26001-
10		07002-63334	O-ring	1	26001-
11		23B-60-33240	O-ring	1	26001-
12		02783-10628	Elbow	2	26001-
13		07002-62434	O-ring	2	26001-
14		02896-61018	O-ring	2	26001-
15		234-60-86280	Hose	1	26001-
16		234-60-86270	Hose	1	26001-
17		02782-10628	Elbow	2	26001-
18		07002-62434	O-ring	2	26001-
19		02896-61018	O-ring	2	26001-
20		234-60-84170	Tube	1	26001-
21		02896-61018	O-ring	1	26001-
22		07283-32746	Clip	1	26001-
23		07283-52737	Seat	1	26001-
24		01643-31032	Washer	2	26001-
25		01597-01009	Nut	2	26001-
26		234-60-86310	Hose	1	26001-
27		04434-51912	Clip	2	26001-
28		01010-81025	Bolt	2	26001-
29		01643-31032	Washer	2	26001-
30		234-60-86320	Hose	1	26001-
31		04434-51912	Clip	2	26001-
32		01010-81025	Bolt	1	26001-
33		01643-31032	Washer	1	26001-
34		234-60-86340	Block	1	26001-
35		01010-81025	Bolt	2	26001-
36		01643-31032	Washer	2	26001-
37		02783-10422	Elbow	2	26001-
38		07002-12034	O-ring	2	26001-
39		02896-11012	O-ring	2	26001-
40		20Y-62-43460	Nipple	1	26001-

FIG. H5200-003004 Hydraulic Piping (Priority Valve Piping) (2/2) (With 10 Spool Valve)

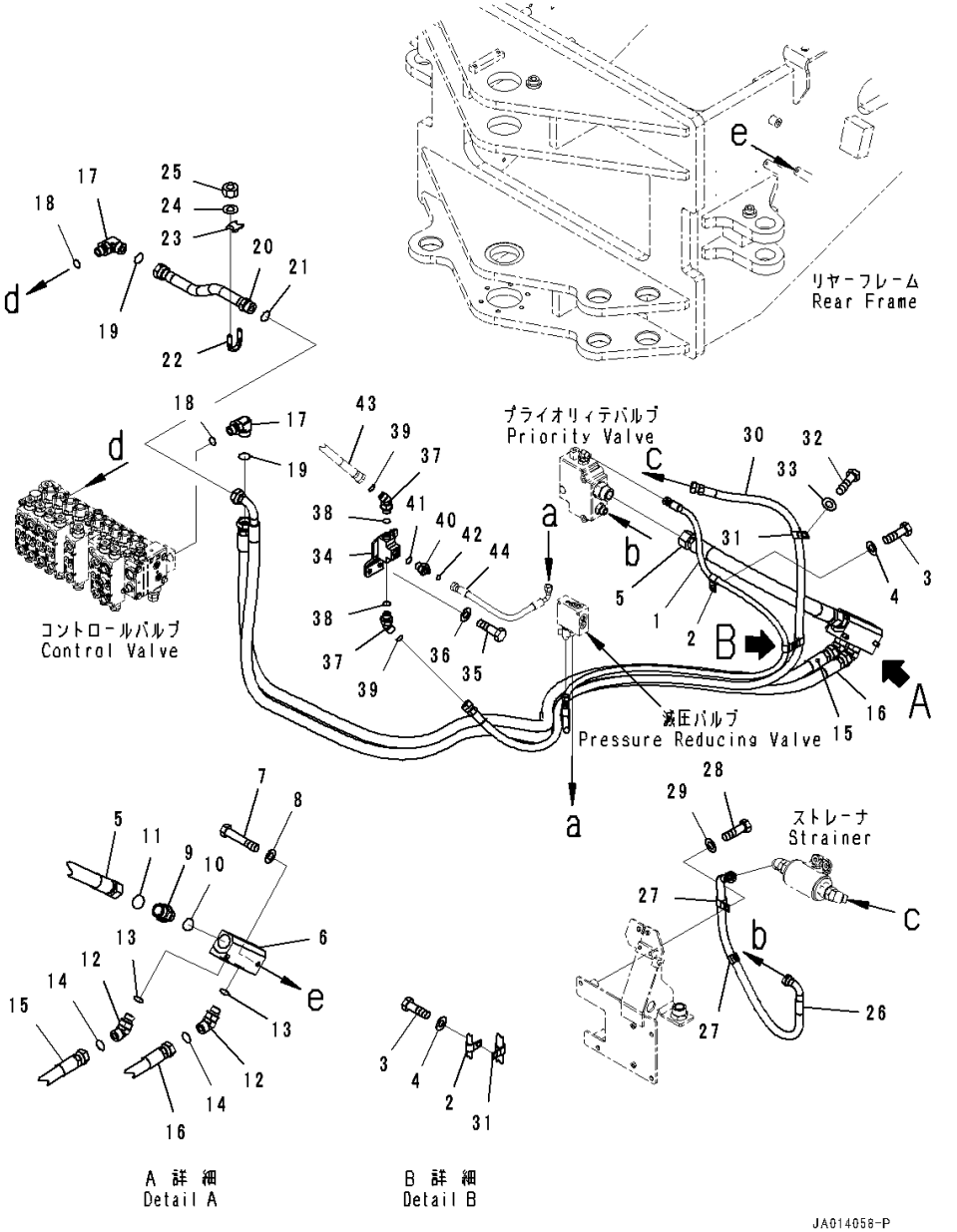

Index	Code	Part Number	Description	Qty	Serial Number
41		07002-12034	O-ring	1	26001-
42		02896-11008	O-ring	1	26001-
43		(234-40-81320)	Hose(Floor,Orbitrol Valve Piping)(Refer to Page 462)		
44		(234-60-86980)	Hose(Hydraulic Piping,LS Piping)(Refer to Page 364)		

FIG. H5200-001004 Hydraulic Piping (Priority Valve Piping) (2/2) (With 9 Spool Valve)

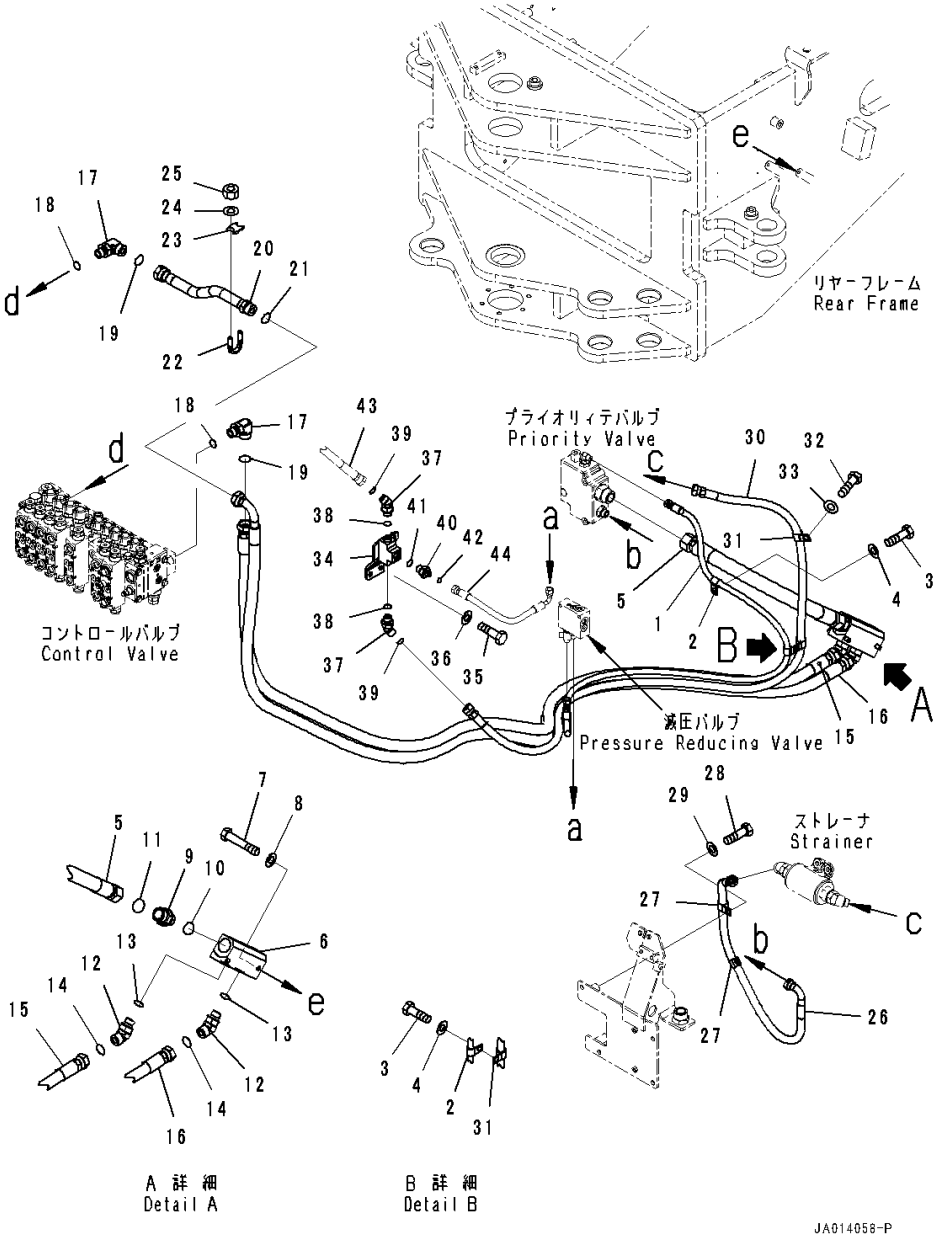

Index	Code	Part Number	Description	Qty	Serial Number
1		234-60-86330	Hose	1	26001-
2		04434-51310	Clip	2	26001-
3		01010-81025	Bolt	2	26001-
4		01643-31032	Washer	2	26001-
5		234-60-86260	Hose	1	26001-
6		23B-60-73310	Block	1	26001-
7		01010-81065	Bolt	2	26001-
8		01643-31032	Washer	2	26001-
9		20U-62-41720	Nipple	1	26001-
10		07002-63334	O-ring	1	26001-
11		23B-60-33240	O-ring	1	26001-
12		02783-10628	Elbow	2	26001-
13		07002-62434	O-ring	2	26001-
14		02896-61018	O-ring	2	26001-
15		234-60-86280	Hose	1	26001-
16		234-60-86270	Hose	1	26001-
17		02782-10628	Elbow	2	26001-
18		07002-62434	O-ring	2	26001-
19		02896-61018	O-ring	2	26001-
20		234-60-86570	Tube	1	26001-
21		02896-61018	O-ring	1	26001-
22		07283-32746	Clip	1	26001-
23		07283-52737	Seat	1	26001-
24		01643-31032	Washer	2	26001-
25		01597-01009	Nut	2	26001-
26		234-60-86310	Hose	1	26001-
27		04434-51912	Clip	2	26001-
28		01010-81025	Bolt	2	26001-
29		01643-31032	Washer	2	26001-
30		234-60-86320	Hose	1	26001-
31		04434-51912	Clip	2	26001-
32		01010-81025	Bolt	1	26001-
33		01643-31032	Washer	1	26001-
34		234-60-86340	Block	1	26001-
35		01010-81025	Bolt	2	26001-
36		01643-31032	Washer	2	26001-
37		02783-10422	Elbow	2	26001-
38		07002-12034	O-ring	2	26001-
39		02896-11012	O-ring	2	26001-
40		20Y-62-43460	Nipple	1	26001-

FIG. H5200-001004 Hydraulic Piping (Priority Valve Piping) (2/2) (With 9 Spool Valve)

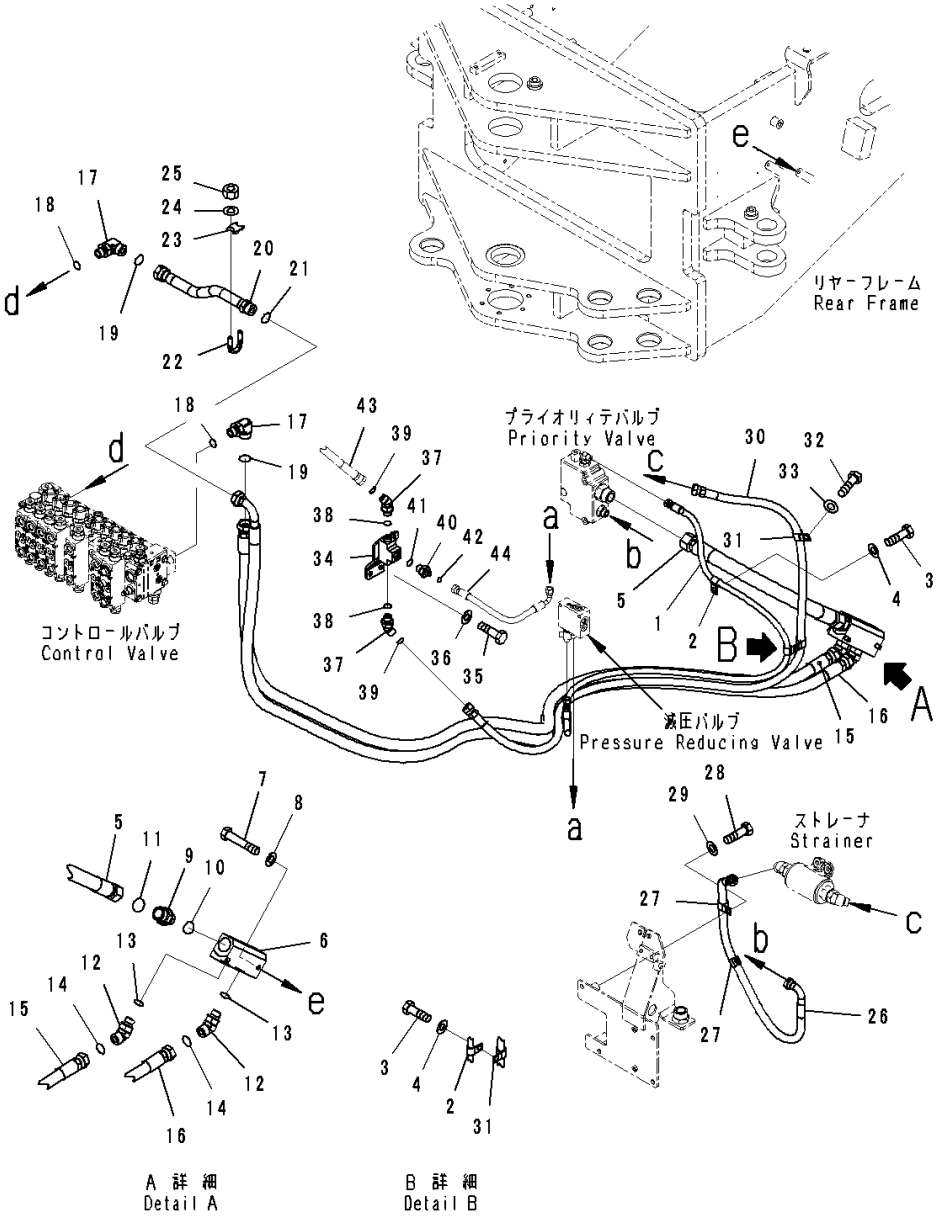

Index	Code	Part Number	Description	Qty	Serial Number
41		07002-12034	O-ring	1	26001-
42		02896-11008	O-ring	1	26001-
43		(234-40-81320)	Hose(Floor,Orbitrol Valve Piping)(Refer to Page 462)		
44		(234-60-86980)	Hose(Hydraulic Piping,LS Piping)(Refer to Page 364)		

FIG. H5200-003005 Hydraulic Piping (Return Piping) (1/2) (With 10 Spool Valve)

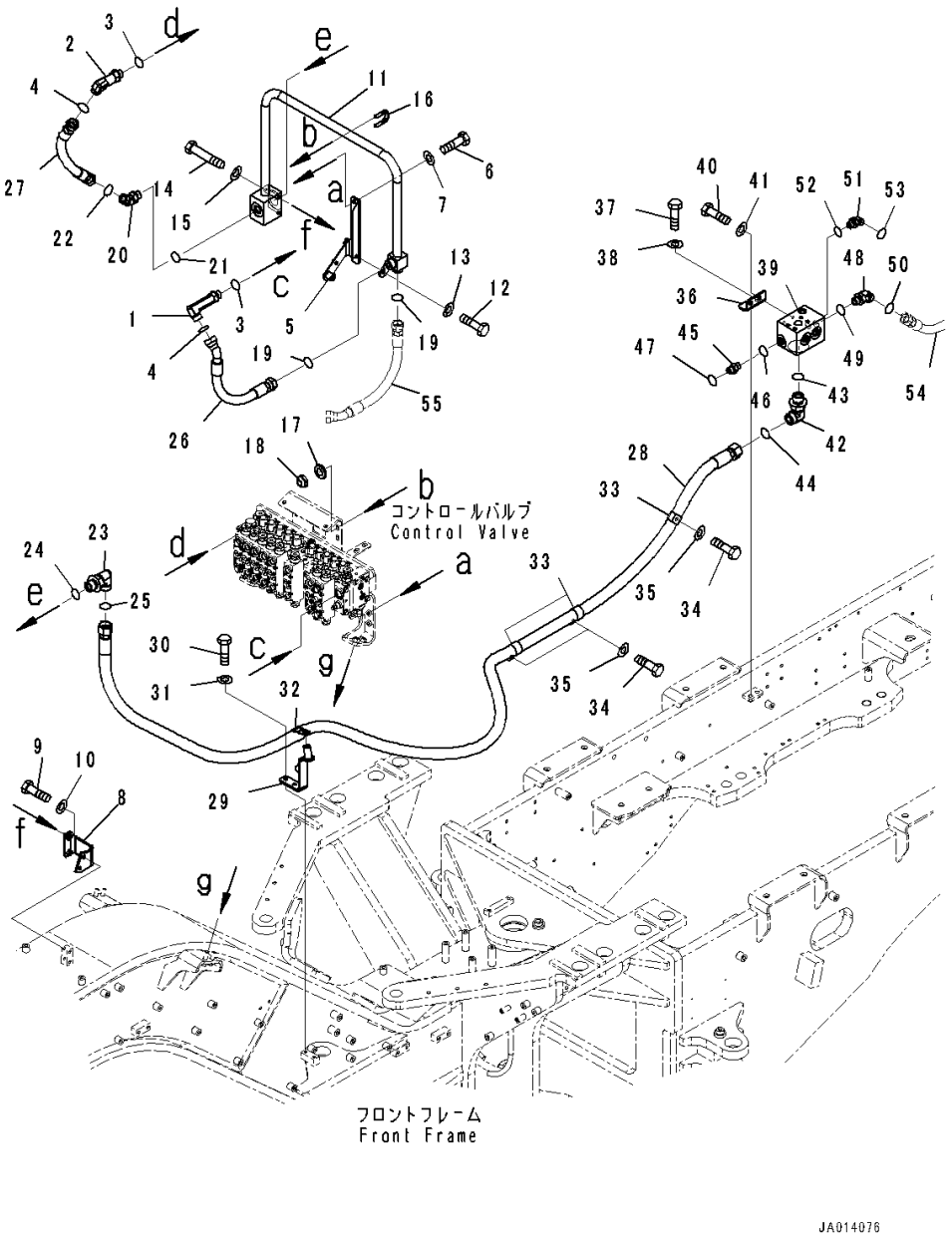

Index	Code	Part Number	Description	Qty	Serial Number
1		23B-60-75190	Elbow	1	26001-
2		23B-60-74750	Elbow	1	26001-
3		07002-12434	O-ring	2	26001-
4		02896-11018	O-ring	2	26001-
5		234-60-86410	Bracket	1	26001-
6		01010-81030	Bolt	2	26001-
7		01643-31032	Washer	2	26001-
8		234-60-86380	Bracket	1	26001-
9		01010-81025	Bolt	2	26001-
10		01643-31032	Washer	2	26001-
11		234-60-86390	Tube	1	26001-
12		01010-81025	Bolt	1	26001-
13		01643-31032	Washer	1	26001-
14		01010-81080	Bolt	2	26001-
15		01643-31032	Washer	2	26001-
16		07283-32738	Clip, Pipe	2	26001-
17		01643-31032	Washer	4	26001-
18		01597-01009	Nut	4	26001-
19		02896-11018	O-ring	2	26001-
20		02783-10628	Elbow	1	26001-
21		07002-12434	O-ring	1	26001-
22		02896-11018	O-ring	1	26001-
23		21W-62-42640	Elbow	1	26001-
24		07002-13334	O-ring	1	26001-
25		23B-60-33240	O-ring	1	26001-
26		234-60-86440	Hose	1	26001-
27		234-60-84180	Hose	1	26001-
28		234-60-86430	Hose	1	26001-
29		234-60-86420	Bracket	1	26001-
30		01010-81025	Bolt	2	26001-
31		01643-31032	Washer	2	26001-
32		04434-53412	Clip	1	26001-
33		04434-53411	Clip	3	26001-
34		01010-81025	Bolt	3	26001-
35		01643-31032	Washer	3	26001-
36		234-60-87150	Plate	1	26001-
37		01010-81030	Bolt	2	26001-
38		01643-31032	Washer	2	26001-
39		234-60-86460	Block	1	26001-
40		01010-81025	Bolt	2	26001-

FIG. H5200-003005 Hydraulic Piping (Return Piping) (1/2) (With 10 Spool Valve)

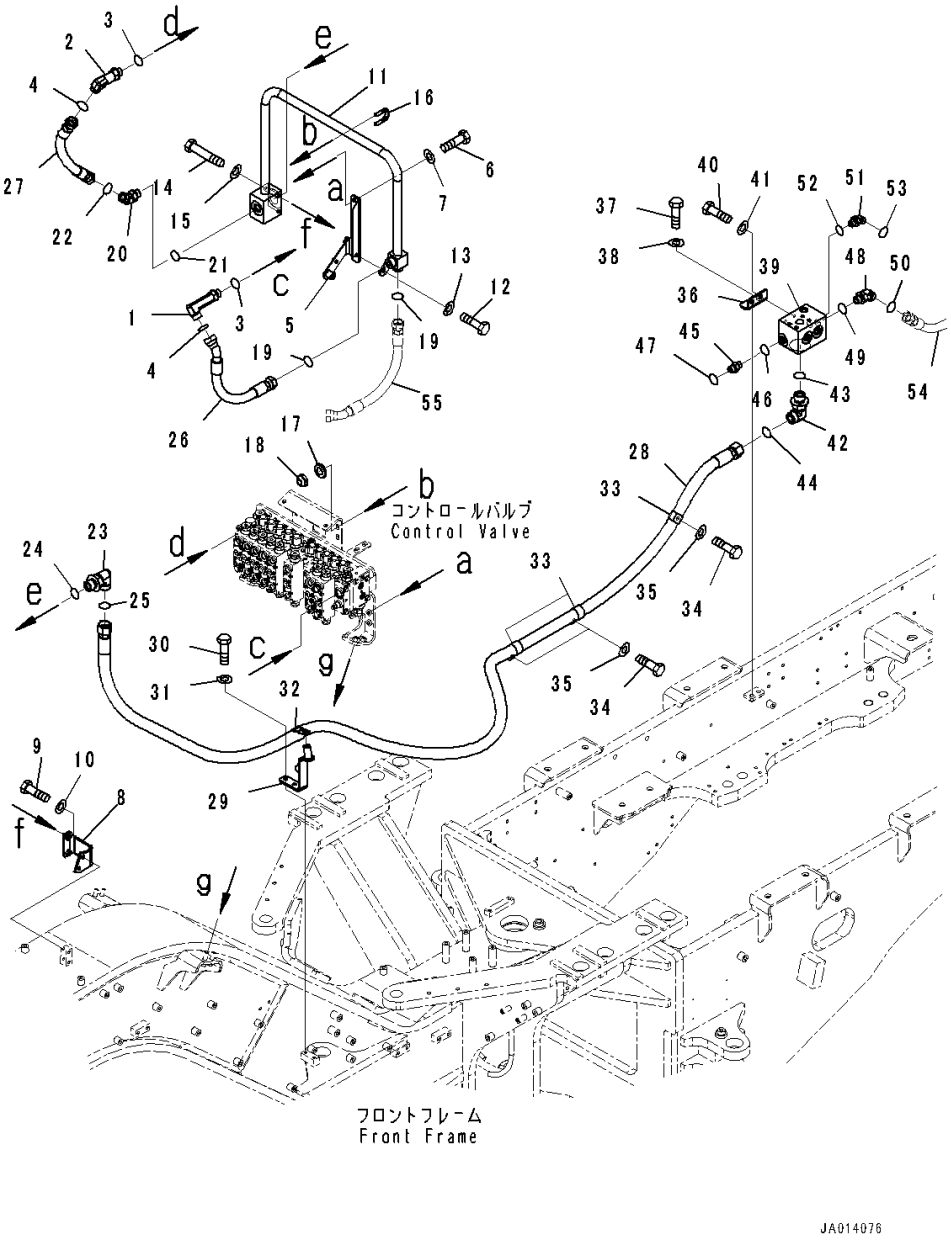

Index	Code	Part Number	Description	Qty	Serial Number
41		01643-31032	Washer	2	26001-
42		21W-62-42640	Elbow	1	26001-
43		07002-13334	O-ring	1	26001-
44		23B-60-33240	O-ring	1	26001-
45		02781-00422	Union	1	26001-
46		07002-12034	O-ring	1	26001-
47		02896-11012	O-ring	1	26001-
48		02783-10628	Elbow	1	26001-
49		07002-12434	O-ring	1	26001-
50		02896-11018	O-ring	1	26001-
51		02783-10422	Elbow	1	26001-
52		07002-12034	O-ring	1	26001-
53		02896-11012	O-ring	1	26001-
54		(234-60-86860)	Hose(Hydraulic Piping,Fan Drive Piping)(Refer to Page 362)		
55		(02776-006A4)	Hose(Front Hydraulic Piping,Safety Valve Piping,With 10 Spool Valve)(Refer to Page 387)		
		(02776-006A4)	Hose(Front Hydraulic Piping,Safety Valve Piping,With 10 Spool Valve,Front Blade)(Refer to Page 388)		

FIG. H5200-001005 Hydraulic Piping (Return Piping) (1/2) (With 9 Spool Valve)

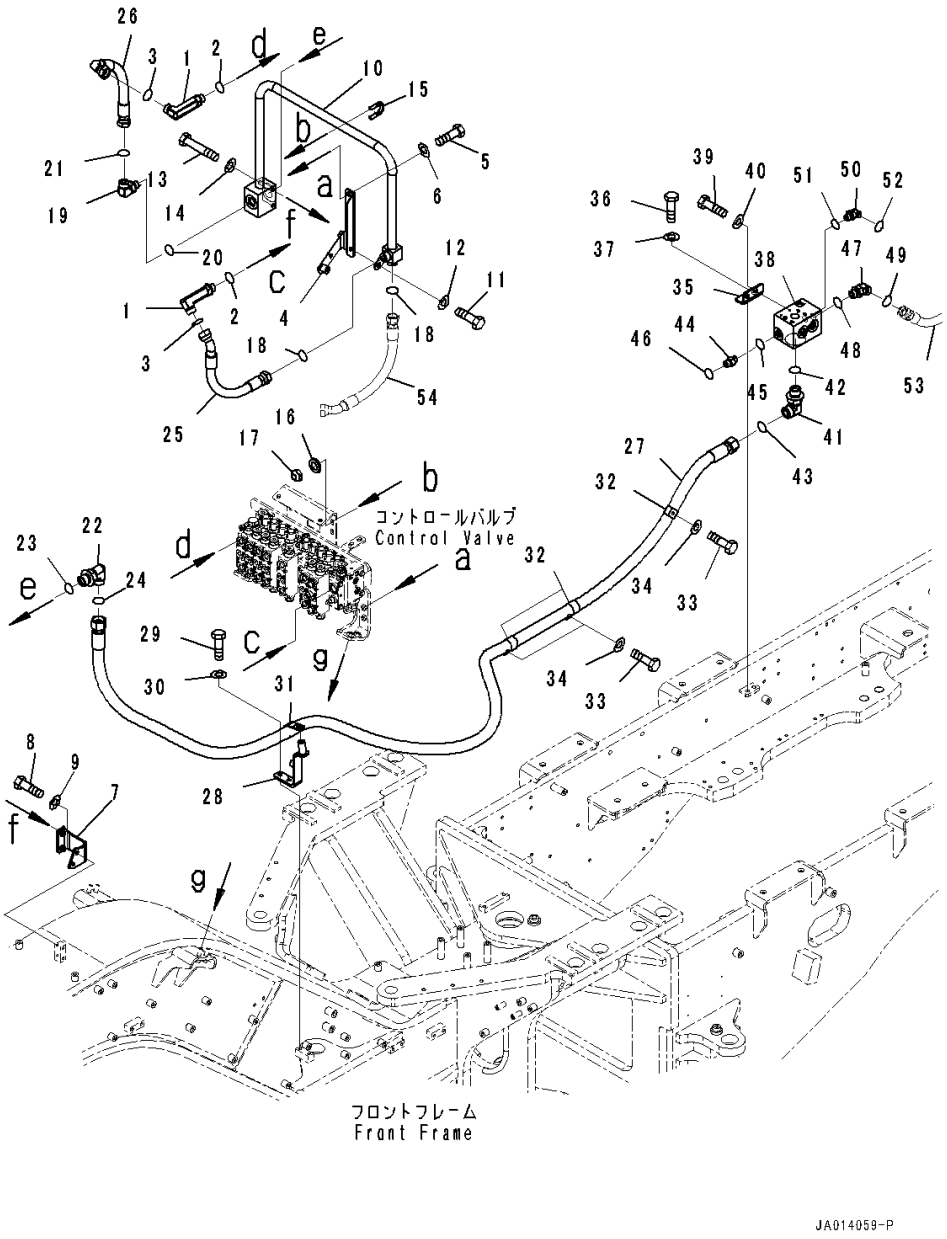

Index	Code	Part Number	Description	Qty	Serial Number
1		23B-60-75190	Elbow	2	26001-
2		07002-12434	O-ring	2	26001-
3		02896-11018	O-ring	2	26001-
4		234-60-86410	Bracket	1	26001-
5		01010-81030	Bolt	2	26001-
6		01643-31032	Washer	2	26001-
7		234-60-86380	Bracket	1	26001-
8		01010-81025	Bolt	2	26001-
9		01643-31032	Washer	2	26001-
10		234-60-86390	Tube	1	26001-
11		01010-81025	Bolt	1	26001-
12		01643-31032	Washer	1	26001-
13		01010-81080	Bolt	2	26001-
14		01643-31032	Washer	2	26001-
15		07283-32738	Clip, Pipe	2	26001-
16		01643-31032	Washer	4	26001-
17		01597-01009	Nut	4	26001-
18		02896-11018	O-ring	2	26001-
19		02782-10628	Elbow	1	26001-
20		07002-12434	O-ring	1	26001-
21		02896-11018	O-ring	1	26001-
22		21W-62-42640	Elbow	1	26001-
23		07002-13334	O-ring	1	26001-
24		23B-60-33240	O-ring	1	26001-
25		234-60-86440	Hose	1	26001-
26		234-60-86450	Hose	1	26001-
27		234-60-86430	Hose	1	26001-
28		234-60-86420	Bracket	1	26001-
29		01010-81025	Bolt	2	26001-
30		01643-31032	Washer	2	26001-
31		04434-53412	Clip	1	26001-
32		04434-53411	Clip	3	26001-
33		01010-81025	Bolt	3	26001-
34		01643-31032	Washer	3	26001-
35		234-60-87150	Plate	1	26001-
36		01010-81030	Bolt	2	26001-
37		01643-31032	Washer	2	26001-
38		234-60-86460	Block	1	26001-
39		01010-81025	Bolt	2	26001-
40		01643-31032	Washer	2	26001-

FIG. H5200-001005 Hydraulic Piping (Return Piping) (1/2) (With 9 Spool Valve)

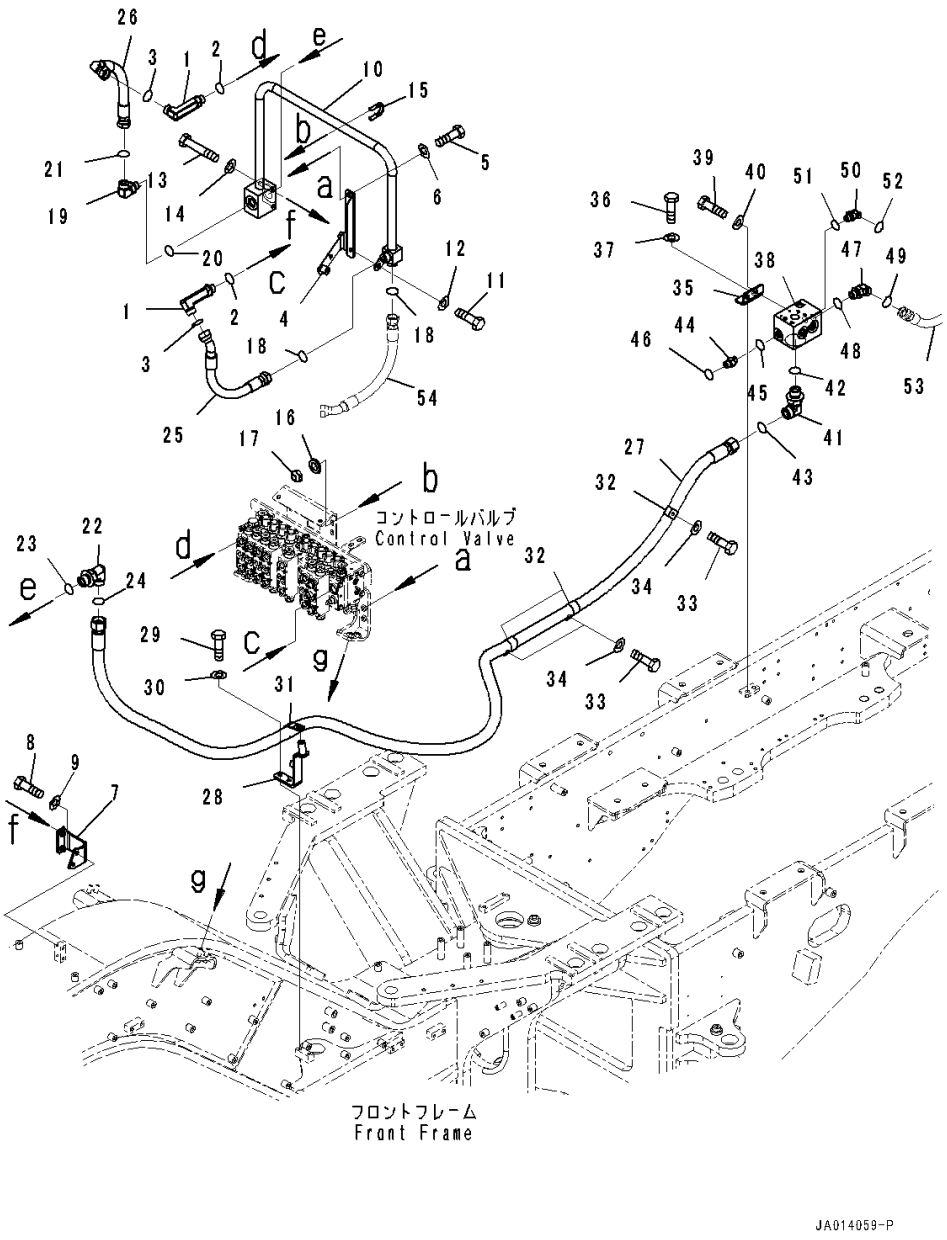

Index	Code	Part Number	Description	Qty	Serial Number
41		21W-62-42640	Elbow	1	26001-
42		07002-13334	O-ring	1	26001-
43		23B-60-33240	O-ring	1	26001-
44		02781-00422	Union	1	26001-
45		07002-12034	O-ring	1	26001-
46		02896-11012	O-ring	1	26001-
47		02783-10628	Elbow	1	26001-
48		07002-12434	O-ring	1	26001-
49		02896-11018	O-ring	1	26001-
50		02783-10422	Elbow	1	26001-
51		07002-12034	O-ring	1	26001-
52		02896-11012	O-ring	1	26001-
53		(234-60-86860)	Hose(Hydraulic Piping,Fan Drive Piping)(Refer to Page 362)		
54		(02776-006A4)	Hose(Front Hydraulic Piping,Safety Valve Piping,With 9 Spool Valve)(Refer to Page 389)		
		(02776-006A4)	Hose(Front Hydraulic Piping,Safety Valve Piping,With 9 Spool Valve,Scarifier, Front, 11-Shanks and Tooth)(Refer to Page 390)		

FIG. H5200-003006 Hydraulic Piping (Return Piping) (2/2) (With 10 Spool Valve)

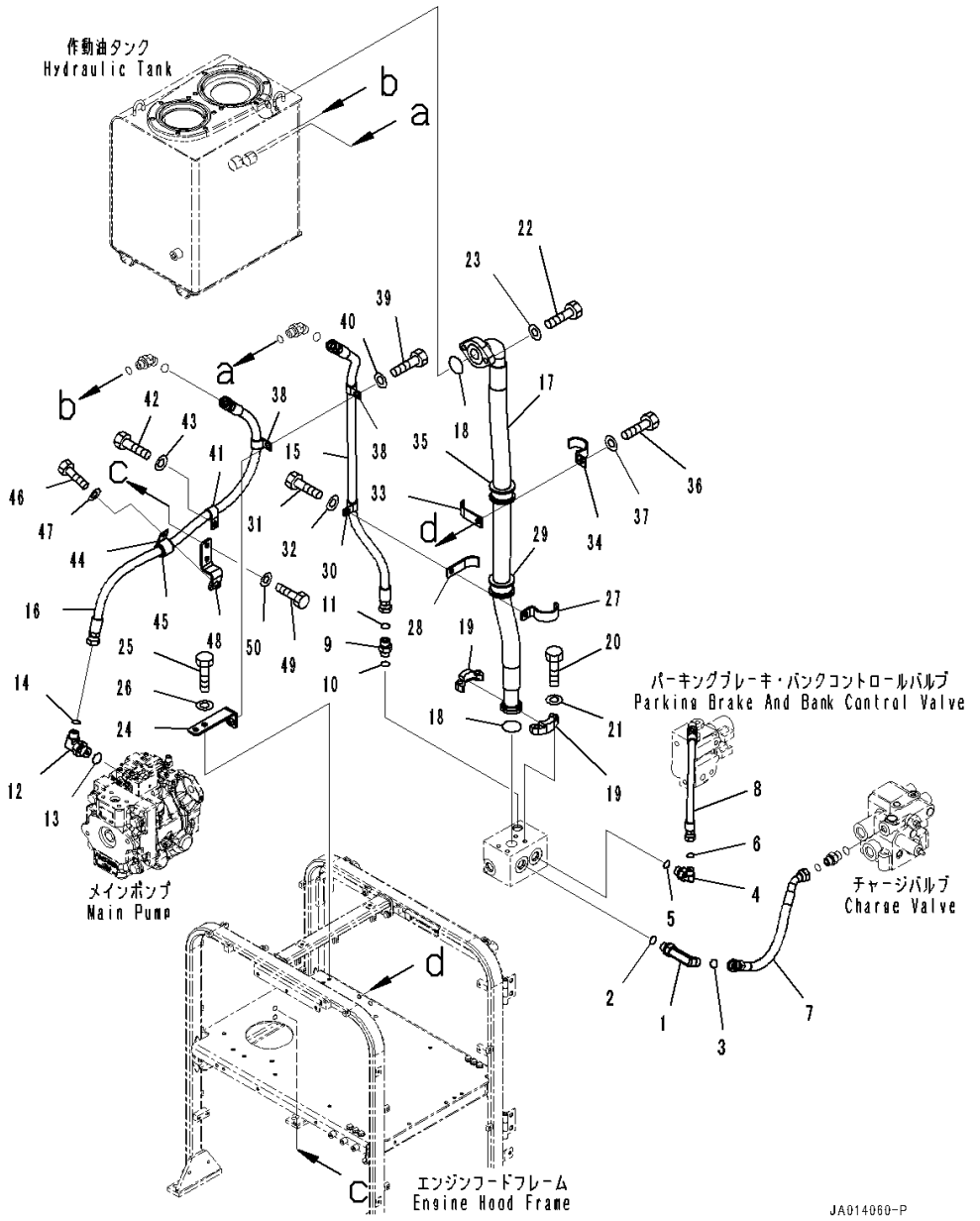

Index	Code	Part Number	Description	Qty	Serial Number
1		02782-10424	Elbow	1	26001-
2		07002-12034	O-ring	1	26001-
3		02896-11012	O-ring	1	26001-
4		02782-10315	Elbow	1	26001-
5		07002-12034	O-ring	1	26001-
6		02896-11009	O-ring	1	26001-
7		234-60-86490	Hose	1	26001-
8		02774-00303	Hose	1	26001-
9		02781-00422	Union	1	26001-
10		07002-12034	O-ring	1	26001-
11		02896-11012	O-ring	1	26001-
12		02782-10425	Elbow	1	26001-
13		07002-12434	O-ring	1	26001-
14		02896-11012	O-ring	1	26001-
15		234-60-86480	Hose	1	26001-
16		234-60-86520	Hose	1	26001-
17		234-60-86470	Hose	1	26001-
18		07000-13038	O-ring	2	26001-
19		07371-31255	Flange, Split	2	26001-
20		07372-21035	Bolt	4	26001-
21		01643-51032	Washer	4	26001-
22		01010-81040	Bolt	2	26001-
23		01643-31032	Washer	2	26001-
24		234-60-86530	Bracket	1	26001-
25		01010-81025	Bolt	2	26001-
26		01643-31032	Washer	2	26001-
27		419-62-32140	Clamp	1	26001-
28		419-62-32130	Clamp	1	26001-
29		419-62-32150	Cushion	1	26001-
30		04434-51912	Clip	1	26001-
31		01010-81030	Bolt	1	26001-
32		01643-31032	Washer	1	26001-
33		419-62-32130	Clamp	1	26001-
34		419-62-32140	Clamp	1	26001-
35		419-62-32150	Cushion	1	26001-
36		01010-81030	Bolt	1	26001-
37		01643-31032	Washer	1	26001-
38		04434-51912	Clip	2	26001-
39		01010-81025	Bolt	1	26001-
40		01643-31032	Washer	1	26001-

FIG. H5200-003006 Hydraulic Piping (Return Piping) (2/2) (With 10 Spool Valve)

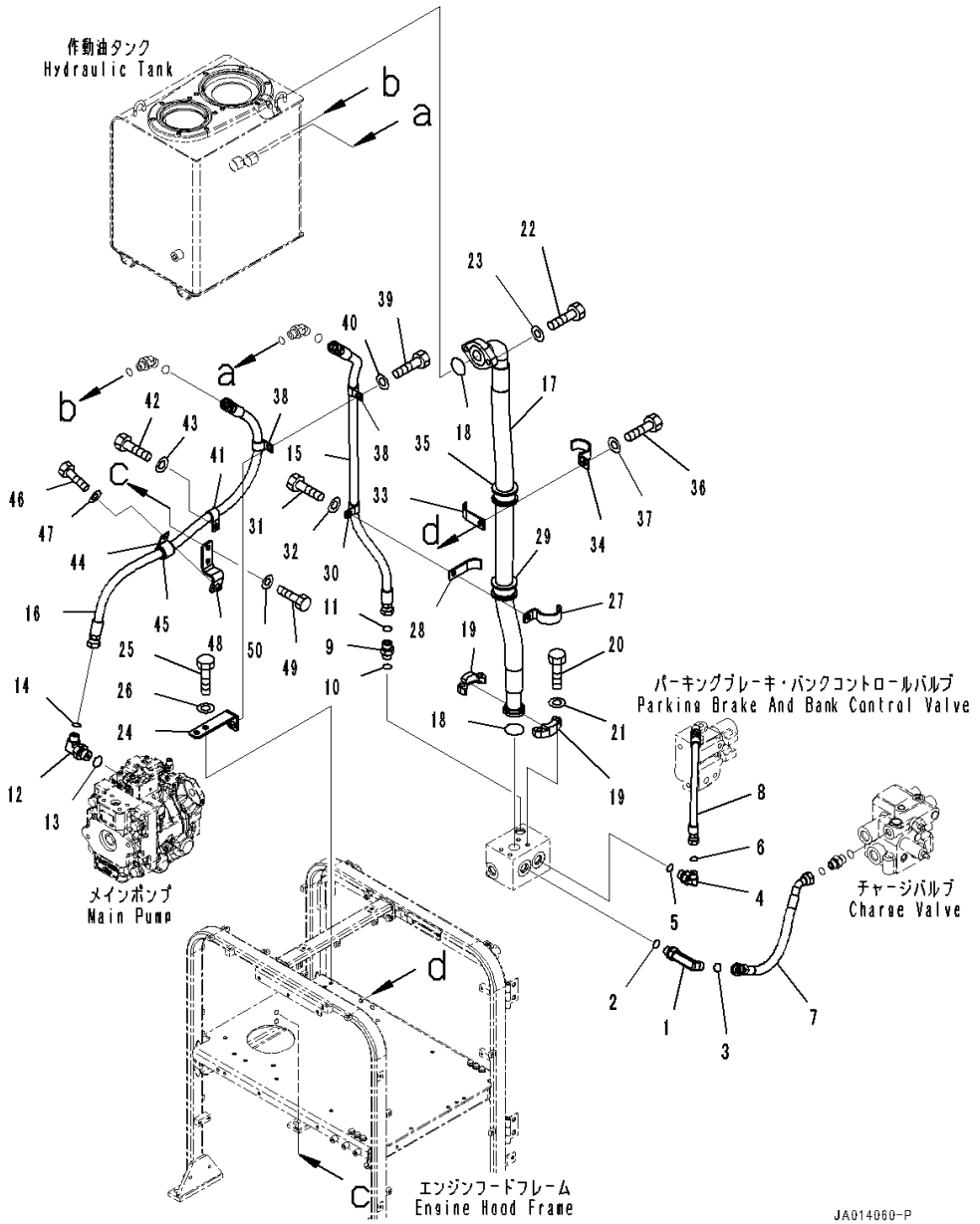

Index	Code	Part Number	Description	Qty	Serial Number
41		04434-51912	Clip	1	26001-
42		01010-81025	Bolt	1	26001-
43		01643-31032	Washer	1	26001-
44		04434-52711	Clip	1	26001-
45		07095-20418	Cushion	1	26001-
46		01010-81025	Bolt	1	26001-
47		01643-31032	Washer	1	26001-
48		234-60-87250	Bracket	1	26001-
49		01010-81025	Bolt	2	26001-
50		01643-31032	Washer	2	26001-

FIG. H5200-001006 Hydraulic Piping (Return Piping) (2/2) (With 9 Spool Valve)

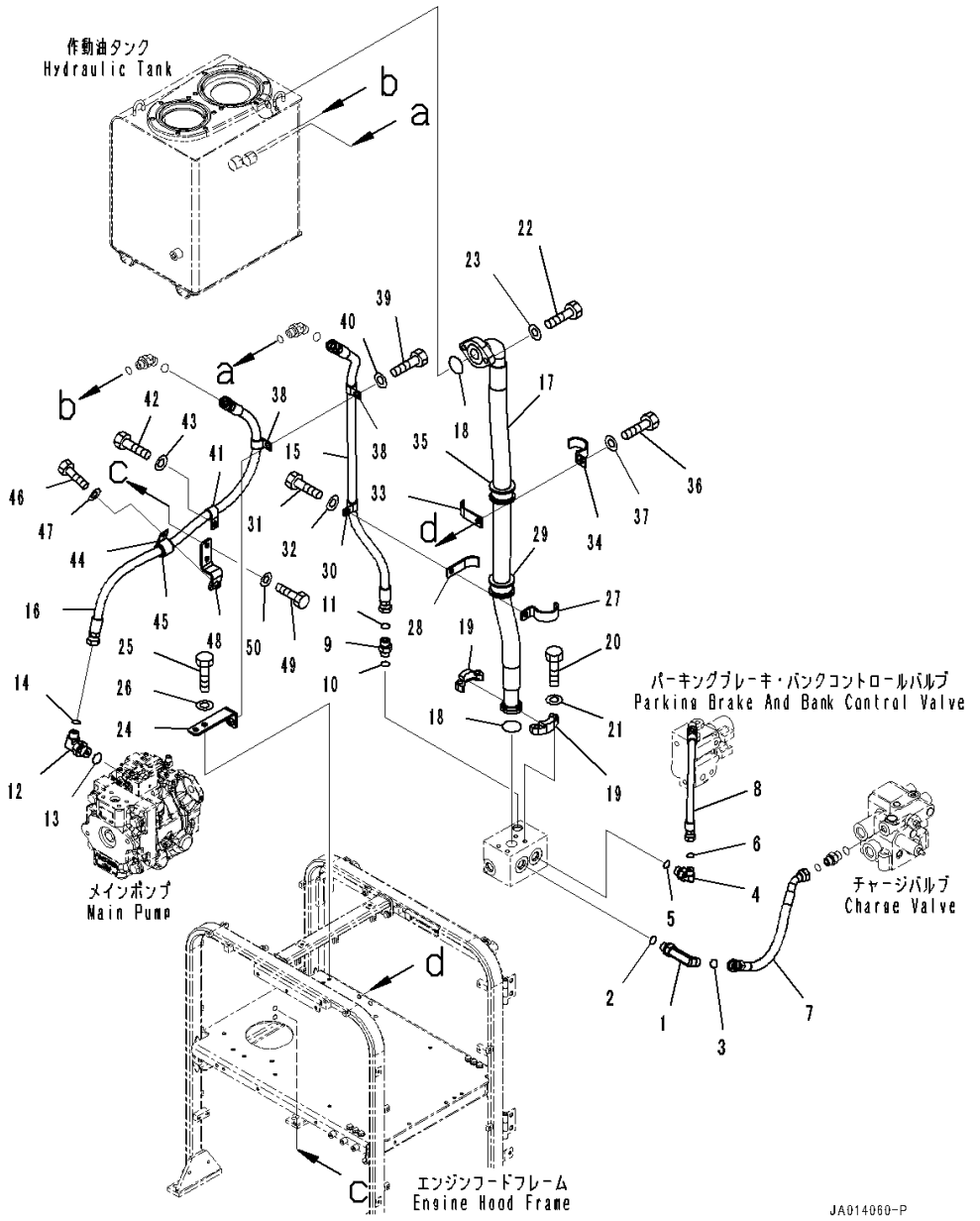

Index	Code	Part Number	Description	Qty	Serial Number
1		02782-10424	Elbow	1	26001-
2		07002-12034	O-ring	1	26001-
3		02896-11012	O-ring	1	26001-
4		02782-10315	Elbow	1	26001-
5		07002-12034	O-ring	1	26001-
6		02896-11009	O-ring	1	26001-
7		234-60-86490	Hose	1	26001-
8		02774-00303	Hose	1	26001-
9		02781-00422	Union	1	26001-
10		07002-12034	O-ring	1	26001-
11		02896-11012	O-ring	1	26001-
12		02782-10425	Elbow	1	26001-
13		07002-12434	O-ring	1	26001-
14		02896-11012	O-ring	1	26001-
15		234-60-86480	Hose	1	26001-
16		234-60-86520	Hose	1	26001-
17		234-60-86470	Hose	1	26001-
18		07000-13038	O-ring	2	26001-
19		07371-31255	Flange, Split	2	26001-
20		07372-21035	Bolt	4	26001-
21		01643-51032	Washer	4	26001-
22		01010-81040	Bolt	2	26001-
23		01643-31032	Washer	2	26001-
24		234-60-86530	Bracket	1	26001-
25		01010-81025	Bolt	2	26001-
26		01643-31032	Washer	2	26001-
27		419-62-32140	Clamp	1	26001-
28		419-62-32130	Clamp	1	26001-
29		419-62-32150	Cushion	1	26001-
30		04434-51912	Clip	1	26001-
31		01010-81030	Bolt	1	26001-
32		01643-31032	Washer	1	26001-
33		419-62-32130	Clamp	1	26001-
34		419-62-32140	Clamp	1	26001-
35		419-62-32150	Cushion	1	26001-
36		01010-81030	Bolt	1	26001-
37		01643-31032	Washer	1	26001-
38		04434-51912	Clip	2	26001-
39		01010-81025	Bolt	1	26001-
40		01643-31032	Washer	1	26001-

FIG. H5200-001006 Hydraulic Piping (Return Piping) (2/2) (With 9 Spool Valve)

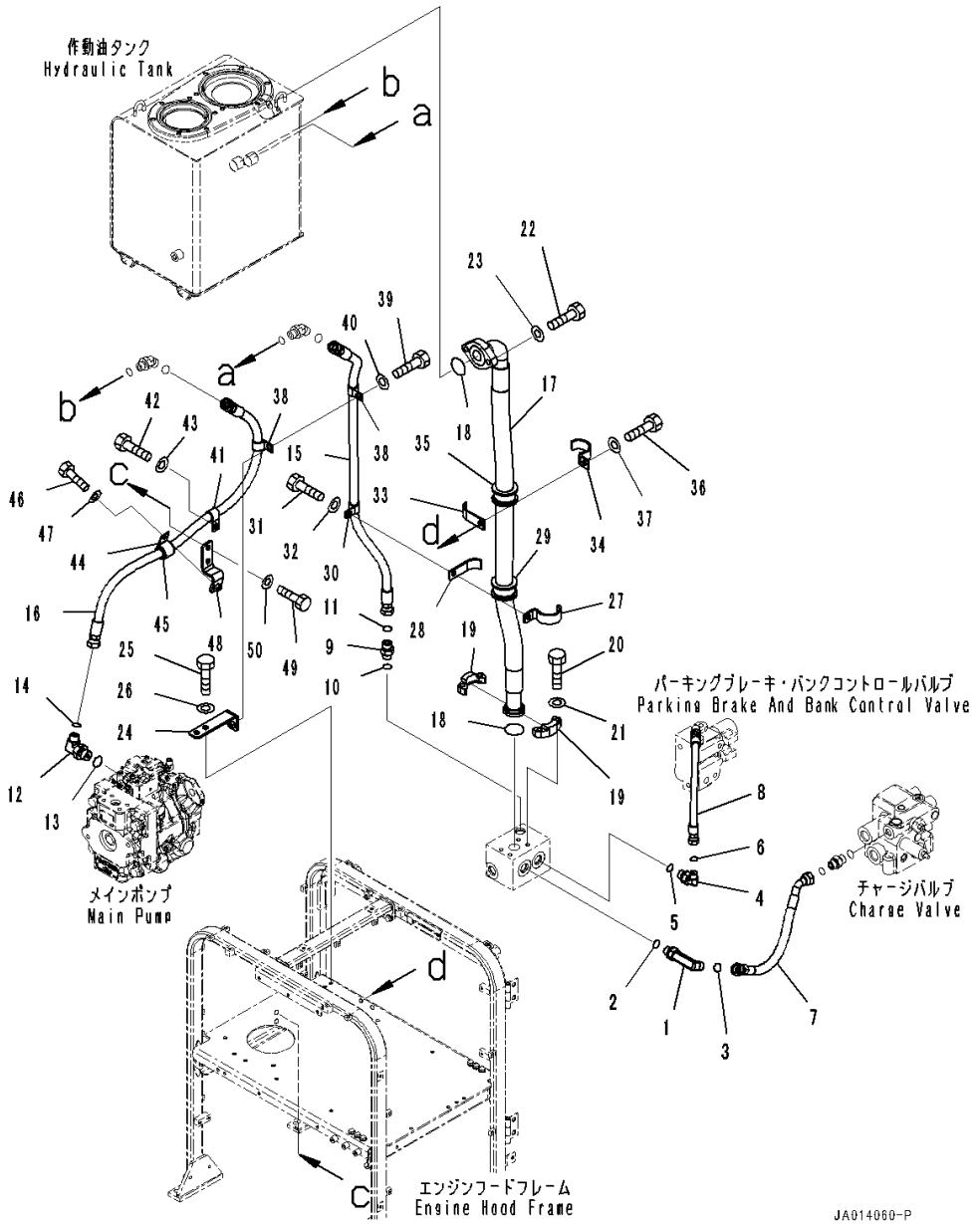

Index	Code	Part Number	Description	Qty	Serial Number
41		04434-51912	Clip	1	26001-
42		01010-81025	Bolt	1	26001-
43		01643-31032	Washer	1	26001-
44		04434-52711	Clip	1	26001-
45		07095-20418	Cushion	1	26001-
46		01010-81025	Bolt	1	26001-
47		01643-31032	Washer	1	26001-
48		234-60-87250	Bracket	1	26001-
49		01010-81025	Bolt	2	26001-
50		01643-31032	Washer	2	26001-

FIG. H5200-001007 Hydraulic Piping (Charge Valve)

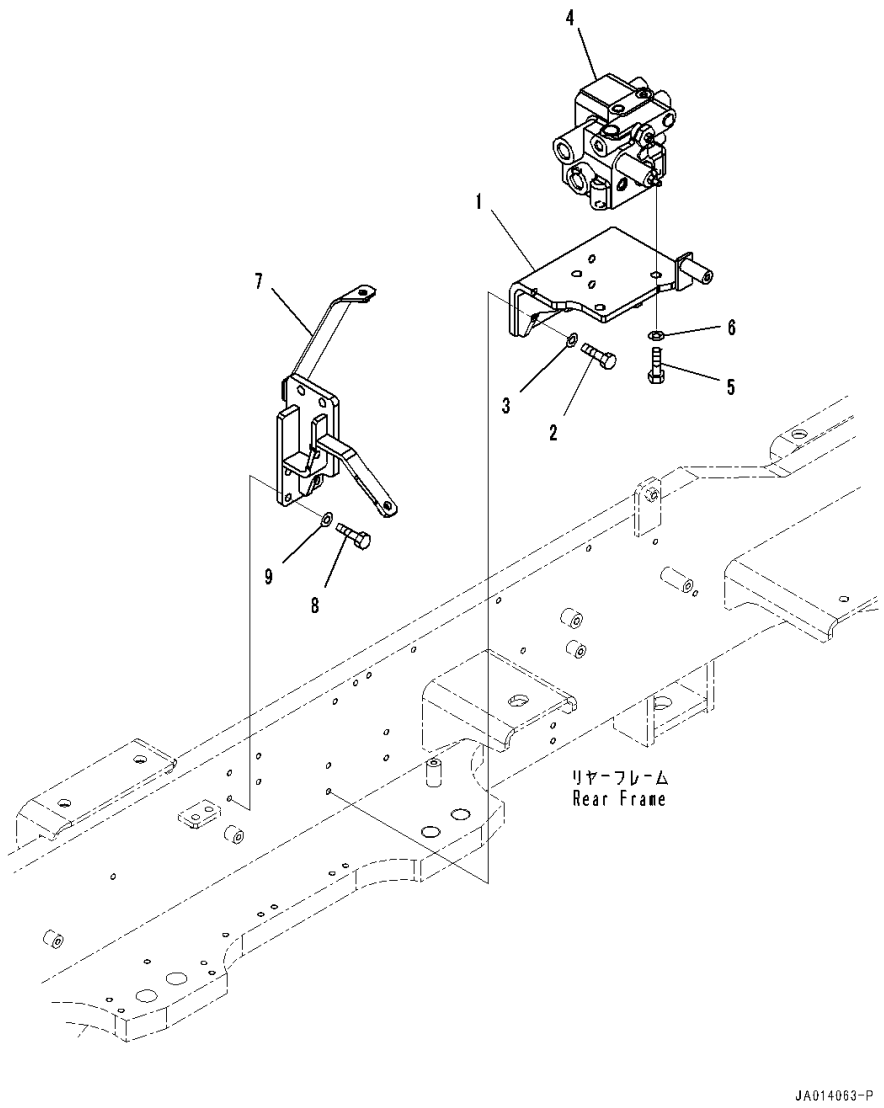

Index	Code	Part Number	Description	Qty	Serial Number
1		234-60-86540	Bracket	1	26001-
2		01010-81030	Bolt	4	26001-
3		01643-31032	Washer	4	26001-
4		234-60-83210	Valve	1	26001-
5		01010-81235	Bolt	3	26001-
6		01643-31232	Washer	3	26001-
7		234-60-86550	Bracket	1	26001-
8		01010-81030	Bolt	4	26001-
9		01643-31032	Washer	4	26001-

FIG. H5200-001008 Hydraulic Piping (Parking Brake and Bank Control Valve)

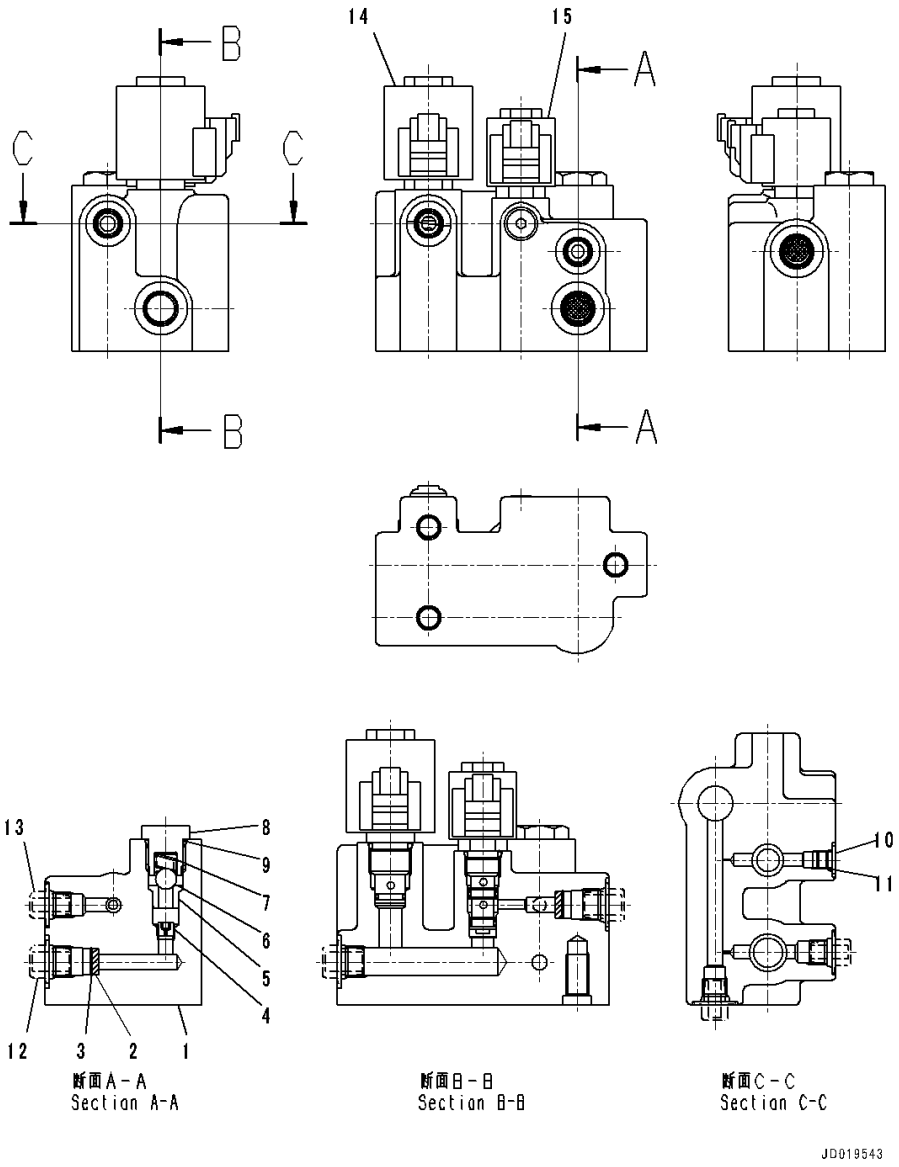

Index	Code	Part Number	Description	Qty	Serial Number
		23B-60-73220	Valve, Parking Brake and Bank Control	1	26001-
1		23B-61-42110	• Valve, Solenoid	1	26001-
2		23B-61-42140	• Valve, Solenoid	1	26001-
3	C1		• Body	1	26001-
4		23C-61-52120	• Filter, Oil	2	26001-
5		04065-01410	• Ring	2	26001-
6	C1		• Orifice	1	26001-
7	C1		• Seat	1	26001-
8		417-43-37560	• Ball, Steel	1	26001-
9		417-43-37570	• Spring	1	26001-
10		417-43-37580	• Plug	1	26001-
11		417-43-37550	• O-ring	1	26001-
12		XK2629120330	• Plug	1	26001-
13		XK0401008000	• O-ring	1	26001-
14	C1		• Cap	3	26001-
15	C1		• Cap	3	26001-

FIG. H5200-001009 Hydraulic Piping (Charge Valve Related Parts)

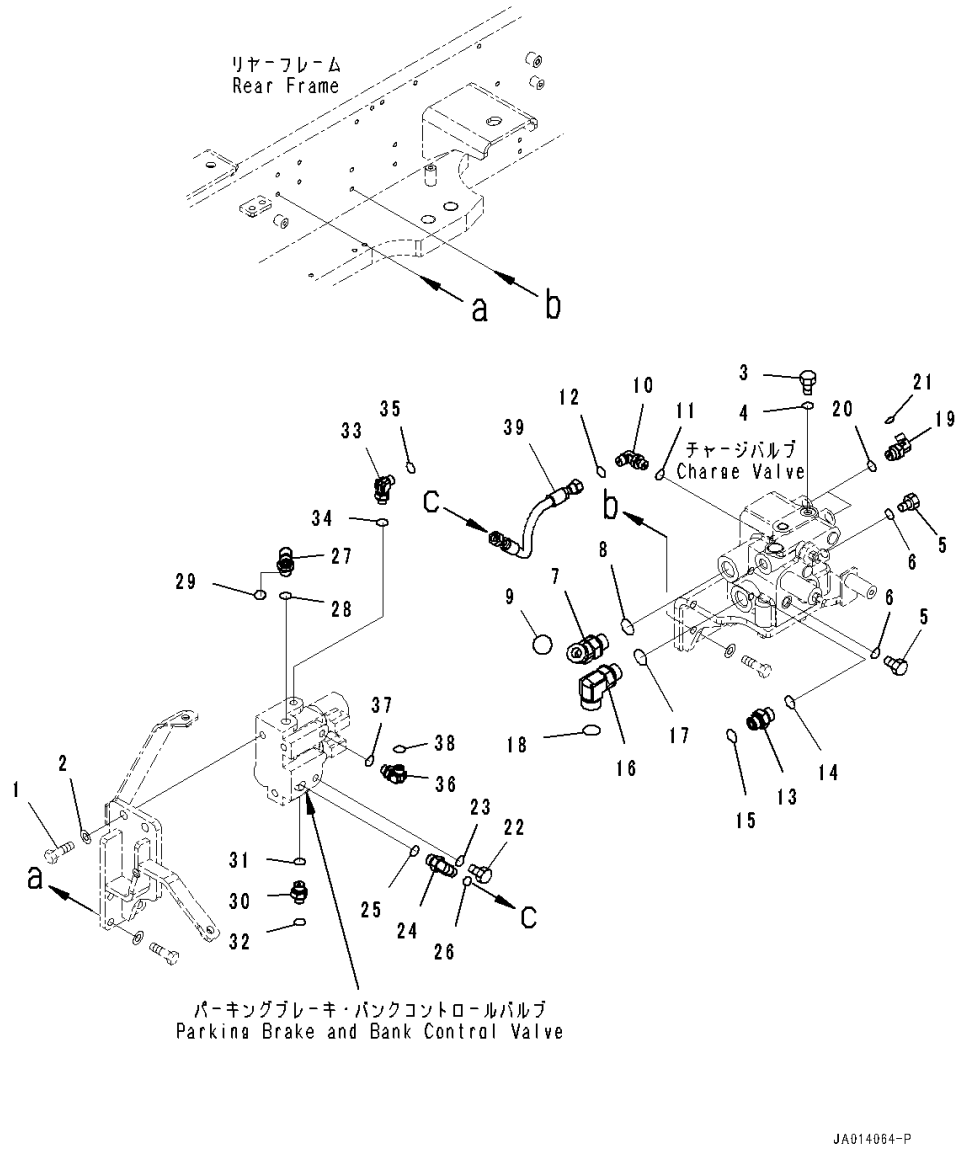

Index	Code	Part Number	Description	Qty	Serial Number
1		01010-81235	Bolt	3	26001-
2		01643-31232	Washer	3	26001-
3		07040-11007	Plug	1	26001-
4		07002-11023	O-ring	1	26001-
5		07040-11409	Plug	2	26001-
6		07002-11423	O-ring	2	26001-
7		02783-10628	Elbow	1	26001-
8		07002-12434	O-ring	1	26001-
9		02896-11018	O-ring	1	26001-
10		02782-10210	Elbow	1	26001-
11		07002-11423	O-ring	1	26001-
12		02896-11008	O-ring	1	26001-
13		419-62-31480	Union	1	26001-
14		07000-12018	O-ring	1	26001-
15		02896-11012	O-ring	1	26001-
16		02782-10628	Elbow	1	26001-
17		07002-12434	O-ring	1	26001-
18		02896-11018	O-ring	1	26001-
19		20U-Y14-1550	Elbow	2	26001-
20		07000-12014	O-ring	2	26001-
21		02896-11008	O-ring	2	26001-
22		23B-60-73190	Plug	1	26001-
23		07000-12011	O-ring	1	26001-
24		20U-Y14-1550	Elbow	1	26001-
25		07000-12014	O-ring	1	26001-
26		02896-11008	O-ring	1	26001-
27		56B-88-12320	Elbow	1	26001-
28		07000-12014	O-ring	1	26001-
29		02896-11009	O-ring	1	26001-
30		421-62-31110	Union	1	26001-
31		07000-12014	O-ring	1	26001-
32		02896-11008	O-ring	1	26001-
33		21W-62-43970	Elbow	1	26413-
	A2	21W-62-43980	Elbow	1	26001-26412
34		07000-12011	O-ring	1	26001-
35		02896-11008	O-ring	1	26001-
36		21W-62-43970	Elbow	1	26413-
	A2	21W-62-43980	Elbow	1	26001-26412
37		07000-12011	O-ring	1	26001-
38		02896-11008	O-ring	1	26001-

FIG. H5200-001009 Hydraulic Piping (Charge Valve Related Parts)

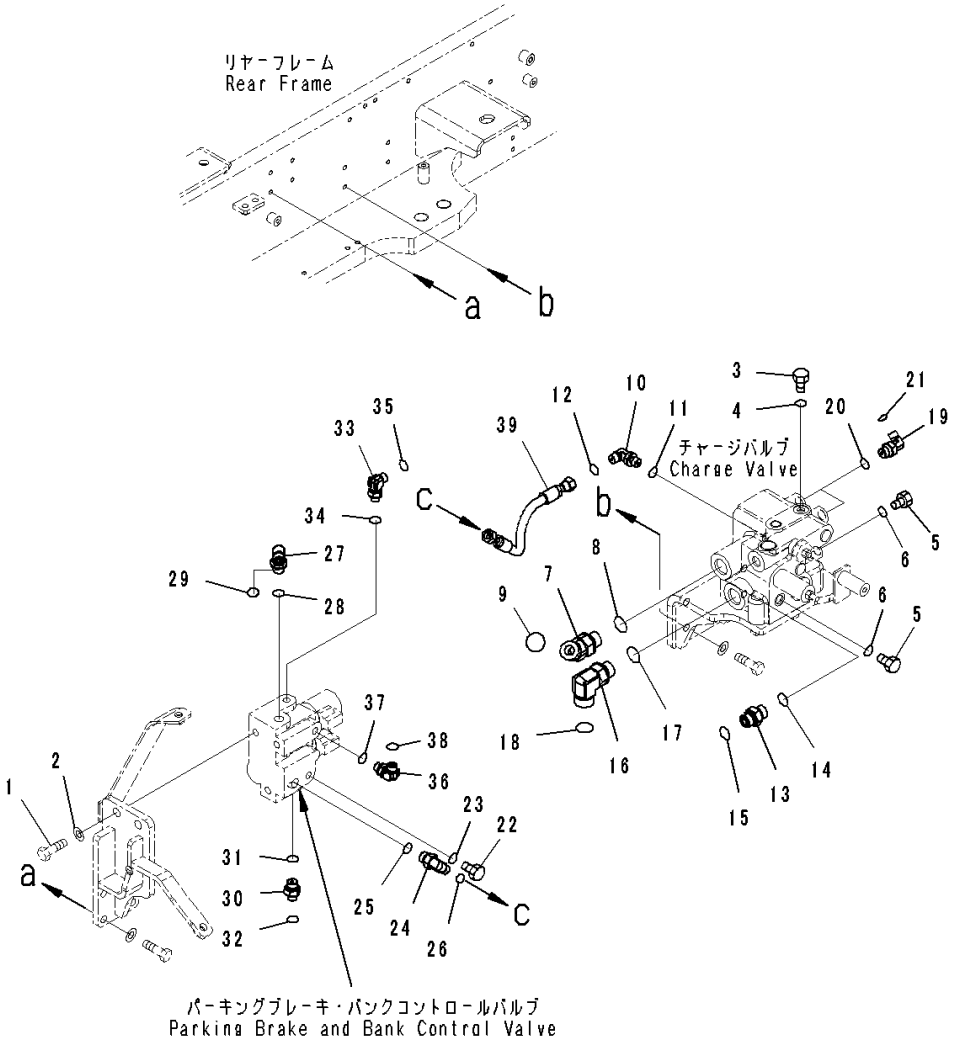

Index	Code	Part Number	Description	Qty	Serial Number
39		234-60-86560	Hose	1	26001-

FIG. H5200-001010 Hydraulic Piping (Hose Clamp)

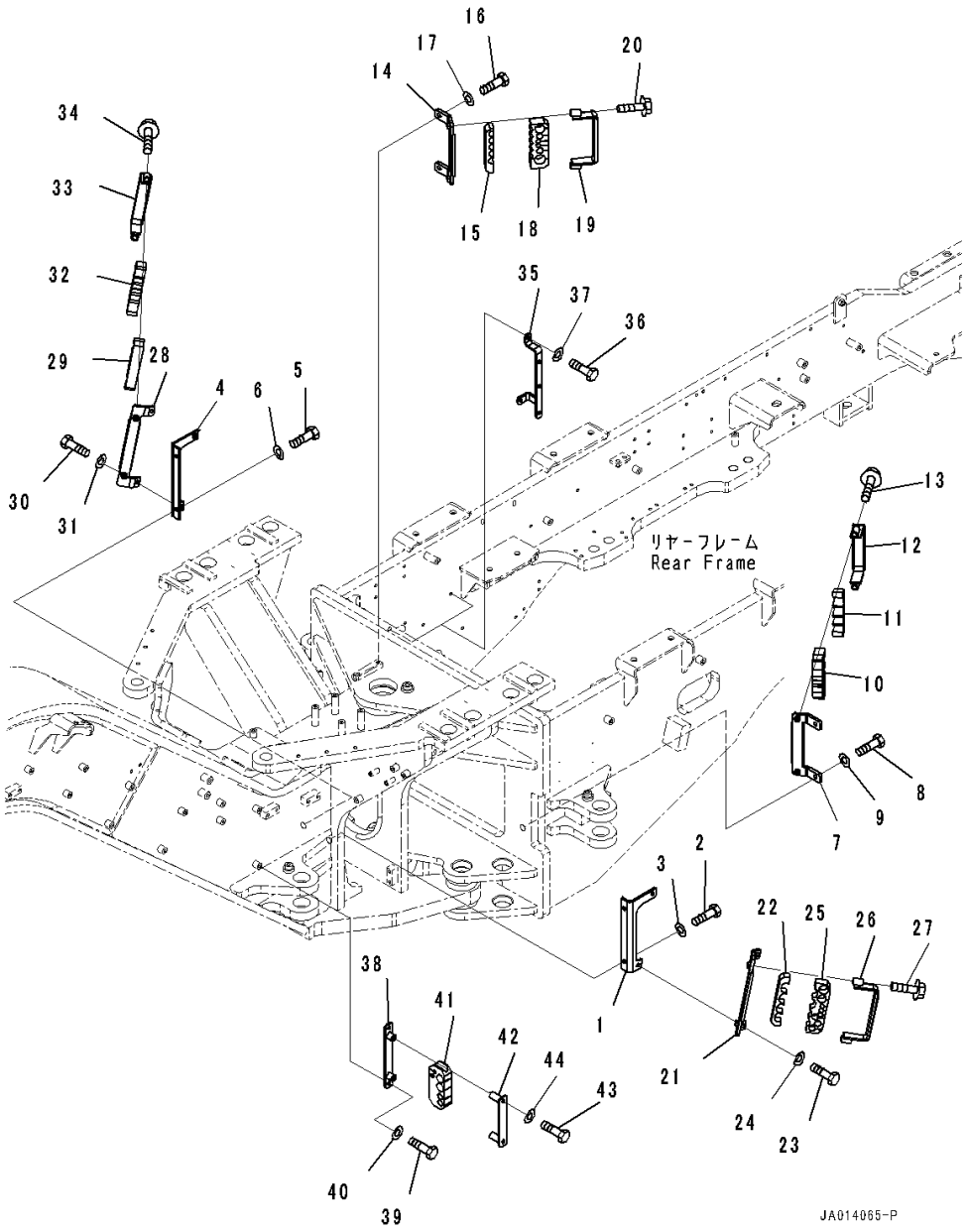

Index	Code	Part Number	Description	Qty	Serial Number
1		234-60-86670	Bracket	1	26001-
2		01010-81025	Bolt	2	26001-
3		01643-31032	Washer	2	26001-
4		234-60-86660	Bracket	1	26001-
5		01010-81025	Bolt	2	26001-
6		01643-31032	Washer	2	26001-
7		234-60-86590	Bracket	1	26001-
8		01010-81025	Bolt	2	26001-
9		01643-31032	Washer	2	26001-
10		234-60-86640	Cushion	1	26001-
11		234-60-86650	Cushion	1	26001-
12		234-60-86630	Bracket	1	26001-
13		01435-01055	Bolt	2	26001-
14		234-60-86580	Bracket	1	26001-
15		234-60-86610	• Cushion	1	26001-
16		01010-81025	Bolt	2	26001-
17		01643-31032	Washer	2	26001-
18		234-60-86620	Cushion	1	26001-
19		234-60-86630	Bracket	1	26001-
20		01435-01055	Bolt	2	26001-
21		234-60-86730	Bracket	1	26001-
22		234-60-86650	• Cushion	1	26001-
23		01010-81030	Bolt	2	26001-
24		01643-31032	Washer	2	26001-
25		234-60-86640	Cushion	1	26001-
26		234-60-86630	Bracket	1	26001-
27		01435-01060	Bolt	2	26001-
28		234-60-86680	Bracket	1	26001-
29		234-60-86710	• Cushion	1	26001-
30		01010-81030	Bolt	2	26001-
31		01643-31032	Washer	2	26001-
32		234-60-86720	Cushion	1	26001-
33		234-60-86630	Bracket	1	26001-
34		01435-01060	Bolt	2	26001-
35		234-60-86770	Bracket	2	26001-
36		01010-81025	Bolt	4	26001-
37		01643-31032	Washer	4	26001-
38		234-60-86740	Bracket	1	26001-
39		01010-81025	Bolt	2	26001-
40		01643-31032	Washer	2	26001-

FIG. H5200-001010 Hydraulic Piping (Hose Clamp)

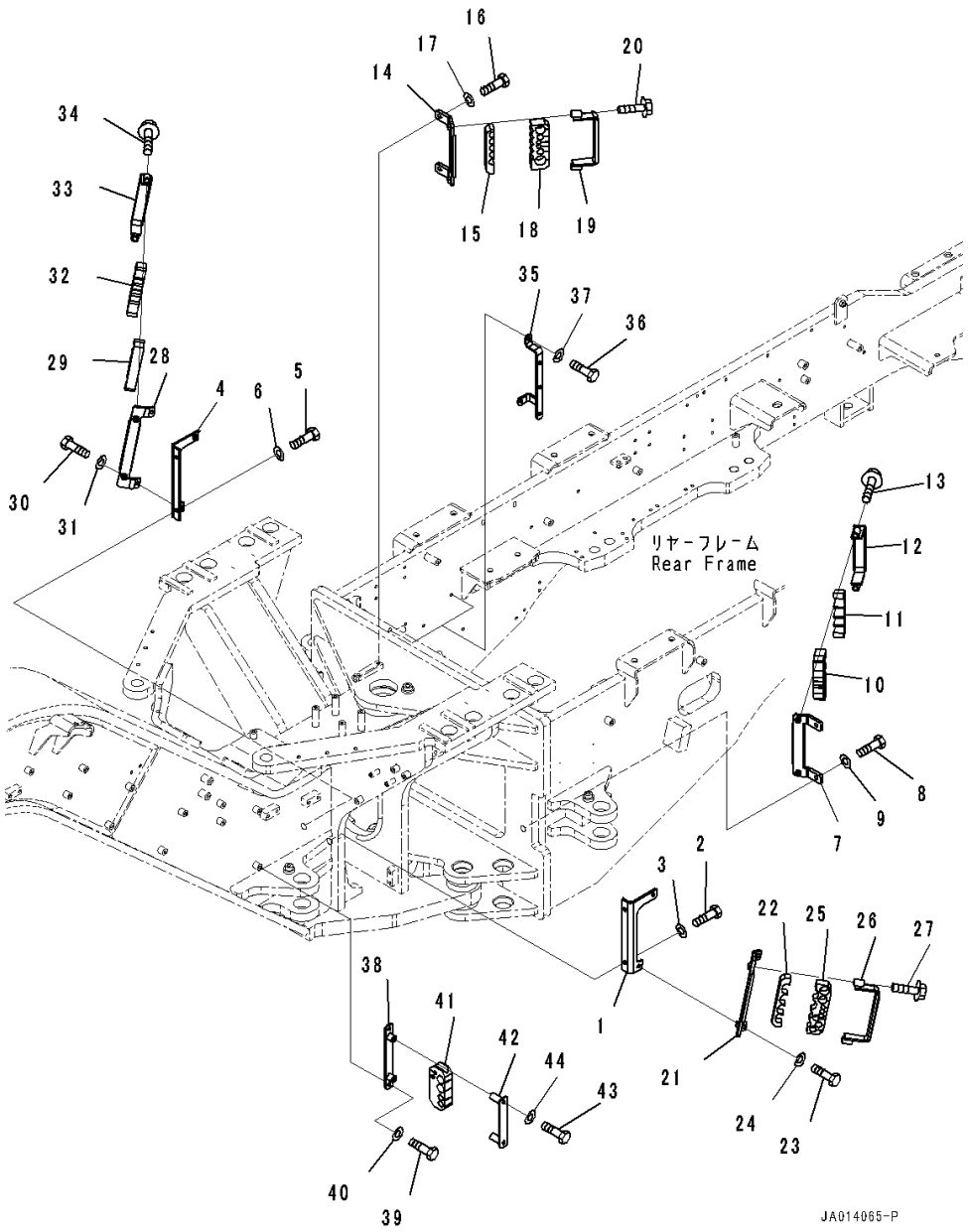

Index	Code	Part Number	Description	Qty	Serial Number
41		234-60-86750	Cushion	1	26001-
42		234-60-86760	Bracket	1	26001-
43		01010-81070	Bolt	2	26001-
44		01643-31032	Washer	2	26001-

FIG. H5200-001011 Hydraulic Piping (Fan Drive Piping) (1/2)

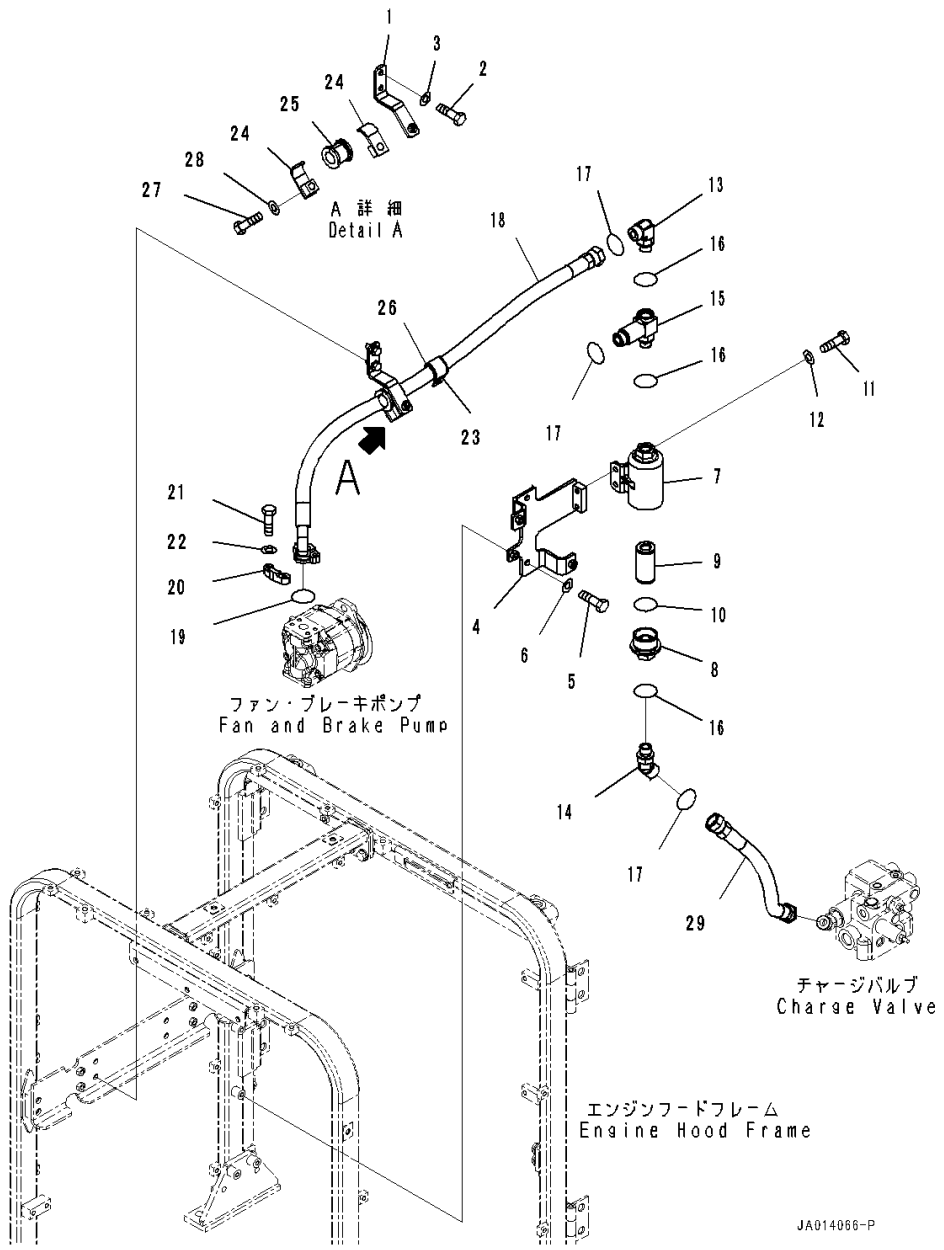

Index	Code	Part Number	Description	Qty	Serial Number
1		234-60-87271	Bracket	1	26001-
2		01010-81025	Bolt	2	26001-
3		01643-31032	Washer	2	26001-
4		234-60-86810	Bracket	1	26001-
5		01010-81025	Bolt	2	26001-
6		01643-31032	Washer	2	26001-
7		421-43-22562	Case	1	26001-
8		421-43-22571	Cap	1	26001-
9		421-43-27920	Strainer	1	26001-
10		07002-15234	O-ring	1	26001-
11		01010-81025	Bolt	2	26001-
12		01643-31032	Washer	2	26001-
13		02782-10628	Elbow	1	26001-
14		02783-10628	Elbow	1	26001-
15		207-62-72171	Elbow	1	26001-
16		07002-12434	O-ring	3	26001-
17		02896-11018	O-ring	3	26001-
18		234-60-87221	Hose	1	26001-
19		07000-13025	O-ring	1	26001-
20		07371-30638	Flange, Split	2	26001-
21		01010-80830	Bolt	4	26001-
22		01643-50823	Washer	4	26001-
23		04434-53412	Clip	1	26001-
24		07094-10620	Clamp	2	26001-
25		07095-00627	Cushion	1	26001-
26		07095-20627	Cushion	1	26001-
27		01010-81080	Bolt	1	26001-
28		01643-31032	Washer	1	26001-
29		234-60-86830	Hose	1	26001-

FIG. H5200-004011 Hydraulic Piping (Fan Drive Piping) (1/2) (With Ripper,10 Spool Valve)

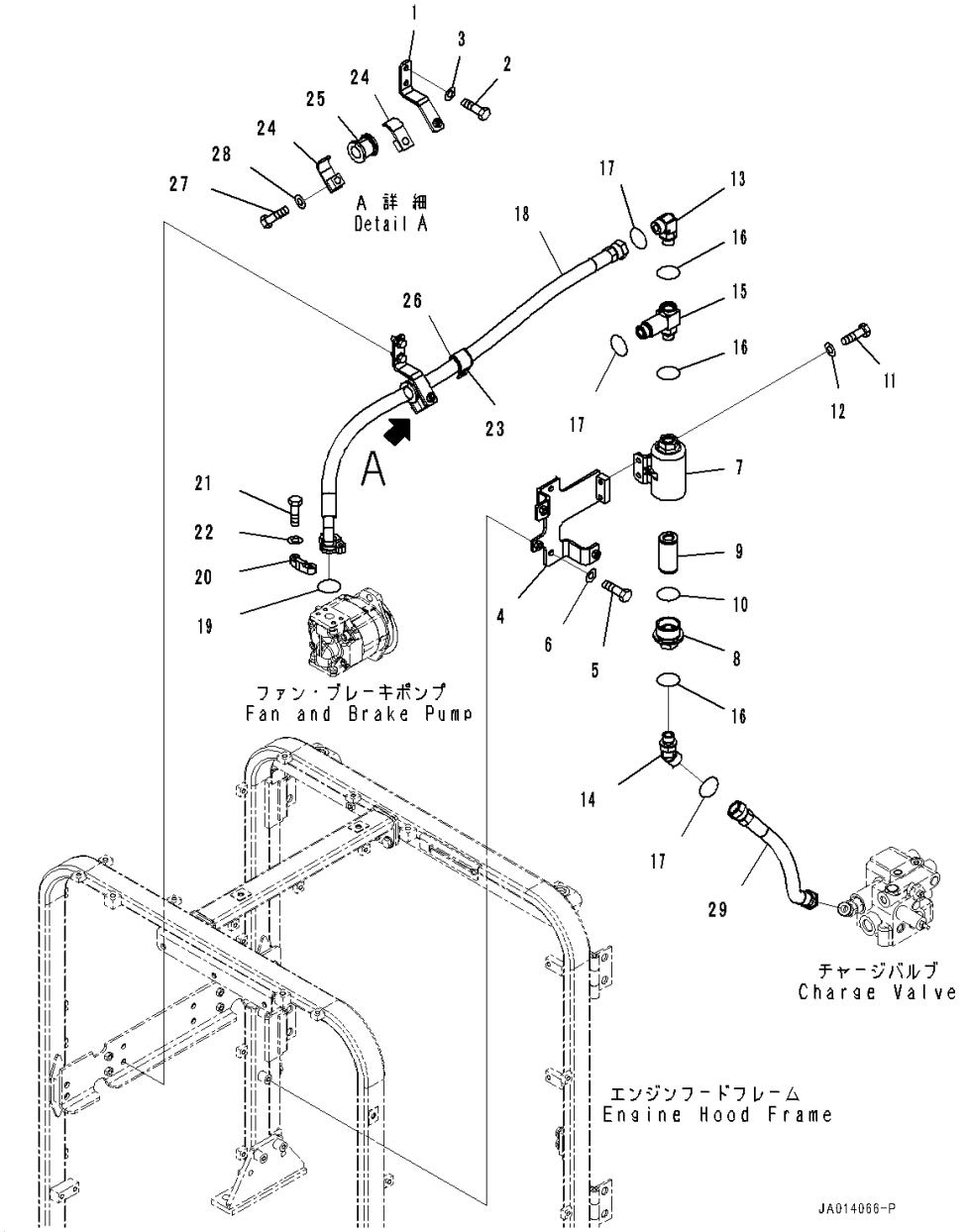

Index	Code	Part Number	Description	Qty	Serial Number
1		234-60-87271	Bracket	1	26001-
2		01010-81025	Bolt	2	26001-
3		01643-31032	Washer	2	26001-
4		234-60-86810	Bracket	1	26001-
5		01010-81025	Bolt	2	26001-
6		01643-31032	Washer	2	26001-
7		421-43-22562	Case	1	26001-
8		421-43-22571	Cap	1	26001-
9		421-43-27920	Strainer	1	26001-
10		07002-15234	O-ring	1	26001-
11		01010-81025	Bolt	2	26001-
12		01643-31032	Washer	2	26001-
13		02782-10628	Elbow	1	26001-
14		02783-10628	Elbow	1	26001-
15		207-62-72171	Elbow	1	26001-
16		07002-12434	O-ring	3	26001-
17		02896-11018	O-ring	3	26001-
18		234-60-87221	Hose	1	26001-
19		07000-13025	O-ring	1	26001-
20		07371-30638	Flange, Split	2	26001-
21		01010-80830	Bolt	4	26001-
22		01643-50823	Washer	4	26001-
23		04434-53412	Clip	1	26001-
24		07094-10620	Clamp	2	26001-
25		07095-00627	Cushion	1	26001-
26		07095-20627	Cushion	1	26001-
27		01010-81080	Bolt	1	26001-
28		01643-31032	Washer	1	26001-
29		234-60-86830	Hose	1	26001-

FIG. H5200-001012 Hydraulic Piping (Fan Drive Piping) (2/2)

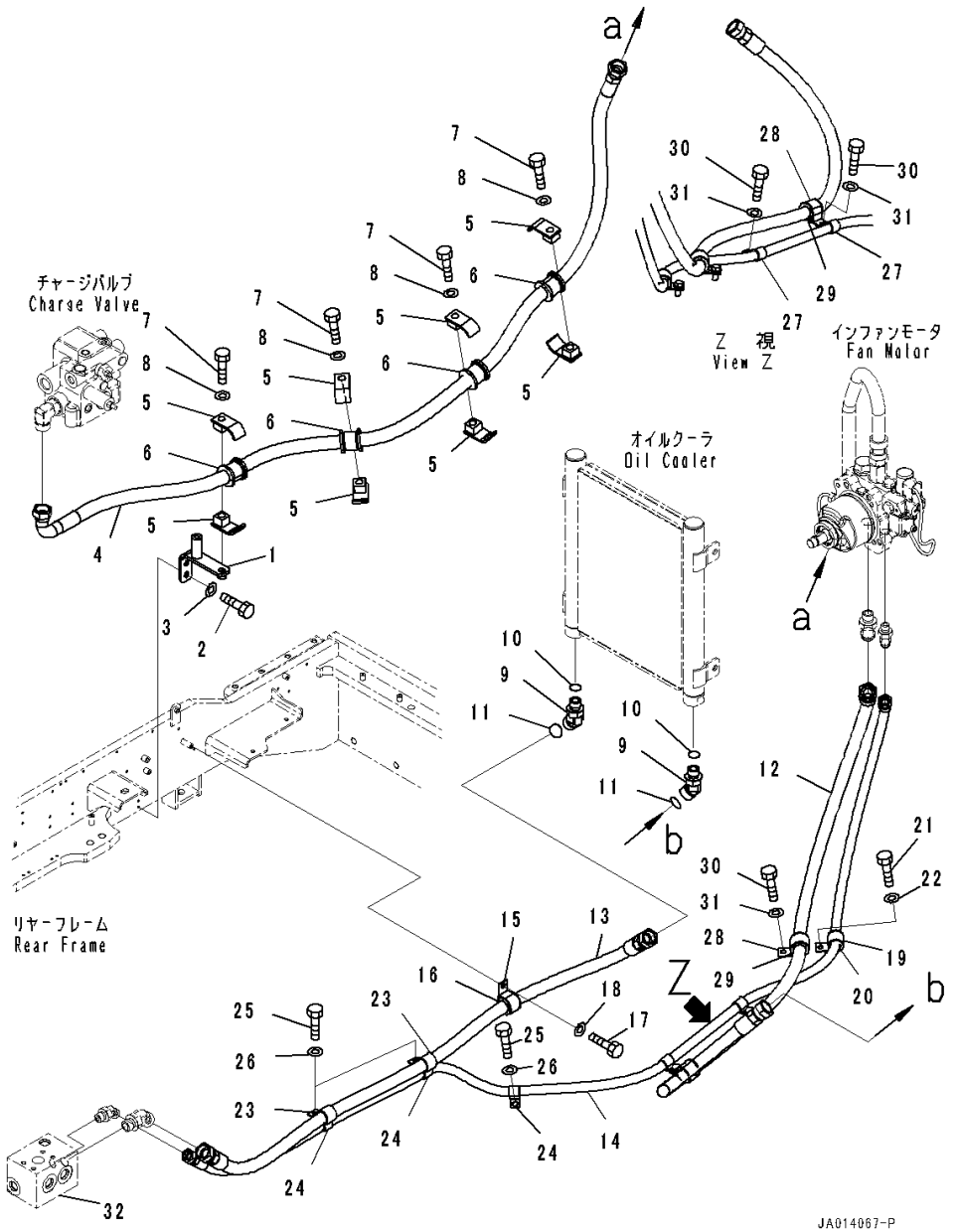

Index	Code	Part Number	Description	Qty	Serial Number
1		234-60-86790	Bracket	1	26001-
2		01010-81025	Bolt	2	26001-
3		01643-31032	Washer	2	26001-
4		234-60-86840	Hose	1	26001-
5		07094-10620	Clamp	8	26001-
6		07095-00628	Cushion	4	26001-
7		01010-81270	Bolt	4	26001-
8		01643-31232	Washer	4	26001-
9		02783-10628	Elbow	2	26001-
10		07002-12434	O-ring	2	26001-
11		02896-11018	O-ring	2	26001-
12		234-60-86850	Hose	1	26001-
13		234-60-86860	Hose	1	26001-
14		234-60-86870	Hose	1	26001-
15		04434-53411	Clip	1	26001-
16		07095-20625	Cushion	1	26001-
17		01010-81025	Bolt	1	26001-
18		01643-31032	Washer	1	26001-
19		04434-52711	Clip	1	26001-
20		07095-20419	Cushion	1	26001-
21		01010-81025	Bolt	1	26001-
22		01643-31032	Washer	1	26001-
23		04434-52711	Clip	2	26001-
24		04434-51912	Clip	3	26001-
25		01010-81025	Bolt	3	26001-
26		01643-31032	Washer	3	26001-
27		04434-51912	Clip	2	26001-
28		04434-53411	Clip	2	26001-
29		07095-20625	Cushion	2	26001-
30		01010-81025	Bolt	3	26001-
31		01643-31032	Washer	3	26001-
32		(234-60-86460)	Block(Hydraulic Piping,Return Piping,With 10 Spool Valve)(Refer to Page 346)		
		(234-60-86460)	Block(Hydraulic Piping,Return Piping,With 9 Spool Valve)(Refer to Page 348)		

FIG. H5200-001013 Hydraulic Piping (Parking Brake Piping)

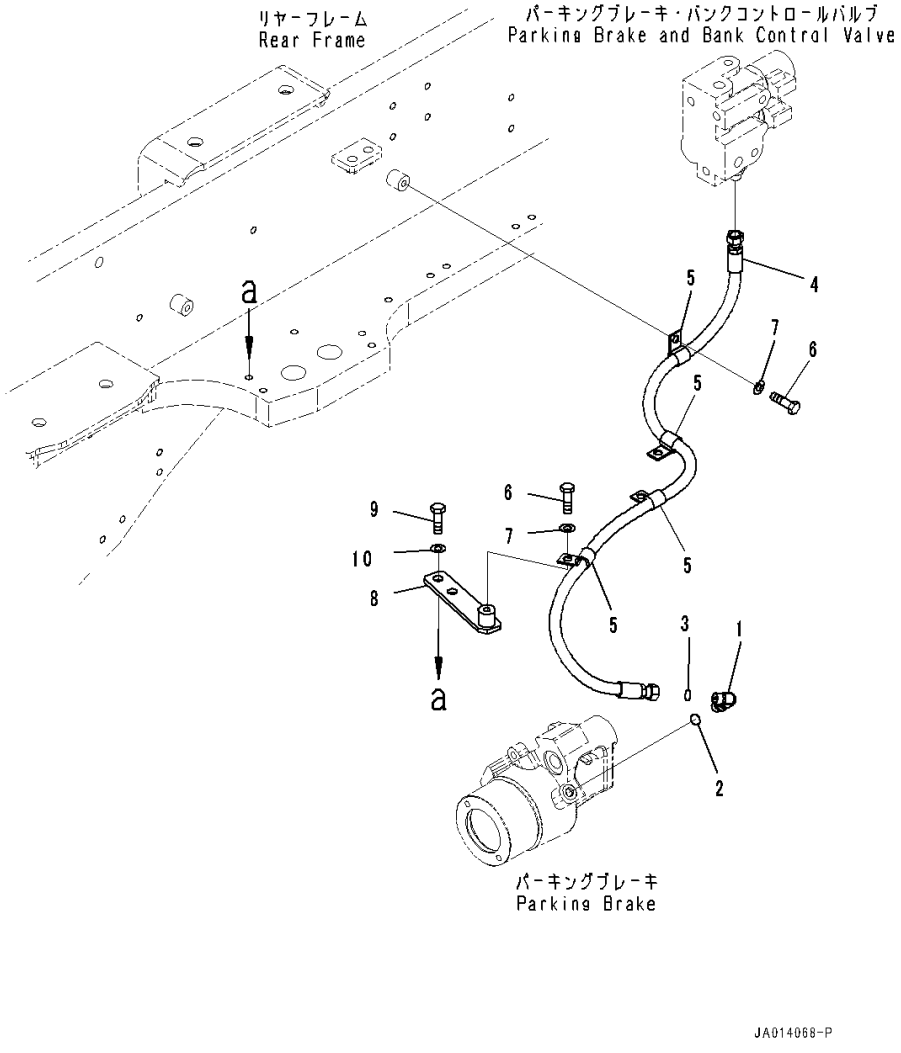

Index	Code	Part Number	Description	Qty	Serial Number
1		418-62-32163	Elbow	1	26001-
2		416-62-11480	O-ring	1	26001-
3		02896-11008	O-ring	1	26001-
4		234-60-86880	Hose	1	26001-
5		04434-51310	Clip	4	26001-
6		01010-81025	Bolt	4	26001-
7		01643-31032	Washer	4	26001-
8		234-60-87130	Bracket	1	26001-
9		01010-81025	Bolt	2	26001-
10		01643-31032	Washer	2	26001-

FIG. H5200-001014 Hydraulic Piping (LS Piping) (1/2)

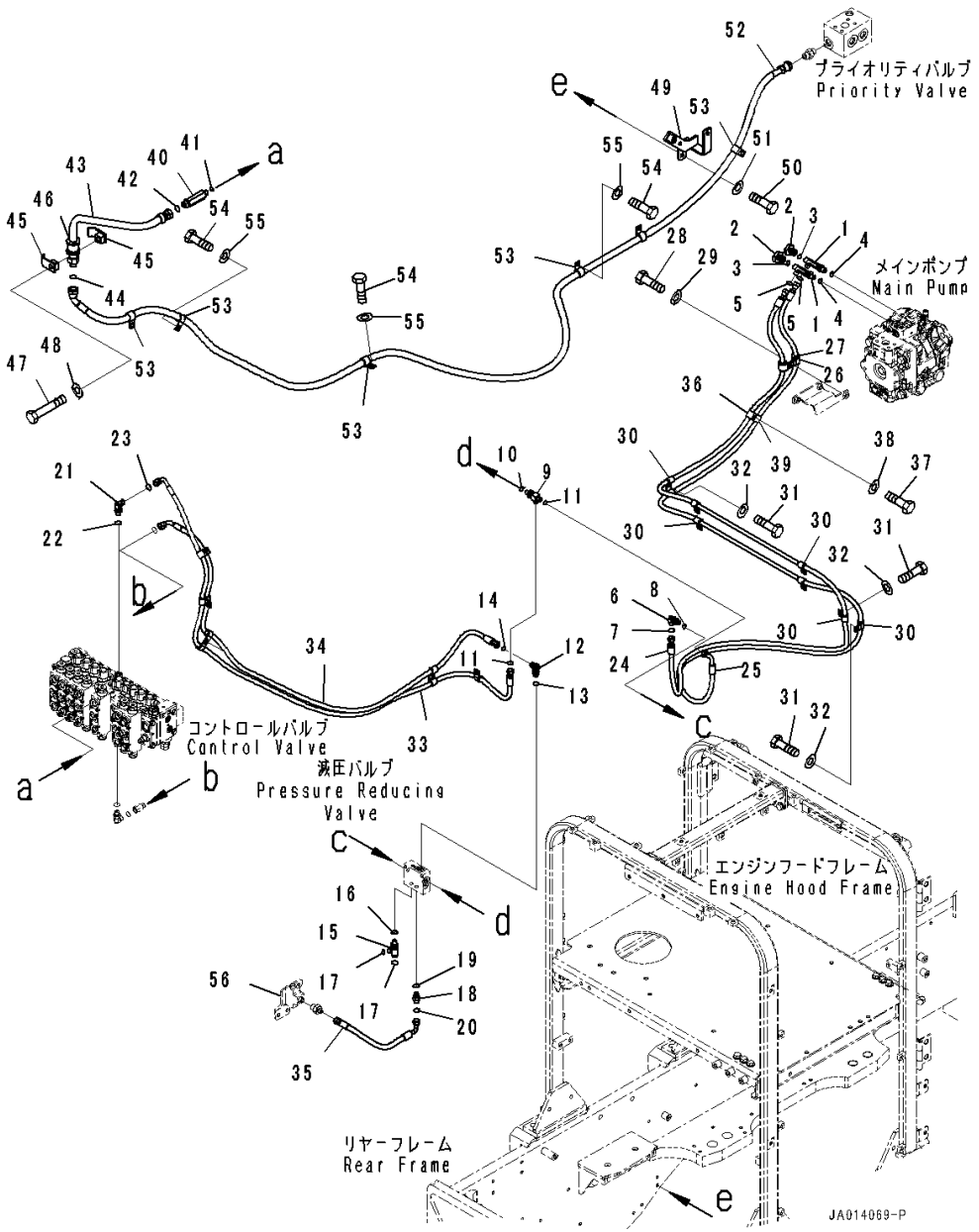

Index	Code	Part Number	Description	Qty	Serial Number
1		22L-62-22151	Elbow	2	26001-
2		07040-11007	Plug	2	26001-
3		07002-11023	O-ring	2	26001-
4		07002-11423	O-ring	2	26001-
5		02896-11008	O-ring	2	26001-
6		21W-62-43980	Elbow	1	26001-
7		07000-12011	O-ring	1	26001-
8		02896-11008	O-ring	1	26001-
9		20U-62-41740	Tee	1	26001-
10		07000-12011	O-ring	1	26001-
11		02896-11008	O-ring	2	26001-
12		21W-62-43980	Elbow	1	26001-
13		07000-12011	O-ring	1	26001-
14		02896-11008	O-ring	1	26001-
15		20U-62-41740	Tee	1	26001-
16		07000-12011	O-ring	1	26001-
17		02896-11008	O-ring	2	26001-
18		11Y-62-12140	Nipple	1	26001-
19		07000-12011	O-ring	1	26001-
20		02896-11008	O-ring	1	26001-
21		02782-10210	Elbow	1	26001-
22		07002-11423	O-ring	1	26001-
23		02896-11008	O-ring	1	26001-
24		234-60-86940	Hose	1	26001-
25		234-60-86930	Hose	1	26001-
26		04434-51910	Clip	2	26001-
27		07095-20213	Cushion	2	26001-
28		01010-81025	Bolt	1	26001-
29		01643-31032	Washer	1	26001-
30		04434-51310	Clip	8	26001-
31		01010-81025	Bolt	5	26001-
32		01643-31032	Washer	5	26001-
33		234-60-86950	Hose	1	26001-
34		234-60-86960	Hose	1	26001-
35		234-60-86980	Hose	1	26001-
36		04434-51310	Clip	1	26001-
37		01010-81025	Bolt	1	26001-
38		01643-31032	Washer	1	26001-
39		04434-51310	Clip	1	26001-
40		23B-60-73990	Union	1	26001-

FIG. H5200-001014 Hydraulic Piping (LS Piping) (1/2)

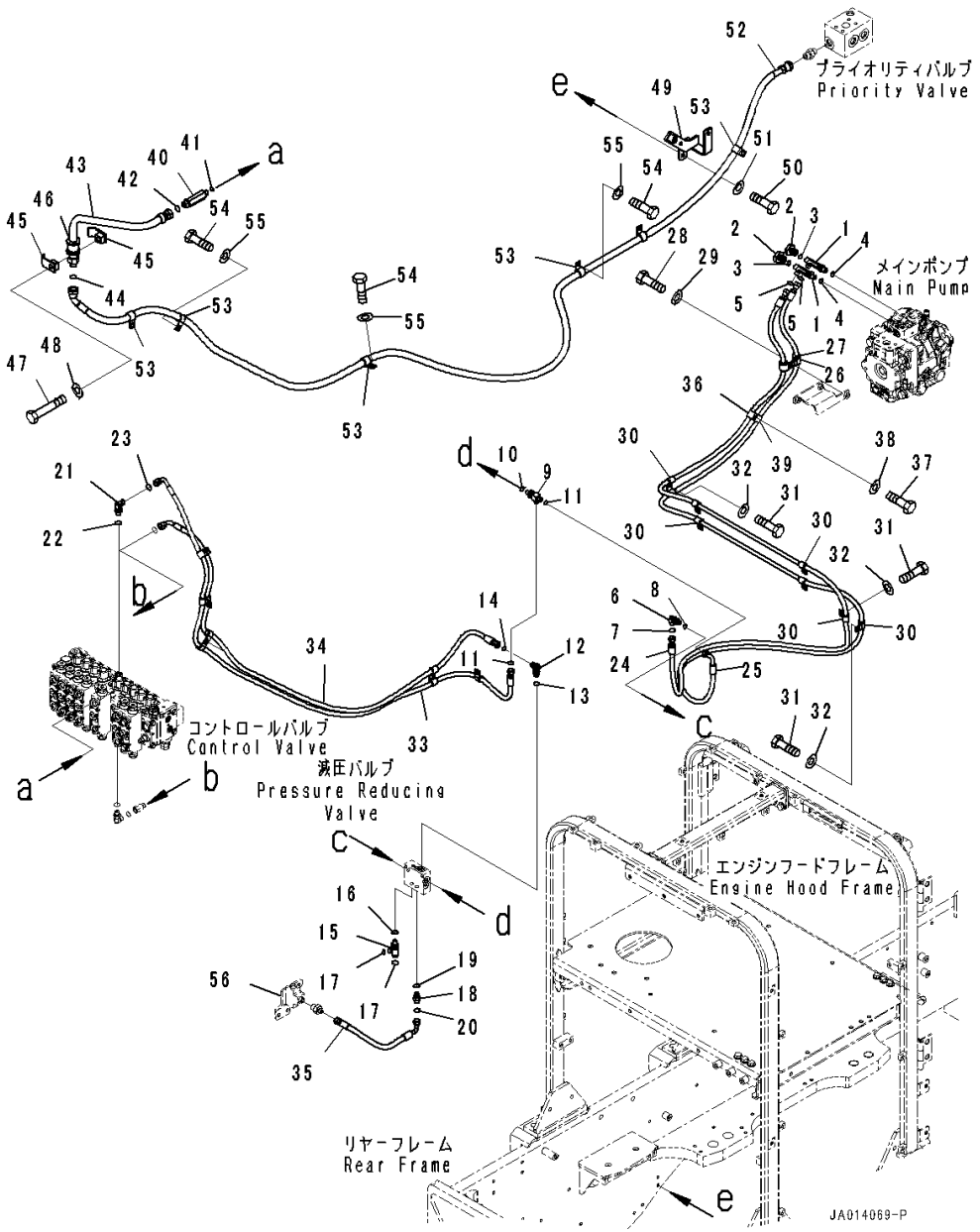

Index	Code	Part Number	Description	Qty	Serial Number
41		07002-11423	O-ring	1	26001-
42		02896-11012	O-ring	1	26001-
43		234-60-86910	Tube	1	26001-
44		02896-11012	O-ring	1	26001-
45		07094-10417	Clamp	2	26001-
46		07095-00421	Cushion	1	26001-
47		01010-81265	Bolt	1	26001-
48		01643-31232	Washer	1	26001-
49		234-60-86890	Bracket	1	26001-
50		01010-81025	Bolt	2	26001-
51		01643-31032	Washer	2	26001-
52		234-60-86920	Hose	1	26001-
53		04434-51912	Clip	6	26001-
54		01010-81025	Bolt	5	26001-
55		01643-31032	Washer	5	26001-
56		(234-60-86340)	Block(Hydraulic Piping,Priority Valve Piping,With 9 Spool Valve)(Refer to Page 344)		
		(234-60-86340)	Block(Hydraulic Piping,Priority Valve Piping,With 10 Spool Valve)(Refer to Page 342)		

FIG. H5200-001015 Hydraulic Piping (LS Piping) (2/2)

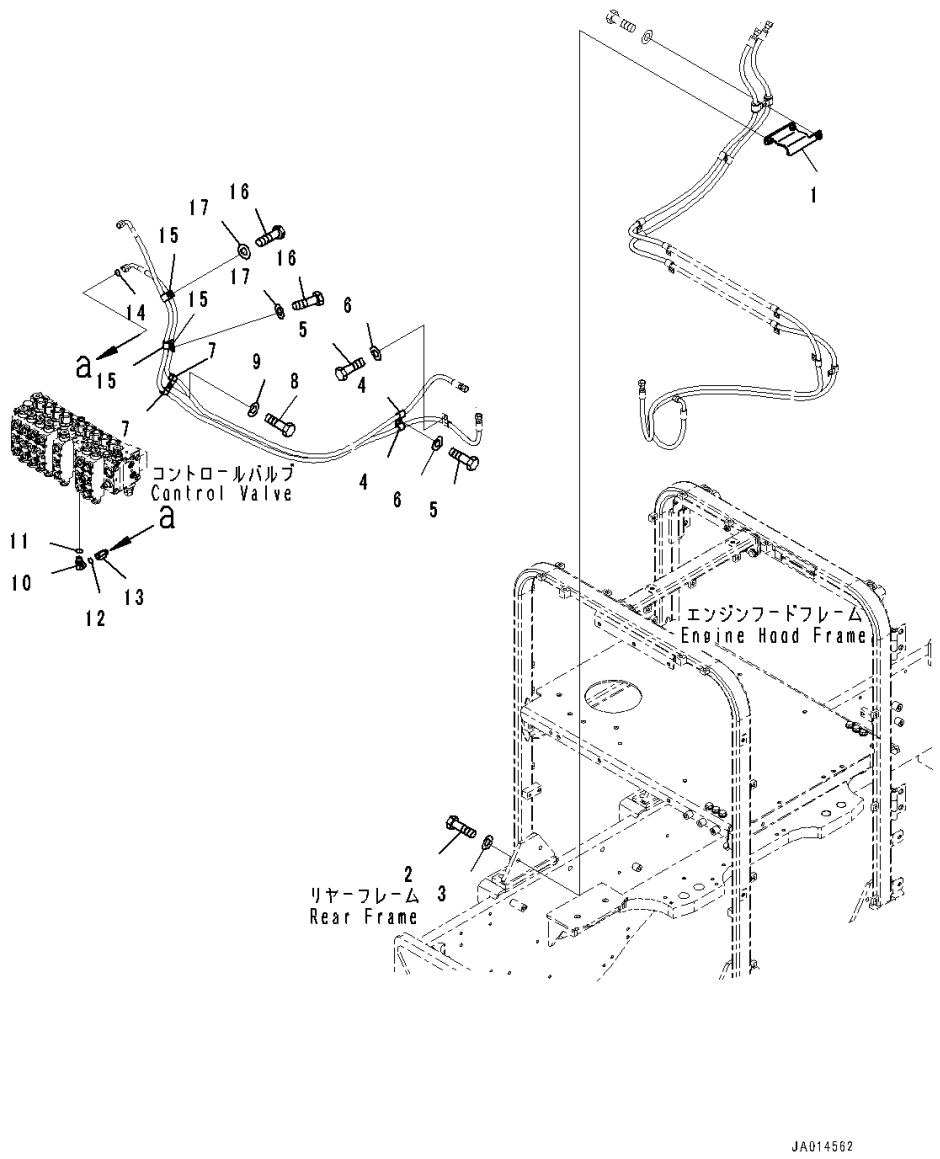

Index	Code	Part Number	Description	Qty	Serial Number
1		234-60-87180	Bracket	1	26001-
2		01010-81030	Bolt	2	26001-
3		01643-31032	Washer	2	26001-
4		04434-51310	Clip	3	26001-
5		01010-81025	Bolt	2	26001-
6		01643-31032	Washer	2	26001-
7		04434-51310	Clip	2	26001-
8		01010-81025	Bolt	1	26001-
9		01643-31032	Washer	1	26001-
10		02782-10210	Elbow	1	26001-
11		07002-11423	O-ring	1	26001-
12		02896-11008	O-ring	1	26001-
13		419-43-37570	Union	1	26001-
14		02896-11008	O-ring	1	26001-
15		04434-51310	Clip	4	26001-
16		01010-81025	Bolt	2	26001-
17		01643-31032	Washer	2	26001-

FIG. H5200-001016 Hydraulic Piping (Differential Lock Piping)

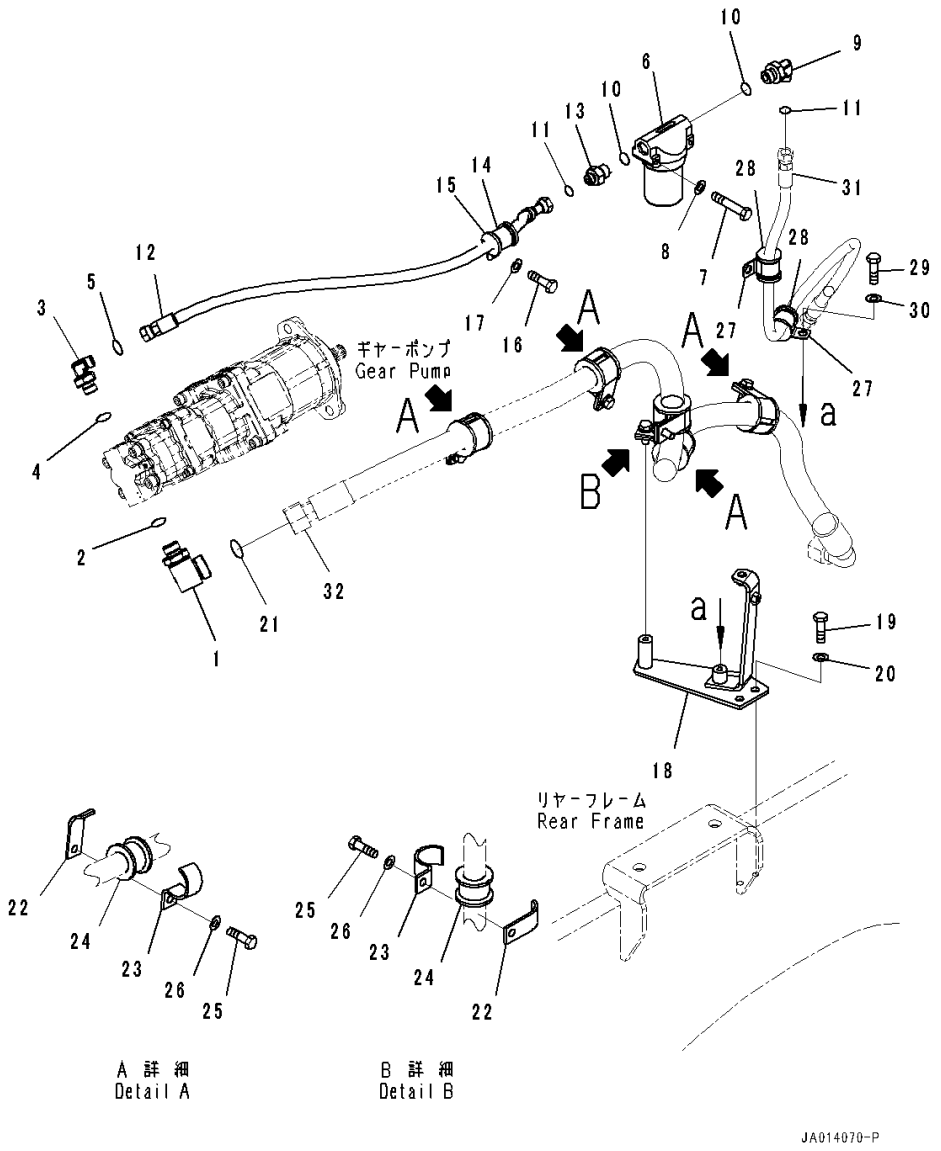

Index	Code	Part Number	Description	Qty	Serial Number
1		234-60-82411	Elbow	1	26001-
2		07000-B3024	O-ring	1	26001-
3		56B-88-12310	Elbow	1	26001-
4		07000-B2018	O-ring	1	26001-
5		02896-61009	O-ring	1	26001-
6		23C-60-51200	Filter	1	26001-
		195-15-75560	• Element	1	26001-
		234-60-62230	• O-ring	1	26001-
7		01010-80660	Bolt	2	26001-
8		01643-30623	Washer	2	26001-
9		56B-88-12310	Elbow	1	26001-
10		07000-B2018	O-ring	2	26001-
11		02896-61009	O-ring	2	26001-
12		234-60-82320	Hose	1	26001-
13		56B-88-12220	Union	1	26001-
14		142-06-13540	Clip	1	26001-
15		07095-00316	Cushion	1	26001-
16		01010-81025	Bolt	1	26001-
17		01643-31032	Washer	1	26001-
18		234-60-87170	Bracket	1	26001-
19		01010-81025	Bolt	2	26001-
20		01643-31032	Washer	2	26001-
21		23B-60-33240	O-ring	1	26001-
22		418-62-32550	Clamp	5	26001-
23		418-62-32560	Clamp	5	26001-
24		21T-62-76840	Cushion	5	26001-
25		01010-81030	Bolt	5	26001-
26		01643-31032	Washer	5	26001-
27		142-06-13540	Clip	2	26001-
28		07095-00316	Cushion	2	26001-
29		01010-81025	Bolt	2	26001-
30		01643-31032	Washer	2	26001-
31		(234-60-82330)	Hose(Rear Axle,Final Drive, Center Case)(Refer to Page 256)		
32		(234-60-82340)	Hose(Rear Axle,Final Drive, Solenoid Valve and Piping)(Refer to Page 263)		

FIG. H5200-004016 Hydraulic Piping (Differential Lock Piping) (With Ripper,10 Spool Valve)

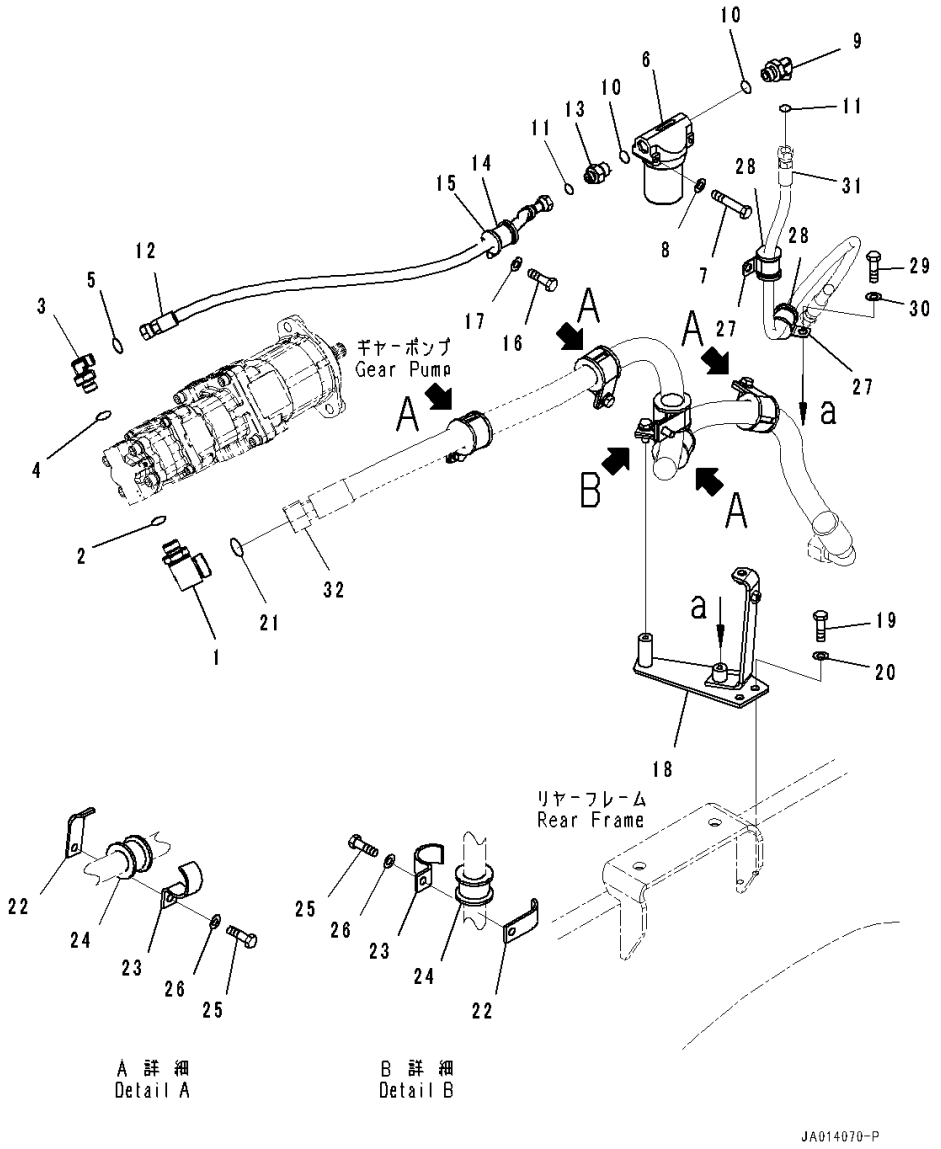

Index	Code	Part Number	Description	Qty	Serial Number
1		234-60-82411	Elbow	1	26001-
2		07000-B3024	O-ring	1	26001-
3		56B-88-12310	Elbow	1	26001-
4		07000-B2018	O-ring	1	26001-
5		02896-61009	O-ring	1	26001-
6		23C-60-51200	Filter	1	26001-
		195-15-75560	• Element	1	26001-
		234-60-62230	• O-ring	1	26001-
7		01010-80660	Bolt	2	26001-
8		01643-30623	Washer	2	26001-
9		56B-88-12310	Elbow	1	26001-
10		07000-B2018	O-ring	2	26001-
11		02896-61009	O-ring	2	26001-
12		234-60-82320	Hose	1	26001-
13		56B-88-12220	Union	1	26001-
14		142-06-13540	Clip	1	26001-
15		07095-00316	Cushion	1	26001-
16		01010-81025	Bolt	1	26001-
17		01643-31032	Washer	1	26001-
18		234-60-87170	Bracket	1	26001-
19		01010-81025	Bolt	2	26001-
20		01643-31032	Washer	2	26001-
21		23B-60-33240	O-ring	1	26001-
22		418-62-32550	Clamp	5	26001-
23		418-62-32560	Clamp	5	26001-
24		21T-62-76840	Cushion	5	26001-
25		01010-81030	Bolt	5	26001-
26		01643-31032	Washer	5	26001-
27		142-06-13540	Clip	2	26001-
28		07095-00316	Cushion	2	26001-
29		01010-81025	Bolt	2	26001-
30		01643-31032	Washer	2	26001-
31		(234-60-82330)	Hose(Rear Axle,Final Drive, Center Case)(Refer to Page 256)		
32		(234-60-82340)	Hose(Rear Axle,Final Drive, Solenoid Valve and Piping)(Refer to Page 263)		

FIG. H5200-001017 Hydraulic Piping (Engine Starting Aid)

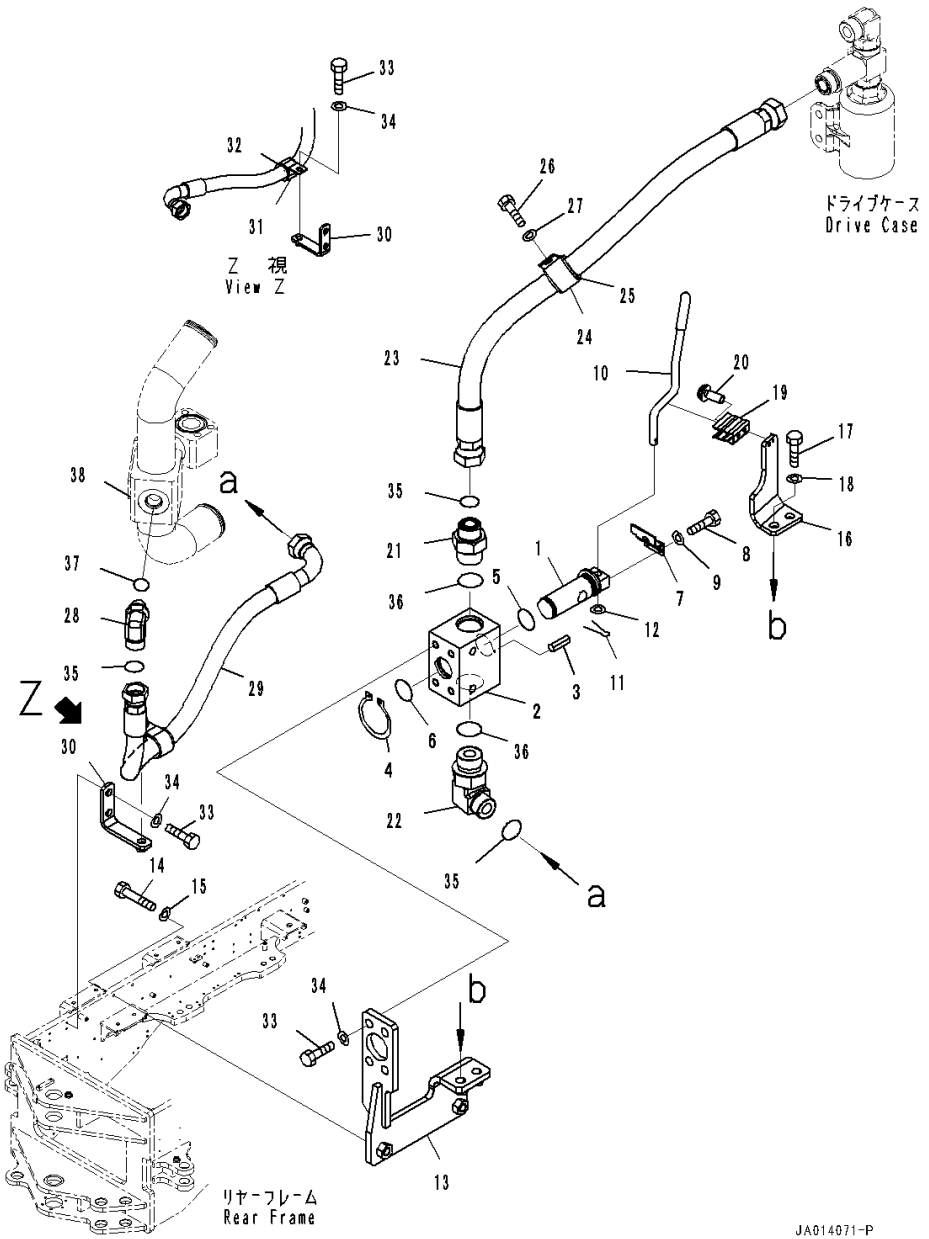

Index	Code	Part Number	Description	Qty	Serial Number
		234-60-83120	Valve Assembly	1	26001-
1		234-60-83130	• Shaft	1	26001-
2	C1		• Body	1	26001-
3		04025-00412	• Pin, Spring	1	26001-
4		04064-03015	• Ring, Snap, for Shaft Side	1	26001-
5		07000-13025	• O-ring	1	26001-
6		07000-13031	• O-ring	1	26001-
7		234-60-83150	Plate	1	26001-
8		01010-80616	Bolt	2	26001-
9		01643-30623	Washer	2	26001-
10		234-60-83141	Bar	1	26001-
11		04050-13020	Pin, Cotter	1	26001-
12		01640-21016	Washer	1	26001-
13		234-60-87290	Bracket	1	26001-
14		01010-D1265	Bolt	2	26001-
15		01643-71232	Washer	2	26001-
16		234-60-87420	Plate	1	26001-
17		01010-81030	Bolt	2	26001-
18		01643-31032	Washer	2	26001-
19		23S-54-54750	Spring	1	26001-
20		01023-10410	Screw	2	26001-
21		21W-973-4560	Nipple	1	26001-
22		02782-10632	Elbow	1	26001-
23		234-60-86821	Hose	1	26001-
24		04434-53412	Clip	1	26001-
25		07095-20627	Cushion	1	26001-
26		01010-81030	Bolt	1	26001-
27		01643-31032	Washer	1	26001-
28		02782-10628	Elbow	1	26001-
29		234-60-87230	Hose	1	26001-
30		234-60-87280	Bracket	1	26001-
31		04434-53411	Clip	1	26001-
32		07095-20625	Cushion	1	26001-
33		01010-81025	Bolt	7	26001-
34		01643-31032	Washer	7	26001-
35		02896-11018	O-ring	3	26001-
36		07002-13334	O-ring	2	26001-
37		07002-12434	O-ring	1	26001-
38		(234-60-86220)	Tube(Hydraulic Piping,Suction Piping)(Refer to Page 336)		

FIG. H5200-002018 Hydraulic Piping (Plug)

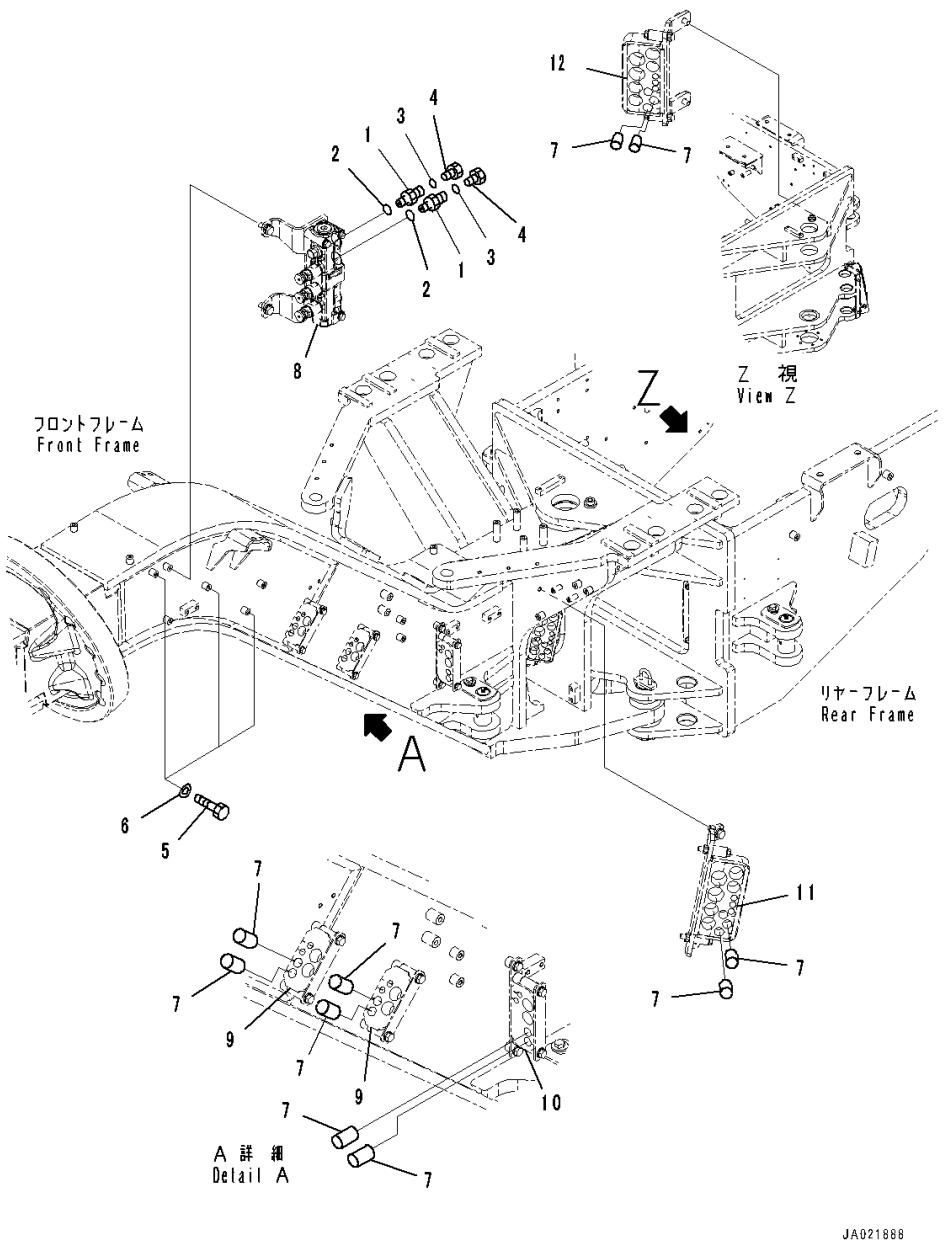

Index	Code	Part Number	Description	Qty	Serial Number
1		02781-00420	Union	2	26001-
2		07002-11823	O-ring	2	26001-
3		02896-11012	O-ring	2	26001-
4		02789-10422	Plug	2	26001-
5		01010-81020	Bolt	3	26001-
6		01643-31032	Washer	3	26001-
7		21W-62-41350	Plug	10	26001-
8		(723-10-21500)	Valve Assembly, Suction and Relief(Front Hydraulic Piping,Safety Valve)(Refer to Page 386)		
9		(234-60-84620)	Cushion(Front Hydraulic Piping,Bracket and Cushion,With Front Blade)(Refer to Page 383)		
		(234-60-84620)	Cushion(Front Hydraulic Piping,Bracket and Cushion,With Scarifier, Front, 11-Shanks and Tooth)(Refer to Page 384)		
		(234-60-84620)	Cushion(Front Hydraulic Piping,Bracket and Cushion)(Refer to Page 382)		
10		(234-60-86750)	Cushion(Hydraulic Piping,Hose Clamp)(Refer to Page 359)		
11		(234-60-86640)	Cushion(Hydraulic Piping,Hose Clamp)(Refer to Page 358)		
12		(234-60-84720)	Bracket(Front Hydraulic Piping,Safety Valve Mounting)(Refer to Page 385)		

FIG. H5200-001018 Hydraulic Piping (Ripper Piping)

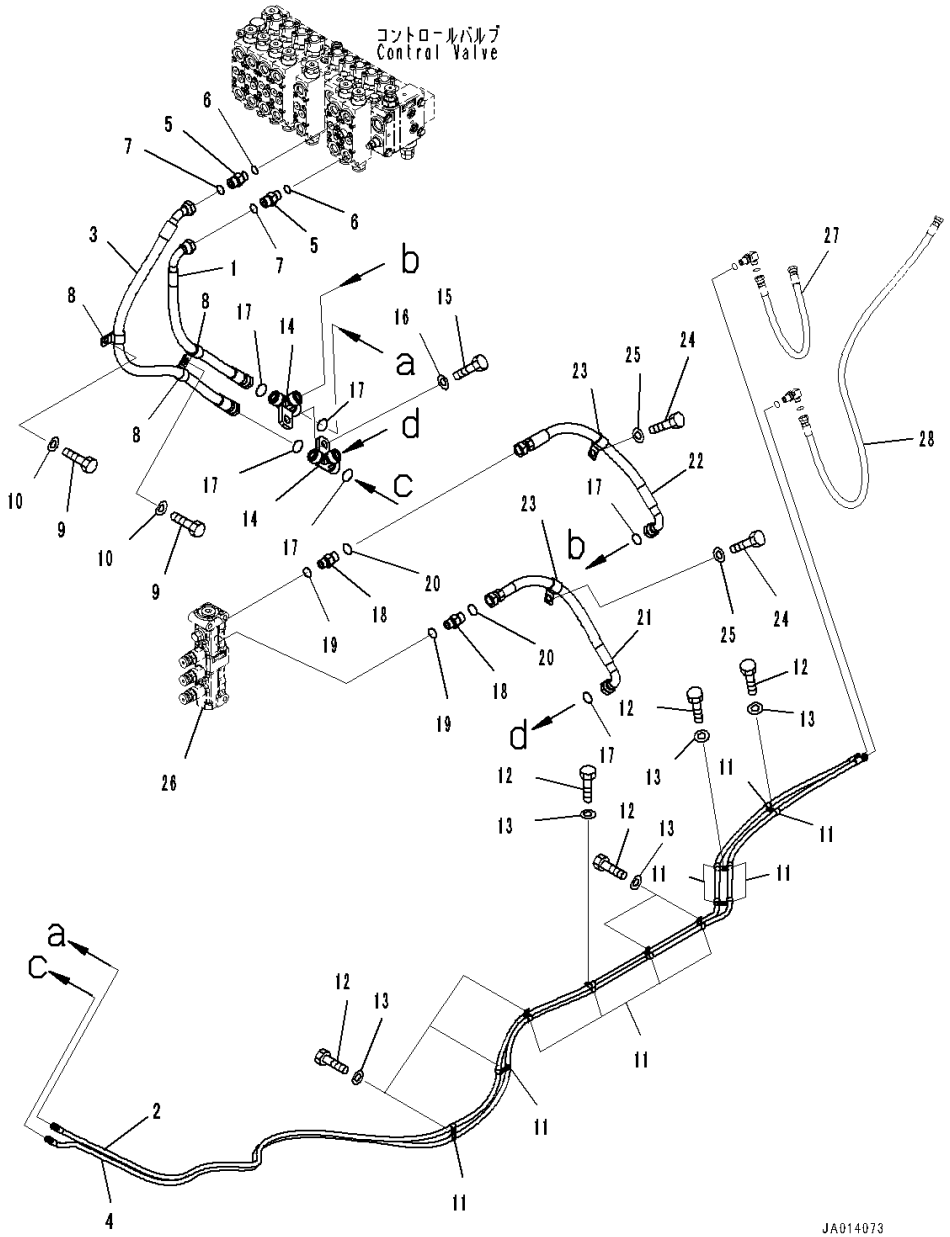

Index	Code	Part Number	Description	Qty	Serial Number
1		02757-004A5	Hose, Face Seal Type	1	26001-
2		234-60-86990	Hose	1	26001-
3		234-60-87160	Hose	1	26001-
4		234-60-87120	Hose	1	26001-
5		02781-00420	Union	2	26001-
6		07002-11823	O-ring	2	26001-
7		02896-11012	O-ring	2	26001-
8		04434-51912	Clip	3	26001-
9		01010-81025	Bolt	2	26001-
10		01643-31032	Washer	2	26001-
11		04434-51912	Clip	18	26001-
12		01010-81025	Bolt	9	26001-
13		01643-31032	Washer	9	26001-
14		234-60-84740	Tee	2	26001-
15		01010-81030	Bolt	1	26001-
16		01643-31032	Washer	1	26001-
17		02896-11012	O-ring	6	26001-
18		02781-00420	Union	2	26001-
19		07002-11823	O-ring	2	26001-
20		02896-11012	O-ring	2	26001-
21		234-60-84890	Hose	1	26001-
22		02757-004A4	Hose, Face Seal Type	1	26001-
23		04434-51912	Clip	2	26001-
24		01010-81025	Bolt	2	26001-
25		01643-31032	Washer	2	26001-
26		(723-10-21500)	Valve Assembly, Suction and Relief(Front Hydraulic Piping,Safety Valve)(Refer to Page 386)		
27		(234-785-8220)	Hose(Ripper,Bracket)(Refer to Page 590)		
28		(234-785-8230)	Hose(Ripper,Bracket)(Refer to Page 590)		

FIG. H5210-001001 Front Hydraulic Piping (Parking Brake and Bank Control Valve Piping)

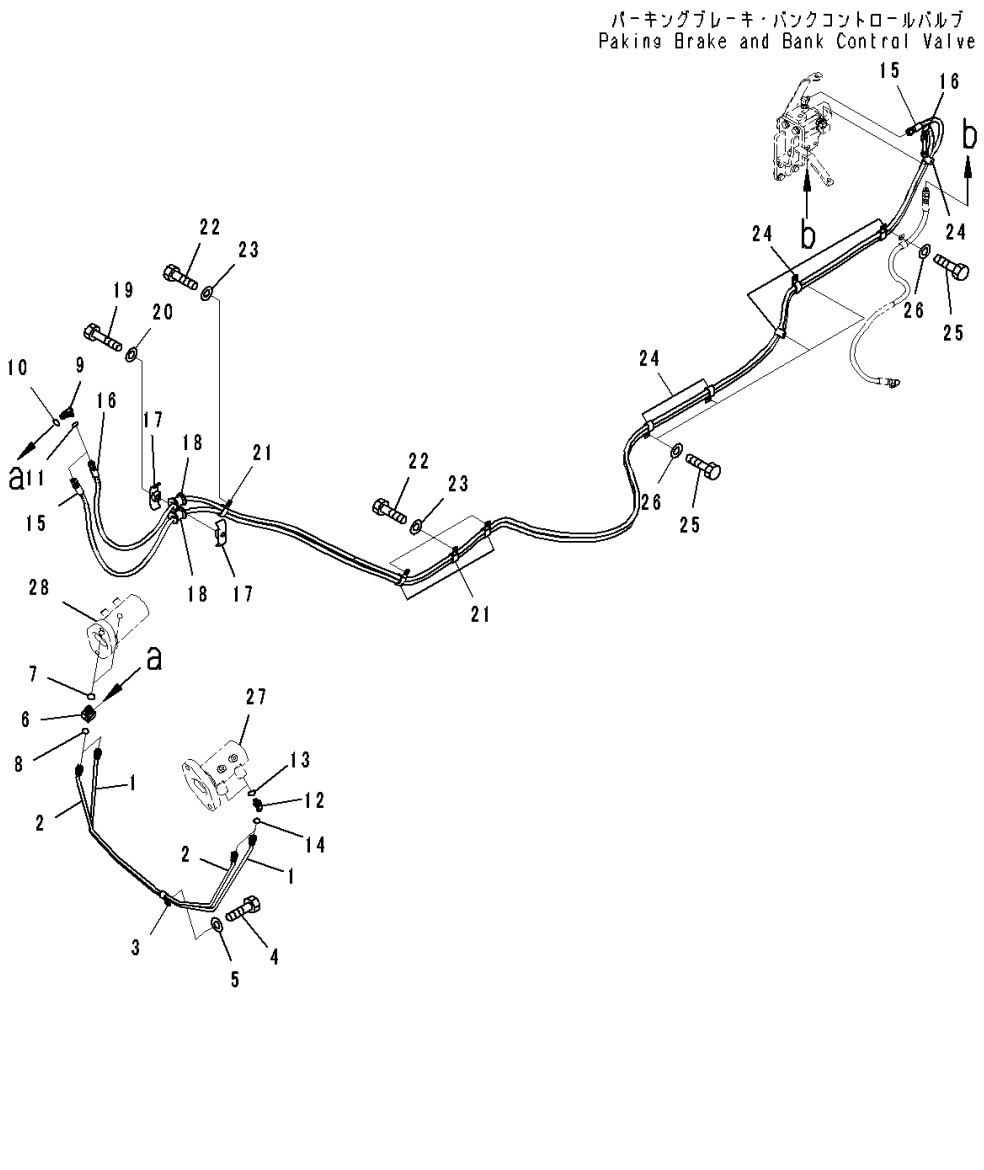

Index	Code	Part Number	Description	Qty	Serial Number
1		234-60-84230	Tube	1	26001-
2		234-60-84240	Tube	1	26001-
3		23B-60-34970	Clip	1	26001-
4		01010-81020	Bolt	1	26001-
5		01643-31032	Washer	1	26001-
6		424-43-37510	Tee	2	26001-26279
7		07002-11423	O-ring	2	26001-26279
8		02896-11008	O-ring	2	26001-26279
9		02782-10210	Elbow	2	26001-26279
10		07002-11423	O-ring	2	26001-26279
11		02896-11008	O-ring	2	26001-26279
12		02783-10210	Elbow	2	26001-26279
13		07002-11423	O-ring	2	26001-26279
14		02896-11008	O-ring	2	26001-26279
15		234-60-84210	Hose	1	26001-
16		234-60-84220	Hose	1	26001-
17		22P-62-13540	Clamp	2	26001-
18		07095-00314	Cushion	2	26001-
19		01010-81260	Bolt	1	26001-
20		01643-31232	Washer	1	26001-
21		04435-51410	Clip	4	26001-
22		01010-81025	Bolt	4	26001-
23		01643-31032	Washer	4	26001-
24		04435-51410	Clip	6	26001-
25		01010-81025	Bolt	5	26001-
26		01643-31032	Washer	5	26001-
27		(234-70-81280)	Case(Blade and Circle Lifter,Case)(Refer to Page 583)		
28		(234-70-81290)	Case(Blade and Circle Lifter,Case)(Refer to Page 583)		

FIG. H5210-001002 Front Hydraulic Piping (Control Valve Related Parts)

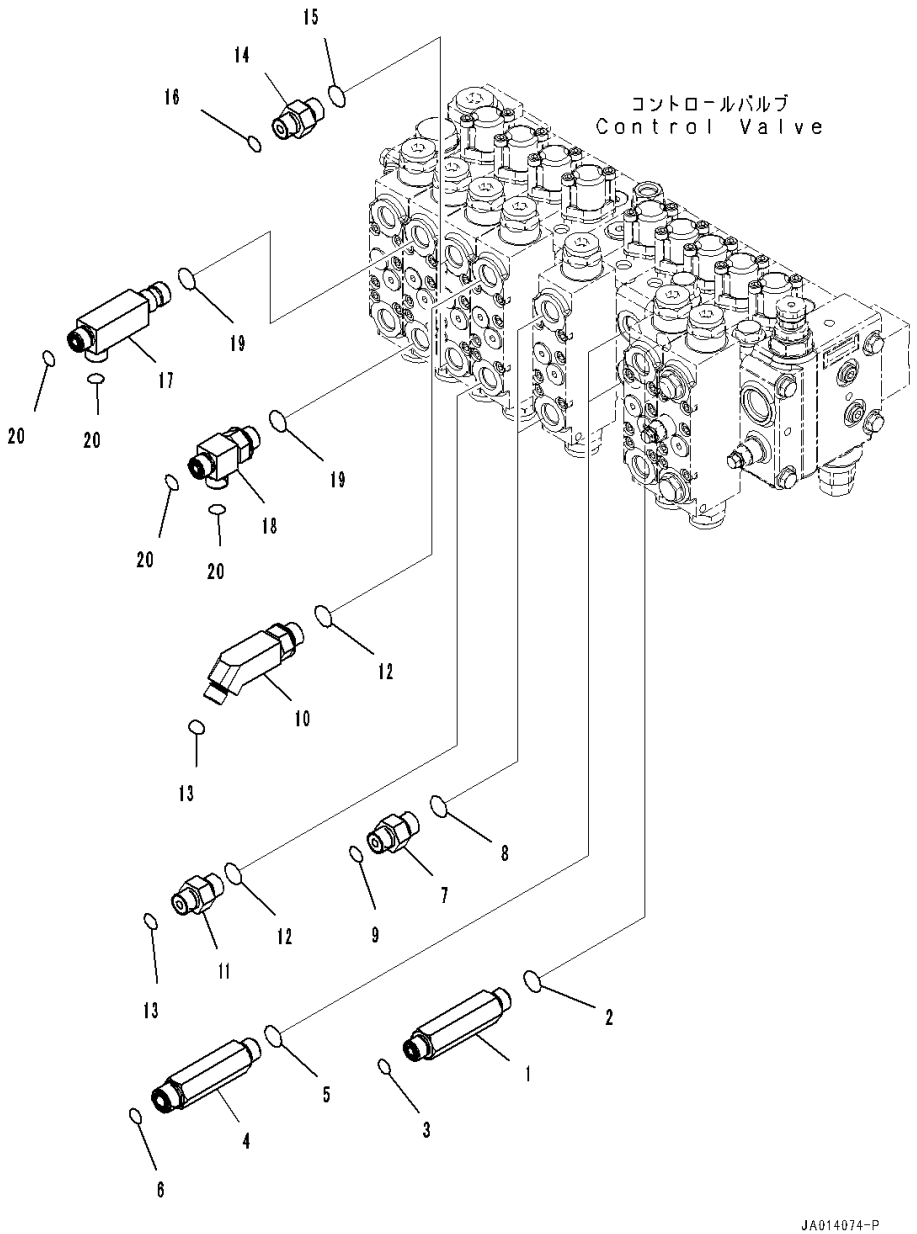

Index	Code	Part Number	Description	Qty	Serial Number
1		23B-60-72280	Union	2	26001-
2		07002-11823	O-ring	2	26001-
3		02896-11009	O-ring	2	26001-
4		23B-60-73980	Union	2	26001-
5		07002-11823	O-ring	2	26001-
6		02896-11012	O-ring	2	26001-
7		02781-00313	Union	2	26001-
8		07002-11823	O-ring	2	26001-
9		02896-11009	O-ring	2	26001-
10		23B-60-71590	Elbow	1	26001-
11		02781-00313	Union	1	26001-
12		07002-11823	O-ring	2	26001-
13		02896-11009	O-ring	2	26001-
14		02781-00313	Union	2	26001-
15		07002-11823	O-ring	2	26001-
16		02896-11009	O-ring	2	26001-
17		234-60-84760	Tee	1	26001-
18		234-60-84770	Tee	1	26001-
19		07002-11823	O-ring	2	26001-
20		02896-11009	O-ring	4	26001-

FIG. H5210-004002 Front Hydraulic Piping (Control Valve Related Parts) (With Front Blade)

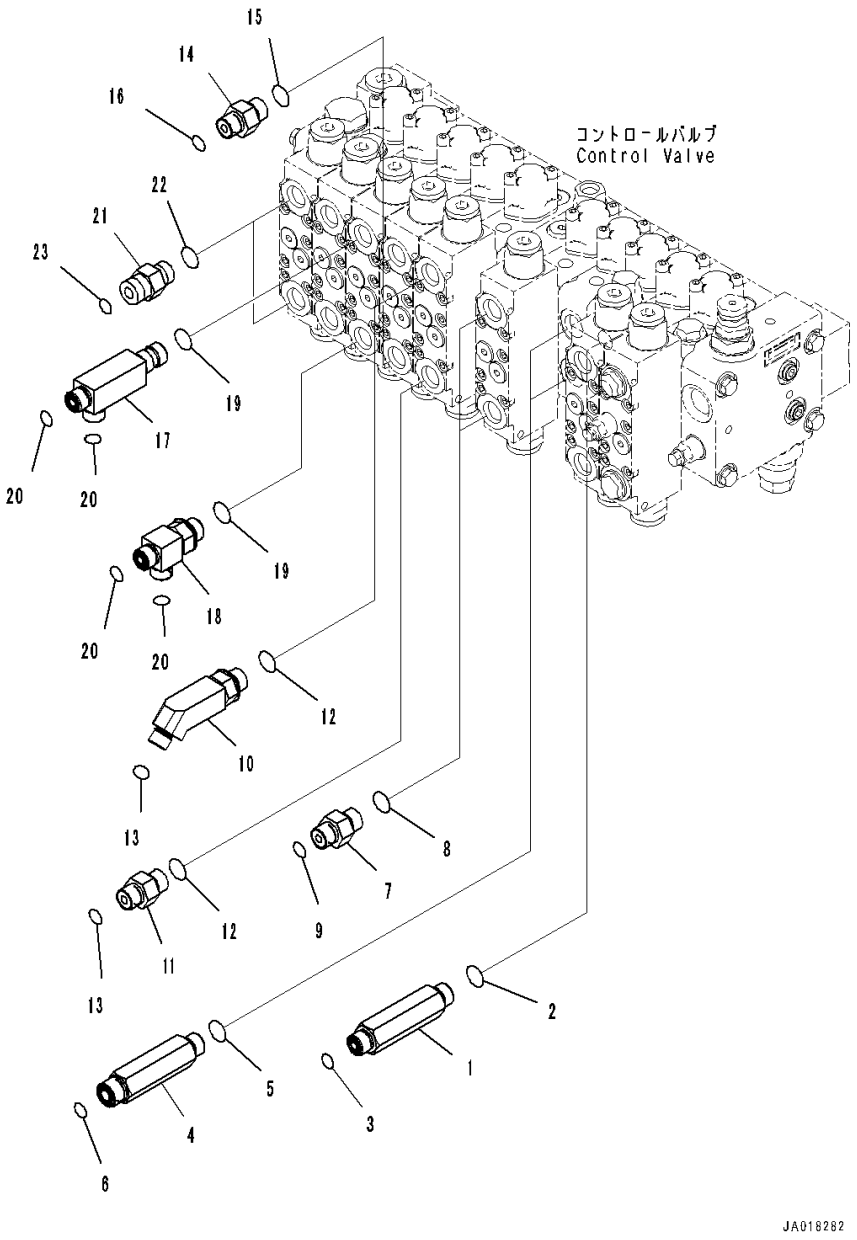

Index	Code	Part Number	Description	Qty	Serial Number
1		23B-60-72280	Union	2	26001-
2		07002-11823	O-ring	2	26001-
3		02896-11009	O-ring	2	26001-
4		23B-60-73980	Union	2	26001-
5		07002-11823	O-ring	2	26001-
6		02896-11012	O-ring	2	26001-
7		02781-00313	Union	2	26001-
8		07002-11823	O-ring	2	26001-
9		02896-11009	O-ring	2	26001-
10		23B-60-71590	Elbow	1	26001-
11		02781-00313	Union	1	26001-
12		07002-11823	O-ring	2	26001-
13		02896-11009	O-ring	2	26001-
14		02781-00313	Union	2	26001-
15		07002-11823	O-ring	2	26001-
16		02896-11009	O-ring	2	26001-
17		234-60-84760	Tee	1	26001-
18		234-60-84770	Tee	1	26001-
19		07002-11823	O-ring	2	26001-
20		02896-11009	O-ring	4	26001-
21		02781-00420	Union	2	26001-
22		07002-11823	O-ring	2	26001-
23		02896-11012	O-ring	2	26001-

FIG. H5210-001003 Front Hydraulic Piping (Frame Piping)

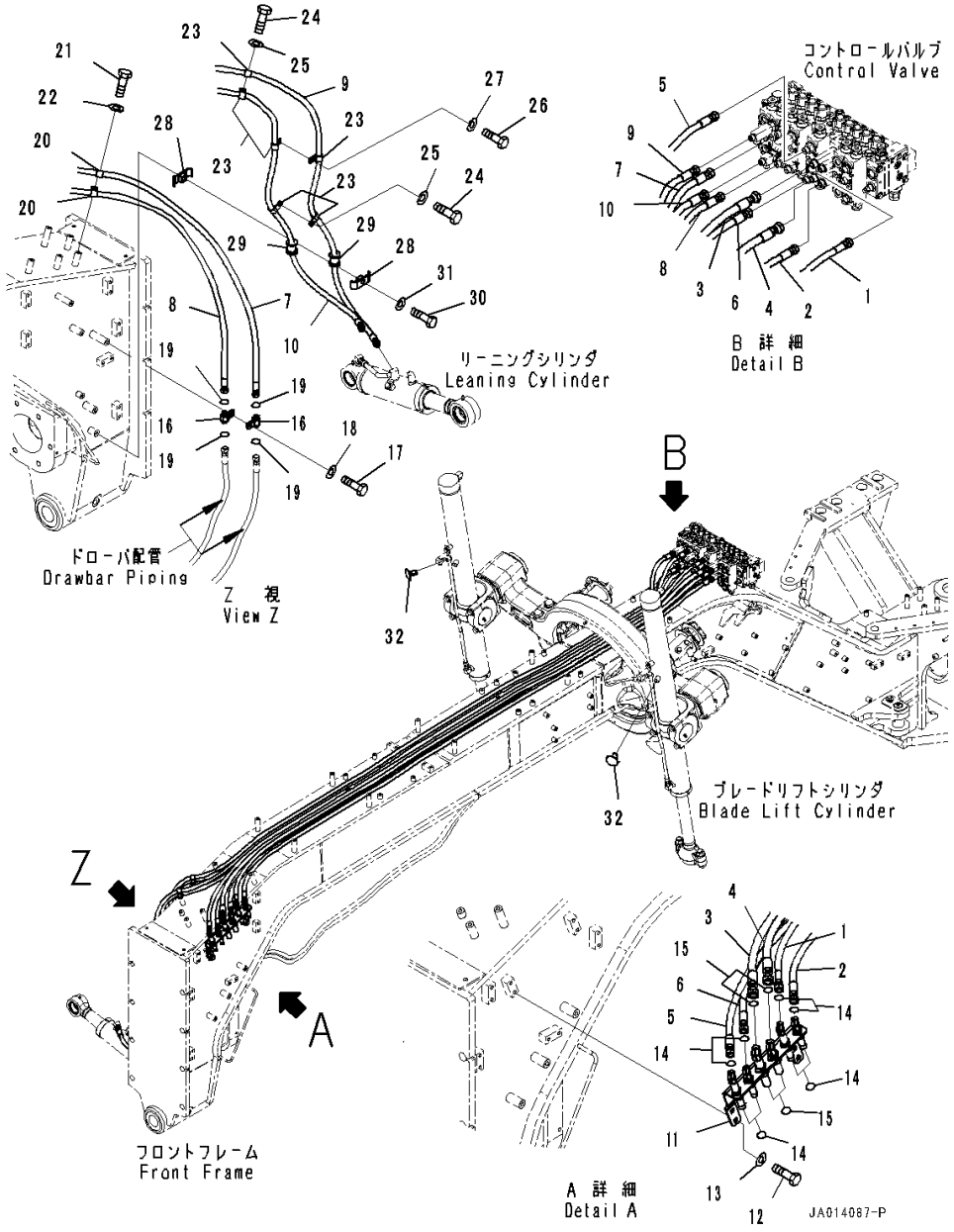

Index	Code	Part Number	Description	Qty	Serial Number
1		234-60-84250	Hose	1	26001-
2		234-60-84260	Hose	1	26001-
3		234-60-84290	Hose	1	26001-
4		234-60-84310	Hose	1	26001-
5		234-60-84270	Hose	1	26001-
6		234-60-84280	Hose	1	26001-
7		234-60-84320	Hose	1	26001-
8		234-60-84330	Hose	1	26001-
9		234-60-84340	Hose	1	26001-
10		234-60-84350	Hose	1	26001-
11		234-60-84300	Bracket	1	26001-
12		01010-81025	Bolt	4	26001-
13		01643-31032	Washer	4	26001-
14		02896-11009	O-ring	8	26001-
15		02896-11012	O-ring	4	26001-
16		8255-62-4240	Connector	2	26001-
17		01010-81235	Bolt	1	26001-
18		01643-31232	Washer	1	26001-
19		02896-11009	O-ring	4	26001-
20		04434-51712	Clip	2	26001-
21		01010-81025	Bolt	1	26001-
22		01643-31032	Washer	1	26001-
23		04434-51712	Clip	6	26001-
24		01010-81025	Bolt	2	26001-
25		01643-31032	Washer	2	26001-
26		01010-81020	Bolt	1	26001-
27		01643-31032	Washer	1	26001-
28		22P-62-13540	Clamp	2	26001-
29		07095-00317	Cushion	2	26001-
30		01010-81260	Bolt	1	26001-
31		01643-31232	Washer	1	26001-
32		416-54-34230	Plug	2	26001-

FIG. H5210-004003 Front Hydraulic Piping (Frame Piping) (With Front Blade)

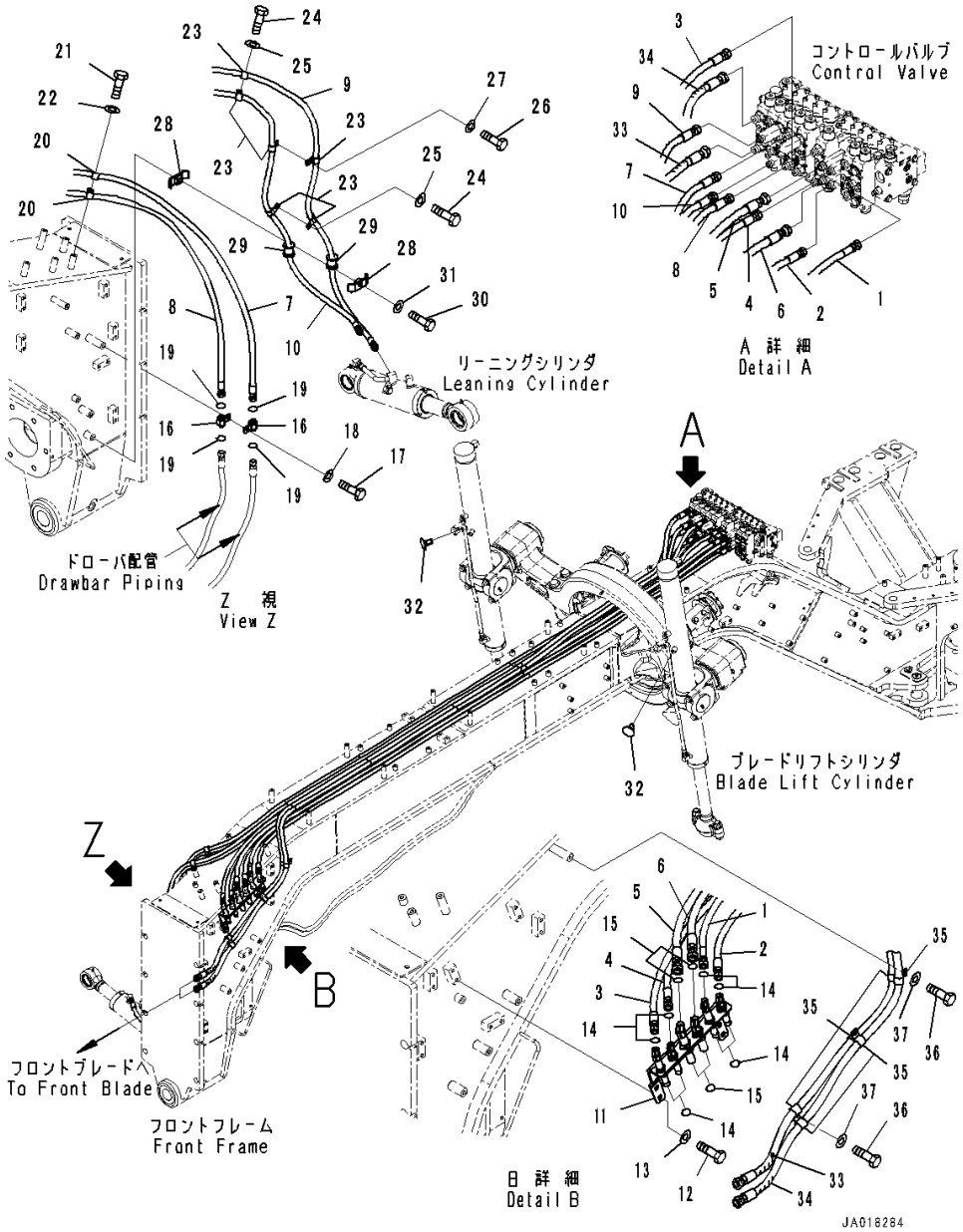

Index	Code	Part Number	Description	Qty	Serial Number
1		234-60-85511	Hose	1	26001-
2		234-60-85521	Hose	1	26001-
3		234-60-85531	Hose	1	26001-
4		234-60-85541	Hose	1	26001-
5		234-60-85551	Hose	1	26001-
6		234-60-85561	Hose	1	26001-
7		234-60-85571	Hose	1	26001-
8		234-60-85581	Hose	1	26001-
9		234-60-85590	Hose	1	26001-
10		234-60-85610	Hose	1	26001-
11		234-60-84300	Bracket	1	26001-
12		01010-81025	Bolt	4	26001-
13		01643-31032	Washer	4	26001-
14		02896-11009	O-ring	8	26001-
15		02896-11012	O-ring	4	26001-
16		8255-62-4240	Connector	2	26001-
17		01010-81235	Bolt	1	26001-
18		01643-31232	Washer	1	26001-
19		02896-11009	O-ring	4	26001-
20		04434-51712	Clip	2	26001-
21		01010-81025	Bolt	1	26001-
22		01643-31032	Washer	1	26001-
23		04434-51712	Clip	6	26001-
24		01010-81025	Bolt	2	26001-
25		01643-31032	Washer	2	26001-
26		01010-81020	Bolt	1	26001-
27		01643-31032	Washer	1	26001-
28		22P-62-13540	Clamp	2	26001-
29		07095-00317	Cushion	2	26001-
30		01010-81260	Bolt	1	26001-
31		01643-31232	Washer	1	26001-
32		416-54-34230	Plug	2	26001-
33		234-60-86122	Hose	1	26413-
	A2	234-60-86121	Hose	1	26001-26412
34		234-60-86132	Hose	1	26413-
	A2	234-60-86131	Hose	1	26001-26412
35		04434-51912	Clip	6	26001-
36		01010-81025	Bolt	2	26001-
37		01643-31032	Washer	2	26001-

FIG. H5210-001004 Front Hydraulic Piping (Drawbar Piping Clamp)

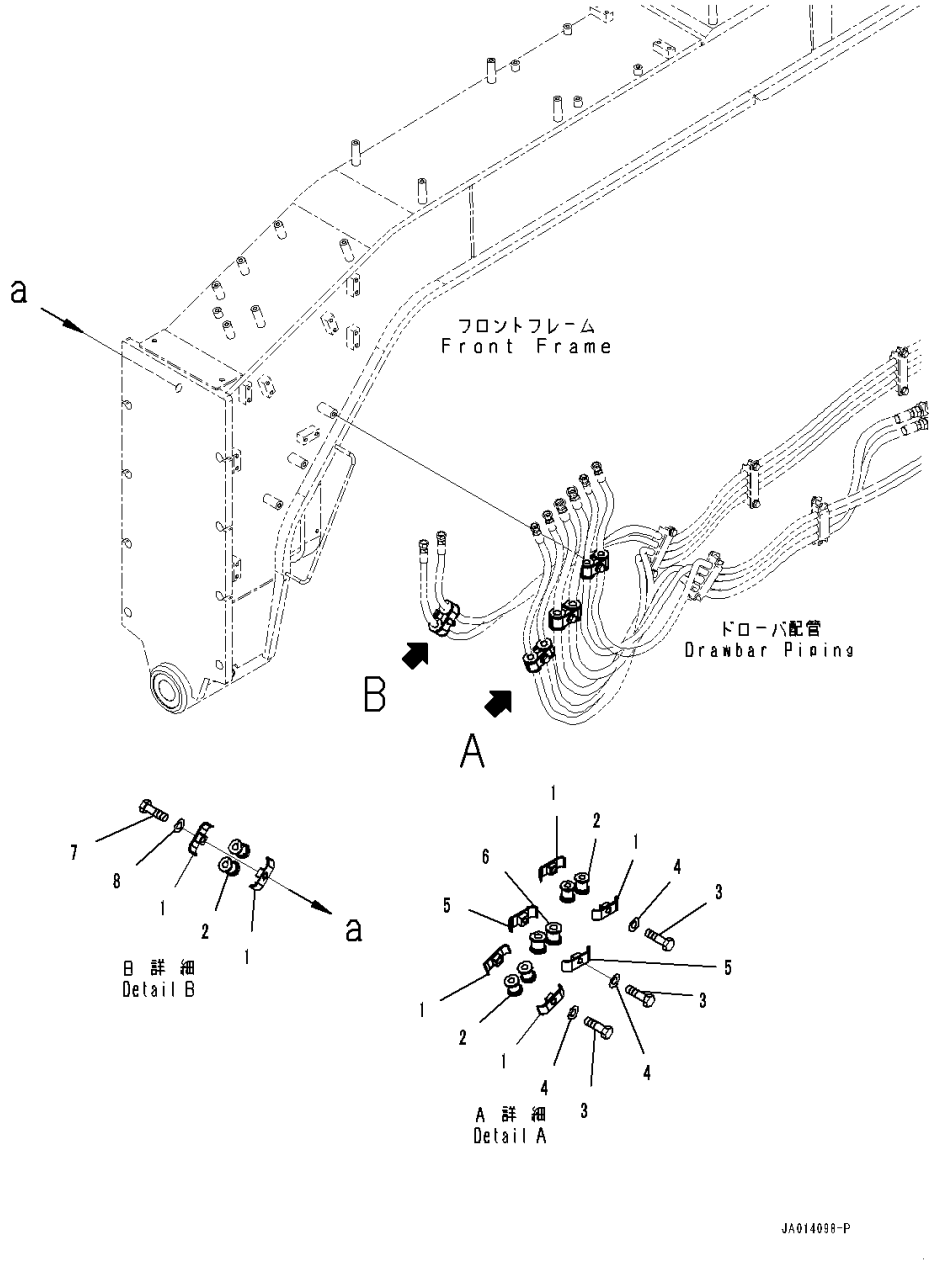

Index	Code	Part Number	Description	Qty	Serial Number
1		22P-62-13540	Clamp	6	26001-
2		07095-00317	Cushion	6	26001-
3		01010-81260	Bolt	3	26001-
4		01643-31232	Washer	3	26001-
5		07094-30417	Clamp	2	26001-
6		07095-00420	Cushion	2	26001-
7		01010-81260	Bolt	1	26001-
8		01643-31232	Washer	1	26001-

FIG. H5210-002005 Front Hydraulic Piping (Articulate Cylinder Piping) (With 10 Spool Valve)

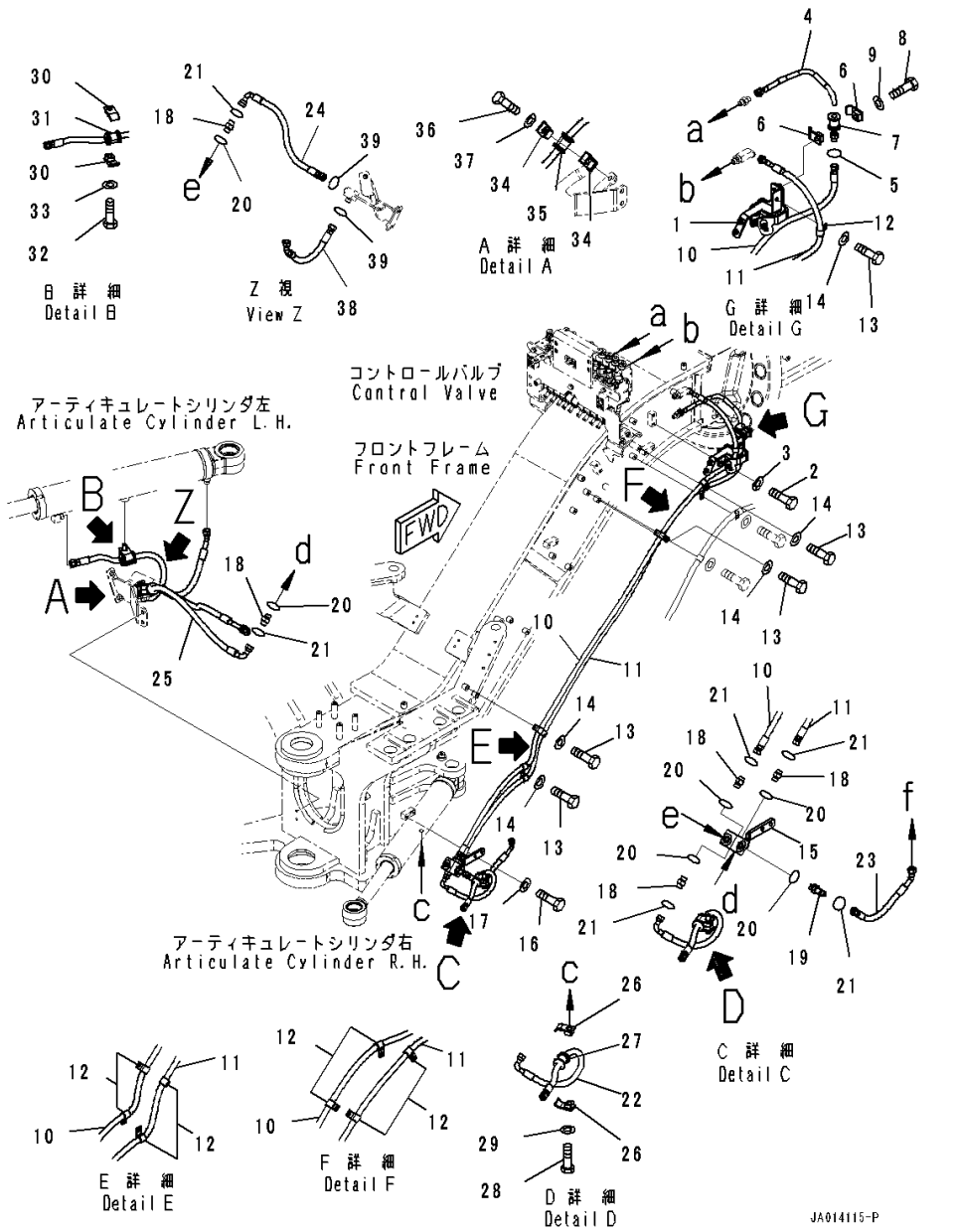

Index	Code	Part Number	Description	Qty	Serial Number
1		234-60-85291	Bracket	1	26001-
2		01010-81025	Bolt	2	26001-
3		01643-31032	Washer	2	26001-
4		234-60-84530	Tube	1	26001-
5		02896-11009	O-ring	1	26001-
6		07094-10315	Clamp	2	26001-
7		07095-00314	Cushion	1	26001-
8		01010-81260	Bolt	1	26001-
9		01643-31232	Washer	1	26001-
10		234-60-84520	Hose	1	26001-
11		234-60-84550	Hose	1	26001-
12		04434-51712	Clip	9	26001-
13		01010-81025	Bolt	5	26001-
14		01643-31032	Washer	5	26001-
15		234-60-84560	Tee	1	26001-
16		01010-81030	Bolt	2	26001-
17		01643-31032	Washer	2	26001-
18		02781-00313	Union	5	26001-
19		02782-10313	Elbow	1	26001-
20		07002-11823	O-ring	6	26001-
21		02896-11009	O-ring	6	26001-
22		234-60-84570	Hose	1	26001-
23		234-60-84580	Hose	1	26001-
24		02766-003A4	Hose	1	26001-
25		234-60-84591	Hose	1	26001-
26		22P-62-13510	Clamp	2	26001-
27		07095-00317	Cushion	1	26001-
28		01010-81260	Bolt	1	26001-
29		01643-31232	Washer	1	26001-
30		22P-62-13510	Clamp	2	26001-
31		07095-00317	Cushion	1	26001-
32		01010-81260	Bolt	1	26001-
33		01643-31232	Washer	1	26001-
34		22P-62-13510	Clamp	2	26001-
35		07095-00317	Cushion	1	26001-
36		01010-81260	Bolt	1	26001-
37		01643-31232	Washer	1	26001-
38		02767-003A3	Hose, Face Seal Type	1	26001-
39		02896-11009	O-ring	2	26001-

FIG. H5210-004005 Front Hydraulic Piping (Articulate Cylinder Piping) (With 10 Spool Valve,Front Blade)

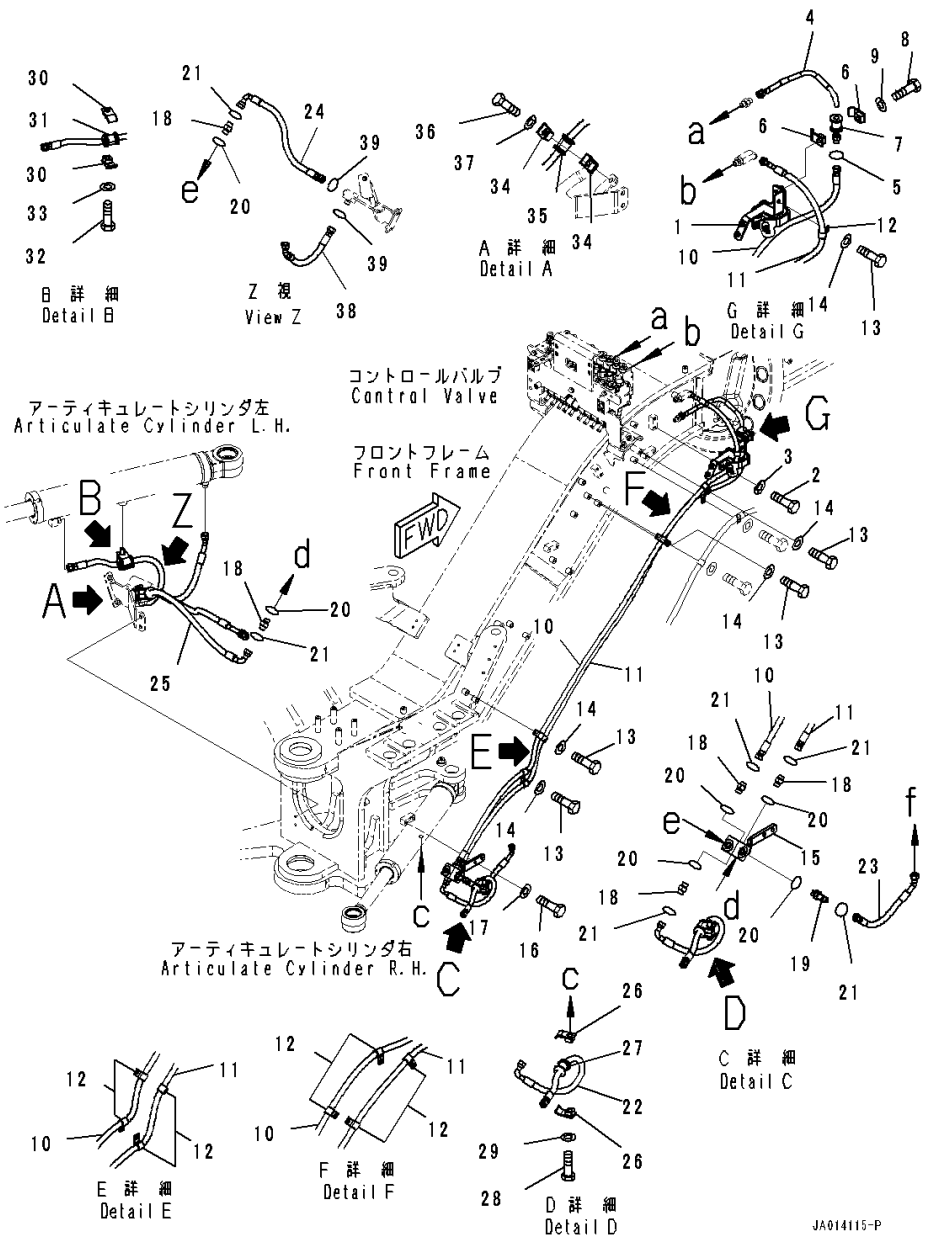

Index	Code	Part Number	Description	Qty	Serial Number
1		234-60-85291	Bracket	1	26001-
2		01010-81025	Bolt	2	26001-
3		01643-31032	Washer	2	26001-
4		234-60-84530	Tube	1	26001-
5		02896-11009	O-ring	1	26001-
6		07094-10315	Clamp	2	26001-
7		07095-00314	Cushion	1	26001-
8		01010-81260	Bolt	1	26001-
9		01643-31232	Washer	1	26001-
10		234-60-84520	Hose	1	26001-
11		234-60-84550	Hose	1	26001-
12		04434-51712	Clip	9	26001-
13		01010-81025	Bolt	5	26001-
14		01643-31032	Washer	5	26001-
15		234-60-84560	Tee	1	26001-
16		01010-81030	Bolt	2	26001-
17		01643-31032	Washer	2	26001-
18		02781-00313	Union	5	26001-
19		02782-10313	Elbow	1	26001-
20		07002-11823	O-ring	6	26001-
21		02896-11009	O-ring	6	26001-
22		234-60-84570	Hose	1	26001-
23		234-60-84580	Hose	1	26001-
24		02766-003A4	Hose	1	26001-
25		234-60-84591	Hose	1	26001-
26		22P-62-13510	Clamp	2	26001-
27		07095-00317	Cushion	1	26001-
28		01010-81260	Bolt	1	26001-
29		01643-31232	Washer	1	26001-
30		22P-62-13510	Clamp	2	26001-
31		07095-00317	Cushion	1	26001-
32		01010-81260	Bolt	1	26001-
33		01643-31232	Washer	1	26001-
34		22P-62-13510	Clamp	2	26001-
35		07095-00317	Cushion	1	26001-
36		01010-81260	Bolt	1	26001-
37		01643-31232	Washer	1	26001-
38		02767-003A3	Hose, Face Seal Type	1	26001-
39		02896-11009	O-ring	2	26001-

FIG. H5210-001005 Front Hydraulic Piping (Articulate Cylinder Piping) (With 9 Spool Valve)

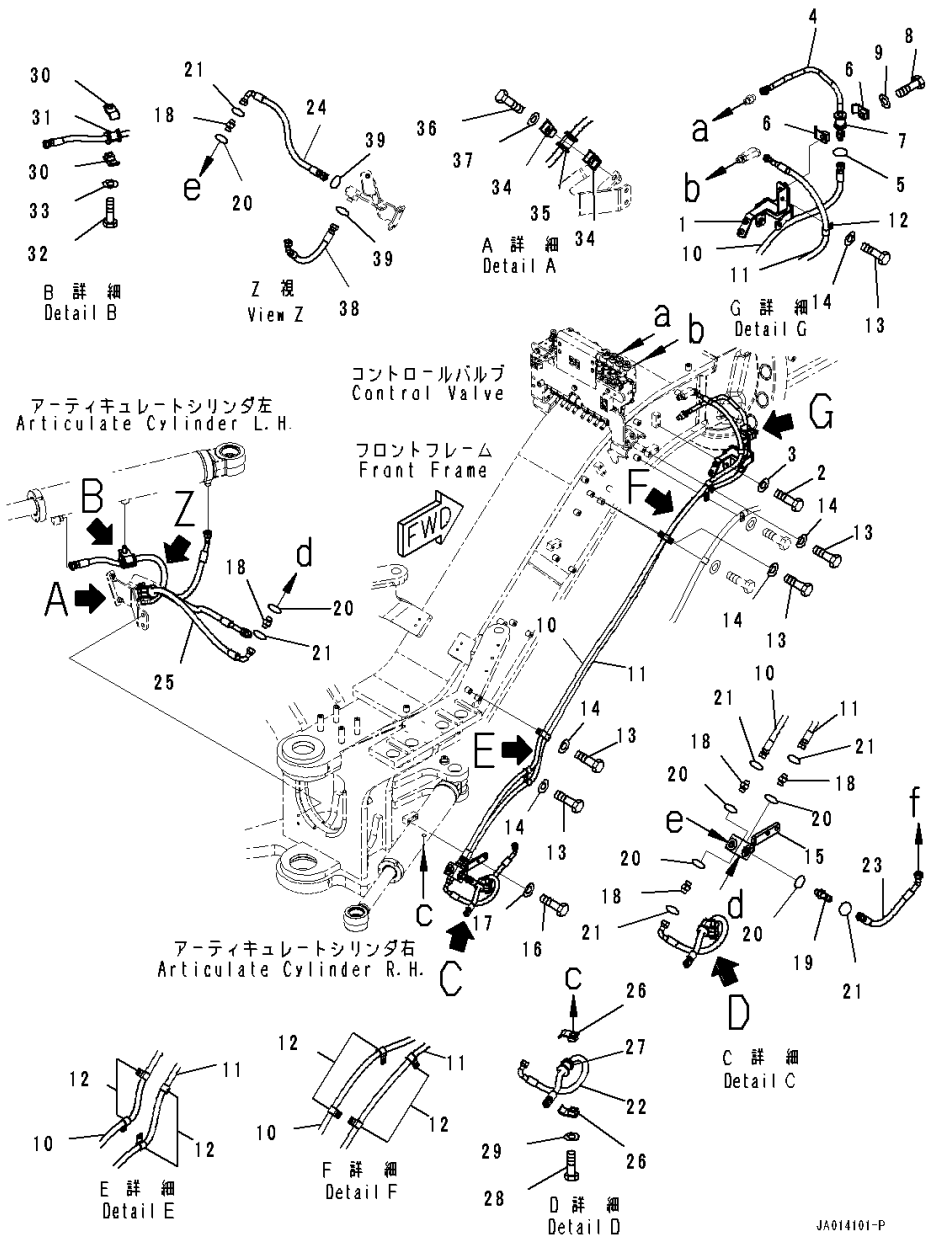

Index	Code	Part Number	Description	Qty	Serial Number
1		234-60-85161	Bracket	1	26001-
2		01010-81025	Bolt	2	26001-
3		01643-31032	Washer	2	26001-
4		234-60-84530	Tube	1	26001-
5		02896-11009	O-ring	1	26001-
6		07094-10315	Clamp	2	26001-
7		07095-00314	Cushion	1	26001-
8		01010-81260	Bolt	1	26001-
9		01643-31232	Washer	1	26001-
10		234-60-84520	Hose	1	26001-
11		234-60-84550	Hose	1	26001-
12		04434-51712	Clip	9	26001-
13		01010-81025	Bolt	5	26001-
14		01643-31032	Washer	5	26001-
15		234-60-84560	Tee	1	26001-
16		01010-81030	Bolt	2	26001-
17		01643-31032	Washer	2	26001-
18		02781-00313	Union	5	26001-
19		02782-10313	Elbow	1	26001-
20		07002-11823	O-ring	6	26001-
21		02896-11009	O-ring	6	26001-
22		234-60-84570	Hose	1	26001-
23		234-60-84580	Hose	1	26001-
24		02766-003A4	Hose	1	26001-
25		234-60-84591	Hose	1	26001-
26		22P-62-13510	Clamp	2	26001-
27		07095-00317	Cushion	1	26001-
28		01010-81260	Bolt	1	26001-
29		01643-31232	Washer	1	26001-
30		22P-62-13510	Clamp	2	26001-
31		07095-00317	Cushion	1	26001-
32		01010-81260	Bolt	1	26001-
33		01643-31232	Washer	1	26001-
34		22P-62-13510	Clamp	2	26001-
35		07095-00317	Cushion	1	26001-
36		01010-81260	Bolt	1	26001-
37		01643-31232	Washer	1	26001-
38		02767-003A3	Hose, Face Seal Type	1	26001-
39		02896-11009	O-ring	2	26001-

FIG. H5210-003005 Front Hydraulic Piping (Articulate Cylinder Piping) (With 9 Spool Valve,Scarifier, Front, 11-Shanks and Tooth)

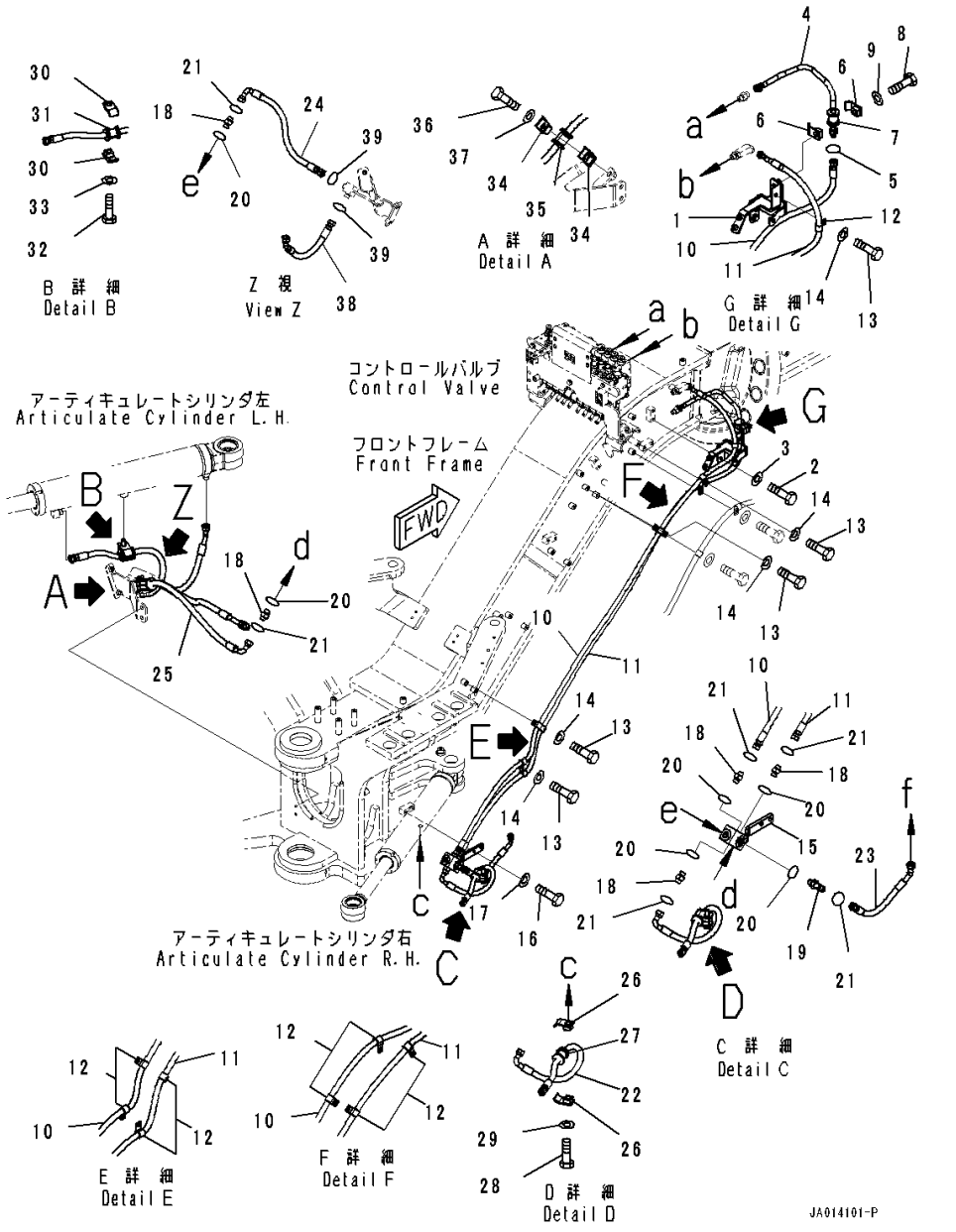

Index	Code	Part Number	Description	Qty	Serial Number
1		234-60-85161	Bracket	1	26001-
2		01010-81025	Bolt	2	26001-
3		01643-31032	Washer	2	26001-
4		234-60-84530	Tube	1	26001-
5		02896-11009	O-ring	1	26001-
6		07094-10315	Clamp	2	26001-
7		07095-00314	Cushion	1	26001-
8		01010-81260	Bolt	1	26001-
9		01643-31232	Washer	1	26001-
10		234-60-84520	Hose	1	26001-
11		234-60-84550	Hose	1	26001-
12		04434-51712	Clip	9	26001-
13		01010-81025	Bolt	5	26001-
14		01643-31032	Washer	5	26001-
15		234-60-84560	Tee	1	26001-
16		01010-81030	Bolt	2	26001-
17		01643-31032	Washer	2	26001-
18		02781-00313	Union	5	26001-
19		02782-10313	Elbow	1	26001-
20		07002-11823	O-ring	6	26001-
21		02896-11009	O-ring	6	26001-
22		234-60-84570	Hose	1	26001-
23		234-60-84580	Hose	1	26001-
24		02766-003A4	Hose	1	26001-
25		234-60-84591	Hose	1	26001-
26		22P-62-13510	Clamp	2	26001-
27		07095-00317	Cushion	1	26001-
28		01010-81260	Bolt	1	26001-
29		01643-31232	Washer	1	26001-
30		22P-62-13510	Clamp	2	26001-
31		07095-00317	Cushion	1	26001-
32		01010-81260	Bolt	1	26001-
33		01643-31232	Washer	1	26001-
34		22P-62-13510	Clamp	2	26001-
35		07095-00317	Cushion	1	26001-
36		01010-81260	Bolt	1	26001-
37		01643-31232	Washer	1	26001-
38		02767-003A3	Hose, Face Seal Type	1	26001-
39		02896-11009	O-ring	2	26001-

FIG. H5210-001006 Front Hydraulic Piping (Bracket and Cushion)

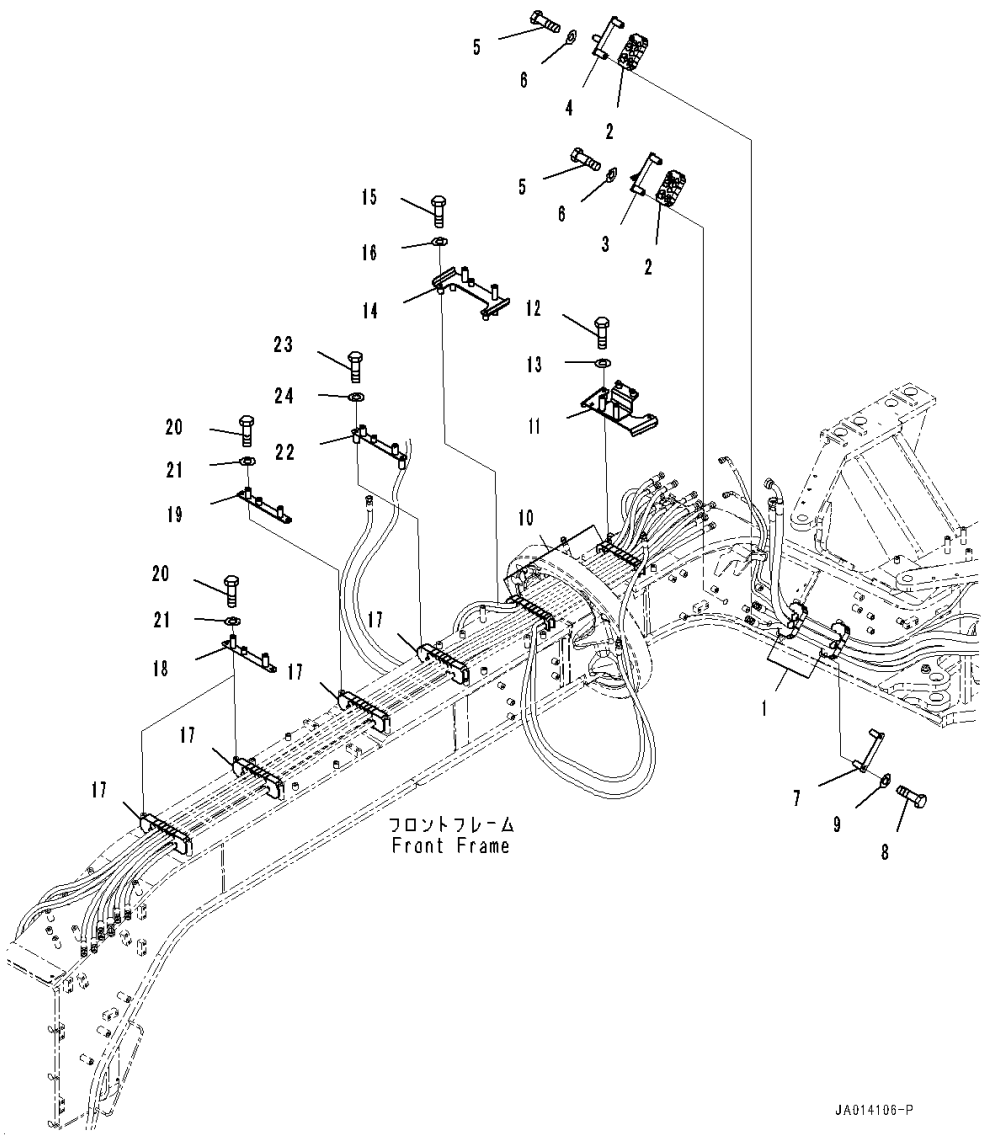

Index	Code	Part Number	Description	Qty	Serial Number
1		234-60-84620	Cushion	2	26001-
2		234-60-84630	Cushion	2	26001-
3		234-60-85271	Plate	1	26001-
4		234-60-85280	Plate	1	26001-
5		01010-81070	Bolt	4	26001-
6		01643-31032	Washer	4	26001-
7		234-60-84650	Plate	2	26001-
8		01010-81070	Bolt	4	26001-
9		01643-31032	Washer	4	26001-
10		234-60-84660	Cushion	2	26001-
11		234-60-85170	Bracket	1	26001-
12		01010-81050	Bolt	2	26001-
13		01643-31032	Washer	2	26001-
14		234-60-85121	Bracket	1	26001-
15		01010-81050	Bolt	2	26001-
16		01643-31032	Washer	2	26001-
17		234-60-84690	Cushion	4	26001-
18		234-60-84710	Plate	2	26001-
19		234-60-84961	Plate	1	26001-
20		01010-81020	Bolt	6	26001-
21		01643-31032	Washer	6	26001-
22		234-60-85131	Plate	1	26001-
23		01010-81070	Bolt	2	26001-
24		01643-31032	Washer	2	26001-

FIG. H5210-004006 Front Hydraulic Piping (Bracket and Cushion) (With Front Blade)

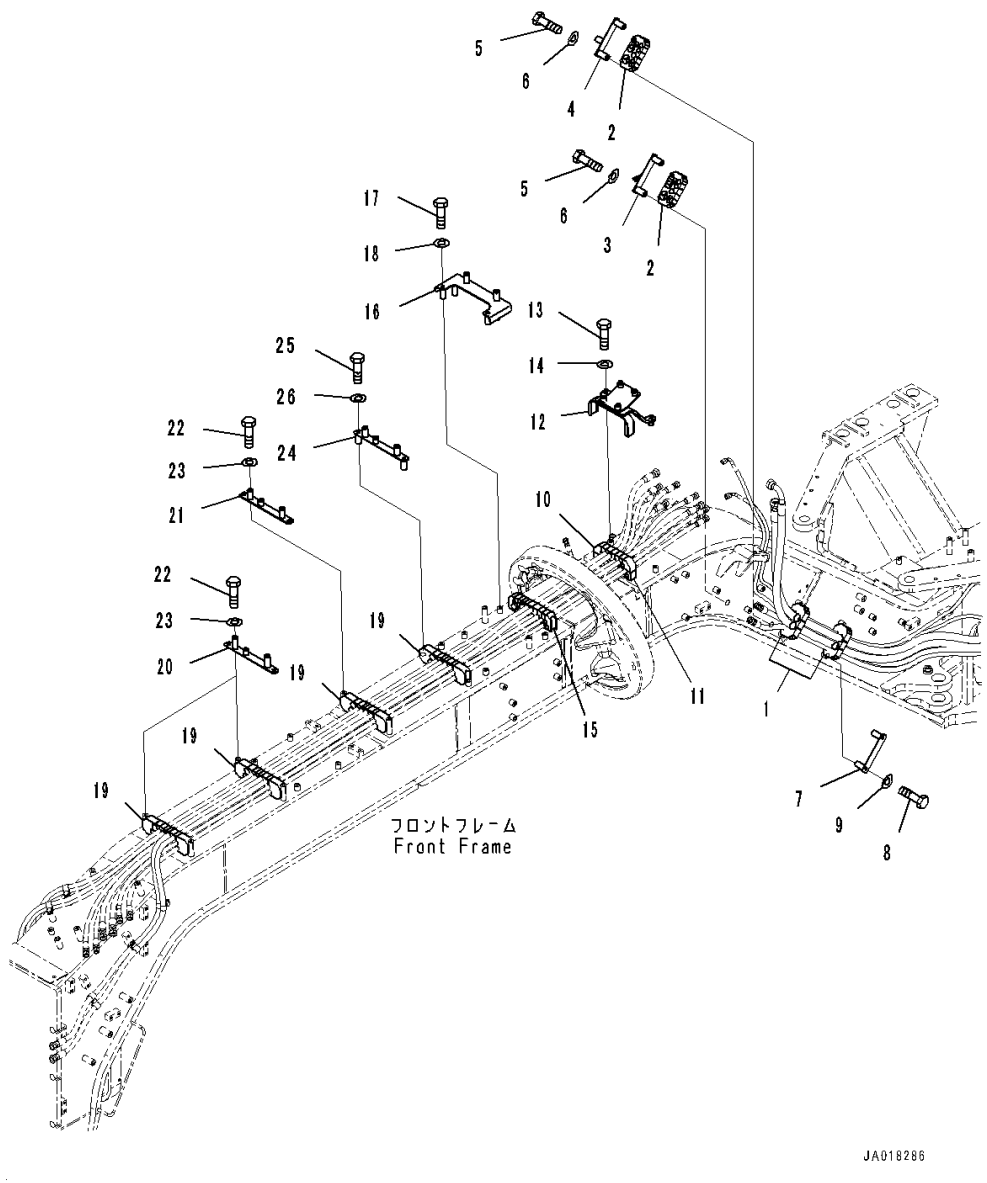

Index	Code	Part Number	Description	Qty	Serial Number
1		234-60-84620	Cushion	2	26001-
2		234-60-84630	Cushion	2	26001-
3		234-60-85271	Plate	1	26001-
4		234-60-85280	Plate	1	26001-
5		01010-81070	Bolt	4	26001-
6		01643-31032	Washer	4	26001-
7		234-60-84650	Plate	2	26001-
8		01010-81070	Bolt	4	26001-
9		01643-31032	Washer	4	26001-
10		234-60-86160	Cushion	1	26001-
11		234-60-86170	Cushion	1	26001-
12		234-60-86190	Bracket	1	26001-
13		01010-81050	Bolt	2	26001-
14		01643-31032	Washer	2	26001-
15		234-60-86151	Cushion	1	26001-
16		234-60-86180	Bracket	1	26001-
17		01010-81070	Bolt	2	26001-
18		01643-31032	Washer	2	26001-
19		234-60-86140	Cushion	4	26001-
20		234-60-84710	Plate	2	26001-
21		234-60-84961	Plate	1	26001-
22		01010-81020	Bolt	6	26001-
23		01643-31032	Washer	6	26001-
24		234-60-85131	Plate	1	26001-
25		01010-81070	Bolt	2	26001-
26		01643-31032	Washer	2	26001-

FIG. H5210-003006 Front Hydraulic Piping (Bracket and Cushion) (With Scarifier, Front, 11-Shanks and Tooth)

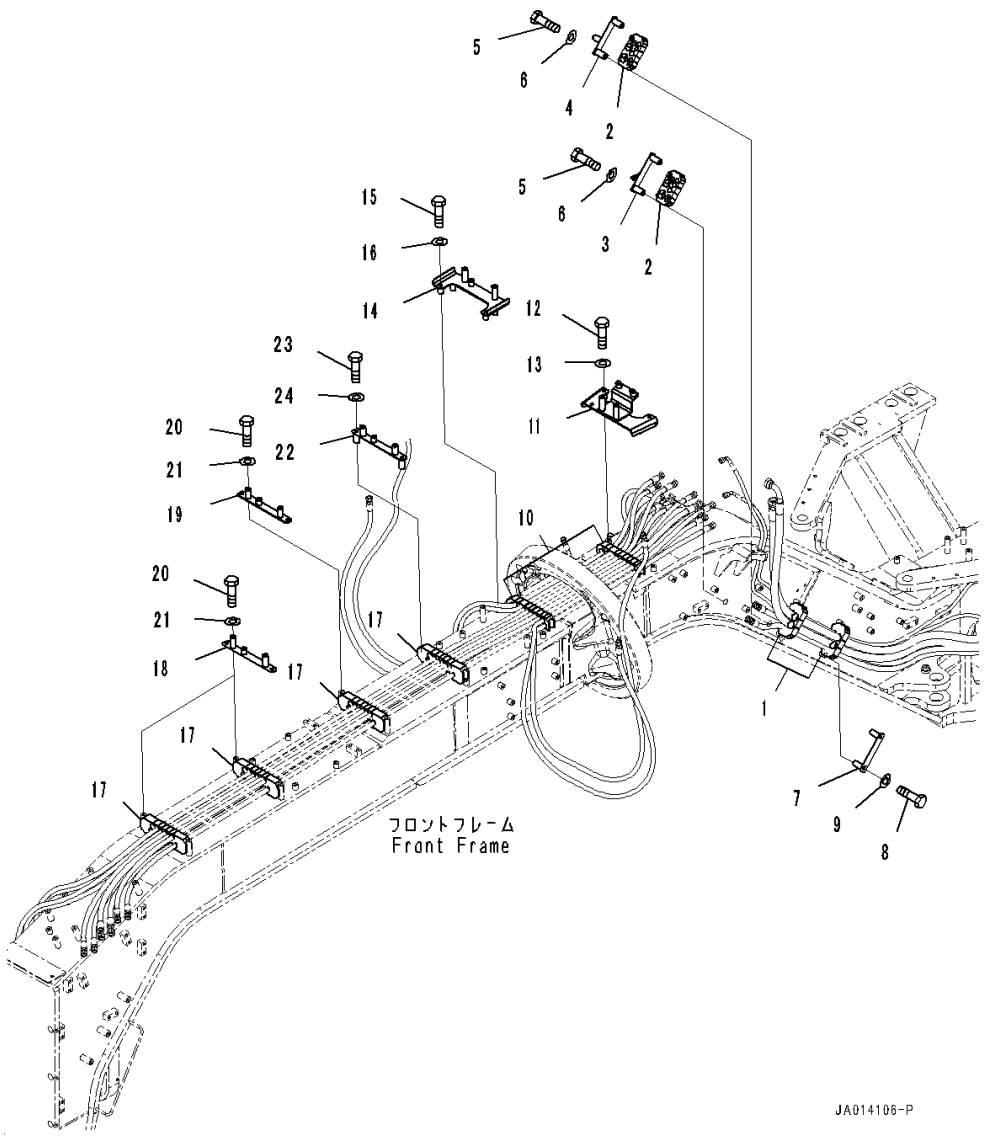

Index	Code	Part Number	Description	Qty	Serial Number
1		234-60-84620	Cushion	2	26001-
2		234-60-84630	Cushion	2	26001-
3		234-60-85271	Plate	1	26001-
4		234-60-85280	Plate	1	26001-
5		01010-81070	Bolt	4	26001-
6		01643-31032	Washer	4	26001-
7		234-60-84650	Plate	2	26001-
8		01010-81070	Bolt	4	26001-
9		01643-31032	Washer	4	26001-
10		234-60-84660	Cushion	2	26001-
11		234-60-85170	Bracket	1	26001-
12		01010-81050	Bolt	2	26001-
13		01643-31032	Washer	2	26001-
14		234-60-85121	Bracket	1	26001-
15		01010-81050	Bolt	2	26001-
16		01643-31032	Washer	2	26001-
17		234-60-84690	Cushion	4	26001-
18		234-60-84710	Plate	2	26001-
19		234-60-84961	Plate	1	26001-
20		01010-81020	Bolt	6	26001-
21		01643-31032	Washer	6	26001-
22		234-60-85131	Plate	1	26001-
23		01010-81070	Bolt	2	26001-
24		01643-31032	Washer	2	26001-

FIG. H5210-001007 Front Hydraulic Piping (Safety Valve Mounting)

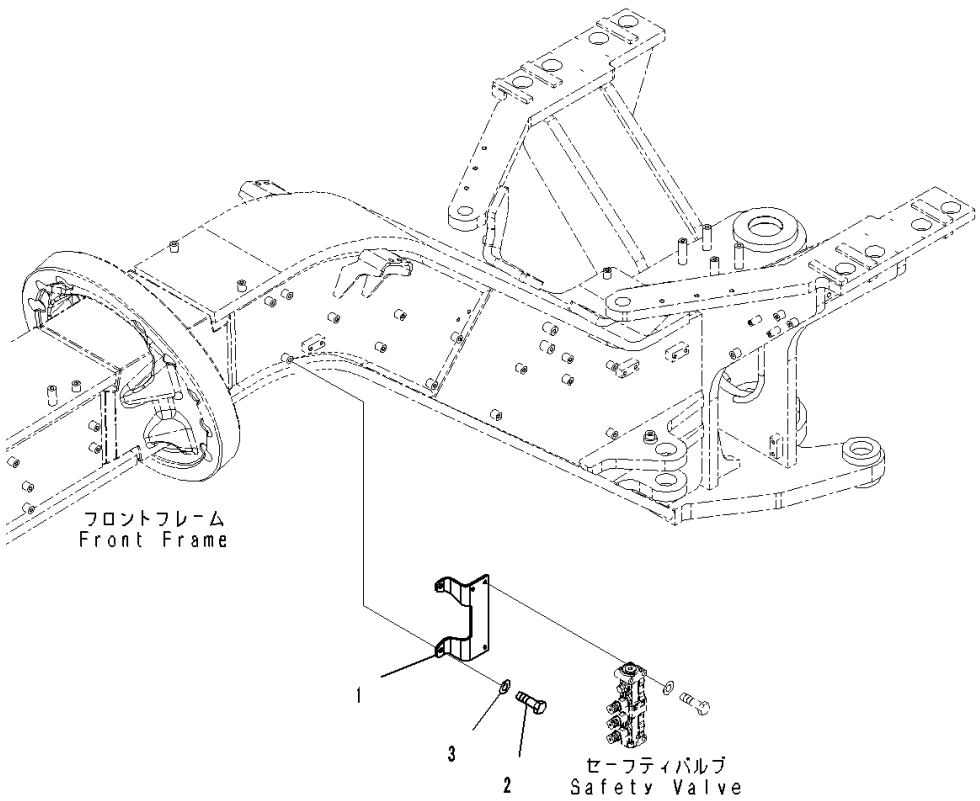

Index	Code	Part Number	Description	Qty	Serial Number
1		234-60-84720	Bracket	1	26001-
2		01010-81025	Bolt	2	26001-
3		01643-31032	Washer	2	26001-

FIG. H5210-001008 Front Hydraulic Piping (Safety Valve)

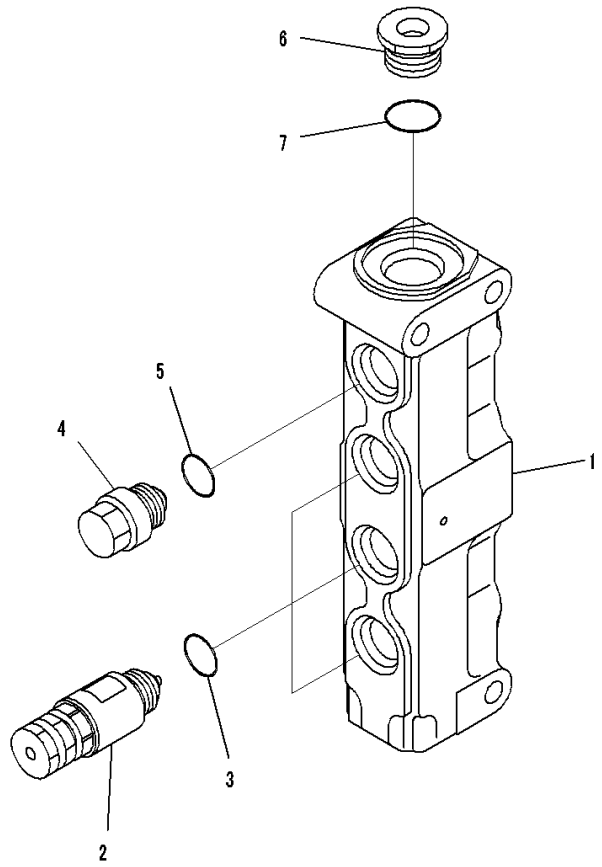

Index	Code	Part Number	Description	Qty	Serial Number
		702-21-09410	Valve Assembly	1	26001-
1	C1		• Block	1	26001-
2		723-10-21500	• Valve Assembly, Suction and Relief	3	26001-
3		07002-12034	• • O-ring	1	26001-
4		723-10-80200	• Valve Assembly, Suction	1	26001-
5		07002-12034	• • O-ring	1	26001-
6		723-26-15230	• Plug	1	26001-
7		07002-12434	• O-ring	1	26001-

FIG. H5210-002009 Front Hydraulic Piping (Safety Valve Piping) (With 10 Spool Valve)

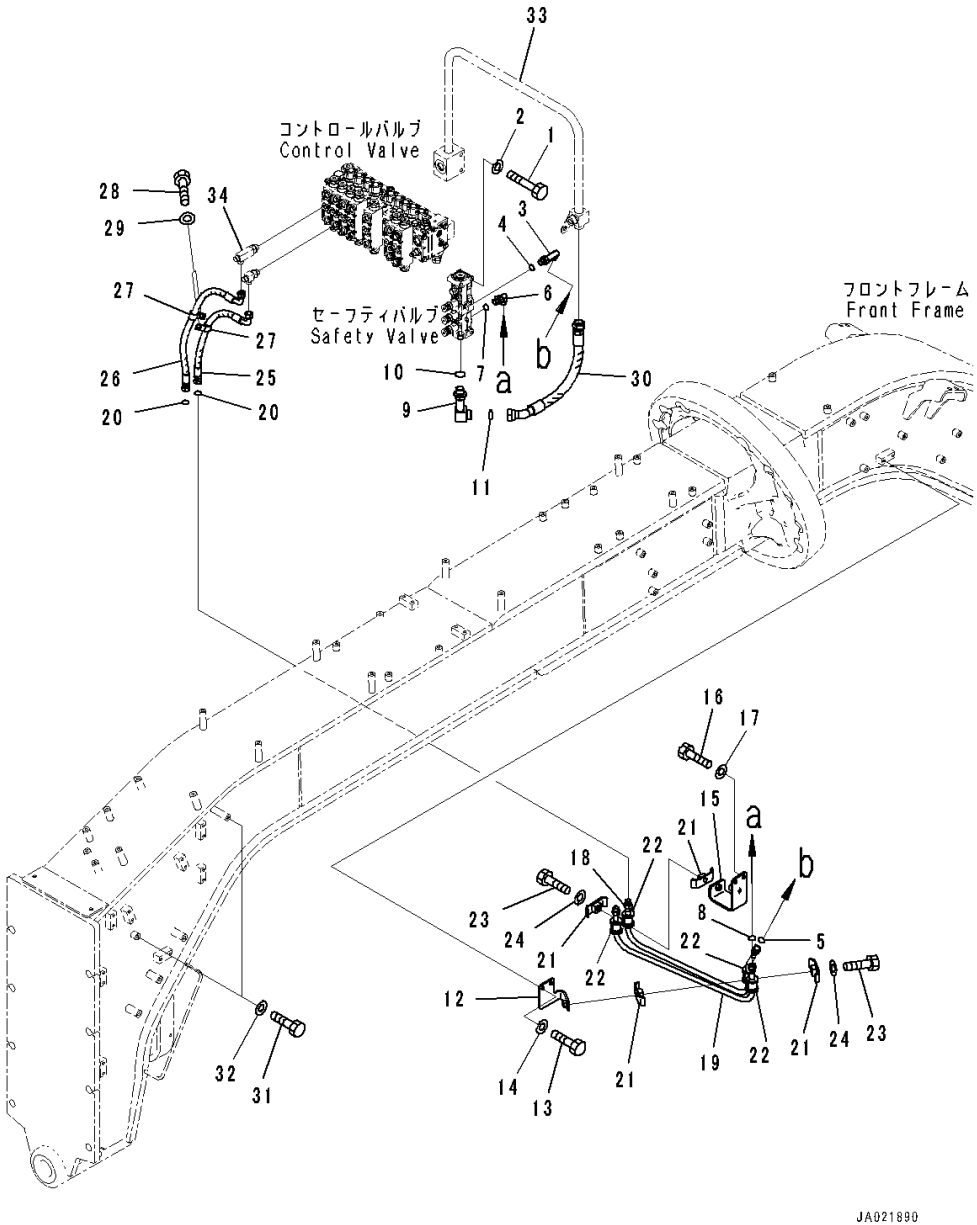

Index	Code	Part Number	Description	Qty	Serial Number
1		01010-80875	Bolt	3	26001-
2		01643-30823	Washer	3	26001-
3		02782-10314	Elbow	1	26001-
4		07002-11823	O-ring	1	26001-
5		02896-11009	O-ring	1	26001-
6		02782-10313	Elbow	1	26001-
7		07002-11823	O-ring	1	26001-
8		02896-11009	O-ring	1	26001-
9		421-09-31130	Elbow	1	26001-
10		07002-12434	O-ring	1	26001-
11		02896-11018	O-ring	1	26001-
12		234-60-84870	Bracket	1	26001-
13		01010-81025	Bolt	2	26001-
14		01643-31032	Washer	2	26001-
15		234-60-84830	Bracket	1	26001-
16		01010-81025	Bolt	2	26001-
17		01643-31032	Washer	2	26001-
18		234-60-84810	Tube	1	26001-
19		234-60-84820	Tube	1	26001-
20		02896-11009	O-ring	2	26001-
21		07094-30315	Clamp	4	26001-
22		07095-00314	Cushion	4	26001-
23		01010-81260	Bolt	2	26001-
24		01643-31232	Washer	2	26001-
25		234-60-84190	Hose	1	26001-
26		234-60-84780	Hose	1	26001-
27		04434-51712	Clip	2	26001-
28		01010-81025	Bolt	2	26001-
29		01643-31032	Washer	2	26001-
30		02776-006A4	Hose	1	26001-
31		01010-81016	Bolt	2	26079-
32		01643-31032	Washer	2	26079-
33		(234-60-86390)	Tube(Hydraulic Piping,Return Piping,With 10 Spool Valve)(Refer to Page 346)		
34		(234-60-84760)	Tee(Front Hydraulic Piping,Control Valve Related Parts)(Refer to Page 373)		

FIG. H5210-004009 Front Hydraulic Piping (Safety Valve Piping) (With 10 Spool Valve,Front Blade)

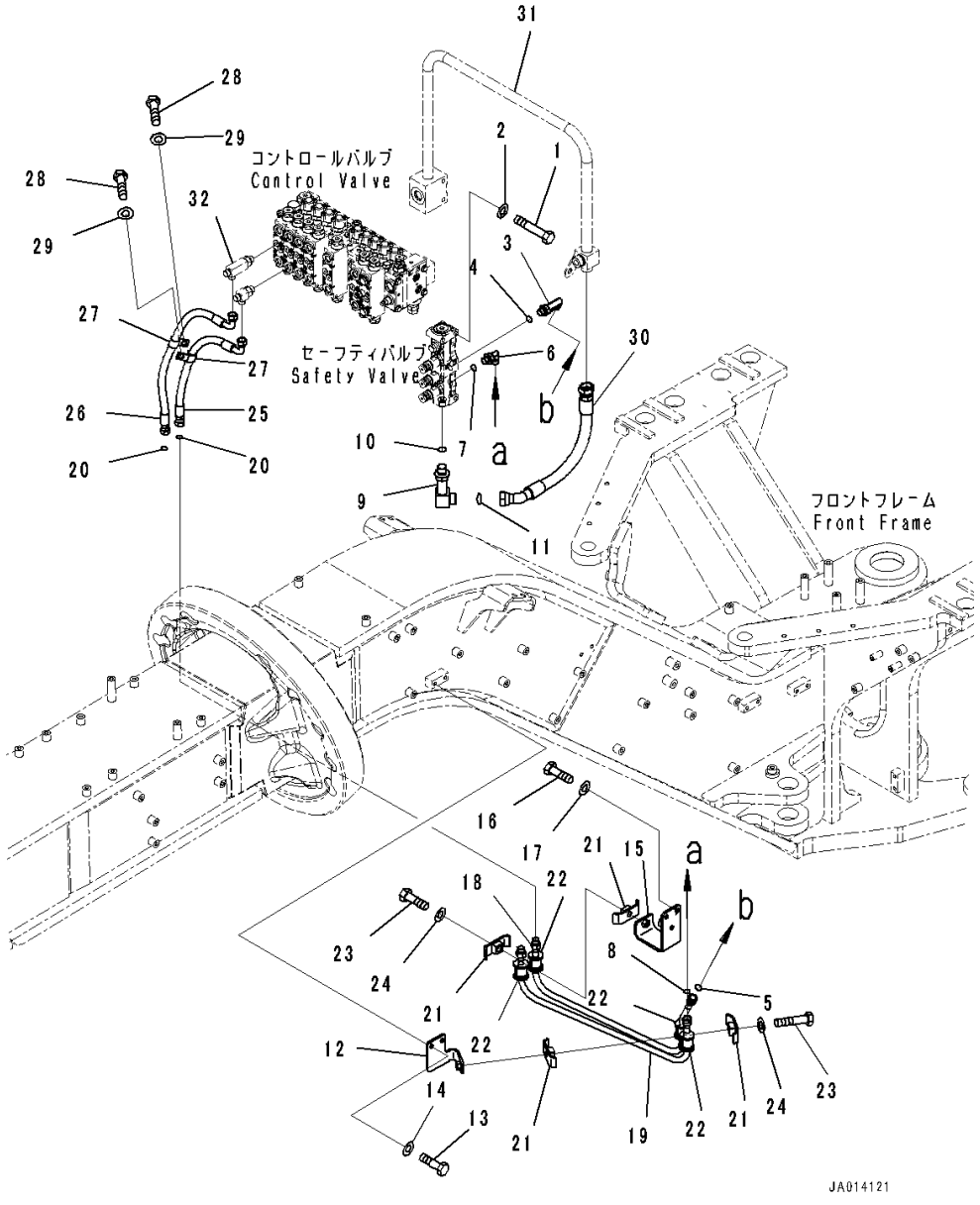

Index	Code	Part Number	Description	Qty	Serial Number
1		01010-80875	Bolt	3	26001-
2		01643-30823	Washer	3	26001-
3		02782-10314	Elbow	1	26001-
4		07002-11823	O-ring	1	26001-
5		02896-11009	O-ring	1	26001-
6		02782-10313	Elbow	1	26001-
7		07002-11823	O-ring	1	26001-
8		02896-11009	O-ring	1	26001-
9		421-09-31130	Elbow	1	26001-
10		07002-12434	O-ring	1	26001-
11		02896-11018	O-ring	1	26001-
12		234-60-84870	Bracket	1	26001-
13		01010-81025	Bolt	2	26001-
14		01643-31032	Washer	2	26001-
15		234-60-84830	Bracket	1	26001-
16		01010-81025	Bolt	2	26001-
17		01643-31032	Washer	2	26001-
18		234-60-84810	Tube	1	26001-
19		234-60-84820	Tube	1	26001-
20		02896-11009	O-ring	2	26001-
21		07094-30315	Clamp	4	26001-
22		07095-00314	Cushion	4	26001-
23		01010-81260	Bolt	2	26001-
24		01643-31232	Washer	2	26001-
25		234-60-84190	Hose	1	26001-
26		234-60-84780	Hose	1	26001-
27		04434-51712	Clip	2	26001-
28		01010-81025	Bolt	2	26001-
29		01643-31032	Washer	2	26001-
30		02776-006A4	Hose	1	26001-
31		(234-60-86390)	Tube(Hydraulic Piping,Return Piping,With 10 Spool Valve)(Refer to Page 346)		
32		(234-60-84760)	Tee(Front Hydraulic Piping,Control Valve Related Parts,With Front Blade)(Refer to Page 374)		

FIG. H5210-001009 Front Hydraulic Piping (Safety Valve Piping) (With 9 Spool Valve)

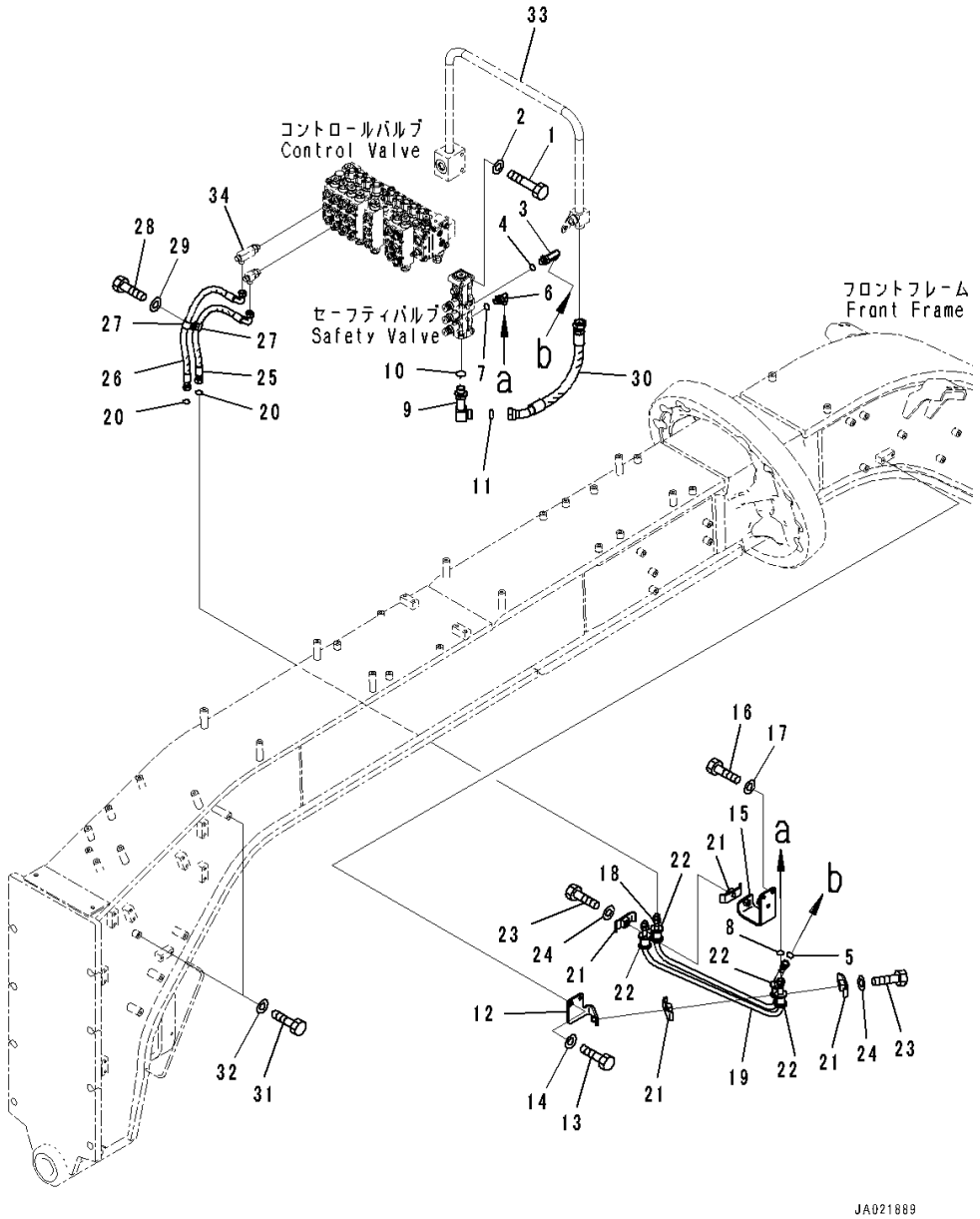

Index	Code	Part Number	Description	Qty	Serial Number
1		01010-80875	Bolt	3	26001-
2		01643-30823	Washer	3	26001-
3		02782-10314	Elbow	1	26001-
4		07002-11823	O-ring	1	26001-
5		02896-11009	O-ring	1	26001-
6		02782-10313	Elbow	1	26001-
7		07002-11823	O-ring	1	26001-
8		02896-11009	O-ring	1	26001-
9		421-09-31130	Elbow	1	26001-
10		07002-12434	O-ring	1	26001-
11		02896-11018	O-ring	1	26001-
12		234-60-84870	Bracket	1	26001-
13		01010-81025	Bolt	2	26001-
14		01643-31032	Washer	2	26001-
15		234-60-84830	Bracket	1	26001-
16		01010-81025	Bolt	2	26001-
17		01643-31032	Washer	2	26001-
18		234-60-84810	Tube	1	26001-
19		234-60-84820	Tube	1	26001-
20		02896-11009	O-ring	2	26001-
21		07094-30315	Clamp	4	26001-
22		07095-00314	Cushion	4	26001-
23		01010-81260	Bolt	2	26001-
24		01643-31232	Washer	2	26001-
25		234-60-84790	Hose	1	26001-
26		234-60-84780	Hose	1	26001-
27		04434-51712	Clip	2	26001-
28		01010-81025	Bolt	1	26001-
29		01643-31032	Washer	1	26001-
30		02776-006A4	Hose	1	26001-
31		01010-81016	Bolt	2	26079-
32		01643-31032	Washer	2	26079-
33		(234-60-86390)	Tube(Hydraulic Piping,Return Piping,With 9 Spool Valve)(Refer to Page 348)		
34		(234-60-84760)	Tee(Front Hydraulic Piping,Control Valve Related Parts)(Refer to Page 373)		

FIG. H5210-003009 Front Hydraulic Piping (Safety Valve Piping) (With 9 Spool Valve,Scarifier, Front, 11-Shanks and Tooth)

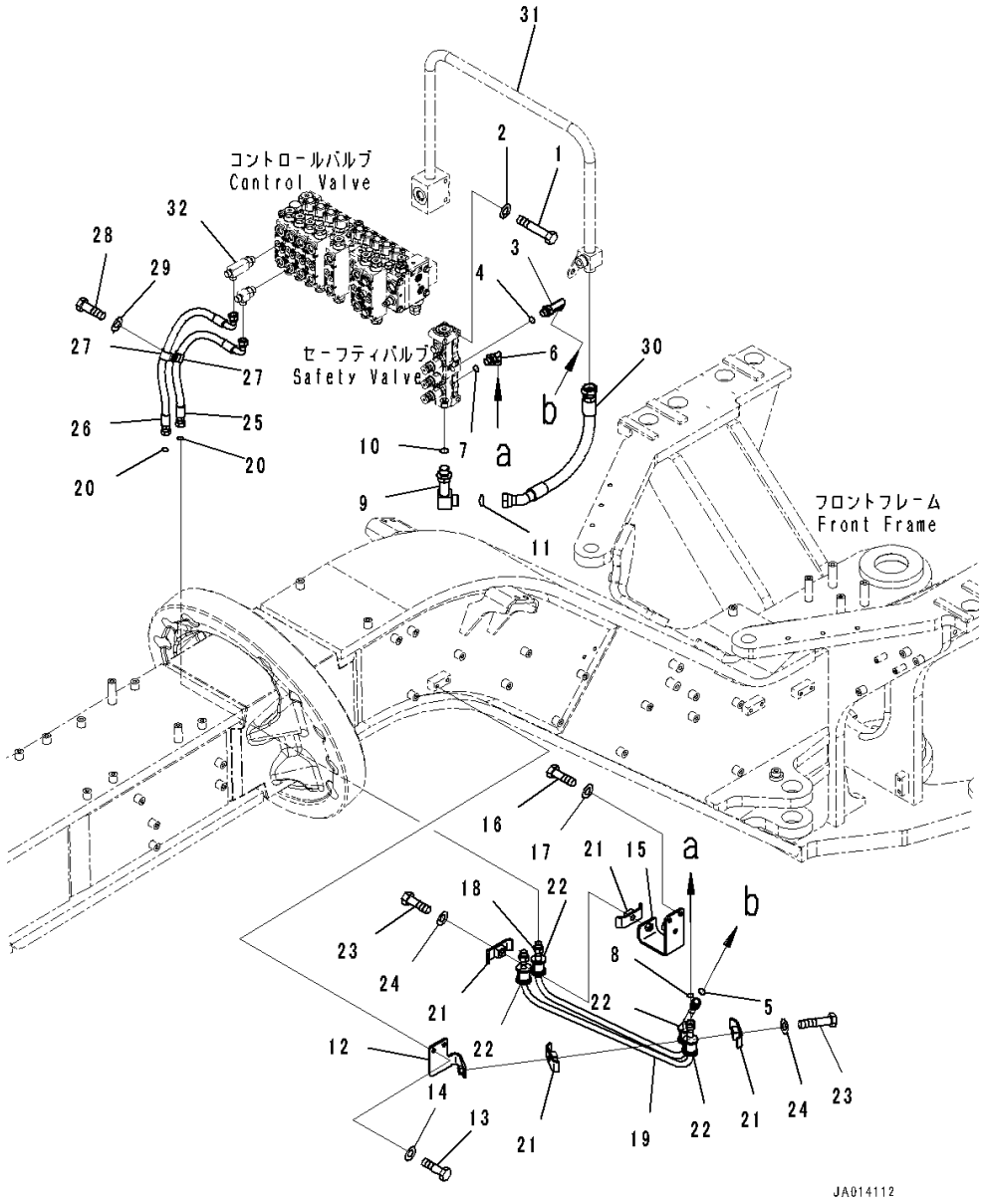

Index	Code	Part Number	Description	Qty	Serial Number
1		01010-80875	Bolt	3	26001-
2		01643-30823	Washer	3	26001-
3		02782-10314	Elbow	1	26001-
4		07002-11823	O-ring	1	26001-
5		02896-11009	O-ring	1	26001-
6		02782-10313	Elbow	1	26001-
7		07002-11823	O-ring	1	26001-
8		02896-11009	O-ring	1	26001-
9		421-09-31130	Elbow	1	26001-
10		07002-12434	O-ring	1	26001-
11		02896-11018	O-ring	1	26001-
12		234-60-84870	Bracket	1	26001-
13		01010-81025	Bolt	2	26001-
14		01643-31032	Washer	2	26001-
15		234-60-84830	Bracket	1	26001-
16		01010-81025	Bolt	2	26001-
17		01643-31032	Washer	2	26001-
18		234-60-84810	Tube	1	26001-
19		234-60-84820	Tube	1	26001-
20		02896-11009	O-ring	2	26001-
21		07094-30315	Clamp	4	26001-
22		07095-00314	Cushion	4	26001-
23		01010-81260	Bolt	2	26001-
24		01643-31232	Washer	2	26001-
25		234-60-84790	Hose	1	26001-
26		234-60-84780	Hose	1	26001-
27		04434-51712	Clip	2	26001-
28		01010-81025	Bolt	1	26001-
29		01643-31032	Washer	1	26001-
30		02776-006A4	Hose	1	26001-
31		(234-60-86390)	Tube(Hydraulic Piping,Return Piping,With 9 Spool Valve)(Refer to Page 348)		
32		(234-60-84760)	Tee(Front Hydraulic Piping,Control Valve Related Parts)(Refer to Page 373)		

FIG. H5210-003010 Front Hydraulic Piping (Scarifier Piping)

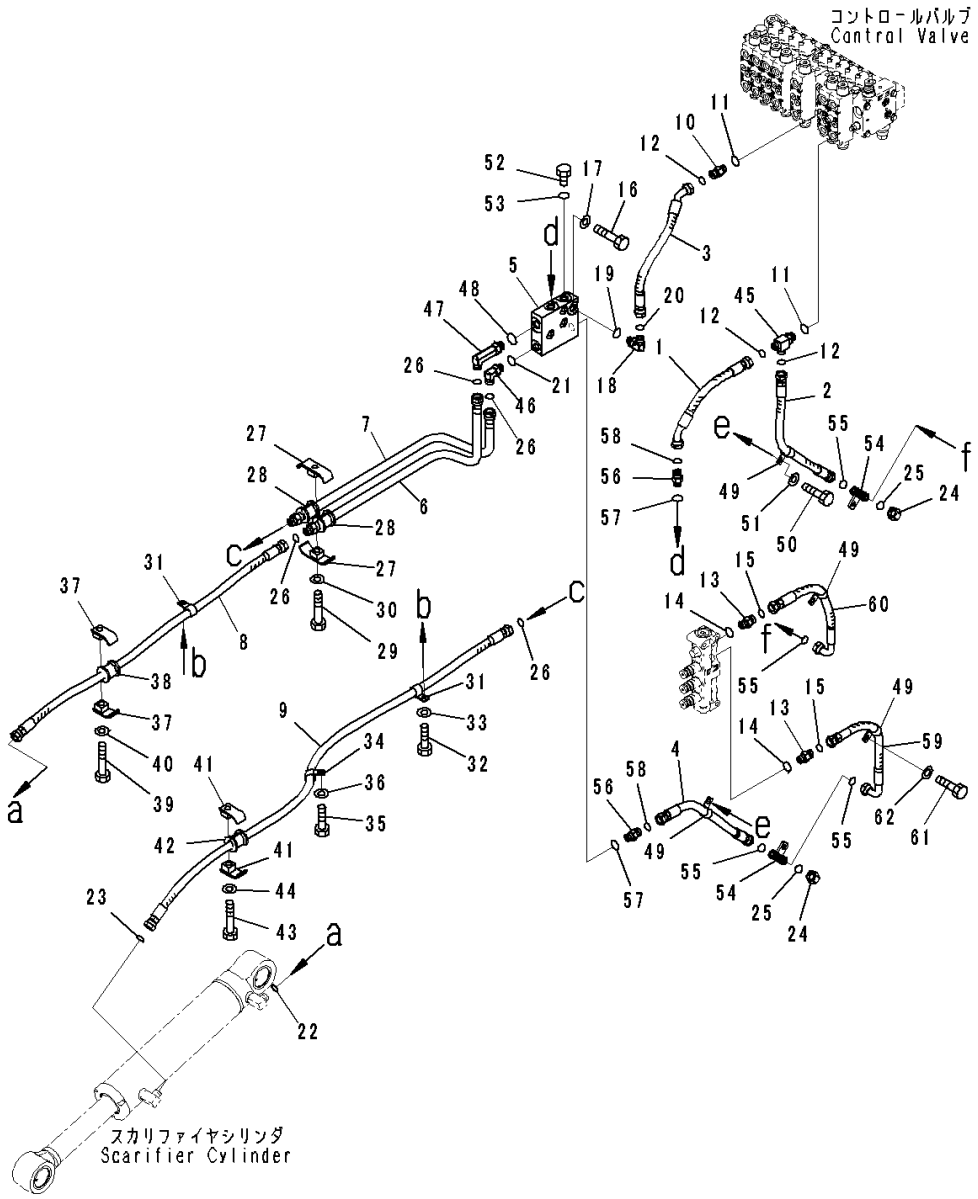

Index	Code	Part Number	Description	Qty	Serial Number
1		02758-00403	Hose, Face Seal Type	1	26001-
2		234-60-85360	Hose	1	26001-
3		234-60-85380	Hose	1	26001-
4		234-60-85370	Hose	1	26001-
5		234-60-85310	Block	1	26001-
6		234-60-85320	Tube	1	26001-
7		234-60-85330	Tube	1	26001-
8		234-60-85341	Hose	1	26001-
9		234-60-85351	Hose	1	26001-
10		02781-00420	Union	1	26001-
11		07002-11823	O-ring	2	26001-
12		02896-11012	O-ring	3	26001-
13		02781-00420	Union	2	26001-
14		07002-11823	O-ring	2	26001-
15		02896-11012	O-ring	2	26001-
16		01010-81055	Bolt	3	26001-
17		01643-31032	Washer	3	26001-
18		02782-10420	Elbow	1	26001-
19		07002-11823	O-ring	1	26001-
20		02896-11012	O-ring	1	26001-
21		07002-11823	O-ring	1	26001-
22		02896-11012	O-ring	1	26001-
23		02896-11012	O-ring	1	26001-
24		02789-10422	Plug	2	26001-
25		02896-11012	O-ring	2	26001-
26		02896-11012	O-ring	4	26001-
27		07094-30417	Clamp	2	26001-
28		07095-00421	Cushion	2	26001-
29		01010-81265	Bolt	1	26001-
30		01643-31232	Washer	1	26001-
31		04434-51910	Clip	2	26001-
32		01010-81025	Bolt	1	26001-
33		01643-31032	Washer	1	26001-
34		04434-51910	Clip	1	26001-
35		01010-81025	Bolt	1	26001-
36		01643-31032	Washer	1	26001-
37		07094-10417	Clamp	2	26001-
38		07095-00420	Cushion	1	26001-
39		01010-81265	Bolt	1	26001-
40		01643-31232	Washer	1	26001-

FIG. H5210-003010 Front Hydraulic Piping (Scarifier Piping)

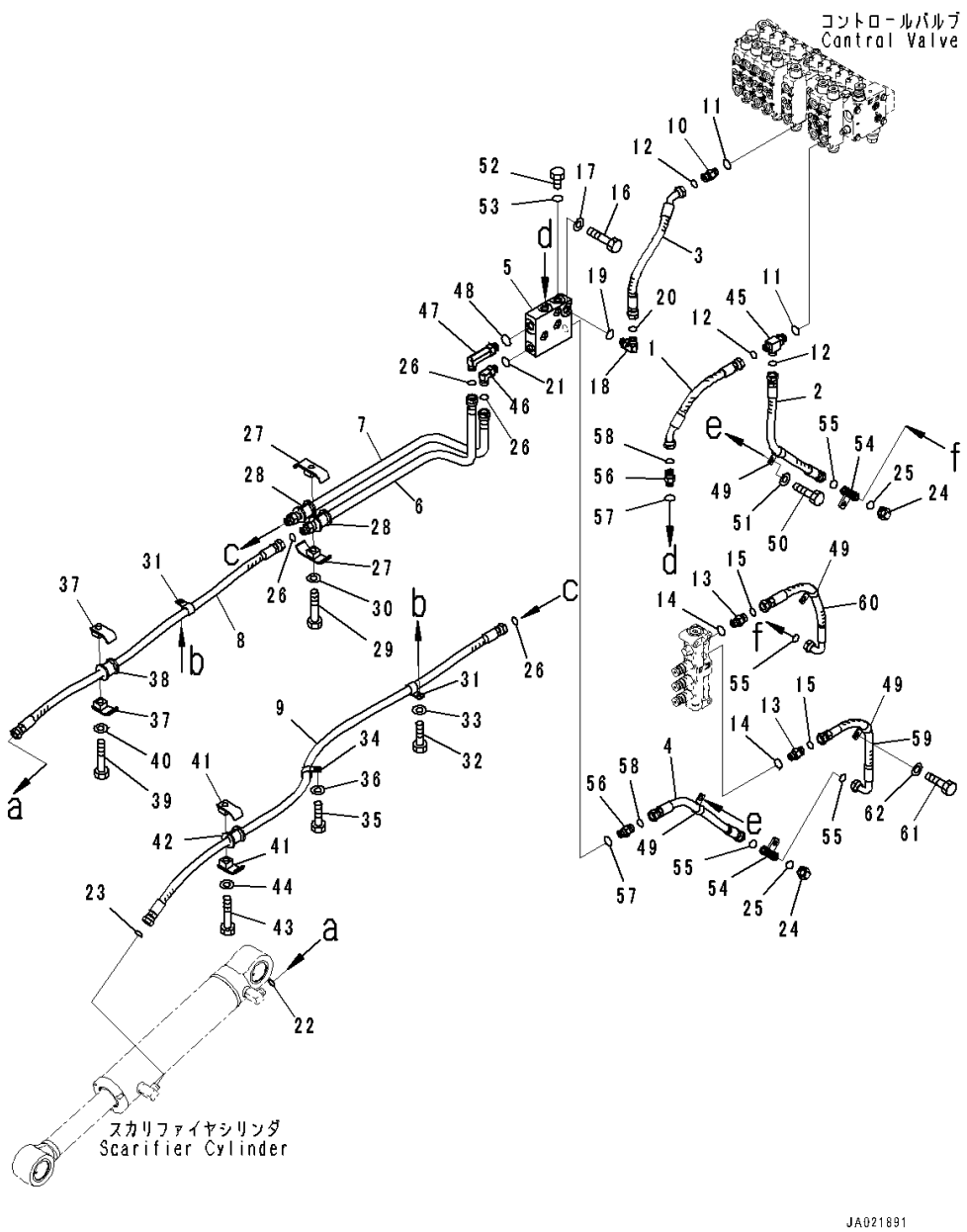

Index	Code	Part Number	Description	Qty	Serial Number
41		07094-10417	Clamp	2	26001-
42		07095-00420	Cushion	1	26001-
43		01010-81265	Bolt	1	26001-
44		01643-31232	Washer	1	26001-
45		21N-62-41410	Tee	1	26001-
46		02782-10420	Elbow	1	26001-
47		02782-10424	Elbow	1	26001-
48		07002-12034	O-ring	1	26001-
49		04434-51912	Clip	4	26001-
50		01010-81025	Bolt	3	26001-
51		01643-31032	Washer	3	26001-
52		07040-11812	Plug	1	26001-
53		07002-11823	O-ring	1	26001-
54		234-60-84740	Tee	2	26001-
55		02896-11012	O-ring	4	26001-
56		02781-00420	Union	2	26001-
57		07002-11823	O-ring	2	26001-
58		02896-11012	O-ring	2	26001-
59		234-60-84890	Hose	1	26001-
60		02757-004A4	Hose, Face Seal Type	1	26001-
61		01010-81030	Bolt	1	26001-
62		01643-31032	Washer	1	26001-

FIG. H6290-001001 Transmission Cooling Piping (Piping)

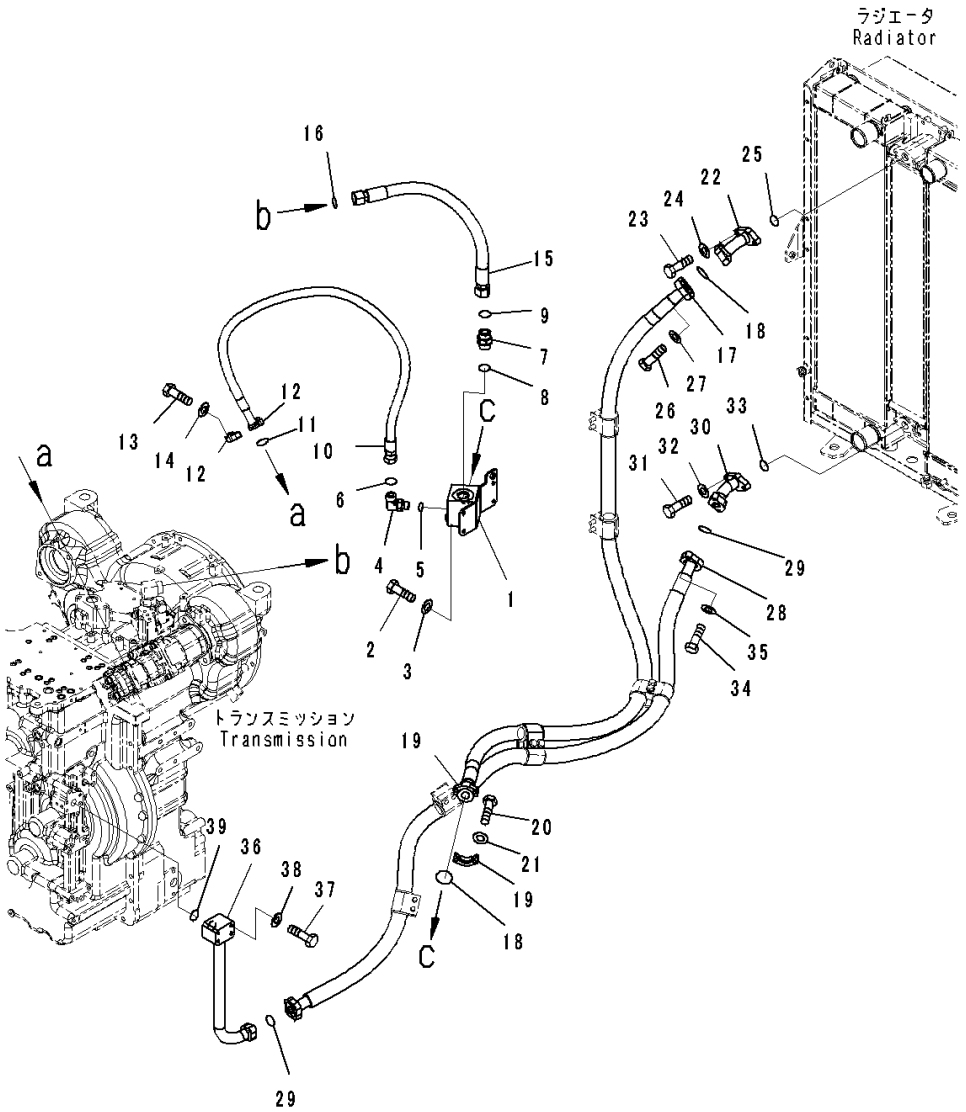

Index	Code	Part Number	Description	Qty	Serial Number
1		234-49-81220	Block	1	26001-
2		01010-81025	Bolt	4	26001-
3		01643-31032	Washer	4	26001-
4		02782-10628	Elbow	1	26001-
5		07002-62434	O-ring	1	26001-
6		02896-61018	O-ring	1	26001-
7		20U-62-41720	Nipple	1	26001-
8		07002-23334	O-ring	1	26001-
9		23B-60-33240	O-ring	1	26001-
10		234-49-81211	Hose	1	26001-
11		07000-B3025	O-ring	1	26001-
12		07371-30638	Flange, Split	2	26001-
13		01010-80835	Bolt	4	26001-
14		01643-50823	Washer	4	26001-
15		234-49-81191	Hose	1	26001-
16		23B-60-33240	O-ring	1	26001-
17		234-49-81120	Hose	1	26001-
18		07000-B3038	O-ring	2	26001-
19		07371-31255	Flange, Split	2	26001-
20		07372-21035	Bolt	4	26001-
21		01643-51032	Washer	4	26001-
22		234-49-81140	Tube	1	26001-
23		07372-21040	Bolt	2	26001-
24		01643-51032	Washer	2	26001-
25		07000-B3035	O-ring	1	26001-
26		07372-21040	Bolt	2	26001-
27		01643-51032	Washer	2	26001-
28		234-49-81110	Hose	1	26001-
29		07000-B3038	O-ring	2	26001-
30		234-49-81150	Tube	1	26001-
31		07372-21040	Bolt	2	26001-
32		01643-51032	Washer	2	26001-
33		07000-B3035	O-ring	1	26001-
34		07372-21040	Bolt	2	26001-
35		01643-51032	Washer	2	26001-
36		234-49-81170	Tube	1	26001-
37		01010-81080	Bolt	4	26001-
38		01643-31032	Washer	4	26001-
39		07000-B3035	O-ring	1	26001-

FIG. H6290-001002 Transmission Cooling Piping (Mounting)

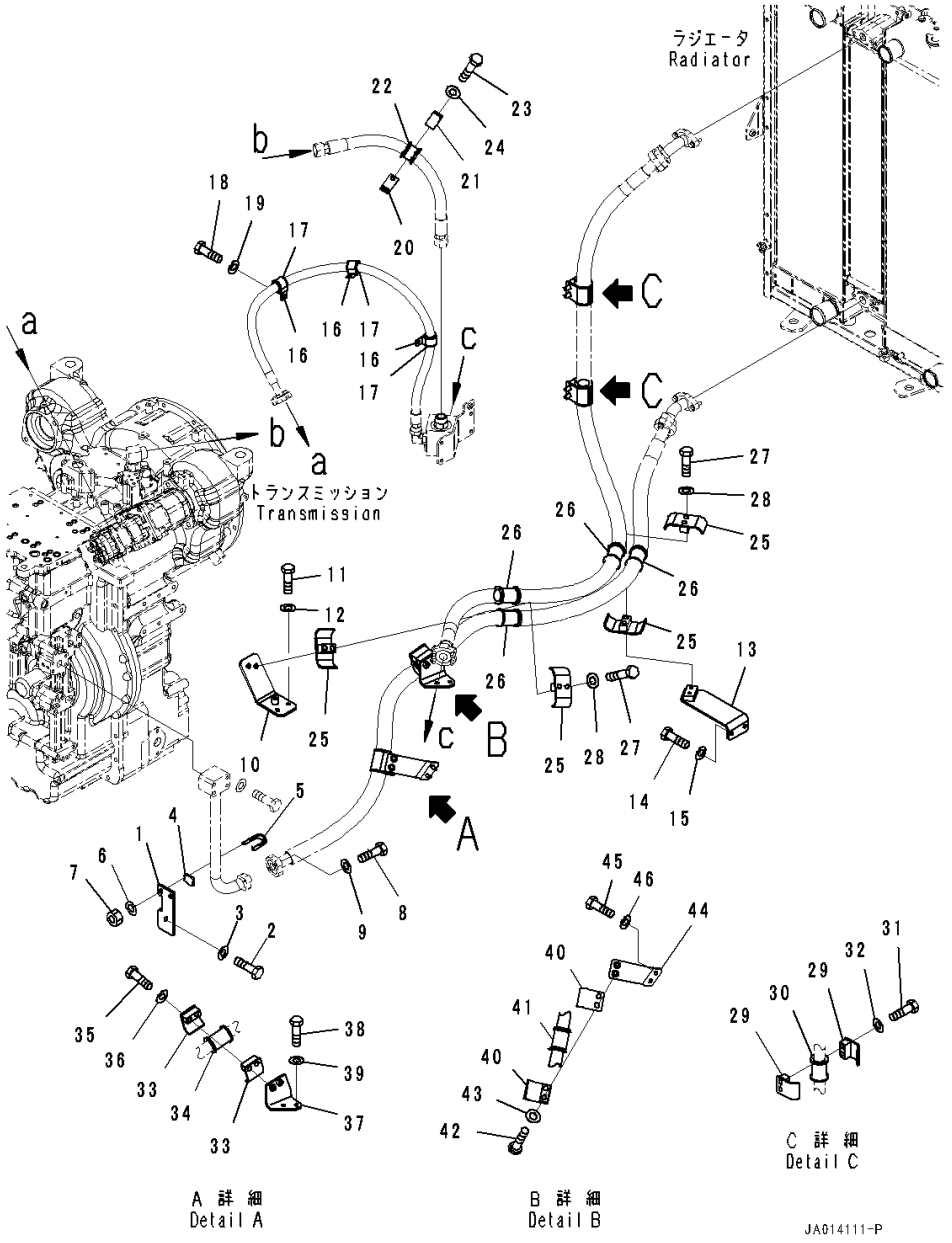

Index	Code	Part Number	Description	Qty	Serial Number
1		234-49-81180	Bracket	1	26001-
2		01010-81025	Bolt	1	26001-
3		01643-31032	Washer	1	26001-
4		07283-53444	Seat	1	26001-
5		07283-33450	Clip	1	26001-
6		01643-31032	Washer	2	26001-
7		01597-01009	Nut	2	26001-
8		07372-21040	Bolt	2	26001-
9		01643-51032	Washer	2	26001-
10		234-49-81230	Bracket	1	26001-
11		01010-81025	Bolt	2	26001-
12		01643-31032	Washer	2	26001-
13		234-49-81160	Bracket	1	26001-
14		01010-81025	Bolt	2	26001-
15		01643-31032	Washer	2	26001-
16		04434-53411	Clip	3	26001-
17		07095-20627	Cushion	3	26001-
18		01010-81025	Bolt	3	26001-
19		01643-31032	Washer	3	26001-
20		418-62-32550	Clamp	1	26001-
21		418-62-32560	Clamp	1	26001-
22		21T-62-76840	Cushion	1	26001-
23		01010-81025	Bolt	1	26001-
24		01643-31032	Washer	1	26001-
25		07094-31024	Clamp	4	26001-
26		07095-01038	Cushion	4	26001-
27		01010-81280	Bolt	4	26001-
28		01643-31232	Washer	4	26001-
29		07094-11024	Clamp	4	26001-
30		07095-01038	Cushion	2	26001-
31		01010-81280	Bolt	4	26001-
32		01643-31232	Washer	4	26001-
33		07094-11024	Clamp	2	26001-
34		07095-01038	Cushion	1	26001-
35		01010-81280	Bolt	2	26001-
36		01643-31232	Washer	2	26001-
37		234-49-81250	Bracket	1	26001-
38		01010-81025	Bolt	2	26001-
39		01643-31032	Washer	2	26001-
40		07094-11024	Clamp	2	26001-

FIG. H6290-001002 Transmission Cooling Piping (Mounting)

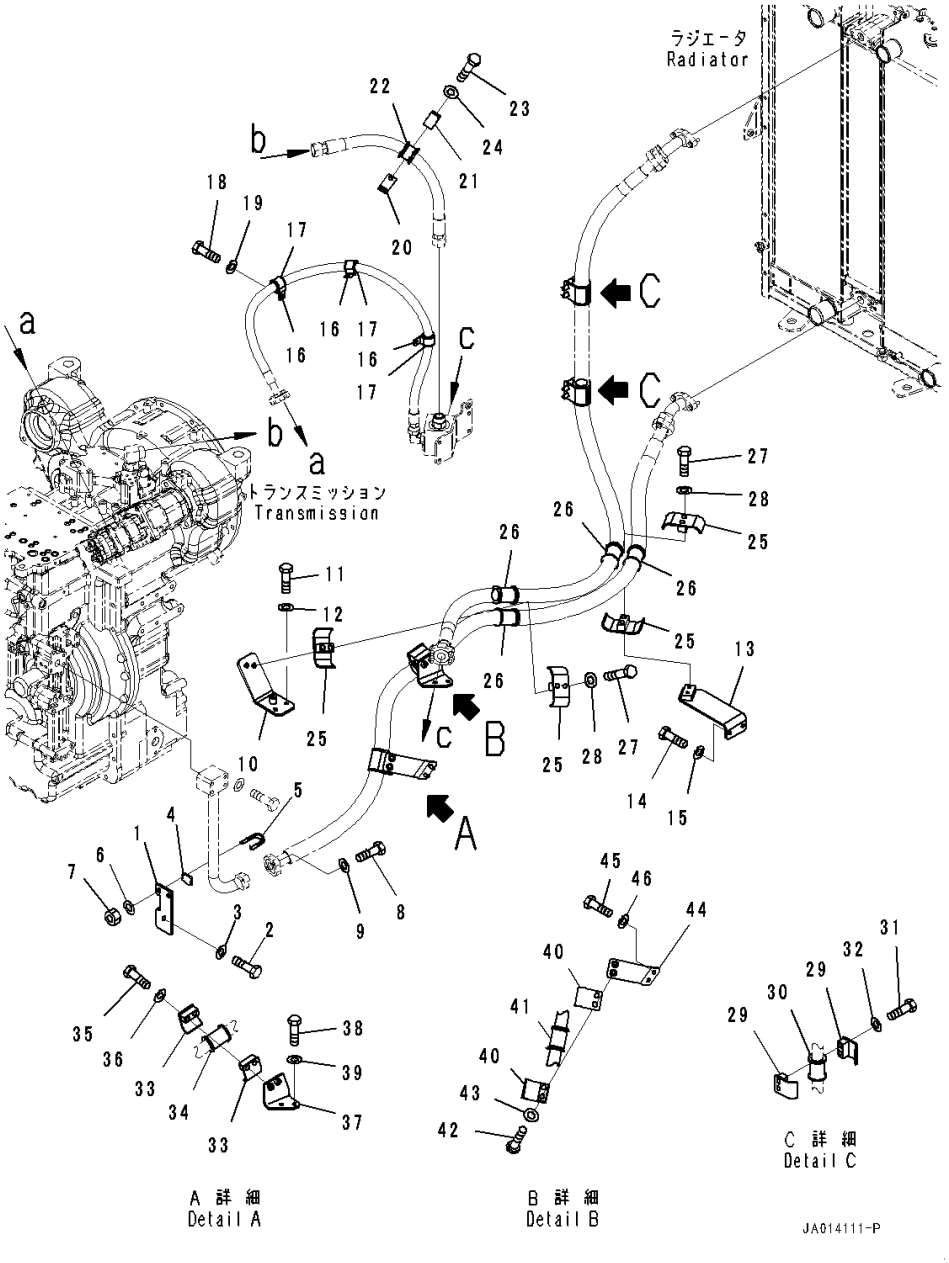

Index	Code	Part Number	Description	Qty	Serial Number
41		07095-01038	Cushion	1	26001-
42		01010-81280	Bolt	2	26001-
43		01643-31232	Washer	2	26001-
44		234-49-81240	Bracket	1	26001-
45		01010-81025	Bolt	2	26001-
46		01643-31032	Washer	2	26001-

FRAME AND ITS RELATED PARTS

FIG. J4110-001001A Front Frame

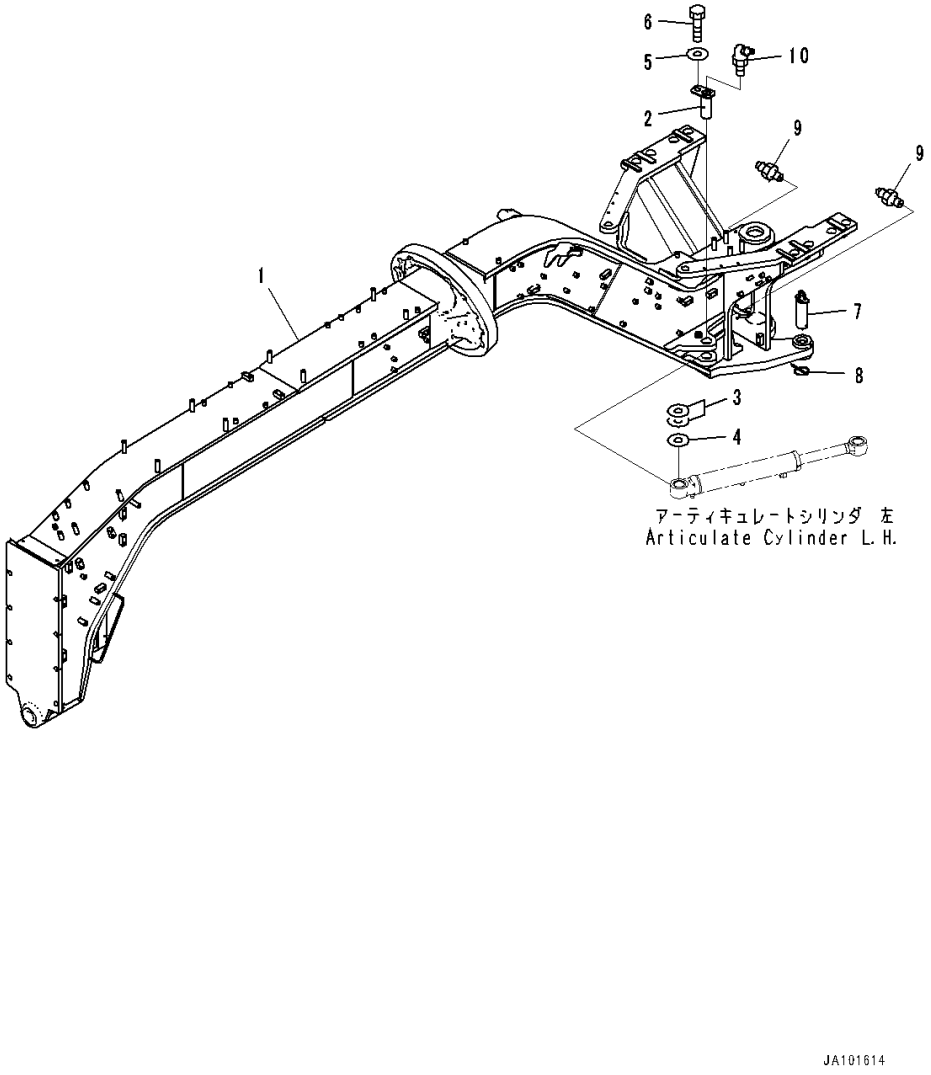

Index	Code	Part Number	Description	Qty	Serial Number
1		234-46-81103	Frame	1	26329-
2		421-46-21760	Pin	2	26001-
3		421-46-11771	Shim,T=1.0mm	4	26280-
4		421-46-11781	Shim,T=0.5mm	2	26280-
5		175-54-34170	Washer	2	26001-
6		01010-81220	Bolt	2	26001-
7		23C-46-52371	Pin	1	26001-
8		569-74-61470	Pin, Linch	1	26001-
9		07020-00900	Fitting, Grease	2	26001-
10		07020-00000	Fitting, Grease	2	26001-

FIG. J4110-002001A Front Frame (With Scarifier, Front, 11-Shanks and Tooth)

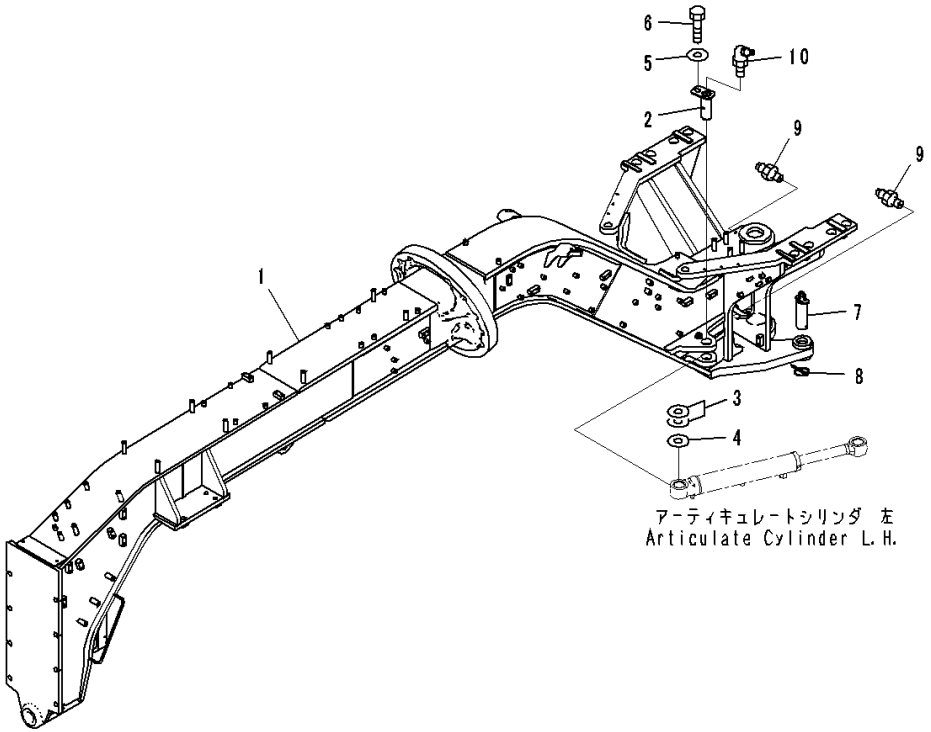

Index	Code	Part Number	Description	Qty	Serial Number
1		234-46-82102	Seat Assembly, Front Frame	1	26329-
2		421-46-21760	Pin	2	26001-
3		421-46-11771	Shim,T=1.0mm	4	26280-
4		421-46-11781	Shim,T=0.5mm	2	26280-
5		175-54-34170	Washer	2	26001-
6		01010-81220	Bolt	2	26001-
7		23C-46-52371	Pin	1	26001-
8		569-74-61470	Pin, Linch	1	26001-
9		07020-00900	Fitting, Grease	2	26001-
10		07020-00000	Fitting, Grease	2	26001-

FIG. J4120-002001 Rear Frame

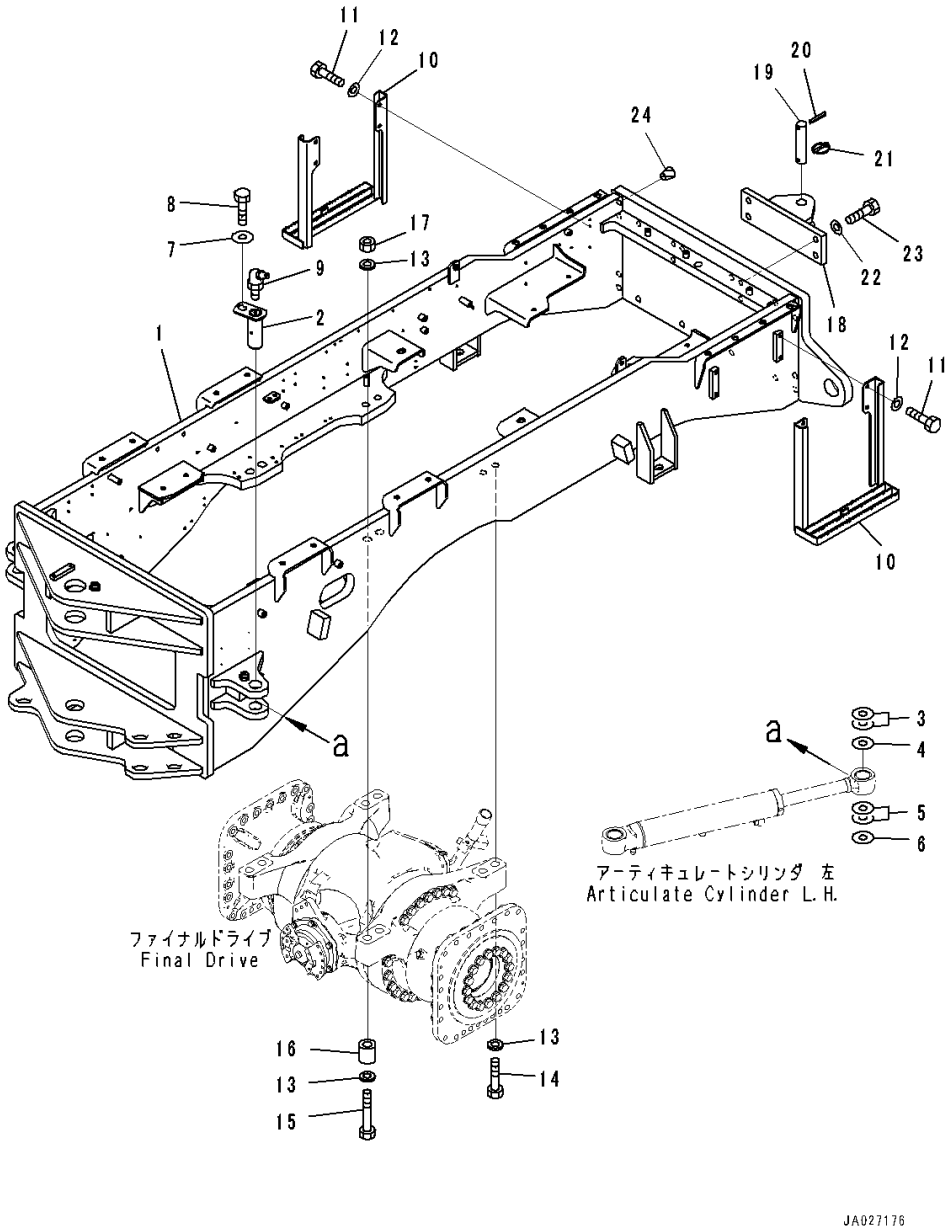

Index	Code	Part Number	Description	Qty	Serial Number
1		234-46-85100	Frame	1	26001-
2		421-46-21760	Pin	2	26001-
3		421-46-11771	Shim,T=1.0mm	8	26280-
4		421-46-11781	Shim,T=0.5mm	2	26280-
5		421-46-11771	Shim,T=1.0mm	4	26280-
6		421-46-11781	Shim,T=0.5mm	2	26280-
7		175-54-34170	Washer	2	26001-
8		01010-81220	Bolt	2	26001-
9		07020-00675	Fitting, Grease	2	26001-
10		424-46-42121	Step	2	26001-
11		01010-81225	Bolt	8	26001-
12		01643-31232	Washer	8	26001-
13		01643-33080	Washer	12	26001-
14		01011-63060	Bolt	4	26001-
15		234-46-85460	Bolt	4	26001-
16		234-46-85430	Collar	4	26001-
17		01580-13024	Nut	4	26001-
18		238-46-81120	Drawbar	1	26001-
19		23C-46-65710	Pin	1	26001-
20		04025-01065	Pin, Spring	1	26001-
21		426-46-12280	Pin, Linch	1	26001-
22		01643-32460	Washer	4	26001-
23		01010-82465	Bolt	4	26001-
24		07049-02734	Plug	16	26001-

FIG. J4120-001001 Rear Frame (For Ripper)

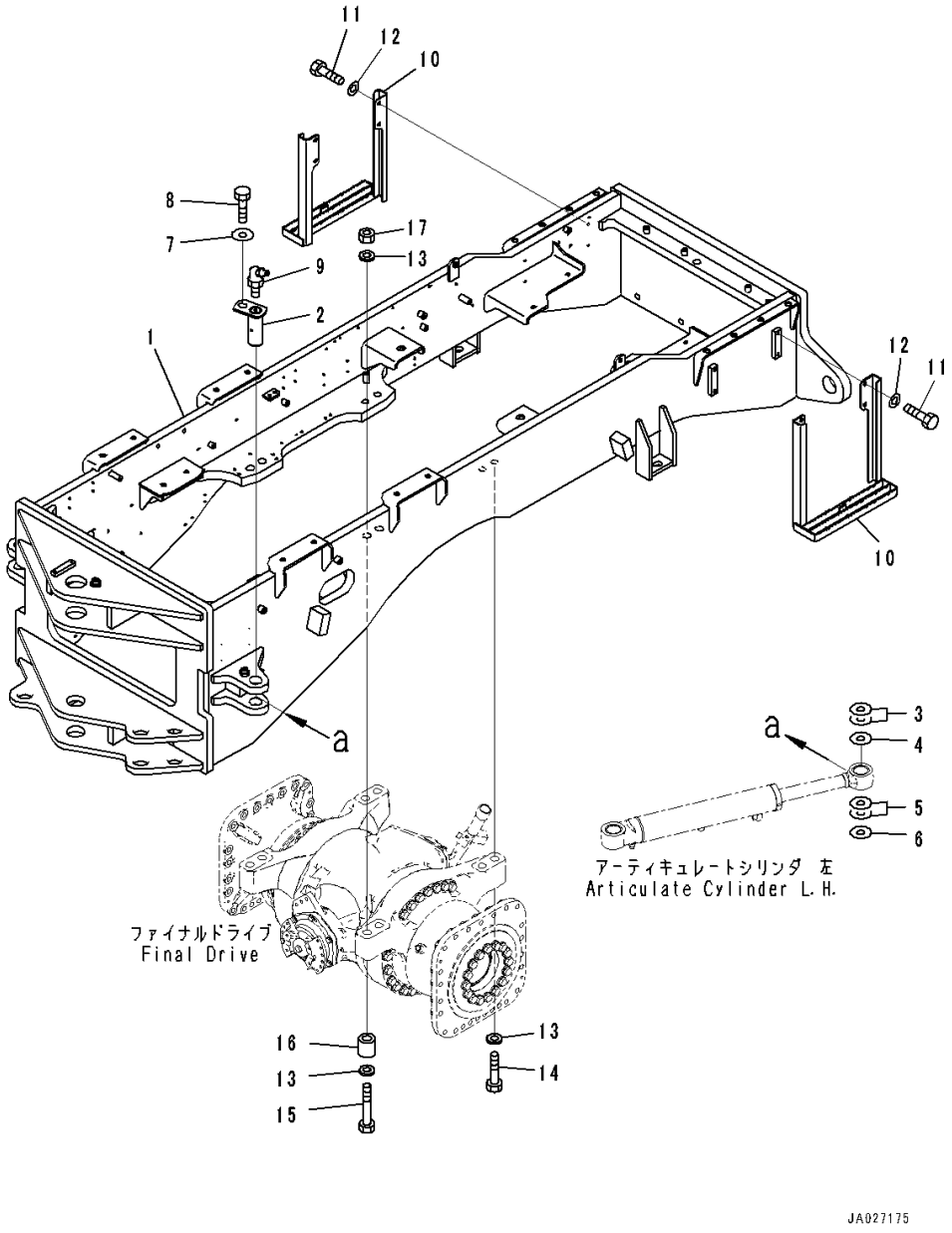

Index	Code	Part Number	Description	Qty	Serial Number
1		234-46-85100	Frame	1	26001-
2		421-46-21760	Pin	2	26001-
3		421-46-11771	Shim,T=1.0mm	8	26280-
4		421-46-11781	Shim,T=0.5mm	2	26280-
5		421-46-11771	Shim,T=1.0mm	4	26280-
6		421-46-11781	Shim,T=0.5mm	2	26280-
7		175-54-34170	Washer	2	26001-
8		01010-81220	Bolt	2	26001-
9		07020-00675	Fitting, Grease	2	26001-
10		424-46-42121	Step	2	26001-
11		01010-81225	Bolt	8	26001-
12		01643-31232	Washer	8	26001-
13		01643-33080	Washer	12	26001-
14		01011-63060	Bolt	4	26001-
15		234-46-85460	Bolt	4	26001-
16		234-46-85430	Collar	4	26001-
17		01580-13024	Nut	4	26001-

FIG. J4130-001001 Hinge Pin

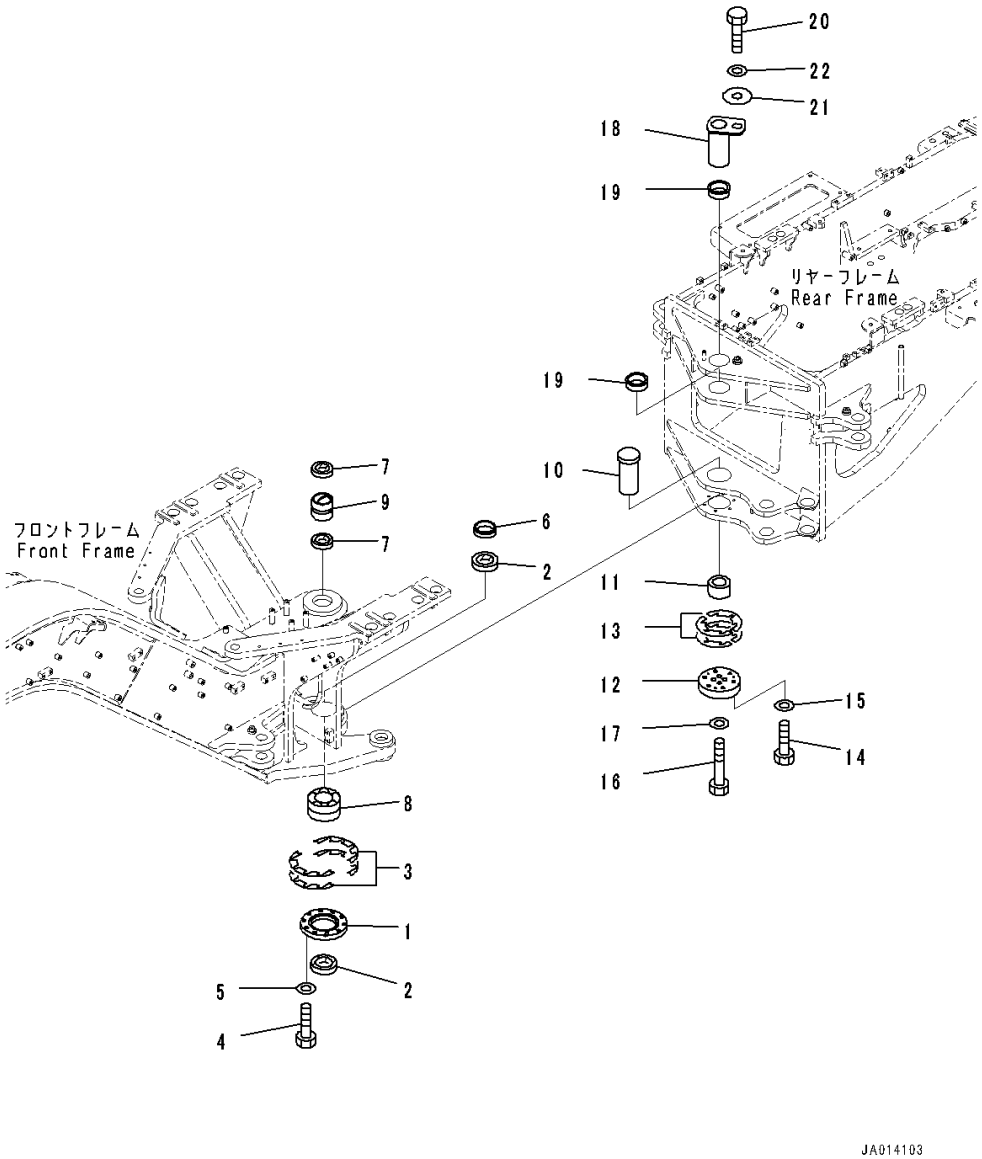

Index	Code	Part Number	Description	Qty	Serial Number
1		421-46-11710	Retainer	1	26001-
2		421-09-11310	Seal, Dust	2	26001-
3		421-46-11372	Shim,T=0.1mm	8	26001-
		421-46-11382	Shim,T=0.5mm	2	26001-
		423-46-41390	Shim,T=1.0mm	6	26001-
4		01010-81240	Bolt	10	26001-
5		01643-31232	Washer	10	26001-
6		424-46-11171	Spacer	1	26001-
7		419-09-11110	Seal, Dust	2	26001-
8		421-46-11361	Bearing	1	26001-
9		234-46-81821	Bushing	1	26001-
10		424-46-11182	Pin	1	26001-
11		424-46-11160	Spacer	1	26001-
12		23B-46-33110	Cover	1	26001-
13		23B-46-33121	Shim,T=0.2mm	8	26001-
		23B-46-33131	Shim,T=0.5mm	2	26001-
		23B-46-33161	Shim,T=1.0mm	4	26001-
14		01010-81250	Bolt	6	26001-
15		01643-31232	Washer	6	26001-
16		01010-61695	Bolt	4	26001-
17		01643-31645	Washer	4	26001-
18		23B-46-33150	Shaft	1	26001-
19		23B-46-33140	Bushing	2	26001-
20		01010-81625	Bolt	1	26001-
21		421-70-11280	Washer	1	26001-
22		01643-31645	Washer	1	26001-

OPERATOR'S COMPARTMENT AND CONTROL SYSTEM

FIG. K0110-001001 Operator's Seat

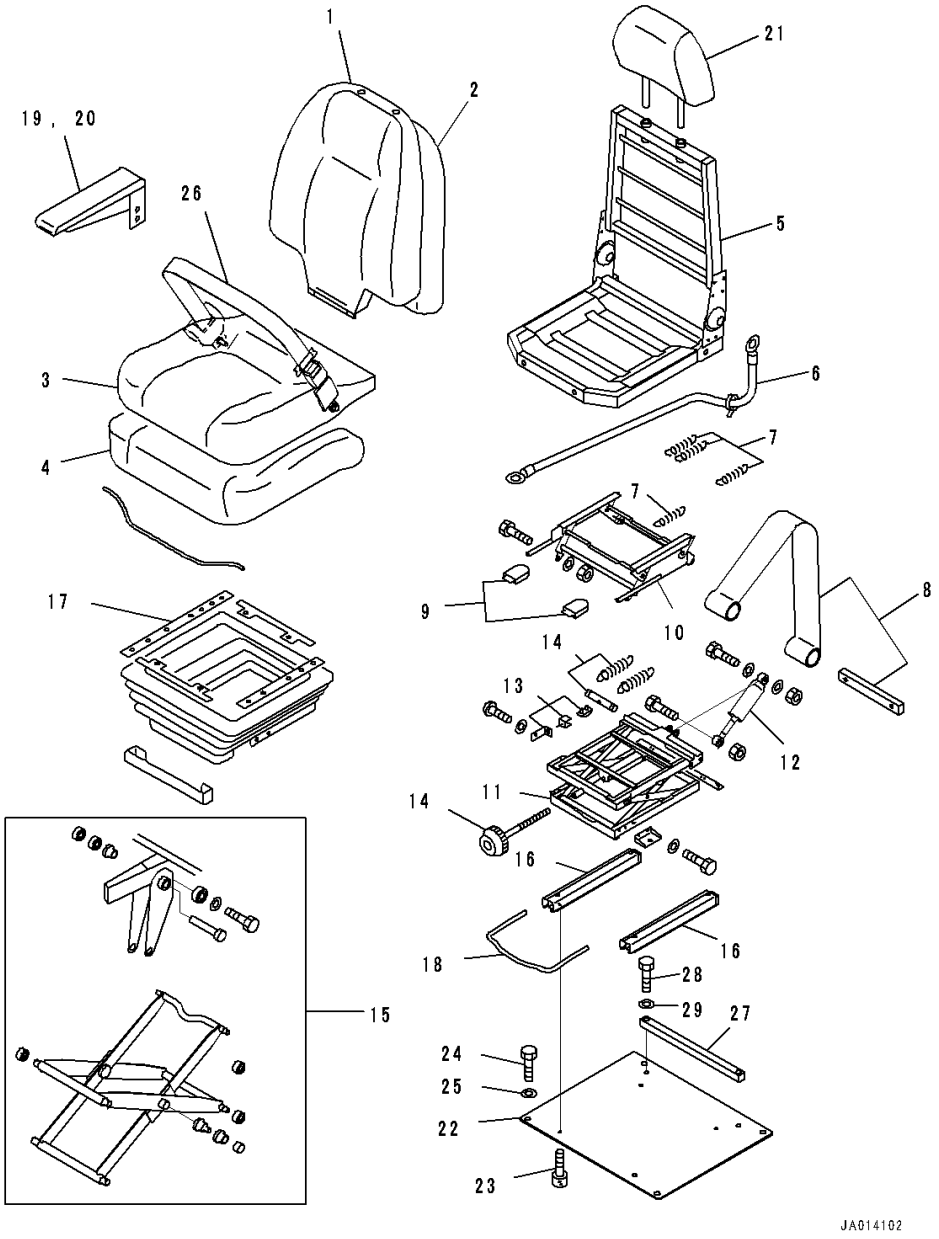

Index	Code	Part Number	Description	Qty	Serial Number
		23B-57-31301	Operator's Seat Assembly	1	26001-
		AS182321	• Upper Assembly	1	26001-
1		AS182322	• • Cover Assembly	1	26001-
2		AS160167	• • Back Seat Foam Kit	1	26001-
3		AS182323	• • Seat Cover Kit	1	26001-
4		AS157154	• • Seat Foam Kit	1	26001-
5		AS182324	• • Frame Kit	1	26001-
6		AS162032	• Cable Kit	1	26001-
7		AS156713	• Spring Kit	1	26001-
8		AS172287	• Plate	1	26001-
9		AS162036	• Handle Kit	1	26001-
10		AS164959	• Lifter Assembly	1	26001-
11		AS182325	• Suspension Assembly	1	26001-
12		AS156718	• • Damper Assembly	1	26001-
13		AS156717	• • Up Stop and Bump Stop Kit	1	26001-
14		AS156737	• • Weight Adjuster Kit	1	26001-
15		AS156738	• • Bearing Kit	1	26001-
16		AS172639	• Adjuster Kit	1	26001-
17		AS162047	• Cover Kit	1	26001-
18		AS168853	• Handle Kit	1	26001-
19		AS174752	• Armrest	1	26001-
20		AS174753	• Armrest	1	26001-
21		AS182326	• Headrest	1	26001-
22		23B-57-71130	Bracket	1	26001-
23		01252-70820	Bolt	4	26001-
24		01010-81225	Bolt	4	26001-
25		01643-31232	Washer	4	26001-
26		17A-57-21203	Seat Belt Kit	1	26348-
	A1	17A-57-21202	Seat Belt Kit	1	26001-26347
27		23B-57-31220	Plate	1	26001-
28		01010-81240	Bolt	2	26001-
29		01643-31232	Washer	2	26001-

FIG. K0210-001001 ROPS Cab (Body) (Low Height)

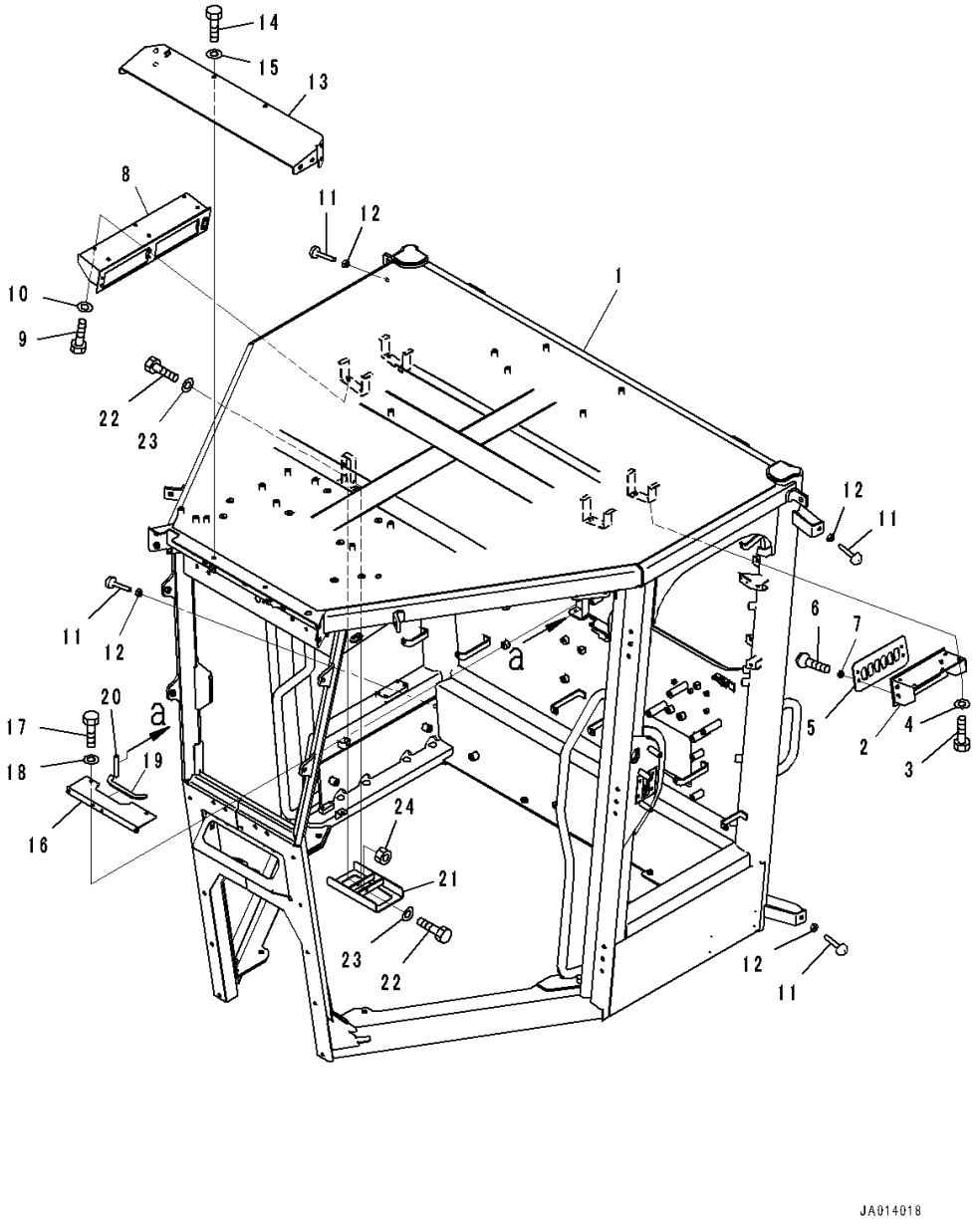

Index	Code	Part Number	Description	Qty	Serial Number
		234-952-8504	ROPS Cab Assembly,Low Height	1	26455-
	A2	234-952-8503	ROPS Cab Assembly,Low Height	1	26184-26454
		234-952-8502	ROPS Cab Assembly,Low Height	1	26074-26183
		234-952-8501	ROPS Cab Assembly,Low Height	1	26001-26073
1	C1		• Cab	1	26455-
	C1		• Cab	1	26001-26454
2		23A-952-7940	• Bracket	1	26001-
3		01010-80612	• Bolt	4	26001-
4		01643-30623	• Washer	4	26001-
5		23B-952-7130	• Plate	1	26001-
6		01225-70620	• Screw, Philips Head	4	26001-
7		23S-55-51970	• Washer	4	26001-
8		23A-952-7910	• Bracket	1	26001-
9		01010-80612	• Bolt	6	26001-
10		01643-30623	• Washer	6	26001-
11		20T-54-75290	• Stopper	4	26001-
12		20T-54-74550	• Nut	4	26001-
13		234-952-8960	• Cover	1	26001-
14		01010-D1020	• Bolt	6	26001-
15		01643-71032	• Washer	6	26001-
16		23A-952-7650	• Cover	1	26001-
17		01010-80620	• Bolt	2	26001-
18		01643-30623	• Washer	2	26001-
19		423-944-4391	• Finisher	1	26001-
20		423-06-42640	• Finisher	1	26001-
21		23B-952-7531	• Bracket	1	26280-
	A2	23B-952-7530	• Bracket	1	26001-26279
22		01010-80612	• Bolt	2	26001-
23		01643-30623	• Washer	2	26001-
24		01580-10605	• Nut	1	26001-

FIG. K0210-002001 ROPS Cab (Body) (Low Height, Slide Window)

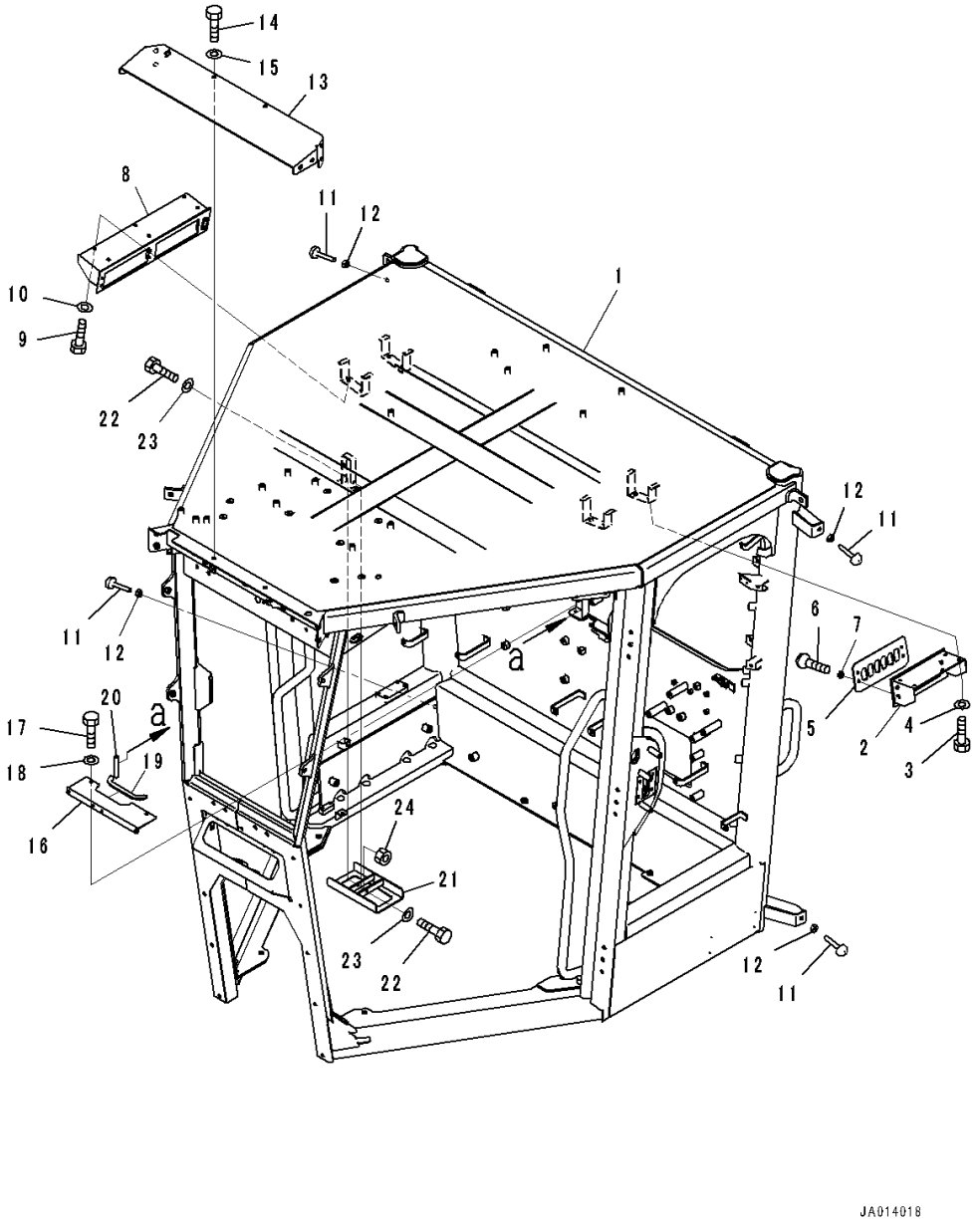

Index	Code	Part Number	Description	Qty	Serial Number
		234-952-8604	ROPS Cab Assembly,Low Height, Slide Window	1	26455-
	A2	234-952-8603	ROPS Cab Assembly,Low Height, Slide Window	1	26184-26454
		234-952-8602	ROPS Cab Assembly,Low Height, Slide Window	1	26074-26183
		234-952-8601	ROPS Cab Assembly,Low Height, Slide Window	1	26001-26073
1	C1		• Cab	1	26455-
	C1		• Cab	1	26001-26454
2		23A-952-7940	• Bracket	1	26001-
3		01010-80612	• Bolt	4	26001-
4		01643-30623	• Washer	4	26001-
5		23B-952-7130	• Plate	1	26001-
6		01225-70620	• Screw, Philips Head	4	26001-
7		23S-55-51970	• Washer	4	26001-
8		23A-952-7910	• Bracket	1	26001-
9		01010-80612	• Bolt	6	26001-
10		01643-30623	• Washer	6	26001-
11		20T-54-75290	• Stopper	4	26001-
12		20T-54-74550	• Nut	4	26001-
13		234-952-8960	• Cover	1	26001-
14		01010-D1020	• Bolt	6	26001-
15		01643-71032	• Washer	6	26001-
16		23A-952-7650	• Cover	1	26001-
17		01010-80620	• Bolt	2	26001-
18		01643-30623	• Washer	2	26001-
19		423-944-4391	• Finisher	1	26001-
20		423-06-42640	• Finisher	1	26001-
21		23B-952-7531	• Bracket	1	26280-
	A2	23B-952-7530	• Bracket	1	26001-26279
22		01010-80612	• Bolt	2	26001-
23		01643-30623	• Washer	2	26001-
24		01580-10605	• Nut	1	26001-

FIG. K0210-002002 ROPS Cab (Roof Cover) (Low Height, Slide Window)

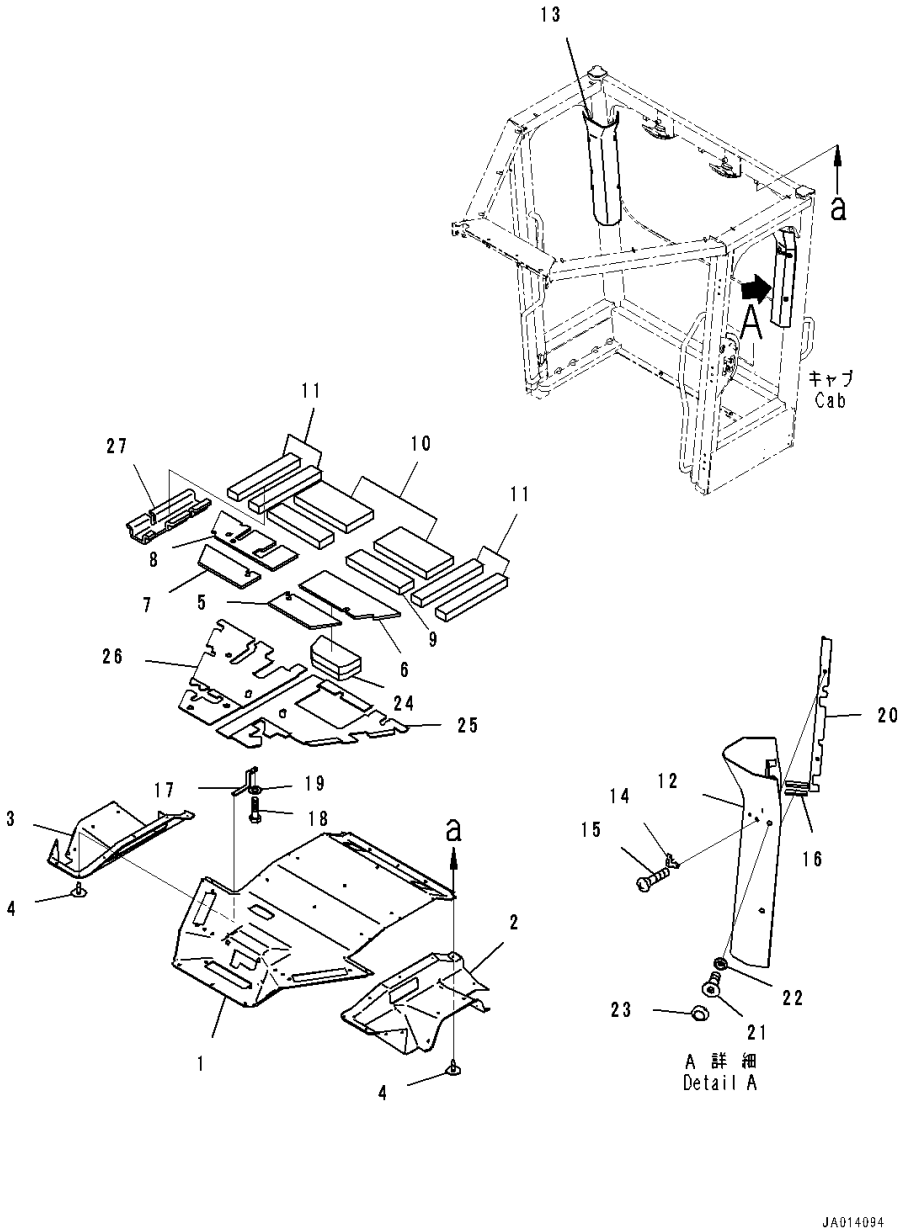

Index	Code	Part Number	Description	Qty	Serial Number
		234-952-8604	ROPS Cab Assembly,Low Height, Slide Window	1	26455-
	A2	234-952-8603	ROPS Cab Assembly,Low Height, Slide Window	1	26184-26454
		234-952-8602	ROPS Cab Assembly,Low Height, Slide Window	1	26074-26183
		234-952-8601	ROPS Cab Assembly,Low Height, Slide Window	1	26001-26073
1		23A-952-7170	• Pad	1	26001-
2		234-952-8371	• Pad	1	26001-
3		234-952-8381	• Pad	1	26001-
4		23A-952-7290	• Button	39	26001-
5		23A-952-7530	• Sheet	1	26001-
6		23A-952-7870	• Sheet	1	26001-
7		23A-952-7680	• Sheet	1	26001-
8		23A-952-7880	• Sheet	1	26001-
9		23A-952-7540	• Sheet	2	26001-
10		23A-952-7560	• Sheet	2	26001-
11		23A-952-7550	• Sheet	4	26001-
12		23B-952-7831	• Cover	1	26001-
13		23B-952-7841	• Cover	1	26001-
14		205-54-51250	• Hanger	1	26001-
15		01225-70416	• Screw, Philips Head	2	26001-
16		423-54-32340	• Finisher	2	26001-
17		23A-952-8690	• Plate	2	26001-
18		01010-81020	• Bolt	4	26001-
19		01643-31032	• Washer	4	26001-
20		23A-952-8560	• Plate	4	26001-
21		01240-00616	• Screw	8	26001-
22		423-925-5851	• Washer	8	26001-
23		423-925-5860	• Cap	8	26001-
24		23A-952-8620	• Sheet	1	26001-
25		23B-952-8450	• Sheet	1	26001-
26		23B-952-8460	• Sheet	1	26001-
27		23B-952-8470	• Sheet	1	26001-

FIG. K0210-001002 ROPS Cab (Roof Cover, Hanger and Sheet) (Low Height)

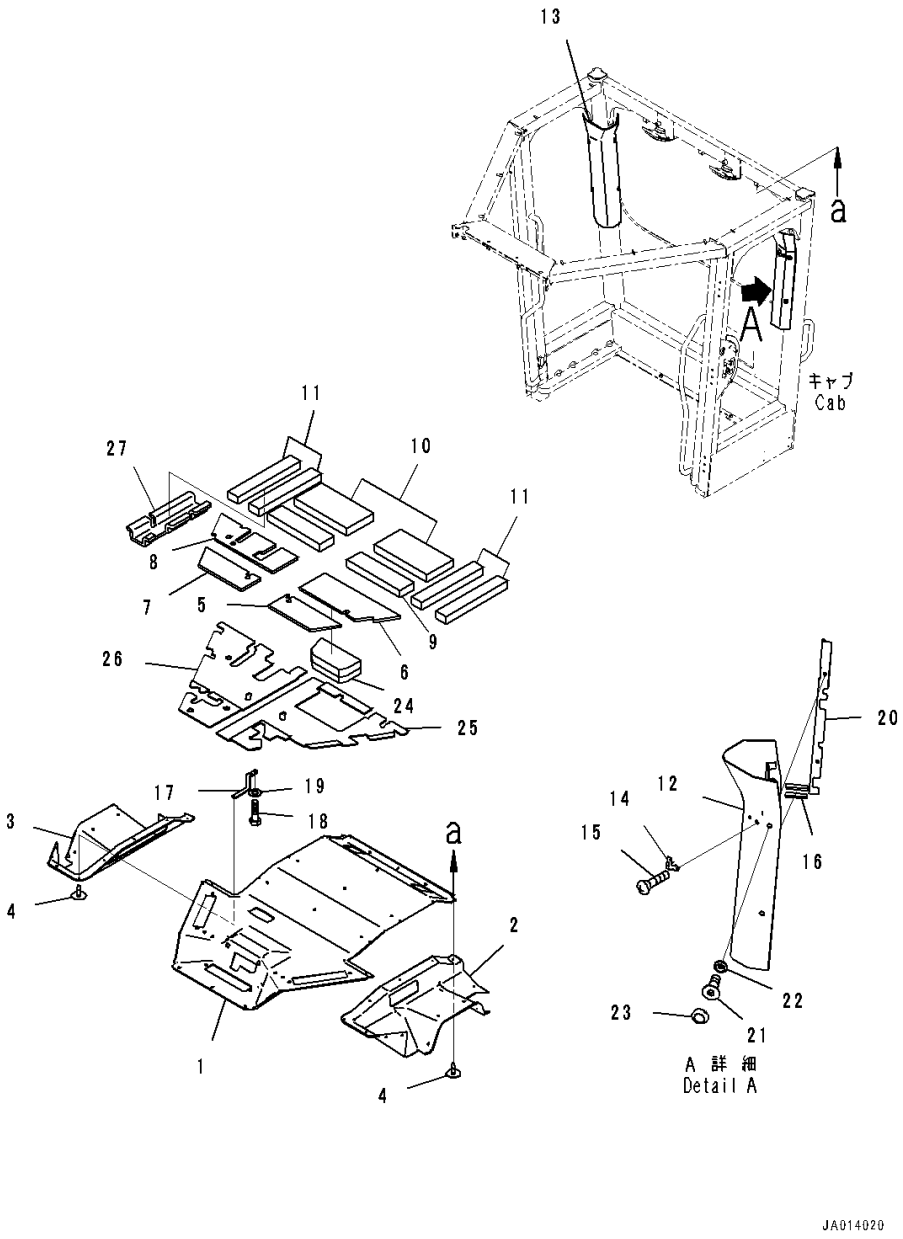

Index	Code	Part Number	Description	Qty	Serial Number
		234-952-8504	ROPS Cab Assembly,Low Height	1	26455-
	A2	234-952-8503	ROPS Cab Assembly,Low Height	1	26184-26454
		234-952-8502	ROPS Cab Assembly,Low Height	1	26074-26183
		234-952-8501	ROPS Cab Assembly,Low Height	1	26001-26073
1		23A-952-7170	• Pad	1	26001-
2		234-952-8371	• Pad	1	26001-
3		234-952-8381	• Pad	1	26001-
4		23A-952-7290	• Button	39	26001-
5		23A-952-7530	• Sheet	1	26001-
6		23A-952-7870	• Sheet	1	26001-
7		23A-952-7680	• Sheet	1	26001-
8		23A-952-7880	• Sheet	1	26001-
9		23A-952-7540	• Sheet	2	26001-
10		23A-952-7560	• Sheet	2	26001-
11		23A-952-7550	• Sheet	4	26001-
12		23B-952-7831	• Cover	1	26001-
13		23B-952-7560	• Cover	1	26001-
14		205-54-51250	• Hanger	1	26001-
15		01225-70416	• Screw, Philips Head	2	26001-
16		423-54-32340	• Finisher	2	26001-
17		23A-952-8690	• Plate	2	26001-
18		01010-81020	• Bolt	4	26001-
19		01643-31032	• Washer	4	26001-
20		23A-952-8560	• Plate	4	26001-
21		01240-00616	• Screw	8	26001-
22		423-925-5851	• Washer	8	26001-
23		423-925-5860	• Cap	8	26001-
24		23A-952-8620	• Sheet	1	26001-
25		23B-952-8450	• Sheet	1	26001-
26		23B-952-8460	• Sheet	1	26001-
27		23B-952-8470	• Sheet	1	26001-

FIG. K0210-001003 ROPS Cab (Rubber Antenna)

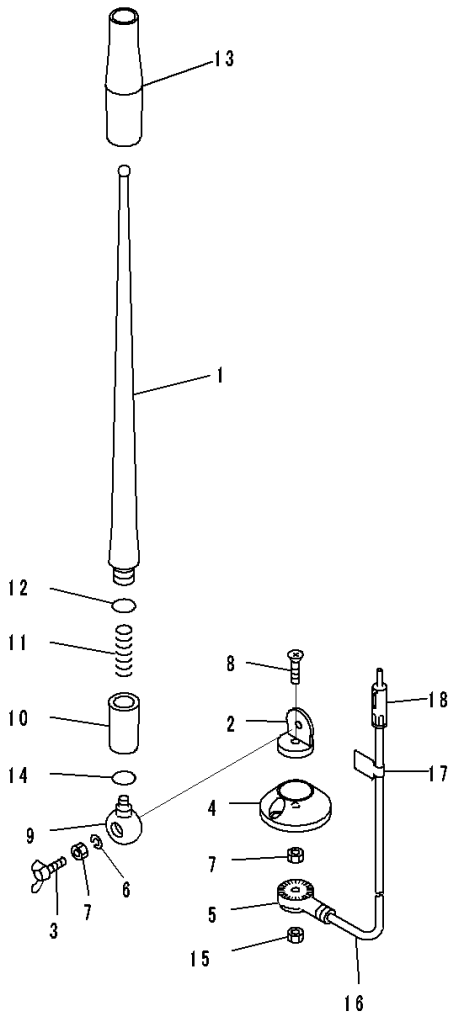

JH002177

Index	Code	Part Number	Description	Qty	Serial Number
		234-952-8504	ROPS Cab Assembly,Low Height	1	26455-
	A2	234-952-8503	ROPS Cab Assembly,Low Height	1	26184-26454
		234-952-8502	ROPS Cab Assembly,Low Height	1	26074-26183
		234-952-8501	ROPS Cab Assembly,Low Height	1	26001-26073
		234-952-8604	ROPS Cab Assembly,Low Height, Slide Window	1	26455-
		20Y-06-41990	• Antenna	1	26001-
1		RFU419B-418-A	• • Rod	1	26001-
2	C1		• • Holder	1	26001-
3		RFU419B-418-D	• • Bolt, Wing	1	26001-
4		RFU419B-418-E	• • Base	1	26001-
5	C1		• • Holder	1	26001-
6		RFU419B-418-B	• • Washer, Spring	1	26001-
7		RFU419B-418-C	• • Nut	2	26001-
8	C1		• • Screw	1	26001-
9	C1		• • Holder	1	26001-
10	C1		• • Holder Assembly	1	26001-
11	C1		• • Spring	1	26001-
12	C1		• • O-ring	1	26001-
13	C1		• • Tube	1	26001-
14	C1		• • O-ring	1	26001-
15		RFU419B-418-C	• • Nut	2	26001-
16		RFU419B-418-F	• • Cable	1	26001-
17	C1		• • Plate	1	26001-
18	C1		• • Plug	1	26001-

FIG. K0210-001004 ROPS Cab (Cup Holder and Ashtray)

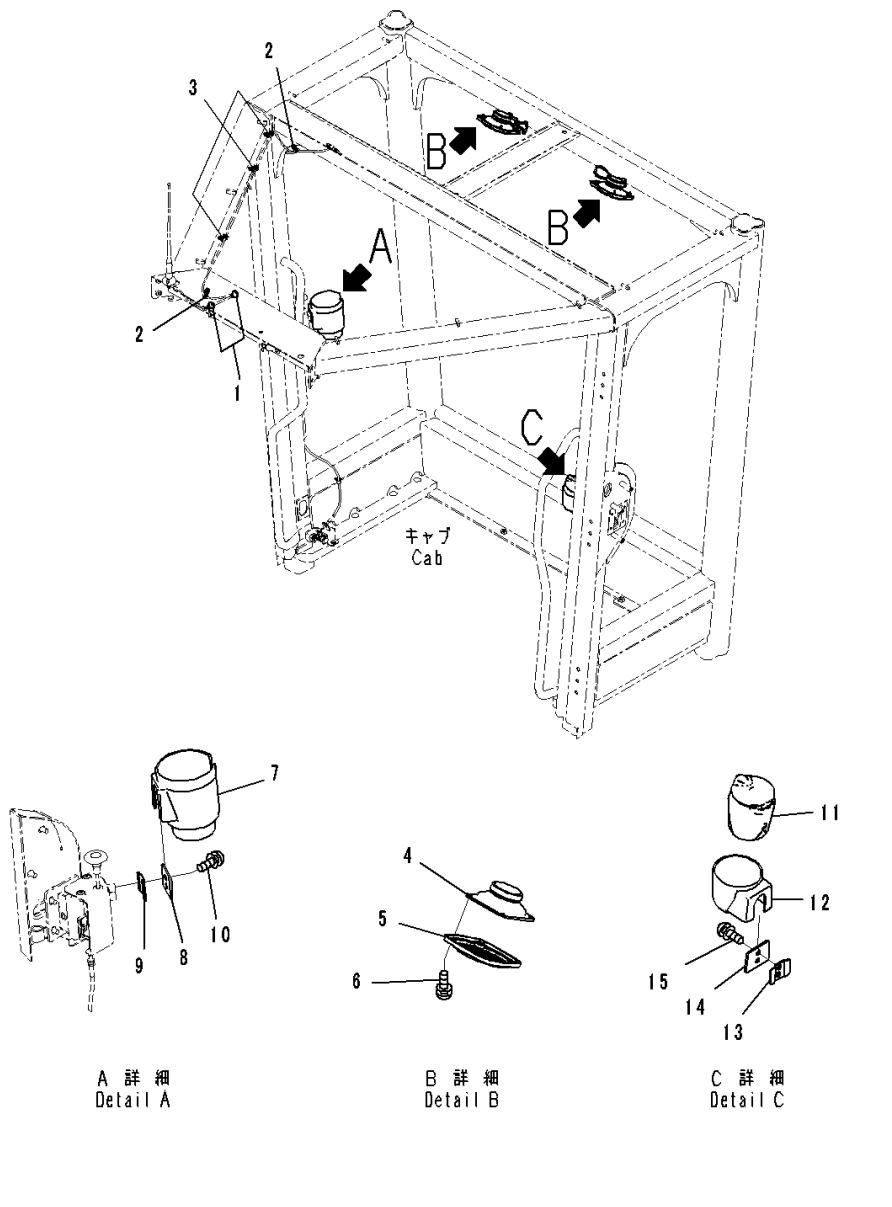

Index	Code	Part Number	Description	Qty	Serial Number
		234-952-8504	ROPS Cab Assembly,Low Height	1	26455-
	A2	234-952-8503	ROPS Cab Assembly,Low Height	1	26184-26454
		234-952-8502	ROPS Cab Assembly,Low Height	1	26074-26183
		234-952-8501	ROPS Cab Assembly,Low Height	1	26001-26073
		234-952-8604	ROPS Cab Assembly,Low Height, Slide Window	1	26455-
1		08037-10610	• Grommet	2	26001-
2		08034-40521	• Band	2	26001-
3		08059-00310	• Clip	3	26001-
4		20Y-06-42180	• Speaker	2	26001-
5		20Y-53-12221	• Cover	2	26001-
6		01023-20416	• Screw	8	26001-
7		208-53-12991	• Holder	1	26001-
8		421-926-4780	• Plate	1	26001-
9		426-925-3890	• Plate	1	26001-
10		01023-10614	• Screw	2	26001-
11		20Y-43-41491	• Ashtray	1	26001-
12		425-926-3751	• Holder	1	26001-
13		426-925-3890	• Plate	1	26001-
14		421-926-4780	• Plate	1	26001-
15		01023-10614	• Screw	2	26001-

FIG. K0210-001005 ROPS Cab (Cab Wiring Harness)

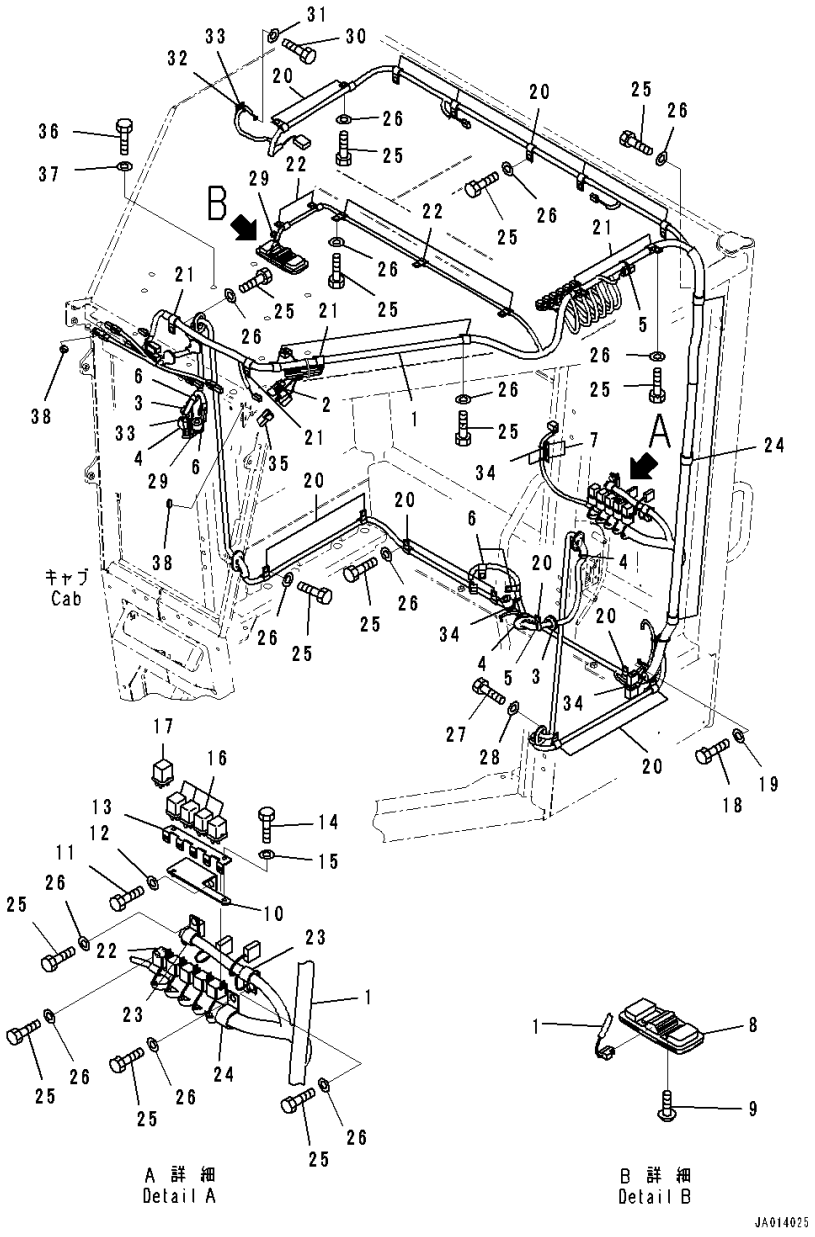

Index	Code	Part Number	Description	Qty	Serial Number
		234-952-8504	ROPS Cab Assembly,Low Height	1	26455-
	A2	234-952-8503	ROPS Cab Assembly,Low Height	1	26184-26454
		234-952-8502	ROPS Cab Assembly,Low Height	1	26074-26183
		234-952-8501	ROPS Cab Assembly,Low Height	1	26001-26073
		234-952-8604	ROPS Cab Assembly,Low Height, Slide Window	1	26455-
1		234-952-8411	• Wiring Harness	1	26280-
	A2	234-952-8410	• Wiring Harness	1	26001-26279
2		21J-06-13661	• • Diode	1	26001-
3		08037-11425	• Grommet	2	26001-
4		14X-Y79-3341	• Grommet	2	26001-
5		08034-20414	• Band,Black	6	26001-
6		04434-51012	• Clip	4	26001-
7		20U-54-46520	• Hook, Sticker Type	2	26001-
8		421-06-26210	• Room Lamp	1	26001-
		421-06-26250	• • Lens	2	26001-
		421-06-26260	• • Bulb,10watt	2	26001-
9		01023-70514	• Screw	2	26001-
10		23A-952-7950	• Bracket	1	26001-
11		01010-81020	• Bolt	2	26001-
12		01643-31032	• Washer	2	26001-
13		569-06-61180	• Bracket	1	26001-
14		01010-80616	• Bolt	2	26001-
15		01643-30623	• Washer	2	26001-
16		569-06-61960	• Relay	4	26001-
17		569-06-61970	• Relay	1	26001-
18		01010-80812	• Bolt	1	26001-
19		01643-30823	• Washer	1	26001-
20		04434-51412	• Clip	15	26001-
21		04434-51912	• Clip	7	26001-
22		04434-51012	• Clip	6	26001-
23		04434-51712	• Clip	2	26001-
24		04434-52712	• Clip	4	26001-
25		01010-81020	• Bolt	26	26001-
26		01643-31032	• Washer	26	26001-
27		01010-D1020	• Bolt	8	26001-
28		01643-71032	• Washer	8	26001-
29		08034-40521	• Band	4	26001-
30		01010-80610	• Bolt	1	26001-
31		01643-30623	• Washer	1	26001-

FIG. K0210-001005 ROPS Cab (Cab Wiring Harness)

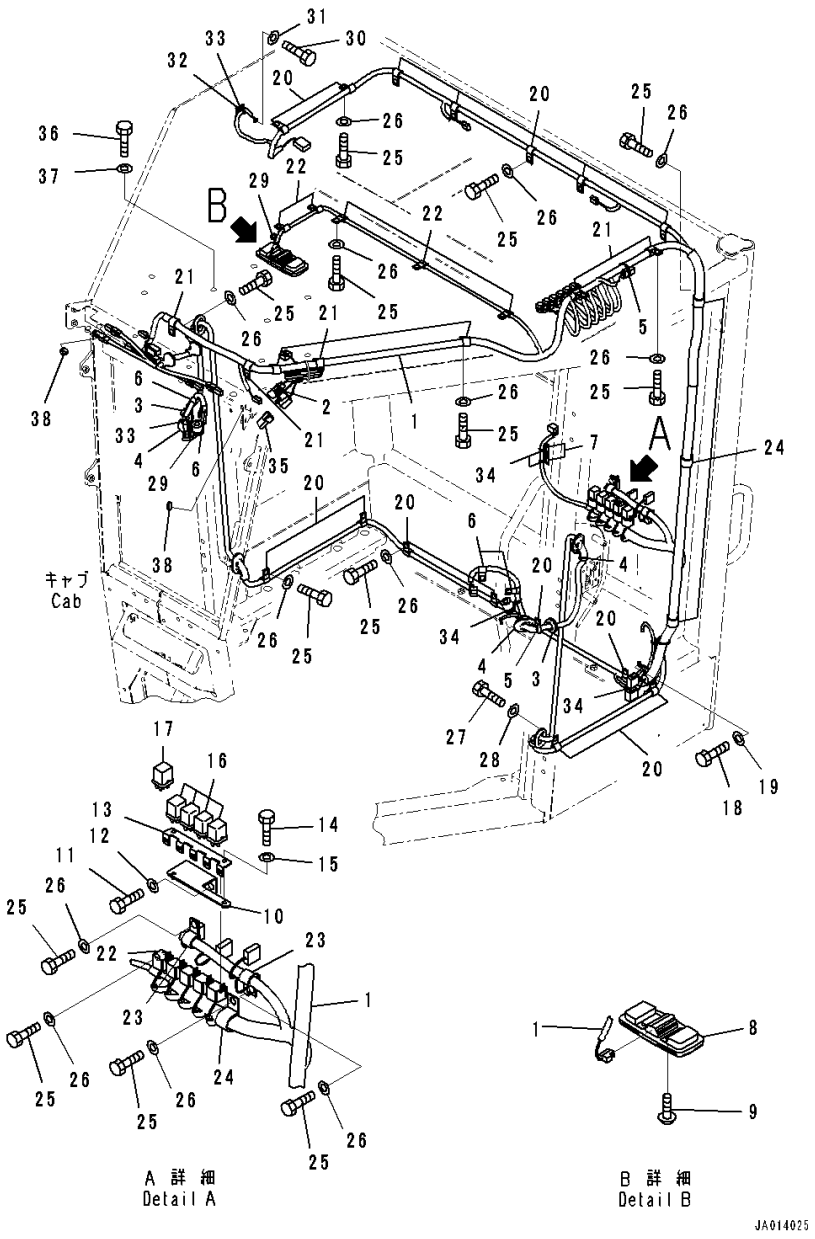

Index	Code	Part Number	Description	Qty	Serial Number
32		20U-54-46520	• Hook, Sticker Type	2	26001-
33		08034-20414	• Band,Black	2	26001-
34		08034-40521	• Band	2	26001-
35		08055-00282	• Connector	1	26001-
36		01010-D0812	• Bolt	19	26001-
37		01643-70823	• Washer	19	26001-
38		09415-01008	• Cap	3	26001-

FIG. K0210-001006 ROPS Cab (Air Pulling Out Device)

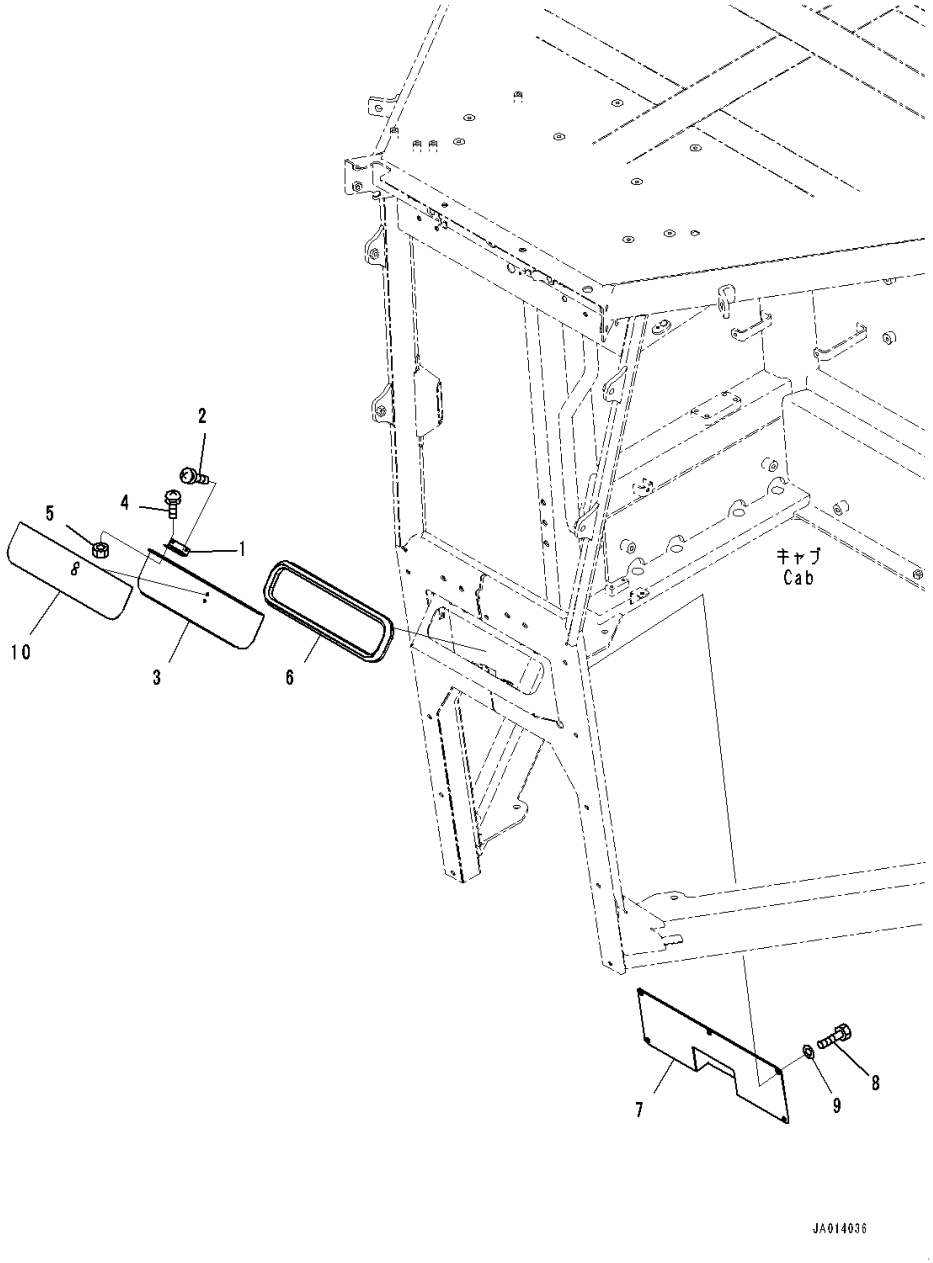

Index	Code	Part Number	Description	Qty	Serial Number
		234-952-8504	ROPS Cab Assembly,Low Height	1	26455-
	A2	234-952-8503	ROPS Cab Assembly,Low Height	1	26184-26454
		234-952-8502	ROPS Cab Assembly,Low Height	1	26074-26183
		234-952-8501	ROPS Cab Assembly,Low Height	1	26001-26073
		234-952-8604	ROPS Cab Assembly,Low Height, Slide Window	1	26455-
1		569-54-8B100	• Hinge	2	26001-
2		01023-10420	• Screw	4	26001-
3		23B-952-7280	• Plate	1	26001-
4		01023-10410	• Screw	4	26001-
5		01580-60403	• Nut	4	26001-
6		23A-952-8980	• Seal	1	26001-
7		23A-952-7840	• Cover	1	26001-
8		01010-D0816	• Bolt	5	26001-
9		01643-70823	• Washer	5	26001-
10		23A-952-8410	• Sheet	1	26001-

FIG. K0210-001007 ROPS Cab (Glass Window, Front)

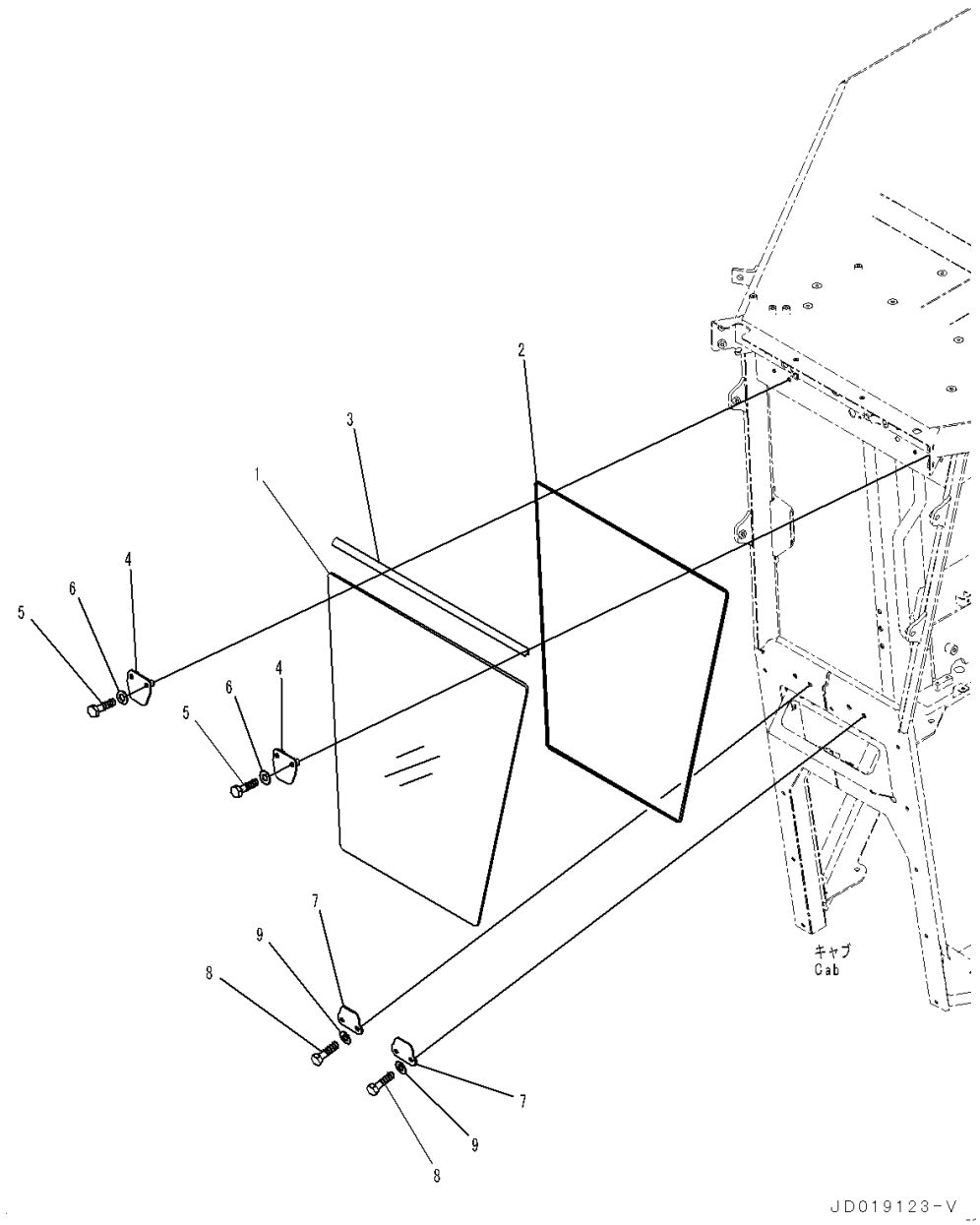

Index	Code	Part Number	Description	Qty	Serial Number
		234-952-8504	ROPS Cab Assembly,Low Height	1	26455-
	A2	234-952-8503	ROPS Cab Assembly,Low Height	1	26184-26454
		234-952-8502	ROPS Cab Assembly,Low Height	1	26074-26183
		234-952-8501	ROPS Cab Assembly,Low Height	1	26001-26073
		234-952-8604	ROPS Cab Assembly,Low Height, Slide Window	1	26455-
1		23A-952-7310	• Glass	1	26001-
2		23B-952-7910	• Rubber	1	26001-
3		23A-952-7240	• Finisher	1	26001-
4		23A-952-7250	• Plate	2	26001-
5		01010-D0835	• Bolt	4	26001-
6		01643-70823	• Washer	4	26001-
7		23A-952-7260	• Plate	2	26001-
8		01010-D0825	• Bolt	4	26001-
9		01643-70823	• Washer	4	26001-

FIG. K0210-001008 ROPS Cab (Front and Rear Wiper) (With Low Height)

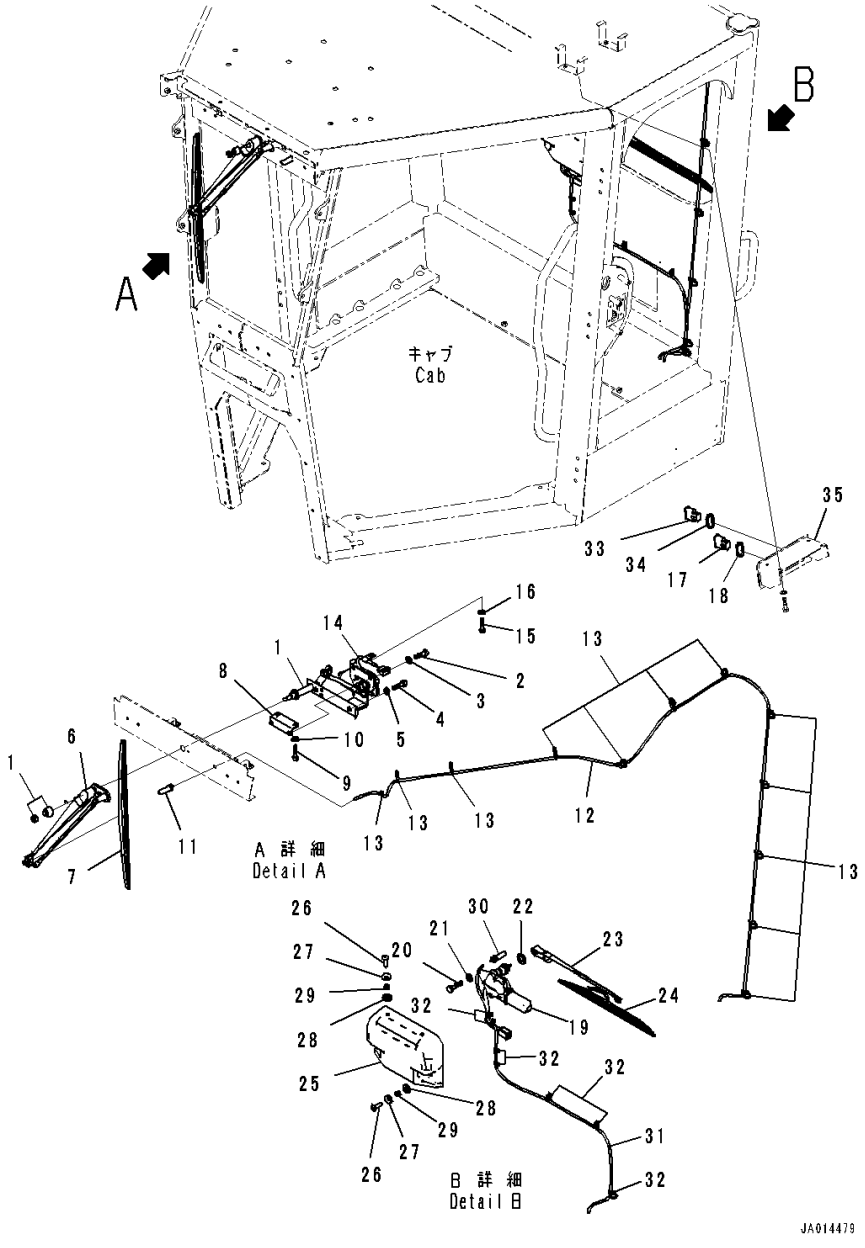

Index	Code	Part Number	Description	Qty	Serial Number
		234-952-8504	ROPS Cab Assembly,Low Height	1	26455-
	A2	234-952-8503	ROPS Cab Assembly,Low Height	1	26184-26454
		234-952-8502	ROPS Cab Assembly,Low Height	1	26074-26183
		234-952-8501	ROPS Cab Assembly,Low Height	1	26001-26073
1		23B-952-7440	• Motor, Wiper	1	26001-
2		01010-80616	• Bolt	2	26001-
3		01643-30623	• Washer	2	26001-
4		01010-80620	• Bolt	2	26001-
5		01643-30623	• Washer	2	26001-
6		23B-952-7450	• Arm	1	26001-
7		362-56-42690	• Wiper Blade	1	26001-
8		23A-952-7470	• Plate	1	26001-
9		01010-80612	• Bolt	2	26001-
10		01643-30623	• Washer	2	26001-
11		22T-55-11630	• Nozzle Assembly	1	26001-
12		569-54-83290	• Hose	1	26001-
13		08034-40521	• Band	12	26001-
14		04434-50812	• Clip	1	26001-
15		01010-81020	• Bolt	1	26001-
16		01643-31032	• Washer	1	26001-
17		17A-06-42210	• Switch, Wiper,Front	1	26001-
18		418-926-4530	• Spacer	1	26001-
19		23A-952-8211	• Motor, Wiper	1	26280-
	A2	23A-952-8210	• Motor, Wiper	1	26001-26279
20		01010-80820	• Bolt	3	26001-
21		01643-30823	• Washer	3	26001-
22		417-926-3650	• Spacer	1	26001-
23		20T-54-84840	• Arm, Wiper	1	26001-
24		20T-54-74990	• Wiper Blade	1	26001-
25		421-926-4311	• Cover	1	26001-
26		01225-70620	• Screw, Philips Head	4	26001-
27		23S-55-51970	• Washer	4	26001-
28		426-56-31870	• Washer	4	26001-
29		426-56-31890	• Collar	4	26001-
30		22T-55-11630	• Nozzle Assembly	1	26001-
31		418-07-36140	• Hose	1	26001-
32		08034-40521	• Band	7	26001-
33		42C-06-33131	• Switch, Wiper,Rear	1	26061-
	A2	42C-06-33130	• Switch, Wiper,Rear	1	26001-26060
34		418-926-4530	• Spacer	1	26001-

FIG. K0210-001008 ROPS Cab (Front and Rear Wiper) (With Low Height)

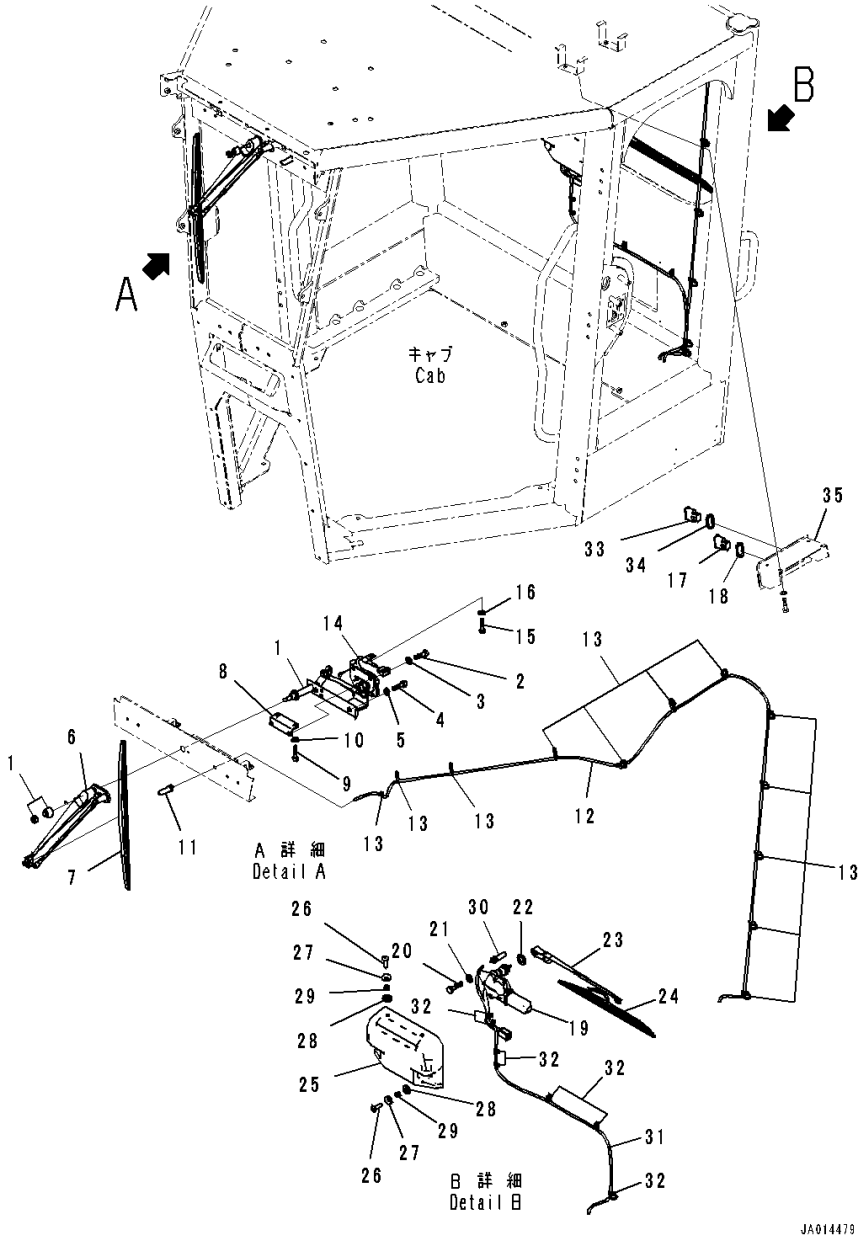

Index	Code	Part Number	Description	Qty	Serial Number
35		(23A-952-7940)	Bracket(ROPS Cab,Body,Low Height)(Refer to Page 405)		

FIG. K0210-002008 ROPS Cab (Front and Rear Wiper) (With Low Height, Slide Window)

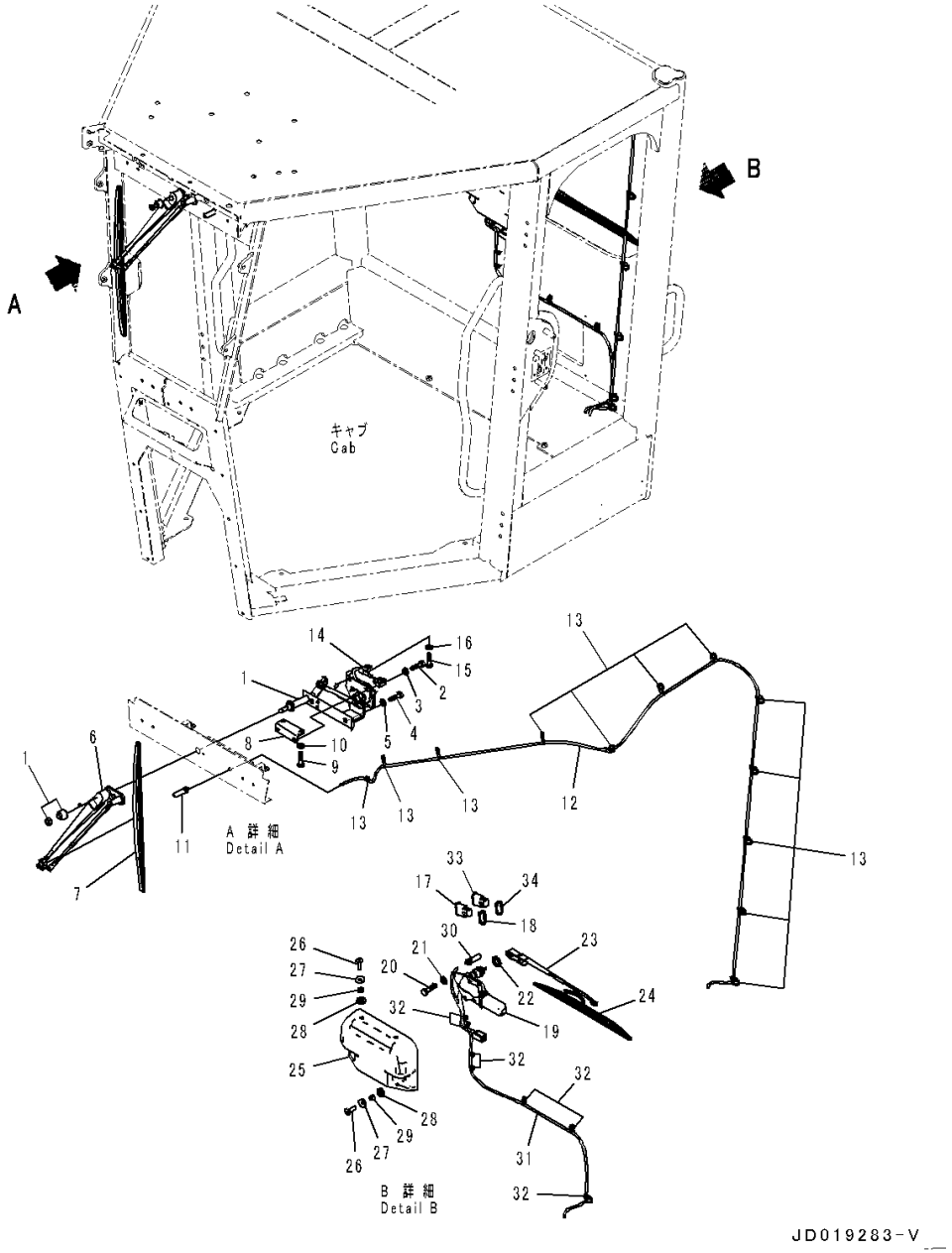

Index	Code	Part Number	Description	Qty	Serial Number
		234-952-8604	ROPS Cab Assembly,Low Height, Slide Window	1	26455-
	A2	234-952-8603	ROPS Cab Assembly,Low Height, Slide Window	1	26184-26454
		234-952-8602	ROPS Cab Assembly,Low Height, Slide Window	1	26074-26183
		234-952-8601	ROPS Cab Assembly,Low Height, Slide Window	1	26001-26073
1		23B-952-7440	• Motor, Wiper	1	26001-
2		01010-80616	• Bolt	2	26001-
3		01643-30623	• Washer	2	26001-
4		01010-80620	• Bolt	2	26001-
5		01643-30623	• Washer	2	26001-
6		23B-952-7450	• Arm	1	26001-
7		362-56-42690	• Wiper Blade	1	26001-
8		23A-952-7470	• Plate	1	26001-
9		01010-80612	• Bolt	2	26001-
10		01643-30623	• Washer	2	26001-
11		22T-55-11630	• Nozzle Assembly	1	26001-
12		569-54-83290	• Hose	1	26001-
13		08034-40521	• Band	12	26001-
14		04434-50812	• Clip	1	26001-
15		01010-81020	• Bolt	1	26001-
16		01643-31032	• Washer	1	26001-
17		17A-06-42210	• Switch, Wiper,Door	1	26001-
18		418-926-4530	• Spacer	1	26001-
19		23A-952-8211	• Motor, Wiper	1	26280-
	A2	23A-952-8210	• Motor, Wiper	1	26001-26279
20		01010-80820	• Bolt	3	26001-
21		01643-30823	• Washer	3	26001-
22		417-926-3650	• Spacer	1	26001-
23		20T-54-84840	• Arm, Wiper	1	26001-
24		20T-54-74990	• Wiper Blade	1	26001-
25		421-926-4311	• Cover	1	26001-
26		01225-70620	• Screw, Philips Head	4	26001-
27		23S-55-51970	• Washer	4	26001-
28		426-56-31870	• Washer	4	26001-
29		426-56-31890	• Collar	4	26001-
30		22T-55-11630	• Nozzle Assembly	1	26001-
31		418-07-36140	• Hose	1	26001-

FIG. K0210-002008 ROPS Cab (Front and Rear Wiper) (With Low Height, Slide Window)

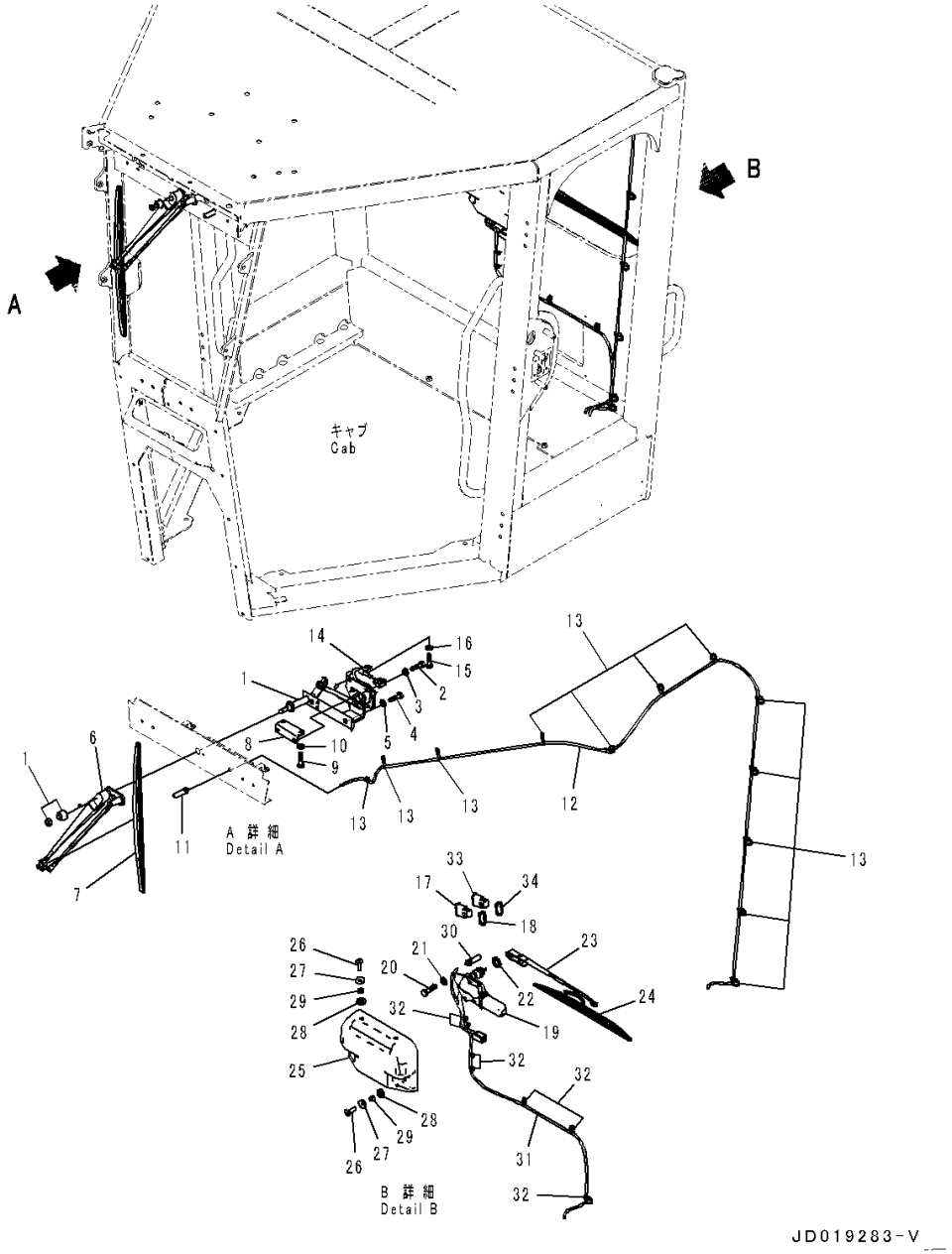

Index	Code	Part Number	Description	Qty	Serial Number
32		08034-40521	• Band	7	26001-
33		42C-06-33131	• Switch, Wiper	1	26061-
	A2	42C-06-33130	• Switch, Wiper,Rear	1	26001-26060
34		418-926-4530	• Spacer	1	26001-

FIG. K0210-001009 ROPS Cab (Door, L.H.)

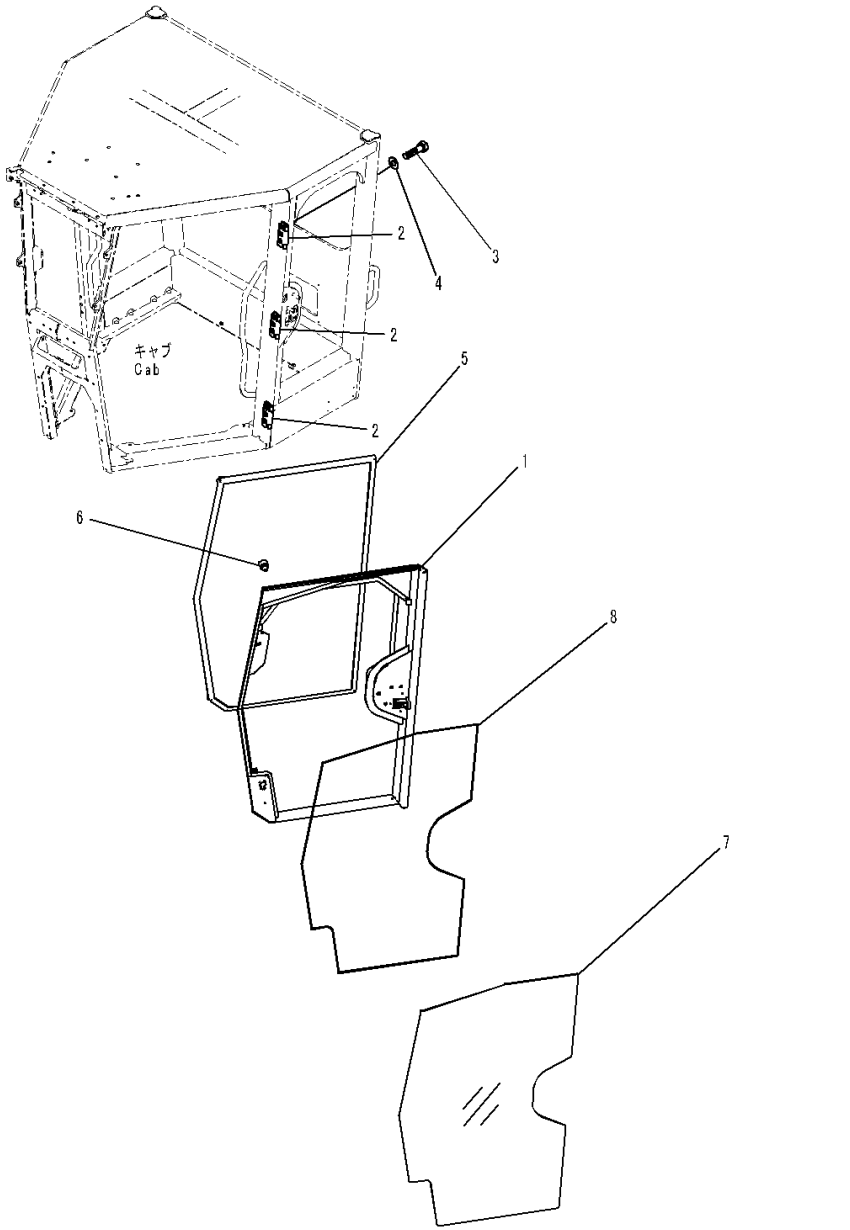

Index	Code	Part Number	Description	Qty	Serial Number
		234-952-8504	ROPS Cab Assembly,Low Height	1	26455-
	A2	234-952-8503	ROPS Cab Assembly,Low Height	1	26184-26454
		234-952-8502	ROPS Cab Assembly,Low Height	1	26074-26183
		234-952-8501	ROPS Cab Assembly,Low Height	1	26001-26073
		234-952-8604	ROPS Cab Assembly,Low Height, Slide Window	1	26455-
		234-952-8104	• Door Group	1	26455-
	A2	234-952-8103	• Door Group	1	26280-26454
		234-952-8102	• Door Group	1	26184-26279
		234-952-8101	• Door Group	1	26074-26183
		234-952-8100	• Door Group	1	26001-26073
1	C1		• • Door	1	26001-
2		14X-911-1330	• • Hinge	3	26001-
3		01010-D1025	• • Bolt	18	26001-
4		01643-71032	• • Washer	18	26001-
5		23B-952-7941	• • Seal	1	26455-
	A2	23B-952-7940	• • Seal	1	26001-26454
6		417-923-3950	• • Stopper	1	26001-
7		234-952-8330	• • Glass	1	26001-
8		234-952-8930	• • Rubber	1	26001-

FIG. K0210-001010 ROPS Cab (Door Lock, L.H.)

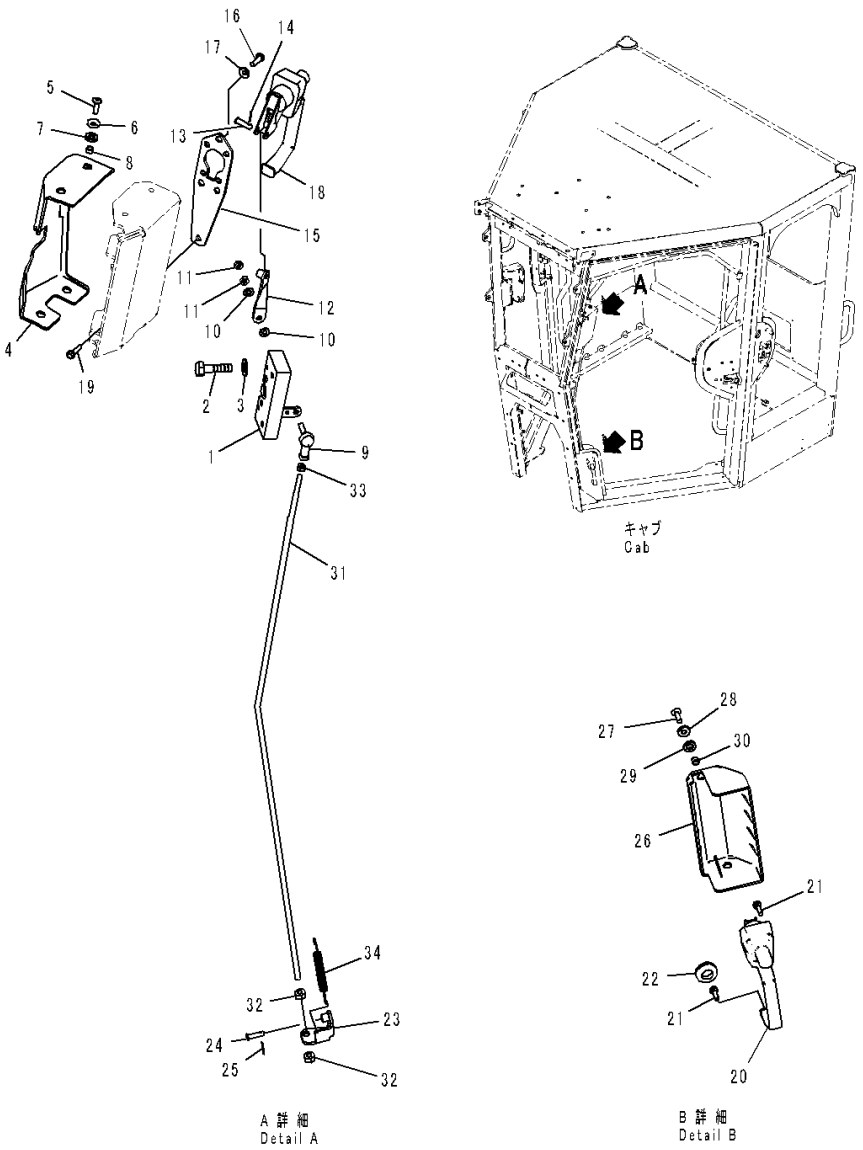

Index	Code	Part Number	Description	Qty	Serial Number
		234-952-8504	ROPS Cab Assembly,Low Height	1	26455-
	A2	234-952-8503	ROPS Cab Assembly,Low Height	1	26184-26454
		234-952-8502	ROPS Cab Assembly,Low Height	1	26074-26183
		234-952-8501	ROPS Cab Assembly,Low Height	1	26001-26073
		234-952-8604	ROPS Cab Assembly,Low Height, Slide Window	1	26455-
		234-952-8104	• Door Group	1	26455-
	A2	234-952-8103	• Door Group	1	26280-26454
		234-952-8102	• Door Group	1	26184-26279
		234-952-8101	• Door Group	1	26074-26183
		234-952-8100	• Door Group	1	26001-26073
1		195-Z11-4510	• • Lock	1	26001-
2		01010-D0635	• • Bolt	4	26001-
3		01643-70623	• • Washer	4	26001-
4		23A-952-7581	• • Cover	1	26001-
5		01225-70620	• • Screw, Philips Head	4	26001-
6		23S-55-51970	• • Washer	4	26001-
7		426-56-31870	• • Washer	4	26001-
8		426-56-31890	• • Collar	4	26001-
9		04256-40622	• • Joint, Ball	1	26001-
10		23B-952-7480	• • Packing	2	26001-
11		01580-10605	• • Nut	2	26001-
12		23A-952-8720	• • Bracket	1	26001-
13		04205-10622	• • Pin	1	26001-
14		04050-11612	• • Pin, Cotter	1	26001-
15		23A-952-8710	• • Plate	1	26001-
16		01245-00620	• • Screw	3	26001-
17		01643-70623	• • Washer	3	26001-
18		23A-952-8510	• • Handle Assembly	1	26001-
19		01023-70525	• • Screw	5	26001-
20		11Y-979-2571	• • Handle Assembly	1	26001-
21		01023-70520	• • Screw	5	26001-
22		09415-01610	• • Cap	1	26001-
23		23B-952-7380	• • Bracket	1	26001-
24		04205-10622	• • Pin	1	26001-
25		04050-11612	• • Pin, Cotter	1	26001-
26		23A-952-7270	• • Cover	1	26001-
27		01225-70616	• • Screw, Philips Head	2	26001-
28		23S-55-51970	• • Washer	2	26001-
29		426-56-31870	• • Washer	2	26001-

FIG. K0210-001010 ROPS Cab (Door Lock, L.H.)

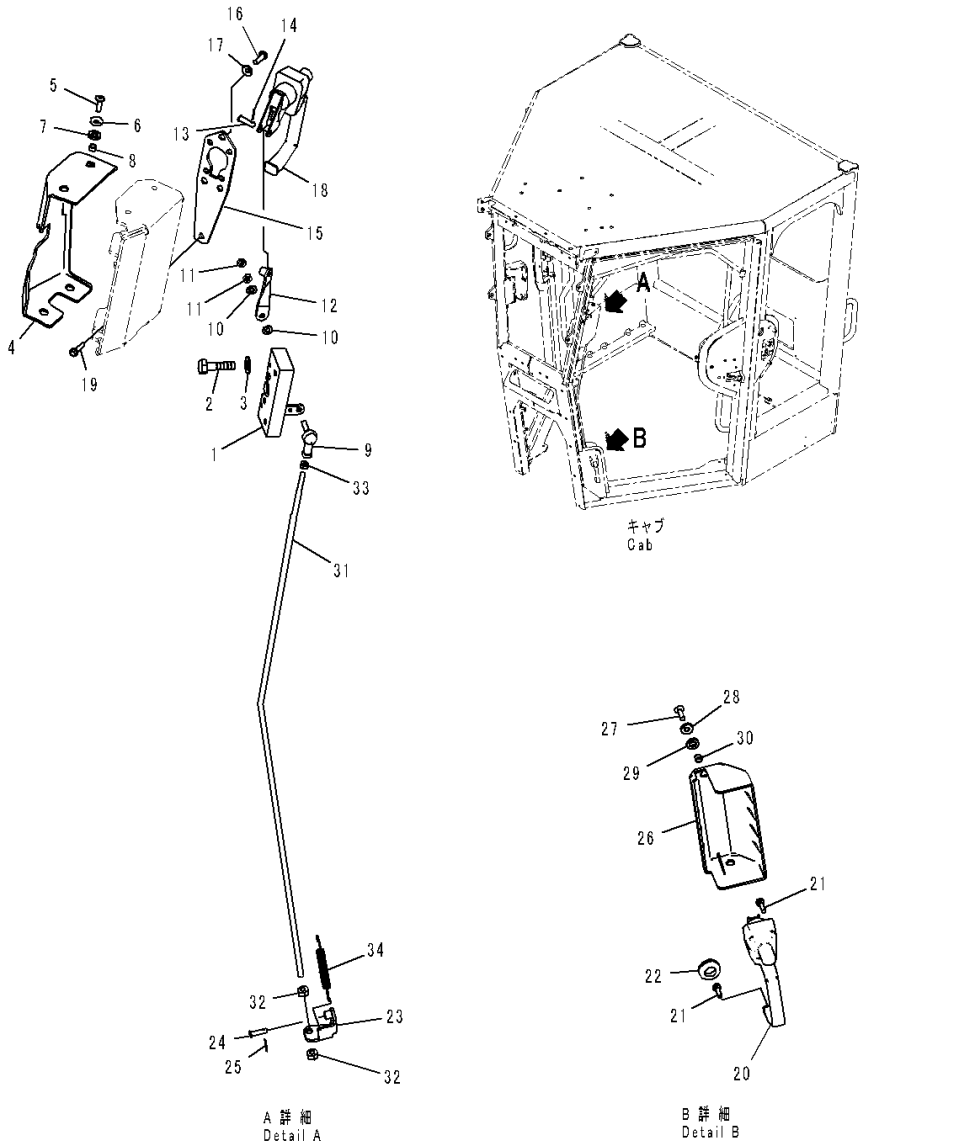

Index	Code	Part Number	Description	Qty	Serial Number
30		426-56-31890	• • Collar	2	26001-
31		23A-952-7480	• • Rod	1	26001-
32		01580-10806	• • Nut	2	26001-
33		01580-10605	• • Nut	1	26001-
34		23A-952-7770	• • Spring	1	26001-

FIG. K0210-001011 ROPS Cab (Door Open Lock, L.H.)

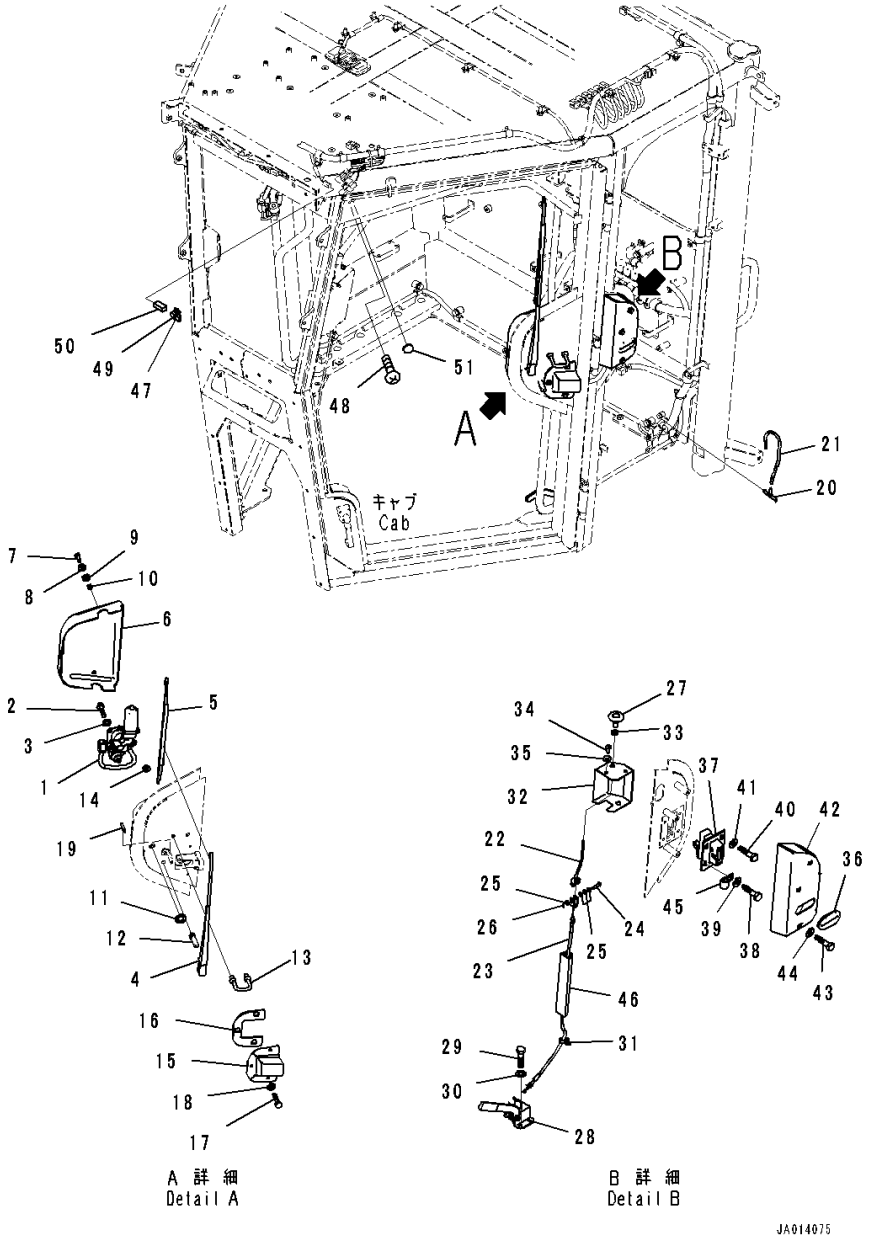

Index	Code	Part Number	Description	Qty	Serial Number
		234-952-8504	ROPS Cab Assembly,Low Height	1	26455-
	A2	234-952-8503	ROPS Cab Assembly,Low Height	1	26184-26454
		234-952-8502	ROPS Cab Assembly,Low Height	1	26074-26183
		234-952-8501	ROPS Cab Assembly,Low Height	1	26001-26073
		234-952-8604	ROPS Cab Assembly,Low Height, Slide Window	1	26455-
		234-952-8104	• Door Group	1	26455-
	A2	234-952-8103	• Door Group	1	26280-26454
		234-952-8102	• Door Group	1	26184-26279
		234-952-8101	• Door Group	1	26074-26183
		234-952-8100	• Door Group	1	26001-26073
1		23B-952-7471	• • Motor	1	26280-
	A2	23B-952-7470	• • Motor	1	26001-26279
2		01010-80816	• • Bolt	3	26001-
3		01643-30823	• • Washer	3	26001-
4		23B-952-7540	• • Arm	1	26001-
5		20T-54-74990	• • Wiper Blade	1	26001-
6		23B-952-7330	• • Cover	1	26001-
7		01225-70620	• • Screw, Philips Head	3	26001-
8		23S-55-51970	• • Washer	3	26001-
9		426-56-31870	• • Washer	3	26001-
10		426-56-31890	• • Collar	3	26001-
11		424-926-3890	• • Spacer	1	26001-
12		22T-55-11630	• • Nozzle Assembly	1	26001-
13		234-952-8580	• • Striker	1	26001-
14		01580-11008	• • Nut	2	26001-
15		23B-952-7160	• • Cover	1	26001-
16		23B-952-7170	• • Sheet	1	26001-
17		01010-D0612	• • Bolt	3	26001-
18		01643-70623	• • Washer	3	26001-
19		423-06-42430	• • Finisher	1	26001-
20		232-957-9710	• • Connector	1	26001-
21		423-944-4670	• • Hose	1	26001-
22		23B-952-7360	• • Rod	1	26001-
23		234-952-8890	• • Cable	1	26001-
24		203-06-41560	• • Pin	1	26001-
25		01640-20508	• • Washer	4	26001-
26		04050-11210	• • Pin, Cotter	1	26001-
27		417-926-3370	• • Knob	1	26001-
28		234-952-8870	• • Lever	1	26001-

FIG. K0210-001011 ROPS Cab (Door Open Lock, L.H.)

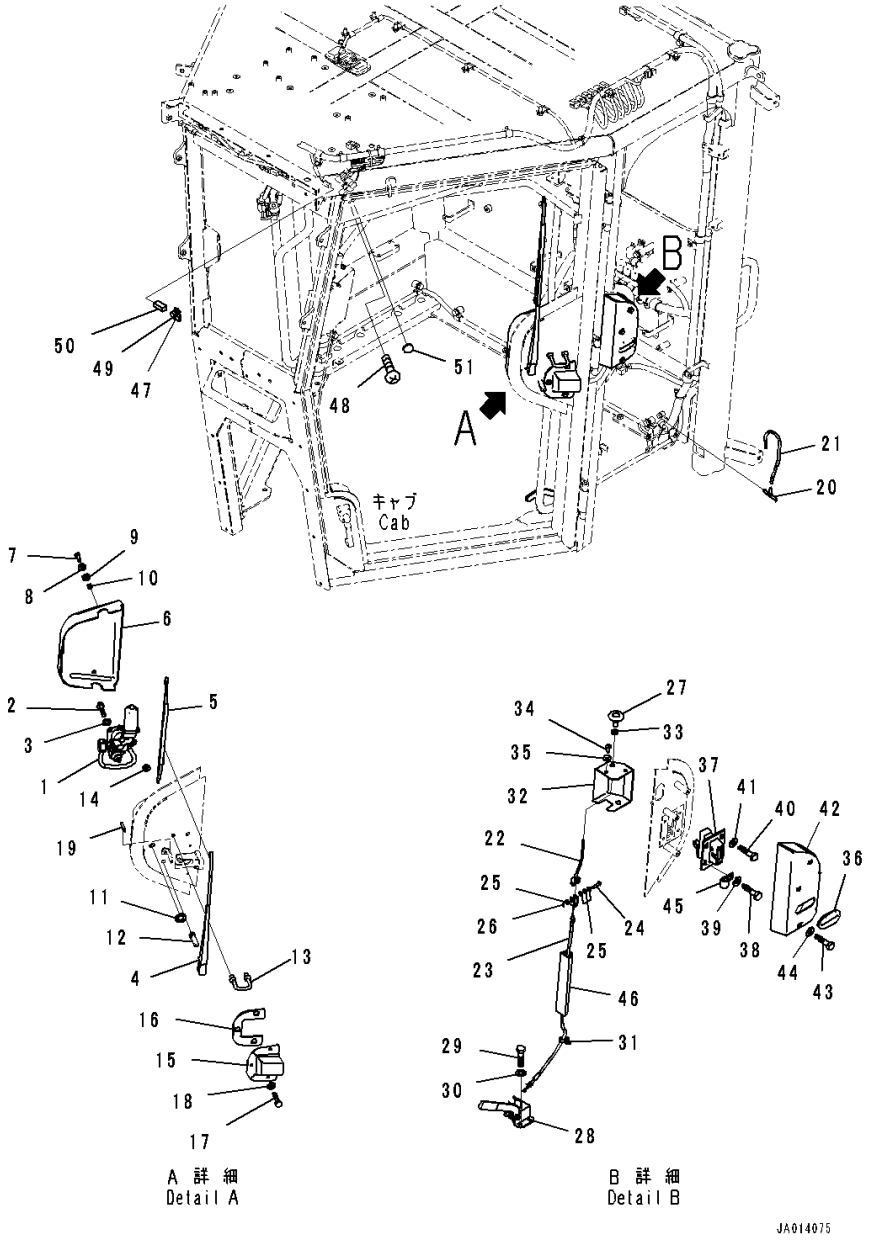

Index	Code	Part Number	Description	Qty	Serial Number
29		01010-D0616	• • Bolt	3	26001-
30		01643-70623	• • Washer	3	26001-
31		08059-00310	• • Clip	2	26001-
32		23B-952-7720	• • Cover	1	26001-
33		20Y-06-16170	• • Grommet	1	26001-
34		01225-70616	• • Screw, Philips Head	2	26001-
35		23S-55-51970	• • Washer	2	26001-
36		423-926-3860	• • Grommet	1	26001-
37		23A-952-8762	• • Lock Assembly	1	26074-
	A2	23A-952-8761	• • Lock Assembly	1	26001-26073
38		01010-D0816	• • Bolt	2	26001-
39		01643-70823	• • Washer	2	26001-
40		01010-D0820	• • Bolt	2	26001-
41		01643-70823	• • Washer	2	26001-
42		23B-952-7350	• • Cover	1	26001-
43		01010-D0816	• • Bolt	3	26001-
44		01643-70823	• • Washer	3	26001-
45		04434-51412	• • Clip	1	26001-
46		23A-952-7690	• • Duct	1	26001-
47		08034-40521	• • Band	1	26001-
48		419-923-2130	• • Screw	1	26001-
49		08056-00111	• • Connector Body, Male	1	26001-
50		08056-00130	• • Holder, Male	1	26001-
51		09415-01008	• • Cap	1	26001-

FIG. K0210-001012 ROPS Cab (Seal and Sheet) (1/2)

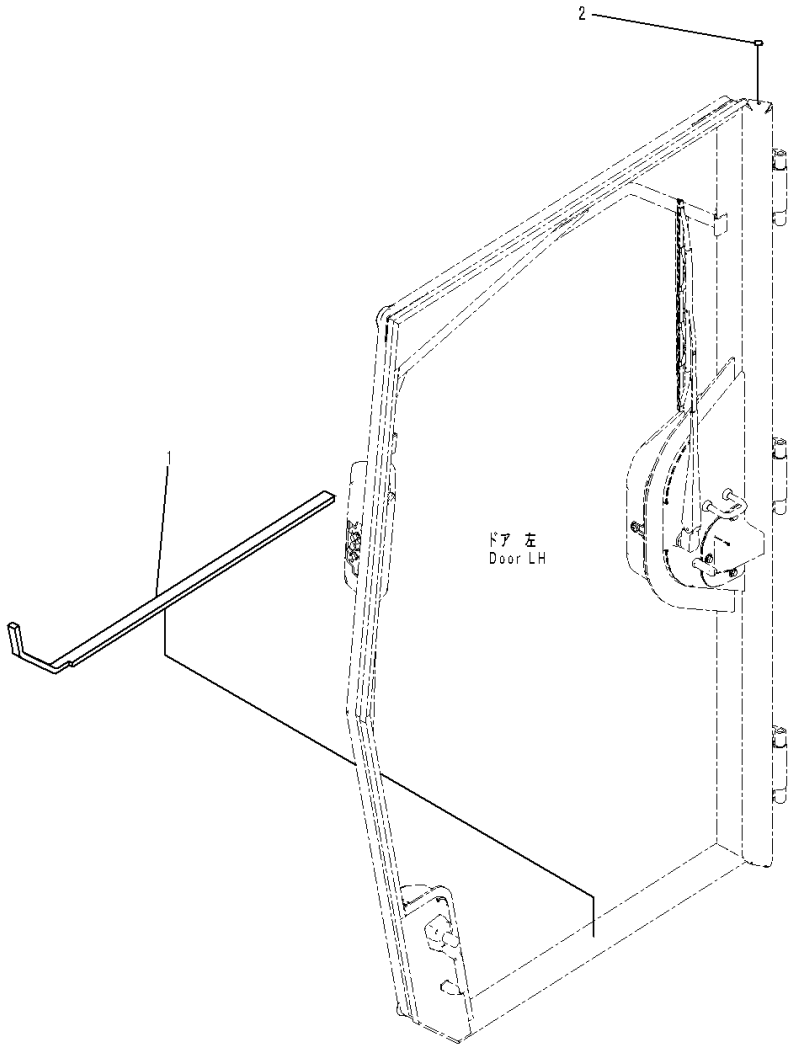

Index	Code	Part Number	Description	Qty	Serial Number
		234-952-8504	ROPS Cab Assembly,Low Height	1	26455-
	A2	234-952-8503	ROPS Cab Assembly,Low Height	1	26184-26454
		234-952-8502	ROPS Cab Assembly,Low Height	1	26074-26183
		234-952-8501	ROPS Cab Assembly,Low Height	1	26001-26073
		234-952-8604	ROPS Cab Assembly,Low Height, Slide Window	1	26455-
		234-952-8104	• Door Group	1	26455-
	A2	234-952-8103	• Door Group	1	26280-26454
		234-952-8102	• Door Group	1	26184-26279
		234-952-8101	• Door Group	1	26074-26183
		234-952-8100	• Door Group	1	26001-26073
1		23A-952-8770	• • Sheet	1	26001-
2		22B-54-17290	• • Seal	1	26001-

FIG. K0210-001013 ROPS Cab (Door, R.H.)

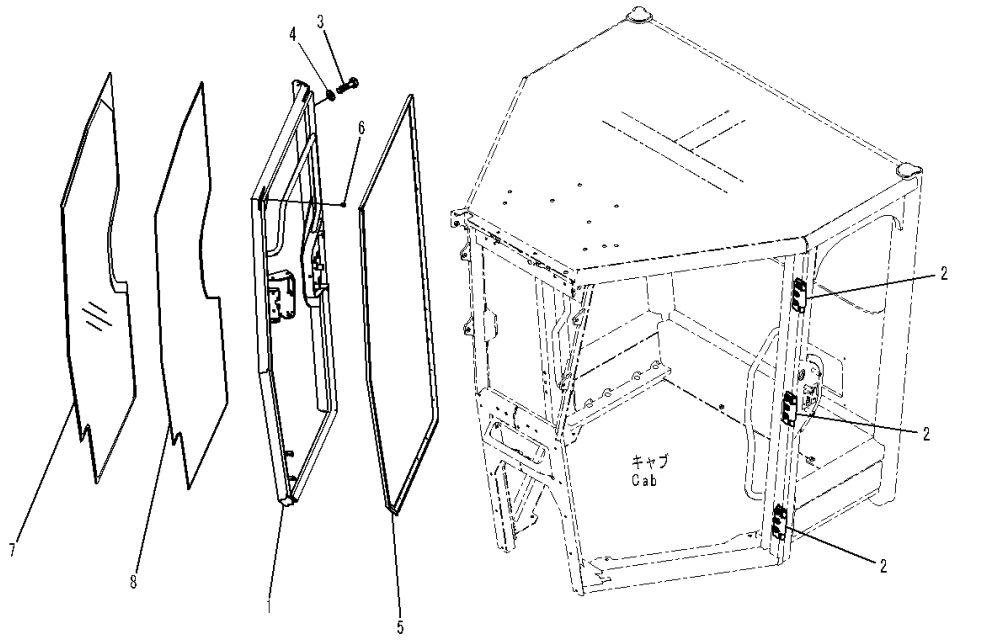

Index	Code	Part Number	Description	Qty	Serial Number
		234-952-8504	ROPS Cab Assembly,Low Height	1	26455-
	A2	234-952-8503	ROPS Cab Assembly,Low Height	1	26184-26454
		234-952-8502	ROPS Cab Assembly,Low Height	1	26074-26183
		234-952-8501	ROPS Cab Assembly,Low Height	1	26001-26073
		234-952-8604	ROPS Cab Assembly,Low Height, Slide Window	1	26455-
		234-952-8104	• Door Group	1	26455-
	A2	234-952-8103	• Door Group	1	26280-26454
		234-952-8102	• Door Group	1	26184-26279
		234-952-8101	• Door Group	1	26074-26183
		234-952-8100	• Door Group	1	26001-26073
1	C1		• • Door	1	26001-
2		14X-911-1330	• • Hinge	3	26001-
3		01010-D1025	• • Bolt	18	26001-
4		01643-71032	• • Washer	18	26001-
5		23B-952-7951	• • Seal	1	26455-
	A2	23B-952-7950	• • Seal	1	26001-26454
6		417-923-3950	• • Stopper	1	26001-
7		234-952-8340	• • Glass	1	26001-
8		234-952-8930	• • Rubber	1	26001-

FIG. K0210-001014 ROPS Cab (Door Lock, R.H.)

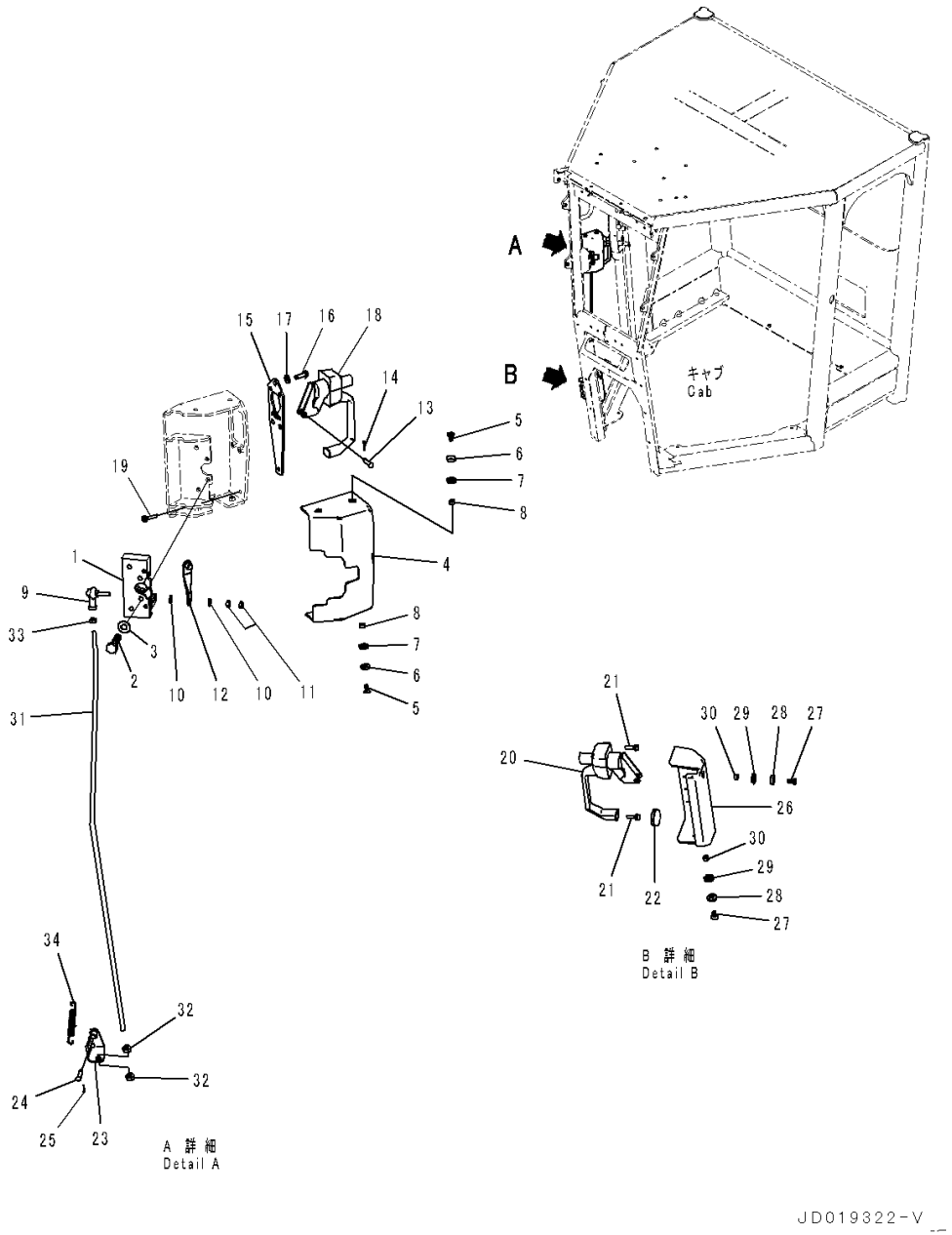

Index	Code	Part Number	Description	Qty	Serial Number
		234-952-8504	ROPS Cab Assembly,Low Height	1	26455-
	A2	234-952-8503	ROPS Cab Assembly,Low Height	1	26184-26454
		234-952-8502	ROPS Cab Assembly,Low Height	1	26074-26183
		234-952-8501	ROPS Cab Assembly,Low Height	1	26001-26073
		234-952-8604	ROPS Cab Assembly,Low Height, Slide Window	1	26455-
		234-952-8104	• Door Group	1	26455-
	A2	234-952-8103	• Door Group	1	26280-26454
		234-952-8102	• Door Group	1	26184-26279
		234-952-8101	• Door Group	1	26074-26183
		234-952-8100	• Door Group	1	26001-26073
1		195-Z11-4520	• • Lock	1	26001-
2		01010-D0635	• • Bolt	4	26001-
3		01643-70623	• • Washer	4	26001-
4		23A-952-7591	• • Cover	1	26001-
5		01225-70620	• • Screw, Philips Head	4	26001-
6		23S-55-51970	• • Washer	4	26001-
7		426-56-31870	• • Washer	4	26001-
8		426-56-31890	• • Collar	4	26001-
9		04256-40622	• • Joint, Ball	1	26001-
10		23B-952-7480	• • Packing	2	26001-
11		01580-10605	• • Nut	2	26001-
12		23A-952-8730	• • Bracket	1	26001-
13		04205-10622	• • Pin	1	26001-
14		04050-11612	• • Pin, Cotter	1	26001-
15		23A-952-8710	• • Plate	1	26001-
16		01245-00620	• • Screw	3	26001-
17		01643-70623	• • Washer	3	26001-
18		23A-952-8510	• • Handle Assembly	1	26001-
19		01023-60525	• • Screw	5	26001-
20		11Y-979-2571	• • Handle Assembly	1	26001-
21		01023-70520	• • Screw	5	26001-
22		09415-01610	• • Cap	1	26001-
23		23B-952-7390	• • Bracket	1	26001-
24		04205-10622	• • Pin	1	26001-
25		04050-11612	• • Pin, Cotter	1	26001-
26		23A-952-7280	• • Cover	1	26001-
27		01225-70616	• • Screw, Philips Head	2	26001-
28		23S-55-51970	• • Washer	2	26001-
29		426-56-31870	• • Washer	2	26001-

FIG. K0210-001014 ROPS Cab (Door Lock, R.H.)

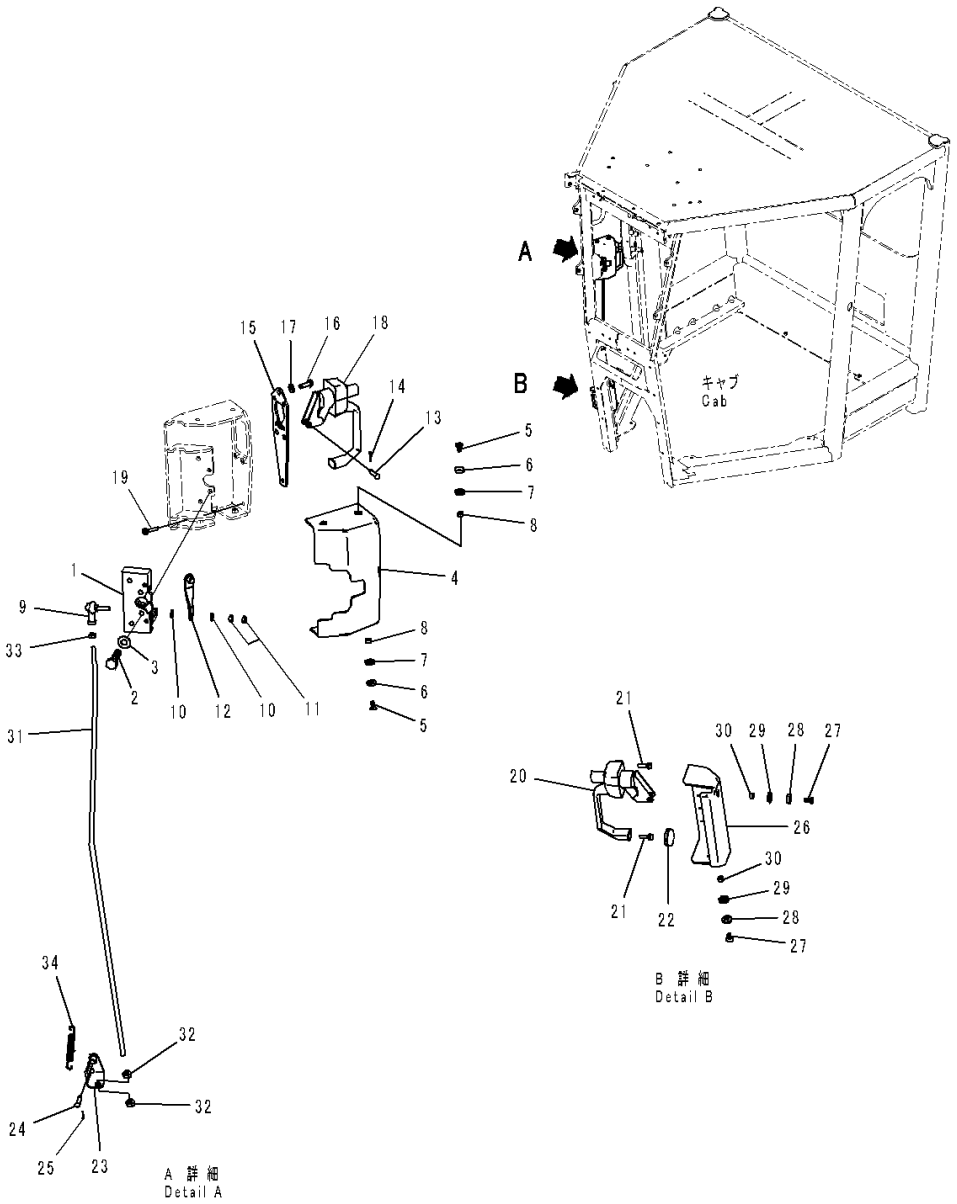

Index	Code	Part Number	Description	Qty	Serial Number
30		426-56-31890	• • Collar	2	26001-
31		23A-952-7490	• • Rod	1	26001-
32		01580-10806	• • Nut	2	26001-
33		01580-10605	• • Nut	1	26001-
34		23A-952-7770	• • Spring	1	26001-

FIG. K0210-001015 ROPS Cab (Door Open Lock, R.H.)

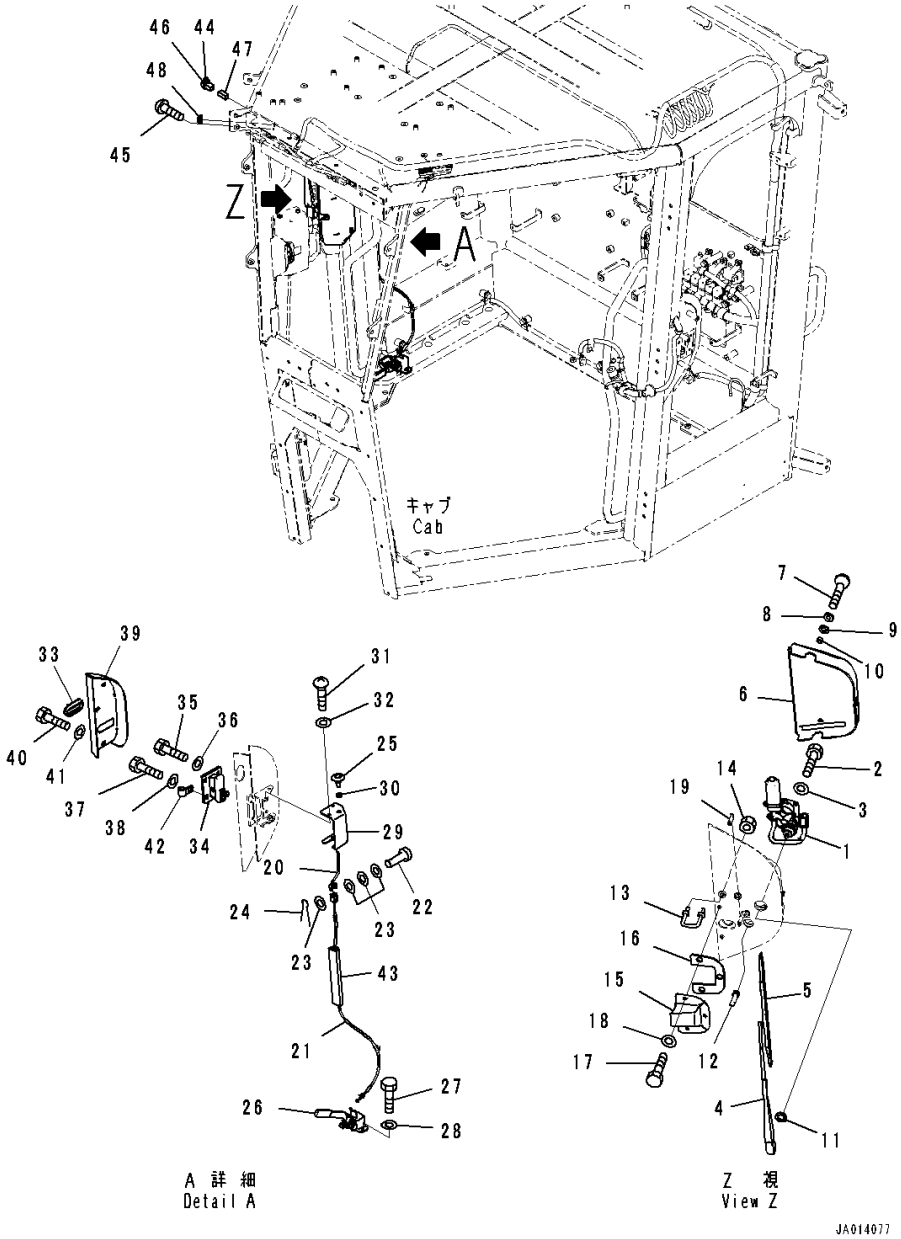

Index	Code	Part Number	Description	Qty	Serial Number
		234-952-8504	ROPS Cab Assembly,Low Height	1	26455-
	A2	234-952-8503	ROPS Cab Assembly,Low Height	1	26184-26454
		234-952-8502	ROPS Cab Assembly,Low Height	1	26074-26183
		234-952-8501	ROPS Cab Assembly,Low Height	1	26001-26073
		234-952-8604	ROPS Cab Assembly,Low Height, Slide Window	1	26455-
		234-952-8104	• Door Group	1	26455-
	A2	234-952-8103	• Door Group	1	26280-26454
		234-952-8102	• Door Group	1	26184-26279
		234-952-8101	• Door Group	1	26074-26183
		234-952-8100	• Door Group	1	26001-26073
1		421-926-3613	• • Motor, Wiper	1	26184-
	A2	421-926-3612	• • Motor, Wiper	1	26001-26183
2		01010-80816	• • Bolt	3	26001-
3		01643-30823	• • Washer	3	26001-
4		23B-952-7540	• • Arm	1	26001-
5		20T-54-74990	• • Wiper Blade	1	26001-
6		23B-952-7330	• • Cover	1	26001-
7		01225-70620	• • Screw, Philips Head	3	26001-
8		23S-55-51970	• • Washer	3	26001-
9		426-56-31870	• • Washer	3	26001-
10		426-56-31890	• • Collar	3	26001-
11		424-926-3890	• • Spacer	1	26001-
12		22T-55-11630	• • Nozzle Assembly	1	26001-
13		234-952-8580	• • Striker	1	26001-
14		01580-11008	• • Nut	2	26001-
15		23B-952-7160	• • Cover	1	26001-
16		23B-952-7170	• • Sheet	1	26001-
17		01010-D0612	• • Bolt	3	26001-
18		01643-70623	• • Washer	3	26001-
19		423-06-42430	• • Finisher	1	26001-
20		23A-952-7610	• • Rod	1	26001-
21		234-952-8890	• • Cable	1	26001-
22		203-06-41560	• • Pin	1	26001-
23		01640-20508	• • Washer	4	26001-
24		04050-11210	• • Pin, Cotter	1	26001-
25		417-926-3370	• • Knob	1	26001-
26		234-952-8880	• • Lever	1	26001-
27		01010-D0616	• • Bolt	3	26001-
28		01643-70623	• • Washer	3	26001-

FIG. K0210-001015 ROPS Cab (Door Open Lock, R.H.)

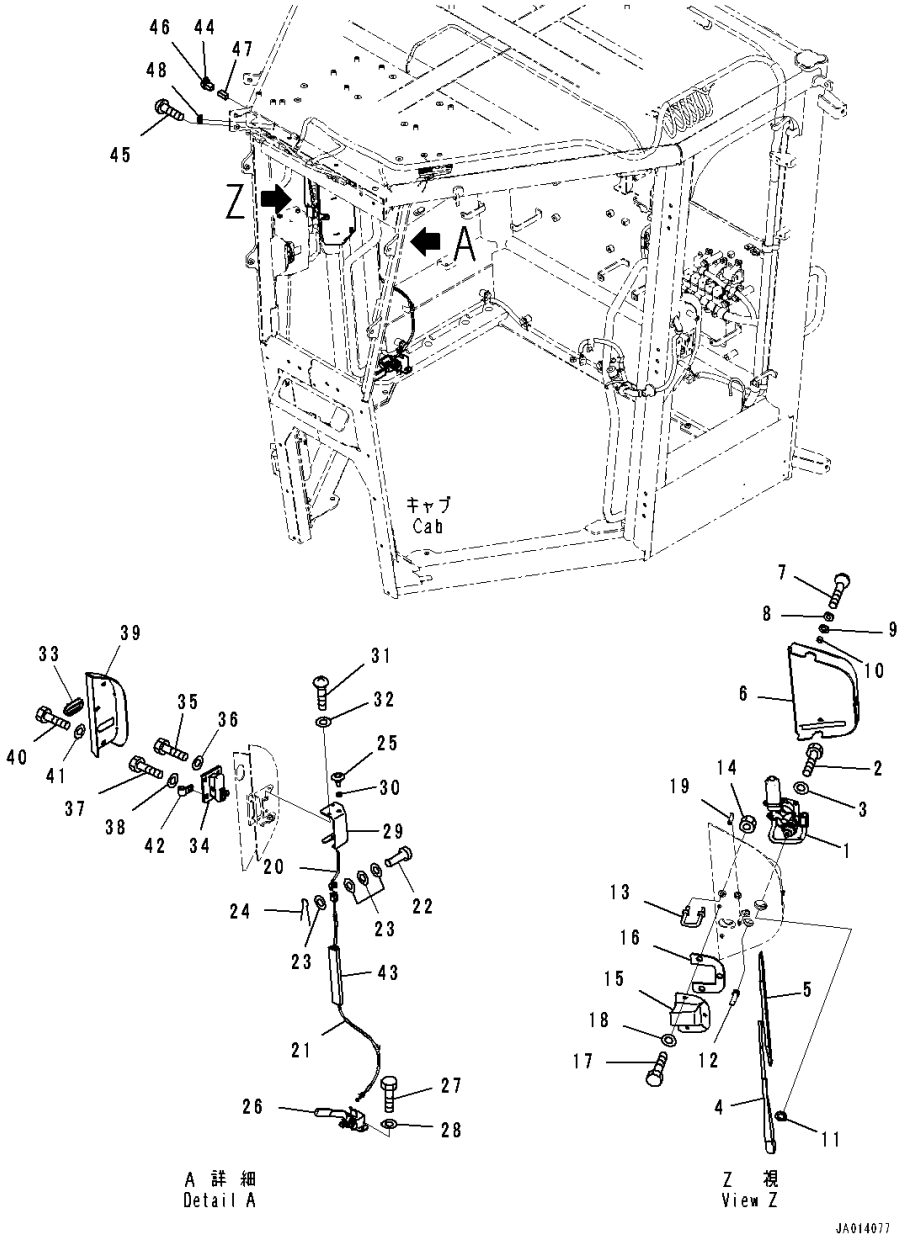

Index	Code	Part Number	Description	Qty	Serial Number
29		23B-952-8140	• • Bracket	1	26001-
30		20Y-06-16170	• • Grommet	1	26001-
31		01225-70616	• • Screw, Philips Head	2	26001-
32		23S-55-51970	• • Washer	2	26001-
33		423-926-3860	• • Grommet	1	26001-
34		23A-952-8762	• • Lock Assembly	1	26074-
	A2	23A-952-8761	• • Lock Assembly	1	26001-26073
35		01010-D0820	• • Bolt	2	26001-
36		01643-70823	• • Washer	2	26001-
37		01010-D0816	• • Bolt	2	26001-
38		01643-70823	• • Washer	2	26001-
39		23B-952-7370	• • Cover	1	26001-
40		01010-D0816	• • Bolt	3	26001-
41		01643-70823	• • Washer	3	26001-
42		04434-51412	• • Clip	1	26001-
43		23A-952-7690	• • Duct	1	26001-
44		08034-40521	• • Band	1	26001-
45		419-923-2130	• • Screw	1	26001-
46		08056-00111	• • Connector Body, Male	1	26001-
47		08056-00130	• • Holder, Male	1	26001-
48		09415-01008	• • Cap	1	26001-

FIG. K0210-001016 ROPS Cab (Door Wiper Switch)

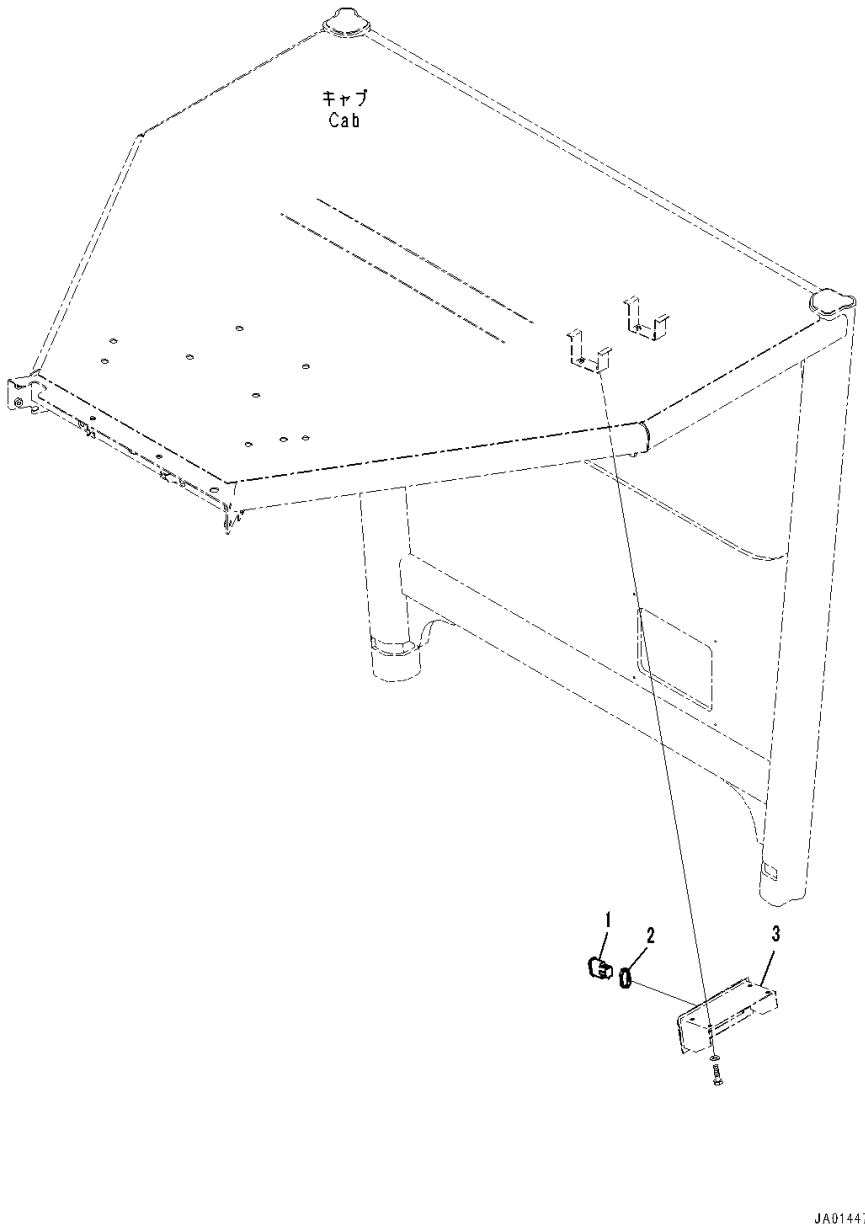

Index	Code	Part Number	Description	Qty	Serial Number
		234-952-8504	ROPS Cab Assembly,Low Height	1	26455-
	A2	234-952-8503	ROPS Cab Assembly,Low Height	1	26184-26454
		234-952-8502	ROPS Cab Assembly,Low Height	1	26074-26183
		234-952-8501	ROPS Cab Assembly,Low Height	1	26001-26073
		234-952-8604	ROPS Cab Assembly,Low Height, Slide Window	1	26455-
		234-952-8104	• Door Group	1	26455-
	A2	234-952-8103	• Door Group	1	26280-26454
		234-952-8102	• Door Group	1	26184-26279
		234-952-8101	• Door Group	1	26074-26183
		234-952-8100	• Door Group	1	26001-26073
1		17A-06-42210	• • Switch, Wiper	1	26001-
2		418-926-4530	• • Spacer	1	26001-
3		(23A-952-7940)	Bracket(ROPS Cab,Body,Low Height)(Refer to Page 405)		
		(23A-952-7940)	Bracket(ROPS Cab,Body,Low Height, Slide Window)(Refer to Page 406)		

FIG. K0210-001017 ROPS Cab (Seal and Sheet) (2/2)

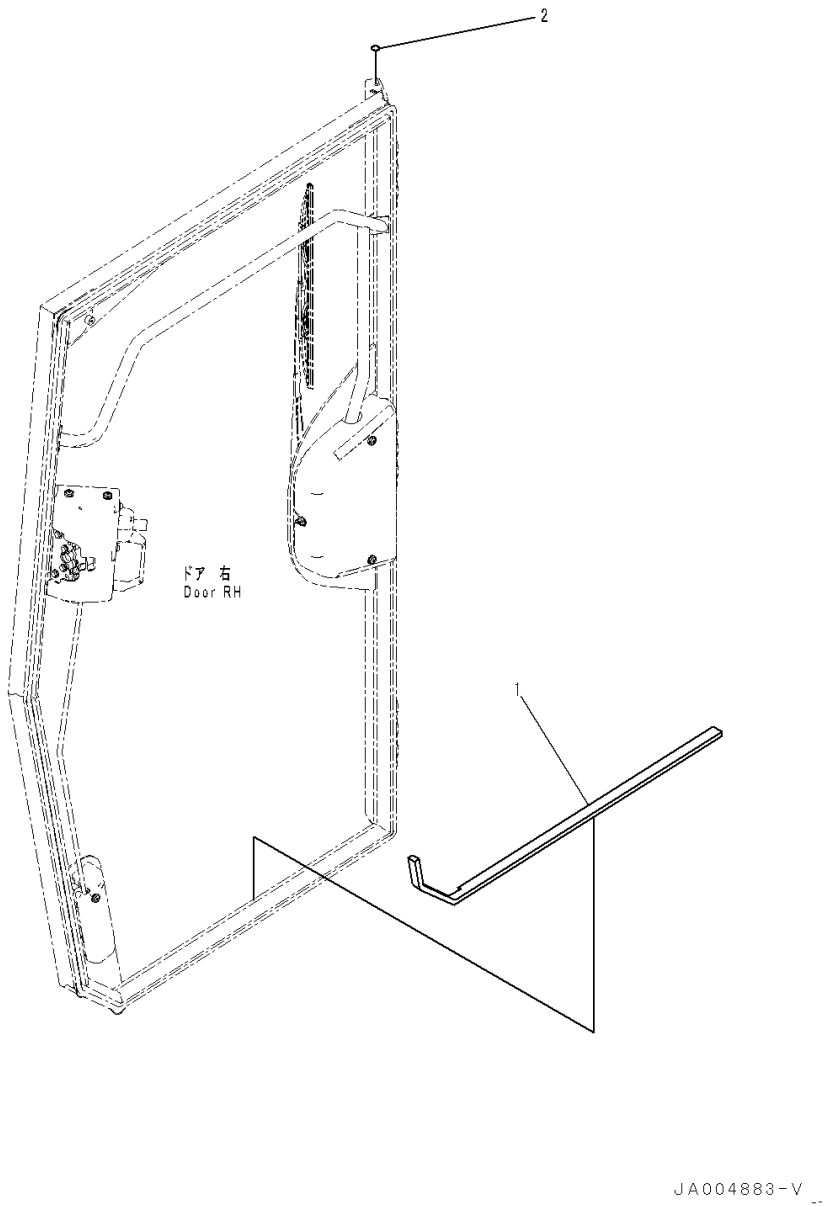

Index	Code	Part Number	Description	Qty	Serial Number
		234-952-8504	ROPS Cab Assembly,Low Height	1	26455-
	A2	234-952-8503	ROPS Cab Assembly,Low Height	1	26184-26454
		234-952-8502	ROPS Cab Assembly,Low Height	1	26074-26183
		234-952-8501	ROPS Cab Assembly,Low Height	1	26001-26073
		234-952-8604	ROPS Cab Assembly,Low Height, Slide Window	1	26455-
		234-952-8104	• Door Group	1	26455-
	A2	234-952-8103	• Door Group	1	26280-26454
		234-952-8102	• Door Group	1	26184-26279
		234-952-8101	• Door Group	1	26074-26183
		234-952-8100	• Door Group	1	26001-26073
1		23A-952-8840	• • Sheet	1	26001-
2		22B-54-17290	• • Seal	1	26001-

FIG. K0210-001018 ROPS Cab (Door Lock Striker)

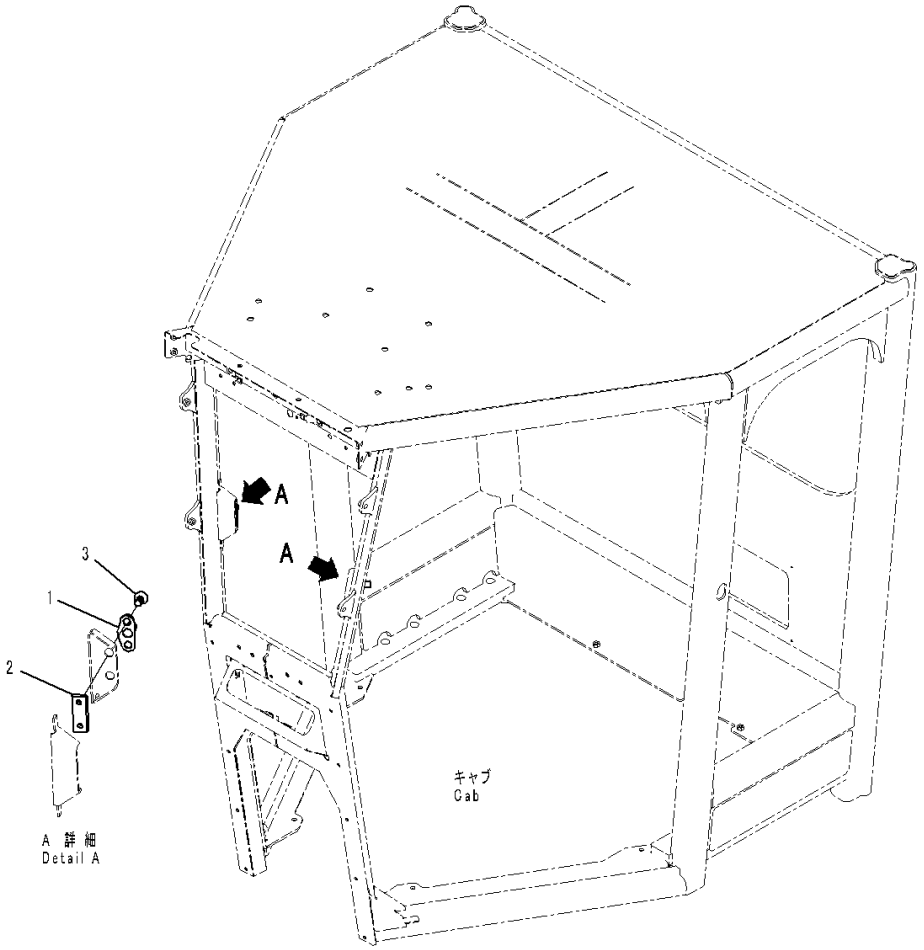

Index	Code	Part Number	Description	Qty	Serial Number
		234-952-8504	ROPS Cab Assembly,Low Height	1	26455-
	A2	234-952-8503	ROPS Cab Assembly,Low Height	1	26184-26454
		234-952-8502	ROPS Cab Assembly,Low Height	1	26074-26183
		234-952-8501	ROPS Cab Assembly,Low Height	1	26001-26073
		234-952-8604	ROPS Cab Assembly,Low Height, Slide Window	1	26455-
		234-952-8104	• Door Group	1	26455-
	A2	234-952-8103	• Door Group	1	26280-26454
		234-952-8102	• Door Group	1	26184-26279
		234-952-8101	• Door Group	1	26074-26183
		234-952-8100	• Door Group	1	26001-26073
1		21J-54-16190	• • Striker	2	26001-
2		23A-952-1890	• • Plate	2	26001-
3		01240-01020	• • Screw, Hexagon Socket Head	4	26001-

FIG. K0210-001019 ROPS Cab (Air Conditioner Duct)

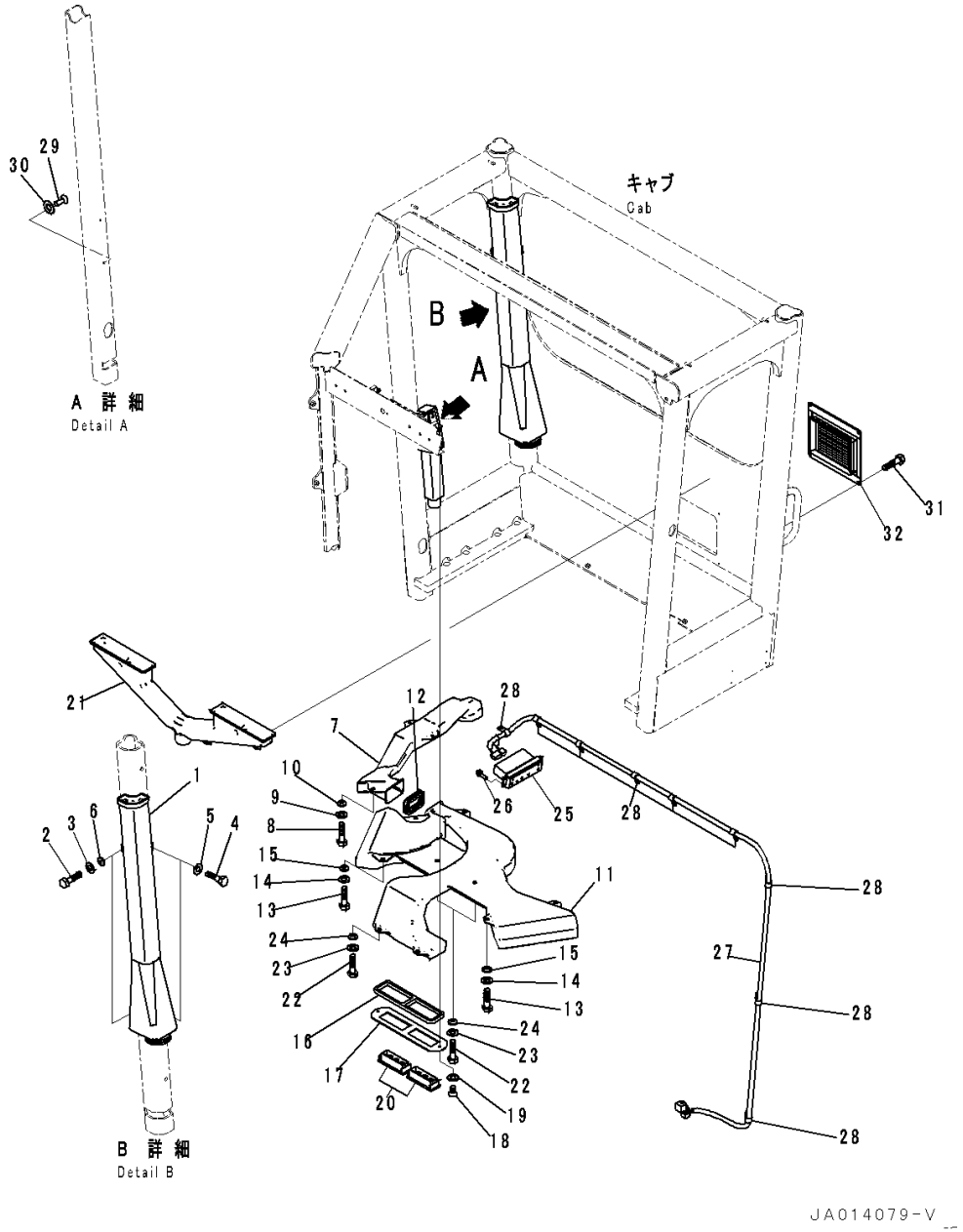

Index	Code	Part Number	Description	Qty	Serial Number
		234-952-8504	ROPS Cab Assembly,Low Height	1	26455-
	A2	234-952-8503	ROPS Cab Assembly,Low Height	1	26184-26454
		234-952-8502	ROPS Cab Assembly,Low Height	1	26074-26183
		234-952-8501	ROPS Cab Assembly,Low Height	1	26001-26073
		234-952-8604	ROPS Cab Assembly,Low Height, Slide Window	1	26455-
1		23A-952-7741	• Duct	1	26001-
2		01010-80620	• Bolt	2	26001-
3		01643-30623	• Washer	2	26001-
4		01010-80616	• Bolt	2	26001-
5		01643-30623	• Washer	2	26001-
6		20Y-53-12310	• Collar	2	26001-
7		23A-952-7750	• Duct	1	26001-
8		01010-80620	• Bolt	3	26001-
9		01643-30623	• Washer	3	26001-
10		20Y-53-12310	• Collar	3	26001-
11		23A-952-7760	• Duct	1	26001-
12		23B-952-7220	• Seal	2	26001-
13		01010-80620	• Bolt	9	26001-
14		01643-30623	• Washer	9	26001-
15		20Y-53-12310	• Collar	9	26001-
16		23B-952-7250	• Seal	3	26001-
17		23B-952-7680	• Plate	3	26001-
18		01225-70620	• Screw, Philips Head	6	26001-
19		23S-55-51970	• Washer	6	26001-
20		421-07-12512	• Grille	6	26001-
21		23A-952-7510	• Duct	1	26001-
22		01010-80620	• Bolt	4	26001-
23		01643-30623	• Washer	4	26001-
24		20Y-53-12310	• Collar	4	26001-
25		23B-07-73111	• Panel	1	26001-
26		01023-70414	• Screw	4	26001-
27		23B-952-7120	• Wiring Harness	1	26001-
28		04434-51712	• Clip	9	26001-
29		01225-70616	• Screw, Philips Head	1	26001-
30		23S-55-51970	• Washer	1	26001-
31		234-07-84190	• Louver	1	26001-
32		20Y-54-65790	• Bolt	4	26001-

FIG. K0210-001020 ROPS Cab (Wiper Switch)

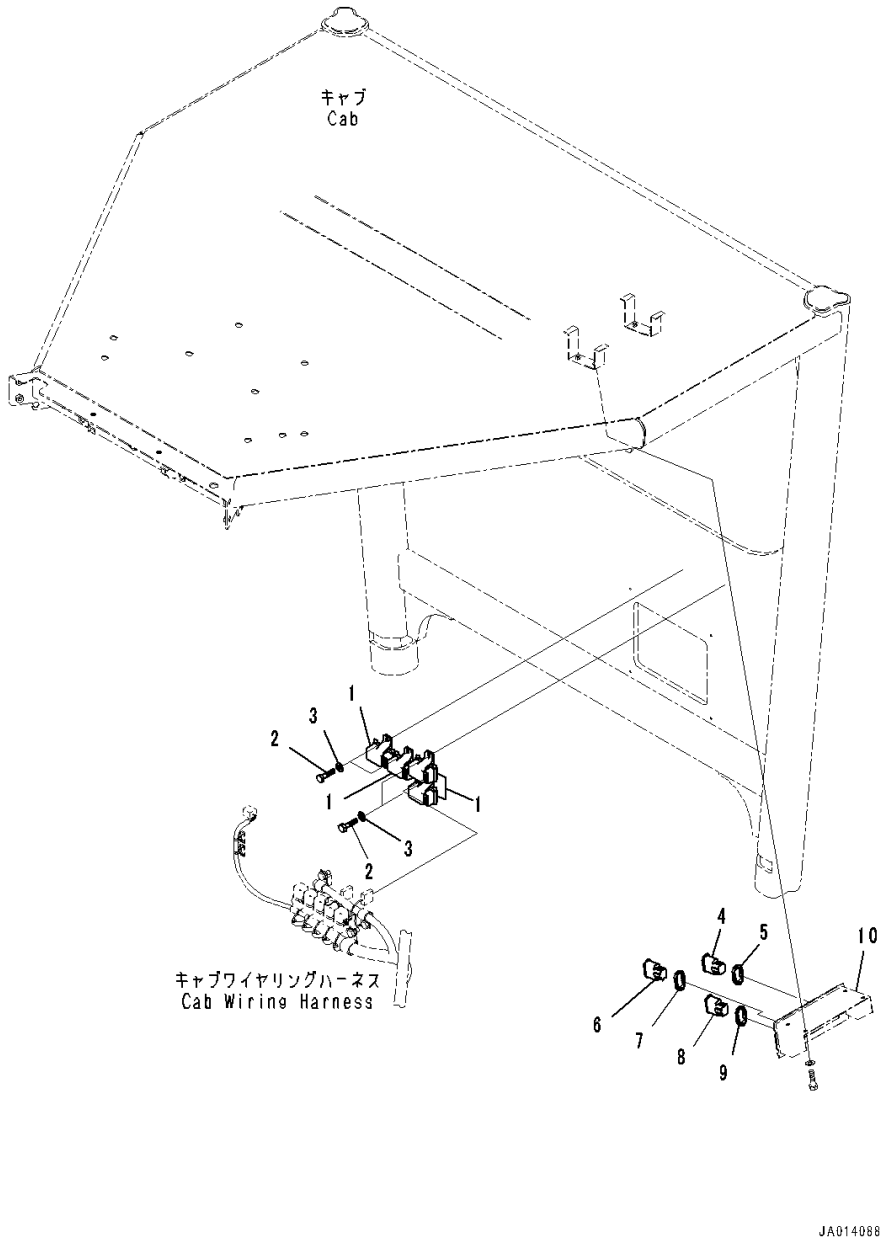

Index	Code	Part Number	Description	Qty	Serial Number
		234-952-8504	ROPS Cab Assembly,Low Height	1	26455-
	A2	234-952-8503	ROPS Cab Assembly,Low Height	1	26184-26454
		234-952-8502	ROPS Cab Assembly,Low Height	1	26074-26183
		234-952-8501	ROPS Cab Assembly,Low Height	1	26001-26073
		234-952-8604	ROPS Cab Assembly,Low Height, Slide Window	1	26455-
1		17A-Z11-2420	• Relay	4	26001-
2		01010-80612	• Bolt	4	26001-
3		01643-30623	• Washer	4	26001-
4		17A-06-42220	• Switch,Wiper Intermittent Operation	1	26001-
5		418-926-4530	• Spacer	1	26001-
6		20Y-06-42190	• Cover	1	26001-
7		418-926-4530	• Spacer	1	26001-
8		20Y-06-42190	• Cover	1	26001-
9		418-926-4530	• Spacer	1	26001-
10		(23A-952-7940)	Bracket(ROPS Cab,Body,Low Height, Slide Window)(Refer to Page 406)		
		(23A-952-7940)	Bracket(ROPS Cab,Body,Low Height)(Refer to Page 405)		

FIG. K0210-001021 ROPS Cab (Glass Window, Rear) (Low Height)

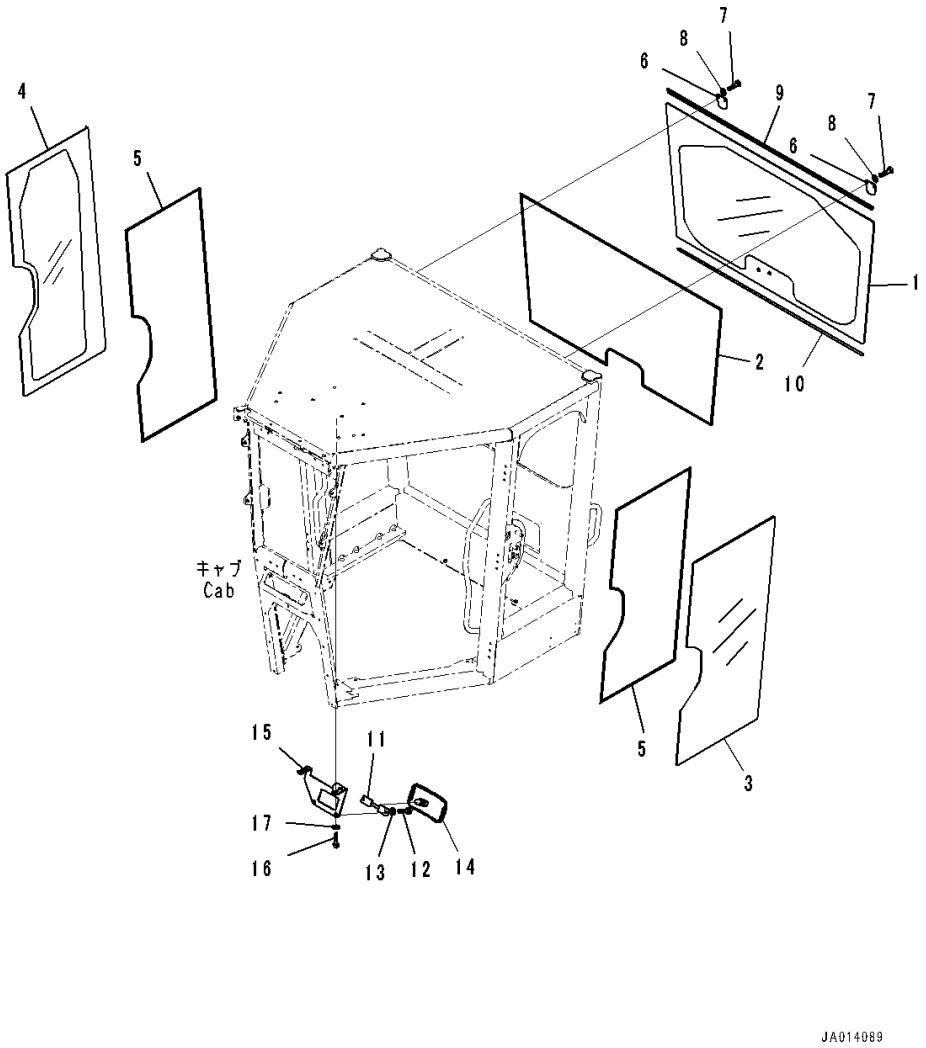

Index	Code	Part Number	Description	Qty	Serial Number
		234-952-8504	ROPS Cab Assembly,Low Height	1	26455-
	A2	234-952-8503	ROPS Cab Assembly,Low Height	1	26184-26454
		234-952-8502	ROPS Cab Assembly,Low Height	1	26074-26183
		234-952-8501	ROPS Cab Assembly,Low Height	1	26001-26073
1		23A-952-7320	• Glass	1	26001-
2		23B-952-7920	• Rubber	1	26001-
3		23A-952-7330	• Glass	1	26001-
4		23A-952-7340	• Glass	1	26001-
5		23B-952-7960	• Rubber	2	26001-
6		23A-952-7230	• Plate	2	26001-
7		01010-D0820	• Bolt	4	26001-
8		01643-70823	• Washer	4	26001-
9		23B-952-7490	• Finisher	1	26001-
10		23B-952-7590	• Finisher	1	26001-
11		23A-952-8610	• Bracket	1	26001-
12		01010-D1030	• Bolt	2	26001-
13		01643-71032	• Washer	2	26001-
14		195-Z11-2180	• Mirror	1	26001-
15		23B-952-7690	• Bracket	1	26001-
16		01010-81020	• Bolt	4	26001-
17		01643-31032	• Washer	4	26001-

FIG. K0210-002021 ROPS Cab (Glass Window, Rear) (Low Height, Slide Window)

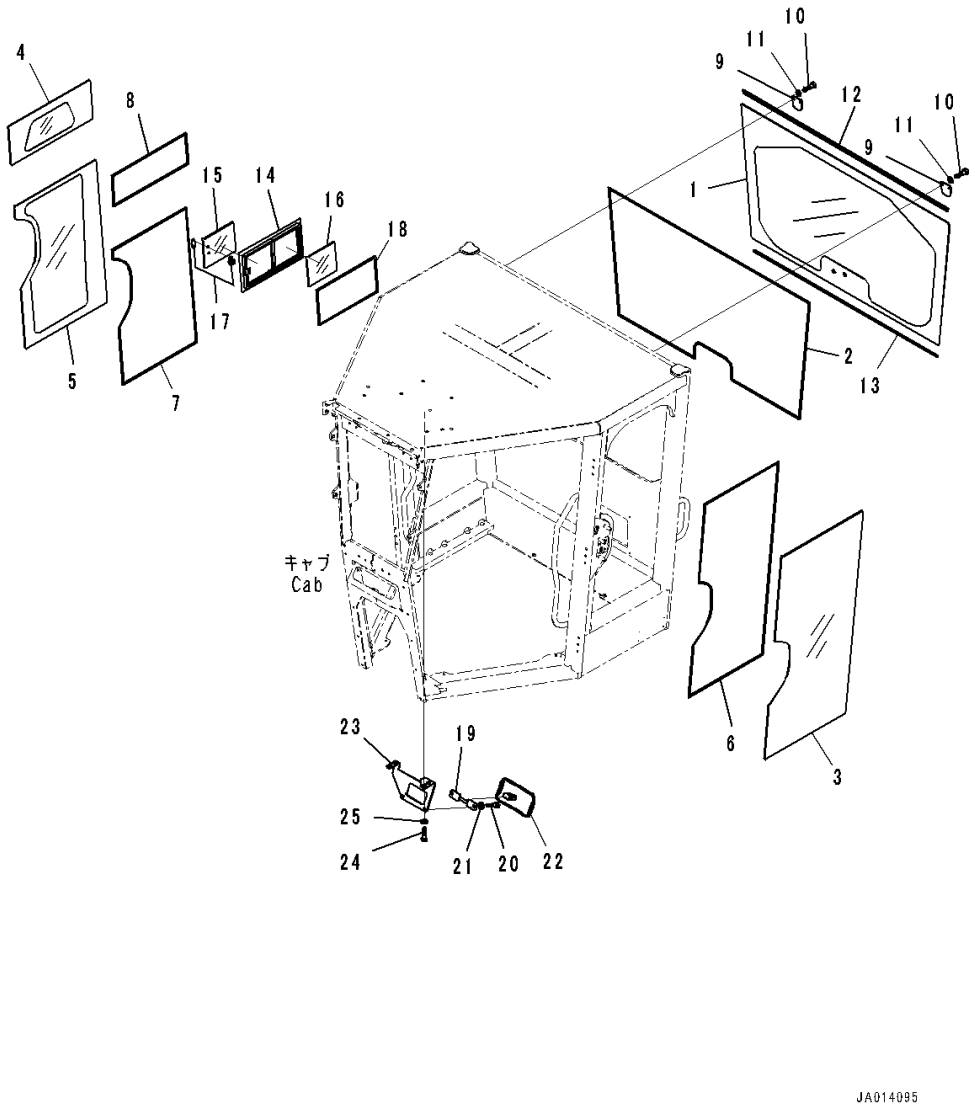

Index	Code	Part Number	Description	Qty	Serial Number
		234-952-8604	ROPS Cab Assembly,Low Height, Slide Window	1	26455-
	A2	234-952-8603	ROPS Cab Assembly,Low Height, Slide Window	1	26184-26454
		234-952-8602	ROPS Cab Assembly,Low Height, Slide Window	1	26074-26183
		234-952-8601	ROPS Cab Assembly,Low Height, Slide Window	1	26001-26073
1		23A-952-7320	• Glass	1	26001-
2		23B-952-7920	• Rubber	1	26001-
3		23A-952-7330	• Glass	1	26001-
4		23A-952-7140	• Glass	1	26001-
5		23A-952-7150	• Glass	1	26001-
6		23B-952-7960	• Rubber	1	26001-
7		23B-952-7610	• Rubber	1	26001-
8		23B-952-7620	• Rubber	1	26001-
9		23A-952-7230	• Plate	2	26001-
10		01010-D0820	• Bolt	4	26001-
11		01643-70823	• Washer	4	26001-
12		23B-952-7490	• Finisher	1	26001-
13		23B-952-7590	• Finisher	1	26001-
14		23A-952-7710	• Sash Assembly	1	26001-
15		23A-952-8630	• • Glass	1	26001-
16		23A-952-8640	• • Glass	1	26001-
17		20Y-54-13322	• • Lock Assembly	1	26001-
18		23A-952-7930	• Rubber	1	26001-
19		23A-952-8610	• Bracket	1	26001-
20		01010-D1030	• Bolt	2	26001-
21		01643-71032	• Washer	2	26001-
22		195-Z11-2180	• Mirror	1	26001-
23		23B-952-7690	• Bracket	1	26001-
24		01010-81020	• Bolt	4	26001-
25		01643-31032	• Washer	4	26001-

FIG. K0210-001022 ROPS Cab (Handrail)

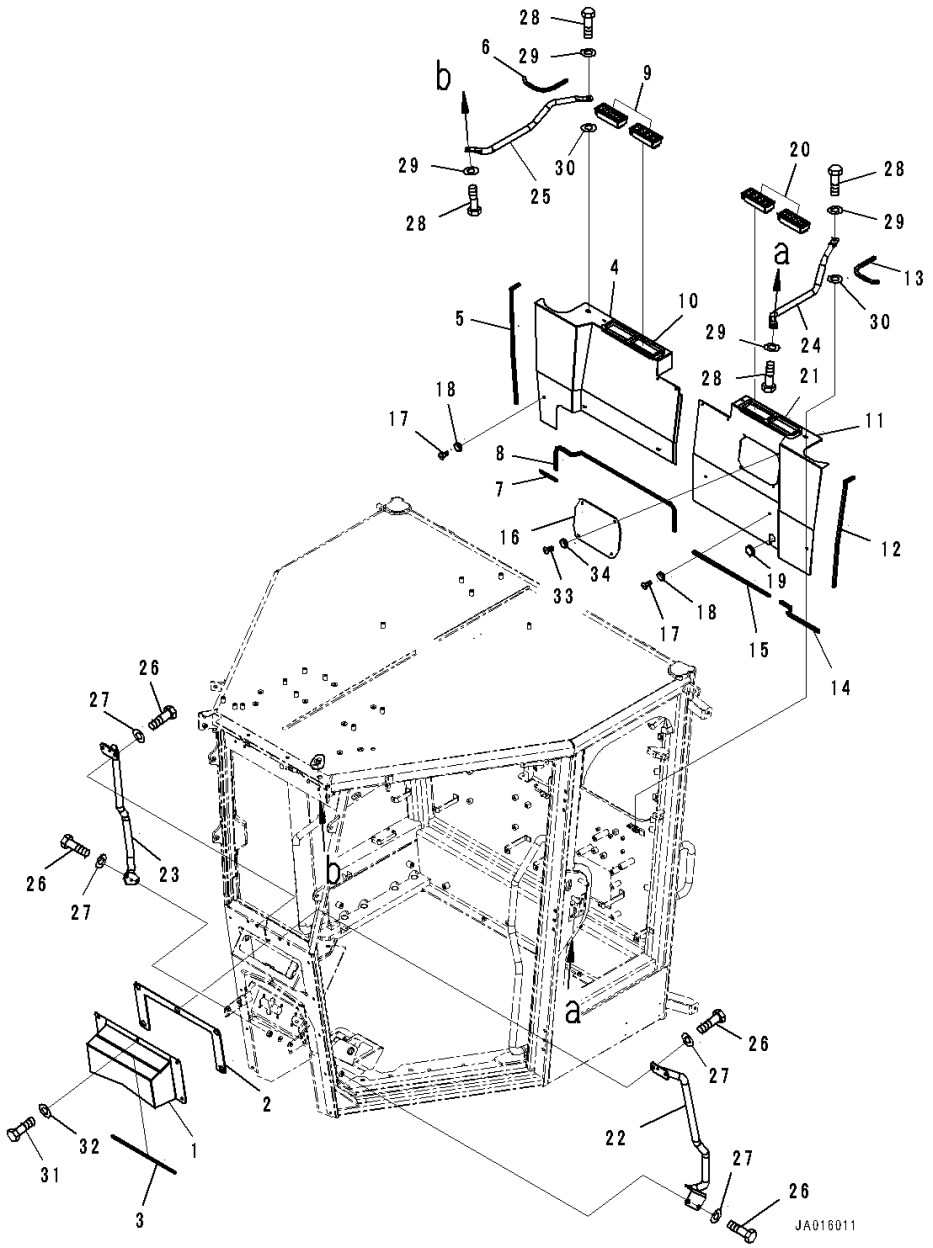

Index	Code	Part Number	Description	Qty	Serial Number
		234-952-8504	ROPS Cab Assembly,Low Height	1	26455-
	A2	234-952-8503	ROPS Cab Assembly,Low Height	1	26184-26454
		234-952-8502	ROPS Cab Assembly,Low Height	1	26074-26183
		234-952-8501	ROPS Cab Assembly,Low Height	1	26001-26073
		234-952-8604	ROPS Cab Assembly,Low Height, Slide Window	1	26455-
1		23A-952-7831	Cover	1	26001-
2		23B-952-7290	Sheet	1	26001-
3		423-921-4340	Finisher	1	26001-
4		23A-952-7990	Cover	1	26001-
5		423-54-32370	Finisher	1	26001-
6		423-54-42680	Finisher	1	26001-
7		423-944-4720	Finisher	1	26001-
8		23B-952-7630	Finisher	1	26001-
9		421-07-12512	Grille	2	26001-
10		23B-952-7260	Seal	1	26001-
11		23A-952-8290	Cover	1	26001-
12		423-54-32370	Finisher	1	26001-
13		423-54-42680	Finisher	1	26001-
14		14X-06-52171	Trim	1	26001-
15		423-54-32540	Finisher	1	26001-
16		23A-952-8520	Cover	1	26001-
17		01225-70616	Screw, Philips Head	4	26001-
18		23S-55-51970	Washer	4	26001-
19		09415-02512	Cap	1	26001-
20		421-07-12512	Grille	2	26001-
21		23B-952-7260	Seal	1	26001-
22		234-952-8850	Handrail	1	26001-
23		234-952-8860	Handrail	1	26001-
24		234-952-8660	Handrail	1	26001-
25		234-952-8670	Handrail	1	26001-
26		01010-D1025	Bolt	9	26001-
27		01643-71032	Washer	9	26001-
28		01010-D1030	Bolt	4	26001-
29		01643-71032	Washer	4	26001-
30		01643-71032	Washer	2	26001-
31		01010-D0820	Bolt	5	26001-
32		01643-70823	Washer	5	26001-
33		01225-70616	Screw, Philips Head	14	26001-
34		23S-55-51970	Washer	14	26001-

FIG. K0215-001001 Rearview Mirror

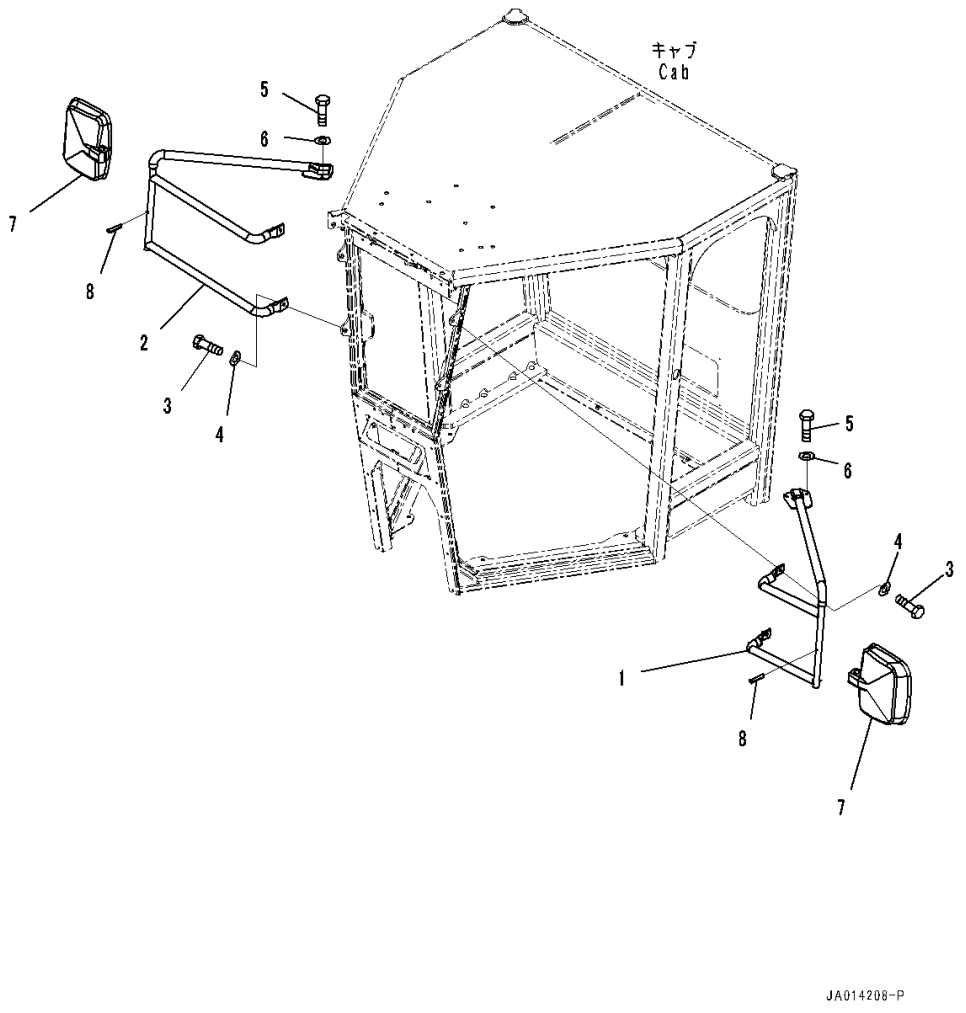

Index	Code	Part Number	Description	Qty	Serial Number
1		234-952-8420	Stay	1	26001-
2		234-952-8430	Stay	1	26001-
3		01010-D1030	Bolt	4	26001-
4		01643-71032	Washer	4	26001-
5		01010-D0820	Bolt	4	26001-
6		01643-70823	Washer	4	26001-
7		421-54-25610	Mirror	2	26001-
		421-54-25620	• Bushing	2	26001-
		421-54-25630	• Holder	1	26001-
		421-54-25640	• Lens	1	26001-
		421-54-25650	• Frame	1	26001-
		421-54-25660	• Screw	4	26001-
8		04025-00632	Pin, Spring	2	26001-

FIG. K0310-001001 Floor Mat

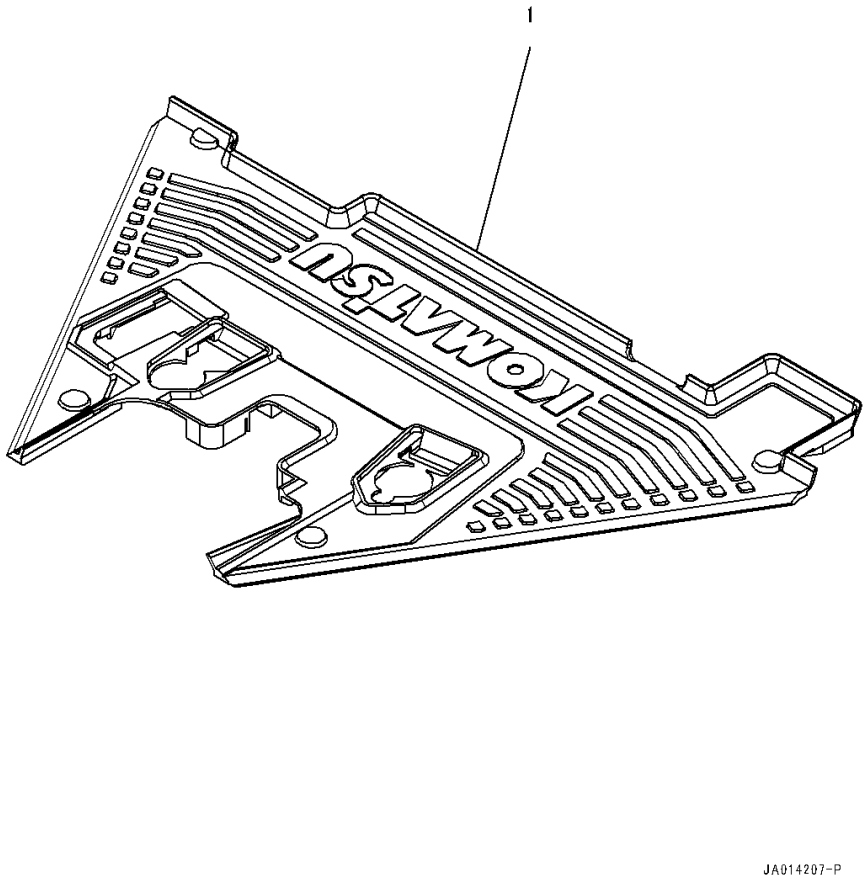

Index	Code	Part Number	Description	Qty	Serial Number
1		234-54-81121	Mat	1	26447-
	A4	234-54-81120	Mat,(234-54-81121,23B-45-73100)	1	26001-26446

FIG. K0350-001001 Window Washer

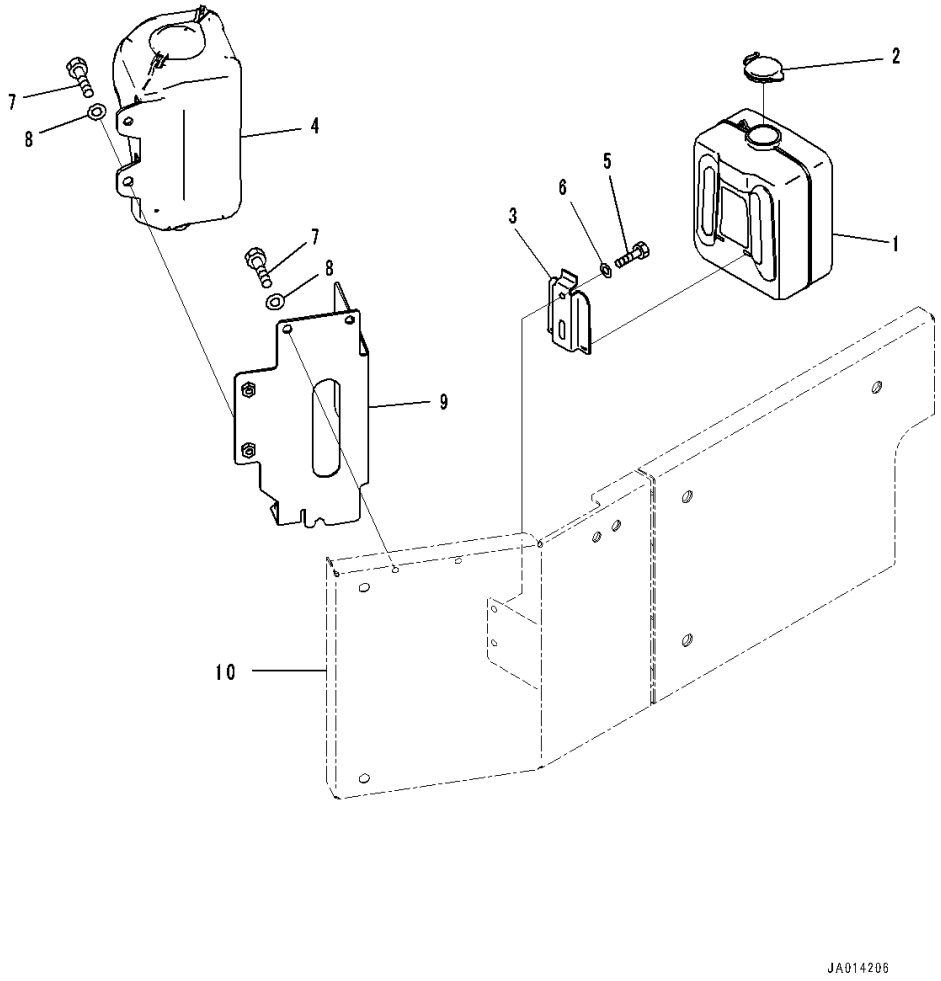

Index	Code	Part Number	Description	Qty	Serial Number
1		21W-06-42130	Tank Assembly	1	26001-
2		21W-06-42140	• Cap	1	26001-
3		203-03-41620	• Bracket	1	26001-
4		14X-Y11-2110	Tank Assembly, Window Washer	1	26001-
5		01010-80816	Bolt	3	26001-
6		01643-30823	Washer	3	26001-
7		01010-80616	Bolt	5	26001-
8		01643-30623	Washer	5	26001-
9		234-54-83410	Bracket	1	26001-
10		(234-54-83131)	Cover(Front Frame Cover,Floor Cover)(Refer to Page 538)		
		(234-54-83131)	Cover(Front Frame Cover,Floor Cover)(Refer to Page 540)		

FIG. K0710-001001 Air Conditioner Piping (Air Compressor)

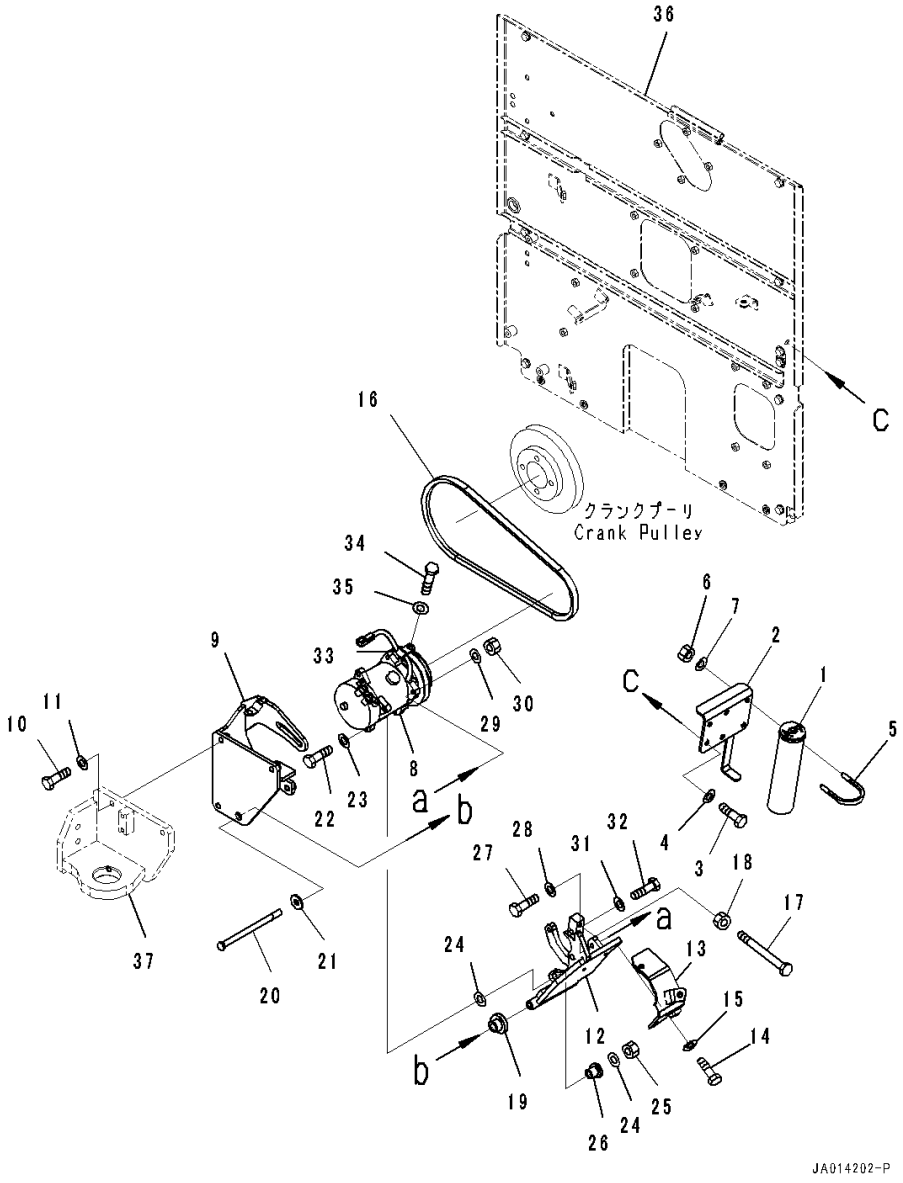

Index	Code	Part Number	Description	Qty	Serial Number
1		423-07-31571	Receiver	1	26001-
2		234-07-81670	Bracket	1	26001-
3		01010-81025	Bolt	2	26001-
4		01643-31032	Washer	2	26001-
5		07283-36155	Clip	2	26001-
6		01597-01009	Nut	4	26001-
7		01643-31032	Washer	4	26001-
8		23B-07-61112	Compressor	1	26001-
9		234-07-81110	Bracket	1	26001-
10		01010-81245	Bolt	3	26001-
11		01643-31232	Washer	3	26001-
12		234-07-81120	Bracket	1	26001-
13		234-07-81140	Bracket	1	26001-
14		01010-81025	Bolt	2	26001-
15		01643-31032	Washer	2	26001-
16		04120-21748	V-belt	1	26001-
17		01017-51430	Bolt	1	26001-
18		01580-11411	Nut	1	26001-
19		419-07-11761	Collar	1	26001-
20		424-S62-4290	Bolt	1	26001-
21		124-54-26540	Washer	1	26001-
22		01010-81055	Bolt	2	26001-
23		01643-31032	Washer	2	26001-
24		01643-31032	Washer	4	26001-
25		01580-11008	Nut	2	26001-
26		425-S62-3160	Collar	2	26001-
27		01010-81045	Bolt	3	26001-
28		01643-31032	Washer	3	26001-
29		01643-31032	Washer	3	26001-
30		01580-11008	Nut	3	26001-
31		01643-31445	Washer, Flat	1	26001-
32		01010-81440	Bolt	1	26001-
33		600-051-2100	Clip	1	26001-
34		01010-81025	Bolt	1	26001-
35		01643-31032	Washer	1	26001-
36		(234-03-81991)	Cover(Radiator,Mounting,For Extra Bad Fuel and Poor Fuel Specification, Water+Dust, Additional Filter)(Refer to Page 160)		

FIG. K0710-001001 Air Conditioner Piping (Air Compressor)

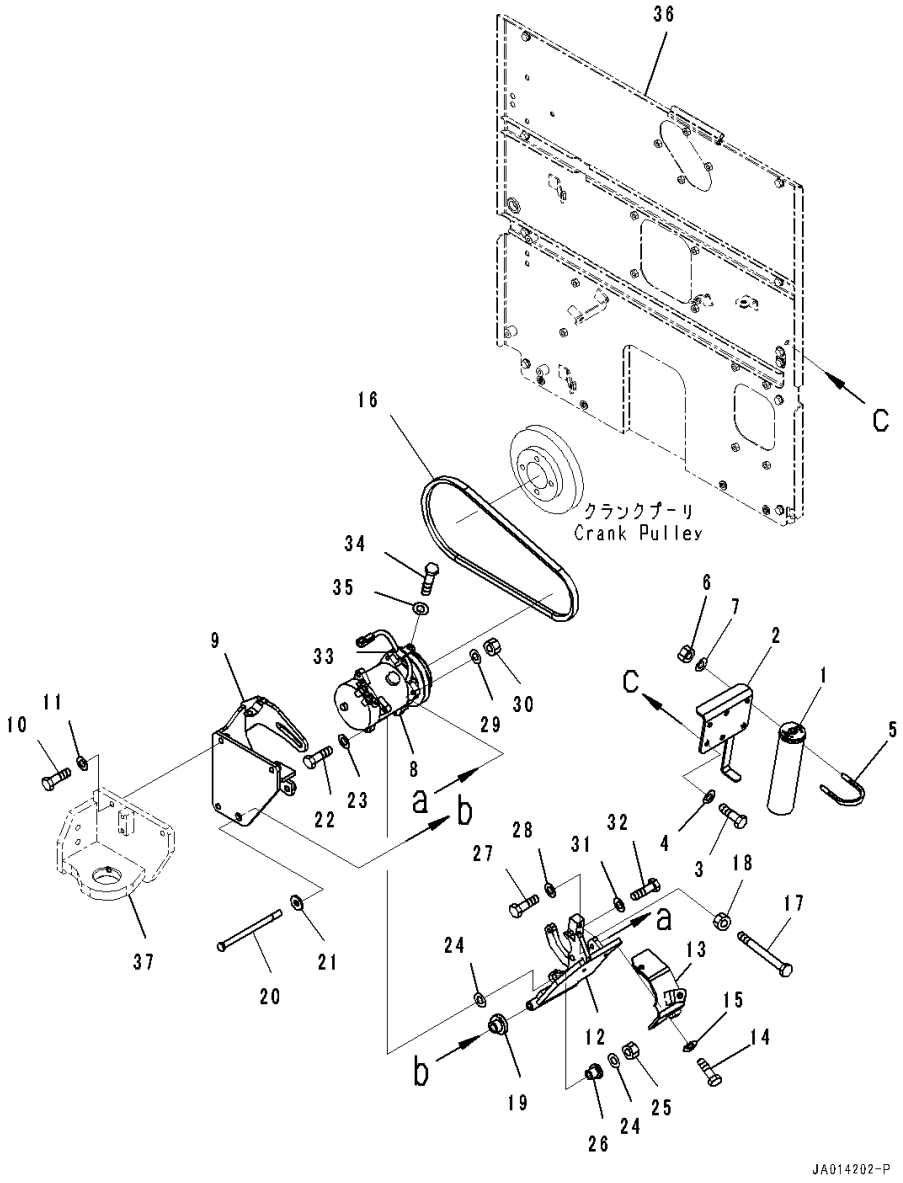

Index	Code	Part Number	Description	Qty	Serial Number
		(234-03-82991)	Cover(Radiator,Mounting,For Extra Bad Fuel and Poor Fuel Specification, Water+Dust, Large Fuel Prefilter)(Refer to Page 162)		
37		(234-01-81310)	Bracket(Engine Mounting)(Refer to Page 136)		

FIG. K0710-001002 Air Conditioner Piping (Piping)

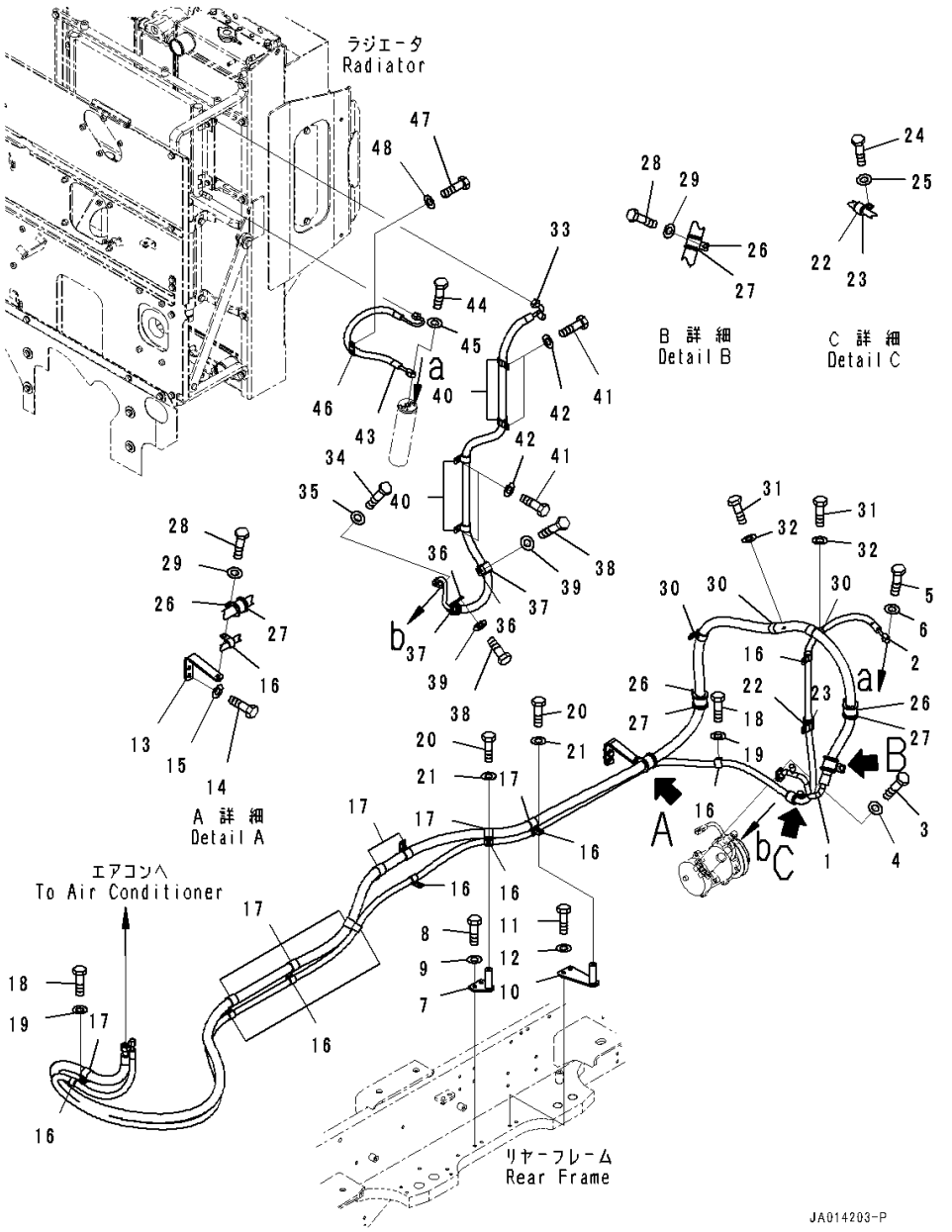

Index	Code	Part Number	Description	Qty	Serial Number
1		234-07-81210	Hose	1	26001-
2		234-07-81220	Hose	1	26001-
3		01010-80830	Bolt	1	26001-
4		01643-30823	Washer	1	26001-
5		01010-80625	Bolt	1	26001-
6		01643-30623	Washer	1	26001-
7		234-07-81240	Bracket	1	26001-
8		01010-81025	Bolt	2	26001-
9		01643-31032	Washer	2	26001-
10		234-07-81230	Bracket	1	26001-
11		01010-81025	Bolt	2	26001-
12		01643-31032	Washer	2	26001-
13		234-07-81250	Bracket	1	26001-
14		01010-81025	Bolt	2	26001-
15		01643-31032	Washer	2	26001-
16		04434-51910	Clip	10	26001-
17		6150-51-9490	Clip	8	26001-
18		01010-81025	Bolt	7	26001-
19		01643-31032	Washer	7	26001-
20		01010-81020	Bolt	2	26001-
21		01643-31032	Washer	2	26001-
22		04434-52711	Clip	2	26001-
23		07095-20419	Cushion	2	26001-
24		01010-81025	Bolt	1	26001-
25		01643-31032	Washer	1	26001-
26		208-06-19170	Clip	4	26001-
27		07095-00630	Cushion	4	26001-
28		01010-81025	Bolt	2	26001-
29		01643-31032	Washer	2	26001-
30		6150-51-9490	Clip	3	26001-
31		01010-81025	Bolt	2	26001-
32		01643-31032	Washer	2	26001-
33		234-07-81260	Hose	1	26001-
34		01010-80830	Bolt	1	26001-
35		01643-30823	Washer	1	26001-
36		04434-53211	Clip	2	26001-
37		07095-20523	Cushion	2	26001-
38		01010-81025	Bolt	2	26001-
39		01643-31032	Washer	2	26001-
40		04434-52310	Clip	4	26001-

FIG. K0710-001002 Air Conditioner Piping (Piping)

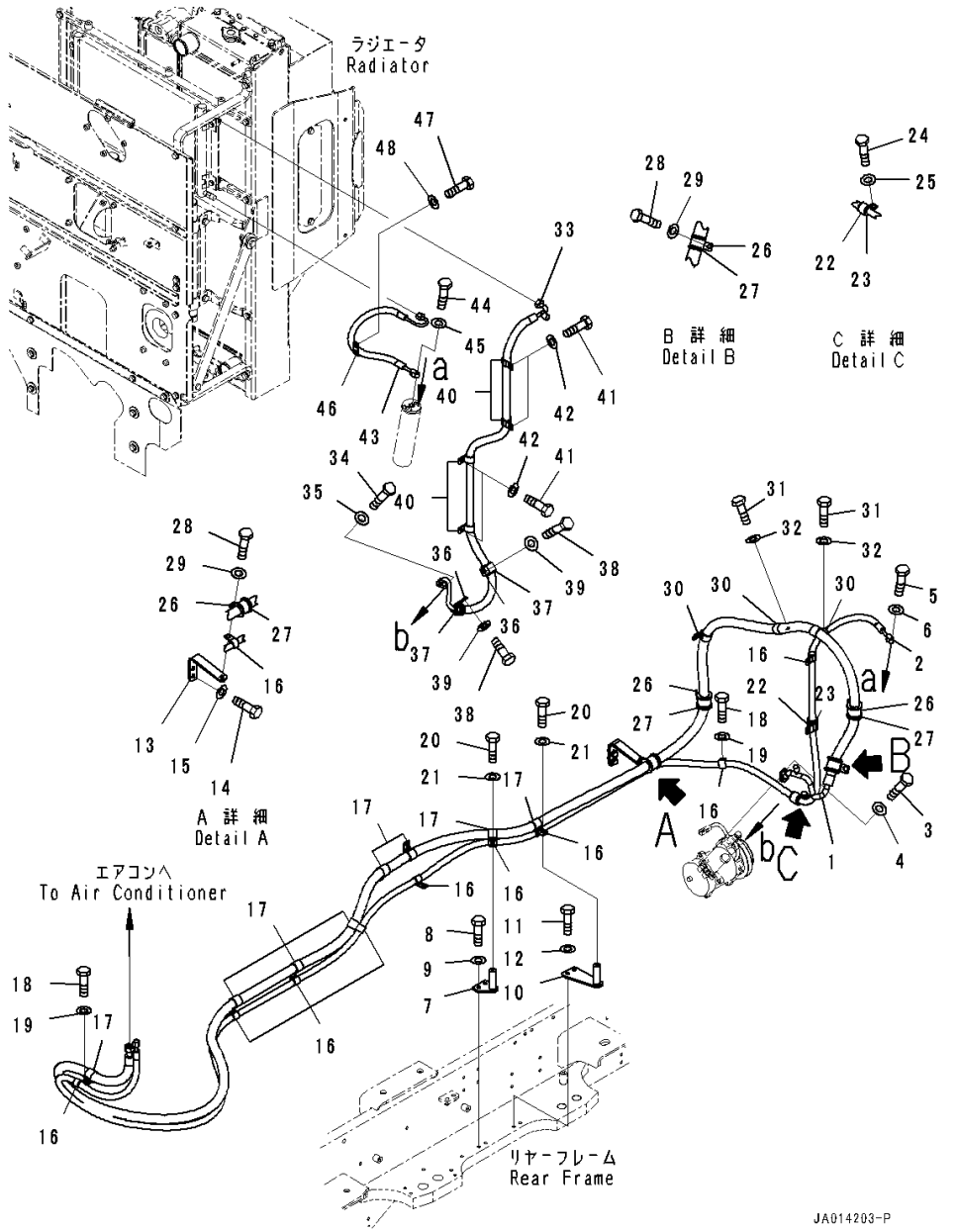

Index	Code	Part Number	Description	Qty	Serial Number
41		01010-81025	Bolt	4	26001-
42		01643-31032	Washer	4	26001-
43		234-07-81270	Hose	1	26001-
44		01010-80625	Bolt	1	26001-
45		01643-30623	Washer	1	26001-
46		04434-51910	Clip	1	26001-
47		01010-81025	Bolt	1	26001-
48		01643-31032	Washer	1	26001-

FIG. K0713-001001 Heater Piping

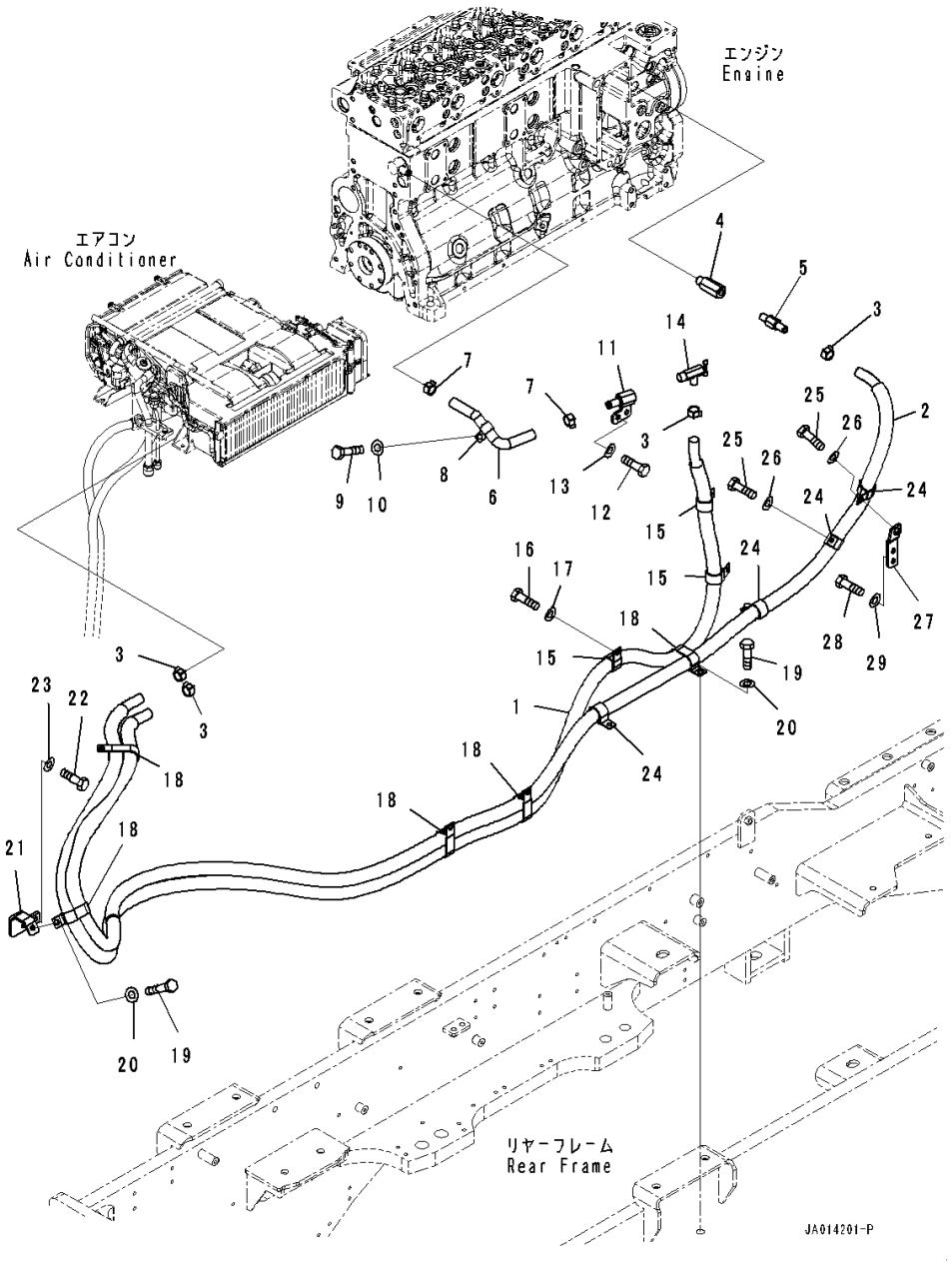

Index	Code	Part Number	Description	Qty	Serial Number
1		234-07-81610	Hose	1	26001-
2		234-07-81620	Hose	1	26001-
3		09479-12400	Clip	4	26001-
4		207-979-7390	Nipple	1	26001-
5		11Y-979-8920	Nipple	1	26001-
6		234-07-81630	Hose	1	26001-
7		09479-12400	Clip	2	26001-
8		04434-52312	Clip	1	26001-
9		01010-81025	Bolt	1	26001-
10		01643-31032	Washer	1	26001-
11		234-07-81640	Nipple	1	26001-
12		01010-81025	Bolt	2	26001-
13		01643-31032	Washer	2	26001-
14		09482-10000	Valve, Water	1	26001-
15		04434-53411	Clip	3	26001-
16		01010-81025	Bolt	2	26001-
17		01643-31032	Washer	2	26001-
18		569-06-61980	Clip	5	26001-
19		01010-81025	Bolt	3	26001-
20		01643-31032	Washer	3	26001-
21		234-07-81650	Bracket	1	26001-
22		01010-81025	Bolt	2	26001-
23		01643-31032	Washer	2	26001-
24		04434-53411	Clip	4	26001-
25		01010-81025	Bolt	4	26001-
26		01643-31032	Washer	4	26001-
27		234-07-81660	Bracket	1	26001-
28		01010-81025	Bolt	2	26001-
29		01643-31032	Washer	2	26001-

FIG. K0810-001001 Parts For Less Radio

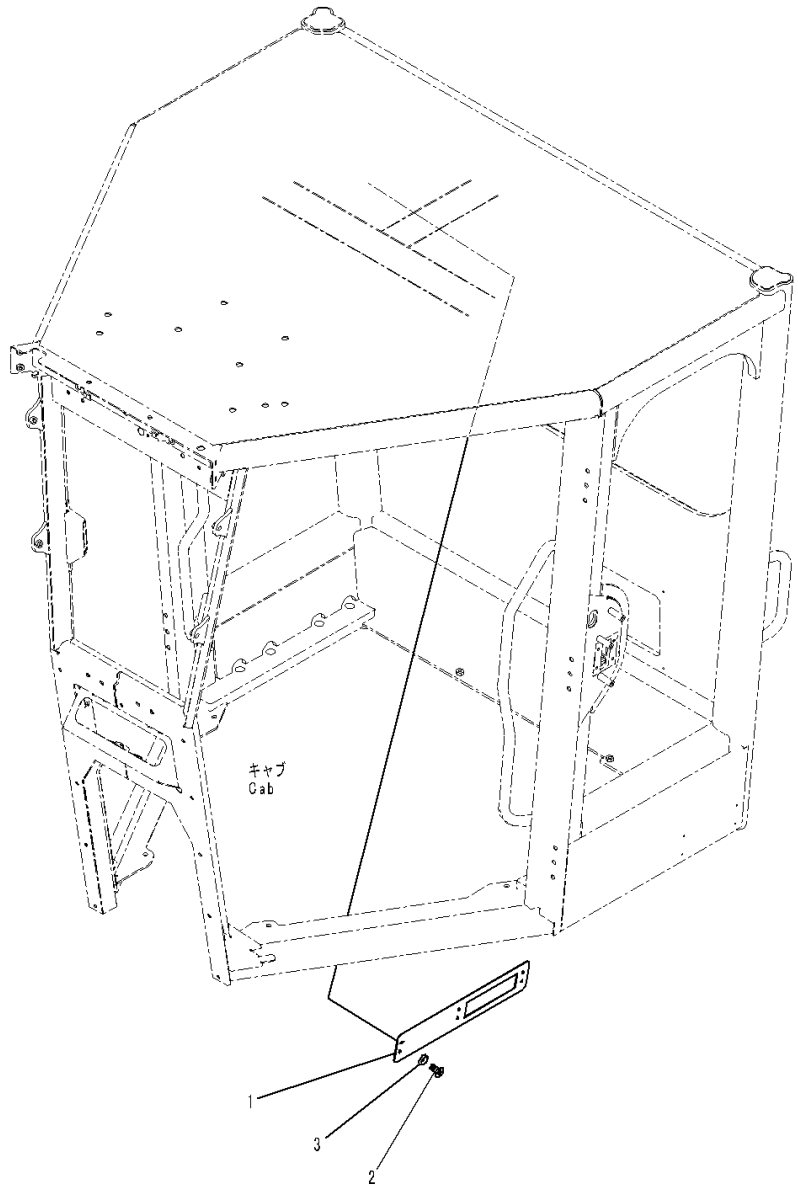

Index	Code	Part Number	Description	Qty	Serial Number
1		23A-952-8531	Plate	1	26001-
2		01225-70620	Screw, Philips Head	6	26001-
3		23S-55-51970	Washer	6	26001-

FIG. K0810-002001 Radio (With AM-FM Radio, Europe and Asia)

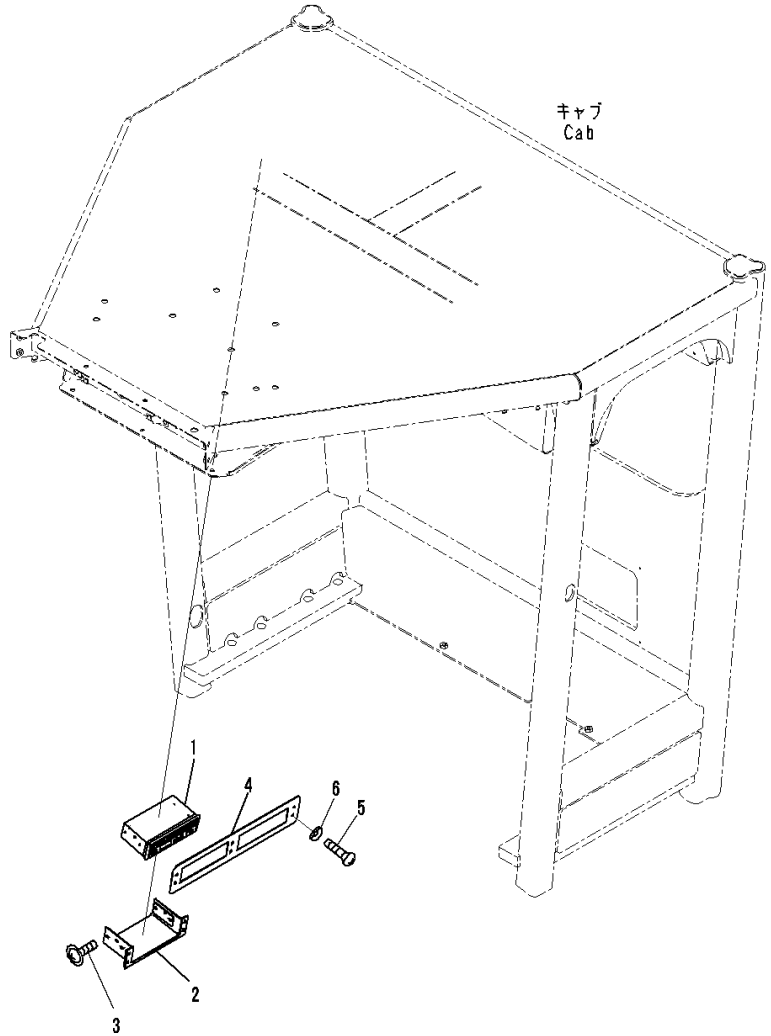

Index	Code	Part Number	Description	Qty	Serial Number
1		56D-06-37130	Radio	1	26001-
2		234-952-8920	Bracket	1	26001-
3		01023-10510	Screw	6	26001-
4		234-952-8140	Plate	1	26001-
5		01225-70620	Screw, Philips Head	6	26001-
6		23S-55-51970	Washer	6	26001-

FIG. K0830-001001 Fire Extinguisher

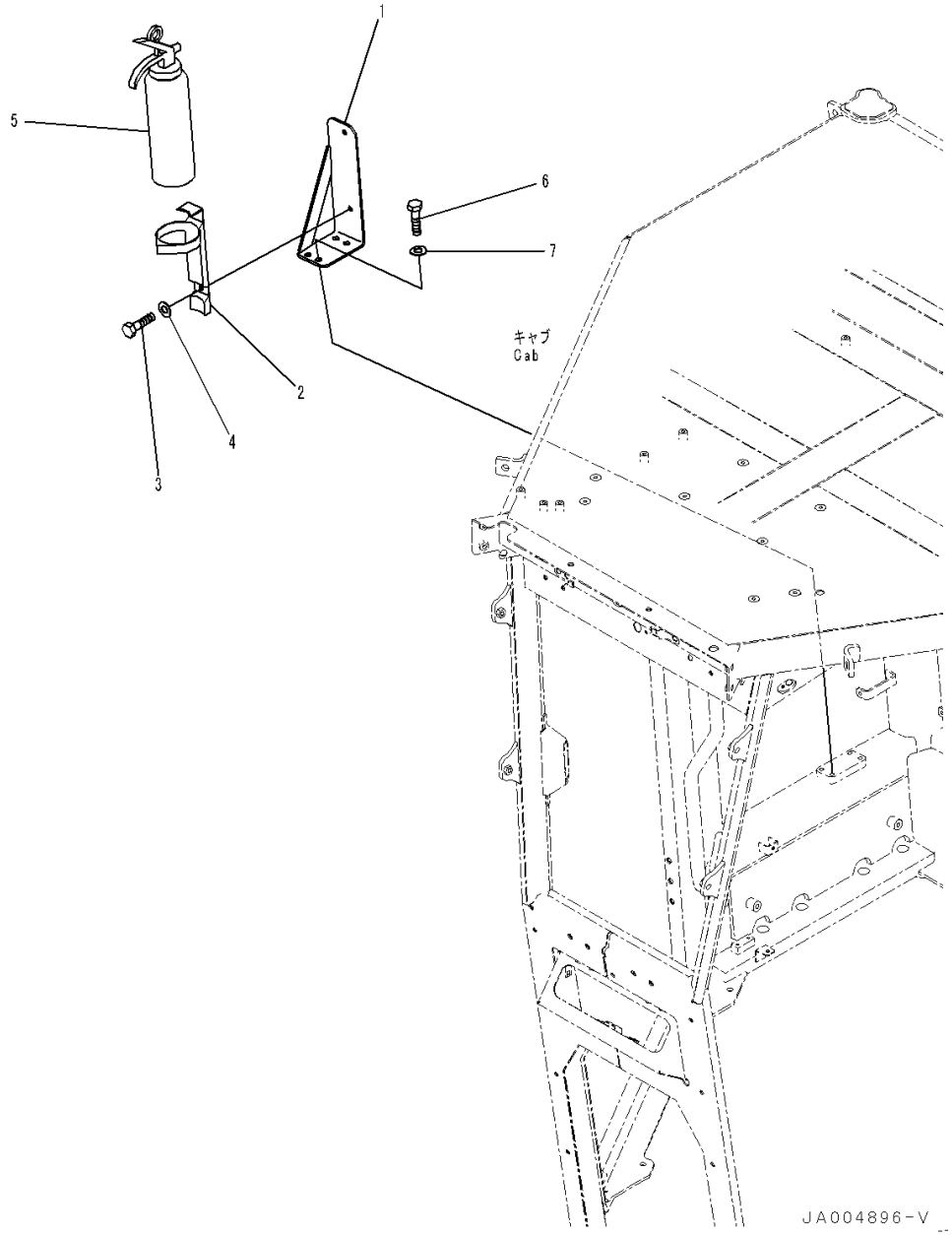

Index	Code	Part Number	Description	Qty	Serial Number
1		23B-952-7650	Bracket	1	26001-
2		23S-983-1140	Bracket	1	26001-
3		01010-D0816	Bolt	2	26001-
4		01643-70823	Washer	2	26001-
5		23S-983-1130	Fire Extinguisher	1	26001-
6		01010-D1020	Bolt	4	26001-
7		01643-71032	Washer	4	26001-

FIG. K1110-001001 Floor (Steering Post Related Parts)

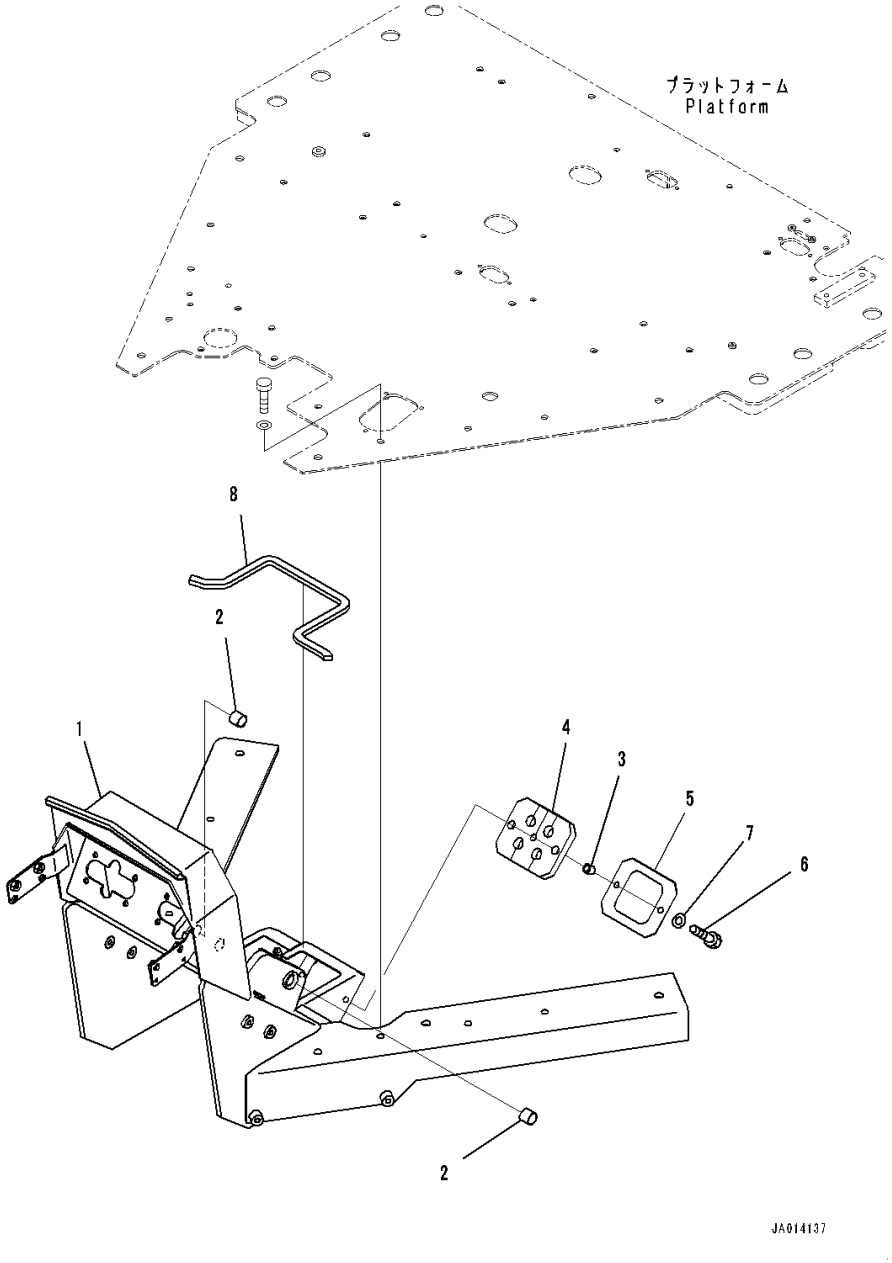

Index	Code	Part Number	Description	Qty	Serial Number
1		234-43-82110	Bracket	1	26001-
2		234-885-1620	Bushing	4	26001-
3		41H-879-1250	Spacer	2	26001-
4		23B-43-72550	Cushion	1	26001-
5		23B-43-72540	Plate	1	26001-
6		01010-80830	Bolt	2	26001-
7		01643-30823	Washer	2	26001-
8		23B-54-72320	Sheet	1	26001-

FIG. K1110-004002 Floor (Rod) (With 10 Spool Valve)

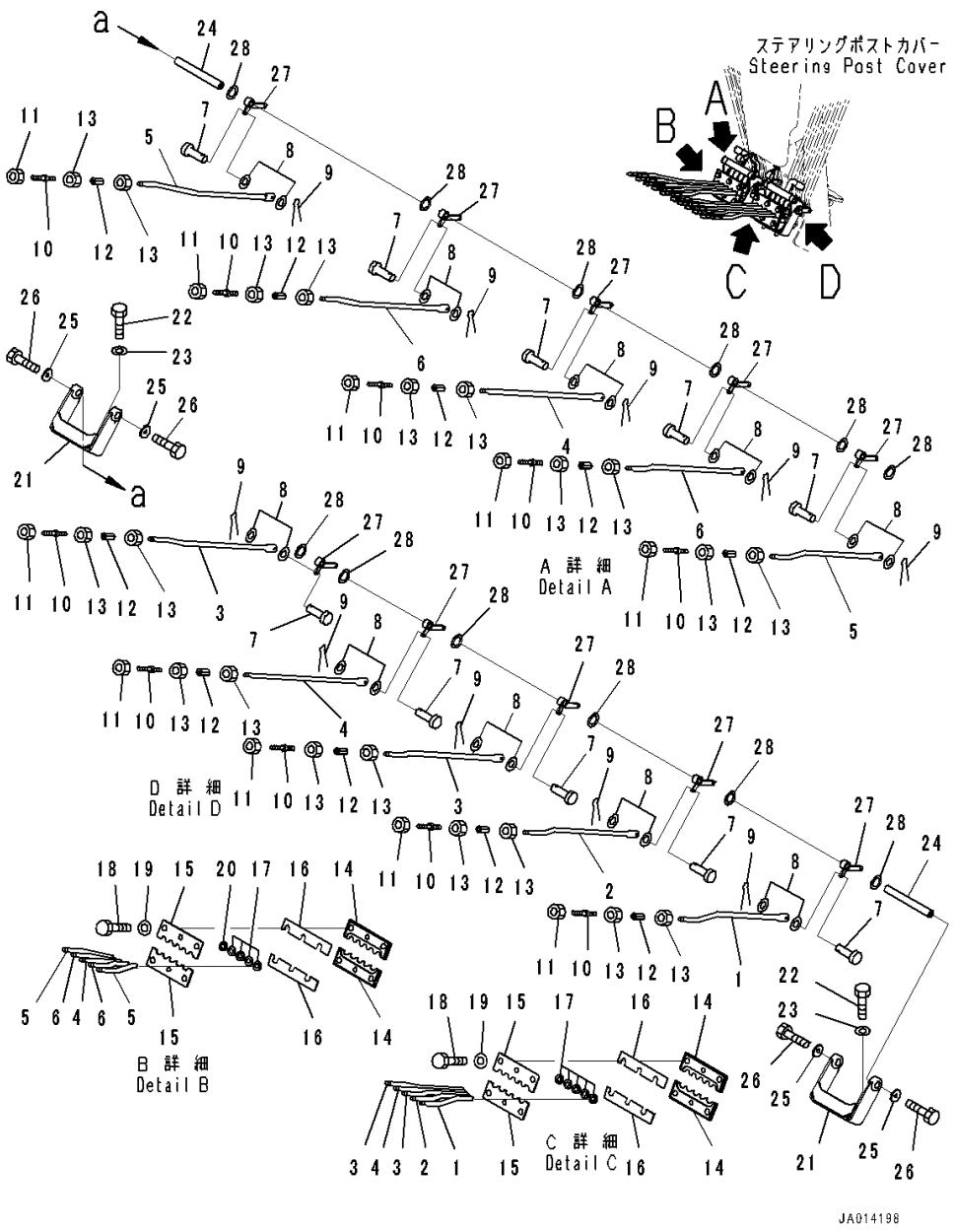

Index	Code	Part Number	Description	Qty	Serial Number
1		234-43-82210	Rod	1	26001-
2		234-43-82220	Rod	1	26001-
3		234-43-82230	Rod	2	26001-
4		234-43-82240	Rod	2	26001-
5		234-43-82260	Rod	2	26001-
6		234-43-82270	Rod	2	26001-
7		04205-10516	Pin	10	26001-
8		01640-20508	Washer	20	26001-
9		04050-11210	Pin, Cotter	10	26001-
10		04248-30808	Rod	10	26001-
11		01508-40805	Nut	10	26001-
12		23B-43-72770	Joint	10	26001-
13		01580-10806	Nut	20	26001-
14		23B-43-82320	Plate	4	26393-
	A2	234-43-82340	Plate	4	26001-26392
15		23B-43-82310	Plate	4	26393-
	A2	234-43-82330	Plate	4	26001-26392
16		23B-54-72150	Shim,T=0.2mm	12	26001-
17		23B-54-72160	Washer	10	26001-
18		01010-80820	Bolt	12	26001-
19		01643-30823	Washer	12	26001-
20		01640-21016	Washer	1	26001-
21		234-43-82130	Bracket	2	26001-
22		01010-81020	Bolt	4	26001-
23		01643-31032	Washer	4	26001-
24		23B-43-72190	Shaft	2	26001-
25		175-61-23220	Washer	4	26001-
26		01010-80816	Bolt	4	26001-
27		23B-43-72220	Lever	10	26001-
28		237-43-17420	Washer	18	26001-

FIG. K1110-002002 Floor (Rod) (With 10 Spool Valve,12volt Converter)

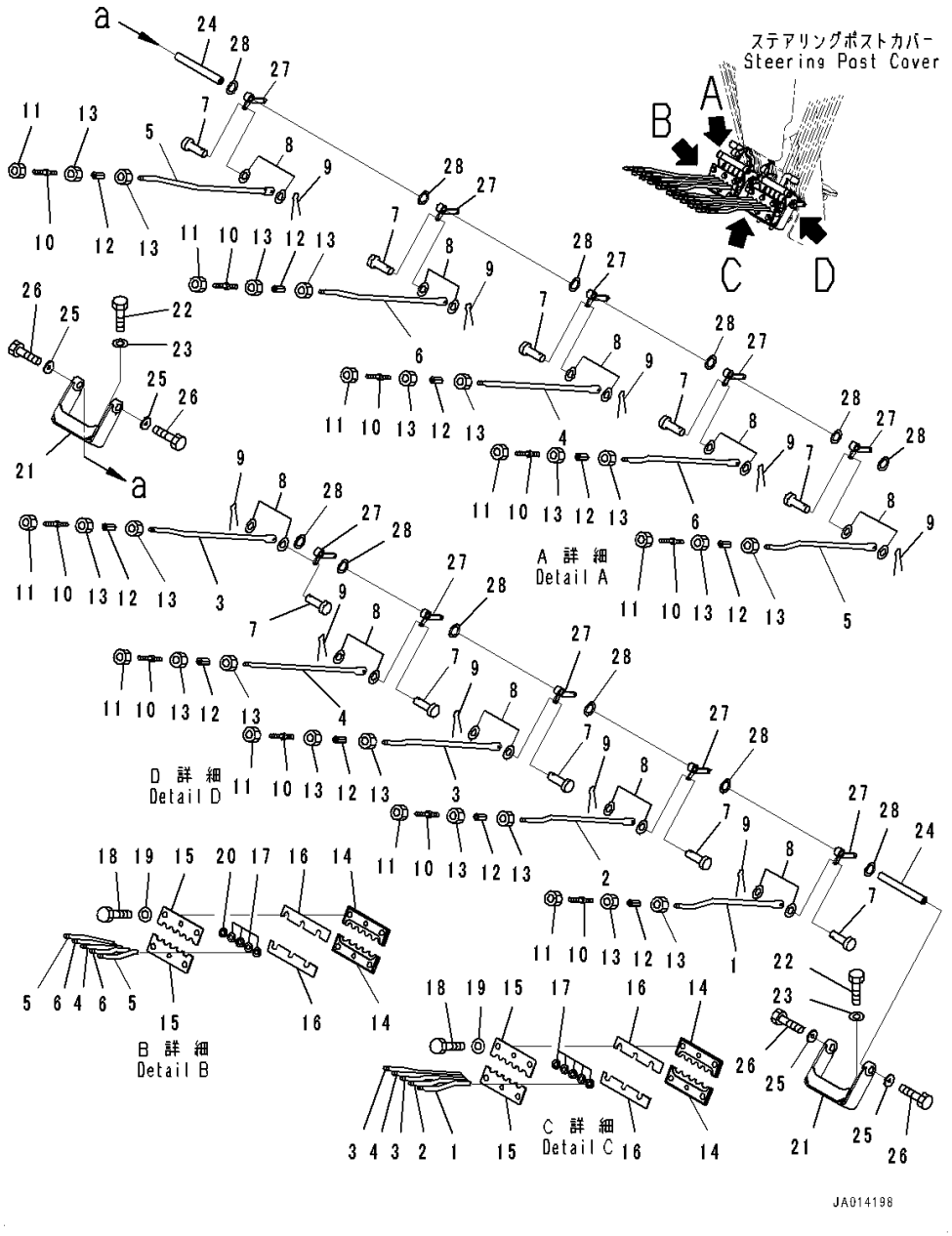

Index	Code	Part Number	Description	Qty	Serial Number
1		234-43-82210	Rod	1	26001-
2		234-43-82220	Rod	1	26001-
3		234-43-82230	Rod	2	26001-
4		234-43-82240	Rod	2	26001-
5		234-43-82260	Rod	2	26001-
6		234-43-82270	Rod	2	26001-
7		04205-10516	Pin	10	26001-
8		01640-20508	Washer	20	26001-
9		04050-11210	Pin, Cotter	10	26001-
10		04248-30808	Rod	10	26001-
11		01508-40805	Nut	10	26001-
12		23B-43-72770	Joint	10	26001-
13		01580-10806	Nut	20	26001-
14		23B-43-82320	Plate	4	26393-
	A2	234-43-82340	Plate	4	26001-26392
15		23B-43-82310	Plate	4	26393-
	A2	234-43-82330	Plate	4	26001-26392
16		23B-54-72150	Shim,T=0.2mm	12	26001-
17		23B-54-72160	Washer	10	26001-
18		01010-80820	Bolt	12	26001-
19		01643-30823	Washer	12	26001-
20		01640-21016	Washer	1	26001-
21		234-43-82130	Bracket	2	26001-
22		01010-81020	Bolt	4	26001-
23		01643-31032	Washer	4	26001-
24		23B-43-72190	Shaft	2	26001-
25		175-61-23220	Washer	4	26001-
26		01010-80816	Bolt	4	26001-
27		23B-43-72220	Lever	10	26001-
28		237-43-17420	Washer	18	26001-

FIG. K1110-001002 Floor (Rod) (With 9 Spool Valve)

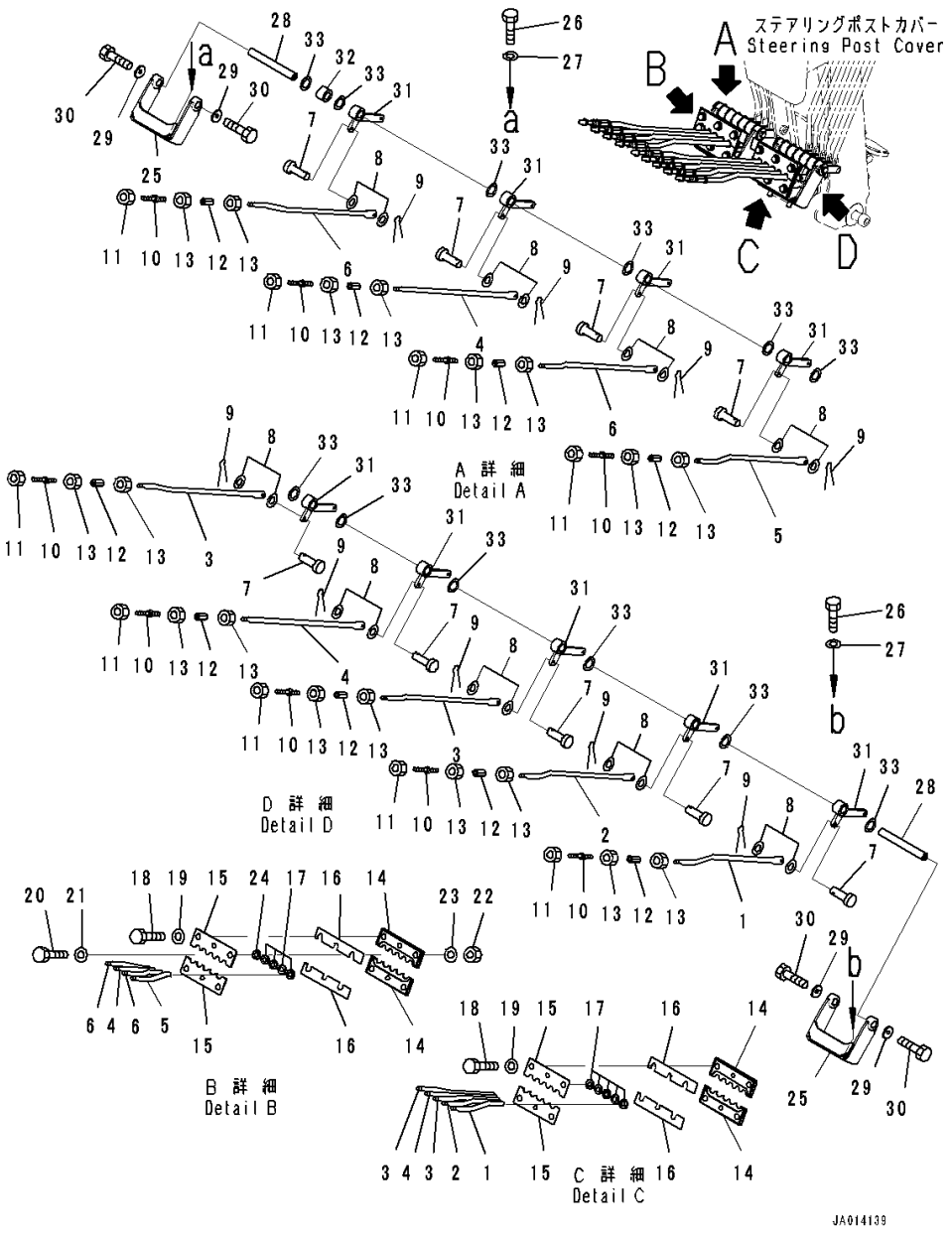

Index	Code	Part Number	Description	Qty	Serial Number
1		234-43-82210	Rod	1	26001-
2		234-43-82220	Rod	1	26001-
3		234-43-82230	Rod	2	26001-
4		234-43-82240	Rod	2	26001-
5		234-43-82260	Rod	1	26001-
6		234-43-82270	Rod	2	26001-
7		04205-10516	Pin	9	26001-
8		01640-20508	Washer	18	26001-
9		04050-11210	Pin, Cotter	9	26001-
10		04248-30808	Rod	9	26001-
11		01508-40805	Nut	9	26001-
12		23B-43-72770	Joint	9	26001-
13		01580-10806	Nut	18	26001-
14		23B-43-82320	Plate	4	26393-
	A2	234-43-82340	Plate	4	26001-26392
15		23B-43-82310	Plate	4	26393-
	A2	234-43-82330	Plate	4	26001-26392
16		23B-54-72150	Shim,T=0.2mm	12	26001-
17		23B-54-72160	Washer	10	26001-
18		01010-80820	Bolt	12	26001-
19		01643-30823	Washer	12	26001-
20		01010-81025	Bolt	1	26001-
21		01643-31032	Washer	1	26001-
22		01580-11008	Nut	1	26001-
23		01643-31032	Washer	1	26001-
24		01640-21016	Washer	1	26001-
25		234-43-82130	Bracket	2	26001-
26		01010-81020	Bolt	4	26001-
27		01643-31032	Washer	4	26001-
28		23B-43-72190	Shaft	2	26001-
29		175-61-23220	Washer	4	26001-
30		01010-80816	Bolt	4	26001-
31		23B-43-72220	Lever	9	26001-
32		23B-43-72380	Collar	1	26001-
33		237-43-17420	Washer	18	26001-

FIG. K1110-003002 Floor (Rod) (With 9 Spool Valve,12volt Converter)

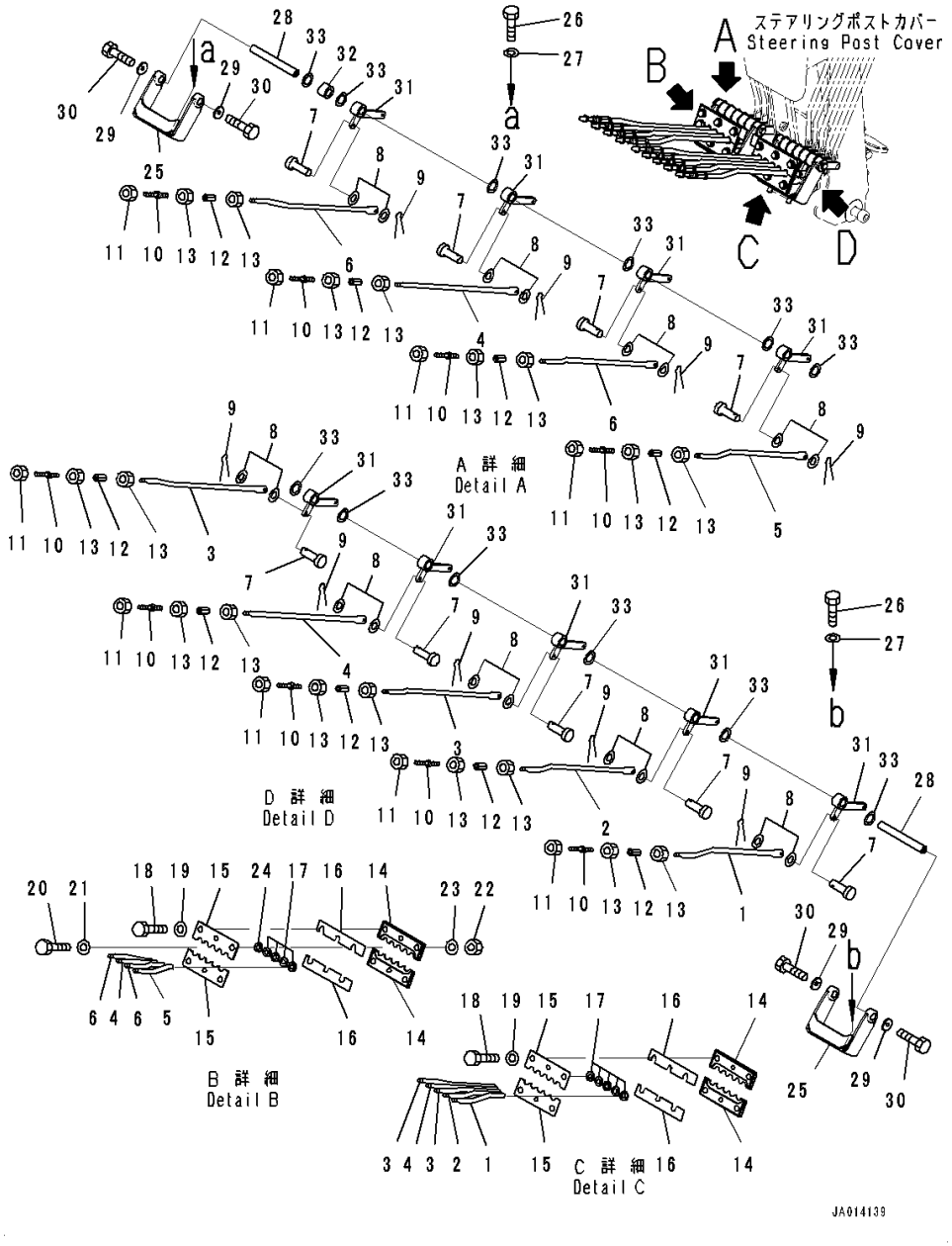

Index	Code	Part Number	Description	Qty	Serial Number
1		234-43-82210	Rod	1	26001-
2		234-43-82220	Rod	1	26001-
3		234-43-82230	Rod	2	26001-
4		234-43-82240	Rod	2	26001-
5		234-43-82260	Rod	1	26001-
6		234-43-82270	Rod	2	26001-
7		04205-10516	Pin	9	26001-
8		01640-20508	Washer	18	26001-
9		04050-11210	Pin, Cotter	9	26001-
10		04248-30808	Rod	9	26001-
11		01508-40805	Nut	9	26001-
12		23B-43-72770	Joint	9	26001-
13		01580-10806	Nut	18	26001-
14		23B-43-82320	Plate	4	26393-
	A2	234-43-82340	Plate	4	26001-26392
15		23B-43-82310	Plate	4	26393-
	A2	234-43-82330	Plate	4	26001-26392
16		23B-54-72150	Shim,T=0.2mm	12	26001-
17		23B-54-72160	Washer	10	26001-
18		01010-80820	Bolt	12	26001-
19		01643-30823	Washer	12	26001-
20		01010-81025	Bolt	1	26001-
21		01643-31032	Washer	1	26001-
22		01580-11008	Nut	1	26001-
23		01643-31032	Washer	1	26001-
24		01640-21016	Washer	1	26001-
25		234-43-82130	Bracket	2	26001-
26		01010-81020	Bolt	4	26001-
27		01643-31032	Washer	4	26001-
28		23B-43-72190	Shaft	2	26001-
29		175-61-23220	Washer	4	26001-
30		01010-80816	Bolt	4	26001-
31		23B-43-72220	Lever	9	26001-
32		23B-43-72380	Collar	1	26001-
33		237-43-17420	Washer	18	26001-

FIG. K1110-001003A Floor (Steering Post)

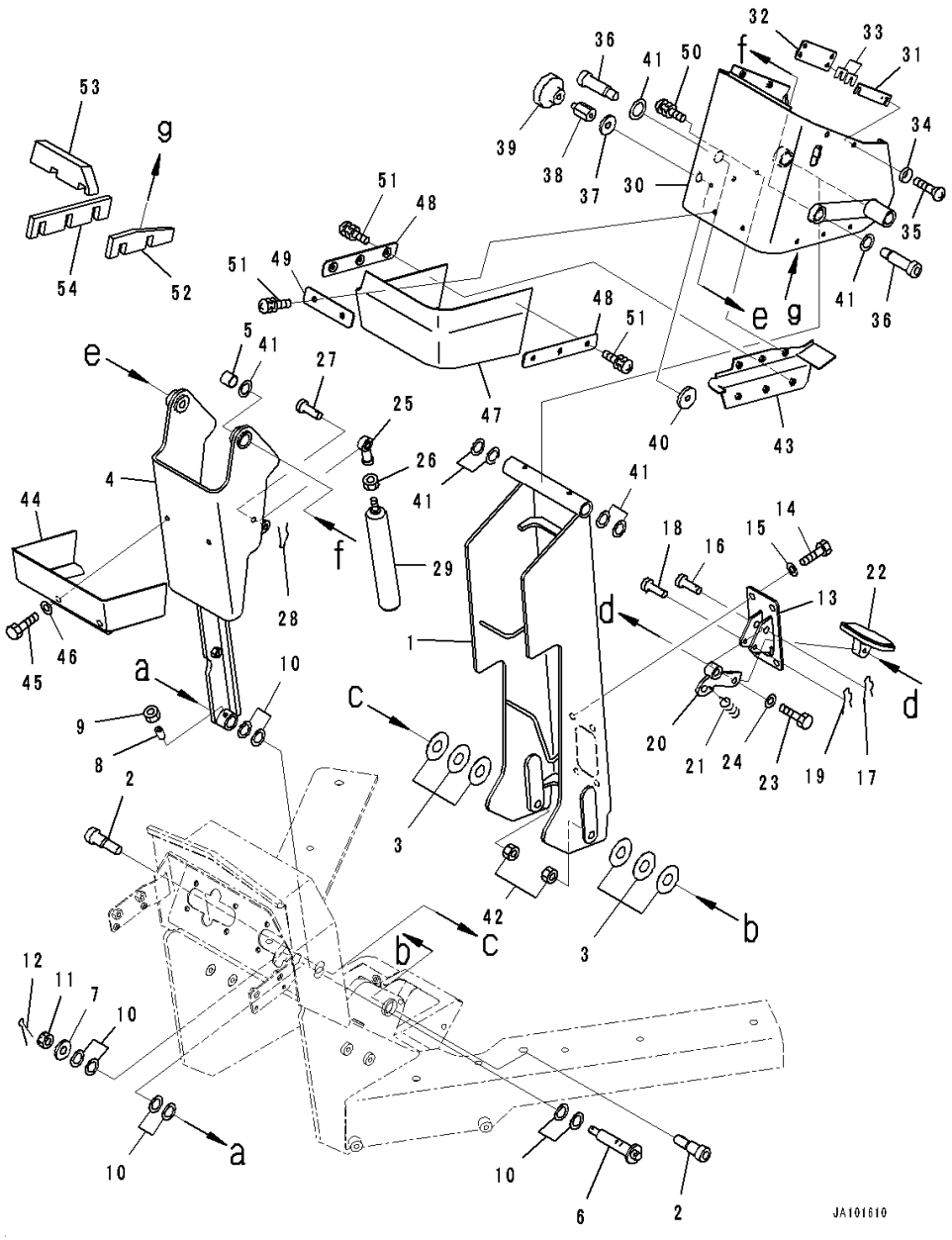

Index	Code	Part Number	Description	Qty	Serial Number
1		234-43-82432	Bracket	1	26280-
2		23B-43-72830	Joint	2	26001-
3		23B-43-36350	Spacer	6	26001-
4		23B-43-75440	Bracket	1	26001-
5		234-885-1620	Bushing	1	26001-
6		23B-43-72520	Shaft	1	26001-
7		175-54-34170	Washer	1	26001-
8		01310-20816	Screw	1	26001-
9		01580-10806	Nut	1	26001-
10		237-43-17420	Washer	8	26001-
11		01590-31215	Nut, Slotted	1	26001-
12		04050-13022	Pin, Cotter	1	26001-
13		23B-43-72480	Bracket	1	26001-
14		01010-81025	Bolt	4	26001-
15		01643-31032	Washer	4	26001-
16		04205-11238	Pin	1	26001-
17		04052-21253	Pin, Snap	1	26001-
18		23B-43-72470	Pin	1	26001-
19		04052-20833	Pin, Snap	1	26001-
20		23B-43-72450	Bracket	1	26001-
21		6127-81-9741	Spring	1	26001-
22		232-43-13130	Pedal	1	26001-
23		01010-81025	Bolt	1	26001-
24		01643-31032	Washer	1	26001-
25		04250-81056	End	1	26001-
26		01582-11008	Nut	1	26001-
27		23B-43-72390	Pin	1	26001-
28		04052-21038	Pin, Snap	1	26001-
29		23B-43-36380	Dumper	1	26001-
30		23B-43-75421	Cover	1	26291-
31		23B-43-73260	Plate	1	26291-
32		23B-43-73250	Plate	1	26291-
33		23B-43-73290	Shim,1.0mm	4	26291-
		23B-43-73320	Shim,0.3mm	4	26291-
34		23S-55-51970	Washer	2	26291-
35		01225-70620	Screw, Philips Head	2	26291-
36		23B-43-72990	Joint	2	26001-
37		175-54-34170	Washer	1	26001-
38		23B-43-72850	Pole	1	26001-
39		232-950-2291	Knob	1	26001-

FIG. K1110-001003A Floor (Steering Post)

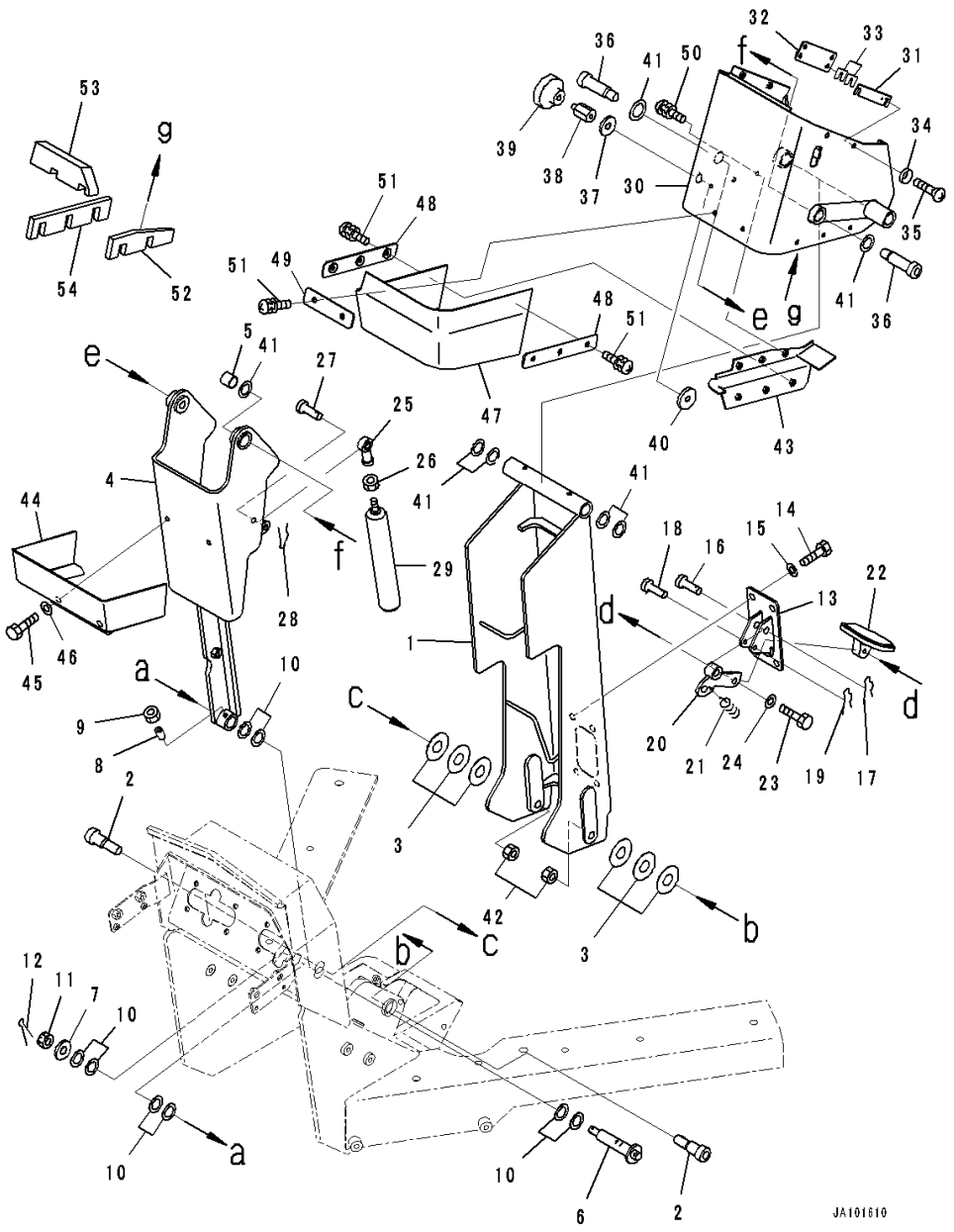

Index	Code	Part Number	Description	Qty	Serial Number
40		23B-43-35820	Plate	1	26001-
41		237-43-17420	Washer	7	26001-
42		01580-11613	Nut	2	26001-
43		23B-43-75520	Bracket	1	26001-
44		23B-43-75550	Bracket	1	26001-
45		01010-80820	Bolt	2	26001-
46		01643-30823	Washer	2	26001-
47		23B-43-75510	Sheet	1	26001-
48		23B-43-75530	Plate	2	26001-
49		23B-43-75540	Plate	1	26001-
50		01023-70614	Screw	3	26001-
51		01023-70616	Screw	8	26001-
52		234-43-81440	Sheet	1	26001-
53		234-43-81450	Sheet	1	26001-
54		234-43-81460	Sheet	1	26001-

FIG. K1110-002004 Floor (Lever) (With 10 Spool Valve)

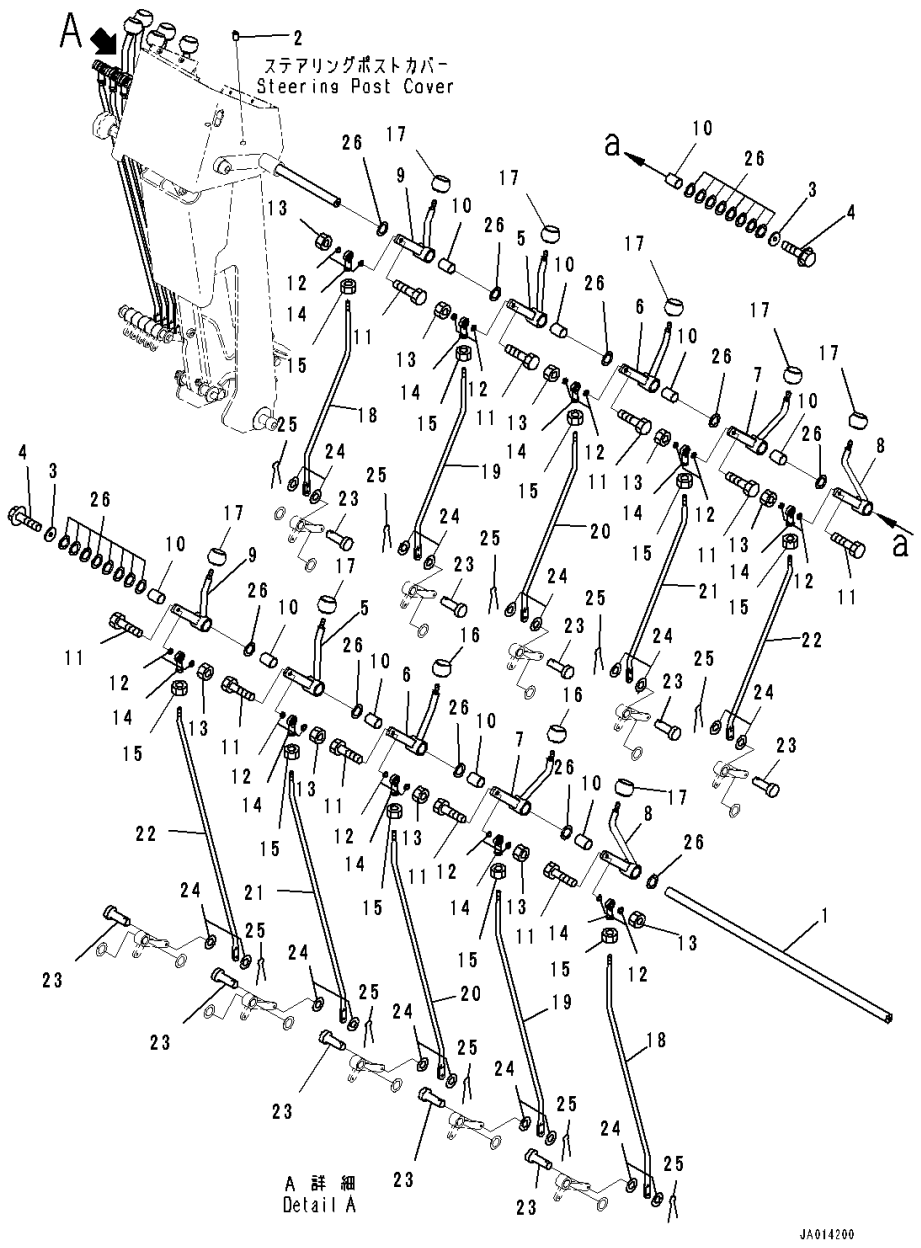

Index	Code	Part Number	Description	Qty	Serial Number
1		23B-43-72560	Bar	1	26001-
2		01310-20812	Screw	2	26001-
3		23B-43-35810	Plate	2	26001-
4		01435-00816	Bolt	2	26001-
5		23B-43-72290	Lever	2	26001-
6		23B-43-72310	Lever	2	26001-
7		23B-43-72320	Lever	2	26001-
8		23B-43-72330	Lever	2	26001-
9		23B-43-72280	Lever	2	26001-
10		234-885-1610	Bushing	10	26001-
11		234-43-81150	Bolt	10	26001-
12		04254-10823	Spacer	20	26001-
13		01580-10806	Nut	10	26001-
14		04250-40847	Rod End	10	26280-
		04250-80847	Rod End	10	26001-26279
15		01580-10806	Nut	10	26001-
16		237-43-17490	Knob	2	26001-
17		237-43-17480	Knob	8	26001-
18		23B-43-72270	Rod	2	26001-
19		23B-43-72260	Rod	2	26001-
20		23B-43-72250	Rod	2	26001-
21		23B-43-72240	Rod	2	26001-
22		23B-43-72230	Rod	2	26001-
23		04205-10516	Pin	10	26001-
24		01640-20508	Washer	20	26001-
25		04050-11210	Pin, Cotter	10	26001-
26		237-43-17420	Washer	26	26001-

FIG. K1110-001004 Floor (Lever) (With 9 Spool Valve)

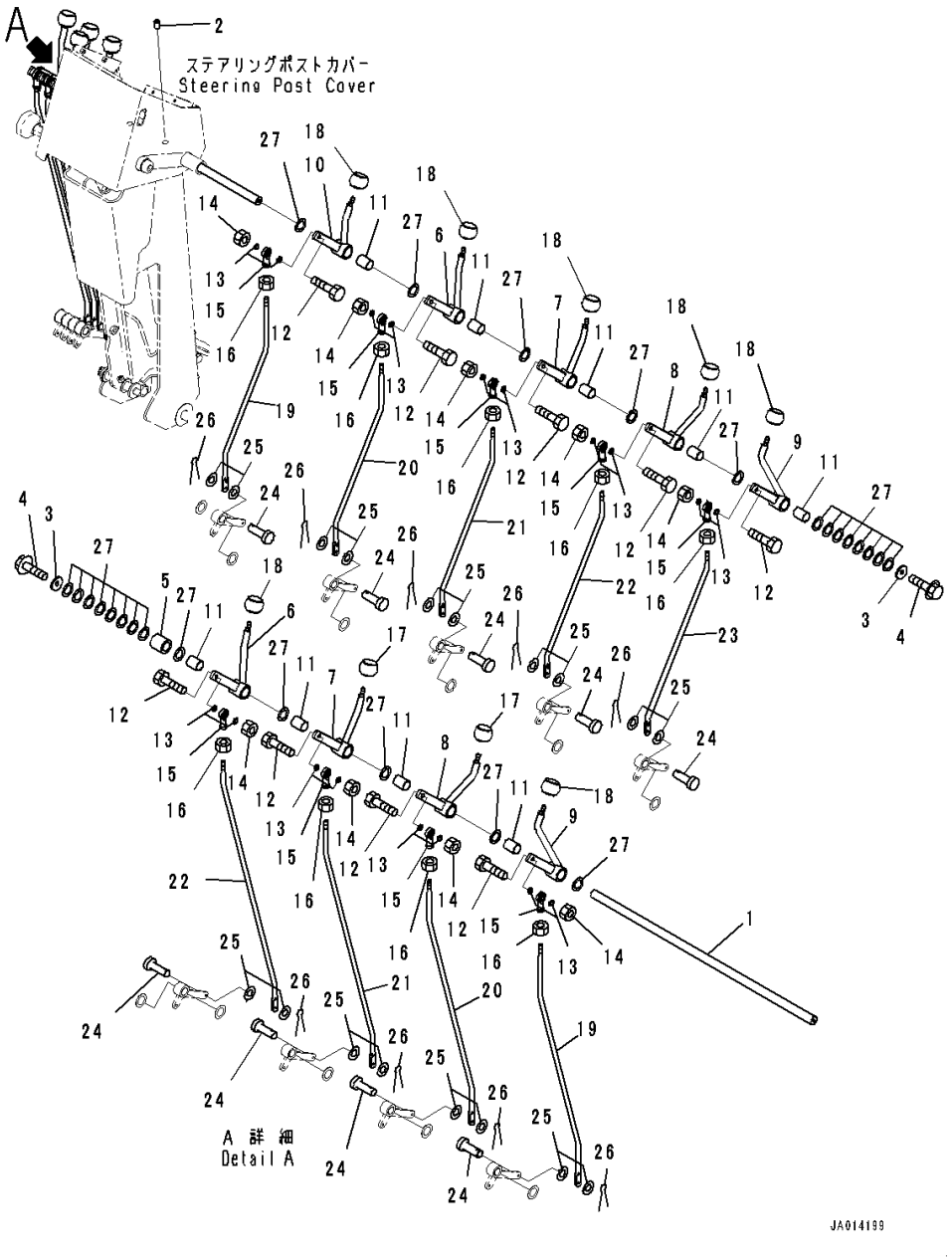

Index	Code	Part Number	Description	Qty	Serial Number
1		23B-43-72560	Bar	1	26001-
2		01310-20812	Screw	2	26001-
3		23B-43-35810	Plate	2	26001-
4		01435-00816	Bolt	2	26001-
5		237-43-17440	Collar	1	26001-
6		23B-43-72290	Lever	2	26001-
7		23B-43-72310	Lever	2	26001-
8		23B-43-72320	Lever	2	26001-
9		23B-43-72330	Lever	2	26001-
10		23B-43-72280	Lever	1	26001-
11		234-885-1610	Bushing	9	26001-
12		234-43-81150	Bolt	9	26001-
13		04254-10823	Spacer	18	26001-
14		01580-10806	Nut	9	26001-
15		04250-40847	Rod End	9	26280-
		04250-80847	Rod End	9	26001-26279
16		01580-10806	Nut	9	26001-
17		237-43-17490	Knob	2	26001-
18		237-43-17480	Knob	7	26001-
19		23B-43-72270	Rod	2	26001-
20		23B-43-72260	Rod	2	26001-
21		23B-43-72250	Rod	2	26001-
22		23B-43-72240	Rod	2	26001-
23		23B-43-72230	Rod	1	26001-
24		04205-10516	Pin	9	26001-
25		01640-20508	Washer	18	26001-
26		04050-11210	Pin, Cotter	9	26001-
27		237-43-17420	Washer	26	26001-

FIG. K1110-001005 Floor (Switch and Plate)

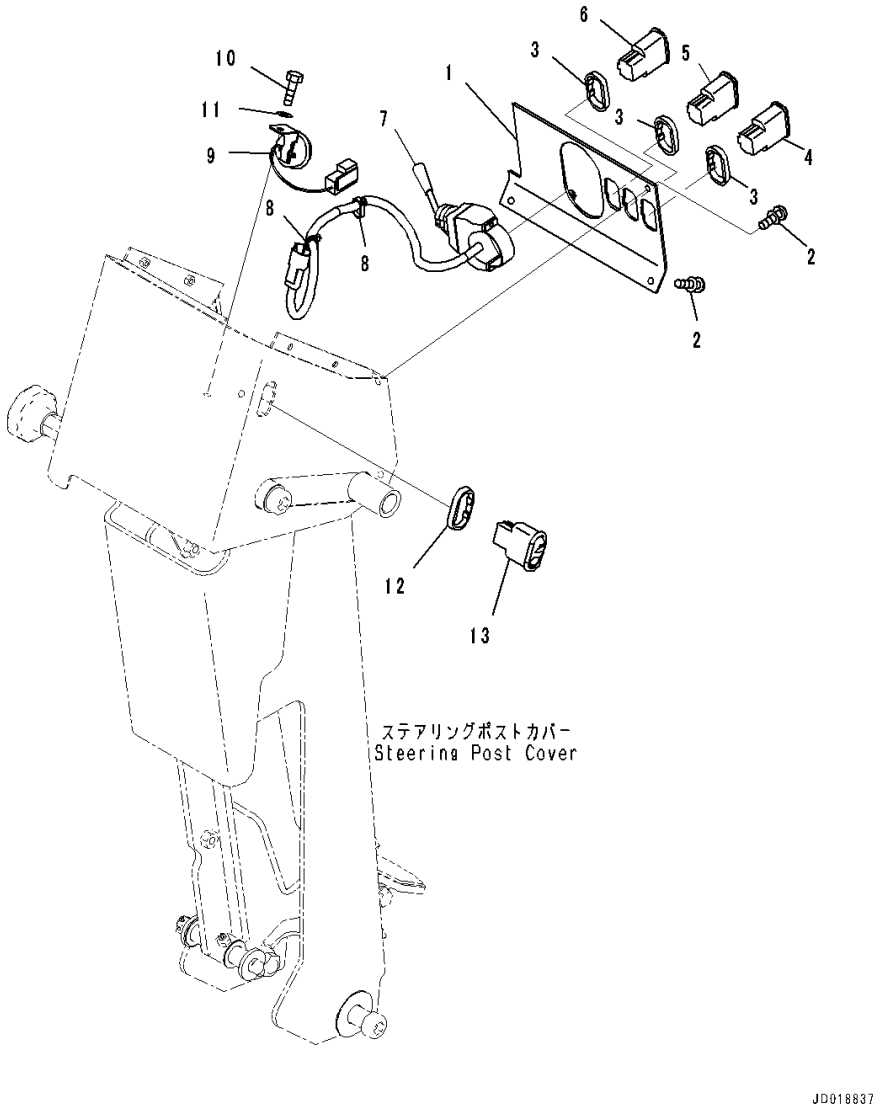

Index	Code	Part Number	Description	Qty	Serial Number
1		23B-43-72410	Plate	1	26001-
2		01023-10612	Screw	3	26001-
3		418-926-4530	Spacer	3	26001-
4		423-06-45410	Switch,Machine Monitor Mode Selector1	1	26001-
5		423-06-45390	Switch,Machine Monitor Mode Selector2	1	26001-
6		20Y-06-42190	Cover	1	26001-
7		23B-06-42590	Switch, Turn Signal	1	26001-
8		08034-20519	Band	2	26001-
9		203-06-56230	Buzzer	1	26001-
10		01010-80612	Bolt	1	26001-
11		01643-30623	Washer	1	26001-
12		418-926-4530	Spacer	1	26001-
13		23B-06-71610	Switch,Dimmer	1	26001-

FIG. K1110-001006 Floor (Wiring Harness, Steering Post)

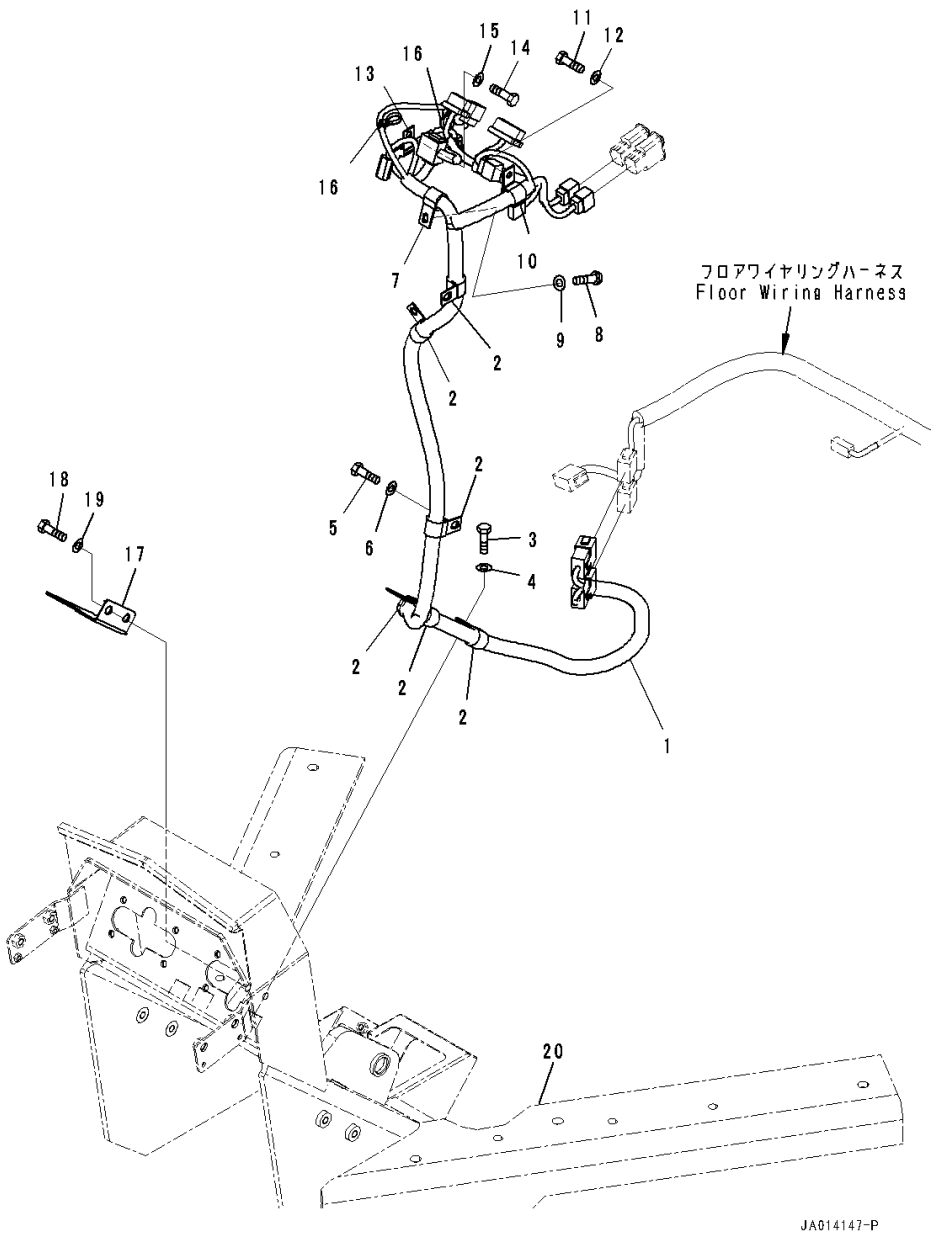

Index	Code	Part Number	Description	Qty	Serial Number
1		234-06-81220	Wiring Harness	1	26001-
2		04434-51910	Clip	6	26001-
3		01010-81020	Bolt	5	26001-
4		01643-31032	Washer	5	26001-
5		01010-81030	Bolt	1	26001-
6		01643-31032	Washer	1	26001-
7		04434-51708	Clip	1	26001-
8		01010-80816	Bolt	1	26001-
9		01643-30823	Washer	1	26001-
10		04434-51908	Clip	1	26001-
11		01010-80816	Bolt	1	26001-
12		01643-30823	Washer	1	26001-
13		04434-51008	Clip	1	26001-
14		01010-80816	Bolt	1	26001-
15		01643-30823	Washer	1	26001-
16		08034-40521	Band	2	26001-
17		23B-43-72750	Cover	1	26001-
18		01010-81020	Bolt	2	26001-
19		01643-31032	Washer	2	26001-
20		(234-43-82110)	Bracket(Floor,Steering Post Related Parts)(Refer to Page 449)		

FIG. K1110-001007 Floor (Orbitrol Valve Mounting)

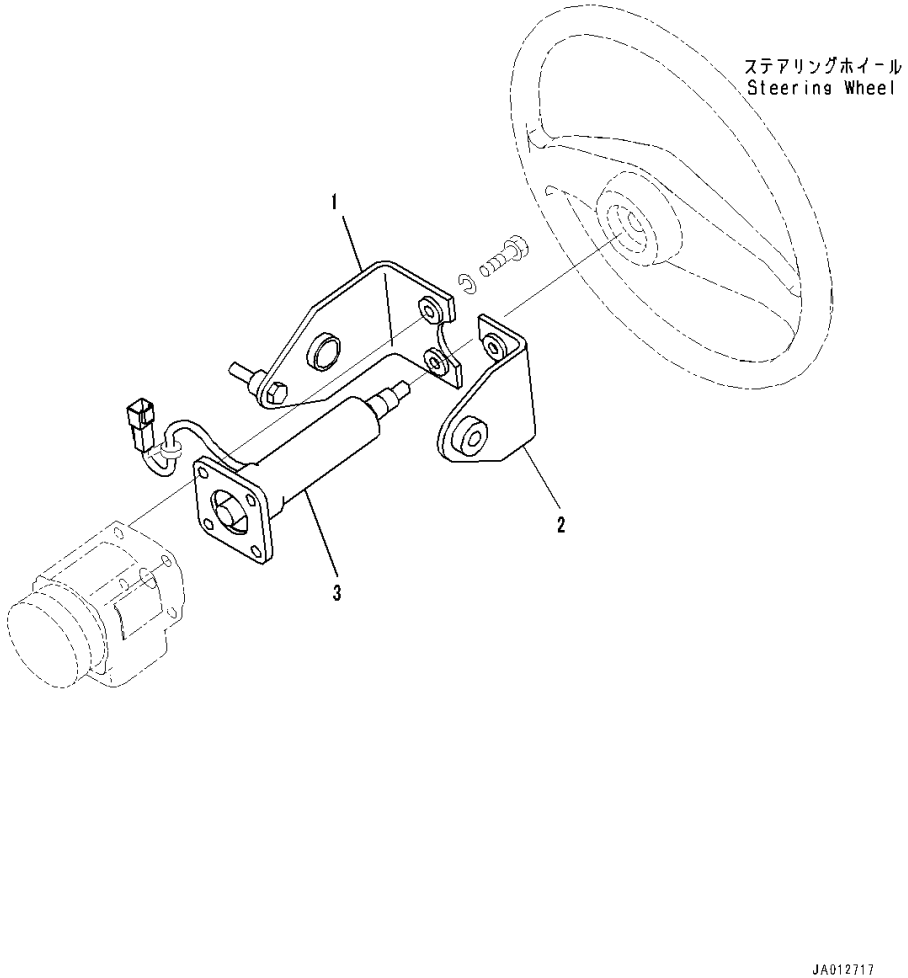

Index	Code	Part Number	Description	Qty	Serial Number
1		23B-43-72490	Bracket	1	26001-
2		23B-43-72510	Bracket	1	26001-
3		23B-40-31502	Column Assembly	1	26001-

FIG. K1110-001008 Floor (Orbitrol Valve)

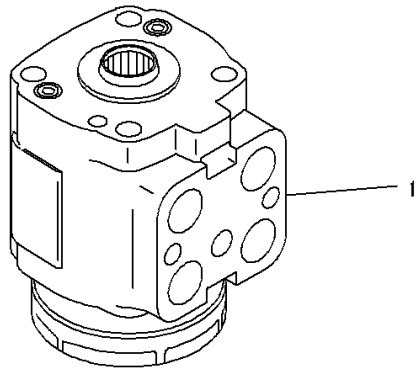

JA014399

Index	Code	Part Number	Description	Qty	Serial Number
1		234-40-81401	Orbitrol Steering Control Assembly	1	26001-
	B1	234-40-81400	Orbitrol Steering Control Assembly	1	(26001-26218)

FIG. K1110-001009 Floor (Orbitrol Valve Piping)

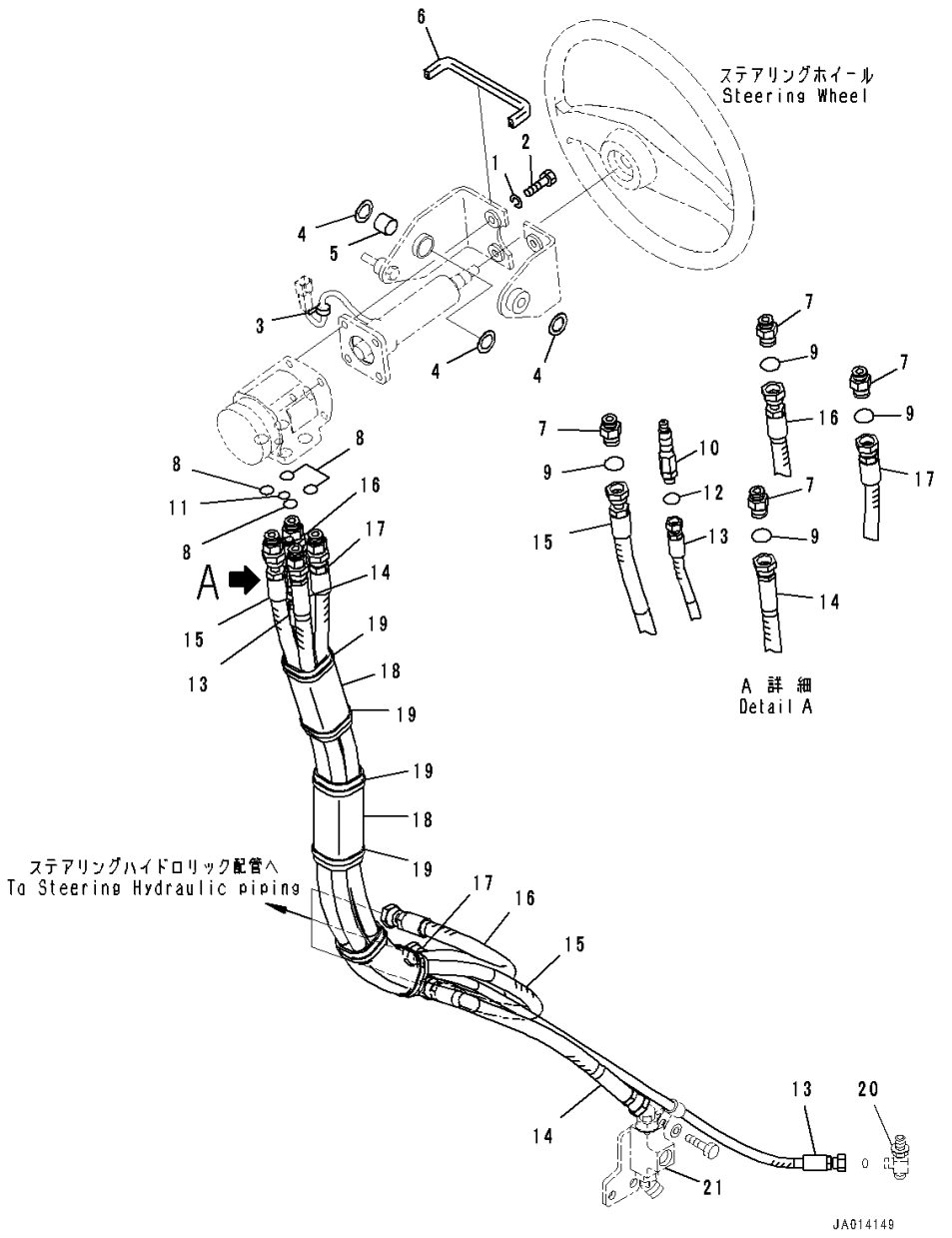

Index	Code	Part Number	Description	Qty	Serial Number
1		01602-21030	Washer	4	26001-
2		01010-81035	Bolt	4	26001-
3		08034-20519	Band	1	26001-
4		237-43-17420	Washer	3	26001-
5		234-885-1620	Bushing	1	26001-
6		23B-43-72860	Seal	1	26001-
7		417-62-31120	Nipple	4	26001-
8		22W-61-12220	O-ring	4	26001-
9		02896-11012	O-ring	4	26001-
10		234-40-81740	Valve	1	26001-
11		416-62-11480	O-ring	1	26001-
12		02896-11008	O-ring	1	26001-
13		234-40-81630	Hose	1	26001-
14		234-40-81320	Hose	1	26001-
15		234-40-81330	Hose	1	26001-
16		234-40-81340	Hose	1	26001-
17		234-40-81350	Hose	1	26001-
18		135-49-33370	Tape, Vinyl	3	26001-
19		08034-20834	Band	6	26001-
20		(20U-62-41740)	Tee(Hydraulic Piping,LS Piping)(Refer to Page 364)		
21		(234-60-86340)	Block(Hydraulic Piping,Priority Valve Piping,With 9 Spool Valve)(Refer to Page 344)		
		(234-60-86340)	Block(Hydraulic Piping,Priority Valve Piping,With 10 Spool Valve)(Refer to Page 342)		

FIG. K1110-001010A Floor (Monitor)

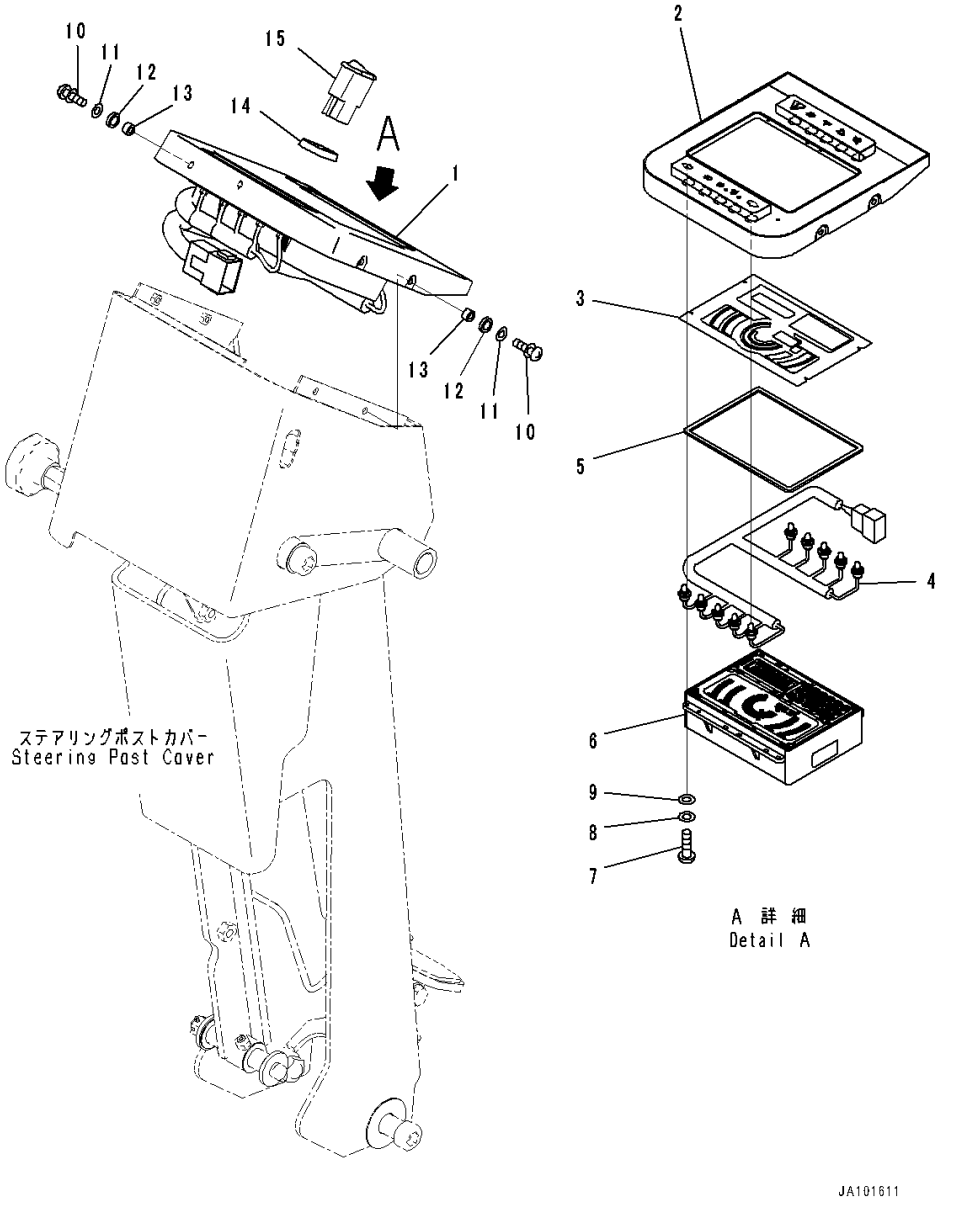

Index	Code	Part Number	Description	Qty	Serial Number
1		234-06-81902	Monitor	1	26291-
2		234-06-82311	• Panel	1	26333-
3		234-06-81910	• Plate	1	26001-
4		23C-06-51880	• Wiring Harness	1	26001-
5		23B-06-61530	• Packing	1	26001-
6	C1		• Module	1	26001-
7		23C-06-12410	• Screw	8	26001-
8		01640-20408	• Washer	8	26001-
9		01601-20410	• Washer	8	26001-
10		01023-20616	Screw	4	26291-
11		01643-70623	Washer	4	26291-
12		23B-43-73310	Washer	4	26291-
13		23B-43-73330	Collar	4	26299-
14		418-926-4530	Spacer	1	26001-
15		23B-06-71640	Switch	1	26001-

FIG. K1110-001011 Floor (Steering Wheel)

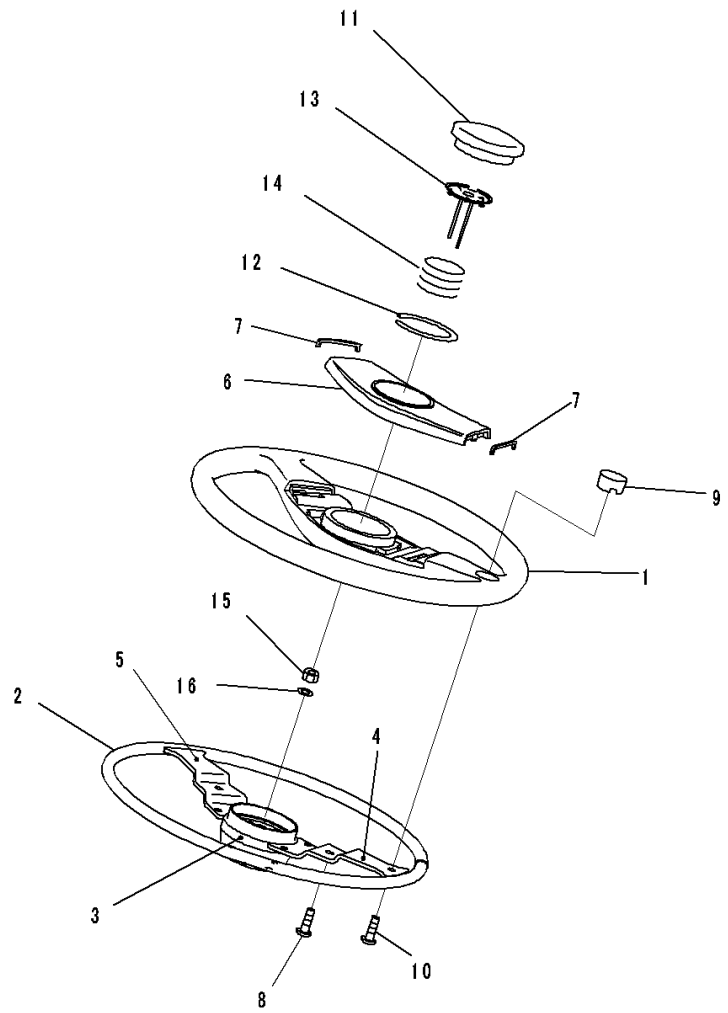

Index	Code	Part Number	Description	Qty	Serial Number
		23C-40-61501	Steering Wheel Assembly	1	26001-
		23C-40-61510	• Wheel	1	26001-
1		421-40-42350	• • Steering Wheel	1	26001-
2	C1		• • • Insert Assembly	1	26001-
3	C1		• • • • Boss,Welded	1	26001-
4	C1		• • • • Plate,Welded	1	26001-
5	C1		• • • • Plate,Welded	1	26001-
		421-40-42360	• • Cover Assembly	1	26001-
6		421-40-42370	• • • Cover	1	26001-
7		421-40-42380	• • • Seal	2	26001-
8		421-40-42390	• • Screw	1	26001-
9		23C-40-61610	• • Cap	1	26001-
10		23C-40-61620	• • Screw, Tapping	1	26001-
		421-40-42230	• Pad Assembly	1	26001-
11		421-40-42510	• • Pad	1	26001-
12		421-40-42520	• • Spring	1	26001-
		421-40-42240	• Needle Assembly	1	26001-
13		421-40-42530	• • Needle	1	26001-
14		421-40-42540	• • Spring	1	26001-
15		421-40-12440	Nut	1	26001-
16		421-40-12450	Washer	1	26001-

FIG. K1110-001012 Floor (Platform)

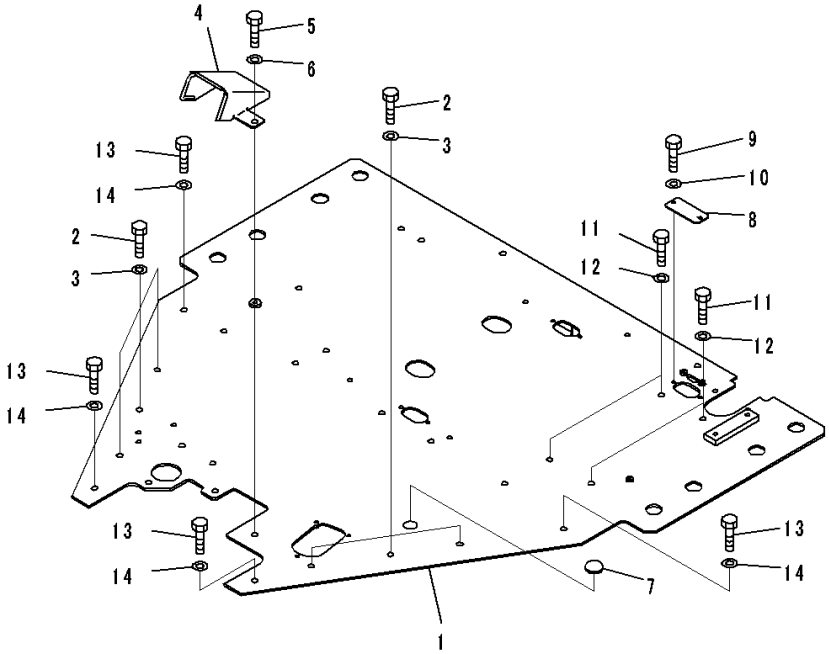

Index	Code	Part Number	Description	Qty	Serial Number
1		234-54-82110	Platform	1	26001-
2		01010-81025	Bolt	6	26001-
3		01643-31032	Washer	6	26001-
4		23B-54-72120	Cover	1	26001-
5		01010-81020	Bolt	2	26001-
6		01643-31032	Washer	2	26001-
7		09415-02110	Cap	1	26001-
8		23B-54-61180	Plate	1	26001-
9		01010-80616	Bolt	2	26001-
10		01643-30623	Washer	2	26001-
11		01010-81020	Bolt	4	26001-
12		01643-31032	Washer	4	26001-
13		01010-81245	Bolt	4	26001-
14		01643-31232	Washer	4	26001-

FIG. K1110-001013 Floor (Console Box)

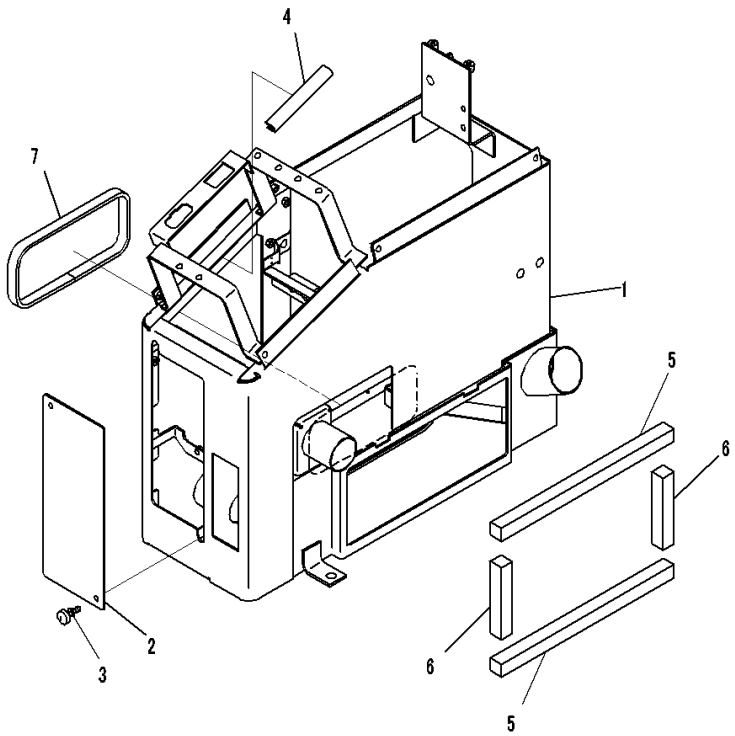

Index	Code	Part Number	Description	Qty	Serial Number
1		234-54-82170	Cover	1	26001-
2		23B-54-72240	Plate	1	26001-
3		235-54-11540	Knob	2	26001-
4		21W-54-42630	Trim	1	26001-
5		23B-54-72331	Cushion	2	26001-
6		23B-54-72360	Cushion	2	26001-
7		23B-54-72370	Cushion	1	26001-

FIG. K1110-001014 Floor (Switch)

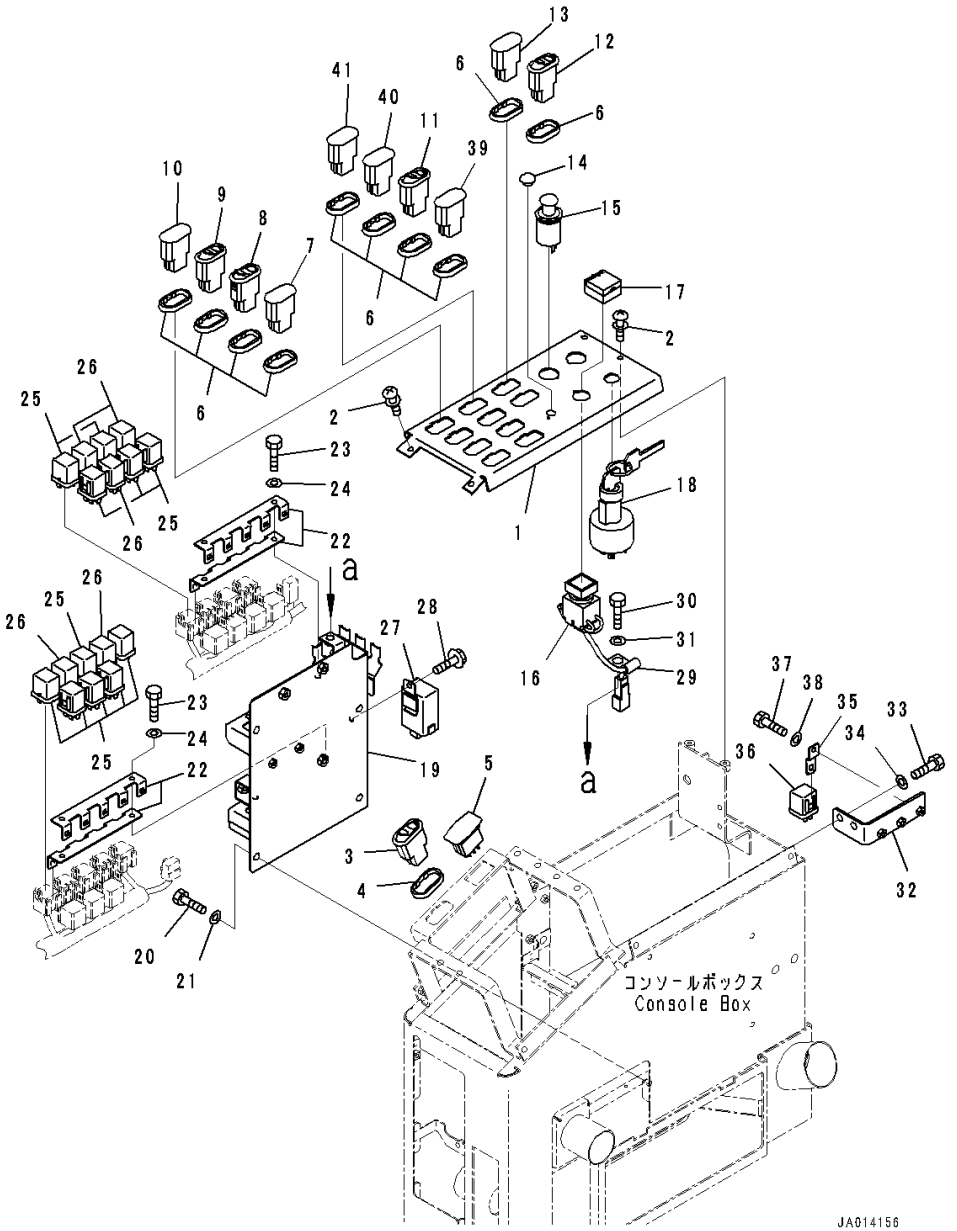

Index	Code	Part Number	Description	Qty	Serial Number
1		23B-06-72110	Panel	1	26001-
2		01023-70614	Screw	4	26001-
3		23B-06-71620	Switch, RPM Set Mode Selector	1	26001-
4		418-926-4530	Spacer	1	26001-
5		23B-06-61311	Switch,RPM Set	1	26001-
6		418-926-4530	Spacer	10	26001-
7		20Y-06-42190	Cover	1	26001-
8		418-06-46130	Switch,Hazard Lamp	1	26001-
9		23B-06-71650	Switch, Transmission Shift Mode Selector	1	26001-
10		20Y-06-42190	Cover	1	26001-
11		23B-06-71660	Switch,Headlamp	1	26001-
12		423-06-45521	Switch, Power Mode	1	26001-
13		20Y-06-42190	Cover	1	26001-
14		130-911-1640	Plug	1	26001-
15		20Y-06-23472	Cigarette Lighter	1	26001-
16		23B-06-42570	Switch,Lift Arm Lock	1	26001-
17		23B-06-71670	Cover	1	26001-
18		08086-50100	Switch, Starting	1	26280-
	A2	08086-20100	Switch, Starting	1	26001-26279
19		23B-06-71530	Bracket	1	26001-
20		01010-80816	Bolt	4	26001-
21		01643-30823	Washer	4	26001-
22		569-06-61180	Bracket	4	26001-
23		01010-80616	Bolt	4	26001-
24		01643-30623	Washer	4	26001-
25		569-06-61960	Relay	11	26001-
26		569-06-61970	Relay	5	26001-
27		416-06-22250	Flasher	1	26001-
28		01435-00608	Bolt	1	26001-
29		04434-50612	Clip	1	26001-
30		01010-80816	Bolt	1	26001-
31		01643-30823	Washer	1	26001-
32		23B-06-71570	Bracket	1	26001-
33		01010-80820	Bolt	2	26001-
34		01643-30823	Washer	2	26001-
35		287-06-16420	Bracket	2	26001-
36		569-06-61960	Relay	2	26001-
37		01010-80612	Bolt	2	26001-
38		01643-30623	Washer	2	26001-

FIG. K1110-001014 Floor (Switch)

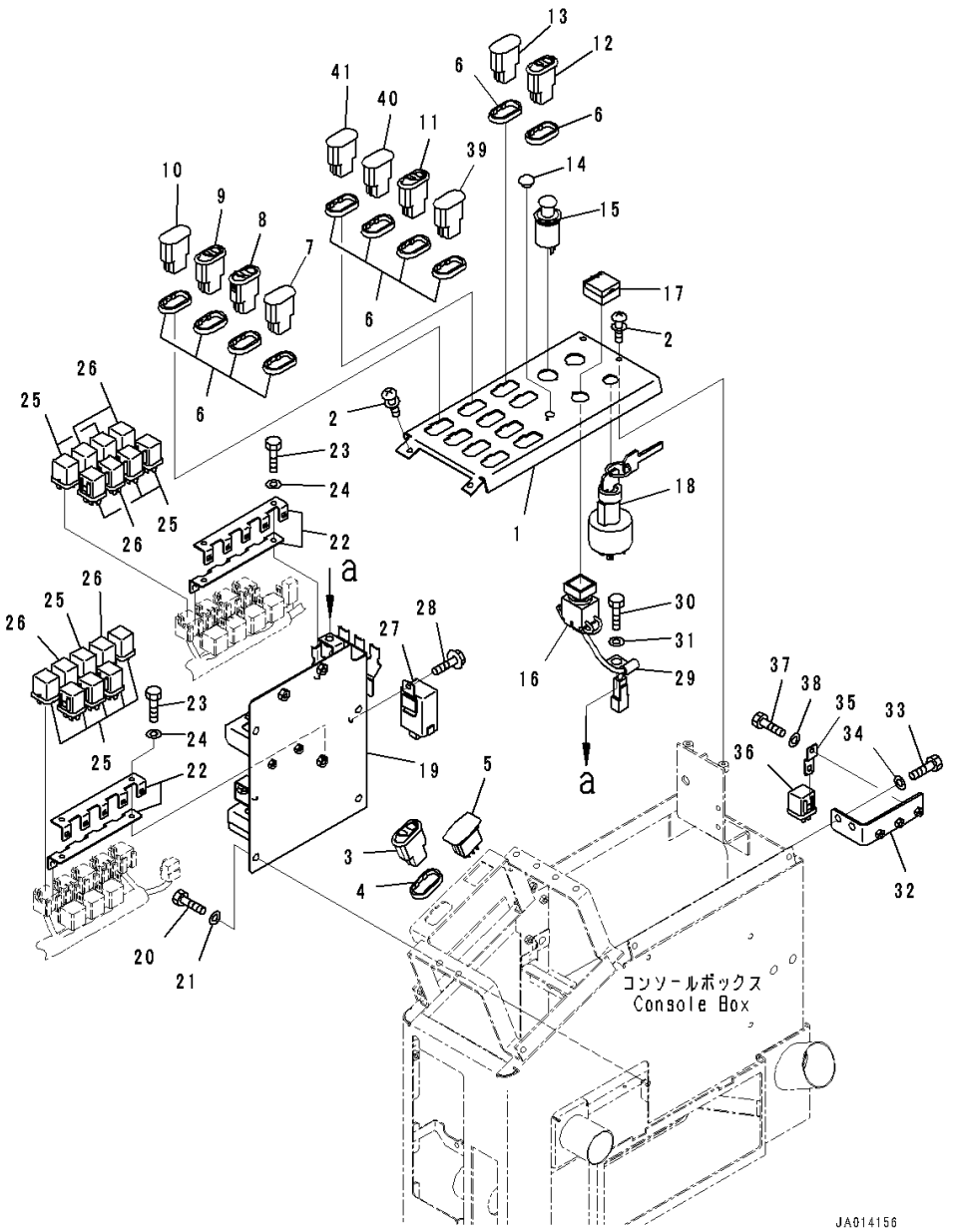

Index	Code	Part Number	Description	Qty	Serial Number
39		20Y-06-42190	Cover	1	26001-
40		20Y-06-42190	Cover	1	26001-
41		20Y-06-42190	Cover	1	26001-

FIG. K1110-004014 Floor (Switch)

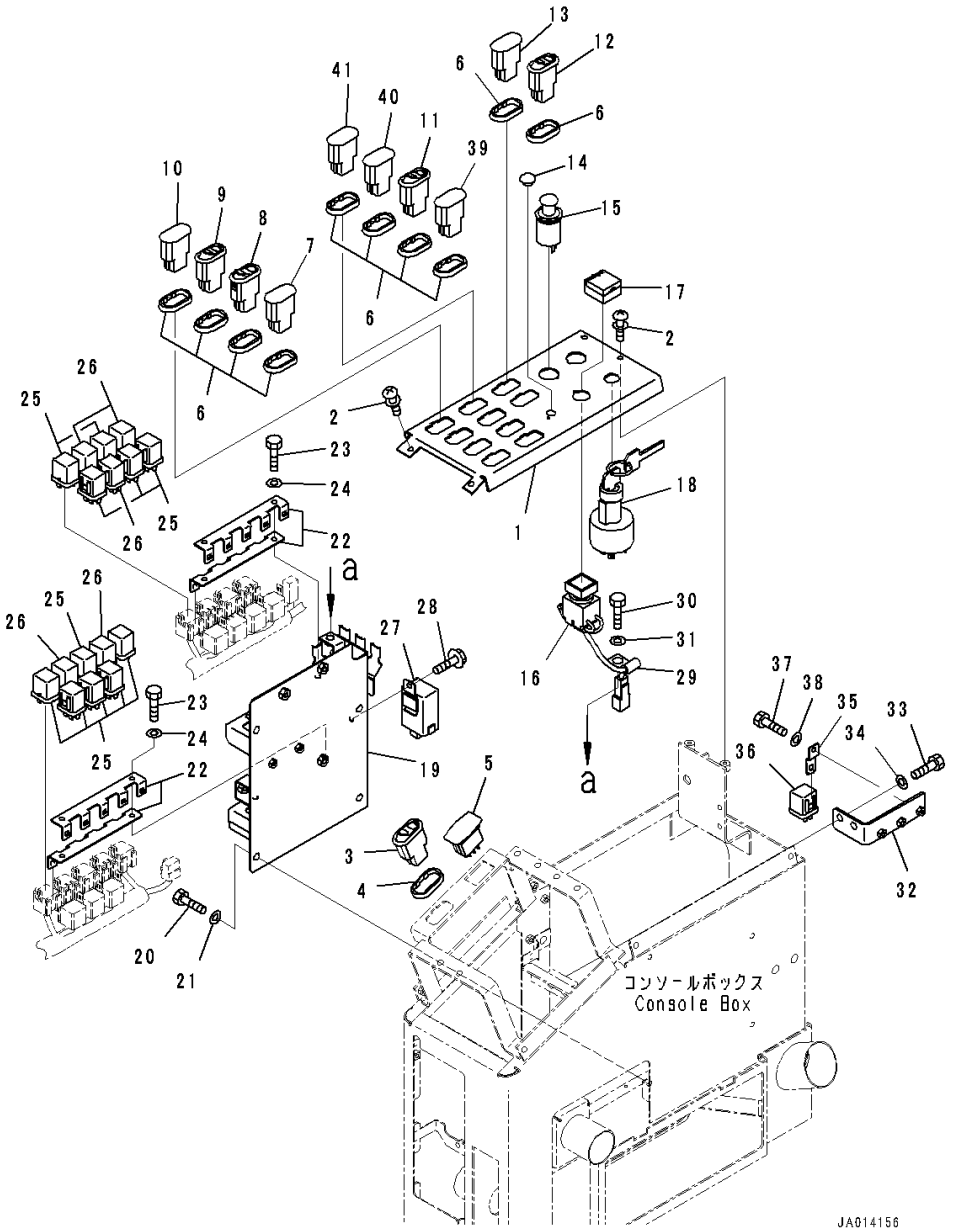

Index	Code	Part Number	Description	Qty	Serial Number
1		23B-06-72110	Panel	1	26001-
2		01023-70614	Screw	4	26001-
3		23B-06-71620	Switch, RPM Set Mode Selector	1	26001-
4		418-926-4530	Spacer	1	26001-
5		23B-06-61311	Switch,RPM Set	1	26001-
6		418-926-4530	Spacer	10	26001-
7		20Y-06-42190	Cover	1	26001-
8		418-06-46130	Switch,Hazard Lamp	1	26001-
9		23B-06-71650	Switch, Transmission Shift Mode Selector	1	26001-
10		20Y-06-42190	Cover	1	26001-
11		23B-06-71660	Switch,Headlamp	1	26001-
12		423-06-45521	Switch, Power Mode	1	26001-
13		20Y-06-42190	Cover	1	26001-
14		130-911-1640	Plug	1	26001-
15		20Y-06-23472	Cigarette Lighter	1	26001-
16		23B-06-42570	Switch,Lift Arm Lock	1	26001-
17		23B-06-71670	Cover	1	26001-
18		08086-50100	Switch, Starting	1	26280-
	A2	08086-20100	Switch, Starting	1	26001-26279
19		23B-06-71530	Bracket	1	26001-
20		01010-80816	Bolt	4	26001-
21		01643-30823	Washer	4	26001-
22		569-06-61180	Bracket	4	26001-
23		01010-80616	Bolt	4	26001-
24		01643-30623	Washer	4	26001-
25		569-06-61960	Relay	11	26001-
26		569-06-61970	Relay	5	26001-
27		416-06-22250	Flasher	1	26001-
28		01435-00608	Bolt	1	26001-
29		04434-50612	Clip	1	26001-
30		01010-80816	Bolt	1	26001-
31		01643-30823	Washer	1	26001-
32		23B-06-71570	Bracket	1	26001-
33		01010-80820	Bolt	2	26001-
34		01643-30823	Washer	2	26001-
35		287-06-16420	Bracket	2	26001-
36		569-06-61960	Relay	2	26001-
37		01010-80612	Bolt	2	26001-
38		01643-30623	Washer	2	26001-

FIG. K1110-004014 Floor (Switch)

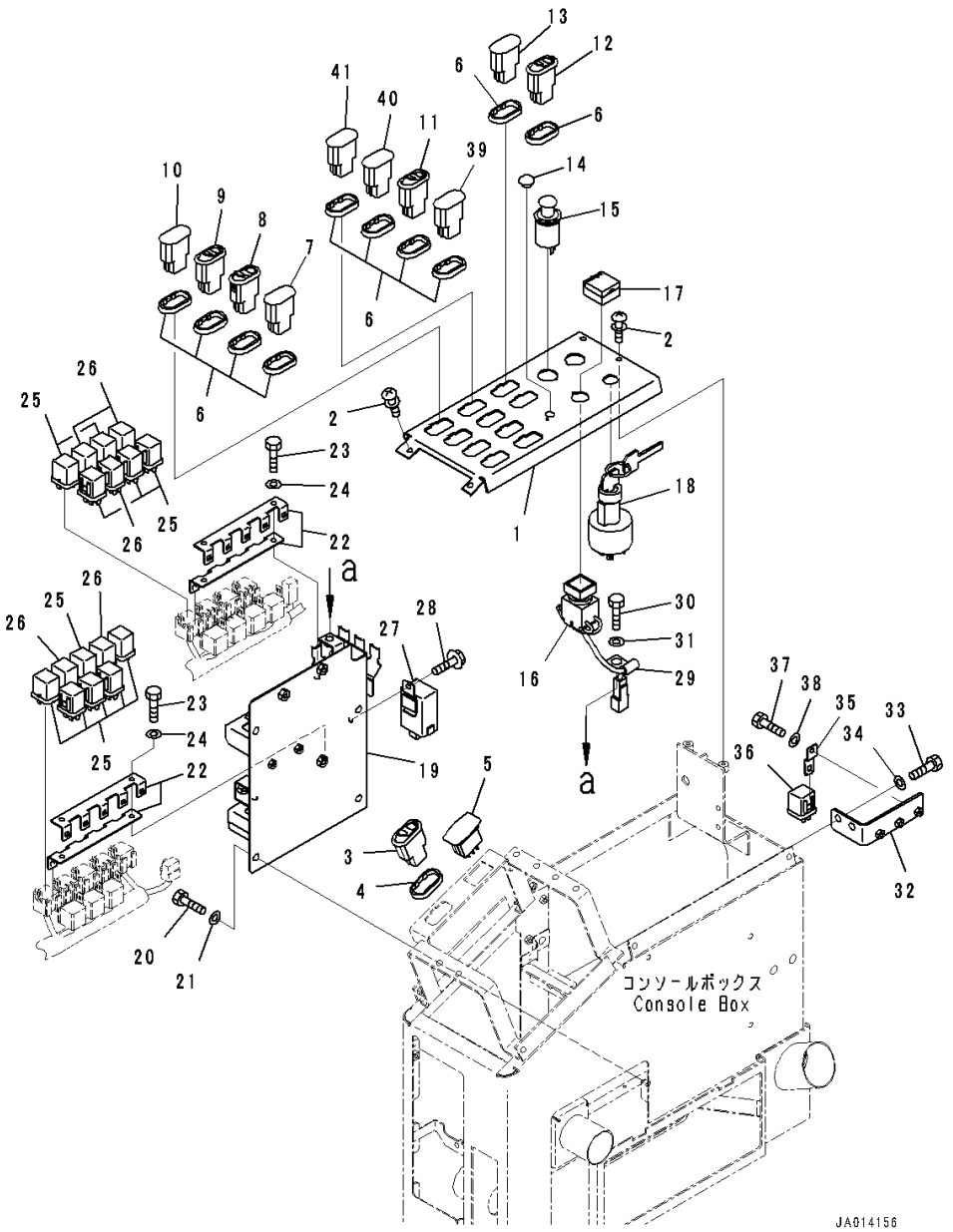

Index	Code	Part Number	Description	Qty	Serial Number
39		20Y-06-42190	Cover	1	26001-
40		20Y-06-42190	Cover	1	26001-
41		20Y-06-42190	Cover	1	26001-

FIG. K1110-002015 Floor (Wiring Harness) (With 10 Spool Valve)

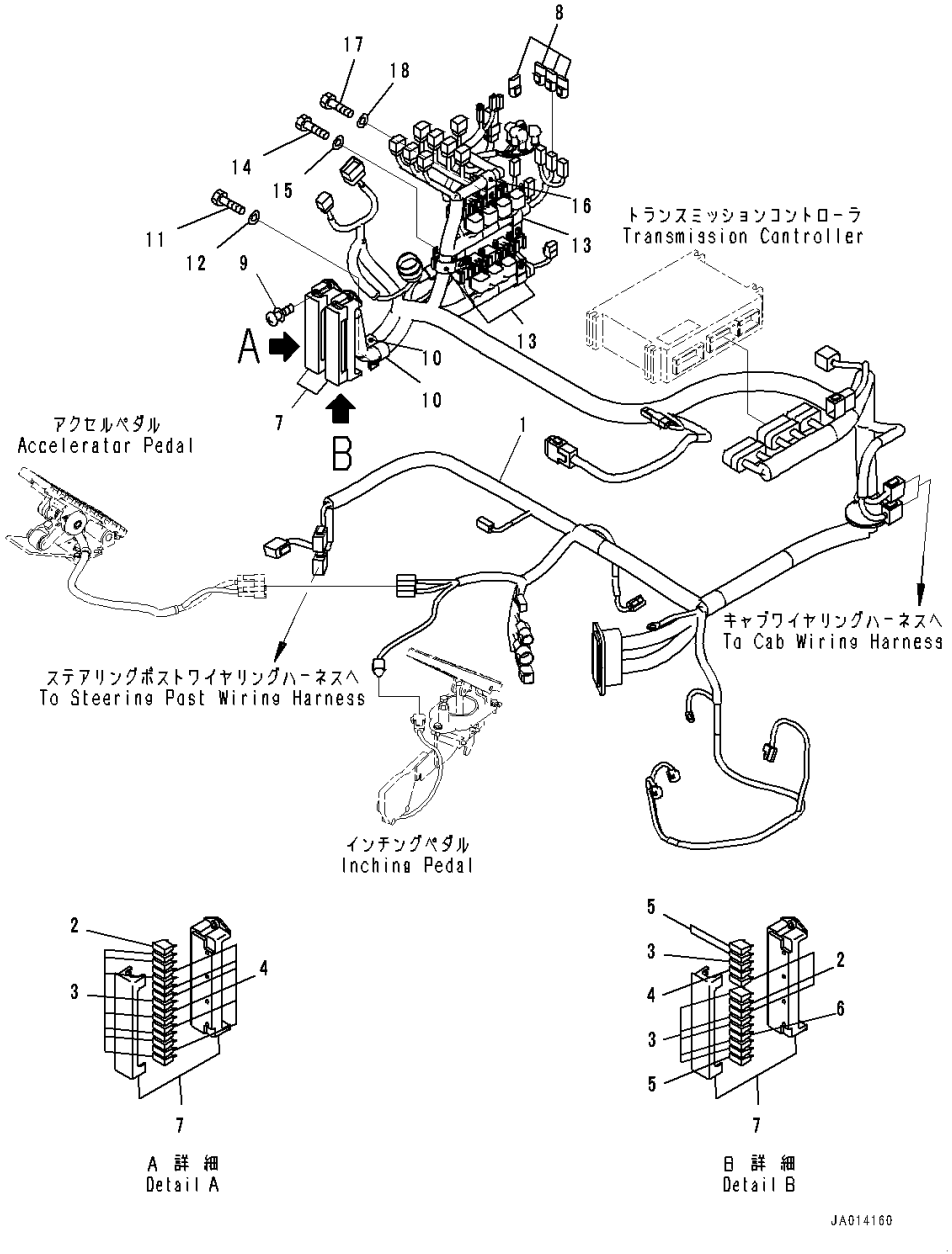

Index	Code	Part Number	Description	Qty	Serial Number
1		234-06-81151	Wiring Harness	1	26001-
2		08041-00500	• Fuse,5Amp.	6	26001-
3		08041-01000	• Fuse,10Amp.	16	26001-
4		08041-01500	• Fuse,15Amp.	9	26001-
5		08041-02000	• Fuse,20Amp.	4	26001-
6		08041-03000	• Fuse,30Amp.	2	26001-
7		08041-01500	• Fuse,15Amp.	2	26001-
8		21J-06-13661	• Diode	4	26001-
9		01023-10620	Screw	4	26001-
10		04434-52310	Clip	2	26001-
11		01010-81020	Bolt	1	26001-
12		01643-31032	Washer	1	26001-
13		04434-52310	Clip	3	26001-
14		01010-80816	Bolt	3	26001-
15		01643-30823	Washer	3	26001-
16		04434-51908	Clip	1	26001-
17		01010-80816	Bolt	1	26001-
18		01643-30823	Washer	1	26001-

FIG. K1110-001015 Floor (Wiring Harness) (With 9 Spool Valve)

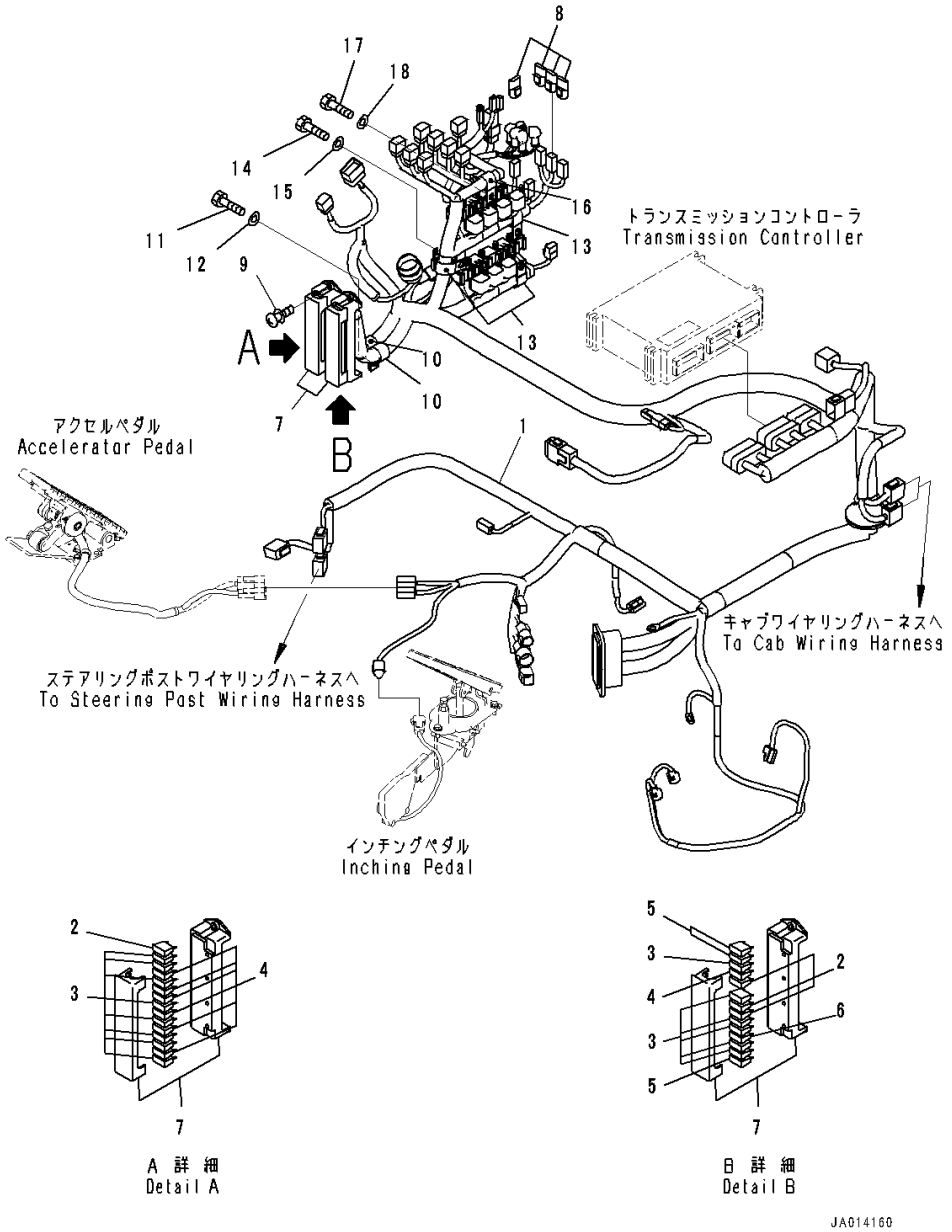

Index	Code	Part Number	Description	Qty	Serial Number
1		234-06-81151	Wiring Harness	1	26001-
2		08041-00500	• Fuse,5Amp.	6	26001-
3		08041-01000	• Fuse,10Amp.	16	26001-
4		08041-01500	• Fuse,15Amp.	9	26001-
5		08041-02000	• Fuse,20Amp.	4	26001-
6		08041-03000	• Fuse,30Amp.	2	26001-
7		08044-01500	• Box Assembly, Fuse	2	26001-
8		21J-06-13661	• Diode	4	26001-
9		01023-10620	Screw	4	26001-
10		04434-52310	Clip	2	26001-
11		01010-81020	Bolt	1	26001-
12		01643-31032	Washer	1	26001-
13		04434-52310	Clip	3	26001-
14		01010-80816	Bolt	3	26001-
15		01643-30823	Washer	3	26001-
16		04434-51908	Clip	1	26001-
17		01010-80816	Bolt	1	26001-
18		01643-30823	Washer	1	26001-

FIG. K1110-002016 Floor (12V converter)

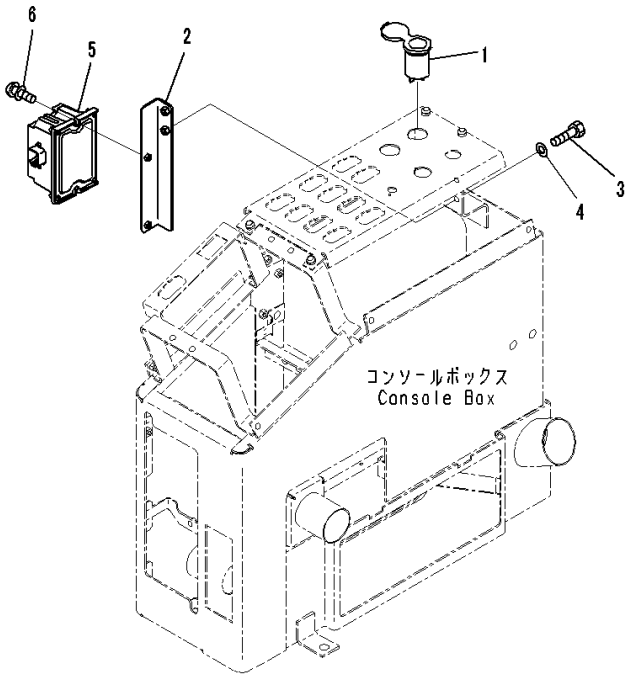

Index	Code	Part Number	Description	Qty	Serial Number
1		198-Z11-6890	Socket Assembly	1	26001-
2		23B-06-71551	Bracket	1	26001-
3		01010-80616	Bolt	2	26001-
4		01643-30623	Washer	2	26001-
5		2A5-06-11881	Converter	1	26001-
6		01023-70520	Screw	2	26001-

FIG. K1110-001016 Floor (Connector Plug)

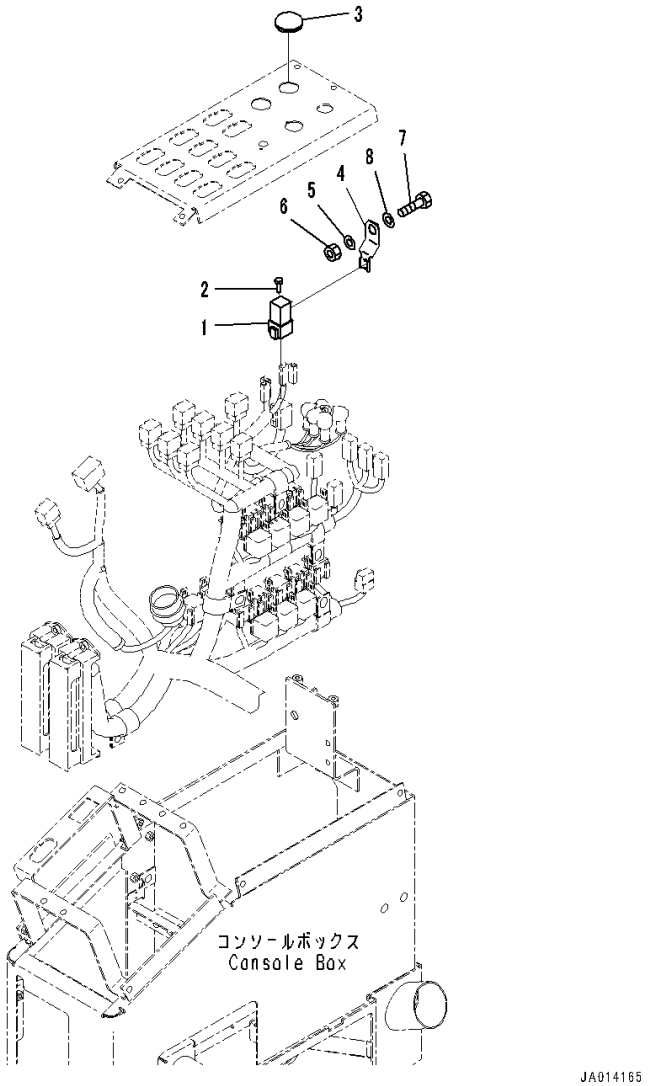

Index	Code	Part Number	Description	Qty	Serial Number
1		08192-26100	Connector	1	26001-
2		08191-00770	Plug, Connector	6	26001-
3		09415-02110	Cap	1	26001-
4		08193-21012	Clip	1	26001-
5		01643-31032	Washer	1	26001-
6		01580-11008	Nut	1	26001-
7		01010-81020	Bolt	1	26001-
8		01643-31032	Washer	1	26001-

FIG. K1110-001017 Floor (Gear Shift Lever)

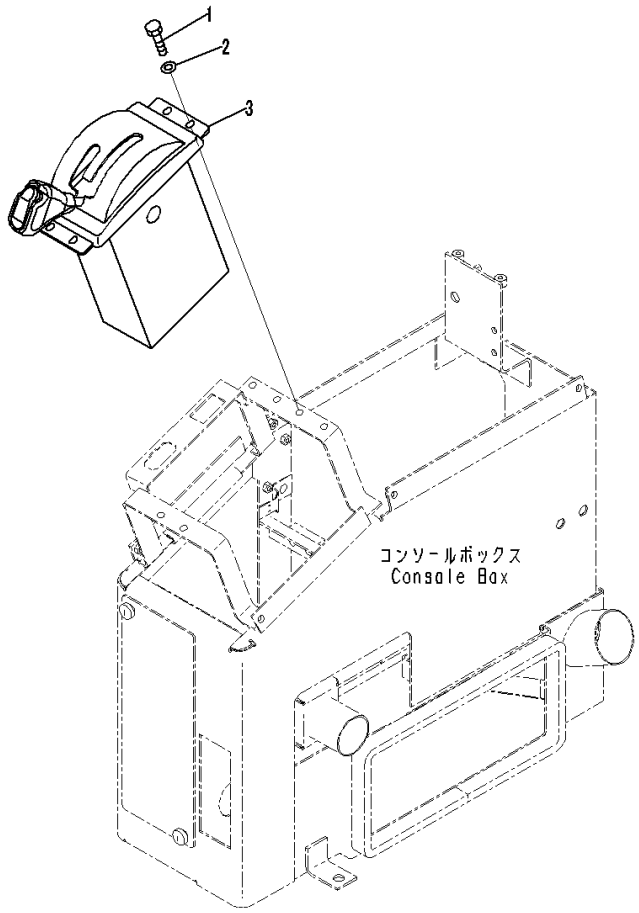

Index	Code	Part Number	Description	Qty	Serial Number
1		01010-80616	Bolt	4	26001-
2		01643-30623	Washer	4	26001-
3		23C-45-61100	Lever Assembly	1	26001-

FIG. K1110-001018 Floor (Console Cover, R.H.)

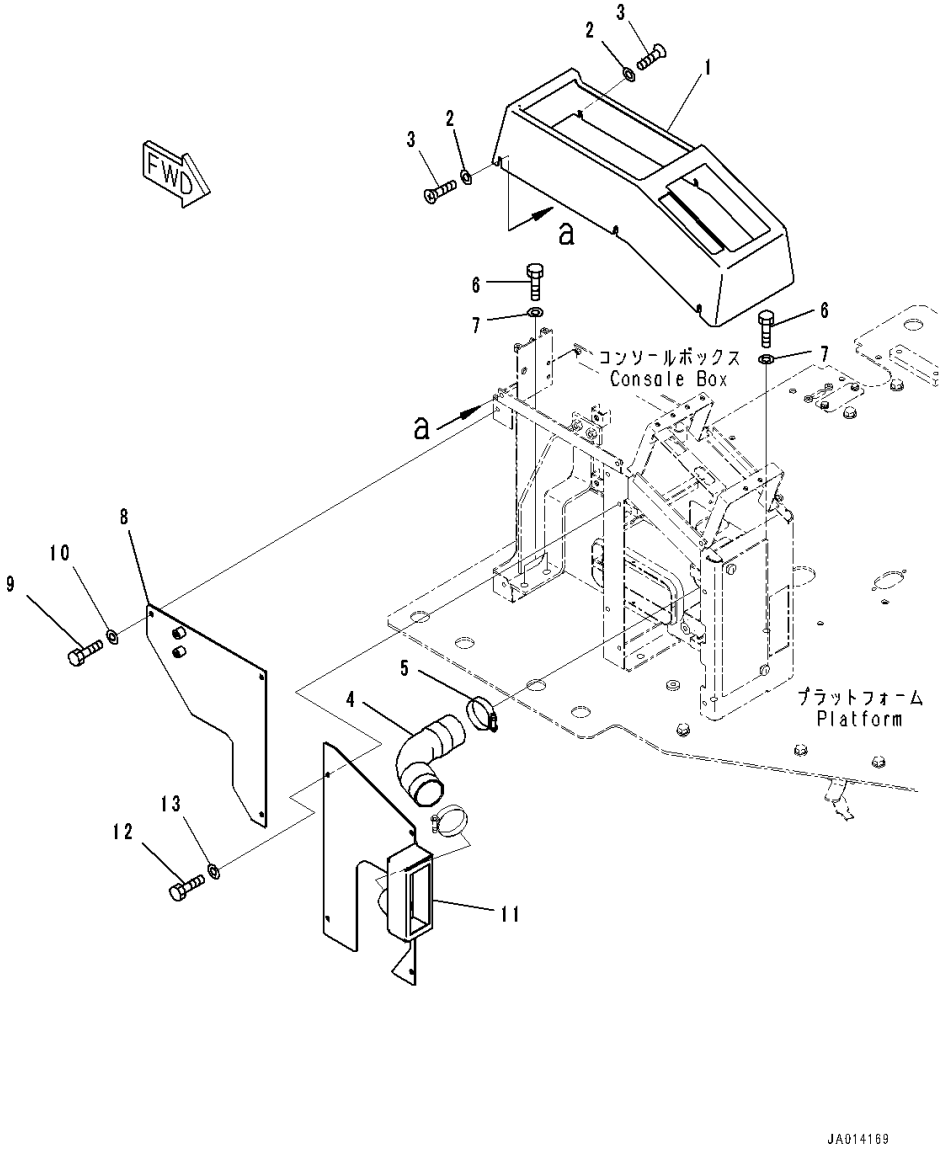

Index	Code	Part Number	Description	Qty	Serial Number
1		23B-43-61150	Cover	1	26001-
2		23S-55-51970	Washer	6	26001-
3		01225-70616	Screw, Philips Head	6	26001-
4		23A-952-8750	Hose	1	26001-
5		07281-00549	Clamp	1	26001-
6		01010-81025	Bolt	5	26001-
7		01643-31032	Washer	5	26001-
8		23B-54-74540	Plate	1	26001-
9		01010-80616	Bolt	3	26001-
10		01643-30623	Washer	3	26001-
11		234-54-82230	Cover	1	26001-
12		01010-80616	Bolt	4	26001-
13		01643-30623	Washer	4	26001-

FIG. K1110-001019 Floor (Accelerator Pedal)

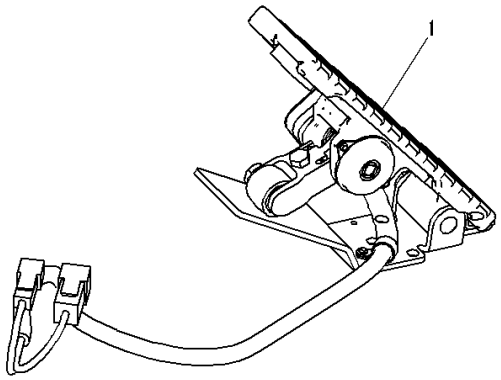

JY021154

Index	Code	Part Number	Description	Qty	Serial Number
1		702-16-07022	Pedal Assembly	1	26001-
		702-16-73960	• Cover, Rubber	1	26001-

FIG. K1110-004019 Floor (Accelerator Pedal)

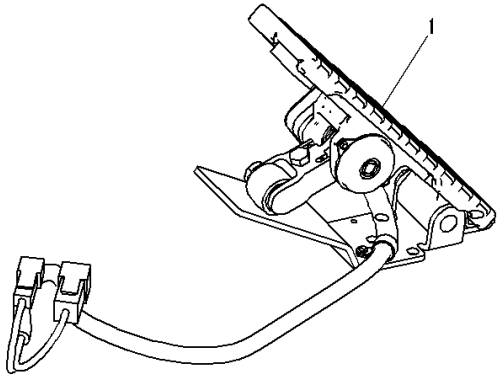

JY021154

Index	Code	Part Number	Description	Qty	Serial Number
1		702-16-07022	Pedal Assembly	1	26001-
		702-16-73960	• Cover, Rubber	1	26001-

FIG. K1110-001020 Floor (Accelerator Pedal Mounting)

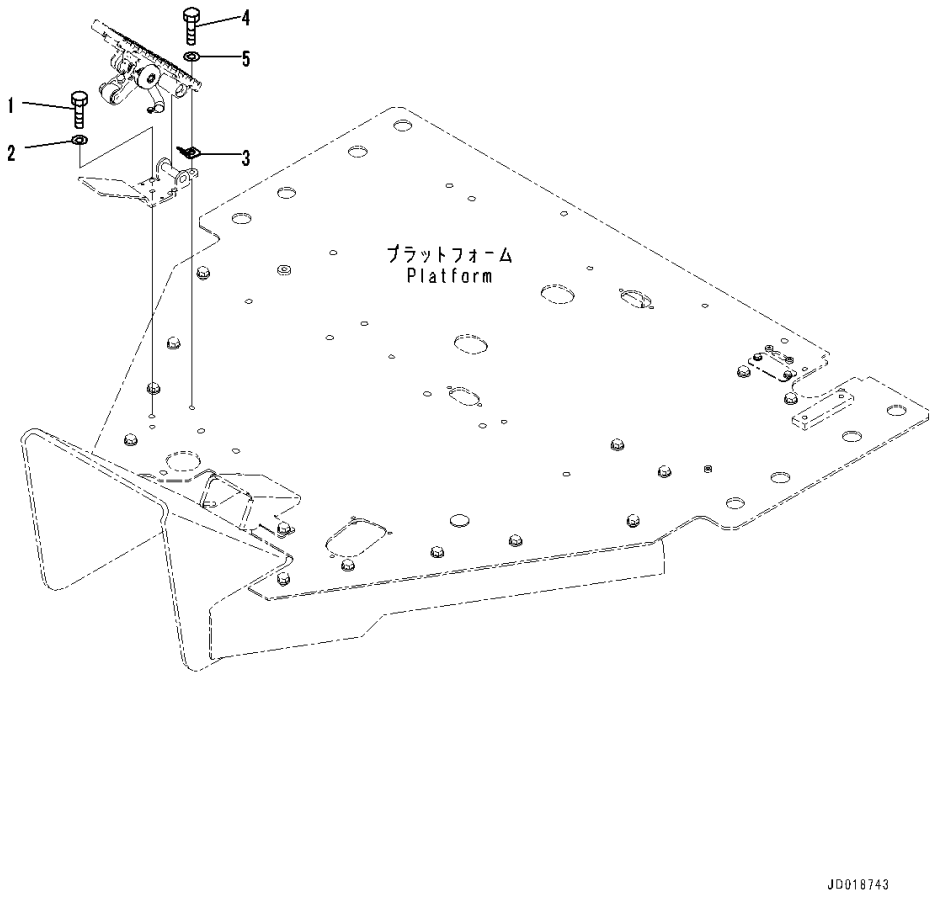

Index	Code	Part Number	Description	Qty	Serial Number
1		01010-80820	Bolt	2	26001-
2		01643-30823	Washer	2	26001-
3		42C-54-22330	Plate	1	26001-
4		01010-80820	Bolt	1	26001-
5		01643-30823	Washer	1	26001-

FIG. K1110-001021 Floor (Inching Pedal and Brake Pedal)

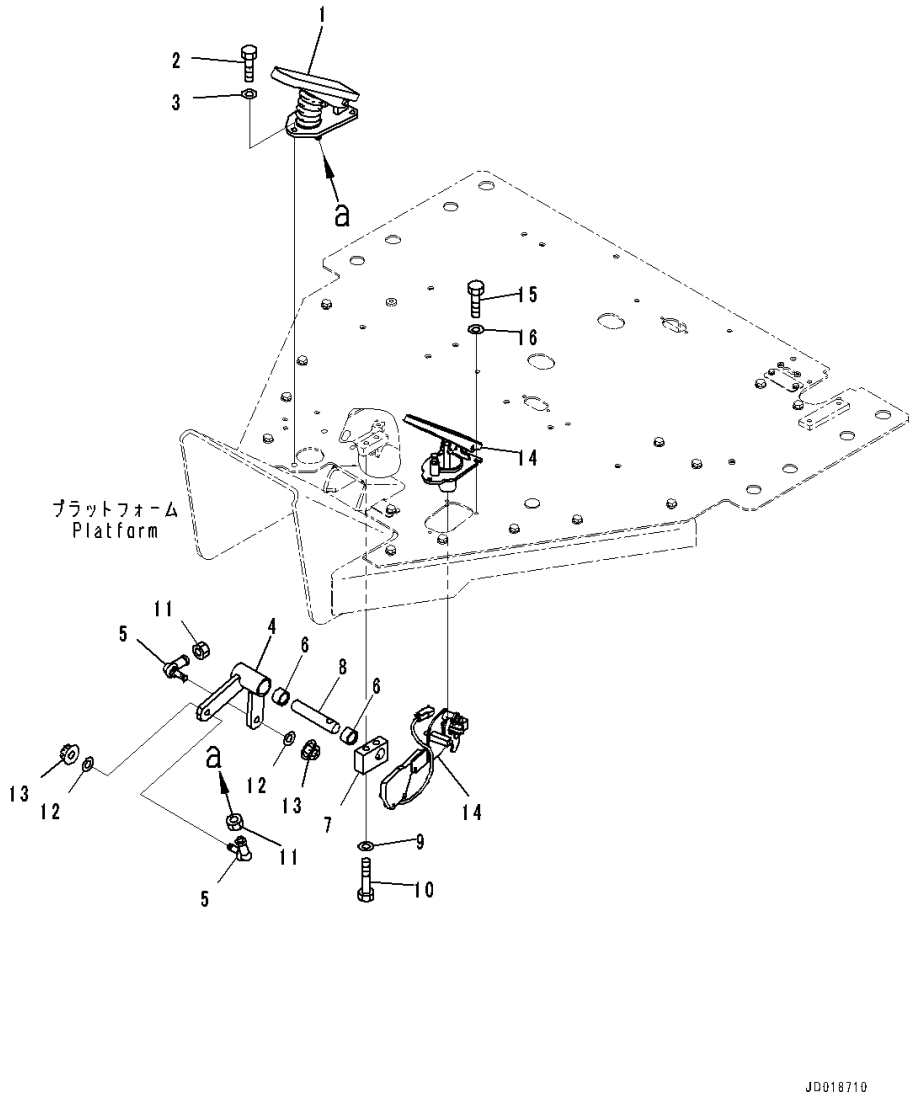

Index	Code	Part Number	Description	Qty	Serial Number
1		23B-43-72340	Pedal	1	26001-
2		01010-81030	Bolt	3	26001-
3		01643-31032	Washer	3	26001-
4		23B-43-72350	Lever	1	26001-
5		04256-41230	Joint, Ball	2	26001-
6		06124-02520	Bearing	2	26001-
7		418-43-37130	Plate	1	26001-
8		23B-43-72360	Pin	1	26001-
9		01643-31232	Washer	2	26001-
10		01010-81270	Bolt	2	26001-
11		01582-11210	Nut	2	26001-
12		01643-31232	Washer	2	26001-
13		01595-01210	Nut, Flanged	2	26001-
14		23B-45-73100	Pedal	1	26447-
		23B-45-72100	Pedal	1	26001-26446
15		01010-80620	Bolt	3	26001-
16		01643-30623	Washer	3	26001-

FIG. K1110-001022 Floor (Brake Valve)

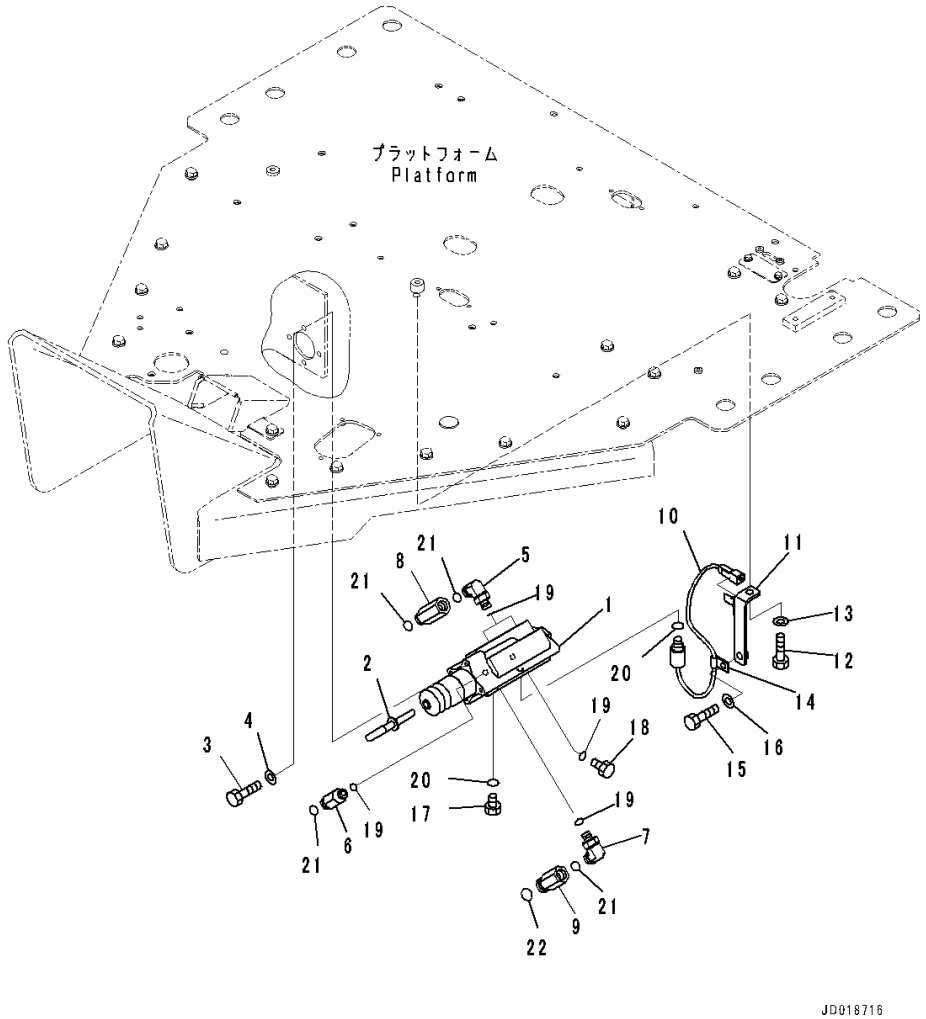

Index	Code	Part Number	Description	Qty	Serial Number
1		23B-43-71610	Valve Assembly	1	26001-
2		418-43-37140	Rod	1	26001-
3		01010-80825	Bolt	4	26001-
4		01643-30823	Washer	4	26001-
5		423-43-37260	Elbow	2	26001-
6		23B-43-72790	Union	2	26001-
7		423-43-37260	Elbow	1	26001-
8		23B-43-72780	Union	2	26001-
9		23B-43-72690	Union	1	26001-
10		418-43-37230	Switch, Stop Lamp	1	26001-
11		23B-43-72370	Bracket	1	26001-
12		01010-81020	Bolt	1	26001-
13		01643-31032	Washer	1	26001-
14		04434-50510	Clip	1	26001-
15		01010-81020	Bolt	1	26001-
16		01643-31032	Washer	1	26001-
17		07040-11409	Plug	1	26001-
18		07040-11612	Plug	1	26001-
19		07002-11623	O-ring	6	26001-
20		07002-11423	O-ring	2	26001-
21		02896-11012	O-ring	7	26001-
22		02896-11015	O-ring	1	26001-

FIG. K1110-001023A Floor (Air Conditioner Unit)

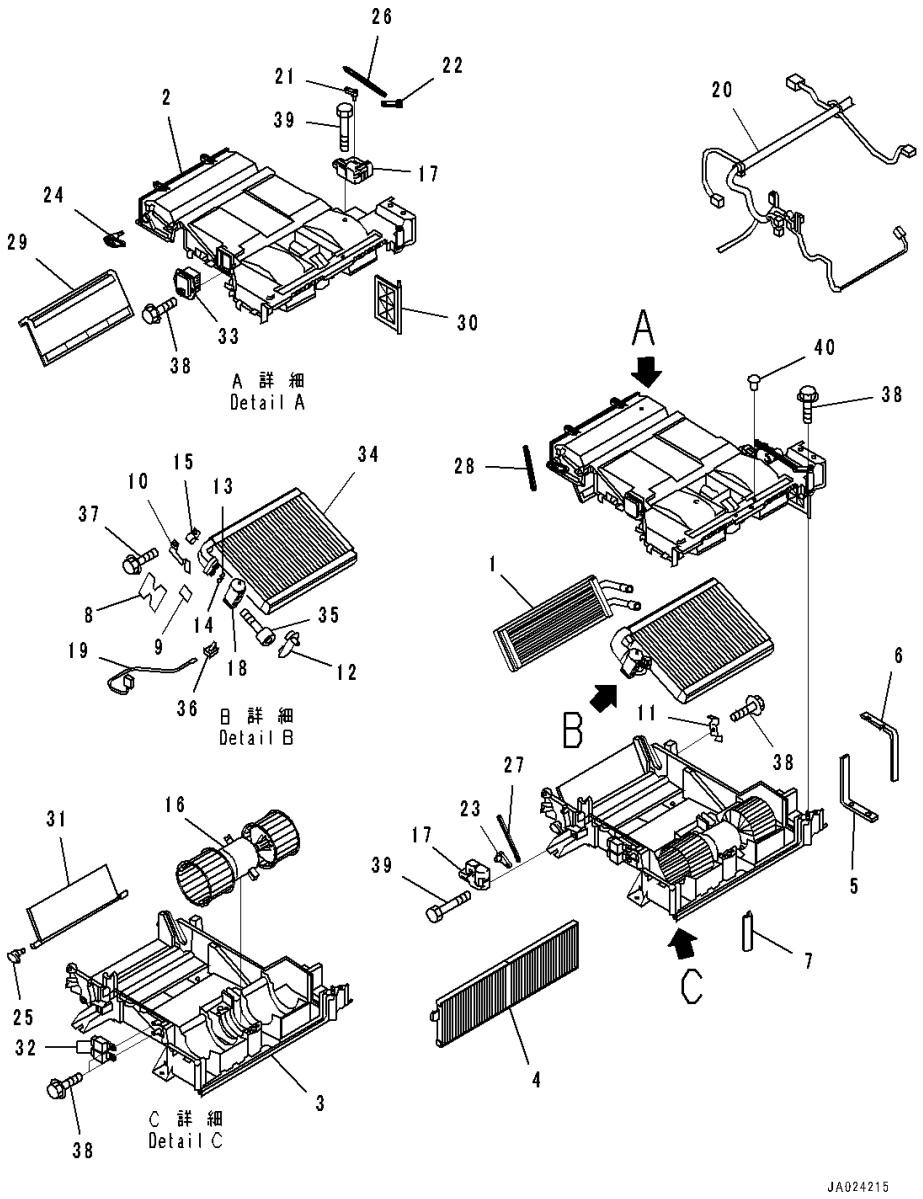

Index	Code	Part Number	Description	Qty	Serial Number
		23B-07-74114	Air Conditioner	1	26284-
1		AN51141-10491	• Heater Core Assembly	1	26284-
2		AN51150-12571	• Case Assembly	1	26284-
3		AN51150-12582	• Case Assembly	1	26284-
4		AN51186-10430	• Filter	1	26284-
5		AN51191-59570	• Packing	1	26284-
6		AN51191-59580	• Packing	1	26284-
7		AN51191-59810	• Packing	1	26284-
8		AN51194-54000	• Packing	1	26284-
9		AN51194-60201	• Packing	1	26284-
10		AN51240-43650	• Bracket	1	26284-
11		AN51243-41510	• Holder	1	26284-
12		AN51436-D0580	• Cover	1	26284-
13		AN51439-D0041	• O-ring	1	26284-
14		AN51439-D0051	• O-ring	1	26284-
15		AN51451-42230	• Retainer	1	26284-
16		AN51500-11180	• Motor Assembly	1	26284-
17		AN51502-15140	• Motor	2	26284-
18		AN51515-A0600	• Valve, Expansion	1	26284-
19		AN51532-41281	• Thermistor	1	26284-
20		AN51550-19142	• Wiring Harness	1	26284-
21		AN51571-43930	• Lever	1	26284-
22		AN51571-43940	• Lever	1	26284-
23		AN51571-43950	• Lever	1	26284-
24		AN51571-43961	• Lever	1	26284-
25		AN51571-43970	• Lever	1	26284-
26		AN51571-44050	• Rod	1	26284-
27		AN51571-44060	• Rod	1	26284-
28		AN51571-44070	• Rod	1	26284-
29		AN51573-11760	• Door	1	26284-
30		AN51573-11780	• Door	1	26284-
31		AN51573-12070	• Door	1	26284-
32		AN51580-41010	• Relay	2	26284-
33		AN51589-17820	• Fan Driver	1	26284-
34		AN51700-A0370	• Evaporator Assembly	1	26284-
35		AN51851-42580	• Bolt	2	26284-
36		AN51873-40341	• Holder	1	26284-
37		ANKB+0612DAA	• Bolt	1	26284-
38		ANTB105160TA	• Bolt	15	26284-
39		ANTN104300TA	• Bolt	6	26284-

FIG. K1110-001023A Floor (Air Conditioner Unit)

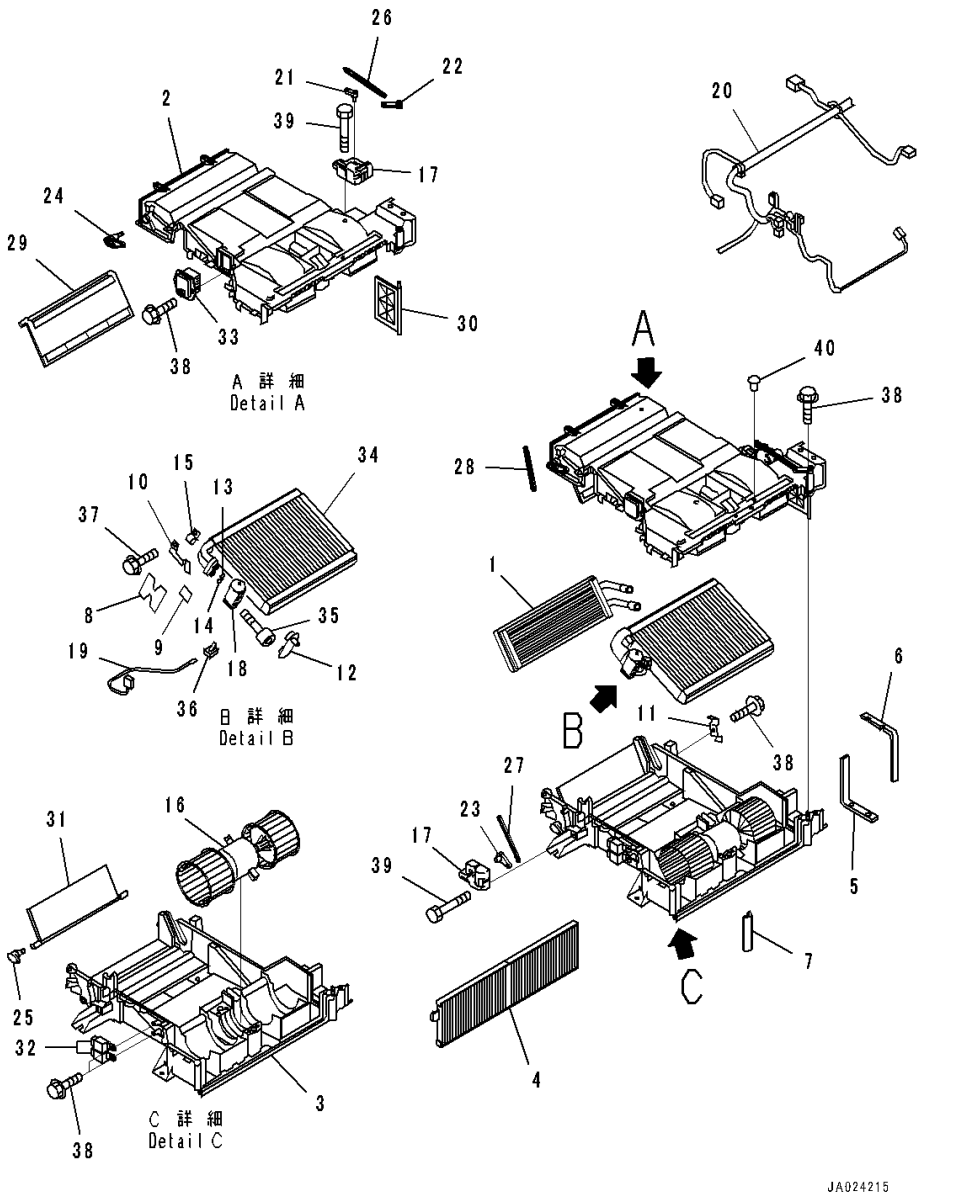

Index	Code	Part Number	Description	Qty	Serial Number
40		AN51872-40850	• Clip	1	26284-

FIG. K1110-001024 Floor (Air Conditioner Related Parts)

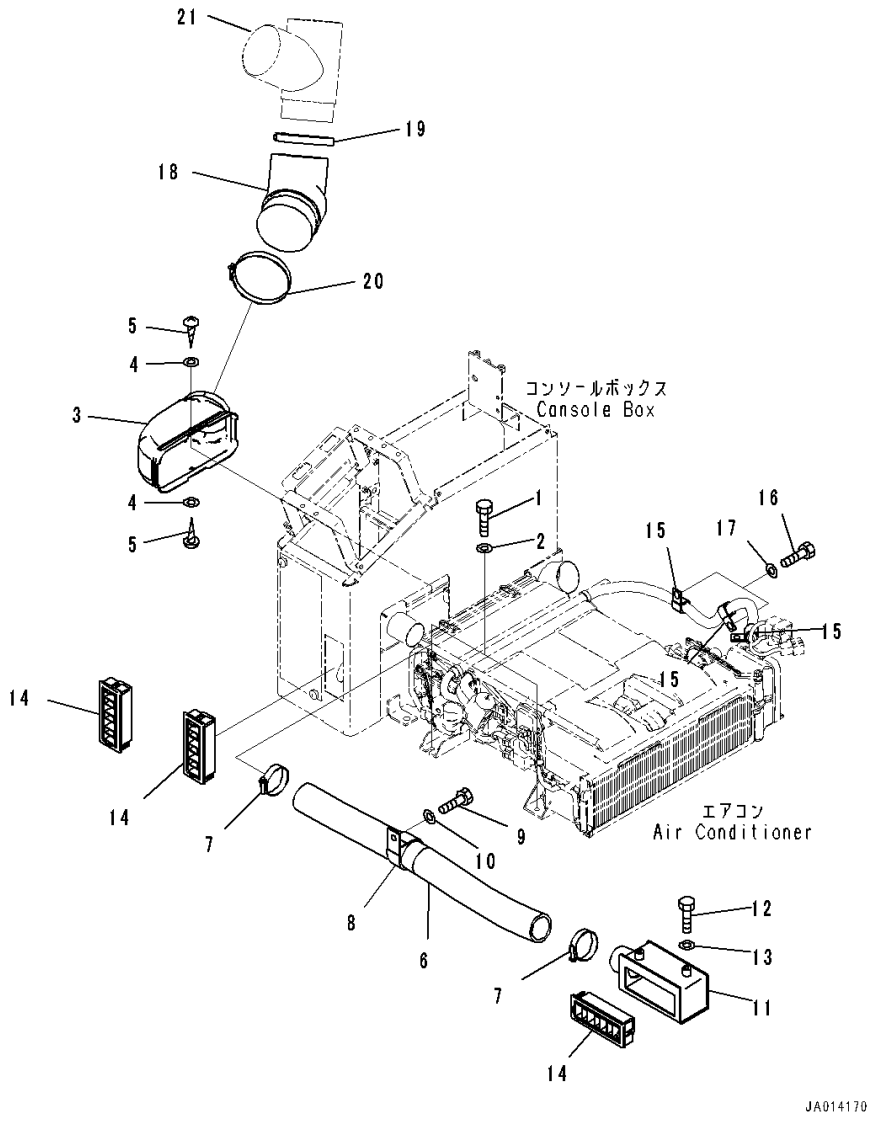

Index	Code	Part Number	Description	Qty	Serial Number
1		01010-80820	Bolt	4	26001-
2		01643-30823	Washer	4	26001-
3		21T-979-4380	Duct	1	26001-
4		01640-20508	Washer	2	26001-
5		01370-00512	Screw	2	26001-
6		23B-07-74130	Hose	1	26001-
7		07281-00609	Clamp	2	26001-
8		23S-56-21150	Clip	1	26001-
9		01010-81020	Bolt	1	26001-
10		01643-31032	Washer	1	26001-
11		23B-07-74160	Duct	1	26001-
12		01010-80816	Bolt	2	26001-
13		01643-30823	Washer	2	26001-
14		421-07-23870	Grille	3	26001-
15		04434-51910	Clip	3	26001-
16		01010-81020	Bolt	2	26001-
17		01643-31032	Washer	2	26001-
18		23B-07-74470	Hose	1	26001-
19		23B-07-74440	Clamp	1	26001-
20		07281-01159	Clamp	1	26001-
21		(23B-07-74431)	Pipe(Floor,Air Conditioner Duct)(Refer to Page 501)		

FIG. K1110-001025 Floor (Air Conditioner Drain Piping)

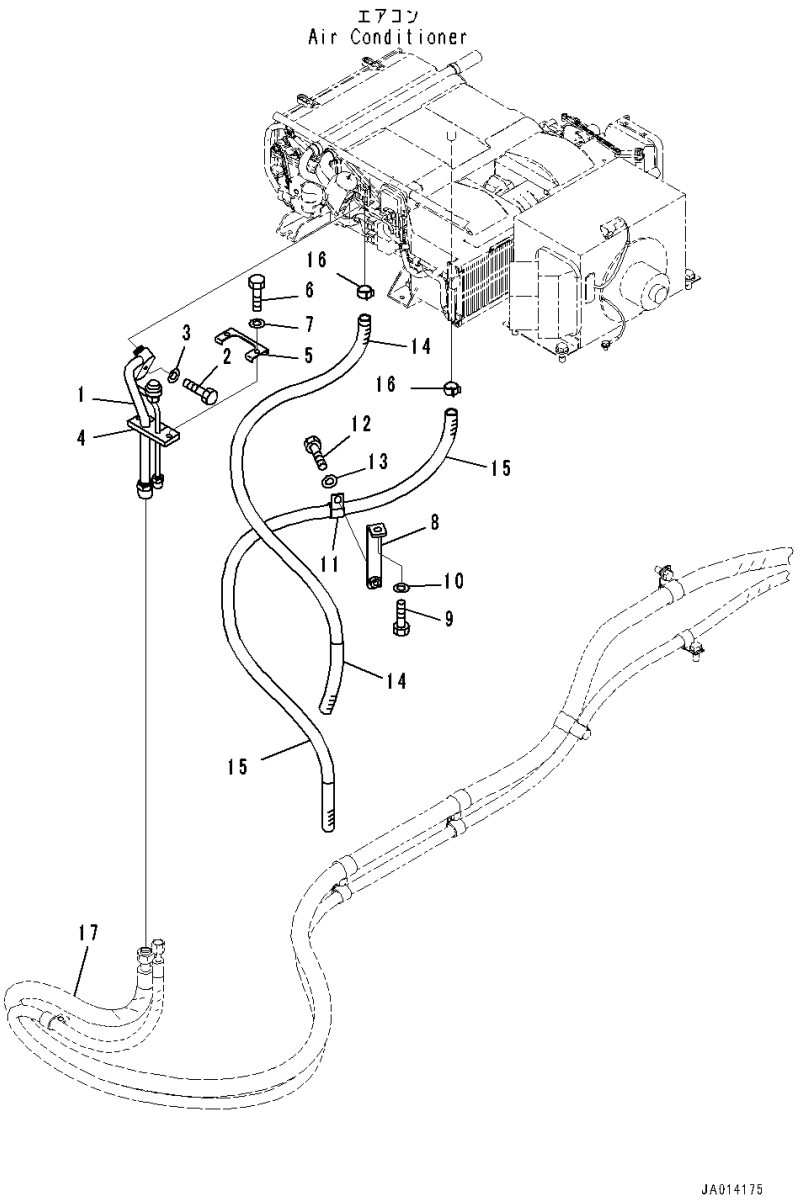

Index	Code	Part Number	Description	Qty	Serial Number
1		23B-07-74210	Tube	1	26001-
2		01010-80630	Bolt	1	26001-
3		01643-30623	Washer	1	26001-
4		23B-07-74290	Sheet	1	26001-
5		23B-809-5470	Plate	1	26001-
6		01010-80625	Bolt	2	26001-
7		01643-30623	Washer	2	26001-
8		427-04-11130	Plate	1	26001-
9		01010-81020	Bolt	1	26001-
10		01643-31032	Washer	1	26001-
11		04434-52110	Clip	1	26001-
12		01010-81020	Bolt	1	26001-
13		01643-31032	Washer	1	26001-
14		234-07-81410	Hose	1	26001-
15		234-07-81420	Hose	1	26001-
16		07285-00180	Clip	2	26001-
17		(234-07-81210)	Hose(Air Conditioner Piping,Piping)(Refer to Page 443)		

FIG. K1110-001026 Floor (Air Conditioner Piping)

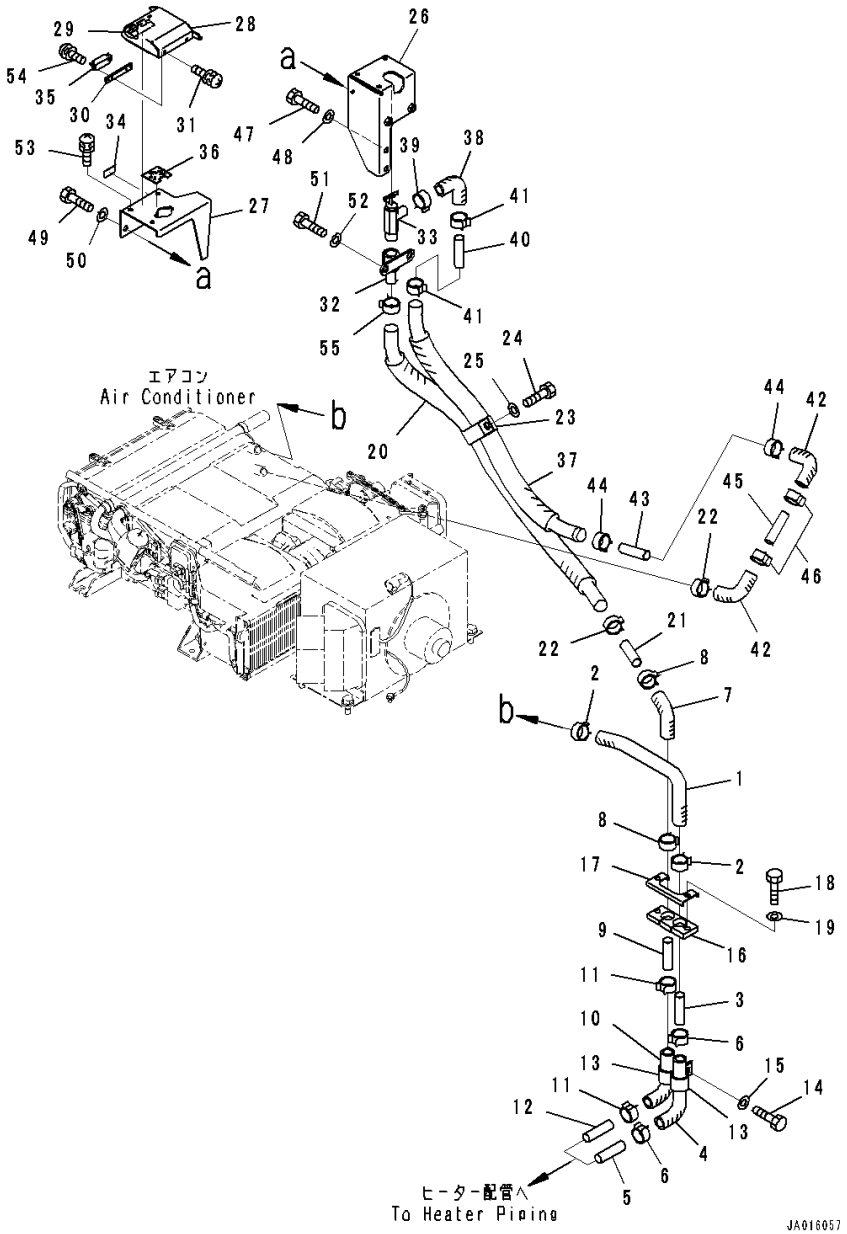

Index	Code	Part Number	Description	Qty	Serial Number
1		23B-07-74230	Hose	1	26001-
2		09479-02400	Clip	2	26001-
3		09484-00560	Connector	1	26001-
4		23B-809-5460	Hose	1	26001-
5		09484-00560	Connector	1	26001-
6		09479-02400	Clip	2	26001-
7		09483-30550	Hose	1	26001-
8		09479-02400	Clip	2	26001-
9		09484-00560	Connector	1	26001-
10		23B-07-74220	Hose	1	26001-
11		09479-02400	Clip	2	26001-
12		09484-00560	Connector	1	26001-
13		04434-52511	Clip	2	26001-
14		01010-81020	Bolt	1	26001-
15		01643-31032	Washer	1	26001-
16		23C-07-62480	Sheet	1	26001-
17		23B-809-5470	Plate	1	26001-
18		01010-80625	Bolt	2	26001-
19		01643-30623	Washer	2	26001-
20		23B-07-74560	Hose	1	26001-
21		09484-00560	Connector	1	26001-
22		09479-02400	Clip	2	26001-
23		569-06-61980	Clip	1	26001-
24		01010-81020	Bolt	1	26001-
25		01643-31032	Washer	1	26001-
26		234-54-84460	Bracket	1	26001-
27		234-54-84430	Cover	1	26001-
28		234-54-84470	Cover	1	26001-
29		23B-54-74560	• Hinge,Welded	1	26001-
30		234-54-84450	Plate	1	26001-
31		01023-20306	Screw	2	26001-
32		234-54-84410	Joint	1	26001-
33		09482-10000	Valve, Water	1	26001-
34		23B-54-74520	Cushion	1	26001-
35		421-09-21370	Catcher	1	26001-
36		23B-53-74110	Plate	1	26001-
37		23B-07-74550	Hose	1	26001-
38		09483-30550	Hose	1	26001-
39		09479-02400	Clip	1	26001-
40		09484-00560	Connector	1	26001-

FIG. K1110-001026 Floor (Air Conditioner Piping)

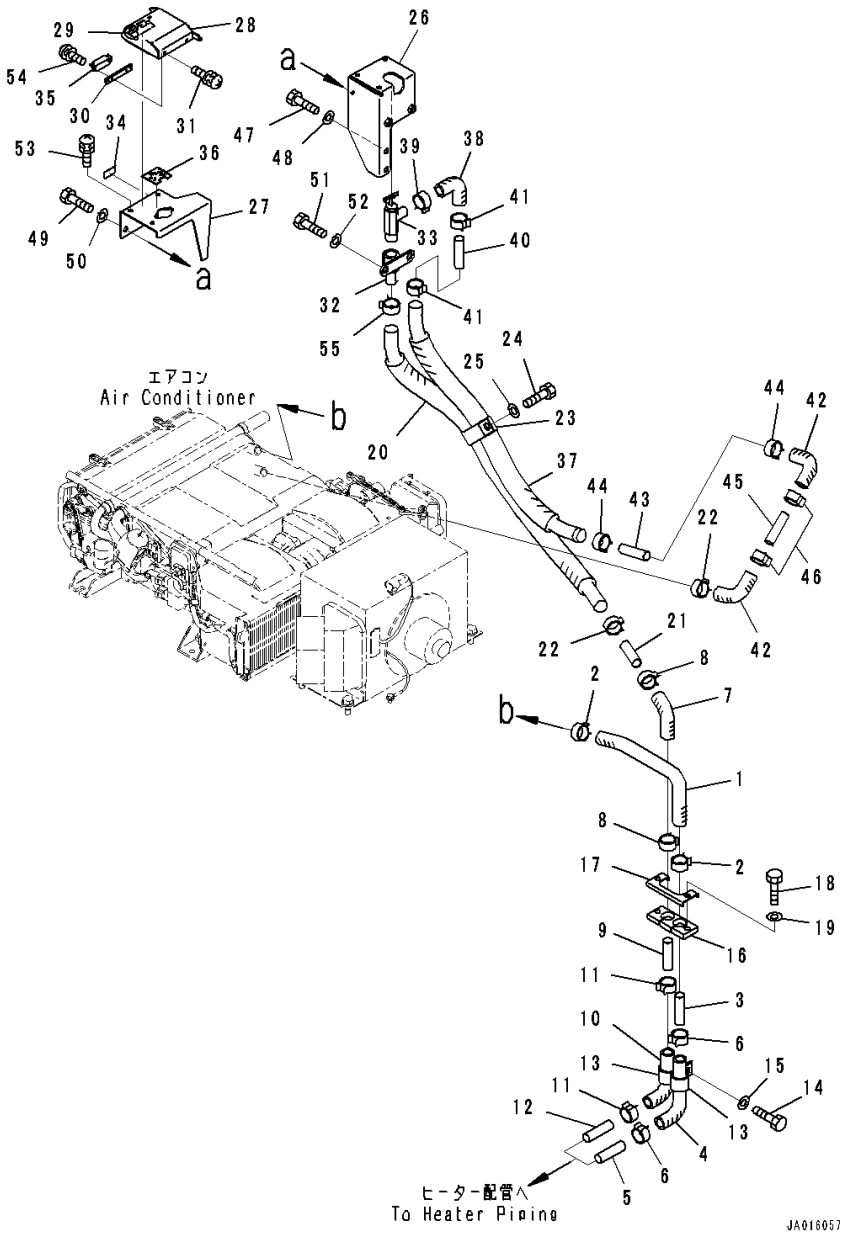

Index	Code	Part Number	Description	Qty	Serial Number
41		09479-02400	Clip	2	26001-
42		09483-30550	Hose	2	26001-
43		09484-00560	Connector	1	26001-
44		09479-02400	Clip	2	26001-
45		09484-00560	Connector	1	26001-
46		09479-02400	Clip	2	26001-
47		01010-80820	Bolt	2	26001-
48		01643-30823	Washer	2	26001-
49		01010-D0816	Bolt	1	26001-
50		01643-70823	Washer	1	26001-
51		01010-D0820	Bolt	2	26001-
52		01643-70823	Washer	2	26001-
53		01023-70616	Screw	3	26001-
54		01023-20306	Screw	2	26001-
55		09479-02400	Clip	1	26001-

FIG. K1110-004026 Floor (Air Conditioner Piping)

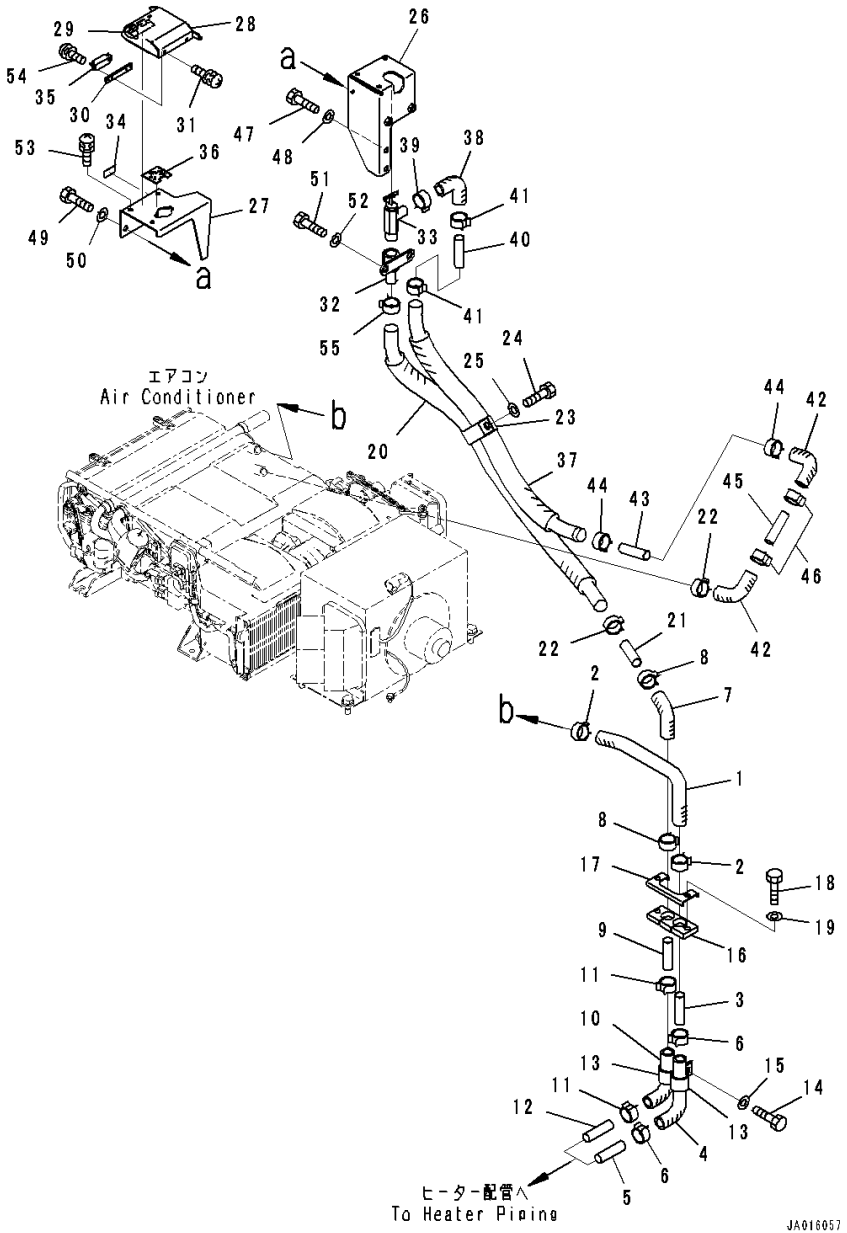

Index	Code	Part Number	Description	Qty	Serial Number
1		23B-07-74230	Hose	1	26001-
2		09479-02400	Clip	2	26001-
3		09484-00560	Connector	1	26001-
4		23B-809-5460	Hose	1	26001-
5		09484-00560	Connector	1	26001-
6		09479-02400	Clip	2	26001-
7		09483-30550	Hose	1	26001-
8		09479-02400	Clip	2	26001-
9		09484-00560	Connector	1	26001-
10		23B-07-74220	Hose	1	26001-
11		09479-02400	Clip	2	26001-
12		09484-00560	Connector	1	26001-
13		04434-52511	Clip	2	26001-
14		01010-81020	Bolt	1	26001-
15		01643-31032	Washer	1	26001-
16		23C-07-62480	Sheet	1	26001-
17		23B-809-5470	Plate	1	26001-
18		01010-80625	Bolt	2	26001-
19		01643-30623	Washer	2	26001-
20		23B-07-74560	Hose	1	26001-
21		09484-00560	Connector	1	26001-
22		09479-02400	Clip	2	26001-
23		569-06-61980	Clip	1	26001-
24		01010-81020	Bolt	1	26001-
25		01643-31032	Washer	1	26001-
26		234-54-84460	Bracket	1	26001-
27		234-54-84430	Cover	1	26001-
28		234-54-84470	Cover	1	26001-
29		23B-54-74560	• Hinge,Welded	1	26001-
30		234-54-84450	Plate	1	26001-
31		01023-20306	Screw	2	26001-
32		234-54-84410	Joint	1	26001-
33		09482-10000	Valve, Water	1	26001-
34		23B-54-74520	Cushion	1	26001-
35		421-09-21370	Catcher	1	26001-
36		23B-53-74110	Plate	1	26001-
37		23B-07-74550	Hose	1	26001-
38		09483-30550	Hose	1	26001-
39		09479-02400	Clip	1	26001-
40		09484-00560	Connector	1	26001-

FIG. K1110-004026 Floor (Air Conditioner Piping)

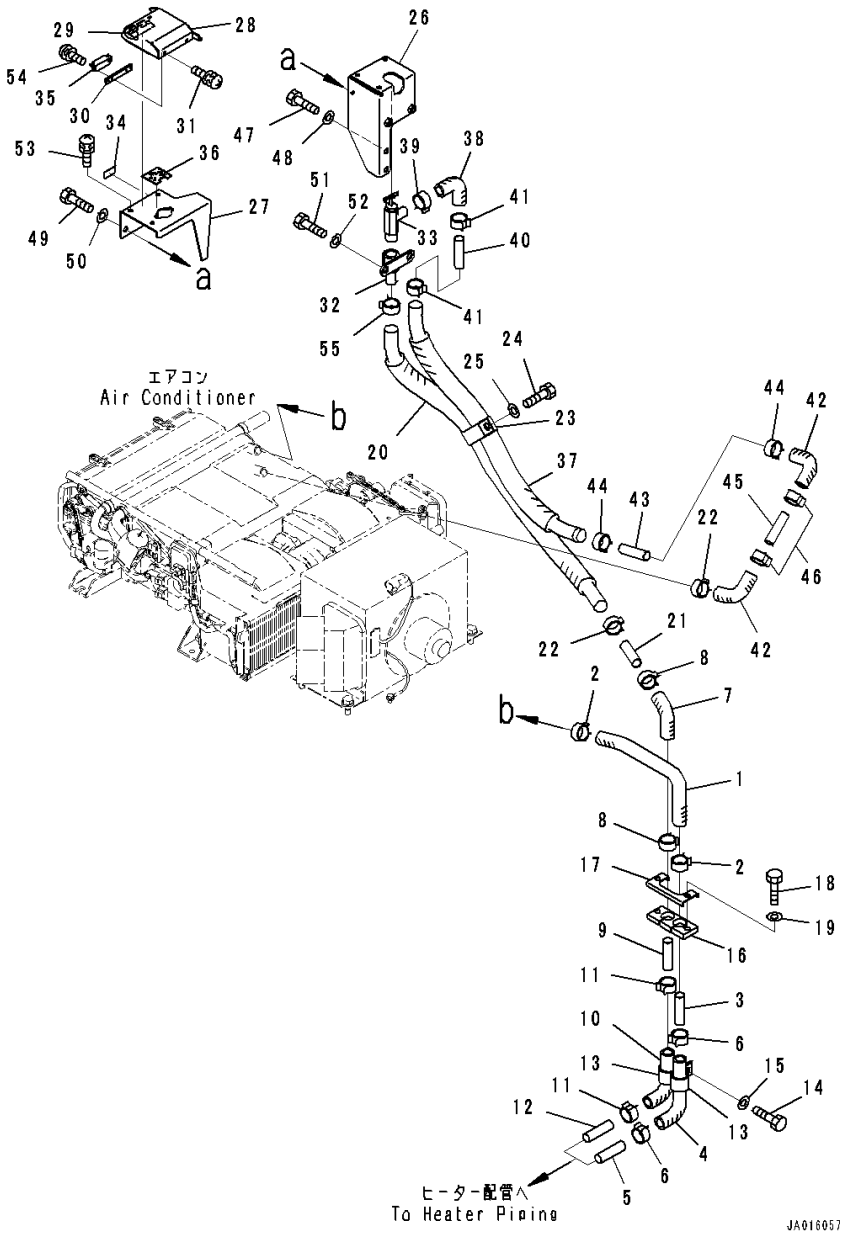

Index	Code	Part Number	Description	Qty	Serial Number
41		09479-02400	Clip	2	26001-
42		09483-30550	Hose	2	26001-
43		09484-00560	Connector	1	26001-
44		09479-02400	Clip	2	26001-
45		09484-00560	Connector	1	26001-
46		09479-02400	Clip	2	26001-
47		01010-80820	Bolt	2	26001-
48		01643-30823	Washer	2	26001-
49		01010-D0816	Bolt	1	26001-
50		01643-70823	Washer	1	26001-
51		01010-D0820	Bolt	2	26001-
52		01643-70823	Washer	2	26001-
53		01023-70616	Screw	3	26001-
54		01023-20306	Screw	2	26001-
55		09479-02400	Clip	1	26001-

FIG. K1110-001027 Floor (Operator's Seat Mounting)

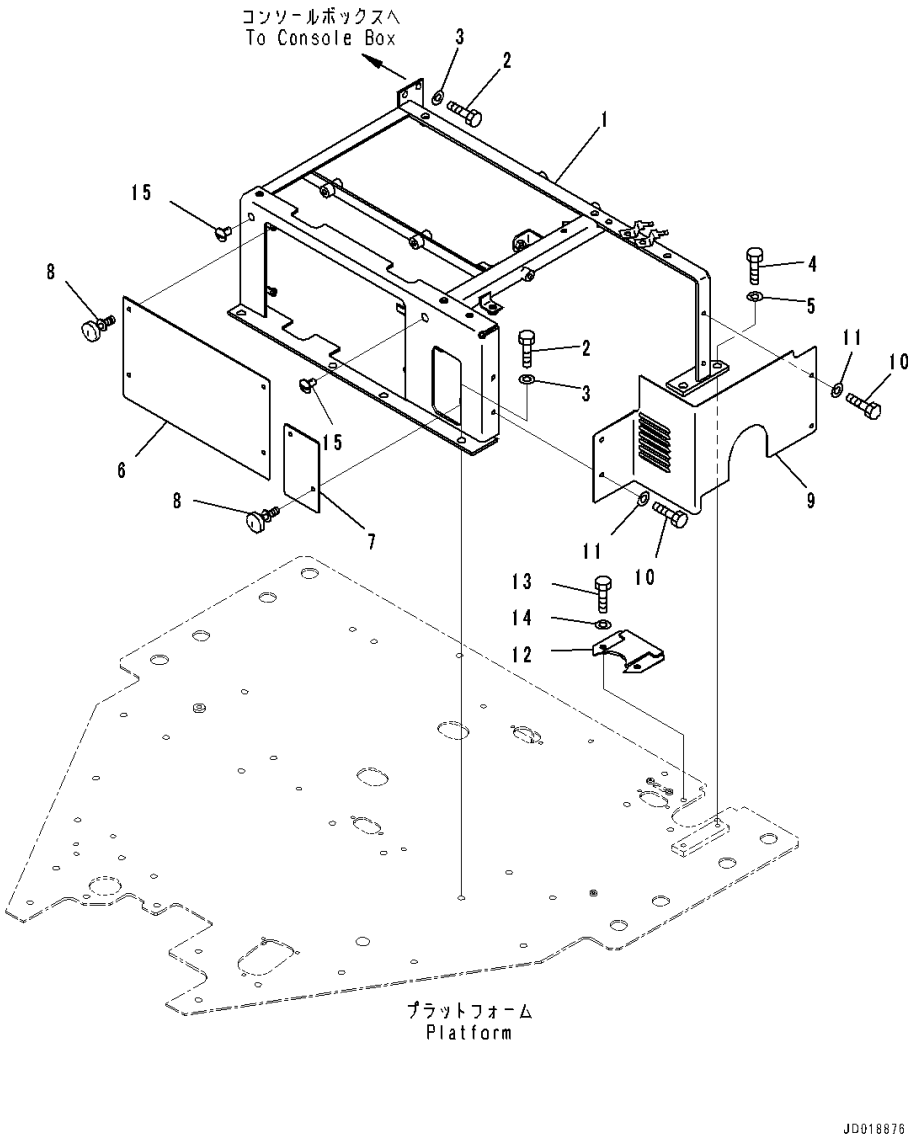

Index	Code	Part Number	Description	Qty	Serial Number
1		23B-54-72191	Bracket	1	26001-
2		01010-81025	Bolt	6	26001-
3		01643-31032	Washer	6	26001-
4		01010-81030	Bolt	2	26001-
5		01643-31032	Washer	2	26001-
6		23B-54-72250	Cover	1	26001-
7		23B-54-72260	Plate	1	26001-
8		235-54-11540	Knob	6	26001-
9		23B-54-72220	Cover	1	26001-
10		01010-80620	Bolt	4	26001-
11		01643-30623	Washer	4	26001-
12		23B-54-72310	Bracket	1	26001-
13		01010-80820	Bolt	2	26001-
14		01643-30823	Washer	2	26001-
15		22L-46-12150	Cap	2	26001-

FIG. K1110-001028 Floor (Transmission Controller)

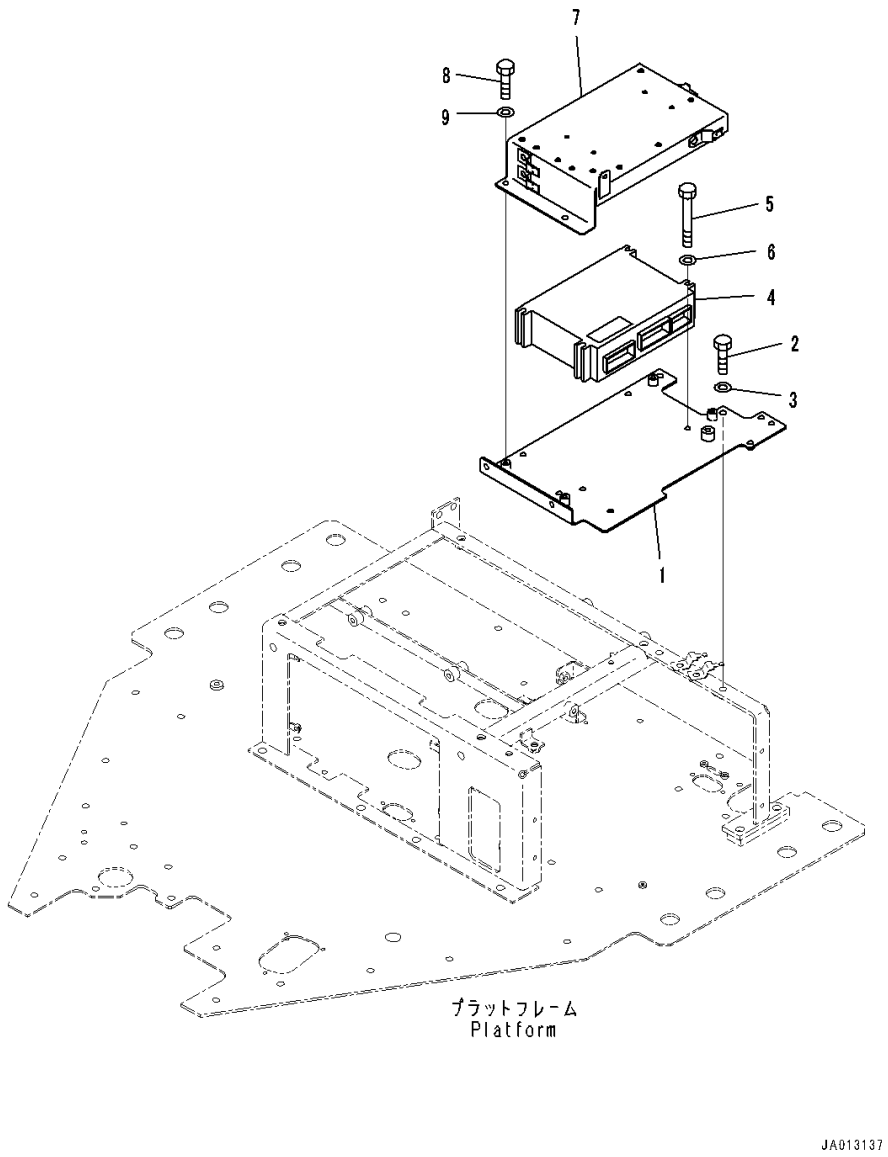

Index	Code	Part Number	Description	Qty	Serial Number
1		23B-54-72270	Bracket	1	26001-
2		01010-81025	Bolt	3	26001-
3		01643-31032	Washer	3	26001-
4		7821-26-7001	Controller, ATC	1	26358-
	A2	7821-26-7000	Controller, ATC	1	26001-26357
5		01643-30823	Washer	4	26001-
6		01010-80885	Bolt	4	26001-
7		23B-06-72140	Cover	1	26001-
8		01010-80816	Bolt	4	26001-
9		01643-30823	Washer	4	26001-

FIG. K1110-003028 Floor (Transmission Controller)

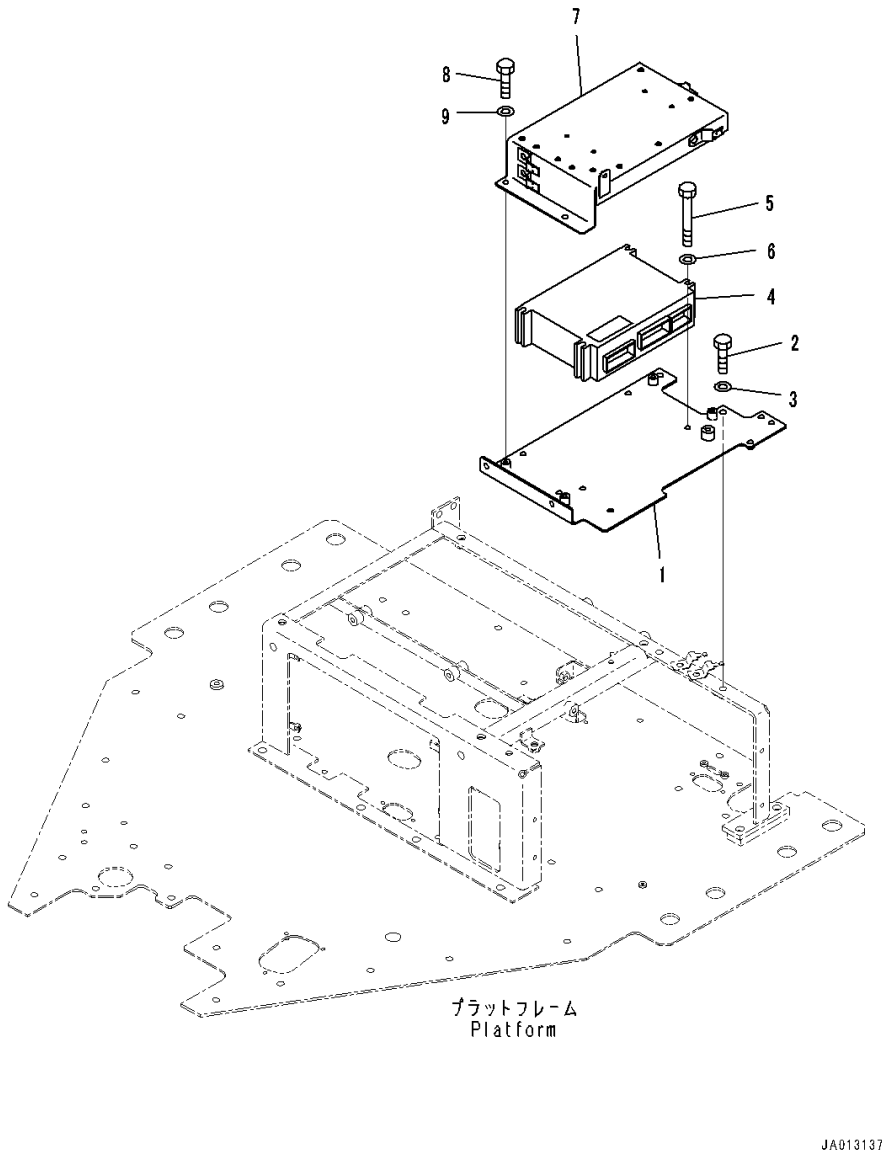

Index	Code	Part Number	Description	Qty	Serial Number
1		23B-54-72270	Bracket	1	26001-
2		01010-81025	Bolt	3	26001-
3		01643-31032	Washer	3	26001-
4		7821-26-7001	Controller, ATC	1	26358-
	A2	7821-26-7000	Controller, ATC	1	26001-26357
5		01643-30823	Washer	4	26001-
6		01010-80885	Bolt	4	26001-
7		23B-06-72140	Cover	1	26001-
8		01010-80816	Bolt	4	26001-
9		01643-30823	Washer	4	26001-

FIG. K1110-002028 Floor (Transmission Controller) (With 10 Spool Valve,12volt Converter)

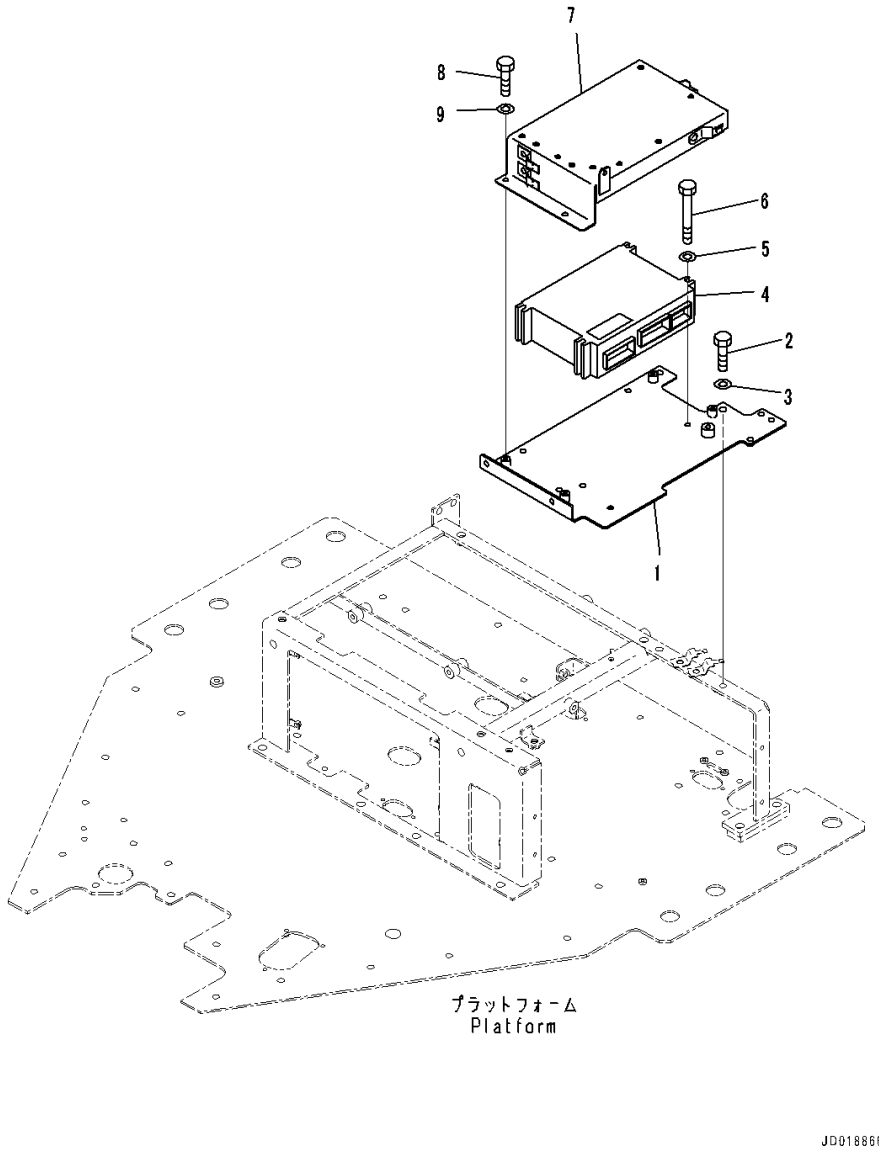

Index	Code	Part Number	Description	Qty	Serial Number
1		23B-54-72270	Bracket	1	26001-
2		01010-81025	Bolt	3	26001-
3		01643-31032	Washer	3	26001-
4		7821-26-7001	Controller, ATC	1	26358-
	A2	7821-26-7000	Controller, ATC	1	26001-26357
5		01643-30823	Washer	4	26001-
6		01010-80885	Bolt	4	26001-
7		23B-06-71540	Cover	1	26001-
8		01010-80816	Bolt	4	26001-
9		01643-30823	Washer	4	26001-

FIG. K1110-001029 Floor (Wiring Harness Mounting)

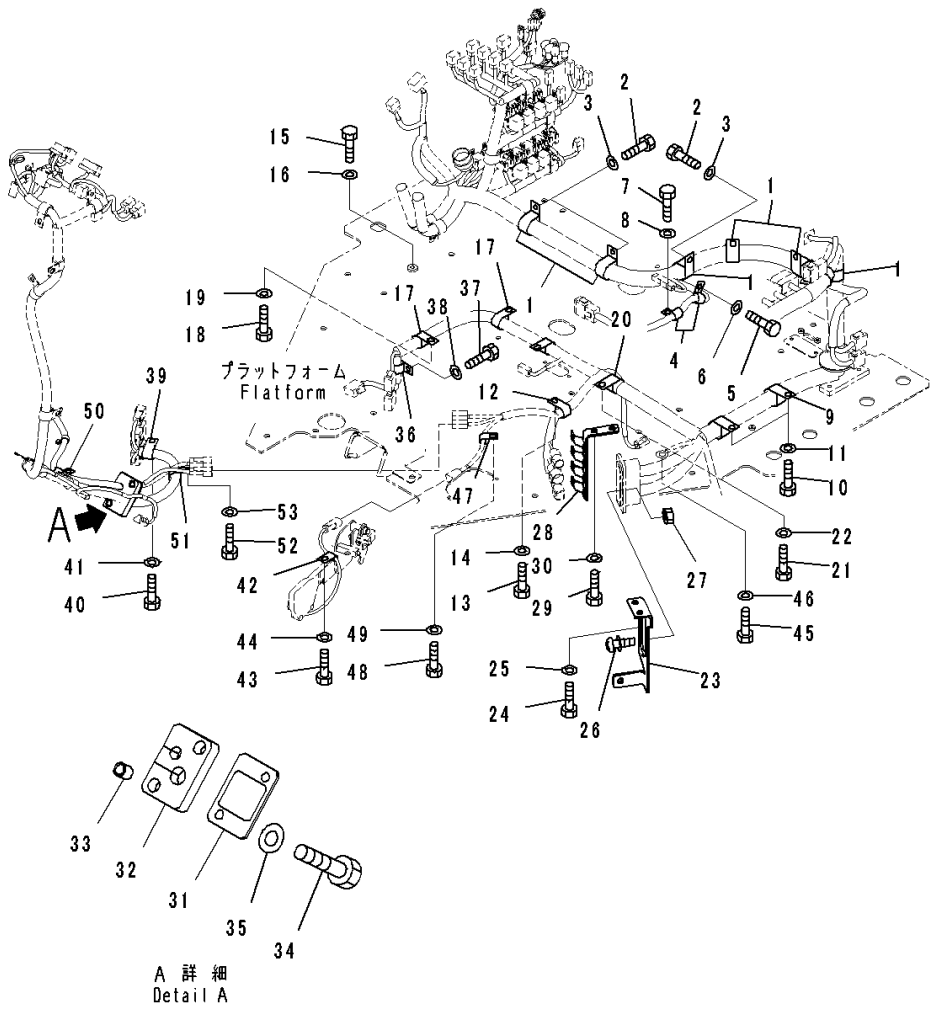

Index	Code	Part Number	Description	Qty	Serial Number
1		04434-53411	Clip	7	26001-
2		01010-81020	Bolt	7	26001-
3		01643-31032	Washer	7	26001-
4		04434-51410	Clip	2	26001-
5		01010-81020	Bolt	1	26001-
6		01643-31032	Washer	1	26001-
7		01010-81025	Bolt	1	26001-
8		01643-31032	Washer	1	26001-
9		281-01-13180	Clip	2	26001-
10		01010-81020	Bolt	2	26001-
11		01643-31032	Washer	2	26001-
12		04434-51910	Clip	1	26001-
13		01010-81020	Bolt	1	26001-
14		01643-31032	Washer	1	26001-
15		01010-81016	Bolt	1	26001-
16		01643-31032	Washer	1	26001-
17		04434-52310	Clip	3	26001-
18		01010-81020	Bolt	3	26001-
19		01643-31032	Washer	3	26001-
20		04434-52712	Clip	1	26001-
21		01010-81020	Bolt	1	26001-
22		01643-31032	Washer	1	26001-
23		234-06-81510	Bracket	1	26001-
24		01010-81020	Bolt	2	26001-
25		01643-31032	Washer	2	26001-
26		01023-60420	Screw	4	26001-
27		01580-60403	Nut	4	26001-
28		234-06-81520	Bracket	1	26001-
29		01010-81020	Bolt	2	26001-
30		01643-31032	Washer	2	26001-
31		23B-43-72580	Plate	1	26001-
32		23B-43-72590	Cushion	1	26001-
33		41H-879-1250	Spacer	2	26001-
34		01010-80830	Bolt	2	26001-
35		01643-30823	Washer	2	26001-
36		04434-51710	Clip	1	26001-
37		01010-81020	Bolt	1	26001-
38		01643-31032	Washer	1	26001-
39		04434-51910	Clip	1	26001-
40		01010-81020	Bolt	1	26001-

FIG. K1110-001029 Floor (Wiring Harness Mounting)

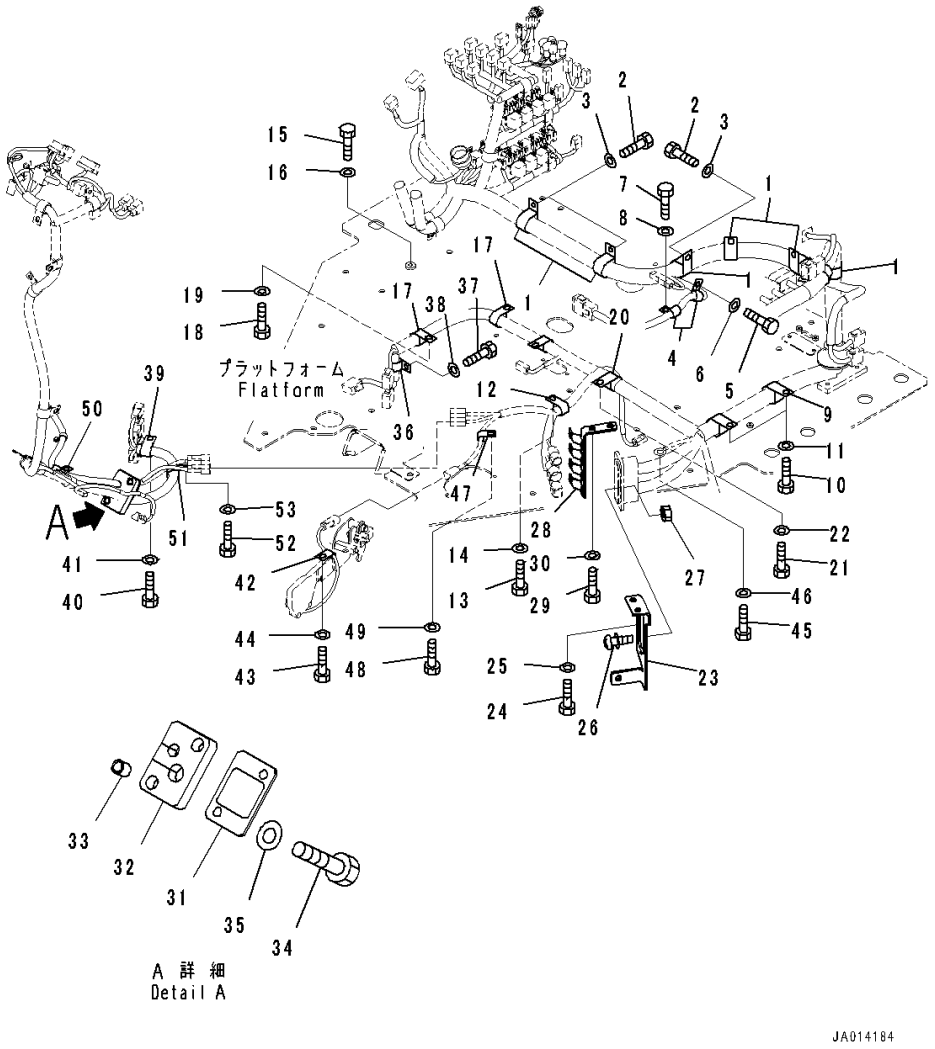

Index	Code	Part Number	Description	Qty	Serial Number
41		01643-31032	Washer	1	26001-
42		04434-50610	Clip	1	26001-
43		01010-81020	Bolt	1	26001-
44		01643-31032	Washer	1	26001-
45		01010-81016	Bolt	1	26001-
46		01643-31032	Washer	1	26001-
47		04434-50810	Clip	1	26001-
48		01010-81020	Bolt	1	26001-
49		01643-31032	Washer	1	26001-
50		04434-51310	Clip	1	26001-
51		04434-51910	Clip	1	26001-
52		01010-81020	Bolt	1	26001-
53		01643-31032	Washer	1	26001-

FIG. K1110-001030 Floor (Window Washer Piping)

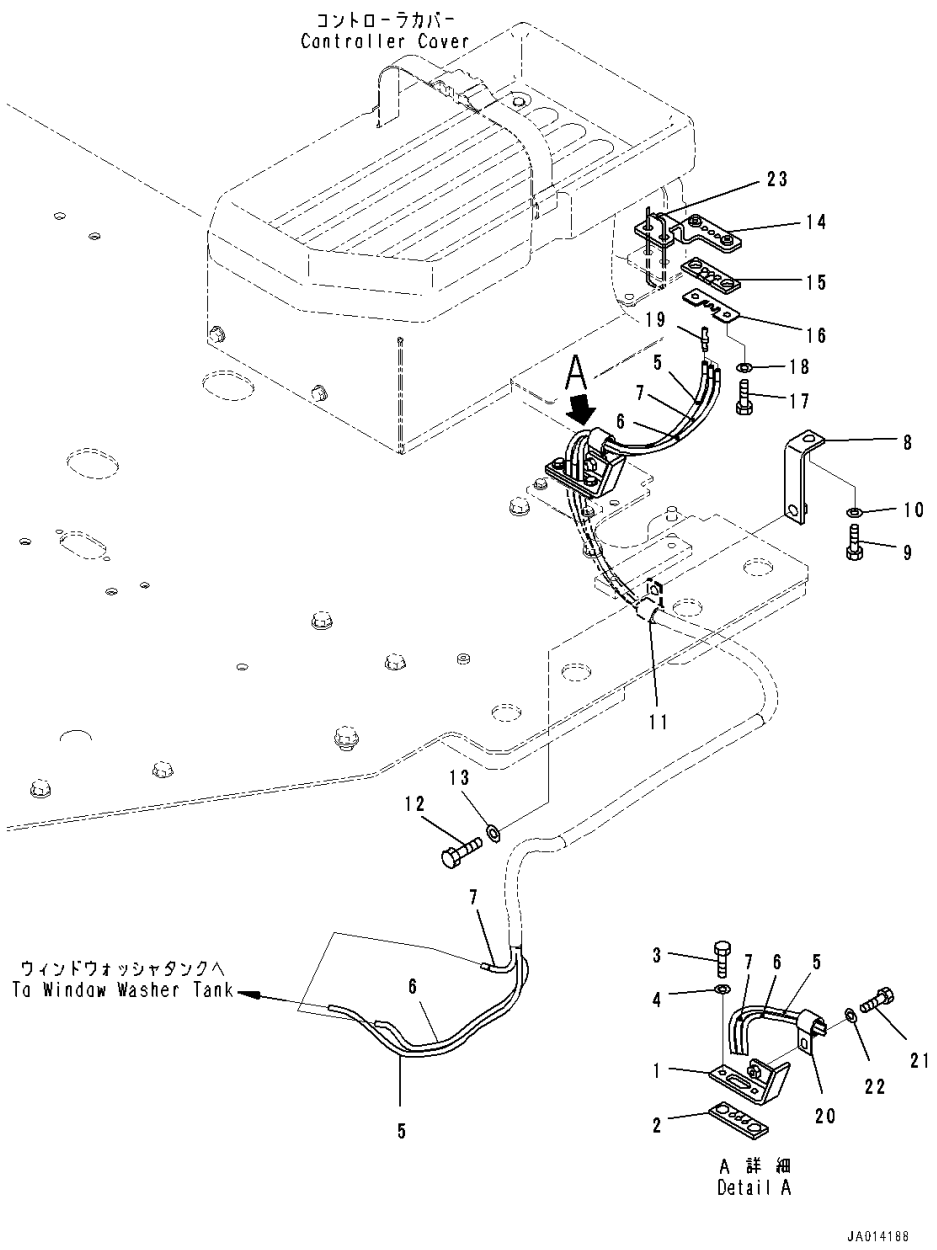

Index	Code	Part Number	Description	Qty	Serial Number
1		23B-54-72430	Bracket	1	26001-
2		23B-54-72440	Cushion	1	26001-
3		01010-80620	Bolt	2	26001-
4		01643-30623	Washer	2	26001-
5		234-54-82480	Hose	1	26001-
6		234-54-82490	Hose	1	26001-
7		23B-54-72470	Hose,Orange	1	26001-
8		23S-44-14540	Plate	1	26001-
9		01010-81020	Bolt	1	26001-
10		01643-31032	Washer	1	26001-
11		04434-51410	Clip	1	26001-
12		01010-81020	Bolt	1	26001-
13		01643-31032	Washer	1	26001-
14		23B-54-72530	Bracket	1	26001-
15		23B-54-72450	Cushion	1	26001-
16		23B-54-72460	Plate	1	26001-
17		01010-80620	Bolt	2	26001-
18		01643-30623	Washer	2	26001-
19		207-06-61490	Valve	3	26001-
20		04434-51408	Clip	1	26001-
21		01010-80820	Bolt	1	26001-
22		01643-30823	Washer	1	26001-
23		08034-20834	Band	1	26001-

FIG. K1110-001031 Floor (Cab In Parts, Air Duct)

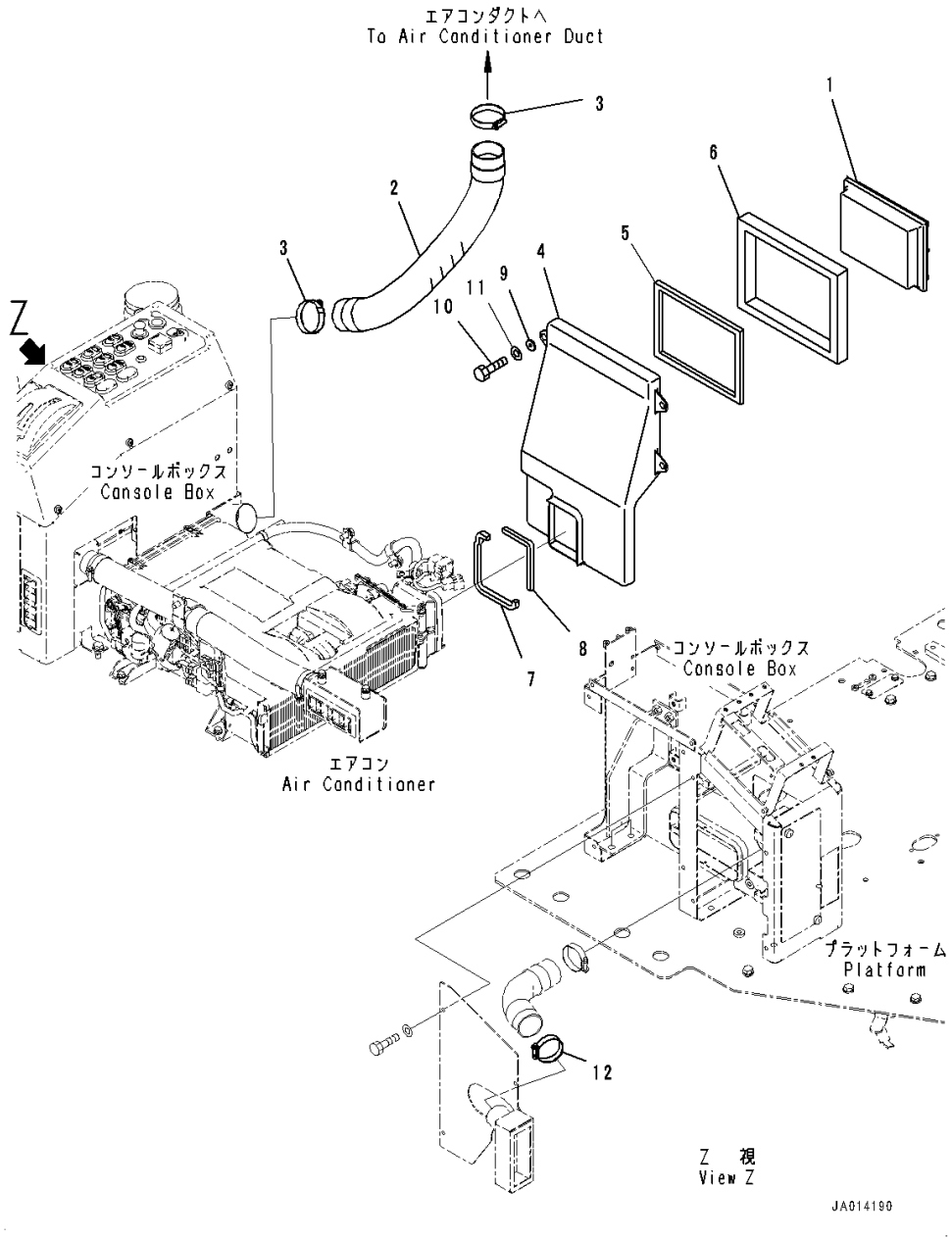

Index	Code	Part Number	Description	Qty	Serial Number
1		17M-911-3530	Element	1	26001-
2		09485-06507	Hose, Air	1	26001-
3		07281-00709	Clamp	2	26001-
4		23B-07-74140	Duct	1	26001-
5		23B-07-74250	Sheet	1	26001-
6		23B-07-74260	Sheet	1	26001-
7		23B-07-74310	Sheet	1	26001-
8		23B-07-74320	Sheet	1	26001-
9		20Y-53-12310	Collar	4	26001-
10		01010-80616	Bolt	4	26001-
11		01643-30623	Washer	4	26001-
12		07281-00549	Clamp	1	26001-

FIG. K1110-001032 Floor (Platform Related Parts)

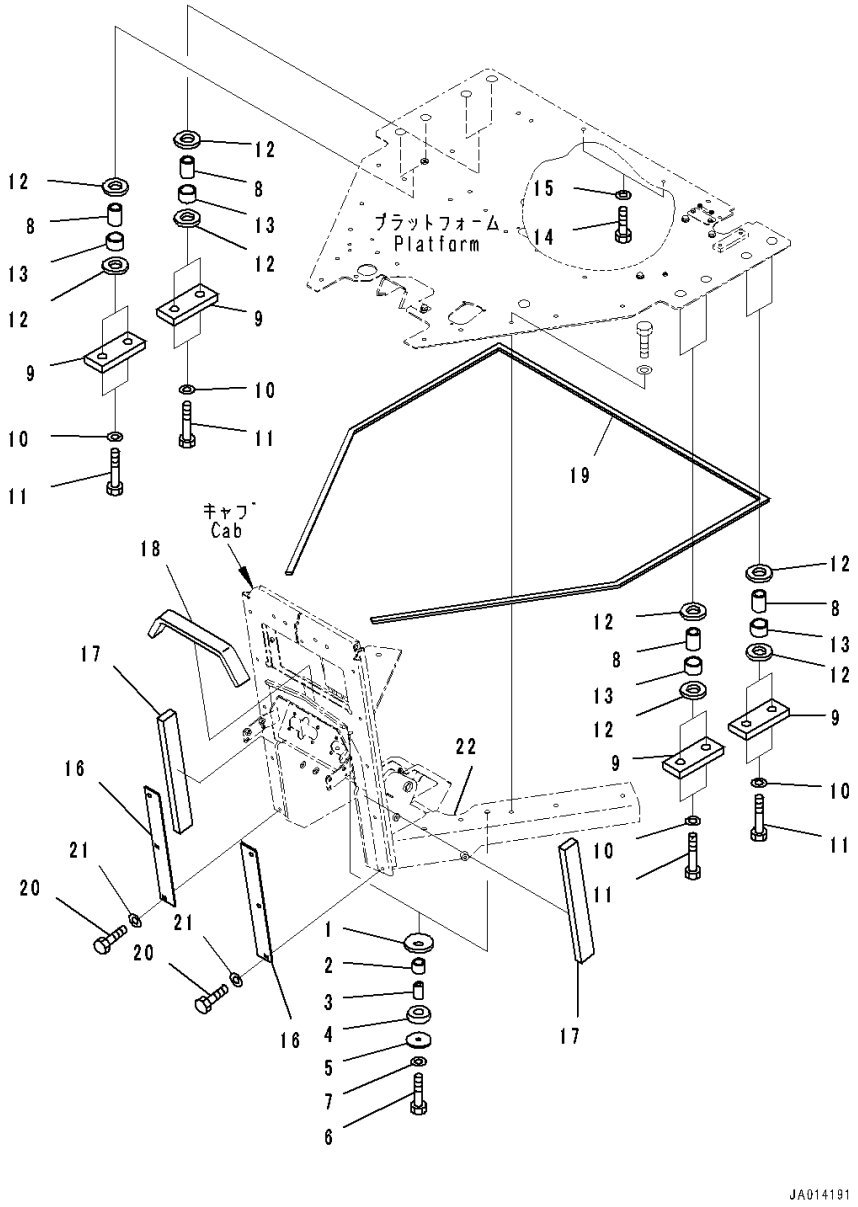

Index	Code	Part Number	Description	Qty	Serial Number
1		23B-54-72540	Cushion	2	26001-
2		23B-54-32140	Cushion	2	26001-
3		23B-54-32151	Spacer	2	26001-
4		23A-54-11180	Cushion	2	26001-
5		23B-54-32160	Plate	2	26001-
6		01010-81280	Bolt	2	26001-
7		01643-31232	Washer	2	26001-
8		23B-957-5510	Spacer	8	26001-
9		23B-54-72521	Plate	4	26001-
10		01643-32780	Washer	8	26001-
11		01011-82750	Bolt	8	26001-
12		23B-957-7510	Cushion	16	26001-
13		23B-957-5520	Cushion	8	26001-
14		01010-81030	Bolt	2	26001-
15		01643-31032	Washer	2	26001-
16		23B-952-7410	Plate	2	26001-
17		23B-952-7420	Seal	2	26001-
18		23B-952-7430	Seal	1	26001-
19		23B-952-7520	Seal	1	26001-
20		01010-D0820	Bolt	6	26001-
21		01643-70823	Washer	6	26001-
22		(234-43-82110)	Bracket(Floor,Steering Post Related Parts)(Refer to Page 449)		

FIG. K1110-001033 Floor (Controller Cover)

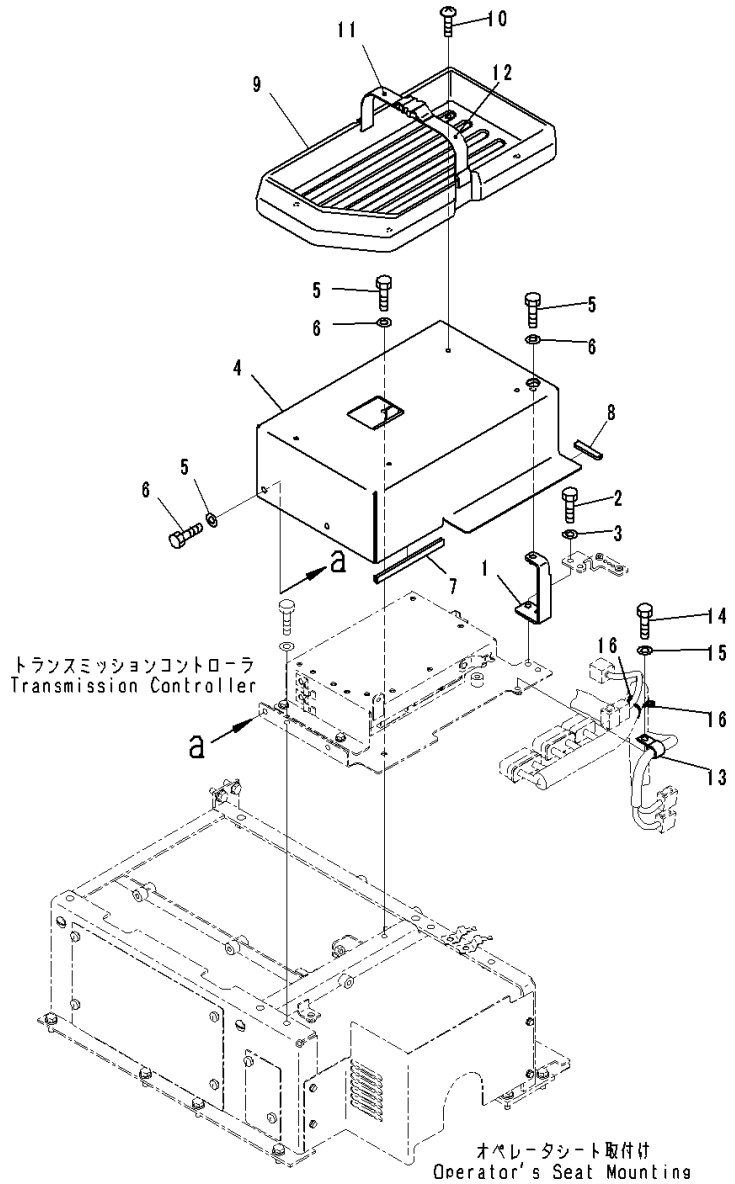

Index	Code	Part Number	Description	Qty	Serial Number
1		23B-54-72350	Bracket	1	26001-
2		01010-80825	Bolt	2	26001-
3		01643-30823	Washer	2	26001-
4		23B-54-72280	Cover	1	26001-
5		01010-80820	Bolt	4	26001-
6		01643-30823	Washer	4	26001-
7		423-944-4391	Finisher	1	26001-
8		423-54-32340	Finisher	1	26001-
9		421-54-32611	Tray	1	26001-
10		01023-10616	Screw	4	26001-
11		426-54-22780	Band	1	26001-
12		426-54-22790	Band	1	26001-
13		04434-51708	Clip	1	26001-
14		01010-80820	Bolt	1	26001-
15		01643-30823	Washer	1	26001-
16		08034-40521	Band	2	26001-

FIG. K1110-001034 Floor (Air Conditioner Drain Piping Mounting)

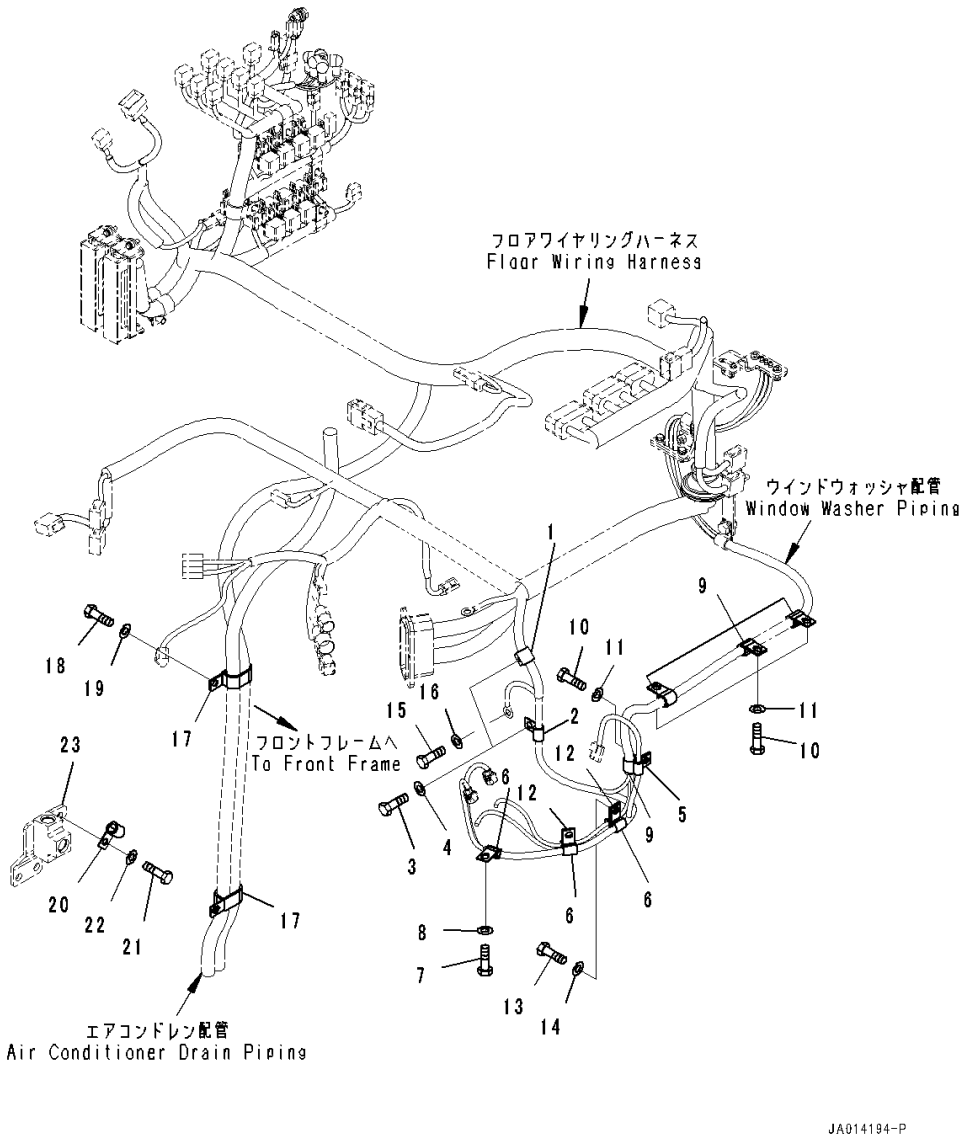

Index	Code	Part Number	Description	Qty	Serial Number
1		04434-51410	Clip	1	26001-
2		04434-51010	Clip	1	26001-
3		01010-81020	Bolt	2	26001-
4		01643-31032	Washer	2	26001-
5		04434-50810	Clip	1	26001-
6		04434-51010	Clip	3	26001-
7		01010-81020	Bolt	1	26001-
8		01643-31032	Washer	1	26001-
9		04434-51410	Clip	4	26001-
10		01010-81020	Bolt	4	26001-
11		01643-31032	Washer	4	26001-
12		04435-50610	Clip	2	26001-
13		01010-81020	Bolt	2	26001-
14		01643-31032	Washer	2	26001-
15		01010-81020	Bolt	1	26001-
16		01643-31032	Washer	1	26001-
17		04435-52110	Clip	2	26001-
18		01010-81025	Bolt	1	26001-
19		01643-31032	Washer	1	26001-
20		04434-51310	Clip	1	26001-
21		01010-81025	Bolt	1	26001-
22		01643-31032	Washer	1	26001-
23		(234-60-86340)	Block(Hydraulic Piping,Priority Valve Piping,With 10 Spool Valve)(Refer to Page 342)		
		(234-60-86340)	Block(Hydraulic Piping,Priority Valve Piping,With 9 Spool Valve)(Refer to Page 344)		

FIG. K1110-001035 Floor (Air Conditioner Duct)

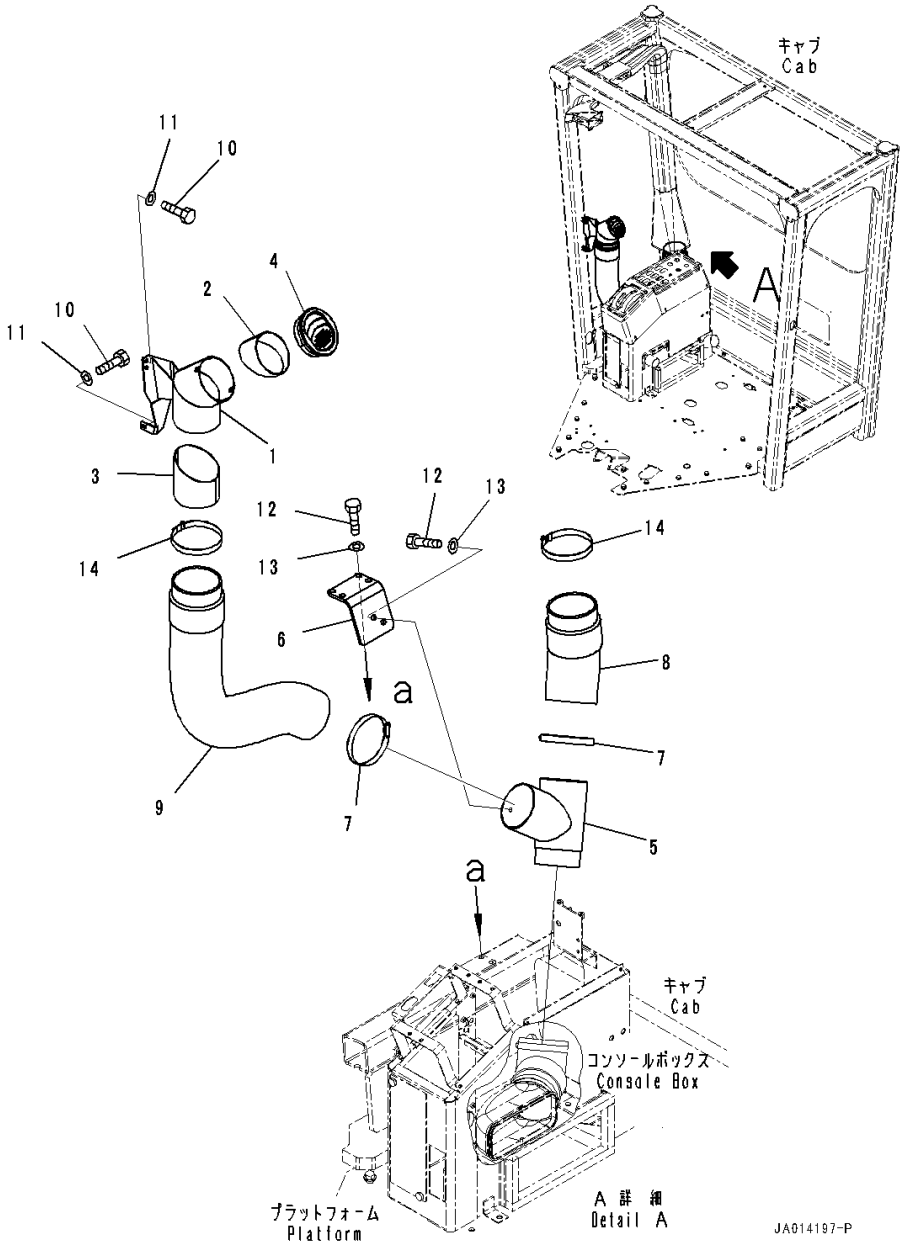

Index	Code	Part Number	Description	Qty	Serial Number
1		234-07-81711	Duct	1	26001-
2		23B-07-74520	• Seal	1	26001-
3		23B-07-74530	• Seal	1	26001-
4		23B-07-74540	• Grille Assembly	1	26001-
5		23B-07-74431	Pipe	1	26001-
6		23B-07-74410	Bracket	1	26001-
7		23B-07-74440	Clamp	2	26001-
8		23B-07-74450	Hose	1	26001-
9		23B-07-74460	Hose	1	26001-
10		01010-D0616	Bolt	3	26001-
11		01643-70623	Washer	3	26001-
12		01010-D1020	Bolt	6	26001-
13		01643-71032	Washer	6	26001-
14		07281-01159	Clamp	2	26001-

FIG. K4208-001001 KOMTRAX Controller (ORBCOMM)

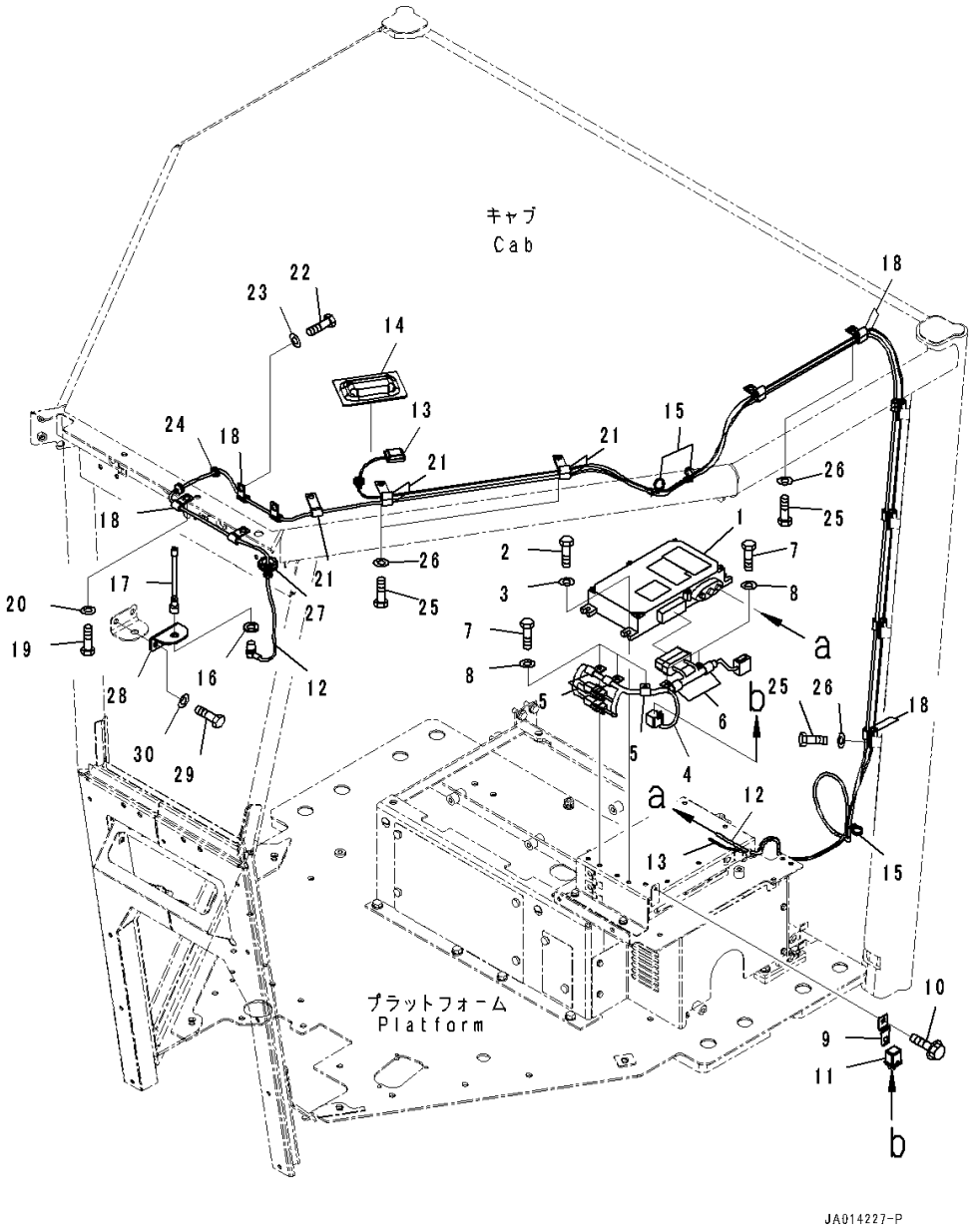

Index	Code	Part Number	Description	Qty	Serial Number
1		7826-20-7046	Controller, KOMTRAX	1	26427-
	A2	7826-20-7045	Controller, KOMTRAX	1	26301-26426
	A2	7826-20-7044	Controller, KOMTRAX	1	26280-26300
	A2	7826-20-7042	Controller, KOMTRAX	1	26228-26279
	A2	7826-20-7041	Controller, KOMTRAX	1	26071-26227
	A2	7826-20-7037	Controller, KOMTRAX	1	26001-26070
2		01010-80825	Bolt	4	26001-
3		01643-30823	Washer	4	26001-
4		23B-06-71310	Wiring Harness	1	26001-
5		04434-51008	Clip	3	26001-
6		04434-51408	Clip	2	26001-
7		01010-80816	Bolt	5	26001-
8		01643-30823	Washer	5	26001-
9		287-06-16420	Bracket	1	26001-
10		01435-00608	Bolt	1	26001-
11		569-06-61960	Relay	1	26001-
12		234-952-8170	Cable Assembly	1	26001-
13		23B-953-3442	Antenna Assembly	1	26458-
	A2	23B-953-3441	Antenna Assembly	1	26001-26457
14		56D-54-23470	Cover	1	26001-
15		08034-40521	Band	3	26001-
16		01640-21626	Washer, Flat	1	26001-
17		8A13-10-2100	Antenna	1	26435-
18		04434-51012	Clip	15	26001-
19		01010-80816	Bolt	1	26001-
20		01643-30823	Washer	1	26001-
21		515-35-11941	Clip	5	26001-
22		01010-81020	Bolt	1	26001-
23		01643-31032	Washer	1	26001-
24		175-06-81610	Grommet	1	26001-
25		01010-81016	Bolt	8	26001-
26		01643-31032	Washer	8	26001-
27		42A-06-54320	Grommet	1	26001-
28		419-06-55160	Bracket	1	26001-
29		01010-D1020	Bolt	2	26001-
30		01643-71032	Washer	2	26001-

FIG. K4208-004001A KOMTRAX Controller (3G)

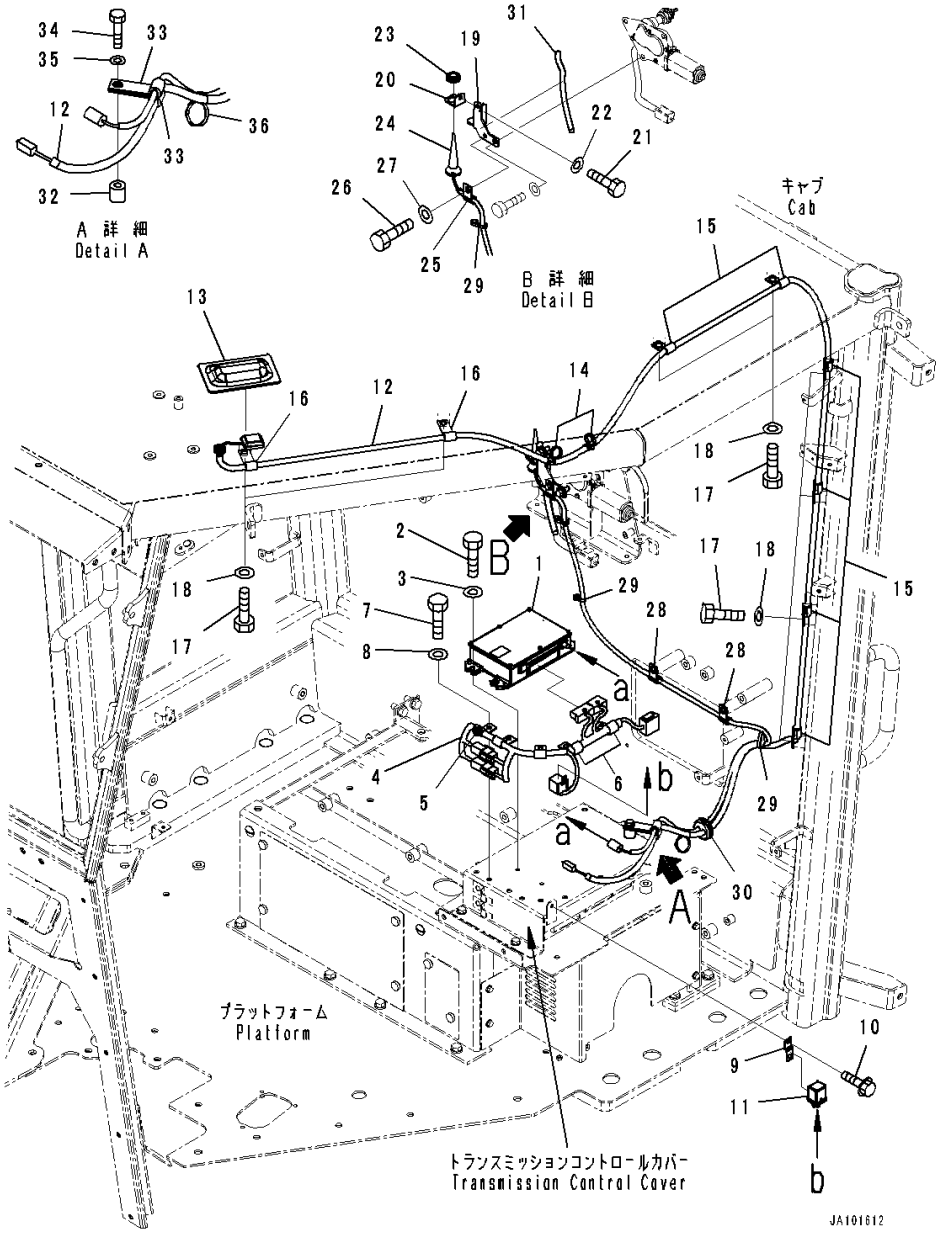

Index	Code	Part Number	Description	Qty	Serial Number
1		7826-25-6306	Controller, KOMTRAX	1	26427-
	A2	7826-25-6304	Controller, KOMTRAX	1	26354-26426
	A2	7826-25-6303	Controller, KOMTRAX	1	26291-26353
2		01010-80620	Bolt	4	26001-
3		01643-30623	Washer	4	26001-
4		23B-06-74311	Wiring Harness	1	26001-
5		04434-51008	Clip	3	26001-
6		04434-51408	Clip	2	26001-
7		01010-80816	Bolt	5	26001-
8		01643-30823	Washer	5	26001-
9		287-06-16420	Bracket	1	26001-
10		01435-00608	Bolt	1	26001-
11		569-06-61960	Relay	1	26001-
12		23B-953-3442	Antenna Assembly	1	26458-
	A2	23B-953-3441	Antenna Assembly	1	26001-26457
13		56D-54-23470	Cover	1	26001-
14		08034-40521	Band	2	26001-
15		04434-51012	Clip	6	26001-
16		515-35-11941	Clip	2	26001-
17		01010-81016	Bolt	8	26001-
18		01643-31032	Washer	8	26001-
19		423-06-47451	Bracket	1	26321-
20		423-06-47461	Plate	1	26321-
21		01010-80616	Bolt	1	26001-
22		01643-30623	Washer	1	26001-
23		08037-01610	Grommet	1	26001-
24		423-06-47471	Antenna Assembly	1	26321-
25		04434-50808	Clip	1	26001-
26		01010-80616	Bolt	1	26001-
27		01643-30623	Washer	1	26001-
28		04434-50810	Clip	2	26001-
29		08034-40521	Band	3	26001-
30		234-952-8440	Grommet	1	26001-
31		08017-C0702	Conduit	1	26001-
32		561-06-41930	Boss	1	26321-
33		515-35-11941	Clip	2	26321-
34		01010-80840	Bolt	1	26321-
35		01643-30823	Washer	1	26321-
36		08034-40521	Band	1	26321-

FIG. K4208-002001B KOMTRAX Controller (GPRS)

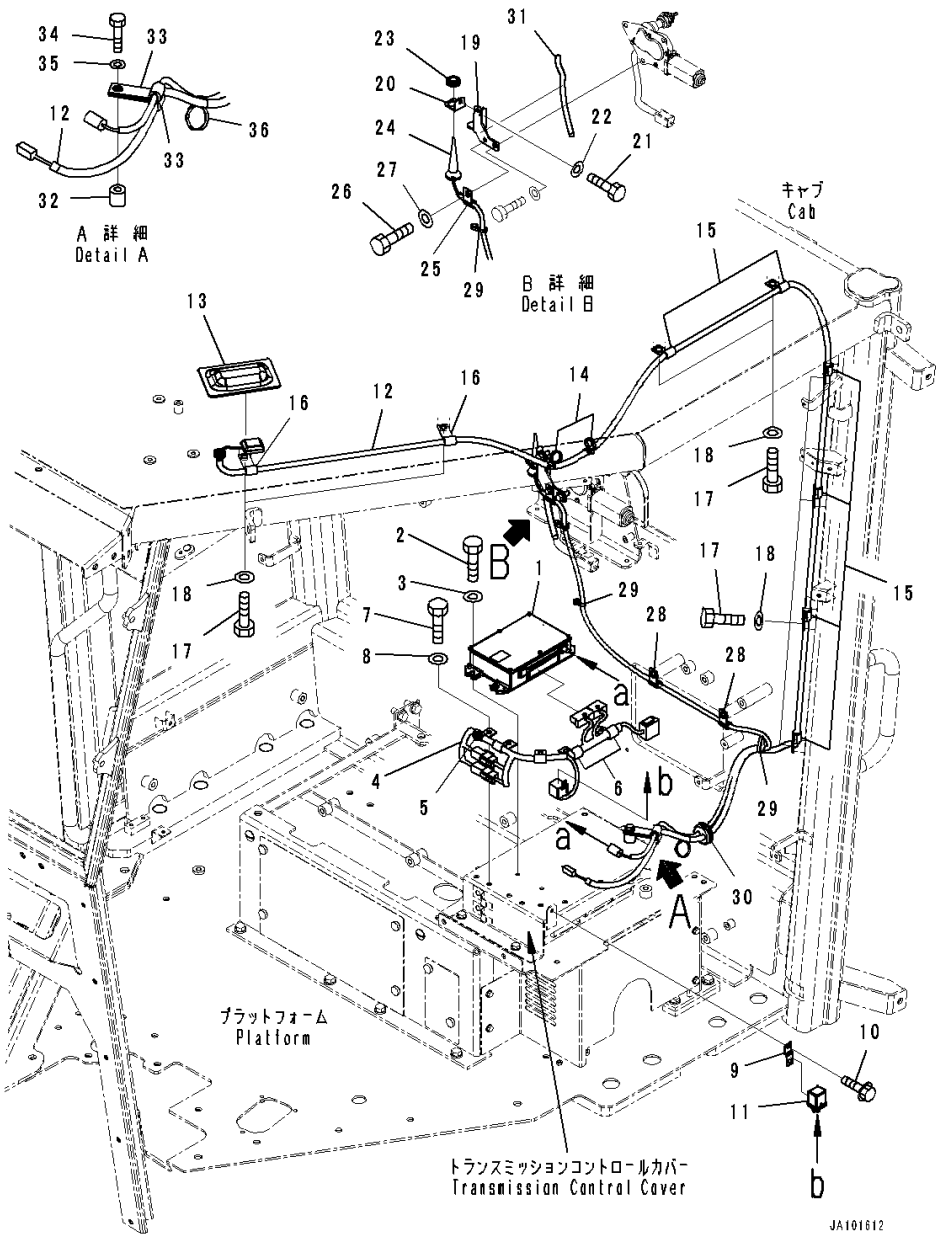

Index	Code	Part Number	Description	Qty	Serial Number
1		7826-25-5309	Controller, KOMTRAX	1	26353-
	A2	7826-25-5307	Controller, KOMTRAX	1	26280-26352
2		01010-80620	Bolt	4	26001-
3		01643-30623	Washer	4	26001-
4		23B-06-74311	Wiring Harness	1	26001-
5		04434-51008	Clip	3	26001-
6		04434-51408	Clip	2	26001-
7		01010-80816	Bolt	5	26001-
8		01643-30823	Washer	5	26001-
9		287-06-16420	Bracket	1	26001-
10		01435-00608	Bolt	1	26001-
11		569-06-61960	Relay	1	26001-
12		23B-953-3442	Antenna Assembly	1	26458-
	A2	23B-953-3441	Antenna Assembly	1	26001-26457
13		56D-54-23470	Cover	1	26001-
14		08034-40521	Band	2	26001-
15		04434-51012	Clip	6	26001-
16		515-35-11941	Clip	2	26001-
17		01010-81016	Bolt	8	26001-
18		01643-31032	Washer	8	26001-
19		423-06-47451	Bracket	1	26280-
20		423-06-47461	Plate	1	26280-
21		01010-80616	Bolt	1	26001-
22		01643-30623	Washer	1	26001-
23		08037-01610	Grommet	1	26001-
24		423-06-47471	Antenna Assembly	1	26280-
25		04434-50808	Clip	1	26001-
26		01010-80616	Bolt	1	26001-
27		01643-30623	Washer	1	26001-
28		04434-50810	Clip	2	26001-
29		08034-40521	Band	3	26001-
30		234-952-8440	Grommet	1	26001-
31		08017-C0702	Conduit	1	26001-
32		561-06-41930	Boss	1	26321-
33		515-35-11941	Clip	2	26321-
34		01010-80840	Bolt	1	26321-
35		01643-30823	Washer	1	26321-
36		08034-40521	Band	1	26321-

FIG. K4208-003001 KOMTRAX Less

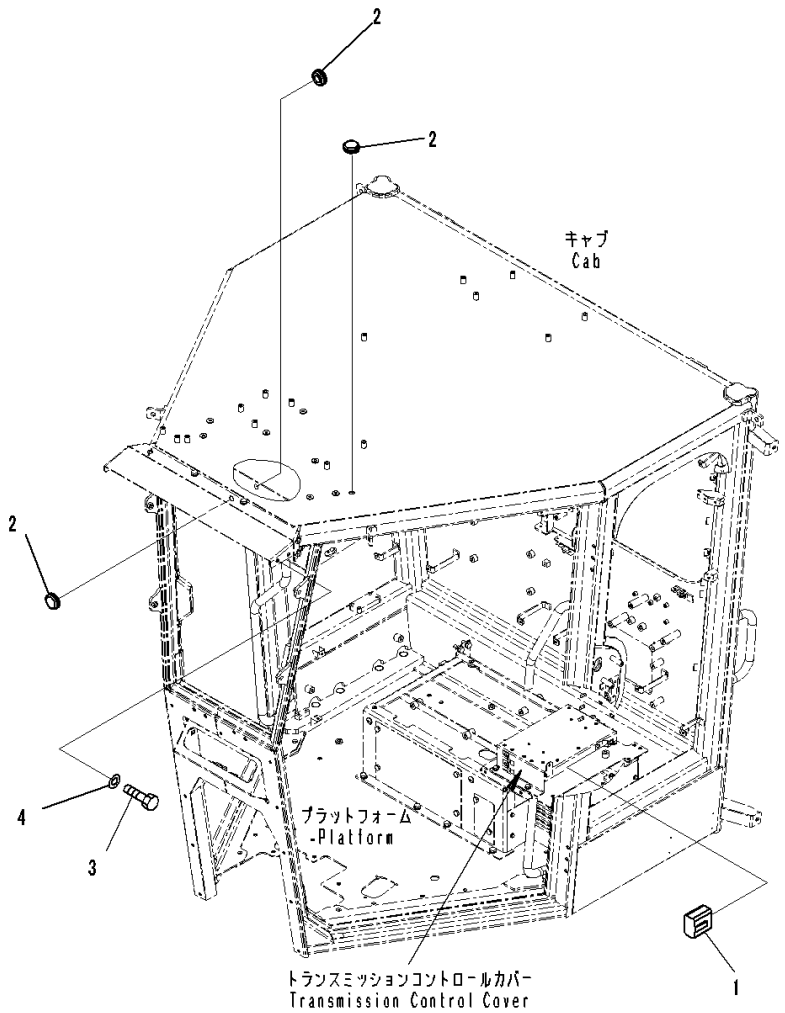

Index	Code	Part Number	Description	Qty	Serial Number
1		421-06-31410	Wiring Harness	1	26001-
2		09415-01008	Cap	3	26001-
3		01010-D1016	Bolt	2	26001-
4		01643-71032	Washer	2	26001-

FIG. K4460-001001 Brake Control (Accumulator Mounting)

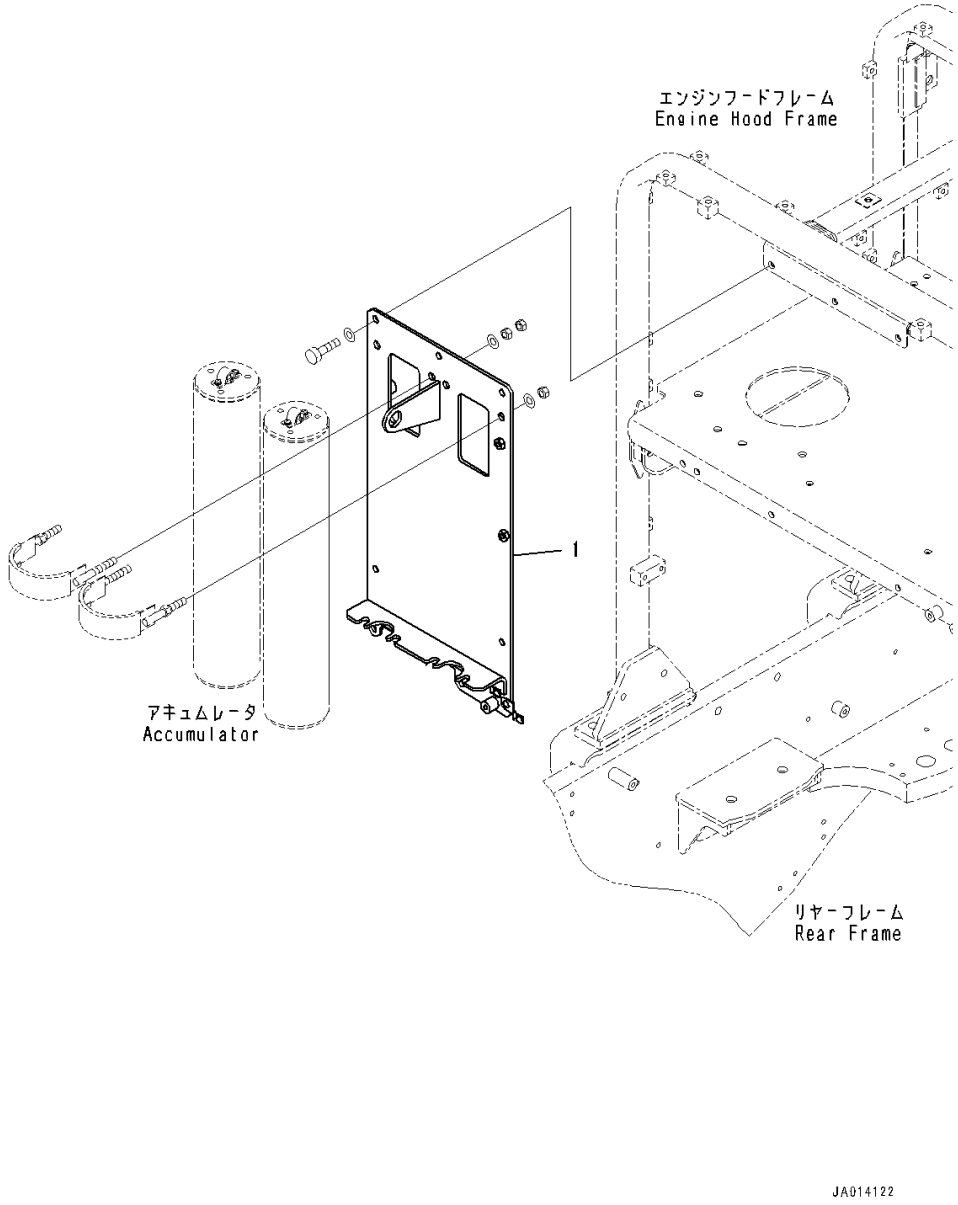

Index	Code	Part Number	Description	Qty	Serial Number
1		234-43-81110	Bracket	1	26001-

FIG. K4460-001002 Brake Control (Brake Accumulator)

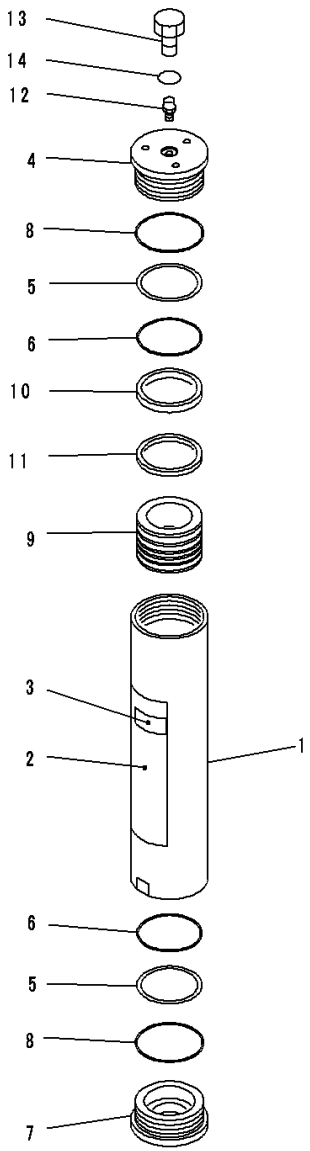

JY017914

Index	Code	Part Number	Description	Qty	Serial Number
		721-32-10681	Accumulator Assembly	2	26001-
1		721-10-10330	• Cylinder	1	26001-
2		721-89-10054	• Plate, Warning, Accumulator	1	26001-
3		721-89-10100	• Cover	1	26001-
4		721-29-10040	• Cover, Top	1	26001-
5		707-35-91020	• Ring, Back-up	2	26001-
6		07000-15090	• O-ring	2	26001-
7		721-26-10050	• Cover, End	1	26001-
8		07000-12100	• O-ring	2	26001-
9		721-36-10030	• Piston	1	26001-
10		721-47-12080	• Seal, Piston	1	26001-
11		721-47-12021	• Seal, Step	1	26001-
12		721-89-12011	Valve, Gas	1	26001-
13		707-87-14820	Plug	1	26001-
14		07000-13029	O-ring	1	26001-

FIG. K4460-001003 Brake Control (Accumulator Related Parts)

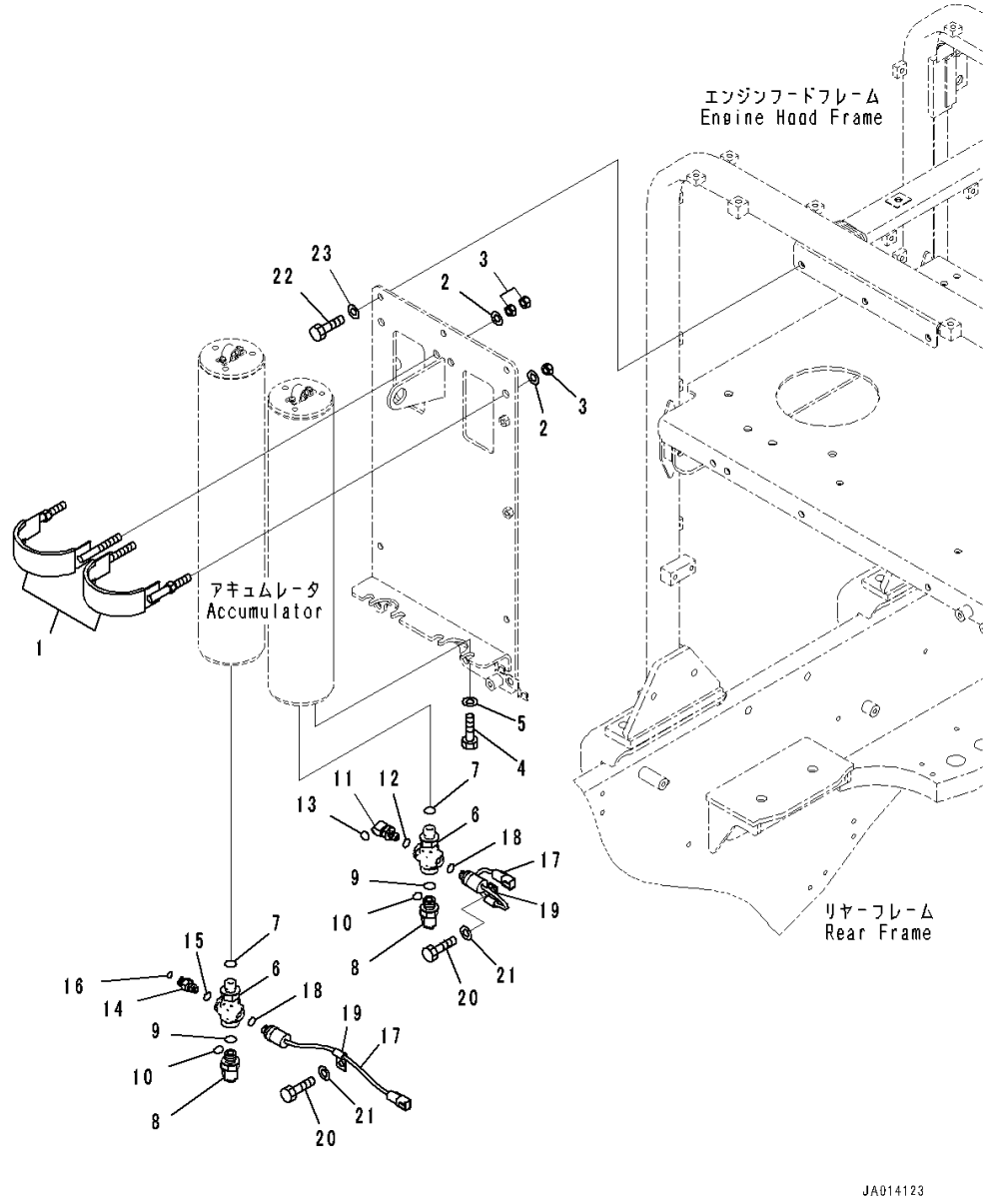

Index	Code	Part Number	Description	Qty	Serial Number
1		421-43-22360	Band	2	26001-
2		01643-31232	Washer	4	26001-
3		421-40-12440	Nut	6	26001-
4		01010-81225	Bolt	4	26001-
5		01643-31232	Washer	4	26001-
6		23B-43-71120	Tee	2	26001-
7		07002-12034	O-ring	2	26001-
8		02782-10422	Elbow	2	26001-
9		07002-12034	O-ring	2	26001-
10		02896-11012	O-ring	2	26001-
11		21W-62-43920	Elbow	1	26001-
12		07002-11423	O-ring	1	26001-
13		02896-11008	O-ring	1	26001-
14		21W-62-43930	Nipple	1	26001-
15		07002-11423	O-ring	1	26001-
16		02896-11008	O-ring	1	26001-
17		421-43-32912	Switch, Pressure,Brake Accumulator	2	26001-
18		07002-11423	O-ring	2	26001-
19		04434-50610	Clip	2	26001-
20		01010-81025	Bolt	2	26001-
21		01643-31032	Washer	2	26001-
22		01010-81025	Bolt	5	26001-
23		01643-31032	Washer	5	26001-

FIG. K4460-001004 Brake Control (Slack Adjuster Mounting) (1/2)

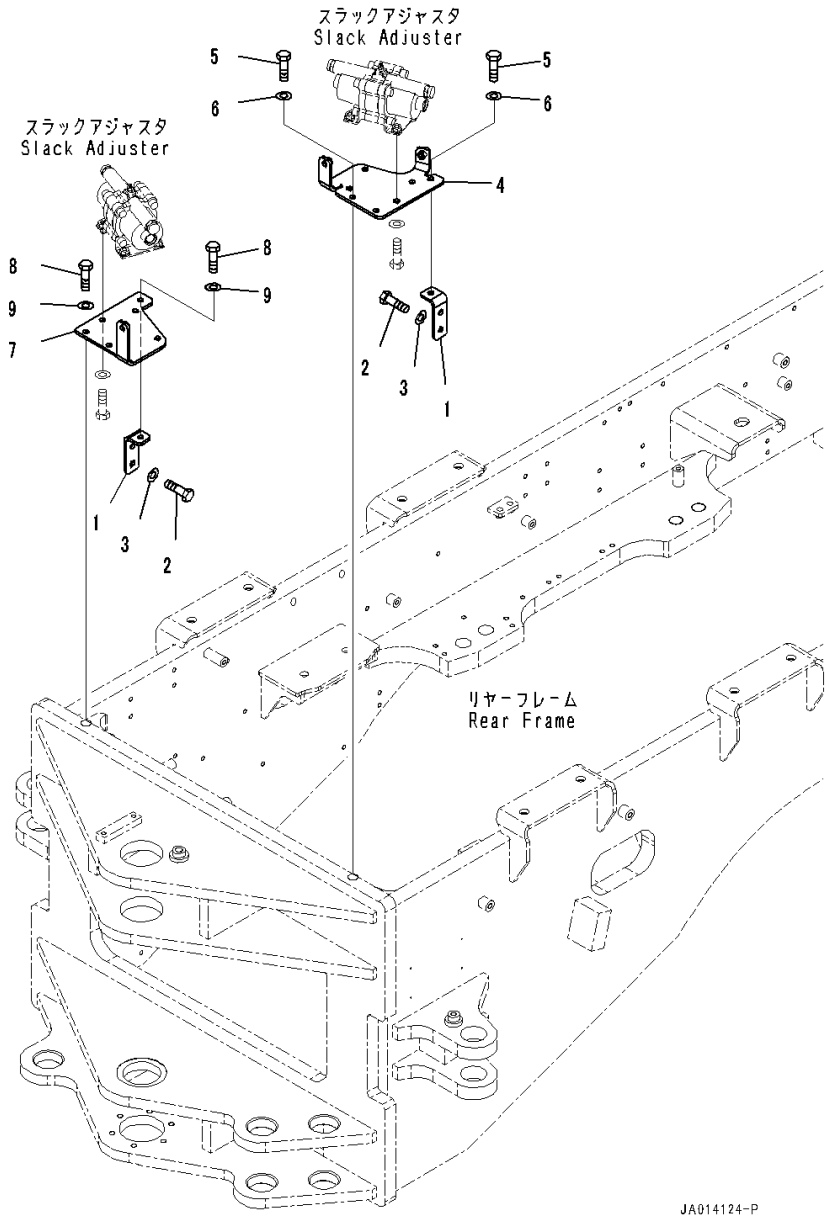

Index	Code	Part Number	Description	Qty	Serial Number
1		234-43-81140	Bracket	2	26001-
2		01010-81025	Bolt	4	26001-
3		01643-31032	Washer	4	26001-
4		234-43-81130	Bracket	1	26001-
5		01010-81025	Bolt	3	26001-
6		01643-31032	Washer	3	26001-
7		234-43-81120	Bracket	1	26001-
8		01010-81025	Bolt	3	26001-
9		01643-31032	Washer	3	26001-

FIG. K4460-001005 Brake Control (Slack Adjuster)

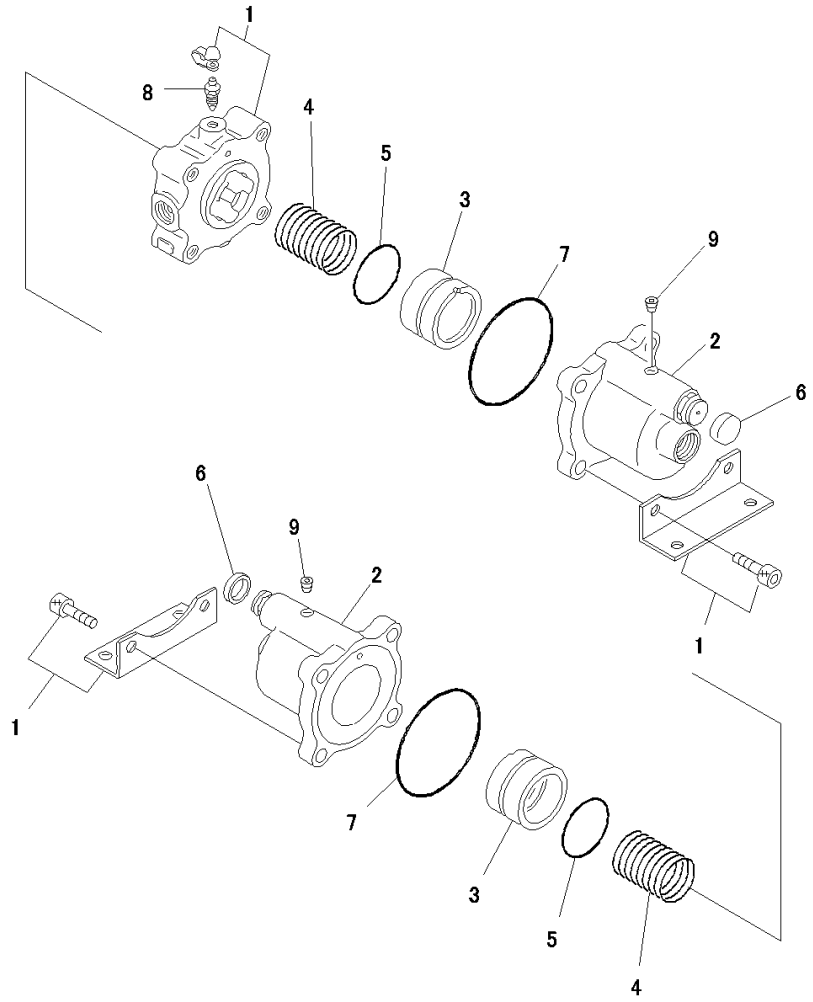

PNE3837

Index	Code	Part Number	Description	Qty	Serial Number
1		424-35-15201	Slack Adjuster	2	26001-
2	C1		• Cylinder Assembly	2	26001-
		424-35-15280	• • O-ring	1	26001-
3		424-35-15220	• Piston	2	26001-
4		424-35-15230	• Spring	2	26001-
5		424-35-15240	• O-ring	2	26001-
6		424-35-15250	• Cover	2	26001-
7		424-35-15260	• O-ring	2	26001-
8		424-35-15270	• Valve	1	26001-
9		07043-70108	• Plug, Taper	2	26001-

FIG. K4460-001006 Brake Control (Slack Adjuster Mounting) (2/2)

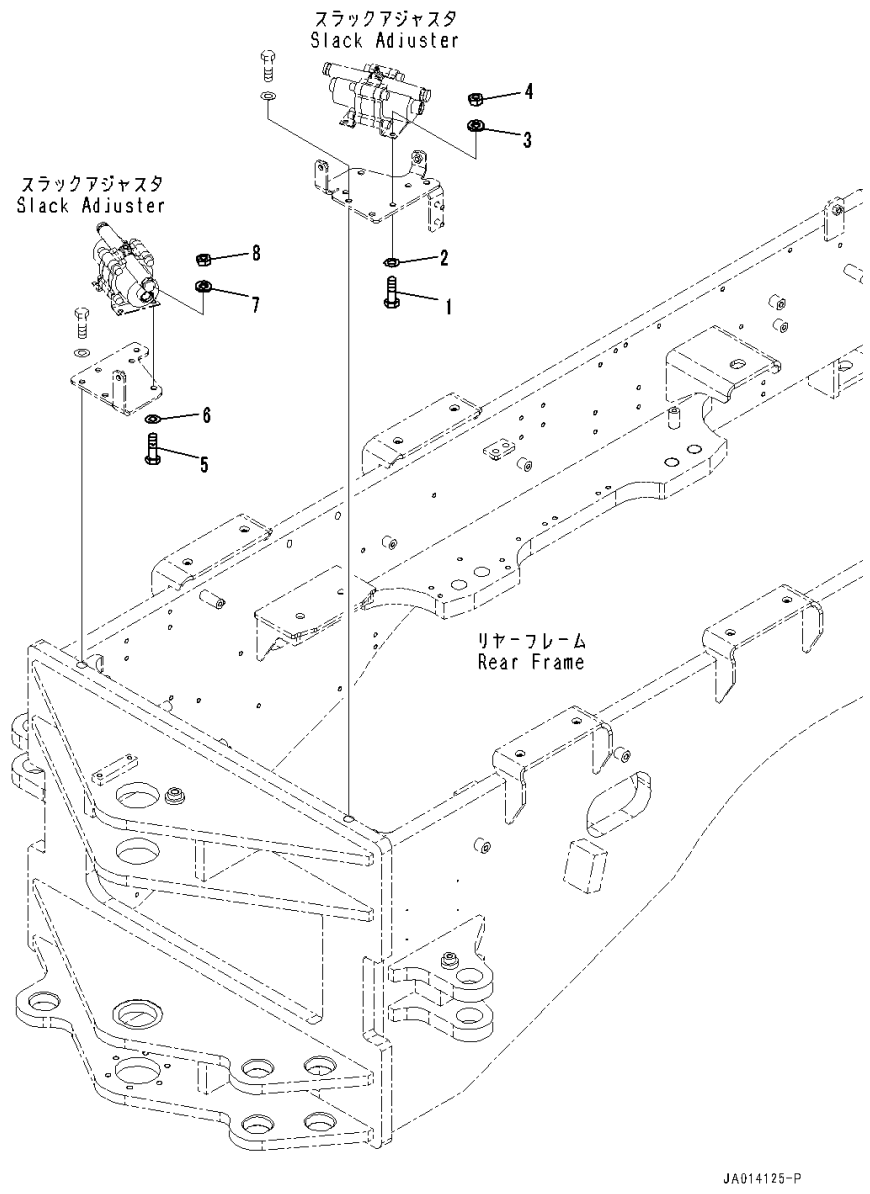

Index	Code	Part Number	Description	Qty	Serial Number
1		01010-81025	Bolt	4	26001-
2		01643-31032	Washer	4	26001-
3		01643-31032	Washer	4	26001-
4		01580-11008	Nut	4	26001-
5		01010-81025	Bolt	4	26001-
6		01643-31032	Washer	4	26001-
7		01643-31032	Washer	4	26001-
8		01580-11008	Nut	4	26001-

FIG. K4470-001001 Brake Piping (Accumulator Piping)

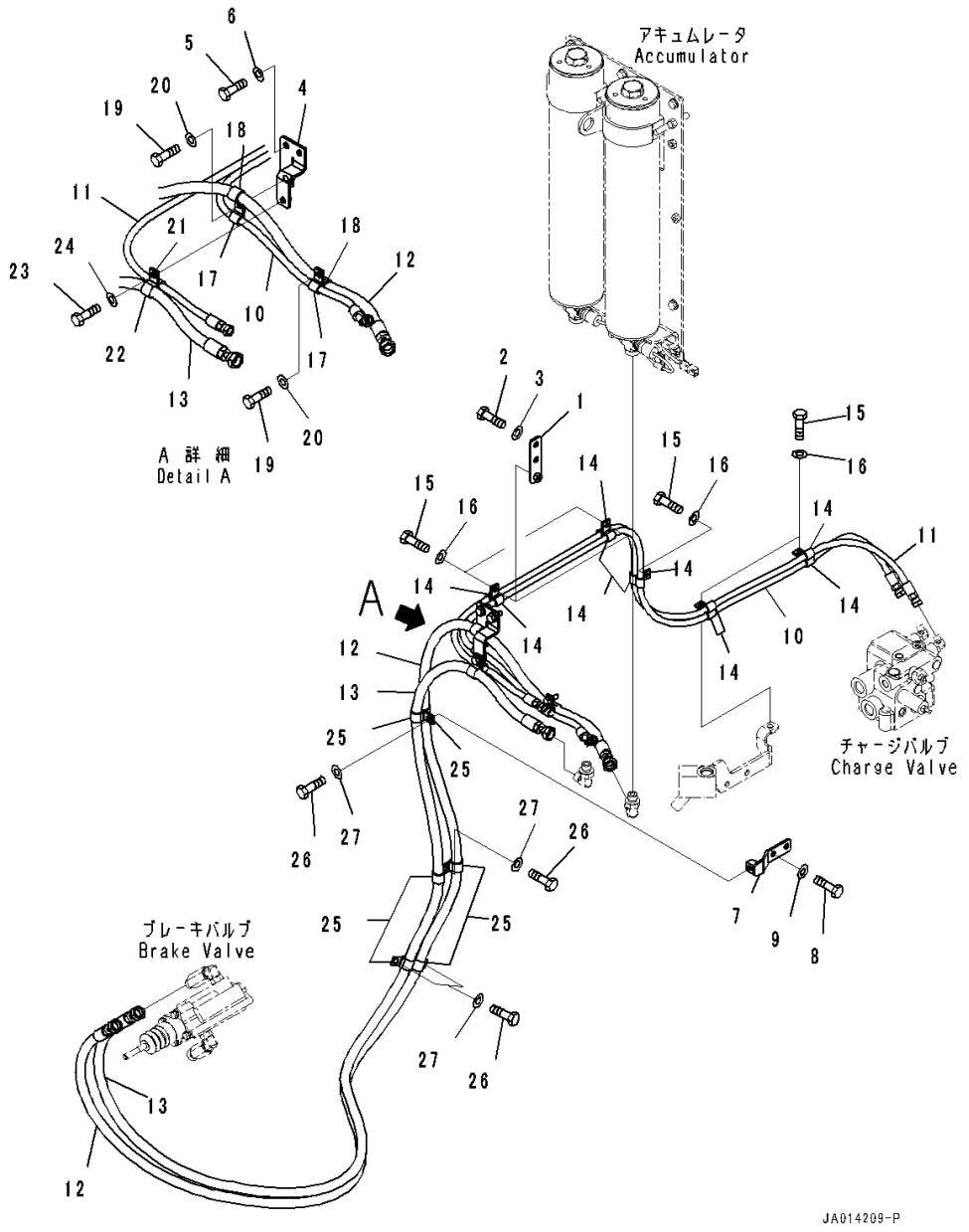

Index	Code	Part Number	Description	Qty	Serial Number
1		234-43-81220	Bracket	2	26001-
2		01010-81025	Bolt	4	26001-
3		01643-31032	Washer	4	26001-
4		234-43-81210	Bracket	1	26001-
5		01010-81025	Bolt	2	26001-
6		01643-31032	Washer	2	26001-
7		234-43-81250	Bracket	1	26001-
8		01010-81025	Bolt	2	26001-
9		01643-31032	Washer	2	26001-
10		234-43-81230	Hose	1	26001-
11		234-43-81240	Hose	1	26001-
12		234-43-81270	Hose	1	26001-
13		234-43-81260	Hose	1	26001-
14		04434-51310	Clip	10	26001-
15		01010-81025	Bolt	5	26001-
16		01643-31032	Washer	5	26001-
17		04434-51310	Clip	2	26001-
18		04434-51912	Clip	2	26001-
19		01010-81025	Bolt	2	26001-
20		01643-31032	Washer	2	26001-
21		04434-51310	Clip	1	26001-
22		04434-51912	Clip	1	26001-
23		01010-81025	Bolt	1	26001-
24		01643-31032	Washer	1	26001-
25		04434-51912	Clip	6	26001-
26		01010-81025	Bolt	4	26001-
27		01643-31032	Washer	4	26001-

FIG. K4470-001002 Brake Piping (Slack Adjuster Piping)

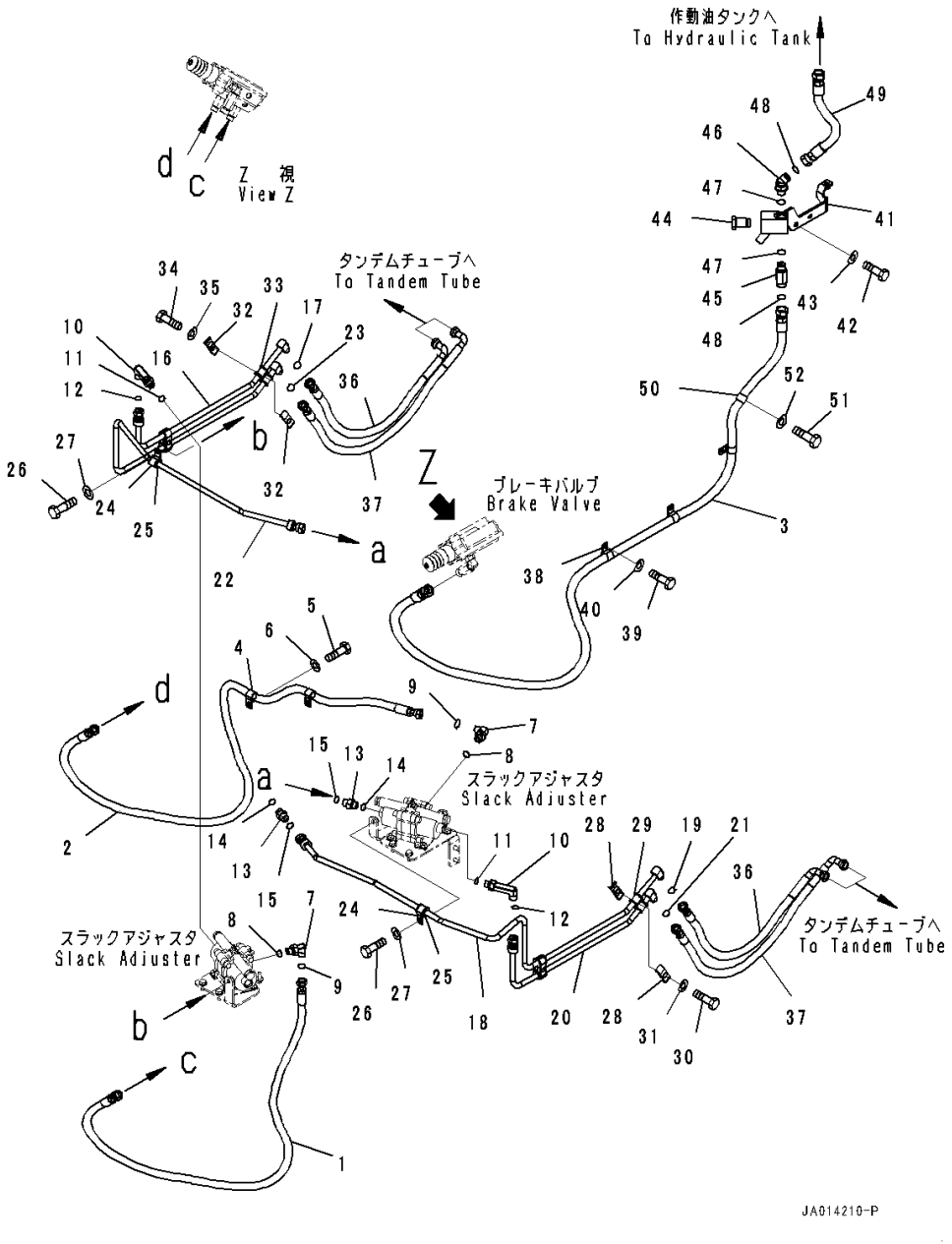

Index	Code	Part Number	Description	Qty	Serial Number
1		234-43-81370	Hose	1	26001-
2		234-43-81380	Hose	1	26001-
3		234-43-81390	Hose	1	26001-
4		04434-51912	Clip	2	26001-
5		01010-81025	Bolt	2	26001-
6		01643-31032	Washer	2	26001-
7		02782-10422	Elbow	2	26001-
8		07002-12034	O-ring	2	26001-
9		02896-11012	O-ring	2	26001-
10		02782-10424	Elbow	2	26001-
11		07002-12034	O-ring	2	26001-
12		02896-11012	O-ring	2	26001-
13		02781-00422	Union	2	26001-
14		07002-12034	O-ring	2	26001-
15		02896-11012	O-ring	2	26001-
16		234-43-81280	Tube	1	26001-
17		02896-11012	O-ring	1	26001-
18		234-43-81310	Tube	1	26001-
19		02896-11012	O-ring	1	26001-
20		234-43-81340	Tube	1	26001-
21		02896-11012	O-ring	1	26001-
22		234-43-81290	Tube	1	26001-
23		02896-11012	O-ring	1	26001-
24		04434-52110	Clip	2	26001-
25		425-43-11180	Grommet	2	26001-
26		01010-81025	Bolt	2	26001-
27		01643-31032	Washer	2	26001-
28		262-60-74340	Clamp	4	26001-
29		425-43-11180	Grommet	4	26001-
30		01010-81250	Bolt	2	26001-
31		01643-31232	Washer	2	26001-
32		262-60-74340	Clamp	4	26001-
33		425-43-11180	Grommet	4	26001-
34		01010-81250	Bolt	2	26001-
35		01643-31232	Washer	2	26001-
36		234-43-81320	Hose	2	26001-
37		234-43-81330	Hose	2	26001-
38		04434-52210	Clip	3	26001-
39		01010-81025	Bolt	3	26001-
40		01643-31032	Washer	3	26001-

FIG. K4470-001002 Brake Piping (Slack Adjuster Piping)

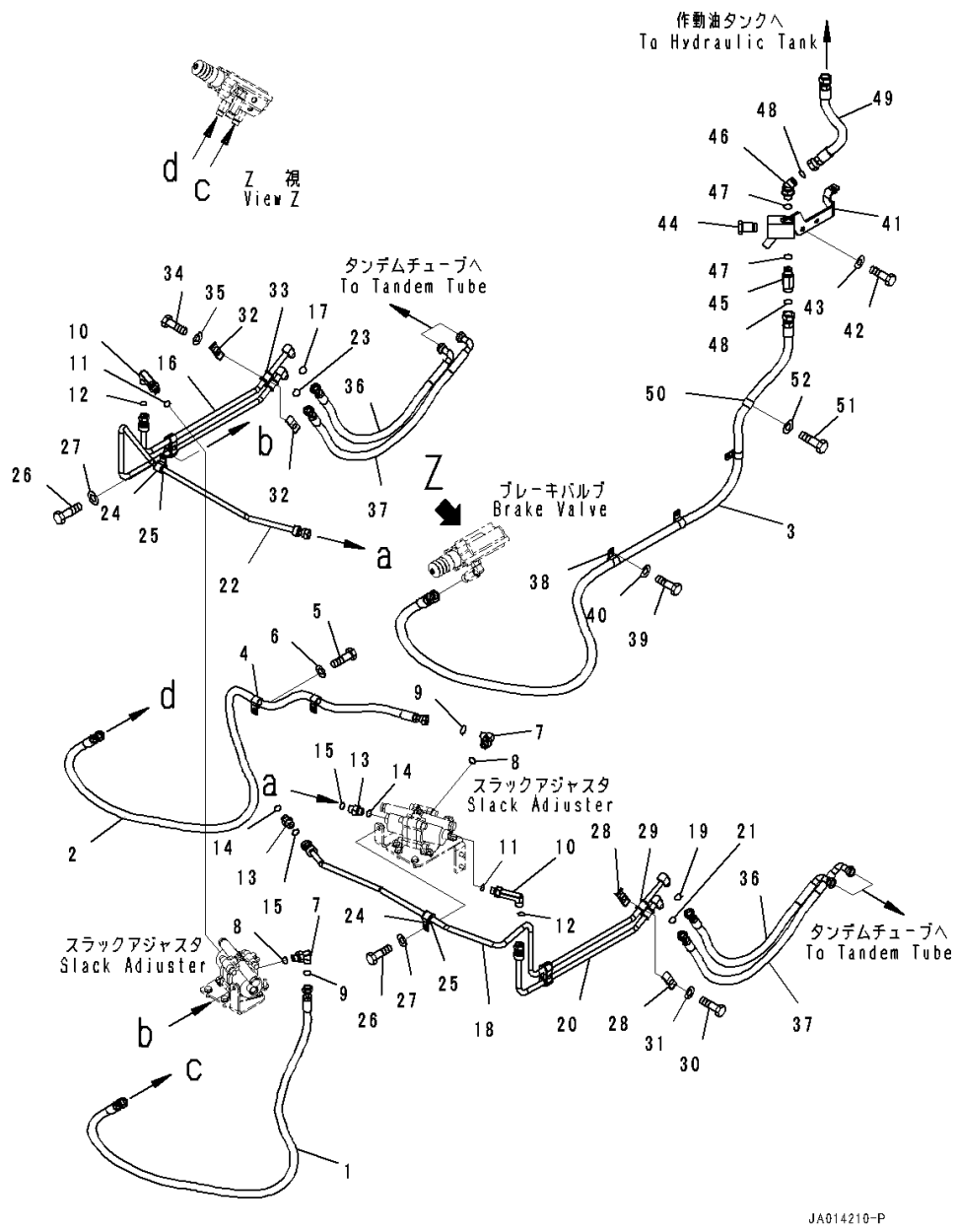

Index	Code	Part Number	Description	Qty	Serial Number
41		234-43-81411	Block	1	26001-
42		01010-81025	Bolt	2	26001-
43		01643-31032	Washer	2	26001-
44		424-01-11110	Plug	1	26001-
45		21W-62-42481	Nipple	1	26001-
46		02783-10522	Elbow	1	26001-
47		07002-12434	O-ring	2	26001-
48		02896-11015	O-ring	2	26001-
49		234-43-81430	Hose	1	26001-
50		04434-52210	Clip	1	26001-
51		01010-81025	Bolt	1	26001-
52		01643-31032	Washer	1	26001-

GUARDS AND COVERS

FIG. M4100-001001 Engine Hood (Hood and Frame)

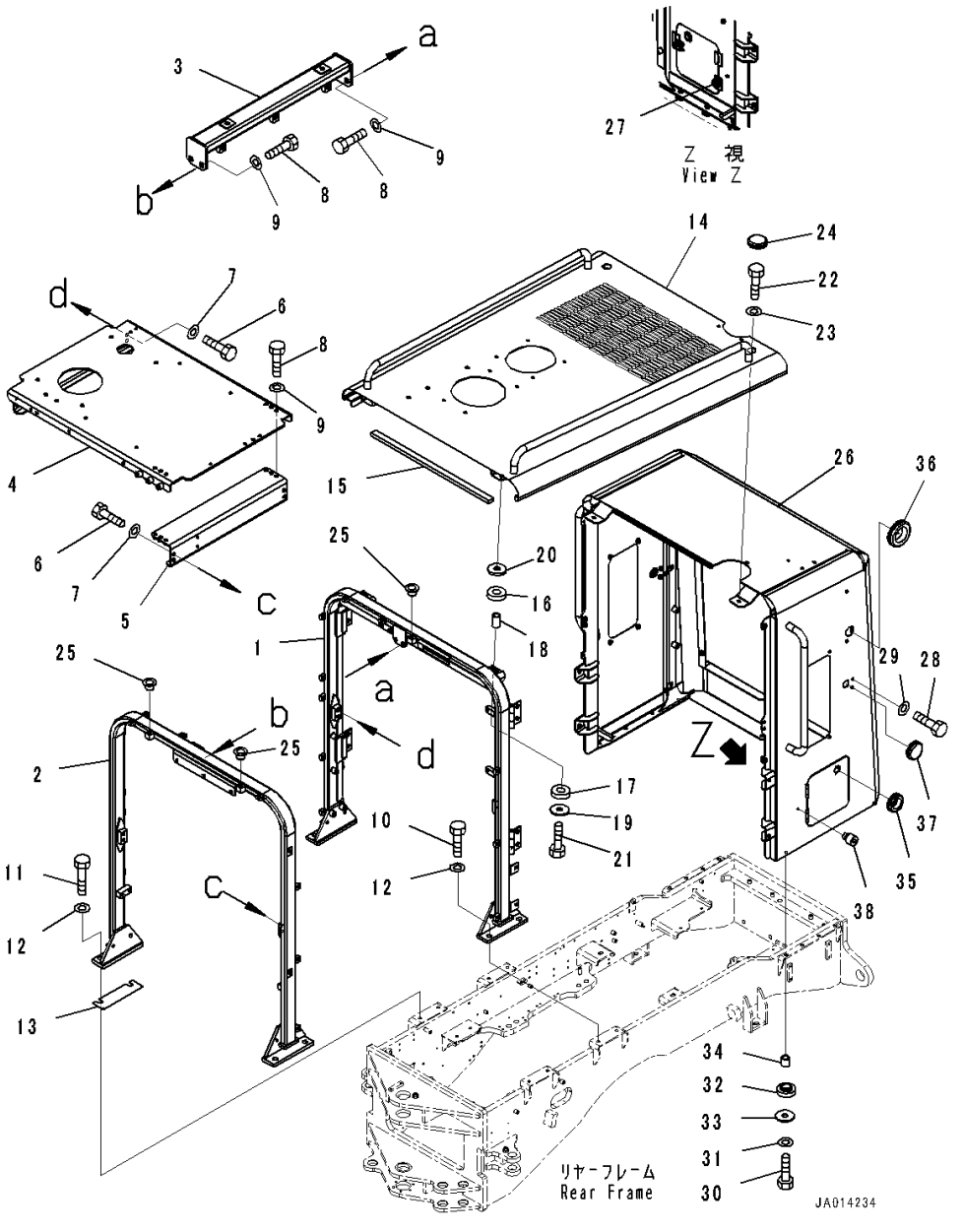

Index	Code	Part Number	Description	Qty	Serial Number
		234-60-81121	Frame Assembly	1	26001-
1		234-60-81310	• Frame	1	26001-
2		234-60-81320	• Frame	1	26001-
3		234-60-81330	• Frame	1	26001-
4		234-60-81362	• Plate	1	26001-
5		234-60-81350	• Bracket	1	26001-
6		01010-81225	• Bolt	6	26001-
7		01643-31232	• Washer	6	26001-
8		01010-81230	• Bolt	10	26001-
9		01643-31232	• Washer	10	26001-
10		01010-81645	Bolt	4	26001-
11		01010-81650	Bolt	4	26001-
12		01643-31645	Washer	8	26001-
13		23B-60-71160	Shim,T=0.5mm	3	26001-
		234-54-81630	Hood	1	26001-
14	C1		• Hood	1	26001-
15		234-54-81610	• Sheet	1	26001-
16		419-43-17930	Cushion	2	26001-
17		417-62-13620	Cushion	2	26001-
18		417-62-14130	Spacer	2	26001-
19		419-43-17920	Washer	2	26001-
20		209-54-14650	Washer	2	26001-
21		01010-81250	Bolt	2	26001-
22		01010-81240	Bolt	2	26001-
23		01643-31232	Washer	2	26001-
24		09415-02512	Cap	2	26001-
25		07048-01210	Plug, Plastic	3	26001-
26		234-54-81930	Grille	1	26001-
27		23B-54-71550	• Hinge,Welded	2	26001-
28		01010-D1030	Bolt	4	26001-
29		01643-71032	Washer	4	26001-
30		01010-81045	Bolt	8	26001-
31		01643-31032	Washer	8	26001-
32		56B-40-13440	Cushion	8	26001-
33		415-64-13120	Washer	8	26001-
34		23B-54-63251	Spacer	8	26001-
35		08037-02512	Grommet	1	26001-
36		08037-03614	Grommet	2	26001-
37		09415-02512	Cap	2	26001-
38		415-54-11980	Cushion	1	26001-

FIG. M4100-003001 Engine Hood (Hood and Frame) (With Rear Working Lamp)

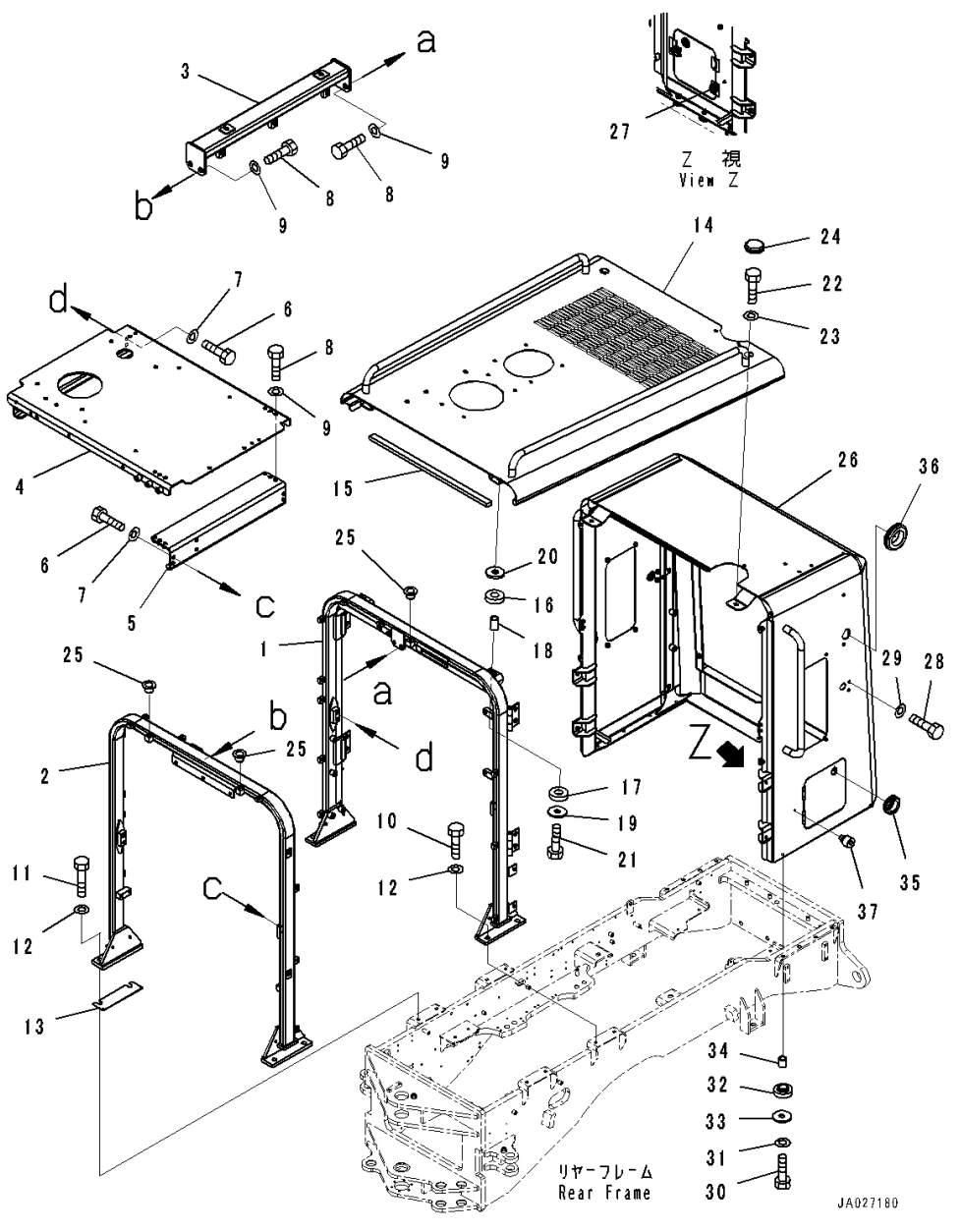

Index	Code	Part Number	Description	Qty	Serial Number
		234-60-81121	Frame Assembly	1	26001-
1		234-60-81310	• Frame	1	26001-
2		234-60-81320	• Frame	1	26001-
3		234-60-81330	• Frame	1	26001-
4		234-60-81362	• Plate	1	26001-
5		234-60-81350	• Bracket	1	26001-
6		01010-81225	• Bolt	6	26001-
7		01643-31232	• Washer	6	26001-
8		01010-81230	• Bolt	10	26001-
9		01643-31232	• Washer	10	26001-
10		01010-81645	Bolt	4	26001-
11		01010-81650	Bolt	4	26001-
12		01643-31645	Washer	8	26001-
13		23B-60-71160	Shim,T=0.5mm	3	26001-
		234-54-81630	Hood	1	26001-
14	C1		• Hood	1	26001-
15		234-54-81610	• Sheet	1	26001-
16		419-43-17930	Cushion	2	26001-
17		417-62-13620	Cushion	2	26001-
18		417-62-14130	Spacer	2	26001-
19		419-43-17920	Washer	2	26001-
20		209-54-14650	Washer	2	26001-
21		01010-81250	Bolt	2	26001-
22		01010-81240	Bolt	2	26001-
23		01643-31232	Washer	2	26001-
24		09415-02512	Cap	2	26001-
25		07048-01210	Plug, Plastic	3	26001-
26		234-54-81930	Grille	1	26001-
27		23B-54-71550	• Hinge,Welded	2	26001-
28		01010-D1030	Bolt	4	26001-
29		01643-71032	Washer	4	26001-
30		01010-81045	Bolt	8	26001-
31		01643-31032	Washer	8	26001-
32		56B-40-13440	Cushion	8	26001-
33		415-64-13120	Washer	8	26001-
34		23B-54-63251	Spacer	8	26001-
35		08037-02512	Grommet	1	26001-
36		08037-03614	Grommet	2	26001-
37		415-54-11980	Cushion	1	26001-

FIG. M4100-002002 Engine Hood (Hood Side Cover)

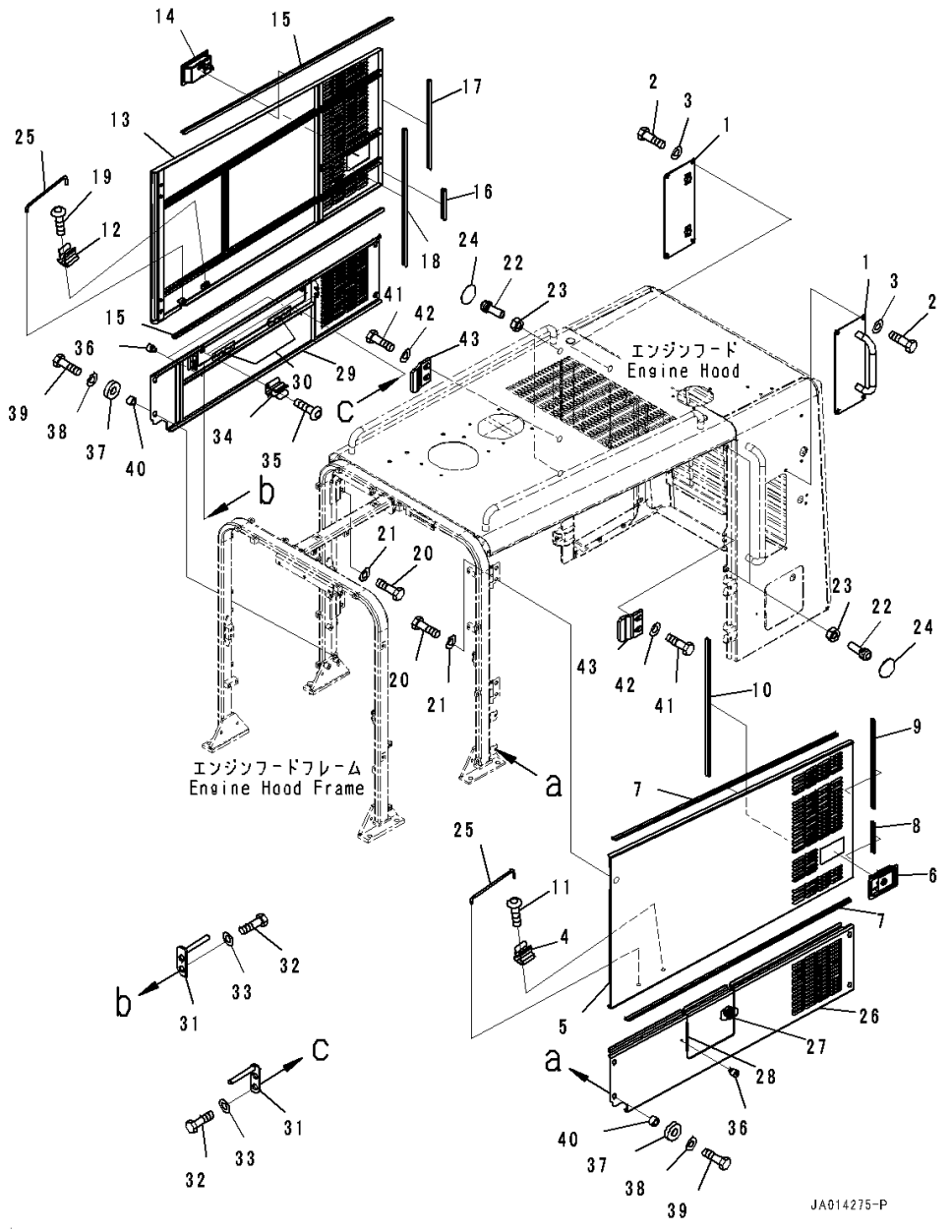

Index	Code	Part Number	Description	Qty	Serial Number
1		23B-54-71560	Cover	2	26001-
2		01010-D1025	Bolt	8	26001-
3		01643-71032	Washer	8	26001-
		234-54-81410	Cover	1	26001-
4		20R-54-11460	• Spring	1	26001-
5	C1		• Cover	1	26001-
6		20Y-54-74172	• • Lock,Welded	1	26001-
7		234-54-81460	• Seal	2	26001-
8		234-54-81470	• Seal	1	26001-
9		234-54-81480	• Seal	1	26001-
10		234-54-81490	• Seal	1	26001-
11		01023-10510	• Screw	2	26001-
		234-54-81420	Cover	1	26001-
12		20R-54-11460	• Spring	1	26001-
13	C1		• Cover	1	26001-
14		20Y-54-74172	• • Lock,Welded	1	26001-
15		234-54-81460	• Seal	2	26001-
16		234-54-81470	• Seal	1	26001-
17		234-54-81480	• Seal	1	26001-
18		234-54-81490	• Seal	1	26001-
19		01023-10510	• Screw	2	26001-
20		01010-81225	Bolt	8	26001-
21		424-54-14220	Washer	8	26001-
22		20Y-54-14290	Stopper	4	26001-
23		01580-11008	Nut	4	26001-
24		20Y-00-11350	Plate	4	26001-
25		20Y-54-29232	Bar	2	26001-
26		234-54-81150	Cover	1	26001-
27		22M-54-19170	• Stopper,Welded	1	26047-
28		416-09-12220	• Hinge,Welded	1	26047-
29		234-54-81160	Cover	1	26001-
30		416-09-12220	• Hinge,Welded	2	26047-
31		22B-54-19970	Plate	2	26001-
32		01010-81025	Bolt	4	26001-
33		01643-31032	Washer	4	26001-
34		20R-54-11460	Spring	2	26001-
35		01023-10510	Screw	4	26001-
36		415-54-11980	Cushion	3	26001-
37		417-62-13620	Cushion	8	26001-
38		415-64-13120	Washer	8	26001-

FIG. M4100-002002 Engine Hood (Hood Side Cover)

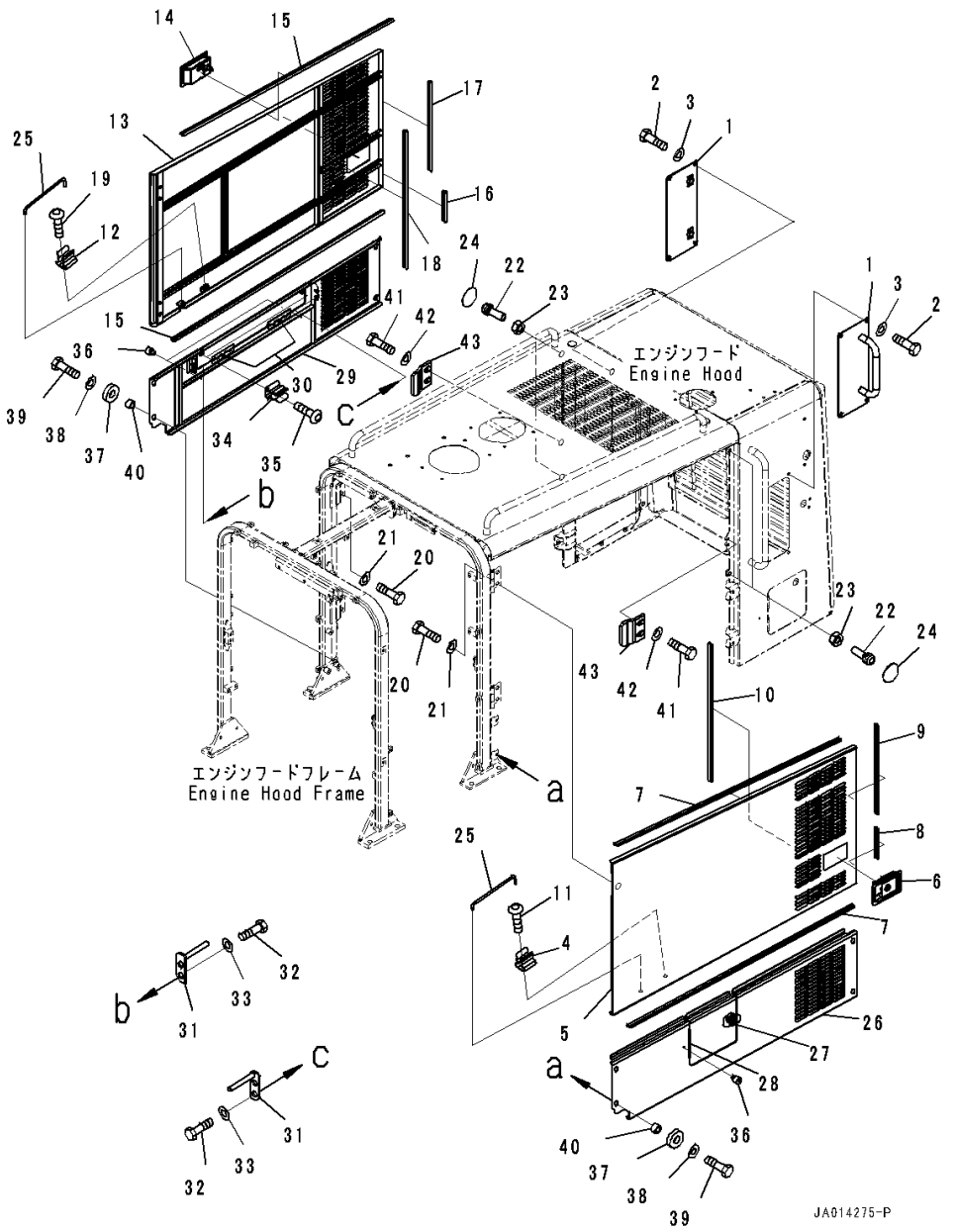

Index	Code	Part Number	Description	Qty	Serial Number
39		01010-81030	Bolt	8	26001-
40		23B-54-71450	Spacer	8	26001-
41		01010-81025	Bolt	4	26001-
42		424-09-12650	Washer	4	26001-
43		234-54-81260	Plate	2	26001-

FIG. M4100-001002 Engine Hood (Hood Side Cover) (With Rear Under View Mirror)

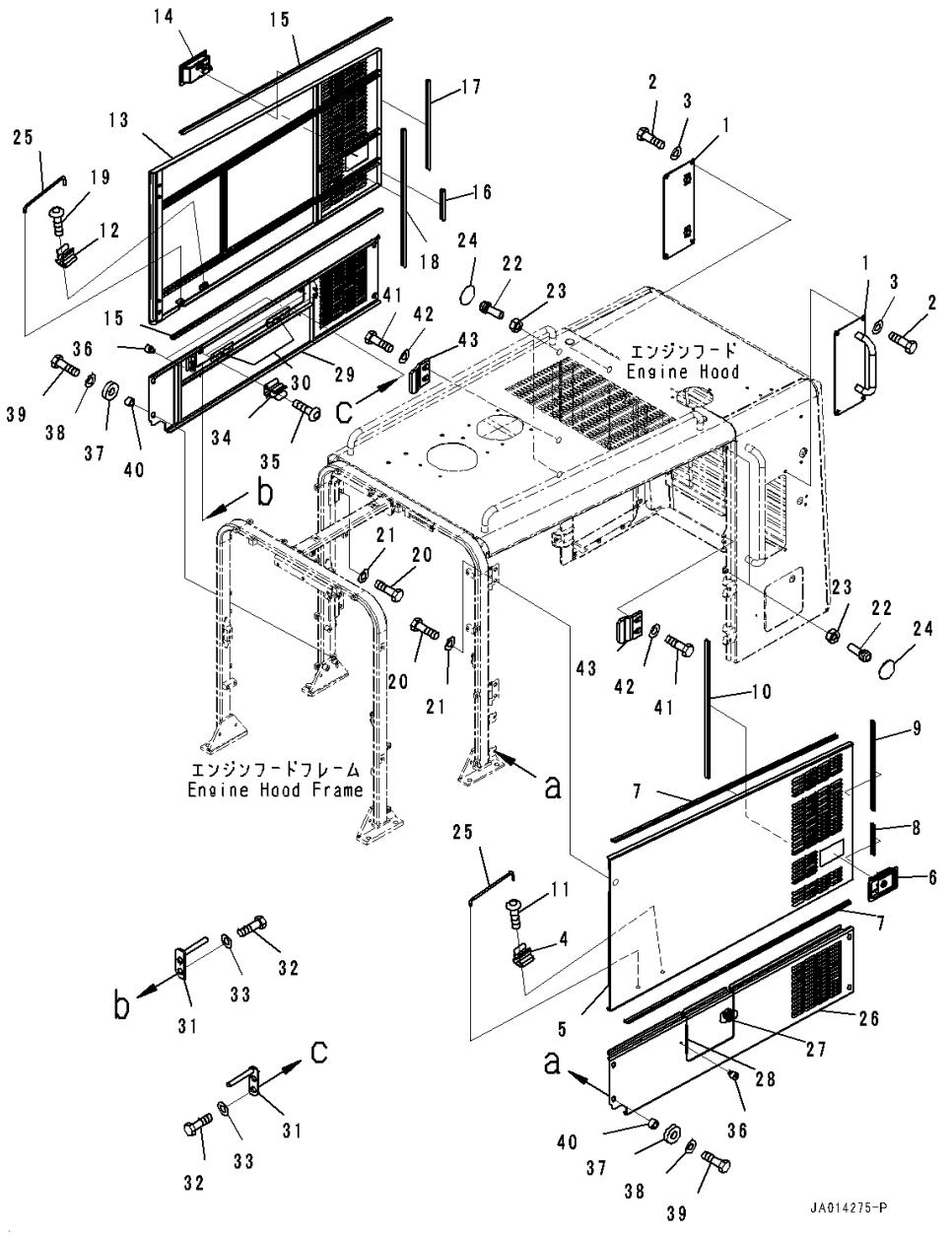

Index	Code	Part Number	Description	Qty	Serial Number
1		23B-54-71560	Cover	2	26001-
2		01010-D1025	Bolt	8	26001-
3		01643-71032	Washer	8	26001-
		234-54-81410	Cover	1	26001-
4		20R-54-11460	• Spring	1	26001-
5	C1		• Cover	1	26001-
6		20Y-54-74172	• • Lock,Welded	1	26001-
7		234-54-81460	• Seal	2	26001-
8		234-54-81470	• Seal	1	26001-
9		234-54-81480	• Seal	1	26001-
10		234-54-81490	• Seal	1	26001-
11		01023-10510	• Screw	2	26001-
		234-54-81420	Cover	1	26001-
12		20R-54-11460	• Spring	1	26001-
13	C1		• Cover	1	26001-
14		20Y-54-74172	• • Lock,Welded	1	26001-
15		234-54-81460	• Seal	2	26001-
16		234-54-81470	• Seal	1	26001-
17		234-54-81480	• Seal	1	26001-
18		234-54-81490	• Seal	1	26001-
19		01023-10510	• Screw	2	26001-
20		01010-81225	Bolt	8	26001-
21		424-54-14220	Washer	8	26001-
22		20Y-54-14290	Stopper	4	26001-
23		01580-11008	Nut	4	26001-
24		20Y-00-11350	Plate	4	26001-
25		20Y-54-29232	Bar	2	26001-
26		234-54-81150	Cover	1	26001-
27		22M-54-19170	• Stopper,Welded	1	26001-
28		416-09-12220	• Hinge,Welded	1	26001-
29		234-54-81160	Cover	1	26001-
30		416-09-12220	• Hinge,Welded	2	26001-
31		22B-54-19970	Plate	2	26001-
32		01010-81025	Bolt	4	26001-
33		01643-31032	Washer	4	26001-
34		20R-54-11460	Spring	2	26001-
35		01023-10510	Screw	4	26001-
36		415-54-11980	Cushion	3	26001-
37		417-62-13620	Cushion	8	26001-
38		415-64-13120	Washer	8	26001-

FIG. M4100-001002 Engine Hood (Hood Side Cover) (With Rear Under View Mirror)

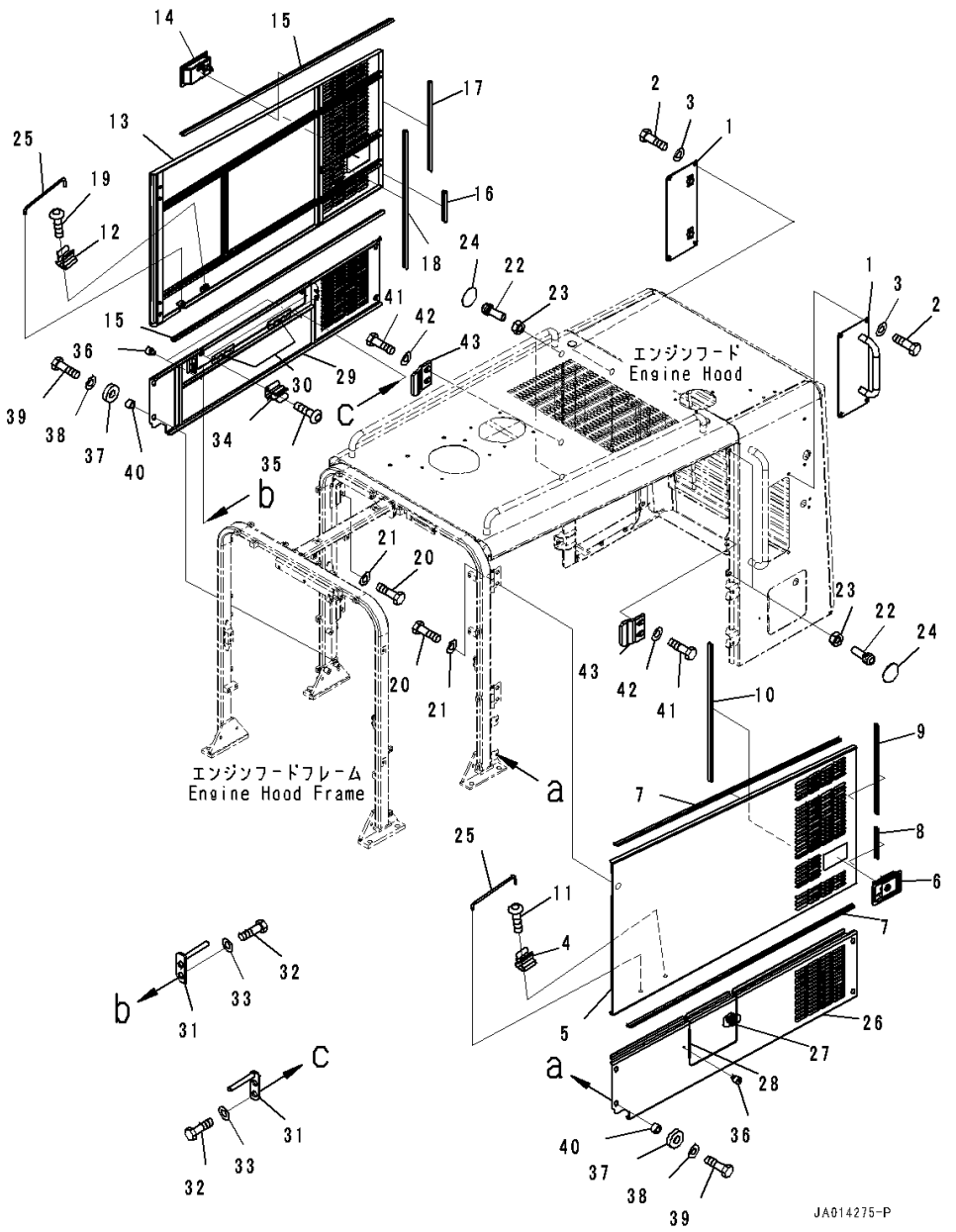

Index	Code	Part Number	Description	Qty	Serial Number
39		01010-81030	Bolt	8	26001-
40		23B-54-71450	Spacer	8	26001-
41		01010-81025	Bolt	4	26001-
42		424-09-12650	Washer	4	26001-
43		234-54-81260	Plate	2	26001-

FIG. M4100-004002 Engine Hood (Hood Side Cover) (With Rear Working Lamp)

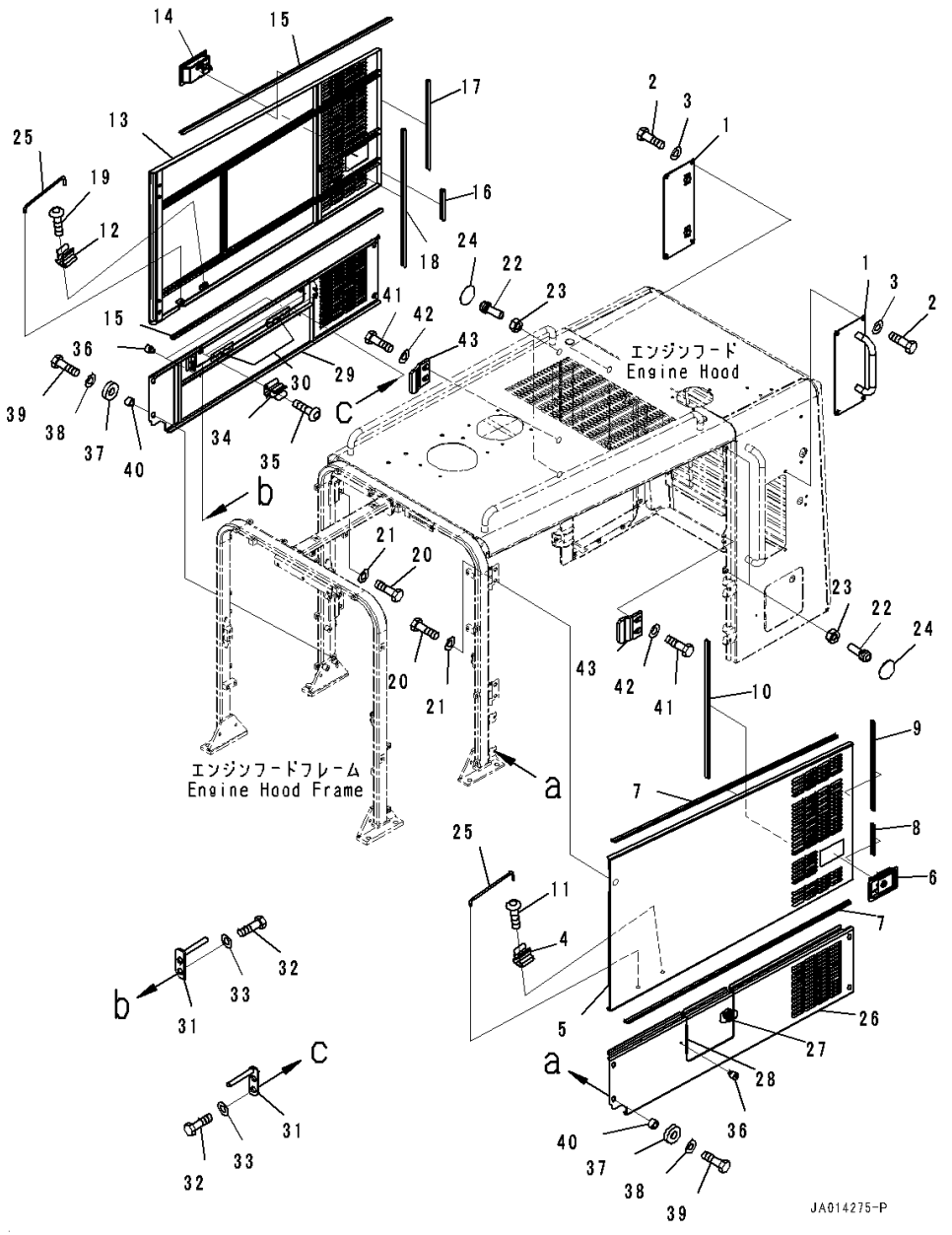

Index	Code	Part Number	Description	Qty	Serial Number
1		23B-54-71560	Cover	2	26001-
2		01010-D1025	Bolt	8	26001-
3		01643-71032	Washer	8	26001-
		234-54-81410	Cover	1	26001-
4		20R-54-11460	• Spring	1	26001-
5	C1		• Cover	1	26001-
6		20Y-54-74172	• • Lock,Welded	1	26001-
7		234-54-81460	• Seal	2	26001-
8		234-54-81470	• Seal	1	26001-
9		234-54-81480	• Seal	1	26001-
10		234-54-81490	• Seal	1	26001-
11		01023-10510	• Screw	2	26001-
		234-54-81420	Cover	1	26001-
12		20R-54-11460	• Spring	1	26001-
13	C1		• Cover	1	26001-
14		20Y-54-74172	• • Lock,Welded	1	26001-
15		234-54-81460	• Seal	2	26001-
16		234-54-81470	• Seal	1	26001-
17		234-54-81480	• Seal	1	26001-
18		234-54-81490	• Seal	1	26001-
19		01023-10510	• Screw	2	26001-
20		01010-81225	Bolt	8	26001-
21		424-54-14220	Washer	8	26001-
22		20Y-54-14290	Stopper	4	26001-
23		01580-11008	Nut	4	26001-
24		20Y-00-11350	Plate	4	26001-
25		20Y-54-29232	Bar	2	26001-
26		234-54-81150	Cover	1	26001-
27		22M-54-19170	• Stopper,Welded	1	26001-
28		416-09-12220	• Hinge,Welded	1	26001-
29		234-54-81160	Cover	1	26001-
30		416-09-12220	• Hinge,Welded	2	26001-
31		22B-54-19970	Plate	2	26001-
32		01010-81025	Bolt	4	26001-
33		01643-31032	Washer	4	26001-
34		20R-54-11460	Spring	2	26001-
35		01023-10510	Screw	4	26001-
36		415-54-11980	Cushion	3	26001-
37		417-62-13620	Cushion	8	26001-
38		415-64-13120	Washer	8	26001-

FIG. M4100-004002 Engine Hood (Hood Side Cover) (With Rear Working Lamp)

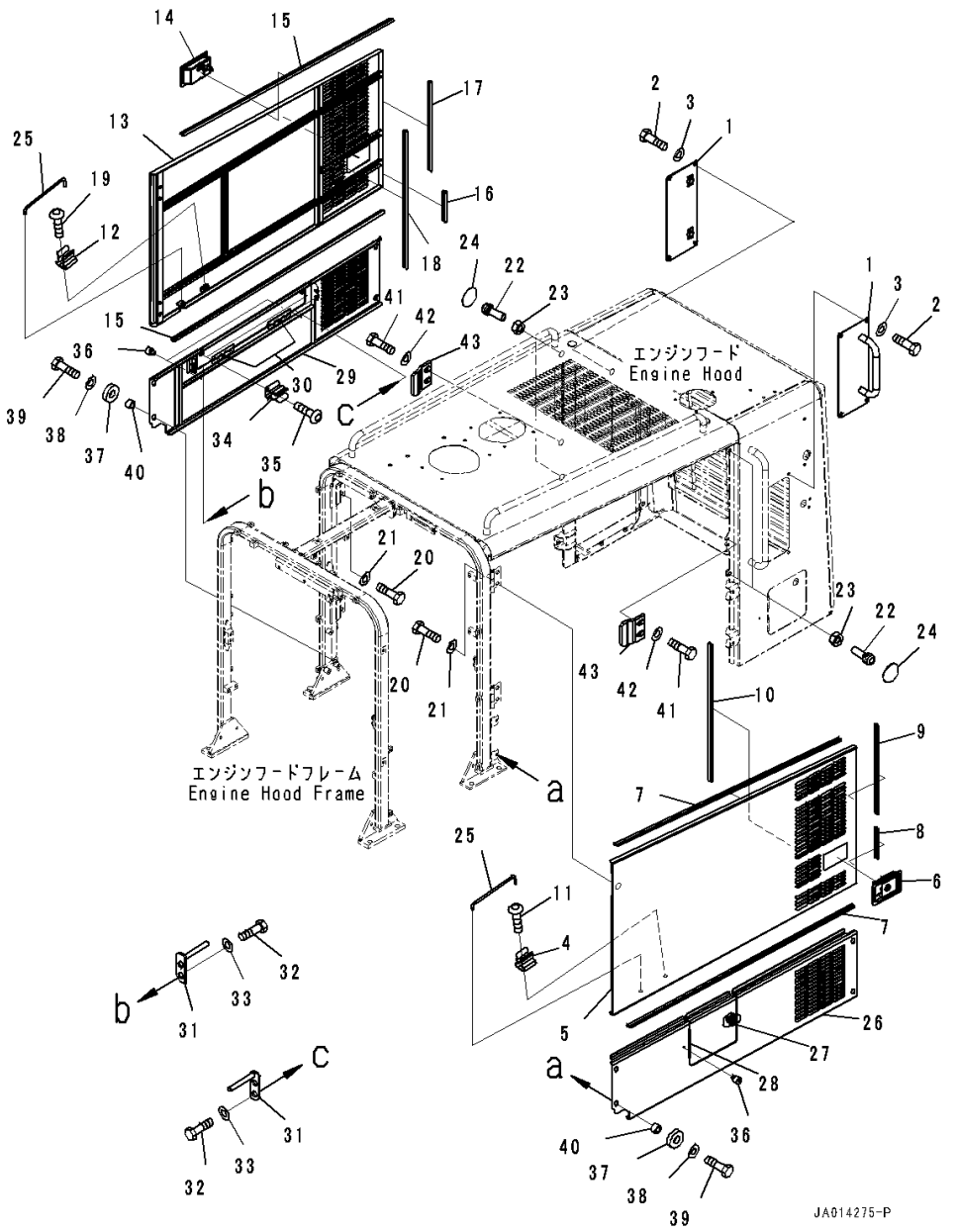

Index	Code	Part Number	Description	Qty	Serial Number
39		01010-81030	Bolt	8	26001-
40		23B-54-71450	Spacer	8	26001-
41		01010-81025	Bolt	4	26001-
42		424-09-12650	Washer	4	26001-
43		234-54-81260	Plate	2	26001-

FIG. M4100-003002 Engine Hood (Hood Side Cover) (With Rear Working Lamp,Rear Under View Mirror)

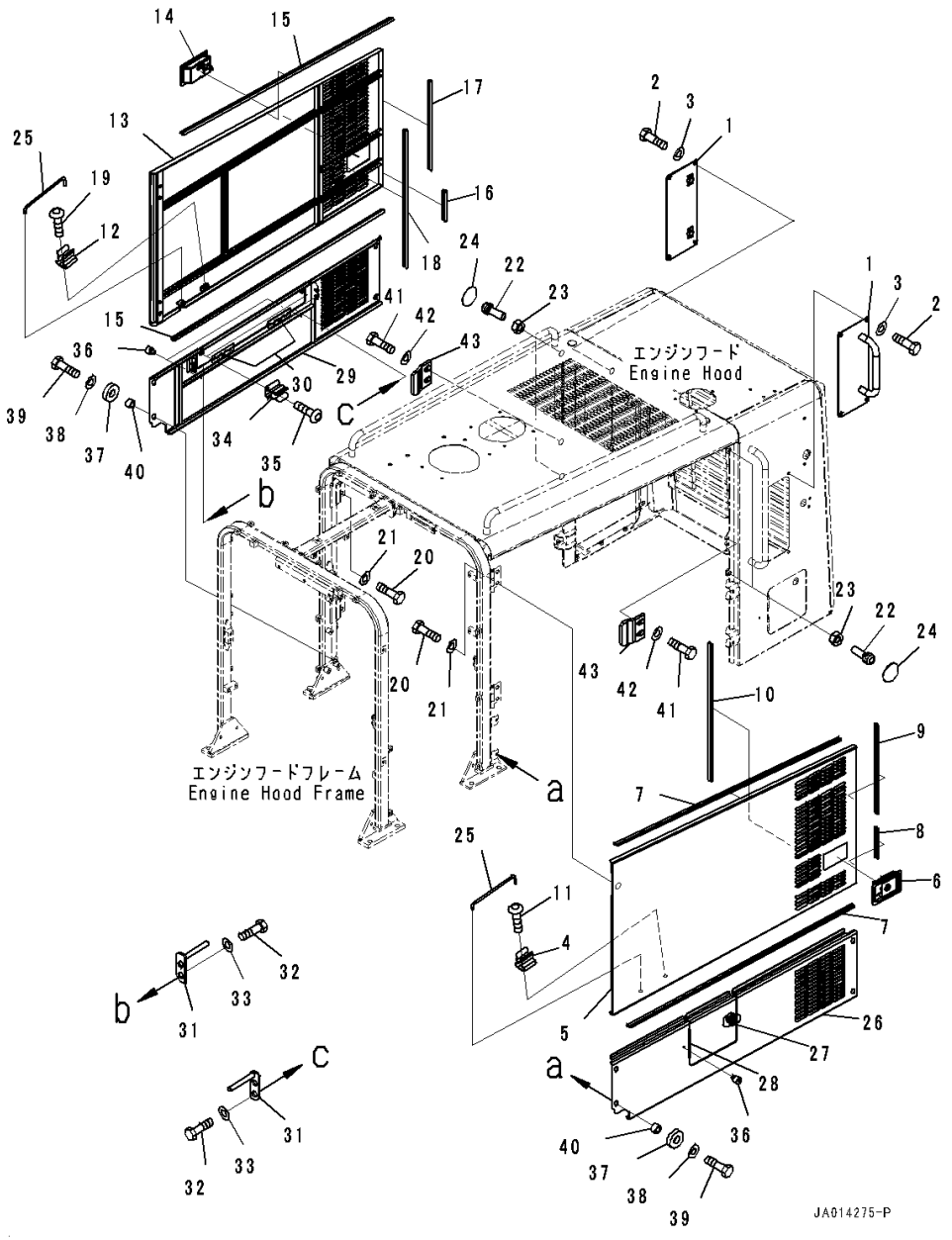

Index	Code	Part Number	Description	Qty	Serial Number
1		23B-54-71560	Cover	2	26001-
2		01010-D1025	Bolt	8	26001-
3		01643-71032	Washer	8	26001-
		234-54-81410	Cover	1	26001-
4		20R-54-11460	• Spring	1	26001-
5	C1		• Cover	1	26001-
6		20Y-54-74172	• • Lock	1	26001-
7		234-54-81460	• Seal	2	26001-
8		234-54-81470	• Seal	1	26001-
9		234-54-81480	• Seal	1	26001-
10		234-54-81490	• Seal	1	26001-
11		01023-10510	• Screw	2	26001-
		234-54-81420	Cover	1	26001-
12		20R-54-11460	• Spring	1	26001-
13	C1		• Cover	1	26001-
14		20Y-54-74172	• • Lock	1	26001-
15		234-54-81460	• Seal	2	26001-
16		234-54-81470	• Seal	1	26001-
17		234-54-81480	• Seal	1	26001-
18		234-54-81490	• Seal	1	26001-
19		01023-10510	• Screw	2	26001-
20		01010-81225	Bolt	8	26001-
21		424-54-14220	Washer	8	26001-
22		20Y-54-14290	Stopper	4	26001-
23		01580-11008	Nut	4	26001-
24		20Y-00-11350	Plate	4	26001-
25		20Y-54-29232	Bar	2	26001-
26		234-54-81150	Cover	1	26001-
27		22M-54-19170	• Stopper,Welded	1	26001-
28		416-09-12220	• Hinge,Welded	1	26001-
29		234-54-81160	Cover	1	26001-
30		416-09-12220	• Hinge,Welded	2	26001-
31		22B-54-19970	Plate	2	26001-
32		01010-81025	Bolt	4	26001-
33		01643-31032	Washer	4	26001-
34		20R-54-11460	Spring	2	26001-
35		01023-10510	Screw	4	26001-
36		415-54-11980	Cushion	3	26001-
37		417-62-13620	Cushion	8	26001-
38		415-64-13120	Washer	8	26001-

FIG. M4100-003002 Engine Hood (Hood Side Cover) (With Rear Working Lamp,Rear Under View Mirror)

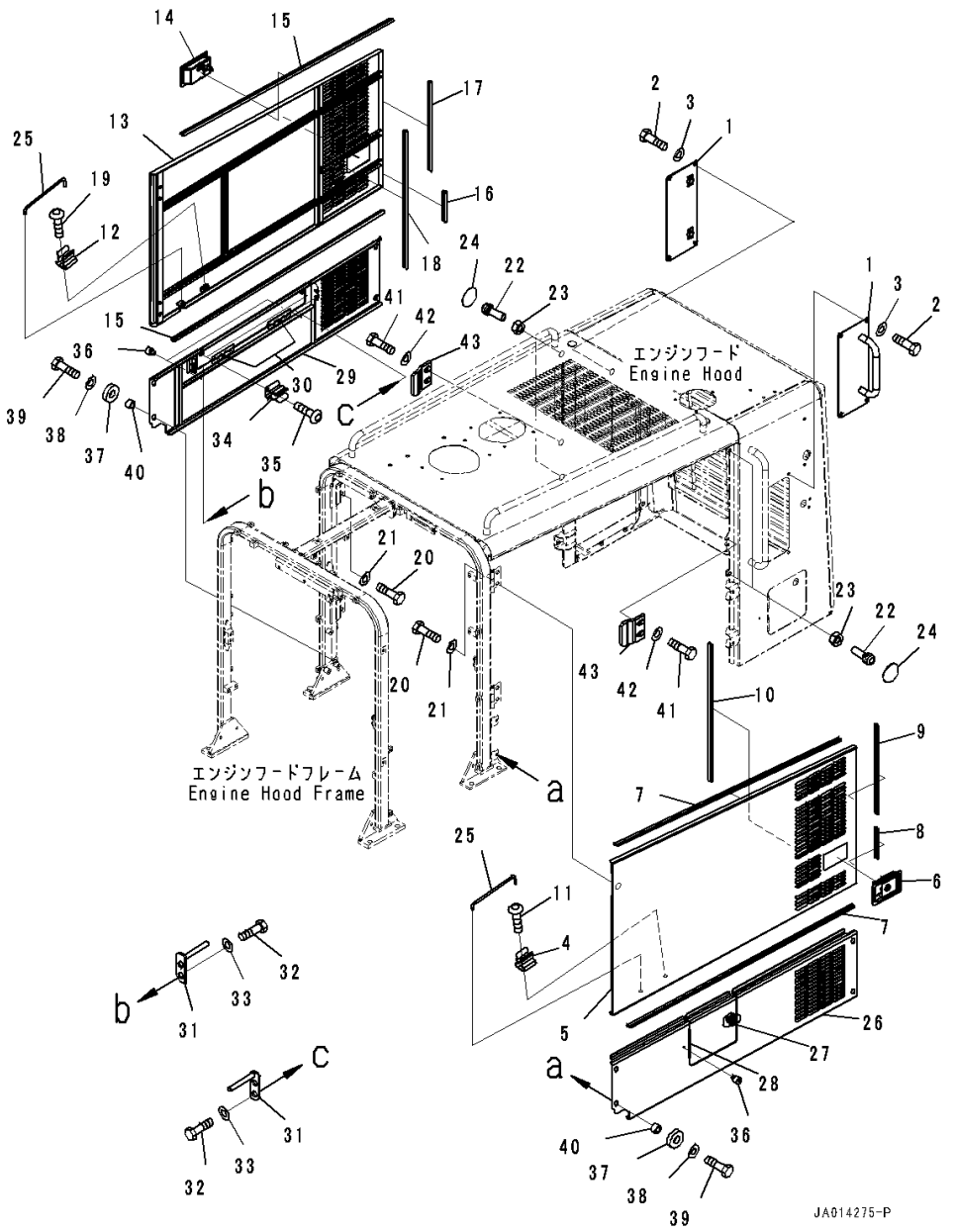

Index	Code	Part Number	Description	Qty	Serial Number
39		01010-81030	Bolt	8	26001-
40		23B-54-71450	Spacer	8	26001-
41		01010-81025	Bolt	4	26001-
42		424-09-12650	Washer	4	26001-
43		234-54-81260	Plate	2	26001-

FIG. M4100-001003A Engine Hood (Hood Front Cover)

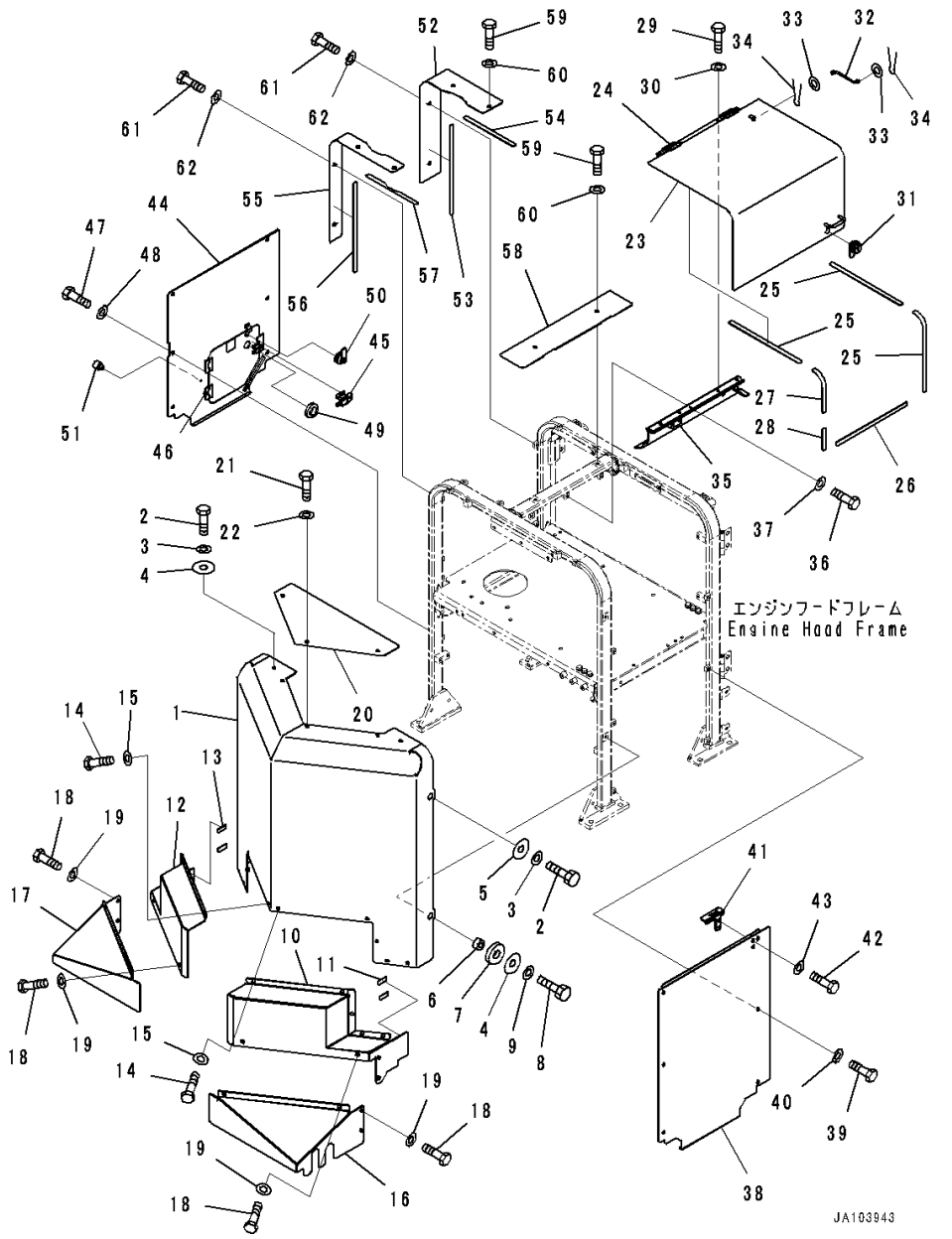

Index	Code	Part Number	Description	Qty	Serial Number
1		234-54-81171	Cover	1	26451-
2		01010-D1025	Bolt	4	26451-
3		01643-71032	Washer	4	26451-
4		416-54-42580	Washer	4	26451-
5		424-46-44360	Collar	2	26451-
6		23B-54-71850	Spacer	2	26451-
7		23B-54-71880	Cushion	2	26451-
8		01010-D1035	Bolt	2	26451-
9		01643-71032	Washer	2	26451-
		234-54-81781	Cover	1	26001-
10	C1		• Cover	1	26001-
11		421-09-21420	• Sheet	2	26001-
		234-54-81791	Cover	1	26001-
12	C1		• Cover	1	26001-
13		421-09-21420	• Sheet	2	26001-
14		01010-D1025	Bolt	10	26001-
15		01643-71032	Washer	10	26001-
16		234-54-85111	Cover	1	26001-
17		234-54-85121	Cover	1	26001-
18		01010-D1025	Bolt	8	26001-
19		01643-71032	Washer	8	26001-
20		234-54-81370	Cover	1	26001-
21		01010-D1025	Bolt	3	26001-
22		01643-71032	Washer	3	26001-
		234-54-81761	Cover	1	26451-
23	C1		• Cover	1	26451-
24		23B-54-71550	• • Hinge,Welded	2	26451-
25		234-54-85180	• Sheet	3	26451-
26		234-54-85180	• Sheet	1	26451-
27		234-54-85280	• Sheet	1	26451-
28		234-54-85290	• Sheet	1	26451-
29		01010-81020	Bolt	4	26001-
30		424-09-12650	Washer	4	26001-
31		23B-54-34540	Lock	1	26001-
		205-54-76280	• Rotor Assembly	1	26001-
32		203-54-56630	Rod	1	26001-
33		01643-30623	Washer	2	26001-
34		04050-11612	Pin, Cotter	2	26001-
35		234-54-81670	Cover	1	26001-
36		01010-81025	Bolt	3	26001-

FIG. M4100-001003A Engine Hood (Hood Front Cover)

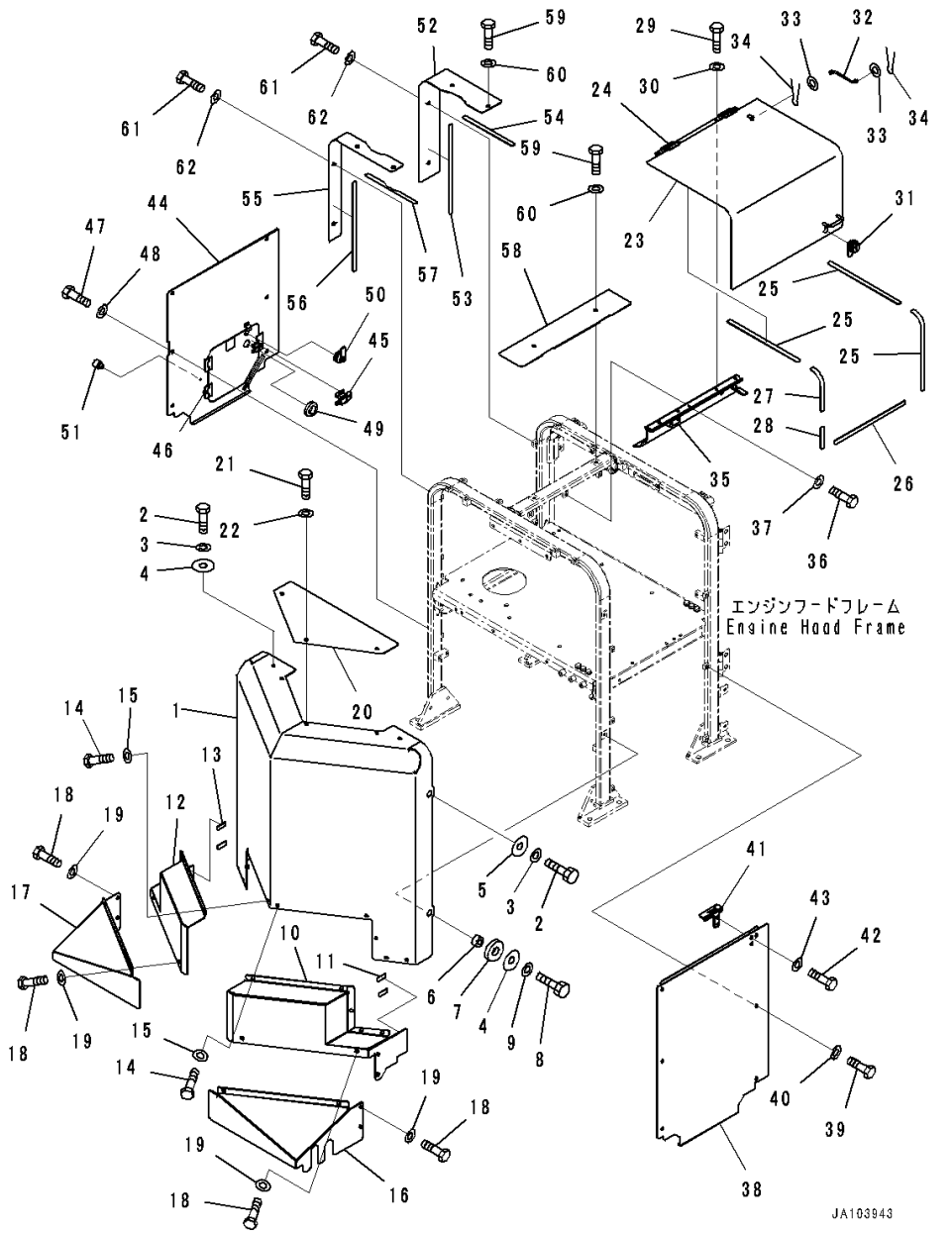

Index	Code	Part Number	Description	Qty	Serial Number
37		01643-31032	Washer	3	26001-
38		234-54-81192	Cover	1	26451-
39		01010-81025	Bolt	6	26001-
40		01643-31032	Washer	6	26001-
41		23B-54-71540	Bracket	1	26001-
42		01010-81025	Bolt	2	26001-
43		01643-31032	Washer	2	26001-
44		234-54-81813	Cover	1	26451-
45		22M-54-19170	• Stopper,Welded	1	26451-
46		23B-54-71550	• Hinge,Welded	2	26451-
47		01010-81025	Bolt	6	26001-
48		01643-31032	Washer	6	26001-
49		08037-02512	Grommet	1	26001-
50		205-60-71220	Lock Assembly	1	26001-
		205-54-76280	• Rotor Assembly	1	26001-
51		415-54-11980	Cushion	1	26001-
52		234-54-85130	Cover	1	26001-
53		234-54-85190	• Sheet	1	26001-
54		234-54-85271	• Sheet	1	26001-
55		234-54-85141	Cover	1	26451-
56		234-54-85190	• Sheet	1	26001-
57		234-54-85240	• Sheet	1	26001-
58		234-54-85170	Cover	1	26001-
59		01010-D1025	Bolt	6	26001-
60		01643-71032	Washer	6	26001-
61		01010-81025	Bolt	4	26001-
62		01643-31032	Washer	4	26001-

FIG. M4100-003003A Engine Hood (Hood Front Cover) (With Rear Working Lamp)

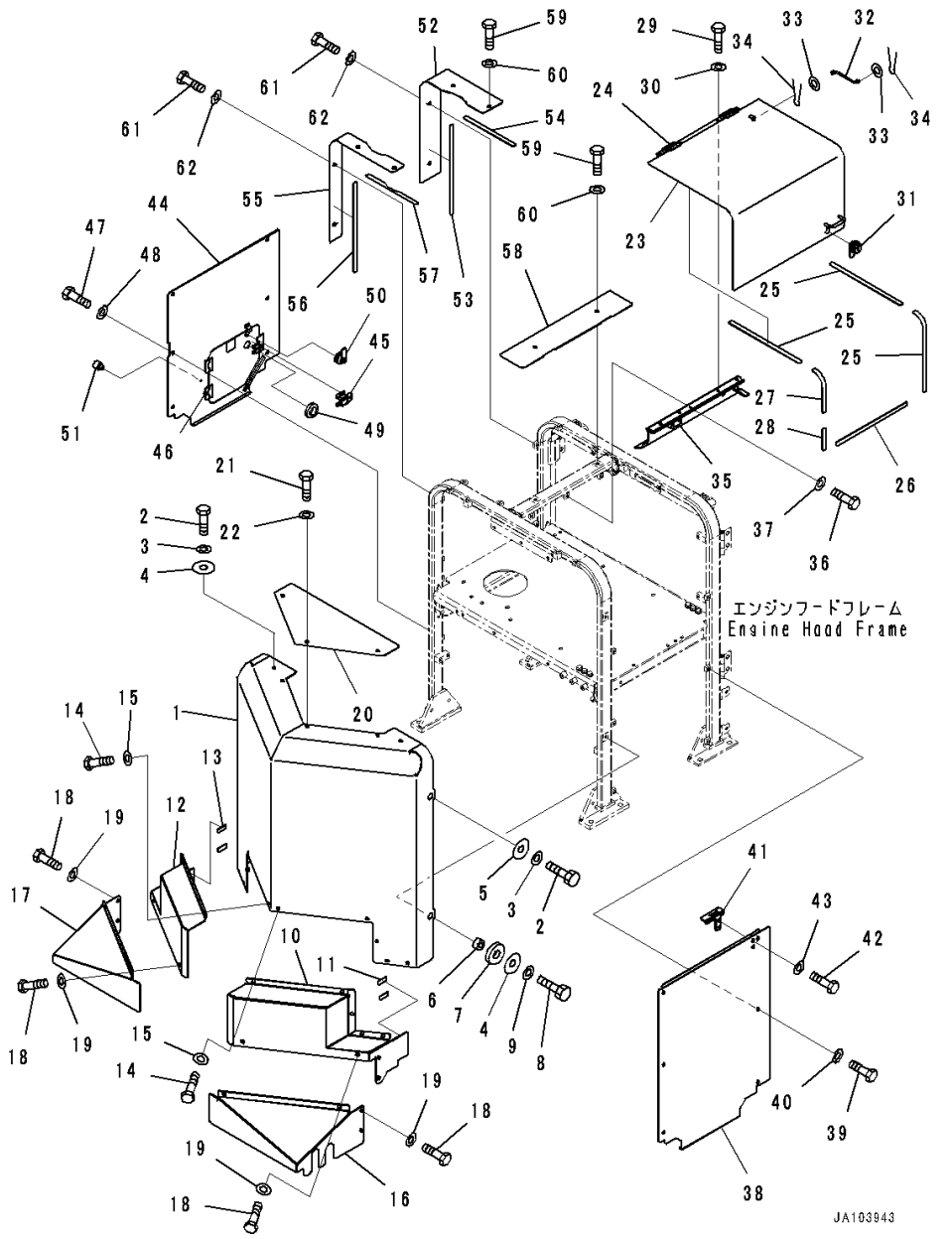

Index	Code	Part Number	Description	Qty	Serial Number
1		234-54-81171	Cover	1	26451-
2		01010-D1025	Bolt	4	26451-
3		01643-71032	Washer	4	26451-
4		416-54-42580	Washer	4	26451-
5		424-46-44360	Collar	2	26451-
6		23B-54-71850	Spacer	2	26451-
7		23B-54-71880	Cushion	2	26451-
8		01010-D1035	Bolt	2	26451-
9		01643-71032	Washer	2	26451-
		234-54-81781	Cover	1	26001-
10	C1		• Cover	1	26001-
11		421-09-21420	• Sheet	2	26001-
		234-54-81791	Cover	1	26001-
12	C1		• Cover	1	26001-
13		421-09-21420	• Sheet	2	26001-
14		01010-D1025	Bolt	10	26001-
15		01643-71032	Washer	10	26001-
16		234-54-85111	Cover	1	26001-
17		234-54-85121	Cover	1	26001-
18		01010-D1025	Bolt	8	26001-
19		01643-71032	Washer	8	26001-
20		234-54-81370	Cover	1	26001-
21		01010-D1025	Bolt	3	26001-
22		01643-71032	Washer	3	26001-
		234-54-81761	Cover	1	26451-
23	C1		• Cover	1	26451-
24		23B-54-71550	• • Hinge,Welded	2	26451-
25		234-54-85180	• Sheet	3	26451-
26		234-54-85180	• Sheet	1	26451-
27		234-54-85280	• Sheet	1	26451-
28		234-54-85290	• Sheet	1	26451-
29		01010-81020	Bolt	4	26001-
30		424-09-12650	Washer	4	26001-
31		23B-54-34540	Lock	1	26001-
		205-54-76280	• Rotor Assembly	1	26001-
32		203-54-56630	Rod	1	26001-
33		01643-30623	Washer	2	26001-
34		04050-11612	Pin, Cotter	2	26001-
35		234-54-81670	Cover	1	26001-
36		01010-81025	Bolt	3	26001-

FIG. M4100-003003A Engine Hood (Hood Front Cover) (With Rear Working Lamp)

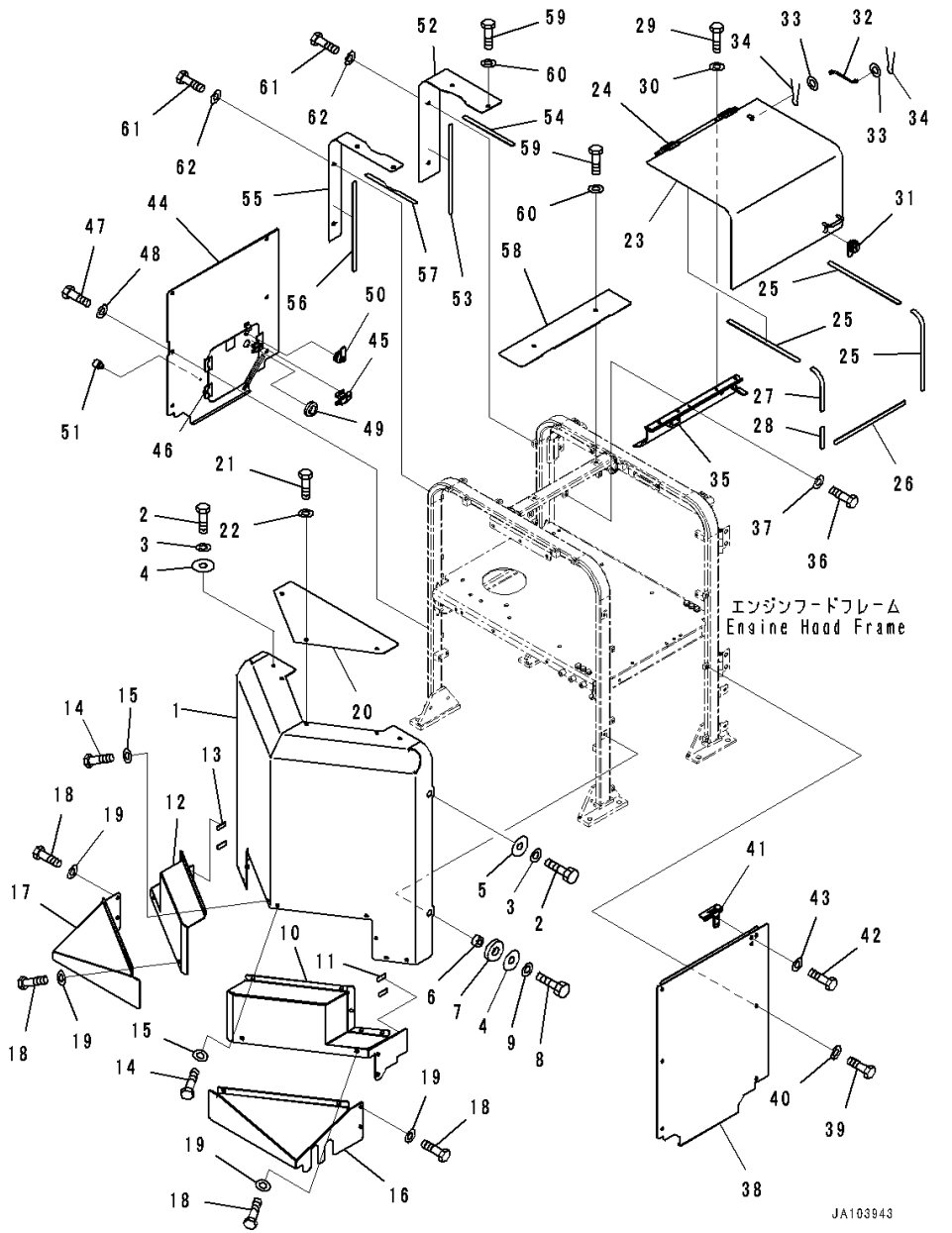

Index	Code	Part Number	Description	Qty	Serial Number
37		01643-31032	Washer	3	26001-
38		234-54-81192	Cover	1	26451-
39		01010-81025	Bolt	6	26001-
40		01643-31032	Washer	6	26001-
41		23B-54-71540	Bracket	1	26001-
42		01010-81025	Bolt	2	26001-
43		01643-31032	Washer	2	26001-
44		234-54-81813	Cover	1	26451-
45		22M-54-19170	• Stopper,Welded	1	26451-
46		23B-54-71550	• Hinge,Welded	2	26451-
47		01010-81025	Bolt	6	26001-
48		01643-31032	Washer	6	26001-
49		08037-02512	Grommet	1	26001-
50		205-60-71220	Lock Assembly	1	26001-
		205-54-76280	• Rotor Assembly	1	26001-
51		415-54-11980	Cushion	1	26001-
52		234-54-85130	Cover	1	26001-
53		234-54-85190	• Sheet	1	26001-
54		234-54-85271	• Sheet	1	26001-
55		234-54-85141	Cover	1	26451-
56		234-54-85190	• Sheet	1	26001-
57		234-54-85240	• Sheet	1	26001-
58		234-54-85170	Cover	1	26001-
59		01010-D1025	Bolt	6	26001-
60		01643-71032	Washer	6	26001-
61		01010-81025	Bolt	4	26001-
62		01643-31032	Washer	4	26001-

FIG. M4100-001004 Engine Hood (Radiator Mask)

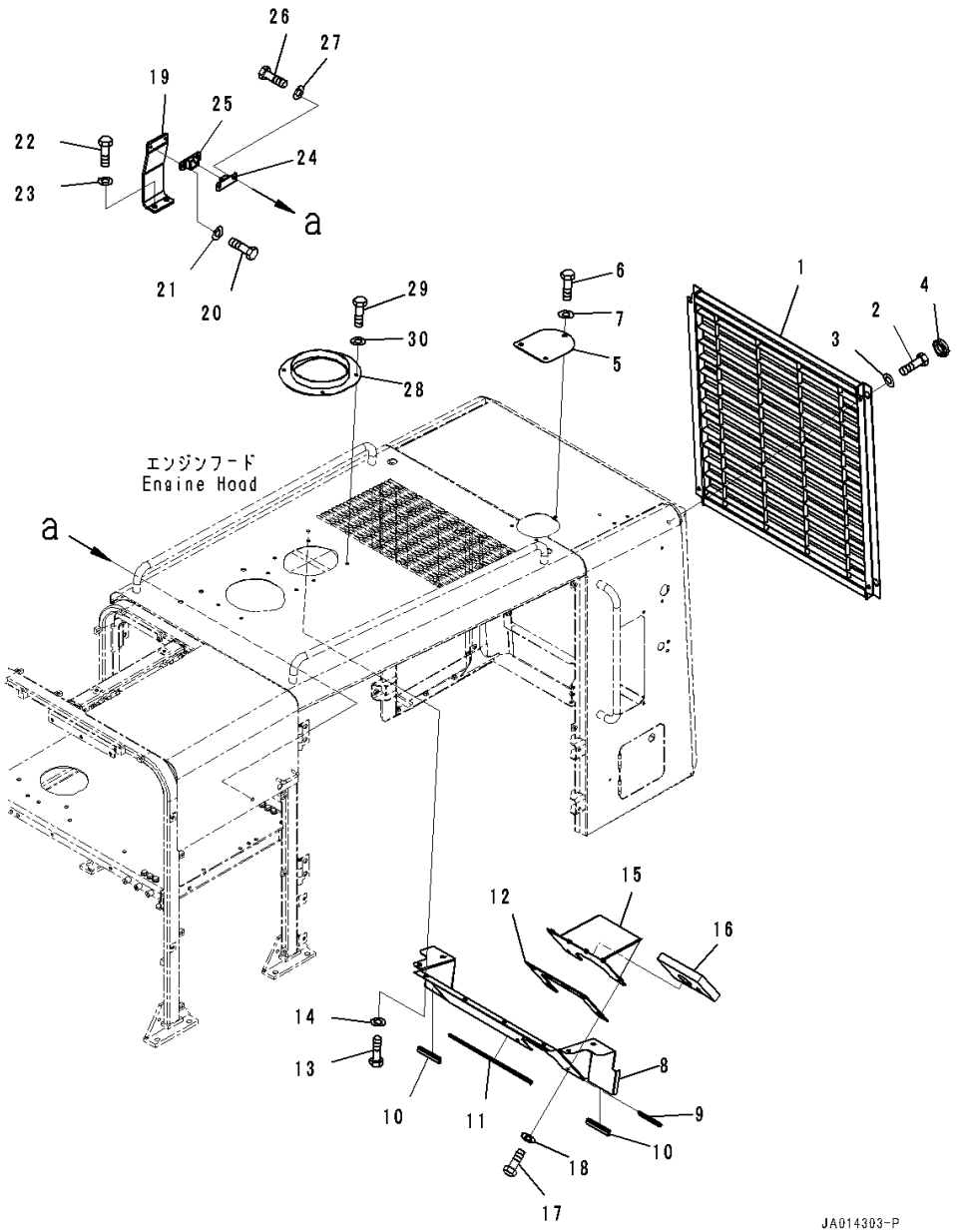

Index	Code	Part Number	Description	Qty	Serial Number
1		234-54-81250	Mask	1	26001-
2		01016-51055	Bolt	4	26001-
3		01643-31032	Washer	4	26001-
4		09415-02110	Cap	4	26001-
5		234-54-81380	Cover	1	26001-
6		01010-D1025	Bolt	3	26001-
7		01643-71032	Washer	3	26001-
		234-54-85210	Cover	1	26001-
8	C1		• Cover	1	26001-
9		234-54-81330	• Seal	1	26001-
10		234-54-85220	• Seal	2	26001-
11		234-54-85230	• Seal	1	26001-
12		234-54-81570	Sheet	1	26001-
13		01010-81025	Bolt	8	26001-
14		01643-31032	Washer	8	26001-
		234-54-81340	Cover	1	26001-
15	C1		• Cover	1	26001-
16		234-54-81350	• Sheet	1	26001-
17		01010-81025	Bolt	6	26001-
18		01643-31032	Washer	6	26001-
19		234-54-81230	Bracket	1	26001-
20		01010-80620	Bolt	2	26001-
21		01643-30623	Washer	2	26001-
22		01010-81030	Bolt	2	26001-
23		01643-31032	Washer	2	26001-
24		205-54-53550	Dovetail	1	26001-
25		205-54-51971	Dovetail	1	26001-
26		01010-80612	Bolt	2	26001-
27		01643-30623	Washer	2	26001-
28		234-54-81970	Bracket	1	26001-
29		01010-D1025	Bolt	4	26001-
30		01643-71032	Washer	4	26001-

FIG. M4100-003004 Engine Hood (Radiator Mask) (With Rear Working Lamp)

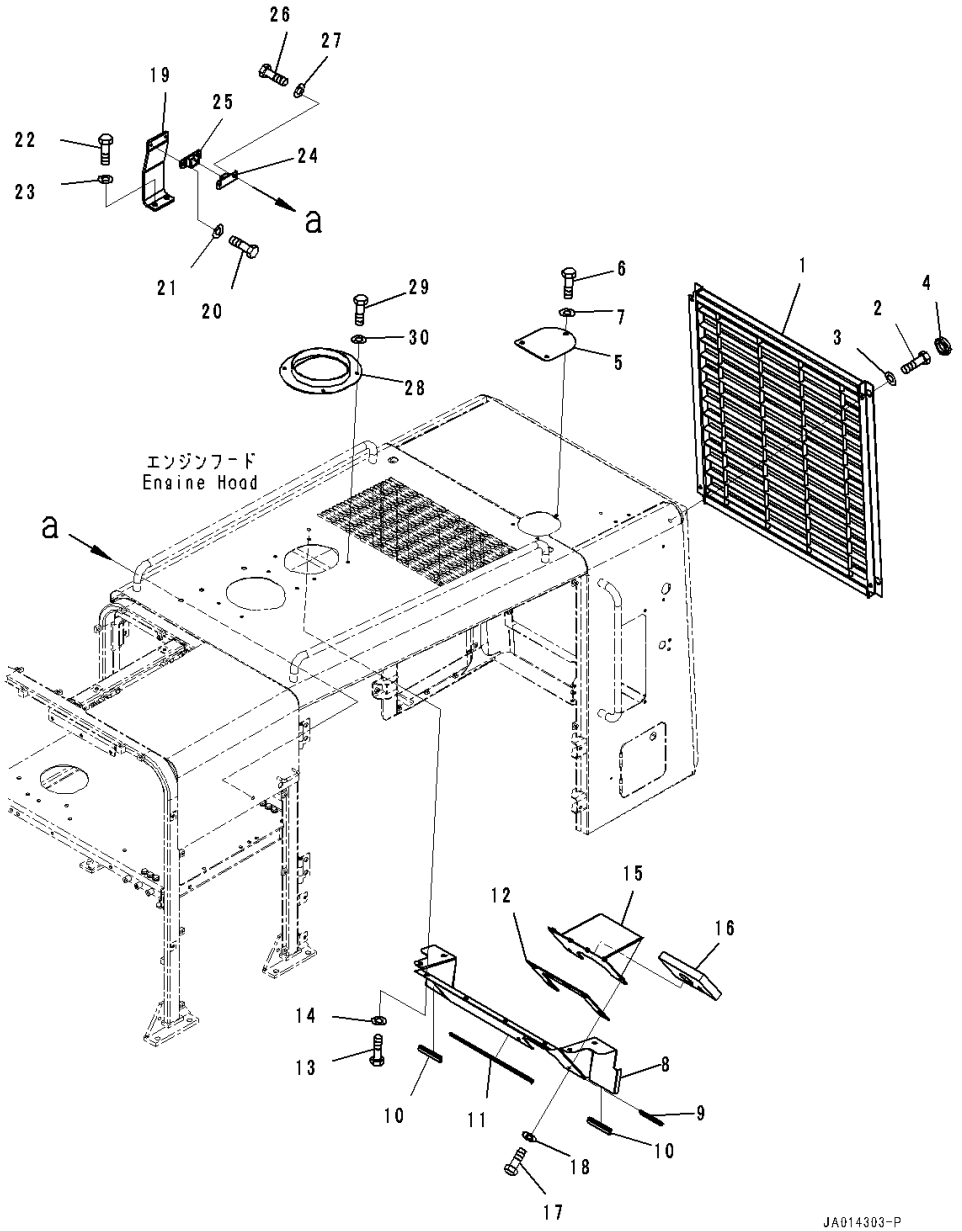

Index	Code	Part Number	Description	Qty	Serial Number
1		234-54-81250	Mask	1	26001-
2		01016-51055	Bolt	4	26001-
3		01643-31032	Washer	4	26001-
4		09415-02110	Cap	4	26001-
5		234-54-81380	Cover	1	26001-
6		01010-D1025	Bolt	3	26001-
7		01643-71032	Washer	3	26001-
		234-54-85210	Cover	1	26001-
8	C1		• Cover	1	26001-
9		234-54-81330	• Seal	1	26001-
10		234-54-85220	• Seal	2	26001-
11		234-54-85230	• Seal	1	26001-
12		234-54-81570	Sheet	1	26001-
13		01010-81025	Bolt	8	26001-
14		01643-31032	Washer	8	26001-
		234-54-81340	Cover	1	26001-
15	C1		• Cover	1	26001-
16		234-54-81350	• Sheet	1	26001-
17		01010-81025	Bolt	6	26001-
18		01643-31032	Washer	6	26001-
19		234-54-81230	Bracket	1	26001-
20		01010-80620	Bolt	2	26001-
21		01643-30623	Washer	2	26001-
22		01010-81030	Bolt	2	26001-
23		01643-31032	Washer	2	26001-
24		205-54-53550	Dovetail	1	26001-
25		205-54-51971	Dovetail	1	26001-
26		01010-80612	Bolt	2	26001-
27		01643-30623	Washer	2	26001-
28		234-54-81970	Bracket	1	26001-
29		01010-D1025	Bolt	4	26001-
30		01643-71032	Washer	4	26001-

FIG. M4100-001005 Engine Hood (Rear Combination Lamp)

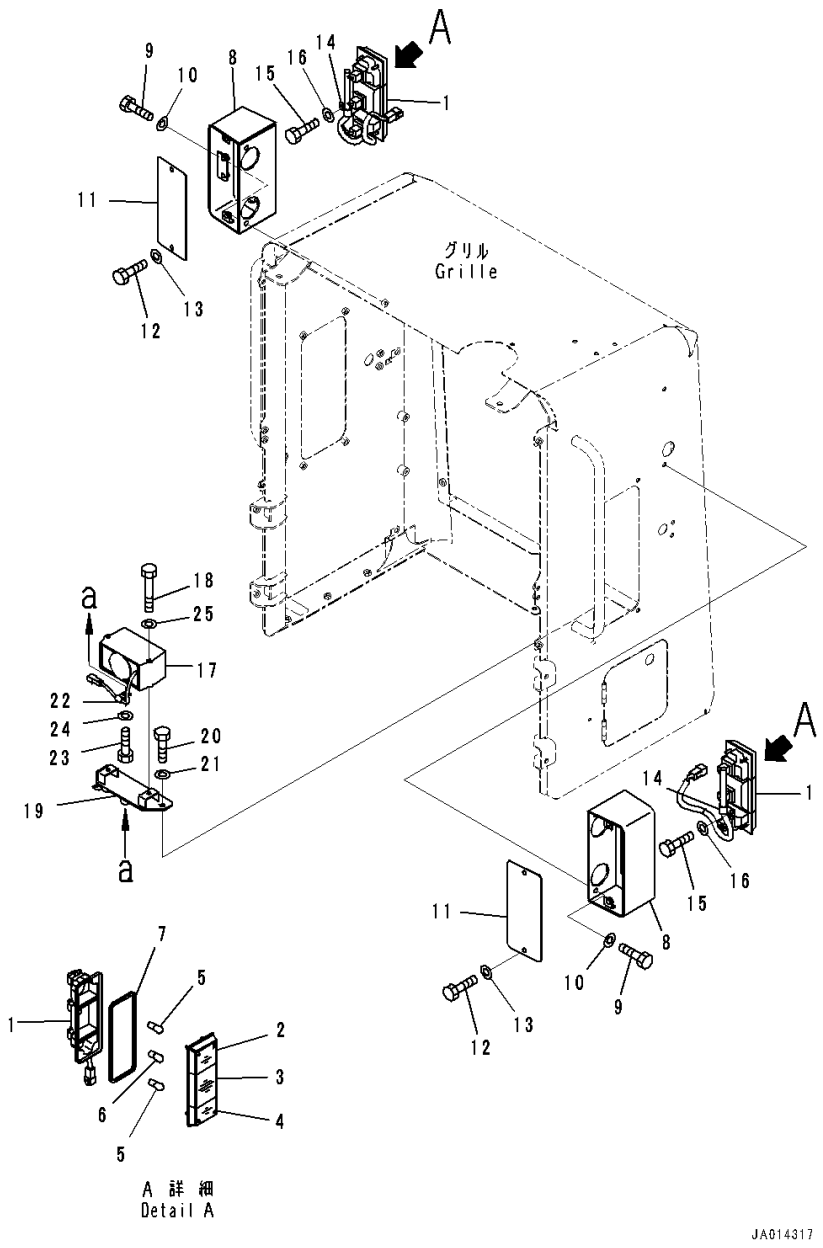

Index	Code	Part Number	Description	Qty	Serial Number
1		424-06-43241	Lamp	2	26001-
2		23A-06-21510	• Lens,Amber	1	26001-
3		424-06-43320	• Lens,Red	1	26001-
4		23A-06-21530	• Lens,Clear	1	26001-
5		424-06-43330	• Bulb,21watt	2	26001-
6		424-06-43340	• Bulb,21/5watt	1	26001-
7		23A-06-21440	• Gasket	1	26001-
8		23B-06-73310	Bracket	2	26001-
9		01010-81025	Bolt	4	26001-
10		01643-31032	Washer	4	26001-
11		23B-06-73321	Plate	2	26001-
12		01010-D1020	Bolt	4	26001-
13		01643-71032	Washer	4	26001-
14		04434-51410	Clip	2	26001-
15		01010-81025	Bolt	2	26001-
16		01643-31032	Washer	2	26001-
17		08164-A1000	Alarm, Back-up	1	26001-
18		01010-80895	Bolt	2	26001-
19		234-54-81620	Bracket	1	26001-
20		01010-81020	Bolt	2	26001-
21		01643-31032	Washer	2	26001-
22		04434-50610	Clip	1	26001-
23		01010-81020	Bolt	1	26001-
24		01643-31032	Washer	1	26001-
25		01640-20816	Washer	2	26001-

FIG. M4100-001006 Engine Hood (Air Cleaner Mounting)

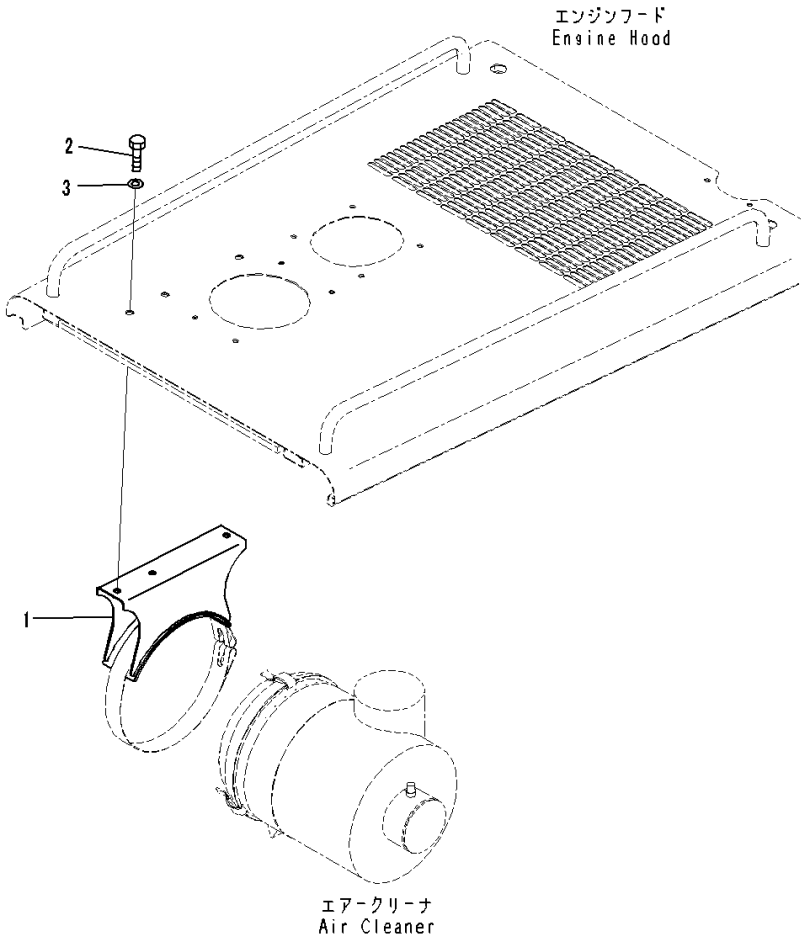

Index	Code	Part Number	Description	Qty	Serial Number
1		234-54-81290	Bracket	1	26001-
2		01010-D1225	Bolt	3	26001-
3		01643-71232	Washer	3	26001-

FIG. M4100-001007 Engine Hood (Air Cleaner Assembly)

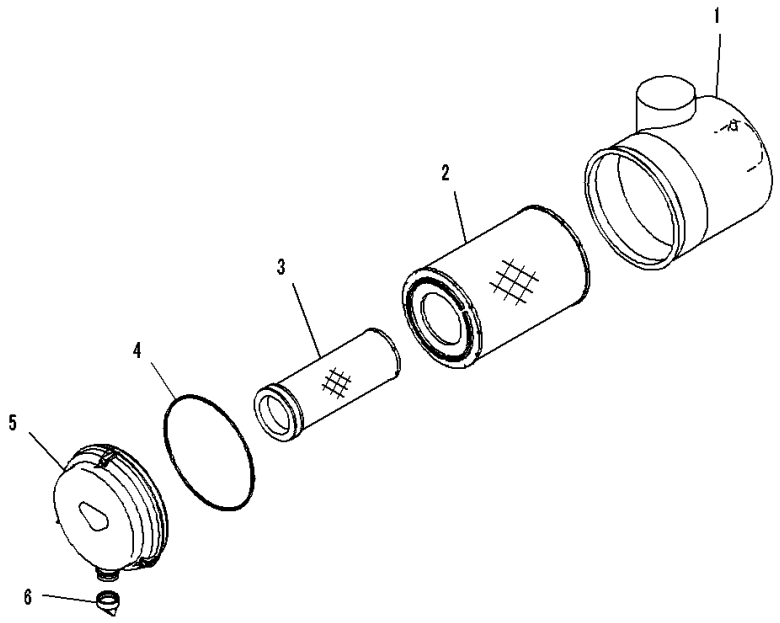

Index	Code	Part Number	Description	Qty	Serial Number
		6156-81-7101	Air Cleaner Assembly	1	26001-
1	C1		• Body	1	26001-
		600-185-5100	• Element Assembly	1	26001-
2		600-185-5110	• • Element	1	26001-
3	C1		• • Element	1	26001-
4		600-184-1570	• • O-ring	1	26001-
5		600-184-1510	• Cover Assembly	1	26001-
6		600-184-1350	• Valve,Vacuator	1	26001-

FIG. M4100-001008 Engine Hood (Dust Indicator)

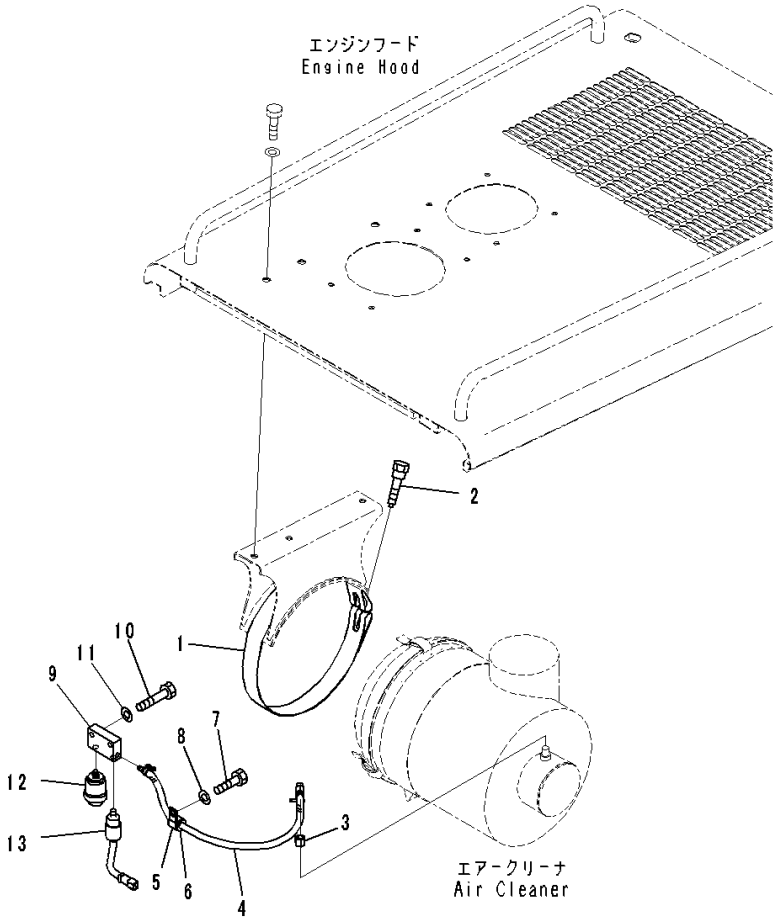

Index	Code	Part Number	Description	Qty	Serial Number
1		6151-11-4840	Band	1	26001-
2		6643-11-4641	Bolt	1	26001-
3		6743-81-7530	Adapter	1	26001-
4		08671-50080	Hose	1	26001-
5		04434-52112	Clip	1	26001-
6		07095-20314	Cushion	1	26001-
7		01010-81025	Bolt	1	26001-
8		01643-31032	Washer	1	26001-
9		423-06-42720	Block	1	26001-
10		01010-81040	Bolt	2	26001-
11		01643-31032	Washer	2	26001-
12		08672-01000	Indicator	1	26001-
13		423-06-43160	Sensor, Dust Indicator	1	26001-

FIG. M4100-001009 Engine Hood (Wiring Harness and Mirror) (With Rear Under View Mirror)

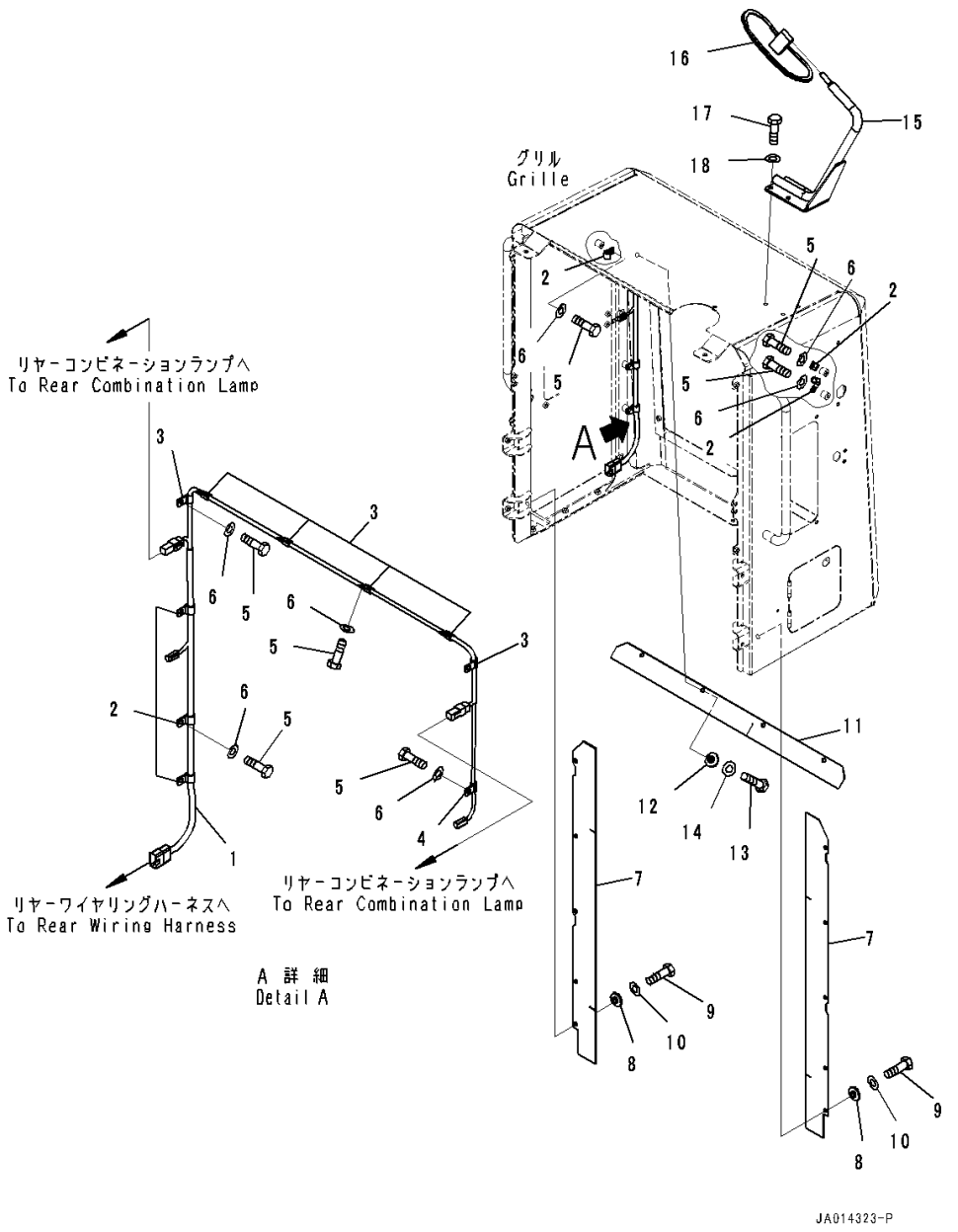

Index	Code	Part Number	Description	Qty	Serial Number
1		234-06-81230	Wiring Harness	1	26001-
2		04434-51410	Clip	6	26001-
3		04434-51010	Clip	6	26001-
4		04434-50810	Clip	1	26001-
5		01010-81025	Bolt	13	26001-
6		01643-31032	Washer	13	26001-
7		234-03-81710	Sheet	2	26001-
8		20Y-53-12310	Collar	10	26001-
9		01010-80620	Bolt	10	26001-
10		01643-30623	Washer	10	26001-
11		234-03-81840	Sheet	1	26001-
12		20Y-53-12310	Collar	4	26001-
13		01010-80620	Bolt	4	26001-
14		01643-30623	Washer	4	26001-
15		234-54-81820	Stay	1	26001-
16		08174-13118	Mirror	1	26001-
17		01010-D1030	Bolt	3	26001-
18		01643-71032	Washer	3	26001-

FIG. M4100-002009 Engine Hood (Wiring Harness)

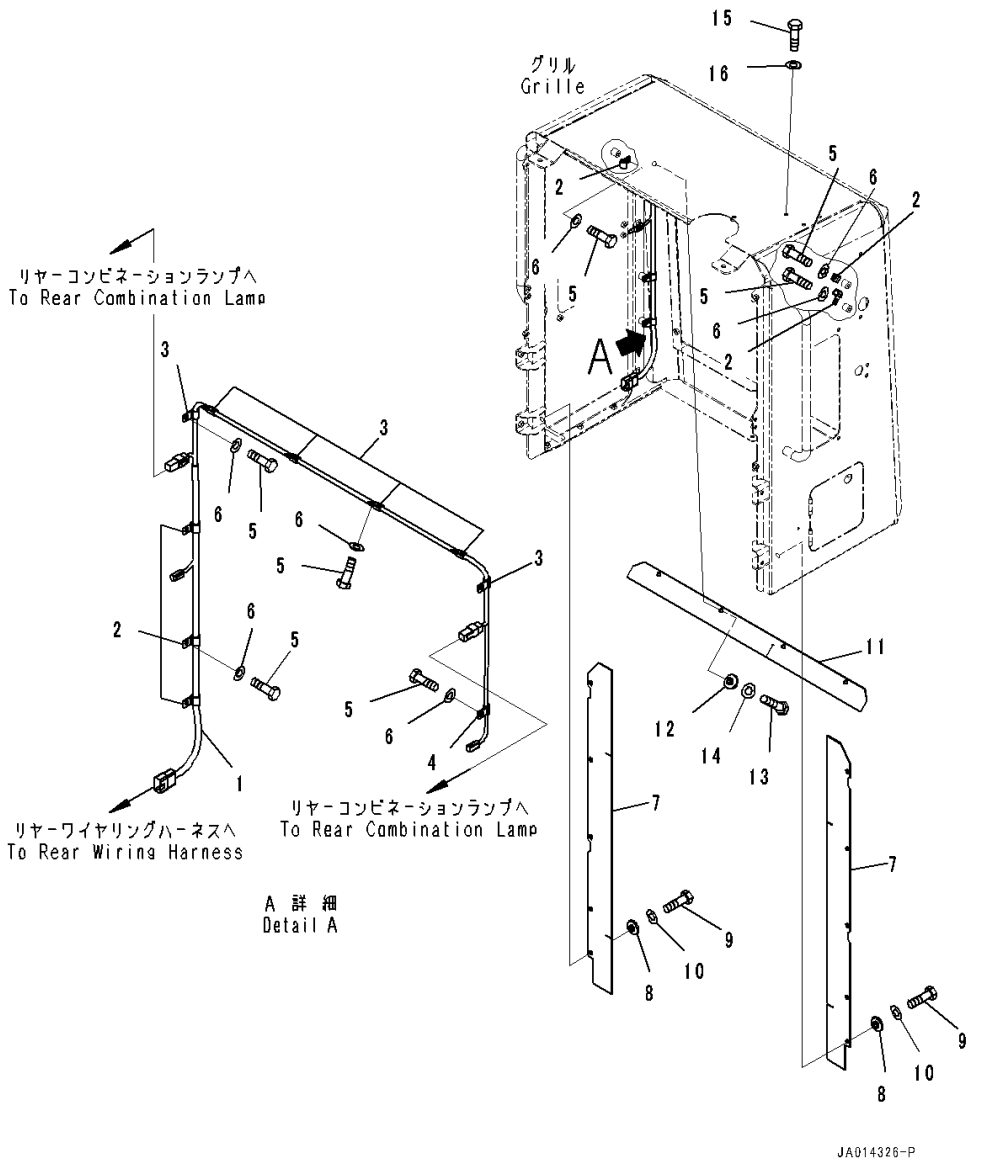

Index	Code	Part Number	Description	Qty	Serial Number
1		234-06-81230	Wiring Harness	1	26001-
2		04434-51410	Clip	6	26001-
3		04434-51010	Clip	6	26001-
4		04434-50810	Clip	1	26001-
5		01010-81025	Bolt	13	26001-
6		01643-31032	Washer	13	26001-
7		234-03-81710	Sheet	2	26001-
8		20Y-53-12310	Collar	10	26001-
9		01010-80620	Bolt	10	26001-
10		01643-30623	Washer	10	26001-
11		234-03-81840	Sheet	1	26001-
12		20Y-53-12310	Collar	4	26001-
13		01010-80620	Bolt	4	26001-
14		01643-30623	Washer	4	26001-
15		01010-D1025	Bolt	3	26001-
16		01643-71032	Washer	3	26001-

FIG. M4230-001001 Front Frame Cover (Floor Cover) (1/2)

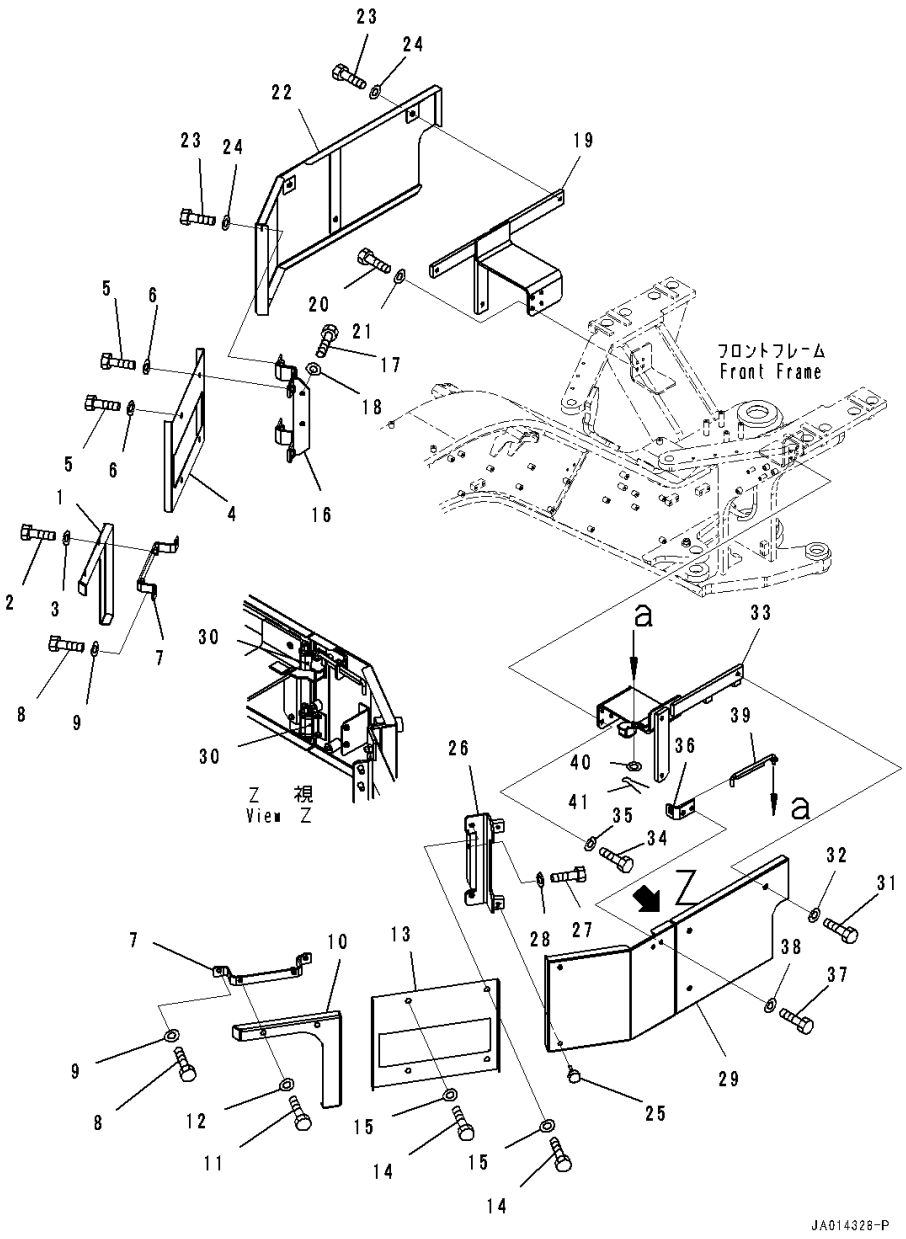

Index	Code	Part Number	Description	Qty	Serial Number
1		234-54-83110	Cover	1	26001-
2		01010-D1025	Bolt	2	26001-
3		01643-71032	Washer	2	26001-
4		234-54-83290	Cover	1	26001-
5		01010-D1025	Bolt	4	26001-
6		01643-71032	Washer	4	26001-
7		234-54-83241	Bracket	2	26001-
8		01010-D1020	Bolt	4	26001-
9		01643-71032	Washer	4	26001-
10		234-54-83120	Cover	1	26001-
11		01010-D1025	Bolt	2	26001-
12		01643-71032	Washer	2	26001-
13		234-54-83280	Cover	1	26001-
14		01010-D1025	Bolt	4	26001-
15		01643-71032	Washer	4	26001-
16		234-54-83260	Bracket	1	26001-
17		01010-D1025	Bolt	2	26001-
18		01643-71032	Washer	2	26001-
19		234-54-83270	Bracket	1	26001-
20		01010-D1030	Bolt	4	26001-
21		01643-71032	Washer	4	26001-
22		234-54-83231	Cover	1	26001-
23		01010-D1025	Bolt	5	26001-
24		01643-71032	Washer	5	26001-
25		23B-54-31990	Screw	2	26001-
26		234-54-83140	Bracket	1	26001-
27		01010-D1025	Bolt	2	26001-
28		01643-71032	Washer	2	26001-
29		234-54-83131	Cover	1	26001-
30		23B-54-31891	• Hinge,Welded	2	26001-
31		01010-D1025	Bolt	3	26001-
32		421-54-34550	Washer	3	26001-
33		234-54-83250	Bracket	1	26001-
34		01010-D1030	Bolt	4	26001-
35		01643-71032	Washer	4	26001-
36		23B-54-73420	Bracket	1	26001-
37		01010-D1025	Bolt	2	26001-
38		01643-71032	Washer	2	26001-
39		22B-46-24170	Rod	1	26001-
40		01643-80823	Washer	1	26001-

FIG. M4230-001001 Front Frame Cover (Floor Cover) (1/2)

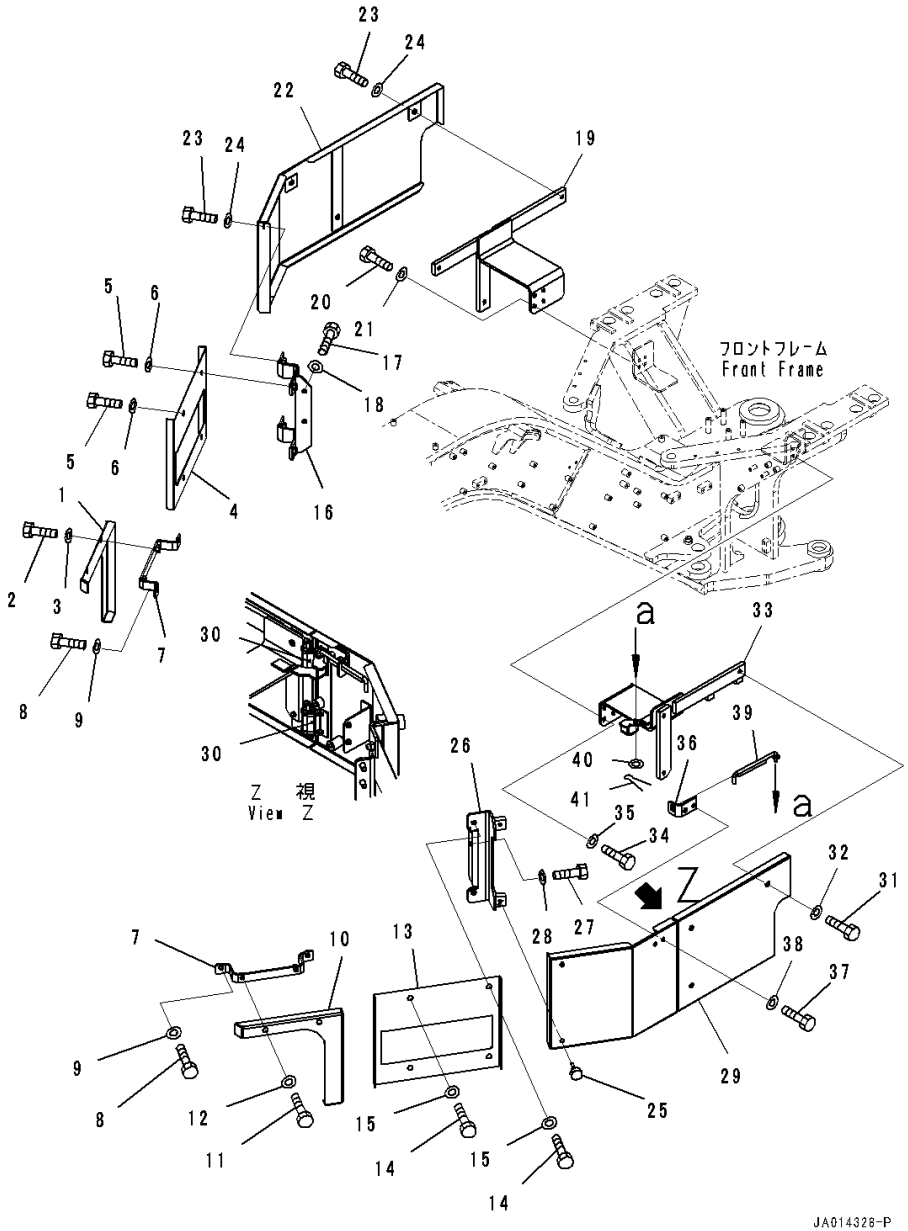

Index	Code	Part Number	Description	Qty	Serial Number
41		04050-12015	Pin, Cotter	1	26001-

FIG. M4230-002001 Front Frame Cover (Floor Cover) (1/2)

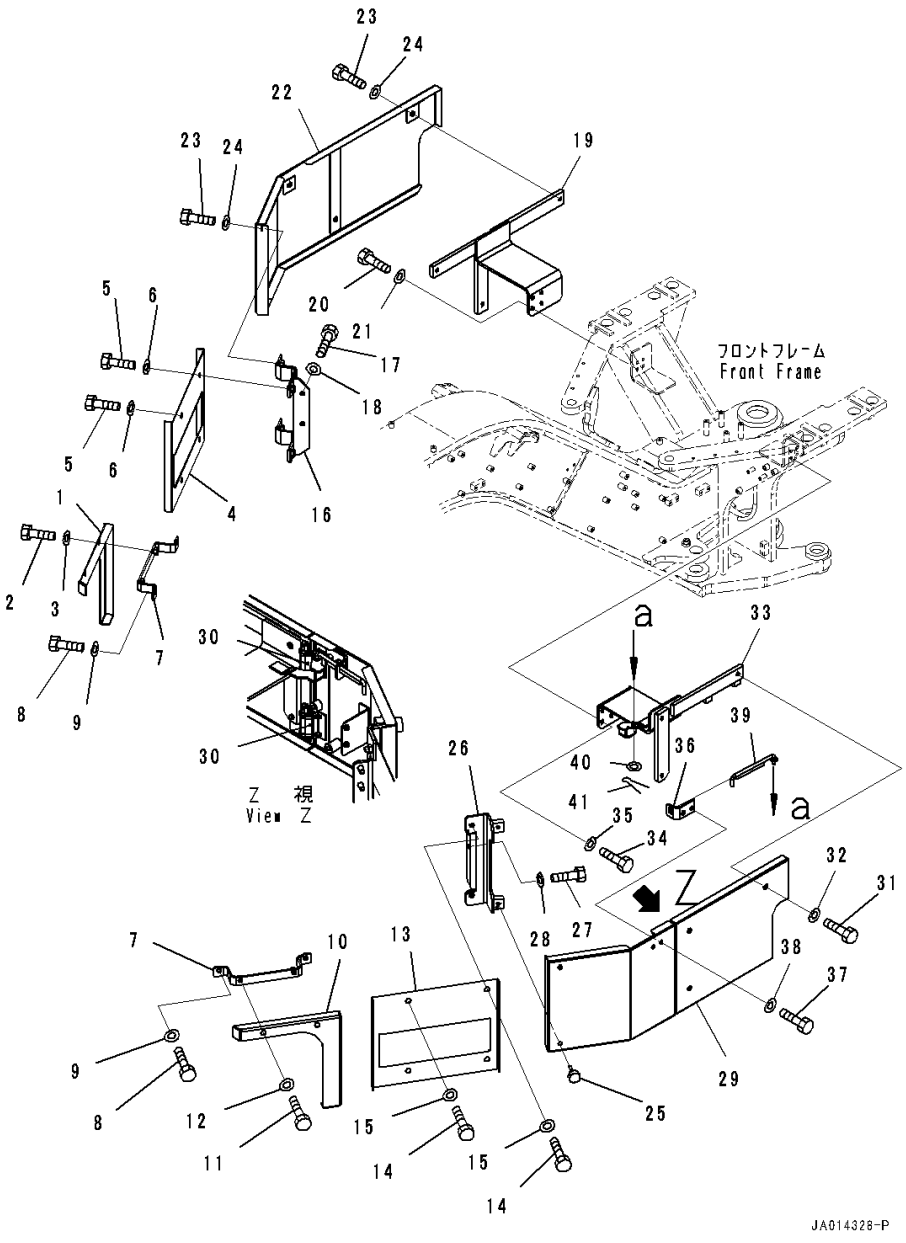

Index	Code	Part Number	Description	Qty	Serial Number
1		234-54-83110	Cover	1	26001-
2		01010-D1025	Bolt	2	26001-
3		01643-71032	Washer	2	26001-
4		234-54-83290	Cover	1	26001-
5		01010-D1025	Bolt	4	26001-
6		01643-71032	Washer	4	26001-
7		234-54-83241	Bracket	2	26001-
8		01010-D1020	Bolt	4	26001-
9		01643-71032	Washer	4	26001-
10		234-54-83120	Cover	1	26001-
11		01010-D1025	Bolt	2	26001-
12		01643-71032	Washer	2	26001-
13		234-54-83280	Cover	1	26001-
14		01010-D1025	Bolt	4	26001-
15		01643-71032	Washer	4	26001-
16		234-54-83260	Bracket	1	26001-
17		01010-D1025	Bolt	2	26001-
18		01643-71032	Washer	2	26001-
19		234-54-83270	Bracket	1	26001-
20		01010-D1030	Bolt	4	26001-
21		01643-71032	Washer	4	26001-
22		234-54-83231	Cover	1	26001-
23		01010-D1025	Bolt	5	26001-
24		01643-71032	Washer	5	26001-
25		23B-54-31990	Screw	2	26001-
26		234-54-83140	Bracket	1	26001-
27		01010-D1025	Bolt	2	26001-
28		01643-71032	Washer	2	26001-
29		234-54-83131	Cover	1	26001-
30		23B-54-31891	• Hinge,Welded	2	26001-
31		01010-D1025	Bolt	3	26001-
32		421-54-34550	Washer	3	26001-
33		234-54-83250	Bracket	1	26001-
34		01010-D1030	Bolt	4	26001-
35		01643-71032	Washer	4	26001-
36		23B-54-73420	Bracket	1	26001-
37		01010-D1025	Bolt	2	26001-
38		01643-71032	Washer	2	26001-
39		22B-46-24170	Rod	1	26001-
40		01643-80823	Washer	1	26001-

FIG. M4230-002001 Front Frame Cover (Floor Cover) (1/2)

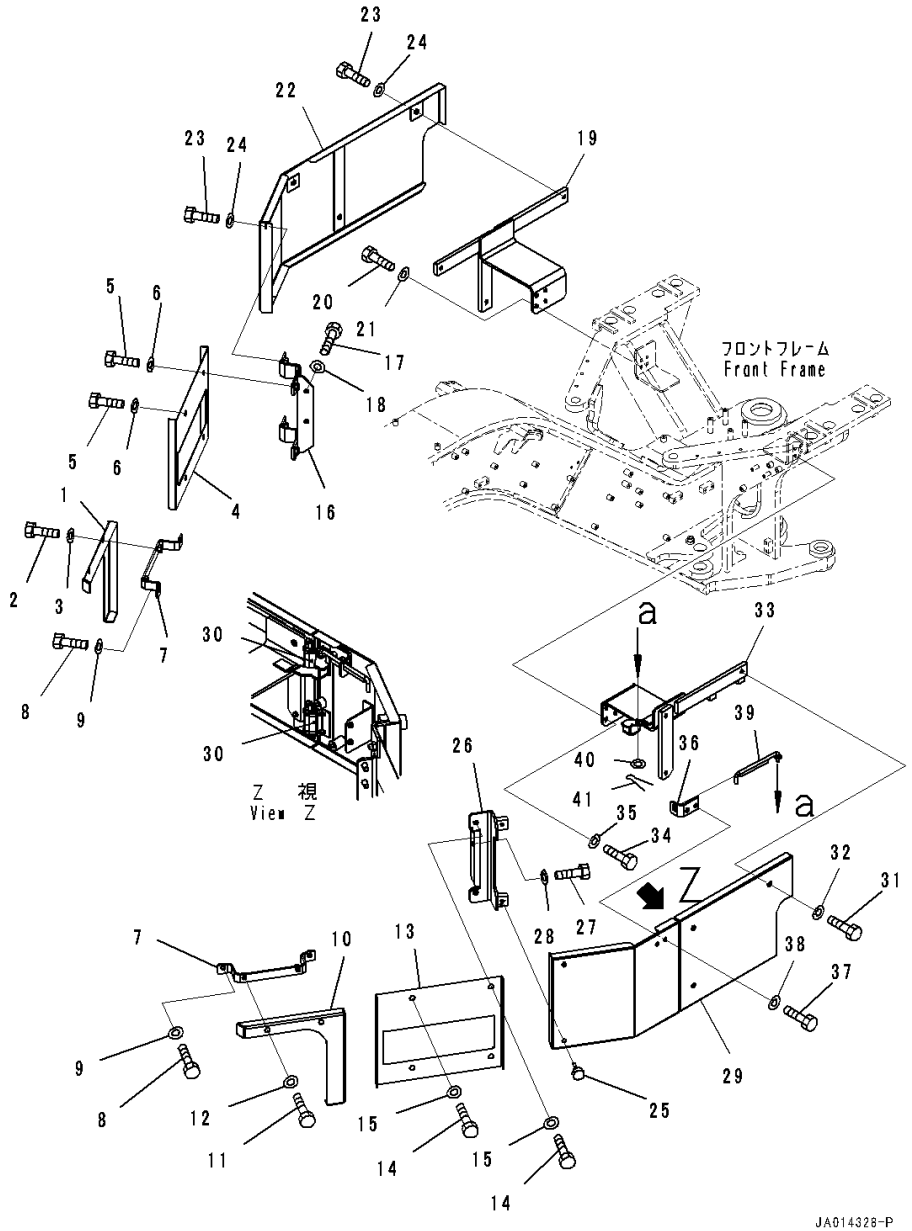

Index	Code	Part Number	Description	Qty	Serial Number
41		04050-12015	Pin, Cotter	1	26001-

FIG. M4230-001002 Front Frame Cover (Floor Cover) (2/2)

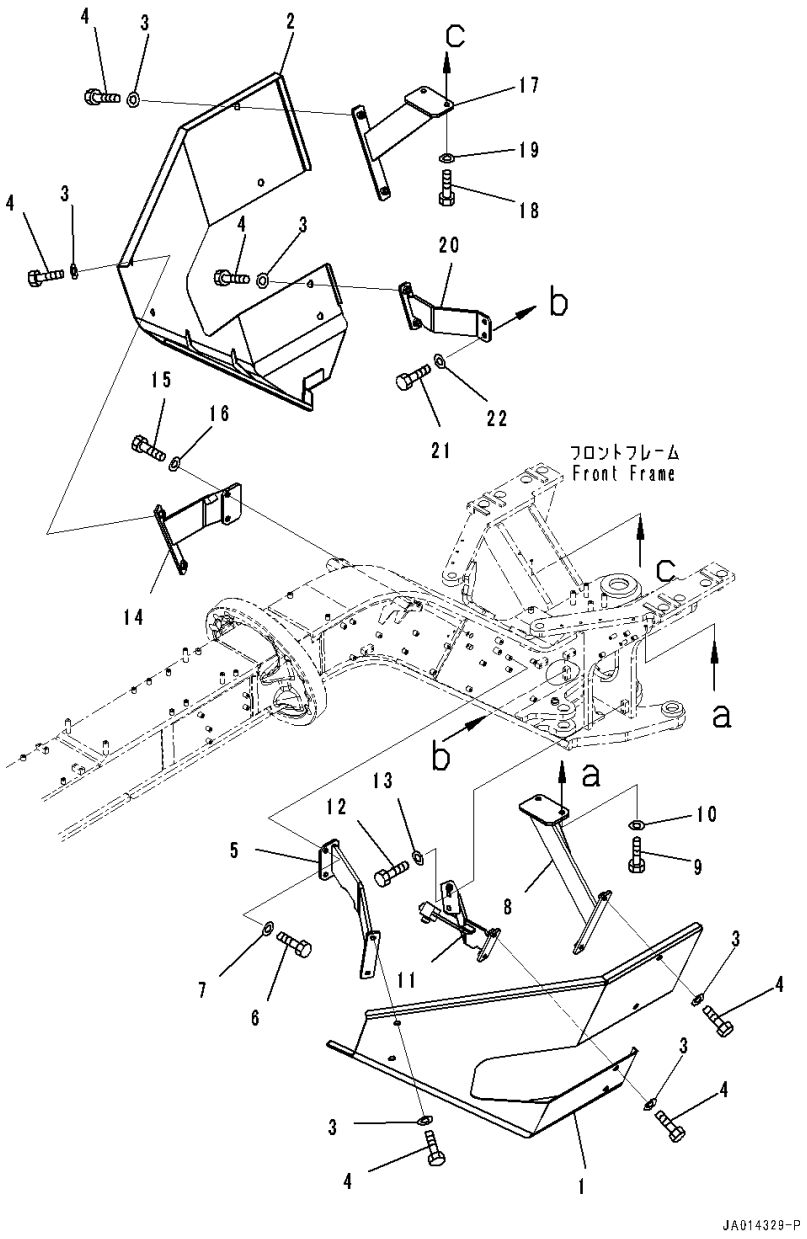

Index	Code	Part Number	Description	Qty	Serial Number
1		234-54-83751	Cover	1	26001-
2		234-54-83761	Cover	1	26001-
3		424-09-12650	Washer	12	26001-
4		01010-81025	Bolt	12	26001-
5		234-54-83771	Bracket	1	26001-
6		01010-81025	Bolt	2	26001-
7		01643-31032	Washer	2	26001-
8		234-54-83780	Bracket	1	26001-
9		01010-81030	Bolt	2	26001-
10		01643-31032	Washer	2	26001-
11		234-54-83790	Bracket	1	26001-
12		01010-81025	Bolt	2	26001-
13		01643-31032	Washer	2	26001-
14		234-54-84210	Bracket	1	26001-
15		01010-81025	Bolt	2	26001-
16		01643-31032	Washer	2	26001-
17		234-54-84220	Bracket	1	26001-
18		01010-81030	Bolt	2	26001-
19		01643-31032	Washer	2	26001-
20		234-54-84230	Bracket	1	26001-
21		01010-81025	Bolt	2	26001-
22		01643-31032	Washer	2	26001-

FIG. M4230-002002 Front Frame Cover (Floor Cover) (2/2)

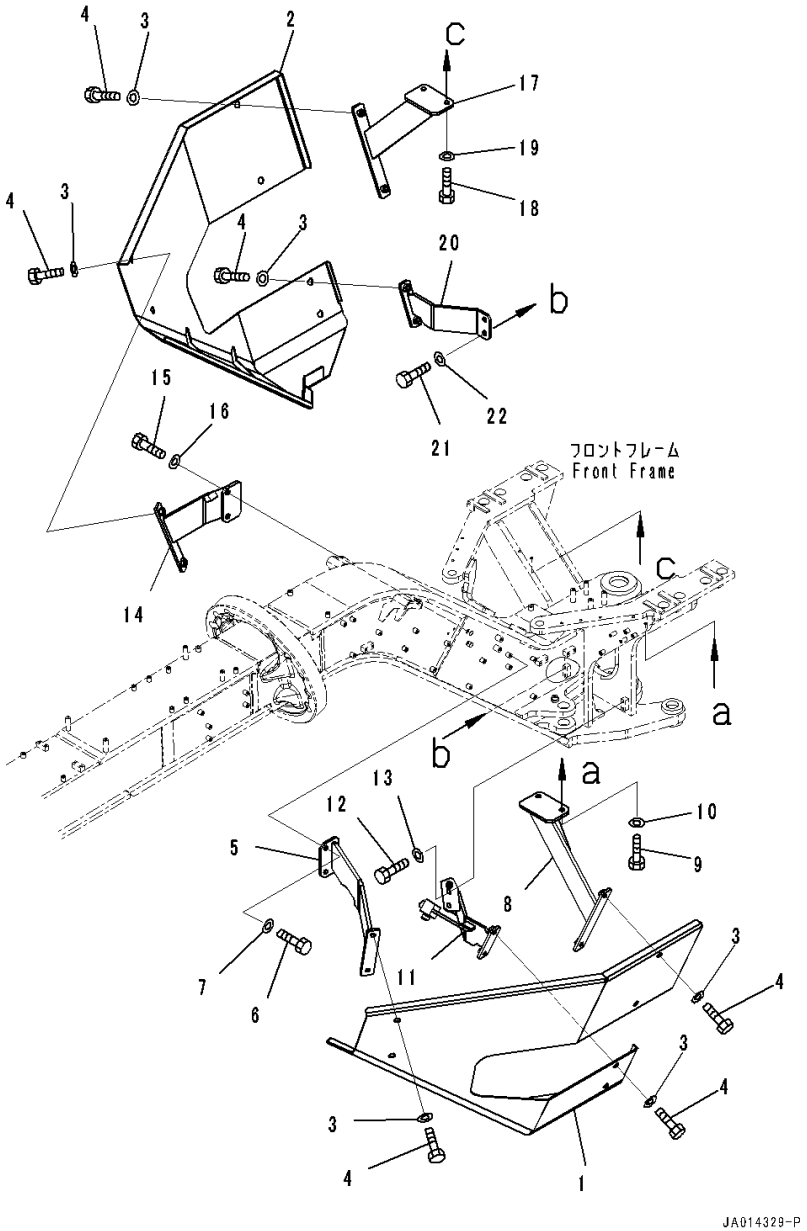

Index	Code	Part Number	Description	Qty	Serial Number
1		234-54-83751	Cover	1	26001-
2		234-54-83761	Cover	1	26001-
3		424-09-12650	Washer	12	26001-
4		01010-81025	Bolt	12	26001-
5		234-54-83771	Bracket	1	26001-
6		01010-81025	Bolt	2	26001-
7		01643-31032	Washer	2	26001-
8		234-54-83780	Bracket	1	26001-
9		01010-81030	Bolt	2	26001-
10		01643-31032	Washer	2	26001-
11		234-54-83790	Bracket	1	26001-
12		01010-81025	Bolt	2	26001-
13		01643-31032	Washer	2	26001-
14		234-54-84210	Bracket	1	26001-
15		01010-81025	Bolt	2	26001-
16		01643-31032	Washer	2	26001-
17		234-54-84220	Bracket	1	26001-
18		01010-81030	Bolt	2	26001-
19		01643-31032	Washer	2	26001-
20		234-54-84230	Bracket	1	26001-
21		01010-81025	Bolt	2	26001-
22		01643-31032	Washer	2	26001-

FIG. M4230-001003 Front Frame Cover (Front Cover)

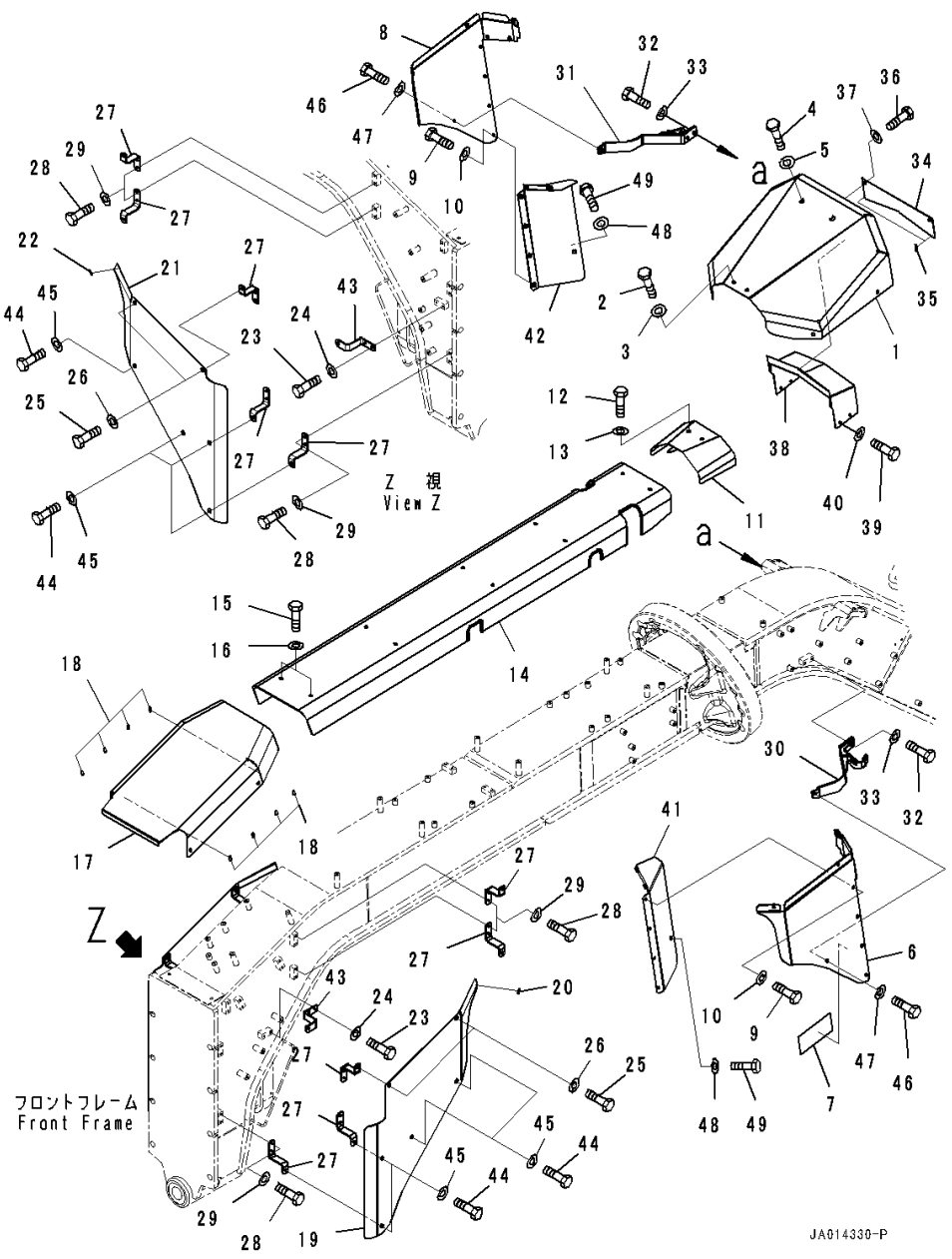

Index	Code	Part Number	Description	Qty	Serial Number
1		234-54-83170	Cover	1	26001-
2		01010-D1025	Bolt	6	26001-
3		01643-71032	Washer	6	26001-
4		01010-D1025	Bolt	2	26001-
5		421-54-34550	Washer	2	26001-
		234-54-83422	Cover	1	26001-
6	C1		• Cover	1	26001-
7		234-54-83431	• Sheet	1	26001-
8		234-54-83221	Cover	1	26001-
9		01010-D1025	Bolt	12	26001-
10		01643-71032	Washer	12	26001-
11		234-54-83181	Cover	1	26001-
12		01010-D1020	Bolt	2	26001-
13		01643-71032	Washer	2	26001-
14		234-54-83340	Cover	1	26001-
15		01010-D1025	Bolt	10	26001-
16		01643-71032	Washer	10	26001-
		234-54-83440	Cover	1	26001-
17	C1		• Cover	1	26001-
18		421-09-21420	• Sheet	8	26001-
19		234-54-83190	Cover	1	26001-
20		421-09-21420	• Sheet	1	26001-
21		234-54-83320	Cover	1	26001-
22		421-09-21420	• Sheet	1	26001-
23		01010-81025	Bolt	4	26001-
24		01643-31032	Washer	4	26001-
25		01010-D1025	Bolt	4	26001-
26		01643-71032	Washer	4	26001-
27		234-54-83350	Bracket	10	26001-
28		01010-81025	Bolt	20	26001-
29		01643-31032	Washer	20	26001-
30		234-54-83310	Bracket	1	26001-
31		234-54-83371	Bracket	1	26001-
32		01010-81025	Bolt	4	26001-
33		01643-31032	Washer	4	26001-
		234-54-83450	Cover	1	26001-
34	C1		• Plate	1	26001-
35		234-54-83470	• Sheet	2	26001-
36		01010-D1025	Bolt	2	26001-
37		01643-71032	Washer	2	26001-

FIG. M4230-001003 Front Frame Cover (Front Cover)

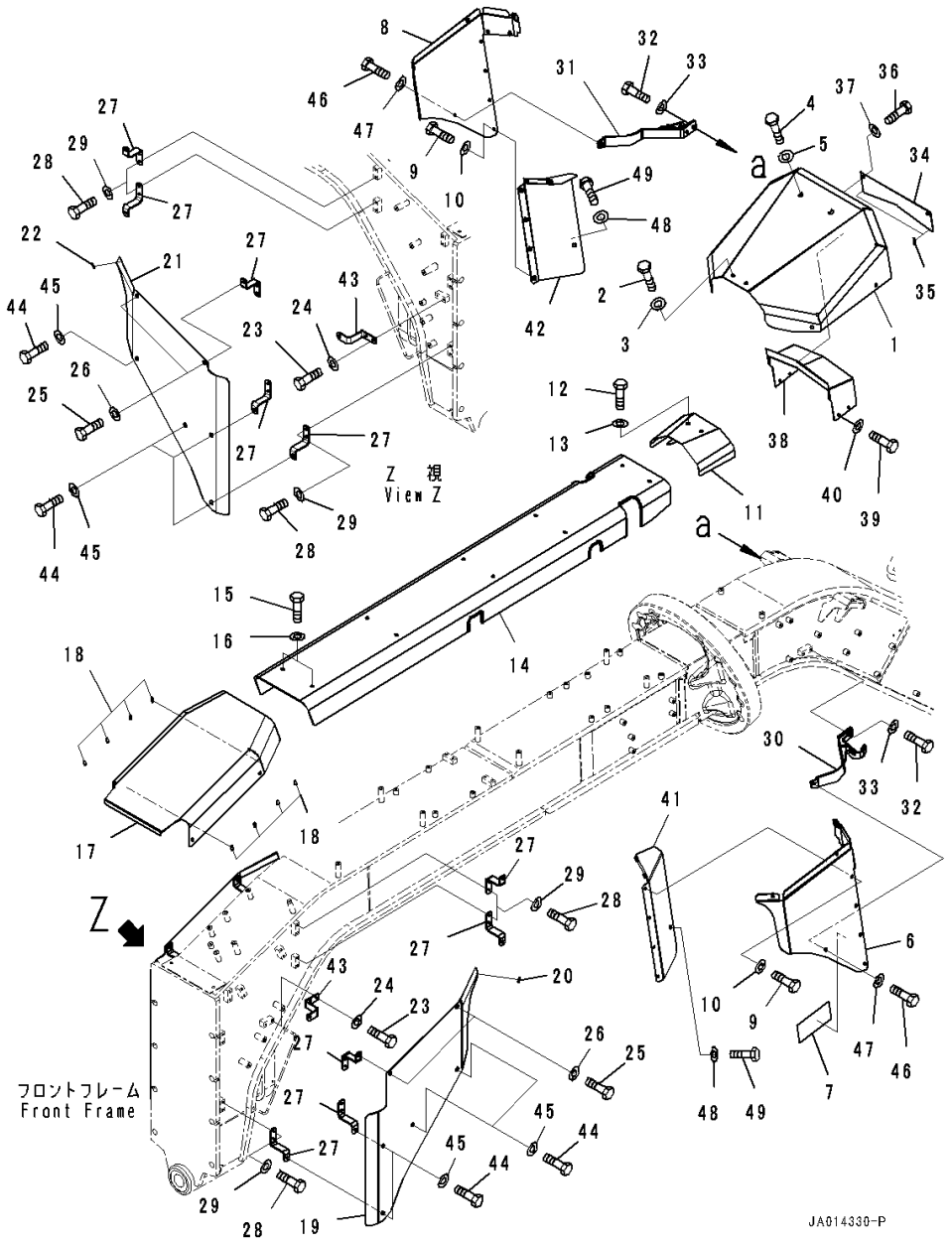

Index	Code	Part Number	Description	Qty	Serial Number
38		234-54-83360	Cover	1	26001-
39		01010-D1025	Bolt	4	26001-
40		01643-71032	Washer	4	26001-
41		234-54-83380	Cover	1	26001-
42		234-54-83480	Cover	1	26001-
43		234-54-83460	Bracket	2	26001-
44		01010-81025	Bolt	8	26001-
45		424-09-12650	Washer	8	26001-
46		01010-D1025	Bolt	2	26001-
47		01643-71032	Washer	2	26001-
48		421-54-34550	Washer	2	26001-
49		01010-D1025	Bolt	2	26001-

FIG. M4230-003003 Front Frame Cover (Front Cover) (With Front Blade)

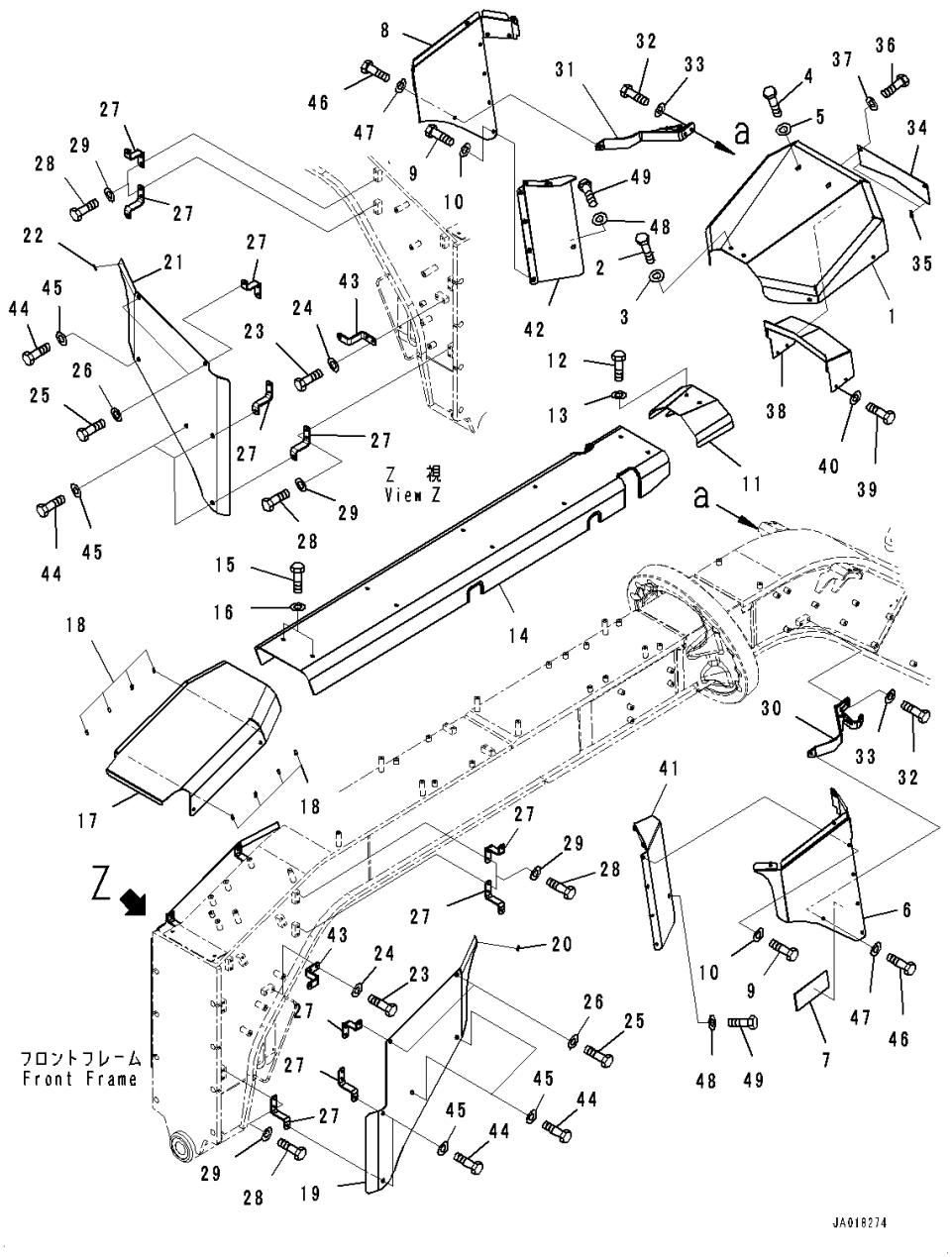

Index	Code	Part Number	Description	Qty	Serial Number
1		234-54-83170	Cover	1	26001-
2		01010-D1025	Bolt	6	26001-
3		01643-71032	Washer	6	26001-
4		01010-D1025	Bolt	2	26001-
5		421-54-34550	Washer	2	26001-
		234-54-83422	Cover	1	26001-
6	C1		• Cover	1	26001-
7		234-54-83431	• Sheet	1	26001-
8		234-54-83221	Cover	1	26001-
9		01010-D1025	Bolt	12	26001-
10		01643-71032	Washer	12	26001-
11		234-54-83181	Cover	1	26001-
12		01010-D1020	Bolt	2	26001-
13		01643-71032	Washer	2	26001-
14		234-54-83340	Cover	1	26001-
15		01010-D1025	Bolt	10	26001-
16		01643-71032	Washer	10	26001-
		234-54-83440	Cover	1	26001-
17	C1		• Cover	1	26001-
18		421-09-21420	• Sheet	8	26001-
19		234-54-84290	Cover	1	26001-
20		421-09-21420	• Sheet	1	26001-
21		234-54-83320	Cover	1	26001-
22		421-09-21420	• Sheet	1	26001-
23		01010-81025	Bolt	4	26001-
24		01643-31032	Washer	4	26001-
25		01010-D1025	Bolt	4	26001-
26		01643-71032	Washer	4	26001-
27		234-54-83350	Bracket	10	26001-
28		01010-81025	Bolt	20	26001-
29		01643-31032	Washer	20	26001-
30		234-54-83310	Bracket	1	26001-
31		234-54-83371	Bracket	1	26001-
32		01010-81025	Bolt	4	26001-
33		01643-31032	Washer	4	26001-
		234-54-83450	Cover	1	26001-
34	C1		• Plate	1	26001-
35		234-54-83470	• Sheet	2	26001-
36		01010-D1025	Bolt	2	26001-
37		01643-71032	Washer	2	26001-

FIG. M4230-003003 Front Frame Cover (Front Cover) (With Front Blade)

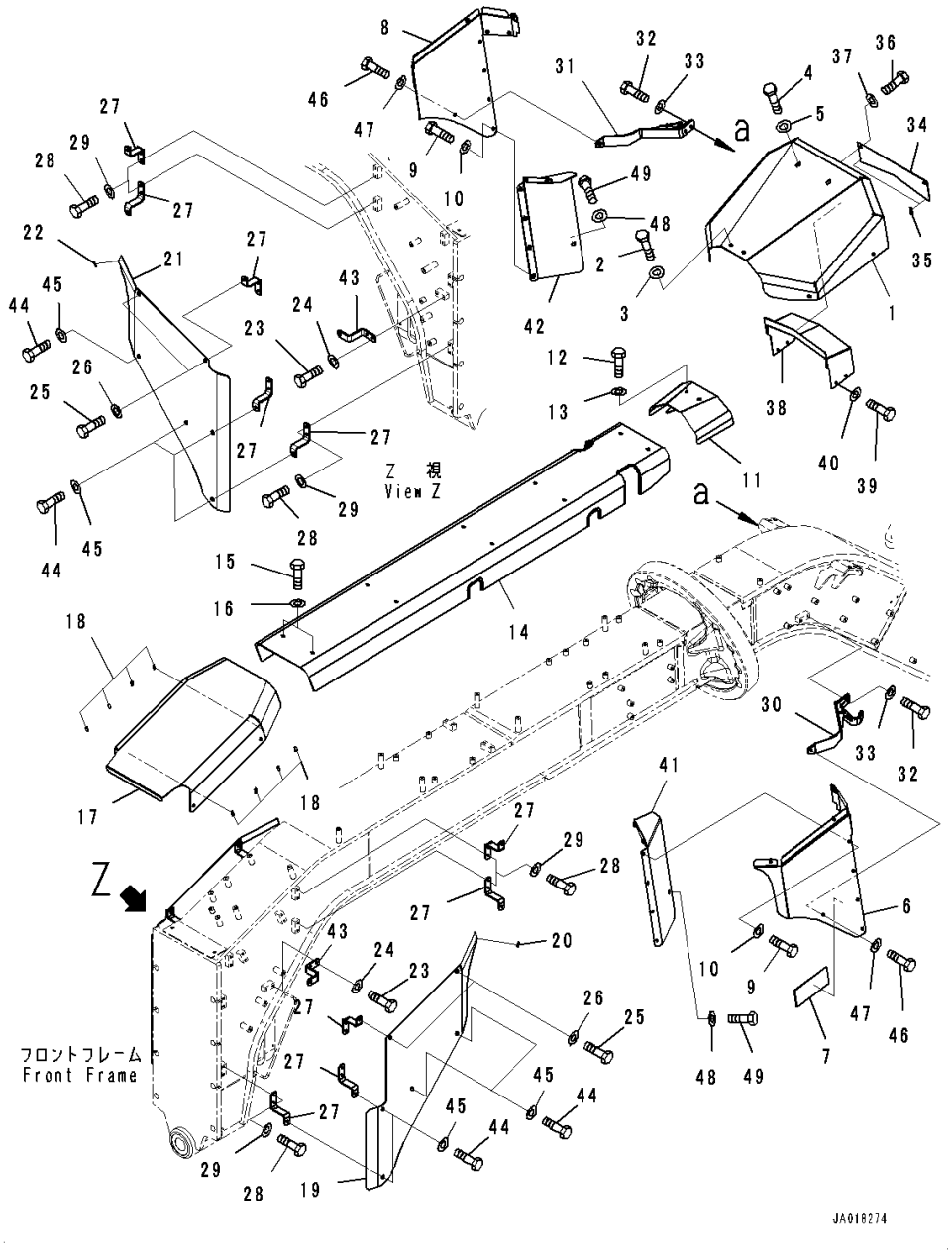

Index	Code	Part Number	Description	Qty	Serial Number
38		234-54-83360	Cover	1	26001-
39		01010-D1025	Bolt	4	26001-
40		01643-71032	Washer	4	26001-
41		234-54-83380	Cover	1	26001-
42		234-54-83480	Cover	1	26001-
43		234-54-83460	Bracket	2	26001-
44		01010-81025	Bolt	8	26001-
45		424-09-12650	Washer	8	26001-
46		01010-D1025	Bolt	2	26001-
47		01643-71032	Washer	2	26001-
48		421-54-34550	Washer	2	26001-
49		01010-D1025	Bolt	2	26001-

FIG. M4230-002003 Front Frame Cover (Front Cover) (With Scarifier, Front, 11-Shanks and Tooth)

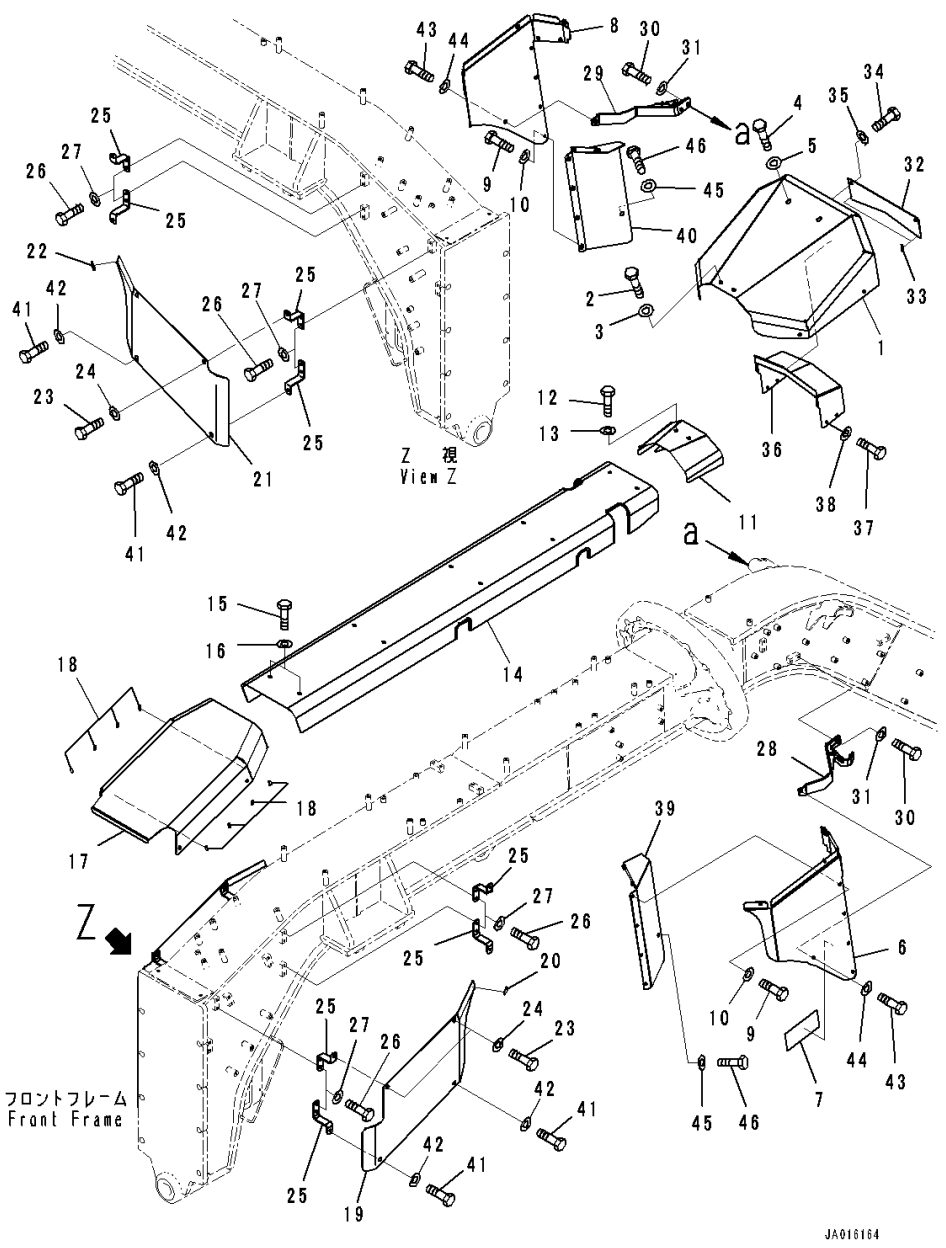

Index	Code	Part Number	Description	Qty	Serial Number
1		234-54-83170	Cover	1	26001-
2		01010-D1025	Bolt	6	26001-
3		01643-71032	Washer	6	26001-
4		01010-D1025	Bolt	2	26001-
5		421-54-34550	Washer	2	26001-
		234-54-83422	Cover	1	26001-
6	C1		• Cover	1	26001-
7		234-54-83431	• Sheet	1	26001-
8		234-54-83221	Cover	1	26001-
9		01010-D1025	Bolt	12	26001-
10		01643-71032	Washer	12	26001-
11		234-54-83181	Cover	1	26001-
12		01010-D1020	Bolt	2	26001-
13		01643-71032	Washer	2	26001-
14		234-54-83340	Cover	1	26001-
15		01010-D1025	Bolt	10	26001-
16		01643-71032	Washer	10	26001-
		234-54-83440	Cover	1	26001-
17	C1		• Cover	1	26001-
18		421-09-21420	• Sheet	8	26001-
19		234-54-84391	Cover	1	26001-
20		421-09-21420	• Sheet	1	26001-
21		234-54-84321	Cover	1	26001-
22		421-09-21420	• Sheet	1	26001-
23		01010-D1025	Bolt	4	26001-
24		01643-71032	Washer	4	26001-
25		234-54-83350	Bracket	8	26001-
26		01010-81025	Bolt	16	26001-
27		01643-31032	Washer	16	26001-
28		234-54-83310	Bracket	1	26001-
29		234-54-83371	Bracket	1	26001-
30		01010-81025	Bolt	4	26001-
31		01643-31032	Washer	4	26001-
		234-54-83450	Cover	1	26001-
32	C1		• Plate	1	26001-
33		234-54-83470	• Sheet	2	26001-
34		01010-D1025	Bolt	2	26001-
35		01643-71032	Washer	2	26001-
36		234-54-83360	Cover	1	26001-
37		01010-D1025	Bolt	4	26001-

FIG. M4230-002003 Front Frame Cover (Front Cover) (With Scarifier, Front, 11-Shanks and Tooth)

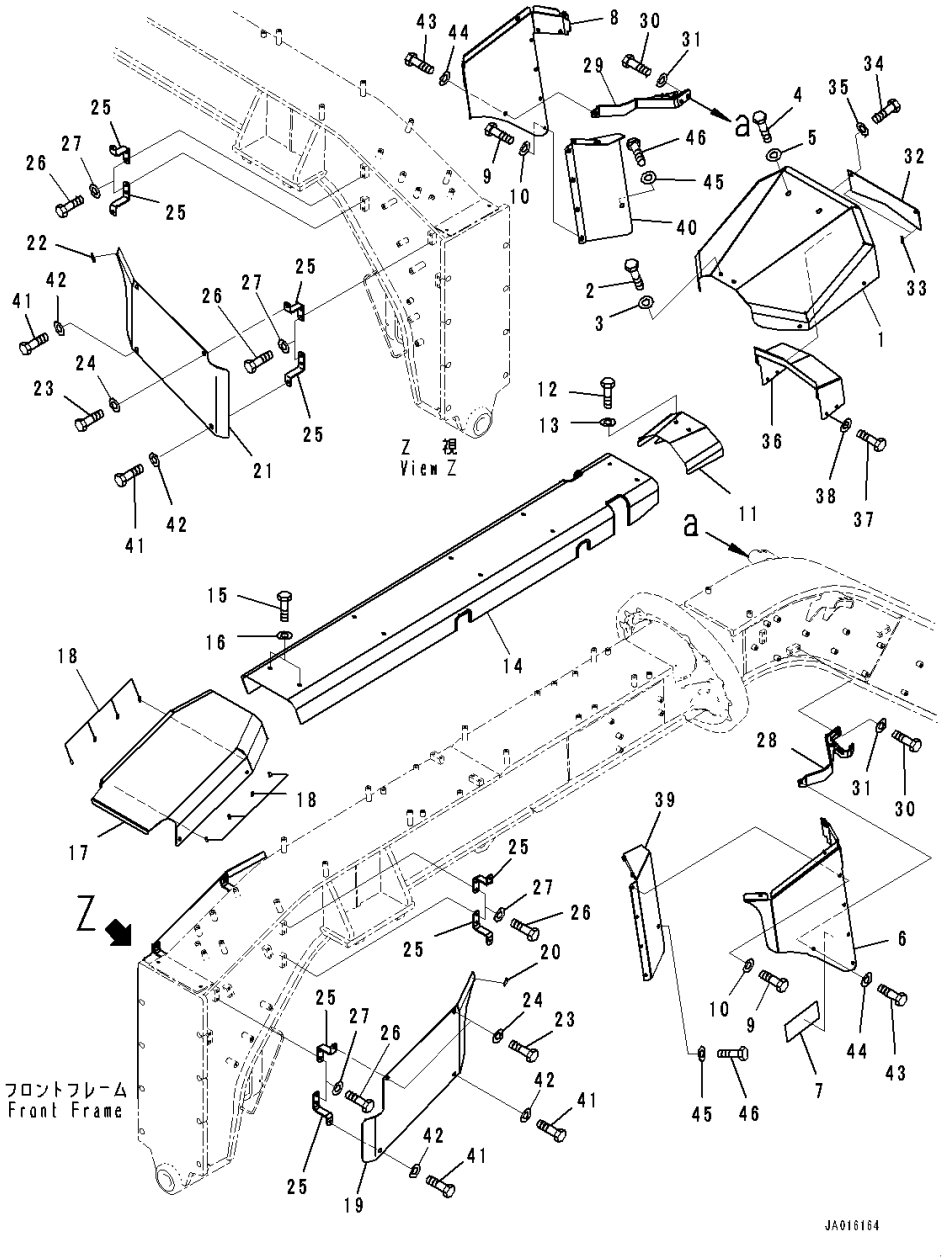

Index	Code	Part Number	Description	Qty	Serial Number
38		01643-71032	Washer	4	26001-
39		234-54-83380	Cover	1	26001-
40		234-54-83480	Cover	1	26001-
41		01010-81025	Bolt	4	26001-
42		424-09-12650	Washer	4	26001-
43		01010-D1025	Bolt	2	26001-
44		01643-71032	Washer	2	26001-
45		421-54-34550	Washer	2	26001-
46		01010-D1025	Bolt	2	26001-

FIG. M4231-001001 Transmission Under Guard

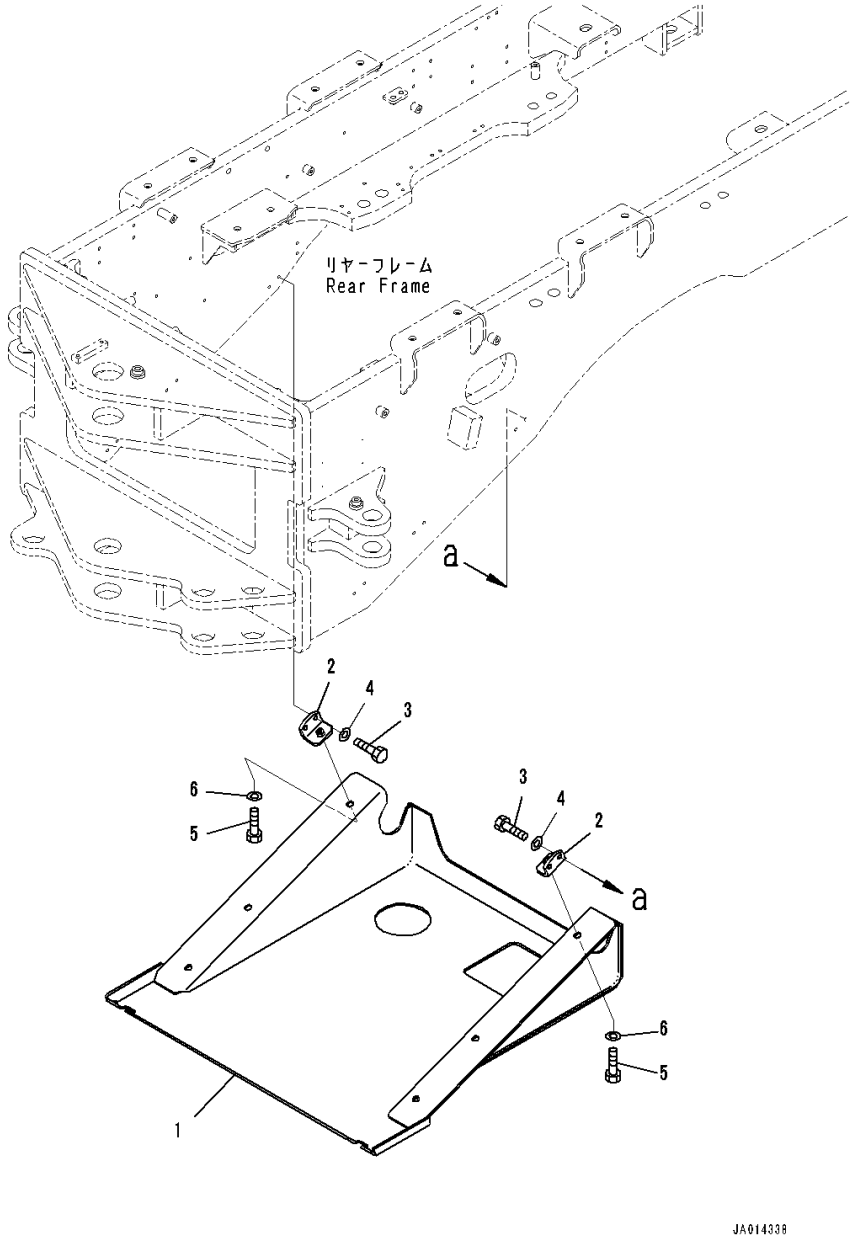

Index	Code	Part Number	Description	Qty	Serial Number
1		234-915-8111	Cover	1	26001-
2		234-915-8120	Bracket	6	26001-
3		01010-81025	Bolt	12	26001-
4		01643-31032	Washer	12	26001-
5		01010-81230	Bolt	6	26001-
6		01643-31232	Washer	6	26001-

FIG. M4240-001001 Tool Box

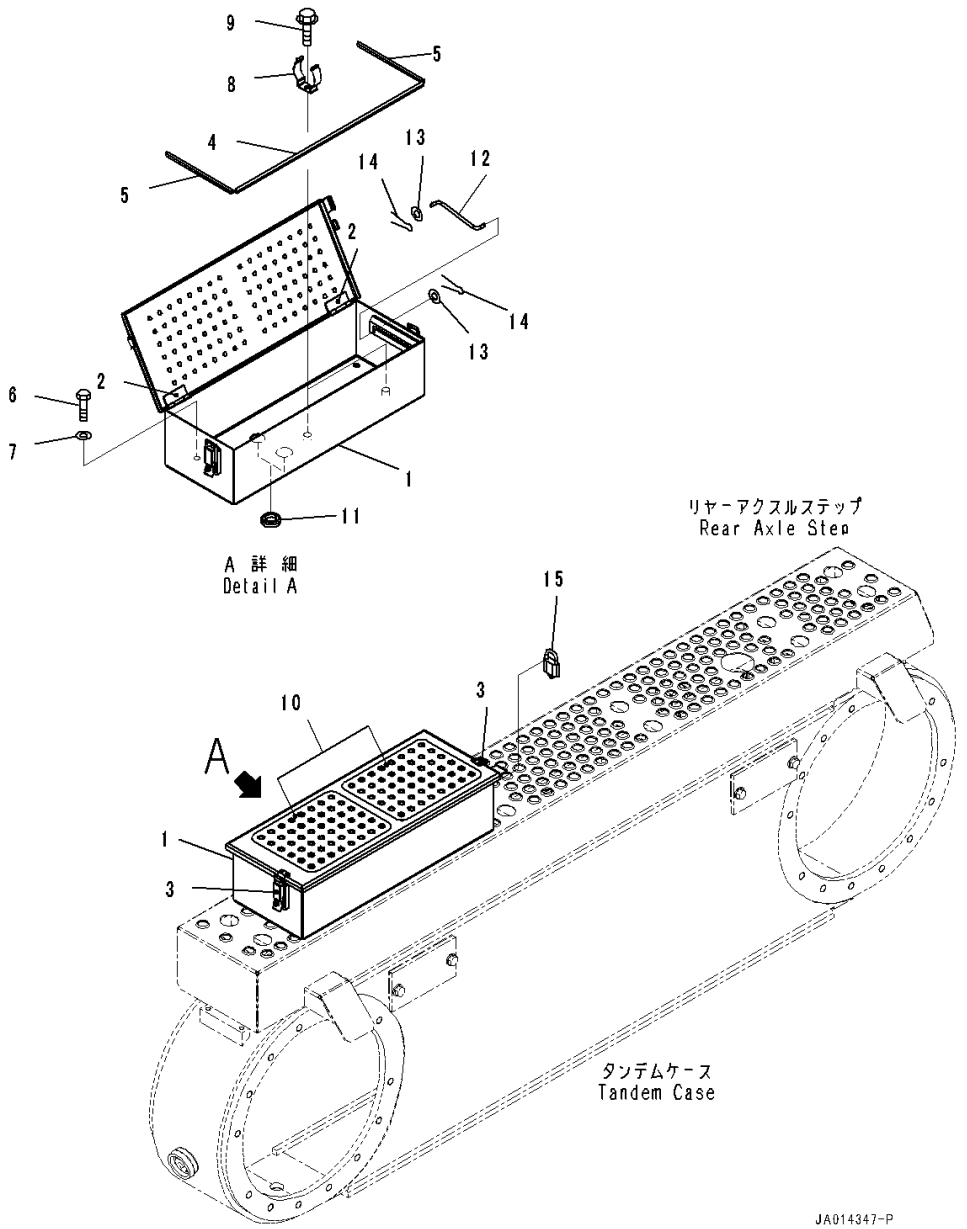

Index	Code	Part Number	Description	Qty	Serial Number
		234-98-81101	Box, Tool	1	26001-
1		234-98-81111	• Box, Tool	1	26001-
2		232-54-54720	• • Hinge,Welded	2	26001-
3		238-06-12331	• • Lock,Welded	2	26001-
4		234-98-81130	• Trim	1	26001-
5		23B-98-71141	• Trim	2	26001-
6		01010-81020	Bolt	4	26001-
7		01643-31032	Washer	4	26001-
8		417-54-21460	Spring	2	26001-
9		01435-00812	Bolt	2	26001-
10		23B-98-71120	Sheet	2	26001-
11		09415-02512	Cap	2	26001-
12		203-54-56630	Rod	1	26001-
13		01643-30623	Washer	2	26001-
14		04050-11612	Pin, Cotter	2	26001-
15		09460-00000	Lock	1	26001-

FIG. M4310-001001 Ladder

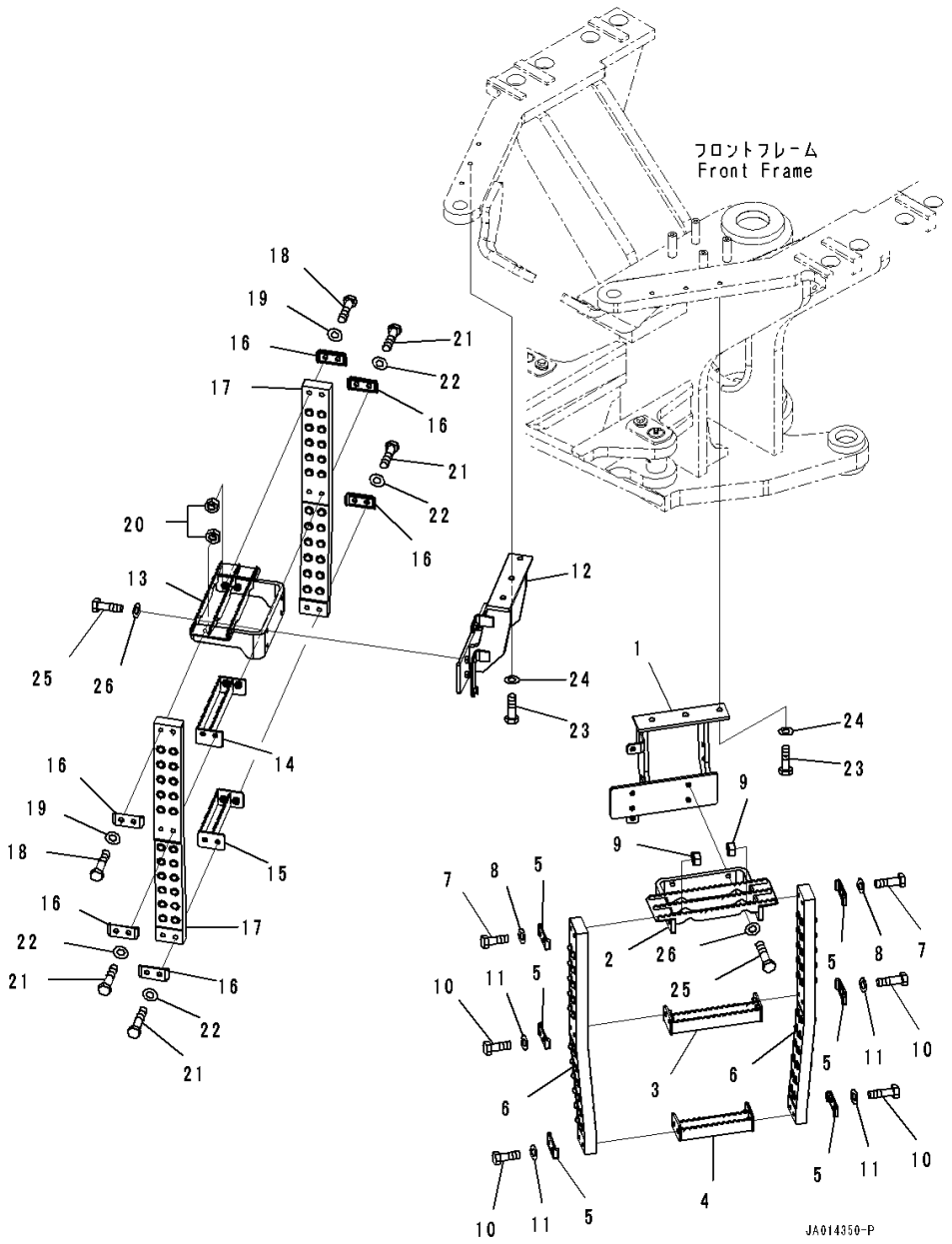

Index	Code	Part Number	Description	Qty	Serial Number
1		234-54-83150	Bracket	1	26001-
		23B-54-32208	Step Assembly	1	26001-
2		23B-54-33991	• Bracket	1	26001-
3		23B-54-33971	• Step	1	26001-
4		23B-54-33980	• Step	1	26001-
5		23B-54-34850	• Plate	6	26001-
6		23B-54-34841	• Rubber	2	26001-
7		01010-81070	• Bolt	4	26001-
8		01643-31032	• Washer	4	26001-
9		01580-11008	• Nut	4	26001-
10		01010-81060	• Bolt	8	26001-
11		01643-31032	• Washer	8	26001-
12		234-54-83160	Bracket	1	26001-
		23B-54-32208	Step Assembly	1	26001-
13		23B-54-33991	• Bracket	1	26001-
14		23B-54-33971	• Step	1	26001-
15		23B-54-33980	• Step	1	26001-
16		23B-54-34850	• Plate	6	26001-
17		23B-54-34841	• Rubber	2	26001-
18		01010-81070	• Bolt	4	26001-
19		01643-31032	• Washer	4	26001-
20		01580-11008	• Nut	4	26001-
21		01010-81060	• Bolt	8	26001-
22		01643-31032	• Washer	8	26001-
23		01010-81235	Bolt	6	26001-
24		01643-31232	Washer	6	26001-
25		01010-D1035	Bolt	8	26001-
26		01643-71032	Washer	8	26001-

FIG. M4510-002001 Front Blade (Blade)

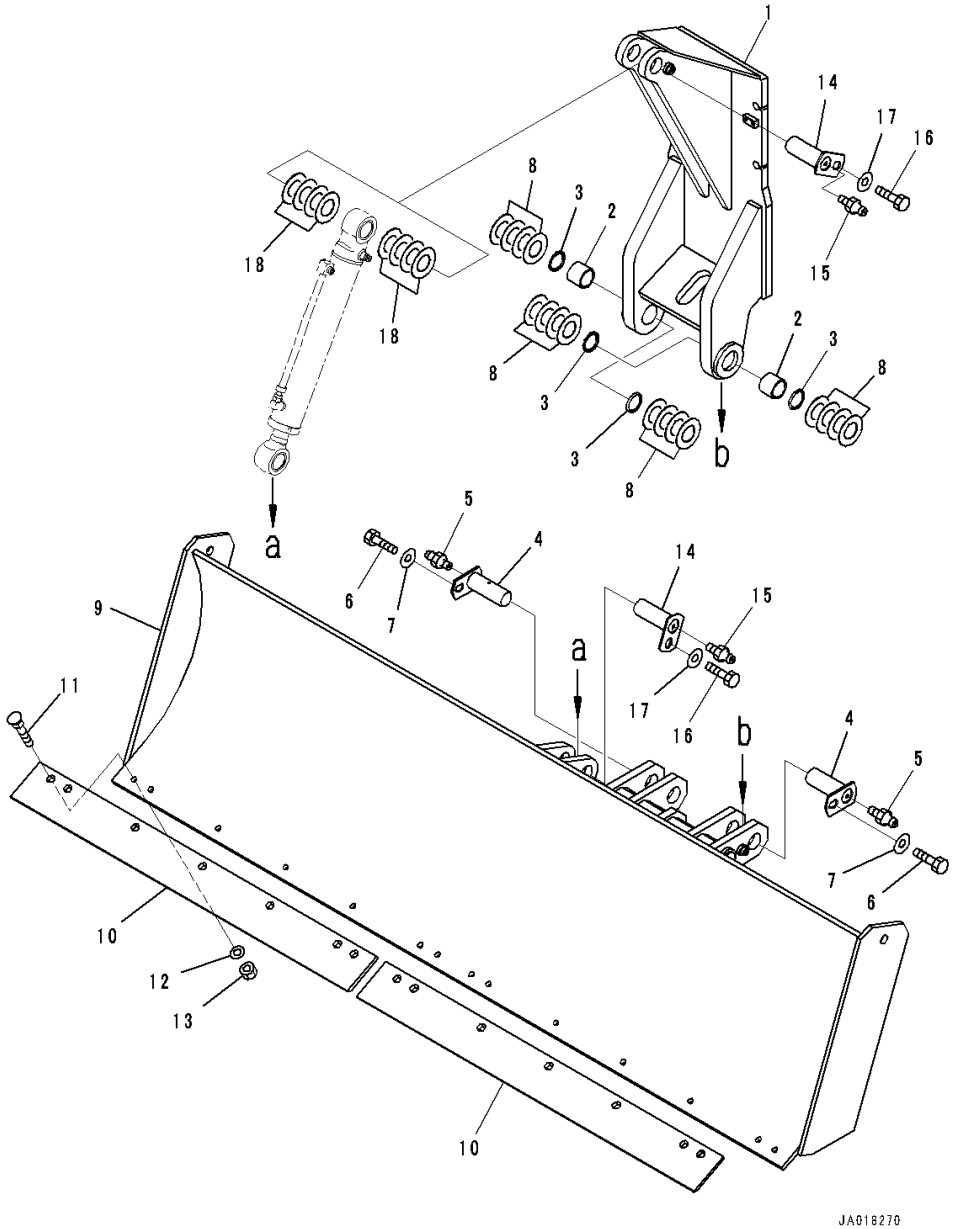

Index	Code	Part Number	Description	Qty	Serial Number
1	C1		Bracket	1	26001-
2		07143-10506	Bushing	2	26001-
3		07145-00055	Seal, Dust	4	26001-
4		421-46-21760	Pin	2	26001-
5		07020-00000	Fitting, Grease	2	26001-
6		01010-81220	Bolt	2	26001-
7		175-54-34170	Washer	2	26001-
8		201-70-71280	Spacer,T=1.0mm	20	26001-
9		234-725-8330	Blade	1	26001-
10		232-971-6121	Edge	2	26148-
		232-971-6120	Edge	2	26001-26147
11		232-70-12450	Bolt	14	26001-
12		01643-31645	Washer	14	26001-
13		232-70-12480	Nut	14	26001-
14		421-46-21760	Pin	2	26001-
15		07020-00000	Fitting, Grease	2	26001-
16		01010-81220	Bolt	2	26001-
17		175-54-34170	Washer	2	26001-
18		201-70-71280	Spacer,T=1.0mm	10	26001-

FIG. M4510-002002 Front Blade (Blade Cylinder)

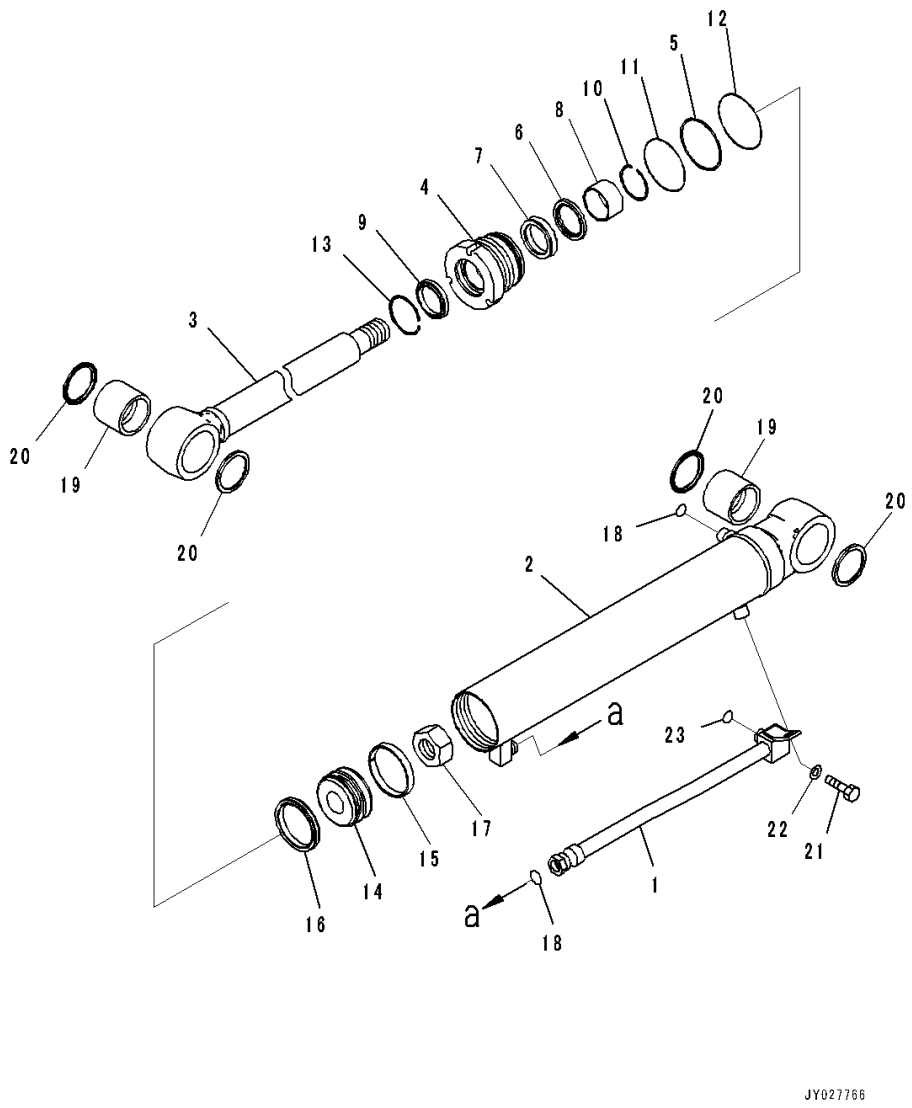

Index	Code	Part Number	Description	Qty	Serial Number
1		707-86-01710	Tube	1	26001-
		707-G0-01540	Cylinder Assembly	1	26001-
2		707-11-85750	• Cylinder	1	26001-
3		707-58-50L70	• Rod, Piston	1	26001-
4		707-29-85380	• Head, Cylinder	1	26001-
5		707-35-10810	• Ring, Back-up, (Kit : K12)	1	26001-
6		707-51-50650	• Ring, Buffer, (Kit : K12)	1	26001-
7		707-51-50860	• Packing, Rod, (Kit : K12)	1	26001-
8		707-52-90251	• Bushing	1	26001-
9		707-56-50740	• Seal, Dust, (Kit : K12)	1	26001-
10		707-75-50110	• Ring, Snap	1	26001-
11		07000-12085	• O-ring, (Kit : K12)	1	26001-
12		07000-B2080	• O-ring, (Kit : K12)	1	26001-
13		07179-12062	• Ring, Snap	1	26001-
14		707-36-85270	• Piston	1	26001-
15		707-39-85120	• Ring, Wear, (Kit : K12)	1	26001-
16		707-44-85151	• Ring, Piston, (Kit : K12)	1	26001-
17		707-67-36020	• Nut	1	26001-
18		02896-61012	• O-ring, (Kit : K12)	2	26001-
19		07143-10506	• Bushing	2	26001-
20		07145-00055	• Seal, Dust, (Kit : K12)	4	26001-
21		01010-81020	Bolt	1	26001-
22		01643-31032	Washer	1	26001-
23		02896-61012	O-ring, (Kit : K12)	1	26001-

FIG. M4510-002003 Front Blade (Piping and Mounting)

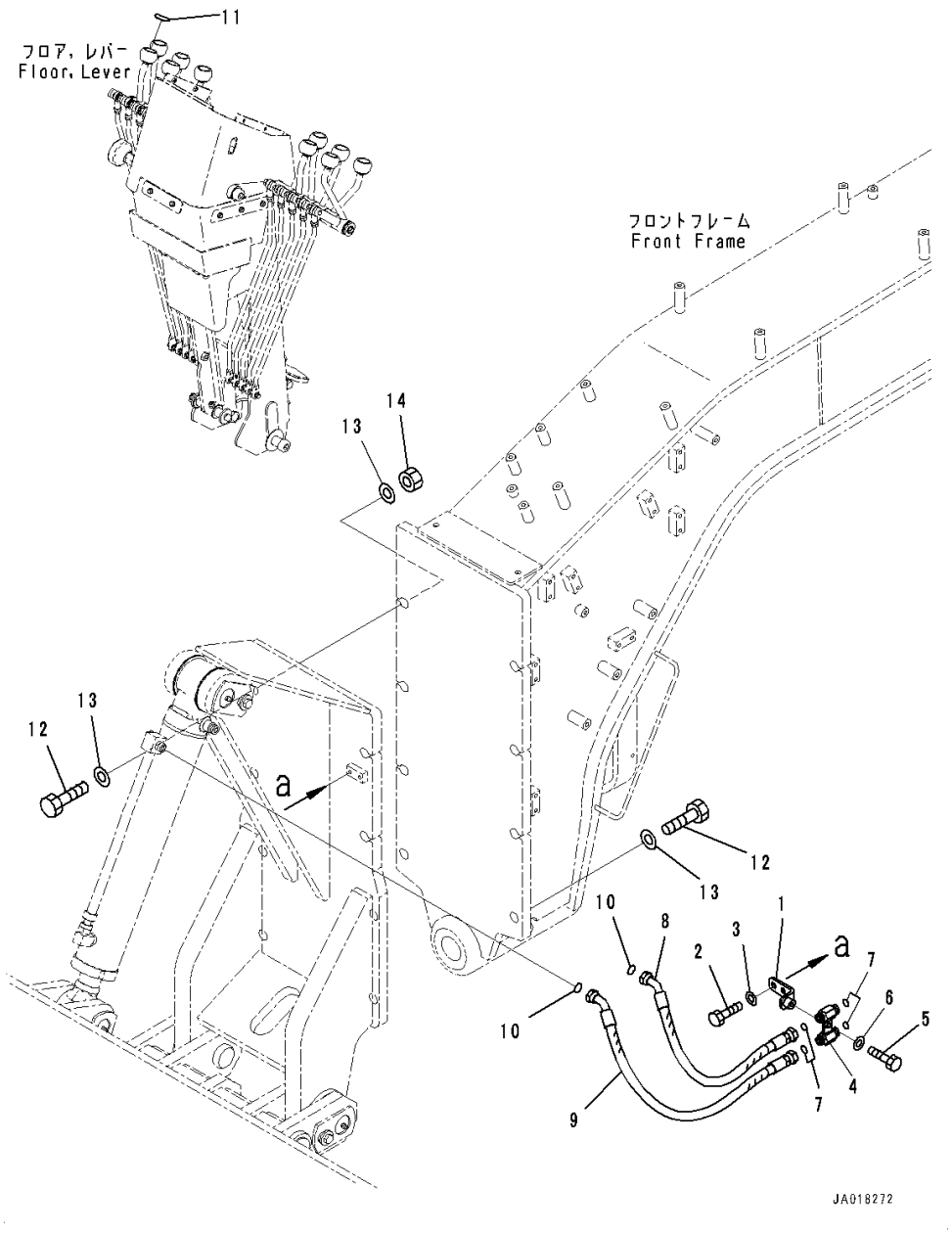

Index	Code	Part Number	Description	Qty	Serial Number
1		234-725-8340	Bracket	1	26001-
2		01010-81020	Bolt	2	26001-
3		01643-31032	Washer	2	26001-
4		419-14-31330	Connector	1	26001-
5		01010-81025	Bolt	1	26001-
6		01643-31032	Washer	1	26001-
7		02896-11012	O-ring	4	26001-
8		02758-00406	Hose, Face Seal Type	1	26413-
	A2	02767-00406	Hose, Face Seal Type	1	26001-26412
9		02758-004A7	Hose, Face Seal Type	1	26413-
	A2	02767-004A7	Hose, Face Seal Type	1	26001-26412
10		02896-11012	O-ring	2	26001-
11		234-870-8511	Plate, Mark, Blade Lift	1	26001-
12		01010-82490	Bolt	8	26001-
13		01643-32460	Washer	12	26001-
14		01580-12419	Nut	4	26001-

FIG. M4510-001001 Front Weight

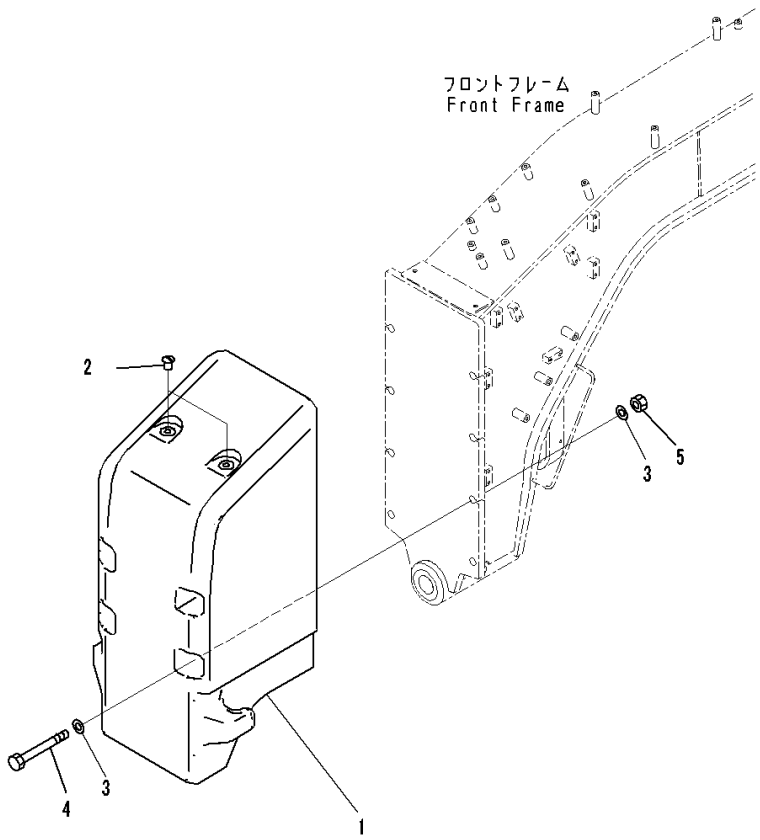

Index	Code	Part Number	Description	Qty	Serial Number
1		234-846-8110	Pusher	1	26001-
2		21U-46-31220	Cap	2	26001-
3		22X-22-11280	Washer	8	26001-
4		419-09-11130	Bolt	4	26001-
5		01580-12419	Nut	4	26001-

WHEEL AND ITS RELATED PARTS

FIG. S0100-003001 Tire and Rim (20.5-R25-G2, Tubeless Tires, Bridgestone)

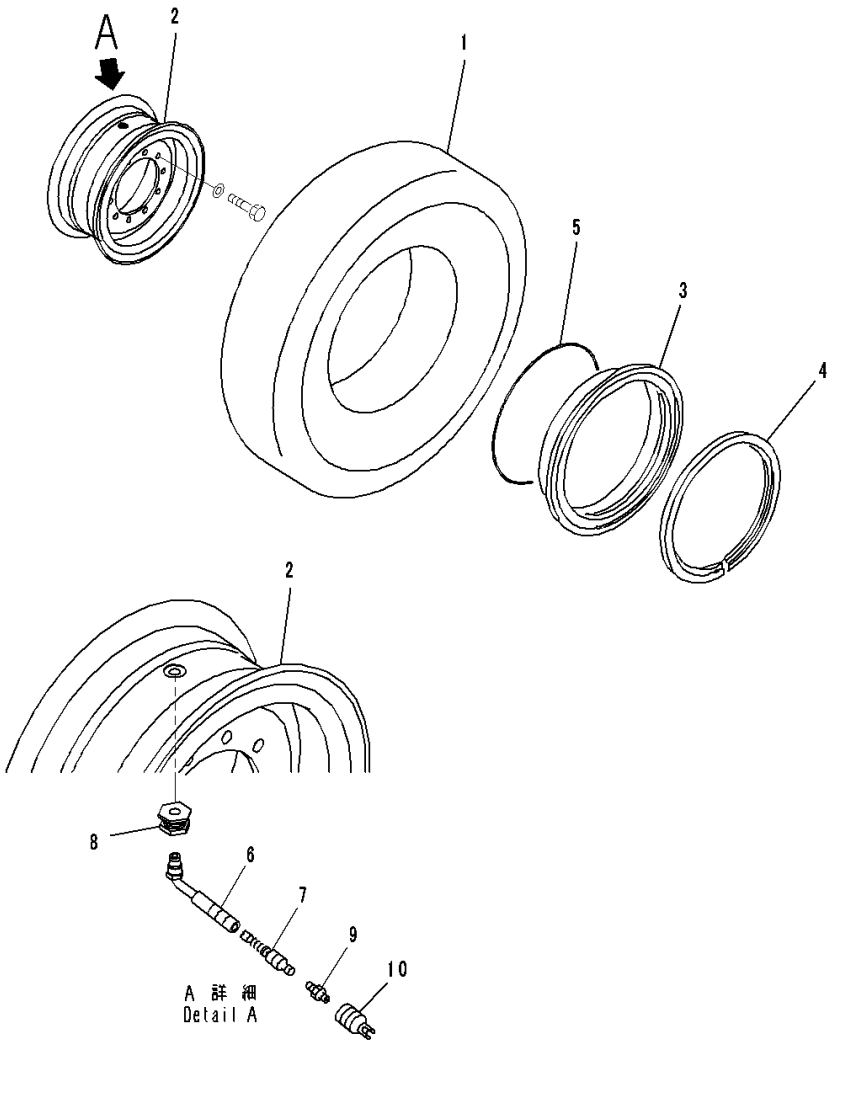

Index	Code	Part Number	Description	Qty	Serial Number
		23C-30-62200	Tire and Rim Assembly	6	26001-
1		23C-30-62210	• Tire	1	26001-
		234-30-81100	• Rim Assembly	1	26001-
2		234-30-81110	• • Rim	1	26001-
3		419-30-11130	• • Flange	1	26001-
4		419-30-11140	• • Ring, Lock	1	26001-
5		419-30-11630	• O-ring	1	26001-
		09280-10040	• Valve Assembly, Tire	1	26001-
6		09280-10130	• • Stem	1	26001-
7		09281-00041	• • Core, Valve	1	26001-
8		09283-00000	• • Seat, Valve	1	26001-
9		09285-00000	• • Adapter	1	26001-
10		09282-00017	• • Cap, Valve	1	26001-

FIG. S0100-002001 Tire and Rim (Front) (1/2) (16.00-24-16PR-G2, Tubed Tires, Bridgestone)

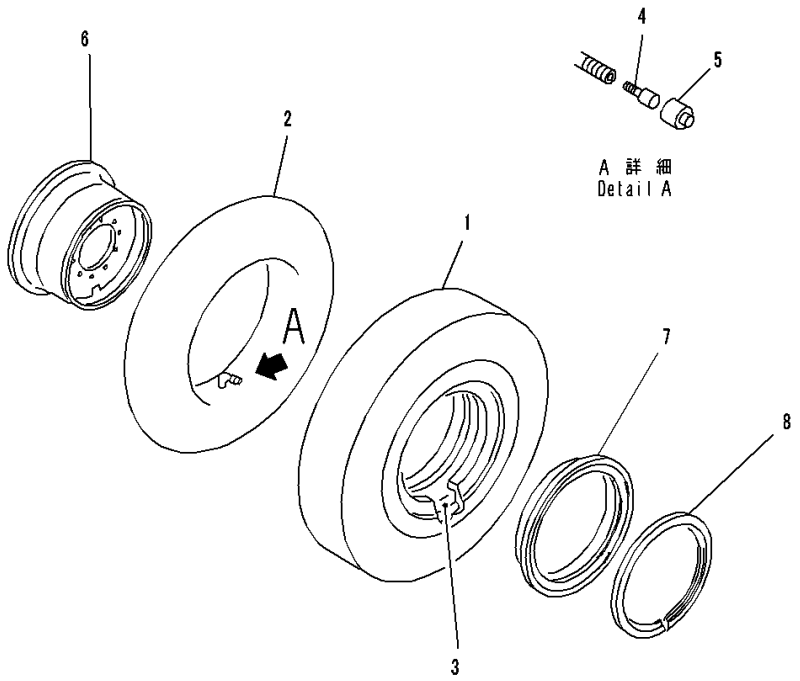

Index	Code	Part Number	Description	Qty	Serial Number
		234-30-82200	Tire and Rim Assembly	1	26001-
		234-30-21800	• Tire Assembly	1	26001-
1		234-30-21810	• • Tire	1	26001-
2		234-30-21120	• • Tube	1	26001-
3		234-30-21130	• • Flap	1	26001-
4		234-30-21170	• • Core, Valve	1	26001-
5		234-30-21180	• • Cap, Valve	1	26001-
6		234-30-82100	• Rim Assembly	1	26001-
7		234-30-22120	• • Ring	1	26001-
8		234-30-22130	• • Ring	1	26001-

FIG. S0100-004001 Tire and Rim (Front) (20.5-R25-E3, Tubeless Tires, Yokohama)

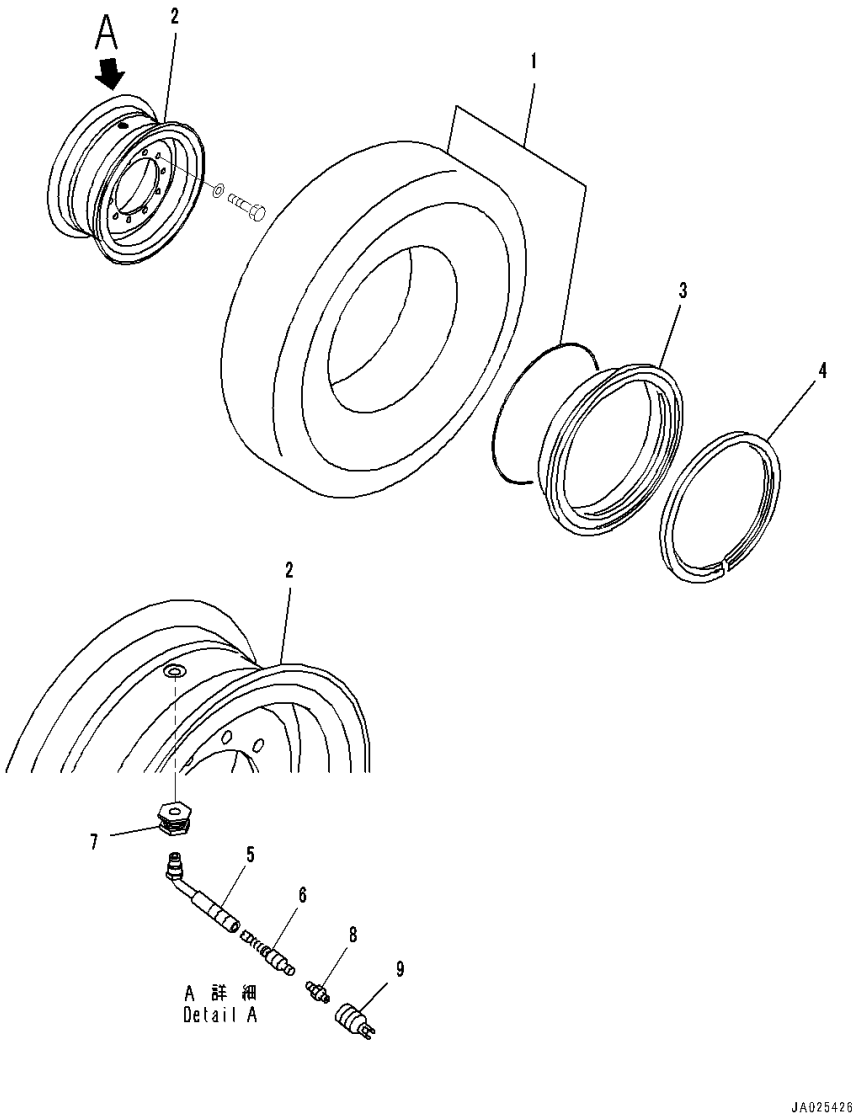

Index	Code	Part Number	Description	Qty	Serial Number
		234-30-81150	Tire and Rim Assembly	2	26001-
1		234-30-81140	• Tire	1	26001-
		234-30-81100	• Rim Assembly	1	26001-
2		234-30-81110	• • Rim	1	26001-
3		419-30-11130	• • Flange	1	26001-
4		419-30-11140	• • Ring, Lock	1	26001-
		09280-10040	• Valve Assembly, Tire	1	26001-
5		09280-10130	• • Stem	1	26001-
6		09281-00041	• • Core, Valve	1	26001-
7		09283-00000	• • Seat, Valve	1	26001-
8		09285-00000	• • Adapter	1	26001-
9		09282-00017	• • Cap, Valve	1	26001-

FIG. S0100-001001 Tire and Rim (Front) (20.5-R25-G2 XTLA Pattern, Tubeless Tires, Michelin)

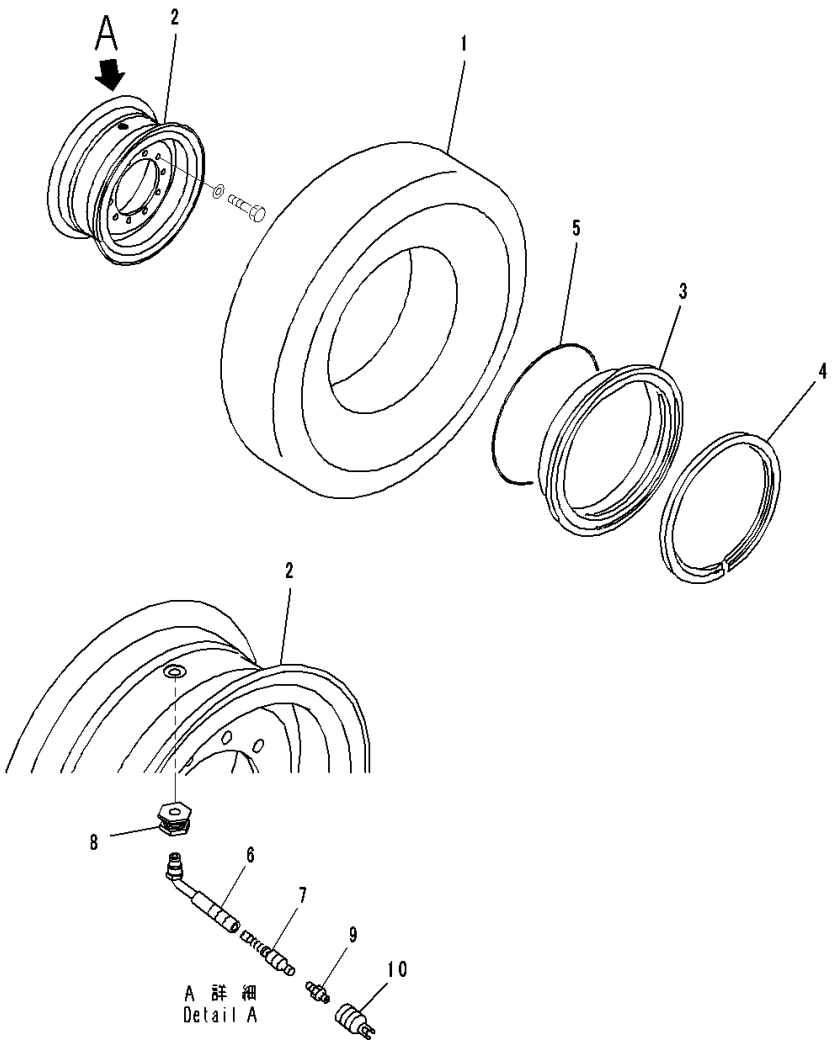

Index	Code	Part Number	Description	Qty	Serial Number
		234-30-81200	Tire and Rim Assembly	2	26001-
1		23C-30-62110	• Tire	1	26001-
		234-30-81100	• Rim Assembly	1	26001-
2		234-30-81110	• • Rim	1	26001-
3		419-30-11130	• • Flange	1	26001-
4		419-30-11140	• • Ring, Lock	1	26001-
5		419-30-11630	• O-ring	1	26001-
		09280-10040	• Valve Assembly, Tire	1	26001-
6		09280-10130	• • Stem	1	26001-
7		09281-00041	• • Core, Valve	1	26001-
8		09283-00000	• • Seat, Valve	1	26001-
9		09285-00000	• • Adapter	1	26001-
10		09282-00017	• • Cap, Valve	1	26001-

FIG. S0100-005001 Tire and Rim (Front) (20.5-R25-L3, Tubeless Tires, Michelin)

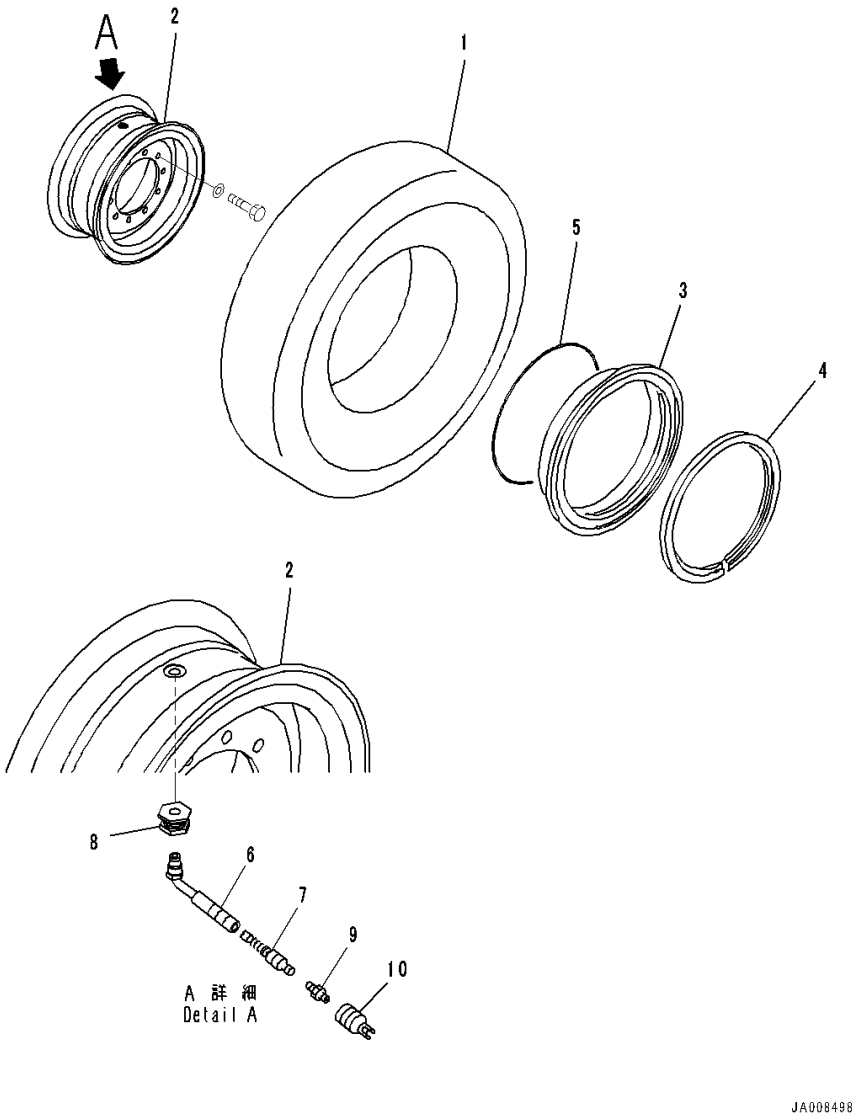

Index	Code	Part Number	Description	Qty	Serial Number
		234-30-81300	Tire and Rim Assembly	2	26001-
1		418-X51-2111	• Tire	1	26001-
		234-30-81100	• Rim Assembly	1	26001-
2		234-30-81110	• • Rim	1	26001-
3		419-30-11130	• • Flange	1	26001-
4		419-30-11140	• • Ring, Lock	1	26001-
5		419-30-11630	• O-ring	1	26001-
		09280-10040	• Valve Assembly, Tire	1	26001-
6		09280-10130	• • Stem	1	26001-
7		09281-00041	• • Core, Valve	1	26001-
8		09283-00000	• • Seat, Valve	1	26001-
9		09285-00000	• • Adapter	1	26001-
10		09282-00017	• • Cap, Valve	1	26001-

FIG. S0100-004002 Tire and Rim (Rear) (20.5-R25-E3, Tubeless Tires, Yokohama)

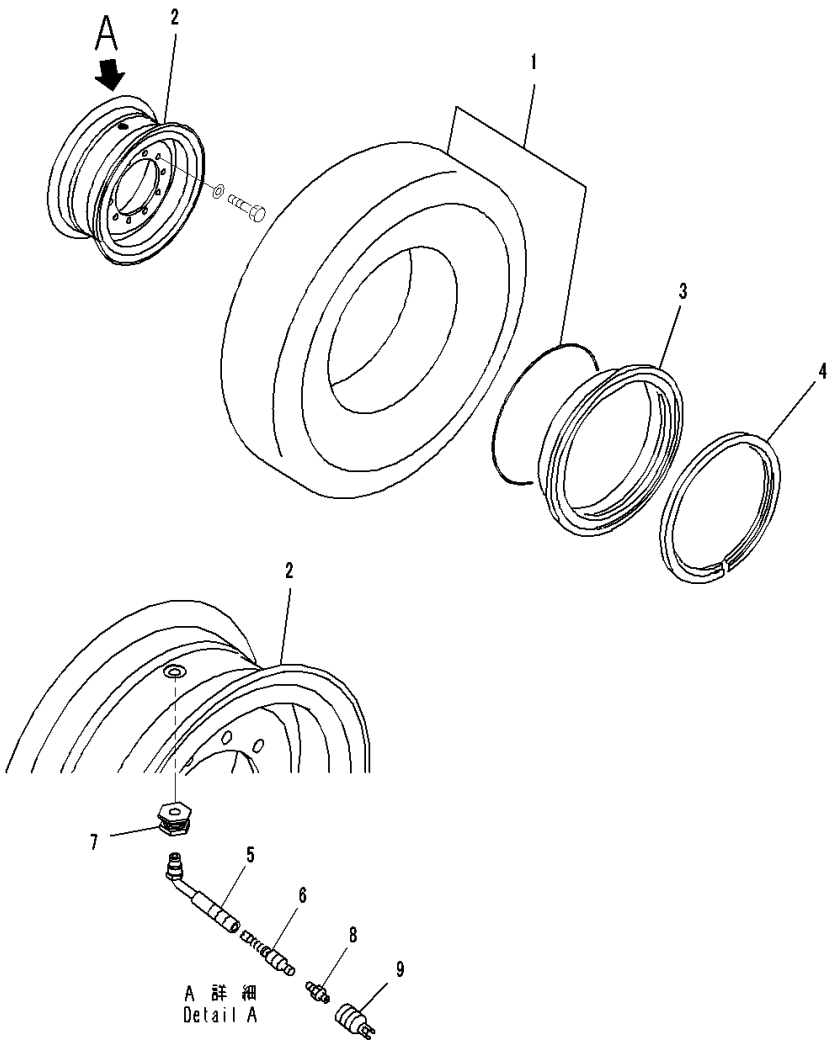

Index	Code	Part Number	Description	Qty	Serial Number
		234-30-81150	Tire and Rim Assembly	4	26001-
1		234-30-81140	• Tire	1	26001-
		234-30-81100	• Rim Assembly	1	26001-
2		234-30-81110	• • Rim	1	26001-
3		419-30-11130	• • Flange	1	26001-
4		419-30-11140	• • Ring, Lock	1	26001-
		09280-10040	• Valve Assembly, Tire	1	26001-
5		09280-10130	• • Stem	1	26001-
6		09281-00041	• • Core, Valve	1	26001-
7		09283-00000	• • Seat, Valve	1	26001-
8		09285-00000	• • Adapter	1	26001-
9		09282-00017	• • Cap, Valve	1	26001-

FIG. S0100-001002 Tire and Rim (Rear) (20.5-R25-G2 XTLA Pattern, Tubeless Tires, Michelin)

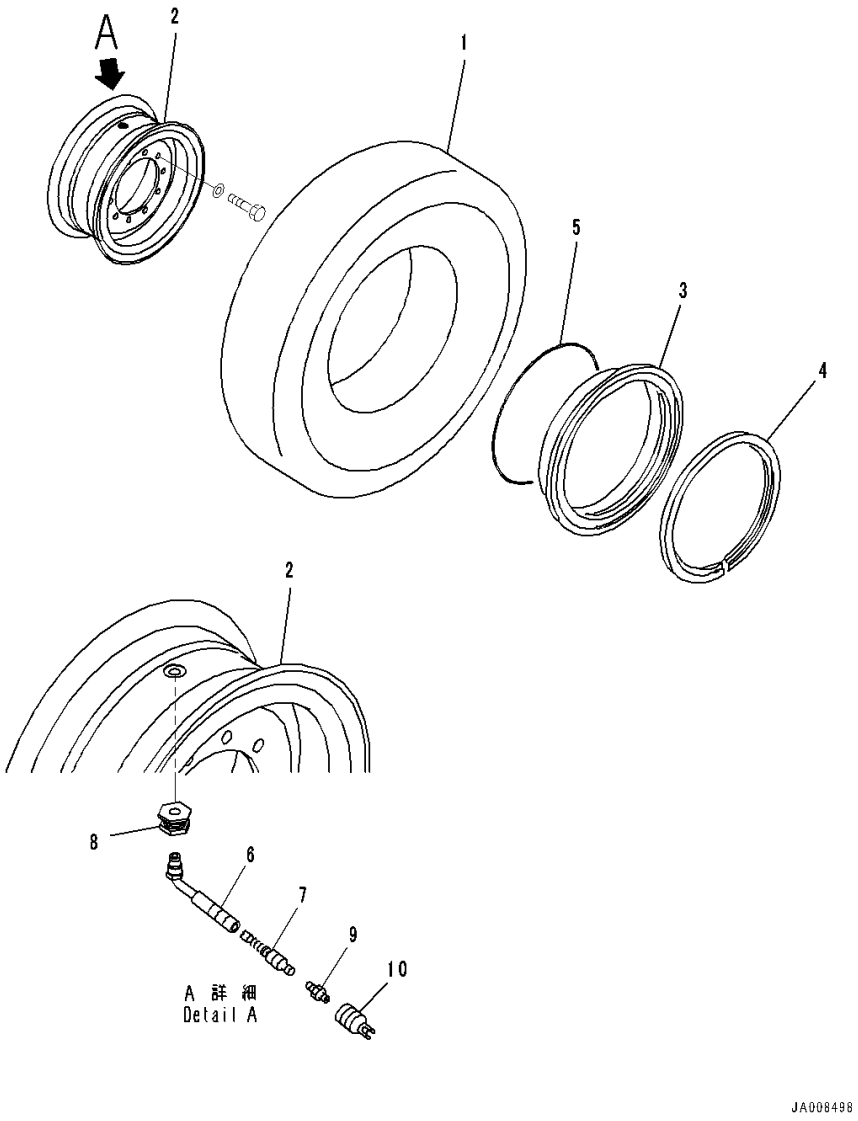

Index	Code	Part Number	Description	Qty	Serial Number
		234-30-81200	Tire and Rim Assembly	4	26001-
1		23C-30-62110	• Tire	1	26001-
		234-30-81100	• Rim Assembly	1	26001-
2		234-30-81110	• • Rim	1	26001-
3		419-30-11130	• • Flange	1	26001-
4		419-30-11140	• • Ring, Lock	1	26001-
5		419-30-11630	• O-ring	1	26001-
		09280-10040	• Valve Assembly, Tire	1	26001-
6		09280-10130	• • Stem	1	26001-
7		09281-00041	• • Core, Valve	1	26001-
8		09283-00000	• • Seat, Valve	1	26001-
9		09285-00000	• • Adapter	1	26001-
10		09282-00017	• • Cap, Valve	1	26001-

FIG. S0100-005002 Tire and Rim (Rear) (20.5-R25-L3, Tubeless Tires, Michelin)

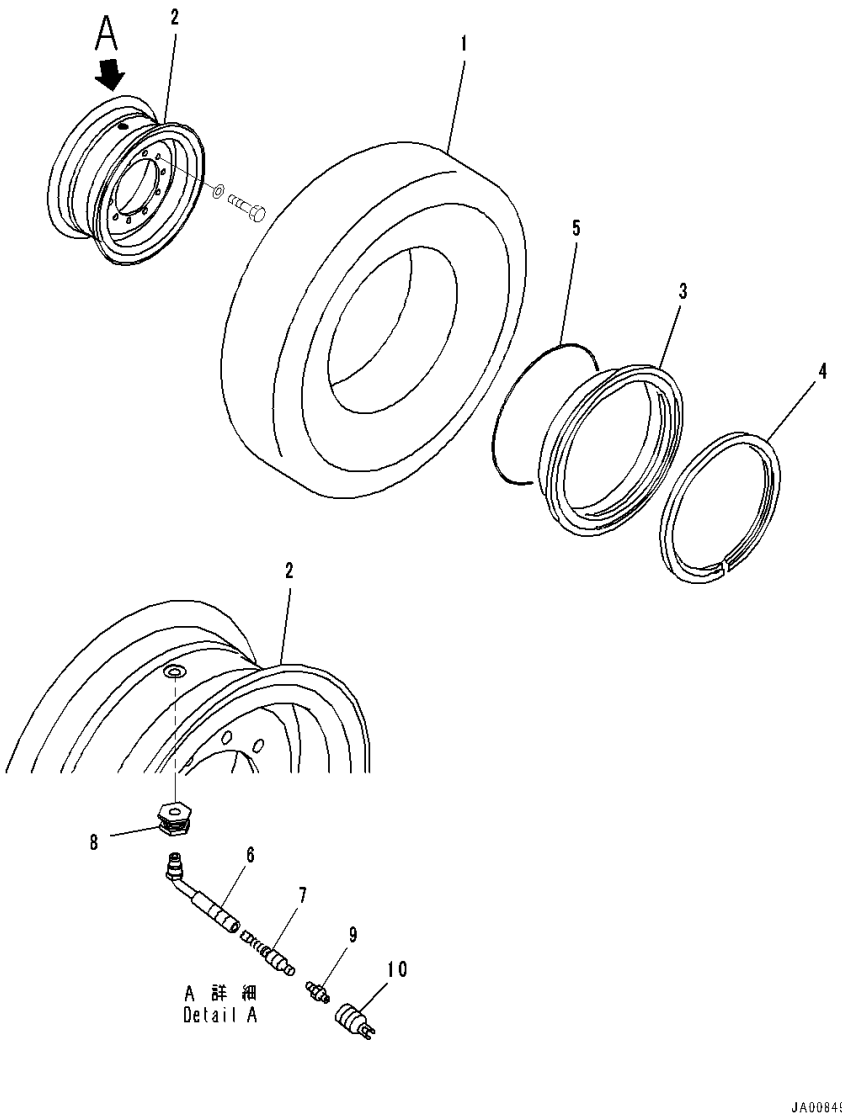

Index	Code	Part Number	Description	Qty	Serial Number
		234-30-81300	Tire and Rim Assembly	4	26001-
1		418-X51-2111	• Tire	1	26001-
		234-30-81100	• Rim Assembly	1	26001-
2		234-30-81110	• • Rim	1	26001-
3		419-30-11130	• • Flange	1	26001-
4		419-30-11140	• • Ring, Lock	1	26001-
5		419-30-11630	• O-ring	1	26001-
		09280-10040	• Valve Assembly, Tire	1	26001-
6		09280-10130	• • Stem	1	26001-
7		09281-00041	• • Core, Valve	1	26001-
8		09283-00000	• • Seat, Valve	1	26001-
9		09285-00000	• • Adapter	1	26001-
10		09282-00017	• • Cap, Valve	1	26001-

FIG. S0100-002003 Tire and Rim (Rear) (1/2) (16.00-24-16PR-G2, Tubed Tires, Bridgestone)

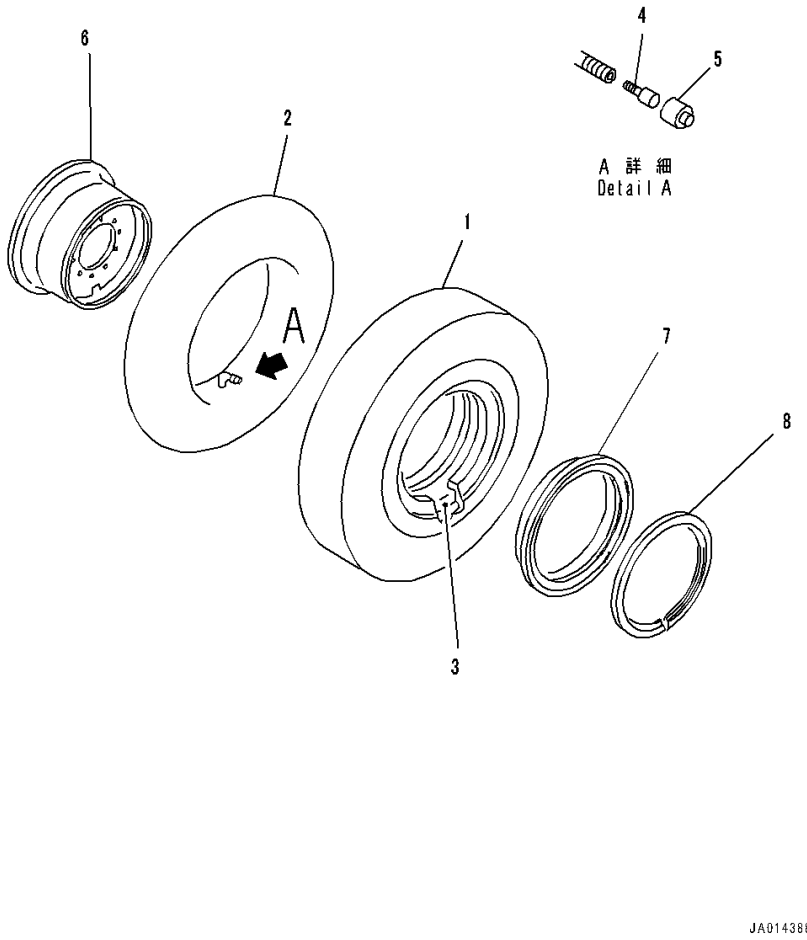

Index	Code	Part Number	Description	Qty	Serial Number
		234-30-82200	Tire and Rim Assembly	2	26001-
		234-30-21800	• Tire Assembly	1	26001-
1		234-30-21810	• • Tire	1	26001-
2		234-30-21120	• • Tube	1	26001-
3		234-30-21130	• • Flap	1	26001-
4		234-30-21170	• • Core, Valve	1	26001-
5		234-30-21180	• • Cap, Valve	1	26001-
6		234-30-82100	• Rim Assembly	1	26001-
7		234-30-22120	• • Ring	1	26001-
8		234-30-22130	• • Ring	1	26001-

WORK EQUIPMENT

FIG. T5110-001001 Circle Drawbar (Drawbar)

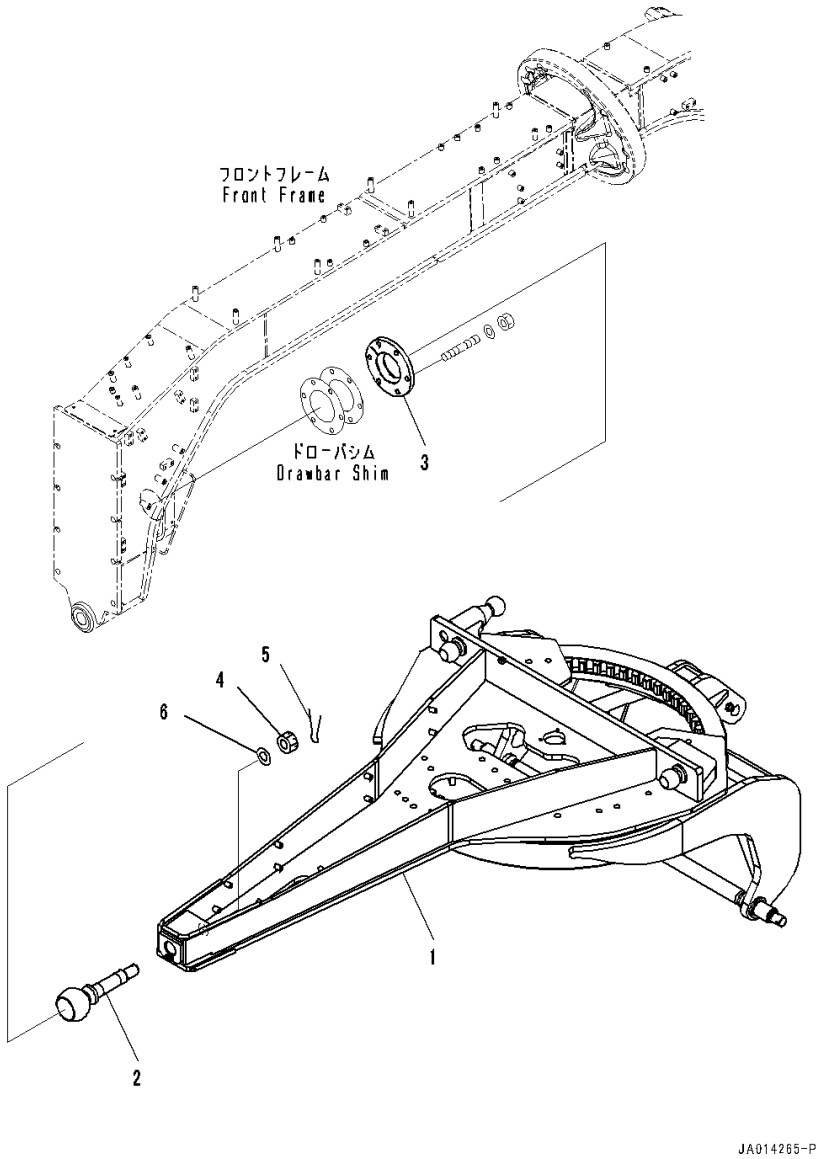

Index	Code	Part Number	Description	Qty	Serial Number
1		234-70-82511	Drawbar	1	26001-
2		234-70-11140	Stud	1	26001-
3		234-70-81410	Flange	1	26001-
4		01590-34850	Nut, Slotted	1	26001-
5		04050-18085	Pin, Cotter	1	26001-
6		234-70-11230	Washer	1	26001-

FIG. T5110-001002 Circle Drawbar (Support)

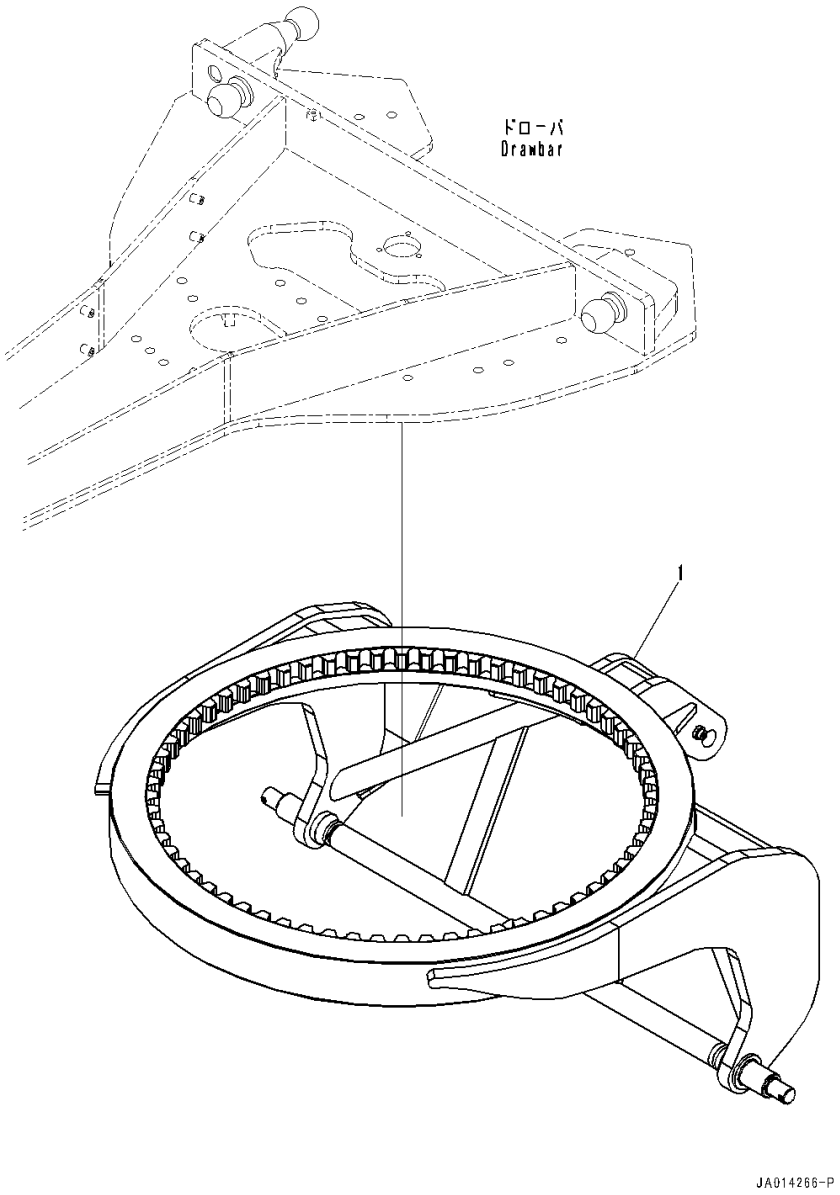

Index	Code	Part Number	Description	Qty	Serial Number
1		234-70-82210	Circle	1	26001-

FIG. T5110-001003 Circle Drawbar (Drawbar Guide)

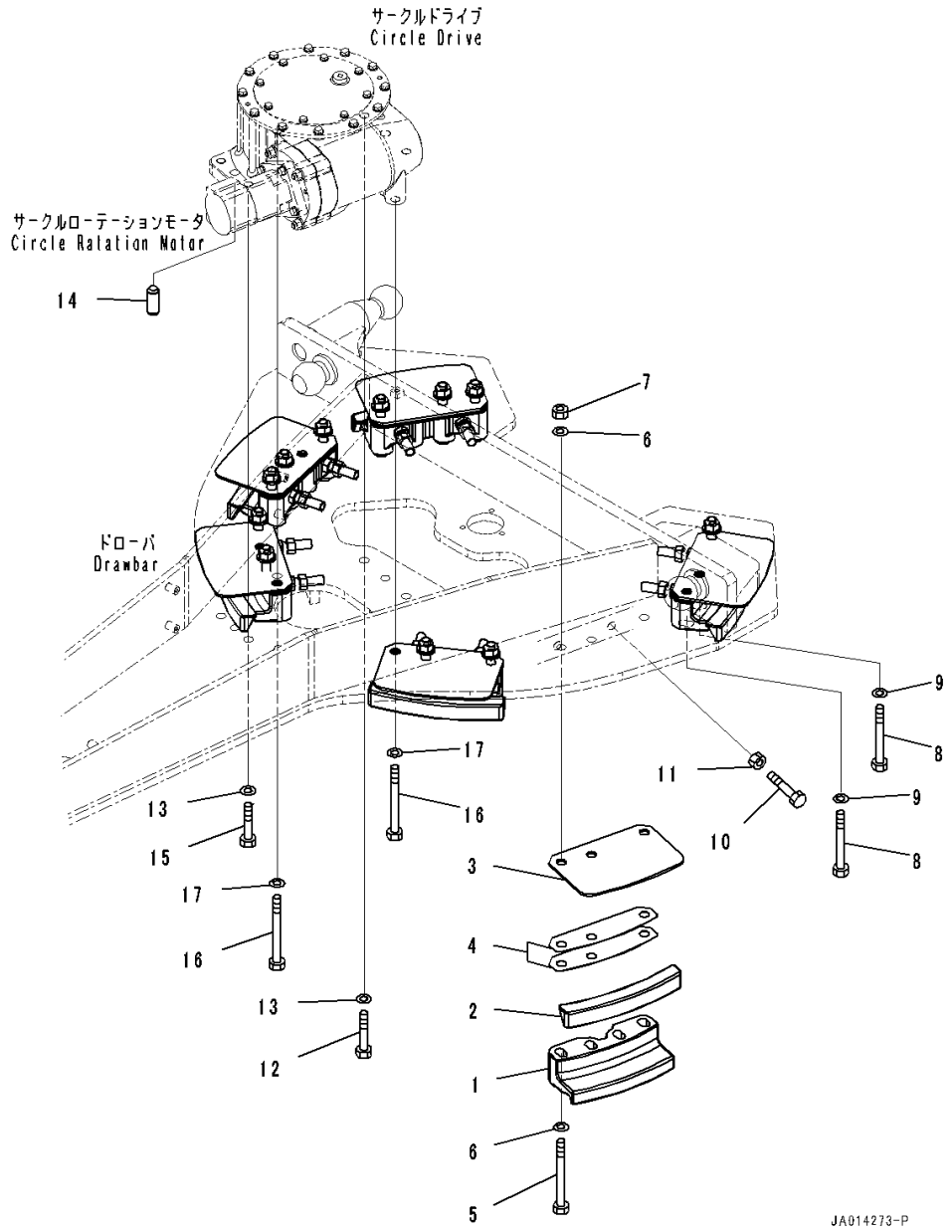

Index	Code	Part Number	Description	Qty	Serial Number
1		234-70-81810	Guide	6	26001-
2		23C-70-51240	Guide	6	26001-
3		234-70-81820	Plate	6	26001-
4		234-70-81830	Shim,T=1.0mm	48	26001-
5		01011-82465	Bolt	14	26001-
6		01643-32460	Washer	28	26001-
7		01580-12419	Nut	14	26001-
8		01011-82440	Bolt	2	26001-
9		01643-32460	Washer	2	26001-
10		01016-52480	Bolt	12	26001-
11		01580-12419	Nut	12	26001-
12		01010-82470	Bolt	2	26001-
13		01643-32460	Washer	4	26001-
14		232-71-13151	Pin	2	26001-
15		01010-82465	Bolt	2	26001-
16		01011-82465	Bolt	2	26001-
17		01643-32460	Washer	2	26001-

FIG. T5110-001004 Circle Drawbar (Blade Shift Cylinder)

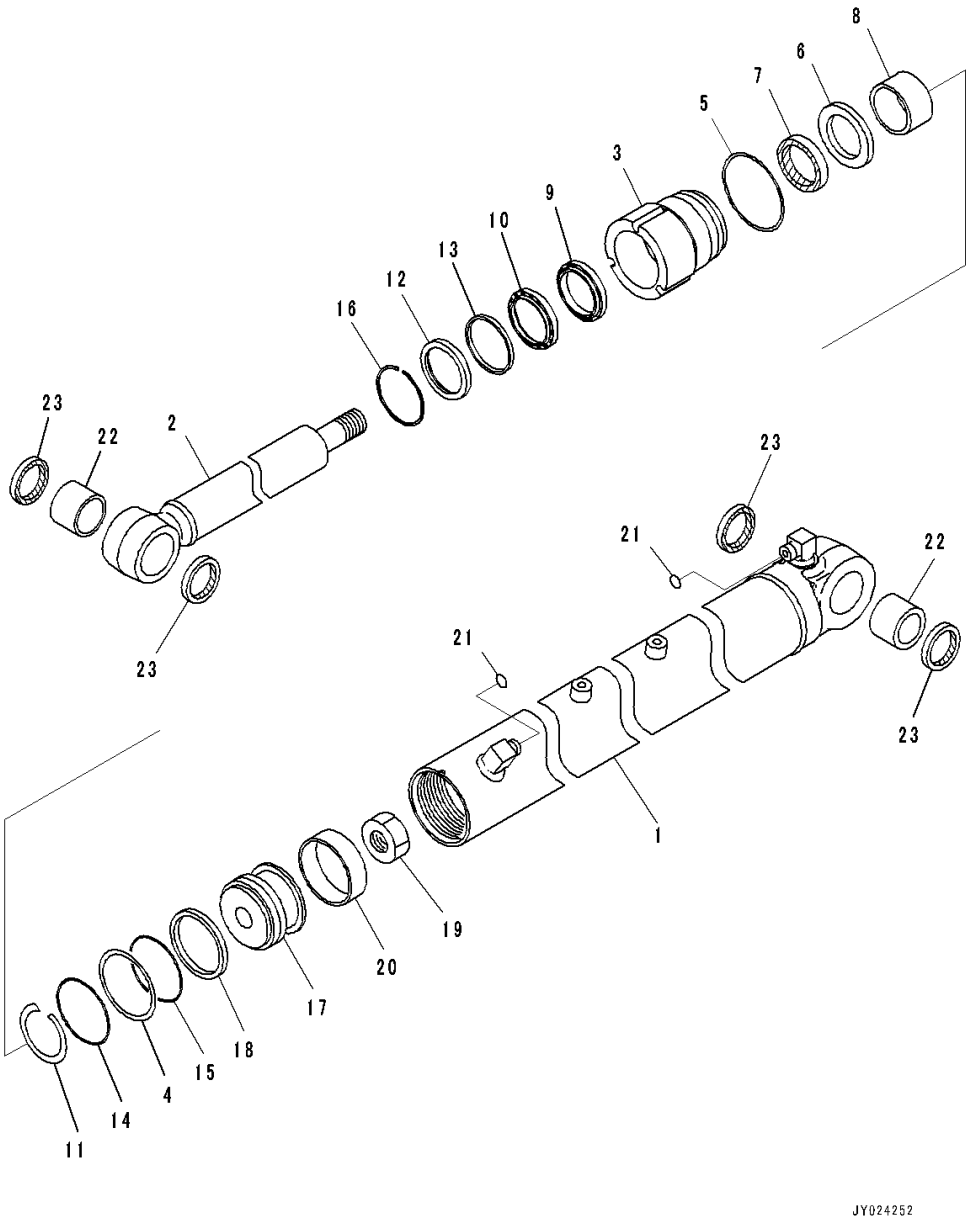

Index	Code	Part Number	Description	Qty	Serial Number
		707-G0-01110	Cylinder Assembly	1	26001-
1		707-11-80K80	• Cylinder	1	26001-
2		707-58-55A60	• Rod, Piston	1	26001-
3		707-29-80110	• Head, Cylinder	1	26001-
4		707-35-10760	• Ring, Back-up, (Kit : K05)	1	26001-
5		707-45-80930	• Washer, Lock	1	26001-
6		707-51-55650	• Ring, Buffer, (Kit : K05)	1	26001-
7		707-51-55860	• Packing, Rod, (Kit : K05)	1	26001-
8		707-52-90301	• Bushing	1	26001-
9		707-56-55740	• Seal, Dust, (Kit : K05)	1	26001-
10		707-56-55820	• Seal, Dust, (Kit : K05)	1	26001-
11		707-75-55110	• Ring, Snap	1	26001-
12		707-88-41680	• Ring	1	26001-
13		707-88-46180	• Collar	1	26001-
14		07000-12080	• O-ring, (Kit : K05)	1	26001-
15		07000-B2075	• O-ring, (Kit : K05)	1	26001-
16		07179-12069	• Ring, Snap	1	26001-
17		707-36-80280	• Piston	1	26001-
18		707-44-80150	• Ring, Piston, (Kit : K05)	1	26001-
19		707-67-33040	• Nut	1	26001-
20		07155-00820	• Ring, Wear, (Kit : K05)	1	26001-
21		02896-11009	• O-ring, (Kit : K05)	2	26001-
22		07143-10505	• Bushing	2	26001-
23		07145-00050	• Seal, Dust, (Kit : K05)	4	26001-

FIG. T5110-001005 Circle Drawbar (Blade Tilt Cylinder)

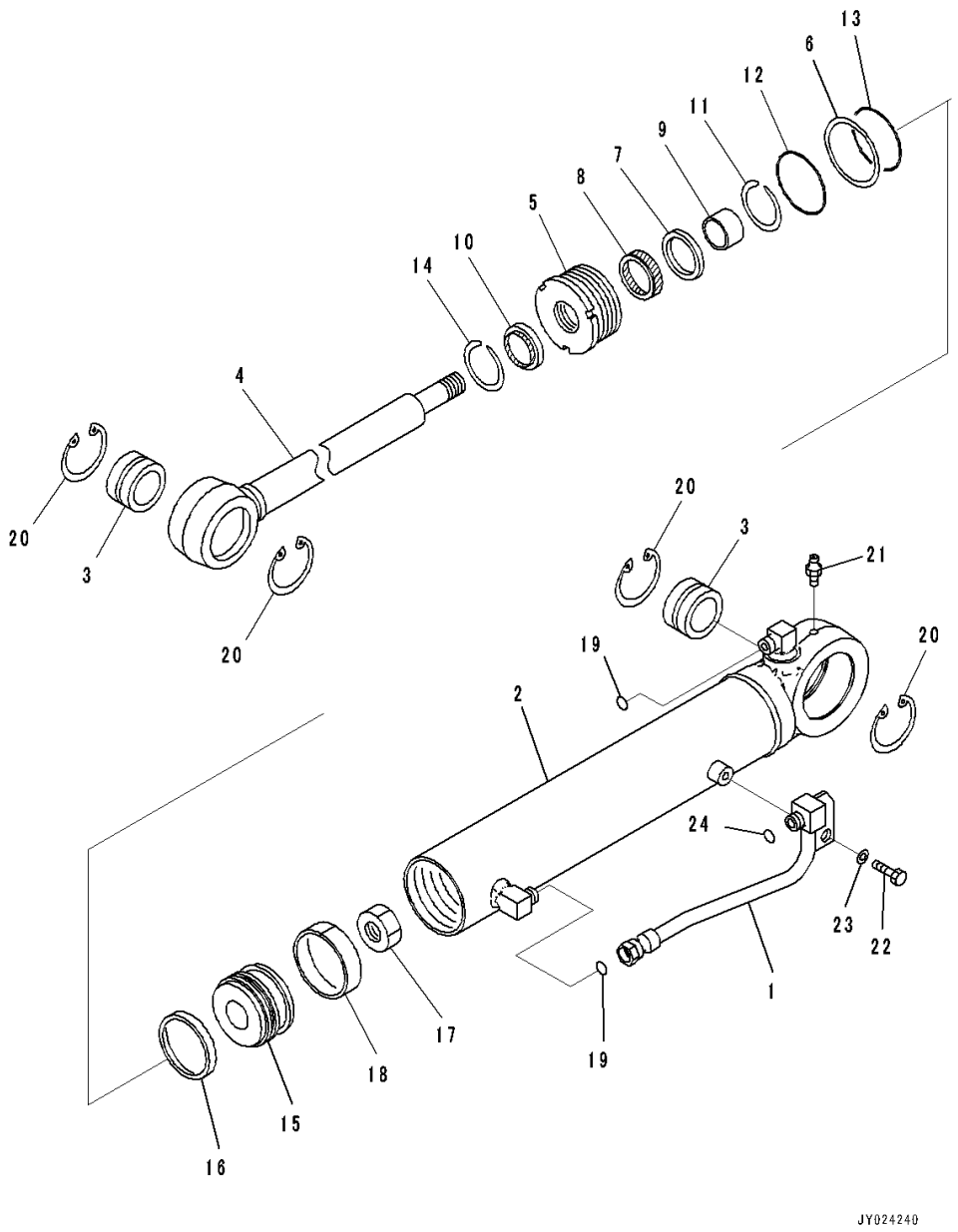

Index	Code	Part Number	Description	Qty	Serial Number
1		707-86-01430	Tube	1	26001-
		707-G0-01100	Cylinder Assembly	1	26001-
2		707-11-80K70	• Cylinder	1	26001-
3		707-46-50020	• Bushing	2	26001-
4		707-58-45A20	• Rod, Piston	1	26001-
5		707-29-80100	• Head, Cylinder	1	26001-
6		707-35-10760	• Ring, Back-up, (Kit : K06)	1	26001-
7		707-51-45650	• Ring, Buffer, (Kit : K06)	1	26001-
8		707-51-45860	• Packing, Rod, (Kit : K06)	1	26001-
9		707-52-90201	• Bushing	1	26001-
10		707-56-45740	• Seal, Dust, (Kit : K06)	1	26001-
11		707-75-45110	• Ring, Snap	1	26001-
12		07000-12080	• O-ring, (Kit : K06)	1	26001-
13		07000-B2075	• O-ring, (Kit : K06)	1	26001-
14		07179-12057	• Ring, Snap	1	26001-
15		707-36-80420	• Piston	1	26001-
16		707-44-80150	• Ring, Piston, (Kit : K06)	1	26001-
17		707-67-33040	• Nut	1	26001-
18		07156-00810	• Ring, Wear, (Kit : K06)	1	26001-
19		02896-11009	• O-ring, (Kit : K06)	2	26001-
20		04065-08025	• Ring, Snap	4	26001-
21		07020-00000	• Fitting, Grease	1	26001-
22		01010-81020	Bolt	1	26001-
23		01643-31032	Washer	1	26001-
24		02896-11009	O-ring, (Kit : K06)	1	26001-

FIG. T5110-001006 Circle Drawbar (Circle Drive)

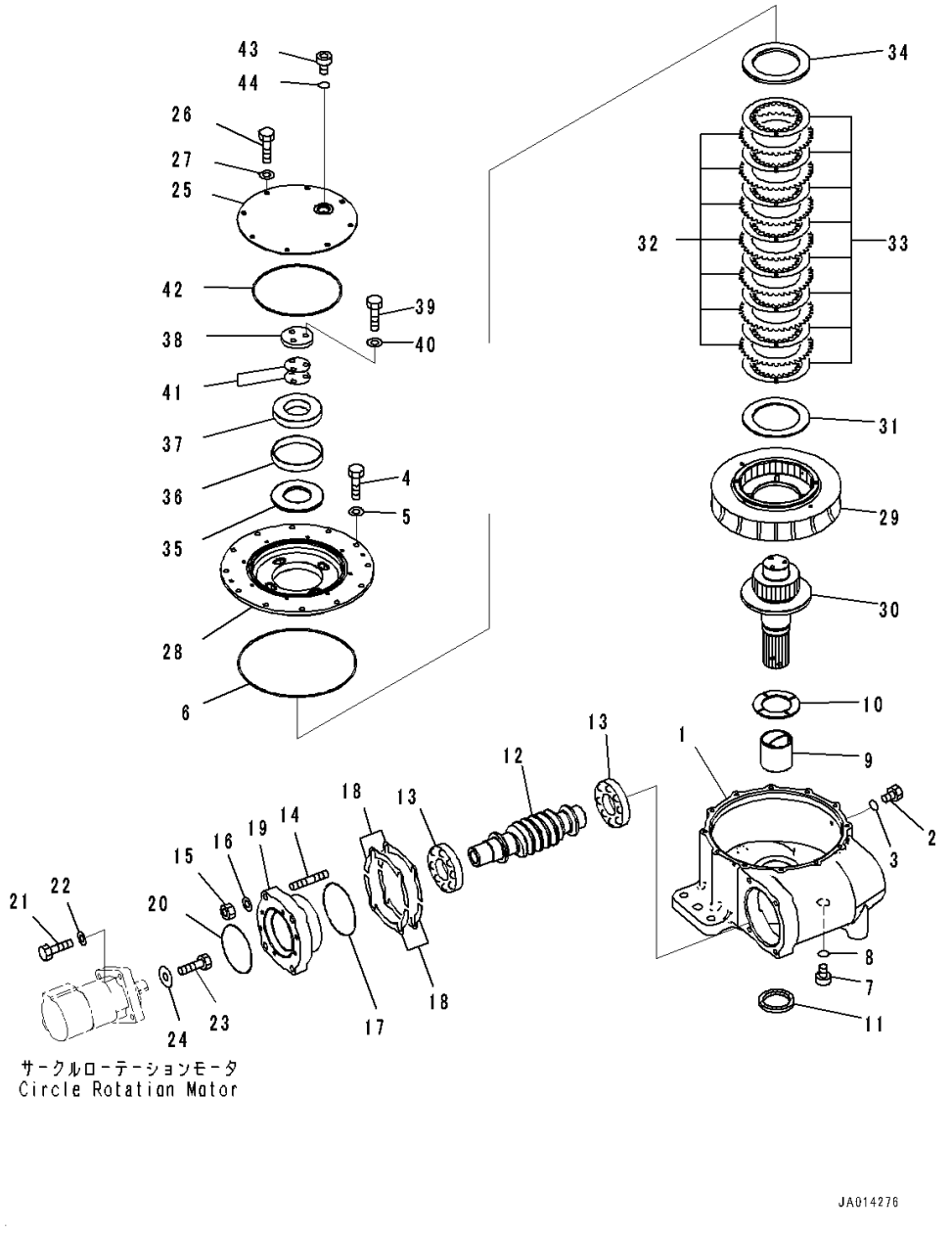

Index	Code	Part Number	Description	Qty	Serial Number
1		234-70-85110	Case	1	26001-
2		07040-11007	Plug	1	26001-
3		07002-11023	O-ring	1	26001-
4		01010-81230	Bolt	12	26001-
5		01643-31232	Washer	12	26001-
6		07000-15340	O-ring	1	26001-
7		07040-13016	Plug	1	26001-
8		07002-13034	O-ring	1	26001-
9		23C-70-55210	Bushing	1	26001-
10		23B-70-52320	Plate	1	26001-
11		23B-70-52290	Seal	1	26001-
12		234-70-35161	Worm	1	26001-
13		06002-30312	Bearing	2	26001-
14		01140-51665	Stud	4	26001-
15		01582-11613	Nut	4	26001-
16		01643-31645	Washer	4	26001-
17		07000-15150	O-ring	1	26001-
18		234-70-85210	Shim,T=1.0mm	4	26001-
		234-70-85220	Shim,T=0.2mm	12	26001-
		234-70-85230	Shim,T=0.1mm	8	26001-
19		234-70-85180	Housing	1	26001-
20		07000-12135	O-ring	1	26001-
21		01010-81250	Bolt	4	26001-
22		01643-31232	Washer	4	26001-
23		02010-70619	Bolt, Unified	1	26001-
24		232-860-5320	Washer	1	26001-
25		23C-70-55220	Cover	1	26001-
26		01010-81020	Bolt	8	26001-
27		01643-31032	Washer	8	26001-
28		23C-70-55171	Cover	1	26001-
29		23C-70-55161	Wheel	1	26001-
30		234-70-85150	Shaft	1	26001-
31		235-70-45260	Spacer	1	26001-
32		714-07-12680	Plate	7	26001-
33		235-70-45420	Disc	8	26001-
34		235-70-45270	Spacer	1	26001-
35		235-70-45360	Spring	1	26001-
36		23C-70-55190	Bushing	1	26001-
37		23C-70-55180	Collar	1	26001-
38		23B-70-52230	Plate	1	26001-

FIG. T5110-001006 Circle Drawbar (Circle Drive)

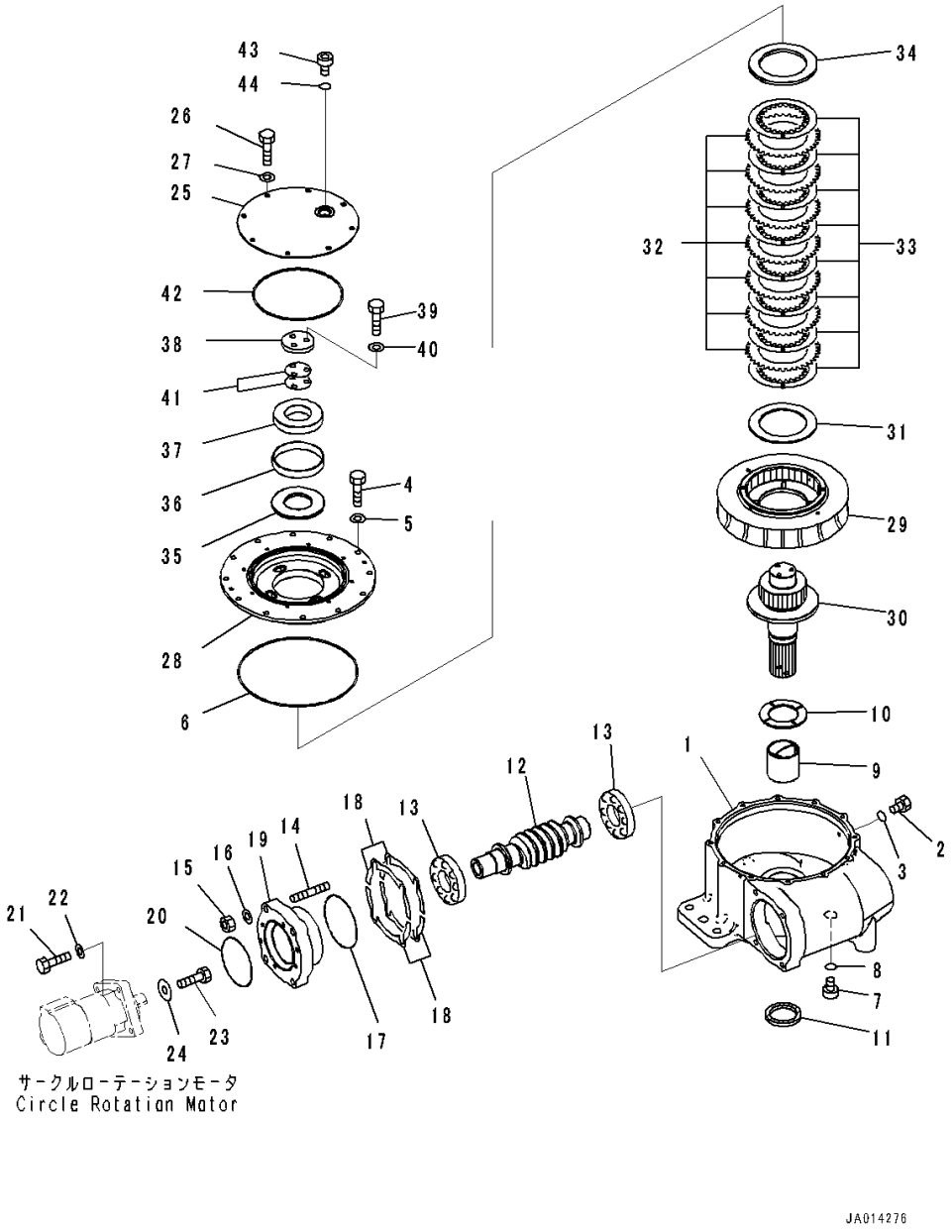

Index	Code	Part Number	Description	Qty	Serial Number
39		01010-81240	Bolt	3	26001-
40		01643-31232	Washer	3	26001-
41		235-70-45330	Shim,T=0.5mm	6	26001-
		235-70-45340	Shim,T=0.2mm	8	26001-
42		07000-15260	O-ring	1	26001-
43		07040-13016	Plug	1	26001-
44		07002-13034	O-ring	1	26001-

FIG. T5110-001007 Circle Drawbar (Circle Rotation Motor)

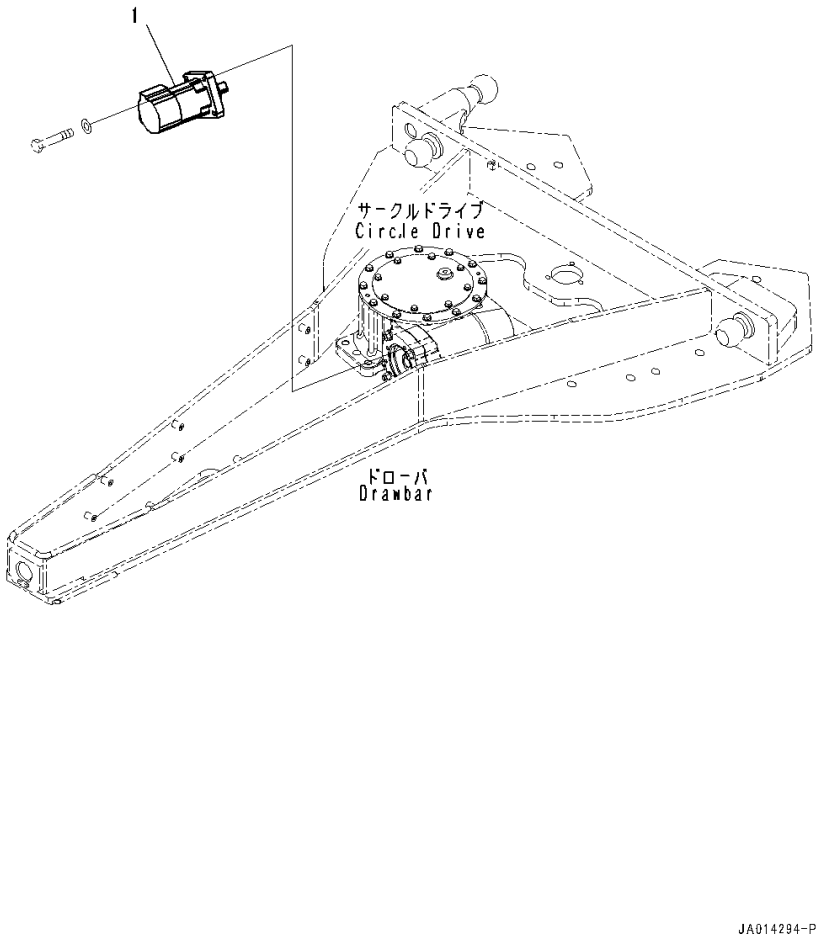

Index	Code	Part Number	Description	Qty	Serial Number
1		234-62-85200	Motor	1	26001-

FIG. T5110-001008 Circle Drawbar (Circle Drive Related Parts)

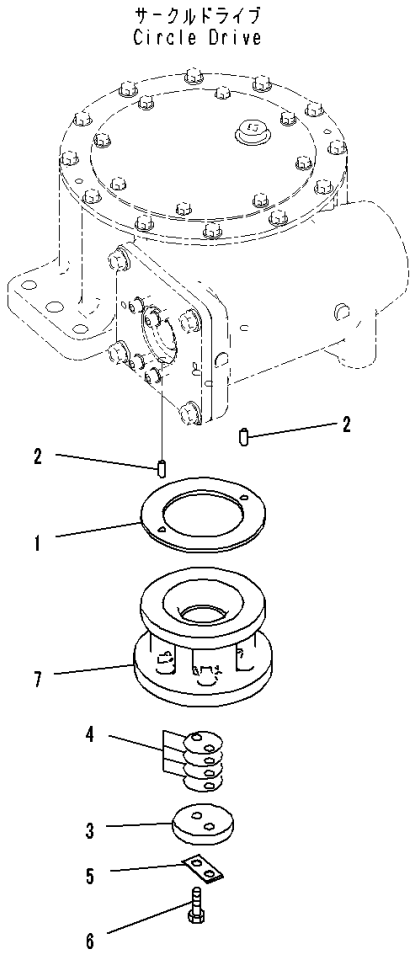

JA008502

Index	Code	Part Number	Description	Qty	Serial Number
1		23B-70-52220	Plate	1	26001-
2		04020-01024	Pin, Dowel	2	26001-
3		235-70-15850	Holder	1	26001-
4		235-70-15860	Shim,T=1.0mm	4	26001-
		235-70-15870	Shim,T=0.5mm	6	26001-
		235-70-15880	Shim,T=0.2mm	5	26001-
5		04081-05512	Lock	1	26001-
6		01010-81235	Bolt	2	26001-
7		23C-70-55140	Gear	1	26001-

FIG. T5110-001009 Circle Drawbar (Swivel Joint, 4-Way Type)

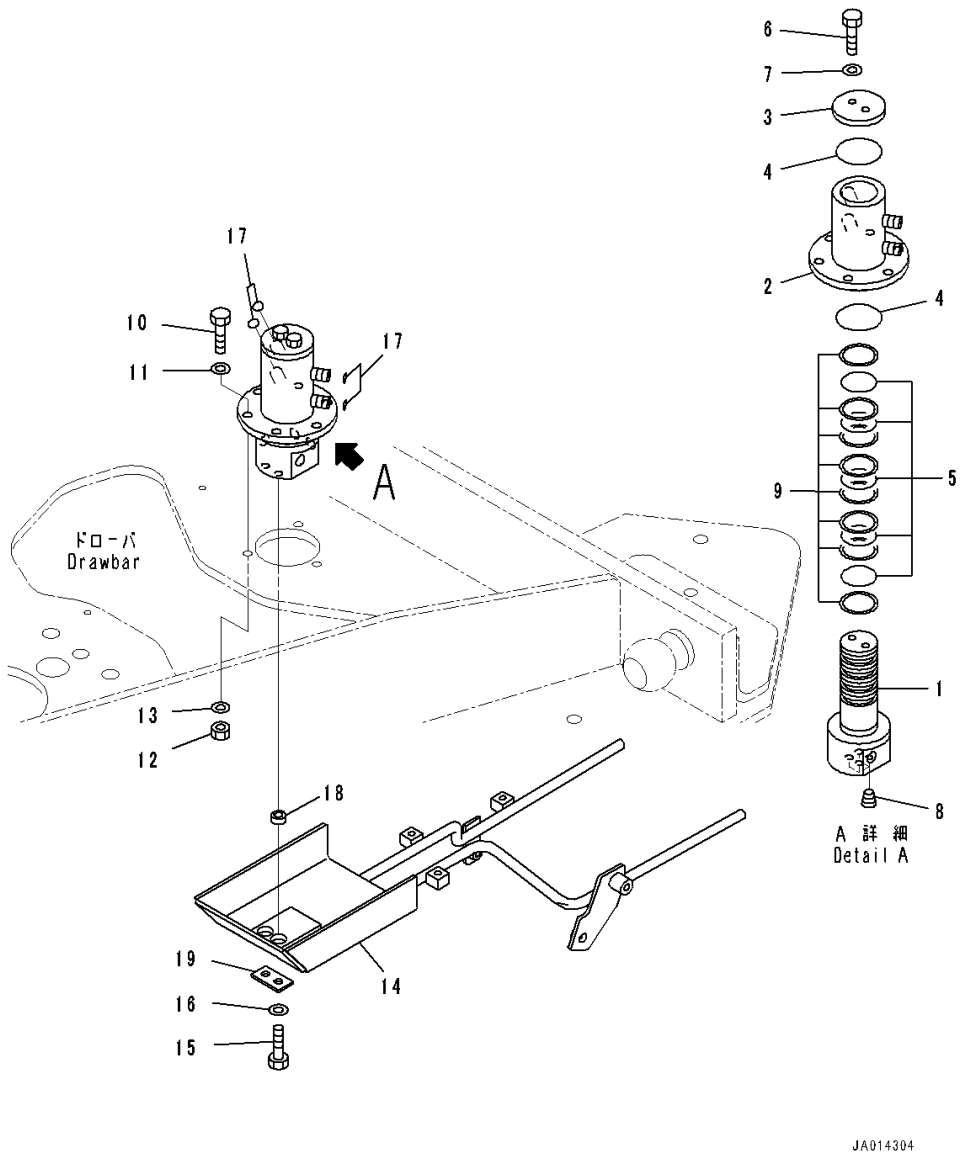

Index	Code	Part Number	Description	Qty	Serial Number
		23B-60-42701	Swivel Joint Assembly	1	26001-
1		23E-735-1421	• Flange	1	26001-
2		23B-60-42711	• Case	1	26001-
3		232-60-54730	• Plate	1	26001-
4		07000-12065	• O-ring	2	26001-
5		07000-13050	• O-ring	5	26001-
6		01010-81225	• Bolt	2	26001-
7		01643-31232	• Washer	2	26001-
8		07043-00211	• Plug, Taper	4	26001-
9		07001-03050	• Ring, Back-up	8	26001-
10		01010-81255	Bolt	3	26001-
11		01643-31232	Washer	3	26001-
12		01580-11210	Nut	3	26001-
13		01643-31232	Washer	3	26001-
14		234-60-87140	Cover	1	26001-
15		01010-81235	Bolt	2	26001-
16		01643-31232	Washer	2	26001-
17		02896-11009	O-ring	4	26001-
18		23B-60-34470	Collar	2	26001-
19		23B-60-34480	Plate	1	26001-

FIG. T5110-001010 Circle Drawbar (Piping)

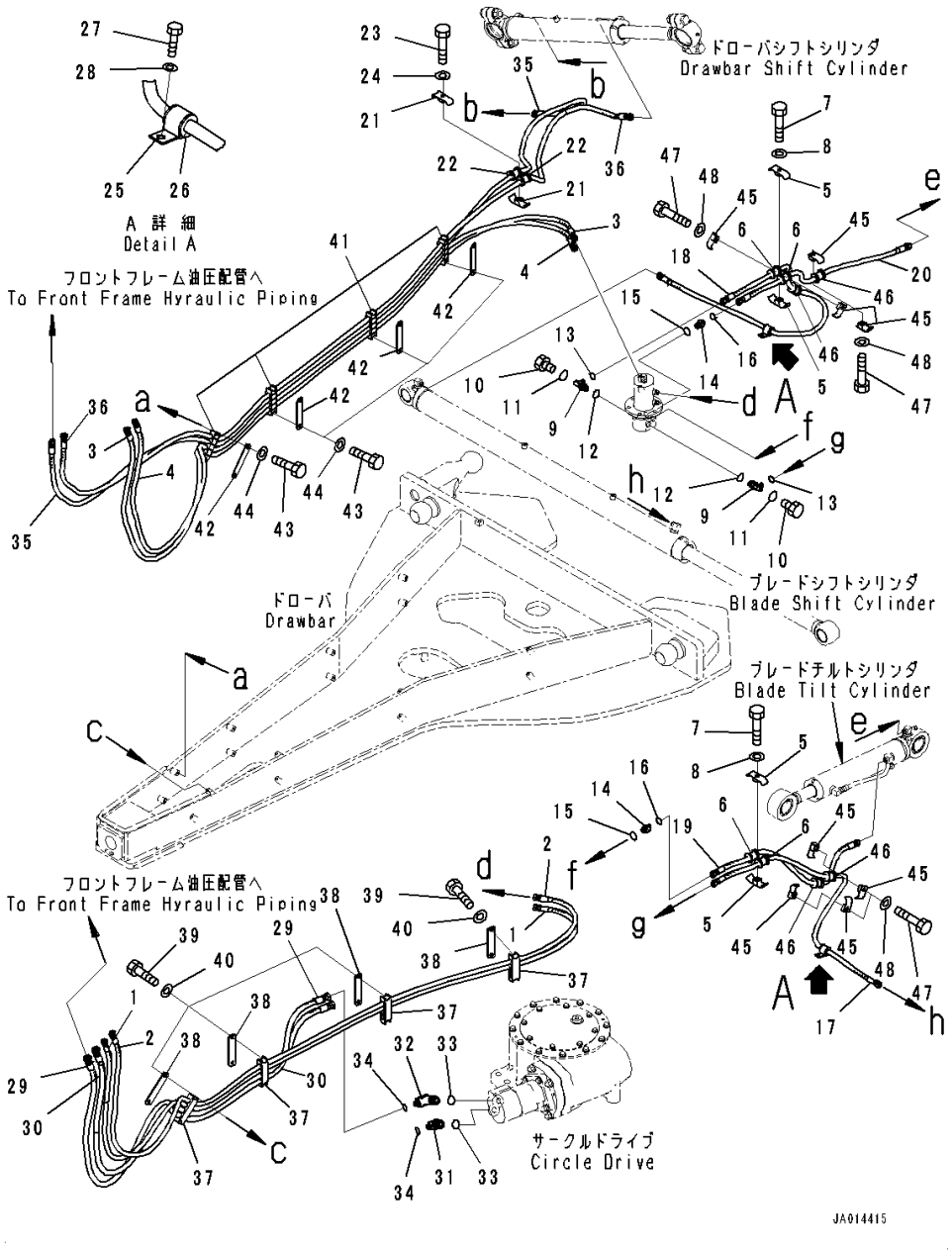

Index	Code	Part Number	Description	Qty	Serial Number
1		234-60-84370	Hose	1	26001-
2		234-60-84380	Hose	1	26001-
3		234-60-84390	Hose	1	26001-
4		234-60-84410	Hose	1	26001-
5		22P-62-13540	Clamp	4	26001-
6		07095-00317	Cushion	4	26001-
7		01010-81260	Bolt	2	26001-
8		01643-31232	Washer	2	26001-
9		02782-50315	Elbow	2	26001-
10		07040-11007	Plug	2	26001-
11		07002-11023	O-ring	2	26001-
12		07002-12034	O-ring	2	26001-
13		02896-11009	O-ring	2	26001-
14		02781-00315	Union	2	26001-
15		07002-12034	O-ring	2	26001-
16		02896-11009	O-ring	2	26001-
17		234-60-84420	Hose	1	26001-
18		234-60-84430	Hose	1	26001-
19		234-60-84440	Hose	1	26001-
20		234-60-84450	Hose	1	26001-
21		22P-62-13540	Clamp	2	26001-
22		07095-00317	Cushion	2	26001-
23		01010-81255	Bolt	1	26001-
24		01643-31232	Washer	1	26001-
25		04434-52711	Clip	2	26001-
26		07095-20418	Cushion	2	26001-
27		01010-81020	Bolt	2	26001-
28		01643-31032	Washer	2	26001-
29		234-60-84480	Hose	1	26001-
30		234-60-84490	Hose	1	26001-
31		234-62-87940	Elbow	1	26001-
32		234-60-84840	Elbow	1	26001-
33		416-62-13450	O-ring	2	26001-
34		02896-11012	O-ring	2	26001-
35		234-60-84460	Hose	1	26001-
36		234-60-84470	Hose	1	26001-
37		23C-60-52451	Cushion	4	26001-
38		23B-60-72930	Plate	4	26001-
39		01010-81025	Bolt	8	26001-
40		01643-31032	Washer	8	26001-

FIG. T5110-001010 Circle Drawbar (Piping)

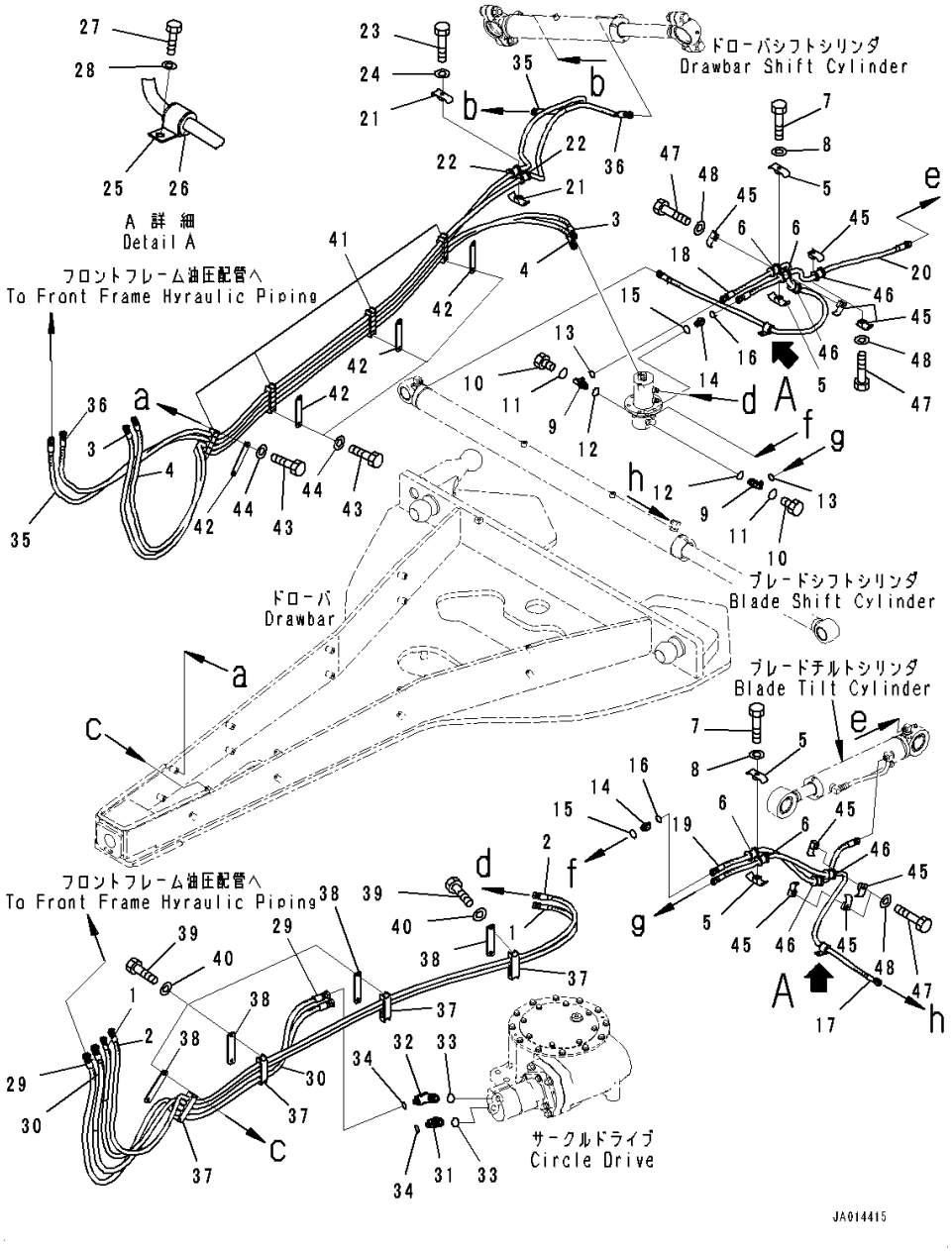

Index	Code	Part Number	Description	Qty	Serial Number
41		23C-60-52461	Cushion	4	26001-
42		23B-60-72930	Plate	4	26001-
43		01010-81025	Bolt	8	26001-
44		01643-31032	Washer	8	26001-
45		22P-62-13510	Clamp	8	26001-
46		07095-00317	Cushion	4	26001-
47		01010-81260	Bolt	6	26001-
48		01643-31232	Washer	6	26001-

FIG. T5110-001011 Circle Drawbar (Adjuster)

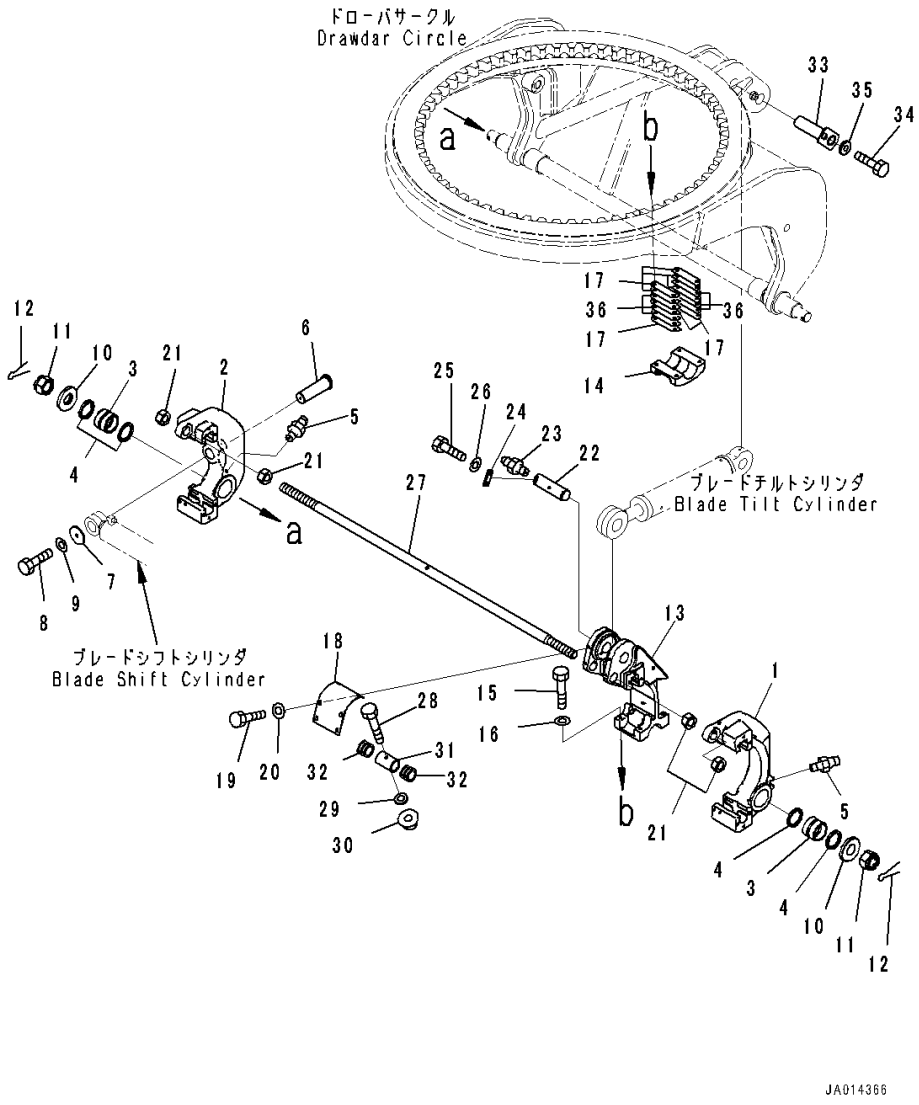

Index	Code	Part Number	Description	Qty	Serial Number
1		234-70-82110	Adjuster	1	26001-
2		234-70-82120	Adjuster	1	26001-
3		07144-10706	Bushing	2	26001-
4		418-09-11110	Seal, Dust	4	26001-
5		07020-00000	Fitting, Grease	2	26001-
6		234-70-32150	Shaft	1	26001-
7		232-70-52460	Washer	1	26001-
8		01010-81225	Bolt	1	26001-
9		01643-31232	Washer	1	26001-
10		234-979-6270	Washer	2	26001-
11		01590-34548	Nut, Slotted	2	26001-
12		04050-18080	Pin, Cotter	2	26001-
		23C-70-53101	Bracket	1	26429-
		23C-70-53100	Bracket	1	26001-26428
13	C1		• Bracket	1	26429-
	C1		• Bracket	1	26001-26428
14	C1		• Bracket	1	26429-
	C1		• Bracket	1	26001-26428
15		01010-81270	• Bolt	4	26001-
16		01643-31232	• Washer	4	26001-
17		23B-735-1250	• Shim,T=0.5mm	8	26001-
18		234-70-33241	Cover	1	26001-
19		01010-81016	Bolt	6	26001-
20		01643-31032	Washer	6	26001-
21		01580-13629	Nut	4	26001-
22		09241-50175	Pin	1	26001-
23		07020-00000	Fitting, Grease	1	26001-
24		04082-00212	Lock	1	26001-
25		01010-81225	Bolt	2	26001-
26		01643-31232	Washer	2	26001-
27		234-70-33260	Rod	1	26001-
28		01010-81280	Bolt	1	26001-
29		01643-31232	Washer	1	26001-
30		01594-01210	Nut	1	26001-
31		234-70-33270	Collar	1	26001-
32		234-70-33280	Shim,T=1.0mm	6	26001-
33		23C-70-53150	Pin	1	26001-
34		01010-81225	Bolt	1	26001-
35		175-54-34170	Washer	1	26001-
36		23B-735-1250	Shim,T=0.5mm	6	26001-

FIG. T5110-001012A Circle Drawbar (Shim and Cover)

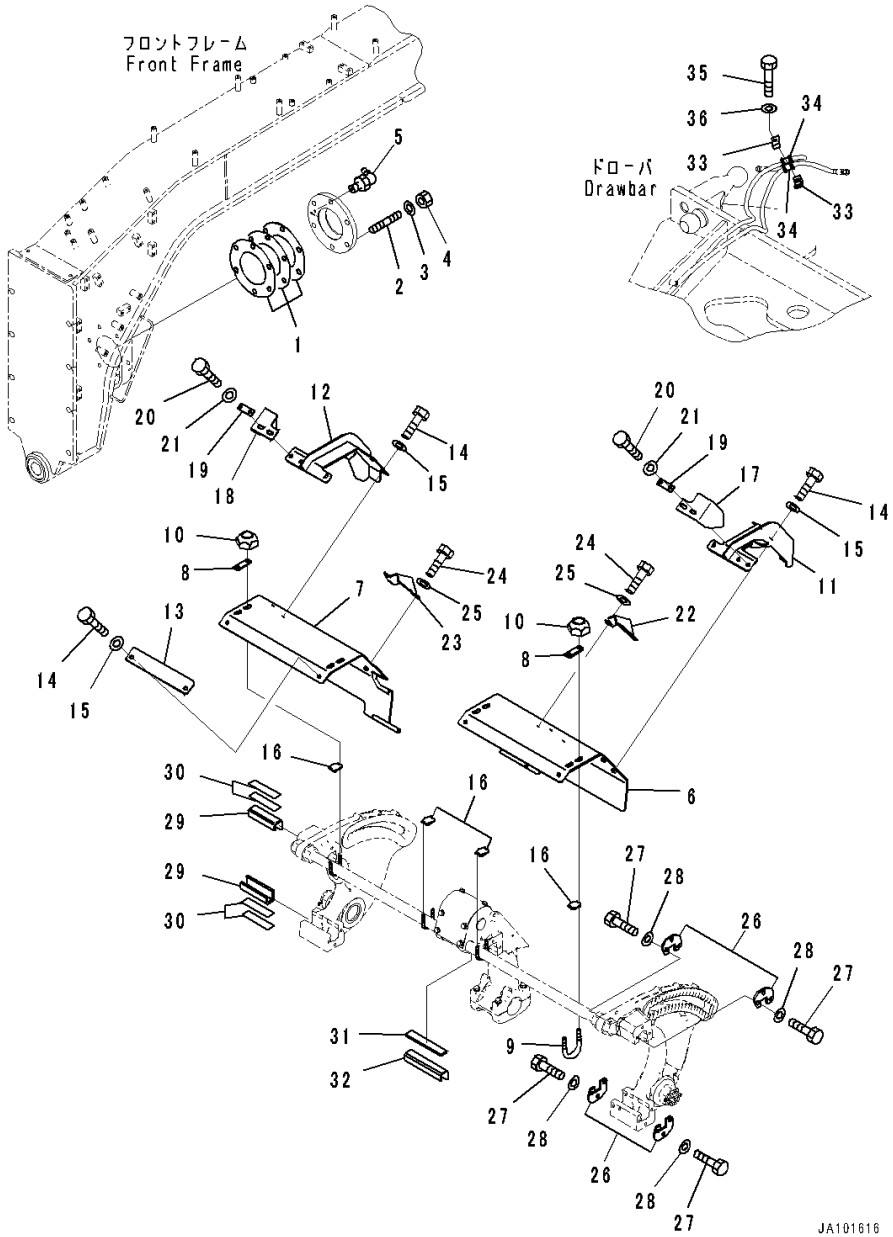

Index	Code	Part Number	Description	Qty	Serial Number
1		234-46-11181	Shim,T=0.2mm	3	26001-
		23C-70-51271	Shim,T=0.5mm	4	26001-
2		01124-82055	Stud	6	26001-
3		01643-32060	Washer	6	26001-
4		01580-12016	Nut	6	26001-
5		07020-00675	Fitting, Grease	1	26001-
6		234-70-82231	Cover	1	26343-
7		234-70-82221	Cover	1	26343-
8		23C-70-53250	Plate	4	26001-
9		07283-34354	Clip, Pipe	4	26001-
10		22P-70-12160	Nut	8	26001-
11		234-70-82261	Cover	1	26343-
12		234-70-82251	Cover	1	26343-
13		23C-70-62690	Cover	1	26001-
14		01010-81025	Bolt	8	26001-
15		01643-31032	Washer	8	26001-
16		07283-54353	Seat	4	26001-
17		234-70-82281	Cover	1	26343-
18		234-70-82271	Cover	1	26343-
19		23C-70-53250	Plate	2	26343-
20		01010-81030	Bolt	4	26343-
21		01643-31032	Washer	4	26343-
22		23B-70-81910	Cover	1	26343-
23		23B-70-81920	Cover	1	26343-
24		01010-81025	Bolt	6	26343-
25		01643-31032	Washer	6	26343-
26		23C-70-53182	Plate	10	26175-
27		01010-81225	Bolt	30	26001-
28		01643-31232	Washer	30	26001-
29		23C-70-53141	Guide	4	26308-
30		23C-70-53260	Shim,T=1.0mm	8	26001-
31		23C-70-53270	Plate	1	26001-
32		23B-735-3321	Guide	1	26291-
33		22P-62-13540	Clamp	2	26001-
34		07095-00317	Cushion	2	26001-
35		01010-81055	Bolt	1	26001-
36		01643-31032	Washer	1	26001-

FIG. T5115-001001 Blade and Circle Lifter (Bracket)

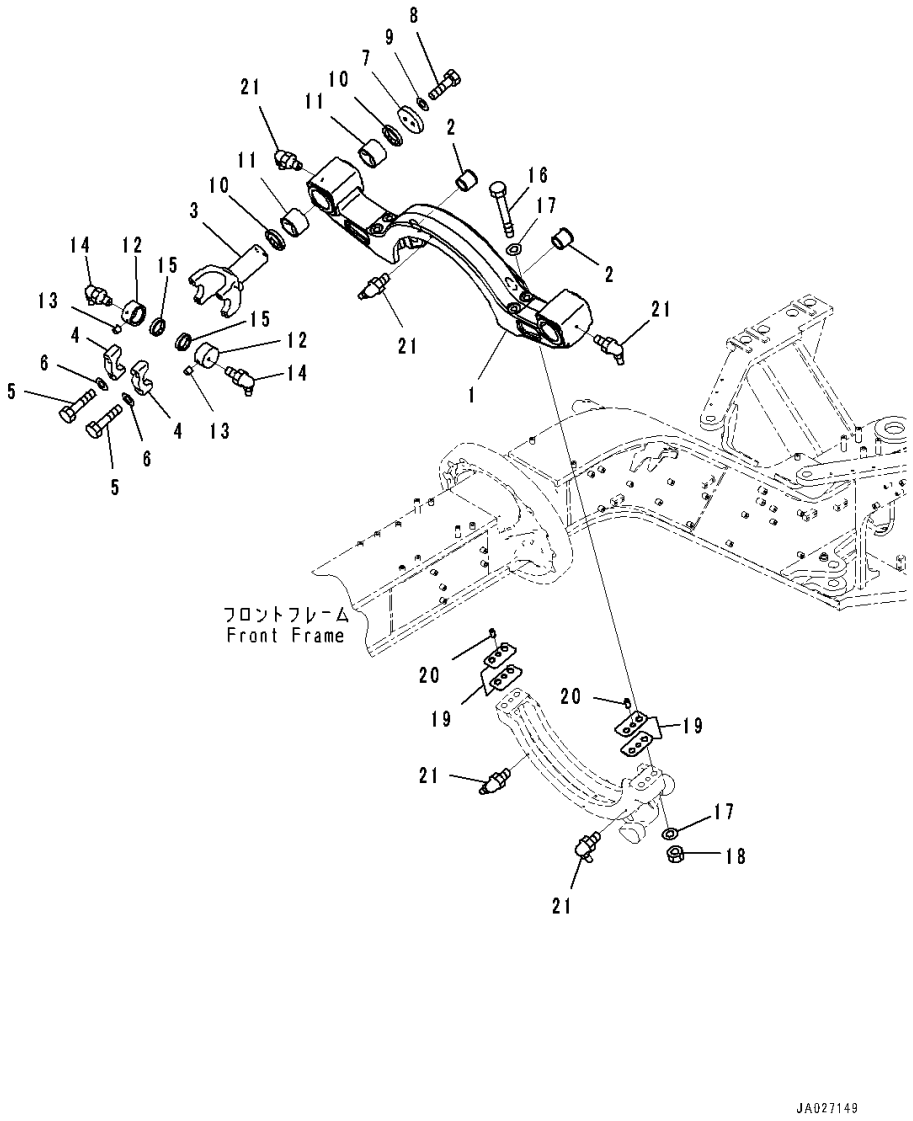

Index	Code	Part Number	Description	Qty	Serial Number
1		23C-70-62480	Bracket	1	26001-
2		23C-70-51410	Bushing	2	26001-
3		234-70-34150	Yoke	2	26001-
4		234-70-34160	Cap	4	26001-
5		01010-81680	Bolt	8	26001-
6		01643-31645	Washer	8	26001-
7		234-71-11161	Washer	2	26001-
8		01010-81650	Bolt	4	26001-
9		01643-31645	Washer	4	26001-
10		07145-00085	Seal, Dust	4	26001-
11		206-910-8170	Bushing	4	26001-
12		234-70-34271	Bushing	4	26001-
13		144-70-15251	Pin, Dowel	4	26001-
14		07020-00900	Fitting, Grease	4	26001-
15		234-70-34180	Seal	4	26001-
16		144-851-2570	Bolt	4	26001-
17		01643-32460	Washer	8	26001-
18		01580-12419	Nut	4	26001-
19		23C-70-51391	Shim,T=2.0mm	4	26001-
20		04020-01842	Pin, Dowel	2	26001-
21		07020-00900	Fitting, Grease	5	26001-

FIG. T5115-001002A Blade and Circle Lifter (Case)

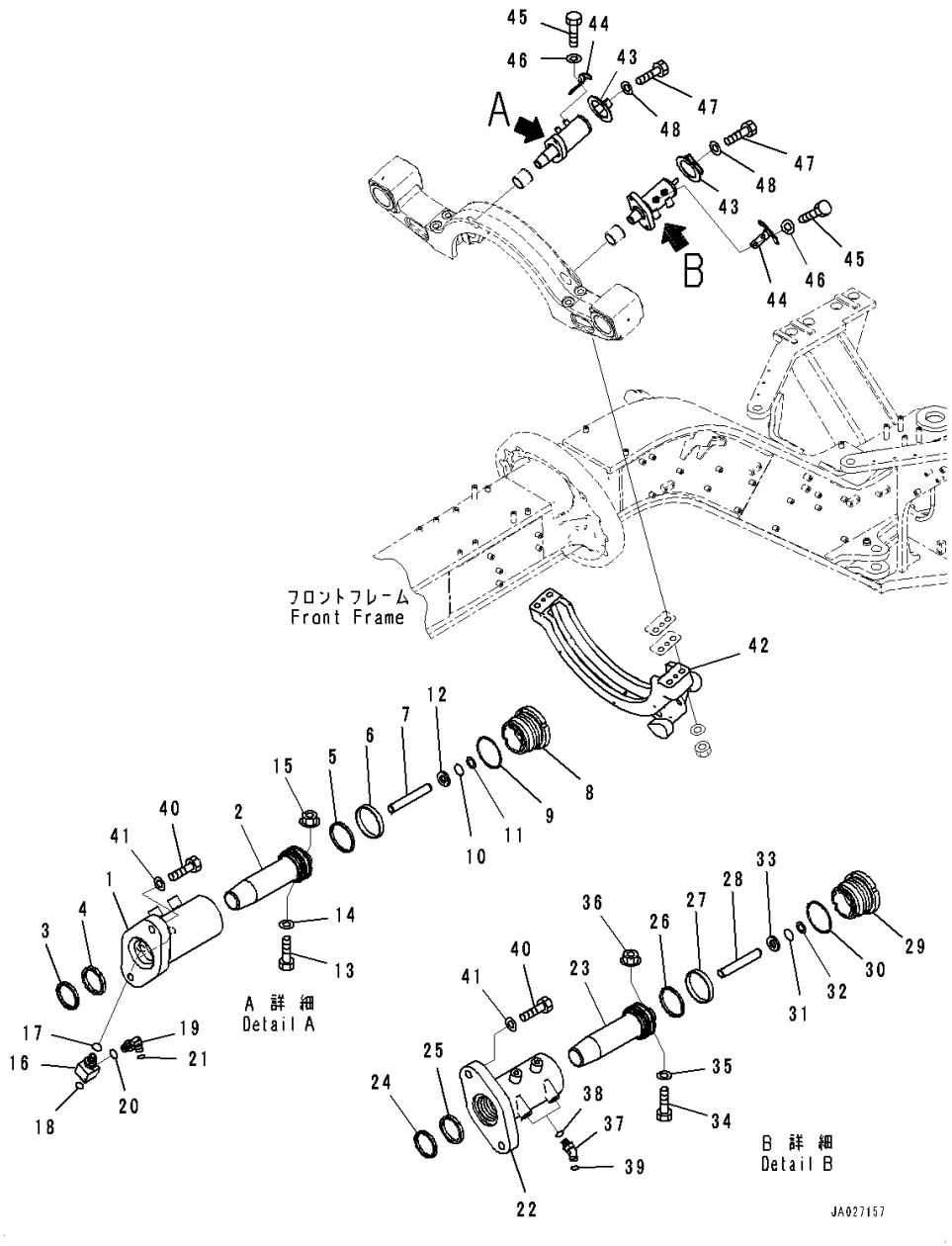

Index	Code	Part Number	Description	Qty	Serial Number
		234-70-81320	Pin Assembly	1	26280-
1		234-70-81290	• Case	1	26280-
2		23C-70-51371	• Rod	1	26280-
3		23B-43-35180	• Seal	1	26280-
4		23B-43-35190	• Packing	1	26280-
5		07161-00070	• Ring, Piston	1	26280-
6		07156-00710	• Ring, Wear	1	26280-
7		234-70-81270	• Shaft	1	26280-
8		23B-43-35170	• Cover	1	26280-
9		07000-12065	• O-ring	1	26280-
10		07000-12016	• O-ring	1	26280-
11		07001-02016	• Ring, Back-up	1	26280-
12		234-43-39250	• Seal	1	26280-
13		01010-80635	• Bolt	1	26280-
14		01640-20610	• Washer	1	26280-
15		01594-00606	• Nut, Flanged	1	26280-
16		424-43-37510	• Tee	2	26280-
17		07002-11423	• O-ring	2	26280-
18		02896-11008	• O-ring	2	26280-
19		02782-10210	• Elbow	2	26280-
20		07002-11423	• O-ring	2	26280-
21		02896-11008	• O-ring	2	26280-
		234-70-81310	Pin Assembly	1	26280-
22		234-70-81280	• Case	1	26280-
23		23C-70-51371	• Rod	1	26280-
24		23B-43-35180	• Seal	1	26280-
25		23B-43-35190	• Packing	1	26280-
26		07161-00070	• Ring, Piston	1	26280-
27		07156-00710	• Ring, Wear	1	26280-
28		234-70-81270	• Shaft	1	26280-
29		23B-43-35170	• Cover	1	26280-
30		07000-12065	• O-ring	1	26280-
31		07000-12016	• O-ring	1	26280-
32		07001-02016	• Ring, Back-up	1	26280-
33		234-43-39250	• Seal	1	26280-
34		01010-80635	• Bolt	1	26280-
35		01640-20610	• Washer	1	26280-
36		01594-00606	• Nut, Flanged	1	26280-
37		02783-10210	• Elbow	2	26280-
38		07002-11423	• O-ring	2	26280-

FIG. T5115-001002A Blade and Circle Lifter (Case)

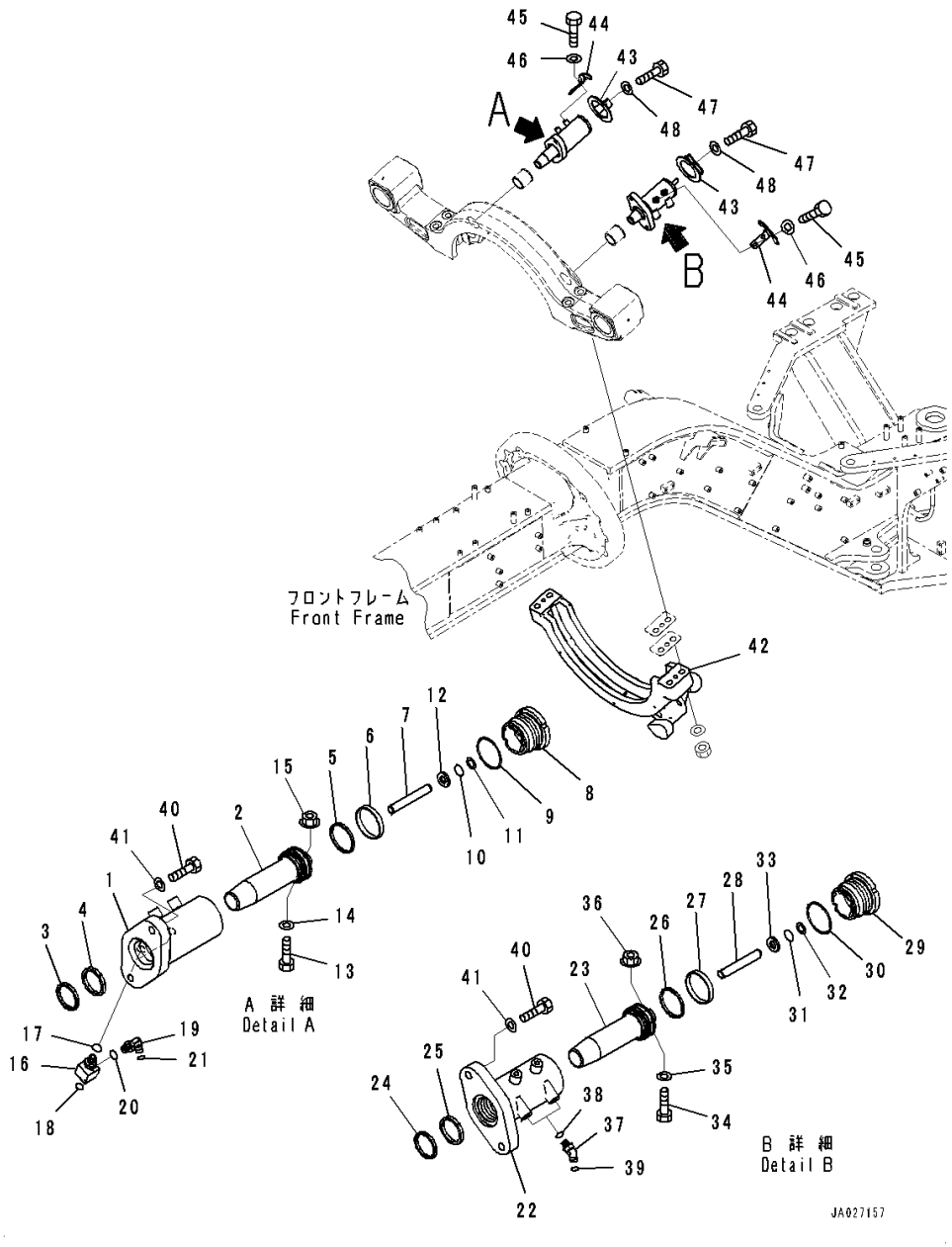

Index	Code	Part Number	Description	Qty	Serial Number
39		02896-11008	• O-ring	2	26280-
40		01010-81455	Bolt	4	26001-
41		01643-31445	Washer, Flat	4	26001-
42		23C-70-62450	Bracket	1	26001-
43		234-70-81260	Cover	2	26001-
44		234-70-81250	Bracket	2	26001-
45		01010-81025	Bolt	4	26001-
46		01643-31032	Washer	4	26001-
47		01010-80816	Bolt	2	26001-
48		01643-30823	Washer	2	26001-

FIG. T5120-001001 Blade (4.3m Width)

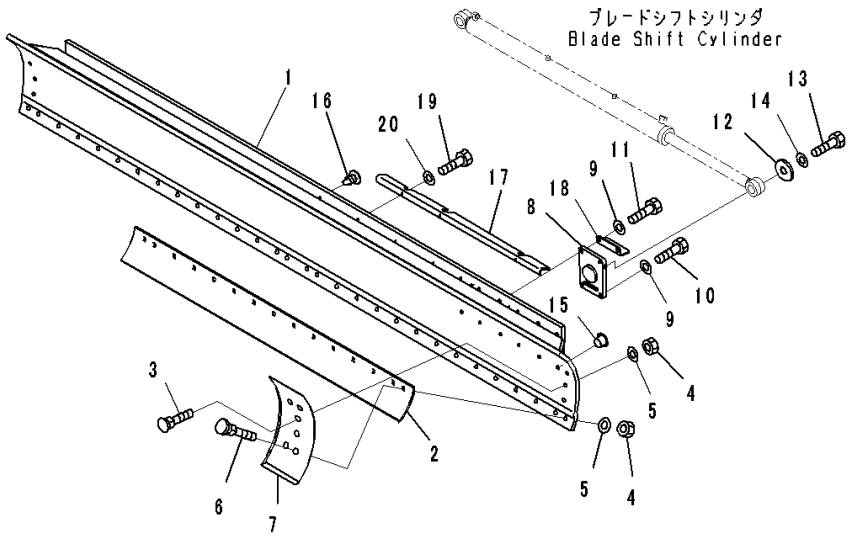

Index	Code	Part Number	Description	Qty	Serial Number
1		23C-70-62460	Blade	1	26001-
2		234-70-12710	Edge	2	26001-
3		234-70-32250	Bolt	32	26001-
4		234-70-32290	Nut	36	26001-
5		01643-32060	Washer	36	26001-
6		234-70-32270	Bolt	4	26001-
7		234-70-32241	End Bit	2	26001-
8		234-70-32160	Bracket	1	26001-
9		01643-31845	Washer	4	26001-
10		01010-81845	Bolt	2	26001-
11		01010-81855	Bolt	2	26001-
12		232-70-52460	Washer	1	26001-
13		01010-81225	Bolt	1	26001-
14		01643-31232	Washer	1	26001-
15		07048-01815	Plug, Plastic	6	26001-
16		20T-54-74510	Cap	1	26001-
17		23C-70-62290	Cover	1	26001-
18		234-70-37140	Cover	1	26001-
19		01010-81025	Bolt	3	26001-
20		01643-31032	Washer	3	26001-

FIG. T5120-003001 Blade (4.3m Width, 25mm Thickness, Overlay, Edge Height 203mm)

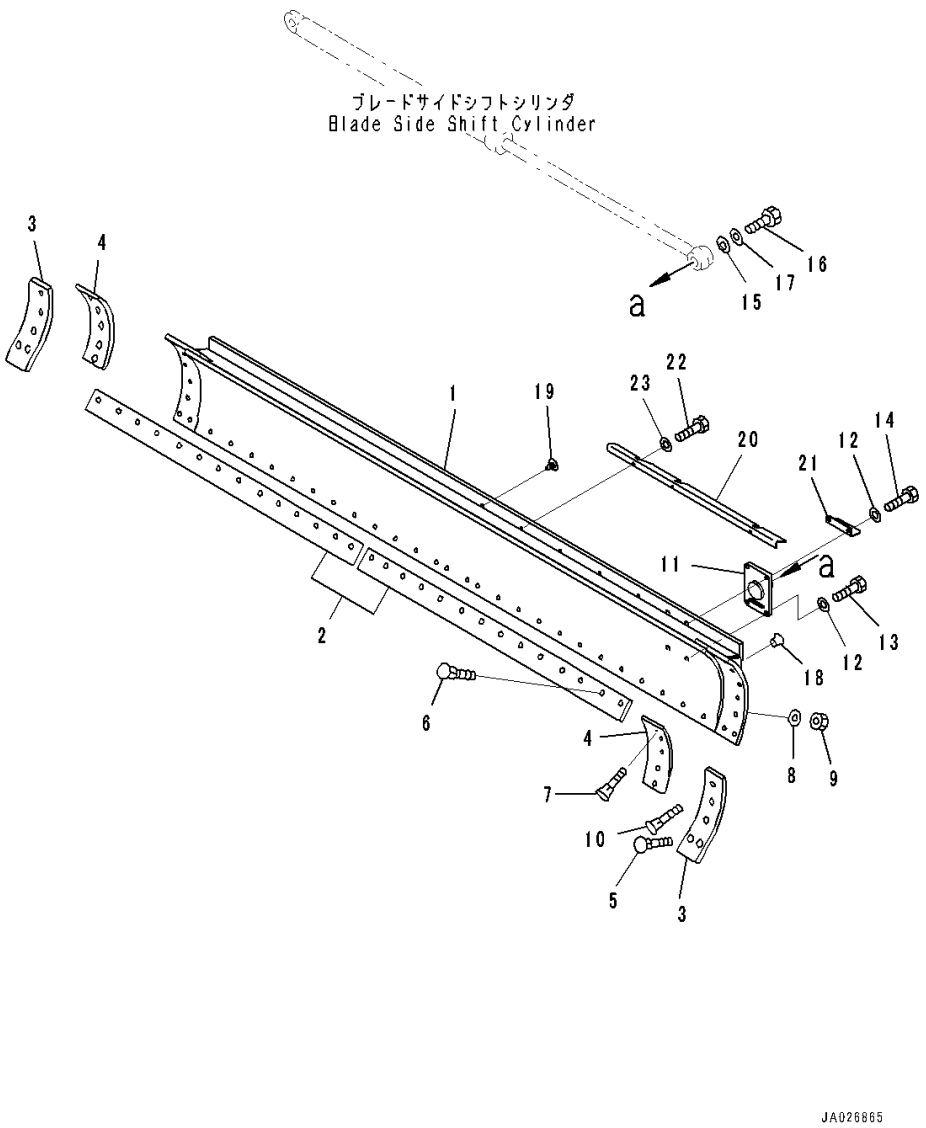

Index	Code	Part Number	Description	Qty	Serial Number
1		234-70-82130	Blade	1	26001-
2		234-70-12710	Edge	2	26001-
3		234-70-32230	Edge	2	26001-
4		234-70-32241	End Bit	2	26001-
5		234-70-32260	Bolt	2	26001-
6		234-70-32250	Bolt	26	26001-
7		234-70-32270	Bolt	10	26001-
8		01643-32060	Washer	40	26001-
9		234-70-32290	Nut	40	26001-
10		234-70-32280	Bolt	2	26001-
11		234-70-32160	Bracket	1	26001-
12		01643-31845	Washer	4	26001-
13		01010-81845	Bolt	2	26001-
14		01010-81855	Bolt	2	26001-
15		232-70-52460	Washer	1	26001-
16		01010-81225	Bolt	1	26001-
17		01643-31232	Washer	1	26001-
18		07048-01815	Plug, Plastic	6	26001-
19		20T-54-74510	Cap	1	26001-
20		23C-70-62290	Cover	1	26001-
21		234-70-37140	Cover	1	26001-
22		01010-81025	Bolt	3	26001-
23		01643-31032	Washer	3	26001-

FIG. T5120-002001 Blade (4.3m Width, 25mm Thickness, Side Edge, Edge Height 203mm)

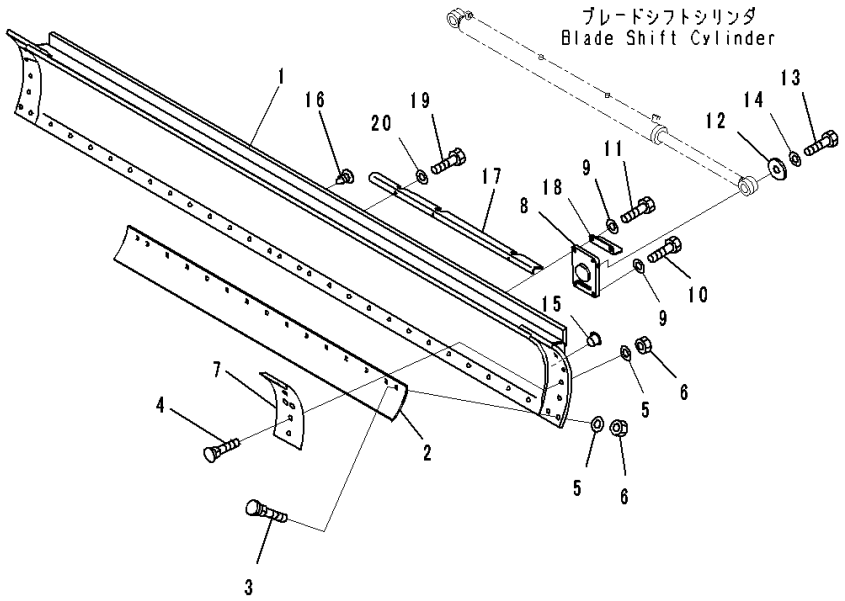

Index	Code	Part Number	Description	Qty	Serial Number
1		234-70-82130	Blade	1	26001-
2		234-70-12710	Edge	2	26001-
3		234-70-32250	Bolt	30	26001-
4		234-70-32260	Bolt	10	26001-
5		234-70-32290	Nut	40	26001-
6		01643-32060	Washer	40	26001-
7		234-70-32230	Edge,Side	2	26001-
8		234-70-32160	Bracket	1	26001-
9		01643-31845	Washer	4	26001-
10		01010-81845	Bolt	2	26001-
11		01010-81855	Bolt	2	26001-
12		232-70-52460	Washer	1	26001-
13		01010-81225	Bolt	1	26001-
14		01643-31232	Washer	1	26001-
15		07048-01815	Plug, Plastic	6	26001-
16		20T-54-74510	Cap	1	26001-
17		23C-70-62290	Cover	1	26001-
18		234-70-37140	Cover	1	26001-
19		01010-81025	Bolt	3	26001-
20		01643-31032	Washer	3	26001-

FIG. T5125-002001 Ripper (Link)

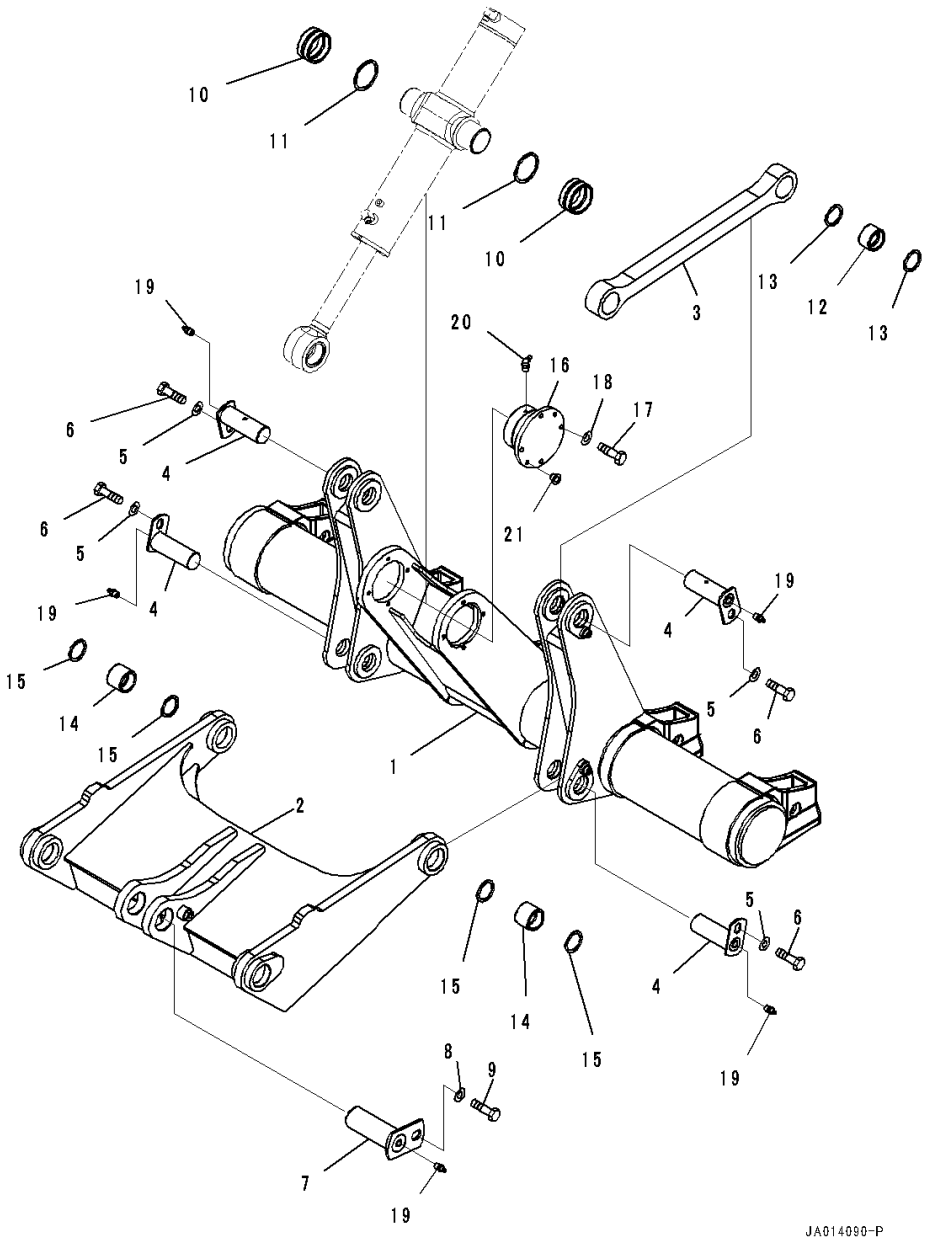

Index	Code	Part Number	Description	Qty	Serial Number
1		234-785-8112	Bracket	1	26001-
	B1	234-785-8111	Bracket	1	(26001-26306)
2		234-785-8160	Link	1	26001-
3		23C-785-5140	Rod	2	26001-
4		417-70-11970	Pin	4	26001-
5		175-54-34170	Washer	4	26001-
6		01010-81220	Bolt	4	26001-
7		419-70-11911	Pin	1	26001-
8		421-70-11280	Washer	1	26001-
9		01010-81625	Bolt	1	26001-
10		234-785-1610	Bushing	2	26001-
11		07145-00090	Seal, Dust	2	26001-
12		234-785-1620	Bushing	4	26001-
13		07145-00060	Seal, Dust	8	26001-
14		07143-10606	Bushing	4	26001-
15		07145-00060	Seal, Dust	8	26001-
16		234-785-1711	Support	2	26001-
17		01010-81245	Bolt	8	26001-
18		01643-31232	Washer	8	26001-
19		07020-00000	Fitting, Grease	5	26001-
20		07020-00675	Fitting, Grease	2	26001-
21		07048-01210	Plug, Plastic	4	26001-

FIG. T5125-002002 Ripper (Ripper Cylinder)

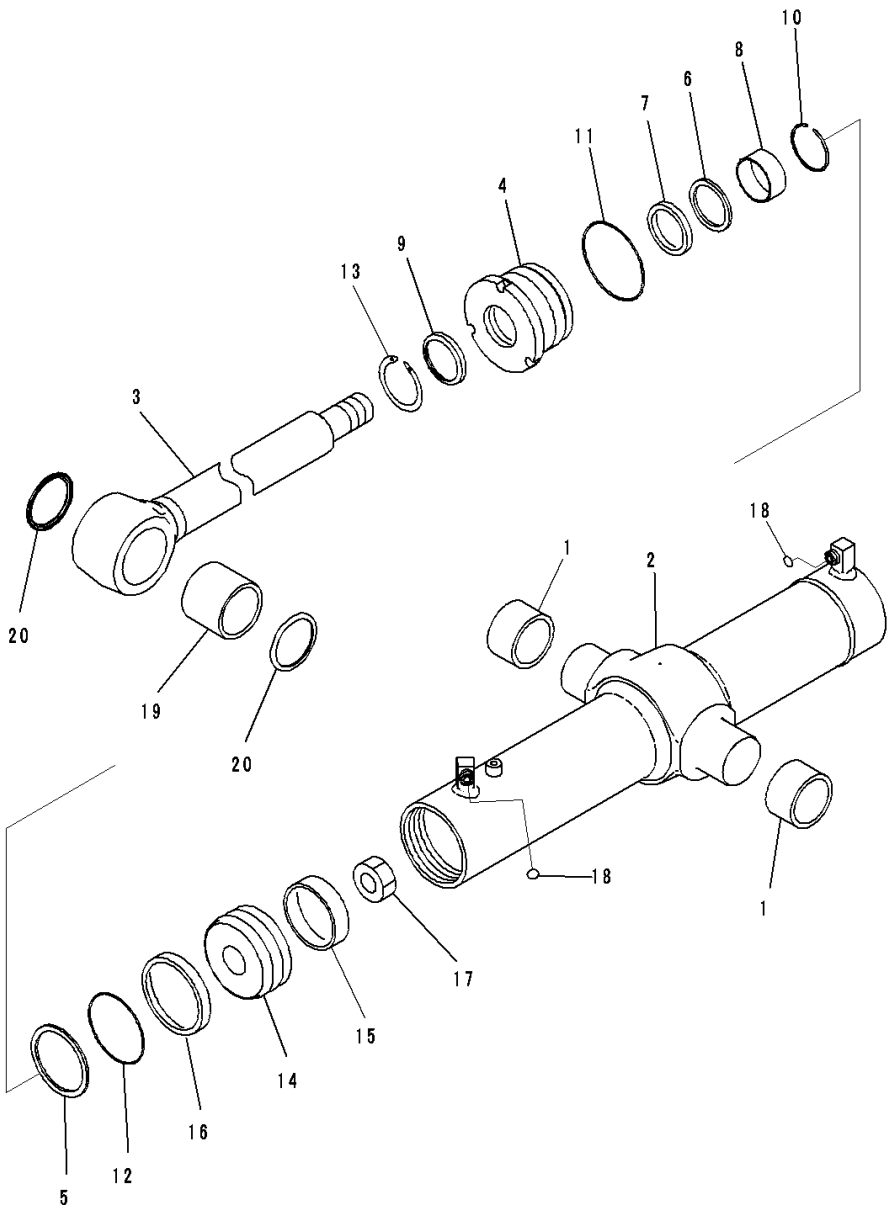

Index	Code	Part Number	Description	Qty	Serial Number
		707-G2-00320	Cylinder Assembly	1	26001-
1		234-63-25080	• Bushing	2	26001-
2		707-12-11250	• Cylinder	1	26001-
3		707-58-60A30	• Rod, Piston	1	26001-
4		707-29-11A60	• Head, Cylinder	1	26001-
5		707-35-11110	• Ring, Back-up, (Kit : K07)	1	26001-
6		707-51-60650	• Ring, Buffer, (Kit : K07)	1	26001-
7		707-51-60860	• Packing, Rod, (Kit : K07)	1	26001-
8		707-52-90351	• Bushing	1	26001-
9		707-56-60740	• Seal, Dust, (Kit : K07)	1	26001-
10		707-75-60110	• Ring, Snap	1	26001-
11		07000-12115	• O-ring, (Kit : K07)	1	26001-
12		07000-B2110	• O-ring, (Kit : K07)	1	26001-
13		07179-12074	• Ring, Snap	1	26001-
14		707-36-11780	• Piston	1	26001-
15		707-39-11510	• Ring, Wear, (Kit : K07)	1	26001-
16		707-44-11250	• Ring, Piston, (Kit : K07)	1	26001-
17		707-67-42020	• Nut	1	26001-
18		02896-11012	• O-ring, (Kit : K07)	2	26001-
19		07143-10707	• Bushing	1	26001-
20		07145-00075	• Seal, Dust, (Kit : K07)	2	26001-

FIG. T5125-002003 Ripper (Bracket)

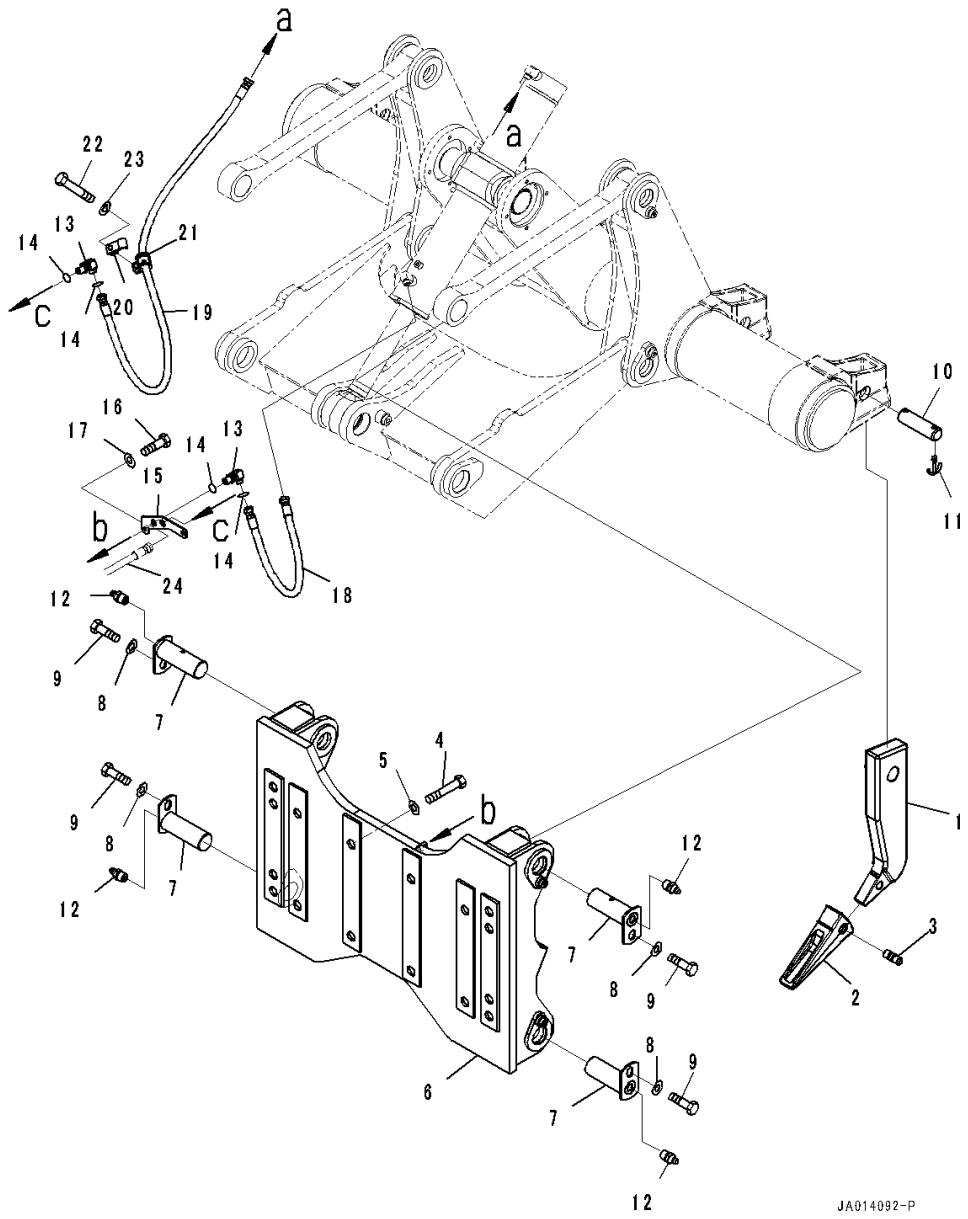

Index	Code	Part Number	Description	Qty	Serial Number
1		232-785-1291	Shank	3	26001-
2		234-785-1121	Point	3	26001-
3		113-78-21170	Pin	3	26001-
4		01010-82785	Bolt	16	26001-
5		01643-32780	Washer	16	26001-
6		234-785-8131	Bracket	1	26001-
7		417-70-11970	Pin	4	26001-
8		175-54-34170	Washer	4	26001-
9		01010-81220	Bolt	4	26001-
10		232-785-1310	Pin	3	26001-
11		04050-10070	Pin, Cotter	6	26001-
12		07020-00000	Fitting, Grease	4	26001-
13		23C-60-52210	Joint	2	26001-
14		02896-11012	O-ring	4	26001-
15		234-785-8210	Plate	1	26001-
16		01010-81025	Bolt	2	26001-
17		01643-31032	Washer	2	26001-
18		234-785-8220	Hose	1	26001-
19		234-785-8230	Hose	1	26001-
20		07094-10417	Clamp	2	26001-
21		07095-00420	Cushion	1	26001-
22		01010-81060	Bolt	1	26001-
23		01643-31032	Washer	1	26001-
24		(234-60-87120)	Hose(Hydraulic Piping,Ripper Piping)(Refer to Page 371)		

FIG. T5126-001001 Ripper Shank

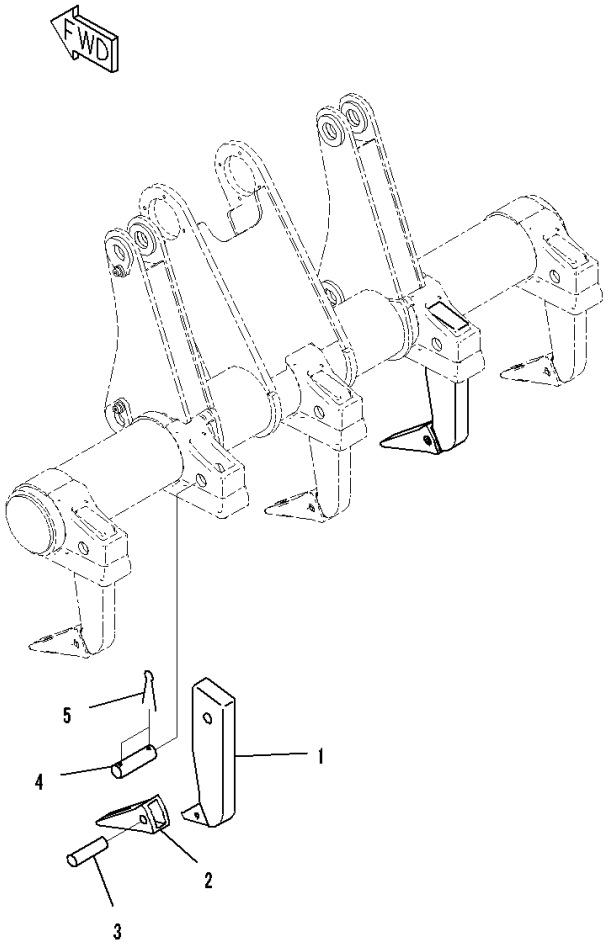

Index	Code	Part Number	Description	Qty	Serial Number
1		232-785-1291	Shank	2	26001-
2		234-785-1121	Point	2	26001-
3		113-78-21170	Pin	2	26001-
4		232-785-1310	Pin	2	26001-
5		04050-10070	Pin, Cotter	4	26001-

FIG. T5140-001001 Blade Lift Cylinder

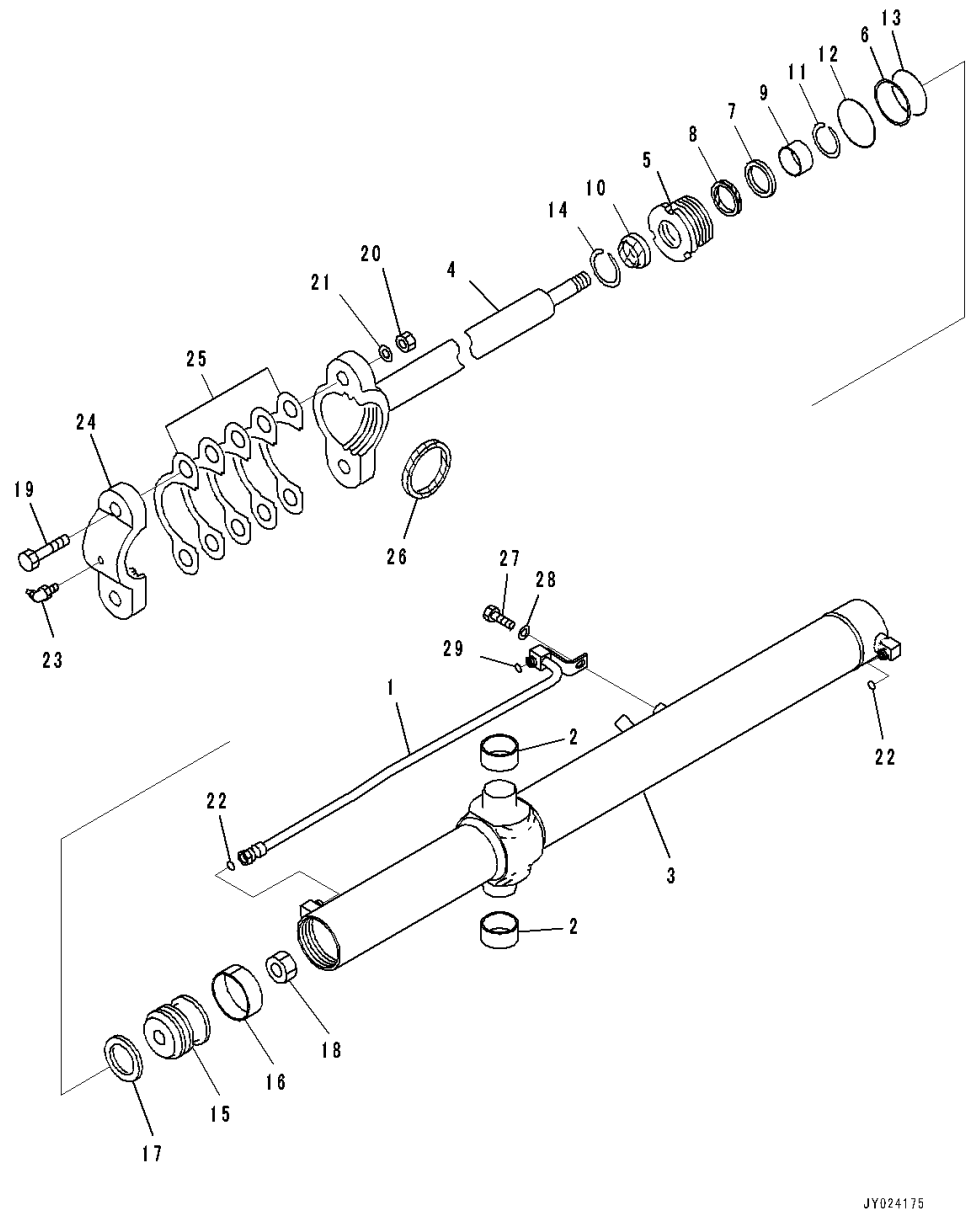

Index	Code	Part Number	Description	Qty	Serial Number
1		707-86-01420	Tube	2	26001-
		707-G2-00310	Cylinder Assembly	2	26001-
2		234-63-13080	• Bushing	2	26001-
3		707-12-85050	• Cylinder	1	26001-
4		707-60-55030	• Rod, Piston	1	26001-
5		707-29-85370	• Head, Cylinder	1	26001-
6		707-35-10810	• Ring, Back-up, (Kit : K08)	1	26001-
7		707-51-55650	• Ring, Buffer, (Kit : K08)	1	26001-
8		707-51-55860	• Packing, Rod, (Kit : K08)	1	26001-
9		707-52-90301	• Bushing	1	26001-
10		707-56-55740	• Seal, Dust, (Kit : K08)	1	26001-
11		707-75-55110	• Ring, Snap	1	26001-
12		07000-12085	• O-ring, (Kit : K08)	1	26001-
13		07000-B2080	• O-ring, (Kit : K08)	1	26001-
14		07179-12069	• Ring, Snap	1	26001-
15		707-36-85240	• Piston	1	26001-
16		707-39-85120	• Ring, Wear, (Kit : K08)	1	26001-
17		707-44-85151	• Ring, Piston, (Kit : K08)	1	26001-
18		707-67-39020	• Nut	1	26001-
19		01010-82285	• Bolt	2	26001-
20		01580-12218	• Nut	2	26001-
21		01643-32260	• Washer	2	26001-
22		02896-11009	• O-ring, (Kit : K08)	2	26001-
23		07020-00900	• Fitting, Grease	1	26001-
24		07138-01090	• Cap	1	26001-
25		07139-01002	• Shim,T=0.2mm	3	26001-
		07139-01005	• Shim,T=0.5mm	2	26001-
26		07141-00100	• Seal, (Kit : K08)	1	26001-
27		01010-81020	Bolt	2	26001-
28		01643-31032	Washer	2	26001-
29		02896-11009	O-ring, (Kit : K08)	2	26001-

FIG. T5155-001001 Drawbar Shift Cylinder

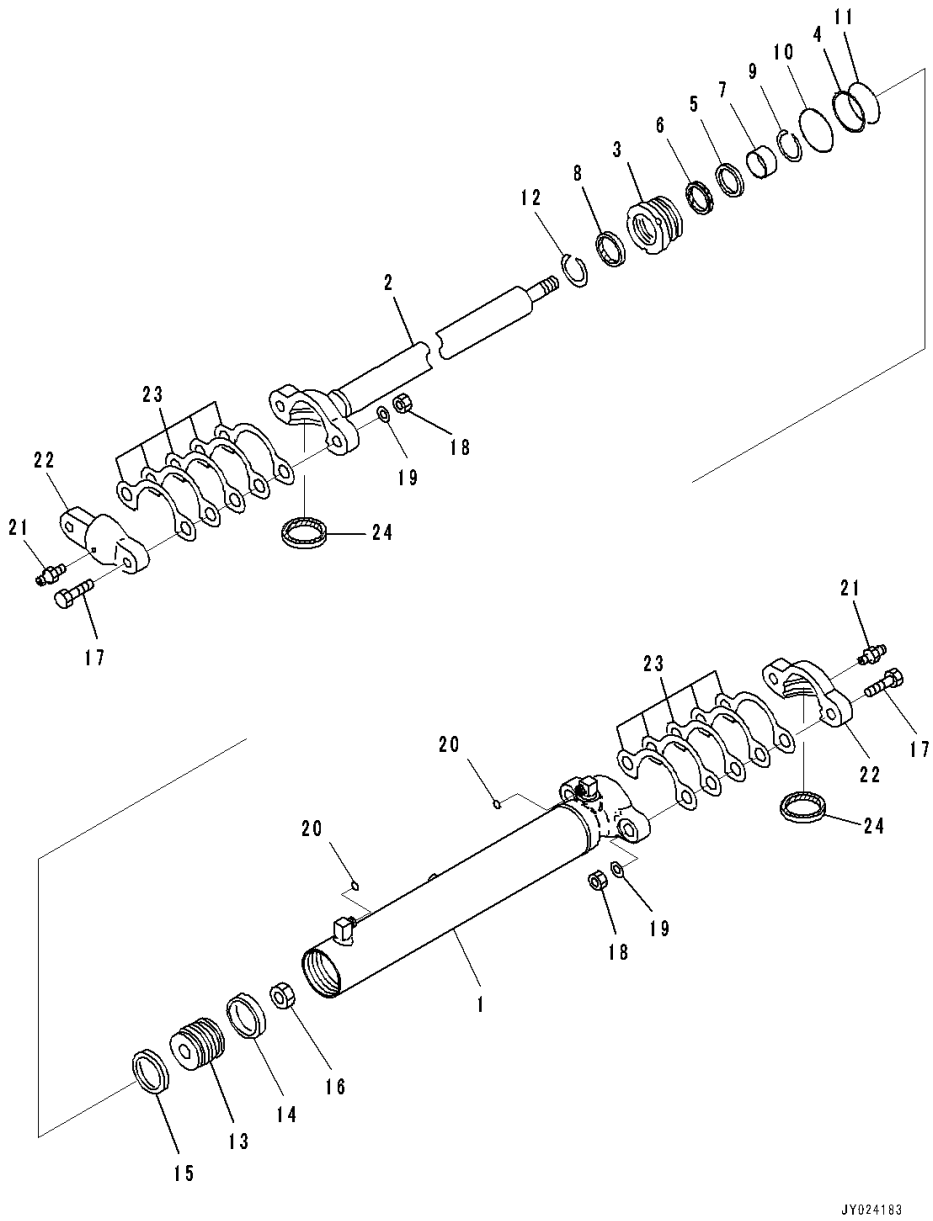

Index	Code	Part Number	Description	Qty	Serial Number
		707-G0-01090	Cylinder Assembly	1	26001-
1		707-11-80K60	• Cylinder	1	26001-
2		707-60-50030	• Rod, Piston	1	26001-
3		707-29-80090	• Head, Cylinder	1	26001-
4		707-35-10760	• Ring, Back-up, (Kit : K09)	1	26001-
5		707-51-50650	• Ring, Buffer, (Kit : K09)	1	26001-
6		707-51-50860	• Packing, Rod, (Kit : K09)	1	26001-
7		707-52-90251	• Bushing	1	26001-
8		707-56-50740	• Seal, Dust, (Kit : K09)	1	26001-
9		707-75-50110	• Ring, Snap	1	26001-
10		07000-12080	• O-ring, (Kit : K09)	1	26001-
11		07000-B2075	• O-ring, (Kit : K09)	1	26001-
12		07179-12062	• Ring, Snap	1	26001-
13		707-36-80390	• Piston	1	26001-
14		707-39-80140	• Ring, Wear, (Kit : K09)	1	26001-
15		707-44-80150	• Ring, Piston, (Kit : K09)	1	26001-
16		707-67-33040	• Nut	1	26001-
17		01010-82285	• Bolt	4	26001-
18		01580-12218	• Nut	4	26001-
19		01643-32260	• Washer	4	26001-
20		02896-11009	• O-ring, (Kit : K09)	2	26001-
21		07020-00000	• Fitting, Grease	2	26001-
22		07138-01090	• Cap	2	26001-
23		07139-01002	• Shim,T=0.2mm	6	26001-
		07139-01005	• Shim,T=0.5mm	4	26001-
24		07141-00100	• Seal, (Kit : K09)	2	26001-

FIG. T5156-001001 Scarifier Cylinder

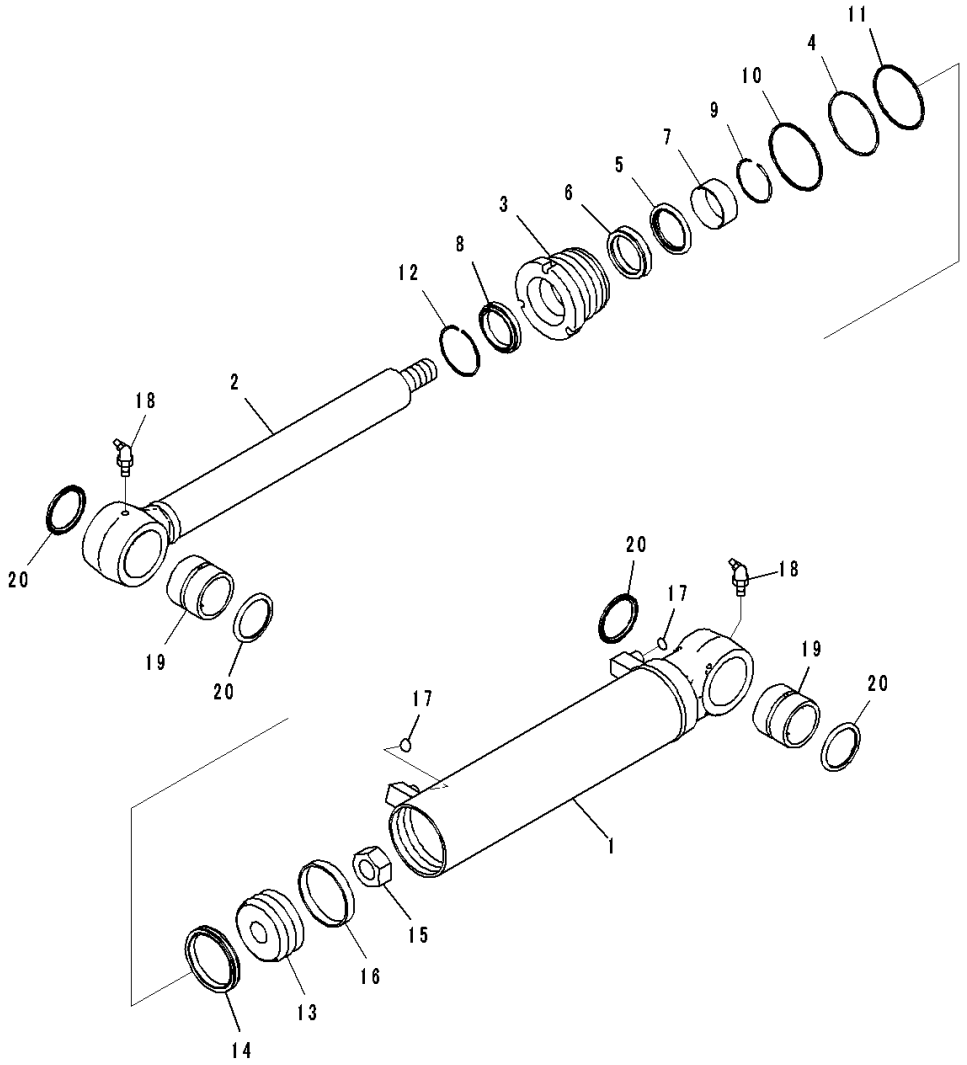

Index	Code	Part Number	Description	Qty	Serial Number
		707-G0-01210	Cylinder Assembly	1	26045-
1		707-11-90A30	• Cylinder	1	26045-
2		707-58-55A70	• Rod, Piston	1	26045-
3		707-29-90A40	• Head, Cylinder	1	26045-
4		707-35-10860	• Ring, Back-up, (Kit : K11)	1	26045-
5		707-51-55650	• Ring, Buffer, (Kit : K11)	1	26045-
6		707-51-55860	• Packing, Rod, (Kit : K11)	1	26045-
7		707-52-90311	• Bushing	1	26045-
8		707-56-55740	• Seal, Dust, (Kit : K11)	1	26045-
9		707-75-55110	• Ring, Snap	1	26045-
10		07000-12090	• O-ring, (Kit : K11)	1	26045-
11		07000-B2085	• O-ring, (Kit : K11)	1	26045-
12		07179-12069	• Ring, Snap	1	26045-
13		707-36-90420	• Piston	1	26045-
14		707-44-90151	• Ring, Piston, (Kit : K11)	1	26045-
15		707-67-30050	• Nut	1	26045-
16		07156-00912	• Ring, Wear, (Kit : K11)	1	26045-
17		02896-61012	• O-ring, (Kit : K11)	2	26045-
18		07020-00675	• Fitting, Grease	2	26045-
19		07144-10506	• Bushing	2	26045-
20		07145-00055	• Seal, Dust, (Kit : K11)	4	26045-

FIG. T5160-001001 Articulate Cylinder

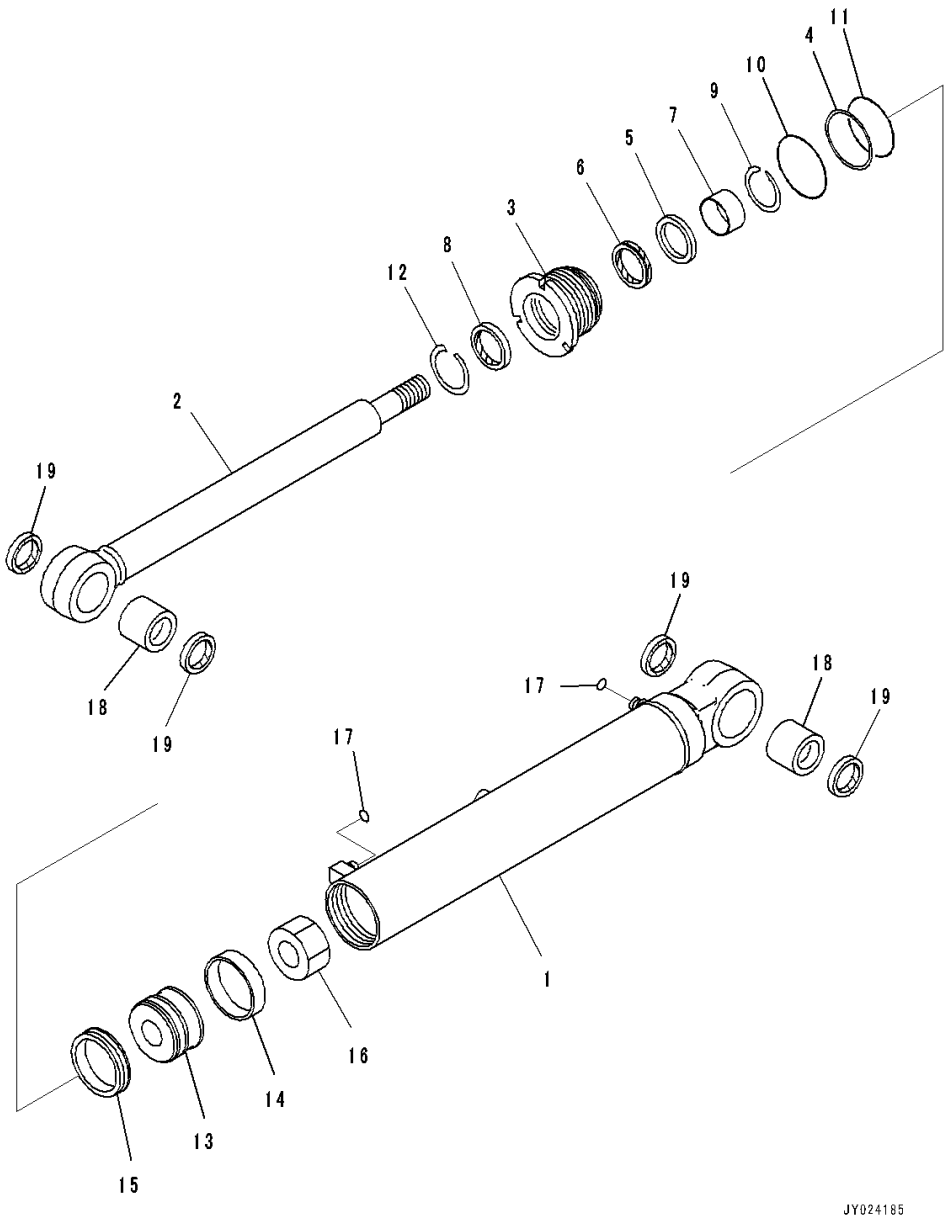

Index	Code	Part Number	Description	Qty	Serial Number
		707-G0-01120	Cylinder Assembly	2	26001-
1		707-11-85700	• Cylinder	1	26001-
2		707-58-50L30	• Rod, Piston	1	26001-
3		707-29-85380	• Head, Cylinder	1	26001-
4		707-35-10810	• Ring, Back-up, (Kit : K10)	1	26001-
5		707-51-50650	• Ring, Buffer, (Kit : K10)	1	26001-
6		707-51-50860	• Packing, Rod, (Kit : K10)	1	26001-
7		707-52-90251	• Bushing	1	26001-
8		707-56-50740	• Seal, Dust, (Kit : K10)	1	26001-
9		707-75-50110	• Ring, Snap	1	26001-
10		07000-12085	• O-ring, (Kit : K10)	1	26001-
11		07000-B2080	• O-ring, (Kit : K10)	1	26001-
12		07179-12062	• Ring, Snap	1	26001-
13		707-36-85270	• Piston	1	26001-
14		707-39-85120	• Ring, Wear, (Kit : K10)	1	26001-
15		707-44-85151	• Ring, Piston, (Kit : K10)	1	26001-
16		707-67-36020	• Nut	1	26001-
17		02896-11009	• O-ring, (Kit : K10)	2	26001-
18		07143-10506	• Bushing	2	26001-
19		07145-00055	• Seal, Dust, (Kit : K10)	4	26001-

FIG. T5170-002001 Scarifier (Front, 11-Shanks and Tooth)

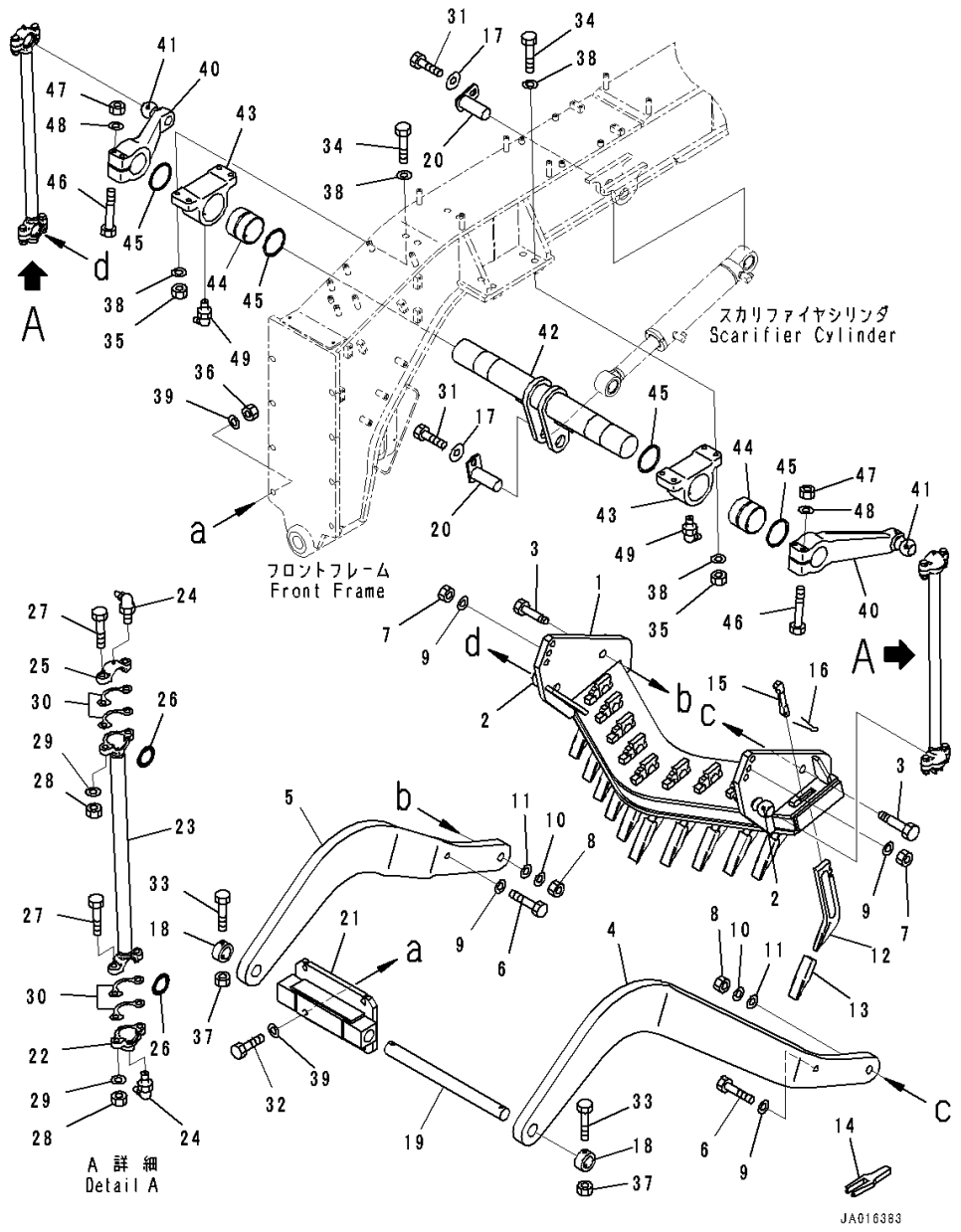

Index	Code	Part Number	Description	Qty	Serial Number
1		234-71-23160	Body	1	26001-
2		234-70-13120	• Stud, Ball,Welded	2	26001-
3		234-71-23170	Bolt	2	26001-
4		234-71-81140	Arm	1	26001-
5		234-71-81150	Arm	1	26001-
6		01011-82415	Bolt	2	26001-
7		01580-12419	Nut	2	26001-
8		01580-13326	Nut	2	26001-
9		01643-32460	Washer	4	26001-
10		01643-33380	Washer	2	26001-
11		01643-33690	Washer	2	26001-
12		232-71-51310	Shank	11	26001-
13		232-71-51320	Tooth	11	26001-
14		232-71-51330	Tool	1	26001-
15		232-70-13142	Wedge	11	26001-
16		04050-18050	Pin, Cotter	11	26001-
17		175-54-34170	Washer	2	26001-
18		234-70-81210	Washer	2	26001-
19		234-71-81130	Rod	1	26001-
20		234-71-81190	Pin	2	26001-
21		234-71-82110	Bracket	1	26001-
22		234-70-13180	Cap	2	26001-
23		234-71-81162	Rod	2	26073-
	A2	234-71-81161	Rod	2	26001-26072
24		07020-00900	Fitting, Grease	4	26001-
25		07138-00870	Cap, Ball Joint	2	26001-
26		07141-00080	Seal, Dust	4	26001-
27		01010-81875	Bolt	8	26001-
28		01580-11815	Nut	8	26001-
29		01643-31845	Washer	8	26001-
30		07139-00805	Shim,T=0.5mm	10	26073-
		07139-00805	Shim,T=0.5mm	8	26001-26072
31		01010-81225	Bolt	2	26001-
32		01010-82490	Bolt	4	26001-
33		01011-81400	Bolt	2	26001-
34		01019-32020	Bolt	8	26001-
35		01580-12016	Nut	8	26001-
36		01580-12419	Nut	4	26001-
37		01596-01413	Nut, Flanged	2	26001-
38		01643-32060	Washer	16	26001-

FIG. T5170-002001 Scarifier (Front, 11-Shanks and Tooth)

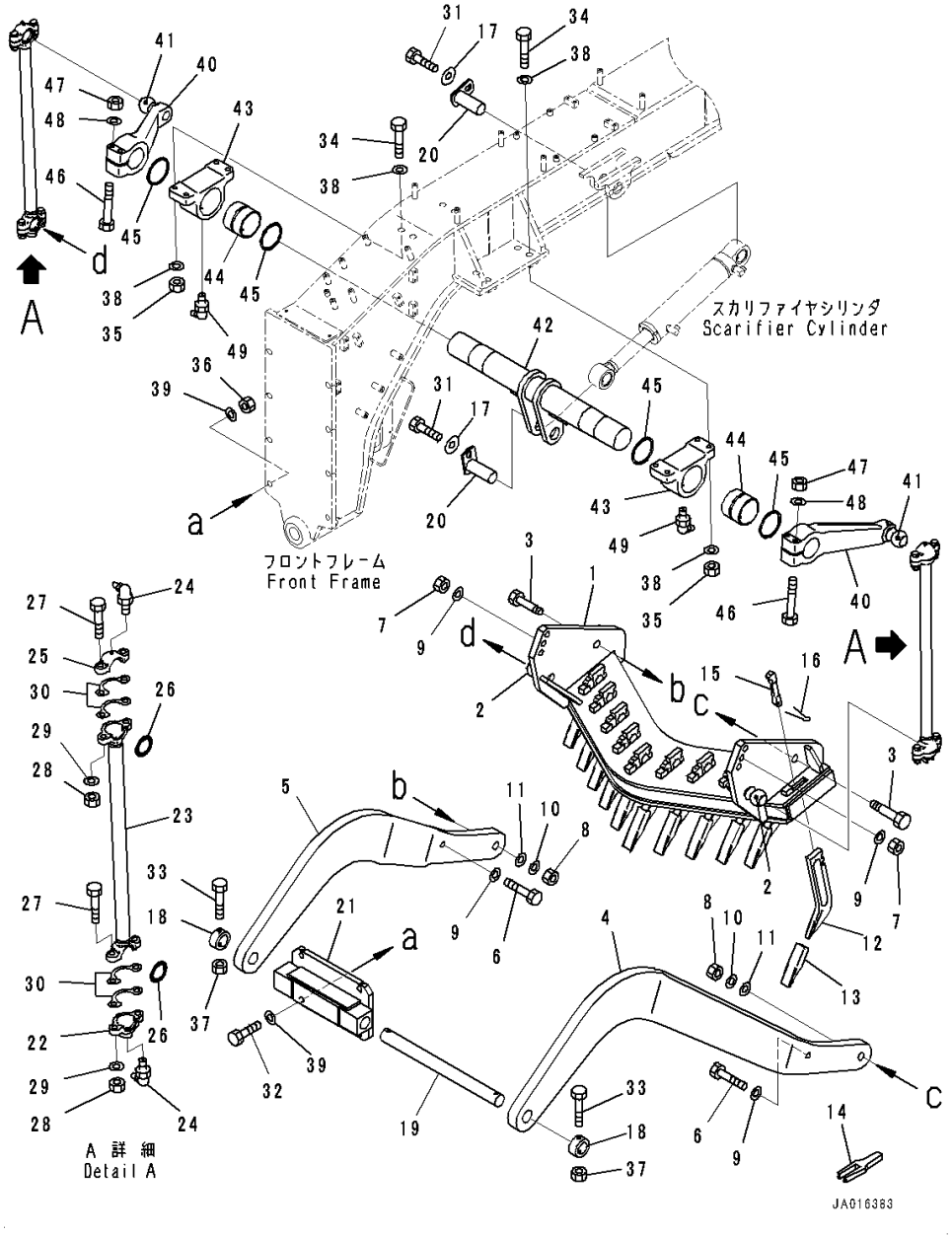

Index	Code	Part Number	Description	Qty	Serial Number
39		01643-32460	Washer	8	26001-
40		234-71-81170	Lever	2	26001-
41		234-70-83120	• Stud, Ball,Welded	1	26001-
42		234-71-81310	Shaft	1	26001-
43		234-71-21220	Support	2	26001-
44		234-71-16131	Bushing	2	26001-
45		07145-00110	Seal, Dust	4	26001-
46		01011-81640	Bolt	4	26001-
47		01580-11613	Nut	4	26001-
48		01643-31645	Washer	4	26001-
49		07020-00675	Fitting, Grease	2	26001-

FIG. T5170-001001 Scarifier (Front, 11-Shanks and Tooth, Adjusting Rod)

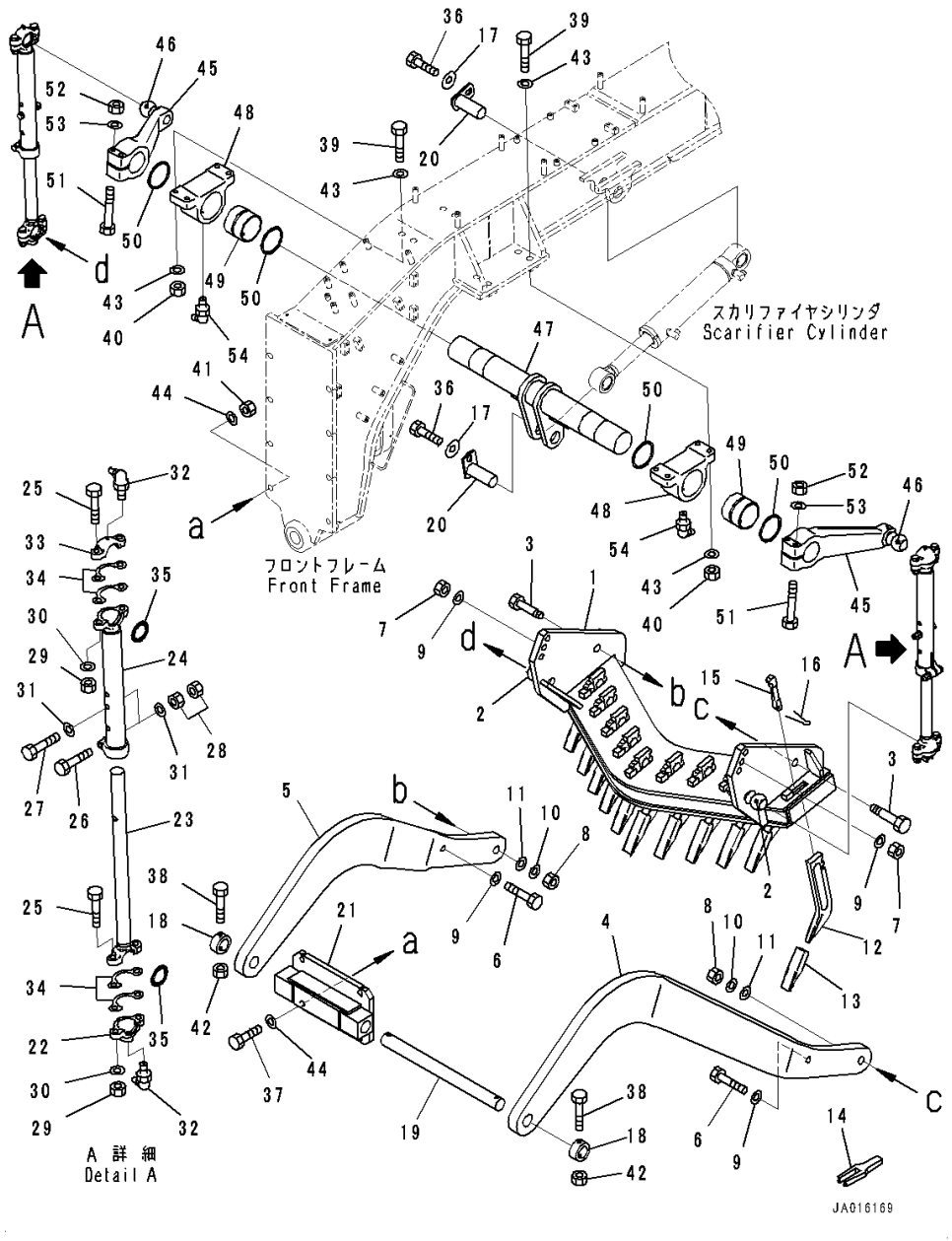

Index	Code	Part Number	Description	Qty	Serial Number
1		234-71-23160	Body	1	26001-
2		234-70-13120	• Stud, Ball,Welded	2	26001-
3		234-71-23170	Bolt	2	26001-
4		234-71-81140	Arm	1	26001-
5		234-71-81150	Arm	1	26001-
6		01011-82415	Bolt	2	26001-
7		01580-12419	Nut	2	26001-
8		01580-13326	Nut	2	26001-
9		01643-32460	Washer	4	26001-
10		01643-33380	Washer	2	26001-
11		01643-33690	Washer	2	26001-
12		232-71-51310	Shank	11	26001-
13		232-71-51320	Tooth	11	26001-
14		232-71-51330	Tool	1	26001-
15		232-70-13142	Wedge	11	26001-
16		04050-18050	Pin, Cotter	11	26001-
17		175-54-34170	Washer	2	26001-
18		234-70-81210	Washer	2	26001-
19		234-71-81130	Rod	1	26001-
20		234-71-81190	Pin	2	26001-
21		234-71-82110	Bracket	1	26001-
22		234-70-13180	Cap	2	26001-
23		234-70-83212	Rod	2	26073-
	A2	234-70-83211	Rod	2	26001-26072
24		234-71-81241	Tube	2	26001-
25		01010-81875	Bolt	8	26001-
26		01011-81600	Bolt	2	26001-
27		01011-81610	Bolt	2	26001-
28		01580-11613	Nut	8	26001-
29		01580-11815	Nut	8	26001-
30		01643-31845	Washer	8	26001-
31		01643-51645	Washer	6	26073-
32		07020-00900	Fitting, Grease	4	26001-
33		07138-00870	Cap, Ball Joint	2	26001-
34		07139-00805	Shim,T=0.5mm	10	26001-
35		07141-00080	Seal, Dust	4	26001-
36		01010-81225	Bolt	2	26001-
37		01010-82490	Bolt	4	26001-
38		01011-81400	Bolt	2	26001-
39		01019-32020	Bolt	8	26001-

FIG. T5170-001001 Scarifier (Front, 11-Shanks and Tooth, Adjusting Rod)

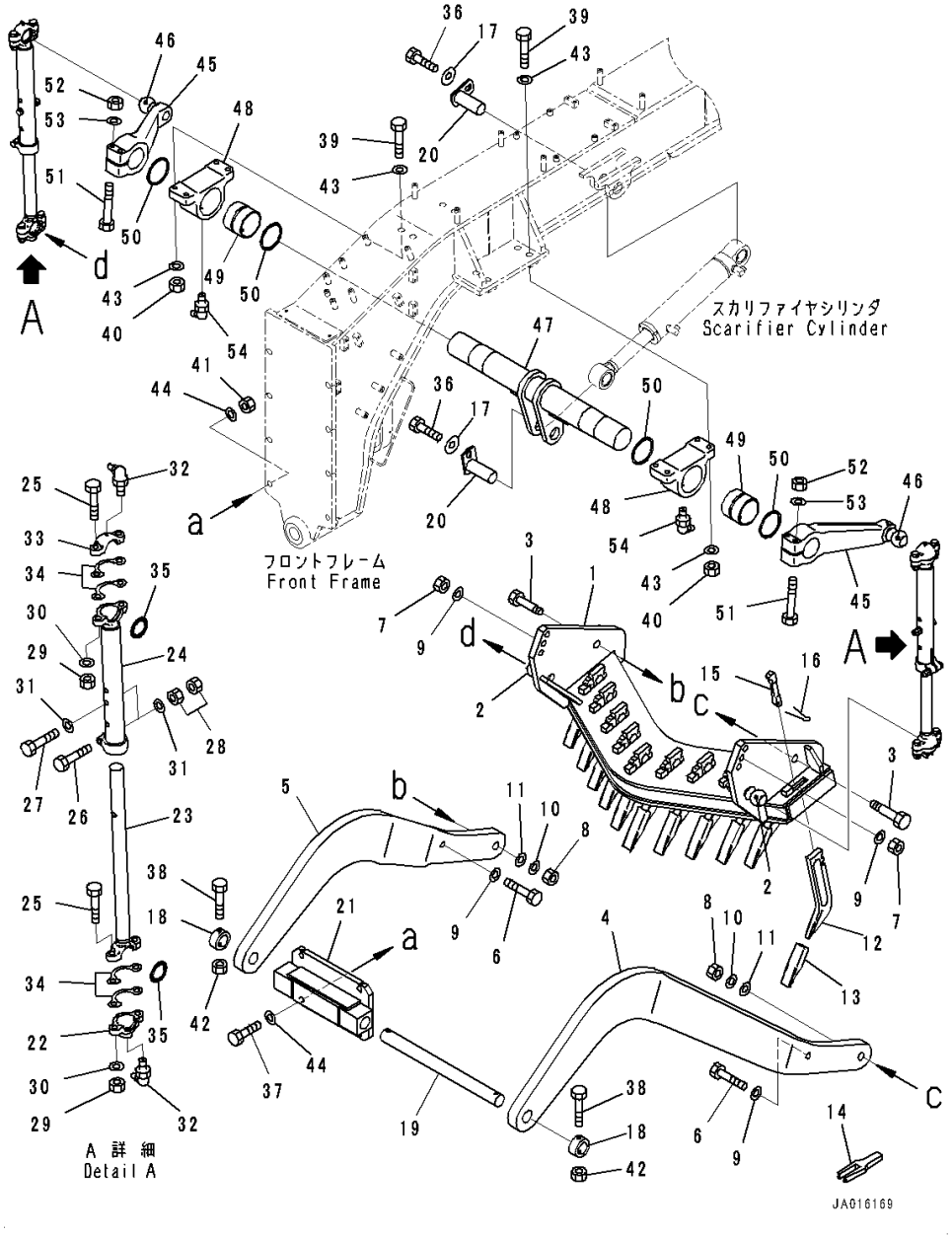

Index	Code	Part Number	Description	Qty	Serial Number
40		01580-12016	Nut	8	26001-
41		01580-12419	Nut	4	26001-
42		01596-01413	Nut, Flanged	2	26001-
43		01643-32060	Washer	16	26001-
44		01643-32460	Washer	8	26001-
45		234-71-81170	Lever	2	26001-
46		234-70-83120	• Stud, Ball,Welded	1	26001-
47		234-71-81310	Shaft	1	26001-
48		234-71-21220	Support	2	26001-
49		234-71-16131	Bushing	2	26001-
50		07145-00110	Seal, Dust	4	26001-
51		01011-81640	Bolt	4	26001-
52		01580-11613	Nut	4	26001-
53		01643-31645	Washer	4	26001-
54		07020-00675	Fitting, Grease	2	26001-

MARKS AND PLATES

FIG. U0100-001001 Marks and Plates (Mark and Plate) (1/2)

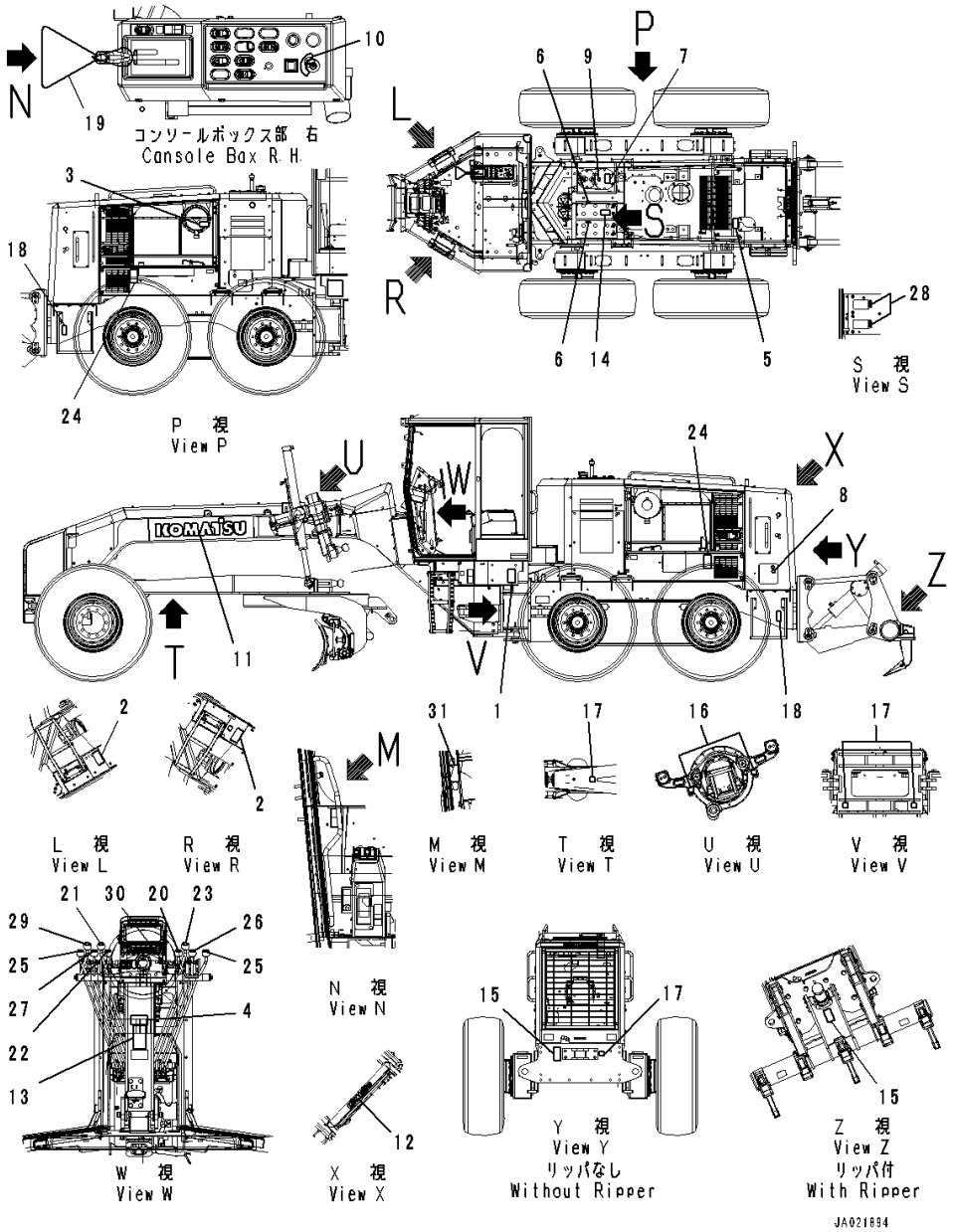

Index	Code	Part Number	Description	Qty	Serial Number
1		09161-C0881	Plate, Warning, Articulation Lock	1	26001-
2		09162-E0881	Plate, Danger, Keep Off	2	26001-
3		09637-A0640	Plate, Service Instruction, Air Cleaner	1	26001-
4		09651-A0841	Plate, Warning, Read Manual Before Operating	1	26001-
5		09653-A0641	Plate, Warning, High Temperature	1	26001-
6		09664-70001	Plate, Danger, Battery	2	26001-
7		09653-A0641	Plate, Warning, High Temperature	1	26001-
8		09669-0000E	Plate, Symbol, Fuel Filler	1	26001-
9		09669-0000C	Plate, Symbol, Oil Filler	1	26001-
10		09683-0000A	Plate, Symbol, Starting Switch Control	1	26001-
11		09690-P1120	Plate, Komatsu Logo	2	26001-
12		09690-F0400	Plate, Komatsu Logo	1	26001-
13		09802-E0640	Plate, Warning, Before Operating and Traveling	1	26001-
14		09808-A1201	Plate, Warning, Battery Cables	1	26001-
15		09806-E0883	Plate, Danger, Keep Away from Machine	1	26001-
16		09960-00601	Mark, Lift Point,L=60mm	2	26001-
17		09960-00602	Mark, Tie Down Point	4	26001-
18		09960-01201	Mark, Lift Point and Tie Down Point,L=120mm	2	26001-
19		09963-A1640	Tag, Danger, Do Not Operate	1	26001-
20		232-43-18281	Plate, Mark, Drawbar Shift	1	26001-
21		232-735-1340	Plate, Mark, Power Tilt	1	26001-
22		234-53-32321	Plate, Mark, Circle Revolution	1	26001-
23		234-53-32330	Plate,Articulate	1	26001-
24		09667-A0880	Plate, Caution, Rotating Object	2	26001-
25		237-54-13211	Plate, Mark, Blade Lift	2	26001-
26		237-54-13221	Plate, Mark, Leaning	1	26001-
27		237-54-13231	Plate, Mark, Blade Shift	1	26001-
28		09659-A057B	Plate, Warning, Explosion Hazard	2	26001-
29		232-785-1411	Plate,Ripper	1	26001-
30		23A-53-11550	Decal, Mark, Turn Signal	1	26001-
31		23B-53-71180	Plate, Caution,MT/AT Velocity Range	1	26001-

FIG. U0100-001002 Marks and Plates (Mark and Plate) (2/2)

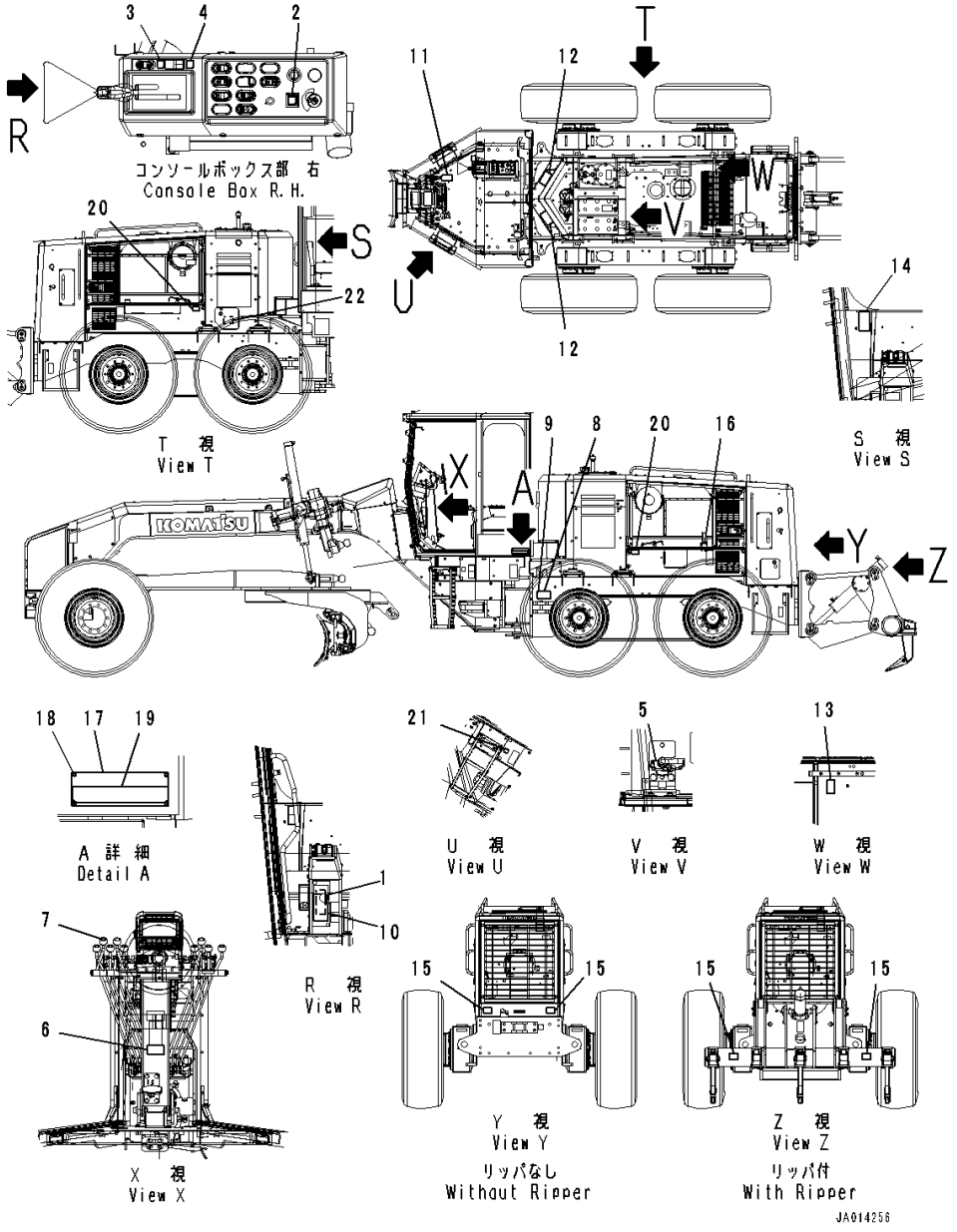

Index	Code	Part Number	Description	Qty	Serial Number
		23B-53-71240	Plate	1	26001-
1	C1		• Plate, Fuse Box	1	26001-
2	C1		• Plate, Lift Arm Lock Switch	1	26001-
3	C1		• Plate, Lifter Lock	1	26001-
4	C1		• Plate, RPM Set	1	26001-
5		425-93-41310	• Plate	1	26001-
6		23B-53-71250	Plate, Caution,Encounter With Scarifier	1	26001-
7		237-54-13271	Plate,Scarifire	1	26001-
8	C2	09602-10002	Plate, Name (Limited Supply)	1	26001-
9		04418-13060	Screw	4	26001-
10		09801-E0881	Plate, Danger, High Voltage Hazard	1	26001-
11		23B-53-71260	Tag, Mark, Leaning	1	26001-
12		09805-C0881	Plate, Caution, Do Not Get On	2	26001-
13		09642-A0480	Plate, Notice, Coolant	1	26001-
14		234-53-81160	Plate, Warning, Bank Control	1	26001-
15		14X-98-35181	Plate, Reflector	2	26001-
16		09667-A0641	Plate, Caution, Rotating Object	1	26001-
17	C2	09620-A2001	Plate, Name, ROPS/FOPS (Limited Supply)	1	26001-
18		205-00-72430	Rivet	4	26001-
19		09620-A3001	Plate, Warning, ROPS/FOPS	1	26001-
20		23B-53-71270	Plate,Don't Walk	2	26001-
21		22B-00-11340	Plate, Symbol, Window Washer	1	26001-
22		234-53-81130	Plate, Read Manual, Engine Starting Aid Operating	1	26001-

FIG. U0100-001003 Marks and Plates (Decal)

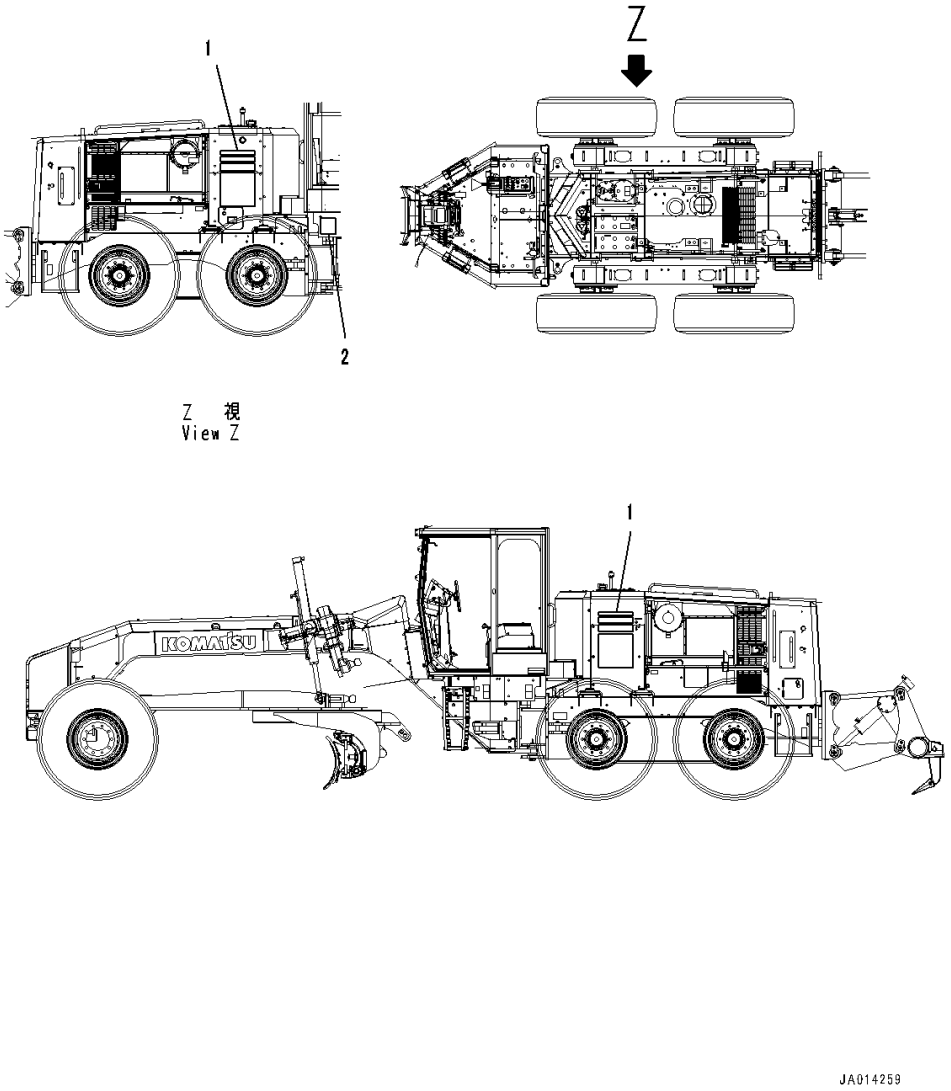

Index	Code	Part Number	Description	Qty	Serial Number
1		234-53-81150	Plate, Machine Model	2	26001-
2		234-53-81111	Lubrication Chart	1	26358-
	A2	234-53-81110	Lubrication Chart	1	26001-26357

FIG. U0205-001001 Caution Plates, KOMTRAX

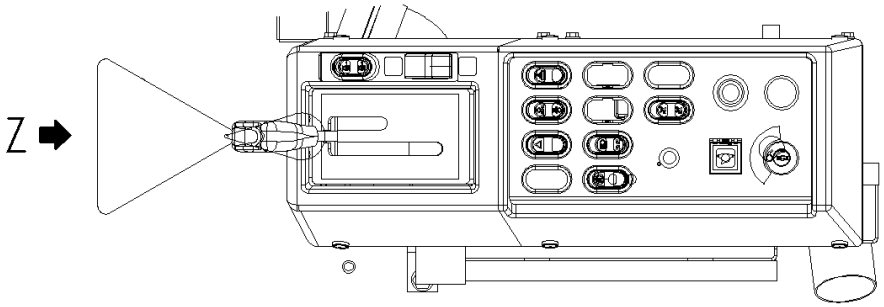

コンソールボックス部 右
Console Box R.H.

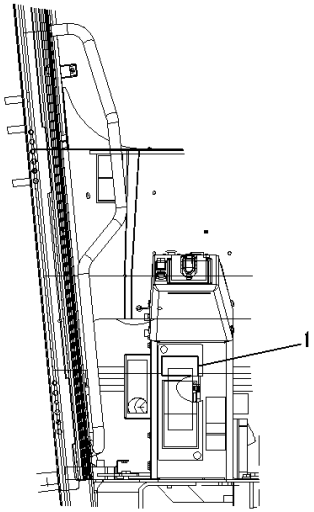

Z 視
View Z

JA014247

Index	Code	Part Number	Description	Qty	Serial Number
1		09845-00480	Plate, Caution, Blast Site	1	26001-

AUXILIARY PARTS AND TOOL

FIG. V0100-001001 Spare Parts

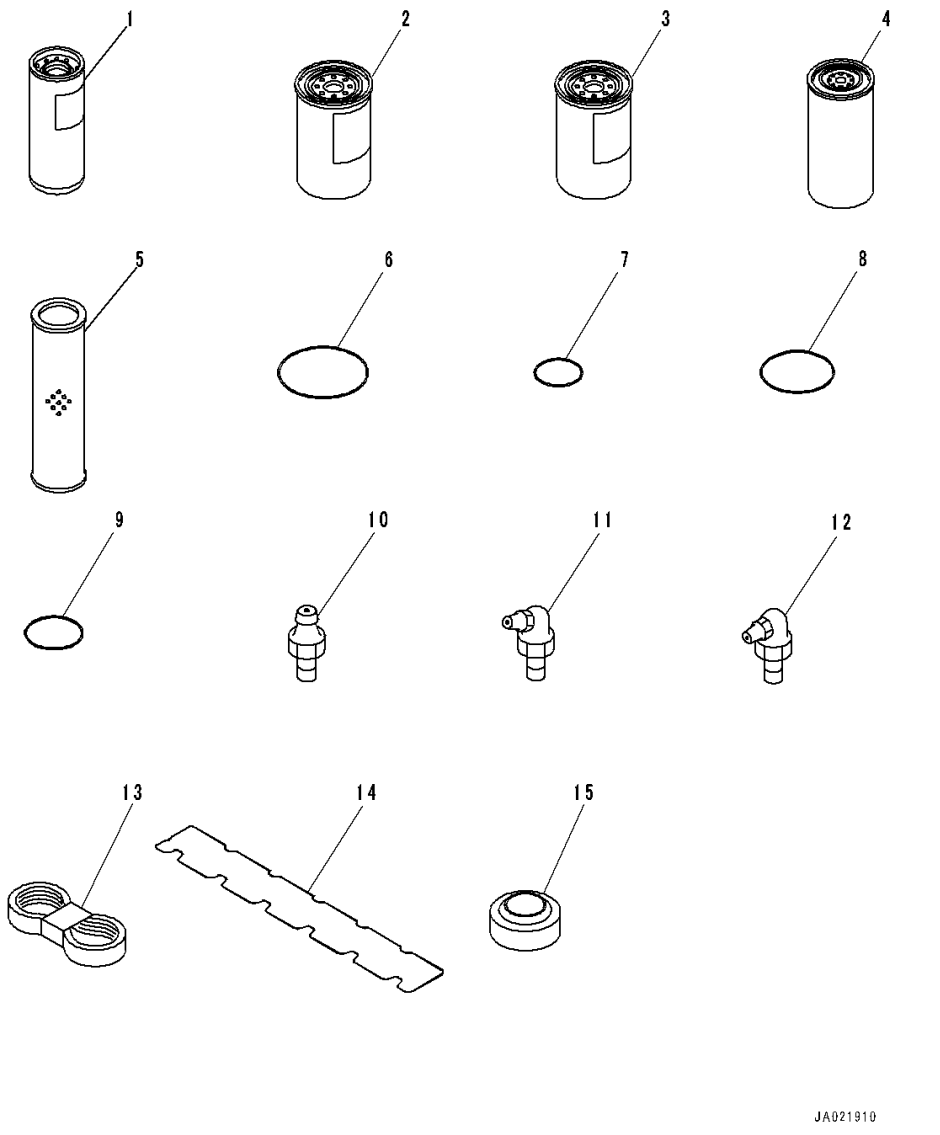

Index	Code	Part Number	Description	Qty	Serial Number
1		6742-01-4540	Cartridge	1	26001-
2		600-319-3610	Cartridge Assembly	1	26001-
3		600-319-3750	Cartridge	1	26001-
4		714-07-28713	Cartridge	1	26001-
5		423-60-45461	Element	1	26405-
	A2	423-60-45460	Element	1	26001-26404
6		07000-15195	O-ring	1	26001-
7		07000-72105	O-ring	1	26001-
8		07000-15160	O-ring	1	26001-
9		234-60-62230	O-ring	1	26001-
10		07020-00000	Fitting, Grease	4	26001-
11		07020-00675	Fitting, Grease	4	26001-
12		07020-00900	Fitting, Grease	4	26001-
13		6743-62-3710	Belt,1612.9mm	1	26001-
14		6745-11-8810	Gasket	1	26001-
15		6745-11-8160	Isolator	8	26001-

FIG. V0100-003001 Spare Parts (Extra Bad Fuel and Poor Fuel Specification, Water+Dust, Large Fuel Prefilter)

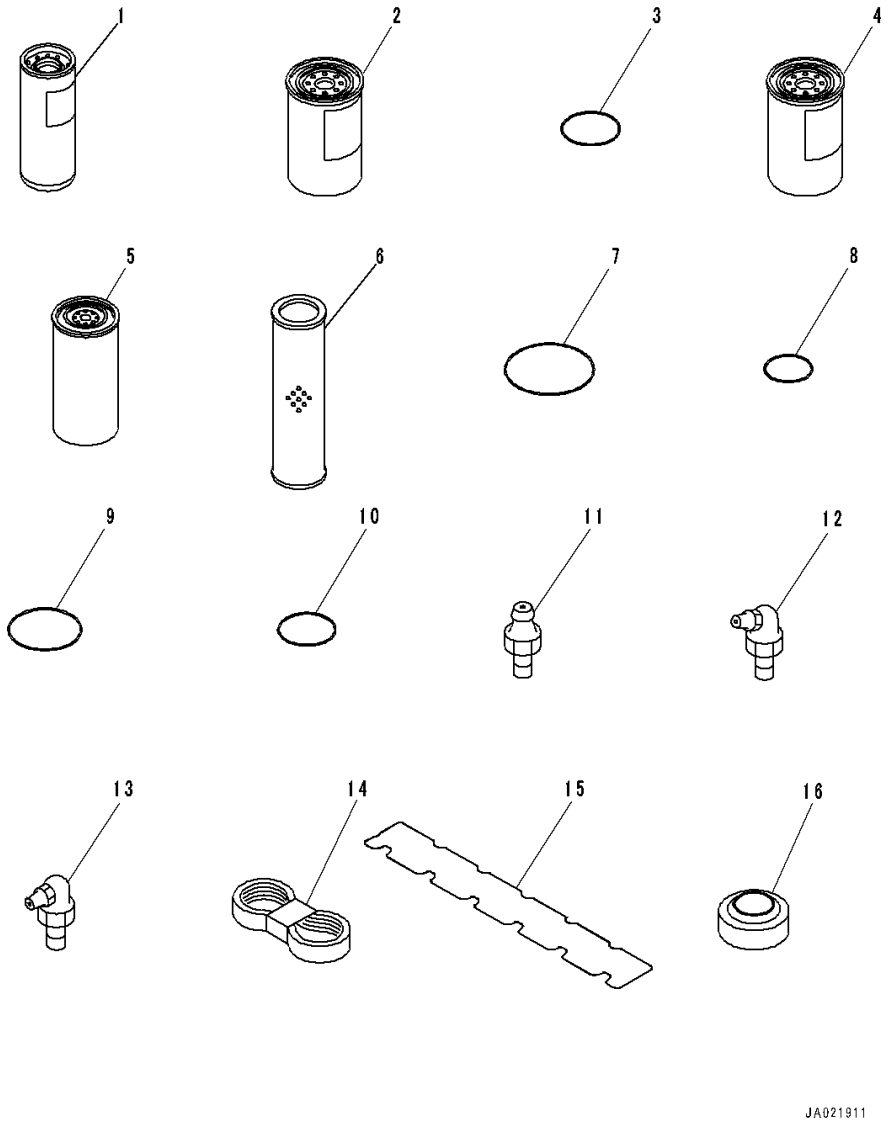

Index	Code	Part Number	Description	Qty	Serial Number
1		6742-01-4540	Cartridge	1	26001-
2		600-311-5612	Cartridge	1	26447-
	A1	600-311-5610	Cartridge	1	26001-26446
3		600-311-5630	O-ring	1	26001-
4		600-319-3750	Cartridge	1	26001-
5		714-07-28713	Cartridge	1	26001-
6		423-60-45461	Element	1	26405-
	A2	423-60-45460	Element	1	26001-26404
7		07000-15195	O-ring	1	26001-
8		07000-72105	O-ring	1	26001-
9		07000-15160	O-ring	1	26001-
10		234-60-62230	O-ring	1	26001-
11		07020-00000	Fitting, Grease	4	26001-
12		07020-00675	Fitting, Grease	4	26001-
13		07020-00900	Fitting, Grease	4	26001-
14		6743-62-3710	Belt,1612.9mm	1	26001-
15		6745-11-8810	Gasket	1	26001-
16		6745-11-8160	Isolator	8	26001-

FIG. V0100-004001 Spare Parts (Extra Bad Fuel and Poor Fuel Specification, Water+Dust, Large Fuel Prefilter,With 90Amp. Alternator)

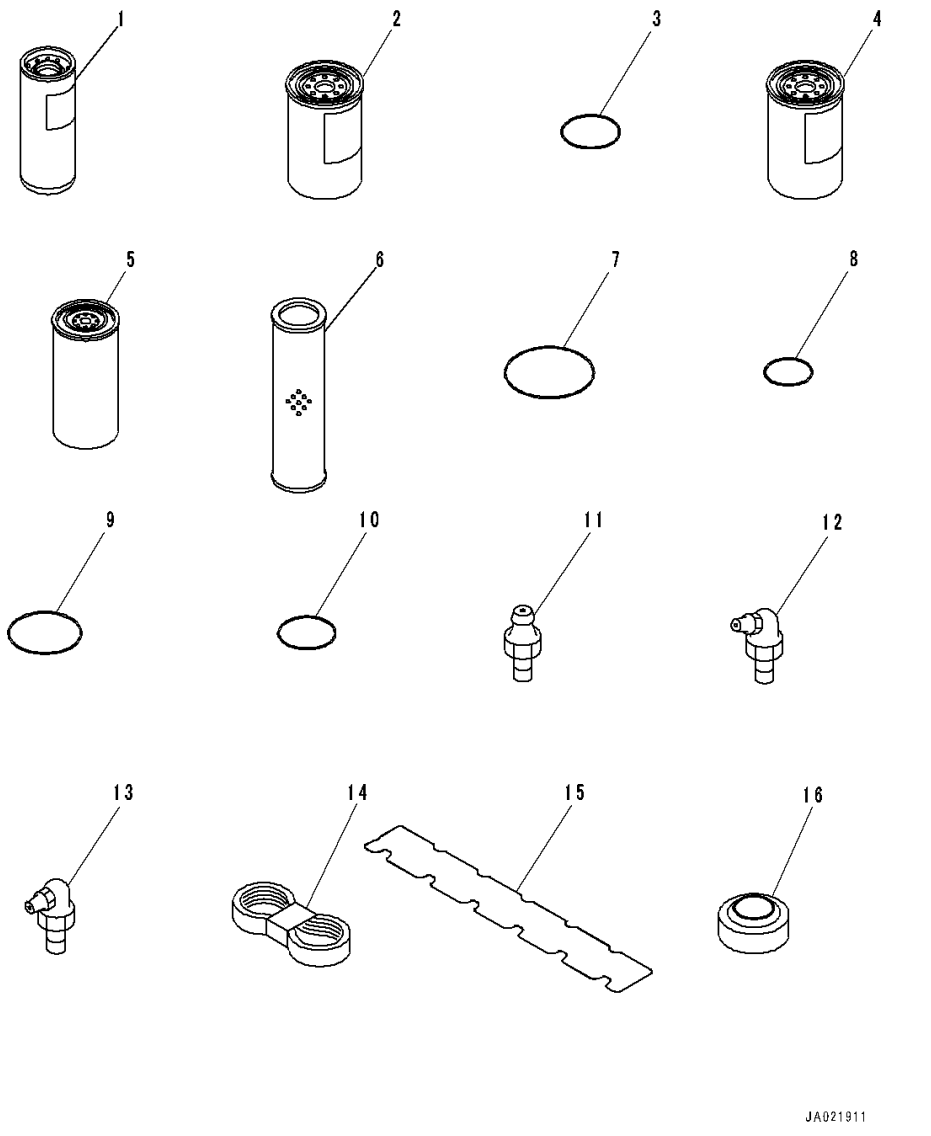

Index	Code	Part Number	Description	Qty	Serial Number
1		6742-01-4540	Cartridge	1	26001-
2		600-311-5612	Cartridge	1	26447-
	A1	600-311-5610	Cartridge	1	26001-26446
3		600-311-5630	O-ring	1	26001-
4		600-319-3750	Cartridge	1	26001-
5		714-07-28713	Cartridge	1	26001-
6		423-60-45461	Element	1	26405-
	A2	423-60-45460	Element	1	26001-26404
7		07000-15195	O-ring	1	26001-
8		07000-72105	O-ring	1	26001-
9		07000-15160	O-ring	1	26001-
10		234-60-62230	O-ring	1	26001-
11		07020-00000	Fitting, Grease	4	26001-
12		07020-00675	Fitting, Grease	4	26001-
13		07020-00900	Fitting, Grease	4	26001-
14		6732-82-3540	Belt,1663.7mm	1	26001-
15		6745-11-8810	Gasket	1	26001-
16		6745-11-8160	Isolator	8	26001-

FIG. V0100-002001 Spare Parts (With 90Amp. Alternator)

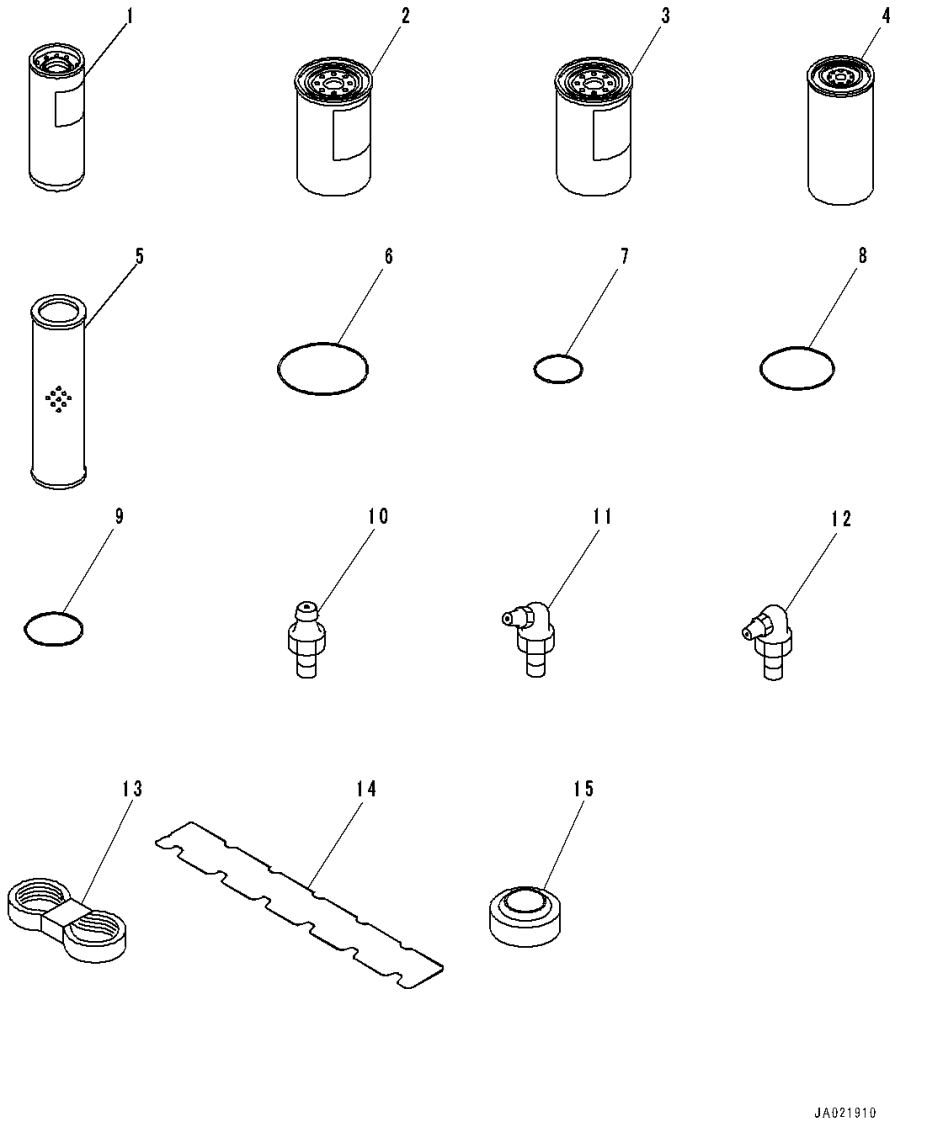

Index	Code	Part Number	Description	Qty	Serial Number
1		6742-01-4540	Cartridge	1	26001-
2		600-319-3610	Cartridge Assembly	1	26001-
3		600-319-3750	Cartridge	1	26001-
4		714-07-28713	Cartridge	1	26001-
5		423-60-45461	Element	1	26405-
	A2	423-60-45460	Element	1	26001-26404
6		07000-15195	O-ring	1	26001-
7		07000-72105	O-ring	1	26001-
8		07000-15160	O-ring	1	26001-
9		234-60-62230	O-ring	1	26001-
10		07020-00000	Fitting, Grease	4	26001-
11		07020-00675	Fitting, Grease	4	26001-
12		07020-00900	Fitting, Grease	4	26001-
13		6732-82-3540	Belt,1663.7mm	1	26001-
14		6745-11-8810	Gasket	1	26001-
15		6745-11-8160	Isolator	8	26001-

FIG. V0300-001001 General Tool Set

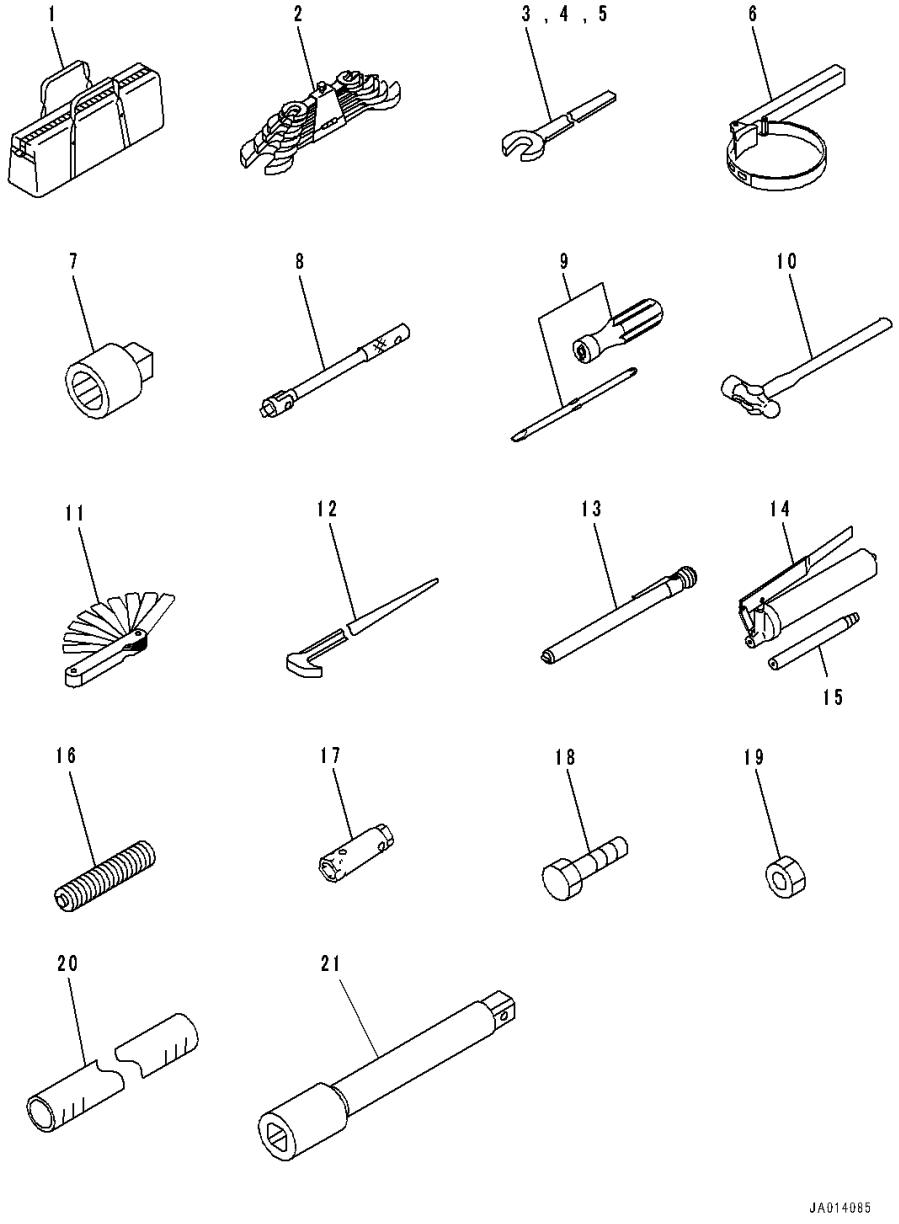

Index	Code	Part Number	Description	Qty	Serial Number
1		09056-05513	Tool Bag	1	26001-
2		09000-30006	Wrench Set	1	26001-
3		09001-00700	Wrench	1	26001-
4		09001-03600	Wrench,W=36mm	1	26001-
5		09001-04600	Wrench,W=46mm	1	26001-
6		09019-28036	Wrench, Filter	1	26001-
7		09021-01725	Socket,W=17mm	1	26001-
8		09023-00300	Handle	1	26001-
9		09033-00190	Driver	1	26001-
10		09039-00150	Hammer	1	26001-
11		09054-00009	Gauge, Filler	1	26001-
12		09055-10390	Bar	1	26001-
13		09289-00000	Gauge, Tire Inflation Pressure	1	26001-
		07952-70014	Pump Assembly	1	26291-
	A2	07952-70004	Pump Assembly	1	26001-26290
14		07950-10451	• Grease Pump	1	26291-
	A2	07950-10450	• Grease Pump	1	26001-26290
15		07951-41017	• Nozzle,L=171mm	1	26001-
16		07950-90403	Cartridge, Grease	1	26001-
17		09209-13641	Wrench, Hub Nut	1	26001-
18		01011-83010	Bolt	1	26001-
19		01580-13024	Nut	1	26001-
20		07287-01916	Hose	1	26001-
21		09022-00150	Extension,L=150mm	1	26001-

SPECIAL PRODUCT AND ITS RELATED PARTS

FIG. X5000-001001 Accessory Parts

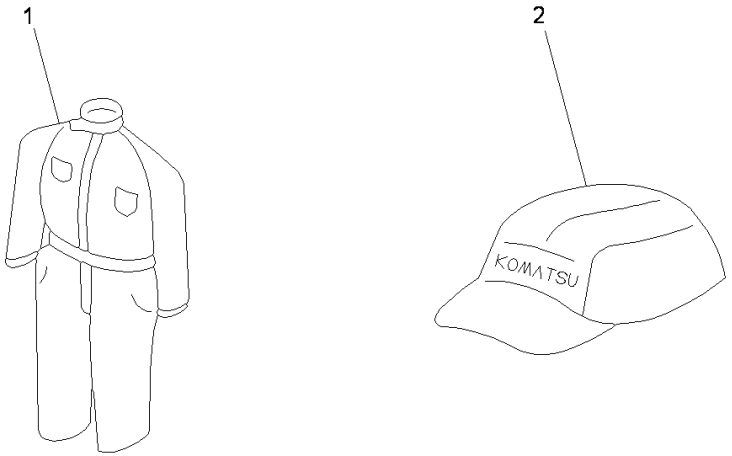

PX13549

Index	Code	Part Number	Description	Qty	Serial Number
1		09980-10550	Overall	1	26001-
2		09982-20057	Cap	1	26001-

FIELD REPAIR SERVICE PARTS

FIG. KIT Service Kit Parts (1/3)

Index	Code	Part Number	Description	Qty	Serial Number
K01		234-13-05000	Service Kit, Transmission		26001-
		07000-72015	• O-ring	19	
		07000-72015	• O-ring	6	
		07000-72022	• O-ring	4	
		07000-72022	• O-ring	2	
		07000-72022	• O-ring	6	
		07000-72022	• O-ring	2	
		07000-72055	• O-ring	2	
		07000-72100	• O-ring	1	
		07000-72105	• O-ring	1	
		07000-72120	• O-ring	1	
		07000-73028	• O-ring	1	
		07000-73028	• O-ring	1	
		07000-73028	• O-ring	1	
		07000-73032	• O-ring	3	
		07000-73032	• O-ring	1	
		07002-61023	• O-ring	1	
		07002-61023	• O-ring	1	
		07002-61223	• O-ring	5	
		07002-61423	• O-ring	2	
		07002-61423	• O-ring	5	
		07002-61623	• O-ring	4	
		07002-62434	• O-ring	3	
		07002-62434	• O-ring	1	
		07002-62434	• O-ring	1	
		07005-01012	• Seal, Washer	15	
		07018-31255	• Ring	1	
		198-15-29230	• Seal Ring	2	
		232-15-19220	• Seal Ring	2	
		419-15-12122	• Ring	3	
		419-15-12122	• Ring	2	
		56B-15-19210	• Seal Ring	1	
		56D-15-29210	• Seal Ring	1	
		56D-15-29210	• Seal Ring	1	
		714-07-19320	• Seal Ring	2	
		714-07-19320	• Seal Ring	2	
		714-07-19320	• Seal Ring	1	
		714-11-19230	• Seal Ring	1	
		714-12-19121	• Seal, Oil	1	
		714-12-19170	• Seal, Dust	1	
		714-12-39210	• Seal Ring	2	
		714-12-39230	• Seal Ring	3	
		714-12-39230	• Seal Ring	3	
		714-13-19210	• Seal Ring	2	
		714-16-19210	• Seal Ring	2	
		714-16-19220	• Seal Ring	1	
		714-21-19810	• Seal Ring	2	
K02		234-13-05010	Service Kit, Transmission Control Valve		26001-
		07000-71007	• O-ring	8	
		07000-72015	• O-ring	32	
		07000-73022	• O-ring	2	
		07000-73030	• O-ring	5	
		07000-A2060	• O-ring	1	
		07002-61023	• O-ring	2	
		07002-61023	• O-ring	1	
		07002-61023	• O-ring	4	
		07002-61023	• O-ring	3	
		07002-61023	• O-ring	1	
		07002-61223	• O-ring	6	
		07002-61223	• O-ring	14	
		07002-61823	• O-ring	1	
		07002-62434	• O-ring	3	
		07002-63034	• O-ring	1	
		07002-63034	• O-ring	1	
		07002-63034	• O-ring	2	
		07002-63334	• O-ring	2	
K03		707-99-05620	Seal Kit, Steering Cylinder		26001-
		707-56-35740	• Seal, Dust	1	
		707-51-35860	• Packing, Rod	1	
		707-51-35650	• Ring, Buffer	1	
		707-44-50060	• Ring, Piston	1	
		707-35-20450	• Ring, Back-up	1	
		10E-63-32390	• Ring, Wear	1	
		07000-B3045	• O-ring	1	
		07000-13048	• O-ring	1	
		02896-11009	• O-ring	3	
K04		707-99-26200	Seal Kit, Leaning Cylinder		26001-
		707-56-55740	• Seal, Dust	1	
		707-51-55860	• Packing, Rod	1	
		707-51-55650	• Ring, Buffer	1	

FIG. KIT Service Kit Parts (2/3)

Index	Code	Part Number	Description	Qty	Serial Number
		707-44-85151	• Ring, Piston	1	
		707-39-85120	• Ring, Wear	1	
		707-35-10810	• Ring, Back-up	1	
		07145-00055	• Seal, Dust	2	
		07145-00050	• Seal, Dust	2	
		07000-B2080	• O-ring	1	
		07000-12085	• O-ring	1	
		02896-11009	• O-ring	3	
K05		707-99-26210	Seal Kit, Blade Shift Cylinder		26001-
		707-56-55820	• Seal, Dust	1	
		707-56-55740	• Seal, Dust	1	
		707-51-55860	• Packing, Rod	1	
		707-51-55650	• Ring, Buffer	1	
		707-44-80150	• Ring, Piston	1	
		707-35-10760	• Ring, Back-up	1	
		07155-00820	• Ring, Wear	1	
		07145-00050	• Seal, Dust	4	
		07000-B2075	• O-ring	1	
		07000-12080	• O-ring	1	
		02896-11009	• O-ring	2	
K06		707-99-24320	Seal Kit, Power Tilt Cylinder		26001-
		707-56-45740	• Seal, Dust	1	
		707-51-45860	• Packing, Rod	1	
		707-51-45650	• Ring, Buffer	1	
		707-44-80150	• Ring, Piston	1	
		707-35-10760	• Ring, Back-up	1	
		07156-00810	• Ring, Wear	1	
		07000-B2075	• O-ring	1	
		07000-12080	• O-ring	1	
		02896-11009	• O-ring	3	
K07		707-99-35620	Seal Kit, Ripper Cylinder		26001-
		707-56-60740	• Seal, Dust	1	
		707-51-60860	• Packing, Rod	1	
		707-51-60650	• Ring, Buffer	1	
		707-44-11250	• Ring, Piston	1	
		707-39-11510	• Ring, Wear	1	
		707-35-11110	• Ring, Back-up	1	
		07145-00075	• Seal, Dust	2	
		07000-B2110	• O-ring	1	
		07000-12115	• O-ring	1	
		02896-11012	• O-ring	2	
K08		707-99-26220	Seal Kit, Blade Lift Cylinder		26001-
		707-56-55740	• Seal, Dust	1	
		707-51-55860	• Packing, Rod	1	
		707-51-55650	• Ring, Buffer	1	
		707-44-85151	• Ring, Piston	1	
		707-39-85120	• Ring, Wear	1	
		707-35-10810	• Ring, Back-up	1	
		07141-00100	• Seal	1	
		07000-B2080	• O-ring	1	
		07000-12085	• O-ring	1	
		02896-11009	• O-ring	3	
K09		707-99-25280	Seal Kit, Drawbar Shift Cylinder		26001-
		707-56-50740	• Seal, Dust	1	
		707-51-50860	• Packing, Rod	1	
		707-51-50650	• Ring, Buffer	1	
		707-44-80150	• Ring, Piston	1	
		707-39-80140	• Ring, Wear	1	
		707-35-10760	• Ring, Back-up	1	
		07141-00100	• Seal	2	
		07000-B2075	• O-ring	1	
		07000-12080	• O-ring	1	
		02896-11009	• O-ring	2	
K10		707-99-25270	Seal Kit, Articulate Cylinder		26001-
		707-56-50740	• Seal, Dust	1	
		707-51-50860	• Packing, Rod	1	
		707-51-50650	• Ring, Buffer	1	
		707-44-85151	• Ring, Piston	1	
		707-39-85120	• Ring, Wear	1	
		707-35-10810	• Ring, Back-up	1	
		07145-00055	• Seal, Dust	4	
		07000-B2080	• O-ring	1	
		07000-12085	• O-ring	1	
		02896-11009	• O-ring	2	
K11		721-98-00480	Seal kit, Hydraulic Cylinder		26045-
		707-56-55740	• Seal, Dust	1	
		707-51-55860	• Packing, Rod	1	
		707-51-55650	• Ring, Buffer	1	
		707-44-90151	• Ring, Piston	1	
		707-35-10860	• Ring, Back-up	1	

FIG. KIT Service Kit Parts (3/3)

Index	Code	Part Number	Description	Qty	Serial Number
		07156-00912	• Ring, Wear	1	
		07145-00055	• Seal, Dust	4	
		07000-B2085	• O-ring	1	
		07000-12090	• O-ring	1	
		02896-61012	• O-ring	2	
K12		721-98-00580	Seal Kit, Hydraulic Cylinder		26001-
		707-56-50740	• Seal, Dust	1	
		707-51-50860	• Packing, Rod	1	
		707-51-50650	• Ring, Buffer	1	
		707-44-85151	• Ring, Piston	1	
		707-39-85120	• Ring, Wear	1	
		707-35-10810	• Ring, Back-up	1	
		07145-00055	• Seal, Dust	4	
		07000-B2080	• O-ring	1	
		07000-12085	• O-ring	1	
		02896-61012	• O-ring	3	
K13		234-13-05001	Service Kit, Transmission		26001-
		07000-72015	• O-ring	19	
		07000-72015	• O-ring	6	
		07000-72022	• O-ring	4	
		07000-72022	• O-ring	2	
		07000-72022	• O-ring	6	
		07000-72022	• O-ring	2	
		07000-72055	• O-ring	2	
		07000-72100	• O-ring	1	
		07000-72105	• O-ring	1	
		07000-72120	• O-ring	1	
		07000-73028	• O-ring	1	
		07000-73028	• O-ring	1	
		07000-73028	• O-ring	1	
		07000-73032	• O-ring	3	
		07000-73032	• O-ring	1	
		07002-61023	• O-ring	1	
		07002-61023	• O-ring	1	
		07002-61223	• O-ring	5	
		07002-61423	• O-ring	2	
		07002-61423	• O-ring	5	
		07002-61623	• O-ring	4	
		07002-62434	• O-ring	3	
		07002-62434	• O-ring	1	
		07002-62434	• O-ring	1	
		07005-01012	• Seal, Washer	15	
		07018-31255	• Ring	1	
		198-15-29230	• Seal Ring	2	
		232-15-19220	• Seal Ring	2	
		419-15-12122	• Ring	3	
		419-15-12122	• Ring	2	
		56B-15-19210	• Seal Ring	1	
		56D-15-29210	• Seal Ring	1	
		56D-15-29210	• Seal Ring	1	
		714-07-19320	• Seal Ring	2	
		714-07-19320	• Seal Ring	2	
		714-07-19320	• Seal Ring	1	
		714-11-19230	• Seal Ring	1	
		714-12-19121	• Seal, Oil	1	
		714-12-29170	• Seal, Dust	1	
		714-12-39210	• Seal Ring	2	
		714-12-39230	• Seal Ring	3	
		714-12-39230	• Seal Ring	3	
		714-13-19210	• Seal Ring	2	
		714-16-19210	• Seal Ring	2	
		714-16-19220	• Seal Ring	1	
		714-21-19810	• Seal Ring	2	

NUMERICAL INDEX

PartNumber	Page	Index
01010-61230	258	15
	264	2
01010-61235	226	4
	258	29
	259	33
01010-61240	256	3
01010-61245	256	5
	257	14
01010-61255	258	3
01010-61440	259	35
01010-61470	310	13
01010-61635	271	20
	273	20
01010-61645	264	5
01010-61680	257	5
01010-61695	402	16
01010-62080	260	18
01010-62455	255	1
01010-80610	411	30
01010-80612	59	9
	405	3
	405	9
	405	22
	406	3
	406	9
	406	22
	415	9
	417	9
	434	2
	458	10
	467	37
	469	37
	530	26
	531	26
01010-80616	193	12
	194	12
	197	3
	369	8
	411	14
	415	2
	417	2
	433	4
	440	7
	465	9
	467	23
	469	23
	473	3
	475	1
	476	9
	476	12
	497	10
	503	21
	503	26
	504	21
	504	26
01010-80620	405	17
	406	17
	415	4
	417	4
	433	2
	433	8
	433	13
	433	22
	480	15
	490	10
	496	3
	496	17
	503	2
	504	2
	530	20
	531	20
	536	9
	536	13
	537	9
	537	13

PartNumber	Page	Index
01010-80625	443	5
	444	44
	485	6
	486	18
	488	18
01010-80630	485	2
01010-80635	583	13
	583	34
01010-80660	213	35
	367	7
	368	7
01010-80812	411	18
01010-80816	193	6
	194	6
	198	25
	199	25
	223	10
	224	2
	422	2
	428	2
	440	5
	450	26
	451	26
	452	30
	453	30
	459	8
	459	11
	459	14
	467	20
	467	30
	469	20
	469	30
	471	14
	471	17
	472	14
	472	17
	484	12
	491	8
	492	8
	493	8
	502	7
	502	19
	503	7
	504	7
	584	47
01010-80820	265	14
	266	14
	308	3
	308	18
	309	3
	309	18
	415	20
	417	20
	450	18
	451	18
	452	18
	453	18
	455	45
	467	33
	469	33
	479	1
	479	4
	484	1
	487	47
	489	47
	490	13
	496	21
	499	5
	499	14
01010-80825	147	47
	149	47
	481	3
	499	2
	502	2
01010-80830	76	2

PartNumber	Page	Index
	193	2
	194	2
	204	14
	204	23
	360	21
	361	21
	443	3
	443	34
	449	6
	494	34
01010-80835	241	14
	393	13
01010-80840	159	3
	503	34
	504	34
01010-80850	198	16
	199	16
	327	1
01010-80875	387	1
	388	1
	389	1
	390	1
01010-80880	214	46
	262	7
	277	7
	337	5
	338	5
01010-80885	491	6
	492	6
	493	6
01010-80895	532	18
01010-81016	157	16
	216	46
	219	4
	387	31
	389	31
	494	15
	495	45
	502	25
	503	17
	504	17
	580	19
01010-81020	136	26
	151	2
	152	2
	157	9
	157	12
	157	18
	160	10
	160	35
	162	14
	162	39
	164	6
	166	6
	170	10
	171	47
	172	10
	173	47
	200	3
	200	6
	200	9
	200	18
	200	27
	201	3
	201	6
	201	9
	201	18
	201	27
	202	10
	203	10
	204	4
	204	7
	204	10
	204	30
	204	34

PartNumber	Page	Index
	205	8
	206	8
	207	8
	208	8
	210	3
	210	19
	215	12
	215	15
	215	18
	215	27
	216	41
	217	2
	238	14
	239	18
	248	20
	252	25
	256	20
	322	4
	322	38
	323	41
	324	4
	324	38
	325	41
	329	16
	330	16
	333	13
	334	13
	370	5
	372	4
	375	26
	376	26
	382	20
	383	22
	384	20
	407	18
	408	18
	411	11
	411	25
	415	15
	417	15
	435	16
	436	24
	443	20
	450	22
	451	22
	452	26
	453	26
	459	3
	459	18
	465	5
	465	11
	471	11
	472	11
	474	7
	481	12
	481	15
	484	9
	484	16
	485	9
	485	12
	486	14
	486	24
	488	14
	488	24
	494	2
	494	5
	494	10
	494	13
	494	18
	494	21
	494	24
	494	29
	494	37
	494	40
	495	43
	495	48
	495	52
	496	9
	496	12
	500	3
	500	7
	500	10
	500	13
	500	15
	502	22
	526	29
	528	29
	532	20
	532	23
	551	6
	554	21
	555	2
	572	22
	573	26
	578	27
	592	27
01010-81025	136	17
	136	21
	136	24
	136	31
	136	34
	146	8
	147	49
	148	8
	149	49
	150	3
	150	6
	150	8
	160	31
	160	39
	161	45
	162	35
	163	43
	163	49
	164	12
	164	21
	164	26
	164	37
	165	44
	166	12
	166	17
	166	21
	166	26
	166	37
	167	44
	170	4
	170	15
	170	20
	170	29
	170	34
	170	39
	172	4
	172	15
	172	20
	172	29
	172	34
	172	39
	174	10
	174	13
	175	10
	175	13
	176	10
	176	13
	176	16
	177	10
	177	13
	177	16
	181	6
	181	9
	181	17
	181	21
	181	29
	181	34
	182	6
	182	9
	182	17
	182	21
	182	29
	182	34
	183	7
	183	15
	183	19
	183	27
	183	34
	184	7
	184	15
	184	19
	184	27
	184	34
	185	10
	185	13
	185	16
	188	6
	188	9
	188	17
	188	21
	188	29
	188	34
	191	2
	191	5
	191	8
	191	11
	192	2
	192	5
	192	8
	192	11
	195	8
	195	11
	195	18
	195	21
	195	24
	195	30
	195	33
	195	38
	196	42
	196	45
	196	53
	196	57
	196	60
	197	7
	198	11
	198	19
	198	22
	199	11
	199	19
	199	22
	200	12
	200	15
	200	20
	200	25
	200	30
	201	12
	201	15
	201	20
	201	25
	201	30
	202	2
	202	8
	202	13
	202	18
	203	2
	203	8
	203	13
	203	18
	210	8

PartNumber	Page	Index
	210	14
	210	17
	210	22
	210	25
	210	28
	210	31
	210	34
	210	38
	210	40
	211	42
	212	2
	212	5
	212	8
	212	11
	212	14
	212	17
	212	20
	212	23
	212	26
	212	29
	212	33
	212	36
	213	7
	213	13
	213	17
	213	20
	213	38
	214	42
	214	49
	214	52
	214	56
	215	6
	215	10
	215	34
	216	44
	220	9
	221	7
	244	10
	244	22
	244	25
	267	5
	267	11
	267	13
	276	3
	277	2
	279	2
	279	8
	280	6
	308	1
	309	1
	322	27
	322	32
	322	36
	323	49
	324	27
	324	32
	324	36
	325	49
	329	6
	329	13
	329	21
	329	25
	330	6
	330	13
	330	21
	330	25
	332	3
	333	10
	333	18
	334	10
	334	18
	336	10
	337	2
	337	11
	338	2
	338	11
	339	
	339	14
	339	18
	339	21
	339	25
	340	
	340	14
	340	18
	340	21
	340	25
	341	
	341	14
	341	18
	341	21
	341	25
	342	3
	342	28
	342	32
	342	35
	344	3
	344	28
	344	32
	344	35
	346	9
	346	12
	346	30
	346	34
	346	40
	348	8
	348	11
	348	29
	348	33
	348	39
	350	25
	350	39
	351	42
	351	46
	351	49
	352	25
	352	39
	353	42
	353	46
	353	49
	358	2
	358	5
	358	8
	358	16
	358	36
	358	39
	360	2
	360	5
	360	11
	361	2
	361	5
	361	11
	362	2
	362	17
	362	21
	362	25
	362	30
	363	6
	363	9
	364	28
	364	31
	364	37
	365	50
	365	54
	366	5
	366	8
	366	16
	367	16
	367	19
	367	29
	368	16
	368	19
	368	29
	369	33
	371	9
	371	12
	371	24
	372	22
	372	25
	375	12
	375	21
	375	24
	376	12
	376	21
	376	24
	376	36
	378	2
	378	13
	379	2
	379	13
	380	2
	380	13
	381	2
	381	13
	385	2
	387	13
	387	16
	387	28
	388	13
	388	16
	388	28
	389	13
	389	16
	389	28
	390	13
	390	16
	390	28
	391	32
	391	35
	392	50
	393	2
	394	2
	394	11
	394	14
	394	18
	394	23
	394	38
	395	45
	441	3
	441	14
	441	34
	443	8
	443	11
	443	14
	443	18
	443	24
	443	28
	443	31
	443	38
	444	41
	444	47
	445	9
	445	12
	445	16
	445	19
	445	22
	445	25
	445	28
	452	20
	453	20
	454	14
	454	23
	465	2
	476	6
	490	2
	491	2

PartNumber	Page	Index
	492	2
	493	2
	494	7
	500	18
	500	21
	508	20
	508	22
	509	2
	509	5
	509	8
	511	1
	511	5
	512	2
	512	5
	512	8
	512	15
	512	19
	512	23
	512	26
	513	5
	513	26
	513	39
	514	42
	514	51
	518	32
	519	41
	520	32
	521	41
	522	32
	523	41
	524	32
	525	41
	526	36
	527	39
	527	42
	527	47
	527	61
	528	36
	529	39
	529	42
	529	47
	529	61
	530	13
	530	17
	531	13
	531	17
	532	9
	532	15
	535	7
	536	5
	537	5
	542	4
	542	6
	542	12
	542	15
	542	21
	543	4
	543	6
	543	12
	543	15
	543	21
	544	23
	544	28
	544	32
	545	44
	546	23
	546	28
	546	32
	547	44
	548	26
	548	30
	549	41
	550	3
	555	5
	578	39
	579	43
	581	14
	581	24
	584	45
	585	19
	586	22
	587	19
	590	16
01010-81030	44	3
	146	22
	148	22
	157	4
	159	5
	160	3
	160	7
	160	14
	162	5
	162	11
	162	18
	164	17
	179	1
	180	1
	210	11
	227	13
	233	11
	236	26
	239	3
	239	23
	241	3
	241	6
	262	30
	263	39
	271	14
	273	14
	277	34
	279	5
	323	45
	325	45
	339	9
	340	9
	341	9
	346	6
	346	37
	348	5
	348	36
	350	31
	350	36
	352	31
	352	36
	354	2
	354	8
	358	23
	358	30
	366	2
	367	25
	368	25
	369	17
	369	26
	371	15
	378	16
	379	16
	380	16
	381	16
	392	61
	459	5
	480	2
	490	4
	498	14
	519	39
	521	39
	523	39
	525	39
	530	22
	531	22
	542	9
	542	18
	543	9
	543	18
	581	20
01010-81035	162	7
	179	4
	180	4
	183	1
	183	4
	184	1
	184	4
	462	2
01010-81040	181	1
	182	1
	188	1
	241	17
	242	13
	350	22
	352	22
	535	10
01010-81045	146	24
	148	24
	215	3
	441	27
	516	30
	517	30
01010-81050	136	10
	147	51
	149	51
	215	20
	382	12
	382	15
	383	13
	384	12
	384	15
01010-81055	181	3
	182	3
	188	3
	328	2
	391	16
	441	22
	581	35
01010-81060	213	10
	235	43
	237	33
	242	9
	552	10
	552	21
	590	22
01010-81065	202	16
	203	16
	342	7
	344	7
01010-81070	215	38
	234	27
	243	2
	359	43
	382	5
	382	8
	382	23
	383	5
	383	8
	383	17
	383	25
	384	5
	384	8
	384	23
	552	7
	552	18
01010-81075	336	6
01010-81080	236	28
	346	14
	348	13
	360	27
	361	27

PartNumber	Page	Index
	393	37
01010-81085	147	37
	149	37
	238	27
01010-81095	235	45
01010-81220	213	27
	398	6
	399	6
	400	8
	401	8
	553	6
	553	16
	588	6
	590	9
01010-81225	196	48
	322	11
	324	11
	400	11
	401	11
	404	24
	508	4
	516	6
	517	6
	518	20
	520	20
	522	20
	524	20
	577	6
	580	8
	580	25
	580	34
	581	27
	585	13
	586	16
	587	13
	596	31
	598	36
01010-81230	151	5
	152	5
	202	5
	203	5
	232	7
	232	10
	253	2
	265	13
	266	13
	284	31
	332	5
	516	8
	517	8
	550	5
	573	4
01010-81235	137	2
	157	1
	213	25
	267	20
	308	6
	309	6
	321	2
	336	13
	354	5
	356	1
	375	17
	376	17
	552	23
	576	6
	577	15
01010-81240	136	3
	137	5
	227	17
	238	4
	402	4
	404	28
	516	22
	517	22

PartNumber	Page	Index
	574	39
01010-81245	213	31
	244	7
	441	10
	465	13
	588	17
01010-81250	136	8
	160	29
	162	33
	402	14
	513	30
	513	34
	516	21
	517	21
	573	21
01010-81255	227	18
	265	5
	266	5
	577	10
	578	23
01010-81260	329	10
	330	10
	333	22
	334	22
	372	19
	375	30
	376	30
	377	3
	377	7
	378	8
	378	28
	378	32
	378	36
	379	8
	379	28
	379	32
	379	36
	380	8
	380	28
	380	32
	380	36
	381	8
	381	28
	381	32
	381	36
	387	23
	388	23
	389	23
	390	23
	578	7
	579	47
01010-81265	160	21
	162	25
	233	4
	365	47
	391	29
	391	39
	392	43
01010-81270	155	3
	362	7
	480	10
	580	15
01010-81275	136	5
01010-81280	277	24
	394	27
	394	31
	394	35
	395	42
	498	6
	580	28
01010-81295	280	11
01010-81440	441	32
01010-81455	584	40
01010-81625	402	20
	588	9

PartNumber	Page	Index
01010-81630	213	5
01010-81635	198	3
	198	6
	199	3
	199	6
01010-81640	248	18
	315	2
01010-81645	516	10
	517	10
01010-81650	281	3
	516	11
	517	11
	582	8
01010-81660	269	3
01010-81680	582	5
01010-81845	585	10
	586	13
	587	10
01010-81855	585	11
	586	14
	587	11
01010-81860	269	1
01010-81875	596	27
	598	25
01010-82285	592	19
	593	17
01010-82465	400	23
	570	15
01010-82470	570	12
01010-82490	555	12
	596	32
	598	37
01010-82785	590	4
01010-D0612	422	17
	428	17
01010-D0616	423	29
	428	27
	501	10
01010-D0635	420	2
	426	2
01010-D0812	412	36
01010-D0816	413	8
	423	38
	423	43
	429	37
	429	40
	448	3
	487	49
	489	49
01010-D0820	223	15
	423	40
	429	35
	435	7
	436	10
	437	31
	438	5
	487	51
	489	51
	498	20
01010-D0825	219	2
	414	8
01010-D0835	414	5
01010-D0860	223	2
01010-D1016	205	10
	208	10
	505	3
01010-D1020	218	3
	405	14
	406	14
	411	27
	448	6
	501	12
	502	29
	532	12
	538	8

PartNumber	Page	Index
	540	8
	544	12
	546	12
	548	12
01010-D1025	138	2
	139	3
	140	3
	142	3
	205	14
	205	17
	206	12
	206	15
	207	12
	207	15
	208	14
	208	17
	209	3
	419	3
	425	3
	437	26
	518	2
	520	2
	522	2
	524	2
	526	2
	526	14
	526	18
	526	21
	527	59
	528	2
	528	14
	528	18
	528	21
	529	59
	530	6
	530	29
	531	6
	531	29
	537	15
	538	2
	538	5
	538	11
	538	14
	538	17
	538	23
	538	27
	538	31
	538	37
	540	2
	540	5
	540	11
	540	14
	540	17
	540	23
	540	27
	540	31
	540	37
	544	2
	544	4
	544	9
	544	15
	544	25
	544	36
	545	39
	545	46
	545	49
	546	2
	546	4
	546	9
	546	15
	546	25
	546	36
	547	39
	547	46
	547	49

PartNumber	Page	Index
	548	2
	548	4
	548	9
	548	15
	548	23
	548	34
	548	37
	549	43
	549	46
01010-D1030	435	12
	436	20
	437	28
	438	3
	516	28
	517	28
	536	17
	538	20
	538	34
	540	20
	540	34
01010-D1035	526	8
	528	8
	552	25
01010-D1225	284	5
	284	13
	533	2
01010-D1265	369	14
01010-F1285	143	3
01011-62005	261	3
01011-62015	261	7
01011-62040	260	11
01011-62450	271	4
	273	4
01011-63060	400	14
	401	14
01011-81010	215	26
	215	33
01011-81020	237	35
01011-81200	280	3
01011-81400	596	33
	598	38
01011-81600	598	26
01011-81610	598	27
01011-81640	281	7
	597	46
	599	51
01011-82405	170	25
	172	25
01011-82415	596	6
	598	6
01011-82430	170	26
	172	26
01011-82440	136	14
	570	8
01011-82465	570	5
	570	16
01011-82750	498	11
01011-83010	253	4
	612	18
01016-51055	530	2
	531	2
01016-52045	246	5
01016-52480	570	10
01017-51430	441	17
01019-32020	596	34
	598	39
01023-10406	286	16
	297	16
01023-10410	369	20
	413	4
01023-10420	413	2
01023-10510	447	3
	518	11
	518	19
	518	35

PartNumber	Page	Index
	520	11
	520	19
	520	35
	522	11
	522	19
	522	35
	524	11
	524	19
	524	35
01023-10535	204	17
01023-10612	458	2
01023-10614	410	10
	410	15
01023-10616	499	10
01023-10620	471	9
	472	9
01023-20306	486	31
	487	54
	488	31
	489	54
01023-20416	410	6
01023-20616	463	10
01023-60420	494	26
01023-60525	426	19
01023-70414	433	26
01023-70514	411	9
01023-70520	420	21
	426	21
	473	6
01023-70525	420	19
01023-70614	455	50
	467	2
	469	2
01023-70616	455	51
	487	53
	489	53
01050-31230	112	10
01050-61260	226	2
01053-61660	254	2
01093-51205	247	10
01124-82055	581	2
01140-51665	573	14
01225-70416	407	15
	408	15
01225-70616	420	27
	423	34
	426	27
	429	31
	433	29
	437	17
	437	33
	476	3
01225-70620	405	6
	406	6
	415	26
	417	26
	420	5
	422	7
	426	5
	428	7
	433	18
	446	2
	447	5
	454	35
01240-00616	407	21
	408	21
01240-01020	432	3
01245-00620	420	16
	426	16
01252-60610	286	8
	297	8
01252-60612	286	15
	297	15
01252-60616	154	14
01252-60640	286	14

PartNumber	Page	Index
	297	14
01252-60645	314	6
01252-60820	154	5
01252-60830	285	21
	296	21
01252-60845	154	31
01252-61035	320	4
01252-61285	318	11
01252-61295	316	14
01252-70820	404	23
01252-70830	320	6
01252-71265	319	12
01252-90510	236	3
	236	9
	236	15
01252-A0650	236	21
01252-A1245	315	12
01253-61425	317	14
01310-20812	456	2
	457	2
01310-20816	454	8
01370-00512	484	5
01435-00608	467	28
	469	28
	502	10
	503	10
	504	10
01435-00812	551	9
01435-00816	456	4
	457	4
01435-00820	44	9
01435-00825	106	1
01435-00845	119	2
01435-01020	44	6
	51	15
	112	9
	118	38
	119	5
01435-01025	34	5
	45	3
	51	14
01435-01030	45	13
	204	2
01435-01040	45	9
	45	14
01435-01055	113	8
	358	13
	358	20
01435-01060	358	27
	358	34
01435-01065	45	6
01435-01080	51	9
01435-01220	57	10
01435-01235	57	9
01435-01240	117	2
01435-01245	51	4
01435-60612	66	3
01435-60816	35	11
	60	9
	72	7
	84	4
	118	16
01435-60820	43	10
	58	14
	104	2
	118	7
	127	5
01435-60825	103	2
01435-60835	33	1
	118	18
01435-60890	37	5
	38	2
	83	2
01435-61025	112	5
01435-61030	112	6
01436-01045	51	10
01437-00825	78	12
01508-40805	204	27
	450	11
	451	11
	452	11
	453	11
01530-04812	233	9
	233	16
01580-03024	253	5
01580-10504	204	21
01580-10605	197	5
	405	24
	406	24
	420	11
	421	33
	426	11
	427	33
01580-10806	159	9
	191	16
	192	16
	204	28
	223	7
	241	16
	308	24
	309	24
	421	32
	427	32
	450	13
	451	13
	452	13
	453	13
	454	9
	456	13
	456	15
	457	14
	457	16
01580-11008	241	19
	329	18
	330	18
	333	15
	334	15
	422	14
	428	14
	441	25
	441	30
	452	22
	453	22
	474	6
	511	4
	511	8
	518	23
	520	23
	522	23
	524	23
	552	9
	552	20
01580-11210	112	4
	577	12
01580-11411	441	18
01580-11613	455	42
	597	47
	598	28
	599	52
01580-11815	596	28
	598	29
01580-12016	581	4
	596	35
	599	40
01580-12218	592	20
	593	18
01580-12419	555	14
	556	5
	570	7
	570	11
	582	18
	596	7
	596	36
	598	7
	599	41
01580-13024	400	17
	401	17
	612	19
01580-13326	596	8
	598	8
01580-13629	580	21
01580-60403	413	5
	494	27
01580-71210	143	5
01582-11008	154	16
	454	26
01582-11210	113	5
	114	4
	115	4
	312	16
	480	11
01582-11613	573	15
01583-11610	272	38
	274	38
01583-12012	157	7
01583-13923	249	11
01584-00605	58	7
	118	8
01584-01210	51	7
	117	4
01590-31215	454	11
01590-34548	580	11
01590-34850	568	4
01592-32427	245	5
01593-31210	247	12
01593-31613	254	3
01593-32414	249	3
01593-33018	246	11
	247	3
01594-00606	583	15
	583	36
01594-01008	51	3
01594-01210	580	30
01595-01008	34	3
	34	12
	57	6
01595-01210	480	13
01596-01413	596	37
	599	42
01597-01009	157	28
	244	20
	336	18
	342	25
	344	25
	346	18
	348	17
	394	7
	441	6
01601-20410	463	9
01602-21030	462	1
01640-20408	463	8
01640-20508	204	16
	204	20
	308	16
	309	16
	422	25
	428	23
	450	8
	451	8
	452	8
	453	8
	456	24
	457	25
	484	4
01640-20610	583	14

PartNumber	Page	Index
	583	35
01640-20716	118	19
01640-20816	118	17
	532	25
01640-21016	369	12
	450	20
	451	20
	452	24
	453	24
01640-21626	308	25
	309	25
	502	16
01640-41223	143	4
01641-20812	78	13
01643-01232	258	4
	258	16
	258	30
	259	34
	264	3
01643-30623	59	10
	118	13
	193	13
	194	13
	197	4
	213	36
	367	8
	368	8
	369	9
	405	4
	405	10
	405	18
	405	23
	406	4
	406	10
	406	18
	406	23
	411	15
	411	31
	415	3
	415	5
	415	10
	417	3
	417	5
	417	10
	433	3
	433	5
	433	9
	433	14
	433	23
	434	3
	440	8
	443	6
	444	45
	458	11
	465	10
	467	24
	467	38
	469	24
	469	38
	473	4
	475	2
	476	10
	476	13
	480	16
	485	3
	485	7
	486	19
	488	19
	490	11
	496	4
	496	18
	497	11
	503	3
	503	22
	503	27
	504	3
	504	22
	504	27
	526	33
	528	33
	530	21
	530	27
	531	21
	531	27
	536	10
	536	14
	537	10
	537	14
	551	13
01643-30823	35	9
	147	48
	149	48
	159	4
	191	15
	192	15
	193	3
	193	7
	194	3
	194	7
	198	17
	198	26
	199	17
	199	26
	204	15
	214	47
	223	6
	223	11
	224	3
	262	8
	265	15
	266	15
	277	8
	308	4
	308	19
	309	4
	309	19
	327	2
	337	6
	338	6
	387	2
	388	2
	389	2
	390	2
	411	19
	415	21
	417	21
	422	3
	428	3
	440	6
	443	4
	443	35
	449	7
	450	19
	451	19
	452	19
	453	19
	455	46
	459	9
	459	12
	459	15
	467	21
	467	31
	467	34
	469	21
	469	31
	469	34
	471	15
	471	18
	472	15
	472	18
	479	2
	479	5
	481	4
	484	2
	484	13
	487	48
	489	48
	490	14
	491	5
	491	9
	492	5
	492	9
	493	5
	493	9
	494	35
	496	22
	499	3
	499	6
	499	15
	502	3
	502	8
	502	20
	503	8
	503	35
	504	8
	504	35
	584	48
01643-31032	34	10
	34	15
	44	4
	112	16
	113	14
	136	11
	136	18
	136	22
	136	25
	136	27
	136	32
	136	35
	146	9
	146	23
	146	25
	147	38
	147	50
	147	52
	148	9
	148	23
	148	25
	149	38
	149	50
	149	52
	150	4
	150	7
	150	9
	151	3
	152	3
	157	5
	157	10
	157	13
	157	17
	157	19
	157	27
	159	6
	160	4
	160	8
	160	11
	160	15
	160	32
	160	36
	160	40
	161	46
	162	6
	162	8
	162	12
	162	15

PartNumber	Page	Index
	162	19
	162	36
	163	40
	163	44
	163	50
	164	7
	164	13
	164	18
	164	22
	164	27
	164	38
	165	45
	166	7
	166	13
	166	18
	166	22
	166	27
	166	38
	167	45
	170	5
	170	11
	170	16
	170	21
	170	30
	170	35
	171	40
	171	48
	172	5
	172	11
	172	16
	172	21
	172	30
	172	35
	173	40
	173	48
	174	11
	174	14
	175	11
	175	14
	176	11
	176	14
	176	17
	177	11
	177	14
	177	17
	179	2
	179	5
	180	2
	180	5
	181	2
	181	4
	181	7
	181	10
	181	18
	181	22
	181	30
	181	35
	182	2
	182	4
	182	7
	182	10
	182	18
	182	22
	182	30
	182	35
	183	2
	183	5
	183	8
	183	16
	183	20
	183	28
	183	35
	184	2
	184	5
	184	8
	184	16
	184	20
	184	28
	184	35
	185	11
	185	14
	185	17
	188	2
	188	4
	188	7
	188	10
	188	18
	188	22
	188	30
	188	35
	191	3
	191	6
	191	9
	191	12
	192	3
	192	6
	192	9
	192	12
	195	9
	195	12
	195	19
	195	22
	195	25
	195	31
	195	34
	195	39
	196	43
	196	46
	196	54
	196	58
	197	8
	198	12
	198	20
	198	23
	199	12
	199	20
	199	23
	200	4
	200	7
	200	10
	200	13
	200	16
	200	19
	200	21
	200	26
	200	28
	200	31
	201	4
	201	7
	201	10
	201	13
	201	16
	201	19
	201	21
	201	26
	201	28
	201	31
	202	3
	202	9
	202	11
	202	14
	202	17
	202	19
	203	3
	203	9
	203	11
	203	14
	203	17
	203	19
	204	5
	204	8
	204	11
	204	31
	204	35
	205	9
	206	9
	207	9
	208	9
	210	4
	210	9
	210	12
	210	15
	210	18
	210	20
	210	23
	210	26
	210	29
	210	32
	210	35
	210	39
	211	41
	212	3
	212	6
	212	9
	212	12
	212	15
	212	18
	212	21
	212	24
	212	27
	212	30
	212	34
	212	37
	213	8
	213	11
	213	14
	213	18
	213	21
	213	39
	214	43
	214	50
	214	53
	214	57
	215	4
	215	7
	215	11
	215	13
	215	16
	215	19
	215	21
	215	25
	215	28
	215	32
	215	35
	215	39
	216	42
	216	45
	216	47
	217	3
	219	5
	220	10
	221	8
	227	14
	234	28
	235	44
	235	46
	236	27
	236	29
	237	34
	237	36
	238	15
	238	28
	239	4
	239	19
	239	24

PartNumber	Page	Index
	241	4
	241	7
	242	10
	242	14
	243	3
	244	11
	244	19
	244	23
	244	26
	248	21
	252	26
	256	21
	262	31
	263	40
	267	6
	267	12
	267	14
	271	15
	273	15
	276	4
	277	3
	277	35
	279	3
	279	6
	279	9
	280	7
	308	2
	309	2
	322	5
	322	28
	322	33
	322	37
	322	39
	323	42
	323	46
	323	50
	324	5
	324	28
	324	33
	324	37
	324	39
	325	42
	325	46
	325	50
	328	3
	329	7
	329	14
	329	17
	329	22
	329	26
	330	7
	330	14
	330	17
	330	22
	330	26
	332	4
	333	11
	333	14
	333	19
	334	11
	334	14
	334	19
	336	7
	336	11
	336	17
	337	3
	337	12
	338	3
	338	12
	339	10
	339	15
	339	19
	339	22
	339	26
	340	10
	340	15
	340	19
	340	22
	340	26
	341	10
	341	15
	341	19
	341	22
	341	26
	342	4
	342	8
	342	24
	342	29
	342	33
	342	36
	344	4
	344	8
	344	24
	344	29
	344	33
	344	36
	346	7
	346	10
	346	13
	346	15
	346	17
	346	31
	346	35
	346	38
	347	41
	348	6
	348	9
	348	12
	348	14
	348	16
	348	30
	348	34
	348	37
	348	40
	350	23
	350	26
	350	32
	350	37
	350	40
	351	43
	351	47
	351	50
	352	23
	352	26
	352	32
	352	37
	352	40
	353	43
	353	47
	353	50
	354	3
	354	9
	358	3
	358	6
	358	9
	358	17
	358	24
	358	31
	358	37
	358	40
	359	44
	360	3
	360	6
	360	12
	360	28
	361	3
	361	6
	361	12
	361	28
	362	3
	362	18
	362	22
	362	26
	362	31
	363	7
	363	10
	364	29
	364	32
	364	38
	365	51
	365	55
	366	3
	366	6
	366	9
	366	17
	367	17
	367	20
	367	26
	367	30
	368	17
	368	20
	368	26
	368	30
	369	18
	369	27
	369	34
	370	6
	371	10
	371	13
	371	16
	371	25
	372	5
	372	23
	372	26
	375	13
	375	22
	375	25
	375	27
	376	13
	376	22
	376	25
	376	27
	376	37
	378	3
	378	14
	378	17
	379	3
	379	14
	379	17
	380	3
	380	14
	380	17
	381	3
	381	14
	381	17
	382	6
	382	9
	382	13
	382	16
	382	21
	382	24
	383	6
	383	9
	383	14
	383	18
	383	23
	383	26
	384	6
	384	9
	384	13
	384	16
	384	21
	384	24
	385	3
	387	14

PartNumber	Page	Index
	387	17
	387	29
	387	32
	388	14
	388	17
	388	29
	389	14
	389	17
	389	29
	389	32
	390	14
	390	17
	390	29
	391	17
	391	33
	391	36
	392	51
	392	62
	393	3
	393	38
	394	3
	394	6
	394	12
	394	15
	394	19
	394	24
	394	39
	395	46
	407	19
	408	19
	411	12
	411	26
	415	16
	417	16
	435	17
	436	25
	441	4
	441	7
	441	15
	441	23
	441	24
	441	28
	441	29
	441	35
	443	9
	443	12
	443	15
	443	19
	443	21
	443	25
	443	29
	443	32
	443	39
	444	42
	444	48
	445	10
	445	13
	445	17
	445	20
	445	23
	445	26
	445	29
	450	23
	451	23
	452	21
	452	23
	452	27
	453	21
	453	23
	453	27
	454	15
	454	24
	459	4
	459	6
	459	19
	465	3
	465	6
	465	12
	471	12
	472	12
	474	5
	474	8
	476	7
	480	3
	481	13
	481	16
	484	10
	484	17
	485	10
	485	13
	486	15
	486	25
	488	15
	488	25
	490	3
	490	5
	491	3
	492	3
	493	3
	494	3
	494	6
	494	8
	494	11
	494	14
	494	16
	494	19
	494	22
	494	25
	494	30
	494	38
	495	41
	495	44
	495	46
	495	49
	495	53
	496	10
	496	13
	498	15
	500	4
	500	8
	500	11
	500	14
	500	16
	500	19
	500	22
	502	23
	502	26
	503	18
	504	18
	508	21
	508	23
	509	3
	509	6
	509	9
	511	2
	511	3
	511	6
	511	7
	512	3
	512	6
	512	9
	512	16
	512	20
	512	24
	512	27
	513	6
	513	27
	513	40
	514	43
	514	52
	516	31
	517	31
	518	33
	520	33
	522	33
	524	33
	527	37
	527	40
	527	43
	527	48
	527	62
	529	37
	529	40
	529	43
	529	48
	529	62
	530	3
	530	14
	530	18
	530	23
	531	3
	531	14
	531	18
	531	23
	532	10
	532	16
	532	21
	532	24
	535	8
	535	11
	536	6
	537	6
	542	7
	542	10
	542	13
	542	16
	542	19
	542	22
	543	7
	543	10
	543	13
	543	16
	543	19
	543	22
	544	24
	544	29
	544	33
	546	24
	546	29
	546	33
	548	27
	548	31
	550	4
	551	7
	552	8
	552	11
	552	19
	552	22
	554	22
	555	3
	555	6
	572	23
	573	27
	578	28
	578	40
	579	44
	580	20
	581	15
	581	21
	581	25
	581	36
	584	46
	585	20
	586	23
	587	20

PartNumber	Page	Index
	590	17
	590	23
	592	28
01643-31232	112	2
	112	8
	113	2
	114	3
	115	3
	136	4
	136	6
	136	9
	137	3
	137	6
	151	6
	152	6
	157	2
	160	24
	162	28
	196	49
	202	6
	203	6
	213	26
	213	28
	213	32
	226	5
	227	19
	232	8
	232	11
	233	5
	238	5
	244	8
	245	12
	246	22
	247	11
	253	3
	256	4
	256	6
	257	15
	265	6
	265	16
	266	6
	266	16
	267	21
	277	25
	280	2
	280	12
	284	32
	308	7
	309	7
	312	15
	315	11
	315	13
	321	3
	322	12
	324	12
	329	11
	330	11
	332	6
	332	9
	333	23
	334	23
	336	14
	354	6
	356	2
	362	8
	365	48
	372	20
	375	18
	375	31
	376	18
	376	31
	377	4
	377	8
	378	9
	378	29
	378	33
	378	37
	379	9
	379	29
	379	33
	379	37
	380	9
	380	29
	380	33
	380	37
	381	9
	381	29
	381	33
	381	37
	387	24
	388	24
	389	24
	390	24
	391	30
	391	40
	392	44
	394	28
	394	32
	394	36
	395	43
	400	12
	401	12
	402	5
	402	15
	404	25
	404	29
	441	11
	465	14
	480	9
	480	12
	498	7
	508	2
	508	5
	513	31
	513	35
	516	7
	516	9
	516	23
	517	7
	517	9
	517	23
	550	6
	552	24
	573	5
	573	22
	574	40
	577	7
	577	11
	577	13
	577	16
	578	8
	578	24
	579	48
	580	9
	580	16
	580	26
	580	29
	581	28
	585	14
	586	17
	587	14
	588	18
01643-31445	310	14
	441	31
	584	41
01643-31645	198	2
	198	5
	199	2
	199	5
	213	4
	247	9
	254	4
	264	6
	269	4
	271	21
	273	21
	281	4
	315	3
	402	17
	402	22
	516	12
	517	12
	553	12
	573	16
	582	6
	582	9
	597	48
	599	53
01643-31845	269	2
	585	9
	586	12
	587	9
	596	29
	598	30
01643-32060	246	6
	260	12
	260	19
	261	8
	581	3
	585	5
	586	8
	587	6
	596	38
	599	43
01643-32260	592	21
	593	19
01643-32460	255	2
	271	5
	273	5
	400	22
	555	13
	570	6
	570	9
	570	13
	570	17
	582	17
	596	9
	597	39
	598	9
	599	44
01643-32780	498	10
	590	5
01643-33080	246	13
	400	13
	401	13
01643-33380	596	10
	598	10
01643-33690	596	11
	598	11
01643-50823	241	15
	285	18
	296	18
	320	7
	360	22
	361	22
	393	14
01643-51032	241	18
	280	18
	320	5
	339	5
	340	5
	341	5
	350	21
	352	21
	393	21

PartNumber	Page	Index
	393	24
	393	27
	393	32
	393	35
	394	9
01643-51232	316	15
	318	12
	319	13
	336	3
01643-51645	308	12
	309	12
	598	31
01643-70623	420	3
	420	17
	422	18
	423	30
	426	3
	426	17
	428	18
	428	28
	463	11
	501	11
01643-70823	219	3
	223	3
	223	16
	412	37
	413	9
	414	6
	414	9
	423	39
	423	41
	423	44
	429	36
	429	38
	429	41
	435	8
	436	11
	437	32
	438	6
	448	4
	487	50
	487	52
	489	50
	489	52
	498	21
01643-71032	142	4
	205	11
	205	15
	205	18
	206	13
	206	16
	207	13
	207	16
	208	11
	208	15
	208	18
	209	4
	218	4
	405	15
	406	15
	411	28
	419	4
	425	4
	435	13
	436	21
	437	27
	437	29
	437	30
	438	4
	448	7
	501	13
	502	30
	505	4
	516	29
	517	29

PartNumber	Page	Index
	518	3
	520	3
	522	3
	524	3
	526	3
	526	9
	526	15
	526	19
	526	22
	527	60
	528	3
	528	9
	528	15
	528	19
	528	22
	529	60
	530	7
	530	30
	531	7
	531	30
	532	13
	536	18
	537	16
	538	3
	538	6
	538	9
	538	12
	538	15
	538	18
	538	21
	538	24
	538	28
	538	35
	538	38
	540	3
	540	6
	540	9
	540	12
	540	15
	540	18
	540	21
	540	24
	540	28
	540	35
	540	38
	544	3
	544	10
	544	13
	544	16
	544	26
	544	37
	545	40
	545	47
	546	3
	546	10
	546	13
	546	16
	546	26
	546	37
	547	40
	547	47
	548	3
	548	10
	548	13
	548	16
	548	24
	548	35
	549	38
	549	44
	552	26
01643-71232	284	6
	284	14
	369	15
	533	3
01643-80823	538	40

PartNumber	Page	Index
	540	40
02010-70619	573	23
02754-003A3	262	15
02757-004A4	371	22
	392	60
02757-004A5	371	1
02758-00403	391	1
02758-00406	555	8
02758-004A7	555	9
02765-003A3	328	15
02766-003A4	378	24
	379	24
	380	24
	381	24
02767-00204	256	13
02767-003A3	378	38
	379	38
	380	38
	381	38
02767-00406	555	
02767-004A7	555	
02774-00303	350	8
	352	8
02776-006A4	347	
	347	55
	349	
	349	54
	387	30
	388	30
	389	30
	390	30
02781-0021D	256	11
02781-00313	329	1
	330	1
	333	1
	334	1
	373	7
	373	11
	373	14
	374	7
	374	11
	374	14
	378	18
	379	18
	380	18
	381	18
02781-00315	322	19
	324	19
	328	4
	578	14
02781-00420	179	6
	180	6
	370	1
	371	5
	371	18
	374	21
	391	10
	391	13
	392	56
02781-00422	347	45
	349	44
	350	9
	352	9
	513	13
02782-10210	356	10
	364	21
	366	10
	372	9
	583	19
02782-10313	378	19
	379	19
	380	19
	381	19
	387	6
	388	6

PartNumber	Page	Index
	389	6
	390	6
02782-10314	387	3
	388	3
	389	3
	390	3
02782-10315	181	23
	182	23
	183	21
	184	21
	188	23
	256	17
	332	10
	350	4
	352	4
02782-10420	391	18
	392	46
02782-10421	174	4
	175	4
	176	4
	177	4
	181	11
	182	11
	185	4
	188	11
02782-10422	174	1
	175	1
	176	1
	177	1
	185	1
	508	8
	513	7
02782-10424	350	1
	352	1
	392	47
	513	10
02782-10425	244	12
	350	12
	352	12
02782-10628	342	17
	344	17
	348	19
	356	16
	360	13
	361	13
	369	28
	393	4
02782-1062A	322	13
	324	13
02782-10632	369	22
02782-50315	263	43
	328	7
	578	9
02783-10210	284	19
	372	12
	583	37
02783-10315	322	16
	324	16
	328	12
02783-10422	267	15
	284	22
	322	7
	324	7
	342	37
	344	37
	347	51
	349	50
02783-10522	514	46
02783-10628	157	29
	342	12
	344	12
	346	20
	347	48
	349	47
	356	7

PartNumber	Page	Index
	360	14
	361	14
	362	9
02789-10422	370	4
	391	24
02896-11008	284	21
	315	4
	337	18
	337	21
	338	18
	338	21
	343	42
	345	42
	356	12
	356	21
	356	26
	356	32
	356	35
	356	38
	363	3
	364	5
	364	8
	364	11
	364	14
	364	17
	364	20
	364	23
	366	12
	366	14
	372	8
	372	11
	372	14
	462	12
	508	13
	508	16
	583	18
	583	21
	584	39
02896-11009	87	17
	181	24
	181	36
	182	24
	182	36
	183	22
	184	22
	184	36
	250	19
	250	22
	251	19
	251	22
	252	19
	252	27
	256	25
	322	17
	322	21
	324	17
	324	21
	328	6
	328	9
	328	14
	329	3
	330	3
	332	11
	333	3
	334	3
	350	6
	352	6
	356	29
	373	3
	373	9
	373	13
	373	16
	373	20
	374	3
	374	9

PartNumber	Page	Index
	374	13
	374	16
	374	20
	375	14
	375	19
	376	14
	376	19
	378	5
	378	21
	378	39
	379	5
	379	21
	379	39
	380	5
	380	21
	380	39
	381	5
	381	21
	381	39
	387	5
	387	8
	387	20
	388	5
	388	8
	388	20
	389	5
	389	8
	389	20
	390	5
	390	8
	390	20
	571	21
	572	19
	572	24
	577	17
	578	13
	578	16
	592	22
	592	29
	593	20
	595	17
	616	
	617	
02896-11012	92	3
	157	34
	174	3
	174	6
	175	3
	175	6
	176	3
	176	6
	177	3
	177	6
	179	7
	179	11
	180	7
	180	11
	181	13
	181	15
	182	13
	182	15
	183	11
	183	13
	183	36
	184	11
	184	13
	267	17
	284	24
	322	9
	322	29
	324	9
	324	29
	337	27
	338	27
	342	39

PartNumber	Page	Index
	344	39
	347	47
	347	53
	349	46
	349	52
	350	3
	350	11
	350	14
	352	3
	352	11
	352	14
	356	15
	365	42
	365	44
	370	3
	371	7
	371	17
	371	20
	373	6
	374	6
	374	23
	375	15
	376	15
	391	12
	391	15
	391	20
	391	22
	391	23
	391	25
	391	26
	392	55
	392	58
	462	9
	481	21
	508	10
	513	9
	513	12
	513	15
	513	17
	513	19
	513	21
	513	23
	555	7
	555	10
	578	34
	589	18
	590	14
	617	
02896-11015	284	27
	481	22
	514	48
02896-11018	157	22
	157	24
	157	31
	322	15
	322	30
	324	15
	324	30
	346	4
	346	19
	346	22
	347	50
	348	3
	348	18
	348	21
	349	49
	356	9
	356	18
	360	17
	361	17
	362	11
	369	35
	387	11
	388	11
	389	11
	390	11
02896-21008	256	14
	262	5
02896-21009	256	19
	262	20
	263	46
02896-21012	244	14
	244	16
	337	30
	337	33
	338	30
	338	33
02896-61009	89	17
	188	24
	188	36
	367	5
	367	11
	368	5
	368	11
02896-61012	93	3
	185	3
	185	6
	188	13
	188	15
	554	18
	554	23
	594	17
	618	
02896-61018	342	14
	342	19
	342	21
	344	14
	344	19
	344	21
	393	6
04010-00310	204	13
04010-00722	157	6
04020-00514	228	7
	229	7
04020-00616	155	2
	314	5
04020-00820	318	10
	319	11
04020-01024	310	12
	316	13
	317	13
	318	2
	576	2
04020-01228	227	16
	258	17
	281	9
04020-01434	257	18
04020-01638	260	10
04020-01842	582	20
04025-00412	369	3
04025-00632	438	8
04025-01065	400	20
04050-10070	590	11
	591	5
04050-11210	308	17
	309	17
	422	26
	428	24
	450	9
	451	9
	452	9
	453	9
	456	25
	457	26
04050-11612	420	14
	420	25
	426	14
	426	25
	526	34
	528	34
	551	14
04050-12015	539	41
	541	41
04050-13020	247	13
	369	11
04050-13022	454	12
04050-14025	254	5
04050-15035	249	4
04050-15045	245	6
04050-16045	246	12
	247	4
04050-18050	596	16
	598	16
04050-18080	580	12
04050-18085	568	5
04052-20833	454	19
04052-21038	454	28
04052-21253	454	17
04064-03015	369	4
04064-08025	242	3
04065-01410	355	5
04065-01610	153	11
04065-02012	315	6
04065-03012	319	7
04065-03212	155	17
04065-04018	316	9
	317	9
04065-04518	155	10
04065-04818	312	6
04065-05520	250	20
	251	20
04065-06220	245	8
	249	13
04065-06825	311	28
04065-08025	572	20
04070-00105	271	10
	273	10
04077-00120	241	24
04081-05512	576	5
04082-00212	580	24
04120-21748	441	16
04205-10516	308	15
	309	15
	450	7
	451	7
	452	7
	453	7
	456	23
	457	24
04205-10622	420	13
	420	24
	426	13
	426	24
04205-11238	454	16
04248-30808	450	10
	451	10
	452	10
	453	10
04248-30818	204	26
04250-40847	456	14
	457	15
04250-60847	308	22
	309	22
04250-80847	204	25
	456	
	457	
04250-81056	454	25
04250-90847	204	24
	308	
	309	
04254-10823	204	19
	204	22
	308	21
	308	23
	309	21

PartNumber	Page	Index
	309	23
	456	12
	457	13
04256-40622	420	9
	426	9
04256-41230	480	5
04260-00635	241	25
04260-01270	310	21
04418-13060	239	6
	603	9
04434-50510	157	15
	481	14
04434-50610	157	14
	170	12
	171	49
	172	12
	173	49
	220	8
	221	6
	238	13
	495	42
	508	19
	532	22
04434-50612	467	29
	469	29
04434-50808	503	25
	504	25
04434-50810	200	14
	200	22
	200	24
	200	29
	201	14
	201	22
	201	24
	201	29
	202	12
	203	12
	204	33
	495	47
	500	5
	503	28
	504	28
	536	4
	537	4
04434-50812	415	14
	417	14
04434-51008	35	7
	223	9
	459	13
	502	5
	503	5
	504	5
04434-51010	181	8
	182	8
	183	6
	184	6
	188	8
	196	52
	204	29
	210	21
	210	27
	212	4
	212	13
	212	22
	212	28
	212	32
	500	2
	500	6
	536	3
	537	3
04434-51012	223	14
	411	6
	411	22
	502	18
	503	15
	504	15
04434-51210	164	25
	166	25
	339	20
	340	20
	341	20
04434-51310	342	2
	344	2
	363	5
	364	30
	364	36
	364	39
	366	4
	366	7
	366	15
	495	50
	500	20
	512	14
	512	17
	512	21
04434-51408	496	20
	502	6
	503	6
	504	6
04434-51410	200	8
	200	11
	201	8
	201	11
	202	1
	202	7
	203	1
	203	7
	205	7
	206	7
	207	7
	208	7
	212	19
	494	4
	496	11
	500	1
	500	9
	532	14
	536	2
	537	2
04434-51412	202	4
	203	4
	411	20
	423	45
	429	42
04434-51610	136	30
04434-51708	459	7
	499	13
04434-51710	181	33
	182	33
	183	32
	184	32
	188	33
	198	9
	198	27
	199	9
	199	27
	212	16
	256	27
	339	16
	339	23
	340	16
	340	23
	341	16
	341	23
	494	36
04434-51712	256	22
	329	12
	329	15
	330	12
	330	15
	333	9
	333	12
	334	9
	334	12
	375	20
	375	23
	376	20
	376	23
	378	12
	379	12
	380	12
	381	12
	387	27
	388	27
	389	27
	390	27
	411	23
	433	28
04434-51908	459	10
	471	16
	472	16
04434-51910	210	16
	210	24
	210	37
	212	1
	212	7
	364	26
	391	31
	391	34
	443	16
	444	46
	459	2
	484	15
	494	12
	494	39
	495	51
04434-51912	170	38
	172	38
	244	24
	322	3
	324	3
	342	27
	342	31
	344	27
	344	31
	350	30
	350	38
	351	41
	352	30
	352	38
	353	41
	362	24
	362	27
	365	53
	371	8
	371	11
	371	23
	376	35
	392	49
	411	21
	512	18
	512	22
	512	25
	513	4
04434-52110	170	17
	172	17
	196	55
	198	14
	199	14
	210	5
	485	11
	513	24
04434-52112	535	5
04434-52210	164	11
	166	11

PartNumber	Page	Index
	513	38
	514	50
04434-52310	176	12
	177	12
	179	13
	180	13
	181	16
	182	16
	183	14
	184	14
	195	10
	195	20
	195	32
	196	44
	210	13
	212	35
	213	12
	215	5
	443	40
	471	10
	471	13
	472	10
	472	13
	494	17
04434-52312	445	8
04434-52511	486	13
	488	13
04434-52711	181	27
	182	27
	183	25
	184	25
	185	12
	188	16
	210	6
	210	30
	210	36
	351	44
	353	44
	362	19
	362	23
	443	22
	578	25
04434-52712	170	36
	172	36
	210	7
	411	24
	494	20
04434-53211	136	16
	174	8
	175	8
	176	8
	177	8
	181	19
	182	19
	183	17
	184	17
	188	27
	195	40
	213	15
	215	8
	443	36
04434-53212	322	31
	324	31
04434-53411	185	8
	188	19
	346	33
	348	32
	362	15
	362	28
	369	31
	394	16
	445	15
	445	24
	494	1
04434-53412	323	43
	325	43
	346	32
	348	31
	360	23
	361	23
	369	24
04435-50610	500	12
04435-51410	372	21
	372	24
04435-51710	183	33
	184	33
04435-52110	500	17
04530-13655	239	16
06002-30312	573	13
06002-32218	248	22
06002-32219	248	23
06124-02520	480	6
07000-11003	289	5
	293	28
	300	5
	304	28
07000-11005	272	36
	274	36
07000-11007	285	15
	290	24
	291	39
	292	15
	292	26
	293	11
	293	24
	296	15
	301	24
	302	39
	303	15
	303	26
	304	11
	304	24
	305	41
07000-11008	285	12
	296	12
07000-12011	293	23
	304	23
	356	23
	356	34
	356	37
	364	7
	364	10
	364	13
	364	16
	364	19
07000-12014	356	20
	356	25
	356	28
	356	31
07000-12015	290	13
	290	17
	290	29
	290	33
	292	4
	292	8
	292	20
	293	4
	293	16
	301	13
	301	17
	301	29
	301	33
	303	4
	303	8
	303	20
	304	4
	304	16
	304	34
07000-12016	583	10
	583	31
07000-12018	271	34
	273	34
	356	14
07000-12060	336	4
07000-12065	577	4
	583	9
	583	30
07000-12080	571	14
	572	12
	593	10
	617	
07000-12085	172	9
	252	12
	554	11
	592	12
	595	10
	617	
	618	
07000-12090	336	15
	594	10
	618	
07000-12095	248	5
07000-12100	285	11
	296	11
	331	7
	331	12
	507	8
07000-12115	589	11
	617	
07000-12130	172	28
	315	1
07000-12135	573	20
07000-13024	288	6
	299	6
07000-13025	360	19
	361	19
	369	5
07000-13029	331	8
	507	14
07000-13031	369	6
07000-13038	350	18
	352	18
07000-13042	336	8
07000-13048	250	12
	251	12
	616	
07000-13050	577	5
07000-15090	331	9
	331	13
	507	6
07000-15150	573	17
07000-15160	284	15
	608	8
	609	9
	610	9
	611	8
07000-15195	284	4
	608	6
	609	7
	610	7
	611	6
07000-15200	172	3
07000-15260	574	42
07000-15340	573	6
07000-15395	271	18
	273	18
07000-15405	271	19
	273	19
07000-71007	236	20
	616	
07000-72011	258	23
07000-72015	236	19
	237	37
	238	26
	616	

PartNumber	Page	Index
	618	
07000-72022	235	42
	235	48
	237	38
	238	24
	616	
	618	
07000-72055	227	15
	616	
	618	
07000-72100	233	12
	616	
	618	
07000-72105	238	2
	608	7
	609	8
	610	8
	611	7
	616	
	618	
07000-72120	232	6
	616	
	618	
07000-73022	236	25
	616	
07000-73025	262	9
07000-73028	237	39
	238	25
	239	2
	616	
	618	
07000-73030	234	26
	616	
07000-73032	235	41
	235	47
	616	
	618	
07000-75190	257	13
07000-75385	260	25
07000-75490	137	4
07000-A2060	236	
	616	
07000-A3024	236	
07000-A3045	244	6
07000-A5050	257	4
07000-B1009	310	10
	314	3
07000-B2011	312	14
07000-B2014	314	2
07000-B2018	367	4
	367	10
	368	4
	368	10
07000-B2060	310	26
	315	8
07000-B2065	280	4
07000-B2075	571	15
	572	13
	593	11
	617	
07000-B2080	252	13
	554	12
	592	13
	595	11
	617	
	618	
07000-B2085	170	9
	594	11
	618	
07000-B2100	315	9
07000-B2105	321	1
07000-B2110	589	12
	617	
07000-B2130	170	28
07000-B3024	367	2
	368	2
07000-B3025	393	11
07000-B3028	277	9
07000-B3032	280	19
	339	2
	340	2
	341	2
07000-B3035	393	25
	393	33
	393	39
07000-B3038	393	18
	393	29
07000-B3040	314	1
07000-B3045	250	13
	251	13
	280	13
	616	
07000-B5200	170	3
07000-E1008	154	2
07000-E1010	154	29
07000-E2110	155	1
07000-F2012	154	4
07000-F5120	254	8
07001-01003	289	4
	293	29
	300	4
	304	29
07001-02016	583	11
	583	32
07001-03050	577	9
07002-10823	287	10
	298	10
07002-11023	260	23
	289	10
	290	9
	300	10
	301	9
	326	12
	328	11
	356	4
	364	3
	573	3
	578	11
07002-11223	272	40
	274	40
	289	2
	290	21
	290	37
	292	12
	292	24
	293	8
	293	20
	293	26
	300	2
	301	21
	301	37
	303	12
	303	24
	304	8
	304	20
	304	26
	305	38
	326	7
07002-11423	179	10
	179	15
	180	10
	180	15
	183	10
	184	10
	284	20
	289	15
	300	15
	356	6
	356	11
	364	4
	364	22
	365	41
	366	11
	372	7
	372	10
	372	13
	481	20
	508	12
	508	15
	508	18
	583	17
	583	20
	583	38
07002-11623	286	31
	297	31
	326	5
	481	19
07002-11823	157	33
	174	5
	175	5
	176	5
	176	19
	177	5
	177	19
	179	8
	180	8
	181	12
	182	12
	288	4
	293	33
	299	4
	305	45
	329	2
	330	2
	333	2
	334	2
	370	2
	371	6
	371	19
	373	2
	373	5
	373	8
	373	12
	373	15
	373	19
	374	2
	374	5
	374	8
	374	12
	374	15
	374	19
	374	22
	378	20
	379	20
	380	20
	381	20
	387	4
	387	7
	388	4
	388	7
	389	4
	389	7
	390	4
	390	7
	391	11
	391	14
	391	19
	391	21
	392	53
	392	57
07002-12034	174	2
	175	2
	176	2
	177	2
	181	25

PartNumber	Page	Index
	182	25
	183	23
	184	23
	267	16
	284	23
	288	11
	289	12
	295	2
	295	4
	299	11
	300	12
	307	2
	307	4
	322	8
	322	18
	322	20
	324	8
	324	18
	324	20
	328	5
	328	8
	328	13
	332	12
	342	38
	343	41
	344	38
	345	41
	347	46
	347	52
	349	45
	349	51
	350	2
	350	5
	350	10
	352	2
	352	5
	352	10
	386	3
	386	5
	392	48
	508	7
	508	9
	513	8
	513	11
	513	14
	578	12
	578	15
07002-12434	157	21
	157	30
	172	7
	265	8
	265	19
	265	21
	266	8
	266	19
	266	21
	271	32
	273	32
	284	26
	287	5
	288	2
	289	7
	290	15
	290	19
	290	31
	290	35
	292	6
	292	10
	292	22
	293	6
	293	18
	294	4
	294	6
	298	5
	299	2
	300	7
	301	15
	301	19
	301	31
	301	35
	303	6
	303	10
	303	22
	304	6
	304	18
	304	36
	306	4
	306	6
	322	14
	324	14
	346	3
	346	21
	347	49
	348	2
	348	20
	349	48
	350	13
	352	13
	356	8
	356	17
	360	16
	361	16
	362	10
	369	37
	386	7
	387	10
	388	10
	389	10
	390	10
	514	47
07002-13034	573	8
	574	44
07002-13334	346	24
	347	43
	348	23
	349	42
	369	36
07002-15234	284	11
	337	10
	338	10
	360	10
	361	10
07002-20823	153	15
07002-21023	153	3
	154	17
	154	25
	263	45
07002-21223	153	6
07002-21423	153	8
	156	2
	256	15
	262	19
	262	21
07002-21623	154	22
07002-22034	256	18
	262	11
	263	47
07002-22434	244	13
	256	9
	262	2
	262	24
	263	33
	337	29
	337	32
	338	29
	338	32
07002-23334	153	23
	262	23
	277	11
	277	14
	277	17
	277	27
	393	8
07002-25234	262	27
07002-61023	227	11
	234	4
	235	39
	236	6
	236	12
	236	18
	238	22
	310	6
	314	12
	314	14
	616	
	618	
07002-61223	234	32
	236	31
	238	20
	616	
	618	
07002-61423	227	3
	227	9
	310	8
	616	
	618	
07002-61623	238	18
	313	7
	314	10
	616	
	618	
07002-61823	185	5
	185	19
	188	12
	236	24
	616	
07002-62034	185	2
	188	25
07002-62434	170	7
	227	5
	234	30
	239	9
	239	13
	342	13
	342	18
	344	13
	344	18
	393	5
	616	
	618	
07002-63034	234	6
	234	16
	234	25
	616	
07002-63334	234	35
	342	10
	344	10
	616	
07005-00812	178	11
07005-01012	238	12
	616	
	618	
07005-02216	59	1
07005-02416	59	2
07012-00105	260	20
07018-31255	241	27
	616	
	618	
07020-00000	246	19
	247	5
	248	14
	250	23
	251	23
	252	20
	254	6

PartNumber	Page	Index
	398	10
	399	10
	553	5
	553	15
	572	21
	580	5
	580	23
	588	19
	590	12
	593	21
	608	10
	609	11
	610	11
	611	10
07020-00675	252	21
	400	9
	401	9
	581	5
	588	20
	594	18
	597	49
	599	54
	608	11
	609	12
	610	12
	611	11
07020-00900	246	17
	248	13
	249	6
	250	21
	251	21
	398	9
	399	9
	582	14
	582	21
	592	23
	596	24
	598	32
	608	12
	609	13
	610	13
	611	12
07030-00252	239	11
	256	26
	265	17
	266	17
07040-11007	153	2
	260	22
	263	44
	328	10
	356	3
	364	2
	573	2
	578	10
07040-11409	153	7
	179	14
	180	14
	310	7
	356	5
	481	17
07040-11612	481	18
07040-11812	176	18
	177	18
	185	18
	236	23
	392	52
07040-12012	262	10
07040-12412	170	6
	172	6
	265	7
	265	18
	266	7
	266	18
07040-13016	573	7
	574	43

PartNumber	Page	Index
07042-20108	45	8
07043-00211	577	8
07043-70108	250	24
	251	24
	510	9
07043-70211	228	4
07044-12412	256	8
	265	20
	266	20
	271	31
	273	31
07048-01210	516	25
	517	25
	588	21
07048-01815	585	15
	586	18
	587	15
07049-01215	239	14
07049-02025	239	15
07049-02734	400	24
07051-00005	284	
07056-18422	170	31
	172	31
07092-01000	284	2
07094-10315	378	6
	379	6
	380	6
	381	6
07094-10417	365	45
	391	37
	392	41
	590	20
07094-10620	360	24
	361	24
	362	5
07094-11024	394	29
	394	33
	394	40
07094-30315	387	21
	388	21
	389	21
	390	21
07094-30417	377	5
	391	27
07094-31024	277	22
	394	25
07095-00314	267	10
	372	18
	378	7
	379	7
	380	7
	381	7
	387	22
	388	22
	389	22
	390	22
07095-00316	367	15
	367	28
	368	15
	368	28
07095-00317	329	9
	329	20
	329	24
	330	9
	330	20
	330	24
	333	17
	333	21
	334	17
	334	21
	375	29
	376	29
	377	2
	378	27
	378	31

PartNumber	Page	Index
	378	35
	379	27
	379	31
	379	35
	380	27
	380	31
	380	35
	381	27
	381	31
	381	35
	578	6
	578	22
	579	46
	581	34
07095-00420	377	6
	391	38
	392	42
	590	21
07095-00421	365	46
	391	28
07095-00627	360	25
	361	25
07095-00628	323	48
	325	48
	362	6
07095-00630	136	20
	443	27
07095-01033	277	23
07095-01038	394	26
	394	30
	394	34
	395	41
07095-20211	198	10
	198	28
	199	10
	199	28
	256	28
	339	17
	339	24
	340	17
	340	24
	341	17
	341	24
07095-20213	364	27
07095-20314	170	18
	172	18
	196	56
	198	15
	199	15
	535	6
07095-20418	351	45
	353	45
	578	26
07095-20419	170	37
	172	37
	362	20
	443	23
07095-20420	181	28
	182	28
	183	26
	184	26
07095-20522	322	34
	324	34
07095-20523	174	9
	175	9
	176	9
	177	9
	181	20
	182	20
	183	18
	184	18
	188	28
	196	41
	213	16
	215	9

PartNumber	Page	Index
	443	37
07095-20625	362	16
	362	29
	369	32
07095-20627	185	9
	188	20
	323	44
	325	44
	360	26
	361	26
	369	25
	394	17
07138-00870	596	25
	598	33
07138-01090	592	24
	593	22
07139-00805	596	
	596	30
	598	34
07139-01002	592	25
	593	23
07139-01005	592	
	593	
07141-00080	596	26
	598	35
07141-00100	592	26
	593	24
	617	
07143-10505	571	22
07143-10506	553	2
	554	19
	595	18
07143-10606	588	14
07143-10707	589	19
07144-10505	252	22
07144-10506	594	19
07144-10706	580	3
07145-00050	247	7
	248	11
	252	23
	571	23
	617	
07145-00055	246	10
	252	24
	553	3
	554	20
	594	20
	595	19
	617	
	618	
07145-00060	246	15
	588	13
	588	15
07145-00075	589	20
	617	
07145-00085	582	10
07145-00090	588	11
07145-00110	597	45
	599	50
07155-00820	571	20
	617	
07156-00710	583	6
	583	27
07156-00810	572	18
	617	
07156-00912	594	16
	618	
07161-00070	583	5
	583	26
07179-12047	250	14
	251	14
07179-12057	572	14
07179-12062	554	13
	593	12
	595	12
07179-12069	252	14
	571	16
	592	14
	594	12
07179-12074	589	13
07206-30710	238	10
07217-71013	170	23
	172	23
07260-03218	280	20
07260-04716	280	14
07260-05818	280	8
	336	20
07260-05825	336	22
07270-41010	183	29
	184	29
07270-41014	181	31
	182	31
	183	30
	184	30
	188	31
07281-00359	43	6
	59	6
07281-00549	476	5
	497	12
07281-00609	484	7
07281-00709	497	3
07281-01159	484	20
	501	14
07283-32738	157	25
	346	16
	348	15
07283-32746	342	22
	344	22
07283-33450	394	5
07283-34346	57	4
	244	18
07283-34354	581	9
07283-36155	336	16
	441	5
07283-37671	34	2
	34	13
07283-52737	157	26
	342	23
	344	23
07283-53444	394	4
07283-54353	57	5
	581	16
07283-56170	336	19
07285-00130	171	42
	173	42
	181	32
	182	32
	183	31
	184	31
	188	32
07285-00155	136	29
07285-00180	485	16
07285-00220	71	2
07286-01970	71	1
07287-01916	612	20
07289-00045	280	21
07289-00070	164	2
	164	4
	166	2
	166	4
	280	15
07289-00080	280	9
	336	21
	336	23
07289-00120	168	2
07289-00145	168	3
07289-00160	139	7
	142	1
07289-00170	138	5
	139	5
	140	5
07299-00070	164	39
	165	46
	166	39
	167	46
07299-00080	34	7
	165	40
	165	47
	167	40
	167	47
07371-30638	360	20
	361	20
	393	12
07371-31049	339	3
	340	3
	341	3
07371-31255	350	19
	352	19
	393	19
07372-21035	339	4
	340	4
	341	4
	350	20
	352	20
	393	20
07372-21040	280	17
	393	23
	393	26
	393	31
	393	34
	394	8
07372-21235	315	10
07372-21250	336	2
07376-70315	256	24
07730-50004	164	8
	166	8
07950-10450	612	
07950-10451	612	14
07950-90403	612	16
07951-41017	612	15
07952-70004	612	
07952-70014	612	
08000-00020	190	2
08000-00021	190	3
08001-3195G	190	1
08007-26050	191	18
	192	18
08017-C0702	503	31
	504	31
08028-64011	195	1
08034-00310	236	13
08034-20414	411	5
	412	33
08034-20519	205	6
	206	6
	207	6
	208	6
	458	8
	462	3
08034-20834	462	19
	496	23
08034-40521	160	12
	162	16
	410	2
	411	29
	412	34
	415	13
	415	32
	417	13
	418	32
	423	47
	429	44
	459	16
	499	16
	502	15

PartNumber	Page	Index
	503	14
	503	29
	503	36
	504	14
	504	29
	504	36
08037-01610	146	10
	148	10
	160	16
	162	20
	503	23
	504	23
08037-02512	160	17
	162	21
	205	12
	206	10
	207	10
	208	12
	220	11
	222	3
	516	35
	517	35
	527	49
	529	49
08037-03614	516	36
	517	36
08037-10610	410	1
08037-11425	411	3
08038-00035	195	6
	195	15
	195	28
	195	36
08038-02027	196	51
	213	40
08038-10035	195	16
08041-00500	471	2
	472	2
08041-01000	471	3
	472	3
08041-01500	471	4
	471	7
	472	4
08041-02000	471	5
	472	5
08041-03000	471	6
	472	6
08044-01500	472	7
08055-00282	412	35
08056-00111	423	49
	429	46
08056-00130	423	50
	429	47
08059-00310	410	3
	423	31
08086-20100	467	
	469	
08086-50100	467	18
	469	18
08088-60000	193	1
	194	1
08105-12420	205	
	206	
	207	
	208	
08164-A1000	532	17
08174-13118	536	16
08191-00770	118	35
	474	2
08192-26100	474	1
08193-20010	118	9
	119	4
08193-21012	170	13
	172	13
	200	5
	200	17
	200	23
	201	5
	201	17
	201	23
	202	21
	203	21
	239	17
	329	33
	330	33
	474	4
08671-50080	535	4
08672-01000	535	12
09000-30006	612	2
09001-00700	612	3
09001-03600	612	4
09001-04600	612	5
09019-28036	612	6
09021-01725	612	7
09022-00150	612	21
09023-00300	612	8
09033-00190	612	9
09039-00150	612	10
09054-00009	612	11
09055-10390	612	12
09056-05513	612	1
09161-C0881	602	1
09162-E0881	602	2
09209-13641	612	17
09241-50175	580	22
09280-10040	558	
	560	
	561	
	562	
	563	
	564	
	565	
09280-10130	558	6
	560	5
	561	6
	562	6
	563	5
	564	6
	565	6
09281-00041	558	7
	560	6
	561	7
	562	7
	563	6
	564	7
	565	7
09282-00017	558	10
	560	9
	561	10
	562	10
	563	9
	564	10
	565	10
09283-00000	558	8
	560	7
	561	8
	562	8
	563	7
	564	8
	565	8
09285-00000	558	9
	560	8
	561	9
	562	9
	563	8
	564	9
	565	9
09289-00000	612	13
09415-01008	412	38
	423	51
	429	48
	505	2
09415-01610	219	7
	420	22
	426	22
09415-02110	465	7
	474	3
	530	4
	531	4
09415-02512	205	5
	206	5
	207	5
	208	5
	219	6
	437	19
	516	24
	516	37
	517	24
	551	11
09415-03614	147	53
	149	53
09460-00000	551	15
09479-02400	164	10
	166	10
	486	2
	486	6
	486	8
	486	11
	486	22
	486	39
	487	41
	487	44
	487	46
	487	55
	488	2
	488	6
	488	8
	488	11
	488	22
	488	39
	489	41
	489	44
	489	46
	489	55
09479-12400	445	3
	445	7
09482-10000	445	14
	486	33
	488	33
09483-10312	136	28
09483-30550	486	7
	486	38
	487	42
	488	7
	488	38
	489	42
09484-00560	486	3
	486	5
	486	9
	486	12
	486	21
	486	40
	487	43
	487	45
	488	3
	488	5
	488	9
	488	12
	488	21
	488	40
	489	43
	489	45
09485-06507	497	2
09602-10002	603	8
09608-05080	239	5
09620-A2001	603	17

PartNumber	Page	Index
09620-A3001	603	19
09637-A0640	602	3
09642-A0480	603	13
09651-A0841	602	4
09653-A0641	602	5
	602	7
09659-A057B	331	17
	602	28
09664-70001	602	6
09667-A0641	603	16
09667-A0880	602	24
09669-0000C	602	9
09669-0000E	602	8
09683-0000A	602	10
09690-F0400	602	12
09690-P1120	602	11
09801-E0881	603	10
09802-E0640	602	13
09805-C0881	603	12
09806-E0883	602	15
09808-A1201	602	14
09845-00480	605	1
09960-00601	602	16
09960-00602	602	17
09960-01201	602	18
09963-A1640	602	19
09980-10550	614	1
09982-20057	614	2
104-15-25480	234	20
104-15-25490	234	18
10E-63-32390	250	15
	251	15
	616	
113-78-21170	590	3
	591	3
11Y-06-11372	220	1
	220	2
	220	3
	221	1
	221	2
	222	1
11Y-09-11140	164	31
	166	31
11Y-62-12140	364	18
11Y-979-2571	420	20
	426	20
11Y-979-8920	445	5
1241155H1	72	1
124-54-26540	441	21
125-15-15290	234	19
1294859H1	72	5
1295465H92	132	1
12H-15-14140	234	23
12R-60-11230	284	16
130-911-1640	467	14
	469	14
134-03-61410	164	32
	166	32
135-49-33370	462	18
142-06-13540	367	14
	367	27
	368	14
	368	27
144-70-15251	582	13
144-851-2570	582	16
144-874-7470	119	3
145-13-12160	241	23
14S-46-25140	191	19
	192	19
14X-06-12260	195	27
14X-06-12280	195	2
	195	5
14X-06-12290	195	3
14X-06-52171	437	14
14X-15-15850	234	5
	234	24
14X-15-16210	234	21
14X-49-12340	238	3
14X-49-51520	235	40
14X-60-51240	284	28
14X-911-1330	419	2
	425	2
14X-98-35181	603	15
14X-Y11-2110	440	4
14X-Y79-3341	411	4
154-03-72270	157	8
154-20-71130	226	1
154-61-16570	44	8
156-72-11210	247	6
170-21-11190	239	10
175-06-81610	502	24
175-15-56470	234	22
175-21-12180	258	5
	258	14
175-54-34170	398	5
	399	5
	400	7
	401	7
	454	7
	454	37
	553	7
	553	17
	580	35
	588	5
	590	8
	596	17
	598	17
175-61-23220	450	25
	451	25
	452	29
	453	29
176-62-11650	284	7
17A-03-14111	164	14
	166	14
17A-03-14120	164	15
	166	15
17A-03-52520	146	11
	147	40
	148	11
	149	40
17A-06-42210	415	17
	417	17
	430	1
17A-06-42220	434	4
17A-13-46200	236	
17A-13-46201	236	8
17A-15-19240	258	24
17A-57-21202	404	
17A-57-21203	404	26
17A-Z11-2420	434	1
17M-03-46530	179	9
	180	9
	183	9
	184	9
17M-911-3530	497	1
195-03-41380	146	1
	148	1
195-15-32710	242	8
195-15-75560	367	
	368	
195-43-41530	136	7
195-Z11-2180	435	14
	436	22
195-Z11-4510	420	1
195-Z11-4520	426	1
198-15-29230	242	6
	616	
	618	
198-Z11-6890	473	1
201-70-71280	553	8
	553	18
203-03-41620	440	3
203-06-41560	422	24
	428	22
203-06-56230	458	9
203-54-56630	526	32
	528	32
	551	12
205-00-72430	603	18
205-03-71330	202	15
	203	15
205-03-71440	164	20
	166	20
205-30-62650	45	5
205-54-51250	407	14
	408	14
205-54-51971	530	25
	531	25
205-54-53550	530	24
	531	24
205-54-72641	246	9
	247	2
205-54-76280	526	
	527	
	528	
	529	
205-60-71220	527	50
	529	50
206-03-43340	164	24
	164	29
	166	24
	166	29
206-910-8170	582	11
207-03-75590	146	2
	148	2
207-06-61490	496	19
207-62-32890	198	24
	199	24
207-62-72171	360	15
	361	15
207-62-83950	87	16
	89	16
207-979-7390	445	4
208-04-71780	171	43
	173	43
208-06-19170	443	26
208-53-12991	410	7
209-09-11340	259	36
209-54-14650	516	20
	517	20
20B-27-11210	314	7
20R-54-11460	518	4
	518	12
	518	34
	520	4
	520	12
	520	34
	522	4
	522	12
	522	34
	524	4
	524	12
	524	34
20T-54-74510	585	16
	586	19
	587	16
20T-54-74550	405	12
	406	12
20T-54-74990	415	24
	417	24
	422	5
	428	5
20T-54-75290	405	11
	406	11
20T-54-84840	415	23

PartNumber	Page	Index
	417	23
20U-54-46520	411	7
	412	32
20U-62-41610	157	32
20U-62-41720	342	9
	344	9
	393	7
20U-62-41740	364	9
	364	15
	462	20
20U-62-41810	263	32
20U-70-41560	204	32
20U-Y14-1550	356	19
	356	24
20Y-00-11350	518	24
	520	24
	522	24
	524	24
20Y-06-16170	423	33
	429	30
20Y-06-23472	467	15
	469	15
20Y-06-41990	409	
20Y-06-42130	223	17
20Y-06-42180	410	4
20Y-06-42190	434	6
	434	8
	458	6
	467	7
	467	10
	467	13
	468	39
	468	40
	468	41
	469	7
	469	10
	469	13
	470	39
	470	40
	470	41
20Y-43-41491	410	11
20Y-53-12221	410	5
20Y-53-12310	433	6
	433	10
	433	15
	433	24
	497	9
	536	8
	536	12
	537	8
	537	12
20Y-54-13322	436	17
20Y-54-14290	518	22
	520	22
	522	22
	524	22
20Y-54-29232	518	25
	520	25
	522	25
	524	25
20Y-54-65790	433	32
20Y-54-74172	518	6
	518	14
	520	6
	520	14
	522	6
	522	14
	524	6
	524	14
20Y-62-22790	156	4
20Y-62-22820	156	3
20Y-62-43460	342	40
	344	40
21J-06-13661	200	2
	201	2
	210	2
	213	2
	411	2
	471	8
	472	8
21J-54-16190	432	1
21N-62-41410	392	45
21T-62-76840	263	38
	277	32
	339	8
	340	8
	341	8
	367	24
	368	24
	394	22
21T-979-4380	484	3
21U-46-31220	556	2
21W-06-42130	440	1
21W-06-42140	440	2
21W-54-42630	466	4
21W-60-41170	284	8
21W-62-41350	370	7
21W-62-42481	284	25
	514	45
21W-62-42640	234	34
	277	10
	277	16
	346	23
	347	42
	348	22
	349	41
21W-62-42920	314	11
21W-62-43920	508	11
21W-62-43930	508	14
21W-62-43970	356	33
	356	36
21W-62-43980	356	
	364	6
	364	12
21W-62-99895	263	41
21W-973-4560	369	21
22B-00-11340	603	21
22B-46-24170	538	39
	540	39
22B-54-17290	424	2
	431	2
22B-54-19970	518	31
	520	31
	522	31
	524	31
22B-60-11160	284	18
22B-62-18940	337	28
	337	31
	338	28
	338	31
22L-46-12150	490	15
22L-62-22151	364	1
22M-54-19170	518	27
	520	27
	522	27
	524	27
	527	45
	529	45
22M-60-22130	213	29
22P-62-13510	333	20
	334	20
	378	26
	378	30
	378	34
	379	26
	379	30
	379	34
	380	26
	380	30
	380	34
	381	26
	381	30
	381	34
	579	45
22P-62-13540	329	8
	330	8
	372	17
	375	28
	376	28
	377	1
	578	5
	578	21
	581	33
22P-70-12160	581	10
22T-55-11630	415	11
	415	30
	417	11
	417	30
	422	12
	428	12
22T-56-23290	146	12
	148	12
22W-06-13220	193	
	194	
22W-43-17330	234	12
22W-61-12220	462	8
22X-22-11280	556	3
22X-878-1980	202	20
	203	20
232-03-56111	164	5
	166	5
232-15-19220	242	7
	616	
	618	
232-22-51740	260	
232-22-51741	260	14
232-43-13130	454	22
232-43-18281	602	20
232-54-54720	551	2
232-60-54730	577	3
232-70-12450	553	11
232-70-12480	553	13
232-70-13142	596	15
	598	15
232-70-52460	580	7
	585	12
	586	15
	587	12
232-71-13151	570	14
232-71-51310	596	12
	598	12
232-71-51320	596	13
	598	13
232-71-51330	596	14
	598	14
232-735-1340	602	21
232-785-1291	590	1
	591	1
232-785-1310	590	10
	591	4
232-785-1411	602	29
232-860-5320	573	24
232-950-2291	454	39
232-957-9710	422	20
232-971-6120	553	
232-971-6121	553	10
234-01-81110	34	1
234-01-81120	34	4
234-01-81130	51	11
234-01-81160	59	5
234-01-81181	59	7
234-01-81190	51	13
234-01-81310	136	1
	442	37
234-01-81320	136	2

PartNumber	Page	Index
	196	59
234-01-81330	281	1
234-01-81340	281	2
234-01-81350	34	6
234-01-81410	136	33
234-01-81450	281	8
234-01-81461	281	6
234-02-81131	165	43
	167	43
234-02-81142	164	36
	166	36
234-02-81210	164	34
	166	34
234-02-81220	165	41
	167	41
234-02-81231	164	35
	166	35
234-02-81240	165	42
	167	42
234-03-81100	146	
	148	
234-03-81101	146	
	148	
234-03-81110	146	
	148	
234-03-81130	146	
	148	
234-03-81131	146	
	148	
234-03-81160	146	
	148	
234-03-81190	147	
	149	
234-03-81211	146	28
	148	28
234-03-81231	146	15
	148	15
234-03-81240	146	16
	148	16
234-03-81251	146	17
	148	17
234-03-81271	146	4
	148	4
234-03-81281	147	43
	149	43
234-03-81291	147	44
	149	44
234-03-81310	147	45
	149	45
234-03-81341	146	29
	148	29
234-03-81350	146	30
	148	30
234-03-81360	146	31
	148	31
234-03-81410	146	5
	146	18
	148	5
	148	18
234-03-81450	146	6
	147	42
	148	6
	149	42
234-03-81460	146	32
	149	32
234-03-81470	147	33
	149	33
234-03-81480	147	34
	149	34
234-03-81520	157	23
234-03-81530	157	11
234-03-81551	160	22
	162	26
234-03-81610	150	2
234-03-81620	159	2
234-03-81630	161	41
	163	45
234-03-81640	161	42
	163	46
234-03-81650	161	43
	163	47
234-03-81660	150	5
234-03-81710	536	7
	537	7
234-03-81810	160	37
	163	41
234-03-81820	160	38
	163	42
234-03-81840	536	11
	537	11
234-03-81870	160	2
234-03-81910	151	1
	152	1
234-03-81920	160	9
	162	13
234-03-81940	157	20
234-03-81960	160	1
	162	1
234-03-81971	151	4
	152	4
	157	37
	158	
234-03-81980	160	13
	162	17
234-03-81991	160	5
	174	15
	175	15
	179	16
	180	16
	183	37
	184	37
	441	36
234-03-82120	164	3
	166	3
234-03-82130	164	9
	166	9
234-03-82140	164	16
234-03-82160	160	6
	162	10
234-03-82191	164	19
	166	19
234-03-82210	160	33
	162	37
234-03-82220	160	30
	162	34
234-03-82240	160	34
	162	38
234-03-82310	164	1
	166	1
234-03-82540	166	16
234-03-82870	162	2
234-03-82880	162	3
234-03-82890	162	4
234-03-82991	162	9
	167	48
	176	20
	177	20
	181	37
	182	37
	185	20
	188	37
	442	
234-03-83110	150	1
234-03-83120	164	30
	166	30
234-03-83130	164	23
	166	23
234-03-83140	164	28
	166	28
234-04-81101	172	
234-04-81110	170	1
	172	1
234-04-81120	170	27
	172	27
234-04-81131	170	2
	172	2
234-04-81140	170	14
	172	14
234-04-81160	136	23
234-04-81190	170	19
	172	19
234-04-81200	170	
234-04-82110	174	7
234-04-82120	183	12
234-04-82130	181	26
	183	24
234-04-82140	179	12
234-04-82150	183	3
	184	3
234-04-82160	179	3
	180	3
234-04-82180	174	12
	175	12
	176	15
	177	15
	185	15
234-04-82210	170	33
	172	33
234-04-82220	171	41
	173	41
234-04-82310	176	7
234-04-82320	181	14
234-04-82350	167	
	167	49
	181	5
	182	5
	188	5
234-04-82410	175	7
234-04-82420	184	12
234-04-82430	182	26
	184	24
234-04-82440	180	12
234-04-82460	177	7
234-04-82470	182	14
234-04-82530	188	26
234-04-82560	185	7
234-04-82570	188	14
234-06-81121	210	1
234-06-81130	213	1
234-06-81140	215	1
234-06-81151	471	1
	472	1
234-06-81160	198	8
	199	8
234-06-81170	198	13
234-06-81180	199	13
234-06-81190	212	31
234-06-81220	459	1
234-06-81230	536	1
	537	1
234-06-81241	200	1
234-06-81250	205	2
	206	2
	207	2
	208	2
234-06-81260	209	5
234-06-81310	195	4
234-06-81320	195	14
234-06-81340	195	13
234-06-81350	196	50
234-06-81360	195	26
234-06-81370	195	35
234-06-81380	196	47
234-06-81411	198	1
	199	1

PartNumber	Page	Index
234-06-81420	191	7
	192	7
234-06-81430	191	1
	192	1
234-06-81440	191	10
	192	10
234-06-81470	195	37
234-06-81480	195	17
234-06-81490	191	4
	192	4
234-06-81510	494	23
234-06-81520	494	28
234-06-81611	205	1
	206	1
	207	1
	208	1
234-06-81620	209	2
234-06-81630	220	5
	221	4
234-06-81640	220	6
	221	5
234-06-81650	220	4
	221	3
234-06-81660	220	7
	222	2
234-06-81680	204	3
234-06-81710	215	2
	278	37
234-06-81720	210	10
234-06-81730	210	33
234-06-81740	212	10
234-06-81750	212	25
234-06-81771	198	4
	199	4
234-06-81780	195	29
234-06-81790	195	7
234-06-81830	213	3
234-06-81840	213	6
234-06-81860	213	9
234-06-81880	217	1
234-06-81890	198	7
	199	7
234-06-81902	463	1
234-06-81910	463	3
234-06-81920	213	33
234-06-81930	215	23
	215	29
234-06-82241	201	1
234-06-82311	463	2
234-07-81110	441	9
234-07-81120	441	12
234-07-81140	441	13
234-07-81210	443	1
	485	17
234-07-81220	443	2
234-07-81230	443	10
234-07-81240	443	7
234-07-81250	443	13
234-07-81260	443	33
234-07-81270	444	43
234-07-81410	485	14
234-07-81420	485	15
234-07-81610	445	1
234-07-81620	445	2
234-07-81630	445	6
234-07-81640	445	11
234-07-81650	445	21
234-07-81660	445	27
234-07-81670	441	2
234-07-81711	501	1
234-07-84190	433	31
234-12-81120	137	1
234-13-05000	616	K01
234-13-05001	618	K13
234-13-05010	616	K02
234-13-80000	227	
	228	
	229	
	230	
	231	
	232	
	233	
	234	
	236	
	238	
	239	
	240	
	241	
	242	
	243	
234-13-81000	241	
	242	
	243	
234-13-81120	241	1
234-13-81190	243	4
234-13-81210	242	11
234-13-81250	242	12
234-13-81520	241	5
234-13-82110	241	20
234-13-82120	241	21
234-13-82140	241	22
234-13-82510	241	26
234-13-87110	242	4
234-13-87210	242	5
234-13-87500	241	
234-13-87530	241	10
234-13-88110	238	6
234-13-88120	238	7
234-13-88130	238	8
234-13-88140	238	9
234-15-81110	227	
234-15-81120	227	
234-15-82010	228	
234-15-82020	229	
234-15-82030	230	
234-15-82040	231	
234-15-82110	228	
234-15-82120	229	
234-15-82130	230	
234-15-82140	231	
234-15-82410	228	25
234-15-82420	228	29
234-15-82430	229	29
234-15-82450	230	28
234-15-82460	230	29
234-15-82470	231	16
234-15-82510	228	27
234-15-82520	233	1
234-15-82540	240	1
234-15-82610	228	6
234-15-82630	229	5
234-15-82640	229	9
	231	4
234-15-82650	230	4
234-15-82660	230	5
234-15-82690	228	9
	229	6
234-15-82940	229	25
234-15-83230	233	10
234-15-84110	232	
234-15-84810	232	3
234-15-84920	232	9
234-15-85010	236	
234-15-85011	236	
234-15-85020	234	
234-15-85030	238	
234-15-85120	234	1
234-15-85300	239	1
234-15-85810	239	21
234-15-85820	239	22
234-15-89410	233	6
234-15-89510	230	22
234-16-81320	277	6
234-16-82110	244	1
234-16-82120	244	9
234-16-82130	244	2
234-16-82210	280	1
234-16-82221	280	5
234-16-82230	280	10
234-16-82241	280	16
234-16-82260	244	21
234-16-82271	244	17
234-16-82310	277	1
234-16-82320	277	4
234-16-82330	277	5
234-16-82341	279	1
234-16-82350	279	7
234-16-82360	277	29
234-22-80100	256	
	260	
	261	
	262	
	264	
	265	
	266	
	267	
	268	
	269	
	270	
	271	
	273	
234-22-80101	256	
	257	
	260	
	261	
	262	
	264	
	265	
	266	
	267	
	268	
	269	
	270	
	271	
	273	
234-22-80103	256	
	257	
	258	
	260	
	261	
	262	
	265	
	266	
	267	
	268	
	269	
	271	
	273	
234-22-81100	260	24
234-22-81110	257	8
234-22-81120	257	9
234-22-81140	257	6
234-22-81150	257	1
234-22-81160	260	
234-22-81170	260	
234-22-81180	260	
234-22-81200	261	6
234-22-81301	257	
234-22-81310	260	21
234-22-81360	262	1
234-22-81370	261	5
234-22-81410	259	37
234-22-81430	275	1
234-22-81480	256	29
	275	2

PartNumber	Page	Index
234-22-81510	256	1
234-22-81520	260	9
234-22-81530	260	13
234-22-81550	260	7
234-22-81560	261	4
234-22-81620	258	2
234-22-81650	258	31
234-22-81780	258	25
234-22-81790	258	26
234-22-81840	260	1
234-22-81850	260	2
234-22-81860	260	3
234-22-81870	260	4
234-22-81910	261	1
234-22-81920	261	2
234-22-81930	260	15
234-22-81940	260	16
234-22-81950	260	17
234-22-82000	256	
	260	
	261	
	262	
234-22-82001	256	
	257	
	260	
	261	
	262	
234-22-82003	256	
	257	
	258	
	260	
	261	
	262	
234-22-82110	256	2
234-22-82540	262	4
234-23-12570	248	1
234-25-31142	265	3
	266	3
234-25-31150	265	9
	266	9
234-25-31172	265	12
	266	12
234-25-31400	268	1
234-25-81110	271	16
	273	16
234-25-81120	271	24
	273	24
234-25-81130	271	1
	273	1
234-25-81160	271	17
	273	17
234-25-81170	271	8
	273	8
234-25-81190	271	6
	273	6
234-25-81210	271	9
	273	9
234-25-81250	271	27
	273	27
234-25-81300	271	3
	273	3
234-25-81330	271	7
	273	7
234-25-81340	271	11
	273	11
234-25-81350	276	1
234-25-81360	276	2
234-25-81370	271	2
	273	2
234-25-81380	267	3
234-25-81390	267	4
234-25-81430	265	10
	266	10
234-25-81440	265	11
	266	11
234-25-81450	265	4
	266	4
234-25-81460	267	2
234-25-81490	271	13
	273	13
234-25-81510	267	1
234-25-81610	265	1
234-25-81710	266	1
234-25-81810	267	7
234-25-81820	267	8
234-27-31260	248	8
234-27-31270	248	9
234-27-81110	245	
234-27-81111	245	1
234-27-81140	246	1
234-27-81150	247	15
234-27-81160	247	14
234-27-81170	253	1
234-27-81180	248	15
234-27-81510	249	8
234-27-81530	246	18
234-30-21120	559	2
	566	2
234-30-21130	559	3
	566	3
234-30-21170	559	4
	566	4
234-30-21180	559	5
	566	5
234-30-21800	559	
	566	
234-30-21810	559	1
	566	1
234-30-22120	559	7
	566	7
234-30-22130	559	8
	566	8
234-30-81100	558	
	560	
	561	
	562	
	563	
	564	
	565	
234-30-81110	558	2
	560	2
	561	2
	562	2
	563	2
	564	2
	565	2
234-30-81140	560	1
	563	1
234-30-81150	560	
	563	
234-30-81200	561	
	564	
234-30-81300	562	
	565	
234-30-82100	559	6
	566	6
234-30-82200	559	
	566	
234-32-81310	226	6
	264	1
234-32-81330	226	3
234-40-81111	322	1
234-40-81121	322	2
234-40-81130	322	6
	324	6
234-40-81140	322	22
	324	22
234-40-81151	322	25
	324	25
234-40-81160	322	24
	324	24
234-40-81171	322	23
	324	23
234-40-81181	322	26
	324	26
234-40-81320	343	43
	345	43
	462	14
234-40-81330	462	15
234-40-81340	462	16
234-40-81350	462	17
234-40-81400	461	
234-40-81401	461	1
234-40-81530	322	10
	324	10
234-40-81630	462	13
234-40-81740	462	10
234-40-82111	324	1
234-40-82121	324	2
234-43-39250	583	12
	583	33
234-43-81110	506	1
234-43-81120	509	7
234-43-81130	509	4
234-43-81140	509	1
234-43-81150	456	11
	457	12
234-43-81210	512	4
234-43-81220	512	1
234-43-81230	512	10
234-43-81240	512	11
234-43-81250	512	7
234-43-81260	512	13
234-43-81270	512	12
234-43-81280	513	16
234-43-81290	513	22
234-43-81310	513	18
234-43-81320	513	36
234-43-81330	513	37
234-43-81340	513	20
234-43-81370	513	1
234-43-81380	513	2
234-43-81390	513	3
234-43-81411	514	41
234-43-81430	514	49
234-43-81440	455	52
234-43-81450	455	53
234-43-81460	455	54
234-43-82110	449	1
	459	20
	498	22
234-43-82130	450	21
	451	21
	452	25
	453	25
234-43-82210	450	1
	451	1
	452	1
	453	1
234-43-82220	450	2
	451	2
	452	2
	453	2
234-43-82230	450	3
	451	3
	452	3
	453	3
234-43-82240	450	4
	451	4
	452	4
	453	4
234-43-82260	450	5
	451	5
	452	5
	453	5

PartNumber	Page	Index
234-43-82270	450	6
	451	6
	452	6
	453	6
234-43-82330	450	
	451	
	452	
	453	
234-43-82340	450	
	451	
	452	
	453	
234-43-82432	454	1
234-46-11181	581	1
234-46-31280	254	7
234-46-81103	398	1
234-46-81821	402	9
234-46-82102	399	1
234-46-85100	400	1
	401	1
234-46-85430	400	16
	401	16
234-46-85460	400	15
	401	15
234-49-81110	393	28
234-49-81120	393	17
234-49-81140	393	22
234-49-81150	393	30
234-49-81160	394	13
234-49-81170	393	36
234-49-81180	394	1
234-49-81191	393	15
234-49-81211	393	10
234-49-81220	393	1
234-49-81230	394	10
234-49-81240	395	44
234-49-81250	394	37
234-53-32321	602	22
234-53-32330	602	23
234-53-81110	604	
234-53-81111	604	2
234-53-81130	603	22
234-53-81150	604	1
234-53-81160	603	14
234-54-81120	439	
234-54-81121	439	1
234-54-81150	518	26
	520	26
	522	26
	524	26
234-54-81160	518	29
	520	29
	522	29
	524	29
234-54-81171	526	1
	528	1
234-54-81192	527	38
	529	38
234-54-81230	530	19
	531	19
234-54-81250	530	1
	531	1
234-54-81260	519	43
	521	43
	523	43
	525	43
234-54-81280	138	1
	139	1
234-54-81290	533	1
234-54-81330	530	9
	531	9
234-54-81340	530	
	531	
234-54-81350	530	16
	531	16

PartNumber	Page	Index
234-54-81370	526	20
	528	20
234-54-81380	530	5
	531	5
234-54-81410	518	
	520	
	522	
	524	
234-54-81420	518	
	520	
	522	
	524	
234-54-81460	518	7
	518	15
	520	7
	520	15
	522	7
	522	15
	524	7
	524	15
234-54-81470	518	8
	518	16
	520	8
	520	16
	522	8
	522	16
	524	8
	524	16
234-54-81480	518	9
	518	17
	520	9
	520	17
	522	9
	522	17
	524	9
	524	17
234-54-81490	518	10
	518	18
	520	10
	520	18
	522	10
	522	18
	524	10
	524	18
234-54-81570	530	12
	531	12
234-54-81610	516	15
	517	15
234-54-81620	532	19
234-54-81630	516	
	517	
234-54-81670	526	35
	528	35
234-54-81761	526	
	528	
234-54-81781	526	
	528	
234-54-81791	526	
	528	
234-54-81813	527	44
	529	44
234-54-81820	536	15
234-54-81930	516	26
	517	26
234-54-81970	530	28
	531	28
234-54-82110	465	1
234-54-82170	466	1
234-54-82230	476	11
234-54-82480	496	5
234-54-82490	496	6
234-54-83110	538	1
	540	1
234-54-83120	538	10
	540	10

PartNumber	Page	Index
234-54-83131	440	
	440	10
	538	29
	540	29
234-54-83140	538	26
	540	26
234-54-83150	552	1
234-54-83160	552	12
234-54-83170	544	1
	546	1
	548	1
234-54-83181	544	11
	546	11
	548	11
234-54-83190	544	19
234-54-83221	544	8
	546	8
	548	8
234-54-83231	538	22
	540	22
234-54-83241	538	7
	540	7
234-54-83250	538	33
	540	33
234-54-83260	538	16
	540	16
234-54-83270	538	19
	540	19
234-54-83280	538	13
	540	13
234-54-83290	538	4
	540	4
234-54-83310	544	30
	546	30
	548	28
234-54-83320	544	21
	546	21
234-54-83340	544	14
	546	14
	548	14
234-54-83350	544	27
	546	27
	548	25
234-54-83360	545	38
	547	38
	548	36
234-54-83371	544	31
	546	31
	548	29
234-54-83380	545	41
	547	41
	549	39
234-54-83410	440	9
234-54-83422	544	
	546	
	548	
234-54-83431	544	7
	546	7
	548	7
234-54-83440	544	
	546	
	548	
234-54-83450	544	
	546	
	548	
234-54-83460	545	43
	547	43
234-54-83470	544	35
	546	35
	548	33
234-54-83480	545	42
	547	42
	549	40
234-54-83751	542	1
	543	1

PartNumber	Page	Index
234-54-83761	542	2
	543	2
234-54-83771	542	5
	543	5
234-54-83780	542	8
	543	8
234-54-83790	542	11
	543	11
234-54-84210	542	14
	543	14
234-54-84220	542	17
	543	17
234-54-84230	542	20
	543	20
234-54-84290	546	19
234-54-84321	548	21
234-54-84391	548	19
234-54-84410	486	32
	488	32
234-54-84430	486	27
	488	27
234-54-84450	486	30
	488	30
234-54-84460	486	26
	488	26
234-54-84470	486	28
	488	28
234-54-85111	526	16
	528	16
234-54-85121	526	17
	528	17
234-54-85130	527	52
	529	52
234-54-85141	527	55
	529	55
234-54-85170	527	58
	529	58
234-54-85180	526	25
	526	26
	528	25
	528	26
234-54-85190	527	53
	527	56
	529	53
	529	56
234-54-85210	530	
	531	
234-54-85220	530	10
	531	10
234-54-85230	530	11
	531	11
234-54-85240	527	57
	529	57
234-54-85271	527	54
	529	54
234-54-85280	526	27
	528	27
234-54-85290	526	28
	528	28
234-54-87110	140	1
234-60-62230	367	
	368	
	608	9
	609	10
	610	10
	611	9
234-60-81110	284	1
234-60-81121	516	
	517	
234-60-81210	284	12
234-60-81220	284	3
234-60-81230	284	17
234-60-81310	516	1
	517	1
234-60-81320	516	2
	517	2
234-60-81330	516	3
	517	3
234-60-81350	516	5
	517	5
234-60-81362	516	4
	517	4
234-60-82320	367	12
	368	12
234-60-82330	256	23
	367	31
	368	31
234-60-82340	263	35
	367	32
	368	32
234-60-82350	262	
234-60-82370	262	17
234-60-82411	367	1
	368	1
234-60-83120	369	
234-60-83130	369	1
234-60-83141	369	10
234-60-83150	369	7
234-60-83210	354	4
234-60-83220	337	4
	338	4
234-60-84111	308	5
	309	5
234-60-84170	342	20
234-60-84180	346	27
234-60-84190	387	25
	388	25
234-60-84210	372	15
234-60-84220	372	16
234-60-84230	372	1
234-60-84240	372	2
234-60-84250	375	1
234-60-84260	375	2
234-60-84270	375	5
234-60-84280	375	6
234-60-84290	375	3
234-60-84300	375	11
	376	11
234-60-84310	375	4
234-60-84320	375	7
234-60-84330	375	8
234-60-84340	375	9
234-60-84350	375	10
234-60-84370	578	1
234-60-84380	578	2
234-60-84390	578	3
234-60-84410	578	4
234-60-84420	578	17
234-60-84430	578	18
234-60-84440	578	19
234-60-84450	578	20
234-60-84460	578	35
234-60-84470	578	36
234-60-84480	578	29
234-60-84490	578	30
234-60-84520	378	10
	379	10
	380	10
	381	10
234-60-84530	378	4
	379	4
	380	4
	381	4
234-60-84550	378	11
	379	11
	380	11
	381	11
234-60-84560	378	15
	379	15
	380	15
	381	15
234-60-84570	378	22
	379	22
	380	22
	381	22
234-60-84580	378	23
	379	23
	380	23
	381	23
234-60-84591	378	25
	379	25
	380	25
	381	25
234-60-84620	370	
	370	9
	382	1
	383	1
	384	1
234-60-84630	382	2
	383	2
	384	2
234-60-84650	382	7
	383	7
	384	7
234-60-84660	382	10
	384	10
234-60-84690	382	17
	384	17
234-60-84710	382	18
	383	20
	384	18
234-60-84720	370	12
	385	1
234-60-84740	371	14
	392	54
234-60-84760	373	17
	374	17
	387	34
	388	32
	389	34
	390	32
234-60-84770	373	18
	374	18
234-60-84780	387	26
	388	26
	389	26
	390	26
234-60-84790	389	25
	390	25
234-60-84810	387	18
	388	18
	389	18
	390	18
234-60-84820	387	19
	388	19
	389	19
	390	19
234-60-84830	387	15
	388	15
	389	15
	390	15
234-60-84840	578	32
234-60-84870	387	12
	388	12
	389	12
	390	12
234-60-84890	371	21
	392	59
234-60-84961	382	19
	383	21
	384	19
234-60-85121	382	14
	384	14
234-60-85131	382	22
	383	24

PartNumber	Page	Index
	384	22
234-60-85161	380	1
	381	1
234-60-85170	382	11
	384	11
234-60-85271	382	3
	383	3
	384	3
234-60-85280	382	4
	383	4
	384	4
234-60-85291	378	1
	379	1
234-60-85310	391	5
234-60-85320	391	6
234-60-85330	391	7
234-60-85341	391	8
234-60-85351	391	9
234-60-85360	391	2
234-60-85370	391	4
234-60-85380	391	3
234-60-85511	376	1
234-60-85521	376	2
234-60-85531	376	3
234-60-85541	376	4
234-60-85551	376	5
234-60-85561	376	6
234-60-85571	376	7
234-60-85581	376	8
234-60-85590	376	9
234-60-85610	376	10
234-60-86110	315	7
234-60-86121	376	
234-60-86122	376	33
234-60-86131	376	
234-60-86132	376	34
234-60-86140	383	19
234-60-86151	383	15
234-60-86160	383	10
234-60-86170	383	11
234-60-86180	383	16
234-60-86190	383	12
234-60-86210	336	1
234-60-86220	336	5
	369	38
234-60-86230	336	12
234-60-86240	336	9
234-60-86250	277	36
	278	
	337	1
	338	1
234-60-86260	342	5
	344	5
234-60-86270	342	16
	344	16
234-60-86280	342	15
	344	15
234-60-86291	339	1
	340	1
	341	1
234-60-86310	342	26
	344	26
234-60-86320	342	30
	344	30
234-60-86330	342	1
	344	1
234-60-86340	342	34
	344	34
	365	
	365	56
	462	
	462	21
	500	
	500	23
234-60-86350	339	13
	340	13
	341	13
234-60-86360	315	
	315	14
	339	12
	340	12
	341	12
234-60-86370	339	11
	340	11
	341	11
234-60-86380	346	8
	348	7
234-60-86390	323	
	323	51
	325	
	325	51
	346	11
	348	10
	387	33
	388	31
	389	33
	390	31
234-60-86410	346	5
	348	4
234-60-86420	346	29
	348	28
234-60-86430	346	28
	348	27
234-60-86440	346	26
	348	25
234-60-86450	348	26
234-60-86460	346	39
	348	38
	362	
	362	32
234-60-86470	350	17
	352	17
234-60-86480	350	15
	352	15
234-60-86490	350	7
	352	7
234-60-86520	350	16
	352	16
234-60-86530	350	24
	352	24
234-60-86540	354	1
234-60-86550	354	7
234-60-86560	357	39
234-60-86570	344	20
234-60-86580	358	14
234-60-86590	358	7
234-60-86610	358	15
234-60-86620	358	18
234-60-86630	358	12
	358	19
	358	26
	358	33
234-60-86640	358	10
	358	25
	370	11
234-60-86650	358	11
	358	22
234-60-86660	358	4
234-60-86670	358	1
234-60-86680	358	28
234-60-86710	358	29
234-60-86720	358	32
234-60-86730	358	21
234-60-86740	358	38
234-60-86750	359	41
	370	10
234-60-86760	359	42
234-60-86770	358	35
234-60-86790	362	1
234-60-86810	360	4
	361	4
234-60-86821	369	23
234-60-86830	360	29
	361	29
234-60-86840	157	36
	362	4
234-60-86850	362	12
234-60-86860	347	54
	349	53
	362	13
234-60-86870	362	14
234-60-86880	363	4
234-60-86890	365	49
234-60-86910	365	43
234-60-86920	365	52
234-60-86930	364	25
234-60-86940	364	24
234-60-86950	364	33
234-60-86960	364	34
234-60-86980	343	44
	345	44
	364	35
234-60-86990	371	2
234-60-87120	371	4
	590	24
234-60-87130	363	8
234-60-87140	577	14
234-60-87150	346	36
	348	35
234-60-87160	371	3
234-60-87170	367	18
	368	18
234-60-87180	366	1
234-60-87221	360	18
	361	18
234-60-87230	336	24
	369	29
234-60-87250	351	48
	353	48
234-60-87271	360	1
	361	1
234-60-87280	369	30
234-60-87290	369	13
234-60-87420	369	16
234-62-85200	575	1
234-62-87940	578	31
234-63-13080	592	2
234-63-25080	589	1
234-70-11140	568	2
234-70-11230	568	6
234-70-12710	585	2
	586	2
	587	2
234-70-13120	596	2
	598	2
234-70-13180	596	22
	598	22
234-70-32150	580	6
234-70-32160	585	8
	586	11
	587	8
234-70-32230	586	3
	587	7
234-70-32241	585	7
	586	4
234-70-32250	585	3
	586	6
	587	3
234-70-32260	586	5
	587	4
234-70-32270	585	6
	586	7
234-70-32280	586	10
234-70-32290	585	4
	586	9

PartNumber	Page	Index
	587	5
234-70-33241	580	18
234-70-33260	580	27
234-70-33270	580	31
234-70-33280	580	32
234-70-34150	582	3
234-70-34160	582	4
234-70-34180	582	15
234-70-34271	582	12
234-70-35161	573	12
234-70-37140	585	18
	586	21
	587	18
234-70-81210	596	18
	598	18
234-70-81250	584	44
234-70-81260	584	43
234-70-81270	583	7
	583	28
234-70-81280	372	27
	583	22
234-70-81290	372	28
	583	1
234-70-81310	583	
234-70-81320	583	
234-70-81410	568	3
234-70-81810	570	1
234-70-81820	570	3
234-70-81830	570	4
234-70-82110	580	1
234-70-82120	580	2
234-70-82130	586	1
	587	1
234-70-82210	569	1
234-70-82221	581	7
234-70-82231	581	6
234-70-82251	581	12
234-70-82261	581	11
234-70-82271	581	18
234-70-82281	581	17
234-70-82511	568	1
234-70-83120	597	41
	599	46
234-70-83211	598	
234-70-83212	598	23
234-70-85110	573	1
234-70-85150	573	30
234-70-85180	573	19
234-70-85210	573	18
234-70-85220	573	
234-70-85230	573	
234-71-11161	582	7
234-71-16131	597	44
	599	49
234-71-21220	597	43
	599	48
234-71-23160	596	1
	598	1
234-71-23170	596	3
	598	3
234-71-81130	596	19
	598	19
234-71-81140	596	4
	598	4
234-71-81150	596	5
	598	5
234-71-81161	596	
234-71-81162	596	23
234-71-81170	597	40
	599	45
234-71-81190	596	20
	598	20
234-71-81241	598	24
234-71-81310	597	42
	599	47
234-71-82110	596	21
	598	21
234-725-8330	553	9
234-725-8340	555	1
234-785-1121	590	2
	591	2
234-785-1610	588	10
234-785-1620	588	12
234-785-1711	588	16
234-785-8111	588	
234-785-8112	588	1
234-785-8131	590	6
234-785-8160	588	2
234-785-8210	590	15
234-785-8220	371	27
	590	18
234-785-8230	371	28
	590	19
234-833-8132	332	1
234-833-8142	332	2
234-833-8150	332	7
234-833-8160	333	4
234-833-8170	333	5
234-833-8180	333	6
234-833-8190	333	7
234-833-8210	333	8
	334	8
234-833-8230	330	27
234-833-8240	330	28
234-833-8250	330	29
234-833-8260	330	30
234-833-8270	329	4
	330	4
234-833-8280	329	5
	330	5
234-833-8310	334	4
234-833-8321	334	5
234-833-8330	334	6
234-833-8341	334	7
234-833-8410	329	27
234-833-8420	329	28
234-833-8430	329	29
234-833-8440	329	30
234-846-8110	556	1
234-870-8511	555	11
234-885-1610	456	10
	457	11
234-885-1620	449	2
	454	5
	462	5
234-915-8111	550	1
234-915-8120	550	2
234-952-8100	419	
	420	
	422	
	424	
	425	
	426	
	428	
	430	
	431	
	432	
234-952-8101	419	
	420	
	422	
	424	
	425	
	426	
	428	
	430	
	431	
	432	
234-952-8102	419	
	420	
	422	
	424	
	425	
	426	
	428	
	430	
	431	
	432	
234-952-8103	419	
	420	
	422	
	424	
	425	
	426	
	428	
	430	
	431	
	432	
234-952-8104	419	
	420	
	422	
	424	
	425	
	426	
	428	
	430	
	431	
	432	
234-952-8140	447	4
234-952-8170	502	12
234-952-8320	223	13
234-952-8330	419	7
234-952-8340	425	7
234-952-8371	407	2
	408	2
234-952-8381	407	3
	408	3
234-952-8410	411	
234-952-8411	411	1
234-952-8420	438	1
234-952-8430	438	2
234-952-8440	503	30
	504	30
234-952-8501	405	
	408	
	409	
	410	
	411	
	413	
	414	
	415	
	419	
	420	
	422	
	424	
	425	
	426	
	428	
	430	
	431	
	432	
	433	
	434	
	435	
	437	
234-952-8502	405	
	408	
	409	
	410	
	411	
	413	
	414	
	415	
	419	
	420	
	422	

PartNumber	Page	Index
	424	
	425	
	426	
	428	
	430	
	431	
	432	
	433	
	434	
	435	
	437	
234-952-8503	405	
	408	
	409	
	410	
	411	
	413	
	414	
	415	
	419	
	420	
	422	
	424	
	425	
	426	
	428	
	430	
	431	
	432	
	433	
	434	
	435	
	437	
234-952-8504	405	
	408	
	409	
	410	
	411	
	413	
	414	
	415	
	419	
	420	
	422	
	424	
	425	
	426	
	428	
	430	
	431	
	432	
	433	
	434	
	435	
	437	
234-952-8580	422	13
	428	13
234-952-8601	406	
	407	
	417	
	436	
234-952-8602	406	
	407	
	417	
	436	
234-952-8603	406	
	407	
	417	
	436	
234-952-8604	406	
	407	
	409	
	410	
	411	
	413	
	414	
	417	
	419	
	420	
	422	
	424	
	425	
	426	
	428	
	430	
	431	
	432	
	433	
	434	
	436	
	437	
234-952-8660	437	24
234-952-8670	437	25
234-952-8680	219	1
234-952-8850	437	22
234-952-8860	437	23
234-952-8870	422	28
234-952-8880	428	26
234-952-8890	422	23
	428	21
234-952-8920	447	2
234-952-8930	419	8
	425	8
234-952-8960	405	13
	406	13
234-979-6270	580	10
234-98-81101	551	
234-98-81111	551	1
234-98-81130	551	4
235-25-11430	248	16
235-27-11670	248	10
235-27-11750	245	14
235-43-18380	308	20
	309	20
235-54-11540	466	3
	490	8
235-60-15480	337	14
	338	14
235-70-15850	576	3
235-70-15860	576	4
235-70-15870	576	
235-70-15880	576	
235-70-45260	573	31
235-70-45270	573	34
235-70-45330	574	41
235-70-45340	574	
235-70-45360	573	35
235-70-45420	573	33
237-23-11142	265	2
	266	2
237-43-17420	308	13
	309	13
	450	28
	451	28
	452	33
	453	33
	454	10
	455	41
	456	26
	457	27
	462	4
237-43-17440	457	5
237-43-17480	456	17
	457	18
237-43-17490	456	16
	457	17
237-54-13211	602	25
237-54-13221	602	26
237-54-13231	602	27
237-54-13271	603	7
238-06-12331	551	3
238-25-16360	248	4
238-46-81120	400	18
23A-06-21440	532	7
23A-06-21510	532	2
23A-06-21530	532	4
23A-22-00161	257	3
23A-22-11660	257	
23A-22-11670	257	
23A-22-11680	257	
23A-22-11690	257	
23A-53-11550	602	30
23A-54-11180	498	4
23A-952-1890	432	2
23A-952-7140	436	4
23A-952-7150	436	5
23A-952-7170	407	1
	408	1
23A-952-7230	435	6
	436	9
23A-952-7240	414	3
23A-952-7250	414	4
23A-952-7260	414	7
23A-952-7270	420	26
23A-952-7280	426	26
23A-952-7290	407	4
	408	4
23A-952-7310	414	1
23A-952-7320	435	1
	436	1
23A-952-7330	435	3
	436	3
23A-952-7340	435	4
23A-952-7470	415	8
	417	8
23A-952-7480	421	31
23A-952-7490	427	31
23A-952-7510	433	21
23A-952-7530	407	5
	408	5
23A-952-7540	407	9
	408	9
23A-952-7550	407	11
	408	11
23A-952-7560	407	10
	408	10
23A-952-7581	420	4
23A-952-7591	426	4
23A-952-7610	428	20
23A-952-7650	405	16
	406	16
23A-952-7680	407	7
	408	7
23A-952-7690	423	46
	429	43
23A-952-7710	436	14
23A-952-7741	433	1
23A-952-7750	433	7
23A-952-7760	433	11
23A-952-7770	421	34
	427	34
23A-952-7831	437	1
23A-952-7840	413	7
23A-952-7870	407	6
	408	6
23A-952-7880	407	8
	408	8
23A-952-7910	405	8
	406	8
23A-952-7930	436	18
23A-952-7940	405	2
	406	2
	416	35
	430	
	430	3

PartNumber	Page	Index
	434	
	434	10
23A-952-7950	411	10
23A-952-7990	437	4
23A-952-8210	415	
	417	
23A-952-8211	415	19
	417	19
23A-952-8290	437	11
23A-952-8410	413	10
23A-952-8510	420	18
	426	18
23A-952-8520	437	16
23A-952-8531	446	1
23A-952-8560	407	20
	408	20
23A-952-8610	435	11
	436	19
23A-952-8620	407	24
	408	24
23A-952-8630	436	15
23A-952-8640	436	16
23A-952-8690	407	17
	408	17
23A-952-8710	420	15
	426	15
23A-952-8720	420	12
23A-952-8730	426	12
23A-952-8750	476	4
23A-952-8761	423	
	429	
23A-952-8762	423	37
	429	34
23A-952-8770	424	1
23A-952-8840	431	1
23A-952-8980	413	6
23B-03-71230	147	46
	149	46
23B-03-71310	147	35
	149	35
23B-03-71770	160	20
	162	24
23B-03-73460	146	19
	148	19
23B-06-42570	467	16
	469	16
23B-06-42590	458	7
23B-06-43380	204	18
23B-06-43650	191	17
	192	17
23B-06-61311	467	5
	469	5
23B-06-61530	463	5
23B-06-61810	215	22
23B-06-71310	502	4
23B-06-71470	204	6
23B-06-71480	204	9
23B-06-71530	467	19
	469	19
23B-06-71540	493	7
23B-06-71551	473	2
23B-06-71570	467	32
	469	32
23B-06-71610	458	13
23B-06-71620	467	3
	469	3
23B-06-71640	463	15
23B-06-71650	467	9
	469	9
23B-06-71660	467	11
	469	11
23B-06-71670	467	17
	469	17
23B-06-71760	197	6
23B-06-72110	467	1
	469	1
23B-06-72140	491	7
	492	7
23B-06-72630	335	1
23B-06-73310	532	8
23B-06-73321	532	11
23B-06-74311	503	4
	504	4
23B-07-61112	441	8
23B-07-73111	433	25
23B-07-74114	482	
23B-07-74130	484	6
23B-07-74140	497	4
23B-07-74160	484	11
23B-07-74210	485	1
23B-07-74220	486	10
	488	10
23B-07-74230	486	1
	488	1
23B-07-74250	497	5
23B-07-74260	497	6
23B-07-74290	485	4
23B-07-74310	497	7
23B-07-74320	497	8
23B-07-74410	501	6
23B-07-74431	484	21
	501	5
23B-07-74440	484	19
	501	7
23B-07-74450	501	8
23B-07-74460	501	9
23B-07-74470	484	18
23B-07-74520	501	2
23B-07-74530	501	3
23B-07-74540	501	4
23B-07-74550	486	37
	488	37
23B-07-74560	486	20
	488	20
23B-13-73411	233	7
23B-13-73420	233	13
23B-13-73430	233	14
23B-13-79310	233	15
23B-13-79320	233	8
23B-15-72610	228	13
	229	15
23B-15-72910	229	3
23B-15-74310	232	2
23B-15-79810	238	11
23B-16-31770	244	15
23B-16-71270	277	13
23B-16-71650	277	19
23B-22-11590	258	12
23B-22-21461	258	6
23B-22-31670	258	11
23B-22-31691	258	8
23B-22-31730	258	19
23B-22-31740	258	20
23B-22-31751	258	21
23B-22-31761	258	22
23B-22-31770	258	
23B-22-31800	258	28
23B-22-31810	258	
23B-22-31820	258	
23B-22-31830	258	
23B-22-32200	258	32
23B-22-32210	259	
23B-22-32220	259	
23B-22-32230	259	
23B-22-32290	259	
23B-22-71200	257	7
23B-22-71250	257	
23B-22-71260	257	
23B-22-71270	257	
23B-22-71280	257	
23B-22-71640	258	27
23B-22-71660	258	10
23B-22-71681	258	7
23B-22-71711	258	9
23B-22-71720	258	18
23B-22-71811	256	30
	262	6
23B-22-71830	262	13
23B-22-71840	262	
23B-22-71841	262	12
23B-22-81600	258	
23B-22-81630	258	13
23B-22-81700	258	
23B-25-33220	271	33
	273	33
23B-25-33610	271	30
	273	30
23B-25-71150	271	26
	273	26
23B-25-71210	272	35
	274	35
23B-25-71360	271	23
	273	23
23B-25-71430	271	22
	273	22
23B-25-71841	267	19
23B-25-71851	267	18
23B-25-73170	271	25
	273	25
23B-27-11360	245	9
	249	5
23B-27-11441	249	7
23B-27-11450	249	10
23B-27-11460	249	9
23B-27-11650	247	8
23B-27-11660	254	9
23B-27-11680	245	11
	246	21
23B-27-11800	245	7
	249	12
23B-27-31480	245	13
23B-27-31540	245	10
23B-32-31302	270	
23B-32-31333	264	7
23B-32-31340	270	2
23B-32-31351	270	3
23B-32-31371	270	5
23B-32-31381	270	6
23B-32-31510	270	11
23B-32-31520	270	12
23B-32-31530	270	13
23B-32-31550	270	16
23B-32-31560	270	17
23B-32-31590	270	18
23B-32-31610	270	19
23B-32-31622	270	20
23B-32-31630	270	21
23B-32-31641	270	22
23B-32-31650	270	23
23B-32-31670	270	30
23B-32-31680	270	
23B-32-31710	270	31
23B-32-31720	270	32
23B-32-31730	270	33
23B-32-31760	270	14
23B-32-71320	264	4
23B-40-31502	460	3
23B-43-35170	583	8
	583	29
23B-43-35180	583	3
	583	24
23B-43-35190	583	4
	583	25
23B-43-35810	456	3
	457	3

PartNumber	Page	Index
23B-43-35820	455	40
23B-43-36350	454	3
23B-43-36380	454	29
23B-43-61150	476	1
23B-43-71120	508	6
23B-43-71610	481	1
23B-43-72190	450	24
	451	24
	452	28
	453	28
23B-43-72220	450	27
	451	27
	452	31
	453	31
23B-43-72230	456	22
	457	23
23B-43-72240	456	21
	457	22
23B-43-72250	456	20
	457	21
23B-43-72260	456	19
	457	20
23B-43-72270	456	18
	457	19
23B-43-72280	456	9
	457	10
23B-43-72290	456	5
	457	6
23B-43-72310	456	6
	457	7
23B-43-72320	456	7
	457	8
23B-43-72330	456	8
	457	9
23B-43-72340	480	1
23B-43-72350	480	4
23B-43-72360	480	8
23B-43-72370	481	11
23B-43-72380	452	32
	453	32
23B-43-72390	454	27
23B-43-72410	458	1
23B-43-72450	454	20
23B-43-72470	454	18
23B-43-72480	454	13
23B-43-72490	460	1
23B-43-72510	460	2
23B-43-72520	454	6
23B-43-72540	449	5
23B-43-72550	449	4
23B-43-72560	456	1
	457	1
23B-43-72580	494	31
23B-43-72590	494	32
23B-43-72690	481	9
23B-43-72750	459	17
23B-43-72770	450	12
	451	12
	452	12
	453	12
23B-43-72780	481	8
23B-43-72790	481	6
23B-43-72830	454	2
23B-43-72850	454	38
23B-43-72860	462	6
23B-43-72990	454	36
23B-43-73250	454	32
23B-43-73260	454	31
23B-43-73290	454	33
23B-43-73310	463	12
23B-43-73320	454	
23B-43-73330	463	13
23B-43-75421	454	30
23B-43-75440	454	4
23B-43-75510	455	47
23B-43-75520	455	43
23B-43-75530	455	48
23B-43-75540	455	49
23B-43-75550	455	44
23B-43-82310	450	15
	451	15
	452	15
	453	15
23B-43-82320	450	14
	451	14
	452	14
	453	14
23B-45-72100	480	
23B-45-73100	480	14
23B-46-33110	402	12
23B-46-33121	402	13
23B-46-33131	402	
23B-46-33140	402	19
23B-46-33150	402	18
23B-46-33161	402	
23B-53-71180	602	31
23B-53-71240	603	
23B-53-71250	603	6
23B-53-71260	603	11
23B-53-71270	603	20
23B-53-74110	486	36
	488	36
23B-54-31891	538	30
	540	30
23B-54-31990	538	25
	540	25
23B-54-32140	498	2
23B-54-32151	498	3
23B-54-32160	498	5
23B-54-32208	552	
23B-54-33971	552	3
	552	14
23B-54-33980	552	4
	552	15
23B-54-33991	552	2
	552	13
23B-54-34540	526	31
	528	31
23B-54-34841	552	6
	552	17
23B-54-34850	552	5
	552	16
23B-54-61180	465	8
23B-54-63251	516	34
	517	34
23B-54-71450	519	40
	521	40
	523	40
	525	40
23B-54-71540	527	41
	529	41
23B-54-71550	516	27
	517	27
	526	24
	527	46
	528	24
	529	46
23B-54-71560	518	1
	520	1
	522	1
	524	1
23B-54-71850	526	6
	528	6
23B-54-71880	526	7
	528	7
23B-54-72120	465	4
23B-54-72150	450	16
	451	16
	452	16
	453	16
23B-54-72160	450	17
	451	17
	452	17
	453	17
23B-54-72191	490	1
23B-54-72220	490	9
23B-54-72240	466	2
23B-54-72250	490	6
23B-54-72260	490	7
23B-54-72270	491	1
	492	1
	493	1
23B-54-72280	499	4
23B-54-72310	490	12
23B-54-72320	449	8
23B-54-72331	466	5
23B-54-72350	499	1
23B-54-72360	466	6
23B-54-72370	466	7
23B-54-72430	496	1
23B-54-72440	496	2
23B-54-72450	496	15
23B-54-72460	496	16
23B-54-72470	496	7
23B-54-72521	498	9
23B-54-72530	496	14
23B-54-72540	498	1
23B-54-73420	538	36
	540	36
23B-54-74520	486	34
	488	34
23B-54-74540	476	8
23B-54-74560	486	29
	488	29
23B-57-31220	404	27
23B-57-31301	404	
23B-57-71130	404	22
23B-60-33112	337	13
	338	13
23B-60-33240	263	34
	263	42
	277	12
	277	15
	277	18
	277	20
	277	21
	277	28
	277	30
	337	15
	337	24
	338	15
	338	24
	342	11
	344	11
	346	25
	347	44
	348	24
	349	43
	367	21
	368	21
	393	9
	393	16
23B-60-34470	577	18
23B-60-34480	577	19
23B-60-34970	372	3
23B-60-42701	577	
23B-60-42711	577	2
23B-60-71160	516	13
	517	13
23B-60-71220	328	1
23B-60-71320	308	8
	309	8
23B-60-71330	308	9
	309	9
23B-60-71341	308	10

PartNumber	Page	Index
	309	10
23B-60-71350	308	11
	309	11
23B-60-71360	308	14
	309	14
23B-60-71410	267	9
	329	19
	329	23
	330	19
	330	23
	333	16
	334	16
23B-60-71440	284	34
23B-60-71590	373	10
	374	10
23B-60-72280	373	1
	374	1
23B-60-72930	578	38
	579	42
23B-60-73190	356	22
23B-60-73220	355	
23B-60-73310	342	6
	344	6
23B-60-73980	373	4
	374	4
23B-60-73990	364	40
23B-60-74720	262	22
23B-60-74730	256	7
23B-60-74740	262	29
23B-60-74750	346	2
23B-60-75190	346	1
	348	1
23B-60-75210	136	19
	323	47
	325	47
23B-61-42110	355	1
23B-61-42140	355	2
23B-70-52220	576	1
23B-70-52230	573	38
23B-70-52290	573	11
23B-70-52320	573	10
23B-70-81910	581	22
23B-70-81920	581	23
23B-735-1250	580	17
	580	36
23B-735-3321	581	32
23B-809-5460	486	4
	488	4
23B-809-5470	485	5
	486	17
	488	17
23B-952-7120	433	27
23B-952-7130	405	5
	406	5
23B-952-7160	422	15
	428	15
23B-952-7170	422	16
	428	16
23B-952-7220	433	12
23B-952-7250	433	16
23B-952-7260	437	10
	437	21
23B-952-7280	413	3
23B-952-7290	437	2
23B-952-7330	422	6
	428	6
23B-952-7350	423	42
23B-952-7360	422	22
23B-952-7370	429	39
23B-952-7380	420	23
23B-952-7390	426	23
23B-952-7410	498	16
23B-952-7420	498	17
23B-952-7430	498	18
23B-952-7440	415	1
	417	1
23B-952-7450	415	6
	417	6
23B-952-7470	422	
23B-952-7471	422	1
23B-952-7480	420	10
	426	10
23B-952-7490	435	9
	436	12
23B-952-7520	498	19
23B-952-7530	405	
	406	
23B-952-7531	405	21
	406	21
23B-952-7540	422	4
	428	4
23B-952-7560	408	13
23B-952-7590	435	10
	436	13
23B-952-7610	436	7
23B-952-7620	436	8
23B-952-7630	437	8
23B-952-7650	448	1
23B-952-7680	433	17
23B-952-7690	435	15
	436	23
23B-952-7720	423	32
23B-952-7831	407	12
	408	12
23B-952-7841	407	13
23B-952-7860	223	12
23B-952-7910	414	2
23B-952-7920	435	2
	436	2
23B-952-7940	419	
23B-952-7941	419	5
23B-952-7950	425	
23B-952-7951	425	5
23B-952-7960	435	5
	436	6
23B-952-8140	429	29
23B-952-8450	407	25
	408	25
23B-952-8460	407	26
	408	26
23B-952-8470	407	27
	408	27
23B-953-3441	502	
	503	
	504	
23B-953-3442	502	13
	503	12
	504	12
23B-957-5510	498	8
23B-957-5520	498	13
23B-957-7510	498	12
23B-98-71120	551	10
23B-98-71141	551	5
23C-03-51751	146	7
	148	7
23C-06-12410	463	7
23C-06-51880	463	4
23C-06-62150	204	12
23C-06-62720	205	13
	206	11
	207	11
	208	13
23C-06-63410	224	1
23C-06-65730	205	16
	206	14
	207	14
	208	16
23C-07-62480	486	16
	488	16
23C-13-57511	241	9
23C-13-57523	241	8
23C-13-57540	241	11
23C-13-57550	241	12
23C-13-57560	241	13
23C-15-52750	230	26
23C-15-66010	234	
23C-22-51260	256	16
23C-25-61190	271	28
	273	28
23C-27-11180	248	19
23C-27-11260	248	7
23C-27-11340	246	4
23C-27-11390	246	8
23C-27-11630	246	7
23C-27-11850	248	17
23C-27-11860	248	
23C-27-11870	248	
23C-27-11880	248	
23C-27-51141	245	3
23C-27-51152	249	1
23C-27-51160	247	1
23C-27-51232	248	2
23C-27-51450	254	1
23C-27-51460	248	6
23C-27-51470	246	3
23C-27-51480	246	2
23C-27-51490	246	20
23C-27-51620	248	3
23C-27-61210	246	
23C-27-61211	246	16
23C-27-61220	246	
23C-27-61221	246	14
23C-27-61230	248	12
23C-27-62180	249	14
23C-27-62190	245	2
23C-30-62110	561	1
	564	1
23C-30-62200	558	
23C-30-62210	558	1
23C-40-61501	464	
23C-40-61510	464	
23C-40-61610	464	9
23C-40-61620	464	10
23C-45-61100	475	3
23C-46-52371	398	7
	399	7
23C-46-65710	400	19
23C-60-51200	367	6
	368	6
23C-60-52140	337	25
	338	25
23C-60-52210	590	13
23C-60-52451	578	37
23C-60-52461	579	41
23C-61-52120	355	4
23C-70-51240	570	2
23C-70-51271	581	
23C-70-51371	583	2
	583	23
23C-70-51391	582	19
23C-70-51410	582	2
23C-70-53100	580	
23C-70-53101	580	
23C-70-53141	581	29
23C-70-53150	580	33
23C-70-53182	581	26
23C-70-53250	581	8
	581	19
23C-70-53260	581	30
23C-70-53270	581	31
23C-70-55140	576	7
23C-70-55161	573	29
23C-70-55171	573	28
23C-70-55180	573	37
23C-70-55190	573	36

PartNumber	Page	Index
23C-70-55210	573	9
23C-70-55220	573	25
23C-70-62290	585	17
	586	20
	587	17
23C-70-62450	584	42
23C-70-62460	585	1
23C-70-62480	582	1
23C-70-62690	581	13
23C-785-5140	588	3
23D-27-11940	170	24
	172	24
	245	4
	249	2
23E-735-1421	577	1
23H-60-14690	262	28
23S-06-54121	205	
	206	
	207	
	208	
23S-44-14540	496	8
23S-54-54750	369	19
23S-55-51970	405	7
	406	7
	415	27
	417	27
	420	6
	420	28
	422	8
	423	35
	426	6
	426	28
	428	8
	429	32
	433	19
	433	30
	437	18
	437	34
	446	3
	447	6
	454	34
	476	2
23S-56-21150	484	8
23S-983-1130	448	5
23S-983-1140	448	2
262-60-74340	513	28
	513	32
281-01-13180	494	9
287-06-16420	467	35
	469	35
	502	9
	503	9
	504	9
2A5-01-11330	281	5
2A5-06-11881	473	5
2A7-04-11260	170	32
	172	32
362-15-19520	228	8
	229	8
362-56-42690	415	7
	417	7
363-04-11130	170	22
	172	22
415-54-11980	516	38
	517	37
	518	36
	520	36
	522	36
	524	36
	527	51
	529	51
415-64-13120	161	44
	163	48
	516	33
	517	33
	518	38
	520	38
	522	38
	524	38
416-03-11210	160	19
	162	23
416-03-11250	160	28
	162	32
416-03-11260	160	26
	162	30
416-03-11270	160	27
	162	31
416-03-11281	160	23
	162	27
416-06-22250	467	27
	469	27
416-09-12220	518	28
	518	30
	520	28
	520	30
	522	28
	522	30
	524	28
	524	30
416-54-34230	329	31
	330	31
	375	32
	376	32
416-54-42580	526	4
	528	4
416-62-11480	337	17
	337	20
	338	17
	338	20
	363	2
	462	11
416-62-13450	578	33
416-S14-2270	146	
	148	
416-S56-1120	223	5
417-03-62270	146	14
	148	14
417-06-43110	205	3
	206	3
	207	3
	208	3
417-43-37550	355	11
417-43-37560	355	8
417-43-37570	355	9
417-43-37580	355	10
417-54-21460	551	8
417-62-13620	516	17
	517	17
	518	37
	520	37
	522	37
	524	37
417-62-14130	516	18
	517	18
417-62-31120	462	7
417-70-11970	588	4
	590	7
417-923-3950	419	6
	425	6
417-926-3370	422	27
	428	25
417-926-3650	415	22
	417	22
418-03-11390	160	18
	162	22
418-06-46130	467	8
	469	8
418-07-36140	415	31
	417	31
418-09-11110	580	4
418-09-11130	213	22
418-22-21460	261	
418-22-21470	261	
418-22-21480	261	
418-43-37130	480	7
418-43-37140	481	2
418-43-37230	481	10
418-62-11620	337	26
	338	26
418-62-11630	337	23
	338	23
418-62-32110	337	16
	338	16
418-62-32162	337	19
	338	19
418-62-32163	363	1
418-62-32172	337	22
	338	22
418-62-32550	263	36
	277	31
	339	6
	340	6
	341	6
	367	22
	368	22
	394	20
418-62-32560	263	37
	277	33
	339	7
	340	7
	341	7
	367	23
	368	23
	394	21
418-926-4530	415	18
	415	34
	417	18
	418	34
	430	2
	434	5
	434	7
	434	9
	458	3
	458	12
	463	14
	467	4
	467	6
	469	4
	469	6
418-U12-3410	141	9
418-U12-3420	141	10
418-X51-2111	562	1
	565	1
419-01-11230	59	4
419-06-31170	191	14
	192	14
419-06-55160	502	28
419-07-11761	441	19
419-09-11110	402	7
419-09-11130	556	4
419-14-31330	555	4
419-15-12122	230	30
	231	18
	616	
	618	
419-15-12140	228	5
	229	10
	230	6
	231	5
419-15-12640	228	17
	229	22
419-15-12650	228	18
	229	23
419-22-12581	260	6
419-30-11130	558	3

PartNumber	Page	Index
	560	3
	561	3
	562	3
	563	3
	564	3
	565	3
419-30-11140	558	4
	560	4
	561	4
	562	4
	563	4
	564	4
	565	4
419-30-11630	558	5
	561	5
	562	5
	564	5
	565	5
419-43-17920	160	25
	162	29
	516	19
	517	19
419-43-17930	516	16
	517	16
419-43-37570	366	13
419-62-31480	356	13
419-62-31530	234	33
419-62-32130	350	28
	350	33
	352	28
	352	33
419-62-32140	350	27
	350	34
	352	27
	352	34
419-62-32150	350	29
	350	35
	352	29
	352	35
419-70-11911	588	7
419-923-2130	423	48
	429	45
41G-06-13210	205	
	206	
	207	
	208	
41G-06-13220	205	
	206	
	207	
	208	
41G-06-13230	205	
	206	
	207	
	208	
41H-879-1250	449	3
	494	33
421-02-31114	143	1
421-02-31120	143	2
421-03-31421	215	36
421-06-11221	191	13
421-06-11221-KY	192	13
421-06-22830	193	10
	194	10
421-06-22840	193	9
	194	9
421-06-22880	193	8
	194	8
	198	29
	199	29
421-06-22910	193	5
	194	5
421-06-22920	193	4
	194	4
421-06-23320	218	
421-06-23330	209	

PartNumber	Page	Index
	218	
	220	
	221	
	222	
421-06-26210	411	8
421-06-26250	411	
421-06-26260	411	
421-06-31410	505	1
421-07-12512	433	20
	437	9
	437	20
421-07-23870	484	14
421-09-11310	402	2
421-09-21370	486	35
	488	35
421-09-21420	526	11
	526	13
	528	11
	528	13
	544	18
	544	20
	544	22
	546	18
	546	20
	546	22
	548	18
	548	20
	548	22
421-09-31130	387	9
	388	9
	389	9
	390	9
421-09-31210	277	26
421-22-32460	271	12
	273	12
421-22-32470	271	
	273	
421-22-32480	271	
	273	
421-22-32490	271	
	273	
421-22-32570	260	8
421-23-32511	260	5
421-33-31730	272	37
	274	37
421-40-12440	332	8
	464	15
	508	3
421-40-12450	464	16
421-40-42230	464	
421-40-42240	464	
421-40-42350	464	1
421-40-42360	464	
421-40-42370	464	6
421-40-42380	464	7
421-40-42390	464	8
421-40-42510	464	11
421-40-42520	464	12
421-40-42530	464	13
421-40-42540	464	14
421-43-22360	508	1
421-43-22562	262	25
	337	7
	338	7
	360	7
	361	7
421-43-22571	262	26
	337	8
	338	8
	360	8
	361	8
421-43-27920	262	
	337	9
	338	9
	360	9

PartNumber	Page	Index
	361	9
421-43-32912	508	17
421-46-11361	402	8
421-46-11372	402	3
421-46-11382	402	
421-46-11710	402	1
421-46-11771	398	3
	399	3
	400	3
	400	5
	401	3
	401	5
421-46-11781	398	4
	399	4
	400	4
	400	6
	401	4
	401	6
421-46-21760	398	2
	399	2
	400	2
	401	2
	553	4
	553	14
421-54-22990	329	32
	330	32
421-54-25610	438	7
421-54-25620	438	
421-54-25630	438	
421-54-25640	438	
421-54-25650	438	
421-54-25660	438	
421-54-32611	499	9
421-54-34550	138	3
	139	2
	140	2
	538	32
	540	32
	544	5
	545	48
	546	5
	547	48
	548	5
	549	45
421-60-11622	284	10
421-60-35170	171	44
	173	44
	284	29
421-60-35180	171	45
	173	45
	284	30
421-60-35190	171	46
	173	46
421-62-31110	356	30
421-70-11280	402	21
	588	8
421-926-3612	428	
421-926-3613	428	1
421-926-4311	415	25
	417	25
421-926-4780	410	8
	410	14
421-U12-3101	141	
421-U12-3140	141	3
421-U12-3150	141	4
421-U12-3160	141	5
421-U12-3170	141	6
421-U12-3181	141	7
421-U12-3190	141	8
421-U12-3230	141	11
421-U12-3240	141	12
421-U12-3250	141	13
421-U12-3260	141	14
421-U12-3330	141	2
423-01-31310	59	3

PartNumber	Page	Index
423-01-31610	59	8
423-01-52120	136	15
423-03-31710	157	3
423-03-41370	146	20
	148	20
423-03-41430	146	21
	148	21
423-06-33130	218	1
423-06-42430	422	19
	428	19
423-06-42640	405	20
	406	20
423-06-42720	535	9
423-06-43160	535	13
423-06-45350	218	2
	220	13
	222	4
423-06-45360	220	12
	221	9
423-06-45390	458	5
423-06-45410	458	4
423-06-45521	467	12
	469	12
423-06-47451	503	19
	504	19
423-06-47461	503	20
	504	20
423-06-47471	503	24
	504	24
423-07-31571	441	1
423-09-H4070	139	6
423-22-11240	257	2
423-43-18430	223	8
423-43-27490	262	18
423-43-37260	481	5
	481	7
423-46-41390	402	
423-54-32340	407	16
	408	16
	499	8
423-54-32370	437	5
	437	12
423-54-32540	437	15
423-54-42680	437	6
	437	13
423-60-45460	284	
	608	
	609	
	610	
	611	
423-60-45461	284	9
	608	5
	609	6
	610	6
	611	5
423-921-4340	437	3
423-925-5851	407	22
	408	22
423-925-5860	407	23
	408	23
423-926-3860	423	36
	429	33
423-944-4391	405	19
	406	19
	499	7
423-944-4670	422	21
423-944-4720	437	7
423-957-4120	223	4
423-957-4142	223	1
424-01-11110	514	44
424-01-11310	136	12
424-01-41111	168	1
424-01-41230	136	13
424-01-41531	34	14
424-03-41540	164	33
	166	33
424-06-23230	205	
	206	
	207	
	208	
424-06-43221	205	4
	206	4
	207	4
	208	4
424-06-43241	532	1
424-06-43320	532	3
424-06-43330	532	5
424-06-43340	532	6
424-09-12650	519	42
	521	42
	523	42
	525	42
	526	30
	528	30
	542	3
	543	3
	545	45
	547	45
	549	42
424-35-15201	510	1
424-35-15220	510	3
424-35-15230	510	4
424-35-15240	510	5
424-35-15250	510	6
424-35-15260	510	7
424-35-15270	510	8
424-35-15280	510	
424-43-37510	372	6
	583	16
424-46-11160	402	11
424-46-11171	402	6
424-46-11182	402	10
424-46-42121	400	10
	401	10
424-46-44360	526	5
	528	5
424-54-14220	518	21
	520	21
	522	21
	524	21
424-926-3890	422	11
	428	11
424-S62-4290	441	20
424-U12-4120	142	2
424-U12-4130	142	5
424-Z23-4150	209	1
425-03-37280	159	7
425-03-37290	159	8
425-15-35330	236	16
425-43-11180	513	25
	513	29
	513	33
425-926-3751	410	12
425-93-41310	603	5
425-S62-3160	441	26
426-15-15480	234	10
426-15-15490	234	8
426-15-15810	234	15
426-15-16261	234	14
426-46-12280	400	21
426-54-22780	499	11
426-54-22790	499	12
426-56-31870	415	28
	417	28
	420	7
	420	29
	422	9
	426	7
	426	29
	428	9
426-56-31890	415	29
	417	29
	420	8
	421	30
	422	10
	426	8
	427	30
	428	10
426-925-3890	410	9
	410	13
427-04-11130	485	8
427-15-19220	228	26
	229	16
42A-06-54320	502	27
42C-06-33130	415	
	418	
42C-06-33131	415	33
	418	33
42C-54-22330	479	3
515-35-11941	502	21
	503	16
	503	33
	504	16
	504	33
561-06-41930	503	32
	504	32
561-43-43390	214	44
561-86-69110	197	1
562-15-16110	234	9
565-44-11460	197	2
566-01-12350	265	22
	266	22
566-02-42200	138	6
566-32-11430	272	
	274	
566-32-11431	272	41
	274	41
566-32-11620	272	42
	274	42
567-13-19110	231	17
569-06-61180	411	13
	467	22
	469	22
569-06-61960	411	16
	467	25
	467	36
	469	25
	469	36
	502	11
	503	11
	504	11
569-06-61970	411	17
	467	26
	469	26
569-06-61980	445	18
	486	23
	488	23
569-15-51721	236	22
569-15-51732	236	
569-33-72140	272	39
	274	39
569-54-83290	415	12
	417	12
569-54-8B100	413	1
569-74-61470	398	8
	399	8
56B-15-16250	234	13
56B-15-16660	234	11
56B-15-19210	230	16
	616	
	618	
56B-15-19422	230	24
56B-15-19520	230	21
56B-22-11750	257	11
56B-22-11760	257	12

PartNumber	Page	Index
56B-40-13440	516	32
	517	32
56B-43-17210	256	12
	262	3
56B-88-12220	367	13
	368	13
56B-88-12310	367	3
	367	9
	368	3
	368	9
56B-88-12320	356	27
56B-88-12370	262	14
56D-06-37130	447	1
56D-15-12710	228	12
	229	13
	230	9
	231	8
56D-15-19311	238	1
56D-15-19420	233	3
56D-15-19630	233	2
56D-15-29210	229	18
	231	10
	616	
	618	
56D-15-29790	228	3
	229	2
	230	2
	231	2
56D-15-35701	236	
56D-15-35702	236	2
56D-15-35800	236	14
56D-54-23470	502	14
	503	13
	504	13
56E-07-21133	159	1
600-051-1140	213	34
600-051-2050	239	20
600-051-2080	215	24
	216	43
600-051-2100	198	21
	199	21
	214	51
	215	17
	215	40
	441	33
600-051-2140	213	37
	215	37
600-051-2160	118	37
600-051-2180	214	48
	215	31
600-051-2200	214	41
	214	45
	214	54
600-051-2240	195	23
	198	18
	199	18
	213	19
	214	55
	215	14
	215	30
600-051-3140	213	30
600-051-3190	213	24
600-051-3240	213	23
600-181-0670	138	4
	139	4
	140	4
600-184-1350	534	6
600-184-1510	534	5
600-184-1570	534	4
600-185-5100	534	
600-185-5110	534	2
600-311-3630	91	3
600-311-3640	91	4
600-311-3660	91	
600-311-3670	91	6
600-311-3690	91	9
	186	8
	187	
600-311-3722	91	
600-311-3730	91	7
600-311-3760	187	6
600-311-3761	186	
600-311-5470	186	9
	187	7
600-311-5610	609	
	610	
600-311-5612	609	2
	610	2
600-311-5630	609	3
	610	3
600-311-5631	186	3
	187	3
600-311-5642	186	4
	187	4
600-311-5660	186	5
	187	5
600-311-7612	178	
600-311-7631	178	5
600-311-9551	178	1
600-311-9580	178	7
600-311-9591	178	9
600-311-9931	178	6
600-311-9941	178	4
600-311-9950	178	8
600-311-9961	178	3
600-311-9971	178	2
600-319-3602	91	
600-319-3610	91	
	133	6
	134	6
	608	2
	611	2
600-319-3750	83	8
	90	1
	133	4
	134	4
	608	3
	609	4
	610	4
	611	3
600-319-5602	186	
	187	
600-319-5612	186	
600-468-2200	122	1
600-645-7850	157	35
600-815-2170	193	11
	194	11
600-816-3120	39	1
600-861-6111	108	
600-861-9122	110	
600-863-5712	116	
6110-73-6231	178	10
6127-11-5180	51	5
6127-81-9741	454	21
6130-12-4581	118	10
6136-21-5770	66	1
6136-21-5870	66	2
6136-21-7120	57	8
	244	3
	275	3
6136-21-7180	57	
	244	4
	275	
6136-21-7190	244	5
	275	4
6150-51-9490	322	35
	322	40
	324	35
	324	40
	443	17
	443	30
6151-11-4840	535	1
6152-11-4970	45	15
6155-71-5810	118	11
6155-71-5820	118	12
6156-81-7101	534	
6162-63-3910	115	5
6164-11-5480	45	11
6207-51-7690	42	4
	43	11
6211-11-5490	51	6
6215-81-9730	63	12
6216-14-6820	63	11
	105	1
6216-14-6860	63	
	105	
6216-24-5730	35	6
6216-54-7320	118	33
6216-74-6180	118	31
6216-74-6190	113	6
6216-74-6220	92	2
	93	2
6216-94-3450	54	16
6221-81-6810	117	1
6222-11-5940	51	2
6261-81-1900	127	
6261-81-2902	127	2
6261-81-6901	127	18
6271-81-4520	127	11
6271-81-9201	127	1
6271-81-9220	127	
6560-81-4530	80	6
6643-11-4641	535	2
6731-51-8150	43	8
6731-61-2151	78	15
6731-71-6270	35	10
6731-74-5910	87	9
	89	9
6732-11-1910	32	11
	54	
	62	1
	72	
6732-11-1920	32	12
	54	24
	62	2
	63	10
	72	4
6732-11-1930	78	1
6732-11-5860	41	3
	41	7
6732-21-1810	54	3
6732-21-1960	32	
	54	
	80	5
	83	
	87	
	89	
6732-21-1981	54	23
	72	3
6732-21-3190	56	2
6732-21-3220	56	3
6732-21-4150	63	8
6732-21-4161	63	9
6732-21-4171	63	5
6732-21-4180	95	12
	118	2
	127	8
6732-21-4220	63	7
6732-21-4290	63	4
6732-21-5170	58	13
6732-21-5530	74	3
6732-21-6120	54	12
6732-21-6150	67	1
6732-21-6630	36	3
6732-22-3110	83	9

PartNumber	Page	Index
	87	8
	89	8
6732-31-4120	65	1
6732-31-4130	65	2
6732-41-1260	73	4
	123	1
6732-41-4520	32	20
6732-41-5430	46	5
	46	8
6732-51-5130	48	1
	62	4
6732-51-8370	43	5
6732-61-3110	127	6
6732-61-3140	48	2
	87	14
	89	14
	118	15
6732-61-3170	80	8
6732-61-3260	100	2
6732-61-4120	82	3
	86	8
6732-71-3210	35	8
	118	28
	127	4
6732-71-5620	87	10
	89	10
6732-71-6510	87	11
	89	11
	95	2
	95	7
6732-81-6880	113	3
6732-81-8810	42	1
6732-81-8820	42	2
6732-81-8830	42	5
6732-81-8860	43	3
6732-82-3540	102	1
	134	5
	610	14
	611	13
6733-61-3150	46	13
6734-71-5520	127	9
6735-21-1910	54	
	118	
6735-21-1920	54	19
	118	29
6735-21-1930	54	20
	118	30
6735-21-1970	32	14
	54	18
	83	4
	87	4
	89	4
6735-21-3720	70	3
6735-21-4160	87	15
	89	15
6735-21-5530	56	1
6735-21-5531	32	2
6735-21-7240	60	11
6735-51-8230	43	1
6735-61-2120	127	7
6735-71-5190	35	3
	58	6
	58	8
6736-11-4460	54	15
6736-21-3230	38	1
6736-21-3360	57	1
6736-21-4221	63	3
6736-21-5320	58	12
6736-39-1140	132	2
6736-81-6170	81	5
6737-51-8770	42	7
	43	2
6738-11-4370	40	2
	42	6
6738-11-4380	40	1
6738-11-4390	40	3
6741-21-1130	54	
6741-21-1131	54	7
6741-21-1140	54	6
6741-21-3320	62	3
6741-21-3330	62	5
6741-21-3530	60	7
6741-21-3541	60	6
6741-21-3810	60	4
6741-21-3820	60	3
6741-21-4110	63	6
6741-21-5121	58	10
6741-31-4100	64	
6741-31-4180	64	1
6741-61-1520	99	2
6741-61-2120	81	2
6741-61-6110	78	7
6741-61-6130	104	
6741-61-6131	104	3
6741-61-7110	72	6
6741-81-6510	112	7
6741-81-6520	112	1
6742-01-0310	58	4
6742-01-0530	60	10
6742-01-0540	60	2
6742-01-0550	60	
6742-01-0950	60	5
6742-01-1080	78	2
6742-01-1360	54	1
6742-01-1370	54	2
6742-01-1380	55	25
	72	2
6742-01-1420	54	4
6742-01-1470	54	13
6742-01-1480	54	21
6742-01-1520	54	11
6742-01-1590	67	2
6742-01-1890	68	2
6742-01-2420	78	6
6742-01-2441	78	9
6742-01-2492	78	16
6742-01-2500	78	14
6742-01-2620	58	1
6742-01-2630	58	3
6742-01-2690	58	9
6742-01-2920	32	1
6742-01-3320	60	12
6742-01-3620	50	1
6742-01-3770	118	5
6742-01-3780	82	2
6742-01-4080	54	22
6742-01-4220	78	
6742-01-4540	77	1
	133	3
	134	3
	608	1
	609	1
	610	1
	611	1
6742-01-4560	112	17
	113	15
6742-01-5047	81	4
6742-01-5053	63	2
6742-01-5117	78	
6742-01-5118	78	4
6742-01-5123	112	15
	113	13
6742-01-5159	54	
6742-01-5195	106	2
6742-01-5199	67	
6742-01-5202	78	8
6742-01-5233	132	
6742-01-5240	132	
6742-01-5287	132	
6742-01-5288	132	
6742-01-5289	68	1
6742-01-5309	69	7
6742-01-5620	54	
6742-21-8500	67	
6743-11-1610	32	21
6743-21-4190	63	1
6743-21-5512	74	
6743-21-5513	74	1
6743-21-5521	74	2
6743-31-3121	69	3
6743-31-3210	69	5
6743-51-4430	78	18
6743-51-5530	58	5
6743-51-5550	58	2
6743-61-1533	99	
6743-61-2112	78	17
6743-61-2150	78	10
6743-61-2210	78	11
6743-61-3441	112	13
	113	11
6743-61-6110	104	1
6743-62-3710	101	1
	133	5
	608	13
	609	14
6743-81-6310	117	3
6743-81-7530	535	3
6743-82-8110	70	2
6744-11-1070	32	6
6744-41-1010	73	3
	124	1
6744-41-3020	46	3
6744-41-4032	32	
6744-41-4033	32	
6744-41-4050	32	19
6744-41-4080	32	
6744-41-4081	32	17
6744-41-4110	32	5
6744-41-4120	32	7
6744-41-5010	46	1
6744-41-5030	46	2
6744-71-1020	80	3
6744-71-1040	80	4
6744-71-1250	80	7
6744-81-4010	127	17
6745-11-1190	32	
6745-11-1811	32	22
6745-11-3110	85	4
	126	4
6745-11-3150	85	5
	126	5
6745-11-4110	36	1
6745-11-4120	36	2
6745-11-4310	37	1
6745-11-4320	45	2
6745-11-4330	34	11
	34	16
6745-11-4340	34	9
6745-11-5110	41	1
6745-11-5170	41	8
6745-11-5210	41	5
6745-11-5220	45	7
6745-11-5230	45	10
6745-11-5240	45	4
6745-11-5250	45	1
6745-11-5280	34	8
6745-11-5590	41	2
	41	6
6745-11-5811	41	
6745-11-6280	51	1
6745-11-7112	46	12
6745-11-7811	46	14
6745-11-8160	33	2
	133	2
	134	2

PartNumber	Page	Index
	608	15
	609	16
	610	16
	611	15
6745-11-8170	33	5
6745-11-8250	35	5
6745-11-8310	33	3
6745-11-8810	33	4
	133	1
	134	1
	608	14
	609	15
	610	15
	611	14
6745-11-9110	51	8
6745-12-3100	85	1
	126	1
6745-18-4210	32	
	132	9
6745-18-4220	32	
	132	6
6745-19-4210	32	3
6745-19-4220	32	9
6745-21-1108	54	
6745-21-1190	54	
6745-21-1290	54	
6745-21-1311	47	1
6745-21-1330	47	2
6745-21-1611	54	
6745-21-1612	54	14
6745-21-3111	60	1
6745-21-3210	60	8
6745-21-5130	58	11
6745-21-7110	35	
6745-21-7120	35	1
6745-21-7130	35	2
6745-21-7181	35	4
6745-21-7240	57	7
6745-21-7250	57	2
6745-21-7260	57	3
6745-31-1120	67	
6745-31-1130	67	4
6745-31-1150	67	6
6745-31-2010	69	
6745-31-2011	69	
6745-31-2012	69	
6745-31-2111	69	6
6745-31-2140	69	1
6745-31-8140	70	1
6745-32-2120	69	
6745-32-2121	69	
6745-39-1100	132	
6745-39-1200	132	
6745-39-1300	132	
6745-39-1400	132	
6745-41-1110	73	1
	125	1
6745-41-1131	73	2
	125	2
6745-41-2100	61	
6745-41-2110	61	1
6745-41-2120	61	2
6745-41-2140	61	4
6745-41-2151	54	
6745-41-2152	54	
6745-41-2153	54	
6745-41-2154	54	8
6745-41-3100	46	11
6745-41-4110	32	18
6745-41-4151	32	16
6745-41-4161	32	15
6745-41-5110	46	10
6745-41-5201	46	
6745-41-5202	46	7
6745-41-5401	46	
6745-41-5402	46	
	46	4
6745-41-5420	46	
6745-41-5430	46	6
	46	9
6745-49-4130	32	4
6745-51-1113	76	1
6745-51-8110	43	7
6745-51-8150	43	9
6745-61-4120	112	14
	113	12
6745-61-4130	112	11
	113	9
6745-61-4230	112	12
	113	10
6745-61-6120	49	1
6745-61-6130	103	1
6745-61-8160	43	
6745-71-1130	80	1
	83	5
	87	2
	88	1
	89	2
	95	4
	95	8
6745-71-1170	80	
6745-71-1171	80	
6745-71-1180	80	14
6745-71-1210	82	1
6745-71-1220	80	9
6745-71-1230	80	10
6745-71-1240	80	15
6745-71-1250	80	16
6745-71-1260	80	19
6745-71-1821	95	10
6745-71-1830	95	11
6745-71-1860	95	13
6745-71-3211	81	
6745-71-3212	81	1
6745-71-4111	86	1
6745-71-4121	86	
6745-71-4141	86	3
6745-71-4150	86	4
6745-71-4310	86	5
6745-71-4330	86	7
6745-71-5110	84	1
6745-71-5120	84	2
6745-71-5160	84	6
	88	5
6745-71-5210	84	3
6745-71-5220	84	5
6745-71-5230	88	4
6745-71-5311	95	1
6745-71-5391	95	5
6745-71-5410	95	6
6745-71-5430	95	9
6745-71-5440	87	5
	89	5
6745-71-5450	87	13
	89	13
6745-71-5460	87	6
	89	6
6745-71-5470	87	7
	89	7
6745-71-5510	86	12
6745-71-5610	87	1
	89	1
6745-71-5630	92	1
	93	1
6745-71-5690	88	2
6745-71-5860	95	3
6745-71-6130	80	2
	83	6
	88	3
6745-71-6190	83	7
6745-71-6410	83	1
6745-72-4210	86	2
6745-81-4120	38	3
6745-81-6160	118	20
6745-81-6170	118	25
6745-81-6210	112	3
6745-81-6220	113	4
6745-81-6230	114	2
6745-81-6240	115	2
6745-81-6250	115	1
6745-81-6260	114	1
6745-81-8020	42	
6745-81-8140	113	1
6745-81-8150	113	7
6745-81-8610	44	2
6745-81-8620	44	5
6745-81-8630	44	7
6745-81-8640	45	12
6745-81-8660	42	3
6745-81-9230	118	4
6745-81-9240	118	1
6745-81-9390	118	3
6745-81-9430	118	14
6745-81-9440	127	3
6745-81-9560	127	10
6745-81-9580	118	27
6745-81-9710	118	6
6745-81-9740	118	21
6745-81-9750	118	22
6745-81-9771	118	24
6745-81-9790	118	26
6745-81-9810	118	23
6745-81-9820	118	36
6745-81-9830	119	1
6746-11-4230	37	2
6746-11-4240	37	4
6746-11-6290	44	1
6746-21-1410	54	5
6746-31-3130	69	2
6746-31-3240	69	
6746-41-4210	32	
6746-61-6230	98	2
6746-61-6240	98	
6746-71-1230	81	3
6746-81-9520	127	15
6754-11-1160	32	8
6754-11-3130	85	2
	126	2
6754-11-3140	85	3
	126	3
6754-11-4120	37	3
	39	2
6754-11-5150	41	4
	41	9
6754-61-4111	100	1
6754-71-1991	130	
6754-71-1992	130	1
6754-71-5430	87	12
	89	12
6754-71-5512	86	9
6754-71-5541	86	11
6754-71-5550	86	10
6754-71-5750	94	2
6754-71-6803	186	
	187	
6754-71-6812	186	1
	187	1
6754-71-7200	91	1
6754-71-7402	91	
6754-71-9710	94	1
6754-72-1212	86	6
6754-81-2701	127	
6754-81-2702	127	19
6754-81-5110	39	
6754-81-9110	127	12

PartNumber	Page	Index
6754-81-9130	127	13
6754-81-9180	127	14
6754-81-9390	118	32
6755-51-8230	43	4
6755-81-1900	127	
	127	16
6991-11-5990	51	12
700-11-31940	236	32
700-22-11410	288	7
	294	2
	294	11
	299	7
	306	2
	306	11
700-22-11910	293	31
	305	43
700-80-64220	288	8
	294	3
	294	10
	299	8
	306	3
	306	10
702-16-07022	477	1
	478	1
702-16-54880	326	8
702-16-73960	477	
	478	
702-21-09410	386	
702-21-53140	289	13
	300	13
702-21-54160	154	8
702-21-54180	154	12
702-21-54190	154	24
702-21-54210	154	9
702-21-54220	154	
702-21-54230	154	
702-21-54240	154	
702-21-54250	154	
702-21-55620	289	14
	300	14
702-21-55870	154	11
702-21-57410	154	10
702-77-03600	153	12
702-81-21130	314	8
705-12-32040	316	
705-17-02022	316	1
705-17-02122	316	2
705-17-02353	316	
	317	
705-17-02360	316	6
	317	6
705-17-02420	320	2
705-17-02430	316	4
	317	4
705-17-02460	316	5
	317	5
705-17-02612	316	3
	317	3
705-17-02830	316	8
	317	8
705-17-02870	316	7
	317	7
705-17-04980	317	15
705-17-32012	316	10
705-17-32412	316	11
705-17-32512	316	12
705-18-02240	317	2
705-18-02820	317	1
705-18-36120	317	10
705-18-36820	317	12
705-29-36430	317	11
705-38-36010	317	
705-40-22011	319	8
705-40-22511	319	10
705-40-22851	319	9
705-40-33011	318	7
705-40-33511	318	9
705-40-33860	318	8
705-40-80331	318	3
705-40-80610	319	
705-40-80620	319	
705-40-80670	320	3
705-40-80770	318	6
	319	4
705-40-81820	319	6
705-40-81870	319	5
705-40-83720	318	5
	319	3
705-41-04540	318	
705-41-05830	319	
705-41-80610	318	
705-41-80620	318	
705-41-81511	319	1
705-41-83030	318	1
705-41-83110	319	2
705-56-24370	317	
	318	
	319	
	320	
705-67-01230	318	4
705-67-01330	320	1
707-11-80K60	593	1
707-11-80K70	572	2
707-11-80K80	571	1
707-11-85690	252	2
707-11-85700	595	1
707-11-85750	554	2
707-11-90A30	594	1
707-12-11250	589	2
707-12-85050	592	3
707-29-11A60	589	4
707-29-50270	250	5
	251	5
707-29-80090	593	3
707-29-80100	572	5
707-29-80110	571	3
707-29-85370	252	5
	592	5
707-29-85380	554	4
	595	3
707-29-90A40	594	3
707-35-10760	571	4
	572	6
	593	4
	617	
707-35-10810	252	6
	554	5
	592	6
	595	4
	617	
	618	
707-35-10860	594	4
	617	
707-35-11110	589	5
	617	
707-35-20450	250	6
	251	6
	616	
707-35-91020	331	3
	331	10
	507	5
707-36-11780	589	14
707-36-50630	250	16
	251	16
707-36-80280	571	17
707-36-80390	593	13
707-36-80420	572	15
707-36-85240	252	15
	592	15
707-36-85270	554	14
	595	13
707-36-90420	594	13
707-39-11510	589	15
	617	
707-39-80140	593	14
	617	
707-39-85120	252	16
	554	15
	592	16
	595	14
	617	
	618	
707-44-11250	589	16
	617	
707-44-50060	250	17
	251	17
	616	
707-44-80150	571	18
	572	16
	593	15
	617	
707-44-85151	252	17
	554	16
	592	17
	595	15
	617	
	618	
707-44-90151	594	14
	617	
707-45-80930	571	5
707-46-50020	572	3
707-51-35650	250	7
	251	7
	616	
707-51-35860	250	8
	251	8
	616	
707-51-45650	572	7
	617	
707-51-45860	572	8
	617	
707-51-50650	554	6
	593	5
	595	5
	617	
	618	
707-51-50860	554	7
	593	6
	595	6
	617	
	618	
707-51-55650	252	7
	571	6
	592	7
	594	5
	616	
	617	
707-51-55860	252	8
	571	7
	592	8
	594	6
	616	
	617	
707-51-60650	589	6
	617	
707-51-60860	589	7
	617	
707-52-90120	250	9
	251	9
707-52-90201	572	9
707-52-90251	554	8
	593	7
	595	7
707-52-90301	252	9
	571	8

PartNumber	Page	Index
	592	9
707-52-90311	594	7
707-52-90351	589	8
707-56-35740	250	10
	251	10
	616	
707-56-45740	572	10
	617	
707-56-50740	554	9
	593	8
	595	8
	617	
	618	
707-56-55740	252	10
	571	9
	592	10
	594	8
	616	
	617	
707-56-55820	571	10
	617	
707-56-60740	589	9
	617	
707-58-45A20	572	4
707-58-50L30	595	2
707-58-50L70	554	3
707-58-55A50	252	3
707-58-55A60	571	2
707-58-55A70	594	2
707-58-60A30	589	3
707-60-50030	593	2
707-60-55030	592	4
707-61-35770	250	2
	251	2
707-67-20020	250	18
	251	18
707-67-30050	594	15
707-67-33040	571	19
	572	17
	593	16
707-67-36020	554	17
	595	16
707-67-39020	252	18
	592	18
707-67-42020	589	17
707-75-35110	250	11
	251	11
707-75-45110	572	11
707-75-50110	554	10
	593	9
	595	9
707-75-55110	252	11
	571	11
	592	11
	594	9
707-75-60110	589	10
707-76-35010	250	3
	251	3
707-76-55120	252	4
707-86-01390	251	1
707-86-01400	250	1
707-86-01410	252	1
707-86-01420	592	1
707-86-01430	572	1
707-86-01710	554	1
707-87-14820	331	4
	507	13
707-88-41680	571	12
707-88-46180	571	13
707-99-05620	616	K03
707-99-24320	617	K06
707-99-25270	617	K10
707-99-25280	617	K09
707-99-26200	616	K04
707-99-26210	617	K05
707-99-26220	617	K08
707-99-35620	617	K07
707-G0-01060	251	
707-G0-01070	250	
707-G0-01081	252	
707-G0-01090	593	
707-G0-01100	572	
707-G0-01110	571	
707-G0-01120	595	
707-G0-01210	594	
707-G0-01540	554	
707-G2-00310	592	
707-G2-00320	589	
708-1L-29340	310	11
708-1S-11890	155	9
708-1S-18180	154	13
708-1U-00280	310	
	312	
	313	
	314	
708-1U-01280	310	
	312	
708-1U-03460	313	
708-1U-04280	310	
708-1U-04290	310	
708-1U-12250	310	22
708-1U-13110	312	1
708-1U-13211	312	2
708-1U-13310	312	10
708-1U-13341	312	9
708-1U-13450	310	20
708-1U-13461	310	19
708-1U-14240	312	13
708-1W-04320	310	15
708-1W-05821	310	27
708-1W-28150	315	5
708-1W-42110	310	23
708-1W-42120	310	18
708-1W-42130	310	25
708-1W-42140	310	24
708-1W-43130	312	4
708-1W-43140	312	5
708-1W-43320	312	7
708-1W-44130	312	11
708-1W-49170	310	9
708-1W-49230	314	9
708-2L-23360	155	14
708-2L-25480	154	27
	314	4
708-3T-13360	312	8
708-3T-14120	312	12
708-7R-04160	154	23
708-7R-11220	153	5
	234	31
	236	30
	238	19
	326	6
708-7R-18160	154	15
708-7R-18180	154	19
708-7R-18190	154	21
708-7R-18220	154	20
708-7R-21110	153	22
708-7R-21120	153	24
708-7S-01340	154	
708-7S-05110	155	7
708-7S-12330	155	4
708-7S-13350	155	20
708-7S-13530	155	15
708-7S-18120	153	16
708-7S-18130	153	17
708-7S-18230	154	3
	154	30
708-7S-18350	154	1
708-7S-18360	154	28
708-7T-00770	153	
	154	
	155	
	156	
708-7T-01440	153	
	154	
708-7T-11380	153	1
708-7T-12340	155	8
708-7T-12520	155	5
708-7T-12530	155	6
708-7T-13160	155	11
708-7T-13820	155	18
708-7T-13830	155	12
708-7T-13840	155	16
708-7T-13850	155	19
708-7T-13860	155	21
708-7T-18130	153	14
708-7T-18140	153	19
708-8E-16150	227	10
	234	3
	235	38
	236	5
	236	11
	236	17
	238	21
708-8E-16160	289	9
	300	9
	310	5
	314	13
708-8E-16250	288	3
	299	3
709-25-11390	294	12
	306	12
709-32-11530	286	12
	297	12
709-32-11840	288	10
	299	10
709-32-11930	293	32
	305	44
711-16-11560	241	2
711-47-52680	241	29
711-53-11770	242	2
711-90-11131	241	28
711-90-11142	243	1
711-90-19310	242	1
714-07-12220	230	20
	231	13
714-07-12670	230	12
714-07-12680	230	13
	573	32
714-07-12711	230	15
714-07-12720	230	11
714-07-12781	230	14
714-07-14120	257	10
714-07-19320	228	15
	229	19
	231	11
	616	
	618	
714-07-28703	279	4
714-07-28713	279	
	608	4
	609	5
	610	5
	611	4
714-07-29320	228	24
714-07-46171	228	28
	240	3
714-08-19560	228	16
	229	20
714-08-19570	229	21
	230	19
	231	12
714-11-19230	229	17
	616	
	618	

PartNumber	Page	Index
714-12-12610	229	14
	230	10
	231	9
714-12-12740	228	22
	229	27
714-12-12760	228	19
	229	24
714-12-17161	271	29
	273	29
714-12-19121	232	5
	616	
	618	
714-12-19170	232	
	616	
714-12-19340	230	27
	240	2
714-12-19711	228	10
	229	11
	230	7
	231	6
714-12-29170	232	4
	618	
714-12-39210	228	30
	616	
	618	
714-12-39230	228	31
	229	30
	616	
	618	
714-12-39340	228	23
	229	28
714-13-19210	228	14
	616	
	618	
714-16-19210	230	18
	616	
	618	
714-16-19220	230	17
	616	
	618	
714-16-19730	228	11
	229	12
	230	8
	231	7
714-21-19810	228	32
	616	
	618	
714-23-12710	230	25
	231	15
714-23-13270	227	12
714-23-15690	236	4
	236	10
714-23-17320	227	7
714-23-18280	239	8
714-23-19410	228	21
	229	26
714-23-19420	228	20
714-23-19430	230	23
	231	14
714-24-25190	227	2
	227	8
720-2M-15270	227	4
	234	29
	239	12
720-68-19610	153	9
	155	13
	312	3
720-68-19760	287	8
	298	8
721-10-10330	507	1
721-10-10400	331	1
721-11-50720	250	4
	251	4
721-26-10050	507	7
721-26-10140	331	11

PartNumber	Page	Index
721-29-10040	507	4
721-29-10140	331	5
721-32-10100	331	
721-32-10681	507	
721-36-10030	507	9
721-36-10070	331	14
721-47-12021	331	15
	507	11
721-47-12080	331	16
	507	10
721-89-10054	507	2
721-89-10100	507	3
721-89-10250	331	2
721-89-12011	331	6
	507	12
721-98-00480	617	K11
721-98-00580	618	K12
723-10-12400	294	9
	306	9
723-10-13700	326	
723-10-14300	295	3
	307	3
723-10-21400	294	5
	306	5
723-10-21500	370	8
	371	26
	386	2
723-10-41100	294	1
	306	1
723-10-80200	295	1
	307	1
	386	4
723-11-02860	290	
	301	
723-11-02880	292	
	303	
723-11-02890	293	
	304	
723-11-02950	293	
	304	
723-11-03150	290	12
	290	28
	301	12
	301	28
723-11-03160	292	3
	303	3
723-11-03170	292	7
	292	19
	293	3
	293	15
	303	7
	303	19
	304	3
	304	15
	304	33
723-11-03180	290	32
	301	32
723-11-03190	290	16
	301	16
723-11-03420	290	
	301	
723-11-03430	292	
	303	
723-11-03440	304	
723-11-14390	289	6
	300	6
723-11-15110	238	17
	286	28
	297	28
723-11-15130	286	21
	297	21
723-11-16130	286	26
	297	26
723-11-16760	326	3
723-11-18150	287	6

PartNumber	Page	Index
	294	8
	298	6
	306	8
723-11-18160	287	7
	294	7
	298	7
	306	7
723-11-18170	290	6
	301	6
	326	9
723-11-18180	290	7
	301	7
	326	10
723-11-18190	290	8
	301	8
	326	11
723-11-18420	285	19
	296	19
723-11-18430	285	20
	296	20
723-11-18540	290	4
	301	4
723-11-18550	290	5
	301	5
723-11-19110	285	13
	296	13
723-11-19130	285	14
	289	8
	290	22
	291	38
	292	13
	292	25
	293	9
	293	21
	296	14
	300	8
	301	22
	302	38
	303	13
	303	25
	304	9
	304	21
	305	39
723-11-19620	288	9
	299	9
723-11-19960	290	2
	301	2
723-11-19970	290	23
	292	14
	293	10
	293	22
	301	23
	303	14
	304	10
	304	22
	305	40
723-11-23540	285	8
	296	8
723-11-26170	286	30
	297	30
	326	4
723-11-26750	286	27
	297	27
723-11-29361	288	5
	299	5
723-11-32730	287	3
	298	3
723-11-35131	286	29
	297	29
723-11-37321	286	10
	297	10
723-11-37341	286	11
	297	11
723-11-37350	286	9
	297	9

PartNumber	Page	Index
723-11-37360	286	17
	297	17
723-11-37840	286	13
	297	13
723-11-37870	286	7
	297	7
723-11-38620	289	1
	293	25
	300	1
	304	25
723-11-38630	289	3
	300	3
723-11-38640	293	27
	304	27
723-11-38650	285	16
	296	16
723-11-38660	285	17
723-11-38670	289	11
	300	11
723-11-38850	296	17
723-11-38970	286	6
	297	6
723-19-18600	285	
	286	
	287	
	288	
	289	
	290	
	292	
	293	
	294	
	295	
723-1A-17800	296	
	297	
	298	
	299	
	300	
	301	
	303	
	304	
	306	
	307	
723-26-15220	290	20
	290	36
	292	11
	292	23
	293	7
	293	19
	301	20
	301	36
	303	11
	303	23
	304	7
	304	19
	305	37
723-26-15230	288	1
	299	1
	386	6
723-30-51130	153	21
729-11-41000	156	1
7821-26-7000	491	
	492	
	493	
7821-26-7001	491	4
	492	4
	493	4
7826-20-7037	502	
7826-20-7041	502	
7826-20-7042	502	
7826-20-7044	502	
7826-20-7045	502	
7826-20-7046	502	1
7826-25-5307	504	
7826-25-5309	504	1
7826-25-6303	503	
7826-25-6304	503	
7826-25-6306	503	1
7861-93-1850	234	36
7861-93-2330	239	7
7861-93-3320	235	37
	238	23
	256	10
	284	33
7861-93-4832	170	8
	172	8
7861-93-8710	204	1
8255-62-4240	375	16
	376	16
8A13-10-2100	502	17
AN51141-10491	482	1
AN51150-12571	482	2
AN51150-12582	482	3
AN51186-10430	482	4
AN51191-59570	482	5
AN51191-59580	482	6
AN51191-59810	482	7
AN51194-54000	482	8
AN51194-60201	482	9
AN51240-43650	482	10
AN51243-41510	482	11
AN51436-D0580	482	12
AN51439-D0041	482	13
AN51439-D0051	482	14
AN51451-42230	482	15
AN51500-11180	482	16
AN51502-15140	482	17
AN51515-A0600	482	18
AN51532-41281	482	19
AN51550-19142	482	20
AN51571-43930	482	21
AN51571-43940	482	22
AN51571-43950	482	23
AN51571-43961	482	24
AN51571-43970	482	25
AN51571-44050	482	26
AN51571-44060	482	27
AN51571-44070	482	28
AN51573-11760	482	29
AN51573-11780	482	30
AN51573-12070	482	31
AN51580-41010	482	32
AN51589-17820	482	33
AN51700-A0370	482	34
AN51851-42580	482	35
AN51872-40850	483	40
AN51873-40341	482	36
ANKB+0612DAA	482	37
ANTB105160TA	482	38
ANTN104300TA	482	39
AS156713	404	7
AS156717	404	13
AS156718	404	12
AS156737	404	14
AS156738	404	15
AS157154	404	4
AS160167	404	2
AS162032	404	6
AS162036	404	9
AS162047	404	17
AS164959	404	10
AS168853	404	18
AS172287	404	8
AS172639	404	16
AS174752	404	19
AS174753	404	20
AS182321	404	
AS182322	404	1
AS182323	404	3
AS182324	404	5
AS182325	404	11
AS182326	404	21
KD0-0055-05122	108	29
	111	43
KD0-0055-05202	108	28
KD0-0056-05302	108	31
	108	38
KD0-0080-06142	111	41
KD0-0083-08802	110	12
KD0-0270-06402	116	26
KD0-0274-06202	116	18
KD0-0275-06802	108	12
KD0-0290-20022	110	16
KD0-0291-08010	110	35
KD0-09001-4580	116	24
KD0-09001-5280	110	28
KD0-09006-0370	108	35
KD0-09006-0730	108	15
KD0-09011-3540	108	30
	109	39
KD0-09057-0220	108	27
KD0-09103-0451	110	27
KD0-09170-1860	110	30
KD0-09170-2501	108	19
KD0-09201-0770	110	4
KD0-09201-0980	108	4
KD0-09201-1400	110	10
KD0-09201-1450	108	7
KD0-23100-0251	116	1
KD0-23200-0334	116	4
KD0-23310-1734	116	5
KD0-23600-0460	116	13
KD0-23611-0692	116	14
KD0-23700-0130	116	19
KD0-23740-0254	116	22
KD0-23750-0124	116	20
KD0-23901-0170	116	23
KD0-23921-0230	116	31
KD0-25000-8333	116	25
KD0-33901-0630	110	25
KD0-33902-0080	108	36
	110	23
KD0-33902-0090	108	37
	110	22
KD0-33902-0100	110	32
KD0-35100-0311	110	1
KD0-35100-0418	108	1
KD0-35120-0250	110	18
KD0-35120-0528	108	16
KD0-35200-0320	110	5
KD0-35200-0528	108	5
KD0-35300-0201	110	6
KD0-35300-0450	108	6
KD0-35411-0648	108	13
KD0-35411-0650	110	13
KD0-35421-0190	110	14
KD0-35421-0240	108	14
KD0-35700-0765	110	
KD0-35700-1140	108	
KD0-35710-0890	110	19
KD0-35710-1330	108	17
KD0-35719-0201	108	32
KD0-35730-0700	108	18
KD0-35730-1200	110	20
KD0-35761-0190	111	42
KD0-35761-0308	108	33
KD0-35784-0210	108	25
KD0-35784-0224	110	29
KD0-35784-0290	108	26
KD0-35902-0010	108	34
KD0-35923-0120	110	36
KD0-35923-0134	108	22
KD0-35923-0160	108	3
KD0-35926-0070	108	8
KD0-35926-0080	110	7
KD0-35926-0090	108	10

PartNumber	Page	Index
KD0-35943-0100	110	31
KD0-35943-0140	108	24
KD0-35943-0154	108	21
KD0-35943-0160	108	23
KD0-35943-0170	108	20
KD0-35943-0211	110	21
KD0-35943-0240	108	2
KD0-35951-0060	108	9
KD0-35951-0080	110	8
KD0-47100-0244	116	17
KD1-0020-06452	110	38
KD1-0240-06305	116	7
KD1-0240-08405	116	15
KD1-0330-06012	111	39
KD1-0331-08020	110	33
KD1-0335-06002	111	40
KD1-0335-08002	110	34
KD1-0335-20002	110	15
KD1-0454-60067	116	9
KD1-0454-62007	116	3
KD1-0454-62047	116	2
KD1-23181-0020	116	10
KD1-23500-0974	116	12
KD1-23913-0040	116	21
KD1-23914-0020	116	11
KD1-23921-0130	116	28
KD1-23921-0140	116	29
KD1-23941-0040	116	30
KD1-33923-0890	110	2
KD1-33926-0660	110	9
KD1-33926-0730	108	11
KD1-33926-0790	110	11
KD1-33943-0450	110	26
KD1-33943-0870	110	24
KD1-35921-0010	110	17
KD1-35923-0030	110	3
KD1-47927-1250	116	27
KD7-09210-2830	116	32
KD7-23120-0310	116	8
KD7-23320-0060	116	16
KD7-23351-0085	116	6
KD7-23700-0524	116	
KD7-35719-0183	110	37
KD7-47761-0010	116	33
KD7-47761-0030	116	34
RFU419B-418-A	409	1
RFU419B-418-B	409	6
RFU419B-418-C	409	7
	409	15
RFU419B-418-D	409	3
RFU419B-418-E	409	4
RFU419B-418-F	409	16
XK0401008000	355	13
XK2629120330	355	12

GD705-5 Motor Grader
Form No. FEN04875-00

©2020 KOMATSU
All Rights Reserved
Printed in Japan 03-20