RUTHZIL TRATOR COMERCIAL DE PEÇAS LTDA 11 97083-6812 ROLANDO CITRANGULO

PEPB057403

JUNHO 2004

# PARTS BOOK KOMATSU

# GD705A-4

## MOTOR GRADER

SERIAL NUMBERS 23063 and up

KOMATSU

PEPB057403

# PARTS BOOK

GD705A-4
Serial No.23063 and up
ENGINE S6D125-1C
Engine No.56416 and up

# FOREWORD

When ordering a spare part, specify the part number, part name, and quantity required, and also specify your machine model code, machine serial number, engine serial number and the service meter reading.

This Parts Book describes not only standard items but also optional equipment and attachments. To order a part, please contact your nearest Komatsu distributor.

This Parts Book contains the information and special symbols as follows:

| | |
|---|---|
| Figure and list | When you open this Parts Book, you will find an illustration on the left page (even-numbered page) for the spare parts group. Each individual part in the group is given an index number.<br>On the right page, the component parts of the group are listed in the order of the index numbers shown on the illustration page. The part number, part name, and applicable machine serial number are given for each part. |
| FIG. No. | The FIG. No. is the number of the illustration shown on the page. It is not the spare part number. The numbers are not always continuous. |
| INDEX | This is the same as the index number in the illustration. The parts are listed in index number order. |
| PART No. | The number given in the PART No. column is the part number for the part shown. It is the code used when ordering that part. It is important that there be no mistake in this code number when ordering. |
| DESCRIP-TION | This gives the name of part that has the part number listed. The mark "." is put in front of the part name of an assembly part and the item is entered following the assembly. If a part marked with "." is a sub assembly, its components are marked with "..".<br>Example: ELEMENT ASSEMBLY, AIR CLEANER<br>.ELEMENT ASSEMBLY, OUTER<br>..ELEMENT, OUTER<br>..NUT, WING<br>..WASHER |
| Q'TY (Quantity) | This specifies the number of pieces used for one machine. However, if a part is included in the assembly and/or component, the quantity per such assembly and/or component is specified. |
| SERIAL No. | Applicable engine serial number is indicated for the engine volume. In the chassis volume, this indicates the machine serial number in which the part is used. |
| Symbols and codes | Symbols and codes are used in the PART No. and DESCRIPTION columns, and represent the following:<br>☐ The part specified in the line above can be used instead of this part. |

Symbols and codes (Cont'd)

| | |
|---|---|
| ⊡ | This part can be used instead of the part specified in the line immediately above. |
| ◆ | This part and the part specified in the line immediately above are interchangeable. |
| ■ | The part specified in the DESCRIPTION column can be used instead of this part if it is used as a set. |
| ☒ | This shows discontinued part. The part specified in the above line is supplied instead. |
| ▼ | This shows a discontinued part. The part specified in the DESCRIPTION column is supplied instead as a set. |
| ☆ | This part cannot be supplied as an individual part. It is supplied as an assembly. |
| ★ | This part cannot be supplied as an individual part. It is supplied as an assembly. However, it is supplied as an individual part by authorized distributors only. |
| ⊙ | This indicates a part group. The part marked with this symbol is not considered a supply part. |
| ==== | The parts surrounded by this line are components of the part group specified in the above line. |
| G-1,G-2 | These indicate categories of part groups. |
| KIT | This indicates kit parts. For kit parts, refer to the service kit tables provided in this Parts Book. |
| △ | This indicates a part supplied as semi-finished. It requires additional work before installation. |
| PAINT(1) | This indicates parts shipped painted with undercoat. |
| PAINT(2) | This indicates parts supplied with different colors from the original color of your machine. |
| (A) | This code indicates special parts for cold weather "A" specification (-30°C) machines. |
| (B) | This indicates special parts for cold weather "B" specification (-50°C) machines. |

# AVANT-PROPOS

Lorsque vous passez une commande d'une ou plusieurs pièces détachées, vous êtes prié de spécifier, outre le ou les numéro(s), désignation(s) et quantité(s) des pièces commandée(s), le numéro de carrosserie, le numéro de série du moteur et la lecture du compteur de service du véhicule.
Sur le présent catalogue des pièces figurent non seulement les équipements standard, mais également les équipements et accessoires en option. Si vous désirez un équipement ou une pièce quelconque, vous êtes prié de prendre contact avec le concessionnaire Komatsu le plus proche.

Ce catalogue des pièces se présente de la manière suivante:

| | |
|---|---|
| Figures et listes | Lorsque vous ouvrez le présent catalogue, vous trouvez: sur la page de gauche (numéro de page pair), les illustrations de toutes les pièces composant l'équipement en question avec les numéros de référence pour chacune des pièces, sur la page de droite (numéro de page impair), la liste des pièces dans l'ordre des numéro de référence des pièces avec indication du numéro des pièces, de la désignation des pièces, de la quantité utilisée et des numéros de série. |
| FIG. No. (Figure et liste) | Le numéro de figure (FIG. XX) correspond au numéro de la figure représentée sur cette page, mais ne correspond pas au numéro de la pièce détachée. Veuillez noter que les numéros de figure ne se suivent pas systématiquement. |
| INDEX (Numéros de référence) | Les numéros de référence correspondent aux numéros de référence notés sur la figure et sont énumérés dans l'ordre des numéros de référence. |
| PART No. (Numéros de pièce) | Les numéros indiqués dans cette colonne correspondent aux numéros des pièces représentées et constituent les codes à spécifier pour toute commande de pièce. Il est important de ne pas faire d'erreur avec ce code au moment de la commande. |
| DESCRIP-TION (Descript-ion) | Dans cette colonne est indiquée la désignation des différentes pièces. Dans le cas d'un ensemble constitué de pièces, la désignation de chacune de ces pièces est précédée d'un point "." et dans le cas d'un ensemble constitué de sous-ensembles eux-mêmes constitués de pièces, la désignation de chacune de ces pièces est précédée de deux points "..".<br>Exemple: ELEMENT ASSEMBLY, AIR CLEANER<br>.ELEMENT ASSEMBLY, OUTER<br>..ELEMENT, OUTER<br>..NUT, WING<br>..WASHER |
| Q'TY (Quantité) | Dans cette colonne est indiqué le nombre de pièces nécessaires pour l'équipement en question. S'il s'agit de pièces comprises dans un ensemble et/ou composant, et la quantité indiquée est le nombre de pièces nécessaires pour l'ensemble et/ou le composant en question. |
| SERIAL No. (Numéros de série) | S'il s'agit d'un élément du moteur, ces numéros sont les numéros de série des moteurs sur lesquels cette pièce est utilisée. S'il s'agit d'un élément de la carrosserie, ces numéros sont les numéros des carrosseries sur lesquelles la pièce en question est utilisée. |

Codification | Les codes indiqués dans les colonnes "N° de pièce" et "Description" ont les significations suivantes:

| | |
|---|---|
| □ | Au lieu de la pièce affectée de ce code, il est possible d'utiliser la pièce qui figure juste au-dessus. |
| ⊡ | La pièce affectée de ce code peut être utilisée à la place de la pièce figurant juste au-dessus. |
| ◆ | La pièce affectée de ce code et la pièce figurant dans la ligne justeau-dessus sont interchangeables |
| ⊠ | Au lieu de la pièce affectée de ce code, il est possible d'utiliser la combinaison des pièces indiquées dans la colonne "Description". |
| ■ | Les pièces affectées de ce code ne sont plus fournies. Au lieu de cette pièce, c'est la pièce figurant dans la ligne justeau-dessus qui sera fournie. |
| ▼ | Les pièces affectées de ce code ne sont plus fournies. Au lieu de cette pièce, c'est la combinaison de pièces figurant dans la colonne "Description" qui sera fournie. |
| ☆ | Les pièces affectées de ce code ne seront pas fournies à l'unité mais par jeu de pièces. |
| ★ | Les pièces affectées de ce code ne seront pas fournies à l'unité mais par jeu de pièces, sauf dans le cas de certains concessionnaires Komatsu. |
| ⊙ | Ce code indique qu'il s'agit d'un groupe de pièces. Les pièces affectées de ce code ne sont pas fournies en tant que pièces détachées. |
| = = = = | Les pièces ainsi encadrées sont les pièces composantes du groupe de pièces indiqué dans la ligne d'au-dessus. |
| G-1, G-2 | Indique le numéro du groupe de pièces |
| KIT | Indique qu'il s'agit d'un kit de pièces. Pour les pièces composantes des kits, veuillez vous reporter à la liste des kits de service. |
| △ | Indique qu'il s'agit de pièces fournies à l'état semi-fini. Ces pièces devront être usinées avant l'installation. |
| PAINT(1) | Indique que sur les pièces fournies est appliquée uniquement une couche primaire. |
| PAINT(2) | Indique que la couleur de la peinture est différente de celle d'origine. |
| (A) | Indique qu'il s'agit de pièces pour spécifications artiques A (−30°C) |
| (B) | Indique qu'il s'agit de pièces pour spécifications artiques B (−50°C) |

# VORWORT

Bei der Bestellung von Teilen bitte die Teilenummer, die Teilebezeichnung und die Menge des jeweiligen Teils sowie die Modellnummer, die Seriennummer der Maschine, die Seriennummer des Motors und den Stand des Betriebsstundenzählers angeben.

In dieser Ersatzteilliste ist nicht nur das Standardzubehör aufgeführt, sondern auch als Sonderausstattung erhältliche Teile und Einrichtungen.

Bestellungen nimmt Ihr zuständiger Komatsu-Händler entgegen.

Die folgenden Angaben sind in der Ersatzteilliste aufgeführt.

| | |
|---|---|
| Bild und Liste | Beim Aufschlagen des Ersatzteilkatalogs ist auf der linken Seite (d.h. der Seite mit der geraden Zahl) eine Darstellung der Bauteile der betreffenden Baugruppe zu finden. Jedes Einzelteil der Baugruppe ist mit einer Kennzahl versehen.<br>Auf der rechten Seite (d.h. der Seite mit der ungeraden Zahl) sind die Bauteile der Baugruppe, geordnet nach den auf der linken Seite angegebenen Kennzahlen, aufgeführt. Jedes Einzelteil wird mit Teilenummer, Teilebezeichnung und entsprechender Seriennummer angegeben. |
| FIG. No.<br>(Bildnummer) | Die Bildnummer entspricht der Nummer des auf der betreffenden Seite stehenden Bilds. Es handelt sich dabei nicht um die Nummer des Lieferteils. Es sei ferner erwähnt, daß die Bilder nicht fortlaufend numeriert sind. |
| INDEX<br>(Kennzahl) | Dabei handelt es sich um die gleiche Zahl wie die Kennzahl im Bild. Die Teile sind geordnet nach der Kennzahl aufgeführt. |
| PART No.<br>(Teilenummer) | Die in der Spalte "Teilenummer" aufgeführte Nummer entspricht der Teilenummer für das betreffende Teil. Diese Nummer dient zur Bestellung des Teils. Deshalb bei der Bestellung stets auf die genaue Angabe der Teilenummer achten. |
| DESCRIPTION<br>(Beschreibung) | Hierunter wird die Bezeichnung des Teils mit der aufgeführten Teilenummer angegeben.<br>Jedes Baugruppen-Bauteil ist mit dem vorangestellten Symbol "." gekennzeichnet und wird hinter der entsprechenden Baugruppe aufgeführt. Handelt es sich bei dem mit "." gekennzeichneten Bauteil um eine Baugruppe, sind die Bauteile dieser Baugruppe mit ".." gekennzeichnet.<br>Beispiel: Element assembly, air cleaner<br>. Element assembly, outer<br>.. Element, outer<br>.. Nut, wing<br>.. Washer |
| Q'TY<br>(Menge) | Hierunter wird die Anzahl der Bauteile für eine Maschine angegeben.<br>Im Falle einer Baugruppe oder eines Aggregats wird allerdings die Anzahl der Teile pro Baugruppe angegeben. |
| SERIAL No.<br>(Seriennummer) | Im Ersatzteilkatalog für den Motor versteht man hierunter die Seriennummer des Motors, in den das betreffende Teil eingebaut ist.<br>Im Ersatzteilkatalog für die Maschine versteht man hierunter die Seriennummer der Maschine, in die das entsprechende Teil eingebaut ist. |
| Kodes | Die in den Spalten "Teile-Nr." und "Beschreibung" verwendeten Kodes haben folgende Bedeutung:<br>□ Anstelle dieses Teils kann das in der vorangegangenen Zeile aufgeführte Teil verwendet werden. |

| | |
|---|---|
| ⊡ | Dieses Teil kann anstelle des in der vorangegangenen Zeile aufgeführten Teils verwendet werden. |
| ◆ | Dieses Teil ist mit dem in der vorangegangenen Zeile aufgeführten Teil austauschbar. |
| ■ | Anstelle dieses Teils kann das in der Spalte "Beschreibung" aufgeführte Teil verwendet werden, wenn das Teil zusammen mit anderen Teilen als ein Bauteilsatz verwendet wird. |
| ⊠ | Dieses Teil kann nicht mehr geliefert werden. Statt dessen wird das in der vorangegangenen Zeile aufgeführte Teil geliefert. |
| ▼ | Dieses Teil kann nicht mehr geliefert werden. Statt dessen wird das in der Spalte "Beschreibung" aufgeführte Teil als ein Bauteilsatz geliefert. |
| ☆ | Dieses Teil kann nicht als Einzelteil, sondern nur als Baugruppe geliefert werden. |
| ★ | Dieses Teil kann nicht als Einzelteil, sondern nur als Baugruppe geliefert werden. Nur bei bestimmten Händlern kann es als Einzelteil bezogen werden. |
| ⊙ | Hierdurch wird ein Aggregat gekennzeichnet.<br>Es wird nicht zu den Lieferteilen gerechnet. |
| = = = = | Die Teile innerhalb dieser Markierung gehören zu dem oben aufgeführten Aggregat. |
| G-1, G-2 | Hiermit wird die Kategorie eines Aggregats angegeben. |
| KIT | Hiermit werden Teile gekennzeichnet, die nur als Satz erhältlich sind. Siehe dazu die Tabelle der als Satz gelieferten Ersatzteile. |
| △ | Hiermit werden Teile gekennzeichnet, die in vorbearbeitetem Zustand geliefert werden und für den Einbau nachbearbeitet werden müssen. |
| PAINT(1) | Hiermit werden Teile gekennzeichnet, die mit Grundierung geliefert werden. |
| PAINT(2) | Hiermit werden Teile gekennzeichnet, die in unterschiedlichen Farben geliefert werden. |
| (A) | Hiermit werden Teile gekennzeichnet, die speziell für kalte Witterung (A) (-30°C) ausgelegt sind. |
| (B) | Hiermit werden Teile gekennzeichnet, die speziell für kalte Witterung (B) (-50°C) ausgelegt sind. |

# PROLOGO

Cuando tenga que efectuar un pedido de repuestos, se ruega especificar el número, el nombre y la cantidad de piezas requeridas, indicando asimismo el número de modelo, el número de serie del motor y la lectura del contador de servicio.

Esta lista de piezas especifica no solamente accesorios estándar sino también piezas y accesorios opcionales. Para realizar un pedido, sírvase ponerse en contacto con su distribuidor Komatsu más cercano.

La lista de repuestos se compone de los elementos siguientes.

| | |
|---|---|
| Figura y lista | Al abrir esta lista de repuestos, encontrará en la página izquierda (página de número impar) una ilustración de los componentes del conjunto. La figura de cada componente individual va provista de un número de índice.<br>En la página derecha (página de número par), los componentes del conjunto están listados siguiendo el orden de los números de índice de la página izquierda. |
| FIG. NO. (Número de figura) | El número de figura es el número indicado en cada una de las respectivas figuras, y no es el número de la pieza. Los números de figura no son siempre continuos. |
| INDEX (Número de índice) | Coincide con el número de índice de cada figura, y aparecen en la lista en orden numérico. |
| PART NO. (Número de pieza) | El número indicado en la columna de "Número de piezas" es el número de pieza que aparece en la figura. Es sumamente importante debido a que se utiliza como código al efectuar el pedido de piezas. |
| DESCRIP-TION (Nombre de las piezas) | Indica la descripción correspondiente a cada número de pieza.<br>Los componentes de un conjunto llevan la marca "." antes del nombre. Por otra parte, cuando se tratan de piezas armadas, llevan la marca ".." antes del nombre<br>Ejemplo: ELEMENT ASSEMBLY, AIR CLEANER<br>.ELEMENT ASSEMBLY, OUTER<br>..ELEMENT, OUTER<br>..NUT, WING<br>..WASHER |
| Q'ty (Cantidad) | Especifica el número de piezas utilizadas en cada máquina. Sin embargo, para un conjunto o componentes de un grupo de piezas, se especifica el número de piezas por conjunto. |
| SERIAL NO. (Número de serie) | En el manual de piezas del motor, indica el número de serie del motor en que se utiliza la pieza.<br>En el manual de piezas de la máquina, indica el número de serie del vehículo en que se utiliza esa pieza. |

Códigos

Los códigos y números de piezas especificados en las columnas "N°. de pieza" y "Nombre de la pieza" representan lo siguiente:

| | |
|---|---|
| □ | En lugar de esta pieza es posible utilizar la pieza indicada en el renglón de arriba. |
| ⊡ | Es posible utilizar esta pieza en lugar de la indicada en el renglón inmediatamente anterior. |
| ◆ | Esta pieza y la indicada en el renglón inmediatamente anterior son intercambiables. |
| ■ | Es posible utilizar la pieza especificada en la columna "Nombre de las piezas" si se utiliza como un conjunto. |
| ☒ | Esta pieza se ha dejado de suministrar. En su lugar, se suministra la pieza indicada en el renglón anterior. |
| ▼ | Esta pieza se ha dejado de suministrar. En su lugar, se suministra la pieza especificada en la columna "Nombre de las piezas" como un conjunto. |
| ☆ | Esta pieza no se suministra como pieza individual. Se suministra como un conjunto. |
| ★ | Esta pieza no se suministra como pieza individual. Se suministra como un conjunto. Sin embargo, es suministrada como pieza individual por ciertos distribuidores. |
| ⊙ | Indica grupo de piezas. Las piezas que llevan este código no son suministrables. |
| ==== | Las piezas rodeadas por esta línea son componentes del grupo de piezas especificado arriba. |
| G-1, G-2 | Indica la clasificación del grupo de piezas. |
| KIT | Indica componentes de un juego. Para los componentes de un juego, refiérase a la tabla de los juegos de servicio. |
| Δ | Indica pieza suministrada como semiterminada. Debe ser reelaborada antes del uso. |
| PAINT(1) | Indica piezas despachadas con una primera mano de pintura. |
| PAINT(2) | Indica piezas despachadas con colores diferentes. |
| (A) | Indica piezas especiales (A) especificadas para climas fríos (-30°C). |
| (B) | Indica piezas especiales (B) especificadas para climas fríos (-50°C) |

# INTRODUÇÃO

Ao solicitar uma peça, informe o número, nome e quantidade da peça necessária, bem como o número da carroçaria, número do motor, e leitura do medidor de serviço.

Esta lista de peças não somente especifica os acessórios padrões mas também as peças opcionais e aditamentos. Para pedir uma peça, entre em contato com o revendedor Komatsu mais próximo.

Este livro de peças consiste nos seguintes itens.

| | |
|---|---|
| Figura e lista | Ao abrir este livro de peças, você encontrará na página esquerda (a página com número par), uma ilustração das peças componentes do conjunto. Cada peça individual no conjunto tem um número de índice.<br>Na página direita (a página com número ímpar), as peças componentes do conjunto são relacionadas na ordem dos números de índice mostrados na página esquerda. Cada peça é designada com um número, nome, e número de série aplicável. |
| FIG. NO. (Número da figura) | O número da figura é o número da figura mostrada em tal página. Ele não é um número para fornecimento da peça. Do mesmo modo, os números das figuras nem sempre são contínuos. |
| INDEX (Número de índice) | Este número é igual ao número de índice na figura. As peças são relacionadas na ordem dos números de índice. |
| PART NO. (Número de peça) | O número designado na coluna "Número da peça" é o número para a peça mostrada. Ele é o código usado para o pedido da peça. É importante que não haja equívoco com respeito a este número ao pedir uma peça. |
| DESCRIP-TION (Descrição) | Este item descreve o nome da peça que tem o número de peça relacionado. É colocado um "." na frente do nome de um componente de conjunto e o item é introduzido após o conjunto. Se uma peça marcada com "." é um conjunto, seus componentes são marcados com "..".<br>Exemplo: ELEMENT ASSEMBLY, AIR CLEANER<br>.ELEMENT ASSEMBLY, OUTER<br>..ELEMENT, OUTER<br>..NUT, WING<br>..WASHER |
| Q'ty (Quantidade) | Este item especifica o número de peças usadas para 1 máquina. No entanto, para o conjunto ou componentes de um grupo de peças, o número de peças por conjunto é especificado. |
| SERIAL NO. (Número de série) | No livro de peças do motor, esse número indica o número de série do motor no qual a peça é usada. No livro de peças da máquina, esse número indica o número de série da máquina na qual a peça é usada. |
| Códigos | Os códigos e número de peça especificados nas colunas "N.º de peça" e "Descrição" representam o seguinte:<br>☐ A peça especificada na linha acima pode ser usada no lugar desta peça. |

| | |
|---|---|
| ⊡ | Esta peça pode ser usada no lugar da peça especificada na linha imediatamente acima. |
| ◆ | Esta peça e a peça especificada na linha imediatamente acima são intercambiáveis. |
| ■ | A peça especificada na coluna "Descrição" pode ser usada no lugar desta peça se ela for usada como um jogo. |
| ☒ | Esta peça não é mais fornecida. A peça especificada na linha acima é fornecida em seu lugar. |
| ▼ | Esta peça não é mais fornecida. A peça especificada na coluna "Descrição" é fornecida em seu lugar como um jogo. |
| ☆ | Esta peça não pode ser fornecida como uma peça individual. Ela é fornecida como um conjunto. |
| ★ | Esta peça não pode ser fornecida como uma peça individual. Ela é fornecida como um conjunto. No entanto, ela é fornecida como uma peça individual somente por revendedores específicos. |
| ⊙ | Isso indica um grupo de peças. Esta peça não é considerada uma peça de fornecimento. |
| ==== | As peças envolvidas por esta linha são componentes do grupo de peças especificado acima. |
| G-1, G-2 | Isso indica a categoria do grupo de peças. |
| KIT | Isso indica componentes de um kit. Para os componentes de um kit, refira-se à tabela de kits de serviço. |
| Δ | Isso indica uma peça fornecida como produto semi-acabado. Ela deve ser reformada antes do uso. |
| PAINT(1) | Isso indica peças embarcadas pintadas com uma primeira mão de fundo. |
| PAINT(2) | Isso indica peças embarcadas com cores diferentes. |
| (A) | Isso indica peças especiais para especificação (A) de tempo frio (-30°C). |
| (B) | Isso indica peças especiais para especificação (B) de tempo frio (-50°C). |

| الرموز | الرموز وارقام القطع المذكورة في عمود « رقم القطعة » وعمود « الوصف » تمثل كما يلي: |
|---|---|
| □ | القطعة المذكورة في السطر السابق يمكن استعمالها بدلاً من هذه القطعة. |
| ⊡ | هذه القطعة يمكن استعمالها بدلاً من القطعة المذكورة في السطر السابق مباشرة. |
| ◆ | هذه القطعة والقطعة المذكورة في السطر السابق مباشرة يمكن لكل منهما ان تحل محل الاخرى. |
| ■ | القطعة المذكورة في عمود « الوصف » يمكن استعمالها بدلاً من هذه القطعة اذا استخدمت كطقم. |
| ⊠ | هذه القطعة توقف توريدها. يتم توريد القطعة المذكورة في السطر السابق بدلاً منها. |
| ▼ | هذه القطعة توقف توريدها. يتم توريد القطعة المذكورة في عمود « الوصف » بدلاً منها كطقم. |
| ☆ | هذه القطعة لا يمكن توريدها كقطعة منفردة. يتم توريدها كمجموعة. |
| ★ | هذه القطعة لا يمكن توريدها كقطعة منفردة. يتم توريدها كمجموعة. على انه يتم توريدها كقطعة منفردة من قبل موزعين معيّنين فقط. |
| ⊙ | هذا يشير الى مجموعة قطع.<br>هذه القطعة لا تعتبر قطعة للتوريد. |
| ==== | القطع المحاطة بهذا الخط هي مكونات لمجموعة القطع المذكورة اعلاه. |
| G-1,G-2 | هذا يشير الى فئة مجموعة القطع. |
| KIT | هذا يشير الى مكونات الاطقم التركيبية. بخصوص الاطقم التركيبية، يرجى مراجعة جدول الاطقم التركيبية للخدمة. |
| △ | هذا يشير الى قطعة مورّدة شبه مكتملة التصنيع. تتطلب استكمال تصنيعها قبل الاستعمال. |
| PAINT(1) | هذا يشير الى القطع المشحونة بعد طلائها بطبقة سفلية. |
| PAINT(2) | هذا يشير الى القطع المشحونة بألوان مختلفة. |
| (A) | هذا يشير الى قطع خاصة بمواصفات الطقس البارد من الفئة (A) (-٣٠°م). |
| (B) | هذا يشير الى قطع خاصة بمواصفات الطقس البارد من الفئة (B) (-٥٠°م). |

# مقدمة

عند طلب القطع، يرجى تحديد رقم القطعة واسم القطعة والكمية المطلوبة من القطعة، مع تحديد رقم الموديل والرقم التسلسلي للمحرك وقراءة عداد الخدمة.

قائمة القطع هذه لا تقتصر على الكماليات القياسية فقط بل تشمل ايضاً القطع والملحقات الاختيارية. لطلب القطع، يرجى الاتصال بأقرب موزع لمنتجات كوماتسو.

قائمة القطع تتضمن البنود التالية.

| | |
|---|---|
| الشكل والقائمة | عندما تفتح كتاب القطع، ستجد على الصفحة اليسرى (الصفحة ذات الرقم الزوجي) شكلاً توضيحياً للقطع المكونة للمجموعة. كل قطعة في مجموعة المكونات لها رقم فهرس.<br>على الصفحة اليمنى (الصفحة ذات الرقم الفردي) تم إدراج قائمة بالقطع التي تتكون منها المجموعة مرتبة حسب ارقام الفهرس المبيّنة في الصفحة اليسرى. وقد اعطيت كل قطعة من القطع رقم قطعة واسم قطعة ورقم تسلسلي ينطبق عليها. |
| FIG. No.<br>(رقم الشكل) | رقم الشكل هو الرقم الخاص بالشكل التوضيحي الذي يظهر في تلك الصفحة. وهو ليس رقم القطعة التي يتم توريدها. كما ان ارقام الاشكال ليست دائماً متتابعة. |
| INDEX<br>(رقم الفهرس) | هذا الرقم هو نفس رقم الفهرس الوارد في الشكل التوضيحي. تدرج القطع في القائمة مرتبة تبعاً لارقام الفهرس. |
| PART No.<br>(رقم القطعة) | الرقم الوارد في عمود « رقم القطعة » هو رقم القطعة الخاص بالقطعة المبيّنة. وهو الرمز المستخدم لطلب تلك القطعة. ومن الضروري عدم ارتكاب اي خطأ في تحديد هذا الرقم عند طلب القطع. |
| DESCRIPTION<br>(الوصف) | يعطي اسم القطعة المدرج رقمها في القائمة.<br>توضع العلامة " . " امام اسماء القطع المكونة للمجموعة ويدرج البند بعد المجموعة. اذا كانت القطعة المشار اليها بالعلامة " . " هي نفسها عبارة عن مجموعة مكونات فان كلاً من مكوناتها يشار اليها بالعلامة " . . ".<br>مثال : ELEMENT ASSEMBLY, AIR CLEANER<br>.ELEMENT ASSEMBLY, OUTER<br>.. ELEMENT, OUTER<br>..NUT, WING<br>..WASHER |
| Q'ty<br>(الكمية) | هذا هو عدد القطع المستخدمة لآلية واحدة. أما بالنسبة لمجموعات المكونات ومجموعات القطع فانه يتم تحديد عدد القطع لكل مجموعة. |
| SERIAL No.<br>(الرقم التسلسلي) | في كتاب قطع المحرك، يشير هذا الرقم الى الرقم التسلسلي للمحرك الذي تستخدم فيه القطعة. في كتاب قطع الآلية، يشير هذا الرقم الى الرقم التسلسلي للآلية التي تستخدم فيها القطعة. |

# ПРЕДИСЛОВИЕ

При формировании заказа на детали, узлы и агрегаты, кроме их номера детали, наименования и количества, завод-изготовитель просит заказчиков информировать о серийном номере машины и двигателя, для которых делается заказ, а также показании счетчика мото-часов.

В Каталоге приведены не только стандартные агрегаты, но и дополнительные устройства и принадлежности, поставляемые по специальному заказу. При необходимости приобретении их обратиться к местному дилеру фирмы "Комацу".

Каталог деталей составлен, как ниже изложено:

| | |
|---|---|
| Рисунки и таблицы деталей | При открытии Каталога на левой странице (чётной) приведен рисунок деталей устройства или агрегата. Каждая деталь обозначена номером позиции.<br>На правой странице (нечётной) приведена таблица деталей, нарисованных на левой странице, с соответствующим номером детали, наименованием, количеством и серийными номерами машины, для которых предназначена данная деталь, в порядке возрастания номеров позиции. |
| FIG No.<br>(№ рисунка) | Номер рисунка (фиг.) является собственным для данного рисунка и не является номером показанной детали. Номера рисунков (фиг.) могут быть непорядковыми. |
| INDEX<br>(Указатель) | В указателе приведены номера позиции деталей на рисунке в порядке возрастания цифр. |
| PART No.<br>(Номер детали) | При заказе на деталь, установленную на рисунке, следует указать номер, приведенный в данной колонне. Именно этот номер определяет каждую деталь. |
| DESCRIPTION<br>(Наименование детали) | Приведено наименование детали, соответствующей выбранному номеру детали. Точка "." поставлена перед наименованием каждой составной части устройства. Если составная часть состоит из множества деталей, то эти детали обозначаются двумя точками "..".<br>Например: ELEMENT ASSEMBLY, AIR CLEANER<br>. ELEMENT ASSEMBLY, OUTER<br>.. ELEMENT, OUTER<br>.. NUT, WING<br>.. WASHER |
| Q'TY<br>(Количество) | Указано количество деталей, необходимое на единицу данного устройства. Для деталей составной части устройства, а также для группы деталей указано их количество на единицу составной части или на группу. |
| SERIAL No.<br>(Серийные номера) | В части двигателя приведены серийные номера двигателей, а в части шасси — серийные номера машин, в которых применена данная деталь. |
| Условные обозначения | Условные обозначения, применяемые в колоннах "Номер детали" и "Наименование детали", характеризуют следующее:<br>□ Вышеприведенная деталь может заменить настоящую деталь. |

Условные обозначения

(Продолжение)

| | |
|---|---|
| ◙ | Настоящая деталь может заменить деталь, приведенную на одну строчку выше. |
| ◆ | Настоящая деталь и деталь, приведенную на одну строчку выше, имеют взаимозаменяемость. |
| ■ | Взамен настоящей детали возможно использовать детали, приведенные в колонне "Наименование детали", в комплекте. |
| □ | Поставка этой детали прекращена. Взамен этой детали поставляется деталь, приведенная на одну строчку выше. |
| ▼ | Поставка этой детали прекращена. Взамен этой детали поставляются детали, приведенные в колонне "Наименование детали", в комплекте. |
| ☆ | Настоящая деталь поставляется только в комплекте, а не в отдельности. |
| ★ | Настоящая деталь поставляется, как правило, только в комплекте, а не в отдельности. Ее можно достать только у отдельных дилеров фирмы "Комацу". |
| ◉ | Группа деталей.<br>Детали не подлежат дополнительной поставке. |
| ------ | Детали, ограниченные этой линией, составляют вышеприведенную группу деталей. |
| G-1, G-2 | Обозначения, характеризующие отдельные группы деталей. |
| KIT | Составляющая комплекта.<br>См. таблицы ремонтных комплектов. |
| △ | Деталь, поставляемая в неготовом виде.<br>Перед употреблением необходимо дополнительно обработать. |
| PAINT(1) | Детали, отгружаемые в загрунтованном виде. |
| PAINT(2) | Детали, отгружаемые в окрашенном в другой цвет виде. |
| (A) | Детали, рассчитанные на холодные районы (-30° C) |
| (B) | Детали, рассчитанные на особо холодные районы (-50° C) |

# 前　言

订购零件时，请注明需要零件的货号、品名、数量以及使用机器的车辆编号、发动机型号和系列号、工作时数。

此零件明细表上不仅记载有标准装备零件，还记载有选购零件、附件零件。如果您需要订货，请与最近的小松代理店联系。

为了清楚明了，零件手册中有如下规定:

| | |
|---|---|
| 图　　表 | 打开此零件清单后，<br>在左侧的页上（偶数页）用图示表示按安装的装置上的零件。在图示上标有各种零件的索引号码。<br>在右侧的页上（奇数页）按照左侧图示上表示的零件索引号码以表格的形式<br>表示货号、品名、数量、适用机型。 |
| FIG. No. | 图号 (FIG.) 表示该页图的号码，它不时补充零件用的货号同时，此号码不一定是连续号码。 |
| INDEX | 与图的索引号码一致，按索引号码顺序编制为表格形式。 |
| PART No. | 此栏所示的货号是图示零件的货号，它是在订货时需要的标明的特定代号，是非常重要的。 |
| DESCRIP-TION | 它表示相当于货号的零件名称。<br>构成组装品的零件，在品名的前面有标记，记载在组装品之后。<br>另外，如果标记的零件是组装品，在该构成零件的品名前标有 .. 标记。<br>例如: ELEMENT ASSEMBLY, AIR CLEANER<br>.ELEMENT ASSEMBLY, OUTER<br>..ELEMENT, OUTER<br>..NUT, WING<br>..WASHER |
| Q'TY | 表示 1 台机器中需要使用的该零件数量。<br>但是，如果是组装零件和零件组的构成零件时，表示其组装件的件数。 |
| SERIAL No. | 发动机篇中表示该使用零件的发动机型号，在机体篇中表示该使用零件的车辆号码。 |
| 代　　号 | 货号栏和零件品名栏里的代号如下所示:<br>□　　上一行的零件可取代此行零件来使用。 |

代　　号（续）

| | |
|---|---|
| ⊡ | 此行零件可代替紧接着的上一行零件使用。 |
| ◆ | 此行零件可与紧挨着的上一行零件互换使用。 |
| ■ | 如果将此行零件说明栏内的零件配套后，可取代此零件来使用。 |
| ⊠ | 该行零件已停止供应，用上一行的零件代替使用。 |
| ▼ | 此行零件已停止供应，将此行零件说明栏内的零件配套后代替此零件供应。 |
| ☆ | 此行零件拟成套供应，不以单一零件供应。 |
| ★ | 此行零件拟成套供应，不以单一零件供应，但特定代理除外。 |
| ⊙ | 成组零件，一般不考虑成组供应。 |
| ==== | 用这种符号包括的零件是符号上一行指明成组件的零部件。 |
| G-1,G-2 | 成组零件编号。 |
| KIT | 修理包，关于修理包构件详情，请参考技术服务修理包资料。 |
| △ | 此行零件以半成品的形式供应，使用前必须再加工。 |
| PAINT(1) | 只涂底漆装船。 |
| PAINT(2) | 和本体不同颜色装船。 |
| (A) | 适用寒冷地区。（－30℃） |
| (B) | 适用极寒冷地区。（－50℃） |

# CONTENTS


| | | |
|---|---|---|
| FOREWORD | | 0F- 2 |
| CONTENTS | | 0C- 1 |

| 01[CYLINDER HEAD] | FIG NO. | PAGE |
|---|---|---|
| CYLINDER HEAD(#26751-) | 0101A | 01- 2 |
| ROCKER ARM AND HOUSING | 0111 | 01- 4 |
| ROCKER ARM HOUSING COVER | 0115 | 01- 6 |
| AIR INTAKE MANIFOLD | 0131 | 01- 8 |
| AIR INTAKE MANIFOLD (COLD TERRAIN SPEC.) | 0132 | 01- 10 |
| AIR CLEANER AND CONNECTION | 0141 | 01- 12 |
| EXHAUST MANIFOLD AND TURBOCHARGER | 0151 | 01- 16 |
| TURBOCHARGER(#23599-) | 0155A | 01- 18 |
| MUFFLER | 0161 | 01- 20 |
| WATER MANIFOLD AND THERMOSTAT | 0171 | 01- 22 |

| 02[CYLINDER BLOCK] | | |
|---|---|---|
| CYLINDER BLOCK | 0201 | 02- 2 |
| CYLINDER BLOCK COVER | 0207 | 02- 6 |
| CYLINDER BLOCK COVER (COLD TERRAIN SPEC.) | 0208 | 02- 8 |
| FRONT COVER AND GEAR | 0211 | 02- 10 |
| OIL PAN | 0221 | 02- 14 |
| OIL PAN (COLD TERRAIN SPEC.) | 0222 | 02- 16 |
| FLYWHEEL AND FLYWHEEL HOUSING | 0231 | 02- 18 |
| POWER TAKE OFF (1/2) | 0241 | 02- 20 |
| POWER TAKE OFF (2/2) | 0242 | 02- 22 |
| CRANKSHAFT | 0251 | 02- 26 |
| PISTON AND CONNECTING ROD | 0261 | 02- 30 |
| CAMSHAFT | 0271 | 02- 34 |

| 03[LUBRICATING OIL SYSTEM] | | |
|---|---|---|
| LUBRICATING OIL PUMP AND SUCTION PIPE | 0301 | 03- 2 |
| LUBRICATING OIL FILTER | 0311 | 03- 6 |
| LUBRICATING OIL FILTER (COLD TERRAIN SPEC.) | 0312 | 03- 8 |
| LUBRICATING OIL PIPING | 0321 | 03- 10 |
| TURBOCHARGER LUBRICATING OIL PIPING | 0325 | 03- 12 |
| TURBOCHARGER LUBRICATING OIL PIPING (COLD TERRAIN SPEC.) | 0327 | 03- 14 |
| P.T.O. LUBRICATING OIL PIPING | 0328 | 03- 16 |
| LUBRICATING OIL COOLER | 0331 | 03- 18 |
| TORQUE CONVERTER COOLER | 0335 | 03- 20 |

| 04[FUEL SYSTEM] | | |
|---|---|---|
| FUEL INJECTION PUMP AND PIPING | 0401 | 04- 2 |
| FUEL INJECTION PUMP AND PIPING (COLD TERRAIN SPEC.) | 0403 | 04- 6 |
| FUEL FILTER AND PIPING | 0411 | 04- 10 |
| FUEL FILTER AND PIPING (COLD TERRAIN SPEC.) | 0412 | 04- 12 |
| FUEL NOZZLE AND SPILL PIPE(#23599-) | 0421A | 04- 14 |
| FUEL NOZZLE AND SPILL PIPE (COLD TERRAIN SPEC.) | 0423 | 04- 18 |
| FUEL INJECTION PUMP (PUMP) (1/2) (#56416-) | 0451C | 04- 22 |
| FUEL INJECTION PUMP (PUMP) (2/2) (#56416-) | 0452C | 04- 26 |
| FUEL INJECTION PUMP (PUMP) (1/2) (COLD TERRAIN SPEC.) (#10532-) | 0455 | 04- 28 |
| FUEL INJECTION PUMP (PUMP) (2/2) (COLD TERRAIN SPEC.) (#10532-) | 0456 | 04- 32 |
| FUEL INJECTION PUMP (GOVERNOR) (1/2) (#56416-) | 0461B | 04- 38 |
| FUEL INJECTION PUMP (GOVERNOR) (2/2) (#56416-) | 0462B | 04- 42 |
| FUEL INJECTION PUMP (GOVERNOR) (1/2) (COLD TERRAIN SPEC.) (#10532-) | 0465 | 04- 46 |

| | FIG NO. | PAGE |
|---|---|---|
| FUEL INJECTION PUMP (GOVERNOR) (2/2) (COLD TERRAIN SPEC.) (#10532-) | 0466 | 04- 48 |
| FUEL INJECTION PUMP (COUPLING) (#56416-) | 0471C | 04- 50 |
| FUEL INJECTION PUMP (COUPLING) (COLD TERRAIN SPEC.) (#10532-) | 0473 | 04- 52 |
| FUEL INJECTION PUMP (FEED PUMP) (#56416-) | 0481B | 04- 54 |
| FUEL INJECTION PUMP (FEED PUMP) (COLD TERRAIN SPEC.) (#10532-) | 0483 | 04- 56 |
| **05[COOLING SYSTEM]** | | |
| WATER PUMP AND MOUNTING | 0501 | 05- 2 |
| WATER PUMP AND MOUNTING (COLD TERRAIN SPEC.) | 0502 | 05- 4 |
| COOLING FAN AND MOUNTING | 0511 | 05- 6 |
| COOLING FAN AND MOUNTING (COLD TERRAIN SPEC.) | 0513 | 05- 8 |
| CORROSION RESISTOR AND PIPING | 0521 | 05- 10 |
| **06[ELECTRICAL SYSTEM]** | | |
| ALTERNATOR AND MOUNTING (35A) | 0601 | 06- 2 |
| ALTERNATOR AND MOUNTING (50A) (COLD TERRAIN SPEC.) | 0603 | 06- 4 |
| STARTING MOTOR AND MOUNTING (7.5KW) | 0621 | 06- 6 |
| STARTING MOTOR AND MOUNTING (11KW) (COLD TERRAIN SPEC.) | 0622 | 06- 8 |
| ALTERNATOR (35A) | 0641 | 06- 10 |
| ALTERNATOR (50A) (COLD TERRAIN SPEC.) | 0643 | 06- 12 |
| STARTING MOTOR (7.5KW) (#18372-) | 0661A | 06- 14 |
| **07[ACCESSORY]** | | |
| AIR COMPRESSOR AND PIPING | 0701 | 07- 2 |
| AIR COMPRESSOR(#38811-) | 0711A | 07- 4 |





| 09[ENGINE KIT] | FIG NO. | PAGE |
|---|---|---|
| GASKET KIT | 0991 | 09- 2 |
| GASKET KIT (COLD TERRAIN SPEC.) | 0993 | 09- 8 |
| **10[ENGINE RELATED PARTS AND ELECTRICAL SYSTEM]** | | |
| ENGINE AND TRANSMISSION MOUNTING PARTS | 1001 | 10- 2 |
| AIR CLEANER CAP(#.-) | 1003 | 10- 6 |
| MUFFLER(#.-) | 1005 | 10- 8 |
| AIR CLEANER RELATED PARTS(#23001-) | 1011A | 10- 10 |
| ENGINE OIL FILTER CONNECTING PARTS (FOR INTERFERENCE PREVENTION OF STEERING PUMP) (#23001-) | 1021 | 10- 12 |
| RADIATOR AND OIL COOLER(#23001-) | 1201A | 10- 14 |
| RADIATOR PIPING | 1211 | 10- 16 |
| FUEL TANK AND HYDRAULIC TANK(#23001-) | 1301A | 10- 20 |
| FUEL PIPING(#23001-) | 1311B | 10- 22 |
| BATTERY(#23001-) | 1401C | 10- 24 |
| LARGE CAPACITY BATTERY(#23001-) | 1405A | 10- 26 |
| MONITOR PANEL(#23001-) | 1411B | 10- 28 |
| MONITOR PANEL (WITH BLADE ACCUMULATOR) (#23001-) | 1415B | 10- 30 |
| INSTRUMENT PANEL(#23001-) | 1451C | 10- 32 |
| INSTRUMENT PANEL (WITH BLADE ACCUMULATOR) (#23001-) | 1453C | 10- 34 |
| INSTRUMENT PANEL (WITH CAUTION LAMP) (#23001-) | 1455C | 10- 36 |
| INSTRUMENT PANEL (WITH FRONT AND REAR WORK LAMP) (#23001-) | 1459 | 10- 38 |
| ELECTRICAL SYSTEM (FRONT LINE) (#23001-) | 1501A | 10- 40 |
| ELECTRICAL SYSTEM (CENTER LINE) (#23001-) | 1503A | 10- 42 |

| | FIG NO. | PAGE |
|---|---|---|
| ELECTRICAL SYSTEM (MONITOR PANEL LINE) (#23001-) | 1505B | 10- 44 |
| ELECTRICAL SYSTEM (INSTRUMENT PANEL LINE) (#23001-) | 1507C | 10- 46 |
| ELECTRICAL SYSTEM (BATTERY LINE) (#23001-) | 1509A | 10- 50 |
| ELECTRICAL SYSTEM (ENGINE LINE) (#23001-) | 1511A | 10- 52 |
| ELECTRICAL SYSTEM (REAR LINE) (#23001-) | 1513A | 10- 54 |
| ENGINE STOP MOTOR AND MOUNTING PARTS(#21222-) | 1551 | 10- 58 |
| HEAD LAMP AND FRONT CONBINATION LAMP (WITH SIDE MIRROR) (#23001-) | 1801A | 10- 60 |
| CAUTION LAMP (FLOOR FRAME MOUNTING TYPE) | 1821 | 10- 62 |
| REAR WORK LAMP | 1831 | 10- 64 |
| LICENSE PLATE LAMP (WITH RIPPER) (#23001-) | 1841A | 10- 66 |
| BLADE ACCUMULATOR WIRING | 1851 | 10- 68 |

20[POWER TRAIN]

| | | |
|---|---|---|
| JOINT | 2001 | 20- 2 |
| DRIVE SHAFT | 2051 | 20- 4 |
| TRANSMISSION (TRANSMISSION CASE) | 2411 | 20- 6 |
| TRANSMISSION (TRANSFAR CASE) | 2412 | 20- 8 |
| TRANSMISSION (REVERSE CLUTCH) (#21348-) | 2415A | 20- 12 |
| TRANSMISSION (FORWARD CLUTCH) | 2416 | 20- 16 |
| TRANSMISSION (3RD AND 4TH CLUTCH) | 2417 | 20- 18 |
| TRANSMISSION (1ST AND 2ND CLUTCH) | 2418 | 20- 22 |
| TRANSMISSION (LOW AND HIGH CLUTCH) | 2419 | 20- 26 |
| TRANSMISSION (OUTPUT SHAFT) (1/2) | 2421 | 20- 30 |
| TRANSMISSION (OUTPUT SHAFT) (2/2) | 2422 | 20- 32 |
| TRANSMISSION (CONTROL VALVE COVER) | 2423 | 20- 34 |
| TRANSMISSION (CONTROL VALVE) (1/3) | 2451 | 20- 38 |
| TRANSMISSION (CONTROL VALVE) (2/3) | 2452 | 20- 42 |
| TRANSMISSION (CONTROL VALVE) (3/3) | 2453 | 20- 46 |
| PARKING BRAKE | 2471 | 20- 48 |
| TRANSMISSION PUMP(#23001-) | 2501A | 20- 50 |
| STEERING PUMP(#23001-) | 2503A | 20- 52 |
| TRANSMISSION OIL FILTER(#23001-) | 2511A | 20- 54 |
| TRANSMISSION PIPING(#23001-) | 2551A | 20- 56 |
| TRANSMISSION OIL COOLER PIPING(#23001-) | 2553A | 20- 58 |
| TRANSMISSION OIL PRESSURE CHECK PIPING | 2561 | 20- 60 |
| FINAL DRIVE CASE (1/2) | 2601 | 20- 62 |
| FINAL DRIVE CASE (2/2) | 2603 | 20- 66 |
| FINAL DRIVE GEAR (1/2) (#23001-) | 2605A | 20- 70 |
| FINAL DRIVE GEAR (2/2) | 2607 | 20- 72 |
| TANDEM DRIVE CASE(#21020-) | 2651A | 20- 76 |
| TANDEM DRIVE GEAR AND CHAIN | 2653 | 20- 78 |
| STEERING VALVE(#23001-) | 2711A | 20- 82 |
| PILOT CHECK VALVE (FOR STEERING) (#23001-) | 2713A | 20- 84 |
| FLOW CONTROL VALVE | 2715 | 20- 86 |
| STEERING CYLINDER(#23063-) | 2721C | 20- 88 |
| LEANING CYLINDER(#23063-) | 2723C | 20- 90 |
| ARTICULATE CYLINDER(#23063-) | 2725B | 20- 92 |
| STEERING PIPING (SUCTION LINE) (#23036-) | 2751B | 20- 94 |
| STEERING PIPING (DELIVERY LINE) (#23001-) | 2753A | 20- 96 |
| STEERING PIPING (CYLINDER LINE) (#23001-) | 2755A | 20- 98 |
| STEERING PIPING (COOLING LINE) (#23001-) | 2757 | 20- 100 |
| FRONT AXLE (1/3) (#21164-) | 2801A | 20- 102 |
| FRONT AXLE (2/3) (#21164-) | 2803A | 20- 106 |
| FRONT AXLE (3/3) (#21037-) | 2805A | 20- 108 |

30[WHEEL]

| | | |
|---|---|---|
| WHEEL AND TUBED TIRE (TRUCTION TYPE) (16.00-24-12PR) | 3001 | 30- 2 |

| | FIG NO | PAGE |
|---|---|---|
| WHEEL AND TUBED TIRE (ROCK TYPE) (16.00-24-12PR) | 3003 | 30- 4 |
| WHEEL AND TUBELESS TIRE (TRUCTION TYPE) (16.00-24-12PR) | 3011 | 30- 6 |
| WHEEL AND TUBELESS TIRE (ROCK TYPE) (16.00-24-12PR) | 3013 | 30- 8 |
| WHEEL AND TUBELESS TIRE (TRUCTION TYPE) (20.5-25-12PR) | 3021 | 30- 10 |

40[CONTROL SYSTEM]

| | | |
|---|---|---|
| FUEL CONTROL LEVER(#23001-) | 4001C | 40- 2 |
| ACCELERATOR PEDAL(#23001-) | 4011A | 40- 4 |
| ACCELERATOR LINKAGE(#23001-) | 4013 | 40- 6 |
| TRANSMISSION CONTROL BOX AND LOCK LEVER(#23001-) | 4101A | 40- 8 |
| TRANSMISSION CONTROL LEVER AND LINKAGE(#23001-) | 4105A | 40- 10 |
| INCHING PEDAL(#23001-) | 4111A | 40- 14 |
| PARKING BRAKE CONTROL LEVER(#23001-) | 4121A | 40- 16 |
| STEERING WHEEL(#21030-) | 4201A | 40- 18 |
| CONSOLE BOX(#23001-) | 4305A | 40- 20 |
| HYDRAULIC CONTROL LEVER (L.H.) (#23001-) | 4321B | 40- 24 |
| HYDRAULIC CONTROL LEVER (R.H.) (WITH RIPPER) (#23001-) | 4322 | 40- 26 |
| HYDRAULIC CONTROL LEVER (R.H.) (#23001-) | 4323B | 40- 28 |
| HYDRAULIC CONTROL LINKAGE (FOR CIRCLE REVERSE) (#23001-) | 4331A | 40- 32 |
| HYDRAULIC CONTROL LEVER (FOR CIRCLE REVERSE) (WITH RIPPER) (#23001-) | 4333A | 40- 34 |
| DUAL DEMAND VALVE CONTROL (D.D.V. SPEC.) (#23001-) | 4336 | 40- 36 |
| HYDRAULIC CONTROL LEVER (FOR SCARIFIER) (#23001-) | 4341B | 40- 38 |
| HYDRAULIC CONTROL LEVER (FOR FRONT BLADE) (#23001-) | 4343B | 40- 40 |
| BANK PIN | 4371 | 40- 42 |
| BANK CUTTING CONTROL PIPING (1/2) (#23001-) | 4381 | 40- 44 |
| BANK CUTTING CONTROL PIPING (2/2) (#23001-) | 4383 | 40- 46 |
| BANK CUTTING CONTROL PIPING (1/2) (D.D.V SPEC.) (#23001-) | 4385 | 40- 48 |
| BANK CUTTING CONTROL PIPING (2/2) (D.D.V. SPEC.) (#23001-) | 4387 | 40- 50 |
| RELAY VALVE | 4401 | 40- 52 |
| BRAKE VALVE | 4403 | 40- 54 |
| AIR DRYER(#23001-) | 4405A | 40- 58 |
| AIR TANK AND MOUNTING PARTS | 4451 | 40- 62 |
| AIR PIPING (AIR COMPRESSOR TO AIR TANK) (WITHOUT AIR DRYER) (#23001-) | 4453A | 40- 64 |
| AIR PIPING (AIR COMPRESSOR TO AIR TANK) (WITH AIR DRYER) (#23001-) | 4454A | 40- 66 |
| AIR TANK AND MOUNTING PARTS (WITH RIPPER) | 4455 | 40- 68 |
| AIR DRYER AND MOUNTING PARTS(#23001-) | 4471A | 40- 70 |
| BRAKE PIPING (1/2) (#23001-) | 4481A | 40- 72 |
| BRAKE PIPING (2/2) (#23001-) | 4483A | 40- 74 |

50[FRAME AND GUARD]

| | | |
|---|---|---|
| FRONT FRAME | 5001 | 50- 2 |
| REAR FRAME | 5011 | 50- 4 |
| REAR FRAME (WITH RIPPRE) (#23001-) | 5013 | 50- 6 |
| HOOK | 5051 | 50- 8 |
| HOOK (WITH RIPPER) | 5053 | 50- 10 |
| RADIATOR GUARD(#23001-) | 5101A | 50- 12 |

| | FIG NO. | PAGE |
|---|---|---|
| ENGINE HOOD AND SIDE DOOR(#23001-) | 5103 | 50- 14 |
| BATTERY COVER AND LOWER SIDE COVER(#23001-) | 5121 | 50- 16 |
| TRANSMISSION UNDER GUARD(#23001-) | 5171A | 50- 20 |
| OPERATOR'S COMPARTMENT (FLOOR FRAME AND STEP) (#23001-) | 5201A | 50- 22 |
| OPERATOR'S COMPARTMENT (CONTROL PANEL BOX) (#23001-) | 5203 | 50- 24 |
| OPERATOR'S COMPARTMENT (SIDE COVER) (#23001-) | 5205 | 50- 26 |
| HAND RAIL(#23001-) | 5251A | 50- 28 |
| FLOOR MAT(#23001-) | 5271A | 50- 30 |
| OPERATOR'S SEAT(#23001-) | 5301B | 50- 32 |
| OPERATOR'S CAB (CAB) (#23001-) | 5401A | 50- 36 |
| OPERATOR'S CAB (INNER PANEL) (#23001-) | 5403A | 50- 38 |
| OPERATOR'S CAB (WINDOW GLASS) (#23001-) | 5405A | 50- 40 |
| OPERATOR'S CAB (DOOR) (#23001-) | 5407A | 50- 42 |
| OPERATOR'S CAB (ELECTRICAL PARTS AND ACCESSORY PARTS) (#23001-) | 5409A | 50- 46 |
| RADIO(#23001-) | 5471 | 50- 50 |
| CANVAS CANOPY(#23001-) | 5511A | 50- 52 |
| CANVAS CANOPY (WITH MIRROR) (#23001-) | 5513A | 50- 54 |
| STEEL CANOPY(#23001-) | 5515B | 50- 56 |
| ROPS CANOPY(#23001-) | 5517A | 50- 58 |
| ROPS (FOR ROPS CAB) (#23001-) | 5521 | 50- 60 |
| FRONT WEIGHT | 5551 | 50- 62 |
| FRONT WEIGHT (WITH RIPPER) | 5553 | 50- 64 |
| AIR CONDITIONER (1/10) (AIR CONDENSER AND RELATED PARTS) (#23001-) | 5611 | 50- 66 |
| AIR CONDITIONER (2/10) (AIR CONDENSER AND MOUNTING PARTS) (#23058-) | 5612A | 50- 68 |
| AIR CONDITIONER (3/10) (AIR COMPRESSER AND MOUNTING PARTS) (#23001-) | 5613 | 50- 72 |
| AIR CONDITIONER (4/10) (COOLER PIPING) (#23001-) | 5614 | 50- 74 |
| AIR CONDITIONER (5/10) (HEATER PIPING) (#23001-) | 5615 | 50- 78 |
| AIR CONDITIONER (6/10) (AIR PIPING, FRONT) (#23001-) | 5616 | 50- 80 |
| AIR CONDITIONER (7/10) (AIR PIPING, REAR) (#23001-) | 5617 | 50- 82 |
| AIR CONDITIONER (8/10) (CONTROL PANEL) (#23001-) | 5618 | 50- 84 |
| AIR CONDITIONER (9/10) (ELECTRICAL PARTS) (#23001-) | 5619 | 50- 86 |
| AIR CONDITIONER (10/10) (AIR COMPRESSER INNER PARTS) (#23001-) | 5620 | 50- 88 |
| CAR HEATER (1/2) (WATER PIPING) (#23001-) | 5701A | 50- 90 |
| CAR HEATER (2/2) (AIR PIPING) (#23001-) | 5703A | 50- 92 |
| EXTINGUISHER (FLOOR FRAME MOUNTING TYPE) | 5901 | 50- 94 |
| EXTINGUISHER (CAB MOUNTING TYPE) (#23001-) | 5905A | 50- 96 |

60[HYDRAULIC SYSTEM]

| | | |
|---|---|---|
| WORK EQUIPMENT PUMP(#23001-) | 6011 | 60- 2 |
| WORK EQUIPMENT PUMP (D.D.V. SPEC.) (#23001-) | 6012 | 60- 4 |
| CIRCLE REVERSE PUMP(#23001-) | 6015 | 60- 6 |
| CIRCLE REVERSE PUMP(#23001-) | 6016 | 60- 8 |
| CIRCLE REVERSE PUMP (D D.V. SPEC.) (#23001-) | 6017 | 60- 10 |
| HYDRAULIC MOTOR(#21086-) | 6051A | 60- 12 |
| SWIVEL JOINT | 6071 | 60- 16 |
| HYDRAULIC OIL TANK(#23001-) | 6101A | 60- 18 |
| HYDRAULIC OIL TANK (D D.V SPEC) (#23001-) | 6103 | 60- 20 |
| HYDRAULIC OIL FILTER(#23001-) | 6111 | 60- 22 |
| HYDRAULIC OIL FILTER (D D.V. SPEC) (#23001-) | 6113 | 60- 24 |

| | FIG NO. | PAGE |
|---|---|---|
| CONTROL VALVE, L.H. (3-SPOOL) (#23001-) | 6201A | 60- 26 |
| CONTROL VALVE, L.H. (1-SPOOL) (FOR CIRCLE REVERSE GEAR) (#23001-) | 6203A | 60- 28 |
| CONTROL VALVE, L.H. (2-SPOOL) (WITH CIRCLE REVERSE AND RIPPER) (#23001-) | 6215A | 60- 30 |
| CONTROL VALVE, R.H. (4-SPOOL) (#23001-) | 6221A | 60- 32 |
| CONTROL VALVE, R.H. (5-SPOOL) (#23001-) | 6223 | 60- 34 |
| PILOT CHECK VALVE (FOR LEANING) | 6241 | 60- 36 |
| PILOT CHECK VALVE (FOR ARTICULATE) (#21030-) | 6243A | 60- 38 |
| PILOT CHECK VALVE (FOR DRAWBAR SIDE SHIFT) | 6245 | 60- 40 |
| PILOT CHECK VALVE (FOR BLADE LIFT, L.H.) | 6247 | 60- 42 |
| PILOT CHECK VALVE (FOR BLADE LIFT, R.H.) | 6249 | 60- 44 |
| PILOT CHECK VALVE (FOR POWER TILT) (#21037-) | 6251A | 60- 46 |
| PILOT CHECK VALVE (FOR SCARIFIER) | 6261 | 60- 48 |
| PILOT CHECK VALVE (FOR FRONT BLADE) | 6263 | 60- 50 |
| PILOT CHECK VALVE (FOR RIPPER) | 6265 | 60- 52 |
| DUAL DEMAND VALVE (D.D.V SPEC) (#23001-) | 6271 | 60- 54 |
| DIRECTIONAL CONTROL VALVE (D.D.V SPEC) (#23001-) | 6273 | 60- 56 |
| FLOW DIVIDER VALVE (D D.V SPEC) (#23001-) | 6275 | 60- 58 |
| DRAWBAR SHIFT CYLINDER(#21086-) | 6301A | 60- 60 |
| BLADE LIFT CYLINDER(#23063-) | 6303B | 60- 62 |
| BLADE SIDE SHIFT CYLINDER(#23063-) | 6305B | 60- 64 |
| POWER TILT CYLINDER(#23063-) | 6307B | 60- 66 |
| SCARIFIER CYLINDER(#.-) | 6311A | 60- 68 |
| FRONT BLADE CYLINDER | 6313 | 60- 70 |
| RIPPER CYLINDER | 6315 | 60- 72 |
| HYDRAULIC PIPING (CONTROL VALVE CONNECTING PARTS, L.H.) (#23001-) | 6321 | 60- 74 |
| HYDRAULIC PIPING (CONTROL VALVE CONNECTING PARTS, R.H.) (#23001-) | 6325 | 60- 76 |





| | FIG NO. | PAGE |
|---|---|---|
| HYDRAULIC PIPING (TANK TO PUMP) (#23001-) | 6401A | 60- 78 |
| HYDRAULIC PIPING (PUMP TO VALVE) (1/2) (#23001-) | 6403A | 60- 80 |
| HYDRAULIC PIPING (PUMP TO VALVE) (2/2) (#23001-) | 6405A | 60- 82 |
| HYDRAULIC PIPING (VALVE TO TANK) (#23001-) | 6407A | 60- 84 |
| HYDRAULIC PIPING (TANK TO PUMP) (WITH RIPPER) (#23001-) | 6411A | 60- 88 |
| HYDRAULIC PIPING (TANK TO PUMP) (WITH RIPPER) (D.D.V. SPEC) (#23001-) | 6412 | 60- 90 |
| HYDRAULIC PIPING (PUMP TO VALVE) (1/2) (WITH RIPPER) (#23001-) | 6413A | 60- 92 |
| HYDRAULIC PIPING (PUMP TO VALVE) (1/2) (WITH RIPPER) (D.D.V. SPEC) (#23001-) | 6414 | 60- 94 |
| HYDRAULIC PIPING (PUMP TO VALVE) (2/2) (WITH RIPPER) (#23001-) | 6415A | 60- 98 |
| HYDRAULIC PIPING (PUMP TO VALVE) (2/2) (WITH RIPPER) (D.D.V. SPEC) (#23001-) | 6416 | 60- 100 |
| HYDRAULIC PIPING (VALVE TO TANK) (WITH RIPPER) (#23001-) | 6417A | 60- 104 |
| HYDRAULIC PIPING (VALVE TO TANK) (WITH RIPPER) (D.D.V. SPEC) (#23001-) | 6418 | 60- 106 |
| HYDRAULIC PIPING (LEANING CYLINDER LINE) (#23001-) | 6421A | 60- 108 |
| HYDRAULIC PIPING (ARTICULATE CYLINDER LINE) (#23001-) | 6423C | 60- 110 |
| HYDRAULIC PIPING (ARTICULATE CYLINDER LINE) (D.D.V. SPEC) (#23001-) | 6427 | 60- 112 |
| HYDRAULIC PIPING (DRAWBAR SHIFT CYLINDER LINE) (#23001-) | 6431A | 60- 114 |

| | FIG NO. | PAGE |
|---|---|---|
| HYDRAULIC PIPING (BLADE LIFT CYLINDER LINE) (#23001-) | 6435A | 60- 116 |
| HYDRAULIC PIPING (BLADE SIDE SHIFT CYLINDER LINE) (#23001-) | 6437C | 60- 118 |
| HYDRAULIC PIPING (CIRCLE MOTOR LINE) (#23001-) | 6441C | 60- 122 |
| HYDRAULIC PIPING (SCARIFIER CYLINDER LINE) (#23001-) | 6451A | 60- 124 |
| HYDRAULIC PIPING (FRONT BLADE CYLINDER LINE) (#23001-) | 6455B | 60- 126 |
| HYDRAULIC PIPING (RIPPER CYLINDER LINE) (1/2) (#23001-) | 6461A | 60- 128 |
| HYDRAULIC PIPING (RIPPER CYLINDER LINE) (2/2) (#23001-) | 6463A | 60- 130 |
| HYDRAULIC PIPING (POWER TILT CYLINDER LINE) (#23001-) | 6471 | 60- 132 |
| HYDRAULIC PIPING (BLADE ACCUMULATOR LINE) (#.-) | 6611A | 60- 136 |

70[WORK EQUIPMENT]

| | | |
|---|---|---|
| DRAWBAR | 7001 | 70- 2 |
| BLADE(#21086-) | 7011A | 70- 4 |
| BLADE (WIDTH 4900MM) (#21086-) | 7012A | 70- 6 |
| HEAVY DUTY BLADE(#21086-) | 7013A | 70- 8 |
| CIRCLE SUPPORT | 7015 | 70- 10 |
| CIRCLE SUPPORT (FOR HEAVY DUTY BLADE) | 7017 | 70- 14 |
| BLADE LIFTER | 7021 | 70- 18 |
| CIRCLE REVERSE GEAR(#23001-) | 7031B | 70- 20 |
| CLUTCH TYPE CIRCLE REVERSE GEAR (1/2) (DRY TYPE) | 7037 | 70- 24 |
| CLUTCH TYPE CIRCLE REVERSE GEAR (2/2) (DRY TYPE) | 7038 | 70- 28 |
| SCARIFIER | 7101 | 70- 30 |
| SCARIFIER LIFTER | 7111 | 70- 34 |
| FRONT BLADE(#..-) | 7151A | 70- 36 |
| REAR MOUNT RIPPER | 7201 | 70- 38 |

90[MARK PLATE、TOOL AND KIT]

| | | |
|---|---|---|
| MARKS AND PLATES (ENGLISH) (#23001-) | 9801B | 90- 2 |
| MARKS AND PLATES (ARABIC) (#23001-) | 9821B | 90- 6 |
| MARKS AND PLATES (FRENCH) (#23001-) | 9831B | 90- 10 |
| TOOL(#23001-) | 9901A | 90- 14 |
| TOOL BOX | 9911 | 90- 16 |
| KIT (TRANSMISSION) | 9991 | 90- 18 |

ZZ[NUMERICAL INDEX] ZZ- 1





GD705A-4

# CYLINDER HEAD

# FIG.0101A CYLINDER HEAD(#26751-)

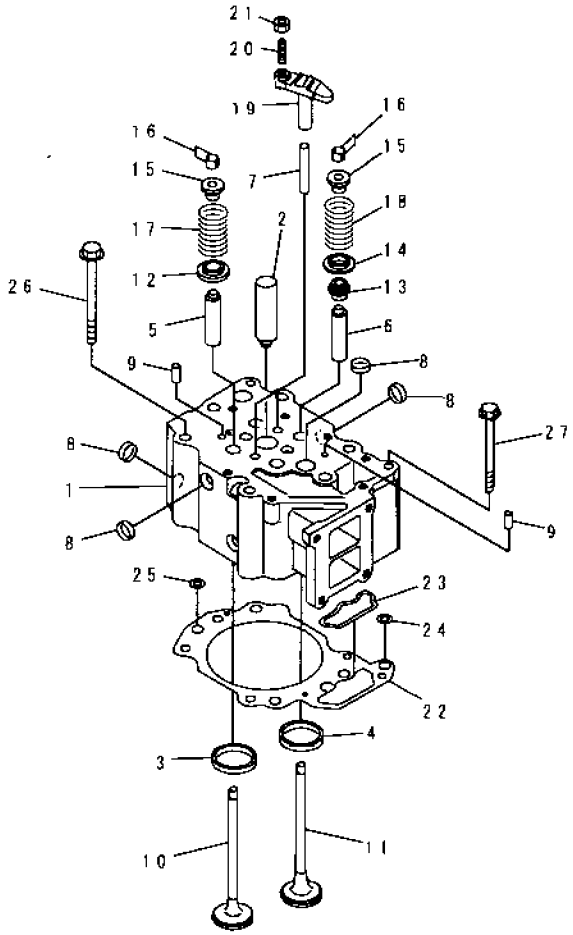


PJJ5048

| INDEX | PART NO | DESCRIPTION | Q'TY | SERIAL NO |
|---|---|---|---|---|
| | 6151-11-1100 | CYLINDER HEAD ASS'Y.VALVE LESS | 6 | 10001- |
| 1 | ☆ | HEAD,CYLINDER | 1 | 10001- |
| 2 | 6136-11-1130 | .SLEEVE | 1 | 10001- |
| 3 | 6150-11-1331 | INSERT,INTAKE VALVE (STD) | 2 | 10001- |
| | 6150-19-1331 | .INSERT, 0.25MM,INTAKE VALVE (OS) | 2 | 10001- |
| | 6150-18-1331 | .INSERT, 0.50MM,INTAKE VALVE (OS) | 2 | 10001- |
| | 6150-17-1331 | INSERT, 0.75MM,INTAKE VALVE (OS) | 2 | 10001- |
| | 6150-16-1331 | .INSERT, 1.00MM,INTAKE VALVE (OS) | 2 | 10001- |
| 4 | 6150-11-1320 | .INSERT,EXHAUST VALVE (STD) | 2 | 10001- |
| | 6150-19-1320 | INSERT, 0.25MM,EXHAUST VALVE (OS) | 2 | 10001- |
| | 6150-18-1320 | .INSERT, 0.50MM,EXHAUST VALVE (OS) | 2 | 10001- |
| | 6150-17-1320 | .INSERT, 0.75MM,EXHAUST VALVE (OS) | 2 | 10001- |
| | 6150-16-1320 | .INSERT, 1.00MM,EXHAUST VALVE (OS) | 2 | 10001- |
| 5 | 6150-12-1341 | .GUIDE,INTAKE VALVE | 2 | 10001- |
| 6 | 6150-12-1351 | .GUIDE,EXHAUST VALVE | 2 | 10001- |
| 7 | 6150-11-1140 | .GUIDE | 2 | 10001- |
| 8 | 6162-13-1150 | .PLUG | 8 | 13377- |
| 9 | 04020-00820 | .PIN,DOWEL | 2 | 10001- |
| 10 | 6150-41-4111 | VALVE,INTAKE | 12 | 10001- |
| 11 | 6150-41-4210 | VALVE,EXHAUST | 12 | 10001- |
| 12 | 6150-41-4540 | ROTATOR,INTAKE VALVE | 12 | 10001- |
| 13 | 6140-41-4540 | SEAL,EXHAUST VALVE (K1) | 12 | 10001- |
| 14 | 6150-41-4430 | SEAT,LOWER | 12 | 10001- |
| 15 | 6150-41-4510 | SEAT,UPPER | 24 | 10001- |
| 16 | 6136-42-4520 | COTTER | 48 | 10001- |
| 17 | 6150-41-4420 | SPRING,INTAKE | 12 | 10001- |
| 18 | 6150-41-4411 | SPRING,EXHAUST | 12 | 10001- |
| 19 | 6150-41-5611 | CROSSHEAD | 12 | 10001- |
| 20 | 6150-41-5620 | SCREW | 12 | 10001- |
| 21 | 6150-41-5630 | NUT | 12 | 10001- |
| 22 | 6150-17-1812 | GASKET,HEAD (K1) | 6 | 26751- |
| 23 | 6150-11-1920 | .GROMMET,OIL | 1 | 26751- |
| 24 | 6150-11-1930 | .GROMMET,OIL | 1 | 26751- |
| 25 | 6150-11-1940 | .GROMMET,WATER | 4 | 26751- |
| 26 | 6150-11-1610 | BOLT | 36 | 10001- |
| 27 | 6150-81-9160 | BOLT | 6 | 10001- |

# FIG.0111 ROCKER ARM AND HOUSING

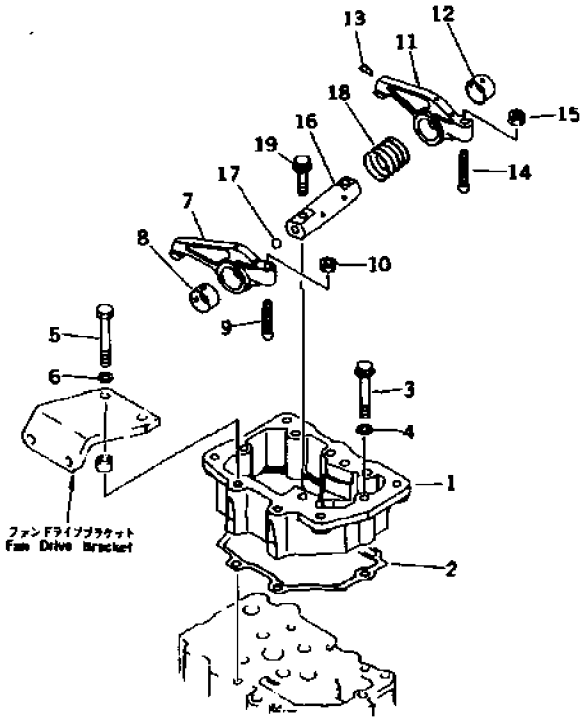


| INDEX | PART NO. | DESCRIPTION | Q'TY | SERIAL NO. |
|---|---|---|---|---|
| 1 | 6150-11-7110 | HOUSING,ROCKER ARM | 6 | 10001- |
| 2 | 6150-11-7810 | GASKET (K1) | 6 | 10001- |
| 3 | 6150-81-9140 | BOLT | 40 | 10001- |
| 4 | 01643-31032 | WASHER | 40 | 29381- |
| | 01642-21016 | WASHER | 40 | 10001-29380 |
| 5 | 01010-51095 | BOLT | 2 | 10001- |
| 6 | 01640-21016 | WASHER | 2 | 10001- |
| | 6150-41-5400 | ARM ASS'Y,INTAKE | 6 | 10001- |
| 7 | ☆ | .ARM,ROCKER | 1 | 10001- |
| 8 | 6150-41-5420 | .BUSHING | 1 | 10001- |
| 9 | 6150-41-5540 | SCREW | 6 | 10001- |
| 10 | 01582-01008 | NUT | 6 | 10001- |
| | 6150-41-5500 | ARM ASS'Y,EXHAUST | 6 | 10001- |
| 11 | ☆ | .ARM,ROCKER | 1 | 10001- |
| 12 | 6150-41-5420 | .BUSHING | 1 | 10001- |
| 13 | 6162-43-5340 | .RIVET | 1 | 10001- |
| 14 | 6150-41-5540 | SCREW | 6 | 10001- |
| 15 | 01582-01008 | NUT | 6 | 10001- |
| | 6150-41-5300 | ROCKER ARM SHAFT A | 6 | 10001- |
| 16 | ☆ | .SHAFT | 1 | 10001- |
| 17 | 6150-81-8420 | .BALL | 1 | 10001- |
| 18 | 6150-41-5320 | SPRING | 6 | 10001- |
| 19 | 6150-81-9370 | BOLT | 12 | 10001- |

# FIG.0115 ROCKER ARM HOUSING COVER

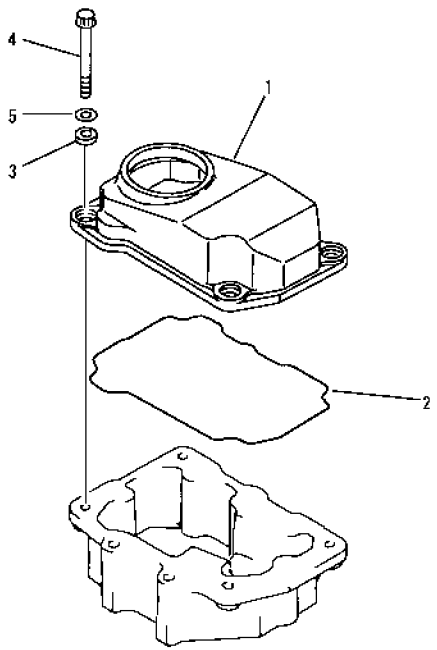


PE38302

| INDEX | PART NO. | DESCRIPTION | Q'TY | SERIAL NO |
|---|---|---|---|---|
| 1 | 6150-11-8111 | COVER, HEAD | 6 | 10001- |
| 2 | 6150-11-8810 | GASKET (KIT) | 6 | 10001- |
| 3 | 6150-11-8820 | RUBBER (KIT) | 24 | 10001- |
| 4 | 6150-81-9370 | BOLT | 24 | 10001- |
| 5 | 01640-21016 | WASHER | 24 | 10001- |

# FIG.0131 AIR INTAKE MANIFOLD

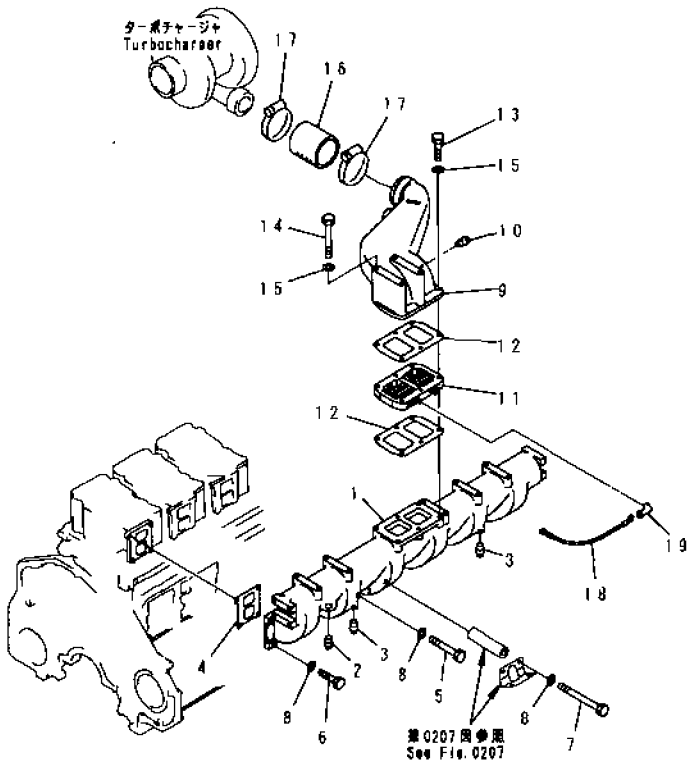


| INDEX | PART NO | DESCRIPTION | Q'TY | SERIAL NO |
|---|---|---|---|---|
| | 6151-11-4910 | INTAKE MANIFOLD A | 1 | 10001- |
| 1 | ☆ | .MANIFOLD,AIR INTAKE | 1 | 10001- |
| 2 | 07042-00415 | .PLUG | 1 | 10001- |
| 3 | 07042-00108 | .PLUG | 2 | 10001- |
| 4 | 6150-11-4810 | GASKET (K1) | 6 | 10001- |
| 5 | 01011-51010 | BOLT | 8 | 10001- |
| 6 | 01010-51030 | BOLT | 14 | 10001- |
| 7 | 01011-51000 | BOLT | 2 | 10001- |
| 8 | 01640-21016 | WASHER | 24 | 10001- |
| 9 | 6151-11-4311 | CONNECTOR,AIR | 1 | 10001- |
| 10 | 07042-00108 | PLUG | 1 | 26033- |
| | 07042-00108 | PLUG | 2 | 10001-26032 |
| 11 | 600-815-3810 | HEATER,RIBBON | 1 | 10001- |
| 12 | 6150-11-4820 | GASKET (K1) | 2 | 10001- |
| 13 | 01010-51055 | BOLT | 2 | 10001- |
| 14 | 01011-51065 | BOLT | 4 | 10001- |
| 15 | 01641-21016 | WASHER | 6 | 10001- |
| 16 | 6151-11-4410 | HOSE | 1 | 10001- |
| 17 | 07281-01029 | CLAMP | 2 | 10001- |
| 18 | 6678-81-4340 | WIRE, 170MM | 1 | 10001- |
| 19 | 08038-00519 | CAP | 1 | 10001- |

# FIG. 0132 AIR INTAKE MANIFOLD (COLD TERRAIN SPEC.)

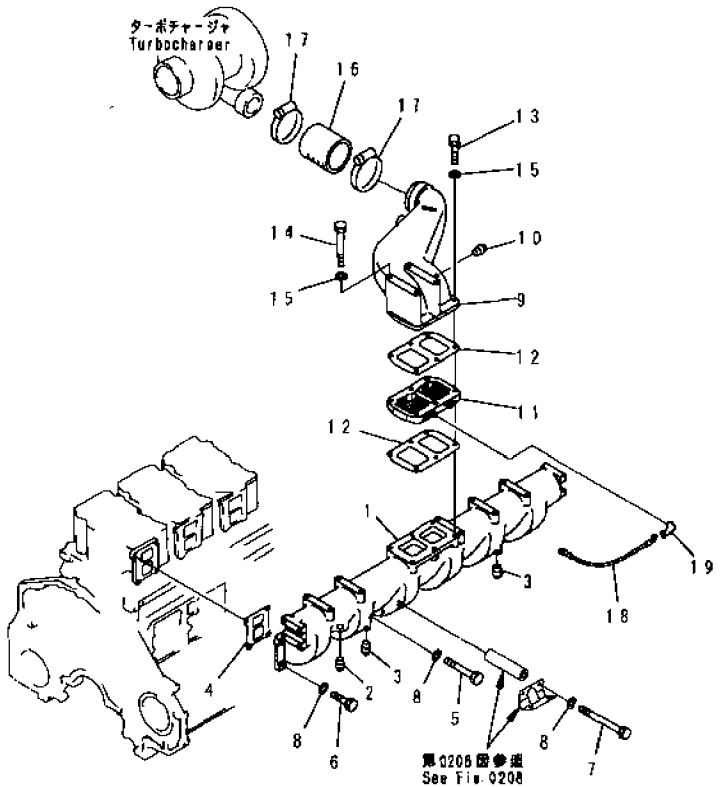


| INDEX | PART NO | DESCRIPTION | Q'TY | SERIAL NO. |
|---|---|---|---|---|
| | 6151-11-4910 | INTAKE MANIFOLD A. | 1 | 10001- |
| 1 | ☆ | . MANIFOLD, AIR INTAKE. | 1 | 10001- |
| 2 | 07042-00415 | . PLUG. | 1 | 10001- |
| 3 | 07042-00108 | . PLUG. | 2 | 10001- |
| 4 | 6150-11-4810 | GASKET. (K1) | 6 | 10001- |
| 5 | 01011-51010 | BOLT. | 8 | 10001- |
| 6 | 01010-51030 | BOLT. | 14 | 10001- |
| 7 | 01011-51000 | BOLT. | 2 | 10001- |
| 8 | 01640-21016 | WASHER. | 24 | 10001- |
| 9 | 6151-11-4311 | CONNECTOR, AIR. | 1 | 10001- |
| 10 | 07042-00108 | PLUG. | 1 | 26033- |
| | 07042-00108 | PLUG | 2 | 10001-26032 |
| 11 | 600-815-3810 | HEATER, RIBBON. | 1 | 10001- |
| 12 | 6150-11-4820 | GASKET. (K1). | 2 | 10001- |
| 13 | 01010-51055 | BOLT. | 2 | 10001- |
| 14 | 01011-51065 | BOLT. | 4 | 10001- |
| 15 | 01641-21016 | WASHER. | 6 | 10001- |
| 16 | 6151-11-4410 | HOSE. | 1 | 10001- |
| 17 | 07281-01029 | CLAMP. | 2 | 10001- |
| 18 | 6151-81-4530 | WIRE, 170MM. | 1 | 10001- |
| 19 | 08038-10519 | CAP. | 1 | 10001- |

# FIG.0141 AIR CLEANER AND CONNECTION

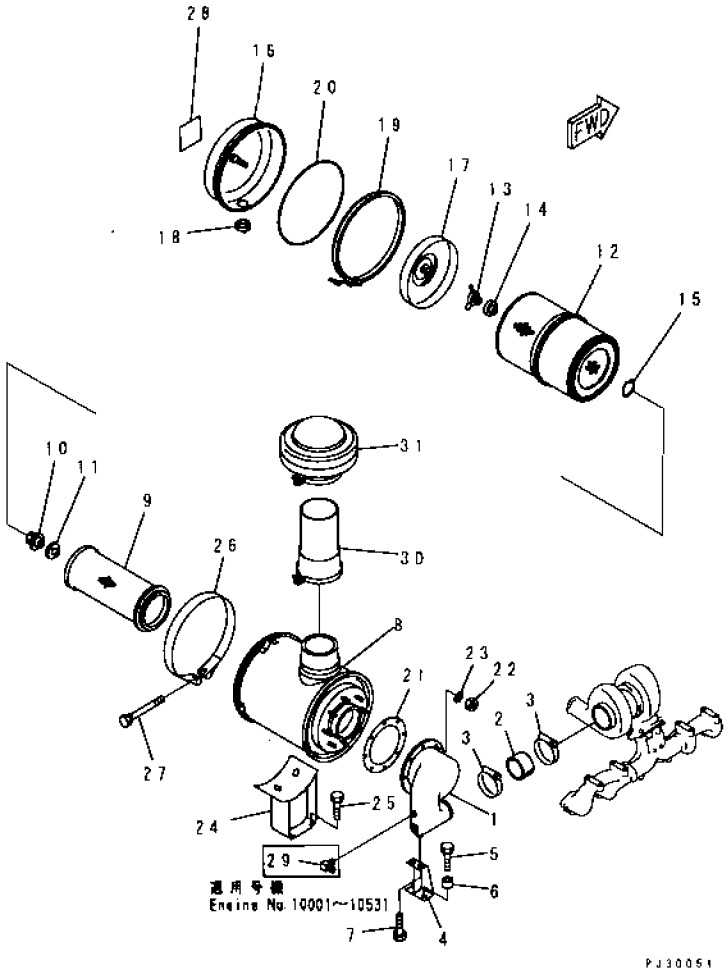


| INDEX | PART NO. | DESCRIPTION | Q'TY | SERIAL NO. |
|---|---|---|---|---|
| 1 | 6151-11-4220 | CONNECTOR | 1 | 10001- |
| 2 | 6151-11-4450 | HOSE | 1 | 10001- |
| 3 | 07281-01159 | CLAMP | 2 | 10001- |
| 4 | 6151-11-4610 | BRACKET | 1 | 10001- |
| 5 | 01010-31040 | BOLT | 2 | 10001- |
| 6 | 6631-11-5630 | SPACER | 2 | 10001- |
| 7 | 01010-51025 | BOLT | 2 | 10001- |
| | 6151-81-7800 | AIR CLEANER ASS'Y | 1 | 13382- |
| | □6711-81-7100 | AIR CLEANER ASS'Y | 1 | 10001-13381 |
| | 6151-81-7900 | AIR CLEANER ASS'Y, (COLD TERRAIN SPEC.) | 1 | 10001- |
| 8 | 6711-81-7110 | .BODY | 1 | 10001- |
| | 6125-81-7032 | .ELEMENT ASS'Y | 1 | 10001- |
| | 6162-83-7040 | .ELEMENT ASS'Y, (COLD TERRAIN SPEC.) | 1 | 10001- |
| 9 | ☆ | . ELEMENT, INNER | 1 | 10001- |
| | ☆ | . ELEMENT, INNER (COLD TERRAIN SPEC.) | 1 | 10001- |
| 10 | 600-181-9671 | . NUT, WING | 1 | 10001- |
| 11 | 600-181-7511 | WASHER, SEAL | 1 | 10001- |
| | 600-181-4470 | .WASHER, SEAL (COLD TERRAIN SPEC.) | 1 | 10001- |
| | 600-181-4300 | .ELEMENT ASS'Y, OUTER | 1 | 10001- |
| | 600-181-4600 | .ELEMENT ASS'Y<br>OUTER (COLD TERRAIN SPEC.) | 1 | 10001- |
| 12 | ☆ | . ELEMENT, OUTER | 1 | 10001- |
| | ☆ | . ELEMENT, OUTER (COLD TERRAIN SPEC.) | 1 | 10001- |
| 13 | 600-181-1990 | . NUT, WING | 1 | 10001- |
| 14 | 600-181-4591 | . WASHER, SEAL | 1 | 10001- |
| | 600-181-4480 | . WASHER, SEAL (COLD TERRAIN SPEC.) | 1 | 10001- |
| 15 | 04064-01510 | . RING, SNAP | 1 | 10001- |
| 16 | 6710-82-7121 | .CUP | 1 | 10001- |
| 17 | 6710-82-7130 | .BAFFLE | 1 | 10001- |
| 18 | 600-181-1590 | .VALVE | 1 | 10001- |
| | 600-181-4240 | VALVE, (COLD TERRAIN SPEC.) | 1 | 10001- |
| 19 | 600-181-1480 | .CLAMP | 1 | 10001- |
| 20 | 6127-81-7190 | .O-RING | 1 | 10001- |
| | 600-181-4360 | .O-RING, (COLD TERRAIN SPEC.) | 1 | 10001- |
| 21 | 6127-81-4821 | GASKET (K1) | 1 | 10001- |
| 22 | 01580-11008 | NUT | 8 | 10001- |
| 23 | 01640-21016 | WASHER | 8 | 10001- |
| 24 | 6151-11-4520 | BRACKET | 1 | 10001- |
| 25 | 01010-51030 | BOLT | 4 | 10001- |
| 26 | 6691-13-4610 | BAND ASS'Y | 1 | 10001- |
| | 6691-21-6550 | .PIN | 1 | 10001- |
| | 6691-21-6560 | PIN, WITH THREAD | 1 | 10001- |

# FIG. 0141 AIR CLEANER AND CONNECTION

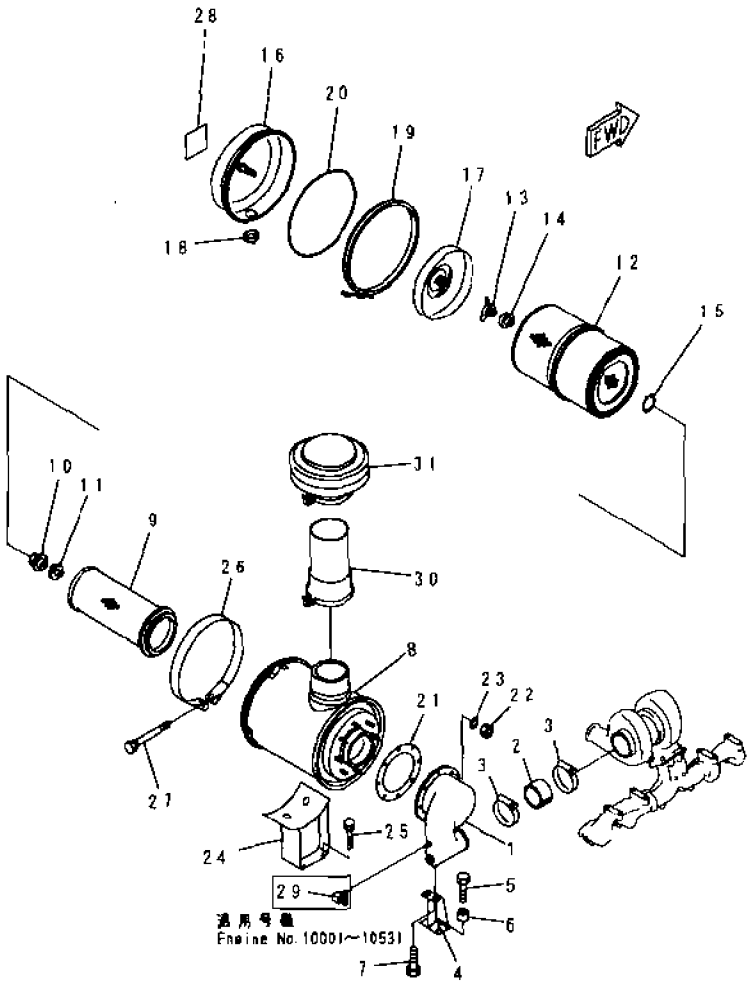


| INDEX | PART NO | DESCRIPTION | Q'TY | SERIAL NO |
|---|---|---|---|---|
| 27 | 6643-11-4641 | BOLT | 1 | 10001- |
| 28 | 09637-00161 | PLATE, INSTRUCTION, (ENGLISH-JAPANESE) | 1 | 10001- |
| | 09637-90261 | PLATE, INSTRUCTION, (CHINESE) | 1 | 10001- |
| | 09637-04161 | PLATE, INSTRUCTION, (PERSIAN) | 1 | 10001- |
| | 09637-40162 | PLATE, INSTRUCTION, (RUSSIAN) | 1 | 10001- |
| 29 | 08671-50721 | ELBOW | 1 | 10001-10531 |
| 30 | 6711-81-7910 | CONNECTOR | 1 | 10001- |
| 31 | 600-181-1511 | CAP | 1 | 10001- |
| 32 | 08670-02001 | INDICATOR, DUST (NOT SHOWN) | 1 | - |

# FIG. 0151 EXHAUST MANIFOLD AND TURBOCHARGER

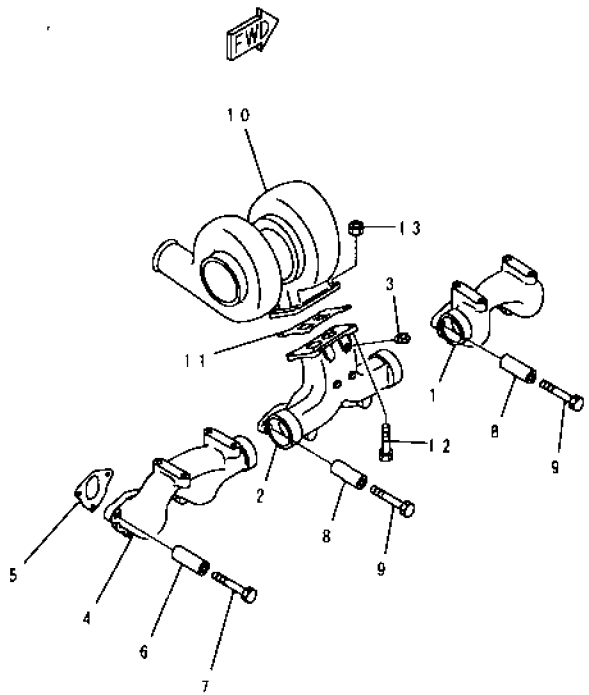


| INDEX | PART NO. | DESCRIPTION | Q'TY | SERIAL NO |
|---|---|---|---|---|
| 1 | 6151-11-5110 | MANIFOLD, EXHAUST, FRONT | 1 | 10001- |
| 2 | 6151-11-5140 | MANIFOLD, EXHAUST, CENTER | 1 | 46357- |
| | ◆6151-11-5150 | MANIFOLD, EXHAUST, CENTER | 1 | 10001-46356 |
| 3 | 07042-00108 | PLUG | 1 | 14876- |
| | 07042-00108 | PLUG | 2 | 10001-14875 |
| 4 | 6151-11-5130 | MANIFOLD, EXHAUST, REAR | 1 | 10001- |
| 5 | 6150-11-5810 | GASKET (K1) | 6 | 10001- |
| 6 | 6136-11-5120 | SPACER | 16 | 10001- |
| 7 | 01011-31000 | BOLT | 16 | 10001- |
| 8 | 6134-11-5120 | SPACER | 2 | 10532- |
| | 6136-11-5120 | SPACER | 2 | 10001-10531 |
| 9 | 01010-31080 | BOLT | 2 | 10532- |
| | 01011-31000 | BOLT | 2 | 10001-10531 |
| 10 | (6152-81-8310) | TURBOCHARGER A., (SEE FIG. 0155A) | 1 | 23599- |
| | (6152-81-8300) | TURBOCHARGER A., (SEE FIG. 0155) | 1 | 10001-23598 |
| 11 | 6151-11-5710 | GASKET (K1) | 1 | 10001- |
| 12 | 01050-61045 | BOLT | 4 | 10001- |
| 13 | 6114-11-5590 | NUT | 4 | 10001- |

# FIG. 0155A TURBOCHARGER (#23599-)

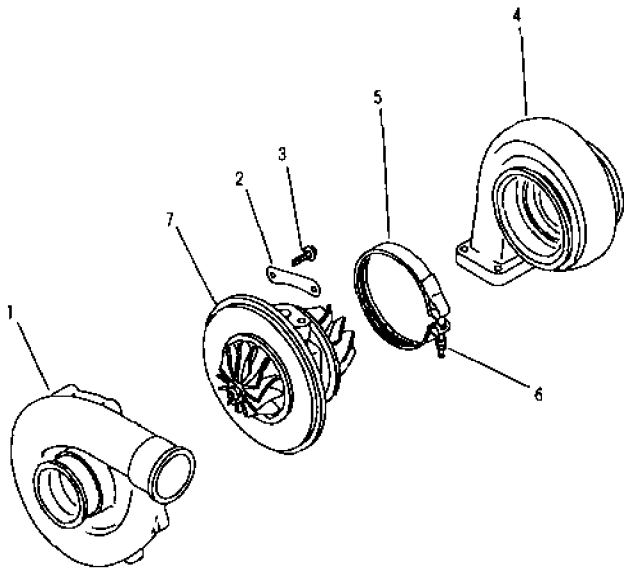


PE3T015

| INDEX | PART NO | DESCRIPTION | Q'TY | SERIAL NO. |
|---|---|---|---|---|
| | 6152-81-8310 | TURBOCHARGER A., (TA4532) | 1 | 23599- |
| 1 | GA443209-0028 | .HOUSING, COMPRESSOR | 1 | 23599- |
| 2 | GA410987-0000 | .CLAMP | 4 | 23599- |
| 3 | GA400627-0810 | .BOLT | 8 | 23599- |
| 4 | GA442262-0004 | .HOUSING, TURBINE | 1 | 23599- |
| | GA400738-5460 | .V-BAND ASS'Y | 1 | 23599- |
| 5 | GA400738-0460 | ..V-BAND | 1 | 23599- |
| 6 | GA400580-0000 | ..NUT, LOCK | 1 | 23599- |
| 7 | GA441398-5052 | CENTER HOUSING A. | 1 | 23599- |

# FIG. 0161 MUFFLER

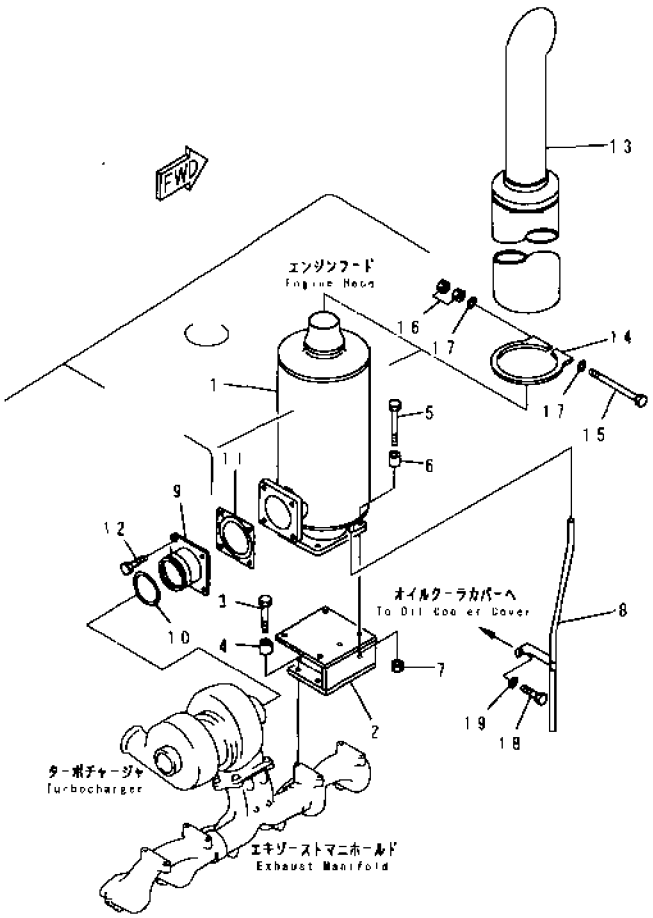


| INDEX | PART NO | DESCRIPTION | Q'TY | SERIAL NO. |
|---|---|---|---|---|
| 1 | 6151-11-5510 | MUFFLER | 1 | 10001- |
| 2 | 6151-11-5610 | BRACKET | 1 | 10001- |
| 3 | 01010-31040 | BOLT | 4 | 10001- |
| 4 | 6631-11-5630 | SPACER | 4 | 10001- |
| 5 | 01010-31055 | BOLT | 4 | 10001- |
| 6 | 6631-11-5630 | SPACER | 4 | 10001- |
| 7 | 01580-01008 | NUT | 4 | 10001- |
| 8 | 6151-11-5810 | TUBE | 1 | 10001- |
| 9 | 6151-11-5380 | JOINT | 1 | 10001- |
| 10 | 6151-11-5280 | RING | 1 | 10001- |
| 11 | 6150-11-5750 | GASKET (K1) | 1 | 10423- |
| | □6643-11-5750 | GASKET (K1) | 1 | 10001-10422 |
| 12 | 01010-31230 | BOLT | 4 | 10001- |
| 13 | 6678-12-5730 | PIPE, EXHAUST | 1 | 10001- |
| 14 | 6693-12-5540 | CLAMP | 1 | 10001- |
| 15 | 6693-12-5550 | BOLT | 1 | 10001- |
| 16 | 01582-21411 | NUT | 2 | 10001- |
| 17 | 01641-21423 | WASHER | 2 | 10001- |
| 18 | 01010-51030 | BOLT | 1 | 10001- |
| 19 | 01640-21016 | WASHER | 1 | 10001- |

# FIG.0171 WATER MANIFOLD AND THERMOSTAT

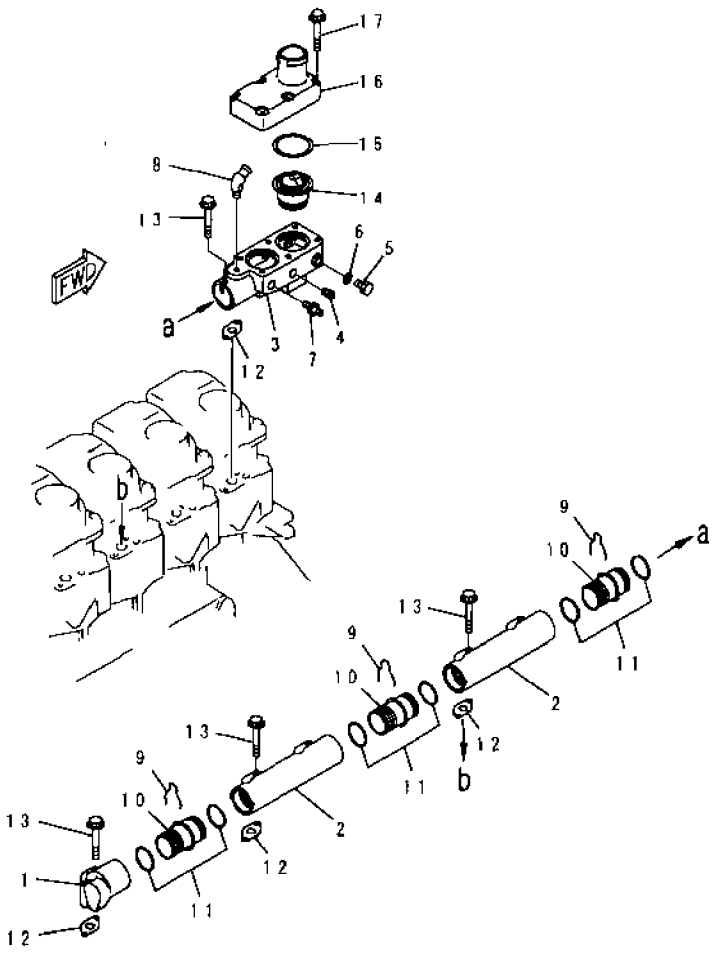


| INDEX | PART NO | DESCRIPTION | Q'TY | SERIAL NO. |
|---|---|---|---|---|
| 1 | 6150-11-6120 | MANIFOLD,WATER | 1 | 10001- |
| 2 | 6150-11-6111 | MANIFOLD,WATER | 2 | 10001- |
| 3 | 6150-11-6410 | HOUSING | 1 | 10001- |
| 4 | 07042-00415 | PLUG | 1 | 10001- |
| 5 | 6672-12-6290 | PLUG | 1 | 10001- |
| 6 | 07005-01612 | GASKET (K1) | 1 | 10001- |
| 7 | (07214-50510) | CONNECTOR | 1 | 10001- |
| 8 | 6136-61-8640 | NIPPLE | 1 | 10001- |
| 9 | 6150-11-6280 | SPRING | 3 | 10001- |
| 10 | 6150-11-6210 | TUBE | 3 | 10001- |
| 11 | 02893-05043 | O-RING (K1) | 6 | 13377- |
| | 02893-05043 | O-RING (K1) | 10 | 10001-13376 |
| 12 | 6150-11-6310 | GASKET (K1) | 6 | 10001- |
| 13 | 6150-81-9190 | BOLT | 12 | 10001- |
| 14 | 600-421-6310 | THERMOSTAT | 2 | 10001- |
| | 600-421-6320 | THERMOSTAT (COLD TERRAIN SPEC.) | 2 | 10001- |
| 15 | 6138-11-6810 | GASKET (K1) | 2 | 10001- |
| | 6136-11-6880 | GASKET (COLD TERRAIN SPEC.) (K1) | 2 | 10001- |
| 16 | 6150-11-6510 | COVER | 1 | 10001- |
| 17 | 6150-81-9180 | BOLT | 6 | 10001- |

# CYLINDER BLOCK

# FIG. 0201 CYLINDER BLOCK

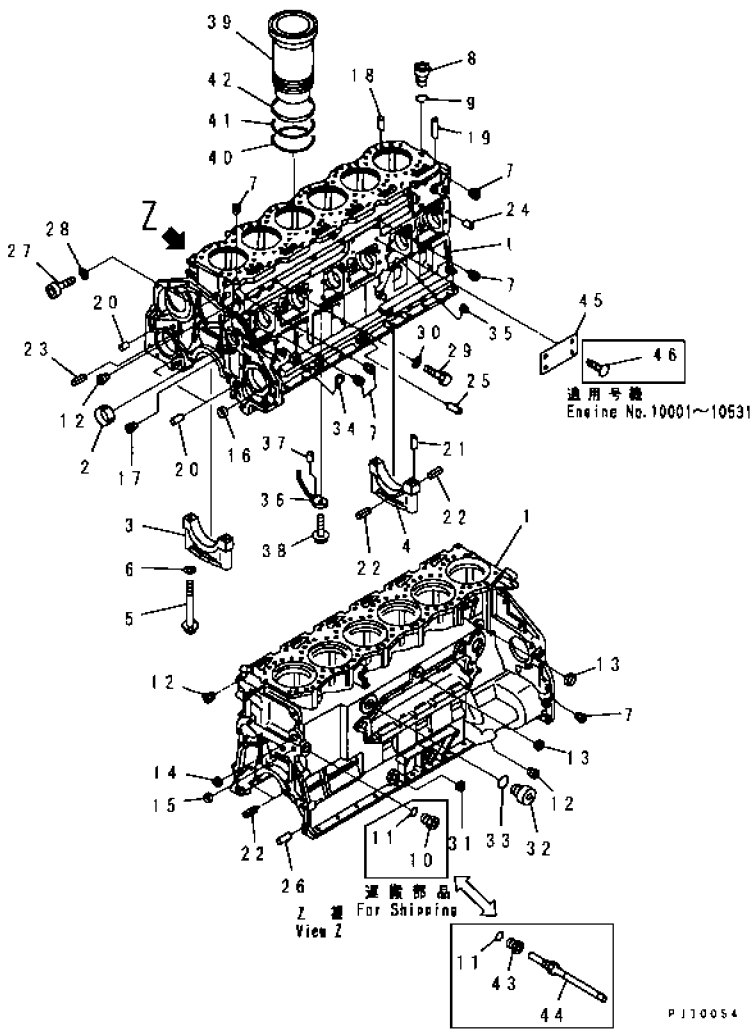


FIG NO. : 0201

| INDEX | PART NO | DESCRIPTION | Q'TY | SERIAL NO |
|---|---|---|---|---|
| | 6151-25-1301 | CYLINDER BLOCK ASS'Y. | 1 | 44925- |
| | 6151-21-1103 | CYLINDER BLOCK ASS'Y. | 1 | 31172-44924 |
| | ■6151-21-1102 | CYLINDER BLOCK ASS'Y. | 1 | 13379-31171 |
| | | (6151-21-1103, 6150-21-2411, | | |
| | | 6150-21-2421, 6150-21-2431) | | |
| | 6151-21-1101 | CYLINDER BLOCK ASS'Y. | 1 | 10001-13378 |
| 1 | ☆ | .BLOCK, CYLINDER | 1 | 44925- |
| | ☆ | .BLOCK, CYLINDER | 1 | |
| | ☆ | .BLOCK, CYLINDER | 1 | |
| | ☆ | BLOCK, CYLINDER | 1 | 10001-13378 |
| 2 | 6150-21-1490 | BUSHING, CAMSHAFT | 7 | 10001- |
| 3 | 6150-21-1210 | .CAP, MAIN METAL, NO 1, 2, 3, 4, 5, 6 | 6 | 10001- |
| 4 | 6150-21-1250 | CAP, MAIN METAL, NO 7 | 1 | 10001- |
| 5 | 6150-21-1710 | BOLT | 14 | 10001- |
| 6 | 01643-31645 | .WASHER | 14 | 10001- |
| 7 | 07043-00108 | PLUG | 7 | 10001- |
| 8 | 07040-12414 | .PLUG | 1 | 10001- |
| 9 | 07002-22434 | .O-RING (K2) | 1 | 10001- |
| 10 | 07040-13016 | .PLUG | 1 | 10001- |
| 11 | 07002-23034 | .O-RING (K2) | 1 | 10001- |
| 12 | 07043-00617 | .PLUG | 3 | 10001- |
| 13 | 07046-43016 | .PLUG | 2 | 10001- |
| 14 | 07046-44016 | .PLUG | 1 | 10001- |
| 15 | 07046-22516 | .PLUG | 1 | 10001- |
| 16 | 07046-21210 | .PLUG | 4 | 10001- |
| 17 | 07043-00211 | .PLUG | 4 | 10001- |
| 18 | 04020-00820 | .PIN, DOWEL | 12 | 10001- |
| 19 | 6150-21-1170 | .TUBE | 1 | 10001- |
| 20 | 6150-41-2430 | .PIN | 3 | 10001- |
| 21 | 04020-00514 | .PIN, DOWEL | 2 | 10001- |
| 22 | 04025-00408 | .PIN, SPRING | 6 | 10001- |
| 23 | 04025-00512 | .PIN, SPRING | 1 | 10001- |
| 24 | 6150-41-2430 | PIN | 12 | 10001- |
| 25 | 04020-01024 | .PIN, DOWEL | 2 | 10001- |
| 26 | 6150-21-4770 | .PIN, DOWEL | 2 | 10001- |
| 27 | 6110-53-5910 | .PLUG | 1 | 10001- |
| 28 | 07005-01412 | GASKET (K2) | 1 | 10001- |
| 29 | 01050-51012 | .BOLT | 2 | 10001- |
| 30 | 07005-01012 | .GASKET (K2) | 2 | 29383- |
| | 07005-01012 | .GASKET | 2 | 10001-29382 |
| 31 | 07046-42816 | PLUG | 1 | 10001- |
| 32 | 6150-21-1180 | PLUG | 2 | 10001- |

FIG NO. : 0201

| INDEX | PART NO | DESCRIPTION | Q'TY | SERIAL NO |
|---|---|---|---|---|
| 33 | 6150-21-1190 | O-RING (K2) | 2 | 10001- |
| 34 | 6150-21-5910 | BUSHING | 1 | 10001- |
| 35 | 07046-22010 | PLUG | 1 | 10001- |
| | 6151-21-1700 | NOZZLE ASS'Y | 6 | 23599- |
| | 6151-21-1800 | NOZZLE ASS'Y | 6 | 10001-23598 |
| 36 | 6151-21-1740 | .NOZZLE, PISTON COOLING | 1 | 23599- |
| | 6151-21-1840 | .NOZZLE, PISTON COOLING | 1 | 10001-23598 |
| 37 | 6151-21-1851 | .PIN | 1 | 10001- |
| 38 | 6150-81-9230 | BOLT | 6 | 10001- |
| 39 | 6151-21-2220 | LINER, CYLINDER | 6 | 10001- |
| 40 | 6150-21-2230 | O-RING, LOWER (K2) | 6 | 10001- |
| 41 | 6150-21-2240 | O-RING, UPPER (K2) | 6 | 10001- |
| 42 | 6150-21-2250 | SEAL, CREVICE (K2) | 6 | 10001- |
| 43 | 6150-81-5510 | PLUG | 1 | 10001- |
| 44 | 281-06-13913 | SENSOR, OIL | 1 | 10001- |
| 45 | ☆ | PLATE, NAME, (LIMITED SUPPLY) | 1 | 10001- |
| | 6150-81-2210 | PLATE, NAME, (COLD TERRAIN SPEC.) | 1 | 10001- |
| 46 | 04418-02550 | SCREW | 4 | 10001-10531 |

# FIG.0207 CYLINDER BLOCK COVER

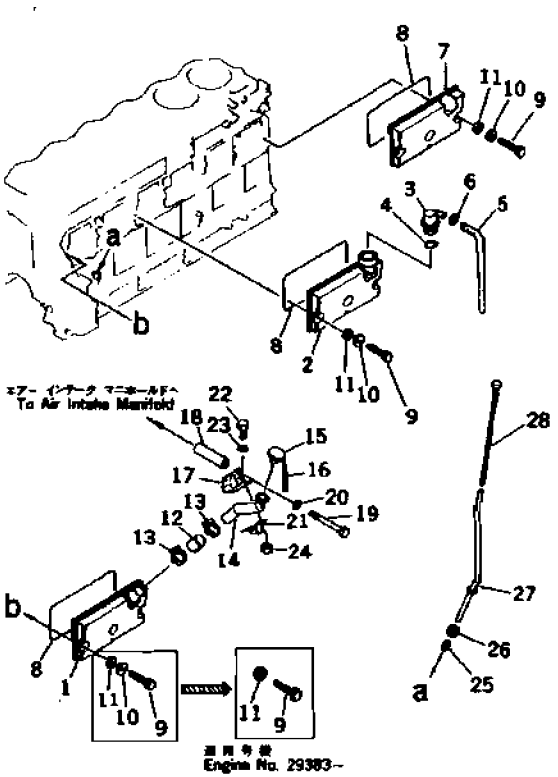


| INDEX | PART NO. | DESCRIPTION | Q'TY | SERIAL NO. |
|---|---|---|---|---|
| 1 | 6150-21-6500 | COVER ASS'Y | 1 | 10001- |
| 2 | 6150-21-6601 | COVER ASS'Y | 1 | 10001- |
| 3 | 6150-21-6710 | BREATHER | 1 | 10001- |
| 4 | 6114-21-5190 | O-RING (K2) | 1 | 10001- |
| 5 | 07286-01963 | HOSE | 1 | 10001- |
| 6 | 07285-00220 | CLIP | 1 | 10001- |
| 7 | 6150-21-6310 | COVER | 1 | 10001- |
| 8 | 6150-21-6450 | GASKET (K2) | 3 | 38811- |
| | □6150-21-6460 | O-RING (K2) | 3 | 10001-38810 |
| 9 | 6210-21-6471 | BOLT | 9 | 29383- |
| | ■6150-21-6470 | BOLT (6210-21-6471, 6150-21-6390) | 9 | 10001-29382 |
| 10 | 6136-11-8130 | WASHER | 9 | 10001-29382 |
| 11 | 6150-21-6390 | PACKING (K2) | 9 | 29383- |
| | ◆6136-11-8142 | PACKING (K2) | 9 | 10001-29382 |
| 12 | 6150-21-6530 | HOSE | 1 | 10001- |
| 13 | 07281-00609 | CLAMP | 2 | 10001- |
| 14 | 6150-21-6560 | FILLER, OIL | 1 | 10001- |
| 15 | 6136-21-7120 | CAP ASS'Y | 1 | 10001- |
| 16 | 6136-21-7190 | CHAIN | 1 | 10001- |
| 17 | 6150-21-6540 | BRACKET | 1 | 10001- |
| 18 | 6136-11-5120 | SPACER | 2 | 10001- |
| 19 | (01011-51000) | BOLT | 2 | 10001- |
| 20 | (01640-21016) | WASHER | 2 | 10001- |
| 21 | 6150-21-6570 | CLAMP | 1 | 26023- |
| | □07282-04311 | CLAMP | 1 | 10001-26022 |
| 22 | 01010-51025 | BOLT | 2 | 10001- |
| 23 | 01640-21016 | WASHER | 2 | 10001- |
| 24 | 01580-11008 | NUT | 2 | 10001- |
| 25 | 6150-21-5920 | COLLAR | 1 | 10001- |
| 26 | 6150-21-5930 | NUT | 1 | 10001- |
| 27 | 6150-21-5440 | GUIDE | 1 | 10001- |
| 28 | 6150-21-5360 | GAUGE, LEVEL | 1 | 10001- |

# FIG.0208 CYLINDER BLOCK COVER (COLD TERRAIN SPEC.)

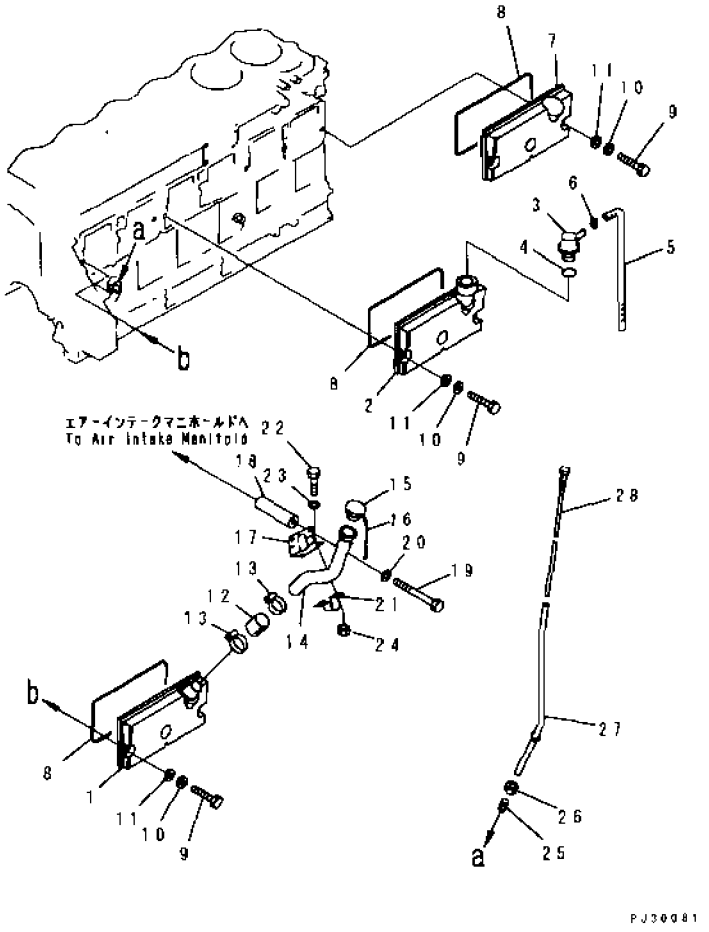


| INDEX | PART NO. | DESCRIPTION | Q'TY | SERIAL NO |
|---|---|---|---|---|
| 1 | 6150-21-6500 | COVER ASS'Y | 1 | 10001- |
| 2 | 6150-21-6601 | COVER ASS'Y | 1 | 10001- |
| 3 | 6150-21-6710 | BREATHER | 1 | 10001- |
| 4 | 6114-21-5190 | O-RING (K2) | 1 | 10001- |
| 5 | 07286-01963 | HOSE | 1 | 10001- |
| 6 | 07285-00220 | CLIP | 1 | 10001- |
| 7 | 6150-21-6310 | COVER | 1 | 10001- |
| 8 | 6150-21-6450 | GASKET (K2) | 3 | 41583- |
| | □6150-21-6460 | O-RING (K2) | 3 | 10001-41582 |
| 9 | 6150-21-6470 | BOLT | 9 | 10001- |
| 10 | 6136-11-8130 | WASHER | 9 | 10001- |
| 11 | 6136-11-8180 | PACKING (K2) | 9 | 10001- |
| 12 | 6150-21-6530 | HOSE | 1 | 10001- |
| 13 | 07281-00609 | CLAMP | 2 | 10001- |
| 14 | 6150-21-6560 | FILLER,OIL | 1 | 10001- |
| 15 | 6136-21-7380 | CAP ASS'Y | 1 | 10001- |
| 16 | 6136-21-7190 | CHAIN | 1 | 10001- |
| 17 | 6150-21-6540 | BRACKET | 1 | 10001- |
| 18 | 6136-11-5120 | SPACER | 2 | 10001- |
| 19 | (01011-51000) | BOLT | 2 | 10001- |
| 20 | (01640-21016) | WASHER | 2 | 10001- |
| 21 | 6150-21-6570 | CLAMP | 1 | 26023- |
| | □07282-04311 | CLAMP | 1 | 10001-26022 |
| 22 | 01010-51025 | BOLT | 2 | 10001- |
| 23 | 01640-21016 | WASHER | 2 | 10001- |
| 24 | 01580-11008 | NUT | 2 | 10001- |
| 25 | 6150-21-5920 | COLLAR | 1 | 10001- |
| 26 | 6150-21-5930 | NUT | 1 | 10001- |
| 27 | 6150-21-5440 | GUIDE | 1 | 10001- |
| 28 | 6150-21-5360 | GAUGE,LEVEL | 1 | 10001- |

# FIG. 0211 FRONT COVER AND GEAR

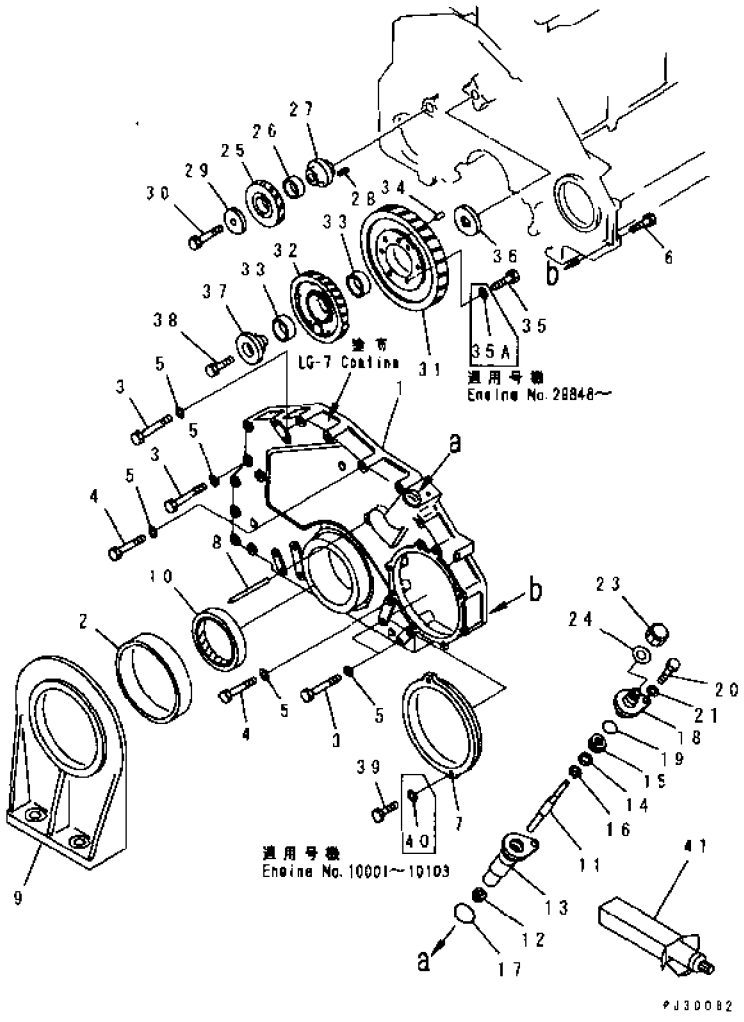


| INDEX | PART NO. | DESCRIPTION | Q'TY | SERIAL NO. |
|---|---|---|---|---|
| | 6150-21-3300 | COVER ASS'Y | 1 | 44923- |
| | ◆6150-21-3101 | COVER ASS'Y | 1 | 10104-44922 |
| | □6150-21-3100 | COVER ASS'Y | 1 | 10001-10103 |
| 1 | ☆ | .COVER, FRONT | 1 | 44923- |
| | ☆ | .COVER, FRONT | 1 | 10104-44922 |
| | ☆ | .COVER, FRONT | 1 | 10001-10103 |
| 2 | ☆ | .BUSHING | 1 | 10104- |
| | ☆ | .BUSHING | 1 | 10001-10103 |
| 3 | 01010-51070 | BOLT | 11 | 10001- |
| | 01010-51070 | BOLT, (COLD TERRAIN SPEC.) | 12 | 10001- |
| 4 | 01010-51075 | BOLT | 6 | 10001- |
| 5 | 01640-21016 | WASHER | 17 | 10001- |
| | 01640-21016 | WASHER, (COLD TERRAIN SPEC.) | 18 | 10001- |
| 6 | 6150-81-9130 | BOLT | 4 | 10001- |
| 7 | 6150-21-3510 | COVER | 1 | 10001- |
| 8 | 6150-21-3450 | POINTER | 1 | 10532- |
| | 6150-21-3380 | POINTER | 1 | 10001-10531 |
| 9 | 6150-21-3620 | SUPPORT, FRONT | 1 | 10001- |
| 10 | 6150-21-3230 | SEAL, FRONT (K2) | 1 | 10001- |
| | 6150-81-5100 | DRIVE ASS'Y, TACHOMETER | 1 | 10001- |
| 11 | 6150-81-5120 | .SHAFT | 1 | 10001- |
| 12 | 6110-73-3220 | .GEAR | 1 | 10001- |
| 13 | 6150-81-5110 | .BUSHING | 1 | 10001- |
| 14 | 6150-71-1910 | .SEAL (K2) | 1 | 18598- |
| | □6610-71-1911 | .SEAL (K2) | 1 | 10001-18597 |
| 15 | 6162-73-1960 | .WASHER, FELT (K2) | 1 | 20660- |
| | □6610-71-1960 | .WASHER, FELT (K2) | 1 | 10001-20659 |
| 16 | 6162-73-1970 | SPACER | 1 | 13382- |
| | □6610-71-1970 | .SPACER | 1 | 10001-13381 |
| 17 | 07000-03030 | O-RING (K2) | 1 | 10001- |
| 18 | 6150-81-5140 | HOUSING | 1 | 10001- |
| 19 | 07000-02020 | O-RING (K2) | 1 | 10001- |
| 20 | 01014-51030 | BOLT | 1 | 10001- |
| 21 | 01640-21016 | WASHER | 1 | 10001- |
| 23 | 6136-81-5291 | CAP | 1 | 10001- |
| 24 | 6130-82-5270 | GASKET (K2) | 1 | 10001- |
| 25 | 6150-31-6110 | GEAR | 1 | 10001- |
| 26 | 6150-31-6120 | BUSHING | 1 | 10001- |
| 27 | 6150-21-2510 | SHAFT | 1 | 10001- |
| 28 | 04025-00512 | PIN | 1 | 10001- |
| 29 | 6150-21-2520 | PLATE | 1 | 10001- |
| 30 | 01010-31460 | BOLT | 1 | 10001- |

FIG NO. : 0211

| INDEX | PART NO. | DESCRIPTION | Q'TY | SERIAL NO. |
|---|---|---|---|---|
| 31 | 6150-31-6311 | GEAR | 1 | 43964- |
| | ■6150-31-6310 | GEAR | 1 | 10001-43963 |
| | | (6150-31-6311, 6150-31-6201, 01010-31030(6), 01643-51032(6)) | | |
| | 6150-31-6201 | GEAR ASS'Y | 1 | 43964- |
| | 6150-31-6200 | GEAR ASS'Y | 1 | 10001-43963 |
| 32 | ☆ | .GEAR | 1 | 43964- |
| | ☆ | .GEAR | 1 | 10001-43963 |
| 33 | 6150-31-6220 | .BUSHING | 2 | 10001- |
| 34 | 6127-21-1260 | PIN | 1 | 10001- |
| 35 | 01010-31030 | BOLT | 6 | 43964- |
| | 01010-30825 | BOLT | 6 | 10001-43963 |
| 35A | 01643-51032 | WASHER | 6 | 43964- |
| | 01643-50823 | WASHER | 6 | 29848-43963 |
| 36 | 6150-21-2421 | PLATE | 1 | 31172- |
| | 6150-21-2420 | PLATE | 1 | 10001-31171 |
| 37 | 6150-21-2411 | SHAFT | 1 | 31172- |
| | 6150-21-2410 | SHAFT | 1 | 10001-31171 |
| 38 | 6150-21-2431 | BOLT | 1 | 31172- |
| | 6150-21-2430 | BOLT | 1 | 10001-31171 |
| 39 | 01010-51020 | BOLT | 2 | 10001- |
| 40 | 01640-21016 | WASHER | 2 | 10001-10103 |
| 41 | 09920-00150 | LIQUID GASKET, LG-7, 150G | AR | 10001- |

# FIG.0221 OIL PAN

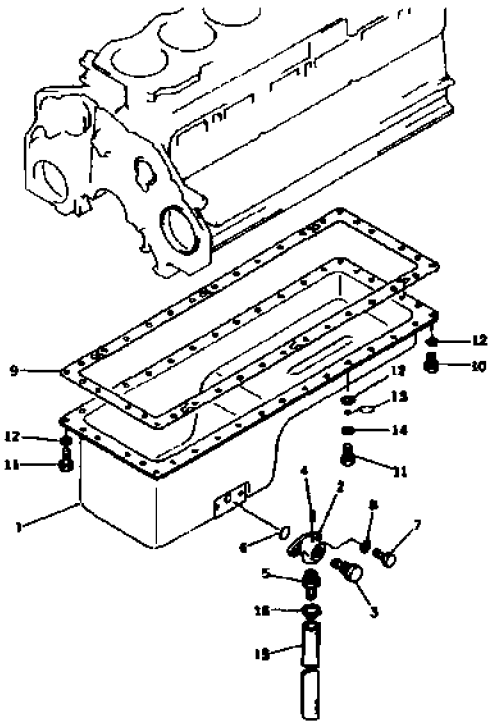


| INDEX | PART NO | DESCRIPTION | Q'TY | SERIAL NO |
|---|---|---|---|---|
| 1 | 6150-21-5120 | PAN, OIL | 1 | 10001- |
| | 6631-24-5600 | VALVE ASS'Y | 1 | 10001- |
| 2 | ☆ | BODY | 1 | 10001- |
| 3 | ☆ | VALVE | 1 | 10001- |
| 4 | 04020-00514 | PIN, DOWEL | 1 | 10001- |
| 5 | 6631-24-5610 | NIPPLE | 1 | 10001- |
| 6 | 07000-63028 | O-RING (K2) | 1 | 10001- |
| 7 | 01010-51025 | BOLT | 2 | 10001- |
| 8 | 01640-21016 | WASHER | 2 | 10001- |
| 9 | 6150-21-5811 | GASKET (K2) | 1 | 21445- |
| | □6150-21-5810 | GASKET (K2) | 1 | 10001-21444 |
| 10 | 01010-51025 | BOLT | 29 | 10001- |
| 11 | 01010-51030 | BOLT | 7 | 10001- |
| 12 | 01640-21016 | WASHER | 36 | 10001- |
| 13 | 6130-22-5290 | CLIP | 1 | 10001- |
| 14 | 01643-31032 | WASHER | 1 | 10001- |
| 15 | 07260-22032 | HOSE | 1 | 10001- |
| 16 | 07281-00419 | CLAMP | 1 | 10001- |

# FIG.0222 OIL PAN (COLD TERRAIN SPEC.)

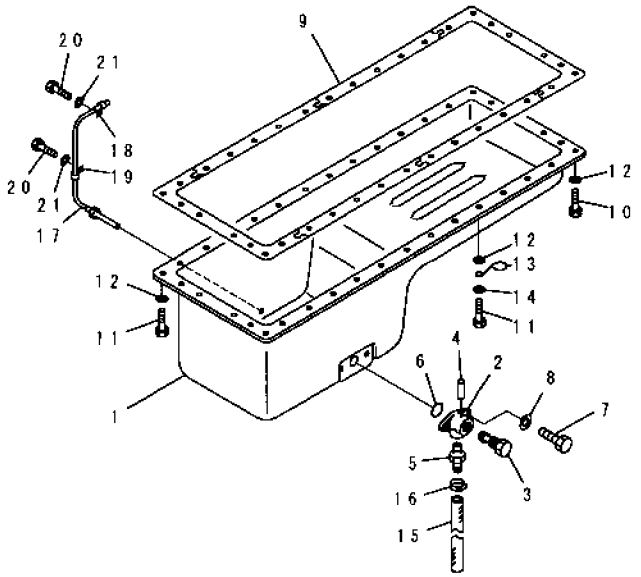


| INDEX | PART NO. | DESCRIPTION | Q'TY | SERIAL NO. |
|---|---|---|---|---|
| 1 | 6150-21-5260 | PAN, OIL | 1 | 10001- |
| | 6631-24-5600 | VALVE ASS'Y | 1 | 10001- |
| 2 | ☆ | .BODY | 1 | 10001- |
| 3 | ☆ | .VALVE | 1 | 10001- |
| 4 | 04020-00514 | .PIN, DOWEL | 1 | 10001- |
| 5 | 6631-24-5610 | .NIPPLE | 1 | 10001- |
| 6 | 07000-63028 | O-RING (K2) | 1 | 10001- |
| 7 | 01010-51025 | BOLT | 2 | 10001- |
| 8 | 01640-21016 | WASHER | 2 | 10001- |
| 9 | 6150-21-5811 | GASKET (K2) | 1 | 21445- |
| | □6150-21-5810 | GASKET (K2) | 1 | 10001-21444 |
| 10 | 01010-51025 | BOLT | 29 | 10001- |
| 11 | 01010-51030 | BOLT | 7 | 10001- |
| 12 | 01640-21016 | WASHER | 36 | 10001- |
| 13 | 6130-22-5290 | CLIP | 1 | 10001- |
| 14 | 01643-31032 | WASHER | 1 | 10001- |
| 15 | 07260-22032 | HOSE | 1 | 10001- |
| 16 | 07281-00419 | CLAMP | 1 | 10001- |
| 17 | 600-815-6330 | HEATER | 1 | 10001- |
| 18 | 600-050-2620 | CLIP | 1 | 10001- |
| 19 | 08036-21814 | CLIP | 1 | 10001- |
| 20 | 01010-51016 | BOLT | 2 | 10001- |
| 21 | 01640-21016 | WASHER | 2 | 10001- |

# FIG.0231 FLYWHEEL AND FLYWHEEL HOUSING

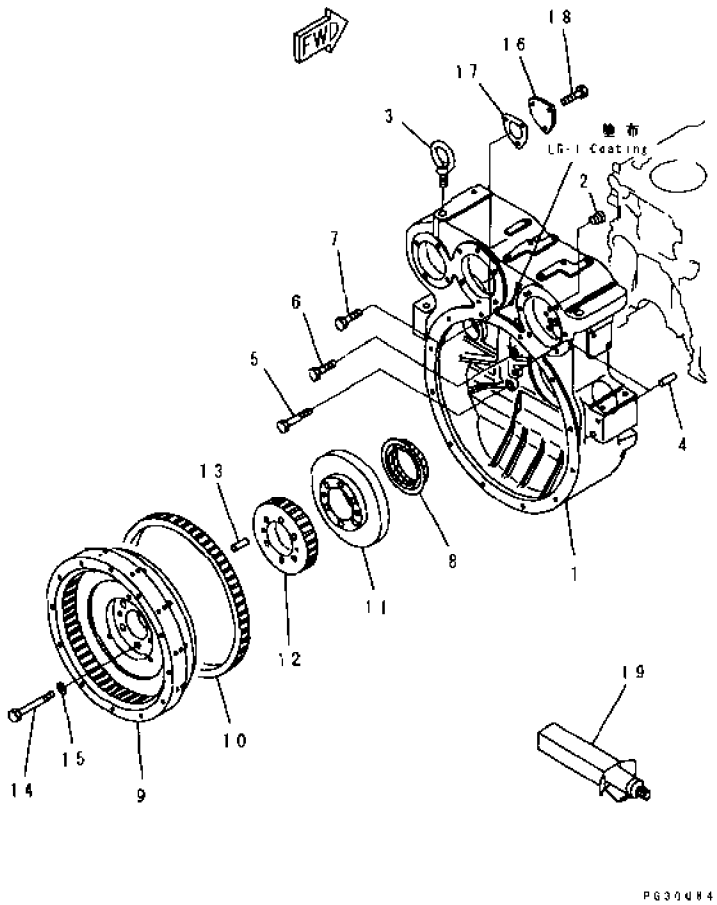


| INDEX | PART NO | DESCRIPTION | Q'TY | SERIAL NO |
|---|---|---|---|---|
| 1 | 6150-21-4441 | HOUSING,FLYWHEEL | 1 | 30696- |
| | □6150-21-4440 | HOUSING,FLYWHEEL | 1 | 10001-30695 |
| 2 | 07043-00108 | PLUG | 1 | 10001- |
| 3 | 04530-02438 | BOLT,EYE | 2 | 10001- |
| 4 | (6150-21-4770) | PIN,DOWEL | 2 | 14545- |
| | □6610-21-4570 | PIN,DOWEL | 2 | 10001-14544 |
| 5 | 01010-31670 | BOLT | 2 | 10001- |
| 6 | 01010-31650 | BOLT | 6 | 10001- |
| 7 | 01010-31040 | BOLT | 2 | 10001- |
| 8 | 6150-21-4243 | SEAL, REAR (K2) | 1 | 22025- |
| | □6150-21-4250 | SEAL, REAR (K2) | 1 | 18599-22024 |
| | □6150-21-4242 | SEAL, REAR (K2) | 1 | 10001-18598 |
| | 6150-29-4243 | SEAL, REAR, (SERVICE PARTS) | 1 | 10001- |
| | 6151-31-1241 | FLYWHEEL ASS'Y | 1 | 22025- |
| | □6151-31-1240 | FLYWHEEL ASS'Y | 1 | 10001-22024 |
| 9 | ☆ | .FLYWHEEL | 1 | 10001- |
| 10 | 6150-31-1341 | .GEAR | 1 | 22025- |
| | □6150-31-1340 | .GEAR | 1 | 10001-22024 |
| 11 | 6150-31-1710 | SPACER | 1 | 10001- |
| 12 | 6631-31-1370 | GEAR | 1 | 10001- |
| 13 | 6150-31-1360 | PIN | 2 | 10532- |
| | □6670-31-1330 | PIN | 2 | 10001-10531 |
| 14 | 01051-31625 | BOLT | 6 | 10001- |
| 15 | 01643-31645 | WASHER | 6 | 10001- |
| 16 | 6150-21-4730 | PLATE | 1 | 10001- |
| 17 | 6150-21-4740 | GASKET (K2) | 1 | 10001- |
| 18 | 01010-51020 | BOLT | 3 | 10001- |
| 19 | (09920-00150) | LIQUID GASKET,LG-7, 150G | AR | 10001- |

# FIG.0241 POWER TAKE OFF (1/2)

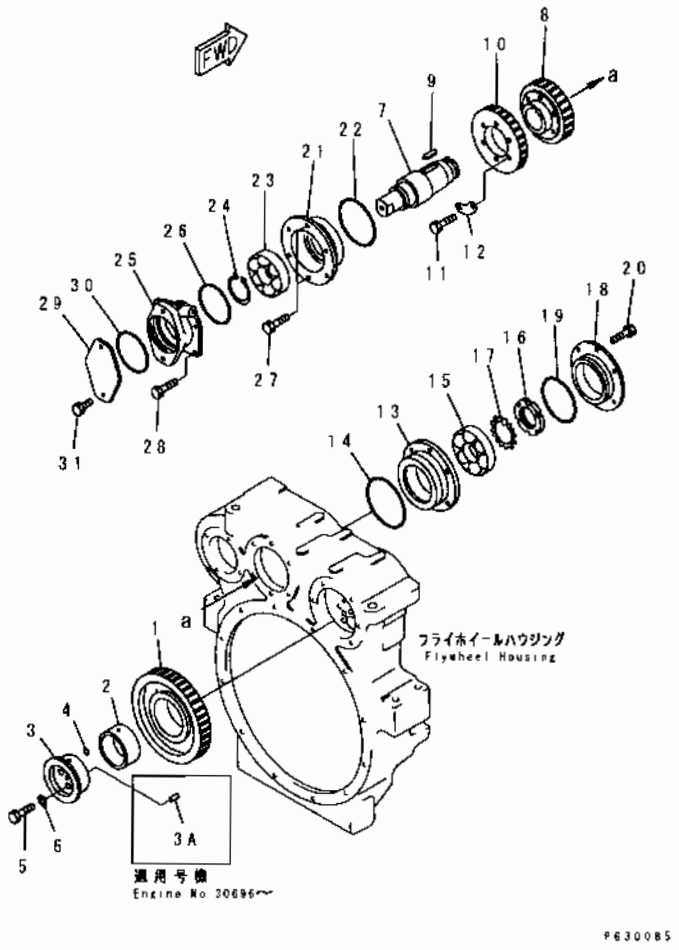


| INDEX | PART NO. | DESCRIPTION | Q'TY | SERIAL NO |
|---|---|---|---|---|
| 1 | 6631-21-4321 | GEAR, IDLE | 1 | 10001- |
| 2 | 6631-21-4371 | BUSHING | 1 | 10001- |
| 3 | 6150-21-4511 | SHAFT | 1 | 30696- |
| | □6150-21-4510 | SHAFT | 1 | 10001-30695 |
| 3A | 04020-00514 | PIN, DOWEL | 1 | 30696- |
| 4 | 07000-02010 | O-RING (K3) | 1 | 10001- |
| 5 | 6631-21-4360 | BOLT | 3 | 10001- |
| 6 | 6610-31-3331 | WASHER | 3 | 10001- |
| 7 | 6151-21-4510 | SHAFT | 1 | 10001- |
| 8 | 6631-21-4440 | GEAR | 1 | 10001- |
| 9 | 04000-01865 | KEY | 1 | 10001- |
| 10 | 6150-21-4540 | GEAR | 1 | 10001- |
| 11 | 01050-31045 | BOLT | 6 | 10001- |
| 12 | 6631-21-4460 | PLATE (K3) | 3 | 10001- |
| 13 | 6631-21-4421 | CASE, BEARING | 1 | 10001- |
| 14 | 6631-21-4870 | O-RING (K3) | 1 | 10001- |
| 15 | 06001-00213 | BEARING, ROLLER | 1 | 10001- |
| 16 | 01530-06214 | NUT | 1 | 10001- |
| 17 | 01658-26223 | WASHER, LOCK (K3) | 1 | 10001- |
| 18 | 6631-21-4431 | COVER | 1 | 10001- |
| 19 | 07000-65110 | O-RING (K3) | 1 | 10001- |
| 20 | 01010-51235 | BOLT | 6 | 10001- |
| 21 | 6667-21-4470 | CASE, BEARING | 1 | 10001- |
| 22 | 6667-21-4670 | O-RING (K3) | 1 | 10001- |
| 23 | 06000-06213 | BEARING, BALL | 1 | 10001- |
| 24 | 04064-06525 | RING, SNAP | 1 | 10001- |
| 25 | 6151-21-4430 | CASE | 1 | 10001- |
| 26 | 6667-21-4662 | O-RING (K3) | 1 | 10001- |
| 27 | 01010-51230 | BOLT | 2 | 10001- |
| 28 | 01010-51240 | BOLT | 4 | 10001- |
| 29 | 6679-22-4150 | COVER | 1 | 10001- |
| 30 | 07000-02105 | O-RING (K3) | 1 | 10001- |
| 31 | 01010-51225 | BOLT | 2 | 10001- |

# FIG.0242 POWER TAKE OFF (2/2)

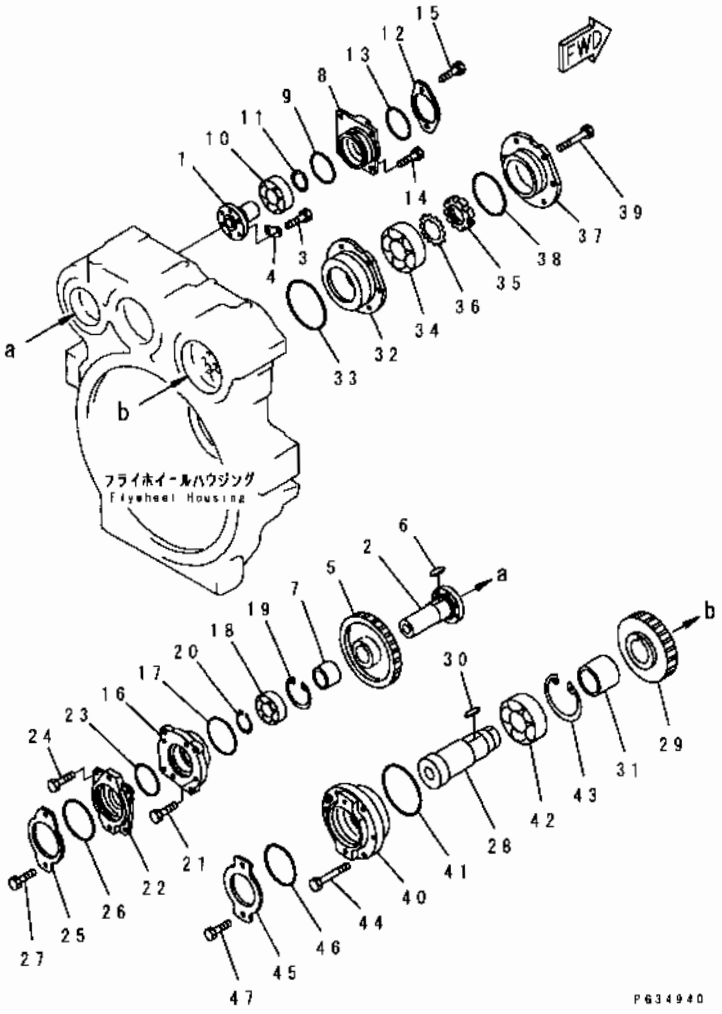


| INDEX | PART NO | DESCRIPTION | Q'TY | SERIAL NO |
|---|---|---|---|---|
| 1 | 6679-22-4641 | SHAFT | 1 | 10001- |
| 2 | 6679-22-4670 | SHAFT | 1 | 10001- |
| 3 | 01010-30820 | BOLT | 6 | 10001- |
| 4 | 6631-21-4690 | PLATE (K3) | 3 | 10001- |
| 5 | 6150-21-4550 | GEAR | 1 | 10001- |
| 6 | 04000-01235 | KEY | 1 | 10001- |
| 7 | 6631-21-4650 | SPACER | 1 | 10001- |
| 8 | 6151-21-4520 | CASE, BEARING | 1 | 10001- |
| 9 | 07000-63088 | O-RING (K3) | 1 | 10001- |
| 10 | 06000-06208 | BEARING, BALL | 1 | 10001- |
| 11 | 04064-04018 | RING, SNAP | 1 | 10001- |
| 12 | 6144-21-9811 | PLATE | 1 | 10001- |
| 13 | 07000-02085 | O-RING (K3) | 1 | 10001- |
| 14 | 01010-51025 | BOLT | 4 | 10001- |
| 15 | 01010-51020 | BOLT | 2 | 10001- |
| 16 | 6679-22-4680 | CASE, BEARING | 1 | 10001- |
| 17 | 07000-62095 | O-RING (K3) | 1 | 10001- |
| 18 | 06000-06209 | BEARING, BALL | 1 | 10001- |
| 19 | 04065-08530 | RING, SNAP | 1 | 10001- |
| 20 | 04064-04518 | RING, SNAP | 1 | 10001- |
| 21 | 01010-51025 | BOLT | 4 | 10001- |
| 22 | 6151-21-4420 | CASE | 1 | 10001- |
| 23 | 07000-02085 | O-RING (K3) | 1 | 10001- |
| 24 | 01010-51025 | BOLT | 4 | 10001- |
| 25 | 6679-22-4150 | COVER | 1 | 10001- |
| 26 | 07000-02105 | O-RING (K3) | 1 | 10001- |
| 27 | 01010-51225 | BOLT | 2 | 10001- |
| 28 | 6678-22-4510 | SHAFT | 1 | 10001- |
| 29 | 6631-21-4520 | GEAR | 1 | 10001- |
| 30 | 04000-01850 | KEY | 1 | 10001- |
| 31 | 6631-21-4550 | SPACER | 1 | 10001- |
| 32 | 6631-21-4581 | CASE, BEARING | 1 | 10001- |
| 33 | 6667-21-4670 | O-RING (K3) | 1 | 10001- |
| 34 | 06001-00213 | BEARING, ROLLER | 1 | 10001- |
| 35 | 01530-06214 | NUT | 1 | 10001- |
| 36 | 01658-26223 | WASHER, LOCK (K3) | 1 | 10001- |
| 37 | 6631-21-4561 | COVER | 1 | 10001- |
| 38 | 07000-65110 | O-RING (K3) | 1 | 10001- |
| 39 | 01010-51235 | BOLT | 5 | 10001- |
| 40 | 6678-22-4530 | CASE, BEARING | 1 | 10001- |
| 41 | 6667-21-4630 | O-RING (K3) | 1 | 10001- |
| 42 | 06000-06214 | BEARING, BALL | 1 | 10001- |

FIG NO. . 0242

| INDEX | PART NO | DESCRIPTION | Q'TY | SERIAL NO. |
|---|---|---|---|---|
| 43 | 04065-01240 | RING, SNAP..... ..... ..... | 1 | 10001- |
| 44 | 01010-51245 | BOLT.. .. . .. ..... ..... | 6 | 10001- |
| 45 | 6679-22-4150 | COVER..... ..... .. ..... | 1 | 10001- |
| 46 | 07000-02105 | O-RING.. .... ..... ..(K3)..... | 1 | 10001- |
| 47 | 01010-51225 | BOLT..... ..... | 2 | 10001- |

# FIG. 0251 CRANKSHAFT

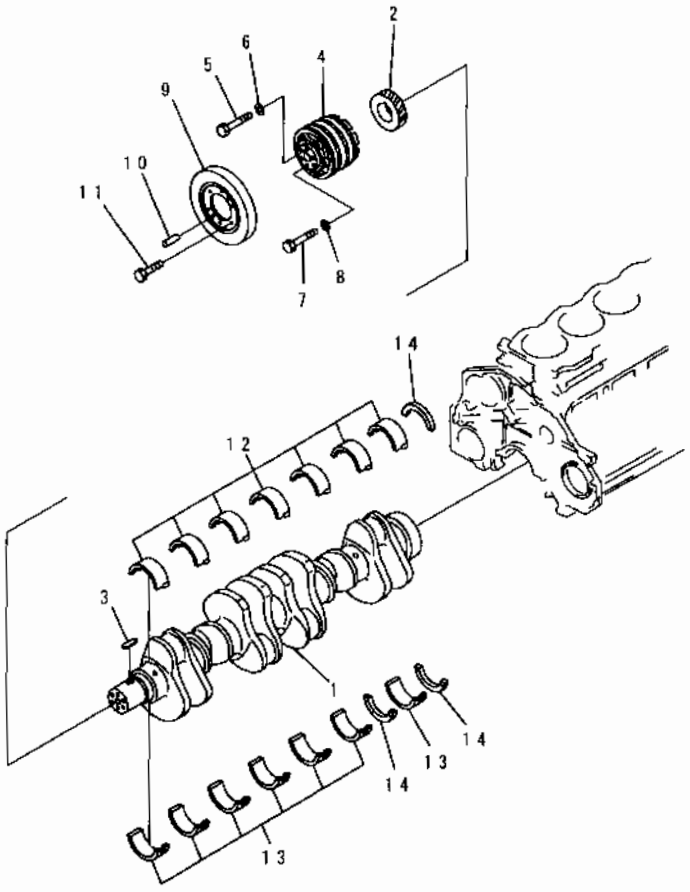


| INDEX | PART NO | DESCRIPTION | Q'TY | SERIAL NO. |
|---|---|---|---|---|
| | 6151-31-1010 | CRANKSHAFT ASS'Y. | 1 | 10001- |
| 1 | ☆ | .CRANKSHAFT | 1 | 10001- |
| 2 | 6150-31-1121 | .GEAR, CRANKSHAFT | 1 | 10001- |
| 3 | 6150-31-1130 | KEY | 1 | 10001- |
| 4 | 6150-31-1550 | PULLEY, NON HARDENING | 1 | 10001- |
| | 6150-31-1560 | PULLEY, HARDENING | 1 | 10001- |
| 5 | 01051-51430 | BOLT | 1 | 10001- |
| 6 | 6130-32-1361 | WASHER | 1 | 10001- |
| 7 | 01051-51635 | BOLT | 5 | 10001- |
| 8 | 6150-31-1810 | WASHER | 5 | 10001- |
| 9 | 6151-31-8100 | DAMPER ASS'Y. | 1 | 10001- |
| 10 | 04020-01228 | PIN, DOWEL | 1 | 10001- |
| 11 | 01010-51225 | BOLT | 6 | 10001- |
| | | STANDARD | | |
| | 6150-21-8000 | MAIN METAL ASS'Y. | 1 | 10001- |
| | 6150-21-8010 | .MAIN METAL ASS'Y. | 7 | 10001- |
| 12 | ☆ | . METAL, UPPER | 1 | 10001- |
| 13 | ☆ | . METAL, LOWER | 1 | 10001- |
| 14 | 6150-21-8050 | .THRUST METAL ASS'Y | 1 | 10001- |
| | ☆ | . METAL, THRUST | 3 | 10001- |
| | | UNDERSIZE 0.25MM | | |
| | 6150-29-8010 | MAIN METAL ASS'Y. | 7 | 10001- |
| 12 | ☆ | .METAL, UPPER | 1 | 10001- |
| 13 | ☆ | .METAL, LOWER | 1 | 10001- |
| | | UNDERSIZE 0.50MM | | |
| | 6150-28-8010 | MAIN METAL ASS'Y. | 7 | 10001- |
| 12 | ☆ | .METAL, UPPER | 1 | 10001- |
| 13 | ☆ | .METAL, LOWER | 1 | 10001- |
| | | UNDERSIZE 0.75MM | | |
| | 6150-27-8010 | MAIN METAL ASS'Y. | 7 | 10001- |
| 12 | ☆ | .METAL, UPPER | 1 | 10001- |
| 13 | ☆ | .METAL, LOWER | 1 | 10001- |
| | | UNDERSIZE 1.00MM | | |
| | 6150-26-8010 | MAIN METAL ASS'Y. | 7 | 10001- |
| 12 | ☆ | METAL, UPPER | 1 | 10001- |
| 13 | ☆ | .METAL, LOWER | 1 | 10001- |
| | | OVERSIZE 0.25MM | | |
| 14 | 6150-29-8050 | THRUST METAL ASS'Y. | 1 | 10001- |
| | ☆ | .METAL, THRUST | 3 | 10001- |
| | | OVERSIZE 0.50MM | | |
| 14 | 6150-28-8050 | THRUST METAL ASS'Y | 1 | 10001- |
| | ☆ | .METAL, THRUST | 3 | 10001- |

FIG NO. : 0251

| INDEX | PART NO. | DESCRIPTION | Q'TY | SERIAL NO. |
|---|---|---|---|---|
| | | OVERSIZE 0.75MM. .. ..... ... | | |
| 14 | 6150-27-8050 | THRUST METAL ASS'Y ..... ..... | 1 | 10001- |
| | ☆ | .METAL,THRUST.. . ..... ..... .... | 3 | 10001- |
| | | OVERSIZE 1.00MM... .. ..... . | | |
| 14 | 6150-26-8050 | THRUST METAL ASS'Y ..... ..... | 1 | 10001- |
| | ☆ | .METAL,THRUST. ..... | 3 | 10001- |

# FIG.0261 PISTON AND CONNECTING ROD

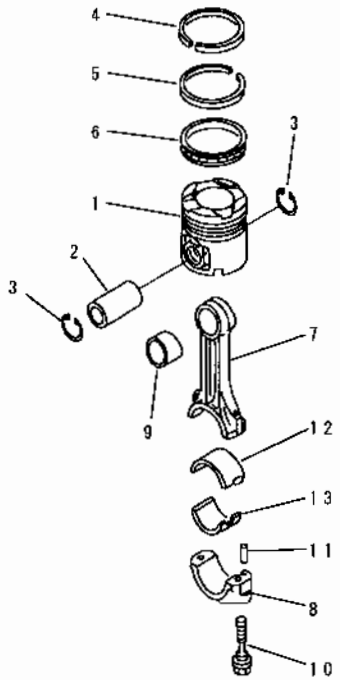


PE32108

| INDEX | PART NO. | DESCRIPTION | Q TY | SERIAL NO |
|---|---|---|---|---|
| 1 | 6151-31-2150 | PISTON | 6 | 23599- |
| | 6151-31-2112 | PISTON | 6 | 10132-23598 |
| | 6151-31-2111 | PISTON | 6 | 10006-10131 |
| | 6151-31-2131 | PISTON | 6 | 10001-10005 |
| 2 | 6151-31-2420 | PIN,PISTON | 6 | 23599- |
| | 6151-31-2410 | PIN,PISTON | 6 | 10006-23598 |
| | 6151-31-2430 | PIN,PISTON | 6 | 10001-10005 |
| 3 | 04065-04818 | RING,SNAP | 12 | 10001- |
| | 6150-31-2033 | PISTON RING ASS'Y | 6 | 45949- |
| | □6150-31-2032 | PISTON RING ASS'Y | 6 | 13464-45948 |
| | □6150-31-2031 | PISTON RING ASS'Y | 6 | 10132-13463 |
| | 6151-31-2031 | PISTON RING ASS'Y | 6 | 10006-10131 |
| | □6151-31-2040 | PISTON RING ASS'Y | 6 | 10001-10005 |
| 4 | ☆ | .RING,TOP | 1 | 13464- |
| | ☆ | .RING,TOP | 1 | 10001-13463 |
| 5 | ☆ | .RING,SECOND | 1 | 45949- |
| | ☆ | .RING,SECOND | 1 | 10132-45948 |
| | ☆ | .RING,SECOND | 1 | 10001-10131 |
| 6 | ☆ | .RING,OIL | 1 | 10006- |
| | ☆ | .RING,OIL | 1 | 10001-10005 |
| | 6151-31-3200 | CONNECTING ROD ASS'Y | 6 | 23599- |
| | 6151-31-3101 | CONNECTING ROD ASS'Y | 6 | 10006-23598 |
| | 6151-31-3200 | CONNECTING ROD ASS'Y | 6 | 10001-10005 |
| 7 | ☆ | .ROD,CONNECTING | 1 | 23599- |
| | ☆ | .ROD,CONNECTING | 1 | 10006-23598 |
| | ☆ | .ROD,CONNECTING | 1 | 10001-10005 |
| 8 | ☆ | .CAP | 1 | 10001- |
| 9 | 6151-31-3230 | .BUSHING | 1 | 23599- |
| | 6150-31-3130 | .BUSHING | 1 | 10006-23598 |
| | 6151-31-3230 | .BUSHING | 1 | 10001-10005 |
| 10 | 6150-31-3310 | .BOLT | 2 | 10001- |
| 11 | 02400-10413 | .PIN,DOWEL | 2 | 10001- |
| | | STANDARD | | |
| | 6150-31-3040 | METAL ASS'Y | 6 | 23599- |
| | 6151-31-3040 | METAL ASS'Y | 6 | 10006-23598 |
| | 6150-31-3040 | METAL ASS'Y | 6 | 10001-10005 |
| 12 | ☆ | .METAL,UPPER | 1 | 10001- |
| 13 | ☆ | METAL,LOWER | 1 | 23599- |
| | ☆ | .METAL,LOWER | 1 | |
| | ☆ | .METAL,LOWER | 1 | 10001-10005 |
| | | UNDERSIZE 0.25MM | | |
| | 6150-39-3040 | METAL ASS'Y | 6 | 23599- |

FIG NO. 0261

| INDEX | PART NO | DESCRIPTION | Q'TY | SERIAL NO |
|---|---|---|---|---|
| | 6151-39-3040 | METAL ASS'Y | 6 | 10006-23598 |
| | 6150-39-3040 | METAL ASS'Y | 6 | 10001-10005 |
| 12 | ☆ | . METAL, UPPER | 1 | 10001- |
| 13 | ☆ | . METAL, LOWER | 1 | 23599- |
| | ☆ | . METAL, LOWER | 1 | |
| | ☆ | . METAL, LOWER | 1 | 10001-10005 |
| | | UNDERSIZE 0.50MM | | |
| | 6150-38-3040 | METAL ASS'Y | 6 | 23599- |
| | 6151-38-3040 | METAL ASS'Y | 6 | 10006-23598 |
| | 6150-38-3040 | METAL ASS'Y | 6 | 10001-10005 |
| 12 | ☆ | . METAL, UPPER | 1 | 10001- |
| 13 | ☆ | . METAL, LOWER | 1 | 23599- |
| | ☆ | . METAL, LOWER | 1 | |
| | ☆ | . METAL, LOWER | 1 | 10001-10005 |
| | | UNDERSIZE 0.75MM | | |
| | 6150-37-3040 | METAL ASS'Y | 6 | 23599- |
| | 6151-37-3040 | METAL ASS'Y | 6 | 10006-23598 |
| | 6150-37-3040 | METAL ASS'Y | 6 | 10001-10005 |
| 12 | ☆ | . METAL, UPPER | 1 | 10001- |
| 13 | ☆ | . METAL, LOWER | 1 | 23599- |
| | ☆ | . METAL, LOWER | 1 | |
| | ☆ | . METAL, LOWER | 1 | 10001-10005 |
| | | UNDERSIZE 1.00MM | | |
| | 6150-36-3040 | METAL ASS'Y | 6 | 23599- |
| | 6151-36-3040 | METAL ASS'Y | 6 | 10006-23598 |
| | 6150-36-3040 | METAL ASS'Y | 6 | 10001-10005 |
| 12 | ☆ | . METAL, UPPER | 1 | 10001- |
| 13 | ☆ | . METAL, LOWER | 1 | 23599- |
| | ☆ | . METAL, LOWER | 1 | |
| | ☆ | . METAL, LOWER | 1 | 10001-10005 |

# FIG. 0271 CAMSHAFT

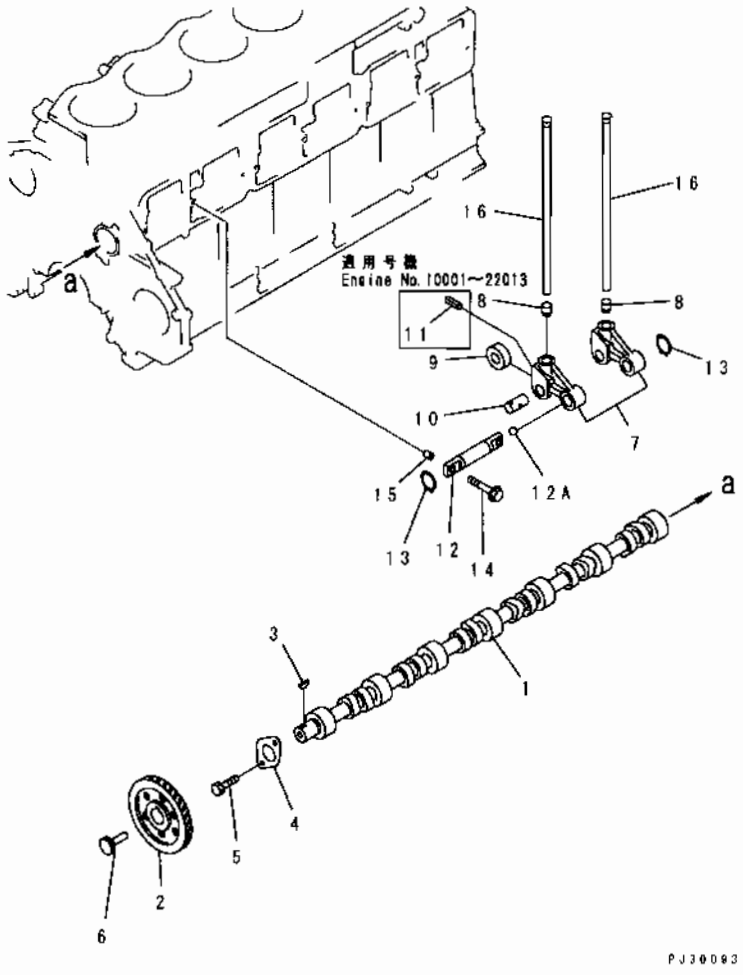






| INDEX | PART NO | DESCRIPTION | Q'TY | SERIAL NO |
|---|---|---|---|---|
| | 6150-41-1012 | CAMSHAFT ASS'Y | 1 | 10132- |
| | 6150-41-1011 | CAMSHAFT ASS'Y | 1 | 10006-10131 |
| | □6150-41-1010 | CAMSHAFT ASS'Y | 1 | 10001-10005 |
| 1 | ☆ | . CAMSHAFT | 1 | 10132- |
| | ☆ | . CAMSHAFT | 1 | |
| | ☆ | . CAMSHAFT | 1 | 10001-10005 |
| 2 | 6150-41-1120 | . GEAR, CAMSHAFT | 1 | 10001- |
| 3 | 04010-00725 | . KEY | 1 | 10001- |
| 4 | 6150-41-1130 | PLATE, THRUST | 1 | 19319- |
| | □6127-41-1131 | PLATE, THRUST | 1 | 10001-19318 |
| 5 | 01010-31022 | BOLT | 2 | 10001- |
| 6 | 6150-81-5131 | GEAR | 1 | 10132- |
| | 6150-81-5130 | GEAR | 1 | 10001-10131 |
| | 6150-41-2302 | LEVER ASS'Y | 12 | 22014- |
| | ■6150-41-2301 | LEVER ASS'Y | 12 | 10132-22013 |
| | | (6150-41-2302, 6150-41-2401) | | |
| | 6150-41-2300 | LEVER ASS'Y | 12 | 10001-10131 |
| 7 | ☆ | . LEVER | 1 | 22014- |
| | ☆ | . LEVER | 1 | 10132-22013 |
| | ☆ | . LEVER | 1 | 10001-10131 |
| 8 | ☆ | SOCKET | 1 | 22014- |
| | ☆ | SOCKET | 1 | 10001-22013 |
| 9 | 6150-41-2341 | . ROLLER | 1 | 22014- |
| | 6150-41-2340 | . ROLLER | 1 | 10001-22013 |
| 10 | ☆ | . PIN | 1 | 22014- |
| | ☆ | . PIN | 1 | |
| | ☆ | . PIN | 1 | 10001-10131 |
| 11 | 6150-41-2370 | . PIN, ROLL | 1 | 13382-22013 |
| | □6610-41-2370 | . PIN, ROLL | 1 | 10001-13381 |
| | 6150-41-2401 | SHAFT ASS'Y | 6 | 22014- |
| | 6150-41-2400 | SHAFT ASS'Y | 6 | 10001-22013 |
| 12 | ☆ | . SHAFT | 1 | 22014- |
| | ☆ | . SHAFT | 1 | 10001-22013 |
| 12A | 6150-81-8420 | . BALL | 1 | 10001- |
| 13 | 04064-02012 | RING, SNAP | 12 | 10001- |
| 14 | 6150-41-2450 | BOLT | 12 | 10001- |
| 15 | (6150-41-2430) | PIN | 12 | 10001- |
| 16 | 6150-41-3111 | ROD, PUSH | 12 | 10132- |
| | 6150-41-3110 | ROD, PUSH | 12 | 10001-10131 |

# LUBRICATING OIL SYSTEM

# FIG.0301 LUBRICATING OIL PUMP AND SUCTION PIPE

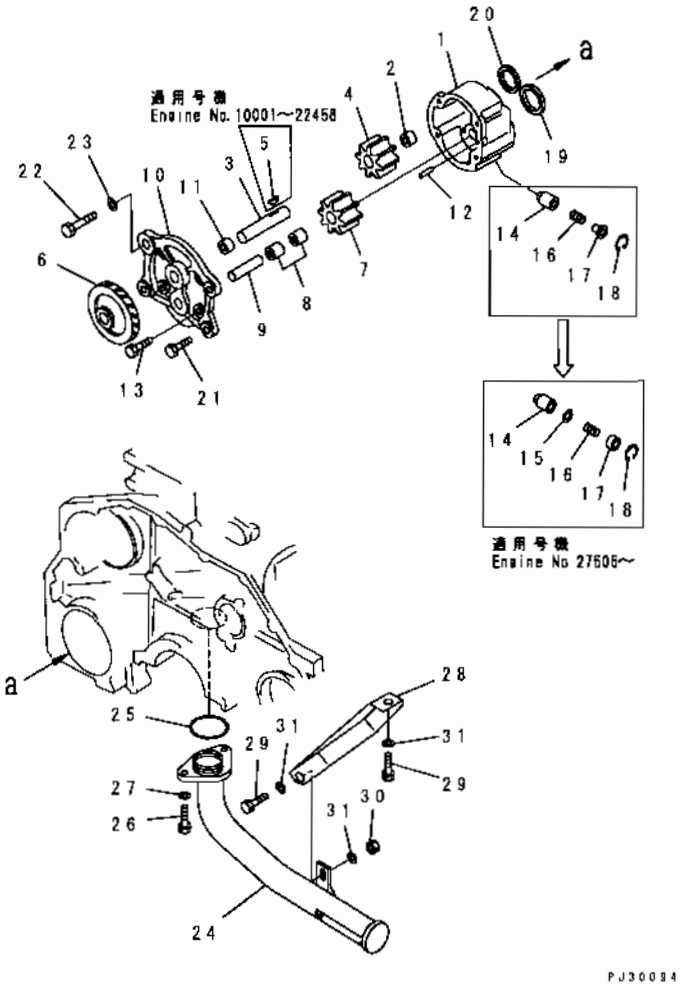


| INDEX | PART NO | DESCRIPTION | Q'TY | SERIAL NO |
|---|---|---|---|---|
| | 6151-51-1005 | OIL PUMP ASS'Y | 1 | 34014- |
| | □6151-51-1004 | OIL PUMP ASS'Y | 1 | 10001-34013 |
| | 6151-51-1203 | .BODY ASS'Y | 1 | 34014- |
| | 6151-51-1202 | .BODY ASS'Y | 1 | 10001-34013 |
| 1 | ☆ | BODY | 1 | 34014- |
| | ☆ | ..BODY | 1 | 10001-34013 |
| 2 | 6151-51-1430 | ..BUSHING | 1 | 10001- |
| | 6151-51-1303 | .SHAFT ASS'Y | 1 | 10001- |
| 3 | 6151-51-1313 | ..SHAFT | 1 | 22457- |
| | □6151-51-1312 | ..SHAFT | 1 | 10001-22456 |
| 4 | 6151-51-1511 | ..GEAR | 1 | 22457- |
| | □6151-51-1510 | ..GEAR | 1 | 10001-22456 |
| 5 | 04010-10516 | KEY | 1 | 10001-22456 |
| 6 | 6151-51-1610 | .GEAR | 1 | 10001- |
| | 6151-51-1401 | .GEAR ASS'Y | 1 | 10001- |
| 7 | ☆ | ..GEAR | 1 | 10001- |
| 8 | 6151-51-1421 | ..BUSHING | 2 | 10001- |
| | 6151-51-1102 | .COVER ASS'Y | 1 | 10001- |
| 9 | 6151-51-1320 | ..SHAFT | 1 | 10001- |
| 10 | ☆ | COVER | 1 | 10001- |
| 11 | 6151-51-1430 | .BUSHING | 1 | 10001- |
| 12 | 6136-52-1620 | .PIN | 1 | 10001- |
| 13 | 01010-30825 | .BOLT | 4 | 10001- |
| 14 | 6136-52-1640 | .VALVE | 1 | 10001- |
| 15 | 6151-51-1710 | .SHIM, 0.8MM | 1 | 27606- |
| 16 | 6136-52-1650 | .SPRING | 1 | 10001- |
| 17 | 6150-51-1660 | .PLUG | 1 | 34013- |
| | 6150-51-1652 | RETAINER | 1 | 27606-34012 |
| | □6150-51-1650 | .RETAINER | 1 | 10001-27605 |
| 18 | 04065-01610 | .RING,SNAP | 1 | 10001- |
| 19 | 6150-51-1710 | RING (K2) | 1 | 10001- |
| 20 | 6150-51-1720 | RING (K2) | 1 | 10001- |
| 21 | 01010-31025 | BOLT | 3 | 10001- |
| 22 | 01010-31035 | BOLT | 1 | 10001- |
| 23 | 01643-31032 | WASHER | 1 | 10001- |
| 24 | 6150-51-6230 | STRAINER | 1 | 10001- |
| 25 | 07000-63045 | O-RING (K2) | 1 | 10001- |
| 26 | 01010-31025 | BOLT | 2 | 10001- |
| 27 | 01640-01016 | WASHER | 2 | 10001-10663 |
| 28 | 6150-51-6241 | BRACKET | 1 | 10001- |
| 29 | 01010-31020 | BOLT | 2 | 10001- |
| 30 | 01580-01008 | NUT | 1 | 10001- |

FIG NO. : 0301

| INDEX | PART NO. | DESCRIPTION | Q'TY | SERIAL NO |
|---|---|---|---|---|
| 31 | 01640-01016 | WASHER..... | 3 | 10001- |

# FIG.0311 LUBRICATING OIL FILTER

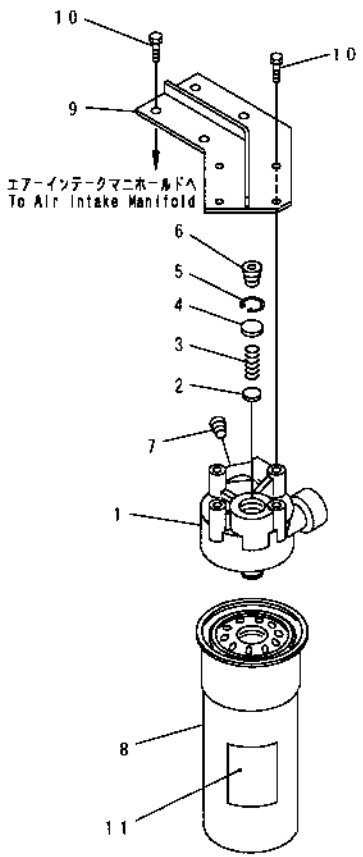


PJ30128

| INDEX | PART NO | DESCRIPTION | Q'TY | SERIAL NO. |
|---|---|---|---|---|
| | 6151-51-5301 | OIL FILTER ASS'Y. | 1 | 10001- |
| 1 | 6151-51-5310 | .HEAD. | 1 | 10001- |
| 2 | 6150-51-4920 | .DISC. | 1 | 11889- |
| | □6712-51-4920 | .DISC | 1 | 10001-11888 |
| 3 | 6151-51-5320 | .SPRING. | 1 | 10001- |
| 4 | 6150-51-4360 | .RETAINER. | 1 | 10001- |
| 5 | 04065-03012 | .RING,SNAP. | 1 | 10001- |
| 6 | 02720-21616 | .PLUG. | 1 | 10001- |
| 7 | 07043-50617 | .PLUG. | 1 | 10001- |
| 8 | 600-211-1230 | .CARTRIDGE. | 1 | 10001- |
| 9 | 6151-51-5241 | BRACKET. | 1 | 10001- |
| 10 | 01010-51025 | BOLT. | 8 | 10001- |
| 11 | 600-211-1771 | PLATE, INSTRUCTION. | 1 | 10001- |

# FIG.0312 LUBRICATING OIL FILTER (COLD TERRAIN SPEC.)

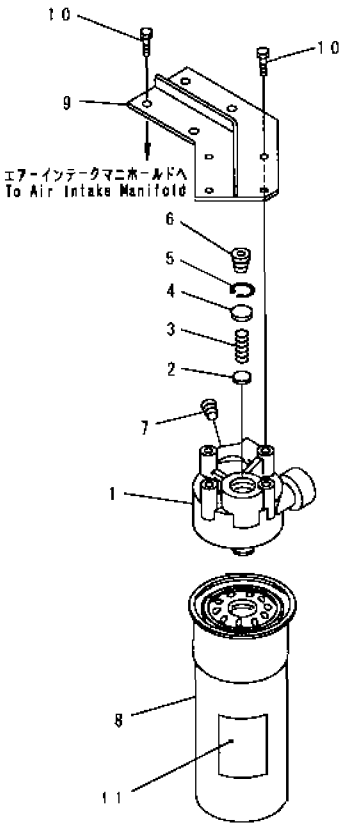


PJ30128

| INDEX | PART NO. | DESCRIPTION | Q'TY | SERIAL NO |
|---|---|---|---|---|
| | 6151-51-5401 | OIL FILTER ASS'Y | 1 | 10001- |
| 1 | 6151-51-5310 | .HEAD | 1 | 10001- |
| 2 | 6150-51-4920 | .DISC | 1 | 12025- |
| | □6712-51-4920 | .DISC | 1 | 10001-12024 |
| 3 | 6151-51-5320 | .SPRING | 1 | 10001- |
| 4 | 6150-51-4360 | .RETAINER | 1 | 10001- |
| 5 | 04065-03012 | RING,SNAP | 1 | 10001- |
| 6 | 02720-21616 | PLUG | 1 | 10001- |
| 7 | 02720-21214 | .PLUG | 1 | 10001- |
| 8 | 600-211-1290 | .CARTRIDGE | 1 | 10001- |
| 9 | 6151-51-5241 | BRACKET | 1 | 10001- |
| 10 | 01010-51025 | BOLT | 8 | 10001- |
| 11 | 600-211-1771 | PLATE, INSTRUCTION | 1 | 10001- |

# FIG.0321 LUBRICATING OIL PIPING

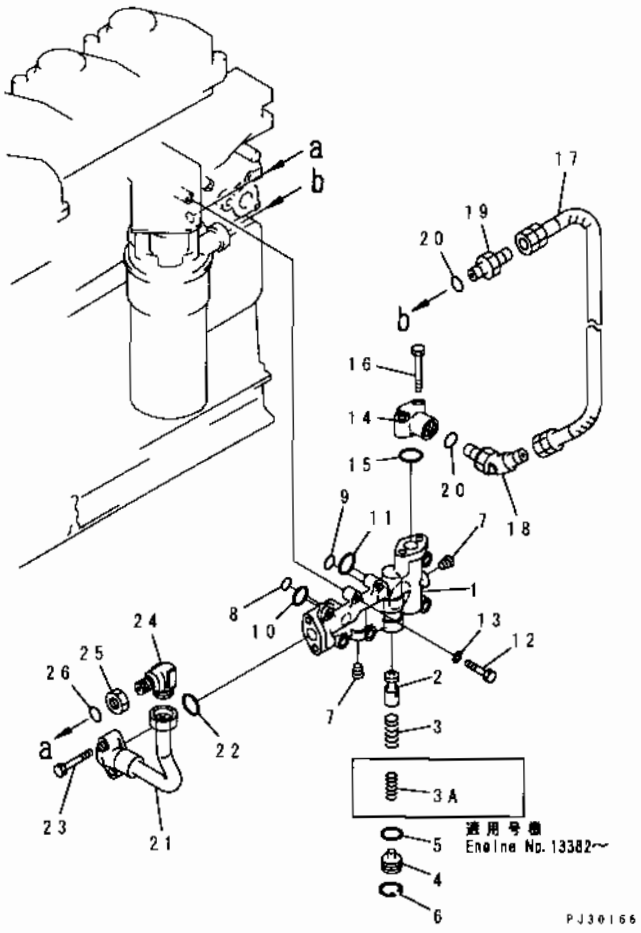


| INDEX | PART NO | DESCRIPTION | Q'TY | SERIAL NO |
|---|---|---|---|---|
| | 6151-51-5603 | ADAPTER ASS'Y. | 1 | 10001- |
| 1 | 6151-51-5611 | .BODY | 1 | 10001- |
| 2 | 6150-51-5622 | .VALVE | 1 | 10001- |
| 3 | 6151-51-5680 | .SPRING, OUTER | 1 | 13382- |
| | 6150-51-5630 | .SPRING, OUTER | 1 | 10001-13381 |
| 3A | 6151-51-5690 | .SPRING, INNER | 1 | 13382- |
| 4 | 6150-51-5641 | .PLUG | 1 | 10001- |
| 5 | 07000-62020 | .O-RING | 1 | 10001- |
| 6 | 04065-02412 | RING, SNAP | 1 | 10001- |
| 7 | 07043-00312 | .PLUG | 2 | 10001- |
| 8 | 07000-62015 | O-RING (K2) | 1 | 10001- |
| 9 | 07000-62020 | O-RING (K2) | 1 | 10001- |
| 10 | 07000-63028 | O-RING (K2) | 1 | 10001- |
| 11 | 07000-63035 | O-RING (K2) | 1 | 10001- |
| 12 | 6150-81-9370 | BOLT | 7 | 10001- |
| 13 | 01640-21016 | WASHER | 7 | 10001- |
| 14 | 6150-51-5710 | CONNECTOR | 1 | 10001- |
| 15 | 6124-61-2181 | GROMMET (K2) | 1 | 10001- |
| 16 | 01010-51050 | BOLT | 2 | 10001- |
| 17 | 07102-20603 | HOSE, INLET | 1 | 10001- |
| 18 | 07236-10628 | ELBOW | 1 | 10001- |
| 19 | 07230-10628 | UNION | 1 | 10001- |
| 20 | 07002-32434 | O-RING (K2) | 2 | 10001- |
| 21 | 6150-51-5660 | TUBE | 1 | 10001- |
| 22 | 6124-61-2181 | GROMMET (K2) | 1 | 10001- |
| 23 | 01010-51050 | BOLT | 2 | 10001- |
| 24 | 6150-51-5471 | ELBOW | 1 | 10001- |
| 25 | 07239-12410 | NUT | 1 | 10001- |
| 26 | 07002-32434 | O-RING (K2) | 1 | 10001- |

# FIG.0325 TURBOCHARGER LUBRICATING OIL PIPING

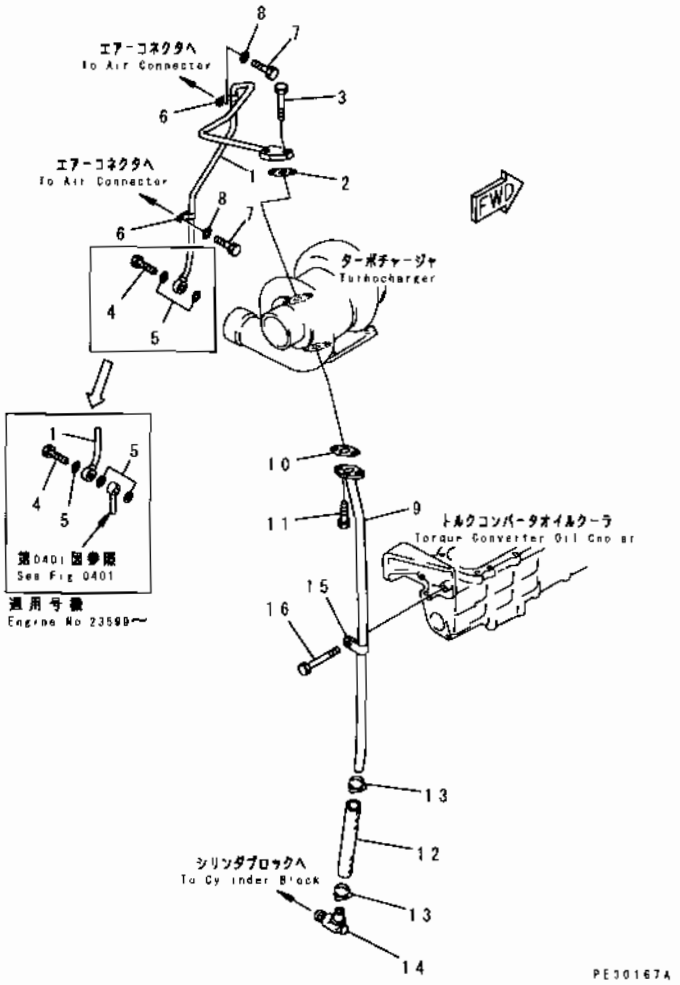


| INDEX | PART NO | DESCRIPTION | Q'TY | SERIAL NO. |
|---|---|---|---|---|
| 1 | 6151-51-8630 | TUBE, INLET | 1 | 23599- |
| | 6151-51-8221 | PIPE, INLET | 1 | 10001-23598 |
| 2 | 6151-51-8710 | GASKET (K1) | 1 | 23599- |
| | 6151-51-8160 | GASKET (K1) | 1 | 10001-23598 |
| 3 | 01010-50830 | BOLT | 2 | 23599- |
| | 01010-51030 | BOLT | 2 | 10001-23598 |
| 4 | (6127-71-5710) | BOLT, JOINT | 1 | 23599- |
| | 07206-31014 | BOLT, JOINT | 1 | 10001-23598 |
| 5 | 07005-01412 | GASKET (K1) | 3 | 23599- |
| | 07005-01412 | GASKET (K1) | 2 | 10001-23598 |
| 6 | 6991-11-5990 | CLAMP | 2 | 10001- |
| 7 | 01010-51016 | BOLT | 2 | 10001- |
| 8 | 01640-21016 | WASHER | 2 | 10001- |
| 9 | 6151-51-8730 | TUBE | 1 | 23599- |
| | 6151-51-8210 | TUBE | 1 | 10001-23598 |
| 10 | 6151-51-8720 | GASKET (K1) | 1 | 23599- |
| | 6151-51-8150 | GASKET (K1) | 1 | 10001-23598 |
| 11 | 01010-50820 | BOLT | 2 | 23599- |
| | 01010-51020 | BOLT | 2 | 10001-23598 |
| 12 | 07260-22025 | HOSE | 1 | 10001- |
| 13 | 07281-00359 | CLAMP | 2 | 10001- |
| 14 | 6151-51-8130 | ELBOW | 1 | 10001- |
| 15 | 6600-01-5551 | CLAMP | 1 | 10001- |
| 16 | (01010-51040) | BOLT | 1 | 10001- |

# FIG. 0327 TURBOCHARGER LUBRICATING OIL PIPING (COLD TERRAIN SPEC.)

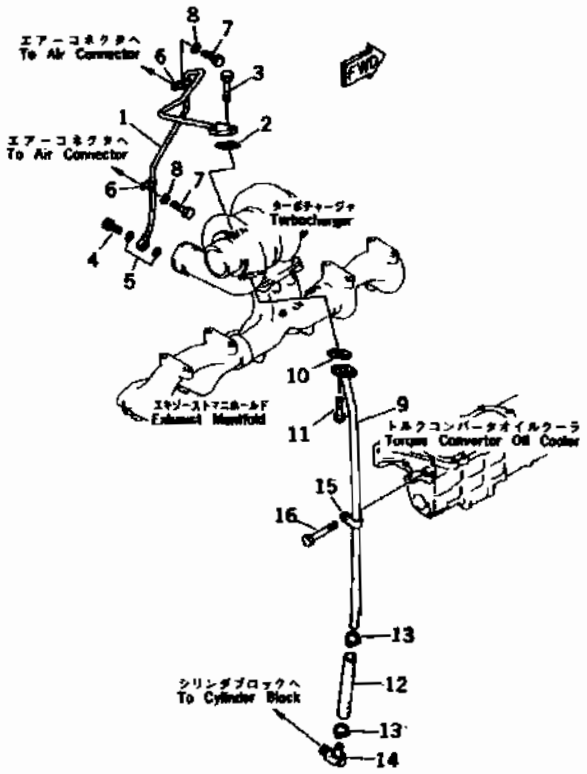


| INDEX | PART NO. | DESCRIPTION | Q'TY | SERIAL NO |
|---|---|---|---|---|
| 1 | 6151-51-8630 | TUBE, INLET | 1 | 23599- |
| | 6151-51-8221 | PIPE, INLET | 1 | 10001-23598 |
| 2 | 6151-51-8710 | GASKET (K1) | 1 | 23599- |
| | 6151-51-8160 | GASKET (K1) | 1 | 10001-23598 |
| 3 | 01010-50830 | BOLT | 2 | 23599- |
| | 01010-51030 | BOLT | 2 | 10001-23598 |
| 4 | 07206-31014 | BOLT, JOINT | 1 | 10001- |
| 5 | 07005-01412 | GASKET (K1) | 2 | 10001- |
| 6 | 6991-11-5990 | CLAMP | 2 | 10001- |
| 7 | 01010-51016 | BOLT | 2 | 10001- |
| 8 | 01640-21016 | WASHER | 2 | 10001- |
| 9 | 6151-51-8730 | TUBE | 1 | 23599- |
| | 6151-51-8210 | TUBE | 1 | 10001-23598 |
| 10 | 6151-51-8720 | GASKET (K1) | 1 | 23599- |
| | 6151-51-8150 | GASKET (K1) | 1 | 10001-23598 |
| 11 | 01010-50820 | BOLT | 2 | 23599- |
| | 01010-51020 | BOLT | 2 | 10001-23598 |
| 12 | 07260-22025 | HOSE | 1 | 10001- |
| 13 | 07281-00359 | CLAMP | 2 | 10001- |
| 14 | 6151-51-8130 | ELBOW | 1 | 10001- |
| 15 | 6600-01-5551 | CLAMP | 1 | 10001- |
| 16 | (01010-51040) | BOLT | 1 | 10001- |

# FIG.0327 TURBOCHARGER LUBRICATING OIL PIPING (COLD TERRAIN SPEC.)

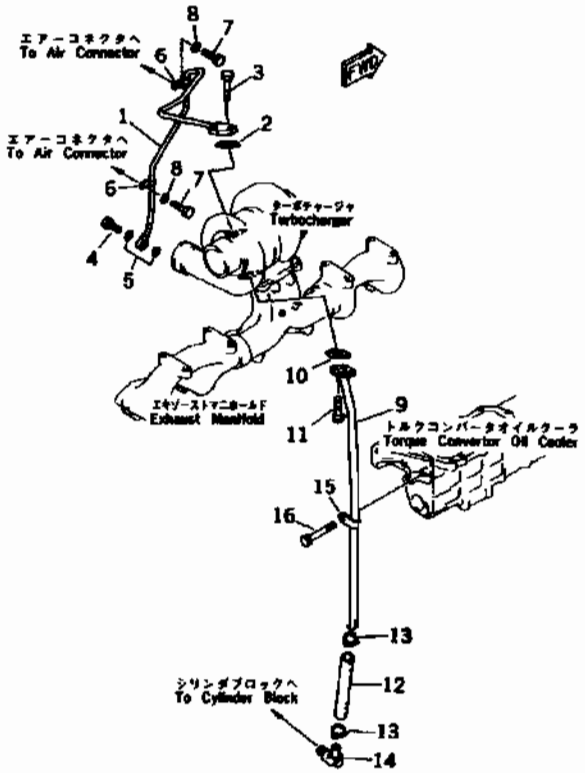


| INDEX | PART NO | DESCRIPTION | Q'TY | SERIAL NO |
|---|---|---|---|---|
| 1 | 6151-51-8630 | TUBE, INLET | 1 | 23599- |
| | 6151-51-8221 | PIPE, INLET | 1 | 10001-23598 |
| 2 | 6151-51-8710 | GASKET (K1) | 1 | 23599- |
| | 6151-51-8160 | GASKET (K1) | 1 | 10001-23598 |
| 3 | 01010-50830 | BOLT | 2 | 23599- |
| | 01010-51030 | BOLT | 2 | 10001-23598 |
| 4 | 07206-31014 | BOLT, JOINT | 1 | 10001- |
| 5 | 07005-01412 | GASKET (K1) | 2 | 10001- |
| 6 | 6991-11-5990 | CLAMP | 2 | 10001- |
| 7 | 01010-51016 | BOLT | 2 | 10001- |
| 8 | 01640-21016 | WASHER | 2 | 23599- |
| 9 | 6151-51-8730 | TUBE | 1 | 10001-23598 |
| | 6151-51-8210 | TUBE | 1 | 23599- |
| 10 | 6151-51-8720 | GASKET (K1) | 1 | 10001-23598 |
| | 6151-51-8150 | GASKET (K1) | 1 | 23599- |
| 11 | 01010-50820 | BOLT | 2 | 10001-23598 |
| | 01010-51020 | BOLT | 2 | 10001- |
| 12 | 07260-22025 | HOSE | 1 | 10001- |
| 13 | 07281-00359 | CLAMP | 2 | 10001- |
| 14 | 6151-51-8130 | ELBOW | 1 | 10001- |
| 15 | 6600-01-5551 | CLAMP | 1 | 10001- |
| 16 | (01010-51040) | BOLT | 1 | |

# FIG.0331 LUBRICATING OIL COOLER

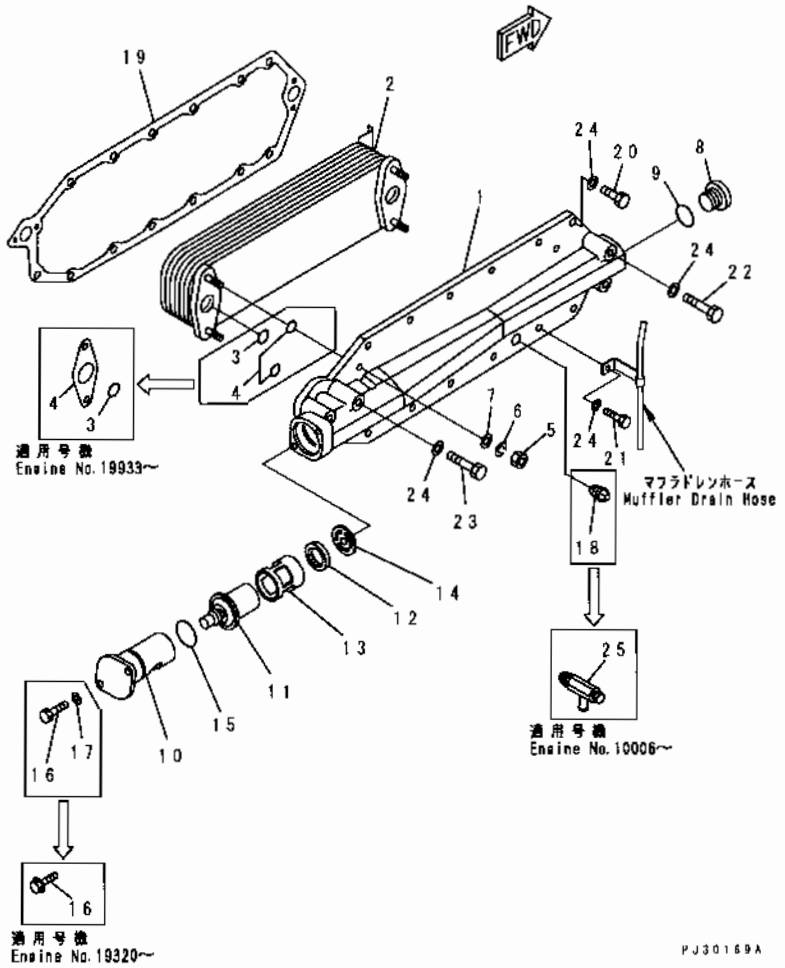


| INDEX | PART NO | DESCRIPTION | Q'TY | SERIAL NO. |
|---|---|---|---|---|
| 1 | 6150-61-2123 | COVER | 1 | 19933- |
| | 6150-61-2122 | COVER | 1 | 10298-19932 |
| | 6150-61-2121 | COVER | 1 | 10006-10297 |
| | 6150-61-2120 | COVER | 1 | 10001-10005 |
| 2 | 6151-61-2111 | ELEMENT | 1 | 10006- |
| | 6151-61-2110 | ELEMENT | 1 | 10001-10005 |
| 3 | 6150-61-2510 | O-RING (K2) | 2 | 10001- |
| 4 | 6150-61-2560 | GASKET (K2) | 2 | 19933- |
| | 6150-61-2520 | O-RING | 4 | 17810-19932 |
| | 6150-61-2520 | O-RING (K2) | 4 | 10001-17809 |
| | 6150-61-2520 | O-RING, (COLD TERRAIN SPEC.) (K2) | 4 | 10001-19932 |
| 5 | 01582-11008 | NUT | 4 | 10001- |
| 6 | 01602-21030 | WASHER, SPRING | 4 | 10001- |
| 7 | 01640-21016 | WASHER | 4 | 10001- |
| 8 | 6150-61-2530 | PLUG | 1 | 10001- |
| 9 | 6150-61-2550 | O-RING (K2) | 1 | 10001- |
| 10 | 6150-61-2131 | COVER | 1 | 10006- |
| | 6150-61-2130 | COVER | 1 | 10001-10005 |
| 11 | 6212-65-2610 | THERMOSTAT | 1 | 41127- |
| | ◆6150-61-2620 | THERMOSTAT | 1 | 10001-41126 |
| 12 | 6150-61-2540 | SEAL (K2) | 1 | 10001- |
| 13 | 6150-61-2141 | CASE | 1 | 10006- |
| | 6150-61-2140 | CASE | 1 | 10001-10005 |
| 14 | 6150-61-2151 | PLATE | 1 | 10006- |
| | 6150-61-2150 | PLATE | 1 | 10001-10005 |
| 15 | 07000-63042 | O-RING (K2) | 1 | 10001- |
| 16 | 01435-00825 | BOLT | 2 | 19320- |
| | 01010-50825 | BOLT | 2 | 10001-19319 |
| 17 | 01640-20816 | WASHER | 2 | 10001-19319 |
| 18 | 07042-00312 | PLUG | 1 | 10001-10005 |
| 19 | 6150-61-2812 | GASKET (K2) | 1 | 22230- |
| | □6150-61-2811 | GASKET (K2) | 1 | 10006-22229 |
| | 6150-61-2810 | GASKET | 1 | 10001-10005 |
| 20 | 01010-51025 | BOLT | 12 | 10001- |
| 21 | (01010-51030) | BOLT | 1 | 10001- |
| 22 | 01010-51065 | BOLT | 2 | 10001- |
| 23 | 01010-51080 | BOLT | 2 | 10006- |
| | 01010-51070 | BOLT | 2 | 10001-10005 |
| 24 | 01640-21016 | WASHER | 17 | 10001- |
| 25 | 6140-61-6512 | VALVE | 1 | 10006- |

# FIG.0335 TORQUE CONVERTER COOLER

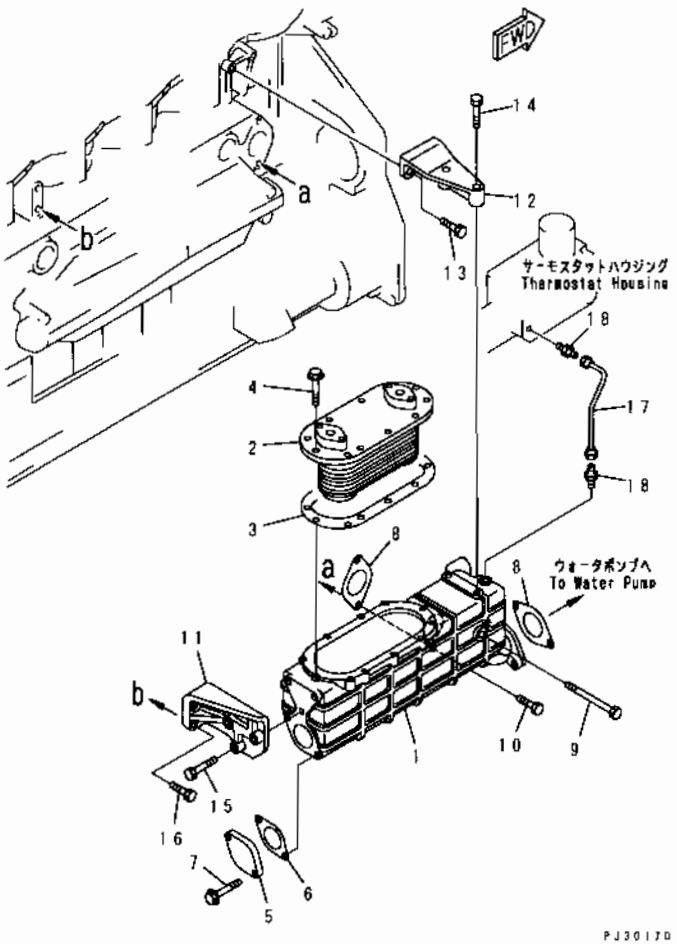


| INDEX | PART NO | DESCRIPTION | Q'TY | SERIAL NO. |
|---|---|---|---|---|
| | 6150-61-9301 | OIL COOLER ASS'Y | 1 | 10001- |
| 1 | 6150-61-9111 | .HOUSING | 1 | 10001- |
| 2 | 6150-61-9320 | .ELEMENT | 1 | 10001- |
| 3 | 6150-61-9130 | .GASKET (K2) | 1 | 10001- |
| 4 | 01435-01020 | .BOLT | 11 | 28399- |
| | □01010-51020 | .BOLT | 11 | 10001-28398 |
| 5 | 6150-61-9140 | .PLATE | 1 | 10001- |
| 6 | 6150-61-9150 | .GASKET (K2) | 1 | 10001- |
| 7 | 01435-01025 | .BOLT | 2 | 28399- |
| | □01010-51025 | .BOLT | 2 | 10001-28398 |
| 8 | 6150-61-1820 | GASKET (K2,K6) | 2 | 10001- |
| 9 | 01011-51030 | BOLT | 1 | 10001- |
| 10 | 01010-51030 | BOLT | 1 | 10001- |
| 11 | 6150-61-9511 | BRACKET | 1 | 10001- |
| 12 | 6150-61-9520 | BRACKET | 1 | 10001- |
| 13 | 01010-51030 | BOLT | 2 | 10001- |
| 14 | 01010-51045 | BOLT | 2 | 10001- |
| 15 | 01010-51040 | BOLT | 3 | 10001- |
| 16 | 01010-51025 | BOLT | 2 | 10001- |
| 17 | 6150-61-9311 | TUBE | 1 | 10001- |
| 18 | 07214-50510 | CONNECTOR | 2 | 10001- |

# FUEL SYSTEM

# FIG.0401 FUEL INJECTION PUMP AND PIPING

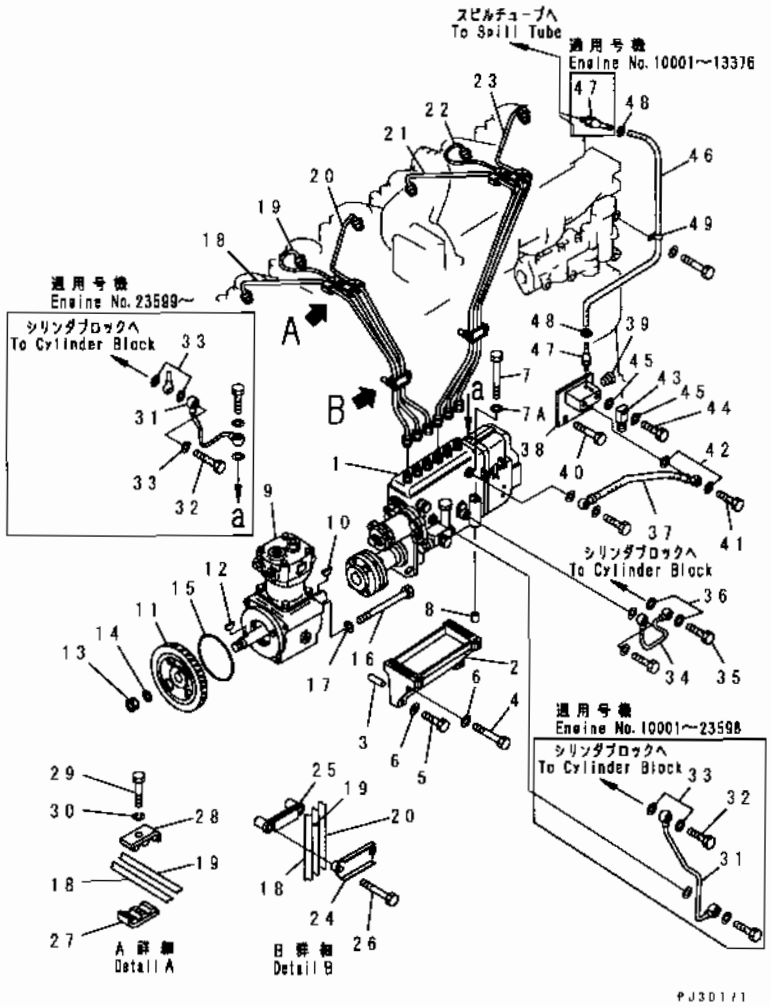


| INDEX | PART NO. | DESCRIPTION | Q'TY | SERIAL NO |
|---|---|---|---|---|
| 1 | (6151-71-1552) | INJECTION PUMP ASS'Y, (SEE FIG.0451C) | 1 | 56416- |
| | (6151-71-1551) | INJECTION PUMP A., (SEE FIG.0451B) | 1 | 34936-56415 |
| | (◆6151-71-1550) | INJECTION PUMP A., (SEE FIG.0451B) | 1 | 23599-34935 |
| | (6151-71-1513) | INJECTION PUMP A., (SEE FIG.0451A) | 1 | 13379-23598 |
| | (□6151-71-1512) | INJECTION PUMP A., (SEE FIG 0451) | 1 | 12021-13378 |
| | (□6151-71-1511) | INJECTION PUMP A., (SEE FIG 0451) | 1 | 10001-12020 |
| 2 | 6150-21-6120 | BRACKET | 1 | 28692- |
| | ■6150-21-6111 | BRACKET (6150-21-6120, 01010-51080(2), 01010-51070(2)) | 1 | 23599-28691 |
| | 6151-21-6110 | BRACKET | 1 | 10001-23598 |
| 3 | (04020-01024) | PIN, DOWEL | 2 | 10001- |
| 4 | 01010-51080 | BOLT | 2 | 28692- |
| | 01010-51075 | BOLT | 2 | 10001-28691 |
| 5 | 01010-51070 | BOLT | 2 | 28692- |
| | 01010-51045 | BOLT | 2 | 10001-28691 |
| 6 | 01643-31032 | WASHER | 4 | 10001- |
| 7 | 01010-30875 | BOLT | 4 | 23599- |
| | 6150-81-9250 | BOLT | 4 | 10001-23598 |
| 7A | 6110-71-5810 | WASHER | 4 | 23599- |
| | 01641-21016 | WASHER | 4 | 10001-23598 |
| 8 | 6150-41-2430 | PIN | 2 | 10001- |
| 9 | (6151-81-3111) | AIR COMPRESSOR A., (SEE FIG.0711A) | 1 | 42026- |
| | (◆6151-81-3110) | AIR COMPRESSOR A., (SEE FIG.0711) | 1 | 10001-42025 |
| 10 | 6150-71-3160 | KEY | 1 | 10001- |
| 11 | 6150-71-3210 | GEAR | 1 | 10001- |
| 12 | 04010-00519 | KEY | 1 | 10001- |
| 13 | 01583-12414 | NUT | 1 | 10001- |
| 14 | 01643-32460 | WASHER | 1 | 10001- |
| 15 | 07000-62125 | O-RING (K2,K8) | 1 | 43485- |
| | ◆07000-42125 | O-RING (K2,K8) | 1 | 10001-43484 |
| 16 | 01011-51040 | BOLT | 4 | 10001- |
| 17 | 01640-21016 | WASHER | 4 | 10001- |
| 18 | 6150-71-5111 | TUBE, INJECTION, NO.1 | 1 | 23599- |
| | 6151-71-5110 | TUBE, INJECTION, NO 1 | 1 | 10001-23598 |
| 19 | 6150-71-5121 | TUBE, INJECTION, NO.2 | 1 | 23599- |
| | 6151-71-5120 | TUBE, INJECTION, NO.2 | 1 | 10001-23598 |
| 20 | 6150-71-5131 | TUBE, INJECTION, NO.3 | 1 | 23599- |
| | 6151-71-5130 | TUBE, INJECTION, NO.3 | 1 | 10001-23598 |
| 21 | 6150-71-5141 | TUBE, INJECTION, NO.4 | 1 | 23599- |
| | 6151-71-5140 | TUBE, INJECTION, NO.4 | 1 | 10001-23598 |
| 22 | 6150-71-5151 | TUBE, INJECTION, NO.5 | 1 | 23599- |

FIG NO. : 0401

| INDEX | PART NO. | DESCRIPTION | Q'TY | SERIAL NO |
|---|---|---|---|---|
| | 6151-71-5150 | TUBE, INJECTION, NO.5 | 1 | 10001-23598 |
| 23 | 6150-71-5161 | TUBE, INJECTION, NO.6 | 1 | 23599- |
| | 6151-71-5160 | TUBE, INJECTION, NO 6 | 1 | 10001-23598 |
| 24 | 6144-73-5510 | CLAMP | 2 | 10001- |
| 25 | 6151-71-5520 | CLAMP | 2 | 10001- |
| 26 | 01010-51055 | BOLT | 4 | 10001- |
| | 6134-71-5701 | CLIP ASS'Y | 4 | 10001- |
| 27 | 6134-71-5721 | .CLIP, WITH THREAD | 1 | 10001- |
| 28 | 6134-71-5711 | .CLIP | 1 | 10001- |
| 29 | 01010-50630 | .BOLT | 1 | 10001- |
| 30 | 01602-20619 | .WASHER, SPRING | 1 | 10001- |
| 31 | 6151-71-5660 | TUBE | 1 | 23599- |
| | 6151-71-5610 | TUBE | 1 | 10001-23598 |
| 32 | 6127-71-5710 | BOLT, JOINT | 1 | 23599- |
| | 07206-30710 | BOLT, JOINT | 1 | 10001-23598 |
| 33 | (07005-01412) | GASKET | 3 | 23599- |
| | 07005-01012 | GASKET (K2) | 2 | 10001-23599 |
| 34 | 6150-71-5710 | TUBE | 1 | 23599- |
| | 6151-71-5710 | TUBE | 1 | 10001-23598 |
| 35 | 07206-31014 | BOLT, JOINT | 1 | 10001- |
| 36 | 07005-01412 | GASKET (K2) | 2 | 10001- |
| 37 | 07271-01445 | HOSE | 1 | 10001- |
| 38 | 6151-71-8510 | ADAPTER | 1 | 10001- |
| 39 | 07043-00108 | PLUG | 1 | 10001- |
| 40 | 01010-51020 | BOLT | 2 | 10001- |
| 41 | 07206-31014 | BOLT, JOINT | 1 | 10001- |
| 42 | 07005-01412 | GASKET (K2) | 2 | 10001- |
| 43 | 6151-71-8810 | JOINT | 1 | 10001- |
| 44 | 07206-31014 | BOLT, JOINT | 1 | 10001- |
| 45 | 07005-01412 | GASKET (K2) | 2 | 10001- |
| 46 | 07270-20480 | TUBE | 1 | 10001- |
| 47 | 07209-01040 | NIPPLE | 1 | 13377- |
| | 07209-01040 | NIPPLE | 2 | 10001-13376 |
| 48 | 07285-00085 | CLIP | 2 | 10001- |
| 49 | 08036-10814 | CLIP | 1 | 10001- |

FIG NO. : 0403

| INDEX | PART NO. | DESCRIPTION | Q'TY | SERIAL NO |
|---|---|---|---|---|
| 39 | 07043-00108 | PLUG | 1 | 10001- |
| 40 | 01010-51020 | BOLT | 2 | 10001- |
| 41 | 07206-31014 | BOLT, JOINT | 1 | 10001- |
| 42 | 07005-01412 | GASKET (K2) | 2 | 10001- |
| 43 | 6151-71-8810 | JOINT | 1 | 10001- |
| 44 | 07206-31014 | BOLT, JOINT | 1 | 10001- |
| 45 | 07005-01412 | GASKET (K2) | 2 | 10001- |
| 46 | 07270-20480 | TUBE | 1 | 10001- |
| 47 | 07209-01040 | NIPPLE | 1 | 13377- |
| | 07209-01040 | NIPPLE | 2 | 10001-13376 |
| 48 | 07285-00085 | CLIP | 2 | 10001- |
| 49 | 08036-10814 | CLIP | 1 | 10001- |

FIG NO. : 0403

| INDEX | PART NO. | DESCRIPTION | Q'TY | SERIAL NO |
|---|---|---|---|---|
| 39 | 07043-00108 | PLUG | 1 | 10001- |
| 40 | 01010-51020 | BOLT | 2 | 10001- |
| 41 | 07206-31014 | BOLT, JOINT | 1 | 10001- |
| 42 | 07005-01412 | GASKET (K2) | 2 | 10001- |
| 43 | 6151-71-8810 | JOINT | 1 | 10001- |
| 44 | 07206-31014 | BOLT, JOINT | 1 | 10001- |
| 45 | 07005-01412 | GASKET (K2) | 2 | 10001- |
| 46 | 07270-20480 | TUBE | 1 | 10001- |
| 47 | 07209-01040 | NIPPLE | 1 | 13377- |
| | 07209-01040 | NIPPLE | 2 | 10001-13376 |
| 48 | 07285-00085 | CLIP | 2 | 10001- |
| 49 | 08036-10814 | CLIP | 1 | 10001- |

# FIG.0412 FUEL FILTER AND PIPING (COLD TERRAIN SPEC.)

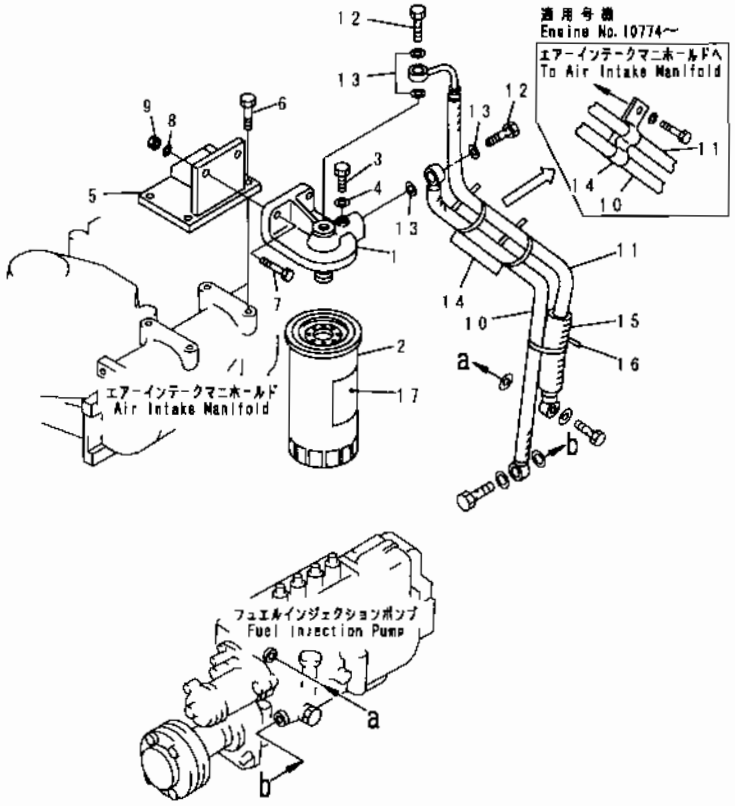


| INDEX | PART NO | DESCRIPTION | Q'TY | SERIAL NO |
|---|---|---|---|---|
| | 6138-71-6200 | FUEL FILTER ASS'Y | 1 | 10001- |
| 1 | 6138-71-6110 | .BRACKET | 1 | 10001- |
| 2 | 600-311-8281 | .CARTRIDGE | 1 | 10001- |
| | 6110-73-6231 | ..PLUG | 1 | 10001- |
| | 07005-00812 | ..GASKET | 1 | 10001- |
| 3 | 6110-73-6231 | .PLUG | 1 | 10001- |
| 4 | 07005-00812 | .GASKET | 1 | 10001- |
| 5 | 6150-71-6210 | BRACKET | 1 | 10001- |
| 6 | 01010-51025 | BOLT | 4 | 10001- |
| 7 | 01010-51030 | BOLT | 2 | 10001- |
| 8 | 01640-21016 | WASHER | 2 | 10001- |
| 9 | 01580-11008 | NUT | 2 | 10001- |
| 10 | 07271-21465 | HOSE | 1 | 10001- |
| 11 | 6151-71-5470 | HOSE | 1 | 10001- |
| 12 | 07206-31014 | BOLT,JOINT | 2 | 10001- |
| 13 | 07005-01412 | GASKET (K2) | 4 | 10001- |
| 14 | 6150-61-8810 | CLIP | 1 | 10774- |
| | 08034-00414 | BAND | 2 | 10001-10773 |
| 15 | 205-62-72140 | COVER | 1 | 34936- |
| 16 | 08034-00519 | BAND | 1 | 34936- |
| 17 | 600-311-8673 | PLATE, CAUTION | 1 | 10001- |

# FIG.0421A FUEL NOZZLE AND SPILL PIPE(#23599-)

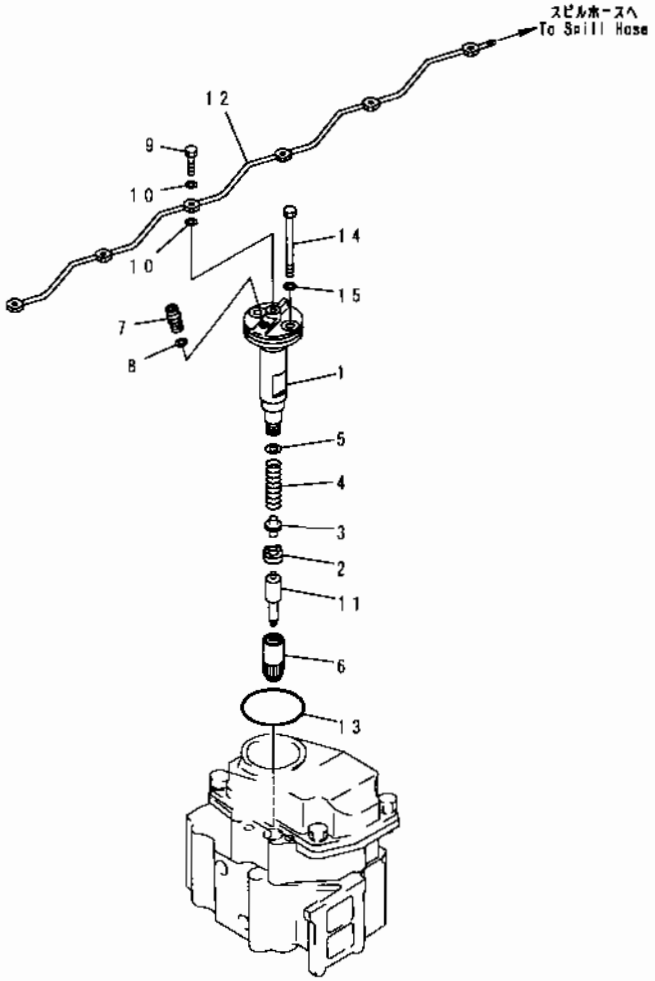


| INDEX | PART NO | DESCRIPTION | Q'TY | SERIAL NO |
|---|---|---|---|---|
| | 6150-11-3101 | NOZZLE HOLDER ASS'Y | 1 | 23599- |
| | 6150-11-3111 | HOLDER ASS'Y | 1 | 23599- |
| 1 | ND093111-2710 | BODY | 1 | 23599- |
| 2 | ND093220-0050 | PACKING | 1 | 23599- |
| 3 | ND093121-0320 | PIN, PUSH | 1 | 23599- |
| 4 | ND093127-0270 | SPRING | 1 | 23599- |
| 5 | ND093175-1020 | SHIM, 0.7MM | AR | 23599- |
| | ND093175-1500 | SHIM, 0.725MM | AR | 23599- |
| | ND093175-1030 | SHIM, 0.75MM | AR | 23599- |
| | ND093175-1510 | SHIM, 0.775MM | AR | 23599- |
| | ND093175-1040 | SHIM, 0.8MM | AR | 23599- |
| | ND093175-1520 | SHIM, 0.825MM | AR | 23599- |
| | ND093175-1050 | SHIM, 0.85MM | AR | 23599- |
| | ND093175-1530 | SHIM, 0.875MM | AR | 23599- |
| | ND093175-1060 | SHIM, 0.9MM | AR | 23599- |
| | ND093175-1540 | SHIM, 0.925MM | AR | 23599- |
| | ND093175-1070 | SHIM, 0.95MM | AR | 23599- |
| | ND093175-1550 | SHIM, 0.975MM | AR | 23599- |
| | ND093175-1080 | SHIM, 1.0MM | AR | 23599- |
| | ND093175-1560 | SHIM, 1.025MM | AR | 23599- |
| | ND093175-1090 | SHIM, 1.05MM | AR | 23599- |
| | ND093175-1570 | SHIM, 1.075MM | AR | 23599- |
| | ND093175-1100 | SHIM, 1.1MM | AR | 23599- |
| | ND093175-1580 | SHIM, 1.125MM | AR | 23599- |
| | ND093175-1110 | SHIM, 1.15MM | AR | 23599- |
| | ND093175-1590 | SHIM, 1.175MM | AR | 23599- |
| | ND093175-1120 | SHIM, 1.2MM | AR | 23599- |
| | ND093175-1600 | SHIM, 1.225MM | AR | 23599- |
| | ND093175-1130 | SHIM, 1.25MM | AR | 23599- |
| | ND093175-1610 | SHIM, 1.275MM | AR | 23599- |
| | ND093175-1140 | SHIM, 1.3MM | AR | 23599- |
| | ND093175-1620 | SHIM, 1.325MM | AR | 23599- |
| | ND093175-1150 | SHIM, 1.35MM | AR | 23599- |
| | ND093175-1630 | SHIM, 1.375MM | AR | 23599- |
| | ND093175-1160 | SHIM, 1.4MM | AR | 23599- |
| | ND093175-1640 | SHIM, 1.425MM | AR | 23599- |
| | ND093175-1170 | SHIM, 1.45MM | AR | 23599- |
| | ND093175-1650 | SHIM, 1.475MM | AR | 23599- |
| | ND093175-1180 | SHIM, 1.5MM | AR | 23599- |
| 6 | ND093164-1120 | NUT | 1 | 23599- |
| 7 | ND093151-0390 | CONNECTOR | 1 | 23599- |
| 8 | ND093158-0010 | GASKET | 1 | 23599- |

# FIG. 0421A FUEL NOZZLE AND SPILL PIPE(#23599-)

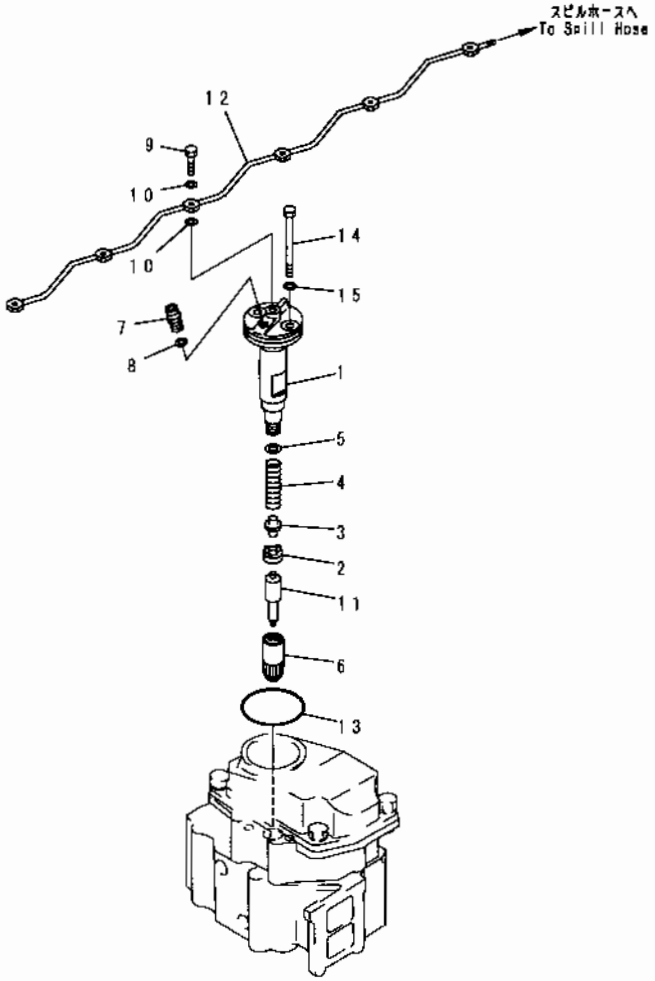


| INDEX | PART NO. | DESCRIPTION | Q'TY | SERIAL NO |
|---|---|---|---|---|
| | 6150-11-3101 | NOZZLE HOLDER ASS'Y | 1 | 23599- |
| | 6150-11-3111 | HOLDER ASS'Y | 1 | 23599- |
| 1 | ND093111-2710 | BODY | 1 | 23599- |
| 2 | ND093220-0050 | PACKING | 1 | 23599- |
| 3 | ND093121-0320 | PIN, PUSH | 1 | 23599- |
| 4 | ND093127-0270 | SPRING | 1 | 23599- |
| 5 | ND093175-1020 | SHIM, 0.7MM | AR | 23599- |
| | ND093175-1500 | SHIM, 0.725MM | AR | 23599- |
| | ND093175-1030 | SHIM, 0.75MM | AR | 23599- |
| | ND093175-1510 | SHIM, 0.775MM | AR | 23599- |
| | ND093175-1040 | SHIM, 0.8MM | AR | 23599- |
| | ND093175-1520 | SHIM, 0.825MM | AR | 23599- |
| | ND093175-1050 | SHIM, 0.85MM | AR | 23599- |
| | ND093175-1530 | SHIM, 0.875MM | AR | 23599- |
| | ND093175-1060 | SHIM, 0.9MM | AR | 23599- |
| | ND093175-1540 | SHIM, 0.925MM | AR | 23599- |
| | ND093175-1070 | SHIM, 0.95MM | AR | 23599- |
| | ND093175-1550 | SHIM, 0.975MM | AR | 23599- |
| | ND093175-1080 | SHIM, 1.0MM | AR | 23599- |
| | ND093175-1560 | SHIM, 1.025MM | AR | 23599- |
| | ND093175-1090 | SHIM, 1.05MM | AR | 23599- |
| | ND093175-1570 | SHIM, 1.075MM | AR | 23599- |
| | ND093175-1100 | SHIM, 1.1MM | AR | 23599- |
| | ND093175-1580 | SHIM, 1.125MM | AR | 23599- |
| | ND093175-1110 | SHIM, 1.15MM | AR | 23599- |
| | ND093175-1590 | SHIM, 1.175MM | AR | 23599- |
| | ND093175-1120 | SHIM, 1.2MM | AR | 23599- |
| | ND093175-1600 | SHIM, 1.225MM | AR | 23599- |
| | ND093175-1130 | SHIM, 1.25MM | AR | 23599- |
| | ND093175-1610 | SHIM, 1.275MM | AR | 23599- |
| | ND093175-1140 | SHIM, 1.3MM | AR | 23599- |
| | ND093175-1620 | SHIM, 1.325MM | AR | 23599- |
| | ND093175-1150 | SHIM, 1.35MM | AR | 23599- |
| | ND093175-1630 | SHIM, 1.375MM | AR | 23599- |
| | ND093175-1160 | SHIM, 1.4MM | AR | 23599- |
| | ND093175-1640 | SHIM, 1.425MM | AR | 23599- |
| | ND093175-1170 | SHIM, 1.45MM | AR | 23599- |
| | ND093175-1650 | SHIM, 1.475MM | AR | 23599- |
| | ND093175-1180 | SHIM, 1.5MM | AR | 23599- |
| 6 | ND093164-1120 | NUT | 1 | 23599- |
| 7 | ND093151-0390 | CONNECTOR | 1 | 23599- |
| 8 | ND093158-0010 | GASKET | 1 | 23599- |

FIG NO. : 0421A

| INDEX | PART NO. | DESCRIPTION | Q'TY | SERIAL NO. |
|---|---|---|---|---|
| 9 | ND093166-0010 | ..SCREW, JOINT | 1 | 23599- |
| 10 | 07005-00812 | ..GASKET (K1) | 2 | 23599- |
| 11 | 6150-11-3120 | .NOZZLE | 1 | 23599- |
| 12 | 6150-71-5340 | TUBE | 1 | 13377- |
| 13 | 07000-65065 | O-RING (K1) | 6 | 10001- |
| 14 | 01011-51045 | BOLT | 12 | 10001- |
| 15 | 07005-01012 | GASKET (K1) | 12 | 10001- |

# FIG.0423 FUEL NOZZLE AND SPILL PIPE (COLD TERRAIN SPEC.)

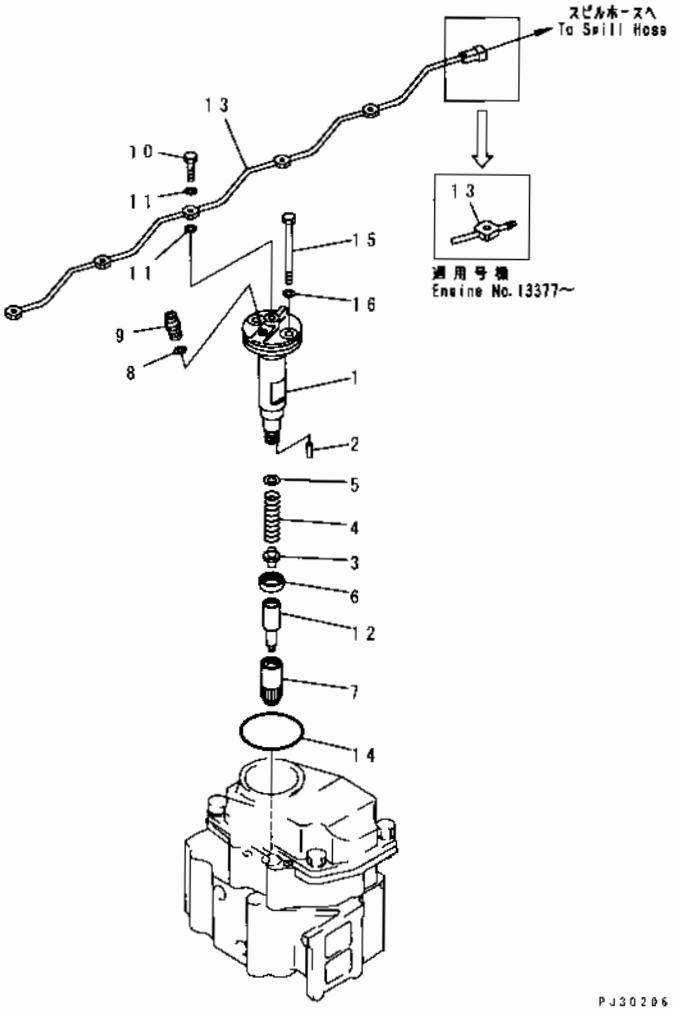


| INDEX | PART NO. | DESCRIPTION | Q'TY | SERIAL NO |
|---|---|---|---|---|
| | 6151-11-3101 | NOZZLE HOLDER ASS'Y. | 6 | 10001- |
| 1 | 6151-11-3111 | .HOLDER ASS'Y | 1 | 10001- |
| 2 | DK150525-1700 | ..PIN. | 2 | 10001- |
| 3 | DK150550-4700 | ..ROD, PUSH. | 1 | 10001- |
| 4 | DK150562-5000 | ..SPRING, NOZZLE | 1 | 10001- |
| 5 | DK150530-4000 | ..SHIM, 0.500MM. | AR | 10001- |
| | DK150530-4100 | ..SHIM, 0.525MM. | AR | 10001- |
| | DK150530-4200 | ..SHIM, 0.550MM. | AR | 10001- |
| | DK150530-4300 | ..SHIM, 0.575MM. | AR | 10001- |
| | DK150530-4400 | ..SHIM, 0.600MM. | AR | 10001- |
| | DK150530-4500 | ..SHIM, 0.625MM. | AR | 10001- |
| | DK150530-4600 | ..SHIM, 0.650MM. | AR | 10001- |
| | DK150530-4700 | ..SHIM, 0.675MM. | AR | 10001- |
| | DK150530-4800 | ..SHIM, 0.700MM. | AR | 10001- |
| | DK150530-4900 | ..SHIM, 0.725MM. | AR | 10001- |
| | DK150530-5000 | ..SHIM, 0.750MM. | AR | 10001- |
| | DK150530-5100 | ..SHIM, 0.775MM. | AR | 10001- |
| | DK150530-5200 | ..SHIM, 0.800MM. | AR | 10001- |
| | DK150530-5300 | ..SHIM, 0.825MM. | AR | 10001- |
| | DK150530-5400 | ..SHIM, 0.850MM. | AR | 10001- |
| | DK150530-5500 | ..SHIM, 0.875MM. | AR | 10001- |
| | DK150530-5600 | .SHIM, 0.900MM. | AR | 10001- |
| | DK150530-5700 | ..SHIM, 0.925MM. | AR | 10001- |
| | DK150530-5800 | ..SHIM, 0.950MM. | AR | 10001- |
| | DK150530-5900 | ..SHIM, 0.975MM. | AR | 10001- |
| | DK150530-6000 | ..SHIM, 1.000MM. | AR | 10001- |
| | DK150530-6100 | .SHIM, 1.025MM | AR | 10001- |
| | DK150530-6200 | ..SHIM, 1.050MM. | AR | 10001- |
| | DK150530-6300 | ..SHIM, 1.075MM. | AR | 10001- |
| | DK150530-6400 | ..SHIM, 1.100MM. | AR | 10001- |
| | DK150530-6500 | ..SHIM, 1.125MM. | AR | 10001- |
| | DK150530-6600 | ..SHIM, 1.150MM | AR | 10001- |
| | DK150530-6700 | ..SHIM, 1.175MM. | AR | 10001- |
| | DK150530-6800 | ..SHIM, 1.200MM. | AR | 10001- |
| | DK150530-6900 | .SHIM, 1.225MM. | AR | 10001- |
| | DK150530-7000 | ..SHIM, 1.250MM. | AR | 10001- |
| | DK150530-7100 | ..SHIM, 1.275MM. | AR | 10001- |
| | DK150530-7200 | ..SHIM, 1.300MM. | AR | 10001- |
| | DK150530-7300 | ..SHIM, 1.325MM. | AR | 10001- |
| | DK150530-7400 | ..SHIM, 1.350MM | AR | 10001- |
| | DK150530-7500 | ..SHIM, 1.375MM | AR | 10001- |
| | DK150530-7600 | SHIM, 1.400MM. | AR | 10001- |

FIG NO. : 0423

| INDEX | PART NO | DESCRIPTION | Q'TY | SERIAL NO. |
|---|---|---|---|---|
| | DK150530-7700 | SHIM, 1.425MM | AR | 10001- |
| | DK150530-7800 | SHIM, 1.450MM | AR | 10001- |
| | DK150530-7900 | SHIM, 1.475MM | AR | 10001- |
| | DK150530-8000 | SHIM, 1.500MM | AR | 10001- |
| | DK150530-8100 | SHIM, 1.525MM | AR | 10001- |
| | DK150530-8200 | SHIM, 1.550MM | AR | 10001- |
| | DK150530-8300 | SHIM, 1.575MM | AR | 10001- |
| | DK150530-8400 | SHIM, 1.600MM | AR | 10001- |
| | DK150530-8500 | SHIM, 1.625MM | AR | 10001- |
| | DK150530-8600 | SHIM, 1.650MM | AR | 10001- |
| | DK150530-8700 | SHIM, 1.675MM | AR | 10001- |
| | DK150530-8800 | SHIM, 1.700MM | AR | 10001- |
| | DK150530-8900 | SHIM, 1.725MM | AR | 10001- |
| | DK150530-9000 | SHIM, 1.750MM | AR | 10001- |
| | DK150530-9100 | SHIM, 1.775MM | AR | 10001- |
| | DK150530-9200 | SHIM, 1.800MM | AR | 10001- |
| | DK150530-9300 | SHIM, 1.825MM | AR | 10001- |
| | DK150530-9400 | SHIM, 1.850MM | AR | 10001- |
| | DK150530-9500 | SHIM, 1.875MM | AR | 10001- |
| | DK150530-9600 | SHIM, 1.900MM | AR | 10001- |
| | DK150530-9700 | SHIM, 1.925MM | AR | 10001- |
| | DK150530-9800 | SHIM, 1.950MM | AR | 10001- |
| | DK150530-9900 | SHIM, 1.975MM | AR | 10001- |
| 6 | DK150524-4100 | SPACER | 1 | 10001- |
| 7 | DK150650-9400 | NUT, RETAINING | 1 | 10001- |
| 8 | DK029300-5070 | GASKET | 1 | 10001- |
| 9 | DK150645-6800 | CONNECTOR, INLET | 1 | 10001- |
| 10 | 6127-11-3152 | BOLT, JOINT | 1 | 10001- |
| 11 | 07005-00812 | GASKET (K1) | 2 | 10001- |
| 12 | 6151-11-3121 | NOZZLE | 1 | 10001- |
| 13 | 6150-71-5340 | TUBE | 1 | 13377- |
| | 6150-71-5330 | TUBE | 1 | 10001-13376 |
| 14 | 07000-65065 | O-RING (K1) | 6 | 10001- |
| 15 | 01011-51045 | BOLT | 12 | 10001- |
| 16 | 07005-01012 | GASKET (K1) | 12 | 10001- |

# FIG.0451C FUEL INJECTION PUMP (PUMP) (1/2) (#56416-)

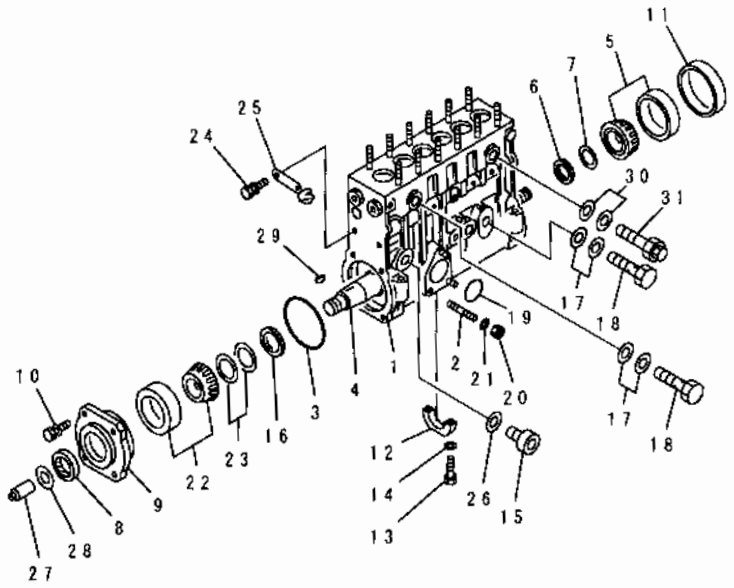


| INDEX | PART NO. | DESCRIPTION | Q'TY | SERIAL NO. |
|---|---|---|---|---|
| | 6151-71-1552 | INJECTION PUMP ASS'Y.<br>THIS ASSEMBLY CONSISTS OF ALL PARTS SHOWN IN FIGS.0451C TO 0481C. | 1 | 56416- |
| | ND190100-0101 | .BODY ASS'Y.<br>THIS ASSEMBLY CONSISTS OF ALL PARTS SHOWN IN FIGS.0451C AND 0452C. | 1 | 56416- |
| 1 | ND090110-4460 | ..HOUSING. | 1 | 56416- |
| 2 | ND949043-0010 | ...STUD. | 3 | 56416- |
| 3 | ND949140-3940 | .O-RING. | 1 | 56416- |
| 4 | ND090191-1090 | ..CAMSHAFT. | 1 | 56416- |
| 5 | ND949101-0140 | .BEARING,ROLLER. | 1 | 56416- |
| 6 | ND090193-0050 | ..RING,ADJUST. | 1 | 56416- |
| 7 | ND090194-0410 | .PLATE, 0.03MM. | AR | 56416- |
| | ND090194-0070 | ..PLATE, 0.1MM. | AR | 56416- |
| | ND090194-0340 | .PLATE, 0.12MM. | AR | 56416- |
| | ND090194-0350 | ..PLATE, 0.14MM. | AR | 56416- |
| | ND090194-0080 | ..PLATE, 0.15MM. | AR | 56416- |
| | ND090194-0360 | ..PLATE, 0.18MM. | AR | 56416- |
| | ND090194-0090 | .PLATE, 0.3MM. | AR | 56416- |
| | ND090194-0100 | ..PLATE, 0.5MM. | AR | 56416- |
| 8 | ND949150-2820 | ..SEAL,OIL | 1 | 56416- |
| 9 | ND090201-0430 | ..COVER,BEARING. | 1 | 56416- |
| 10 | ND91518-06161 | BOLT. | 4 | 56416- |
| 11 | ND090433-0020 | .RETAINER,BEARING. | 1 | 56416- |
| 12 | ND090361-0180 | ..BEARING,CENTER. | 1 | 56416- |
| | ND090361-0240 | ..BEARING,CENTER. | 1 | 56416- |
| 13 | ND90015-06181 | ..SCREW. | 2 | 56416- |
| | ND949006-6510 | ..SCREW. | 2 | 56416- |
| | ND949006-7300 | ..SCREW. | 2 | 56416- |
| 14 | ND090248-0010 | ..WASHER. | 2 | 56416- |
| 15 | ND090317-0140 | ..PLUG. | 1 | 56416- |
| 16 | ND090193-0060 | ..RING,ADJUST. | 1 | 56416- |
| 17 | ND090222-0070 | ..WASHER. | 4 | 56416- |
| 18 | ND949180-0310 | ..SCREW. | 2 | 56416- |
| 19 | ND949140-0380 | .O-RING. | 1 | 56416- |
| 20 | ND90160-06051 | ..NUT. | 3 | 56416- |
| 21 | ND90258-06001 | ..WASHER,SPRING. | 3 | 56416- |
| 22 | ND949101-0130 | ..BEARING,ROLLER. | 1 | 56416- |
| 23 | ND090194-0420 | .PLATE, 0.03MM | AR | 56416- |
| | ND090194-0300 | ..PLATE, 0.1MM. | AR | 56416- |
| | ND090194-0370 | ..PLATE, 0.12MM. | AR | 56416- |
| | ND090194-0380 | ..PLATE, 0.14MM. | AR | 56416- |

FIG NO. : 0451C

| INDEX | PART NO | DESCRIPTION | Q'TY | SERIAL NO |
|---|---|---|---|---|
| | ND090194-0310 | ..PLATE, 0.16MM.. | AR | 56416- |
| | ND090194-0390 | ..PLATE, 0.18MM.. | AR | 56416- |
| | ND090194-0320 | ..PLATE, 0.3MM.. | AR | 56416- |
| | ND090194-0330 | .PLATE, 0.5MM.. | AR | 56416- |
| 24 | ND949047-0620 | ..BOLT.. | 2 | 56416- |
| 25 | ND090118-0490 | ..NEEDLE, TIMING.. | 1 | 56416- |
| 26 | ND949018-0350 | .WASHER.. | 1 | 56416- |
| 27 | ND090012-0140 | .NUT.. | 1 | 56416- |
| 28 | ND949014-0070 | .WASHER.. | 1 | 56416- |
| 29 | ND90458-05750 | KEY.. | 1 | 56416- |
| 30 | ND090222-0070 | .WASHER.. | 2 | 56416- |
| 31 | ND090310-0080 | .VALVE ASS'Y, OVER FLOW.. | 1 | 56416- |

# FIG.0452C FUEL INJECTION PUMP (PUMP) (2/2) (#56416-)

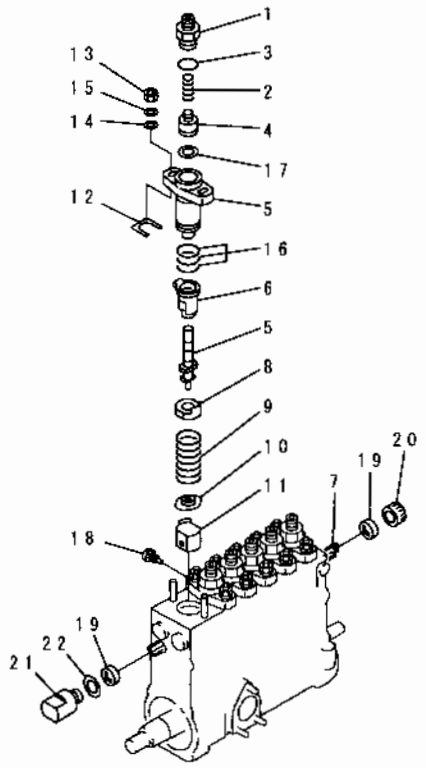


FG3P758

| INDEX | PART NO | DESCRIPTION | Q'TY | SERIAL NO |
|---|---|---|---|---|
| | (6151-71-1552) | INJECTION PUMP ASS'Y<br>THIS ASSEMBLY CONSISTS OF ALL PARTS SHOWN IN FIGS.0451C TO 0481C. | 1 | 56416- |
| | (ND190100-0101) | .BODY ASS'Y<br>THIS ASSEMBLY CONSISTS OF ALL PARTS SHOWN IN FIGS.0451C AND 0452C. | 1 | 56416- |
| 1 | ND090130-0500 | . HOLDER,DELIVERY VALVE | 6 | 56416- |
| 2 | ND090136-0770 | . SPRING,DELIVERY VALVE | 6 | 56416- |
| 3 | ND949140-2570 | ..O-RING | 6 | 56416- |
| 4 | ND090140-1430 | ..VALVE SUB ASS'Y,DELIVERY | 6 | 56416- |
| 5 | ND090150-5881 | ..ELEMENT | 6 | 56416- |
| 6 | ND090160-0150 | ..SLEEVE,CONTROL | 6 | 56416- |
| 7 | ND090212-0471 | ..RACK,CONTROL | 1 | 56416- |
| 8 | ND090163-0160 | ..SEAT,UPPER | 6 | 56416- |
| 9 | ND090164-0250 | ..SPRING,PLUNGER | 6 | 56416- |
| 10 | ND090165-0150 | . SEAT,LOWER | 6 | 56416- |
| 11 | ND090170-0320 | ..TAPPET ASS'Y | 6 | 56416- |
| 12 | ND090438-0391 | ..SHIM, 1.75MM | AR | 56416- |
| | ND090438-0401 | ..SHIM, 1.8MM | AR | 56416- |
| | ND090438-0411 | ..SHIM, 1.85MM | AR | 56416- |
| | ND090438-0421 | ..SHIM, 1.9MM | AR | 56416- |
| | ND090438-0431 | ..SHIM, 1.95MM | AR | 56416- |
| | ND090438-0441 | ..SHIM, 2.0MM | AR | 56416- |
| | ND090438-0451 | ..SHIM, 2.05MM | AR | 56416- |
| | ND090438-0461 | ..SHIM, 2.1MM | AR | 56416- |
| | ND090438-0471 | .SHIM, 2.15MM | AR | 56416- |
| | ND090438-0481 | .SHIM, 2.2MM | AR | 56416- |
| | ND090438-0491 | .SHIM, 2.25MM | AR | 56416- |
| | ND090438-0501 | ..SHIM, 2.3MM | AR | 56416- |
| | ND090438-0511 | ..SHIM, 2.35MM | AR | 56416- |
| | ND090438-0521 | ..SHIM, 2.4MM | AR | 56416- |
| 13 | ND90196-08651 | ..NUT | 12 | 56416- |
| 14 | ND949013-5880 | ..WASHER | 12 | 56416- |
| 15 | ND90258-08001 | WASHER,SPRING | 12 | 56416- |
| 16 | ND090139-0340 | .O-RING | 12 | 56416- |
| 17 | ND949018-1730 | ..WASHER | 6 | 56416- |
| 18 | ND090215-0060 | ..SCREW | 1 | 56416- |
| 19 | ND090114-0110 | ..BUSHING | 2 | 56416- |
| 20 | ND090367-0040 | ..BUSHING | 1 | 56416- |
| 21 | ND090018-0410 | .COVER | 1 | 56416- |
| 22 | ND949018-1550 | .WASHER | 1 | 56416- |

# FIG.0455 FUEL INJECTION PUMP (PUMP) (1/2) (COLD TERRAIN SPEC.) (#10532-)

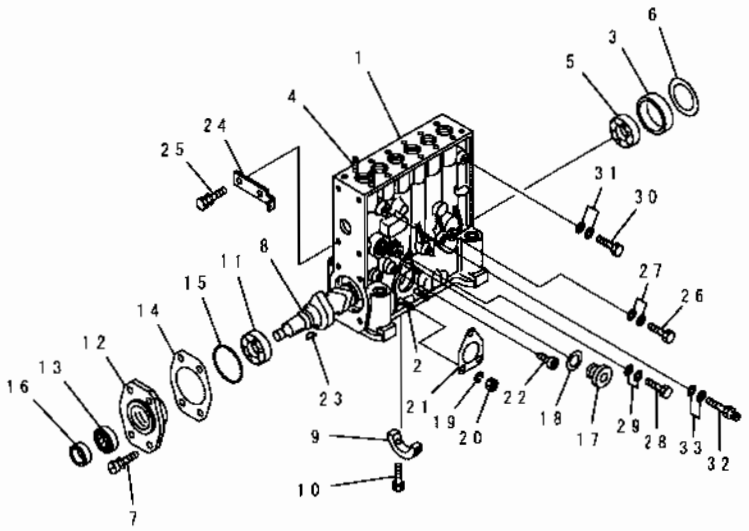


| INDEX | PART NO. | DESCRIPTION | Q'TY | SERIAL NO |
|---|---|---|---|---|
| | 6151-71-1531 | INJECTION PUMP A..... THIS ASSEMBLY CONSISTS OF ALL PARTS SHOWN IN FIGS 0455 TO 0485. | 1 | 10532- |
| | DK106069-5431 | .PUMP ASS'Y..... THIS ASSEMBLY CONSISTS OF ALL PARTS SHOWN IN FIGS.0455 AND 0456. | 1 | 10532- |
| 1 | DK134051-6220 | ..HOUSING.. | 1 | 10532- |
| 2 | DK029040-6020 | ...STUD.. | 3 | 10532- |
| 3 | DK134311-0000 | ..RING.. | 1 | 10532- |
| 4 | DK134138-0000 | ..STUD.. | 12 | 10532- |
| 5 | DK016650-2230 | ..BEARING.. | 1 | 10532- |
| 6 | DK134303-0400 | ..SHIM, 0.60MM.. | AR | 10532- |
| | DK134303-0000 | ..SHIM, 1.20MM.. | AR | 10532- |
| | DK134303-0100 | ..SHIM, 1.50MM.. | AR | 10532- |
| | DK134303-0200 | ..SHIM, 1.80MM.. | AR | 10532- |
| | DK134303-0300 | ..SHIM, 2.00MM.. | AR | 10532- |
| 7 | DK029010-6810 | ..BOLT.. | 4 | 10532- |
| 8 | DK134371-5200 | ..CAMSHAFT.. | 1 | 10532- |
| 9 | DK134306-0700 | ..BEARING,CENTER.. | 1 | 10532- |
| 10 | DK020106-2040 | ..BOLT.. | 2 | 10532- |
| 11 | DK016650-2230 | ..BEARING.. | 1 | 10532- |
| 12 | DK134316-1700 | ..COVER.. | 1 | 10532- |
| 13 | DK139629-0100 | .SEAL,OIL.. | 1 | 10532- |
| 14 | DK134314-0000 | .SHIM, 0.10MM.. | AR | 10532- |
| | DK134314-0100 | SHIM, 0.12MM.. | AR | 10532- |
| | DK134314-0200 | ..SHIM, 0.14MM.. | AR | 10532- |
| | DK134314-0300 | .SHIM, 0.16MM.. | AR | 10532- |
| | DK134314-0400 | ..SHIM, 0.18MM.. | AR | 10532- |
| | DK134314-0500 | ..SHIM, 0.30MM.. | AR | 10532- |
| | DK134314-0600 | ..SHIM, 0.50MM.. | AR | 10532- |
| 15 | DK029635-5050 | ..O-RING.. | 1 | 10532- |
| 16 | DK134563-0900 | ..SLEEVE.. | 1 | 10532- |
| 17 | DK134045-0100 | ..PLUG.. | 1 | 10532- |
| 18 | DK026524-2940 | ..GASKET.. | 1 | 10532- |
| 19 | DK014110-6440 | ..WASHER,SPRING.. | 3 | 10532- |
| 20 | DK013020-6040 | ..NUT.. | 3 | 10532- |
| 21 | DK131041-0500 | ..GASKET.. | 1 | 10532- |
| 22 | DK134047-0000 | ..PLUG.. | 6 | 10532- |
| 23 | DK025805-1910 | ..KEY.. | 1 | 10532- |
| 24 | DK134496-0100 | ..POINTER.. | 1 | 10532- |
| 25 | DK020006-1240 | ..BOLT.. | 2 | 10532- |
| 26 | DK134430-3520 | ..BOLT,EYE.. | 1 | 10532- |

# FIG.0455 FUEL INJECTION PUMP (PUMP) (1/2) (COLD TERRAIN SPEC.) (#10532-)

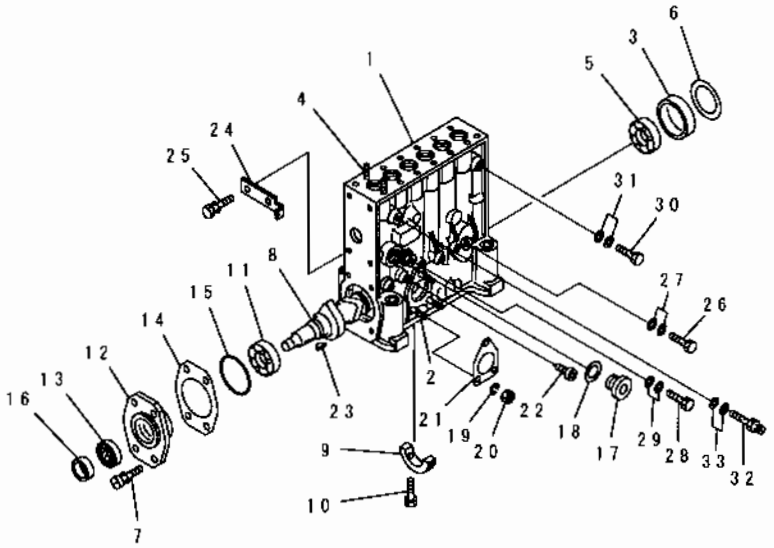


PJ3F591

| INDEX | PART NO. | DESCRIPTION | Q'TY | SERIAL NO. |
|---|---|---|---|---|
| 27 | DK029341-4130 | ..GASKET | 2 | 10532- |
| 28 | DK029731-0120 | ..BOLT,EYE | 1 | 10532- |
| 29 | DK029341-0110 | ..GASKET | 2 | 10532- |
| 30 | DK029731-4680 | ..BOLT,EYE | 1 | 10532- |
| 31 | DK029341-4130 | ..GASKET | 2 | 10532- |
| 32 | DK131424-1520 | ..VALVE,OVER FLOW | 1 | 10532- |
| 33 | DK029341-4130 | ..GASKET | 2 | 10532- |

# FIG. 0456 FUEL INJECTION PUMP (PUMP) (2/2) (COLD TERRAIN SPEC.) (#10532-)

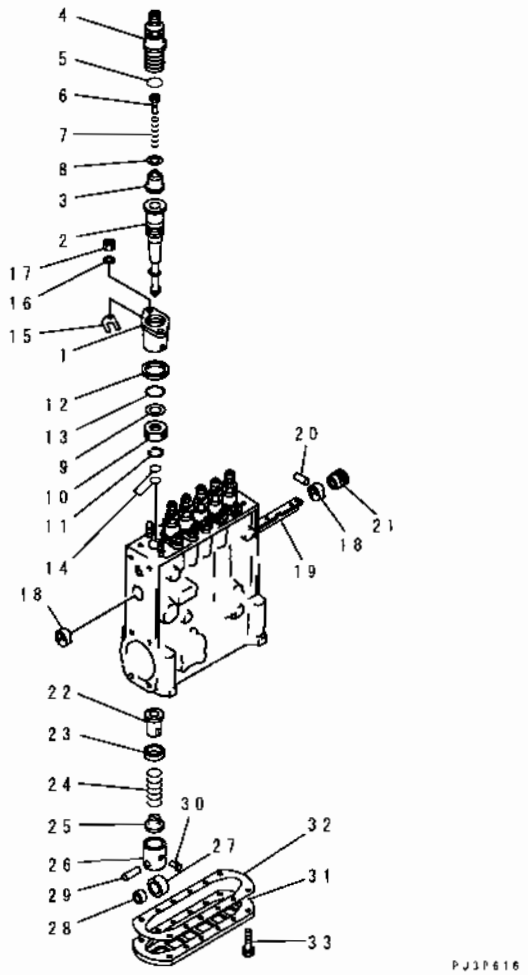


| INDEX | PART NO | DESCRIPTION | Q'TY | SERIAL NO |
|---|---|---|---|---|
| | (6151-71-1531) | INJECTION PUMP A.<br>THIS ASSEMBLY CONSISTS OF ALL PARTS SHOWN IN FIGS. 0455 TO 0485. | 1 | 10532- |
| | (DK106069-5431) | PUMP ASS'Y.<br>THIS ASSEMBLY CONSISTS OF ALL PARTS SHOWN IN FIGS. 0455 AND 0456. | 1 | 10532- |
| | DK134143-7720 | ..BLOCK ASS'Y. | 6 | 10532- |
| 1 | DK134131-1020 | .FLANGE | 1 | 10532- |
| 2 | DK134101-9820 | ...PLUNGER ASS'Y. | 1 | 10532- |
| 3 | DK134110-0120 | ...VALVE, DELIVERY. | 1 | 10532- |
| 4 | DK134116-4720 | ...HOLDER. | 1 | 10532- |
| 5 | DK139722-0100 | ...O-RING | 1 | 10532- |
| 6 | DK134117-0500 | ...STOPPER. | 1 | 10532- |
| 7 | DK134112-2000 | ...SPRING. | 1 | 10532- |
| 8 | DK134115-0100 | ...GASKET. | 1 | 10532- |
| 9 | DK029302-0140 | ...WASHER. | 1 | 10532- |
| 10 | DK134135-0200 | ...DEFLECTOR. | 1 | 10532- |
| 11 | DK029602-0010 | ...RING, SNAP. | 1 | 10532- |
| 12 | DK134137-0100 | .. RING. | 1 | 10532- |
| 13 | DK029632-9040 | ...O-RING. | 1 | 10532- |
| 14 | DK139715-0000 | ...O-RING | 2 | 10532- |
| 15 | DK139400-0900 | ..SHIM, 0.500MM. | AR | 10532- |
| | DK139400-1000 | ..SHIM, 0.525MM. | AR | 10532- |
| | DK139400-1100 | ..SHIM, 0.550MM. | AR | 10532- |
| | DK139400-1200 | ..SHIM, 0.575MM. | AR | 10532- |
| | DK139400-1300 | ..SHIM, 0.600MM | AR | 10532- |
| | DK139400-1400 | ..SHIM, 0.625MM. | AR | 10532- |
| | DK139400-1500 | ..SHIM, 0.650MM. | AR | 10532- |
| | DK139400-1600 | ..SHIM, 0.675MM. | AR | 10532- |
| | DK139400-1700 | ..SHIM, 0.700MM. | AR | 10532- |
| | DK139400-1800 | ..SHIM, 0.725MM. | AR | 10532- |
| | DK139400-1900 | .SHIM, 0.750MM. | AR | 10532- |
| | DK139400-2000 | ..SHIM, 0.775MM. | AR | 10532- |
| | DK139400-2100 | ..SHIM, 0.800MM. | AR | 10532- |
| | DK139400-2200 | ..SHIM, 0.825MM. | AR | 10532- |
| | DK139400-2300 | ..SHIM, 0.850MM. | AR | 10532- |
| | DK139400-2400 | ..SHIM, 0.875MM | AR | 10532- |
| | DK139400-2500 | ..SHIM, 0.900MM. | AR | 10532- |
| | DK139400-2600 | .SHIM, 0.925MM. | AR | 10532- |
| | DK139400-2700 | ..SHIM, 0.950MM. | AR | 10532- |
| | DK139400-2800 | ..SHIM, 0.975MM. | AR | 10532- |
| | DK139400-2900 | .SHIM, 1.000MM. | AR | 10532- |

# FIG.0456 FUEL INJECTION PUMP (PUMP) (2/2) (COLD TERRAIN SPEC.) (#10532-)

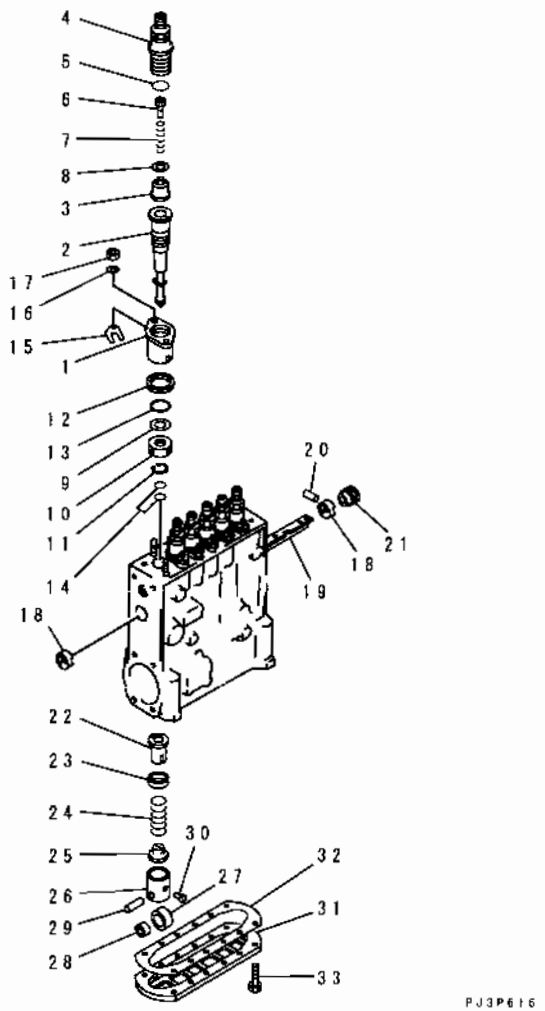


| INDEX | PART NO | DESCRIPTION | Q'TY | SERIAL NO |
|---|---|---|---|---|
| | DK139400-3000 | SHIM, 1.025MM | AR | 10532- |
| | DK139400-3100 | SHIM, 1.050MM | AR | 10532- |
| | DK139400-3200 | SHIM, 1.075MM | AR | 10532- |
| | DK139400-3300 | SHIM, 1.100MM | AR | 10532- |
| | DK139400-3400 | SHIM, 1.125MM | AR | 10532- |
| | DK139400-3500 | SHIM, 1.150MM | AR | 10532- |
| | DK139400-3600 | SHIM, 1.175MM | AR | 10532- |
| | DK139400-3700 | SHIM, 1.200MM | AR | 10532- |
| | DK139400-3800 | SHIM, 1.225MM | AR | 10532- |
| | DK139400-3900 | SHIM, 1.250MM | AR | 10532- |
| | DK139400-4000 | SHIM, 1.275MM | AR | 10532- |
| | DK139400-4100 | SHIM, 1.300MM | AR | 10532- |
| | DK139400-4200 | SHIM, 1.325MM | AR | 10532- |
| | DK139400-4300 | SHIM, 1.350MM | AR | 10532- |
| | DK139400-4400 | SHIM, 1.375MM | AR | 10532- |
| | DK139400-4500 | SHIM, 1.400MM | AR | 10532- |
| | DK139400-4600 | SHIM, 1.425MM | AR | 10532- |
| | DK139400-4700 | SHIM, 1.450MM | AR | 10532- |
| | DK139400-4800 | SHIM, 1.475MM | AR | 10532- |
| | DK139400-4900 | SHIM, 1.500MM | AR | 10532- |
| | DK139400-5000 | SHIM, 1.525MM | AR | 10532- |
| | DK139400-5100 | SHIM, 1.550MM | AR | 10532- |
| | DK139400-5200 | SHIM, 1.575MM | AR | 10532- |
| | DK139400-5300 | SHIM, 1.600MM | AR | 10532- |
| | DK139400-5400 | SHIM, 1.625MM | AR | 10532- |
| | DK139400-5500 | SHIM, 1.650MM | AR | 10532- |
| | DK139400-5600 | SHIM, 1.675MM | AR | 10532- |
| | DK139400-5700 | SHIM, 1.700MM | AR | 10532- |
| | DK139400-5800 | SHIM, 1.725MM | AR | 10532- |
| | DK139400-5900 | SHIM, 1.750MM | AR | 10532- |
| | DK139400-6000 | SHIM, 1.775MM | AR | 10532- |
| | DK139400-6100 | SHIM, 1.800MM | AR | 10532- |
| | DK139400-6200 | SHIM, 1.825MM | AR | 10532- |
| | DK139400-6300 | SHIM, 1.850MM | AR | 10532- |
| | DK139400-6400 | SHIM, 1.875MM | AR | 10532- |
| | DK139400-6500 | SHIM, 1.900MM | AR | 10532- |
| | DK139400-6600 | SHIM, 1.925MM | AR | 10532- |
| | DK139400-6700 | SHIM, 1.950MM | AR | 10532- |
| | DK139400-6800 | SHIM, 1.975MM | AR | 10532- |
| 16 | DK134132-0300 | WASHER | 12 | 10532- |
| 17 | DK013021-0040 | NUT | 12 | 10532- |
| 18 | DK134001-0000 | BUSHING | 2 | 10532- |

FIG NO. : 0456

| INDEX | PART NO. | DESCRIPTION | Q'TY | SERIAL NO |
|---|---|---|---|---|
| 19 | DK134256-0000 | .RACK, CONTROL | 1 | 10532- |
| 20 | DK024030-2030 | ..PIN | 1 | 10532- |
| 21 | DK134222-0000 | ..BUSHING | 1 | 10532- |
| 22 | DK134241-0021 | .SLEEVE, CONTROL | 6 | 10532- |
| 23 | DK134216-0000 | .SEAT, SPRING | 6 | 10532- |
| 24 | DK134215-0400 | .SPRING | 6 | 10532- |
| 25 | DK134217-0000 | ..SEAT, SPRING | 6 | 10532- |
| 26 | DK134200-0020 | .TAPPET ASS'Y | 6 | 10532- |
| 27 | DK134204-0000 | ...ROLLER | 1 | 10532- |
| 28 | DK134205-0000 | ...BUSHING | 1 | 10532- |
| 29 | DK134203-0000 | ...PIN | 1 | 10532- |
| 30 | DK131206-0500 | ...GUIDE | 1 | 10532- |
| 31 | DK134043-0800 | ..COVER | 1 | 10532- |
| 32 | DK134042-0100 | ..GASKET | 1 | 10532- |
| 33 | DK012206-1640 | ..SCREW | 12 | 10532- |

# FIG.0461B FUEL INJECTION PUMP (GOVERNOR) (1/2)

(#56416-)

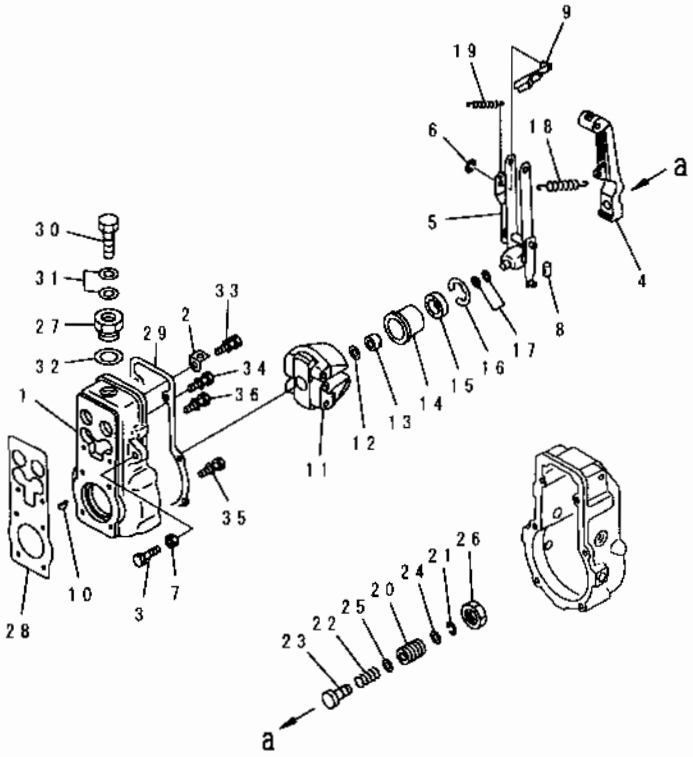


| INDEX | PART NO. | DESCRIPTION | Q'TY | SERIAL NO |
|---|---|---|---|---|
| | (6151-71-1552) | INJECTION PUMP ASS'Y<br>THIS ASSEMBLY CONSISTS OF ALL PARTS SHOWN IN FIGS.0451C TO 0481C. | 1 | 56416- |
| | ND190800-4110 | .GOVERNOR ASS'Y.<br>THIS ASSEMBLY CONSISTS OF ALL PARTS SHOWN IN FIGS.0461B AND 0462B | 1 | 56416- |
| 1 | ND090810-0540 | ..HOUSING | 1 | 56416- |
| 2 | ND090878-0260 | ..PLATE | 1 | 56416- |
| 3 | ND091024-0031 | ..SCREW,ADJUST | 1 | 56416- |
| 4 | ND090901-0150 | ..LEVER ASS'Y,TENSION | 1 | 56416- |
| 5 | ND090930-0490 | ..LEVER ASS'Y,CONTROL | 1 | 56416- |
| 6 | ND090894-0010 | ..E-RING | 1 | 56416- |
| 7 | ND948053-0051 | ..NUT | 1 | 56416- |
| 8 | ND091046-0010 | ..SLIDER,SUPPORT | 1 | 56416- |
| 9 | ND090970-0350 | ..SHACKLE ASS'Y | 1 | 56416- |
| 10 | ND949130-0050 | ..KEY | 1 | 56416- |
| 11 | ND090840-0520 | ..FLYWEIGHT ASS'Y | 1 | 56416- |
| 12 | ND949015-0500 | ..WASHER, 2.5MM,SPRING | 1 | 56416- |
| 13 | ND090844-0010 | ..NUT | 1 | 56416- |
| 14 | ND090860-0200 | .SLEEVE SUB ASS'Y | 1 | 56416- |
| 15 | ND090868-0040 | ...PLATE,THRUST | 1 | 56416- |
| 16 | ND90567-30000 | ..RING,SNAP | 1 | 56416- |
| 17 | ND949013-4090 | .WASHER, 0.1MM | AR | 56416- |
| | ND949013-4060 | .WASHER, 0.2MM | AR | 56416- |
| | ND949013-4070 | ..WASHER, 0.3MM | AR | 56416- |
| | ND949013-4080 | ..WASHER, 0.4MM | AR | 56416- |
| | ND949013-4100 | ..WASHER, 1.0MM | AR | 56416- |
| 18 | ND090992-0410 | ..SPRING,CONTROL | 1 | 56416- |
| 19 | ND090993-0280 | ..SPRING,START | 1 | 56416- |
| | ND090910-0430 | .ADAPTER ASS'Y | 1 | 56416- |
| 20 | ND090911-0010 | ..SCREW | 1 | 56416- |
| 21 | ND090894-0010 | ...E-RING | 1 | 56416- |
| 22 | ND090918-0380 | ...SPRING,GOVERNOR | 1 | 56416- |
| 23 | ND090919-0010 | ...ADAPTER | 1 | 56416- |
| 24 | ND090921-0010 | ..WASHER,GOVERNOR | 1 | 56416- |
| 25 | ND949013-3880 | ...WASHER, 0.1MM | AR | 56416- |
| | ND949013-4040 | ...WASHER, 0.2MM | AR | 56416- |
| | ND949013-4020 | ...WASHER, 0.25MM | AR | 56416- |
| | ND949013-4030 | ...WASHER, 0.5MM | AR | 56416- |
| | ND949013-7880 | ...WASHER, 1.0MM | AR | 56416- |
| 26 | ND090923-0011 | ..NUT,LOCK | 1 | 56416- |
| 27 | ND090224-0140 | ..PLUG | 1 | 56416- |

FIG NO. : 0461B

| INDEX | PART NO. | DESCRIPTION | Q'TY | SERIAL NO |
|---|---|---|---|---|
| 28 | ND090119-0160 | ..GASKET | 1 | 56416- |
| 29 | ND090823-0420 | ..GASKET | 1 | 56416- |
| 30 | ND090245-0230 | ..SCREW | 1 | 56416- |
| 31 | ND090222-0120 | ..WASHER | 2 | 56416- |
| 32 | ND949018-1550 | ..WASHER | 1 | 56416- |
| 33 | ND949047-6880 | .BOLT | 2 | 56416- |
| 34 | ND949047-6900 | .BOLT | 1 | 56416- |
| 35 | ND949047-6890 | .BOLT | 4 | 56416- |
| 36 | ND949047-6910 | .BOLT | 1 | 56416- |

# FIG.0462B FUEL INJECTION PUMP (GOVERNOR) (2/2)

(#56416-)

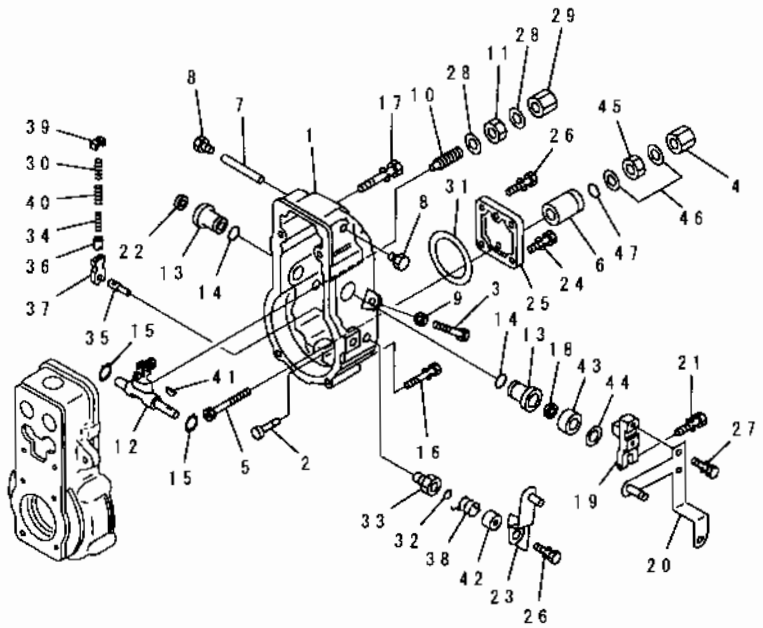


| INDEX | PART NO. | DESCRIPTION | Q'TY | SERIAL NO |
|---|---|---|---|---|
| | (6151-71-1552) | INJECTION PUMP ASS'Y<br>THIS ASSEMBLY CONSISTS OF ALL PARTS SHOWN IN FIGS.0451C TO 0481C. | 1 | 56416- |
| | (ND190800-4110) | .GOVERNOR ASS'Y<br>THIS ASSEMBLY CONSISTS OF ALL PARTS SHOWN IN FIGS.0461B AND 0462B. | 1 | 56416- |
| 1 | ND091011-2280 | COVER, GOVERNOR | 1 | 56416- |
| 2 | ND091014-0090 | ..PIN, STOP | 1 | 56416- |
| 3 | ND091024-0031 | ..SCREW, ADJUST | 2 | 56416- |
| 4 | ND091031-0151 | ..NUT | 1 | 56416- |
| 5 | ND091006-0150 | ..SCREW, ADJUST | 1 | 56416- |
| 6 | ND090944-0310 | ..BUSHING | 1 | 56416- |
| 7 | ND090989-0010 | ..SHAFT, LEVER SUPPORT | 1 | 56416- |
| 8 | ND090991-0010 | ..PLUG, SCREW | 2 | 56416- |
| 9 | ND948053-0051 | ..NUT | 1 | 56416- |
| 10 | ND090560-0200 | CAPSULE | 1 | 56416- |
| 11 | ND090923-0060 | ..NUT | 1 | 56416- |
| 12 | ND090880-0140 | .LEVER | 1 | 56416- |
| 13 | ND090892-0160 | ..BUSHING, LEVER | 2 | 56416- |
| 14 | ND949140-5760 | ..O-RING | 2 | 56416- |
| 15 | ND949071-0090 | ..WASHER, SNAP | 2 | 56416- |
| 16 | ND949047-1760 | ..BOLT | 4 | 56416- |
| 17 | ND949047-1750 | .BOLT | 2 | 56416- |
| 18 | ND949150-2690 | ..SEAL, OIL | 1 | 56416- |
| 19 | ND091071-1420 | ..LEVER | 1 | 56416- |
| 20 | ND091070-4290 | ..LEVER | 1 | 56416- |
| 21 | ND949047-1190 | .BOLT | 1 | 56416- |
| 22 | ND091094-0060 | .CAP, LEVER | 1 | 56416- |
| 23 | ND091090-1110 | ..LEVER, STOP | 1 | 56416- |
| 24 | ND949047-1790 | ..BOLT | 2 | 56416- |
| 25 | ND091051-0480 | ..PLATE, COVER | 1 | 56416- |
| 26 | ND91418-06141 | .BOLT | 3 | 56416- |
| 27 | ND91418-06161 | ..BOLT | 2 | 56416- |
| 28 | ND090241-0010 | ..WASHER, 1.6MM | 2 | 56416- |
| 29 | ND091031-0030 | ..NUT | 1 | 56416- |
| 30 | ND091038-0040 | .SPRING | 1 | 56416- |
| 31 | ND949062-1270 | .PACKING | 1 | 56416- |
| 32 | ND949140-6170 | ..O-RING | 1 | 56416- |
| 33 | ND091016-0360 | ..BUSHING, BEARING | 1 | 56416- |
| 34 | ND091038-0050 | ..SPRING | 1 | 56416- |
| 35 | ND091035-0240 | .SHAFT, GOVERNOR | 1 | 56416- |
| 36 | ND091036-0010 | .CUP | 1 | 56416- |

FIG NO. : 0462B

| INDEX | PART NO. | DESCRIPTION | Q'TY | SERIAL NO |
|---|---|---|---|---|
| 37 | ND091034-0130 | ..LEVER, SUPPORT | 1 | 56416- |
| 38 | ND091042-0030 | ..SPRING | 1 | 56416- |
| 39 | ND091033-0030 | ..PLATE | 1 | 56416- |
| 40 | ND091038-0030 | ..SPRING | 1 | 56416- |
| 41 | ND949130-0030 | ..KEY, WOODRUFF | 1 | 56416- |
| 42 | ND091043-0010 | ..COVER | 1 | 56416- |
| 43 | ND090944-0440 | ..BUSHING | 1 | 56416- |
| 44 | ND949013-8210 | .WASHER, 0.3MM | 1 | 56416- |
|  | ND949013-8220 | ..WASHER, 0.6MM | 1 | 56416- |
|  | ND949013-8230 | ..WASHER, 0.9MM | 1 | 56416- |
| 45 | ND949050-3390 | ..NUT | 1 | 56416- |
| 46 | ND949018-1020 | ..WASHER, 1.0MM | 2 | 56416- |
| 47 | ND949140-5740 | ..O-RING | 1 | 56416- |

# FIG.0465 FUEL INJECTION PUMP (GOVERNOR) (1/2) (COLD TERRAIN SPEC.) (#10532-)

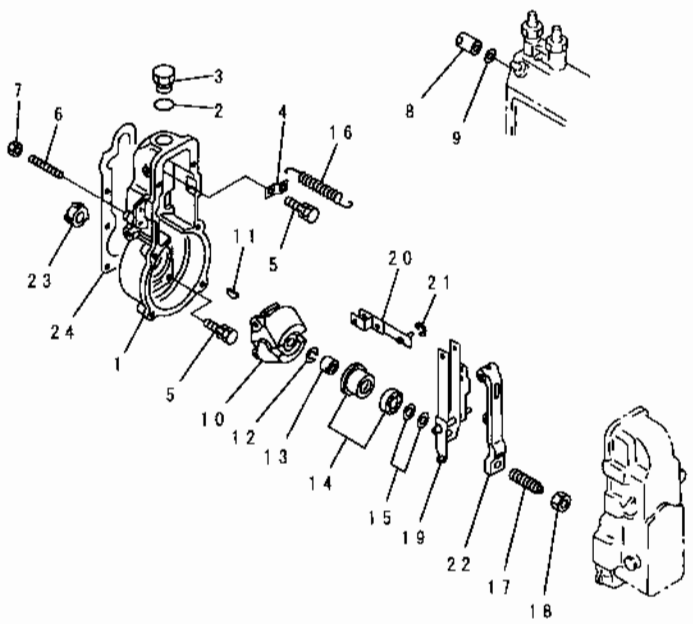


PG3P014

| INDEX | PART NO | DESCRIPTION | Q'TY | SERIAL NO. |
|---|---|---|---|---|
| | (6151-71-1531) | INJECTION PUMP A<br>THIS ASSEMBLY CONSISTS OF ALL PARTS SHOWN IN FIGS.0455 TO 0485. | 1 | 10532- |
| | DK105407-3042 | .GOVERNOR ASS'Y.<br>THIS ASSEMBLY CONSISTS OF ALL PARTS SHOWN IN FIGS.0465 AND 0466. | 1 | 10532- |
| 1 | DK154000-5720 | ..HOUSING. | 1 | 10532- |
| 2 | DK029632-5070 | ..O-RING. | 1 | 10532- |
| 3 | DK154007-2900 | ..PLUG. | 1 | 10532- |
| 4 | DK154350-6000 | ..PLATE. | 1 | 10532- |
| 5 | DK020106-2040 | ..BOLT. | 8 | 10532- |
| 6 | DK154010-0100 | .SCREW. | 1 | 10532- |
| 7 | DK154011-0100 | ..NUT,LOCK. | 1 | 10532- |
| 8 | DK155404-1700 | ..CAP. | 1 | 10532- |
| 9 | DK026524-3040 | ..GASKET. | 1 | 10532- |
| 10 | DK154101-0020 | ..FLYWEIGHT ASS'Y. | 1 | 10532- |
| 11 | DK025803-1610 | ..KEY, 16MM. | 1 | 10532- |
| 12 | DK029321-2020 | ..WASHER,SPRING. | 1 | 10532- |
| 13 | DK029231-2030 | ..NUT. | 1 | 10532- |
| 14 | DK154123-2720 | ..SLEEVE. | 1 | 10532- |
| 15 | DK029311-0010 | ..SHIM, 0.20MM. | AR | 10532- |
| | DK029311-0180 | ..SHIM, 0.30MM. | AR | 10532- |
| | DK029311-0190 | ..SHIM, 0.40MM. | AR | 10532- |
| | DK139410-0000 | ..SHIM, 0.50MM. | AR | 10532- |
| | DK029311-0210 | ..SHIM, 1.00MM. | AR | 10532- |
| | DK139410-0100 | ..SHIM, 1.50MM. | AR | 10532- |
| 16 | DK154154-0500 | .SPRING | 1 | 10532- |
| 17 | DK154177-0920 | ..CAPSULE,SPRING. | 1 | 10532- |
| 18 | DK029201-6010 | ..NUT. | 1 | 10532- |
| 19 | DK154210-2720 | ..GUIDE LEVER ASS'Y. | 1 | 10532- |
| 20 | DK154230-2920 | ..LINK. | 1 | 10532- |
| 21 | DK016010-0540 | ..RING,SNAP. | 1 | 10532- |
| 22 | DK154236-4100 | ..LEVER,TENSION. | 1 | 10532- |
| 23 | DK155412-5800 | ..IMPELLER. | 1 | 10532- |
| 24 | DK154350-8700 | ..GASKET. | 1 | 10532- |

# FIG. 0466 FUEL INJECTION PUMP (GOVERNOR) (2/2) (COLD TERRAIN SPEC.) (#10532-)

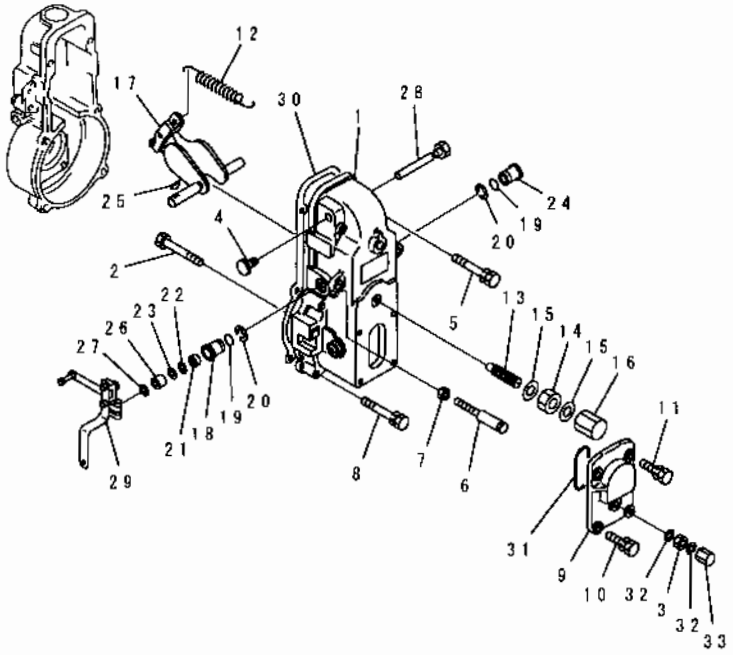


PG3P016

| INDEX | PART NO | DESCRIPTION | Q'TY | SERIAL NO |
|---|---|---|---|---|
| | (6151-71-1531) | INJECTION PUMP A.<br>THIS ASSEMBLY CONSISTS OF ALL PARTS SHOWN IN FIGS. 0455 TO 0485. | 1 | 10532- |
| | (DK105407-3042) | GOVERNOR ASS'Y.<br>THIS ASSEMBLY CONSISTS OF ALL PARTS SHOWN IN FIGS. 0465 AND 0466. | 1 | 10532- |
| 1 | DK154500-8820 | .COVER | 1 | 10532- |
| 2 | DK154031-4300 | .SCREW | 1 | 10532- |
| 3 | DK139208-0500 | ..NUT | 1 | 10532- |
| 4 | DK154036-0300 | ..PLUG | 1 | 10532- |
| 5 | DK020106-5040 | ..BOLT | 2 | 10532- |
| 6 | DK154010-0300 | ..SCREW | 1 | 10532- |
| 7 | DK154011-0100 | .NUT | 1 | 10532- |
| 8 | DK020106-3840 | ..BOLT | 4 | 10532- |
| 9 | DK154063-7300 | ..COVER | 1 | 10532- |
| 10 | DK029020-6210 | ..BOLT | 2 | 10532- |
| 11 | DK020006-1640 | .BOLT | 2 | 10532- |
| 12 | DK154150-0400 | ..SPRING | 1 | 10532- |
| 13 | DK154158-1020 | ..CAPSULE, SPRING | 1 | 10532- |
| 14 | DK154011-1700 | ..NUT | 1 | 10532- |
| 15 | DK026512-1540 | ..GASKET | 2 | 10532- |
| 16 | DK154159-1200 | ..NUT, CAP | 1 | 10532- |
| 17 | DK154200-7020 | ..LEVER ASS'Y, SWIVEL | 1 | 10532- |
| 18 | DK154204-3000 | ..BUSHING | 1 | 10532- |
| 19 | DK029631-8020 | ..O-RING | 2 | 10532- |
| 20 | DK016010-1640 | ..RING, SNAP | 2 | 10532- |
| 21 | DK139611-0000 | ..SEAL, OIL | 1 | 10532- |
| 22 | DK139411-0000 | ..SHIM, 0.40MM | 1 | 10532- |
| 23 | DK029311-1090 | ..SHIM, 0.30MM | AR | 10532- |
| 24 | DK154204-3100 | ..BUSHING | 1 | 10532- |
| 25 | DK025803-1310 | .KEY, 13MM | 1 | 10532- |
| 26 | DK154206-2800 | .COLLAR | 1 | 10532- |
| 27 | DK154206-0200 | ..WASHER, 1.0MM | AR | 10532- |
| 28 | DK154237-1100 | ..PIN | 1 | 10532- |
| 29 | DK154347-4920 | ..LEVER | 1 | 10532- |
| 30 | DK154350-7800 | .GASKET | 1 | 10532- |
| 31 | DK029635-2020 | ..O-RING | 1 | 10532- |
| 32 | DK026508-1140 | ..GASKET | 2 | 10532- |
| 33 | DK154035-2000 | ..NUT, CAP | 1 | 10532- |

# FIG.0471C FUEL INJECTION PUMP (COUPLING) (#56416-)

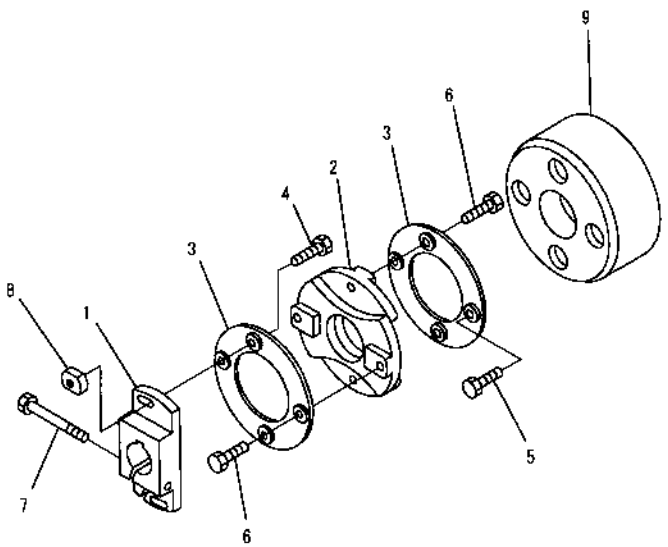


PD3P972

| INDEX | PART NO | DESCRIPTION | Q'TY | SERIAL NO |
|---|---|---|---|---|
| | (6151-71-1552) | INJECTION PUMP ASS'Y<br>THIS ASSEMBLY CONSISTS OF ALL PARTS SHOWN IN FIGS.0451C TO 0481C. | 1 | 56416- |
| | ND092500-0441 | COUPLING ASS'Y | 1 | 56416- |
| 1 | ND092415-0451 | .FLANGE,COUPLING | 1 | 56416- |
| 2 | ND092437-0270 | ..COUPLING | 1 | 56416- |
| 3 | ND092460-0051 | ..PLATE SUB ASS'Y | 2 | 56416- |
| 4 | ND949040-6640 | .BOLT | 2 | 56416- |
| 5 | ND949040-6361 | ..BOLT | 2 | 56416- |
| 6 | ND949040-6630 | ..BOLT | 4 | 56416- |
| 7 | ND092433-0150 | ..BOLT | 1 | 56416- |
| 8 | ND092431-0181 | ..NUT | 2 | 56416- |
| 9 | ND092551-0430 | ..BLOCK,COUPLING | 1 | 56416- |

# FIG.0473 FUEL INJECTION PUMP (COUPLING) (COLD TERRAIN SPEC.) (#10532-)

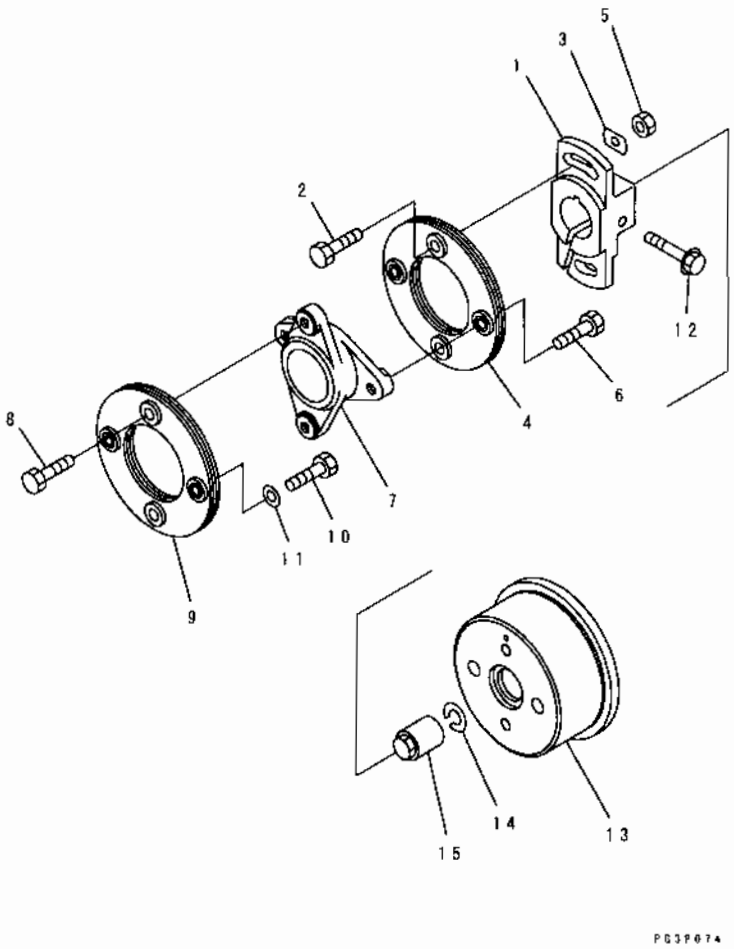


| INDEX | PART NO | DESCRIPTION | Q'TY | SERIAL NO. |
|---|---|---|---|---|
| | (6151-71-1531) | INJECTION PUMP A.<br>THIS ASSEMBLY CONSISTS OF ALL PARTS SHOWN IN FIGS.0455 TO 0485. | 1 | 10532- |
| | DK105663-0360 | .COUPLING ASS'Y. | 1 | 10532- |
| 1 | DK156630-6400 | ..COUPLING. | 1 | 10532- |
| 2 | DK156633-6200 | .BOLT. | 2 | 10532- |
| 3 | DK156615-2800 | ..WASHER. | 2 | 10532- |
| 4 | DK156605-5320 | ..PLATE. | 1 | 10532- |
| 5 | DK156617-2100 | ..NUT. | 2 | 10532- |
| 6 | DK156633-3300 | .BOLT. | 2 | 10532- |
| 7 | DK156609-6300 | ..COUPLING,CROSS. | 1 | 10532- |
| 8 | DK156633-3300 | ..BOLT. | 2 | 10532- |
| 9 | DK156605-5420 | ..PLATE. | 1 | 10532- |
| 10 | DK156633-3300 | ..BOLT. | 2 | 10532- |
| 11 | DK156615-1600 | ..WASHER. | 2 | 10532- |
| 12 | DK156633-8400 | .BOLT. | 1 | 10532- |
| | DK156636-6220 | COUPLING ASS'Y. | 1 | 10532- |
| 13 | DK156636-6200 | ..COUPLING. | 1 | 10532- |
| 14 | DK023641-8410 | ..WASHER,SPRING. | 1 | 10532- |
| 15 | DK134325-0600 | ..NUT | 1 | 10532- |

# FIG.0481B FUEL INJECTION PUMP (FEED PUMP) (#56416-)

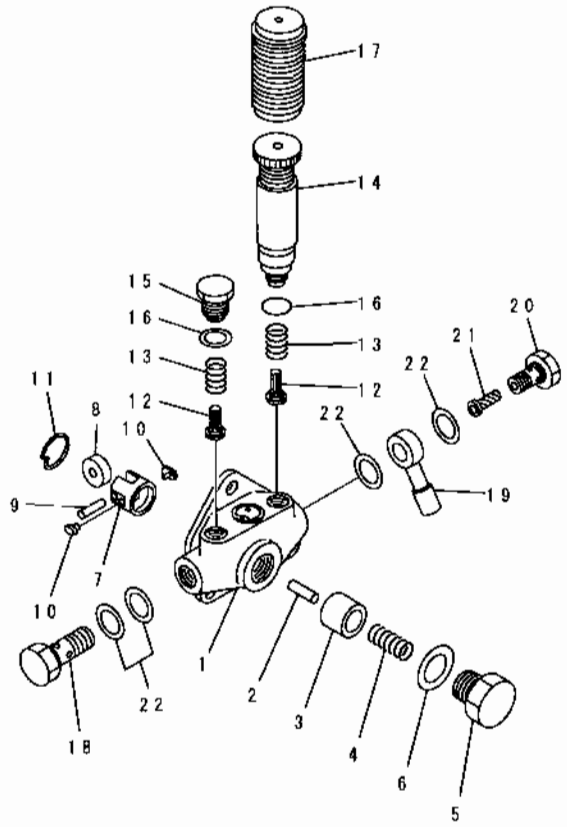


PG3P024

| INDEX | PART NO. | DESCRIPTION | Q'TY | SERIAL NO. |
|---|---|---|---|---|
| | (6151-71-1552) | INJECTION PUMP ASS'Y<br>THIS ASSEMBLY CONSISTS OF ALL PARTS SHOWN IN FIGS.0451C TO 0481C. | 1 | 56416- |
| | ND092100-1761 | .FEED PUMP ASS'Y | 1 | 56416- |
| 1 | ND092120-0370 | ..HOUSING | 1 | 56416- |
| 2 | ND092168-0150 | ...ROD,PUSH | 1 | 56416- |
| 3 | ND092171-0011 | ..PISTON | 1 | 56416- |
| 4 | ND092182-0060 | ..SPRING,PISTON | 1 | 56416- |
| 5 | ND092184-0021 | ..PLUG,CHAMBER | 1 | 56416- |
| 6 | ND949018-1240 | ..WASHER, 1MM | 1 | 56416- |
| 7 | ND092174-0050 | ..TAPPET,FEED PUMP | 1 | 56416- |
| 8 | ND092176-0010 | ..ROLLER,TAPPET | 1 | 56416- |
| 9 | ND092178-0040 | ..PIN,ROLLER | 1 | 56416- |
| 10 | ND092179-0070 | ..BLOCK,SLIDING | 2 | 56416- |
| 11 | ND949072-0940 | ..RING,SNAP | 1 | 56416- |
| 12 | ND092121-0011 | ..VALVE,CHECK | 2 | 56416- |
| 13 | ND092124-0010 | .SPRING,VALVE | 2 | 56416- |
| 14 | ND092130-0220 | .PUMP ASS'Y,PRIMING | 1 | 56416- |
| 15 | ND092126-0010 | .PLUG,CHAMBER | 1 | 56416- |
| 16 | ND092125-0010 | ..GASKET | 2 | 56416- |
| 17 | ND090061-0011 | ..COVER,PRIMING PUMP | 1 | 56416- |
| 18 | ND949180-0310 | ..SCREW | 1 | 56416- |
| 19 | ND949181-0420 | ..NIPPLE | 1 | 56416- |
| 20 | ND092223-0070 | ..SCREW | 1 | 56416- |
| 21 | ND092220-0040 | ..FILTER,FUEL | 1 | 56416- |
| 22 | ND090222-0070 | ..WASHER | 4 | 56416- |

# FIG.0483 FUEL INJECTION PUMP (FEED PUMP) (COLD TERRAIN SPEC.) (#10532-)

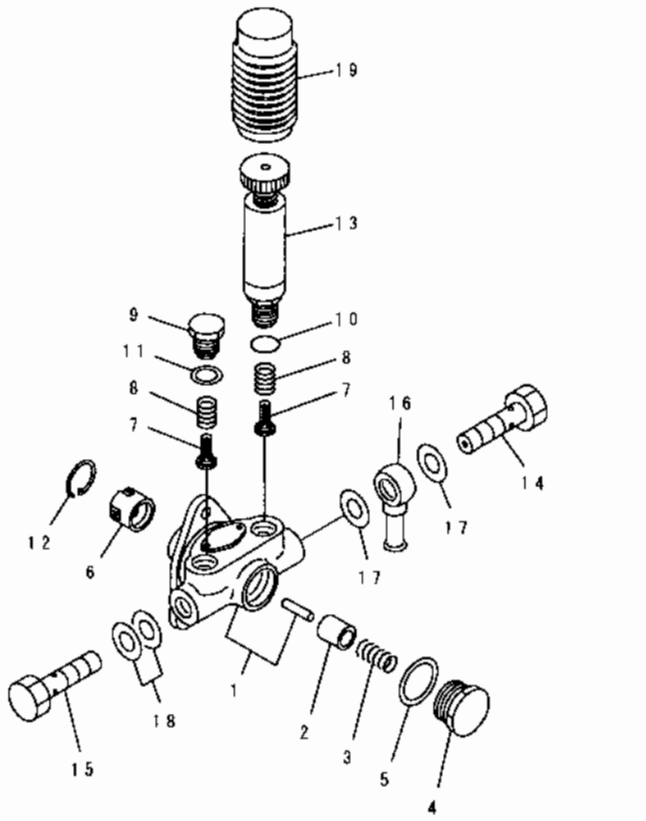


| INDEX | PART NO. | DESCRIPTION | Q'TY | SERIAL NO. |
|---|---|---|---|---|
| | (6151-71-1531) | INJECTION PUMP A.....<br>THIS ASSEMBLY CONSISTS OF ALL PARTS SHOWN IN FIGS.0455 TO 0485. | 1 | 10532- |
| | DK105217-1600 | .FEED PUMP ASS'Y..... | 1 | 10532- |
| 1 | DK152004-1620 | ..HOUSING..... | 1 | 10532- |
| 2 | DK152100-1120 | ..PISTON..... | 1 | 10532- |
| 3 | DK152102-1600 | ..SPRING..... | 1 | 10532- |
| 4 | DK152105-0200 | ..PLUG..... | 1 | 10532- |
| 5 | DK029332-6030 | ..GASKET..... | 1 | 10532- |
| 6 | DK152111-4020 | ..TAPPET..... | 1 | 10532- |
| 7 | DK152115-0500 | ..VALVE..... | 2 | 10532- |
| 8 | DK152116-0200 | ..SPRING..... | 2 | 10532- |
| 9 | DK152117-0400 | ..PLUG..... | 1 | 10532- |
| 10 | DK139716-0000 | ..O-RING..... | 1 | 10532- |
| 11 | DK029331-6030 | ..GASKET..... | 1 | 10532- |
| 12 | DK152121-0200 | ..RING,SNAP..... | 1 | 10532- |
| 13 | DK152200-5320 | ..PUMP,PRIMING..... | 1 | 10532- |
| 14 | DK152300-5920 | ..BOLT,EYE..... | 1 | 10532- |
| 15 | DK029731-4680 | ..BOLT,EYE..... | 1 | 10532- |
| 16 | DK029711-4310 | ..EYE..... | 1 | 10532- |
| 17 | DK029341-4130 | ..GASKET..... | 2 | 10532- |
| 18 | DK029341-4130 | ..GASKET..... | 2 | 10532- |
| 19 | DK152320-0100 | ..COVER..... | 1 | 10532- |

# COOLING SYSTEM

# FIG.0501 WATER PUMP AND MOUNTING

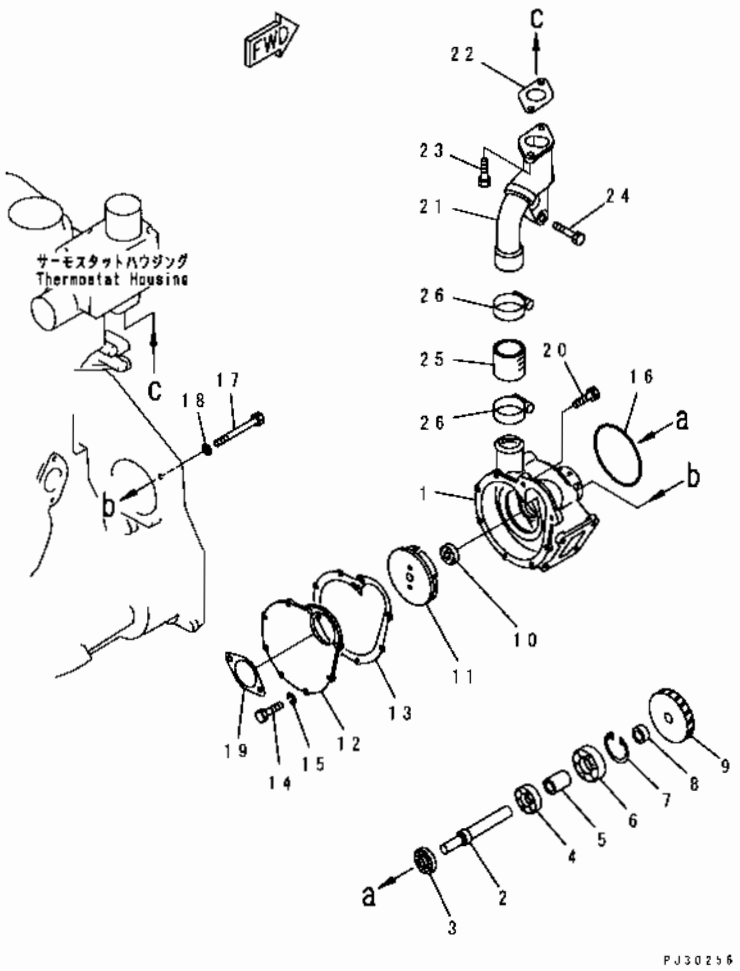


| INDEX | PART NO | DESCRIPTION | Q'TY | SERIAL NO |
|---|---|---|---|---|
| | 6151-61-1101 | WATER PUMP ASS'Y | 1 | 10001- |
| 1 | ☆ | .BODY | 1 | 10001- |
| 2 | 6151-61-1310 | .SHAFT | 1 | 10001- |
| 3 | 6150-61-1510 | .SEAL, WATER (K6) | 1 | 10001- |
| 4 | 06030-06004 | .BEARING, BALL | 1 | 10001- |
| 5 | 6151-61-1360 | .SPACER | 1 | 10001- |
| 6 | 06030-06304 | .BEARING, BALL | 1 | 10001- |
| 7 | 04065-05220 | RING, SNAP | 1 | 10001- |
| 8 | 6150-61-1350 | .SPACER | 1 | 10001- |
| 9 | 6150-61-1410 | .GEAR | 1 | 10001- |
| 10 | 6150-61-1520 | .SEAL, WATER (K6) | 1 | 10423- |
| | □6610-61-1512 | .SEAL, WATER (K6) | 1 | 10001-10422 |
| 11 | 6151-61-1210 | .IMPELLER | 1 | 10001- |
| 12 | 6151-61-1151 | COVER | 1 | 10001- |
| 13 | 6151-61-1161 | GASKET (K6) | 1 | 10001- |
| 14 | 01010-50816 | .BOLT | 6 | 10001- |
| 15 | 01602-20825 | .WASHER, SPRING | 6 | 10001- |
| 16 | 07000-62115 | O-RING (K6) | 1 | 43485- |
| | ◆07000-02115 | O-RING (K6) | 1 | 10001-43484 |
| 17 | 01011-51015 | BOLT | 3 | 10001- |
| 18 | 01640-21016 | WASHER | 3 | 10001- |
| 19 | (6150-61-1820) | GASKET (K6) | 1 | 10001- |
| 20 | 01010-51035 | BOLT | 2 | 10001- |
| 21 | 6150-61-6510 | CONNECTOR | 1 | 10001- |
| 22 | 6150-61-6830 | GASKET (K1) | 1 | 10001- |
| 23 | 01010-51030 | BOLT | 2 | 10001- |
| 24 | 01010-51040 | BOLT | 2 | 10001- |
| 25 | 6141-64-7270 | HOSE | 1 | 10001- |
| 26 | 07281-00709 | CLAMP | 2 | 10001- |

# FIG.0502 WATER PUMP AND MOUNTING (COLD TERRAIN SPEC.)

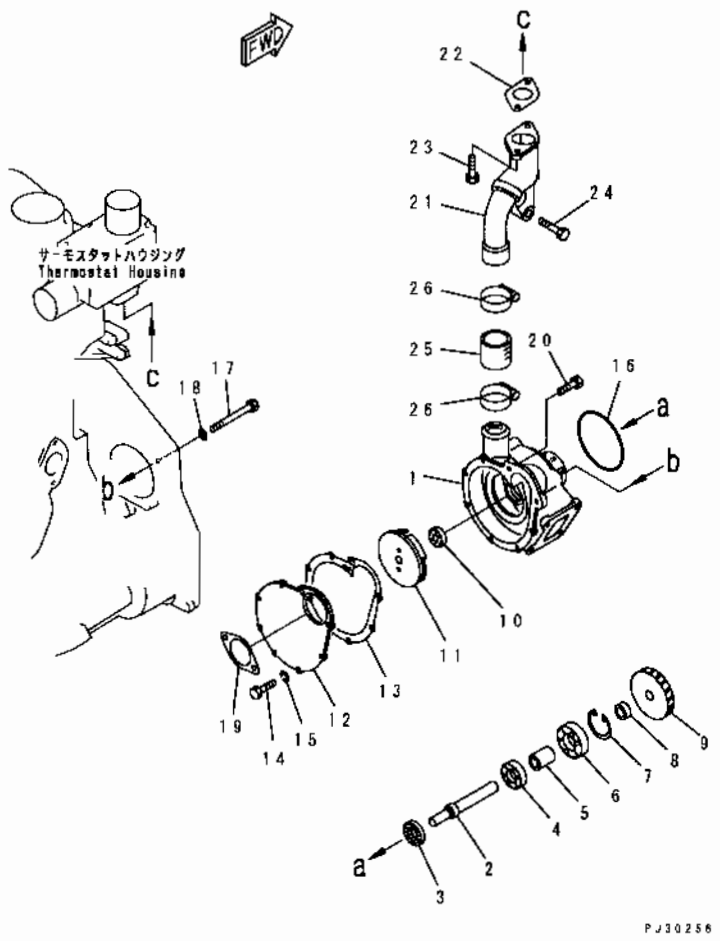


| INDEX | PART NO. | DESCRIPTION | Q'TY | SERIAL NO |
|---|---|---|---|---|
| | 6151-61-1201 | WATER PUMP ASS'Y | 1 | 10001- |
| 1 | ☆ | .BODY | 1 | 10001- |
| 2 | 6151-61-1310 | .SHAFT | 1 | 10001- |
| 3 | 6150-61-1510 | .SEAL, WATER (K6) | 1 | 10001- |
| 4 | 06030-06004 | .BEARING, BALL | 1 | 10001- |
| 5 | 6151-61-1360 | .SPACER | 1 | 10001- |
| 6 | 06030-06304 | .BEARING, BALL | 1 | 10001- |
| 7 | 04065-05220 | .RING, SNAP | 1 | 10001- |
| 8 | 6150-61-1350 | .SPACER | 1 | 10001- |
| 9 | 6150-61-1410 | .GEAR | 1 | 10001- |
| 10 | 6124-61-1241 | .SEAL, WATER (K6) | 1 | 10001- |
| 11 | 6151-61-1210 | .IMPELLER | 1 | 10001- |
| 12 | 6151-61-1151 | .COVER | 1 | 10001- |
| 13 | 6151-61-1161 | .GASKET (K6) | 1 | 10001- |
| 14 | 01010-50816 | .BOLT | 6 | 10001- |
| 15 | 01602-20825 | .WASHER, SPRING | 6 | 10001- |
| 16 | 07000-42115 | O-RING (K6) | 1 | 10001- |
| 17 | 01011-51015 | BOLT | 3 | 10001- |
| 18 | 01640-21016 | WASHER | 3 | 10001- |
| 19 | (6150-61-1820) | GASKET (K6) | 1 | 10001- |
| 20 | 01010-51035 | BOLT | 2 | 10001- |
| 21 | 6150-61-6510 | CONNECTOR | 1 | 10001- |
| 22 | 6150-61-6830 | GASKET (K1) | 1 | 10001- |
| 23 | 01010-51030 | BOLT | 2 | 10001- |
| 24 | 01010-51040 | BOLT | 2 | 10001- |
| 25 | 6141-64-7270 | HOSE | 1 | 10001- |
| 26 | 07281-00709 | CLAMP | 2 | 10001- |

# FIG.0511 COOLING FAN AND MOUNTING

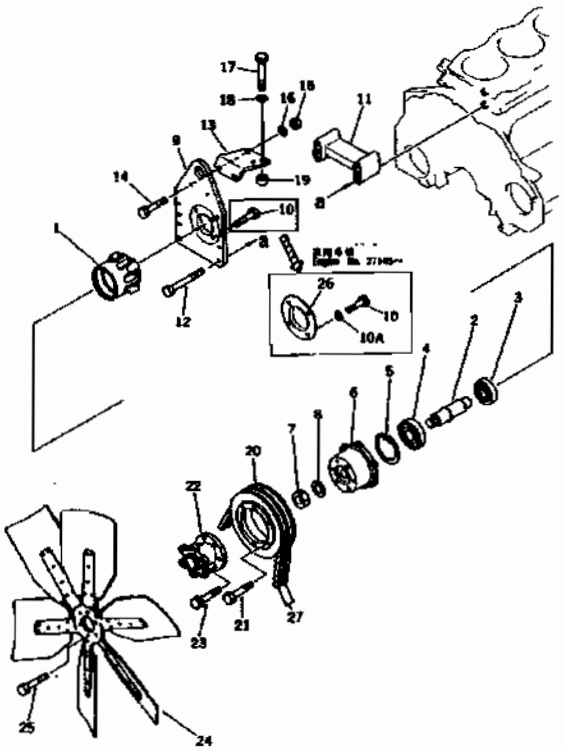


| INDEX | PART NO | DESCRIPTION | Q'TY | SERIAL NO. |
|---|---|---|---|---|
| | 6151-61-3101 | CASE ASS'Y | 1 | 27145- |
| | □6151-61-3100 | CASE ASS'Y | 1 | 10001-27144 |
| 1 | 6151-61-3152 | .CASE. (MARK A) | 1 | 27145- |
| | 6151-61-3152 | .CASE | 1 | 17317-27144 |
| | 6151-61-3150 | .CASE | 1 | 10001-17316 |
| 2 | 6151-61-3170 | .SHAFT | 1 | 10001- |
| 3 | 06037-06206 | BEARING, BALL | 1 | 20660- |
| | 06007-06206 | BEARING, BALL | 1 | 10001-20659 |
| 4 | 06037-06307 | BEARING, BALL | 1 | 20660- |
| | 06007-06307 | .BEARING, BALL | 1 | 10001-20659 |
| 5 | 04065-08025 | .RING, SNAP | 1 | 10001- |
| 6 | 6151-61-3110 | .HUB | 1 | 10001- |
| 7 | 01583-02414 | .NUT | 1 | 10001- |
| 8 | 01643-32460 | .WASHER | 1 | 10001- |
| 9 | 6151-61-3410 | PLATE | 1 | 10001- |
| 10 | 01010-51030 | BOLT | 4 | 10001- |
| 10A | 01641-21016 | WASHER | 4 | 27145- |
| 11 | 6150-61-3540 | SPACER | 1 | 10001- |
| 12 | 01011-51015 | BOLT | 4 | 10001- |
| 13 | 6151-61-3550 | BRACKET | 1 | 10001- |
| 14 | 01010-51040 | BOLT | 2 | 10001- |
| 15 | 01580-11008 | NUT | 2 | 10001- |
| 16 | 01643-31032 | WASHER | 2 | 10001- |
| 17 | (01010-51095) | BOLT | 2 | 10001- |
| 18 | (01640-21016) | WASHER | 2 | 10001- |
| 19 | 6131-12-5920 | SPACER | 2 | 16717- |
| | □205-965-1310 | SPACER | 2 | 10001-16716 |
| 20 | 6151-61-3210 | PULLEY, NON HARDENING | 1 | 10001- |
| | 6151-61-3620 | PULLEY, HARDENING | 1 | 10001- |
| 21 | 01010-51030 | BOLT | 6 | 10001- |
| 22 | 6151-61-3720 | SPACER | 1 | 10001- |
| 23 | 01010-51030 | BOLT | 6 | 10001- |
| 24 | 600-633-0801 | FAN, COOLING | 1 | 25656- |
| | □600-633-0800 | FAN, COOLING | 1 | 10001-25655 |
| 25 | 01010-51030 | BOLT | 6 | 10001- |
| 26 | 6151-61-3970 | COVER | 1 | 27145- |
| 27 | 04121-22266 | V-BELT SET | 1 | 10001- |

# FIG.0513 COOLING FAN AND MOUNTING (COLD TERRAIN SPEC.)

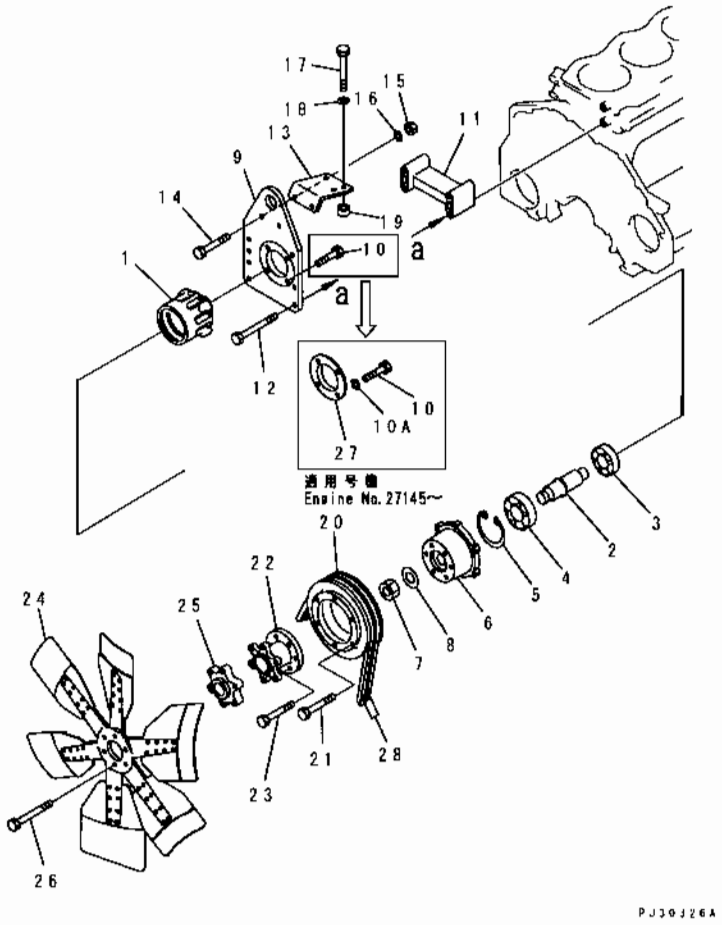


| INDEX | PART NO | DESCRIPTION | Q'TY | SERIAL NO |
|---|---|---|---|---|
| | 6151-61-3401 | CASE ASS'Y | 1 | 27145- |
| | □6151-61-3400 | CASE ASS'Y | 1 | 10001-27144 |
| 1 | 6151-61-3152 | .CASE, (MARK A) | 1 | 27145- |
| | 6151-61-3152 | .CASE | 1 | 10001-27144 |
| 2 | 6151-61-3170 | SHAFT | 1 | 10001- |
| 3 | 06037-06206 | .BEARING, BALL | 1 | 20660- |
| | 06007-06206 | BEARING, BALL | 1 | 10001-20659 |
| 4 | 06037-06307 | .BEARING, BALL | 1 | 20660- |
| | 06007-06307 | .BEARING, BALL | 1 | 10001-20659 |
| 5 | 04065-08025 | .RING, SNAP | 1 | 10001- |
| 6 | 6151-61-3110 | .HUB | 1 | 10001- |
| 7 | 01583-02414 | .NUT | 1 | 10001- |
| 8 | 01643-32460 | .WASHER | 1 | 10001- |
| 9 | 6151-61-3410 | PLATE | 1 | 10001- |
| 10 | 01010-51030 | BOLT | 4 | 10001- |
| 10A | 01641-21016 | WASHER | 4 | 27145- |
| 11 | 6150-61-3540 | SPACER | 1 | 10001- |
| 12 | 01011-51015 | BOLT | 4 | 10001- |
| 13 | 6151-61-3550 | BRACKET | 1 | 10001- |
| 14 | 01010-51040 | BOLT | 2 | 10001- |
| 15 | 01580-11008 | NUT | 2 | 10001- |
| 16 | 01643-31032 | WASHER | 2 | 10001- |
| 17 | (01010-51095) | BOLT | 2 | 10001- |
| 18 | (01640-21016) | WASHER | 2 | 10001- |
| 19 | 6131-12-5920 | SPACER | 2 | 16717- |
| | □205-965-1310 | SPACER | 2 | 10001-16716 |
| 20 | 6151-61-3210 | PULLEY, NON HARDENING | 1 | 10001- |
| 21 | 01010-51030 | BOLT | 6 | 10001- |
| 22 | 6151-61-3720 | SPACER | 1 | 10001- |
| 23 | 01010-51030 | BOLT | 6 | 10001- |
| 24 | 600-635-0801 | FAN, COOLING | 1 | 25656- |
| | □600-635-0800 | FAN, COOLING | 1 | 10001-25655 |
| 25 | 6130-62-3350 | SPACER | 1 | 10001- |
| 26 | 01010-51055 | BOLT | 6 | 10001- |
| 27 | 6151-61-3970 | COVER | 1 | 27145- |
| 28 | 04121-32268 | V-BELT SET | 1 | 10001- |

# FIG.0521 CORROSION RESISTOR AND PIPING

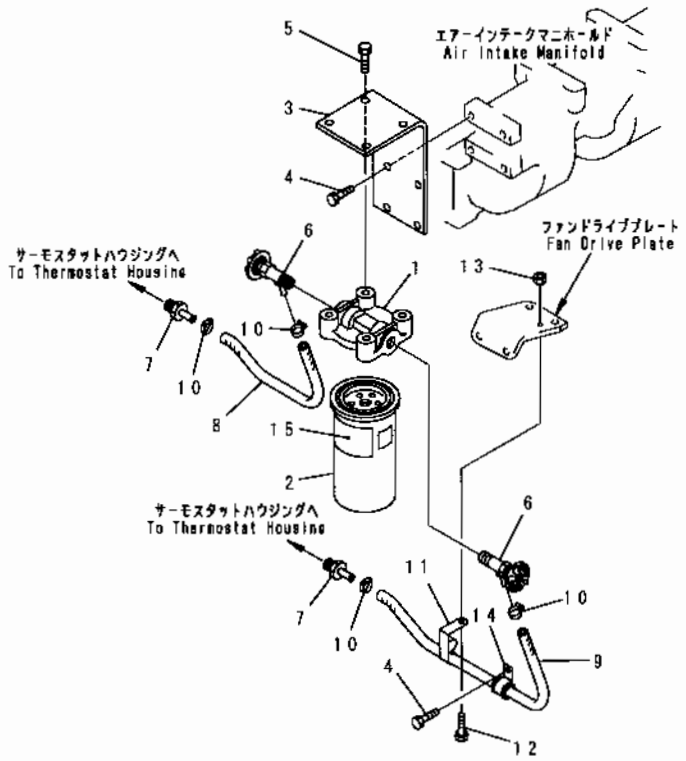


| INDEX | PART NO | DESCRIPTION | Q'TY | SERIAL NO |
|---|---|---|---|---|
| | 6150-61-8171 | RESISTOR ASS'Y, CORROSION | 1 | 22457- |
| | □6710-61-8104 | RESISTOR ASS'Y, CORROSION | 1 | 10001-22456 |
| | 600-411-1841 | RESISTOR ASS'Y, (COLD TERRAIN SPEC.) | 1 | 10001- |
| 1 | 6150-61-8211 | .HEAD | 1 | 22457- |
| | □6710-61-8212 | .HEAD | 1 | 10001-22456 |
| | 6150-61-8211 | HEAD, (COLD TERRAIN SPEC.) | 1 | 10001- |
| 2 | 600-411-1150 | .CARTRIDGE | 1 | 22457- |
| | 600-411-1020 | CARTRIDGE | 1 | 10001-22456 |
| | 600-411-1570 | .CARTRIDGE, (COLD TERRAIN SPEC.) | 1 | 10001- |
| 3 | 6150-61-8110 | BRACKET | 1 | 10001- |
| 4 | 01010-51025 | BOLT | 4 | 10001- |
| 5 | 02010-70625 | BOLT | 4 | 10001- |
| 6 | 6150-61-8410 | VALVE, WATER | 2 | 10001- |
| 7 | 6138-55-7610 | NIPPLE | 2 | 10001- |
| 8 | 07260-20936 | HOSE | 1 | 10001- |
| | 07260-30936 | HOSE, (COLD TERRAIN SPEC.) | 1 | 10001- |
| 9 | 07260-30956 | HOSE | 1 | 10001- |
| 10 | 07281-00197 | CLAMP | 4 | 10001- |
| 11 | 6150-61-8810 | CLIP | 1 | 10001- |
| 12 | 01010-51020 | BOLT | 1 | 10001- |
| 13 | 01580-11008 | NUT | 1 | 10001- |
| 14 | 6631-61-8550 | CLIP | 1 | 10001-10531 |
| 15 | 09647-60101 | PLATE, INSTRUCTION, (CHINESE) | 1 | 10001- |
| | 09647-04202 | PLATE, INSTRUCTION, (PERSIAN) | 1 | 10001- |
| | 09647-40302 | PLATE, INSTRUCTION, (RUSSIAN) | 1 | 10001- |

# ELECTRICAL SYSTEM

# FIG.0603 ALTERNATOR AND MOUNTING (50A) (COLD TERRAIN SPEC.)

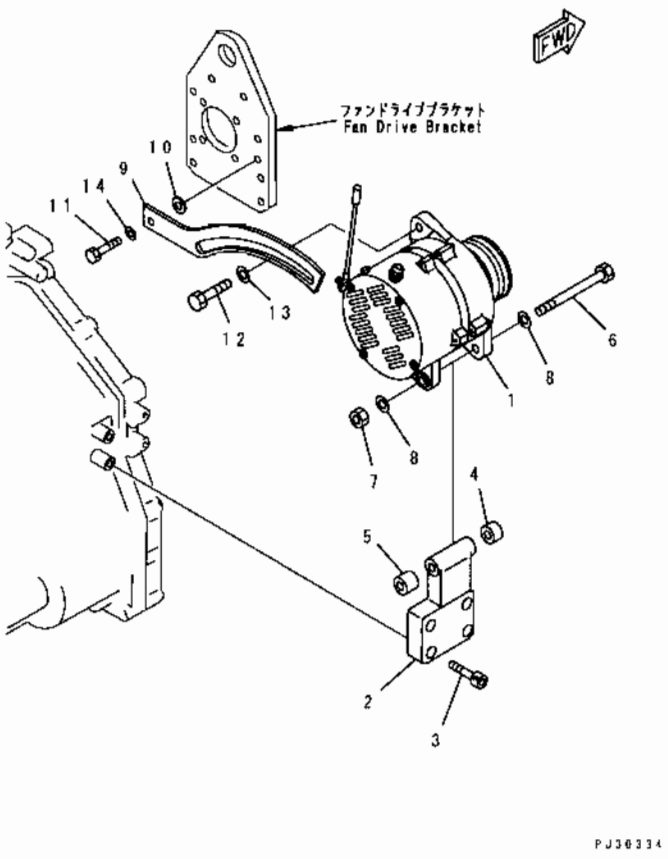


| INDEX | PART NO | DESCRIPTION | Q'TY | SERIAL NO. |
|---|---|---|---|---|
| 1 | (600-821-9310) | ALTERNATOR A. (50A), (SEE FIG.0643) | 1 | 10001- |
| 2 | 6150-81-6350 | BRACKET | 1 | 10001- |
| 3 | 6150-81-9130 | BOLT | 4 | 10001- |
| 4 | 560-43-12470 | SPACER | 1 | 10001- |
| 5 | 217-72-14350 | SPACER | 1 | 10001- |
| 6 | 6128-21-6780 | BOLT | 1 | 10001- |
| 7 | 02205-10812 | NUT | 1 | 10001- |
| 8 | 01640-21323 | WASHER | 2 | 10001- |
| 9 | 6150-81-6760 | PLATE, ADJUST | 1 | 10001- |
| 10 | 6110-23-6490 | SPACER | 1 | 10001- |
| 11 | 01010-51030 | BOLT | 1 | 10001- |
| 12 | 01050-51230 | BOLT | 1 | 10001- |
| 13 | 01643-31232 | WASHER | 1 | 10001- |
| 14 | 01643-31032 | WASHER | 1 | 10001- |

# FIG.0621 STARTING MOTOR AND MOUNTING (7.5KW)

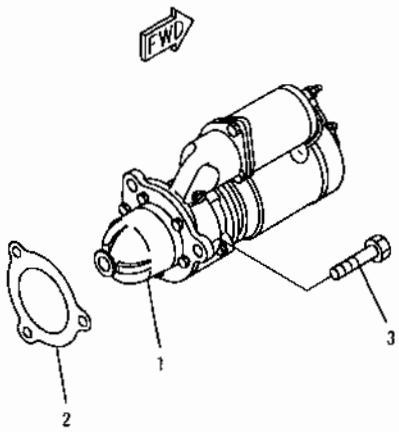


PJ30357

| INDEX | PART NO | DESCRIPTION | Q'TY | SERIAL NO |
|---|---|---|---|---|
| 1 | (600-813-4530) | STARTING MOTOR ASS'Y.... ..... (7.5KW) (SEE FIG.0661A) | 1 | 18372- |
| | (□600-813-3530) | STARTING MOTOR ASS'Y... ..... (7.5KW) (SEE FIG.0661) | 1 | 10001-18371 |
| 2 | 6610-81-2210 | GASKET..... ..... .. .(K2).. ... | 1 | 10001- |
| 3 | 01010-51640 | BOLT..... ..... .... .. ..... | 3 | 10001- |

# FIG.0622 STARTING MOTOR AND MOUNTING (11KW) (COLD TERRAIN SPEC.)

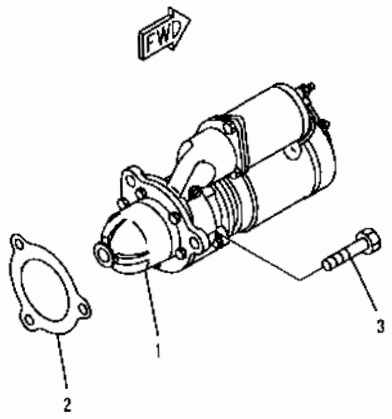


PJ30357

| INDEX | PART NO | DESCRIPTION | Q'TY | SERIAL NO. |
|---|---|---|---|---|
| 1 | 600-813-3922 | STARTING MOTOR ASS'Y, (11KW)..... | 1 | 10001- |
| 2 | 6610-81-2210 | GASKET..... .....(K2)..... | 1 | 10001- |
| 3 | 01010-51640 | BOLT..... ..... .. ..... | 3 | 10001- |

# FIG.0641 ALTERNATOR (35A)

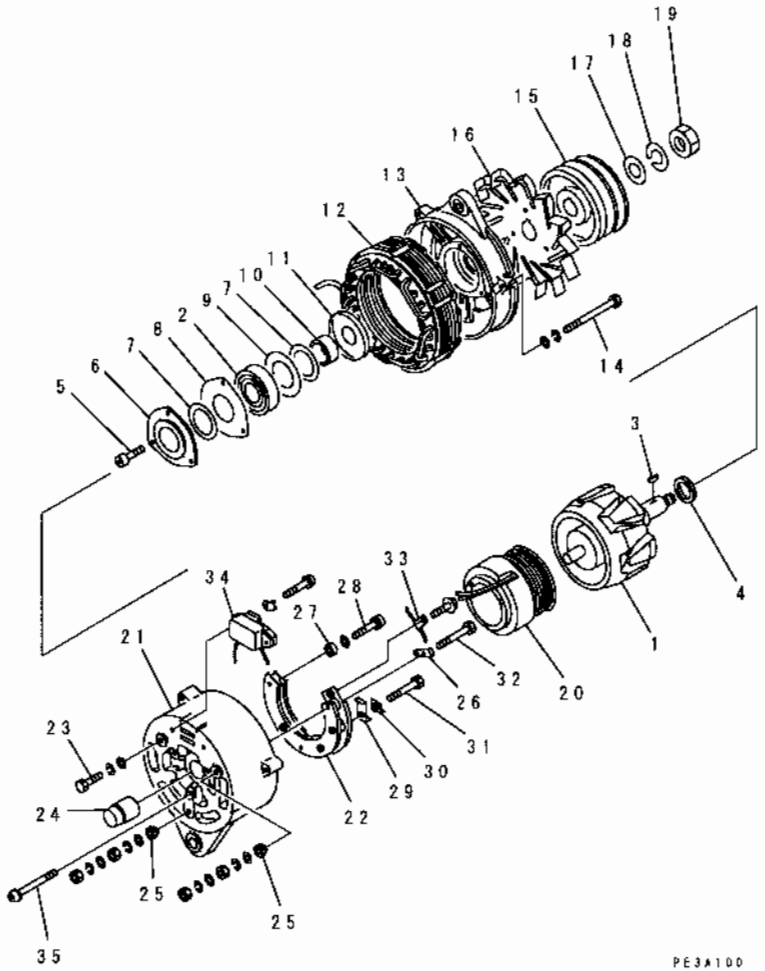


| INDEX | PART NO. | DESCRIPTION | Q'TY | SERIAL NO. |
|---|---|---|---|---|
| | 600-821-8360 | ALTERNATOR A. (35A)<br>(NON HARDENING PULLEY TYPE) | 1 | 10001- |
| | 600-821-7220 | ALTERNATOR A. (35A)<br>(HARDENING PULLEY TYPE) | 1 | 10001- |
| 1 | KD1-33100-1270 | ROTOR ASS'Y. | 1 | 10001- |
| 2 | KD1-0456-63057 | .BEARING, BALL, FRONT. | 1 | 10001- |
| 3 | KD1-0416-04160 | KEY. | 1 | 10001- |
| 4 | KD1-33923-0780 | COLLAR. | 1 | 10001- |
| 5 | KD1-0055-06162 | .SCREW. | 3 | 10001- |
| 6 | KD0-35926-0060 | RETAINER. | 1 | 10001- |
| 7 | KD1-33951-0610 | .PACKING. | 2 | 10001- |
| 8 | KD1-33926-0750 | .RETAINER. | 1 | 10001- |
| 9 | KD1-33926-0730 | RETAINER. | 1 | 10001- |
| 10 | KD1-33923-0810 | COLLAR. | 1 | 10001- |
| 11 | KD1-33926-0770 | RETAINER. | 1 | 10001- |
| 12 | KD1-33200-1230 | .STATOR ASS'Y. | 1 | 10001- |
| 13 | KD1-33310-1060 | BRACKET, FRONT. | 1 | 10001- |
| 14 | KD0-0275-06852 | BOLT. | 3 | 10001- |
| 15 | KD1-35411-0040 | .PULLEY, NON HARDENING. | 1 | 10001- |
| | KD0-35411-0180 | PULLEY, HARDENING. | 1 | 10001- |
| 16 | KD1-33421-0510 | FAN. | 1 | 10001- |
| 17 | KD1-0330-16012 | .WASHER. | 1 | 10001- |
| 18 | KD1-0335-16002 | .WASHER, SPRING | 1 | 10001- |
| 19 | KD0-0280-16022 | NUT. | 1 | 10001- |
| 20 | KD0-33120-0220 | .FIELD COIL ASS'Y. | 1 | 10001- |
| | KD0-35700-0030 | REAR BRACKET ASS'Y. | 1 | 10001- |
| 21 | KD0-33710-2870 | ..REAR BRACKET ASS'Y | 1 | 10001- |
| 22 | KD0-33730-2190 | ..RECTIFIER ASS'Y. | 1 | 10001- |
| 23 | KD0-0080-05102 | ..BOLT | 1 | 10001- |
| 24 | KD1-09202-0070 | .BEARING, ROLLER, REAR. | 1 | 10001- |
| 25 | KD1-33943-0770 | ..BUSHING, INSULATE. | 2 | 10001- |
| 26 | KD1-33928-0220 | .STOPPER | 1 | 10001- |
| 27 | KD1-09102-0010 | ..PLATE, INSULATE. | 1 | 10001- |
| 28 | KD0-0055-05252 | .SCREW. | 1 | 10001- |
| 29 | KD1-33928-0230 | ..STOPPER. | 1 | 10001- |
| 30 | KD1-33943-0760 | .BUSHING, INSULATE. | 1 | 10001- |
| 31 | KD0-0080-05502 | ..BOLT, R-TERMINAL. | 1 | 10001- |
| 32 | KD0-0080-05452 | .BOLT, B-TERMINAL. | 1 | 10001- |
| 33 | KD1-0550-05013 | ..PLATE. | 1 | 10001- |
| 34 | KD7-44000-0907 | ..REGULATOR ASS'Y. | 1 | 10001- |
| 35 | KD0-0056-05452 | .SCREW. | 3 | 10001- |

# FIG.0643 ALTERNATOR (50A) (COLD TERRAIN SPEC.)

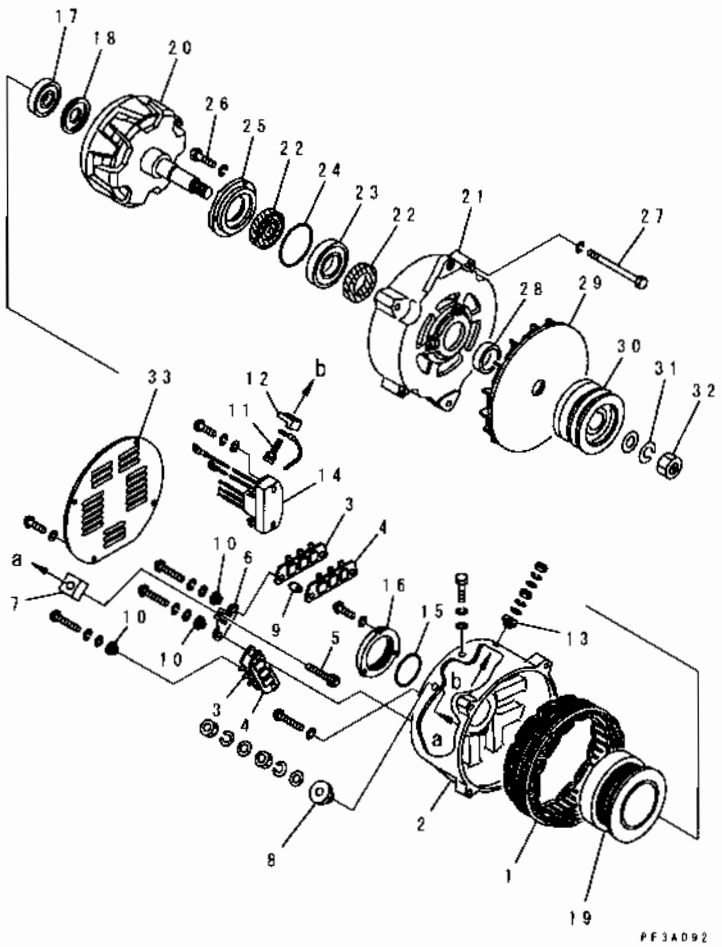


| INDEX | PART NO. | DESCRIPTION | Q'TY | SERIAL NO |
|---|---|---|---|---|
| | 600-821-9310 | ALTERNATOR A. (50A) | 1 | 10001- |
| 1 | SD1211-35010X0 | .STATOR ASS'Y | 1 | 10001- |
| | SD1230-18500X0 | .REAR BRACKET ASS'Y | 1 | 10001- |
| 2 | SD2240-19500X0 | ..BRACKET, REAR | 1 | 10001- |
| 3 | SD1235-06400X0 | ..HEAT SINK ASS'Y(+) | 2 | 10001- |
| 4 | SD1235-06410X0 | ..HEAT SINK ASS'Y(-) | 2 | 10001- |
| 5 | SD5010-26400X0 | BOLT | 1 | 10001- |
| 6 | SD3220-38800X0 | .SUPPORT | 1 | 10001- |
| 7 | SD4215-04000X0 | .INSULATOR | 1 | 10001- |
| 8 | SD4041-07500X0 | ..BUSHING | 1 | 10001- |
| 9 | SD4215-03900X0 | ..INSULATOR | 4 | 10001- |
| 10 | SD4041-00900X0 | ..BUSHING | 4 | 10001- |
| 11 | SD8140-0503010 | ..BOLT | 1 | 10001- |
| 12 | SD4215-01300X0 | ..INSULATOR | 1 | 10001- |
| 13 | SD4041-05700X0 | BUSHING | 1 | 10001- |
| 14 | SD1510-02901X0 | ..REGULATOR ASS'Y | 1 | 10001- |
| 15 | SD4142-01000X0 | .O-RING | 1 | 10001- |
| 16 | SD2202-01401X0 | .COVER | 1 | 10001- |
| 17 | SD6206-01210X0 | .BEARING, BALL | 1 | 10001- |
| 18 | SD3409-00300X0 | .COVER | 1 | 10001- |
| 19 | SD1251-00700X0 | .COIL ASS'Y | 1 | 10001- |
| 20 | SD1221-15100X0 | .ROTOR ASS'Y | 1 | 10001- |
| | SD1240-07100X0 | .FRONT BRACKET ASS'Y | 1 | 10001- |
| 21 | SD2242-08600X0 | ..BRACKET, FRONT | 1 | 10001- |
| 22 | SD6410-01800X0 | .SEAL, OIL | 2 | 10001- |
| 23 | SD6206-01200X0 | ..BEARING, BALL | 1 | 10001- |
| 24 | SD4142-00900X0 | ..O-RING | 1 | 10001- |
| 25 | SD2202-02200X0 | ..COVER | 1 | 10001- |
| 26 | SD5010-21500X0 | ..BOLT | 3 | 10001- |
| 27 | SD5010-04730X0 | .BOLT | 4 | 10001- |
| 28 | SD3600-17300X0 | .COLLAR | 1 | 10001- |
| 29 | SD1982-03200X0 | FAN ASS'Y | 1 | 10001- |
| 30 | SD2080-22400X0 | .PULLEY, NON HARDENING | 1 | 10001- |
| 31 | SD3000-07800X0 | .WASHER | 1 | 10001- |
| 32 | SD8264-1830010 | .NUT | 1 | 10001- |
| 33 | SD3002-04600X0 | .COVER | 1 | 10001- |

# FIG.0661A STARTING MOTOR (7.5KW) (#18372-)

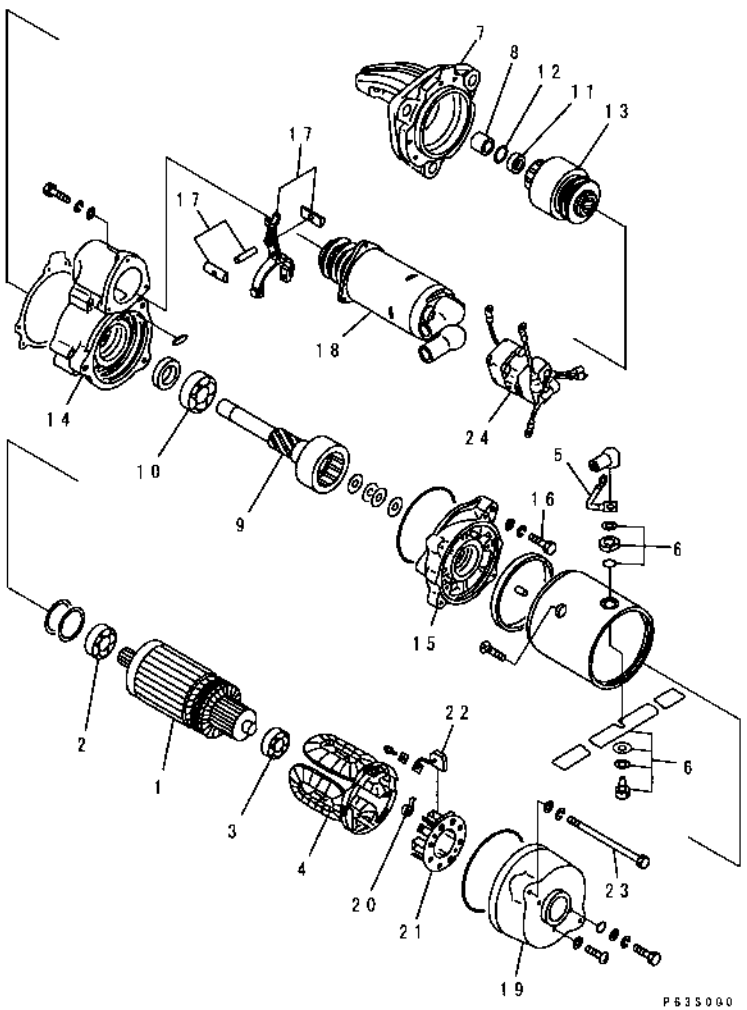


| INDEX | PART NO. | DESCRIPTION | Q'TY | SERIAL NO. |
|---|---|---|---|---|
| | 600-813-4530 | STARTING MOTOR ASS'Y, (7.5KW) | 1 | 18372- |
| 1 | KD0-23100-0251 | .ARMATURE ASS'Y | 1 | 18372- |
| 2 | KD1-0454-62047 | ..BEARING, BALL, FRONT | 1 | 18372- |
| 3 | KD1-0454-62007 | ..BEARING, BALL, REAR | 1 | 18372- |
| 4 | KD0-23230-0281 | .FIELD COIL ASS'Y | 1 | 18372- |
| 5 | KD1-23785-0060 | .LEAD WIRE ASS'Y | 1 | 18372- |
| 6 | KD7-23780-0200 | .TERMINAL ASS'Y | 1 | 18372- |
| 7 | KD0-23310-0860 | .BRACKET, FRONT | 1 | 18372- |
| 8 | KD7-23351-0080 | ..METAL | 1 | 18372- |
| 9 | KD7-23120-0310 | .SHAFT ASS'Y | 1 | 18372- |
| 10 | KD1-0454-60067 | ..BEARING, BALL | 1 | 18372- |
| 11 | KD1-23181-0020 | .STOPPER, PINION | 1 | 18372- |
| 12 | KD1-23914-0020 | .RING, CLIP | 1 | 18372- |
| 13 | KD1-23500-0170 | .CLUTCH ASS'Y, OVER RUNNING | 1 | 18372- |
| 14 | KD0-23600-0250 | CENTER BRACKET A | 1 | 18372- |
| 15 | KD0-23611-0690 | .BRACKET, CENTER | 1 | 18372- |
| 16 | KD1-0240-08405 | .BOLT | 3 | 18372- |
| 17 | KD7-23320-0060 | .SHIFT LEVER ASS'Y | 1 | 18372- |
| 18 | KD0-47100-3940 | .MAGNETIC SWITCH A | 1 | 18372- |
| | KD7-23700-0520 | .REAR BRACKET ASS'Y | 1 | 18372- |
| 19 | KD0-23700-0130 | ..REAR BRACKET ASS'Y | 1 | 18372- |
| 20 | KD1-23913-0040 | ..SPRING, BRUSH | 4 | 18372- |
| 21 | KD0-23750-0250 | ..BRUSH HOLDER ASS'Y | 1 | 18372- |
| 22 | KD0-23740-0250 | ..BRUSH ASS'Y | 4 | 18372- |
| 23 | KD0-23901-0170 | .BOLT | 2 | 18372- |
| 24 | KD0-25000-6520 | .SWITCH ASS'Y | 1 | 18372- |
| 25 | KD7-09210-1560 | SEAL ASS'Y, (NOT SHOWN) | 1 | 18372- |

# ACCESSORY

# FIG. 0701 AIR COMPRESSOR AND PIPING

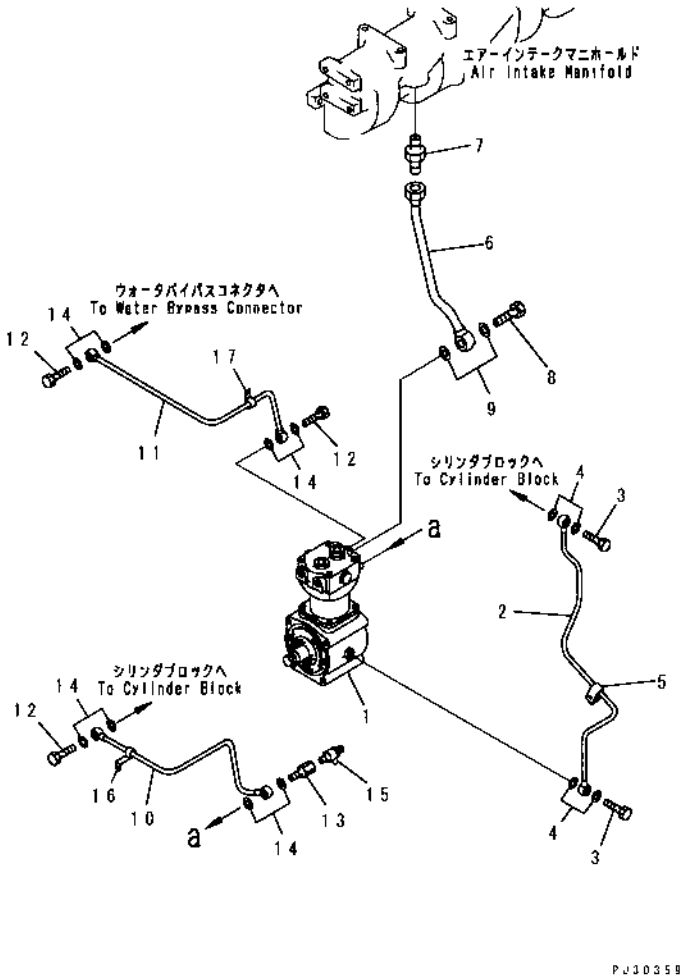


| INDEX | PART NO | DESCRIPTION | Q'TY | SERIAL NO. |
|---|---|---|---|---|
| 1 | (6151-81-3111) | AIR COMPRESSOR A., (SEE FIG. 0711A) | 1 | 38811- |
| | (◆6151-81-3110) | AIR COMPRESSOR A., (SEE FIG. 0711) | 1 | 10001-38810 |
| 2 | 6151-81-3520 | TUBE | 1 | 10001- |
| 3 | 07206-30710 | BOLT, JOINT | 2 | 10001- |
| 4 | 07005-01012 | GASKET (K8) | 4 | 10001- |
| 5 | 6151-81-3530 | CLIP | 1 | 10001- |
| 6 | 6151-81-3720 | TUBE, AIR | 1 | 10001- |
| 7 | 07214-51521 | CONNECTOR | 1 | 10001- |
| 8 | 6137-81-3140 | BOLT, JOINT | 1 | 10001- |
| 9 | 6164-91-6220 | GASKET (K8) | 2 | 34485- |
| | ◆07005-02416 | GASKET (K8) | 2 | 10001-34484 |
| 10 | 6151-81-3420 | TUBE, WATER | 1 | 10001- |
| 11 | 6151-81-3430 | TUBE, WATER | 1 | 10001- |
| 12 | 07206-31014 | BOLT | 3 | 10001- |
| 13 | 6151-81-3461 | JOINT | 1 | 10001- |
| 14 | 07005-01412 | GASKET (K8) | 8 | 10001- |
| 15 | 6050-61-6630 | VALVE, DRAIN | 1 | 10001- |
| 16 | 6151-81-3440 | CLIP | 1 | 10001- |
| 17 | 6151-81-3450 | CLIP | 1 | 10001- |

# FIG. 0711A AIR COMPRESSOR (#38811-)

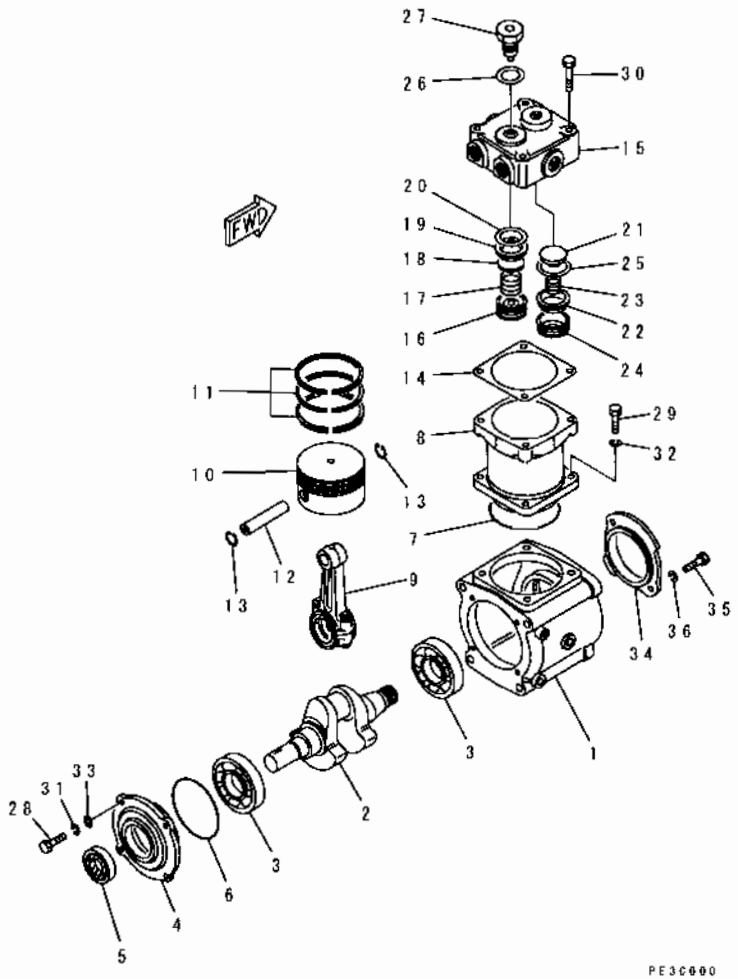


| INDEX | PART NO | DESCRIPTION | Q'TY | SERIAL NO. |
|---|---|---|---|---|
| | 6151-81-3111 | AIR COMPRESSOR A | 1 | 38811- |
| 1 | DK487000-5800 | .CASE, CRANK | 1 | 38811- |
| 2 | DK487008-8300 | .CRANKSHAFT | 1 | 38811- |
| 3 | DK016690-2640 | BEARING | 2 | 38811- |
| 4 | DK487003-3120 | .COVER, BEARING | 1 | 38811- |
| 5 | DK029623-8040 | .SEAL, OIL (K8) | 1 | 38811- |
| 6 | DK487061-2500 | .O-RING (K8) | 1 | 38811- |
| 7 | DK487061-3700 | .O-RING (K8) | 1 | 38811- |
| 8 | DK487001-2700 | .CYLINDER | 1 | 38811- |
| 9 | DK487013-1820 | .CONNECTING ROD A | 1 | 38811- |
| | DK487099-9220 | .PISTON ASS'Y | 1 | 38811- |
| 10 | DK487009-2000 | ..PISTON | 1 | 38811- |
| 11 | DK487010-4720 | ..RING KIT, PISTON | 1 | 38811- |
| 12 | DK487012-0100 | .PIN, PISTON | 1 | 38811- |
| 13 | DK016110-1610 | .RING, SNAP | 2 | 38811- |
| 14 | DK487020-2100 | .GASKET (K8) | 1 | 38811- |
| | DK487018-4420 | .CYLINDER HEAD ASS'Y | 1 | 38811- |
| 15 | DK487018-4320 | ..HEAD, CYLINDER | 1 | 38811- |
| 16 | DK487028-1601 | ..GUIDE | 1 | 38811- |
| 17 | DK487027-1100 | ..SPRING, INTAKE VALVE | 1 | 38811- |
| 18 | DK487026-1600 | ..VALVE, PLATE | 2 | 38811- |
| 19 | DK487025-0900 | .SEAT, INTAKE VALVE | 1 | 38811- |
| 20 | DK029333-8020 | ..GASKET | 2 | 38811- |
| 21 | DK487042-1000 | ..GUIDE, SPRING | 1 | 38811- |
| 22 | DK487032-2700 | ..GUIDE, DELIVERY VALVE | 1 | 38811- |
| 23 | DK487031-1800 | ..SPRING, DELIVERY VALVE | 1 | 38811- |
| 24 | DK487030-2000 | ..SEAT, DELIVERY VALVE | 1 | 38811- |
| 25 | DK487039-0200 | GASKET (K8) | 1 | 38811- |
| 26 | DK029312-4070 | ..SHIM (K8) | 1 | 38811- |
| 27 | DK487021-2020 | ..UNLOADER VALVE A | 1 | 38811- |
| 28 | DK156603-4400 | .BOLT | 4 | 38811- |
| 29 | DK010110-2570 | .BOLT | 4 | 38811- |
| 30 | DK487088-0000 | .BOLT | 4 | 38811- |
| 31 | DK014110-8440 | .WASHER, SPRING | 4 | 38811- |
| 32 | DK014111-0440 | .WASHER, SPRING | 4 | 38811- |
| 33 | DK014020-8140 | WASHER | 4 | 38811- |
| 34 | DK487093-0000 | .ADAPTER | 1 | 38811- |
| 35 | DK010006-1270 | .BOLT | 2 | 38811- |
| 36 | DK014110-6440 | .WASHER, SPRING | 2 | 38811- |

# ENGINE KIT

# FIG.0991 GASKET KIT

**KIT** 詳細については次のページを参照してください。 See subsequent pages for detail.

| | | | |
|---|---|---|---|
| K-1 | 6151-K1-1002 | シリンダヘッドガスケットキット CYLINDER HEAD GASKET KIT | 適用号機 ENGINE NO. 26751 – ) |
| | □6151-K1-1001 | シリンダヘッドガスケットキット CYLINDER HEAD GASKET KIT | 適用号機 ENGINE NO. 25656 – 26750 |
| | □6151-K1-1000 | シリンダヘッドガスケットキット CYLINDER HEAD GASKET KIT | 適用号機 ENGINE NO. 23599 – 25655 |
| | 6151-K1-0301 | シリンダヘッドガスケットキット CYLINDER HEAD GASKET KIT | 適用号機 ENGINE NO. 13377 – 23598 |
| | 6151-K1-0300 | シリンダヘッドガスケットキット CYLINDER HEAD GASKET KIT | 適用号機 ENGINE NO. 10001 – 13376 |
| K-2 | 6151-K2-0404 | シリンダブロックガスケットキット CYLINDER BLOCK GASKET KIT | 適用号機 ENGINE NO. 43485 – ) |
| | □6151-K2-0403 | シリンダブロックガスケットキット CYLINDER BLOCK GASKET KIT | 適用号機 ENGINE NO. 29383 – 43484 |
| | □6151-K2-0402 | シリンダブロックガスケットキット CYLINDER BLOCK GASKET KIT | 適用号機 ENGINE NO. 23903 – 29382 |
| | □6151-K2-0401 | シリンダブロックガスケットキット CYLINDER BLOCK GASKET KIT | 適用号機 ENGINE NO. 17810 – 23902 |
| | 6151-K2-0400 | シリンダブロックガスケットキット CYLINDER BLOCK GASKET KIT | 適用号機 ENGINE NO. 10001 – 17809 |
| K-3 | 6151-K3-0400 | P.T.Oガスケットキット P.T.O GASKET KIT | 適用号機 ENGINE NO. 10001 – ) |
| K-6 | 6151-K6-1202 | ウォータポンプガスケットキット WATER PUMP GASKET KIT | 適用号機 ENGINE NO. 43485 – ) |
| | □6151-K6-1201 | ウォータポンプガスケットキット WATER PUMP GASKET KIT | 適用号機 ENGINE NO. 10423 – 43484 |
| | □6151-K6-1200 | ウォータポンプガスケットキット WATER PUMP GASKET KIT | 適用号機 ENGINE NO. 10001 – 10422 |
| K-8 | 6151-K8-1002 | エアーコンプレッサーガスケットキット AIR COMPRESSOR GASKET KIT | 適用号機 ENGINE NO. 43485 – ) |
| | □6151-K8-1001 | エアーコンプレッサーガスケットキット AIR COMPRESSOR GASKET KIT | 適用号機 ENGINE NO. 34486 – 43484 |
| | □6151-K8-1000 | エアーコンプレッサーガスケットキット AIR COMPRESSOR GASKET KIT | 適用号機 ENGINE NO. 10001 – 34484 |



| INDEX | PART NO | DESCRIPTION | Q'TY | SERIAL NO |
|---|---|---|---|---|
| 1 | 6151-K1-1002 | GASKET KIT,CYLINDER HEAD | 1 | 26751- |
| | □6151-K1-1001 | GASKET KIT,CYLINDER HEAD | 1 | 25656-26750 |
| | □6151-K1-1000 | GASKET KIT,CYLINDER HEAD | 1 | 23599-25655 |
| | 6151-K1-0301 | GASKET KIT,CYLINDER HEAD | 1 | 13377-23598 |
| | 6151-K1-0300 | GASKET KIT,CYLINDER HEAD | 1 | 10001-13376 |
| | 6140-41-4540 | SEAL | 12 | 10001- |
| | 6150-17-1812 | GASKET | 6 | 26751- |
| | □6150-11-1812 | GASKET | 6 | 25657-26750 |
| | □6150-11-1811 | GASKET | 6 | 25656-25656 |
| | ◆6150-11-1810 | GASKET | 6 | 23599-25655 |
| | 6150-11-1810 | GASKET | 6 | 10001-13376 |
| | 6150-11-7810 | GASKET | 6 | 10001- |
| | 6150-11-8810 | GASKET | 6 | 10001- |
| | 6150-11-8820 | RUBBER | 24 | 10001- |
| | 6150-11-4810 | GASKET | 6 | 10001- |
| | 6150-11-4820 | GASKET | 2 | 10001- |
| | 6127-81-4821 | GASKET | 1 | 10001- |
| | 6150-11-5810 | GASKET | 6 | 10001- |
| | 6151-11-5710 | GASKET | 1 | 10001- |
| | 6150-11-5750 | GASKET | 1 | 13377- |
| | □6643-11-5750 | GASKET | 1 | 10001-13376 |
| | 07005-01612 | GASKET | 1 | 10001- |
| | 02893-05043 | O-RING | 6 | 13377- |
| | 02893-05043 | O-RING | 10 | 10001-13376 |
| | 6150-11-6310 | GASKET | 6 | 10001- |
| | 6138-11-6810 | GASKET | 2 | 10001- |
| | 6151-51-8710 | GASKET | 1 | 23599- |
| | 6151-51-8160 | GASKET | 1 | 10001-23598 |
| | 07005-01412 | GASKET | 3 | 23599- |
| | 07005-01412 | GASKET | 2 | 10001-23598 |
| | 6151-51-8720 | GASKET | 1 | 23599- |
| | 6151-51-8150 | GASKET | 1 | 10001-23598 |
| | DK029300-5070 | GASKET | 6 | 10001-25655 |
| | 07005-00812 | GASKET | 12 | 10001- |
| | 07000-65065 | O-RING | 6 | 10001- |
| | 07005-01012 | GASKET | 12 | 10001- |
| | 6150-61-6830 | GASKET | 1 | 10001- |
| | 07005-01412 | GASKET | 1 | 10001- |
| | 08034-00519 | BAND | 3 | 10001- |
| | 08034-00414 | BAND | 3 | 10001- |
| 2 | 6151-K2-0404 | GASKET KIT,CYLINDER BLOCK | 1 | 43485- |
| | □6151-K2-0403 | GASKET KIT,CYLINDER BLOCK | 1 | 29383-43484 |

| INDEX | PART NO | DESCRIPTION | Q'TY | SERIAL NO |
|---|---|---|---|---|
| | □6151-K2-0402 | GASKET KIT, CYLINDER BLOCK | 1 | 23903-29382 |
| | □6151-K2-0401 | GASKET KIT, CYLINDER BLOCK | 1 | 17810-23902 |
| | 6151-K2-0400 | GASKET KIT, CYLINDER BLOCK | 1 | 10001-17809 |
| | 07002-22434 | O-RING | 1 | 10001- |
| | 07002-23034 | O-RING | 1 | 10001- |
| | 07005-01412 | GASKET | 1 | 10001- |
| | 07005-01012 | GASKET | 2 | 29383- |
| | 07005-01012 | GASKET | 1 | 10001-29382 |
| | 6150-21-1190 | O-RING | 2 | 10001- |
| | 6150-21-2230 | O-RING | 6 | 10001- |
| | 6150-21-2240 | O-RING | 6 | 10001- |
| | 6150-21-2250 | SEAL | 6 | 10001- |
| | 6114-21-5190 | O-RING | 1 | 10001- |
| | 6150-21-6450 | GASKET | 3 | 29383- |
| | □6150-21-6460 | O-RING | 3 | 10001-29382 |
| | 6150-21-6390 | PACKING | 9 | 29383- |
| | ◆6136-11-8142 | PACKING | 9 | 10001-29382 |
| | 6150-21-3230 | SEAL, FRONT | 1 | 10001- |
| | 6150-71-1910 | SEAL | 1 | 17810- |
| | □6610-71-1911 | SEAL | 1 | 10001-17809 |
| | 6162-73-1960 | WASHER | 1 | 17810- |
| | □6610-71-1960 | WASHER | 1 | 10001-17809 |
| | 07000-03030 | O-RING | 1 | 10001- |
| | 07000-02020 | O-RING | 1 | 10001- |
| | 6130-82-5270 | GASKET | 1 | 10001- |
| | 07000-63028 | O-RING | 1 | 10001- |
| | 6150-21-5811 | GASKET | 1 | 23903- |
| | □6150-21-5810 | GASKET | 1 | 10001-23902 |
| | 6150-21-4243 | SEAL, REAR | 1 | 43485- |
| | □6150-21-4250 | SEAL, REAR | 1 | 17810-43484 |
| | □6150-21-4242 | SEAL, REAR | 1 | 10001-17809 |
| | 6150-21-4740 | GASKET | 1 | 10001- |
| | 6150-51-1710 | RING | 1 | 10001- |
| | 6150-51-1720 | RING | 1 | 10001- |
| | 07000-63045 | O-RING | 1 | 10001- |
| | 07000-62020 | O-RING | 1 | 10001-23902 |
| | 07000-62015 | O-RING | 1 | 10001- |
| | 07000-62020 | O-RING | 1 | 10001- |
| | 07000-63028 | O-RING | 1 | 10001- |
| | 07000-63035 | O-RING | 1 | 10001- |
| | 6124-61-2181 | GROMMET | 2 | 10001- |
| | 07002-32434 | O-RING | 3 | 10001- |





| INDEX | PART NO | DESCRIPTION | Q'TY | SERIAL NO. |
|---|---|---|---|---|
| | 6150-61-2510 | O-RING | 2 | 10001- |
| | 6150-61-2520 | O-RING | 4 | 10001-17809 |
| | 6150-61-2560 | GASKET | 2 | 17810- |
| | 6150-61-2550 | O-RING | 1 | 10001- |
| | 6150-61-2540 | SEAL | 1 | 10001- |
| | 07000-63042 | O-RING | 1 | 10001- |
| | 6150-61-2812 | GASKET | 1 | 17810- |
| | □6150-61-2811 | GASKET | 1 | 10001-17809 |
| | 6150-61-9130 | GASKET | 1 | 10001- |
| | 6150-61-9150 | GASKET | 1 | 10001- |
| | 6150-61-1820 | GASKET | 2 | 10001- |
| | 07000-62125 | O-RING | 1 | 43485- |
| | ◆07000-02125 | O-RING | 1 | 10001-43484 |
| | 07005-01012 | GASKET | 4 | 10001- |
| | 07005-01412 | GASKET | 5 | 17810- |
| | 07005-01412 | GASKET | 4 | 10001-17809 |
| | 07005-00812 | GASKET | 1 | 10001-43484 |
| | 07005-01412 | GASKET | 18 | 10001- |
| | 6610-81-2210 | GASKET | 1 | 10001- |
| | 08034-00519 | BAND | 3 | 10001- |
| | 08034-00414 | BAND | 3 | 10001- |
| 3 | 6151-K3-0401 | GASKET KIT, P.T.O. | 1 | 10001- |
| | 07000-02010 | O-RING | 1 | 10001- |
| | 6631-21-4460 | PLATE | 3 | 10001- |
| | 6631-21-4870 | O-RING | 1 | 10001- |
| | 01658-26223 | WASHER | 1 | 10001- |
| | 07000-65110 | O-RING | 1 | 10001- |
| | 6667-21-4670 | O-RING | 1 | 10001- |
| | 6667-21-4662 | O-RING | 1 | 10001- |
| | 07000-02105 | O-RING | 1 | 10001- |
| | 6631-21-4690 | PLATE | 3 | 10001- |
| | 07000-63088 | O-RING | 1 | 10001- |
| | 07000-02085 | O-RING | 1 | 10001- |
| | 07000-62095 | O-RING | 1 | 10001- |
| | 07000-02085 | O-RING | 1 | 10001- |
| | 07000-02105 | O-RING | 1 | 10001- |
| | 6667-21-4670 | O-RING | 1 | 10001- |
| | 01658-26223 | WASHER | 1 | 10001- |
| | 07000-65110 | O-RING | 1 | 10001- |
| | 6667-21-4630 | O-RING | 1 | 10001- |
| | 07000-02105 | O-RING | 1 | 10001- |
| | 07005-01012 | GASKET | 23 | 10001- |

# FIG.0991 GASKET KIT

**KIT** 詳細については次のページを参照してください。 See subsequent pages for detail.

| | | | |
|---|---|---|---|
| K-1 | 6151-K1-1002 | シリンダヘッドガスケットキット CYLINDER HEAD GASKET KIT | 適用号機 ENGINE NO. 26751 – ) |
| | □6151-K1-1001 | シリンダヘッドガスケットキット CYLINDER HEAD GASKET KIT | 適用号機 ENGINE NO. 25856 – 26750 |
| | □6151-K1-1000 | シリンダヘッドガスケットキット CYLINDER HEAD GASKET KIT | 適用号機 ENGINE NO. 23599 – 25855 |
| | 6151-K1-0901 | シリンダヘッドガスケットキット CYLINDER HEAD GASKET KIT | 適用号機 ENGINE NO. 13377 – 23598 |
| | 6151-K1-0900 | シリンダヘッドガスケットキット CYLINDER HEAD GASKET KIT | 適用号機 ENGINE NO. 10001 – 13376 |
| K-2 | 6151-K2-0404 | シリンダブロックガスケットキット CYLINDER BLOCK GASKET KIT | 適用号機 ENGINE NO. 43485 – ) |
| | □6151-K2-0403 | シリンダブロックガスケットキット CYLINDER BLOCK GASKET KIT | 適用号機 ENGINE NO. 29382 – 43484 |
| | □6151-K2-0402 | シリンダブロックガスケットキット CYLINDER BLOCK GASKET KIT | 適用号機 ENGINE NO. 23903 – 29382 |
| | □6151-K2-0401 | シリンダブロックガスケットキット CYLINDER BLOCK GASKET KIT | 適用号機 ENGINE NO. 17810 – 23902 |
| | 6151-K2-0400 | シリンダブロックガスケットキット CYLINDER BLOCK GASKET KIT | 適用号機 ENGINE NO. 10001 – 17809 |
| K-3 | 6151-K3-0400 | P.T.O.ガスケットキット P.T.O GASKET KIT | 適用号機 ENGINE NO. 10001 – ) |
| K-8 | 6151-K8-1202 | ウォータポンプガスケットキット WATER PUMP GASKET KIT | 適用号機 ENGINE NO. 43485 – ) |
| | □6151-K8-1201 | ウォータポンプガスケットキット WATER PUMP GASKET KIT | 適用号機 ENGINE NO. 10423 – 43484 |
| | □6151-K8-1200 | ウォータポンプガスケットキット WATER PUMP GASKET KIT | 適用号機 ENGINE NO. 10001 – 10422 |
| K-9 | 6151-K8-1002 | エアーコンプレッサ ガスケットキット AIR COMPRESSOR GASKET KIT | 適用号機 ENGINE NO. 43485 – ) |
| | □6151-K8-1001 | エアーコンプレッサ ガスケットキット AIR COMPRESSOR GASKET KIT | 適用号機 ENGINE NO. 34485 – 43484 |
| | □6151-K8-1000 | エアーコンプレッサ ガスケットキット AIR COMPRESSOR GASKET KIT | 適用号機 ENGINE NO. 10001 – 34484 |



| INDEX | PART NO. | DESCRIPTION | Q'TY | SERIAL NO. |
|---|---|---|---|---|
| 6 | 6151-K6-1202 | GASKET KIT, WATER PUMP | 1 | 43485- |
| | □6151-K6-1201 | GASKET KIT, WATER PUMP | 1 | 10423-43484 |
| | □6151-K6-1200 | GASKET KIT, WATER PUMP | 1 | 10001-10422 |
| | 6150-61-1510 | . SEAL | 1 | 10001- |
| | 6150-61-1520 | . SEAL, WATER | 1 | 10423- |
| | □6610-61-1512 | . SEAL, WATER | 1 | 10001-10422 |
| | 6151-61-1161 | . GASKET | 1 | 10104- |
| | 07000-62115 | . O-RING | 1 | 43485- |
| | ◆07000-02115 | . O-RING | 1 | 10001-43484 |
| | 6150-61-1820 | GASKET | 2 | 10001- |
| | 6150-61-6910 | GASKET | 1 | 10001- |
| 8 | 6151-K8-1002 | GASKET KIT, AIR COMPRESSOR | 1 | 43485- |
| | □6151-K8-1001 | GASKET KIT, AIR COMPRESSOR | 1 | 34485-43484 |
| | □6151-K8-1000 | GASKET KIT, AIR COMPRESSOR | 1 | 10001-34484 |
| | 07000-62125 | . O-RING | 1 | 43485- |
| | ◆07000-02125 | . O-RING | 1 | 10001-43484 |
| | 07005-01012 | . GASKET | 4 | 10001- |
| | 6164-91-6220 | . GASKET | 2 | 34485- |
| | ◆07005-02416 | . GASKET | 2 | 10001-34484 |
| | 07005-01412 | . GASKET | 8 | 10001- |
| | DK029623-8040 | . SEAL | 1 | 10001- |
| | DK487061-2500 | . O-RING | 1 | 10001- |
| | DK487061-3700 | . O-RING | 1 | 10001- |
| | DK487020-2100 | . GASKET | 1 | 10001- |
| | DK029333-8020 | . GASKET | 2 | 10001- |
| | DK487039-0200 | GASKET | 1 | 10001- |
| | DK029312-4070 | . SHIM | 1 | 34485- |

# FIG.0993 GASKET KIT (COLD TERRAIN SPEC.)

**KIT** 詳細については次のページを参照してください。 See subsequent pages for detail.

| | | | |
|---|---|---|---|
| K-1 | 6151-K1-3601 | シリンダヘッドガスケットセット CYLINDER HEAD GASKET KIT | 適用号機 ENGINE NO. 23599 – ) |
| | 6151-K1-3600 | シリンダヘッドガスケットセット CYLINDER HEAD GASKET KIT | 適用号機 ENGINE NO. 10001 – 23598 |
| K-2 | 6151-K2-3601 | シリンダブロックガスケットセット CYLINDER BLOCK GASKET KIT | 適用号機 ENGINE NO. 19933 – ) |
| | 6151-K2-3600 | シリンダブロックガスケットセット CYLINDER BLOCK GASKET KIT | 適用号機 ENGINE NO. 10001 – 19932 |
| K-3 | 6151-K3-0401 | P.T.O.ガスケットセット P.T.O GASKET KIT | 適用号機 ENGINE NO. 10001 – ) |
| K-4 | 6151-K4-4101 | ウォータポンプガスケットセット WATER PUMP GASKET KIT | 適用号機 ENGINE NO. 10001 – ) |
| | ■6151-K4-4100 | ウォータポンプガスケットセット WATER PUMP GASKET KIT | 適用号機 ENGINE NO. 10001 – 10831 |
| K-5 | 6151-K5-0702 | エアーコンプレッサ ガスケットセット AIR COMPRESSOR GASKET KIT | 適用号機 ENGINE NO. 34835 – ) |
| | □6151-K5-0701 | エアーコンプレッサ ガスケットセット AIR COMPRESSOR GASKET KIT | 適用号機 ENGINE NO. 17899 – 34837 |
| | 6151-K5-0700 | エアーコンプレッサ ガスケットセット AIR COMPRESSOR GASKET KIT | 適用号機 ENGINE NO. 10001 – 17998 |

| INDEX | PART NO. | DESCRIPTION | Q'TY | SERIAL NO |
|---|---|---|---|---|
| 1 | 6151-K1-3601 | GASKET KIT, CYLINDER HEAD | 1 | 23599- |
| | 6151-K1-3600 | GASKET KIT, CYLINDER HEAD | 1 | 10001-23598 |
| | 6140-41-4540 | SEAL | 12 | 10001- |
| | 6150-17-1812 | .GASKET | 6 | 10001- |
| | 6150-11-7810 | .GASKET | 6 | 10001- |
| | 6150-11-8810 | .GASKET | 6 | 10001- |
| | 6150-11-8820 | RUBBER | 24 | 10001- |
| | 6150-11-4810 | .GASKET | 6 | 10001- |
| | 6150-11-4820 | .GASKET | 2 | 10001- |
| | 6127-81-4821 | .GASKET | 1 | 10001- |
| | 6150-11-5810 | GASKET | 6 | 10001- |
| | 6151-11-5710 | .GASKET | 1 | 10001- |
| | 6150-11-5750 | .GASKET | 1 | 10001- |
| | 07005-01612 | .GASKET | 1 | 10001- |
| | 02893-05043 | .O-RING | 6 | 10001- |
| | 6150-11-6310 | GASKET | 6 | 10001- |
| | 6136-11-6880 | .GASKET | 2 | 10001- |
| | 6151-51-8710 | .GASKET | 1 | 23599- |
| | 6151-51-8160 | .GASKET | 1 | 10001-23598 |
| | 07005-01412 | .GASKET | 2 | 10001- |
| | 6151-51-8720 | .GASKET | 1 | 23599- |
| | 6151-51-8150 | .GASKET | 1 | 10001-23598 |
| | 07005-00812 | .GASKET | 12 | 10001- |
| | 07000-65065 | .O-RING | 6 | 10001- |
| | 07005-01012 | .GASKET | 12 | 10001- |
| | 6150-61-6830 | .GASKET | 1 | 10001- |
| | 08034-00519 | .BAND | 3 | 10001- |
| | 08034-00414 | .BAND | 3 | 10001- |
| 2 | 6151-K2-3601 | GASKET KIT, CYLINDER BLOCK | 1 | 19933- |
| | 6151-K2-3600 | GASKET KIT, CYLINDER BLOCK | 1 | 10001-19932 |
| | 07002-22434 | .O-RING | 1 | 10001- |
| | 07002-23034 | .O-RING | 1 | 10001- |
| | 07005-01412 | .GASKET | 1 | 10001- |
| | 07005-01012 | .GASKET | 2 | 10001- |
| | 6151-21-1190 | .O-RING | 2 | 10001- |
| | 6150-21-2230 | .O-RING | 6 | 10001- |
| | 6150-21-2240 | .O-RING | 6 | 10001- |
| | 6150-21-2250 | .SEAL | 6 | 10001- |
| | 6114-21-5190 | .O-RING | 1 | 10001- |
| | 6150-21-6450 | .GASKET | 3 | 19933- |
| | □6150-21-6460 | .O-RING | 3 | 10001-19932 |
| | 6136-11-8180 | .PACKING | 9 | 10001- |

# FIG.0993 GASKET KIT (COLD TERRAIN SPEC.)

**KIT** 詳細については次のページを参照してください。 See subsequent pages for detail.

| | | | |
|---|---|---|---|
| K-1 | 6151-K1-3601 | シリンダヘッドガスケットキット CYLINDER HEAD GASKET KIT | 適用号機 ENGINE NO. 23599 – ) |
| | 6151-K1-3600 | シリンダヘッドガスケットキット CYLINDER HEAD GASKET KIT | 適用号機 ENGINE NO. 10001 – 23598) |
| K-2 | 6151-K2-3601 | シリンダブロックガスケットキット CYLINDER BLOCK GASKET KIT | 適用号機 ENGINE NO. 19933 – ) |
| | 6151-K2-3600 | シリンダブロックガスケットキット CYLINDER BLOCK GASKET KIT | 適用号機 ENGINE NO. 10001 – 19932) |
| K-3 | 6151-K3-0401 | P.T.Oガスケットキット P.T.O GASKET KIT | 適用号機 ENGINE NO. 10001 – ) |
| K-4 | 6151-K4-4101 | ウォータポンプガスケットキット WATER PUMP GASKET KIT | 適用号機 ENGINE NO. 10001 – ) |
| | ※6151-K4-4100 | ウォータポンプガスケットキット WATER PUMP GASKET KIT | 適用号機 ENGINE NO. 10001 – 10531) |
| K-5 | 6151-K5-0702 | エアーコンプレッサガスケットキット AIR COMPRESSOR GASKET KIT | 適用号機 ENGINE NO. 34928 – ) |
| | □6151-K5-0701 | エアーコンプレッサガスケットキット AIR COMPRESSOR GASKET KIT | 適用号機 ENGINE NO. 17999 – 34927) |
| | 6151-K5-0700 | エアーコンプレッサガスケットキット AIR COMPRESSOR GASKET KIT | 適用号機 ENGINE NO. 10001 – 17998) |

| INDEX | PART NO. | DESCRIPTION | Q'TY | SERIAL NO. |
|---|---|---|---|---|
| | 6150-21-3230 | SEAL, FRONT | 1 | 10001- |
| | 6150-71-1910 | SEAL | 1 | 19933- |
| | □6610-71-1911 | SEAL | 1 | 10001-19932 |
| | 6162-73-1960 | WASHER | 1 | 19933- |
| | □6610-71-1960 | WASHER | 1 | 10001-19932 |
| | 07000-03030 | O-RING | 1 | 10001- |
| | 07000-02020 | O-RING | 1 | 10001- |
| | 6130-82-5270 | GASKET | 1 | 10001- |
| | 07000-63028 | O-RING | 1 | 10001- |
| | 6150-21-5811 | GASKET | 1 | 19933- |
| | □6150-21-5810 | GASKET | 1 | 10001-19932 |
| | 6150-21-4243 | SEAL, REAR | 1 | 19933- |
| | □6150-21-4250 | SEAL, REAR | 1 | 10001-19932 |
| | 6150-21-4740 | GASKET | 1 | 10001- |
| | 6150-51-1710 | RING | 1 | 10001- |
| | 6150-51-1720 | RING | 1 | 10001- |
| | 07000-63045 | O-RING | 1 | 10001- |
| | 07000-62015 | O-RING | 1 | 10001- |
| | 07000-62020 | O-RING | 1 | 10001- |
| | 07000-63028 | O-RING | 1 | 10001- |
| | 07000-63035 | O-RING | 1 | 10001- |
| | 6124-61-2181 | GROMMET | 2 | 10001- |
| | 07002-32434 | O-RING | 3 | 10001- |
| | 6150-61-2510 | O-RING | 2 | 10001- |
| | 6150-61-2520 | O-RING | 4 | 10001-19932 |
| | 6150-61-2560 | GASKET | 2 | 19933- |
| | 6150-61-2550 | O-RING | 1 | 10001- |
| | 6150-61-2540 | SEAL | 1 | 10001- |
| | 07000-63042 | O-RING | 1 | 10001- |
| | 6150-61-2812 | GASKET | 1 | 19933- |
| | □6150-61-2811 | GASKET | 1 | 10001-19932 |
| | 6150-61-9130 | GASKET | 1 | 10001- |
| | 6150-61-9150 | GASKET | 1 | 10001- |
| | 6150-61-1820 | GASKET | 2 | 10001- |
| | 07000-42125 | O-RING | 1 | 10001- |
| | 07005-01012 | GASKET | 4 | 10001- |
| | 07005-01412 | GASKET | 18 | 10001- |
| | 6610-81-2210 | GASKET | 1 | 10001- |
| | 08034-00519 | BAND | 3 | 10001- |
| | 08034-00414 | BAND | 3 | 10001- |
| 3 | 6151-K3-0401 | GASKET KIT, P.T.O | 1 | 10001- |
| | 07000-02010 | O-RING | 1 | 10001- |

FIG NO. : 0993

| INDEX | PART NO | DESCRIPTION | Q'TY | SERIAL NO |
|---|---|---|---|---|
| | 6631-21-4460 | .PLATE | 3 | 10001- |
| | 6631-21-4870 | .O-RING | 1 | 10001- |
| | 01658-26223 | .WASHER | 1 | 10001- |
| | 07000-65110 | .O-RING | 1 | 10001- |
| | 6667-21-4670 | .O-RING | 1 | 10001- |
| | 6667-21-4662 | .O-RING | 1 | 10001- |
| | 07000-02105 | .O-RING | 1 | 10001- |
| | 6631-21-4690 | .PLATE | 3 | 10001- |
| | 07000-63088 | .O-RING | 1 | 10001- |
| | 07000-02085 | .O-RING | 1 | 10001- |
| | 07000-62095 | .O-RING | 1 | 10001- |
| | 07000-02085 | .O-RING | 1 | 10001- |
| | 07000-02105 | .O-RING | 1 | 10001- |
| | 6667-21-4670 | O-RING | 1 | 10001- |
| | 01658-26223 | .WASHER | 1 | 10001- |
| | 07000-65110 | .O-RING | 1 | 10001- |
| | 6667-21-4630 | .O-RING | 1 | 10001- |
| | 07000-02105 | O-RING | 1 | 10001- |
| | 07005-01012 | .GASKET | 23 | 10001- |
| 6 | 6151-K6-4101 | GASKET KIT, WATER PUMP | 1 | 10001- |
| | (⊠6151-K6-4100) | GASKET KIT, WATER PUMP | 1 | (10001-10531) |
| | 6150-61-1510 | .SEAL | 1 | 10001- |
| | 6124-61-1241 | .SEAL, WATER | 1 | 10001- |
| | 6151-61-1161 | .GASKET | 1 | 10001- |
| | 07000-42115 | .O-RING | 1 | 10001- |
| | (⊠07000-02115) | .O-RING | 1 | (10001-10530) |
| | 6150-61-1820 | .GASKET | 2 | 10001- |
| 8 | 6151-K8-0702 | GASKET KIT, AIR COMPRESSOR | 1 | 34938- |
| | □6151-K8-0701 | GASKET KIT, AIR COMPRESSOR | 1 | 17999-34937 |
| | 6151-K8-0700 | GASKET KIT, AIR COMPRESSOR | 1 | 10038-17998 |
| | 07000-42125 | .O-RING | 1 | 17999- |
| | 07005-01012 | .GASKET | 4 | 10038- |
| | 6164-91-6220 | .GASKET | 2 | 34938- |
| | ◆07005-02416 | .GASKET | 2 | 10038-34937 |
| | 07005-01412 | .GASKET | 8 | 10038- |
| | DK029623-8040 | .SEAL | 1 | 17999- |
| | DK487061-2500 | .O-RING | 1 | 17999- |
| | DK487061-3700 | .O-RING | 1 | 17999- |
| | DK487020-2100 | .GASKET | 1 | 17999- |
| | DK029333-8020 | .GASKET | 2 | 17999- |
| | DK487039-0200 | .GASKET | 1 | 17999- |
| | DK029312-4070 | .SHIM | 1 | 17999- |

# ENGINE RELATED PARTS AND ELECTRICAL SYSTEM

# FIG. 1001 ENGINE AND TRANSMISSION MOUNTING PARTS

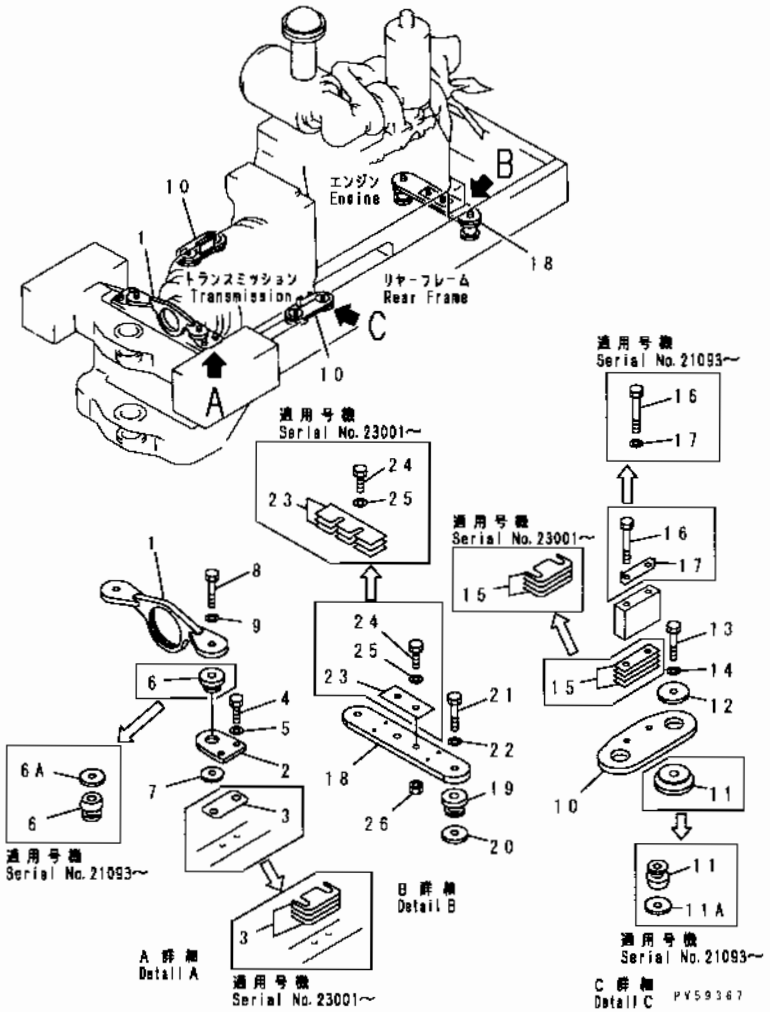


| INDEX | PART NO | DESCRIPTION | Q'TY | SERIAL NO. |
|---|---|---|---|---|
| 1 | 234-01-31110 | BRACKET | 1 | 21001- |
| | 234-01-31230 | BRACKET, (D.D.V. SPEC.) | 1 | 23001- |
| 2 | 234-01-31120 | PLATE | 2 | 21001- |
| | 234-01-31241 | PLATE, (D D.V. SPEC.) | 2 | 23266- |
| | □234-01-31240 | PLATE, (D.D.V. SPEC.) | 2 | 23001-23265 |
| 3 | 234-01-51150 | SHIM, 0.2MM | 20 | 23001- |
| | 234-01-51140 | SHIM, 0.5MM | 8 | 23001- |
| | 234-01-51130 | SHIM, 1.0MM | 16 | 23001- |
| | 232-14-00461 | SHIM ASS'Y | 2 | 21048-23000 |
| | 232-14-00460 | SHIM ASS'Y | 2 | 21001-21047 |
| | ☆ | .SHIM, 0.2MM | 10 | 21001-23000 |
| | ☆ | .SHIM, 0.5MM | 4 | 21001-23000 |
| | ☆ | SHIM, 1.0MM | 8 | 21048-23000 |
| | ☆ | .SHIM, 1.0MM | 2 | 21001-21047 |
| 4 | 01010-81660 | BOLT | 4 | 23001- |
| | □01010-51660 | BOLT | 4 | 21001-23000 |
| 5 | 01643-31645 | WASHER | 4 | 21001- |
| 6 | 287-01-18340 | CUSHION | 2 | 21020- |
| | □234-01-41120 | CUSHION | 2 | 21001-21019 |
| 6A | 205-01-51120 | SPACER | 2 | 21093- |
| 7 | 234-01-31130 | PLATE | 2 | 21001- |
| 8 | 01011-81815 | BOLT | 2 | 23001- |
| | □01011-51815 | BOLT | 2 | 21001-23000 |
| 9 | 01643-31845 | WASHER | 2 | 21001- |
| 10 | 234-01-31140 | PLATE | 2 | 21001- |
| 11 | 287-01-18340 | CUSHION | 4 | 21020- |
| | □234-01-41120 | CUSHION | 4 | 21001-21019 |
| 11A | 205-01-51120 | SPACER | 4 | 21093- |
| 12 | 262-01-12210 | PLATE | 4 | 21001- |
| 13 | 01011-81805 | BOLT | 4 | 23001- |
| | □01011-51805 | BOLT | 4 | 21001-23000 |
| 14 | 01643-31845 | WASHER | 4 | 21001- |
| 15 | 234-01-51150 | SHIM, 0.2MM | 8 | 23001- |
| | 234-01-51140 | SHIM, 0.5MM | 4 | 23001- |
| | 234-01-51150 | SHIM, 0.2MM | 12 | 23001- |
| | 232-14-00411 | SHIM ASS'Y | 2 | 21093-23000 |
| | 232-14-00410 | SHIM ASS'Y | 2 | 21001-21092 |
| | ☆ | .SHIM, 0.2MM | 6 | 21093-23000 |
| | ☆ | .SHIM, 0.2MM | 2 | 21001-21092 |
| | ☆ | .SHIM, 0.5MM | 4 | 21093-23000 |
| | ☆ | .SHIM, 0.5MM | 2 | 21001-21092 |
| | ☆ | .SHIM, 1.0MM | 4 | 21093-23000 |

FIG NO. : 1001

| INDEX | PART NO | DESCRIPTION | Q'TY | SERIAL NO |
|---|---|---|---|---|
| | ☆ | .SHIM, 1.0MM | 2 | 21001-21092 |
| 16 | 01011-81815 | BOLT | 4 | 23001- |
| | □01011-51815 | BOLT | 4 | 21001-23000 |
| 17 | 01643-31845 | WASHER | 4 | 21093- |
| | 281-20-15221 | PLATE | 2 | 21001-21092 |
| 18 | 234-991-1210 | PLATE | 1 | 21001- |
| 19 | 234-01-41110 | CUSHION | 2 | 21020- |
| | □287-01-18330 | CUSHION | 2 | 21001-21019 |
| 20 | 234-01-31170 | PLATE | 2 | 21001- |
| 21 | 01011-82465 | BOLT | 2 | 23001- |
| | □01011-52465 | BOLT | 2 | 21001-23000 |
| 22 | 01643-32460 | WASHER | 2 | 21001- |
| 23 | 23B-01-11140 | SHIM, 0.2MM | 10 | 23001- |
| | 234-991-0010 | SHIM ASS'Y | 1 | 21001-23000 |
| | 23B-01-11130 | SHIM, 0.5MM | 4 | 23001- |
| | ☆ | .SHIM, 0.2MM | 10 | 21001-23000 |
| | 23B-01-11120 | SHIM, 1.0MM | 4 | 23001- |
| | ☆ | .SHIM, 1.0MM | 4 | 21001-23000 |
| 24 | 01010-81875 | BOLT | 2 | 23001- |
| | □01010-51875 | BOLT | 2 | 21001-23000 |
| 25 | 01643-31845 | WASHER | 2 | 21001- |
| 26 | 01580-11815 | NUT | 2 | 21001- |

FIG NO. : 1003

# FIG.1003 AIR CLEANER CAP(#.-)

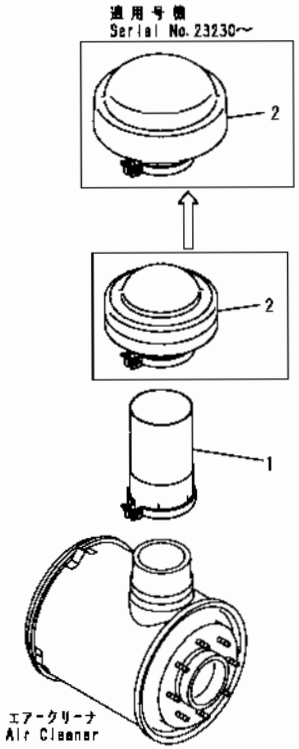


D0022870

| INDEX | PART NO | DESCRIPTION | Q'TY | SERIAL NO |
|---|---|---|---|---|
| 1 | 6711-81-7910 | CONNECTOR | 1 | .- |
| 2 | 566-02-42200 | CAP | 1 | 23230- |
| | 600-181-1511 | CAP | 1 | .-23229 |

# FIG. 1005 MUFFLER(#.-)

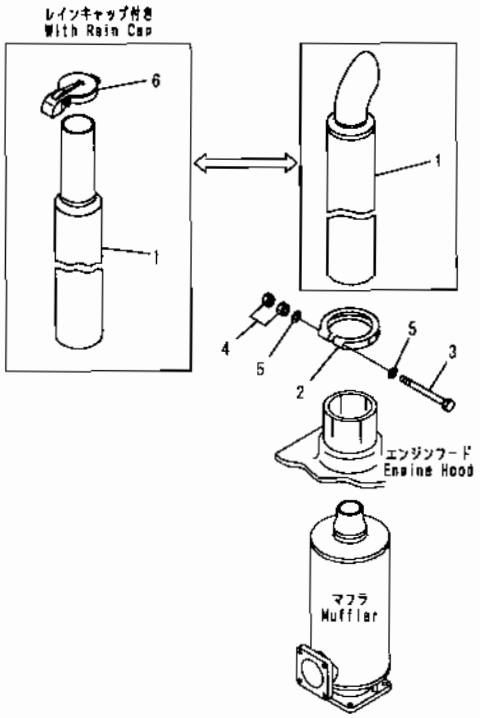


00027871

| INDEX | PART NO | DESCRIPTION | Q'TY | SERIAL NO. |
|---|---|---|---|---|
| 1 | 6151-11-5590 | PIPE, EXHAUST | 1 | .- |
| | 6150-11-5690 | PIPE, EXHAUST (WITH RAIN CAP) | 1 | .- |
| 2 | 6693-12-5540 | CLAMP | 1 | .- |
| 3 | 6693-12-5550 | BOLT | 1 | .- |
| 4 | 01582-21411 | NUT | 2 | .- |
| 5 | 01641-21423 | WASHER | 2 | .- |
| 6 | 6711-11-5781 | CAP, RAIN | 1 | .- |

# FIG. 1011A AIR CLEANER RELATED PARTS (#23001-)

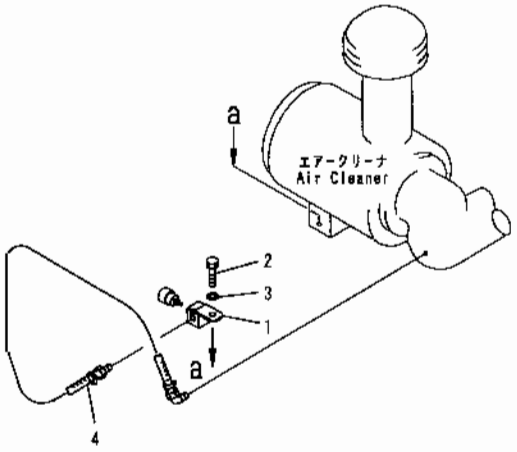


PV59358

| INDEX | PART NO. | DESCRIPTION | Q'TY | SERIAL NO |
|---|---|---|---|---|
| 1 | 234-844-5170 | NIPPLE | 1 | 23001- |
| 2 | 01010-81035 | BOLT | 1 | 23001- |
| 3 | 01643-31032 | WASHER | 1 | 23001- |
| 4 | 08671-50110 | HOSE | 1 | 23001- |
| | 08671-50721 | ELBOW | 1 | 23001- |

FIG. 1021 ENGINE OIL FILTER CONNECTING PARTS (FOR INTERFERENCE PREVENTION OF STEERING PUMP) (#23001-)

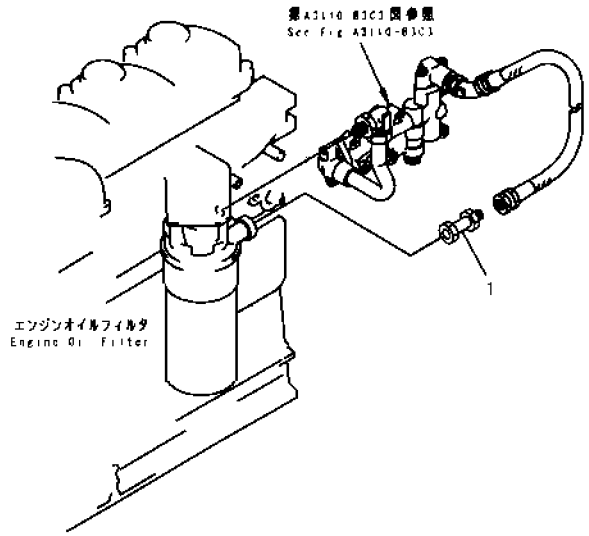


PT58562



FIG NO. : 1021

| INDEX | PART NO | DESCRIPTION | Q'TY | SERIAL NO |
|---|---|---|---|---|
| 1 | 234-60-32710 | JOINT..... .. .. ..... ..... ... | 1 | 23001- |

# FIG. 1201A RADIATOR AND OIL COOLER (#23001-)

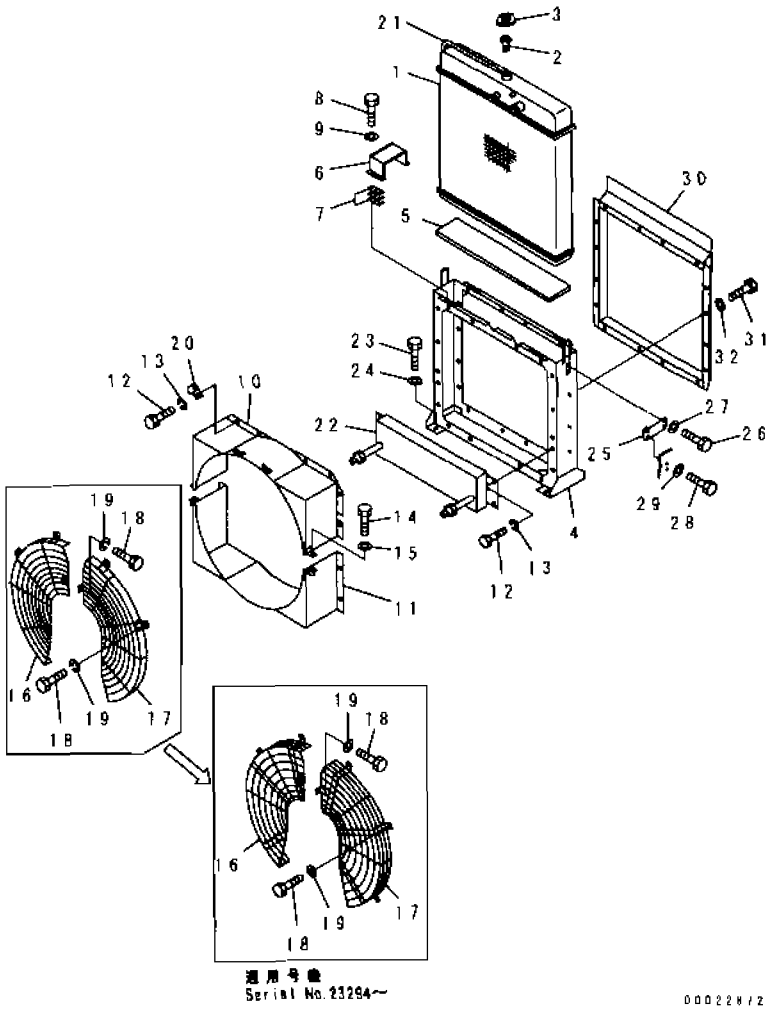


| INDEX | PART NO | DESCRIPTION | Q'TY | SERIAL NO. |
|---|---|---|---|---|
| | 234-03-61201 | RADIATOR ASS'Y. | 1 | 23294- |
| | □234-03-61200 | RADIATOR ASS'Y. | 1 | 23001-23293 |
| 1 | 234-03-31401 | .CORE ASS'Y. | 1 | 23001- |
| 2 | 230-03-11470 | .STRAINER. | 1 | 23001- |
| 3 | 101-03-13141 | .CAP, PRESSURE. | 1 | 23001- |
| 4 | 234-03-61210 | .FRAME. | 1 | 23001- |
| 5 | 234-03-11130 | .SEAT, RUBBER. | 1 | 23001- |
| 6 | 424-03-11150 | .CLAMP. | 1 | 23001- |
| 7 | 281-03-12560 | .SHIM, 0.6MM. | 25 | 23001- |
| 8 | 01010-80820 | .BOLT. | 12 | 23001- |
| 9 | 01602-20825 | .WASHER, SPRING. | 12 | 23001- |
| 10 | 234-03-61110 | .SHROUD. | 1 | 23001- |
| 11 | 234-03-61230 | .SHROUD. | 1 | 23001- |
| 12 | 01010-81016 | .BOLT. | 18 | 23001- |
| 13 | 01602-21030 | .WASHER, SPRING | 18 | 23001- |
| 14 | 01010-81016 | .BOLT. | 2 | 23001- |
| 15 | 01602-21030 | .WASHER, SPRING. | 2 | 23001- |
| 16 | 234-03-31142 | .NET, WIRE | 1 | 23294- |
| | □234-03-31141 | .NET, WIRE. | 1 | 23001-23293 |
| 17 | 234-03-41132 | .NET, WIRE. | 1 | 23294- |
| | □234-03-41131 | .NET, WIRE. | 1 | 23001-23293 |
| 18 | 01010-81016 | .BOLT. | 7 | 23001- |
| 19 | 01643-31032 | .WASHER, SPRING. | 7 | 23294- |
| | 01602-21030 | .WASHER, SPRING. | 7 | 23001-23293 |
| 20 | 232-03-11210 | .CLIP. | 3 | 23001- |
| 21 | 234-03-11181 | .HOSE, BAFFLE. | 1 | 23001- |
| 22 | 23C-03-11130 | .COOLER, OIL COOLER. | 1 | 23001- |
| 23 | 01010-81635 | BOLT. | 4 | 23001- |
| 24 | 01643-31645 | WASHER. | 4 | 23001- |
| 25 | 234-03-32172 | PLATE. | 2 | 23001- |
| 26 | 01010-81016 | BOLT. | 4 | 23001- |
| 27 | 01643-31032 | WASHER. | 4 | 23001- |
| 28 | 01010-81050 | BOLT. | 4 | 23001- |
| 29 | 01643-31032 | WASHER. | 4 | 23001- |
| 30 | 234-03-32160 | PLATE. | 1 | 23001- |
| 31 | 01010-81016 | BOLT. | 16 | 23001- |
| 32 | 01643-31032 | WASHER. | 16 | 23001- |

# FIG. 1211 RADIATOR PIPING

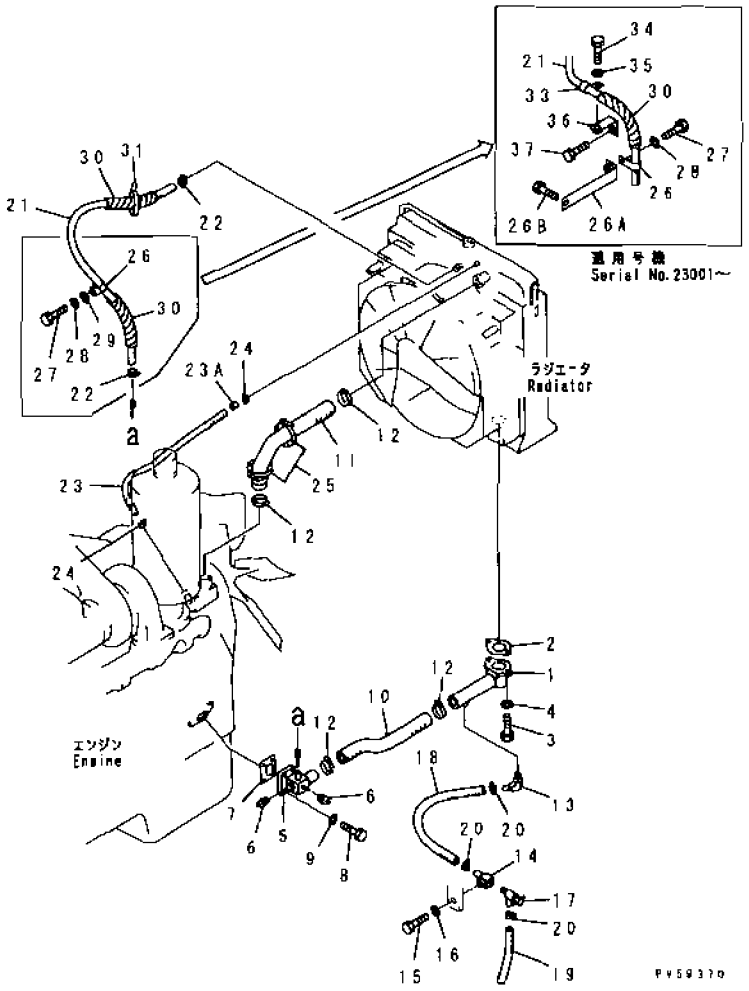


| INDEX | PART NO. | DESCRIPTION | Q'TY | SERIAL NO. |
|---|---|---|---|---|
| 1 | 234-03-32141 | TUBE | 1 | 23001- |
| | 234-03-32140 | TUBE | 1 | 21001-23000 |
| 2 | 232-03-12131 | GASKET | 1 | 21289- |
| | □232-03-12130 | GASKET | 1 | 21001-21288 |
| 3 | 01011-81200 | BOLT | 2 | 23001- |
| | ◆01011-51200 | BOLT | 2 | 21001-23000 |
| 4 | 01643-31232 | WASHER | 2 | 21001- |
| 5 | 234-991-1431 | TUBE | 1 | 23001- |
| | 234-991-1430 | TUBE | 1 | 21001-23000 |
| 6 | 07042-20415 | PLUG | 2 | 21001- |
| 7 | 234-991-1421 | GASKET | 1 | 21289- |
| | □234-991-1420 | GASKET | 1 | 21001-21288 |
| 8 | 01010-81050 | BOLT | 4 | 23001- |
| | ◆01010-51050 | BOLT | 4 | 21001-23000 |
| 9 | 01643-31032 | WASHER | 4 | 21001- |
| 10 | 234-03-42120 | HOSE | 1 | 21001- |
| 11 | 234-03-42110 | HOSE | 1 | 21001- |
| 12 | 07289-00070 | CLAMP | 4 | 21337- |
| | 07281-00809 | CLAMP | 4 | 21001-21336 |
| 13 | 232-43-54461 | ELBOW | 1 | 21348- |
| | 232-43-54460 | ELBOW | 1 | 21001-21347 |
| 14 | 232-03-56111 | NIPPLE | 1 | 21348- |
| | 232-03-56110 | NIPPLE | 1 | 21001-21347 |
| 15 | 01010-51020 | BOLT | 1 | 21001- |
| 16 | 01643-31032 | WASHER | 1 | 21001- |
| 17 | 07730-50004 | VALVE | 1 | 21086- |
| | □07730-30004 | VALVE | 1 | 21001-21085 |
| 18 | 07260-21445 | HOSE | 1 | 21008- |
| | □07260-21446 | HOSE | 1 | 21001-21007 |
| 19 | 07260-21428 | HOSE | 1 | 21001- |
| 20 | 07280-02523 | CLAMP | 3 | 21348- |
| | 07281-00289 | CLAMP | 3 | 21001-21347 |
| 21 | 07261-22616 | HOSE | 1 | 23001- |
| | 07261-22614 | HOSE | 1 | 21008-23000 |
| | □07261-22613 | HOSE | 1 | 21001-21007 |
| 22 | 07289-00045 | CLAMP | 2 | 23001- |
| | 07281-00489 | CLAMP | 2 | 21001-23000 |
| 23 | 07261-20910 | HOSE | 1 | 21001- |
| 23A | 23A-03-11350 | CHOKE | 1 | 21337- |
| 24 | 07280-01920 | CLAMP | 2 | 23001- |
| | 07281-00197 | CLAMP | 2 | 21001-23000 |
| 25 | 08034-30521 | BAND | 2 | 23001- |

# FIG. 1211 RADIATOR PIPING

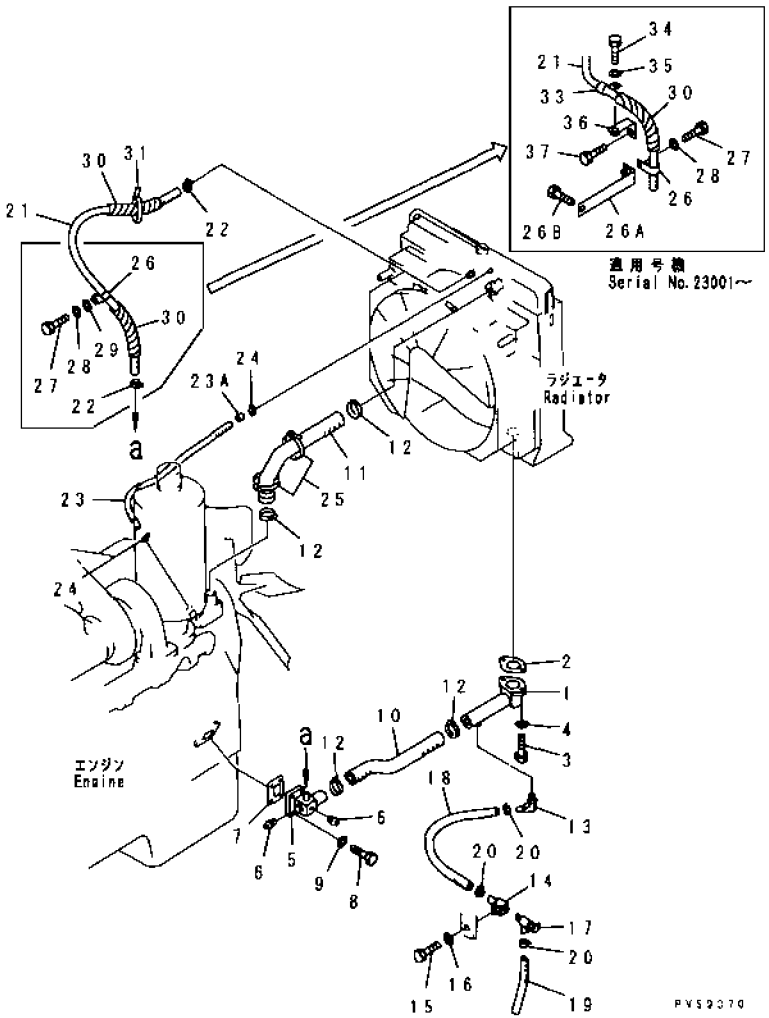


| INDEX | PART NO. | DESCRIPTION | Q'TY | SERIAL NO |
|---|---|---|---|---|
| | 08034-00834 | BAND | 2 | 21008-23000 |
| 26 | 281-01-13180 | CLIP | 1 | 21008- |
| 26A | 234-03-61310 | BRACKET | 1 | 23001- |
| 26B | 01010-81050 | BOLT | 1 | 23001- |
| 27 | 01010-81020 | BOLT | 1 | 23001- |
| | ◆01010-51020 | BOLT | 1 | 21008-23000 |
| 28 | 01643-31032 | WASHER | 1 | 21008- |
| 29 | 01641-21016 | WASHER | 1 | 21008-23000 |
| 30 | 273-60-24450 | TUBE, SPIRAL | 2 | 21001- |
| 31 | 08034-00519 | BAND | 1 | 21001- |
| 33 | 281-01-13180 | CLIP | 1 | 23001- |
| 34 | 01010-81016 | BOLT | 1 | 23001- |
| 35 | 01643-31032 | WASHER | 1 | 23001- |
| 36 | 234-03-61240 | BRACKET | 1 | 23001- |
| 37 | 01010-81020 | BOLT | 2 | 23001- |

# FIG. 1301A FUEL TANK AND HYDRAULIC TANK (#23001-)

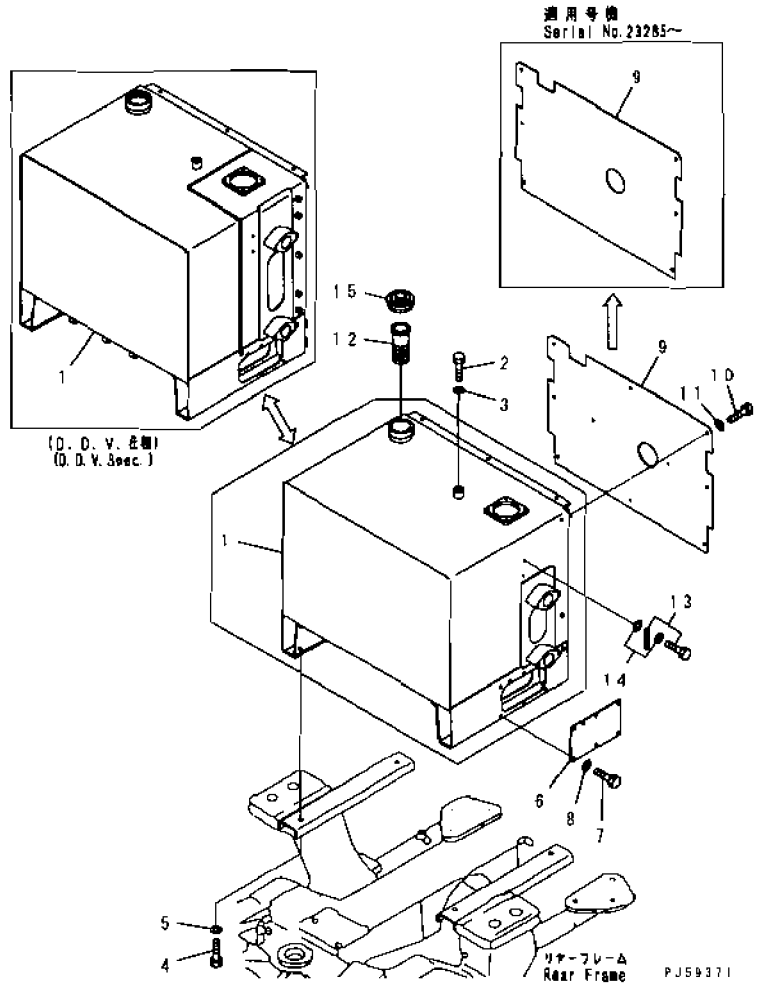


| INDEX | PART NO | DESCRIPTION | Q'TY | SERIAL NO. |
|---|---|---|---|---|
| 1 | 234-04-61122 | TANK | 1 | 23285- |
| | 234-04-61121 | TANK | 1 | 23036-23284 |
| | 234-04-61120 | TANK | 1 | 23001-23035 |
| | 234-04-61511 | TANK, (D.D.V. SPEC) | 1 | 23285- |
| | 234-04-61510 | TANK, (D.D.V SPEC) | 1 | 23001-23284 |
| 2 | 01010-82035 | BOLT | 1 | 21018- |
| 3 | 01643-32060 | WASHER | 1 | 21018- |
| 4 | 01010-81640 | BOLT | 4 | 23001- |
| 5 | 01643-31645 | WASHER | 4 | 23001- |
| 6 | 234-04-61150 | PLATE | 1 | 23001- |
| 7 | 01010-81025 | BOLT | 5 | 23001- |
| 8 | 01643-31032 | WASHER | 5 | 23001- |
| 9 | 234-04-61162 | COVER | 1 | 23285- |
| | 234-04-61161 | COVER | 1 | 23232-23284 |
| | 234-04-61160 | COVER | 1 | 23001-23231 |
| 10 | 01010-81016 | BOLT | 6 | 23285- |
| | 01010-81016 | BOLT | 10 | 23001-23284 |
| 11 | 01643-31032 | WASHER | 6 | 23285- |
| | 01643-31032 | WASHER | 10 | 23001-23284 |
| 12 | 238-04-12130 | STRAINER | 1 | 23001- |
| 13 | 23A-60-13500 | GAUGE | 1 | 23001- |
| 14 | 07005-01012 | GASKET | 2 | 23001- |
| 15 | 20Y-04-11160 | CAP, WITH LOCK | 1 | 23001- |

# FIG. 1311B FUEL PIPING(#23001-)

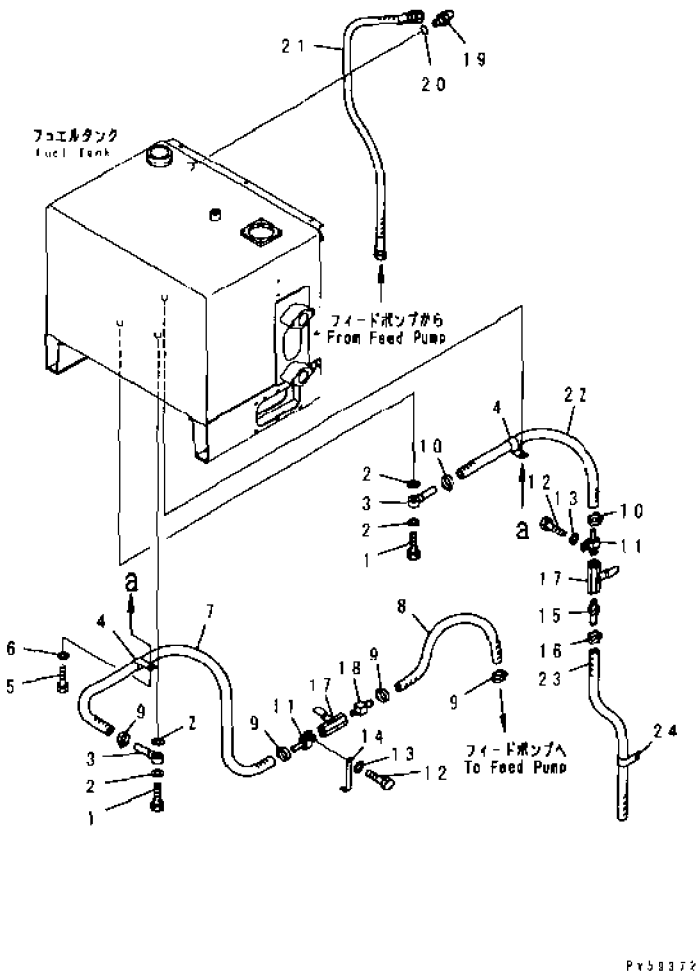


| INDEX | PART NO | DESCRIPTION | Q'TY | SERIAL NO. |
|---|---|---|---|---|
| 1 | 07206-11014 | BOLT | 2 | 23001- |
| 2 | 07005-01412 | GASKET | 4 | 23001- |
| 3 | 238-04-12110 | TUBE | 2 | 23001- |
| 4 | 04434-51710 | CLIP | 1 | 23001- |
| 5 | 01010-81016 | BOLT | 1 | 23001- |
| 6 | 01643-31032 | WASHER | 1 | 23001- |
| 7 | 07261-20914 | HOSE | 1 | 23001- |
| 8 | 07260-20904 | HOSE | 1 | 23001- |
| 9 | 07281-00197 | CLAMP | 4 | 23001- |
| 10 | 07281-00197 | CLAMP | 2 | 23001- |
| 11 | 232-04-61190 | NIPPLE | 2 | 23001- |
| 12 | 01010-50825 | BOLT | 2 | 23001- |
| 13 | 01643-30823 | WASHER | 2 | 23001- |
| 14 | 234-04-61180 | BRACKET | 1 | 23001- |
| 15 | 232-04-52340 | NIPPLE | 1 | 23001- |
| 16 | 236-04-21190 | CLIP | 1 | 23001- |
| 17 | 07700-40460 | VALVE | 2 | 23001- |
| 18 | 232-04-52151 | NIPPLE | 1 | 23001- |
| 19 | 07235-10315 | ELBOW | 1 | 23001- |
| 20 | 07002-12034 | O-RING | 1 | 23001- |
| 21 | 07102-20314 | HOSE | 1 | 23001- |
| 22 | 07260-20970 | HOSE | 1 | 23001- |
| 23 | 07270-01275 | TUBE | 1 | 23001- |
| 24 | 08036-01814 | CLIP | 1 | 23001- |

# FIG. 1401C BATTERY (#23001-)

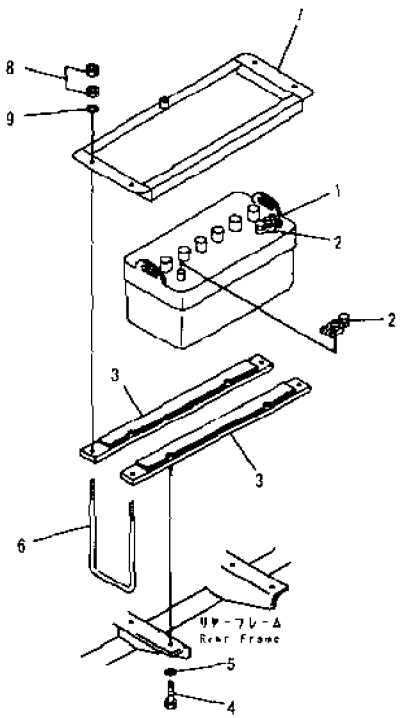


| INDEX | PART NO | DESCRIPTION | Q'TY | SERIAL NO. |
|---|---|---|---|---|
| 1 | 08000-32215 | BATTERY, WET | 2 | 23001- |
| 2 | 08000-00000 | TERMINAL, (+) | 2 | 21001- |
| | 08000-00001 | TERMINAL, (-) | 2 | 21001- |
| 3 | 23A-06-12430 | BRACKET | 4 | 23001- |
| 4 | 01010-51025 | BOLT | 8 | 23001- |
| 5 | 01643-31032 | WASHER | 8 | 23001- |
| 6 | 23A-06-12420 | U-BOLT | 4 | 23001- |
| 7 | 23A-06-12410 | HOLDER | 2 | 23001- |
| 8 | 01580-11008 | NUT | 16 | 23001- |
| 9 | 01643-31032 | WASHER | 8 | 23001- |

# FIG. 1405A LARGE CAPACITY BATTERY (#23001-)

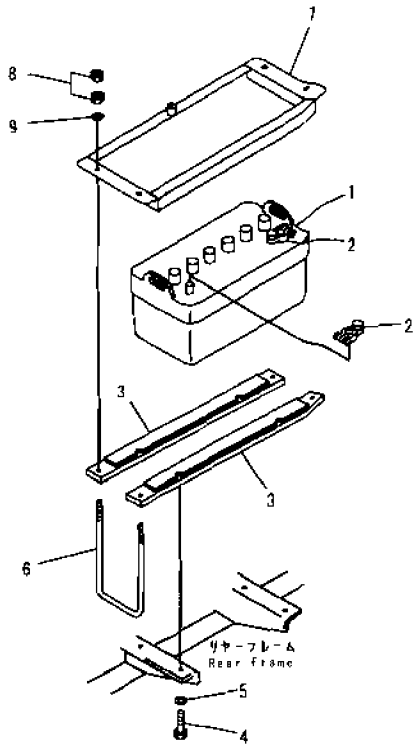


PJ59314

| INDEX | PART NO | DESCRIPTION | Q'TY | SERIAL NO |
|---|---|---|---|---|
| 1 | 08000-02221 | BATTERY | 2 | 21001- |
| 2 | 08000-00000 | TERMINAL (+) | 2 | 21001- |
| | 08000-00001 | TERMINAL (-) | 2 | 21001- |
| 3 | 23B-06-12420 | BRACKET | 4 | 23001- |
| 4 | 01010-51025 | BOLT | 8 | 23001- |
| 5 | 01643-31032 | WASHER | 8 | 23001- |
| 6 | 23A-06-12420 | U-BOLT | 4 | 23001- |
| 7 | 23B-06-12410 | HOLDER | 2 | 23001- |
| 8 | 01580-11008 | NUT | 16 | 23001- |
| 9 | 01643-31032 | WASHER | 8 | 23001- |

FIG. 1411B MONITOR PANEL (#23001-)

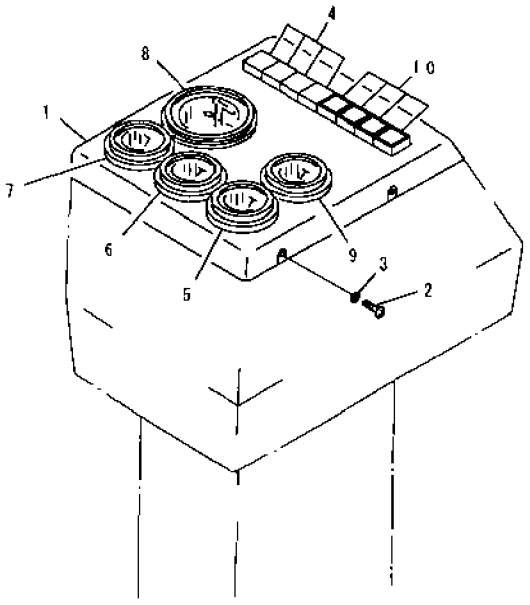


PV59373

FIG NO. : 1411B

| INDEX | PART NO | DESCRIPTION | Q'TY | SERIAL NO. |
|---|---|---|---|---|
| 1 | 234-06-63130 | PANEL | 1 | 23001- |
| 2 | 01220-40616 | SCREW | 4 | 21027- |
| 3 | 01643-30623 | WASHER | 4 | 21027- |
| 4 | 262-06-59860 | CAP | 4 | 23001- |
| 5 | 232-06-52321 | GAUGE, ENGINE OIL PRESSURE | 1 | 21027- |
| 6 | 232-06-52341 | GAUGE, WATER TEMPERATURE | 1 | 21337- |
| 7 | 232-06-52361 | GAUGE, FUEL | 1 | 21337- |
| 8 | 234-06-31110 | SPEEDOMETER | 1 | 21001- |
| 9 | 08687-22403 | METER, SERVICE | 1 | 23001- |
| 10 | 234-06-63220 | LAMP, PILOT | 1 | 23001- |
| | 262-06-56490 | BULB, 3W | 4 | 23001- |
| | 08055-10882 | CONNECTOR | 1 | 23001- |

# FIG. 1415B MONITOR PANEL (WITH BLADE ACCUMULATOR)

(#23001-)

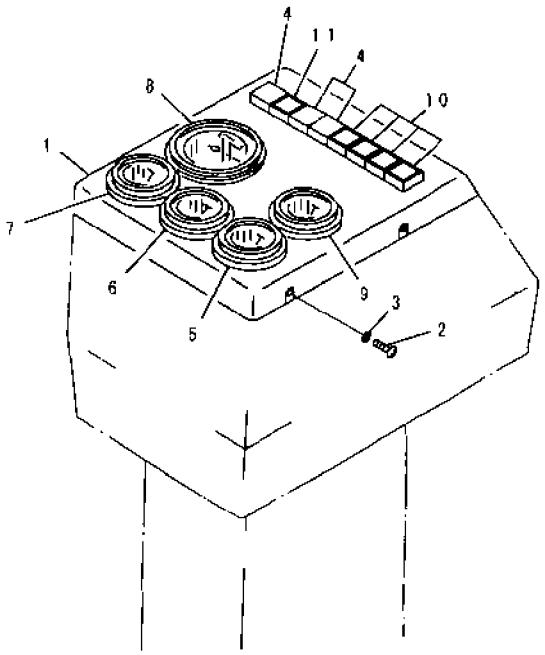


PV59374

| INDEX | PART NO. | DESCRIPTION | Q'TY | SERIAL NO. |
|---|---|---|---|---|
| 1 | 234-06-63130 | PANEL | 1 | 23001- |
| 2 | 01220-40616 | SCREW | 4 | 21027- |
| 3 | 01643-30623 | WASHER | 4 | 21027- |
| 4 | 262-06-59860 | CAP | 3 | 23001- |
| 5 | 232-06-52321 | GAUGE, ENGINE OIL PRESSURE | 1 | 21027- |
| 6 | 232-06-52341 | GAUGE, WATER TEMPERATURE | 1 | 21337- |
| 7 | 232-06-52361 | GAUGE, FUEL | 1 | 21337- |
| 8 | 234-06-31110 | SPEEDOMETER | 1 | 21001- |
| 9 | 08687-22403 | METER, SERVICE | 1 | 23001- |
| 10 | 234-06-63220 | LAMP, PILOT | 1 | 23001- |
| | 262-06-56490 | .BULB, 3W | 4 | 23001- |
| | 08055-10882 | .CONNECTOR | 1 | 23001- |
| 11 | 234-06-63230 | LAMP, ACCUMULATOR | 1 | 23001- |

# FIG. 1451C INSTRUMENT PANEL (#23001-)

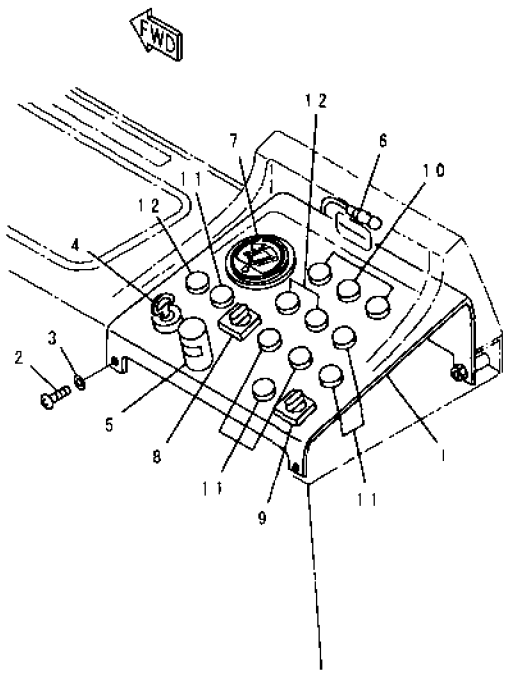


PV59375

| INDEX | PART NO. | DESCRIPTION | Q'TY | SERIAL NO |
|---|---|---|---|---|
| 1 | 234-06-63140 | PANEL | 4 | 23001- |
| 2 | 01220-40616 | SCREW | 4 | 23001- |
| 3 | 01643-30623 | WASHER | 1 | 21001- |
| 4 | 08086-20000 | SWITCH, STARTING | 1 | 23001- |
| 5 | 600-815-3730 | SIGNAL, HEATER | 1 | 21001- |
| 6 | 235-06-15370 | LAMP, PANEL | 1 | 23001- |
| 7 | 238-06-15140 | GAUGE, AIR PRESSURE | 1 | 23001- |
| 8 | 23E-06-13110 | SWITCH, HEAD LAMP | 1 | 23001- |
| 9 | 23B-06-12321 | SWITCH, BANK CONTROL | 1 | 23001- |
| | 23A-53-12121 | PLATE, OPERATING, BANK CONTROL | 1 | 23001- |
| | 23A-53-35350 | PLATE, OPERATING, BANK CONTROL (ARABIC) | 1 | 23001- |
| 10 | 09415-00506 | CAP | 3 | 23001- |
| 11 | 09415-01610 | CAP | 6 | 23001- |
| 12 | 130-911-1640 | PLUG | 3 | 23001- |

# FIG. 1453C INSTRUMENT PANEL (WITH BLADE ACCUMULATOR)

(#23001-)

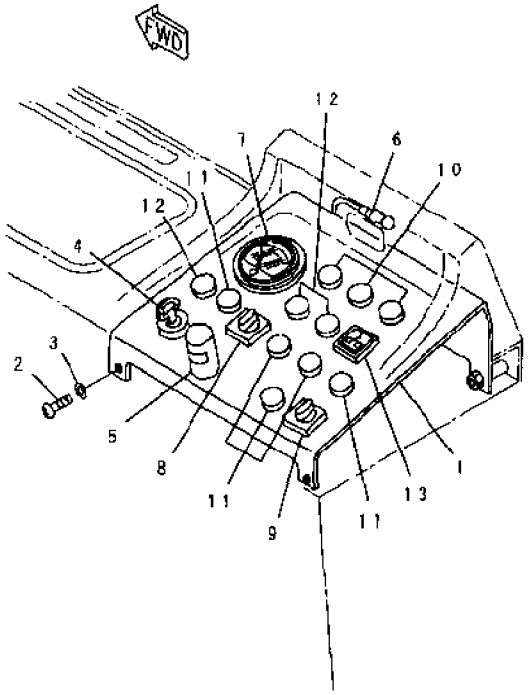


FW5937A

| INDEX | PART NO. | DESCRIPTION | Q'TY | SERIAL NO |
|---|---|---|---|---|
| 1 | 234-06-63140 | PANEL | 1 | 23001- |
| 2 | 01220-40616 | SCREW | 4 | 23001- |
| 3 | 01543-30623 | WASHER | 4 | 21001- |
| 4 | 08086-20000 | SWITCH, STARTING | 1 | 23001- |
| 5 | 600-815-3730 | SIGNAL, HEATER | 1 | 21001- |
| 6 | 235-06-15370 | LAMP, PANEL | 1 | 23001- |
| 7 | 238-06-15140 | GAUGE, AIR PRESSURE | 1 | 23001- |
| 8 | 23E-06-13110 | SWITCH, HEAD LAMP | 1 | 23001- |
| 9 | 238-06-12321 | SWITCH, BANK CONTROL | 1 | 23001- |
| | 23A-53-12121 | PLATE, OPERATING, BANK CONTROL | 1 | 23001- |
| | 23A-53-35350 | PLATE, OPERATING, BANK CONTROL (ARABIC) | 1 | 23001- |
| 10 | 09415-00506 | CAP | 3 | 23001- |
| 11 | 09415-01610 | CAP | 5 | 23001- |
| 12 | 130-911-1640 | PLUG | 3 | 23001- |
| 13 | 238-806-1110 | SWITCH, ACCUMULATOR | 1 | 23001- |

FIG NO. : 1455C

# FIG. 1455C INSTRUMENT PANEL (WITH CAUTION LAMP)

(#23001-)

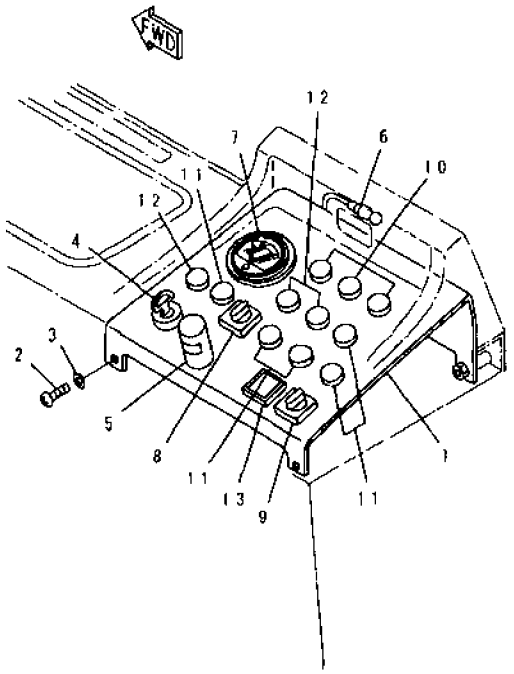


| INDEX | PART NO | DESCRIPTION | Q'TY | SERIAL NO. |
|---|---|---|---|---|
| 1 | 234-06-63140 | PANEL | 1 | 23001- |
| 2 | 01220-40616 | SCREW | 4 | 23001- |
| 3 | 01643-30623 | WASHER | 4 | 21001- |
| 4 | 08086-20000 | SWITCH, STARTING | 1 | 23001- |
| 5 | 600-815-3730 | SIGNAL, HEATER | 1 | 21001- |
| 6 | 235-06-15370 | LAMP, PANEL | 1 | 23001- |
| 7 | 238-06-15140 | GAUGE, AIR PRESSURE | 1 | 23001- |
| 8 | 23E-06-13110 | SWITCH, HEAD LAMP | 1 | 23001- |
| 9 | 23B-06-12321 | SWITCH, BANK CONTROL | 1 | 23001- |
| | 23A-53-12121 | PLATE, OPERATING, BANK CONTROL | 1 | 23001- |
| | 234-53-35350 | PLATE, OPERATING, BANK CONTROL (ARABIC) | 1 | 23001- |
| 10 | 09415-00506 | CAP | 3 | 23001- |
| 11 | 09415-01610 | CAP | 5 | 23001- |
| 12 | 130-911-1640 | PLUG | 3 | 23001- |
| 13 | 23E-06-13151 | SWITCH, CAUTION LAMP | 1 | 23001- |

# FIG. 1459 INSTRUMENT PANEL (WITH FRONT AND REAR WORK LAMP) (#23001-)

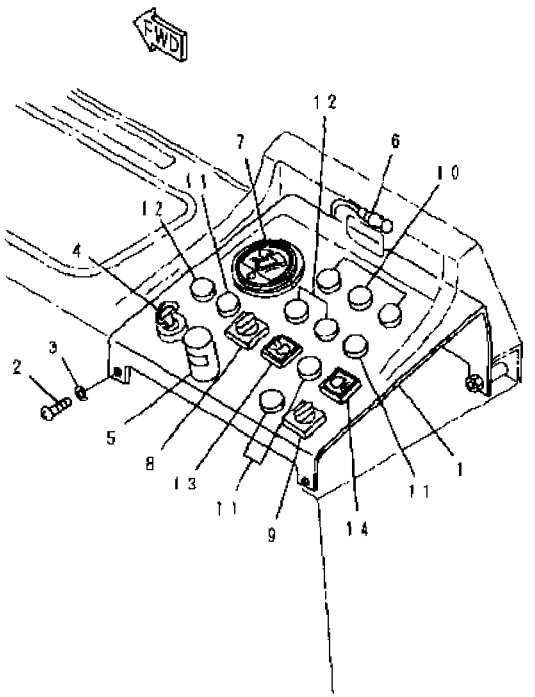


PJ2F505

| INDEX | PART NO | DESCRIPTION | Q'TY | SERIAL NO. |
|---|---|---|---|---|
| 1 | 234-06-63140 | PANEL | 4 | 23001- |
| 2 | 01220-40616 | SCREW | 4 | 23001- |
| 3 | 01643-30623 | WASHER | 1 | 21001- |
| 4 | 08086-20000 | SWITCH, STARTING | 1 | 23001- |
| 5 | 600-815-3730 | SIGNAL, HEATER | 1 | 21001- |
| 6 | 235-06-15370 | LAMP, PANEL | 1 | 23001- |
| 7 | 238-06-15140 | GAUGE, AIR PRESSURE | 1 | 23001- |
| 8 | 23E-06-13110 | SWITCH, HEAD LAMP | 1 | 23001- |
| 9 | 23B-06-12321 | SWITCH, BANK CONTROL | 1 | 23001- |
| | 23A-53-12121 | PLATE, OPERATING, BANK CONTROL | 1 | 23001- |
| | 234-53-35350 | PLATE, OPERATING, BANK CONTROL (ARABIC) | 1 | 23001- |
| 10 | 09415-00506 | CAP | 3 | 23001- |
| 11 | 09415-01610 | CAP | 6 | 23001- |
| 12 | 130-911-1640 | PLUG | 3 | 23001- |
| 13 | 23F-06-11710 | SWITCH, FRONT WORK LAMP | 1 | 23001- |
| | 23F-53-11420 | PLATE, MARK, FRONT WORK LAMP | 1 | 23001- |
| 14 | 23F-06-11710 | SWITCH, REAR WORK LAMP | 1 | 23001- |
| | 23F-53-11410 | PLATE, MARK, REAR WORK LAMP | 1 | 23001- |

# FIG. 1501A ELECTRICAL SYSTEM (FRONT LINE) (#23001-)

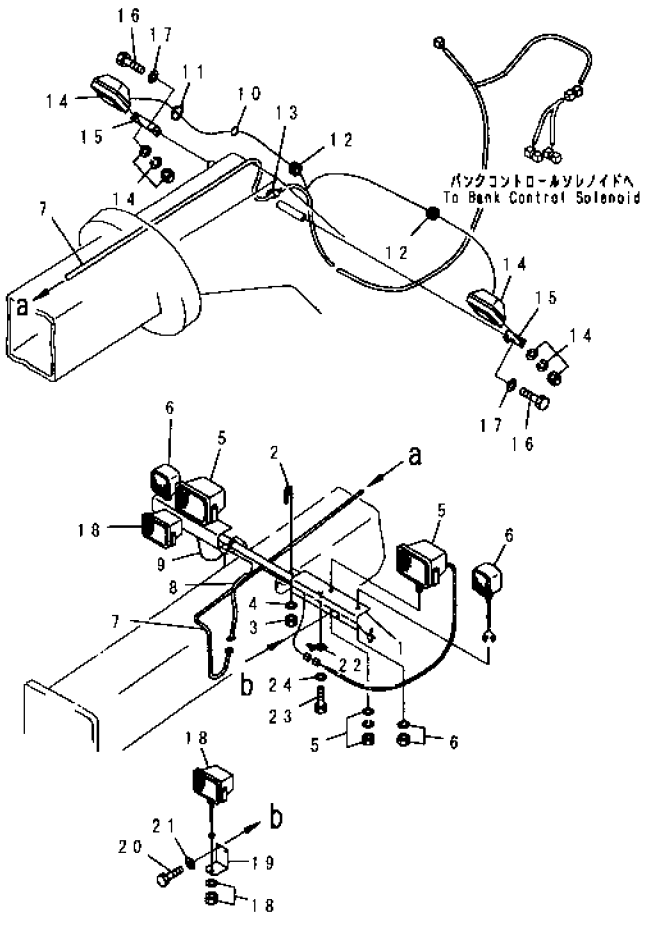


| INDEX | PART NO | DESCRIPTION | Q'TY | SERIAL NO. |
|---|---|---|---|---|
| 1 | 234-06-63110 | BRACKET | 1 | 23001- |
| 2 | 232-06-31290 | U-BOLT | 2 | 23001- |
| 3 | 01580-11210 | NUT | 4 | 23001- |
| 4 | 01643-31232 | WASHER | 8 | 23001- |
| 5 | 23S-06-54111 | LAMP ASS'Y, HEAD | 2 | 23001- |
| | 23S-06-23230 | .BULB, 75/70W | 1 | 23001- |
| | 23S-06-54121 | .LENS ASS'Y | 1 | 23001- |
| | 01582-11411 | .NUT | 1 | 23001- |
| | 01602-21442 | .WASHER, SPRING | 1 | 23001- |
| | 01643-31445 | .WASHER | 1 | 23001- |
| 6 | 23F-06-11130 | LAMP ASS'Y, TURN SIGNAL | 2 | 23001- |
| | 23F-06-11550 | .BULB, 25W | 1 | 23001- |
| | 23F-06-11650 | .BULB, 12W | 1 | 23001- |
| | 23F-06-11540 | .LENS | 1 | 23001- |
| 7 | 234-06-63150 | HARNESS | 1 | 23001- |
| 8 | 234-06-63150 | HARNESS | 1 | 23001- |
| 9 | 234-06-21560 | CABLE, EARTH | 1 | 23001- |
| 10 | 232-856-5250 | CLIP | 10 | 23001- |
| 11 | 08034-00414 | BAND | 15 | 23001- |
| 12 | 08037-01610 | GROMMET | 2 | 23001- |
| 13 | 08036-11214 | CLIP | 1 | 23001- |
| 14 | 23B-06-22211 | LAMP ASS'Y, WORK | 2 | 23001- |
| | 23B-06-12241 | .LENS | 1 | 23001- |
| | 08119-02460 | .BULB, 60W | 1 | 23001- |
| 15 | 23B-06-22220 | BRACKET | 2 | 23001- |
| 16 | 01010-81430 | BOLT | 2 | 23001- |
| 17 | 01643-31445 | WASHER | 2 | 23001- |
| 18 | 23D-06-33500 | LAMP ASS'Y, FOG | 2 | 23001- |
| | 23D-06-33590 | .BULB, 35W | 1 | 23001- |
| | 23D-06-33580 | .LENS | 1 | 23001- |
| 19 | 234-06-63120 | BRACKET | 2 | 23001- |
| 20 | 01010-80825 | BOLT | 4 | 23001- |
| 21 | 01643-30823 | WASHER | 4 | 23001- |
| 22 | 08053-01510 | CLIP | 2 | 23001- |
| 23 | 01010-80816 | BOLT | 2 | 23001- |
| 24 | 01643-80823 | WASHER | 2 | 23001- |

# FIG. 1503A ELECTRICAL SYSTEM (CENTER LINE) (#23001-)

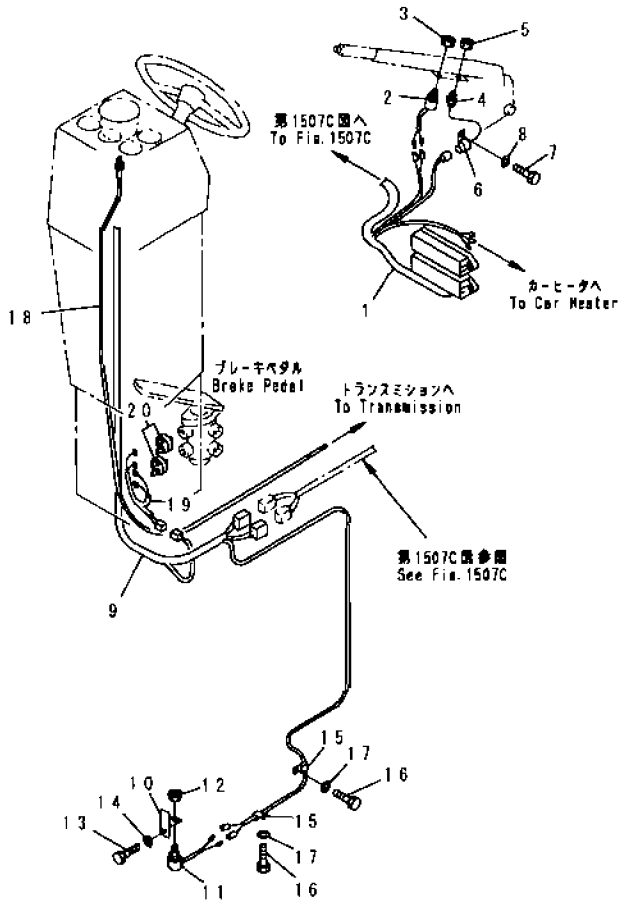


| INDEX | PART NO. | DESCRIPTION | Q'TY | SERIAL NO |
|---|---|---|---|---|
| 1 | (234-06-63160) | HARNESS | 1 | 23001- |
| 2 | 234-06-13361 | SWITCH, PARKING BRAKE | 1 | 23001- |
| 3 | 234-06-13380 | NUT | 1 | 23001- |
| 4 | 238-06-12310 | SWITCH, BUZZER | 1 | 23001- |
| 5 | 01583-11610 | NUT | 1 | 23001- |
| 6 | 08036-01814 | CLIP | 1 | 23001- |
| 7 | 01010-81016 | BOLT | 1 | 23001- |
| 8 | 01643-31032 | WASHER | 1 | 23001- |
| 9 | (234-06-63180) | HARNESS | 1 | 23001- |
| 10 | 238-06-17210 | BRACKET | 1 | 23001- |
| 11 | 236-06-23220 | SWITCH | 1 | 23001- |
| 12 | 236-06-23230 | NUT | 1 | 23001- |
| 13 | 01010-80820 | BOLT | 1 | 23001- |
| 14 | 01643-30823 | WASHER | 1 | 23001- |
| 15 | 08036-10810 | CLIP | 2 | 23001- |
| 16 | 01010-50816 | BOLT | 2 | 23001- |
| 17 | 01643-30823 | WASHER | 2 | 23001- |
| 18 | 08603-00028 | CABLE, SPEEDOMETER | 1 | 23001- |
| 19 | 234-06-62190 | HARNESS | 1 | 23001- |
| 20 | 281-06-14280 | SWITCH, STOP LAMP | 2 | 23001- |

# FIG. 1505B ELECTRICAL SYSTEM (MONITOR PANEL LINE)

(#23001-)

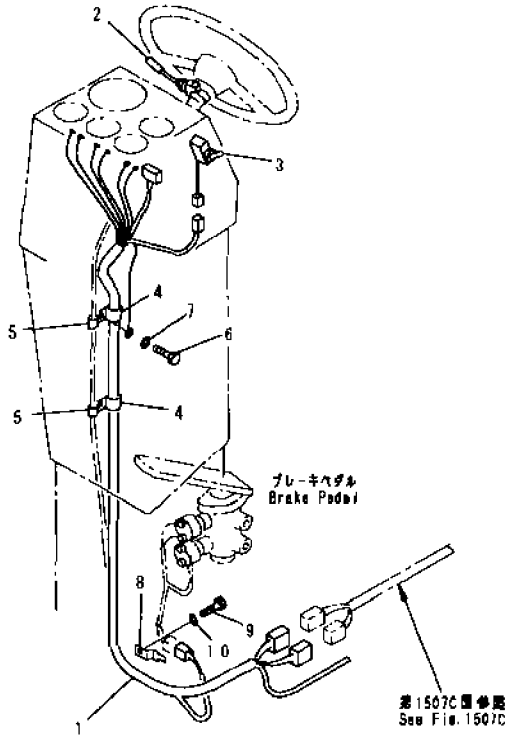


P959380

| INDEX | PART NO | DESCRIPTION | Q'TY | SERIAL NO. |
|---|---|---|---|---|
| 1 | 234-06-63180 | HARNESS | 1 | 23001- |
| 2 | 23A-06-12650 | SWITCH, TURN SIGNAL | 1 | 23001- |
| 3 | 23A-06-12660 | SWITCH, DIMMER | 1 | 23001- |
| 4 | 08036-02514 | CLIP | 2 | 23001- |
| 5 | 08036-01414 | CLIP | 2 | 23001- |
| 6 | 01010-81016 | BOLT | 2 | 23001- |
| 7 | 01643-31032 | WASHER | 2 | 23001- |
| 8 | 08053-01510 | CLIP | 1 | 23001- |
| 9 | 01010-81016 | BOLT | 1 | 23001- |
| 10 | 01643-31032 | WASHER | 1 | 23001- |

# FIG. 1507C ELECTRICAL SYSTEM (INSTRUMENT PANEL LINE)

(#23001-)

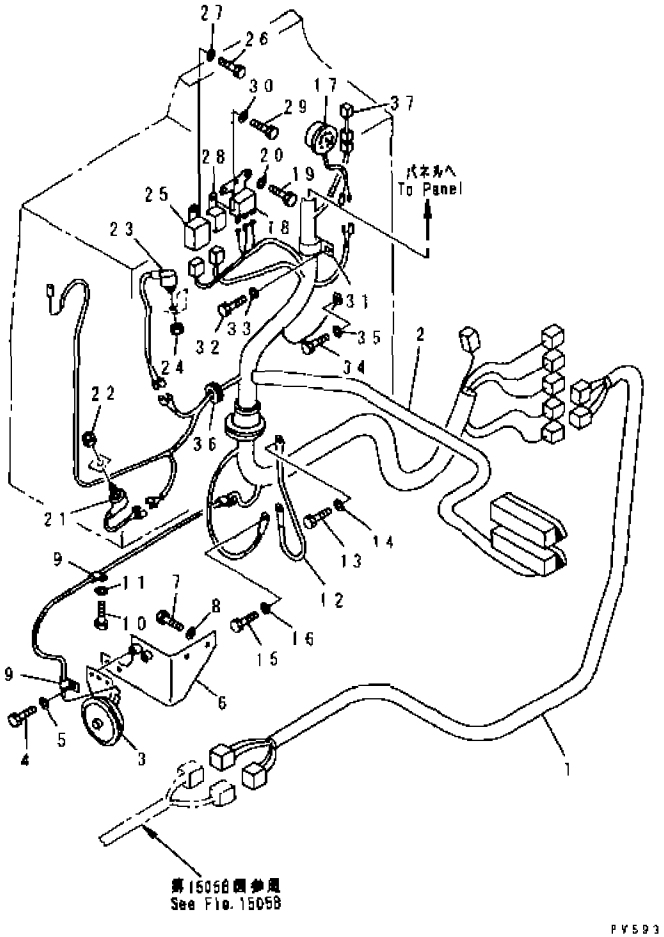


| INDEX | PART NO. | DESCRIPTION | Q'TY | SERIAL NO |
|---|---|---|---|---|
| 1 | 234-06-63270 | HARNESS | 1 | 23001- |
| 2 | 234-06-63160 | HARNESS, (WITH FUSE BOX) | 1 | 23001- |
| | 234-06-63170 | .HARNESS | 1 | 23001- |
| | 08044-01500 | .BOX, FUSE | 2 | 23001- |
| | 08041-00500 | .FUSE, 5A | 2 | 23001- |
| | 08041-01000 | .FUSE, 10A | 12 | 23001- |
| | 08041-01500 | .FUSE, 15A | 5 | 23001- |
| | 08041-02000 | .FUSE, 20A | 13 | 23001- |
| | 08041-03000 | .FUSE, 30A | 4 | 23001- |
| 3 | 08160-62430 | HORN | 1 | 23001- |
| 4 | 01010-80816 | BOLT | 2 | 23001- |
| 5 | 01643-30823 | WASHER | 2 | 23001- |
| 6 | 234-06-61140 | BRACKET | 1 | 23001- |
| 7 | 01010-80820 | BOLT | 2 | 23001- |
| 8 | 01643-30823 | WASHER | 2 | 23001- |
| 9 | 08036-01014 | CLIP | 3 | 23001- |
| 10 | 01010-80812 | BOLT | 2 | 23001- |
| 11 | 01643-30823 | WASHER | 2 | 23001- |
| 12 | 238-06-11160 | CABLE | 1 | 23001- |
| 13 | 01010-80816 | BOLT | 1 | 23001- |
| 14 | 01643-30823 | WASHER | 1 | 23001- |
| 15 | 01010-81016 | BOLT | 1 | 23001- |
| 16 | 01643-31032 | WASHER | 1 | 23001- |
| 17 | 232-06-61620 | BUZZER | 1 | 21001- |
| 18 | 08163-02400 | RELAY, HORN | 1 | 21001- |
| 19 | 01010-80612 | BOLT | 2 | 21001- |
| 20 | 01643-30623 | WASHER | 2 | 21001- |
| 21 | 08074-40000 | SWITCH, NEUTRAL | 1 | 21001- |
| 22 | 236-06-23230 | NUT | 1 | 21001- |
| 23 | 08074-40000 | SWITCH, BACK LAMP | 1 | 21001- |
| 24 | 236-06-23230 | NUT | 1 | 21001- |
| 25 | 416-06-22250 | FLASHER, HAZARD | 1 | 23001- |
| 26 | 01010-80612 | BOLT | 1 | 21001- |
| 27 | 01643-30623 | WASHER | 1 | 21001- |
| 28 | 569-06-61960 | RELAY, ENGINE STOP | 1 | 21001- |
| 29 | 01010-80612 | BOLT | 1 | 21001- |
| 30 | 01643-30623 | WASHER | 1 | 21001- |
| 31 | 08036-03014 | CLIP | 1 | 23001- |
| 32 | 01010-81016 | BOLT | 1 | 23001- |
| 33 | 01643-31032 | WASHER | 1 | 23001- |
| 34 | 01010-80612 | BOLT | 1 | 23001- |
| 35 | 01643-30623 | WASHER | 1 | 23001- |

FIG NO. : 1507C

| INDEX | PART NO | DESCRIPTION | Q'TY | SERIAL NO. |
|---|---|---|---|---|
| 36 | 08037-02512 | GROMMET..... | 2 | 23001- |
| 37 | 238-806-1110 | HARNESS, (FOR ACCUMULATOR)..... | 1 | 23001- |



GD705A-4

# FIG. 1509A ELECTRICAL SYSTEM (BATTERY LINE) (#23001-)

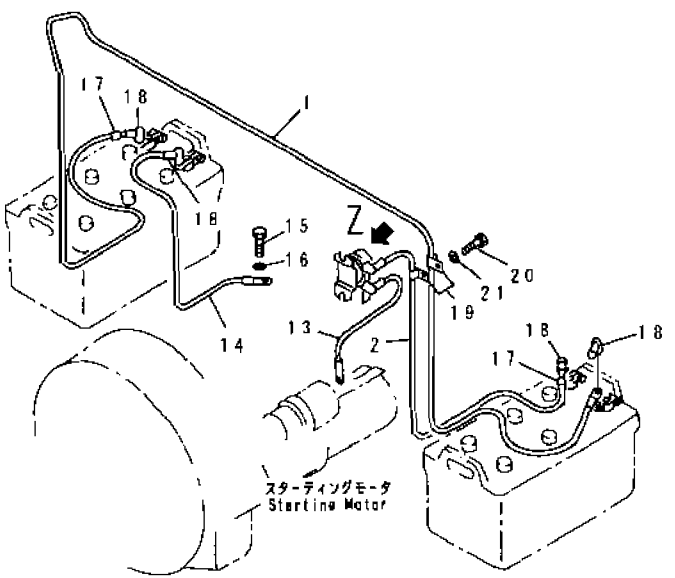


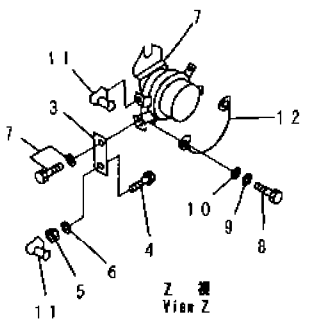


PY54382

| INDEX | PART NO | DESCRIPTION | Q'TY. | SERIAL NO |
|---|---|---|---|---|
| 1 | 08028-65350 | CABLE | 1 | 23001- |
| 2 | 08028-65125 | CABLE | 1 | 23001- |
| 3 | 234-06-32240 | PLATE | 1 | 21001- |
| 4 | 01010-50820 | BOLT | 1 | 21001- |
| 5 | 01580-10806 | NUT | 1 | 21001- |
| 6 | 01643-30823 | WASHER | 1 | 21001- |
| 7 | 08088-30000 | SWITCH, BATTERY | 1 | 21330- |
| 8 | 01010-50830 | BOLT | 2 | 21001- |
| 9 | 01643-30823 | WASHER | 2 | 21001- |
| 10 | 01641-20812 | WASHER | 2 | 21001- |
| 11 | 232-06-11960 | CAP, TERMINAL | 3 | 23001- |
| 12 | 237-06-11510 | WIRE | 1 | 21001- |
| 13 | 232-06-11960 | CAP | 1 | 23001- |
| 14 | 234-06-31220 | CABLE | 1 | 21001- |
| 15 | 01010-81016 | BOLT | 1 | 23001- |
| 16 | 01643-31032 | WASHER | 1 | 21001- |
| 17 | 234-06-41320 | BAND, MARK | 2 | 21001- |
| 18 | 232-06-11970 | CAP | 4 | 21001- |
| 19 | 08036-01814 | CLIP | 2 | 23001- |
| 20 | 01010-81016 | BOLT | 1 | 23001- |
| 21 | 01643-31032 | WASHER | 1 | 23001- |

# FIG. 1511A ELECTRICAL SYSTEM (ENGINE LINE) (#23001-)

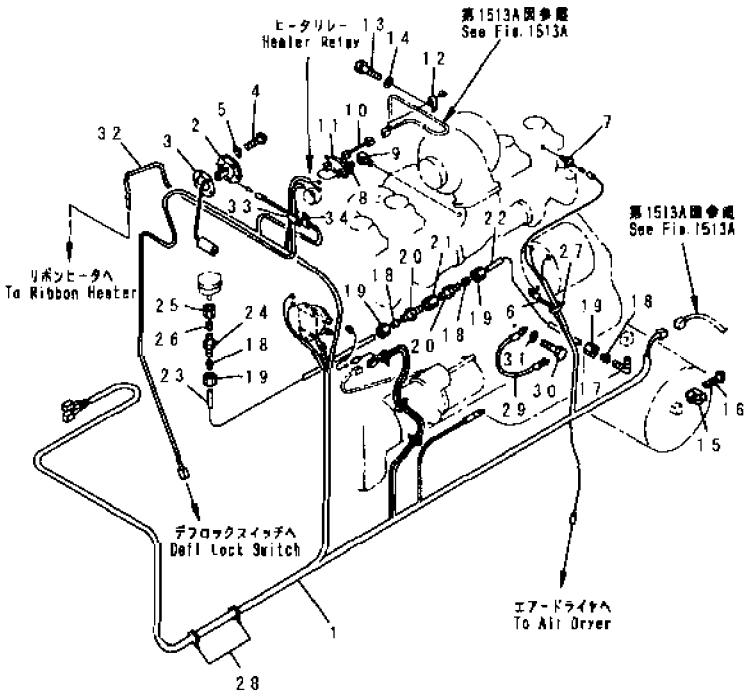


| INDEX | PART NO | DESCRIPTION | Q'TY | SERIAL NO |
|---|---|---|---|---|
| 1 | 234-06-63210 | HARNESS | 1 | 23001- |
| 2 | 232-06-52431 | SENSOR, FUEL | 1 | 21268- |
| 3 | 237-06-15190 | PACKING | 1 | 21001- |
| 4 | 01220-40412 | SCREW | 5 | 21001- |
| 5 | 01601-20410 | WASHER, SPRING | 5 | 21001- |
| 6 | 234-06-42560 | CABLE, (ALTERNATOR EARTH) | 1 | 23001- |
| 7 | 237-06-15120 | SENSOR, THERMO | 1 | 21001- |
| 8 | 232-06-52461 | SENSOR, OIL PRESSURE | 1 | 21002- |
| 9 | 232-06-61470 | NIPPLE | 1 | 21001- |
| 10 | 234-06-42220 | HARNESS | 1 | 21081- |
| 11 | 08034-00519 | BAND | 1 | 23001- |
| 12 | 08036-01014 | CLIP | 2 | 23001- |
| 13 | 01010-50816 | BOLT | 1 | 21001- |
| 14 | 01643-30823 | WASHER | 1 | 21001- |
| 15 | 234-06-42180 | SWITCH, LOW PRESSURE | 2 | 21348- |
| 16 | 01220-40408 | SCREW | 2 | 21001- |
| 17 | 07834-00413 | ELBOW | 1 | 21001- |
| 18 | 07831-00411 | SLEEVE | 4 | 21001- |
| 19 | 07833-00410 | NUT | 4 | 21001- |
| 20 | 07836-00410 | CONNECTOR | 2 | 21001- |
| 21 | 07324-60100 | COUPLING | 1 | 21001- |
| 22 | 07823-00427 | TUBE | 1 | 21027- |
| 23 | 07823-00419 | TUBE | 1 | 21001- |
| 24 | 235-06-15350 | NIPPLE | 1 | 21027- |
| 25 | 234-06-11920 | NUT | 1 | 21001- |
| 26 | 234-06-11930 | SLEEVE | 1 | 21001- |
| 27 | 08034-00310 | BAND | 5 | 21001- |
| 28 | 08034-00414 | BAND | 10 | 21001- |
| 29 | 324-06-32190 | CABLE, (ENGINE EARTH) | 1 | 23001- |
| 30 | 01010-81016 | BOLT | 2 | 23001- |
| 31 | 01643-31032 | WASHER | 2 | 23001- |
| 32 | 234-06-41220 | CABLE | 1 | 21002- |
| 33 | 08036-01814 | CLIP | 1 | 23001- |
| 34 | 08036-01014 | CLIP | 1 | 23001- |

FIG NO. : 1513A

# FIG. 1513A ELECTRICAL SYSTEM (REAR LINE) (#23001-)

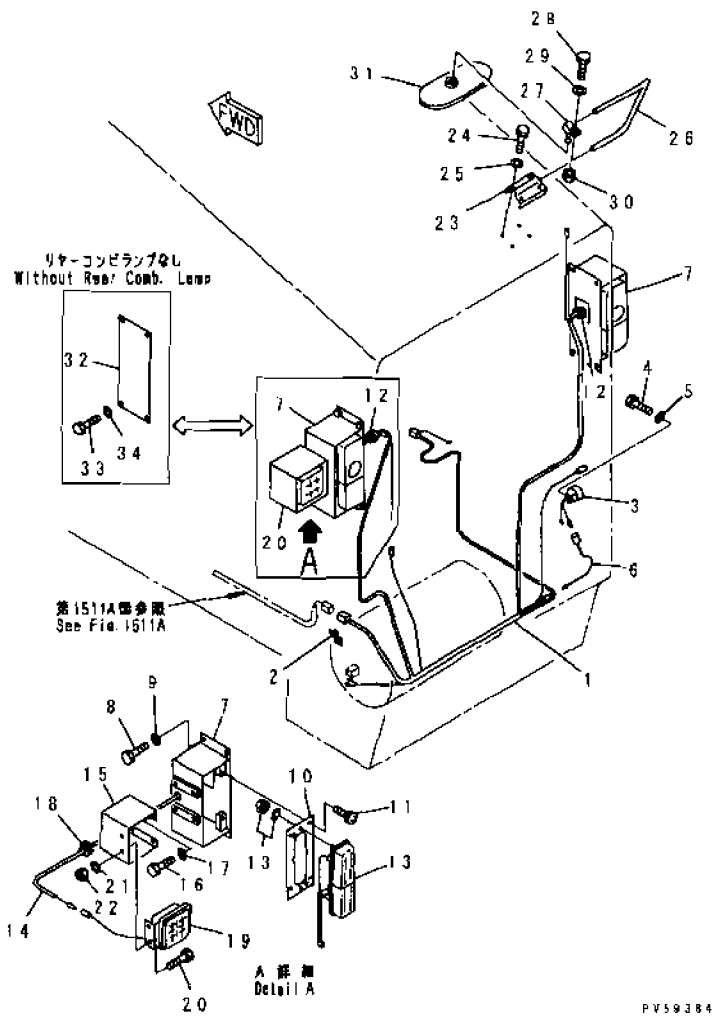


| INDEX | PART NO | DESCRIPTION | Q'TY | SERIAL NO |
|---|---|---|---|---|
| 1 | 234-06-63190 | HARNESS | 1 | 23001- |
| 2 | 08053-01510 | CLIP | 1 | 23001- |
| 3 | 08165-30000 | BUZZER | 1 | 23001- |
| 4 | 01010-80816 | BOLT | 1 | 23001- |
| 5 | 01643-30823 | WASHER | 2 | 23001- |
| 6 | 234-06-62240 | CABLE | 1 | 23001- |
| 7 | 234-06-61220 | BRACKET, L.H. | 1 | 23001- |
| | 234-06-61230 | BRACKET, R.H. | 1 | 23001- |
| 8 | 01010-81025 | BOLT | 8 | 23001- |
| 9 | 01643-31032 | WASHER | 8 | 23001- |
| 10 | 238-06-18230 | BRACKET | 2 | 23001- |
| 11 | 01023-60612 | SCREW | 8 | 23001- |
| 12 | 08037-03614 | GROMMET | 8 | 23001- |
| 13 | 235-06-13430 | COMBINATION LAMP A., L.H. | 1 | 23108- |
| | □237-06-13350 | COMBINATION LAMP A., L.H. | 1 | 21001-23107 |
| | 235-06-13420 | LAMP ASS'Y, R.H | 1 | 23108- |
| | □237-06-13340 | COMBINATION LAMP A., R.H. | 1 | 21001-23107 |
| | 237-06-13360 | .LENS | 1 | 21001- |
| | 08104-02420 | .BULB, 25/10W, 25/10W | 1 | 21001- |
| | 08105-02420 | .BULB, 25W, 25W | 1 | 21001- |
| | 08111-02430 | .BULB, 3W, 3W | 1 | 21001- |
| 14 | 234-06-62230 | CABLE | 1 | 23001- |
| 15 | 23F-06-11180 | BRACKET | 1 | 23001- |
| 16 | 01010-80812 | BOLT | 4 | 23001- |
| 17 | 01643-30823 | WASHER | 4 | 23001- |
| 18 | 08037-01008 | GROMMET | 1 | 23001- |
| 19 | 421-06-13901 | LAMP ASS'Y, BACK UP | 1 | 23001- |
| | 421-06-13911 | .LENS | 1 | 23001- |
| | 08105-12420 | .BULB, 25W | 1 | 23001- |
| 20 | 01010-80812 | BOLT | 1 | 23001- |
| 21 | 01643-30823 | WASHER | 2 | 23001- |
| 22 | 01580-10806 | NUT | 2 | 23001- |
| 23 | 232-06-15131 | BRACKET | 1 | 21001- |
| 24 | 01010-81040 | BOLT | 4 | 21001- |
| 25 | 01643-31032 | WASHER | 4 | 21001- |
| 26 | 234-06-15230 | TUBE | 1 | 21001- |
| 27 | 232-06-15151 | PIVOT | 1 | 21001- |
| 28 | 01010-80825 | BOLT | 1 | 21001- |
| 29 | 01643-30823 | WASHER | 1 | 21001- |
| 30 | 01580-10806 | NUT | 1 | 21001- |
| 31 | 08174-10001 | MIRROR | 1 | 21001- |
| 32 | 234-54-65290 | COVER, (WITHOUT COMBINATION LAMP) | 2 | 23001- |

FIG NO. : 1513A

| INDEX | PART NO | DESCRIPTION | Q'TY | SERIAL NO |
|---|---|---|---|---|
| 33 | 01010-81020 | BOLT | 8 | 23001- |
| 34 | 01643-31032 | WASHER | 8 | 23001- |



GD705A-4

FIG NO. : 1551

# FIG. 1551 ENGINE STOP MOTOR AND MOUNTING PARTS (#21222-)

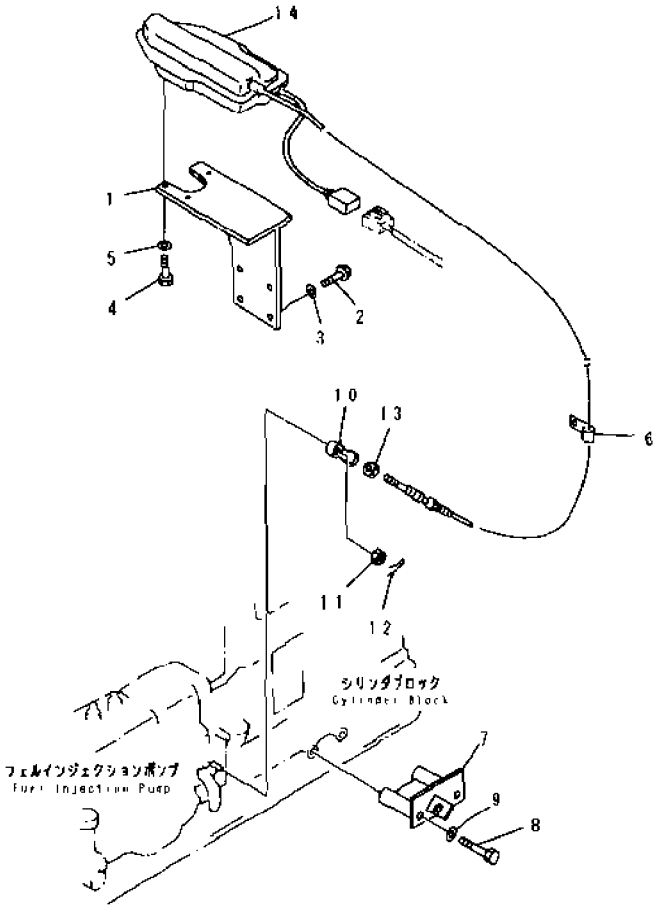


| INDEX | PART NO | DESCRIPTION | Q'TY | SERIAL NO |
|---|---|---|---|---|
| 1 | 234-01-41310 | BRACKET | 1 | 21222- |
| 2 | 01010-51025 | BOLT | 4 | 21222- |
| 3 | 01643-31032 | WASHER | 4 | 21222- |
| 4 | 01010-50625 | BOLT | 3 | 21222- |
| 5 | 01643-30623 | WASHER | 3 | 21222- |
| 6 | 08036-10814 | CLIP | 1 | 21222- |
| 7 | 234-01-41330 | BRACKET | 1 | 21222- |
| 8 | 01011-51000 | BOLT | 2 | 21222- |
| 9 | 01643-31032 | WASHER | 2 | 21222- |
| 10 | 04250-40639 | END ROD | 1 | 21222- |
| 11 | 01590-10607 | NUT | 1 | 21222- |
| 12 | 04050-11212 | PIN, COTTER | 1 | 21222- |
| 13 | 01580-10605 | NUT | 1 | 21222- |
| 14 | 600-815-7650 | MOTOR, ENGINE STOP | 1 | 21222- |

FIG NO. : 1801A

# FIG. 1801A HEAD LAMP AND FRONT CONBINATION LAMP (WITH SIDE MIRROR) (#23001-)

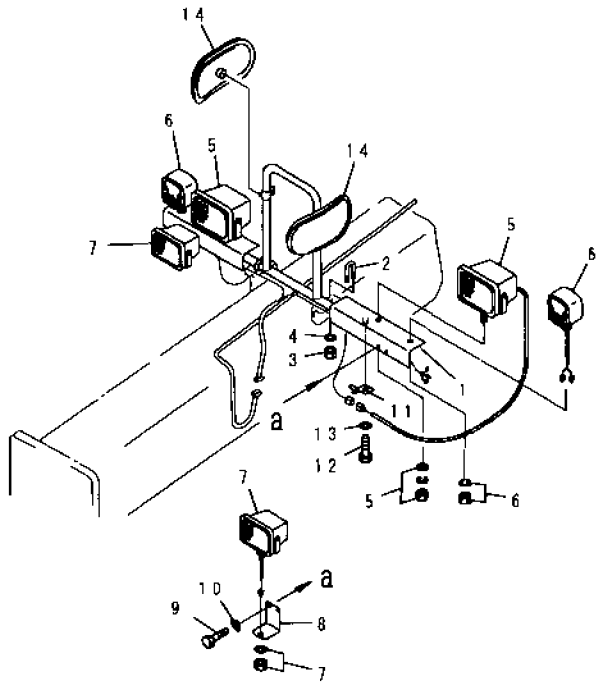


PV59385

| INDEX | PART NO. | DESCRIPTION | Q'TY | SERIAL NO |
|---|---|---|---|---|
| 1 | 234-06-63260 | BRACKET, (WITH MIRROR) | 1 | 23001- |
| 2 | 232-06-31290 | U-BOLT | 2 | 23001- |
| 3 | 01580-11210 | NUT | 4 | 23001- |
| 4 | 01643-31232 | WASHER | 8 | 23001- |
| 5 | 23S-06-54111 | LAMP ASS'Y, HEAD | 2 | 23001- |
| | 23S-06-23230 | .BULB, 75/70W | 1 | 23001- |
| | 23S-06-54121 | .LENS ASS'Y | 1 | 23001- |
| | 01582-11411 | .NUT | 1 | 23001- |
| | 01602-21442 | WASHER, SPRING | 1 | 23001- |
| | 01643-31445 | .WASHER | 1 | 23001- |
| 6 | 23F-06-11130 | LAMP ASS'Y, TURN SIGNAL | 2 | 23001- |
| | 23F-06-11550 | .BULB, 25W | 1 | 23001- |
| | 23F-06-11650 | .BULB, 12W | 1 | 23001- |
| | 23F-06-11540 | .LENS | 1 | 23001- |
| 7 | 23D-06-33500 | LAMP ASS'Y, FOG | 2 | 23001- |
| | 23D-06-33590 | .BULB, 35W | 1 | 23001- |
| | 23D-06-33580 | .LENS | 1 | 23001- |
| 8 | 234-06-63120 | BRACKET | 2 | 23001- |
| 9 | 01010-80825 | BOLT | 4 | 23001- |
| 10 | 01643-30823 | WASHER | 4 | 23001- |
| 11 | 08053-01510 | CLIP | 2 | 23001- |
| 12 | 01010-80816 | BOLT | 2 | 23001- |
| 13 | 01643-80823 | WASHER | 2 | 23001- |
| 14 | 08174-10001 | MIRROR, SIDE | 2 | 23001- |

# FIG. 1821 CAUTION LAMP (FLOOR FRAME MOUNTING TYPE)

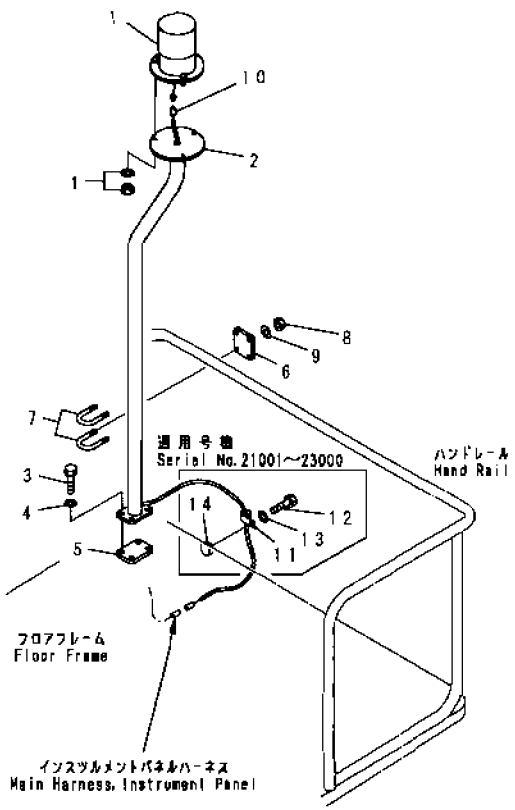


| INDEX | PART NO | DESCRIPTION | Q'TY | SERIAL NO. |
|---|---|---|---|---|
| 1 | 08154-12400 | LAMP ASS'Y, BEACON | 1 | 21001- |
| | 08103-02460 | . BULB, 35W | 1 | 21001- |
| | 08154-30003 | . GLOBE | 1 | 21001- |
| 2 | 234-06-22170 | BRACKET | 1 | 21001- |
| 3 | 01010-81225 | BOLT | 4 | 23001- |
| | ◆01010-51225 | BOLT | 4 | 21001-23000 |
| 4 | 01643-31232 | WASHER | 4 | 21001- |
| 5 | 234-06-22120 | SEAT (WELDED) | 1 | 21001- |
| 6 | 234-06-22140 | PLATE | 1 | 21001- |
| 7 | 238-06-14360 | U-BOLT | 2 | 21001- |
| 8 | 01580-11008 | NUT | 4 | 21001- |
| 9 | 01643-31032 | WASHER | 4 | 21001- |
| 10 | 234-956-6140 | CABLE | 1 | 23001- |
| | 234-06-88120 | CABLE | 1 | 21001-23000 |
| 11 | 08036-10810 | CLIP | 1 | 21001-23000 |
| 12 | 01010-50812 | BOLT | 1 | 21001-23000 |
| 13 | 01643-30823 | WASHER | 1 | 21001-23000 |
| 14 | 01571-00814 | SEAT (WELDED) | 1 | 21001-23000 |

# FIG.1831 REAR WORK LAMP

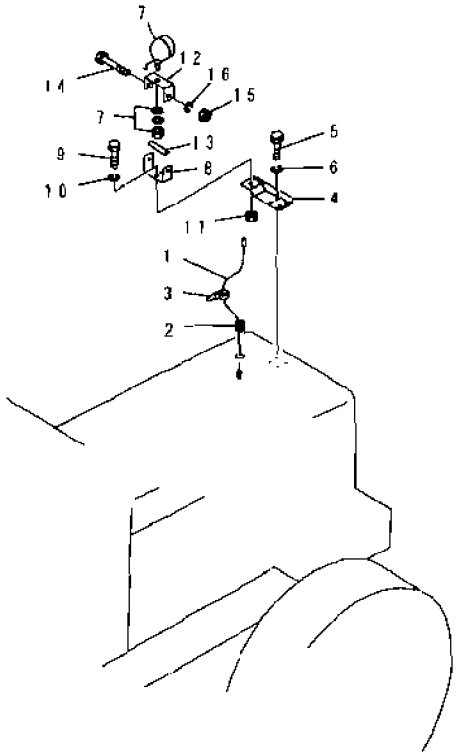


PR52223

| INDEX | PART NO | DESCRIPTION | Q'TY | SERIAL NO |
|---|---|---|---|---|
| 1 | 234-06-41240 | CABLE | 1 | 21001- |
| 2 | 08037-01008 | GROMMET | 1 | 21001- |
| 3 | 08034-00310 | BAND | 5 | 21001- |
| 4 | 232-06-51490 | STAY | 1 | 21001- |
| 5 | 01010-81035 | BOLT | 4 | 23001- |
| | ◆01010-51035 | BOLT | 4 | 21001-23000 |
| 6 | 01643-31032 | WASHER | 4 | 21001- |
| 7 | 23B-06-22210 | LAMP ASS'Y,WORK | 1 | 23001- |
| | 232-06-51980 | LAMP ASS'Y,WORK | 1 | 21001-23000 |
| | 23B-06-12241 | .LENS | 1 | 23001- |
| | 232-06-51990 | .LENS | 1 | 21001-23000 |
| | 08100-02460 | .BULB, 60/60W | 1 | 21001- |
| 8 | 232-06-51460 | BRACKET | 1 | 21001- |
| 9 | 01010-81025 | BOLT | 1 | 23001- |
| | ◆01010-51025 | BOLT | 1 | 21001-23000 |
| 10 | 01643-31032 | WASHER | 1 | 21001- |
| 11 | 01580-11008 | NUT | 1 | 21001- |
| 12 | 232-06-51470 | BRACKET | 1 | 21001- |
| 13 | 232-06-51450 | TUBE | 1 | 21001- |
| 14 | 01010-80875 | BOLT | 1 | 23001- |
| | ◆01010-50875 | BOLT | 1 | 21001-23000 |
| 15 | 01580-10806 | NUT | 1 | 21001- |
| 16 | 01643-30823 | WASHER | 1 | 21001- |

# FIG. 1841A LICENSE PLATE LAMP (WITH RIPPER) (#23001-)

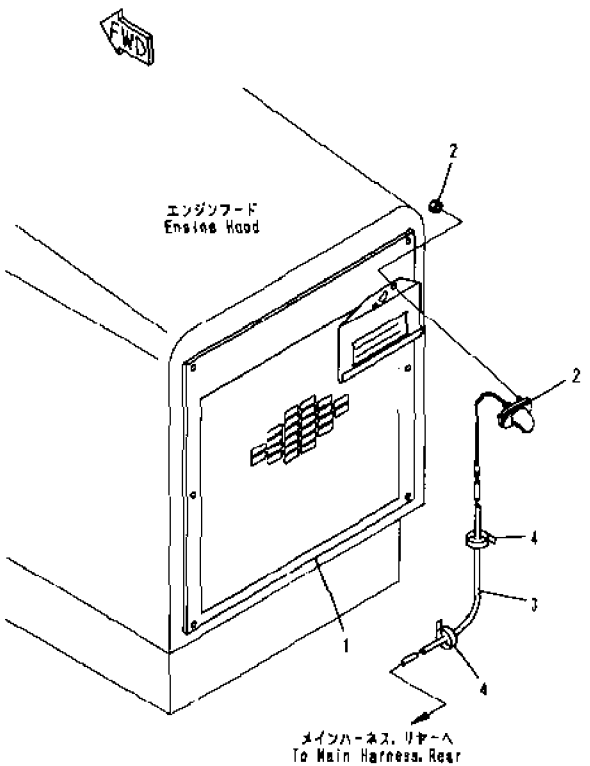


PY59387

| INDEX | PART NO | DESCRIPTION | Q'TY | SERIAL NO. |
|---|---|---|---|---|
| 1 | 234-54-61450 | MASK, (MODIFIED PARTS) | 1 | 23001- |
| | 23B-06-12830 | .BRACKET (WELDED) | 1 | 23001- |
| | 234-54-65260 | .MASK | 1 | 23001- |
| 2 | 23D-06-13360 | LAMP ASS'Y | 1 | 23001- |
| | 08110-12410 | .BULB, 12W | 1 | 23001- |
| 3 | 234-06-62220 | CABLE | 1 | 23001- |
| 4 | 08034-00310 | BAND | 4 | 23001- |

FIG NO. : 1851

# FIG. 1851 BLADE ACCUMULATOR WIRING

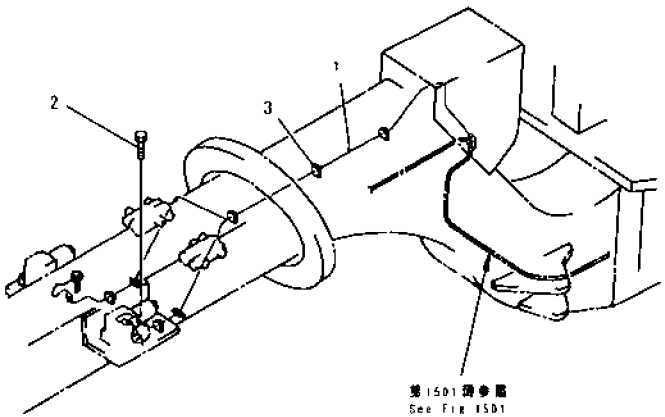


PJ53880

| INDEX | PART NO | DESCRIPTION | Q'TY | SERIAL NO |
|---|---|---|---|---|
| 1 | 232-06-54180 | CABLE | 1 | 21001- |
| 2 | 01010-50810 | BOLT | 2 | 21001- |
| 3 | 08034-00414 | BAND | 20 | 21001- |

# POWER TRAIN

FIG. 2001 JOINT

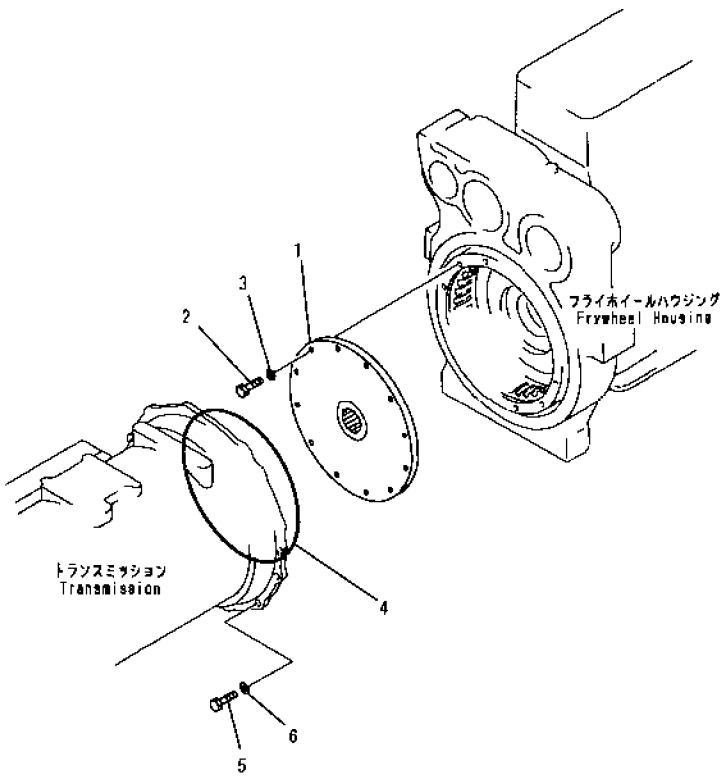


PR51170



FIG NO. : 2001

| INDEX | PART NO | DESCRIPTION | Q'TY | SERIAL NO. |
|---|---|---|---|---|
| 1 | 234-12-31110 | DISC | 1 | 21001- |
| 2 | 01010-51230 | BOLT | 12 | 21001- |
| 3 | 01643-31232 | WASHER | 12 | 21001- |
| 4 | 232-11-51140 | O-RING | 1 | 21001- |
| 5 | 01010-51240 | BOLT | 11 | 21001- |
| 6 | 01643-31232 | WASHER | 11 | 21001- |

# FIG. 2051 DRIVE SHAFT

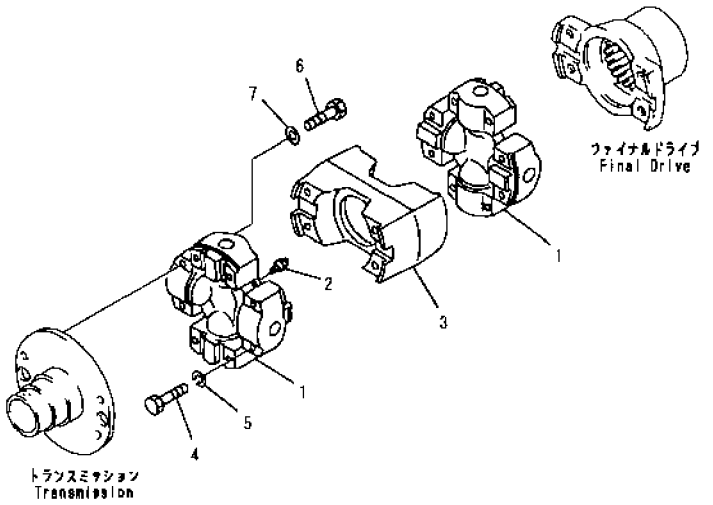


| INDEX | PART NO | DESCRIPTION | Q'TY | SERIAL NO |
|---|---|---|---|---|
| | 234-20-31200 | SHAFT ASS'Y, PROPELLER | 1 | 21008- |
| | 234-20-31100 | SHAFT ASS'Y, PROPELLER | 1 | 21001-21007 |
| 1 | 234-20-31210 | SPIDER ASS'Y | 2 | 21008- |
| | 234-20-31110 | SPIDER ASS'Y | 2 | 21001-21007 |
| 2 | KUUNF1/4F | NIPPLE, GREASE | 1 | 21008- |
| | 234-20-31120 | NIPPLE, GREASE | 1 | 21001-21007 |
| 3 | 234-20-31220 | YOKE ASS'Y | 1 | 21008- |
| | 234-20-31130 | YOKE ASS'Y | 1 | 21001-21007 |
| 4 | 234-20-31230 | BOLT | 8 | 21008- |
| | 234-20-31150 | BOLT | 8 | 21001-21007 |
| 5 | 234-20-31140 | WASHER, SPRING | 8 | 21001-21007 |
| 6 | 01010-81260 | BOLT | 8 | 21001- |
| 7 | 01643-31232 | WASHER | 8 | 21001- |

FIG. 2411 TRANSMISSION (TRANSMISSION CASE)

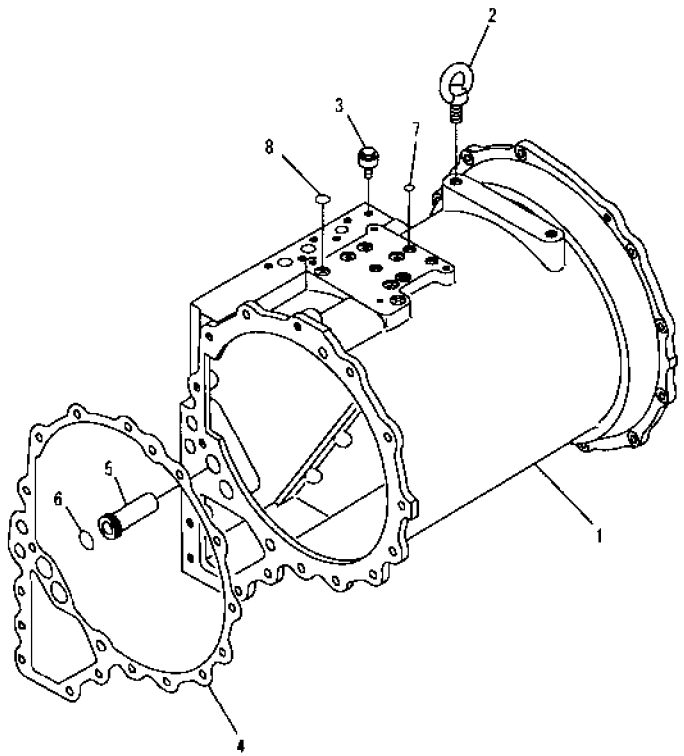


PTS1173

FIG NO. : 2411

| INDEX | PART NO | DESCRIPTION | Q'TY | SERIAL NO. |
|---|---|---|---|---|
| | | SERIAL NO. IN ( ) INDICATES TRANSMISSION SERIAL NO. | | |
| | 234-15-21080 | TRANSMISSION ASS'Y. | 1 | 21348- |
| | 234-15-00601 | TRANSMISSION ASS'Y. | 1 | (2220)-(2233) |
| | 234-15-00600 | TRANSMISSION ASS'Y. | 1 | (1618)-(2219) |
| | □234-15-00201 | TRANSMISSION ASS'Y. | 1 | 21001-(1617) |
| | | THESE ASSEMBLIES CONSIST OF ALL PARTS SHOWN IN FIGS. 2411 TO 2471. | | |
| 1 | 234-15-21110 | CASE. | 1 | 21001- |
| 2 | 04530-02030 | BOLT, EYE. | 2 | 21001- |
| 3 | 07030-00252 | BREATHER. | 1 | 21001- |
| 4 | 234-15-21121 | GASKET. (K1) | 1 | 21001- |
| | □234-15-21120 | GASKET. (K1) | 1 | 21001-(2078) |
| 5 | 234-15-21330 | SLEEVE. | 2 | 21001- |
| 6 | 07000-73030 | O-RING. (K1) | 2 | 21001- |
| 7 | 07000-72014 | O-RING. (K1) | 3 | 21001- |
| 8 | 07000-72021 | O-RING. (K1) | 7 | 21001- |

# FIG. 2412 TRANSMISSION (TRANSFAR CASE)

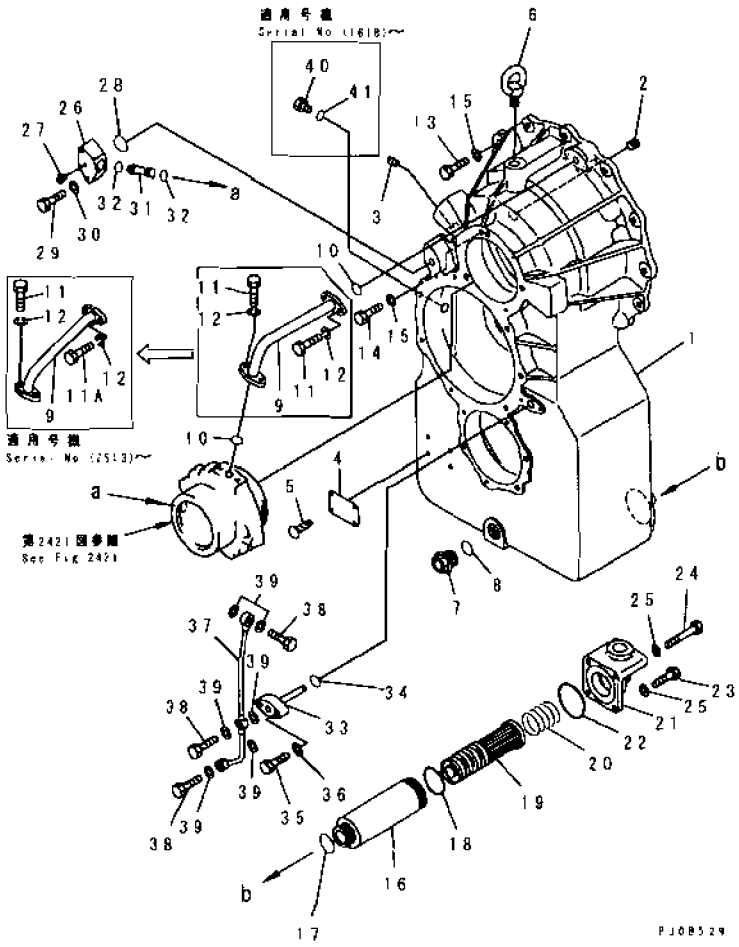


| INDEX | PART NO | DESCRIPTION | Q'TY | SERIAL NO |
|---|---|---|---|---|
| | | SERIAL NO. IN ( ) INDICATES TRANSMISSION SERIAL NO. | | |
| | (234-15-21080) | TRANSMISSION ASS'Y | 1 | (2234)- |
| | (234-15-00601) | TRANSMISSION ASS'Y | 1 | (2220)-(2233) |
| | (234-15-00600) | TRANSMISSION ASS'Y | 1 | (1618)-(2219) |
| | (□234-15-00201) | TRANSMISSION ASS'Y | 1 | 21001-(1617) |
| | | THESE ASSEMBLIES CONSIST OF ALL PARTS SHOWN IN FIGS 2411 TO 2471. | | |
| 1 | 234-15-23111 | .CASE | 1 | (1618)- |
| | 234-15-23110 | .CASE | 1 | 21001-(1617) |
| 2 | 562-15-11460 | .PLUG | 1 | 21001- |
| 3 | 07042-20108 | .PLUG | 1 | 21001- |
| 4 | 09608-05080 | PLATE, NAME, (LIMITED SUPPLY) | 1 | 21001- |
| 5 | 04418-13060 | .SCREW | 4 | 21001- |
| 6 | 04530-02030 | BOLT, EYE | 1 | 21001- |
| 7 | 07044-13620 | .PLUG | 1 | 21001- |
| 8 | 07002-03634 | .O-RING (K1) | 1 | 21001- |
| 9 | 234-15-21362 | .TUBE | 1 | (2513)- |
| | □234-15-21361 | .TUBE | 1 | 21001-(2512) |
| 10 | 07000-73025 | .O-RING (K1) | 2 | 21001- |
| 11 | 01010-81030 | .BOLT | 2 | (2513)- |
| | 01010-81030 | .BOLT | 4 | 21001-(2512) |
| 11A | 01010-81040 | BOLT | 2 | (2513)- |
| 12 | 01602-21030 | .WASHER, SPRING | 4 | 21001- |
| 13 | 01010-61440 | .BOLT | 16 | 21001- |
| 14 | 01010-61475 | .BOLT | 1 | 21001- |
| 15 | 01643-31445 | .WASHER | 17 | 21001- |
| 16 | 145-14-31660 | .CASE | 1 | 21001- |
| 17 | 07000-73045 | .O-RING (K1) | 1 | 21001- |
| 18 | 07000-02075 | .O-RING (K1) | 1 | 21001- |
| 19 | 145-14-31620 | .MAGNET ASS'Y | 1 | 21001- |
| 20 | 145-14-31650 | .SPRING | 1 | 21001- |
| 21 | 234-15-21710 | .COVER | 1 | 21001- |
| 22 | 07000-02090 | .O-RING (K1) | 1 | 21001- |
| 23 | 01010-81030 | .BOLT | 2 | 21001- |
| 24 | 01011-81020 | .BOLT | 2 | 21001- |
| 25 | 01643-31032 | .WASHER | 4 | 21001- |
| 26 | 234-15-21350 | .FLANGE | 1 | 21001- |
| 27 | 07042-20108 | .PLUG | 1 | 21001- |
| 28 | 07000-73035 | .O-RING (K1) | 1 | 21001- |
| 29 | 01010-81055 | .BOLT | 2 | 21001- |
| 30 | 01643-31032 | .WASHER | 2 | 21001- |

# FIG. 2412 TRANSMISSION (TRANSFAR CASE)

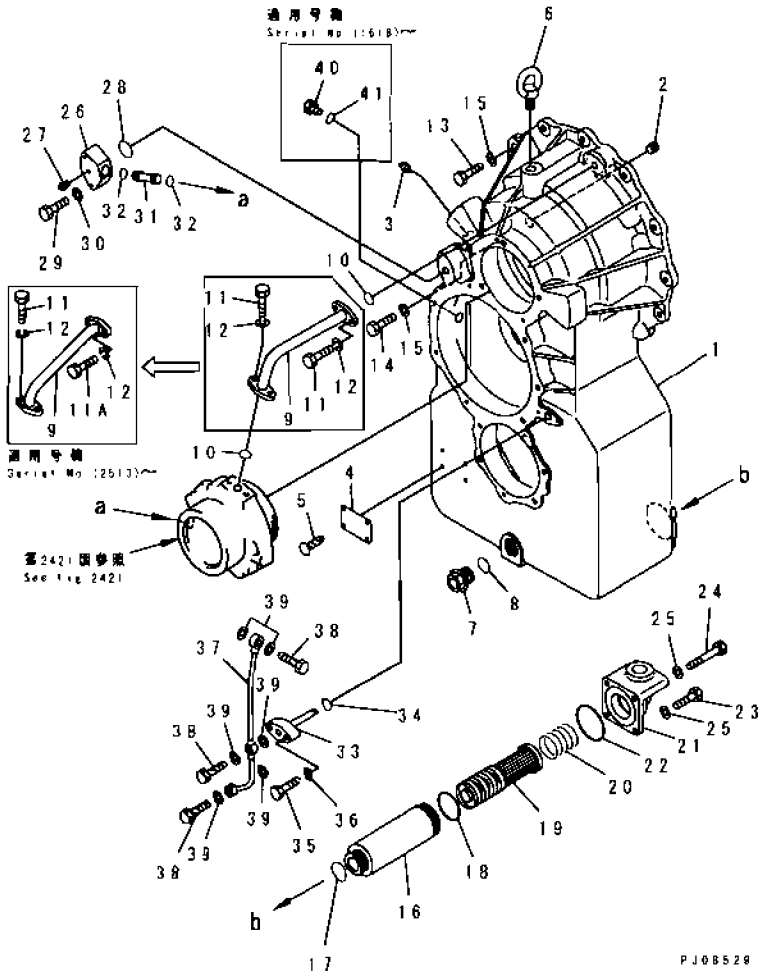


| INDEX | PART NO. | DESCRIPTION | Q'TY | SERIAL NO |
|---|---|---|---|---|
| 31 | 232-15-17440 | SLEEVE | 1 | 21001- |
| 32 | 07000-72021 | O-RING (K1) | 2 | 21001- |
| 33 | 232-15-11380 | TUBE | 1 | 21001- |
| 34 | 07000-73025 | O-RING (K1) | 1 | 21001- |
| 35 | 01010-81045 | BOLT | 2 | 21001- |
| 36 | 01643-31032 | WASHER | 2 | 21001- |
| 37 | 234-15-21370 | TUBE | 1 | 21001- |
| 38 | 07206-11014 | BOLT, JOINT | 3 | 21001- |
| 39 | 07005-01412 | GASKET (K1) | 6 | 21001- |
| 40 | 424-15-13950 | PLUG | 1 | (1618)- |
| 41 | 07000-73025 | O-RING (K1) | 1 | (1618)- |

# FIG. 2415A TRANSMISSION (REVERSE CLUTCH) (#21348-)

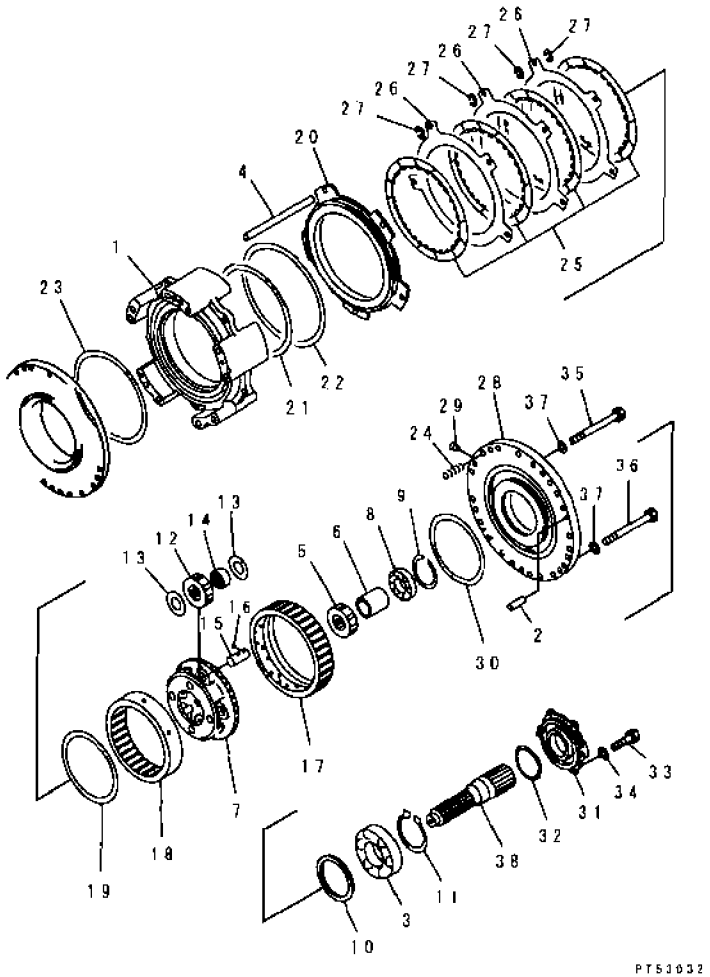


| INDEX | PART NO. | DESCRIPTION | Q'TY | SERIAL NO |
|---|---|---|---|---|
| | | SERIAL NO. IN ( ) INDICATES TRANSMISSION SERIAL NO. | | |
| | (234-15-21080) | TRANSMISSION ASS'Y | 1 | 21348- |
| | | THIS ASSEMBLY CONSISTS OF ALL PARTS SHOWN IN FIGS. 2411 TO 2412 AND FIGS. 2415 , 2416 TO 2471. | | |
| 1 | 234-15-21210 | . HOUSING | 1 | 21001- |
| 2 | 04020-01228 | . PIN, DOWEL | 2 | 21001- |
| 3 | 06000-06922 | . BEARING | 1 | 21001- |
| 4 | 232-15-11270 | . PIN | 5 | 21001- |
| 5 | 235-15-12211 | GEAR | 1 | 21348- |
| 6 | 235-15-12150 | . SPACER | 1 | 21348- |
| 7 | 235-15-12310 | . CARRIER | 1 | (1618)- |
| 8 | 06000-06210 | . BEARING | 1 | 21001- |
| 9 | 04077-00090 | . RING, SNAP | 1 | 21001- |
| 10 | 234-15-22560 | . SPACER | 1 | 21001- |
| 11 | 04070-00110 | . RING, SNAP | 1 | 21001- |
| 12 | 235-15-12410 | . GEAR | 4 | (1618)- |
| 13 | 09233-12920 | WASHER, THRUST | 8 | 21001- |
| 14 | 09232-02932 | . BEARING | 4 | 21001- |
| 15 | 232-15-12530 | . SHAFT | 4 | 21001- |
| 16 | 04260-00635 | . BALL | 4 | 21001- |
| 17 | 234-15-22660 | . GEAR, RING | 1 | 21001- |
| 18 | 235-15-22640 | . GEAR, RING | 1 | (2226)- |
| 19 | 232-15-19530 | . RING, SNAP | 1 | 21001- |
| 20 | 234-15-22780 | PISTON | 1 | 21001- |
| 21 | 232-15-19210 | . RING, SEAL | 1 | 21001- |
| 22 | 144-15-22881 | . RING, SEAL | 1 | 21001- |
| 23 | 569-15-12860 | . RING, SEAL | 1 | 21001- |
| 24 | 145-14-12790 | . SPRING, (L= 59.0) (L=59) | 10 | (2400)- |
| | 125-15-12821 | . SPRING, (L= 53.0) (L=53) | 10 | 21001-(2399) |
| 25 | 424-15-12711 | . DISC | 4 | 21348- |
| 26 | 134-15-12720 | . PLATE | 3 | 21001- |
| 27 | 175-15-42880 | . SPRING | 20 | 21001- |
| | 234-15-00230 | . CAGE ASS'Y | 1 | 21001- |
| 28 | ☆ | .. CAGE | 1 | 21001- |
| 29 | 175-15-11230 | .. PLUG | 1 | 21001- |
| 30 | 07018-12005 | . RING, SEAL | 1 | 21001- |
| 31 | 234-15-21231 | . CAGE | 1 | 21001- |
| 32 | 07018-00954 | . RING, SEAL | 1 | 21001- |
| 33 | 01010-81230 | . BOLT | 6 | 21001- |
| 34 | 01643-31232 | . WASHER | 6 | 21001- |

# FIG. 2415A TRANSMISSION (REVERSE CLUTCH) (#21348-)

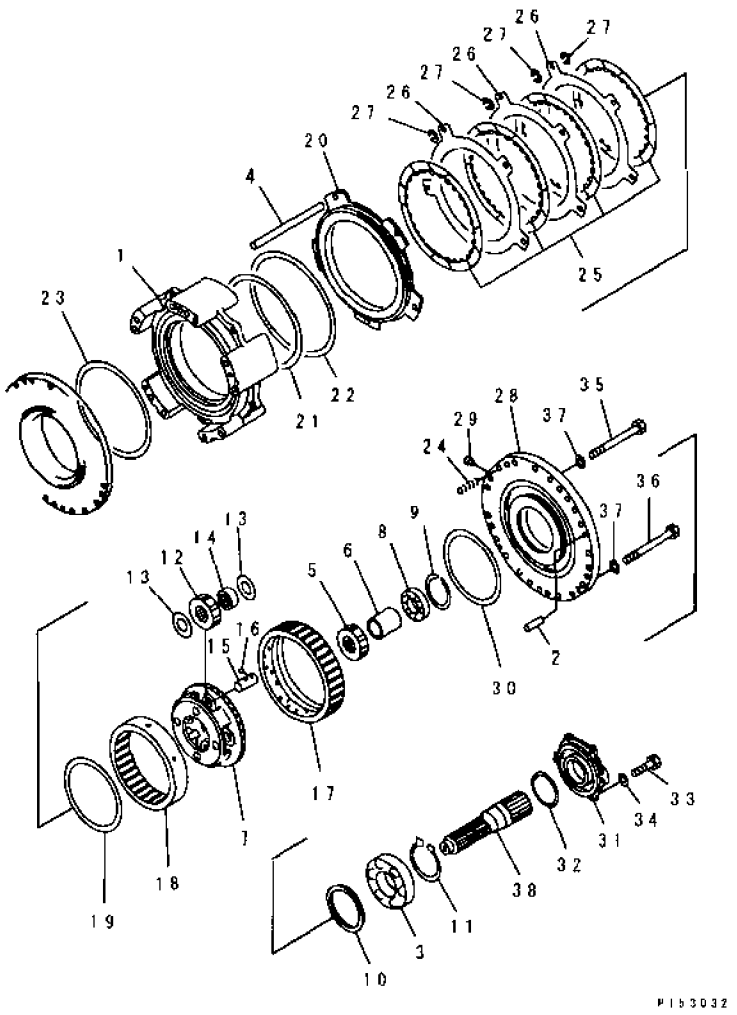


| INDEX | PART NO | DESCRIPTION | Q'TY | SERIAL NO |
|---|---|---|---|---|
| 35 | 234-15-21250 | BOLT | 8 | 21001- |
| 36 | 234-15-21260 | BOLT | 1 | 21001- |
| 37 | 145-14-11571 | WASHER | 9 | (2541)- |
| | 145-14-11570 | WASHER | 9 | 21001-(2540) |
| 38 | 234-15-22111 | SHAFT | 1 | 21001- |

# FIG. 2416 TRANSMISSION (FORWARD CLUTCH)

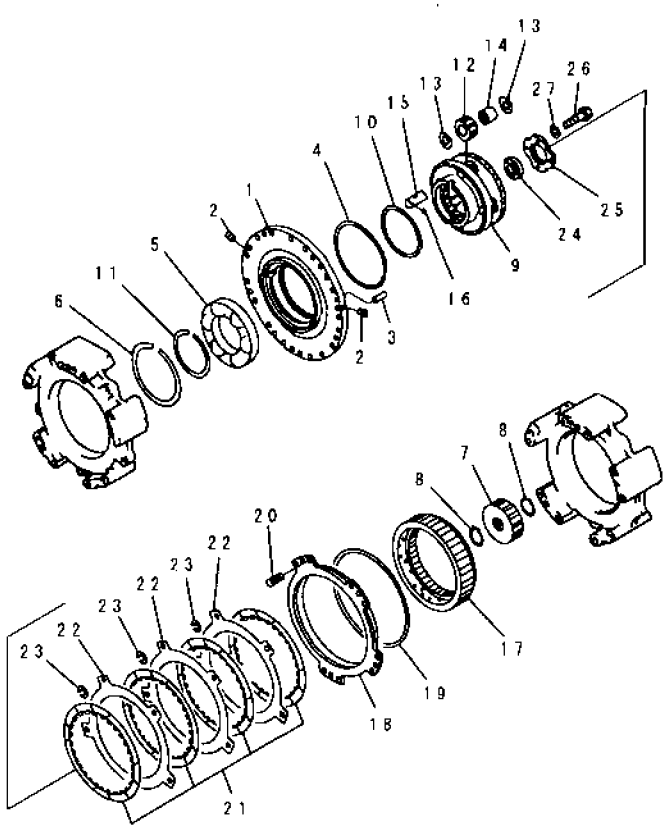


| INDEX | PART NO. | DESCRIPTION | Q'TY | SERIAL NO |
|---|---|---|---|---|
| | | SERIAL NO. IN ( ) INDICATES TRANSMISSION SERIAL NO. | | |
| | (234-15-21080) | TRANSMISSION ASS'Y | 1 | (2234)- |
| | (234-15-00601) | TRANSMISSION ASS'Y | 1 | (2220)-(2233) |
| | (234-15-00600) | TRANSMISSION ASS'Y | 1 | (1618)-(2219) |
| | (□234-15-00201) | TRANSMISSION ASS'Y | 1 | 21001-(1617) |
| | | THESE ASSEMBLIES CONSIST OF ALL PARTS SHOWN IN FIGS. 2411 TO 2471. | | |
| | 234-15-00220 | CAGE ASS'Y | 1 | 21001- |
| 1 | ☆ | .CAGE | 1 | 21001- |
| 2 | 234-15-12780 | .SCREW | 2 | 21001- |
| 3 | 175-15-31210 | .PIN | 2 | 21001- |
| 4 | 07018-12205 | .RING, SEAL | 1 | 21001- |
| 5 | 06000-06928 | .BEARING | 1 | 21001- |
| 6 | 04071-00190 | .RING, SNAP | 1 | 21001- |
| 7 | 235-15-12220 | .GEAR | 1 | (1618)- |
| | 234-15-22210 | .GEAR | 1 | 21001-(1617) |
| 8 | 04064-05020 | .RING, SNAP | 2 | 21001- |
| 9 | 235-15-22320 | CARRIER | 1 | (2226)- |
| | 234-15-22320 | CARRIER | 1 | 21001-(2225) |
| 10 | 234-15-22570 | .SPACER | 1 | 21001- |
| 11 | 04070-00140 | .RING, SNAP | 1 | 21001- |
| 12 | 235-15-12420 | .GEAR | 4 | (1618)- |
| | 232-15-12420 | .GEAR | 4 | 21001-(1617) |
| 13 | 09233-12920 | .WASHER, THRUST | 8 | 21001- |
| 14 | 09232-02932 | .BEARING | 4 | 21001- |
| 15 | 232-15-12530 | .SHAFT | 4 | 21001- |
| 16 | 04260-00635 | .BALL | 4 | 21001- |
| 17 | 234-15-22650 | .GEAR, RING | 1 | 21001- |
| 18 | 234-15-22761 | .PISTON | 1 | 21001- |
| 19 | 562-15-19220 | .RING, SEAL | 1 | 21001- |
| 20 | 125-15-12821 | .SPRING, (L= 53.0), (L=53) | 10 | 21001- |
| 21 | 424-15-12711 | .DISC | 4 | (2281)- |
| | □135-15-22713 | .DISC | 4 | 21001-(2280) |
| 22 | 134-15-12720 | .PLATE | 3 | 21001- |
| 23 | 175-15-42880 | .SPRING | 20 | 21001- |
| 24 | 06000-06207 | .BEARING | 1 | 21001- |
| 25 | 234-15-22390 | .HOLDER | 1 | 21001- |
| 26 | 01010-81025 | .BOLT | 4 | 21001- |
| 27 | 01643-31032 | .WASHER | 4 | 21001- |

# FIG. 2417 TRANSMISSION (3RD AND 4TH CLUTCH)

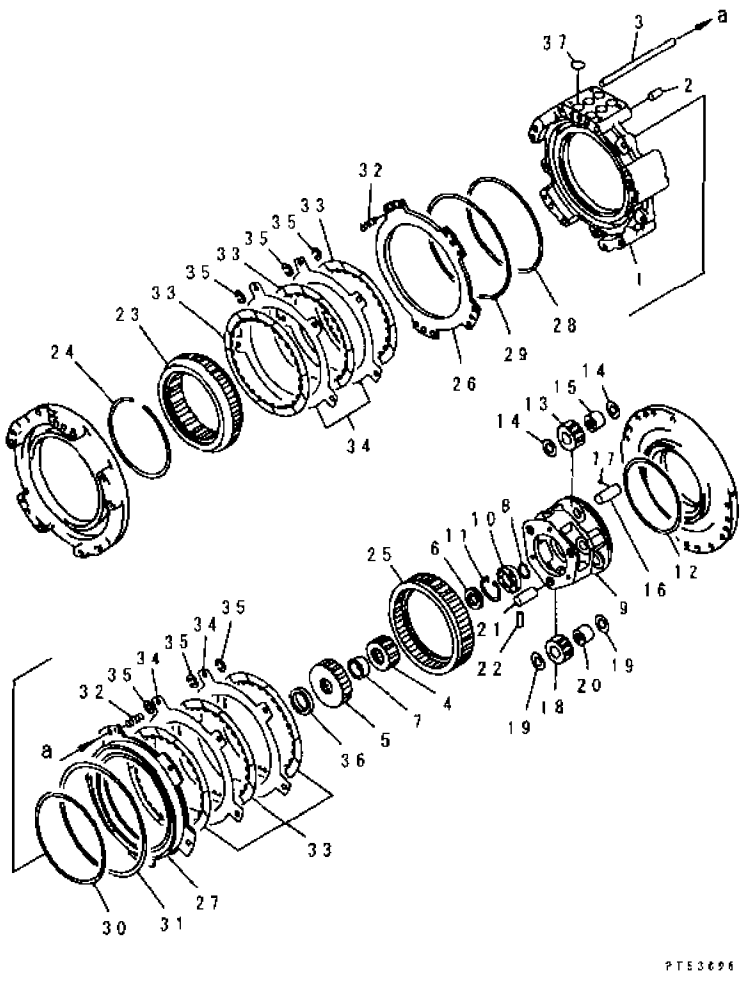


| INDEX | PART NO. | DESCRIPTION | Q'TY | SERIAL NO. |
|---|---|---|---|---|
| | | SERIAL NO. IN ( ) INDICATES TRANSMISSION SERIAL NO. | | |
| | (234-15-21080) | TRANSMISSION ASS'Y | 1 | (2234)- |
| | (234-15-00601) | TRANSMISSION ASS'Y | 1 | (2220)-(2233) |
| | (234-15-00600) | TRANSMISSION ASS'Y | 1 | (1618)-(2219) |
| | (□234-15-00201) | TRANSMISSION ASS'Y | 1 | 21001-(1617) |
| | | THESE ASSEMBLIES CONSIST OF ALL PARTS SHOWN IN FIGS. 2411 TO 2471. | | |
| 1 | 234-15-21180 | .HOUSING | 1 | 21001- |
| 2 | 569-15-41310 | .SLEEVE | 9 | (1618)- |
| | 09231-01430 | .SLEEVE | 9 | 21001-(1617) |
| 3 | 234-15-12770 | PIN | 5 | 21001- |
| 4 | 235-15-12230 | GEAR | 1 | (1618)- |
| | 234-15-22230 | GEAR | 1 | 21001-(1617) |
| 5 | 235-15-12240 | .GEAR | 1 | (1618)- |
| | 234-15-22240 | .GEAR | 1 | 21001-(1617) |
| 6 | 234-15-22150 | .SPACER | 1 | 21001- |
| 7 | 234-15-22160 | .SPACER | 1 | 21001- |
| 8 | 04064-03515 | RING, SNAP | 1 | 21001- |
| 9 | 234-15-22330 | .CARRIER | 1 | 21001- |
| 10 | 06000-06207 | .BEARING | 1 | 21001- |
| 11 | 04065-07225 | .RING, SNAP | 1 | 21001- |
| 12 | 07018-12205 | .RING, SEAL | 1 | 21001- |
| 13 | 235-15-12430 | .GEAR | 3 | (1618)- |
| | 234-15-22420 | .GEAR | 3 | 21001-(1617) |
| 14 | 09233-13220 | .WASHER, THRUST | 6 | 21001- |
| 15 | 41E-15-19310 | .BEARING | 3 | (1650)- |
| | ◆09232-03238 | .BEARING | 3 | 21001-(1649) |
| 16 | 234-15-22510 | .SHAFT | 3 | 21001- |
| 17 | 04260-00635 | .BALL | 3 | 21001- |
| 18 | 235-15-12420 | .GEAR | 3 | (1618)- |
| | 232-15-12420 | .GEAR | 3 | 21001-(1617) |
| 19 | 09233-12920 | .WASHER, THRUST | 6 | 21001- |
| 20 | 09232-02932 | .BEARING | 3 | 21001- |
| 21 | 234-15-22520 | .SHAFT | 3 | 21001- |
| 22 | 04025-00424 | PIN, SPRING | 3 | (1618)- |
| | 04025-00416 | .PIN, SPRING | 3 | 21001-(1617) |
| 23 | 234-15-22630 | GEAR, RING | 1 | 21001- |
| 24 | 232-15-19540 | .RING, SNAP | 1 | 21001- |
| 25 | 234-15-22640 | .GEAR, RING | 1 | 21001- |
| 26 | 234-15-22750 | .PISTON | 1 | 21001- |
| 27 | 234-15-22730 | .PISTON | 1 | 21001- |

| INDEX | PART NO | DESCRIPTION | Q'TY | SERIAL NO |
|---|---|---|---|---|
| 28 | 569-15-12860 | . RING, SEAL | 1 | 21001- |
| 29 | 144-15-22881 | . RING, SEAL | 1 | 21001- |
| 30 | 569-15-12860 | . RING, SEAL | 1 | 21001- |
| 31 | 568-15-12850 | . RING, SEAL | 1 | 21001- |
| 32 | 125-15-12860 | SPRING | 20 | 21001- |
| 33 | 424-15-12711 | . DISC | 6 | (2234)- |
| | □424-15-12710 | . DISC | 6 | (1618)-(2233) |
| | 135-15-22713 | . DISC | 6 | 21001-(1617) |
| 34 | 134-15-12720 | . PLATE | 4 | 21001- |
| 35 | 175-15-42880 | . SPRING | 30 | 21001- |
| 36 | 234-15-22170 | . SPACER | 1 | 21001- |
| 37 | 07000-73030 | . O-RING (K1) | 6 | 21001- |



GD705A-4

# FIG. 2418 TRANSMISSION (1ST AND 2ND CLUTCH)

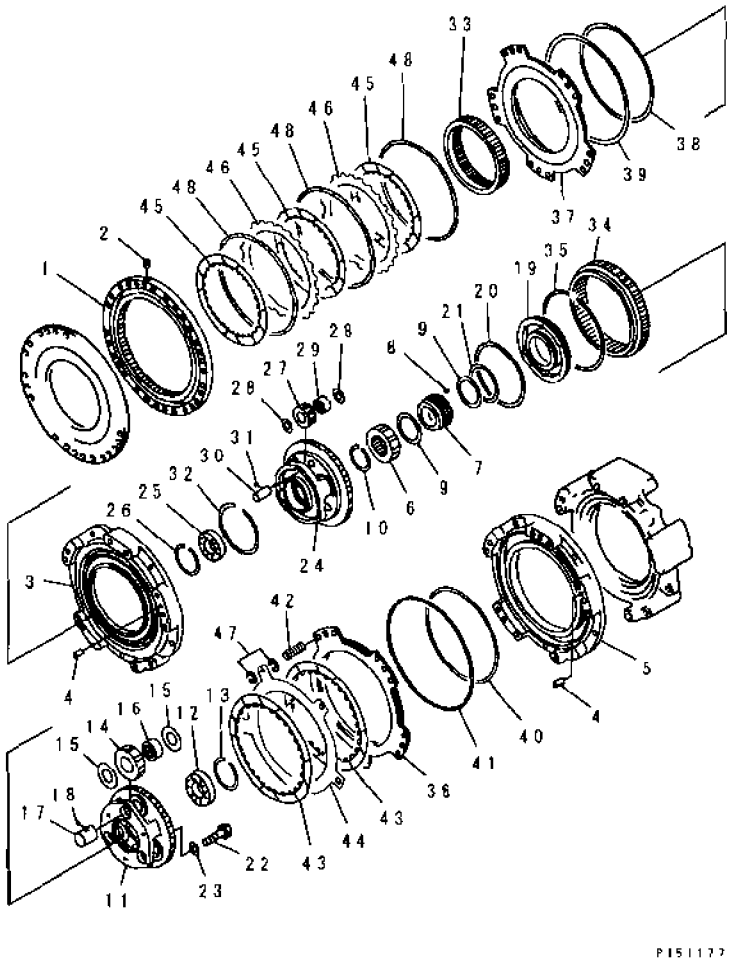


| INDEX | PART NO. | DESCRIPTION | Q'TY | SERIAL NO. |
|---|---|---|---|---|
| | | SERIAL NO. IN ( ) INDICATES TRANSMISSION SERIAL NO. | | |
| | (234-15-21080) | TRANSMISSION ASS'Y | 1 | (2234)- |
| | (234-15-00601) | TRANSMISSION ASS'Y | 1 | (2220)-(2233) |
| | (234-15-00600) | TRANSMISSION ASS'Y | 1 | (1618)-(2219) |
| | (□234-15-00201) | TRANSMISSION ASS'Y | 1 | 21001-(1617) |
| | | THESE ASSEMBLIES CONSIST OF ALL PARTS SHOWN IN FIGS 2411 TO 2471. | | |
| | 234-15-00210 | .PLATE ASS'Y | 1 | 21001- |
| 1 | ☆ | ..PLATE | 1 | 21001- |
| 2 | 234-15-12790 | ..SCREW | 4 | 21001- |
| 3 | 234-15-21160 | .HOUSING | 1 | 21001- |
| 4 | 04020-01228 | .PIN, DOWEL | 4 | 21001- |
| 5 | 234-15-21170 | .HOUSING | 1 | 21001- |
| 6 | 235-15-12250 | .GEAR | 1 | (1618)- |
| | 234-15-22250 | .GEAR | 1 | 21001-(1617) |
| 7 | 234-15-22180 | .COLLAR | 1 | 21001- |
| 8 | 04260-00635 | .BALL | 1 | 21001- |
| 9 | 07018-20904 | .RING, SEAL | 2 | 21001- |
| 10 | 04064-06525 | .RING, SNAP | 1 | 21001- |
| 11 | 234-15-22340 | .CARRIER | 1 | 21001- |
| 12 | 234-15-29310 | BEARING | 1 | 21001- |
| 13 | 04077-00090 | .RING, SNAP | 1 | 21001- |
| 14 | 235-15-12440 | .GEAR | 3 | (1618)- |
| | 234-15-22430 | .GEAR | 3 | 21001-(1617) |
| 15 | 09233-13820 | WASHER, THRUST | 6 | 21001- |
| 16 | 09232-03825 | .BEARING | 3 | 21001- |
| 17 | 234-15-22530 | .SHAFT | 3 | 21001- |
| 18 | 04260-00635 | .BALL | 3 | 21001- |
| 19 | 234-15-22370 | .CAGE | 1 | 21001- |
| 20 | 07018-11805 | .RING, SEAL | 1 | 21001- |
| 21 | 07018-01104 | .RING, SEAL | 1 | 21001- |
| 22 | 01010-81065 | .BOLT | 3 | 21001- |
| 23 | 01643-31032 | .WASHER | 3 | 21001- |
| 24 | 234-15-22350 | .CARRIER | 1 | 21001- |
| 25 | 234-15-29310 | .BEARING | 1 | 21001- |
| 26 | 04077-00090 | .RING, SNAP | 1 | 21001- |
| 27 | 235-15-12450 | .GEAR | 3 | (1618)- |
| | 234-15-22440 | .GEAR | 3 | 21001-(1617) |
| 28 | 421-15-12360 | WASHER, THRUST | 6 | (2702)- |
| | □235-15-12590 | .WASHER, THRUST | 6 | (1618)-(2701) |
| | 09233-02320 | .WASHER, THRUST | 6 | 21001-(1617) |

# FIG. 2419 TRANSMISSION (LOW AND HIGH CLUTCH)

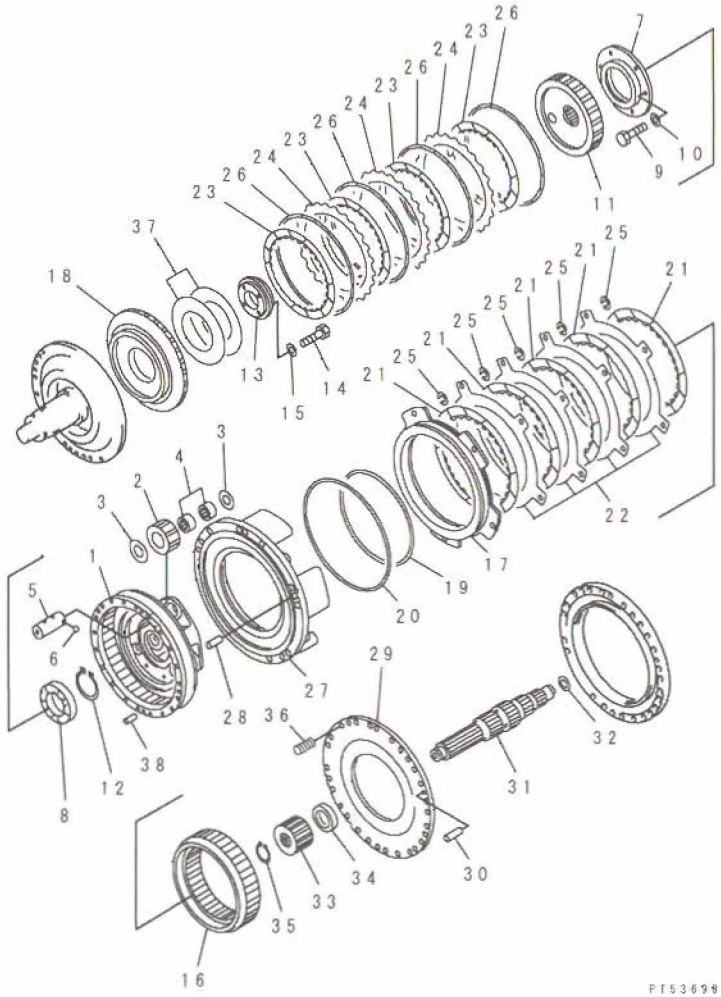


| INDEX | PART NO. | DESCRIPTION | Q'TY | SERIAL NO. |
|---|---|---|---|---|
| | | SERIAL NO. IN ( ) INDICATES TRANSMISSION SERIAL NO. | | |
| | (234-15-21080) | TRANSMISSION ASS'Y | 1 | (2234)- |
| | (234-15-00601) | TRANSMISSION ASS'Y | 1 | (2220)-(2233) |
| | (234-15-00600) | TRANSMISSION ASS'Y | 1 | (1618)-(2219) |
| | (□234-15-00201) | TRANSMISSION ASS'Y | 1 | 21001-(1617) |
| | | THESE ASSEMBLIES CONSIST OF ALL PARTS SHOWN IN FIGS. 2411 TO 2471. | | |
| 1 | 234-15-22360 | . CARRIER | 1 | 21001- |
| 2 | 235-15-12460 | . GEAR | 3 | (1618)- |
| | 234-15-22450 | . GEAR | 3 | 21001-(1617) |
| 3 | 09233-13820 | . WASHER, THRUST | 6 | 21001- |
| 4 | 09232-03825 | . BEARING | 6 | 21001- |
| 5 | 234-15-22550 | . SHAFT | 3 | 21001- |
| 6 | 04260-00635 | . BALL | 3 | 21001- |
| 7 | 234-15-22380 | . CAGE | 1 | 21001- |
| 8 | 06000-06015 | . BEARING | 1 | 21001- |
| 9 | 01010-81025 | . BOLT | 6 | 21001- |
| 10 | 01643-31032 | . WASHER | 6 | 21001- |
| 11 | 234-15-22270 | . GEAR | 1 | 21001- |
| 12 | 04064-07525 | . RING, SNAP | 1 | 21001- |
| 13 | 234-15-22810 | . CAGE | 1 | 21001- |
| 14 | 01010-81025 | . BOLT | 4 | 21001- |
| 15 | 01643-31032 | . WASHER | 4 | 21001- |
| 16 | 234-15-22610 | . GEAR, RING | 1 | 21001- |
| 17 | 234-15-22730 | . PISTON | 1 | 21001- |
| 18 | 234-15-22770 | . PISTON | 1 | 21001- |
| 19 | 569-15-12860 | . RING, SEAL | 1 | 21001- |
| 20 | 568-15-12850 | . RING, SEAL | 1 | 21001- |
| 21 | 424-15-12711 | . DISC | 5 | (2234)- |
| | □424-15-12710 | . DISC | 5 | (1618)-(2233) |
| | 135-15-22713 | . DISC | 5 | 21001-(1617) |
| 22 | 134-15-12720 | . PLATE | 4 | 21001- |
| 23 | 23S-15-12710 | . DISC | 4 | (1618)- |
| | 124-15-42710 | . DISC | 4 | 21001-(1617) |
| 24 | 232-15-12720 | . PLATE | 3 | (1618)- |
| | 490-15-12720 | . PLATE | 3 | 21001-(1617) |
| 25 | 175-15-42880 | . SPRING | 25 | 21001- |
| 26 | 232-15-12960 | . SPRING | 4 | (1618)- |
| | 490-15-12910 | . SPRING | 4 | 21001-(1617) |
| 27 | 235-15-11130 | . HOUSING | 1 | (1618)- |
| | 234-15-21130 | . HOUSING | 1 | 21001-(1617) |

FIG NO. : 2419

| INDEX | PART NO | DESCRIPTION | Q'TY | SERIAL NO |
|---|---|---|---|---|
| 28 | 04020-01638 | . PIN, DOWEL | 2 | 21001- |
| 29 | 234-15-21140 | . PLATE | 1 | 21001- |
| 30 | 125-15-11250 | . PIN | 2 | 21001- |
| 31 | 234-15-22120 | . SHAFT | 1 | 21001- |
| 32 | 07018-10352 | . RING, SEAL | 1 | 21001- |
| 33 | 235-15-12260 | . GEAR | 1 | (1618)- |
| | 234-15-22260 | . GEAR | 1 | 21001-(1617) |
| 34 | 234-15-22190 | . SPACER | 1 | 21001- |
| 35 | 04064-05520 | . RING, SNAP | 1 | 21001- |
| 36 | 175-15-42781 | . SPRING, (L=66) | 10 | (1618)- |
| | 175-15-42780 | . SPRING, (L=66) | 10 | 21001-(1617) |
| 37 | 232-15-12940 | . SPRING | 2 | 21001- |
| 38 | 04020-01228 | . PIN, DOWEL | 4 | 21001- |

# FIG. 2421 TRANSMISSION (OUTPUT SHAFT) (1/2)

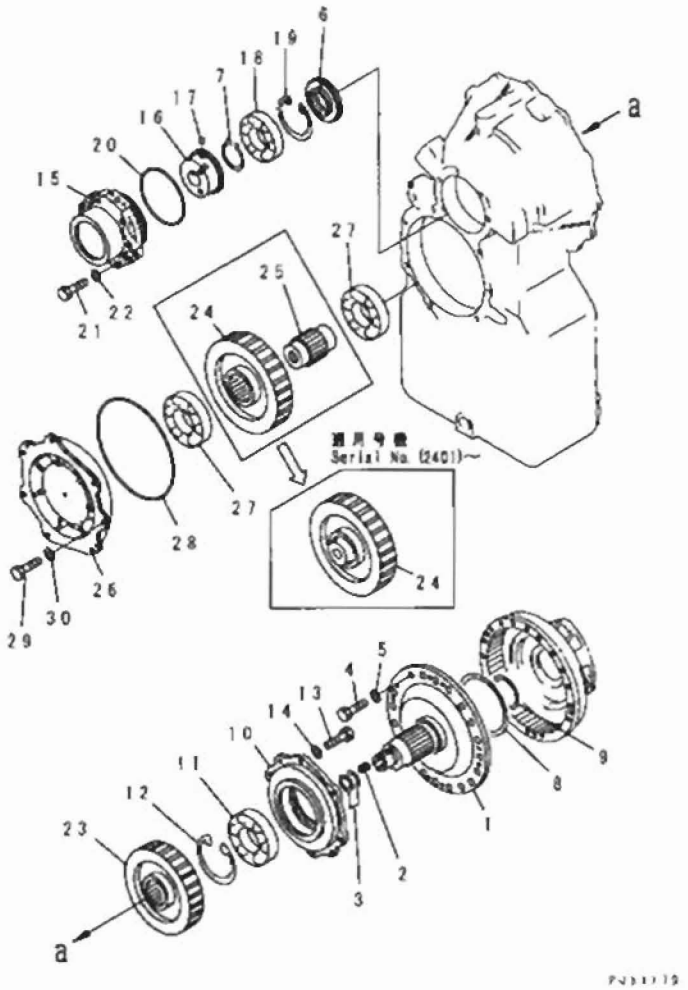


| INDEX | PART NO. | DESCRIPTION | Q'TY | SERIAL NO. |
|---|---|---|---|---|
| | | SERIAL NO. IN ( ) INDICATES TRANSMISSION SERIAL NO. | | |
| | (234-15-21080) | TRANSMISSION ASS'Y | 1 | (2234)- |
| | (234-15-00601) | TRANSMISSION ASS'Y | 1 | (2220)-(2233) |
| | (234-15-00600) | TRANSMISSION ASS'Y | 1 | (1618)-(2219) |
| | (□234-15-00201) | TRANSMISSION ASS'Y | 1 | 21001-(1617) |
| | | THESE ASSEMBLIES CONSIST OF ALL PARTS SHOWN IN FIGS. 2411 TO 2471. | | |
| | 234-15-00240 | .SHAFT ASS'Y | 1 | 21001- |
| 1 | ☆ | ..SHAFT | 1 | 21001- |
| 2 | 568-15-11380 | ..PLUG | 2 | 21001- |
| 3 | 07018-20452 | .RING, SEAL | 2 | 21001- |
| 4 | 01010-81230 | .BOLT | 20 | 21001- |
| 5 | 01643-31232 | .WASHER | 20 | 21001- |
| 6 | 234-15-22820 | .SPACER | 1 | 21001- |
| 7 | 04064-07525 | .RING, SNAP | 1 | 21001- |
| 8 | 234-15-29210 | .RING, SEAL | 1 | 21001- |
| 9 | 234-15-29220 | .RING, SEAL | 1 | 21001- |
| 10 | 235-15-13290 | .CAGE | 1 | (1618)- |
| | 234-15-23120 | .CAGE | 1 | 21001-(1617) |
| 11 | 281-15-13931 | .BEARING | 1 | 21001- |
| 12 | 04071-00150 | .RING, SNAP | 1 | 21001- |
| 13 | 01010-81235 | .BOLT | 6 | 21001- |
| 14 | 01643-31232 | .WASHER | 6 | 21001- |
| 15 | 234-15-23130 | .CAGE | 1 | 21001- |
| 16 | 234-15-23250 | .COLLAR | 1 | 21001- |
| 17 | 04260-00635 | .BALL | 1 | 21001- |
| 18 | 234-15-29330 | .BEARING | 1 | 21001- |
| 19 | 04077-00130 | .RING, SNAP | 1 | 21001- |
| 20 | 07000-05150 | .O-RING (K1) | 1 | 21001- |
| 21 | 01010-61465 | .BOLT | 6 | 21001- |
| 22 | 01643-31445 | .WASHER | 6 | 21001- |
| 23 | 281-15-13231 | .GEAR | 1 | 21001- |
| 24 | 234-15-23220 | .GEAR | 1 | (2401)- |
| | 281-15-13220 | .GEAR | 1 | 21001-(2400) |
| 25 | 281-15-13310 | .SHAFT | 1 | 21001-(2400) |
| 26 | 234-15-23140 | .CAGE | 1 | 21001- |
| 27 | 234-15-29340 | .BEARING | 2 | 21001- |
| 28 | 07000-05280 | .O-RING (K1) | 1 | 21001- |
| 29 | 01010-81235 | .BOLT | 7 | 21001- |
| 30 | 01643-31232 | .WASHER | 7 | 21001- |

# FIG. 2422 TRANSMISSION (OUTPUT SHAFT) (2/2)

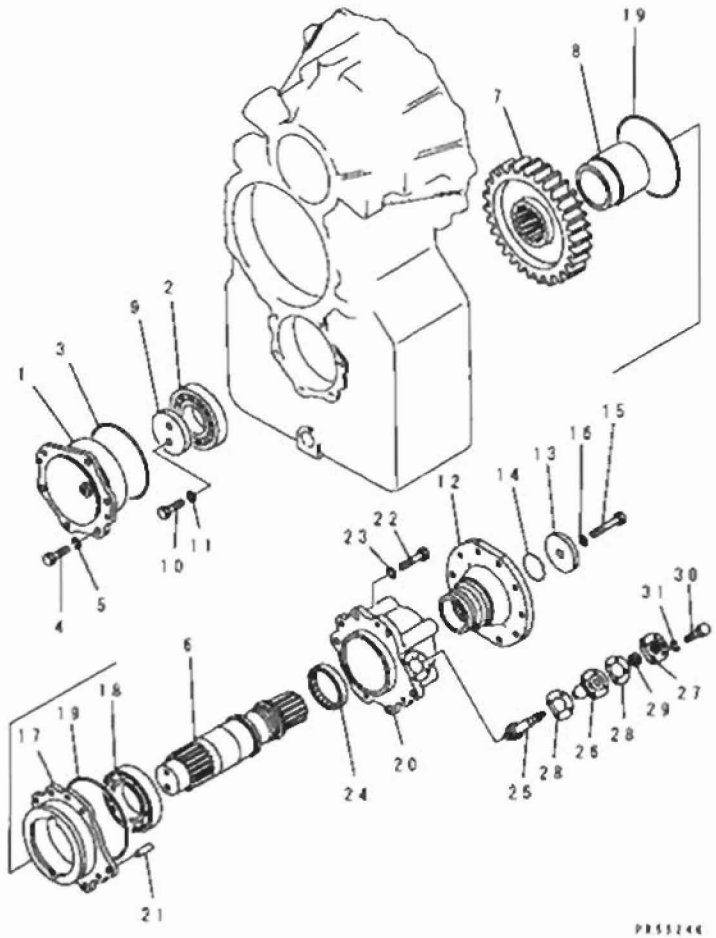


| INDEX | PART NO. | DESCRIPTION | Q'TY | SERIAL NO. |
|---|---|---|---|---|
| | | SERIAL NO. IN ( ) INDICATES TRANSMISSION SERIAL NO. | | |
| | (234-15-21080) | TRANSMISSION ASS'Y | 1 | (2234)- |
| | (234-15-00601) | TRANSMISSION ASS'Y | 1 | (2220)-(2233) |
| | (234-15-00600) | TRANSMISSION ASS'Y | 1 | (1618)-(2219) |
| | (□234-15-00201) | TRANSMISSION ASS'Y | 1 | 21001-(1617) |
| | | THESE ASSEMBLIES CONSIST OF ALL PARTS SHOWN IN FIGS. 2411 TO 2471. | | |
| 1 | 234-15-23150 | CAGE | 1 | 21001- |
| 2 | 234-15-29340 | BEARING | 1 | 21001- |
| 3 | 07000-05170 | O-RING (K1) | 1 | 21001- |
| 4 | 01010-81235 | BOLT | 6 | 21001- |
| 5 | 01643-31232 | WASHER | 6 | 21001- |
| 6 | 234-15-23310 | SHAFT | 1 | 21001- |
| 7 | 234-15-23230 | GEAR | 1 | 21001- |
| 8 | 234-15-23260 | COLLAR | 1 | 21001- |
| 9 | 234-15-23290 | HOLDER | 1 | 21001- |
| 10 | 01010-61440 | BOLT | 2 | 21001- |
| 11 | 01643-31445 | WASHER | 2 | 21001- |
| 12 | 234-15-23271 | COUPLING | 1 | 21001- |
| 13 | 234-15-23280 | HOLDER | 1 | 21001- |
| 14 | 07000-05065 | O-RING (K1) | 1 | 21001- |
| 15 | 01011-61610 | BOLT | 1 | 21001- |
| 16 | 01643-31645 | WASHER | 1 | 21001- |
| 17 | 234-15-23360 | CAGE | 1 | 21001- |
| 18 | 06040-06217 | BEARING | 1 | (2513)- |
| | ◆234-15-29350 | BEARING | 1 | 21001-(2512) |
| 19 | 07000-05170 | O-RING (K1) | 2 | 21001- |
| 20 | 234-15-23350 | CAGE | 1 | 21001- |
| 21 | 175-15-31210 | PIN | 2 | 21001- |
| 22 | 01010-81250 | BOLT | 6 | 21001- |
| 23 | 01643-31232 | WASHER | 6 | 21001- |
| 24 | 07012-10095 | SEAL, OIL | 1 | 21001- |
| 25 | 232-15-13420 | SHAFT | 1 | 21001- |
| 26 | 232-15-13430 | BUSHING | 1 | 21001- |
| 27 | 232-15-13440 | FLANGE | 1 | 21001- |
| 28 | 232-15-13451 | GASKET (K1) | 2 | (1618)- |
| | □232-15-13450 | GASKET (K1) | 2 | 21001-(1617) |
| 29 | 130-09-11590 | SEAL, OIL (K1) | 1 | 21001- |
| 30 | 01010-80630 | BOLT | 4 | 21001- |
| 31 | 01643-30623 | WASHER | 4 | 21001- |

# FIG. 2423 TRANSMISSION (CONTROL VALVE COVER)

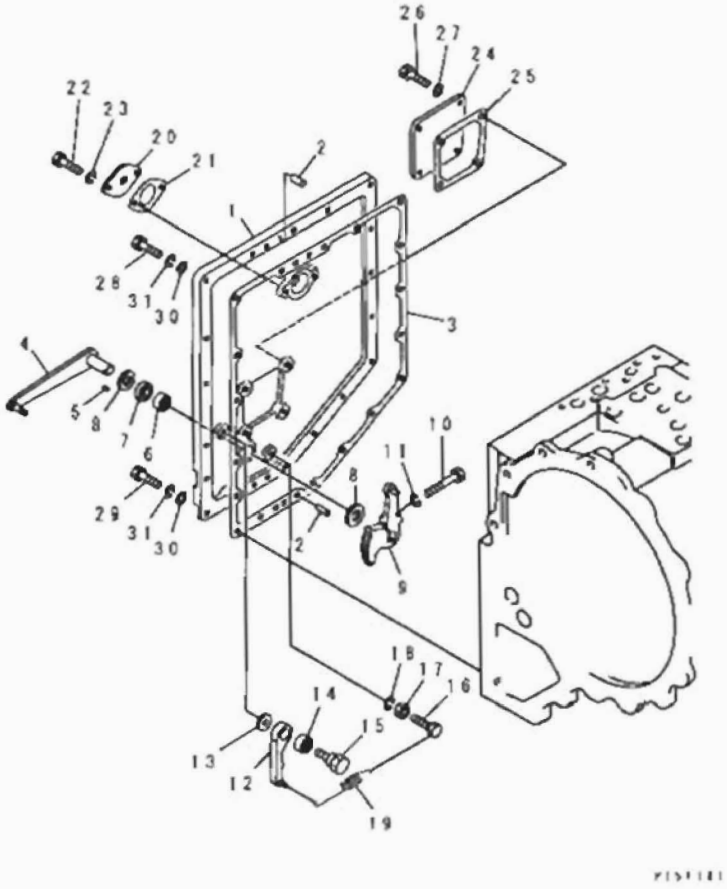

| INDEX | PART NO. | DESCRIPTION | Q'TY | SERIAL NO. |
|---|---|---|---|---|
| | | SERIAL NO. IN ( ) INDICATES TRANSMISSION SERIAL NO. | | |
| | (234-15-21080) | TRANSMISSION ASS'Y. | 1 | (2234)- |
| | (234-15-00601) | TRANSMISSION ASS'Y. | 1 | (2220)-(2233) |
| | (234-15-00600) | TRANSMISSION ASS'Y. | 1 | (1618)-(2219) |
| | (□234-15-00201) | TRANSMISSION ASS'Y. | 1 | 21001-(1617) |
| | | THESE ASSEMBLIES CONSIST OF ALL PARTS SHOWN IN FIGS. 2411 TO 2471. | | |
| 1 | 234-15-25810 | COVER | 1 | 21001- |
| 2 | 04020-01024 | PIN, DOWEL | 2 | 21001- |
| 3 | 234-15-25951 | GASKET (K2) | 1 | (2079)- |
| | □234-15-25950 | GASKET (K2) | 1 | 21001-(2078) |
| 4 | 234-15-25750 | LEVER | 1 | 21001- |
| 5 | 04010-00300 | KEY | 1 | 21001- |
| 6 | 06120-02016 | BEARING | 1 | 21001- |
| 7 | 144-15-29110 | SEAL, OIL (K2) | 1 | 21001- |
| 8 | 144-15-25570 | WASHER | 2 | 21001- |
| 9 | 234-15-25761 | LEVER | 1 | (2802)- |
| | □234-15-25760 | LEVER | 1 | 21001-(2801) |
| 10 | 01010-80850 | BOLT | 1 | 21001- |
| 11 | 01602-20825 | WASHER, SPRING | 1 | 21001- |
| 12 | 232-15-15770 | LEVER | 1 | 21001- |
| 13 | 232-15-15790 | WASHER | 1 | 21001- |
| 14 | 06120-01612 | BEARING | 1 | 21001- |
| 15 | 232-15-15780 | SHAFT | 1 | 21001- |
| 16 | 125-15-11461 | BOLT | 1 | 21001- |
| 17 | 01580-11008 | NUT | 1 | 21001- |
| 18 | 01602-21030 | WASHER, SPRING | 1 | 21001- |
| 19 | 232-15-16270 | SPRING (L=119.4) | 1 | 21001- |
| 20 | 125-15-21640 | PLATE | 1 | 21001- |
| 21 | 113-15-11641 | GASKET (K2) | 1 | (2079)- |
| | 113-15-11640 | GASKET (K2) | 1 | 21001-(2078) |
| 22 | 01010-81025 | BOLT | 2 | 21001- |
| 23 | 01602-21030 | WASHER | 2 | 21001- |
| 24 | 232-15-15840 | COVER | 1 | 21001- |
| 25 | 232-15-15971 | GASKET (K2) | 1 | (2079)- |
| | □232-15-15970 | GASKET (K2) | 1 | 21001-(2078) |
| 26 | 01010-81025 | BOLT | 4 | 21001- |
| 27 | 01643-31032 | WASHER | 4 | 21001- |
| 28 | 01010-81040 | BOLT | 16 | 21001- |
| 29 | 01010-81030 | BOLT | 3 | 21001- |
| 30 | 01643-31032 | WASHER | 19 | 21001- |

FIG NO. : 2423

| INDEX | PART NO. | DESCRIPTION | Q'TY | SERIAL NO. |
|---|---|---|---|---|
| 31 | 01602-21030 | WASHER, SPRING | 19 | 21001- |



GD705A-4

# FIG. 2451 TRANSMISSION (CONTROL VALVE) (1/3)

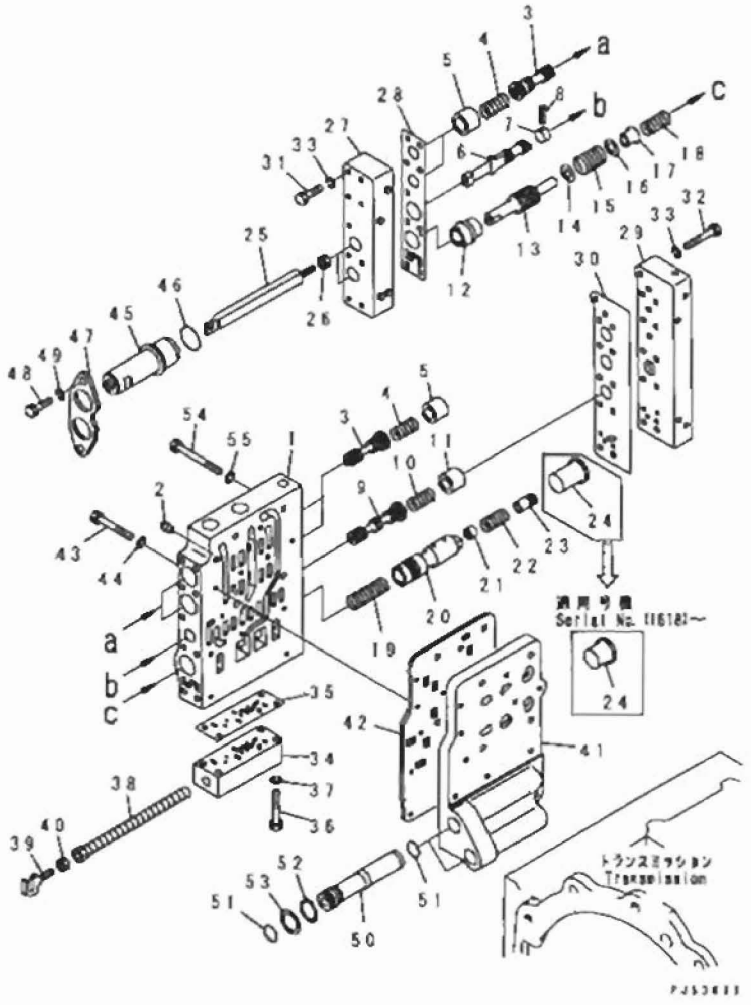


| INDEX | PART NO. | DESCRIPTION | Q'TY | SERIAL NO. |
|---|---|---|---|---|
| | | SERIAL NO. IN ( ) INDICATES TRANSMISSION SERIAL NO. | | |
| | (234-15-21080) | TRANSMISSION ASS'Y | 1 | (2234)- |
| | (234-15-00601) | TRANSMISSION ASS'Y | 1 | (2220)-(2233) |
| | (234-15-00600) | TRANSMISSION ASS'Y | 1 | (1618)-(2219) |
| | (□234-15-00201) | TRANSMISSION ASS'Y | 1 | 21001-(1617) |
| | | THESE ASSEMBLIES CONSIST OF ALL PARTS SHOWN IN FIGS. 2411 TO 2471. | | |
| | 234-15-00303 | . VALVE ASS'Y | 1 | (1618)- |
| | 234-15-00301 | . VALVE ASS'Y | 1 | 21001-(1617) |
| 1 | ☆ | . . BODY, VALVE | 1 | 21001- |
| 2 | 07042-20108 | . . PLUG | 1 | 21001- |
| 3 | 232-15-15210 | . . SPOOL | 4 | 21001- |
| 4 | 232-15-16110 | . . SPRING, (L=36.8) | 4 | 21001- |
| 5 | 232-15-15230 | . . STOPPER | 4 | 21001- |
| 6 | 232-15-15260 | . . SPOOL | 1 | 21001- |
| 7 | 232-15-15270 | . . STOPPER | 1 | 21001- |
| 8 | 04025-00440 | . . PIN, SPRING | 1 | 21001- |
| 9 | 232-15-15240 | . . SPOOL | 1 | 21001- |
| 10 | 232-15-16110 | . . SPRING, (L=36.8) | 1 | 21001- |
| 11 | 232-15-15250 | . . STOPPER | 1 | 21001- |
| 12 | 232-15-15360 | . . SLEEVE | 1 | 21001- |
| 13 | 232-15-15281 | . . SPOOL | 1 | 21001- |
| 14 | 232-15-15350 | . . WASHER | 1 | 21001- |
| 15 | 232-15-16180 | . . SPRING, (L=16.1) | 1 | 21001- |
| 16 | 281-15-15480 | . . SHIM, 0.5MM | 1 | 21001- |
| 17 | 232-15-15340 | . . SEAT | 1 | 21001- |
| 18 | 234-15-26240 | . . SPRING, (L=40) | 1 | (1618)- |
| | 232-15-16170 | . . SPRING, (L=50.2) | 1 | 21001-(1617) |
| 19 | 232-15-16230 | . . SPRING, (L=50.2) | 1 | (1618)- |
| | 362-15-15530 | . . SPRING, (L=39) | 1 | 21001-(1617) |
| 20 | 232-15-15372 | . . VALVE | 1 | (2349)- |
| | 232-15-15371 | . . VALVE | 1 | (1618)-(2348) |
| | □232-15-15370 | . . VALVE | 1 | 21001-(1617) |
| 21 | 22M-75-18890 | . . VALVE | 1 | 21001- |
| 22 | 125-15-15290 | . . SPRING | 1 | 21001- |
| 23 | 22M-75-18880 | . . SLEEVE | 1 | 21001- |
| 24 | 232-15-15292 | . . STOPPER | 1 | (1618)- |
| | 232-15-15291 | . . STOPPER | 1 | 21001-(1617) |
| 25 | 234-15-25710 | . . YOKE | 2 | 21001- |
| 26 | 01580-10806 | . . NUT | 2 | 21001- |
| 27 | 232-15-15391 | . . COVER | 1 | 21001- |

FIG NO. : 2451

| INDEX | PART NO. | DESCRIPTION | Q'TY | SERIAL NO. |
|---|---|---|---|---|
| 28 | 234-15-25921 | GASKET (K2) | 1 | 21001- |
| 29 | 234-15-25380 | COVER | 1 | 21001- |
| 30 | 234-15-25910 | GASKET (K2) | 1 | 21001- |
| 31 | 01010-80850 | BOLT | 9 | 21001- |
| 32 | 01010-80845 | BOLT | 11 | 21001- |
| 33 | 01602-20825 | WASHER, SPRING | 20 | 21001- |
| 34 | 234-15-25310 | BODY | 1 | 21001- |
| 35 | 234-15-25930 | GASKET (K2) | 1 | 21001- |
| 36 | 01010-80845 | BOLT | 4 | 21001- |
| 37 | 01602-20825 | WASHER, SPRING | 4 | 21001- |
| 38 | 234-15-25331 | SPOOL | 1 | (1618)- |
| | 234-15-25330 | SPOOL | 1 | 21001-(1617) |
| 39 | 234-15-25720 | YOKE | 1 | 21001- |
| 40 | 01580-10806 | NUT | 1 | 21001- |
| 41 | 234-15-25131 | SEAT, VALVE | 1 | 21001- |
| 42 | 234-15-25141 | PLATE | 1 | 21001- |
| 43 | 01010-80860 | BOLT | 11 | 21001- |
| 44 | 01602-20825 | WASHER, SPRING | 11 | 21001- |
| 45 | 232-15-15720 | COUPLING | 2 | 21001- |
| 46 | 07000-73028 | O-RING (K2) | 2 | 21001- |
| 47 | 232-15-15730 | COVER | 1 | 21001- |
| 48 | 01010-81025 | BOLT | 2 | 21001- |
| 49 | 01602-21030 | WASHER, SPRING | 2 | 21001- |
| 50 | 232-15-15170 | SLEEVE | 2 | 21001- |
| 51 | 07000-72021 | O-RING (K2) | 4 | 21001- |
| 52 | 04064-02512 | RING, SNAP | 2 | 21001- |
| 53 | 232-15-15190 | PLATE | 2 | 21001- |
| 54 | 01010-81080 | BOLT | 4 | 21001- |
| 55 | 01602-21030 | WASHER, SPRING | 4 | 21001- |

FIG NO. : 2452

| INDEX | PART NO. | DESCRIPTION | Q'TY | SERIAL NO. |
|---|---|---|---|---|
| 28 | 01011-81205 | BOLT | 2 | 21001- |
| 29 | 01602-21236 | WASHER, SPRING | 2 | 21001- |
| 30 | 234-15-25650 | FLANGE | 1 | 21001- |
| 31 | 07000-73025 | O-RING (K2) | 1 | 21001- |
| 32 | 07042-80108 | PLUG | 2 | (2334)- |
| | 07042-20108 | PLUG | 2 | 21001-(2333) |
| 33 | 01010-81065 | BOLT | 2 | 21001- |
| 34 | 01602-21030 | WASHER, SPRING | 2 | 21001- |
| 35 | 238-15-17440 | SLEEVE | 1 | 21001- |
| 36 | 07000-72021 | O-RING (K2) | 2 | 21001- |
| 37 | 01010-81085 | BOLT | 2 | 21001- |
| 38 | 01602-21030 | WASHER, SPRING | 2 | 21001- |

# FIG. 2453 TRANSMISSION (CONTROL VALVE) (3/3)

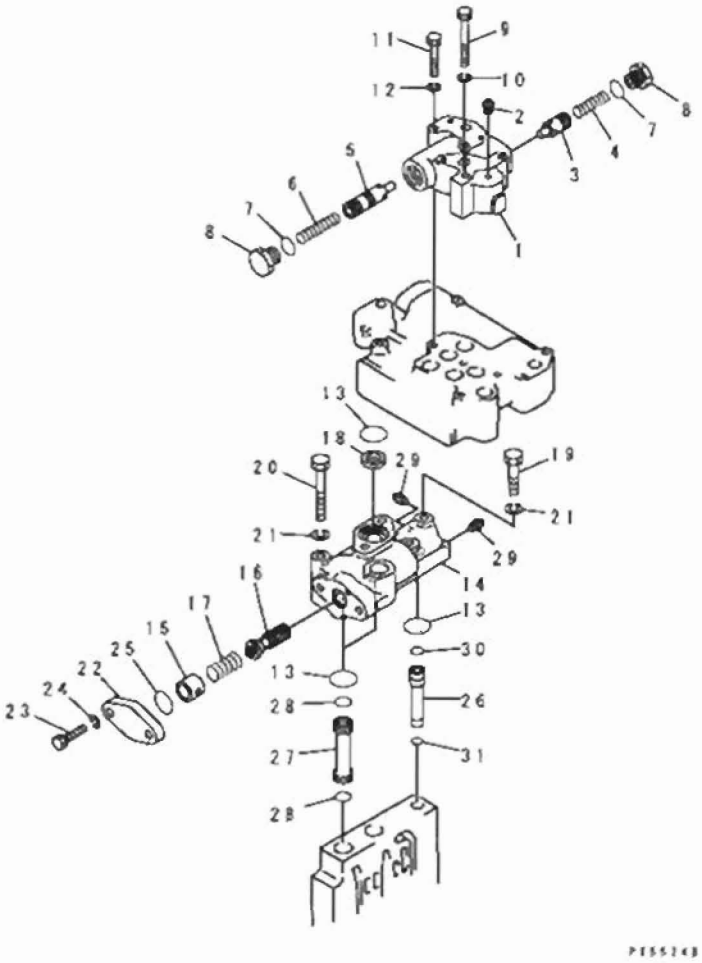

| INDEX | PART NO | DESCRIPTION | Q'TY | SERIAL NO. |
|---|---|---|---|---|
| | | SERIAL NO. IN ( ) INDICATES TRANSMISSION SERIAL NO. | | |
| | (234-15-21080) | TRANSMISSION ASS'Y | 1 | (2234)- |
| | (234-15-00601) | TRANSMISSION ASS'Y | 1 | (2220)-(2233) |
| | (234-15-00600) | TRANSMISSION ASS'Y | 1 | (1618)-(2219) |
| | (□234-15-00201) | TRANSMISSION ASS'Y | 1 | 21001-(1617) |
| | | THESE ASSEMBLIES CONSIST OF ALL PARTS SHOWN IN FIGS. 2411 TO 2471. | | |
| | 232-15-00110 | .VALVE ASS'Y | 1 | 21001- |
| | 232-15-00140 | ..VALVE BODY ASS'Y | 1 | 21001- |
| 1 | ☆ | ...BODY, VALVE | 1 | 21001- |
| 2 | 07042-20108 | ...PLUG | 1 | 21001- |
| 3 | 232-15-14230 | ..VALVE | 1 | 21001- |
| 4 | 232-15-14260 | ..SPRING, (L= 39.4) | 1 | 21001- |
| 5 | 232-15-14130 | ..VALVE | 1 | 21001- |
| 6 | 232-15-14160 | ..SPRING, (L=71.4) | 1 | 21001- |
| 7 | 07002-02434 | ..O-RING (K2) | 2 | 21001- |
| 8 | 232-15-14280 | ..PLUG | 2 | 21001- |
| 9 | 01011-81030 | BOLT | 1 | 21001- |
| 10 | 01602-21030 | WASHER, SPRING | 1 | 21001- |
| 11 | 01010-80860 | BOLT | 3 | 21001- |
| 12 | 01602-20825 | WASHER, SPRING | 3 | 21001- |
| 13 | 07000-73035 | .O-RING (K2) | 4 | 21001- |
| 14 | 234-15-25120 | VALVE, BODY | 1 | 21001- |
| 15 | 234-15-25230 | STOPPER | 1 | 21001- |
| 16 | 232-15-15221 | SPOOL | 1 | (1618)- |
| | 232-15-15220 | SPOOL | 1 | 21001-(1617) |
| 17 | 232-15-16110 | SPRING, (L=36.8) | 1 | 21001- |
| 18 | 238-15-15630 | STRAINER | 1 | 21001- |
| 19 | 01010-81250 | BOLT | 2 | 21001- |
| 20 | 01010-81285 | BOLT | 1 | 21001- |
| 21 | 01602-21236 | WASHER, SPRING | 3 | 21001- |
| 22 | 07336-51027 | FLANGE | 1 | 21001- |
| 23 | 01010-81030 | BOLT | 2 | 21001- |
| 24 | 01602-21030 | WASHER, SPRING | 2 | 21001- |
| 25 | 07000-73035 | O-RING (K2) | 1 | 21001- |
| 26 | 234-15-25160 | SLEEVE | 1 | 21001- |
| 27 | 232-15-15150 | SLEEVE | 2 | 21001- |
| 28 | 07000-72021 | O-RING (K2) | 4 | 21001- |
| 29 | 07042-20108 | PLUG | 2 | 21001- |
| 30 | 07000-72016 | O-RING (K2) | 1 | 21001- |
| 31 | 07000-72012 | O-RING (K2) | 1 | 21001- |

# FIG. 2471 PARKING BRAKE

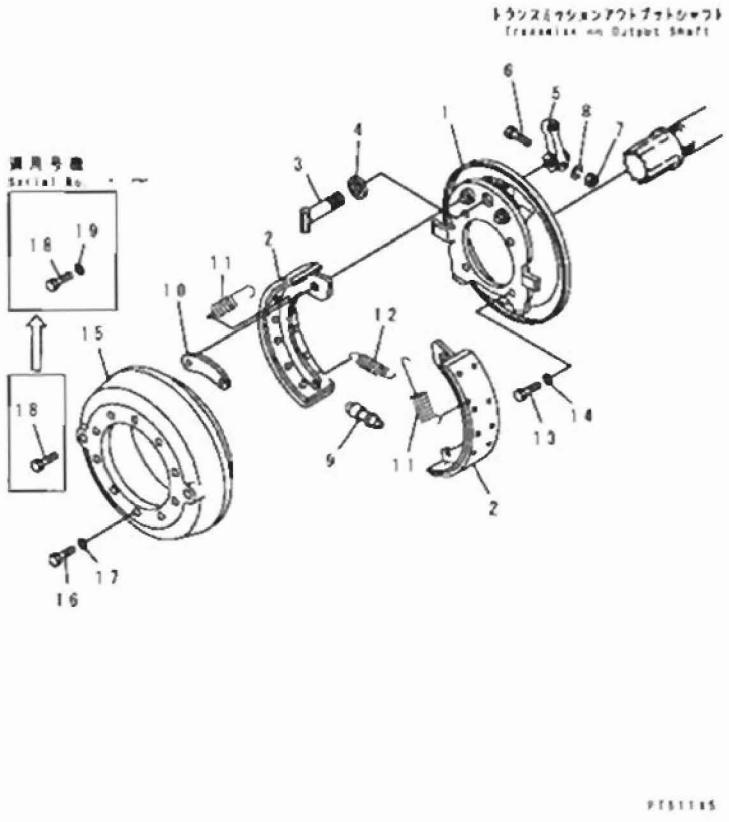






| INDEX | PART NO. | DESCRIPTION | Q'TY | SERIAL NO. |
|---|---|---|---|---|
| | | SERIAL NO. IN ( ) INDICATES TRANSMISSION SERIAL NO. | | |
| | (234-15-21080) | TRANSMISSION ASS'Y | 1 | (2234)- |
| | (234-15-00601) | TRANSMISSION ASS'Y | 1 | (2220)-(2233) |
| | (234-15-00600) | TRANSMISSION ASS'Y | 1 | (1618)-(2219) |
| | (□234-15-00201) | TRANSMISSION ASS'Y | 1 | 21001-(1617) |
| | | THESE ASSEMBLIES CONSIST OF ALL PARTS SHOWN IN FIGS. 2411 TO 2471. | | |
| | 234-32-32201 | BRAKE ASS'Y, PARKING | 1 | 21001- |
| | (▨234-32-32200) | BRAKE ASS'Y, PARKING | 1 | (21001- ) |
| 1 | 234-32-12610 | SUPPORT ASS'Y | 1 | 21001- |
| 2 | 234-32-12591 | SHOE ASS'Y | 2 | 21001- |
| | (▨234-32-12590) | SHOE ASS'Y | 2 | (21001-.) |
| 3 | 234-32-12460 | CAMSHAFT | 1 | 21001- |
| 4 | 234-32-12470 | SEAL, DUST | 1 | 21001- |
| 5 | 234-32-32210 | LEVER | 1 | 21001- |
| 6 | 234-32-32220 | BOLT | 1 | 21001- |
| 7 | 234-32-12520 | NUT | 1 | 21001- |
| 8 | 234-32-12510 | WASHER | 1 | 21001- |
| 9 | 234-32-12620 | ADJUSTER ASS'Y | 1 | 21001- |
| 10 | 234-32-12530 | BRACE | 1 | 21001- |
| 11 | 234-32-12541 | SPRING | 2 | 21001- |
| | (▨234-32-12540) | SPRING | 2 | (21001-.) |
| 12 | 234-32-12581 | SPRING | 1 | 21001- |
| | (▨234-32-12580) | SPRING | 1 | (21001-.) |
| 13 | 234-32-32120 | BOLT | 4 | 21001- |
| 14 | 01643-31645 | WASHER | 4 | 21001- |
| 15 | 234-32-32110 | DRUM | 1 | 21001- |
| 16 | 01010-61435 | BOLT | 10 | 21001- |
| 17 | 01643-31445 | WASHER | 10 | 21001- |
| 18 | 01010-61420 | BOLT | 2 | 21001- |
| 19 | 01643-31445 | WASHER | 2 | -. |

## FIG. 2501A TRANSMISSION PUMP (#23001-)

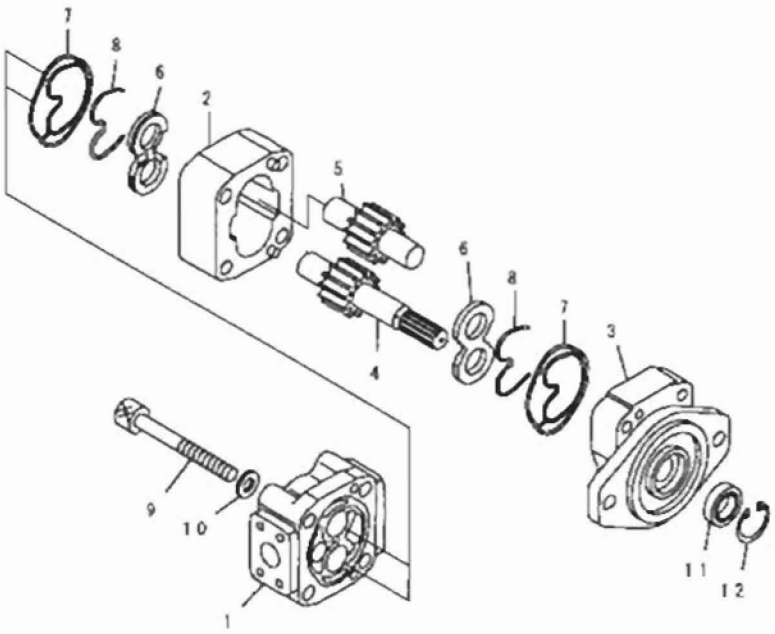


PC57608

| INDEX | PART NO | DESCRIPTION | Q'TY | SERIAL NO |
|---|---|---|---|---|
| | 234-60-65300 | PUMP ASS'Y<br>THE KAYABA KOGYO PART NUMBER IS THAT KB IS REMOVED FROM KOMATSU PART NUMBER LISTED BELOW. | 1 | 23001- |
| 1 | KB20132-60620 | COVER | 1 | 23001- |
| 2 | ☆ | PLATE | 1 | 23001- |
| 3 | KB20132-60422 | FLANGE | 1 | 23001- |
| | KBB530B-00006 | GEAR ASS'Y | 1 | 23001- |
| 4 | ☆ | GEAR, DRIVE | 1 | 23001- |
| 5 | ☆ | GEAR, DRIVEN | 1 | 23001- |
| 6 | KB20131-60720 | PLATE | 2 | 23001- |
| 7 | ☆ | SEAL (KIT) | 2 | 23001- |
| 8 | ☆ | RING (KIT) | 2 | 23001- |
| 9 | KB20131-61402 | BOLT | 4 | 23001- |
| 10 | KB20131-61801 | WASHER | 4 | 23001- |
| 11 | ☆ | SEAL, OIL (KIT) | 1 | 23001- |
| 12 | ☆ | RING, SNAP (KIT) | 1 | 23001- |
| | | SERVICE KIT | | |
| KIT | KB2013A-60012 | SEAL KIT, TRANSMISSION PUMP | 1 | 23001- |

FIG NO. 2503A

## FIG. 2503A STEERING PUMP (#23001-)

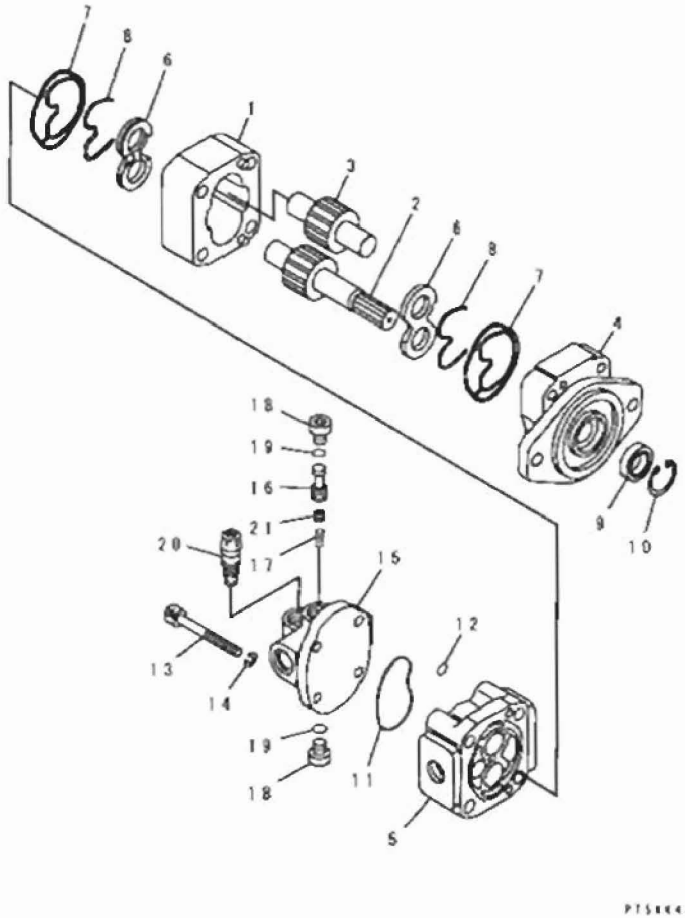


| INDEX | PART NO. | DESCRIPTION | Q'TY | SERIAL NO. |
|---|---|---|---|---|
| | 234-60-65200 | PUMP ASS'Y. | 1 | 23001- |
| | | THE KAYABA KOGYO PART NUMBER IS THAT KB IS REMOVED FROM KOMATSU PART NUMBER LISTED BELOW. | | |
| 1 | ☆ | . PLATE, GEAR | 1 | 23001- |
| | KB2013B-20034 | . GEAR ASS'Y. | 1 | 23001- |
| 2 | ☆ | .. GEAR, DRIVE | 1 | 23001- |
| 3 | ☆ | .. GEAR, DRIVEN | 1 | 23001- |
| 4 | KB20132-20543 | . FLANGE | 1 | 23001- |
| 5 | KB20802-50101 | . COVER | 1 | 23001- |
| 6 | KB20131-21542 | . PLATE | 2 | 23001- |
| 7 | ☆ | . SEAL (KIT) | 2 | 23001- |
| 8 | ☆ | . RING (KIT) | 2 | 23001- |
| 9 | ☆ | . SEAL, OIL (KIT) | 1 | 23001- |
| 10 | ☆ | . RING, SNAP (KIT) | 1 | 23001- |
| 11 | ☆ | . O-RING (KIT) | 1 | 23001- |
| 12 | ☆ | . O-RING (KIT) | 1 | 23001- |
| 13 | KB20131-21447 | . BOLT | 4 | 23001- |
| 14 | KB20111-11301 | . WASHER | 4 | 23001- |
| | KBB5850-00103 | . VALVE ASS'Y, FLOW PRIORITY | 1 | 23001- |
| 15 | KB20931-90117 | .. BODY | 1 | 23001- |
| 16 | KB20931-70210 | .. PLUNGER | 1 | 23001- |
| 17 | KB21731-40501 | .. SPRING | 1 | 23001- |
| 18 | KB20931-70503 | .. PLUG | 2 | 23001- |
| 19 | KB21001-00036 | .. O-RING (KIT) | 2 | 23001- |
| 20 | KBC001B-23007 | .. VALVE, RELIEF | 1 | 23001- |
| 21 | KB21731-30937 | .. PLUG | 1 | 23001- |
| | | SERVICE KIT | | |
| KIT | KBB520A-00001 | SEAL KIT, STEERING PUMP | 1 | 23001- |

# FIG. 2511A TRANSMISSION OIL FILTER (#23001-)

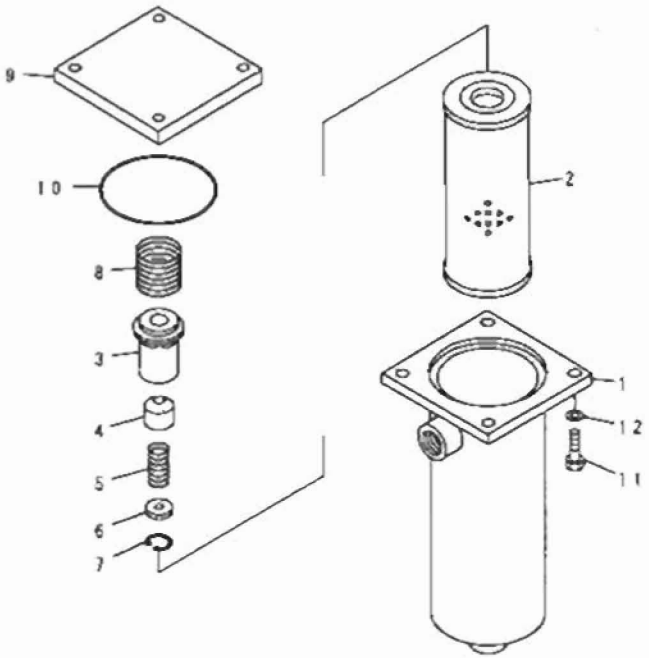


| INDEX | PART NO. | DESCRIPTION | Q'TY | SERIAL NO |
|---|---|---|---|---|
| | 23C-16-11100 | FILTER ASS'Y | 1 | 23001- |
| 1 | 23C-16-11120 | CASE | 1 | 23001- |
| 2 | 281-16-11290 | ELEMENT | 1 | 23001- |
| 3 | 141-49-33990 | CAGE | 1 | 23001- |
| 4 | 141-49-33980 | SLEEVE | 1 | 23001- |
| 5 | 141-49-36171 | SPRING | 1 | 23001- |
| 6 | 141-49-33970 | PLATE | 1 | 23001- |
| 7 | 04065-03012 | RING, SNAP | 1 | 23001- |
| 8 | 6003200-4-40 | SPRING | 1 | 23001- |
| 9 | 23C-16-11110 | COVER | 1 | 23001- |
| 10 | 07000-12125 | O-RING | 1 | 23001- |
| 11 | 01016-51260 | BOLT | 4 | 23001- |
| 12 | 01643-31232 | WASHER | 4 | 23001- |

# FIG. 2551A TRANSMISSION PIPING(#23001-)

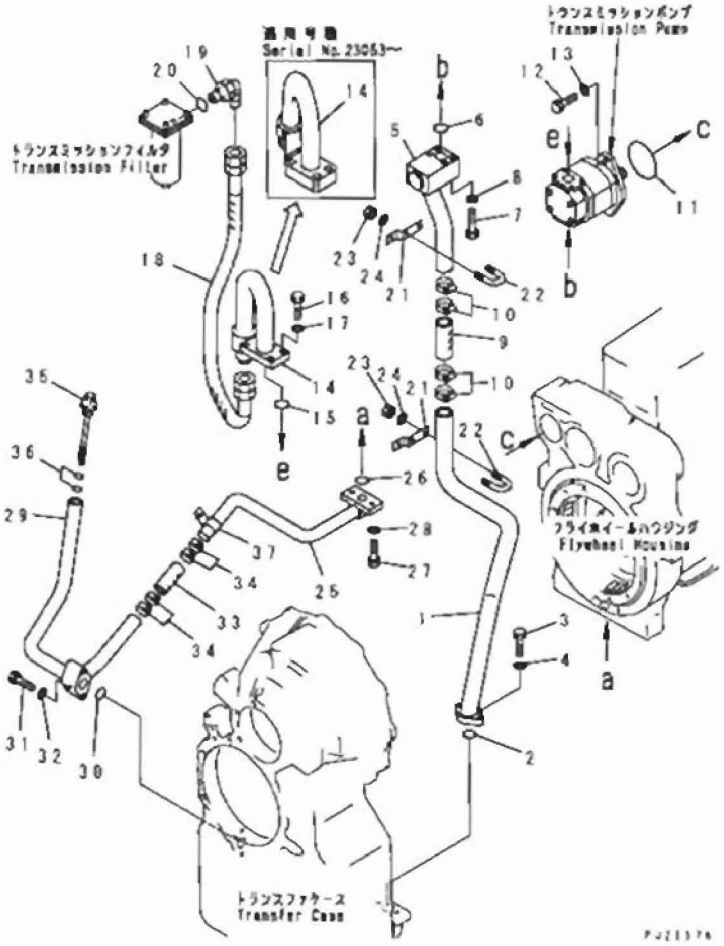


| INDEX | PART NO. | DESCRIPTION | Q'TY | SERIAL NO. |
|---|---|---|---|---|
| 1 | 234-16-31160 | TUBE | 1 | 21001- |
| 2 | 07000-13042 | O-RING | 1 | 21001- |
| 3 | 01010-81035 | BOLT | 2 | 23001- |
| 4 | 01643-31032 | WASHER | 2 | 21001- |
| 5 | 234-16-61110 | TUBE | 1 | 23001- |
| 6 | 07000-13042 | O-RING | 1 | 21001- |
| 7 | 01010-81070 | BOLT | 4 | 23001- |
| 8 | 01643-31032 | WASHER | 4 | 21001- |
| 9 | 07260-24118 | HOSE | 1 | 23001- |
| 10 | 07289-00055 | CLAMP | 4 | 23001- |
| 11 | 07000-12105 | O-RING | 1 | 21001- |
| 12 | 01010-51235 | BOLT | 2 | 21001- |
| 13 | 01643-31232 | WASHER | 2 | 21001- |
| 14 | 234-16-61131 | TUBE | 1 | 23063- |
| | □234-16-61130 | TUBE | 1 | 23001-23062 |
| 15 | 07000-13032 | O-RING | 1 | 23001- |
| 16 | 01010-81025 | BOLT | 4 | 23001- |
| 17 | 01643-31032 | WASHER | 4 | 23001- |
| 18 | 07103-50611 | HOSE | 1 | 23001- |
| 19 | 07235-10628 | ELBOW | 1 | 23001- |
| 20 | 07002-12434 | O-RING | 1 | 21001- |
| 21 | 234-16-31740 | PLATE | 2 | 21001- |
| 22 | 07283-34346 | CLIP | 2 | - |
| | □07283-24346 | CLIP | 2 | 21001- |
| 23 | 01599-01011 | NUT | 4 | 21001- |
| 24 | 01643-31032 | WASHER | 4 | 21001- |
| 25 | 234-16-31180 | TUBE | 1 | 21001- |
| 26 | 07000-13035 | O-RING | 1 | 21001- |
| 27 | 01010-81435 | BOLT | 2 | 23001- |
| 28 | 01643-31445 | WASHER | 2 | 21001- |
| 29 | 234-16-31170 | TUBE | 1 | 21001- |
| 30 | 07000-13035 | O-RING | 1 | 21001- |
| 31 | 01010-81065 | BOLT | 2 | 23001- |
| 32 | 01643-31032 | WASHER | 2 | 21001- |
| 33 | 07260-23228 | HOSE | 1 | 23001- |
| 34 | 07289-00045 | CLAMP | 4 | 23001- |
| 35 | 232-16-12430 | GAUGE | 1 | 21001- |
| 36 | 07000-03022 | O-RING | 2 | 21001- |
| 37 | 234-16-31270 | CLIP | 1 | 21001- |

# FIG. 2553A TRANSMISSION OIL COOLER PIPING(#23001-)

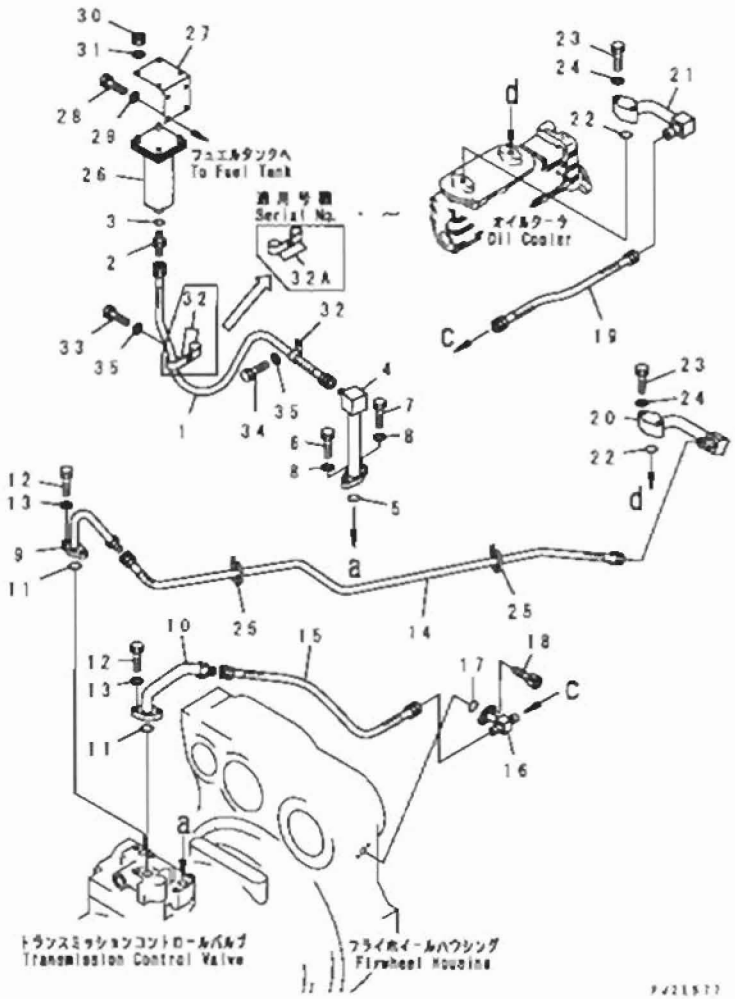






| INDEX | PART NO | DESCRIPTION | Q'TY | SERIAL NO |
|---|---|---|---|---|
| 1 | 07103-50612 | HOSE | 1 | 23001- |
| 2 | 07230-20628 | UNION | 1 | 23001- |
| 3 | 07002-12434 | O-RING | 1 | 23001- |
| 4 | 234-16-61140 | TUBE | 1 | 23001- |
| 5 | 07000-13028 | O-RING | 1 | 23001- |
| 6 | 01010-81030 | BOLT | 1 | 23001- |
| 7 | 01011-81000 | BOLT | 1 | 23001- |
| 8 | 01643-31032 | WASHER | 2 | 23001- |
| 9 | 234-16-61150 | TUBE | 1 | 23001- |
| | 234-60-72410 | TUBE, (D.D.V. SPEC) | 1 | 23001- |
| 10 | 23C-16-11240 | TUBE | 1 | 23001- |
| | 234-60-72420 | TUBE, (D.D.V. SPEC) | 1 | 23001- |
| 11 | 07000-13028 | O-RING | 2 | 23001- |
| 12 | 01010-81030 | BOLT | 4 | 23001- |
| 13 | 01643-31032 | WASHER | 4 | 23001- |
| 14 | 07103-50615 | HOSE | 1 | 23001- |
| | 07103-50616 | HOSE, (D.D.V. SPEC) | 1 | 23001- |
| 15 | 07103-50607 | HOSE | 1 | 23001- |
| | 07103-50608 | HOSE, (D.D.V. SPEC) | 1 | 23001- |
| 16 | 23C-16-11251 | TUBE | 1 | 23001- |
| 17 | 07000-13025 | O-RING | 1 | 23001- |
| 18 | 01252-71030 | BOLT | 2 | 23001- |
| 19 | 07103-50606 | HOSE | 1 | 23001- |
| 20 | 234-A16-3120 | TUBE | 1 | 23001- |
| 21 | 23A-A16-3110 | TUBE | 1 | 23001- |
| 22 | 07000-13025 | O-RING | 2 | 23001- |
| 23 | 01010-81055 | BOLT | 4 | 23001- |
| 24 | 01643-31032 | WASHER | 4 | 23001- |
| 25 | 08034-00834 | BAND | 6 | 23001- |
| 26 | (23C-16-11100) | FILTER ASS'Y | 1 | 23001- |
| 27 | 23C-16-11130 | BRACKET | 1 | 23001- |
| 28 | 01010-81230 | BOLT | 4 | 23001- |
| 29 | 01643-31232 | WASHER | 4 | 23001- |
| 30 | 01580-11210 | NUT | 4 | 23001- |
| 31 | 01643-31232 | WASHER | 4 | 23001- |
| 32 | 04434-53411 | CLIP | 1 | - |
| | 04434-53411 | CLIP | 3 | 23001- |
| 32A | 234-16-61170 | CLIP | 2 | - |
| 33 | 01010-81020 | BOLT | 1 | 23001- |
| 34 | 01643-31032 | WASHER | 2 | 23001- |
| 35 | 01010-81016 | BOLT | 1 | 23001- |

FIG NO. : 2561

# FIG. 2561 TRANSMISSION OIL PRESSURE CHECK PIPING

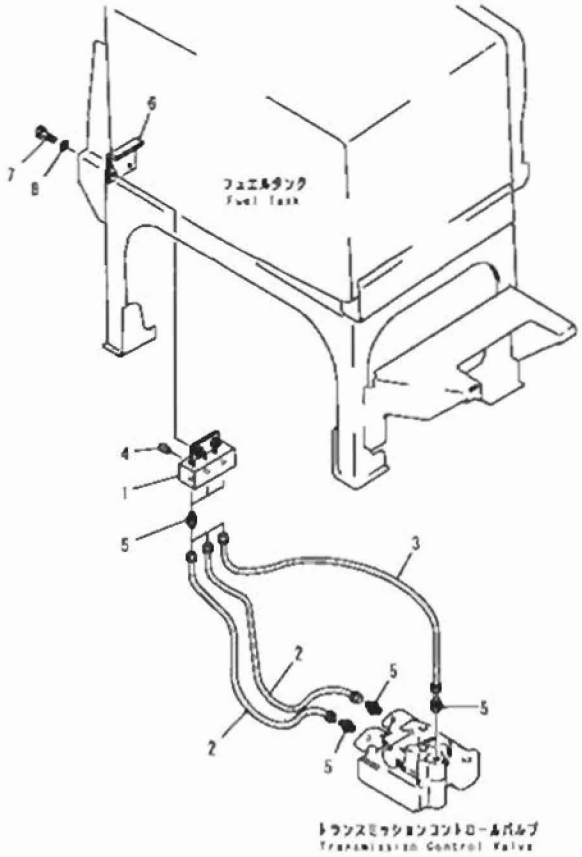


| INDEX | PART NO. | DESCRIPTION | Q'TY | SERIAL NO. |
|---|---|---|---|---|
| 1 | 234-16-31410 | JOINT | 1 | 21001- |
| 2 | 234-16-31420 | TUBE | 2 | 21001- |
| 3 | 234-16-31430 | TUBE | 1 | 21001- |
| 4 | 07042-20108 | PLUG | 3 | 21001- |
| 5 | 07213-50610 | CONNECTOR | 6 | 21001- |
| 6 | 234-04-31221 | PLATE (WELDED) | 1 | 21001- |
| 7 | 01010-51030 | BOLT | 2 | 21001- |
| 8 | 01643-31032 | WASHER | 2 | 21001- |

# FIG. 2601 FINAL DRIVE CASE (1/2)

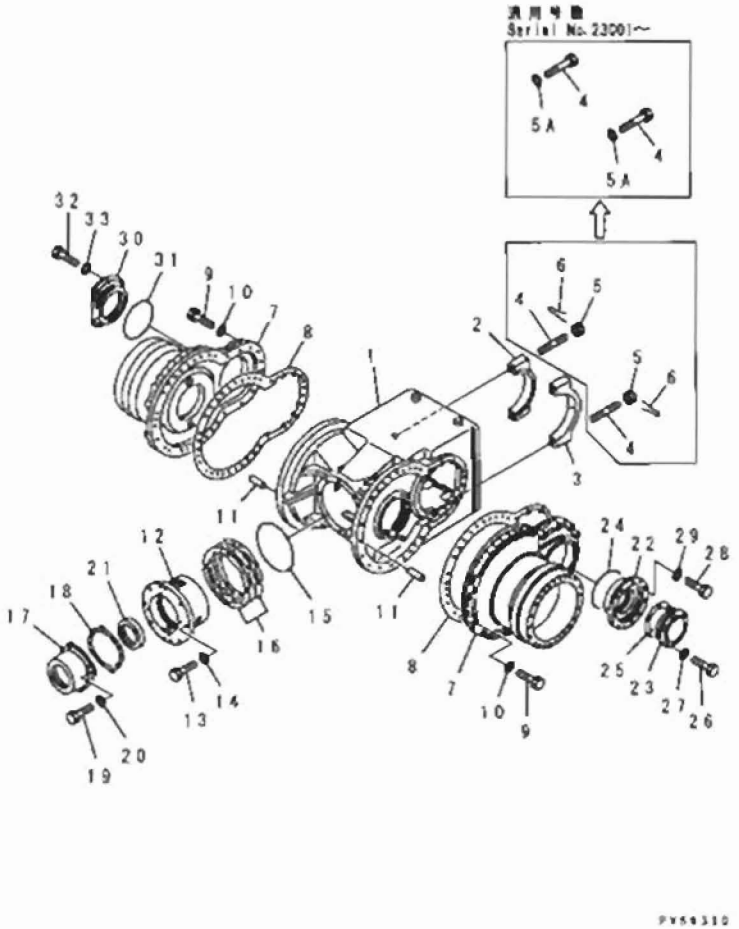


| INDEX | PART NO | DESCRIPTION | Q'TY | SERIAL NO. |
|---|---|---|---|---|
| | 234-22-00260 | FINAL DRIVE ASS'Y | 1 | 23001- |
| | 234-22-00209 | FINAL DRIVE ASS'Y | 1 | 21330-23000 |
| | 234-22-00208 | FINAL DRIVE ASS'Y | 1 | 21289-21329 |
| | 234-22-00207 | FINAL DRIVE ASS'Y | 1 | 21222-21288 |
| | 234-22-00206 | FINAL DRIVE ASS'Y | 1 | 21164-21221 |
| | 234-22-00205 | FINAL DRIVE ASS'Y | 1 | 21057-21163 |
| | □234-22-00204 | FINAL DRIVE ASS'Y | 1 | 21051-21056 |
| | □234-22-00203 | FINAL DRIVE ASS'Y | 1 | 21020-21050 |
| | 234-22-00202 | FINAL DRIVE ASS'Y | 1 | 21018-21019 |
| | 234-22-00201 | FINAL DRIVE ASS'Y | 1 | 21014-21017 |
| | 234-22-00200 | FINAL DRIVE ASS'Y | 1 | 21001-21013 |
| | | THESE ASSEMBLIES CONSIST OF ALL PARTS SHOWN IN FIGS. 2601 TO 2607 | | |
| | 234-22-00120 | .CASE ASS'Y | 1 | 21001- |
| 1 | 234-22-31110 | ..CASE | 1 | 21001- |
| 2 | 232-22-51170 | ..CAP | 1 | 21001- |
| 3 | 232-22-51180 | ..CAP | 1 | 21001- |
| 4 | 01011-82450 | ..BOLT | 4 | 23001- |
| | 01143-62445 | ..STUD | 4 | 21001-23000 |
| 5 | 01592-32427 | ..NUT | 4 | 21330-23000 |
| | □01592-12427 | ..NUT | 4 | 21001-21329 |
| 5A | 01643-32460 | ..WASHER | 4 | 23001- |
| 6 | 04050-15045 | ..PIN, COTTER | 4 | 21018-23000 |
| | □04050-05045 | ..PIN, COTTER | 4 | 21001-21017 |
| 7 | 234-22-31120 | .CASE, SIDE | 2 | 21001- |
| 8 | 234-22-31131 | .GASKET (KIT) | 2 | 21001- |
| | (⊠234-22-31130) | .GASKET (KIT) | 2 | (21001-21288) |
| 9 | 01010-51685 | .BOLT | 60 | 21001- |
| 10 | 01643-31645 | .WASHER | 60 | 21001- |
| 11 | 04020-01638 | .PIN, DOWEL | 4 | 21001- |
| 12 | 234-22-31140 | .RETAINER | 1 | 21001- |
| 13 | 01010-51445 | .BOLT | 8 | 21001- |
| 14 | 01643-31445 | .WASHER | 8 | 21001- |
| 15 | 07000-15220 | .O-RING (KIT) | 1 | 21001- |
| 16 | 234-22-00110 | .SHIM ASS'Y | 1 | 21001- |
| 17 | 234-22-31150 | .COVER | 1 | 21001- |
| 18 | 234-22-31161 | .GASKET (KIT) | 1 | 21001- |
| | (⊠234-22-31160) | .GASKET (KIT) | 1 | (21001-21288) |
| 19 | 01010-51030 | .BOLT | 4 | 21001- |
| 20 | 01643-31032 | .WASHER | 4 | 21001- |
| 21 | 234-22-32340 | .SEAL, OIL (KIT) | 1 | 21330- |
| | □07012-00110 | .SEAL, OIL (KIT) | 1 | 21001-21329 |

FIG NO. : 2601

| INDEX | PART NO. | DESCRIPTION | Q'TY | SERIAL NO. |
|---|---|---|---|---|
| 22 | 232-22-51271 | CAGE | 1 | 21001- |
| 23 | 232-22-51281 | COVER | 1 | 21001- |
| 24 | 234-22-31350 | O-RING (KIT) | 1 | 21001- |
| 25 | 234-22-31341 | GASKET (KIT) | 1 | 21001- |
| | (⊠234-22-31340) | GASKET (KIT) | 1 | (21001-21288) |
| 26 | 01010-51030 | BOLT | 6 | 21001- |
| 27 | 01643-31032 | WASHER | 6 | 21001- |
| 28 | 01010-51035 | BOLT | 6 | 21001- |
| 29 | 01643-31032 | WASHER | 6 | 21001- |
| 30 | 232-22-51251 | COVER | 1 | 21001- |
| 31 | 234-22-31350 | O-RING (KIT) | 1 | 21001- |
| 32 | 01010-51030 | BOLT | 6 | 21001- |
| 33 | 01643-31032 | WASHER | 6 | 21001- |
| | | SERVICE KIT | | |
| KIT | 234-22-00223 | SERVICE KIT, FINAL DRIVE | 1 | 21330- |
| | □234-22-00222 | SERVICE KIT, FINAL DRIVE | 1 | 21001-21329 |
| | (⊠234-22-00221) | SERVICE KIT, FINAL DRIVE | 1 | (21001-21221) |
| | (⊠234-22-00220) | SERVICE KIT, FINAL DRIVE | 1 | (21001-21050) |

# FIG. 2603 FINAL DRIVE CASE (2/2)

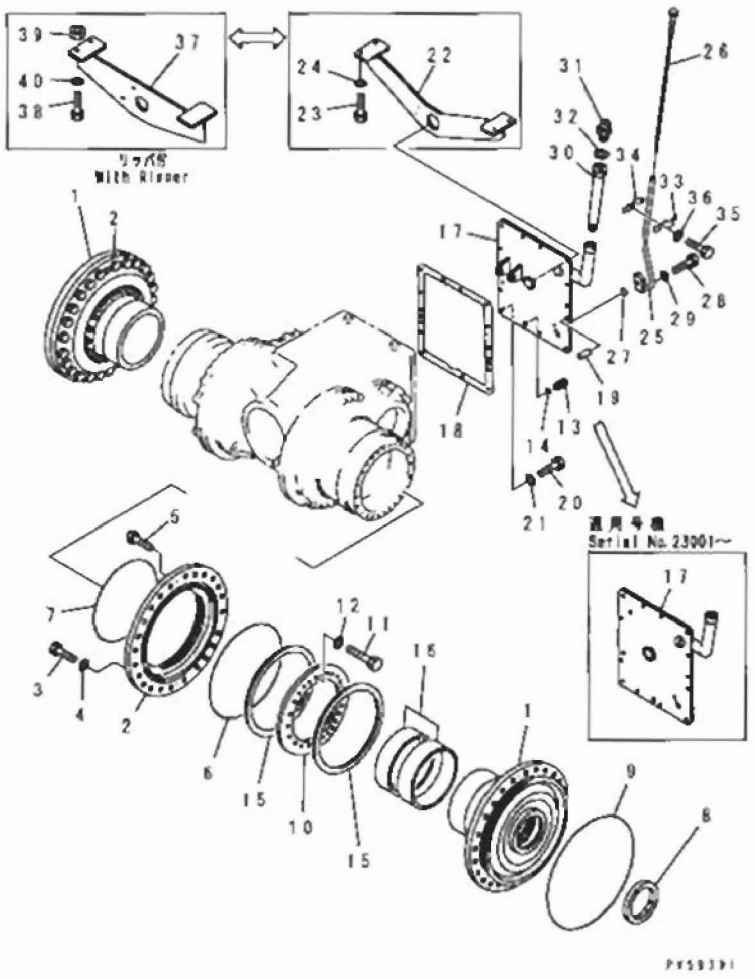


| INDEX | PART NO | DESCRIPTION | Q'TY | SERIAL NO. |
|---|---|---|---|---|
| | (234-22-00260) | FINAL DRIVE ASS'Y | 1 | 23001- |
| | (234-22-00209) | FINAL DRIVE ASS'Y | 1 | 21330-23000 |
| | (234-22-00208) | FINAL DRIVE ASS'Y | 1 | 21289-21329 |
| | (234-22-00207) | FINAL DRIVE ASS'Y | 1 | 21222-21288 |
| | (234-22-00206) | FINAL DRIVE ASS'Y | 1 | 21164-21221 |
| | (234-22-00205) | FINAL DRIVE ASS'Y | 1 | 21057-21163 |
| | (□234-22-00204) | FINAL DRIVE ASS'Y | 1 | 21051-21056 |
| | (□234-22-00203) | FINAL DRIVE ASS'Y | 1 | 21020-21050 |
| | (234-22-00202) | FINAL DRIVE ASS'Y | 1 | 21018-21019 |
| | (234-22-00201) | FINAL DRIVE ASS'Y | 1 | 21014-21017 |
| | (234-22-00200) | FINAL DRIVE ASS'Y | 1 | 21001-21013 |
| | | THESE ASSEMBLIES CONSIST OF ALL PARTS SHOWN IN FIGS. 2601 TO 2607 | | |
| 1 | 234-22-31210 | FLANGE | 2 | 21001- |
| 2 | 234-22-31220 | CAGE | 2 | 21001- |
| 3 | 01010-51875 | BOLT | 48 | 21001- |
| 4 | 01643-31845 | WASHER | 48 | 21001- |
| 5 | 01010-51240 | BOLT | 4 | 21001- |
| 6 | 07000-15435 | O-RING (KIT) | 2 | 21001- |
| 7 | 234-22-31261 | O-RING (KIT) | 2 | 21051- |
| | □234-22-31260 | O-RING (KIT) | 2 | 21001-21050 |
| 8 | 234-22-32340 | SEAL, OIL (KIT) | 2 | 21330- |
| | □07012-00110 | SEAL, OIL (KIT) | 2 | 21001-21329 |
| 9 | 07000-15475 | O-RING (KIT) | 2 | 21222- |
| | □07000-15480 | O-RING (KIT) | 2 | 21001-21221 |
| 10 | 234-22-31230 | PLATE | 2 | 21001- |
| 11 | 01018-11465 | BOLT | 48 | 21001- |
| 12 | 01643-31445 | WASHER | 48 | 21001- |
| 13 | 07044-12412 | PLUG | 1 | 21001- |
| 14 | 07002-12434 | O-RING (KIT) | 1 | 21001- |
| 15 | 234-22-31251 | WASHER | 4 | 21057- |
| | □234-22-31250 | WASHER | 4 | 21001-21056 |
| 16 | 232-22-51740 | BUSHING | 4 | 21001- |
| 17 | 234-22-36150 | COVER | 1 | 23001- |
| | 234-22-31290 | COVER | 1 | 21001-23000 |
| 18 | 234-22-31362 | GASKET (KIT) | 1 | 21330- |
| | □234-22-31361 | GASKET (KIT) | 1 | 21001-21329 |
| | (▨234-22-31360) | GASKET (KIT) | 1 | (21001-21288) |
| 19 | 04020-01638 | PIN, DOWEL | 2 | 21001- |
| 20 | 01010-51435 | BOLT | 14 | 21001- |
| 21 | 01643-31445 | WASHER | 14 | 21001- |
| 22 | 234-22-31280 | HANGER | 1 | 21001- |

FIG NO : 2603

| INDEX | PART NO | DESCRIPTION | Q'TY | SERIAL NO. |
|---|---|---|---|---|
| 23 | 01010-52050 | BOLT | 4 | 21001- |
| 24 | 01643-32060 | WASHER | 4 | 21001- |
| 25 | 234-22-31410 | . TUBE | 1 | 21001- |
| 26 | 234-22-31421 | . GAUGE | 1 | 23077- |
| | □234-22-31420 | . GAUGE | 1 | 21001-23076 |
| 27 | 07000-12018 | O-RING (KIT) | 1 | 21001- |
| 28 | 01010-51040 | BOLT | 2 | 21001- |
| 29 | 01643-31032 | WASHER | 2 | 21001- |
| 30 | 238-22-11550 | FILLER | 1 | 21001- |
| 31 | 232-23-11220 | . BREATHER | 1 | 21001- |
| 32 | 07003-03036 | GASKET (KIT) | 1 | 21001- |
| 33 | 238-22-11650 | CLAMP | 1 | 21001- |
| 34 | 238-22-11660 | CLAMP | 1 | 21001- |
| 35 | 01010-50820 | BOLT | 2 | 21001- |
| 36 | 01643-30823 | WASHER | 2 | 21001- |
| 37 | 234-785-1340 | HANGER | 1 | 21001- |
| 38 | 01010-52080 | BOLT | 4 | 21001- |
| 39 | 01580-12016 | NUT | 4 | 21001- |
| 40 | 01643-32060 | WASHER | 4 | 21001- |
| | | SERVICE KIT | | |
| KIT | (234-22-00223) | SERVICE KIT, FINAL DRIVE | 1 | 21330- |
| | (□234-22-00222) | SERVICE KIT, FINAL DRIVE | 1 | 21001-21329 |
| | ((▨234-22-00221)) | SERVICE KIT, FINAL DRIVE | 1 | (21001-21221) |
| | ((▨234-22-00220)) | SERVICE KIT, FINAL DRIVE | 1 | (21001-21050) |

# FIG. 2605A FINAL DRIVE GEAR (1/2) (#23001-)

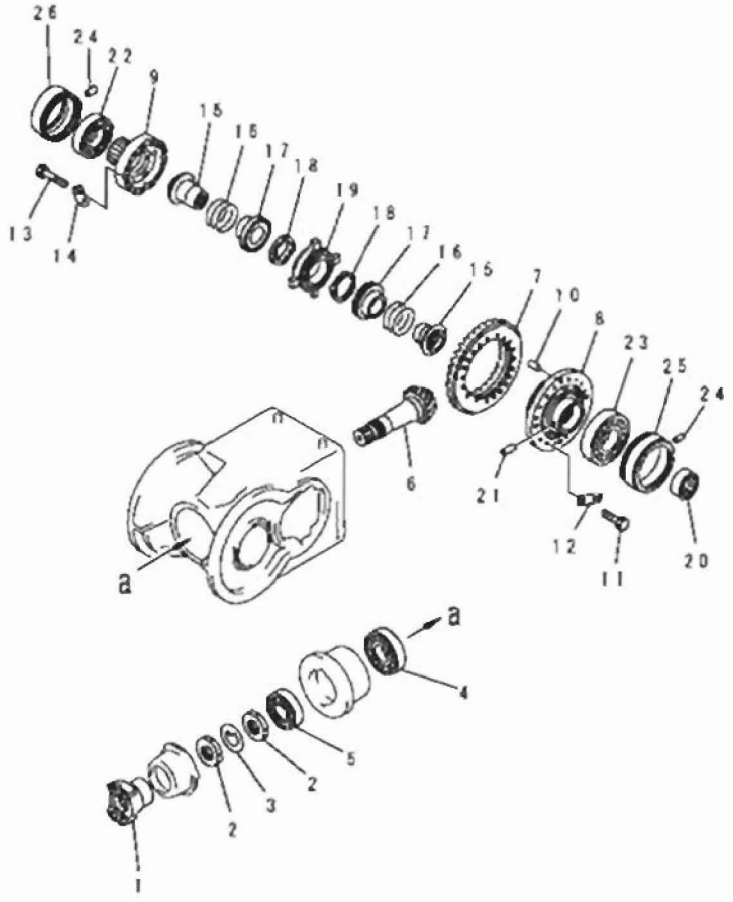


| INDEX | PART NO. | DESCRIPTION | Q'TY | SERIAL NO. |
|---|---|---|---|---|
| | (234-22-00260) | FINAL DRIVE ASS'Y<br>THIS ASSEMBLY CONSISTS OF ALL PARTS SHOWN IN FIGS. 2601 TO 2607. | 1 | 23001- |
| 1 | 234-22-32210 | .COUPLING | 1 | 21001- |
| 2 | 234-22-32170 | .NUT | 2 | 21001- |
| 3 | 234-22-32180 | .LOCK | 1 | 21001- |
| 4 | 234-991-2310 | .BEARING | 1 | 23001- |
| 5 | 06003-30316 | .BEARING | 1 | 21001- |
| | 234-22-00130 | .BEVEL GEAR ASS'Y | 1 | 23001- |
| 6 | 234-22-32110 | ..PINION | 1 | 21001- |
| 7 | 234-22-32120 | ..GEAR | 1 | 21001- |
| 8 | 234-22-32310 | .CASE | 1 | 21001- |
| 9 | 232-22-52240 | .CASE | 1 | 21001- |
| 10 | 04020-01842 | .PIN, DOWEL | 4 | 21001- |
| 11 | 01010-51440 | .BOLT | 16 | 21001- |
| 12 | 234-22-32290 | .PLATE | 8 | 21001- |
| 13 | 01010-81685 | .BOLT | 16 | 21001- |
| 14 | 232-22-52250 | .PLATE, LOCK | 8 | 21001- |
| | 23B-22-11900 | .NO-SPIN ASS'Y | 1 | 23001- |
| 15 | 23B-22-11950 | ..GEAR | 2 | 23001- |
| 16 | 23B-22-11940 | ..SPRING | 2 | 23001- |
| 17 | 23B-22-11910 | ..CLUTCH | 2 | 23001- |
| 18 | 23B-22-11920 | ..RING | 2 | 23001- |
| 19 | 23B-22-11930 | ..SPIDER | 2 | 23001- |
| 20 | 232-22-52310 | .BEARING | 1 | 21001- |
| 21 | 232-22-52320 | .PIN | 1 | 21001- |
| 22 | 06002-32024 | .BEARING | 1 | 21001- |
| 23 | 06002-32028 | .BEARING | 1 | 21001- |
| 24 | 04020-01024 | .PIN, DOWEL | 2 | 21001- |
| 25 | 232-22-52680 | .CAGE | 1 | 21001- |
| 26 | 232-22-52670 | .CAGE | 1 | 21001- |

# FIG. 2607 FINAL DRIVE GEAR (2/2)

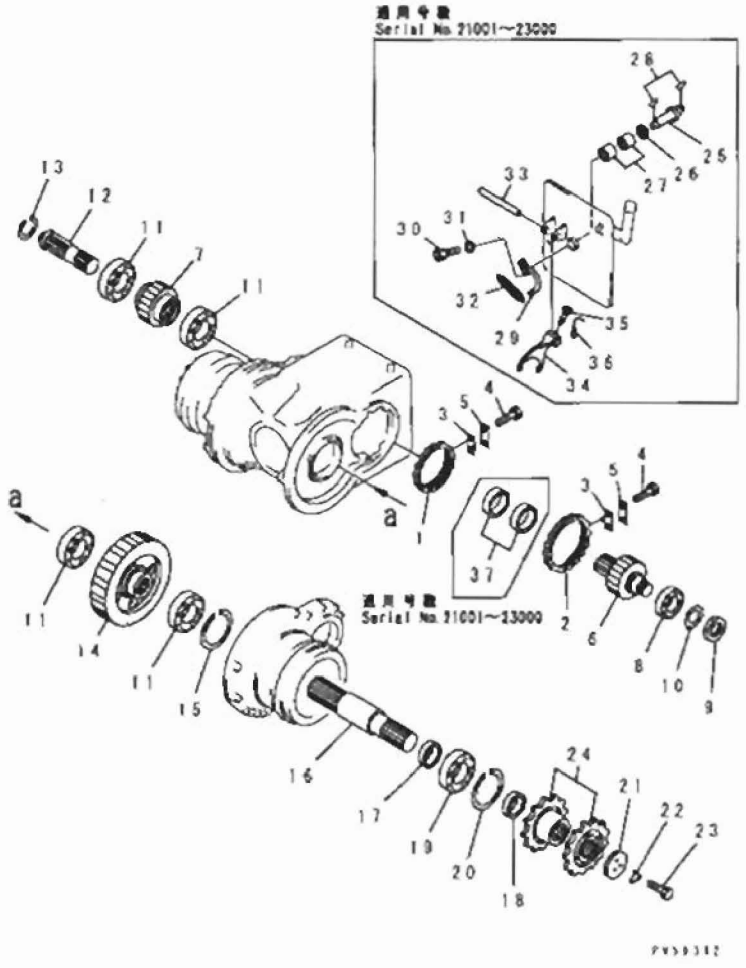


| INDEX | PART NO. | DESCRIPTION | Q'TY | SERIAL NO |
|---|---|---|---|---|
| | (234-22-00260) | FINAL DRIVE ASS'Y | 1 | 23001- |
| | (234-22-00209) | FINAL DRIVE ASS'Y | 1 | 21330-23000 |
| | (234-22-00208) | FINAL DRIVE ASS'Y | 1 | 21289-21329 |
| | (234-22-00207) | FINAL DRIVE ASS'Y | 1 | 21222-21288 |
| | (234-22-00206) | FINAL DRIVE ASS'Y | 1 | 21164-21221 |
| | (234-22-00205) | FINAL DRIVE ASS'Y | 1 | 21057-21163 |
| | (□234-22-00204) | FINAL DRIVE ASS'Y | 1 | 21051-21056 |
| | (□234-22-00203) | FINAL DRIVE ASS'Y | 1 | 21020-21050 |
| | (234-22-00202) | FINAL DRIVE ASS'Y | 1 | 21018-21019 |
| | (234-22-00201) | FINAL DRIVE ASS'Y | 1 | 21014-21017 |
| | (234-22-00200) | FINAL DRIVE ASS'Y | 1 | 21001-21013 |
| | | THESE ASSEMBLIES CONSIST OF ALL PARTS SHOWN IN FIGS. 2601 TO 2607. | | |
| 1 | 232-22-52290 | NUT | 1 | 21001- |
| 2 | 232-22-52270 | NUT | 1 | 21001- |
| 3 | 234-21-12360 | LOCK | 2 | 21001- |
| 4 | 01010-51020 | BOLT | 4 | 21001- |
| 5 | 04081-05012 | LOCK | 2 | 21001- |
| 6 | 234-22-32150 | GEAR | 1 | 21001- |
| 7 | 234-22-32140 | GEAR | 1 | 21001- |
| 8 | 06030-22213 | BEARING | 1 | 21001- |
| 9 | 01530-06214 | NUT | 1 | 21001- |
| 10 | 01658-26223 | WASHER | 1 | 21001- |
| 11 | 232-22-52460 | BEARING | 6 | 21001- |
| 12 | 234-22-32220 | SHAFT | 1 | 21001- |
| 13 | 04065-08025 | RING, SNAP | 1 | 21001- |
| 14 | 234-22-32132 | GEAR | 2 | 23036- |
| | □234-22-32131 | GEAR | 2 | 21164-23035 |
| | 234-22-32130 | GEAR | 2 | 21001-21163 |
| 15 | 04071-00180 | RING, SNAP | 2 | 21001- |
| 16 | 234-22-32230 | SHAFT | 2 | 21001- |
| 17 | 234-22-32240 | COLLAR | 2 | 21001- |
| 18 | 234-22-32250 | COLLAR | 2 | 21001- |
| 19 | 06030-22219 | BEARING | 2 | 21001- |
| 20 | 04071-00170 | RING, SNAP | 2 | 21001- |
| 21 | 234-22-32260 | HOLDER | 2 | 21001- |
| 22 | 234-22-32270 | LOCK | 2 | 21001- |
| 23 | 01010-51245 | BOLT | 6 | 21001- |
| 24 | 234-22-32160 | SPROCKET | 4 | 21001- |
| 25 | 234-22-33111 | SHAFT | 1 | 21330-23000 |
| | 234-22-33110 | SHAFT | 1 | 21001-21329 |
| 26 | 07012-00035 | SEAL, OIL (KIT) | 1 | 21001-23000 |

# FIG. 2607 FINAL DRIVE GEAR (2/2)

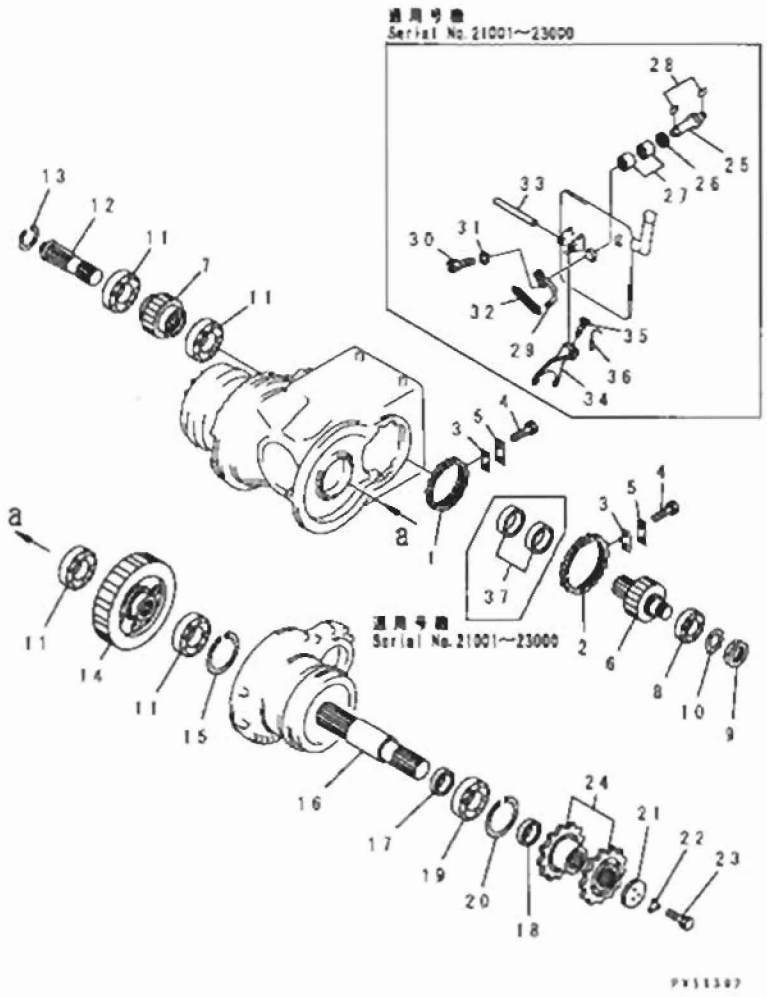


| INDEX | PART NO. | DESCRIPTION | Q'TY | SERIAL NO. |
|---|---|---|---|---|
| 27 | 06120-03520 | BEARING | 2 | 21001-23000 |
| 28 | 04010-00519 | KEY | 2 | 21001-23000 |
| 29 | 234-22-33120 | LEVER | 1 | 21001-23000 |
| 30 | 01010-51035 | BOLT | 1 | 21001-23000 |
| 31 | 01643-31032 | WASHER | 1 | 21001-23000 |
| 32 | 232-22-53260 | SPRING | 1 | 21001-23000 |
| 33 | 232-22-53130 | SHAFT | 1 | 21001-23000 |
| 34 | 232-22-53110 | FORK, SHIFTER | 1 | 21001-23000 |
| 35 | 170-14-13222 | SCREW | 1 | 21001-23000 |
| 36 | 04059-02416 | WIRE | 1 | 21001-23000 |
| 37 | 565-22-13171 | BUSHING | 2 | 21001-23000 |
| | | SERVICE KIT | | |
| KIT | (234-22-00223) | SERVICE KIT, FINAL DRIVE | 1 | 21330-23000 |
| | (□234-22-00222) | SERVICE KIT, FINAL DRIVE | 1 | 21001-21329 |
| | ((□234-22-00221)) | SERVICE KIT, FINAL DRIVE | 1 | (21001-21221) |
| | ((□234-22-00220)) | SERVICE KIT, FINAL DRIVE | 1 | (21001-21050) |

# FIG. 2651A TANDEM DRIVE CASE(#21020-)

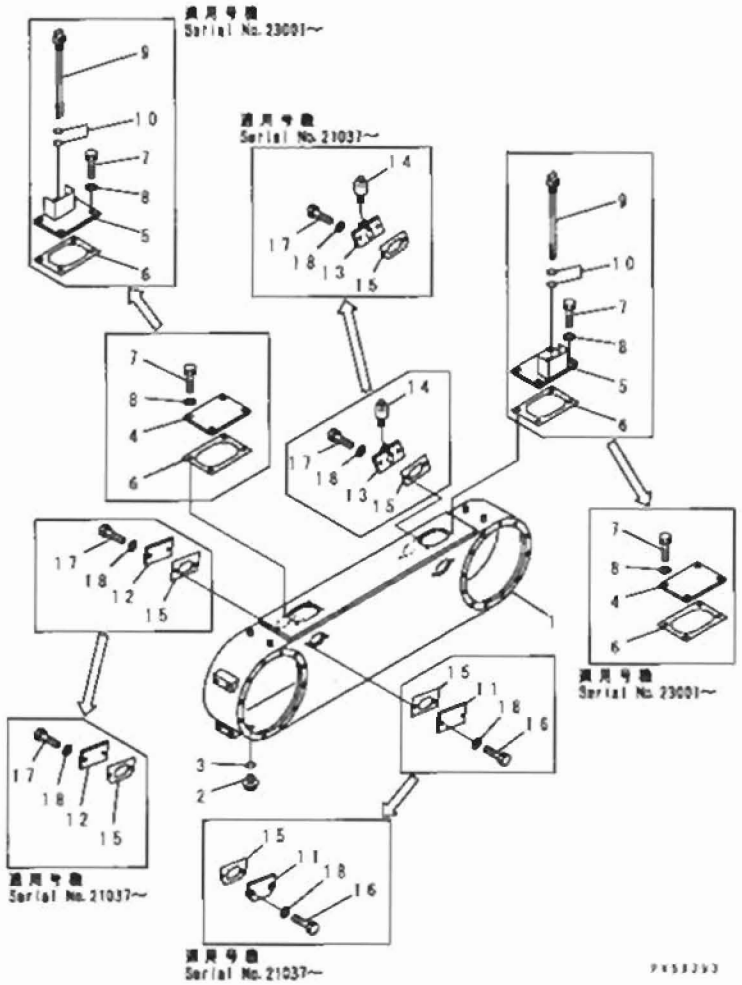


| INDEX | PART NO. | DESCRIPTION | Q'TY | SERIAL NO. |
|---|---|---|---|---|
| | 234-25-00230 | TANDEM DRIVE ASS'Y, L.H. | 1 | 23001- |
| | 234-25-00015 | TANDEM DRIVE ASS'Y, L.H. | 1 | 21289-23000 |
| | 234-25-00014 | TANDEM DRIVE ASS'Y, L.H. | 1 | 21037-21288 |
| | 234-25-00013 | TANDEM DRIVE ASS'Y, L.H. | 1 | 21020-21036 |
| | 234-25-00240 | TANDEM DRIVE ASS'Y, R.H. | 1 | 23001- |
| | 234-25-00025 | TANDEM DRIVE ASS'Y, R.H. | 1 | 21289-23000 |
| | 234-25-00024 | TANDEM DRIVE ASS'Y, R.H. | 1 | 21037-21288 |
| | 234-25-00023 | TANDEM DRIVE ASS'Y, R.H. | 1 | 21020-21036 |
| | | THESE ASSEMBLIES CONSIST OF ALL PARTS SHOWN IN FIGS. 2651A AND 2653. | | |
| 1 | 234-25-31111 | CASE | 1 | 21020- |
| 2 | 07044-12412 | PLUG | 1 | 21001- |
| 3 | 07002-12434 | O-RING (KIT) | 1 | 21001- |
| 4 | 237-23-11142 | COVER | 1 | 21020- |
| 5 | 234-23-61110 | COVER | 1 | 23001- |
| | 238-23-11171 | COVER | 1 | 21020-23000 |
| 6 | 234-25-31142 | GASKET (KIT) | 2 | 21020- |
| | (▨234-25-31141) | GASKET (KIT) | 2 | (21020-21288) |
| 7 | 01010-81230 | BOLT | 8 | 23001- |
| | ◆01010-51230 | BOLT | 8 | 21001-23000 |
| 8 | 01643-31232 | WASHER | 8 | 21001- |
| 9 | 234-25-31180 | GAUGE | 1 | 21001- |
| 10 | 07002-12434 | O-RING (KIT) | 2 | 21001- |
| 11 | 234-25-31511 | COVER | 2 | 21037- |
| | 234-25-31510 | COVER | 2 | 21001-21036 |
| 12 | 234-25-31150 | COVER | 1 | 21001- |
| 13 | 234-25-31160 | COVER | 1 | 21001- |
| 14 | 07030-00252 | BREATHER | 1 | 21001- |
| 15 | 234-25-31172 | GASKET (KIT) | 4 | 21037- |
| | (▨234-25-31171) | GASKET (KIT) | 4 | (21037-21288) |
| | □235-25-11160 | GASKET (KIT) | 4 | 21001-21036 |
| 16 | 01010-81225 | BOLT | 4 | 23001- |
| | ◆01010-51225 | BOLT | 4 | 21001-23000 |
| 17 | 01010-81230 | BOLT | 4 | 23001- |
| | ◆01010-51230 | BOLT | 4 | 21001-23000 |
| 18 | 01643-31232 | WASHER | 8 | 21001- |
| | | SERVICE KIT | | |
| KIT | 234-25-07014 | SERVICE KIT, TANDEM DRIVE | 1 | 21020- |
| | (▨234-25-07013) | SERVICE KIT, TANDEM DRIVE | 1 | (21020-21288) |
| | (▨234-25-07012) | SERVICE KIT, TANDEM DRIVE | 1 | (21020-21036) |

# FIG. 2653 TANDEM DRIVE GEAR AND CHAIN

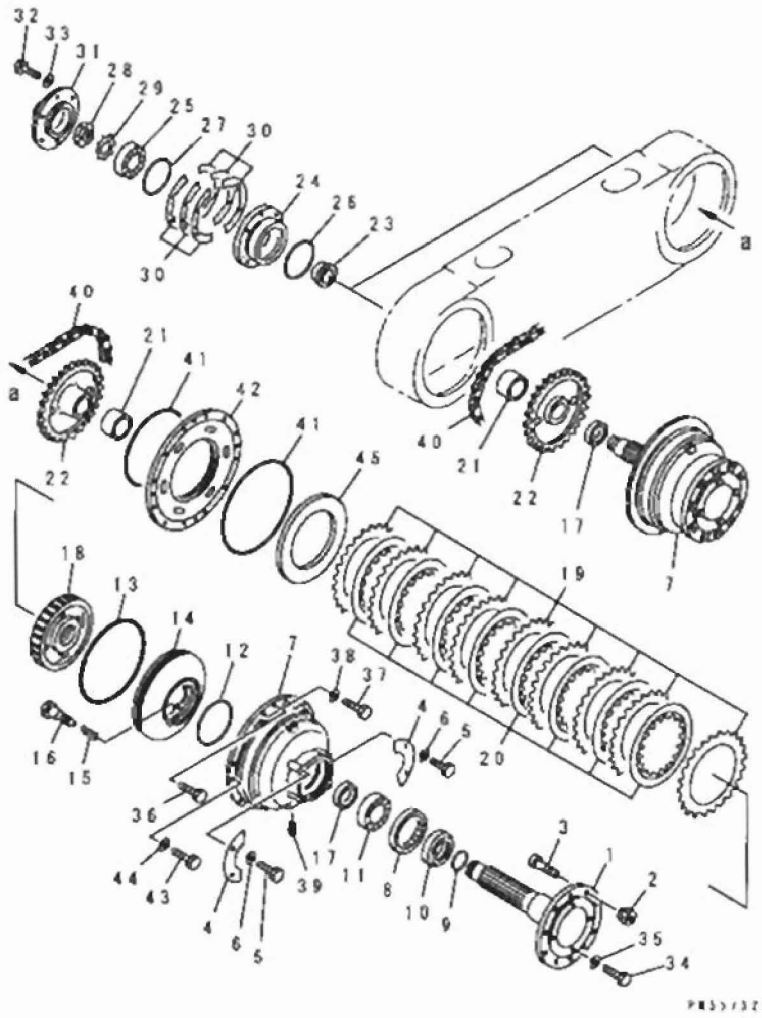

| INDEX | PART NO | DESCRIPTION | Q'TY | SERIAL NO |
|---|---|---|---|---|
| | (234-25-00015) | TANDEM DRIVE ASS'Y, L.H. | 1 | 21289- |
| | (234-25-00014) | TANDEM DRIVE ASS'Y, L.H. | 1 | 21037-21288 |
| | (234-25-00013) | TANDEM DRIVE ASS'Y, L.H. | 1 | 21020-21036 |
| | (234-25-00012) | TANDEM DRIVE ASS'Y, L.H. | 1 | 21014-21019 |
| | (□234-25-00011) | TANDEM DRIVE ASS'Y, L.H. | 1 | 21002-21013 |
| | (234-25-00010) | TANDEM DRIVE ASS'Y, L.H. | 1 | 21001-21001 |
| | (234-25-00025) | TANDEM DRIVE ASS'Y, R.H. | 1 | 21289- |
| | (234-25-00024) | TANDEM DRIVE ASS'Y, R.H. | 1 | 21037-21288 |
| | (234-25-00023) | TANDEM DRIVE ASS'Y, R.H. | 1 | 21020-21036 |
| | (234-25-00022) | TANDEM DRIVE ASS'Y, R.H. | 1 | 21014-21019 |
| | (□234-25-00021) | TANDEM DRIVE ASS'Y, R.H. | 1 | 21002-21013 |
| | (234-25-00020) | TANDEM DRIVE ASS'Y, R.H. | 1 | 21001-21001 |
| | | THESE ASSEMBLIES CONSIST OF ALL PARTS SHOWN IN FIGS. 2651 AND 2653. | | |
| 1 | 234-25-31380 | SHAFT | 2 | 21001- |
| 2 | 234-23-13210 | NUT | 20 | 21001- |
| 3 | 238-25-16350 | BOLT | 20 | 21001- |
| 4 | 234-25-31360 | PLATE | 4 | 21001- |
| 5 | 01010-81016 | BOLT | 8 | 23001- |
| | ◆01010-51016 | BOLT | 8 | 21001-23000 |
| 6 | 01643-31032 | WASHER | 8 | 21001- |
| 7 | 234-25-31290 | CAGE | 2 | 21001- |
| 8 | 234-25-31440 | SEAL, OIL (KIT) | 2 | 21008- |
| | □234-25-31220 | SEAL, OIL (KIT) | 2 | 21001-21007 |
| 9 | 07000-12120 | O-RING (KIT) | 2 | 21001- |
| 10 | 234-25-31210 | SPACER | 2 | 21001- |
| 11 | 234-23-12520 | BEARING | 2 | 21001- |
| 12 | 232-25-51180 | O-RING (KIT) | 2 | 21001- |
| 13 | 232-25-51170 | O-RING (KIT) | 2 | 21001- |
| 14 | 232-25-51160 | PISTON | 2 | 21001- |
| 15 | 232-25-51641 | SPRING | 12 | 21002- |
| | □232-25-51640 | SPRING | 12 | 21001-21001 |
| 16 | 232-25-51221 | BOLT | 12 | 21001- |
| 17 | 234-25-31230 | SPACER | 2 | 21001- |
| 18 | 234-25-31340 | GEAR | 2 | 21001- |
| 19 | 232-25-51430 | PLATE | 12 | 21014- |
| | □232-25-51520 | PLATE | 12 | 21002-21013 |
| | □232-25-51520 | PLATE | 18 | 21001-21001 |
| 20 | 235-25-11360 | DISC, FRICTION | 10 | 21037- |
| | □232-25-51410 | PLATE, FRICTION | 10 | 21014-21036 |
| | □232-25-31350 | PLATE, FRICTION | 10 | 21002-21013 |
| | 232-25-31350 | PLATE | 16 | 21001-21001 |

FIG NO. : 2653

| INDEX | PART NO | DESCRIPTION | Q'TY | SERIAL NO. |
|---|---|---|---|---|
| 21 | 234-25-31240 | SPACER | 2 | 21001- |
| 22 | 234-25-31190 | SPROCKET | 2 | 21001- |
| 23 | 234-25-31250 | SPACER | 2 | 21001- |
| 24 | 234-25-31260 | CAGE | 2 | 21001- |
| 25 | 06002-32218 | BEARING | 2 | 21001- |
| 26 | 07000-15200 | O-RING (KIT) | 2 | 21001- |
| 27 | 07000-15180 | O-RING (KIT) | 2 | 21001- |
| 28 | 01531-09016 | NUT | 2 | 21001- |
| 29 | 01659-09018 | WASHER | 2 | 21001- |
| 30 | 234-25-00030 | SHIM ASS'Y | 2 | 21001- |
| 31 | 234-25-31270 | CAGE | 2 | 21001- |
| 32 | 01010-81670 | BOLT | 12 | 23001- |
| | ◆01010-51670 | BOLT | 12 | 21001-23000 |
| 33 | 01643-31645 | WASHER | 12 | 21001- |
| 34 | 01010-81670 | BOLT | 8 | 23001- |
| | ◆01010-51420 | BOLT | 8 | 21001-23000 |
| 35 | 01643-31445 | WASHER | 8 | 21001- |
| 36 | 01010-81640 | BOLT | 8 | 23001- |
| | ◆01010-51640 | BOLT | 8 | 21001-23000 |
| 37 | 01010-81675 | BOLT | 4 | 23001- |
| | ◆01010-51675 | BOLT | 4 | 21001-23000 |
| 38 | 01643-31645 | WASHER | 4 | 21001- |
| 39 | 07042-20312 | PLUG | 4 | 21001- |
| 40 | 234-25-31400 | CHAIN ASS'Y | 2 | 21001- |
| | 234-25-31410 | LINK ASS'Y, JOINT | 1 | 21001- |
| | 234-25-31420 | PIN | 2 | 21001- |
| | 234-25-31430 | LINK ASS'Y, ROLLER | 25 | 21001- |
| 41 | 07000-15500 | O-RING (KIT) | 4 | 21001- |
| 42 | 232-25-31280 | SUPPORT | 2 | 21001- |
| 43 | 01010-81670 | BOLT | 20 | 23001- |
| | ◆01010-51670 | BOLT | 20 | 21001-23000 |
| 44 | 01643-31645 | WASHER | 20 | 21001- |
| 45 | 234-25-31560 | PLATE | 2 | 21001- |
| | | SERVICE KIT | | |
| KIT | (234-25-07014) | SERVICE KIT, TANDEM DRIVE | 1 | 21020- |
| | ((□234-25-07013)) | SERVICE KIT, TANDEM DRIVE | 1 | (21020-21288) |
| | ((□234-25-07012)) | SERVICE KIT, TANDEM DRIVE | 1 | (21022-21036) |
| | (234-25-05010) | SERVICE KIT, TANDEM DRIVE | 1 | 21001-21019 |
| | ((□234-25-07011)) | SERVICE KIT, TANDEM DRIVE | 1 | (21001-21019) |
| | ((□234-25-07010)) | SERVICE KIT, TANDEM DRIVE | 1 | (21001-21007) |

## FIG. 2711A STEERING VALVE (#23001-)

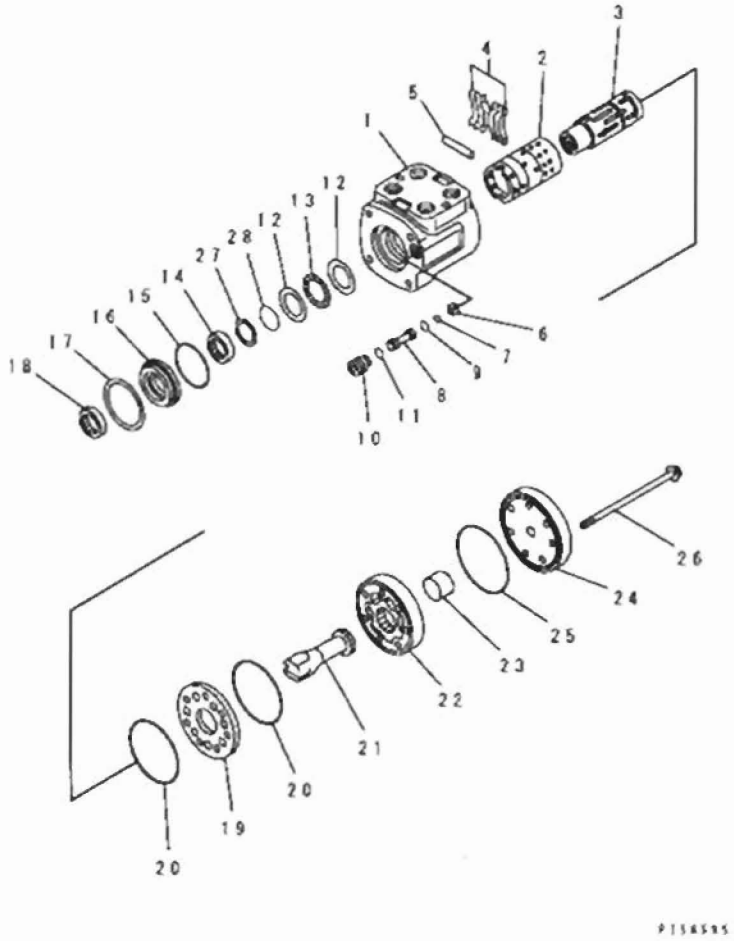


| INDEX | PART NO. | DESCRIPTION | Q'TY | SERIAL NO. |
|---|---|---|---|---|
| | 23C-40-11100 | VALVE ASS'Y, STEERING<br>THIS ASSEMBLY CONSISTS OF ALL PARTS SHOWN IN FIGS. 2711A AND 2713A. | 1 | 23001- |
| | 23A-40-11200 | VALVE ASS'Y | 1 | 23001- |
| | 237-40-12560 | HOUSING ASS'Y, CONTROL | 1 | 23001- |
| 1 | ☆ | HOUSING | 1 | 23001- |
| 2 | ☆ | SLEEVE | 1 | 23001- |
| 3 | ☆ | SPOOL | 1 | 23001- |
| 4 | 237-40-12610 | SPRING, CENTER RING | 6 | 23001- |
| 5 | 237-40-12620 | PIN | 1 | 23001- |
| 6 | 237-40-12550 | RETAINER | 1 | 23001- |
| 7 | 237-40-12540 | BALL | 1 | 23001- |
| 8 | 237-40-12520 | SEAT, CHECK | 1 | 23001- |
| 9 | ☆ | O-RING (KIT) | 1 | 23001- |
| 10 | 237-40-12490 | SCREW, SET | 1 | 23001- |
| 11 | ☆ | O-RING (KIT) | 1 | 23001- |
| | 237-40-12460 | BEARING ASS'Y | 1 | 23001- |
| 12 | 237-40-12470 | RACE | 2 | 23001- |
| 13 | 237-40-12480 | NEEDLE | 1 | 23001- |
| 14 | ☆ | SEAL (KIT) | 1 | 23001- |
| 15 | ☆ | O-RING (KIT) | 1 | 23001- |
| 16 | 23A-40-11280 | BUSHING | 1 | 23001- |
| 17 | 237-40-12420 | RING | 1 | 23001- |
| 18 | ☆ | SEAL, DUST (KIT) | 1 | 23001- |
| 19 | 237-40-12640 | PLATE, SPACER | 1 | 23001- |
| 20 | ☆ | O-RING (KIT) | 2 | 23001- |
| 21 | 237-40-12650 | SHAFT | 1 | 23001- |
| 22 | 23A-40-11220 | DRIVE | 1 | 23001- |
| 23 | 23A-40-11230 | SPACER | 1 | 23001- |
| 24 | 237-40-12670 | CAP, END | 1 | 23001- |
| 25 | ☆ | O-RING (KIT) | 1 | 23001- |
| 26 | 23A-40-11210 | SCREW | 7 | 23001- |
| 27 | ☆ | RING, BACK-UP (KIT) | 1 | 23001- |
| 28 | ☆ | O-RING (KIT) | 1 | 23001- |
| | | SERVICE KIT | | |
| KIT | 23A-40-05010 | SERVICE KIT, STEERING VALVE | 1 | 23001- |

# FIG. 2713A PILOT CHECK VALVE (FOR STEERING) (#23001-)

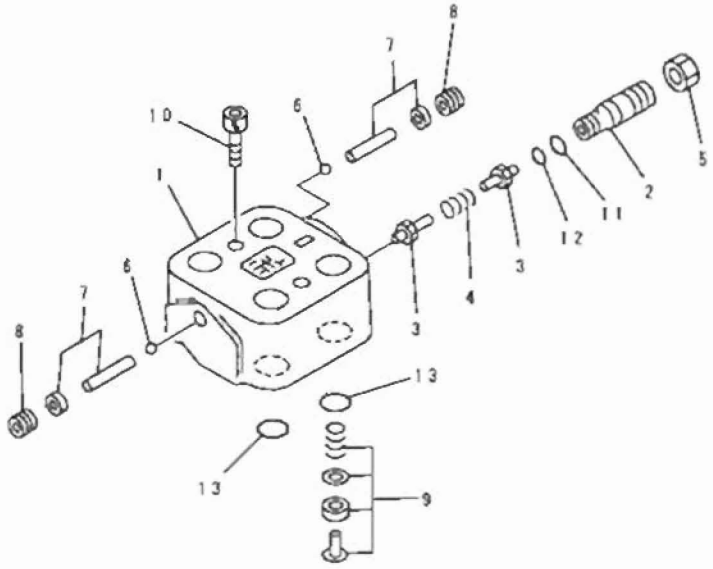


PA51196

| INDEX | PART NO. | DESCRIPTION | Q'TY | SERIAL NO. |
|---|---|---|---|---|
| | (23C-40-11100) | VALVE ASS'Y, STEERING<br>THIS ASSEMBLY CONSISTS OF ALL PARTS SHOWN IN FIGS. 2711A AND 2713A. | 1 | 23001- |
| | 23C-40-11300 | . RELIEF VALVE ASS'Y | 1 | 23001- |
| 1 | 23C-40-11310 | .. HOUSING | 1 | 23001- |
| 2 | 23A-40-11520 | .. SCREW | 1 | 23001- |
| 3 | 23A-40-11530 | .. CONE | 2 | 23001- |
| 4 | 23A-40-11540 | .. SPRING | 1 | 23001- |
| 5 | 23A-40-11550 | .. NUT | 1 | 23001- |
| 6 | 23A-40-11580 | .. BALL | 2 | 23001- |
| 7 | 23A-40-11590 | .. BALL SUB ASS'Y | 2 | 23001- |
| 8 | 23A-40-11720 | .. PLUG | 2 | 23001- |
| 9 | 23C-40-11350 | .. CHECK VALVE ASS'Y | 1 | 23001- |
| 10 | 23C-40-11290 | .. BOLT | 2 | 23001- |
| | 23A-40-05020 | .. SERVICE KIT | 1 | 23001- |
| 11 | 23A-40-11560 | ... O-RING | 1 | 23001- |
| 12 | 23A-40-11570 | ... O-RING | 1 | 23001- |
| 13 | 23A-40-11670 | ... O-RING | 4 | 23001- |

# FIG. 2715 FLOW CONTROL VALVE

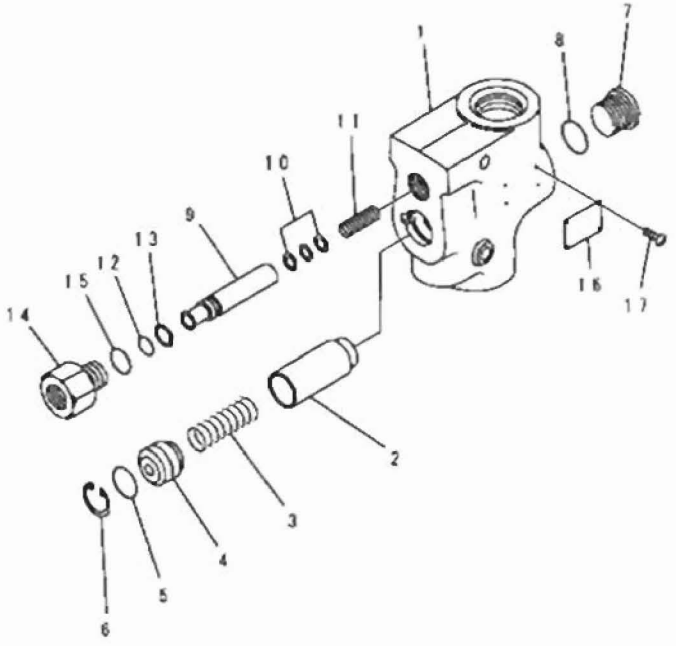


| INDEX | PART NO. | DESCRIPTION | Q'TY | SERIAL NO. |
|---|---|---|---|---|
| | 234-40-32300 | VALVE ASS'Y, FLOW CONTROL | 1 | 21001- |
| 1 | 234-40-32310 | BODY | 1 | 21001- |
| 2 | 234-40-32320 | PLUNGER | 1 | 21001- |
| 3 | 234-40-32420 | SPRING | 1 | 21001- |
| 4 | 234-40-32350 | SEAT, SPRING | 1 | 21001- |
| 5 | 234-40-32450 | O-RING (KIT) | 1 | 21001- |
| 6 | 234-40-32360 | RING, SNAP | 1 | 21001- |
| 7 | 234-40-32340 | PLUG | 1 | 21001- |
| 8 | 234-40-32440 | O-RING (KIT) | 1 | 21001- |
| 9 | 234-40-32370 | PLUNGER | 1 | 21001- |
| 10 | 234-40-05020 | SHIM ASS'Y | 1 | 21001- |
| 11 | 234-40-32430 | SPRING | 1 | 21001- |
| 12 | 234-40-32470 | O-RING (KIT) | 1 | 21001- |
| 13 | 234-40-32480 | RING, BACK-UP (KIT) | 1 | 21001- |
| 14 | 234-40-32330 | CONNECTOR | 1 | 21001- |
| 15 | 234-40-32460 | O-RING (KIT) | 1 | 21001- |
| 16 | 234-40-32490 | PLATE, NAME | 1 | 21001- |
| 17 | 234-40-32510 | SCREW | 4 | 21001- |
| | | SERVICE KIT | | |
| KIT | 234-40-05110 | SERVICE KIT, FLOW CONTROL VALVE | 1 | 21001- |

# FIG. 2721C STEERING CYLINDER(#23063-)

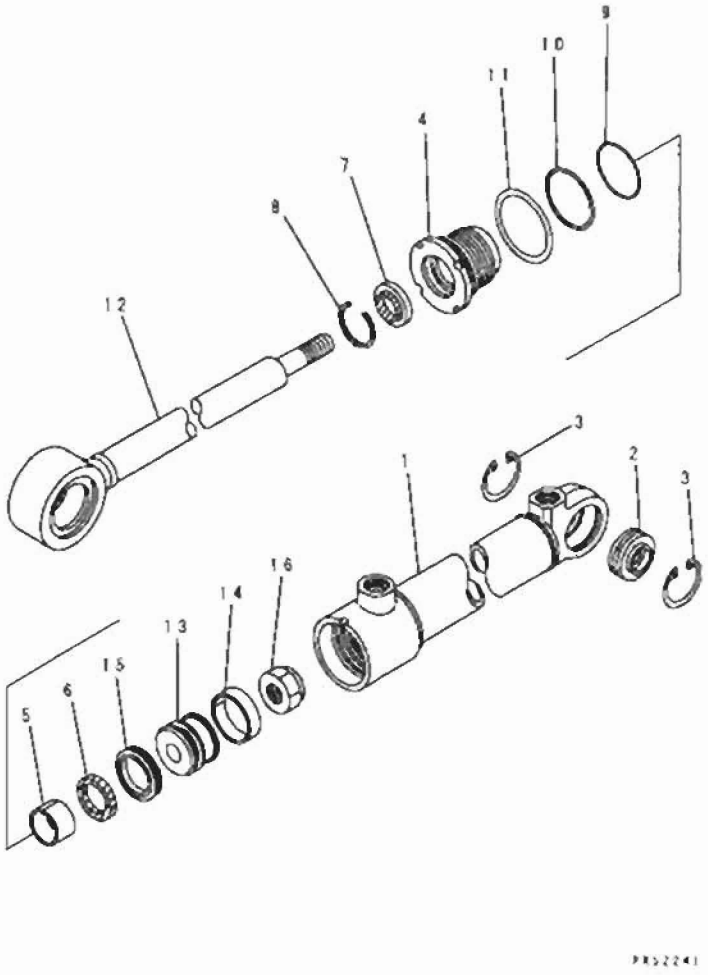


| INDEX | PART NO | DESCRIPTION | Q'TY | SERIAL NO |
|---|---|---|---|---|
| | 707-00-X7B30 | CYLINDER ASS'Y, STEERING | 2 | 23063- |
| | 234-63-76600 | CYLINDER ASS'Y, STEERING | 1 | 21086- |
| 1 | 234-63-76640 | CYLINDER | 1 | 21086- |
| 2 | 707-46-03010 | BUSHING | 1 | 21086- |
| 3 | 04065-04718 | RING, SNAP | 2 | 21086- |
| 4 | 707-29-50981 | HEAD, CYLINDER | 1 | 21086- |
| 5 | 07177-03525 | BUSHING | 1 | 21086- |
| 6 | 707-51-35210 | PACKING, ROD (KIT) | 1 | 21086- |
| 7 | 175-63-75190 | SEAL, DUST (KIT) | 1 | 21086- |
| 8 | 07179-12047 | RING, SNAP | 1 | 21086- |
| 9 | 07000-13045 | O-RING (KIT) | 1 | 21086- |
| 10 | 707-35-99500 | RING, BACK-UP (KIT) | 1 | 21086- |
| 11 | 07000-03048 | O-RING (KIT) | 1 | 21086- |
| 12 | 23A-63-76620 | ROD, PISTON | 1 | 21086- |
| 13 | 707-36-50531 | PISTON | 1 | 21086- |
| 14 | 10E-63-32390 | RING, WEAR (KIT) | 1 | 21086- |
| 15 | 707-44-50070 | RING, PISTON (KIT) | 1 | 21086- |
| 16 | 07165-12022 | NUT | 1 | 21086- |
| | | SERVICE KIT | | |
| KIT | 707-98-05410 | SERVICE KIT, STEERING CYLINDER | 2 | 21086- |

# FIG. 2723C LEANING CYLINDER(#23063-)

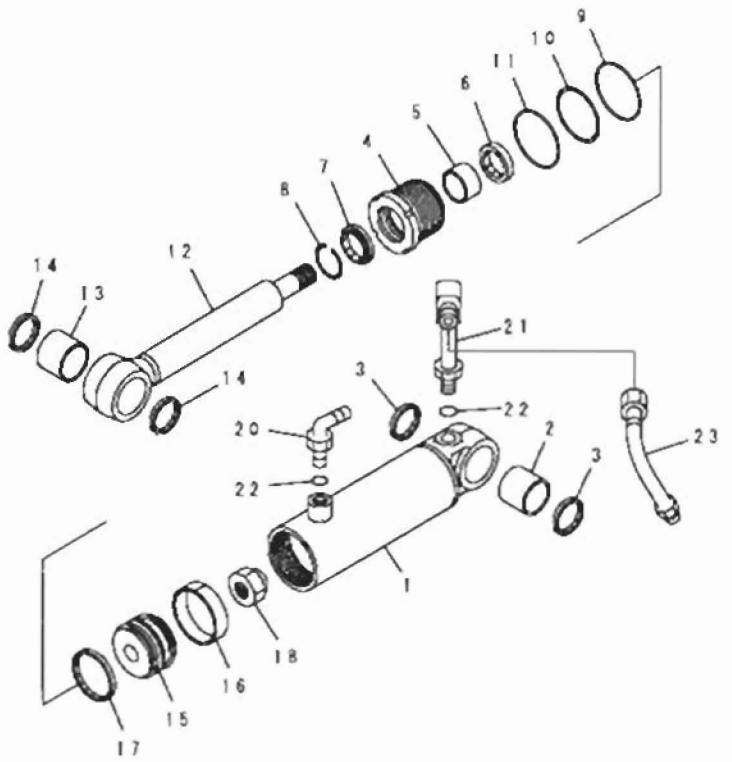


| INDEX | PART NO. | DESCRIPTION | Q'TY | SERIAL NO. |
|---|---|---|---|---|
| | 707-00-X7A60 | CYLINDER GROUP, LEANING | 1 | 23063- |
| | 234-63-01040 | .CYLINDER ASS'Y, LEANING | 1 | 23001- |
| 1 | 234-63-53340 | ..CYLINDER | 1 | 23001- |
| 2 | 07143-10505 | ..BUSHING | 1 | 21001- |
| 3 | 07145-00050 | ..SEAL, DUST (KIT) | 2 | 21001- |
| 4 | 707-29-90820 | ..HEAD, CYLINDER | 1 | 23001- |
| 5 | 07177-04530 | ..BUSHING | 1 | 21001- |
| 6 | 707-51-45210 | ..PACKING, ROD (KIT) | 1 | 21001- |
| 7 | 112-63-15370 | ..SEAL, DUST (KIT) | 1 | 21001- |
| 8 | 07179-12057 | ..RING, SNAP | 1 | 21001- |
| 9 | 07000-12085 | ..O-RING (KIT) | 1 | 21001- |
| 10 | 07146-02086 | ..RING, BACK-UP (KIT) | 1 | 23001- |
| 11 | 07000-12090 | ..O-RING (KIT) | 1 | 23001- |
| 12 | 234-63-53320 | ..ROD, PISTON | 1 | 23001- |
| 13 | 07143-10505 | ..BUSHING | 1 | 21001- |
| 14 | 07145-00050 | ..SEAL, DUST (KIT) | 2 | 21001- |
| 15 | 707-36-90930 | ..PISTON | 1 | 23001- |
| 16 | 07156-00912 | ..RING, WEAR (KIT) | 1 | 23001- |
| 17 | 707-44-90070 | ..RING, PISTON (KIT) | 1 | 21001- |
| 18 | 01580-03024 | ..NUT | 1 | 23001- |
| 20 | 07235-10422 | .ELBOW | 1 | 23063- |
| 21 | 234-60-33850 | .TUBE | 1 | 23063- |
| 22 | 07002-12034 | .O-RING | 2 | 23063- |
| 23 | 234-60-33330 | .TUBE | 1 | 23063- |
| | | SERVICE KIT | | |
| KIT | 707-98-24480 | SERVICE KIT, LEANING CYLINDER | 1 | 23001- |

# FIG. 2725B ARTICULATE CYLINDER(#23063-)

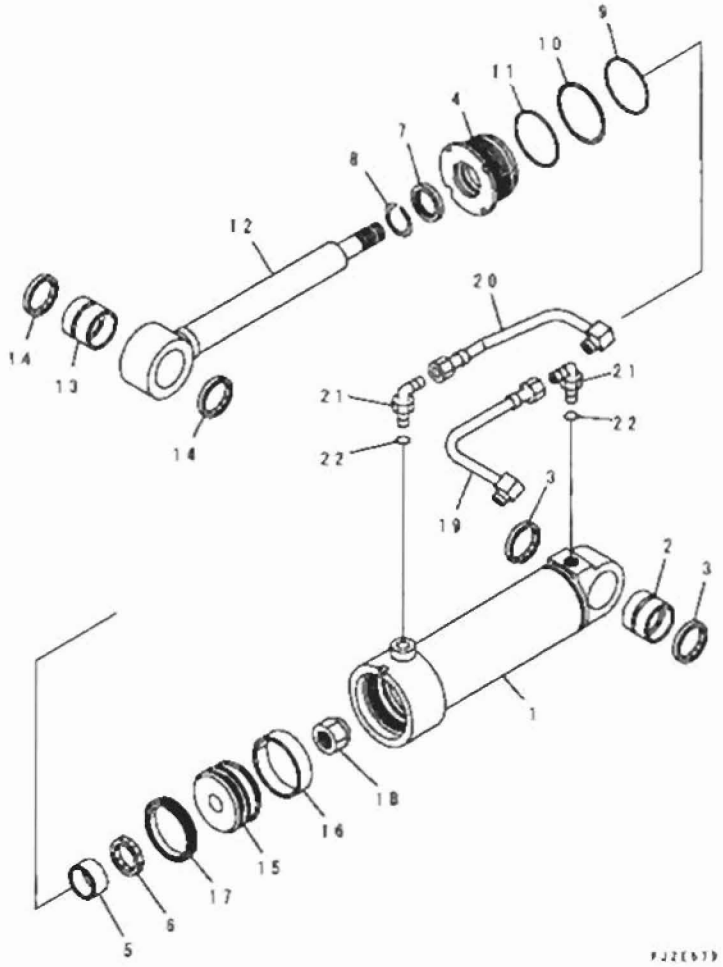


| INDEX | PART NO. | DESCRIPTION | Q'TY | SERIAL NO. |
|---|---|---|---|---|
| | 707-00-X7B11 | CYLINDER GROUP, ARTICULATE, L.H. | 1 | 23134- |
| | 707-00-X7B10 | CYLINDER GROUP, ARTICULATE, L.H. | 1 | 23063-23133 |
| | 707-00-X7B21 | CYLINDER GROUP, ARTICULATE, R.H. | 1 | 23134- |
| | 707-00-X7B20 | CYLINDER GROUP, ARTICULATE, R.H. | 1 | 23063-23133 |
| | 234-63-63200 | .CYLINDER ASS'Y, ARTICULATE | 1 | 21086- |
| 1 | 23C-63-63140 | ..CYLINDER | 1 | 21086- |
| 2 | 07144-10606 | ..BUSHING | 1 | 21001- |
| 3 | 07145-00060 | ..SEAL, DUST (KIT) | 2 | 21001- |
| 4 | 707-29-11930 | ..HEAD, CYLINDER | 1 | 21086- |
| 5 | 07177-05530 | ..BUSHING | 1 | 21001- |
| 6 | 707-51-52210 | ..PACKING, ROD (KIT) | 1 | 21086- |
| 7 | 707-56-55510 | ..SEAL, DUST (KIT) | 1 | 21001- |
| 8 | 07179-12069 | ..RING, SNAP | 1 | 21086- |
| 9 | 07000-12105 | ..O-RING (KIT) | 1 | 21086- |
| 10 | 707-35-91100 | ..RING, BACK-UP (KIT) | 1 | 21086- |
| 11 | 07000-02110 | ..O-RING (KIT) | 1 | 21086- |
| 12 | 23C-63-63120 | ..ROD, PISTON | 1 | 21086- |
| 13 | 07143-10606 | ..BUSHING | 1 | 21086- |
| 14 | 07145-00060 | ..SEAL, DUST (KIT) | 2 | 21001- |
| 15 | 707-36-11911 | ..PISTON | 1 | 21086- |
| 16 | 07155-01125 | ..RING, WEAR (KIT) | 1 | 21001- |
| 17 | 707-44-11070 | ..SEAL, PISTON (KIT) | 1 | 21086- |
| 18 | 07165-13638 | ..NUT | 1 | 21001- |
| 19 | 234-60-33660 | .TUBE, L.H. | 1 | 23063- |
| | 234-60-33670 | .TUBE, R.H. | 1 | 23063- |
| 20 | 234-60-33640 | .TUBE, L.H. | 1 | 23063- |
| | 234-60-33650 | .TUBE, R.H. | 1 | 23063- |
| 21 | 07235-10422 | .ELBOW | 2 | 23063- |
| 22 | 07002-12034 | .O-RING | 2 | 23063- |
| | | SERVICE KIT | | |
| KIT | 707-98-34420 | SERVICE KIT, ARTICULATE CYLINDER | 2 | 21086- |

FIG NO. : 2751B

## FIG. 2751B STEERING PIPING (SUCTION LINE) (#23036-)

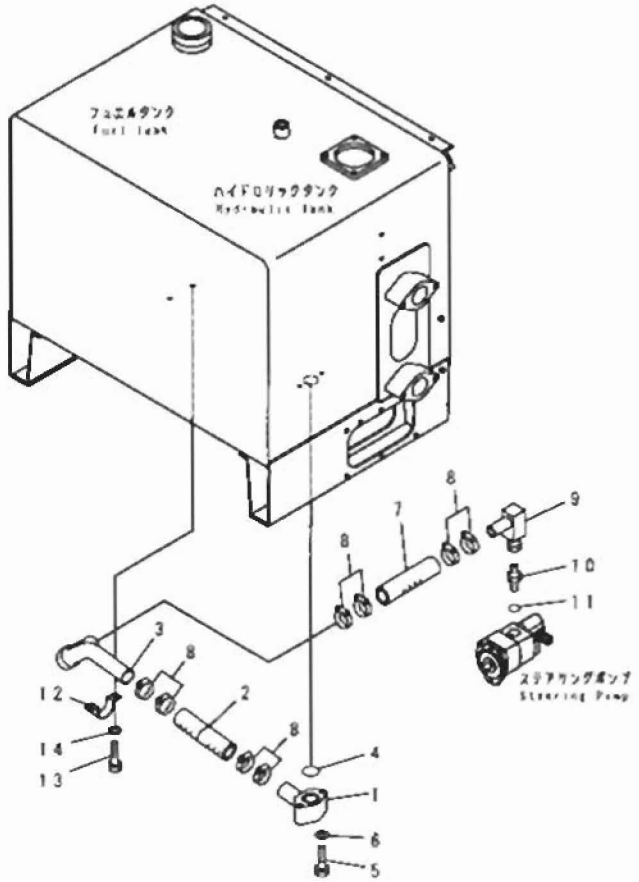


PJ23002

| INDEX | PART NO | DESCRIPTION | Q'TY | SERIAL NO |
|---|---|---|---|---|
| 1 | 234-40-62260 | TUBE | 1 | 23036- |
| 2 | 07260-04136 | HOSE | 1 | 23036- |
| 3 | 234-40-62240 | TUBE | 1 | 23036- |
| 4 | 07000-13042 | O-RING | 1 | 23001- |
| 5 | 01010-81070 | BOLT | 2 | 23001- |
| 6 | 01643-31032 | WASHER | 2 | 23001- |
| 7 | 07260-04128 | HOSE | 1 | 23036- |
| 8 | 07289-00055 | CLAMP | 8 | 23036- |
| 9 | 234-40-62130 | TUBE | 1 | 23001- |
| 10 | 262-60-55131 | NIPPLE | 1 | 23001- |
| 11 | 235-60-15480 | O-RING | 1 | 23001- |
| 12 | 234-40-62250 | CLAMP | 1 | 23036- |
| 13 | 01010-81016 | BOLT | 2 | 23001- |
| 14 | 01643-31032 | WASHER | 2 | 23001- |

FIG NO. : 2753A

# FIG. 2753A STEERING PIPING (DELIVERY LINE) (#23001-)

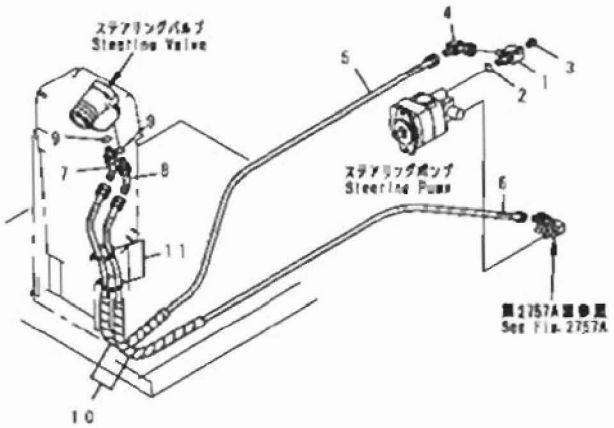


PY53181

| INDEX | PART NO. | DESCRIPTION | Q'TY | SERIAL NO. |
|---|---|---|---|---|
| 1 | 234-40-33280 | ELBOW | 1 | 23001- |
| 2 | 234-40-33290 | O-RING | 1 | 23001- |
| 3 | 07042-70108 | PLUG | 1 | 23001- |
| 4 | 234-40-62230 | ELBOW | 1 | 23001- |
| 5 | 230-09-24330 | HOSE | 1 | 23001- |
| 6 | 07103-50430 | HOSE | 1 | 23001- |
| 7 | 234-40-41310 | ELBOW | 1 | 23001- |
| 8 | 238-40-41320 | ELBOW | 1 | 23001- |
| 9 | 237-40-13160 | O-RING | 2 | 23001- |
| 10 | 260-60-13770 | TUBE | 2 | 23001- |
| 11 | 08034-00834 | BAND | 3 | 23001- |

FIG NO. : 2755A

# FIG. 2755A STEERING PIPING (CYLINDER LINE) (#23001-)

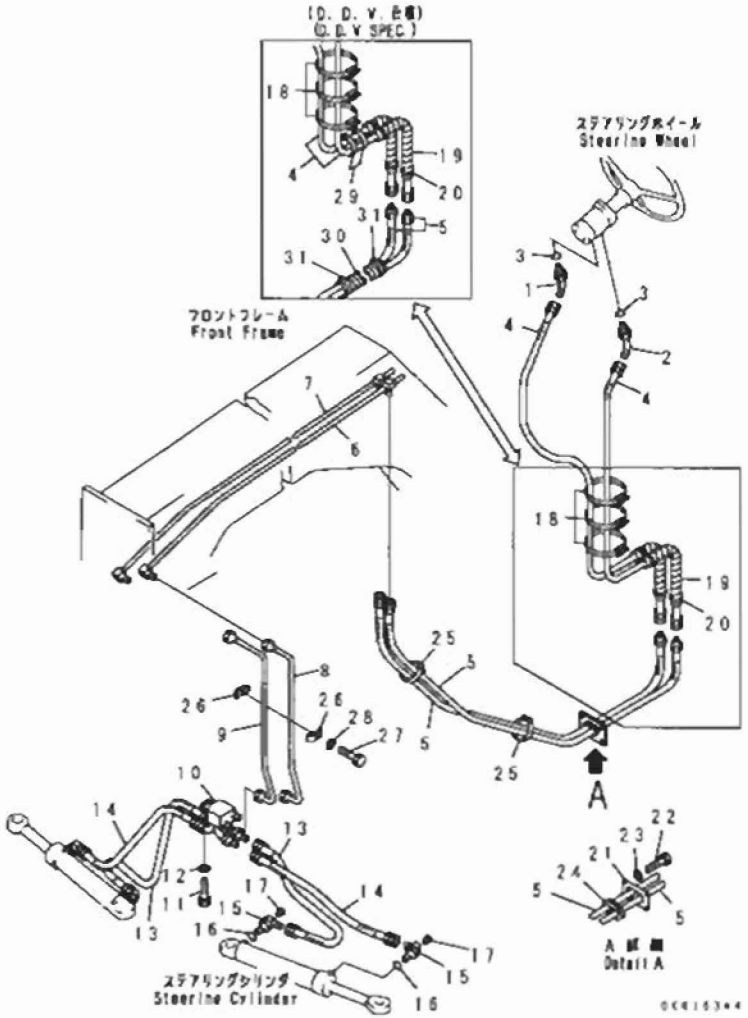


| INDEX | PART NO. | DESCRIPTION | Q'TY | SERIAL NO. |
|---|---|---|---|---|
| 1 | 234-40-41310 | ELBOW | 1 | 23001- |
| 2 | 234-40-41320 | TUBE | 1 | 23001- |
| 3 | 237-40-13160 | O-RING | 2 | 23001- |
| 4 | 230-09-24180 | HOSE | 2 | 23001- |
| 5 | 232-60-62310 | HOSE | 2 | 23001- |
| 6 | 234-43-33381 | TUBE | 1 | 23001- |
| 7 | 234-43-33392 | TUBE | 1 | 23001- |
| 8 | 234-40-61120 | TUBE | 1 | 23001- |
| 9 | 234-40-61110 | TUBE | 1 | 23001- |
| 10 | 234-40-33100 | BLOCK ASS'Y | 1 | 23001- |
| 11 | 01010-51020 | BOLT | 2 | 23001- |
| 12 | 01643-31032 | WASHER | 2 | 23001- |
| 13 | 07113-00305 | HOSE | 2 | 23001- |
| 14 | 07113-00306 | HOSE | 2 | 23001- |
| 15 | 07235-50315 | ELBOW | 4 | 23001- |
| 16 | 07002-12034 | O-RING | 4 | 23001- |
| 17 | 07043-70108 | PLUG | 4 | 23001- |
| 18 | 08034-00834 | BAND | 3 | 23001- |
| 19 | 26C-60-13770 | TUBE | 2 | 23001- |
| 20 | 08034-00834 | BAND | 4 | 23001- |
| 21 | 234-60-33680 | PLATE | 1 | 23001- |
| 22 | 01010-51025 | BOLT | 4 | 23001- |
| 23 | 01643-31032 | WASHER | 4 | 23001- |
| 24 | 234-60-33690 | GROMMET | 1 | 23001- |
| 25 | 08034-00536 | BAND | 2 | 23001- |
| 26 | 233-60-34130 | CLIP | 2 | 23001- |
| 27 | 01010-50845 | BOLT | 1 | 23001- |
| 28 | 01643-30823 | WASHER | 1 | 23001- |
| 29 | 08034-20536 | BAND. (D.D.V. SPEC.) | 2 | 23001- |
| 30 | 565-04-11420 | TUBE. (D.D.V. SPEC.) | 1 | 23001- |
| 31 | 08034-20536 | BAND. (D.D.V. SPEC.) | 2 | 23001- |

# FIG. 2757 STEERING PIPING (COOLING LINE) (#23001-)

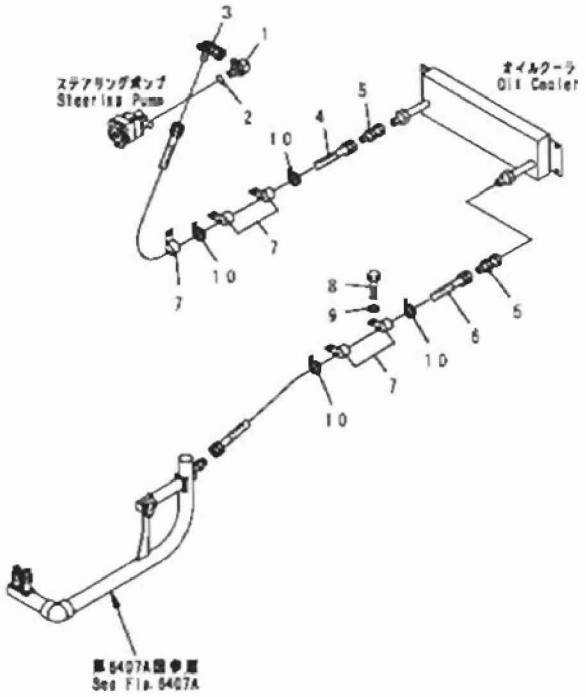


| INDEX | PART NO. | DESCRIPTION | Q'TY | SERIAL NO. |
|---|---|---|---|---|
| 1 | 262-60-58280 | ELBOW | 1 | 23001- |
| 2 | 237-60-24190 | O-RING | 1 | 23001- |
| 3 | 234-40-62220 | TEE | 1 | 23001- |
| 4 | 07103-50617 | HOSE | 1 | 23001- |
| 5 | 234-40-62210 | JOINT | 2 | 23001- |
| 6 | 07103-50618 | HOSE | 1 | 23001- |
| 7 | 04434-53411 | CLIP | 5 | 23001- |
| 8 | 01010-81016 | BOLT | 4 | 23001- |
| 9 | 01643-31032 | WASHER | 4 | 23001- |
| 10 | 08034-00536 | BAND | 4 | 23001- |

FIG NO. : 2801A

## FIG. 2801A FRONT AXLE (1/3) (#21164-)

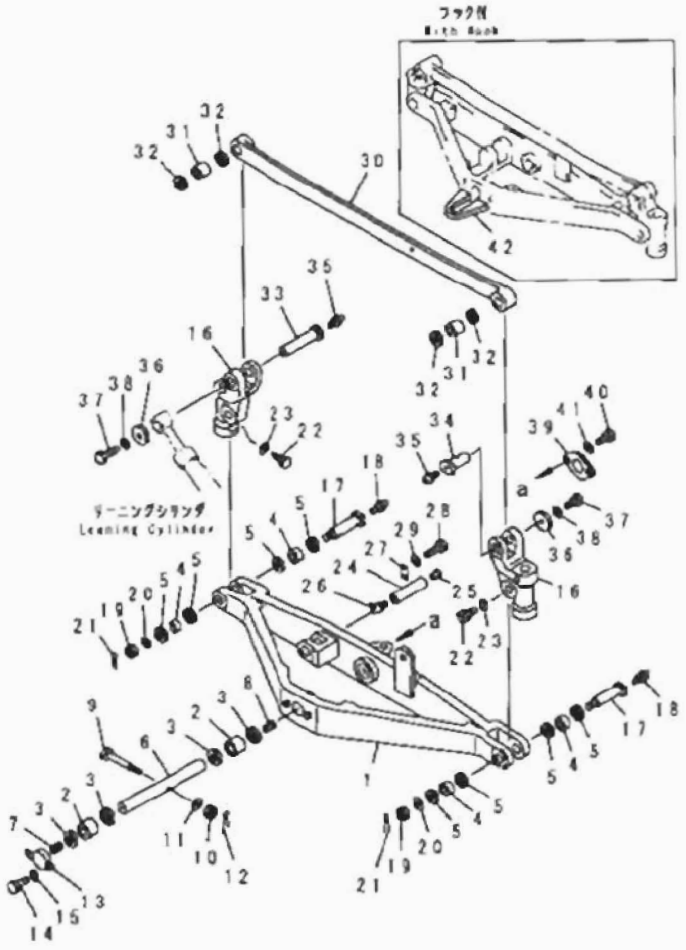


| INDEX | PART NO | DESCRIPTION | Q'TY | SERIAL NO. |
|---|---|---|---|---|
| | 234-27-00302 | FRONT AXLE ASS'Y | 1 | 21164- |
| 1 | 234-27-32520 | .AXLE, FRONT | 1 | 21164- |
| 2 | 07143-10606 | .BUSHING | 2 | 21164- |
| 3 | 07145-00060 | .SEAL, DUST (KIT) | 4 | 21164- |
| 4 | 234-27-31820 | .BUSHING | 4 | 21001- |
| 5 | 07145-00045 | .SEAL, DUST (KIT) | 8 | 21001- |
| 6 | 234-27-31511 | SHAFT | 1 | 21048- |
| 7 | 23C-27-11930 | SCREW | 1 | 21048- |
| 8 | 07043-70108 | PLUG | 1 | 21048- |
| 9 | 234-27-31320 | BOLT | 1 | 21001- |
| 10 | 01592-31215 | NUT | 1 | 21322- |
| | □01592-11215 | NUT | 1 | 21001-21321 |
| 11 | 01643-31232 | WASHER | 1 | 21001- |
| 12 | 04050-13020 | PIN, COTTER | 1 | 21001- |
| 13 | 234-27-32540 | COVER | 1 | 21164- |
| 14 | 01010-51225 | BOLT | 2 | 21164- |
| 15 | 01643-31232 | WASHER | 2 | 21164- |
| 16 | 234-27-32430 | BRACKET | 2 | 21164- |
| 17 | 234-27-31810 | PIN | 2 | 21001- |
| 18 | 07020-00000 | FITTING, GREASE | 2 | 21001- |
| 19 | 01593-33621 | NUT | 2 | 21322- |
| | □01593-13621 | NUT | 2 | 21001-21321 |
| 20 | 01643-33690 | WASHER | 2 | 21001- |
| 21 | 04050-16055 | PIN, COTTER | 2 | 21001- |
| 22 | 234-27-31890 | BOLT | 2 | 21001- |
| 23 | 01640-21626 | WASHER | 2 | 21001- |
| 24 | 234-27-31860 | PIN | 1 | 21001- |
| 25 | 07048-01010 | PLUG | 1 | 21001- |
| 26 | 07020-00675 | FITTING, GREASE | 1 | 21001- |
| 27 | 04082-00206 | LOCK | 1 | 21001- |
| 28 | 01010-51225 | BOLT | 2 | 21001- |
| 29 | 01643-31232 | WASHER | 2 | 21001- |
| | 234-27-00310 | LEANING ROD ASS'Y | 1 | 21001- |
| 30 | 234-27-31120 | .ROD, LEANING | 1 | 21001- |
| 31 | 234-27-31850 | .BUSHING | 2 | 21001- |
| 32 | 07145-00050 | .SEAL, DUST (KIT) | 4 | 21001- |
| 33 | 234-27-31830 | PIN | 1 | 21001- |
| 34 | 234-27-31840 | PIN | 1 | 21001- |
| 35 | 07020-00000 | FITTING, GREASE | 2 | 21001- |
| 36 | 234-27-31370 | PLATE | 2 | 21001- |
| 37 | 01010-51635 | BOLT | 2 | 21001- |
| 38 | 01643-31645 | WASHER | 2 | 21001- |

FIG NO. : 2801A

| INDEX | PART NO | DESCRIPTION | Q'TY | SERIAL NO. |
|---|---|---|---|---|
| 39 | 234-27-32550 | COVER | 1 | 21164- |
| 40 | 01010-51230 | BOLT | 2 | 21164- |
| 41 | 01643-31232 | WASHER | 2 | 21164- |
| 42 | 232-946-7120 | HOOK (WELDED) | 1 | 21001- |
| | | SERVICE KIT | | |
| KIT | 234-27-07012 | SERVICE KIT,FRONT AXLE | 1 | 21164- |

## FIG. 2803A FRONT AXLE (2/3) (#21164-)

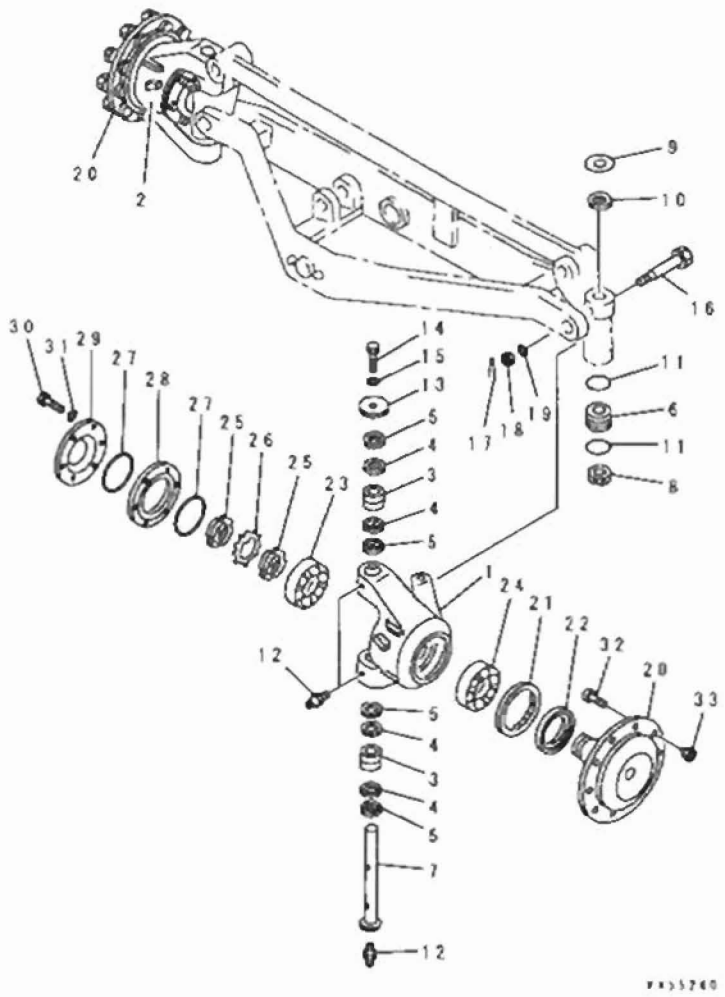


| INDEX | PART NO | DESCRIPTION | Q'TY | SERIAL NO. |
|---|---|---|---|---|
| | 234-27-00221 | HOUSING ASS'Y, L.H. | 1 | 21164- |
| | 234-27-00231 | HOUSING ASS'Y, R.H. | 1 | 21164- |
| 1 | 234-27-32410 | .HOUSING, L.H. | 1 | 21164- |
| 2 | 234-27-32420 | .HOUSING, R.H. | 1 | 21164- |
| 3 | 234-27-32450 | .BUSHING | 2 | 21164- |
| 4 | 232-785-1270 | .SEAL, DUST | 4 | 21001- |
| 5 | 07145-00050 | .SEAL, DUST | 4 | 21164- |
| 6 | 234-27-32460 | COVER | 2 | 21164- |
| 7 | 234-27-32440 | PIN, KING | 2 | 21164- |
| 8 | 234-27-31270 | BEARING | 2 | 21001- |
| 9 | 234-27-32470 | SPACER, 3.0MM | 2 | 21164- |
| | 234-27-31250 | SPACER, 4.0MM | 2 | 21001- |
| | 234-27-32480 | SPACER, 5.0MM | 2 | 21164- |
| 10 | 07145-00050 | SEAL, DUST | 2 | 21164- |
| 11 | 07000-15090 | O-RING | 4 | 21164- |
| 12 | 07020-00000 | FITTING, GREASE | 6 | 21164- |
| 13 | 234-27-32490 | COVER | 2 | 21164- |
| 14 | 01010-51225 | BOLT | 2 | 21164- |
| 15 | 01643-31232 | WASHER | 2 | 21164- |
| 16 | 234-27-31310 | BOLT | 2 | 21001- |
| 17 | 04050-12018 | PIN, COTTER | 2 | 21001- |
| 18 | 01593-31008 | NUT | 2 | 21322- |
| | □01593-11008 | NUT | 2 | 21001-21321 |
| 19 | 01643-31032 | WASHER | 2 | 21001- |
| 20 | 234-27-31150 | SHAFT, HUB | 2 | 21001- |
| 21 | 238-25-15130 | SEAL, OIL (KIT) | 2 | 21008- |
| 22 | 234-27-31290 | SPACER | 2 | 21001- |
| 23 | 06002-32218 | BEARING | 2 | 21001- |
| 24 | 06002-32219 | BEARING | 2 | 21001- |
| 25 | 01531-08516 | NUT | 4 | 21001- |
| 26 | 01659-28518 | WASHER | 2 | 21001- |
| 27 | 07000-15170 | O-RING (KIT) | 4 | 21001- |
| 28 | 234-27-31220 | SPACER | 2 | 21001- |
| 29 | 234-27-31210 | CAP | 2 | 21001- |
| 30 | 01010-51035 | BOLT | 12 | 21001- |
| 31 | 01643-31032 | WASHER | 12 | 21001- |
| 32 | 238-25-16350 | BOLT | 20 | 21001- |
| 33 | 234-23-13210 | NUT | 20 | 21001- |
| | | SERVICE KIT | | |
| KIT | (234-27-07012) | SERVICE KIT, FRONT AXLE | 1 | 21164- |

# FIG. 2805A FRONT AXLE (3/3) (#21037-)

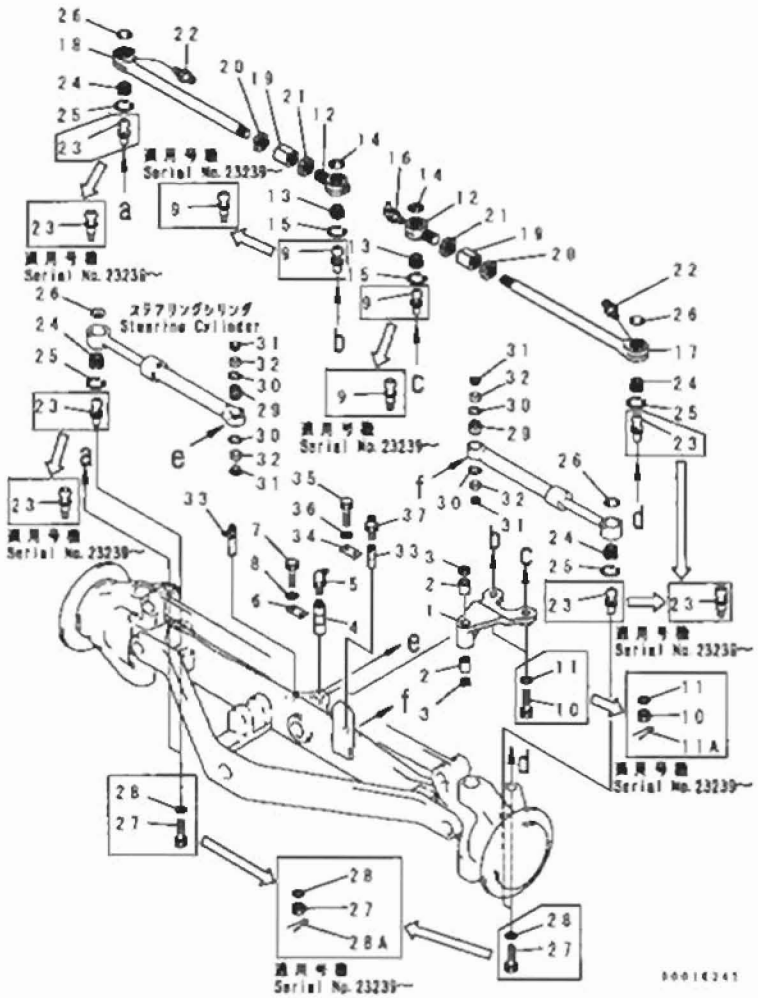


| INDEX | PART NO. | DESCRIPTION | Q'TY | SERIAL NO. |
|---|---|---|---|---|
| | 234-27-00321 | PITMAN ARM ASS'Y | 1 | 21035- |
| 1 | 234-27-31411 | . ARM, PITMAN | 1 | 21035- |
| 2 | 234-27-31920 | . BUSHING | 2 | 21001- |
| 3 | 232-27-51560 | . SEAL | 2 | 21001- |
| 4 | 234-27-31910 | PIN | 1 | 21001- |
| 5 | 07020-00900 | FITTING, GREASE | 1 | 21001- |
| 6 | 04082-00206 | LOCK | 1 | 21001- |
| 7 | 01010-51225 | BOLT | 2 | 21001- |
| 8 | 01643-31232 | WASHER | 2 | 21001- |
| 9 | 234-27-32590 | STUD, JOINT | 2 | 23239- |
| | 234-27-31433 | BALL, JOINT | 2 | 21037-23238 |
| 10 | 01593-32414 | NUT | 2 | 23239- |
| | 01010-81435 | BOLT | 2 | 21037-23238 |
| 11 | 23B-27-31550 | WASHER | | 23239- |
| | 234-27-31460 | PLATE | 2 | 21037-23238 |
| 11A | 04050-15035 | PIN, COTTER | 2 | 23239- |
| 12 | 234-27-31690 | END, ROD | 2 | 21001- |
| 13 | 232-27-31450 | BUSHING | 2 | 21001- |
| 14 | 234-27-31961 | PLUG | 2 | 21033- |
| 15 | 04065-06020 | RING, SNAP | 2 | 21001- |
| 16 | 07020-00900 | FITTING, GREASE | 2 | 21001- |
| 17 | 234-27-31610 | ROD, TIE L.H. | 1 | 21001- |
| 18 | 234-27-31620 | ROD, TIE R.H. | 1 | 21001- |
| 19 | 234-27-31660 | JOINT | 2 | 21001- |
| 20 | 234-27-31670 | NUT | 2 | 21001- |
| 21 | 234-27-31680 | NUT | 2 | 21001- |
| 22 | 07020-00000 | FITTING, GREASE | 2 | 21001- |
| 23 | 234-27-32590 | STUD, JOINT | 4 | 23239- |
| | 234-27-31433 | BALL, JOINT | 4 | 21037-23238 |
| 24 | 234-27-31450 | BUSHING | 4 | 21001- |
| 25 | 04065-06020 | RING, SNAP | 4 | 21001- |
| 26 | 234-27-31961 | PLUG | 4 | 21033- |
| 27 | 01593-32414 | NUT | 4 | 23239- |
| | 01010-81435 | BOLT | 4 | 21037-23238 |
| 28 | 23B-27-31550 | WASHER | 4 | 23239- |
| | 234-27-31460 | PLATE | 4 | 21037-23238 |
| 28A | 04050-15035 | PIN, COTTER | 4 | 23239- |
| 29 | 234-27-31880 | BUSHING | 2 | 21001- |
| 30 | 04065-04718 | RING, SNAP | 4 | 21001- |
| 31 | 234-27-31480 | SPACER | 4 | 21001- |
| 32 | 234-27-31490 | COVER | 4 | 21001- |
| 33 | 234-27-31950 | PIN | 2 | 21001- |

FIG NO. : 2805A

## FIG. 2805A FRONT AXLE (3/3) (#21037-)

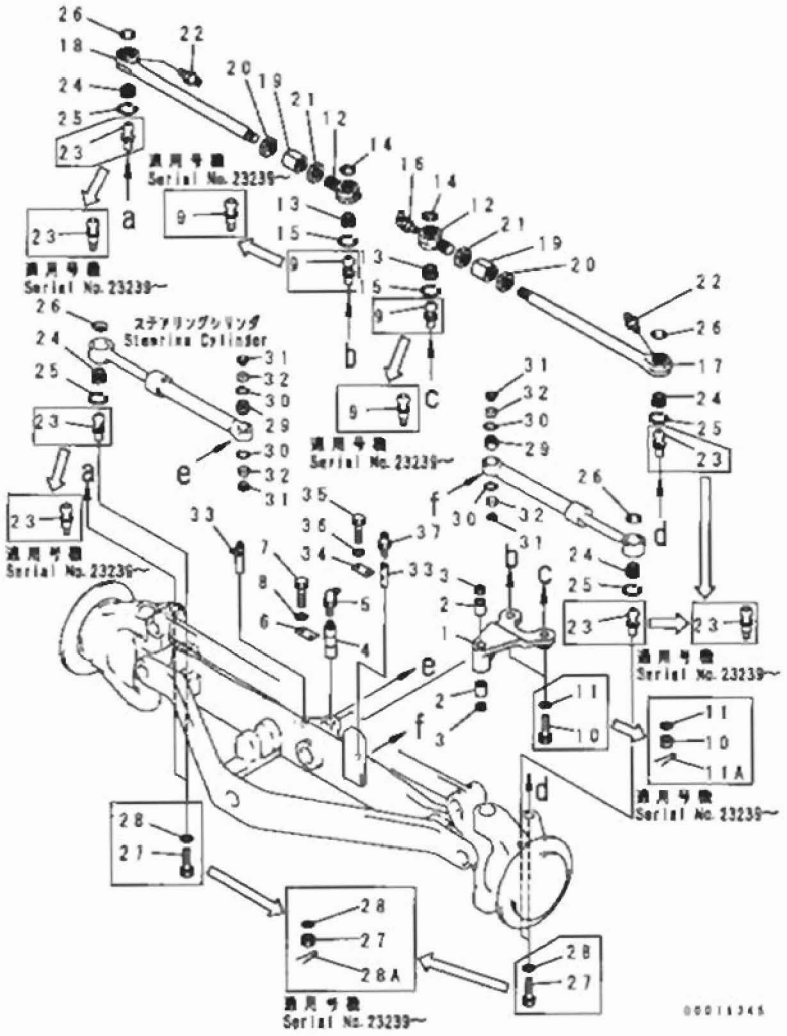


| INDEX | PART NO. | DESCRIPTION | Q'TY | SERIAL NO |
|---|---|---|---|---|
| 34 | 04082-00206 | LOCK | 2 | 21001- |
| 35 | 01010-51225 | BOLT | 4 | 21001- |
| 36 | 01643-31232 | WASHER | 4 | 21001- |
| 37 | 07020-00675 | FITTING, GREASE | 2 | 21001- |

# WHEEL

FIG. 3001 WHEEL AND TUBED TIRE (TRUCTION TYPE)

(16.00-24-12PR)

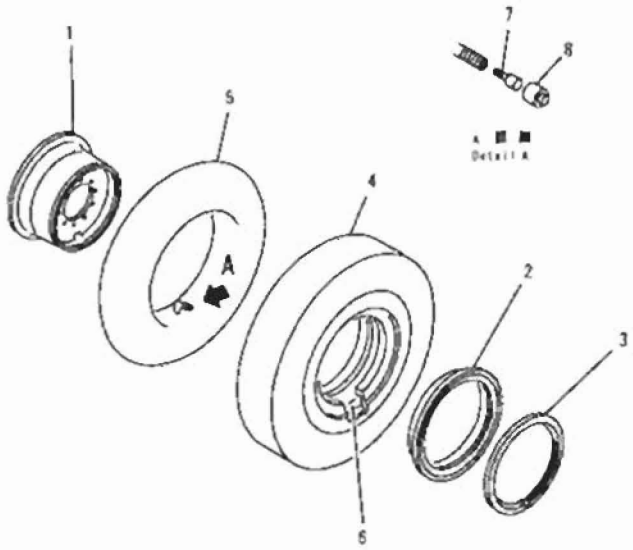






| INDEX | PART NO | DESCRIPTION | Q'TY | SERIAL NO |
|---|---|---|---|---|
| | | 16.00-24-12PR | | |
| | | TRACTION TYPE | | |
| | 234-30-00620 | WHEEL ASS'Y, FRONT L.H. AND REAR R.H. | 3 | 21001- |
| | 234-30-00610 | WHEEL ASS'Y, FRONT R.H. AND REAR L.H. | 3 | 21001- |
| | 234-30-22100 | . RIM ASS'Y, (TOPY) | 1 | 21001- |
| 1 | 234-30-22110 | .. RIM, WHEEL | 1 | 21001- |
| 2 | 234-30-22120 | .. RING, SIDE | 1 | 21001- |
| 3 | 234-30-22130 | .. RING, LOCK | 1 | 21001- |
| | 234-30-21100 | . TIRE ASS'Y, (BRIGDESTONE) | 1 | 21001- |
| 4 | 234-30-21110 | .. TIRE | 1 | 21001- |
| 5 | 234-30-21120 | .. TUBE | 1 | 21001- |
| 6 | 234-30-21130 | .. FLAP | 1 | 21001- |
| 7 | 234-30-21170 | .. CORE, VALVE | 1 | 21001- |
| 8 | 234-30-21180 | .. CAP, VALVE | 1 | 21001- |

FIG NO. : 3003

## FIG. 3003 WHEEL AND TUBED TIRE (ROCK TYPE)

(16.00-24-12PR)

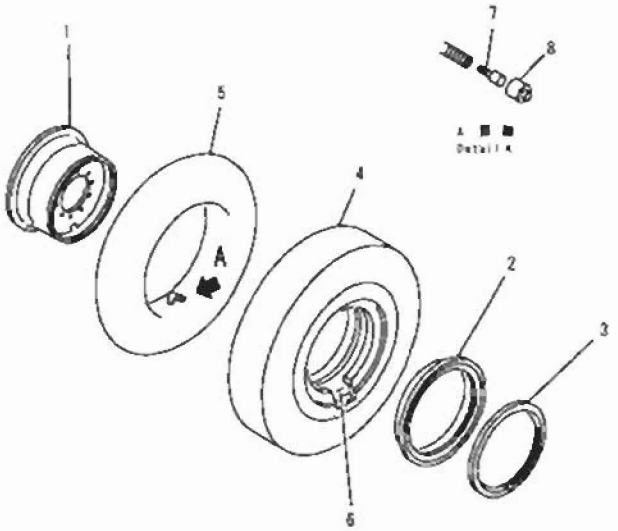


PJ03893

| INDEX | PART NO. | DESCRIPTION | Q'TY | SERIAL NO. |
|---|---|---|---|---|
| | | 16.00-24-12PR | | |
| | | ROCK TYPE | | |
| | 234-30-00260 | WHEEL ASS'Y | 6 | 21001- |
| | 234-30-22100 | . RIM ASS'Y, (TOPY) | 1 | 21001- |
| 1 | 234-30-22110 | .. RIM, WHEEL | 1 | 21001- |
| 2 | 234-30-22120 | .. RING, SIDE | 1 | 21001- |
| 3 | 234-30-22130 | .. RING, LOCK | 1 | 21001- |
| | 234-30-21400 | . TIRE ASS'Y, (BRIGDESTONE) | 1 | 21001- |
| 4 | 234-30-21410 | .. TIRE | 1 | 21001- |
| 5 | 234-30-21120 | .. TUBE | 1 | 21001- |
| 6 | 234-30-21130 | .. FLAP | 1 | 21001- |
| 7 | 234-30-21170 | .. CORE, VALVE | 1 | 21001- |
| 8 | 234-30-21180 | .. CAP, VALVE | 1 | 21001- |

# FIG.3011 WHEEL AND TUBELESS TIRE (TRUCTION TYPE)

(16.00-24-12PR)

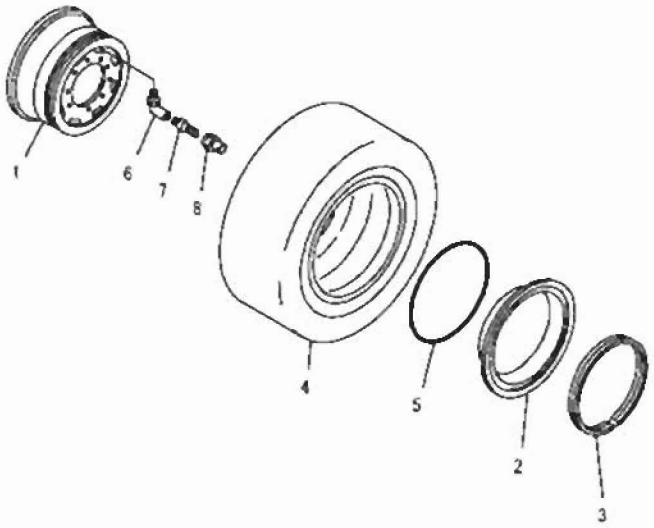


PW55715

| INDEX | PART NO. | DESCRIPTION | Q'TY | SERIAL NO. |
|---|---|---|---|---|
| | | 16.00-24-12PR | | |
| | | TRUCTION TYPE | | |
| | 234-30-00640 | WHEEL AND RIM ASS'Y | 3 | 21001- |
| | | FRONT L.H. AND REAR R.H. | | |
| | 234-30-00630 | WHEEL AND RIM ASS'Y | 3 | 21001- |
| | | FRONT R.H. AND REAR L.H. | | |
| | 234-30-22300 | RIM ASS'Y | 1 | 21001- |
| 1 | 234-30-22310 | ..RIM,WHEEL | 1 | 21001- |
| 2 | 234-30-22120 | ..RING,SIDE | 1 | 21001- |
| 3 | 234-30-22130 | ..RING,LOCK | 1 | 21001- |
| | 234-30-21200 | TIRE ASS'Y | 1 | 21001- |
| 4 | 234-30-21210 | ..TIRE | 1 | 21001- |
| 5 | 234-30-21230 | ..O-RING | 1 | 21001- |
| 6 | 234-30-21220 | ..VALVE | 1 | 21001- |
| 7 | 234-30-21170 | ..CORE,VALVE | 1 | 21001- |
| 8 | 234-30-21180 | ..CAP,VALVE | 1 | 21001- |

FIG NO. : 3013

# FIG. 3013 WHEEL AND TUBELESS TIRE (ROCK TYPE)

## (16.00-24-12PR)

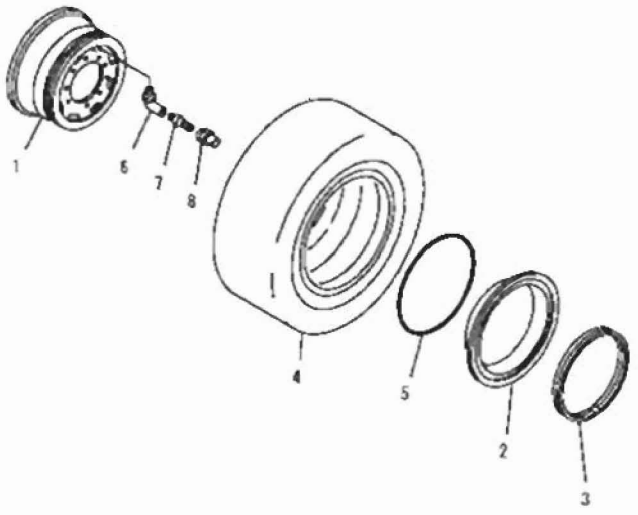


| INDEX | PART NO. | DESCRIPTION | Q'TY | SERIAL NO. |
|---|---|---|---|---|
| | | 16.00-24-12PR | | |
| | | ROCK TYPE | | |
| | 234-30-00270 | WHEEL AND TIRE ASS'Y | 6 | 21001- |
| | 234-30-22300 | . RIM ASS'Y | 1 | 21001- |
| 1 | 234-30-22310 | .. RIM, WHEEL | 1 | 21001- |
| 2 | 234-30-22120 | .. RING, SIDE | 1 | 21001- |
| 3 | 234-30-22130 | .. RING, LOCK | 1 | 21001- |
| | 234-30-21300 | . TIRE ASS'Y | 1 | 21001- |
| 4 | 234-30-21310 | .. TIRE | 1 | 21001- |
| 5 | 234-30-21230 | .. O-RING | 1 | 21001- |
| 6 | 234-30-24120 | .. VALVE | 1 | 21001- |
| 7 | 234-30-24140 | .. CORE, VALVE | 1 | 21001- |
| 8 | 234-30-24150 | .. CAP, VALVE | 1 | 21001- |

# FIG. 3021 WHEEL AND TUBELESS TIRE (TRUCTION TYPE)

(20.5-25-12PR)

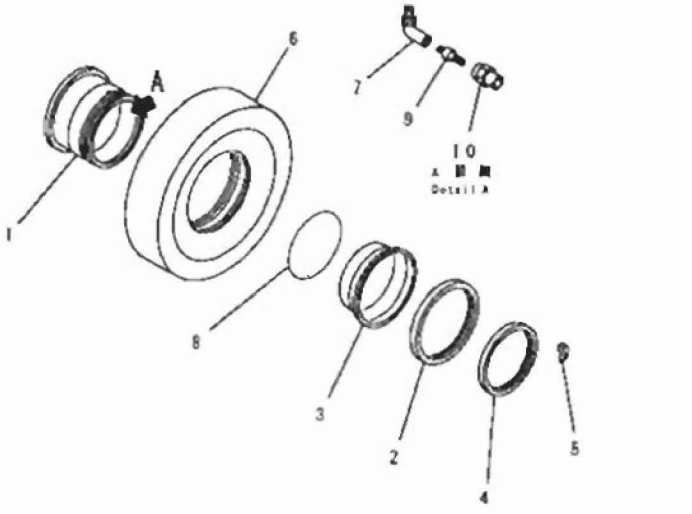


| INDEX | PART NO | DESCRIPTION | Q'TY | SERIAL NO |
|---|---|---|---|---|
| | | 20.5-25-12PR | | |
| | | TRUCTION TYPE | | |
| | 234-30-00660 | WHEEL AND RIM ASS'Y | 3 | 21001- |
| | | FRONT L.H. AND REAR R.H. | | |
| | 234-30-00650 | WHEEL AND RIM ASS'Y | 3 | 21001- |
| | | FRONT R.H. AND REAR L.H. | | |
| | 234-30-22700 | RIM, ASS'Y, (TOPY) | 1 | 21001- |
| 1 | 234-30-22710 | .RIM, WHEEL | 1 | 21001- |
| 2 | 234-30-22720 | .RING, SIDE | 1 | 21001- |
| 3 | 234-30-22730 | .BAND, SEAT | 1 | 21001- |
| 4 | 234-30-22740 | .RING, LOCK | 1 | 21001- |
| 5 | 234-30-22750 | .DRIVER, RING | 1 | 21001- |
| | 234-30-24100 | .TIRE ASS'Y, (BRIDGESTONE) | 1 | 21001- |
| 6 | 234-30-24110 | .TIRE | 1 | 21001- |
| 7 | 234-30-24120 | .VALVE | 1 | 21001- |
| 8 | 234-30-24130 | .O-RING | 1 | 21001- |
| 9 | 234-30-24140 | .CORE, VALVE | 1 | 21001- |
| 10 | 234-30-24150 | .CAP, VALVE | 1 | 21001- |

# CONTROL SYSTEM

# FIG. 4001C FUEL CONTROL LEVER (#23001-)

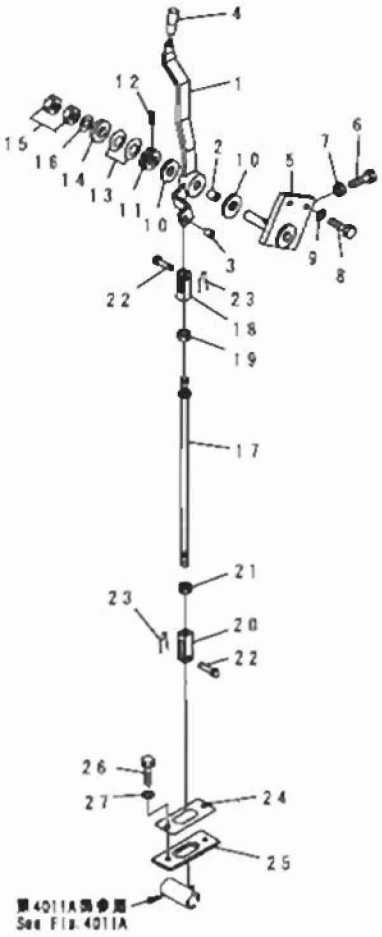


PV59398



FIG NO. : 4001C

| INDEX | PART NO | DESCRIPTION | Q'TY | SERIAL NO. |
|---|---|---|---|---|
| 1 | 23E-43-12350 | LEVER | 1 | 23001- |
| 2 | 09350-01420 | BUSHING | 1 | 23001- |
| 3 | 06600-00805 | BUSHING | 1 | 23001- |
| 4 | 238-43-12310 | KNOB | 1 | 23001- |
| 5 | 23E-43-12360 | BRACKET | 1 | 23001- |
| 6 | 232-45-11610 | BOLT | 2 | 23001- |
| 7 | 01580-10806 | NUT | 2 | 23001- |
| 8 | 01010-51225 | BOLT | 2 | 23001- |
| 9 | 01643-31232 | WASHER | 2 | 23001- |
| 10 | 144-43-51220 | FACING | 2 | 23001- |
| 11 | 273-43-12120 | DISC | 1 | 23001- |
| 12 | 04025-00416 | PIN, SPRING | 1 | 23001- |
| 13 | 101-854-9355 | SPRING | 2 | 23001- |
| 14 | 23A-43-12220 | DISC | 1 | 23001- |
| 15 | 01580-11210 | NUT | 2 | 23001- |
| 16 | 01643-31232 | WASHER | 1 | 23001- |
| 17 | 04248-30837 | ROD | 1 | 23001- |
| 18 | 04211-20844 | YOKE | 1 | 23001- |
| 19 | 01580-10806 | NUT | 1 | 23001- |
| 20 | 04221-20844 | YOKE, L.H. THREAD | 1 | 23001- |
| 21 | 01508-20805 | NUT, L.H. THREAD | 1 | 23001- |
| 22 | 04205-10822 | PIN | 2 | 23001- |
| 23 | 04052-10833 | PIN, SNAP | 2 | 23001- |
| 24 | 23B-43-12230 | COVER | 1 | 23001- |
| 25 | 23B-43-12240 | SEAT | 1 | 23001- |
| 26 | 01010-80825 | BOLT | 2 | 23001- |
| 27 | 01643-30823 | WASHER | 2 | 23001- |

# FIG. 4011A ACCELERATOR PEDAL (#23001-)

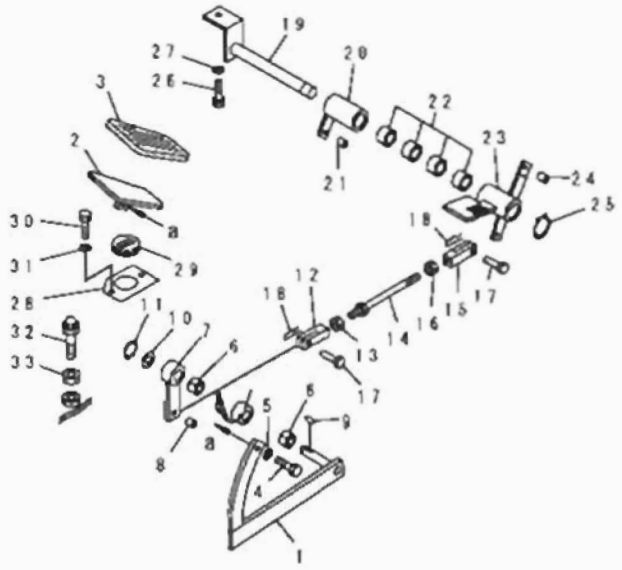

A11A530





| INDEX | PART NO. | DESCRIPTION | Q'TY | SERIAL NO. |
|---|---|---|---|---|
| 1 | 23D-43-21290 | LEVER | 1 | 23001- |
| 2 | 23D-43-21130 | PEDAL | 1 | 23001- |
| 3 | 235-43-12180 | COVER | 1 | 23001- |
| 4 | 01010-51225 | BOLT | 1 | 23001- |
| 5 | 01643-31232 | WASHER | 1 | 23001- |
| 6 | 232-43-52320 | BUSHING | 2 | 23001- |
| 7 | 23D-43-21550 | LEVER | 1 | 23001- |
| 8 | 06600-00805 | BUSHING | 1 | 23001- |
| 9 | 04010-00519 | KEY | 1 | 23001- |
| 10 | 01640-21626 | WASHER | 1 | 23001- |
| 11 | 04064-01610 | RING | 1 | 23001- |
| 12 | 04211-20844 | YOKE | 1 | 23001- |
| 13 | 01580-10806 | NUT | 1 | 23001- |
| 14 | 04248-30819 | ROD | 1 | 23001- |
| 15 | 04221-20844 | YOKE | 1 | 23001- |
| 16 | 01508-20805 | NUT | 1 | 23001- |
| 17 | 04205-10822 | PIN | 2 | 23001- |
| 18 | 04052-10833 | PIN | 2 | 23001- |
| 19 | 23E-43-18630 | LEVER | 1 | 23001- |
| 20 | 23E-43-18640 | LEVER | 1 | 23001- |
| 21 | 06600-00805 | BUSHING | 1 | 23001- |
| 22 | 09350-01620 | BUSHING | 4 | 23001- |
| 23 | 23E-43-18620 | LEVER | 1 | 23001- |
| 24 | 06600-00805 | BUSHING | 4 | 23001- |
| 25 | 04064-01610 | RING | 1 | 23001- |
| 26 | 01010-51230 | BOLT | 1 | 23001- |
| 27 | 01643-31232 | WASHER | 1 | 23001- |
| 28 | 23B-43-12210 | COVER | 1 | 23001- |
| 29 | 235-957-2170 | GROMMET | 1 | 23001- |
| 30 | 01010-80825 | BOLT | 2 | 23001- |
| 31 | 01643-30823 | WASHER | 2 | 23001- |
| 32 | 232-43-52430 | BUMPER | 1 | 23001- |
| 33 | 01580-11210 | NUT | 1 | 23001- |

FIG NO. : 4013

# FIG. 4013 ACCELERATOR LINKAGE (#23001-)

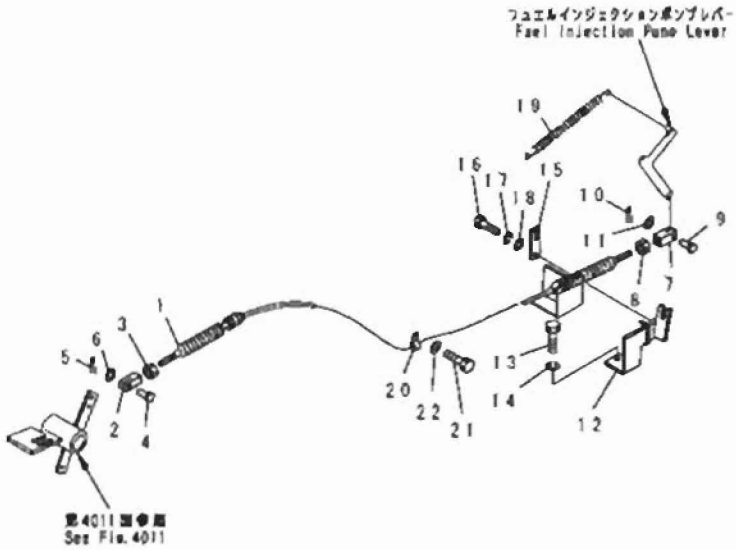


PY59389

| INDEX | PART NO. | DESCRIPTION | Q'TY | SERIAL NO. |
|---|---|---|---|---|
| 1 | 234-43-51610 | CABLE | 1 | 23001- |
| 2 | 234-975-5760 | YOKE | 1 | 23001- |
| 3 | 01580-10605 | NUT | 1 | 23001- |
| 4 | 04205-10822 | PIN | 1 | 23001- |
| 5 | 04050-12012 | PIN | 1 | 23001- |
| 6 | 01641-20608 | WASHER | 1 | 23001- |
| 7 | 04211-20634 | YOKE | 1 | 23001- |
| 8 | 01580-10605 | NUT | 1 | 23001- |
| 9 | 04205-10620 | PIN | 1 | 23001- |
| 10 | 04050-11612 | PIN | 1 | 23001- |
| 11 | 01640-20610 | WASHER | 1 | 23001- |
| 12 | 234-43-42113 | BRACKET | 1 | 23001- |
| 13 | 01010-80820 | BOLT | 2 | 23001- |
| 14 | 01643-30823 | WASHER | 2 | 23001- |
| 15 | 232-43-52540 | PLATE | 1 | 23001- |
| 16 | 01010-80820 | BOLT | 1 | 23001- |
| 17 | 01640-20816 | WASHER | 1 | 23001- |
| 18 | 01643-30823 | WASHER | 1 | 23001- |
| 19 | 232-43-12360 | SPRING | 1 | 23001- |
| 20 | 08036-10814 | CLIP | 1 | 23001- |
| 21 | 01010-81016 | BOLT | 1 | 23001- |
| 22 | 01643-31032 | WASHER | 1 | 23001- |

# FIG. 4101A TRANSMISSION CONTROL BOX AND LOCK LEVER (#23001-)

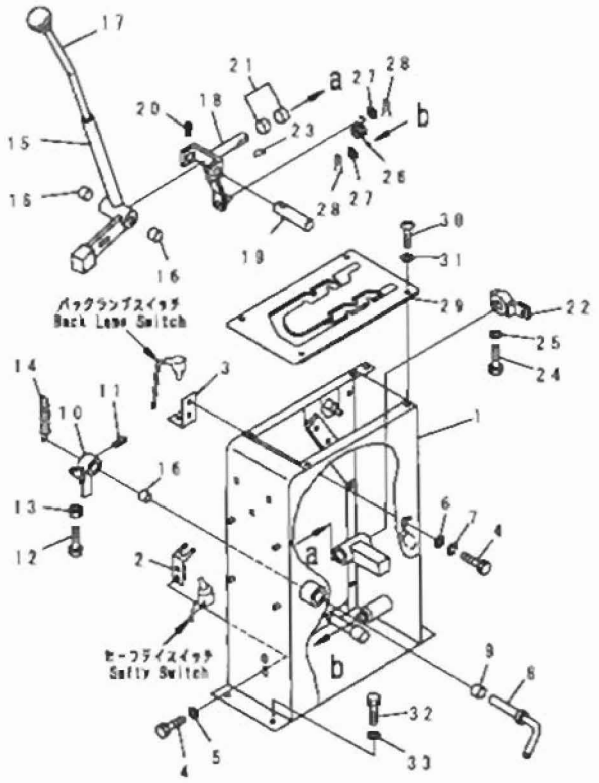


| INDEX | PART NO. | DESCRIPTION | Q'TY | SERIAL NO |
|---|---|---|---|---|
| 1 | 23F-45-11111 | BOX | 1 | 23001- |
| 2 | 23A-45-11170 | PLATE | 1 | 23001- |
| 3 | 233-45-11250 | BRACKET | 1 | 23001- |
| 4 | 01010-50616 | BOLT | 4 | 23001- |
| 5 | 01643-30623 | WASHER | 2 | 23001- |
| 6 | 01643-30623 | WASHER | 2 | 23001- |
| 7 | 01602-20619 | WASHER, SPRING | 2 | 23001- |
| 8 | 23B-45-11122 | LEVER | 1 | 23001- |
| 9 | 232-43-52320 | BUSHING | 2 | 23001- |
| 10 | 232-45-11621 | LEVER | 1 | 23001- |
| 11 | 04025-00532 | PIN, SPRING | 1 | 23001- |
| 12 | 232-45-11610 | BOLT | 1 | 23001- |
| 13 | 01580-10806 | NUT | 1 | 23001- |
| 14 | 135-43-21480 | SPRING | 1 | 23001- |
| 15 | 23C-45-11180 | LEVER | 1 | 23001- |
| 16 | 232-43-52320 | BUSHING | 2 | 23001- |
| 17 | 09304-01250 | KNOB | 1 | 23001- |
| 18 | 23A-45-11121 | YOKE | 1 | 23001- |
| 19 | 232-45-11220 | PIN | 1 | 23001- |
| 20 | 04025-00532 | PIN, SPRING | 1 | 23001- |
| 21 | 232-43-52320 | BUSHING | 2 | 23001- |
| 22 | 233-45-11140 | LEVER | 1 | 23001- |
| 23 | 04010-00519 | KEY | 1 | 23001- |
| 24 | 01010-50830 | BOLT | 1 | 23001- |
| 25 | 01643-30823 | WASHER | 1 | 23001- |
| 26 | 09463-00002 | SPRING | 1 | 23001- |
| 27 | 01643-30623 | WASHER | 2 | 23001- |
| 28 | 04050-11610 | PIN, COTTER | 2 | 23001- |
| 29 | 23C-45-11170 | GUIDE | 1 | 23001- |
| 30 | 01220-40825 | SCREW | 4 | 23001- |
| 31 | 01641-20812 | WASHER | 4 | 23001- |
| 32 | 01010-51230 | BOLT | 4 | 23001- |
| 33 | 01643-31232 | WASHER | 4 | 23001- |

# FIG. 4105A TRANSMISSION CONTROL LEVER AND LINKAGE (#23001-)

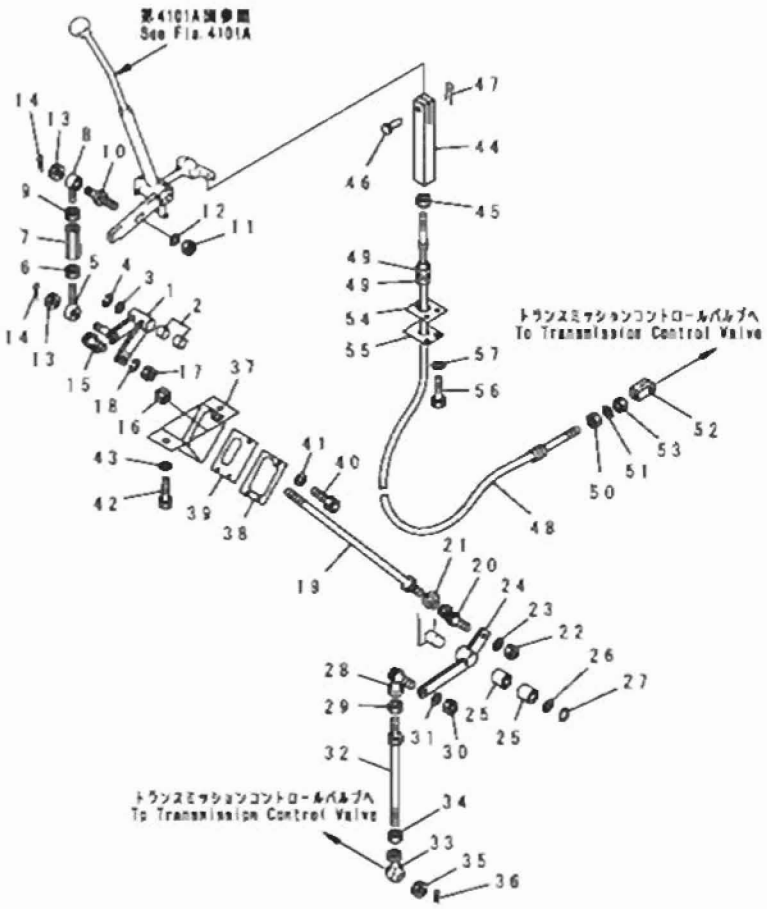






| INDEX | PART NO. | DESCRIPTION | Q'TY. | SERIAL NO. |
|---|---|---|---|---|
| 1 | 23A-45-11130 | LEVER | 1 | 23001- |
| 2 | 232-43-52320 | BUSHING | 2 | 23001- |
| 3 | 01643-31645 | WASHER | 1 | 23001- |
| 4 | 04064-01610 | RING, SNAP | 1 | 23001- |
| 5 | 04252-11061 | END, ROD | 1 | 23001- |
| 6 | 01583-11006 | NUT | 1 | 23001- |
| 7 | 232-45-11180 | ROD | 1 | 23001- |
| 8 | 04252-11061 | END, L. H. SCREW | 1 | 23001- |
| 9 | 01508-41006 | NUT, L. H. SCREW | 1 | 23001- |
| 10 | 232-45-11340 | PIN | 1 | 23001- |
| 11 | 01582-11008 | NUT | 1 | 23001- |
| 12 | 01643-31032 | WASHER | 1 | 23001- |
| 13 | 23A-45-11290 | NUT | 2 | 23001- |
| 14 | 04050-12018 | PIN, COTTER | 2 | 23001- |
| 15 | 238-45-11310 | LINK, BALL | 1 | 23001- |
| 16 | 01508-41006 | NUT, L. H. SCREW | 1 | 23001- |
| 17 | 01583-11006 | NUT | 1 | 23001- |
| 18 | 01643-31032 | WASHER | 1 | 23001- |
| 19 | 04248-31046 | ROD | 1 | 23001- |
| 20 | 238-45-11320 | LINK, BALL | 1 | 23001- |
| 21 | 01583-11006 | NUT | 1 | 23001- |
| 22 | 01582-11008 | NUT | 1 | 23001- |
| 23 | 01643-31032 | WASHER | 1 | 23001- |
| 24 | 23C-45-11150 | LEVER | 1 | 23001- |
| 25 | 232-43-52320 | BUSHING | 2 | 23001- |
| 26 | 01643-31645 | WASHER | 1 | 23001- |
| 27 | 04064-01610 | RING, SNAP | 1 | 23001- |
| 28 | 238-45-11320 | LINK, BALL | 1 | 23001- |
| 29 | 01583-11006 | NUT | 1 | 23001- |
| 30 | 01582-11008 | NUT | 1 | 23001- |
| 31 | 01643-31032 | WASHER | 1 | 23001- |
| 32 | 04248-31036 | ROD | 1 | 23001- |
| 33 | 04250-91056 | END, ROD | 1 | 23001- |
| 34 | 01508-41006 | NUT, L. H. SCREW | 1 | 23001- |
| 35 | 01593-31008 | NUT | 1 | 23001- |
| 36 | 04050-12018 | PIN, COTTER | 1 | 23001- |
| 37 | 23C-43-11210 | COVER | 1 | 23001- |
| 38 | 23C-43-11220 | PLATE | 1 | 23001- |
| 39 | 23C-43-11230 | SEAT | 1 | 23001- |
| 40 | 01010-50614 | BOLT | 3 | 23001- |
| 41 | 01643-30625 | WASHER | 3 | 23001- |
| 42 | 01010-50825 | BOLT | 2 | 23001- |

FIG NO. : 4105A

| INDEX | PART NO. | DESCRIPTION | Q'TY | SERIAL NO. |
|---|---|---|---|---|
| 43 | 01643-30823 | WASHER | 2 | 23001- |
| 44 | 23A-45-11190 | YOKE | 1 | 23001- |
| 45 | 01580-10605 | NUT | 1 | 23001- |
| 46 | 04205-10822 | PIN | 1 | 23001- |
| 47 | 04052-10833 | PIN, SNAP | 1 | 23001- |
| 48 | 23E-45-12131 | CABLE | 1 | 23001- |
| 49 | 01583-11610 | NUT | 2 | 23001- |
| 50 | 01582-11613 | NUT | 1 | 23001- |
| 51 | 07005-01612 | GASKET | 1 | 23001- |
| 52 | 232-45-11311 | YOKE | 1 | 23001- |
| 53 | 01580-10605 | NUT | 1 | 23001- |
| 54 | 23B-43-12250 | COVER | 1 | 23001- |
| 55 | 23B-43-12260 | SEAT | 1 | 23001- |
| 56 | 01010-50825 | BOLT | 2 | 23001- |
| 57 | 01643-30823 | WASHER | 2 | 23001- |

# FIG. 4111A INCHING PEDAL (#23001-)

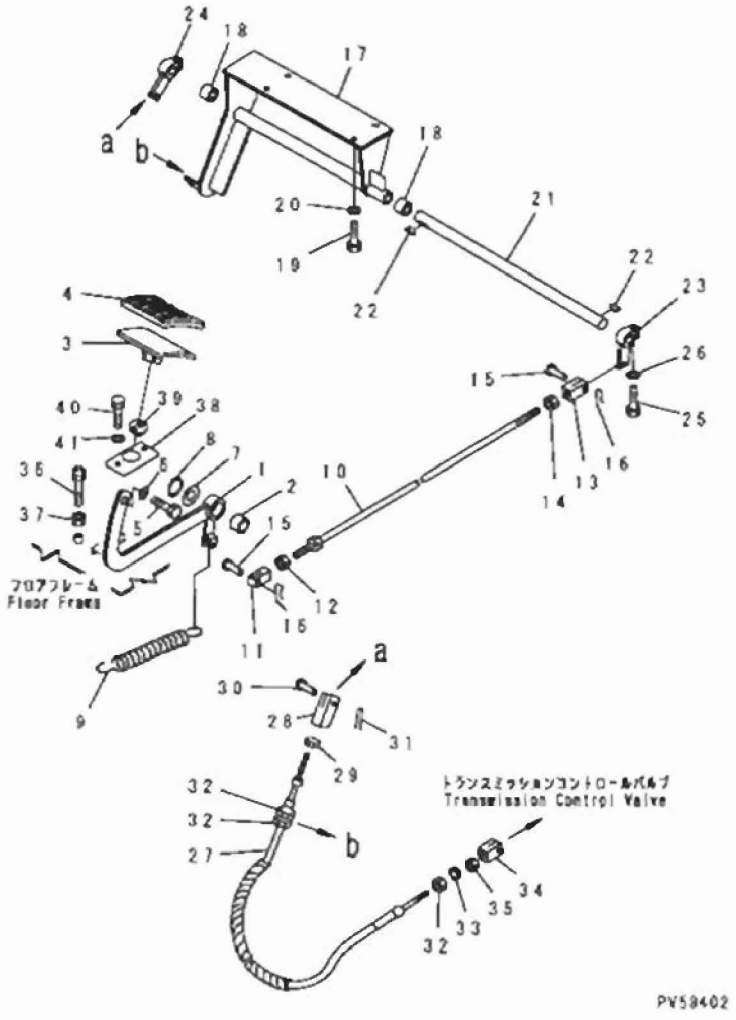


| INDEX | PART NO | DESCRIPTION | Q'TY | SERIAL NO |
|---|---|---|---|---|
| 1 | 23A-45-12110 | LEVER | 1 | 23001- |
| 2 | 234-885-1620 | BUSHING | 1 | 23001- |
| 3 | 235-45-12110 | PEDAL | 1 | 23001- |
| 4 | 235-45-12170 | COVER | 1 | 23001- |
| 5 | 01010-81225 | BOLT | 1 | 23001- |
| 6 | 01643-51232 | WASHER | 1 | 23001- |
| 7 | 01643-32060 | WASHER | 1 | 23001- |
| 8 | 04064-02012 | RING, SNAP | 1 | 23001- |
| 9 | 232-43-13162 | SPRING | 1 | 23001- |
| 10 | 04248-31040 | ROD | 1 | 23001- |
| 11 | 04210-21040 | YOKE | 1 | 23001- |
| 12 | 01582-11008 | NUT | 1 | 23001- |
| 13 | 04220-21040 | YOKE, L.H. SCREW | 1 | 23001- |
| 14 | 01508-41006 | NUT, L.H. SCREW | 1 | 23001- |
| 15 | 04205-11028 | PIN | 2 | 23001- |
| 16 | 04052-01038 | PIN, SNAP | 2 | 23001- |
| 17 | 234-45-61110 | BRACKET | 1 | 23001- |
| 18 | 234-885-1620 | BUSHING | 2 | 23001- |
| 19 | 01010-81225 | BOLT | 4 | 23001- |
| 20 | 01643-51232 | WASHER | 4 | 23001- |
| 21 | 234-45-61120 | SHAFT | 1 | 23001- |
| 22 | 04010-00519 | KEY | 2 | 23001- |
| 23 | 23C-45-11110 | LEVER | 1 | 23001- |
| 24 | 23C-45-11120 | LEVER | 1 | 23001- |
| 25 | 01010-80830 | BOLT | 2 | 23001- |
| 26 | 01643-50823 | WASHER | 2 | 23001- |
| 27 | 232-45-11321 | CABLE | 1 | 23001- |
| 28 | 232-43-12550 | YOKE | 1 | 23001- |
| 29 | 01580-10605 | NUT | 1 | 23001- |
| 30 | 04205-10822 | PIN | 1 | 23001- |
| 31 | 04052-10833 | PIN, SNAP | 1 | 23001- |
| 32 | 01582-11613 | NUT | 3 | 23001- |
| 33 | 07005-01612 | GASKET | 1 | 23001- |
| 34 | 232-45-11311 | YOKE | 1 | 23001- |
| 35 | 01580-10605 | NUT | 1 | 23001- |
| 36 | 232-43-52430 | BUMPER | 1 | 23001- |
| 37 | 01580-11210 | NUT | 1 | 23001- |
| 38 | 238-43-12210 | COVER | 1 | 23001- |
| 39 | 235-957-2170 | GROMMET | 1 | 23001- |
| 40 | 01010-80825 | BOLT | 2 | 23001- |
| 41 | 01643-30823 | WASHER | 2 | 23001- |

FIG NO. : 4121A

# FIG. 4121A PARKING BRAKE CONTROL LEVER (#23001-)

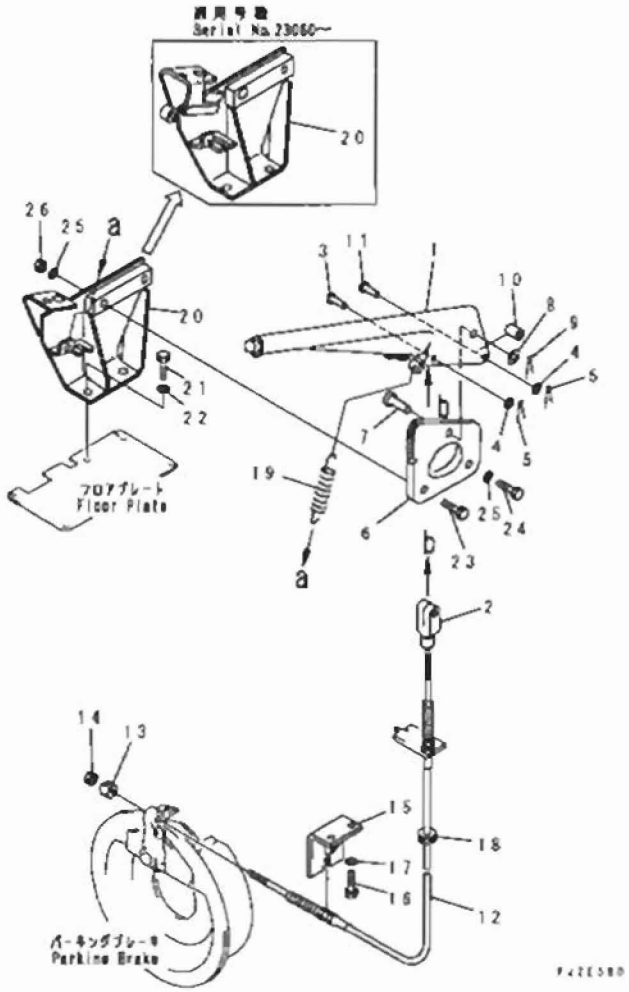


| INDEX | PART NO | DESCRIPTION | Q'TY | SERIAL NO. |
|---|---|---|---|---|
| | 232-43-56100 | LEVER ASS'Y, BRAKE | 1 | 21001- |
| 1 | ☆ | LEVER | 1 | 21001- |
| 2 | 232-43-56120 | YOKE | 1 | 21001- |
| 3 | 232-43-56130 | PIN | 1 | 21001- |
| 4 | 01641-21016 | WASHER | 2 | 21001- |
| 5 | 04050-13015 | PIN, COTTER | 2 | 21001- |
| 6 | 232-43-56150 | BRACKET | 1 | 21001- |
| 7 | 04205-11235 | PIN | 1 | 21001- |
| 8 | 01641-21223 | WASHER | 1 | 21001- |
| 9 | 04050-13020 | PIN, COTTER | 1 | 21001- |
| 10 | 232-43-56140 | COLLAR | 1 | 21001- |
| 11 | 04205-11030 | PIN | 1 | 21001- |
| 12 | 232-43-56220 | CABLE | 1 | 21001- |
| 13 | 232-43-56210 | NUT | 1 | 21001- |
| 14 | 01580-10806 | NUT | 1 | 21001- |
| 15 | 234-43-16174 | BRACKET | 1 | 21001- |
| 16 | 01010-51020 | BOLT | 2 | 21001- |
| 17 | 01643-31032 | WASHER | 2 | 21001- |
| 18 | 08037-02512 | GROMMET | 1 | 23001- |
| 19 | 135-43-21480 | SPRING | 1 | 21001- |
| 20 | 234-43-61391 | BRACKET | 1 | 23060- |
| | 234-43-61390 | BRACKET | 1 | 23001-23059 |
| 21 | 01010-81230 | BOLT | 2 | 23001- |
| 22 | 01643-31232 | WASHER | 2 | 23001- |
| 23 | 01010-81245 | BOLT | 1 | 23001- |
| 24 | 01010-81230 | BOLT | 1 | 23001- |
| 25 | 01643-31232 | WASHER | 2 | 23001- |
| 26 | 01580-11210 | NUT | 1 | 23001- |

FIG NO. : 4201A

## FIG. 4201A STEERING WHEEL (#21030-)

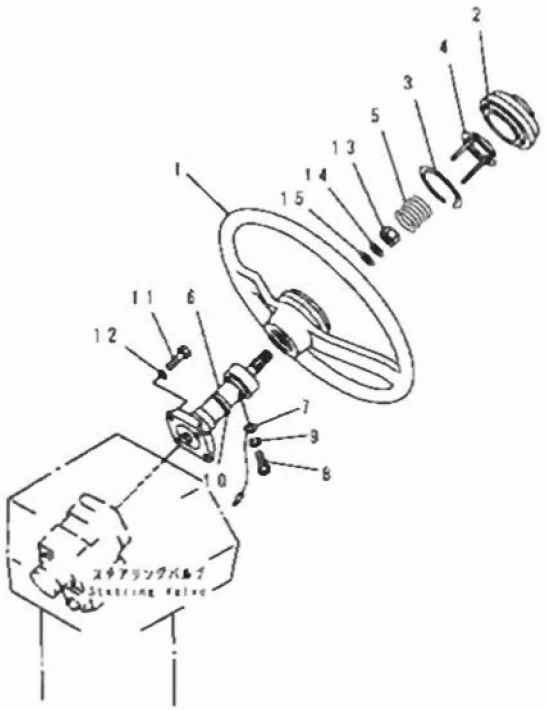


| INDEX | PART NO. | DESCRIPTION | Q'TY | SERIAL NO. |
|---|---|---|---|---|
| | 234-40-31201 | WHEEL ASS'Y | 1 | 21030- |
| 1 | 234-40-31210 | . WHEEL, STEERING | 1 | 21030- |
| 2 | 235-40-11230 | . CAP, HORN | 1 | 21030- |
| 3 | 235-40-11240 | . SPRING, LOCK | 1 | 21030- |
| 4 | 234-40-31231 | . NEEDLE, CONTACT | 1 | 21030- |
| 5 | 235-40-11220 | . SPRING, HORN | 1 | 21030- |
| 6 | 230-40-11100 | SHAFT ASS'Y | 1 | 21030- |
| 7 | 230-40-11130 | . WIRE ASS'Y | 1 | 21030- |
| 8 | 230-40-11120 | . SCREW | 1 | 21030- |
| 9 | 01601-20307 | . WASHER, SPRING | 1 | 21030- |
| 10 | 230-40-11110 | SEAT | 1 | 21030- |
| 11 | 02010-70638 | BOLT | 4 | 21001- |
| 12 | 01643-31032 | WASHER | 4 | 21030- |
| 13 | 01582-11411 | NUT | 1 | 21001- |
| 14 | 01643-31445 | WASHER | 1 | 21030- |
| 15 | 01640-21426 | WASHER | 1 | 21001- |

# FIG. 4305A CONSOLE BOX (#23001-)

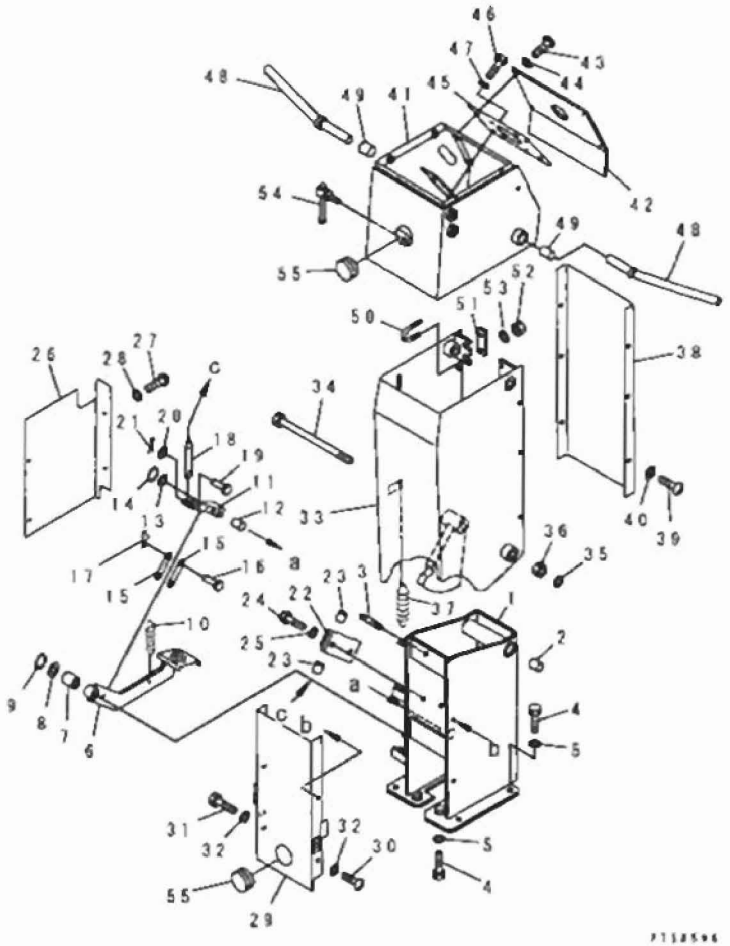

| INDEX | PART NO. | DESCRIPTION | Q'TY | SERIAL NO. |
|---|---|---|---|---|
| 1 | 23D-43-21150 | BRACKET | 1 | 23001- |
| 2 | 234-885-1610 | .BUSHING | 2 | 23001- |
| 3 | 238-43-38280 | BOLT | 1 | 23001- |
| 4 | 01010-81235 | BOLT | 4 | 23001- |
| 5 | 01643-31232 | WASHER | 4 | 23001- |
| 6 | 238-43-38220 | PEDAL | 1 | 23001- |
| 7 | 237-43-17240 | .BUSHING | 1 | 23001- |
| 8 | 01643-31232 | WASHER | 1 | 23001- |
| 9 | 04064-01210 | RING, SNAP | 1 | 23001- |
| 10 | 234-835-2230 | SPRING | 1 | 23001- |
| 11 | 238-43-38210 | LEVER | 1 | 23001- |
| 12 | 237-43-17240 | .BUSHING | 1 | 23001- |
| 13 | 01643-31232 | WASHER | 1 | 23001- |
| 14 | 04064-01210 | RING, SNAP | 1 | 23001- |
| 15 | 238-43-38770 | PLATE | 2 | 23001- |
| 16 | 04205-10822 | PIN | 2 | 23001- |
| 17 | 234-43-18710 | PIN, SNAP | 2 | 23001- |
| 18 | 238-43-38190 | PIN | 1 | 23001- |
| 19 | 04205-10628 | PIN | 1 | 23001- |
| 20 | 01643-30623 | WASHER | 1 | 23001- |
| 21 | 233-43-27750 | PIN, SNAP | 1 | 23001- |
| 22 | 238-43-38180 | BLOCK | 1 | 23001- |
| 23 | 237-43-17240 | .BUSHING | 2 | 23001- |
| 24 | 01010-81030 | BOLT | 2 | 23001- |
| 25 | 01643-31032 | WASHER | 2 | 23001- |
| 26 | 23D-43-21590 | COVER | 1 | 23001- |
| 27 | 01220-40616 | SCREW | 2 | 23001- |
| 28 | 01643-30623 | WASHER | 2 | 23001- |
| 29 | 234-43-51140 | COVER | 1 | 23001- |
| 30 | 01220-40616 | SCREW | 2 | 23001- |
| 31 | 01010-80616 | BOLT | 2 | 23001- |
| 32 | 01643-30623 | WASHER | 4 | 23001- |
| 33 | 23F-43-11230 | BOX | 1 | 23001- |
| 34 | 238-43-38160 | SHAFT | 1 | 23001- |
| 35 | 233-43-27860 | NUT | 1 | 23001- |
| 36 | 01643-31845 | WASHER | 1 | 23001- |
| 37 | 230-43-13120 | SPRING | 1 | 23001- |
| 38 | 23D-43-21610 | COVER | 1 | 23001- |
| 39 | 01220-40616 | SCREW | 6 | 23001- |
| 40 | 01643-30623 | WASHER | 6 | 23001- |
| 41 | 23F-843-1710 | BOX | 1 | 23001- |
| 42 | 23F-843-1720 | COVER | 1 | 23001- |

## FIG. 4305A CONSOLE BOX (#23001-)

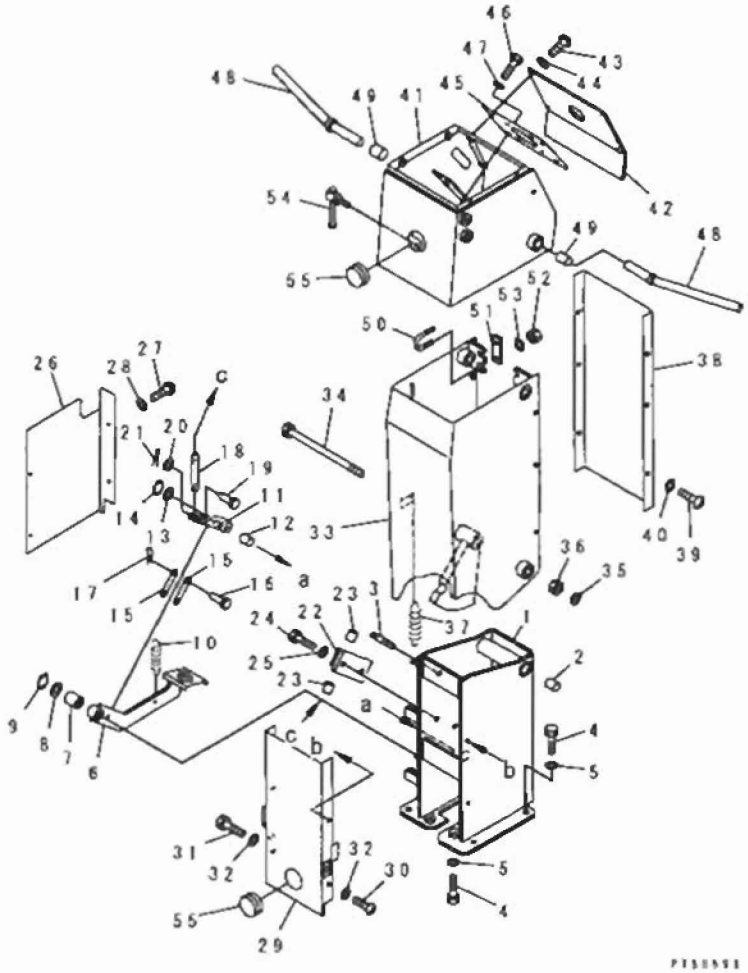

| INDEX | PART NO. | DESCRIPTION | Q'TY | SERIAL NO |
|---|---|---|---|---|
| 43 | 01220-40620 | SCREW | 4 | 23001- |
| 44 | 01643-30623 | WASHER | 4 | 23001- |
| 45 | 23D-43-18550 | PLATE | 1 | 23001- |
| 46 | 01010-81025 | BOLT | 4 | 23001- |
| 47 | 01643-31032 | WASHER | 4 | 23001- |
| 48 | 23D-43-21521 | SHAFT | 2 | 23001- |
| 49 | 234-885-1610 | BUSHING | 2 | 23001- |
| 50 | 07283-22236 | CLIP | 2 | 23001- |
| 51 | 23D-43-21620 | PLATE | 2 | 23001- |
| 52 | 01580-11008 | NUT | 4 | 23001- |
| 53 | 01643-31032 | WASHER | 4 | 23001- |
| 54 | 238-43-38230 | HANDLE | 1 | 23001- |
| 55 | 09415-03614 | CAP | 2 | 23001- |

# FIG. 4321B HYDRAULIC CONTROL LEVER (L.H.) (#23001-)

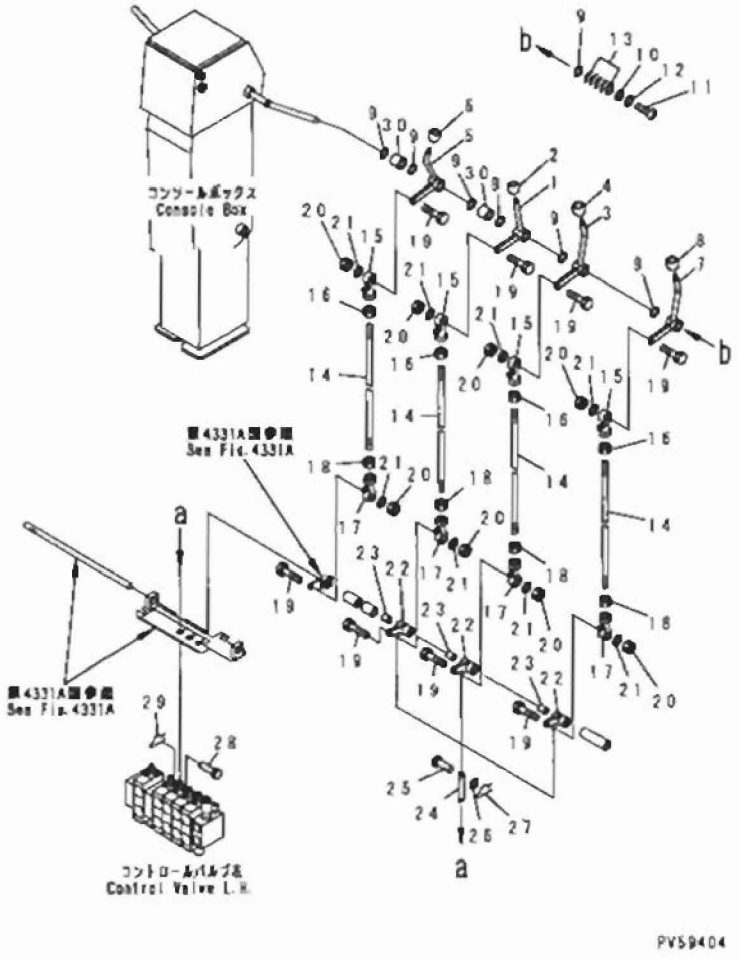


| INDEX | PART NO. | DESCRIPTION | Q'TY | SERIAL NO. |
|---|---|---|---|---|
| 1 | 234-43-61240 | LEVER, ARTICULATE | 1 | 23001- |
| 2 | 237-43-17480 | KNOB | 1 | 23001- |
| | 237-54-13260 | PLATE, OPERATING | 1 | 23001- |
| 3 | 234-43-61230 | LEVER, DRAWBAR SHIFT | 1 | 23001- |
| 4 | 232-43-00123 | KNOB ASS'Y, DRAWBAR SHIFT | 1 | 23001- |
| | 237-43-17480 | .KNOB | 1 | 23001- |
| | 232-43-18281 | .PLATE, OPERATING | 1 | 23001- |
| 5 | 234-43-61650 | LEVER, CIRCLE REVERSE | 1 | 23001- |
| 6 | 237-43-17490 | KNOB | 1 | 23001- |
| | 237-54-13251 | PLATE, OPERATING | 1 | 23001- |
| 7 | 234-43-61220 | LEVER, BLADE LIFT | 1 | 23001- |
| 8 | 237-43-00081 | KNOB ASS'Y, BLADE LIFT | 1 | 23001- |
| | 237-43-17480 | .KNOB | 1 | 23001- |
| | 237-54-13211 | .PLATE, OPERATING | 1 | 23001- |
| 9 | 237-43-17420 | WASHER | 2 | 23001- |
| 10 | 23A-43-18190 | WASHER | 1 | 23001- |
| 11 | 01220-40816 | SCREW | 1 | 23001- |
| 12 | 01643-30823 | WASHER | 1 | 23001- |
| 13 | 232-43-58380 | SHIM, 0.2MM | 6 | 23001- |
| | 232-43-58370 | SHIM, 0.5MM | 4 | 23001- |
| 14 | 235-43-31150 | ROD | 4 | 23001- |
| 15 | 04250-60847 | END, ROD, L.H. THREAD | 4 | 23001- |
| 16 | 01508-40805 | NUT, L.H. THREAD | 4 | 23001- |
| 17 | 04250-40847 | END, ROD | 4 | 23001- |
| 18 | 01580-10806 | NUT | 4 | 23001- |
| 19 | 235-43-18380 | BOLT | 8 | 23001- |
| 20 | 01580-10806 | NUT | 8 | 23001- |
| 21 | 04254-10823 | SPACER | 16 | 23001- |
| 22 | 23D-43-21390 | LEVER | 3 | 23001- |
| 23 | 234-43-38440 | BUSHING | 3 | 23001- |
| 24 | 23D-43-21371 | ROD | 3 | 23001- |
| 25 | 04205-10618 | PIN | 3 | 23001- |
| 26 | 01641-20608 | WASHER | 3 | 23001- |
| 27 | 04050-11612 | PIN, COTTER | 3 | 23001- |
| 28 | 235-43-18441 | PIN | 3 | 23001- |
| 29 | 04050-11212 | PIN, COTTER | 3 | 23001- |
| 30 | 237-43-17440 | COLLAR | 2 | 23001- |

# FIG. 4322 HYDRAULIC CONTROL LEVER (R.H.) (WITH RIPPER)

(#23001-)

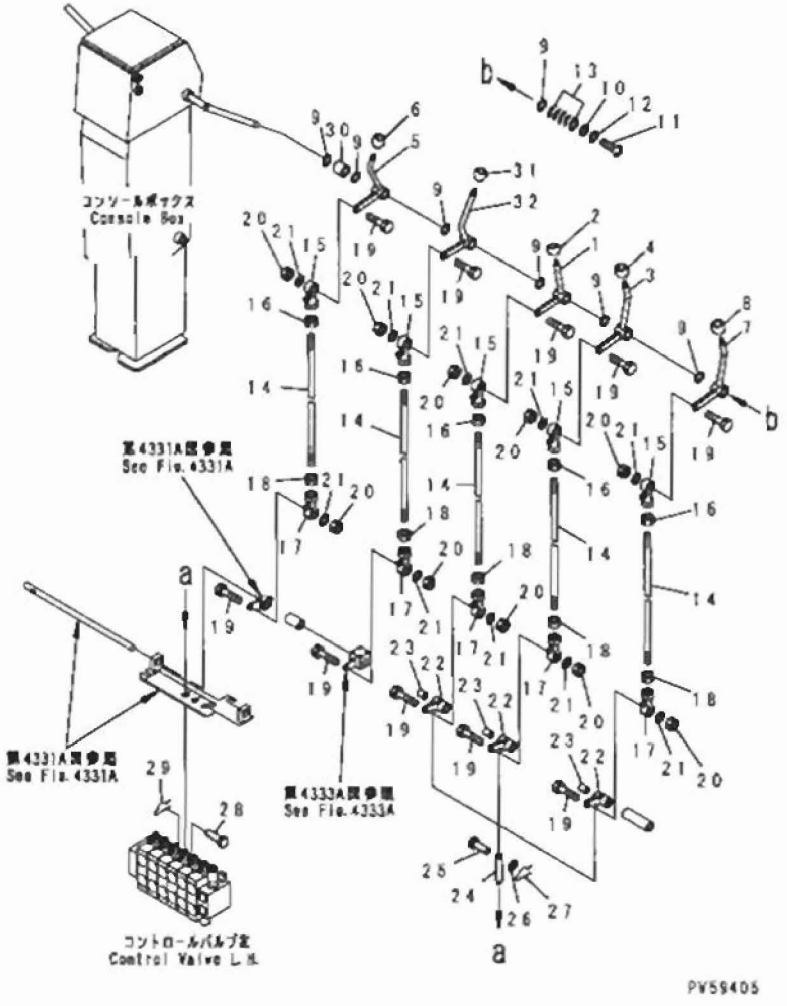


| INDEX | PART NO. | DESCRIPTION | Q'TY | SERIAL NO |
|---|---|---|---|---|
| 1 | 234-43-61240 | LEVER, ARTICULATE | 1 | 23001- |
| 2 | 237-43-17480 | KNOB | 1 | 23001- |
| | 237-54-13260 | PLATE, OPERATING | 1 | 23001- |
| 3 | 234-43-61230 | LEVER, DRAWBAR SHIFT | 1 | 23001- |
| 4 | 232-43-00123 | KNOB ASS'Y, DRAWBAR SHIFT | 1 | 23001- |
| | 237-43-17480 | KNOB | 1 | 23001- |
| | 232-43-18281 | PLATE, OPERATING | 1 | 23001- |
| 5 | 234-43-61650 | LEVER, CIRCLE REVERSE | 1 | 23001- |
| 6 | 237-43-17490 | KNOB | 1 | 23001- |
| | 237-54-13251 | PLATE, OPERATING | 1 | 23001- |
| 7 | 234-43-61220 | LEVER, BLADE LIFT | 1 | 23001- |
| 8 | 237-43-00081 | KNOB ASS'Y, BLADE LIFT | 1 | 23001- |
| | 237-43-17480 | KNOB | 1 | 23001- |
| | 237-54-13211 | PLATE, OPERATING | 1 | 23001- |
| 9 | 237-43-17420 | WASHER | 8 | 23001- |
| 10 | 23A-43-18190 | WASHER | 1 | 23001- |
| 11 | 01220-40816 | SCREW | 1 | 23001- |
| 12 | 01643-30823 | WASHER | 1 | 23001- |
| 13 | 232-43-58380 | SHIM, 0.2MM | 6 | 23001- |
| | 232-43-58370 | SHIM, 0.5MM | 4 | 23001- |
| 14 | 235-43-31150 | ROD | 5 | 23001- |
| 15 | 04250-60847 | END, ROD, L.H. THREAD | 5 | 23001- |
| 16 | 01508-40805 | NUT, L.H. THREAD | 5 | 23001- |
| 17 | 04250-40847 | END, ROD | 5 | 23001- |
| 18 | 01580-10806 | NUT | 5 | 23001- |
| 19 | 235-43-18380 | BOLT | 10 | 23001- |
| 20 | 01580-10806 | NUT | 10 | 23001- |
| 21 | 04254-10823 | SPACER | 20 | 23001- |
| 22 | 23D-43-21390 | LEVER | 3 | 23001- |
| 23 | 234-43-38440 | BUSHING | 3 | 23001- |
| 24 | 23D-43-21371 | ROD | 3 | 23001- |
| 25 | 04205-10618 | PIN | 3 | 23001- |
| 26 | 01641-20608 | WASHER | 3 | 23001- |
| 27 | 04050-11612 | PIN, COTTER | 3 | 23001- |
| 28 | 235-43-18441 | PIN | 3 | 23001- |
| 29 | 04050-11212 | PIN, COTTER | 3 | 23001- |
| 30 | 237-43-17440 | COLLAR | 1 | 23001- |
| 31 | 237-43-17480 | KNOB | 1 | 23001- |
| | 232-785-1411 | PLATE, OPERATING, RIPPER | 1 | 23001- |
| 32 | 234-43-61640 | LEVER, RIPPER | 1 | 23001- |

# FIG. 4323B HYDRAULIC CONTROL LEVER (R.H.) (#23001-)

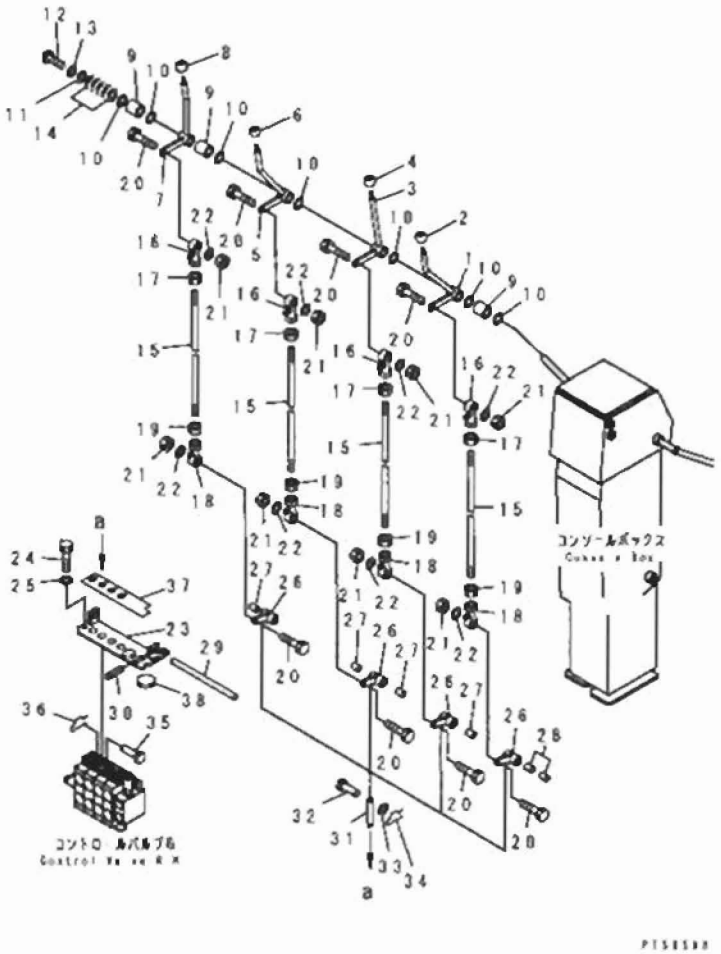

| INDEX | PART NO. | DESCRIPTION | Q'TY | SERIAL NO. |
|---|---|---|---|---|
| 1 | 234-43-51432 | LEVER, POWER TILT | 1 | 23001- |
| 2 | 232-735-0050 | KNOB ASS'Y, POWER TILT | 1 | 23001- |
| | 237-43-17480 | . KNOB | 1 | 23001- |
| | 232-735-1340 | . PLATE, OPERATING | 1 | 23001- |
| 3 | 234-43-51412 | LEVER, BLADE SIDE SHIFT | 1 | 23001- |
| 4 | 237-43-00061 | KNOB ASS'Y, BLADE SIDE SHIFT | 1 | 23001- |
| | 237-43-17480 | . KNOB | 1 | 23001- |
| | 237-54-13231 | . PLATE, OPERATING | 1 | 23001- |
| 5 | 234-43-51442 | LEVER, LEANING | 1 | 23001- |
| 6 | 237-43-00121 | KNOB ASS'Y, LEANING | 1 | 23001- |
| | 237-43-17490 | . KNOB | 1 | 23001- |
| | 237-54-13221 | . PLATE, OPERATING | 1 | 23001- |
| 7 | 234-43-51422 | LEVER, BLADE LIFT | 1 | 23001- |
| 8 | 237-43-00081 | KNOB ASS'Y, BLADE LIFT | 1 | 23001- |
| | 237-43-17480 | . KNOB | 1 | 23001- |
| | 237-54-13211 | . PLATE, OPERATING | 1 | 23001- |
| 9 | 237-43-17440 | COLLAR | 2 | 23001- |
| 10 | 237-43-17420 | WASHER | 8 | 23001- |
| 11 | 23A-43-18190 | WASHER | 1 | 23001- |
| 12 | 01220-40816 | SCREW | 1 | 23001- |
| 13 | 01643-30823 | WASHER | 1 | 23001- |
| 14 | 232-43-58380 | SHIM, 0.2MM | 6 | 23001- |
| | 232-43-58370 | SHIM, 0.5MM | 4 | 23001- |
| 15 | 235-43-31150 | ROD | 4 | 23001- |
| 16 | 04250-60847 | END, ROD, L.H. THREAD | 4 | 23001- |
| 17 | 01508-40805 | NUT, L.H. THREAD | 4 | 23001- |
| 18 | 04250-40847 | END, ROD | 4 | 23001- |
| 19 | 01580-10806 | NUT | 4 | 23001- |
| 20 | 235-43-18380 | BOLT | 8 | 23001- |
| 21 | 01580-10806 | NUT | 8 | 23001- |
| 22 | 04254-10823 | SPACER | 16 | 23001- |
| 23 | 234-43-61110 | BRACKET | 1 | 23001- |
| 24 | 01010-51020 | BOLT | 2 | 23001- |
| 25 | 01643-31032 | WASHER | 2 | 23001- |
| 26 | 23D-43-21390 | LEVER | 4 | 23001- |
| 27 | 234-43-38440 | BUSHING | 4 | 23001- |
| 28 | 23D-43-21430 | COLLAR | 2 | 23001- |
| 29 | 234-43-61140 | SHAFT | 1 | 23001- |
| 30 | 04025-00532 | PIN, SPRING | 1 | 23001- |
| 31 | 23D-43-21371 | ROD | 4 | 23001- |
| 32 | 04205-10618 | PIN | 4 | 23001- |
| 33 | 01641-20608 | WASHER | 4 | 23001- |

# FIG. 4323B HYDRAULIC CONTROL LEVER (R.H.) (#23001-)

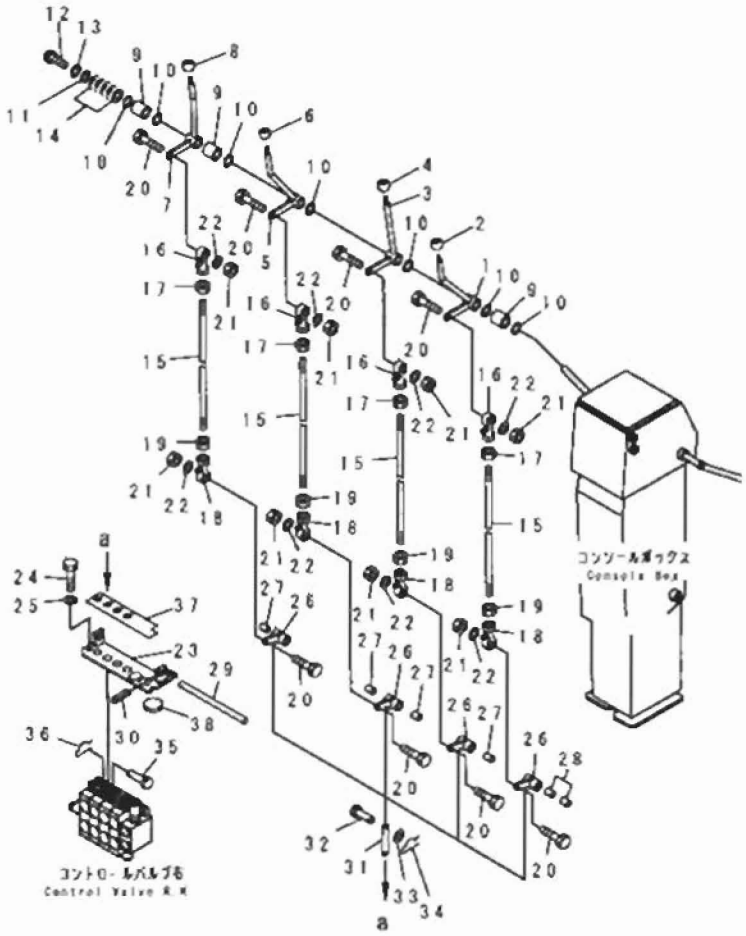


| INDEX | PART NO. | DESCRIPTION | Q'TY | SERIAL NO. |
|---|---|---|---|---|
| 34 | 04050-11612 | PIN, COTTER | 4 | 23001- |
| 35 | 235-43-18441 | PIN | 4 | 23001- |
| 36 | 04050-11212 | PIN, COTTER | 4 | 23001- |
| 37 | 234-43-61150 | PLATE | 1 | 23001- |
| 38 | 234-54-61190 | CUSHION | 1 | 23001- |

# FIG. 4331A HYDRAULIC CONTROL LINKAGE (FOR CIRCLE REVERSE) (#23001-)

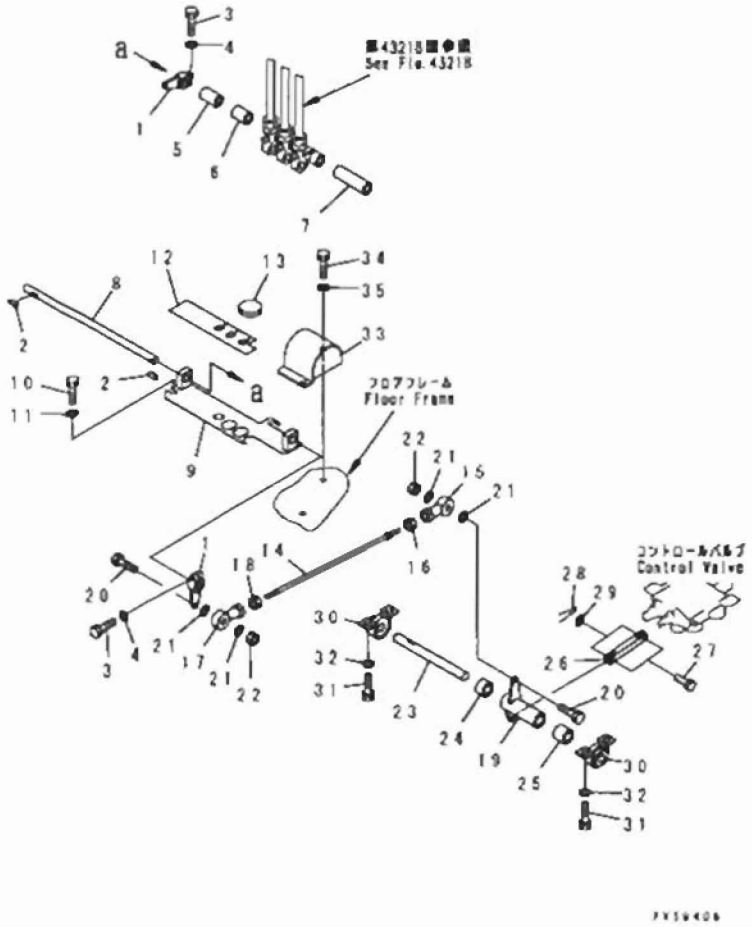


| INDEX | PART NO. | DESCRIPTION | Q'TY | SERIAL NO. |
|---|---|---|---|---|
| 1 | 234-43-61550 | LEVER | 2 | 23001- |
| 2 | 04010-00519 | KEY | 2 | 23001- |
| 3 | 01010-80830 | BOLT | 2 | 23001- |
| 4 | 01643-30823 | WASHER | 2 | 23001- |
| 5 | 234-43-61570 | COLLAR | 1 | 23001- |
| 6 | 23D-43-21430 | COLLAR | 2 | 23001- |
| 7 | 234-43-61560 | COLLAR | 1 | 23001- |
| 8 | 234-43-61590 | SHAFT | 1 | 23001- |
| 9 | 234-43-61620 | BRACKET, L. H. | 1 | 23001- |
| 10 | 01010-81020 | BOLT | 2 | 23001- |
| 11 | 01643-31032 | WASHER | 2 | 23001- |
| 12 | 234-43-61610 | PLATE, L. H. | 1 | 23001- |
| 13 | 234-43-61190 | PLATE | 1 | 23001- |
| 14 | 04248-30842 | ROD | 1 | 23001- |
| 15 | 04250-40847 | END, ROD | 1 | 23001- |
| 16 | 01580-10806 | NUT | 1 | 23001- |
| 17 | 04250-60847 | END, ROD | 1 | 23001- |
| 18 | 01508-40805 | NUT, L. H. THREAD | 1 | 23001- |
| 19 | 234-43-61520 | LEVER | 1 | 23001- |
| 20 | 235-43-18380 | BOLT | 2 | 23001- |
| 21 | 04254-10823 | SPACER | 4 | 23001- |
| 22 | 01580-10806 | NUT | 2 | 23001- |
| 23 | 234-43-61510 | SHAFT | 1 | 23001- |
| 24 | 234-43-61530 | COLLAR, R. H. | 1 | 23001- |
| 25 | 234-43-61540 | COLLAR, L. H. | 1 | 23001- |
| 26 | 234-43-37520 | YOKE | 1 | 23001- |
| 27 | 04205-10825 | PIN | 2 | 23001- |
| 28 | 04050-12012 | PIN, COTTER | 2 | 23001- |
| 29 | 01641-20812 | WASHER | 2 | 23001- |
| 30 | 06125-02051 | BEARING | 30 | 23001- |
| 31 | 01010-80816 | BOLT | 31 | 23001- |
| 32 | 01643-30823 | WASHER | 4 | 23001- |
| 33 | 234-43-61630 | COVER | 1 | 23001- |
| 34 | 01010-81020 | BOLT | 2 | 23001- |
| 35 | 01643-31032 | WASHER | 2 | 23001- |

# FIG. 4333A HYDRAULIC CONTROL LEVER (FOR CIRCLE REVERSE) (WITH RIPPER) (#23001-)

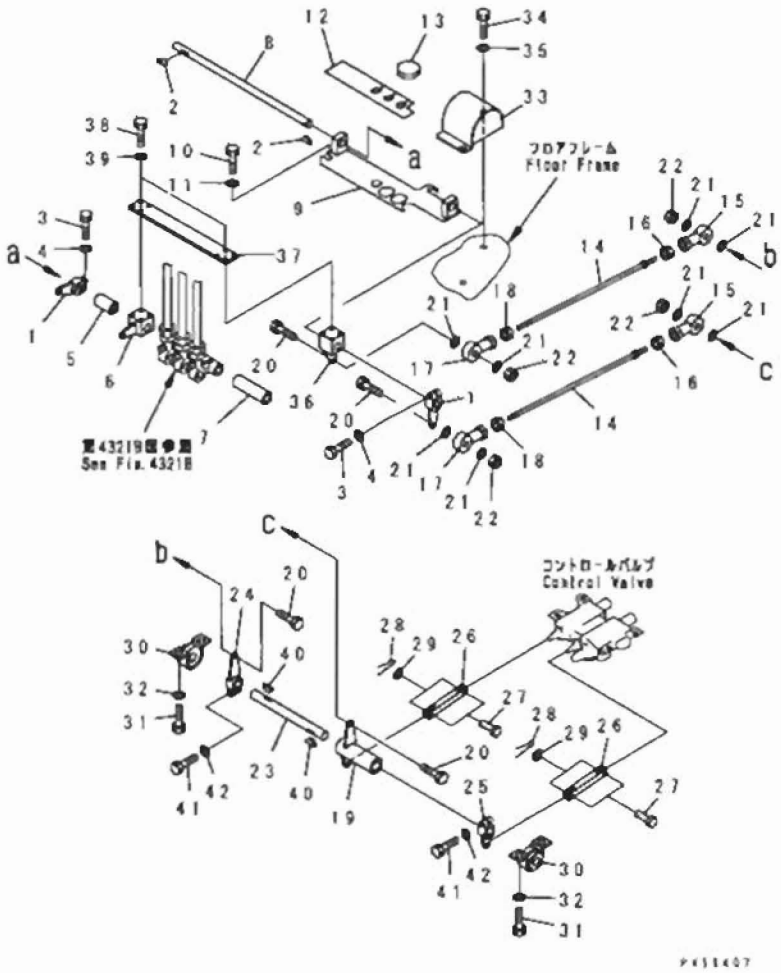


| INDEX | PART NO. | DESCRIPTION | Q'TY | SERIAL NO. |
|---|---|---|---|---|
| 1 | 234-43-61550 | LEVER | 2 | 23001- |
| 2 | 04010-00519 | KEY | 2 | 23001- |
| 3 | 01010-80830 | BOLT | 2 | 23001- |
| 4 | 01643-30823 | WASHER | 2 | 23001- |
| 5 | 234-43-61570 | COLLAR | 1 | 23001- |
| 6 | 234-43-61690 | LEVER | 1 | 23001- |
| 7 | 234-43-61560 | COLLAR | 1 | 23001- |
| 8 | 234-43-61590 | SHAFT | 1 | 23001- |
| 9 | 234-43-61620 | BRACKET, L.H. | 1 | 23001- |
| 10 | 01010-81020 | BOLT | 2 | 23001- |
| 11 | 01643-31032 | WASHER | 2 | 23001- |
| 12 | 234-43-61610 | PLATE, L.H. | 1 | 23001- |
| 13 | 234-43-61190 | PLATE | 1 | 23001- |
| 14 | 04248-30842 | ROD | 2 | 23001- |
| 15 | 04250-40847 | END, ROD | 2 | 23001- |
| 16 | 01580-10806 | NUT | 2 | 23001- |
| 17 | 04250-60847 | END, ROD | 2 | 23001- |
| 18 | 01508-40805 | NUT, L.H. THREAD | 2 | 23001- |
| 19 | 234-43-61520 | LEVER | 2 | 23001- |
| 20 | 235-43-18380 | BOLT | 4 | 23001- |
| 21 | 04254-10823 | SPACER | 8 | 23001- |
| 22 | 01580-10806 | NUT | 4 | 23001- |
| 23 | 234-43-61510 | SHAFT | 1 | 23001- |
| 24 | 234-43-61660 | LEVER, RIPPER | 1 | 23001- |
| 25 | 234-43-37550 | LEVER, RIPPER | 1 | 23001- |
| 26 | 234-43-37520 | YOKE | 2 | 23001- |
| 27 | 04205-10825 | PIN | 4 | 23001- |
| 28 | 04050-12012 | PIN, COTTER | 4 | 23001- |
| 29 | 01641-20812 | WASHER | 4 | 23001- |
| 30 | 06125-02051 | BEARING | 30 | 23001- |
| 31 | 01010-80816 | BOLT | 31 | 23001- |
| 32 | 01643-30823 | WASHER | 4 | 23001- |
| 33 | 234-43-61630 | COVER | 1 | 23001- |
| 34 | 01010-81020 | BOLT | 2 | 23001- |
| 35 | 01643-31032 | WASHER | 2 | 23001- |
| 36 | 234-43-61670 | LEVER, RIPPER | 1 | 23001- |
| 37 | 234-43-61680 | BRACKET | 1 | 23001- |
| 38 | 01010-80616 | BOLT | 8 | 23001- |
| 39 | 01643-30623 | WASHER | 8 | 23001- |
| 40 | 04010-00519 | KEY | 2 | 23001- |
| 41 | 01010-80830 | BOLT | 2 | 23001- |
| 42 | 01643-30832 | WASHER | 2 | 23001- |

# FIG. 4331A HYDRAULIC CONTROL LINKAGE (FOR CIRCLE REVERSE) (#23001-)

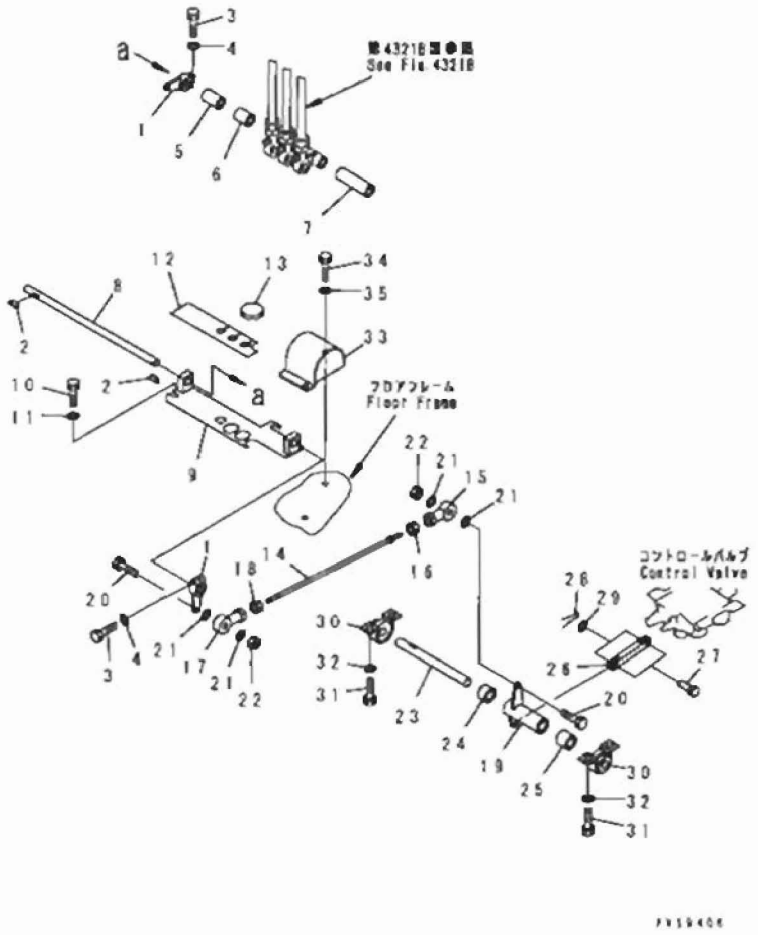






| INDEX | PART NO | DESCRIPTION | Q TY | SERIAL NO. |
|---|---|---|---|---|
| 1 | 234-43-61550 | LEVER | 2 | 23001- |
| 2 | 04010-00519 | KEY | 2 | 23001- |
| 3 | 01010-80830 | BOLT | 2 | 23001- |
| 4 | 01643-30823 | WASHER | 2 | 23001- |
| 5 | 234-43-61570 | COLLAR | 1 | 23001- |
| 6 | 23D-43-21430 | COLLAR | 2 | 23001- |
| 7 | 234-43-61560 | COLLAR | 1 | 23001- |
| 8 | 234-43-61590 | SHAFT | 1 | 23001- |
| 9 | 234-43-61620 | BRACKET, L. H | 1 | 23001- |
| 10 | 01010-81020 | BOLT | 2 | 23001- |
| 11 | 01643-31032 | WASHER | 2 | 23001- |
| 12 | 234-43-61610 | PLATE, L. H. | 1 | 23001- |
| 13 | 234-43-61190 | PLATE | 1 | 23001- |
| 14 | 04248-30842 | ROD | 1 | 23001- |
| 15 | 04250-40847 | END, ROD | 1 | 23001- |
| 16 | 01580-10806 | NUT | 1 | 23001- |
| 17 | 04250-60847 | END, ROD | 1 | 23001- |
| 18 | 01508-40805 | NUT, L. H. THREAD | 1 | 23001- |
| 19 | 234-43-61520 | LEVER | 1 | 23001- |
| 20 | 235-43-18380 | BOLT | 2 | 23001- |
| 21 | 04254-10823 | SPACER | 4 | 23001- |
| 22 | 01580-10806 | NUT | 2 | 23001- |
| 23 | 234-43-61510 | SHAFT | 1 | 23001- |
| 24 | 234-43-61530 | COLLAR, R. H. | 1 | 23001- |
| 25 | 234-43-61540 | COLLAR, L. H. | 1 | 23001- |
| 26 | 234-43-37520 | YOKE | 1 | 23001- |
| 27 | 04205-10825 | PIN | 2 | 23001- |
| 28 | 04050-12012 | PIN, COTTER | 2 | 23001- |
| 29 | 01641-20812 | WASHER | 2 | 23001- |
| 30 | 06125-02051 | BEARING | 30 | 23001- |
| 31 | 01010-80816 | BOLT | 31 | 23001- |
| 32 | 01643-30823 | WASHER | 4 | 23001- |
| 33 | 234-43-61630 | COVER | 1 | 23001- |
| 34 | 01010-81020 | BOLT | 2 | 23001- |
| 35 | 01643-31032 | WASHER | 2 | 23001- |

# FIG. 4336 DUAL DEMAND VALVE CONTROL (D. D. V. SPEC.)

(#23001-)

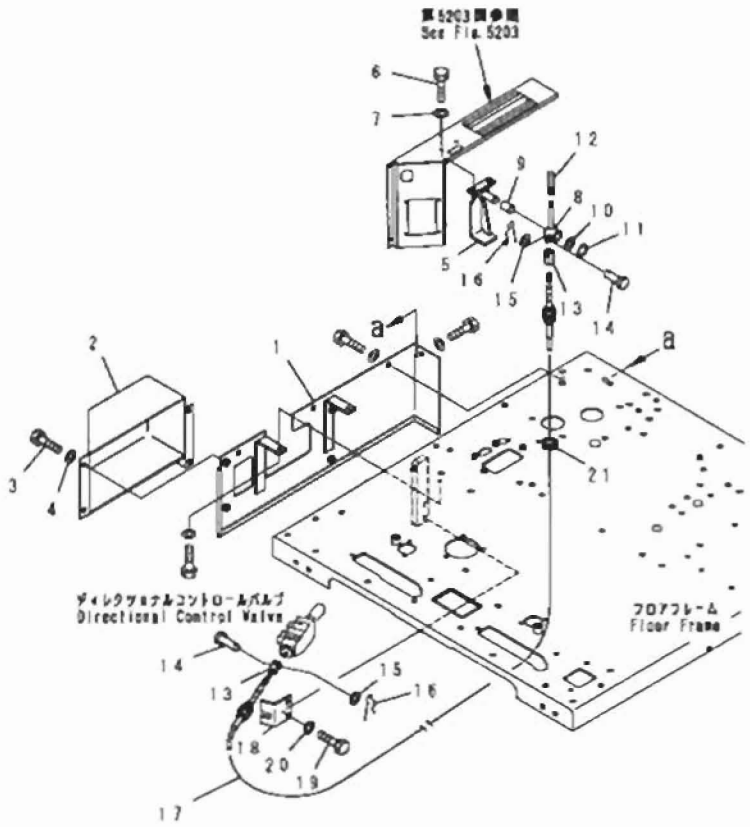


| INDEX | PART NO | DESCRIPTION | Q'TY | SERIAL NO. |
|---|---|---|---|---|
| 1 | 234-60-72360 | COVER, R. H | 1 | 23001- |
| 2 | 234-60-72370 | COVER | 1 | 23001- |
| 3 | 01010-81020 | BOLT | 2 | 23001- |
| 4 | 01643-31032 | WASHER | 2 | 23001- |
| 5 | 234-60-72330 | BRACKET | 1 | 23001- |
| 6 | 01010-80820 | BOLT | 2 | 23001- |
| 7 | 01643-30823 | WASHER | 2 | 23001- |
| 8 | 234-60-72340 | LEVER | 1 | 23001- |
| 9 | 234-885-1610 | BUSHING | 1 | 23001- |
| 10 | 01640-22032 | WASHER | 1 | 23001- |
| 11 | 04064-02012 | RING, SNAP | 1 | 23001- |
| 12 | 09305-00800 | KNOB | 1 | 23001- |
| 13 | 04210-00624 | YOKE | 2 | 23001- |
| 14 | 04205-00618 | PIN | 2 | 23001- |
| 15 | 01641-00608 | WASHER | 2 | 23001- |
| 16 | 04052-00633 | PIN | 2 | 23001- |
| 17 | 234-60-72350 | CABLE | 1 | 23001- |
| 18 | 234-60-72320 | BRACKET | 1 | 23001- |
| 19 | 01010-81230 | BOLT | 2 | 23001- |
| 20 | 01643-31232 | WASHER | 2 | 23001- |
| 21 | 08037-02512 | GROMMET | 1 | 23001- |

# FIG. 4341B HYDRAULIC CONTROL LEVER (FOR SCARIFIER)

(#23001-)

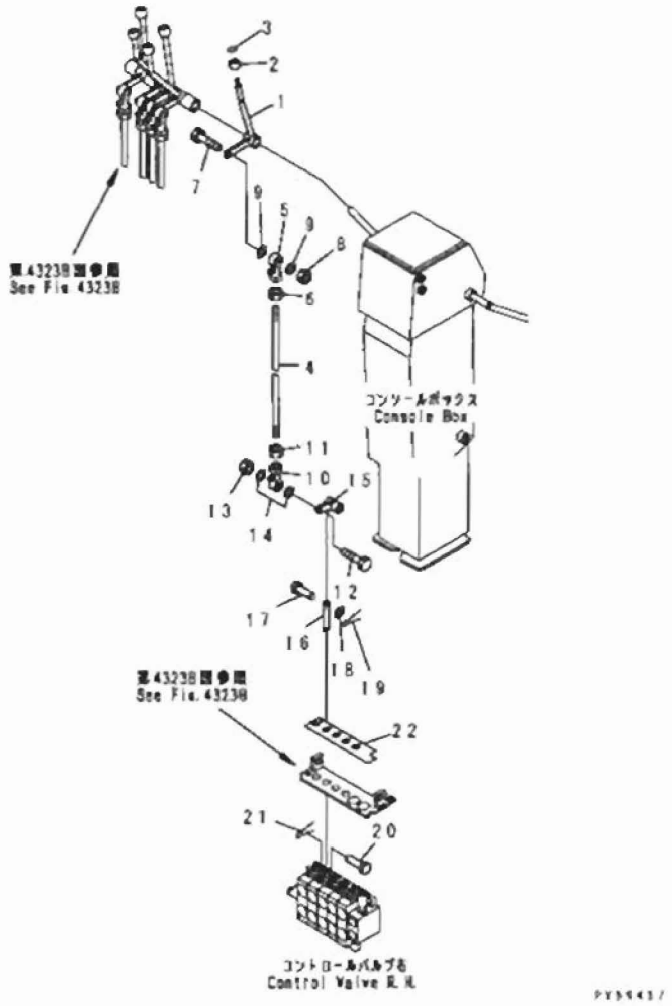


| INDEX | PART NO. | DESCRIPTION | Q'TY | SERIAL NO. |
|---|---|---|---|---|
| 1 | 234-43-61310 | LEVER, SCARIFIER | 1 | 23001- |
| | 234-885-1610 | BUSHING | 1 | 23001- |
| | 234-870-0150 | KNOB ASS'Y, SCARIFIER | 1 | 23001- |
| 2 | 237-43-17480 | KNOB | 1 | 23001- |
| 3 | 237-54-13270 | PLATE, OPERATING | 1 | 23001- |
| 4 | 233-43-21360 | ROD | 1 | 23001- |
| 5 | 04250-60847 | END, ROD | 1 | 23001- |
| 6 | 01508-40805 | NUT, L.H. THREAD | 1 | 23001- |
| 7 | 235-43-18380 | BOLT | 1 | 23001- |
| 8 | 01580-10806 | NUT | 1 | 23001- |
| 9 | 04254-10823 | SPACER | 2 | 23001- |
| 10 | 04250-40847 | END, ROD | 1 | 23001- |
| 11 | 01580-10806 | NUT | 1 | 23001- |
| 12 | 235-43-18380 | BOLT | 1 | 23001- |
| 13 | 01580-10806 | NUT | 1 | 23001- |
| 14 | 04254-10823 | SPACER | 2 | 23001- |
| 15 | 230-43-21390 | LEVER | 1 | 23001- |
| 16 | 230-43-21371 | ROD | 1 | 23001- |
| 17 | 04205-10618 | PIN | 1 | 23001- |
| 18 | 01641-20608 | WASHER | 1 | 23001- |
| 19 | 04050-11612 | PIN, COTTER | 1 | 23001- |
| 20 | 235-43-18441 | PIN | 1 | 23001- |
| 21 | 04050-11212 | PIN, COTTER | 1 | 23001- |
| 22 | 234-43-61160 | PLATE | 1 | 23001- |

# FIG. 4343B HYDRAULIC CONTROL LEVER (FOR FRONT BLADE)

(#23001-)

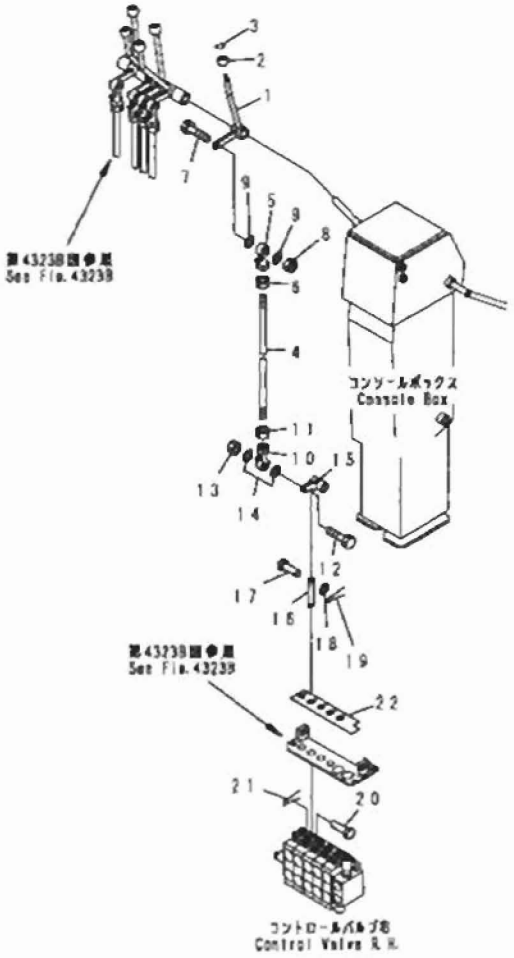


| INDEX | PART NO. | DESCRIPTION | Q'TY | SERIAL NO. |
|---|---|---|---|---|
| 1 | 234-43-61310 | LEVER, FRONT BLADE | 1 | 23001- |
| | 234-885-1610 | . BUSHING | 1 | 23001- |
| | 234-870-0150 | KNOB ASS'Y, FRONT BLADE | 1 | 23001- |
| 2 | 237-43-17480 | . KNOB | 1 | 23001- |
| 3 | 234-870-8511 | . PLATE, OPERATING, OPERATING | 1 | 23001- |
| 4 | 233-43-21360 | ROD | 1 | 23001- |
| 5 | 04250-60847 | END, ROD | 1 | 23001- |
| 6 | 01508-40605 | NUT, L.H. THREAD | 1 | 23001- |
| 7 | 235-43-18380 | BOLT | 1 | 23001- |
| 8 | 01580-10806 | NUT | 1 | 23001- |
| 9 | 04254-10823 | SPACER | 2 | 23001- |
| 10 | 04250-40847 | END, ROD | 1 | 23001- |
| 11 | 01580-10806 | NUT | 1 | 23001- |
| 12 | 235-43-18380 | BOLT | 1 | 23001- |
| 13 | 01580-10806 | NUT | 1 | 23001- |
| 14 | 04254-10823 | SPACER | 2 | 23001- |
| 15 | 230-43-21390 | LEVER | 1 | 23001- |
| 16 | 230-43-21371 | ROD | 1 | 23001- |
| 17 | 04205-10618 | PIN | 1 | 23001- |
| 18 | 01641-20608 | WASHER | 1 | 23001- |
| 19 | 04050-11612 | PIN, COTTER | 1 | 23001- |
| 20 | 235-43-18441 | PIN | 1 | 23001- |
| 21 | 04050-11212 | PIN, COTTER | 1 | 23001- |
| 22 | 234-43-61160 | PLATE | 1 | 23001- |

# FIG. 4371 BANK PIN

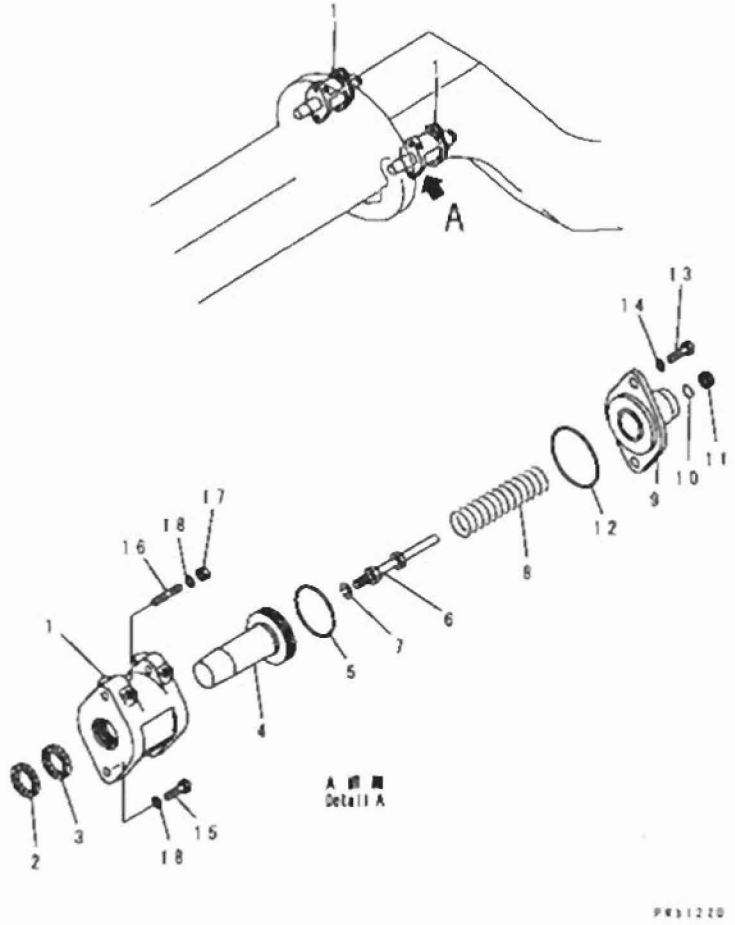


| INDEX | PART NO. | DESCRIPTION | Q'TY | SERIAL NO |
|---|---|---|---|---|
| | 234-43-05113 | BANK PIN ASS'Y, L.H. | 1 | 21337- |
| | □234-43-05112 | BANK PIN ASS'Y, L.H. | 1 | 21001-21336 |
| | 234-43-05123 | BANK PIN ASS'Y, R.H. | 1 | 21337- |
| | □234-43-05122 | BANK PIN ASS'Y, R.H. | 1 | 21001-21336 |
| 1 | 234-43-39120 | .BODY, L.H. | 1 | 21001- |
| | 234-43-39110 | .BODY, R.H. | 1 | 21001- |
| 2 | 234-43-39210 | .SEAL, DUST | 1 | 21001- |
| 3 | 234-43-39190 | .PACKING | 1 | 21001- |
| 4 | 234-43-39380 | .PISTON | 1 | 21001- |
| 5 | 234-43-39310 | .O-RING | 1 | 21001- |
| 6 | 234-43-39390 | .SHAFT | 1 | 21001- |
| 7 | 01643-31445 | .WASHER | 1 | 21001- |
| 8 | 233-43-17221 | .SPRING | 1 | 21001- |
| 9 | 234-43-39370 | .COVER | 1 | 21001- |
| 10 | 07000-12016 | .O-RING | 1 | 21001- |
| 11 | 234-43-39250 | .SEAL, DUST | 1 | 21001- |
| 12 | 07000-12115 | .O-RING | 1 | 21001- |
| 13 | 01010-51435 | .BOLT | 2 | 21001- |
| 14 | 238-22-11760 | .WASHER | 2 | 21337- |
| | 01602-21442 | .WASHER, SPRING | 2 | 21001-21336 |
| 15 | 01010-51450 | .BOLT | 1 | 21001- |
| 16 | 01144-51460 | .STUD | 1 | 21001- |
| 17 | 01580-11411 | .NUT | 1 | 21001- |
| 18 | 238-22-11760 | .WASHER | 2 | 21337- |
| | 01602-21442 | .WASHER, SPRING | 2 | 21001-21336 |

# FIG. 4381 BANK CUTTING CONTROL PIPING (1/2) (#23001-)

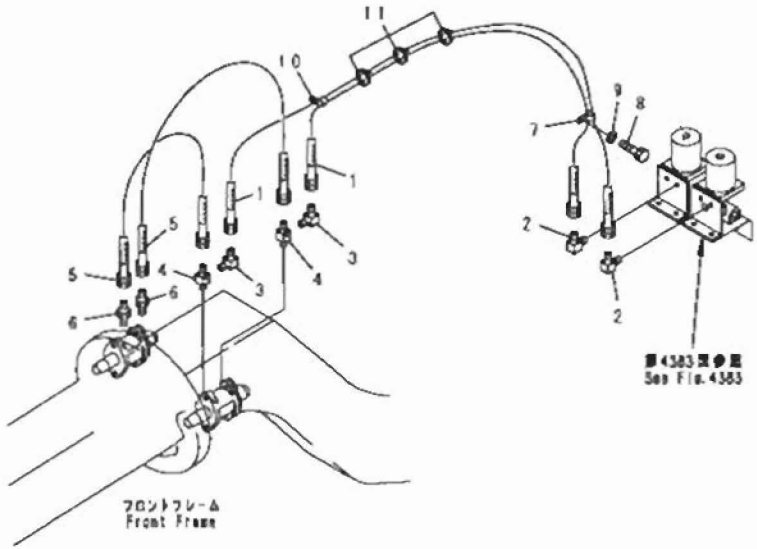


PY59408

| INDEX | PART NO. | DESCRIPTION | Q'TY | SERIAL NO. |
|---|---|---|---|---|
| 1 | 07103-50245 | HOSE | 2 | 23001- |
| 2 | 234-60-22140 | ELBOW | 2 | 23001- |
| 3 | 234-60-22140 | ELBOW | 2 | 23001- |
| 4 | 238-44-11360 | NIPPLE | 2 | 23001- |
| 5 | 07103-50205 | HOSE | 2 | 23001- |
| 6 | 07238-10210 | CONNECTOR | 2 | 23001- |
| 7 | 04435-51708 | CLIP | 1 | 23001- |
| 8 | 01010-80816 | BOLT | 1 | 23001- |
| 9 | 01643-30823 | WASHER | 1 | 23001- |
| 10 | 04434-51712 | CLIP | 2 | 23001- |
| 11 | 08034-00519 | BAND | 6 | 23001- |

# FIG. 4383 BANK CUTTING CONTROL PIPING (2/2) (#23001-)

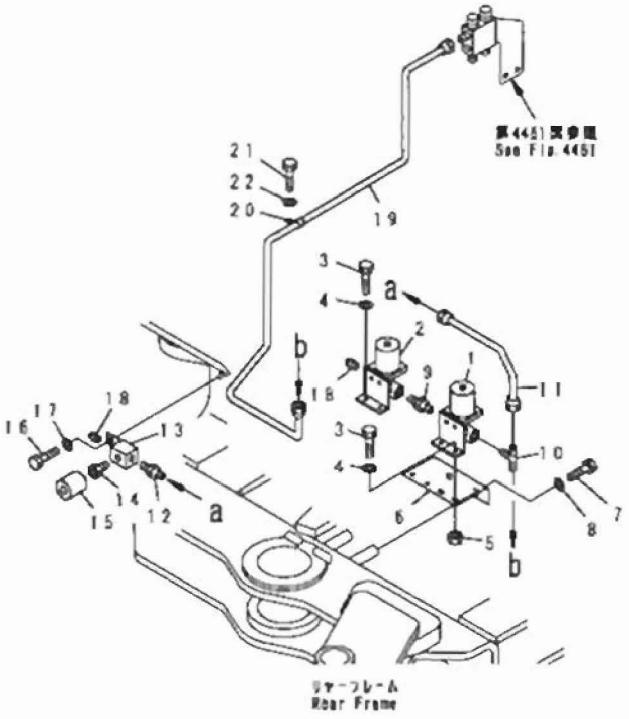


| INDEX | PART NO | DESCRIPTION | Q'TY | SERIAL NO |
|---|---|---|---|---|
| 1 | 234-44-61440 | VALVE | 1 | 23001- |
| | 235-44-11930 | VALVE | 1 | 23001- |
| 2 | 234-44-61430 | VALVE | 1 | 23001- |
| | 235-44-11920 | VALVE | 1 | 23001- |
| 3 | 01010-80620 | BOLT | 4 | 23001- |
| 4 | 01643-30623 | WASHER | 4 | 23001- |
| 5 | 01580-10605 | NUT | 4 | 23001- |
| 6 | 234-44-51241 | PLATE | 1 | 23001- |
| 7 | 01010-81020 | BOLT | 2 | 23001- |
| 8 | 01643-31032 | WASHER | 2 | 23001- |
| 9 | 07325-10200 | NIPPLE | 1 | 23001- |
| 10 | 07218-60813 | TEE | 1 | 23001- |
| 11 | 234-44-51161 | TUBE | 1 | 23001- |
| 12 | 07214-60813 | CONNECTOR | 1 | 23001- |
| 13 | 234-44-51170 | CONNECTOR | 1 | 23001- |
| 14 | 07880-10500 | SOCKET | 1 | 23001- |
| 15 | 234-44-32150 | CAP ASS'Y | 1 | 23001- |
| 16 | 01010-81020 | BOLT | 1 | 23001- |
| 17 | 01643-31032 | WASHER | 1 | 23001- |
| 18 | 07042-20211 | PLUG | 2 | 23001- |
| 19 | 234-44-61190 | TUBE | 1 | 23001- |
| 20 | 04434-50808 | CLIP | 1 | 23001- |
| 21 | 01010-80816 | BOLT | 1 | 23001- |
| 22 | 01643-30823 | WASHER | 1 | 23001- |

FIG NO 4385

# FIG. 4385 BANK CUTTING CONTROL PIPING (1/2) (D. D. V. SPEC.) (#23001-)

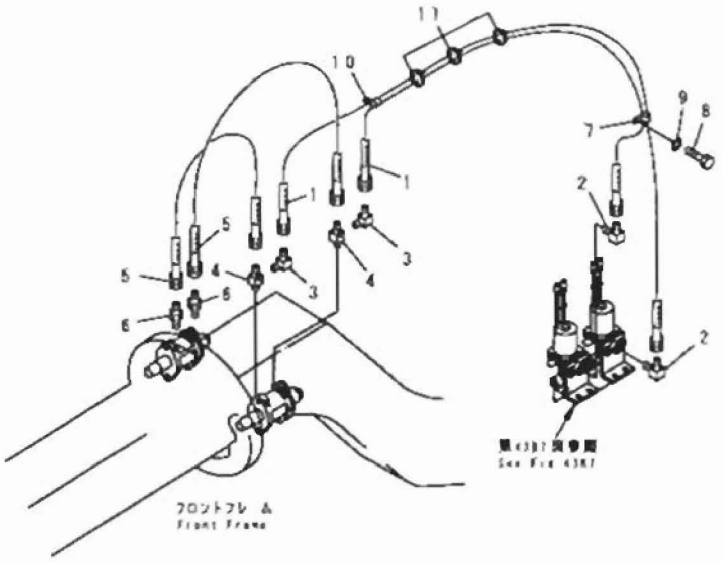


| INDEX | PART NO | DESCRIPTION | Q'TY | SERIAL NO |
|---|---|---|---|---|
| 1 | 07103-50245 | HOSE | 2 | 23001- |
| 2 | 234-60-22140 | ELBOW | 2 | 23001- |
| 3 | 234-60-22140 | ELBOW | 2 | 23001- |
| 4 | 23B-44-11360 | NIPPLE | 2 | 23001- |
| 5 | 07103-50205 | HOSE | 2 | 23001- |
| 6 | 07238-10210 | CONNECTOR | 2 | 23001- |
| 7 | 04435-51708 | CLIP | 1 | 23001- |
| 8 | 01010-80816 | BOLT | 1 | 23001- |
| 9 | 01643-30823 | WASHER | 1 | 23001- |
| 10 | 04434-51712 | CLIP | 2 | 23001- |
| 11 | 08034-00519 | BAND | 6 | 23001- |

FIG NO. : 4387

# FIG. 4387 BANK CUTTING CONTROL PIPING (2/2) (D. D. V. SPEC.) (#23001-)

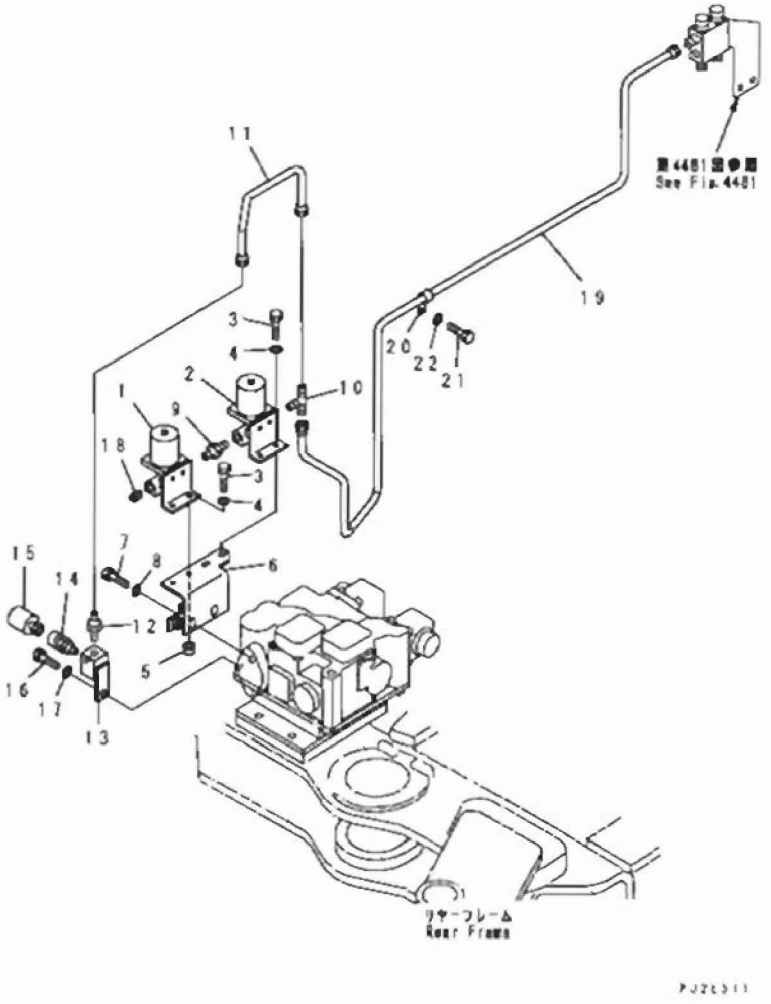


| INDEX | PART NO. | DESCRIPTION | Q'TY | SERIAL NO |
|---|---|---|---|---|
| 1 | 234-44-61440 | VALVE | 1 | 23001- |
| | 235-44-11930 | . VALVE | 1 | 23001- |
| 2 | 234-44-61430 | VALVE | 1 | 23001- |
| | 235-44-11920 | . VALVE | 1 | 23001- |
| 3 | 01010-80620 | BOLT | 4 | 23001- |
| 4 | 01643-30623 | WASHER | 4 | 23001- |
| 5 | 01580-10605 | NUT | 4 | 23001- |
| 6 | 234-44-61611 | BRACKET | 1 | 23001- |
| 7 | 01010-81020 | BOLT | 2 | 23001- |
| 8 | 01643-31032 | WASHER | 2 | 23001- |
| 9 | 07325-10200 | NIPPLE | 1 | 23001- |
| 10 | 07218-60813 | TEE | 1 | 23001- |
| 11 | 234-44-61620 | TUBE | 1 | 23001- |
| 12 | 07214-60813 | CONNECTOR | 1 | 23001- |
| 13 | 234-44-51170 | CONNECTOR | 1 | 23001- |
| 14 | 07880-10500 | SOCKET | 1 | 23001- |
| 15 | 234-44-32150 | CAP ASS'Y | 1 | 23001- |
| 16 | 01010-81020 | BOLT | 1 | 23001- |
| 17 | 01643-31032 | WASHER | 1 | 23001- |
| 18 | 07042-20211 | PLUG | 2 | 23001- |
| 19 | 234-44-61630 | TUBE | 1 | 23001- |
| 20 | 04434-50808 | CLIP | 1 | 23001- |
| 21 | 01010-80816 | BOLT | 1 | 23001- |
| 22 | 01643-30823 | WASHER | 1 | 23001- |

FIG. 4401 RELAY VALVE

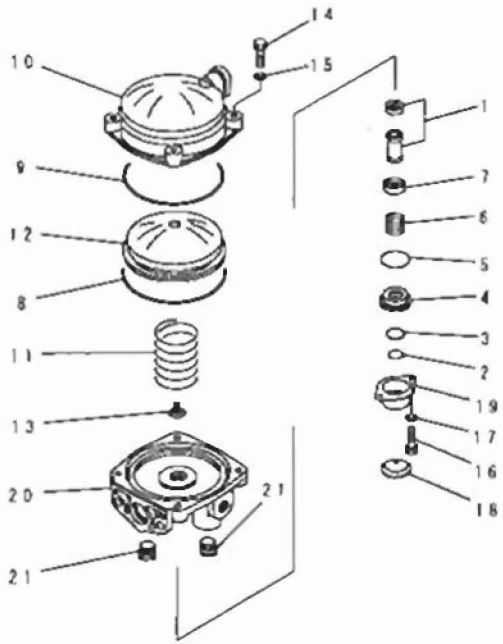




FIG NO. : 4401

| INDEX | PART NO. | DESCRIPTION | Q'TY | SERIAL NO. |
|---|---|---|---|---|
| | 565-44-11201 | VALVE ASS'Y, AIR RELAY | 2 | 21001- |
| | 565-44-05110 | VALVE ASS'Y, RELAY | 1 | 21001- |
| | 565-44-11020 | VALVE ASS'Y (KIT) | 1 | 21001- |
| 1 | 560-44-11760 | VALVE (KIT) | 1 | 21001- |
| 2 | 560-44-11770 | RING, RETAINER (KIT) | 1 | 21001- |
| 3 | 560-44-11780 | O-RING (KIT) | 1 | 21001- |
| 4 | 560-44-11790 | GUIDE, VALVE (KIT) | 1 | 21001- |
| 5 | 560-44-11810 | O-RING (KIT) | 1 | 21001- |
| 6 | 560-44-11820 | SPRING (KIT) | 1 | 21001- |
| 7 | 560-44-11830 | RETAINER (KIT) | 1 | 21001- |
| 8 | 560-44-11840 | RING, SEAL (KIT) | 1 | 21001- |
| 9 | 560-44-11850 | O-RING (KIT) | 1 | 21001- |
| 10 | 560-44-11860 | COVER | 1 | 21001- |
| 11 | 560-44-11870 | SPRING, RETURN | 1 | 21001- |
| 12 | 560-44-11880 | PISTON, RELAY | 1 | 21001- |
| 13 | 560-44-11890 | SEAT, VALVE | 1 | 21001- |
| 14 | 560-44-11910 | BOLT | 4 | 21001- |
| 15 | 560-44-11920 | WASHER, SPRING | 4 | 21001- |
| 16 | 560-44-11930 | SCREW, CAP | 2 | 21001- |
| 17 | 560-44-11940 | WASHER, SPRING | 2 | 21001- |
| 18 | 560-44-11950 | VALVE, EXHAUST (KIT) | 1 | 21001- |
| 19 | 560-44-11960 | COVER, EXHAUST | 1 | 21001- |
| 20 | 560-44-11990 | BODY | 1 | 21001- |
| 21 | 560-44-11970 | PLUG | 2 | 21001- |
| | | SERVICE KIT | | |
| KIT | 565-44-05021 | SERVICE KIT, RELAY VALVE | 2 | 21001- |

# FIG. 4403 BRAKE VALVE

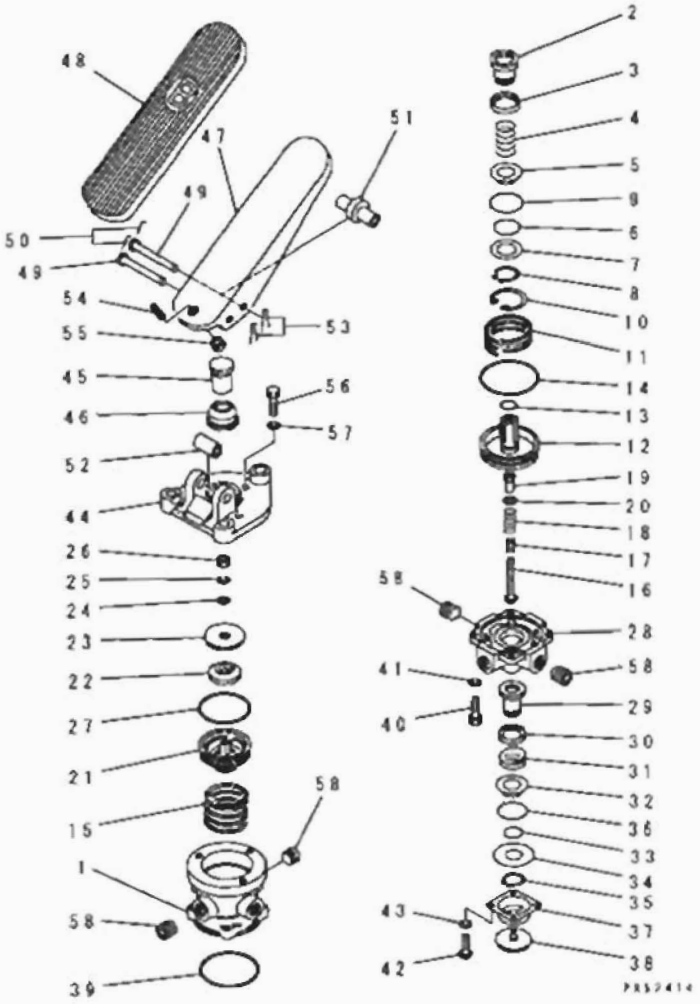


| INDEX | PART NO. | DESCRIPTION | Q'TY | SERIAL NO. |
|---|---|---|---|---|
| | 238-44-12110 | VALVE ASS'Y, DUAL BRAKE | 1 | 21001- |
| 1 | 238-44-12120 | BODY, UPPER | 1 | 21001- |
| | 238-44-00030 | UPPER VALVE ASS'Y | 1 | 21001- |
| 2 | ☆ | VALVE, UPPER (KIT B) | 1 | 21001- |
| 3 | 238-44-12140 | RETAINER, VALVE | 1 | 21001- |
| 4 | ☆ | SPRING, UPPER VALVE (KIT A) | 1 | 21001- |
| 5 | 238-44-12160 | RETAINER, UPPER | 1 | 21001- |
| 6 | ☆ | O-RING (KIT B) | 1 | 21001- |
| 7 | 238-44-12180 | WASHER | 1 | 21001- |
| 8 | ☆ | RING (KIT B) | 1 | 21001- |
| 9 | ☆ | O-RING (KIT B) | 1 | 21001- |
| 10 | ☆ | RING (KIT B) | 1 | 21001- |
| 11 | ☆ | SPRING, RELAY PISTON (KIT A) | 1 | 21001- |
| 12 | 238-44-12230 | PISTON, RELAY | 1 | 21001- |
| 13 | ☆ | O-RING (KIT B) | 1 | 21001- |
| 14 | ☆ | O-RING (KIT B) | 1 | 21001- |
| 15 | ☆ | SPRING, PISTON RETURN (KIT A) | 1 | 21001- |
| | 238-44-00050 | STEM ASS'Y | 1 | 21001- |
| 16 | 238-44-12270 | STEM | 1 | 21001- |
| 17 | ☆ | SPRING, INNER (KIT A) | 1 | 21001- |
| 18 | ☆ | SPRING, OUTER (KIT A) | 1 | 21001- |
| 19 | 238-44-12310 | SLEEVE | 1 | 21001- |
| 20 | 238-44-12320 | WASHER, STEM | 1 | 21001- |
| 21 | 238-44-12330 | PISTON, UPPER | 1 | 21001- |
| 22 | ☆ | SPRING, RUBBER (KIT B) | 1 | 21001- |
| 23 | 238-44-12350 | SEAT, SPRING | 1 | 21001- |
| 24 | 01643-30623 | WASHER | 1 | 21001- |
| 25 | 01602-20619 | WASHER, SPRING | 1 | 21001- |
| 26 | 01580-10605 | NUT | 1 | 21001- |
| 27 | ☆ | O-RING (KIT B) | 1 | 21001- |
| 28 | 238-44-12370 | BODY, LOWER | 1 | 21001- |
| | 238-44-00070 | LOWER VALVE ASS'Y | 1 | 21001- |
| 29 | ☆ | VALVE, LOWER (KIT B) | 1 | 21001- |
| 30 | 238-44-12390 | RETAINER, VALVE | 1 | 21001- |
| 31 | ☆ | SPRING, LOWER VALVE (KIT A) | 1 | 21001- |
| 32 | 238-44-12420 | RETAINER, LOWER | 1 | 21001- |
| 33 | ☆ | O-RING (KIT B) | 1 | 21001- |
| 34 | 238-44-12440 | WASHER | 1 | 21001- |
| 35 | ☆ | RING (KIT B) | 1 | 21001- |
| 36 | ☆ | O-RING (KIT B) | 1 | 21001- |
| 37 | 238-44-12470 | COVER, EXHAUST | 1 | 21001- |
| 38 | ☆ | VALVE, EXHAUST (KIT B) | 1 | 21001- |

FIG NO. : 4403

| INDEX | PART NO. | DESCRIPTION | Q'TY | SERIAL NO. |
|---|---|---|---|---|
| 39 | ☆ | .O-RING.....(KIT B)... | 1 | 21001- |
| 40 | 01010-50625 | .BOLT..... | 4 | 21001- |
| 41 | 01602-20619 | .WASHER, SPRING..... | 4 | 21001- |
| 42 | 01220-40510 | .SCREW..... | 4 | 21001- |
| 43 | 01602-20513 | WASHER, SPRING..... | 4 | 21001- |
| | 238-44-00080 | MOUNT PLATE ASS'Y..... | 1 | 21001- |
| 44 | 238-44-12510 | .PLATE ASS'Y..... | 1 | 21001- |
| 45 | 238-44-12520 | ..PLUNGER..... | 1 | 21001- |
| 46 | 238-44-12530 | ..BOOT, PLUNGER..... | 1 | 21001- |
| 47 | 238-44-12540 | ..TREADLE..... | 1 | 21001- |
| 48 | 238-44-12550 | ..BOOT, TREADLE..... | 1 | 21001- |
| 49 | 238-44-12560 | ..PIN..... | 2 | 21001- |
| 50 | 238-44-12570 | ..PIN..... | 2 | 21001- |
| 51 | 238-44-12580 | ..ROLLER..... | 1 | 21001- |
| 52 | 238-44-12590 | ..PIPE..... | 1 | 21001- |
| 53 | 238-44-12610 | ..PIN, SPLIT..... | 2 | 21001- |
| 54 | 238-44-12620 | ..SCREW, SET..... | 1 | 21001- |
| 55 | 01580-10806 | ..NUT..... | 1 | 21001- |
| 56 | 01010-50822 | ..BOLT..... | 3 | 21001- |
| 57 | 01602-20825 | ..WASHER, SPRING..... | 3 | 21001- |
| 58 | 07043-00312 | .PLUG..... | 8 | 21001- |
| | | SERVICE KIT..... | | |
| KIT A | 238-44-05010 | SERVICE KIT, BRAKE VALVE SPRING..... | 1 | 21001- |
| KIT B | 238-44-05030 | SERVICE KIT, BRAKE VALVE REPAIR..... | 1 | 21001- |

# FIG. 4405A AIR DRYER (#23001-)

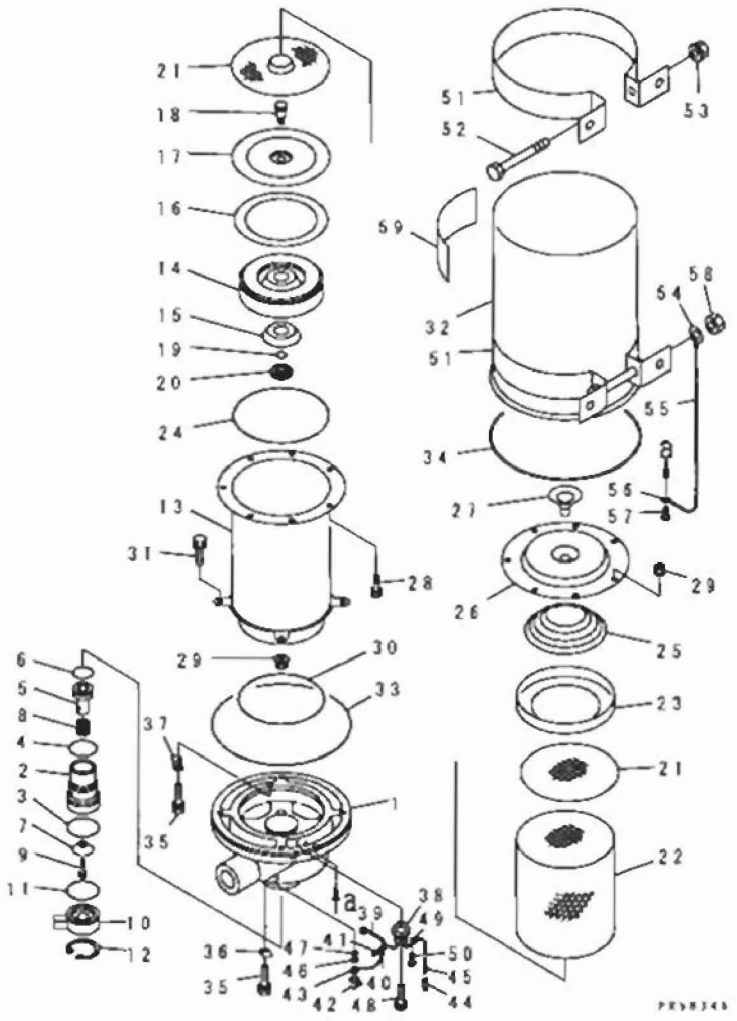

| INDEX | PART NO. | DESCRIPTION | Q'TY | SERIAL NO. |
|---|---|---|---|---|
| 1 | 234-44-42100 | DRYER, AIR | 1 | 23001- |
| | 234-44-42110 | VALVE ASS'Y | 1 | 23001- |
| 2 | ☆ | BODY | 1 | 23001- |
| 3 | ☆ | O-RING (KIT) | 1 | 23001- |
| 4 | ☆ | O-RING (KIT) | 1 | 23001- |
| 5 | ☆ | PISTON | 1 | 23001- |
| 6 | ☆ | O-RING (KIT) | 1 | 23001- |
| 7 | ☆ | VALVE (KIT) | 1 | 23001- |
| 8 | ☆ | SPRING | 1 | 23001- |
| 9 | ☆ | BOLT, (WITH WASHER) | 1 | 23001- |
| 10 | ☆ | BODY, EXHAUST | 1 | 23001- |
| 11 | ☆ | O-RING (KIT) | 1 | 23001- |
| 12 | ☆ | RING | 1 | 23001- |
| | 234-44-42120 | CARTRIDGE | 1 | 23001- |
| 13 | ☆ | CASE | 1 | 23001- |
| 14 | ☆ | FILTER, OIL (KIT) | 1 | 23001- |
| 15 | ☆ | GASKET (KIT) | 1 | 23001- |
| 16 | ☆ | GASKET (KIT) | 1 | 23001- |
| 17 | ☆ | PLATE | 1 | 23001- |
| 18 | ☆ | BOLT | 1 | 23001- |
| 19 | ☆ | O-RING (KIT) | 1 | 23001- |
| 20 | ☆ | SPACER | 1 | 23001- |
| 21 | ☆ | FILTER (KIT) | 2 | 23001- |
| 22 | ☆ | DESICCANT (KIT) | 1 | 23001- |
| 23 | ☆ | PLATE | 1 | 23001- |
| 24 | ☆ | O-RING (KIT) | 1 | 23001- |
| 25 | ☆ | SPRING | 1 | 23001- |
| 26 | ☆ | COVER | 1 | 23001- |
| 27 | ☆ | VALVE (KIT) | 1 | 23001- |
| 28 | ☆ | BOLT | 6 | 23001- |
| 29 | ☆ | NUT, (WITH WASHER) | 7 | 23001- |
| 30 | ☆ | O-RING (KIT) | 1 | 23001- |
| 31 | ☆ | BOLT, (WITH WASHER) | 4 | 23001- |
| 32 | ☆ | CHAMBER | 1 | 23001- |
| 33 | ☆ | O-RING (KIT) | 1 | 23001- |
| 34 | ☆ | RING | 1 | 23001- |
| 35 | ☆ | BOLT, (WITH WASHER) | 2 | 23001- |
| 36 | ☆ | PLATE | 1 | 23001- |
| 37 | ☆ | PLATE | 1 | 23001- |
| | 234-44-42130 | THERMOSTAT ASS'Y | 1 | 23001- |
| 38 | ☆ | THERMOSTAT | 1 | 23001- |
| 39 | ☆ | WIRE | 1 | 23001- |

FIG NO. : 4405A

| INDEX | PART NO | DESCRIPTION | Q'TY | SERIAL NO. |
|---|---|---|---|---|
| 40 | ☆ | ..WIRE | 1 | 23001- |
| 41 | ☆ | ..CONNECTOR | 1 | 23001- |
| 42 | ☆ | ..BOOT | 2 | 23001- |
| 43 | ☆ | ..TERMINAL | 2 | 23001- |
| 44 | ☆ | ..COVER | 1 | 23001- |
| 45 | ☆ | ..TERMINAL | 1 | 23001- |
| 46 | 234-44-42140 | .HEATER | 2 | 23001- |
| 47 | ☆ | .GASKET | 2 | 23001- |
| 48 | ☆ | .SCREW | 2 | 23001- |
| 49 | ☆ | .CLAMP | 1 | 23001- |
| 50 | ☆ | .SCREW | 1 | 23001- |
| 51 | ☆ | .BRACKET | 2 | 23001- |
| 52 | ☆ | .BOLT | 2 | 23001- |
| 53 | ☆ | .NUT, (WITH WASHER) | 2 | 23001- |
| 54 | ☆ | .TERMINAL | 1 | 23001- |
| 55 | ☆ | .WIRE | 1 | 23001- |
| 56 | ☆ | .TERMINAL | 1 | 23001- |
| 57 | ☆ | .SCREW | 1 | 23001- |
| 58 | ☆ | .NUT | 1 | 23001- |
| 59 | ☆ | .PLATE, CAUTION | 1 | 23001- |
| | | SERVICE KIT | | |
| KIT | 234-44-42150 | REPAIR KIT, AIR DRYER | 1 | 23001- |



GD705A-4

FIG NO. : 4451

# FIG. 4451 AIR TANK AND MOUNTING PARTS

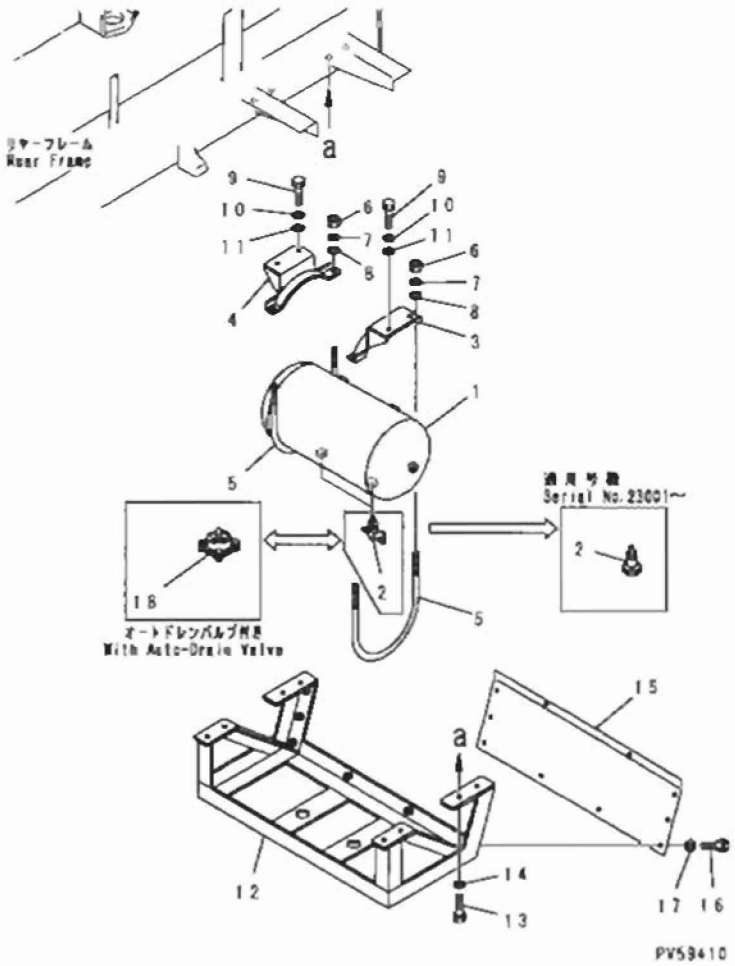


| INDEX | PART NO. | DESCRIPTION | Q'TY | SERIAL NO. |
|---|---|---|---|---|
| 1 | 234-44-11114 | TANK, AIR | 1 | 21001- |
| 2 | 565-44-12700 | VALVE ASS'Y, DRAIN | 2 | 23001- |
| | 500-44-14140 | VALVE, DRAIN | 2 | 21001-23000 |
| 3 | 232-44-54830 | SUPPORT, L.H. | 1 | 21001- |
| 4 | 232-44-54820 | SUPPORT, R.H. | 1 | 21001- |
| 5 | 232-44-54810 | U-BOLT | 2 | 21001- |
| 6 | 01580-11008 | NUT | 4 | 21001- |
| 7 | 01643-31032 | WASHER | 4 | 21001- |
| 8 | 01643-31032 | WASHER | 4 | 21001- |
| 9 | 01010-51030 | BOLT | 4 | 21001- |
| 10 | 01643-31032 | WASHER | 4 | 21001- |
| 11 | 01643-31032 | WASHER | 4 | 21001- |
| 12 | 234-44-31811 | GUARD | 1 | 23001- |
| | 234-44-31810 | GUARD | 1 | 21001-23000 |
| 13 | 01010-81425 | BOLT | 8 | 23001- |
| | □01010-51425 | BOLT | 8 | 21001-23000 |
| 14 | 01643-31445 | WASHER | 8 | 21001- |
| 15 | 234-44-31820 | COVER | 1 | 21001- |
| 16 | 01010-81020 | BOLT | 8 | 23001- |
| | □01010-51020 | BOLT | 8 | 21100-23000 |
| | 01010-51020 | BOLT | 10 | 21001-21099 |
| 17 | 01643-31032 | WASHER | 8 | 21100- |
| | 01643-31032 | WASHER | 10 | 21001-21099 |
| 18 | 232-44-53510 | VALVE, DRAIN | 2 | 21001-23000 |

# FIG. 4453A AIR PIPING (AIR COMPRESSOR TO AIR TANK)
## (WITHOUT AIR DRYER) (#23001-)

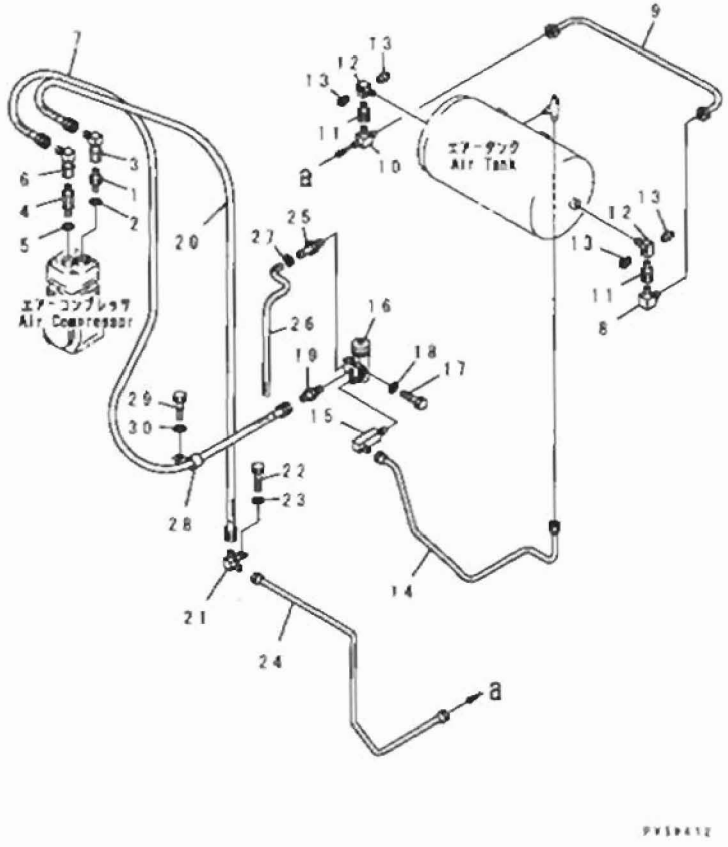


| INDEX | PART NO | DESCRIPTION | Q'TY | SERIAL NO |
|---|---|---|---|---|
| 1 | 234-44-61110 | UNION | 1 | 23001- |
| 2 | 07005-02416 | GASKET | 1 | 23001- |
| 3 | 234-44-61130 | ELBOW | 1 | 23001- |
| 4 | 234-44-61120 | UNION | 1 | 23001- |
| 5 | 07005-01412 | GASKET | 1 | 23001- |
| 6 | 234-44-61130 | ELBOW | 1 | 23001- |
| 7 | 07102-20408 | HOSE | 1 | 23001- |
| 8 | 232-44-52270 | ELBOW | 1 | 23001- |
| 9 | 234-44-31540 | TUBE | 1 | 23001- |
| 10 | 238-44-11460 | TEE | 1 | 23001- |
| 11 | 234-44-11242 | VALVE ASS'Y, CHECK | 2 | 23001- |
| 12 | 232-44-54720 | ELBOW | 2 | 23001- |
| 13 | 07042-20211 | PLUG | 2 | 23001- |
| 14 | 234-44-41131 | TUBE | 1 | 23001- |
| 15 | 238-44-11340 | ELBOW | 1 | 23001- |
| 16 | (232-44-52611) | GOVERNOR, AIR | 1 | 23001- |
| 17 | 01010-50875 | BOLT | 2 | 23001- |
| 18 | 01643-30823 | WASHER | 2 | 23001- |
| 19 | 237-60-14550 | NIPPLE | 1 | 23001- |
| 20 | 07102-20405 | HOSE | 1 | 23001- |
| 21 | 234-44-61140 | ELBOW | 1 | 23001- |
| 22 | 01010-81225 | BOLT | 1 | 23001- |
| 23 | 01643-31232 | WASHER | 1 | 23001- |
| 24 | 234-44-61410 | TUBE | 1 | 23001- |
| 25 | 234-44-22380 | JOINT | 1 | 23001- |
| 26 | 07288-20604 | HOSE | 1 | 23001- |
| 27 | 07285-00055 | CLIP | 1 | 23001- |
| 28 | 08036-02514 | CLIP | 2 | 23001- |
| 29 | 01010-81220 | BOLT | 1 | 23001- |
| 30 | 01643-31232 | WASHER | 1 | 23001- |

# FIG. 4454A AIR PIPING (AIR COMPRESSOR TO AIR TANK) (WITH AIR DRYER) (#23001-)

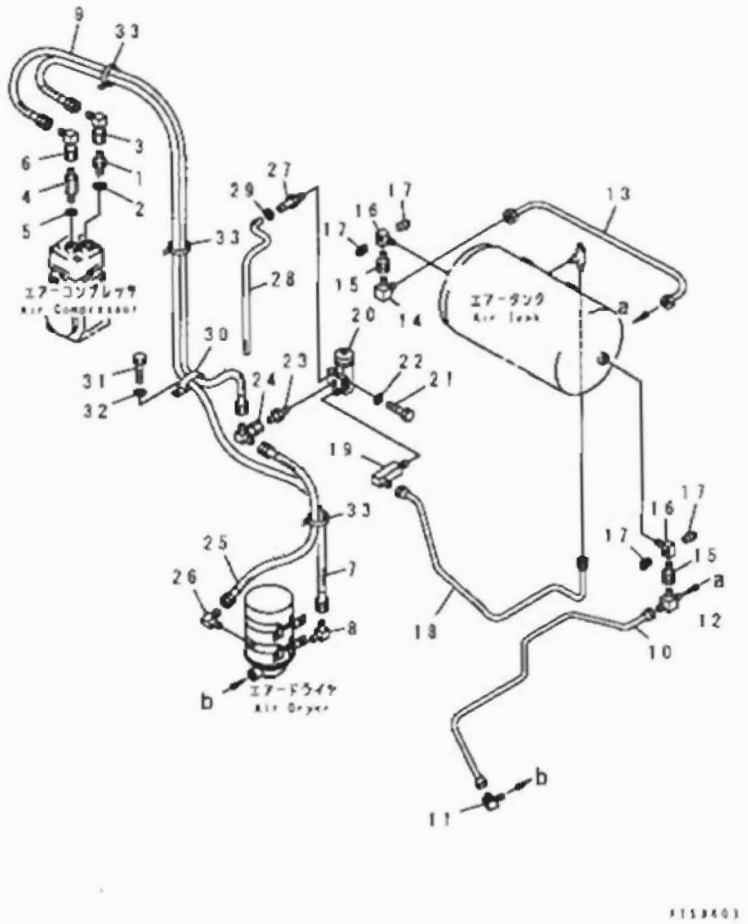


| INDEX | PART NO. | DESCRIPTION | Q'TY | SERIAL NO. |
|---|---|---|---|---|
| 1 | 234-44-61110 | UNION | 1 | 23001- |
| 2 | 07005-02416 | GASKET | 1 | 23001- |
| 3 | 234-44-61130 | ELBOW | 1 | 23001- |
| 4 | 234-44-61120 | UNION | 1 | 23001- |
| 5 | 07005-01412 | GASKET | 1 | 23001- |
| 6 | 234-44-61130 | ELBOW | 1 | 23001- |
| 7 | 07103-50419 | HOSE | 1 | 23001- |
| 8 | 234-943-6260 | ELBOW | 1 | 23001- |
| 9 | 07102-20408 | HOSE | 1 | 23001- |
| 10 | 234-44-41251 | TUBE | 1 | 23001- |
| 11 | 232-44-52270 | ELBOW | 1 | 23001- |
| 12 | 238-44-11460 | TEE | 1 | 23001- |
| 13 | 234-44-31540 | TUBE | 1 | 23001- |
| 14 | 238-44-11460 | TEE | 1 | 23001- |
| 15 | 234-44-11242 | VALVE ASS'Y, CHECK | 2 | 23001- |
| 16 | 232-44-54720 | ELBOW | 2 | 23001- |
| | 232-44-54720 | ELBOW, L.H. (AUTO TRANSMISSION SPEC.) | 1 | 23001- |
| | 234-44-51230 | ELBOW, R.H. (AUTO TRANSMISSION SPEC.) | 1 | 23001- |
| 17 | 07042-20211 | PLUG | 2 | 23001- |
| 18 | 234-44-41131 | TUBE | 1 | 23001- |
| 19 | 238-44-11340 | ELBOW | 1 | 23001- |
| 20 | (232-44-52611) | GOVERNOR, AIR | 1 | 23001- |
| 21 | 01010-50875 | BOLT | 2 | 23001- |
| 22 | 01643-30823 | WASHER | 2 | 23001- |
| 23 | 237-60-14550 | NIPPLE | 1 | 23001- |
| 24 | 234-44-61210 | ELBOW | 1 | 23001- |
| 25 | 07103-50416 | HOSE | 1 | 23001- |
| 26 | 234-44-41280 | ELBOW | 1 | 23001- |
| 27 | 234-44-22380 | JOINT | 1 | 23001- |
| 28 | 07288-20604 | HOSE | 1 | 23001- |
| 29 | 07285-00055 | CLIP | 1 | 23001- |
| 30 | 08036-02514 | CLIP | 2 | 23001- |
| 31 | 01010-81220 | BOLT | 1 | 23001- |
| 32 | 01643-31232 | WASHER | 1 | 23001- |
| 33 | 08034-00834 | BAND | 3 | 23001- |

# FIG. 4455 AIR TANK AND MOUNTING PARTS (WITH RIPPER)

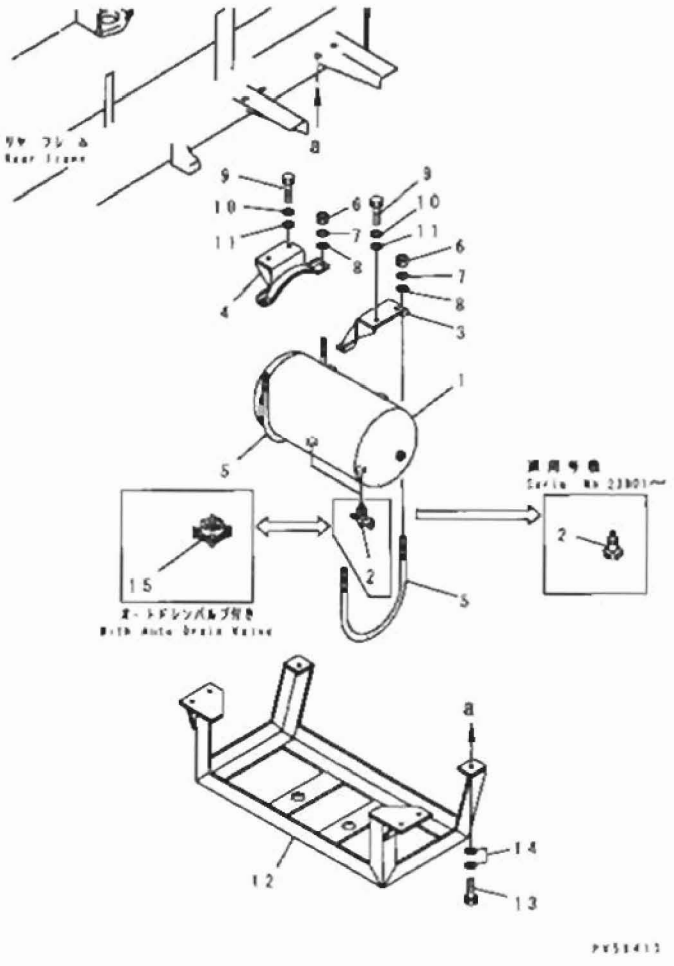


| INDEX | PART NO. | DESCRIPTION | Q'TY | SERIAL NO. |
|---|---|---|---|---|
| 1 | 234-44-11114 | TANK, AIR | 1 | 21001- |
| 2 | 565-44-12700 | VALVE ASS'Y, DRAIN | 2 | 23001- |
| | 500-44-14140 | VALVE, DRAIN | 2 | 21001-23000 |
| 3 | 232-44-54830 | SUPPORT, L.H. | 1 | 21001- |
| 4 | 232-44-54820 | SUPPORT, R.H. | 1 | 21001- |
| 5 | 232-44-54810 | U-BOLT | 2 | 21001- |
| 6 | 01580-11008 | NUT | 4 | 21001- |
| 7 | 01643-31032 | WASHER | 4 | 21001- |
| 8 | 01643-31032 | WASHER | 4 | 21001- |
| 9 | 01010-81030 | BOLT | 4 | 23001- |
| | □01010-51030 | BOLT | 4 | 21001-23000 |
| 10 | 01643-31032 | WASHER | 4 | 21001- |
| 11 | 01643-31032 | WASHER | 4 | 21001- |
| 12 | 234-44-31830 | GUARD | 1 | 21001- |
| 13 | 01010-81430 | BOLT | 6 | 23001- |
| | □01010-51430 | BOLT | 6 | 21001-23000 |
| 14 | 01643-31445 | WASHER | 12 | 21001- |
| 15 | 232-44-53510 | VALVE, DRAIN | 2 | 21001-23000 |

FIG NO. : 4471A

## FIG. 4471A AIR DRYER AND MOUNTING PARTS (#23001-)

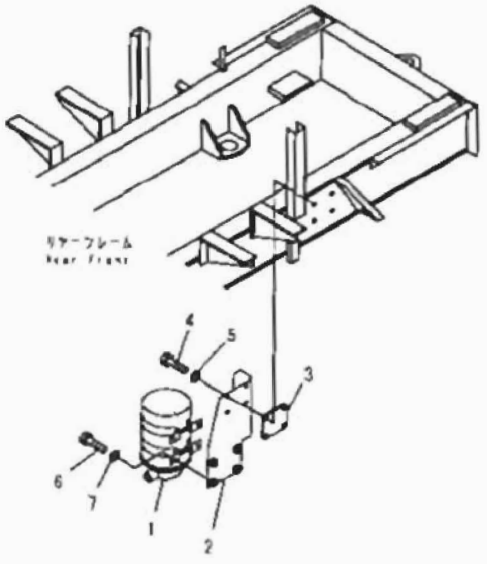


| INDEX | PART NO | DESCRIPTION | Q'TY | SERIAL NO |
|---|---|---|---|---|
| 1 | (234-44-42100) | DRYER, AIR | 1 | 23001- |
| 2 | 234-44-31741 | BRACKET | 1 | 23001- |
| 3 | 238-46-12730 | SEAT (WELDED) | 1 | 23001- |
| 4 | 01010-81225 | BOLT | 4 | 23001- |
| 5 | 01643-31232 | WASHER | 4 | 23001- |
| 6 | 01010-81025 | BOLT | 4 | 23001- |
| 7 | 01643-31032 | WASHER | 4 | 23001- |

FIG NO. : 4481A

# FIG. 4481A BRAKE PIPING (1/2) (#23001-)

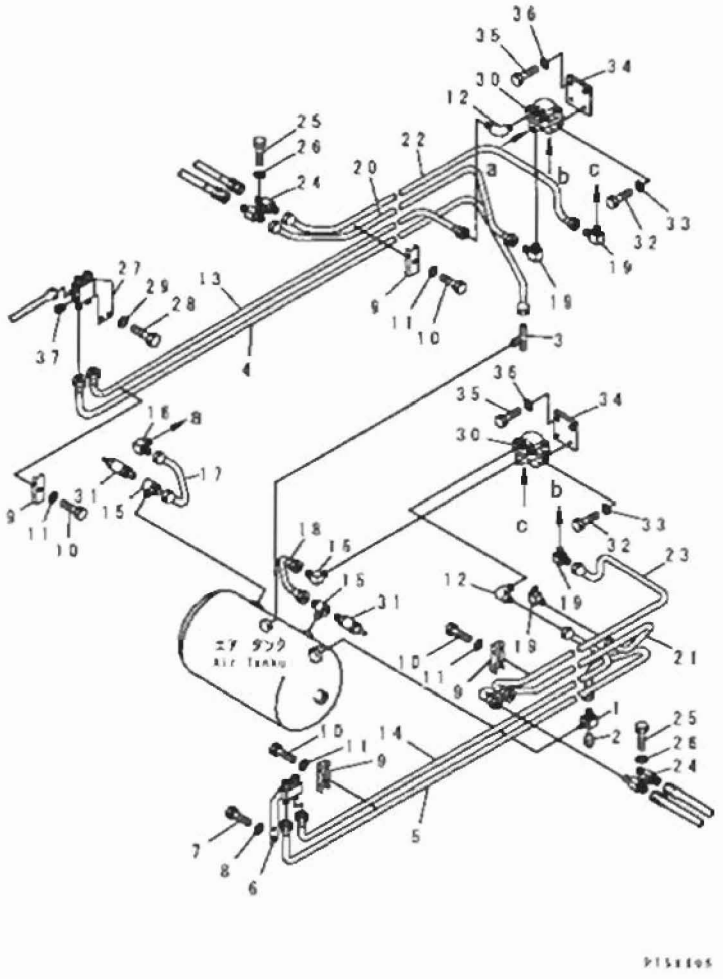

| INDEX | PART NO. | DESCRIPTION | Q'TY | SERIAL NO. |
|---|---|---|---|---|
| 1 | 232-44-52580 | ELBOW | 1 | 21008- |
| 2 | 07042-20211 | PLUG | 1 | 23001- |
| 3 | 07218-61013 | TEE | 1 | 21001- |
| 4 | 234-44-31130 | TUBE | 1 | 21001- |
| 5 | 234-44-31141 | TUBE | 1 | 23001- |
| 6 | 234-44-61150 | JOINT | 1 | 23001- |
| 7 | 01010-80816 | BOLT | 2 | 23001- |
| 8 | 01643-30823 | WASHER | 2 | 23001- |
| 9 | 232-43-54351 | CLIP | 14 | 23001- |
| 10 | 01010-80816 | BOLT | 14 | 23001- |
| 11 | 01643-30823 | WASHER | 14 | 23001- |
| 12 | 07217-61013 | ELBOW | 2 | 21001- |
| 13 | 234-44-31420 | TUBE | 1 | 21001- |
| 14 | 234-44-31431 | TUBE | 1 | 23001- |
| 15 | 232-44-52580 | ELBOW | 2 | 21001- |
| 16 | 232-44-52970 | ELBOW | 2 | 21001- |
| 17 | 234-44-31160 | TUBE | 1 | 21001- |
| 18 | 234-44-31170 | TUBE | 1 | 21001- |
| 19 | 232-44-52970 | ELBOW | 4 | 21001- |
| 20 | 234-44-31180 | TUBE | 1 | 21001- |
| 21 | 234-44-31190 | TUBE | 1 | 21001- |
| 22 | 234-44-31210 | TUBE | 1 | 21001- |
| 23 | 234-44-31220 | TUBE | 1 | 21001- |
| 24 | 234-44-31450 | JOINT | 2 | 21001- |
| 25 | 01010-81225 | BOLT | 2 | 23001- |
| 26 | 01643-31232 | WASHER | 2 | 21001- |
| 27 | 234-44-61170 | BLOCK | 1 | 23001- |
| 28 | 01010-80816 | BOLT | 2 | 23001- |
| 29 | 01643-30823 | WASHER | 2 | 21001- |
| 30 | (565-44-11201) | VALVE ASS'Y. RELAY | 2 | 21001- |
| 31 | 232-44-52620 | VALVE ASS'Y. SAFETY | 2 | 21001- |
| 32 | 01010-50830 | BOLT | 4 | 21001- |
| 33 | 01643-30823 | WASHER | 4 | 21001- |
| 34 | 234-44-31630 | PLATE | 2 | 21001- |
| 35 | 01010-50830 | BOLT | 4 | 21001- |
| 36 | 01643-30823 | WASHER | 4 | 21001- |
| 37 | 07042-20211 | PLUG | 1 | 23001- |

# FIG. 4483A BRAKE PIPING (2/2) (#23001-)

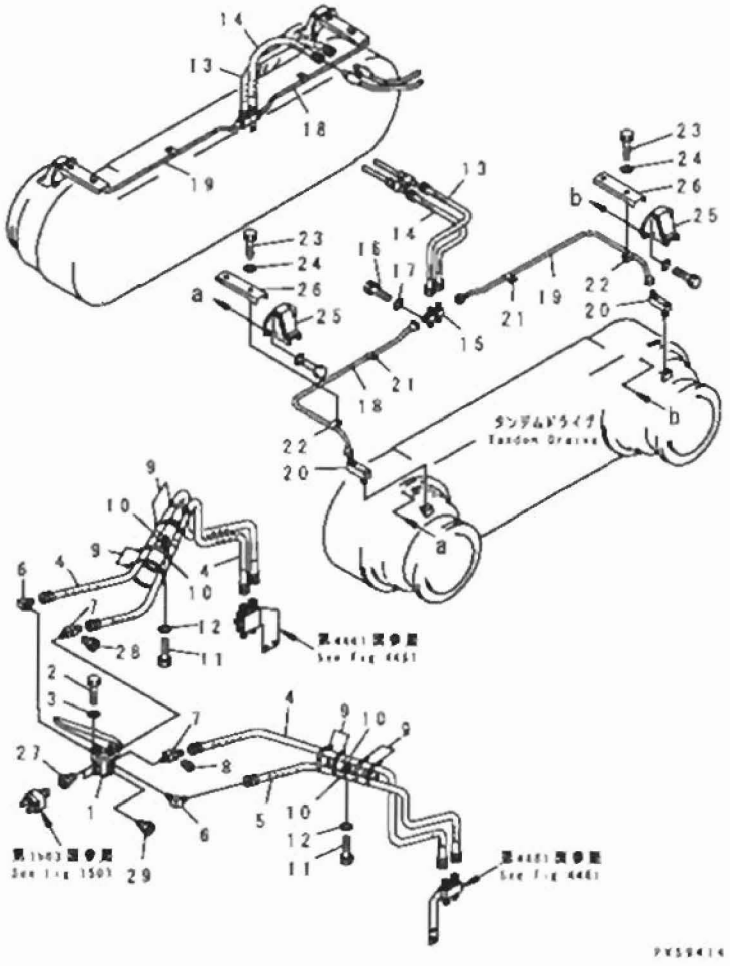


| INDEX | PART NO | DESCRIPTION | Q'TY | SERIAL NO. |
|---|---|---|---|---|
| 1 | (238-44-12110) | VALVE ASS'Y, DUAL BRAKE | 1 | 21001- |
| 2 | 01010-51035 | BOLT | 3 | 21001- |
| 3 | 01643-31032 | WASHER | 3 | 21001- |
| 4 | 07102-20415 | HOSE | 3 | 23001- |
| 5 | 07102-20416 | HOSE | 1 | 23001- |
| 6 | 232-44-52450 | ELBOW | 2 | 21001- |
| 7 | 238-44-11390 | ELBOW | 2 | 21001- |
| 8 | 07042-20211 | PLUG | 2 | 21001- |
| 9 | 08034-00834 | BAND | 10 | 21001- |
| 10 | 08036-02514 | CLIP | 4 | 21001- |
| 11 | 01010-81016 | BOLT | 2 | 23001- |
| 12 | 01643-31032 | WASHER | 2 | 21001- |
| 13 | 07103-50406 | HOSE | 2 | 21001- |
| 14 | 07103-50405 | HOSE | 2 | 21001- |
| 15 | 234-44-31460 | JOINT | 2 | 21001- |
| 16 | 01010-81250 | BOLT | 2 | 23001- |
| 17 | 01643-31232 | WASHER | 2 | 21001- |
| 18 | 234-44-31240 | TUBE | 2 | 21001- |
| 19 | 234-44-31230 | TUBE | 2 | 21001- |
| 20 | 234-44-31350 | ELBOW | 4 | 21001- |
| 21 | 232-44-54680 | CLIP | 4 | 21001- |
| 22 | 234-04-11420 | CLIP | 4 | 21001- |
| 23 | 01010-80816 | BOLT | 8 | 21001- |
| 24 | 01643-30823 | WASHER | 8 | 21001- |
| 25 | 234-44-31340 | PROTECTOR | 4 | 21001- |
| 26 | 234-44-31470 | COVER, (WITH TUBE PROTECT) (OP) | 4 | 21001- |
| 27 | 07326-10302 | ADAPTER | 2 | 21001- |
| 28 | 07326-10201 | ADAPTER | 1 | 23001- |
| 29 | 07034-70312 | PLUG | 2 | 23001- |

# FRAME AND GUARD

# FIG. 5001 FRONT FRAME

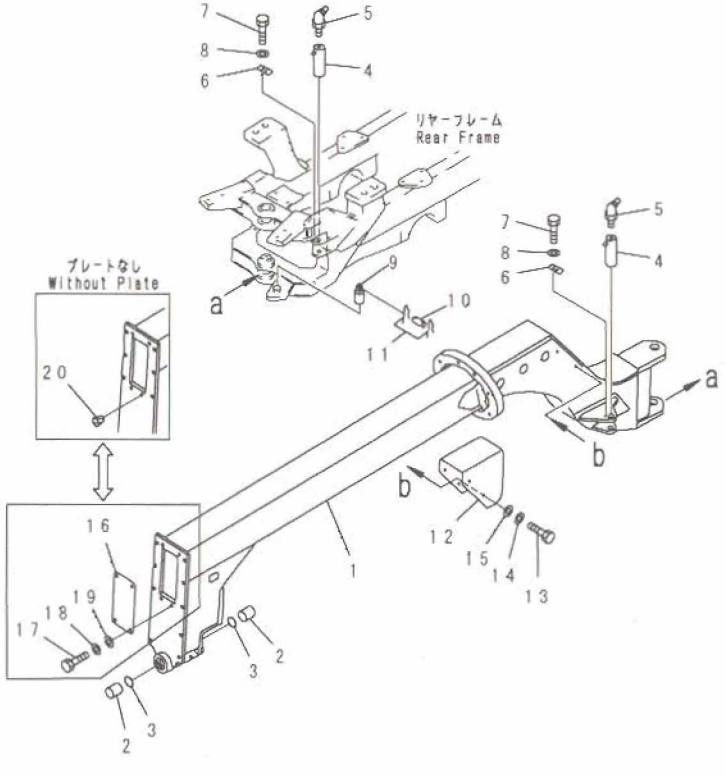


| INDEX | PART NO. | DESCRIPTION | Q'TY | SERIAL NO. |
|---|---|---|---|---|
| 1 | 234-46-61200 | FRAME, FRONT | 1 | 23001- |
| | 234-46-00110 | FRAME, FRONT | 1 | 21001-23000 |
| 2 | 234-46-31280 | BUSHING | 2 | 21001- |
| 3 | 07000-F5095 | O-RING | 2 | -- |
| | □07000-15095 | O-RING | 2 | 23001- |
| | 07000-15100 | O-RING | 2 | 21001-23000 |
| 4 | 234-46-31290 | PIN | 4 | 21001- |
| 5 | 07020-00675 | FITTING, GREASE | 6 | 21001- |
| 6 | 04082-00206 | LOCK | 4 | 21001- |
| 7 | 01010-81225 | BOLT | 8 | 23001- |
| | □01010-51225 | BOLT | 8 | 21001-23000 |
| 8 | 01643-31232 | WASHER | 8 | 21001- |
| 9 | 232-45-13130 | PIN | 1 | 23001- |
| | 234-46-34130 | PIN | 1 | 21086-23000 |
| | 232-45-13130 | PIN | 1 | 21001-21085 |
| 10 | 234-54-31171 | PIN | 1 | 21086- |
| | □234-54-31170 | PIN | 1 | 21001-21085 |
| 11 | 04052-11038 | PIN | 2 | -- |
| | □04052-01038 | PIN, SNAP | 2 | 21001- |
| 12 | 234-46-31261 | COVER | 1 | 21001- |
| 13 | 01010-81020 | BOLT | 4 | 23001- |
| | □01010-51020 | BOLT | 4 | 21001-23000 |
| 14 | 01643-31032 | WASHER | 4 | 21001- |
| 15 | 01643-31032 | WASHER | 4 | 21001- |
| 16 | 232-46-51350 | PLATE | 1 | 21001- |
| 17 | 01010-81225 | BOLT | 4 | 23001- |
| | □01010-51225 | BOLT | 4 | 21001-23000 |
| 18 | 01643-31232 | WASHER | 4 | 21001- |
| 19 | 01643-31232 | WASHER | 4 | 21001- |
| 20 | 07049-02430 | PLUG | 4 | 21001- |

# FIG. 5011 REAR FRAME

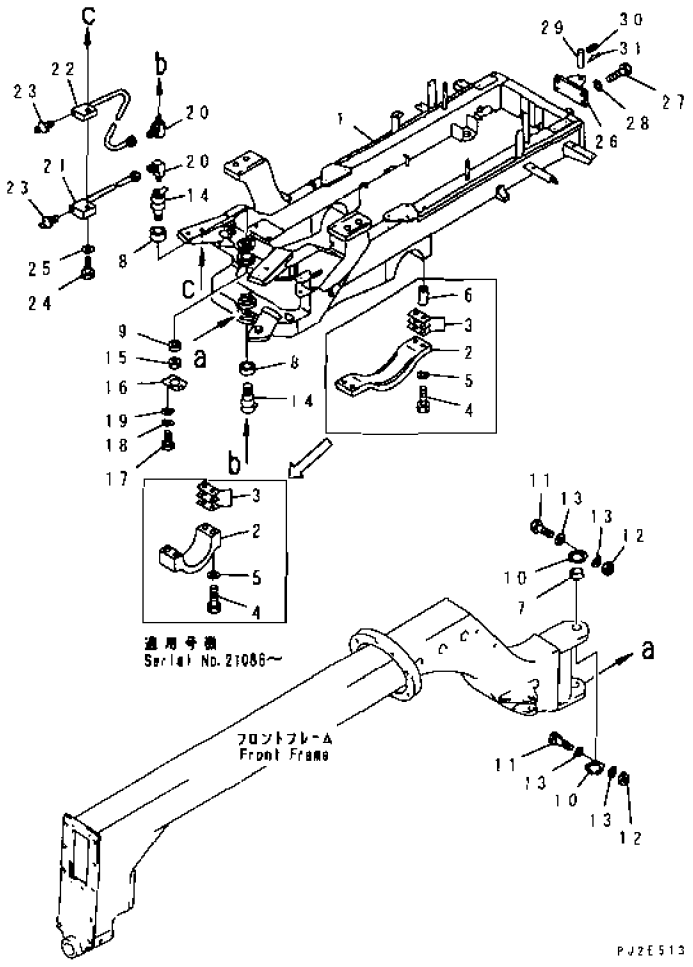


| INDEX | PART NO. | DESCRIPTION | Q'TY | SERIAL NO |
|---|---|---|---|---|
| 1 | 234-46-62210 | FRAME, REAR | 1 | 23001- |
| | 234-46-00210 | FRAME, REAR | 1 | 21001-23000 |
| 2 | 234-46-32581 | CAP | 2 | 21086- |
| | ■234-46-42250 | CAP | 2 | 21001-21085 |
| | | (234-46-32581, , 234-46-42240) | | |
| 3 | 234-46-01010 | SHIM ASS'Y | 2 | 21001- |
| 4 | 01011-82455 | BOLT | 8 | 21001- |
| 5 | 01643-32460 | WASHER | 8 | 21001- |
| 6 | 234-46-42240 | SPACER | 8 | 21001-21085 |
| 7 | 232-46-53210 | BUSHING | 2 | 21001- |
| 8 | 236-46-13380 | BUSHING | 2 | 21001- |
| 9 | 236-46-13390 | BUSHING | 2 | 21001- |
| 10 | 236-46-13610 | O-RING | 4 | 21001- |
| 11 | 235-46-11710 | BOLT | 4 | 21080- |
| | 236-46-13620 | BOLT | 4 | 21001-21079 |
| 12 | 01598-00608 | NUT | 4 | 21014- |
| | 01598-10608 | NUT | 4 | 21001-21013 |
| 13 | 01640-20610 | WASHER | 8 | 21001- |
| 14 | 232-46-54190 | PIN | 2 | 21001- |
| 15 | 236-46-13410 | NUT | 2 | 21001- |
| 16 | 236-46-13420 | PLATE | 2 | 21001- |
| 17 | 01010-81630 | BOLT | 4 | 23001- |
| | 01010-51630 | BOLT | 4 | 21001-23000 |
| 18 | 01643-31645 | WASHER | 4 | 21001- |
| 19 | 01643-31645 | WASHER | 4 | 21001- |
| 20 | 232-46-54560 | ELBOW | 2 | 21001- |
| 21 | 232-46-54570 | TUBE | 1 | 21001- |
| 22 | 232-46-54571 | TUBE | 1 | 21001- |
| 23 | 07020-00000 | FITTING, GREASE | 2 | 21001- |
| 24 | 01010-81250 | BOLT | 1 | 23001- |
| | □01010-51250 | BOLT | 1 | 21001-23000 |
| 25 | 01643-31232 | WASHER | 1 | 21001- |
| 26 | 238-46-81120 | DRAWBER | 1 | 21001- |
| 27 | 01010-82465 | BOLT | 4 | 21001- |
| 28 | 01643-32460 | WASHER | 4 | 21001- |
| 29 | 232-46-11711 | PIN | 1 | 21001- |
| 30 | 04025-01065 | PIN, SPRING | 1 | 21001- |
| 31 | 232-46-11920 | PIN, SNAP | 1 | 21001- |

# FIG. 5013 REAR FRAME (WITH RIPPRE) (#23001-)

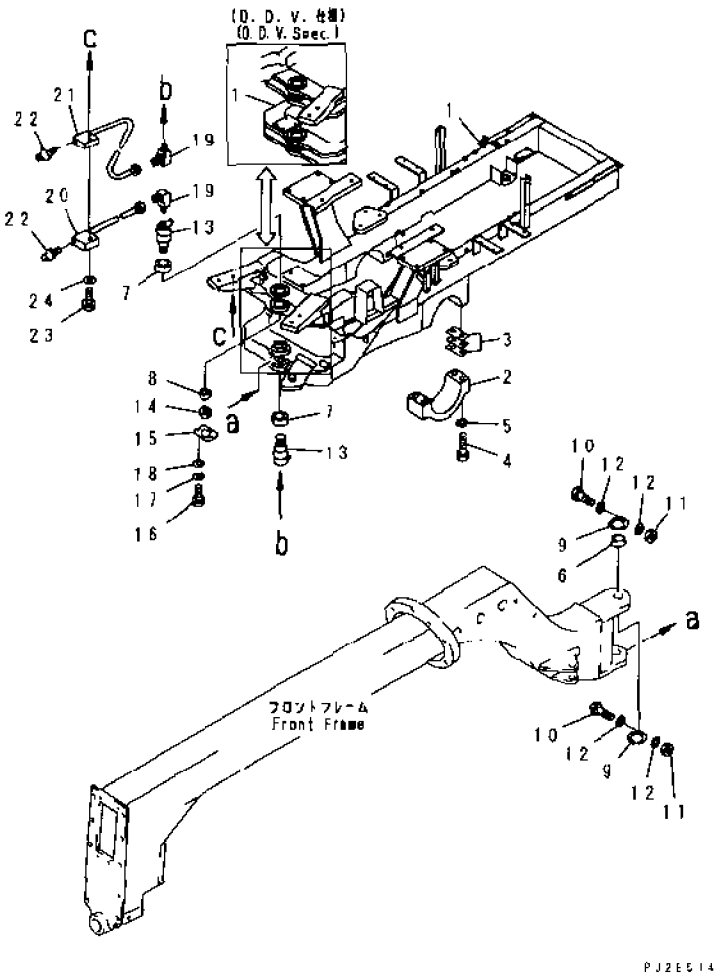


| INDEX | PART NO | DESCRIPTION | Q'TY | SERIAL NO |
|---|---|---|---|---|
| 1 | 234-785-3310 | FRAME, REAR | 1 | 23001- |
| | 234-60-72441 | REAR FRAME, (D. D. V. SPEC.) | 1 | 23001- |
| 2 | 234-46-32581 | CAP | 2 | 23001- |
| 3 | 234-46 01010 | SHIM ASS'Y | 2 | 23001- |
| 4 | 01011-82455 | BOLT | 8 | 23001- |
| 5 | 01643-32460 | WASHER | 8 | 23001- |
| 6 | 232-46-53210 | BUSHING | 2 | 23001- |
| 7 | 236-46-13380 | BUSHING | 2 | 23001- |
| 8 | 236-46-13390 | BUSHING | 2 | 23001- |
| 9 | 236-46-13610 | O-RING | 4 | 23001- |
| 10 | 235-46-11710 | BOLT | 4 | 23001- |
| 11 | 01598-00608 | NUT | 4 | 23001- |
| 12 | 01640-20610 | WASHER | 8 | 23001- |
| 13 | 232-46-54190 | PIN | 2 | 23001- |
| 14 | 236-46-13410 | NUT | 2 | 23001- |
| 15 | 236-46-13420 | PLATE | 2 | 23001- |
| 16 | 01010-81630 | BOLT | 4 | 23001- |
| 17 | 01643-31645 | WASHER | 4 | 23001- |
| 18 | 01643-31645 | WASHER | 4 | 23001- |
| 19 | 232-46-54560 | ELBOW | 2 | 23001- |
| 20 | 232-46-54570 | TUBE | 1 | 23001- |
| 21 | 232-46-54571 | TUBE | 1 | 23001- |
| 22 | 07020-00000 | FITTING, GREASE | 2 | 23001- |
| 23 | 01010-81250 | BOLT | 1 | 23001- |
| 24 | 01643-31232 | WASHER | 1 | 23001- |

# FIG. 5051 HOOK

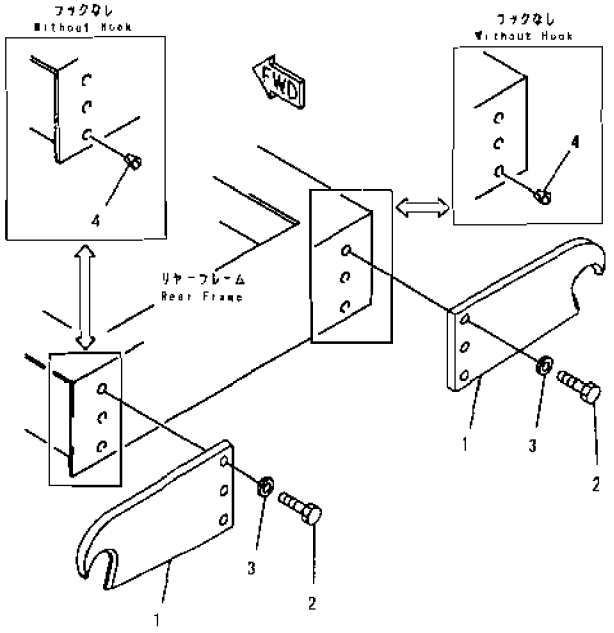


PJ53916

| INDEX | PART NO. | DESCRIPTION | Q'TY | SERIAL NO |
|---|---|---|---|---|
| 1 | 234-98-31240 | HOOK | 2 | 21001- |
| 2 | 01010-52465 | BOLT | 6 | 21002- |
| | □01010-52470 | BOLT | 6 | 21001-21001 |
| 3 | 01643-32460 | WASHER | 6 | 21001- |
| 4 | 07049-02430 | PLUG, (WITHOUT HOOK) | 6 | 21001- |

FIG NO. : 5053

# FIG. 5053 HOOK (WITH RIPPER)

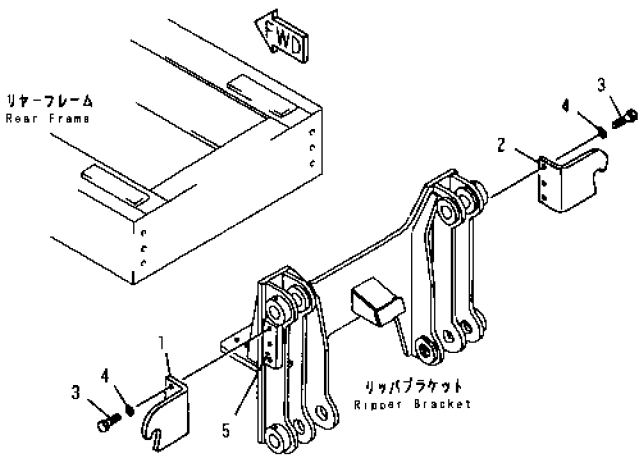


PW55762

| INDEX | PART NO. | DESCRIPTION | Q'TY | SERIAL NO. |
|---|---|---|---|---|
| 1 | 234-98-31220 | HOOK, L.H. | 1 | 21001- |
| 2 | 234-98-31230 | HOOK, R.H. | 1 | 21001- |
| 3 | 01010-52465 | BOLT | 6 | 21001- |
| 4 | 01643-32460 | WASHER | 6 | 21001- |
| 5 | 234-98-31250 | PLATE (WELDED) | 2 | 21001- |

# FIG. 5101A RADIATOR GUARD (#23001-)

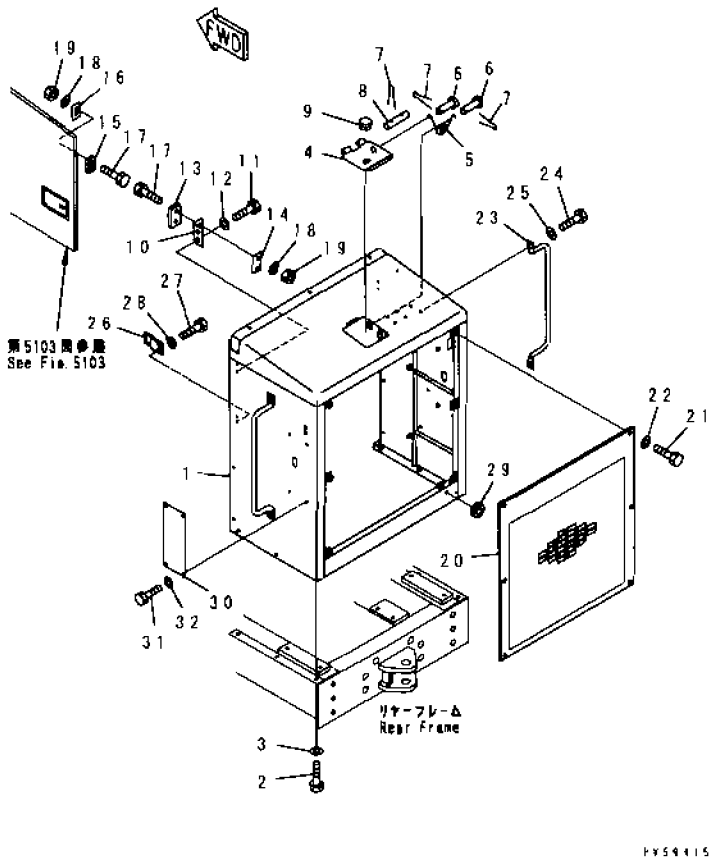


| INDEX | PART NO. | DESCRIPTION | Q'TY | SERIAL NO |
|---|---|---|---|---|
| 1 | 234-54-65210 | GRILLE, RADIATOR | 1 | 23001- |
| 2 | 01010-81025 | BOLT | 6 | 23001- |
| 3 | 01643-31032 | WASHER | 6 | 23001- |
| 4 | 238-54-15810 | COVER | 1 | 23001- |
| 5 | 233-54-22520 | SPRING | 1 | 23001- |
| 6 | 04205-10616 | PIN | 2 | 23001- |
| 7 | 04050-11610 | PIN, COTTER | 4 | 23001- |
| 8 | 131-54-11270 | PIN | 1 | 23001- |
| 9 | 09415-01610 | CAP | 1 | 23001- |
| 10 | 23F-54-15340 | BRACKET | 2 | 23001- |
| 11 | 01010-81020 | BOLT | 4 | 23001- |
| 12 | 01643-31032 | WASHER | 4 | 23001- |
| 13 | 566-54-13410 | STRIKER | 2 | 23001- |
| 14 | 203-54-56790 | PLATE | 2 | 23001- |
| 15 | 566-54-14420 | STOPPER | 2 | 23001- |
| 16 | 203-54-52610 | PLATE | 2 | 23001- |
| 17 | 01225-40820 | SCREW | 8 | 23001- |
| 18 | 566-54-13570 | WASHER | 8 | 23001- |
| 19 | 01580-10806 | NUT | 8 | 23001- |
| 20 | 234-54-65260 | MASK | 1 | 23001- |
| 21 | 01010-81016 | BOLT | 6 | 23001- |
| 22 | 01643-31032 | WASHER | 6 | 23001- |
| 23 | 234-54-33210 | STAY | 2 | 23001- |
| 24 | 01010-81030 | BOLT | 4 | 23001- |
| 25 | 01643-31032 | WASHER | 4 | 23001- |
| 26 | 23F-54-15270 | HOOK | 2 | 23001- |
| 27 | 01010-81020 | BOLT | 4 | 23001- |
| 28 | 01643-31032 | WASHER | 4 | 23001- |
| 29 | 08037-01008 | GROMMET | 1 | 23001- |
| 30 | 234-54-65290 | COVER | 2 | 23001- |
| 31 | 01010-81020 | BOLT | 8 | 23001- |
| 32 | 01643-31032 | WASHER | 8 | 23001- |

# FIG. 5103 ENGINE HOOD AND SIDE DOOR(#23001-)

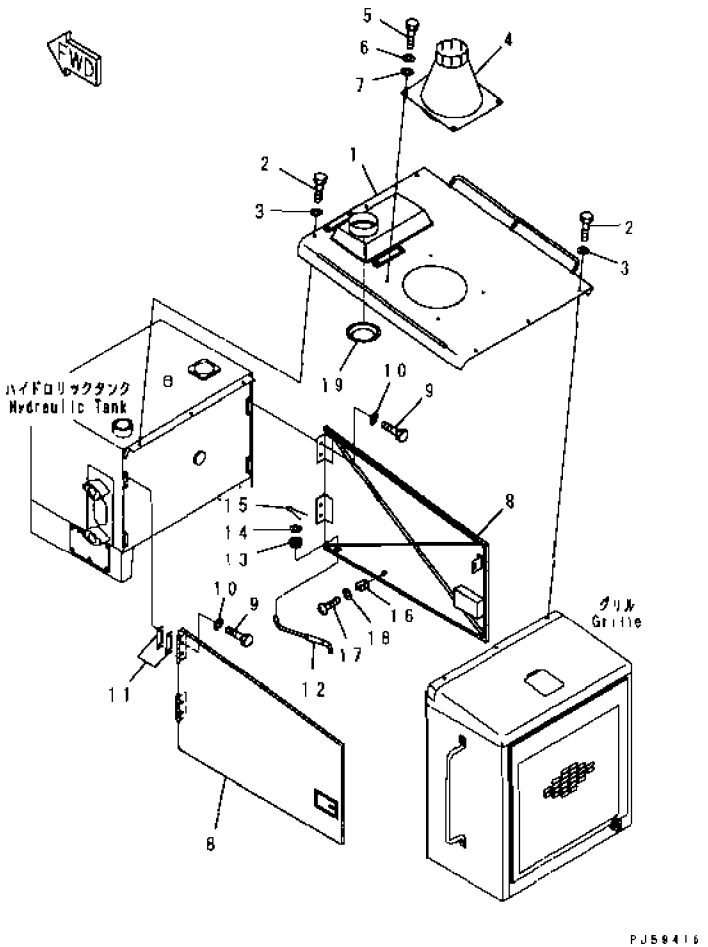


| INDEX | PART NO | DESCRIPTION | Q'TY. | SERIAL NO |
|---|---|---|---|---|
| 1 | 234-02-61110 | HOOD, ENGINE | 1 | 23001- |
| 2 | 01010-81025 | BOLT | 6 | 23001- |
| 3 | 234-54-13252 | WASHER | 6 | 23001- |
| 4 | 234-54-65610 | BRACKET | 1 | 23001- |
| 5 | 01010-51025 | BOLT | 4 | 23001- |
| 6 | 01643-31032 | WASHER | 4 | 23001- |
| 7 | 232-43-58360 | WASHER | 4 | 23001- |
| 8 | 234-54-65310 | DOOR, SIDE, L.H. | 1 | 23001- |
| | 234-54-65330 | DOOR, SIDE, R.H. | 1 | 23001- |
| | 421-54-11363 | LOCK ASS'Y (WELDED) | 1 | 23001- |
| 9 | 01010-51020 | BOLT | 8 | 23001- |
| 10 | 01643-31032 | WASHER | 8 | 23001- |
| 11 | 234-54-65350 | SHIM, 1.0MM, (REPAIR PARTS) | 10 | 23001- |
| 12 | 235-54-21760 | BAR | 2 | 23001- |
| 13 | 08037-01008 | GROMMET | 2 | 23001- |
| 14 | 01643-31032 | WASHER | 2 | 23001- |
| 15 | 04050-13018 | PIN, COTTER | 2 | 23001- |
| 16 | 283-06-17130 | CLIP | 2 | 23001- |
| 17 | 01220-60610 | SCREW | 2 | 23001- |
| 18 | 01643-30623 | WASHER | 2 | 23001- |
| 19 | 234-54-32160 | BOOT | 1 | 23001- |

# FIG. 5121 BATTERY COVER AND LOWER SIDE COVER (#23001-)

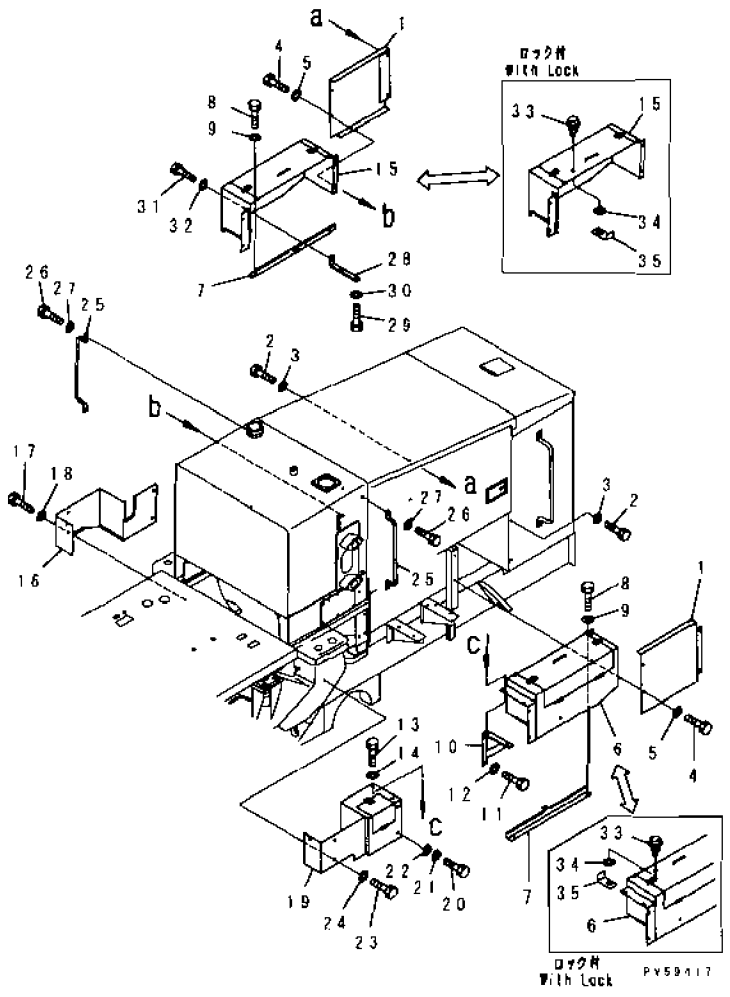


| INDEX | PART NO | DESCRIPTION | Q'TY | SERIAL NO. |
|---|---|---|---|---|
| 1 | 234-54-65450 | COVER, L.H. | 1 | 23001- |
| | 234-54-65470 | COVER, R.H. | 1 | 23001- |
| 2 | 01010-81020 | BOLT | 4 | 23001- |
| 3 | 01643-31032 | WASHER | 4 | 23001- |
| 4 | 01010-81025 | BOLT | 4 | 23001- |
| 5 | 234-54-13252 | WASHER | 4 | 23001- |
| 6 | 234-54-65830 | BOX, BATTERY, L.H. | 1 | 23001- |
| | 234-54-65970 | BOX, BATTERY, L.H. (WITH LOCK) | 1 | 23001- |
| | 23F-54-15570 | .CATCH (WELDED) | 2 | 23001- |
| | 23F-54-15560 | .HINGE (WELDED) | 2 | 23001- |
| 7 | 234-54-65570 | BRACKET, L.H. | 1 | 23001- |
| | 234-54-65580 | BRACKET, R.H. | 1 | 23001- |
| 8 | 01010-81025 | BOLT | 4 | 23058- |
| | □01010-81020 | BOLT | 4 | 23001-23057 |
| 9 | 01643-31032 | WASHER | 4 | 23001- |
| 10 | 234-54-65860 | BRACKET | 1 | 23001- |
| 11 | 01010-81025 | BOLT | 2 | 23001- |
| 12 | 01643-31032 | WASHER | 2 | 23001- |
| 13 | 01010-81030 | BOLT | 2 | 23001- |
| 14 | 234-54-13252 | WASHER | 2 | 23001- |
| 15 | 234-54-65820 | BOX, BATTERY, R.H. | 1 | 23001- |
| | 234-54-65960 | BOX, BATTERY, R.H. (WITH LOCK) | 1 | 23001- |
| | 23F-54-15570 | .CATCH (WELDED) | 1 | 23001- |
| | 23F-54-15560 | .HINGE (WELDED) | 1 | 23001- |
| 16 | 234-54-65850 | COVER, R.H. | 1 | 23001- |
| 17 | 01010-81025 | BOLT | 5 | 23001- |
| 18 | 234-54-13252 | WASHER | 5 | 23001- |
| 19 | 234-54-65840 | COVER | 1 | 23001- |
| 20 | 01010-81020 | BOLT | 2 | 23001- |
| 21 | 234-54-13252 | WASHER | 2 | 23001- |
| 22 | 01643-31032 | WASHER | 2 | 23001- |
| 23 | 01010-81025 | BOLT | 3 | 23001- |
| 24 | 234-54-13252 | WASHER | 3 | 23001- |
| 25 | 234-54-65780 | STAY | 2 | 23001- |
| 26 | 01010-81020 | BOLT | 4 | 23001- |
| 27 | 01643-31032 | WASHER | 4 | 23001- |
| 28 | 234-54-65710 | BRACKET | 2 | 23001- |
| 29 | 01010-81035 | BOLT | 4 | 23001- |
| 30 | 01643-31032 | WASHER | 4 | 23001- |
| 31 | 01010-81020 | BOLT | 2 | 23058- |
| | □01010-81016 | BOLT | 2 | 23001-23057 |
| 32 | 234-54-13252 | WASHER | 2 | 23001- |

# FIG. 5121 BATTERY COVER AND LOWER SIDE COVER(#23001-)

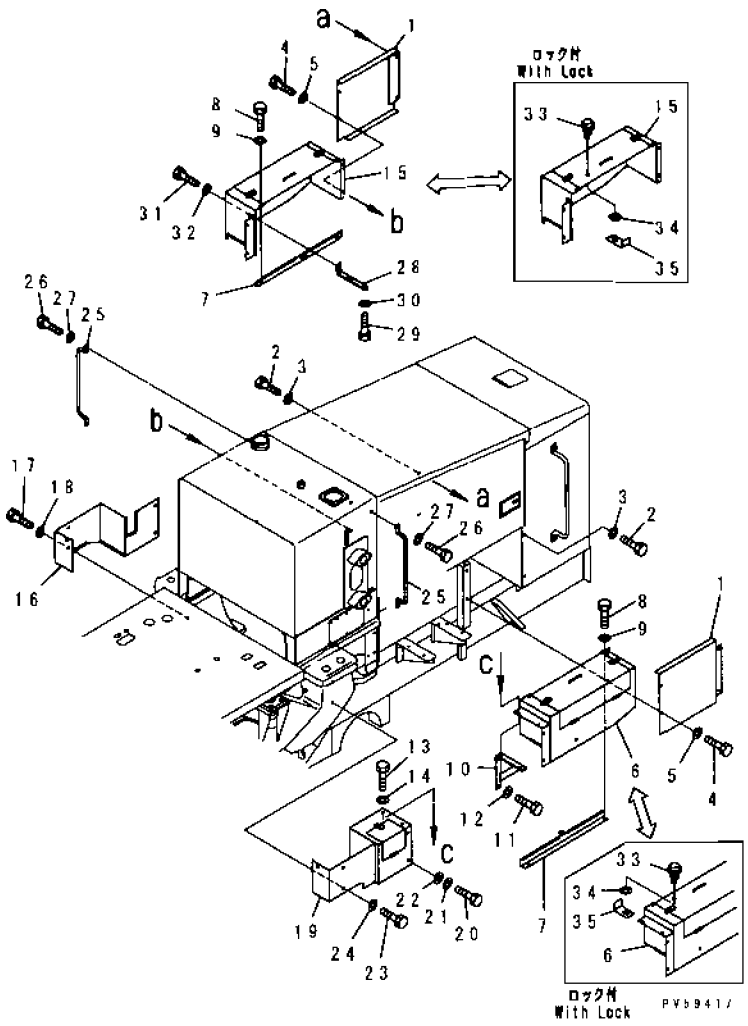


| INDEX | PART NO. | DESCRIPTION | Q'TY | SERIAL NO. |
|---|---|---|---|---|
| 33 | 232-855-1870 | LOCK | 2 | 23001- |
| 34 | 01641-20812 | WASHER | 4 | 23001- |
| 35 | 235-54-21640 | STOPPER | 2 | 23001- |

FIG NO. : 5171A

# FIG. 5171A TRANSMISSION UNDER GUARD (#23001-)

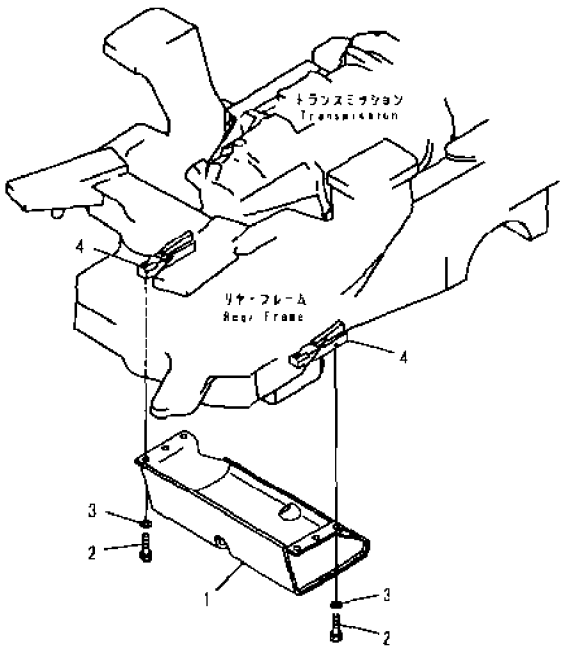


| INDEX | PART NO | DESCRIPTION | Q TY | SERIAL NO |
|---|---|---|---|---|
| 1 | 234-915-6140 | GUARD | 1 | 23001- |
| 2 | 01010-52050 | BOLT | 6 | 23001- |
| 3 | 01643-32060 | WASHER | 6 | 23001- |
| 4 | 234-915-7220 | SEAT (WELDED) | 2 | 23001- |

# FIG. 5201A OPERATOR'S COMPARTMENT (FLOOR FRAME AND STEP) (#23001-)

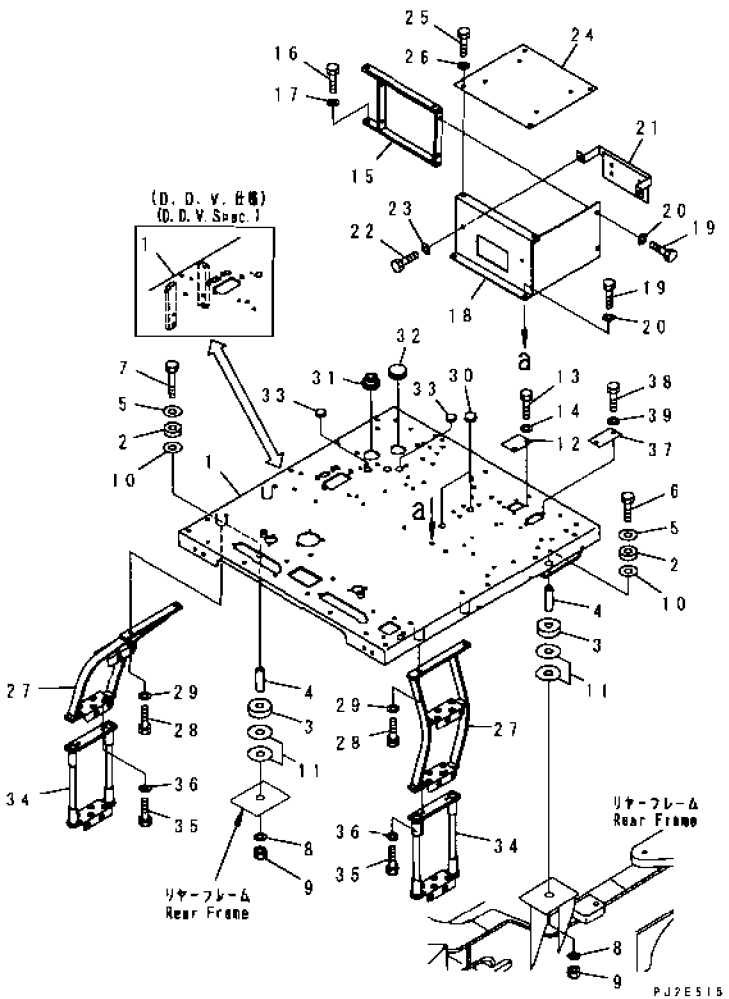


| INDEX | PART NO. | DESCRIPTION | Q'TY | SERIAL NO. |
|---|---|---|---|---|
| 1 | 234-54-61120 | FRAME, FLOOR | 1 | 23001- |
| | 234-60-72450 | FRAME, FLOOR (D.D.V. SPEC.) | 1 | 23001- |
| 2 | 237-54-11270 | CUSHION | 4 | 23001- |
| 3 | 237-54-11280 | CUSHION | 4 | 23001- |
| 4 | 234-54-11470 | COLLAR | 4 | 23001- |
| 5 | 234-54-11480 | PLATE | 4 | 23001- |
| 6 | 01010-81690 | BOLT | 2 | 23001- |
| 7 | 01011-81600 | BOLT | 2 | 23001- |
| 8 | 01643-31645 | WASHER | 4 | 23001- |
| 9 | 01580-11613 | NUT | 4 | 23001- |
| 10 | 238-54-11150 | WASHER | 4 | 23001- |
| 11 | 237-01-00020 | SHIM ASS'Y | 1 | 23001- |
| 12 | 234-54-65940 | PLATE | 1 | 23001- |
| 13 | 01010-80820 | BOLT | 2 | 23001- |
| 14 | 01643-30823 | WASHER | 2 | 23001- |
| 15 | 234-54-61360 | BRACKET | 1 | 23001- |
| 16 | 01010-81235 | BOLT | 4 | 23001- |
| 17 | 01643-31232 | WASHER | 4 | 23001- |
| 18 | 234-54-61350 | BRACKET | 1 | 23001- |
| 19 | 01010-81225 | BOLT | 4 | 23001- |
| 20 | 01643-31232 | WASHER | 4 | 23001- |
| 21 | 23F-54-15490 | BRACKET | 1 | 23001- |
| 22 | 01010-81220 | BOLT | 2 | 23001- |
| 23 | 01643-31232 | WASHER | 2 | 23001- |
| 24 | 234-54-61320 | PLATE | 1 | 23001- |
| 25 | 01010-81220 | BOLT | 4 | 23001- |
| 26 | 01643-31232 | WASHER | 4 | 23001- |
| 27 | 234-54-61420 | STEP, L.H. | 1 | 23001- |
| | 234-54-61430 | STEP, R.H. | 1 | 23001- |
| 28 | 01010-81230 | BOLT | 4 | 23001- |
| 29 | 01643-31232 | WASHER | 4 | 23001- |
| 30 | 09415-02110 | CAP | 2 | 23001- |
| 31 | 08037-13550 | GROMMET | 1 | 23001- |
| 32 | 08037-05016 | GROMMET | 1 | 23001- |
| 33 | 08037-02512 | GROMMET | 2 | 23001- |
| 34 | 234-54-61410 | STEP | 2 | 23001- |
| 35 | 01010-81030 | BOLT | 4 | 23001- |
| 36 | 01643-31032 | WASHER | 4 | 23001- |
| 37 | 234-54-61130 | PLATE | 1 | 23001- |
| 38 | 01010-81020 | BOLT | 2 | 23001- |
| 39 | 01643-31032 | WASHER | 2 | 23001- |

# FIG. 5203 OPERATOR'S COMPARTMENT (CONTROL PANEL BOX)

(#23001-)

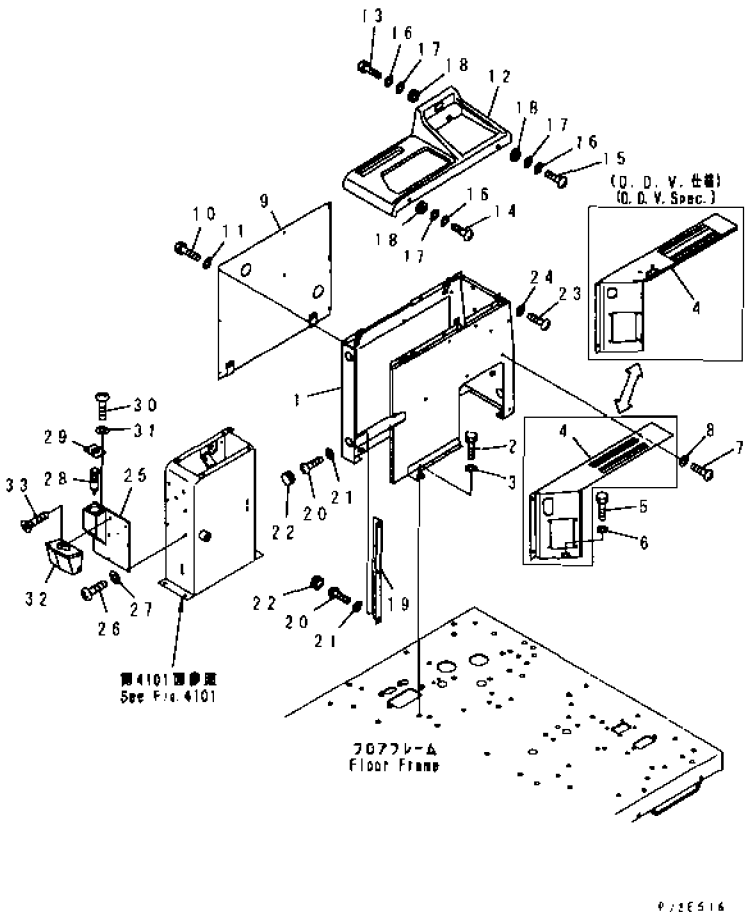


| INDEX | PART NO | DESCRIPTION | Q'TY | SERIAL NO |
|---|---|---|---|---|
| 1 | 234-54-61210 | BOX, CONTROL PANEL | 1 | 23001- |
| 2 | 01010-81225 | BOLT | 4 | 23001- |
| 3 | 01643-31232 | WASHER | 4 | 23001- |
| 4 | 234-54-61221 | BOX | 1 | 23001- |
| | 234-60-72390 | BOX, (D.D.V. SPEC) | 1 | 23001- |
| 5 | 01010-81225 | BOLT | 1 | 23001- |
| 6 | 01643-31232 | WASHER | 1 | 23001- |
| 7 | 01220-40620 | SCREW | 5 | 23001- |
| 8 | 01643-30623 | WASHER | 5 | 23001- |
| 9 | 234-54-61240 | COVER | 1 | 23001- |
| 10 | 01010-80625 | BOLT | 8 | 23001- |
| 11 | 01643-30623 | WASHER | 8 | 23001- |
| 12 | 23B-54-12221 | COVER | 1 | 23001- |
| 13 | 01010-80630 | BOLT | 2 | 23001- |
| 14 | 01220-40616 | SCREW | 1 | 23001- |
| 15 | 01220-40630 | SCREW | 1 | 23001- |
| 16 | 01642-20608 | WASHER | 4 | 23001- |
| 17 | 01643-30823 | WASHER | 4 | 23001- |
| 18 | 23D-54-21310 | SEAT | 4 | 23001- |
| 19 | 23B-54-12230 | PLATE | 1 | 23001- |
| 20 | 01220-40620 | SCREW | 5 | 23001- |
| 21 | 01641-20608 | WASHER | 5 | 23001- |
| 22 | 09415-02520 | CAP | 5 | 23001- |
| 23 | 01220-40620 | SCREW | 6 | 23001- |
| 24 | 01643-30623 | WASHER | 6 | 23001- |
| 25 | 234-54-61230 | BOX, (MODIFIED PARTS) | 1 | 23001- |
| | 234-54-53291 | .BRACKET | 1 | 23001- |
| 26 | 01220-40612 | SCREW | 4 | 23001- |
| 27 | 01643-30623 | WASHER | 4 | 23001- |
| 28 | 232-957-7741 | LIGHTER, CIGAR | 1 | 23001- |
| 29 | 234-54-53510 | PLATE | 1 | 23001- |
| 30 | 01220-40412 | SCREW | 2 | 23001- |
| 31 | 01641-20405 | WASHER | 2 | 23001- |
| 32 | 20T-54-75380 | ASHTRAY | 1 | 23001- |
| 33 | 01224-40408 | SCREW | 3 | 23001- |

# FIG. 5205 OPERATOR'S COMPARTMENT (SIDE COVER) (#23001-)

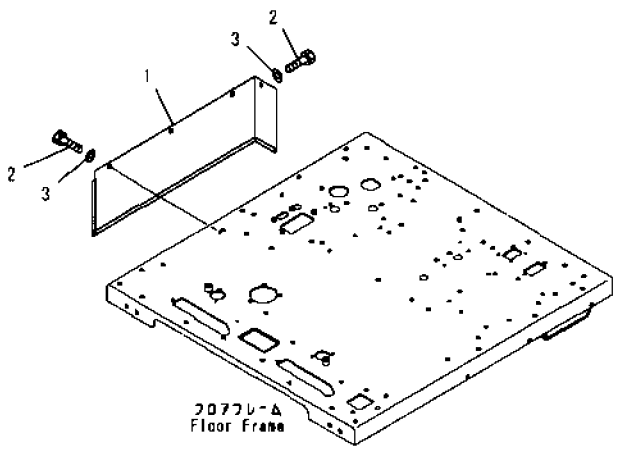


PVS9420

| INDEX | PART NO | DESCRIPTION | Q'TY | SERIAL NO. |
|---|---|---|---|---|
| 1 | 234-54-65920 | COVER, R. H | 1 | 23001- |
| 2 | 01010-81030 | BOLT | 4 | 23001- |
| 3 | 234-54-13252 | WASHER | 4 | 23001- |

# FIG. 5251A HAND RAIL (#23001-)

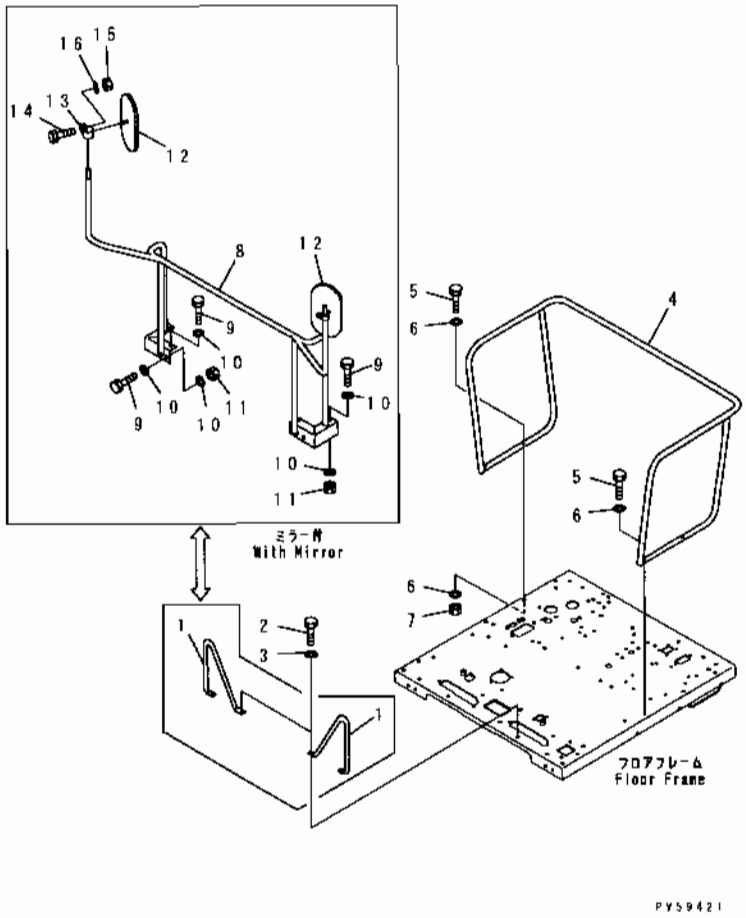


| INDEX | PART NO | DESCRIPTION | Q'TY | SERIAL NO |
|---|---|---|---|---|
| 1 | 23A-54-11350 | GUARD | 1 | 23001- |
| 2 | 01010-51225 | BOLT | 4 | 23001- |
| 3 | 01643-31232 | WASHER | 4 | 23001- |
| 4 | 23A-54-11310 | GUARD | 1 | 23001- |
| 5 | 01010-81260 | BOLT | 4 | 23001- |
| 6 | 01643-31232 | WASHER | 8 | 23001- |
| 7 | 01580-11210 | NUT | 2 | 23001- |
| 8 | 23E-54-12250 | BRACKET, (WITH MIRROR) | 1 | 23001- |
| 9 | 01010-81230 | BOLT, (WITH MIRROR) | 8 | 23001- |
| 10 | 01643-31232 | WASHER, (WITH MIRROR) | 14 | 23001- |
| 11 | 01580-11210 | NUT, (WITH MIRROR) | 6 | 23001- |
| 12 | 08174-10001 | MIRROR | 2 | 23001- |
| 13 | 232-06-15151 | PIVOT, (WITH MIRROR) | 2 | 23001- |
| 14 | 01010-50825 | BOLT, (WITH MIRROR) | 2 | 23001- |
| 15 | 01580-10806 | NUT, (WITH MIRROR) | 2 | 23001- |
| 16 | 01643-30823 | WASHER, (WITH MIRROR) | 2 | 23001- |

# FIG. 5271A FLOOR MAT (#23001-)

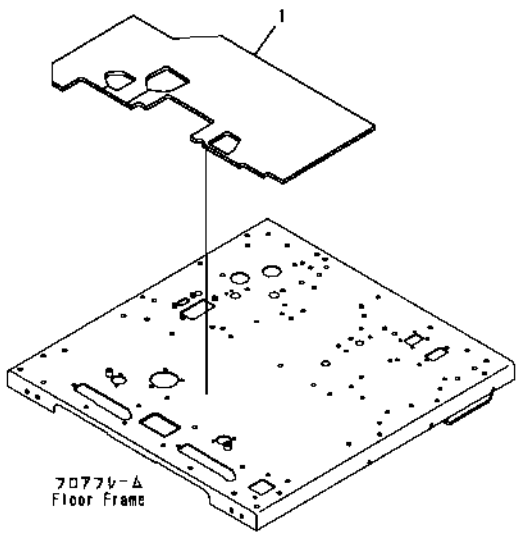


PY59422

| INDEX | PART NO. | DESCRIPTION | Q'TY | SERIAL NO. |
|---|---|---|---|---|
| 1 | 234-856-4120 | MAT, FLOOR | 1 | 23001- |

# FIG. 5301B OPERATOR'S SEAT (#23001-)

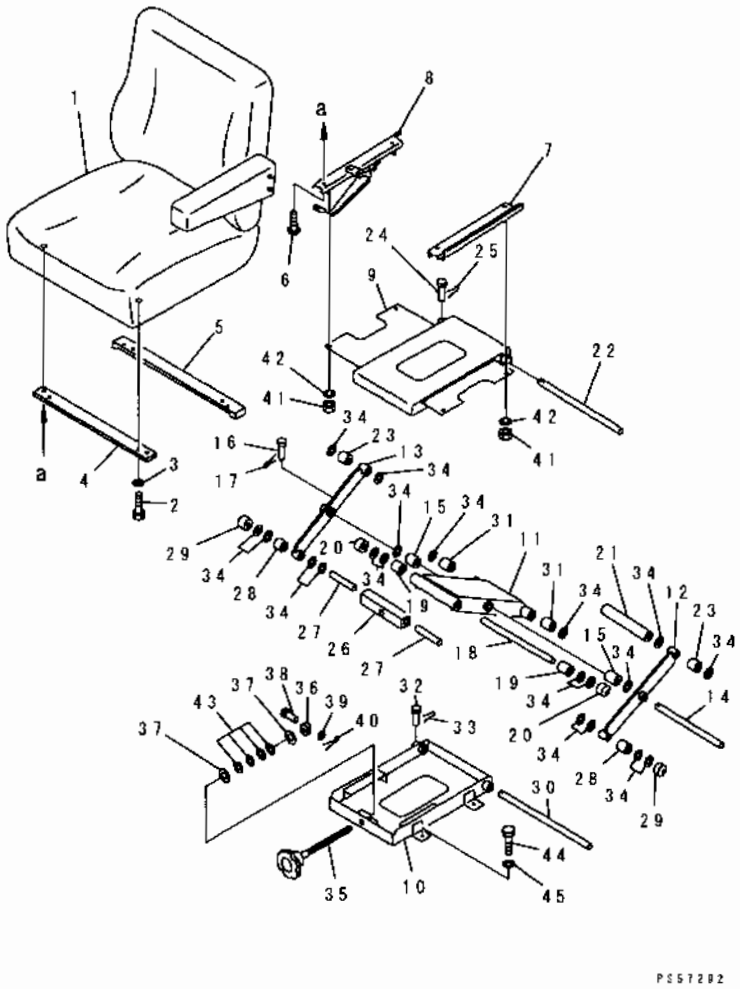


| INDEX | PART NO. | DESCRIPTION | Q'TY | SERIAL NO. |
|---|---|---|---|---|
| 1 | 23B-57-21401 | OPERATOR'S SEAT A | 1 | 23001- |
| | 23B-57-21400 | OPERATOR'S SEAT A | 1 | 23001- |
| | 21U-57-11230 | .REST, ARM | 1 | 23001- |
| 2 | 01010-50820 | BOLT | 4 | 23001- |
| 3 | 01643-30823 | WASHER | 4 | 23001- |
| | 23E-57-11100 | STAND ASS'Y | 1 | 23001- |
| 4 | 23E-57-11210 | PLATE | 1 | 23001- |
| 5 | 23E-57-11220 | .PLATE | 1 | 23001- |
| 6 | 01220-40812 | .SCREW | 4 | 23001- |
| 7 | 236-54-22331 | .ADJUSTER ASS'Y, L.H. | 1 | 23001- |
| 8 | 236-54-22351 | .ADJUSTER ASS'Y, R.H. | 1 | 23001- |
| 9 | 23E-57-11110 | .BRACKET | 1 | 23001- |
| 10 | 23E-57-11130 | .BRACKET | 1 | 23001- |
| 11 | 205-57-72520 | .LINK | 1 | 23001- |
| 12 | 205-57-72530 | .LINK | 1 | 23001- |
| 13 | 205-57-72540 | .LINK | 1 | 23001- |
| 14 | 205-57-63170 | .PIN | 1 | 23001- |
| 15 | 203-57-21280 | .BUSHING | 2 | 23001- |
| 16 | 207-57-11240 | .PIN | 1 | 23001- |
| 17 | 04050-11610 | .PIN, COTTER | 1 | 23001- |
| 18 | 205-57-63190 | .PIN | 1 | 23001- |
| 19 | 203-57-21280 | .BUSHING | 2 | 23001- |
| 20 | 203-57-21310 | .ROLLER | 2 | 23001- |
| 21 | 205-57-72560 | .COLLAR | 1 | 23001- |
| 22 | 205-57-63180 | .PIN | 1 | 23001- |
| 23 | 203-57-21280 | .BUSHING | 2 | 23001- |
| 24 | 207-57-11240 | PIN | 1 | 23001- |
| 25 | 04050-11610 | .PIN, COTTER | 1 | 23001- |
| 26 | 205-57-72570 | .BAR | 1 | 23001- |
| 27 | 207-57-11220 | .PIN | 2 | 23001- |
| 28 | 203-57-21280 | .BUSHING | 2 | 23001- |
| 29 | 203-57-21310 | .ROLLER | 2 | 23001- |
| 30 | 205-57-63160 | PIN | 1 | 23001- |
| 31 | 203-57-21280 | BUSHING | 2 | 23001- |
| 32 | 207-57-11240 | .PIN | 1 | 23001- |
| 33 | 04050-11610 | .PIN, COTTER | 1 | 23001- |
| 34 | 23E-57-00010 | .SHIM ASS'Y | 2 | 23001- |
| | 203-57-21320 | .SHIM, 0.5MM | 10 | 23001- |
| 35 | 23E-57-11150 | .KNOB | 1 | 23001- |
| 36 | 23E-57-11160 | .NUT | 1 | 23001- |
| 37 | 01643-31445 | .WASHER | 2 | 23001- |
| 38 | 205-57-63250 | .PIN | 1 | 23001- |

# FIG. 5301B OPERATOR'S SEAT (#23001-)

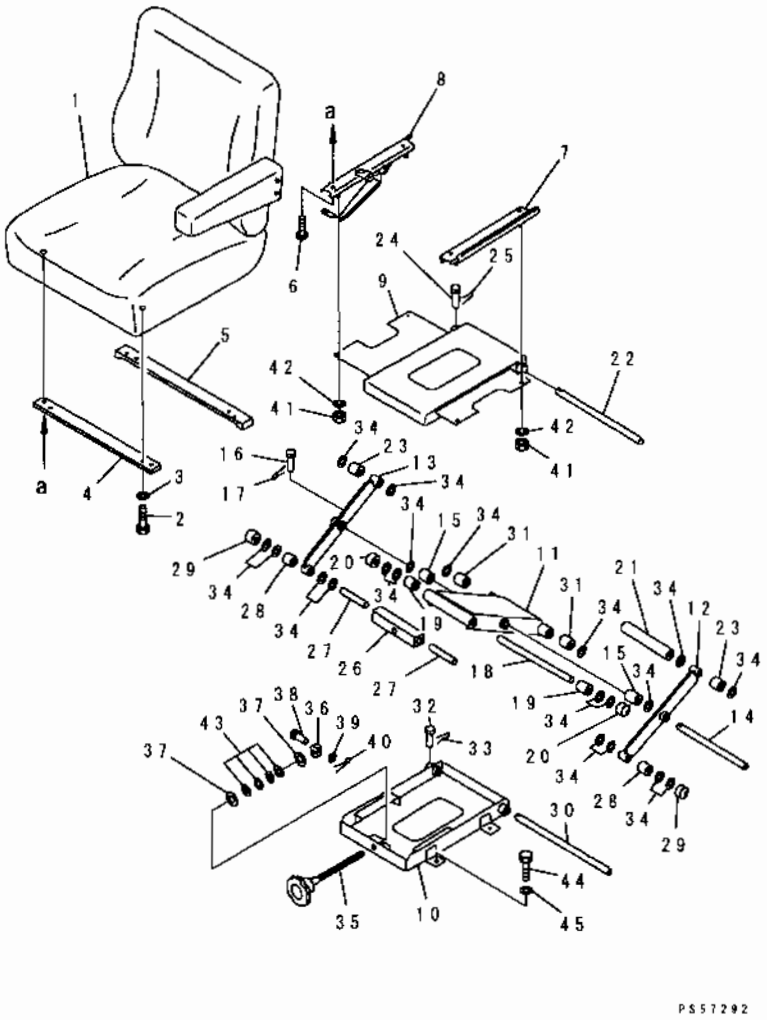


| INDEX | PART NO. | DESCRIPTION | Q'TY | SERIAL NO |
|---|---|---|---|---|
| 39 | 01641-20608 | .WASHER | 1 | 23001- |
| 40 | 04050-11610 | .PIN, COTTER | 1 | 23001- |
| 41 | 01580-10806 | .NUT | 4 | 23001- |
| 42 | 01643-30823 | .WASHER | 4 | 23001- |
| 43 | 23E-57-11120 | .SPRING | 4 | 23001- |
| 44 | 01010-51225 | BOLT | 4 | 23001- |
| 45 | 01643-31232 | WASHER | 4 | 23001- |

# FIG. 5401A OPERATOR'S CAB (CAB) (#23001-)

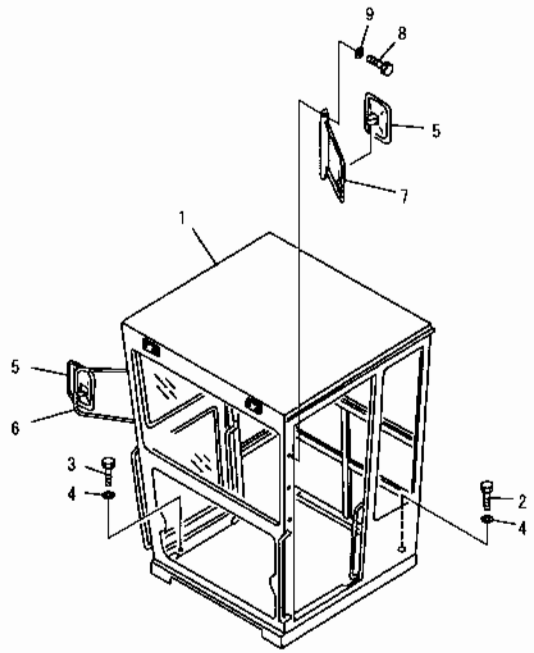


PV59423

| INDEX | PART NO | DESCRIPTION | Q'TY | SERIAL NO. |
|---|---|---|---|---|
| | 234-950-0050 | CAB ASS'Y.<br>THIS ASSEMBLY CONSISTS OF ALL PARTS SHOWN IN FIGS. 5401A TO 5409A | 1 | 23001- |
| 1 | 236-950-1200 | . CAB, STEEL. | 1 | 23001- |
| 2 | 01010-51255 | . BOLT. | 3 | 23001- |
| 3 | 01010-51225 | . BOLT. | 12 | 23001- |
| 4 | 01643-31232 | . WASHER. | 15 | 23001- |
| 5 | 232-957-2850 | . MIRROR. | 2 | 23001- |
| 6 | 235-950-1330 | BRACKET, R. H. | 1 | 23001- |
| 7 | 235-950-1320 | . BRACKET, L. H. | 1 | 23001- |
| 8 | 01010-81025 | . BOLT. | 6 | 23001- |
| 9 | 01643-31032 | WASHER. | 6 | 23001- |

# FIG. 5403A OPERATOR'S CAB (INNER PANEL) (#23001-)

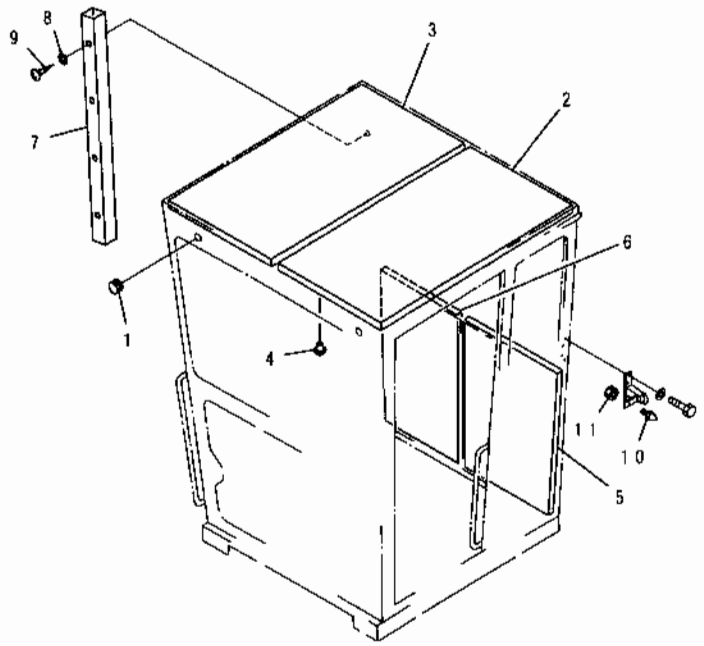


| INDEX | PART NO. | DESCRIPTION | Q'TY | SERIAL NO |
|---|---|---|---|---|
| | (234-950-0050) | CAB ASS'Y<br>THIS ASSEMBLY CONSISTS OF ALL PARTS SHOWN IN FIGS. 5401A TO 5409A | 1 | 23001- |
| 1 | 09415-01610 | .CAP | 2 | 23001- |
| 2 | 23B-950-2850 | .PANEL | 1 | 23001- |
| 3 | 23B-950-2860 | .PANEL | 1 | 23001- |
| 4 | 09416-10000 | .BUTTON | 66 | 23001- |
| 5 | 23B-950-2870 | .PANEL | 1 | 23001- |
| 6 | 23B-950-2880 | .PANEL | 1 | 23001- |
| 7 | 235-950-1830 | .COVER | 1 | 23001- |
| 8 | 01641-20508 | .WASHER | 4 | 23001- |
| 9 | 01370-00508 | SCREW | 4 | 23001- |
| 10 | 235-950-1370 | .CUSHION | 2 | 23001- |
| 11 | 01580-11008 | .NUT | 2 | 23001- |

# FIG. 5405A OPERATOR'S CAB (WINDOW GLASS) (#23001-)

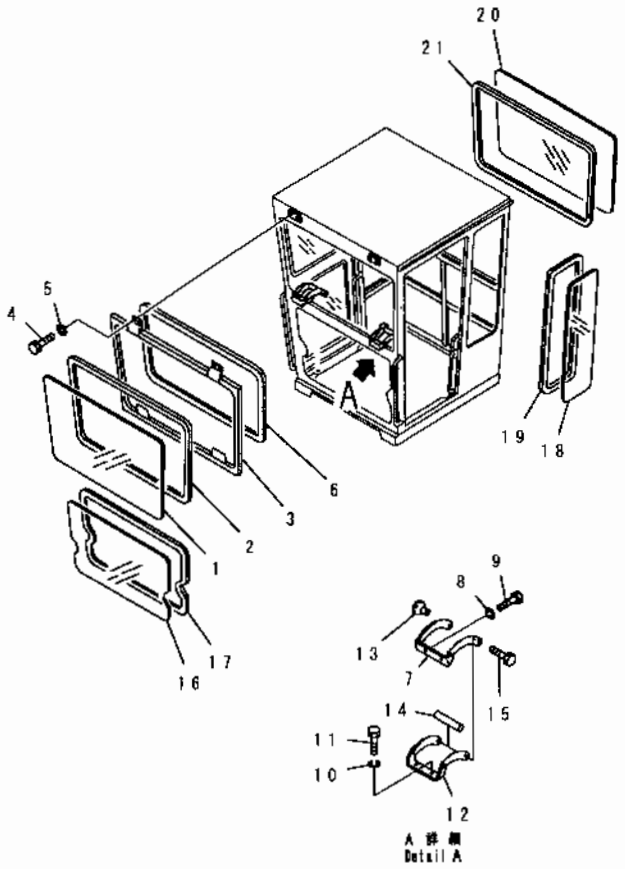


PV59425

| INDEX | PART NO | DESCRIPTION | Q'TY | SERIAL NO |
|---|---|---|---|---|
| | (234-950-0050) | CAB ASS'Y.<br>THIS ASSEMBLY CONSISTS OF ALL PARTS SHOWN IN FIGS. 5401A TO 5409A. | 1 | 23001- |
| 1 | 23B-950-1660 | .GLASS. | 1 | 23001- |
| 2 | 09410-40426 | .STRIP, WEATHER. | 1 | 23001- |
| 3 | 23B-950-1620 | .BRACKET. | 1 | 23001- |
| 4 | 01010-51025 | .BOLT. | 4 | 23001- |
| 5 | 01643-31032 | .WASHER. | 4 | 21001- |
| 6 | 23B-951-3260 | .SEAL. | 1 | 23001- |
| 7 | 235-950-2411 | .LINK, L.H. | 1 | 23001- |
| | 235-950-2421 | .LINK, R.H. | 1 | 23001- |
| 8 | 01602-20825 | .WASHER, SPRING. | 4 | 23001- |
| 9 | 01010-50820 | .BOLT. | 4 | 23001- |
| 10 | 01602-20825 | .WASHER, SPRING. | 4 | 23001- |
| 11 | 01010-50820 | .BOLT. | 4 | 23001- |
| 12 | 235-950-2430 | LINK. | 2 | 23001- |
| 13 | 232-950-2291 | KNOB. | 2 | 23001- |
| 14 | 235-950-2440 | COLLAR. | 2 | 23001- |
| 15 | 235-950-2450 | .BOLT. | 2 | 23001- |
| 16 | 23A-950-1630 | GLASS. | 1 | 23001- |
| 17 | 09410-40404 | .STRIP, WEATHER. | 1 | 23001- |
| 18 | 23B-950-1650 | .GLASS. | 2 | 23001- |
| 19 | 09410-40381 | .STRIP, WEATHER. | 2 | 23001- |
| 20 | 23B-950-1640 | .GLASS. | 1 | 23001- |
| 21 | 09410-40407 | .STRIP, WEATHER. | 1 | 23001- |

# FIG. 5407A OPERATOR'S CAB (DOOR) (#23001-)

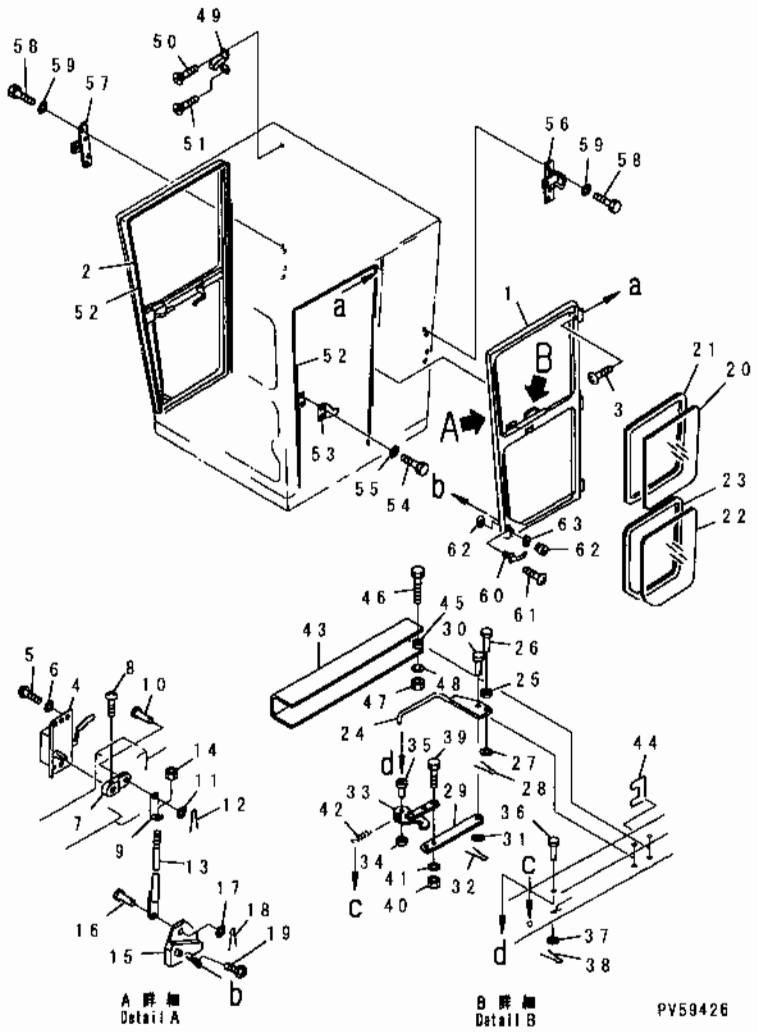


| INDEX | PART NO. | DESCRIPTION | Q'TY | SERIAL NO |
|---|---|---|---|---|
| | (234-950-0050) | CAB ASS'Y<br>THIS ASSEMBLY CONSISTS OF ALL PARTS SHOWN IN FIGS. 5401A TO 5409A. | 1 | 23001- |
| 1 | 23B-950-1550 | . DOOR, L. H. | 1 | 23001- |
| 2 | 23B-950-1560 | . DOOR, R. H. | 1 | 23001- |
| 3 | 01220-40812 | . SCREW | 18 | 23001- |
| 4 | 232-957-6471 | . LOCK, DOOR, L. H. | 1 | 23001- |
| | 232-957-6481 | . LOCK, DOOR, R. H. | 1 | 23001- |
| 5 | 01023-60616 | . SCREW | 12 | 23001- |
| 6 | 01643-30623 | . WASHER | 12 | 23001- |
| 7 | 232-957-6520 | . LEVER | 2 | 23001- |
| 8 | 01220-40420 | . SCREW | 2 | 23001- |
| 9 | 235-950-1560 | . PLATE | 2 | 23001- |
| 10 | 04205-10614 | . PIN | 2 | 23001- |
| 11 | 01641-20608 | . WASHER | 2 | 23001- |
| 12 | 04050-11610 | . PIN, COTTER | 2 | 23001- |
| 13 | 232-957-2840 | . ROD | 2 | 23001- |
| 14 | 01580-10605 | . NUT | 2 | 23001- |
| 15 | 235-950-1570 | . LEVER, L. H. | 1 | 23001- |
| | 235-950-1580 | . LEVER, R. H. | 1 | 23001- |
| 16 | 04205-10614 | . PIN | 2 | 23001- |
| 17 | 01641-20608 | . WASHER | 2 | 23001- |
| 18 | 04050-11610 | . PIN, COTTER | 2 | 23001- |
| 19 | 01220-40412 | . SCREW | 2 | 23001- |
| 20 | 23B-950-1610 | . GLASS | 2 | 23001- |
| 21 | 09410-40332 | . STRIP, WEATHER | 2 | 23001- |
| 22 | 23B-950-1590 | . GLASS | 2 | 23001- |
| 23 | 09410-40284 | . STRIP, WEATHER | 2 | 23001- |
| 24 | 235-950-1660 | . HANDLE, L. H. | 1 | 23001- |
| | 235-950-1670 | . HANDLE, R. H. | 1 | 23001- |
| 25 | 235-950-1540 | . SPACER | 2 | 23001- |
| 26 | 235-950-1510 | . PIN | 2 | 23001- |
| 27 | 01641-10608 | . WASHER | 2 | 23001- |
| 28 | 04050-11612 | . PIN, COTTER | 2 | 23001- |
| 29 | 235-950-1490 | PLATE | 2 | 23001- |
| 30 | 04205-10616 | PIN | 2 | 23001- |
| 31 | 01641-10608 | . WASHER | 2 | 23001- |
| 32 | 04050-11612 | PIN, COTTER | 2 | 23001- |
| 33 | 232-957-6240 | LOCK, L. H. | 1 | 23001- |
| | 232-957-6250 | . LOCK, R. H. | 1 | 23001- |
| 34 | 232-957-6540 | . COLLAR | 2 | 23001- |
| 35 | 232-957-6260 | . SPACER | 2 | 23001- |

FIG NO. : 5407A

| INDEX | PART NO | DESCRIPTION | Q'TY | SERIAL NO. |
|---|---|---|---|---|
| 36 | 04205-11045 | . PIN | 2 | 23001- |
| 37 | 01641-11016 | . WASHER | 2 | 23001- |
| 38 | 04050-13020 | PIN, COTTER | 2 | 23001- |
| 39 | 01010-50616 | . BOLT | 4 | 23001- |
| 40 | 01580-10605 | . NUT | 4 | 23001- |
| 41 | 01643-30623 | . WASHER | 4 | 23001- |
| 42 | 232-957-6310 | . SPRING | 2 | 23001- |
| 43 | 235-950-1460 | COVER, L.H. | 1 | 23001- |
| | 235-950-1470 | . COVER, R.H. | 1 | 23001- |
| 44 | 235-950-1480 | . PLATE | 2 | 23001- |
| 45 | 235-950-1520 | . SPACER | 4 | 23001- |
| 46 | 235-950-1530 | . BOLT | 4 | 23001- |
| 47 | 01580-10605 | . NUT | 4 | 23001- |
| 48 | 01602-20619 | . WASHER, SPRING | 4 | 23001- |
| 49 | 22X-54-14260 | . LOCK | 1 | 23001- |
| 50 | 01225-40512 | . SCREW | 2 | 23001- |
| 51 | 01225-40512 | . SCREW | 1 | 23001- |
| 52 | 09412-00052 | . SEAL, DOOR | 2 | 23001- |
| 53 | 234-959-4250 | . BRACKET | 2 | 23001- |
| 54 | 01010-51020 | . BOLT | 4 | 23001- |
| 55 | 01643-31032 | WASHER | 4 | 23001- |
| 56 | 23B-950-3190 | . CATCH, L.H | 1 | 23001- |
| 57 | 23B-950-3210 | . CATCH, R.H. | 1 | 23001- |
| 58 | 01010-51030 | . BOLT | 8 | 23001- |
| 59 | 01643-31032 | . WASHER | 8 | 23001- |
| 60 | 232-957-6550 | . HANDLE | 2 | 23001- |
| 61 | 01220-40412 | SCREW | 4 | 23001- |
| 62 | 232-855-1370 | . LOCK | 1 | 23001- |
| 63 | 232-855-1880 | . SPACER | 1 | 23001- |

# FIG. 5409A OPERATOR'S CAB (ELECTRICAL PARTS AND ACCESSORY PARTS) (#23001-)

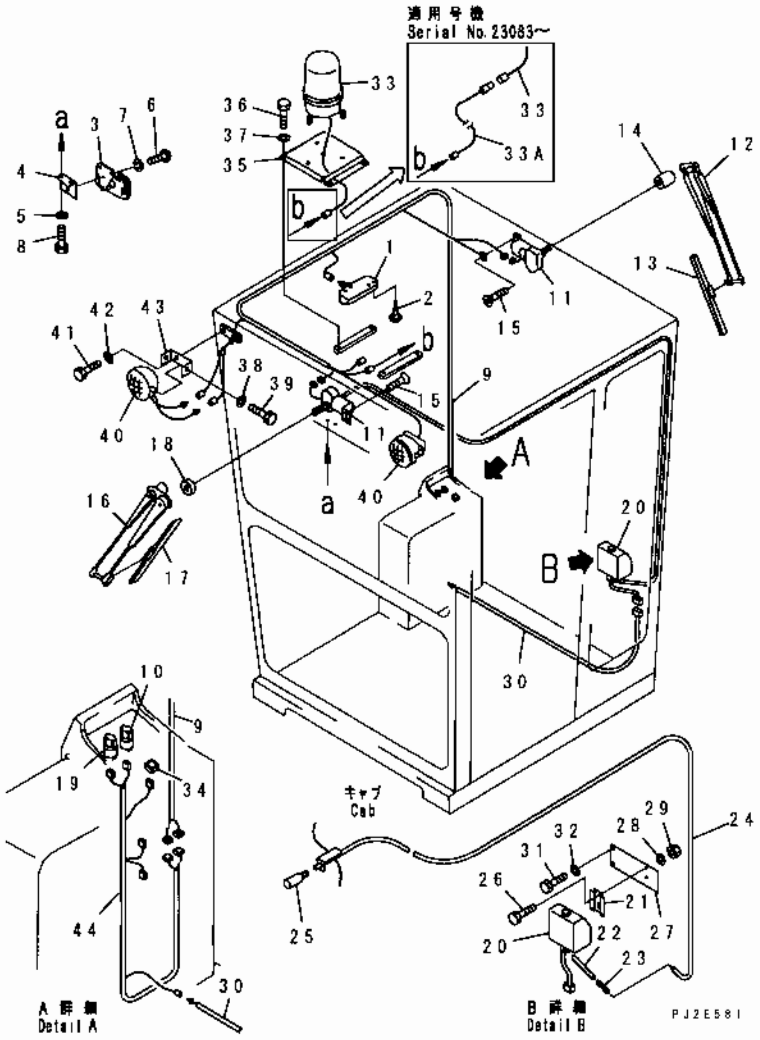


| INDEX | PART NO. | DESCRIPTION | Q'TY | SERIAL NO. |
|---|---|---|---|---|
| | (234-950-0050) | CAB ASS'Y | 1 | 23001- |
| | | THIS ASSEMBLY CONSISTS OF ALL PARTS SHOWN IN FIGS. 5401A TO 5409A. | | |
| 1 | 08141-02400 | .LAMP | 1 | 21001- |
| | 08116-02410 | ..BULB, 10W | 1 | 21001- |
| 2 | 01370-00410 | .SCREW | 2 | 23001- |
| 3 | 232-957-5170 | .MIRROR, ROOM | 1 | 23001- |
| 4 | 235-950-2320 | .BRACKET | 1 | 23001- |
| 5 | 01643-30823 | .WASHER | 2 | 23001- |
| 6 | 01220-40510 | .SCREW | 3 | 23001- |
| 7 | 01601-20513 | .WASHER, SPRING | 3 | 23001- |
| 8 | 01010-50820 | .BOLT | 2 | 23001- |
| 9 | 23A-950-1230 | .WIRE ASS'Y | 1 | 23001- |
| 10 | 205-06-71341 | .SWITCH, WIPER | 1 | 23001- |
| 11 | 08180-12411 | .WIPER MOTOR ASS'Y | 2 | 23001- |
| 12 | 08184-00400 | .ARM | 1 | 23001- |
| 13 | 08185-00400 | .BLADE | 1 | 23001- |
| 14 | 235-950-1850 | .SPACER | 1 | 23001- |
| 15 | 01224-40516 | .SCREW | 4 | 23001- |
| 16 | 08184-30500 | .ARM | 1 | 23001- |
| 17 | 08185-00450 | .BLADE | 1 | 23001- |
| 18 | 23B-950-1460 | .COLLAR | 1 | 23001- |
| 19 | 205-06-71690 | .SWITCH ASS'Y, WIPER | 1 | 23001- |
| | 232-950-5700 | .TANK ASS'Y, WINDOW WASHER | 1 | 23001- |
| 20 | 232-856-5120 | ..TANK ASS'Y | 1 | 23001- |
| 21 | 232-856-5130 | . BRACKET | 1 | 23001- |
| 22 | 232-856-5140 | . HOSE | 1 | 23001- |
| 23 | 232-856-5160 | ..CONNECTOR | 1 | 23001- |
| 24 | 232-856-5260 | . HOSE, 10M | 1 | 23001- |
| 25 | 232-856-5170 | ..NOZZLE | 1 | 23001- |
| 26 | 01010-80616 | .BOLT | 2 | 23001- |
| 27 | 234-950-6410 | .PLATE | 1 | 23001- |
| 28 | 01643-30623 | .WASHER | 2 | 23001- |
| 29 | 01580-10605 | .NUT | 2 | 23001- |
| 30 | 234-950-6520 | .HARNESS | 1 | 23001- |
| 31 | 01010-81025 | .BOLT | 2 | 23001- |
| 32 | 01643-31032 | .WASHER | 2 | 23001- |
| 33 | 08154-12400 | .LAMP ASS'Y, BEACON | 1 | 23001- |
| | 08103-02460 | ..BULB, 35W | 1 | 23001- |
| | 08154-30003 | ..GLOBE | 1 | 23001- |
| 33A | 23B-06-13140 | .WIRE ASS'Y | 1 | 23001- |
| 34 | 23E-06-13151 | .SWITCH, CAUTION LAMP | 1 | 23001- |

FIG NO. : 5409A

| INDEX | PART NO | DESCRIPTION | Q'TY | SERIAL NO. |
|---|---|---|---|---|
| 35 | 232-957-9510 | BRACKET | 1 | 23001- |
| 36 | 01010-81016 | BOLT | 4 | 23001- |
| 37 | 01643-31032 | WASHER | 4 | 23001- |
| 38 | 01643-30823 | WASHER | 4 | 23001- |
| 39 | 01010-80820 | BOLT | 4 | 23001- |
| 40 | 08121-22400 | LAMP | 2 | 23001- |
| 41 | 01010-81020 | BOLT | 4 | 23001- |
| 42 | 01643-31032 | WASHER | 4 | 23001- |
| 43 | 23B-950-3330 | BRACKET | 2 | 23001- |
| 44 | 234-950-6510 | HARNESS | 1 | 23001- |



GD705A-4

# FIG. 5471 RADIO (#23001-)

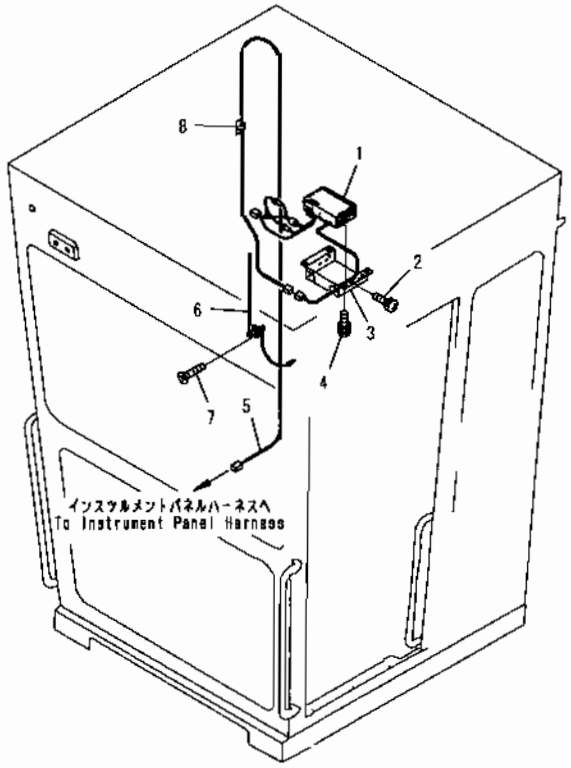


PJ2E582

| INDEX | PART NO. | DESCRIPTION | Q'TY | SERIAL NO. |
|---|---|---|---|---|
| 1 | 23A-950-2360 | RADIO | 1 | 23001- |
| 2 | 01023-10508 | SCREW | 6 | 23001- |
| 3 | 23D-950-5160 | BRACKET | 1 | 23001- |
| 4 | 01023-60612 | SCREW | 4 | 23001- |
| 5 | 234-951-1740 | WIRING HARNESS | 1 | 23001- |
| 6 | 362-56-42261 | RUBBER ANTENNA | 1 | 23001- |
| 7 | 01224-40420 | SCREW | 2 | 23001- |
| 8 | 08051-00801 | CLIP | 10 | 23001- |

# FIG. 5511A CANVAS CANOPY (#23001-)

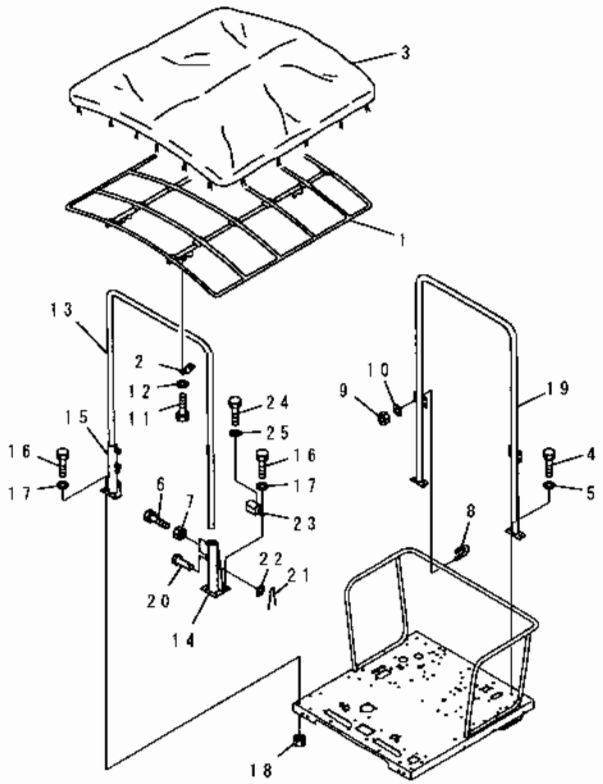


PV58428





| INDEX | PART NO | DESCRIPTION | Q'TY | SERIAL NO. |
|---|---|---|---|---|
| | 232-956-0130 | CANVAS CANOPY ASS'Y | 1 | 23001- |
| | 232-956-0211 | ROOF ASS'Y | 1 | -- |
| 1 | 232-55-13113 | .ROOF | 1 | -- |
| 2 | 23B-956-1180 | .CLIP | 4 | -- |
| 3 | 23D-956-1180 | SHEET | 1 | -- |
| 4 | 01010-81225 | BOLT | 4 | 23001- |
| 5 | 01643-31232 | .WASHER | 4 | 23001- |
| 6 | 01016-51235 | BOLT | 4 | 23001- |
| 7 | 01580-11210 | NUT | 4 | 23001- |
| 8 | 07283-24346 | .CLIP | 4 | 23001- |
| 9 | 01597-01009 | .NUT | 8 | 23001- |
| 10 | 01643-31032 | .WASHER | 8 | 23001- |
| 11 | 01010-81430 | .BOLT | 8 | 23001- |
| 12 | 01643-31445 | .WASHER | 8 | 23001- |
| 13 | 234-855-7131 | .POLE | 1 | 23001- |
| 14 | 234-956-6110 | BRACKET, L.H. | 1 | 23001- |
| 15 | 23B-956-1350 | .BRACKET, R.H. | 1 | 23001- |
| 16 | 01010-81225 | .BOLT | 6 | 23001- |
| 17 | 01643-31232 | .WASHER | 6 | 23001- |
| 18 | 01580-11210 | .NUT | 6 | 23001- |
| 19 | 23B-956-1120 | .COLUMN | 1 | 23001- |
| 20 | 232-55-13170 | .PIN | 2 | 23001- |
| 21 | 04050-13020 | .PIN, COTTER | 2 | 23001- |
| 22 | 01641-21223 | WASHER | 2 | 23001- |
| 23 | 234-956-6120 | .COVER | 1 | 23001- |
| 24 | 01010-81025 | .BOLT | 1 | 23001- |
| 25 | 01643-31032 | .WASHER | 1 | 23001- |

# FIG. 5513A CANVAS CANOPY (WITH MIRROR) (#23001-)

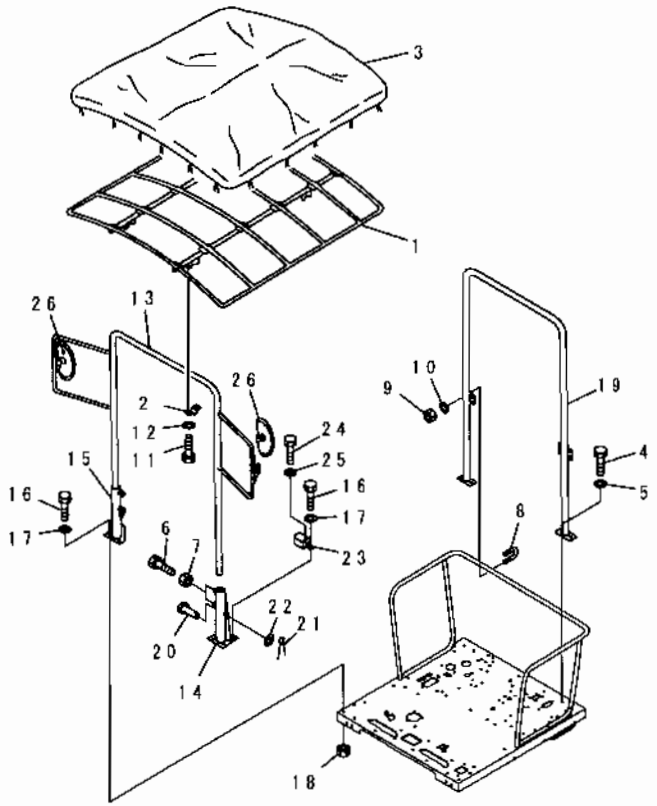


PV59429

| INDEX | PART NO | DESCRIPTION | Q'TY | SERIAL NO. |
|---|---|---|---|---|
| | 232-956-0211 | ROOF ASS'Y | 1 | -- |
| 1 | 232-55-13113 | .ROOF | 1 | -- |
| 2 | 23B-956-1180 | .CLIP | 4 | -- |
| 3 | 23D-956-1180 | SHEET | 1 | - |
| 4 | 01010-81225 | BOLT | 4 | 23001- |
| 5 | 01643-31232 | WASHER | 4 | 23001- |
| 6 | 01016-51235 | BOLT | 4 | 23001- |
| 7 | 01580-11210 | NUT | 4 | 23001- |
| 8 | 07283-24346 | CLIP | 4 | 23001- |
| 9 | 01597-01009 | NUT | 8 | 23001- |
| 10 | 01643-31032 | WASHER | 8 | 23001- |
| 11 | 01010-81430 | BOLT | 8 | 23001- |
| 12 | 01643-31445 | WASHER | 8 | 23001- |
| 13 | 234-956-6130 | COLUMN | 1 | 23001- |
| 14 | 234-956-6110 | BRACKET, L.H. | 1 | 23001- |
| 15 | 23B-956-1350 | BRACKET, R.H. | 1 | 23001- |
| 16 | 01010-81225 | BOLT | 6 | 23001- |
| 17 | 01643-31232 | WASHER | 6 | 23001- |
| 18 | 01580-11210 | NUT | 6 | 23001- |
| 19 | 23B-956-1120 | COLUMN | 1 | 23001- |
| 20 | 232-55-13170 | PIN | 2 | 23001- |
| 21 | 04050-13020 | PIN, COTTER | 2 | 23001- |
| 22 | 01641-21223 | WASHER | 2 | 23001- |
| 23 | 234-956-6120 | COVER | 1 | 23001- |
| 24 | 01010-81025 | BOLT | 1 | 23001- |
| 25 | 01643-31032 | WASHER | 1 | 23001- |
| 26 | 232-957-2850 | MIRROR | 2 | 23001- |

# FIG. 5515B STEEL CANOPY (#23001-)

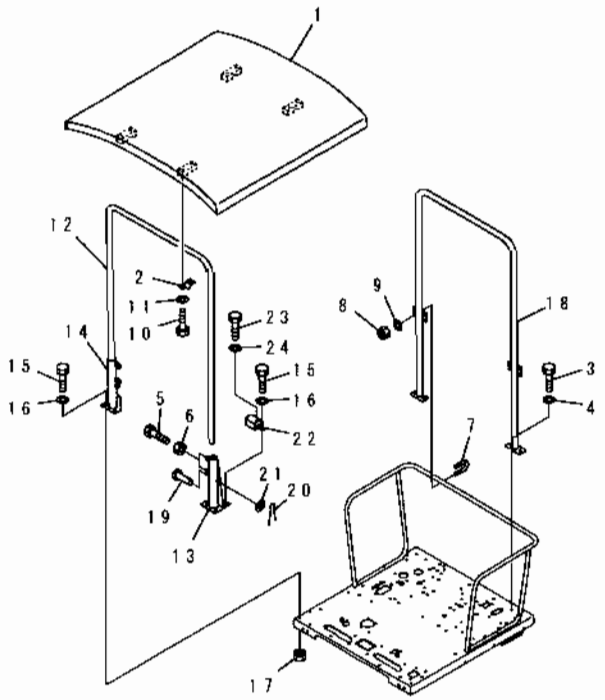


| INDEX | PART NO | DESCRIPTION | Q TY | SERIAL NO |
|---|---|---|---|---|
| | 234-956-0020 | STEEL CANOPY ASS'Y | 1 | 23001- |
| | 232-956-0221 | .ROOF ASS'Y | 1 | ..- |
| 1 | 232-55-13312 | ..ROOF | 1 | ..- |
| 2 | 23B-956-1180 | ..CLIP | 4 | ..- |
| 3 | 01010-81225 | .BOLT | 4 | 23001- |
| 4 | 01643-31232 | .WASHER | 4 | 23001- |
| 5 | 01016-51235 | .BOLT | 4 | 23001- |
| 6 | 01580-11210 | .NUT | 4 | 23001- |
| 7 | 07283-24346 | .CLIP | 4 | 23001- |
| 8 | 01597-01009 | .NUT | 8 | 23001- |
| 9 | 01643-31032 | .WASHER | 8 | 23001- |
| 10 | 01010-81430 | .BOLT | 8 | 23001- |
| 11 | 01643-31445 | WASHER | 8 | 23001- |
| 12 | 234-855-7131 | .POLE | 1 | 23001- |
| 13 | 234-956-6110 | .BRACKET | 1 | 23001- |
| 14 | 23B-956-1350 | .BRACKET, L.H. | 1 | 23001- |
| 15 | 01010-81225 | .BOLT, R.H. | 6 | 23001- |
| 16 | 01643-31232 | .WASHER | 6 | 23001- |
| 17 | 01580-11210 | .NUT | 6 | 23001- |
| 18 | 23B-956-1120 | .COLUMN | 1 | 23001- |
| 19 | 232-55-13170 | .PIN | 2 | 23001- |
| 20 | 04050-13020 | .PIN, COTTER | 2 | 23001- |
| 21 | 01641-21223 | .WASHER | 2 | 23001- |
| 22 | 234-956-6120 | .COVER | 1 | 23001- |
| 23 | 01010-81025 | .BOLT | 1 | 23001- |
| 24 | 01643-31032 | .WASHER | 1 | 23001- |

# FIG. 5517A ROPS CANOPY (#23001-)

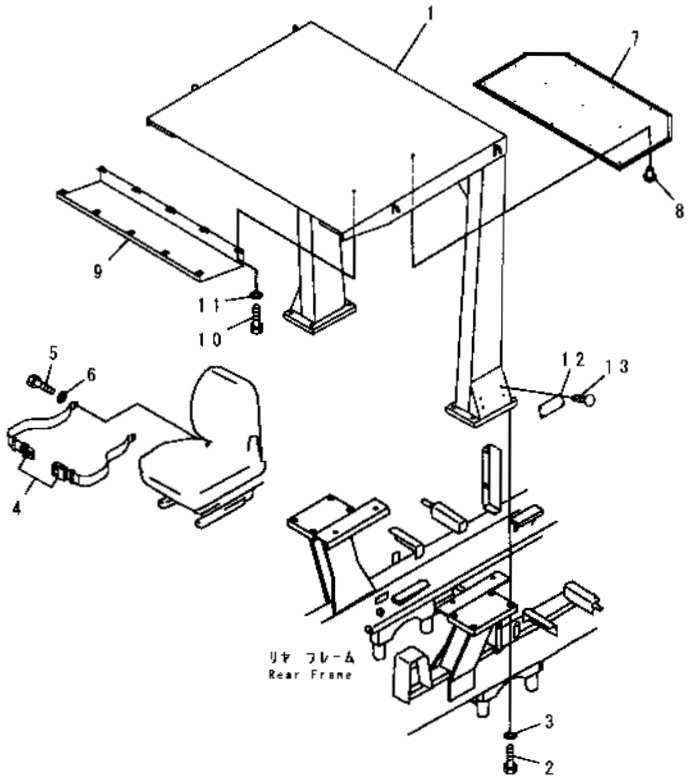


| INDEX | PART NO | DESCRIPTION | Q'TY | SERIAL NO |
|---|---|---|---|---|
| | 234-957-0220 | ROPS CANOPY ASS'Y | 1 | 23001- |
| 1 | 234-957-1420 | .ROPS CANOPY | 1 | 23001- |
| 2 | 01010-82485 | .BOLT | 8 | -<br>- |
| | 01010-82490 | .BOLT | 8 | 23001- |
| 3 | 01643-32460 | WASHER | 8 | 23001- |
| 4 | 09409-10001 | .BELT, LAP SEAT | 1 | 23001- |
| 5 | 01010-81020 | .BOLT | 2 | 23001- |
| 6 | 01643-31032 | .WASHER | 6 | 23001- |
| 7 | 23C-957-1150 | .PANEL | 1 | 23001- |
| 8 | 23B-957-3630 | .BUTTON | 13 | 23001- |
| 9 | 23C-957-1230 | .COVER | 1 | 23001- |
| 10 | 01010-81020 | BOLT | 10 | 23001- |
| 11 | 01643-31032 | .WASHER | 10 | 23001- |
| 12 | 09620-30200 | PLATE, NAME | 1 | 23001- |
| 13 | 04418-13060 | SCREW | 4 | 23001- |

# FIG. 5521 ROPS (FOR ROPS CAB) (#23001-)

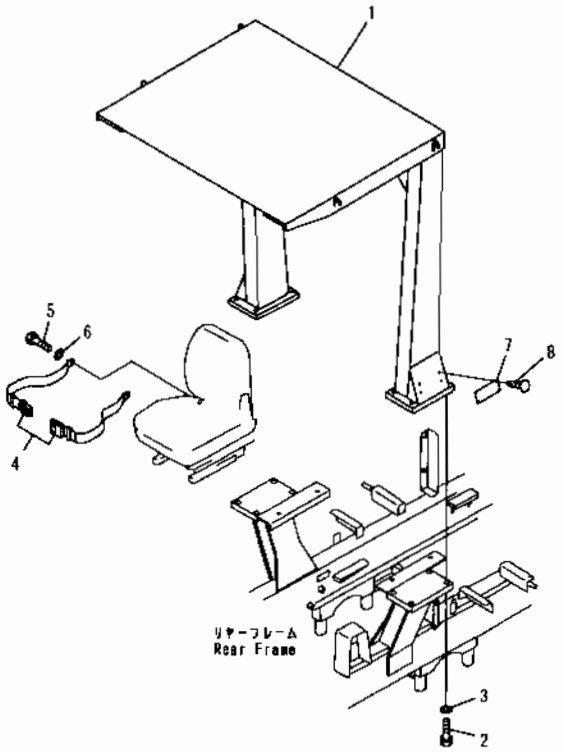


| INDEX | PART NO | DESCRIPTION | Q TY | SERIAL NO. |
|---|---|---|---|---|
| | 234-957-0230 | ROPS ASS'Y | 1 | 23001- |
| 1 | 234-957-1210 | .ROPS COLUMN | 1 | 23001- |
| 2 | 01010-82485 | .BOLT | 8 | 23001- |
| 3 | 01643-32460 | .WASHER | 8 | 23001- |
| 4 | 09409-10001 | .BELT, LAP SEAT | 1 | 23001- |
| 5 | 01010-81020 | .BOLT | 2 | 23001- |
| 6 | 01010-31032 | .BOLT | 2 | 23001- |
| 7 | 09620-30200 | PLATE, NAME | 1 | 23001- |
| 8 | 04418-13060 | SCREW | 4 | 23001- |

# FIG. 5551 FRONT WEIGHT

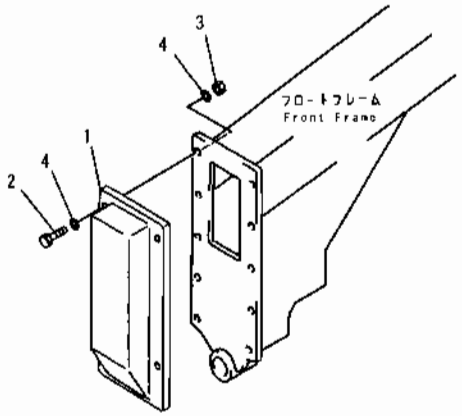


PJ52312

| INDEX | PART NO | DESCRIPTION | Q'TY | SERIAL NO. |
|---|---|---|---|---|
| 1 | 234-846-3212 | WEIGHT | 1 | 21228- |
| | □234-846-3211 | WEIGHT | 1 | 21001-21227 |
| 2 | 01011-52410 | BOLT | 4 | 21001- |
| 3 | 01580-12419 | NUT | 4 | 21001- |
| 4 | 01643-32460 | WASHER | 8 | 21001- |

# FIG. 5553 FRONT WEIGHT (WITH RIPPER)

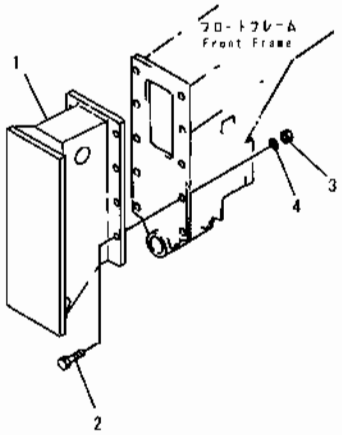


PJ53932

| INDEX | PART NO | DESCRIPTION | Q'TY | SERIAL NO |
|---|---|---|---|---|
| 1 | 234-930-3112 | WEIGHT | 1 | 21228- |
| | □234-930-3111 | WEIGHT | 1 | 21001-21227 |
| 2 | 01011-52410 | BOLT | 8 | 21001- |
| 3 | 01580-12419 | NUT | 8 | 21001- |
| 4 | 01643-32460 | WASHER | 16 | 21001- |

# FIG. 5611 AIR CONDITIONER (1/10) (AIR CONDENSER AND RELATED PARTS) (#23001-)

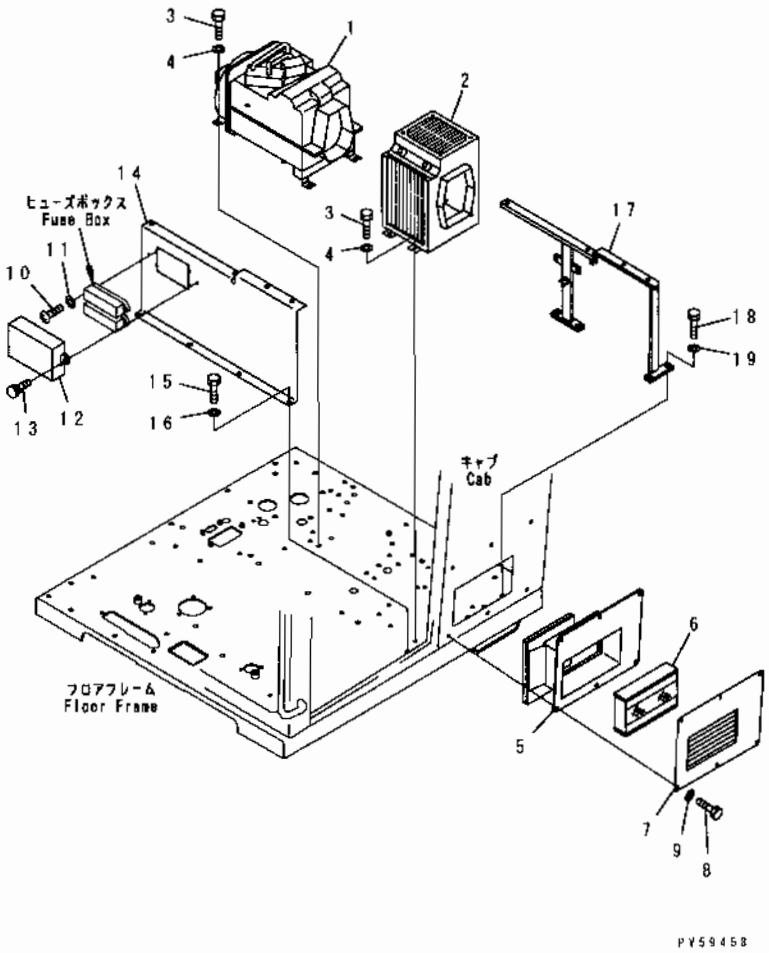


| INDEX | PART NO | DESCRIPTION | Q'TY | SERIAL NO |
|---|---|---|---|---|
| 1 | 421-07-21510 | AIR CONDITIONER UNIT | 1 | 23001- |
| 2 | 421-07-21110 | DAMPER ASS'Y | 1 | 23001- |
| | ND014540-0280 | FILTER SET, UPPER | 1 | 23001- |
| | ND014540-0290 | FILTER SET, SIDE | 1 | 23001- |
| 3 | 01010-81016 | BOLT | 9 | 23001- |
| 4 | 01643-31032 | WASHER | 9 | 23001- |
| 5 | 234-809-9390 | DUCT | 1 | 23001- |
| 6 | 421-07-12312 | FILTER, AIR | 1 | 23001- |
| 7 | 234-809-9410 | COVER | 1 | 23001- |
| 8 | 01010-80820 | BOLT | 6 | 23001- |
| 9 | 01643-30823 | WASHER | 6 | 23001- |
| 10 | 01220-40620 | SCREW | 4 | 23001- |
| 11 | 01641-20608 | WASHER | 4 | 23001- |
| 12 | 234-809-8990 | COVER | 1 | 23001- |
| 13 | 01232-10620 | SCREW | 2 | 23001- |
| 14 | 234-809-8980 | BRACKET | 1 | 23001- |
| 15 | 01010-81225 | BOLT | 4 | 23001- |
| 16 | 01643-31232 | WASHER | 4 | 23001- |
| 17 | 234-809-8970 | BRACKET | 1 | 23001- |
| 18 | 01010-81235 | BOLT | 4 | 23001- |
| 19 | 01643-31232 | WASHER | 4 | 23001- |

# FIG. 5612A AIR CONDITIONER (2/10) (AIR CONDENSER AND MOUNTING PARTS) (#23058-)

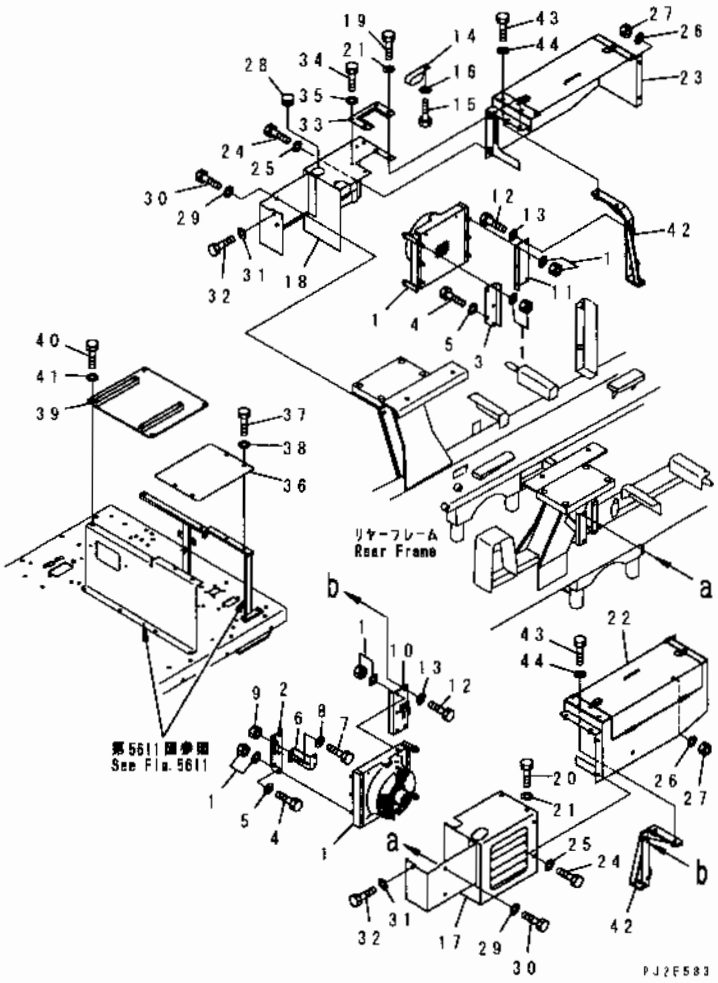


| INDEX | PART NO | DESCRIPTION | Q'TY | SERIAL NO |
|---|---|---|---|---|
| 1 | 421-07-21530 | CONDENSER ASS'Y | 2 | 23001- |
| 2 | 234-809-9290 | BRACKET, L. H | 1 | 23001- |
| 3 | 234-809-9310 | BRACKET, R. H | 1 | 23001- |
| 4 | 01010-81020 | BOLT | 4 | 23001- |
| 5 | 01643-31032 | WASHER | 4 | 23001- |
| 6 | 234-809-9420 | BRACKET | 1 | 23001- |
| 7 | 01010-80820 | BOLT | 2 | 23001- |
| 8 | 01643-30823 | WASHER | 2 | 23001- |
| 9 | 01580-10806 | NUT | 2 | 23001- |
| 10 | 234-809-9430 | BRACKET, L. H | 1 | 23001- |
| 11 | 234-809-9440 | BRACKET, R. H. | 1 | 23001- |
| 12 | 01010-81030 | BOLT | 4 | 23001- |
| 13 | 01643-31032 | WASHER | 4 | 23001- |
| 14 | 234-809-9450 | CLIP | 1 | 23001- |
| 15 | 01010-81020 | BOLT | 1 | 23001- |
| 16 | 01643-31032 | WASHER | 1 | 23001- |
| 17 | 234-809-9461 | COVER, L. H. | 1 | 23058- |
| 18 | 234-809-9471 | COVER, R. H. | 1 | 23058- |
| 19 | 01010-81030 | BOLT | 2 | 23058- |
| 20 | 01010-81020 | BOLT | 2 | 23058- |
| 21 | 234-54-13252 | WASHER | 4 | 23001- |
| 22 | 234-809-9481 | BATTERY BOX, L H | 1 | 23058- |
| 23 | 234-809-9491 | BATTERY BOX, R. H. | 1 | 23058- |
| 24 | 01010-81020 | BOLT | 4 | 23001- |
| 25 | 234-54-13252 | WASHER | 4 | 23001- |
| 26 | 01643-31032 | WASHER | 4 | 23001- |
| 27 | 01580-11008 | NUT | 4 | 23001- |
| 28 | 09415-05016 | CAP | 1 | 23001- |
| 29 | 234-54-13252 | WASHER | 4 | 23001- |
| 30 | 01010-81025 | BOLT | 4 | 23001- |
| 31 | 234-54-13252 | WASHER | 4 | 23001- |
| 32 | 01010-81025 | BOLT | 2 | 23001- |
| 33 | 234-809-9510 | SEAT | 1 | 23001- |
| 34 | 01010-81025 | BOLT | 3 | 23058- |
| 35 | 01643-31032 | WASHER | 3 | 23001- |
| 36 | 234-809-9280 | PLATE | 1 | 23001- |
| 37 | 01010-81220 | BOLT | 4 | 23001- |
| 38 | 01643-31232 | WASHER | 4 | 23001- |
| 39 | 234-809-9271 | SEAT | 1 | 23036- |
| 40 | 01010-81225 | BOLT | 4 | 23001- |
| 41 | 01643-31232 | WASHER | 4 | 23001- |
| 42 | 234-809-9321 | BRACKET, L. H. | 1 | 23058- |

# FIG. 5612A AIR CONDITIONER (2/10) (AIR CONDENSER AND MOUNTING PARTS) (#23058-)

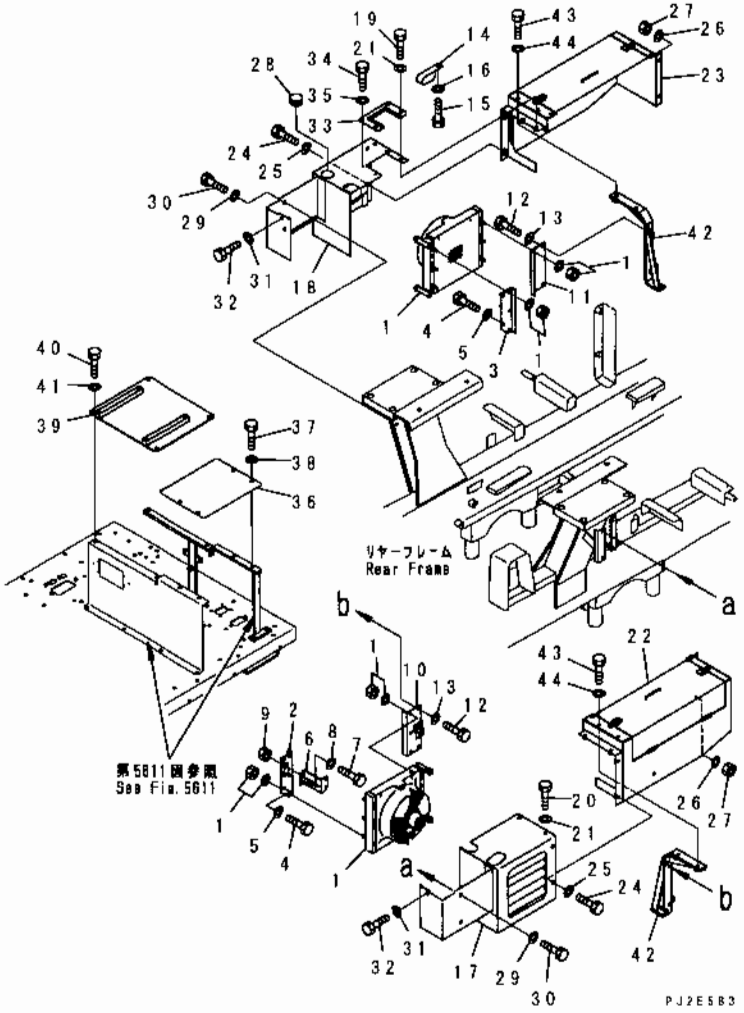


| INDEX | PART NO. | DESCRIPTION | Q'TY | SERIAL NO |
|---|---|---|---|---|
| | 234-809-9331 | BRACKET, R H. | 1 | 23058- |
| 43 | 01010-81025 | BOLT | 4 | 23058- |
| 44 | 01643-31032 | WASHER | 4 | 23058- |

# FIG. 5613 AIR CONDITIONER (3/10) (AIR COMPRESSER AND MOUNTING PARTS) (#23001-)

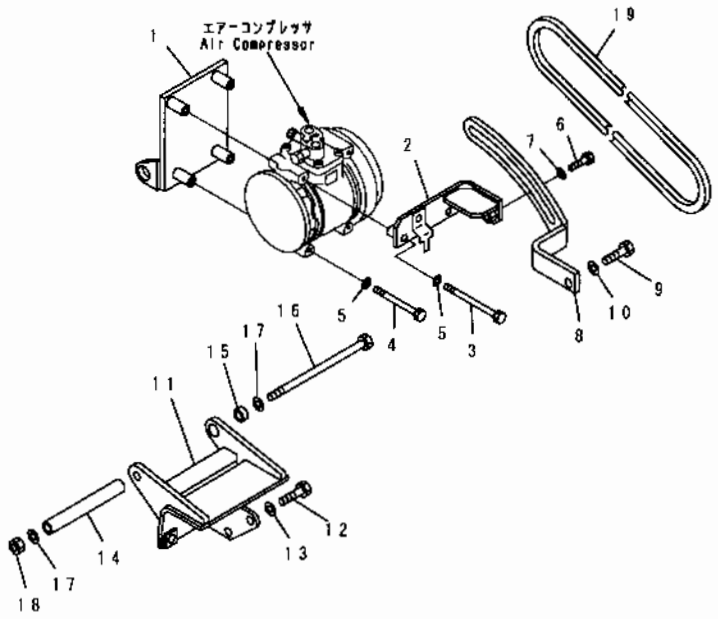


| INDEX | PART NO | DESCRIPTION | Q'TY | SERIAL NO. |
|---|---|---|---|---|
| 1 | 234-809-6120 | BRACKET | 1 | 23001- |
| 2 | 234-809-6130 | BRACKET | 1 | 23001- |
| 3 | 232-60-12442 | BOLT | 2 | 23001- |
| 4 | 01010-80885 | BOLT | 2 | 23001- |
| 5 | 01643-30823 | WASHER | 4 | 23001- |
| 6 | 01010-81230 | BOLT | 1 | 23001- |
| 7 | 01643-31232 | WASHER | 1 | 23001- |
| 8 | 234-809-6140 | BRACKET | 1 | 23001- |
| 9 | 01010-81030 | BOLT | 1 | 23001- |
| 10 | 01643-31032 | WASHER | 1 | 23001- |
| 11 | 234-809-6110 | BRACKET | 1 | 23001- |
| 12 | 01010-81085 | BOLT | 4 | 23001- |
| 13 | 01643-31032 | WASHER | 4 | 23001- |
| 14 | 234-809-6180 | COLLAR | 1 | 23001- |
| 15 | 419-07-11760 | COLLAR | 1 | 23001- |
| 16 | 01011-81285 | BOLT | 1 | 23001- |
| 17 | 01643-31232 | WASHER | 2 | 23001- |
| 18 | 01580-11210 | NUT | 1 | 23001- |
| 19 | 04120-21757 | V-BELT | 1 | 23001- |

# FIG.5614 AIR CONDITIONER (4/10) (COOLER PIPING)

(#23001-)

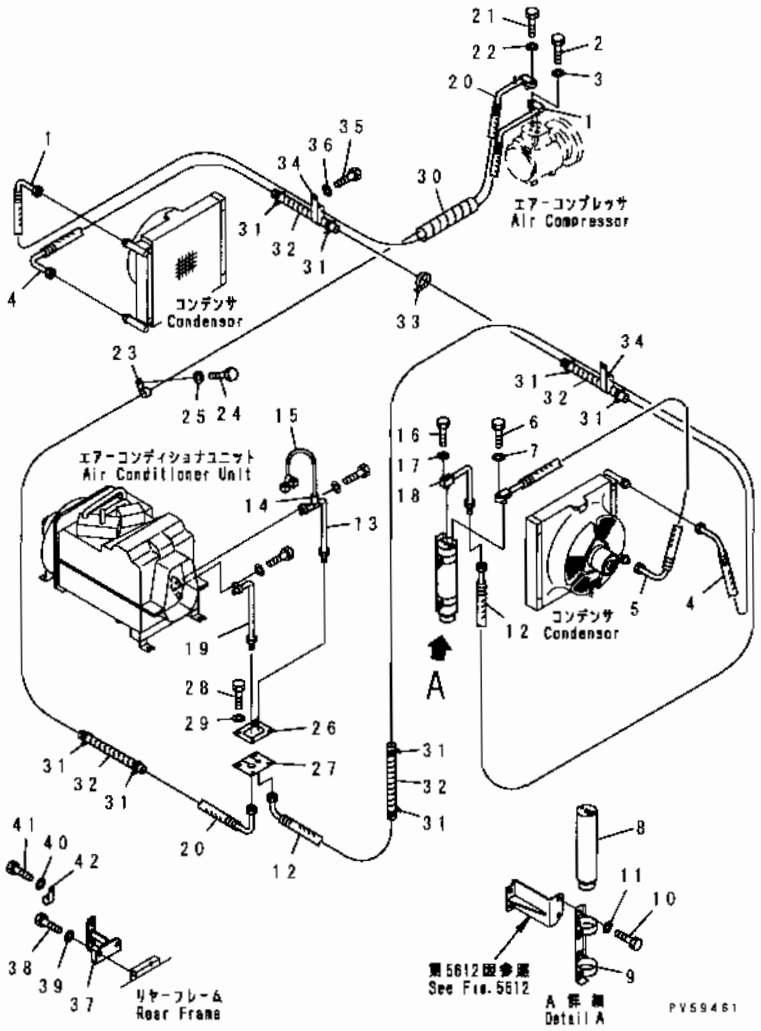


| INDEX | PART NO | DESCRIPTION | Q'TY | SERIAL NO |
|---|---|---|---|---|
| 1 | 234-809-9550 | HOSE | 1 | 23001- |
| | 20Y-979-3140 | .O-RING | 2 | 23001- |
| 2 | 01010-80630 | BOLT | 1 | 23001- |
| 3 | 01643-30623 | WASHER | 1 | 23001- |
| 4 | 234-809-9560 | HOSE | 1 | 23001- |
| | 20Y-979-3150 | .O-RING, M16 | 1 | 23001- |
| | 20Y-979-3140 | .O-RING, M22 | 1 | 23001- |
| 5 | 234-809-8950 | HOSE | 1 | 23001- |
| | 20Y-979-3150 | .O-RING | 2 | 23001- |
| 6 | 01010-80625 | BOLT | 1 | 23001- |
| 7 | 01643-30623 | WASHER | 1 | 23001- |
| 8 | 20Y-979-3120 | TANK | 1 | 23001- |
| 9 | 234-809-6190 | HOLDER | 1 | 23001- |
| 10 | 01010-80816 | BOLT | 2 | 23001- |
| 11 | 01643-30823 | WASHER | 2 | 23001- |
| 12 | 234-809-9540 | HOSE | 1 | 23001- |
| | 20Y-979-3150 | .O-RING | 1 | 23001- |
| 13 | 234-809-8860 | TUBE | 1 | 23001- |
| 14 | 421-07-21810 | .SWITCH, PRESSURE | 1 | 23001- |
| 15 | 421-07-21820 | .WIRING HARNESS | 1 | 23001- |
| 16 | 01010-80625 | BOLT | 1 | 23001- |
| 17 | 01643-30623 | WASHER | 1 | 23001- |
| 18 | 234-809-8930 | TUBE | 1 | 23001- |
| | 20Y-979-3150 | .O-RING | 1 | 23001- |
| 19 | 234-809-8870 | TUBE | 1 | 23001- |
| 20 | 234-809-8511 | HOSE | 1 | 23001- |
| | 20Y-979-3130 | .O-RING | 2 | 23001- |
| 21 | 01010-80630 | BOLT | 1 | 23001- |
| 22 | 01643-30823 | WASHER | 1 | 23001- |
| 23 | 04434-52210 | CLIP | 1 | 23001- |
| 24 | 01010-81016 | BOLT | 1 | 23001- |
| 25 | 01643-31032 | WASHER | 1 | 23001- |
| 26 | 23D-809-2450 | PLATE | 1 | 23001- |
| 27 | 23D-809-2460 | RUBBER | 1 | 23001- |
| 28 | 01010-80820 | BOLT | 4 | 23001- |
| 29 | 01643-30823 | WASHER | 4 | 23001- |
| 30 | 273-60-24450 | TUBE, SPIRAL | 1 | 23001- |
| 31 | 08034-00519 | BAND | 20 | 23001- |
| 32 | 273-60-14650 | TUBE, SPIRAL | 10 | 23001- |
| 33 | 08034-00519 | BAND | 1 | 23001- |
| 34 | 04435-52110 | CLIP | 2 | 23001- |
| 35 | 01010-81016 | BOLT | 2 | 23001- |

FIG NO. : 5614

| INDEX | PART NO. | DESCRIPTION | Q'TY | SERIAL NO |
|---|---|---|---|---|
| 36 | 01643-31032 | WASHER | 2 | 23001- |
| 37 | 234-809-9520 | BRACKET | 1 | 23001- |
| 38 | 01010-80820 | BOLT | 2 | 23001- |
| 39 | 01643-30823 | WASHER | 2 | 23001- |
| 40 | 01643-30823 | WASHER | 1 | 23001- |
| 41 | 01010-80816 | BOLT | 1 | 23001- |
| 42 | 08036-01014 | CLIP | 1 | 23001- |

# FIG.5615 AIR CONDITIONER (5/10) (HEATER PIPING)

(#23001-)

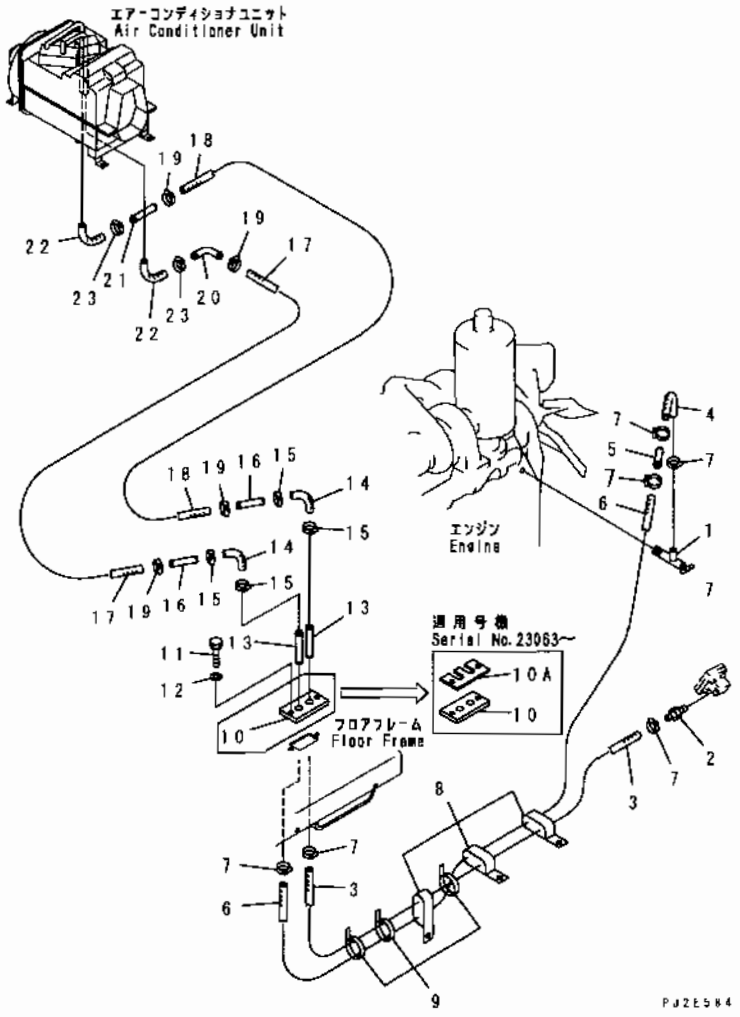


| INDEX | PART NO | DESCRIPTION | Q'TY | SERIAL NO. |
|---|---|---|---|---|
| 1 | 09482-10000 | VALVE | 1 | 23001- |
| 2 | 232-817-1590 | NIPPLE | 1 | 23001- |
| 3 | 09483-00523 | HOSE | 1 | 23001- |
| 4 | 09483-20550 | HOSE | 1 | 23001- |
| 5 | 09484-00560 | CONNECTOR | 1 | 23001- |
| 6 | 09483-00517 | HOSE | 1 | 23001- |
| 7 | 09479-02400 | CLAMP | 6 | 23244- |
| | □07280-02523 | CLAMP | 6 | 23001-23243 |
| 8 | 04435-52511 | CLIP | 1 | 23001- |
| 9 | 08034-00536 | BAND | 3 | 23001- |
| 10 | 234-807-5620 | PLATE | 1 | 23001- |
| 10A | 234-807-5670 | PLATE | 1 | 23063- |
| 11 | 01010-81035 | BOLT | 2 | 23063- |
| | 01010-81030 | BOLT | 2 | 23001-23062 |
| 12 | 01643-31032 | WASHER | 2 | 23001- |
| 13 | 234-807-5630 | CONNECTOR | 2 | 23001- |
| 14 | 09483-20550 | HOSE | 2 | 23001- |
| 15 | 09479-02400 | CLAMP | 4 | 23244- |
| | □07280-02523 | CLAMP | 4 | 23001-23243 |
| 16 | 09484-00560 | CONNECTOR | 2 | 23001- |
| 17 | 09483-00405 | HOSE | 1 | 23001- |
| 18 | 09483-00505 | HOSE | 1 | 23001- |
| 19 | 09479-02400 | CLAMP | 4 | 23244- |
| | □07280-02523 | CLAMP | 4 | 23001-23243 |
| 20 | 234-809-8680 | TUBE | 1 | 23001- |
| 21 | 09484-00560 | CONNECTOR | 1 | 23001- |
| 22 | 09483-20550 | HOSE | 2 | 23001- |
| 23 | 09479-02400 | CLAMP | 2 | 23244- |
| | □07280-02523 | CLAMP | 2 | 23001-23243 |

# FIG. 5616 AIR CONDITIONER (6/10) (AIR PIPING, FRONT)

(#23001-)

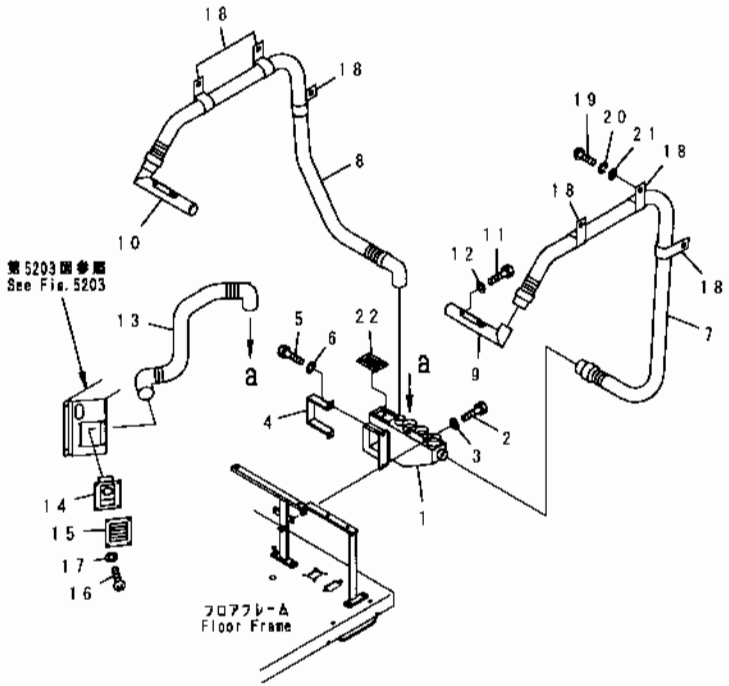


| INDEX | PART NO | DESCRIPTION | Q'TY | SERIAL NO |
|---|---|---|---|---|
| 1 | 23D-809-3431 | BOX | 1 | 23001- |
| 2 | 01010-80816 | BOLT | 2 | 23001- |
| 3 | 01643-30823 | WASHER | 2 | 23001- |
| 4 | 23D-809-3120 | CLAMP | 1 | 23001- |
| 5 | 01010-80825 | BOLT | 2 | 23001- |
| 6 | 01643-30823 | WASHER | 2 | 23001- |
| 7 | 09485-04530 | HOSE | 1 | 23083- |
| | □23D-807-1230 | HOSE | 1 | 23001-23082 |
| 8 | 234-809-9650 | HOSE | 1 | 23083- |
| | □23D-807-1240 | HOSE | 1 | 23001-23082 |
| 9 | 234-809-9350 | PIPE | 1 | 23001- |
| 10 | 234-809-9360 | PIPE | 1 | 23001- |
| 11 | 01010-81016 | BOLT | 4 | 23001- |
| 12 | 01643-31032 | WASHER | 4 | 23001- |
| 13 | 234-809-8970 | BRACKET | 1 | 23058- |
| | □234-809-8810 | HOSE | 1 | 23001-23057 |
| 14 | 23B-809-3730 | BOX | 1 | 23001- |
| 15 | 142-979-3221 | GRILLE ASS'Y | 1 | 23001- |
| 16 | 01220-40612 | SCREW | 4 | 23001- |
| 17 | 01643-30623 | WASHER | 4 | 23001- |
| 18 | 23D-807-1280 | CLIP | 6 | 23001- |
| 19 | 01220-40516 | SCREW | 6 | 23001- |
| 20 | 01601-20513 | WASHER, SPRING | 6 | 23001- |
| 21 | 01641-20508 | WASHER | 6 | 23001- |
| 22 | 142-979-3221 | GRILLE ASS'Y | 1 | 23001- |

# FIG. 5617 AIR CONDITIONER (7/10) (AIR PIPING, REAR)

(#23001-)

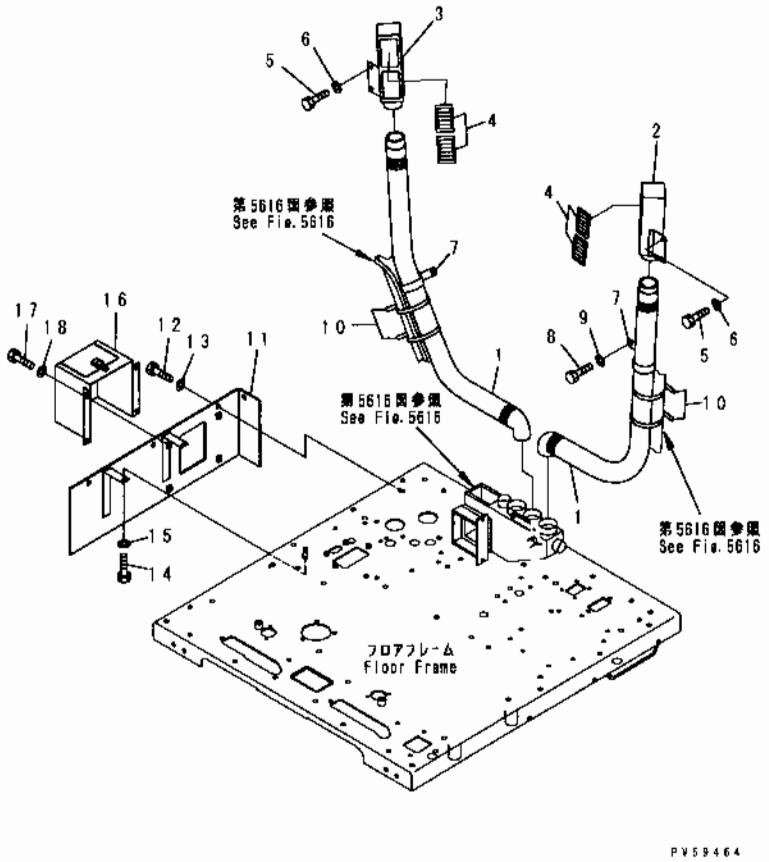


| INDEX | PART NO | DESCRIPTION | Q'TY | SERIAL NO. |
|---|---|---|---|---|
| 1 | 23A-809-3460 | HOSE | 2 | 23001- |
| 2 | 234-809-9370 | BOX, L. H. | 1 | 23001- |
| 3 | 234-809-9380 | BOX, R. H | 1 | 23001- |
| 4 | 142-979-3221 | GRILLE ASS'Y. | 4 | 23001- |
| 5 | 01010-81016 | BOLT | 4 | 23001- |
| 6 | 01643-31032 | WASHER | 4 | 23001- |
| 7 | 232-809-4850 | CLIP | 2 | 23001- |
| 8 | 01010-81016 | BOLT | 2 | 23001- |
| 9 | 01643-31032 | WASHER | 2 | 23001- |
| 10 | 08034-00823 | BAND | 4 | 23001- |
| 11 | 234-809-9590 | COVER, R. H. | 1 | 23001- |
| 12 | 01010-81030 | BOLT | 4 | 23001- |
| 13 | 234-54-13252 | WASHER | 4 | 23001- |
| 14 | 01010-80820 | BOLT | 2 | 23001- |
| 15 | 01643-30823 | WASHER | 2 | 23001- |
| 16 | 234-809-9530 | COVER | 1 | 23001- |
| 17 | 01010-81020 | BOLT | 4 | 23001- |
| 18 | 01643-31032 | WASHER | 4 | 23001- |

# FIG.5618 AIR CONDITIONER (8/10) (CONTROL PANEL)

(#23001-)

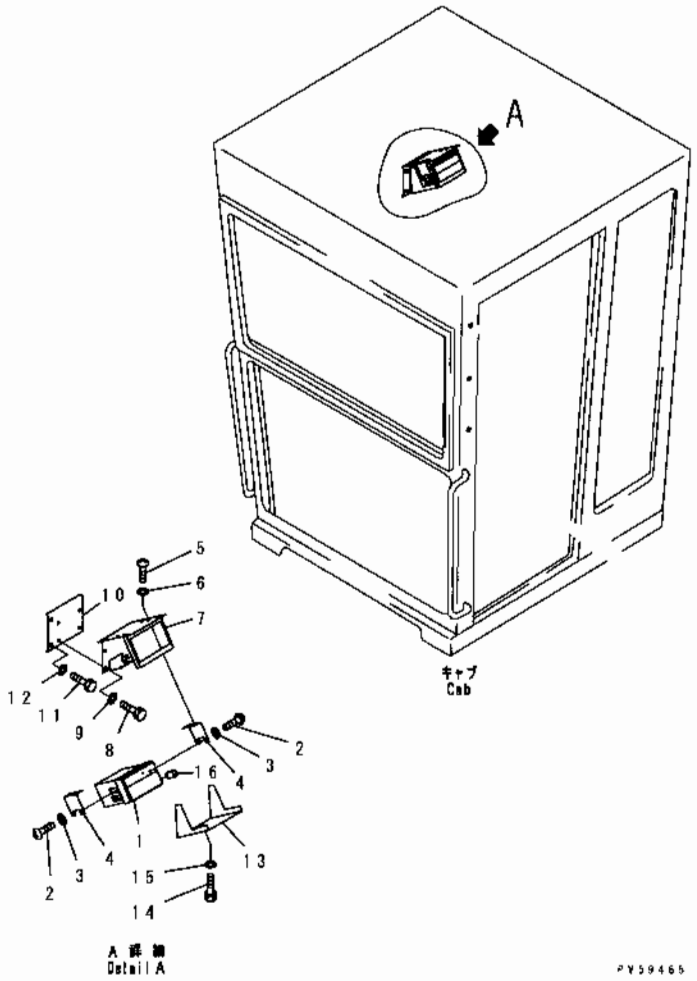


| INDEX | PART NO | DESCRIPTION | Q'TY | SERIAL NO |
|---|---|---|---|---|
| 1 | 421-07-21150 | CONTROLLER | 1 | 23001- |
| 2 | 01220-40410 | SCREW | 4 | 23001- |
| 3 | 01640-20408 | WASHER | 4 | 23001- |
| 4 | 23D-809-3560 | BRACKET | 2 | 23001- |
| 5 | 01220-40612 | SCREW | 4 | 23001- |
| 6 | 01641-20608 | WASHER | 4 | 23001- |
| 7 | 23D-809-3540 | BRACKET | 1 | 23001- |
| 8 | 01010-81020 | BOLT | 4 | 23001- |
| 9 | 01643-31032 | WASHER | 4 | 23001- |
| 10 | 23D-809-3530 | BRACKET | 1 | 23001- |
| 11 | 01010-81025 | BOLT | 2 | 23001- |
| 12 | 01643-31032 | WASHER | 2 | 23001- |
| 13 | 23D-809-3580 | COVER | 1 | 23001- |
| 14 | 01010-80812 | BOLT | 2 | 23001- |
| 15 | 01641-20812 | WASHER | 2 | 23001- |
| 16 | 235-809-4690 | PLATE | 1 | 23001- |

# FIG.5619 AIR CONDITIONER (9/10) (ELECTRICAL PARTS)

(#23001-)

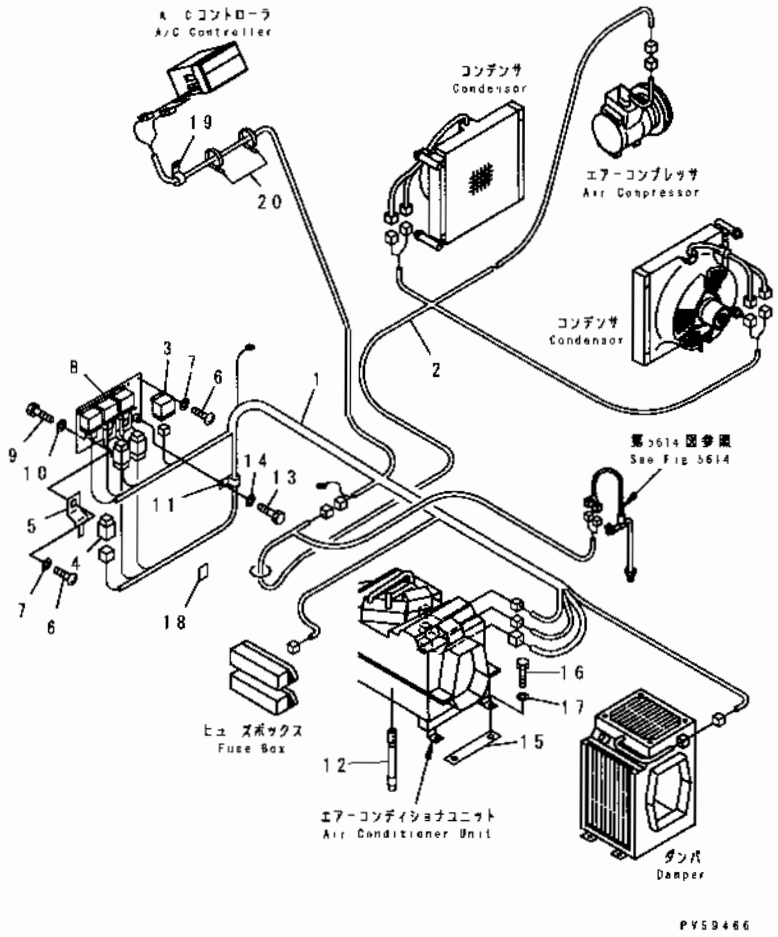


| INDEX | PART NO | DESCRIPTION | Q'TY | SERIAL NO |
|---|---|---|---|---|
| 1 | 234-809-9610 | WIRING HARNESS | 1 | 23001- |
| 2 | 234-809-9570 | HARNESS | 1 | 23001- |
| 3 | 421-07-21260 | RELAY, BLOWER | 4 | 23001- |
| 4 | 425-963-1920 | RELAY, CONDENSOR | 3 | 23001- |
| 5 | 421-07-21180 | BRACKET | 3 | 23001- |
| 6 | 01220-30608 | SCREW | 11 | 23001- |
| 7 | 01643-30623 | WASHER | 11 | 23001- |
| 8 | 23D-809-3380 | BRACKET | 1 | 23001- |
| 9 | 01010-80612 | BOLT | 4 | 23001- |
| 10 | 01643-30623 | WASHER | 4 | 23001- |
| 11 | 08036-02514 | CLIP | 2 | 23001- |
| 12 | 20Y-979-2191 | HOSE | 1 | 23001- |
| 13 | 01010-51016 | BOLT | 4 | 23001- |
| 14 | 01643-31032 | WASHER | 4 | 23001- |
| 15 | 234-809-6660 | PLATE | 1 | 23001- |
| 16 | 01010-51225 | BOLT | 2 | 23001- |
| 17 | 01643-31232 | WASHER | 2 | 23001- |
| 18 | 23D-809-3570 | PLATE | 3 | 23001- |
| 19 | 08036-01814 | CLIP | 3 | 23001- |
| 20 | 08034-00536 | BAND | 5 | 23001- |

# FIG.5620 AIR CONDITIONER (10/10) (AIR COMPRESSER INNER PARTS) (#23001-)

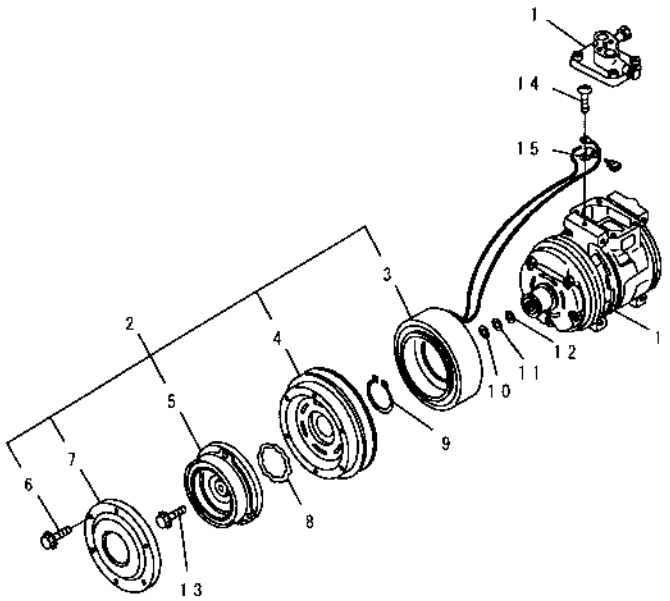


| INDEX | PART NO. | DESCRIPTION | Q'TY | SERIAL NO |
|---|---|---|---|---|
| | 20Y-979-3110 | AIR COMPRESSOR A<br>THE DENSO PART NUMBER IS THAT ND IS REMOVED FROM KOMATSU PART NUMBER LISTED BELOW. | 1 | 23001- |
| 1 | ND447200-0240 | .COMPRESSOR ASS'Y | 1 | 23001- |
| 2 | ND447300-1440 | .CLUTCH ASS'Y | 1 | 23001- |
| 3 | ND047310-7240 | ..STATOR | 1 | 23001- |
| 4 | ND047350-7130 | ..ROTOR | 1 | 23001- |
| 5 | ND447410-0010 | ..HUB | 1 | 23001- |
| | ND447410-0020 | ..HUB | 1 | 23001- |
| 6 | ND949047-2950 | ..BOLT | 6 | 23001- |
| 7 | ND047372-0660 | ..COVER | 1 | 23001- |
| 8 | ND949070-0831 | .RING, SNAP | 1 | 23001- |
| 9 | ND949070-0640 | .RING, SNAP | 1 | 23001- |
| 10 | ND949013-7480 | .WASHER, 0.1MM | 1 | 23001- |
| 11 | ND949013-7500 | .WASHER, 0.3MM | 1 | 23001- |
| 12 | ND949013-7510 | .WASHER, 0.5MM | 1 | 23001- |
| 13 | ND949048-0430 | .BOLT | 1 | 23001- |
| 14 | ND91310-05081 | .SCREW | 1 | 23001- |
| 15 | ND146691-4470 | .CLAMP | 1 | 23001- |

# FIG. 5701A CAR HEATER (1/2) (WATER PIPING) (#23001-)

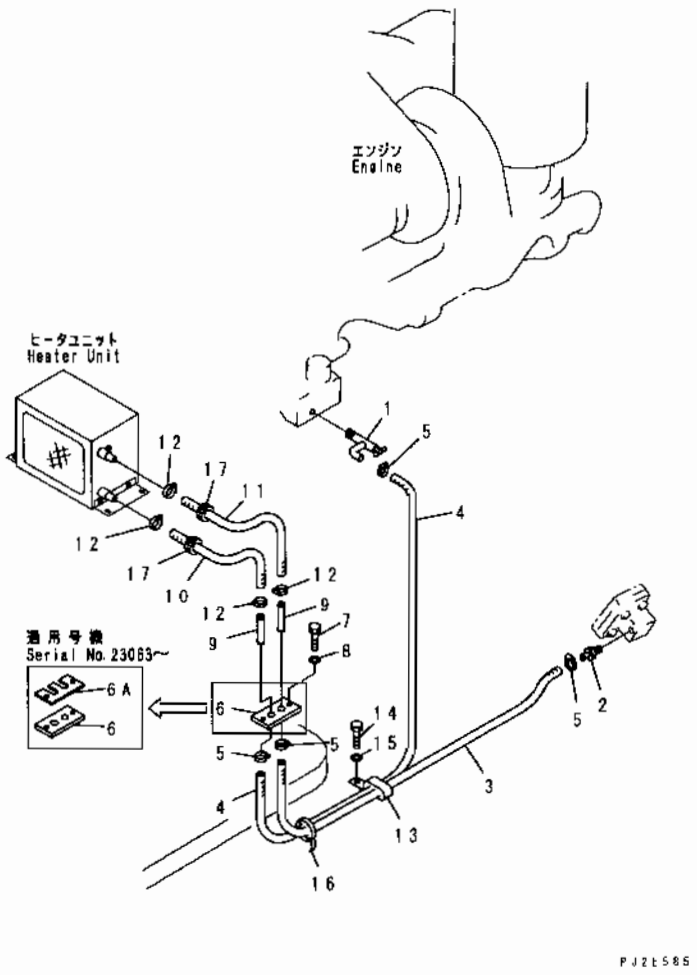


| INDEX | PART NO. | DESCRIPTION | Q'TY | SERIAL NO. |
|---|---|---|---|---|
| 1 | 09482-10000 | VALVE | 1 | 23001- |
| 2 | 232-817-1590 | NIPPLE | 1 | 23001- |
| 3 | 09483-00523 | HOSE | 1 | 23001- |
| 4 | 09483-00527 | HOSE | 1 | 23001- |
| 5 | 09479-02400 | CLAMP | 4 | 23244- |
| | □07280-02523 | CLAMP | 4 | 23001-23243 |
| 6 | 234-807-5620 | PLATE | 1 | 23001- |
| 6A | 234-807-5670 | PLATE | 1 | 23063- |
| 7 | 01010-81035 | BOLT | 2 | 23063- |
| | 01010-81030 | BOLT | 2 | 23001-23062 |
| 8 | 01643-31032 | WASHER | 2 | 23001- |
| 9 | 234-807-5630 | CONNECTOR | 2 | 23001- |
| 10 | 234-807-3640 | HOSE | 1 | 23001- |
| 11 | 234-807-7950 | HOSE | 1 | 23001- |
| 12 | 09479-02400 | CLAMP | 4 | 23244- |
| | □07280-02523 | CLAMP | 4 | 23001-23243 |
| 13 | 232-817-1140 | CLIP | 1 | 23001- |
| 14 | 01010-81016 | BOLT | 1 | 23001- |
| 15 | 01643-31032 | WASHER | 1 | 23001- |
| 16 | 08034-00519 | BAND | 3 | 23001- |
| 17 | 08037-03614 | GROMMET | 2 | 23001- |

# FIG. 5703A CAR HEATER (2/2) (AIR PIPING) (#23001-)

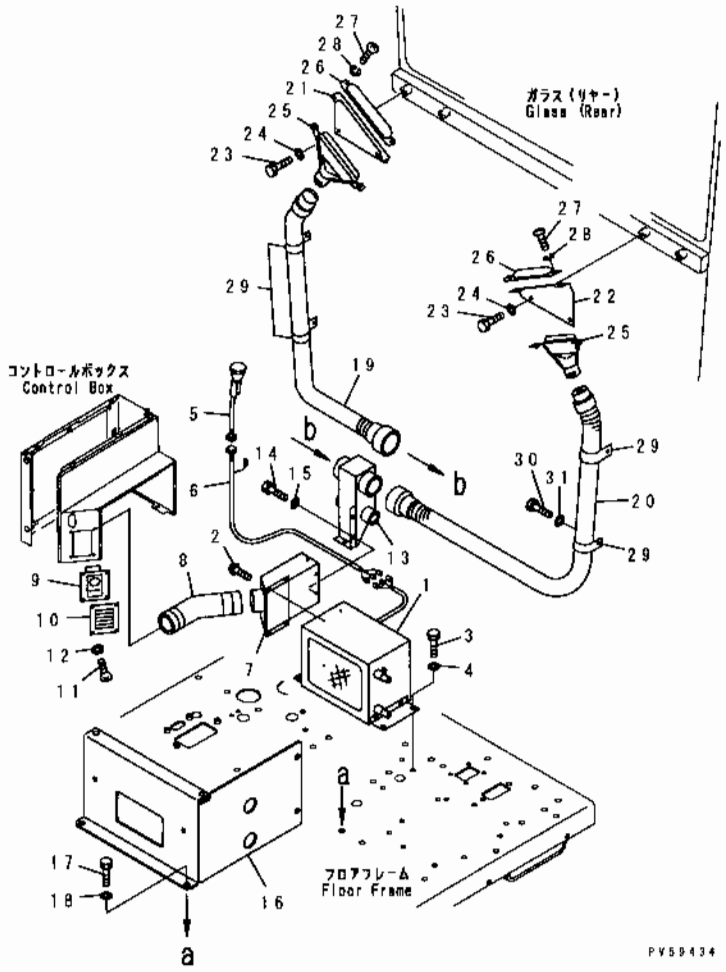


| INDEX | PART NO | DESCRIPTION | Q'TY | SERIAL NO |
|---|---|---|---|---|
| 1 | 23B-807-1210 | HEATER UNIT ASS'Y, (MODIFIED PART) | 1 | 23001- |
| | 232-817-1610 | .HEATER ASS'Y | 1 | 23001- |
| | 232-817-1630 | ..RADIATOR | 1 | 23001- |
| | 232-817-1640 | ..FAN, BLOWER | 1 | 23001- |
| | 232-817-1650 | ..RESISTOR, BLOWER | 1 | 23001- |
| | 232-817-1660 | .MOTOR | 1 | 23001- |
| 2 | ND90930-04061 | ..SCREW | 4 | 23001- |
| 3 | 01010-81016 | BOLT | 3 | 23001- |
| 4 | 01643-31032 | WASHER | 3 | 23001- |
| 5 | 232-817-1620 | SWITCH | 1 | 23001- |
| 6 | 234-06-63160 | HARNESS | 1 | 23001- |
| 7 | 234-807-5611 | BOX | 1 | 23001- |
| 8 | 234-807-5660 | BOX | 1 | 23001- |
| 9 | 23B-809-3730 | BOX | 1 | 23001- |
| 10 | 142-979-3221 | GRILLE ASS'Y | 1 | 23001- |
| 11 | 01220-40612 | SCREW | 4 | 23001- |
| 12 | 01643-30623 | WASHER | 4 | 23001- |
| 13 | 234-807-5660 | BOX | 1 | 23001- |
| 14 | 01010-80612 | BOLT | 3 | 23001- |
| 15 | 01643-30623 | WASHER | 3 | 23001- |
| 16 | 234-807-7960 | BRACKET | 1 | 23001- |
| 17 | 01010-81225 | BOLT | 4 | 23001- |
| 18 | 01643-31232 | WASHER | 4 | 23001- |
| 19 | 234-807-7940 | HOSE, R.H. | 1 | 23001- |
| 20 | 234-807-1650 | HOSE, L.H. | 1 | 23001- |
| 21 | 23B-817-1440 | BRACKET, R.H. | 1 | 23001- |
| 22 | 23B-817-1430 | BRACKET, L.H. | 1 | 23001- |
| 23 | 01010-81016 | BOLT | 4 | 23001- |
| 24 | 01643-31032 | WASHER | 4 | 23001- |
| 25 | 232-817-1350 | NOZZLE | 2 | 23001- |
| 26 | 232-817-1360 | COVER | 2 | 23001- |
| 27 | 01220-40512 | SCREW | 4 | 23001- |
| 28 | 01601-20513 | WASHER, SPRING | 4 | 23001- |
| 29 | 232-807-6161 | CLIP | 4 | 23001- |
| 30 | 01010-81016 | BOLT | 4 | 23001- |
| 31 | 01643-31032 | WASHER | 4 | 23001- |

# FIG.5901 EXTINGUISHER (FLOOR FRAME MOUNTING TYPE)

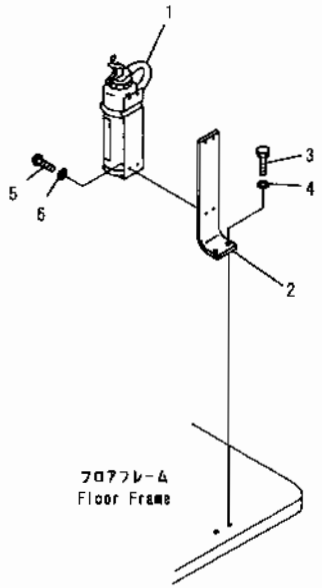


PV59435

| INDEX | PART NO | DESCRIPTION | Q'TY | SERIAL NO |
|---|---|---|---|---|
| 1 | 09495-40000 | FIRE EXTINGUISHER, (ENGLISH) | 1 | 21001- |
| | 09495-50000 | FIRE EXTINGUISHER, (FRENCH) | 1 | 21001-23000 |
| | 09495-60000 | FIRE EXTINGUISHER, (ITALIAN) | 1 | 21001-23000 |
| | 09495-11010 | FIRE EXTINGUISHER, (ARABIC) | 1 | -. |
| | □09495-11000 | FIRE EXTINGUISHER, (ARABIC) | 1 | 21001-. |
| 2 | 234-901-3510 | BRACKET | 1 | 23001- |
| | □234-901-3310 | BRACKET | 1 | 21001-23000 |
| 3 | 01010-51030 | BOLT | 2 | 21001- |
| 4 | 01643-31032 | WASHER | 2 | 21001- |
| 5 | 01220-40620 | SCREW | 4 | 21001- |
| 6 | 01643-30623 | WASHER | 4 | 21001- |

# FIG.5905A EXTINGUISHER (CAB MOUNTING TYPE) (#23001-)

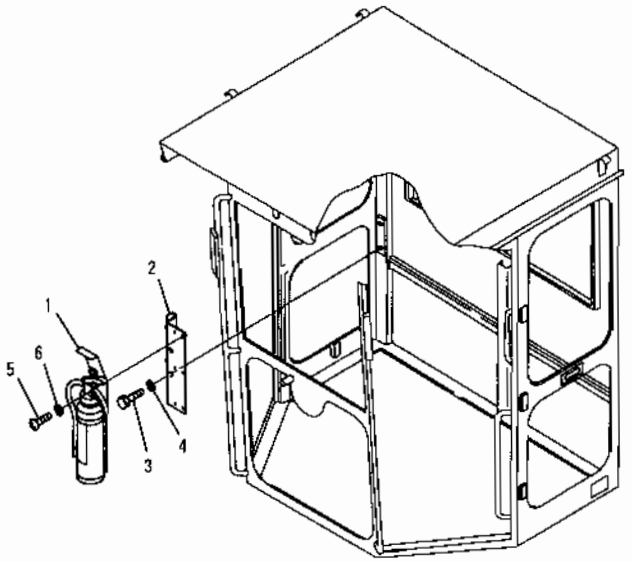


PJ7E517

| INDEX | PART NO | DESCRIPTION | Q'TY | SERIAL NO |
|---|---|---|---|---|
| 1 | 09495-11010 | FIRE EXTINGUISHER, (ARABIC) | 1 | 23001- |
| 2 | 234-950-9640 | BRACKET | 1 | 23001- |
| 3 | 01010-81020 | BOLT | 2 | 23001- |
| 4 | 01643-31032 | WASHER | 2 | 23001- |
| 5 | 01220-40512 | SCREW | 4 | 23001- |
| 6 | 01601-20513 | WASHER | 4 | 23001- |

# HYDRAULIC SYSTEM

# FIG. 6011 WORK EQUIPMENT PUMP(#23001-)

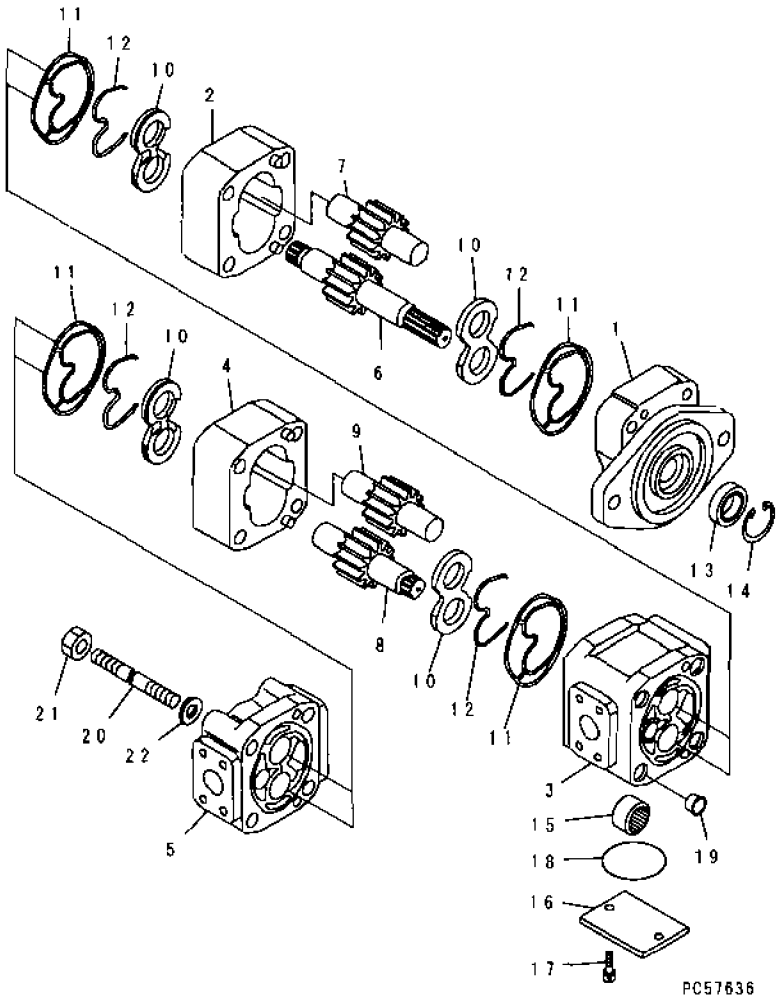


| INDEX | PART NO | DESCRIPTION | Q'TY | SERIAL NO |
|---|---|---|---|---|
| | 234-60-65100 | PUMP ASS'Y. | 1 | 23001- |
| | | THE KAYABA KOGYO PART NUMBER IS THAT KB IS REMOVED FROM KOMATSU PART NUMBER LISTED BELOW. | | |
| 1 | KB20132-60522 | .FLANGE. | 1 | 23001- |
| 2 | ☆ | .PLATE, GEAR. | 1 | 23001- |
| 3 | KB20132-70320 | .PLATE, CENTER. | 1 | 23001- |
| 4 | ☆ | .PLATE, GEAR. | 1 | 23001- |
| 5 | KB20132-60620 | .COVER. | 1 | 23001- |
| | KB2013B-70019 | .GEAR ASS'Y, FRONT. | 1 | 23001- |
| 6 | ☆ | ..GEAR, DRIVE. | 1 | 23001- |
| 7 | ☆ | ..GEAR, DRIVEN. | 1 | 23001- |
| | KBB530B-10003 | .GEAR ASS'Y, REAR. | 1 | 23001- |
| 8 | ☆ | ..GEAR, DRIVE | 1 | 23001- |
| 9 | ☆ | ..GEAR, DRIVEN. | 1 | 23001- |
| 10 | KB20131-60722 | .PLATE. | 4 | 23001- |
| 11 | ☆ | .SEAL. (KIT) | 4 | 23001- |
| 12 | ☆ | .RING. | 4 | 23001- |
| 13 | ☆ | .SEAL. | 1 | 23001- |
| 14 | ☆ | .RING. | 1 | 23001- |
| 15 | KB20131-70401 | .COUPLING. | 1 | 23001- |
| 16 | KB20131-61901 | .COVER. | 1 | 23001- |
| 17 | KB92702-10160 | .BOLT. | 2 | 23001- |
| 18 | ☆ | .O-RING. (KIT) | 1 | 23001- |
| 19 | KB20131-70901 | .STABILIZER | 4 | 23001- |
| 20 | KB20131-70812 | .BOLT. | 4 | 23001- |
| 21 | KB93308-14110 | .NUT. | 4 | 23001- |
| 22 | KB20131-61801 | .WASHER. | 4 | 23001- |
| | | SERVICE KIT. | | |
| KIT | KBB530A-10001 | SEAL KIT, HYDRAULIC PUMP. | 1 | 23001- |

# FIG. 6012 WORK EQUIPMENT PUMP (D.D.V. SPEC.) (#23001-)

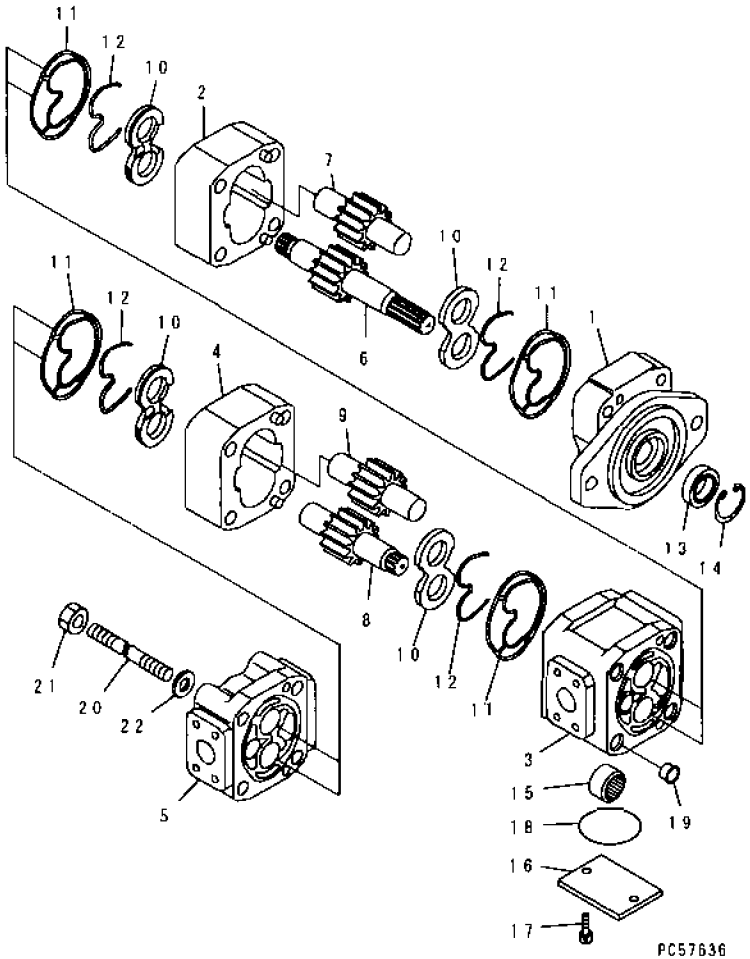


| INDEX | PART NO | DESCRIPTION | Q'TY | SERIAL NO |
|---|---|---|---|---|
| | 234-60-72100 | PUMP ASS'Y<br>THE KAYABA KOGYO PART NUMBER IS THAT KB IS REMOVED FROM KOMATSU PART NUMBER LISTED BELOW. | 1 | 23001- |
| 1 | KB20132-60522 | .FLANGE | 1 | 23001- |
| 2 | ☆ | .PLATE, GEAR | 1 | 23001- |
| 3 | KB20132-70320 | .PLATE, CENTER | 1 | 23001- |
| 4 | ☆ | .PLATE, GEAR | 1 | 23001- |
| 5 | KB20132-60620 | .COVER | 1 | 23001- |
| 6 | ☆ | .GEAR, DRIVE | 1 | 23001- |
| 7 | ☆ | .GEAR, DRIVEN | 1 | 23001- |
| 8 | ☆ | .GEAR, DRIVE | 1 | 23001- |
| 9 | ☆ | .GEAR, DRIVEN | 1 | 23001- |
| 10 | KB20131-60722 | .PLATE | 4 | 23001- |
| 11 | ☆ | .SEAL (KIT) | 4 | 23001- |
| 12 | ☆ | .RING | 4 | 23001- |
| 13 | ☆ | .SEAL | 1 | 23001- |
| 14 | ☆ | .RING, SNAP | 1 | 23001- |
| 15 | KB20131-70401 | .COUPLING | 1 | 23001- |
| 16 | KB20131-61901 | .COVER | 1 | 23001- |
| 17 | KB92702-10160 | .BOLT | 2 | 23001- |
| 18 | ☆ | .O-RING (KIT) | 1 | 23001- |
| 19 | KB20131-70901 | STABILIZER | 4 | 23001- |
| 20 | ☆ | .BOLT | 4 | 23001- |
| 21 | KB93308-14110 | .NUT | 4 | 23001- |
| 22 | KB20131-61801 | .WASHER | 4 | 23001- |
| | | SERVICE KIT | | |
| KIT | KBB530A-10001 | SEAL KIT, HYDRAULIC PUMP | 1 | 23001- |

# FIG. 6015 CIRCLE REVERSE PUMP(#23001-)

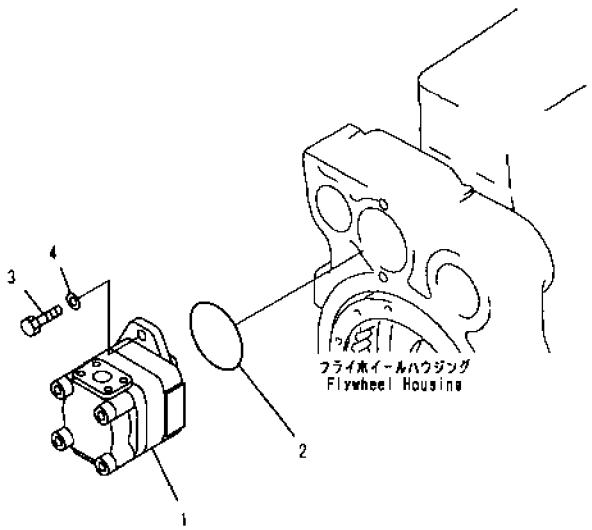


PY59414

| INDEX | PART NO. | DESCRIPTION | Q'TY. | SERIAL NO. |
|---|---|---|---|---|
| 1 | (234-60-65400) | PUMP ASS'Y. | 1 | 23001- |
| | (234-60-72200) | PUMP ASS'Y, (D.D.V. SPEC) | 1 | 23001- |
| 2 | 07000-12105 | O-RING | 1 | 23001- |
| 3 | 01010-81235 | BOLT | 2 | 23001- |
| 4 | 01643-31232 | WASHER | 2 | 23001- |

# FIG. 6016 CIRCLE REVERSE PUMP (#23001-)

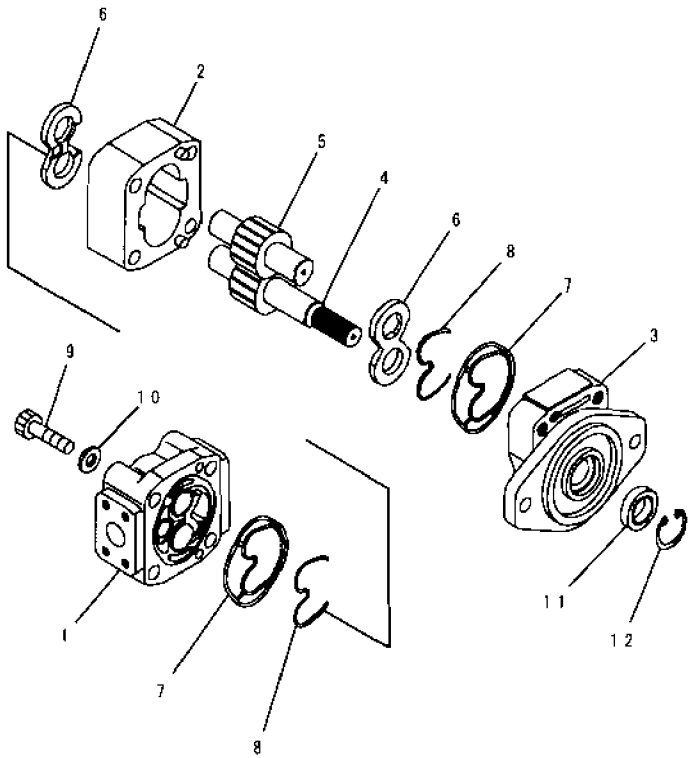


PJ59495

| INDEX | PART NO | DESCRIPTION | Q'TY | SERIAL NO |
|---|---|---|---|---|
| | 234-60-65400 | PUMP ASS'Y | 1 | 23001- |
| | | THE KAYABA KOGYO PART NUMBER IS THAT KB IS REMOVED FROM KOMATSU PART NUMBER LISTED BELOW. | | |
| 1 | KB20132-60620 | COVER | 1 | 23001- |
| 2 | ☆ | .PLATE,GEAR | 1 | 23001- |
| 3 | KB20132-60522 | .FLANGE | 1 | 23001- |
| 4 | ☆ | ..GEAR,DRIVE | 1 | 23001- |
| 5 | ☆ | ..GEAR,DRIVEN | 1 | 23001- |
| 6 | KB20131-60722 | .PLATE | 2 | 23001- |
| 7 | ☆ | .SEAL (KIT) | 2 | 23001- |
| 8 | ☆ | .RING (KIT) | 2 | 23001- |
| 9 | KB92703-14010 | BOLT | 4 | 23001- |
| 10 | KB20131-61801 | WASHER | 4 | 23001- |
| 11 | ☆ | SEAL (KIT) | 1 | 23001- |
| 12 | ☆ | .RING (KIT) | 1 | 23001- |
| | | SERVICE KIT | | |
| KIT | KB2013A-60013 | .REPAIR KIT,HYDRAULIC PUMP | 1 | 23001- |

# FIG. 6017 CIRCLE REVERSE PUMP (D.D.V. SPEC.) (#23001-)

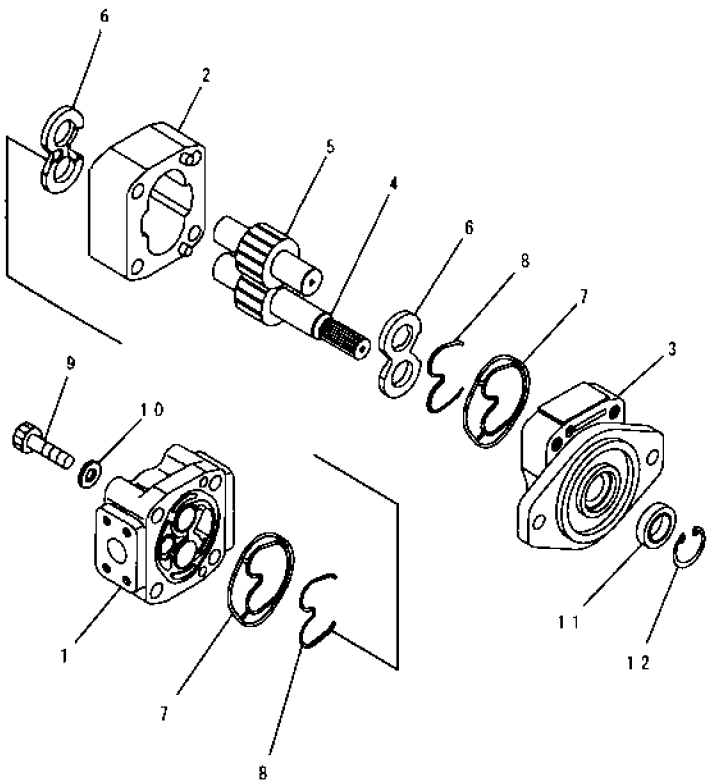


| INDEX | PART NO. | DESCRIPTION | Q'TY | SERIAL NO. |
|---|---|---|---|---|
| | 234-60-72200 | PUMP ASS'Y<br>THE KAYABA KOGYO PART NUMBER IS THAT KB IS REMOVED FROM KOMATSU PART NUMBER LISTED BELOW | 1 | 23001- |
| 1 | KB20132-60620 | . COVER | 1 | 23001- |
| 2 | ☆ | . PLATE, GEAR | 1 | 23001- |
| 3 | KB20132-60522 | . FLANGE | 1 | 23001- |
| 4 | ☆ | . GEAR, DRIVE | 1 | 23001- |
| 5 | ☆ | . GEAR, DRIVEN | 1 | 23001- |
| 6 | KB20131-60720 | . PLATE | 2 | 23001- |
| 7 | ☆ | . SEAL | 2 | 23001- |
| 8 | ☆ | . RING, BACK-UP | 2 | 23001- |
| 9 | ☆ | BOLT | 4 | 23001- |
| 10 | KB20131-61801 | WASHER | 4 | 23001- |
| 11 | ☆ | SEAL, OIL | 1 | 23001- |
| 12 | ☆ | RING, SNAP | 1 | 23001- |

# FIG. 6051A HYDRAULIC MOTOR(#21086-)

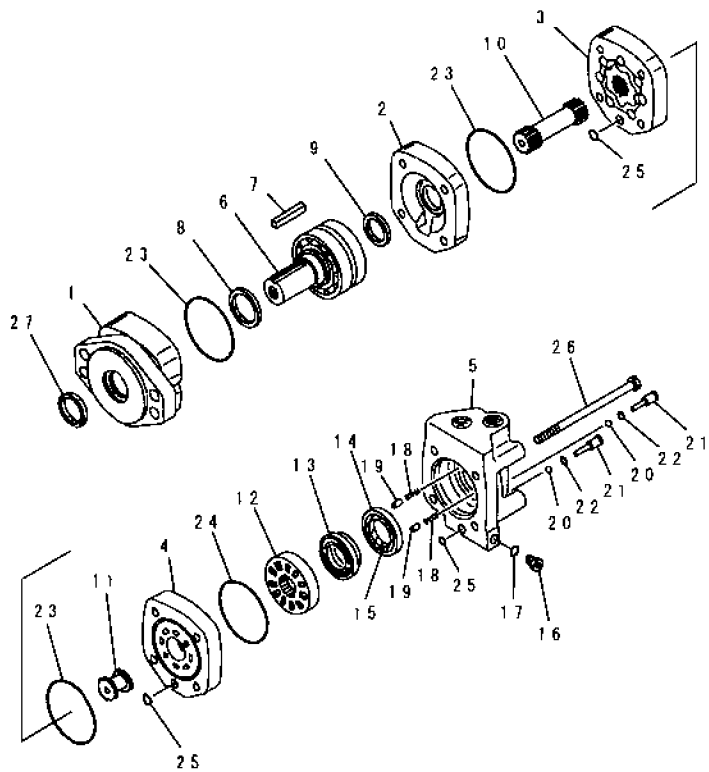


| INDEX | PART NO | DESCRIPTION | Q'TY | SERIAL NO |
|---|---|---|---|---|
| | 23B-62-11400 | MOTOR ASS'Y<br>THE SUMITOMO EATON PART NUMBER IS THAT ST IS REMOVED FROM KOMATSU PART NUMBER LISTED BELOW. | 1 | 21086- |
| 1 | ST7385-3 | .HOUSING | 1 | 21086- |
| | (☒23A-62-11110) | HOUSING | 1 | (21086-21086) |
| 2 | 232-62-11580 | .PLATE | 1 | 21086- |
| 3 | 23B-62-11420 | .ROTOR | 1 | 21086- |
| 4 | 232-62-11660 | .PLATE | 1 | 21086- |
| 5 | ST8355S-10 | .HOUSING | 1 | 21086- |
| | (☒232-62-11750) | .HOUSING | 1 | (21086-21086) |
| 6 | ST7404-3 | .SHAFT | 1 | 21086- |
| | (☒23A-62-11120) | .SHAFT | 1 | (21086-21086) |
| 7 | ST14352 | .KEY | 1 | 21086- |
| | (☒23A-62-11130) | .KEY | 1 | (21086-21086) |
| 8 | ST9075-1 | .SEAL, OIL (KIT A) | 1 | 21086- |
| | (☒232-62-11540) | .SEAL, OIL (KIT A) | 1 | (21086-21086) |
| 9 | ST9050 | .SEAL, OIL (KIT A) | 1 | 21086- |
| | (☒232-62-11570) | SEAL, OIL (KIT A) | 1 | (21086-21086) |
| 10 | 23B-62-11410 | .SHAFT, DRIVE | 1 | 21086- |
| 11 | 232-62-11650 | .DRIVE | 1 | 21086- |
| 12 | 232-62-11680 | .VALVE | 1 | 21086- |
| 13 | ST8915 | .PLATE | 1 | 21086- |
| | (☒232-62-11690) | .PLATE | 1 | (21086-21086) |
| 14 | ST9135-2 | .SEAL, OUTER (KIT B) | 1 | 21086- |
| | (☒232-62-11720) | .SEAL, OUTER (KIT B) | 1 | (21086-21086) |
| 15 | ST9135-1 | .SEAL, INNER (KIT B) | 1 | 21086- |
| | (☒232-62-11710) | .SEAL, INNER (KIT B) | 1 | (21086-21086) |
| 16 | ST14236 | .PLUG | 1 | 21086- |
| | (☒232-62-11760) | .PLUG | 1 | (21086-21086) |
| 17 | ST15073 | .O-RING (KIT B) | 1 | 21086- |
| | (☒232-62-11820) | .O-RING (KIT B) | 1 | (21086-21086) |
| 18 | 232-62-11730 | .SPRING | 2 | 21086- |
| 19 | 232-62-11740 | PIN | 2 | 21086- |
| 20 | 232-62-11770 | BALL | 2 | 21086- |
| | 232-62-11780 | .PLUG ASS'Y | 2 | 21086- |
| 21 | 232-62-11840 | ..PLUG | 1 | 21086- |
| 22 | ST250003-903 | ..O-RING (KIT B) | 1 | 21086- |
| | (☒232-62-11830) | ..O-RING (KIT B) | 1 | (21086-21086) |
| 23 | ST9022-6 | .O-RING (KIT A, B) | 3 | 21086- |
| | (☒232-62-11530) | .O-RING (KIT A, B) | 3 | (21086-21086) |
| 24 | ST9022-2 | .O-RING (KIT B) | 1 | 21086- |

# FIG. 6051A HYDRAULIC MOTOR (#21086-)

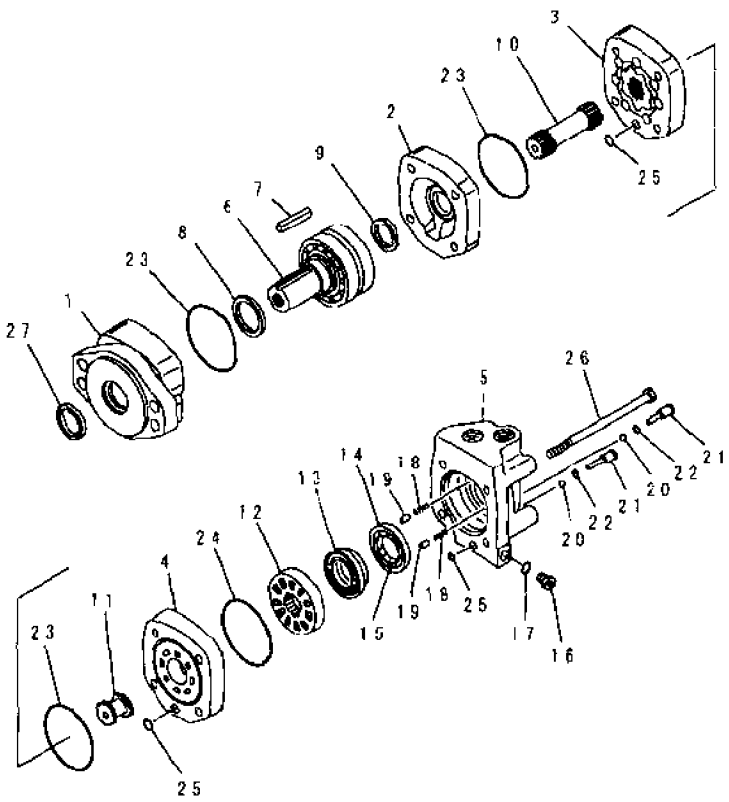


PM55795

| INDEX | PART NO. | DESCRIPTION | Q'TY | SERIAL NO. |
|---|---|---|---|---|
| | (※232-62-11670) | O-RING.....(KIT B)... | 1 | (21086-21086) |
| 25 | ST9022-12 | O-RING.....(KIT B)... | 3 | 21086- |
| | (※232-62-11640) | O-RING.....(KIT B)... | 3 | (21086-21086) |
| 26 | 23B-62-11430 | BOLT..... | 4 | 21086- |
| 27 | 232-62-11510 | SEAL, DUST..... | 1 | 21086- |
| | | SERVICE KIT..... | | |
| KIT A | ST61091S | SERVICE KIT, HYDRAULIC MOTOR..... | 1 | 21086- |
| KIT B | ST61200 | SERVICE KIT, HYDRAULIC MOTOR..... | 1 | 21086- |

# SWIVEL JOINT

FIG NO. 6071

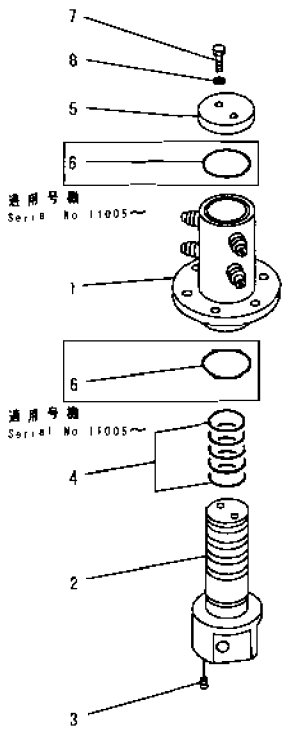


PJ53789

| INDEX | PART NO. | DESCRIPTION | Q'TY | SERIAL NO. |
|---|---|---|---|---|
| | 232-735-3102 | SWIVEL JOINT ASS'Y | 1 | 21033- |
| | □232-735-3101 | JOINT ASS'Y, SWIVEL | 1 | 21001-21032 |
| 1 | 232-735-3111 | .BODY | 1 | 21033- |
| | 232-735-3110 | .BODY | 1 | 21001-21032 |
| 2 | 232-735-3120 | .FLANGE | 1 | 21001- |
| 3 | 07043-00211 | .PLUG | 4 | 21001- |
| 4 | 07000-13050 | .O-RING | 5 | 21001- |
| 5 | 232-60-54730 | .PLATE | 1 | 21001- |
| 6 | 07000-12065 | .O-RING | 2 | 21033- |
| 7 | 01010-51225 | .BOLT | 2 | 21001- |
| 8 | 01643-31232 | .WASHER | 2 | 21033- |
| | 01602-21236 | .WASHER, SPRING | 2 | 21001-21032 |



GD705A-4

# FIG.6071 SWIVEL JOINT

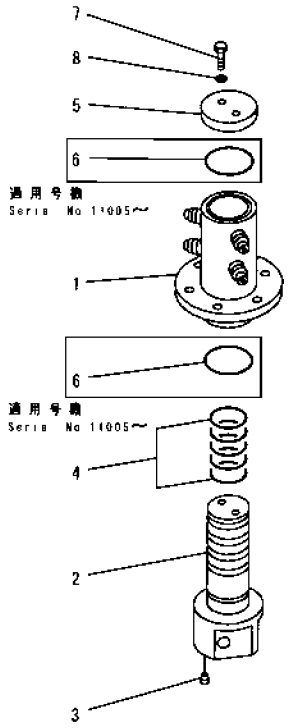


PJ5J789

| INDEX | PART NO. | DESCRIPTION | Q'TY | SERIAL NO. |
|---|---|---|---|---|
| | 232-735-3102 | SWIVEL JOINT ASS'Y | 1 | 21033- |
| | □232-735-3101 | JOINT ASS'Y,SWIVEL | 1 | 21001-21032 |
| 1 | 232-735-3111 | .BODY | 1 | 21033- |
| | 232-735-3110 | .BODY | 1 | 21001-21032 |
| 2 | 232-735-3120 | .FLANGE | 1 | 21001- |
| 3 | 07043-00211 | .PLUG | 4 | 21001- |
| 4 | 07000-13050 | .O-RING | 5 | 21001- |
| 5 | 232-60-54730 | .PLATE | 1 | 21001- |
| 6 | 07000-12065 | .O-RING | 2 | 21033- |
| 7 | 01010-51225 | .BOLT | 2 | 21001- |
| 8 | 01643-31232 | .WASHER | 2 | 21033- |
| | 01602-21236 | .WASHER,SPRING | 2 | 21001-21032 |

# FIG. 6101A HYDRAULIC OIL TANK (#23001-)

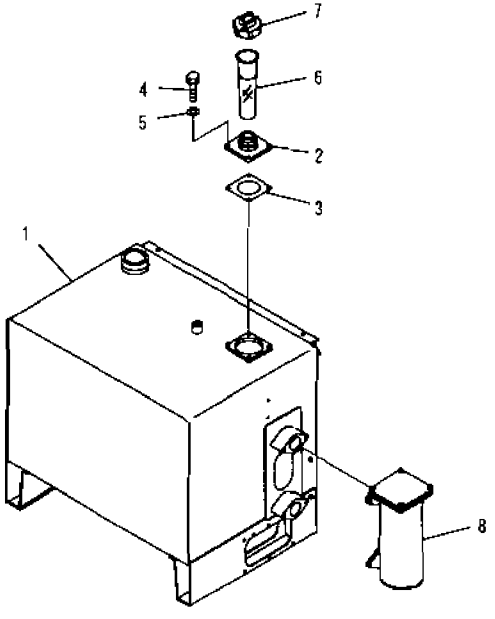


PVE9433

| INDEX | PART NO. | DESCRIPTION | Q'TY | SERIAL NO |
|---|---|---|---|---|
| 1 | (234-04-61121) | TANK | 1 | 23036- |
| | (234-04-61120) | TANK | 1 | 23001-23035 |
| 2 | 23A-04-11340 | FILLER | 1 | 23001- |
| 3 | 232-60-68141 | PACKING | 1 | 23001- |
| 4 | 01010-81020 | BOLT | 4 | 23001- |
| 5 | 01643-31032 | WASHER | 4 | 23001- |
| 6 | 07056-10045 | STRAINER | 1 | 23001- |
| 7 | 07051-00000 | CAP | 1 | 23001- |
| | 07092-00000 | CAP, WITH LOCK | 1 | 23001- |
| 8 | (23C-60-13100) | FILTER ASS'Y, HYDRAULIC | 1 | 23001- |

# FIG. 6103 HYDRAULIC OIL TANK (D.D.V SPEC) (#23001-)

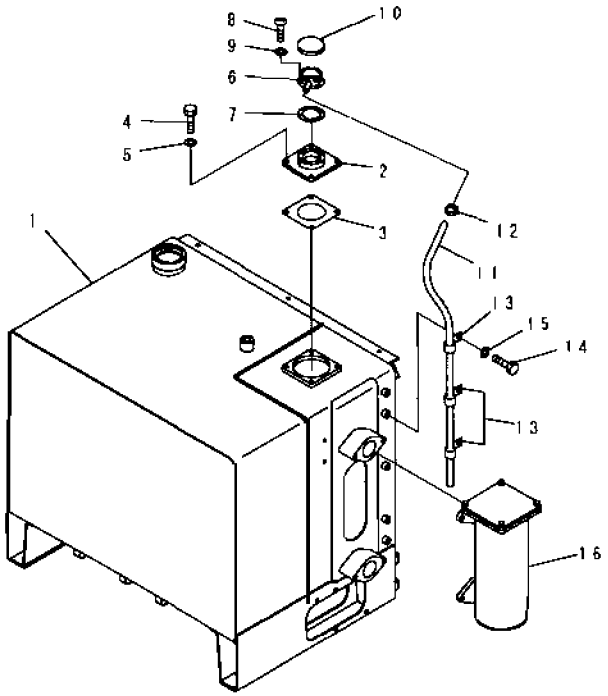


| INDEX | PART NO. | DESCRIPTION | Q'TY | SERIAL NO |
|---|---|---|---|---|
| 1 | (234-04-61510) | TANK, (D.D.V. SPEC) | 1 | 23001- |
| 2 | 234-60-72540 | FILLER | 1 | 23001- |
| 3 | 232-60-68141 | PACKING | 1 | 23001- |
| 4 | 01010-81020 | BOLT | 4 | 23001- |
| 5 | 01643-31032 | WASHER | 4 | 23001- |
| 6 | 201-60-12171 | FILLER NECK, NECK | 1 | 23001- |
| 7 | 205-60-51460 | GASKET | 1 | 23001- |
| 8 | 01220-40516 | SCREW | 6 | 23001- |
| 9 | 01641-20508 | WASHER | 6 | 23001- |
| 10 | 201-60-12190 | CAP ASS'Y | 1 | 23001- |
| 11 | 07270-60822 | TUBE | 1 | 23001- |
| 12 | 07280-01110 | CLAMP | 1 | 23001- |
| 13 | 04434-51010 | CLIP | 3 | 23001- |
| 14 | 01010-81016 | BOLT | 3 | 23001- |
| 15 | 01643-31032 | WASHER | 3 | 23001- |
| 16 | (234-60-72600) | FILTER, (D.D.V SPEC) | 1 | 23001- |

# FIG.6113 HYDRAULIC OIL FILTER (D.D.V. SPEC) (#23001-)

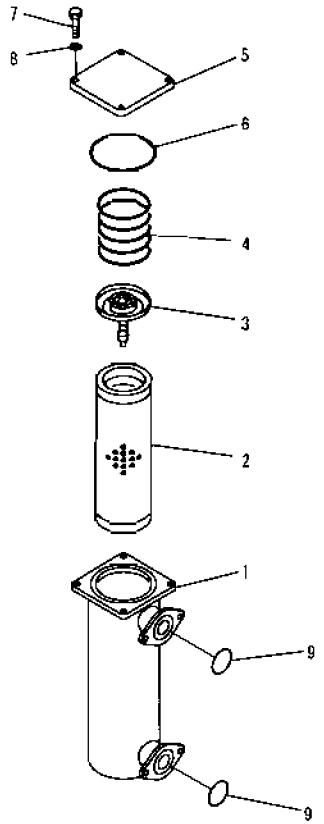


PJ2E519

| INDEX | PART NO. | DESCRIPTION | Q'TY | SERIAL NO. |
|---|---|---|---|---|
| | 234-60-72600 | FILTER | 1 | 23001- |
| 1 | 234-60-72610 | .HOUSING | 1 | 23001- |
| 2 | 07063-01210 | .ELEMENT | 1 | 23001- |
| 3 | 12R-60-11300 | .VALVE ASS'Y | 1 | 23001- |
| 4 | 12R-60-11390 | .SPRING | 1 | 23001- |
| 5 | 234-60-72620 | .PLATE | 1 | 23001- |
| 6 | 07000-15170 | .O-RING | 1 | 23001- |
| 7 | 01010-81240 | .BOLT | 4 | 23001- |
| 8 | 01643-31232 | .WASHER | 4 | 23001- |
| 9 | 07000-02065 | .O-RING | 2 | 23001- |

# FIG. 6201A CONTROL VALVE, L.H. (3-SPOOL) (#23001-)

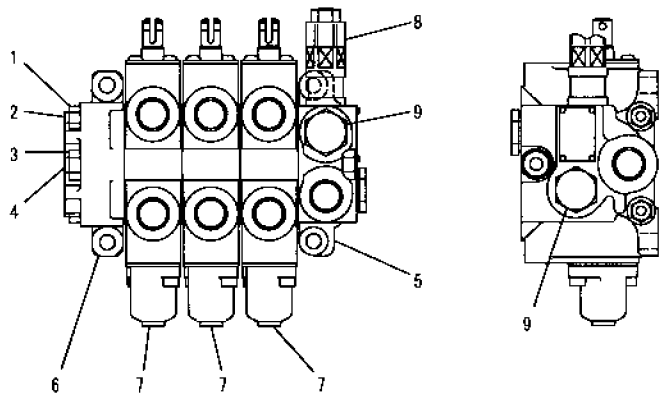


PV59438

| INDEX | PART NO. | DESCRIPTION | Q'TY | SERIAL NO |
|---|---|---|---|---|
| | 234-60-66300 | VALVE ASS'Y, 3-SPOOL.....<br>THE KAYABA KOGYO PART NUMBER IS THAT KB IS REMOVED FROM KOMATSU PART NUMBER LISTED BELOW | 1 | 23001- |
| 1 | KB93118-08652 | NUT..... | 4 | 23001- |
| 2 | KB21031-30104 | .STUD..... | 2 | 23001- |
| 3 | KB93128-10082 | .NUT..... | 2 | 23001- |
| 4 | KB21031-30103 | STUD..... | 1 | 23001- |
| 5 | KB21013-34848 | .INLET SECTION ASS'Y..... | 1 | 23001- |
| 6 | KB21011-30153 | .OUTER SECTION..... | 1 | 23001- |
| 7 | KB21013-35039 | .SPOOL SECTION ASS'Y..... | 3 | 23001- |
| 8 | KB21013-30664 | RELIEF VALVE ASS'Y ..... | 1 | 23001- |
| 9 | KB21003-00207 | .PLUG ASS'Y ..... | 2 | 23001- |

# FIG. 6203A CONTROL VALVE, L.H. (1-SPOOL) (FOR CIRCLE REVERSE GEAR) (#23001-)

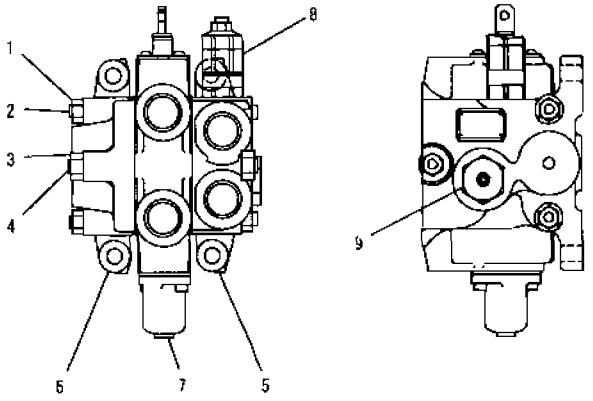


PV59439

| INDEX | PART NO | DESCRIPTION | Q'TY | SERIAL NO |
|---|---|---|---|---|
| | 234-60-66400 | VALVE ASS'Y, (FOR CIRCLE REVERSE)<br>THE KAYABA KOGYO PART NUMBER IS THAT KB IS REMOVED FROM KOMATSU PART NUMBER LISTED BELOW. | 1 | 23001- |
| 1 | KB21001-00332 | .NUT | 4 | 23001- |
| 2 | KB21011-40401 | .STUD | 2 | 23001- |
| 3 | KB21001-00333 | .NUT | 2 | 23001- |
| 4 | KB21011-40402 | STUD | 1 | 23001- |
| 5 | KB21013-47105 | INLET SECTION ASS'Y | 1 | 23001- |
| 6 | KB21011-40301 | .OUTLET SECTION ASS'Y | 1 | 23001- |
| 7 | KB21013-40201 | .SPOOL SECTION ASS'Y | 1 | 23001- |
| 8 | KB21113-40058 | .VALVE ASS'Y, RELIEF | 1 | 23001- |
| 9 | KB21003-00197 | .PLUG ASS'Y | 1 | 23001- |

# FIG. 6215A CONTROL VALVE, L.H. (2-SPOOL) (WITH CIRCLE REVERSE AND RIPPER) (#23001-)

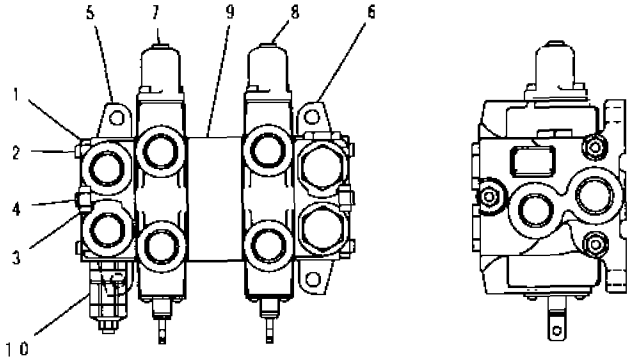


PV59440

| INDEX | PART NO | DESCRIPTION | Q'TY | SERIAL NO |
|---|---|---|---|---|
| | 234-60-66700 | VALVE ASS'Y, 2-SPOOL<br>THE KAYABA KOGYO PART NUMBER IS THAT KB IS REMOVED FROM KOMATSU PART NUMBER LISTED BELOW. | 1 | 23001- |
| 1 | KB21001-00332 | .NUT | 4 | 23001- |
| 2 | KB21031-40401 | .STUD | 2 | 23001- |
| 3 | KB21001-00333 | .NUT | 2 | 23001- |
| 4 | KB21031-40402 | .STUD | 1 | 23001- |
| 5 | KB21013-47104 | .INLET SECTION ASS'Y | 1 | 23001- |
| 6 | KB21013-40121 | .INLET SECTION ASS'Y | 1 | 23001- |
| 7 | KB21013-40201 | .SPOOL SECTION ASS'Y | 1 | 23001- |
| 8 | KB21013-40301 | .SPOOL SECTION ASS'Y | 1 | 23001- |
| 9 | KB21011-41602 | .BLOCK | 1 | 23001- |
| 10 | KB21113-40058 | .VALVE ASS'Y, RELIEF | 1 | 23001- |

# FIG. 6215A CONTROL VALVE, L.H. (2-SPOOL) (WITH CIRCLE REVERSE AND RIPPER) (#23001-)

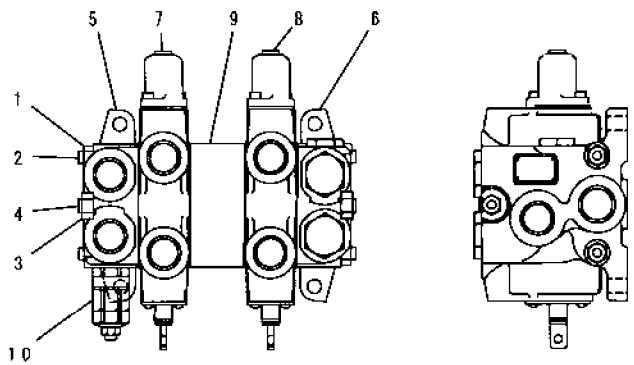


PY59440

| INDEX | PART NO. | DESCRIPTION | Q'TY | SERIAL NO. |
|---|---|---|---|---|
| | 234-60-66700 | VALVE ASS'Y, 2-SPOOL<br>THE KAYABA KOGYO PART NUMBER IS THAT KB IS REMOVED FROM KOMATSU PART NUMBER LISTED BELOW. | 1 | 23001- |
| 1 | KB21001-00332 | .NUT | 4 | 23001- |
| 2 | KB21031-40401 | .STUD | 2 | 23001- |
| 3 | KB21001-00333 | .NUT | 2 | 23001- |
| 4 | KB21031-40402 | .STUD | 1 | 23001- |
| 5 | KB21013-47104 | .INLET SECTION ASS'Y | 1 | 23001- |
| 6 | KB21013-40121 | .INLET SECTION ASS'Y | 1 | 23001- |
| 7 | KB21013-40201 | .SPOOL SECTION ASS'Y | 1 | 23001- |
| 8 | KB21013-40301 | .SPOOL SECTION ASS'Y | 1 | 23001- |
| 9 | KB21011-41602 | BLOCK | 1 | 23001- |
| 10 | KB21113-40058 | .VALVE ASS'Y, RELIEF | 1 | 23001- |

FIG NO. : 6221A

## FIG. 6221A CONTROL VALVE, R.H. (4-SPOOL) (#23001-)

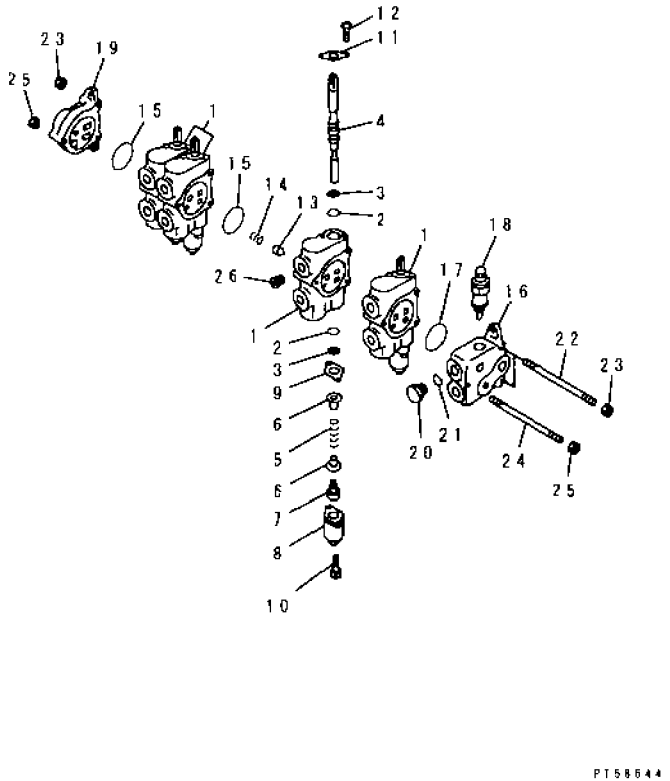


| INDEX | PART NO | DESCRIPTION | Q'TY | SERIAL NO. |
|---|---|---|---|---|
| | 234-60-66100 | VALVE ASS'Y, CONTROL<br>THE KAYABA KOGYO PART NUMBER IS THAT KB IS REMOVED FROM KOMATSU PART NUMBER LISTED BELOW | 1 | 23001- |
| | KB21013-35039 | .SPOOL SECTION ASS'Y | 4 | 23001- |
| 1 | ☆ | ..HOUSING | 1 | 23001- |
| 2 | ☆ | ..O-RING | 2 | 23001- |
| 3 | ☆ | ..WIPER | 2 | 23001- |
| 4 | ☆ | ..SPOOL | 1 | 23001- |
| 5 | KB21011-30646 | ..SPRING | 1 | 23001- |
| 6 | KB21011-30702 | ..SEAT, SPRING | 2 | 23001- |
| 7 | KB21011-30507 | ..SCREW | 1 | 23001- |
| 8 | KB21011-31044 | ..CAP | 1 | 23001- |
| 9 | KB21011-31702 | ..PLATE | 1 | 23001- |
| 10 | KB92702-06181 | ..BOLT | 2 | 23001- |
| 11 | KB21011-31702 | ..PLATE | 1 | 23001- |
| 12 | KB91111-60102 | ..SCREW | 2 | 23001- |
| 13 | KB21011-32404 | ..POPPET | 1 | 23001- |
| 14 | KB21011-30604 | ..SPRING | 1 | 23001- |
| 15 | ☆ | ..O-RING | 1 | 23001- |
| | KB21013-34839 | .SECTION ASS'Y | 1 | 23001- |
| 16 | KB21011-30349 | ..HOUSING | 1 | 23001- |
| 17 | ☆ | ..O-RING | 1 | 23001- |
| 18 | KB21013-30664 | .RELIEF VALVE ASS'Y | 1 | 23001- |
| 19 | KB21011-30153 | .OUTER SECTION | 1 | 23001- |
| | KB21003-00207 | .PLUG ASS'Y | 1 | 23001- |
| 20 | KB21001-00504 | ..PLUG | 1 | 23001- |
| 21 | ☆ | ..O-RING | 1 | 23001- |
| 22 | KB21041-30104 | .STUD | 2 | 23001- |
| 23 | KB93118-08652 | .NUT | 4 | 23001- |
| 24 | KB21041-30103 | .STUD | 1 | 23001- |
| 25 | KB93128-10082 | .NUT | 2 | 23001- |
| 26 | KB99001-04040 | .PLUG | 11 | 23001- |

# FIG. 6223 CONTROL VALVE, R.H. (5-SPOOL) (#23001-)

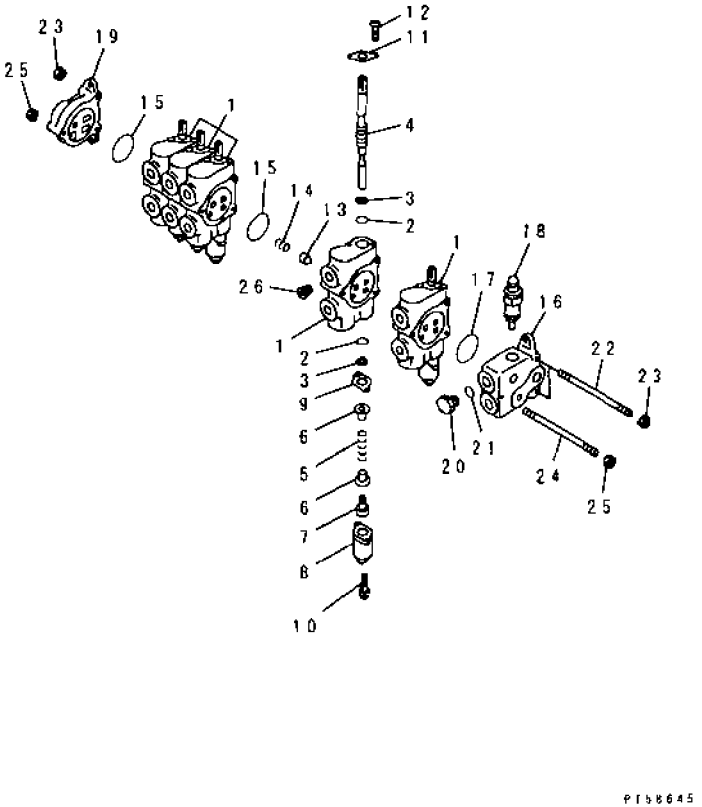


| INDEX | PART NO | DESCRIPTION | Q'TY | SERIAL NO. |
|---|---|---|---|---|
| | 234-60-66500 | VALVE ASS'Y, CONTROL<br>THE KAYABA KOGYO PART NUMBER IS THAT KB IS REMOVED FROM KOMATSU PART NUMBER LISTED BELOW. | 1 | 23001- |
| | KB21013-35039 | .SPOOL SECTION ASS'Y | 5 | 23001- |
| 1 | ☆ | ..HOUSING | 1 | 23001- |
| 2 | ☆ | ..O-RING | 2 | 23001- |
| 3 | ☆ | ..WIPER | 2 | 23001- |
| 4 | ☆ | ..SPOOL | 1 | 23001- |
| 5 | KB21011-30646 | ..SPRING | 1 | 23001- |
| 6 | KB21011-30702 | ..SEAT, SPRING | 2 | 23001- |
| 7 | KB21011-30507 | ..SCREW | 1 | 23001- |
| 8 | KB21011-31044 | ..CAP | 1 | 23001- |
| 9 | KB21011-31702 | .PLATE | 1 | 23001- |
| 10 | KB92702-06181 | ..BOLT | 2 | 23001- |
| 11 | KB21011-31702 | .PLATE | 1 | 23001- |
| 12 | KB91111-60102 | ..SCREW | 2 | 23001- |
| 13 | KB21011-32404 | .POPPET | 1 | 23001- |
| 14 | KB21011-30604 | ..SPRING | 1 | 23001- |
| 15 | ☆ | .O-RING | 1 | 23001- |
| | KB21013-34839 | .SECTION ASS'Y | 1 | 23001- |
| 16 | KB21011-30349 | ..HOUSING | 1 | 23001- |
| 17 | ☆ | ..O-RING | 1 | 23001- |
| 18 | KB21013-30664 | .RELIEF VALVE ASS'Y | 1 | 23001- |
| 19 | KB21011-30153 | .OUTER SECTION | 1 | 23001- |
| | KB21003-00207 | .PLUG ASS'Y | 1 | 23001- |
| 20 | KB21001-00504 | ..PLUG | 1 | 23001- |
| 21 | ☆ | ..O-RING | 1 | 23001- |
| 22 | KB21051-30106 | .STUD | 2 | 23001- |
| 23 | KB93118-08652 | .NUT | 4 | 23001- |
| 24 | KB21051-30105 | .STUD | 1 | 23001- |
| 25 | KB93128-10082 | .NUT | 2 | 23001- |
| 26 | KB99001-04040 | .PLUG | 13 | 23001- |

# FIG. 6241 PILOT CHECK VALVE (FOR LEANING)

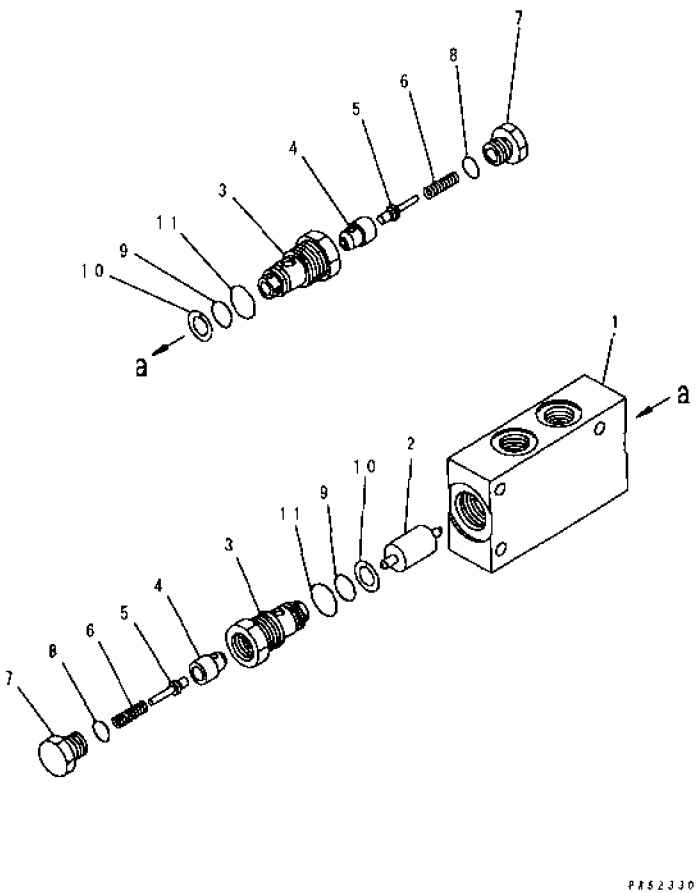


| INDEX | PART NO. | DESCRIPTION | Q'TY | SERIAL NO. |
|---|---|---|---|---|
| | 232-61-11700 | VALVE ASS'Y, PILOT CHECK | 1 | 21001- |
| 1 | 232-61-11510 | BODY | 1 | 21001- |
| 2 | 232-61-11520 | PISTON | 1 | 21001- |
| | 232-61-00120 | VALVE ASS'Y | 2 | 21001- |
| 3 | ☆ | SLEEVE | 1 | 21001- |
| 4 | ☆ | VALVE | 1 | 21001- |
| 5 | ☆ | VALVE | 1 | 21001- |
| 6 | 232-61-11230 | SPRING | 1 | 21001- |
| 7 | 232-61-11120 | PLUG | 1 | 21001- |
| 8 | 07002-12034 | O-RING | 1 | 21001- |
| 9 | 07000-12020 | O-RING | 2 | 21001- |
| 10 | 07001-02020 | RING, BACK-UP | 2 | 21001- |
| 11 | 07002-13034 | O-RING | 2 | 21001- |

# FIG. 6243A PILOT CHECK VALVE (FOR ARTICULATE) (#21030-)

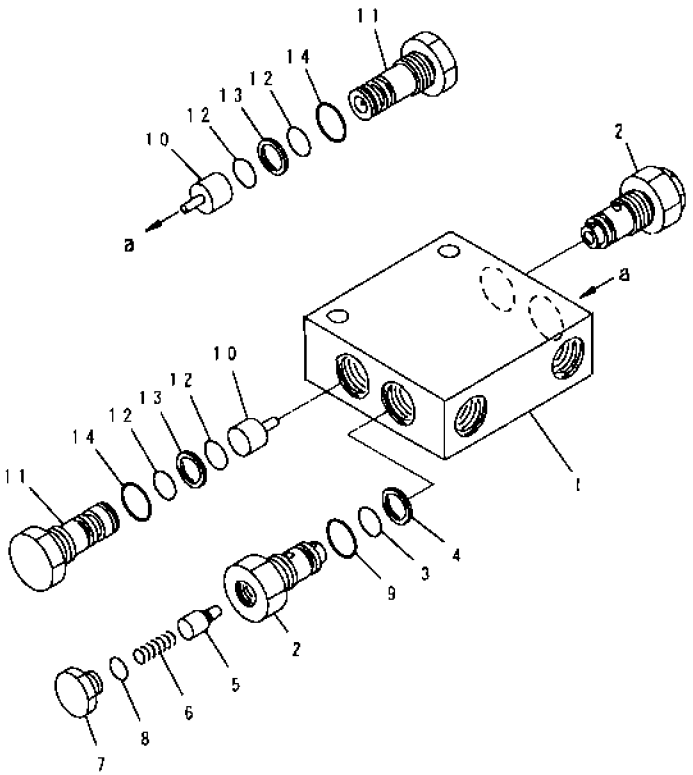


| INDEX | PART NO | DESCRIPTION | Q'TY | SERIAL NO |
|---|---|---|---|---|
| | 235-61-13700 | VALVE ASS'Y, PILOT CHECK | 1 | 21030- |
| 1 | 235-61-13710 | . BODY | 1 | 21030- |
| | 235-61-11400 | . VALVE ASS'Y | 2 | 21030- |
| 2 | ☆ | .. SLEEVE | 1 | 21030- |
| 3 | 07000-12014 | . O-RING | 1 | 21030- |
| 4 | 07001-02014 | .. RING, BACK-UP | 1 | 21030- |
| 5 | ☆ | . VALVE | 1 | 21030- |
| 6 | 235-61-11150 | .. SPRING | 1 | 21030- |
| 7 | 235-61-11140 | . PLUG | 1 | 21030- |
| 8 | 07002-11423 | .. O-RING | 1 | 21030- |
| 9 | 07002-12434 | .. O-RING | 1 | 21030- |
| 10 | 235-61-11220 | . PISTON | 2 | 21030- |
| 11 | 235-61-13720 | . PLUG | 2 | 21030- |
| 12 | 07000-12014 | . O-RING | 4 | 21030- |
| 13 | 07001-02014 | . RING, BACK-UP | 2 | 21030- |
| 14 | 07002-12434 | . O-RING | 2 | 21030- |

# FIG. 6245 PILOT CHECK VALVE (FOR DRAWBAR SIDE SHIFT)

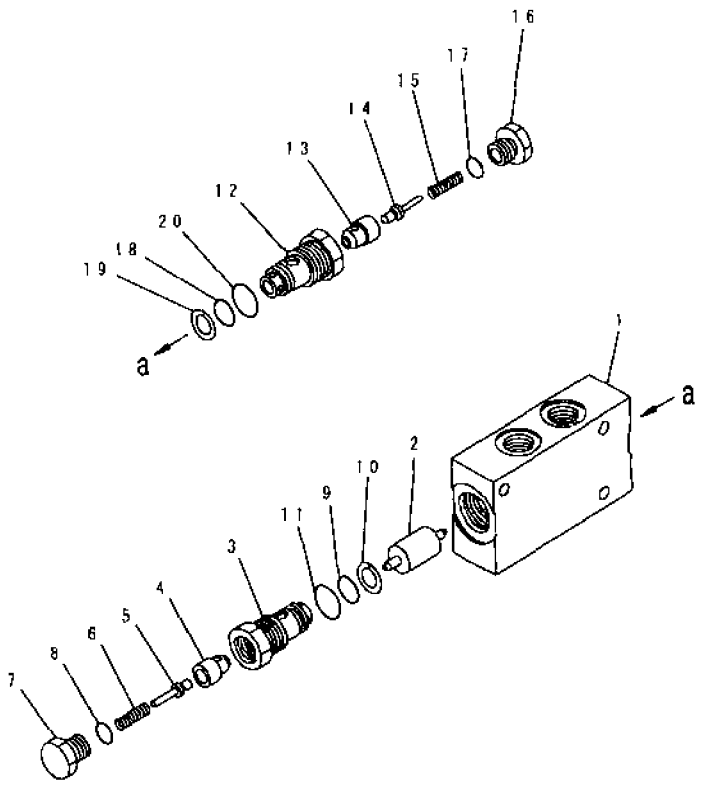


PR52332

| INDEX | PART NO. | DESCRIPTION | Q'TY | SERIAL NO. |
|---|---|---|---|---|
| | 232-61-11600 | VALVE ASS'Y, PILOT CHECK | 1 | 21001- |
| 1 | 232-61-11510 | .BODY | 1 | 21001- |
| 2 | 232-61-11520 | .PISTON | 1 | 21001- |
| | 232-61-11300 | .VALVE ASS'Y | 1 | 21001- |
| | 232-61-00240 | ..VALVE ASS'Y | 1 | 21001- |
| 3 | ☆ | ...SLEEVE | 1 | 21001- |
| 4 | ☆ | ...VALVE | 1 | 21001- |
| 5 | ☆ | ...VALVE | 1 | 21001- |
| 6 | 232-61-11230 | ..SPRING | 1 | 21001- |
| 7 | 232-61-11120 | ..PLUG | 1 | 21001- |
| 8 | 07002-12034 | ..O-RING | 1 | 21001- |
| 9 | 07000-12020 | ..O-RING | 1 | 21001- |
| 10 | 07001-02020 | ..RING, BACK-UP | 1 | 21001- |
| 11 | 07002-13034 | ..O-RING | 1 | 21001- |
| | 232-61-11400 | .VALVE ASS'Y | 1 | 21001- |
| | 232-61-00250 | ..VALVE ASS'Y | 1 | 21001- |
| 12 | ☆ | ...SLEEVE | 1 | 21001- |
| 13 | ☆ | ...VALVE | 1 | 21001- |
| 14 | ☆ | ...VALVE | 1 | 21001- |
| 15 | 232-61-11230 | ..SPRING | 1 | 21001- |
| 16 | 232-61-11120 | ..PLUG | 1 | 21001- |
| 17 | 07002-12034 | ..O-RING | 1 | 21001- |
| 18 | 07000-12020 | ..O-RING | 1 | 21001- |
| 19 | 07001-02020 | ..RING, BACK-UP | 1 | 21001- |
| 20 | 07002-13034 | ..O-RING | 1 | 21001- |

# FIG.6247 PILOT CHECK VALVE (FOR BLADE LIFT, L.H.)

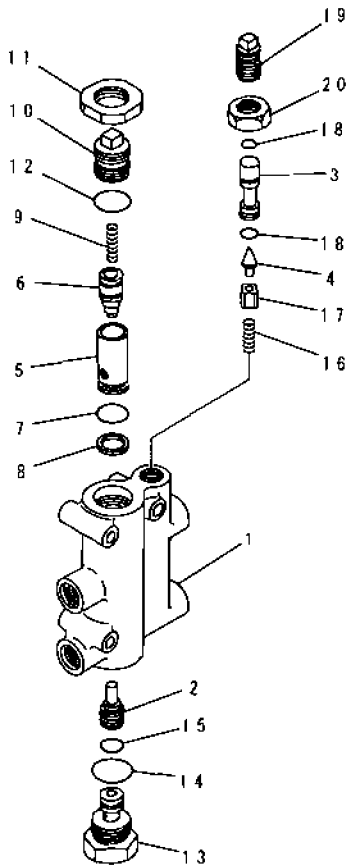


PRb2333

| INDEX | PART NO | DESCRIPTION | Q'TY | SERIAL NO |
|---|---|---|---|---|
| | 232-60-56100 | VALVE ASS'Y, PILOT CHECK | 1 | 21001- |
| | 232-60-00351 | . VALVE ASS'Y | 1 | 21001- |
| 1 | ☆ | .. BODY | 1 | 21001- |
| 2 | ☆ | .. VALVE, POPPET | 1 | 21001- |
| 3 | ☆ | .. SPOOL | 1 | 21001- |
| 4 | ☆ | .. VALVE, POPPET | 1 | 21001- |
| | 236-60-00071 | . VALVE ASS'Y, MAIN | 1 | 21001- |
| 5 | ☆ | .. SLEEVE | 1 | 21001- |
| 6 | ☆ | VALVE, MAIN | 1 | 21001- |
| 7 | 07000-12021 | . O-RING | 1 | 21001- |
| 8 | 07001-02021 | RING, BACK-UP | 1 | 21001- |
| 9 | 234-60-16350 | SPRING | 1 | 21001- |
| 10 | 232-60-16440 | . PLUG | 1 | 21001- |
| 11 | 232-60-16450 | . NUT | 1 | 21001- |
| 12 | 07002-13034 | . O-RING | 1 | 21001- |
| 13 | 232-60-56120 | . PLUG | 1 | 21001- |
| 14 | 07002-13334 | . O-RING | 1 | 21001- |
| 15 | 07000-13022 | . O-RING | 1 | 21001- |
| 16 | 234-60-16240 | . SPRING | 1 | 21001- |
| 17 | 232-60-56150 | . COLLAR | 1 | 21001- |
| 18 | 07000-12012 | . O-RING | 2 | 21001- |
| 19 | 232-60-56140 | . BOLT | 1 | 21001- |
| 20 | 01583-12012 | . NUT | 1 | 21001- |

# FIG. 6249 PILOT CHECK VALVE (FOR BLADE LIFT, R.H.)

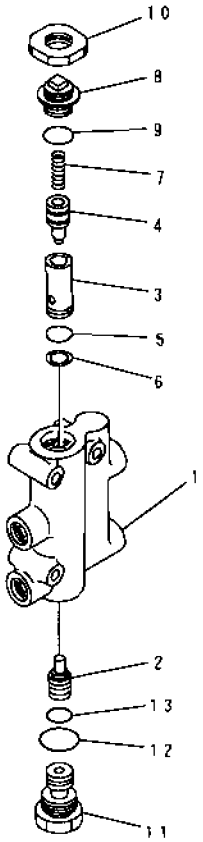


PR52334

| INDEX | PART NO. | DESCRIPTION | Q'TY | SERIAL NO |
|---|---|---|---|---|
| | 232-60-56300 | VALVE ASS'Y, PILOT CHECK | 1 | 21001- |
| | 232-60-00350 | . VALVE ASS'Y | 1 | 21001- |
| 1 | ☆ | .. BODY | 1 | 21001- |
| 2 | ☆ | .. VALVE, PILOT | 1 | 21001- |
| | 232-60-00071 | . VALVE ASS'Y, MAIN | 1 | 21001- |
| 3 | ☆ | .. SLEEVE | 1 | 21001- |
| 4 | ☆ | .. VALVE, MAIN | 1 | 21001- |
| 5 | 07000-12021 | . O-RING | 1 | 21001- |
| 6 | 07001-02021 | . RING, BACK-UP | 1 | 21001- |
| 7 | 234-60-16350 | . SPRING | 1 | 21001- |
| 8 | 232-60-16440 | . PLUG | 1 | 21001- |
| 9 | 07002-13034 | . O-RING | 1 | 21001- |
| 10 | 232-60-16450 | NUT | 1 | 21001- |
| 11 | 232-60-56120 | PLUG | 1 | 21001- |
| 12 | 07002-13334 | O-RING | 1 | 21001- |
| 13 | 07000-13022 | . O-RING | 1 | 21001- |

# FIG.6251A PILOT CHECK VALVE (FOR POWER TILT) (#21037-)

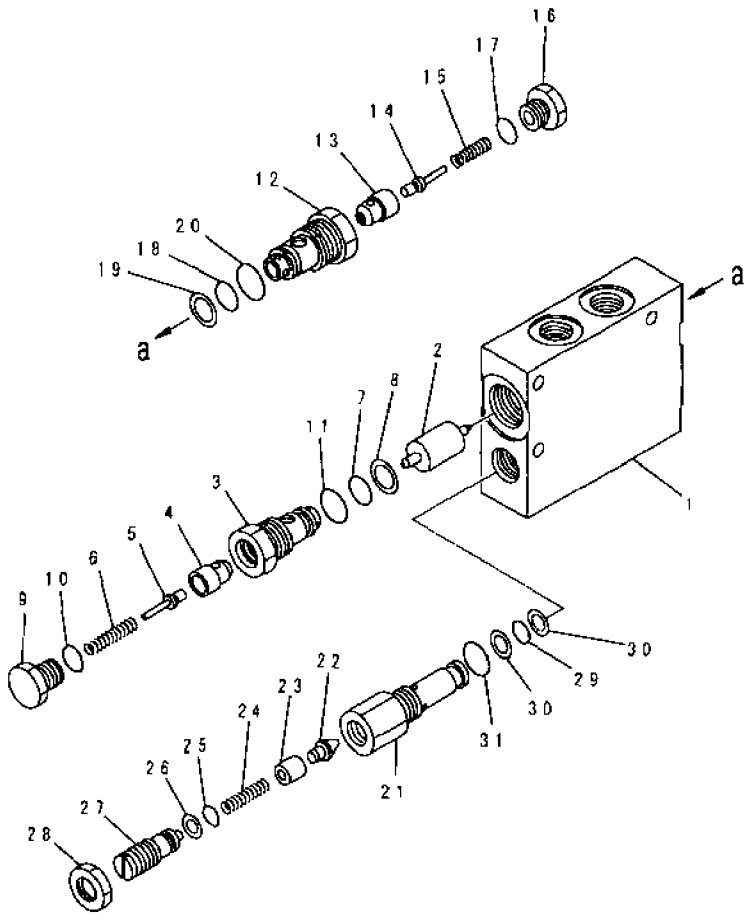


| INDEX | PART NO | DESCRIPTION | Q'TY | SERIAL NO |
|---|---|---|---|---|
| | 234-61-31301 | VALVE ASS'Y,PILOT CHECK | 1 | 21037- |
| 1 | 232-61-12310 | .BODY | 1 | 21001- |
| 2 | 232-61-11520 | .PISTON | 1 | 21001- |
| | 232-61-11400 | VALVE ASS'Y | 1 | 21037- |
| 3 | ☆ | ..SLEEVE | 1 | 21001- |
| 4 | ☆ | ..VALVE | 1 | 21037- |
| 5 | ☆ | ..VALVE | 1 | 21037- |
| 6 | 232-61-11230 | ..SPRING | 1 | 21037- |
| 7 | 07000-12020 | ..O-RING | 1 | 21001- |
| 8 | 07001-02020 | ..RING,BACK-UP | 1 | 21001- |
| 9 | 232-61-11120 | .PLUG | 1 | 21001- |
| 10 | 07002-12034 | ..O-RING | 1 | 21001- |
| 11 | 07002-13034 | ..O-RING | 1 | 21001- |
| | 234-61-11300 | .VALVE ASS'Y | 1 | 21001- |
| | 234-61-00110 | ..VALVE ASS'Y | 1 | 21001- |
| 12 | ☆ | ...SLEEVE | 1 | 21001- |
| 13 | ☆ | ...VALVE | 1 | 21001- |
| 14 | ☆ | ...VALVE | 1 | 21001- |
| 15 | 232-61-11230 | ..SPRING | 1 | 21001- |
| 16 | 232-61-11120 | ..PLUG | 1 | 21001- |
| 17 | 07002-12034 | ..O-RING | 1 | 21001- |
| 18 | 07000-12020 | ..O-RING | 1 | 21001- |
| 19 | 07001-02020 | ..RING,BACK-UP | 1 | 21001- |
| 20 | 07002-13034 | ..O-RING | 1 | 21001- |
| | 232-61-12100 | VALVE ASS'Y | 1 | 21001- |
| | 232-61-00151 | .VALVE ASS'Y | 1 | 21001- |
| 21 | ☆ | ..SLEEVE | 1 | 21001- |
| 22 | ☆ | ...VALVE | 1 | 21001- |
| 23 | 232-60-56150 | ..COLLAR | 1 | 21001- |
| 24 | 234-60-16240 | ..SPRING | 1 | 21001- |
| 25 | 07000-12012 | ..O-RING | 1 | 21001- |
| 26 | 07001-02012 | ..RING,BACK-UP | 1 | 21037- |
| 27 | 232-40-57620 | .BOLT | 1 | 21001- |
| 28 | 232-40-57630 | .NUT | 1 | 21001- |
| 29 | 07000-12016 | .O-RING | 1 | 21001- |
| 30 | 07001-02016 | ..RING,BACK-UP | 2 | 21001- |
| 31 | 07002-12434 | ..O-RING | 1 | 21001- |

# FIG.6251A PILOT CHECK VALVE (FOR POWER TILT) (#21037-)

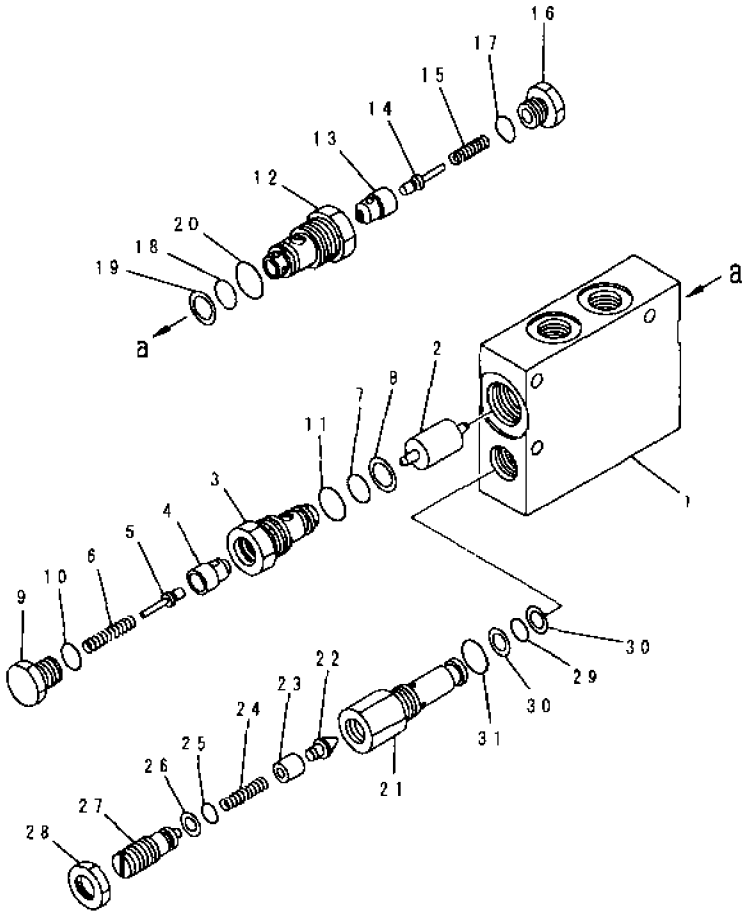


| INDEX | PART NO | DESCRIPTION | Q'TY | SERIAL NO. |
|---|---|---|---|---|
| | 234-61-31301 | VALVE ASS'Y,PILOT CHECK | 1 | 21037- |
| 1 | 232-61-12310 | .BODY | 1 | 21001- |
| 2 | 232-61-11520 | .PISTON | 1 | 21001- |
| | 232-61-11400 | .VALVE ASS'Y | 1 | 21037- |
| 3 | ☆ | ..SLEEVE | 1 | 21001- |
| 4 | ☆ | ..VALVE | 1 | 21037- |
| 5 | ☆ | ..VALVE | 1 | 21037- |
| 6 | 232-61-11230 | ..SPRING | 1 | 21037- |
| 7 | 07000-12020 | ..O-RING | 1 | 21001- |
| 8 | 07001-02020 | ..RING,BACK-UP | 1 | 21001- |
| 9 | 232-61-11120 | ..PLUG | 1 | 21001- |
| 10 | 07002-12034 | ..O-RING | 1 | 21001- |
| 11 | 07002-13034 | ..O-RING | 1 | 21001- |
| | 234-61-11300 | .VALVE ASS'Y | 1 | 21001- |
| | 234-61-00110 | .VALVE ASS'Y | 1 | 21001- |
| 12 | ☆ | ..SLEEVE | 1 | 21001- |
| 13 | ☆ | ..VALVE | 1 | 21001- |
| 14 | ☆ | ..VALVE | 1 | 21001- |
| 15 | 232-61-11230 | ..SPRING | 1 | 21001- |
| 16 | 232-61-11120 | ..PLUG | 1 | 21001- |
| 17 | 07002-12034 | ..O-RING | 1 | 21001- |
| 18 | 07000-12020 | ..O-RING | 1 | 21001- |
| 19 | 07001-02020 | ..RING,BACK-UP | 1 | 21001- |
| 20 | 07002-13034 | ..O-RING | 1 | 21001- |
| | 232-61-12100 | .VALVE ASS'Y | 1 | 21001- |
| | 232-61-00151 | ..VALVE ASS'Y | 1 | 21001- |
| 21 | ☆ | ...SLEEVE | 1 | 21001- |
| 22 | ☆ | ...VALVE | 1 | 21001- |
| 23 | 232-60-56150 | ..COLLAR | 1 | 21001- |
| 24 | 234-60-16240 | ..SPRING | 1 | 21001- |
| 25 | 07000-12012 | ..O-RING | 1 | 21001- |
| 26 | 07001-02012 | ..RING,BACK-UP | 1 | 21037- |
| 27 | 232-40-57820 | ..BOLT | 1 | 21001- |
| 28 | 232-40-57830 | ..NUT | 1 | 21001- |
| 29 | 07000-12016 | ..O-RING | 1 | 21001- |
| 30 | 07001-02016 | ..RING,BACK-UP | 2 | 21001- |
| 31 | 07002-12434 | ..O-RING | 1 | 21001- |

# FIG. 6249 PILOT CHECK VALVE (FOR BLADE LIFT, R.H.)

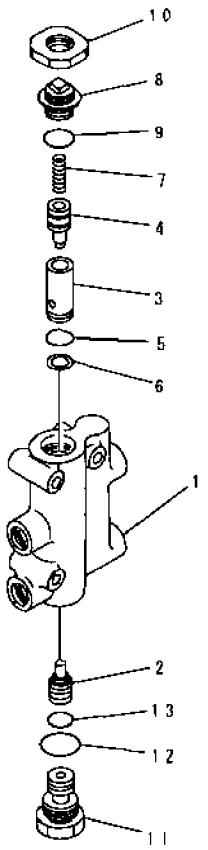


PR52334

| INDEX | PART NO. | DESCRIPTION | Q'TY | SERIAL NO |
|---|---|---|---|---|
| | 232-60-56300 | VALVE ASS'Y, PILOT CHECK | 1 | 21001- |
| | 232-60-00350 | VALVE ASS'Y | 1 | 21001- |
| 1 | ☆ | BODY | 1 | 21001- |
| 2 | ☆ | VALVE, PILOT | 1 | 21001- |
| | 232-60-00071 | VALVE ASS'Y, MAIN | 1 | 21001- |
| 3 | ☆ | SLEEVE | 1 | 21001- |
| 4 | ☆ | VALVE, MAIN | 1 | 21001- |
| 5 | 07000-12021 | O-RING | 1 | 21001- |
| 6 | 07001-02021 | RING, BACK-UP | 1 | 21001- |
| 7 | 234-60-16350 | SPRING | 1 | 21001- |
| 8 | 232-60-16440 | PLUG | 1 | 21001- |
| 9 | 07002-13034 | O-RING | 1 | 21001- |
| 10 | 232-60-16450 | NUT | 1 | 21001- |
| 11 | 232-60-56120 | PLUG | 1 | 21001- |
| 12 | 07002-13334 | O-RING | 1 | 21001- |
| 13 | 07000-13022 | O-RING | 1 | 21001- |

# FIG. 6261 PILOT CHECK VALVE (FOR SCARIFIER)

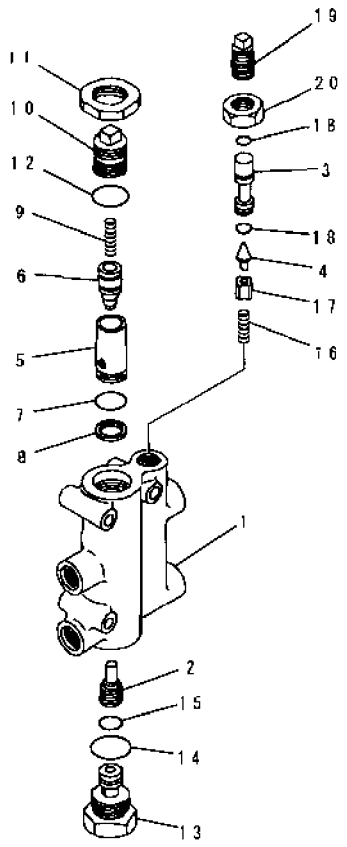


PR52333

| INDEX | PART NO. | DESCRIPTION | Q'TY | SERIAL NO |
|---|---|---|---|---|
| | 232-60-56100 | VALVE ASS'Y, PILOT CHECK | 1 | 21001- |
| | 232-60-00351 | .VALVE ASS'Y | 1 | 21001- |
| 1 | ☆ | ..BODY | 1 | 21001- |
| 2 | ☆ | ..VALVE, POPPET | 1 | 21001- |
| 3 | ☆ | ..SPOOL | 1 | 21001- |
| 4 | ☆ | ..VALVE, POPPET | 1 | 21001- |
| | 236-60-00071 | .VALVE ASS'Y, MAIN | 1 | 21001- |
| 5 | ☆ | ..SLEEVE | 1 | 21001- |
| 6 | ☆ | ..VALVE, MAIN | 1 | 21001- |
| 7 | 07000-12021 | .O-RING | 1 | 21001- |
| 8 | 07001-02021 | .RING, BACK-UP | 1 | 21001- |
| 9 | 234-60-16350 | SPRING | 1 | 21001- |
| 10 | 232-60-16440 | PLUG | 1 | 21001- |
| 11 | 232-60-16450 | NUT | 1 | 21001- |
| 12 | 07002-13034 | O-RING | 1 | 21001- |
| 13 | 232-60-56120 | .PLUG | 1 | 21001- |
| 14 | 07002-13334 | .O-RING | 1 | 21001- |
| 15 | 07000-13022 | .O-RING | 1 | 21001- |
| 16 | 234-60-16240 | .SPRING | 1 | 21001- |
| 17 | 232-60-56150 | .COLLAR | 1 | 21001- |
| 18 | 07000-12012 | .O-RING | 2 | 21001- |
| 19 | 232-60-56140 | .BOLT | 1 | 21001- |
| 20 | 01583-12012 | .NUT | 1 | 21001- |

# FIG. 6265 PILOT CHECK VALVE (FOR RIPPER)

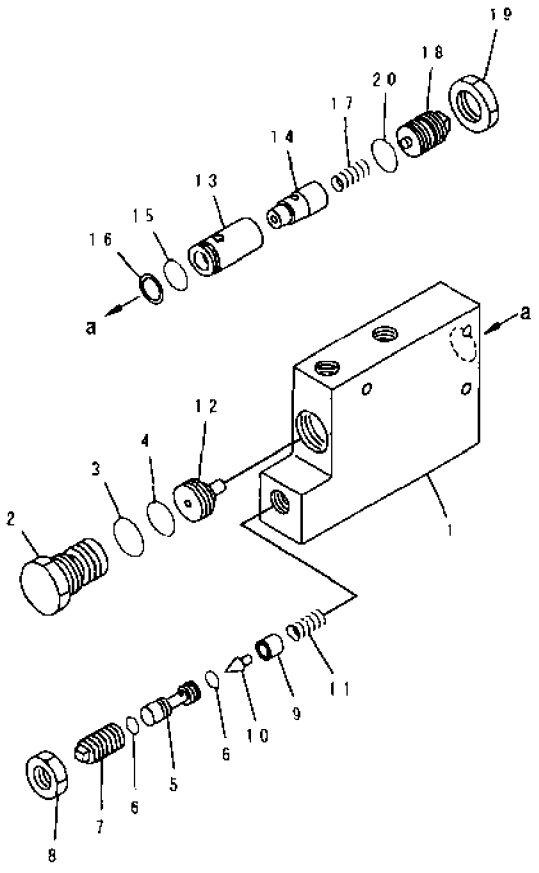


PJ53934

| INDEX | PART NO | DESCRIPTION | Q'TY | SERIAL NO |
|---|---|---|---|---|
| | 234-61-31200 | VALVE ASS'Y, PILOT CHECK | 1 | 21001- |
| 1 | 232-06-56210 | .HOUSING | 1 | 21001- |
| 2 | 232-60-56120 | .PLUG | 1 | 21001- |
| 3 | 07002-13334 | .O-RING | 1 | 21001- |
| 4 | 07000-13022 | .O-RING | 1 | 21001- |
| 5 | 232-60-56130 | .SPOOL | 1 | 21001- |
| 6 | 07000-12012 | .O-RING | 2 | 21001- |
| 7 | 232-60-56140 | .BOLT | 1 | 21001- |
| 8 | 01583-12012 | .NUT | 1 | 21001- |
| 9 | 232-60-56150 | .COLLAR | 1 | 21001- |
| 10 | 135-60-12152 | .VALVE | 1 | 21001- |
| 11 | 234-60-16240 | .SPRING | 1 | 21001- |
| 12 | 232-60-16343 | .VALVE | 1 | 21001- |
| 13 | 232-60-16430 | .SLEEVE | 1 | 21001- |
| 14 | 234-60-16360 | .VALVE | 1 | 21001- |
| 15 | 07000-12021 | .O-RING | 1 | 21001- |
| 16 | 07001-02021 | .RING, BACK-UP | 1 | 21001- |
| 17 | 234-60-16350 | .SPRING | 1 | 21001- |
| 18 | 232-60-16440 | .PLUG | 1 | 21001- |
| 19 | 232-60-16450 | .NUT | 1 | 21001- |
| 20 | 07002-13034 | .O-RING | 1 | 21001- |

# FIG. 6271 DUAL DEMAND VALVE (D.D.V SPEC) (#23001-)

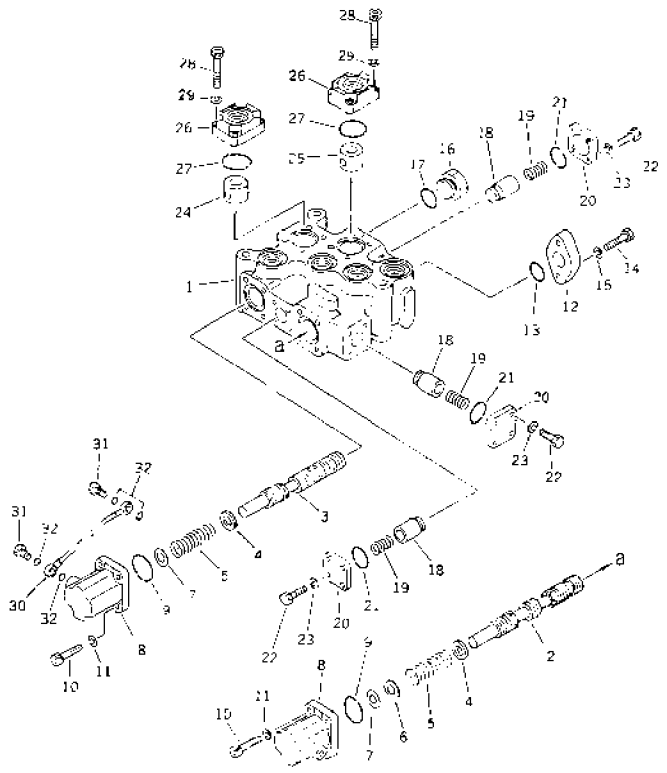

| INDEX | PART NO | DESCRIPTION | Q'TY | SERIAL NO |
|---|---|---|---|---|
| | 702-21-25000 | VALVE ASS'Y | 1 | 23001- |
| 1 | ☆ | .BODY | 1 | 23001- |
| 2 | ☆ | .SPOOL | 1 | 23001- |
| 3 | ☆ | .SPOOL | 1 | 23001- |
| 4 | 700-93-11240 | .PLATE | 2 | 23001- |
| 5 | 702-21-12140 | .SPRING | 2 | 23001- |
| 6 | 702-21-18220 | .SHIM | 1 | 23001- |
| 7 | 702-21-12230 | .SHIM | 2 | 23001- |
| 8 | 702-21-12150 | .CASE | 2 | 23001- |
| 9 | 07000-53040 | .O-RING | 2 | 23001- |
| 10 | 01252-31030 | .BOLT | 8 | 23001- |
| 11 | 01602-21030 | .WASHER, SPRING | 8 | 23001- |
| 12 | 702-21-12210 | .COVER | 1 | 23001- |
| 13 | 07000-53030 | .O-RING | 1 | 23001- |
| 14 | 01010-51040 | .BOLT | 2 | 23001- |
| 15 | 01602-21030 | .WASHER, SPRING | 2 | 23001- |
| 16 | 07040-13316 | .PLUG | 1 | 23001- |
| 17 | 07002-53334 | .O-RING | 1 | 23001- |
| 18 | 701-10-64140 | .VALVE | 3 | 23001- |
| 19 | 701-10-64150 | .SPRING | 3 | 23001- |
| 20 | 706-73-71121 | .PLATE | 3 | 23001- |
| 21 | 07000-53032 | .O-RING | 3 | 23001- |
| 22 | 01010-50825 | .BOLT | 12 | 23001- |
| 23 | 01602-20825 | .WASHER, SPRING | 12 | 23001- |
| 24 | 702-21-12170 | .ORIFICE | 1 | 23001- |
| 25 | 702-21-12160 | ORIFICE | 1 | 23001- |
| 26 | 702-21-12180 | .COVER | 2 | 23001- |
| 27 | 07000-53040 | .O-RING | 2 | 23001- |
| 28 | 01252-31030 | .BOLT | 8 | 23001- |
| 29 | 01602-21030 | .WASHER, SPRING | 8 | 23001- |

# FIG. 6273 DIRECTIONAL CONTROL VALVE (D.D.V SPEC)

(#23001-)

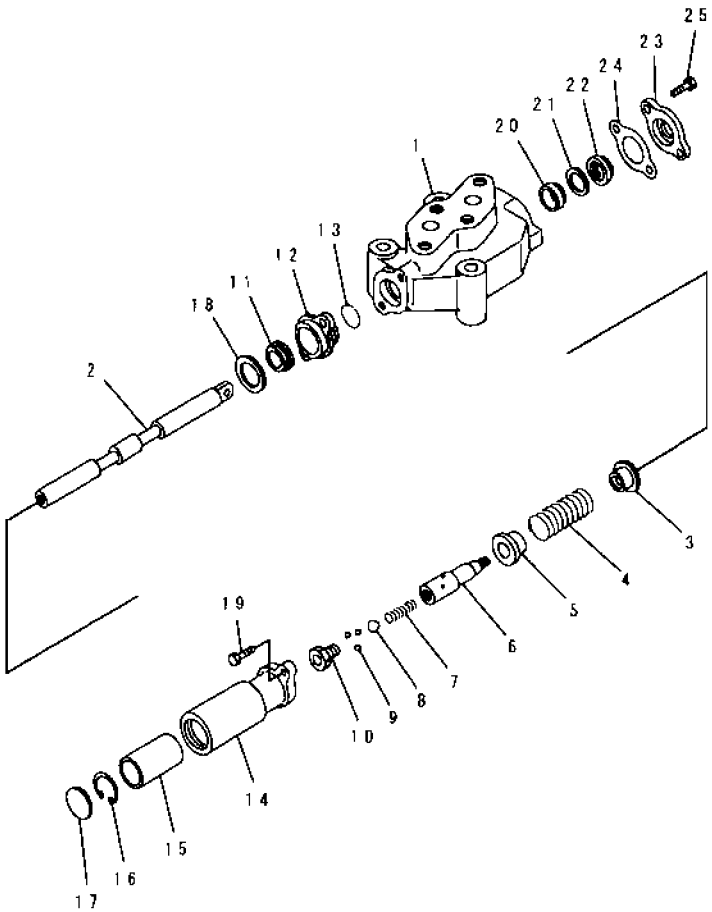


| INDEX | PART NO | DESCRIPTION | Q'TY | SERIAL NO. |
|---|---|---|---|---|
| | 702-15-65000 | VALVE ASS'Y | 1 | 23001- |
| 1 | ☆ | BODY | 1 | 23001- |
| 2 | ☆ | SPOOL | 1 | 23001- |
| 3 | 700-22-11291 | RETAINER | 1 | 23001- |
| 4 | 700-22-11510 | SPRING | 1 | 23001- |
| 5 | 700-21-11170 | RETAINER | 1 | 23001- |
| 6 | 700-21-11181 | PLUG | 1 | 23001- |
| 7 | 700-21-11190 | SPRING | 1 | 23001- |
| 8 | 700-82-11340 | BALL | 1 | 23001- |
| 9 | 700-84-11730 | BALL | 3 | 23001- |
| 10 | 700-21-11210 | PLUG | 1 | 23001- |
| 11 | 700-22-12320 | U-PACKING | 1 | 23001- |
| 12 | 700-21-11140 | PLATE | 1 | 23001- |
| 13 | 07000-42018 | O-RING | 1 | 23001- |
| 14 | 700-21-11230 | CASE, DETENT | 1 | 23001- |
| 15 | 700-21-11221 | DETENT | 1 | 23001- |
| 16 | 700-22-11610 | RING, SNAP | 1 | 23001- |
| 17 | 700-22-11590 | PLATE | 1 | 23001- |
| 18 | 700-21-11150 | PLATE | 1 | 23001- |
| 19 | 01252-40620 | BOLT | 2 | 23001- |
| 20 | 700-22-12320 | U-PACKING | 1 | 23001- |
| 21 | 700-22-11430 | COLLAR | 1 | 23001- |
| 22 | 700-22-12330 | SEAL DUST | 1 | 23001- |
| 23 | 700-22-11270 | PLATE | 1 | 23001- |
| 24 | 700-22-11420 | GASKET | 1 | 23001- |
| 25 | 01252-40616 | BOLT | 2 | 23001- |

# FIG. 6275 FLOW DIVIDER VALVE (D.D.V SPEC) (#23001-)

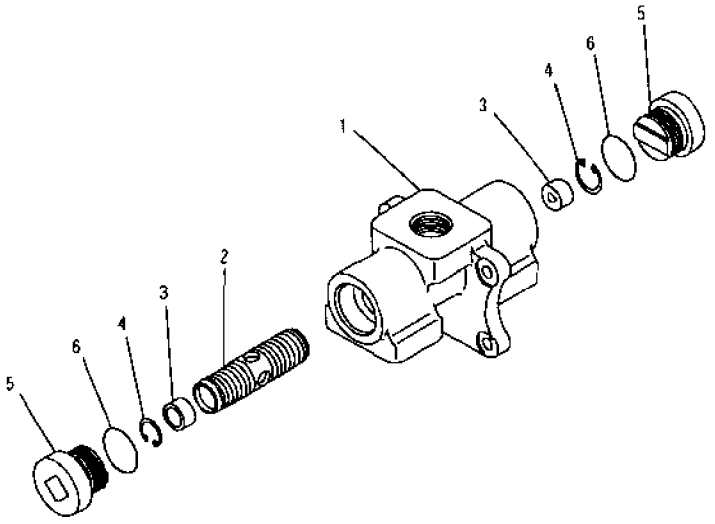


| INDEX | PART NO | DESCRIPTION | Q'TY | SERIAL NO. |
|---|---|---|---|---|
| | 234-61-31100 | VALVE ASS'Y, FLOW DIVIDER | 1 | 23001- |
| 1 | 234-61-31110 | .HOUSING | 1 | 23001- |
| 2 | 234-61-31120 | .PISTON | 1 | 23001- |
| 3 | 234-61-31130 | .SLEEVE | 2 | 23001- |
| 4 | 04065-02512 | .RING, SNAP | 2 | 23001- |
| 5 | 237-60-17130 | .PLUG | 2 | 23001- |
| 6 | 07002-14234 | .O-RING | 2 | 23001- |

# FIG. 6301A DRAWBAR SHIFT CYLINDER (#21086-)

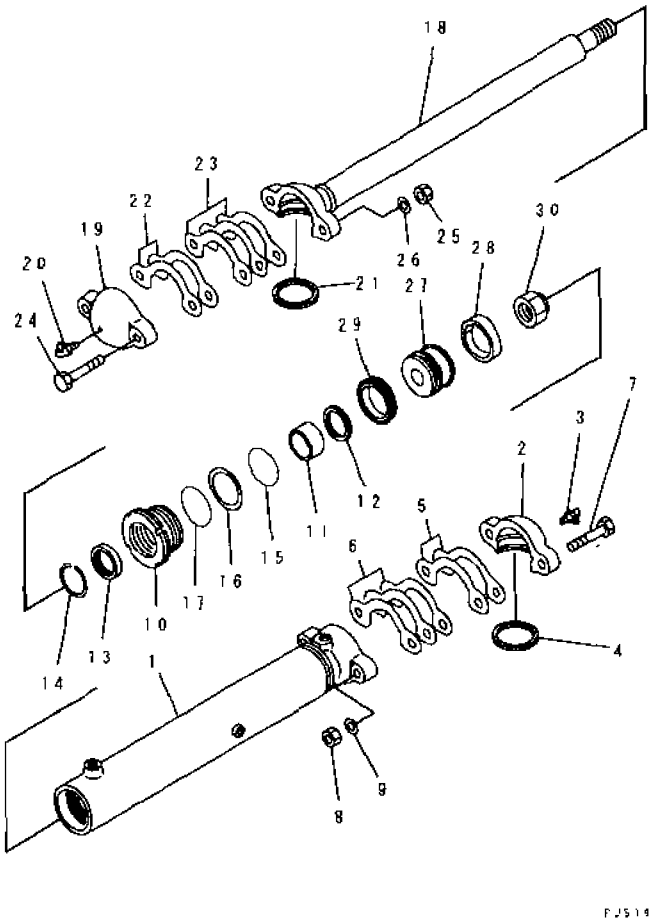


| INDEX | PART NO | DESCRIPTION | Q'TY | SERIAL NO. |
|---|---|---|---|---|
| | 234-63-23101 | CYLINDER ASS'Y, DRAWBAR SHIFT | 1 | 23001- |
| | 234-63-23100 | CYLINDER ASS'Y, DRAWBAR SHIFT | 1 | 21086-23000 |
| 1 | 23C-63-23141 | .CYLINDER | 1 | 23001- |
| | 23C-63-23140 | .CYLINDER | 1 | 21086-23000 |
| 2 | 07138-01090 | .CAP | 1 | 21001- |
| 3 | 07020-00900 | .FITTING, GREASE | 1 | 21086- |
| 4 | 07141-00100 | .SEAL, DUST (KIT) | 1 | 21001- |
| 5 | 07139-01005 | .SHIM, 0.5MM | 2 | 21001- |
| 6 | 07139-01002 | .SHIM, 0.2MM | 3 | 21001- |
| 7 | 01010-52285 | .BOLT | 2 | 21001- |
| 8 | 01580-12218 | .NUT | 2 | 21001- |
| 9 | 01643-32260 | .WASHER | 2 | 21086- |
| 10 | 707-29-90940 | .HEAD, CYLINDER | 1 | 21086- |
| 11 | 07177-05530 | .BUSHING | 1 | 21001- |
| 12 | 707-51-55210 | .PACKING, ROD (KIT) | 1 | 21086- |
| 13 | 707-56-55510 | .SEAL, DUST (KIT) | 1 | 21001- |
| 14 | 07179-12069 | .RING, SNAP | 1 | 21001- |
| 15 | 07000-12085 | .O-RING (KIT) | 1 | 21086- |
| 16 | 07001-02085 | .RING, BACK-UP (KIT) | 1 | 21086- |
| 17 | 07000-12090 | .O-RING (KIT) | 1 | 21086- |
| 18 | 23C-63-23121 | .ROD, PISTON | 1 | 23001- |
| | 23C-63-23120 | .ROD, PISTON | 1 | 21086-23000 |
| 19 | 07138-01090 | .CAP | 1 | 21001- |
| 20 | 07020-00900 | .FITTING, GREASE | 1 | 21086- |
| 21 | 07141-00100 | .SEAL, DUST (KIT) | 1 | 21001- |
| 22 | 07139-01005 | .SHIM, 0.5MM | 2 | 21001- |
| 23 | 07139-01002 | .SHIM, 0.2MM | 3 | 21001- |
| 24 | 01010-52285 | .BOLT | 2 | 21001- |
| 25 | 01580-12218 | .NUT | 2 | 21001- |
| 26 | 01643-32260 | .WASHER | 2 | 21086- |
| 27 | 707-36-90930 | .PISTON | 1 | 23001- |
| | 707-36-90911 | .PISTON | 1 | 21086-23000 |
| 28 | 07156-00912 | .RING, WEAR | 1 | 23001- |
| | 07155-00925 | .RING, WEAR (KIT) | 1 | 21001-23000 |
| 29 | 707-44-90070 | .RING, PISTON (KIT) | 1 | 21086- |
| 30 | 07165-13033 | .NUT | 1 | 21086- |
| | | SERVICE KIT | | |
| KIT | 707-98-26690 | SERVICE KIT, DRAWBAR SHIFT CYLINDER | 1 | 21086- |

# FIG. 6303B BLADE LIFT CYLINDER(#23063-)

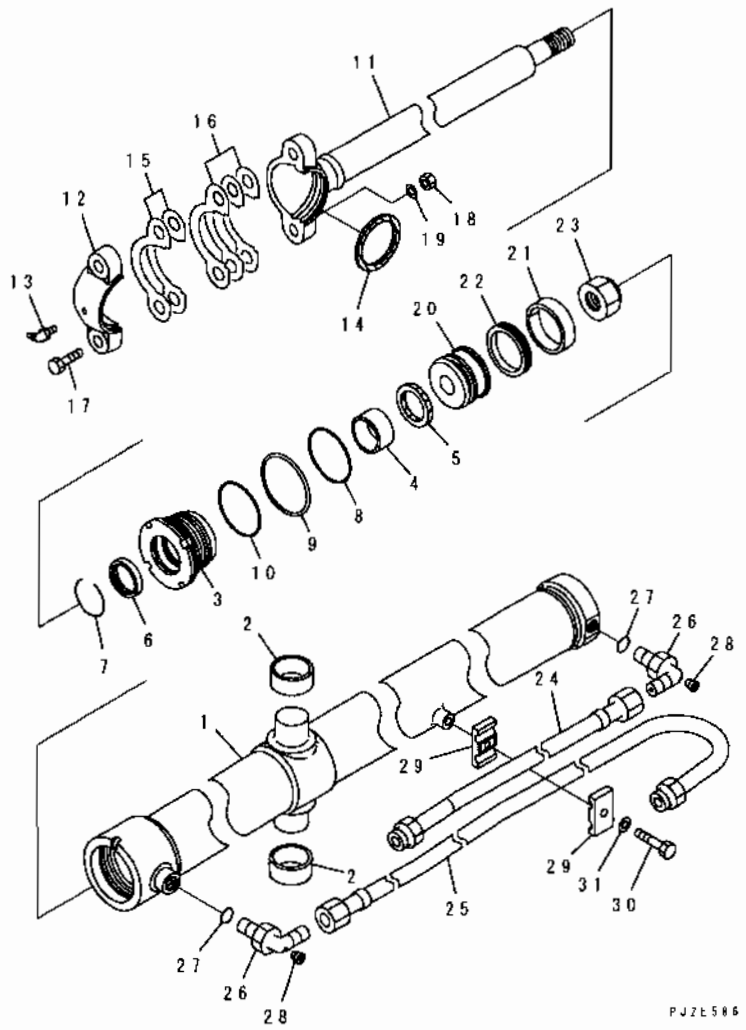


| INDEX | PART NO. | DESCRIPTION | Q'TY | SERIAL NO |
|---|---|---|---|---|
| | 707-00-X7A70 | CYLINDER GROUP, BLADE LIFT, L.H. | 1 | 23063- |
| | 707-00-X7A80 | CYLINDER GROUP, BLADE LIFT, L.H. | 1 | 23063- |
| | 234-63-13400 | .CYLINDER ASS'Y, BLADE LIFT | 1 | 21086- |
| 1 | 234-63-13440 | ..CYLINDER | 1 | 21086- |
| 2 | 234-63-13080 | ..BUSHING | 2 | 21001- |
| 3 | 707-29-90940 | ..HEAD, CYLINDER | 1 | 21086- |
| 4 | 07177-05530 | ..BUSHING | 1 | 21001- |
| 5 | 707-51-55210 | .PACKING, ROD (KIT) | 1 | 21086- |
| 6 | 707-56-55510 | ..SEAL, DUST (KIT) | 1 | 21001- |
| 7 | 07179-12069 | ..RING, SNAP | 1 | 21001- |
| 8 | 07000-12085 | ..O-RING (KIT) | 1 | 21086- |
| 9 | 07001-02085 | ..RING, BACK-UP (KIT) | 1 | 21086- |
| 10 | 07000-12090 | ..O-RING (KIT) | 1 | 21086- |
| 11 | 23C-63-13120 | ..ROD, PISTON | 1 | 21086- |
| 12 | 07138-01090 | .CAP | 1 | 21001- |
| 13 | 07020-00900 | .FITTING, GREASE | 1 | 21086- |
| 14 | 07141-00100 | .SEAL, DUST (KIT) | 1 | 21001- |
| 15 | 07139-01005 | .SHIM, 0.5MM | 2 | 21001- |
| 16 | 07139-01002 | ..SHIM, 0.2MM | 3 | 21001- |
| 17 | 01010-52285 | ..BOLT | 2 | 21001- |
| 18 | 01580-12218 | .NUT | 2 | 21001- |
| 19 | 01643-32260 | ..WASHER | 2 | 21001- |
| 20 | 707-36-90911 | ..PISTON | 1 | 21086- |
| 21 | 07155-00925 | .RING, WEAR (KIT) | 1 | 21001- |
| 22 | 707-44-90070 | ..RING, PISTON (KIT) | 1 | 21086- |
| 23 | 07165-13033 | ..NUT | 1 | 21086- |
| 24 | 234-60-45110 | .TUBE | 1 | 23063- |
| 25 | 234-60-45120 | .TUBE | 1 | 23063- |
| 26 | 07235-50422 | .ELBOW | 2 | 23063- |
| 27 | 07002-12034 | .O-RING | 2 | 23063- |
| 28 | 07043-70108 | .PLUG | 2 | 23063- |
| 29 | 232-60-54830 | .CLIP | 2 | 23063- |
| 30 | 01010-81050 | .BOLT | 1 | 23063- |
| 31 | 01643-31032 | .WASHER | 1 | 23063- |
| | | SERVICE KIT | | |
| KIT | 707-98-26410 | SERVICE KIT, BLADE LIFT CYLINDER | 2 | 21086- |

# FIG. 6305B BLADE SIDE SHIFT CYLINDER (#23063-)

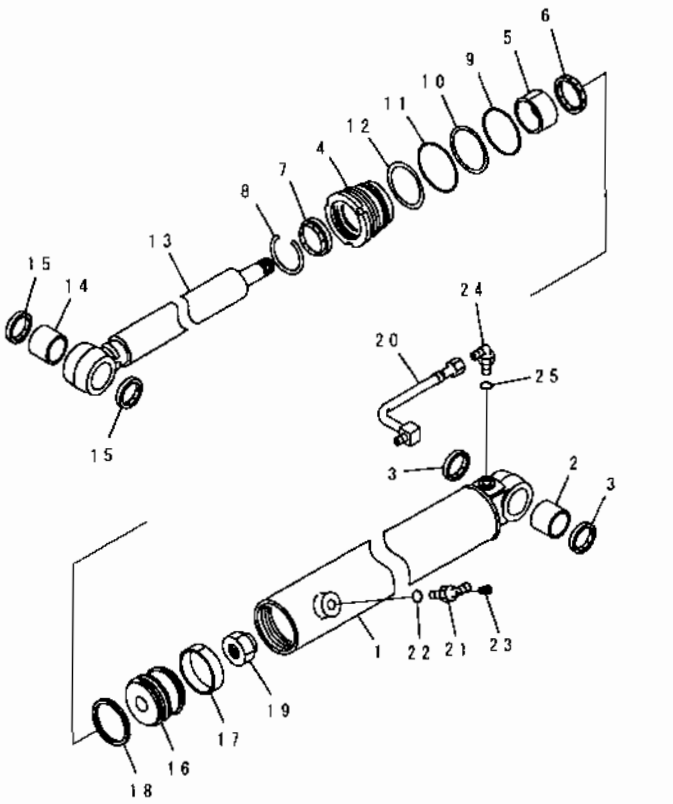


| INDEX | PART NO | DESCRIPTION | Q'TY | SERIAL NO. |
|---|---|---|---|---|
| | 707-00-X7B50 | CYLINDER GROUP, BLADE SIDE SHIFT | 1 | 23063- |
| | 23C-63-43101 | . CYLINDER ASS'Y, BLADE SIDE SHIFT | 1 | 21086- |
| 1 | 23C-63-43141 | .. CYLINDER | 1 | 21086- |
| 2 | 07143-10505 | .. BUSHING | 1 | 21086- |
| 3 | 07145-00050 | .. SEAL, DUST (KIT) | 2 | 21086- |
| 4 | 707-29-90980 | .. HEAD, CYLINDER | 1 | 21086- |
| 5 | 07177-05530 | .. BUSHING | 1 | 21001- |
| 6 | 707-51-55210 | .. PACKING, ROD (KIT) | 1 | 21086- |
| 7 | 707-56-55510 | .. SEAL, DUST (KIT) | 1 | 21086- |
| 8 | 07179-12069 | .. RING, SNAP | 1 | 21001- |
| 9 | 07000-12085 | .. O-RING (KIT) | 1 | 21086- |
| 10 | 07001-02085 | .. RING, BACK-UP (KIT) | 1 | 21086- |
| 11 | 07000-12090 | . O-RING (KIT) | 1 | 21086- |
| 12 | 707-45-90910 | . PLATE | 1 | 21086- |
| 13 | 23C-63-43120 | .. ROD, PISTON | 1 | 21086- |
| 14 | 07143-10505 | .. BUSHING | 1 | 21001- |
| 15 | 07145-00050 | .. SEAL, DUST (KIT) | 2 | 21001- |
| 16 | 707-36-09011 | .. PISTON | 1 | 21086- |
| 17 | 07155-00925 | .. RING, WEAR (KIT) | 1 | 21001- |
| 18 | 07161-10090 | .. RING, PISTON (KIT) | 1 | 21086- |
| 19 | 07165-13033 | .. NUT, NYLON | 1 | 21086- |
| 20 | 234-60-45230 | . TUBE | 1 | 23063- |
| 21 | 234-60-34380 | . ELBOW | 1 | 23063- |
| 22 | 07002-12034 | . O-RING | 1 | 23063- |
| 23 | 07043-70108 | . PLUG | 1 | 23063- |
| 24 | 07235-10422 | ELBOW | 1 | 23063- |
| 25 | 07002-12034 | . O-RING | 1 | 23063- |
| | | SERVICE KIT | | |
| KIT | 707-98-26441 | SERVICE KIT, BLADE SHIFT CYLINDER | 1 | 21086- |

# FIG. 6307B POWER TILT CYLINDER (#23063-)

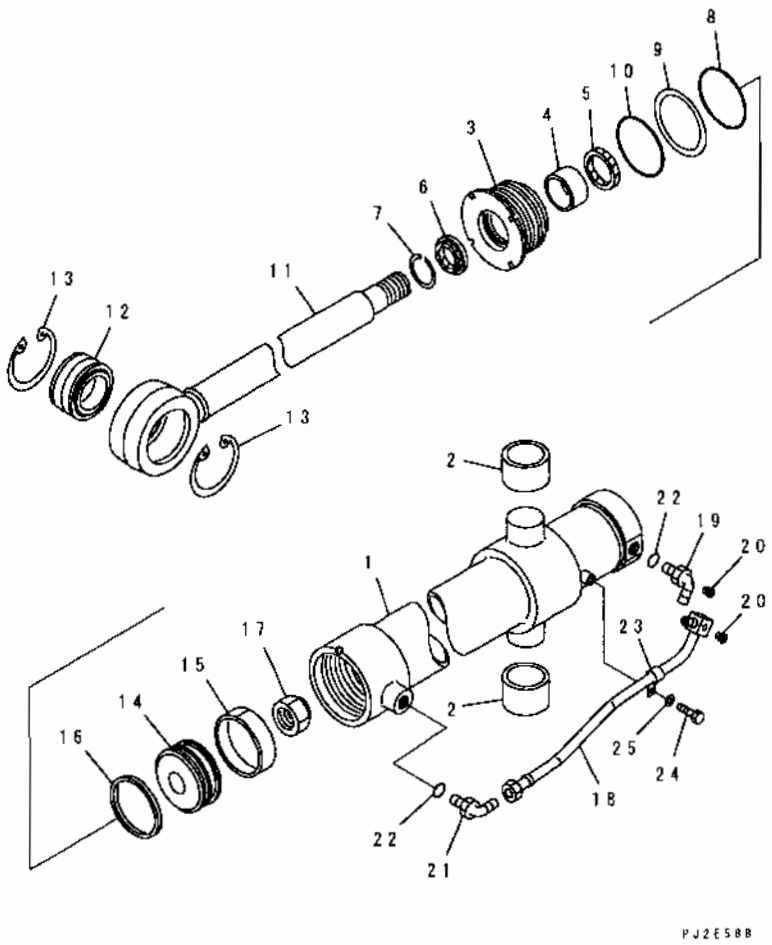


| INDEX | PART NO. | DESCRIPTION | Q'TY | SERIAL NO |
|---|---|---|---|---|
| | 707-00-X7A90 | CYLINDER GROUP, POWER TILT | 1 | 23063- |
| | 234-63-28200 | . CYLINDER ASS'Y, POWER TILT | 1 | 21086- |
| 1 | 23C-63-28140 | .. CYLINDER | 1 | 21086- |
| 2 | 154-63-12340 | .. BUSHING | 2 | 21001- |
| 3 | 707-29-10920 | .. HEAD, CYLINDER | 1 | 21086- |
| 4 | 07177-05030 | .. BUSHING | 1 | 21001- |
| 5 | 707-51-50210 | .. PACKING, ROD (KIT) | 1 | 21086- |
| 6 | 176-63-92240 | .. SEAL, DUST (KIT) | 1 | 21086- |
| 7 | 07179-12062 | .. RING, SNAP | 1 | 21001- |
| 8 | 07000-12095 | .. O-RING (KIT) | 1 | 21086- |
| 9 | 07001-02095 | .. RING, BACK-UP (KIT) | 1 | 21086- |
| 10 | 07000-12100 | .. O-RING (KIT) | 1 | 21086- |
| 11 | 23C-63-28120 | .. ROD, PISTON | 1 | 21086- |
| 12 | 707-46-06010 | .. BUSHING | 1 | 21001- |
| 13 | 04065-09030 | .. RING, SNAP | 2 | 21001- |
| 14 | 707-36-10911 | .. PISTON | 1 | 21086- |
| 15 | 07155-01025 | .. RING, WEAR (KIT) | 1 | 21001- |
| 16 | 707-44-10070 | .. RING, PISTON (KIT) | 1 | 21001- |
| 17 | 07165-13336 | . NUT | 1 | 21086- |
| 18 | 234-60-34220 | . TUBE | 1 | 23063- |
| 19 | 234-60-34280 | . ELBOW | 1 | 23063- |
| 20 | 07043-70108 | . PLUG | 2 | 23063- |
| 21 | 232-60-14281 | . ELBOW | 1 | 23063- |
| 22 | 07002-12434 | . O-RING | 2 | 23063- |
| 23 | 08036-01414 | . CLIP | 1 | 23063- |
| 24 | 01010-81016 | BOLT | 1 | 23063- |
| 25 | 01643-31032 | WASHER | 1 | 23063- |
| | | SERVICE KIT | | |
| KIT | 707-98-32080 | SERVICE KIT, POWER TILT CYLINDER | 1 | 21086- |

# FIG. 6311A SCARIFIER CYLINDER (#.-)

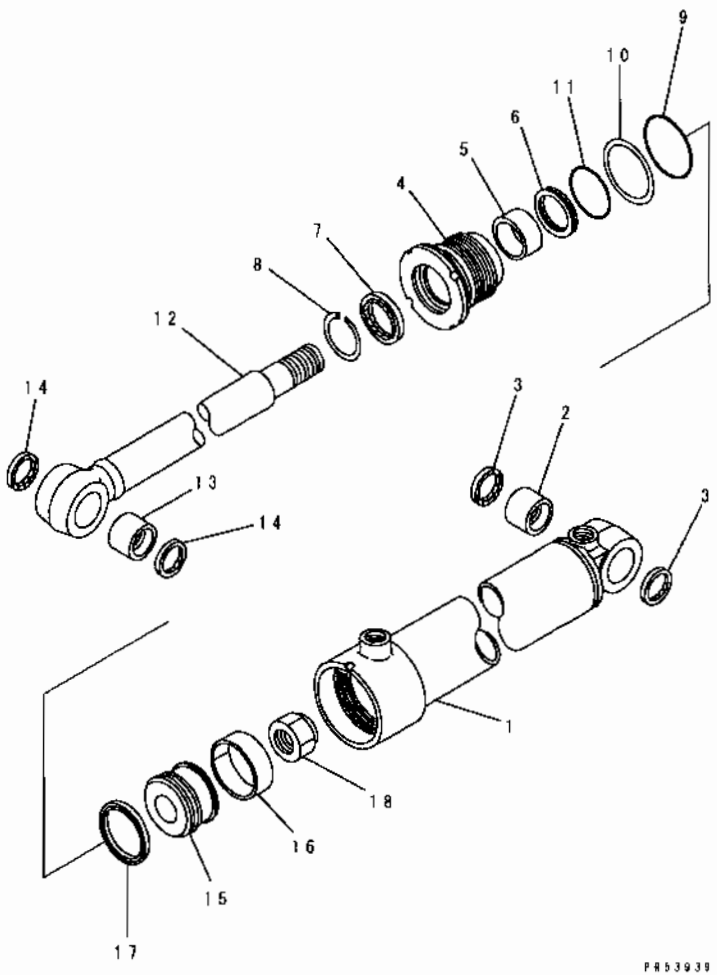


| INDEX | PART NO | DESCRIPTION | Q'TY | SERIAL NO. |
|---|---|---|---|---|
| | 234-63-32300 | CYLINDER ASS'Y, SCARIFIER | 1 | .- |
| 1 | 234-63-32340 | . CYLINDER | 1 | .- |
| 2 | 07143-10505 | BUSHING | 1 | 21001- |
| 3 | 07145-00050 | . SEAL, DUST (KIT) | 2 | 21001- |
| 4 | 707-29-90940 | . HEAD, CYLINDER | 1 | .- |
| 5 | 07177-05530 | . BUSHING | 1 | 21001- |
| 6 | 707-51-55210 | . PACKING, ROD (KIT) | 1 | .- |
| 7 | 707-56-55510 | . SEAL, DUST (KIT) | 1 | 21001- |
| 8 | 07179-12069 | . RING, SNAP | 1 | 21001- |
| 9 | 07000-12085 | . O-RING (KIT) | 1 | .- |
| 10 | 07001-02085 | . RING, BACK-UP (KIT) | 1 | .- |
| 11 | 07000-12090 | . O-RING (KIT) | 1 | .- |
| 12 | 234-63-32320 | ROD, PISTON | 1 | .- |
| 13 | 07143-10505 | . BUSHING | 1 | 21001- |
| 14 | 07145-00050 | . SEAL, DUST (KIT) | 2 | 21001- |
| 15 | 707-36-90911 | . PISTON | 1 | .- |
| 16 | 07155-00925 | . RING, WEAR (KIT) | 1 | 21001- |
| 17 | 707-44-90070 | . RING, PISTON (KIT) | 1 | 21001- |
| 18 | 07165-13033 | . NUT | 1 | .- |
| | | SERVICE KIT | | |
| KIT | 707-98-26490 | SERVICE KIT, SCARIFIER CYLINDER | 1 | .- |

# FIG. 6313 FRONT BLADE CYLINDER

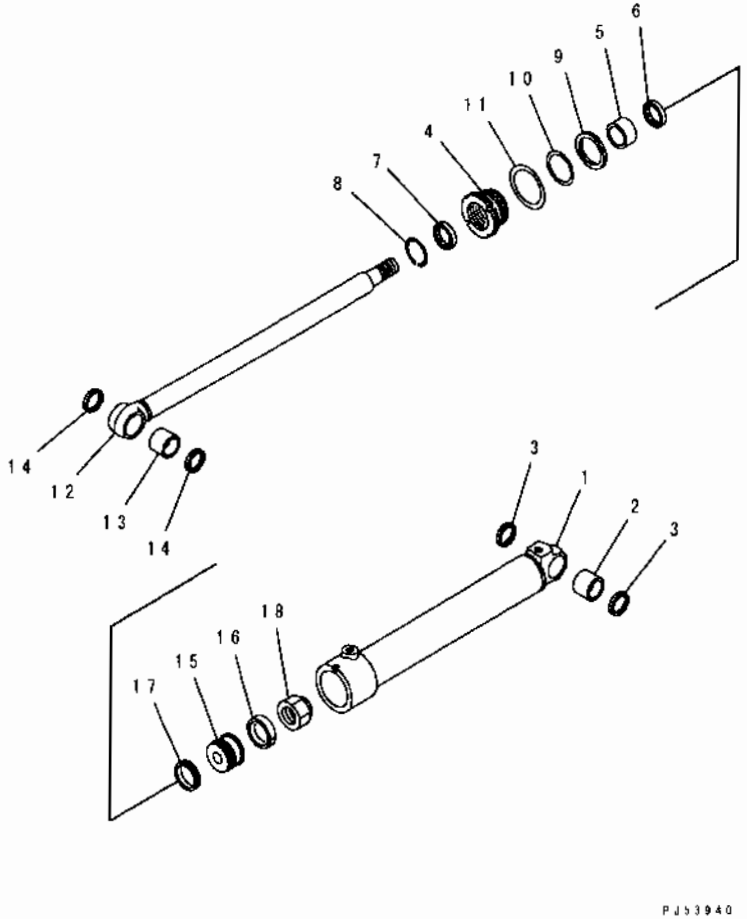


| INDEX | PART NO. | DESCRIPTION | Q'TY | SERIAL NO. |
|---|---|---|---|---|
| | 234-63-38300 | CYLINDER ASS'Y, FRONT BLADE | 1 | 21001- |
| 1 | 234-63-38340 | . CYLINDER | 1 | 21001- |
| 2 | 07143-10506 | . BUSHING | 1 | 21001- |
| 3 | 07145-00055 | . SEAL, DUST (KIT) | 2 | 21001- |
| 4 | 707-29-10940 | HEAD, CYLINDER | 1 | 21001- |
| 5 | 07177-05530 | . BUSHING | 1 | 21001- |
| 6 | 707-51-55210 | . PACKING, ROD (KIT) | 1 | 21001- |
| 7 | 707-56-55510 | . SEAL, DUST (KIT) | 1 | 21001- |
| 8 | 07179-12069 | . RING, SNAP | 1 | 21001- |
| 9 | 07000-12095 | O-RING (KIT) | 1 | 21001- |
| 10 | 07001-02095 | . RING, BACK-UP (KIT) | 1 | 21001- |
| 11 | 07000-02100 | . O-RING (KIT) | 1 | 21001- |
| 12 | 234-63-38320 | . ROD, PISTON | 1 | 21001- |
| 13 | 07143-10506 | . BUSHING | 1 | 21001- |
| 14 | 07145-00055 | . SEAL, DUST (KIT) | 2 | 21001- |
| 15 | 707-36-10920 | . PISTON | 1 | 21001- |
| 16 | 07155-01025 | . RING, WEAR (KIT) | 1 | 21001- |
| 17 | 707-44-10070 | . RING, PISTON (KIT) | 1 | 21001- |
| 18 | 07165-13638 | . NUT, NYLON | 1 | 21001- |
| | | SERVICE KIT | | |
| KIT | 707-98-34050 | SERVICE KIT, FRONT BLADE | 1 | 21001- |

# FIG. 6315 RIPPER CYLINDER

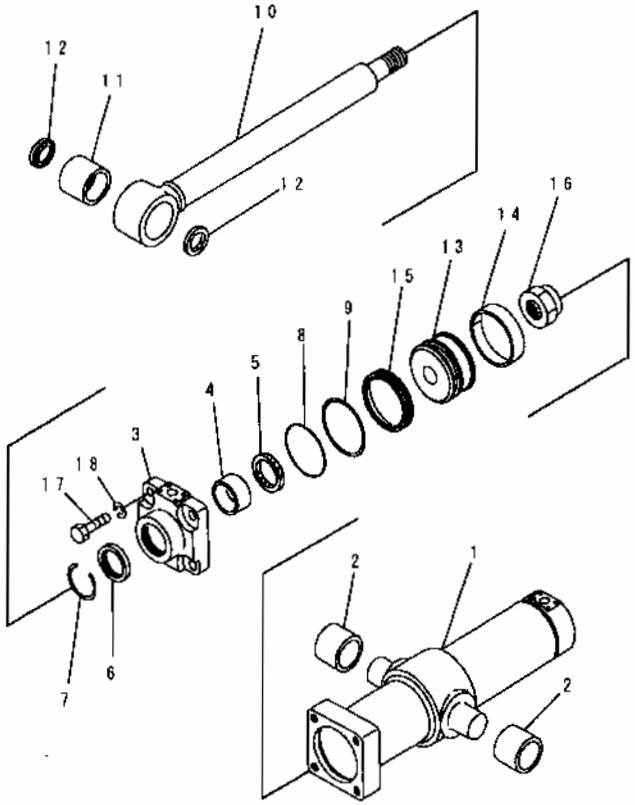


PJ52367





| INDEX | PART NO | DESCRIPTION | Q'TY | SERIAL NO. |
|---|---|---|---|---|
| | 234-63-25001 | CYLINDER ASS'Y, RIPPER | 1 | 21001- |
| 1 | 234-63-25040 | .CYLINDER | 1 | 21001- |
| 2 | 234-63-25080 | .BUSHING | 2 | 21001- |
| 3 | 707-27-14290 | .HEAD, CYLINDER | 1 | 21001- |
| 4 | 07177-07030 | .BUSHING | 1 | 21001- |
| 5 | 707-51-70211 | .PACKING, ROD (KIT) | 1 | 21001- |
| 6 | 144-63-95170 | .SEAL, DUST (KIT) | 1 | 21001- |
| 7 | 07179-12084 | .RING, SNAP | 1 | 21001- |
| 8 | 07000-12135 | O-RING (KIT) | 1 | 21001- |
| 9 | 07146-02136 | .RING, BACK-UP (KIT) | 1 | 21001- |
| 10 | 234-63-25020 | .ROD, PISTON | 1 | 21001- |
| 11 | 07143-10707 | .BUSHING | 1 | 21001- |
| 12 | 07145-00075 | .SEAL, DUST (KIT) | 2 | 21001- |
| 13 | 707-36-14180 | .PISTON | 1 | 21001- |
| 14 | 07155-01435 | .RING, WEAR (KIT) | 1 | 21001- |
| 15 | 707-44-14180 | RING, PISTON (KIT) | 1 | 21001- |
| 16 | 07165-15252 | .NUT | 1 | 21001- |
| 17 | 01010-62475 | .BOLT | 4 | 21001- |
| 18 | 01602-02472 | .WASHER, SPRING | 4 | 21001- |
| | | SERVICE KIT | | |
| KIT | 707-98-52100 | SERVICE KIT, RIPPER | 1 | 21001- |

# FIG. 6321 HYDRAULIC PIPING (CONTROL VALVE CONNECTING PARTS, L.H.) (#23001-)

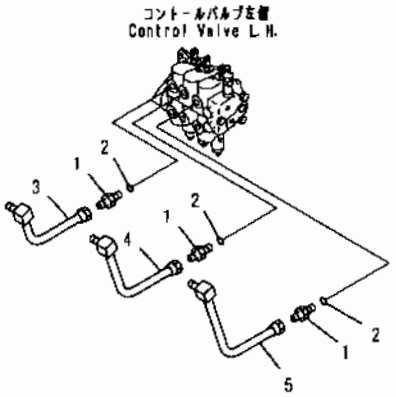


PV59441

| INDEX | PART NO | DESCRIPTION | Q'TY | SERIAL NO |
|---|---|---|---|---|
| 1 | 237-60-23120 | NIPPLE | 6 | 23001- |
| 2 | 07000-12018 | O-RING | 6 | 23001- |
| 3 | 234-60-68330 | TUBE, UPPER | 1 | 23001- |
| | 234-60-68530 | TUBE, LOWER | 1 | 23001- |
| 4 | 234-60-68320 | TUBE, UPPER | 1 | 23001- |
| | 234-60-68520 | TUBE, LOWER | 1 | 23001- |
| 5 | 234-60-68310 | TUBE, UPPER | 1 | 23001- |
| | 234-60-68510 | TUBE, LOWER | 1 | 23001- |

# FIG. 6325 HYDRAULIC PIPING (CONTROL VALVE CONNECTING PARTS、R.H.) (#23001-)

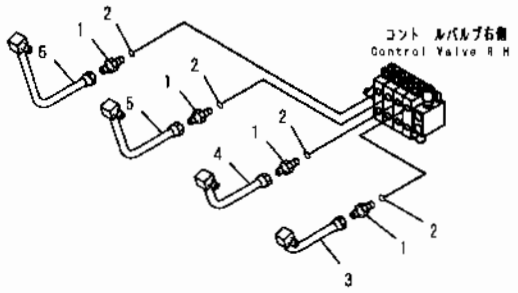


PT5865

| INDEX | PART NO | DESCRIPTION | Q'TY | SERIAL NO |
|---|---|---|---|---|
| 1 | 237-60-23120 | NIPPLE | 8 | 23001- |
| 2 | 07000-12018 | O-RING | 8 | 23001- |
| 3 | 234-60-68390 | TUBE, UPPER | 1 | 23001- |
| | 234-60-68590 | TUBE, LOWER | 1 | 23001- |
| 4 | 234-60-68380 | TUBE, UPPER | 1 | 23001- |
| | 234-60-68580 | TUBE, LOWER | 1 | 23001- |
| 5 | 234-60-68370 | TUBE, UPPER | 1 | 23001- |
| | 234-60-68570 | TUBE, LOWER | 1 | 23001- |
| 6 | 234-60-68360 | TUBE, UPPER | 1 | 23001- |
| | 234-60-68560 | TUBE, LOWER | 1 | 23001- |

# FIG.6401A HYDRAULIC PIPING (TANK TO PUMP) (#23001-)

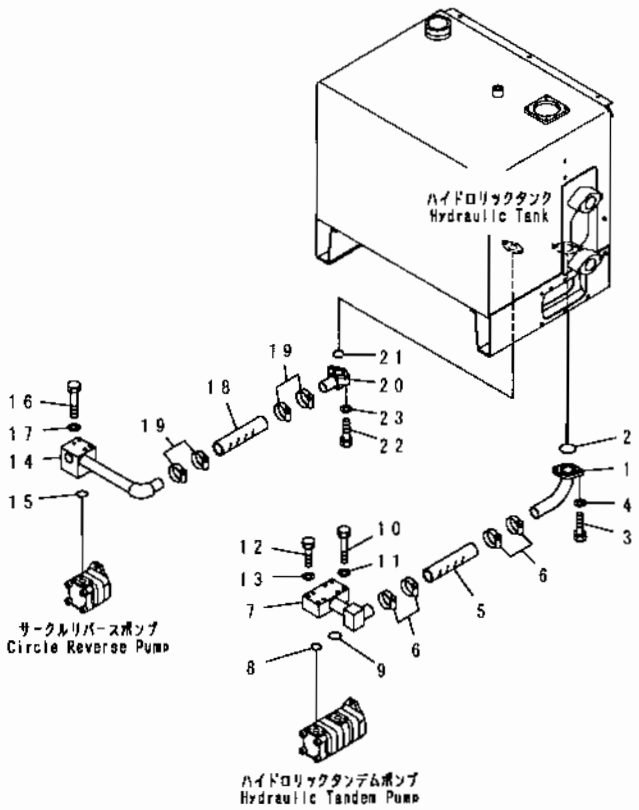


| INDEX | PART NO | DESCRIPTION | Q'TY | SERIAL NO |
|---|---|---|---|---|
| 1 | 234-60-69840 | TUBE | 1 | 23001- |
| 2 | 07000-12065 | O-RING | 1 | 23001- |
| 3 | 01010-81230 | BOLT | 4 | 23001- |
| 4 | 01643-31232 | WASHER | 4 | 23001- |
| 5 | 07260-04718 | HOSE | 1 | 23001- |
| 6 | 07281-00709 | CLAMP | 4 | 23001- |
| 7 | 234-60-69860 | TUBE | 1 | 23001- |
| 8 | 07000-13042 | O-RING | 1 | 23001- |
| 9 | 07000-13048 | O-RING | 1 | 23001- |
| 10 | 01011-81280 | BOLT | 4 | 23001- |
| 11 | 01643-31232 | WASHER | 4 | 23001- |
| 12 | 01010-81080 | BOLT | 4 | 23001- |
| 13 | 01643-31032 | WASHER | 4 | 23001- |
| 14 | 234-60-69760 | ELBOW | 1 | 23001- |
| 15 | 07000-13042 | O-RING | 1 | 23001- |
| 16 | 01011-81020 | BOLT | 2 | 23001- |
| 17 | 01643-31232 | WASHER | 2 | 23001- |
| 18 | 07260-04116 | HOSE | 1 | 23001- |
| 19 | 07281-00609 | CLAMP | 4 | 23001- |
| 20 | 234-972-5331 | ELBOW | 1 | 23001- |
| 21 | 07000-13042 | O-RING | 1 | 23001- |
| 22 | 01010-81245 | BOLT | 2 | 23001- |
| 23 | 01643-31232 | WASHER | 2 | 23001- |

# FIG. 6405A HYDRAULIC PIPING (PUMP TO VALVE) (2/2)

(#23001-)

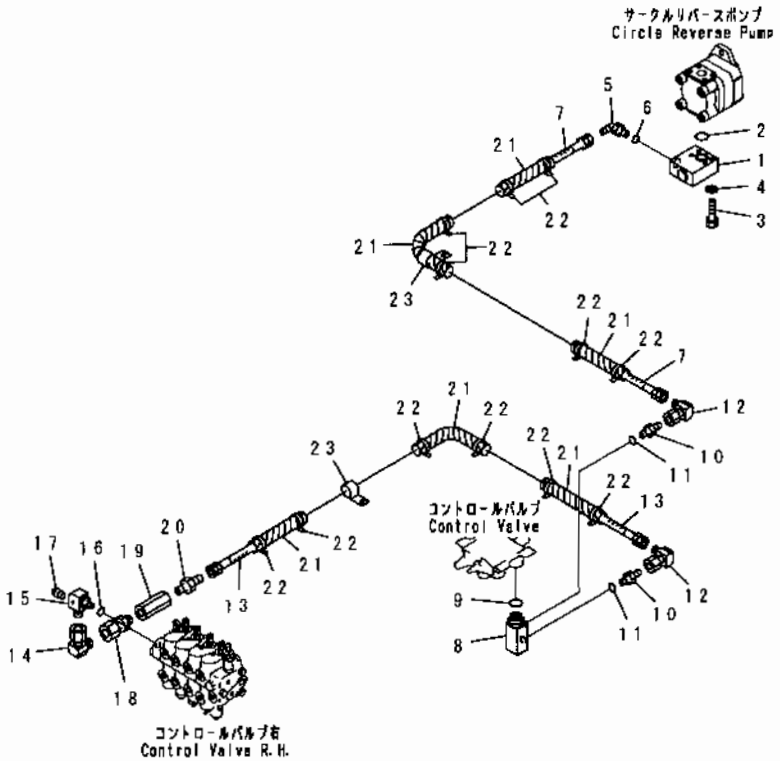


| INDEX | PART NO | DESCRIPTION | Q'TY | SERIAL NO. |
|---|---|---|---|---|
| 1 | 234-972-5310 | BLOCK | 1 | 23001- |
| 2 | 07000-13032 | O-RING | 1 | 23001- |
| 3 | 01010-81060 | BOLT | 2 | 23001- |
| 4 | 01643-31032 | WASHER | 2 | 23001- |
| 5 | 07235-10628 | ELBOW | 1 | 23001- |
| 6 | 07000-12434 | O-RING | 1 | 23001- |
| 7 | 07106-20614 | HOSE | 1 | 23001- |
| 8 | 234-60-69820 | ELBOW | 1 | 23001- |
| 9 | 26A-60-15690 | O-RING | 1 | 23001- |
| 10 | 07230-20628 | UNION | 2 | 23001- |
| 11 | 07002-22434 | O-RING | 2 | 23001- |
| 12 | 234-60-69290 | ELBOW | 2 | 23001- |
| 13 | 07106-20616 | HOSE | 1 | 23001- |
| 14 | 234-60-69290 | ELBOW | 1 | 23001- |
| 15 | 23F-60-16240 | ELBOW | 1 | 23001- |
| 16 | 237-60-22240 | O-RING | 1 | 23001- |
| 17 | 07042-20108 | PLUG | 1 | 23001- |
| 18 | 234-60-69720 | NIPPLE | 1 | 23001- |
| 19 | 262-60-67470 | VALVE, CHECK | 1 | 23001- |
| 20 | 234-833-2190 | NIPPLE | 1 | 23001- |
| 21 | 08210-02904 | SPIRAL TUBE | 6 | 23001- |
| 22 | 08034-00519 | BAND | 12 | 23001- |
| 23 | 04434-53211 | CLIP | 2 | 23001- |

# FIG.6403A HYDRAULIC PIPING (PUMP TO VALVE) (1/2)

(#23001-)

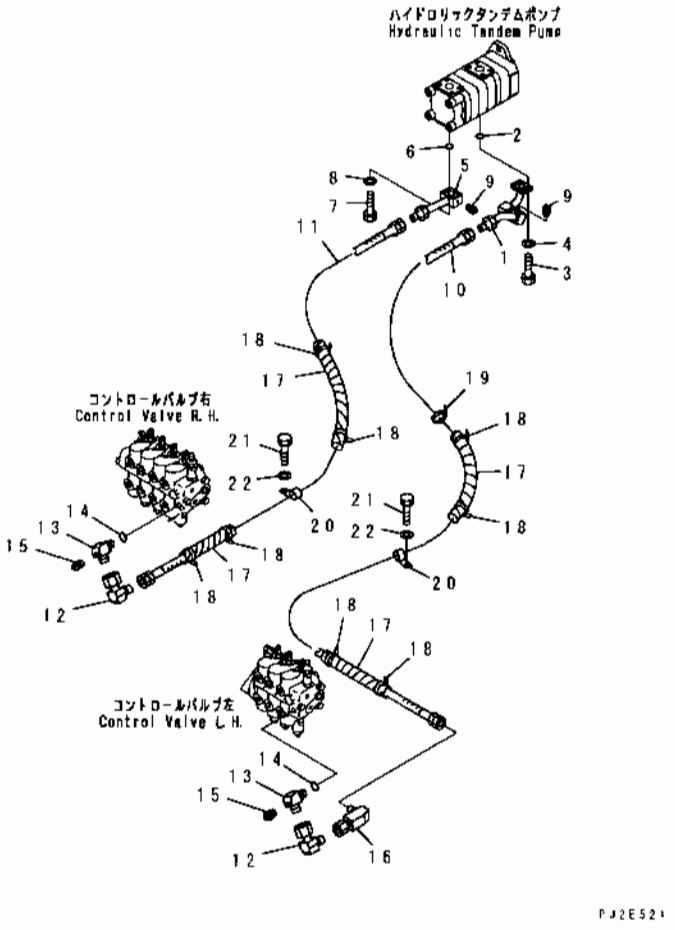


| INDEX | PART NO | DESCRIPTION | Q'TY | SERIAL NO. |
|---|---|---|---|---|
| 1 | 234-60-69360 | TUBE | 1 | 23001- |
| 2 | 07002-13034 | O-RING | 1 | 23001- |
| 3 | 01010-81030 | BOLT | 4 | 23001- |
| 4 | 01643-31032 | WASHER | 4 | 23001- |
| 5 | 234-60-69240 | TUBE | 1 | 23001- |
| 6 | 07000-13032 | O-RING | 1 | 23001- |
| 7 | 01010-81060 | BOLT | 4 | 23001- |
| 8 | 01643-31032 | WASHER | 4 | 23001- |
| 9 | 07042-20108 | PLUG | 2 | 23001- |
| 10 | 07108-20616 | HOSE | 1 | 23001- |
| 11 | 07108-20615 | HOSE | 1 | 23001- |
| 12 | 234-60-69290 | ELBOW | 2 | 23001- |
| 13 | 23F-60-16240 | ELBOW | 2 | 23001- |
| 14 | 237-60-22240 | O-RING | 2 | 23001- |
| 15 | 07042-20108 | PLUG | 2 | 23001- |
| 16 | 234-60-69710 | ELBOW | 1 | 23001- |
| 17 | 08210-02904 | SPIRAL TUBE | 4 | 23001- |
| 18 | 08034-00519 | BAND | 8 | 23001- |
| 19 | 08034-00536 | BAND | 10 | 23001- |
| 20 | 04434-53211 | CLIP | 2 | 23001- |
| 21 | 01010-81020 | BOLT | 2 | 23001- |
| 22 | 01643-31032 | WASHER | 2 | 23001- |

# FIG. 6407A HYDRAULIC PIPING (VALVE TO TANK) (#23001-)

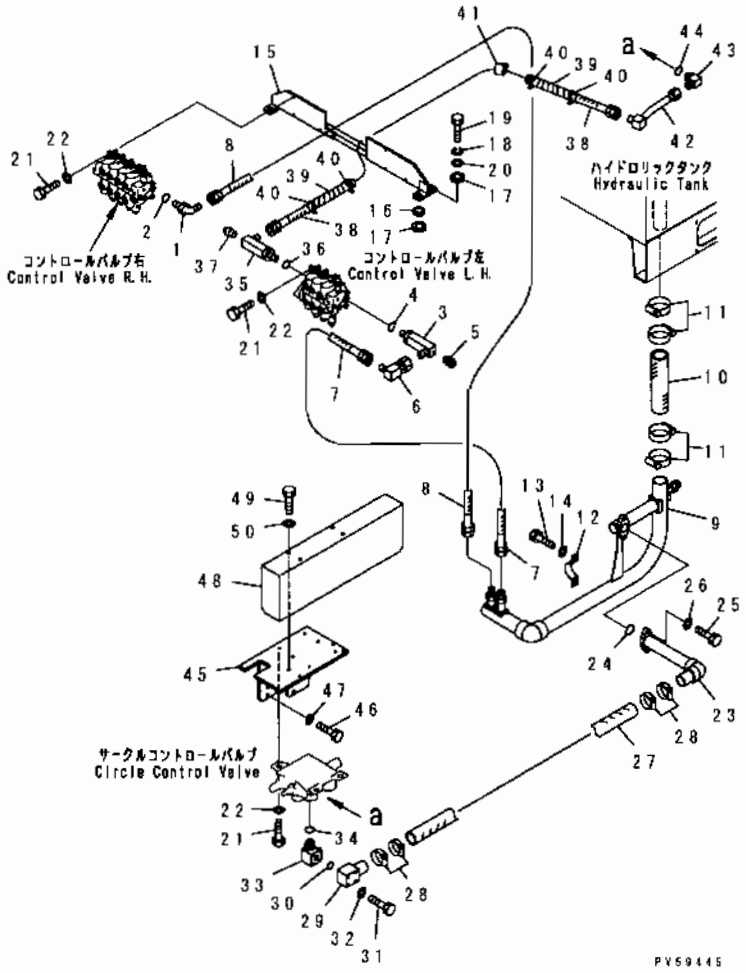


| INDEX | PART NO. | DESCRIPTION | Q'TY | SERIAL NO |
|---|---|---|---|---|
| 1 | 23B-60-14460 | ELBOW | 1 | 23001- |
| 2 | 237-60-22240 | O-RING | 1 | 23001- |
| 3 | 234-60-69750 | ELBOW | 1 | 23001- |
| 4 | 237-60-22240 | O-RING | 1 | 23001- |
| 5 | 07042-20108 | PLUG | 1 | 23001- |
| 6 | 234-60-69890 | ELBOW | 1 | 23001- |
| 7 | 07103-50614 | HOSE | 1 | 23001- |
| 8 | 07103-50609 | HOSE | 1 | 23001- |
| 9 | 234-60-69850 | TUBE | 1 | 23001- |
| 10 | 07260-05832 | HOSE | 1 | 23001- |
| 11 | 07281-00909 | CLAMP | 4 | 23001- |
| 12 | 07282-16114 | CLAMP | 2 | 23001- |
| 13 | 01010-81220 | BOLT | 2 | 23001- |
| 14 | 01643-31232 | WASHER | 2 | 23001- |
| 15 | 234-60-69120 | BRACKET | 1 | 23001- |
| 16 | 23B-60-16490 | COLLAR | 4 | 23001- |
| 17 | 23B-60-16740 | SEAT | 8 | 23001- |
| 18 | 23B-60-16870 | WASHER | 4 | 23001- |
| 19 | 01010-81045 | BOLT | 4 | 23001- |
| 20 | 01643-31032 | WASHER | 4 | 23001- |
| 21 | 01010-80830 | BOLT | 6 | 23001- |
| 22 | 01643-30823 | WASHER | 6 | 23001- |
| 23 | 234-60-69960 | TUBE | 1 | 23001- |
| 24 | 07000-13045 | O-RING | 1 | 23001- |
| 25 | 01010-81240 | BOLT | 2 | 23001- |
| 26 | 01643-31232 | WASHER | 2 | 23001- |
| 27 | 07260-04736 | HOSE | 1 | 23001- |
| 28 | 07281-00709 | CLAMP | 4 | 23001- |
| 29 | 234-60-69980 | ELBOW | 1 | 23001- |
| 30 | 07000-13028 | O-RING | 1 | 23001- |
| 31 | 01010-80870 | BOLT | 4 | 23001- |
| 32 | 01643-30823 | WASHER | 4 | 23001- |
| 33 | 234-60-69990 | ELBOW | 1 | 23001- |
| 34 | 234-60-15480 | O-RING | 1 | 23001- |
| 35 | 234-60-69740 | ELBOW | 1 | 23001- |
| 36 | 237-60-22240 | O-RING | 1 | 23001- |
| 37 | 07042-20108 | PLUG | 1 | 23001- |
| 38 | 07108-20608 | HOSE | 1 | 23001- |
| 39 | 08210-02904 | SPIRAL TUBE | 2 | 23001- |
| 40 | 08034-00519 | BAND | 4 | 23001- |
| 41 | 04434-53211 | CLIP | 1 | 23001- |
| 42 | 234-60-69970 | TUBE | 1 | 23001- |

# FIG. 6407A HYDRAULIC PIPING (VALVE TO TANK) (#23001-)

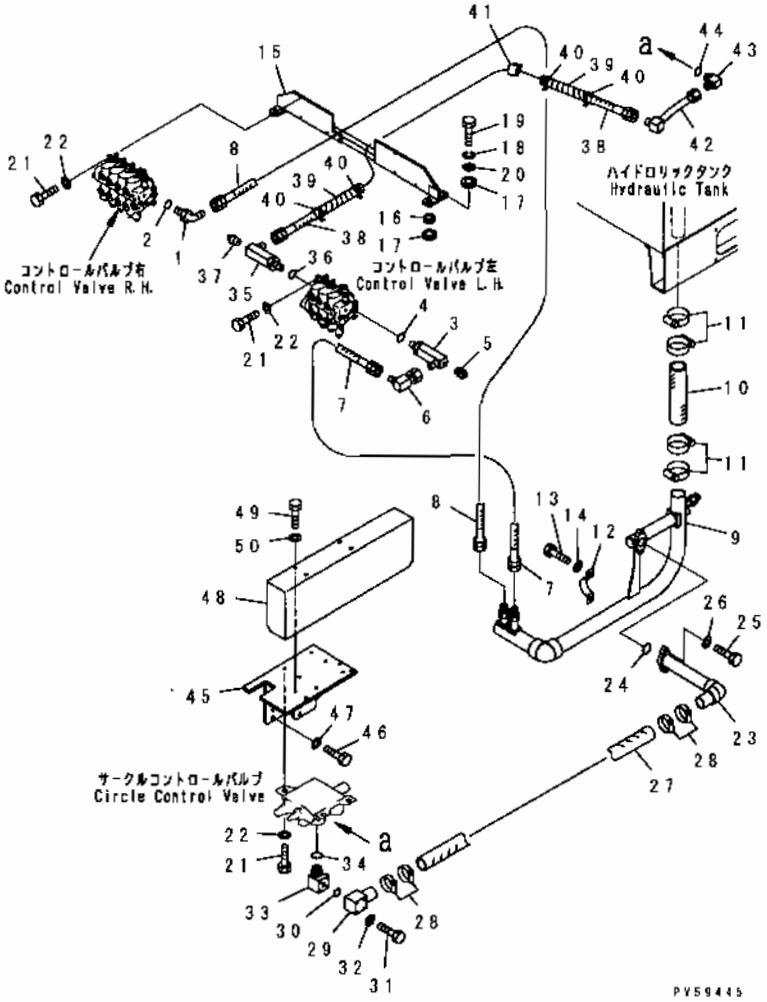


| INDEX | PART NO. | DESCRIPTION | Q'TY | SERIAL NO. |
|---|---|---|---|---|
| 43 | 234-60-69730 | ELBOW | 1 | 23001- |
| 44 | 26A-60-15690 | O-RING | 1 | 23001- |
| 45 | 234-60-69910 | BRACKET | 1 | 23001- |
| 46 | 01010-81230 | BOLT | 4 | 23001- |
| 47 | 01643-31232 | WASHER | 4 | 23001- |
| 48 | 234-60-69940 | COVER | 1 | 23001- |
| 49 | 01010-81016 | BOLT | 4 | 23001- |
| 50 | 01643-31232 | WASHER | 4 | 23001- |

# FIG. 6411A HYDRAULIC PIPING (TANK TO PUMP) (WITH RIPPER) (#23001-)

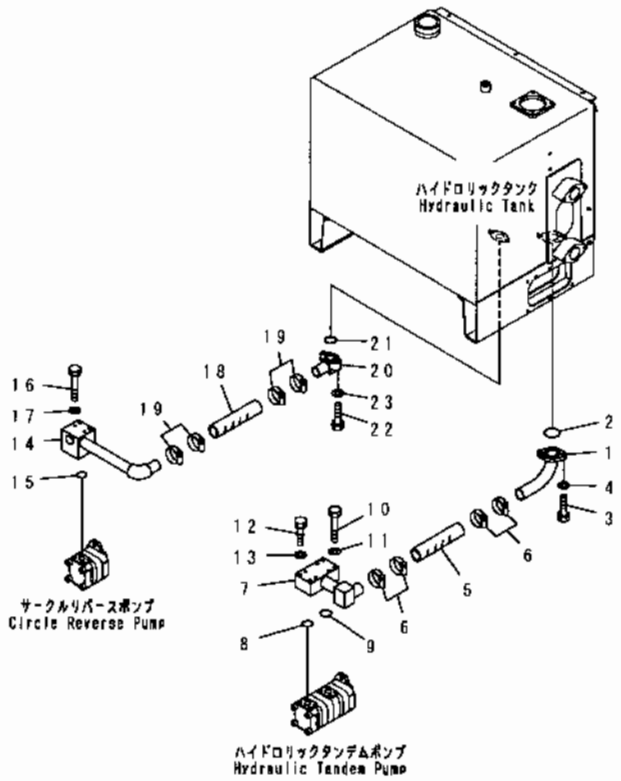


| INDEX | PART NO | DESCRIPTION | Q'TY | SERIAL NO. |
|---|---|---|---|---|
| 1 | 234-60-69840 | TUBE | 1 | 23001- |
| 2 | 07000-12065 | O-RING | 1 | 23001- |
| 3 | 01010-81230 | BOLT | 4 | 23001- |
| 4 | 01643-31232 | WASHER | 4 | 23001- |
| 5 | 07260-04718 | HOSE | 1 | 23001- |
| 6 | 07281-00709 | CLAMP | 4 | 23001- |
| 7 | 234-60-69860 | TUBE | 1 | 23001- |
| 8 | 07000-13042 | O-RING | 1 | 23001- |
| 9 | 07000-13048 | O-RING | 1 | 23001- |
| 10 | 01011-81280 | BOLT | 4 | 23001- |
| 11 | 01643-31232 | WASHER | 4 | 23001- |
| 12 | 01010-81080 | BOLT | 4 | 23001- |
| 13 | 01643-31032 | WASHER | 4 | 23001- |
| 14 | 234-60-69760 | ELBOW | 1 | 23001- |
| 15 | 07000-13042 | O-RING | 1 | 23001- |
| 16 | 01011-81020 | BOLT | 2 | 23001- |
| 17 | 01643-31232 | WASHER | 2 | 23001- |
| 18 | 07260-04116 | HOSE | 1 | 23001- |
| 19 | 07281-00609 | CLAMP | 4 | 23001- |
| 20 | 234-972-5331 | ELBOW | 1 | 23001- |
| 21 | 07000-13042 | O-RING | 1 | 23001- |
| 22 | 01010-81245 | BOLT | 2 | 23001- |
| 23 | 01643-31232 | WASHER | 2 | 23001- |

# FIG. 6412 HYDRAULIC PIPING (TANK TO PUMP) (WITH RIPPER) (D.D.V. SPEC) (#23001-)

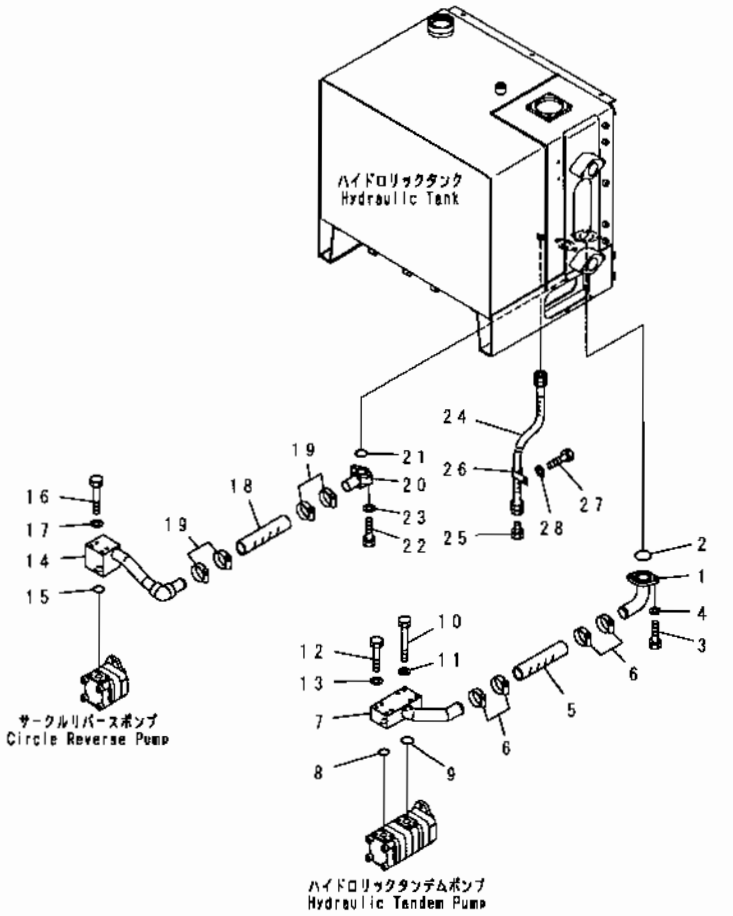


| INDEX | PART NO | DESCRIPTION | Q'TY | SERIAL NO. |
|---|---|---|---|---|
| 1 | 234-60-72550 | TUBE | 1 | 23001- |
| 2 | 07000-12065 | O-RING | 1 | 23001- |
| 3 | 01010-81230 | BOLT | 4 | 23001- |
| 4 | 01643-31232 | WASHER | 4 | 23001- |
| 5 | 07260-04718 | HOSE | 1 | 23001- |
| 6 | 07281-00709 | CLAMP | 4 | 23001- |
| 7 | 234-60-72280 | TUBE | 1 | 23001- |
| 8 | 07000-13042 | O-RING | 1 | 23001- |
| 9 | 07000-13048 | O-RING | 1 | 23001- |
| 10 | 01011-81280 | BOLT | 4 | 23001- |
| 11 | 01643-31232 | WASHER | 4 | 23001- |
| 12 | 01010-81080 | BOLT | 4 | 23001- |
| 13 | 01643-31032 | WASHER | 4 | 23001- |
| 14 | 234-60-72260 | ELBOW | 1 | 23001- |
| 15 | 07000-13042 | O-RING | 1 | 23001- |
| 16 | 01011-81015 | BOLT | 4 | 23001- |
| 17 | 01643-31232 | WASHER | 4 | 23001- |
| 18 | 07260-04116 | HOSE | 1 | 23001- |
| 19 | 07281-00609 | CLAMP | 4 | 23001- |
| 20 | 234-972-5331 | ELBOW | 1 | 23001- |
| 21 | 07000-13042 | O-RING | 1 | 23001- |
| 22 | 01010-81245 | BOLT | 2 | 23001- |
| 23 | 01643-31232 | WASHER | 2 | 23001- |
| 24 | 07102-20408 | HOSE | 1 | 23001- |
| 25 | 07376-50422 | PLUG | 1 | 23001- |
| 26 | 04434-52210 | CLIP | 1 | 23001- |
| 27 | 01010-81016 | BOLT | 1 | 23001- |
| 28 | 01643-31032 | WASHER | 1 | 23001- |

# FIG. 6413A HYDRAULIC PIPING (PUMP TO VALVE) (1/2) (WITH RIPPER) (#23001-)

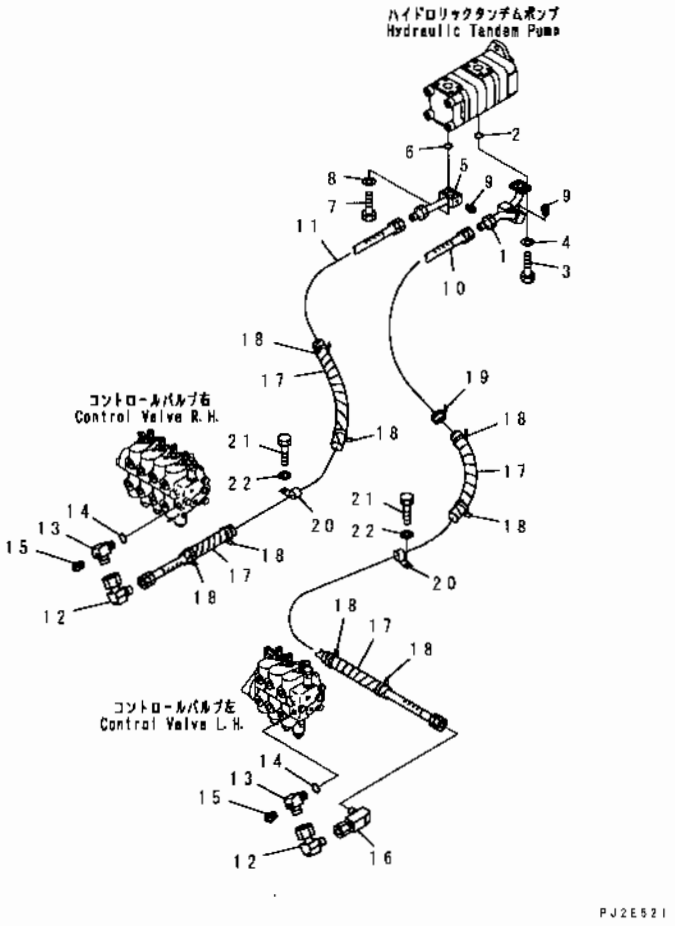


| INDEX | PART NO | DESCRIPTION | Q'TY | SERIAL NO. |
|---|---|---|---|---|
| 1 | 234-60-69360 | TUBE | 1 | 23001- |
| 2 | 07002-13034 | O-RING | 1 | 23001- |
| 3 | 01010-81030 | BOLT | 4 | 23001- |
| 4 | 01643-31032 | WASHER | 4 | 23001- |
| 5 | 234-60-69240 | TUBE | 1 | 23001- |
| 6 | 07000-13032 | O-RING | 1 | 23001- |
| 7 | 01010-81060 | BOLT | 4 | 23001- |
| 8 | 01643-31032 | WASHER | 4 | 23001- |
| 9 | 07042-20108 | PLUG | 2 | 23001- |
| 10 | 07108-20616 | HOSE | 1 | 23001- |
| 11 | 07108-20615 | HOSE | 1 | 23001- |
| 12 | 234-60-69290 | ELBOW | 2 | 23001- |
| 13 | 23F-60-16240 | ELBOW | 2 | 23001- |
| 14 | 237-60-22240 | O-RING | 2 | 23001- |
| 15 | 07042-20108 | PLUG | 2 | 23001- |
| 16 | 234-60-69710 | ELBOW | 1 | 23001- |
| 17 | 08210-02904 | SPIRAL TUBE | 4 | 23001- |
| 18 | 08034-00519 | BAND | 8 | 23001- |
| 19 | 08034-00536 | BAND | 10 | 23001- |
| 20 | 04434-53211 | CLIP | 2 | 23001- |
| 21 | 01010-81020 | BOLT | 2 | 23001- |
| 22 | 01643-31032 | WASHER | 2 | 23001- |

# FIG. 6414 HYDRAULIC PIPING (PUMP TO VALVE) (1/2) (WITH RIPPER) (D.D.V. SPEC) (#23001-)

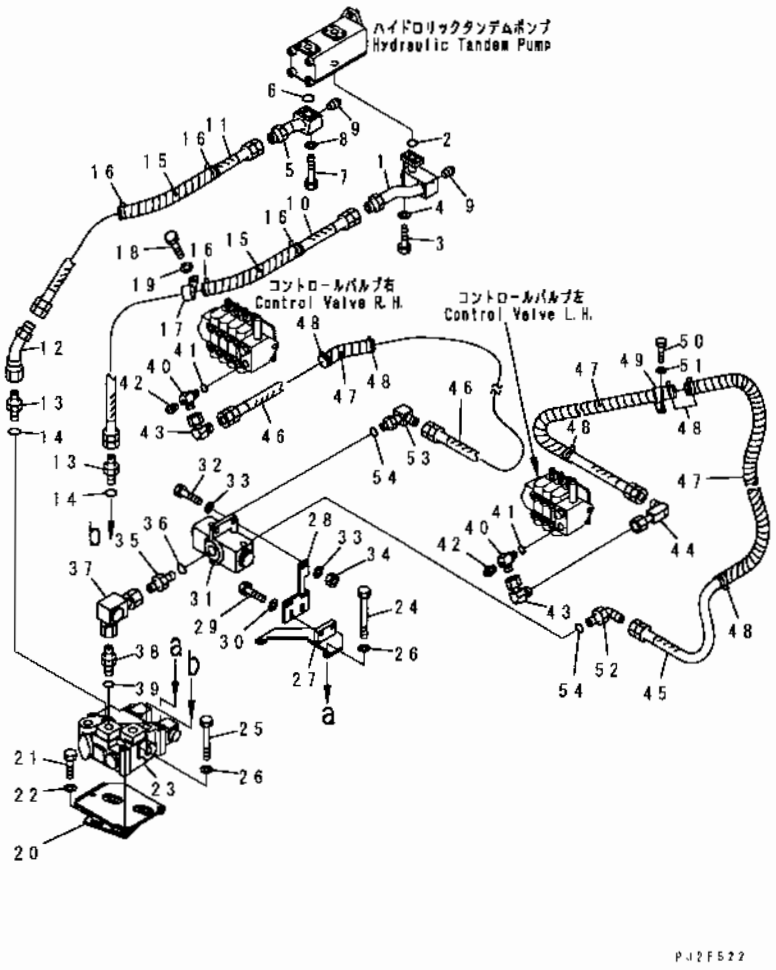


| INDEX | PART NO. | DESCRIPTION | Q'TY | SERIAL NO. |
|---|---|---|---|---|
| 1 | 234-60-72290 | TUBE | 1 | 23001- |
| 2 | 07002-13034 | O-RING | 1 | 23001- |
| 3 | 01010-81030 | BOLT | 4 | 23001- |
| 4 | 01643-31032 | WASHER | 4 | 23001- |
| 5 | 234-60-72310 | TUBE | 1 | 23001- |
| 6 | 07000-13032 | O-RING | 1 | 23001- |
| 7 | 01010-81060 | BOLT | 4 | 23001- |
| 8 | 01643-31032 | WASHER | 4 | 23001- |
| 9 | 07042-20108 | PLUG | 2 | 23001- |
| 10 | 07108-21010 | HOSE | 1 | 23001- |
| 11 | 234-60-72660 | HOSE | 1 | 23001- |
| 12 | 234-60-72160 | ELBOW | 2 | 23001- |
| 13 | 07230-11034 | UNION | 1 | 23001- |
| 14 | 07002-13334 | O-RING | 2 | 23001- |
| 15 | 08210-02904 | SPIRAL TUBE | 2 | 23001- |
| 16 | 08034-00519 | BAND | 4 | 23001- |
| 17 | 04434-53411 | CLIP | 1 | 23001- |
| 18 | 01010-81020 | BOLT | 1 | 23001- |
| 19 | 01643-31032 | WASHER | 1 | 23001- |
| 20 | 234-60-72121 | BRACKET | 1 | 23001- |
| 21 | 01010-81230 | BOLT | 4 | 23001- |
| 22 | 01643-31232 | WASHER | 4 | 23001- |
| 23 | (702-21-25000) | VALVE ASS'Y | 1 | 23001- |
| 24 | 01011-81240 | BOLT | 2 | 23001- |
| 25 | 01011-81230 | BOLT | 1 | 23001- |
| 26 | 01643-31232 | WASHER | 3 | 23001- |
| 27 | 234-60-72130 | BRACKET | 1 | 23001- |
| 28 | 234-60-72141 | BRACKET | 1 | 23001- |
| 29 | 01010-81230 | BOLT | 2 | 23001- |
| 30 | 01643-31232 | WASHER | 2 | 23001- |
| 31 | 234-61-31100 | VALVE ASS'Y | 1 | 23001- |
| 32 | 01010-81040 | BOLT | 3 | 23001- |
| 33 | 01643-31032 | WASHER | 6 | 23001- |
| 34 | 01580-11008 | NUT | 3 | 23001- |
| 35 | 07230-11034 | UNION | 1 | 23001- |
| 36 | 07002-13334 | O-RING | 1 | 23001- |
| 37 | 234-60-72170 | ELBOW | 1 | 23001- |
| 38 | 07230-11034 | UNION | 1 | 23001- |
| 39 | 07002-13334 | O-RING | 1 | 23001- |
| 40 | 23F-60-16240 | ELBOW | 2 | 23001- |
| 41 | 237-60-22240 | O-RING | 2 | 23001- |
| 42 | 07042-20108 | PLUG | 2 | 23001- |

FIG NO. : 6414

| INDEX | PART NO | DESCRIPTION | Q'TY | SERIAL NO. |
|---|---|---|---|---|
| 43 | 234-60-69290 | ELBOW | 2 | 23001- |
| 44 | 234-60-69710 | ELBOW | 1 | 23001- |
| 45 | 07108-20615 | HOSE | 1 | 23001- |
| 46 | 07108-20613 | HOSE | 1 | 23001- |
| 47 | 08210-02904 | SPIRAL TUBE | 3 | 23001- |
| 48 | 08034-00519 | BAND | 6 | 23001- |
| 49 | 04434-53411 | CLIP | 1 | 23001- |
| 50 | 01010-81020 | BOLT | 1 | 23001- |
| 51 | 01643-31032 | WASHER | 1 | 23001- |
| 52 | 07235-10628 | ELBOW | 1 | 23001- |
| 53 | 22X-62-13360 | ELBOW | 1 | 23001- |
| 54 | 07002-12434 | O-RING | 2 | 23001- |



GD705A-4

# FIG. 6415A HYDRAULIC PIPING (PUMP TO VALVE) (2/2) (WITH RIPPER) (#23001-)

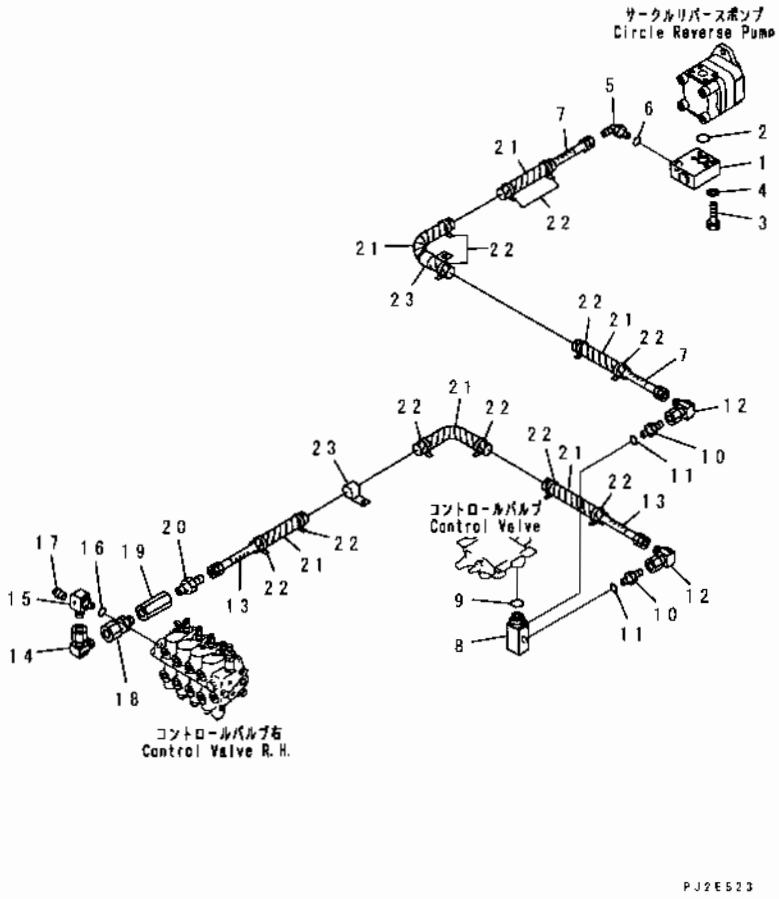


| INDEX | PART NO | DESCRIPTION | Q'TY | SERIAL NO |
|---|---|---|---|---|
| 1 | 234-972-5310 | BLOCK | 1 | 23001- |
| 2 | 07000-13032 | O-RING | 1 | 23001- |
| 3 | 01010-81060 | BOLT | 2 | 23001- |
| 4 | 01643-31032 | WASHER | 2 | 23001- |
| 5 | 07235-10628 | ELBOW | 1 | 23001- |
| 6 | 07000-12434 | O-RING | 1 | 23001- |
| 7 | 07106-20614 | HOSE | 1 | 23001- |
| 8 | 234-60-69820 | ELBOW | 1 | 23001- |
| 9 | 26A-60-15690 | O-RING | 1 | 23001- |
| 10 | 07230-20628 | UNION | 2 | 23001- |
| 11 | 07002-22434 | O-RING | 2 | 23001- |
| 12 | 234-60-69290 | ELBOW | 2 | 23001- |
| 13 | 07106-20616 | HOSE | 1 | 23001- |
| 14 | 234-60-69290 | ELBOW | 1 | 23001- |
| 15 | 23F-60-16240 | ELBOW | 1 | 23001- |
| 16 | 237-60-22240 | O-RING | 1 | 23001- |
| 17 | 07042-20108 | PLUG | 1 | 23001- |
| 18 | 234-60-69720 | NIPPLE | 1 | 23001- |
| 19 | 262-60-76470 | VALVE, CHECK | 1 | 23001- |
| 20 | 234-833-2190 | NIPPLE | 1 | 23001- |
| 21 | 08210-02904 | SPIRAL TUBE | 6 | 23001- |
| 22 | 08034-00519 | BAND | 12 | 23001- |
| 23 | 04434-53211 | CLIP | 2 | 23001- |

# FIG. 6416 HYDRAULIC PIPING (PUMP TO VALVE) (2/2) (WITH RIPPER) (D.D.V. SPEC) (#23001-)

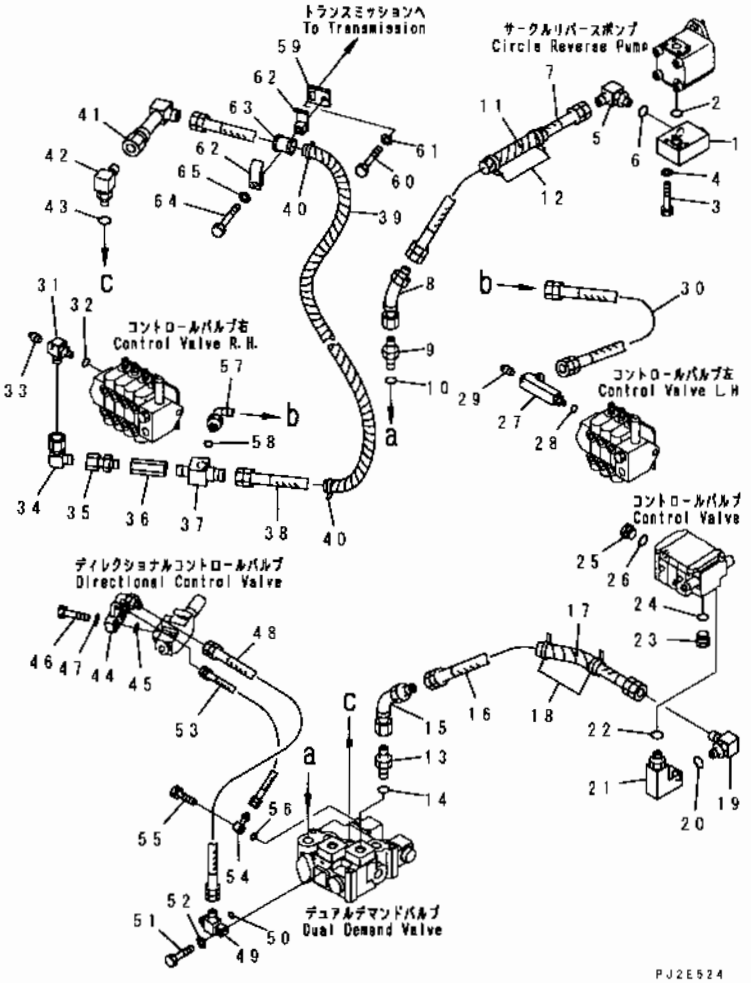


| INDEX | PART NO. | DESCRIPTION | Q'TY | SERIAL NO |
|---|---|---|---|---|
| 1 | 234-60-72271 | BLOCK | 1 | 23001- |
| 2 | 07000-13032 | O-RING | 1 | 23001- |
| 3 | 01010-81060 | BOLT | 4 | 23001- |
| 4 | 01643-31032 | WASHER | 4 | 23001- |
| 5 | 234-60-35450 | ELBOW | 1 | 23001- |
| 6 | 07002-13334 | O-RING | 1 | 23001- |
| 7 | 07108-21011 | HOSE | 1 | 23001- |
| 8 | 234-60-72670 | ELBOW | 1 | 23001- |
| 9 | 07230-11034 | UNION | 2 | 23001- |
| 10 | 07002-13334 | O-RING | 2 | 23001- |
| 11 | 08210-02904 | SPIRAL TUBE | 1 | 23001- |
| 12 | 08034-00519 | BAND | 2 | 23001- |
| 13 | 07230-11034 | UNION | 1 | 23001- |
| 14 | 07002-13334 | O-RING | 1 | 23001- |
| 15 | 234-60-72160 | ELBOW | 1 | 23001- |
| 16 | 07108-21010 | HOSE | 1 | 23001- |
| 17 | 08210-02904 | SPIRAL TUBE | 1 | 23001- |
| 18 | 08034-00519 | BAND | 2 | 23001- |
| 19 | 234-60-35450 | ELBOW | 1 | 23001- |
| 20 | 07000-13334 | O-RING | 1 | 23001- |
| 21 | 234-60-72220 | ELBOW | 1 | 23001- |
| 22 | 26A-60-15690 | O-RING | 1 | 23001- |
| 23 | 234-60-69790 | PLUG | 1 | 23001- |
| 24 | 235-60-15480 | O-RING | 1 | 23001- |
| 25 | 234-60-72480 | PLUG | 1 | 23001- |
| 26 | 26A-60-15690 | O-RING | 1 | 23001- |
| 27 | 234-60-69740 | ELBOW | 1 | 23001- |
| 28 | 237-60-22240 | O-RING | 1 | 23001- |
| 29 | 07042-20108 | PLUG | 1 | 23001- |
| 30 | 07102-20606 | HOSE | 1 | 23001- |
| 31 | 23F-60-16240 | ELBOW | 1 | 23001- |
| 32 | 237-60-22240 | O-RING | 1 | 23001- |
| 33 | 07042-20108 | PLUG | 1 | 23001- |
| 34 | 234-60-69290 | ELBOW | 1 | 23001- |
| 35 | 234-60-69720 | NIPPLE | 1 | 23001- |
| 36 | 262-60-76470 | VALVE | 1 | 23001- |
| 37 | 234-60-72241 | BLOCK | 1 | 23001- |
| 38 | 234-60-72640 | HOSE | 1 | 23001- |
| 39 | 08210-02904 | SPIRAL TUBE | 1 | 23001- |
| 40 | 08034-00519 | BAND | 2 | 23001- |
| 41 | 234-60-72180 | TUBE | 1 | 23001- |
| 42 | 234-60-35450 | ELBOW | 1 | 23001- |

# FIG. 6416 HYDRAULIC PIPING (PUMP TO VALVE) (2/2) (WITH RIPPER) (D.D.V. SPEC) (#23001-)

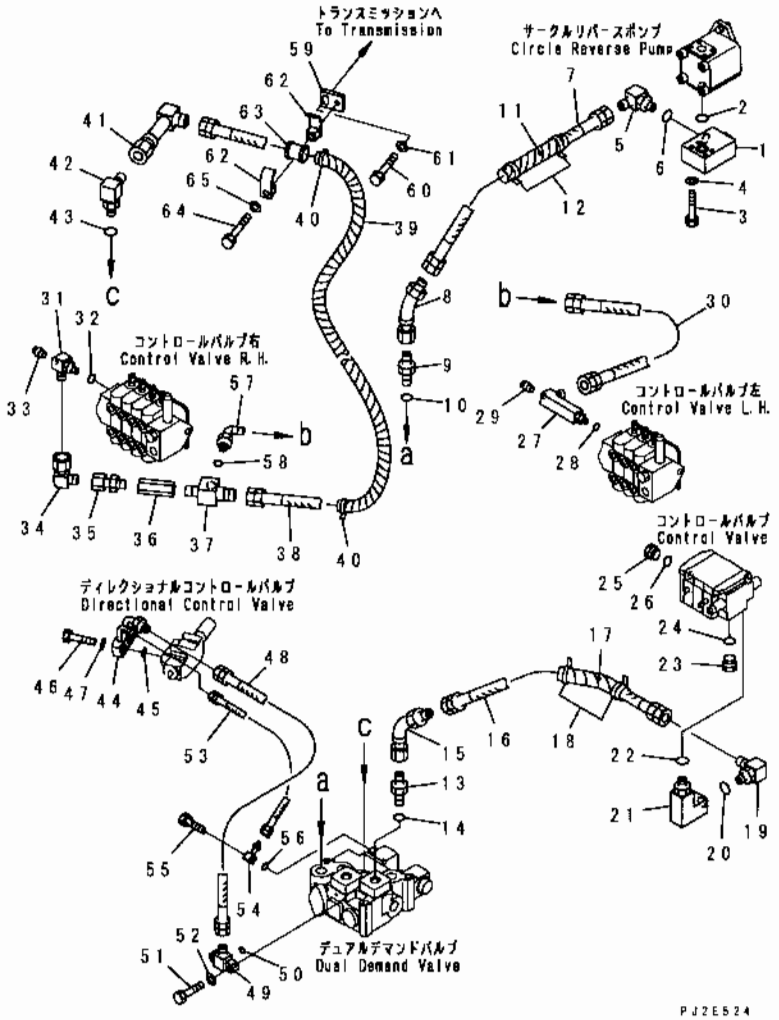


| INDEX | PART NO | DESCRIPTION | Q'TY | SERIAL NO. |
|---|---|---|---|---|
| 43 | 07000-13334 | O-RING | 1 | 23001- |
| 44 | 234-60-72230 | BLOCK | 1 | 23001- |
| 45 | 07000-13022 | O-RING | 2 | 23001- |
| 46 | 01010-81040 | BOLT | 4 | 23001- |
| 47 | 01643-31032 | WASHER | 4 | 23001- |
| 48 | 07108-20410 | HOSE | 1 | 23001- |
| 49 | 234-60-72210 | BLOCK | 1 | 23001- |
| 50 | 07000-12018 | O-RING | 1 | 23001- |
| 51 | 01010-81040 | BOLT | 2 | 23001- |
| 52 | 01643-31032 | WASHER | 2 | 23001- |
| 53 | 07123-10210 | HOSE | 1 | 23001- |
| 54 | 234-60-32370 | TUBE | 1 | 23001- |
| 55 | 234-60-32380 | JOINT | 1 | 23001- |
| 56 | 07000-12012 | O-RING | 1 | 23001- |
| 57 | 07235-10628 | ELBOW | 1 | 23001- |
| 58 | 07002-12434 | O-RING | 1 | 23001- |
| 59 | 234-60-72680 | PLATE | 1 | 23001- |
| 60 | 01010-81245 | BOLT | 1 | 23001- |
| 61 | 01643-31232 | WASHER | 1 | 23001- |
| 62 | 07094-11024 | CLAMP | 2 | 23001- |
| 63 | 07095-01038 | CUSHION | 1 | 23001- |
| 64 | 01010-81275 | BOLT | 1 | 23001- |
| 65 | 01643-31232 | WASHER | 1 | 23001- |

# FIG. 6417A HYDRAULIC PIPING (VALVE TO TANK) (WITH RIPPER) (#23001-)

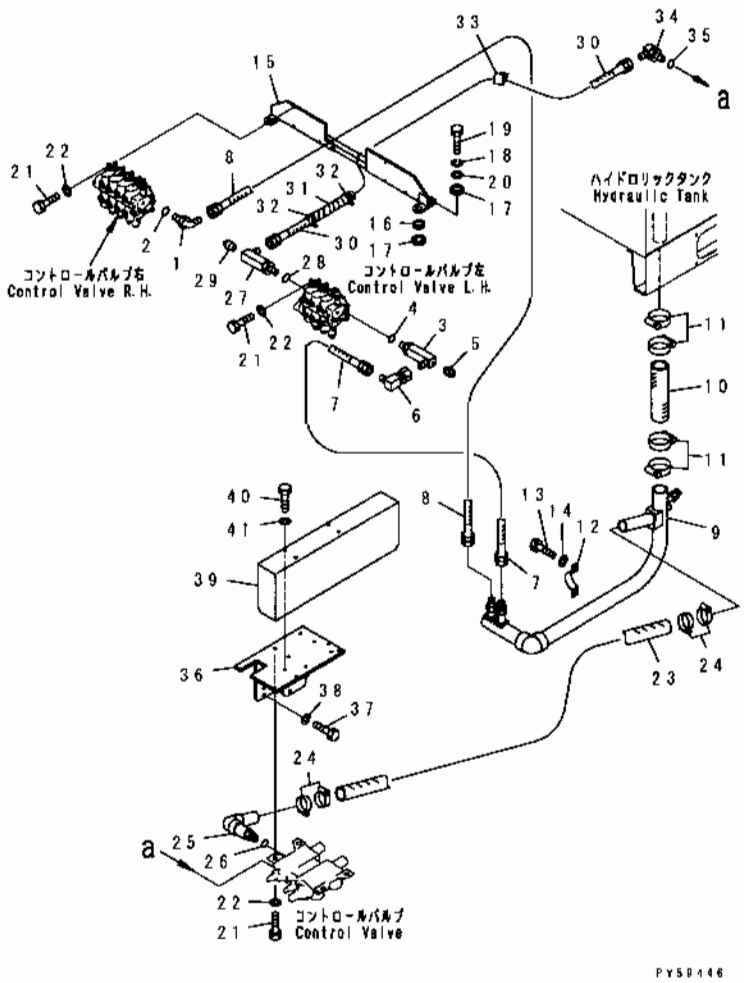


| INDEX | PART NO | DESCRIPTION | Q'TY | SERIAL NO |
|---|---|---|---|---|
| 1 | 23B-60-14460 | ELBOW | 1 | 23001- |
| 2 | 237-60-22240 | O-RING | 1 | 23001- |
| 3 | 234-60-69750 | ELBOW | 1 | 23001- |
| 4 | 237-60-22240 | O-RING | 1 | 23001- |
| 5 | 07042-20108 | PLUG | 1 | 23001- |
| 6 | 234-60-69890 | ELBOW | 1 | 23001- |
| 7 | 07103-50614 | HOSE | 1 | 23001- |
| 8 | 07103-50609 | HOSE | 1 | 23001- |
| 9 | 234-60-69870 | TUBE | 1 | 23001- |
| 10 | 07260-05832 | HOSE | 1 | 23001- |
| 11 | 07281-00909 | CLAMP | 4 | 23001- |
| 12 | 07282-16114 | CLAMP | 2 | 23001- |
| 13 | 01010-81220 | BOLT | 2 | 23001- |
| 14 | 01643-31232 | WASHER | 2 | 23001- |
| 15 | 234-60-69120 | BRACKET | 1 | 23001- |
| 16 | 23B-60-16490 | COLLAR | 4 | 23001- |
| 17 | 23B-60-16740 | SEAT | 8 | 23001- |
| 18 | 23B-60-16870 | WASHER | 4 | 23001- |
| 19 | 01010-81045 | BOLT | 4 | 23001- |
| 20 | 01643-31032 | WASHER | 4 | 23001- |
| 21 | 01010-80830 | BOLT | 6 | 23001- |
| 22 | 01643-30823 | WASHER | 6 | 23001- |
| 23 | 07260-04750 | HOSE | 1 | 23001- |
| 24 | 07281-00709 | CLAMP | 4 | 23001- |
| 25 | 234-60-69810 | ELBOW | 1 | 23001- |
| 26 | 235-60-15480 | O-RING | 1 | 23001- |
| 27 | 234-60-69740 | ELBOW | 1 | 23001- |
| 28 | 237-60-22240 | O-RING | 1 | 23001- |
| 29 | 07042-20108 | PLUG | 1 | 23001- |
| 30 | 07108-20608 | HOSE | 1 | 23001- |
| 31 | 08210-02904 | SPIRAL TUBE | 1 | 23001- |
| 32 | 08034-00519 | BAND | 2 | 23001- |
| 33 | 04434-53211 | CLIP | 1 | 23001- |
| 34 | 234-60-69730 | ELBOW | 1 | 23001- |
| 35 | 26A-60-15690 | O-RING | 1 | 23001- |
| 36 | 234-60-69910 | BRACKET | 1 | 23001- |
| 37 | 01010-81230 | BOLT | 4 | 23001- |
| 38 | 01643-31232 | WASHER | 4 | 23001- |
| 39 | 234-60-69940 | COVER | 1 | 23001- |
| 40 | 01010-81016 | BOLT | 4 | 23001- |
| 41 | 01643-31232 | WASHER | 4 | 23001- |

# FIG. 6418 HYDRAULIC PIPING (VALVE TO TANK) (WITH RIPPER) (D. D. V. SPEC) (#23001-)

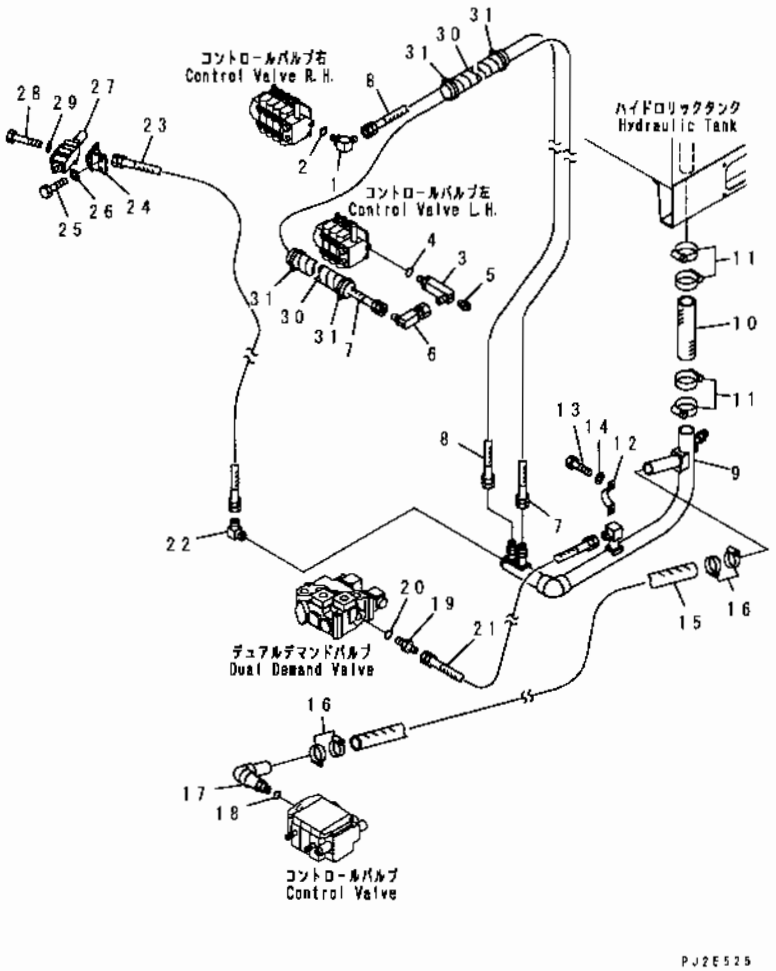


| INDEX | PART NO. | DESCRIPTION | Q'TY | SERIAL NO. |
|---|---|---|---|---|
| 1 | 23B-60-14460 | ELBOW | 1 | 23001- |
| 2 | 237-60-22240 | O-RING | 1 | 23001- |
| 3 | 234-60-69750 | ELBOW | 1 | 23001- |
| 4 | 237-60-22240 | O-RING | 1 | 23001- |
| 5 | 07042-20108 | PLUG | 1 | 23001- |
| 6 | 234-60-69890 | ELBOW | 1 | 23001- |
| 7 | 07103-50614 | HOSE | 1 | 23001- |
| 8 | 07103-50609 | HOSE | 1 | 23001- |
| 9 | 234-60-72250 | TUBE | 1 | 23001- |
| 10 | 07260-05832 | HOSE | 1 | 23001- |
| 11 | 07281-00909 | CLAMP | 4 | 23001- |
| 12 | 07282-16114 | CLAMP | 2 | 23001- |
| 13 | 01010-81220 | BOLT | 2 | 23001- |
| 14 | 01643-31232 | WASHER | 2 | 23001- |
| 15 | 07260-04750 | HOSE | 1 | 23001- |
| 16 | 07281-00709 | CLAMP | 4 | 23001- |
| 17 | 234-60-69810 | ELBOW | 1 | 23001- |
| 18 | 235-60-15480 | O-RING | 1 | 23001- |
| 19 | 07230-11034 | UNION | 1 | 23001- |
| 20 | 07002-13334 | O-RING | 1 | 23001- |
| 21 | 07108-21007 | HOSE | 1 | 23001- |
| 22 | 233-40-33190 | ELBOW | 1 | 23001- |
| 23 | 07102-30312 | HOSE | 1 | 23001- |
| 24 | 234-60-72150 | BRACKET | 1 | 23001- |
| 25 | 01010-81230 | BOLT | 2 | 23001- |
| 26 | 01643-31232 | WASHER | 2 | 23001- |
| 27 | (702-15-65001) | VALVE ASS'Y | 1 | 23001- |
| 28 | 01010-51090 | BOLT | 3 | 23001- |
| 29 | 01643-31032 | WASHER | 3 | 23001- |
| 30 | 565-04-11420 | TUBE, SPIRAL | 2 | 23001- |
| 31 | 08034-20536 | BAND | 4 | 23001- |

# FIG. 6421A HYDRAULIC PIPING (LEANING CYLINDER LINE)

(#23001-)

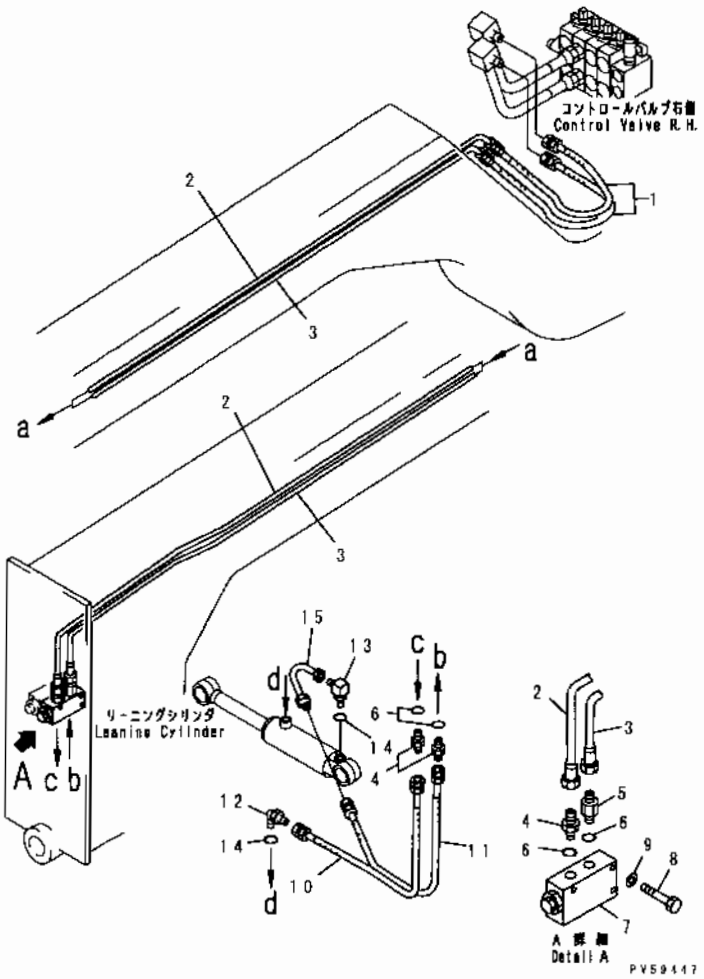


| INDEX | PART NO. | DESCRIPTION | Q'TY | SERIAL NO |
|---|---|---|---|---|
| 1 | 230-09-23100 | HOSE | 2 | 23001- |
| 2 | 234-60-68130 | TUBE | 1 | 23001- |
| 3 | 234-60-68140 | TUBE | 1 | 23001- |
| 4 | 07230-10422 | UNION | 3 | 21001- |
| 5 | 238-60-28190 | NIPPLE | 1 | 21001- |
| 6 | 07002-12034 | O-RING | 4 | 21001- |
| 7 | (232-61-11700) | VALVE ASS'Y, PILOT CHECK | 1 | 21001- |
| 8 | 238-60-28310 | BOLT | 3 | 21001- |
| 9 | 01643-30823 | WASHER | 3 | 21001- |
| 10 | 07113-00412 | HOSE | 1 | 21001- |
| 11 | 07113-00410 | HOSE | 1 | 21001- |
| 12 | (07235-10422) | ELBOW | 1 | 23063- |
| | 07235-10422 | ELBOW | 1 | 21001-23062 |
| 13 | (234-60-33850) | TUBE | 1 | 23063- |
| | 234-60-33850 | TUBE | 1 | 21001-23062 |
| 14 | (07002-12034) | O-RING | 1 | 23063- |
| | 07002-12034 | O-RING | 2 | 21001-23062 |
| 15 | (234-60-33330) | TUBE | 1 | 23063- |
| | 234-60-33330 | TUBE | 1 | 21001-23062 |

# FIG. 6423C HYDRAULIC PIPING (ARTICULATE CYLINDER LINE)

(#23001-)

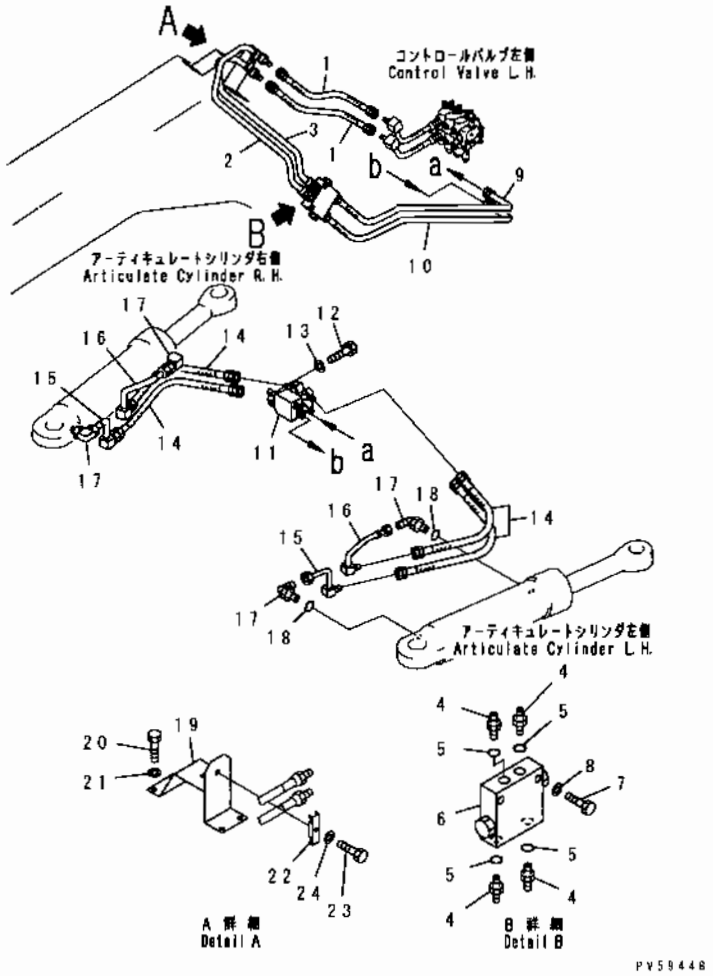


| INDEX | PART NO | DESCRIPTION | Q'TY | SERIAL NO. |
|---|---|---|---|---|
| 1 | 230-09-23130 | HOSE | 2 | 23001- |
| 2 | 234-60-68220 | TUBE | 1 | 23001- |
| 3 | 234-60-68230 | TUBE | 1 | 23001- |
| 4 | 07230-10422 | UNION | 4 | 23001- |
| 5 | 07002-12034 | O-RING | 4 | 23001- |
| 6 | (235-61-13700) | VALVE ASS'Y. PILOT CHECK | 1 | 23001- |
| 7 | 01010-50860 | BOLT | 2 | 23001- |
| 8 | 01643-30823 | WASHER | 2 | 23001- |
| 9 | 234-60-45130 | TUBE | 1 | 23001- |
| 10 | 234-60-45140 | TUBE | 1 | 23001- |
| 11 | 234-60-33700 | BLOCK | 1 | 23001- |
| 12 | 01010-51020 | BOLT | 2 | 23001- |
| 13 | 01643-31032 | WASHER | 2 | 23001- |
| 14 | 230-09-24065 | HOSE | 4 | 23001- |
| 15 | (234-60-33660) | TUBE, L.H. | 1 | 23063- |
| | 234-60-33660 | TUBE, L.H. | 1 | 23001-23062 |
| | (234-60-33670) | TUBE, R.H. | 1 | 23063- |
| | 234-60-33670 | TUBE, R.H. | 1 | 23001-23062 |
| 16 | (234-60-33640) | TUBE, L.H | 1 | 23063- |
| | 234-60-33640 | TUBE, L.H | 1 | 23001-23062 |
| | (234-60-33650) | TUBE, R.H | 1 | 23063- |
| | 234-60-33650 | TUBE, R.H. | 1 | 23001-23062 |
| 17 | (07235-10422) | ELBOW | 4 | 23063- |
| | 07235-10422 | ELBOW | 4 | 23001-23062 |
| 18 | (07002-12034) | O-RING | 4 | 23063- |
| | 07002-12434 | O-RING | 4 | 23001-23062 |
| 19 | 234-60-63110 | BRACKET | 1 | 23001- |
| 20 | 01010-81225 | BOLT | 4 | 23001- |
| 21 | 01643-31232 | WASHER | 4 | 23001- |
| 22 | 234-60-63120 | CLIP | 1 | 23001- |
| 23 | 01010-81045 | BOLT | 1 | 23001- |
| 24 | 01643-31032 | WASHER | 1 | 23001- |

# FIG. 6427 HYDRAULIC PIPING (ARTICULATE CYLINDER LINE)

## (D. D. V. SPEC) (#23001-)

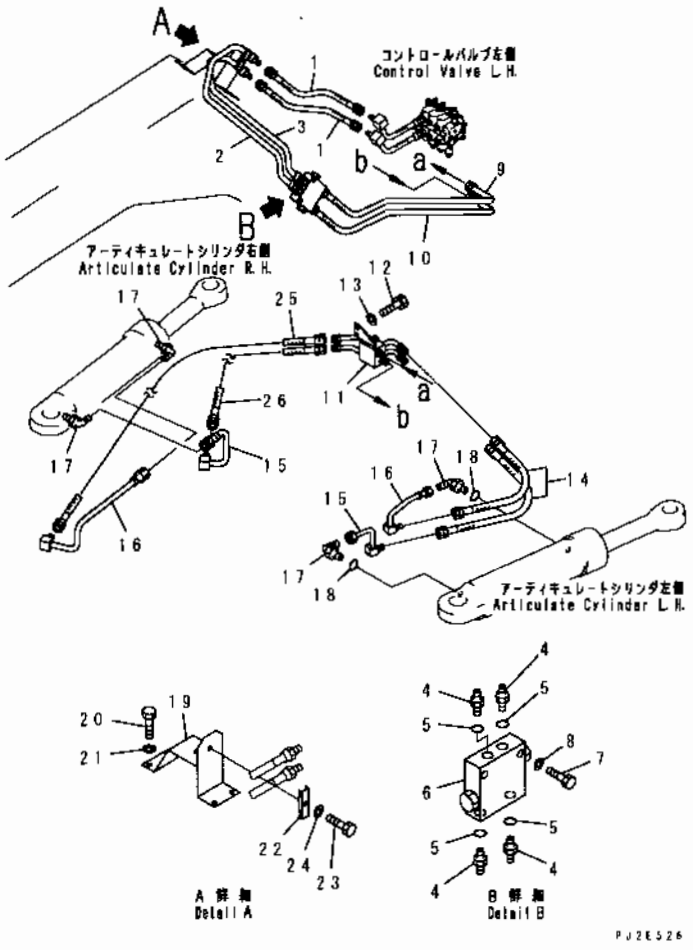


| INDEX | PART NO. | DESCRIPTION | Q'TY | SERIAL NO. |
|---|---|---|---|---|
| 1 | 230-09-23130 | HOSE | 2 | 23001- |
| 2 | 234-60-68220 | TUBE | 1 | 23001- |
| 3 | 234-60-68230 | TUBE | 1 | 23001- |
| 4 | 07230-10422 | UNION | 4 | 23001- |
| 5 | 07002-12034 | O-RING | 4 | 23001- |
| 6 | (235-61-13700) | VALVE ASS'Y, PILOT CHECK | 1 | 23001- |
| 7 | 01010-50860 | BOLT | 2 | 23001- |
| 8 | 01643-30823 | WASHER | 2 | 23001- |
| 9 | 234-60-45130 | TUBE | 1 | 23001- |
| 10 | 234-60-45140 | TUBE | 1 | 23001- |
| 11 | 234-60-72470 | BLOCK, (D. D. V. SPEC) | 1 | 23001- |
| 12 | 01010-51020 | BOLT | 2 | 23001- |
| 13 | 01643-31032 | WASHER | 2 | 23001- |
| 14 | 230-09-24065 | HOSE | 2 | 23001- |
| 15 | 234-60-33660 | TUBE, L.H. | 1 | 23001- |
| | 234-60-72490 | TUBE, R.H. (D D.V. SPEC) | 1 | 23001- |
| 16 | 234-60-33640 | TUBE, L.H. | 1 | 23001- |
| | 234-60-72510 | TUBE, R.H. (D.D.V. SPEC) | 1 | 23001- |
| 17 | 07235-10422 | ELBOW | 4 | 23001- |
| 18 | 07002-12434 | O-RING | 4 | 23001- |
| 19 | 234-60-63110 | BRACKET | 1 | 23001- |
| 20 | 01010-81225 | BOLT | 4 | 23001- |
| 21 | 01643-31232 | WASHER | 4 | 23001- |
| 22 | 234-60-63120 | CLIP | 1 | 23001- |
| 23 | 01010-81045 | BOLT | 1 | 23001- |
| 24 | 01643-31032 | WASHER | 1 | 23001- |
| 25 | 07183-404A5 | HOSE, (D.D.V. SPEC.) | 1 | 23001- |
| 26 | 07183-40406 | HOSE, (D.D.V. SPEC.) | 1 | 23001- |

# FIG. 6431A HYDRAULIC PIPING (DRAWBAR SHIFT CYLINDER LINE) (#23001-)

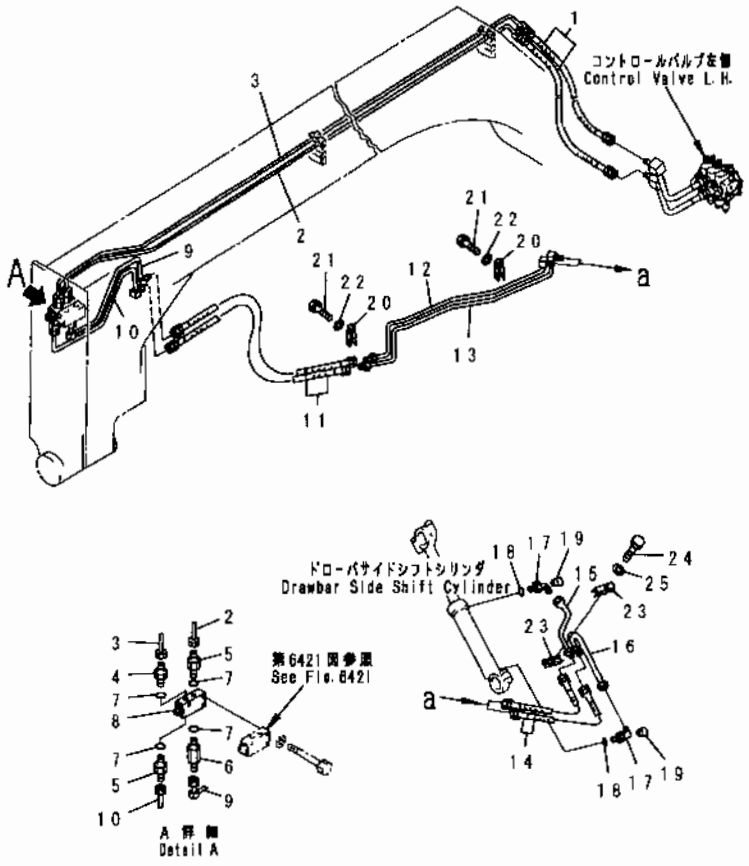


| INDEX | PART NO. | DESCRIPTION | Q'TY | SERIAL NO |
|---|---|---|---|---|
| 1 | 230-09-23100 | HOSE | 2 | 23001- |
| 2 | 234-60-68110 | TUBE | 1 | 23001- |
| 3 | 234-60-68120 | TUBE | 1 | 23001- |
| 4 | 07230-10422 | UNION | 1 | 23001- |
| 5 | 238-60-28190 | NIPPLE | 2 | 23001- |
| 6 | 232-60-62960 | NIPPLE | 1 | 23001- |
| 7 | 07002-12034 | O-RING | 4 | 23001- |
| 8 | (232-61-11600) | VALVE ASS'Y, PILOT CHECK | 1 | 23001- |
| 9 | 234-60-33930 | TUBE | 1 | 23001- |
| 10 | 234-60-33940 | TUBE | 1 | 23001- |
| 11 | 230-09-04170 | HOSE | 2 | 23001- |
| 12 | 234-60-34480 | TUBE | 1 | 23001- |
| 13 | 234-60-34470 | TUBE | 1 | 23001- |
| 14 | 230-09-04070 | HOSE | 2 | 23001- |
| 15 | 234-60-34510 | TUBE | 1 | 23001- |
| 16 | 234-60-34460 | TUBE | 1 | 23001- |
| 17 | 07235-50422 | ELBOW | 2 | 23001- |
| 18 | 07002-12034 | O-RING | 2 | 23001- |
| 19 | 07043-00108 | PLUG | 2 | 23001- |
| 20 | 232-60-54820 | CLIP | 2 | 23001- |
| 21 | 01010-81020 | BOLT | 2 | 23001- |
| 22 | 01643-31032 | WASHER | 2 | 23001- |
| 23 | 232-60-54830 | CLIP | 2 | 23001- |
| 24 | 01010-81045 | BOLT | 1 | 23001- |
| 25 | 01643-31032 | WASHER | 1 | 23001- |

# FIG. 6435A HYDRAULIC PIPING (BLADE LIFT CYLINDER LINE)

(#23001-)

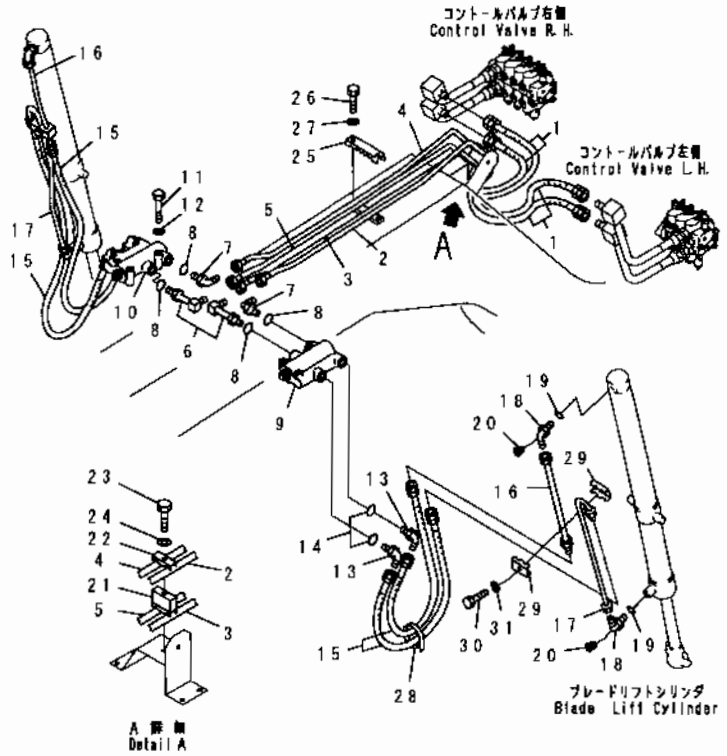


| INDEX | PART NO. | DESCRIPTION | Q'TY | SERIAL NO |
|---|---|---|---|---|
| 1 | 230-09-23130 | HOSE, L.H. | 2 | 23001- |
| | 230-09-23100 | HOSE, R.H | 2 | 23001- |
| 2 | 234-60-68240 | TUBE | 1 | 23001- |
| 3 | 234-60-68250 | TUBE | 1 | 23001- |
| 4 | 234-60-68260 | TUBE | 1 | 23001- |
| 5 | 234-60-68270 | TUBE | 1 | 23001- |
| 6 | 234-60-33850 | TUBE | 2 | 23001- |
| 7 | 07235-10422 | ELBOW | 2 | 23001- |
| 8 | 07002-12034 | O-RING | 4 | 23001- |
| 9 | (232-60-56300) | VALVE ASS'Y, PILOT CHECK | 1 | 23001- |
| 10 | (232-60-56100) | VALVE ASS'Y, PILOT CHECK | 1 | 23001- |
| 11 | 01010-80865 | BOLT | 6 | 23001- |
| 12 | 01643-30823 | WASHER | 6 | 23001- |
| 13 | 07235-10422 | ELBOW | 4 | 23001- |
| 14 | 07002-12034 | O-RING | 4 | 23001- |
| 15 | 230-09-04110 | HOSE | 4 | 23001- |
| 16 | (234-60-45110) | TUBE | 2 | 23063- |
| | 234-60-45110 | TUBE | 2 | 23001-23062 |
| 17 | (234-60-45120) | TUBE | 2 | 23063- |
| | 234-60-45120 | TUBE | 2 | 23001-23062 |
| 18 | (07235-50422) | ELBOW | 4 | 23063- |
| | 07235-50422 | ELBOW | 4 | 23001-23062 |
| 19 | (07002-12034) | O-RING | 4 | 23063- |
| | 07002-12034 | O-RING | 4 | 23001-23062 |
| 20 | (07043-70108) | PLUG | 4 | 23063- |
| | 07043-70108 | PLUG | 4 | 23001-23062 |
| 21 | 234-60-63130 | CLIP | 1 | 23001- |
| 22 | 234-60-33240 | CLIP | 1 | 23001- |
| 23 | 01011-81010 | BOLT | 1 | 23001- |
| 24 | 01643-31032 | WASHER | 1 | 23001- |
| 25 | 234-60-33790 | CLIP | 1 | 23001- |
| 26 | 01010-51030 | BOLT | 2 | 23001- |
| 27 | 01643-31032 | WASHER | 2 | 23001- |
| 28 | 08034-00823 | BAND | 2 | 23001- |
| 29 | (232-60-54830) | CLIP | 4 | 23063- |
| | 232-60-54830 | CLIP | 4 | 23001-23062 |
| 30 | (01010-81050) | BOLT | 2 | 23063- |
| | 01010-81050 | BOLT | 2 | 23001-23062 |
| 31 | (01643-31032) | WASHER | 2 | 23063- |
| | 01643-31032 | WASHER | 2 | 23001-23062 |

# FIG. 6437C HYDRAULIC PIPING (BLADE SIDE SHIFT CYLINDER LINE) (#23001-)

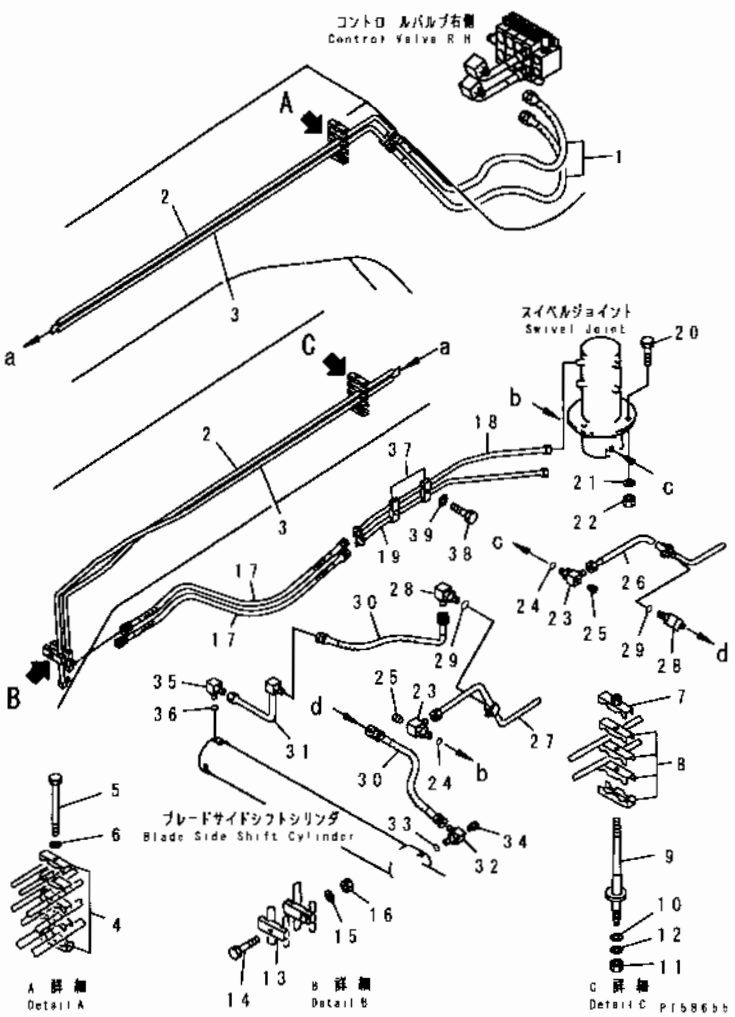


| INDEX | PART NO | DESCRIPTION | Q'TY | SERIAL NO. |
|---|---|---|---|---|
| 1 | 230-09-23100 | HOSE | 2 | 23001- |
| 2 | 234-60-68160 | TUBE | 1 | 23001- |
| 3 | 234-60-68150 | TUBE | 1 | 23001- |
| 4 | 234-60-33240 | CLIP | 5 | 23001- |
| 5 | 01011-81020 | BOLT | 1 | 23001- |
| 6 | 01643-31032 | WASHER | 1 | 23001- |
| 7 | 234-60-33260 | CLIP | 1 | 23001- |
| 8 | 234-60-33240 | CLIP | 4 | 23001- |
| 9 | 234-60-33890 | BOLT | 1 | 23001- |
| 10 | 232-60-54920 | WASHER | 1 | 23001- |
| 11 | 01580-11613 | NUT | 1 | 23001- |
| 12 | 01643-31645 | WASHER | 1 | 23001- |
| 13 | 234-60-33310 | CLIP | 1 | 23001- |
| 14 | 01010-81085 | BOLT | 1 | 23001- |
| 15 | 01643-31032 | WASHER | 1 | 23001- |
| 16 | 01580-11008 | NUT | 1 | 23001- |
| 17 | 230-09-04140 | HOSE | 2 | 23001- |
| 18 | 234-60-34110 | TUBE | 1 | 23001- |
| 19 | 234-60-34120 | TUBE | 1 | 23001- |
| 20 | 01010-81250 | BOLT | 3 | 23001- |
| 21 | 01643-31232 | WASHER | 3 | 23001- |
| 22 | 01580-11210 | NUT | 3 | 23001- |
| 23 | 07235-50422 | ELBOW | 2 | 23001- |
| 24 | 07002-12034 | O-RING | 2 | 23001- |
| 25 | 07043-70108 | PLUG | 2 | 23001- |
| 26 | 234-60-34410 | TUBE | 1 | 23001- |
| 27 | 234-60-34420 | TUBE | 1 | 23001- |
| 28 | 07235-10422 | ELBOW | 2 | 23001- |
| 29 | 07002-12034 | O-RING | 2 | 23001- |
| 30 | 07113-00406 | HOSE | 2 | 23001- |
| 31 | (234-60-45230) | TUBE | 1 | 23063- |
| | 234-60-45230 | TUBE | 1 | 23001-23062 |
| 32 | (234-60-34380) | ELBOW | 1 | 23063- |
| | 234-60-34380 | ELBOW | 1 | 23001-23062 |
| 33 | (07002-12034) | O-RING | 1 | 23063- |
| | 07002-12034 | O-RING | 1 | 23001-23062 |
| 34 | (07043-70108) | PLUG | 1 | 23063- |
| | 07043-70108 | PLUG | 1 | 23001-23062 |
| 35 | (07235-10422) | ELBOW | 1 | 23063- |
| | 07235-10422 | ELBOW | 1 | 23001-23062 |
| 36 | (07002-12034) | O-RING | 1 | 23063- |
| | 07002-12034 | O-RING | 1 | 23001-23062 |

FIG NO. : 6437C

| INDEX | PART NO | DESCRIPTION | Q'TY | SERIAL NO. |
|---|---|---|---|---|
| 37 | 232-60-54820 | CLIP | 2 | 23001- |
| 38 | 01010-81020 | BOLT | 2 | 23001- |
| 39 | 01643-31032 | WASHER | 2 | 23001- |



GD705A-4

# FIG.6441C HYDRAULIC PIPING (CIRCLE MOTOR LINE)

(#23001-)

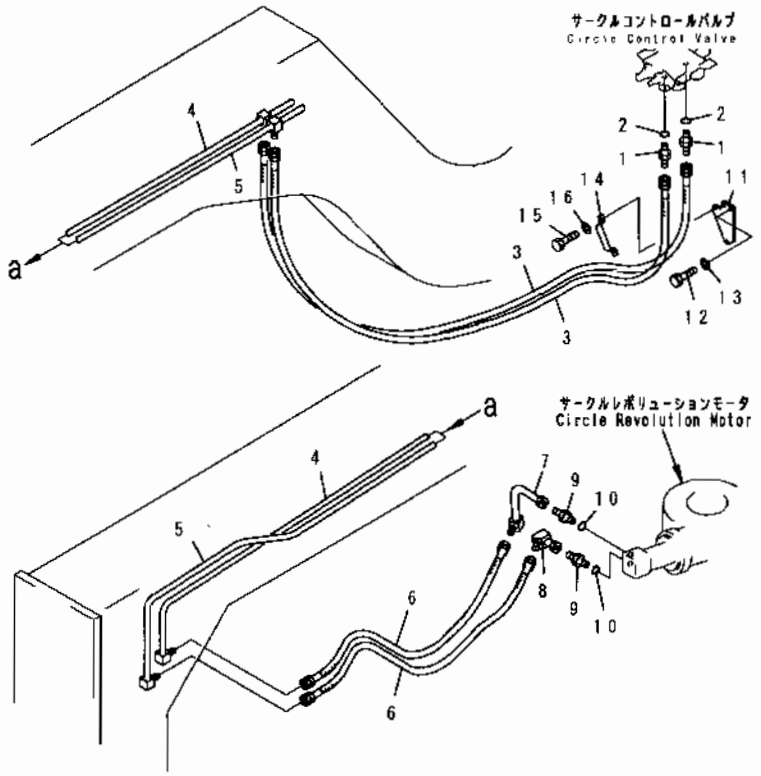


| INDEX | PART NO | DESCRIPTION | Q'TY | SERIAL NO |
|---|---|---|---|---|
| 1 | 26A-60-15710 | NIPPLE | 2 | 21001- |
| 2 | 26A-60-15690 | O-RING | 2 | 21001- |
| 3 | 07113-00632 | HOSE | 2 | 21001- |
| 4 | 234-60-33171 | TUBE | 1 | 21001- |
| 5 | 234-60-33181 | TUBE | 1 | 21001- |
| 6 | 07108-20616 | HOSE | 2 | 21086- |
| 7 | 234-60-45190 | TUBE | 1 | 21086- |
| 8 | 234-60-45211 | TUBE | 1 | 21089- |
| 9 | 234-60-45220 | NIPPLE | 2 | 21086- |
| 10 | 237-60-24190 | O-RING | 2 | 21086- |
| 11 | 234-60-69690 | PLATE | 1 | 23001- |
| 12 | 01010-81025 | BOLT | 2 | 23001- |
| 13 | 01643-31032 | WASHER | 2 | 23001- |
| 14 | 234-60-33430 | CLIP | 1 | 21001- |
| 15 | 01010-80816 | BOLT | 2 | 21001- |
| 16 | 01643-30823 | WASHER | 2 | 21001- |

# FIG. 6451A HYDRAULIC PIPING (SCARIFIER CYLINDER LINE)

(#23001-)

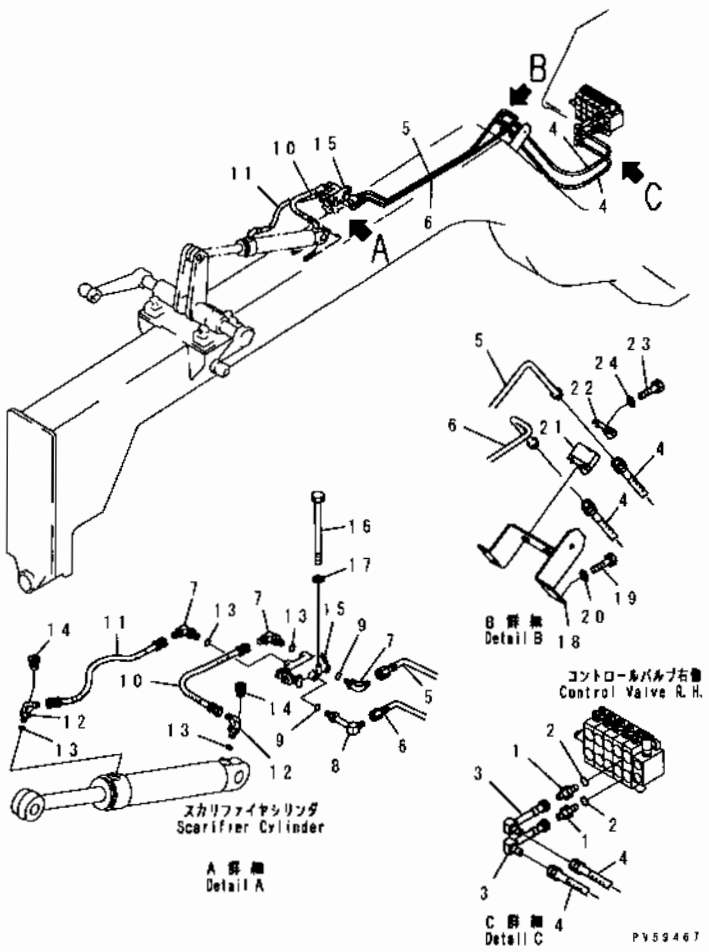


| INDEX | PART NO. | DESCRIPTION | Q'TY | SERIAL NO. |
|---|---|---|---|---|
| 1 | 237-60-23120 | NIPPLE | 2 | 23001- |
| 2 | 07000-12018 | O-RING | 2 | 23001- |
| 3 | 234-60-68550 | TUBE | 2 | 23001- |
| 4 | 07113-00311 | HOSE | 2 | 23001- |
| 5 | 234-60-68460 | TUBE | 1 | 23001- |
| 6 | 234-60-68450 | TUBE | 1 | 23001- |
| 7 | 07235-10422 | ELBOW | 3 | 23001- |
| 8 | 234-60-33850 | TUBE | 1 | 23001- |
| 9 | 07002-12034 | O-RING | 2 | 23001- |
| 10 | 230-09-04060 | HOSE | 1 | 23001- |
| 11 | 230-09-04100 | HOSE | 1 | 23001- |
| 12 | 07235-50422 | ELBOW | 2 | 23001- |
| 13 | 07002-12034 | O-RING | 4 | 23001- |
| 14 | 07043-70108 | PLUG | 2 | 23001- |
| 15 | (232-60-56100) | VALVE ASS'Y, PILOT CHECK | 1 | 23001- |
| 16 | 233-60-14981 | BOLT | 3 | 23001- |
| 17 | 01643-30823 | WASHER | 3 | 23001- |
| 18 | 234-60-68470 | BRACKET | 1 | 23001- |
| 19 | 01010-81225 | BOLT | 4 | 23001- |
| 20 | 01643-31232 | WASHER | 4 | 23001- |
| 21 | 234-60-68480 | CLIP | 1 | 23001- |
| 22 | 234-60-33250 | CLIP | 1 | 23001- |
| 23 | 01011-81010 | BOLT | 1 | 23001- |
| 24 | 01643-31032 | WASHER | 1 | 23001- |

# FIG. 6455B HYDRAULIC PIPING (FRONT BLADE CYLINDER LINE)

(#23001-)

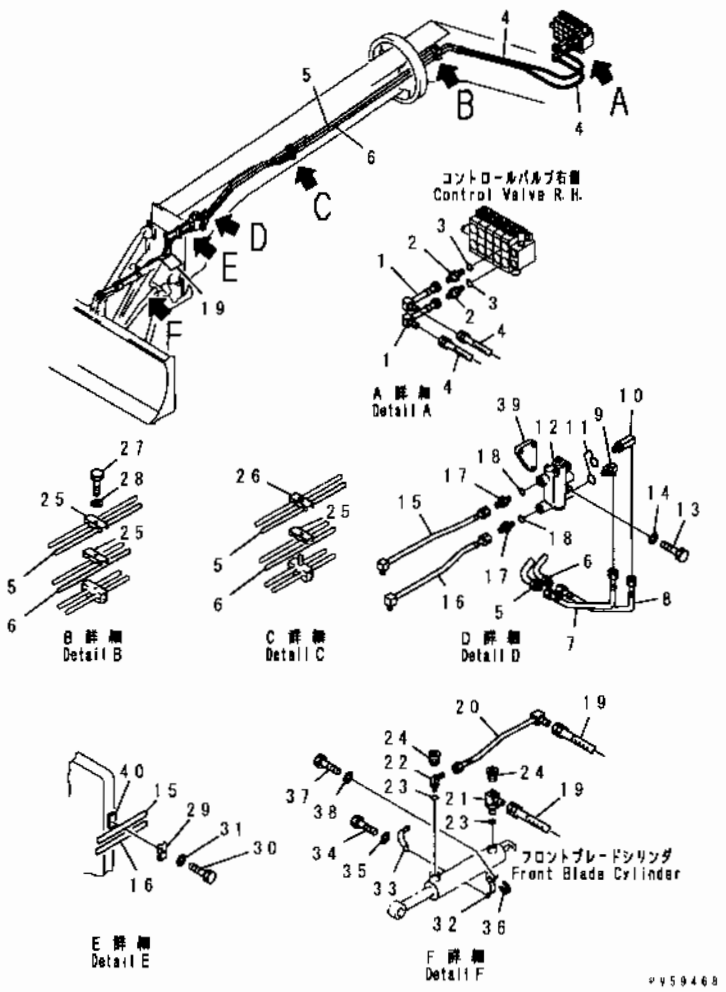


| INDEX | PART NO | DESCRIPTION | Q'TY | SERIAL NO |
|---|---|---|---|---|
| 1 | 234-60-68550 | TUBE | 2 | 23001- |
| 2 | 237-60-23120 | NIPPLE | 2 | 23001- |
| 3 | 07000-12018 | O-RING | 2 | 23001- |
| 4 | 230-09-23100 | HOSE | 2 | 23001- |
| 5 | 234-60-71110 | TUBE | 1 | 23001- |
| 6 | 234-60-71120 | TUBE | 1 | 23001- |
| 7 | 234-60-38150 | TUBE | 1 | 21001- |
| 8 | 234-60-38160 | TUBE | 1 | 21001- |
| 9 | 07235-10422 | ELBOW | 1 | 21001- |
| 10 | 234-60-34160 | ELBOW | 1 | 21001- |
| 11 | 07002-12034 | O-RING | 2 | 21001- |
| 12 | (232-60-56300) | VALVE ASS'Y. | 1 | 21001- |
| 13 | 01010-81070 | BOLT | 2 | 23001- |
| 14 | 01643-31032 | WASHER | 2 | 23001- |
| 15 | 234-60-38131 | TUBE | 1 | ..- |
| 16 | 234-60-38141 | TUBE | 1 | ..- |
| 17 | 07230-10422 | UNION | 2 | 21001- |
| 18 | 07002-12034 | O-RING | 2 | 21001- |
| 19 | 07108-20411 | HOSE | 2 | ..- |
| 20 | 234-60-38171 | TUBE | 1 | ..- |
| 21 | 234-60-34280 | ELBOW | 1 | ..- |
| 22 | 234-60-34280 | ELBOW | 1 | 21001- |
| 23 | 07002-12434 | O-RING | 2 | 21001- |
| 24 | 07043-00108 | PLUG | 2 | 21001- |
| 25 | 234-60-33240 | CLIP | 3 | 21001- |
| 26 | 234-60-33260 | CLIP | 1 | 21001- |
| 27 | 01011-81005 | BOLT | 1 | 23001- |
| 28 | 01643-31032 | WASHER | 1 | 21001- |
| 29 | 232-60-54820 | CLIP | 1 | 21001- |
| 30 | 01010-81040 | BOLT | 1 | 23001- |
| 31 | 01643-31032 | WASHER | 1 | 21001- |
| 32 | 234-60-34230 | BAND | 1 | 21001- |
| 33 | 234-60-34240 | BAND | 1 | 21001- |
| 34 | 01010-80825 | BOLT | 2 | 23001- |
| 35 | 01643-30823 | WASHER | 2 | 21001- |
| 36 | 07283-21529 | CLIP | 1 | 21001- |
| 37 | 01598-00809 | NUT | 2 | 21001- |
| 38 | 01643-30823 | WASHER | 2 | 21001- |
| 39 | 237-46-12530 | PLATE (WELDED) | 1 | 21001- |
| 40 | 234-979-5320 | SEAT (WELDED) | 1 | 21001- |

# FIG. 6461A HYDRAULIC PIPING (RIPPER CYLINDER LINE)

(1/2) (#23001-)

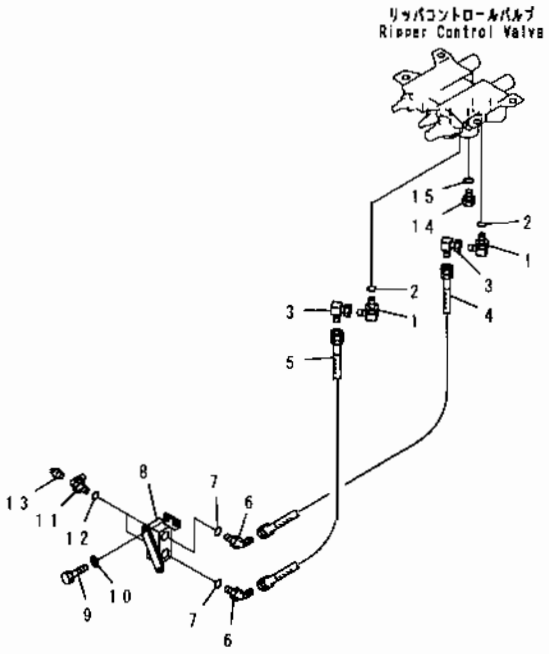


| INDEX | PART NO | DESCRIPTION | Q'TY | SERIAL NO |
|---|---|---|---|---|
| 1 | 234-60-69770 | ELBOW | 2 | 23001- |
| 2 | 26A-60-15690 | O-RING | 2 | 23001- |
| 3 | 234-60-32530 | ELBOW | 2 | 23001- |
| 4 | 234-876-3340 | HOSE | 1 | 23001- |
| 5 | 07113-00504 | HOSE | 1 | 23001- |
| 6 | 07236-10522 | ELBOW | 2 | 23001- |
| 7 | 07002-12434 | O-RING | 2 | 23001- |
| 8 | 234-60-69780 | BLOCK | 1 | 23001- |
| 9 | 01010-81025 | BOLT | 2 | 23001- |
| 10 | 01643-31032 | WASHER | 2 | 23001- |
| 11 | 07235-50522 | ELBOW | 2 | 23001- |
| 12 | 07002-12434 | O-RING | 2 | 23001- |
| 13 | 07042-20108 | PLUG | 2 | 23001- |
| 14 | 234-60-69790 | PLUG | 1 | 23001- |
| 15 | 235-60-15480 | O-RING | 1 | 23001- |

# FIG. 6463A HYDRAULIC PIPING (RIPPER CYLINDER LINE)

## (2/2) (#23001-)

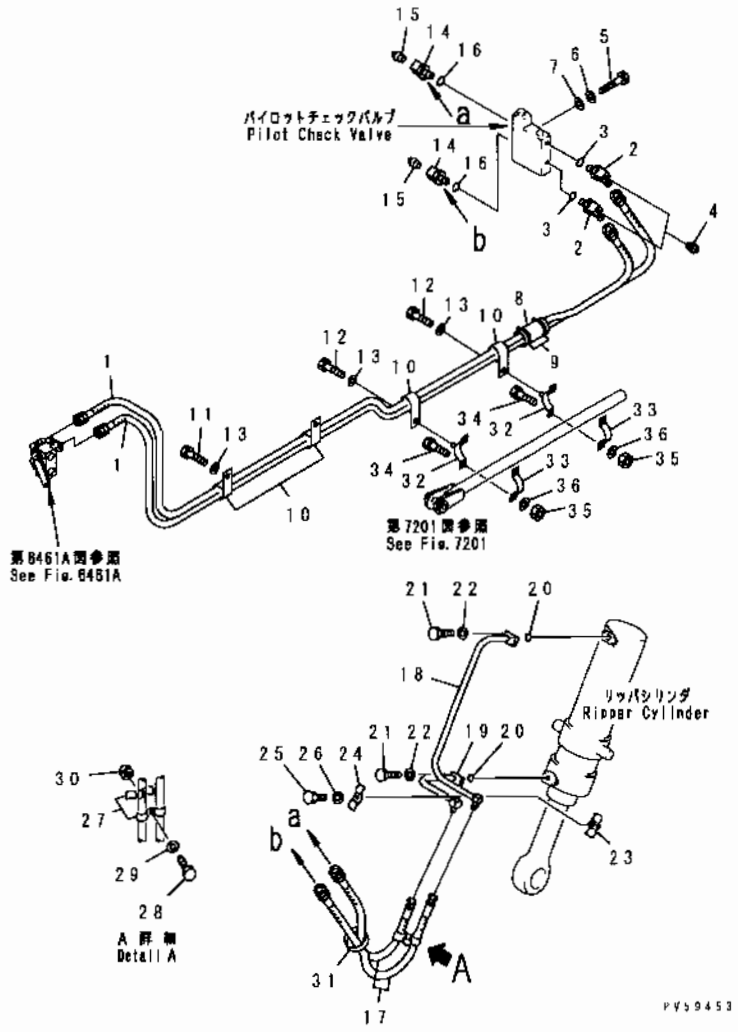


| INDEX | PART NO. | DESCRIPTION | Q'TY | SERIAL NO |
|---|---|---|---|---|
| 1 | 07123-00538 | HOSE | 2 | 23001- |
| 2 | 238-60-31540 | ELBOW | 2 | 21001- |
| 3 | 07002-12034 | O-RING | 2 | 21001- |
| 4 | 07042-20108 | PLUG | 2 | 23001- |
| 5 | 01010-80870 | BOLT | 3 | 21001- |
| 6 | 01643-30823 | WASHER | 3 | 21001- |
| 7 | 01640-20816 | WASHER | 3 | 21001- |
| 8 | 232-60-62670 | COVER | 2 | 21001- |
| 9 | 08034-00519 | BAND | 4 | 21001- |
| 10 | 234-60-35540 | CLAMP | 4 | 23001- |
| 11 | 01010-81016 | BOLT | 2 | 23001- |
| 12 | 01010-81020 | BOLT | 2 | 23001- |
| 13 | 01643-31032 | WASHER | 4 | 23001- |
| 14 | 07235-50422 | ELBOW | 2 | 21001- |
| 15 | 07042-20108 | PLUG | 2 | 21001- |
| 16 | 07002-12034 | O-RING | 2 | 21001- |
| 17 | 07123-00410 | HOSE | 2 | 21001- |
| 18 | 234-60-35210 | TUBE | 1 | 21001- |
| 19 | 234-785-1580 | TUBE | 1 | 21001- |
| 20 | 07000-13032 | O-RING | 2 | 21001- |
| 21 | 01010-81035 | BOLT | 8 | 23001- |
| 22 | 01643-31032 | WASHER | 8 | 21001- |
| 23 | 232-60-62171 | CLIP | 1 | 21001- |
| 24 | 234-60-35220 | CLIP | 1 | 21001- |
| 25 | 01010-50825 | BOLT | 1 | 21001- |
| 26 | 01643-30823 | WASHER | 1 | 21001- |
| 27 | 236-60-24930 | CLIP | 2 | 21001- |
| 28 | 01010-80845 | BOLT | 1 | 23001- |
| 29 | 01643-30823 | WASHER | 1 | 21001- |
| 30 | 01580-10806 | NUT | 1 | 21001- |
| 31 | 08034-00823 | BAND | 1 | 21001- |
| 32 | 232-60-64840 | BAND | 1 | 21001- |
| 33 | 232-60-64850 | BAND | 1 | 21001- |
| 34 | 01010-80830 | BOLT | 2 | 23001- |
| 35 | 01580-10806 | NUT | 2 | 21001- |
| 36 | 01643-30823 | WASHER | 2 | 21001- |

# FIG. 6471 HYDRAULIC PIPING (POWER TILT CYLINDER LINE)

(#23001-)

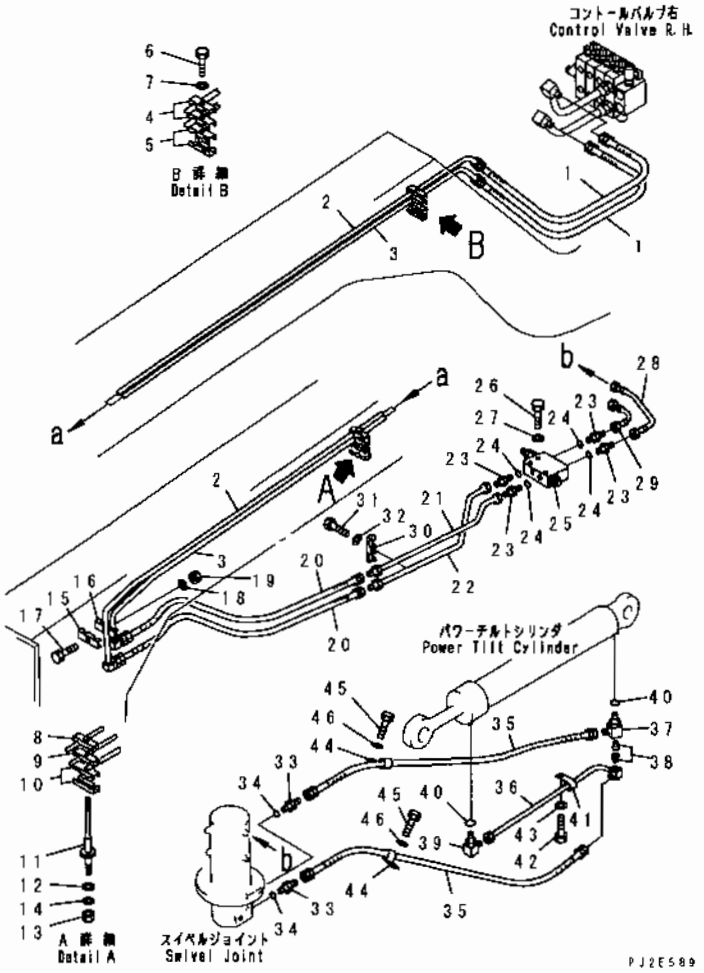


| INDEX | PART NO. | DESCRIPTION | Q'TY | SERIAL NO |
|---|---|---|---|---|
| 1 | 230-09-23100 | HOSE | 2 | 23001- |
| 2 | 234-60-68170 | TUBE | 1 | 23001- |
| 3 | 234-60-68180 | TUBE | 1 | 23001- |
| 4 | 234-60-33250 | CLIP | 2 | 23001- |
| 5 | 234-60-33240 | CLIP | 2 | 23001- |
| 6 | 01011-81005 | BOLT | 1 | 23001- |
| 7 | 01643-31032 | WASHER | 1 | 23001- |
| 8 | 234-60-33270 | CLIP | 1 | 23001- |
| 9 | 234-60-33250 | CLIP | 1 | 23001- |
| 10 | 234-60-33240 | CLIP | 2 | 23001- |
| 11 | 234-60-33890 | BOLT | 1 | 23001- |
| 12 | 232-60-54920 | WASHER | 1 | 23001- |
| 13 | 01580-11613 | NUT | 1 | 23001- |
| 14 | 01643-31645 | WASHER | 1 | 23001- |
| 15 | 234-60-33310 | CLIP | 1 | 23001- |
| 16 | 234-60-33290 | CLIP | 1 | 23001- |
| 17 | 01010-81085 | BOLT | 1 | 23001- |
| 18 | 01643-31032 | WASHER | 1 | 23001- |
| 19 | 01580-11008 | NUT | 1 | 23001- |
| 20 | 230-09-04130 | HOSE | 2 | 23001- |
| 21 | 234-60-34170 | TUBE | 1 | 23001- |
| 22 | 234-60-34180 | TUBE | 1 | 23001- |
| 23 | 07230-10422 | UNION | 4 | 23001- |
| 24 | 07002-12034 | O-RING | 4 | 23001- |
| 25 | (234-61-31301) | VALVE ASS'Y | 1 | 23001- |
| 26 | 01010-80870 | BOLT | 3 | 23001- |
| 27 | 01643-30823 | WASHER | 3 | 23001- |
| 28 | 234-60-34190 | TUBE | 1 | 23001- |
| 29 | 234-60-34210 | TUBE | 1 | 23001- |
| 30 | 232-60-54820 | CLIP | 1 | 23001- |
| 31 | 01010-81020 | BOLT | 1 | 23001- |
| 32 | 01643-31032 | WASHER | 1 | 23001- |
| 33 | 232-60-54110 | NIPPLE | 2 | 23001- |
| 34 | 07002-12034 | O-RING | 2 | 23001- |
| 35 | 230-09-04110 | HOSE | 2 | 23001- |
| 36 | (234-60-34220) | TUBE | 1 | 23063- |
| | 234-60-34220 | TUBE | 1 | 23001-23062 |
| 37 | (234-60-34280) | ELBOW | 1 | 23063- |
| | 234-60-34280 | ELBOW | 1 | 23001-23062 |
| 38 | (07043-70108) | PLUG | 2 | 23063- |
| | 07043-70108 | PLUG | 2 | 23001-23062 |
| 39 | (232-60-14281) | ELBOW | 1 | 23063- |

# FIG. 6471 HYDRAULIC PIPING (POWER TILT CYLINDER LINE)

(#23001-)

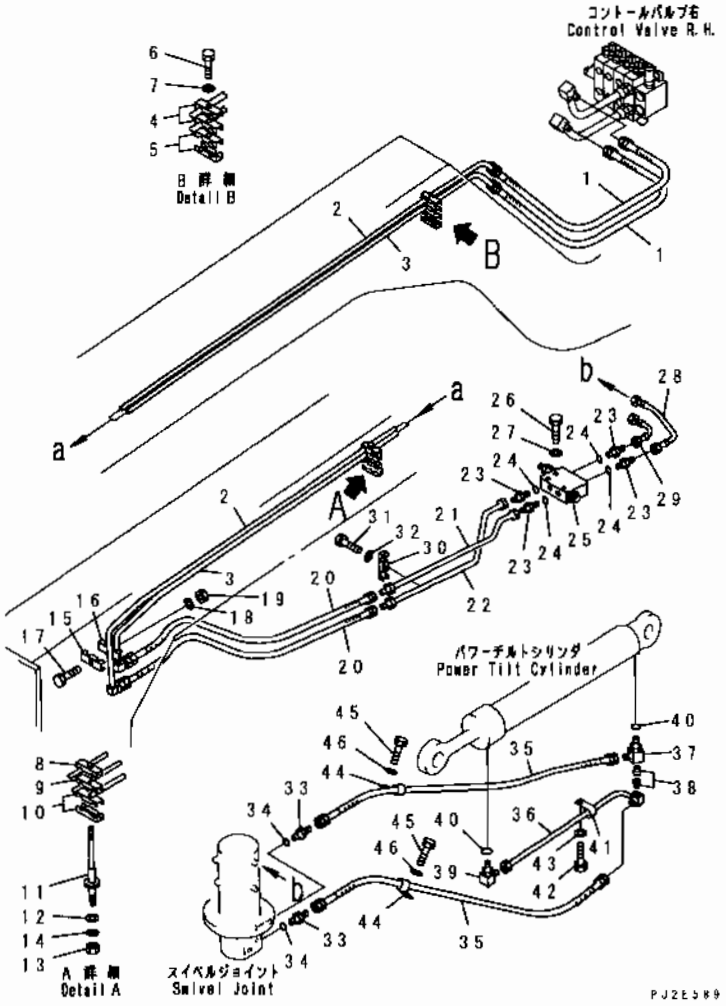


| INDEX | PART NO. | DESCRIPTION | Q'TY | SERIAL NO |
|---|---|---|---|---|
| | 232-60-14281 | ELBOW | 1 | 23001-23062 |
| 40 | (07002-12434) | O-RING | 2 | 23063- |
| | 07002-12434 | O-RING | 2 | 23001-23062 |
| 41 | (08036-01414) | CLIP | 1 | 23063- |
| | 08036-01414 | CLIP | 1 | 23001-23062 |
| 42 | (01010-81016) | BOLT | 1 | 23063- |
| | 01010-81016 | BOLT | 1 | 23001-23062 |
| 43 | (01643-31032) | WASHER | 1 | 23063- |
| | 01643-31032 | WASHER | 1 | 23001-23062 |
| 44 | 08036-02514 | CLIP | 2 | 23001- |
| 45 | 01010-81016 | BOLT | 2 | 23001- |
| 46 | 01643-31032 | WASHER | 2 | 23001- |

# FIG. 6611A HYDRAULIC PIPING (BLADE ACCUMULATOR LINE)

(#.-)

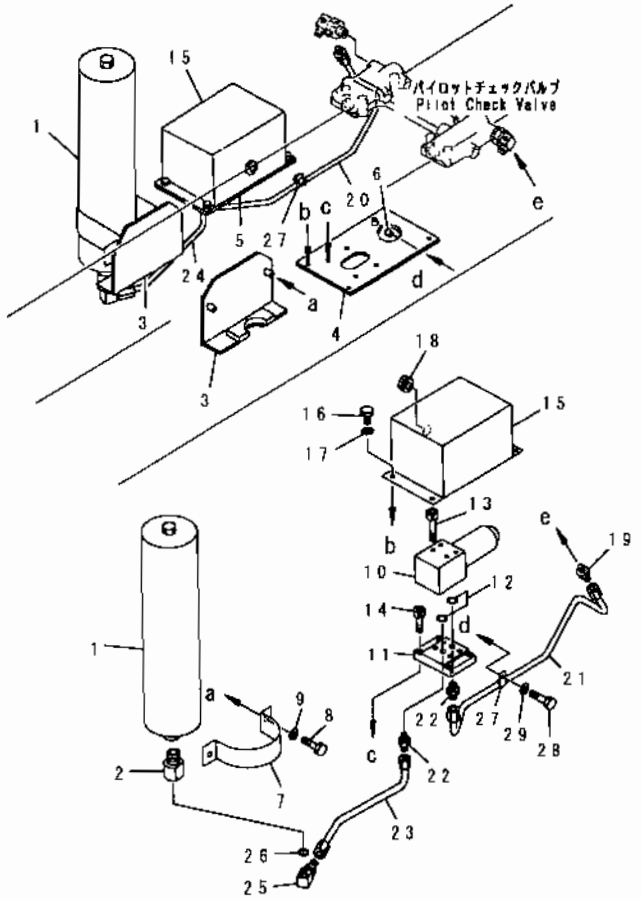


| INDEX | PART NO | DESCRIPTION | Q'TY | SERIAL NO. |
|---|---|---|---|---|
| 1 | 234-993-6501 | ACCUMULATOR ASS'Y | 2 | -- |
| | □234-993-6500 | ACCUMULATOR ASS'Y | 2 | -- |
| 2 | 234-993-6600 | VALVE ASS'Y | 2 | - |
| 3 | 232-833-3121 | BRACKET (WELDED) | 2 | - |
| 4 | 232-833-3130 | BRACKET, L.H. (WELDED) | 1 | 21001- |
| 5 | 232-833-3160 | BRACKET, R.H. (WELDED) | 1 | 21001- |
| 6 | 233-70-21170 | SEAT (WELDED) | 2 | 21001- |
| 7 | 232-833-3150 | CLIP | 2 | 21001- |
| 8 | 01010-81225 | BOLT | 4 | 23001- |
| | ◆01010-51225 | BOLT | 4 | 21001-23000 |
| 9 | 01643-31232 | WASHER | 4 | 21001- |
| 10 | 232-833-4111 | VALVE ASS'Y | 2 | -- |
| | □232-833-2110 | VALVE ASS'Y | 2 | 21001- |
| 11 | 232-833-2120 | PLATE | 2 | 21001- |
| 12 | 07000-12016 | O-RING | 4 | 21001- |
| 13 | 01252-40880 | BOLT | 8 | 21001- |
| 14 | 01252-41025 | BOLT | 8 | 21001- |
| 15 | 232-833-3140 | COVER | 2 | 21001- |
| 16 | 01010-81016 | BOLT | 8 | 23001- |
| | ◆01010-51016 | BOLT | 8 | 21001-23000 |
| 17 | 01643-31032 | WASHER | 8 | 21001- |
| 18 | 08037-01008 | GROMMET | 2 | 21001- |
| 19 | 237-60-14550 | NIPPLE | 2 | - |
| 20 | 234-833-1311 | TUBE | 1 | - |
| 21 | 234-833-1321 | TUBE | 1 | - |
| 22 | 07238-10422 | CONNECTOR | 4 | - |
| 23 | 234-833-1331 | TUBE | 1 | - |
| 24 | 234-833-1341 | TUBE | 1 | - |
| 25 | 232-44-52450 | ELBOW | 2 | - |
| 26 | 07002-12034 | O-RING | 2 | 21001- |
| 27 | 04434-11510 | CLIP | 2 | -- |
| 28 | 01010-51020 | BOLT | 2 | 21001- |
| 29 | 01643-31032 | WASHER | 2 | 21001- |

# WORK EQUIPMENT

FIG NO. : 7001

# FIG. 7001 DRAWBAR

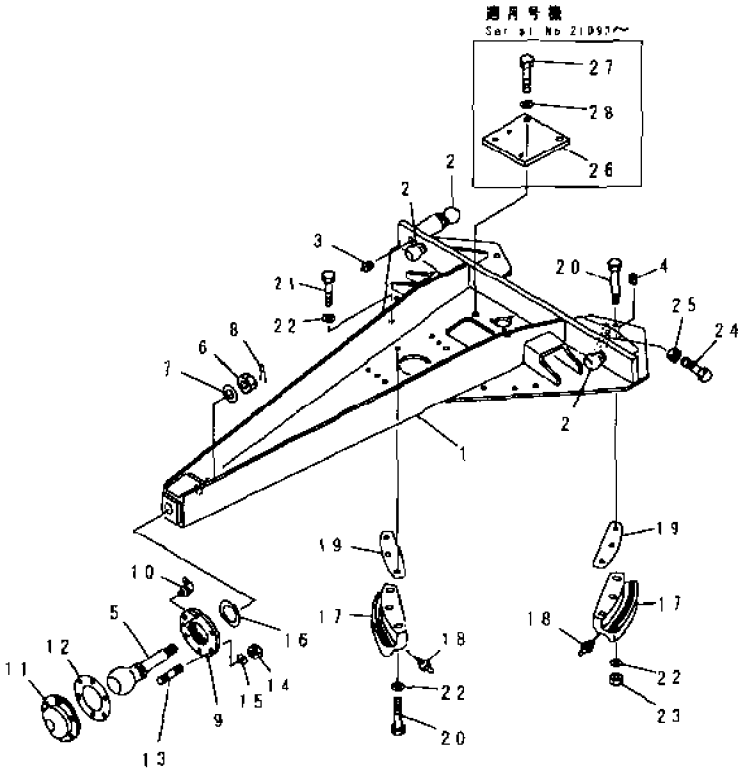


| INDEX | PART NO. | DESCRIPTION | Q'TY | SERIAL NO |
|---|---|---|---|---|
| | 234-70-06110 | DRAWBAR ASS'Y | 1 | 21008- |
| | 234-70-05110 | DRAWBAR ASS'Y | 1 | 21001-21007 |
| 1 | 234-70-31110 | .DRAWBAR | 1 | 21001- |
| 2 | 234-70-11131 | ..STUD, BALL (WELDED) | 3 | 21001 |
| 3 | 07042-20108 | .PLUG | 2 | 21001- |
| 4 | 234-70-31190 | .PLUG | 2 | 21001- |
| 5 | 234-70-11140 | .STUD, BALL | 1 | 21001- |
| 6 | 01590-34850 | .NUT | 1 | 23250- |
| | □01590-14850 | .NUT | 1 | 21001-23249 |
| 7 | 234-70-11230 | .WASHER | 1 | 21001- |
| 8 | 04050-18085 | .PIN, COTTER | 1 | 21001- |
| 9 | 234-46-11160 | .FLANGE | 1 | 21001- |
| 10 | 07020-00675 | .FITTING, GREASE | 1 | 21001- |
| 11 | 234-46-11150 | .RETAINER | 1 | 21001- |
| 12 | 234-70-05120 | .SHIM ASS'Y | 1 | 21001- |
| | ☆ | ..SHIM, 0.2MM | 15 | 21001- |
| 13 | 01124-82065 | .STUD | 6 | 21001- |
| 14 | 01580-12016 | .NUT | 6 | 21001- |
| 15 | 01643-32060 | WASHER | 6 | 21001- |
| 16 | 234-46-11190 | .SEAL | 1 | 21001- |
| 17 | 234-70-31141 | .GUIDE | 6 | 21008- |
| | 234-70-31140 | GUIDE | 6 | 21001-21007 |
| 18 | 07020-00000 | .FITTING, GREASE | 6 | 21001- |
| 19 | 234-70-05130 | .SHIM ASS'Y | 6 | 21001- |
| 20 | 01011-52445 | .BOLT | 16 | 21014- |
| | □01011-52455 | .BOLT | 16 | 21001-21013 |
| 21 | 01011-52460 | .BOLT | 2 | 21014- |
| | □01011-52470 | .BOLT | 2 | 21001-21013 |
| 22 | 01643-32460 | .WASHER | 32 | 21001- |
| 23 | 01580-12419 | .NUT | 14 | 21001- |
| 24 | 01016-52480 | BOLT | 12 | 21001- |
| 25 | 01580-12419 | .NUT | 12 | 21001- |
| 26 | 234-70-31181 | PLATE | 1 | 21093- |
| 27 | 01010-51030 | BOLT | 2 | 21093- |
| 28 | 234-54-13252 | WASHER | 2 | 21093- |

# FIG. 7011A BLADE(#21086-)

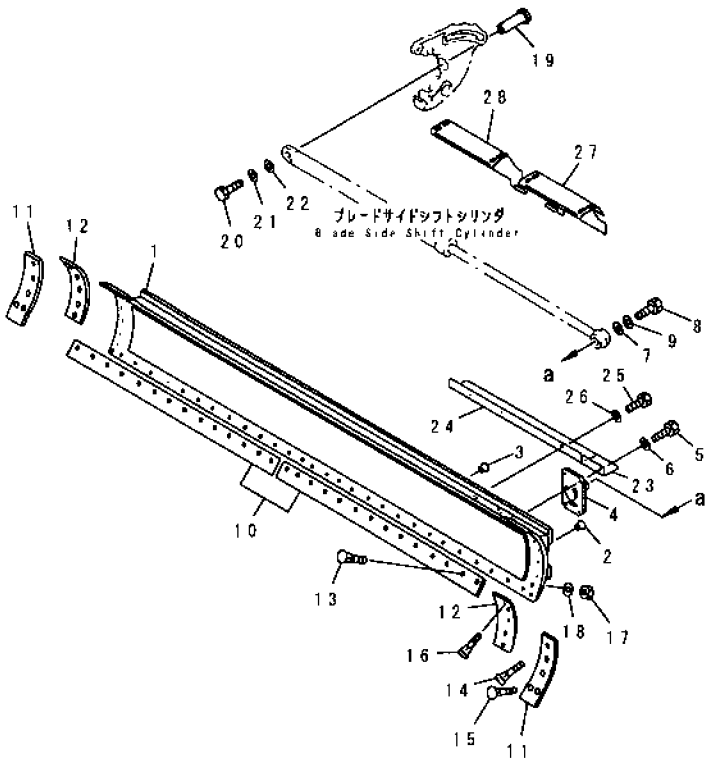


| INDEX | PART NO | DESCRIPTION | Q'TY | SERIAL NO |
|---|---|---|---|---|
| | 234-70-00312 | BLADE ASS'Y | 1 | 21086- |
| 1 | 234-70-32113 | .BLADE | 1 | 21086- |
| | 234-70-32131 | ..RAIL, UPPER (WELDED) | 1 | 21086- |
| | 234-70-32121 | ..RAIL, LOWER (WELDED) | 1 | 21086- |
| 2 | 07048-01815 | PLUG | 6 | 21001- |
| 3 | 07048-01010 | .PLUG | 1 | 21001- |
| 4 | 234-70-32160 | .BRACKET | 1 | 21001- |
| 5 | 01010-51840 | .BOLT | 4 | 21001- |
| 6 | 01643-31845 | .WASHER | 4 | 21001- |
| 7 | 232-70-52460 | .WASHER | 1 | 21001- |
| 8 | 01010-51225 | .BOLT | 1 | 21001- |
| 9 | 01643-31232 | .WASHER | 1 | 21001- |
| | 234-70-00232 | EDGE ASS'Y | 1 | 21035- |
| 10 | 234-70-12710 | .EDGE | 2 | 21035- |
| 11 | 234-70-32230 | .EDGE, SIDE | 2 | 21001- |
| 12 | 234-70-32240 | .BIT, END | 2 | 21001- |
| 13 | 234-70-32250 | BOLT | 26 | 21001- |
| 14 | 234-70-32280 | BOLT | 2 | 21001- |
| 15 | 234-70-32260 | BOLT | 2 | 21001- |
| 16 | 234-70-32270 | BOLT | 10 | 21001- |
| 17 | 234-70-32290 | NUT | 40 | 21001- |
| 18 | 01643-32060 | WASHER | 40 | 21001- |
| 19 | 234-70-32150 | SHAFT | 1 | 21086- |
| 20 | 01010-51225 | BOLT | 1 | 21086- |
| 21 | 01643-31232 | WASHER | 1 | 21086- |
| 22 | 232-70-52460 | WASHER | 1 | 21086- |
| 23 | 234-70-32220 | COVER | 1 | 21001- |
| 24 | 234-70-32210 | COVER | 1 | 21001- |
| 25 | 01010-51020 | BOLT | 3 | 21001- |
| 26 | 01643-31032 | WASHER | 3 | 21001- |
| 27 | 234-70-33312 | COVER, L.H. | 1 | 21086- |
| 28 | 234-70-33322 | COVER, R.H. | 1 | 21086- |

# FIG. 7012A BLADE (WIDTH 4900MM) (#21086-)

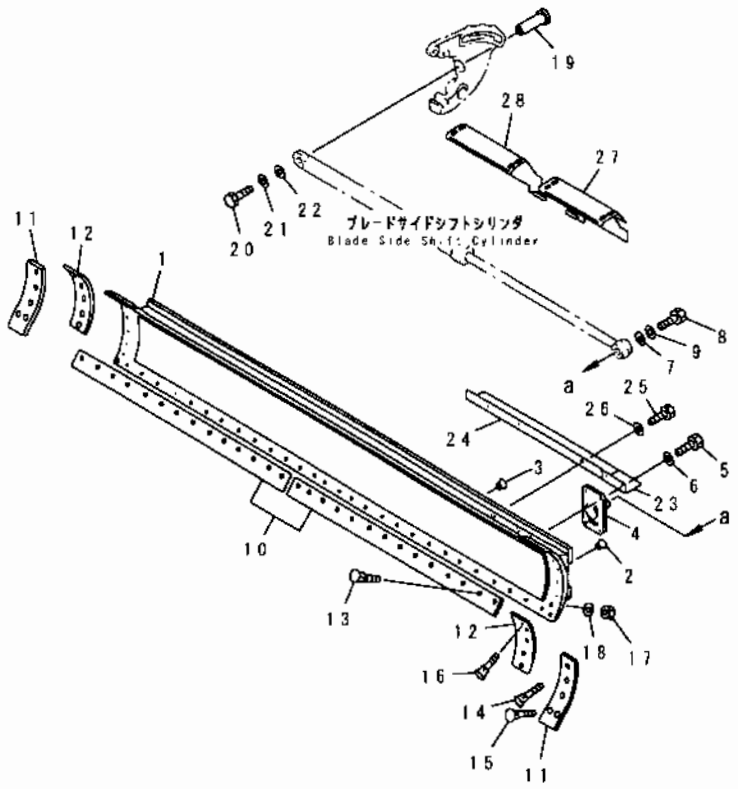


| INDEX | PART NO. | DESCRIPTION | Q'TY | SERIAL NO |
|---|---|---|---|---|
| | 234-70-00411 | BLADE ASS'Y | 1 | 21001- |
| 1 | 234-70-32611 | . BLADE | 1 | 21001- |
| | 234-70-32630 | .. RAIL, UPPER (WELDED) | 1 | 21001- |
| | 234-70-32640 | .. RAIL, LOWER (WELDED) | 1 | 21001- |
| 2 | 07048-01815 | . PLUG | 6 | 21001- |
| 3 | 07048-01010 | . PLUG | 1 | 21001- |
| 4 | 234-70-32160 | . BRACKET | 1 | 21001- |
| 5 | 01010-51840 | . BOLT | 4 | 21001- |
| 6 | 01643-31845 | . WASHER | 4 | 21001- |
| 7 | 232-70-52460 | . WASHER | 1 | 21001- |
| 8 | 01010-51225 | . BOLT | 1 | 21001- |
| 9 | 01643-31232 | . WASHER | 1 | 21001- |
| | 234-70-00431 | EDGE ASS'Y | 1 | 21001- |
| 10 | 234-70-12720 | . EDGE | 2 | 21001- |
| 11 | 234-70-32230 | . EDGE, SIDE | 2 | 21001- |
| 12 | 234-70-32240 | . BIT, END | 2 | 21001- |
| 13 | 234-70-32250 | BOLT | 30 | 21001- |
| 14 | 234-70-32280 | BOLT | 2 | 21001- |
| 15 | 234-70-32260 | BOLT | 2 | 21001- |
| 16 | 234-70-32270 | BOLT | 10 | 21001- |
| 17 | 234-70-32290 | NUT | 44 | 21001- |
| 18 | 01643-32060 | WASHER | 44 | 21001- |
| 19 | 234-70-32150 | SHAFT | 1 | 21086- |
| 20 | 01010-51225 | BOLT | 1 | 21086- |
| 21 | 01643-31232 | WASHER | 1 | 21086- |
| 22 | 232-70-52460 | WASHER | 1 | 21086- |
| 23 | 234-70-32220 | COVER | 1 | 21001- |
| 24 | 234-70-32210 | COVER | 1 | 21001- |
| 25 | 01010-51020 | BOLT | 3 | 21001- |
| 26 | 01643-31032 | WASHER | 3 | 21001- |
| 27 | 234-70-33312 | COVER, L.H. | 1 | 21086- |
| 28 | 234-70-33322 | COVER, R.H. | 1 | 21086- |

# FIG. 7013A HEAVY DUTY BLADE (#21086-)

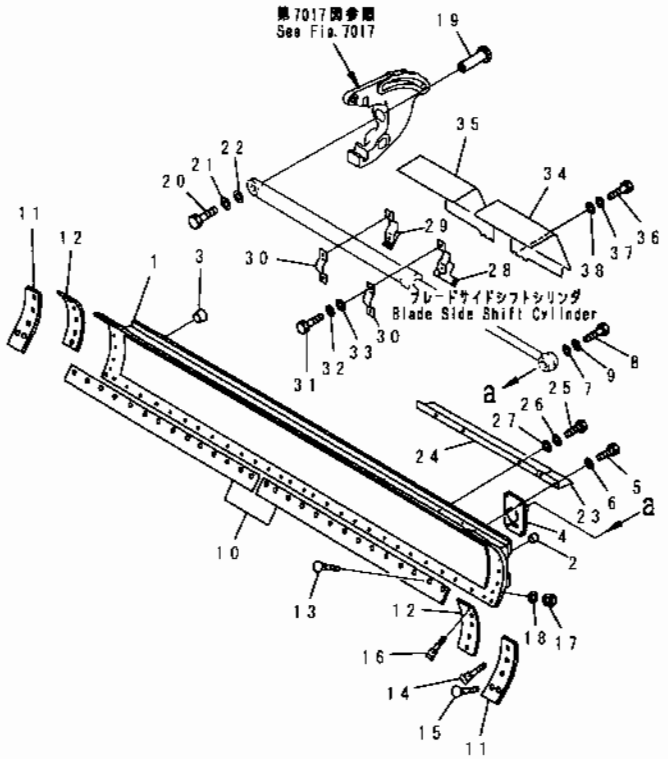


| INDEX | PART NO. | DESCRIPTION | Q'TY | SERIAL NO |
|---|---|---|---|---|
| 1 | 234-70-32971 | BLADE | 1 | 21001- |
| | 234-70-32991 | . RAIL, UPPER. (WELDED). | 1 | 21001- |
| | 234-70-32981 | . RAIL, LOWER. (WELDED). | 1 | 21001- |
| 2 | 07048-01815 | PLUG. | 6 | 21001- |
| 3 | 07048-01010 | PLUG. | 1 | 21001- |
| 4 | 234-70-33550 | BRACKET. | 1 | 21001- |
| 5 | 01010-51865 | BOLT. | 6 | 21001- |
| 6 | 01643-31845 | WASHER. | 6 | 21001- |
| 7 | 232-70-52460 | WASHER. | 1 | 21001- |
| 8 | 01010-51225 | BOLT | 1 | 21001- |
| 9 | 01643-31232 | WASHER. | 1 | 21001- |
| 10 | 234-70-12680 | EDGE. | 2 | 21001- |
| 11 | 234-70-32230 | EDGE, SIDE. | 2 | 21001- |
| 12 | 234-70-32240 | BIT, END. | 2 | 21001- |
| 13 | 234-70-32260 | BOLT. | 26 | 21001- |
| 14 | 234-70-32280 | BOLT. | 2 | 21001- |
| 15 | 234-70-32260 | BOLT. | 2 | 21001- |
| 16 | 234-70-32270 | BOLT. | 10 | 21001- |
| 17 | 234-70-32290 | NUT. | 40 | 21001- |
| 18 | 01643-32060 | WASHER. | 40 | 21001- |
| 19 | 234-70-32150 | SHAFT. | 1 | 21086- |
| 20 | 01010-51225 | BOLT. | 1 | 21086- |
| 21 | 01643-31232 | WASHER, DUST. | 1 | 21086- |
| 22 | 232-70-52460 | WASHER. | 1 | 21086- |
| 23 | 234-70-32920 | COVER. | 1 | 21001- |
| 24 | 234-70-32910 | COVER. | 1 | 21001- |
| 25 | 01010-51025 | BOLT. | 3 | 21001- |
| 26 | 01643-31032 | WASHER. | 3 | 21001- |
| 27 | 01643-31032 | WASHER. | 3 | 21001- |
| 28 | 234-70-33610 | CLIP. | 1 | 21001- |
| 29 | 234-70-33590 | CLIP. | 1 | 21001- |
| 30 | 234-70-33620 | CLIP. | 2 | 21001- |
| 31 | 01010-51230 | BOLT. | 4 | 21001- |
| 32 | 01643-31232 | WASHER. | 4 | 21001- |
| 33 | 234-54-13252 | WASHER. | 4 | 21001- |
| 34 | 234-70-32950 | COVER, L. H. | 1 | 21001- |
| 35 | 234-70-32960 | COVER, R. H. | 1 | 21001- |
| 36 | 01010-51230 | BOLT. | 8 | 21001- |
| 37 | 01643-31232 | WASHER. | 8 | 21001- |
| 38 | 01643-31232 | WASHER. | 8 | 21001- |

# FIG. 7015 CIRCLE SUPPORT

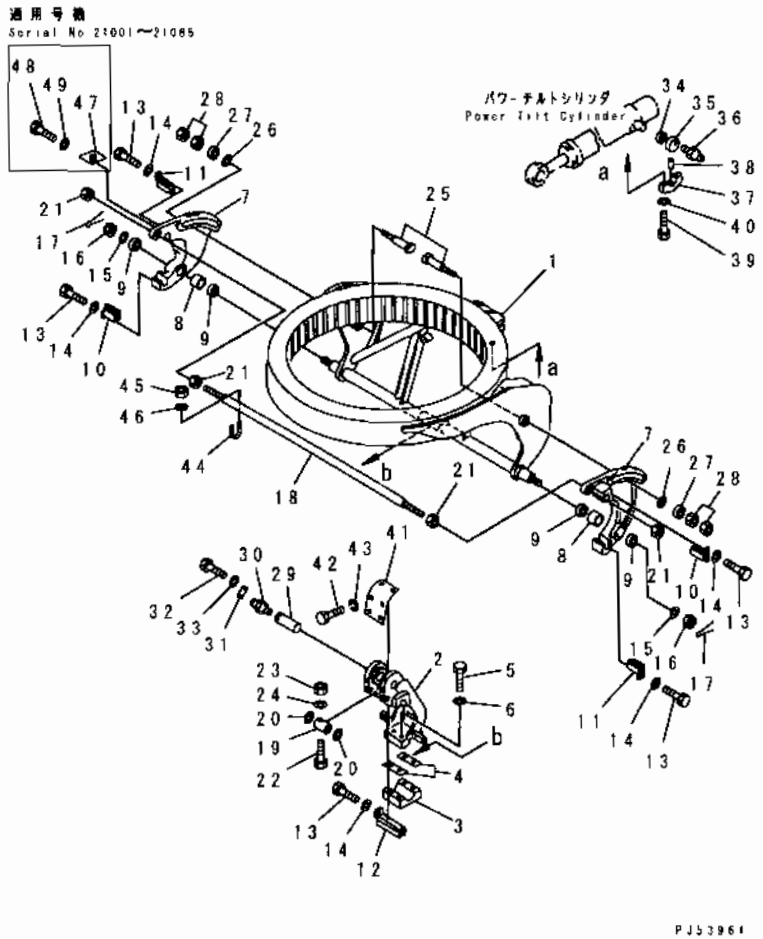


| INDEX | PART NO | DESCRIPTION | Q'TY | SERIAL NO |
|---|---|---|---|---|
| 1 | 234-70-33112 | SUPPORT | 1 | 21008- |
| | 234-70-33111 | SUPPORT | 1 | 21001-21007 |
| | 234-70-00260 | BRACKET ASS'Y. | 1 | 21086- |
| | 234-70-05250 | BRACKET ASS'Y | 1 | 21001-21085 |
| 2 | ☆ | .BRACKET | 1 | 21086- |
| | ☆ | .BRACKET | 1 | 21001-21085 |
| 3 | ☆ | .BRACKET | 1 | 21086- |
| | ☆ | .BRACKET | 1 | 21001-21085 |
| 4 | 23B-735-0120 | SHIM ASS'Y | 1 | 21086- |
| | 234-70-05141 | SHIM ASS'Y | 1 | 21001-21085 |
| | ☆ | .SHIM, 0.5MM | 10 | -21085 |
| 5 | 01010-51270 | BOLT | 4 | 21001- |
| 6 | 01643-31232 | WASHER | 4 | 21001- |
| | 234-70-05160 | ADJUSTER ASS'Y, L.H. | 1 | 21001- |
| | 234-70-05171 | ADJUSTER ASS'Y, R.H. | 1 | 21086- |
| | 234-70-05170 | ADJUSTER ASS'Y, R.H. | 1 | 21001-21085 |
| 7 | 234-70-33370 | .ADJUSTER, L.H. | 1 | 21001- |
| | 234-70-33380 | .ADJUSTER, R.H. | 1 | 21086- |
| | 234-70-33360 | ADJUSTER, R.H | 1 | 21001-21085 |
| 8 | 234-979-6260 | .BUSHING | 1 | 21001- |
| 9 | 234-70-34180 | .SEAL | 2 | 21001- |
| 10 | 234-70-33180 | GUIDE | 2 | 21001- |
| 11 | 234-70-33190 | GUIDE | 2 | 21001- |
| 12 | 232-735-1250 | GUIDE | 1 | 21001- |
| 13 | 01010-51435 | BOLT | 5 | 21001- |
| 14 | 01643-31445 | WASHER | 5 | 21001- |
| 15 | 234-979-6270 | WASHER | 2 | 21001- |
| 16 | 01590-14548 | NUT | 2 | 21001- |
| 17 | 04050-18080 | PIN, COTTER | 2 | 21001- |
| 18 | 234-70-33260 | ROD | 1 | 21001- |
| 19 | 234-70-33270 | COLLAR | 1 | 21001- |
| 20 | 234-70-05150 | SHIM ASS'Y | 2 | 21001- |
| | ☆ | SHIM, 1.0MM | 3 | 21001- |
| 21 | 01580-13629 | NUT | 4 | 21001- |
| 22 | 01010-51280 | BOLT | 1 | 21001- |
| 23 | 01598-01214 | NUT | 1 | 21001- |
| 24 | 01643-31232 | WASHER | 1 | 21001- |
| 25 | 234-870-6220 | BOLT | 2 | 21001- |
| 26 | 232-735-1261 | WASHER | 2 | 21001- |
| 27 | 234-70-33170 | COLLAR | 2 | 21001- |
| 28 | 01580-13024 | NUT | 4 | 21001- |
| 29 | 234-70-33290 | PIN | 1 | 21001- |

FIG NO. : 7015

| INDEX | PART NO | DESCRIPTION | Q'TY | SERIAL NO |
|---|---|---|---|---|
| 30 | 07020-00000 | FITTING, GREASE | 1 | 21001- |
| 31 | 04082-00212 | LOCK | 1 | 21001- |
| 32 | 01010-51225 | BOLT | 2 | 21001- |
| 33 | 01643-31232 | WASHER | 2 | 21001- |
| 34 | 07145-00075 | SEAL, DUST | 2 | 21001- |
| 35 | 234-70-33341 | BUSHING | 2 | 21057- |
| | 234-70-33340 | BUSHING | 2 | 21001-21056 |
| 36 | 07020-00000 | FITTING, GREASE | 2 | 21001- |
| 37 | 234-70-33330 | CAP | 2 | 21001- |
| 38 | 144-70-15251 | PIN | 2 | 21001- |
| 39 | 01010-51680 | BOLT | 4 | 21001- |
| 40 | 01643-31645 | WASHER | 4 | 21001- |
| 41 | 234-70-33241 | COVER | 1 | 21086- |
| | 234-70-33240 | COVER | 1 | 21001-21085 |
| 42 | 01010-51016 | BOLT | 6 | 21086- |
| | 01010-50610 | BOLT | 6 | 21001-21085 |
| 43 | 01643-31032 | WASHER | 6 | 21086- |
| | 01602-20619 | WASHER, SPRING | 6 | 21001-21085 |
| 44 | 07283-24354 | CLIP, SEAT | 4 | 21001- |
| 45 | 01599-01011 | NUT | 8 | 21001- |
| 46 | 234-54-13252 | WASHER | 8 | 21001- |
| 47 | 232-735-1370 | COVER | 1 | 21001-21085 |
| 48 | 01010-51020 | BOLT | 2 | 21001-21085 |
| 49 | 01643-31032 | WASHER | 2 | 21001-21085 |

# FIG. 7017 CIRCLE SUPPORT (FOR HEAVY DUTY BLADE)

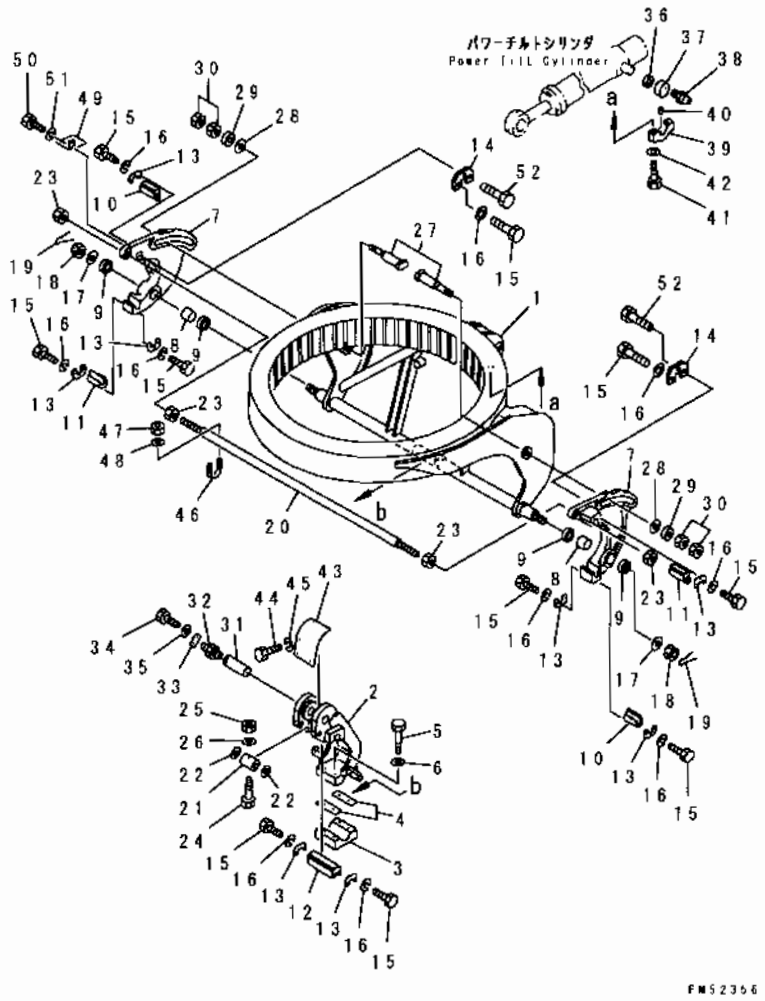


| INDEX | PART NO | DESCRIPTION | Q'TY | SERIAL NO |
|---|---|---|---|---|
| 1 | 234-70-33112 | SUPPORT | 1 | 21008- |
| | 234-70-33111 | SUPPORT | 1 | 21001-21007 |
| | 234-70-00270 | BRACKET ASS'Y. | 1 | 21001- |
| 2 | ☆ | . BRACKET | 1 | 21001- |
| 3 | ☆ | . BRACKET | 1 | 21001- |
| 4 | 234-70-05141 | SHIM ASS'Y | 1 | 21001- |
| | ☆ | . SHIM, 0.5MM | 10 | 21001- |
| 5 | 01010-51270 | BOLT | 4 | 21001- |
| 6 | 01643-31232 | WASHER | 4 | 21001- |
| | 234-70-05180 | ADJUSTER ASS'Y, L.H. | 1 | 21001- |
| | 234-70-05190 | ADJUSTER ASS'Y, R.H. | 1 | 21001- |
| 7 | 234-70-33521 | . ADJUSTER, L.H. | 1 | 21001- |
| | 234-70-33710 | . ADJUSTER, R.H. | 1 | 21001- |
| 8 | 234-979-6260 | . BUSHING | 1 | 21001- |
| 9 | 234-70-34180 | . SEAL | 2 | 21001- |
| 10 | 234-70-32940 | GUIDE | 2 | 21001- |
| 11 | 234-70-32940 | GUIDE | 2 | 21001- |
| 12 | 234-70-33530 | GUIDE | 1 | 21001- |
| 13 | 234-70-33570 | PLATE | 8 | 21001- |
| 14 | 234-70-33650 | PLATE, L.H. | 1 | 21001- |
| | 234-70-33640 | PLATE, R.H. | 1 | 21001- |
| 15 | 01010-51230 | BOLT | 26 | 21001- |
| 16 | 01643-31232 | WASHER | 26 | 21001- |
| 17 | 234-979-6270 | WASHER | 2 | 21001- |
| 18 | 01590-14548 | NUT | 2 | 21001- |
| 19 | 04050-18080 | PIN, COTTER | 2 | 21001- |
| 20 | 234-70-33260 | ROD | 1 | 21001- |
| 21 | 234-70-33270 | COLLAR | 1 | 21001- |
| 22 | 234-70-05150 | SHIM ASS'Y | 2 | 21001- |
| | ☆ | SHIM, 1.0MM | 3 | 21001- |
| 23 | 01580-13629 | NUT | 4 | 21001- |
| 24 | 01010-51280 | BOLT | 1 | 21001- |
| 25 | 01598-01214 | NUT | 1 | 21001- |
| 26 | 01643-31232 | WASHER | 1 | 21001- |
| 27 | 234-870-6220 | BOLT | 2 | 21001- |
| 28 | 232-735-1261 | WASHER | 2 | 21001- |
| 29 | 234-70-33170 | COLLAR | 2 | 21001- |
| 30 | 01580-13024 | NUT | 4 | 21001- |
| 31 | 234-70-33290 | PIN | 1 | 21001- |
| 32 | 07020-00000 | FITTING, GREASE | 1 | 21001- |
| 33 | 04082-00212 | LOCK | 1 | 21001- |
| 34 | 01010-51225 | BOLT | 2 | 21001- |

FIG NO. : 7017

| INDEX | PART NO. | DESCRIPTION | Q'TY | SERIAL NO |
|---|---|---|---|---|
| 35 | 01643-31232 | WASHER | 2 | 21001- |
| 36 | 07145-00075 | SEAL, DUST | 2 | 21001- |
| 37 | 234-70-33341 | BUSHING | 2 | 21057- |
| | 234-70-33340 | BUSHING | 2 | 21001-21056 |
| 38 | 07020-00000 | FITTING, GREASE | 2 | 21001- |
| 39 | 234-70-33330 | CAP | 2 | 21001- |
| 40 | 144-70-15251 | PIN | 2 | 21001- |
| 41 | 01010-51680 | BOLT | 4 | 21001- |
| 42 | 01643-31645 | WASHER | 4 | 21001- |
| 43 | 234-70-33240 | COVER | 1 | 21001- |
| 44 | 01010-50610 | BOLT | 6 | 21001- |
| 45 | 01602-20619 | WASHER, SPRING | 6 | 21001- |
| 46 | 07283-24354 | CLIP, SEAT | 6 | 21001- |
| 47 | 01599-01011 | NUT | 12 | 21001- |
| 48 | 234-54-13252 | WASHER | 12 | 21001- |
| 49 | 232-735-1370 | COVER | 1 | 21001- |
| 50 | 01010-51020 | BOLT | 2 | 21001- |
| 51 | 01643-31032 | WASHER | 2 | 21001- |
| 52 | 262-70-14680 | BOLT | 4 | 21001- |

# FIG. 7021 BLADE LIFTER

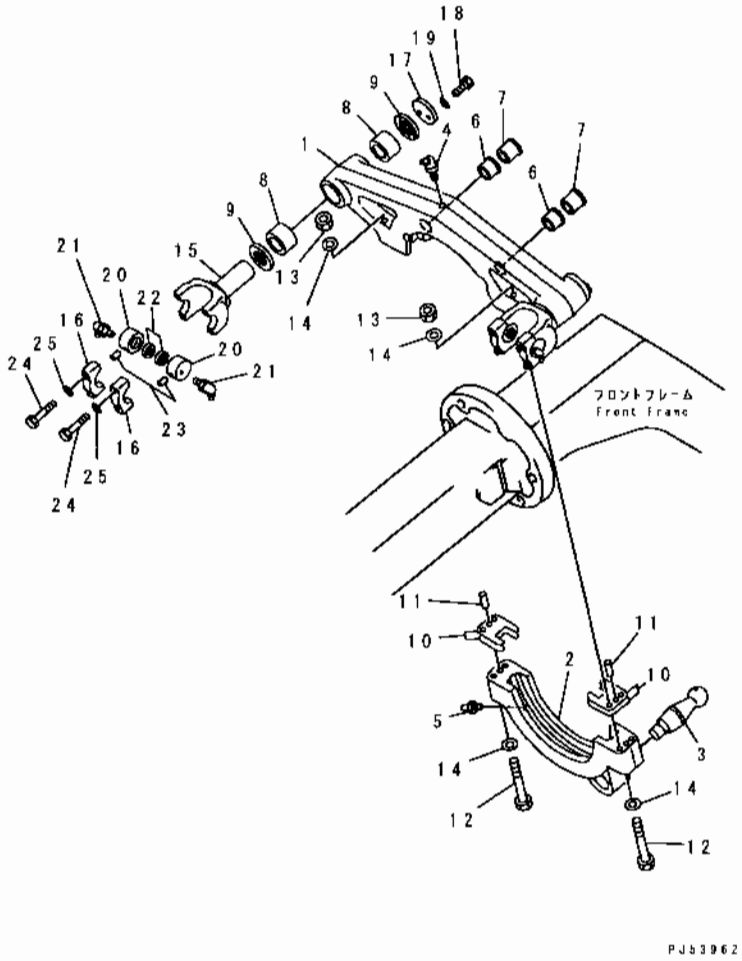


| INDEX | PART NO | DESCRIPTION | Q'TY. | SERIAL NO |
|---|---|---|---|---|
| | 234-70-05202 | BLADE LIFTER ASS'Y. | 1 | 21057- |
| | □234-70-05201 | BLADE LIFTER ASS'Y. | 1 | 21001-21056 |
| | 234-70-05211 | .BRACKET ASS'Y. | 1 | 21001- |
| 1 | ☆ | ..BRACKET. | 1 | 21001- |
| 2 | ☆ | ..BRACKET. | 1 | 21001- |
| 3 | 234-70-34141 | ...STUD, BALL. | 1 | 21001- |
| 4 | 07020-00675 | .FITTING, GREASE. | 1 | 21001- |
| 5 | 07020-00000 | .FITTING, GREASE. | 4 | 21001- |
| 6 | 234-70-34210 | .BUSHING. | 6 | 21001- |
| 7 | 234-70-34190 | .BUSHING. | 2 | 21001- |
| 8 | 07143-10806 | .BUSHING. | 4 | 21001- |
| 9 | 07145-00085 | .SEAL, DUST. | 4 | 21001- |
| 10 | 234-70-05220 | .SHIM ASS'Y. | 2 | 21001- |
| | ☆ | ..SHIM, 0.5MM. | 4 | 21001- |
| 11 | 04020-01842 | .PIN, DOWEL. | 2 | 21001- |
| 12 | 234-977-1750 | .BOLT. | 4 | 21001- |
| 13 | 01580-12419 | NUT. | 4 | 21001- |
| 14 | 01643-32460 | WASHER. | 8 | 21001- |
| | 234-70-05230 | .YOKE ASS'Y. | 2 | 21001- |
| 15 | ☆ | ..YOKE. | 1 | 21001- |
| 16 | ☆ | ..CAP. | 2 | 21001- |
| 17 | 234-71-11161 | .HOLDER. | 2 | 21001- |
| 18 | 01010-51650 | .BOLT. | 4 | 21001- |
| 19 | 01643-31645 | .WASHER. | 4 | 21001- |
| 20 | 234-70-34271 | .BUSHING. | 4 | 21057- |
| | □234-70-34270 | .BUSHING. | 4 | 21001-21056 |
| 21 | 07020-00900 | .FITTING, GREASE. | 4 | 21001- |
| 22 | 234-70-34180 | .SEAL, DUST. | 4 | 21001- |
| 23 | 144-70-15251 | .PIN | 4 | 21001- |
| 24 | 01010-51680 | .BOLT. | 8 | 21001- |
| 25 | 01643-31645 | .WASHER | 8 | 21001- |

# FIG. 7031B CIRCLE REVERSE GEAR (#23001-)

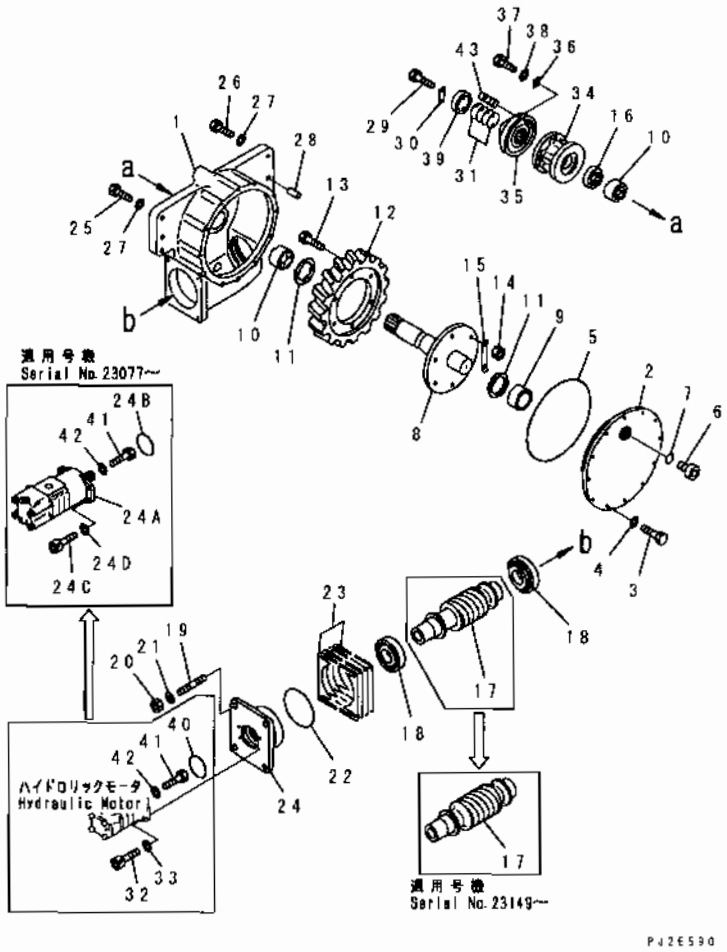


| INDEX | PART NO. | DESCRIPTION | Q'TY | SERIAL NO. |
|---|---|---|---|---|
| 1 | 234-70-35110 | CASE | 1 | 21001- |
| 2 | 234-70-35120 | COVER | 1 | 21001- |
| 3 | 01010-81230 | BOLT | 12 | 23001- |
| 4 | 01643-31232 | WASHER | 12 | 21001- |
| 5 | 07000-15340 | O-RING (KIT) | 1 | 21001- |
| 6 | 07040-13016 | PLUG | 2 | 21001- |
| 7 | 07002-13034 | O-RING (KIT) | 2 | 21001- |
| 8 | 234-70-35330 | SHAFT | 1 | 21008- |
| 9 | 232-70-54440 | BUSHING | 1 | 21001- |
| 10 | 234-71-13190 | BUSHING | 2 | 21001- |
| 11 | 234-70-35150 | WASHER | 2 | 21001- |
| 12 | 234-70-35142 | WHEEL, WORM | 1 | 23149- |
| | □234-70-35141 | WHEEL, WORM | 1 | 21018-23148 |
| 13 | 01090-51660 | BOLT | 6 | 21001- |
| 14 | 01582-11613 | NUT | 6 | 21001- |
| 15 | 234-70-35170 | LOCK | 3 | 21001- |
| 16 | 07012-00062 | SEAL | 1 | 21001- |
| 17 | 234-70-35161 | SHIM ASS'Y | 1 | 23149- |
| | □234-70-35160 | GEAR | 1 | 21001-23148 |
| 18 | 06002-30312 | BEARING | 2 | 21001- |
| 19 | 01140-51640 | STUD | 4 | 21001- |
| 20 | 01582-11613 | NUT | 4 | 21001- |
| 21 | 01643-31645 | WASHER | 4 | 21001- |
| 22 | 07000-15150 | O-RING (KIT) | 1 | 21001- |
| 23 | 234-70-00210 | SHIM ASS'Y | 1 | 21001- |
| 24 | 234-70-35191 | HOUSING | 1 | 21086- |
| 24A | 23B-62-11400 | MOTOR ASS'Y | 1 | 23077- |
| 24B | 07000-12085 | O-RING | 1 | 23077- |
| 24C | 01252-71240 | BOLT | 4 | 23077- |
| 24D | 01641-21223 | WASHER | 4 | 23149- |
| | 01640-21223 | WASHER | 4 | 23077-23148 |
| 25 | 01010-82475 | BOLT | 3 | 23001- |
| 26 | 01010-82460 | BOLT | 3 | 23001- |
| 27 | 01643-32460 | WASHER | 4 | 21001- |
| 28 | 232-71-13150 | PIN | 2 | 21001- |
| 29 | 01010-51235 | BOLT | 2 | 21001- |
| 30 | 04081-06012 | LOCK | 1 | 21001- |
| 31 | 238-70-00190 | SHIM ASS'Y | 1 | 21001- |
| | ☆ | SHIM, 0.5MM | 10 | 21001- |
| 32 | 01252-71240 | BOLT | 4 | 23001-23076 |
| 33 | 01641-21223 | WASHER | 4 | 21086-23076 |
| 34 | 234-71-13225 | GEAR | 1 | 21037- |

# FIG. 7031B CIRCLE REVERSE GEAR (#23001-)

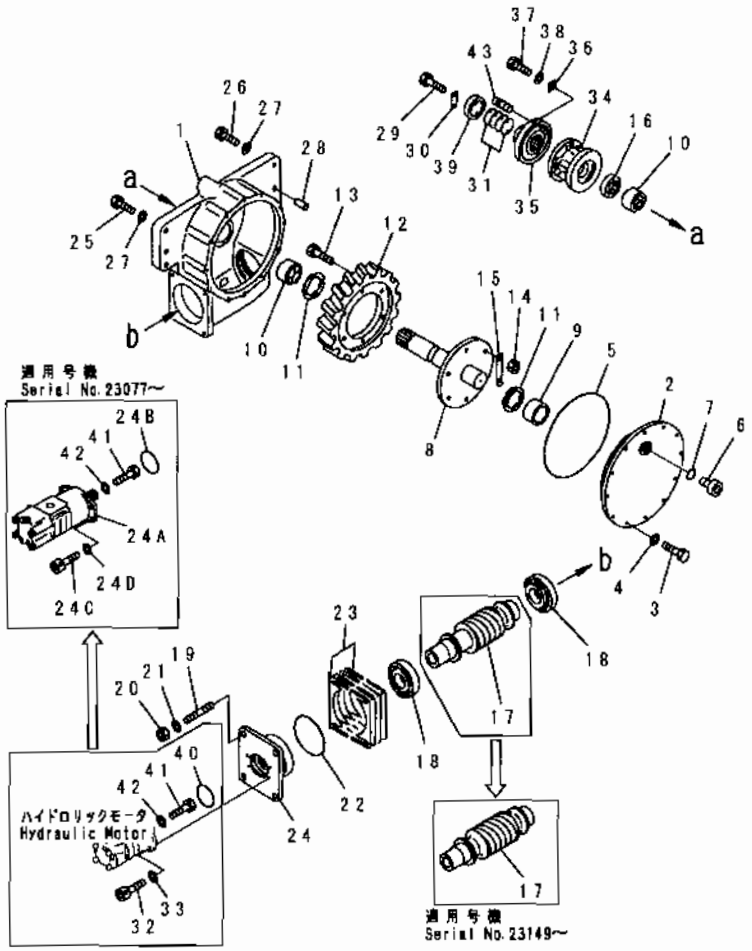


| INDEX | PART NO | DESCRIPTION | Q'TY | SERIAL NO |
|---|---|---|---|---|
| 35 | 234-71-13244 | JOINT | 1 | 21037- |
| 36 | 234-71-13350 | PLATE | 1 | 21037- |
| 37 | 01010-80820 | BOLT | 1 | -. |
| | 01010-50820 | BOLT | 1 | 21001-. |
| 38 | 01643-30823 | WASHER | 1 | 21001- |
| 39 | 232-70-54330 | HOLDER | 1 | 21001- |
| 40 | 07000-12085 | O-RING | 1 | 21086-23076 |
| 41 | 02010-70619 | BOLT | 1 | 21086- |
| 42 | 232-860-5320 | WASHER | 1 | 21086- |
| 43 | 234-71-13443 | PIN, SHEAR | 1 | 21177- |
| | | SERVICE KIT | | |
| KIT | (234-70-07020) | SERVICE KIT, CIRCLE REVERSE GEAR | 1 | 21001- |

# FIG. 7037 CLUTCH TYPE CIRCLE REVERSE GEAR (1/2) (DRY TYPE)

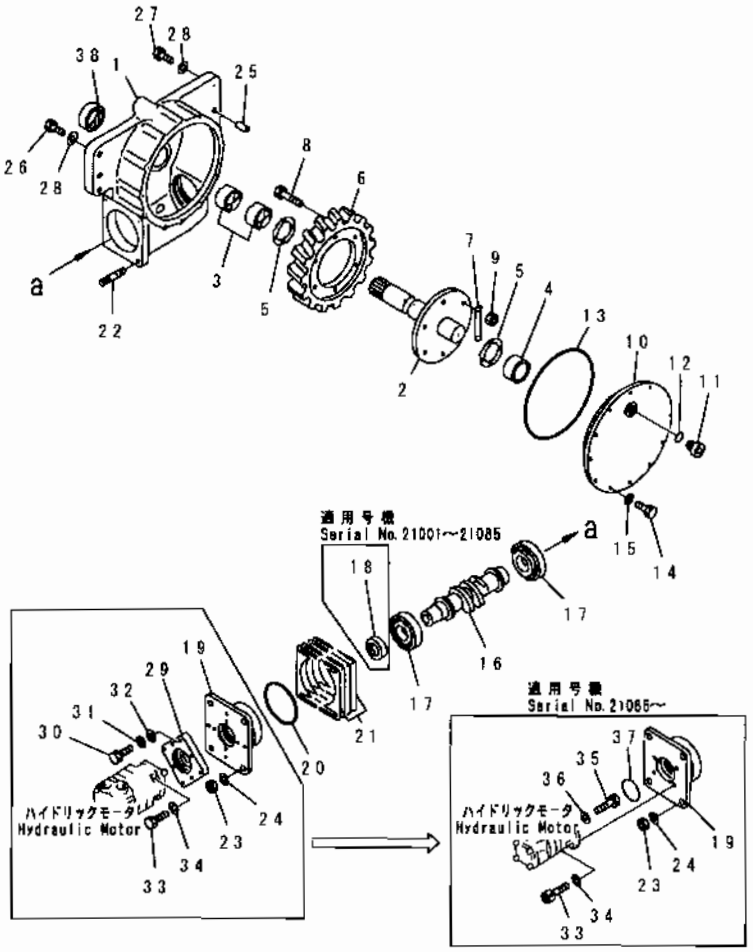


| INDEX | PART NO. | DESCRIPTION | Q'TY | SERIAL NO |
|---|---|---|---|---|
| 1 | 234-70-35110 | CASE | 1 | 21001- |
| 2 | 234-70-35330 | SHAFT | 1 | 21008- |
| | 234-70-35130 | SHAFT | 1 | 21001-21007 |
| 3 | 234-71-13190 | BUSHING | 2 | 21001- |
| 4 | 232-70-54440 | BUSHING | 1 | 21001- |
| 5 | 234-70-35150 | WASHER | 2 | 21001- |
| 6 | 234-70-35141 | WHEEL, WORM | 1 | 21018- |
| | 234-70-35140 | WHEEL, WORM | 1 | 21001-21017 |
| 7 | 234-70-35170 | LOCK | 3 | 21001- |
| 8 | 01090-51660 | BOLT | 6 | 21001- |
| 9 | 01582-11613 | NUT | 6 | 21001- |
| 10 | 234-70-35120 | COVER | 1 | 21001- |
| 11 | 07040-13016 | PLUG | 2 | 21001- |
| 12 | 07002-13034 | O-RING (KIT) | 2 | 21001- |
| 13 | 07000-15340 | O-RING (KIT) | 1 | 21001- |
| 14 | 01010-51230 | BOLT | 12 | 21001- |
| 15 | 01643-31232 | WASHER | 12 | 21001- |
| 16 | 234-70-35160 | GEAR | 1 | 21001- |
| 17 | 06002-30312 | BEARING | 2 | 21001- |
| 18 | 07011-00055 | SEAL | 1 | 21001-21085 |
| 19 | 234-70-35191 | HOUSING | 1 | 21086- |
| | 234-70-35190 | HOUSING | 1 | 21001-21085 |
| 20 | 07000-15150 | O-RING (KIT) | 1 | 21001- |
| 21 | 234-70-00210 | SHIM ASS'Y | 1 | 21001- |
| 22 | 01140-51640 | STUD | 4 | 21001- |
| 23 | 01582-11613 | NUT | 4 | 21001- |
| 24 | 01643-31645 | WASHER | 4 | 21001- |
| 25 | 232-71-13150 | PIN | 2 | 21001- |
| 26 | 01010-52475 | BOLT | 1 | 21001- |
| 27 | 01010-52460 | BOLT | 3 | 21001- |
| 28 | 01643-32460 | WASHER | 4 | 21001- |
| 29 | 234-70-35240 | PLATE | 1 | 21001-21085 |
| 30 | 01010-51240 | BOLT | 4 | 21001-21085 |
| 31 | 01643-31232 | WASHER | 4 | 21001-21085 |
| 32 | 01640-21223 | WASHER | 4 | 21001-21085 |
| 33 | 01252-41240 | BOLT | 4 | 21086- |
| | 01010-51240 | BOLT | 4 | 21001-21085 |
| 34 | 01641-21223 | WASHER | 4 | 21086- |
| | 01602-21236 | WASHER, SPRING | 4 | 21001-21085 |
| 35 | 02010-70619 | BOLT | 1 | 21086- |
| 36 | 232-860-5320 | WASHER | 1 | 21086- |
| 37 | 07000-12085 | O-RING | 1 | 21086- |

# FIG. 7037 CLUTCH TYPE CIRCLE REVERSE GEAR (1/2) (DRY TYPE)

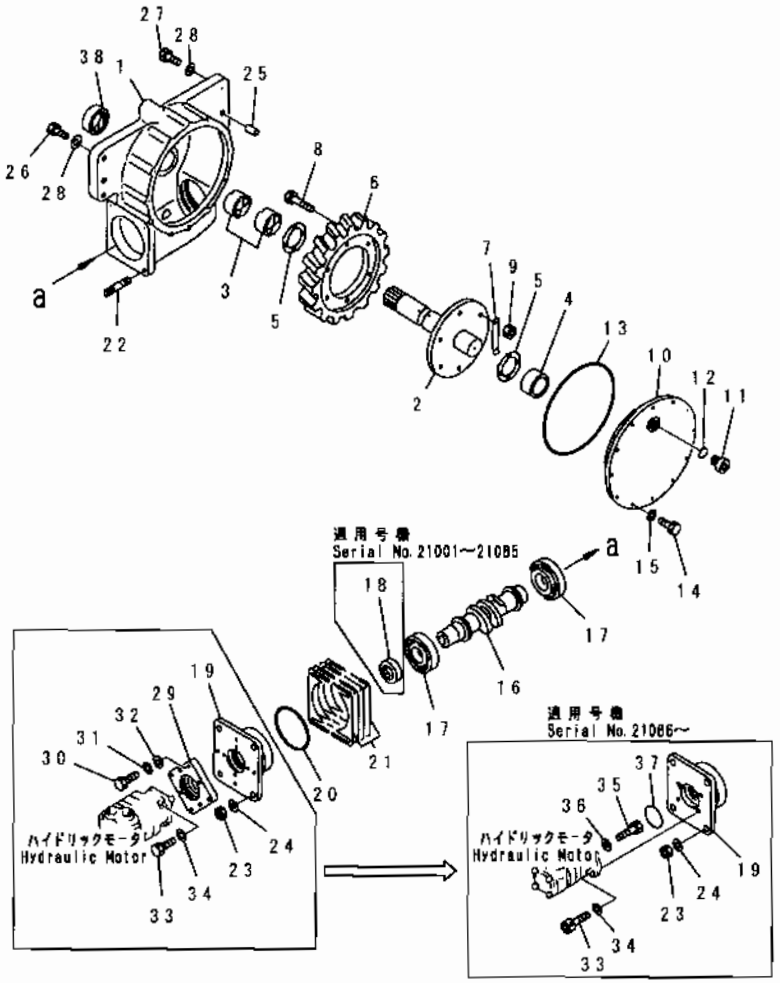


| INDEX | PART NO | DESCRIPTION | Q'TY | SERIAL NO. |
|---|---|---|---|---|
| 38 | 07012-00062 | SEAL, OIL..... | 1 | 21001- |
| | | SERVICE KIT ..... | | |
| KIT | 234-70-07020 | SERVICE KIT, CIRCLE REVERSE GEAR..... | 1 | 21001- |

# FIG. 7038 CLUTCH TYPE CIRCLE REVERSE GEAR (2/2) (DRY TYPE)

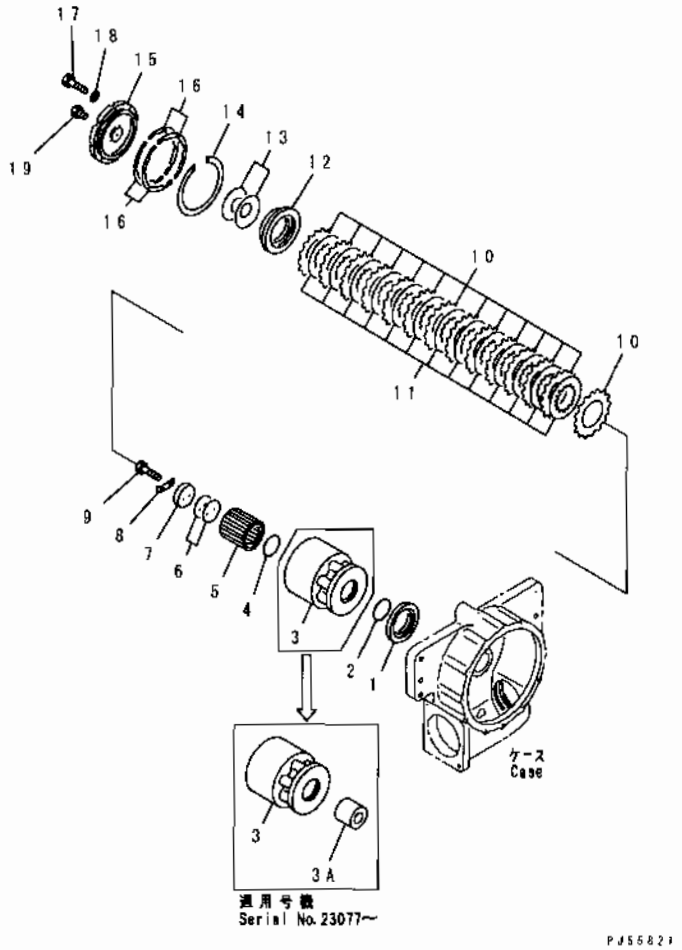


| INDEX | PART NO | DESCRIPTION | Q'TY | SERIAL NO |
|---|---|---|---|---|
| 1 | 234-70-36540 | PLATE | 1 | 21001- |
| 2 | 07000-05060 | O-RING | 1 | 21001- |
| 3 | 234-70-36511 | GEAR | 1 | 23077- |
| | □234-70-36510 | GEAR | 1 | 21001-23076 |
| 3A | 234-70-36590 | .BUSHING | 1 | 23077- |
| 4 | 07000-05070 | O-RING | 1 | 21001- |
| 5 | 234-70-36520 | COUPLING | 1 | 21001- |
| 6 | 238-70-00190 | SHIM ASS'Y | 1 | 21001- |
| | ☆ | .SHIM, 0.5MM | 10 | 21001- |
| 7 | 04080-06012 | HOLDER | 1 | 21001- |
| 8 | 04081-06012 | LOCK | 1 | 21001- |
| 9 | 01010-51235 | BOLT | 2 | 21001- |
| 10 | 714-16-19730 | PLATE | 14 | -- |
| | 419-15-12310 | PLATE | 14 | 21001- |
| 11 | 235-70-15920 | DISC | 13 | 21001- |
| 12 | 234-70-36530 | END, PLATE | 1 | 21001- |
| 13 | 235-70-15790 | SPRING | 2 | 21001- |
| 14 | 419-15-12140 | RING, SNAP | 1 | 21001- |
| 15 | 235-70-15810 | COVER | 1 | 21001- |
| 16 | 235-70-00190 | SHIM ASS'Y | 1 | 21001- |
| | 235-70-15960 | SHIM, 0.1MM | 10 | -- |
| 17 | 01010-50825 | BOLT | 8 | 21001- |
| 18 | 01643-30823 | WASHER | 8 | 21001- |
| 19 | 07040-11409 | PLUG | 1 | 21001- |

# FIG. 7101 SCARIFIER

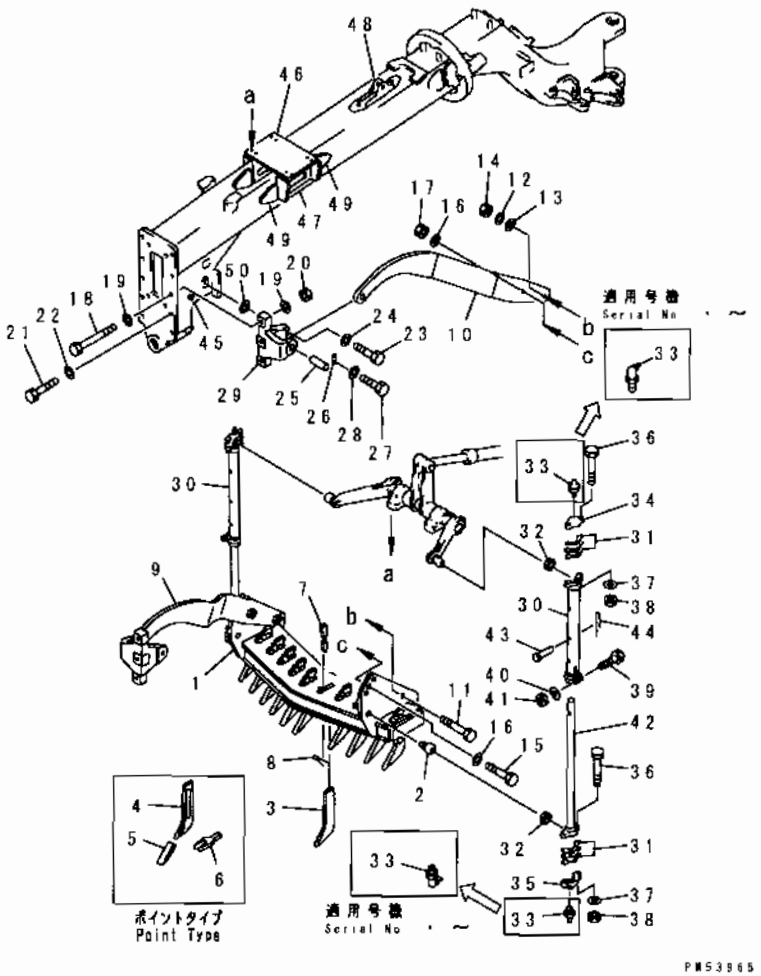






| INDEX | PART NO | DESCRIPTION | Q'TY | SERIAL NO |
|---|---|---|---|---|
| | 234-71-00152 | SCARIFIER ASS'Y | 1 | -. |
| | □234-71-00151 | SCARIFIER ASS'Y | 1 | -. |
| | 234-71-00150 | SCARIFIER ASS'Y | 1 | 21001-. |
| 1 | 234-71-23160 | BODY | 1 | -. |
| | 234-71-21110 | BODY | 1 | 21001-. |
| 2 | 234-70-13120 | STUD, BALL | 2 | 21001- |
| 3 | 09271-00045 | TOOTH | 11 | 21001- |
| 4 | 232-71-51310 | SHANK | 11 | 21001- |
| 5 | 232-71-51320 | TOOTH | 11 | 21001- |
| 6 | 232-71-51330 | TOOL | 1 | 21001- |
| 7 | 232-70-13142 | WEDGE | 11 | 21001- |
| 8 | 04050-18050 | PIN, COTTER | 11 | 21001- |
| 9 | 234-71-23140 | ROD, R.H. | 1 | -. |
| | 234-71-21120 | ROD, R.H. | 1 | 21001-. |
| 10 | 234-71-23150 | ROD, L.H. | 1 | -. |
| | 234-71-21130 | ROD, L.H. | 1 | 21001-. |
| 11 | 234-71-23170 | BOLT | 2 | -. |
| | 234-71-21160 | BOLT | 2 | 21001-. |
| 12 | 01643-33380 | WASHER | 2 | 21001- |
| 13 | 01643-33690 | WASHER | 2 | 21001- |
| 14 | 01580-13326 | NUT | 2 | 21001- |
| 15 | 01011-82415 | BOLT | 2 | -. |
| | 01011-82405 | BOLT | 2 | 21001-. |
| 16 | 01643-32460 | WASHER | 4 | 21001- |
| 17 | 01580-12419 | NUT | 2 | 21001- |
| 18 | 01011-82415 | BOLT | 4 | 23001- |
| | ◆01011-52415 | BOLT | 4 | 21001-23001 |
| 19 | 01643-32460 | WASHER | 8 | 21001- |
| 20 | 01580-12419 | NUT | 4 | 21001- |
| 21 | 01010-82475 | BOLT | 2 | 23001- |
| | ◆01010-52475 | BOLT | 2 | 21001-23000 |
| 22 | 01643-32460 | WASHER | 2 | 21001- |
| 23 | 01010-81655 | BOLT | 2 | 23001- |
| | ◆01010-51655 | BOLT | 2 | 21001-23000 |
| 24 | 01643-31645 | WASHER | 2 | 21001- |
| 25 | 09241-50170 | PIN | 2 | 21001- |
| 26 | 04082-00212 | LOCK | 2 | 21001- |
| 27 | 01010-81225 | BOLT | 4 | 23001- |
| | ◆01010-51225 | BOLT | 4 | 21001-23000 |
| 28 | 01643-31232 | WASHER | 4 | 21001- |
| 29 | 234-71-21170 | BRACKET | 2 | 21001- |
| 30 | 234-71-21141 | TUBE | 2 | 21001- |

FIG NO. : 7101

| INDEX | PART NO | DESCRIPTION | Q'TY | SERIAL NO. |
|---|---|---|---|---|
| 31 | 234-71-00060 | .SHIM ASS'Y | 4 | 21001- |
| 32 | 07141-00080 | .SEAL, DUST | 4 | 21001-23000 |
| 33 | 07020-00900 | .FITTING, GREASE | 4 | .- |
| | 07020-00000 | .FITTING, GREASE | 4 | 21001-. |
| 34 | 07138-00870 | .CAP | 2 | 21001- |
| 35 | 234-70-13180 | CAP | 2 | 21001- |
| 36 | 01010-51875 | .BOLT | 8 | 21001- |
| 37 | 01643-31845 | WASHER | 8 | 21001- |
| 38 | 01580-11815 | NUT | 8 | 21001- |
| 39 | 01010-81680 | .BOLT | 2 | 23001- |
| | ◆01010-51680 | .BOLT | 2 | 21001-23000 |
| 40 | 01643-31645 | .WASHER | 2 | 21001- |
| 41 | 01580-11613 | .NUT | 2 | 21001- |
| 42 | 234-70-13211 | .ROD | 2 | 21001- |
| | 232-70-00121 | .PIN ASS'Y | 2 | 21001- |
| 43 | 232-70-13361 | . PIN | 1 | 21001- |
| 44 | 232-70-13440 | . PIN, SNAP | 1 | 21001- |
| 45 | 234-71-21370 | .SEAT (WELDED) | 2 | 21001- |
| 46 | 234-71-21340 | .BRACKET (WELDED) | 1 | 21001- |
| 47 | 234-71-21350 | .BRACKET (WELDED) | 2 | 21001- |
| 48 | 234-71-21330 | .BRACKET (WELDED) | 1 | 21001- |
| 49 | 234-71-21360 | .PLATE (WELDED) | 4 | 21001- |
| 50 | 234-71-00070 | .SHIM ASS'Y | 1 | ..- |
| | ☆ | ..SHIM, 1.0MM | 8 | ..- |



GD705A-4

# FIG. 7111 SCARIFIER LIFTER

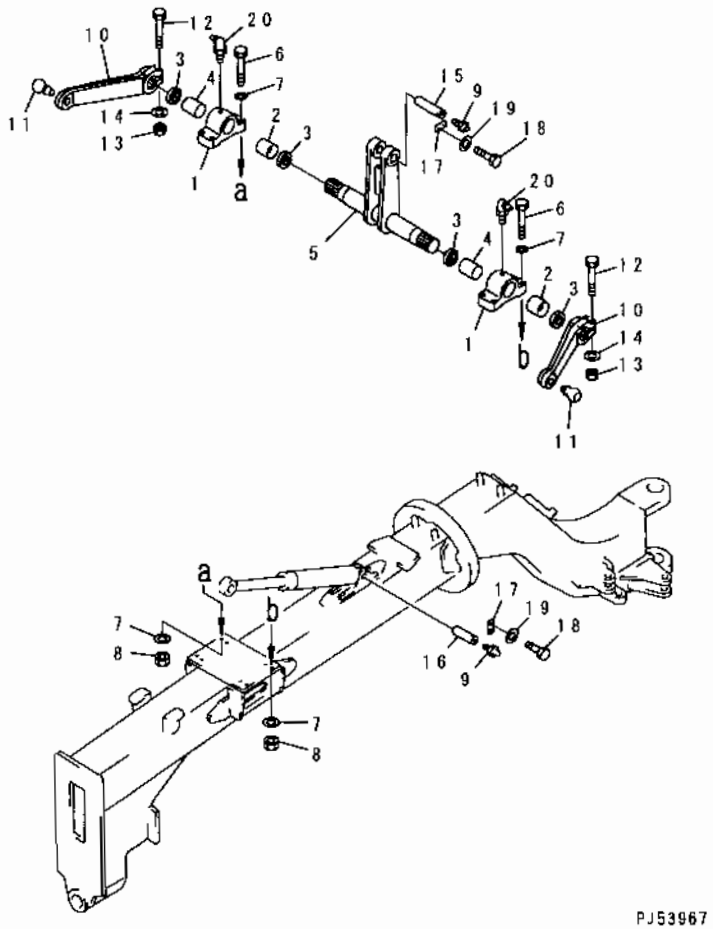


| INDEX | PART NO. | DESCRIPTION | Q'TY | SERIAL NO |
|---|---|---|---|---|
| | 234-71-00120 | LIFTER ASS'Y | 1 | 21001- |
| | 234-71-00130 | .SUPPORT ASS'Y | 2 | 21001- |
| 1 | 234-71-21220 | ..SUPPORT | 1 | 21001- |
| 2 | 234-71-16131 | ..BUSHING | 1 | 21001- |
| 3 | 07145-00110 | ..SEAL, DUST | 2 | 21001- |
| 4 | 234-71-21230 | .COLLAR | 2 | 21001- |
| 5 | 234-71-21210 | .SHAFT | 1 | 21001- |
| 6 | 01019-32000 | .BOLT | 8 | 21001- |
| 7 | 01643-32060 | .WASHER | 16 | 21001- |
| 8 | 01580-12016 | .NUT | 8 | 21001- |
| 9 | 07020-00000 | .FITTING, GREASE | 2 | 21001- |
| 10 | 234-71-16171 | .LEVER | 2 | 21001- |
| 11 | 234-70-13120 | ..STUD, BALL | 1 | 21001- |
| 12 | 01011-81640 | BOLT | 4 | 21001- |
| 13 | 01580-11613 | .NUT | 4 | 21001- |
| 14 | 01643-31645 | .WASHER | 4 | 21001- |
| 15 | 09241-50165 | .PIN | 1 | 21001- |
| 16 | 09241-50130 | PIN | 1 | 21001- |
| 17 | 04082-00212 | .LOCK | 2 | 21001- |
| 18 | 01010-81225 | .BOLT | 4 | 23001- |
| | ◆01010-51225 | .BOLT | 4 | 21001-23000 |
| 19 | 01643-31232 | .WASHER | 4 | 21001- |
| 20 | 07020-00900 | .FITTING, GREASE | 2 | 21001- |

# FIG. 7151A FRONT BLADE(#. . -)

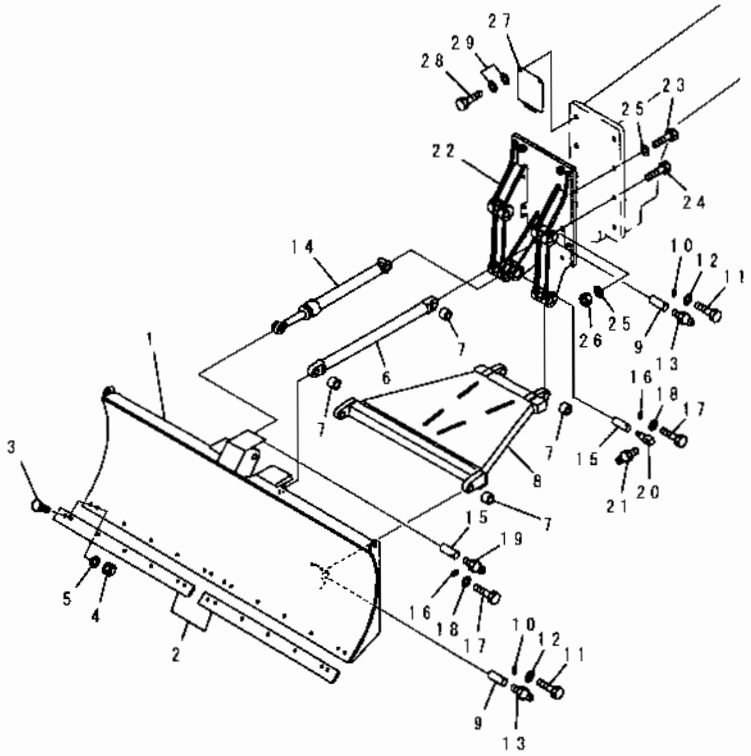






| INDEX | PART NO | DESCRIPTION | Q'TY | SERIAL NO |
|---|---|---|---|---|
| 1 | 234-725-1111 | BLADE, FRONT | 1 | . . - |
| 2 | 232-971-6120 | EDGE | 2 | . . - |
| 3 | 232-70-12450 | BOLT | 14 | 21001- |
| 4 | 232-70-12480 | NUT | 14 | 21001- |
| 5 | 01643-31645 | WASHER | 14 | 21001- |
| 6 | 234-725-1141 | ROD | 2 | . . - |
| 7 | 234-870-8120 | BUSHING | 8 | 21001- |
| 8 | 234-725-1130 | FRAME | 1 | 21001- |
| 9 | 09241-45160 | PIN | 8 | . . - |
| 10 | 04082-00212 | LOCK | 8 | 21001- |
| 11 | 01010-51225 | BOLT | 16 | 21001- |
| 12 | 01643-31232 | WASHER | 16 | 21001- |
| 13 | 07020-00000 | FITTING, GREASE | 8 | 21001- |
| 14 | (234-63-38300) | CYLINDER ASS'Y | 1 | 21001- |
| 15 | 234-725-1150 | PIN | 2 | 21001- |
| 16 | 04082-00212 | LOCK | 2 | 21001- |
| 17 | 01010-51225 | BOLT | 4 | 21001- |
| 18 | 01643-31232 | WASHER | 4 | 21001- |
| 19 | 07020-00000 | FITTING, GREASE | 1 | 21001- |
| 20 | 234-870-8340 | NIPPLE | 1 | 21001- |
| 21 | 07020-00001 | FITTING, GREASE | 1 | 21001- |
| 22 | 234-725-1122 | BRACKET | 1 | . . - |
| 23 | 01010-52495 | BOLT | 6 | . . - |
| 24 | 01010-52495 | BOLT | 2 | 21001- |
| 25 | 01643-32460 | WASHER | 8 | 21001- |
| 26 | 01580-12419 | NUT | 2 | 21001- |
| 27 | 234-725-1161 | COVER | 1 | . . - |
| 28 | 01010-51225 | BOLT | 2 | 21001- |
| 29 | 01643-31232 | WASHER | 4 | 21001- |

# FIG. 7201 REAR MOUNT RIPPER

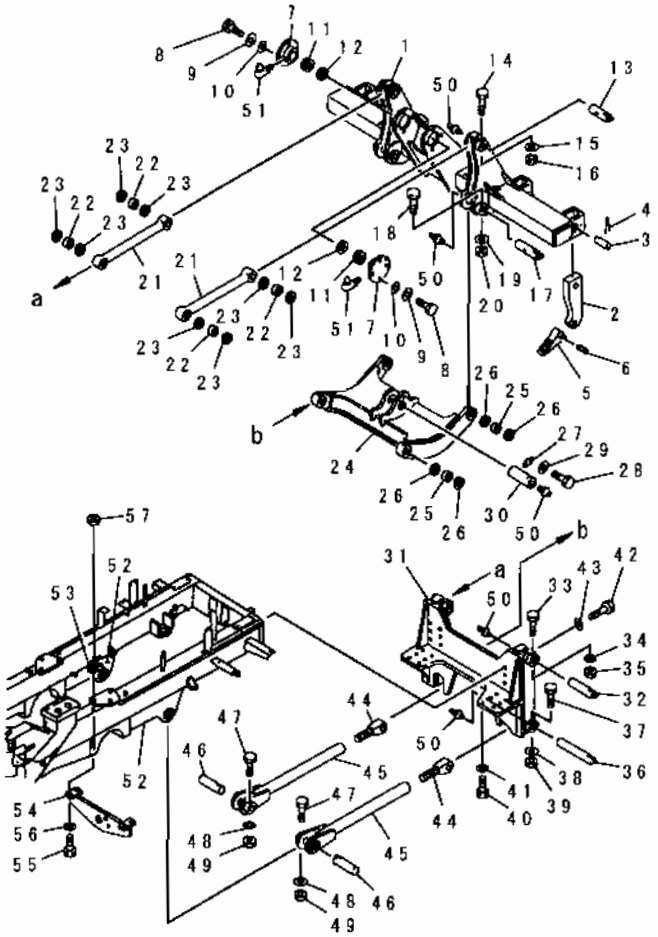


| INDEX | PART NO | DESCRIPTION | Q'TY | SERIAL NO |
|---|---|---|---|---|
| | 234-785-0041 | RIPPER BODY ASS'Y | 1 | -. |
| | □234-785-0040 | RIPPER BODY ASS'Y | 1 | 21001-. |
| 1 | 234-785-1111 | .BRACKET | 1 | 21001- |
| 2 | 232-785-1291 | .SHANK | 3 | 21001- |
| 3 | 232-785-1310 | .PIN | 3 | 21001- |
| 4 | 04050-10070 | PIN, COTTER | 6 | 21001- |
| 5 | 234-785-1121 | .POINT | 3 | 21001- |
| 6 | 113-78-21170 | .PIN | 3 | 21001- |
| 7 | 234-785-1711 | .SUPPORT | 2 | -. |
| | □234-785-1710 | .SUPPORT | 2 | 21001-. |
| 8 | 01010-81250 | .BOLT | 8 | 23001- |
| | ◆01010-51250 | .BOLT | 8 | 21001-23000 |
| 9 | 01643-31232 | .WASHER | 8 | 21001- |
| 10 | 01640-21223 | .WASHER | 8 | 21001- |
| 11 | 234-785-1610 | .BUSHING | 2 | 21001- |
| 12 | 07145-00090 | .SEAL | 2 | 21001- |
| 13 | 234-785-1630 | .PIN | 2 | 21001- |
| 14 | 01011-81025 | .BOLT | 2 | 23001- |
| | 01011-51025 | .BOLT | 2 | 21001-23000 |
| 15 | 01643-31032 | .WASHER | 2 | 21001- |
| 16 | 01580-11008 | .NUT | 2 | 21001- |
| 17 | 234-785-1640 | .PIN | 2 | 21001- |
| 18 | 01011-81025 | .BOLT | 2 | 23001- |
| | ◆01011-51025 | .BOLT | 2 | 21001-23000 |
| 19 | 01643-31032 | .WASHER | 2 | 21001- |
| 20 | 01580-11008 | .NUT | 2 | 21001- |
| 21 | 234-785-1680 | .ROD | 2 | 21001- |
| 22 | 234-785-1620 | .BUSHING | 4 | 21001- |
| 23 | 07145-00060 | .SEAL | 8 | 21001- |
| 24 | 234-785-1690 | .LINK | 1 | 21001- |
| 25 | 07143-10606 | .BUSHING | 4 | 21001- |
| 26 | 07145-00060 | .SEAL | 8 | 21001- |
| 27 | 04082-00406 | .LOCK | 1 | 21001- |
| 28 | 01010-81225 | .BOLT | 2 | 23001- |
| | ◆01010-51225 | .BOLT | 2 | 21001-23000 |
| 29 | 01643-31232 | WASHER | 2 | 21001- |
| 30 | 234-785-1670 | .PIN | 1 | 21001- |
| 31 | 234-785-1231 | .BRACKET | 1 | 21001- |
| 32 | 234-785-1650 | PIN | 2 | 21001- |
| 33 | 01011-81025 | .BOLT | 2 | 23001- |
| | ◆01011-51025 | .BOLT | 2 | 21001-23000 |
| 34 | 01643-31032 | .WASHER | 2 | 21001- |

FIG NO. : 7201

| INDEX | PART NO | DESCRIPTION | Q'TY | SERIAL NO |
|---|---|---|---|---|
| 35 | 01580-11008 | .NUT | 2 | 21001- |
| 36 | 234-785-1660 | .PIN | 2 | 21001- |
| 37 | 01011-81025 | .BOLT | 2 | 23001- |
| | ◆01011-51025 | .BOLT | 2 | 21001-23000 |
| 38 | 01643-31032 | .WASHER | 2 | 21001- |
| 39 | 01580-11008 | .NUT | 2 | 21001- |
| 40 | 01010-82455 | .BOLT | 6 | 23001- |
| | ◆01010-52455 | .BOLT | 6 | 21001-23000 |
| 41 | 01643-32460 | .WASHER | 6 | 21001- |
| 42 | 01010-52465 | .BOLT | 6 | 21001- |
| 43 | 01643-32460 | .WASHER | 6 | 21001- |
| 44 | 234-785-1261 | .BOLT, EYE | 2 | 21001- |
| 45 | 234-785-1271 | .ROD | 2 | 21001- |
| 46 | 234-785-1160 | PIN | 2 | 21001- |
| 47 | 01011-81025 | .BOLT | 2 | 23001- |
| | ◆01011-51025 | BOLT | 2 | 21001-23000 |
| 48 | 01643-31032 | .WASHER | 2 | 21001- |
| 49 | 01580-11008 | NUT | 2 | 21001- |
| 50 | 07020-00000 | .FITTING, GREASE | 9 | 21001- |
| 51 | 07020-00675 | .FITTING, GREASE | 2 | 21001- |
| 52 | 234-785-1350 | FRAME (WELDED) | 2 | 23001- |
| | 234-785-1320 | BRACKET (WELDED) | 2 | 21001-23000 |
| 53 | 234-785-1330 | BRACKET (WELDED) | 2 | 21001- |
| 54 | (234-785-1340) | HANGER | 1 | 21001- |
| 55 | 01010-82080 | BOLT | 4 | 21001- |
| 56 | 01643-32060 | WASHER | 4 | 21001- |
| 57 | 01580-12016 | NUT | 4 | 21001- |



GD705A-4

# MARK PLATE、TOOL AND KIT

# FIG. 9801B MARKS AND PLATES (ENGLISH) (#23001-)

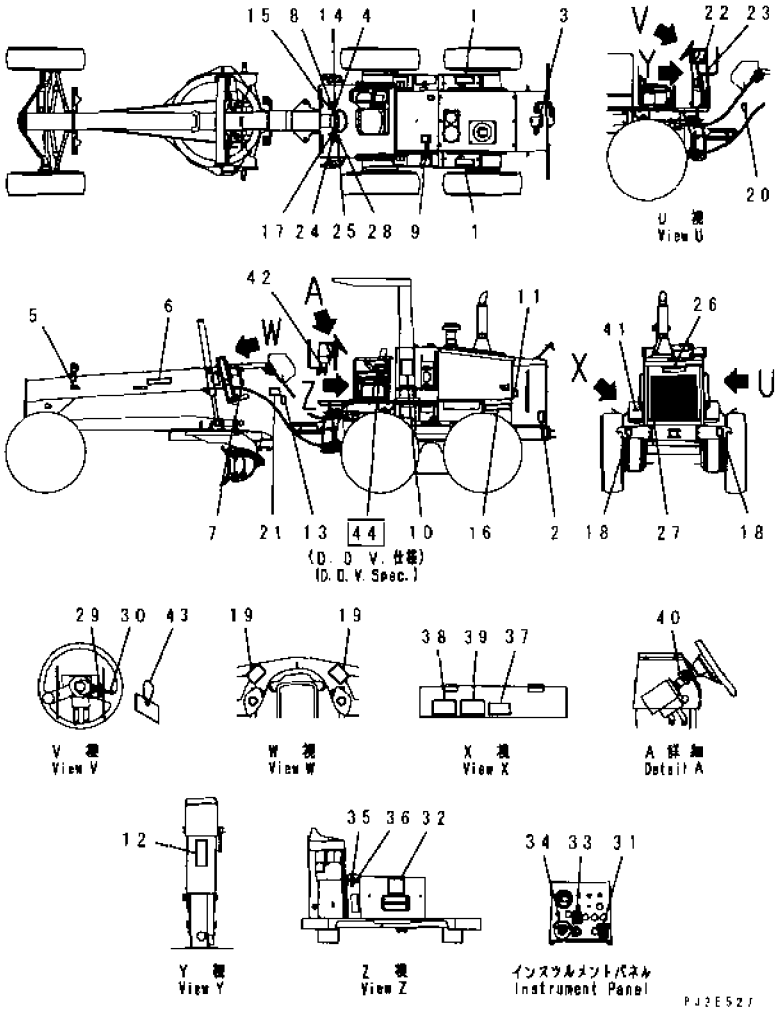




| INDEX | PART NO | DESCRIPTION | Q'TY | SERIAL NO |
|---|---|---|---|---|
| 1 | 273-53-11430 | SHEET, NONSKID | 2 | 23001- |
| 2 | 09806-E0883 | PLATE, SAFETY | 1 | 23001- |
| 3 | 09653-A0481 | PLATE, SAFETY, RADIATOR CAP | 1 | 23001- |
| 4 | 237-54-13211 | PLATE, OPERATING | 5 | 23001- |
| 5 | 237-54-13321 | PLATE, CAUTION, STEERING HOSE | 2 | 21001- |
| 6 | 09690-B0400 | PLATE, MARK, KOMATSU | 2 | 21228- |
| 7 | 09820-E0481 | PLATE, CAUTION, AIR CYLINDER | 2 | 23001- |
| 8 | 237-54-13221 | PLATE, OPERATING | 1 | 23001- |
| 9 | 09653-A0481 | PLATE, SAFETY, HYDRAULIC OIL TANK | 1 | 21302- |
| 10 | 234-53-61230 | CHART, OIL | 1 | 23001- |
| 11 | 09667-A0641 | PLATE, SAFETY, REVOLVING OBJECT CAUTION | 2 | 23001- |
| 12 | 09161-E0641 | PLATE, SAFETY, ARTICULATE LOCK | 1 | 23001- |
| 13 | 09162-E0641 | PLATE, SAFETY, KEEP OUT | 1 | 23001- |
| 14 | 237-54-13231 | PLATE, OPERATING | 1 | 23001- |
| 15 | 232-735-1340 | PLATE, OPERATING | 1 | 23001- |
| 16 | 234-53-31510 | PLATE, MARK, GD705A | 2 | 21228- |
| 17 | 234-53-32321 | PLATE, OPERATING | 1 | 23001- |
| 18 | 09960-01001 | PLATE, MARK, HANDLING | 2 | 23001- |
| 19 | 09960-01001 | PLATE, MARK, HANDLING | 2 | 23001- |
| 20 | 09162-E0641 | PLATE, SAFETY, KEEP OUT | 1 | 23001- |
| 21 | 09602-01635 | PLATE, NAME (LIMITED SUPPLY) | 1 | 21228- |
| | 04418-13060 | SCREW | 4 | 21020- |
| 22 | 234-53-31120 | PLATE, BANK PIN | 1 | 21001- |
| 23 | 09651-A0641 | PLATE, SAFETY, BEFORE OPERATING | 1 | 23001- |
| 24 | 237-54-13260 | PLATE, OPERATING | 1 | 23001- |
| 25 | 232-43-18281 | PLATE, OPERATING | 1 | 23001- |
| 26 | 09690-B0400 | PLATE, MARK, KOMATSU | 1 | 23001- |
| 27 | 234-53-31270 | TAG | 1 | 21020- |
| 28 | 237-54-13211 | PLATE, OPERATING | 1 | 23001- |
| 29 | 23A-53-11550 | PLATE, OPERATING, TURN SIGNAL | 1 | 23001- |
| 30 | 23F-53-11191 | PLATE, OPERATING, TURN SIGNAL | 1 | 23001- |
| 31 | 23A-53-12121 | PLATE, OPERATING, BANK PIN | 1 | 23001- |
| 32 | 23A-53-61220 | PLATE, CAUTION | 1 | 23001- |
| 33 | 23E-53-11321 | PLATE, OPERATING, HEAD LAMP | 1 | 23001- |
| 34 | 09683-0000A | PLATE, OPERATING, STARTING SWITCH | 1 | 21337- |
| 35 | 235-45-31260 | PLATE, INSTRUCTION, LOCK | 1 | 23001- |
| 36 | 235-45-31270 | PLATE, INSTRUCTION, UNLOCK | 1 | 23001- |
| 37 | 09808-A0881 | PLATE, SAFETY, BATTERY CABLE | 2 | 23001- |
| 38 | 235-53-31210 | PLATE, INSTRUCTION, BATTERY | 2 | 23001- |
| 39 | 235-53-31220 | PLATE, INSTRUCTION, BATTERY | 2 | 23001- |
| 40 | 234-53-51240 | PLATE, MARK, DIMMER SWITCH | 1 | 23001- |
| 41 | 234-53-31310 | PLATE, CAUTION, BATTERY | 1 | 23001- |

FIG NO. : 9801B

| INDEX | PART NO. | DESCRIPTION | Q'TY | SERIAL NO |
|---|---|---|---|---|
| 42 | 232-53-61810 | PLATE, OPERATING, SCARIFIER..... | 1 | 23001- |
| 43 | 09963-03001 | TAG, DO NOT OPERATE..... | 1 | 23001- |
| 44 | 234-53-31161 | PLATE, (D.D.V. SPEC)..... | 1 | 23001- |

# FIG. 9821B MARKS AND PLATES (ARABIC) (#23001-)

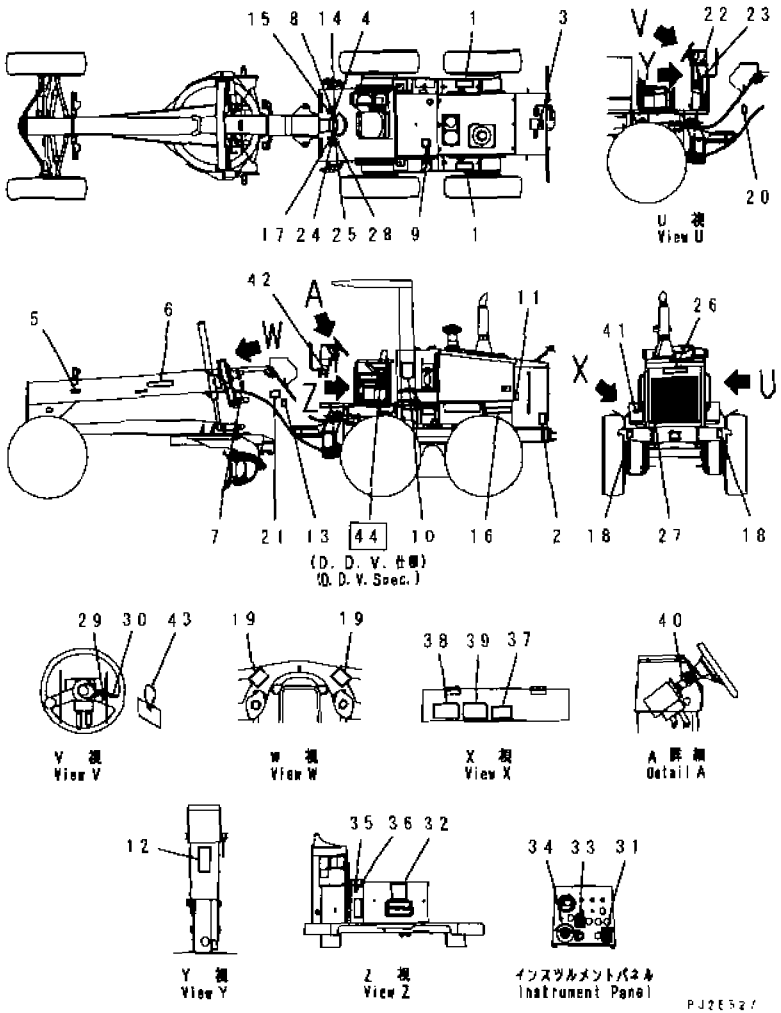


| INDEX | PART NO | DESCRIPTION | Q'TY | SERIAL NO |
|---|---|---|---|---|
| 1 | 273-53-11430 | SHEET, NONSKID | 2 | 23001- |
| 2 | 09806-E0883 | PLATE, SAFETY | 1 | 23001- |
| 3 | 09653-A0481 | PLATE, SAFETY, RADIATOR CAP | 1 | 23001- |
| 4 | 237-54-13211 | PLATE, OPERATING | 5 | 23001- |
| 5 | 238-53-15190 | PLATE, STEERING HOSE | 2 | 21001- |
| 6 | 09690-B0400 | PLATE, MARK, KOMATSU | 2 | 21228- |
| 7 | 09820-E0481 | PLATE, CAUTION, AIR CYLINDER | 2 | 23001- |
| 8 | 237-54-13221 | PLATE, OPERATING | 1 | 23001- |
| 9 | 09653-A0481 | PLATE, SAFETY, HYDRAULIC OIL TANK | 1 | 21302- |
| 10 | 234-53-35310 | LEVER, OIL | 1 | 23001- |
| 11 | 09667-A0641 | PLATE, SAFETY, REVOLVING OBJECT CAUTION | 2 | 23001- |
| 12 | 09161-E0641 | PLATE, SAFETY, ARTICULATE LOCK | 1 | 23001- |
| 13 | 09162-E0641 | PLATE, SAFETY, KEEP OUT | 1 | 23001- |
| 14 | 237-54-13231 | PLATE, OPERATING | 1 | 23001- |
| 15 | 232-735-1340 | PLATE, OPERATING | 1 | 23001- |
| 16 | 234-53-31510 | PLATE, MARK, GD705A | 2 | 21228- |
| 17 | 234-53-32321 | PLATE, OPERATING | 1 | 23001- |
| 18 | 09960-01001 | PLATE, MARK, HANDLING | 2 | 23001- |
| 19 | 09960-01001 | PLATE, MARK, HANDLING | 2 | 23001- |
| 20 | 09162-E0641 | PLATE, SAFETY, KEEP OUT | 1 | 23001- |
| 21 | 234-53-35192 | PLATE, NAME. (LIMITED SUPPLY) | 1 | 21228- |
| | 04418-13060 | SCREW | 4 | 21020- |
| 22 | 234-53-35120 | PLATE, BANK PIN | 1 | 21001- |
| 23 | 09651-A0641 | PLATE, SAFETY, BEFORE OPERATING | 1 | 23001- |
| 24 | 237-54-13260 | PLATE, OPERATING | 1 | 23001- |
| 25 | 232-43-18281 | PLATE, OPERATING | 1 | 23001- |
| 26 | 09690-B0400 | PLATE, MARK, KOMATSU | 1 | 23001- |
| 27 | 234-53-45120 | TAG | 1 | 21020- |
| 28 | 237-54-13211 | PLATE, OPERATING | 1 | 23001- |
| 29 | 23A-53-11550 | PLATE, OPERATING, TURN SIGNAL | 1 | 23001- |
| 30 | 23F-53-11191 | PLATE, OPERATING, TURN SIGNAL | 1 | 23001- |
| 31 | 234-53-35350 | PLATE, OPERATING, BANK PIN | 1 | 23001- |
| 32 | 23A-53-61220 | PLATE, CAUTION | 1 | 23001- |
| 33 | 23E-53-11321 | PLATE, OPERATING, HEAD LAMP | 1 | 23001- |
| 34 | 09683-0000A | PLATE, OPERATING, STARTING SWITCH | 1 | 21337- |
| 35 | 235-45-31260 | PLATE, INSTRUCTION, LOCK | 1 | 23001- |
| 36 | 235-45-31270 | PLATE, INSTRUCTION, UNLOCK | 1 | 23001- |
| 37 | 09808-A0881 | PLATE, SAFETY, BATTERY CABLE | 2 | 23001- |
| 38 | 234-53-35320 | PLATE, INSTRUCTION, BATTERY | 2 | 23001- |
| 39 | 234-53-35330 | PLATE, INSTRUCTION, BATTERY | 2 | 23001- |
| 40 | 235-53-11610 | PLATE, OPERATING, DIMMER SWITCH | 1 | 23001- |
| 41 | 234-53-31310 | PLATE, CAUTION, BATTERY | 1 | 23001- |

FIG NO. : 9821B

| INDEX | PART NO | DESCRIPTION | Q'TY | SERIAL NO. |
|---|---|---|---|---|
| 42 | 232-53-61810 | PLATE, OPERATING, SCARIFIER..... | 1 | 23001- |
| 43 | 09963-00201 | TAG, DO NOT OPERATE..... | 1 | 23001- |
| 44 | 234-53-35160 | PLATE, (D.D.V. SPEC)..... | 1 | 23001- |

# FIG. 9831B MARKS AND PLATES (FRENCH) (#23001-)

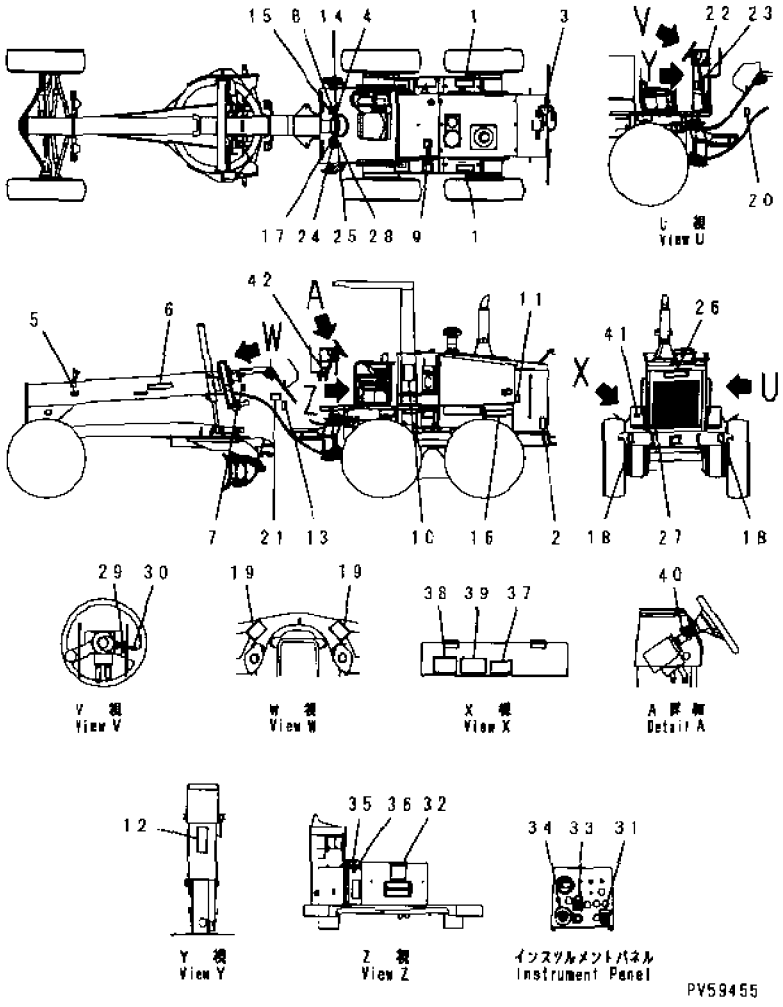


| INDEX | PART NO | DESCRIPTION | Q'TY | SERIAL NO |
|---|---|---|---|---|
| 1 | 273-53-11430 | SHEET | 2 | 23001- |
| 2 | 09806-E0883 | PLATE, SAFETY | 1 | 23001- |
| 3 | 09668-A0481 | PLATE, SAFETY, RADIATOR CAP | 1 | 23001- |
| 4 | 237-54-13211 | PLATE, OPERATING | 1 | 23001- |
| 5 | 238-53-13190 | PLATE, STEERING HOSE | 2 | 21001- |
| 6 | 09602-51635 | PLATE, NAME, KOMATSU | 2 | 23001- |
| 7 | 09820-E0481 | PLATE, CAUTION, AIR CYLINDER | 2 | 23001- |
| 8 | 237-54-13221 | PLATE, OPERATING | 1 | 23001- |
| 9 | 09653-A0481 | PLATE, SAFETY, HYDRAULIC OIL TANK | 1 | 23001- |
| 10 | 234-53-33330 | CHART, OIL | 1 | 23001- |
| 11 | 09667-A0641 | PLATE, SAFETY, REVOLVING OBJECT CAUTION | 2 | 23001- |
| 12 | 09161-E0641 | PLATE, SAFETY, ARTICULATE LOCK | 1 | 23001- |
| 13 | 09162-E0641 | PLATE, SAFETY, KEEP OUT | 1 | 23001- |
| 14 | 237-54-13231 | PLATE, OPERATING | 1 | 23001- |
| 15 | 232-735-1340 | PLATE, OPERATING | 1 | 23001- |
| 16 | 234-53-31510 | PLATE, MARK, GD705A | 2 | 21228- |
| 17 | 234-53-32321 | PLATE, OPERATING | 1 | 23001- |
| 18 | 09960-01001 | PLATE, MARK, HANDLING | 2 | 23001- |
| 19 | 09960-01001 | PLATE, MARK, HANDLING | 2 | 23001- |
| 20 | 09162-E0641 | PLATE, SAFETY, KEEP OUT | 1 | 23001- |
| 21 | 09602-51635 | PLATE, NAME, (LIMITED SUPPLY) | 1 | 21228- |
| | 04418-13060 | SCREW | 4 | 21020- |
| 22 | 234-53-33120 | PLATE, BANK PIN | 1 | 21001- |
| 23 | 09651-A0641 | PLATE, SAFETY, BEFORE OPERATING | 1 | 23001- |
| 24 | 237-54-13260 | PLATE, OPERATING | 1 | 23001- |
| 25 | 232-43-18281 | PLATE, OPERATING | 1 | 23001- |
| 26 | 09602-51635 | PLATE, NAME, KOMATSU | 1 | 23001- |
| 27 | 234-53-43120 | PLATE, TAG | 1 | 23001- |
| 28 | 237-54-13211 | PLATE, OPERATING | 1 | 23001- |
| 29 | 23A-53-11550 | PLATE, OPERATING, TURN SIGNAL | 1 | 23001- |
| 30 | 23F-53-11191 | PLATE, OPERATING, TURN SIGNAL | 1 | 23001- |
| 31 | 234-53-33310 | PLATE, OPERATING, BANK PIN | 1 | 23001 |
| 32 | 234-53-33320 | PLATE, OPERATING | 1 | 23001- |
| 33 | 09683-0000A | PLATE, OPERATING, STARTING SWITCH | 1 | 21337- |
| 34 | 23E-53-11321 | PLATE, OPERATING, HEAD LAMP | 1 | 23001- |
| 35 | 235-45-31260 | PLATE, INSTRUCTION, LOCK | 1 | 23001- |
| 36 | 235-45-31270 | PLATE, INSTRUCTION, UNLOCK | 1 | 23001- |
| 37 | 09808-A0881, | PLATE, SAFETY, BATTERY CABLE | 2 | 23001- |
| 38 | 235-53-32570 | PLATE, INSTRUCTION, BATTERY | 2 | 23001- |
| 39 | 235-53-32580 | PLATE, INSTRUCTION, BATTERY | 2 | 23001- |
| 40 | 234-53-11610 | PLATE, INSTRUCTION, DIMMER SWITCH | 1 | 23001- |
| 41 | 234-53-31310 | PLATE, CAUTION, BATTERY | 1 | 23001- |

FIG NO. : 9831B

| INDEX | PART NO | DESCRIPTION | Q'TY | SERIAL NO. |
|---|---|---|---|---|
| 42 | 232-53-61810 | PLATE, OPERATING, SCARIFIER..... | 1 | 23001- |



GD705A-4

FIG. 9901A TOOL (#23001-)

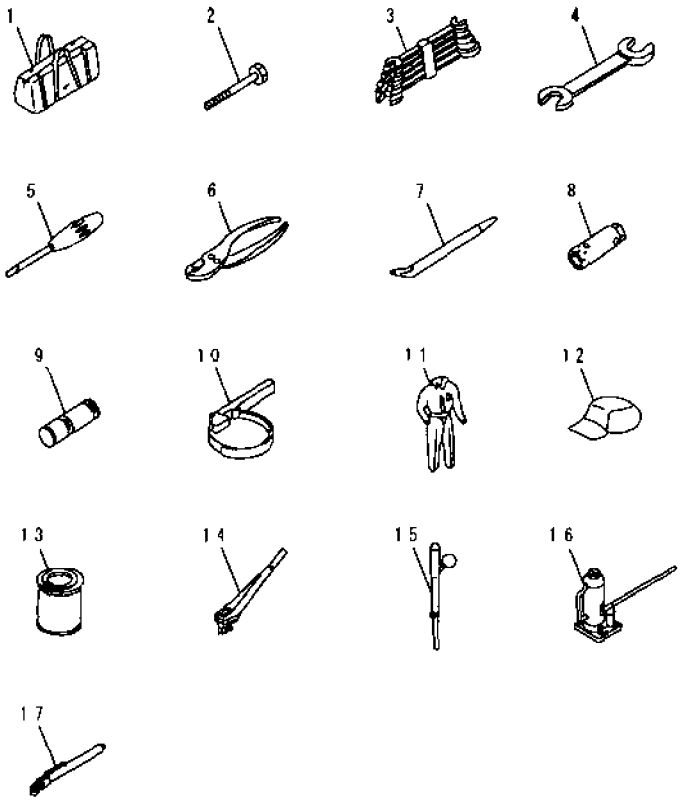


PV59456



FIG NO. : 9901A

| INDEX | PART NO | DESCRIPTION | Q'TY | SERIAL NO |
|---|---|---|---|---|
| 1 | 09056-04613 | BAG | 1 | 23001- |
| 2 | 01010-82470 | BOLT | 1 | 23001- |
| 3 | 09000-30006 | WRENCH SET | 1 | 21001- |
| 4 | 09002-03236 | WRENCH, 32X36 | 1 | 21001- |
| 5 | 09033-00190 | DRIVER, SCREW | 1 | 21001- |
| 6 | 09036-00150 | PLIERS | 1 | 21001- |
| 7 | 09055-10390 | BAR | 1 | 23001- |
| 8 | 09209-13641 | WRENCH | 1 | 21001- |
| 9 | 234-71-13443 | PIN, SHEAR | 4 | 21177- |
| 10 | 09019-08035 | WRENCH | 1 | 21001- |
| 11 | 09980-10550 | OVERALL | 1 | 23001- |
| 12 | 09982-20057 | CAP | 1 | 21228- |
| 13 | 232-902-1290 | PAINT | 1 | 21001- |
| 14 | 232-902-1280 | BRUSH | 1 | 21001- |
| 15 | 08690-00265 | HYDROMETER | 1 | 21001- |
| 16 | 23A-98-11310 | JACK, 10TON | 1 | 21001- |
| | 232-901-3120 | JACK, 15TON | 1 | 21001- |
| 17 | 09289-00000 | GAUGE, TIRE | 1 | 21001- |

# FIG. 9911 TOOL BOX

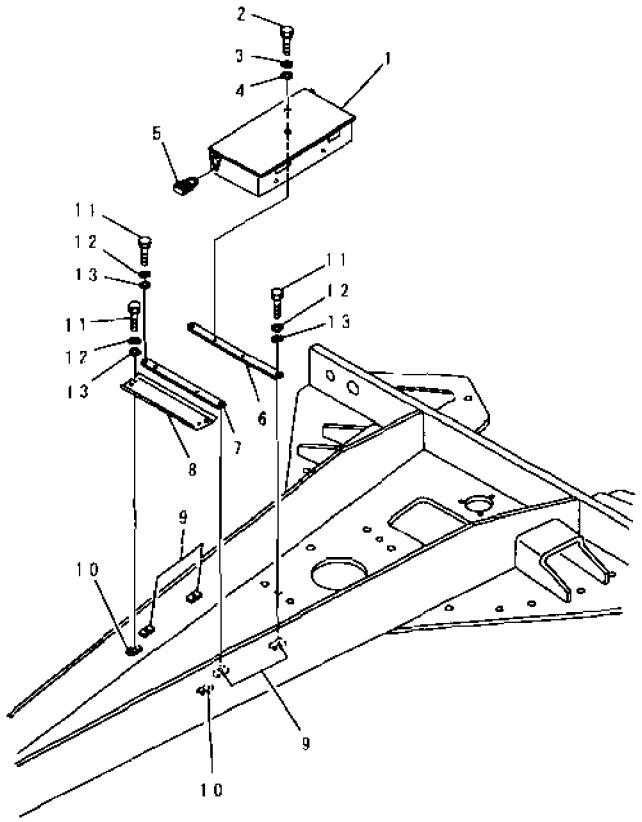


PR52378

| INDEX | PART NO. | DESCRIPTION | Q'TY | SERIAL NO |
|---|---|---|---|---|
| 1 | 234-98-31110 | BOX | 1 | 21001- |
| 2 | 01010-80820 | BOLT | 4 | 23001- |
| | ◆01010-50820 | BOLT | 4 | 21001-23000 |
| 3 | 01643-30823 | WASHER | 4 | 21001- |
| 4 | 01643-30823 | WASHER | 4 | 21001-23000 |
| 5 | 232-46-13310 | PADLOCK | 1 | 21001- |
| 6 | 234-98-31160 | PLATE | 1 | 21001- |
| 7 | 234-98-31170 | PLATE | 1 | 21001- |
| 8 | 234-98-31150 | PLATE | 1 | 21001- |
| 9 | 234-98-31130 | SEAT (WELDED) | 4 | 21001- |
| 10 | 234-98-31140 | SEAT (WELDED) | 2 | 21001- |
| 11 | 01010-80820 | BOLT | 8 | 23001- |
| | ◆01010-50820 | BOLT | 8 | 21001-23000 |
| 12 | 01643-30823 | WASHER | 8 | 21001- |
| 13 | 01643-30823 | WASHER | 8 | 21001-23000 |

# FIG. 9991 KIT (TRANSMISSION)

## KIT

詳細については次のページを参照して下さい。
See subsequent pages for details.

1K-1 234-15-07012
トランスミッション サービス キット 適用号機
TRANSMISSION SERVICE KIT (Serial No.(1615)～)

(■234-15-07011)
トランスミッション サービス キット 適用号機
TRANSMISSION SERVICE KIT (Serial No.(1615)～(2078))

234-15-07010
トランスミッション サービス キット 適用号機
TRANSMISSION SERVICE KIT (Serial No.(21001)～(1614))

1K-2 234-15-07021
トランスミッション コントロール バルブ サービス キット
TRANSMISSION CONTROL VALVE SERVICE KIT
適用号機
(Serial No.(21001)～)

(■113-15-07020)
トランスミッション コントロール バルブ サービス キット
TRANSMISSION CONTROL VALVE SERVICE KIT
適用号機
(Serial No.(21001)～(2078))

PJX0007





| INDEX | PART NO. | DESCRIPTION | Q'TY | SERIAL NO. |
|---|---|---|---|---|
| 1 | 234-15-07012 | SERVICE KIT, TRANSMISSION | 1 | (1615)- |
| | (■234-15-07011) | SERVICE KIT, TRANSMISSION | 1 | ((1615)-(2078)) |
| | 234-15-07010 | SERVICE KIT, TRANSMISSION | 1 | 21001-(1614) |
| | 234-15-21121 | GASKET | 1 | 21001- |
| | (■234-15-21120) | GASKET | 1 | (21001-(2078)) |
| | 07000-73030 | O-RING | 8 | 21001- |
| | 07000-72014 | O-RING | 3 | 21001- |
| | 07000-72021 | O-RING | 9 | 21001- |
| | 07002-03634 | O-RING | 1 | 21001- |
| | 07000-73025 | O-RING | 3 | 21001- |
| | 07000-73045 | O-RING | 1 | 21001- |
| | 07000-02075 | O-RING | 1 | 21001- |
| | 07000-02090 | O-RING | 1 | 21001- |
| | 07000-73035 | O-RING | 1 | 21001- |
| | 07005-01412 | GASKET | 6 | 21001- |
| | 07000-73025 | O-RING | 1 | (1618)- |
| | 07000-05150 | O-RING | 1 | 21001- |
| | 07000-05280 | O-RING | 1 | 21001- |
| | 07000-05170 | O-RING | 3 | 21001- |
| | 07000-05065 | O-RING | 1 | 21001- |
| | 232-15-13451 | GASKET | 2 | (1618)- |
| | 232-15-13450 | GASKET | 2 | 21001-(1617) |
| | 130-09-11590 | SEAL, OIL | 1 | 21001- |
| 2 | 234-15-07021 | SERVICE KIT, TRANSMISSION CONTROL VALVE | 1 | 21001- |
| | (■234-15-07020) | SERVICE KIT, TRANSMISSION CONTROL VALVE | 1 | (21001-(2078)) |
| | 234-15-25951 | GASKET | 1 | 21001- |
| | (■234-15-25950) | GASKET | 1 | (21001-(2078)) |
| | 144-15-29110 | SEAL, OIL | 1 | 21001- |
| | 113-15-11641 | GASKET | 1 | 21001- |
| | (■113-15-11640) | GASKET | 1 | (21001-(2078)) |
| | 232-15-15971 | GASKET | 1 | 21001- |
| | (■232-15-15970) | GASKET | 1 | (21001-(2078)) |
| | 234-15-25921 | GASKET | 1 | 21001- |
| | 234-15-25910 | GASKET | 1 | 21001- |
| | 234-15-25930 | GASKET | 1 | 21001- |
| | 07000-73028 | O-RING | 2 | 21001- |
| | 07000-72021 | O-RING | 16 | 21001- |
| | 07000-73032 | O-RING | 4 | 21001- |
| | 07000-73035 | O-RING | 6 | 21001- |
| | 07000-73045 | O-RING | 1 | 21001- |
| | 07000-72012 | O-RING | 2 | 21001- |
| | 07000-73025 | O-RING | 1 | 21001- |

FIG NO. : 9991

| INDEX | PART NO | DESCRIPTION | Q'TY | SERIAL NO. |
|---|---|---|---|---|
| | 07002-02434 | O-RING | 2 | 21001- |
| | 07000-72016 | O-RING | 1 | 21001- |



GD705A-4

# NUMERICAL INDEX

| PARTS NO. | FIG NO. | INDEX | PAGE |
|---|---|---|---|
| DK010006-1270 | 0711A | 35 | 07- 5 |
| DK010110-2570 | 0711A | 29 | 07- 5 |
| DK012206-1640 | 0456 | 33 | 04- 35 |
| DK013020-6040 | 0455 | 20 | 04- 29 |
| DK013021-0040 | 0456 | 17 | 04- 34 |
| DK014020-8140 | 0711A | 33 | 07- 5 |
| DK014110-6440 | 0455 | 19 | 04- 29 |
| DK014110-6440 | 0711A | 36 | 07- 5 |
| DK014110-8440 | 0711A | 31 | 07- 5 |
| DK014111-0440 | 0711A | 32 | 07- 5 |
| DK016010-0540 | 0465 | 21 | 04- 47 |
| DK016010-1640 | 0466 | 20 | 04- 49 |
| DK016110-1610 | 0711A | 13 | 07- 5 |
| DK016650-2230 | 0455 | 11 | 04- 29 |
| DK016650-2230 | 0455 | 5 | 04- 29 |
| DK016690-2640 | 0711A | 3 | 07- 5 |
| DK020006-1240 | 0455 | 25 | 04- 29 |
| DK020006-1640 | 0466 | 11 | 04- 49 |
| DK020106-2040 | 0455 | 10 | 04- 29 |
| DK020106-2040 | 0465 | 5 | 04- 47 |
| DK020106-3840 | 0466 | 8 | 04- 49 |
| DK020106-5040 | 0466 | 5 | 04- 49 |
| DK023641-8410 | 0473 | 14 | 04- 53 |
| DK024030-2030 | 0456 | 20 | 04- 35 |
| DK025803-1310 | 0466 | 25 | 04- 49 |
| DK025803-1610 | 0465 | 11 | 04- 47 |
| DK025805-1910 | 0455 | 23 | 04- 29 |
| DK026508-1140 | 0466 | 32 | 04- 49 |
| DK026512-1540 | 0466 | 15 | 04- 49 |
| DK026524-2940 | 0455 | 18 | 04- 29 |
| DK026524-3040 | 0465 | 9 | 04- 47 |
| DK029010-6810 | 0455 | 7 | 04- 29 |
| DK029020-6210 | 0466 | 10 | 04- 49 |
| DK029040-6020 | 0455 | 2 | 04- 29 |
| DK029201-6010 | 0465 | 18 | 04- 47 |
| DK029231-2030 | 0465 | 13 | 04- 47 |
| DK029300-5070 | 0423 | 8 | 04- 20 |
| DK029300-5070 | 0991 | 1 | 09- 3 |
| DK029302-0140 | 0456 | 9 | 04- 33 |
| DK029311-0010 | 0465 | 15 | 04- 47 |
| DK029311-0180 | 0465 | 15 | 04- 47 |
| DK029311-0190 | 0465 | 15 | 04- 47 |
| DK029311-0210 | 0465 | 15 | 04- 47 |
| DK029311-1090 | 0466 | 23 | 04- 49 |
| DK029312-4070 | 0711A | 26 | 07- 5 |
| DK029312-4070 | 0991 | 8 | 09- 6 |
| DK029312-4070 | 0993 | 8 | 09- 11 |
| DK029321-2020 | 0465 | 12 | 04- 47 |
| DK029331-6030 | 0483 | 11 | 04- 57 |
| DK029332-6030 | 0483 | 5 | 04- 57 |

| PARTS NO | FIG NO | INDEX | PAGE |
|---|---|---|---|
| DK029333-8020 | 0711A | 20 | 07- 5 |
| DK029333-8020 | 0991 | 8 | 09- 6 |
| DK029333-8020 | 0993 | 8 | 09- 11 |
| DK029341-0110 | 0455 | 29 | 04- 30 |
| DK029341-4130 | 0455 | 27 | 04- 30 |
| DK029341-4130 | 0455 | 31 | 04- 30 |
| DK029341-4130 | 0455 | 33 | 04- 30 |
| DK029341-4130 | 0483 | 17 | 04- 57 |
| DK029341-4130 | 0483 | 18 | 04- 57 |
| DK029602-0010 | 0456 | 11 | 04- 33 |
| DK029623-8040 | 0711A | 5 | 07- 5 |
| DK029623-8040 | 0991 | 8 | 09- 6 |
| DK029623-8040 | 0993 | 8 | 09- 11 |
| DK029631-8020 | 0466 | 19 | 04- 49 |
| DK029632-5070 | 0465 | 2 | 04- 47 |
| DK029632-9040 | 0456 | 13 | 04- 33 |
| DK029635-2020 | 0466 | 31 | 04- 49 |
| DK029635-5050 | 0455 | 15 | 04- 29 |
| DK029711-4310 | 0483 | 16 | 04- 57 |
| DK029731-0120 | 0455 | 28 | 04- 30 |
| DK029731-4680 | 0455 | 30 | 04- 30 |
| DK029731-4680 | 0483 | 15 | 04- 57 |
| DK105217-1600 | 0483 | 1 | 04- 57 |
| DK105407-3042 | 0465 | 1 | 04- 47 |
| DK105407-3042 | 0466 | 1 | 04- 49 |
| DK105663-0360 | 0473 | 1 | 04- 53 |
| DK106069-5431 | 0455 | 1 | 04- 29 |
| DK106069-5431 | 0456 | 1 | 04- 33 |
| DK131041-0500 | 0455 | 21 | 04- 29 |
| DK131206-0500 | 0456 | 30 | 04- 35 |
| DK131424-1520 | 0455 | 32 | 04- 30 |
| DK134001-0000 | 0456 | 18 | 04- 34 |
| DK134042-0100 | 0456 | 32 | 04- 35 |
| DK134043-0800 | 0456 | 31 | 04- 35 |
| DK134045-0100 | 0455 | 17 | 04- 29 |
| DK134047-0000 | 0455 | 22 | 04- 29 |
| DK134051-6220 | 0455 | 1 | 04- 29 |
| DK134101-9820 | 0456 | 2 | 04- 33 |
| DK134110-0120 | 0456 | 3 | 04- 33 |
| DK134112-2000 | 0456 | 7 | 04- 33 |
| DK134115-0100 | 0456 | 8 | 04- 33 |
| DK134116-4720 | 0456 | 4 | 04- 33 |
| DK134117-0500 | 0456 | 6 | 04- 33 |
| DK134131-1020 | 0456 | 1 | 04- 33 |
| DK134132-0300 | 0456 | 16 | 04- 34 |
| DK134135-0200 | 0456 | 10 | 04- 33 |
| DK134137-0100 | 0456 | 12 | 04- 33 |
| DK134138-0000 | 0455 | 4 | 04- 29 |
| DK134143-7720 | 0456 | 1 | 04- 33 |
| DK134200-0020 | 0456 | 26 | 04- 35 |



| PARTS NO. | FIG NO | INDEX | PAGE |
|---|---|---|---|
| DK134203-0000 | 0456 | 29 | 04- 35 |
| DK134204-0000 | 0456 | 27 | 04- 35 |
| DK134205-0000 | 0456 | 28 | 04- 35 |
| DK134215-0400 | 0456 | 24 | 04- 35 |
| DK134216-0000 | 0456 | 23 | 04- 35 |
| DK134217-0000 | 0456 | 25 | 04- 35 |
| DK134222-0000 | 0456 | 21 | 04- 35 |
| DK134241-0021 | 0456 | 22 | 04- 35 |
| DK134256-0000 | 0456 | 19 | 04- 35 |
| DK134303-0000 | 0455 | 6 | 04- 29 |
| DK134303-0100 | 0455 | 6 | 04- 29 |
| DK134303-0200 | 0455 | 6 | 04- 29 |
| DK134303-0300 | 0455 | 6 | 04- 29 |
| DK134303-0400 | 0455 | 6 | 04- 29 |
| DK134306-0700 | 0455 | 9 | 04- 29 |
| DK134311-0000 | 0455 | 3 | 04- 29 |
| DK134314-0000 | 0455 | 14 | 04- 29 |
| DK134314-0100 | 0455 | 14 | 04- 29 |
| DK134314-0200 | 0455 | 14 | 04- 29 |
| DK134314-0300 | 0455 | 14 | 04- 29 |
| DK134314-0400 | 0455 | 14 | 04- 29 |
| DK134314-0500 | 0455 | 14 | 04- 29 |
| DK134314-0600 | 0455 | 14 | 04- 29 |
| DK134316-1700 | 0455 | 12 | 04- 29 |
| DK134325-0600 | 0473 | 15 | 04- 53 |
| DK134371-5200 | 0455 | 8 | 04- 29 |
| DK134430-3520 | 0455 | 26 | 04- 29 |
| DK134496-0100 | 0455 | 24 | 04- 29 |
| DK134563-0900 | 0455 | 16 | 04- 29 |
| DK139208-0500 | 0466 | 3 | 04- 49 |
| DK139400-0900 | 0456 | 15 | 04- 33 |
| DK139400-1000 | 0456 | 15 | 04- 33 |
| DK139400-1100 | 0456 | 15 | 04- 33 |
| DK139400-1200 | 0456 | 15 | 04- 33 |
| DK139400-1300 | 0456 | 15 | 04- 33 |
| DK139400-1400 | 0456 | 15 | 04- 33 |
| DK139400-1500 | 0456 | 15 | 04- 33 |
| DK139400-1600 | 0456 | 15 | 04- 33 |
| DK139400-1700 | 0456 | 15 | 04- 33 |
| DK139400-1800 | 0456 | 15 | 04- 33 |
| DK139400-1900 | 0456 | 15 | 04- 33 |
| DK139400-2000 | 0456 | 15 | 04- 33 |
| DK139400-2100 | 0456 | 15 | 04- 33 |
| DK139400-2200 | 0456 | 15 | 04- 33 |
| DK139400-2300 | 0456 | 15 | 04- 33 |
| DK139400-2400 | 0456 | 15 | 04- 33 |
| DK139400-2500 | 0456 | 15 | 04- 33 |
| DK139400-2600 | 0456 | 15 | 04- 33 |
| DK139400-2700 | 0456 | 15 | 04- 33 |
| DK139400-2800 | 0456 | 15 | 04- 33 |

| PARTS NO. | FIG NO | INDEX | PAGE |
|---|---|---|---|
| DK139400-2900 | 0456 | 15 | 04- 33 |
| DK139400-3000 | 0456 | 15 | 04- 34 |
| DK139400-3100 | 0456 | 15 | 04- 34 |
| DK139400-3200 | 0456 | 15 | 04- 34 |
| DK139400-3300 | 0456 | 15 | 04- 34 |
| DK139400-3400 | 0456 | 15 | 04- 34 |
| DK139400-3500 | 0456 | 15 | 04- 34 |
| DK139400-3600 | 0456 | 15 | 04- 34 |
| DK139400-3700 | 0456 | 15 | 04- 34 |
| DK139400-3800 | 0456 | 15 | 04- 34 |
| DK139400-3900 | 0456 | 15 | 04- 34 |
| DK139400-4000 | 0456 | 15 | 04- 34 |
| DK139400-4100 | 0456 | 15 | 04- 34 |
| DK139400-4200 | 0456 | 15 | 04- 34 |
| DK139400-4300 | 0456 | 15 | 04- 34 |
| DK139400-4400 | 0456 | 15 | 04- 34 |
| DK139400-4500 | 0456 | 15 | 04- 34 |
| DK139400-4600 | 0456 | 15 | 04- 34 |
| DK139400-4700 | 0456 | 15 | 04- 34 |
| DK139400-4800 | 0456 | 15 | 04- 34 |
| DK139400-4900 | 0456 | 15 | 04- 34 |
| DK139400-5000 | 0456 | 15 | 04- 34 |
| DK139400-5100 | 0456 | 15 | 04- 34 |
| DK139400-5200 | 0456 | 15 | 04- 34 |
| DK139400-5300 | 0456 | 15 | 04- 34 |
| DK139400-5400 | 0456 | 15 | 04- 34 |
| DK139400-5500 | 0456 | 15 | 04- 34 |
| DK139400-5600 | 0456 | 15 | 04- 34 |
| DK139400-5700 | 0456 | 15 | 04- 34 |
| DK139400-5800 | 0456 | 15 | 04- 34 |
| DK139400-5900 | 0456 | 15 | 04- 34 |
| DK139400-6000 | 0456 | 15 | 04- 34 |
| DK139400-6100 | 0456 | 15 | 04- 34 |
| DK139400-6200 | 0456 | 15 | 04- 34 |
| DK139400-6300 | 0456 | 15 | 04- 34 |
| DK139400-6400 | 0456 | 15 | 04- 34 |
| DK139400-6500 | 0456 | 15 | 04- 34 |
| DK139400-6600 | 0456 | 15 | 04- 34 |
| DK139400-6700 | 0456 | 15 | 04- 34 |
| DK139400-6800 | 0456 | 15 | 04- 34 |
| DK139410-0000 | 0465 | 15 | 04- 47 |
| DK139410-0100 | 0465 | 15 | 04- 47 |
| DK139411-0000 | 0466 | 22 | 04- 49 |
| DK139611-0000 | 0466 | 21 | 04- 49 |
| DK139629-0100 | 0455 | 13 | 04- 29 |
| DK139715-0000 | 0456 | 14 | 04- 33 |
| DK139716-0000 | 0483 | 10 | 04- 57 |
| DK139722-0100 | 0456 | 5 | 04- 33 |
| DK150524-4100 | 0423 | 6 | 04- 20 |
| DK150525-1700 | 0423 | 2 | 04- 19 |

| PARTS NO | FIG NO | INDEX | PAGE |
|---|---|---|---|
| DK150530-4000 | 0423 | 5 | 04- 19 |
| DK150530-4100 | 0423 | 5 | 04- 19 |
| DK150530-4200 | 0423 | 5 | 04- 19 |
| DK150530-4300 | 0423 | 5 | 04- 19 |
| DK150530-4400 | 0423 | 5 | 04- 19 |
| DK150530-4500 | 0423 | 5 | 04- 19 |
| DK150530-4600 | 0423 | 5 | 04- 19 |
| DK150530-4700 | 0423 | 5 | 04- 19 |
| DK150530-4800 | 0423 | 5 | 04- 19 |
| DK150530-4900 | 0423 | 5 | 04- 19 |
| DK150530-5000 | 0423 | 5 | 04- 19 |
| DK150530-5100 | 0423 | 5 | 04- 19 |
| DK150530-5200 | 0423 | 5 | 04- 19 |
| DK150530-5300 | 0423 | 5 | 04- 19 |
| DK150530-5400 | 0423 | 5 | 04- 19 |
| DK150530-5500 | 0423 | 5 | 04- 19 |
| DK150530-5600 | 0423 | 5 | 04- 19 |
| DK150530-5700 | 0423 | 5 | 04- 19 |
| DK150530-5800 | 0423 | 5 | 04- 19 |
| DK150530-5900 | 0423 | 5 | 04- 19 |
| DK150530-6000 | 0423 | 5 | 04- 19 |
| DK150530-6100 | 0423 | 5 | 04- 19 |
| DK150530-6200 | 0423 | 5 | 04- 19 |
| DK150530-6300 | 0423 | 5 | 04- 19 |
| DK150530-6400 | 0423 | 5 | 04- 19 |
| DK150530-6500 | 0423 | 5 | 04- 19 |
| DK150530-6600 | 0423 | 5 | 04- 19 |
| DK150530-6700 | 0423 | 5 | 04- 19 |
| DK150530-6800 | 0423 | 5 | 04- 19 |
| DK150530-6900 | 0423 | 5 | 04- 19 |
| DK150530-7000 | 0423 | 5 | 04- 19 |
| DK150530-7100 | 0423 | 5 | 04- 19 |
| DK150530-7200 | 0423 | 5 | 04- 19 |
| DK150530-7300 | 0423 | 5 | 04- 19 |
| DK150530-7400 | 0423 | 5 | 04- 19 |
| DK150530-7500 | 0423 | 5 | 04- 19 |
| DK150530-7600 | 0423 | 5 | 04- 19 |
| DK150530-7700 | 0423 | 5 | 04- 20 |
| DK150530-7800 | 0423 | 5 | 04- 20 |
| DK150530-7900 | 0423 | 5 | 04- 20 |
| DK150530-8000 | 0423 | 5 | 04- 20 |
| DK150530-8100 | 0423 | 5 | 04- 20 |
| DK150530-8200 | 0423 | 5 | 04- 20 |
| DK150530-8300 | 0423 | 5 | 04- 20 |
| DK150530-8400 | 0423 | 5 | 04- 20 |
| DK150530-8500 | 0423 | 5 | 04- 20 |
| DK150530-8600 | 0423 | 5 | 04- 20 |
| DK150530-8700 | 0423 | 5 | 04- 20 |
| DK150530-8800 | 0423 | 5 | 04- 20 |
| DK150530-8900 | 0423 | 5 | 04- 20 |

| PARTS NO | FIG NO | INDEX | PAGE |
|---|---|---|---|
| DK150530-9000 | 0423 | 5 | 04- 20 |
| DK150530-9100 | 0423 | 5 | 04- 20 |
| DK150530-9200 | 0423 | 5 | 04- 20 |
| DK150530-9300 | 0423 | 5 | 04- 20 |
| DK150530-9400 | 0423 | 5 | 04- 20 |
| DK150530-9500 | 0423 | 5 | 04- 20 |
| DK150530-9600 | 0423 | 5 | 04- 20 |
| DK150530-9700 | 0423 | 5 | 04- 20 |
| DK150530-9800 | 0423 | 5 | 04- 20 |
| DK150530-9900 | 0423 | 5 | 04- 20 |
| DK150550-4700 | 0423 | 3 | 04- 19 |
| DK150562-5000 | 0423 | 4 | 04- 19 |
| DK150645-6800 | 0423 | 9 | 04- 20 |
| DK150650-9400 | 0423 | 7 | 04- 20 |
| DK152004-1620 | 0483 | 1 | 04- 57 |
| DK152100-1120 | 0483 | 2 | 04- 57 |
| DK152102-1600 | 0483 | 3 | 04- 57 |
| DK152105-0200 | 0483 | 4 | 04- 57 |
| DK152111-4020 | 0483 | 6 | 04- 57 |
| DK152115-0500 | 0483 | 7 | 04- 57 |
| DK152116-0200 | 0483 | 8 | 04- 57 |
| DK152117-0400 | 0483 | 9 | 04- 57 |
| DK152121-0200 | 0483 | 12 | 04- 57 |
| DK152200-5320 | 0483 | 13 | 04- 57 |
| DK152300-5920 | 0483 | 14 | 04- 57 |
| DK152320-0100 | 0483 | 19 | 04- 57 |
| DK154000-5720 | 0465 | 1 | 04- 47 |
| DK154007-2900 | 0465 | 3 | 04- 47 |
| DK154010-0100 | 0465 | 6 | 04- 47 |
| DK154010-0300 | 0466 | 6 | 04- 49 |
| DK154011-0100 | 0465 | 7 | 04- 47 |
| DK154011-0100 | 0466 | 7 | 04- 49 |
| DK154011-1700 | 0466 | 14 | 04- 49 |
| DK154031-4300 | 0466 | 2 | 04- 49 |
| DK154035-2000 | 0466 | 33 | 04- 49 |
| DK154036-0300 | 0466 | 4 | 04- 49 |
| DK154063-7300 | 0466 | 9 | 04- 49 |
| DK154101-0020 | 0465 | 10 | 04- 47 |
| DK154123-2720 | 0465 | 14 | 04- 47 |
| DK154150-0400 | 0466 | 12 | 04- 49 |
| DK154154-0500 | 0465 | 16 | 04- 47 |
| DK154158-1020 | 0466 | 13 | 04- 49 |
| DK154159-1200 | 0466 | 16 | 04- 49 |
| DK154177-0920 | 0465 | 17 | 04- 47 |
| DK154200-7020 | 0466 | 17 | 04- 49 |
| DK154204-3000 | 0466 | 18 | 04- 49 |
| DK154204-3100 | 0466 | 24 | 04- 49 |
| DK154206-0200 | 0466 | 27 | 04- 49 |
| DK154206-2800 | 0466 | 26 | 04- 49 |
| DK154210-2720 | 0465 | 19 | 04- 47 |





| PARTS NO. | FIG NO. | INDEX | PAGE |
|---|---|---|---|
| DK154230-2920 | 0465 | 20 | 04- 47 |
| DK154236-4100 | 0465 | 22 | 04- 47 |
| DK154237-1100 | 0466 | 28 | 04- 49 |
| DK154347-4920 | 0466 | 29 | 04- 49 |
| DK154350-6000 | 0465 | 4 | 04- 47 |
| DK154350-7800 | 0466 | 30 | 04- 49 |
| DK154350-8700 | 0465 | 24 | 04- 47 |
| DK154500-8820 | 0466 | 1 | 04- 49 |
| DK155404-1700 | 0465 | 8 | 04- 47 |
| DK155412-5800 | 0465 | 23 | 04- 47 |
| DK156603-4400 | 0711A | 28 | 07- 5 |
| DK156605-5320 | 0473 | 4 | 04- 53 |
| DK156605-5420 | 0473 | 9 | 04- 53 |
| DK156609-6300 | 0473 | 7 | 04- 53 |
| DK156615-1600 | 0473 | 11 | 04- 53 |
| DK156615-2800 | 0473 | 3 | 04- 53 |
| DK156617-2100 | 0473 | 5 | 04- 53 |
| DK156630-6400 | 0473 | 1 | 04- 53 |
| DK156633-3300 | 0473 | 10 | 04- 53 |
| DK156633-3300 | 0473 | 6 | 04- 53 |
| DK156633-3300 | 0473 | 8 | 04- 53 |
| DK156633-6200 | 0473 | 2 | 04- 53 |
| DK156633-8400 | 0473 | 12 | 04- 53 |
| DK156636-6200 | 0473 | 13 | 04- 53 |
| DK156636-6220 | 0473 | 13 | 04- 53 |
| DK487000-5800 | 0711A | 1 | 07- 5 |
| DK487001-2700 | 0711A | 8 | 07- 5 |
| DK487003-3120 | 0711A | 4 | 07- 5 |
| DK487008-8300 | 0711A | 2 | 07- 5 |
| DK487009-2000 | 0711A | 10 | 07- 5 |
| DK487010-4720 | 0711A | 11 | 07- 5 |
| DK487012-0100 | 0711A | 12 | 07- 5 |
| DK487013-1820 | 0711A | 9 | 07- 5 |
| DK487018-4320 | 0711A | 15 | 07- 5 |
| DK487018-4420 | 0711A | 15 | 07- 5 |
| DK487020-2100 | 0711A | 14 | 07- 5 |
| DK487020-2100 | 0991 | 8 | 09- 6 |
| DK487020-2100 | 0993 | 8 | 09- 11 |
| DK487021-2020 | 0711A | 27 | 07- 5 |
| DK487025-0900 | 0711A | 19 | 07- 5 |
| DK487026-1600 | 0711A | 18 | 07- 5 |
| DK487027-1100 | 0711A | 17 | 07- 5 |
| DK487028-1601 | 0711A | 16 | 07- 5 |
| DK487030-2000 | 0711A | 24 | 07- 5 |
| DK487031-1800 | 0711A | 23 | 07- 5 |
| DK487032-2700 | 0711A | 22 | 07- 5 |
| DK487039-0200 | 0711A | 25 | 07- 5 |
| DK487039-0200 | 0991 | 8 | 09- 6 |
| DK487039-0200 | 0993 | 8 | 09- 11 |
| DK487042-1000 | 0711A | 21 | 07- 5 |

| PARTS NO. | FIG NO | INDEX | PAGE |
|---|---|---|---|
| DK487061-2500 | 0711A | 6 | 07- 5 |
| DK487061-2500 | 0991 | 8 | 09- 6 |
| DK487061-2500 | 0993 | 8 | 09- 11 |
| DK487061-3700 | 0711A | 7 | 07- 5 |
| DK487061-3700 | 0991 | 8 | 09- 6 |
| DK487061-3700 | 0993 | 8 | 09- 11 |
| DK487088-0000 | 0711A | 30 | 07- 5 |
| DK487093-0000 | 0711A | 34 | 07- 5 |
| DK487099-9220 | 0711A | 10 | 07- 5 |
| GA400580-0000 | 0155A | 6 | 01- 19 |
| GA400627-0810 | 0155A | 3 | 01- 19 |
| GA400738-0460 | 0155A | 5 | 01- 19 |
| GA400738-5460 | 0155A | 5 | 01- 19 |
| GA410987-0000 | 0155A | 2 | 01- 19 |
| GA441398-5052 | 0155A | 7 | 01- 19 |
| GA442262-0004 | 0155A | 4 | 01- 19 |
| GA443209-0028 | 0155A | 1 | 01- 19 |
| KBB520A-00001 | 2503A | KIT | 20- 53 |
| KBB530A-10001 | 6011 | KIT | 60- 3 |
| KBB530A-10001 | 6012 | KIT | 60- 5 |
| KBB530B-00006 | 2501A | 4 | 20- 51 |
| KBB530B-10003 | 6011 | 8 | 60- 3 |
| KBB5850-00103 | 2503A | 15 | 20- 53 |
| KBC001B-23007 | 2503A | 20 | 20- 53 |
| KB20111-11301 | 2503A | 14 | 20- 53 |
| KB2013A-60012 | 2501A | KIT | 20- 51 |
| KB2013A-60013 | 6016 | KIT | 60- 9 |
| KB2013B-20034 | 2503A | 2 | 20- 53 |
| KB2013B-70019 | 6011 | 6 | 60- 3 |
| KB20131-21447 | 2503A | 13 | 20- 53 |
| KB20131-21542 | 2503A | 6 | 20- 53 |
| KB20131-60720 | 2501A | 6 | 20- 51 |
| KB20131-60720 | 6017 | 6 | 60- 11 |
| KB20131-60722 | 6011 | 10 | 60- 3 |
| KB20131-60722 | 6012 | 10 | 60- 5 |
| KB20131-60722 | 6016 | 6 | 60- 9 |
| KB20131-61402 | 2501A | 9 | 20- 51 |
| KB20131-61801 | 2501A | 10 | 20- 51 |
| KB20131-61801 | 6011 | 22 | 60- 3 |
| KB20131-61801 | 6012 | 22 | 60- 5 |
| KB20131-61801 | 6016 | 10 | 60- 9 |
| KB20131-61801 | 6017 | 10 | 60- 11 |
| KB20131-61901 | 6011 | 16 | 60- 3 |
| KB20131-61901 | 6012 | 16 | 60- 5 |
| KB20131-70401 | 6011 | 15 | 60- 3 |
| KB20131-70401 | 6012 | 15 | 60- 5 |
| KB20131-70812 | 6011 | 20 | 60- 3 |
| KB20131-70901 | 6011 | 19 | 60- 3 |
| KB20131-70901 | 6012 | 19 | 60- 5 |
| KB20132-20543 | 2503A | 4 | 20- 53 |

| PARTS NO. | FIG NO. | INDEX | PAGE |
|---|---|---|---|
| KB20132-60422 | 2501A | 3 | 20- 51 |
| KB20132-60522 | 6011 | 1 | 60- 3 |
| KB20132-60522 | 6012 | 1 | 60- 5 |
| KB20132-60522 | 6016 | 3 | 60- 9 |
| KB20132-60522 | 6017 | 3 | 60- 11 |
| KB20132-60620 | 2501A | 1 | 20- 51 |
| KB20132-60620 | 6011 | 5 | 60- 3 |
| KB20132-60620 | 6012 | 5 | 60- 5 |
| KB20132-60620 | 6016 | 1 | 60- 9 |
| KB20132-60620 | 6017 | 1 | 60- 11 |
| KB20132-70320 | 6011 | 3 | 60- 3 |
| KB20132-70320 | 6012 | 3 | 60- 5 |
| KB20802-50101 | 2503A | 5 | 20- 53 |
| KB20931-70210 | 2503A | 16 | 20- 53 |
| KB20931-70503 | 2503A | 18 | 20- 53 |
| KB20931-90117 | 2503A | 15 | 20- 53 |
| KB21001-00036 | 2503A | 19 | 20- 53 |
| KB21001-00332 | 6203A | 1 | 60- 29 |
| KB21001-00332 | 6215A | 1 | 60- 31 |
| KB21001-00333 | 6203A | 3 | 60- 29 |
| KB21001-00333 | 6215A | 3 | 60- 31 |
| KB21001-00504 | 6221A | 20 | 60- 33 |
| KB21001-00504 | 6223 | 20 | 60- 35 |
| KB21003-00197 | 6203A | 9 | 60- 29 |
| KB21003-00207 | 6201A | 9 | 60- 27 |
| KB21003-00207 | 6221A | 20 | 60- 33 |
| KB21003-00207 | 6223 | 20 | 60- 35 |
| KB21011-30153 | 6201A | 6 | 60- 27 |
| KB21011-30153 | 6221A | 19 | 60- 33 |
| KB21011-30153 | 6223 | 19 | 60- 35 |
| KB21011-30349 | 6221A | 16 | 60- 33 |
| KB21011-30349 | 6223 | 16 | 60- 35 |
| KB21011-30507 | 6221A | 7 | 60- 33 |
| KB21011-30507 | 6223 | 7 | 60- 35 |
| KB21011-30604 | 6221A | 14 | 60- 33 |
| KB21011-30604 | 6223 | 14 | 60- 35 |
| KB21011-30646 | 6221A | 5 | 60- 33 |
| KB21011-30646 | 6223 | 5 | 60- 35 |
| KB21011-30702 | 6221A | 6 | 60- 33 |
| KB21011-30702 | 6223 | 6 | 60- 35 |
| KB21011-31044 | 6221A | 8 | 60- 33 |
| KB21011-31044 | 6223 | 8 | 60- 35 |
| KB21011-31702 | 6221A | 11 | 60- 33 |
| KB21011-31702 | 6221A | 9 | 60- 33 |
| KB21011-31702 | 6223 | 11 | 60- 35 |
| KB21011-31702 | 6223 | 9 | 60- 35 |
| KB21011-32404 | 6221A | 13 | 60- 33 |
| KB21011-32404 | 6223 | 13 | 60- 35 |
| KB21011-40301 | 6203A | 6 | 60- 29 |
| KB21011-40401 | 6203A | 2 | 60- 29 |

| PARTS NO. | FIG NO. | INDEX | PAGE |
|---|---|---|---|
| KB21011-40402 | 6203A | 4 | 60- 29 |
| KB21011-41602 | 6215A | 9 | 60- 31 |
| KB21013-30664 | 6201A | 8 | 60- 27 |
| KB21013-30664 | 6221A | 18 | 60- 33 |
| KB21013-30664 | 6223 | 18 | 60- 35 |
| KB21013-34839 | 6221A | 16 | 60- 33 |
| KB21013-34839 | 6223 | 16 | 60- 35 |
| KB21013-34848 | 6201A | 5 | 60- 27 |
| KB21013-35039 | 6201A | 7 | 60- 27 |
| KB21013-35039 | 6221A | 1 | 60- 33 |
| KB21013-35039 | 6223 | 1 | 60- 35 |
| KB21013-40121 | 6215A | 6 | 60- 31 |
| KB21013-40201 | 6203A | 7 | 60- 29 |
| KB21013-40201 | 6215A | 7 | 60- 31 |
| KB21013-40301 | 6215A | 8 | 60- 31 |
| KB21013-47104 | 6215A | 5 | 60- 31 |
| KB21013-47105 | 6203A | 5 | 60- 29 |
| KB21031-30103 | 6201A | 4 | 60- 27 |
| KB21031-30104 | 6201A | 2 | 60- 27 |
| KB21031-40401 | 6215A | 2 | 60- 31 |
| KB21031-40402 | 6215A | 4 | 60- 31 |
| KB21041-30103 | 6221A | 24 | 60- 33 |
| KB21041-30104 | 6221A | 22 | 60- 33 |
| KB21051-30105 | 6223 | 24 | 60- 35 |
| KB21051-30106 | 6223 | 22 | 60- 35 |
| KB21113-40058 | 6203A | 8 | 60- 29 |
| KB21113-40058 | 6215A | 10 | 60- 31 |
| KB21731-30937 | 2503A | 21 | 20- 53 |
| KB21731-40501 | 2503A | 17 | 20- 53 |
| KB91111-60102 | 6221A | 12 | 60- 33 |
| KB91111-60102 | 6223 | 12 | 60- 35 |
| KB92702-06181 | 6221A | 10 | 60- 33 |
| KB92702-06181 | 6223 | 10 | 60- 35 |
| KB92702-10160 | 6011 | 17 | 60- 3 |
| KB92702-10160 | 6012 | 17 | 60- 5 |
| KB92703-14010 | 6016 | 9 | 60- 9 |
| KB93118-08652 | 6201A | 1 | 60- 27 |
| KB93118-08652 | 6221A | 23 | 60- 33 |
| KB93118-08652 | 6223 | 23 | 60- 35 |
| KB93128-10082 | 6201A | 3 | 60- 27 |
| KB93128-10082 | 6221A | 25 | 60- 33 |
| KB93128-10082 | 6223 | 25 | 60- 35 |
| KB93308-14110 | 6011 | 21 | 60- 3 |
| KB93308-14110 | 6012 | 21 | 60- 5 |
| KB99001-04040 | 6221A | 26 | 60- 33 |
| KB99001-04040 | 6223 | 26 | 60- 35 |
| KDO-0055-05252 | 0641 | 28 | 06- 11 |
| KDO-0056-05452 | 0641 | 35 | 06- 11 |
| KDO-0080-05102 | 0641 | 23 | 06- 11 |
| KDO-0080-05452 | 0641 | 32 | 06- 11 |



| PARTS NO. | FIG NO | INDEX | PAGE |
|---|---|---|---|
| KDO-0080-05502 | 0641 | 31 | 06- 11 |
| KDO-0275-06852 | 0641 | 14 | 06- 11 |
| KDO-0280-16022 | 0641 | 19 | 06- 11 |
| KDO-23100-0251 | 0661A | 1 | 06- 15 |
| KDO-23230-0281 | 0661A | 4 | 06- 15 |
| KDO-23310-0860 | 0661A | 7 | 06- 15 |
| KDO-23600-0250 | 0661A | 14 | 06- 15 |
| KDO-23611-0690 | 0661A | 15 | 06- 15 |
| KDO-23700-0130 | 0661A | 19 | 06- 15 |
| KDO-23740-0250 | 0661A | 22 | 06- 15 |
| KDO-23750-0250 | 0661A | 21 | 06- 15 |
| KDO-23901-0170 | 0661A | 23 | 06- 15 |
| KDO-25000-6520 | 0661A | 24 | 06- 15 |
| KDO-33120-0220 | 0641 | 20 | 06- 11 |
| KDO-33710-2870 | 0641 | 21 | 06- 11 |
| KDO-33730-2190 | 0641 | 22 | 06- 11 |
| KDO-35411-0180 | 0641 | 15 | 06- 11 |
| KDO-35700-0030 | 0641 | 21 | 06- 11 |
| KDO-35926-0060 | 0641 | 6 | 06- 11 |
| KDO-47100-3940 | 0661A | 18 | 06- 15 |
| KD1-0055-06162 | 0641 | 5 | 06- 11 |
| KD1-0240-08405 | 0661A | 16 | 06- 15 |
| KD1-0330-16012 | 0641 | 17 | 06- 11 |
| KD1-0335-16002 | 0641 | 18 | 06- 11 |
| KD1-0416-04160 | 0641 | 3 | 06- 11 |
| KD1-0454-60067 | 0661A | 10 | 06- 15 |
| KD1-0454-62007 | 0661A | 3 | 06- 15 |
| KD1-0454-62047 | 0661A | 2 | 06- 15 |
| KD1-0456-63057 | 0641 | 2 | 06- 11 |
| KD1-0550-05013 | 0641 | 33 | 06- 11 |
| KD1-09102-0010 | 0641 | 27 | 06- 11 |
| KD1-09202-0070 | 0641 | 24 | 06- 11 |
| KD1-23181-0020 | 0661A | 11 | 06- 15 |
| KD1-23500-0170 | 0661A | 13 | 06- 15 |
| KD1-23785-0060 | 0661A | 5 | 06- 15 |
| KD1-23913-0040 | 0661A | 20 | 06- 15 |
| KD1-23914-0020 | 0661A | 12 | 06- 15 |
| KD1-33100-1270 | 0641 | 1 | 06- 11 |
| KD1-33200-1230 | 0641 | 12 | 06- 11 |
| KD1-33310-1060 | 0641 | 13 | 06- 11 |
| KD1-33421-0510 | 0641 | 16 | 06- 11 |
| KD1-33923-0780 | 0641 | 4 | 06- 11 |
| KD1-33923-0810 | 0641 | 10 | 06- 11 |
| KD1-33926-0730 | 0641 | 9 | 06- 11 |
| KD1-33926-0750 | 0641 | 8 | 06- 11 |
| KD1-33926-0770 | 0641 | 11 | 06- 11 |
| KD1-33928-0220 | 0641 | 26 | 06- 11 |
| KD1-33928-0230 | 0641 | 29 | 06- 11 |
| KD1-33943-0760 | 0641 | 30 | 06- 11 |
| KD1-33943-0770 | 0641 | 25 | 06- 11 |

| PARTS NO | FIG NO | INDEX | PAGE |
|---|---|---|---|
| KD1-33951-0610 | 0641 | 7 | 06- 11 |
| KD1-35411-0040 | 0641 | 15 | 06- 11 |
| KD7-09210-1560 | 0661A | 25 | 06- 15 |
| KD7-23120-0310 | 0661A | 9 | 06- 15 |
| KD7-23320-0060 | 0661A | 17 | 06- 15 |
| KD7-23351-0080 | 0661A | 8 | 06- 15 |
| KD7-23700-0520 | 0661A | 19 | 06- 15 |
| KD7-23780-0200 | 0661A | 6 | 06- 15 |
| KD7-44000-0907 | 0641 | 34 | 06- 11 |
| KUUNFI/4F | 2051 | 2 | 20- 5 |
| ND014540-0280 | 5611 | 2 | 50- 67 |
| ND014540-0290 | 5611 | 2 | 50- 67 |
| ND047310-7240 | 5620 | 3 | 50- 89 |
| ND047350-7130 | 5620 | 4 | 50- 89 |
| ND047372-0660 | 5620 | 7 | 50- 89 |
| ND090012-0140 | 0451C | 27 | 04- 24 |
| ND090018-0410 | 0452C | 21 | 04- 27 |
| ND090061-0011 | 0481B | 17 | 04- 55 |
| ND090110-4460 | 0451C | 1 | 04- 23 |
| ND090114-0110 | 0452C | 19 | 04- 27 |
| ND090118-0490 | 0451C | 25 | 04- 24 |
| ND090119-0160 | 0461B | 28 | 04- 40 |
| ND090130-0500 | 0452C | 1 | 04- 27 |
| ND090136-0770 | 0452C | 2 | 04- 27 |
| ND090139-0340 | 0452C | 16 | 04- 27 |
| ND090140-1430 | 0452C | 4 | 04- 27 |
| ND090150-5881 | 0452C | 5 | 04- 27 |
| ND090160-0150 | 0452C | 6 | 04- 27 |
| ND090163-0160 | 0452C | 8 | 04- 27 |
| ND090164-0250 | 0452C | 9 | 04- 27 |
| ND090165-0150 | 0452C | 10 | 04- 27 |
| ND090170-0320 | 0452C | 11 | 04- 27 |
| ND090191-1090 | 0451C | 4 | 04- 23 |
| ND090193-0050 | 0451C | 6 | 04- 23 |
| ND090193-0060 | 0451C | 16 | 04- 23 |
| ND090194-0070 | 0451C | 7 | 04- 23 |
| ND090194-0080 | 0451C | 7 | 04- 23 |
| ND090194-0090 | 0451C | 7 | 04- 23 |
| ND090194-0100 | 0451C | 7 | 04- 23 |
| ND090194-0300 | 0451C | 23 | 04- 23 |
| ND090194-0310 | 0451C | 23 | 04- 24 |
| ND090194-0320 | 0451C | 23 | 04- 24 |
| ND090194-0330 | 0451C | 23 | 04- 24 |
| ND090194-0340 | 0451C | 7 | 04- 23 |
| ND090194-0350 | 0451C | 7 | 04- 23 |
| ND090194-0360 | 0451C | 7 | 04- 23 |
| ND090194-0370 | 0451C | 23 | 04- 23 |
| ND090194-0380 | 0451C | 23 | 04- 23 |
| ND090194-0390 | 0451C | 23 | 04- 24 |
| ND090194-0410 | 0451C | 7 | 04- 23 |

| PARTS NO. | FIG NO. | INDEX | PAGE |
|---|---|---|---|
| ND090194-0420 | 0451C | 23 | 04- 23 |
| ND090201-0430 | 0451C | 9 | 04- 23 |
| ND090212-0471 | 0452C | 7 | 04- 27 |
| ND090215-0060 | 0452C | 18 | 04- 27 |
| ND090222-0070 | 0451C | 17 | 04- 23 |
| ND090222-0070 | 0451C | 30 | 04- 24 |
| ND090222-0070 | 0481B | 22 | 04- 55 |
| ND090222-0120 | 0461B | 31 | 04- 40 |
| ND090224-0140 | 0461B | 27 | 04- 39 |
| ND090241-0010 | 0462B | 28 | 04- 43 |
| ND090245-0230 | 0461B | 30 | 04- 40 |
| ND090248-0010 | 0451C | 14 | 04- 23 |
| ND090310-0080 | 0451C | 31 | 04- 24 |
| ND090317-0140 | 0451C | 15 | 04- 23 |
| ND090361-0180 | 0451C | 12 | 04- 23 |
| ND090361-0240 | 0451C | 12 | 04- 23 |
| ND090367-0040 | 0452C | 20 | 04- 27 |
| ND090433-0020 | 0451C | 11 | 04- 23 |
| ND090438-0391 | 0452C | 12 | 04- 27 |
| ND090438-0401 | 0452C | 12 | 04- 27 |
| ND090438-0411 | 0452C | 12 | 04- 27 |
| ND090438-0421 | 0452C | 12 | 04- 27 |
| ND090438-0431 | 0452C | 12 | 04- 27 |
| ND090438-0441 | 0452C | 12 | 04- 27 |
| ND090438-0451 | 0452C | 12 | 04- 27 |
| ND090438-0461 | 0452C | 12 | 04- 27 |
| ND090438-0471 | 0452C | 12 | 04- 27 |
| ND090438-0481 | 0452C | 12 | 04- 27 |
| ND090438-0491 | 0452C | 12 | 04- 27 |
| ND090438-0501 | 0452C | 12 | 04- 27 |
| ND090438-0511 | 0452C | 12 | 04- 27 |
| ND090438-0521 | 0452C | 12 | 04- 27 |
| ND090560-0200 | 0462B | 10 | 04- 43 |
| ND090810-0540 | 0461B | 1 | 04- 39 |
| ND090823-0420 | 0461B | 29 | 04- 40 |
| ND090840-0520 | 0461B | 11 | 04- 39 |
| ND090844-0010 | 0461B | 13 | 04- 39 |
| ND090860-0200 | 0461B | 14 | 04- 39 |
| ND090868-0040 | 0461B | 15 | 04- 39 |
| ND090878-0260 | 0461B | 2 | 04- 39 |
| ND090880-0140 | 0462B | 12 | 04- 43 |
| ND090892-0160 | 0462B | 13 | 04- 43 |
| ND090894-0010 | 0461B | 21 | 04- 39 |
| ND090894-0010 | 0461B | 6 | 04- 39 |
| ND090901-0150 | 0461B | 4 | 04- 39 |
| ND090910-0430 | 0461B | 20 | 04- 39 |
| ND090911-0010 | 0461B | 20 | 04- 39 |
| ND090918-0380 | 0461B | 22 | 04- 39 |
| ND090919-0010 | 0461B | 23 | 04- 39 |
| ND090921-0010 | 0461B | 24 | 04- 39 |

| PARTS NO. | FIG NO | INDEX | PAGE |
|---|---|---|---|
| ND090923-0011 | 0461B | 26 | 04- 39 |
| ND090923-0060 | 0462B | 11 | 04- 43 |
| ND090930-0490 | 0461B | 5 | 04- 39 |
| ND090944-0310 | 0462B | 6 | 04- 43 |
| ND090944-0440 | 0462B | 43 | 04- 44 |
| ND090970-0350 | 0461B | 9 | 04- 39 |
| ND090989-0010 | 0462B | 7 | 04- 43 |
| ND090991-0010 | 0462B | 8 | 04- 43 |
| ND090992-0410 | 0461B | 18 | 04- 39 |
| ND090993-0280 | 0461B | 19 | 04- 39 |
| ND091006-0150 | 0462B | 5 | 04- 43 |
| ND091011-2280 | 0462B | 1 | 04- 43 |
| ND091014-0090 | 0462B | 2 | 04- 43 |
| ND091016-0360 | 0462B | 33 | 04- 43 |
| ND091024-0031 | 0461B | 3 | 04- 39 |
| ND091024-0031 | 0462B | 3 | 04- 43 |
| ND091031-0030 | 0462B | 29 | 04- 43 |
| ND091031-0151 | 0462B | 4 | 04- 43 |
| ND091033-0030 | 0462B | 39 | 04- 44 |
| ND091034-0130 | 0462B | 37 | 04- 44 |
| ND091035-0240 | 0462B | 35 | 04- 43 |
| ND091036-0010 | 0462B | 36 | 04- 43 |
| ND091038-0030 | 0462B | 40 | 04- 44 |
| ND091038-0040 | 0462B | 30 | 04- 43 |
| ND091038-0050 | 0462B | 34 | 04- 43 |
| ND091042-0030 | 0462B | 38 | 04- 44 |
| ND091043-0010 | 0462B | 42 | 04- 44 |
| ND091046-0010 | 0461B | 8 | 04- 39 |
| ND091051-0480 | 0462B | 25 | 04- 43 |
| ND091070-4290 | 0462B | 20 | 04- 43 |
| ND091071-1420 | 0462B | 19 | 04- 43 |
| ND091090-1110 | 0462B | 23 | 04- 43 |
| ND091094-0060 | 0462B | 22 | 04- 43 |
| ND092100-1761 | 0481B | 1 | 04- 55 |
| ND092120-0370 | 0481B | 1 | 04- 55 |
| ND092121-0011 | 0481B | 12 | 04- 55 |
| ND092124-0010 | 0481B | 13 | 04- 55 |
| ND092125-0010 | 0481B | 16 | 04- 55 |
| ND092126-0010 | 0481B | 15 | 04- 55 |
| ND092130-0220 | 0481B | 14 | 04- 55 |
| ND092168-0150 | 0481B | 2 | 04- 55 |
| ND092171-0011 | 0481B | 3 | 04- 55 |
| ND092174-0050 | 0481B | 7 | 04- 55 |
| ND092176-0010 | 0481B | 8 | 04- 55 |
| ND092178-0040 | 0481B | 9 | 04- 55 |
| ND092179-0070 | 0481B | 10 | 04- 55 |
| ND092182-0060 | 0481B | 4 | 04- 55 |
| ND092184-0021 | 0481B | 5 | 04- 55 |
| ND092220-0040 | 0481B | 21 | 04- 55 |
| ND092223-0070 | 0481B | 20 | 04- 55 |



| PARTS NO | FIG NO. | INDEX | PAGE |
|---|---|---|---|
| ND092415-0451 | 0471C | 1 | 04- 51 |
| ND092431-0181 | 0471C | 8 | 04- 51 |
| ND092433-0150 | 0471C | 7 | 04- 51 |
| ND092437-0270 | 0471C | 2 | 04- 51 |
| ND092460-0051 | 0471C | 3 | 04- 51 |
| ND092500-0441 | 0471C | 1 | 04- 51 |
| ND092551-0430 | 0471C | 9 | 04- 51 |
| ND093111-2710 | 0421A | 1 | 04- 15 |
| ND093121-0320 | 0421A | 3 | 04- 15 |
| ND093127-0270 | 0421A | 4 | 04- 15 |
| ND093151-0390 | 0421A | 7 | 04- 15 |
| ND093158-0010 | 0421A | 8 | 04- 15 |
| ND093164-1120 | 0421A | 6 | 04- 15 |
| ND093166-0010 | 0421A | 9 | 04- 16 |
| ND093175-1020 | 0421A | 5 | 04- 15 |
| ND093175-1030 | 0421A | 5 | 04- 15 |
| ND093175-1040 | 0421A | 5 | 04- 15 |
| ND093175-1050 | 0421A | 5 | 04- 15 |
| ND093175-1060 | 0421A | 5 | 04- 15 |
| ND093175-1070 | 0421A | 5 | 04- 15 |
| ND093175-1080 | 0421A | 5 | 04- 15 |
| ND093175-1090 | 0421A | 5 | 04- 15 |
| ND093175-1100 | 0421A | 5 | 04- 15 |
| ND093175-1110 | 0421A | 5 | 04- 15 |
| ND093175-1120 | 0421A | 5 | 04- 15 |
| ND093175-1130 | 0421A | 5 | 04- 15 |
| ND093175-1140 | 0421A | 5 | 04- 15 |
| ND093175-1150 | 0421A | 5 | 04- 15 |
| ND093175-1160 | 0421A | 5 | 04- 15 |
| ND093175-1170 | 0421A | 5 | 04- 15 |
| ND093175-1180 | 0421A | 5 | 04- 15 |
| ND093175-1500 | 0421A | 5 | 04- 15 |
| ND093175-1510 | 0421A | 5 | 04- 15 |
| ND093175-1520 | 0421A | 5 | 04- 15 |
| ND093175-1530 | 0421A | 5 | 04- 15 |
| ND093175-1540 | 0421A | 5 | 04- 15 |
| ND093175-1550 | 0421A | 5 | 04- 15 |
| ND093175-1560 | 0421A | 5 | 04- 15 |
| ND093175-1570 | 0421A | 5 | 04- 15 |
| ND093175-1580 | 0421A | 5 | 04- 15 |
| ND093175-1590 | 0421A | 5 | 04- 15 |
| ND093175-1600 | 0421A | 5 | 04- 15 |
| ND093175-1610 | 0421A | 5 | 04- 15 |
| ND093175-1620 | 0421A | 5 | 04- 15 |
| ND093175-1630 | 0421A | 5 | 04- 15 |
| ND093175-1640 | 0421A | 5 | 04- 15 |
| ND093175-1650 | 0421A | 5 | 04- 15 |
| ND093220-0050 | 0421A | 2 | 04- 15 |
| ND146691-4470 | 5620 | 15 | 50- 89 |
| ND190100-0101 | 0451C | 1 | 04- 23 |

| PARTS NO. | FIG NO | INDEX | PAGE |
|---|---|---|---|
| ND190100-0101 | 0452C | 1 | 04- 27 |
| ND190800-4110 | 0461B | 1 | 04- 39 |
| ND190800-4110 | 0462B | 1 | 04- 43 |
| ND447200-0240 | 5620 | 1 | 50- 89 |
| ND447300-1440 | 5620 | 2 | 50- 89 |
| ND447410-0010 | 5620 | 5 | 50- 89 |
| ND447410-0020 | 5620 | 5 | 50- 89 |
| ND90015-06181 | 0451C | 13 | 04- 23 |
| ND90160-06051 | 0451C | 20 | 04- 23 |
| ND90196-08651 | 0452C | 13 | 04- 27 |
| ND90258-06001 | 0451C | 21 | 04- 23 |
| ND90258-08001 | 0452C | 15 | 04- 27 |
| ND90458-05750 | 0451C | 29 | 04- 24 |
| ND90567-30000 | 0461B | 16 | 04- 39 |
| ND90930-04061 | 5703A | 2 | 50- 93 |
| ND91310-05081 | 5620 | 14 | 50- 89 |
| ND91418-06141 | 0462B | 26 | 04- 43 |
| ND91418-06161 | 0462B | 27 | 04- 43 |
| ND91518-06161 | 0451C | 10 | 04- 23 |
| ND948053-0051 | 0461B | 7 | 04- 39 |
| ND948053-0051 | 0462B | 9 | 04- 43 |
| ND949006-6510 | 0451C | 13 | 04- 23 |
| ND949006-7300 | 0451C | 13 | 04- 23 |
| ND949013-3880 | 0461B | 25 | 04- 39 |
| ND949013-4020 | 0461B | 25 | 04- 39 |
| ND949013-4030 | 0461B | 25 | 04- 39 |
| ND949013-4040 | 0461B | 25 | 04- 39 |
| ND949013-4060 | 0461B | 17 | 04- 39 |
| ND949013-4070 | 0461B | 17 | 04- 39 |
| ND949013-4080 | 0461B | 17 | 04- 39 |
| ND949013-4090 | 0461B | 17 | 04- 39 |
| ND949013-4100 | 0461B | 17 | 04- 39 |
| ND949013-5880 | 0452C | 14 | 04- 27 |
| ND949013-7480 | 5620 | 10 | 50- 89 |
| ND949013-7500 | 5620 | 11 | 50- 89 |
| ND949013-7510 | 5620 | 12 | 50- 89 |
| ND949013-7880 | 0461B | 25 | 04- 39 |
| ND949013-8210 | 0462B | 44 | 04- 44 |
| ND949013-8220 | 0462B | 44 | 04- 44 |
| ND949013-8230 | 0462B | 44 | 04- 44 |
| ND949014-0070 | 0451C | 28 | 04- 24 |
| ND949015-0500 | 0461B | 12 | 04- 39 |
| ND949018-0350 | 0451C | 26 | 04- 24 |
| ND949018-1020 | 0462B | 46 | 04- 44 |
| ND949018-1240 | 0481B | 6 | 04- 55 |
| ND949018-1550 | 0452C | 22 | 04- 27 |
| ND949018-1550 | 0461B | 32 | 04- 40 |
| ND949018-1730 | 0452C | 17 | 04- 27 |
| ND949040-6361 | 0471C | 5 | 04- 51 |
| ND949040-6630 | 0471C | 6 | 04- 51 |

| PARTS NO | FIG NO | INDEX | PAGE |
|---|---|---|---|
| ND949040-6640 | 0471C | 4 | 04- 51 |
| ND949043-0010 | 0451C | 2 | 04- 23 |
| ND949047-0620 | 0451C | 24 | 04- 24 |
| ND949047-1190 | 0462B | 21 | 04- 43 |
| ND949047-1750 | 0462B | 17 | 04- 43 |
| ND949047-1760 | 0462B | 16 | 04- 43 |
| ND949047-1790 | 0462B | 24 | 04- 43 |
| ND949047-2950 | 5620 | 6 | 50- 89 |
| ND949047-6880 | 0461B | 33 | 04- 40 |
| ND949047-6890 | 0461B | 35 | 04- 40 |
| ND949047-6900 | 0461B | 34 | 04- 40 |
| ND949047-6910 | 0461B | 36 | 04- 40 |
| ND949048-0430 | 5620 | 13 | 50- 89 |
| ND949050-3390 | 0462B | 45 | 04- 44 |
| ND949062-1270 | 0462B | 31 | 04- 43 |
| ND949070-0640 | 5620 | 9 | 50- 89 |
| ND949070-0831 | 5620 | 8 | 50- 89 |
| ND949071-0090 | 0462B | 15 | 04- 43 |
| ND949072-0940 | 0481B | 11 | 04- 55 |
| ND949101-0130 | 0451C | 22 | 04- 23 |
| ND949101-0140 | 0451C | 5 | 04- 23 |
| ND949130-0030 | 0462B | 41 | 04- 44 |
| ND949130-0050 | 0461B | 10 | 04- 39 |
| ND949140-0380 | 0451C | 19 | 04- 23 |
| ND949140-2570 | 0452C | 3 | 04- 27 |
| ND949140-3940 | 0451C | 3 | 04- 23 |
| ND949140-5740 | 0462B | 47 | 04- 44 |
| ND949140-5760 | 0462B | 14 | 04- 43 |
| ND949140-6170 | 0462B | 32 | 04- 43 |
| ND949150-2690 | 0462B | 18 | 04- 43 |
| ND949150-2820 | 0451C | 8 | 04- 23 |
| ND949180-0310 | 0451C | 18 | 04- 23 |
| ND949180-0310 | 0481B | 18 | 04- 55 |
| ND949181-0420 | 0481B | 19 | 04- 55 |
| SD1211-35010X0 | 0643 | 1 | 06- 13 |
| SD1221-15100X0 | 0643 | 20 | 06- 13 |
| SD1230-18500X0 | 0643 | 2 | 06- 13 |
| SD1235-06400X0 | 0643 | 3 | 06- 13 |
| SD1235-06410X0 | 0643 | 4 | 06- 13 |
| SD1240-07100X0 | 0643 | 21 | 06- 13 |
| SD1251-00700X0 | 0643 | 19 | 06- 13 |
| SD1510-02901X0 | 0643 | 14 | 06- 13 |
| SD1982-03200X0 | 0643 | 29 | 06- 13 |
| SD2080-22400X0 | 0643 | 30 | 06- 13 |
| SD2202-01401X0 | 0643 | 16 | 06- 13 |
| SD2202-02200X0 | 0643 | 25 | 06- 13 |
| SD2240-19500X0 | 0643 | 2 | 06- 13 |
| SD2242-08600X0 | 0643 | 21 | 06- 13 |
| SD3000-07800X0 | 0643 | 31 | 06- 13 |
| SD3002-04600X0 | 0643 | 33 | 06- 13 |

| PARTS NO | FIG NO | INDEX | PAGE |
|---|---|---|---|
| SD3220-38800X0 | 0643 | 6 | 06- 13 |
| SD3409-00300X0 | 0643 | 18 | 06- 13 |
| SD3600-17300X0 | 0643 | 28 | 06- 13 |
| SD4041-00900X0 | 0643 | 10 | 06- 13 |
| SD4041-05700X0 | 0643 | 13 | 06- 13 |
| SD4041-07500X0 | 0643 | 8 | 06- 13 |
| SD4142-00900X0 | 0643 | 24 | 06- 13 |
| SD4142-01000X0 | 0643 | 15 | 06- 13 |
| SD4215-01300X0 | 0643 | 12 | 06- 13 |
| SD4215-03900X0 | 0643 | 9 | 06- 13 |
| SD4215-04000X0 | 0643 | 7 | 06- 13 |
| SD5010-04730X0 | 0643 | 27 | 06- 13 |
| SD5010-21500X0 | 0643 | 26 | 06- 13 |
| SD5010-26400X0 | 0643 | 5 | 06- 13 |
| SD6206-01200X0 | 0643 | 23 | 06- 13 |
| SD6206-01210X0 | 0643 | 17 | 06- 13 |
| SD6410-01800X0 | 0643 | 22 | 06- 13 |
| SD8140-0503010 | 0643 | 11 | 06- 13 |
| SD8264-1830010 | 0643 | 32 | 06- 13 |
| ST14236 | 6051A | 16 | 60- 13 |
| ST14352 | 6051A | 7 | 60- 13 |
| ST15073 | 6051A | 17 | 60- 13 |
| ST250003-903 | 6051A | 22 | 60- 13 |
| ST61091S | 6051A | KIT A | 60- 14 |
| ST61200 | 6051A | KIT B | 60- 14 |
| ST7385-3 | 6051A | 1 | 60- 13 |
| ST7404-3 | 6051A | 6 | 60- 13 |
| ST8355S-10 | 6051A | 5 | 60- 13 |
| ST8915 | 6051A | 13 | 60- 13 |
| ST9022-12 | 6051A | 25 | 60- 14 |
| ST9022-2 | 6051A | 24 | 60- 13 |
| ST9022-6 | 6051A | 23 | 60- 13 |
| ST9050 | 6051A | 9 | 60- 13 |
| ST9075-1 | 6051A | 8 | 60- 13 |
| ST9135-1 | 6051A | 15 | 60- 13 |
| ST9135-2 | 6051A | 14 | 60- 13 |
| 01010-30820 | 0242 | 3 | 02- 23 |
| 01010-30825 | 0211 | 35 | 02- 12 |
| 01010-30825 | 0301 | 13 | 03- 3 |
| 01010-30875 | 0401 | 7 | 04- 3 |
| 01010-31020 | 0301 | 29 | 03- 3 |
| 01010-31022 | 0271 | 5 | 02- 35 |
| 01010-31025 | 0301 | 21 | 03- 3 |
| 01010-31025 | 0301 | 26 | 03- 3 |
| 01010-31030 | 0211 | 35 | 02- 12 |
| 01010-31032 | 5521 | 6 | 50- 61 |
| 01010-31035 | 0301 | 22 | 03- 3 |
| 01010-31040 | 0141 | 5 | 01- 13 |
| 01010-31040 | 0161 | 3 | 01- 21 |
| 01010-31040 | 0231 | 7 | 02- 19 |



| PARTS NO | FIG NO. | INDEX | PAGE |
|---|---|---|---|
| 01010-31055 | 0161 | 5 | 01- 21 |
| 01010-31080 | 0151 | 9 | 01- 17 |
| 01010-31230 | 0161 | 12 | 01- 21 |
| 01010-31460 | 0211 | 30 | 02- 11 |
| 01010-31650 | 0231 | 6 | 02- 19 |
| 01010-31670 | 0231 | 5 | 02- 19 |
| 01010-50610 | 7015 | 42 | 70- 12 |
| 01010-50610 | 7017 | 44 | 70- 16 |
| 01010-50614 | 4105A | 40 | 40- 11 |
| 01010-50615 | 4101A | 4 | 40- 9 |
| 01010-50616 | 5407A | 39 | 50- 44 |
| 01010-50625 | 1551 | 4 | 10- 59 |
| 01010-50625 | 4403 | 40 | 40- 55 |
| 01010-50630 | 0401 | 29 | 04- 4 |
| 01010-50630 | 0403 | 29 | 04- 7 |
| 01010-50810 | 1851 | 2 | 10- 69 |
| 01010-50812 | 1821 | 12 | 10- 63 |
| 01010-50816 | 0501 | 14 | 05- 3 |
| 01010-50816 | 0502 | 14 | 05- 5 |
| 01010-50816 | 1503A | 16 | 10- 43 |
| 01010-50816 | 1511A | 13 | 10- 53 |
| 01010-50820 | 0325 | 11 | 03- 13 |
| 01010-50820 | 0327 | 11 | 03- 15 |
| 01010-50820 | 1509A | 4 | 10- 51 |
| 01010-50820 | 2603 | 35 | 20- 68 |
| 01010-50820 | 5301B | 2 | 50- 33 |
| 01010-50820 | 5405A | 11 | 50- 41 |
| 01010-50820 | 5405A | 9 | 50- 41 |
| 01010-50820 | 5409A | 8 | 50- 47 |
| 01010-50820 | 7031B | 37 | 70- 22 |
| 01010-50820 | 9911 | 11 | 90- 17 |
| 01010-50820 | 9911 | 2 | 90- 17 |
| 01010-50822 | 4403 | 56 | 40- 55 |
| 01010-50825 | 0331 | 16 | 03- 19 |
| 01010-50825 | 1311B | 12 | 10- 23 |
| 01010-50825 | 4105A | 42 | 40- 11 |
| 01010-50825 | 4105A | 56 | 40- 12 |
| 01010-50825 | 5251A | 14 | 50- 29 |
| 01010-50825 | 6271 | 22 | 60- 55 |
| 01010-50825 | 6463A | 25 | 60- 131 |
| 01010-50825 | 7038 | 17 | 70- 29 |
| 01010-50830 | 0325 | 3 | 03- 13 |
| 01010-50830 | 0327 | 3 | 03- 15 |
| 01010-50830 | 1509A | 8 | 10- 51 |
| 01010-50830 | 4101A | 24 | 40- 9 |
| 01010-50830 | 4481A | 32 | 40- 73 |
| 01010-50830 | 4481A | 35 | 40- 73 |
| 01010-50845 | 2755A | 27 | 20- 99 |
| 01010-50860 | 6423C | 7 | 60- 111 |
| 01010-50860 | 6427 | 7 | 60- 113 |

| PARTS NO | FIG NO. | INDEX | PAGE |
|---|---|---|---|
| 01010-50875 | 1831 | 14 | 10- 65 |
| 01010-50875 | 4453A | 17 | 40- 65 |
| 01010-50875 | 4454A | 21 | 40- 67 |
| 01010-51016 | 0222 | 20 | 02- 17 |
| 01010-51016 | 0325 | 7 | 03- 13 |
| 01010-51016 | 0327 | 7 | 03- 15 |
| 01010-51016 | 2653 | 5 | 20- 79 |
| 01010-51016 | 5619 | 13 | 50- 87 |
| 01010-51016 | 6611A | 16 | 60- 137 |
| 01010-51016 | 7015 | 42 | 70- 12 |
| 01010-51020 | 0211 | 39 | 02- 12 |
| 01010-51020 | 0231 | 18 | 02- 19 |
| 01010-51020 | 0242 | 15 | 02- 23 |
| 01010-51020 | 0325 | 11 | 03- 13 |
| 01010-51020 | 0327 | 11 | 03- 15 |
| 01010-51020 | 0335 | 4 | 03- 21 |
| 01010-51020 | 0401 | 40 | 04- 4 |
| 01010-51020 | 0403 | 40 | 04- 8 |
| 01010-51020 | 0521 | 12 | 05- 11 |
| 01010-51020 | 1211 | 15 | 10- 17 |
| 01010-51020 | 1211 | 27 | 10- 18 |
| 01010-51020 | 2607 | 4 | 20- 73 |
| 01010-51020 | 2755A | 11 | 20- 99 |
| 01010-51020 | 4121A | 16 | 40- 17 |
| 01010-51020 | 4323B | 24 | 40- 29 |
| 01010-51020 | 4451 | 16 | 40- 63 |
| 01010-51020 | 4451 | 16 | 40- 63 |
| 01010-51020 | 5001 | 13 | 50- 3 |
| 01010-51020 | 5103 | 9 | 50- 15 |
| 01010-51020 | 5407A | 54 | 50- 44 |
| 01010-51020 | 6423C | 12 | 60- 111 |
| 01010-51020 | 6427 | 12 | 60- 113 |
| 01010-51020 | 6611A | 28 | 60- 137 |
| 01010-51020 | 7011A | 25 | 70- 5 |
| 01010-51020 | 7012A | 25 | 70- 7 |
| 01010-51020 | 7015 | 48 | 70- 12 |
| 01010-51020 | 7017 | 50 | 70- 16 |
| 01010-51025 | 0141 | 7 | 01- 13 |
| 01010-51025 | 0207 | 22 | 02- 7 |
| 01010-51025 | 0208 | 22 | 02- 9 |
| 01010-51025 | 0221 | 10 | 02- 15 |
| 01010-51025 | 0221 | 7 | 02- 15 |
| 01010-51025 | 0222 | 10 | 02- 17 |
| 01010-51025 | 0222 | 7 | 02- 17 |
| 01010-51025 | 0242 | 14 | 02- 23 |
| 01010-51025 | 0242 | 21 | 02- 23 |
| 01010-51025 | 0242 | 24 | 02- 23 |
| 01010-51025 | 0311 | 10 | 03- 7 |
| 01010-51025 | 0312 | 10 | 03- 9 |
| 01010-51025 | 0328 | 4 | 03- 17 |

| PARTS NO. | FIG NO. | INDEX | PAGE |
|---|---|---|---|
| 01010-51025 | 0331 | 20 | 03- 19 |
| 01010-51025 | 0335 | 16 | 03- 21 |
| 01010-51025 | 0335 | 7 | 03- 21 |
| 01010-51025 | 0411 | 6 | 04- 11 |
| 01010-51025 | 0412 | 6 | 04- 13 |
| 01010-51025 | 0521 | 4 | 05- 11 |
| 01010-51025 | 1401C | 4 | 10- 25 |
| 01010-51025 | 1405A | 4 | 10- 27 |
| 01010-51025 | 1551 | 2 | 10- 59 |
| 01010-51025 | 1831 | 9 | 10- 65 |
| 01010-51025 | 2755A | 22 | 20- 99 |
| 01010-51025 | 5103 | 5 | 50- 15 |
| 01010-51025 | 5405A | 4 | 50- 41 |
| 01010-51025 | 6111 | 12 | 60- 23 |
| 01010-51025 | 7013A | 25 | 70- 9 |
| 01010-51030 | 0131 | 6 | 01- 9 |
| 01010-51030 | 0132 | 6 | 01- 11 |
| 01010-51030 | 0141 | 25 | 01- 13 |
| 01010-51030 | 0161 | 18 | 01- 21 |
| 01010-51030 | 0221 | 11 | 02- 15 |
| 01010-51030 | 0222 | 11 | 02- 17 |
| 01010-51030 | 0325 | 3 | 03- 13 |
| 01010-51030 | 0327 | 3 | 03- 15 |
| 01010-51030 | 0331 | 21 | 03- 19 |
| 01010-51030 | 0335 | 10 | 03- 21 |
| 01010-51030 | 0335 | 13 | 03- 21 |
| 01010-51030 | 0411 | 7 | 04- 11 |
| 01010-51030 | 0412 | 7 | 04- 13 |
| 01010-51030 | 0501 | 23 | 05- 3 |
| 01010-51030 | 0502 | 23 | 05- 5 |
| 01010-51030 | 0511 | 10 | 05- 7 |
| 01010-51030 | 0511 | 21 | 05- 7 |
| 01010-51030 | 0511 | 23 | 05- 7 |
| 01010-51030 | 0511 | 25 | 05- 7 |
| 01010-51030 | 0513 | 10 | 05- 9 |
| 01010-51030 | 0513 | 21 | 05- 9 |
| 01010-51030 | 0513 | 23 | 05- 9 |
| 01010-51030 | 0603 | 11 | 06- 5 |
| 01010-51030 | 2561 | 7 | 20- 61 |
| 01010-51030 | 2601 | 19 | 20- 63 |
| 01010-51030 | 2601 | 26 | 20- 64 |
| 01010-51030 | 2601 | 32 | 20- 64 |
| 01010-51030 | 4451 | 9 | 40- 63 |
| 01010-51030 | 4455 | 9 | 40- 69 |
| 01010-51030 | 5407A | 58 | 50- 44 |
| 01010-51030 | 5901 | 3 | 50- 95 |
| 01010-51030 | 6435A | 26 | 60- 117 |
| 01010-51030 | 7001 | 27 | 70- 3 |
| 01010-51035 | 0501 | 20 | 05- 3 |
| 01010-51035 | 0502 | 20 | 05- 5 |

| PARTS NO. | FIG NO. | INDEX | PAGE |
|---|---|---|---|
| 01010-51035 | 1831 | 5 | 10- 65 |
| 01010-51035 | 2601 | 28 | 20- 64 |
| 01010-51035 | 2607 | 30 | 20- 74 |
| 01010-51035 | 2803A | 30 | 20- 107 |
| 01010-51035 | 4483A | 2 | 40- 75 |
| 01010-51040 | 0325 | 16 | 03- 13 |
| 01010-51040 | 0327 | 16 | 03- 15 |
| 01010-51040 | 0335 | 15 | 03- 21 |
| 01010-51040 | 0501 | 24 | 05- 3 |
| 01010-51040 | 0502 | 24 | 05- 5 |
| 01010-51040 | 0511 | 14 | 05- 7 |
| 01010-51040 | 0513 | 14 | 05- 9 |
| 01010-51040 | 2603 | 28 | 20- 68 |
| 01010-51040 | 6271 | 14 | 60- 55 |
| 01010-51045 | 0335 | 14 | 03- 21 |
| 01010-51045 | 0401 | 5 | 04- 3 |
| 01010-51045 | 0403 | 5 | 04- 7 |
| 01010-51050 | 0321 | 16 | 03- 11 |
| 01010-51050 | 0321 | 23 | 03- 11 |
| 01010-51050 | 1211 | 8 | 10- 17 |
| 01010-51055 | 0131 | 13 | 01- 9 |
| 01010-51055 | 0132 | 13 | 01- 11 |
| 01010-51055 | 0401 | 26 | 04- 4 |
| 01010-51055 | 0403 | 26 | 04- 7 |
| 01010-51055 | 0513 | 26 | 05- 9 |
| 01010-51065 | 0331 | 22 | 03- 19 |
| 01010-51070 | 0211 | 3 | 02- 11 |
| 01010-51070 | 0211 | 3 | 02- 11 |
| 01010-51070 | 0331 | 23 | 03- 19 |
| 01010-51070 | 0401 | 5 | 04- 3 |
| 01010-51075 | 0211 | 4 | 02- 11 |
| 01010-51075 | 0401 | 4 | 04- 3 |
| 01010-51075 | 0403 | 4 | 04- 7 |
| 01010-51080 | 0331 | 23 | 03- 19 |
| 01010-51080 | 0401 | 4 | 04- 3 |
| 01010-51090 | 0601 | 11 | 06- 3 |
| 01010-51090 | 6418 | 28 | 60- 107 |
| 01010-51095 | 0111 | 5 | 01- 5 |
| 01010-51095 | 0511 | 17 | 05- 7 |
| 01010-51095 | 0513 | 17 | 05- 9 |
| 01010-51225 | 0241 | 31 | 02- 21 |
| 01010-51225 | 0242 | 27 | 02- 23 |
| 01010-51225 | 0242 | 47 | 02- 24 |
| 01010-51225 | 0251 | 11 | 02- 27 |
| 01010-51225 | 1821 | 3 | 10- 63 |
| 01010-51225 | 2651A | 16 | 20- 77 |
| 01010-51225 | 2801A | 14 | 20- 103 |
| 01010-51225 | 2801A | 28 | 20- 103 |
| 01010-51225 | 2803A | 14 | 20- 107 |
| 01010-51225 | 2805A | 35 | 20- 110 |



| PARTS NO. | FIG NO. | INDEX | PAGE |
|---|---|---|---|
| 01010-51225 | 2805A | 7 | 20- 109 |
| 01010-51225 | 4001C | 8 | 40- 3 |
| 01010-51225 | 4011A | 4 | 40- 5 |
| 01010-51225 | 5001 | 17 | 50- 3 |
| 01010-51225 | 5001 | 7 | 50- 3 |
| 01010-51225 | 5251A | 2 | 50- 29 |
| 01010-51225 | 5301B | 44 | 50- 34 |
| 01010-51225 | 5401A | 3 | 50- 37 |
| 01010-51225 | 5619 | 16 | 50- 87 |
| 01010-51225 | 6071 | 7 | 60- 17 |
| 01010-51225 | 6611A | 8 | 60- 137 |
| 01010-51225 | 7011A | 20 | 70- 5 |
| 01010-51225 | 7011A | 8 | 70- 5 |
| 01010-51225 | 7012A | 20 | 70- 7 |
| 01010-51225 | 7012A | 8 | 70- 7 |
| 01010-51225 | 7013A | 20 | 70- 9 |
| 01010-51225 | 7013A | 8 | 70- 9 |
| 01010-51225 | 7015 | 32 | 70- 12 |
| 01010-51225 | 7017 | 34 | 70- 15 |
| 01010-51225 | 7101 | 27 | 70- 31 |
| 01010-51225 | 7111 | 18 | 70- 35 |
| 01010-51225 | 7151A | 11 | 70- 37 |
| 01010-51225 | 7151A | 17 | 70- 37 |
| 01010-51225 | 7151A | 28 | 70- 37 |
| 01010-51225 | 7201 | 28 | 70- 39 |
| 01010-51230 | 0241 | 27 | 02- 21 |
| 01010-51230 | 2001 | 2 | 20- 3 |
| 01010-51230 | 2651A | 17 | 20- 77 |
| 01010-51230 | 2651A | 7 | 20- 77 |
| 01010-51230 | 2801A | 40 | 20- 104 |
| 01010-51230 | 4011A | 26 | 40- 5 |
| 01010-51230 | 4101A | 32 | 40- 9 |
| 01010-51230 | 7013A | 31 | 70- 9 |
| 01010-51230 | 7013A | 36 | 70- 9 |
| 01010-51230 | 7017 | 15 | 70- 15 |
| 01010-51230 | 7037 | 14 | 70- 25 |
| 01010-51235 | 0241 | 20 | 02- 21 |
| 01010-51235 | 0242 | 39 | 02- 23 |
| 01010-51235 | 2551A | 12 | 20- 57 |
| 01010-51235 | 7031B | 29 | 70- 21 |
| 01010-51235 | 7038 | 9 | 70- 29 |
| 01010-51240 | 0241 | 28 | 02- 21 |
| 01010-51240 | 0328 | 13 | 03- 17 |
| 01010-51240 | 2001 | 5 | 20- 3 |
| 01010-51240 | 2603 | 5 | 20- 67 |
| 01010-51240 | 7037 | 30 | 70- 25 |
| 01010-51240 | 7037 | 33 | 70- 25 |
| 01010-51245 | 0242 | 44 | 02- 24 |
| 01010-51245 | 2607 | 23 | 20- 73 |
| 01010-51250 | 5011 | 24 | 50- 5 |

| PARTS NO | FIG NO | INDEX | PAGE |
|---|---|---|---|
| 01010-51250 | 7201 | 8 | 70- 39 |
| 01010-51255 | 5401A | 2 | 50- 37 |
| 01010-51270 | 7015 | 5 | 70- 11 |
| 01010-51270 | 7017 | 5 | 70- 15 |
| 01010-51280 | 7015 | 22 | 70- 11 |
| 01010-51280 | 7017 | 24 | 70- 15 |
| 01010-51420 | 2653 | 34 | 20- 80 |
| 01010-51425 | 4451 | 13 | 40- 63 |
| 01010-51430 | 4455 | 13 | 40- 69 |
| 01010-51435 | 2603 | 20 | 20- 67 |
| 01010-51435 | 4371 | 13 | 40- 43 |
| 01010-51435 | 7015 | 13 | 70- 11 |
| 01010-51440 | 2605A | 11 | 20- 71 |
| 01010-51445 | 2601 | 13 | 20- 63 |
| 01010-51450 | 4371 | 15 | 40- 43 |
| 01010-51630 | 5011 | 17 | 50- 5 |
| 01010-51635 | 2801A | 37 | 20- 103 |
| 01010-51640 | 0621 | 3 | 06- 7 |
| 01010-51640 | 0622 | 3 | 06- 9 |
| 01010-51640 | 2653 | 36 | 20- 80 |
| 01010-51650 | 7021 | 18 | 70- 19 |
| 01010-51655 | 7101 | 23 | 70- 31 |
| 01010-51660 | 1001 | 4 | 10- 3 |
| 01010-51670 | 2653 | 32 | 20- 80 |
| 01010-51670 | 2653 | 43 | 20- 80 |
| 01010-51675 | 2653 | 37 | 20- 80 |
| 01010-51680 | 7015 | 39 | 70- 12 |
| 01010-51680 | 7017 | 41 | 70- 16 |
| 01010-51680 | 7021 | 24 | 70- 19 |
| 01010-51680 | 7101 | 39 | 70- 32 |
| 01010-51685 | 2601 | 9 | 20- 63 |
| 01010-51840 | 7011A | 5 | 70- 5 |
| 01010-51840 | 7012A | 5 | 70- 7 |
| 01010-51865 | 7013A | 5 | 70- 9 |
| 01010-51875 | 1001 | 24 | 10- 3 |
| 01010-51875 | 2603 | 3 | 20- 67 |
| 01010-51875 | 7101 | 36 | 70- 32 |
| 01010-52050 | 2603 | 23 | 20- 68 |
| 01010-52050 | 5171A | 2 | 50- 21 |
| 01010-52080 | 2603 | 38 | 20- 68 |
| 01010-52285 | 6301A | 24 | 60- 61 |
| 01010-52285 | 6301A | 7 | 60- 61 |
| 01010-52285 | 6303B | 17 | 60- 63 |
| 01010-52455 | 7201 | 40 | 70- 40 |
| 01010-52460 | 7037 | 27 | 70- 25 |
| 01010-52465 | 5051 | 2 | 50- 9 |
| 01010-52465 | 5053 | 3 | 50- 11 |
| 01010-52465 | 7201 | 42 | 70- 40 |
| 01010-52470 | 5051 | 2 | 50- 9 |
| 01010-52475 | 7037 | 26 | 70- 25 |

| PARTS NO. | FIG NO. | INDEX | PAGE |
|---|---|---|---|
| 01010-52475 | 7101 | 21 | 70- 31 |
| 01010-52495 | 7151A | 23 | 70- 37 |
| 01010-52495 | 7151A | 24 | 70- 37 |
| 01010-61420 | 2471 | 18 | 20- 49 |
| 01010-61435 | 2471 | 16 | 20- 49 |
| 01010-61440 | 2412 | 13 | 20- 9 |
| 01010-61440 | 2422 | 10 | 20- 33 |
| 01010-61465 | 2421 | 21 | 20- 31 |
| 01010-61475 | 2412 | 14 | 20- 9 |
| 01010-62475 | 6315 | 17 | 60- 73 |
| 01010-80612 | 1507C | 19 | 10- 47 |
| 01010-80612 | 1507C | 26 | 10- 47 |
| 01010-80612 | 1507C | 29 | 10- 47 |
| 01010-80612 | 1507C | 34 | 10- 47 |
| 01010-80612 | 5619 | 9 | 50- 87 |
| 01010-80612 | 5703A | 14 | 50- 93 |
| 01010-80616 | 4305A | 31 | 40- 21 |
| 01010-80616 | 4333A | 38 | 40- 35 |
| 01010-80616 | 5409A | 26 | 50- 47 |
| 01010-80620 | 4383 | 3 | 40- 47 |
| 01010-80620 | 4387 | 3 | 40- 51 |
| 01010-80625 | 5203 | 10 | 50- 25 |
| 01010-80625 | 5614 | 16 | 50- 75 |
| 01010-80625 | 5614 | 6 | 50- 75 |
| 01010-80630 | 2422 | 30 | 20- 33 |
| 01010-80630 | 5203 | 13 | 50- 25 |
| 01010-80630 | 5614 | 2 | 50- 75 |
| 01010-80630 | 5614 | 21 | 50- 75 |
| 01010-80812 | 1507C | 10 | 10- 47 |
| 01010-80812 | 1513A | 16 | 10- 55 |
| 01010-80812 | 1513A | 20 | 10- 55 |
| 01010-80812 | 5618 | 14 | 50- 85 |
| 01010-80816 | 1501A | 23 | 10- 41 |
| 01010-80816 | 1507C | 13 | 10- 47 |
| 01010-80816 | 1507C | 4 | 10- 47 |
| 01010-80816 | 1513A | 4 | 10- 55 |
| 01010-80816 | 1801A | 12 | 10- 61 |
| 01010-80816 | 4331A | 31 | 40- 33 |
| 01010-80816 | 4333A | 31 | 40- 35 |
| 01010-80816 | 4381 | 8 | 40- 45 |
| 01010-80816 | 4383 | 21 | 40- 47 |
| 01010-80816 | 4385 | 8 | 40- 49 |
| 01010-80816 | 4387 | 21 | 40- 51 |
| 01010-80816 | 4481A | 10 | 40- 73 |
| 01010-80816 | 4481A | 28 | 40- 73 |
| 01010-80816 | 4481A | 7 | 40- 73 |
| 01010-80816 | 4483A | 23 | 40- 75 |
| 01010-80816 | 5614 | 10 | 50- 75 |
| 01010-80816 | 5614 | 41 | 50- 76 |
| 01010-80816 | 5616 | 2 | 50- 81 |

| PARTS NO | FIG NO. | INDEX | PAGE |
|---|---|---|---|
| 01010-80816 | 6441C | 15 | 60- 123 |
| 01010-80820 | 1201A | 8 | 10- 15 |
| 01010-80820 | 1503A | 13 | 10- 43 |
| 01010-80820 | 1507C | 7 | 10- 47 |
| 01010-80820 | 4013 | 13 | 40- 7 |
| 01010-80820 | 4013 | 16 | 40- 7 |
| 01010-80820 | 4336 | 6 | 40- 37 |
| 01010-80820 | 5201A | 13 | 50- 23 |
| 01010-80820 | 5409A | 39 | 50- 48 |
| 01010-80820 | 5611 | 8 | 50- 67 |
| 01010-80820 | 5612A | 7 | 50- 69 |
| 01010-80820 | 5614 | 28 | 50- 75 |
| 01010-80820 | 5614 | 38 | 50- 76 |
| 01010-80820 | 5617 | 14 | 50- 83 |
| 01010-80820 | 7031B | 37 | 70- 22 |
| 01010-80820 | 9911 | 11 | 90- 17 |
| 01010-80820 | 9911 | 2 | 90- 17 |
| 01010-80825 | 1501A | 20 | 10- 41 |
| 01010-80825 | 1513A | 28 | 10- 55 |
| 01010-80825 | 1801A | 9 | 10- 61 |
| 01010-80825 | 4001C | 26 | 40- 3 |
| 01010-80825 | 4011A | 30 | 40- 5 |
| 01010-80825 | 4111A | 40 | 40- 15 |
| 01010-80825 | 5616 | 5 | 50- 81 |
| 01010-80825 | 6455B | 34 | 60- 127 |
| 01010-80830 | 4111A | 25 | 40- 15 |
| 01010-80830 | 4331A | 3 | 40- 33 |
| 01010-80830 | 4333A | 3 | 40- 35 |
| 01010-80830 | 4333A | 41 | 40- 35 |
| 01010-80830 | 6407A | 21 | 60- 85 |
| 01010-80830 | 6417A | 21 | 60- 105 |
| 01010-80830 | 6463A | 34 | 60- 131 |
| 01010-80835 | 2452 | 26 | 20- 43 |
| 01010-80845 | 2451 | 32 | 20- 40 |
| 01010-80845 | 2451 | 36 | 20- 40 |
| 01010-80845 | 6463A | 28 | 60- 131 |
| 01010-80850 | 2423 | 10 | 20- 35 |
| 01010-80850 | 2451 | 31 | 20- 40 |
| 01010-80860 | 2451 | 43 | 20- 40 |
| 01010-80860 | 2453 | 11 | 20- 47 |
| 01010-80865 | 6435A | 11 | 60- 117 |
| 01010-80870 | 6407A | 31 | 60- 85 |
| 01010-80870 | 6463A | 5 | 60- 131 |
| 01010-80870 | 6471 | 26 | 60- 133 |
| 01010-80875 | 1831 | 14 | 10- 65 |
| 01010-80885 | 5613 | 4 | 50- 73 |
| 01010-81016 | 1201A | 12 | 10- 15 |
| 01010-81016 | 1201A | 14 | 10- 15 |
| 01010-81016 | 1201A | 18 | 10- 15 |
| 01010-81016 | 1201A | 26 | 10- 15 |





| PARTS NO. | FIG NO | INDEX | PAGE |
|---|---|---|---|
| 01010-81016 | 1201A | 31 | 10- 15 |
| 01010-81016 | 1211 | 34 | 10- 18 |
| 01010-81016 | 1301A | 10 | 10- 21 |
| 01010-81016 | 1301A | 10 | 10- 21 |
| 01010-81016 | 1311B | 5 | 10- 23 |
| 01010-81016 | 1503A | 7 | 10- 43 |
| 01010-81016 | 1505B | 6 | 10- 45 |
| 01010-81016 | 1505B | 9 | 10- 45 |
| 01010-81016 | 1507C | 15 | 10- 47 |
| 01010-81016 | 1507C | 32 | 10- 47 |
| 01010-81016 | 1509A | 15 | 10- 51 |
| 01010-81016 | 1509A | 20 | 10- 51 |
| 01010-81016 | 1511A | 30 | 10- 53 |
| 01010-81016 | 2553A | 35 | 20- 59 |
| 01010-81016 | 2653 | 5 | 20- 79 |
| 01010-81016 | 2751B | 13 | 20- 95 |
| 01010-81016 | 2757 | 8 | 20- 101 |
| 01010-81016 | 4013 | 21 | 40- 7 |
| 01010-81016 | 4483A | 11 | 40- 75 |
| 01010-81016 | 5101A | 21 | 50- 13 |
| 01010-81016 | 5121 | 31 | 50- 17 |
| 01010-81016 | 5409A | 36 | 50- 48 |
| 01010-81016 | 5611 | 3 | 50- 67 |
| 01010-81016 | 5614 | 24 | 50- 75 |
| 01010-81016 | 5614 | 35 | 50- 75 |
| 01010-81016 | 5616 | 11 | 50- 81 |
| 01010-81016 | 5617 | 5 | 50- 83 |
| 01010-81016 | 5617 | 8 | 50- 83 |
| 01010-81016 | 5701A | 14 | 50- 91 |
| 01010-81016 | 5703A | 23 | 50- 93 |
| 01010-81016 | 5703A | 3 | 50- 93 |
| 01010-81016 | 5703A | 30 | 50- 93 |
| 01010-81016 | 6103 | 14 | 60- 21 |
| 01010-81016 | 6307B | 24 | 60- 67 |
| 01010-81016 | 6407A | 49 | 60- 86 |
| 01010-81016 | 6412 | 27 | 60- 91 |
| 01010-81016 | 6417A | 40 | 60- 105 |
| 01010-81016 | 6463A | 11 | 60- 131 |
| 01010-81016 | 6471 | 42 | 60- 134 |
| 01010-81016 | 6471 | 42 | 60- 134 |
| 01010-81016 | 6471 | 45 | 60- 134 |
| 01010-81016 | 6611A | 16 | 60- 137 |
| 01010-81020 | 1211 | 27 | 10- 18 |
| 01010-81020 | 1211 | 37 | 10- 18 |
| 01010-81020 | 1513A | 33 | 10- 56 |
| 01010-81020 | 2553A | 33 | 20- 59 |
| 01010-81020 | 4331A | 10 | 40- 33 |
| 01010-81020 | 4331A | 34 | 40- 33 |
| 01010-81020 | 4333A | 10 | 40- 35 |
| 01010-81020 | 4333A | 34 | 40- 35 |

| PARTS NO. | FIG NO | INDEX | PAGE |
|---|---|---|---|
| 01010-81020 | 4336 | 3 | 40- 37 |
| 01010-81020 | 4383 | 16 | 40- 47 |
| 01010-81020 | 4383 | 7 | 40- 47 |
| 01010-81020 | 4387 | 16 | 40- 51 |
| 01010-81020 | 4387 | 7 | 40- 51 |
| 01010-81020 | 4451 | 16 | 40- 63 |
| 01010-81020 | 5001 | 13 | 50- 3 |
| 01010-81020 | 5101A | 11 | 50- 13 |
| 01010-81020 | 5101A | 27 | 50- 13 |
| 01010-81020 | 5101A | 31 | 50- 13 |
| 01010-81020 | 5121 | 2 | 50- 17 |
| 01010-81020 | 5121 | 20 | 50- 17 |
| 01010-81020 | 5121 | 26 | 50- 17 |
| 01010-81020 | 5121 | 31 | 50- 17 |
| 01010-81020 | 5121 | 8 | 50- 17 |
| 01010-81020 | 5201A | 38 | 50- 23 |
| 01010-81020 | 5409A | 41 | 50- 48 |
| 01010-81020 | 5517A | 10 | 50- 59 |
| 01010-81020 | 5517A | 5 | 50- 59 |
| 01010-81020 | 5521 | 5 | 50- 61 |
| 01010-81020 | 5612A | 15 | 50- 69 |
| 01010-81020 | 5612A | 20 | 50- 69 |
| 01010-81020 | 5612A | 24 | 50- 69 |
| 01010-81020 | 5612A | 4 | 50- 69 |
| 01010-81020 | 5617 | 17 | 50- 83 |
| 01010-81020 | 5618 | 8 | 50- 85 |
| 01010-81020 | 5905A | 3 | 50- 97 |
| 01010-81020 | 6101A | 4 | 60- 19 |
| 01010-81020 | 6103 | 4 | 60- 21 |
| 01010-81020 | 6403A | 21 | 60- 81 |
| 01010-81020 | 6413A | 21 | 60- 93 |
| 01010-81020 | 6414 | 18 | 60- 95 |
| 01010-81020 | 6414 | 50 | 60- 96 |
| 01010-81020 | 6431A | 21 | 60- 115 |
| 01010-81020 | 6437C | 38 | 60- 120 |
| 01010-81020 | 6463A | 12 | 60- 131 |
| 01010-81020 | 6471 | 31 | 60- 133 |
| 01010-81025 | 1301A | 7 | 10- 21 |
| 01010-81025 | 1513A | 8 | 10- 55 |
| 01010-81025 | 1831 | 9 | 10- 65 |
| 01010-81025 | 2416 | 26 | 20- 17 |
| 01010-81025 | 2419 | 14 | 20- 27 |
| 01010-81025 | 2419 | 9 | 20- 27 |
| 01010-81025 | 2423 | 22 | 20- 35 |
| 01010-81025 | 2423 | 26 | 20- 35 |
| 01010-81025 | 2451 | 48 | 20- 40 |
| 01010-81025 | 2551A | 16 | 20- 57 |
| 01010-81025 | 4305A | 46 | 40- 22 |
| 01010-81025 | 4471A | 6 | 40- 71 |
| 01010-81025 | 5101A | 2 | 50- 13 |

| PARTS NO. | FIG NO. | INDEX | PAGE |
|---|---|---|---|
| 01010-81025 | 5103 | 2 | 50- 15 |
| 01010-81025 | 5121 | 11 | 50- 17 |
| 01010-81025 | 5121 | 17 | 50- 17 |
| 01010-81025 | 5121 | 23 | 50- 17 |
| 01010-81025 | 5121 | 4 | 50- 17 |
| 01010-81025 | 5121 | 8 | 50- 17 |
| 01010-81025 | 5401A | 8 | 50- 37 |
| 01010-81025 | 5409A | 31 | 50- 47 |
| 01010-81025 | 5511A | 24 | 50- 53 |
| 01010-81025 | 5513A | 24 | 50- 55 |
| 01010-81025 | 5515B | 23 | 50- 57 |
| 01010-81025 | 5612A | 30 | 50- 69 |
| 01010-81025 | 5612A | 32 | 50- 69 |
| 01010-81025 | 5612A | 34 | 50- 69 |
| 01010-81025 | 5612A | 43 | 50- 70 |
| 01010-81025 | 5618 | 11 | 50- 85 |
| 01010-81025 | 6441C | 12 | 60- 123 |
| 01010-81025 | 6461A | 9 | 60- 129 |
| 01010-81030 | 2412 | 11 | 20- 9 |
| 01010-81030 | 2412 | 11 | 20- 9 |
| 01010-81030 | 2412 | 23 | 20- 9 |
| 01010-81030 | 2423 | 29 | 20- 35 |
| 01010-81030 | 2452 | 21 | 20- 43 |
| 01010-81030 | 2453 | 23 | 20- 47 |
| 01010-81030 | 2553A | 12 | 20- 59 |
| 01010-81030 | 2553A | 6 | 20- 59 |
| 01010-81030 | 4305A | 24 | 40- 21 |
| 01010-81030 | 4455 | 9 | 40- 69 |
| 01010-81030 | 5101A | 24 | 50- 13 |
| 01010-81030 | 5121 | 13 | 50- 17 |
| 01010-81030 | 5201A | 35 | 50- 23 |
| 01010-81030 | 5205 | 2 | 50- 27 |
| 01010-81030 | 5612A | 12 | 50- 69 |
| 01010-81030 | 5612A | 19 | 50- 69 |
| 01010-81030 | 5613 | 9 | 50- 73 |
| 01010-81030 | 5615 | 11 | 50- 79 |
| 01010-81030 | 5617 | 12 | 50- 83 |
| 01010-81030 | 5701A | 7 | 50- 91 |
| 01010-81030 | 6403A | 3 | 60- 81 |
| 01010-81030 | 6413A | 3 | 60- 93 |
| 01010-81030 | 6414 | 3 | 60- 95 |
| 01010-81035 | 1011A | 2 | 10- 11 |
| 01010-81035 | 1831 | 5 | 10- 65 |
| 01010-81035 | 2551A | 3 | 20- 57 |
| 01010-81035 | 5121 | 29 | 50- 17 |
| 01010-81035 | 5615 | 11 | 50- 79 |
| 01010-81035 | 5701A | 7 | 50- 91 |
| 01010-81035 | 6463A | 21 | 60- 131 |
| 01010-81040 | 1513A | 24 | 10- 55 |
| 01010-81040 | 2412 | 11A | 20- 9 |



| PARTS NO. | FIG NO. | INDEX | PAGE |
|---|---|---|---|
| 01010-81040 | 2423 | 28 | 20- 35 |
| 01010-81040 | 6414 | 32 | 60- 95 |
| 01010-81040 | 6416 | 46 | 60- 102 |
| 01010-81040 | 6416 | 51 | 60- 102 |
| 01010-81040 | 6455B | 30 | 60- 127 |
| 01010-81045 | 2412 | 35 | 20- 10 |
| 01010-81045 | 6407A | 19 | 60- 85 |
| 01010-81045 | 6417A | 19 | 60- 105 |
| 01010-81045 | 6423C | 23 | 60- 111 |
| 01010-81045 | 6427 | 23 | 60- 113 |
| 01010-81045 | 6431A | 24 | 60- 115 |
| 01010-81050 | 1201A | 28 | 10- 15 |
| 01010-81050 | 1211 | 26B | 10- 18 |
| 01010-81050 | 1211 | 8 | 10- 17 |
| 01010-81050 | 6303B | 30 | 60- 63 |
| 01010-81050 | 6435A | 30 | 60- 117 |
| 01010-81050 | 6435A | 30 | 60- 117 |
| 01010-81055 | 2412 | 29 | 20- 9 |
| 01010-81055 | 2553A | 23 | 20- 59 |
| 01010-81060 | 6403A | 7 | 60- 81 |
| 01010-81060 | 6405A | 3 | 60- 83 |
| 01010-81060 | 6413A | 7 | 60- 93 |
| 01010-81060 | 6414 | 7 | 60- 95 |
| 01010-81060 | 6415A | 3 | 60- 99 |
| 01010-81060 | 6416 | 3 | 60- 101 |
| 01010-81065 | 2418 | 22 | 20- 23 |
| 01010-81065 | 2452 | 33 | 20- 44 |
| 01010-81065 | 2551A | 31 | 20- 57 |
| 01010-81070 | 2551A | 7 | 20- 57 |
| 01010-81070 | 2751B | 5 | 20- 95 |
| 01010-81070 | 6455B | 13 | 60- 127 |
| 01010-81080 | 2451 | 54 | 20- 40 |
| 01010-81080 | 6401A | 12 | 60- 79 |
| 01010-81080 | 6411A | 12 | 60- 89 |
| 01010-81080 | 6412 | 12 | 60- 91 |
| 01010-81085 | 2452 | 37 | 20- 44 |
| 01010-81085 | 5613 | 12 | 50- 73 |
| 01010-81085 | 6437C | 14 | 60- 119 |
| 01010-81085 | 6471 | 17 | 60- 133 |
| 01010-81220 | 4453A | 29 | 40- 65 |
| 01010-81220 | 4454A | 31 | 40- 67 |
| 01010-81220 | 5201A | 22 | 50- 23 |
| 01010-81220 | 5201A | 25 | 50- 23 |
| 01010-81220 | 5612A | 37 | 50- 69 |
| 01010-81220 | 6407A | 13 | 60- 85 |
| 01010-81220 | 6417A | 13 | 60- 105 |
| 01010-81220 | 6418 | 13 | 60- 107 |
| 01010-81225 | 1821 | 3 | 10- 63 |
| 01010-81225 | 2651A | 16 | 20- 77 |
| 01010-81225 | 4111A | 19 | 40- 15 |



| PARTS NO | FIG NO. | INDEX | PAGE |
|---|---|---|---|
| 01010-81225 | 4111A | 5 | 40- 15 |
| 01010-81225 | 4453A | 22 | 40- 65 |
| 01010-81225 | 4471A | 4 | 40- 71 |
| 01010-81225 | 4481A | 25 | 40- 73 |
| 01010-81225 | 5001 | 17 | 50- 3 |
| 01010-81225 | 5001 | 7 | 50- 3 |
| 01010-81225 | 5201A | 19 | 50- 23 |
| 01010-81225 | 5203 | 2 | 50- 25 |
| 01010-81225 | 5203 | 5 | 50- 25 |
| 01010-81225 | 5511A | 16 | 50- 53 |
| 01010-81225 | 5511A | 4 | 50- 53 |
| 01010-81225 | 5513A | 16 | 50- 55 |
| 01010-81225 | 5513A | 4 | 50- 55 |
| 01010-81225 | 5515B | 15 | 50- 57 |
| 01010-81225 | 5515B | 3 | 50- 57 |
| 01010-81225 | 5611 | 15 | 50- 67 |
| 01010-81225 | 5612A | 40 | 50- 69 |
| 01010-81225 | 5703A | 17 | 50- 93 |
| 01010-81225 | 6423C | 20 | 60- 111 |
| 01010-81225 | 6427 | 20 | 60- 113 |
| 01010-81225 | 6451A | 19 | 60- 125 |
| 01010-81225 | 6611A | 8 | 60- 137 |
| 01010-81225 | 7101 | 27 | 70- 31 |
| 01010-81225 | 7111 | 18 | 70- 35 |
| 01010-81225 | 7201 | 28 | 70- 39 |
| 01010-81230 | 2415A | 33 | 20- 13 |
| 01010-81230 | 2421 | 4 | 20- 31 |
| 01010-81230 | 2553A | 28 | 20- 59 |
| 01010-81230 | 2651A | 17 | 20- 77 |
| 01010-81230 | 2651A | 7 | 20- 77 |
| 01010-81230 | 4121A | 21 | 40- 17 |
| 01010-81230 | 4121A | 24 | 40- 17 |
| 01010-81230 | 4336 | 19 | 40- 37 |
| 01010-81230 | 5201A | 28 | 50- 23 |
| 01010-81230 | 5251A | 9 | 50- 29 |
| 01010-81230 | 5613 | 6 | 50- 73 |
| 01010-81230 | 6401A | 3 | 60- 79 |
| 01010-81230 | 6407A | 46 | 60- 86 |
| 01010-81230 | 6411A | 3 | 60- 89 |
| 01010-81230 | 6412 | 3 | 60- 91 |
| 01010-81230 | 6414 | 21 | 60- 95 |
| 01010-81230 | 6414 | 29 | 60- 95 |
| 01010-81230 | 6417A | 37 | 60- 105 |
| 01010-81230 | 6418 | 25 | 60- 107 |
| 01010-81230 | 7031B | 3 | 70- 21 |
| 01010-81235 | 2421 | 13 | 20- 31 |
| 01010-81235 | 2421 | 29 | 20- 31 |
| 01010-81235 | 2422 | 4 | 20- 33 |
| 01010-81235 | 4305A | 4 | 40- 21 |
| 01010-81235 | 5201A | 16 | 50- 23 |



| PARTS NO. | FIG NO | INDEX | PAGE |
|---|---|---|---|
| 01010-81235 | 5611 | 18 | 50- 67 |
| 01010-81235 | 6015 | 3 | 60- 7 |
| 01010-81240 | 6113 | 7 | 60- 25 |
| 01010-81240 | 6407A | 25 | 60- 85 |
| 01010-81245 | 4121A | 23 | 40- 17 |
| 01010-81245 | 6401A | 22 | 60- 79 |
| 01010-81245 | 6411A | 22 | 60- 89 |
| 01010-81245 | 6412 | 22 | 60- 91 |
| 01010-81245 | 6416 | 60 | 60- 102 |
| 01010-81250 | 2422 | 22 | 20- 33 |
| 01010-81250 | 2453 | 19 | 20- 47 |
| 01010-81250 | 4483A | 16 | 40- 75 |
| 01010-81250 | 5011 | 24 | 50- 5 |
| 01010-81250 | 5013 | 23 | 50- 7 |
| 01010-81250 | 6437C | 20 | 60- 119 |
| 01010-81250 | 7201 | 8 | 70- 39 |
| 01010-81260 | 2051 | 6 | 20- 5 |
| 01010-81260 | 5251A | 5 | 50- 29 |
| 01010-81275 | 6416 | 64 | 60- 102 |
| 01010-81285 | 2453 | 20 | 20- 47 |
| 01010-81425 | 4451 | 13 | 40- 63 |
| 01010-81430 | 1501A | 16 | 10- 41 |
| 01010-81430 | 4455 | 13 | 40- 69 |
| 01010-81430 | 5511A | 11 | 50- 53 |
| 01010-81430 | 5513A | 11 | 50- 55 |
| 01010-81430 | 5515B | 10 | 50- 57 |
| 01010-81435 | 2551A | 27 | 20- 57 |
| 01010-81435 | 2805A | 10 | 20- 109 |
| 01010-81435 | 2805A | 27 | 20- 109 |
| 01010-81630 | 5011 | 17 | 50- 5 |
| 01010-81630 | 5013 | 16 | 50- 7 |
| 01010-81635 | 1201A | 23 | 10- 15 |
| 01010-81640 | 1301A | 4 | 10- 21 |
| 01010-81640 | 2653 | 36 | 20- 80 |
| 01010-81655 | 7101 | 23 | 70- 31 |
| 01010-81660 | 1001 | 4 | 10- 3 |
| 01010-81670 | 2653 | 32 | 20- 80 |
| 01010-81670 | 2653 | 34 | 20- 80 |
| 01010-81670 | 2653 | 43 | 20- 80 |
| 01010-81675 | 2653 | 37 | 20- 80 |
| 01010-81680 | 7101 | 39 | 70- 32 |
| 01010-81685 | 2605A | 13 | 20- 71 |
| 01010-81690 | 5201A | 6 | 50- 23 |
| 01010-81875 | 1001 | 24 | 10- 3 |
| 01010-82035 | 1301A | 2 | 10- 21 |
| 01010-82080 | 7201 | 55 | 70- 40 |
| 01010-82455 | 7201 | 40 | 70- 40 |
| 01010-82460 | 7031B | 26 | 70- 21 |
| 01010-82465 | 5011 | 27 | 50- 5 |
| 01010-82470 | 9901A | 2 | 90- 15 |

| PARTS NO. | FIG NO. | INDEX | PAGE |
|---|---|---|---|
| 01010-82475 | 7031B | 25 | 70- 21 |
| 01010-82475 | 7101 | 21 | 70- 31 |
| 01010-82485 | 5517A | 2 | 50- 59 |
| 01010-82485 | 5521 | 2 | 50- 61 |
| 01010-82490 | 5517A | 2 | 50- 59 |
| 01011-31000 | 0151 | 7 | 01- 17 |
| 01011-31000 | 0151 | 9 | 01- 17 |
| 01011-51000 | 0131 | 7 | 01- 9 |
| 01011-51000 | 0132 | 7 | 01- 11 |
| 01011-51000 | 0207 | 19 | 02- 7 |
| 01011-51000 | 0208 | 19 | 02- 9 |
| 01011-51000 | 1551 | 8 | 10- 59 |
| 01011-51010 | 0131 | 5 | 01- 9 |
| 01011-51010 | 0132 | 5 | 01- 11 |
| 01011-51015 | 0501 | 17 | 05- 3 |
| 01011-51015 | 0502 | 17 | 05- 5 |
| 01011-51015 | 0511 | 12 | 05- 7 |
| 01011-51015 | 0513 | 12 | 05- 9 |
| 01011-51025 | 7201 | 14 | 70- 39 |
| 01011-51025 | 7201 | 18 | 70- 39 |
| 01011-51025 | 7201 | 33 | 70- 39 |
| 01011-51025 | 7201 | 37 | 70- 40 |
| 01011-51025 | 7201 | 47 | 70- 40 |
| 01011-51030 | 0335 | 9 | 03- 21 |
| 01011-51040 | 0401 | 16 | 04- 3 |
| 01011-51040 | 0403 | 16 | 04- 7 |
| 01011-51045 | 0421A | 14 | 04- 16 |
| 01011-51045 | 0423 | 15 | 04- 20 |
| 01011-51065 | 0131 | 14 | 01- 9 |
| 01011-51065 | 0132 | 14 | 01- 11 |
| 01011-51200 | 1211 | 3 | 10- 17 |
| 01011-51805 | 1001 | 13 | 10- 3 |
| 01011-51815 | 1001 | 16 | 10- 3 |
| 01011-51815 | 1001 | 8 | 10- 3 |
| 01011-52410 | 5551 | 2 | 50- 63 |
| 01011-52410 | 5553 | 2 | 50- 65 |
| 01011-52415 | 7101 | 18 | 70- 31 |
| 01011-52445 | 7001 | 20 | 70- 3 |
| 01011-52455 | 7001 | 20 | 70- 3 |
| 01011-52460 | 7001 | 21 | 70- 3 |
| 01011-52465 | 1001 | 21 | 10- 3 |
| 01011-52470 | 7001 | 21 | 70- 3 |
| 01011-61610 | 2422 | 15 | 20- 33 |
| 01011-81000 | 2553A | 7 | 20- 59 |
| 01011-81005 | 6455B | 27 | 60- 127 |
| 01011-81005 | 6471 | 6 | 60- 133 |
| 01011-81010 | 6435A | 23 | 60- 117 |
| 01011-81010 | 6451A | 23 | 60- 125 |
| 01011-81015 | 6412 | 16 | 60- 91 |
| 01011-81020 | 2412 | 24 | 20- 9 |

| PARTS NO. | FIG NO | INDEX | PAGE |
|---|---|---|---|
| 01011-81020 | 6401A | 16 | 60- 79 |
| 01011-81020 | 6411A | 16 | 60- 89 |
| 01011-81020 | 6437C | 5 | 60- 119 |
| 01011-81025 | 7201 | 14 | 70- 39 |
| 01011-81025 | 7201 | 18 | 70- 39 |
| 01011-81025 | 7201 | 33 | 70- 39 |
| 01011-81025 | 7201 | 37 | 70- 40 |
| 01011-81025 | 7201 | 47 | 70- 40 |
| 01011-81030 | 2453 | 9 | 20- 47 |
| 01011-81200 | 1211 | 3 | 10- 17 |
| 01011-81205 | 2452 | 28 | 20- 44 |
| 01011-81230 | 6414 | 25 | 60- 95 |
| 01011-81240 | 6414 | 24 | 60- 95 |
| 01011-81280 | 6401A | 10 | 60- 79 |
| 01011-81280 | 6411A | 10 | 60- 89 |
| 01011-81280 | 6412 | 10 | 60- 91 |
| 01011-81285 | 5613 | 16 | 50- 73 |
| 01011-81600 | 5201A | 7 | 50- 23 |
| 01011-81640 | 7111 | 12 | 70- 35 |
| 01011-81805 | 1001 | 13 | 10- 3 |
| 01011-81815 | 1001 | 16 | 10- 3 |
| 01011-81815 | 1001 | 8 | 10- 3 |
| 01011-82405 | 7101 | 15 | 70- 31 |
| 01011-82415 | 7101 | 15 | 70- 31 |
| 01011-82415 | 7101 | 18 | 70- 31 |
| 01011-82450 | 2601 | 4 | 20- 63 |
| 01011-82455 | 5011 | 4 | 50- 5 |
| 01011-82455 | 5013 | 4 | 50- 7 |
| 01011-82465 | 1001 | 21 | 10- 3 |
| 01014-51030 | 0211 | 20 | 02- 11 |
| 01016-51235 | 5511A | 6 | 50- 53 |
| 01016-51235 | 5513A | 6 | 50- 55 |
| 01016-51235 | 5515B | 5 | 50- 57 |
| 01016-51260 | 2511A | 11 | 20- 55 |
| 01016-52480 | 7001 | 24 | 70- 3 |
| 01018-11465 | 2603 | 11 | 20- 67 |
| 01019-32000 | 7111 | 6 | 70- 35 |
| 01023-10508 | 5471 | 2 | 50- 51 |
| 01023-60612 | 1513A | 11 | 10- 55 |
| 01023-60612 | 5471 | 4 | 50- 51 |
| 01023-60616 | 5407A | 5 | 50- 43 |
| 01050-31045 | 0241 | 11 | 02- 21 |
| 01050-51012 | 0201 | 29 | 02- 3 |
| 01050-51230 | 0601 | 12 | 06- 3 |
| 01050-51230 | 0603 | 12 | 06- 5 |
| 01050-61045 | 0151 | 12 | 01- 17 |
| 01051-31625 | 0231 | 14 | 02- 19 |
| 01051-51430 | 0251 | 5 | 02- 27 |
| 01051-51635 | 0251 | 7 | 02- 27 |
| 01090-51660 | 7031B | 13 | 70- 21 |





| PARTS NO. | FIG NO | INDEX | PAGE |
|---|---|---|---|
| 01090-51660 | 7037 | 8 | 70- 25 |
| 01124-82065 | 7001 | 13 | 70- 3 |
| 01140-51640 | 7031B | 19 | 70- 21 |
| 01140-51640 | 7037 | 22 | 70- 25 |
| 01143-62445 | 2601 | 4 | 20- 63 |
| 01144-51460 | 4371 | 16 | 40- 43 |
| 01220-30608 | 5619 | 6 | 50- 87 |
| 01220-40408 | 1511A | 16 | 10- 53 |
| 01220-40410 | 5618 | 2 | 50- 85 |
| 01220-40412 | 1511A | 4 | 10- 53 |
| 01220-40412 | 5203 | 30 | 50- 25 |
| 01220-40412 | 5407A | 19 | 50- 43 |
| 01220-40412 | 5407A | 61 | 50- 44 |
| 01220-40420 | 5407A | 8 | 50- 43 |
| 01220-40510 | 4403 | 42 | 40- 55 |
| 01220-40510 | 5409A | 6 | 50- 47 |
| 01220-40512 | 5703A | 27 | 50- 93 |
| 01220-40512 | 5905A | 5 | 50- 97 |
| 01220-40516 | 5616 | 19 | 50- 81 |
| 01220-40516 | 6103 | 8 | 60- 21 |
| 01220-40612 | 5203 | 26 | 50- 25 |
| 01220-40612 | 5616 | 16 | 50- 81 |
| 01220-40612 | 5618 | 5 | 50- 85 |
| 01220-40612 | 5703A | 11 | 50- 93 |
| 01220-40616 | 1411B | 2 | 10- 29 |
| 01220-40616 | 1415B | 2 | 10- 31 |
| 01220-40616 | 1451C | 2 | 10- 33 |
| 01220-40616 | 1453C | 2 | 10- 35 |
| 01220-40616 | 1455C | 2 | 10- 37 |
| 01220-40616 | 1459 | 2 | 10- 39 |
| 01220-40616 | 4305A | 27 | 40- 21 |
| 01220-40616 | 4305A | 30 | 40- 21 |
| 01220-40616 | 4305A | 39 | 40- 21 |
| 01220-40616 | 5203 | 14 | 50- 25 |
| 01220-40620 | 4305A | 43 | 40- 22 |
| 01220-40620 | 5203 | 20 | 50- 25 |
| 01220-40620 | 5203 | 23 | 50- 25 |
| 01220-40620 | 5203 | 7 | 50- 25 |
| 01220-40620 | 5611 | 10 | 50- 67 |
| 01220-40620 | 5901 | 5 | 50- 95 |
| 01220-40630 | 5203 | 15 | 50- 25 |
| 01220-40812 | 5301B | 6 | 50- 33 |
| 01220-40812 | 5407A | 3 | 50- 43 |
| 01220-40816 | 4321B | 11 | 40- 25 |
| 01220-40816 | 4322 | 11 | 40- 27 |
| 01220-40816 | 4323B | 12 | 40- 29 |
| 01220-40825 | 4101A | 30 | 40- 9 |
| 01220-60610 | 5103 | 17 | 50- 15 |
| 01224-40408 | 5203 | 33 | 50- 25 |
| 01224-40420 | 5471 | 7 | 50- 51 |

| PARTS NO. | FIG NO | INDEX | PAGE |
|---|---|---|---|
| 01224-40516 | 5409A | 15 | 50- 47 |
| 01225-40512 | 5407A | 50 | 50- 44 |
| 01225-40512 | 5407A | 51 | 50- 44 |
| 01225-40820 | 5101A | 17 | 50- 13 |
| 01232-10620 | 5611 | 13 | 50- 67 |
| 01252-31030 | 6271 | 10 | 60- 55 |
| 01252-31030 | 6271 | 28 | 60- 55 |
| 01252-40616 | 6273 | 25 | 60- 57 |
| 01252-40620 | 6273 | 19 | 60- 57 |
| 01252-40880 | 6611A | 13 | 60- 137 |
| 01252-41025 | 6611A | 14 | 60- 137 |
| 01252-41240 | 7037 | 33 | 70- 25 |
| 01252-71030 | 2553A | 18 | 20- 59 |
| 01252-71240 | 7031B | 24C | 70- 21 |
| 01252-71240 | 7031B | 32 | 70- 21 |
| 01370-00410 | 5409A | 2 | 50- 47 |
| 01370-00508 | 5403A | 9 | 50- 39 |
| 01435-00825 | 0331 | 16 | 03- 19 |
| 01435-01020 | 0335 | 4 | 03- 21 |
| 01435-01025 | 0335 | 7 | 03- 21 |
| 01508-20805 | 4001C | 21 | 40- 3 |
| 01508-20805 | 4011A | 16 | 40- 5 |
| 01508-40805 | 4321B | 16 | 40- 25 |
| 01508-40805 | 4322 | 16 | 40- 27 |
| 01508-40805 | 4323B | 17 | 40- 29 |
| 01508-40805 | 4331A | 18 | 40- 33 |
| 01508-40805 | 4333A | 18 | 40- 35 |
| 01508-40805 | 4341B | 6 | 40- 39 |
| 01508-40805 | 4343B | 6 | 40- 41 |
| 01508-41006 | 4105A | 16 | 40- 11 |
| 01508-41006 | 4105A | 34 | 40- 11 |
| 01508-41006 | 4105A | 9 | 40- 11 |
| 01508-41006 | 4111A | 14 | 40- 15 |
| 01530-06214 | 0241 | 16 | 02- 21 |
| 01530-06214 | 0242 | 35 | 02- 23 |
| 01530-06214 | 2607 | 9 | 20- 73 |
| 01531-08516 | 2803A | 25 | 20- 107 |
| 01531-09016 | 2653 | 28 | 20- 80 |
| 01571-00814 | 1821 | 14 | 10- 63 |
| 01580-01008 | 0161 | 7 | 01- 21 |
| 01580-01008 | 0301 | 30 | 03- 3 |
| 01580-03024 | 2723C | 18 | 20- 91 |
| 01580-10605 | 1551 | 13 | 10- 59 |
| 01580-10605 | 4013 | 3 | 40- 7 |
| 01580-10605 | 4013 | 8 | 40- 7 |
| 01580-10605 | 4105A | 45 | 40- 12 |
| 01580-10605 | 4105A | 53 | 40- 12 |
| 01580-10605 | 4111A | 29 | 40- 15 |
| 01580-10605 | 4111A | 35 | 40- 15 |
| 01580-10605 | 4383 | 5 | 40- 47 |

| PARTS NO | FIG NO | INDEX | PAGE |
|---|---|---|---|
| 01580-10605 | 4387 | 5 | 40- 51 |
| 01580-10605 | 4403 | 26 | 40- 55 |
| 01580-10605 | 5407A | 14 | 50- 43 |
| 01580-10605 | 5407A | 40 | 50- 44 |
| 01580-10605 | 5407A | 47 | 50- 44 |
| 01580-10605 | 5409A | 29 | 50- 47 |
| 01580-10806 | 1509A | 5 | 10- 51 |
| 01580-10806 | 1513A | 22 | 10- 55 |
| 01580-10806 | 1513A | 30 | 10- 55 |
| 01580-10806 | 1831 | 15 | 10- 65 |
| 01580-10806 | 2451 | 26 | 20- 39 |
| 01580-10806 | 2451 | 40 | 20- 40 |
| 01580-10806 | 4001C | 19 | 40- 3 |
| 01580-10806 | 4001C | 7 | 40- 3 |
| 01580-10806 | 4011A | 13 | 40- 5 |
| 01580-10806 | 4101A | 13 | 40- 9 |
| 01580-10806 | 4121A | 14 | 40- 17 |
| 01580-10806 | 4321B | 18 | 40- 25 |
| 01580-10806 | 4321B | 20 | 40- 25 |
| 01580-10806 | 4322 | 18 | 40- 27 |
| 01580-10806 | 4322 | 20 | 40- 27 |
| 01580-10806 | 4323B | 19 | 40- 29 |
| 01580-10806 | 4323B | 21 | 40- 29 |
| 01580-10806 | 4331A | 16 | 40- 33 |
| 01580-10806 | 4331A | 22 | 40- 33 |
| 01580-10806 | 4333A | 16 | 40- 35 |
| 01580-10806 | 4333A | 22 | 40- 35 |
| 01580-10806 | 4341B | 11 | 40- 39 |
| 01580-10806 | 4341B | 13 | 40- 39 |
| 01580-10806 | 4341B | 8 | 40- 39 |
| 01580-10806 | 4343B | 11 | 40- 41 |
| 01580-10806 | 4343B | 13 | 40- 41 |
| 01580-10806 | 4343B | 8 | 40- 41 |
| 01580-10806 | 4403 | 55 | 40- 55 |
| 01580-10806 | 5101A | 19 | 50- 13 |
| 01580-10806 | 5251A | 15 | 50- 29 |
| 01580-10806 | 5301B | 41 | 50- 34 |
| 01580-10806 | 5612A | 9 | 50- 69 |
| 01580-10806 | 6463A | 30 | 60- 131 |
| 01580-10806 | 6463A | 35 | 60- 131 |
| 01580-11008 | 0141 | 22 | 01- 13 |
| 01580-11008 | 0207 | 24 | 02- 7 |
| 01580-11008 | 0208 | 24 | 02- 9 |
| 01580-11008 | 0411 | 9 | 04- 11 |
| 01580-11008 | 0412 | 9 | 04- 13 |
| 01580-11008 | 0511 | 15 | 05- 7 |
| 01580-11008 | 0513 | 15 | 05- 9 |
| 01580-11008 | 0521 | 13 | 05- 11 |
| 01580-11008 | 1401C | 8 | 10- 25 |
| 01580-11008 | 1405A | 8 | 10- 27 |

| PARTS NO. | FIG NO | INDEX | PAGE |
|---|---|---|---|
| 01580-11008 | 1821 | 8 | 10- 63 |
| 01580-11008 | 1831 | 11 | 10- 65 |
| 01580-11008 | 2423 | 17 | 20- 35 |
| 01580-11008 | 4305A | 52 | 40- 22 |
| 01580-11008 | 4451 | 6 | 40- 63 |
| 01580-11008 | 4455 | 6 | 40- 69 |
| 01580-11008 | 5403A | 11 | 50- 39 |
| 01580-11008 | 5612A | 27 | 50- 69 |
| 01580-11008 | 6414 | 34 | 60- 95 |
| 01580-11008 | 6437C | 16 | 60- 119 |
| 01580-11008 | 6471 | 19 | 60- 133 |
| 01580-11008 | 7201 | 16 | 70- 39 |
| 01580-11008 | 7201 | 20 | 70- 39 |
| 01580-11008 | 7201 | 35 | 70- 40 |
| 01580-11008 | 7201 | 39 | 70- 40 |
| 01580-11008 | 7201 | 49 | 70- 40 |
| 01580-11210 | 1501A | 3 | 10- 41 |
| 01580-11210 | 1801A | 3 | 10- 61 |
| 01580-11210 | 2553A | 30 | 20- 59 |
| 01580-11210 | 4001C | 15 | 40- 3 |
| 01580-11210 | 4011A | 33 | 40- 5 |
| 01580-11210 | 4111A | 37 | 40- 15 |
| 01580-11210 | 4121A | 26 | 40- 17 |
| 01580-11210 | 5251A | 11 | 50- 29 |
| 01580-11210 | 5251A | 7 | 50- 29 |
| 01580-11210 | 5511A | 18 | 50- 53 |
| 01580-11210 | 5511A | 7 | 50- 53 |
| 01580-11210 | 5513A | 18 | 50- 55 |
| 01580-11210 | 5513A | 7 | 50- 55 |
| 01580-11210 | 5515B | 17 | 50- 57 |
| 01580-11210 | 5515B | 6 | 50- 57 |
| 01580-11210 | 5613 | 18 | 50- 73 |
| 01580-11210 | 6437C | 22 | 60- 119 |
| 01580-11411 | 4371 | 17 | 40- 43 |
| 01580-11613 | 5201A | 9 | 50- 23 |
| 01580-11613 | 6437C | 11 | 60- 119 |
| 01580-11613 | 6471 | 13 | 60- 133 |
| 01580-11613 | 7101 | 41 | 70- 32 |
| 01580-11613 | 7111 | 13 | 70- 35 |
| 01580-11815 | 1001 | 26 | 10- 3 |
| 01580-11815 | 7101 | 38 | 70- 32 |
| 01580-12016 | 2603 | 39 | 20- 68 |
| 01580-12016 | 7001 | 14 | 70- 3 |
| 01580-12016 | 7111 | 8 | 70- 35 |
| 01580-12016 | 7201 | 57 | 70- 40 |
| 01580-12218 | 6301A | 25 | 60- 61 |
| 01580-12218 | 6301A | 8 | 60- 61 |
| 01580-12218 | 6303B | 18 | 60- 63 |
| 01580-12419 | 5551 | 3 | 50- 63 |
| 01580-12419 | 5553 | 3 | 50- 65 |





| PARTS NO. | FIG NO | INDEX | PAGE |
|---|---|---|---|
| 01580-12419 | 7001 | 23 | 70- 3 |
| 01580-12419 | 7001 | 25 | 70- 3 |
| 01580-12419 | 7021 | 13 | 70- 19 |
| 01580-12419 | 7101 | 17 | 70- 31 |
| 01580-12419 | 7101 | 20 | 70- 31 |
| 01580-12419 | 7151A | 26 | 70- 37 |
| 01580-13024 | 7015 | 28 | 70- 11 |
| 01580-13024 | 7017 | 30 | 70- 15 |
| 01580-13326 | 7101 | 14 | 70- 31 |
| 01580-13629 | 7015 | 21 | 70- 11 |
| 01580-13629 | 7017 | 23 | 70- 15 |
| 01582-01008 | 0111 | 10 | 01- 5 |
| 01582-01008 | 0111 | 15 | 01- 5 |
| 01582-11008 | 0331 | 5 | 03- 19 |
| 01582-11008 | 4105A | 11 | 40- 11 |
| 01582-11008 | 4105A | 22 | 40- 11 |
| 01582-11008 | 4105A | 30 | 40- 11 |
| 01582-11008 | 4111A | 12 | 40- 15 |
| 01582-11411 | 1501A | 5 | 10- 41 |
| 01582-11411 | 1801A | 5 | 10- 61 |
| 01582-11411 | 4201A | 13 | 40- 19 |
| 01582-11613 | 4105A | 50 | 40- 12 |
| 01582-11613 | 4111A | 32 | 40- 15 |
| 01582-11613 | 7031B | 14 | 70- 21 |
| 01582-11613 | 7031B | 20 | 70- 21 |
| 01582-11613 | 7037 | 23 | 70- 25 |
| 01582-11613 | 7037 | 9 | 70- 25 |
| 01582-21411 | 0161 | 16 | 01- 21 |
| 01582-21411 | 1005 | 4 | 10- 9 |
| 01583-02414 | 0511 | 7 | 05- 7 |
| 01583-02414 | 0513 | 7 | 05- 9 |
| 01583-11006 | 4105A | 17 | 40- 11 |
| 01583-11006 | 4105A | 21 | 40- 11 |
| 01583-11006 | 4105A | 29 | 40- 11 |
| 01583-11006 | 4105A | 6 | 40- 11 |
| 01583-11610 | 1503A | 5 | 10- 43 |
| 01583-11610 | 4105A | 49 | 40- 12 |
| 01583-12012 | 6247 | 20 | 60- 43 |
| 01583-12012 | 6261 | 20 | 60- 49 |
| 01583-12012 | 6265 | 8 | 60- 53 |
| 01583-12414 | 0401 | 13 | 04- 3 |
| 01583-12414 | 0403 | 13 | 04- 7 |
| 01590-10607 | 1551 | 11 | 10- 59 |
| 01590-14548 | 7015 | 16 | 70- 11 |
| 01590-14548 | 7017 | 18 | 70- 15 |
| 01590-14850 | 7001 | 6 | 70- 3 |
| 01590-34850 | 7001 | 6 | 70- 3 |
| 01592-11215 | 2801A | 10 | 20- 103 |
| 01592-12427 | 2601 | 5 | 20- 63 |
| 01592-31215 | 2801A | 10 | 20- 103 |

| PARTS NO | FIG NO | INDEX | PAGE |
|---|---|---|---|
| 01592-32427 | 2601 | 5 | 20- 63 |
| 01593-11008 | 2803A | 18 | 20- 107 |
| 01593-13621 | 2801A | 19 | 20- 103 |
| 01593-31008 | 2803A | 18 | 20- 107 |
| 01593-31008 | 4105A | 35 | 40- 11 |
| 01593-32414 | 2805A | 10 | 20- 109 |
| 01593-32414 | 2805A | 27 | 20- 109 |
| 01593-33621 | 2801A | 19 | 20- 103 |
| 01597-01009 | 5511A | 9 | 50- 53 |
| 01597-01009 | 5513A | 9 | 50- 55 |
| 01597-01009 | 5515B | 8 | 50- 57 |
| 01598-00608 | 5011 | 12 | 50- 5 |
| 01598-00608 | 5013 | 11 | 50- 7 |
| 01598-00809 | 6455B | 37 | 60- 127 |
| 01598-01214 | 7015 | 23 | 70- 11 |
| 01598-01214 | 7017 | 25 | 70- 15 |
| 01598-10608 | 5011 | 12 | 50- 5 |
| 01599-01011 | 2551A | 23 | 20- 57 |
| 01599-01011 | 7015 | 45 | 70- 12 |
| 01599-01011 | 7017 | 47 | 70- 16 |
| 01601-20307 | 4201A | 9 | 40- 19 |
| 01601-20410 | 1511A | 5 | 10- 53 |
| 01601-20513 | 5409A | 7 | 50- 47 |
| 01601-20513 | 5616 | 20 | 50- 81 |
| 01601-20513 | 5703A | 28 | 50- 93 |
| 01601-20513 | 5905A | 6 | 50- 97 |
| 01602-02472 | 6315 | 18 | 60- 73 |
| 01602-20513 | 4403 | 43 | 40- 55 |
| 01602-20619 | 0401 | 30 | 04- 4 |
| 01602-20619 | 0403 | 30 | 04- 7 |
| 01602-20619 | 4101A | 7 | 40- 9 |
| 01602-20619 | 4403 | 25 | 40- 55 |
| 01602-20619 | 4403 | 41 | 40- 55 |
| 01602-20619 | 5407A | 48 | 50- 44 |
| 01602-20619 | 7015 | 43 | 70- 12 |
| 01602-20619 | 7017 | 45 | 70- 16 |
| 01602-20825 | 0501 | 15 | 05- 3 |
| 01602-20825 | 0502 | 15 | 05- 5 |
| 01602-20825 | 1201A | 9 | 10- 15 |
| 01602-20825 | 2423 | 11 | 20- 35 |
| 01602-20825 | 2451 | 33 | 20- 40 |
| 01602-20825 | 2451 | 37 | 20- 40 |
| 01602-20825 | 2451 | 44 | 20- 40 |
| 01602-20825 | 2452 | 27 | 20- 43 |
| 01602-20825 | 2453 | 12 | 20- 47 |
| 01602-20825 | 4403 | 57 | 40- 55 |
| 01602-20825 | 5405A | 10 | 50- 41 |
| 01602-20825 | 5405A | 8 | 50- 41 |
| 01602-20825 | 6271 | 23 | 60- 55 |
| 01602-21030 | 0331 | 6 | 03- 19 |

| PARTS NO. | FIG NO. | INDEX | PAGE |
|---|---|---|---|
| 01602-21030 | 1201A | 13 | 10- 15 |
| 01602-21030 | 1201A | 15 | 10- 15 |
| 01602-21030 | 1201A | 19 | 10- 15 |
| 01602-21030 | 2412 | 12 | 20- 9 |
| 01602-21030 | 2423 | 18 | 20- 35 |
| 01602-21030 | 2423 | 23 | 20- 35 |
| 01602-21030 | 2423 | 31 | 20- 36 |
| 01602-21030 | 2451 | 49 | 20- 40 |
| 01602-21030 | 2451 | 55 | 20- 40 |
| 01602-21030 | 2452 | 22 | 20- 43 |
| 01602-21030 | 2452 | 34 | 20- 44 |
| 01602-21030 | 2452 | 38 | 20- 44 |
| 01602-21030 | 2453 | 10 | 20- 47 |
| 01602-21030 | 2453 | 24 | 20- 47 |
| 01602-21030 | 6271 | 11 | 60- 55 |
| 01602-21030 | 6271 | 15 | 60- 55 |
| 01602-21030 | 6271 | 29 | 60- 55 |
| 01602-21236 | 2452 | 29 | 20- 44 |
| 01602-21236 | 2453 | 21 | 20- 47 |
| 01602-21236 | 6071 | 8 | 60- 17 |
| 01602-21236 | 7037 | 34 | 70- 25 |
| 01602-21442 | 1501A | 5 | 10- 41 |
| 01602-21442 | 1801A | 5 | 10- 61 |
| 01602-21442 | 4371 | 14 | 40- 43 |
| 01602-21442 | 4371 | 18 | 40- 43 |
| 01640-01016 | 0301 | 27 | 03- 3 |
| 01640-01016 | 0301 | 31 | 03- 4 |
| 01640-20408 | 5618 | 3 | 50- 85 |
| 01640-20610 | 4013 | 11 | 40- 7 |
| 01640-20610 | 5011 | 13 | 50- 5 |
| 01640-20610 | 5013 | 12 | 50- 7 |
| 01640-20816 | 0331 | 17 | 03- 19 |
| 01640-20816 | 4013 | 17 | 40- 7 |
| 01640-20816 | 6463A | 7 | 60- 131 |
| 01640-21016 | 0111 | 6 | 01- 5 |
| 01640-21016 | 0115 | 5 | 01- 7 |
| 01640-21016 | 0131 | 8 | 01- 9 |
| 01640-21016 | 0132 | 8 | 01- 11 |
| 01640-21016 | 0141 | 23 | 01- 13 |
| 01640-21016 | 0161 | 19 | 01- 21 |
| 01640-21016 | 0207 | 20 | 02- 7 |
| 01640-21016 | 0207 | 23 | 02- 7 |
| 01640-21016 | 0208 | 20 | 02- 9 |
| 01640-21016 | 0208 | 23 | 02- 9 |
| 01640-21016 | 0211 | 21 | 02- 11 |
| 01640-21016 | 0211 | 40 | 02- 12 |
| 01640-21016 | 0211 | 5 | 02- 11 |
| 01640-21016 | 0211 | 5 | 02- 11 |
| 01640-21016 | 0221 | 12 | 02- 15 |
| 01640-21016 | 0221 | 8 | 02- 15 |



| PARTS NO. | FIG NO | INDEX | PAGE |
|---|---|---|---|
| 01640-21016 | 0222 | 12 | 02- 17 |
| 01640-21016 | 0222 | 21 | 02- 17 |
| 01640-21016 | 0222 | 8 | 02- 17 |
| 01640-21016 | 0321 | 13 | 03- 11 |
| 01640-21016 | 0325 | 8 | 03- 13 |
| 01640-21016 | 0327 | 8 | 03- 15 |
| 01640-21016 | 0331 | 24 | 03- 19 |
| 01640-21016 | 0331 | 7 | 03- 19 |
| 01640-21016 | 0401 | 17 | 04- 3 |
| 01640-21016 | 0403 | 17 | 04- 7 |
| 01640-21016 | 0411 | 8 | 04- 11 |
| 01640-21016 | 0412 | 8 | 04- 13 |
| 01640-21016 | 0501 | 18 | 05- 3 |
| 01640-21016 | 0502 | 18 | 05- 5 |
| 01640-21016 | 0511 | 18 | 05- 7 |
| 01640-21016 | 0513 | 18 | 05- 9 |
| 01640-21223 | 7031B | 24D | 70- 21 |
| 01640-21223 | 7037 | 32 | 70- 25 |
| 01640-21223 | 7201 | 10 | 70- 39 |
| 01640-21323 | 0601 | 8 | 06- 3 |
| 01640-21323 | 0603 | 8 | 06- 5 |
| 01640-21426 | 4201A | 15 | 40- 19 |
| 01640-21626 | 2801A | 23 | 20- 103 |
| 01640-21626 | 4011A | 10 | 40- 5 |
| 01640-22032 | 4336 | 10 | 40- 37 |
| 01641-00608 | 4336 | 15 | 40- 37 |
| 01641-10608 | 5407A | 27 | 50- 43 |
| 01641-10608 | 5407A | 31 | 50- 43 |
| 01641-11016 | 5407A | 37 | 50- 44 |
| 01641-20405 | 5203 | 31 | 50- 25 |
| 01641-20508 | 5403A | 8 | 50- 39 |
| 01641-20508 | 5616 | 21 | 50- 81 |
| 01641-20508 | 6103 | 9 | 60- 21 |
| 01641-20608 | 4013 | 6 | 40- 7 |
| 01641-20608 | 4321B | 26 | 40- 25 |
| 01641-20608 | 4322 | 26 | 40- 27 |
| 01641-20608 | 4323B | 33 | 40- 29 |
| 01641-20608 | 4341B | 18 | 40- 39 |
| 01641-20608 | 4343B | 18 | 40- 41 |
| 01641-20608 | 5203 | 21 | 50- 25 |
| 01641-20608 | 5301B | 39 | 50- 34 |
| 01641-20608 | 5407A | 11 | 50- 43 |
| 01641-20608 | 5407A | 17 | 50- 43 |
| 01641-20608 | 5611 | 11 | 50- 67 |
| 01641-20608 | 5618 | 6 | 50- 85 |
| 01641-20812 | 1509A | 10 | 10- 51 |
| 01641-20812 | 4101A | 31 | 40- 9 |
| 01641-20812 | 4331A | 29 | 40- 33 |
| 01641-20812 | 4333A | 29 | 40- 35 |
| 01641-20812 | 5121 | 34 | 50- 18 |



| PARTS NO | FIG NO. | INDEX | PAGE |
|---|---|---|---|
| 01641-20812 | 5618 | 15 | 50- 85 |
| 01641-21016 | 0131 | 15 | 01- 9 |
| 01641-21016 | 0132 | 15 | 01- 11 |
| 01641-21016 | 0401 | 7A | 04- 3 |
| 01641-21016 | 0403 | 7A | 04- 7 |
| 01641-21016 | 0511 | 10A | 05- 7 |
| 01641-21016 | 0513 | 10A | 05- 9 |
| 01641-21016 | 1211 | 29 | 10- 18 |
| 01641-21016 | 4121A | 4 | 40- 17 |
| 01641-21223 | 4121A | 8 | 40- 17 |
| 01641-21223 | 5511A | 22 | 50- 53 |
| 01641-21223 | 5513A | 22 | 50- 55 |
| 01641-21223 | 5515B | 21 | 50- 57 |
| 01641-21223 | 7031B | 24D | 70- 21 |
| 01641-21223 | 7031B | 33 | 70- 21 |
| 01641-21223 | 7037 | 34 | 70- 25 |
| 01641-21423 | 0161 | 17 | 01- 21 |
| 01641-21423 | 1005 | 5 | 10- 9 |
| 01642-20608 | 5203 | 16 | 50- 25 |
| 01642-21016 | 0111 | 4 | 01- 5 |
| 01643-30623 | 1411B | 3 | 10- 29 |
| 01643-30623 | 1415B | 3 | 10- 31 |
| 01643-30623 | 1451C | 3 | 10- 33 |
| 01643-30623 | 1453C | 3 | 10- 35 |
| 01643-30623 | 1455C | 3 | 10- 37 |
| 01643-30623 | 1459 | 3 | 10- 39 |
| 01643-30623 | 1507C | 20 | 10- 47 |
| 01643-30623 | 1507C | 27 | 10- 47 |
| 01643-30623 | 1507C | 30 | 10- 47 |
| 01643-30623 | 1507C | 35 | 10- 47 |
| 01643-30623 | 1551 | 5 | 10- 59 |
| 01643-30623 | 2422 | 31 | 20- 33 |
| 01643-30623 | 4101A | 27 | 40- 9 |
| 01643-30623 | 4101A | 5 | 40- 9 |
| 01643-30623 | 4101A | 6 | 40- 9 |
| 01643-30623 | 4305A | 20 | 40- 21 |
| 01643-30623 | 4305A | 28 | 40- 21 |
| 01643-30623 | 4305A | 32 | 40- 21 |
| 01643-30623 | 4305A | 40 | 40- 21 |
| 01643-30623 | 4305A | 44 | 40- 22 |
| 01643-30623 | 4333A | 39 | 40- 35 |
| 01643-30623 | 4383 | 4 | 40- 47 |
| 01643-30623 | 4387 | 4 | 40- 51 |
| 01643-30623 | 4403 | 24 | 40- 55 |
| 01643-30623 | 5103 | 18 | 50- 15 |
| 01643-30623 | 5203 | 11 | 50- 25 |
| 01643-30623 | 5203 | 24 | 50- 25 |
| 01643-30623 | 5203 | 27 | 50- 25 |
| 01643-30623 | 5203 | 8 | 50- 25 |
| 01643-30623 | 5407A | 41 | 50- 44 |



| PARTS NO | FIG NO. | INDEX | PAGE |
|---|---|---|---|
| 01643-30623 | 5407A | 6 | 50- 43 |
| 01643-30623 | 5409A | 28 | 50- 47 |
| 01643-30623 | 5614 | 17 | 50- 75 |
| 01643-30623 | 5614 | 3 | 50- 75 |
| 01643-30623 | 5614 | 7 | 50- 75 |
| 01643-30623 | 5616 | 17 | 50- 81 |
| 01643-30623 | 5619 | 10 | 50- 87 |
| 01643-30623 | 5619 | 7 | 50- 87 |
| 01643-30623 | 5703A | 12 | 50- 93 |
| 01643-30623 | 5703A | 15 | 50- 93 |
| 01643-30623 | 5901 | 6 | 50- 95 |
| 01643-30625 | 4105A | 41 | 40- 11 |
| 01643-30823 | 1311B | 13 | 10- 23 |
| 01643-30823 | 1501A | 21 | 10- 41 |
| 01643-30823 | 1503A | 14 | 10- 43 |
| 01643-30823 | 1503A | 17 | 10- 43 |
| 01643-30823 | 1507C | 11 | 10- 47 |
| 01643-30823 | 1507C | 14 | 10- 47 |
| 01643-30823 | 1507C | 5 | 10- 47 |
| 01643-30823 | 1507C | 8 | 10- 47 |
| 01643-30823 | 1509A | 6 | 10- 51 |
| 01643-30823 | 1509A | 9 | 10- 51 |
| 01643-30823 | 1511A | 14 | 10- 53 |
| 01643-30823 | 1513A | 17 | 10- 55 |
| 01643-30823 | 1513A | 21 | 10- 55 |
| 01643-30823 | 1513A | 29 | 10- 55 |
| 01643-30823 | 1513A | 5 | 10- 55 |
| 01643-30823 | 1801A | 10 | 10- 61 |
| 01643-30823 | 1821 | 13 | 10- 63 |
| 01643-30823 | 1831 | 16 | 10- 65 |
| 01643-30823 | 2603 | 36 | 20- 68 |
| 01643-30823 | 2755A | 28 | 20- 99 |
| 01643-30823 | 4001C | 27 | 40- 3 |
| 01643-30823 | 4011A | 31 | 40- 5 |
| 01643-30823 | 4013 | 14 | 40- 7 |
| 01643-30823 | 4013 | 18 | 40- 7 |
| 01643-30823 | 4101A | 25 | 40- 9 |
| 01643-30823 | 4105A | 43 | 40- 12 |
| 01643-30823 | 4105A | 57 | 40- 12 |
| 01643-30823 | 4111A | 41 | 40- 15 |
| 01643-30823 | 4321B | 12 | 40- 25 |
| 01643-30823 | 4322 | 12 | 40- 27 |
| 01643-30823 | 4323B | 13 | 40- 29 |
| 01643-30823 | 4331A | 32 | 40- 33 |
| 01643-30823 | 4331A | 4 | 40- 33 |
| 01643-30823 | 4333A | 32 | 40- 35 |
| 01643-30823 | 4333A | 4 | 40- 35 |
| 01643-30823 | 4336 | 7 | 40- 37 |
| 01643-30823 | 4381 | 9 | 40- 45 |
| 01643-30823 | 4383 | 22 | 40- 47 |

| PARTS NO. | FIG NO. | INDEX | PAGE |
|---|---|---|---|
| 01643-30823 | 4385 | 9 | 40- 49 |
| 01643-30823 | 4387 | 22 | 40- 51 |
| 01643-30823 | 4453A | 18 | 40- 65 |
| 01643-30823 | 4454A | 22 | 40- 67 |
| 01643-30823 | 4481A | 11 | 40- 73 |
| 01643-30823 | 4481A | 29 | 40- 73 |
| 01643-30823 | 4481A | 33 | 40- 73 |
| 01643-30823 | 4481A | 36 | 40- 73 |
| 01643-30823 | 4481A | 8 | 40- 73 |
| 01643-30823 | 4483A | 24 | 40- 75 |
| 01643-30823 | 5201A | 14 | 50- 23 |
| 01643-30823 | 5203 | 17 | 50- 25 |
| 01643-30823 | 5251A | 16 | 50- 29 |
| 01643-30823 | 5301B | 3 | 50- 33 |
| 01643-30823 | 5301B | 42 | 50- 34 |
| 01643-30823 | 5409A | 38 | 50- 48 |
| 01643-30823 | 5409A | 5 | 50- 47 |
| 01643-30823 | 5611 | 9 | 50- 67 |
| 01643-30823 | 5612A | 8 | 50- 69 |
| 01643-30823 | 5613 | 5 | 50- 73 |
| 01643-30823 | 5614 | 11 | 50- 75 |
| 01643-30823 | 5614 | 22 | 50- 75 |
| 01643-30823 | 5614 | 29 | 50- 75 |
| 01643-30823 | 5614 | 39 | 50- 76 |
| 01643-30823 | 5614 | 40 | 50- 76 |
| 01643-30823 | 5616 | 3 | 50- 81 |
| 01643-30823 | 5616 | 6 | 50- 81 |
| 01643-30823 | 5617 | 15 | 50- 83 |
| 01643-30823 | 6407A | 22 | 60- 85 |
| 01643-30823 | 6407A | 32 | 60- 85 |
| 01643-30823 | 6417A | 22 | 60- 105 |
| 01643-30823 | 6421A | 9 | 60- 109 |
| 01643-30823 | 6423C | 8 | 60- 111 |
| 01643-30823 | 6427 | 8 | 60- 113 |
| 01643-30823 | 6435A | 12 | 60- 117 |
| 01643-30823 | 6441C | 16 | 60- 123 |
| 01643-30823 | 6451A | 17 | 60- 125 |
| 01643-30823 | 6455B | 35 | 60- 127 |
| 01643-30823 | 6455B | 38 | 60- 127 |
| 01643-30823 | 6463A | 26 | 60- 131 |
| 01643-30823 | 6463A | 29 | 60- 131 |
| 01643-30823 | 6463A | 36 | 60- 131 |
| 01643-30823 | 6463A | 6 | 60- 131 |
| 01643-30823 | 6471 | 27 | 60- 133 |
| 01643-30823 | 7031B | 38 | 70- 22 |
| 01643-30823 | 7038 | 18 | 70- 29 |
| 01643-30823 | 9911 | 12 | 90- 17 |
| 01643-30823 | 9911 | 13 | 90- 17 |
| 01643-30823 | 9911 | 3 | 90- 17 |
| 01643-30823 | 9911 | 4 | 90- 17 |

| PARTS NO. | FIG NO. | INDEX | PAGE |
|---|---|---|---|
| 01643-30832 | 4333A | 42 | 40- 35 |
| 01643-31032 | 0111 | 4 | 01- 5 |
| 01643-31032 | 0221 | 14 | 02- 15 |
| 01643-31032 | 0222 | 14 | 02- 17 |
| 01643-31032 | 0301 | 23 | 03- 3 |
| 01643-31032 | 0401 | 6 | 04- 3 |
| 01643-31032 | 0403 | 6 | 04- 7 |
| 01643-31032 | 0511 | 16 | 05- 7 |
| 01643-31032 | 0513 | 16 | 05- 9 |
| 01643-31032 | 0603 | 14 | 06- 5 |
| 01643-31032 | 1011A | 3 | 10- 11 |
| 01643-31032 | 1201A | 19 | 10- 15 |
| 01643-31032 | 1201A | 27 | 10- 15 |
| 01643-31032 | 1201A | 29 | 10- 15 |
| 01643-31032 | 1201A | 32 | 10- 15 |
| 01643-31032 | 1211 | 16 | 10- 17 |
| 01643-31032 | 1211 | 28 | 10- 18 |
| 01643-31032 | 1211 | 35 | 10- 18 |
| 01643-31032 | 1211 | 9 | 10- 17 |
| 01643-31032 | 1301A | 11 | 10- 21 |
| 01643-31032 | 1301A | 11 | 10- 21 |
| 01643-31032 | 1301A | 8 | 10- 21 |
| 01643-31032 | 1311B | 6 | 10- 23 |
| 01643-31032 | 1401C | 5 | 10- 25 |
| 01643-31032 | 1401C | 9 | 10- 25 |
| 01643-31032 | 1405A | 5 | 10- 27 |
| 01643-31032 | 1405A | 9 | 10- 27 |
| 01643-31032 | 1503A | 8 | 10- 43 |
| 01643-31032 | 1505B | 10 | 10- 45 |
| 01643-31032 | 1505B | 7 | 10- 45 |
| 01643-31032 | 1507C | 16 | 10- 47 |
| 01643-31032 | 1507C | 33 | 10- 47 |
| 01643-31032 | 1509A | 16 | 10- 51 |
| 01643-31032 | 1509A | 21 | 10- 51 |
| 01643-31032 | 1511A | 31 | 10- 53 |
| 01643-31032 | 1513A | 25 | 10- 55 |
| 01643-31032 | 1513A | 34 | 10- 56 |
| 01643-31032 | 1513A | 9 | 10- 55 |
| 01643-31032 | 1551 | 3 | 10- 59 |
| 01643-31032 | 1551 | 9 | 10- 59 |
| 01643-31032 | 1821 | 9 | 10- 63 |
| 01643-31032 | 1831 | 10 | 10- 65 |
| 01643-31032 | 1831 | 6 | 10- 65 |
| 01643-31032 | 2412 | 25 | 20- 9 |
| 01643-31032 | 2412 | 30 | 20- 9 |
| 01643-31032 | 2412 | 36 | 20- 10 |
| 01643-31032 | 2416 | 27 | 20- 17 |
| 01643-31032 | 2418 | 23 | 20- 23 |
| 01643-31032 | 2419 | 10 | 20- 27 |
| 01643-31032 | 2419 | 15 | 20- 27 |



| PARTS NO. | FIG NO | INDEX | PAGE |
|---|---|---|---|
| 01643-31032 | 2423 | 27 | 20- 35 |
| 01643-31032 | 2423 | 30 | 20- 35 |
| 01643-31032 | 2551A | 17 | 20- 57 |
| 01643-31032 | 2551A | 24 | 20- 57 |
| 01643-31032 | 2551A | 32 | 20- 57 |
| 01643-31032 | 2551A | 4 | 20- 57 |
| 01643-31032 | 2551A | 8 | 20- 57 |
| 01643-31032 | 2553A | 13 | 20- 59 |
| 01643-31032 | 2553A | 24 | 20- 59 |
| 01643-31032 | 2553A | 34 | 20- 59 |
| 01643-31032 | 2553A | 8 | 20- 59 |
| 01643-31032 | 2561 | 8 | 20- 61 |
| 01643-31032 | 2601 | 20 | 20- 63 |
| 01643-31032 | 2601 | 27 | 20- 64 |
| 01643-31032 | 2601 | 29 | 20- 64 |
| 01643-31032 | 2601 | 33 | 20- 64 |
| 01643-31032 | 2603 | 29 | 20- 68 |
| 01643-31032 | 2607 | 31 | 20- 74 |
| 01643-31032 | 2653 | 6 | 20- 79 |
| 01643-31032 | 2751B | 14 | 20- 95 |
| 01643-31032 | 2751B | 6 | 20- 95 |
| 01643-31032 | 2755A | 12 | 20- 99 |
| 01643-31032 | 2755A | 23 | 20- 99 |
| 01643-31032 | 2757 | 9 | 20- 101 |
| 01643-31032 | 2803A | 19 | 20- 107 |
| 01643-31032 | 2803A | 31 | 20- 107 |
| 01643-31032 | 4013 | 22 | 40- 7 |
| 01643-31032 | 4105A | 12 | 40- 11 |
| 01643-31032 | 4105A | 18 | 40- 11 |
| 01643-31032 | 4105A | 23 | 40- 11 |
| 01643-31032 | 4105A | 31 | 40- 11 |
| 01643-31032 | 4121A | 17 | 40- 17 |
| 01643-31032 | 4201A | 12 | 40- 19 |
| 01643-31032 | 4305A | 25 | 40- 21 |
| 01643-31032 | 4305A | 47 | 40- 22 |
| 01643-31032 | 4305A | 53 | 40- 22 |
| 01643-31032 | 4323B | 25 | 40- 29 |
| 01643-31032 | 4331A | 11 | 40- 33 |
| 01643-31032 | 4331A | 35 | 40- 33 |
| 01643-31032 | 4333A | 11 | 40- 35 |
| 01643-31032 | 4333A | 35 | 40- 35 |
| 01643-31032 | 4336 | 4 | 40- 37 |
| 01643-31032 | 4383 | 17 | 40- 47 |
| 01643-31032 | 4383 | 8 | 40- 47 |
| 01643-31032 | 4387 | 17 | 40- 51 |
| 01643-31032 | 4387 | 8 | 40- 51 |
| 01643-31032 | 4451 | 10 | 40- 63 |
| 01643-31032 | 4451 | 11 | 40- 63 |
| 01643-31032 | 4451 | 17 | 40- 63 |
| 01643-31032 | 4451 | 17 | 40- 63 |

| PARTS NO | FIG NO. | INDEX | PAGE |
|---|---|---|---|
| 01643-31032 | 4451 | 7 | 40- 63 |
| 01643-31032 | 4451 | 8 | 40- 63 |
| 01643-31032 | 4455 | 10 | 40- 69 |
| 01643-31032 | 4455 | 11 | 40- 69 |
| 01643-31032 | 4455 | 7 | 40- 69 |
| 01643-31032 | 4455 | 8 | 40- 69 |
| 01643-31032 | 4471A | 7 | 40- 71 |
| 01643-31032 | 4483A | 12 | 40- 75 |
| 01643-31032 | 4483A | 3 | 40- 75 |
| 01643-31032 | 5001 | 14 | 50- 3 |
| 01643-31032 | 5001 | 15 | 50- 3 |
| 01643-31032 | 5101A | 12 | 50- 13 |
| 01643-31032 | 5101A | 22 | 50- 13 |
| 01643-31032 | 5101A | 25 | 50- 13 |
| 01643-31032 | 5101A | 28 | 50- 13 |
| 01643-31032 | 5101A | 3 | 50- 13 |
| 01643-31032 | 5101A | 32 | 50- 13 |
| 01643-31032 | 5103 | 10 | 50- 15 |
| 01643-31032 | 5103 | 14 | 50- 15 |
| 01643-31032 | 5103 | 6 | 50- 15 |
| 01643-31032 | 5121 | 12 | 50- 17 |
| 01643-31032 | 5121 | 22 | 50- 17 |
| 01643-31032 | 5121 | 27 | 50- 17 |
| 01643-31032 | 5121 | 3 | 50- 17 |
| 01643-31032 | 5121 | 30 | 50- 17 |
| 01643-31032 | 5121 | 9 | 50- 17 |
| 01643-31032 | 5201A | 36 | 50- 23 |
| 01643-31032 | 5201A | 39 | 50- 23 |
| 01643-31032 | 5401A | 9 | 50- 37 |
| 01643-31032 | 5405A | 5 | 50- 41 |
| 01643-31032 | 5407A | 55 | 50- 44 |
| 01643-31032 | 5407A | 59 | 50- 44 |
| 01643-31032 | 5409A | 32 | 50- 47 |
| 01643-31032 | 5409A | 37 | 50- 48 |
| 01643-31032 | 5409A | 42 | 50- 48 |
| 01643-31032 | 5511A | 10 | 50- 53 |
| 01643-31032 | 5511A | 25 | 50- 53 |
| 01643-31032 | 5513A | 10 | 50- 55 |
| 01643-31032 | 5513A | 25 | 50- 55 |
| 01643-31032 | 5515B | 24 | 50- 57 |
| 01643-31032 | 5515B | 9 | 50- 57 |
| 01643-31032 | 5517A | 11 | 50- 59 |
| 01643-31032 | 5517A | 6 | 50- 59 |
| 01643-31032 | 5611 | 4 | 50- 67 |
| 01643-31032 | 5612A | 13 | 50- 69 |
| 01643-31032 | 5612A | 16 | 50- 69 |
| 01643-31032 | 5612A | 26 | 50- 69 |
| 01643-31032 | 5612A | 35 | 50- 69 |
| 01643-31032 | 5612A | 44 | 50- 70 |
| 01643-31032 | 5612A | 5 | 50- 69 |

| PARTS NO | FIG NO | INDEX | PAGE |
|---|---|---|---|
| 01643-31032 | 5613 | 10 | 50- 73 |
| 01643-31032 | 5613 | 13 | 50- 73 |
| 01643-31032 | 5614 | 25 | 50- 75 |
| 01643-31032 | 5614 | 36 | 50- 76 |
| 01643-31032 | 5615 | 12 | 50- 79 |
| 01643-31032 | 5616 | 12 | 50- 81 |
| 01643-31032 | 5617 | 18 | 50- 83 |
| 01643-31032 | 5617 | 6 | 50- 83 |
| 01643-31032 | 5617 | 9 | 50- 83 |
| 01643-31032 | 5618 | 12 | 50- 85 |
| 01643-31032 | 5618 | 9 | 50- 85 |
| 01643-31032 | 5619 | 14 | 50- 87 |
| 01643-31032 | 5701A | 15 | 50- 91 |
| 01643-31032 | 5701A | 8 | 50- 91 |
| 01643-31032 | 5703A | 24 | 50- 93 |
| 01643-31032 | 5703A | 31 | 50- 93 |
| 01643-31032 | 5703A | 4 | 50- 93 |
| 01643-31032 | 5901 | 4 | 50- 95 |
| 01643-31032 | 5905A | 4 | 50- 97 |
| 01643-31032 | 6101A | 5 | 60- 19 |
| 01643-31032 | 6103 | 15 | 60- 21 |
| 01643-31032 | 6103 | 5 | 60- 21 |
| 01643-31032 | 6111 | 13 | 60- 23 |
| 01643-31032 | 6303B | 31 | 60- 63 |
| 01643-31032 | 6307B | 25 | 60- 67 |
| 01643-31032 | 6401A | 13 | 60- 79 |
| 01643-31032 | 6403A | 22 | 60- 81 |
| 01643-31032 | 6403A | 4 | 60- 81 |
| 01643-31032 | 6403A | 8 | 60- 81 |
| 01643-31032 | 6405A | 4 | 60- 83 |
| 01643-31032 | 6407A | 20 | 60- 85 |
| 01643-31032 | 6411A | 13 | 60- 89 |
| 01643-31032 | 6412 | 13 | 60- 91 |
| 01643-31032 | 6412 | 28 | 60- 91 |
| 01643-31032 | 6413A | 22 | 60- 93 |
| 01643-31032 | 6413A | 4 | 60- 93 |
| 01643-31032 | 6413A | 8 | 60- 93 |
| 01643-31032 | 6414 | 19 | 60- 95 |
| 01643-31032 | 6414 | 33 | 60- 95 |
| 01643-31032 | 6414 | 4 | 60- 95 |
| 01643-31032 | 6414 | 51 | 60- 96 |
| 01643-31032 | 6414 | 8 | 60- 95 |
| 01643-31032 | 6415A | 4 | 60- 99 |
| 01643-31032 | 6416 | 4 | 60- 101 |
| 01643-31032 | 6416 | 47 | 60- 102 |
| 01643-31032 | 6416 | 52 | 60- 102 |
| 01643-31032 | 6417A | 20 | 60- 105 |
| 01643-31032 | 6418 | 29 | 60- 107 |
| 01643-31032 | 6423C | 13 | 60- 111 |
| 01643-31032 | 6423C | 24 | 60- 111 |

| PARTS NO. | FIG NO. | INDEX | PAGE |
|---|---|---|---|
| 01643-31032 | 6427 | 13 | 60- 113 |
| 01643-31032 | 6427 | 24 | 60- 113 |
| 01643-31032 | 6431A | 22 | 60- 115 |
| 01643-31032 | 6431A | 25 | 60- 115 |
| 01643-31032 | 6435A | 24 | 60- 117 |
| 01643-31032 | 6435A | 27 | 60- 117 |
| 01643-31032 | 6435A | 31 | 60- 117 |
| 01643-31032 | 6435A | 31 | 60- 117 |
| 01643-31032 | 6437C | 15 | 60- 119 |
| 01643-31032 | 6437C | 39 | 60- 120 |
| 01643-31032 | 6437C | 6 | 60- 119 |
| 01643-31032 | 6441C | 13 | 60- 123 |
| 01643-31032 | 6451A | 24 | 60- 125 |
| 01643-31032 | 6455B | 14 | 60- 127 |
| 01643-31032 | 6455B | 28 | 60- 127 |
| 01643-31032 | 6455B | 31 | 60- 127 |
| 01643-31032 | 6461A | 10 | 60- 129 |
| 01643-31032 | 6463A | 13 | 60- 131 |
| 01643-31032 | 6463A | 22 | 60- 131 |
| 01643-31032 | 6471 | 18 | 60- 133 |
| 01643-31032 | 6471 | 32 | 60- 133 |
| 01643-31032 | 6471 | 43 | 60- 134 |
| 01643-31032 | 6471 | 43 | 60- 134 |
| 01643-31032 | 6471 | 46 | 60- 134 |
| 01643-31032 | 6471 | 7 | 60- 133 |
| 01643-31032 | 6611A | 17 | 60- 137 |
| 01643-31032 | 6611A | 29 | 60- 137 |
| 01643-31032 | 7011A | 26 | 70- 5 |
| 01643-31032 | 7012A | 26 | 70- 7 |
| 01643-31032 | 7013A | 26 | 70- 9 |
| 01643-31032 | 7013A | 27 | 70- 9 |
| 01643-31032 | 7015 | 43 | 70- 12 |
| 01643-31032 | 7015 | 49 | 70- 12 |
| 01643-31032 | 7017 | 51 | 70- 16 |
| 01643-31032 | 7201 | 15 | 70- 39 |
| 01643-31032 | 7201 | 19 | 70- 39 |
| 01643-31032 | 7201 | 34 | 70- 39 |
| 01643-31032 | 7201 | 38 | 70- 40 |
| 01643-31032 | 7201 | 48 | 70- 40 |
| 01643-31232 | 0601 | 13 | 06- 3 |
| 01643-31232 | 0603 | 13 | 06- 5 |
| 01643-31232 | 1211 | 4 | 10- 17 |
| 01643-31232 | 1501A | 4 | 10- 41 |
| 01643-31232 | 1801A | 4 | 10- 61 |
| 01643-31232 | 1821 | 4 | 10- 63 |
| 01643-31232 | 2001 | 3 | 20- 3 |
| 01643-31232 | 2001 | 6 | 20- 3 |
| 01643-31232 | 2051 | 7 | 20- 5 |
| 01643-31232 | 2415A | 34 | 20- 13 |
| 01643-31232 | 2421 | 14 | 20- 31 |





| PARTS NO. | FIG NO. | INDEX | PAGE |
|---|---|---|---|
| 01643-31232 | 2421 | 30 | 20- 31 |
| 01643-31232 | 2421 | 5 | 20- 31 |
| 01643-31232 | 2422 | 23 | 20- 33 |
| 01643-31232 | 2422 | 5 | 20- 33 |
| 01643-31232 | 2511A | 12 | 20- 55 |
| 01643-31232 | 2551A | 13 | 20- 57 |
| 01643-31232 | 2553A | 29 | 20- 59 |
| 01643-31232 | 2553A | 31 | 20- 59 |
| 01643-31232 | 2651A | 18 | 20- 77 |
| 01643-31232 | 2651A | 8 | 20- 77 |
| 01643-31232 | 2801A | 11 | 20- 103 |
| 01643-31232 | 2801A | 15 | 20- 103 |
| 01643-31232 | 2801A | 29 | 20- 103 |
| 01643-31232 | 2801A | 41 | 20- 104 |
| 01643-31232 | 2803A | 15 | 20- 107 |
| 01643-31232 | 2805A | 36 | 20- 110 |
| 01643-31232 | 2805A | 8 | 20- 109 |
| 01643-31232 | 4001C | 16 | 40- 3 |
| 01643-31232 | 4001C | 9 | 40- 3 |
| 01643-31232 | 4011A | 27 | 40- 5 |
| 01643-31232 | 4011A | 5 | 40- 5 |
| 01643-31232 | 4101A | 33 | 40- 9 |
| 01643-31232 | 4121A | 22 | 40- 17 |
| 01643-31232 | 4121A | 25 | 40- 17 |
| 01643-31232 | 4305A | 13 | 40- 21 |
| 01643-31232 | 4305A | 5 | 40- 21 |
| 01643-31232 | 4305A | 8 | 40- 21 |
| 01643-31232 | 4336 | 20 | 40- 37 |
| 01643-31232 | 4453A | 23 | 40- 65 |
| 01643-31232 | 4453A | 30 | 40- 65 |
| 01643-31232 | 4454A | 32 | 40- 67 |
| 01643-31232 | 4471A | 5 | 40- 71 |
| 01643-31232 | 4481A | 26 | 40- 73 |
| 01643-31232 | 4483A | 17 | 40- 75 |
| 01643-31232 | 5001 | 18 | 50- 3 |
| 01643-31232 | 5001 | 19 | 50- 3 |
| 01643-31232 | 5001 | 8 | 50- 3 |
| 01643-31232 | 5011 | 25 | 50- 5 |
| 01643-31232 | 5013 | 24 | 50- 7 |
| 01643-31232 | 5201A | 17 | 50- 23 |
| 01643-31232 | 5201A | 20 | 50- 23 |
| 01643-31232 | 5201A | 23 | 50- 23 |
| 01643-31232 | 5201A | 26 | 50- 23 |
| 01643-31232 | 5201A | 29 | 50- 23 |
| 01643-31232 | 5203 | 3 | 50- 25 |
| 01643-31232 | 5203 | 6 | 50- 25 |
| 01643-31232 | 5251A | 10 | 50- 29 |
| 01643-31232 | 5251A | 3 | 50- 29 |
| 01643-31232 | 5251A | 6 | 50- 29 |
| 01643-31232 | 5301B | 45 | 50- 34 |



| PARTS NO | FIG NO | INDEX | PAGE |
|---|---|---|---|
| 01643-31232 | 5401A | 4 | 50- 37 |
| 01643-31232 | 5511A | 17 | 50- 53 |
| 01643-31232 | 5511A | 5 | 50- 53 |
| 01643-31232 | 5513A | 17 | 50- 55 |
| 01643-31232 | 5513A | 5 | 50- 55 |
| 01643-31232 | 5515B | 16 | 50- 57 |
| 01643-31232 | 5515B | 4 | 50- 57 |
| 01643-31232 | 5611 | 16 | 50- 67 |
| 01643-31232 | 5611 | 19 | 50- 67 |
| 01643-31232 | 5612A | 38 | 50- 69 |
| 01643-31232 | 5612A | 41 | 50- 69 |
| 01643-31232 | 5613 | 17 | 50- 73 |
| 01643-31232 | 5613 | 7 | 50- 73 |
| 01643-31232 | 5619 | 17 | 50- 87 |
| 01643-31232 | 5703A | 18 | 50- 93 |
| 01643-31232 | 6015 | 4 | 60- 7 |
| 01643-31232 | 6071 | 8 | 60- 17 |
| 01643-31232 | 6113 | 8 | 60- 25 |
| 01643-31232 | 6401A | 11 | 60- 79 |
| 01643-31232 | 6401A | 17 | 60- 79 |
| 01643-31232 | 6401A | 23 | 60- 79 |
| 01643-31232 | 6401A | 4 | 60- 79 |
| 01643-31232 | 6407A | 14 | 60- 85 |
| 01643-31232 | 6407A | 26 | 60- 85 |
| 01643-31232 | 6407A | 47 | 60- 86 |
| 01643-31232 | 6407A | 50 | 60- 86 |
| 01643-31232 | 6411A | 11 | 60- 89 |
| 01643-31232 | 6411A | 17 | 60- 89 |
| 01643-31232 | 6411A | 23 | 60- 89 |
| 01643-31232 | 6411A | 4 | 60- 89 |
| 01643-31232 | 6412 | 11 | 60- 91 |
| 01643-31232 | 6412 | 17 | 60- 91 |
| 01643-31232 | 6412 | 23 | 60- 91 |
| 01643-31232 | 6412 | 4 | 60- 91 |
| 01643-31232 | 6414 | 22 | 60- 95 |
| 01643-31232 | 6414 | 26 | 60- 95 |
| 01643-31232 | 6414 | 30 | 60- 95 |
| 01643-31232 | 6416 | 61 | 60- 102 |
| 01643-31232 | 6416 | 65 | 60- 102 |
| 01643-31232 | 6417A | 14 | 60- 105 |
| 01643-31232 | 6417A | 38 | 60- 105 |
| 01643-31232 | 6417A | 41 | 60- 105 |
| 01643-31232 | 6418 | 14 | 60- 107 |
| 01643-31232 | 6418 | 26 | 60- 107 |
| 01643-31232 | 6423C | 21 | 60- 111 |
| 01643-31232 | 6427 | 21 | 60- 113 |
| 01643-31232 | 6437C | 21 | 60- 119 |
| 01643-31232 | 6451A | 20 | 60- 125 |
| 01643-31232 | 6611A | 9 | 60- 137 |
| 01643-31232 | 7011A | 21 | 70- 5 |

| PARTS NO. | FIG NO | INDEX | PAGE |
|---|---|---|---|
| 01643-31232 | 7011A | 9 | 70- 5 |
| 01643-31232 | 7012A | 21 | 70- 7 |
| 01643-31232 | 7012A | 9 | 70- 7 |
| 01643-31232 | 7013A | 21 | 70- 9 |
| 01643-31232 | 7013A | 32 | 70- 9 |
| 01643-31232 | 7013A | 37 | 70- 9 |
| 01643-31232 | 7013A | 38 | 70- 9 |
| 01643-31232 | 7013A | 9 | 70- 9 |
| 01643-31232 | 7015 | 24 | 70- 11 |
| 01643-31232 | 7015 | 33 | 70- 12 |
| 01643-31232 | 7015 | 6 | 70- 11 |
| 01643-31232 | 7017 | 16 | 70- 15 |
| 01643-31232 | 7017 | 26 | 70- 15 |
| 01643-31232 | 7017 | 35 | 70- 16 |
| 01643-31232 | 7017 | 6 | 70- 15 |
| 01643-31232 | 7031B | 4 | 70- 21 |
| 01643-31232 | 7037 | 15 | 70- 25 |
| 01643-31232 | 7037 | 31 | 70- 25 |
| 01643-31232 | 7101 | 28 | 70- 31 |
| 01643-31232 | 7111 | 19 | 70- 35 |
| 01643-31232 | 7151A | 12 | 70- 37 |
| 01643-31232 | 7151A | 18 | 70- 37 |
| 01643-31232 | 7151A | 29 | 70- 37 |
| 01643-31232 | 7201 | 29 | 70- 39 |
| 01643-31232 | 7201 | 9 | 70- 39 |
| 01643-31445 | 1501A | 17 | 10- 41 |
| 01643-31445 | 1501A | 5 | 10- 41 |
| 01643-31445 | 1801A | 5 | 10- 61 |
| 01643-31445 | 2412 | 15 | 20- 9 |
| 01643-31445 | 2421 | 22 | 20- 31 |
| 01643-31445 | 2422 | 11 | 20- 33 |
| 01643-31445 | 2471 | 17 | 20- 49 |
| 01643-31445 | 2471 | 19 | 20- 49 |
| 01643-31445 | 2551A | 28 | 20- 57 |
| 01643-31445 | 2601 | 14 | 20- 63 |
| 01643-31445 | 2603 | 12 | 20- 67 |
| 01643-31445 | 2603 | 21 | 20- 67 |
| 01643-31445 | 2653 | 35 | 20- 80 |
| 01643-31445 | 4201A | 14 | 40- 19 |
| 01643-31445 | 4371 | 7 | 40- 43 |
| 01643-31445 | 4451 | 14 | 40- 63 |
| 01643-31445 | 4455 | 14 | 40- 69 |
| 01643-31445 | 5301B | 37 | 50- 33 |
| 01643-31445 | 5511A | 12 | 50- 53 |
| 01643-31445 | 5513A | 12 | 50- 55 |
| 01643-31445 | 5515B | 11 | 50- 57 |
| 01643-31445 | 7015 | 14 | 70- 11 |
| 01643-31645 | 0201 | 6 | 02- 3 |
| 01643-31645 | 0231 | 15 | 02- 19 |
| 01643-31645 | 1001 | 5 | 10- 3 |

| PARTS NO. | FIG NO. | INDEX | PAGE |
|---|---|---|---|
| 01643-31645 | 1201A | 24 | 10- 15 |
| 01643-31645 | 1301A | 5 | 10- 21 |
| 01643-31645 | 2422 | 16 | 20- 33 |
| 01643-31645 | 2471 | 14 | 20- 49 |
| 01643-31645 | 2601 | 10 | 20- 63 |
| 01643-31645 | 2653 | 33 | 20- 80 |
| 01643-31645 | 2653 | 38 | 20- 80 |
| 01643-31645 | 2653 | 44 | 20- 80 |
| 01643-31645 | 2801A | 38 | 20- 103 |
| 01643-31645 | 4105A | 26 | 40- 11 |
| 01643-31645 | 4105A | 3 | 40- 11 |
| 01643-31645 | 5011 | 18 | 50- 5 |
| 01643-31645 | 5011 | 19 | 50- 5 |
| 01643-31645 | 5013 | 17 | 50- 7 |
| 01643-31645 | 5013 | 18 | 50- 7 |
| 01643-31645 | 5201A | 8 | 50- 23 |
| 01643-31645 | 6437C | 12 | 60- 119 |
| 01643-31645 | 6471 | 14 | 60- 133 |
| 01643-31645 | 7015 | 40 | 70- 12 |
| 01643-31645 | 7017 | 42 | 70- 16 |
| 01643-31645 | 7021 | 19 | 70- 19 |
| 01643-31645 | 7021 | 25 | 70- 19 |
| 01643-31645 | 7031B | 21 | 70- 21 |
| 01643-31645 | 7037 | 24 | 70- 25 |
| 01643-31645 | 7101 | 24 | 70- 31 |
| 01643-31645 | 7101 | 40 | 70- 32 |
| 01643-31645 | 7111 | 14 | 70- 35 |
| 01643-31645 | 7151A | 5 | 70- 37 |
| 01643-31845 | 1001 | 14 | 10- 3 |
| 01643-31845 | 1001 | 17 | 10- 3 |
| 01643-31845 | 1001 | 25 | 10- 3 |
| 01643-31845 | 1001 | 9 | 10- 3 |
| 01643-31845 | 2603 | 4 | 20- 67 |
| 01643-31845 | 4305A | 36 | 40- 21 |
| 01643-31845 | 7011A | 6 | 70- 5 |
| 01643-31845 | 7012A | 6 | 70- 7 |
| 01643-31845 | 7013A | 6 | 70- 9 |
| 01643-31845 | 7101 | 37 | 70- 32 |
| 01643-32060 | 1301A | 3 | 10- 21 |
| 01643-32060 | 2603 | 24 | 20- 68 |
| 01643-32060 | 2603 | 40 | 20- 68 |
| 01643-32060 | 4111A | 7 | 40- 15 |
| 01643-32060 | 5171A | 3 | 50- 21 |
| 01643-32060 | 7001 | 15 | 70- 3 |
| 01643-32060 | 7011A | 18 | 70- 5 |
| 01643-32060 | 7012A | 18 | 70- 7 |
| 01643-32060 | 7013A | 18 | 70- 9 |
| 01643-32060 | 7111 | 7 | 70- 35 |
| 01643-32060 | 7201 | 56 | 70- 40 |
| 01643-32260 | 6301A | 26 | 60- 61 |





| PARTS NO. | FIG NO | INDEX | PAGE |
|---|---|---|---|
| 01643-32260 | 6301A | 9 | 60- 61 |
| 01643-32260 | 6303B | 19 | 60- 63 |
| 01643-32460 | 0401 | 14 | 04- 3 |
| 01643-32460 | 0403 | 14 | 04- 7 |
| 01643-32460 | 0511 | 8 | 05- 7 |
| 01643-32460 | 0513 | 8 | 05- 9 |
| 01643-32460 | 1001 | 22 | 10- 3 |
| 01643-32460 | 2601 | 5A | 20- 63 |
| 01643-32460 | 5011 | 28 | 50- 5 |
| 01643-32460 | 5011 | 5 | 50- 5 |
| 01643-32460 | 5013 | 5 | 50- 7 |
| 01643-32460 | 5051 | 3 | 50- 9 |
| 01643-32460 | 5053 | 4 | 50- 11 |
| 01643-32460 | 5517A | 3 | 50- 59 |
| 01643-32460 | 5521 | 3 | 50- 61 |
| 01643-32460 | 5551 | 4 | 50- 63 |
| 01643-32460 | 5553 | 4 | 50- 65 |
| 01643-32460 | 7001 | 22 | 70- 3 |
| 01643-32460 | 7021 | 14 | 70- 19 |
| 01643-32460 | 7031B | 27 | 70- 21 |
| 01643-32460 | 7037 | 28 | 70- 25 |
| 01643-32460 | 7101 | 16 | 70- 31 |
| 01643-32460 | 7101 | 19 | 70- 31 |
| 01643-32460 | 7101 | 22 | 70- 31 |
| 01643-32460 | 7151A | 25 | 70- 37 |
| 01643-32460 | 7201 | 41 | 70- 40 |
| 01643-32460 | 7201 | 43 | 70- 40 |
| 01643-33380 | 7101 | 12 | 70- 31 |
| 01643-33690 | 2801A | 20 | 20- 103 |
| 01643-33690 | 7101 | 13 | 70- 31 |
| 01643-50823 | 0211 | 35A | 02- 12 |
| 01643-50823 | 4111A | 26 | 40- 15 |
| 01643-51032 | 0211 | 35A | 02- 12 |
| 01643-51232 | 4111A | 20 | 40- 15 |
| 01643-51232 | 4111A | 6 | 40- 15 |
| 01643-80823 | 1501A | 24 | 10- 41 |
| 01643-80823 | 1801A | 13 | 10- 61 |
| 01658-26223 | 0241 | 17 | 02- 21 |
| 01658-26223 | 0242 | 36 | 02- 23 |
| 01658-26223 | 0991 | 3 | 09- 5 |
| 01658-26223 | 0991 | 3 | 09- 5 |
| 01658-26223 | 0993 | 3 | 09- 11 |
| 01658-26223 | 0993 | 3 | 09- 11 |
| 01658-26223 | 2607 | 10 | 20- 73 |
| 01659-09018 | 2653 | 29 | 20- 80 |
| 01659-28518 | 2803A | 26 | 20- 107 |
| 02010-70619 | 7031B | 41 | 70- 22 |
| 02010-70619 | 7037 | 35 | 70- 25 |
| 02010-70625 | 0521 | 5 | 05- 11 |
| 02010-70638 | 4201A | 11 | 40- 19 |

| PARTS NO. | FIG NO | INDEX | PAGE |
|---|---|---|---|
| 02205-10812 | 0601 | 7 | 06- 3 |
| 02205-10812 | 0603 | 7 | 06- 5 |
| 02400-10413 | 0261 | 11 | 02- 31 |
| 02720-21214 | 0312 | 7 | 03- 9 |
| 02720-21616 | 0311 | 6 | 03- 7 |
| 02720-21616 | 0312 | 6 | 03- 9 |
| 02893-05043 | 0171 | 11 | 01- 23 |
| 02893-05043 | 0171 | 11 | 01- 23 |
| 02893-05043 | 0991 | 1 | 09- 3 |
| 02893-05043 | 0991 | 1 | 09- 3 |
| 02893-05043 | 0993 | 1 | 09- 9 |
| 04000-01235 | 0242 | 6 | 02- 23 |
| 04000-01850 | 0242 | 30 | 02- 23 |
| 04000-01865 | 0241 | 9 | 02- 21 |
| 04010-00300 | 2423 | 5 | 20- 35 |
| 04010-00519 | 0401 | 12 | 04- 3 |
| 04010-00519 | 0403 | 12 | 04- 7 |
| 04010-00519 | 2607 | 28 | 20- 74 |
| 04010-00519 | 4011A | 9 | 40- 5 |
| 04010-00519 | 4101A | 23 | 40- 9 |
| 04010-00519 | 4111A | 22 | 40- 15 |
| 04010-00519 | 4331A | 2 | 40- 33 |
| 04010-00519 | 4333A | 2 | 40- 35 |
| 04010-00519 | 4333A | 40 | 40- 35 |
| 04010-00725 | 0271 | 3 | 02- 35 |
| 04010-10516 | 0301 | 5 | 03- 3 |
| 04020-00514 | 0201 | 21 | 02- 3 |
| 04020-00514 | 0221 | 4 | 02- 15 |
| 04020-00514 | 0222 | 4 | 02- 17 |
| 04020-00514 | 0241 | 3A | 02- 21 |
| 04020-00820 | 0101A | 9 | 01- 3 |
| 04020-00820 | 0201 | 18 | 02- 3 |
| 04020-01024 | 0201 | 25 | 02- 3 |
| 04020-01024 | 0401 | 3 | 04- 3 |
| 04020-01024 | 0403 | 3 | 04- 7 |
| 04020-01024 | 2423 | 2 | 20- 35 |
| 04020-01024 | 2605A | 24 | 20- 71 |
| 04020-01228 | 0251 | 10 | 02- 27 |
| 04020-01228 | 2416A | 2 | 20- 13 |
| 04020-01228 | 2418 | 4 | 20- 23 |
| 04020-01228 | 2419 | 38 | 20- 28 |
| 04020-01638 | 2419 | 28 | 20- 28 |
| 04020-01638 | 2601 | 11 | 20- 63 |
| 04020-01638 | 2603 | 19 | 20- 67 |
| 04020-01842 | 2605A | 10 | 20- 71 |
| 04020-01842 | 7021 | 11 | 70- 19 |
| 04025-00408 | 0201 | 22 | 02- 3 |
| 04025-00416 | 2417 | 22 | 20- 19 |
| 04025-00416 | 4001C | 12 | 40- 3 |
| 04025-00424 | 2417 | 22 | 20- 19 |

| PARTS NO | FIG NO | INDEX | PAGE |
|---|---|---|---|
| 04025-00440 | 2451 | 8 | 20- 39 |
| 04025-00512 | 0201 | 23 | 02- 3 |
| 04025-00512 | 0211 | 28 | 02- 11 |
| 04025-00532 | 4101A | 11 | 40- 9 |
| 04025-00532 | 4101A | 20 | 40- 9 |
| 04025-00532 | 4323B | 30 | 40- 29 |
| 04025-01065 | 5011 | 30 | 50- 5 |
| 04050-05045 | 2601 | 6 | 20- 63 |
| 04050-10070 | 7201 | 4 | 70- 39 |
| 04050-11212 | 1551 | 12 | 10- 59 |
| 04050-11212 | 4321B | 29 | 40- 25 |
| 04050-11212 | 4322 | 29 | 40- 27 |
| 04050-11212 | 4323B | 36 | 40- 30 |
| 04050-11212 | 4341B | 21 | 40- 39 |
| 04050-11212 | 4343B | 21 | 40- 41 |
| 04050-11610 | 4101A | 28 | 40- 9 |
| 04050-11610 | 5101A | 7 | 50- 13 |
| 04050-11610 | 5301B | 17 | 50- 33 |
| 04050-11610 | 5301B | 25 | 50- 33 |
| 04050-11610 | 5301B | 33 | 50- 33 |
| 04050-11610 | 5301B | 40 | 50- 34 |
| 04050-11610 | 5407A | 12 | 50- 43 |
| 04050-11610 | 5407A | 18 | 50- 43 |
| 04050-11612 | 4013 | 10 | 40- 7 |
| 04050-11612 | 4321B | 27 | 40- 25 |
| 04050-11612 | 4322 | 27 | 40- 27 |
| 04050-11612 | 4323B | 34 | 40- 30 |
| 04050-11612 | 4341B | 19 | 40- 39 |
| 04050-11612 | 4343B | 19 | 40- 41 |
| 04050-11612 | 5407A | 28 | 50- 43 |
| 04050-11612 | 5407A | 32 | 50- 43 |
| 04050-12012 | 4013 | 5 | 40- 7 |
| 04050-12012 | 4331A | 28 | 40- 33 |
| 04050-12012 | 4333A | 28 | 40- 35 |
| 04050-12018 | 2803A | 17 | 20- 107 |
| 04050-12018 | 4105A | 14 | 40- 11 |
| 04050-12018 | 4105A | 36 | 40- 11 |
| 04050-13015 | 4121A | 5 | 40- 17 |
| 04050-13018 | 5103 | 15 | 50- 15 |
| 04050-13020 | 2801A | 12 | 20- 103 |
| 04050-13020 | 4121A | 9 | 40- 17 |
| 04050-13020 | 5407A | 38 | 50- 44 |
| 04050-13020 | 5511A | 21 | 50- 53 |
| 04050-13020 | 5513A | 21 | 50- 55 |
| 04050-13020 | 5515B | 20 | 50- 57 |
| 04050-15035 | 2805A | 11A | 20- 109 |
| 04050-15035 | 2805A | 28A | 20- 109 |
| 04050-15045 | 2601 | 6 | 20- 63 |
| 04050-16055 | 2801A | 21 | 20- 103 |
| 04050-18050 | 7101 | 8 | 70- 31 |

| PARTS NO. | FIG NO. | INDEX | PAGE |
|---|---|---|---|
| 04050-18080 | 7015 | 17 | 70- 11 |
| 04050-18080 | 7017 | 19 | 70- 15 |
| 04050-18085 | 7001 | 8 | 70- 3 |
| 04052-00633 | 4336 | 16 | 40- 37 |
| 04052-01038 | 4111A | 16 | 40- 15 |
| 04052-01038 | 5001 | 11 | 50- 3 |
| 04052-10833 | 4001C | 23 | 40- 3 |
| 04052-10833 | 4011A | 18 | 40- 5 |
| 04052-10833 | 4105A | 47 | 40- 12 |
| 04052-10833 | 4111A | 31 | 40- 15 |
| 04052-11038 | 5001 | 11 | 50- 3 |
| 04059-02416 | 2607 | 36 | 20- 74 |
| 04064-01210 | 4305A | 14 | 40- 21 |
| 04064-01210 | 4305A | 9 | 40- 21 |
| 04064-01510 | 0141 | 15 | 01- 13 |
| 04064-01610 | 4011A | 11 | 40- 5 |
| 04064-01610 | 4011A | 25 | 40- 5 |
| 04064-01610 | 4105A | 27 | 40- 11 |
| 04064-01610 | 4105A | 4 | 40- 11 |
| 04064-02012 | 0271 | 13 | 02- 35 |
| 04064-02012 | 4111A | 8 | 40- 15 |
| 04064-02012 | 4336 | 11 | 40- 37 |
| 04064-02512 | 2451 | 52 | 20- 40 |
| 04064-03515 | 2417 | 8 | 20- 19 |
| 04064-04018 | 0242 | 11 | 02- 23 |
| 04064-04518 | 0242 | 20 | 02- 23 |
| 04064-05020 | 2416 | 8 | 20- 17 |
| 04064-05520 | 2419 | 35 | 20- 28 |
| 04064-06525 | 0241 | 24 | 02- 21 |
| 04064-06525 | 2418 | 10 | 20- 23 |
| 04064-07525 | 2419 | 12 | 20- 27 |
| 04064-07525 | 2421 | 7 | 20- 31 |
| 04065-01240 | 0242 | 43 | 02- 24 |
| 04065-01610 | 0301 | 18 | 03- 3 |
| 04065-02412 | 0321 | 6 | 03- 11 |
| 04065-02512 | 6275 | 4 | 60- 59 |
| 04065-03012 | 0311 | 5 | 03- 7 |
| 04065-03012 | 0312 | 5 | 03- 9 |
| 04065-03012 | 2511A | 7 | 20- 55 |
| 04065-04718 | 2721C | 3 | 20- 89 |
| 04065-04718 | 2805A | 30 | 20- 109 |
| 04065-04818 | 0261 | 3 | 02- 31 |
| 04065-05220 | 0501 | 7 | 05- 3 |
| 04065-05220 | 0502 | 7 | 05- 5 |
| 04065-06020 | 2805A | 15 | 20- 109 |
| 04065-06020 | 2805A | 25 | 20- 109 |
| 04065-07225 | 2417 | 11 | 20- 19 |
| 04065-08025 | 0511 | 5 | 05- 7 |
| 04065-08025 | 0513 | 5 | 05- 9 |
| 04065-08025 | 2607 | 13 | 20- 73 |





| PARTS NO. | FIG NO | INDEX | PAGE |
|---|---|---|---|
| 04065-08530 | 0242 | 19 | 02- 23 |
| 04065-09030 | 6307B | 13 | 60- 67 |
| 04070-00110 | 2415A | 11 | 20- 13 |
| 04070-00140 | 2416 | 11 | 20- 17 |
| 04071-00150 | 2421 | 12 | 20- 31 |
| 04071-00170 | 2607 | 20 | 20- 73 |
| 04071-00180 | 2607 | 15 | 20- 73 |
| 04071-00190 | 2416 | 6 | 20- 17 |
| 04077-00090 | 2415A | 9 | 20- 13 |
| 04077-00090 | 2418 | 13 | 20- 23 |
| 04077-00090 | 2418 | 26 | 20- 23 |
| 04077-00130 | 2421 | 19 | 20- 31 |
| 04080-06012 | 7038 | 7 | 70- 29 |
| 04081-05012 | 2607 | 5 | 20- 73 |
| 04081-06012 | 7031B | 30 | 70- 21 |
| 04081-06012 | 7038 | 8 | 70- 29 |
| 04082-00206 | 2801A | 27 | 20- 103 |
| 04082-00206 | 2805A | 34 | 20- 110 |
| 04082-00206 | 2805A | 6 | 20- 109 |
| 04082-00206 | 5001 | 6 | 50- 3 |
| 04082-00212 | 7015 | 31 | 70- 12 |
| 04082-00212 | 7017 | 33 | 70- 15 |
| 04082-00212 | 7101 | 26 | 70- 31 |
| 04082-00212 | 7111 | 17 | 70- 35 |
| 04082-00212 | 7151A | 10 | 70- 37 |
| 04082-00212 | 7151A | 16 | 70- 37 |
| 04082-00406 | 7201 | 27 | 70- 39 |
| 04120-21757 | 5613 | 19 | 50- 73 |
| 04121-22266 | 0511 | 27 | 05- 7 |
| 04121-32268 | 0513 | 28 | 05- 9 |
| 04205-00618 | 4336 | 14 | 40- 37 |
| 04205-10614 | 5407A | 10 | 50- 43 |
| 04205-10614 | 5407A | 16 | 50- 43 |
| 04205-10616 | 5101A | 6 | 50- 13 |
| 04205-10616 | 5407A | 30 | 50- 43 |
| 04205-10618 | 4321B | 25 | 40- 25 |
| 04205-10618 | 4322 | 25 | 40- 27 |
| 04205-10618 | 4323B | 32 | 40- 29 |
| 04205-10618 | 4341B | 17 | 40- 39 |
| 04205-10618 | 4343B | 17 | 40- 41 |
| 04205-10620 | 4013 | 9 | 40- 7 |
| 04205-10628 | 4305A | 19 | 40- 21 |
| 04205-10822 | 4001C | 22 | 40- 3 |
| 04205-10822 | 4011A | 17 | 40- 5 |
| 04205-10822 | 4013 | 4 | 40- 7 |
| 04205-10822 | 4105A | 46 | 40- 12 |
| 04205-10822 | 4111A | 30 | 40- 15 |
| 04205-10822 | 4305A | 16 | 40- 21 |
| 04205-10825 | 4331A | 27 | 40- 33 |
| 04205-10825 | 4333A | 27 | 40- 35 |

| PARTS NO | FIG NO. | INDEX | PAGE |
|---|---|---|---|
| 04205-11028 | 4111A | 15 | 40- 15 |
| 04205-11030 | 4121A | 11 | 40- 17 |
| 04205-11045 | 5407A | 36 | 50- 44 |
| 04205-11235 | 4121A | 7 | 40- 17 |
| 04210-00624 | 4336 | 13 | 40- 37 |
| 04210-21040 | 4111A | 11 | 40- 15 |
| 04211-20634 | 4013 | 7 | 40- 7 |
| 04211-20844 | 4001C | 18 | 40- 3 |
| 04211-20844 | 4011A | 12 | 40- 5 |
| 04220-21040 | 4111A | 13 | 40- 15 |
| 04221-20844 | 4001C | 20 | 40- 3 |
| 04221-20844 | 4011A | 15 | 40- 5 |
| 04248-30819 | 4011A | 14 | 40- 5 |
| 04248-30837 | 4001C | 17 | 40- 3 |
| 04248-30842 | 4331A | 14 | 40- 33 |
| 04248-30842 | 4333A | 14 | 40- 35 |
| 04248-31036 | 4105A | 32 | 40- 11 |
| 04248-31040 | 4111A | 10 | 40- 15 |
| 04248-31046 | 4105A | 19 | 40- 11 |
| 04250-40639 | 1551 | 10 | 10- 59 |
| 04250-40847 | 4321B | 17 | 40- 25 |
| 04250-40847 | 4322 | 17 | 40- 27 |
| 04250-40847 | 4323B | 18 | 40- 29 |
| 04250-40847 | 4331A | 15 | 40- 33 |
| 04250-40847 | 4333A | 15 | 40- 35 |
| 04250-40847 | 4341B | 10 | 40- 39 |
| 04250-40847 | 4343B | 10 | 40- 41 |
| 04250-60847 | 4321B | 15 | 40- 25 |
| 04250-60847 | 4322 | 15 | 40- 27 |
| 04250-60847 | 4323B | 16 | 40- 29 |
| 04250-60847 | 4331A | 17 | 40- 33 |
| 04250-60847 | 4333A | 17 | 40- 35 |
| 04250-60847 | 4341B | 5 | 40- 39 |
| 04250-60847 | 4343B | 5 | 40- 41 |
| 04250-91056 | 4105A | 33 | 40- 11 |
| 04252-11061 | 4105A | 5 | 40- 11 |
| 04252-11061 | 4105A | 8 | 40- 11 |
| 04254-10823 | 4321B | 21 | 40- 25 |
| 04254-10823 | 4322 | 21 | 40- 27 |
| 04254-10823 | 4323B | 22 | 40- 29 |
| 04254-10823 | 4331A | 21 | 40- 33 |
| 04254-10823 | 4333A | 21 | 40- 35 |
| 04254-10823 | 4341B | 14 | 40- 39 |
| 04254-10823 | 4341B | 9 | 40- 39 |
| 04254-10823 | 4343B | 14 | 40- 41 |
| 04254-10823 | 4343B | 9 | 40- 41 |
| 04260-00635 | 2415A | 16 | 20- 13 |
| 04260-00635 | 2416 | 16 | 20- 17 |
| 04260-00635 | 2417 | 17 | 20- 19 |
| 04260-00635 | 2418 | 18 | 20- 23 |

| PARTS NO. | FIG NO. | INDEX | PAGE |
|---|---|---|---|
| 04260-00635 | 2418 | 31 | 20- 24 |
| 04260-00635 | 2418 | 8 | 20- 23 |
| 04260-00635 | 2419 | 6 | 20- 27 |
| 04260-00635 | 2421 | 17 | 20- 31 |
| 04418-02550 | 0201 | 46 | 02- 4 |
| 04418-13060 | 2412 | 5 | 20- 9 |
| 04418-13060 | 5517A | 13 | 50- 59 |
| 04418-13060 | 5521 | 8 | 50- 61 |
| 04418-13060 | 9801B | 21 | 90- 3 |
| 04418-13060 | 9821B | 21 | 90- 7 |
| 04418-13060 | 9831B | 21 | 90- 11 |
| 04434-11510 | 6611A | 27 | 60- 137 |
| 04434-50808 | 4383 | 20 | 40- 47 |
| 04434-50808 | 4387 | 20 | 40- 51 |
| 04434-51010 | 6103 | 13 | 60- 21 |
| 04434-51710 | 1311B | 4 | 10- 23 |
| 04434-51712 | 4381 | 10 | 40- 45 |
| 04434-51712 | 4385 | 10 | 40- 49 |
| 04434-52210 | 5614 | 23 | 50- 75 |
| 04434-52210 | 6412 | 26 | 60- 91 |
| 04434-53211 | 6403A | 20 | 60- 81 |
| 04434-53211 | 6405A | 23 | 60- 83 |
| 04434-53211 | 6407A | 41 | 60- 85 |
| 04434-53211 | 6413A | 20 | 60- 93 |
| 04434-53211 | 6415A | 23 | 60- 99 |
| 04434-53211 | 6417A | 33 | 60- 105 |
| 04434-53411 | 2553A | 32 | 20- 59 |
| 04434-53411 | 2553A | 32 | 20- 59 |
| 04434-53411 | 2757 | 7 | 20- 101 |
| 04434-53411 | 6414 | 17 | 60- 95 |
| 04434-53411 | 6414 | 49 | 60- 96 |
| 04435-51708 | 4381 | 7 | 40- 45 |
| 04435-51708 | 4385 | 7 | 40- 49 |
| 04435-52110 | 5614 | 34 | 50- 75 |
| 04435-52511 | 5615 | 8 | 50- 79 |
| 04530-02030 | 2411 | 2 | 20- 7 |
| 04530-02030 | 2412 | 6 | 20- 9 |
| 04530-02438 | 0231 | 3 | 02- 19 |
| 06000-06015 | 2419 | 8 | 20- 27 |
| 06000-06207 | 2416 | 24 | 20- 17 |
| 06000-06207 | 2417 | 10 | 20- 19 |
| 06000-06208 | 0242 | 10 | 02- 23 |
| 06000-06209 | 0242 | 18 | 02- 23 |
| 06000-06210 | 2415A | 8 | 20- 13 |
| 06000-06213 | 0241 | 23 | 02- 21 |
| 06000-06214 | 0242 | 42 | 02- 23 |
| 06000-06922 | 2415A | 3 | 20- 13 |
| 06000-06928 | 2416 | 5 | 20- 17 |
| 06001-00213 | 0241 | 15 | 02- 21 |
| 06001-00213 | 0242 | 34 | 02- 23 |



| PARTS NO. | FIG NO | INDEX | PAGE |
|---|---|---|---|
| 06002-30312 | 7031B | 18 | 70- 21 |
| 06002-30312 | 7037 | 17 | 70- 25 |
| 06002-32024 | 2605A | 22 | 20- 71 |
| 06002-32028 | 2605A | 23 | 20- 71 |
| 06002-32218 | 2653 | 25 | 20- 80 |
| 06002-32218 | 2803A | 23 | 20- 107 |
| 06002-32219 | 2803A | 24 | 20- 107 |
| 06003-30316 | 2605A | 5 | 20- 71 |
| 06007-06206 | 0511 | 3 | 05- 7 |
| 06007-06206 | 0513 | 3 | 05- 9 |
| 06007-06307 | 0511 | 4 | 05- 7 |
| 06007-06307 | 0513 | 4 | 05- 9 |
| 06030-06004 | 0501 | 4 | 05- 3 |
| 06030-06004 | 0502 | 4 | 05- 5 |
| 06030-06304 | 0501 | 6 | 05- 3 |
| 06030-06304 | 0502 | 6 | 05- 5 |
| 06030-22213 | 2607 | 8 | 20- 73 |
| 06030-22219 | 2607 | 19 | 20- 73 |
| 06037-06206 | 0511 | 3 | 05- 7 |
| 06037-06206 | 0513 | 3 | 05- 9 |
| 06037-06307 | 0511 | 4 | 05- 7 |
| 06037-06307 | 0513 | 4 | 05- 9 |
| 06040-06217 | 2422 | 18 | 20- 33 |
| 06120-01612 | 2423 | 14 | 20- 35 |
| 06120-02016 | 2423 | 6 | 20- 35 |
| 06120-03520 | 2607 | 27 | 20- 74 |
| 06125-02051 | 4331A | 30 | 40- 33 |
| 06125-02051 | 4333A | 30 | 40- 35 |
| 06600-00805 | 4001C | 3 | 40- 3 |
| 06600-00805 | 4011A | 21 | 40- 5 |
| 06600-00805 | 4011A | 24 | 40- 5 |
| 06600-00805 | 4011A | 8 | 40- 5 |
| 07000-F5095 | 5001 | 3 | 50- 3 |
| 07000-02010 | 0241 | 4 | 02- 21 |
| 07000-02010 | 0991 | 3 | 09- 5 |
| 07000-02010 | 0993 | 3 | 09- 10 |
| 07000-02020 | 0211 | 19 | 02- 11 |
| 07000-02020 | 0991 | 2 | 09- 4 |
| 07000-02020 | 0993 | 2 | 09- 10 |
| 07000-02065 | 6111 | 14 | 60- 23 |
| 07000-02065 | 6113 | 9 | 60- 25 |
| 07000-02075 | 2412 | 18 | 20- 9 |
| 07000-02075 | 9991 | 1 | 90- 19 |
| 07000-02085 | 0242 | 13 | 02- 23 |
| 07000-02085 | 0242 | 23 | 02- 23 |
| 07000-02085 | 0991 | 3 | 09- 5 |
| 07000-02085 | 0991 | 3 | 09- 5 |
| 07000-02085 | 0993 | 3 | 09- 11 |
| 07000-02085 | 0993 | 3 | 09- 11 |
| 07000-02090 | 2412 | 22 | 20- 9 |



| PARTS NO | FIG NO. | INDEX | PAGE |
|---|---|---|---|
| 07000-02090 | 9991 | 1 | 90- 19 |
| 07000-02100 | 6313 | 11 | 60- 71 |
| 07000-02105 | 0241 | 30 | 02- 21 |
| 07000-02105 | 0242 | 26 | 02- 23 |
| 07000-02105 | 0242 | 46 | 02- 24 |
| 07000-02105 | 0991 | 3 | 09- 5 |
| 07000-02105 | 0991 | 3 | 09- 5 |
| 07000-02105 | 0991 | 3 | 09- 5 |
| 07000-02105 | 0993 | 3 | 09- 11 |
| 07000-02105 | 0993 | 3 | 09- 11 |
| 07000-02105 | 0993 | 3 | 09- 11 |
| 07000-02110 | 2725B | 11 | 20- 93 |
| 07000-02115 | 0501 | 16 | 05- 3 |
| 07000-02115 | 0991 | 6 | 09- 6 |
| 07000-02115 | 0993 | 6 | 09- 11 |
| 07000-02125 | 0991 | 2 | 09- 5 |
| 07000-02125 | 0991 | 8 | 09- 6 |
| 07000-03022 | 2551A | 36 | 20- 57 |
| 07000-03030 | 0211 | 17 | 02- 11 |
| 07000-03030 | 0991 | 2 | 09- 4 |
| 07000-03030 | 0993 | 2 | 09- 10 |
| 07000-03048 | 2721C | 11 | 20- 89 |
| 07000-05060 | 7038 | 2 | 70- 29 |
| 07000-05065 | 2422 | 14 | 20- 33 |
| 07000-05065 | 9991 | 1 | 90- 19 |
| 07000-05070 | 7038 | 4 | 70- 29 |
| 07000-05150 | 2421 | 20 | 20- 31 |
| 07000-05150 | 9991 | 1 | 90- 19 |
| 07000-05170 | 2422 | 19 | 20- 33 |
| 07000-05170 | 2422 | 3 | 20- 33 |
| 07000-05170 | 9991 | 1 | 90- 19 |
| 07000-05280 | 2421 | 28 | 20- 31 |
| 07000-05280 | 9991 | 1 | 90- 19 |
| 07000-12012 | 6247 | 18 | 60- 43 |
| 07000-12012 | 6251A | 25 | 60- 47 |
| 07000-12012 | 6261 | 18 | 60- 49 |
| 07000-12012 | 6265 | 6 | 60- 53 |
| 07000-12012 | 6416 | 56 | 60- 102 |
| 07000-12014 | 6243A | 12 | 60- 39 |
| 07000-12014 | 6243A | 3 | 60- 39 |
| 07000-12016 | 4371 | 10 | 40- 43 |
| 07000-12016 | 6251A | 29 | 60- 47 |
| 07000-12016 | 6611A | 12 | 60- 137 |
| 07000-12018 | 2603 | 27 | 20- 68 |
| 07000-12018 | 6321 | 2 | 60- 75 |
| 07000-12018 | 6325 | 2 | 60- 77 |
| 07000-12018 | 6416 | 50 | 60- 102 |
| 07000-12018 | 6451A | 2 | 60- 125 |
| 07000-12018 | 6455B | 3 | 60- 127 |
| 07000-12020 | 6241 | 9 | 60- 37 |



| PARTS NO. | FIG NO. | INDEX | PAGE |
|---|---|---|---|
| 07000-12020 | 6245 | 18 | 60- 41 |
| 07000-12020 | 6245 | 9 | 60- 41 |
| 07000-12020 | 6251A | 18 | 60- 47 |
| 07000-12020 | 6251A | 7 | 60- 47 |
| 07000-12021 | 6247 | 7 | 60- 43 |
| 07000-12021 | 6249 | 5 | 60- 45 |
| 07000-12021 | 6261 | 7 | 60- 49 |
| 07000-12021 | 6263 | 5 | 60- 51 |
| 07000-12021 | 6265 | 15 | 60- 53 |
| 07000-12065 | 6071 | 6 | 60- 17 |
| 07000-12065 | 6401A | 2 | 60- 79 |
| 07000-12065 | 6411A | 2 | 60- 89 |
| 07000-12065 | 6412 | 2 | 60- 91 |
| 07000-12085 | 2723C | 9 | 20- 91 |
| 07000-12085 | 6301A | 15 | 60- 61 |
| 07000-12085 | 6303B | 8 | 60- 63 |
| 07000-12085 | 6305B | 9 | 60- 65 |
| 07000-12085 | 6311A | 9 | 60- 69 |
| 07000-12085 | 7031B | 24B | 70- 21 |
| 07000-12085 | 7031B | 40 | 70- 22 |
| 07000-12085 | 7037 | 37 | 70- 25 |
| 07000-12090 | 2723C | 11 | 20- 91 |
| 07000-12090 | 6301A | 17 | 60- 61 |
| 07000-12090 | 6303B | 10 | 60- 63 |
| 07000-12090 | 6305B | 11 | 60- 65 |
| 07000-12090 | 6311A | 11 | 60- 69 |
| 07000-12095 | 6307B | 8 | 60- 67 |
| 07000-12095 | 6313 | 9 | 60- 71 |
| 07000-12100 | 6307B | 10 | 60- 67 |
| 07000-12105 | 2551A | 11 | 20- 57 |
| 07000-12105 | 2725B | 9 | 20- 93 |
| 07000-12105 | 6015 | 2 | 60- 7 |
| 07000-12115 | 4371 | 12 | 40- 43 |
| 07000-12120 | 2653 | 9 | 20- 79 |
| 07000-12125 | 2511A | 10 | 20- 55 |
| 07000-12135 | 6111 | 11 | 60- 23 |
| 07000-12135 | 6315 | 8 | 60- 73 |
| 07000-12434 | 6405A | 6 | 60- 83 |
| 07000-12434 | 6415A | 6 | 60- 99 |
| 07000-13022 | 6247 | 15 | 60- 43 |
| 07000-13022 | 6249 | 13 | 60- 45 |
| 07000-13022 | 6261 | 15 | 60- 49 |
| 07000-13022 | 6263 | 13 | 60- 51 |
| 07000-13022 | 6265 | 4 | 60- 53 |
| 07000-13022 | 6416 | 45 | 60- 102 |
| 07000-13025 | 2553A | 17 | 20- 59 |
| 07000-13025 | 2553A | 22 | 20- 59 |
| 07000-13028 | 2553A | 11 | 20- 59 |
| 07000-13028 | 2553A | 5 | 20- 59 |
| 07000-13028 | 6407A | 30 | 60- 85 |

| PARTS NO. | FIG NO | INDEX | PAGE |
|---|---|---|---|
| 07000-13032 | 2551A | 15 | 20- 57 |
| 07000-13032 | 6403A | 6 | 60- 81 |
| 07000-13032 | 6405A | 2 | 60- 83 |
| 07000-13032 | 6413A | 6 | 60- 93 |
| 07000-13032 | 6414 | 6 | 60- 95 |
| 07000-13032 | 6415A | 2 | 60- 99 |
| 07000-13032 | 6416 | 2 | 60- 101 |
| 07000-13032 | 6463A | 20 | 60- 131 |
| 07000-13035 | 2551A | 26 | 20- 57 |
| 07000-13035 | 2551A | 30 | 20- 57 |
| 07000-13042 | 2551A | 2 | 20- 57 |
| 07000-13042 | 2551A | 6 | 20- 57 |
| 07000-13042 | 2751B | 4 | 20- 95 |
| 07000-13042 | 6401A | 15 | 60- 79 |
| 07000-13042 | 6401A | 21 | 60- 79 |
| 07000-13042 | 6401A | 8 | 60- 79 |
| 07000-13042 | 6411A | 15 | 60- 89 |
| 07000-13042 | 6411A | 21 | 60- 89 |
| 07000-13042 | 6411A | 8 | 60- 89 |
| 07000-13042 | 6412 | 15 | 60- 91 |
| 07000-13042 | 6412 | 21 | 60- 91 |
| 07000-13042 | 6412 | 8 | 60- 91 |
| 07000-13045 | 2721C | 9 | 20- 89 |
| 07000-13045 | 6407A | 24 | 60- 85 |
| 07000-13048 | 6401A | 9 | 60- 79 |
| 07000-13048 | 6411A | 9 | 60- 89 |
| 07000-13048 | 6412 | 9 | 60- 91 |
| 07000-13050 | 6071 | 4 | 60- 17 |
| 07000-13334 | 6416 | 20 | 60- 101 |
| 07000-13334 | 6416 | 43 | 60- 102 |
| 07000-15090 | 2803A | 11 | 20- 107 |
| 07000-15095 | 5001 | 3 | 50- 3 |
| 07000-15100 | 5001 | 3 | 50- 3 |
| 07000-15150 | 7031B | 22 | 70- 21 |
| 07000-15150 | 7037 | 20 | 70- 25 |
| 07000-15170 | 2803A | 27 | 20- 107 |
| 07000-15170 | 6113 | 6 | 60- 25 |
| 07000-15180 | 2653 | 27 | 20- 80 |
| 07000-15200 | 2653 | 26 | 20- 80 |
| 07000-15220 | 2601 | 15 | 20- 63 |
| 07000-15340 | 7031B | 5 | 70- 21 |
| 07000-15340 | 7037 | 13 | 70- 25 |
| 07000-15435 | 2603 | 6 | 20- 67 |
| 07000-15475 | 2603 | 9 | 20- 67 |
| 07000-15480 | 2603 | 9 | 20- 67 |
| 07000-15500 | 2653 | 41 | 20- 80 |
| 07000-42018 | 6273 | 13 | 60- 57 |
| 07000-42115 | 0502 | 16 | 05- 5 |
| 07000-42115 | 0993 | 6 | 09- 11 |
| 07000-42125 | 0401 | 15 | 04- 3 |

| PARTS NO | FIG NO | INDEX | PAGE |
|---|---|---|---|
| 07000-42125 | 0403 | 15 | 04- 7 |
| 07000-42125 | 0993 | 2 | 09- 10 |
| 07000-42125 | 0993 | 8 | 09- 11 |
| 07000-53030 | 6271 | 13 | 60- 55 |
| 07000-53032 | 6271 | 21 | 60- 55 |
| 07000-53040 | 6271 | 27 | 60- 55 |
| 07000-53040 | 6271 | 9 | 60- 55 |
| 07000-62015 | 0321 | 8 | 03- 11 |
| 07000-62015 | 0991 | 2 | 09- 4 |
| 07000-62015 | 0993 | 2 | 09- 10 |
| 07000-62020 | 0321 | 5 | 03- 11 |
| 07000-62020 | 0321 | 9 | 03- 11 |
| 07000-62020 | 0991 | 2 | 09- 4 |
| 07000-62020 | 0991 | 2 | 09- 4 |
| 07000-62020 | 0993 | 2 | 09- 10 |
| 07000-62095 | 0242 | 17 | 02- 23 |
| 07000-62095 | 0991 | 3 | 09- 5 |
| 07000-62095 | 0993 | 3 | 09- 11 |
| 07000-62115 | 0501 | 16 | 05- 3 |
| 07000-62115 | 0991 | 6 | 09- 6 |
| 07000-62125 | 0401 | 15 | 04- 3 |
| 07000-62125 | 0991 | 2 | 09- 5 |
| 07000-62125 | 0991 | 8 | 09- 6 |
| 07000-63028 | 0221 | 6 | 02- 15 |
| 07000-63028 | 0222 | 6 | 02- 17 |
| 07000-63028 | 0321 | 10 | 03- 11 |
| 07000-63028 | 0991 | 2 | 09- 4 |
| 07000-63028 | 0991 | 2 | 09- 4 |
| 07000-63028 | 0993 | 2 | 09- 10 |
| 07000-63028 | 0993 | 2 | 09- 10 |
| 07000-63035 | 0321 | 11 | 03- 11 |
| 07000-63035 | 0991 | 2 | 09- 4 |
| 07000-63035 | 0993 | 2 | 09- 10 |
| 07000-63042 | 0331 | 15 | 03- 19 |
| 07000-63042 | 0991 | 2 | 09- 5 |
| 07000-63042 | 0993 | 2 | 09- 10 |
| 07000-63045 | 0301 | 25 | 03- 3 |
| 07000-63045 | 0991 | 2 | 09- 4 |
| 07000-63045 | 0993 | 2 | 09- 10 |
| 07000-63088 | 0242 | 9 | 02- 23 |
| 07000-63088 | 0991 | 3 | 09- 5 |
| 07000-63088 | 0993 | 3 | 09- 11 |
| 07000-65065 | 0421A | 13 | 04- 16 |
| 07000-65065 | 0423 | 14 | 04- 20 |
| 07000-65065 | 0991 | 1 | 09- 3 |
| 07000-65065 | 0993 | 1 | 09- 9 |
| 07000-65110 | 0241 | 19 | 02- 21 |
| 07000-65110 | 0242 | 38 | 02- 23 |
| 07000-65110 | 0991 | 3 | 09- 5 |
| 07000-65110 | 0991 | 3 | 09- 5 |





| PARTS NO | FIG NO | INDEX | PAGE |
|---|---|---|---|
| 07000-65110 | 0993 | 3 | 09- 11 |
| 07000-65110 | 0993 | 3 | 09- 11 |
| 07000-72012 | 2452 | 25 | 20- 43 |
| 07000-72012 | 2453 | 31 | 20- 47 |
| 07000-72012 | 9991 | 2 | 90- 19 |
| 07000-72014 | 2411 | 7 | 20- 7 |
| 07000-72014 | 9991 | 1 | 90- 19 |
| 07000-72016 | 2453 | 30 | 20- 47 |
| 07000-72016 | 9991 | 2 | 90- 20 |
| 07000-72021 | 2411 | 8 | 20- 7 |
| 07000-72021 | 2412 | 32 | 20- 10 |
| 07000-72021 | 2451 | 51 | 20- 40 |
| 07000-72021 | 2452 | 23 | 20- 43 |
| 07000-72021 | 2452 | 36 | 20- 44 |
| 07000-72021 | 2453 | 28 | 20- 47 |
| 07000-72021 | 9991 | 1 | 90- 19 |
| 07000-72021 | 9991 | 2 | 90- 19 |
| 07000-73025 | 2412 | 10 | 20- 9 |
| 07000-73025 | 2412 | 34 | 20- 10 |
| 07000-73025 | 2412 | 41 | 20- 10 |
| 07000-73025 | 2452 | 31 | 20- 44 |
| 07000-73025 | 9991 | 1 | 90- 19 |
| 07000-73025 | 9991 | 1 | 90- 19 |
| 07000-73025 | 9991 | 2 | 90- 19 |
| 07000-73028 | 2451 | 46 | 20- 40 |
| 07000-73028 | 9991 | 2 | 90- 19 |
| 07000-73030 | 2411 | 6 | 20- 7 |
| 07000-73030 | 2417 | 37 | 20- 20 |
| 07000-73030 | 9991 | 1 | 90- 19 |
| 07000-73032 | 2452 | 18 | 20- 43 |
| 07000-73032 | 9991 | 2 | 90- 19 |
| 07000-73035 | 2412 | 28 | 20- 9 |
| 07000-73035 | 2452 | 19 | 20- 43 |
| 07000-73035 | 2453 | 13 | 20- 47 |
| 07000-73035 | 2453 | 25 | 20- 47 |
| 07000-73035 | 9991 | 1 | 90- 19 |
| 07000-73035 | 9991 | 2 | 90- 19 |
| 07000-73045 | 2412 | 17 | 20- 9 |
| 07000-73045 | 2452 | 20 | 20- 43 |
| 07000-73045 | 9991 | 1 | 90- 19 |
| 07000-73045 | 9991 | 2 | 90- 19 |
| 07001-02012 | 6251A | 26 | 60- 47 |
| 07001-02014 | 6243A | 13 | 60- 39 |
| 07001-02014 | 6243A | 4 | 60- 39 |
| 07001-02016 | 6251A | 30 | 60- 47 |
| 07001-02020 | 6241 | 10 | 60- 37 |
| 07001-02020 | 6245 | 10 | 60- 41 |
| 07001-02020 | 6245 | 19 | 60- 41 |
| 07001-02020 | 6251A | 19 | 60- 47 |
| 07001-02020 | 6251A | 8 | 60- 47 |

| PARTS NO | FIG NO | INDEX | PAGE |
|---|---|---|---|
| 07001-02021 | 6247 | 8 | 60- 43 |
| 07001-02021 | 6249 | 6 | 60- 45 |
| 07001-02021 | 6261 | 8 | 60- 49 |
| 07001-02021 | 6263 | 6 | 60- 51 |
| 07001-02021 | 6265 | 16 | 60- 53 |
| 07001-02085 | 6301A | 16 | 60- 61 |
| 07001-02085 | 6303B | 9 | 60- 63 |
| 07001-02085 | 6305B | 10 | 60- 65 |
| 07001-02085 | 6311A | 10 | 60- 69 |
| 07001-02095 | 6307B | 9 | 60- 67 |
| 07001-02095 | 6313 | 10 | 60- 71 |
| 07002-02434 | 2453 | 7 | 20- 47 |
| 07002-02434 | 9991 | 2 | 90- 20 |
| 07002-03634 | 2412 | 8 | 20- 9 |
| 07002-03634 | 9991 | 1 | 90- 19 |
| 07002-11423 | 6243A | 8 | 60- 39 |
| 07002-12034 | 1311B | 20 | 10- 23 |
| 07002-12034 | 2723C | 22 | 20- 91 |
| 07002-12034 | 2725B | 22 | 20- 93 |
| 07002-12034 | 2755A | 16 | 20- 99 |
| 07002-12034 | 6241 | 8 | 60- 37 |
| 07002-12034 | 6245 | 17 | 60- 41 |
| 07002-12034 | 6245 | 8 | 60- 41 |
| 07002-12034 | 6251A | 10 | 60- 47 |
| 07002-12034 | 6251A | 17 | 60- 47 |
| 07002-12034 | 6303B | 27 | 60- 63 |
| 07002-12034 | 6305B | 22 | 60- 65 |
| 07002-12034 | 6305B | 25 | 60- 65 |
| 07002-12034 | 6421A | 14 | 60- 109 |
| 07002-12034 | 6421A | 14 | 60- 109 |
| 07002-12034 | 6421A | 6 | 60- 109 |
| 07002-12034 | 6423C | 18 | 60- 111 |
| 07002-12034 | 6423C | 5 | 60- 111 |
| 07002-12034 | 6427 | 5 | 60- 113 |
| 07002-12034 | 6431A | 18 | 60- 115 |
| 07002-12034 | 6431A | 7 | 60- 115 |
| 07002-12034 | 6435A | 14 | 60- 117 |
| 07002-12034 | 6435A | 19 | 60- 117 |
| 07002-12034 | 6435A | 19 | 60- 117 |
| 07002-12034 | 6435A | 8 | 60- 117 |
| 07002-12034 | 6437C | 24 | 60- 119 |
| 07002-12034 | 6437C | 29 | 60- 119 |
| 07002-12034 | 6437C | 33 | 60- 119 |
| 07002-12034 | 6437C | 33 | 60- 119 |
| 07002-12034 | 6437C | 36 | 60- 119 |
| 07002-12034 | 6437C | 36 | 60- 119 |
| 07002-12034 | 6451A | 13 | 60- 125 |
| 07002-12034 | 6451A | 9 | 60- 125 |
| 07002-12034 | 6455B | 11 | 60- 127 |
| 07002-12034 | 6455B | 18 | 60- 127 |

| PARTS NO. | FIG NO. | INDEX | PAGE |
|---|---|---|---|
| 07002-12034 | 6463A | 16 | 60- 131 |
| 07002-12034 | 6463A | 3 | 60- 131 |
| 07002-12034 | 6471 | 24 | 60- 133 |
| 07002-12034 | 6471 | 34 | 60- 133 |
| 07002-12034 | 6611A | 26 | 60- 137 |
| 07002-12434 | 2551A | 20 | 20- 57 |
| 07002-12434 | 2553A | 3 | 20- 59 |
| 07002-12434 | 2603 | 14 | 20- 67 |
| 07002-12434 | 2651A | 10 | 20- 77 |
| 07002-12434 | 2651A | 3 | 20- 77 |
| 07002-12434 | 6243A | 14 | 60- 39 |
| 07002-12434 | 6243A | 9 | 60- 39 |
| 07002-12434 | 6251A | 31 | 60- 47 |
| 07002-12434 | 6307B | 22 | 60- 67 |
| 07002-12434 | 6414 | 54 | 60- 96 |
| 07002-12434 | 6416 | 58 | 60- 102 |
| 07002-12434 | 6423C | 18 | 60- 111 |
| 07002-12434 | 6427 | 18 | 60- 113 |
| 07002-12434 | 6455B | 23 | 60- 127 |
| 07002-12434 | 6461A | 12 | 60- 129 |
| 07002-12434 | 6461A | 7 | 60- 129 |
| 07002-12434 | 6471 | 40 | 60- 134 |
| 07002-12434 | 6471 | 40 | 60- 134 |
| 07002-13034 | 6241 | 11 | 60- 37 |
| 07002-13034 | 6245 | 11 | 60- 41 |
| 07002-13034 | 6245 | 20 | 60- 41 |
| 07002-13034 | 6247 | 12 | 60- 43 |
| 07002-13034 | 6249 | 9 | 60- 45 |
| 07002-13034 | 6251A | 11 | 60- 47 |
| 07002-13034 | 6251A | 20 | 60- 47 |
| 07002-13034 | 6261 | 12 | 60- 49 |
| 07002-13034 | 6263 | 9 | 60- 51 |
| 07002-13034 | 6265 | 20 | 60- 53 |
| 07002-13034 | 6403A | 2 | 60- 81 |
| 07002-13034 | 6413A | 2 | 60- 93 |
| 07002-13034 | 6414 | 2 | 60- 95 |
| 07002-13034 | 7031B | 7 | 70- 21 |
| 07002-13034 | 7037 | 12 | 70- 25 |
| 07002-13334 | 6247 | 14 | 60- 43 |
| 07002-13334 | 6249 | 12 | 60- 45 |
| 07002-13334 | 6261 | 14 | 60- 49 |
| 07002-13334 | 6263 | 12 | 60- 51 |
| 07002-13334 | 6265 | 3 | 60- 53 |
| 07002-13334 | 6414 | 14 | 60- 95 |
| 07002-13334 | 6414 | 36 | 60- 95 |
| 07002-13334 | 6414 | 39 | 60- 95 |
| 07002-13334 | 6416 | 10 | 60- 101 |
| 07002-13334 | 6416 | 14 | 60- 101 |
| 07002-13334 | 6416 | 6 | 60- 101 |
| 07002-13334 | 6418 | 20 | 60- 107 |

| PARTS NO. | FIG NO. | INDEX | PAGE |
|---|---|---|---|
| 07002-14234 | 6275 | 6 | 60- 59 |
| 07002-22434 | 0201 | 9 | 02- 3 |
| 07002-22434 | 0991 | 2 | 09- 4 |
| 07002-22434 | 0993 | 2 | 09- 9 |
| 07002-22434 | 6405A | 11 | 60- 83 |
| 07002-22434 | 6415A | 11 | 60- 99 |
| 07002-23034 | 0201 | 11 | 02- 3 |
| 07002-23034 | 0991 | 2 | 09- 4 |
| 07002-23034 | 0993 | 2 | 09- 9 |
| 07002-32434 | 0321 | 20 | 03- 11 |
| 07002-32434 | 0321 | 26 | 03- 11 |
| 07002-32434 | 0991 | 2 | 09- 4 |
| 07002-32434 | 0993 | 2 | 09- 10 |
| 07002-53334 | 6271 | 17 | 60- 55 |
| 07003-03036 | 2603 | 32 | 20- 68 |
| 07005-00812 | 0411 | 2 | 04- 11 |
| 07005-00812 | 0411 | 4 | 04- 11 |
| 07005-00812 | 0411 | 4 | 04- 11 |
| 07005-00812 | 0412 | 2 | 04- 13 |
| 07005-00812 | 0412 | 4 | 04- 13 |
| 07005-00812 | 0421A | 10 | 04- 16 |
| 07005-00812 | 0423 | 11 | 04- 20 |
| 07005-00812 | 0991 | 1 | 09- 3 |
| 07005-00812 | 0991 | 2 | 09- 5 |
| 07005-00812 | 0993 | 1 | 09- 9 |
| 07005-01012 | 0201 | 30 | 02- 3 |
| 07005-01012 | 0201 | 30 | 02- 3 |
| 07005-01012 | 0328 | 11 | 03- 17 |
| 07005-01012 | 0328 | 3 | 03- 17 |
| 07005-01012 | 0401 | 33 | 04- 4 |
| 07005-01012 | 0403 | 33 | 04- 7 |
| 07005-01012 | 0421A | 15 | 04- 16 |
| 07005-01012 | 0423 | 16 | 04- 20 |
| 07005-01012 | 0701 | 4 | 07- 3 |
| 07005-01012 | 0991 | 1 | 09- 3 |
| 07005-01012 | 0991 | 2 | 09- 5 |
| 07005-01012 | 0991 | 2 | 09- 4 |
| 07005-01012 | 0991 | 2 | 09- 4 |
| 07005-01012 | 0991 | 3 | 09- 5 |
| 07005-01012 | 0991 | 8 | 09- 6 |
| 07005-01012 | 0993 | 1 | 09- 9 |
| 07005-01012 | 0993 | 2 | 09- 9 |
| 07005-01012 | 0993 | 2 | 09- 10 |
| 07005-01012 | 0993 | 3 | 09- 11 |
| 07005-01012 | 0993 | 8 | 09- 11 |
| 07005-01012 | 1301A | 14 | 10- 21 |
| 07005-01412 | 0201 | 28 | 02- 3 |
| 07005-01412 | 0325 | 5 | 03- 13 |
| 07005-01412 | 0325 | 5 | 03- 13 |
| 07005-01412 | 0327 | 5 | 03- 15 |



| PARTS NO. | FIG NO. | INDEX | PAGE |
|---|---|---|---|
| 07005-01412 | 0401 | 33 | 04- 4 |
| 07005-01412 | 0401 | 36 | 04- 4 |
| 07005-01412 | 0401 | 42 | 04- 4 |
| 07005-01412 | 0401 | 45 | 04- 4 |
| 07005-01412 | 0403 | 36 | 04- 7 |
| 07005-01412 | 0403 | 42 | 04- 8 |
| 07005-01412 | 0403 | 45 | 04- 8 |
| 07005-01412 | 0411 | 13 | 04- 11 |
| 07005-01412 | 0412 | 13 | 04- 13 |
| 07005-01412 | 0701 | 14 | 07- 3 |
| 07005-01412 | 0991 | 1 | 09- 3 |
| 07005-01412 | 0991 | 1 | 09- 3 |
| 07005-01412 | 0991 | 1 | 09- 3 |
| 07005-01412 | 0991 | 2 | 09- 5 |
| 07005-01412 | 0991 | 2 | 09- 5 |
| 07005-01412 | 0991 | 2 | 09- 4 |
| 07005-01412 | 0991 | 2 | 09- 5 |
| 07005-01412 | 0991 | 8 | 09- 6 |
| 07005-01412 | 0993 | 1 | 09- 9 |
| 07005-01412 | 0993 | 2 | 09- 10 |
| 07005-01412 | 0993 | 2 | 09- 9 |
| 07005-01412 | 0993 | 8 | 09- 11 |
| 07005-01412 | 1311B | 2 | 10- 23 |
| 07005-01412 | 2412 | 39 | 20- 10 |
| 07005-01412 | 4453A | 5 | 40- 65 |
| 07005-01412 | 4454A | 5 | 40- 67 |
| 07005-01412 | 9991 | 1 | 90- 19 |
| 07005-01612 | 0171 | 6 | 01- 23 |
| 07005-01612 | 0991 | 1 | 09- 3 |
| 07005-01612 | 0993 | 1 | 09- 9 |
| 07005-01612 | 4105A | 51 | 40- 12 |
| 07005-01612 | 4111A | 33 | 40- 15 |
| 07005-02416 | 0701 | 9 | 07- 3 |
| 07005-02416 | 0991 | 8 | 09- 6 |
| 07005-02416 | 0993 | 8 | 09- 11 |
| 07005-02416 | 4453A | 2 | 40- 65 |
| 07005-02416 | 4454A | 2 | 40- 67 |
| 07011-00055 | 7037 | 18 | 70- 25 |
| 07012-00035 | 2607 | 26 | 20- 73 |
| 07012-00062 | 7031B | 16 | 70- 21 |
| 07012-00062 | 7037 | 38 | 70- 26 |
| 07012-00110 | 2601 | 21 | 20- 63 |
| 07012-00110 | 2603 | 8 | 20- 67 |
| 07012-10095 | 2422 | 24 | 20- 33 |
| 07018-00954 | 2415A | 32 | 20- 13 |
| 07018-01104 | 2418 | 21 | 20- 23 |
| 07018-10352 | 2419 | 32 | 20- 28 |
| 07018-11805 | 2418 | 20 | 20- 23 |
| 07018-12005 | 2415A | 30 | 20- 13 |
| 07018-12205 | 2416 | 4 | 20- 17 |

| PARTS NO. | FIG NO | INDEX | PAGE |
|---|---|---|---|
| 07018-12205 | 2417 | 12 | 20- 19 |
| 07018-20452 | 2421 | 3 | 20- 31 |
| 07018-20904 | 2418 | 9 | 20- 23 |
| 07020-00000 | 2801A | 18 | 20- 103 |
| 07020-00000 | 2801A | 35 | 20- 103 |
| 07020-00000 | 2803A | 12 | 20- 107 |
| 07020-00000 | 2805A | 22 | 20- 109 |
| 07020-00000 | 5011 | 23 | 50- 5 |
| 07020-00000 | 5013 | 22 | 50- 7 |
| 07020-00000 | 7001 | 18 | 70- 3 |
| 07020-00000 | 7015 | 30 | 70- 12 |
| 07020-00000 | 7015 | 36 | 70- 12 |
| 07020-00000 | 7017 | 32 | 70- 15 |
| 07020-00000 | 7017 | 38 | 70- 16 |
| 07020-00000 | 7021 | 5 | 70- 19 |
| 07020-00000 | 7101 | 33 | 70- 32 |
| 07020-00000 | 7111 | 9 | 70- 35 |
| 07020-00000 | 7151A | 13 | 70- 37 |
| 07020-00000 | 7151A | 19 | 70- 37 |
| 07020-00000 | 7201 | 50 | 70- 40 |
| 07020-00001 | 7151A | 21 | 70- 37 |
| 07020-00675 | 2801A | 26 | 20- 103 |
| 07020-00675 | 2805A | 37 | 20- 110 |
| 07020-00675 | 5001 | 5 | 50- 3 |
| 07020-00675 | 7001 | 10 | 70- 3 |
| 07020-00675 | 7021 | 4 | 70- 19 |
| 07020-00675 | 7201 | 51 | 70- 40 |
| 07020-00900 | 2805A | 16 | 20- 109 |
| 07020-00900 | 2805A | 5 | 20- 109 |
| 07020-00900 | 6301A | 20 | 60- 61 |
| 07020-00900 | 6301A | 3 | 60- 61 |
| 07020-00900 | 6303B | 13 | 60- 63 |
| 07020-00900 | 7021 | 21 | 70- 19 |
| 07020-00900 | 7101 | 33 | 70- 32 |
| 07020-00900 | 7111 | 20 | 70- 35 |
| 07030-00252 | 2411 | 3 | 20- 7 |
| 07030-00252 | 2651A | 14 | 20- 77 |
| 07034-70312 | 4483A | 29 | 40- 75 |
| 07040-11409 | 7038 | 19 | 70- 29 |
| 07040-12414 | 0201 | 8 | 02- 3 |
| 07040-13016 | 0201 | 10 | 02- 3 |
| 07040-13016 | 7031B | 6 | 70- 21 |
| 07040-13016 | 7037 | 11 | 70- 25 |
| 07040-13316 | 6271 | 16 | 60- 55 |
| 07042-00108 | 0131 | 10 | 01- 9 |
| 07042-00108 | 0131 | 10 | 01- 9 |
| 07042-00108 | 0131 | 3 | 01- 9 |
| 07042-00108 | 0132 | 10 | 01- 11 |
| 07042-00108 | 0132 | 10 | 01- 11 |
| 07042-00108 | 0132 | 3 | 01- 11 |

| PARTS NO. | FIG NO | INDEX | PAGE |
|---|---|---|---|
| 07042-00108 | 0151 | 3 | 01- 17 |
| 07042-00108 | 0151 | 3 | 01- 17 |
| 07042-00312 | 0331 | 18 | 03- 19 |
| 07042-00415 | 0131 | 2 | 01- 9 |
| 07042-00415 | 0132 | 2 | 01- 11 |
| 07042-00415 | 0171 | 4 | 01- 23 |
| 07042-20108 | 2412 | 27 | 20- 9 |
| 07042-20108 | 2412 | 3 | 20- 9 |
| 07042-20108 | 2451 | 2 | 20- 39 |
| 07042-20108 | 2452 | 32 | 20- 44 |
| 07042-20108 | 2453 | 2 | 20- 47 |
| 07042-20108 | 2453 | 29 | 20- 47 |
| 07042-20108 | 2561 | 4 | 20- 61 |
| 07042-20108 | 6403A | 15 | 60- 81 |
| 07042-20108 | 6403A | 9 | 60- 81 |
| 07042-20108 | 6405A | 17 | 60- 83 |
| 07042-20108 | 6407A | 37 | 60- 85 |
| 07042-20108 | 6407A | 5 | 60- 85 |
| 07042-20108 | 6413A | 15 | 60- 93 |
| 07042-20108 | 6413A | 9 | 60- 93 |
| 07042-20108 | 6414 | 42 | 60- 95 |
| 07042-20108 | 6414 | 9 | 60- 95 |
| 07042-20108 | 6415A | 17 | 60- 99 |
| 07042-20108 | 6416 | 29 | 60- 101 |
| 07042-20108 | 6416 | 33 | 60- 101 |
| 07042-20108 | 6417A | 29 | 60- 105 |
| 07042-20108 | 6417A | 5 | 60- 105 |
| 07042-20108 | 6418 | 5 | 60- 107 |
| 07042-20108 | 6461A | 13 | 60- 129 |
| 07042-20108 | 6463A | 15 | 60- 131 |
| 07042-20108 | 6463A | 4 | 60- 131 |
| 07042-20108 | 7001 | 3 | 70- 3 |
| 07042-20211 | 4383 | 18 | 40- 47 |
| 07042-20211 | 4387 | 18 | 40- 51 |
| 07042-20211 | 4453A | 13 | 40- 65 |
| 07042-20211 | 4454A | 17 | 40- 67 |
| 07042-20211 | 4481A | 2 | 40- 73 |
| 07042-20211 | 4481A | 37 | 40- 73 |
| 07042-20211 | 4483A | 8 | 40- 75 |
| 07042-20312 | 2653 | 39 | 20- 80 |
| 07042-20415 | 1211 | 6 | 10- 17 |
| 07042-70108 | 2753A | 3 | 20- 97 |
| 07042-80108 | 2452 | 32 | 20- 44 |
| 07043-00108 | 0201 | 7 | 02- 3 |
| 07043-00108 | 0231 | 2 | 02- 19 |
| 07043-00108 | 0401 | 39 | 04- 4 |
| 07043-00108 | 0403 | 39 | 04- 8 |
| 07043-00108 | 6431A | 19 | 60- 115 |
| 07043-00108 | 6455B | 24 | 60- 127 |
| 07043-00211 | 0201 | 17 | 02- 3 |

| PARTS NO. | FIG NO | INDEX | PAGE |
|---|---|---|---|
| 07043-00211 | 6071 | 3 | 60- 17 |
| 07043-00312 | 0321 | 7 | 03- 11 |
| 07043-00312 | 4403 | 58 | 40- 55 |
| 07043-00617 | 0201 | 12 | 02- 3 |
| 07043-50617 | 0311 | 7 | 03- 7 |
| 07043-70108 | 2755A | 17 | 20- 99 |
| 07043-70108 | 2801A | 8 | 20- 103 |
| 07043-70108 | 6303B | 28 | 60- 63 |
| 07043-70108 | 6305B | 23 | 60- 65 |
| 07043-70108 | 6307B | 20 | 60- 67 |
| 07043-70108 | 6435A | 20 | 60- 117 |
| 07043-70108 | 6435A | 20 | 60- 117 |
| 07043-70108 | 6437C | 25 | 60- 119 |
| 07043-70108 | 6437C | 34 | 60- 119 |
| 07043-70108 | 6437C | 34 | 60- 119 |
| 07043-70108 | 6451A | 14 | 60- 125 |
| 07043-70108 | 6471 | 38 | 60- 133 |
| 07043-70108 | 6471 | 38 | 60- 133 |
| 07044-12412 | 2603 | 13 | 20- 67 |
| 07044-12412 | 2651A | 2 | 20- 77 |
| 07044-13620 | 2412 | 7 | 20- 9 |
| 07046-21210 | 0201 | 16 | 02- 3 |
| 07046-22010 | 0201 | 35 | 02- 4 |
| 07046-22516 | 0201 | 15 | 02- 3 |
| 07046-42816 | 0201 | 31 | 02- 3 |
| 07046-43016 | 0201 | 13 | 02- 3 |
| 07046-44016 | 0201 | 14 | 02- 3 |
| 07048-01010 | 2801A | 25 | 20- 103 |
| 07048-01010 | 7011A | 3 | 70- 5 |
| 07048-01010 | 7012A | 3 | 70- 7 |
| 07048-01010 | 7013A | 3 | 70- 9 |
| 07048-01815 | 7011A | 2 | 70- 5 |
| 07048-01815 | 7012A | 2 | 70- 7 |
| 07048-01815 | 7013A | 2 | 70- 9 |
| 07049-02430 | 5001 | 20 | 50- 3 |
| 07049-02430 | 5051 | 4 | 50- 9 |
| 07051-00000 | 6101A | 7 | 60- 19 |
| 07056-10045 | 6101A | 6 | 60- 19 |
| 07063-01100 | 6111 | 2 | 60- 23 |
| 07063-01210 | 6113 | 2 | 60- 25 |
| 07092-00000 | 6101A | 7 | 60- 19 |
| 07094-11024 | 6416 | 62 | 60- 102 |
| 07095-01038 | 6416 | 63 | 60- 102 |
| 07102-20314 | 1311B | 21 | 10- 23 |
| 07102-20405 | 4453A | 20 | 40- 65 |
| 07102-20408 | 4453A | 7 | 40- 65 |
| 07102-20408 | 4454A | 9 | 40- 67 |
| 07102-20408 | 6412 | 24 | 60- 91 |
| 07102-20415 | 4483A | 4 | 40- 75 |
| 07102-20416 | 4483A | 5 | 40- 75 |



| PARTS NO. | FIG NO. | INDEX | PAGE |
|---|---|---|---|
| 07102-20603 | 0321 | 17 | 03- 11 |
| 07102-20606 | 6416 | 30 | 60- 101 |
| 07102-30312 | 6418 | 23 | 60- 107 |
| 07103-50205 | 4381 | 5 | 40- 45 |
| 07103-50205 | 4385 | 5 | 40- 49 |
| 07103-50245 | 4381 | 1 | 40- 45 |
| 07103-50245 | 4385 | 1 | 40- 49 |
| 07103-50405 | 4483A | 14 | 40- 75 |
| 07103-50406 | 4483A | 13 | 40- 75 |
| 07103-50416 | 4454A | 25 | 40- 67 |
| 07103-50419 | 4454A | 7 | 40- 67 |
| 07103-50430 | 2753A | 6 | 20- 97 |
| 07103-50606 | 2553A | 19 | 20- 59 |
| 07103-50607 | 2553A | 15 | 20- 59 |
| 07103-50608 | 2553A | 15 | 20- 59 |
| 07103-50609 | 6407A | 8 | 60- 85 |
| 07103-50609 | 6417A | 8 | 60- 105 |
| 07103-50609 | 6418 | 8 | 60- 107 |
| 07103-50611 | 2551A | 18 | 20- 57 |
| 07103-50612 | 2553A | 1 | 20- 59 |
| 07103-50614 | 6407A | 7 | 60- 85 |
| 07103-50614 | 6417A | 7 | 60- 105 |
| 07103-50614 | 6418 | 7 | 60- 107 |
| 07103-50615 | 2553A | 14 | 20- 59 |
| 07103-50616 | 2553A | 14 | 20- 59 |
| 07103-50617 | 2757 | 4 | 20- 101 |
| 07103-50618 | 2757 | 6 | 20- 101 |
| 07106-20614 | 6405A | 7 | 60- 83 |
| 07106-20614 | 6415A | 7 | 60- 99 |
| 07106-20616 | 6405A | 13 | 60- 83 |
| 07106-20616 | 6415A | 13 | 60- 99 |
| 07108-20410 | 6416 | 48 | 60- 102 |
| 07108-20411 | 6455B | 19 | 60- 127 |
| 07108-20608 | 6407A | 38 | 60- 85 |
| 07108-20608 | 6417A | 30 | 60- 105 |
| 07108-20613 | 6414 | 46 | 60- 96 |
| 07108-20615 | 6403A | 11 | 60- 81 |
| 07108-20615 | 6413A | 11 | 60- 93 |
| 07108-20615 | 6414 | 45 | 60- 96 |
| 07108-20616 | 6403A | 10 | 60- 81 |
| 07108-20616 | 6413A | 10 | 60- 93 |
| 07108-20616 | 6441C | 6 | 60- 123 |
| 07108-21007 | 6418 | 21 | 60- 107 |
| 07108-21010 | 6414 | 10 | 60- 95 |
| 07108-21010 | 6416 | 16 | 60- 101 |
| 07108-21011 | 6416 | 7 | 60- 101 |
| 07113-00305 | 2755A | 13 | 20- 99 |
| 07113-00306 | 2755A | 14 | 20- 99 |
| 07113-00311 | 6451A | 4 | 60- 125 |
| 07113-00406 | 6437C | 30 | 60- 119 |

| PARTS NO | FIG NO | INDEX | PAGE |
|---|---|---|---|
| 07113-00410 | 6421A | 11 | 60- 109 |
| 07113-00412 | 6421A | 10 | 60- 109 |
| 07113-00504 | 6461A | 5 | 60- 129 |
| 07113-00632 | 6441C | 3 | 60- 123 |
| 07123-00410 | 6463A | 17 | 60- 131 |
| 07123-00538 | 6463A | 1 | 60- 131 |
| 07123-10210 | 6416 | 53 | 60- 102 |
| 07138-00870 | 7101 | 34 | 70- 32 |
| 07138-01090 | 6301A | 19 | 60- 61 |
| 07138-01090 | 6301A | 2 | 60- 61 |
| 07138-01090 | 6303B | 12 | 60- 63 |
| 07139-01002 | 6301A | 23 | 60- 61 |
| 07139-01002 | 6301A | 6 | 60- 61 |
| 07139-01002 | 6303B | 16 | 60- 63 |
| 07139-01005 | 6301A | 22 | 60- 61 |
| 07139-01005 | 6301A | 5 | 60- 61 |
| 07139-01005 | 6303B | 15 | 60- 63 |
| 07141-00080 | 7101 | 32 | 70- 32 |
| 07141-00100 | 6301A | 21 | 60- 61 |
| 07141-00100 | 6301A | 4 | 60- 61 |
| 07141-00100 | 6303B | 14 | 60- 63 |
| 07143-10505 | 2723C | 13 | 20- 91 |
| 07143-10505 | 2723C | 2 | 20- 91 |
| 07143-10505 | 6305B | 14 | 60- 65 |
| 07143-10505 | 6305B | 2 | 60- 65 |
| 07143-10505 | 6311A | 13 | 60- 69 |
| 07143-10505 | 6311A | 2 | 60- 69 |
| 07143-10506 | 6313 | 13 | 60- 71 |
| 07143-10506 | 6313 | 2 | 60- 71 |
| 07143-10606 | 2725B | 13 | 20- 93 |
| 07143-10606 | 2801A | 2 | 20- 103 |
| 07143-10606 | 7201 | 25 | 70- 39 |
| 07143-10707 | 6315 | 11 | 60- 73 |
| 07143-10806 | 7021 | 8 | 70- 19 |
| 07144-10606 | 2725B | 2 | 20- 93 |
| 07145-00045 | 2801A | 5 | 20- 103 |
| 07145-00050 | 2723C | 14 | 20- 91 |
| 07145-00050 | 2723C | 3 | 20- 91 |
| 07145-00050 | 2801A | 32 | 20- 103 |
| 07145-00050 | 2803A | 10 | 20- 107 |
| 07145-00050 | 2803A | 5 | 20- 107 |
| 07145-00050 | 6305B | 15 | 60- 65 |
| 07145-00050 | 6305B | 3 | 60- 65 |
| 07145-00050 | 6311A | 14 | 60- 69 |
| 07145-00050 | 6311A | 3 | 60- 69 |
| 07145-00055 | 6313 | 14 | 60- 71 |
| 07145-00055 | 6313 | 3 | 60- 71 |
| 07145-00060 | 2725B | 14 | 20- 93 |
| 07145-00060 | 2725B | 3 | 20- 93 |
| 07145-00060 | 2801A | 3 | 20- 103 |

| PARTS NO. | FIG NO. | INDEX | PAGE |
|---|---|---|---|
| 07145-00060 | 7201 | 23 | 70- 39 |
| 07145-00060 | 7201 | 26 | 70- 39 |
| 07145-00075 | 6315 | 12 | 60- 73 |
| 07145-00075 | 7015 | 34 | 70- 12 |
| 07145-00075 | 7017 | 36 | 70- 16 |
| 07145-00085 | 7021 | 9 | 70- 19 |
| 07145-00090 | 7201 | 12 | 70- 39 |
| 07145-00110 | 7111 | 3 | 70- 35 |
| 07146-02086 | 2723C | 10 | 20- 91 |
| 07146-02136 | 6315 | 9 | 60- 73 |
| 07155-00925 | 6301A | 28 | 60- 61 |
| 07155-00925 | 6303B | 21 | 60- 63 |
| 07155-00925 | 6305B | 17 | 60- 65 |
| 07155-00925 | 6311A | 16 | 60- 69 |
| 07155-01025 | 6307B | 15 | 60- 67 |
| 07155-01025 | 6313 | 16 | 60- 71 |
| 07155-01125 | 2725B | 16 | 20- 93 |
| 07155-01435 | 6315 | 14 | 60- 73 |
| 07156-00912 | 2723C | 16 | 20- 91 |
| 07156-00912 | 6301A | 28 | 60- 61 |
| 07161-10090 | 6305B | 18 | 60- 65 |
| 07165-12022 | 2721C | 16 | 20- 89 |
| 07165-13033 | 6301A | 30 | 60- 61 |
| 07165-13033 | 6303B | 23 | 60- 63 |
| 07165-13033 | 6305B | 19 | 60- 65 |
| 07165-13033 | 6311A | 18 | 60- 69 |
| 07165-13336 | 6307B | 17 | 60- 67 |
| 07165-13638 | 2725B | 18 | 20- 93 |
| 07165-13638 | 6313 | 18 | 60- 71 |
| 07165-15252 | 6315 | 16 | 60- 73 |
| 07177-03525 | 2721C | 5 | 20- 89 |
| 07177-04530 | 2723C | 5 | 20- 91 |
| 07177-05030 | 6307B | 4 | 60- 67 |
| 07177-05530 | 2725B | 5 | 20- 93 |
| 07177-05530 | 6301A | 11 | 60- 61 |
| 07177-05530 | 6303B | 4 | 60- 63 |
| 07177-05530 | 6305B | 5 | 60- 65 |
| 07177-05530 | 6311A | 5 | 60- 69 |
| 07177-05530 | 6313 | 5 | 60- 71 |
| 07177-07030 | 6315 | 4 | 60- 73 |
| 07179-12047 | 2721C | 8 | 20- 89 |
| 07179-12057 | 2723C | 8 | 20- 91 |
| 07179-12062 | 6307B | 7 | 60- 67 |
| 07179-12069 | 2725B | 8 | 20- 93 |
| 07179-12069 | 6301A | 14 | 60- 61 |
| 07179-12069 | 6303B | 7 | 60- 63 |
| 07179-12069 | 6305B | 8 | 60- 65 |
| 07179-12069 | 6311A | 8 | 60- 69 |
| 07179-12069 | 6313 | 8 | 60- 71 |
| 07179-12084 | 6315 | 7 | 60- 73 |

| PARTS NO | FIG NO | INDEX | PAGE |
|---|---|---|---|
| 07183-404A5 | 6427 | 25 | 60- 113 |
| 07183-40406 | 6427 | 26 | 60- 113 |
| 07206-11014 | 1311B | 1 | 10- 23 |
| 07206-11014 | 2412 | 38 | 20- 10 |
| 07206-30710 | 0401 | 32 | 04- 4 |
| 07206-30710 | 0403 | 32 | 04- 7 |
| 07206-30710 | 0701 | 3 | 07- 3 |
| 07206-31014 | 0325 | 4 | 03- 13 |
| 07206-31014 | 0327 | 4 | 03- 15 |
| 07206-31014 | 0401 | 35 | 04- 4 |
| 07206-31014 | 0401 | 41 | 04- 4 |
| 07206-31014 | 0401 | 44 | 04- 4 |
| 07206-31014 | 0403 | 35 | 04- 7 |
| 07206-31014 | 0403 | 41 | 04- 8 |
| 07206-31014 | 0403 | 44 | 04- 8 |
| 07206-31014 | 0411 | 12 | 04- 11 |
| 07206-31014 | 0412 | 12 | 04- 13 |
| 07206-31014 | 0701 | 12 | 07- 3 |
| 07209-01040 | 0401 | 47 | 04- 4 |
| 07209-01040 | 0401 | 47 | 04- 4 |
| 07209-01040 | 0403 | 47 | 04- 8 |
| 07209-01040 | 0403 | 47 | 04- 8 |
| 07213-50610 | 2561 | 5 | 20- 61 |
| 07214-50510 | 0171 | 7 | 01- 23 |
| 07214-50510 | 0335 | 18 | 03- 21 |
| 07214-51521 | 0701 | 7 | 07- 3 |
| 07214-60813 | 4383 | 12 | 40- 47 |
| 07214-60813 | 4387 | 12 | 40- 51 |
| 07217-61013 | 4481A | 12 | 40- 73 |
| 07218-60813 | 4383 | 10 | 40- 47 |
| 07218-60813 | 4387 | 10 | 40- 51 |
| 07218-61013 | 4481A | 3 | 40- 73 |
| 07230-10422 | 6421A | 4 | 60- 109 |
| 07230-10422 | 6423C | 4 | 60- 111 |
| 07230-10422 | 6427 | 4 | 60- 113 |
| 07230-10422 | 6431A | 4 | 60- 115 |
| 07230-10422 | 6455B | 17 | 60- 127 |
| 07230-10422 | 6471 | 23 | 60- 133 |
| 07230-10628 | 0321 | 19 | 03- 11 |
| 07230-11034 | 6414 | 13 | 60- 95 |
| 07230-11034 | 6414 | 35 | 60- 95 |
| 07230-11034 | 6414 | 38 | 60- 95 |
| 07230-11034 | 6416 | 13 | 60- 101 |
| 07230-11034 | 6416 | 9 | 60- 101 |
| 07230-11034 | 6418 | 19 | 60- 107 |
| 07230-20628 | 2553A | 2 | 20- 59 |
| 07230-20628 | 6405A | 10 | 60- 83 |
| 07230-20628 | 6415A | 10 | 60- 99 |
| 07235-10315 | 1311B | 19 | 10- 23 |
| 07235-10422 | 2723C | 20 | 20- 91 |



| PARTS NO | FIG NO | INDEX | PAGE |
|---|---|---|---|
| 07235-10422 | 2725B | 21 | 20- 93 |
| 07235-10422 | 6305B | 24 | 60- 65 |
| 07235-10422 | 6421A | 12 | 60- 109 |
| 07235-10422 | 6421A | 12 | 60- 109 |
| 07235-10422 | 6423C | 17 | 60- 111 |
| 07235-10422 | 6423C | 17 | 60- 111 |
| 07235-10422 | 6427 | 17 | 60- 113 |
| 07235-10422 | 6435A | 13 | 60- 117 |
| 07235-10422 | 6435A | 7 | 60- 117 |
| 07235-10422 | 6437C | 28 | 60- 119 |
| 07235-10422 | 6437C | 35 | 60- 119 |
| 07235-10422 | 6437C | 35 | 60- 119 |
| 07235-10422 | 6451A | 7 | 60- 125 |
| 07235-10422 | 6455B | 9 | 60- 127 |
| 07235-10628 | 2551A | 19 | 20- 57 |
| 07235-10628 | 6405A | 5 | 60- 83 |
| 07235-10628 | 6414 | 52 | 60- 96 |
| 07235-10628 | 6415A | 5 | 60- 99 |
| 07235-10628 | 6416 | 57 | 60- 102 |
| 07235-50315 | 2755A | 15 | 20- 99 |
| 07235-50422 | 6303B | 26 | 60- 63 |
| 07235-50422 | 6431A | 17 | 60- 115 |
| 07235-50422 | 6435A | 18 | 60- 117 |
| 07235-50422 | 6435A | 18 | 60- 117 |
| 07235-50422 | 6437C | 23 | 60- 119 |
| 07235-50422 | 6451A | 12 | 60- 125 |
| 07235-50422 | 6463A | 14 | 60- 131 |
| 07235-50522 | 6461A | 11 | 60- 129 |
| 07236-10522 | 6461A | 6 | 60- 129 |
| 07236-10628 | 0321 | 18 | 03- 11 |
| 07238-10210 | 4381 | 6 | 40- 45 |
| 07238-10210 | 4385 | 6 | 40- 49 |
| 07238-10422 | 6611A | 22 | 60- 137 |
| 07239-12410 | 0321 | 25 | 03- 11 |
| 07260-04116 | 6401A | 18 | 60- 79 |
| 07260-04116 | 6411A | 18 | 60- 89 |
| 07260-04116 | 6412 | 18 | 60- 91 |
| 07260-04128 | 2751B | 7 | 20- 95 |
| 07260-04136 | 2751B | 2 | 20- 95 |
| 07260-04718 | 6401A | 5 | 60- 79 |
| 07260-04718 | 6411A | 5 | 60- 89 |
| 07260-04718 | 6412 | 5 | 60- 91 |
| 07260-04736 | 6407A | 27 | 60- 85 |
| 07260-04750 | 6417A | 23 | 60- 105 |
| 07260-04750 | 6418 | 15 | 60- 107 |
| 07260-05832 | 6407A | 10 | 60- 85 |
| 07260-05832 | 6417A | 10 | 60- 105 |
| 07260-05832 | 6418 | 10 | 60- 107 |
| 07260-20904 | 1311B | 8 | 10- 23 |
| 07260-20936 | 0521 | 8 | 05- 11 |

| PARTS NO. | FIG NO. | INDEX | PAGE |
|---|---|---|---|
| 07260-20970 | 1311B | 22 | 10- 23 |
| 07260-21428 | 1211 | 19 | 10- 17 |
| 07260-21445 | 1211 | 18 | 10- 17 |
| 07260-21446 | 1211 | 18 | 10- 17 |
| 07260-22025 | 0325 | 12 | 03- 13 |
| 07260-22025 | 0327 | 12 | 03- 15 |
| 07260-22032 | 0221 | 15 | 02- 15 |
| 07260-22032 | 0222 | 15 | 02- 17 |
| 07260-23228 | 2551A | 33 | 20- 57 |
| 07260-24118 | 2551A | 9 | 20- 57 |
| 07260-30936 | 0521 | 8 | 05- 11 |
| 07260-30956 | 0521 | 9 | 05- 11 |
| 07261-20910 | 1211 | 23 | 10- 17 |
| 07261-20914 | 1311B | 7 | 10- 23 |
| 07261-22613 | 1211 | 21 | 10- 17 |
| 07261-22614 | 1211 | 21 | 10- 17 |
| 07261-22616 | 1211 | 21 | 10- 17 |
| 07270-01275 | 1311B | 23 | 10- 23 |
| 07270-20480 | 0401 | 46 | 04- 4 |
| 07270-20480 | 0403 | 46 | 04- 8 |
| 07270-60822 | 6103 | 11 | 60- 21 |
| 07271-01445 | 0401 | 37 | 04- 4 |
| 07271-01465 | 0411 | 10 | 04- 11 |
| 07271-21445 | 0403 | 37 | 04- 7 |
| 07271-21465 | 0412 | 10 | 04- 13 |
| 07280-01110 | 6103 | 12 | 60- 21 |
| 07280-01920 | 1211 | 24 | 10- 17 |
| 07280-02523 | 1211 | 20 | 10- 17 |
| 07280-02523 | 5615 | 15 | 50- 79 |
| 07280-02523 | 5615 | 19 | 50- 79 |
| 07280-02523 | 5615 | 23 | 50- 79 |
| 07280-02523 | 5615 | 7 | 50- 79 |
| 07280-02523 | 5701A | 12 | 50- 91 |
| 07280-02523 | 5701A | 5 | 50- 91 |
| 07281-00197 | 0521 | 10 | 05- 11 |
| 07281-00197 | 1211 | 24 | 10- 17 |
| 07281-00197 | 1311B | 10 | 10- 23 |
| 07281-00197 | 1311B | 9 | 10- 23 |
| 07281-00289 | 1211 | 20 | 10- 17 |
| 07281-00359 | 0325 | 13 | 03- 13 |
| 07281-00359 | 0327 | 13 | 03- 15 |
| 07281-00419 | 0221 | 16 | 02- 15 |
| 07281-00419 | 0222 | 16 | 02- 17 |
| 07281-00489 | 1211 | 22 | 10- 17 |
| 07281-00609 | 0207 | 13 | 02- 7 |
| 07281-00609 | 0208 | 13 | 02- 9 |
| 07281-00609 | 6401A | 19 | 60- 79 |
| 07281-00609 | 6411A | 19 | 60- 89 |
| 07281-00609 | 6412 | 19 | 60- 91 |
| 07281-00709 | 0501 | 26 | 05- 3 |

| PARTS NO | FIG NO. | INDEX | PAGE |
|---|---|---|---|
| 07281-00709 | 0502 | 26 | 05- 5 |
| 07281-00709 | 6401A | 6 | 60- 79 |
| 07281-00709 | 6407A | 28 | 60- 85 |
| 07281-00709 | 6411A | 6 | 60- 89 |
| 07281-00709 | 6412 | 6 | 60- 91 |
| 07281-00709 | 6417A | 24 | 60- 105 |
| 07281-00709 | 6418 | 16 | 60- 107 |
| 07281-00809 | 1211 | 12 | 10- 17 |
| 07281-00909 | 6407A | 11 | 60- 85 |
| 07281-00909 | 6417A | 11 | 60- 105 |
| 07281-00909 | 6418 | 11 | 60- 107 |
| 07281-01029 | 0131 | 17 | 01- 9 |
| 07281-01029 | 0132 | 17 | 01- 11 |
| 07281-01159 | 0141 | 3 | 01- 13 |
| 07282-04311 | 0207 | 21 | 02- 7 |
| 07282-04311 | 0208 | 21 | 02- 9 |
| 07282-16114 | 6407A | 12 | 60- 85 |
| 07282-16114 | 6417A | 12 | 60- 105 |
| 07282-16114 | 6418 | 12 | 60- 107 |
| 07283-21529 | 6455B | 36 | 60- 127 |
| 07283-22236 | 4305A | 50 | 40- 22 |
| 07283-24346 | 2551A | 22 | 20- 57 |
| 07283-24346 | 5511A | 8 | 50- 53 |
| 07283-24346 | 5513A | 8 | 50- 55 |
| 07283-24346 | 5515B | 7 | 50- 57 |
| 07283-24354 | 7015 | 44 | 70- 12 |
| 07283-24354 | 7017 | 46 | 70- 16 |
| 07283-34346 | 2551A | 22 | 20- 57 |
| 07285-00055 | 4453A | 27 | 40- 65 |
| 07285-00055 | 4454A | 29 | 40- 67 |
| 07285-00085 | 0401 | 48 | 04- 4 |
| 07285-00085 | 0403 | 48 | 04- 8 |
| 07285-00220 | 0207 | 6 | 02- 7 |
| 07285-00220 | 0208 | 6 | 02- 9 |
| 07286-01963 | 0207 | 5 | 02- 7 |
| 07286-01963 | 0208 | 5 | 02- 9 |
| 07288-20604 | 4453A | 26 | 40- 65 |
| 07288-20604 | 4454A | 28 | 40- 67 |
| 07289-00045 | 1211 | 22 | 10- 17 |
| 07289-00045 | 2551A | 34 | 20- 57 |
| 07289-00055 | 2551A | 10 | 20- 57 |
| 07289-00055 | 2751B | 8 | 20- 95 |
| 07289-00070 | 1211 | 12 | 10- 17 |
| 07324-60100 | 1511A | 21 | 10- 53 |
| 07325-10200 | 4383 | 9 | 40- 47 |
| 07325-10200 | 4387 | 9 | 40- 51 |
| 07326-10201 | 4483A | 28 | 40- 75 |
| 07326-10302 | 4483A | 27 | 40- 75 |
| 07336-51027 | 2453 | 22 | 20- 47 |
| 07376-50422 | 6412 | 25 | 60- 91 |

| PARTS NO. | FIG NO | INDEX | PAGE |
|---|---|---|---|
| 07700-40460 | 1311B | 17 | 10- 23 |
| 07730-30004 | 1211 | 17 | 10- 17 |
| 07730-50004 | 1211 | 17 | 10- 17 |
| 07823-00419 | 1511A | 23 | 10- 53 |
| 07823-00427 | 1511A | 22 | 10- 53 |
| 07831-00411 | 1511A | 18 | 10- 53 |
| 07833-00410 | 1511A | 19 | 10- 53 |
| 07834-00413 | 1511A | 17 | 10- 53 |
| 07836-00410 | 1511A | 20 | 10- 53 |
| 07880-10500 | 4383 | 14 | 40- 47 |
| 07880-10500 | 4387 | 14 | 40- 51 |
| 08000-00000 | 1401C | 2 | 10- 25 |
| 08000-00000 | 1405A | 2 | 10- 27 |
| 08000-00001 | 1401C | 2 | 10- 25 |
| 08000-00001 | 1405A | 2 | 10- 27 |
| 08000-02221 | 1405A | 1 | 10- 27 |
| 08000-32215 | 1401C | 1 | 10- 25 |
| 08028-65125 | 1509A | 2 | 10- 51 |
| 08028-65350 | 1509A | 1 | 10- 51 |
| 08034-00310 | 1511A | 27 | 10- 53 |
| 08034-00310 | 1831 | 3 | 10- 65 |
| 08034-00310 | 1841A | 4 | 10- 67 |
| 08034-00414 | 0411 | 14 | 04- 11 |
| 08034-00414 | 0412 | 14 | 04- 13 |
| 08034-00414 | 0991 | 1 | 09- 3 |
| 08034-00414 | 0991 | 2 | 09- 5 |
| 08034-00414 | 0993 | 1 | 09- 9 |
| 08034-00414 | 0993 | 2 | 09- 10 |
| 08034-00414 | 1501A | 11 | 10- 41 |
| 08034-00414 | 1511A | 28 | 10- 53 |
| 08034-00414 | 1851 | 3 | 10- 69 |
| 08034-00519 | 0411 | 16 | 04- 11 |
| 08034-00519 | 0412 | 16 | 04- 13 |
| 08034-00519 | 0991 | 1 | 09- 3 |
| 08034-00519 | 0991 | 2 | 09- 5 |
| 08034-00519 | 0993 | 1 | 09- 9 |
| 08034-00519 | 0993 | 2 | 09- 10 |
| 08034-00519 | 1211 | 31 | 10- 18 |
| 08034-00519 | 1511A | 11 | 10- 53 |
| 08034-00519 | 4381 | 11 | 40- 45 |
| 08034-00519 | 4385 | 11 | 40- 49 |
| 08034-00519 | 5614 | 31 | 50- 75 |
| 08034-00519 | 5614 | 33 | 50- 75 |
| 08034-00519 | 5701A | 16 | 50- 91 |
| 08034-00519 | 6403A | 18 | 60- 81 |
| 08034-00519 | 6405A | 22 | 60- 83 |
| 08034-00519 | 6407A | 40 | 60- 85 |
| 08034-00519 | 6413A | 18 | 60- 93 |
| 08034-00519 | 6414 | 16 | 60- 95 |
| 08034-00519 | 6414 | 48 | 60- 96 |





| PARTS NO. | FIG NO. | INDEX | PAGE |
|---|---|---|---|
| 08034-00519 | 6415A | 22 | 60- 99 |
| 08034-00519 | 6416 | 12 | 60- 101 |
| 08034-00519 | 6416 | 18 | 60- 101 |
| 08034-00519 | 6416 | 40 | 60- 101 |
| 08034-00519 | 6417A | 32 | 60- 105 |
| 08034-00519 | 6463A | 9 | 60- 131 |
| 08034-00536 | 2755A | 25 | 20- 99 |
| 08034-00536 | 2757 | 10 | 20- 101 |
| 08034-00536 | 5615 | 9 | 50- 79 |
| 08034-00536 | 5619 | 20 | 50- 87 |
| 08034-00536 | 6403A | 19 | 60- 81 |
| 08034-00536 | 6413A | 19 | 60- 93 |
| 08034-00823 | 5617 | 10 | 50- 83 |
| 08034-00823 | 6435A | 28 | 60- 117 |
| 08034-00823 | 6463A | 31 | 60- 131 |
| 08034-00834 | 1211 | 25 | 10- 18 |
| 08034-00834 | 2553A | 25 | 20- 59 |
| 08034-00834 | 2753A | 11 | 20- 97 |
| 08034-00834 | 2755A | 18 | 20- 99 |
| 08034-00834 | 2755A | 20 | 20- 99 |
| 08034-00834 | 4454A | 33 | 40- 67 |
| 08034-00834 | 4483A | 9 | 40- 75 |
| 08034-20536 | 2755A | 29 | 20- 99 |
| 08034-20536 | 2755A | 31 | 20- 99 |
| 08034-20536 | 6418 | 31 | 60- 107 |
| 08034-30521 | 1211 | 25 | 10- 17 |
| 08036-01014 | 1507C | 9 | 10- 47 |
| 08036-01014 | 1511A | 12 | 10- 53 |
| 08036-01014 | 1511A | 34 | 10- 53 |
| 08036-01014 | 5614 | 42 | 50- 76 |
| 08036-01414 | 1505B | 5 | 10- 45 |
| 08036-01414 | 6307B | 23 | 60- 67 |
| 08036-01414 | 6471 | 41 | 60- 134 |
| 08036-01414 | 6471 | 41 | 60- 134 |
| 08036-01814 | 1311B | 24 | 10- 23 |
| 08036-01814 | 1503A | 6 | 10- 43 |
| 08036-01814 | 1509A | 19 | 10- 51 |
| 08036-01814 | 1511A | 33 | 10- 53 |
| 08036-01814 | 5619 | 19 | 50- 87 |
| 08036-02514 | 1505B | 4 | 10- 45 |
| 08036-02514 | 4453A | 28 | 40- 65 |
| 08036-02514 | 4454A | 30 | 40- 67 |
| 08036-02514 | 4483A | 10 | 40- 75 |
| 08036-02514 | 5619 | 11 | 50- 87 |
| 08036-02514 | 6471 | 44 | 60- 134 |
| 08036-03014 | 1507C | 31 | 10- 47 |
| 08036-10810 | 1503A | 15 | 10- 43 |
| 08036-10810 | 1821 | 11 | 10- 63 |
| 08036-10814 | 0401 | 49 | 04- 4 |
| 08036-10814 | 0403 | 49 | 04- 8 |

| PARTS NO | FIG NO. | INDEX | PAGE |
|---|---|---|---|
| 08036-10814 | 1551 | 6 | 10- 59 |
| 08036-10814 | 4013 | 20 | 40- 7 |
| 08036-11214 | 1501A | 13 | 10- 41 |
| 08036-21814 | 0222 | 19 | 02- 17 |
| 08037-01008 | 1513A | 18 | 10- 55 |
| 08037-01008 | 1831 | 2 | 10- 65 |
| 08037-01008 | 5101A | 29 | 50- 13 |
| 08037-01008 | 5103 | 13 | 50- 15 |
| 08037-01008 | 6611A | 18 | 60- 137 |
| 08037-01610 | 1501A | 12 | 10- 41 |
| 08037-02512 | 1507C | 36 | 10- 48 |
| 08037-02512 | 4121A | 18 | 40- 17 |
| 08037-02512 | 4336 | 21 | 40- 37 |
| 08037-02512 | 5201A | 33 | 50- 23 |
| 08037-03614 | 1513A | 12 | 10- 55 |
| 08037-03614 | 5701A | 17 | 50- 91 |
| 08037-05016 | 5201A | 32 | 50- 23 |
| 08037-13550 | 5201A | 31 | 50- 23 |
| 08038-00519 | 0131 | 19 | 01- 9 |
| 08038-10519 | 0132 | 19 | 01- 11 |
| 08041-00500 | 1507C | 2 | 10- 47 |
| 08041-01000 | 1507C | 2 | 10- 47 |
| 08041-01500 | 1507C | 2 | 10- 47 |
| 08041-02000 | 1507C | 2 | 10- 47 |
| 08041-03000 | 1507C | 2 | 10- 47 |
| 08044-01500 | 1507C | 2 | 10- 47 |
| 08051-00801 | 5471 | 8 | 50- 51 |
| 08053-01510 | 1501A | 22 | 10- 41 |
| 08053-01510 | 1505B | 8 | 10- 45 |
| 08053-01510 | 1513A | 2 | 10- 55 |
| 08053-01510 | 1801A | 11 | 10- 61 |
| 08055-10882 | 1411B | 10 | 10- 29 |
| 08055-10882 | 1415B | 10 | 10- 31 |
| 08074-40000 | 1507C | 21 | 10- 47 |
| 08074-40000 | 1507C | 23 | 10- 47 |
| 08086-20000 | 1451C | 4 | 10- 33 |
| 08086-20000 | 1453C | 4 | 10- 35 |
| 08086-20000 | 1455C | 4 | 10- 37 |
| 08086-20000 | 1459 | 4 | 10- 39 |
| 08088-30000 | 1509A | 7 | 10- 51 |
| 08100-02460 | 1831 | 7 | 10- 65 |
| 08103-02460 | 1821 | 1 | 10- 63 |
| 08103-02460 | 5409A | 33 | 50- 47 |
| 08104-02420 | 1513A | 13 | 10- 55 |
| 08105-02420 | 1513A | 13 | 10- 55 |
| 08105-12420 | 1513A | 19 | 10- 55 |
| 08110-12410 | 1841A | 2 | 10- 67 |
| 08111-02430 | 1513A | 13 | 10- 55 |
| 08116-02410 | 5409A | 1 | 50- 47 |
| 08119-02460 | 1501A | 14 | 10- 41 |

| PARTS NO | FIG NO. | INDEX | PAGE |
|---|---|---|---|
| 08121-22400 | 5409A | 40 | 50- 48 |
| 08141-02400 | 5409A | 1 | 50- 47 |
| 08154-12400 | 1821 | 1 | 10- 63 |
| 08154-12400 | 5409A | 33 | 50- 47 |
| 08154-30003 | 1821 | 1 | 10- 63 |
| 08154-30003 | 5409A | 33 | 50- 47 |
| 08160-62430 | 1507C | 3 | 10- 47 |
| 08163-02400 | 1507C | 18 | 10- 47 |
| 08165-30000 | 1513A | 3 | 10- 55 |
| 08174-10001 | 1513A | 31 | 10- 55 |
| 08174-10001 | 1801A | 14 | 10- 61 |
| 08174-10001 | 5251A | 12 | 50- 29 |
| 08180-12411 | 5409A | 11 | 50- 47 |
| 08184-00400 | 5409A | 12 | 50- 47 |
| 08184-30500 | 5409A | 16 | 50- 47 |
| 08185-00400 | 5409A | 13 | 50- 47 |
| 08185-00450 | 5409A | 17 | 50- 47 |
| 08210-02904 | 6403A | 17 | 60- 81 |
| 08210-02904 | 6405A | 21 | 60- 83 |
| 08210-02904 | 6407A | 39 | 60- 85 |
| 08210-02904 | 6413A | 17 | 60- 93 |
| 08210-02904 | 6414 | 15 | 60- 95 |
| 08210-02904 | 6414 | 47 | 60- 96 |
| 08210-02904 | 6415A | 21 | 60- 99 |
| 08210-02904 | 6416 | 11 | 60- 101 |
| 08210-02904 | 6416 | 17 | 60- 101 |
| 08210-02904 | 6416 | 39 | 60- 101 |
| 08210-02904 | 6417A | 31 | 60- 105 |
| 08603-00028 | 1503A | 18 | 10- 43 |
| 08670-02001 | 0141 | 32 | 01- 14 |
| 08671-50110 | 1011A | 4 | 10- 11 |
| 08671-50721 | 0141 | 29 | 01- 14 |
| 08671-50721 | 1011A | 4 | 10- 11 |
| 08687-22403 | 1411B | 9 | 10- 29 |
| 08687-22403 | 1415B | 9 | 10- 31 |
| 08690-00265 | 9901A | 15 | 90- 15 |
| 09000-30006 | 9901A | 3 | 90- 15 |
| 09002-03236 | 9901A | 4 | 90- 15 |
| 09019-08035 | 9901A | 10 | 90- 15 |
| 09033-00190 | 9901A | 5 | 90- 15 |
| 09036-00150 | 9901A | 6 | 90- 15 |
| 09055-10390 | 9901A | 7 | 90- 15 |
| 09056-04613 | 9901A | 1 | 90- 15 |
| 09161-E0641 | 9801B | 12 | 90- 3 |
| 09161-E0641 | 9821B | 12 | 90- 7 |
| 09161-E0641 | 9831B | 12 | 90- 11 |
| 09162-E0641 | 9801B | 13 | 90- 3 |
| 09162-E0641 | 9801B | 20 | 90- 3 |
| 09162-E0641 | 9821B | 13 | 90- 7 |
| 09162-E0641 | 9821B | 20 | 90- 7 |

| PARTS NO. | FIG NO | INDEX | PAGE |
|---|---|---|---|
| 09162-E0641 | 9831B | 13 | 90- 11 |
| 09162-E0641 | 9831B | 20 | 90- 11 |
| 09209-13641 | 9901A | 8 | 90- 15 |
| 09231-01430 | 2417 | 2 | 20- 19 |
| 09232-02225 | 2418 | 29 | 20- 24 |
| 09232-02932 | 2415A | 14 | 20- 13 |
| 09232-02932 | 2416 | 14 | 20- 17 |
| 09232-02932 | 2417 | 20 | 20- 19 |
| 09232-03238 | 2417 | 15 | 20- 19 |
| 09232-03825 | 2418 | 16 | 20- 23 |
| 09232-03825 | 2419 | 4 | 20- 27 |
| 09233-02320 | 2418 | 28 | 20- 23 |
| 09233-12920 | 2415A | 13 | 20- 13 |
| 09233-12920 | 2416 | 13 | 20- 17 |
| 09233-12920 | 2417 | 19 | 20- 19 |
| 09233-13220 | 2417 | 14 | 20- 19 |
| 09233-13820 | 2418 | 15 | 20- 23 |
| 09233-13820 | 2419 | 3 | 20- 27 |
| 09241-45160 | 7151A | 9 | 70- 37 |
| 09241-50130 | 7111 | 16 | 70- 35 |
| 09241-50165 | 7111 | 15 | 70- 35 |
| 09241-50170 | 7101 | 25 | 70- 31 |
| 09271-00045 | 7101 | 3 | 70- 31 |
| 09289-00000 | 9901A | 17 | 90- 15 |
| 09304-01250 | 4101A | 17 | 40- 9 |
| 09305-00800 | 4336 | 12 | 40- 37 |
| 09350-01420 | 4001C | 2 | 40- 3 |
| 09350-01620 | 4011A | 22 | 40- 5 |
| 09409-10001 | 5517A | 4 | 50- 59 |
| 09409-10001 | 5521 | 4 | 50- 61 |
| 09410-40284 | 5407A | 23 | 50- 43 |
| 09410-40332 | 5407A | 21 | 50- 43 |
| 09410-40381 | 5405A | 19 | 50- 41 |
| 09410-40404 | 5405A | 17 | 50- 41 |
| 09410-40407 | 5405A | 21 | 50- 41 |
| 09410-40426 | 5405A | 2 | 50- 41 |
| 09412-00052 | 5407A | 52 | 50- 44 |
| 09415-00506 | 1451C | 10 | 10- 33 |
| 09415-00506 | 1453C | 10 | 10- 35 |
| 09415-00506 | 1455C | 10 | 10- 37 |
| 09415-00506 | 1459 | 10 | 10- 39 |
| 09415-01610 | 1451C | 11 | 10- 33 |
| 09415-01610 | 1453C | 11 | 10- 35 |
| 09415-01610 | 1455C | 11 | 10- 37 |
| 09415-01610 | 1459 | 11 | 10- 39 |
| 09415-01610 | 5101A | 9 | 50- 13 |
| 09415-01610 | 5403A | 1 | 50- 39 |
| 09415-02110 | 5201A | 30 | 50- 23 |
| 09415-02520 | 5203 | 22 | 50- 25 |
| 09415-03614 | 4305A | 55 | 40- 22 |



| PARTS NO | FIG NO. | INDEX | PAGE |
|---|---|---|---|
| 09415-05016 | 5612A | 28 | 50- 69 |
| 09416-10000 | 5403A | 4 | 50- 39 |
| 09463-00002 | 4101A | 26 | 40- 9 |
| 09479-02400 | 5615 | 15 | 50- 79 |
| 09479-02400 | 5615 | 19 | 50- 79 |
| 09479-02400 | 5615 | 23 | 50- 79 |
| 09479-02400 | 5615 | 7 | 50- 79 |
| 09479-02400 | 5701A | 12 | 50- 91 |
| 09479-02400 | 5701A | 5 | 50- 91 |
| 09482-10000 | 5615 | 1 | 50- 79 |
| 09482-10000 | 5701A | 1 | 50- 91 |
| 09483-00405 | 5615 | 17 | 50- 79 |
| 09483-00505 | 5615 | 18 | 50- 79 |
| 09483-00517 | 5615 | 6 | 50- 79 |
| 09483-00523 | 5615 | 3 | 50- 79 |
| 09483-00523 | 5701A | 3 | 50- 91 |
| 09483-00527 | 5701A | 4 | 50- 91 |
| 09483-20550 | 5615 | 14 | 50- 79 |
| 09483-20550 | 5615 | 22 | 50- 79 |
| 09483-20550 | 5615 | 4 | 50- 79 |
| 09484-00560 | 5615 | 16 | 50- 79 |
| 09484-00560 | 5615 | 21 | 50- 79 |
| 09484-00560 | 5615 | 5 | 50- 79 |
| 09485-04530 | 5616 | 7 | 50- 81 |
| 09495-11000 | 5901 | 1 | 50- 95 |
| 09495-11010 | 5901 | 1 | 50- 95 |
| 09495-11010 | 5905A | 1 | 50- 97 |
| 09495-40000 | 5901 | 1 | 50- 95 |
| 09495-50000 | 5901 | 1 | 50- 95 |
| 09495-60000 | 5901 | 1 | 50- 95 |
| 09602-01635 | 9801B | 21 | 90- 3 |
| 09602-51635 | 9831B | 21 | 90- 11 |
| 09602-51635 | 9831B | 26 | 90- 11 |
| 09602-51635 | 9831B | 6 | 90- 11 |
| 09608-05080 | 2412 | 4 | 20- 9 |
| 09620-30200 | 5517A | 12 | 50- 59 |
| 09620-30200 | 5521 | 7 | 50- 61 |
| 09637-00161 | 0141 | 28 | 01- 14 |
| 09637-04161 | 0141 | 28 | 01- 14 |
| 09637-40162 | 0141 | 28 | 01- 14 |
| 09637-90261 | 0141 | 28 | 01- 14 |
| 09647-04202 | 0521 | 15 | 05- 11 |
| 09647-40302 | 0521 | 15 | 05- 11 |
| 09647-50101 | 0521 | 15 | 05- 11 |
| 09651-A0641 | 9801B | 23 | 90- 3 |
| 09651-A0641 | 9821B | 23 | 90- 7 |
| 09651-A0641 | 9831B | 23 | 90- 11 |
| 09653-A0481 | 9801B | 3 | 90- 3 |
| 09653-A0481 | 9801B | 9 | 90- 3 |
| 09653-A0481 | 9821B | 3 | 90- 7 |

| PARTS NO. | FIG NO. | INDEX | PAGE |
|---|---|---|---|
| 09653-A0481 | 9821B | 9 | 90- 7 |
| 09653-A0481 | 9831B | 9 | 90- 11 |
| 09667-A0641 | 9801B | 11 | 90- 3 |
| 09667-A0641 | 9821B | 11 | 90- 7 |
| 09667-A0641 | 9831B | 11 | 90- 11 |
| 09668-A0481 | 9831B | 3 | 90- 11 |
| 09683-0000A | 9801B | 34 | 90- 3 |
| 09683-0000A | 9821B | 34 | 90- 7 |
| 09683-0000A | 9831B | 33 | 90- 11 |
| 09690-B0400 | 9801B | 26 | 90- 3 |
| 09690-B0400 | 9801B | 6 | 90- 3 |
| 09690-B0400 | 9821B | 26 | 90- 7 |
| 09690-B0400 | 9821B | 6 | 90- 7 |
| 09806-E0883 | 9801B | 2 | 90- 3 |
| 09806-E0883 | 9821B | 2 | 90- 7 |
| 09806-E0883 | 9831B | 2 | 90- 11 |
| 09808-A0881 | 9801B | 37 | 90- 3 |
| 09808-A0881 | 9821B | 37 | 90- 7 |
| 09808-A0881 | 9831B | 37 | 90- 11 |
| 09820-E0481 | 9801B | 7 | 90- 3 |
| 09820-E0481 | 9821B | 7 | 90- 7 |
| 09820-E0481 | 9831B | 7 | 90- 11 |
| 09920-00150 | 0211 | 41 | 02- 12 |
| 09920-00150 | 0231 | 19 | 02- 19 |
| 09960-01001 | 9801B | 18 | 90- 3 |
| 09960-01001 | 9801B | 19 | 90- 3 |
| 09960-01001 | 9821B | 18 | 90- 7 |
| 09960-01001 | 9821B | 19 | 90- 7 |
| 09960-01001 | 9831B | 18 | 90- 11 |
| 09960-01001 | 9831B | 19 | 90- 11 |
| 09963-00201 | 9821B | 43 | 90- 8 |
| 09963-03001 | 9801B | 43 | 90- 4 |
| 09980-10550 | 9901A | 11 | 90- 15 |
| 09982-20057 | 9901A | 12 | 90- 15 |
| 10E-63-32390 | 2721C | 14 | 20- 89 |
| 101-03-13141 | 1201A | 3 | 10- 15 |
| 101-854-9355 | 4001C | 13 | 40- 3 |
| 102-60-15180 | 6111 | 3 | 60- 23 |
| 102-60-15190 | 6111 | 8 | 60- 23 |
| 102-60-15220 | 6111 | 6 | 60- 23 |
| 102-60-15230 | 6111 | 5 | 60- 23 |
| 102-60-15240 | 6111 | 4 | 60- 23 |
| 103-15-12220 | 2418 | 32 | 20- 24 |
| 112-63-15370 | 2723C | 7 | 20- 91 |
| 113-15-11640 | 2423 | 21 | 20- 35 |
| 113-15-11640 | 9991 | 2 | 90- 19 |
| 113-15-11641 | 2423 | 21 | 20- 35 |
| 113-15-11641 | 9991 | 2 | 90- 19 |
| 113-78-21170 | 7201 | 6 | 70- 39 |
| 12R-60-11300 | 6113 | 3 | 60- 25 |

| PARTS NO | FIG NO | INDEX | PAGE |
|---|---|---|---|
| 12R-60-11390 | 6113 | 4 | 60- 25 |
| 124-15-42710 | 2418 | 45 | 20- 24 |
| 124-15-42710 | 2419 | 23 | 20- 27 |
| 125-15-11250 | 2419 | 30 | 20- 28 |
| 125-15-11461 | 2423 | 16 | 20- 35 |
| 125-15-12821 | 2415A | 24 | 20- 13 |
| 125-15-12821 | 2416 | 20 | 20- 17 |
| 125-15-12860 | 2417 | 32 | 20- 20 |
| 125-15-12860 | 2418 | 42 | 20- 24 |
| 125-15-15290 | 2451 | 22 | 20- 39 |
| 125-15-21640 | 2423 | 20 | 20- 35 |
| 130-09-11590 | 2422 | 29 | 20- 33 |
| 130-09-11590 | 9991 | 1 | 90- 19 |
| 130-911-1640 | 1451C | 12 | 10- 33 |
| 130-911-1640 | 1453C | 12 | 10- 35 |
| 130-911-1640 | 1455C | 12 | 10- 37 |
| 130-911-1640 | 1459 | 12 | 10- 39 |
| 131-54-11270 | 5101A | 8 | 50- 13 |
| 134-15-12720 | 2415A | 26 | 20- 13 |
| 134-15-12720 | 2416 | 22 | 20- 17 |
| 134-15-12720 | 2417 | 34 | 20- 20 |
| 134-15-12720 | 2418 | 44 | 20- 24 |
| 134-15-12720 | 2419 | 22 | 20- 27 |
| 135-15-22713 | 2416 | 21 | 20- 17 |
| 135-15-22713 | 2417 | 33 | 20- 20 |
| 135-15-22713 | 2418 | 43 | 20- 24 |
| 135-15-22713 | 2419 | 21 | 20- 27 |
| 135-43-21480 | 4101A | 14 | 40- 9 |
| 135-43-21480 | 4121A | 19 | 40- 17 |
| 135-60-12152 | 6265 | 10 | 60- 53 |
| 141-49-33970 | 2511A | 6 | 20- 55 |
| 141-49-33980 | 2511A | 4 | 20- 55 |
| 141-49-33990 | 2511A | 3 | 20- 55 |
| 141-49-36171 | 2511A | 5 | 20- 55 |
| 142-979-3221 | 5616 | 15 | 50- 81 |
| 142-979-3221 | 5616 | 22 | 50- 81 |
| 142-979-3221 | 5617 | 4 | 50- 83 |
| 142-979-3221 | 5703A | 10 | 50- 93 |
| 144-15-22881 | 2415A | 22 | 20- 13 |
| 144-15-22881 | 2417 | 29 | 20- 20 |
| 144-15-25570 | 2423 | 8 | 20- 35 |
| 144-15-29110 | 2423 | 7 | 20- 35 |
| 144-15-29110 | 9991 | 2 | 90- 19 |
| 144-43-51220 | 4001C | 10 | 40- 3 |
| 144-63-95170 | 6315 | 6 | 60- 73 |
| 144-70-15251 | 7015 | 38 | 70- 12 |
| 144-70-15251 | 7017 | 40 | 70- 16 |
| 144-70-15251 | 7021 | 23 | 70- 19 |
| 145-14-11570 | 2415A | 37 | 20- 14 |
| 145-14-11571 | 2415A | 37 | 20- 14 |

| PARTS NO. | FIG NO | INDEX | PAGE |
|---|---|---|---|
| 145-14-12790 | 2415A | 24 | 20- 13 |
| 145-14-31620 | 2412 | 19 | 20- 9 |
| 145-14-31650 | 2412 | 20 | 20- 9 |
| 145-14-31660 | 2412 | 16 | 20- 9 |
| 145-14-43370 | 2452 | 9 | 20- 43 |
| 154-63-12340 | 6307B | 2 | 60- 67 |
| 170-14-13222 | 2607 | 35 | 20- 74 |
| 175-15-11230 | 2415A | 29 | 20- 13 |
| 175-15-15550 | 2452 | 6 | 20- 43 |
| 175-15-31210 | 2416 | 3 | 20- 17 |
| 175-15-31210 | 2422 | 21 | 20- 33 |
| 175-15-42780 | 2419 | 36 | 20- 28 |
| 175-15-42781 | 2419 | 36 | 20- 28 |
| 175-15-42880 | 2415A | 27 | 20- 13 |
| 175-15-42880 | 2416 | 23 | 20- 17 |
| 175-15-42880 | 2417 | 35 | 20- 20 |
| 175-15-42880 | 2418 | 47 | 20- 24 |
| 175-15-42880 | 2419 | 25 | 20- 27 |
| 175-63-75190 | 2721C | 7 | 20- 89 |
| 176-63-92240 | 6307B | 6 | 60- 67 |
| 180-14-25560 | 2452 | 7 | 20- 43 |
| 195-15-15130 | 2452 | 5 | 20- 43 |
| 20T-54-75380 | 5203 | 32 | 50- 25 |
| 20Y-04-11160 | 1301A | 15 | 10- 21 |
| 20Y-979-2191 | 5619 | 12 | 50- 87 |
| 20Y-979-3110 | 5620 | 1 | 50- 89 |
| 20Y-979-3120 | 5614 | 8 | 50- 75 |
| 20Y-979-3130 | 5614 | 20 | 50- 75 |
| 20Y-979-3140 | 5614 | 1 | 50- 75 |
| 20Y-979-3140 | 5614 | 4 | 50- 75 |
| 20Y-979-3150 | 5614 | 12 | 50- 75 |
| 20Y-979-3150 | 5614 | 18 | 50- 75 |
| 20Y-979-3150 | 5614 | 4 | 50- 75 |
| 20Y-979-3150 | 5614 | 5 | 50- 75 |
| 201-60-12171 | 6103 | 6 | 60- 21 |
| 201-60-12190 | 6103 | 10 | 60- 21 |
| 203-54-52610 | 5101A | 16 | 50- 13 |
| 203-54-56790 | 5101A | 14 | 50- 13 |
| 203-57-21280 | 5301B | 15 | 50- 33 |
| 203-57-21280 | 5301B | 19 | 50- 33 |
| 203-57-21280 | 5301B | 23 | 50- 33 |
| 203-57-21280 | 5301B | 28 | 50- 33 |
| 203-57-21280 | 5301B | 31 | 50- 33 |
| 203-57-21310 | 5301B | 20 | 50- 33 |
| 203-57-21310 | 5301B | 29 | 50- 33 |
| 203-57-21320 | 5301B | 34 | 50- 33 |
| 205-01-51120 | 1001 | 11A | 10- 3 |
| 205-01-51120 | 1001 | 6A | 10- 3 |
| 205-06-71341 | 5409A | 10 | 50- 47 |
| 205-06-71690 | 5409A | 19 | 50- 47 |





| PARTS NO. | FIG NO | INDEX | PAGE |
|---|---|---|---|
| 205-57-63160 | 5301B | 30 | 50- 33 |
| 205-57-63170 | 5301B | 14 | 50- 33 |
| 205-57-63180 | 5301B | 22 | 50- 33 |
| 205-57-63190 | 5301B | 18 | 50- 33 |
| 205-57-63250 | 5301B | 38 | 50- 33 |
| 205-57-72520 | 5301B | 11 | 50- 33 |
| 205-57-72530 | 5301B | 12 | 50- 33 |
| 205-57-72540 | 5301B | 13 | 50- 33 |
| 205-57-72560 | 5301B | 21 | 50- 33 |
| 205-57-72570 | 5301B | 26 | 50- 33 |
| 205-60-51460 | 6103 | 7 | 60- 21 |
| 205-62-72140 | 0411 | 15 | 04- 11 |
| 205-62-72140 | 0412 | 15 | 04- 13 |
| 205-965-1310 | 0511 | 19 | 05- 7 |
| 205-965-1310 | 0513 | 19 | 05- 9 |
| 207-57-11220 | 5301B | 27 | 50- 33 |
| 207-57-11240 | 5301B | 16 | 50- 33 |
| 207-57-11240 | 5301B | 24 | 50- 33 |
| 207-57-11240 | 5301B | 32 | 50- 33 |
| 21T-72-14350 | 0601 | 5 | 06- 3 |
| 21T-72-14350 | 0603 | 5 | 06- 5 |
| 21U-57-11230 | 5301B | 1 | 50- 33 |
| 22W-75-18880 | 2451 | 23 | 20- 39 |
| 22W-75-18890 | 2451 | 21 | 20- 39 |
| 22X-54-14260 | 5407A | 49 | 50- 44 |
| 22X-62-13360 | 6414 | 53 | 60- 96 |
| 23A-A16-3110 | 2553A | 21 | 20- 59 |
| 23A-03-11350 | 1211 | 23A | 10- 17 |
| 23A-04-11340 | 6101A | 2 | 60- 19 |
| 23A-06-12410 | 1401C | 7 | 10- 25 |
| 23A-06-12420 | 1401C | 6 | 10- 25 |
| 23A-06-12420 | 1405A | 6 | 10- 27 |
| 23A-06-12430 | 1401C | 3 | 10- 25 |
| 23A-06-12650 | 1505B | 2 | 10- 45 |
| 23A-06-12660 | 1505B | 3 | 10- 45 |
| 23A-40-05010 | 2711A | KIT | 20- 83 |
| 23A-40-05020 | 2713A | 11 | 20- 85 |
| 23A-40-11200 | 2711A | 1 | 20- 83 |
| 23A-40-11210 | 2711A | 26 | 20- 83 |
| 23A-40-11220 | 2711A | 22 | 20- 83 |
| 23A-40-11230 | 2711A | 23 | 20- 83 |
| 23A-40-11280 | 2711A | 16 | 20- 83 |
| 23A-40-11520 | 2713A | 2 | 20- 85 |
| 23A-40-11530 | 2713A | 3 | 20- 85 |
| 23A-40-11540 | 2713A | 4 | 20- 85 |
| 23A-40-11550 | 2713A | 5 | 20- 85 |
| 23A-40-11560 | 2713A | 11 | 20- 85 |
| 23A-40-11570 | 2713A | 12 | 20- 85 |
| 23A-40-11580 | 2713A | 6 | 20- 85 |
| 23A-40-11590 | 2713A | 7 | 20- 85 |

| PARTS NO. | FIG NO. | INDEX | PAGE |
|---|---|---|---|
| 23A-40-11670 | 2713A | 13 | 20- 85 |
| 23A-40-11720 | 2713A | 8 | 20- 85 |
| 23A-43-12220 | 4001C | 14 | 40- 3 |
| 23A-43-18190 | 4321B | 10 | 40- 25 |
| 23A-43-18190 | 4322 | 10 | 40- 27 |
| 23A-43-18190 | 4323B | 11 | 40- 29 |
| 23A-45-11121 | 4101A | 18 | 40- 9 |
| 23A-45-11130 | 4105A | 1 | 40- 11 |
| 23A-45-11170 | 4101A | 2 | 40- 9 |
| 23A-45-11190 | 4105A | 44 | 40- 12 |
| 23A-45-11290 | 4105A | 13 | 40- 11 |
| 23A-45-12110 | 4111A | 1 | 40- 15 |
| 23A-53-11550 | 9801B | 29 | 90- 3 |
| 23A-53-11550 | 9821B | 29 | 90- 7 |
| 23A-53-11550 | 9831B | 29 | 90- 11 |
| 23A-53-12121 | 1451C | 9 | 10- 33 |
| 23A-53-12121 | 1453C | 9 | 10- 35 |
| 23A-53-12121 | 1455C | 9 | 10- 37 |
| 23A-53-12121 | 1459 | 9 | 10- 39 |
| 23A-53-12121 | 9801B | 31 | 90- 3 |
| 23A-53-35350 | 1451C | 9 | 10- 33 |
| 23A-53-35350 | 1453C | 9 | 10- 35 |
| 23A-53-61220 | 9801B | 32 | 90- 3 |
| 23A-53-61220 | 9821B | 32 | 90- 7 |
| 23A-54-11310 | 5251A | 4 | 50- 29 |
| 23A-54-11350 | 5251A | 1 | 50- 29 |
| 23A-60-13500 | 1301A | 13 | 10- 21 |
| 23A-62-11110 | 6051A | 1 | 60- 13 |
| 23A-62-11120 | 6051A | 6 | 60- 13 |
| 23A-62-11130 | 6051A | 7 | 60- 13 |
| 23A-63-76620 | 2721C | 12 | 20- 89 |
| 23A-809-3460 | 5617 | 1 | 50- 83 |
| 23A-950-1230 | 5409A | 9 | 50- 47 |
| 23A-950-1630 | 5405A | 16 | 50- 41 |
| 23A-950-2360 | 5471 | 1 | 50- 51 |
| 23A-98-11310 | 9901A | 16 | 90- 15 |
| 23B-01-11120 | 1001 | 23 | 10- 3 |
| 23B-01-11130 | 1001 | 23 | 10- 3 |
| 23B-01-11140 | 1001 | 23 | 10- 3 |
| 23B-06-12241 | 1501A | 14 | 10- 41 |
| 23B-06-12241 | 1831 | 7 | 10- 65 |
| 23B-06-12321 | 1451C | 9 | 10- 33 |
| 23B-06-12321 | 1453C | 9 | 10- 35 |
| 23B-06-12321 | 1455C | 9 | 10- 37 |
| 23B-06-12321 | 1459 | 9 | 10- 39 |
| 23B-06-12410 | 1405A | 7 | 10- 27 |
| 23B-06-12420 | 1405A | 3 | 10- 27 |
| 23B-06-12830 | 1841A | 1 | 10- 67 |
| 23B-06-13140 | 5409A | 33A | 50- 47 |
| 23B-06-22210 | 1831 | 7 | 10- 65 |

| PARTS NO. | FIG NO | INDEX | PAGE |
|---|---|---|---|
| 23B-06-22211 | 1501A | 14 | 10- 41 |
| 23B-06-22220 | 1501A | 15 | 10- 41 |
| 23B-22-11900 | 2605A | 15 | 20- 71 |
| 23B-22-11910 | 2605A | 17 | 20- 71 |
| 23B-22-11920 | 2605A | 18 | 20- 71 |
| 23B-22-11930 | 2605A | 19 | 20- 71 |
| 23B-22-11940 | 2605A | 16 | 20- 71 |
| 23B-22-11950 | 2605A | 15 | 20- 71 |
| 23B-27-31550 | 2805A | 11 | 20- 109 |
| 23B-27-31550 | 2805A | 28 | 20- 109 |
| 23B-43-12210 | 4011A | 28 | 40- 5 |
| 23B-43-12210 | 4111A | 38 | 40- 15 |
| 23B-43-12230 | 4001C | 24 | 40- 3 |
| 23B-43-12240 | 4001C | 25 | 40- 3 |
| 23B-43-12250 | 4105A | 54 | 40- 12 |
| 23B-43-12260 | 4105A | 55 | 40- 12 |
| 23B-44-11360 | 4381 | 4 | 40- 45 |
| 23B-44-11360 | 4385 | 4 | 40- 49 |
| 23B-45-11122 | 4101A | 8 | 40- 9 |
| 23B-54-12221 | 5203 | 12 | 50- 25 |
| 23B-54-12230 | 5203 | 19 | 50- 25 |
| 23B-54-15810 | 5101A | 4 | 50- 13 |
| 23B-57-21400 | 5301B | 1 | 50- 33 |
| 23B-57-21401 | 5301B | 1 | 50- 33 |
| 23B-60-14460 | 6407A | 1 | 60- 85 |
| 23B-60-14460 | 6417A | 1 | 60- 105 |
| 23B-60-14460 | 6418 | 1 | 60- 107 |
| 23B-60-16490 | 6407A | 16 | 60- 85 |
| 23B-60-16490 | 6417A | 16 | 60- 105 |
| 23B-60-16740 | 6407A | 17 | 60- 85 |
| 23B-60-16740 | 6417A | 17 | 60- 105 |
| 23B-60-16870 | 6407A | 18 | 60- 85 |
| 23B-60-16870 | 6417A | 18 | 60- 105 |
| 23B-62-11400 | 6051A | 1 | 60- 13 |
| 23B-62-11400 | 7031B | 24A | 70- 21 |
| 23B-62-11410 | 6051A | 10 | 60- 13 |
| 23B-62-11420 | 6051A | 3 | 60- 13 |
| 23B-62-11430 | 6051A | 26 | 60- 14 |
| 23B-735-0120 | 7015 | 4 | 70- 11 |
| 23B-806-1110 | 1453C | 13 | 10- 35 |
| 23B-807-1210 | 5703A | 1 | 50- 93 |
| 23B-809-3730 | 5616 | 14 | 50- 81 |
| 23B-809-3730 | 5703A | 9 | 50- 93 |
| 23B-817-1430 | 5703A | 22 | 50- 93 |
| 23B-817-1440 | 5703A | 21 | 50- 93 |
| 23B-950-1200 | 5401A | 1 | 50- 37 |
| 23B-950-1460 | 5409A | 18 | 50- 47 |
| 23B-950-1550 | 5407A | 1 | 50- 43 |
| 23B-950-1560 | 5407A | 2 | 50- 43 |
| 23B-950-1590 | 5407A | 22 | 50- 43 |

| PARTS NO. | FIG NO. | INDEX | PAGE |
|---|---|---|---|
| 23B-950-1610 | 5407A | 20 | 50- 43 |
| 23B-950-1620 | 5405A | 3 | 50- 41 |
| 23B-950-1640 | 5405A | 20 | 50- 41 |
| 23B-950-1650 | 5405A | 18 | 50- 41 |
| 23B-950-1660 | 5405A | 1 | 50- 41 |
| 23B-950-2850 | 5403A | 2 | 50- 39 |
| 23B-950-2860 | 5403A | 3 | 50- 39 |
| 23B-950-2870 | 5403A | 5 | 50- 39 |
| 23B-950-2880 | 5403A | 6 | 50- 39 |
| 23B-950-3190 | 5407A | 56 | 50- 44 |
| 23B-950-3210 | 5407A | 57 | 50- 44 |
| 23B-950-3330 | 5409A | 43 | 50- 48 |
| 23B-951-3260 | 5405A | 6 | 50- 41 |
| 23B-956-1120 | 5511A | 19 | 50- 53 |
| 23B-956-1120 | 5513A | 19 | 50- 55 |
| 23B-956-1120 | 5515B | 18 | 50- 57 |
| 23B-956-1180 | 5511A | 2 | 50- 53 |
| 23B-956-1180 | 5513A | 2 | 50- 55 |
| 23B-956-1180 | 5515B | 2 | 50- 57 |
| 23B-956-1350 | 5511A | 15 | 50- 53 |
| 23B-956-1350 | 5513A | 15 | 50- 55 |
| 23B-956-1350 | 5515B | 14 | 50- 57 |
| 23B-957-3630 | 5517A | 8 | 50- 59 |
| 23C-03-11130 | 1201A | 22 | 10- 15 |
| 23C-16-11100 | 2511A | 1 | 20- 55 |
| 23C-16-11100 | 2553A | 26 | 20- 59 |
| 23C-16-11110 | 2511A | 9 | 20- 55 |
| 23C-16-11120 | 2511A | 1 | 20- 55 |
| 23C-16-11130 | 2553A | 27 | 20- 59 |
| 23C-16-11240 | 2553A | 10 | 20- 59 |
| 23C-16-11251 | 2553A | 16 | 20- 59 |
| 23C-27-11930 | 2801A | 7 | 20- 103 |
| 23C-40-11100 | 2711A | 1 | 20- 83 |
| 23C-40-11100 | 2713A | 1 | 20- 85 |
| 23C-40-11290 | 2713A | 10 | 20- 85 |
| 23C-40-11300 | 2713A | 1 | 20- 85 |
| 23C-40-11310 | 2713A | 1 | 20- 85 |
| 23C-40-11350 | 2713A | 9 | 20- 85 |
| 23C-43-11210 | 4105A | 37 | 40- 11 |
| 23C-43-11220 | 4105A | 38 | 40- 11 |
| 23C-43-11230 | 4105A | 39 | 40- 11 |
| 23C-45-11110 | 4111A | 23 | 40- 15 |
| 23C-45-11120 | 4111A | 24 | 40- 15 |
| 23C-45-11150 | 4105A | 24 | 40- 11 |
| 23C-45-11170 | 4101A | 29 | 40- 9 |
| 23C-45-11180 | 4101A | 15 | 40- 9 |
| 23C-60-13100 | 6101A | 8 | 60- 19 |
| 23C-60-13100 | 6111 | 1 | 60- 23 |
| 23C-60-13110 | 6111 | 1 | 60- 23 |
| 23C-60-13120 | 6111 | 7 | 60- 23 |





| PARTS NO. | FIG NO | INDEX | PAGE |
|---|---|---|---|
| 23C-60-13130 | 6111 | 10 | 60- 23 |
| 23C-63-13120 | 6303B | 11 | 60- 63 |
| 23C-63-23120 | 6301A | 18 | 60- 61 |
| 23C-63-23121 | 6301A | 18 | 60- 61 |
| 23C-63-23140 | 6301A | 1 | 60- 61 |
| 23C-63-23141 | 6301A | 1 | 60- 61 |
| 23C-63-28120 | 6307B | 11 | 60- 67 |
| 23C-63-28140 | 6307B | 1 | 60- 67 |
| 23C-63-43101 | 6305B | 1 | 60- 65 |
| 23C-63-43120 | 6305B | 13 | 60- 65 |
| 23C-63-43141 | 6305B | 1 | 60- 65 |
| 23C-63-63120 | 2725B | 12 | 20- 93 |
| 23C-63-63140 | 2725B | 1 | 20- 93 |
| 23C-957-1150 | 5517A | 7 | 50- 59 |
| 23C-957-1230 | 5517A | 9 | 50- 59 |
| 23D-06-13360 | 1841A | 2 | 10- 67 |
| 23D-06-33500 | 1501A | 18 | 10- 41 |
| 23D-06-33500 | 1801A | 7 | 10- 61 |
| 23D-06-33580 | 1501A | 18 | 10- 41 |
| 23D-06-33580 | 1801A | 7 | 10- 61 |
| 23D-06-33590 | 1501A | 18 | 10- 41 |
| 23D-06-33590 | 1801A | 7 | 10- 61 |
| 23D-40-11100 | 4201A | 6 | 40- 19 |
| 23D-40-11110 | 4201A | 10 | 40- 19 |
| 23D-40-11120 | 4201A | 8 | 40- 19 |
| 23D-40-11130 | 4201A | 7 | 40- 19 |
| 23D-43-18550 | 4305A | 45 | 40- 22 |
| 23D-43-21130 | 4011A | 2 | 40- 5 |
| 23D-43-21150 | 4305A | 1 | 40- 21 |
| 23D-43-21290 | 4011A | 1 | 40- 5 |
| 23D-43-21371 | 4321B | 24 | 40- 25 |
| 23D-43-21371 | 4322 | 24 | 40- 27 |
| 23D-43-21371 | 4323B | 31 | 40- 29 |
| 23D-43-21371 | 4341B | 16 | 40- 39 |
| 23D-43-21371 | 4343B | 16 | 40- 41 |
| 23D-43-21390 | 4321B | 22 | 40- 25 |
| 23D-43-21390 | 4322 | 22 | 40- 27 |
| 23D-43-21390 | 4323B | 26 | 40- 29 |
| 23D-43-21390 | 4341B | 15 | 40- 39 |
| 23D-43-21390 | 4343B | 15 | 40- 41 |
| 23D-43-21430 | 4323B | 28 | 40- 29 |
| 23D-43-21430 | 4331A | 6 | 40- 33 |
| 23D-43-21521 | 4305A | 48 | 40- 22 |
| 23D-43-21550 | 4011A | 7 | 40- 5 |
| 23D-43-21590 | 4305A | 26 | 40- 21 |
| 23D-43-21610 | 4305A | 38 | 40- 21 |
| 23D-43-21620 | 4305A | 51 | 40- 22 |
| 23D-54-21310 | 5203 | 18 | 50- 25 |
| 23D-807-1230 | 5616 | 7 | 50- 81 |
| 23D-807-1240 | 5616 | 8 | 50- 81 |

| PARTS NO | FIG NO | INDEX | PAGE |
|---|---|---|---|
| 23D-807-1280 | 5616 | 18 | 50- 81 |
| 23D-809-2450 | 5614 | 26 | 50- 75 |
| 23D-809-2460 | 5614 | 27 | 50- 75 |
| 23D-809-3120 | 5616 | 4 | 50- 81 |
| 23D-809-3380 | 5619 | 8 | 50- 87 |
| 23D-809-3431 | 5616 | 1 | 50- 81 |
| 23D-809-3530 | 5618 | 10 | 50- 85 |
| 23D-809-3540 | 5618 | 7 | 50- 85 |
| 23D-809-3560 | 5618 | 4 | 50- 85 |
| 23D-809-3570 | 5619 | 18 | 50- 87 |
| 23D-809-3580 | 5618 | 13 | 50- 85 |
| 23D-950-5160 | 5471 | 3 | 50- 51 |
| 23D-956-1180 | 5511A | 3 | 50- 53 |
| 23D-956-1180 | 5513A | 3 | 50- 55 |
| 23E-06-13110 | 1451C | 8 | 10- 33 |
| 23E-06-13110 | 1453C | 8 | 10- 35 |
| 23E-06-13110 | 1455C | 8 | 10- 37 |
| 23E-06-13110 | 1459 | 8 | 10- 39 |
| 23E-06-13151 | 1455C | 13 | 10- 37 |
| 23E-06-13151 | 5409A | 34 | 50- 47 |
| 23E-43-12350 | 4001C | 1 | 40- 3 |
| 23E-43-12360 | 4001C | 5 | 40- 3 |
| 23E-43-18620 | 4011A | 23 | 40- 5 |
| 23E-43-18630 | 4011A | 19 | 40- 5 |
| 23E-43-18640 | 4011A | 20 | 40- 5 |
| 23E-45-12131 | 4105A | 48 | 40- 12 |
| 23E-53-11321 | 9801B | 33 | 90- 3 |
| 23E-53-11321 | 9821B | 33 | 90- 7 |
| 23E-53-11321 | 9831B | 34 | 90- 11 |
| 23E-54-12250 | 5251A | 8 | 50- 29 |
| 23E-57-00010 | 5301B | 34 | 50- 33 |
| 23E-57-11100 | 5301B | 4 | 50- 33 |
| 23E-57-11110 | 5301B | 9 | 50- 33 |
| 23E-57-11120 | 5301B | 43 | 50- 34 |
| 23E-57-11130 | 5301B | 10 | 50- 33 |
| 23E-57-11150 | 5301B | 35 | 50- 33 |
| 23E-57-11160 | 5301B | 36 | 50- 33 |
| 23E-57-11210 | 5301B | 4 | 50- 33 |
| 23E-57-11220 | 5301B | 5 | 50- 33 |
| 23F-06-11130 | 1501A | 6 | 10- 41 |
| 23F-06-11130 | 1801A | 6 | 10- 61 |
| 23F-06-11180 | 1513A | 15 | 10- 55 |
| 23F-06-11540 | 1501A | 6 | 10- 41 |
| 23F-06-11540 | 1801A | 6 | 10- 61 |
| 23F-06-11550 | 1501A | 6 | 10- 41 |
| 23F-06-11550 | 1801A | 6 | 10- 61 |
| 23F-06-11650 | 1501A | 6 | 10- 41 |
| 23F-06-11650 | 1801A | 6 | 10- 61 |
| 23F-06-11710 | 1459 | 13 | 10- 39 |
| 23F-06-11710 | 1459 | 14 | 10- 39 |

| PARTS NO | FIG NO. | INDEX | PAGE |
|---|---|---|---|
| 23F-43-11230 | 4305A | 33 | 40- 21 |
| 23F-45-11111 | 4101A | 1 | 40- 9 |
| 23F-53-11191 | 9801B | 30 | 90- 3 |
| 23F-53-11191 | 9821B | 30 | 90- 7 |
| 23F-53-11191 | 9831B | 30 | 90- 11 |
| 23F-53-11410 | 1459 | 14 | 10- 39 |
| 23F-53-11420 | 1459 | 13 | 10- 39 |
| 23F-54-15270 | 5101A | 26 | 50- 13 |
| 23F-54-15340 | 5101A | 10 | 50- 13 |
| 23F-54-15490 | 5201A | 21 | 50- 23 |
| 23F-54-15560 | 5121 | 15 | 50- 17 |
| 23F-54-15560 | 5121 | 6 | 50- 17 |
| 23F-54-15570 | 5121 | 15 | 50- 17 |
| 23F-54-15570 | 5121 | 6 | 50- 17 |
| 23F-60-16240 | 6403A | 13 | 60- 81 |
| 23F-60-16240 | 6405A | 15 | 60- 83 |
| 23F-60-16240 | 6413A | 13 | 60- 93 |
| 23F-60-16240 | 6414 | 40 | 60- 95 |
| 23F-60-16240 | 6415A | 15 | 60- 99 |
| 23F-60-16240 | 6416 | 31 | 60- 101 |
| 23F-843-1710 | 4305A | 41 | 40- 21 |
| 23F-843-1720 | 4305A | 42 | 40- 21 |
| 23S-06-23230 | 1501A | 5 | 10- 41 |
| 23S-06-23230 | 1801A | 5 | 10- 61 |
| 23S-06-54111 | 1501A | 5 | 10- 41 |
| 23S-06-54111 | 1801A | 5 | 10- 61 |
| 23S-06-54121 | 1501A | 5 | 10- 41 |
| 23S-06-54121 | 1801A | 5 | 10- 61 |
| 23S-15-12710 | 2418 | 45 | 20- 24 |
| 23S-15-12710 | 2419 | 23 | 20- 27 |
| 230-03-11470 | 1201A | 2 | 10- 15 |
| 230-09-04060 | 6451A | 10 | 60- 125 |
| 230-09-04070 | 6431A | 14 | 60- 115 |
| 230-09-04100 | 6451A | 11 | 60- 125 |
| 230-09-04110 | 6435A | 15 | 60- 117 |
| 230-09-04110 | 6471 | 35 | 60- 133 |
| 230-09-04130 | 6471 | 20 | 60- 133 |
| 230-09-04140 | 6437C | 17 | 60- 119 |
| 230-09-04170 | 6431A | 11 | 60- 115 |
| 230-09-23100 | 6421A | 1 | 60- 109 |
| 230-09-23100 | 6431A | 1 | 60- 115 |
| 230-09-23100 | 6435A | 1 | 60- 117 |
| 230-09-23100 | 6437C | 1 | 60- 119 |
| 230-09-23100 | 6455B | 4 | 60- 127 |
| 230-09-23100 | 6471 | 1 | 60- 133 |
| 230-09-23130 | 6423C | 1 | 60- 111 |
| 230-09-23130 | 6427 | 1 | 60- 113 |
| 230-09-23130 | 6435A | 1 | 60- 117 |
| 230-09-24065 | 6423C | 14 | 60- 111 |
| 230-09-24065 | 6427 | 14 | 60- 113 |

| PARTS NO. | FIG NO | INDEX | PAGE |
|---|---|---|---|
| 230-09-24180 | 2755A | 4 | 20- 99 |
| 230-09-24300 | 2753A | 5 | 20- 97 |
| 230-43-13120 | 4305A | 37 | 40- 21 |
| 232-03-11210 | 1201A | 20 | 10- 15 |
| 232-03-12130 | 1211 | 2 | 10- 17 |
| 232-03-12131 | 1211 | 2 | 10- 17 |
| 232-03-56110 | 1211 | 14 | 10- 17 |
| 232-03-56111 | 1211 | 14 | 10- 17 |
| 232-04-52151 | 1311B | 18 | 10- 23 |
| 232-04-52340 | 1311B | 15 | 10- 23 |
| 232-04-61190 | 1311B | 11 | 10- 23 |
| 232-06-11960 | 1509A | 11 | 10- 51 |
| 232-06-11960 | 1509A | 13 | 10- 51 |
| 232-06-11970 | 1509A | 18 | 10- 51 |
| 232-06-15131 | 1513A | 23 | 10- 55 |
| 232-06-15151 | 1513A | 27 | 10- 55 |
| 232-06-15151 | 5251A | 13 | 50- 29 |
| 232-06-31290 | 1501A | 2 | 10- 41 |
| 232-06-31290 | 1801A | 2 | 10- 61 |
| 232-06-51450 | 1831 | 13 | 10- 65 |
| 232-06-51460 | 1831 | 8 | 10- 65 |
| 232-06-51470 | 1831 | 12 | 10- 65 |
| 232-06-51490 | 1831 | 4 | 10- 65 |
| 232-06-51980 | 1831 | 7 | 10- 65 |
| 232-06-51990 | 1831 | 7 | 10- 65 |
| 232-06-52321 | 1411B | 5 | 10- 29 |
| 232-06-52321 | 1415B | 5 | 10- 31 |
| 232-06-52341 | 1411B | 6 | 10- 29 |
| 232-06-52341 | 1415B | 6 | 10- 31 |
| 232-06-52361 | 1411B | 7 | 10- 29 |
| 232-06-52361 | 1415B | 7 | 10- 31 |
| 232-06-52431 | 1511A | 2 | 10- 53 |
| 232-06-52461 | 1511A | 8 | 10- 53 |
| 232-06-54180 | 1851 | 1 | 10- 69 |
| 232-06-56210 | 6265 | 1 | 60- 53 |
| 232-06-61470 | 1511A | 9 | 10- 53 |
| 232-06-61620 | 1507C | 17 | 10- 47 |
| 232-11-51140 | 2001 | 4 | 20- 3 |
| 232-14-00410 | 1001 | 15 | 10- 3 |
| 232-14-00411 | 1001 | 15 | 10- 3 |
| 232-14-00460 | 1001 | 3 | 10- 3 |
| 232-14-00461 | 1001 | 3 | 10- 3 |
| 232-15-00110 | 2453 | 1 | 20- 47 |
| 232-15-00120 | 2452 | 1 | 20- 43 |
| 232-15-00140 | 2453 | 1 | 20- 47 |
| 232-15-11270 | 2415A | 4 | 20- 13 |
| 232-15-11380 | 2412 | 33 | 20- 10 |
| 232-15-12420 | 2416 | 12 | 20- 17 |
| 232-15-12420 | 2417 | 18 | 20- 19 |
| 232-15-12530 | 2415A | 15 | 20- 13 |





| PARTS NO | FIG NO. | INDEX | PAGE |
|---|---|---|---|
| 232-15-12530 | 2416 | 15 | 20- 17 |
| 232-15-12620 | 2418 | 34 | 20- 24 |
| 232-15-12720 | 2418 | 46 | 20- 24 |
| 232-15-12720 | 2419 | 24 | 20- 27 |
| 232-15-12940 | 2419 | 37 | 20- 28 |
| 232-15-12960 | 2418 | 48 | 20- 24 |
| 232-15-12960 | 2419 | 26 | 20- 27 |
| 232-15-13420 | 2422 | 25 | 20- 33 |
| 232-15-13430 | 2422 | 26 | 20- 33 |
| 232-15-13440 | 2422 | 27 | 20- 33 |
| 232-15-13450 | 2422 | 28 | 20- 33 |
| 232-15-13450 | 9991 | 1 | 90- 19 |
| 232-15-13451 | 2422 | 28 | 20- 33 |
| 232-15-13451 | 9991 | 1 | 90- 19 |
| 232-15-14130 | 2453 | 5 | 20- 47 |
| 232-15-14160 | 2453 | 6 | 20- 47 |
| 232-15-14230 | 2453 | 3 | 20- 47 |
| 232-15-14260 | 2453 | 4 | 20- 47 |
| 232-15-14280 | 2453 | 8 | 20- 47 |
| 232-15-15150 | 2453 | 27 | 20- 47 |
| 232-15-15170 | 2451 | 50 | 20- 40 |
| 232-15-15190 | 2451 | 53 | 20- 40 |
| 232-15-15210 | 2451 | 3 | 20- 39 |
| 232-15-15220 | 2453 | 16 | 20- 47 |
| 232-15-15221 | 2453 | 16 | 20- 47 |
| 232-15-15230 | 2451 | 5 | 20- 39 |
| 232-15-15240 | 2451 | 9 | 20- 39 |
| 232-15-15250 | 2451 | 11 | 20- 39 |
| 232-15-15260 | 2451 | 6 | 20- 39 |
| 232-15-15270 | 2451 | 7 | 20- 39 |
| 232-15-15281 | 2451 | 13 | 20- 39 |
| 232-15-15291 | 2451 | 24 | 20- 39 |
| 232-15-15292 | 2451 | 24 | 20- 39 |
| 232-15-15340 | 2451 | 17 | 20- 39 |
| 232-15-15350 | 2451 | 14 | 20- 39 |
| 232-15-15360 | 2451 | 12 | 20- 39 |
| 232-15-15370 | 2451 | 20 | 20- 39 |
| 232-15-15371 | 2451 | 20 | 20- 39 |
| 232-15-15372 | 2451 | 20 | 20- 39 |
| 232-15-15391 | 2451 | 27 | 20- 39 |
| 232-15-15420 | 2452 | 4 | 20- 43 |
| 232-15-15460 | 2452 | 3 | 20- 43 |
| 232-15-15470 | 2452 | 12 | 20- 43 |
| 232-15-15490 | 2452 | 8 | 20- 43 |
| 232-15-15520 | 2452 | 14 | 20- 43 |
| 232-15-15540 | 2452 | 13 | 20- 43 |
| 232-15-15550 | 2452 | 15 | 20- 43 |
| 232-15-15580 | 2452 | 17 | 20- 43 |
| 232-15-15590 | 2452 | 16 | 20- 43 |
| 232-15-15720 | 2451 | 45 | 20- 40 |

| PARTS NO | FIG NO | INDEX | PAGE |
|---|---|---|---|
| 232-15-15730 | 2451 | 47 | 20- 40 |
| 232-15-15770 | 2423 | 12 | 20- 35 |
| 232-15-15780 | 2423 | 15 | 20- 35 |
| 232-15-15790 | 2423 | 13 | 20- 35 |
| 232-15-15840 | 2423 | 24 | 20- 35 |
| 232-15-15890 | 2452 | 9 | 20- 43 |
| 232-15-15970 | 2423 | 25 | 20- 35 |
| 232-15-15970 | 9991 | 2 | 90- 19 |
| 232-15-15971 | 2423 | 25 | 20- 35 |
| 232-15-15971 | 9991 | 2 | 90- 19 |
| 232-15-16110 | 2451 | 10 | 20- 39 |
| 232-15-16110 | 2451 | 4 | 20- 39 |
| 232-15-16110 | 2453 | 17 | 20- 47 |
| 232-15-16160 | 2452 | 2 | 20- 43 |
| 232-15-16170 | 2451 | 18 | 20- 39 |
| 232-15-16180 | 2451 | 15 | 20- 39 |
| 232-15-16210 | 2452 | 10 | 20- 43 |
| 232-15-16220 | 2452 | 11 | 20- 43 |
| 232-15-16230 | 2451 | 19 | 20- 39 |
| 232-15-16270 | 2423 | 19 | 20- 35 |
| 232-15-17440 | 2412 | 31 | 20- 10 |
| 232-15-19210 | 2415A | 21 | 20- 13 |
| 232-15-19530 | 2415A | 19 | 20- 13 |
| 232-15-19540 | 2417 | 24 | 20- 19 |
| 232-15-19540 | 2418 | 35 | 20- 24 |
| 232-16-12430 | 2551A | 35 | 20- 57 |
| 232-22-51170 | 2601 | 2 | 20- 63 |
| 232-22-51180 | 2601 | 3 | 20- 63 |
| 232-22-51251 | 2601 | 30 | 20- 64 |
| 232-22-51271 | 2601 | 22 | 20- 64 |
| 232-22-51281 | 2601 | 23 | 20- 64 |
| 232-22-51740 | 2603 | 16 | 20- 67 |
| 232-22-52240 | 2605A | 9 | 20- 71 |
| 232-22-52250 | 2605A | 14 | 20- 71 |
| 232-22-52270 | 2607 | 2 | 20- 73 |
| 232-22-52290 | 2607 | 1 | 20- 73 |
| 232-22-52310 | 2605A | 20 | 20- 71 |
| 232-22-52320 | 2605A | 21 | 20- 71 |
| 232-22-52460 | 2607 | 11 | 20- 73 |
| 232-22-52670 | 2605A | 26 | 20- 71 |
| 232-22-52680 | 2605A | 25 | 20- 71 |
| 232-22-53110 | 2607 | 34 | 20- 74 |
| 232-22-53130 | 2607 | 33 | 20- 74 |
| 232-22-53260 | 2607 | 32 | 20- 74 |
| 232-23-11220 | 2603 | 31 | 20- 68 |
| 232-25-31280 | 2653 | 42 | 20- 80 |
| 232-25-31350 | 2653 | 20 | 20- 79 |
| 232-25-31350 | 2653 | 20 | 20- 79 |
| 232-25-51160 | 2653 | 14 | 20- 79 |
| 232-25-51170 | 2653 | 13 | 20- 79 |

| PARTS NO. | FIG NO. | INDEX | PAGE |
|---|---|---|---|
| 232-25-51180 | 2653 | 12 | 20- 79 |
| 232-25-51221 | 2653 | 16 | 20- 79 |
| 232-25-51410 | 2653 | 20 | 20- 79 |
| 232-25-51430 | 2653 | 19 | 20- 79 |
| 232-25-51520 | 2653 | 19 | 20- 79 |
| 232-25-51520 | 2653 | 19 | 20- 79 |
| 232-25-51640 | 2653 | 15 | 20- 79 |
| 232-25-51641 | 2653 | 15 | 20- 79 |
| 232-27-31450 | 2805A | 13 | 20- 109 |
| 232-27-51560 | 2805A | 3 | 20- 109 |
| 232-40-57820 | 6251A | 27 | 60- 47 |
| 232-40-57830 | 6251A | 28 | 60- 47 |
| 232-43-00123 | 4321B | 4 | 40- 25 |
| 232-43-00123 | 4322 | 4 | 40- 27 |
| 232-43-12360 | 4013 | 19 | 40- 7 |
| 232-43-12550 | 4111A | 28 | 40- 15 |
| 232-43-13162 | 4111A | 9 | 40- 15 |
| 232-43-18281 | 4321B | 4 | 40- 25 |
| 232-43-18281 | 4322 | 4 | 40- 27 |
| 232-43-18281 | 9801B | 25 | 90- 3 |
| 232-43-18281 | 9821B | 25 | 90- 7 |
| 232-43-18281 | 9831B | 25 | 90- 11 |
| 232-43-52320 | 4011A | 6 | 40- 5 |
| 232-43-52320 | 4101A | 16 | 40- 9 |
| 232-43-52320 | 4101A | 21 | 40- 9 |
| 232-43-52320 | 4101A | 9 | 40- 9 |
| 232-43-52320 | 4105A | 2 | 40- 11 |
| 232-43-52320 | 4105A | 25 | 40- 11 |
| 232-43-52430 | 4011A | 32 | 40- 5 |
| 232-43-52430 | 4111A | 36 | 40- 15 |
| 232-43-52540 | 4013 | 15 | 40- 7 |
| 232-43-54351 | 4481A | 9 | 40- 73 |
| 232-43-54460 | 1211 | 13 | 10- 17 |
| 232-43-54461 | 1211 | 13 | 10- 17 |
| 232-43-56100 | 4121A | 1 | 40- 17 |
| 232-43-56120 | 4121A | 2 | 40- 17 |
| 232-43-56130 | 4121A | 3 | 40- 17 |
| 232-43-56140 | 4121A | 10 | 40- 17 |
| 232-43-56150 | 4121A | 6 | 40- 17 |
| 232-43-56210 | 4121A | 13 | 40- 17 |
| 232-43-56220 | 4121A | 12 | 40- 17 |
| 232-43-58360 | 5103 | 7 | 50- 15 |
| 232-43-58370 | 4321B | 13 | 40- 25 |
| 232-43-58370 | 4322 | 13 | 40- 27 |
| 232-43-58370 | 4323B | 14 | 40- 29 |
| 232-43-58380 | 4321B | 13 | 40- 25 |
| 232-43-58380 | 4322 | 13 | 40- 27 |
| 232-43-58380 | 4323B | 14 | 40- 29 |
| 232-44-52270 | 4453A | 8 | 40- 65 |
| 232-44-52270 | 4454A | 11 | 40- 67 |

| PARTS NO. | FIG NO | INDEX | PAGE |
|---|---|---|---|
| 232-44-52450 | 4483A | 6 | 40- 75 |
| 232-44-52450 | 6611A | 25 | 60- 137 |
| 232-44-52580 | 4481A | 1 | 40- 73 |
| 232-44-52580 | 4481A | 15 | 40- 73 |
| 232-44-52611 | 4453A | 16 | 40- 65 |
| 232-44-52611 | 4454A | 20 | 40- 67 |
| 232-44-52620 | 4481A | 31 | 40- 73 |
| 232-44-52970 | 4481A | 16 | 40- 73 |
| 232-44-52970 | 4481A | 19 | 40- 73 |
| 232-44-53510 | 4451 | 18 | 40- 63 |
| 232-44-53510 | 4455 | 15 | 40- 69 |
| 232-44-54680 | 4483A | 21 | 40- 75 |
| 232-44-54720 | 4453A | 12 | 40- 65 |
| 232-44-54720 | 4454A | 16 | 40- 67 |
| 232-44-54720 | 4454A | 16 | 40- 67 |
| 232-44-54810 | 4451 | 5 | 40- 63 |
| 232-44-54810 | 4455 | 5 | 40- 69 |
| 232-44-54820 | 4451 | 4 | 40- 63 |
| 232-44-54820 | 4455 | 4 | 40- 69 |
| 232-44-54830 | 4451 | 3 | 40- 63 |
| 232-44-54830 | 4455 | 3 | 40- 69 |
| 232-45-11180 | 4105A | 7 | 40- 11 |
| 232-45-11220 | 4101A | 19 | 40- 9 |
| 232-45-11311 | 4105A | 52 | 40- 12 |
| 232-45-11311 | 4111A | 34 | 40- 15 |
| 232-45-11321 | 4111A | 27 | 40- 15 |
| 232-45-11340 | 4105A | 10 | 40- 11 |
| 232-45-11610 | 4001C | 6 | 40- 3 |
| 232-45-11610 | 4101A | 12 | 40- 9 |
| 232-45-11621 | 4101A | 10 | 40- 9 |
| 232-45-13130 | 5001 | 9 | 50- 3 |
| 232-45-13130 | 5001 | 9 | 50- 3 |
| 232-46-11711 | 5011 | 29 | 50- 5 |
| 232-46-11920 | 5011 | 31 | 50- 5 |
| 232-46-13310 | 9911 | 5 | 90- 17 |
| 232-46-51350 | 5001 | 16 | 50- 3 |
| 232-46-53210 | 5011 | 7 | 50- 5 |
| 232-46-53210 | 5013 | 6 | 50- 7 |
| 232-46-54190 | 5011 | 14 | 50- 5 |
| 232-46-54190 | 5013 | 13 | 50- 7 |
| 232-46-54560 | 5011 | 20 | 50- 5 |
| 232-46-54560 | 5013 | 19 | 50- 7 |
| 232-46-54570 | 5011 | 21 | 50- 5 |
| 232-46-54570 | 5013 | 20 | 50- 7 |
| 232-46-54571 | 5011 | 22 | 50- 5 |
| 232-46-54571 | 5013 | 21 | 50- 7 |
| 232-53-61810 | 9801B | 42 | 90- 4 |
| 232-53-61810 | 9821B | 42 | 90- 8 |
| 232-53-61810 | 9831B | 42 | 90- 12 |
| 232-55-13113 | 5511A | 1 | 50- 53 |





| PARTS NO. | FIG NO. | INDEX | PAGE |
|---|---|---|---|
| 232-55-13113 | 5513A | 1 | 50- 55 |
| 232-55-13170 | 5511A | 20 | 50- 53 |
| 232-55-13170 | 5513A | 20 | 50- 55 |
| 232-55-13170 | 5515B | 19 | 50- 57 |
| 232-55-13312 | 5515B | 1 | 50- 57 |
| 232-60-00071 | 6249 | 3 | 60- 45 |
| 232-60-00071 | 6263 | 3 | 60- 51 |
| 232-60-00350 | 6249 | 1 | 60- 45 |
| 232-60-00350 | 6263 | 1 | 60- 51 |
| 232-60-00351 | 6247 | 1 | 60- 43 |
| 232-60-00351 | 6261 | 1 | 60- 49 |
| 232-60-12442 | 5613 | 3 | 50- 73 |
| 232-60-14281 | 6307B | 21 | 60- 67 |
| 232-60-14281 | 6471 | 39 | 60- 134 |
| 232-60-14281 | 6471 | 39 | 60- 133 |
| 232-60-16343 | 6265 | 12 | 60- 53 |
| 232-60-16430 | 6265 | 13 | 60- 53 |
| 232-60-16440 | 6247 | 10 | 60- 43 |
| 232-60-16440 | 6249 | 8 | 60- 45 |
| 232-60-16440 | 6261 | 10 | 60- 49 |
| 232-60-16440 | 6263 | 8 | 60- 51 |
| 232-60-16440 | 6265 | 18 | 60- 53 |
| 232-60-16450 | 6247 | 11 | 60- 43 |
| 232-60-16450 | 6249 | 10 | 60- 45 |
| 232-60-16450 | 6261 | 11 | 60- 49 |
| 232-60-16450 | 6263 | 10 | 60- 51 |
| 232-60-16450 | 6265 | 19 | 60- 53 |
| 232-60-54110 | 6471 | 33 | 60- 133 |
| 232-60-54730 | 6071 | 5 | 60- 17 |
| 232-60-54820 | 6431A | 20 | 60- 115 |
| 232-60-54820 | 6437C | 37 | 60- 120 |
| 232-60-54820 | 6455B | 29 | 60- 127 |
| 232-60-54820 | 6471 | 30 | 60- 133 |
| 232-60-54830 | 6303B | 29 | 60- 63 |
| 232-60-54830 | 6431A | 23 | 60- 115 |
| 232-60-54830 | 6435A | 29 | 60- 117 |
| 232-60-54830 | 6435A | 29 | 60- 117 |
| 232-60-54920 | 6437C | 10 | 60- 119 |
| 232-60-54920 | 6471 | 12 | 60- 133 |
| 232-60-56100 | 6247 | 1 | 60- 43 |
| 232-60-56100 | 6261 | 1 | 60- 49 |
| 232-60-56100 | 6435A | 10 | 60- 117 |
| 232-60-56100 | 6451A | 15 | 60- 125 |
| 232-60-56120 | 6247 | 13 | 60- 43 |
| 232-60-56120 | 6249 | 11 | 60- 45 |
| 232-60-56120 | 6261 | 13 | 60- 49 |
| 232-60-56120 | 6263 | 11 | 60- 51 |
| 232-60-56120 | 6265 | 2 | 60- 53 |
| 232-60-56130 | 6265 | 5 | 60- 53 |
| 232-60-56140 | 6247 | 19 | 60- 43 |

| PARTS NO | FIG NO. | INDEX | PAGE |
|---|---|---|---|
| 232-60-56140 | 6261 | 19 | 60- 49 |
| 232-60-56140 | 6265 | 7 | 60- 53 |
| 232-60-56150 | 6247 | 17 | 60- 43 |
| 232-60-56150 | 6251A | 23 | 60- 47 |
| 232-60-56150 | 6261 | 17 | 60- 49 |
| 232-60-56150 | 6265 | 9 | 60- 53 |
| 232-60-56300 | 6249 | 1 | 60- 45 |
| 232-60-56300 | 6263 | 1 | 60- 51 |
| 232-60-56300 | 6435A | 9 | 60- 117 |
| 232-60-56300 | 6455B | 12 | 60- 127 |
| 232-60-62171 | 6463A | 23 | 60- 131 |
| 232-60-62310 | 2755A | 5 | 20- 99 |
| 232-60-62670 | 6463A | 8 | 60- 131 |
| 232-60-62960 | 6431A | 6 | 60- 115 |
| 232-60-64840 | 6463A | 32 | 60- 131 |
| 232-60-64850 | 6463A | 33 | 60- 131 |
| 232-60-68141 | 6101A | 3 | 60- 19 |
| 232-60-68141 | 6103 | 3 | 60- 21 |
| 232-61-00120 | 6241 | 3 | 60- 37 |
| 232-61-00151 | 6251A | 21 | 60- 47 |
| 232-61-00240 | 6245 | 3 | 60- 41 |
| 232-61-00250 | 6245 | 12 | 60- 41 |
| 232-61-11120 | 6241 | 7 | 60- 37 |
| 232-61-11120 | 6245 | 16 | 60- 41 |
| 232-61-11120 | 6245 | 7 | 60- 41 |
| 232-61-11120 | 6251A | 16 | 60- 47 |
| 232-61-11120 | 6251A | 9 | 60- 47 |
| 232-61-11230 | 6241 | 6 | 60- 37 |
| 232-61-11230 | 6245 | 15 | 60- 41 |
| 232-61-11230 | 6245 | 6 | 60- 41 |
| 232-61-11230 | 6251A | 15 | 60- 47 |
| 232-61-11230 | 6251A | 6 | 60- 47 |
| 232-61-11300 | 6245 | 3 | 60- 41 |
| 232-61-11400 | 6245 | 12 | 60- 41 |
| 232-61-11400 | 6251A | 3 | 60- 47 |
| 232-61-11510 | 6241 | 1 | 60- 37 |
| 232-61-11510 | 6245 | 1 | 60- 41 |
| 232-61-11520 | 6241 | 2 | 60- 37 |
| 232-61-11520 | 6245 | 2 | 60- 41 |
| 232-61-11520 | 6251A | 2 | 60- 47 |
| 232-61-11600 | 6245 | 1 | 60- 41 |
| 232-61-11600 | 6431A | 8 | 60- 115 |
| 232-61-11700 | 6241 | 1 | 60- 37 |
| 232-61-11700 | 6421A | 7 | 60- 109 |
| 232-61-12100 | 6251A | 21 | 60- 47 |
| 232-61-12310 | 6251A | 1 | 60- 47 |
| 232-62-11510 | 6051A | 27 | 60- 14 |
| 232-62-11530 | 6051A | 23 | 60- 13 |
| 232-62-11540 | 6051A | 8 | 60- 13 |
| 232-62-11570 | 6051A | 9 | 60- 13 |

| PARTS NO. | FIG NO. | INDEX | PAGE |
|---|---|---|---|
| 232-62-11580 | 6051A | 2 | 60- 13 |
| 232-62-11640 | 6051A | 25 | 60- 14 |
| 232-62-11650 | 6051A | 11 | 60- 13 |
| 232-62-11660 | 6051A | 4 | 60- 13 |
| 232-62-11670 | 6051A | 24 | 60- 14 |
| 232-62-11680 | 6051A | 12 | 60- 13 |
| 232-62-11690 | 6051A | 13 | 60- 13 |
| 232-62-11710 | 6051A | 15 | 60- 13 |
| 232-62-11720 | 6051A | 14 | 60- 13 |
| 232-62-11730 | 6051A | 18 | 60- 13 |
| 232-62-11740 | 6051A | 19 | 60- 13 |
| 232-62-11750 | 6051A | 5 | 60- 13 |
| 232-62-11760 | 6051A | 16 | 60- 13 |
| 232-62-11770 | 6051A | 20 | 60- 13 |
| 232-62-11780 | 6051A | 21 | 60- 13 |
| 232-62-11820 | 6051A | 17 | 60- 13 |
| 232-62-11830 | 6051A | 22 | 60- 13 |
| 232-62-11840 | 6051A | 21 | 60- 13 |
| 232-70-00121 | 7101 | 43 | 70- 32 |
| 232-70-12450 | 7151A | 3 | 70- 37 |
| 232-70-12480 | 7151A | 4 | 70- 37 |
| 232-70-13142 | 7101 | 7 | 70- 31 |
| 232-70-13361 | 7101 | 43 | 70- 32 |
| 232-70-13440 | 7101 | 44 | 70- 32 |
| 232-70-52460 | 7011A | 22 | 70- 5 |
| 232-70-52460 | 7011A | 7 | 70- 5 |
| 232-70-52460 | 7012A | 22 | 70- 7 |
| 232-70-52460 | 7012A | 7 | 70- 7 |
| 232-70-52460 | 7013A | 22 | 70- 9 |
| 232-70-52460 | 7013A | 7 | 70- 9 |
| 232-70-54330 | 7031B | 39 | 70- 22 |
| 232-70-54440 | 7031B | 9 | 70- 21 |
| 232-70-54440 | 7037 | 4 | 70- 25 |
| 232-71-13150 | 7031B | 28 | 70- 21 |
| 232-71-13150 | 7037 | 25 | 70- 25 |
| 232-71-51310 | 7101 | 4 | 70- 31 |
| 232-71-51320 | 7101 | 5 | 70- 31 |
| 232-71-51330 | 7101 | 6 | 70- 31 |
| 232-735-0050 | 4323B | 2 | 40- 29 |
| 232-735-1250 | 7015 | 12 | 70- 11 |
| 232-735-1261 | 7015 | 26 | 70- 11 |
| 232-735-1261 | 7017 | 28 | 70- 15 |
| 232-735-1340 | 4323B | 2 | 40- 29 |
| 232-735-1340 | 9801B | 15 | 90- 3 |
| 232-735-1340 | 9821B | 15 | 90- 7 |
| 232-735-1340 | 9831B | 15 | 90- 11 |
| 232-735-1370 | 7015 | 47 | 70- 12 |
| 232-735-1370 | 7017 | 49 | 70- 16 |
| 232-735-3101 | 6071 | 1 | 60- 17 |
| 232-735-3102 | 6071 | 1 | 60- 17 |

| PARTS NO. | FIG NO | INDEX | PAGE |
|---|---|---|---|
| 232-735-3110 | 6071 | 1 | 60- 17 |
| 232-735-3111 | 6071 | 1 | 60- 17 |
| 232-735-3120 | 6071 | 2 | 60- 17 |
| 232-785-1270 | 2803A | 4 | 20- 107 |
| 232-785-1291 | 7201 | 2 | 70- 39 |
| 232-785-1310 | 7201 | 3 | 70- 39 |
| 232-785-1411 | 4322 | 31 | 40- 27 |
| 232-807-6161 | 5703A | 29 | 50- 93 |
| 232-809-4850 | 5617 | 7 | 50- 83 |
| 232-817-1140 | 5701A | 13 | 50- 91 |
| 232-817-1350 | 5703A | 25 | 50- 93 |
| 232-817-1360 | 5703A | 26 | 50- 93 |
| 232-817-1590 | 5615 | 2 | 50- 79 |
| 232-817-1590 | 5701A | 2 | 50- 91 |
| 232-817-1610 | 5703A | 1 | 50- 93 |
| 232-817-1620 | 5703A | 5 | 50- 93 |
| 232-817-1630 | 5703A | 1 | 50- 93 |
| 232-817-1640 | 5703A | 1 | 50- 93 |
| 232-817-1650 | 5703A | 1 | 50- 93 |
| 232-817-1660 | 5703A | 1 | 50- 93 |
| 232-833-2110 | 6611A | 10 | 60- 137 |
| 232-833-2120 | 6611A | 11 | 60- 137 |
| 232-833-3121 | 6611A | 3 | 60- 137 |
| 232-833-3130 | 6611A | 4 | 60- 137 |
| 232-833-3140 | 6611A | 15 | 60- 137 |
| 232-833-3150 | 6611A | 7 | 60- 137 |
| 232-833-3160 | 6611A | 5 | 60- 137 |
| 232-833-4111 | 6611A | 10 | 60- 137 |
| 232-855-1370 | 5407A | 62 | 50- 44 |
| 232-855-1870 | 5121 | 33 | 50- 18 |
| 232-855-1880 | 5407A | 63 | 50- 44 |
| 232-856-5120 | 5409A | 20 | 50- 47 |
| 232-856-5130 | 5409A | 21 | 50- 47 |
| 232-856-5140 | 5409A | 22 | 50- 47 |
| 232-856-5160 | 5409A | 23 | 50- 47 |
| 232-856-5170 | 5409A | 25 | 50- 47 |
| 232-856-5250 | 1501A | 10 | 10- 41 |
| 232-856-5260 | 5409A | 24 | 50- 47 |
| 232-860-5320 | 7031B | 42 | 70- 22 |
| 232-860-5320 | 7037 | 36 | 70- 25 |
| 232-901-3120 | 9901A | 16 | 90- 15 |
| 232-902-1280 | 9901A | 14 | 90- 15 |
| 232-902-1290 | 9901A | 13 | 90- 15 |
| 232-946-7120 | 2801A | 42 | 20- 104 |
| 232-950-2291 | 5405A | 13 | 50- 41 |
| 232-950-5700 | 5409A | 20 | 50- 47 |
| 232-956-0130 | 5511A | 1 | 50- 53 |
| 232-956-0211 | 5511A | 1 | 50- 53 |
| 232-956-0211 | 5513A | 1 | 50- 55 |
| 232-956-0221 | 5515B | 1 | 50- 57 |





| PARTS NO. | FIG NO | INDEX | PAGE |
|---|---|---|---|
| 232-957-2840 | 5407A | 13 | 50- 43 |
| 232-957-2850 | 5401A | 5 | 50- 37 |
| 232-957-2850 | 5513A | 26 | 50- 55 |
| 232-957-5170 | 5409A | 3 | 50- 47 |
| 232-957-6240 | 5407A | 33 | 50- 43 |
| 232-957-6250 | 5407A | 33 | 50- 43 |
| 232-957-6260 | 5407A | 35 | 50- 43 |
| 232-957-6310 | 5407A | 42 | 50- 44 |
| 232-957-6471 | 5407A | 4 | 50- 43 |
| 232-957-6481 | 5407A | 4 | 50- 43 |
| 232-957-6520 | 5407A | 7 | 50- 43 |
| 232-957-6540 | 5407A | 34 | 50- 43 |
| 232-957-6550 | 5407A | 60 | 50- 44 |
| 232-957-7741 | 5203 | 28 | 50- 25 |
| 232-957-9510 | 5409A | 35 | 50- 48 |
| 232-971-6120 | 7151A | 2 | 70- 37 |
| 233-40-33190 | 6418 | 22 | 60- 107 |
| 233-43-17221 | 4371 | 8 | 40- 43 |
| 233-43-21360 | 4341B | 4 | 40- 39 |
| 233-43-21360 | 4343B | 4 | 40- 41 |
| 233-43-27750 | 4305A | 21 | 40- 21 |
| 233-43-27860 | 4305A | 35 | 40- 21 |
| 233-45-11140 | 4101A | 22 | 40- 9 |
| 233-45-11250 | 4101A | 3 | 40- 9 |
| 233-54-22520 | 5101A | 5 | 50- 13 |
| 233-60-14981 | 6451A | 16 | 60- 125 |
| 233-60-34130 | 2755A | 26 | 20- 99 |
| 233-70-21170 | 6611A | 6 | 60- 137 |
| 234-A16-3120 | 2553A | 20 | 20- 59 |
| 234-01-31110 | 1001 | 1 | 10- 3 |
| 234-01-31120 | 1001 | 2 | 10- 3 |
| 234-01-31130 | 1001 | 7 | 10- 3 |
| 234-01-31140 | 1001 | 10 | 10- 3 |
| 234-01-31170 | 1001 | 20 | 10- 3 |
| 234-01-31230 | 1001 | 1 | 10- 3 |
| 234-01-31240 | 1001 | 2 | 10- 3 |
| 234-01-31241 | 1001 | 2 | 10- 3 |
| 234-01-41110 | 1001 | 19 | 10- 3 |
| 234-01-41120 | 1001 | 11 | 10- 3 |
| 234-01-41120 | 1001 | 6 | 10- 3 |
| 234-01-41310 | 1551 | 1 | 10- 59 |
| 234-01-41330 | 1551 | 7 | 10- 59 |
| 234-01-51130 | 1001 | 3 | 10- 3 |
| 234-01-51140 | 1001 | 15 | 10- 3 |
| 234-01-51140 | 1001 | 3 | 10- 3 |
| 234-01-51150 | 1001 | 15 | 10- 3 |
| 234-01-51150 | 1001 | 15 | 10- 3 |
| 234-01-51150 | 1001 | 3 | 10- 3 |
| 234-02-61110 | 5103 | 1 | 50- 15 |
| 234-03-11130 | 1201A | 5 | 10- 15 |

| PARTS NO. | FIG NO | INDEX | PAGE |
|---|---|---|---|
| 234-03-11181 | 1201A | 21 | 10- 15 |
| 234-03-31141 | 1201A | 16 | 10- 15 |
| 234-03-31142 | 1201A | 16 | 10- 15 |
| 234-03-31401 | 1201A | 1 | 10- 15 |
| 234-03-32140 | 1211 | 1 | 10- 17 |
| 234-03-32141 | 1211 | 1 | 10- 17 |
| 234-03-32160 | 1201A | 30 | 10- 15 |
| 234-03-32172 | 1201A | 25 | 10- 15 |
| 234-03-41131 | 1201A | 17 | 10- 15 |
| 234-03-41132 | 1201A | 17 | 10- 15 |
| 234-03-42110 | 1211 | 11 | 10- 17 |
| 234-03-42120 | 1211 | 10 | 10- 17 |
| 234-03-61110 | 1201A | 10 | 10- 15 |
| 234-03-61200 | 1201A | 1 | 10- 15 |
| 234-03-61201 | 1201A | 1 | 10- 15 |
| 234-03-61210 | 1201A | 4 | 10- 15 |
| 234-03-61230 | 1201A | 11 | 10- 15 |
| 234-03-61240 | 1211 | 36 | 10- 18 |
| 234-03-61310 | 1211 | 26A | 10- 18 |
| 234-04-11420 | 4483A | 22 | 40- 75 |
| 234-04-31221 | 2561 | 6 | 20- 61 |
| 234-04-61120 | 1301A | 1 | 10- 21 |
| 234-04-61120 | 6101A | 1 | 60- 19 |
| 234-04-61121 | 1301A | 1 | 10- 21 |
| 234-04-61121 | 6101A | 1 | 60- 19 |
| 234-04-61122 | 1301A | 1 | 10- 21 |
| 234-04-61150 | 1301A | 6 | 10- 21 |
| 234-04-61160 | 1301A | 9 | 10- 21 |
| 234-04-61161 | 1301A | 9 | 10- 21 |
| 234-04-61162 | 1301A | 9 | 10- 21 |
| 234-04-61180 | 1311B | 14 | 10- 23 |
| 234-04-61510 | 1301A | 1 | 10- 21 |
| 234-04-61510 | 6103 | 1 | 60- 21 |
| 234-04-61511 | 1301A | 1 | 10- 21 |
| 234-06-11920 | 1511A | 25 | 10- 53 |
| 234-06-11930 | 1511A | 26 | 10- 53 |
| 234-06-13361 | 1503A | 2 | 10- 43 |
| 234-06-13380 | 1503A | 3 | 10- 43 |
| 234-06-15230 | 1513A | 26 | 10- 55 |
| 234-06-21560 | 1501A | 9 | 10- 41 |
| 234-06-22120 | 1821 | 5 | 10- 63 |
| 234-06-22140 | 1821 | 6 | 10- 63 |
| 234-06-22170 | 1821 | 2 | 10- 63 |
| 234-06-31110 | 1411B | 8 | 10- 29 |
| 234-06-31110 | 1415B | 8 | 10- 31 |
| 234-06-31220 | 1509A | 14 | 10- 51 |
| 234-06-32240 | 1509A | 3 | 10- 51 |
| 234-06-41220 | 1511A | 32 | 10- 53 |
| 234-06-41240 | 1831 | 1 | 10- 65 |
| 234-06-41320 | 1509A | 17 | 10- 51 |

| PARTS NO. | FIG NO. | INDEX | PAGE |
|---|---|---|---|
| 234-06-42180 | 1511A | 15 | 10- 53 |
| 234-06-42220 | 1511A | 10 | 10- 53 |
| 234-06-42560 | 1511A | 6 | 10- 53 |
| 234-06-61140 | 1507C | 6 | 10- 47 |
| 234-06-61220 | 1513A | 7 | 10- 55 |
| 234-06-61230 | 1513A | 7 | 10- 55 |
| 234-06-62190 | 1503A | 19 | 10- 43 |
| 234-06-62220 | 1841A | 3 | 10- 67 |
| 234-06-62230 | 1513A | 14 | 10- 55 |
| 234-06-62240 | 1513A | 6 | 10- 55 |
| 234-06-63110 | 1501A | 1 | 10- 41 |
| 234-06-63120 | 1501A | 19 | 10- 41 |
| 234-06-63120 | 1801A | 8 | 10- 61 |
| 234-06-63130 | 1411B | 1 | 10- 29 |
| 234-06-63130 | 1415B | 1 | 10- 31 |
| 234-06-63140 | 1451C | 1 | 10- 33 |
| 234-06-63140 | 1453C | 1 | 10- 35 |
| 234-06-63140 | 1455C | 1 | 10- 37 |
| 234-06-63140 | 1459 | 1 | 10- 39 |
| 234-06-63150 | 1501A | 7 | 10- 41 |
| 234-06-63150 | 1501A | 8 | 10- 41 |
| 234-06-63160 | 1503A | 1 | 10- 43 |
| 234-06-63160 | 1507C | 2 | 10- 47 |
| 234-06-63160 | 5703A | 6 | 50- 93 |
| 234-06-63170 | 1507C | 2 | 10- 47 |
| 234-06-63180 | 1503A | 9 | 10- 43 |
| 234-06-63180 | 1505B | 1 | 10- 45 |
| 234-06-63190 | 1513A | 1 | 10- 55 |
| 234-06-63210 | 1511A | 1 | 10- 53 |
| 234-06-63220 | 1411B | 10 | 10- 29 |
| 234-06-63220 | 1415B | 10 | 10- 31 |
| 234-06-63230 | 1415B | 11 | 10- 31 |
| 234-06-63260 | 1801A | 1 | 10- 61 |
| 234-06-63270 | 1507C | 1 | 10- 47 |
| 234-06-88120 | 1821 | 10 | 10- 63 |
| 234-12-31110 | 2001 | 1 | 20- 3 |
| 234-15-00201 | 2411 | 1 | 20- 7 |
| 234-15-00201 | 2412 | 1 | 20- 9 |
| 234-15-00201 | 2416 | 1 | 20- 17 |
| 234-15-00201 | 2417 | 1 | 20- 19 |
| 234-15-00201 | 2418 | 1 | 20- 23 |
| 234-15-00201 | 2419 | 1 | 20- 27 |
| 234-15-00201 | 2421 | 1 | 20- 31 |
| 234-15-00201 | 2422 | 1 | 20- 33 |
| 234-15-00201 | 2423 | 1 | 20- 35 |
| 234-15-00201 | 2451 | 1 | 20- 39 |
| 234-15-00201 | 2452 | 1 | 20- 43 |
| 234-15-00201 | 2453 | 1 | 20- 47 |
| 234-15-00201 | 2471 | 1 | 20- 49 |
| 234-15-00210 | 2418 | 1 | 20- 23 |

| PARTS NO. | FIG NO | INDEX | PAGE |
|---|---|---|---|
| 234-15-00220 | 2416 | 1 | 20- 17 |
| 234-15-00230 | 2415A | 27 | 20- 13 |
| 234-15-00240 | 2421 | 1 | 20- 31 |
| 234-15-00301 | 2451 | 1 | 20- 39 |
| 234-15-00303 | 2451 | 1 | 20- 39 |
| 234-15-00600 | 2411 | 1 | 20- 7 |
| 234-15-00600 | 2412 | 1 | 20- 9 |
| 234-15-00600 | 2416 | 1 | 20- 17 |
| 234-15-00600 | 2417 | 1 | 20- 19 |
| 234-15-00600 | 2418 | 1 | 20- 23 |
| 234-15-00600 | 2419 | 1 | 20- 27 |
| 234-15-00600 | 2421 | 1 | 20- 31 |
| 234-15-00600 | 2422 | 1 | 20- 33 |
| 234-15-00600 | 2423 | 1 | 20- 35 |
| 234-15-00600 | 2451 | 1 | 20- 39 |
| 234-15-00600 | 2452 | 1 | 20- 43 |
| 234-15-00600 | 2453 | 1 | 20- 47 |
| 234-15-00600 | 2471 | 1 | 20- 49 |
| 234-15-00601 | 2411 | 1 | 20- 7 |
| 234-15-00601 | 2412 | 1 | 20- 9 |
| 234-15-00601 | 2416 | 1 | 20- 17 |
| 234-15-00601 | 2417 | 1 | 20- 19 |
| 234-15-00601 | 2418 | 1 | 20- 23 |
| 234-15-00601 | 2419 | 1 | 20- 27 |
| 234-15-00601 | 2421 | 1 | 20- 31 |
| 234-15-00601 | 2422 | 1 | 20- 33 |
| 234-15-00601 | 2423 | 1 | 20- 35 |
| 234-15-00601 | 2451 | 1 | 20- 39 |
| 234-15-00601 | 2452 | 1 | 20- 43 |
| 234-15-00601 | 2453 | 1 | 20- 47 |
| 234-15-00601 | 2471 | 1 | 20- 49 |
| 234-15-07010 | 9991 | 1 | 90- 19 |
| 234-15-07011 | 9991 | 1 | 90- 19 |
| 234-15-07012 | 9991 | 1 | 90- 19 |
| 234-15-07020 | 9991 | 2 | 90- 19 |
| 234-15-07021 | 9991 | 2 | 90- 19 |
| 234-15-12770 | 2417 | 3 | 20- 19 |
| 234-15-12780 | 2416 | 2 | 20- 17 |
| 234-15-12790 | 2418 | 2 | 20- 23 |
| 234-15-21080 | 2411 | 1 | 20- 7 |
| 234-15-21080 | 2412 | 1 | 20- 9 |
| 234-15-21080 | 2415A | 1 | 20- 13 |
| 234-15-21080 | 2416 | 1 | 20- 17 |
| 234-15-21080 | 2417 | 1 | 20- 19 |
| 234-15-21080 | 2418 | 1 | 20- 23 |
| 234-15-21080 | 2419 | 1 | 20- 27 |
| 234-15-21080 | 2421 | 1 | 20- 31 |
| 234-15-21080 | 2422 | 1 | 20- 33 |
| 234-15-21080 | 2423 | 1 | 20- 35 |
| 234-15-21080 | 2451 | 1 | 20- 39 |



| PARTS NO. | FIG NO | INDEX | PAGE |
|---|---|---|---|
| 234-15-21080 | 2452 | 1 | 20- 43 |
| 234-15-21080 | 2453 | 1 | 20- 47 |
| 234-15-21080 | 2471 | 1 | 20- 49 |
| 234-15-21110 | 2411 | 1 | 20- 7 |
| 234-15-21120 | 2411 | 4 | 20- 7 |
| 234-15-21120 | 9991 | 1 | 90- 19 |
| 234-15-21121 | 2411 | 4 | 20- 7 |
| 234-15-21121 | 9991 | 1 | 90- 19 |
| 234-15-21130 | 2419 | 27 | 20- 27 |
| 234-15-21140 | 2419 | 29 | 20- 28 |
| 234-15-21160 | 2418 | 3 | 20- 23 |
| 234-15-21170 | 2418 | 5 | 20- 23 |
| 234-15-21180 | 2417 | 1 | 20- 19 |
| 234-15-21210 | 2415A | 1 | 20- 13 |
| 234-15-21231 | 2415A | 31 | 20- 13 |
| 234-15-21250 | 2415A | 35 | 20- 14 |
| 234-15-21260 | 2415A | 36 | 20- 14 |
| 234-15-21330 | 2411 | 5 | 20- 7 |
| 234-15-21350 | 2412 | 26 | 20- 9 |
| 234-15-21361 | 2412 | 9 | 20- 9 |
| 234-15-21362 | 2412 | 9 | 20- 9 |
| 234-15-21370 | 2412 | 37 | 20- 10 |
| 234-15-21710 | 2412 | 21 | 20- 9 |
| 234-15-22111 | 2415A | 38 | 20- 14 |
| 234-15-22120 | 2419 | 31 | 20- 28 |
| 234-15-22150 | 2417 | 6 | 20- 19 |
| 234-15-22160 | 2417 | 7 | 20- 19 |
| 234-15-22170 | 2417 | 36 | 20- 20 |
| 234-15-22180 | 2418 | 7 | 20- 23 |
| 234-15-22190 | 2419 | 34 | 20- 28 |
| 234-15-22210 | 2416 | 7 | 20- 17 |
| 234-15-22230 | 2417 | 4 | 20- 19 |
| 234-15-22240 | 2417 | 5 | 20- 19 |
| 234-15-22250 | 2418 | 6 | 20- 23 |
| 234-15-22260 | 2419 | 33 | 20- 28 |
| 234-15-22270 | 2419 | 11 | 20- 27 |
| 234-15-22320 | 2416 | 9 | 20- 17 |
| 234-15-22330 | 2417 | 9 | 20- 19 |
| 234-15-22340 | 2418 | 11 | 20- 23 |
| 234-15-22350 | 2418 | 24 | 20- 23 |
| 234-15-22360 | 2419 | 1 | 20- 27 |
| 234-15-22370 | 2418 | 19 | 20- 23 |
| 234-15-22380 | 2419 | 7 | 20- 27 |
| 234-15-22390 | 2416 | 25 | 20- 17 |
| 234-15-22420 | 2417 | 13 | 20- 19 |
| 234-15-22430 | 2418 | 14 | 20- 23 |
| 234-15-22440 | 2418 | 27 | 20- 23 |
| 234-15-22450 | 2419 | 2 | 20- 27 |
| 234-15-22510 | 2417 | 16 | 20- 19 |
| 234-15-22520 | 2417 | 21 | 20- 19 |

| PARTS NO | FIG NO. | INDEX | PAGE |
|---|---|---|---|
| 234-15-22530 | 2418 | 17 | 20- 23 |
| 234-15-22540 | 2418 | 30 | 20- 24 |
| 234-15-22550 | 2419 | 5 | 20- 27 |
| 234-15-22560 | 2415A | 10 | 20- 13 |
| 234-15-22570 | 2416 | 10 | 20- 17 |
| 234-15-22610 | 2419 | 16 | 20- 27 |
| 234-15-22620 | 2418 | 33 | 20- 24 |
| 234-15-22630 | 2417 | 23 | 20- 19 |
| 234-15-22640 | 2417 | 25 | 20- 19 |
| 234-15-22650 | 2416 | 17 | 20- 17 |
| 234-15-22660 | 2415A | 17 | 20- 13 |
| 234-15-22730 | 2417 | 27 | 20- 19 |
| 234-15-22730 | 2418 | 36 | 20- 24 |
| 234-15-22730 | 2419 | 17 | 20- 27 |
| 234-15-22740 | 2418 | 37 | 20- 24 |
| 234-15-22750 | 2417 | 26 | 20- 19 |
| 234-15-22761 | 2416 | 18 | 20- 17 |
| 234-15-22770 | 2419 | 18 | 20- 27 |
| 234-15-22780 | 2415A | 20 | 20- 13 |
| 234-15-22810 | 2419 | 13 | 20- 27 |
| 234-15-22820 | 2421 | 6 | 20- 31 |
| 234-15-23110 | 2412 | 1 | 20- 9 |
| 234-15-23111 | 2412 | 1 | 20- 9 |
| 234-15-23120 | 2421 | 10 | 20- 31 |
| 234-15-23130 | 2421 | 15 | 20- 31 |
| 234-15-23140 | 2421 | 26 | 20- 31 |
| 234-15-23150 | 2422 | 1 | 20- 33 |
| 234-15-23220 | 2421 | 24 | 20- 31 |
| 234-15-23230 | 2422 | 7 | 20- 33 |
| 234-15-23250 | 2421 | 16 | 20- 31 |
| 234-15-23260 | 2422 | 8 | 20- 33 |
| 234-15-23271 | 2422 | 12 | 20- 33 |
| 234-15-23280 | 2422 | 13 | 20- 33 |
| 234-15-23290 | 2422 | 9 | 20- 33 |
| 234-15-23310 | 2422 | 6 | 20- 33 |
| 234-15-23350 | 2422 | 20 | 20- 33 |
| 234-15-23360 | 2422 | 17 | 20- 33 |
| 234-15-25120 | 2453 | 14 | 20- 47 |
| 234-15-25131 | 2451 | 41 | 20- 40 |
| 234-15-25141 | 2451 | 42 | 20- 40 |
| 234-15-25160 | 2453 | 26 | 20- 47 |
| 234-15-25230 | 2453 | 15 | 20- 47 |
| 234-15-25310 | 2451 | 34 | 20- 40 |
| 234-15-25330 | 2451 | 38 | 20- 40 |
| 234-15-25331 | 2451 | 38 | 20- 40 |
| 234-15-25380 | 2451 | 29 | 20- 40 |
| 234-15-25520 | 2452 | 14 | 20- 43 |
| 234-15-25610 | 2452 | 24 | 20- 43 |
| 234-15-25650 | 2452 | 30 | 20- 44 |
| 234-15-25710 | 2451 | 25 | 20- 39 |

| PARTS NO | FIG NO. | INDEX | PAGE |
|---|---|---|---|
| 234-15-25720 | 2451 | 39 | 20- 40 |
| 234-15-25750 | 2423 | 4 | 20- 35 |
| 234-15-25760 | 2423 | 9 | 20- 35 |
| 234-15-25761 | 2423 | 9 | 20- 35 |
| 234-15-25810 | 2423 | 1 | 20- 35 |
| 234-15-25910 | 2451 | 30 | 20- 40 |
| 234-15-25910 | 9991 | 2 | 90- 19 |
| 234-15-25921 | 2451 | 28 | 20- 40 |
| 234-15-25921 | 9991 | 2 | 90- 19 |
| 234-15-25930 | 2451 | 35 | 20- 40 |
| 234-15-25930 | 9991 | 2 | 90- 19 |
| 234-15-25950 | 2423 | 3 | 20- 35 |
| 234-15-25950 | 9991 | 2 | 90- 19 |
| 234-15-25951 | 2423 | 3 | 20- 35 |
| 234-15-25951 | 9991 | 2 | 90- 19 |
| 234-15-26210 | 2452 | 10 | 20- 43 |
| 234-15-26220 | 2452 | 11 | 20- 43 |
| 234-15-26240 | 2451 | 18 | 20- 39 |
| 234-15-29210 | 2421 | 8 | 20- 31 |
| 234-15-29220 | 2421 | 9 | 20- 31 |
| 234-15-29310 | 2418 | 12 | 20- 23 |
| 234-15-29310 | 2418 | 25 | 20- 23 |
| 234-15-29330 | 2421 | 18 | 20- 31 |
| 234-15-29340 | 2421 | 27 | 20- 31 |
| 234-15-29340 | 2422 | 2 | 20- 33 |
| 234-15-29350 | 2422 | 18 | 20- 33 |
| 234-16-31160 | 2551A | 1 | 20- 57 |
| 234-16-31170 | 2551A | 29 | 20- 57 |
| 234-16-31180 | 2551A | 25 | 20- 57 |
| 234-16-31270 | 2551A | 37 | 20- 57 |
| 234-16-31410 | 2561 | 1 | 20- 61 |
| 234-16-31420 | 2561 | 2 | 20- 61 |
| 234-16-31430 | 2561 | 3 | 20- 61 |
| 234-16-31740 | 2551A | 21 | 20- 57 |
| 234-16-61110 | 2551A | 5 | 20- 57 |
| 234-16-61130 | 2551A | 14 | 20- 57 |
| 234-16-61131 | 2551A | 14 | 20- 57 |
| 234-16-61140 | 2553A | 4 | 20- 59 |
| 234-16-61150 | 2553A | 9 | 20- 59 |
| 234-16-61170 | 2553A | 32A | 20- 59 |
| 234-20-31100 | 2051 | 1 | 20- 5 |
| 234-20-31110 | 2051 | 1 | 20- 5 |
| 234-20-31120 | 2051 | 2 | 20- 5 |
| 234-20-31130 | 2051 | 3 | 20- 5 |
| 234-20-31140 | 2051 | 5 | 20- 5 |
| 234-20-31150 | 2051 | 4 | 20- 5 |
| 234-20-31200 | 2051 | 1 | 20- 5 |
| 234-20-31210 | 2051 | 1 | 20- 5 |
| 234-20-31220 | 2051 | 3 | 20- 5 |
| 234-20-31230 | 2051 | 4 | 20- 5 |

| PARTS NO | FIG NO | INDEX | PAGE |
|---|---|---|---|
| 234-21-12360 | 2607 | 3 | 20- 73 |
| 234-22-00110 | 2601 | 16 | 20- 63 |
| 234-22-00120 | 2601 | 1 | 20- 63 |
| 234-22-00130 | 2605A | 5 | 20- 71 |
| 234-22-00200 | 2601 | 1 | 20- 63 |
| 234-22-00200 | 2603 | 1 | 20- 67 |
| 234-22-00200 | 2607 | 1 | 20- 73 |
| 234-22-00201 | 2601 | 1 | 20- 63 |
| 234-22-00201 | 2603 | 1 | 20- 67 |
| 234-22-00201 | 2607 | 1 | 20- 73 |
| 234-22-00202 | 2601 | 1 | 20- 63 |
| 234-22-00202 | 2603 | 1 | 20- 67 |
| 234-22-00202 | 2607 | 1 | 20- 73 |
| 234-22-00203 | 2601 | 1 | 20- 63 |
| 234-22-00203 | 2603 | 1 | 20- 67 |
| 234-22-00203 | 2607 | 1 | 20- 73 |
| 234-22-00204 | 2601 | 1 | 20- 63 |
| 234-22-00204 | 2603 | 1 | 20- 67 |
| 234-22-00204 | 2607 | 1 | 20- 73 |
| 234-22-00205 | 2601 | 1 | 20- 63 |
| 234-22-00205 | 2603 | 1 | 20- 67 |
| 234-22-00205 | 2607 | 1 | 20- 73 |
| 234-22-00206 | 2601 | 1 | 20- 63 |
| 234-22-00206 | 2603 | 1 | 20- 67 |
| 234-22-00206 | 2607 | 1 | 20- 73 |
| 234-22-00207 | 2601 | 1 | 20- 63 |
| 234-22-00207 | 2603 | 1 | 20- 67 |
| 234-22-00207 | 2607 | 1 | 20- 73 |
| 234-22-00208 | 2601 | 1 | 20- 63 |
| 234-22-00208 | 2603 | 1 | 20- 67 |
| 234-22-00208 | 2607 | 1 | 20- 73 |
| 234-22-00209 | 2601 | 1 | 20- 63 |
| 234-22-00209 | 2603 | 1 | 20- 67 |
| 234-22-00209 | 2607 | 1 | 20- 73 |
| 234-22-00220 | 2601 | KIT | 20- 64 |
| 234-22-00220 | 2603 | KIT | 20- 68 |
| 234-22-00220 | 2607 | KIT | 20- 74 |
| 234-22-00221 | 2601 | KIT | 20- 64 |
| 234-22-00221 | 2603 | KIT | 20- 68 |
| 234-22-00221 | 2607 | KIT | 20- 74 |
| 234-22-00222 | 2601 | KIT | 20- 64 |
| 234-22-00222 | 2603 | KIT | 20- 68 |
| 234-22-00222 | 2607 | KIT | 20- 74 |
| 234-22-00223 | 2601 | KIT | 20- 64 |
| 234-22-00223 | 2603 | KIT | 20- 68 |
| 234-22-00223 | 2607 | KIT | 20- 74 |
| 234-22-00260 | 2601 | 1 | 20- 63 |
| 234-22-00260 | 2603 | 1 | 20- 67 |
| 234-22-00260 | 2605A | 1 | 20- 71 |
| 234-22-00260 | 2607 | 1 | 20- 73 |



| PARTS NO. | FIG NO | INDEX | PAGE |
|---|---|---|---|
| 234-22-31110 | 2601 | 1 | 20- 63 |
| 234-22-31120 | 2601 | 7 | 20- 63 |
| 234-22-31130 | 2601 | 8 | 20- 63 |
| 234-22-31131 | 2601 | 8 | 20- 63 |
| 234-22-31140 | 2601 | 12 | 20- 63 |
| 234-22-31150 | 2601 | 17 | 20- 63 |
| 234-22-31160 | 2601 | 18 | 20- 63 |
| 234-22-31161 | 2601 | 18 | 20- 63 |
| 234-22-31210 | 2603 | 1 | 20- 67 |
| 234-22-31220 | 2603 | 2 | 20- 67 |
| 234-22-31230 | 2603 | 10 | 20- 67 |
| 234-22-31250 | 2603 | 15 | 20- 67 |
| 234-22-31251 | 2603 | 15 | 20- 67 |
| 234-22-31260 | 2603 | 7 | 20- 67 |
| 234-22-31261 | 2603 | 7 | 20- 67 |
| 234-22-31280 | 2603 | 22 | 20- 67 |
| 234-22-31290 | 2603 | 17 | 20- 67 |
| 234-22-31340 | 2601 | 25 | 20- 64 |
| 234-22-31341 | 2601 | 25 | 20- 64 |
| 234-22-31350 | 2601 | 24 | 20- 64 |
| 234-22-31350 | 2601 | 31 | 20- 64 |
| 234-22-31360 | 2603 | 18 | 20- 67 |
| 234-22-31361 | 2603 | 18 | 20- 67 |
| 234-22-31362 | 2603 | 18 | 20- 67 |
| 234-22-31410 | 2603 | 25 | 20- 68 |
| 234-22-31420 | 2603 | 26 | 20- 68 |
| 234-22-31421 | 2603 | 26 | 20- 68 |
| 234-22-32110 | 2605A | 6 | 20- 71 |
| 234-22-32120 | 2605A | 7 | 20- 71 |
| 234-22-32130 | 2607 | 14 | 20- 73 |
| 234-22-32131 | 2607 | 14 | 20- 73 |
| 234-22-32132 | 2607 | 14 | 20- 73 |
| 234-22-32140 | 2607 | 7 | 20- 73 |
| 234-22-32150 | 2607 | 6 | 20- 73 |
| 234-22-32160 | 2607 | 24 | 20- 73 |
| 234-22-32170 | 2605A | 2 | 20- 71 |
| 234-22-32180 | 2605A | 3 | 20- 71 |
| 234-22-32210 | 2605A | 1 | 20- 71 |
| 234-22-32220 | 2607 | 12 | 20- 73 |
| 234-22-32230 | 2607 | 16 | 20- 73 |
| 234-22-32240 | 2607 | 17 | 20- 73 |
| 234-22-32250 | 2607 | 18 | 20- 73 |
| 234-22-32260 | 2607 | 21 | 20- 73 |
| 234-22-32270 | 2607 | 22 | 20- 73 |
| 234-22-32290 | 2605A | 12 | 20- 71 |
| 234-22-32310 | 2605A | 8 | 20- 71 |
| 234-22-32340 | 2601 | 21 | 20- 63 |
| 234-22-32340 | 2603 | 8 | 20- 67 |
| 234-22-33110 | 2607 | 25 | 20- 73 |
| 234-22-33111 | 2607 | 25 | 20- 73 |

| PARTS NO | FIG NO | INDEX | PAGE |
|---|---|---|---|
| 234-22-33120 | 2607 | 29 | 20- 74 |
| 234-22-36150 | 2603 | 17 | 20- 67 |
| 234-23-12520 | 2653 | 11 | 20- 79 |
| 234-23-13210 | 2653 | 2 | 20- 79 |
| 234-23-13210 | 2803A | 33 | 20- 107 |
| 234-23-61110 | 2651A | 5 | 20- 77 |
| 234-25-00010 | 2653 | 1 | 20- 79 |
| 234-25-00011 | 2653 | 1 | 20- 79 |
| 234-25-00012 | 2653 | 1 | 20- 79 |
| 234-25-00013 | 2651A | 1 | 20- 77 |
| 234-25-00013 | 2653 | 1 | 20- 79 |
| 234-25-00014 | 2651A | 1 | 20- 77 |
| 234-25-00014 | 2653 | 1 | 20- 79 |
| 234-25-00015 | 2651A | 1 | 20- 77 |
| 234-25-00015 | 2653 | 1 | 20- 79 |
| 234-25-00020 | 2653 | 1 | 20- 79 |
| 234-25-00021 | 2653 | 1 | 20- 79 |
| 234-25-00022 | 2653 | 1 | 20- 79 |
| 234-25-00023 | 2651A | 1 | 20- 77 |
| 234-25-00023 | 2653 | 1 | 20- 79 |
| 234-25-00024 | 2651A | 1 | 20- 77 |
| 234-25-00024 | 2653 | 1 | 20- 79 |
| 234-25-00025 | 2651A | 1 | 20- 77 |
| 234-25-00025 | 2653 | 1 | 20- 79 |
| 234-25-00030 | 2653 | 30 | 20- 80 |
| 234-25-00230 | 2651A | 1 | 20- 77 |
| 234-25-00240 | 2651A | 1 | 20- 77 |
| 234-25-05010 | 2653 | KIT | 20- 80 |
| 234-25-07010 | 2653 | KIT | 20- 80 |
| 234-25-07011 | 2653 | KIT | 20- 80 |
| 234-25-07012 | 2651A | KIT | 20- 77 |
| 234-25-07012 | 2653 | KIT | 20- 80 |
| 234-25-07013 | 2651A | KIT | 20- 77 |
| 234-25-07013 | 2653 | KIT | 20- 80 |
| 234-25-07014 | 2651A | KIT | 20- 77 |
| 234-25-07014 | 2653 | KIT | 20- 80 |
| 234-25-31111 | 2651A | 1 | 20- 77 |
| 234-25-31141 | 2651A | 6 | 20- 77 |
| 234-25-31142 | 2651A | 6 | 20- 77 |
| 234-25-31150 | 2651A | 12 | 20- 77 |
| 234-25-31160 | 2651A | 13 | 20- 77 |
| 234-25-31171 | 2651A | 15 | 20- 77 |
| 234-25-31172 | 2651A | 15 | 20- 77 |
| 234-25-31180 | 2651A | 9 | 20- 77 |
| 234-25-31190 | 2653 | 22 | 20- 80 |
| 234-25-31210 | 2653 | 10 | 20- 79 |
| 234-25-31220 | 2653 | 8 | 20- 79 |
| 234-25-31230 | 2653 | 17 | 20- 79 |
| 234-25-31240 | 2653 | 21 | 20- 80 |
| 234-25-31250 | 2653 | 23 | 20- 80 |

| PARTS NO | FIG NO | INDEX | PAGE |
|---|---|---|---|
| 234-43-38440 | 4321B | 23 | 40- 25 |
| 234-43-38440 | 4322 | 23 | 40- 27 |
| 234-43-38440 | 4323B | 27 | 40- 29 |
| 234-43-39110 | 4371 | 1 | 40- 43 |
| 234-43-39120 | 4371 | 1 | 40- 43 |
| 234-43-39190 | 4371 | 3 | 40- 43 |
| 234-43-39210 | 4371 | 2 | 40- 43 |
| 234-43-39250 | 4371 | 11 | 40- 43 |
| 234-43-39310 | 4371 | 5 | 40- 43 |
| 234-43-39370 | 4371 | 9 | 40- 43 |
| 234-43-39380 | 4371 | 4 | 40- 43 |
| 234-43-39390 | 4371 | 6 | 40- 43 |
| 234-43-42113 | 4013 | 12 | 40- 7 |
| 234-43-51140 | 4305A | 29 | 40- 21 |
| 234-43-51412 | 4323B | 3 | 40- 29 |
| 234-43-51422 | 4323B | 7 | 40- 29 |
| 234-43-51432 | 4323B | 1 | 40- 29 |
| 234-43-51442 | 4323B | 5 | 40- 29 |
| 234-43-51610 | 4013 | 1 | 40- 7 |
| 234-43-61110 | 4323B | 23 | 40- 29 |
| 234-43-61140 | 4323B | 29 | 40- 29 |
| 234-43-61150 | 4323B | 37 | 40- 30 |
| 234-43-61160 | 4341B | 22 | 40- 39 |
| 234-43-61160 | 4343B | 22 | 40- 41 |
| 234-43-61190 | 4331A | 13 | 40- 33 |
| 234-43-61190 | 4333A | 13 | 40- 35 |
| 234-43-61220 | 4321B | 7 | 40- 25 |
| 234-43-61220 | 4322 | 7 | 40- 27 |
| 234-43-61230 | 4321B | 3 | 40- 25 |
| 234-43-61230 | 4322 | 3 | 40- 27 |
| 234-43-61240 | 4321B | 1 | 40- 25 |
| 234-43-61240 | 4322 | 1 | 40- 27 |
| 234-43-61310 | 4341B | 1 | 40- 39 |
| 234-43-61310 | 4343B | 1 | 40- 41 |
| 234-43-61390 | 4121A | 20 | 40- 17 |
| 234-43-61391 | 4121A | 20 | 40- 17 |
| 234-43-61510 | 4331A | 23 | 40- 33 |
| 234-43-61510 | 4333A | 23 | 40- 35 |
| 234-43-61520 | 4331A | 19 | 40- 33 |
| 234-43-61520 | 4333A | 19 | 40- 35 |
| 234-43-61530 | 4331A | 24 | 40- 33 |
| 234-43-61540 | 4331A | 25 | 40- 33 |
| 234-43-61550 | 4331A | 1 | 40- 33 |
| 234-43-61550 | 4333A | 1 | 40- 35 |
| 234-43-61560 | 4331A | 7 | 40- 33 |
| 234-43-61560 | 4333A | 7 | 40- 35 |
| 234-43-61570 | 4331A | 5 | 40- 33 |
| 234-43-61570 | 4333A | 5 | 40- 35 |
| 234-43-61590 | 4331A | 8 | 40- 33 |
| 234-43-61590 | 4333A | 8 | 40- 35 |

| PARTS NO. | FIG NO | INDEX | PAGE |
|---|---|---|---|
| 234-43-61610 | 4331A | 12 | 40- 33 |
| 234-43-61610 | 4333A | 12 | 40- 35 |
| 234-43-61620 | 4331A | 9 | 40- 33 |
| 234-43-61620 | 4333A | 9 | 40- 35 |
| 234-43-61630 | 4331A | 33 | 40- 33 |
| 234-43-61630 | 4333A | 33 | 40- 35 |
| 234-43-61640 | 4322 | 32 | 40- 27 |
| 234-43-61650 | 4321B | 5 | 40- 25 |
| 234-43-61650 | 4322 | 5 | 40- 27 |
| 234-43-61650 | 4333A | 24 | 40- 35 |
| 234-43-61670 | 4333A | 36 | 40- 35 |
| 234-43-61680 | 4333A | 37 | 40- 35 |
| 234-43-61690 | 4333A | 6 | 40- 35 |
| 234-44-11114 | 4451 | 1 | 40- 63 |
| 234-44-11114 | 4455 | 1 | 40- 69 |
| 234-44-11242 | 4453A | 11 | 40- 65 |
| 234-44-11242 | 4454A | 15 | 40- 67 |
| 234-44-22380 | 4453A | 25 | 40- 65 |
| 234-44-22380 | 4454A | 27 | 40- 67 |
| 234-44-31130 | 4481A | 4 | 40- 73 |
| 234-44-31141 | 4481A | 5 | 40- 73 |
| 234-44-31160 | 4481A | 17 | 40- 73 |
| 234-44-31170 | 4481A | 18 | 40- 73 |
| 234-44-31180 | 4481A | 20 | 40- 73 |
| 234-44-31190 | 4481A | 21 | 40- 73 |
| 234-44-31210 | 4481A | 22 | 40- 73 |
| 234-44-31220 | 4481A | 23 | 40- 73 |
| 234-44-31230 | 4483A | 19 | 40- 75 |
| 234-44-31240 | 4483A | 18 | 40- 75 |
| 234-44-31340 | 4483A | 25 | 40- 75 |
| 234-44-31350 | 4483A | 20 | 40- 75 |
| 234-44-31420 | 4481A | 13 | 40- 73 |
| 234-44-31431 | 4481A | 14 | 40- 73 |
| 234-44-31450 | 4481A | 24 | 40- 73 |
| 234-44-31460 | 4483A | 15 | 40- 75 |
| 234-44-31470 | 4483A | 26 | 40- 75 |
| 234-44-31540 | 4453A | 9 | 40- 65 |
| 234-44-31540 | 4454A | 13 | 40- 67 |
| 234-44-31630 | 4481A | 34 | 40- 73 |
| 234-44-31741 | 4471A | 2 | 40- 71 |
| 234-44-31810 | 4451 | 12 | 40- 63 |
| 234-44-31811 | 4451 | 12 | 40- 63 |
| 234-44-31820 | 4451 | 15 | 40- 63 |
| 234-44-31830 | 4455 | 12 | 40- 69 |
| 234-44-32150 | 4383 | 15 | 40- 47 |
| 234-44-32150 | 4387 | 15 | 40- 51 |
| 234-44-41131 | 4453A | 14 | 40- 65 |
| 234-44-41131 | 4454A | 18 | 40- 67 |
| 234-44-41251 | 4454A | 10 | 40- 67 |
| 234-44-41280 | 4454A | 26 | 40- 67 |





| PARTS NO. | FIG NO. | INDEX | PAGE |
|---|---|---|---|
| 234-44-42100 | 4405A | 1 | 40- 59 |
| 234-44-42100 | 4471A | 1 | 40- 71 |
| 234-44-42110 | 4405A | 2 | 40- 59 |
| 234-44-42120 | 4405A | 13 | 40- 59 |
| 234-44-42130 | 4405A | 38 | 40- 59 |
| 234-44-42140 | 4405A | 46 | 40- 59 |
| 234-44-42150 | 4405A | KIT | 40- 59 |
| 234-44-51161 | 4383 | 11 | 40- 47 |
| 234-44-51170 | 4383 | 13 | 40- 47 |
| 234-44-51170 | 4387 | 13 | 40- 51 |
| 234-44-51230 | 4454A | 16 | 40- 67 |
| 234-44-51241 | 4383 | 6 | 40- 47 |
| 234-44-61110 | 4453A | 1 | 40- 65 |
| 234-44-61110 | 4454A | 1 | 40- 67 |
| 234-44-61120 | 4453A | 4 | 40- 65 |
| 234-44-61120 | 4454A | 4 | 40- 67 |
| 234-44-61130 | 4453A | 3 | 40- 65 |
| 234-44-61130 | 4453A | 6 | 40- 65 |
| 234-44-61130 | 4454A | 3 | 40- 67 |
| 234-44-61130 | 4454A | 6 | 40- 67 |
| 234-44-61140 | 4453A | 21 | 40- 65 |
| 234-44-61150 | 4481A | 6 | 40- 73 |
| 234-44-61170 | 4481A | 27 | 40- 73 |
| 234-44-61190 | 4383 | 19 | 40- 47 |
| 234-44-61210 | 4454A | 24 | 40- 67 |
| 234-44-61410 | 4453A | 24 | 40- 65 |
| 234-44-61430 | 4383 | 2 | 40- 47 |
| 234-44-61430 | 4387 | 2 | 40- 51 |
| 234-44-61440 | 4383 | 1 | 40- 47 |
| 234-44-61440 | 4387 | 1 | 40- 51 |
| 234-44-61611 | 4387 | 6 | 40- 51 |
| 234-44-61620 | 4387 | 11 | 40- 51 |
| 234-44-61630 | 4387 | 19 | 40- 51 |
| 234-45-61110 | 4111A | 17 | 40- 15 |
| 234-45-61120 | 4111A | 21 | 40- 15 |
| 234-46-00110 | 5001 | 1 | 50- 3 |
| 234-46-00210 | 5011 | 1 | 50- 5 |
| 234-46-01010 | 5011 | 3 | 50- 5 |
| 234-46-01010 | 5013 | 3 | 50- 7 |
| 234-46-11150 | 7001 | 11 | 70- 3 |
| 234-46-11160 | 7001 | 9 | 70- 3 |
| 234-46-11190 | 7001 | 16 | 70- 3 |
| 234-46-31261 | 5001 | 12 | 50- 3 |
| 234-46-31280 | 5001 | 2 | 50- 3 |
| 234-46-31290 | 5001 | 4 | 50- 3 |
| 234-46-32581 | 5011 | 2 | 50- 5 |
| 234-46-32581 | 5013 | 2 | 50- 7 |
| 234-46-34130 | 5001 | 9 | 50- 3 |
| 234-46-42240 | 5011 | 6 | 50- 5 |
| 234-46-42250 | 5011 | 2 | 50- 5 |

| PARTS NO. | FIG NO. | INDEX | PAGE |
|---|---|---|---|
| 234-46-61200 | 5001 | 1 | 50- 3 |
| 234-46-62210 | 5011 | 1 | 50- 5 |
| 234-53-11610 | 9831B | 40 | 90- 11 |
| 234-53-31120 | 9801B | 22 | 90- 3 |
| 234-53-31161 | 9801B | 44 | 90- 4 |
| 234-53-31270 | 9801B | 27 | 90- 3 |
| 234-53-31310 | 9801B | 41 | 90- 3 |
| 234-53-31310 | 9821B | 41 | 90- 7 |
| 234-53-31310 | 9831B | 41 | 90- 11 |
| 234-53-31510 | 9801B | 16 | 90- 3 |
| 234-53-31510 | 9821B | 16 | 90- 7 |
| 234-53-31510 | 9831B | 16 | 90- 11 |
| 234-53-32321 | 9801B | 17 | 90- 3 |
| 234-53-32321 | 9821B | 17 | 90- 7 |
| 234-53-32321 | 9831B | 17 | 90- 11 |
| 234-53-33120 | 9831B | 22 | 90- 11 |
| 234-53-33310 | 9831B | 31 | 90- 11 |
| 234-53-33320 | 9831B | 32 | 90- 11 |
| 234-53-33330 | 9831B | 10 | 90- 11 |
| 234-53-35120 | 9821B | 22 | 90- 7 |
| 234-53-35160 | 9821B | 44 | 90- 8 |
| 234-53-35192 | 9821B | 21 | 90- 7 |
| 234-53-35310 | 9821B | 10 | 90- 7 |
| 234-53-35320 | 9821B | 38 | 90- 7 |
| 234-53-35330 | 9821B | 39 | 90- 7 |
| 234-53-35350 | 1455C | 9 | 10- 37 |
| 234-53-35350 | 1459 | 9 | 10- 39 |
| 234-53-35350 | 9821B | 31 | 90- 7 |
| 234-53-43120 | 9831B | 27 | 90- 11 |
| 234-53-45120 | 9821B | 27 | 90- 7 |
| 234-53-51240 | 9801B | 40 | 90- 3 |
| 234-53-61230 | 9801B | 10 | 90- 3 |
| 234-54-11470 | 5201A | 4 | 50- 23 |
| 234-54-11480 | 5201A | 5 | 50- 23 |
| 234-54-13252 | 5103 | 3 | 50- 15 |
| 234-54-13252 | 5121 | 14 | 50- 17 |
| 234-54-13252 | 5121 | 18 | 50- 17 |
| 234-54-13252 | 5121 | 21 | 50- 17 |
| 234-54-13252 | 5121 | 24 | 50- 17 |
| 234-54-13252 | 5121 | 32 | 50- 17 |
| 234-54-13252 | 5121 | 5 | 50- 17 |
| 234-54-13252 | 5205 | 3 | 50- 27 |
| 234-54-13252 | 5612A | 21 | 50- 69 |
| 234-54-13252 | 5612A | 25 | 50- 69 |
| 234-54-13252 | 5612A | 29 | 50- 69 |
| 234-54-13252 | 5612A | 31 | 50- 69 |
| 234-54-13252 | 5617 | 13 | 50- 83 |
| 234-54-13252 | 7001 | 28 | 70- 3 |
| 234-54-13252 | 7013A | 33 | 70- 9 |
| 234-54-13252 | 7015 | 46 | 70- 12 |

| PARTS NO | FIG NO. | INDEX | PAGE |
|---|---|---|---|
| 234-54-13252 | 7017 | 48 | 70- 16 |
| 234-54-31170 | 5001 | 10 | 50- 3 |
| 234-54-31171 | 5001 | 10 | 50- 3 |
| 234-54-32160 | 5103 | 19 | 50- 15 |
| 234-54-33210 | 5101A | 23 | 50- 13 |
| 234-54-53291 | 5203 | 25 | 50- 25 |
| 234-54-53510 | 5203 | 29 | 50- 25 |
| 234-54-61120 | 5201A | 1 | 50- 23 |
| 234-54-61130 | 5201A | 37 | 50- 23 |
| 234-54-61190 | 4323B | 38 | 40- 30 |
| 234-54-61210 | 5203 | 1 | 50- 25 |
| 234-54-61221 | 5203 | 4 | 50- 25 |
| 234-54-61230 | 5203 | 25 | 50- 25 |
| 234-54-61240 | 5203 | 9 | 50- 25 |
| 234-54-61320 | 5201A | 24 | 50- 23 |
| 234-54-61350 | 5201A | 18 | 50- 23 |
| 234-54-61360 | 5201A | 15 | 50- 23 |
| 234-54-61410 | 5201A | 34 | 50- 23 |
| 234-54-61420 | 5201A | 27 | 50- 23 |
| 234-54-61430 | 5201A | 27 | 50- 23 |
| 234-54-61450 | 1841A | 1 | 10- 67 |
| 234-54-65210 | 5101A | 1 | 50- 13 |
| 234-54-65260 | 1841A | 1 | 10- 67 |
| 234-54-65260 | 5101A | 20 | 50- 13 |
| 234-54-65290 | 1513A | 32 | 10- 55 |
| 234-54-65290 | 5101A | 30 | 50- 13 |
| 234-54-65310 | 5103 | 8 | 50- 15 |
| 234-54-65330 | 5103 | 8 | 50- 15 |
| 234-54-65350 | 5103 | 11 | 50- 15 |
| 234-54-65450 | 5121 | 1 | 50- 17 |
| 234-54-65470 | 5121 | 1 | 50- 17 |
| 234-54-65570 | 5121 | 7 | 50- 17 |
| 234-54-65580 | 5121 | 7 | 50- 17 |
| 234-54-65610 | 5103 | 4 | 50- 15 |
| 234-54-65710 | 5121 | 28 | 50- 17 |
| 234-54-65780 | 5121 | 25 | 50- 17 |
| 234-54-65820 | 5121 | 15 | 50- 17 |
| 234-54-65830 | 5121 | 6 | 50- 17 |
| 234-54-65840 | 5121 | 19 | 50- 17 |
| 234-54-65850 | 5121 | 16 | 50- 17 |
| 234-54-65860 | 5121 | 10 | 50- 17 |
| 234-54-65920 | 5205 | 1 | 50- 27 |
| 234-54-65940 | 5201A | 12 | 50- 23 |
| 234-54-65960 | 5121 | 15 | 50- 17 |
| 234-54-65970 | 5121 | 6 | 50- 17 |
| 234-60-15480 | 6407A | 34 | 60- 85 |
| 234-60-16240 | 6247 | 16 | 60- 43 |
| 234-60-16240 | 6251A | 24 | 60- 47 |
| 234-60-16240 | 6261 | 16 | 60- 49 |
| 234-60-16240 | 6265 | 11 | 60- 53 |

| PARTS NO. | FIG NO | INDEX | PAGE |
|---|---|---|---|
| 234-60-16350 | 6247 | 9 | 60- 43 |
| 234-60-16350 | 6249 | 7 | 60- 45 |
| 234-60-16350 | 6261 | 9 | 60- 49 |
| 234-60-16350 | 6263 | 7 | 60- 51 |
| 234-60-16350 | 6265 | 17 | 60- 53 |
| 234-60-16360 | 6265 | 14 | 60- 53 |
| 234-60-22140 | 4381 | 2 | 40- 45 |
| 234-60-22140 | 4381 | 3 | 40- 45 |
| 234-60-22140 | 4385 | 2 | 40- 49 |
| 234-60-22140 | 4385 | 3 | 40- 49 |
| 234-60-32370 | 6416 | 54 | 60- 102 |
| 234-60-32380 | 6416 | 55 | 60- 102 |
| 234-60-32530 | 6461A | 3 | 60- 129 |
| 234-60-32710 | 1021 | 1 | 10- 13 |
| 234-60-33171 | 6441C | 4 | 60- 123 |
| 234-60-33181 | 6441C | 5 | 60- 123 |
| 234-60-33240 | 6435A | 22 | 60- 117 |
| 234-60-33240 | 6437C | 4 | 60- 119 |
| 234-60-33240 | 6437C | 8 | 60- 119 |
| 234-60-33240 | 6455B | 25 | 60- 127 |
| 234-60-33240 | 6471 | 10 | 60- 133 |
| 234-60-33240 | 6471 | 5 | 60- 133 |
| 234-60-33250 | 6451A | 22 | 60- 125 |
| 234-60-33250 | 6471 | 4 | 60- 133 |
| 234-60-33250 | 6471 | 9 | 60- 133 |
| 234-60-33260 | 6437C | 7 | 60- 119 |
| 234-60-33260 | 6455B | 26 | 60- 127 |
| 234-60-33270 | 6471 | 8 | 60- 133 |
| 234-60-33290 | 6471 | 16 | 60- 133 |
| 234-60-33310 | 6437C | 13 | 60- 119 |
| 234-60-33310 | 6471 | 15 | 60- 133 |
| 234-60-33330 | 2723C | 23 | 20- 91 |
| 234-60-33330 | 6421A | 15 | 60- 109 |
| 234-60-33330 | 6421A | 15 | 60- 109 |
| 234-60-33430 | 6441C | 14 | 60- 123 |
| 234-60-33640 | 2725B | 20 | 20- 93 |
| 234-60-33640 | 6423C | 16 | 60- 111 |
| 234-60-33640 | 6423C | 16 | 60- 111 |
| 234-60-33640 | 6427 | 16 | 60- 113 |
| 234-60-33650 | 2725B | 20 | 20- 93 |
| 234-60-33650 | 6423C | 16 | 60- 111 |
| 234-60-33650 | 6423C | 16 | 60- 111 |
| 234-60-33660 | 2725B | 19 | 20- 93 |
| 234-60-33660 | 6423C | 15 | 60- 111 |
| 234-60-33660 | 6423C | 15 | 60- 111 |
| 234-60-33660 | 6427 | 15 | 60- 113 |
| 234-60-33670 | 2725B | 19 | 20- 93 |
| 234-60-33670 | 6423C | 15 | 60- 111 |
| 234-60-33670 | 6423C | 15 | 60- 111 |
| 234-60-33680 | 2755A | 21 | 20- 99 |



| PARTS NO. | FIG NO | INDEX | PAGE |
|---|---|---|---|
| 234-60-33690 | 2755A | 24 | 20- 99 |
| 234-60-33700 | 6423C | 11 | 60- 111 |
| 234-60-33790 | 6435A | 25 | 60- 117 |
| 234-60-33850 | 2723C | 21 | 20- 91 |
| 234-60-33850 | 6421A | 13 | 60- 109 |
| 234-60-33850 | 6421A | 13 | 60- 109 |
| 234-60-33850 | 6435A | 6 | 60- 117 |
| 234-60-33850 | 6451A | 8 | 60- 125 |
| 234-60-33890 | 6437C | 9 | 60- 119 |
| 234-60-33890 | 6471 | 11 | 60- 133 |
| 234-60-33930 | 6431A | 9 | 60- 115 |
| 234-60-33940 | 6431A | 10 | 60- 115 |
| 234-60-34110 | 6437C | 18 | 60- 119 |
| 234-60-34120 | 6437C | 19 | 60- 119 |
| 234-60-34160 | 6455B | 10 | 60- 127 |
| 234-60-34170 | 6471 | 21 | 60- 133 |
| 234-60-34180 | 6471 | 22 | 60- 133 |
| 234-60-34190 | 6471 | 28 | 60- 133 |
| 234-60-34210 | 6471 | 29 | 60- 133 |
| 234-60-34220 | 6307B | 18 | 60- 67 |
| 234-60-34220 | 6471 | 36 | 60- 133 |
| 234-60-34220 | 6471 | 36 | 60- 133 |
| 234-60-34230 | 6455B | 32 | 60- 127 |
| 234-60-34240 | 6455B | 33 | 60- 127 |
| 234-60-34280 | 6307B | 19 | 60- 67 |
| 234-60-34280 | 6455B | 21 | 60- 127 |
| 234-60-34280 | 6455B | 22 | 60- 127 |
| 234-60-34280 | 6471 | 37 | 60- 133 |
| 234-60-34280 | 6471 | 37 | 60- 133 |
| 234-60-34380 | 6305B | 21 | 60- 65 |
| 234-60-34380 | 6437C | 32 | 60- 119 |
| 234-60-34380 | 6437C | 32 | 60- 119 |
| 234-60-34410 | 6437C | 26 | 60- 119 |
| 234-60-34420 | 6437C | 27 | 60- 119 |
| 234-60-34460 | 6431A | 16 | 60- 115 |
| 234-60-34470 | 6431A | 13 | 60- 115 |
| 234-60-34480 | 6431A | 12 | 60- 115 |
| 234-60-34510 | 6431A | 15 | 60- 115 |
| 234-60-35210 | 6463A | 18 | 60- 131 |
| 234-60-35220 | 6463A | 24 | 60- 131 |
| 234-60-35450 | 6416 | 19 | 60- 101 |
| 234-60-35450 | 6416 | 42 | 60- 101 |
| 234-60-35450 | 6416 | 5 | 60- 101 |
| 234-60-35540 | 6463A | 10 | 60- 131 |
| 234-60-38131 | 6455B | 15 | 60- 127 |
| 234-60-38141 | 6455B | 16 | 60- 127 |
| 234-60-38150 | 6455B | 7 | 60- 127 |
| 234-60-38160 | 6455B | 8 | 60- 127 |
| 234-60-38171 | 6455B | 20 | 60- 127 |
| 234-60-45110 | 6303B | 24 | 60- 63 |

| PARTS NO. | FIG NO | INDEX | PAGE |
|---|---|---|---|
| 234-60-45110 | 6435A | 16 | 60- 117 |
| 234-60-45110 | 6435A | 16 | 60- 117 |
| 234-60-45120 | 6303B | 25 | 60- 63 |
| 234-60-45120 | 6435A | 17 | 60- 117 |
| 234-60-45120 | 6435A | 17 | 60- 117 |
| 234-60-45130 | 6423C | 9 | 60- 111 |
| 234-60-45130 | 6427 | 9 | 60- 113 |
| 234-60-45140 | 6423C | 10 | 60- 111 |
| 234-60-45140 | 6427 | 10 | 60- 113 |
| 234-60-45190 | 6441C | 7 | 60- 123 |
| 234-60-45211 | 6441C | 8 | 60- 123 |
| 234-60-45220 | 6441C | 9 | 60- 123 |
| 234-60-45230 | 6305B | 20 | 60- 65 |
| 234-60-45230 | 6437C | 31 | 60- 119 |
| 234-60-45230 | 6437C | 31 | 60- 119 |
| 234-60-63110 | 6423C | 19 | 60- 111 |
| 234-60-63110 | 6427 | 19 | 60- 113 |
| 234-60-63120 | 6423C | 22 | 60- 111 |
| 234-60-63120 | 6427 | 22 | 60- 113 |
| 234-60-63130 | 6435A | 21 | 60- 117 |
| 234-60-65100 | 6011 | 1 | 60- 3 |
| 234-60-65200 | 2503A | 1 | 20- 53 |
| 234-60-65300 | 2501A | 1 | 20- 51 |
| 234-60-65400 | 6015 | 1 | 60- 7 |
| 234-60-65400 | 6016 | 1 | 60- 9 |
| 234-60-66100 | 6221A | 1 | 60- 33 |
| 234-60-66300 | 6201A | 1 | 60- 27 |
| 234-60-66400 | 6203A | 1 | 60- 29 |
| 234-60-66500 | 6223 | 1 | 60- 35 |
| 234-60-66700 | 6215A | 1 | 60- 31 |
| 234-60-68110 | 6431A | 2 | 60- 115 |
| 234-60-68120 | 6431A | 3 | 60- 115 |
| 234-60-68130 | 6421A | 2 | 60- 109 |
| 234-60-68140 | 6421A | 3 | 60- 109 |
| 234-60-68150 | 6437C | 3 | 60- 119 |
| 234-60-68160 | 6437C | 2 | 60- 119 |
| 234-60-68170 | 6471 | 2 | 60- 133 |
| 234-60-68180 | 6471 | 3 | 60- 133 |
| 234-60-68220 | 6423C | 2 | 60- 111 |
| 234-60-68220 | 6427 | 2 | 60- 113 |
| 234-60-68230 | 6423C | 3 | 60- 111 |
| 234-60-68230 | 6427 | 3 | 60- 113 |
| 234-60-68240 | 6435A | 2 | 60- 117 |
| 234-60-68250 | 6435A | 3 | 60- 117 |
| 234-60-68260 | 6435A | 4 | 60- 117 |
| 234-60-68270 | 6435A | 5 | 60- 117 |
| 234-60-68310 | 6321 | 5 | 60- 75 |
| 234-60-68320 | 6321 | 4 | 60- 75 |
| 234-60-68330 | 6321 | 3 | 60- 75 |
| 234-60-68360 | 6325 | 6 | 60- 77 |

| PARTS NO | FIG NO | INDEX | PAGE |
|---|---|---|---|
| 234-60-68370 | 6325 | 5 | 60- 77 |
| 234-60-68380 | 6325 | 4 | 60- 77 |
| 234-60-68390 | 6325 | 3 | 60- 77 |
| 234-60-68450 | 6451A | 6 | 60- 125 |
| 234-60-68460 | 6451A | 5 | 60- 125 |
| 234-60-68470 | 6451A | 18 | 60- 125 |
| 234-60-68480 | 6451A | 21 | 60- 125 |
| 234-60-68510 | 6321 | 5 | 60- 75 |
| 234-60-68520 | 6321 | 4 | 60- 75 |
| 234-60-68530 | 6321 | 3 | 60- 75 |
| 234-60-68550 | 6451A | 3 | 60- 125 |
| 234-60-68550 | 6455B | 1 | 60- 127 |
| 234-60-68560 | 6325 | 6 | 60- 77 |
| 234-60-68570 | 6325 | 5 | 60- 77 |
| 234-60-68580 | 6325 | 4 | 60- 77 |
| 234-60-68590 | 6325 | 3 | 60- 77 |
| 234-60-69120 | 6407A | 15 | 60- 85 |
| 234-60-69120 | 6417A | 15 | 60- 105 |
| 234-60-69240 | 6403A | 5 | 60- 81 |
| 234-60-69240 | 6413A | 5 | 60- 93 |
| 234-60-69290 | 6403A | 12 | 60- 81 |
| 234-60-69290 | 6405A | 12 | 60- 83 |
| 234-60-69290 | 6405A | 14 | 60- 83 |
| 234-60-69290 | 6413A | 12 | 60- 93 |
| 234-60-69290 | 6414 | 43 | 60- 96 |
| 234-60-69290 | 6415A | 12 | 60- 99 |
| 234-60-69290 | 6415A | 14 | 60- 99 |
| 234-60-69290 | 6416 | 34 | 60- 101 |
| 234-60-69360 | 6403A | 1 | 60- 81 |
| 234-60-69360 | 6413A | 1 | 60- 93 |
| 234-60-69690 | 6441C | 11 | 60- 123 |
| 234-60-69710 | 6403A | 16 | 60- 81 |
| 234-60-69710 | 6413A | 16 | 60- 93 |
| 234-60-69710 | 6414 | 44 | 60- 96 |
| 234-60-69720 | 6405A | 18 | 60- 83 |
| 234-60-69720 | 6415A | 18 | 60- 99 |
| 234-60-69720 | 6416 | 35 | 60- 101 |
| 234-60-69730 | 6407A | 43 | 60- 86 |
| 234-60-69730 | 6417A | 34 | 60- 105 |
| 234-60-69740 | 6407A | 35 | 60- 85 |
| 234-60-69740 | 6416 | 27 | 60- 101 |
| 234-60-69740 | 6417A | 27 | 60- 105 |
| 234-60-69750 | 6407A | 3 | 60- 85 |
| 234-60-69750 | 6417A | 3 | 60- 105 |
| 234-60-69750 | 6418 | 3 | 60- 107 |
| 234-60-69760 | 6401A | 14 | 60- 79 |
| 234-60-69760 | 6411A | 14 | 60- 89 |
| 234-60-69770 | 6461A | 1 | 60- 129 |
| 234-60-69780 | 6461A | 8 | 60- 129 |
| 234-60-69790 | 6416 | 23 | 60- 101 |

| PARTS NO. | FIG NO | INDEX | PAGE |
|---|---|---|---|
| 234-60-69790 | 6461A | 14 | 60- 129 |
| 234-60-69810 | 6417A | 25 | 60- 105 |
| 234-60-69810 | 6418 | 17 | 60- 107 |
| 234-60-69820 | 6405A | 8 | 60- 83 |
| 234-60-69820 | 6415A | 8 | 60- 99 |
| 234-60-69840 | 6401A | 1 | 60- 79 |
| 234-60-69840 | 6411A | 1 | 60- 89 |
| 234-60-69850 | 6407A | 9 | 60- 85 |
| 234-60-69860 | 6401A | 7 | 60- 79 |
| 234-60-69860 | 6411A | 7 | 60- 89 |
| 234-60-69870 | 6417A | 9 | 60- 105 |
| 234-60-69890 | 6407A | 6 | 60- 85 |
| 234-60-69890 | 6417A | 6 | 60- 105 |
| 234-60-69890 | 6418 | 6 | 60- 107 |
| 234-60-69910 | 6407A | 45 | 60- 86 |
| 234-60-69910 | 6417A | 36 | 60- 105 |
| 234-60-69940 | 6407A | 48 | 60- 86 |
| 234-60-69940 | 6417A | 39 | 60- 105 |
| 234-60-69960 | 6407A | 23 | 60- 85 |
| 234-60-69970 | 6407A | 42 | 60- 85 |
| 234-60-69980 | 6407A | 29 | 60- 85 |
| 234-60-69990 | 6407A | 33 | 60- 85 |
| 234-60-71110 | 6455B | 5 | 60- 127 |
| 234-60-71120 | 6455B | 6 | 60- 127 |
| 234-60-72100 | 6012 | 1 | 60- 5 |
| 234-60-72121 | 6414 | 20 | 60- 95 |
| 234-60-72130 | 6414 | 27 | 60- 95 |
| 234-60-72141 | 6414 | 28 | 60- 95 |
| 234-60-72150 | 6418 | 24 | 60- 107 |
| 234-60-72160 | 6414 | 12 | 60- 95 |
| 234-60-72160 | 6416 | 15 | 60- 101 |
| 234-60-72170 | 6414 | 37 | 60- 95 |
| 234-60-72180 | 6416 | 41 | 60- 101 |
| 234-60-72200 | 6015 | 1 | 60- 7 |
| 234-60-72200 | 6017 | 1 | 60- 11 |
| 234-60-72210 | 6416 | 49 | 60- 102 |
| 234-60-72220 | 6416 | 21 | 60- 101 |
| 234-60-72230 | 6416 | 44 | 60- 102 |
| 234-60-72241 | 6416 | 37 | 60- 101 |
| 234-60-72250 | 6418 | 9 | 60- 107 |
| 234-60-72260 | 6412 | 14 | 60- 91 |
| 234-60-72271 | 6416 | 1 | 60- 101 |
| 234-60-72280 | 6412 | 7 | 60- 91 |
| 234-60-72290 | 6414 | 1 | 60- 95 |
| 234-60-72310 | 6414 | 5 | 60- 95 |
| 234-60-72320 | 4336 | 18 | 40- 37 |
| 234-60-72330 | 4336 | 5 | 40- 37 |
| 234-60-72340 | 4336 | 8 | 40- 37 |
| 234-60-72350 | 4336 | 17 | 40- 37 |
| 234-60-72360 | 4336 | 1 | 40- 37 |



| PARTS NO | FIG NO. | INDEX | PAGE |
|---|---|---|---|
| 234-60-72370 | 4336 | 2 | 40- 37 |
| 234-60-72390 | 5203 | 4 | 50- 25 |
| 234-60-72410 | 2553A | 9 | 20- 59 |
| 234-60-72420 | 2553A | 10 | 20- 59 |
| 234-60-72441 | 5013 | 1 | 50- 7 |
| 234-60-72450 | 5201A | 1 | 50- 23 |
| 234-60-72470 | 6427 | 11 | 60- 113 |
| 234-60-72480 | 6416 | 25 | 60- 101 |
| 234-60-72490 | 6427 | 15 | 60- 113 |
| 234-60-72510 | 6427 | 16 | 60- 113 |
| 234-60-72540 | 6103 | 2 | 60- 21 |
| 234-60-72550 | 6412 | 1 | 60- 91 |
| 234-60-72600 | 6103 | 16 | 60- 21 |
| 234-60-72600 | 6113 | 1 | 60- 25 |
| 234-60-72610 | 6113 | 1 | 60- 25 |
| 234-60-72620 | 6113 | 5 | 60- 25 |
| 234-60-72640 | 6416 | 38 | 60- 101 |
| 234-60-72660 | 6414 | 11 | 60- 95 |
| 234-60-72670 | 6416 | 8 | 60- 101 |
| 234-60-72680 | 6416 | 59 | 60- 102 |
| 234-61-00110 | 6251A | 12 | 60- 47 |
| 234-61-11300 | 6251A | 12 | 60- 47 |
| 234-61-31100 | 6275 | 1 | 60- 59 |
| 234-61-31100 | 6414 | 31 | 60- 95 |
| 234-61-31110 | 6275 | 1 | 60- 59 |
| 234-61-31120 | 6275 | 2 | 60- 59 |
| 234-61-31130 | 6275 | 3 | 60- 59 |
| 234-61-31200 | 6265 | 1 | 60- 53 |
| 234-61-31301 | 6251A | 1 | 60- 47 |
| 234-61-31301 | 6471 | 25 | 60- 133 |
| 234-63-01040 | 2723C | 1 | 20- 91 |
| 234-63-13080 | 6303B | 2 | 60- 63 |
| 234-63-13400 | 6303B | 1 | 60- 63 |
| 234-63-13440 | 6303B | 1 | 60- 63 |
| 234-63-23100 | 6301A | 1 | 60- 61 |
| 234-63-23101 | 6301A | 1 | 60- 61 |
| 234-63-25001 | 6315 | 1 | 60- 73 |
| 234-63-25020 | 6315 | 10 | 60- 73 |
| 234-63-25040 | 6315 | 1 | 60- 73 |
| 234-63-25080 | 6315 | 2 | 60- 73 |
| 234-63-28200 | 6307B | 1 | 60- 67 |
| 234-63-32300 | 6311A | 1 | 60- 69 |
| 234-63-32320 | 6311A | 12 | 60- 69 |
| 234-63-32340 | 6311A | 1 | 60- 69 |
| 234-63-38300 | 6313 | 1 | 60- 71 |
| 234-63-38300 | 7151A | 14 | 70- 37 |
| 234-63-38320 | 6313 | 12 | 60- 71 |
| 234-63-38340 | 6313 | 1 | 60- 71 |
| 234-63-53320 | 2723C | 12 | 20- 91 |
| 234-63-53340 | 2723C | 1 | 20- 91 |

| PARTS NO | FIG NO | INDEX | PAGE |
|---|---|---|---|
| 234-63-63200 | 2725B | 1 | 20- 93 |
| 234-63-76600 | 2721C | 1 | 20- 89 |
| 234-63-76640 | 2721C | 1 | 20- 89 |
| 234-70-00210 | 7031B | 23 | 70- 21 |
| 234-70-00210 | 7037 | 21 | 70- 25 |
| 234-70-00232 | 7011A | 10 | 70- 5 |
| 234-70-00260 | 7015 | 2 | 70- 11 |
| 234-70-00270 | 7017 | 2 | 70- 15 |
| 234-70-00312 | 7011A | 1 | 70- 5 |
| 234-70-00411 | 7012A | 1 | 70- 7 |
| 234-70-00431 | 7012A | 10 | 70- 7 |
| 234-70-05110 | 7001 | 1 | 70- 3 |
| 234-70-05120 | 7001 | 12 | 70- 3 |
| 234-70-05130 | 7001 | 19 | 70- 3 |
| 234-70-05141 | 7015 | 4 | 70- 11 |
| 234-70-05141 | 7017 | 4 | 70- 15 |
| 234-70-05150 | 7015 | 20 | 70- 11 |
| 234-70-05150 | 7017 | 22 | 70- 15 |
| 234-70-05160 | 7015 | 7 | 70- 11 |
| 234-70-05170 | 7015 | 7 | 70- 11 |
| 234-70-05171 | 7015 | 7 | 70- 11 |
| 234-70-05180 | 7017 | 7 | 70- 15 |
| 234-70-05190 | 7017 | 7 | 70- 15 |
| 234-70-05201 | 7021 | 1 | 70- 19 |
| 234-70-05202 | 7021 | 1 | 70- 19 |
| 234-70-05211 | 7021 | 1 | 70- 19 |
| 234-70-05220 | 7021 | 10 | 70- 19 |
| 234-70-05230 | 7021 | 15 | 70- 19 |
| 234-70-05250 | 7015 | 2 | 70- 11 |
| 234-70-06110 | 7001 | 1 | 70- 3 |
| 234-70-07020 | 7031B | KIT | 70- 22 |
| 234-70-07020 | 7037 | KIT | 70- 26 |
| 234-70-11131 | 7001 | 2 | 70- 3 |
| 234-70-11140 | 7001 | 5 | 70- 3 |
| 234-70-11230 | 7001 | 7 | 70- 3 |
| 234-70-12680 | 7013A | 10 | 70- 9 |
| 234-70-12710 | 7011A | 10 | 70- 5 |
| 234-70-12720 | 7012A | 10 | 70- 7 |
| 234-70-13120 | 7101 | 2 | 70- 31 |
| 234-70-13120 | 7111 | 11 | 70- 35 |
| 234-70-13180 | 7101 | 35 | 70- 32 |
| 234-70-13211 | 7101 | 42 | 70- 32 |
| 234-70-31110 | 7001 | 1 | 70- 3 |
| 234-70-31140 | 7001 | 17 | 70- 3 |
| 234-70-31141 | 7001 | 17 | 70- 3 |
| 234-70-31181 | 7001 | 26 | 70- 3 |
| 234-70-31190 | 7001 | 4 | 70- 3 |
| 234-70-32113 | 7011A | 1 | 70- 5 |
| 234-70-32121 | 7011A | 1 | 70- 5 |
| 234-70-32131 | 7011A | 1 | 70- 5 |

| PARTS NO. | FIG NO | INDEX | PAGE |
|---|---|---|---|
| 234-70-32150 | 7011A | 19 | 70- 5 |
| 234-70-32150 | 7012A | 19 | 70- 7 |
| 234-70-32150 | 7013A | 19 | 70- 9 |
| 234-70-32160 | 7011A | 4 | 70- 5 |
| 234-70-32160 | 7012A | 4 | 70- 7 |
| 234-70-32210 | 7011A | 24 | 70- 5 |
| 234-70-32210 | 7012A | 24 | 70- 7 |
| 234-70-32220 | 7011A | 23 | 70- 5 |
| 234-70-32220 | 7012A | 23 | 70- 7 |
| 234-70-32230 | 7011A | 11 | 70- 5 |
| 234-70-32230 | 7012A | 11 | 70- 7 |
| 234-70-32230 | 7013A | 11 | 70- 9 |
| 234-70-32240 | 7011A | 12 | 70- 5 |
| 234-70-32240 | 7012A | 12 | 70- 7 |
| 234-70-32240 | 7013A | 12 | 70- 9 |
| 234-70-32250 | 7011A | 13 | 70- 5 |
| 234-70-32250 | 7012A | 13 | 70- 7 |
| 234-70-32260 | 7011A | 15 | 70- 5 |
| 234-70-32260 | 7012A | 15 | 70- 7 |
| 234-70-32260 | 7013A | 13 | 70- 9 |
| 234-70-32260 | 7013A | 15 | 70- 9 |
| 234-70-32270 | 7011A | 16 | 70- 5 |
| 234-70-32270 | 7012A | 16 | 70- 7 |
| 234-70-32270 | 7013A | 16 | 70- 9 |
| 234-70-32280 | 7011A | 14 | 70- 5 |
| 234-70-32280 | 7012A | 14 | 70- 7 |
| 234-70-32280 | 7013A | 14 | 70- 9 |
| 234-70-32290 | 7011A | 17 | 70- 5 |
| 234-70-32290 | 7012A | 17 | 70- 7 |
| 234-70-32290 | 7013A | 17 | 70- 9 |
| 234-70-32611 | 7012A | 1 | 70- 7 |
| 234-70-32630 | 7012A | 1 | 70- 7 |
| 234-70-32640 | 7012A | 1 | 70- 7 |
| 234-70-32910 | 7013A | 24 | 70- 9 |
| 234-70-32920 | 7013A | 23 | 70- 9 |
| 234-70-32940 | 7017 | 10 | 70- 15 |
| 234-70-32940 | 7017 | 11 | 70- 15 |
| 234-70-32950 | 7013A | 34 | 70- 9 |
| 234-70-32960 | 7013A | 35 | 70- 9 |
| 234-70-32971 | 7013A | 1 | 70- 9 |
| 234-70-32981 | 7013A | 1 | 70- 9 |
| 234-70-32991 | 7013A | 1 | 70- 9 |
| 234-70-33111 | 7015 | 1 | 70- 11 |
| 234-70-33111 | 7017 | 1 | 70- 15 |
| 234-70-33112 | 7015 | 1 | 70- 11 |
| 234-70-33112 | 7017 | 1 | 70- 15 |
| 234-70-33170 | 7015 | 27 | 70- 11 |
| 234-70-33170 | 7017 | 29 | 70- 15 |
| 234-70-33180 | 7015 | 10 | 70- 11 |
| 234-70-33190 | 7015 | 11 | 70- 11 |

| PARTS NO. | FIG NO. | INDEX | PAGE |
|---|---|---|---|
| 234-70-33240 | 7015 | 41 | 70- 12 |
| 234-70-33240 | 7017 | 43 | 70- 16 |
| 234-70-33241 | 7015 | 41 | 70- 12 |
| 234-70-33260 | 7015 | 18 | 70- 11 |
| 234-70-33260 | 7017 | 20 | 70- 15 |
| 234-70-33270 | 7015 | 19 | 70- 11 |
| 234-70-33270 | 7017 | 21 | 70- 15 |
| 234-70-33290 | 7015 | 29 | 70- 11 |
| 234-70-33290 | 7017 | 31 | 70- 15 |
| 234-70-33312 | 7011A | 27 | 70- 5 |
| 234-70-33312 | 7012A | 27 | 70- 7 |
| 234-70-33322 | 7011A | 28 | 70- 5 |
| 234-70-33322 | 7012A | 28 | 70- 7 |
| 234-70-33330 | 7015 | 37 | 70- 12 |
| 234-70-33330 | 7017 | 39 | 70- 16 |
| 234-70-33340 | 7015 | 35 | 70- 12 |
| 234-70-33340 | 7017 | 37 | 70- 16 |
| 234-70-33341 | 7015 | 35 | 70- 12 |
| 234-70-33341 | 7017 | 37 | 70- 16 |
| 234-70-33360 | 7015 | 7 | 70- 11 |
| 234-70-33370 | 7015 | 7 | 70- 11 |
| 234-70-33380 | 7015 | 7 | 70- 11 |
| 234-70-33521 | 7017 | 7 | 70- 15 |
| 234-70-33530 | 7017 | 12 | 70- 15 |
| 234-70-33550 | 7013A | 4 | 70- 9 |
| 234-70-33570 | 7017 | 13 | 70- 15 |
| 234-70-33590 | 7013A | 29 | 70- 9 |
| 234-70-33610 | 7013A | 28 | 70- 9 |
| 234-70-33620 | 7013A | 30 | 70- 9 |
| 234-70-33640 | 7017 | 14 | 70- 15 |
| 234-70-33650 | 7017 | 14 | 70- 15 |
| 234-70-33710 | 7017 | 7 | 70- 15 |
| 234-70-34141 | 7021 | 3 | 70- 19 |
| 234-70-34180 | 7015 | 9 | 70- 11 |
| 234-70-34180 | 7017 | 9 | 70- 15 |
| 234-70-34180 | 7021 | 22 | 70- 19 |
| 234-70-34190 | 7021 | 7 | 70- 19 |
| 234-70-34210 | 7021 | 6 | 70- 19 |
| 234-70-34270 | 7021 | 20 | 70- 19 |
| 234-70-34271 | 7021 | 20 | 70- 19 |
| 234-70-35110 | 7031B | 1 | 70- 21 |
| 234-70-35110 | 7037 | 1 | 70- 25 |
| 234-70-35120 | 7031B | 2 | 70- 21 |
| 234-70-35120 | 7037 | 10 | 70- 25 |
| 234-70-35130 | 7037 | 2 | 70- 25 |
| 234-70-35140 | 7037 | 6 | 70- 25 |
| 234-70-35141 | 7031B | 12 | 70- 21 |
| 234-70-35141 | 7037 | 6 | 70- 25 |
| 234-70-35142 | 7031B | 12 | 70- 21 |
| 234-70-35150 | 7031B | 11 | 70- 21 |





| PARTS NO. | FIG NO. | INDEX | PAGE |
|---|---|---|---|
| 234-70-35150 | 7037 | 5 | 70- 25 |
| 234-70-35160 | 7031B | 17 | 70- 21 |
| 234-70-35160 | 7037 | 16 | 70- 25 |
| 234-70-35161 | 7031B | 17 | 70- 21 |
| 234-70-35170 | 7031B | 15 | 70- 21 |
| 234-70-35170 | 7037 | 7 | 70- 25 |
| 234-70-35190 | 7037 | 19 | 70- 25 |
| 234-70-35191 | 7031B | 24 | 70- 21 |
| 234-70-35191 | 7037 | 19 | 70- 25 |
| 234-70-35240 | 7037 | 29 | 70- 25 |
| 234-70-35330 | 7031B | 8 | 70- 21 |
| 234-70-35330 | 7037 | 2 | 70- 25 |
| 234-70-36510 | 7038 | 3 | 70- 29 |
| 234-70-36511 | 7038 | 3 | 70- 29 |
| 234-70-36520 | 7038 | 5 | 70- 29 |
| 234-70-36530 | 7038 | 12 | 70- 29 |
| 234-70-36540 | 7038 | 1 | 70- 29 |
| 234-70-36590 | 7038 | 3A | 70- 29 |
| 234-71-00060 | 7101 | 31 | 70- 32 |
| 234-71-00070 | 7101 | 50 | 70- 32 |
| 234-71-00120 | 7111 | 1 | 70- 35 |
| 234-71-00130 | 7111 | 1 | 70- 35 |
| 234-71-00150 | 7101 | 1 | 70- 31 |
| 234-71-00151 | 7101 | 1 | 70- 31 |
| 234-71-00152 | 7101 | 1 | 70- 31 |
| 234-71-11161 | 7021 | 17 | 70- 19 |
| 234-71-13190 | 7031B | 10 | 70- 21 |
| 234-71-13190 | 7037 | 3 | 70- 25 |
| 234-71-13225 | 7031B | 34 | 70- 21 |
| 234-71-13244 | 7031B | 35 | 70- 22 |
| 234-71-13350 | 7031B | 36 | 70- 22 |
| 234-71-13443 | 7031B | 43 | 70- 22 |
| 234-71-13443 | 9901A | 9 | 90- 15 |
| 234-71-16131 | 7111 | 2 | 70- 35 |
| 234-71-16171 | 7111 | 10 | 70- 35 |
| 234-71-21110 | 7101 | 1 | 70- 31 |
| 234-71-21120 | 7101 | 9 | 70- 31 |
| 234-71-21130 | 7101 | 10 | 70- 31 |
| 234-71-21141 | 7101 | 30 | 70- 31 |
| 234-71-21160 | 7101 | 11 | 70- 31 |
| 234-71-21170 | 7101 | 29 | 70- 31 |
| 234-71-21210 | 7111 | 5 | 70- 35 |
| 234-71-21220 | 7111 | 1 | 70- 35 |
| 234-71-21230 | 7111 | 4 | 70- 35 |
| 234-71-21330 | 7101 | 48 | 70- 32 |
| 234-71-21340 | 7101 | 46 | 70- 32 |
| 234-71-21350 | 7101 | 47 | 70- 32 |
| 234-71-21360 | 7101 | 49 | 70- 32 |
| 234-71-21370 | 7101 | 45 | 70- 32 |
| 234-71-23140 | 7101 | 9 | 70- 31 |

| PARTS NO | FIG NO | INDEX | PAGE |
|---|---|---|---|
| 234-71-23150 | 7101 | 10 | 70- 31 |
| 234-71-23160 | 7101 | 1 | 70- 31 |
| 234-71-23170 | 7101 | 11 | 70- 31 |
| 234-725-1111 | 7151A | 1 | 70- 37 |
| 234-725-1122 | 7151A | 22 | 70- 37 |
| 234-725-1130 | 7151A | 8 | 70- 37 |
| 234-725-1141 | 7151A | 6 | 70- 37 |
| 234-725-1150 | 7151A | 15 | 70- 37 |
| 234-725-1161 | 7151A | 27 | 70- 37 |
| 234-785-0040 | 7201 | 1 | 70- 39 |
| 234-785-0041 | 7201 | 1 | 70- 39 |
| 234-785-1111 | 7201 | 1 | 70- 39 |
| 234-785-1121 | 7201 | 5 | 70- 39 |
| 234-785-1160 | 7201 | 46 | 70- 40 |
| 234-785-1231 | 7201 | 31 | 70- 39 |
| 234-785-1261 | 7201 | 44 | 70- 40 |
| 234-785-1271 | 7201 | 45 | 70- 40 |
| 234-785-1320 | 7201 | 52 | 70- 40 |
| 234-785-1330 | 7201 | 53 | 70- 40 |
| 234-785-1340 | 2603 | 37 | 20- 68 |
| 234-785-1340 | 7201 | 54 | 70- 40 |
| 234-785-1350 | 7201 | 52 | 70- 40 |
| 234-785-1580 | 6463A | 19 | 60- 131 |
| 234-785-1610 | 7201 | 11 | 70- 39 |
| 234-785-1620 | 7201 | 22 | 70- 39 |
| 234-785-1630 | 7201 | 13 | 70- 39 |
| 234-785-1640 | 7201 | 17 | 70- 39 |
| 234-785-1650 | 7201 | 32 | 70- 39 |
| 234-785-1660 | 7201 | 36 | 70- 40 |
| 234-785-1670 | 7201 | 30 | 70- 39 |
| 234-785-1680 | 7201 | 21 | 70- 39 |
| 234-785-1690 | 7201 | 24 | 70- 39 |
| 234-785-1710 | 7201 | 7 | 70- 39 |
| 234-785-1711 | 7201 | 7 | 70- 39 |
| 234-785-3310 | 5013 | 1 | 50- 7 |
| 234-807-1650 | 5703A | 20 | 50- 93 |
| 234-807-3640 | 5701A | 10 | 50- 91 |
| 234-807-5611 | 5703A | 7 | 50- 93 |
| 234-807-5620 | 5615 | 10 | 50- 79 |
| 234-807-5620 | 5701A | 6 | 50- 91 |
| 234-807-5630 | 5615 | 13 | 50- 79 |
| 234-807-5630 | 5701A | 9 | 50- 91 |
| 234-807-5660 | 5703A | 13 | 50- 93 |
| 234-807-5660 | 5703A | 8 | 50- 93 |
| 234-807-5670 | 5615 | 10A | 50- 79 |
| 234-807-5670 | 5701A | 6A | 50- 91 |
| 234-807-7940 | 5703A | 19 | 50- 93 |
| 234-807-7950 | 5701A | 11 | 50- 91 |
| 234-807-7960 | 5703A | 16 | 50- 93 |
| 234-809-6110 | 5613 | 11 | 50- 73 |

| PARTS NO. | FIG NO. | INDEX | PAGE |
|---|---|---|---|
| 234-809-6120 | 5613 | 1 | 50- 73 |
| 234-809-6130 | 5613 | 2 | 50- 73 |
| 234-809-6140 | 5613 | 8 | 50- 73 |
| 234-809-6180 | 5613 | 14 | 50- 73 |
| 234-809-6190 | 5614 | 9 | 50- 75 |
| 234-809-6660 | 5619 | 15 | 50- 87 |
| 234-809-8511 | 5614 | 20 | 50- 75 |
| 234-809-8680 | 5615 | 20 | 50- 79 |
| 234-809-8810 | 5616 | 13 | 50- 81 |
| 234-809-8860 | 5614 | 13 | 50- 75 |
| 234-809-8870 | 5614 | 19 | 50- 75 |
| 234-809-8930 | 5614 | 18 | 50- 75 |
| 234-809-8950 | 5614 | 5 | 50- 75 |
| 234-809-8970 | 5611 | 17 | 50- 67 |
| 234-809-8970 | 5616 | 13 | 50- 81 |
| 234-809-8980 | 5611 | 14 | 50- 67 |
| 234-809-8990 | 5611 | 12 | 50- 67 |
| 234-809-9271 | 5612A | 39 | 50- 69 |
| 234-809-9280 | 5612A | 36 | 50- 69 |
| 234-809-9290 | 5612A | 2 | 50- 69 |
| 234-809-9310 | 5612A | 3 | 50- 69 |
| 234-809-9321 | 5612A | 42 | 50- 69 |
| 234-809-9331 | 5612A | 42 | 50- 70 |
| 234-809-9350 | 5616 | 9 | 50- 81 |
| 234-809-9360 | 5616 | 10 | 50- 81 |
| 234-809-9370 | 5617 | 2 | 50- 83 |
| 234-809-9380 | 5617 | 3 | 50- 83 |
| 234-809-9390 | 5611 | 5 | 50- 67 |
| 234-809-9410 | 5611 | 7 | 50- 67 |
| 234-809-9420 | 5612A | 6 | 50- 69 |
| 234-809-9430 | 5612A | 10 | 50- 69 |
| 234-809-9440 | 5612A | 11 | 50- 69 |
| 234-809-9450 | 5612A | 14 | 50- 69 |
| 234-809-9461 | 5612A | 17 | 50- 69 |
| 234-809-9471 | 5612A | 18 | 50- 69 |
| 234-809-9481 | 5612A | 22 | 50- 69 |
| 234-809-9491 | 5612A | 23 | 50- 69 |
| 234-809-9510 | 5612A | 33 | 50- 69 |
| 234-809-9520 | 5614 | 37 | 50- 76 |
| 234-809-9530 | 5617 | 16 | 50- 83 |
| 234-809-9540 | 5614 | 12 | 50- 75 |
| 234-809-9550 | 5614 | 1 | 50- 75 |
| 234-809-9560 | 5614 | 4 | 50- 75 |
| 234-809-9570 | 5619 | 2 | 50- 87 |
| 234-809-9590 | 5617 | 11 | 50- 83 |
| 234-809-9610 | 5619 | 1 | 50- 87 |
| 234-809-9650 | 5616 | 8 | 50- 81 |
| 234-833-1311 | 6611A | 20 | 60- 137 |
| 234-833-1321 | 6611A | 21 | 60- 137 |
| 234-833-1331 | 6611A | 23 | 60- 137 |

| PARTS NO. | FIG NO. | INDEX | PAGE |
|---|---|---|---|
| 234-833-1341 | 6611A | 24 | 60- 137 |
| 234-833-2190 | 6405A | 20 | 60- 83 |
| 234-833-2190 | 6415A | 20 | 60- 99 |
| 234-835-2230 | 4305A | 10 | 40- 21 |
| 234-844-5170 | 1011A | 1 | 10- 11 |
| 234-846-3211 | 5551 | 1 | 50- 63 |
| 234-846-3212 | 5551 | 1 | 50- 63 |
| 234-855-7131 | 5511A | 13 | 50- 53 |
| 234-855-7131 | 5515B | 12 | 50- 57 |
| 234-856-4120 | 5271A | 1 | 50- 31 |
| 234-870-0150 | 4341B | 2 | 40- 39 |
| 234-870-0150 | 4343B | 2 | 40- 41 |
| 234-870-6220 | 7015 | 25 | 70- 11 |
| 234-870-6220 | 7017 | 27 | 70- 15 |
| 234-870-8120 | 7151A | 7 | 70- 37 |
| 234-870-8340 | 7151A | 20 | 70- 37 |
| 234-870-8511 | 4343B | 3 | 40- 41 |
| 234-876-3340 | 6461A | 4 | 60- 129 |
| 234-885-1610 | 4305A | 2 | 40- 21 |
| 234-885-1610 | 4305A | 49 | 40- 22 |
| 234-885-1610 | 4336 | 9 | 40- 37 |
| 234-885-1610 | 4341B | 1 | 40- 39 |
| 234-885-1610 | 4343B | 1 | 40- 41 |
| 234-885-1620 | 4111A | 18 | 40- 15 |
| 234-885-1620 | 4111A | 2 | 40- 15 |
| 234-901-3310 | 5901 | 2 | 50- 95 |
| 234-901-3510 | 5901 | 2 | 50- 95 |
| 234-915-6140 | 5171A | 1 | 50- 21 |
| 234-915-7220 | 5171A | 4 | 50- 21 |
| 234-930-3111 | 5553 | 1 | 50- 65 |
| 234-930-3112 | 5553 | 1 | 50- 65 |
| 234-943-6260 | 4454A | 8 | 40- 67 |
| 234-950-0050 | 5401A | 1 | 50- 37 |
| 234-950-0050 | 5403A | 1 | 50- 39 |
| 234-950-0050 | 5405A | 1 | 50- 41 |
| 234-950-0050 | 5407A | 1 | 50- 43 |
| 234-950-0050 | 5409A | 1 | 50- 47 |
| 234-950-6410 | 5409A | 27 | 50- 47 |
| 234-950-6510 | 5409A | 44 | 50- 48 |
| 234-950-6520 | 5409A | 30 | 50- 47 |
| 234-950-9640 | 5905A | 2 | 50- 97 |
| 234-951-1740 | 5471 | 5 | 50- 51 |
| 234-956-0020 | 5515B | 1 | 50- 57 |
| 234-956-6110 | 5511A | 14 | 50- 53 |
| 234-956-6110 | 5513A | 14 | 50- 55 |
| 234-956-6110 | 5515B | 13 | 50- 57 |
| 234-956-6120 | 5511A | 23 | 50- 53 |
| 234-956-6120 | 5513A | 23 | 50- 55 |
| 234-956-6120 | 5515B | 22 | 50- 57 |
| 234-956-6130 | 5513A | 13 | 50- 55 |



| PARTS NO. | FIG NO | INDEX | PAGE |
|---|---|---|---|
| 234-956-6140 | 1821 | 10 | 10- 63 |
| 234-957-0220 | 5517A | 1 | 50- 59 |
| 234-957-0230 | 5521 | 1 | 50- 61 |
| 234-957-1210 | 5521 | 1 | 50- 61 |
| 234-957-1420 | 5517A | 1 | 50- 59 |
| 234-959-4250 | 5407A | 53 | 50- 44 |
| 234-972-5310 | 6405A | 1 | 60- 83 |
| 234-972-5310 | 6415A | 1 | 60- 99 |
| 234-972-5331 | 6401A | 20 | 60- 79 |
| 234-972-5331 | 6411A | 20 | 60- 89 |
| 234-972-5331 | 6412 | 20 | 60- 91 |
| 234-975-5760 | 4013 | 2 | 40- 7 |
| 234-977-1750 | 7021 | 12 | 70- 19 |
| 234-979-5320 | 6455B | 40 | 60- 127 |
| 234-979-6260 | 7015 | 8 | 70- 11 |
| 234-979-6260 | 7017 | 8 | 70- 15 |
| 234-979-6270 | 7015 | 15 | 70- 11 |
| 234-979-6270 | 7017 | 17 | 70- 15 |
| 234-98-31110 | 9911 | 1 | 90- 17 |
| 234-98-31130 | 9911 | 9 | 90- 17 |
| 234-98-31140 | 9911 | 10 | 90- 17 |
| 234-98-31150 | 9911 | 8 | 90- 17 |
| 234-98-31160 | 9911 | 6 | 90- 17 |
| 234-98-31170 | 9911 | 7 | 90- 17 |
| 234-98-31220 | 5053 | 1 | 50- 11 |
| 234-98-31230 | 5053 | 2 | 50- 11 |
| 234-98-31240 | 5051 | 1 | 50- 9 |
| 234-98-31250 | 5053 | 5 | 50- 11 |
| 234-991-0010 | 1001 | 23 | 10- 3 |
| 234-991-1210 | 1001 | 18 | 10- 3 |
| 234-991-1420 | 1211 | 7 | 10- 17 |
| 234-991-1421 | 1211 | 7 | 10- 17 |
| 234-991-1430 | 1211 | 5 | 10- 17 |
| 234-991-1431 | 1211 | 5 | 10- 17 |
| 234-991-2310 | 2605A | 4 | 20- 71 |
| 234-993-6500 | 6611A | 1 | 60- 137 |
| 234-993-6501 | 6611A | 1 | 60- 137 |
| 234-993-6600 | 6611A | 2 | 60- 137 |
| 235-06-13420 | 1513A | 13 | 10- 55 |
| 235-06-13430 | 1513A | 13 | 10- 55 |
| 235-06-15350 | 1511A | 24 | 10- 53 |
| 235-06-15370 | 1451C | 6 | 10- 33 |
| 235-06-15370 | 1453C | 6 | 10- 35 |
| 235-06-15370 | 1455C | 6 | 10- 37 |
| 235-06-15370 | 1459 | 6 | 10- 39 |
| 235-15-11130 | 2419 | 27 | 20- 27 |
| 235-15-12150 | 2415A | 6 | 20- 13 |
| 235-15-12211 | 2415A | 5 | 20- 13 |
| 235-15-12220 | 2416 | 7 | 20- 17 |
| 235-15-12230 | 2417 | 4 | 20- 19 |

| PARTS NO. | FIG NO. | INDEX | PAGE |
|---|---|---|---|
| 235-15-12240 | 2417 | 5 | 20- 19 |
| 235-15-12250 | 2418 | 6 | 20- 23 |
| 235-15-12260 | 2419 | 33 | 20- 28 |
| 235-15-12310 | 2415A | 7 | 20- 13 |
| 235-15-12410 | 2415A | 12 | 20- 13 |
| 235-15-12420 | 2416 | 12 | 20- 17 |
| 235-15-12420 | 2417 | 18 | 20- 19 |
| 235-15-12430 | 2417 | 13 | 20- 19 |
| 235-15-12440 | 2418 | 14 | 20- 23 |
| 235-15-12450 | 2418 | 27 | 20- 23 |
| 235-15-12460 | 2419 | 2 | 20- 27 |
| 235-15-12590 | 2418 | 28 | 20- 23 |
| 235-15-13290 | 2421 | 10 | 20- 31 |
| 235-15-22320 | 2416 | 9 | 20- 17 |
| 235-15-22520 | 2418 | 30 | 20- 24 |
| 235-15-22640 | 2415A | 18 | 20- 13 |
| 235-15-29410 | 2418 | 29 | 20- 24 |
| 235-25-11160 | 2651A | 15 | 20- 77 |
| 235-25-11360 | 2653 | 20 | 20- 79 |
| 235-40-11220 | 4201A | 5 | 40- 19 |
| 235-40-11230 | 4201A | 2 | 40- 19 |
| 235-40-11240 | 4201A | 3 | 40- 19 |
| 235-43-12180 | 4011A | 3 | 40- 5 |
| 235-43-18380 | 4321B | 19 | 40- 25 |
| 235-43-18380 | 4322 | 19 | 40- 27 |
| 235-43-18380 | 4323B | 20 | 40- 29 |
| 235-43-18380 | 4331A | 20 | 40- 33 |
| 235-43-18380 | 4333A | 20 | 40- 35 |
| 235-43-18380 | 4341B | 12 | 40- 39 |
| 235-43-18380 | 4341B | 7 | 40- 39 |
| 235-43-18380 | 4343B | 12 | 40- 41 |
| 235-43-18380 | 4343B | 7 | 40- 41 |
| 235-43-18441 | 4321B | 28 | 40- 25 |
| 235-43-18441 | 4322 | 28 | 40- 27 |
| 235-43-18441 | 4323B | 35 | 40- 30 |
| 235-43-18441 | 4341B | 20 | 40- 39 |
| 235-43-18441 | 4343B | 20 | 40- 41 |
| 235-43-31150 | 4321B | 14 | 40- 25 |
| 235-43-31150 | 4322 | 14 | 40- 27 |
| 235-43-31150 | 4323B | 15 | 40- 29 |
| 235-44-11920 | 4383 | 2 | 40- 47 |
| 235-44-11920 | 4387 | 2 | 40- 51 |
| 235-44-11930 | 4383 | 1 | 40- 47 |
| 235-44-11930 | 4387 | 1 | 40- 51 |
| 235-45-12110 | 4111A | 3 | 40- 15 |
| 235-45-12170 | 4111A | 4 | 40- 15 |
| 235-45-31260 | 9801B | 35 | 90- 3 |
| 235-45-31260 | 9821B | 35 | 90- 7 |
| 235-45-31260 | 9831B | 35 | 90- 11 |
| 235-45-31270 | 9801B | 36 | 90- 3 |

| PARTS NO | FIG NO. | INDEX | PAGE |
|---|---|---|---|
| 235-45-31270 | 9821B | 36 | 90- 7 |
| 235-45-31270 | 9831B | 36 | 90- 11 |
| 235-46-11710 | 5011 | 11 | 50- 5 |
| 235-46-11710 | 5013 | 10 | 50- 7 |
| 235-53-11610 | 9821B | 40 | 90- 7 |
| 235-53-31210 | 9801B | 38 | 90- 3 |
| 235-53-31220 | 9801B | 39 | 90- 3 |
| 235-53-32570 | 9831B | 38 | 90- 11 |
| 235-53-32580 | 9831B | 39 | 90- 11 |
| 235-54-21640 | 5121 | 35 | 50- 18 |
| 235-54-21760 | 5103 | 12 | 50- 15 |
| 235-60-15480 | 2751B | 11 | 20- 95 |
| 235-60-15480 | 6416 | 24 | 60- 101 |
| 235-60-15480 | 6417A | 26 | 60- 105 |
| 235-60-15480 | 6418 | 18 | 60- 107 |
| 235-60-15480 | 6461A | 15 | 60- 129 |
| 235-61-11140 | 6243A | 7 | 60- 39 |
| 235-61-11150 | 6243A | 6 | 60- 39 |
| 235-61-11220 | 6243A | 10 | 60- 39 |
| 235-61-11400 | 6243A | 2 | 60- 39 |
| 235-61-13700 | 6243A | 1 | 60- 39 |
| 235-61-13700 | 6423C | 6 | 60- 111 |
| 235-61-13700 | 6427 | 6 | 60- 113 |
| 235-61-13710 | 6243A | 1 | 60- 39 |
| 235-61-13720 | 6243A | 11 | 60- 39 |
| 235-70-00190 | 7038 | 16 | 70- 29 |
| 235-70-15790 | 7038 | 13 | 70- 29 |
| 235-70-15810 | 7038 | 15 | 70- 29 |
| 235-70-15920 | 7038 | 11 | 70- 29 |
| 235-70-15960 | 7038 | 16 | 70- 29 |
| 235-809-4690 | 5618 | 16 | 50- 85 |
| 235-950-1320 | 5401A | 7 | 50- 37 |
| 235-950-1330 | 5401A | 6 | 50- 37 |
| 235-950-1370 | 5403A | 10 | 50- 39 |
| 235-950-1460 | 5407A | 43 | 50- 44 |
| 235-950-1470 | 5407A | 43 | 50- 44 |
| 235-950-1480 | 5407A | 44 | 50- 44 |
| 235-950-1490 | 5407A | 29 | 50- 43 |
| 235-950-1510 | 5407A | 26 | 50- 43 |
| 235-950-1520 | 5407A | 45 | 50- 44 |
| 235-950-1530 | 5407A | 46 | 50- 44 |
| 235-950-1540 | 5407A | 25 | 50- 43 |
| 235-950-1560 | 5407A | 9 | 50- 43 |
| 235-950-1570 | 5407A | 15 | 50- 43 |
| 235-950-1580 | 5407A | 15 | 50- 43 |
| 235-950-1660 | 5407A | 24 | 50- 43 |
| 235-950-1670 | 5407A | 24 | 50- 43 |
| 235-950-1830 | 5403A | 7 | 50- 39 |
| 235-950-1850 | 5409A | 14 | 50- 47 |
| 235-950-2320 | 5409A | 4 | 50- 47 |

| PARTS NO. | FIG NO. | INDEX | PAGE |
|---|---|---|---|
| 235-950-2411 | 5405A | 7 | 50- 41 |
| 235-950-2421 | 5405A | 7 | 50- 41 |
| 235-950-2430 | 5405A | 12 | 50- 41 |
| 235-950-2440 | 5405A | 14 | 50- 41 |
| 235-950-2450 | 5405A | 15 | 50- 41 |
| 235-957-2170 | 4011A | 29 | 40- 5 |
| 235-957-2170 | 4111A | 39 | 40- 15 |
| 236-04-21190 | 1311B | 16 | 10- 23 |
| 236-06-23220 | 1503A | 11 | 10- 43 |
| 236-06-23230 | 1503A | 12 | 10- 43 |
| 236-06-23230 | 1507C | 22 | 10- 47 |
| 236-06-23230 | 1507C | 24 | 10- 47 |
| 236-46-13380 | 5011 | 8 | 50- 5 |
| 236-46-13380 | 5013 | 7 | 50- 7 |
| 236-46-13390 | 5011 | 9 | 50- 5 |
| 236-46-13390 | 5013 | 8 | 50- 7 |
| 236-46-13410 | 5011 | 15 | 50- 5 |
| 236-46-13410 | 5013 | 14 | 50- 7 |
| 236-46-13420 | 5011 | 16 | 50- 5 |
| 236-46-13420 | 5013 | 15 | 50- 7 |
| 236-46-13610 | 5011 | 10 | 50- 5 |
| 236-46-13610 | 5013 | 9 | 50- 7 |
| 236-46-13620 | 5011 | 11 | 50- 5 |
| 236-54-22331 | 5301B | 7 | 50- 33 |
| 236-54-22351 | 5301B | 8 | 50- 33 |
| 236-60-00071 | 6247 | 5 | 60- 43 |
| 236-60-00071 | 6261 | 5 | 60- 49 |
| 236-60-24930 | 6463A | 27 | 60- 131 |
| 237-01-00020 | 5201A | 11 | 50- 23 |
| 237-06-11510 | 1509A | 12 | 10- 51 |
| 237-06-13340 | 1513A | 13 | 10- 55 |
| 237-06-13350 | 1513A | 13 | 10- 55 |
| 237-06-13360 | 1513A | 13 | 10- 55 |
| 237-06-15120 | 1511A | 7 | 10- 53 |
| 237-06-15190 | 1511A | 3 | 10- 53 |
| 237-23-11142 | 2651A | 4 | 20- 77 |
| 237-40-12420 | 2711A | 17 | 20- 83 |
| 237-40-12460 | 2711A | 12 | 20- 83 |
| 237-40-12470 | 2711A | 12 | 20- 83 |
| 237-40-12480 | 2711A | 13 | 20- 83 |
| 237-40-12490 | 2711A | 10 | 20- 83 |
| 237-40-12520 | 2711A | 8 | 20- 83 |
| 237-40-12540 | 2711A | 7 | 20- 83 |
| 237-40-12550 | 2711A | 6 | 20- 83 |
| 237-40-12560 | 2711A | 1 | 20- 83 |
| 237-40-12610 | 2711A | 4 | 20- 83 |
| 237-40-12620 | 2711A | 5 | 20- 83 |
| 237-40-12640 | 2711A | 19 | 20- 83 |
| 237-40-12650 | 2711A | 21 | 20- 83 |
| 237-40-12670 | 2711A | 24 | 20- 83 |



| PARTS NO | FIG NO. | INDEX | PAGE |
|---|---|---|---|
| 237-40-13160 | 2753A | 9 | 20- 97 |
| 237-40-13160 | 2755A | 3 | 20- 99 |
| 237-43-00061 | 4323B | 4 | 40- 29 |
| 237-43-00081 | 4321B | 8 | 40- 25 |
| 237-43-00081 | 4322 | 8 | 40- 27 |
| 237-43-00081 | 4323B | 8 | 40- 29 |
| 237-43-00121 | 4323B | 6 | 40- 29 |
| 237-43-17240 | 4305A | 12 | 40- 21 |
| 237-43-17240 | 4305A | 23 | 40- 21 |
| 237-43-17240 | 4305A | 7 | 40- 21 |
| 237-43-17420 | 4321B | 9 | 40- 25 |
| 237-43-17420 | 4322 | 9 | 40- 27 |
| 237-43-17420 | 4323B | 10 | 40- 29 |
| 237-43-17440 | 4321B | 30 | 40- 25 |
| 237-43-17440 | 4322 | 30 | 40- 27 |
| 237-43-17440 | 4323B | 9 | 40- 29 |
| 237-43-17480 | 4321B | 2 | 40- 25 |
| 237-43-17480 | 4321B | 4 | 40- 25 |
| 237-43-17480 | 4321B | 8 | 40- 25 |
| 237-43-17480 | 4322 | 2 | 40- 27 |
| 237-43-17480 | 4322 | 31 | 40- 27 |
| 237-43-17480 | 4322 | 4 | 40- 27 |
| 237-43-17480 | 4322 | 8 | 40- 27 |
| 237-43-17480 | 4323B | 2 | 40- 29 |
| 237-43-17480 | 4323B | 4 | 40- 29 |
| 237-43-17480 | 4323B | 8 | 40- 29 |
| 237-43-17480 | 4341B | 2 | 40- 39 |
| 237-43-17480 | 4343B | 2 | 40- 41 |
| 237-43-17490 | 4321B | 6 | 40- 25 |
| 237-43-17490 | 4322 | 6 | 40- 27 |
| 237-43-17490 | 4323B | 6 | 40- 29 |
| 237-46-12530 | 6455B | 39 | 60- 127 |
| 237-54-11270 | 5201A | 2 | 50- 23 |
| 237-54-11280 | 5201A | 3 | 50- 23 |
| 237-54-13211 | 4321B | 8 | 40- 25 |
| 237-54-13211 | 4322 | 8 | 40- 27 |
| 237-54-13211 | 4323B | 8 | 40- 29 |
| 237-54-13211 | 9801B | 28 | 90- 3 |
| 237-54-13211 | 9801B | 4 | 90- 3 |
| 237-54-13211 | 9821B | 28 | 90- 7 |
| 237-54-13211 | 9821B | 4 | 90- 7 |
| 237-54-13211 | 9831B | 28 | 90- 11 |
| 237-54-13211 | 9831B | 4 | 90- 11 |
| 237-54-13221 | 4323B | 6 | 40- 29 |
| 237-54-13221 | 9801B | 8 | 90- 3 |
| 237-54-13221 | 9821B | 8 | 90- 7 |
| 237-54-13221 | 9831B | 8 | 90- 11 |
| 237-54-13231 | 4323B | 4 | 40- 29 |
| 237-54-13231 | 9801B | 14 | 90- 3 |
| 237-54-13231 | 9821B | 14 | 90- 7 |

| PARTS NO. | FIG NO | INDEX | PAGE |
|---|---|---|---|
| 237-54-13231 | 9831B | 14 | 90- 11 |
| 237-54-13251 | 4321B | 6 | 40- 25 |
| 237-54-13251 | 4322 | 6 | 40- 27 |
| 237-54-13260 | 4321B | 2 | 40- 25 |
| 237-54-13260 | 4322 | 2 | 40- 27 |
| 237-54-13260 | 9801B | 24 | 90- 3 |
| 237-54-13260 | 9821B | 24 | 90- 7 |
| 237-54-13260 | 9831B | 24 | 90- 11 |
| 237-54-13270 | 4341B | 3 | 40- 39 |
| 237-54-13321 | 9801B | 5 | 90- 3 |
| 237-60-14550 | 4453A | 19 | 40- 65 |
| 237-60-14550 | 4454A | 23 | 40- 67 |
| 237-60-14550 | 6611A | 19 | 60- 137 |
| 237-60-17130 | 6275 | 5 | 60- 59 |
| 237-60-22240 | 6403A | 14 | 60- 81 |
| 237-60-22240 | 6405A | 16 | 60- 83 |
| 237-60-22240 | 6407A | 2 | 60- 85 |
| 237-60-22240 | 6407A | 36 | 60- 85 |
| 237-60-22240 | 6407A | 4 | 60- 85 |
| 237-60-22240 | 6413A | 14 | 60- 93 |
| 237-60-22240 | 6414 | 41 | 60- 95 |
| 237-60-22240 | 6415A | 16 | 60- 99 |
| 237-60-22240 | 6416 | 28 | 60- 101 |
| 237-60-22240 | 6416 | 32 | 60- 101 |
| 237-60-22240 | 6417A | 2 | 60- 105 |
| 237-60-22240 | 6417A | 28 | 60- 105 |
| 237-60-22240 | 6417A | 4 | 60- 105 |
| 237-60-22240 | 6418 | 2 | 60- 107 |
| 237-60-22240 | 6418 | 4 | 60- 107 |
| 237-60-23120 | 6321 | 1 | 60- 75 |
| 237-60-23120 | 6325 | 1 | 60- 77 |
| 237-60-23120 | 6451A | 1 | 60- 125 |
| 237-60-23120 | 6455B | 2 | 60- 127 |
| 237-60-24190 | 2757 | 2 | 20- 101 |
| 237-60-24190 | 6441C | 10 | 60- 123 |
| 238-04-12110 | 1311B | 3 | 10- 23 |
| 238-04-12130 | 1301A | 12 | 10- 21 |
| 238-06-11160 | 1507C | 12 | 10- 47 |
| 238-06-12310 | 1503A | 4 | 10- 43 |
| 238-06-14360 | 1821 | 7 | 10- 63 |
| 238-06-15140 | 1451C | 7 | 10- 33 |
| 238-06-15140 | 1453C | 7 | 10- 35 |
| 238-06-15140 | 1455C | 7 | 10- 37 |
| 238-06-15140 | 1459 | 7 | 10- 39 |
| 238-06-17210 | 1503A | 10 | 10- 43 |
| 238-06-18230 | 1513A | 10 | 10- 55 |
| 238-15-15630 | 2453 | 18 | 20- 47 |
| 238-15-15890 | 2452 | 9 | 20- 43 |
| 238-15-15890 | 2452 | 9 | 20- 43 |
| 238-15-17440 | 2452 | 35 | 20- 44 |

| PARTS NO. | FIG NO. | INDEX | PAGE |
|---|---|---|---|
| 568-15-12850 | 2417 | 31 | 20- 20 |
| 568-15-12850 | 2418 | 41 | 20- 24 |
| 568-15-12850 | 2419 | 20 | 20- 27 |
| 569-06-61960 | 1507C | 28 | 10- 47 |
| 569-15-12860 | 2415A | 23 | 20- 13 |
| 569-15-12860 | 2417 | 28 | 20- 20 |
| 569-15-12860 | 2417 | 30 | 20- 20 |
| 569-15-12860 | 2418 | 40 | 20- 24 |
| 569-15-12860 | 2419 | 19 | 20- 27 |
| 569-15-41310 | 2417 | 2 | 20- 19 |
| 600-050-2620 | 0222 | 18 | 02- 17 |
| 600-181-1480 | 0141 | 19 | 01- 13 |
| 600-181-1511 | 0141 | 31 | 01- 14 |
| 600-181-1511 | 1003 | 2 | 10- 7 |
| 600-181-1590 | 0141 | 18 | 01- 13 |
| 600-181-1990 | 0141 | 13 | 01- 13 |
| 600-181-4240 | 0141 | 18 | 01- 13 |
| 600-181-4300 | 0141 | 12 | 01- 13 |
| 600-181-4360 | 0141 | 20 | 01- 13 |
| 600-181-4470 | 0141 | 11 | 01- 13 |
| 600-181-4480 | 0141 | 14 | 01- 13 |
| 600-181-4591 | 0141 | 14 | 01- 13 |
| 600-181-4600 | 0141 | 12 | 01- 13 |
| 600-181-7511 | 0141 | 11 | 01- 13 |
| 600-181-9671 | 0141 | 10 | 01- 13 |
| 600-211-1230 | 0311 | 8 | 03- 7 |
| 600-211-1290 | 0312 | 8 | 03- 9 |
| 600-211-1771 | 0311 | 11 | 03- 7 |
| 600-211-1771 | 0312 | 11 | 03- 9 |
| 600-311-8281 | 0412 | 2 | 04- 13 |
| 600-311-8291 | 0411 | 2 | 04- 11 |
| 600-311-8562 | 0411 | 17 | 04- 11 |
| 600-311-8652 | 0411 | 17 | 04- 11 |
| 600-311-8673 | 0412 | 17 | 04- 13 |
| 600-311-8850 | 0411 | 17 | 04- 11 |
| 600-411-1020 | 0521 | 2 | 05- 11 |
| 600-411-1150 | 0521 | 2 | 05- 11 |
| 600-411-1570 | 0521 | 2 | 05- 11 |
| 600-411-1841 | 0521 | 1 | 05- 11 |
| 600-421-6310 | 0171 | 14 | 01- 23 |
| 600-421-6320 | 0171 | 14 | 01- 23 |
| 600-633-0800 | 0511 | 24 | 05- 7 |
| 600-633-0801 | 0511 | 24 | 05- 7 |
| 600-635-0800 | 0513 | 24 | 05- 9 |
| 600-635-0801 | 0513 | 24 | 05- 9 |
| 600-813-3530 | 0621 | 1 | 06- 7 |
| 600-813-3922 | 0622 | 1 | 06- 9 |
| 600-813-4530 | 0621 | 1 | 06- 7 |
| 600-813-4530 | 0661A | 1 | 06- 15 |
| 600-815-3730 | 1451C | 5 | 10- 33 |

| PARTS NO | FIG NO. | INDEX | PAGE |
|---|---|---|---|
| 600-815-3730 | 1453C | 5 | 10- 35 |
| 600-815-3730 | 1455C | 5 | 10- 37 |
| 600-815-3730 | 1459 | 5 | 10- 39 |
| 600-815-3810 | 0131 | 11 | 01- 9 |
| 600-815-3810 | 0132 | 11 | 01- 11 |
| 600-815-6330 | 0222 | 17 | 02- 17 |
| 600-815-7650 | 1551 | 14 | 10- 59 |
| 600-821-7220 | 0601 | 1 | 06- 3 |
| 600-821-7220 | 0641 | 1 | 06- 11 |
| 600-821-8360 | 0601 | 1 | 06- 3 |
| 600-821-8360 | 0641 | 1 | 06- 11 |
| 600-821-9310 | 0603 | 1 | 06- 5 |
| 600-821-9310 | 0643 | 1 | 06- 13 |
| 6003200-4-40 | 2511A | 8 | 20- 55 |
| 6003200-4-40 | 6111 | 9 | 60- 23 |
| 6050-61-6630 | 0701 | 15 | 07- 3 |
| 6110-23-6490 | 0603 | 10 | 06- 5 |
| 6110-53-5910 | 0201 | 27 | 02- 3 |
| 6110-71-5810 | 0401 | 7A | 04- 3 |
| 6110-73-3220 | 0211 | 12 | 02- 11 |
| 6110-73-6231 | 0411 | 2 | 04- 11 |
| 6110-73-6231 | 0411 | 3 | 04- 11 |
| 6110-73-6231 | 0412 | 2 | 04- 13 |
| 6110-73-6231 | 0412 | 3 | 04- 13 |
| 6114-11-5590 | 0151 | 13 | 01- 17 |
| 6114-21-5190 | 0207 | 4 | 02- 7 |
| 6114-21-5190 | 0208 | 4 | 02- 9 |
| 6114-21-5190 | 0991 | 2 | 09- 4 |
| 6114-21-5190 | 0993 | 2 | 09- 9 |
| 6124-61-1241 | 0502 | 10 | 05- 5 |
| 6124-61-1241 | 0993 | 6 | 09- 11 |
| 6124-61-2181 | 0321 | 15 | 03- 11 |
| 6124-61-2181 | 0321 | 22 | 03- 11 |
| 6124-61-2181 | 0991 | 2 | 09- 4 |
| 6124-61-2181 | 0993 | 2 | 09- 10 |
| 6125-81-7032 | 0141 | 9 | 01- 13 |
| 6127-11-3152 | 0423 | 10 | 04- 20 |
| 6127-21-1260 | 0211 | 34 | 02- 12 |
| 6127-41-1131 | 0271 | 4 | 02- 35 |
| 6127-71-5710 | 0325 | 4 | 03- 13 |
| 6127-71-5710 | 0401 | 32 | 04- 4 |
| 6127-81-4821 | 0141 | 21 | 01- 13 |
| 6127-81-4821 | 0991 | 1 | 09- 3 |
| 6127-81-4821 | 0993 | 1 | 09- 9 |
| 6127-81-7190 | 0141 | 20 | 01- 13 |
| 6128-21-6780 | 0601 | 6 | 06- 3 |
| 6128-21-6780 | 0603 | 6 | 06- 5 |
| 6130-22-5290 | 0221 | 13 | 02- 15 |
| 6130-22-5290 | 0222 | 13 | 02- 17 |
| 6130-32-1361 | 0251 | 6 | 02- 27 |





| PARTS NO. | FIG NO | INDEX | PAGE |
|---|---|---|---|
| 6130-62-3350 | 0513 | 25 | 05- 9 |
| 6130-82-5270 | 0211 | 24 | 02- 11 |
| 6130-82-5270 | 0991 | 2 | 09- 4 |
| 6130-82-5270 | 0993 | 2 | 09- 10 |
| 6131-12-5920 | 0511 | 19 | 05- 7 |
| 6131-12-5920 | 0513 | 19 | 05- 9 |
| 6134-11-5120 | 0151 | 8 | 01- 17 |
| 6134-71-5701 | 0401 | 27 | 04- 4 |
| 6134-71-5701 | 0403 | 27 | 04- 7 |
| 6134-71-5711 | 0401 | 28 | 04- 4 |
| 6134-71-5711 | 0403 | 28 | 04- 7 |
| 6134-71-5721 | 0401 | 27 | 04- 4 |
| 6134-71-5721 | 0403 | 27 | 04- 7 |
| 6136-11-1130 | 0101A | 2 | 01- 3 |
| 6136-11-5120 | 0151 | 6 | 01- 17 |
| 6136-11-5120 | 0151 | 8 | 01- 17 |
| 6136-11-5120 | 0207 | 18 | 02- 7 |
| 6136-11-5120 | 0208 | 18 | 02- 9 |
| 6136-11-6880 | 0171 | 15 | 01- 23 |
| 6136-11-6880 | 0993 | 1 | 09- 9 |
| 6136-11-8130 | 0207 | 10 | 02- 7 |
| 6136-11-8130 | 0208 | 10 | 02- 9 |
| 6136-11-8142 | 0207 | 11 | 02- 7 |
| 6136-11-8142 | 0991 | 2 | 09- 4 |
| 6136-11-8180 | 0208 | 11 | 02- 9 |
| 6136-11-8180 | 0993 | 2 | 09- 9 |
| 6136-21-7120 | 0207 | 15 | 02- 7 |
| 6136-21-7190 | 0207 | 16 | 02- 7 |
| 6136-21-7190 | 0208 | 16 | 02- 9 |
| 6136-21-7380 | 0208 | 15 | 02- 9 |
| 6136-42-4520 | 0101A | 16 | 01- 3 |
| 6136-52-1620 | 0301 | 12 | 03- 3 |
| 6136-52-1640 | 0301 | 14 | 03- 3 |
| 6136-52-1650 | 0301 | 16 | 03- 3 |
| 6136-61-8640 | 0171 | 8 | 01- 23 |
| 6136-81-5291 | 0211 | 23 | 02- 11 |
| 6137-81-3140 | 0701 | 8 | 07- 3 |
| 6138-11-6810 | 0171 | 15 | 01- 23 |
| 6138-11-6810 | 0991 | 1 | 09- 3 |
| 6138-55-7610 | 0521 | 7 | 05- 11 |
| 6138-71-6100 | 0411 | 1 | 04- 11 |
| 6138-71-6110 | 0411 | 1 | 04- 11 |
| 6138-71-6110 | 0412 | 1 | 04- 13 |
| 6138-71-6200 | 0412 | 1 | 04- 13 |
| 6140-41-4540 | 0101A | 13 | 01- 3 |
| 6140-41-4540 | 0991 | 1 | 09- 3 |
| 6140-41-4540 | 0993 | 1 | 09- 9 |
| 6140-61-6512 | 0331 | 25 | 03- 19 |
| 6141-64-7270 | 0501 | 25 | 05- 3 |
| 6141-64-7270 | 0502 | 25 | 05- 5 |

| PARTS NO. | FIG NO. | INDEX | PAGE |
|---|---|---|---|
| 6144-21-9811 | 0242 | 12 | 02- 23 |
| 6144-73-5510 | 0401 | 24 | 04- 4 |
| 6144-73-5510 | 0403 | 24 | 04- 7 |
| 6150-11-1140 | 0101A | 7 | 01- 3 |
| 6150-11-1320 | 0101A | 4 | 01- 3 |
| 6150-11-1331 | 0101A | 3 | 01- 3 |
| 6150-11-1610 | 0101A | 26 | 01- 3 |
| 6150-11-1810 | 0991 | 1 | 09- 3 |
| 6150-11-1810 | 0991 | 1 | 09- 3 |
| 6150-11-1811 | 0991 | 1 | 09- 3 |
| 6150-11-1812 | 0991 | 1 | 09- 3 |
| 6150-11-1920 | 0101A | 23 | 01- 3 |
| 6150-11-1930 | 0101A | 24 | 01- 3 |
| 6150-11-1940 | 0101A | 25 | 01- 3 |
| 6150-11-3101 | 0421A | 1 | 04- 15 |
| 6150-11-3111 | 0421A | 1 | 04- 15 |
| 6150-11-3120 | 0421A | 11 | 04- 16 |
| 6150-11-4810 | 0131 | 4 | 01- 9 |
| 6150-11-4810 | 0132 | 4 | 01- 11 |
| 6150-11-4810 | 0991 | 1 | 09- 3 |
| 6150-11-4810 | 0993 | 1 | 09- 9 |
| 6150-11-4820 | 0131 | 12 | 01- 9 |
| 6150-11-4820 | 0132 | 12 | 01- 11 |
| 6150-11-4820 | 0991 | 1 | 09- 3 |
| 6150-11-4820 | 0993 | 1 | 09- 9 |
| 6150-11-5690 | 1005 | 1 | 10- 9 |
| 6150-11-5750 | 0161 | 11 | 01- 21 |
| 6150-11-5750 | 0991 | 1 | 09- 3 |
| 6150-11-5750 | 0993 | 1 | 09- 9 |
| 6150-11-5810 | 0151 | 5 | 01- 17 |
| 6150-11-5810 | 0991 | 1 | 09- 3 |
| 6150-11-5810 | 0993 | 1 | 09- 9 |
| 6150-11-6111 | 0171 | 2 | 01- 23 |
| 6150-11-6120 | 0171 | 1 | 01- 23 |
| 6150-11-6210 | 0171 | 10 | 01- 23 |
| 6150-11-6280 | 0171 | 9 | 01- 23 |
| 6150-11-6310 | 0171 | 12 | 01- 23 |
| 6150-11-6310 | 0991 | 1 | 09- 3 |
| 6150-11-6310 | 0993 | 1 | 09- 9 |
| 6150-11-6410 | 0171 | 3 | 01- 23 |
| 6150-11-6510 | 0171 | 16 | 01- 23 |
| 6150-11-7110 | 0111 | 1 | 01- 5 |
| 6150-11-7810 | 0111 | 2 | 01- 5 |
| 6150-11-7810 | 0991 | 1 | 09- 3 |
| 6150-11-7810 | 0993 | 1 | 09- 9 |
| 6150-11-8111 | 0115 | 1 | 01- 7 |
| 6150-11-8810 | 0115 | 2 | 01- 7 |
| 6150-11-8810 | 0991 | 1 | 09- 3 |
| 6150-11-8810 | 0993 | 1 | 09- 9 |
| 6150-11-8820 | 0115 | 3 | 01- 7 |

| PARTS NO | FIG NO | INDEX | PAGE |
|---|---|---|---|
| 6150-11-8820 | 0991 | 1 | 09- 3 |
| 6150-11-8820 | 0993 | 1 | 09- 9 |
| 6150-12-1341 | 0101A | 5 | 01- 3 |
| 6150-12-1351 | 0101A | 6 | 01- 3 |
| 6150-16-1320 | 0101A | 4 | 01- 3 |
| 6150-16-1331 | 0101A | 3 | 01- 3 |
| 6150-17-1320 | 0101A | 4 | 01- 3 |
| 6150-17-1331 | 0101A | 3 | 01- 3 |
| 6150-17-1812 | 0101A | 22 | 01- 3 |
| 6150-17-1812 | 0991 | 1 | 09- 3 |
| 6150-17-1812 | 0993 | 1 | 09- 9 |
| 6150-18-1320 | 0101A | 4 | 01- 3 |
| 6150-18-1331 | 0101A | 3 | 01- 3 |
| 6150-19-1320 | 0101A | 4 | 01- 3 |
| 6150-19-1331 | 0101A | 3 | 01- 3 |
| 6150-21-1170 | 0201 | 19 | 02- 3 |
| 6150-21-1180 | 0201 | 32 | 02- 3 |
| 6150-21-1190 | 0201 | 33 | 02- 4 |
| 6150-21-1190 | 0991 | 2 | 09- 4 |
| 6150-21-1210 | 0201 | 3 | 02- 3 |
| 6150-21-1250 | 0201 | 4 | 02- 3 |
| 6150-21-1490 | 0201 | 2 | 02- 3 |
| 6150-21-1710 | 0201 | 5 | 02- 3 |
| 6150-21-2230 | 0201 | 40 | 02- 4 |
| 6150-21-2230 | 0991 | 2 | 09- 4 |
| 6150-21-2230 | 0993 | 2 | 09- 9 |
| 6150-21-2240 | 0201 | 41 | 02- 4 |
| 6150-21-2240 | 0991 | 2 | 09- 4 |
| 6150-21-2240 | 0993 | 2 | 09- 9 |
| 6150-21-2250 | 0201 | 42 | 02- 4 |
| 6150-21-2250 | 0991 | 2 | 09- 4 |
| 6150-21-2250 | 0993 | 2 | 09- 9 |
| 6150-21-2410 | 0211 | 37 | 02- 12 |
| 6150-21-2411 | 0211 | 37 | 02- 12 |
| 6150-21-2420 | 0211 | 36 | 02- 12 |
| 6150-21-2421 | 0211 | 36 | 02- 12 |
| 6150-21-2430 | 0211 | 38 | 02- 12 |
| 6150-21-2431 | 0211 | 38 | 02- 12 |
| 6150-21-2510 | 0211 | 27 | 02- 11 |
| 6150-21-2520 | 0211 | 29 | 02- 11 |
| 6150-21-3100 | 0211 | 1 | 02- 11 |
| 6150-21-3101 | 0211 | 1 | 02- 11 |
| 6150-21-3230 | 0211 | 10 | 02- 11 |
| 6150-21-3230 | 0991 | 2 | 09- 4 |
| 6150-21-3230 | 0993 | 2 | 09- 10 |
| 6150-21-3300 | 0211 | 1 | 02- 11 |
| 6150-21-3380 | 0211 | 8 | 02- 11 |
| 6150-21-3450 | 0211 | 8 | 02- 11 |
| 6150-21-3510 | 0211 | 7 | 02- 11 |
| 6150-21-3620 | 0211 | 9 | 02- 11 |

| PARTS NO. | FIG NO | INDEX | PAGE |
|---|---|---|---|
| 6150-21-4242 | 0231 | 8 | 02- 19 |
| 6150-21-4242 | 0991 | 2 | 09- 4 |
| 6150-21-4243 | 0231 | 8 | 02- 19 |
| 6150-21-4243 | 0991 | 2 | 09- 4 |
| 6150-21-4243 | 0993 | 2 | 09- 10 |
| 6150-21-4250 | 0231 | 8 | 02- 19 |
| 6150-21-4250 | 0991 | 2 | 09- 4 |
| 6150-21-4250 | 0993 | 2 | 09- 10 |
| 6150-21-4440 | 0231 | 1 | 02- 19 |
| 6150-21-4441 | 0231 | 1 | 02- 19 |
| 6150-21-4510 | 0241 | 3 | 02- 21 |
| 6150-21-4511 | 0241 | 3 | 02- 21 |
| 6150-21-4540 | 0241 | 10 | 02- 21 |
| 6150-21-4550 | 0242 | 5 | 02- 23 |
| 6150-21-4730 | 0231 | 16 | 02- 19 |
| 6150-21-4740 | 0231 | 17 | 02- 19 |
| 6150-21-4740 | 0991 | 2 | 09- 4 |
| 6150-21-4740 | 0993 | 2 | 09- 10 |
| 6150-21-4770 | 0201 | 26 | 02- 3 |
| 6150-21-4770 | 0231 | 4 | 02- 19 |
| 6150-21-5120 | 0221 | 1 | 02- 15 |
| 6150-21-5260 | 0222 | 1 | 02- 17 |
| 6150-21-5360 | 0207 | 28 | 02- 7 |
| 6150-21-5360 | 0208 | 28 | 02- 9 |
| 6150-21-5440 | 0207 | 27 | 02- 7 |
| 6150-21-5440 | 0208 | 27 | 02- 9 |
| 6150-21-5810 | 0221 | 9 | 02- 15 |
| 6150-21-5810 | 0222 | 9 | 02- 17 |
| 6150-21-5810 | 0991 | 2 | 09- 4 |
| 6150-21-5810 | 0993 | 2 | 09- 10 |
| 6150-21-5811 | 0221 | 9 | 02- 15 |
| 6150-21-5811 | 0222 | 9 | 02- 17 |
| 6150-21-5811 | 0991 | 2 | 09- 4 |
| 6150-21-5811 | 0993 | 2 | 09- 10 |
| 6150-21-5910 | 0201 | 34 | 02- 4 |
| 6150-21-5920 | 0207 | 25 | 02- 7 |
| 6150-21-5920 | 0208 | 25 | 02- 9 |
| 6150-21-5930 | 0207 | 26 | 02- 7 |
| 6150-21-5930 | 0208 | 26 | 02- 9 |
| 6150-21-6111 | 0401 | 2 | 04- 3 |
| 6150-21-6120 | 0401 | 2 | 04- 3 |
| 6150-21-6310 | 0207 | 7 | 02- 7 |
| 6150-21-6310 | 0208 | 7 | 02- 9 |
| 6150-21-6390 | 0207 | 11 | 02- 7 |
| 6150-21-6390 | 0991 | 2 | 09- 4 |
| 6150-21-6450 | 0207 | 8 | 02- 7 |
| 6150-21-6450 | 0208 | 8 | 02- 9 |
| 6150-21-6450 | 0991 | 2 | 09- 4 |
| 6150-21-6450 | 0993 | 2 | 09- 9 |
| 6150-21-6460 | 0207 | 8 | 02- 7 |





| PARTS NO | FIG NO. | INDEX | PAGE |
|---|---|---|---|
| 6150-21-6460 | 0208 | 8 | 02- 9 |
| 6150-21-6460 | 0991 | 2 | 09- 4 |
| 6150-21-6460 | 0993 | 2 | 09- 9 |
| 6150-21-6470 | 0207 | 9 | 02- 7 |
| 6150-21-6470 | 0208 | 9 | 02- 9 |
| 6150-21-6500 | 0207 | 1 | 02- 7 |
| 6150-21-6500 | 0208 | 1 | 02- 9 |
| 6150-21-6530 | 0207 | 12 | 02- 7 |
| 6150-21-6530 | 0208 | 12 | 02- 9 |
| 6150-21-6540 | 0207 | 17 | 02- 7 |
| 6150-21-6540 | 0208 | 17 | 02- 9 |
| 6150-21-6560 | 0207 | 14 | 02- 7 |
| 6150-21-6560 | 0208 | 14 | 02- 9 |
| 6150-21-6570 | 0207 | 21 | 02- 7 |
| 6150-21-6570 | 0208 | 21 | 02- 9 |
| 6150-21-6601 | 0207 | 2 | 02- 7 |
| 6150-21-6601 | 0208 | 2 | 02- 9 |
| 6150-21-6710 | 0207 | 3 | 02- 7 |
| 6150-21-6710 | 0208 | 3 | 02- 9 |
| 6150-21-8000 | 0251 | 12 | 02- 27 |
| 6150-21-8010 | 0251 | 12 | 02- 27 |
| 6150-21-8050 | 0251 | 14 | 02- 27 |
| 6150-26-8010 | 0251 | 12 | 02- 27 |
| 6150-26-8050 | 0251 | 14 | 02- 27 |
| 6150-27-8010 | 0251 | 12 | 02- 27 |
| 6150-27-8050 | 0251 | 14 | 02- 27 |
| 6150-28-8010 | 0251 | 12 | 02- 27 |
| 6150-28-8050 | 0251 | 14 | 02- 27 |
| 6150-29-4243 | 0231 | 8 | 02- 19 |
| 6150-29-8010 | 0251 | 12 | 02- 27 |
| 6150-29-8050 | 0251 | 14 | 02- 27 |
| 6150-31-1121 | 0251 | 2 | 02- 27 |
| 6150-31-1130 | 0251 | 3 | 02- 27 |
| 6150-31-1340 | 0231 | 10 | 02- 19 |
| 6150-31-1341 | 0231 | 10 | 02- 19 |
| 6150-31-1360 | 0231 | 13 | 02- 19 |
| 6150-31-1550 | 0251 | 4 | 02- 27 |
| 6150-31-1560 | 0251 | 4 | 02- 27 |
| 6150-31-1710 | 0231 | 11 | 02- 19 |
| 6150-31-1810 | 0251 | 8 | 02- 27 |
| 6150-31-2031 | 0261 | 4 | 02- 31 |
| 6150-31-2032 | 0261 | 4 | 02- 31 |
| 6150-31-2033 | 0261 | 4 | 02- 31 |
| 6150-31-3040 | 0261 | 12 | 02- 31 |
| 6150-31-3040 | 0261 | 12 | 02- 31 |
| 6150-31-3130 | 0261 | 9 | 02- 31 |
| 6150-31-3310 | 0261 | 10 | 02- 31 |
| 6150-31-6110 | 0211 | 25 | 02- 11 |
| 6150-31-6120 | 0211 | 26 | 02- 11 |
| 6150-31-6200 | 0211 | 32 | 02- 12 |

| PARTS NO | FIG NO | INDEX | PAGE |
|---|---|---|---|
| 6150-31-6201 | 0211 | 32 | 02- 12 |
| 6150-31-6220 | 0211 | 33 | 02- 12 |
| 6150-31-6310 | 0211 | 31 | 02- 12 |
| 6150-31-6311 | 0211 | 31 | 02- 12 |
| 6150-36-3040 | 0261 | 12 | 02- 32 |
| 6150-36-3040 | 0261 | 12 | 02- 32 |
| 6150-37-3040 | 0261 | 12 | 02- 32 |
| 6150-37-3040 | 0261 | 12 | 02- 32 |
| 6150-38-3040 | 0261 | 12 | 02- 32 |
| 6150-38-3040 | 0261 | 12 | 02- 32 |
| 6150-39-3040 | 0261 | 12 | 02- 31 |
| 6150-39-3040 | 0261 | 12 | 02- 32 |
| 6150-41-1010 | 0271 | 1 | 02- 35 |
| 6150-41-1011 | 0271 | 1 | 02- 35 |
| 6150-41-1012 | 0271 | 1 | 02- 35 |
| 6150-41-1120 | 0271 | 2 | 02- 35 |
| 6150-41-1130 | 0271 | 4 | 02- 35 |
| 6150-41-2300 | 0271 | 7 | 02- 35 |
| 6150-41-2301 | 0271 | 7 | 02- 35 |
| 6150-41-2302 | 0271 | 7 | 02- 35 |
| 6150-41-2340 | 0271 | 9 | 02- 35 |
| 6150-41-2341 | 0271 | 9 | 02- 35 |
| 6150-41-2370 | 0271 | 11 | 02- 35 |
| 6150-41-2400 | 0271 | 12 | 02- 35 |
| 6150-41-2401 | 0271 | 12 | 02- 35 |
| 6150-41-2430 | 0201 | 20 | 02- 3 |
| 6150-41-2430 | 0201 | 24 | 02- 3 |
| 6150-41-2430 | 0271 | 15 | 02- 35 |
| 6150-41-2430 | 0401 | 8 | 04- 3 |
| 6150-41-2430 | 0403 | 8 | 04- 7 |
| 6150-41-2450 | 0271 | 14 | 02- 35 |
| 6150-41-3110 | 0271 | 16 | 02- 35 |
| 6150-41-3111 | 0271 | 16 | 02- 35 |
| 6150-41-4111 | 0101A | 10 | 01- 3 |
| 6150-41-4210 | 0101A | 11 | 01- 3 |
| 6150-41-4411 | 0101A | 18 | 01- 3 |
| 6150-41-4420 | 0101A | 17 | 01- 3 |
| 6150-41-4430 | 0101A | 14 | 01- 3 |
| 6150-41-4510 | 0101A | 15 | 01- 3 |
| 6150-41-4540 | 0101A | 12 | 01- 3 |
| 6150-41-5300 | 0111 | 16 | 01- 5 |
| 6150-41-5320 | 0111 | 18 | 01- 5 |
| 6150-41-5400 | 0111 | 7 | 01- 5 |
| 6150-41-5420 | 0111 | 12 | 01- 5 |
| 6150-41-5420 | 0111 | 8 | 01- 5 |
| 6150-41-5500 | 0111 | 11 | 01- 5 |
| 6150-41-5540 | 0111 | 14 | 01- 5 |
| 6150-41-5540 | 0111 | 9 | 01- 5 |
| 6150-41-5611 | 0101A | 19 | 01- 3 |
| 6150-41-5620 | 0101A | 20 | 01- 3 |

| PARTS NO. | FIG NO | INDEX | PAGE |
|---|---|---|---|
| 6151-11-5130 | 0151 | 4 | 01- 17 |
| 6151-11-5140 | 0151 | 2 | 01- 17 |
| 6151-11-5150 | 0151 | 2 | 01- 17 |
| 6151-11-5280 | 0161 | 10 | 01- 21 |
| 6151-11-5380 | 0161 | 9 | 01- 21 |
| 6151-11-5510 | 0161 | 1 | 01- 21 |
| 6151-11-5590 | 1005 | 1 | 10- 9 |
| 6151-11-5610 | 0161 | 2 | 01- 21 |
| 6151-11-5710 | 0151 | 11 | 01- 17 |
| 6151-11-5710 | 0991 | 1 | 09- 3 |
| 6151-11-5710 | 0993 | 1 | 09- 9 |
| 6151-11-5810 | 0161 | 8 | 01- 21 |
| 6151-21-1101 | 0201 | 1 | 02- 3 |
| 6151-21-1102 | 0201 | 1 | 02- 3 |
| 6151-21-1103 | 0201 | 1 | 02- 3 |
| 6151-21-1190 | 0993 | 2 | 09- 9 |
| 6151-21-1700 | 0201 | 36 | 02- 4 |
| 6151-21-1740 | 0201 | 36 | 02- 4 |
| 6151-21-1800 | 0201 | 36 | 02- 4 |
| 6151-21-1840 | 0201 | 36 | 02- 4 |
| 6151-21-1851 | 0201 | 37 | 02- 4 |
| 6151-21-2220 | 0201 | 39 | 02- 4 |
| 6151-21-4420 | 0242 | 22 | 02- 23 |
| 6151-21-4430 | 0241 | 25 | 02- 21 |
| 6151-21-4510 | 0241 | 7 | 02- 21 |
| 6151-21-4520 | 0242 | 8 | 02- 23 |
| 6151-21-6110 | 0401 | 2 | 04- 3 |
| 6151-21-6110 | 0403 | 2 | 04- 7 |
| 6151-25-1301 | 0201 | 1 | 02- 3 |
| 6151-31-1010 | 0251 | 1 | 02- 27 |
| 6151-31-1240 | 0231 | 9 | 02- 19 |
| 6151-31-1241 | 0231 | 9 | 02- 19 |
| 6151-31-2031 | 0261 | 4 | 02- 31 |
| 6151-31-2040 | 0261 | 4 | 02- 31 |
| 6151-31-2111 | 0261 | 1 | 02- 31 |
| 6151-31-2112 | 0261 | 1 | 02- 31 |
| 6151-31-2131 | 0261 | 1 | 02- 31 |
| 6151-31-2150 | 0261 | 1 | 02- 31 |
| 6151-31-2410 | 0261 | 2 | 02- 31 |
| 6151-31-2420 | 0261 | 2 | 02- 31 |
| 6151-31-2430 | 0261 | 2 | 02- 31 |
| 6151-31-3040 | 0261 | 12 | 02- 31 |
| 6151-31-3101 | 0261 | 7 | 02- 31 |
| 6151-31-3200 | 0261 | 7 | 02- 31 |
| 6151-31-3200 | 0261 | 7 | 02- 31 |
| 6151-31-3230 | 0261 | 9 | 02- 31 |
| 6151-31-3230 | 0261 | 9 | 02- 31 |
| 6151-31-8100 | 0251 | 9 | 02- 27 |
| 6151-36-3040 | 0261 | 12 | 02- 32 |
| 6151-37-3040 | 0261 | 12 | 02- 32 |

| PARTS NO. | FIG NO. | INDEX | PAGE |
|---|---|---|---|
| 6151-38-3040 | 0261 | 12 | 02- 32 |
| 6151-39-3040 | 0261 | 12 | 02- 32 |
| 6151-51-1004 | 0301 | 1 | 03- 3 |
| 6151-51-1005 | 0301 | 1 | 03- 3 |
| 6151-51-1102 | 0301 | 9 | 03- 3 |
| 6151-51-1202 | 0301 | 1 | 03- 3 |
| 6151-51-1203 | 0301 | 1 | 03- 3 |
| 6151-51-1303 | 0301 | 3 | 03- 3 |
| 6151-51-1312 | 0301 | 3 | 03- 3 |
| 6151-51-1313 | 0301 | 3 | 03- 3 |
| 6151-51-1320 | 0301 | 9 | 03- 3 |
| 6151-51-1401 | 0301 | 7 | 03- 3 |
| 6151-51-1421 | 0301 | 8 | 03- 3 |
| 6151-51-1430 | 0301 | 11 | 03- 3 |
| 6151-51-1430 | 0301 | 2 | 03- 3 |
| 6151-51-1510 | 0301 | 4 | 03- 3 |
| 6151-51-1511 | 0301 | 4 | 03- 3 |
| 6151-51-1610 | 0301 | 6 | 03- 3 |
| 6151-51-1710 | 0301 | 15 | 03- 3 |
| 6151-51-5241 | 0311 | 9 | 03- 7 |
| 6151-51-5241 | 0312 | 9 | 03- 9 |
| 6151-51-5301 | 0311 | 1 | 03- 7 |
| 6151-51-5310 | 0311 | 1 | 03- 7 |
| 6151-51-5310 | 0312 | 1 | 03- 9 |
| 6151-51-5320 | 0311 | 3 | 03- 7 |
| 6151-51-5320 | 0312 | 3 | 03- 9 |
| 6151-51-5401 | 0312 | 1 | 03- 9 |
| 6151-51-5603 | 0321 | 1 | 03- 11 |
| 6151-51-5611 | 0321 | 1 | 03- 11 |
| 6151-51-5680 | 0321 | 3 | 03- 11 |
| 6151-51-5690 | 0321 | 3A | 03- 11 |
| 6151-51-8130 | 0325 | 14 | 03- 13 |
| 6151-51-8130 | 0327 | 14 | 03- 15 |
| 6151-51-8150 | 0325 | 10 | 03- 13 |
| 6151-51-8150 | 0327 | 10 | 03- 15 |
| 6151-51-8150 | 0991 | 1 | 09- 3 |
| 6151-51-8150 | 0993 | 1 | 09- 9 |
| 6151-51-8160 | 0325 | 2 | 03- 13 |
| 6151-51-8160 | 0327 | 2 | 03- 15 |
| 6151-51-8160 | 0991 | 1 | 09- 3 |
| 6151-51-8160 | 0993 | 1 | 09- 9 |
| 6151-51-8210 | 0325 | 9 | 03- 13 |
| 6151-51-8210 | 0327 | 9 | 03- 15 |
| 6151-51-8221 | 0325 | 1 | 03- 13 |
| 6151-51-8221 | 0327 | 1 | 03- 15 |
| 6151-51-8630 | 0325 | 1 | 03- 13 |
| 6151-51-8630 | 0327 | 1 | 03- 15 |
| 6151-51-8710 | 0325 | 2 | 03- 13 |
| 6151-51-8710 | 0327 | 2 | 03- 15 |
| 6151-51-8710 | 0991 | 1 | 09- 3 |





| PARTS NO | FIG NO | INDEX | PAGE |
|---|---|---|---|
| 6151-51-8710 | 0993 | 1 | 09- 9 |
| 6151-51-8720 | 0325 | 10 | 03- 13 |
| 6151-51-8720 | 0327 | 10 | 03- 15 |
| 6151-51-8720 | 0991 | 1 | 09- 3 |
| 6151-51-8720 | 0993 | 1 | 09- 9 |
| 6151-51-8730 | 0325 | 9 | 03- 13 |
| 6151-51-8730 | 0327 | 9 | 03- 15 |
| 6151-51-9410 | 0328 | 8 | 03- 17 |
| 6151-61-1101 | 0501 | 1 | 05- 3 |
| 6151-61-1151 | 0501 | 12 | 05- 3 |
| 6151-61-1151 | 0502 | 12 | 05- 5 |
| 6151-61-1161 | 0501 | 13 | 05- 3 |
| 6151-61-1161 | 0502 | 13 | 05- 5 |
| 6151-61-1161 | 0991 | 6 | 09- 6 |
| 6151-61-1161 | 0993 | 6 | 09- 11 |
| 6151-61-1201 | 0502 | 1 | 05- 5 |
| 6151-61-1210 | 0501 | 11 | 05- 3 |
| 6151-61-1210 | 0502 | 11 | 05- 5 |
| 6151-61-1310 | 0501 | 2 | 05- 3 |
| 6151-61-1310 | 0502 | 2 | 05- 5 |
| 6151-61-1360 | 0501 | 5 | 05- 3 |
| 6151-61-1360 | 0502 | 5 | 05- 5 |
| 6151-61-2110 | 0331 | 2 | 03- 19 |
| 6151-61-2111 | 0331 | 2 | 03- 19 |
| 6151-61-3100 | 0511 | 1 | 05- 7 |
| 6151-61-3101 | 0511 | 1 | 05- 7 |
| 6151-61-3110 | 0511 | 6 | 05- 7 |
| 6151-61-3110 | 0513 | 6 | 05- 9 |
| 6151-61-3150 | 0511 | 1 | 05- 7 |
| 6151-61-3152 | 0511 | 1 | 05- 7 |
| 6151-61-3152 | 0511 | 1 | 05- 7 |
| 6151-61-3152 | 0513 | 1 | 05- 9 |
| 6151-61-3152 | 0513 | 1 | 05- 9 |
| 6151-61-3170 | 0511 | 2 | 05- 7 |
| 6151-61-3170 | 0513 | 2 | 05- 9 |
| 6151-61-3210 | 0511 | 20 | 05- 7 |
| 6151-61-3210 | 0513 | 20 | 05- 9 |
| 6151-61-3400 | 0513 | 1 | 05- 9 |
| 6151-61-3401 | 0513 | 1 | 05- 9 |
| 6151-61-3410 | 0511 | 9 | 05- 7 |
| 6151-61-3410 | 0513 | 9 | 05- 9 |
| 6151-61-3550 | 0511 | 13 | 05- 7 |
| 6151-61-3550 | 0513 | 13 | 05- 9 |
| 6151-61-3620 | 0511 | 20 | 05- 7 |
| 6151-61-3720 | 0511 | 22 | 05- 7 |
| 6151-61-3720 | 0513 | 22 | 05- 9 |
| 6151-61-3970 | 0511 | 26 | 05- 7 |
| 6151-61-3970 | 0513 | 27 | 05- 9 |
| 6151-71-1511 | 0401 | 1 | 04- 3 |
| 6151-71-1512 | 0401 | 1 | 04- 3 |

| PARTS NO | FIG NO. | INDEX | PAGE |
|---|---|---|---|
| 6151-71-1513 | 0401 | 1 | 04- 3 |
| 6151-71-1530 | 0403 | 1 | 04- 7 |
| 6151-71-1531 | 0403 | 1 | 04- 7 |
| 6151-71-1531 | 0455 | 1 | 04- 29 |
| 6151-71-1531 | 0456 | 1 | 04- 33 |
| 6151-71-1531 | 0465 | 1 | 04- 47 |
| 6151-71-1531 | 0466 | 1 | 04- 49 |
| 6151-71-1531 | 0473 | 1 | 04- 53 |
| 6151-71-1531 | 0483 | 1 | 04- 57 |
| 6151-71-1550 | 0401 | 1 | 04- 3 |
| 6151-71-1551 | 0401 | 1 | 04- 3 |
| 6151-71-1552 | 0401 | 1 | 04- 3 |
| 6151-71-1552 | 0451C | 1 | 04- 23 |
| 6151-71-1552 | 0452C | 1 | 04- 27 |
| 6151-71-1552 | 0461B | 1 | 04- 39 |
| 6151-71-1552 | 0462B | 1 | 04- 43 |
| 6151-71-1552 | 0471C | 1 | 04- 51 |
| 6151-71-1552 | 0481B | 1 | 04- 55 |
| 6151-71-5110 | 0401 | 18 | 04- 3 |
| 6151-71-5110 | 0403 | 18 | 04- 7 |
| 6151-71-5120 | 0401 | 19 | 04- 3 |
| 6151-71-5120 | 0403 | 19 | 04- 7 |
| 6151-71-5130 | 0401 | 20 | 04- 3 |
| 6151-71-5130 | 0403 | 20 | 04- 7 |
| 6151-71-5140 | 0401 | 21 | 04- 3 |
| 6151-71-5140 | 0403 | 21 | 04- 7 |
| 6151-71-5150 | 0401 | 22 | 04- 4 |
| 6151-71-5150 | 0403 | 22 | 04- 7 |
| 6151-71-5160 | 0401 | 23 | 04- 4 |
| 6151-71-5160 | 0403 | 23 | 04- 7 |
| 6151-71-5470 | 0412 | 11 | 04- 13 |
| 6151-71-5520 | 0401 | 25 | 04- 4 |
| 6151-71-5520 | 0403 | 25 | 04- 7 |
| 6151-71-5610 | 0401 | 31 | 04- 4 |
| 6151-71-5610 | 0403 | 31 | 04- 7 |
| 6151-71-5660 | 0401 | 31 | 04- 4 |
| 6151-71-5710 | 0401 | 34 | 04- 4 |
| 6151-71-5710 | 0403 | 34 | 04- 7 |
| 6151-71-8510 | 0401 | 38 | 04- 4 |
| 6151-71-8510 | 0403 | 38 | 04- 7 |
| 6151-71-8810 | 0401 | 43 | 04- 4 |
| 6151-71-8810 | 0403 | 43 | 04- 8 |
| 6151-81-3110 | 0401 | 9 | 04- 3 |
| 6151-81-3110 | 0403 | 9 | 04- 7 |
| 6151-81-3110 | 0701 | 1 | 07- 3 |
| 6151-81-3111 | 0401 | 9 | 04- 3 |
| 6151-81-3111 | 0403 | 9 | 04- 7 |
| 6151-81-3111 | 0701 | 1 | 07- 3 |
| 6151-81-3111 | 0711A | 1 | 07- 5 |
| 6151-81-3420 | 0701 | 10 | 07- 3 |

| PARTS NO | FIG NO | INDEX | PAGE |
|---|---|---|---|
| 6150-41-5630 | 0101A | 21 | 01- 3 |
| 6150-51-1650 | 0301 | 17 | 03- 3 |
| 6150-51-1652 | 0301 | 17 | 03- 3 |
| 6150-51-1660 | 0301 | 17 | 03- 3 |
| 6150-51-1710 | 0301 | 19 | 03- 3 |
| 6150-51-1710 | 0991 | 2 | 09- 4 |
| 6150-51-1710 | 0993 | 2 | 09- 10 |
| 6150-51-1720 | 0301 | 20 | 03- 3 |
| 6150-51-1720 | 0991 | 2 | 09- 4 |
| 6150-51-1720 | 0993 | 2 | 09- 10 |
| 6150-51-4360 | 0311 | 4 | 03- 7 |
| 6150-51-4360 | 0312 | 4 | 03- 9 |
| 6150-51-4920 | 0311 | 2 | 03- 7 |
| 6150-51-4920 | 0312 | 2 | 03- 9 |
| 6150-51-5471 | 0321 | 24 | 03- 11 |
| 6150-51-5622 | 0321 | 2 | 03- 11 |
| 6150-51-5630 | 0321 | 3 | 03- 11 |
| 6150-51-5641 | 0321 | 4 | 03- 11 |
| 6150-51-5660 | 0321 | 21 | 03- 11 |
| 6150-51-5710 | 0321 | 14 | 03- 11 |
| 6150-51-6230 | 0301 | 24 | 03- 3 |
| 6150-51-6241 | 0301 | 28 | 03- 3 |
| 6150-51-9420 | 0328 | 5 | 03- 17 |
| 6150-51-9430 | 0328 | 6 | 03- 17 |
| 6150-51-9440 | 0328 | 7 | 03- 17 |
| 6150-51-9460 | 0328 | 9 | 03- 17 |
| 6150-51-9470 | 0328 | 10 | 03- 17 |
| 6150-51-9480 | 0328 | 12 | 03- 17 |
| 6150-61-1350 | 0501 | 8 | 05- 3 |
| 6150-61-1350 | 0502 | 8 | 05- 5 |
| 6150-61-1410 | 0501 | 9 | 05- 3 |
| 6150-61-1410 | 0502 | 9 | 05- 5 |
| 6150-61-1510 | 0501 | 3 | 05- 3 |
| 6150-61-1510 | 0502 | 3 | 05- 5 |
| 6150-61-1510 | 0991 | 6 | 09- 6 |
| 6150-61-1510 | 0993 | 6 | 09- 11 |
| 6150-61-1520 | 0501 | 10 | 05- 3 |
| 6150-61-1520 | 0991 | 6 | 09- 6 |
| 6150-61-1820 | 0335 | 8 | 03- 21 |
| 6150-61-1820 | 0501 | 19 | 05- 3 |
| 6150-61-1820 | 0502 | 19 | 05- 5 |
| 6150-61-1820 | 0991 | 2 | 09- 5 |
| 6150-61-1820 | 0991 | 6 | 09- 6 |
| 6150-61-1820 | 0993 | 2 | 09- 10 |
| 6150-61-1820 | 0993 | 6 | 09- 11 |
| 6150-61-2120 | 0331 | 1 | 03- 19 |
| 6150-61-2121 | 0331 | 1 | 03- 19 |
| 6150-61-2122 | 0331 | 1 | 03- 19 |
| 6150-61-2123 | 0331 | 1 | 03- 19 |
| 6150-61-2130 | 0331 | 10 | 03- 19 |

| PARTS NO. | FIG NO | INDEX | PAGE |
|---|---|---|---|
| 6150-61-2131 | 0331 | 10 | 03- 19 |
| 6150-61-2140 | 0331 | 13 | 03- 19 |
| 6150-61-2141 | 0331 | 13 | 03- 19 |
| 6150-61-2150 | 0331 | 14 | 03- 19 |
| 6150-61-2151 | 0331 | 14 | 03- 19 |
| 6150-61-2510 | 0331 | 3 | 03- 19 |
| 6150-61-2510 | 0991 | 2 | 09- 5 |
| 6150-61-2510 | 0993 | 2 | 09- 10 |
| 6150-61-2520 | 0331 | 4 | 03- 19 |
| 6150-61-2520 | 0331 | 4 | 03- 19 |
| 6150-61-2520 | 0331 | 4 | 03- 19 |
| 6150-61-2520 | 0991 | 2 | 09- 5 |
| 6150-61-2520 | 0993 | 2 | 09- 10 |
| 6150-61-2530 | 0331 | 8 | 03- 19 |
| 6150-61-2540 | 0331 | 12 | 03- 19 |
| 6150-61-2540 | 0991 | 2 | 09- 5 |
| 6150-61-2540 | 0993 | 2 | 09- 10 |
| 6150-61-2550 | 0331 | 9 | 03- 19 |
| 6150-61-2550 | 0991 | 2 | 09- 5 |
| 6150-61-2550 | 0993 | 2 | 09- 10 |
| 6150-61-2560 | 0331 | 4 | 03- 19 |
| 6150-61-2560 | 0991 | 2 | 09- 5 |
| 6150-61-2560 | 0993 | 2 | 09- 10 |
| 6150-61-2620 | 0331 | 11 | 03- 19 |
| 6150-61-2810 | 0331 | 19 | 03- 19 |
| 6150-61-2811 | 0331 | 19 | 03- 19 |
| 6150-61-2811 | 0991 | 2 | 09- 5 |
| 6150-61-2811 | 0993 | 2 | 09- 10 |
| 6150-61-2812 | 0331 | 19 | 03- 19 |
| 6150-61-2812 | 0991 | 2 | 09- 5 |
| 6150-61-2812 | 0993 | 2 | 09- 10 |
| 6150-61-3540 | 0511 | 11 | 05- 7 |
| 6150-61-3540 | 0513 | 11 | 05- 9 |
| 6150-61-6510 | 0501 | 21 | 05- 3 |
| 6150-61-6510 | 0502 | 21 | 05- 5 |
| 6150-61-6830 | 0501 | 22 | 05- 3 |
| 6150-61-6830 | 0502 | 22 | 05- 5 |
| 6150-61-6830 | 0991 | 1 | 09- 3 |
| 6150-61-6830 | 0993 | 1 | 09- 9 |
| 6150-61-6910 | 0991 | 6 | 09- 6 |
| 6150-61-8110 | 0521 | 3 | 05- 11 |
| 6150-61-8171 | 0521 | 1 | 05- 11 |
| 6150-61-8211 | 0521 | 1 | 05- 11 |
| 6150-61-8211 | 0521 | 1 | 05- 11 |
| 6150-61-8410 | 0521 | 6 | 05- 11 |
| 6150-61-8810 | 0411 | 14 | 04- 11 |
| 6150-61-8810 | 0412 | 14 | 04- 13 |
| 6150-61-8810 | 0521 | 11 | 05- 11 |
| 6150-61-9111 | 0335 | 1 | 03- 21 |
| 6150-61-9130 | 0335 | 3 | 03- 21 |





| PARTS NO. | FIG NO. | INDEX | PAGE |
|---|---|---|---|
| 6150-61-9130 | 0991 | 2 | 09- 5 |
| 6150-61-9130 | 0993 | 2 | 09- 10 |
| 6150-61-9140 | 0335 | 5 | 03- 21 |
| 6150-61-9150 | 0335 | 6 | 03- 21 |
| 6150-61-9150 | 0991 | 2 | 09- 5 |
| 6150-61-9150 | 0993 | 2 | 09- 10 |
| 6150-61-9301 | 0335 | 1 | 03- 21 |
| 6150-61-9311 | 0335 | 17 | 03- 21 |
| 6150-61-9320 | 0335 | 2 | 03- 21 |
| 6150-61-9511 | 0335 | 11 | 03- 21 |
| 6150-61-9520 | 0335 | 12 | 03- 21 |
| 6150-71-1910 | 0211 | 14 | 02- 11 |
| 6150-71-1910 | 0991 | 2 | 09- 4 |
| 6150-71-1910 | 0993 | 2 | 09- 10 |
| 6150-71-3160 | 0401 | 10 | 04- 3 |
| 6150-71-3160 | 0403 | 10 | 04- 7 |
| 6150-71-3210 | 0401 | 11 | 04- 3 |
| 6150-71-3210 | 0403 | 11 | 04- 7 |
| 6150-71-5111 | 0401 | 18 | 04- 3 |
| 6150-71-5121 | 0401 | 19 | 04- 3 |
| 6150-71-5131 | 0401 | 20 | 04- 3 |
| 6150-71-5141 | 0401 | 21 | 04- 3 |
| 6150-71-5151 | 0401 | 22 | 04- 3 |
| 6150-71-5161 | 0401 | 23 | 04- 4 |
| 6150-71-5330 | 0423 | 13 | 04- 20 |
| 6150-71-5340 | 0421A | 12 | 04- 16 |
| 6150-71-5340 | 0423 | 13 | 04- 20 |
| 6150-71-5420 | 0411 | 11 | 04- 11 |
| 6150-71-5710 | 0401 | 34 | 04- 4 |
| 6150-71-6210 | 0411 | 5 | 04- 11 |
| 6150-71-6210 | 0412 | 5 | 04- 13 |
| 6150-81-2210 | 0201 | 45 | 02- 4 |
| 6150-81-5100 | 0211 | 11 | 02- 11 |
| 6150-81-5110 | 0211 | 13 | 02- 11 |
| 6150-81-5120 | 0211 | 11 | 02- 11 |
| 6150-81-5130 | 0271 | 6 | 02- 35 |
| 6150-81-5131 | 0271 | 6 | 02- 35 |
| 6150-81-5140 | 0211 | 18 | 02- 11 |
| 6150-81-5510 | 0201 | 43 | 02- 4 |
| 6150-81-6330 | 0601 | 2 | 06- 3 |
| 6150-81-6350 | 0603 | 2 | 06- 5 |
| 6150-81-6730 | 0601 | 9 | 06- 3 |
| 6150-81-6760 | 0603 | 9 | 06- 5 |
| 6150-81-8420 | 0111 | 17 | 01- 5 |
| 6150-81-8420 | 0271 | 12A | 02- 35 |
| 6150-81-9130 | 0211 | 6 | 02- 11 |
| 6150-81-9130 | 0601 | 3 | 06- 3 |
| 6150-81-9130 | 0603 | 3 | 06- 5 |
| 6150-81-9140 | 0111 | 3 | 01- 5 |
| 6150-81-9160 | 0101A | 27 | 01- 3 |

| PARTS NO | FIG NO. | INDEX | PAGE |
|---|---|---|---|
| 6150-81-9180 | 0171 | 17 | 01- 23 |
| 6150-81-9190 | 0171 | 13 | 01- 23 |
| 6150-81-9230 | 0201 | 38 | 02- 4 |
| 6150-81-9250 | 0401 | 7 | 04- 3 |
| 6150-81-9250 | 0403 | 7 | 04- 7 |
| 6150-81-9370 | 0111 | 19 | 01- 5 |
| 6150-81-9370 | 0115 | 4 | 01- 7 |
| 6150-81-9370 | 0321 | 12 | 03- 11 |
| 6151-K1-0300 | 0991 | 1 | 09- 3 |
| 6151-K1-0301 | 0991 | 1 | 09- 3 |
| 6151-K1-1000 | 0991 | 1 | 09- 3 |
| 6151-K1-1001 | 0991 | 1 | 09- 3 |
| 6151-K1-1002 | 0991 | 1 | 09- 3 |
| 6151-K1-3600 | 0993 | 1 | 09- 9 |
| 6151-K1-3601 | 0993 | 1 | 09- 9 |
| 6151-K2-0400 | 0991 | 2 | 09- 4 |
| 6151-K2-0401 | 0991 | 2 | 09- 4 |
| 6151-K2-0402 | 0991 | 2 | 09- 4 |
| 6151-K2-0403 | 0991 | 2 | 09- 3 |
| 6151-K2-0404 | 0991 | 2 | 09- 3 |
| 6151-K2-3600 | 0993 | 2 | 09- 9 |
| 6151-K2-3601 | 0993 | 2 | 09- 9 |
| 6151-K3-0401 | 0991 | 3 | 09- 5 |
| 6151-K3-0401 | 0993 | 3 | 09- 10 |
| 6151-K6-1200 | 0991 | 6 | 09- 6 |
| 6151-K6-1201 | 0991 | 6 | 09- 6 |
| 6151-K6-1202 | 0991 | 6 | 09- 6 |
| 6151-K6-4100 | 0993 | 6 | 09- 11 |
| 6151-K6-4101 | 0993 | 6 | 09- 11 |
| 6151-K8-0700 | 0993 | 8 | 09- 11 |
| 6151-K8-0701 | 0993 | 8 | 09- 11 |
| 6151-K8-0702 | 0993 | 8 | 09- 11 |
| 6151-K8-1000 | 0991 | 8 | 09- 6 |
| 6151-K8-1001 | 0991 | 8 | 09- 6 |
| 6151-K8-1002 | 0991 | 8 | 09- 6 |
| 6151-11-1100 | 0101A | 1 | 01- 3 |
| 6151-11-3101 | 0423 | 1 | 04- 19 |
| 6151-11-3111 | 0423 | 1 | 04- 19 |
| 6151-11-3121 | 0423 | 12 | 04- 20 |
| 6151-11-4220 | 0141 | 1 | 01- 13 |
| 6151-11-4311 | 0131 | 9 | 01- 9 |
| 6151-11-4311 | 0132 | 9 | 01- 11 |
| 6151-11-4410 | 0131 | 16 | 01- 9 |
| 6151-11-4410 | 0132 | 16 | 01- 11 |
| 6151-11-4450 | 0141 | 2 | 01- 13 |
| 6151-11-4520 | 0141 | 24 | 01- 13 |
| 6151-11-4610 | 0141 | 4 | 01- 13 |
| 6151-11-4910 | 0131 | 1 | 01- 9 |
| 6151-11-4910 | 0132 | 1 | 01- 11 |
| 6151-11-5110 | 0151 | 1 | 01- 17 |

| PARTS NO | FIG NO | INDEX | PAGE |
|---|---|---|---|
| 6151-81-3430 | 0701 | 11 | 07- 3 |
| 6151-81-3440 | 0701 | 16 | 07- 3 |
| 6151-81-3450 | 0701 | 17 | 07- 3 |
| 6151-81-3461 | 0701 | 13 | 07- 3 |
| 6151-81-3520 | 0701 | 2 | 07- 3 |
| 6151-81-3530 | 0701 | 5 | 07- 3 |
| 6151-81-3720 | 0701 | 6 | 07- 3 |
| 6151-81-4530 | 0132 | 18 | 01- 11 |
| 6151-81-7800 | 0141 | 8 | 01- 13 |
| 6151-81-7900 | 0141 | 8 | 01- 13 |
| 6152-81-8300 | 0151 | 10 | 01- 17 |
| 6152-81-8310 | 0151 | 10 | 01- 17 |
| 6152-81-8310 | 0155A | 1 | 01- 19 |
| 6162-13-1150 | 0101A | 8 | 01- 3 |
| 6162-43-5340 | 0111 | 13 | 01- 5 |
| 6162-73-1960 | 0211 | 15 | 02- 11 |
| 6162-73-1960 | 0991 | 2 | 09- 4 |
| 6162-73-1960 | 0993 | 2 | 09- 10 |
| 6162-73-1970 | 0211 | 16 | 02- 11 |
| 6162-83-7040 | 0141 | 9 | 01- 13 |
| 6164-91-6220 | 0701 | 9 | 07- 3 |
| 6164-91-6220 | 0991 | 8 | 09- 6 |
| 6164-91-6220 | 0993 | 8 | 09- 11 |
| 6210-21-6471 | 0207 | 9 | 02- 7 |
| 6212-65-2610 | 0331 | 11 | 03- 19 |
| 6600-01-5551 | 0325 | 15 | 03- 13 |
| 6600-01-5551 | 0327 | 15 | 03- 15 |
| 6610-21-4570 | 0231 | 4 | 02- 19 |
| 6610-31-3331 | 0241 | 6 | 02- 21 |
| 6610-41-2370 | 0271 | 11 | 02- 35 |
| 6610-61-1512 | 0501 | 10 | 05- 3 |
| 6610-61-1512 | 0991 | 6 | 09- 6 |
| 6610-71-1911 | 0211 | 14 | 02- 11 |
| 6610-71-1911 | 0991 | 2 | 09- 4 |
| 6610-71-1911 | 0993 | 2 | 09- 10 |
| 6610-71-1960 | 0211 | 15 | 02- 11 |
| 6610-71-1960 | 0991 | 2 | 09- 4 |
| 6610-71-1960 | 0993 | 2 | 09- 10 |
| 6610-71-1970 | 0211 | 16 | 02- 11 |
| 6610-81-2210 | 0621 | 2 | 06- 7 |
| 6610-81-2210 | 0622 | 2 | 06- 9 |
| 6610-81-2210 | 0991 | 2 | 09- 5 |
| 6610-81-2210 | 0993 | 2 | 09- 10 |
| 6631-11-5630 | 0141 | 6 | 01- 13 |
| 6631-11-5630 | 0161 | 4 | 01- 21 |
| 6631-11-5630 | 0161 | 6 | 01- 21 |
| 6631-11-5630 | 0601 | 10 | 06- 3 |
| 6631-21-4321 | 0241 | 1 | 02- 21 |
| 6631-21-4360 | 0241 | 5 | 02- 21 |
| 6631-21-4371 | 0241 | 2 | 02- 21 |

| PARTS NO. | FIG NO. | INDEX | PAGE |
|---|---|---|---|
| 6631-21-4421 | 0241 | 13 | 02- 21 |
| 6631-21-4431 | 0241 | 18 | 02- 21 |
| 6631-21-4440 | 0241 | 8 | 02- 21 |
| 6631-21-4460 | 0241 | 12 | 02- 21 |
| 6631-21-4460 | 0991 | 3 | 09- 5 |
| 6631-21-4460 | 0993 | 3 | 09- 11 |
| 6631-21-4520 | 0242 | 29 | 02- 23 |
| 6631-21-4550 | 0242 | 31 | 02- 23 |
| 6631-21-4561 | 0242 | 37 | 02- 23 |
| 6631-21-4581 | 0242 | 32 | 02- 23 |
| 6631-21-4650 | 0242 | 7 | 02- 23 |
| 6631-21-4690 | 0242 | 4 | 02- 23 |
| 6631-21-4690 | 0991 | 3 | 09- 5 |
| 6631-21-4690 | 0993 | 3 | 09- 11 |
| 6631-21-4870 | 0241 | 14 | 02- 21 |
| 6631-21-4870 | 0991 | 3 | 09- 5 |
| 6631-21-4870 | 0993 | 3 | 09- 11 |
| 6631-24-5600 | 0221 | 2 | 02- 15 |
| 6631-24-5600 | 0222 | 2 | 02- 17 |
| 6631-24-5610 | 0221 | 5 | 02- 15 |
| 6631-24-5610 | 0222 | 5 | 02- 17 |
| 6631-31-1370 | 0231 | 12 | 02- 19 |
| 6631-61-8550 | 0521 | 14 | 05- 11 |
| 6643-11-4641 | 0141 | 27 | 01- 14 |
| 6643-11-5750 | 0161 | 11 | 01- 21 |
| 6643-11-5750 | 0991 | 1 | 09- 3 |
| 6658-51-9510 | 0328 | 1 | 03- 17 |
| 6667-21-4470 | 0241 | 21 | 02- 21 |
| 6667-21-4630 | 0242 | 41 | 02- 23 |
| 6667-21-4630 | 0991 | 3 | 09- 5 |
| 6667-21-4630 | 0993 | 3 | 09- 11 |
| 6667-21-4662 | 0241 | 26 | 02- 21 |
| 6667-21-4662 | 0991 | 3 | 09- 5 |
| 6667-21-4662 | 0993 | 3 | 09- 11 |
| 6667-21-4670 | 0241 | 22 | 02- 21 |
| 6667-21-4670 | 0242 | 33 | 02- 23 |
| 6667-21-4670 | 0991 | 3 | 09- 5 |
| 6667-21-4670 | 0991 | 3 | 09- 5 |
| 6667-21-4670 | 0993 | 3 | 09- 11 |
| 6667-21-4670 | 0993 | 3 | 09- 11 |
| 6668-51-9590 | 0328 | 2 | 03- 17 |
| 6670-31-1330 | 0231 | 13 | 02- 19 |
| 6672-12-6290 | 0171 | 5 | 01- 23 |
| 6678-12-5730 | 0161 | 13 | 01- 21 |
| 6678-22-4510 | 0242 | 28 | 02- 23 |
| 6678-22-4530 | 0242 | 40 | 02- 23 |
| 6678-81-4340 | 0131 | 18 | 01- 9 |
| 6679-22-4150 | 0241 | 29 | 02- 21 |
| 6679-22-4150 | 0242 | 25 | 02- 23 |
| 6679-22-4150 | 0242 | 45 | 02- 24 |





| PARTS NO | FIG NO | INDEX | PAGE |
|---|---|---|---|
| 6679-22-4641 | 0242 | 1 | 02- 23 |
| 6679-22-4670 | 0242 | 2 | 02- 23 |
| 6679-22-4680 | 0242 | 16 | 02- 23 |
| 6691-13-4610 | 0141 | 26 | 01- 13 |
| 6691-21-6550 | 0141 | 26 | 01- 13 |
| 6691-21-6560 | 0141 | 26 | 01- 13 |
| 6693-12-5540 | 0161 | 14 | 01- 21 |
| 6693-12-5540 | 1005 | 2 | 10- 9 |
| 6693-12-5550 | 0161 | 15 | 01- 21 |
| 6693-12-5550 | 1005 | 3 | 10- 9 |
| 6710-61-8104 | 0521 | 1 | 05- 11 |
| 6710-61-8212 | 0521 | 1 | 05- 11 |
| 6710-82-7121 | 0141 | 16 | 01- 13 |
| 6710-82-7130 | 0141 | 17 | 01- 13 |
| 6711-11-5781 | 1005 | 6 | 10- 9 |
| 6711-81-7100 | 0141 | 8 | 01- 13 |
| 6711-81-7110 | 0141 | 8 | 01- 13 |
| 6711-81-7910 | 0141 | 30 | 01- 14 |
| 6711-81-7910 | 1003 | 1 | 10- 7 |
| 6712-51-4920 | 0311 | 2 | 03- 7 |
| 6712-51-4920 | 0312 | 2 | 03- 9 |
| 6991-11-5990 | 0325 | 6 | 03- 13 |
| 6991-11-5990 | 0327 | 6 | 03- 15 |
| 700-21-11140 | 6273 | 12 | 60- 57 |
| 700-21-11150 | 6273 | 18 | 60- 57 |
| 700-21-11170 | 6273 | 5 | 60- 57 |
| 700-21-11181 | 6273 | 6 | 60- 57 |
| 700-21-11190 | 6273 | 7 | 60- 57 |
| 700-21-11210 | 6273 | 10 | 60- 57 |
| 700-21-11221 | 6273 | 15 | 60- 57 |
| 700-21-11230 | 6273 | 14 | 60- 57 |
| 700-22-11270 | 6273 | 23 | 60- 57 |
| 700-22-11291 | 6273 | 3 | 60- 57 |
| 700-22-11420 | 6273 | 24 | 60- 57 |
| 700-22-11430 | 6273 | 21 | 60- 57 |
| 700-22-11510 | 6273 | 4 | 60- 57 |
| 700-22-11590 | 6273 | 17 | 60- 57 |
| 700-22-11610 | 6273 | 16 | 60- 57 |
| 700-22-12320 | 6273 | 11 | 60- 57 |
| 700-22-12320 | 6273 | 20 | 60- 57 |
| 700-22-12330 | 6273 | 22 | 60- 57 |
| 700-82-11340 | 6273 | 8 | 60- 57 |
| 700-84-11730 | 6273 | 9 | 60- 57 |
| 700-93-11240 | 6271 | 4 | 60- 55 |
| 701-10-64140 | 6271 | 18 | 60- 55 |
| 701-10-64150 | 6271 | 19 | 60- 55 |
| 702-15-65000 | 6273 | 1 | 60- 57 |
| 702-15-65001 | 6418 | 27 | 60- 107 |
| 702-21-12140 | 6271 | 5 | 60- 55 |
| 702-21-12150 | 6271 | 8 | 60- 55 |

| PARTS NO. | FIG NO | INDEX | PAGE |
|---|---|---|---|
| 702-21-12160 | 6271 | 25 | 60- 55 |
| 702-21-12170 | 6271 | 24 | 60- 55 |
| 702-21-12180 | 6271 | 26 | 60- 55 |
| 702-21-12210 | 6271 | 12 | 60- 55 |
| 702-21-12230 | 6271 | 7 | 60- 55 |
| 702-21-18220 | 6271 | 6 | 60- 55 |
| 702-21-25000 | 6271 | 1 | 60- 55 |
| 702-21-25000 | 6414 | 23 | 60- 95 |
| 706-73-71121 | 6271 | 20 | 60- 55 |
| 707-00-X7A60 | 2723C | 1 | 20- 91 |
| 707-00-X7A70 | 6303B | 1 | 60- 63 |
| 707-00-X7A80 | 6303B | 1 | 60- 63 |
| 707-00-X7A90 | 6307B | 1 | 60- 67 |
| 707-00-X7B10 | 2725B | 1 | 20- 93 |
| 707-00-X7B11 | 2725B | 1 | 20- 93 |
| 707-00-X7B20 | 2725B | 1 | 20- 93 |
| 707-00-X7B21 | 2725B | 1 | 20- 93 |
| 707-00-X7B30 | 2721C | 1 | 20- 89 |
| 707-00-X7B50 | 6305B | 1 | 60- 65 |
| 707-27-14290 | 6315 | 3 | 60- 73 |
| 707-29-10920 | 6307B | 3 | 60- 67 |
| 707-29-10940 | 6313 | 4 | 60- 71 |
| 707-29-11930 | 2725B | 4 | 20- 93 |
| 707-29-50981 | 2721C | 4 | 20- 89 |
| 707-29-90820 | 2723C | 4 | 20- 91 |
| 707-29-90940 | 6301A | 10 | 60- 61 |
| 707-29-90940 | 6303B | 3 | 60- 63 |
| 707-29-90940 | 6311A | 4 | 60- 69 |
| 707-29-90980 | 6305B | 4 | 60- 65 |
| 707-35-91100 | 2725B | 10 | 20- 93 |
| 707-35-99500 | 2721C | 10 | 20- 89 |
| 707-36-09011 | 6305B | 16 | 60- 65 |
| 707-36-10911 | 6307B | 14 | 60- 67 |
| 707-36-10920 | 6313 | 15 | 60- 71 |
| 707-36-11911 | 2725B | 15 | 20- 93 |
| 707-36-14180 | 6315 | 13 | 60- 73 |
| 707-36-50531 | 2721C | 13 | 20- 89 |
| 707-36-90911 | 6301A | 27 | 60- 61 |
| 707-36-90911 | 6303B | 20 | 60- 63 |
| 707-36-90911 | 6311A | 15 | 60- 69 |
| 707-36-90930 | 2723C | 15 | 20- 91 |
| 707-36-90930 | 6301A | 27 | 60- 61 |
| 707-44-10070 | 6307B | 16 | 60- 67 |
| 707-44-10070 | 6313 | 17 | 60- 71 |
| 707-44-11070 | 2725B | 17 | 20- 93 |
| 707-44-14180 | 6315 | 15 | 60- 73 |
| 707-44-50070 | 2721C | 15 | 20- 89 |
| 707-44-90070 | 2723C | 17 | 20- 91 |
| 707-44-90070 | 6301A | 29 | 60- 61 |
| 707-44-90070 | 6303B | 22 | 60- 63 |

| PARTS NO | FIG NO | INDEX | PAGE |
|---|---|---|---|
| 707-44-90070 | 6311A | 17 | 60- 69 |
| 707-45-90910 | 6305B | 12 | 60- 65 |
| 707-46-03010 | 2721C | 2 | 20- 89 |
| 707-46-06010 | 6307B | 12 | 60- 67 |
| 707-51-35210 | 2721C | 6 | 20- 89 |
| 707-51-45210 | 2723C | 6 | 20- 91 |
| 707-51-50210 | 6307B | 5 | 60- 67 |
| 707-51-52210 | 2725B | 6 | 20- 93 |
| 707-51-55210 | 6301A | 12 | 60- 61 |
| 707-51-55210 | 6303B | 5 | 60- 63 |
| 707-51-55210 | 6305B | 6 | 60- 65 |
| 707-51-55210 | 6311A | 6 | 60- 69 |
| 707-51-55210 | 6313 | 6 | 60- 71 |
| 707-51-70211 | 6315 | 5 | 60- 73 |
| 707-56-55510 | 2725B | 7 | 20- 93 |
| 707-56-55510 | 6301A | 13 | 60- 61 |
| 707-56-55510 | 6303B | 6 | 60- 63 |
| 707-56-55510 | 6305B | 7 | 60- 65 |
| 707-56-55510 | 6311A | 7 | 60- 69 |
| 707-56-55510 | 6313 | 7 | 60- 71 |
| 707-98-05410 | 2721C | KIT | 20- 89 |
| 707-98-24480 | 2723C | KIT | 20- 91 |
| 707-98-26410 | 6303B | KIT | 60- 63 |
| 707-98-26441 | 6305B | KIT | 60- 65 |
| 707-98-26490 | 6311A | KIT | 60- 69 |
| 707-98-26690 | 6301A | KIT | 60- 61 |
| 707-98-32080 | 6307B | KIT | 60- 67 |
| 707-98-34050 | 6313 | KIT | 60- 71 |
| 707-98-34420 | 2725B | KIT | 20- 93 |
| 707-98-52100 | 6315 | KIT | 60- 73 |
| 714-16-19730 | 7038 | 10 | 70- 29 |

| PARTS NO | FIG NO | INDEX | PAGE |
|---|---|---|---|

For future use, write your Komatsu machine and distributor information below:

Machine Serial Number:

Engine Serial Number:

Date Delivered:

Komatsu Distributor Name:

Address:

Phone Number:

Fax Number:

E-mail Address:

© All Right Reserved. June 24, 2004

Komatsu and its logo are the registered name and trademark of Komatsu Ltd., Japan